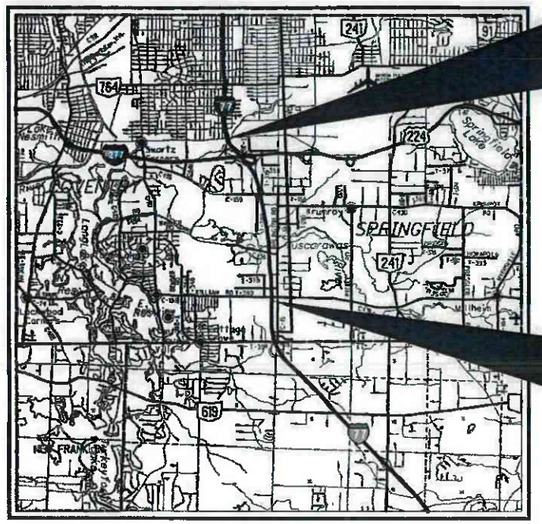


LOCATION MAP

LATITUDE: 41° 0' 22.3" N LONGITUDE: 81° 29' 39.1" W

SCALE IN MILES
0 1 2 3 4

N

PORTION TO BE IMPROVED
INTERSTATE HIGHWAY
FEDERAL ROUTES
STATE ROUTES
COUNTY & TOWNSHIP ROADS
OTHER ROADS

## DESIGN DESIGNATION

FOR DESIGN DESIGNATIONS, SEE SHEET 2

**Contract Proposal available @ www.contracts.dot.state.oh.us**

# STATE OF OHIO

# DEPARTMENT OF TRANSPORTATION

# SUM-77/277/224-VARIOUS

## SUMMIT COUNTY

INDEX OF SHEETS:

FOR INDEX OF SHEETS, SEE SHEET 2

## DESIGN EXCEPTIONS

| DESIGN FEATURE | APPROVAL DATES | SHEET NUMBERS |
|---|---|---|
| SHOULDER WIDTH (I.R. 77) | 12/23/19 | 36 |
| SHOULDER WIDTH (I.R. 77) | 1/31/20 | 36 |
| SHOULDER WIDTH (SB I.R. 77) | 12/23/19 | 36 |
| STOPPING SIGHT DISTANCE (RAMP B HORIZ.) | 1/31/20 | 23 |
| SHOULDER WIDTH (RAMP B-2) | 3/3/20 | 41 |
| HORIZONTAL CURVE RADIUS (RAMP B-2) | 3/3/20 | 24 |
| STOPPING SIGHT DISTANCE (RAMP B-2 HORIZ.) | 3/3/20 | 24 |
| STOPPING SIGHT DISTANCE (RAMP C HORIZ.) | 12/23/19 | 24 |
| HORIZONTAL CURVE RADIUS (RAMP C-2) | 12/23/19 | 25 |
| STOPPING SIGHT DISTANCE (RAMP C-2 HORIZ.) | 12/23/19 | 25 |
| SHOULDER WIDTH (WARNER RD.) | 1/31/20 | 51 |
| DESIGN LOADING STRUCTURAL CAPACITY (SUM-077-0802L/R) | 12/2/20 | 1157 |

## PROJECT DESCRIPTION

PROJECT CONSISTS OF THE FULL DEPTH RECONSTRUCTION OF 2.7 MILES OF I-77, INCLUDING AN ADDITIONAL THROUGH LANE, AND RECONSTRUCTION OF THE I-77/I-277/US-224 INTERCHANGE IN SUMMIT COUNTY. PROJECT ALSO INCLUDES THE RECONSTRUCTION OF THE RAMP C-2 BRIDGE OVER NORTHBOUND I-77, WIDENING OF THE I-77 BRIDGES OVER WARNER ROAD AND WIDENING AND REDECKING OF THE I-77 BRIDGES OVER THE TUSCARAWAS RIVER.

## EARTH DISTURBED AREAS

PROJECT EARTH DISTURBED AREA: 120.12 ACRES
ESTIMATED CONTRACTOR EARTH DISTURBED AREA: 1.00 ACRES
NOTICE OF INTENT EARTH DISTURBED AREA: 121.12 ACRES

## LIMITED ACCESS

THIS IMPROVEMENT IS ESPECIALLY DESIGNED FOR THROUGH TRAFFIC AND HAS BEEN DECLARED A LIMITED ACCESS HIGHWAY OR FREEWAY BY ACTION OF THE DIRECTOR IN ACCORDANCE WITH THE PROVISIONS OF SECTION 5511.02 OF THE OHIO REVISED CODE.

## 2019 SPECIFICATIONS

THE STANDARD SPECIFICATIONS OF THE STATE OF OHIO, DEPARTMENT OF TRANSPORTATION, INCLUDING SUPPLEMENTAL SPECIFICATIONS LISTED IN THE PLANS AND CHANGES LISTED IN THE PROPOSAL SHALL GOVERN THIS IMPROVEMENT.

I HEREBY APPROVE THESE PLANS AND DECLARE THAT THE MAKING OF THIS IMPROVEMENT WILL NOT REQUIRE THE CLOSING TO TRAFFIC OF THE HIGHWAY EXCEPT FOR THE SIDE ROADS AND RAMPS AS DESCRIBED ON SHEETS 115-122 AND THAT THE PROVISIONS FOR THE MAINTENANCE AND SAFETY OF TRAFFIC WILL BE AS SET FORTH ON THE PLANS AND ESTIMATES.

**CONFORMED SET**

ENGINEERS SEAL:
FOR SHEETS 74-401, 908-916, 1037-1064
STATE OF OHIO SEAN S. ROPPLE E-72781 REGISTERED PROFESSIONAL ENGINEER
SIGNED:
DATE: 1/8/2021

PLAN PREPARED BY:
GPD GROUP
520 South Main Street
Akron, OH 44311
330.572.2100 Fax: 330.572.2101

ENGINEERS SEAL:
FOR SHEETS 1065-1261
STATE OF OHIO DAVEN GM NG 36972 REGISTERED PROFESSIONAL ENGINEER
SIGNED:
DATE: 01/29/21

ENGINEERS SEAL:
FOR ENTIRE PLAN EXCEPT SHEETS OTHERWISE NOTED
STATE OF OHIO MARK R. GROSSMAN E-61120 REGISTERED PROFESSIONAL ENGINEER
SIGNED:
DATE: 01/29/21

| STANDARD CONSTRUCTION DRAWINGS | | | | | | | | | | | | | | SUPPLEMENTAL SPECIFICATIONS | | | |
|---|---|---|---|---|---|---|---|---|---|---|---|---|---|---|---|---|---|
| BP-2.1 | 7/17/15 | MGS-1.1 | 1/19/18 | RM-4.5 | 7/21/17 | HL-30.21 | 4/17/20 | MT-95.30 | 7/19/19 | MT-104.10 | 10/16/15 | 800-2019 | 1/15/21 | 905 | 4/17/20 |
| BP-2.2 | 1/15/21 | MGS-2.1 | 1/19/18 | RM-4.6 | 7/19/13 | HL-30.22 | 1/15/21 | MT-95.32 | 4/19/19 | MT-105.10 | 1/17/20 | 807 | 7/17/20 | 908 | 10/20/17 |
| BP-2.3 | 7/18/14 | MGS-2.3 | 7/18/14 | | | HL-40.10 | 7/17/20 | MT-95.40 | 1/17/20 | MT-120.00 | 1/19/18 | 808 | 1/18/19 | 909 | 1/15/21 |
| BP-3.1 | 1/17/20 | MGS-3.1 | 1/19/18 | | | HL-50.11 | 1/16/15 | MT-95.45 | 1/17/20 | | | 809 | 1/15/21 | 913 | 4/21/17 |
| BP-5.1 | 1/18/19 | MGS-3.2 | 1/18/13 | | | HL-50.21 | 1/15/21 | MT-95.70 | 1/17/20 | TC-12.31 | 1/15/21 | 813 | 10/19/18 | 921 | 4/20/12 |
| BP-6.1 | 7/19/13 | MGS-4.2 | 7/19/13 | AS-1-15 | 7/17/15 | HL-60.12 | 1/15/21 | MT-97.11 | 1/20/17 | TC-15.116 | 1/15/21 | 821 | 4/20/12 | 992 | 4/18/14 |
| BP-9.1 | 1/18/19 | MGS-4.3 | 1/18/13 | AS-2-15 | 1/18/19 | HL-60.21 | 7/20/18 | MT-97.12 | 1/20/17 | TC-21.11 | 4/17/20 | 825 | 1/17/20 | | |
| | | MGS-5.2 | 7/15/16 | CPP-1-08 | 7/21/17 | HL-60.31 | 1/17/20 | MT-98.10 | 1/17/20 | TC-21.21 | 1/15/21 | 832 | 10/19/18 | | |
| CB-1.1 | 7/19/19 | MGS-5.3 | 7/15/16 | CS-1-08 | 1/15/21 | | | MT-98.11 | 1/17/20 | TC-21.50 | 4/17/20 | 836 | 1/19/18 | | |
| CB-2.1 | 1/15/21 | MGS-6.1 | 1/19/18 | EXJ-4-87 | 1/19/18 | | | MT-98.20 | 4/19/19 | TC-22.20 | 1/17/14 | 840 | 1/15/21 | | |
| CB-2.2 | 1/15/21 | | | CSD-1-19 | 1/15/21 | | | MT-98.21 | 1/17/20 | TC-41.10 | 7/19/13 | 846 | 4/17/15 | | |
| CB-2.3 | 1/15/16 | HW-2.1 | 7/20/18 | NBS-1-09 | 1/15/21 | ITS-10.10 | 1/15/21 | MT-98.28 | 1/17/20 | TC-41.20 | 10/18/13 | 850 | 1/15/21 | | |
| CB-3.3 | 1/15/16 | HW-2.2 | 7/20/18 | PCB-91 | 7/17/20 | ITS-10.11 | 1/15/21 | MT-98.29 | 1/17/20 | TC-41.30 | 10/18/13 | 855 | 4/20/18 | | |
| | | | | SBR-1-20 | 7/17/20 | ITS-12.10 | 7/19/19 | MT-99.20 | 4/19/19 | TC-41.40 | 10/18/13 | 869 | 10/17/14 | | |
| DM-1.1 | 7/17/20 | I-2.1 | 1/15/16 | SBR-2-20 | 1/15/21 | ITS-14.10 | 1/15/21 | MT-99.30 | 1/17/20 | TC-42.10 | 10/18/13 | 878 | 1/17/20 | | |
| DM-2.1 | 1/18/13 | I-2.2 | 7/19/19 | SCID-1-96 | 7/18/14 | ITS-14.11 | 1/15/21 | MT-99.50 | 1/17/20 | TC-42.20 | 10/18/13 | | | | |
| DM-4.1 | 7/17/20 | I-2.3 | 1/15/16 | SCID-2-14 | 1/15/21 | ITS-14.50 | 1/15/21 | MT-99.60 | 7/15/16 | TC-51.11 | 1/15/16 | SPECIAL PROVISIONS | | | |
| DM-4.2 | 7/20/12 | | | | | ITS-15.10 | 1/15/21 | MT-100.00 | 1/15/16 | TC-51.12 | 1/15/16 | | | | |
| | | MH-1.2 | 1/15/16 | | | ITS-18.00 | 1/15/21 | MT-101.60 | 1/17/20 | TC-52.10 | 10/18/13 | | | | |
| F-1.1 | 7/19/13 | | | HL-10.11 | 1/15/21 | ITS-35.11 | 4/17/20 | MT-101.70 | 1/17/20 | TC-52.20 | 1/15/21 | | | | |
| F-3.1 | 7/19/13 | RM-1.1 | 1/15/21 | HL-10.12 | 1/20/17 | ITS-35.12 | 1/15/21 | MT-101.75 | 1/17/20 | TC-65.10 | 1/17/14 | WPC | 4/22/21 | | |
| F-3.3 | 7/19/13 | RM-4.1 | 1/17/20 | HL-10.31 | 4/17/20 | ITS-35.13 | 1/15/21 | MT-101.90 | 7/17/20 | TC-65.11 | 7/21/17 | | | | |
| F-3.4 | 7/19/13 | RM-4.2 | 4/17/20 | HL-20.11 | 1/15/21 | ITS-36.12 | 1/15/21 | MT-102.10 | 1/17/20 | TC-71.10 | 1/19/18 | | | | |
| | | RM-4.3 | 7/18/14 | HL-20.21 | 1/15/21 | ITS-50.10 | 1/15/21 | MT-102.20 | 4/19/19 | TC-72.20 | 7/20/18 | | | | |
| | | RM-4.4 | 7/19/19 | HL-30.11 | 1/15/21 | | | MT-103.10 | 1/19/18 | TC-83.20 | 7/21/17 | | | | |

UNDERGROUND UTILITIES
OHIO811.org Before You Dig

APPROVED
DATE 12.15.20 SUMMIT COUNTY ENGINEER

APPROVED
DATE 2/1/21 DISTRICT DEPUTY DIRECTOR

APPROVED Jack Marchbanks DKS
DATE 3/10/2021 DIRECTOR, DEPARTMENT OF TRANSPORTATION

FEDERAL PROJECT NO. E171 (457)
PID NO. 106002
CONSTRUCTION PROJECT NO.
RAILROAD INVOLVEMENT NONE
SUM-77/277/224 VARIOUS
1 / 1288

SUM - IR IR 77/277/US 224 Various
210258 PID - 106002
Dist 4 5/13/2021

Contract Proposal available @ www.contracts.dot.state.oh.us

D:\2017\2017258\ProjectData\SUM\106002\Design\Roadway\Sheets\106002_GT00I.dgn 106002GT00I.dgn 1/29/2021 11:47:06 AM prfry

## INDEX OF SHEETS:


| | | | |
|---|---|---|---|
| TITLE SHEET | 1 | CROSS SECTIONS - RAMP A | 638 - 656 |
| PLAN LEGEND AND DESIGN DESIGNATIONS | 2 | CROSS SECTIONS - RAMP B | 657 - 673 |
| SCHEMATIC PLAN | 3 - 12 | CROSS SECTIONS - RAMP B-1 | 674 - 687 |
| GEOMETRIC PLAN | 13 - 22 | CROSS SECTIONS - RAMP B-2 | 688 - 719 |
| CURVE DATA, INTERSECTION DATA AND REFERENCE POINTS | 23 - 28 | CROSS SECTIONS - RAMP C | 720 - 741 |
| TYPICAL SECTIONS | 29 - 65 | CROSS SECTIONS - RAMP C-1 | 742 - 757 |
| GENERAL NOTES | 66 - 73 | CROSS SECTIONS - RAMP C-2 | 758 - 770 |
| MAINTENANCE OF TRAFFIC | 74 - 120, 120A, 121 - 401 | CROSS SECTIONS - RAMP D | 771 - 787 |
| GENERAL SUMMARY | 402 - 406 | CROSS SECTIONS - ARLINGTON ROAD RAMP D | 788 - 798 |
| SUBSUMMARIES | 407 - 416 | CROSS SECTIONS - WARNER ROAD | 799 - 803 |
| ESTIMATED QUANTITIES | 417 - 439 | SUPERELEVATION TABLES | 804 - 840 |
| CALCULATIONS | 440 - 443 | GORE DETAILS | 841 - 868 |
| PROJECT SITE PLAN | 444 - 452 | *PAVEMENT JOINT DETAILS | 869 - 896 |
| PLAN AND PROFILE - I.R. 77 | 453 - 471 | PAVEMENT REMOVAL PLANS | 897 - 906 |
| PLAN AND PROFILE - NB I.R. 77 | 472 - 475 | ROADWAY DETAIL | 907 |
| PLAN AND PROFILE - SB I.R. 77 | 476 - 479 | CULVERT DETAILS | 908 - 920 |
| PLAN - I.R. 277/U.S. 224 | 480 - 484 | DRAINAGE DETAILS | 921 |
| PLAN AND PROFILE - RAMP A | 485 - 487 | UNDERDRAIN DETAILS | 922 - 932 |
| PLAN AND PROFILE - RAMP B | 488 - 489 | TEST HOLE CERTIFICATION | 933 |
| PLAN AND PROFILE - RAMP B-1 | 490 - 491 | TRAFFIC CONTROL | 934 - 1019 , 1019A |
| PLAN AND PROFILE - RAMP B-2 | 492 - 496 | TRAFFIC SURVEILLANCE | 1020- 1036 |
| PLAN AND PROFILE - RAMP C | 497 - 499 | LIGHTING | 1037- 1064 |
| PLAN AND PROFILE - RAMP C-1 | 500 - 501 | NOISE BARRIERS | 1065, 1065A, 1066 - 1072, 1072A, 1073 - 1087, 1087A, 1088 - 1117, 1117A - 1117B, 1118 - 1123, 1123A, 1124 - 1132 |
| PLAN AND PROFILE - RAMP C-2 | 502 - 503 | | |
| PLAN AND PROFILE - RAMP D | 504 - 506 | RETAINING WALLS | 1133 - 1154 |
| PLAN AND PROFILE - ARLINGTON ROAD RAMP D | 507 - 508 | STRUCTURES (OVER 20' SPAN) | |
| PLAN AND PROFILE - WARNER ROAD | 509 | SUM-077-0802 | 1155 - 1180 |
| CROSS SECTION LAYOUT | 510 - 519 | SUM-077-0810 | 1181 - 1224 |
| CROSS SECTIONS - I.R. 77 | 520 - 563 | SUM-077-0927R | 1225 - 1261 |
| CROSS SECTIONS - NB I.R. 77 | 564 - 590 | FENCE PLAN | 1262 - 1272 |
| CROSS SECTIONS - SB I.R. 77 | 591 - 616 | RIGHT OF WAY | 1273 - 1288 |
| CROSS SECTIONS - I.R. 277/ U.S. 224 | 617 - 637 | SOIL PROFILES | |


* SHEETS INCLUDED BUT NOT NEEDED

## DESIGN DESIGNATIONS

| | I-77 | I-77/US-224 | WARNER ROAD |
|---|---|---|---|
| CURRENT YEAR ADT (2020) | 118,630 | 26,910 | 2,500 |
| DESIGN YEAR ADT (2040) | 141,010 | 34,280 | 2,500 |
| DESIGN HOURLY VOLUME (2040) | 14,260 | 3,580 | ----- |
| DIRECTIONAL DISTRIBUTION | 57% | 57% | 50% |
| TRUCKS (24 HOUR B & C) | 9% | 8% | 2% |
| TD | 5% | 4% | -% |
| DESIGN SPEED | 70 MPH | 65 MPH | 45 MPH |
| LEGAL SPEED | 65 MPH | 60 MPH | 40 MPH |
| DESIGN FUNCTIONAL CLASSIFICATION: | 01 URBAN INTERSTATES | 01 URBAN INTERSTATES | 07 URBAN LOCAL ROADS |
| NHS PROJECT | YES | YES | YES |

## BALLOON LEGEND

- (AB-#) ABANDON
- (B-#) CONCRETE BARRIER
- (BR-#) CONCRETE BARRIER REMOVED
- (D-#) CATCH BASINS, MANHOLES AND INLETS
- (DJ-#) CATCH BASINS, MANHOLES AND INLETS ADJUSTED/RECONSTRUCTED TO GRADE
- (DR-#) CATCH BASINS, MANHOLES AND INLETS REMOVED
- (DV-#) DRIVEWAYS
- (E-#) EROSION CONTROL
- (EX-#) EXISTING CATCH BASINS, MANHOLES AND INLETS
- (F-#) FENCE
- (FP-#) FILL & PLUG
- (FR-#) FENCE REMOVED
- (G-#) GUARDRAIL
- (GR-#) GUARDRAIL REMOVED
- (HR-#) HEADWALL REMOVED
- (HW-#) HEADWALL
- (LS-#) LANDSCAPING
- (P-#) DRAINAGE PIPES
- (PR-#) PIPES REMOVED
- (R-#) MISCELLANEOUS REMOVALS
- (SA-#) SANITARY MANHOLE
- (SJ-#) SANITARY STRUCTURE ADJUSTED/RECONSTRUCTED TO GRADE
- (SL-#) SANITARY LATERAL
- (SM-#) SEEDING AND MULCHING
- (SP-#) SANITARY PIPE
- (SR-#) SANITARY REMOVAL
- (U-#) UNDERDRAINS
- (W-#) WATER WORK
- (WJ-#) WATER WORK ADJUSTED TO GRADE
- (WR-#) WATER WORK REMOVALS

## EXISTING UTILITY SYMBOL LEGEND

- = Guy Pole
- = Flag Pole
- = Utility Pole
- = Power Pole
- = Yard Light
- = Parking Meters
- = Parking Meter
- = Air Condition Unit
- = Guy Wire w/Anchor
- = Light Pole
- = Light Pedestal
- = Electric Marker Post
- = Electric Meter
- = Electric Transformer
- = Electric Pedestal
- = Electric Tower
- = Electric Outlet
- = Electric Pull Box
- = Electric Manhole
- = Gas Valve
- = Gas Service
- = Gas Marker Post
- = Gas Meter/ Regulator
- = Tank (Gas, Propane)
- = Fire Hydrant
- = Water Valve
- = Water Manhole
- = Water Well
- = Water Meter
- = Water Spigot / Tap
- = Cistern
- = Sprinkler
- = Sprinkler Control Box
- = Monitoring Well
- = Cable TV Pole
- = Cable TV Marker Post
- = Cable TV Pedestal
- = Telephone Pole
- = Telephone Marker Post
- = Telephone Pedestal
- = Telephone Booth/or Drive-Up
- = Traffic Lighting Control Box
- = Traffic Lighting Pull Box
- = Sign
- = Curb Inlet
- = Catch Basin
- = Cleanout
- = Sanitary Manhole
- = Storm Manhole
- = Telephone Manhole

## PROPOSED UTILITY SYMBOL LEGEND

- = Proposed Catch Basins
- = Proposed Manhole
- = Manhole Adjusted To Grade
- = Proposed Exfiltration Trench
- = Proposed Water Valve
- = Proposed Fire Hydrant
- = Sanitary Manhole Adjusted To Grade
- = Proposed Traffic Pullbox
- = Proposed Conventional Luminaire
- = Proposed Lighting Pullbox
- = Proposed Decorative Luminaire
- = Proposed Signal Pole Pedestal
- = Proposed Signal Pole
- = Test Hole location

## UTILITY LINE LEGEND

- W = Water Line
- G = Gas Line
- SAN = Sanitary Line
- E = Underground Electric
- P = Propane Line
- T = Underground Telephone
- D = Diesel
- CATV = Cable TV.
- TR = Signal Wiring

CALCULATED ATR
CHECKED PJF

PLAN LEGEND AND DESIGN DESIGNATIONS

SUM-77/277/224
VARIOUS



0:\2017\2017258\ProjectData\SUM\106002\Design\Roadway\Sheets\106002_GT002.dgn GT002 2/3/2021 10:15:26 AM pfry

BEGIN PROJECT
BEGIN WORK (SB)
℄ R/W & CONST. I.R. 77
STA. 391+37.36
S.L.M. 7.39

E171 (457)

MEET EXISTING (SOUTHBOUND)

PROP. NOISE WALL C1

KILLIAN ROAD

O.H. ELEC. LINES AND TELCOM LINES (TO REMAIN)

BEGIN WORK (NB)
℄ R/W & CONST. I.R. 77
STA. 371+50.00

MEET EXISTING (NORTHBOUND)

℄ R/W & CONST. I.R. 77

370 375 380 385 390 395

70 75 80 85

BEGIN WORK
℄ CONST. ARLINGTON ROAD RAMP D
STA. 71+69.06

℄ CONST. ARLINGTON ROAD RAMP D

END ℄ CONST.
ARLINGTON
ROAD RAMP D
STA. 88+18.25

STRUCTURE NO.
SUM-77-0744
(NO WORK)

MATCHLINE - STA. 396+00 ℄ I.R. 77, SEE SHEET 4

ARLINGTON ROAD

℄ EX. ARLINGTON ROAD RAMP D

FOR GEOMETRIC PLAN, SEE SHEETS 13 - 22
FOR CURVE DATA, SEE SHEETS 23 - 26

N

0 50 100 200
HORIZONTAL SCALE IN FEET

CALCULATED ZJP
CHECKED PJF

# SCHEMATIC PLAN
## BEGIN TO STA. 396+00 I.R. 77

SUM-77 / 277 / 224
VARIOUS

3
1288

0:\2017\20172581Project Data\SUM\106002\Design\Roadway\Sheets\106002_GB001.dgn Sheet 1/13/2021 11:46:32 PM pfry

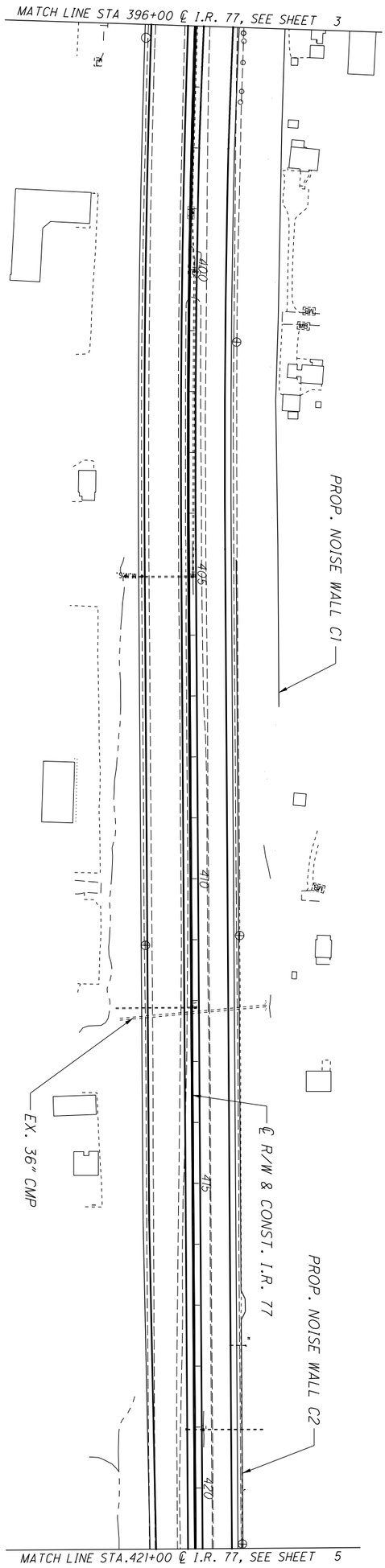


FOR GEOMETRIC PLAN, SEE SHEETS 13 - 22
FOR CURVE DATA, SEE SHEETS 23 - 26

| | | | | |
|---|---|---|---|---|
| 4 / 1288 | SUM-77/277/224<br>VARIOUS | SCHEMATIC PLAN<br>STA. 396+00 TO STA. 421+00 I.R. 77 | CALCULATED ZJP<br>CHECKED PJF | 0 100 50 200<br>HORIZONTAL SCALE IN FEET |

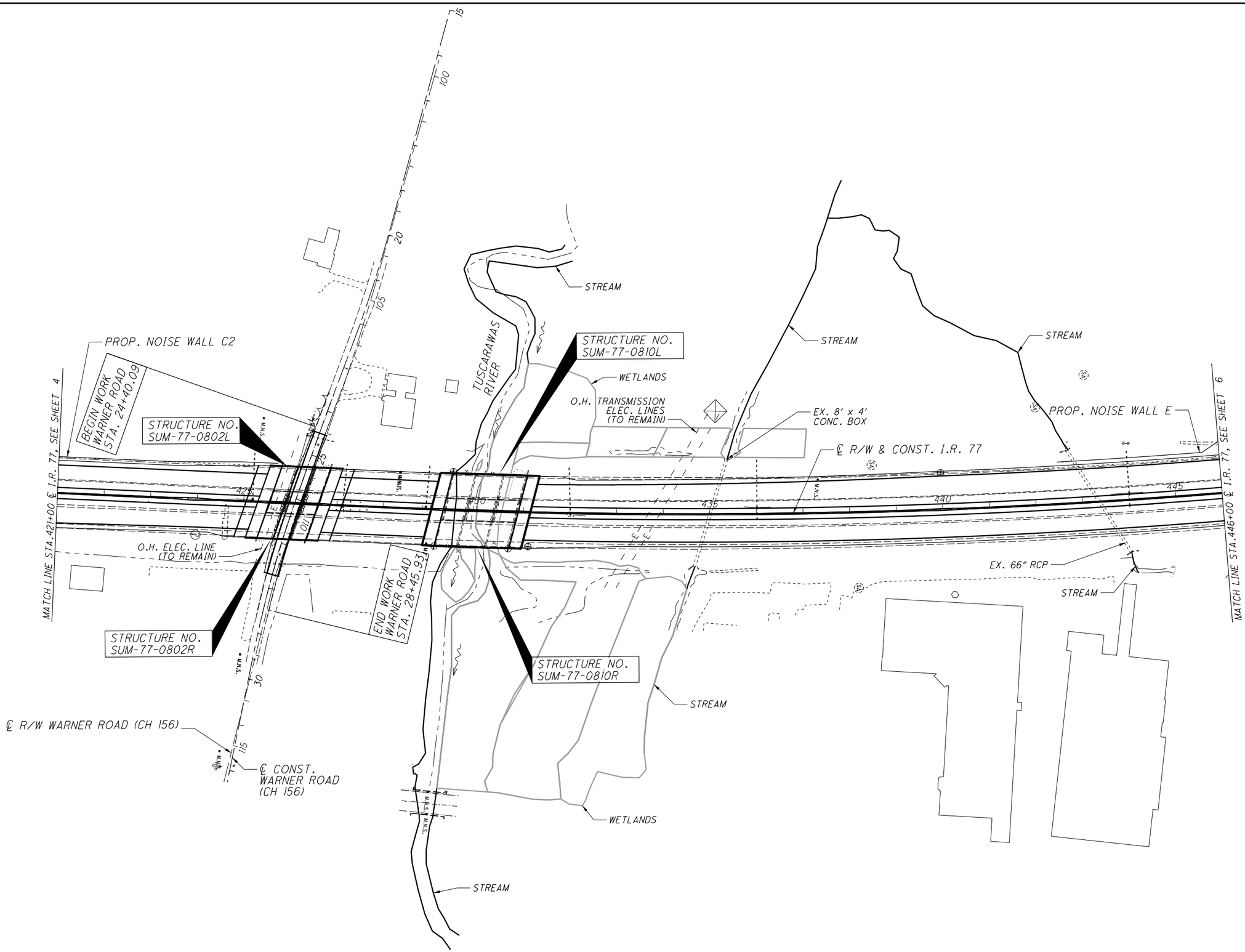


FOR GEOMETRIC PLAN, SEE SHEETS 13 - 22
FOR CURVE DATA, SEE SHEETS 23 - 26

HORIZONTAL SCALE IN FEET
0 50 100 200

CALCULATED ZJP
CHECKED PJF

# SCHEMATIC PLAN
## STA. 421+00 TO STA. 446+00 I.R. 77

SUM-77/277/224
VARIOUS

5
1288

0:\2017\2017258\ProjectData\SUM\06002\Design\Roadway\Sheets\06002_GB003.dgn Design 1/13/2021 1:47:58 PM pfry

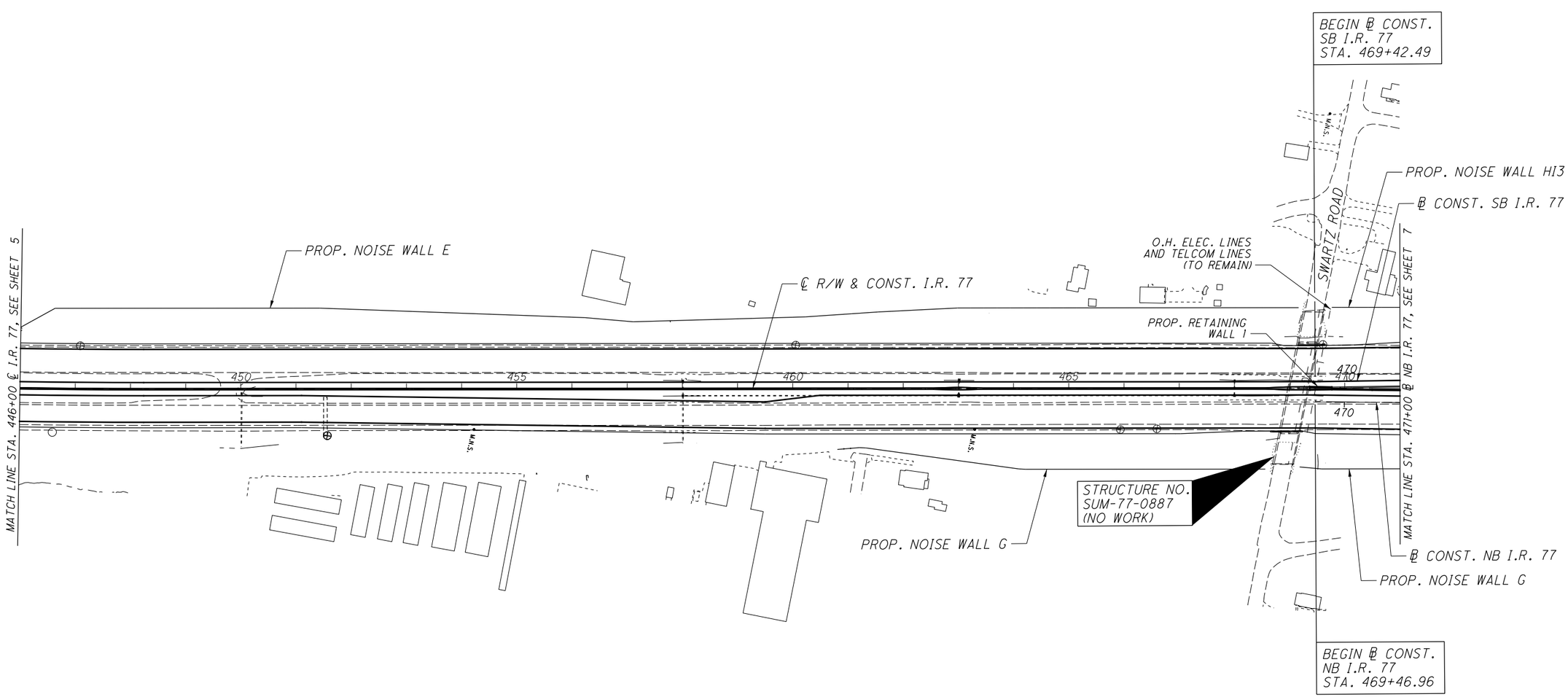


FOR GEOMETRIC PLAN, SEE SHEETS 13 - 22
FOR CURVE DATA, SEE SHEETS 23 - 26

HORIZONTAL SCALE IN FEET
0 50 100 200

CALCULATED ZJP
CHECKED PJF

# SCHEMATIC PLAN
## STA. 446+00 I.R. 77 TO STA. 471+00 NB I.R. 77

SUM-77/277/224
VARIOUS

6
1288

0:\2017\2017258\ProjectData\SUM\06002\Design\Roadway\Sheets\06002_GB004.dgn Design 1/13/2021 1:48:40 PM pfry

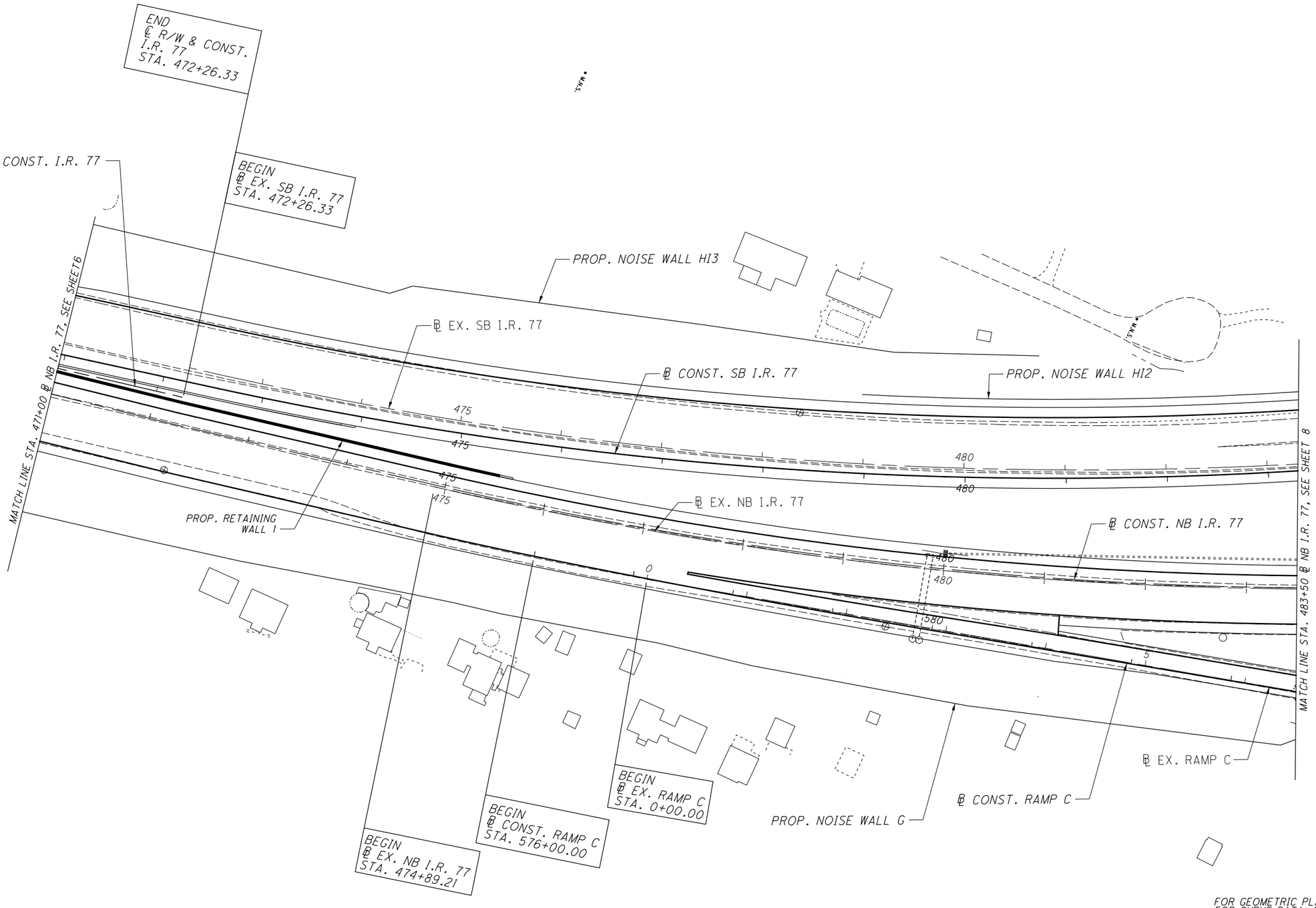


FOR GEOMETRIC PLAN, SEE SHEETS 13 - 22
FOR CURVE DATA, SEE SHEETS 23 - 26

HORIZONTAL SCALE IN FEET
0 25 50 100

CALCULATED ZJP
CHECKED PJF

# SCHEMATIC PLAN
## STA. 471+00 NB I.R. 77 TO STA. 483+50 NB I.R. 77

SUM-77 / 277 / 224
VARIOUS

7
1288

0:\2017\2017258\ProjectData\SUM\06002\Design\Roadway\Sheets\06002_GB005.dgn Design 1/13/2021 11:49:24 PM pfry

# SCHEMATIC PLAN
## I.R. 77 TO STA. 496+00 NB I.R. 77
## STA. 483+50 NB I.R. 77

HORIZONTAL SCALE IN FEET
0 25 50 100

CALCULATED ZJP
CHECKED PJF

SUM-77/277/224
VARIOUS



BEGIN ℄ EX. RAMP A STA. 17+90.67

BEGIN ℄ CONST. RAMP A STA. 86+63.69

BEGIN ℄ CONST. RAMP B-2 STA. 285+64.96

℄ EX. RAMP A

℄ CONST. RAMP A

℄ EX. SB I.R. 77

℄ CONST. SB I.R. 77

℄ CONST. NB I.R. 77

℄ EX. NB I.R. 77

℄ CONST. RAMP B-2

℄ CONST. RAMP C

℄ EX. RAMP C

℄ EX. RAMP C-2

℄ CONST. RAMP C-2

℄ EX. RAMP C-1

℄ CONST. RAMP C-1

STRUCTURE NO. SUM-77-0927R

PROP. NOISE WALL HI2

PROP. NOISE WALL G

PROP. RETAINING WALL 2

STREAM 3

EX. 60" RCP

WETLAND I

MATCH LINE STA. 496+00 ℄ NB I.R. 77, SEE SHEET 9

MATCH LINE STA. 483+50 ℄ NB I.R. 77, SEE SHEET 7

MATCH LINE STA. 590+00 ℄ CONST. RAMP C SEE SHEET 12

MATCH LINE STA. 690+00 ℄ CONST. RAMP C-1 SEE SHEET 12

FOR GEOMETRIC PLAN, SEE SHEETS 13 - 22
FOR CURVE DATA, SEE SHEETS 23 - 26

D:\2017\2017258\ProjectData\SUM\06002\Design\Roadway\Sheets\06002_GB005A.dgn Design 1/13/2021 1:49:55 PM pfry

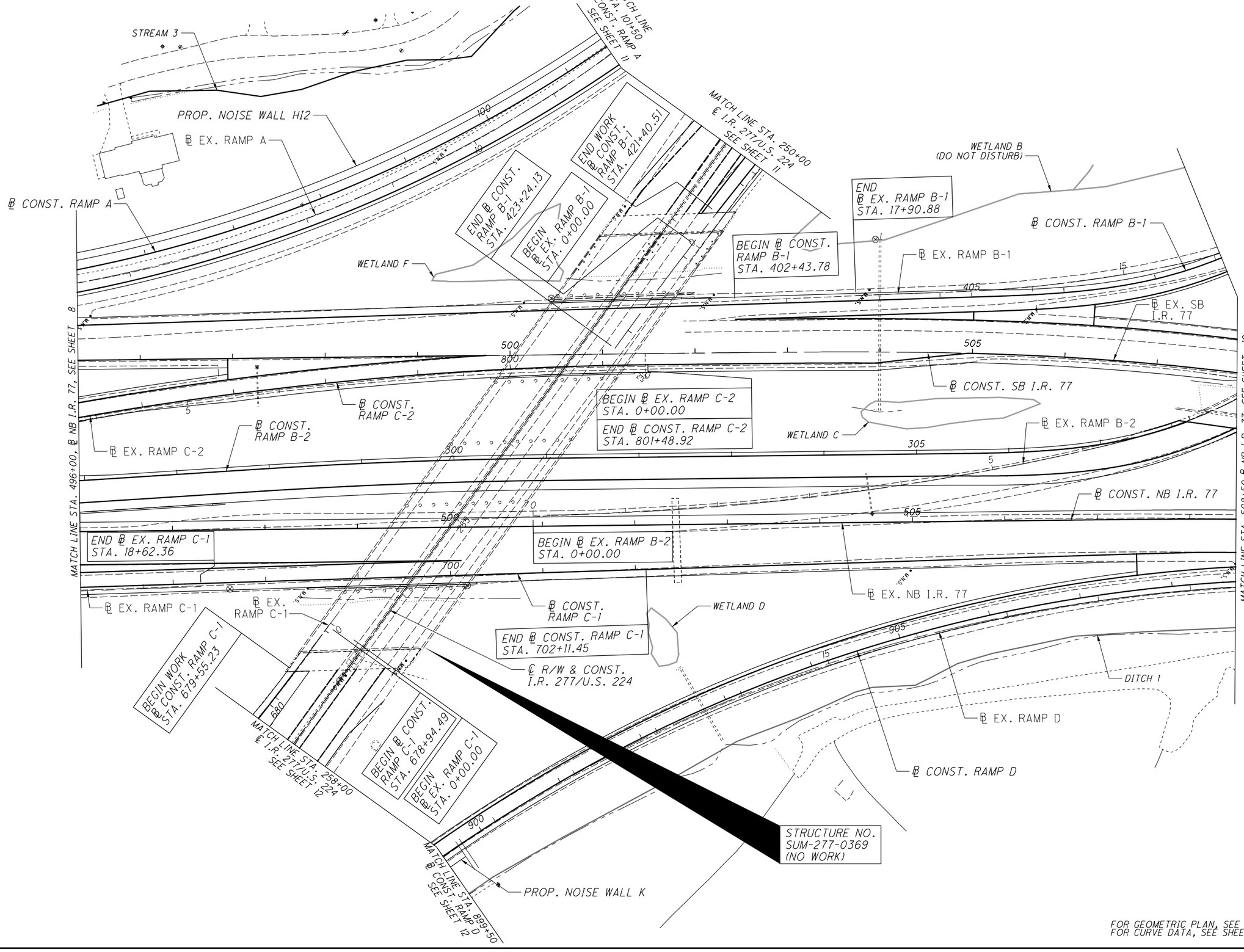


FOR GEOMETRIC PLAN, SEE SHEETS 13 - 22
FOR CURVE DATA, SEE SHEETS 23 - 26

HORIZONTAL SCALE IN FEET
0 25 50 100

CALCULATED ZJP
CHECKED PJF

# SCHEMATIC PLAN
## STA. 496+00 NB I.R. 77 TO STA. 508+50 NB I.R. 77

SUM-77 / 277 / 224
VARIOUS

9
1288

O:\2017\2017258\ProjectData\SUM\106002\Design\Roadway\Sheets\106002_GB006.dgn Design 1/13/2021 11:50:22 PM pfry

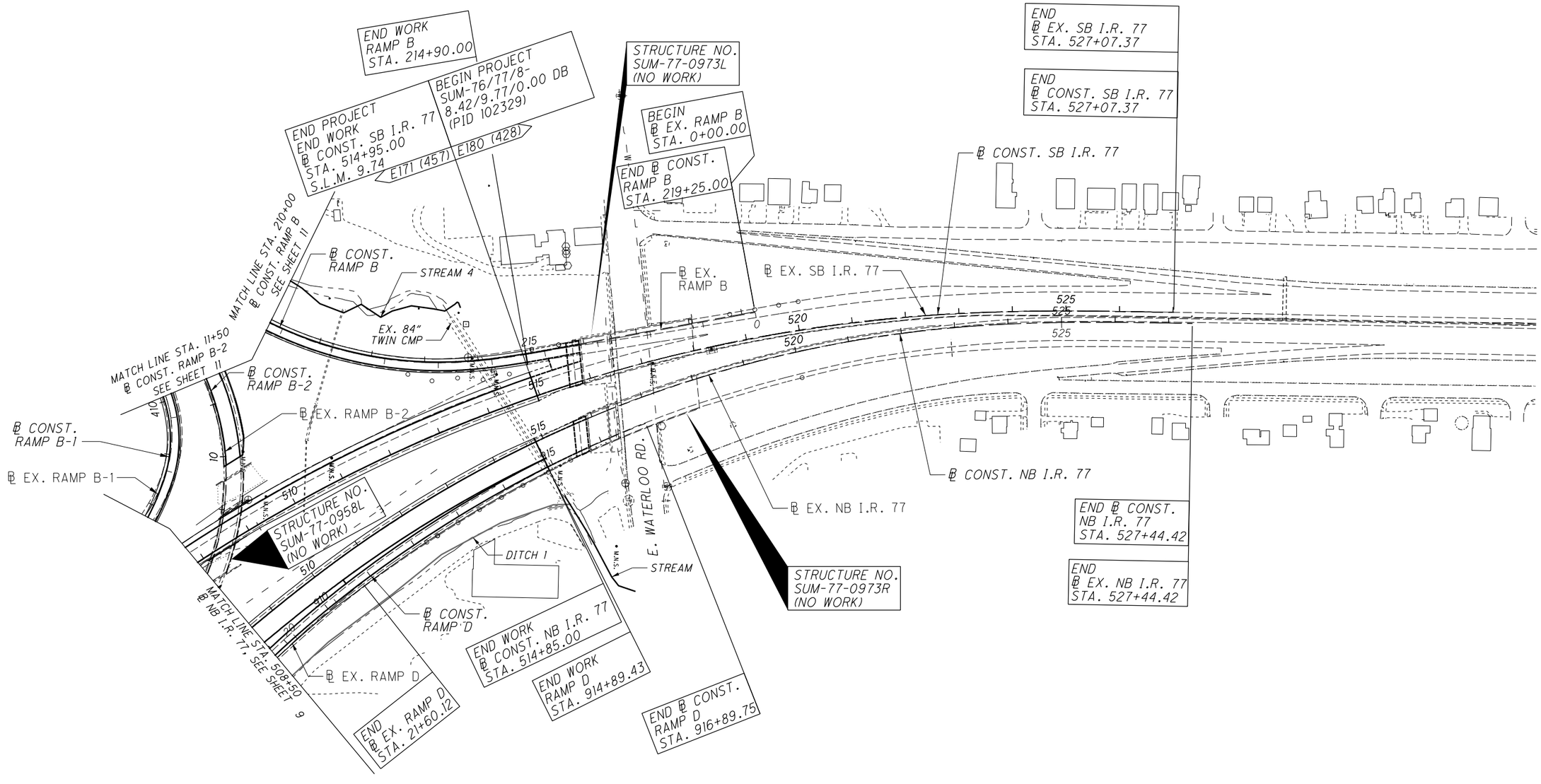


FOR GEOMETRIC PLAN, SEE SHEETS 13 - 22
FOR CURVE DATA, SEE SHEETS 23 - 26

HORIZONTAL SCALE IN FEET
0 50 100 200

CALCULATED ZJP
CHECKED PJF

SCHEMATIC PLAN
STA. 508+50 NB I.R. 77 TO END

SUM-77 / 277 / 224
VARIOUS

10
1288

0:\2017\2017258\ProjectData\SUM\106002\Design\Roadway\Sheets\106002_GB007.dgn Design 1/13/2021 1:50:33 PM pfry

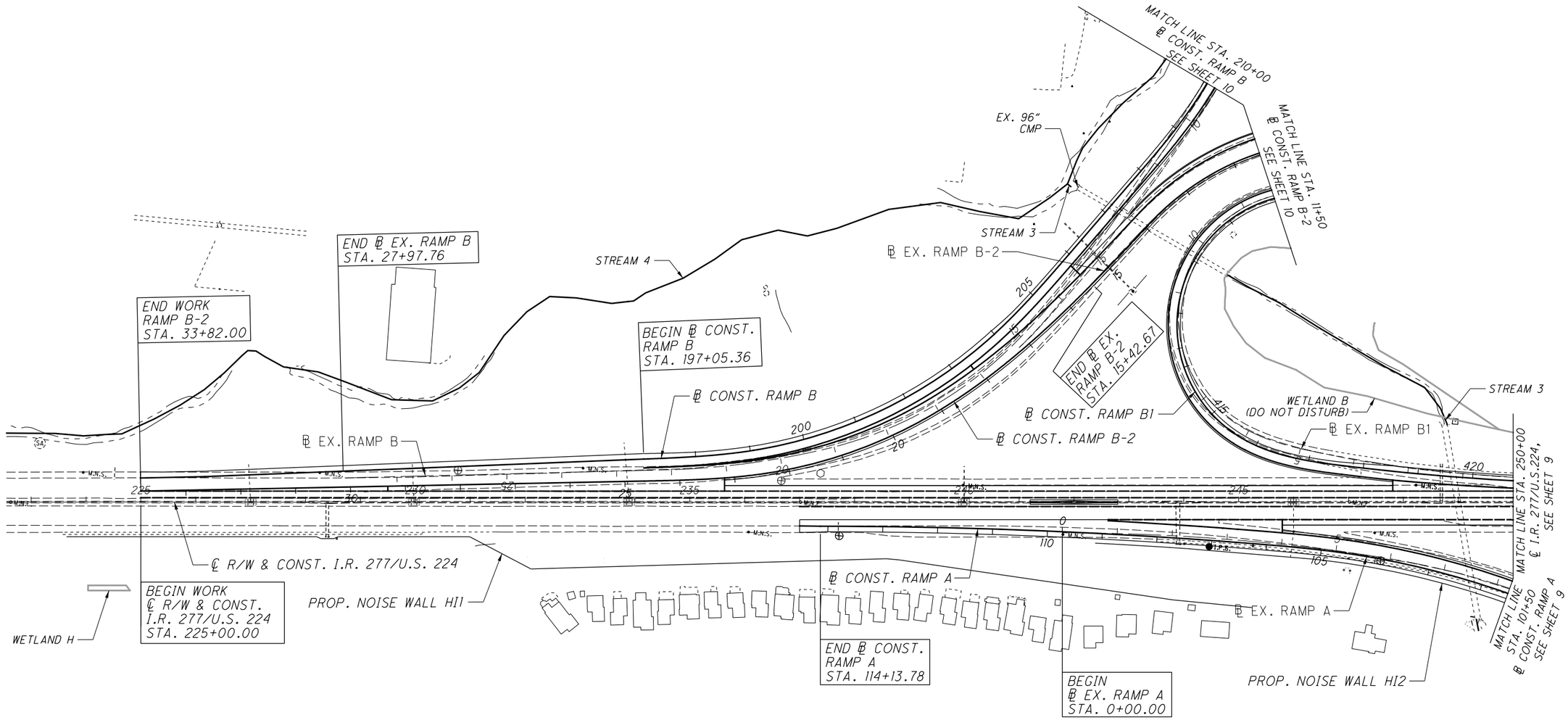


FOR GEOMETRIC PLAN, SEE SHEETS 13 - 22
FOR CURVE DATA, SEE SHEETS 23 - 26

N

0 50 100 200
HORIZONTAL
SCALE IN FEET

CALCULATED ZJP
CHECKED PJF

# SCHEMATIC PLAN
## BEGIN TO STA. 250+00 I.R. 277/U.S. 224

SUM-77/277/224
VARIOUS

11
1288

0:\2017\2017258\ProjectData\SUM\106002\Design\Roadway\Sheets\106002_GB008.dgn Design 1/13/2021 1:50:52 PM pfry

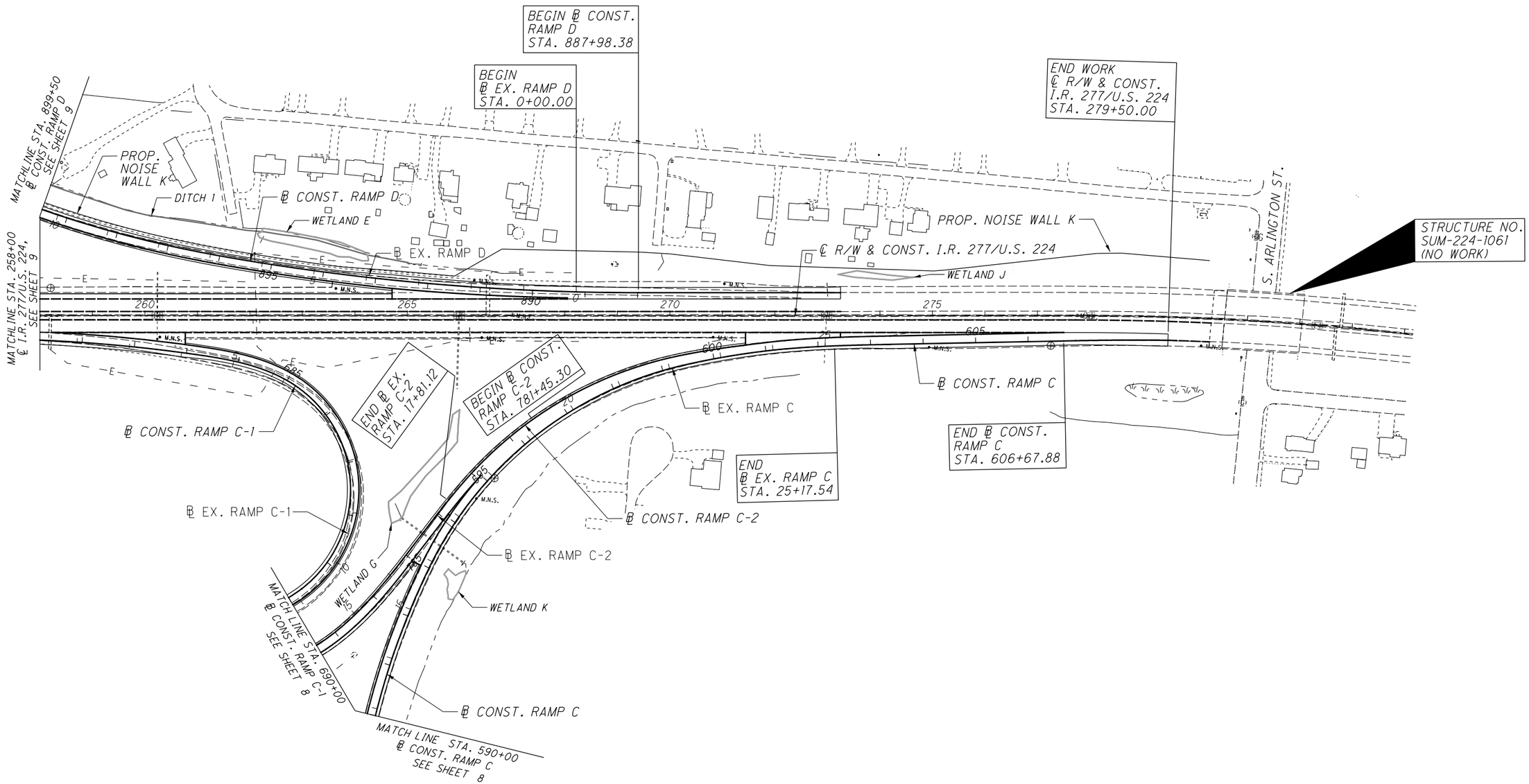


FOR GEOMETRIC PLAN, SEE SHEETS 13 - 22
FOR CURVE DATA, SEE SHEETS 23 - 26

HORIZONTAL SCALE IN FEET
0 50 100 200

CALCULATED ZJP
CHECKED PJF

# SCHEMATIC PLAN
# STA. 258+00 TO END

SUM-77 / 277 / 224
VARIOUS

12
1288

G:\2017\2017258\ProjectData\SUM\06002\Design\Roadway\Sheets\06002_GB009.dgn Design 1/13/2021 1:51:19 PM pfry

0:\2017\2017258\ProjectData\SUM\06002\Design\Roadway\Sheets\06002_GB020.dgn Sheet 1/13/2021 11:51:23 PM pfry

BEGIN WORK (NB)
℄ R/W & CONST. I.R. 77
STA. 371+50.00

BEGIN PROJECT
BEGIN WORK (SB)
℄ R/W & CONST. I.R. 77
STA. 391+37.36
S.L.M. 7.39

E171 (457)

℄ R/W & CONST. I.R. 77

370 375 380 385 390 395

PT Sta. 374+77.72
PT NO. 4

N 0° 17' 46" E

PC Sta. 391+37.36
PT NO. 5

MATCHLINE - STA. 396+00 I.R. 77, SEE SHEET 14

POT Sta. 78+53.92

N 0° 53' 51" W

75 80 85

PT Sta. 75+16.71
PT NO. 2

N 0° 50' 59" W

POT Sta. 88+18.25
PT NO. 3

70

91 92 93 88 90 89

PT NO. 1
PC Sta. 70+99.52

CS Sta. 68+99.52
PCC Sta. 68+59.95
PCC Sta. 66+90.21
PC Sta. 65+72.42

PT Sta. 75+13.53

BEGIN WORK
ARLINGTON ROAD
RAMP D
STA. 71+69.06

BEGIN ℄ CONST.
ARLINGTON ROAD
RAMP D
STA. 70+99.52

END ℄ CONST.
ARLINGTON
ROAD RAMP D
STA. 88+18.25

℄ CONST. ARLINGTON ROAD RAMP D

℄ EX. ARLINGTON ROAD RAMP D

FOR CURVE DATA, SEE SHEETS 23 - 26
FOR REFERENCE POINT TABLE, SEE SHEET 27

N

0 50 100 200
HORIZONTAL
SCALE IN FEET

CALCULATED ZJP
CHECKED PJF

# GEOMETRIC PLAN
## BEGIN TO STA. 396+00 I.R. 77

SUM-77/277/224
VARIOUS

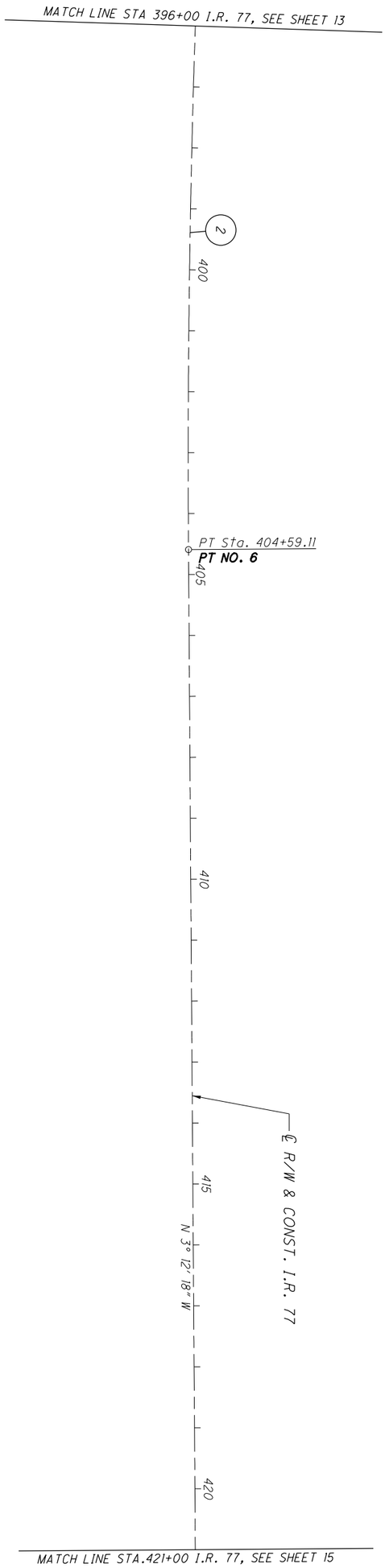


FOR CURVE DATA, SEE SHEETS 23 - 26
FOR REFERENCE POINT TABLE, SEE SHEET 27

| | | | | |
|---|---|---|---|---|
| 14 / 1288 | **SUM-77/277/224**<br>**VARIOUS** | **GEOMETRIC PLAN**<br>**STA. 396+00 TO STA. 421+00** | CALCULATED ZJP<br>CHECKED PJF | 0 100<br>50 200<br>HORIZONTAL SCALE IN FEET |

POT Sta. 15+00.00
PT NO. 8

POT Sta. 99+63.27
PT NO. 99

S 80° 24' 12" E
S 79° 52' 16" E
100

PC Sta. 19+80.72
PT NO. 9

PC Sta. 104+19.89
PT NO. 100

20

℄ CONST. WARNER ROAD (CH 156)

94

105

PT Sta. 22+54.01
PT NO. 10

℄ R/W WARNER ROAD (CH 156)

97

S 74° 56' 15" E

PI Sta. 24+00.00
PT NO. 11

BEGIN WORK
WARNER ROAD
STA. 24+40.09

PT Sta. 108+48.22
PT NO. 101

S 76° 16' 11" E
23

PC Sta. 428+41.24
PT NO. 7

MATCH LINE STA.421+00 I.R. 77, SEE SHEET 14

N 3° 12' 18" W

425

430

435

3

℄ R/W & CONST. I.R. 77

440

445

MATCH LINE STA.446+00 I.R. 77, SEE SHEET 16

PC Sta. 26+07.65
PT NO. 12

S 75° 36' 31" E
110

PI Sta. 111+17.90
PT NO. 102

95

S 81° 38' 30" E

END WORK
WARNER ROAD
STA. 28+45.93

PT Sta. 29+31.09
PT NO. 13

S 84° 06' 55" E
30

115

POT Sta. 115+80.18
PT NO. 103

POT Sta. 32+25.61
PT NO. 14

FOR CURVE DATA, SEE SHEETS 23 - 26
FOR REFERENCE POINT TABLE, SEE SHEET 27

HORIZONTAL SCALE IN FEET
0 50 100 200

CALCULATED ZJP
CHECKED PJF

# GEOMETRIC PLAN
## STA. 421+00 TO STA. 446+00

SUM-77 / 277 / 224
VARIOUS

15
1288

0:\2017\2017258\ProjectData\SUM\06002\Design\Roadway\Sheets\106002-GB022.dgn Design 1/13/2021 1:5:27 PM pfry

FOR CURVE DATA, SEE SHEETS 23 - 26
FOR REFERENCE POINT TABLE, SEE SHEET 27

N

0 50 100 200
HORIZONTAL
SCALE IN FEET

CALCULATED ZJP
CHECKED PJF

# GEOMETRIC PLAN
## STA. 446+00 I.R. 77 TO STA. 471+00 NB I.R. 77

SUM-77 / 277 / 224
VARIOUS

16
1288

0:\2017\2017258\ProjectData\SUM\106002\Design\Roadway\Sheets\106002_GB023.dgn Design 1/13/2021 1:51:30 PM pfry

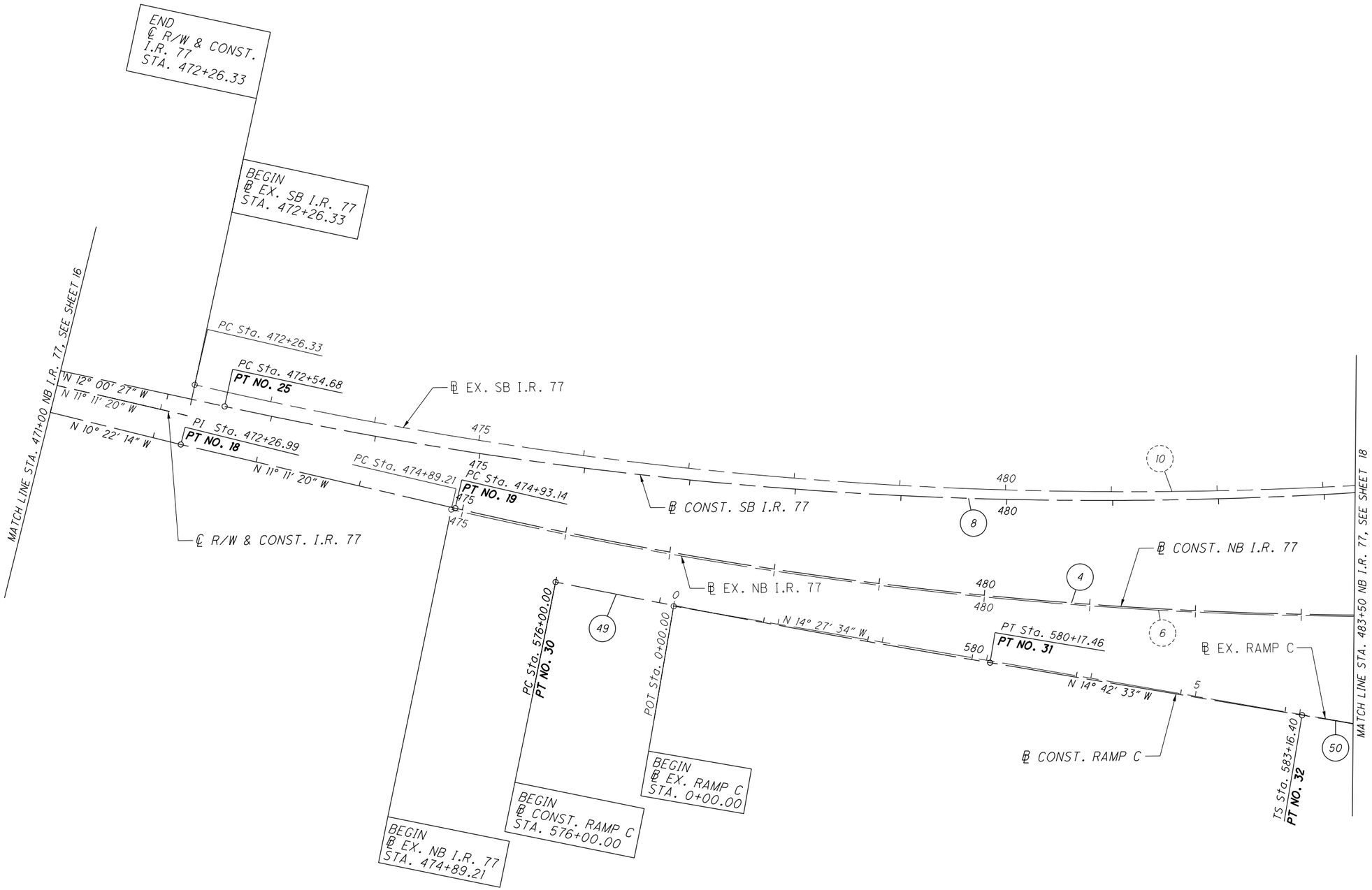


FOR CURVE DATA, SEE SHEETS 23 - 26
FOR REFERENCE POINT TABLE, SEE SHEET 27

HORIZONTAL SCALE IN FEET
0 25 50 100

CALCULATED ZJP
CHECKED PJF

# GEOMETRIC PLAN
## STA. 471+00 NB I.R. 77 TO STA. 483+50 NB I.R. 77

SUM-77 / 277 / 224
VARIOUS

17
1288

G:\2017\2017258\ProjectData\SUM\06002\Design\Roadway\Sheets\06002_GB024.dgn Design 1/13/2021 5:13:33 PM pfry

BEGIN ℄ EX. RAMP A
STA. 17+90.67

ST Sta. 17+90.67

SC Sta. 93+70.00
**PT NO. 41**
CS Sta. 16+40.67

℄ EX. RAMP A

MATCH LINE STA. 496+00 NB I.R. 77, SEE SHEET 19

BEGIN ℄ CONST. RAMP A
STA. 86+63.69

PC Sta. 86+63.69
**PT NO. 39**

CS Sta. 90+70.00
**PT NO. 40**

℄ CONST. RAMP A

PT Sta. 493+08.78

PT Sta. 492+81.37
**PT NO. 26**

PT Sta. 294+71.25
**PT NO. 46**
N 44° 45′ 03″ W
PT Sta. 495+75.59
**PT NO. 20**
PT Sta. 495+71.66
N 41° 45′ 03″ W

**PT NO. 63**
SC Sta. 792+71.33
CS Sta. 8+51.59

CS Sta. 10+01.59
**PT NO. 62**
SC Sta. 791+47.33

ST Sta. 15+62.36

ST Sta. 694+94.95
**PT NO. 69**
N 42° 53′ 47″ W
N 43° 08′ 41″ W

℄ EX. RAMP C-1

CS Sta. 13+62.36
**PT NO. 68**
CS Sta. 691+94.95

℄ EX. SB I.R. 77

℄ CONST. SB I.R. 77

℄ CONST. NB I.R. 77

℄ EX. NB I.R. 77

BEGIN ℄ CONST.
RAMP B-2
STA. 285+64.96

PC Sta. 285+64.96
**PT NO. 45**

℄ CONST.
RAMP B-2

MATCH LINE STA. 483+50 NB I.R. 77, SEE SHEET 17

℄ EX. RAMP C

PC Sta. 7+06.86

SC Sta. 585+16.40
**PT NO. 33**

℄ CONST. RAMP C

℄ CONST.
RAMP C-2

℄ EX. RAMP C-2

℄ CONST.
RAMP C-1

MATCH LINE STA. 590+00
℄ CONST. RAMP C
SEE SHEET 22

MATCH LINE STA. 690+00
℄ CONST. RAMP C-1
SEE SHEET 22

FOR CURVE DATA, SEE SHEETS 23 - 26
FOR REFERENCE POINT TABLE, SEE SHEET 27

HORIZONTAL SCALE IN FEET
0 25 50 100

CALCULATED ZJP
CHECKED PJF

# GEOMETRIC PLAN
## STA. 483+50 NB I.R. 77 TO STA. 496+00 NB I.R. 77

SUM-77 / 277 / 224
VARIOUS

18
1288

0:\2017\2017258\Project Data\SUM\06002\Design\Roadway\Sheets\06002_GB024A.dgn Design 1/13/2021 5:34 PM pfry

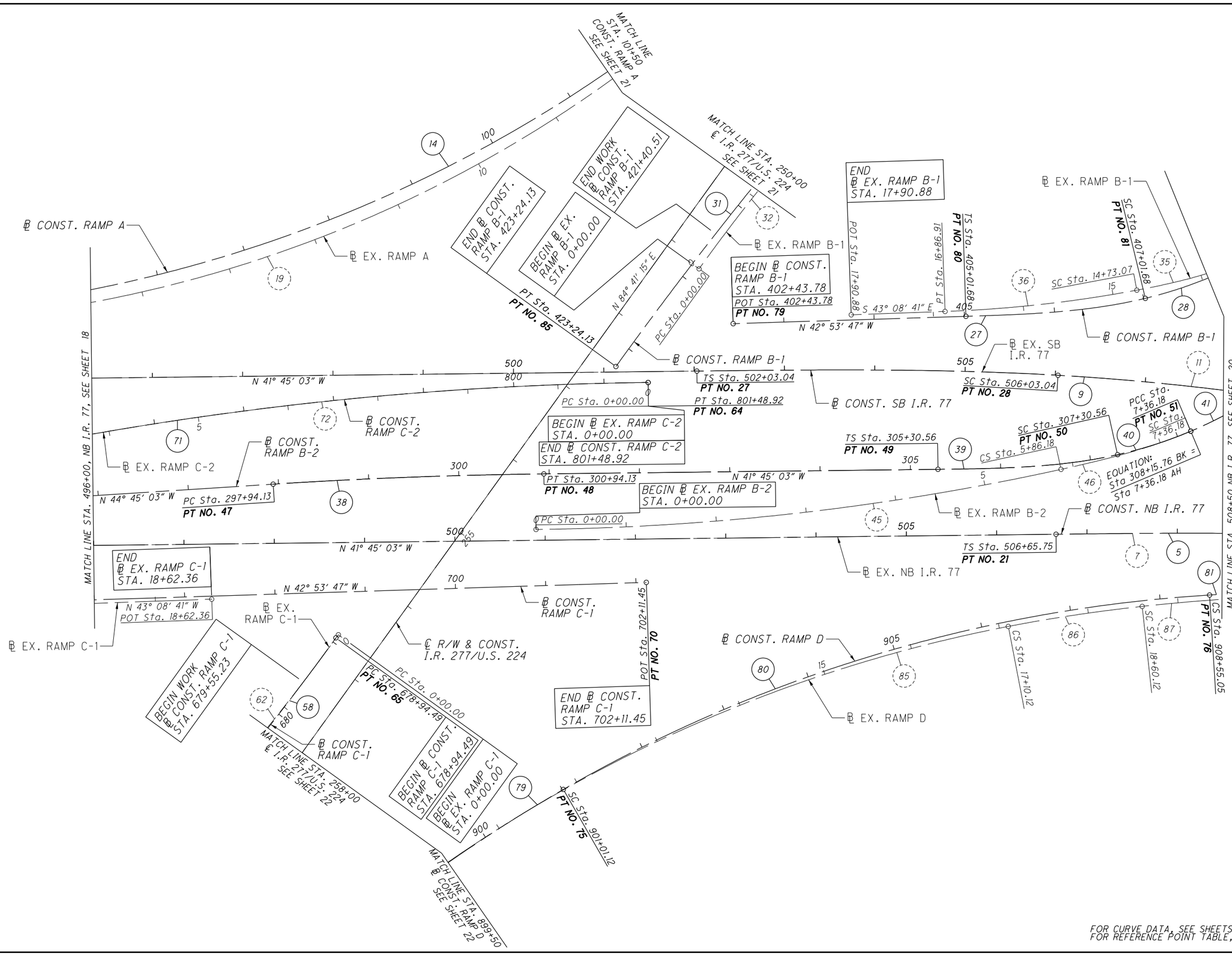
MATCH LINE STA. 101+50 CONST. RAMP A SEE SHEET 21
MATCH LINE STA. 250+00 ℄ I.R. 277/U.S. 224 SEE SHEET 21
℄ CONST. RAMP A
℄ EX. RAMP A
END ℄ CONST. RAMP B-1 STA. 423+24.13
BEGIN ℄ EX. RAMP B-1 STA. 0+00.00
END WORK ℄ CONST. RAMP B-1 STA. 421+40.51
PT Sta. 423+24.13 PT NO. 85
N 84° 41' 15" E
PC Sta. 0+00.00
℄ CONST. RAMP B-1
℄ EX. RAMP B-1
BEGIN ℄ CONST. RAMP B-1 STA. 402+43.78
POT Sta. 402+43.78 PT NO. 79
N 42° 53' 47" W
END ℄ EX. RAMP B-1 STA. 17+90.88
POT Sta. 17+90.88
S 43° 08' 41" E
PT Sta. 16+86.91
TS Sta. 405+01.68 PT NO. 80
SC Sta. 407+01.68 PT NO. 81
SC Sta. 14+73.07
℄ CONST. RAMP B-1
℄ EX. SB I.R. 77
SC Sta. 506+03.04 PT NO. 28
TS Sta. 502+03.04 PT NO. 27
PT Sta. 801+48.92 PT NO. 64
℄ CONST. SB I.R. 77
N 41° 45' 03" W
℄ CONST. RAMP C-2
℄ EX. RAMP C-2
℄ CONST. RAMP B-2
BEGIN ℄ EX. RAMP C-2 STA. 0+00.00
END ℄ CONST. RAMP C-2 STA. 801+48.92
PC Sta. 0+00.00
PT Sta. 300+94.13 PT NO. 48
BEGIN ℄ EX. RAMP B-2 STA. 0+00.00
PC Sta. 297+94.13 PT NO. 47
N 44° 45' 03" W
TS Sta. 305+30.56 PT NO. 49
SC Sta. 307+30.56 PT NO. 50
CS Sta. 5+86.18
PCC Sta. 7+36.18 PT NO. 51
SC Sta. 7+36.18
EQUATION: Sta 308+15.76 BK = Sta 7+36.18 AH
℄ EX. RAMP B-2
℄ CONST. NB I.R. 77
TS Sta. 506+65.75 PT NO. 21
℄ EX. NB I.R. 77
MATCH LINE STA. 496+00, NB I.R. 77, SEE SHEET 18
MATCH LINE STA. 508+50 NB I.R. 77, SEE SHEET 20
END ℄ EX. RAMP C-1 STA. 18+62.36
N 43° 08' 41" W
POT Sta. 18+62.36
℄ EX. RAMP C-1
℄ EX. RAMP C-1
℄ CONST. RAMP C-1
℄ R/W & CONST. I.R. 277/U.S. 224
POT Sta. 702+11.45 PT NO. 70
END ℄ CONST. RAMP C-1 STA. 702+11.45
BEGIN WORK ℄ CONST. RAMP C-1 STA. 679+55.23
PC Sta. 0+00.00 PT NO. 65
PC Sta. 678+94.49
BEGIN ℄ CONST. RAMP C-1 STA. 678+94.49
BEGIN ℄ EX. RAMP C-1 STA. 0+00.00
℄ CONST. RAMP C-1
MATCH LINE STA. 258+00 ℄ I.R. 277/U.S. 224 SEE SHEET 22
MATCH LINE STA. 899+50 ℄ CONST. RAMP D SEE SHEET 22
℄ CONST. RAMP D
℄ EX. RAMP D
SC Sta. 901+01.12 PT NO. 75
CS Sta. 17+10.12
SC Sta. 18+60.12
CS Sta. 808+55.05 PT NO. 78
N 41° 45' 03" W
N 42° 53' 47" W
N 41° 45' 03" W

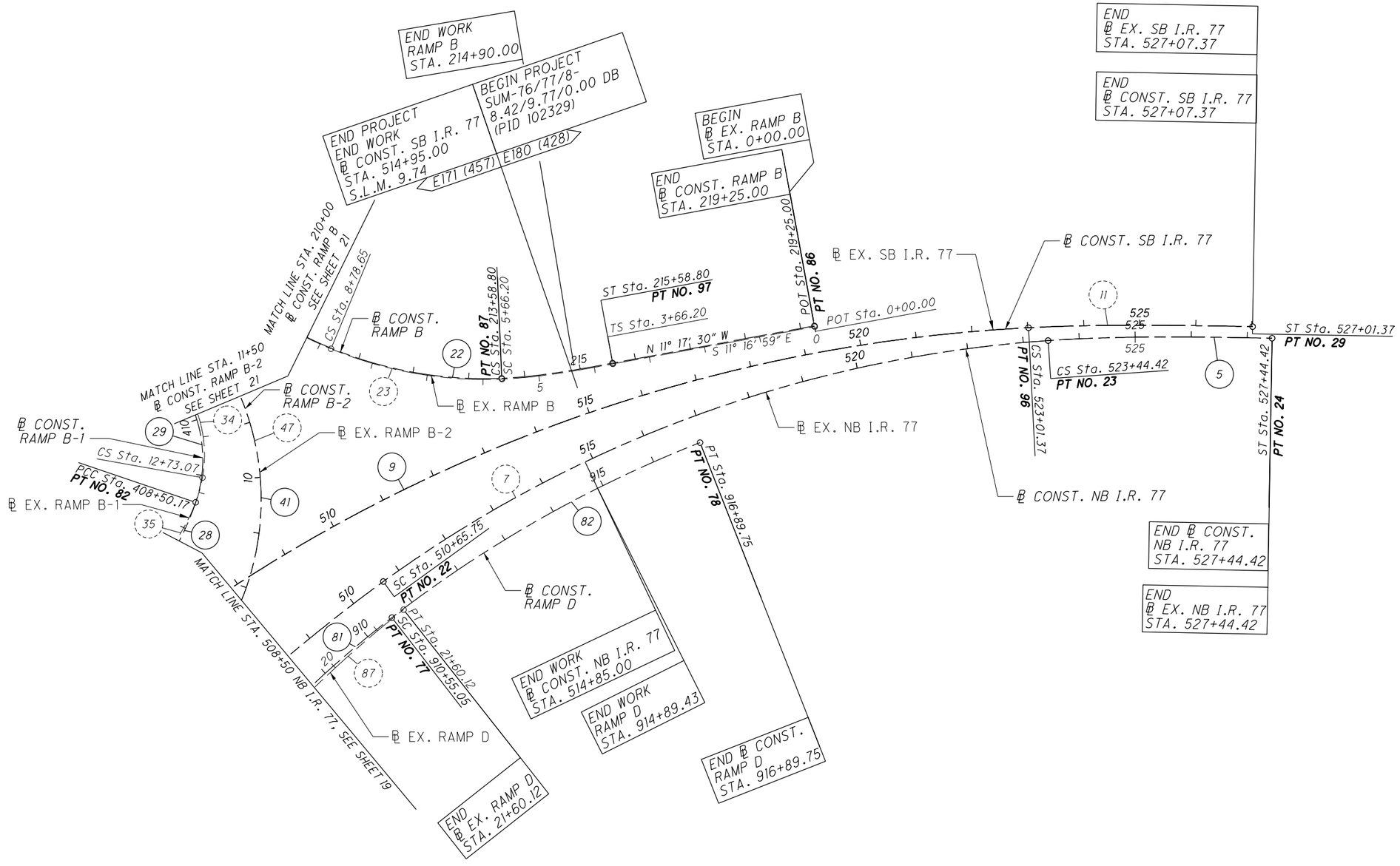


FOR CURVE DATA, SEE SHEETS 23 - 26
FOR REFERENCE POINT TABLE, SEE SHEET 27

HORIZONTAL SCALE IN FEET
0 50 100 200

CALCULATED ZJP
CHECKED PJF

# GEOMETRIC PLAN
## ℄ NB I.R. 77 TO END
## STA. 508+50

SUM-77 / 277 / 224
VARIOUS

20
1288

O:\2017\20172581Data\SUM\106002\Design\Roadway\Sheets\106002_GB026.dgn Design 1/13/2021 5:37 PM pfry

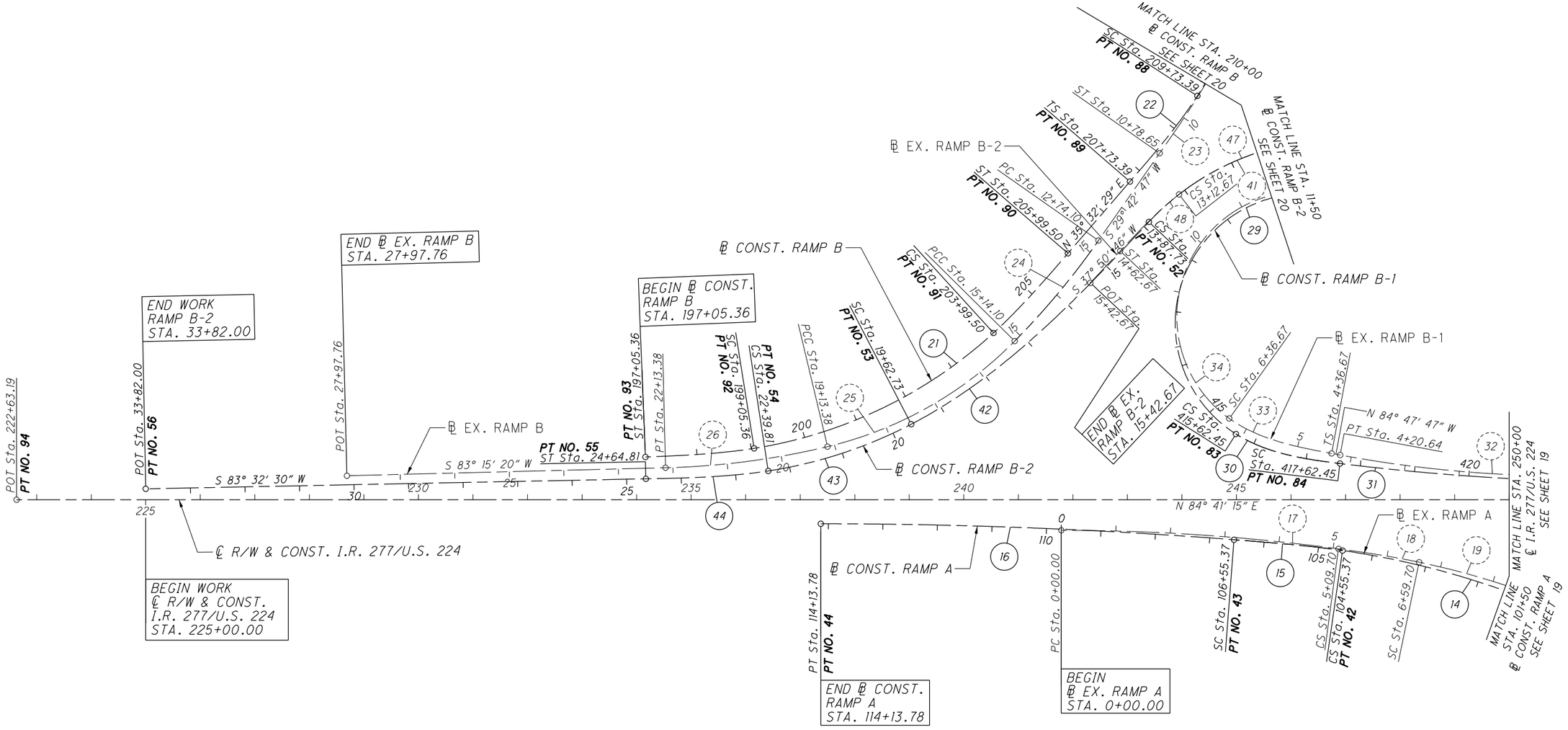


FOR CURVE DATA, SEE SHEETS 23 - 26
FOR REFERENCE POINT TABLE, SEE SHEET 27

HORIZONTAL SCALE IN FEET
0 50 100 200

CALCULATED ZJP
CHECKED PJF

# GEOMETRIC PLAN
## BEGIN TO STA. 250+00 I.R. 277/U.S. 224

SUM-77/277/224
VARIOUS

21
1288

0:\2017\2017258\ProjectData\SUM\06002\Design\Roadway\Sheets\06002_GB021.dgn Design 1/13/2021 1:51:42 PM pfry

HORIZONTAL SCALE IN FEET
0 50 100 200

CALCULATED ZJP
CHECKED PJF

# GEOMETRIC PLAN
## STA. 258+00 TO END

SUM-77 / 277 / 224
VARIOUS

22
1288

G:\2017\2017258\Project Data\SUM\06002\Design\Roadway\Sheets\06002_GB028.dgn Design 1/13/2021 11:51:49 PM pfry

CALCULATED ZJP
CHECKED PJF

# CURVE DATA

**1** ℄ R/W & CONST. I.R. 77
P.I. Sta. 360+81.72
Δ = 43° 10′ 45″ (RT)
Dc = 1° 28′ 08″
R = 3,900.50′
T = 1,543.50′
L = 2,939.50′
E = 294.29′
C = 2,870.43′
C.B. = N 21° 17′ 37″ W
D.S. = 70 MPH
$e_{max}$ = 0.052
P.C. STA. 345+38.22
P.T. STA. 374+77.72

**2** ℄ R/W & CONST. I.R. 77
P.I. Sta. 397+98.44
Δ = 3° 30′ 04″ (LT)
Dc = 0° 15′ 54″
R = 21,630.91′
T = 661.08′
L = 1,321.75′
E = 10.10′
C = 1,321.55′
C.B. = N 1° 27′ 16″ W
D.S. = 70 MPH
$e_{max}$ = NC
P.C. STA. 391+37.36
P.T. STA. 404+59.11

**3** ℄ R/W & CONST. I.R. 77
P.I. Sta. 438+34.18
Δ = 7° 59′ 02″ (LT)
Dc = 0° 24′ 10″
R = 14,228.56′
T = 992.94′
L = 1,982.67′
E = 34.60′
C = 1,981.07′
C.B. = N 7° 11′ 49″ W
D.S. = 70 MPH
$e_{max}$ = NC
P.C. STA. 428+41.24
P.T. STA. 448+23.91

**4** ℄ CONST. NB I.R. 77
P.I. Sta. 485+59.78
Δ = 30° 33′ 43″ (LT)
Dc = 1° 28′ 03″
R = 3,904.07′
T = 1,066.64′
L = 2,082.45′
E = 143.09′
C = 2,057.85′
C.B. = N 26° 28′ 11″ W
D.S. = 70 MPH
$e_{max}$ = 0.0452
P.C. STA. 474+93.14
P.T. STA. 495+75.59

**5** ℄ CONST. NB I.R. 77
P.I. Sta. 517+45.80
Δ = 41° 58′ 00″ (RT)
Dc = 2° 30′ 00″
R = 2,291.83′
Ls = 400.00′
θs = 5° 00′ 00″
LT = 266.77′
ST = 133.43′
x = 399.70′
y = 11.63′
k = 199.95′
p = 2.91′
Δc = 31° 58′ 00″ (RT)
Lc = 1,278.67′
Ts = 1,080.05′
Es = 165.89′
C = 1,262.15′
C1 = C2 = 399.86′
C.B.1 = N 40° 05′ 03″ W
C.B. = N 20° 46′ 03″ W
C.B.2 = S 1° 27′ 02″ E
D.S. = 60 MPH
$e_{max}$ = 0.051
T.S. STA. 506+65.75
S.C. STA. 510+65.75
C.S. STA. 523+44.42
S.T. STA. 527+44.42

**6** ℄ EX. NB I.R. 77
P.I. Sta. 485+55.84
Δ = 30° 33′ 43″ (LT)
Dc = 1° 28′ 03″
R = 3,904.07′
T = 1,066.64′
L = 2,082.45′
E = 143.09′
C = 2,057.85′
C.B. = N 26° 28′ 11″ W
P.C. STA. 474+89.21
P.T. STA. 495+71.66

**7** ℄ EX. NB I.R. 77
P.I. Sta. 517+45.80
Δ = 41° 58′ 00″ (RT)
Dc = 2° 30′ 00″
R = 2,291.83′
Ls = 400.00′
θs = 5° 00′ 00″
LT = 266.77′
ST = 133.43′
x = 399.70′
y = 11.63′
k = 199.95′
p = 2.91′
Δc = 31° 58′ 00″ (RT)
Lc = 1,278.67′
Ts = 1,080.05′
Es = 165.89′
C = 1,262.15′
C1 = C2 = 399.86′
C.B.1 = N 40° 05′ 03″ W
C.B. = N 20° 46′ 03″ W
C.B.2 = S 1° 27′ 02″ E
T.S. STA. 506+65.75
S.C. STA. 510+65.75
C.S. STA. 523+44.42
S.T. STA. 527+44.42

**8** ℄ CONST. SB I.R. 77
P.I. Sta. 482+91.41
Δ = 29° 44′ 36″ (LT)
Dc = 1° 28′ 03″
R = 3,904.07′
T = 1,036.73′
L = 2,026.68′
E = 135.31′
C = 2,004.00′
C.B. = N 26° 52′ 45″ W
D.S. = 70 MPH
$e_{max}$ = 0.0452
P.C. STA. 472+54.68
P.T. STA. 492+81.37

**9** ℄ CONST. SB I.R. 77
P.I. Sta. 515+02.63
Δ = 41° 58′ 00″ (RT)
Dc = 2° 00′ 00″
R = 2,864.79′
Ls = 400.00′
θs = 4° 00′ 00″
LT = 266.73′
ST = 133.40′
x = 399.81′
y = 9.31′
k = 199.97′
p = 2.33′
Δc = 33° 58′ 00″ (RT)
Lc = 1,698.33′
Ts = 1,299.59′
Es = 205.96′
C = 1,673.57′
C1 = C2 = 399.91′
C.B.1 = N 40° 25′ 03″ W
C.B. = N 20° 46′ 03″ W
C.B.2 = N 1° 07′ 03″ W
D.S. = 60 MPH
$e_{max}$ = 0.045
T.S. STA. 502+03.04
S.C. STA. 506+03.04
C.S. STA. 523+01.37
S.T. STA. 527+01.37

**10** ℄ EX. SB I.R. 77
P.I. Sta. 482+92.97
Δ = 30° 33′ 43″ (LT)
Dc = 1° 28′ 03″
R = 3,904.07′
T = 1,066.64′
L = 2,082.45′
E = 143.09′
C = 2,057.85′
C.B. = N 26° 28′ 11″ W
P.C. STA. 472+26.33
P.T. STA. 493+08.78

**11** ℄ EX. SB I.R. 77
P.I. Sta. 515+02.63
Δ = 41° 58′ 00″ (RT)
Dc = 2° 00′ 00″
R = 2,864.79′
Ls = 400.00′
θs = 4° 00′ 00″
LT = 266.73′
ST = 133.40′
x = 399.81′
y = 9.31′
k = 199.97′
p = 2.33′
Δc = 33° 58′ 00″ (RT)
Lc = 1,698.33′
Ts = 1,299.59′
Es = 205.96′
C = 1,673.57′
C1 = C2 = 399.91′
C.B.1 = N 40° 25′ 03″ W
C.B. = N 20° 46′ 03″ W
C.B.2 = N 1° 07′ 03″ W
T.S. STA. 502+03.04
S.C. STA. 506+03.04
C.S. STA. 523+01.37
S.T. STA. 527+01.37

**12** ℄ CONST. RAMP A
P.I. Sta. 88+67.18
Δ = 8° 07′ 34″ (LT)
Dc = 2° 00′ 00″
R = 2,864.79′
T = 203.49′
L = 406.31′
E = 7.22′
C = 405.96′
C.B. = N 36° 44′ 56″ W
D.S. = 60 MPH
$e_{max}$ = 0.045
P.C. STA. 86+63.69
C.S. STA. 90+70.00

**13** ℄ CONST. RAMP A
P.I. STA. 92+70.10
Ls = 300.00′
f s = 5° 37′ 30″
LT = 200.10′
ST = 100.09′
x = 299.71′
y = 9.81′
k = 149.95′
p = 2.45′
C.S. STA. 90+70.00
S.C. STA. 93+70.00

**14** ℄ CONST. RAMP A
P.I. Sta. 99+36.72
Δ = 40° 42′ 05″ (LT)
Dc = 3° 45′ 00″
R = 1,527.89′
T = 566.72′
L = 1,085.37′
E = 101.72′
C = 1,062.69′
C.B. = N 66° 47′ 16″ W
D.S = 55 MPH (SSD = 50 MPH)
$e_{max}$ = 0.0555
S.C. STA. 93+70.00
C.S. STA. 104+55.37

**15** ℄ CONST. RAMP A
P.I. STA. 105+22.06
Ls = 200.00′
f s = 3° 45′ 00″
LT = 133.36′
ST = 66.69′
x = 199.91′
y = 4.36′
k = 99.99′
p = 1.09′
C.S. STA. 104+55.37
S.C. STA. 106+55.37

**16** ℄ CONST. RAMP A
P.I. Sta. 110+34.76
Δ = 4° 25′ 27″ (LT)
Dc = 0° 35′ 00″
R = 9,822.13′
T = 379.40′
L = 758.42′
E = 7.32′
C = 758.23′
C.B. = S 86° 53′ 59″ W
D.S. = 65 MPH
$e_{max}$ = 0.0187
S.C. STA. 106+55.37
P.T. STA. 114+13.78

**17** ℄ EX. RAMP A
P.I. Sta. 2+55.23
Δ = 7° 38′ 44″ (RT)
Dc = 1° 30′ 00″
R = 3,819.72′
T = 255.23′
L = 509.70′
E = 8.52′
C = 509.33′
C.B. = N 88° 30′ 37″ E
P.C. STA. 0+00.00
P.T. STA. 5+09.70

**18** ℄ EX. RAMP A
P.I. STA. 5+96.10
Ls = 150.00′
f s = 4° 07′ 30″
LT = 86.40′
ST = 43.67′
x = 149.90′
y = 4.58′
k = 74.99′
p = 0.41′
C.S. STA. 5+09.70
S.C. STA. 6+59.70

**19** ℄ EX. RAMP A
P.I. Sta. 11+70.30
Δ = 39° 14′ 19″ (RT)
Dc = 4° 00′ 00″
R = 1,432.39′
T = 510.60′
L = 980.96′
E = 88.28′
C = 961.90′
C.B. = S 63° 55′ 21″ E
S.C. STA. 6+59.70
C.S. STA. 16+40.67

**20** ℄ EX. RAMP A
P.I. STA. 16+90.68
Ls = 150.00′
f s = 3° 00′ 00″
LT = 100.01′
ST = 50.01′
x = 149.96′
y = 2.62′
k = 74.99′
p = 0.65′
C.S. STA. 16+40.67
S.T. STA. 17+90.67

**21** ℄ CONST. RAMP B
P.I. Sta. 201+73.97
Δ = 46° 51′ 17″ (LT)
Dc = 6° 45′ 00″
R = 848.83′
Ls = 200.00′
θs = 6° 45′ 00″
LT = 133.43′
ST = 66.75′
x = 199.72′
y = 7.85′
k = 99.95′
p = 1.96′
Δc = 33° 21′ 17″ (LT)
Lc = 494.14′
Ts = 468.61′
Es = 78.40′
C = 487.20′
C1 = C2 = 199.88′
C.B.1 = N 80° 08′ 47″ E
C.B. = N 58° 58′ 07″ E
C.B.2 = S 37° 47′ 28″ W
D.S. = 50 MPH (SSD = 45 MPH)
$e_{max}$ = 0.060
T.S. STA. 197+05.36
S.C. STA. 199+05.36
C.S. STA. 203+99.50
S.T. STA. 205+99.50

**22** ℄ CONST. RAMP B
P.I. Sta. 211+84.50
Δ = 46° 49′ 58″ (LT)
Dc = 8° 00′ 00″
R = 716.20′
Ls = 200.00′
θs = 8° 00′ 00″
LT = 133.47′
ST = 66.79′
x = 199.61′
y = 9.30′
k = 99.94′
p = 2.33′
Δc = 30° 49′ 58″ (LT)
Lc = 385.41′
Ts = 411.11′
Es = 66.81′
C = 380.78′
C1 = C2 = 199.83′
C.B.1 = N 32° 52′ 30″ E
C.B. = N 12° 07′ 30″ E
C.B.2 = S 8° 37′ 31″ E
D.S. = 45 MPH
SSD = 305′ (360′ MIN.)
ACTUAL D.S. = 40 MPH
$e_{max}$ = 0.060
T.S. STA. 207+73.39
S.C. STA. 209+73.39
C.S. STA. 213+58.80
S.T. STA. 215+58.80

**23** ℄ EX. RAMP B
P.I. Sta. 7+34.75
Δ = 40° 59′ 46″ (RT)
Dc = 8° 00′ 00″
R = 716.20′
Ls = 200.00′
θs = 8° 00′ 00″
LT = 133.47′
ST = 66.79′
x = 199.61′
y = 9.30′
k = 99.94′
p = 2.33′
Δc = 24° 59′ 46″ (RT)
Lc = 312.45′
Ts = 368.55′
Es = 50.89′
C = 309.98′
C1 = C2 = 199.83′
C.B.1 = S 8° 37′ 01″ E
C.B. = S 9° 12′ 54″ W
C.B.2 = N 27° 02′ 48″ E
T.S. STA. 3+66.20
S.C. STA. 5+66.20
C.S. STA. 8+78.65
S.T. STA. 10+78.65

**24** ℄ EX. RAMP B
P.I. Sta. 13+94.38
Δ = 9° 36′ 00″ (RT)
Dc = 4° 00′ 00″
R = 1,432.39′
T = 120.28′
L = 240.00′
E = 5.04′
C = 239.72′
C.B. = S 34° 30′ 47″ W
P.C. STA. 12+74.10
P.C.C. STA. 15+14.10

SUM-77 / 277 / 224
VARIOUS



D:\2017\2017258\ProjectData\SUM\106002\Design\Roadway\Sheets\106002_GB100.dgn Sheet 1/13/2021 1:52:26 PM pfry

25 — ℄ EX. RAMP B
P.I. Sta. 17+19.07
Δ = 31° 56′ 33″ (RT)
Dc = 8° 00′ 00″
R = 716.19′
T = 204.98′
L = 399.28′
E = 28.76′
C = 394.13′
C.B. = S 55° 17′ 03″ W
P.C.C. STA. 15+14.10
P.C.C. STA. 19+13.38

26 — ℄ EX. RAMP B
P.I. Sta. 20+63.93
Δ = 12° 00′ 00″ (RT)
Dc = 4° 00′ 00″
R = 1,432.43′
T = 150.55′
L = 300.01′
E = 7.89′
C = 299.46′
C.B. = S 77° 15′ 20″ W
P.C.C. STA. 19+13.38
P.T. STA. 22+13.38

27 — ℄ CONST. RAMP B-1
P.I. STA. 406+35.31
Ls = 200.00′
f s = 11° 45′ 00″
LT = 133.63′
ST = 66.93′
x = 199.16′
y = 13.63′
k = 99.86′
p = 3.41′
T.S. STA. 405+01.68
S.C. STA. 407+01.68

28 — ℄ CONST. RAMP B-1
P.I. Sta. 407+76.50
Δ = 17° 26′ 53″ (LT)
Dc = 11° 45′ 00″
R = 487.62′
T = 74.83′
L = 148.49′
E = 5.71′
C = 147.92′
C.B. = N 63° 22′ 14″ W
D.S. = 40 MPH (SSD = 35 MPH)
$e_{max}$ = 0.060
S.C. STA. 407+01.68
P.C.C. STA. 408+50.17

29 — ℄ CONST. RAMP B-1
P.I. Sta. 438+65.75
Δ = 170° 56′ 49″ (LT)
Dc = 24° 00′ 00″
R = 238.73′
T = 3,015.57′
L = 712.28′
E = 2,786.28′
C = 475.98′
C.B. = S 22° 25′ 55″ W
D.S. = 30 MPH (SSD = 25 MPH)
$e_{max}$ = 0.060
P.C.C. STA. 408+50.17
C.S. STA. 415+62.45

30 — ℄ CONST. RAMP B-1
P.I. STA. 416+33.74
Ls = 200.00′
f s = 25° 15′ 00″
LT = 131.48′
ST = 71.29′
x = 195.95′
y = 30.41′
k = 99.36′
p = 6.58′
C.S. STA. 415+62.45
S.C. STA. 417+62.45

31 — ℄ CONST. RAMP B-1
P.I. Sta. 420+43.64
Δ = 7° 01′ 15″ (LT)
Dc = 1° 15′ 00″
R = 4,583.66′
T = 281.19′
L = 561.67′
E = 8.62′
C = 561.32′
C.B. = N 88° 11′ 53″ E
D.S. = 65 MPH
$e_{max}$ = 0.036
S.C. STA. 417+62.45
P.T. STA. 423+24.13

32 — ℄ EX. RAMP B-1
P.I. Sta. 2+10.91
Δ = 10° 30′ 58″ (RT)
Dc = 2° 30′ 00″
R = 2,291.83′
T = 210.91′
L = 420.64′
E = 9.68′
C = 420.05′
C.B. = S 89° 56′ 44″ W
P.C. STA. 0+00.00
P.T. STA. 4+20.64

33 — ℄ EX. RAMP B-1
P.I. STA. 5+71.36
Ls = 200.00′
f s = 25° 00′ 00″
LT = 134.69′
ST = 67.90′
x = 196.23′
y = 28.70′
k = 99.37′
p = 7.22′
T.S. STA. 4+36.67
S.C. STA. 6+36.67

34 — ℄ EX. RAMP B-1
P.I. Sta. 18+79.17
Δ = 159° 05′ 53″ (RT)
Dc = 25° 00′ 00″
R = 229.18′
T = 1,242.49′
L = 636.39′
E = 1,034.27′
C = 450.76′
C.B. = N 19° 45′ 10″ E
S.C. STA. 6+36.67
C.S. STA. 12+73.07

35 — ℄ EX. RAMP B-1
P.I. STA. 13+50.81
Ls = 200.00′
f s = 29° 00′ 00″
LT = 126.18′
ST = 77.74′
x = 194.17′
y = 37.69′
k = 99.15′
p = 6.07′
C.S. STA. 12+73.07
S.C. STA. 14+73.07

36 — ℄ EX. RAMP B-1
P.I. Sta. 15+80.19
Δ = 8° 33′ 13″ (RT)
Dc = 4° 00′ 00″
R = 1,432.39′
T = 107.12′
L = 213.84′
E = 4.00′
C = 213.64′
C.B. = S 47° 25′ 17″ E
S.C. STA. 14+73.07
P.T. STA. 16+86.91

37 — ℄ CONST. RAMP B-2
P.I. Sta. 290+21.80
Δ = 17° 49′ 55″ (LT)
Dc = 1° 58′ 03″
R = 2,911.98′
T = 456.84′
L = 906.29′
E = 35.62′
C = 902.63′
C.B. = N 35° 50′ 05″ W
D.S. = 70 MPH (SSD = 60 MPH)
$e_{max}$ = 0.0545
P.C. STA. 285+64.96
P.T. STA. 294+71.25

38 — ℄ CONST. RAMP B-2
P.I. Sta. 299+44.16
Δ = 3° 00′ 00″ (RT)
Dc = 1° 00′ 00″
R = 5,729.58′
T = 150.03′
L = 300.00′
E = 1.96′
C = 299.97′
C.B. = N 43° 15′ 03″ W
D.S. = 60 MPH
$e_{max}$ = 0.027
P.C. STA. 297+94.13
P.T. STA. 300+94.13

39 — ℄ CONST. RAMP B-2
P.I. STA. 306+64.20
Ls = 200.00′
f s = 12° 00′ 01″
LT = 133.64′
ST = 66.95′
x = 199.12′
y = 13.92′
k = 99.85′
p = 3.49′
T.S. STA. 305+30.56
S.C. STA. 307+30.56

40 — ℄ CONST. RAMP B-2
P.I. Sta. 307+73.27
Δ = 10° 13′ 25″ (LT)
Dc = 12° 00′ 01″
(NDC Dc = 9° 00′ MAX.)
R = 477.46′
T = 42.71′
L = 85.19′
E = 1.91′
C = 85.08′
C.B. = N 58° 51′ 46″ W
D.S. = 35 MPH (45 MPH MIN.)
SSD = 205′ (360′ MIN.)
ACTUAL D.S. = 30 MPH
$e_{max}$ = 0.057
S.C. STA. 307+30.56
P.C.C. STA. 308+15.76 BK/
STA. 7+36.18 AH

41 — ℄ CONST. RAMP B-2
P.I. Sta. 11+24.11
Δ = 78° 11′ 12″ (LT)
Dc = 12° 00′ 01″
(NDC Dc = 9° 00′ MAX.)
R = 477.46′
T = 387.93′
L = 651.55′
E = 137.73′
C = 602.16′
C.B. = S 76° 55′ 56″ W
D.S. = 35 MPH (45 MPH MIN.)
SSD = 205′ (360′ MIN.)
ACTUAL D.S. = 30 MPH
$e_{max}$ = 0.057
P.C.C. STA. 7+36.18 AH/
STA. 308+15.76 BK
C.S. STA. 13+87.73

42 — ℄ CONST. RAMP B-2
P.I. STA. 17+73.39
Ls = 575.00′
f s = 19° 24′ 22″
LT = 385.66′
ST = 193.79′
x = 568.44′
y = 64.39′
k = 286.40′
p = 16.16′
C.S. STA. 13+87.73
S.C. STA. 19+62.73

43 — ℄ CONST. RAMP B-2
P.I. Sta. 21+02.51
Δ = 18° 42′ 10″ (RT)
Dc = 6° 45′ 00″
R = 848.83′
T = 139.78′
L = 277.08′
E = 11.43′
C = 275.85′
C.B. = S 66° 35′ 48″ W
D.S. = 50 MPH
$e_{max}$ = 0.060
S.C. STA. 19+62.73
C.S. STA. 22+39.81

44 — ℄ CONST. RAMP B-2
P.I. STA. 23+14.93
Ls = 225.00′
f s = 7° 35′ 37″
LT = 150.14′
ST = 75.13′
x = 224.61′
y = 9.93′
k = 112.43′
p = 2.48′
C.S. STA. 22+39.81
S.T. STA. 24+64.81

45 — ℄ EX. RAMP B-2
P.I. Sta. 2+94.12
Δ = 11° 43′ 25″ (LT)
Dc = 2° 00′ 00″
R = 2,864.79′
T = 294.12′
L = 586.18′
E = 15.06′
C = 585.16′
C.B. = N 47° 36′ 45″ W
P.C. STA. 0+00.00
C.S. STA. 5+86.18

46 — ℄ EX. RAMP B-2
P.I. STA. 6+79.23
Ls = 150.00′
f s = 10° 30′ 00″
LT = 93.05′
ST = 57.32′
x = 149.42′
y = 10.45′
k = 74.92′
p = 1.63′
C.S. STA. 5+86.18
S.C. STA. 7+36.18

47 — ℄ EX. RAMP B-2
P.I. Sta. 10+65.43
Δ = 69° 10′ 46″ (LT)
Dc = 12° 00′ 01″
R = 477.46′
T = 329.25′
L = 576.49′
E = 102.52′
C = 542.10′
C.B. = S 81° 26′ 09″ W
S.C. STA. 7+36.18
C.S. STA. 13+12.67

48 — ℄ EX. RAMP B-2
P.I. STA. 13+62.79
Ls = 150.00′
f s = 9° 00′ 00″
LT = 100.13′
ST = 50.12′
x = 149.63′
y = 7.84′
k = 74.94′
p = 1.96′
C.S. STA. 13+12.67
S.T. STA. 14+62.67

49 — ℄ CONST. RAMP C
P.I. Sta. 578+08.75
Δ = 1° 57′ 07″ (LT)
Dc = 0° 28′ 03″
R = 12,253.42′
T = 208.75′
L = 417.46′
E = 1.78′
C = 417.44′
C.B. = N 13° 43′ 59″ W
D.S. = 70 MPH
$e_{max}$ = 0.0177
P.C. STA. 576+00.00
P.T. STA. 580+17.46

50 — ℄ CONST. RAMP C
P.I. STA. 584+49.77
Ls = 200.00′
f s = 4° 00′ 00″
LT = 133.37′
ST = 66.70′
x = 199.90′
y = 4.65′
k = 99.98′
p = 1.16′
T.S. STA. 583+16.40
S.C. STA. 585+16.40

51 — ℄ CONST. RAMP C
P.I. Sta. 589+20.09
Δ = 31° 28′ 43″ (RT)
Dc = 4° 00′ 00″
R = 1,432.39′
T = 403.69′
L = 786.96′
E = 55.80′
C = 777.10′
C.B. = N 5° 01′ 48″ E
D.S. = 60 MPH (SSD = 50 MPH)
$e_{max}$ = 0.060
S.C. STA. 585+16.40
P.C.C. STA. 593+03.36

52 — ℄ CONST. RAMP C
P.I. Sta. 596+43.35
Δ = 50° 47′ 20″ (RT)
Dc = 8° 00′ 00″
R = 716.20′
T = 339.99′
L = 634.86′
E = 76.60′
C = 614.28′
C.B. = N 46° 09′ 50″ E
D.S. = 45 MPH
SSD = 305′ (360′ MIN.)
ACTUAL D.S. = 40 MPH
$e_{max}$ = 0.060
P.C.C. STA. 593+03.36
P.C.C. STA. 599+38.22

53 — ℄ CONST. RAMP C
P.I. Sta. 600+38.18
Δ = 7° 59′ 01″ (RT)
Dc = 4° 00′ 00″
R = 1,432.39′
T = 99.96′
L = 199.59′
E = 3.48′
C = 199.43′
C.B. = N 75° 33′ 00″ E
D.S. = 60 MPH (SSD = 50 MPH)
$e_{max}$ = 0.060
P.C.C. STA. 599+38.22
C.S. STA. 601+37.81

54 — ℄ CONST. RAMP C
P.I. STA. 602+04.51
Ls = 200.00′
f s = 4° 00′ 00″
LT = 133.37′
ST = 66.70′
x = 199.90′
y = 4.65′
k = 99.98′
p = 1.16′
C.S. STA. 601+37.81
S.T. STA. 603+37.81

55 — ℄ EX. RAMP C
P.I. Sta. 11+49.44
Δ = 34° 20′ 24″ (RT)
Dc = 4° 00′ 00″
R = 1,432.39′
T = 442.58′
L = 858.50′
E = 66.82′
C = 845.71′
C.B. = N 2° 42′ 38″ E
P.C. STA. 7+06.86
P.T. STA. 15+65.36

56 — ℄ EX. RAMP C
P.I. Sta. 19+24.77
Δ = 51° 35′ 29″ (RT)
Dc = 8° 00′ 00″
R = 716.20′
T = 346.16′
L = 644.89′
E = 79.27′
C = 623.33′
C.B. = N 45° 40′ 34″ E
P.C. STA. 15+78.61
P.C.C. STA. 22+23.50

CALCULATED ZJP
CHECKED PJF

# CURVE DATA

SUM-77 / 277 / 224
VARIOUS



0:\2017\2017258\ProjectData\SUM\06002\Design\Roadway\Sheets\06002_GB10L.dgn Sheet 1/13/2021 5:52:57 PM pfry

57 — ℄ EX. RAMP C
P.I. Sta. 23+71.04
Δ = 11° 45′ 41″ (RT)
Dc = 4° 00′ 00″
R = 1,432.39′
T = 147.54′
L = 294.03′
E = 7.58′
C = 293.52′
C.B. = N 77° 21′ 09″ E
P.C.C. STA. 22+23.50
P.T. STA. 25+17.54

58 — ℄ CONST. RAMP C-1
P.I. Sta. 681+06.79
Δ = 8° 07′ 29″ (RT)
Dc = 1° 55′ 00″
R = 2,989.35′
T = 212.30′
L = 423.90′
E = 7.53′
C = 423.54′
C.B. = N 88° 45′ 00″ E
D.S. = 55 MPH
$e_{max}$ = 0.0387
P.C. STA. 678+94.49
C.S. STA. 683+18.39

59 — ℄ CONST. RAMP C-1
P.I. STA. 684+48.34
Ls = 200.00′
f s = 25° 55′ 00″
LT = 129.96′
ST = 73.02′
x = 195.63′
y = 31.91′
k = 99.32′
p = 6.39′
C.S. STA. 683+18.39
S.C. STA. 685+18.39

60 — ℄ CONST. RAMP C-1
P.I. Sta. 700+58.25
Δ = 162° 22′ 29″ (RT)
Dc = 24° 00′ 00″
R = 238.73′
T = 1,539.86′
L = 676.56′
E = 1,319.52′
C = 471.83′
C.B. = S 19° 54′ 58″ W
D.S. = 30 MPH (SSD = 25 MPH)
$e_{max}$ = 0.060
S.C. STA. 685+18.39
C.S. STA. 691+94.95

61 — ℄ CONST. RAMP C-1
P.I. STA. 692+98.87
Ls = 300.00′
f s = 36° 00′ 00″
LT = 204.30′
ST = 103.92′
x = 288.37′
y = 61.08′
k = 148.05′
p = 15.49′
C.S. STA. 691+94.95
S.T. STA. 694+94.95

62 — ℄ EX. RAMP C-1
P.I. Sta. 2+12.14
Δ = 10° 34′ 37″ (RT)
Dc = 2° 30′ 00″
R = 2,291.83′
T = 212.14′
L = 423.08′
E = 9.80′
C = 422.48′
C.B. = N 89° 58′ 34″ E
P.C. STA. 0+00.00
P.T. STA. 4+23.08

63 — ℄ EX. RAMP C-1
P.I. STA. 5+73.65
Ls = 200.00′
f s = 24° 00′ 00″
LT = 134.58′
ST = 67.80′
x = 196.52′
y = 27.58′
k = 99.42′
p = 6.94′
T.S. STA. 4+39.07
S.C. STA. 6+39.07

64 — ℄ EX. RAMP C-1
P.I. Sta. 9+86.54
Δ = 221° 35′ 27″ (RT)
Dc = 24° 00′ 00″
R = 238.73′
Ls = 200.00′
θs = 24° 00′ 00″
LT = 134.58′
ST = 67.80′
x = 196.52′
y = 27.58′
k = 99.42′
p = 6.94′
Δc = 173° 35′ 27″ (RT)
Lc = 723.30′
Ts = 547.47′
Es = 272.25′
C = 476.72′
C1 = C2 = 198.44′
C.B.1 = S 76° 44′ 51″ E
C.B. = S 26° 03′ 36″ W
C.B.2 = S 51° 07′ 58″ E
S.C. STA. 6+39.07
C.S. STA. 13+62.36

65 — ℄ EX. RAMP C-1
P.I. STA. 14+30.16
Ls = 200.00′
f s = 24° 00′ 00″
LT = 134.58′
ST = 67.80′
x = 196.52′
y = 27.58′
k = 99.42′
p = 6.94′
C.S. STA. 13+62.36
S.T. STA. 15+62.36

66 — ℄ CONST. RAMP C-2
P.I. Sta. 782+19.82
Δ = 11° 22′ 45″ (LT)
Dc = 7° 39′ 38″
R = 747.92′
T = 74.52′
L = 148.54′
E = 3.70′
C = 148.30′
C.B. = S 43° 33′ 57″ W
D.S. = 45 MPH
$e_{max}$ = 0.060
P.C. STA. 781+45.30
C.S. STA. 782+93.84

67 — ℄ CONST. RAMP C-2
P.I. STA. 783+43.89
Ls = 150.00′
f s = 5° 44′ 44″
LT = 100.05′
ST = 50.05′
x = 149.85′
y = 5.01′
k = 74.97′
p = 1.25′
C.S. STA. 782+93.84
S.T. STA. 784+43.84

68 — ℄ CONST. RAMP C-2
P.I. STA. 786+50.14
Ls = 250.00′
f s = 18° 45′ 00″
LT = 167.61′
ST = 84.19′
x = 247.34′
y = 27.06′
k = 124.56′
p = 6.79′
T.S. STA. 784+82.53
S.C. STA. 787+32.53

69 — ℄ CONST. RAMP C-2
P.I. Sta. 789+63.04
Δ = 62° 13′ 11″ (RT)
Dc = 15° 00′ 00″
(NDC Dc = 9° 00′ MAX.)
R = 381.97′
T = 230.51′
L = 414.80′
E = 64.16′
C = 394.72′
C.B. = S 81° 59′ 26″ W
D.S. = 35 MPH (45 MPH MIN.)
SSD = 194′ (360′ MIN.)
ACTUAL D.S. = 29 MPH
$e_{max}$ = 0.060
S.C. STA. 787+32.53
C.S. STA. 791+47.33

70 — ℄ CONST. RAMP C-2
P.I. STA. 792+02.11
Ls = 150.00′
f s = 12° 22′ 30″
LT = 95.72′
ST = 54.79′
x = 149.23′
y = 11.74′
k = 74.88′
p = 2.21′
C.S. STA. 791+47.33
S.C. STA. 792+97.33

71 — ℄ CONST. RAMP C-2
P.I. Sta. 797+24.90
Δ = 12° 46′ 26″ (RT)
Dc = 1° 30′ 00″
R = 3,819.72′
T = 427.57′
L = 851.59′
E = 23.86′
C = 849.83′
C.B. = N 48° 08′ 16″ W
D.S. = 60 MPH (SSD = 55 MPH)
$e_{max}$ = 0.037
S.C. STA. 792+97.33
P.T. STA. 801+48.92

72 — ℄ EX. RAMP C-2
P.I. Sta. 4+27.57
Δ = 12° 46′ 26″ (LT)
Dc = 1° 30′ 00″
R = 3,819.72′
T = 427.57′
L = 851.59′
E = 23.86′
C = 849.83′
C.B. = S 48° 08′ 16″ E
P.C. STA. 0+00.00
C.S. STA. 8+51.59

73 — ℄ EX. RAMP C-2
P.I. STA. 9+47.31
Ls = 150.00′
f s = 12° 22′ 30″
LT = 95.72′
ST = 54.79′
x = 149.23′
y = 11.74′
k = 74.88′
p = 2.21′
C.S. STA. 8+51.59
S.C. STA. 10+01.59

74 — ℄ EX. RAMP C-2
P.I. Sta. 12+59.38
Δ = 68° 01′ 46″ (LT)
Dc = 15° 00′ 00″
R = 381.97′
T = 257.79′
L = 453.53′
E = 78.85′
C = 427.35′
C.B. = N 79° 05′ 08″ E
S.C. STA. 10+01.59
P.C.C. STA. 14+55.12

75 — ℄ EX. RAMP C-2
P.I. Sta. 15+58.98
Δ = 14° 27′ 48″ (LT)
Dc = 7° 00′ 00″
R = 818.51′
T = 103.86′
L = 206.62′
E = 6.56′
C = 206.07′
C.B. = N 37° 50′ 21″ E
P.C.C. STA. 14+55.12
P.T. STA. 16+61.74

76 — ℄ CONST. RAMP D
P.I. Sta. 891+58.50
Δ = 8° 59′ 04″ (RT)
Dc = 1° 15′ 00″
R = 4,583.66′
T = 360.12′
L = 718.75′
E = 14.12′
C = 718.02′
C.B. = S 89° 10′ 47″ W
D.S. = 65 MPH
$e_{max}$ = 0.036
P.C. STA. 887+98.38
C.S. STA. 895+17.13

77 — ℄ CONST. RAMP D
P.I. STA. 896+29.68
Ls = 200.00′
f s = 4° 00′ 00″
LT = 112.54′
ST = 87.54′
x = 199.87′
y = 6.11′
k = 99.98′
p = 0.44′
C.S. STA. 895+17.13
S.C. STA. 897+17.13

78 — ℄ CONST. RAMP D
P.I. Sta. 898+09.19
Δ = 5° 03′ 35″ (RT)
Dc = 2° 45′ 00″
R = 2,083.48′
T = 92.05′
L = 183.99′
E = 2.03′
C = 183.93′
C.B. = N 79° 47′ 54″ W
D.S. = 55 MPH
$e_{max}$ = 0.048
S.C. STA. 897+17.13
C.S. STA. 899+01.12

79 — ℄ CONST. RAMP D
P.I. STA. 900+05.22
Ls = 200.00′
f s = 6° 15′ 00″
LT = 104.10′
ST = 96.10′
x = 199.63′
y = 10.46′
k = 99.96′
p = 0.22′
C.S. STA. 899+01.12
S.C. STA. 901+01.12

80 — ℄ CONST. RAMP D
P.I. Sta. 904+84.89
Δ = 26° 23′ 16″ (RT)
Dc = 3° 30′ 00″
R = 1,637.02′
T = 383.77′
L = 753.93′
E = 44.38′
C = 747.29′
C.B. = N 57° 49′ 29″ W
D.S. = 50 MPH
$e_{max}$ = 0.048
S.C. STA. 901+01.12
C.S. STA. 908+55.05

81 — ℄ CONST. RAMP D
P.I. STA. 909+49.98
Ls = 200.00′
f s = 6° 03′ 40″
LT = 105.26′
ST = 94.93′
x = 199.66′
y = 10.02′
k = 99.96′
p = 0.27′
C.S. STA. 908+55.05
S.C. STA. 910+55.05

82 — ℄ CONST. RAMP D
P.I. Sta. 913+74.55
Δ = 16° 15′ 22″ (RT)
Dc = 2° 33′ 40″
R = 2,237.04′
T = 319.50′
L = 634.70′
E = 22.70′
C = 632.57′
C.B. = N 30° 26′ 29″ W
D.S. = 60 MPH
$e_{max}$ = 0.051
S.C. STA. 910+55.05
P.T. STA. 916+89.75

83 — ℄ EX. RAMP D
P.I. Sta. 3+78.12
Δ = 11° 18′ 24″ (RT)
Dc = 1° 30′ 00″
R = 3,819.72′
T = 378.12′
L = 753.78′
E = 18.67′
C = 752.56′
C.B. = N 89° 39′ 33″ W
P.C. STA. 0+00.00
C.S. STA. 7+53.78

84 — ℄ EX. RAMP D
P.I. STA. 8+38.80
Ls = 150.00′
f s = 3° 45′ 00″
LT = 85.03′
ST = 65.03′
x = 149.91′
y = 4.25′
k = 74.99′
p = 0.33′
C.S. STA. 7+53.78
S.C. STA. 9+03.78

85 — ℄ EX. RAMP D
P.I. Sta. 13+15.30
Δ = 28° 13′ 19″ (RT)
Dc = 3° 30′ 00″
R = 1,637.02′
T = 411.52′
L = 806.34′
E = 50.93′
C = 798.21′
C.B. = N 66° 08′ 41″ W
S.C. STA. 9+03.78
C.S. STA. 17+10.12

86 — ℄ EX. RAMP D
P.I. STA. 17+82.16
Ls = 150.00′
f s = 4° 41′ 15″
LT = 78.04′
ST = 72.04′
x = 149.84′
y = 5.89′
k = 74.98′
p = 0.12′
C.S. STA. 17+10.12
S.C. STA. 18+60.12

CALCULATED ZJP
CHECKED PJF

CURVE DATA

SUM-77 / 277 / 224
VARIOUS

25
1288

0:\2017\2017258\ProjectData\SUM\106002\Design\Roadway\Sheets\106002_GB102.dgn Sheet 1/13/2021 1:53:27 PM pfry

**87** — ℄ EX. RAMP D
P.I. Sta. 20+10.38
Δ = 8° 15′ 00″ (RT)
Dc = 2° 45′ 00″
R = 2,083.48′
T = 150.26′
L = 300.00′
E = 5.41′
C = 299.74′
C.B. = N 43° 13′ 17″ W
S.C. STA. 18+60.12
P.T. STA. 21+60.12

**88** — ℄ CONST. ARLINGTON RAMP D
P.I. Sta. 73+08.33
Δ = 6° 15′ 29″ (RT)
Dc = 1° 30′ 00″
R = 3,819.72′
T = 208.81′
L = 417.19′
E = 5.70′
C = 416.99′
C.B. = N 3° 58′ 43″ W
D.S. = 50 MPH
$e_{max}$ = 0.028
P.C. STA. 70+99.52
P.T. STA. 75+16.71

**89** — ℄ EX. ARLINGTON RAMP D
P.I. Sta. 66+33.08
Δ = 33° 44′ 40″ (RT)
Dc = 28° 38′ 52″
R = 200.00′
T = 60.66′
L = 117.79′
E = 9.00′
C = 116.10′
C.B. = S 18° 46′ 55″ W
P.C. STA. 65+72.42
P.C.C. STA. 66+90.21

**90** — ℄ EX. ARLINGTON RAMP D
P.I. Sta. 68+03.74
Δ = 97° 15′ 08″ (RT)
Dc = 57° 17′ 45″
R = 100.00′
T = 113.53′
L = 169.74′
E = 51.29′
C = 150.08′
C.B. = S 84° 16′ 49″ W
P.C.C. STA. 66+90.21
P.C.C. STA. 68+59.95

**91** — ℄ EX. ARLINGTON RAMP D
P.I. Sta. 68+79.80
Δ = 11° 20′ 17″ (RT)
Dc = 28° 38′ 52″
R = 200.00′
T = 19.85′
L = 39.58′
E = 0.98′
C = 39.51′
C.B. = N 41° 25′ 29″ W
P.C.C. STA. 68+59.95
C.S. STA. 68+99.52

**92** — ℄ EX. ARLINGTON RAMP D
P.I. STA. 69+67.82
Ls = 200.00′
f s = 28° 38′ 52″
LT = 135.12′
ST = 68.30′
x = 195.06′
y = 32.74′
k = 99.17′
p = 8.26′
C.S. STA. 68+99.52
S.C. STA. 70+99.52

**93** — ℄ EX. ARLINGTON RAMP D
P.I. Sta. 73+06.73
Δ = 6° 12′ 36″ (RT)
Dc = 1° 30′ 00″
R = 3,819.72′
T = 207.21′
L = 414.00′
E = 5.62′
C = 413.80′
C.B. = N 4° 00′ 10″ W
S.C. STA. 70+99.52
P.T. STA. 75+13.53

**94** — ℄ CONST. WARNER ROAD (CH 156)
P.I. Sta. 21+17.47
Δ = 5° 27′ 57″ (RT)
Dc = 2° 00′ 00″
R = 2,864.79′
T = 136.75′
L = 273.29′
E = 3.26′
C = 273.18′
C.B. = S 77° 40′ 14″ E
D.S. = 45 MPH
$e_{max}$ = NC
P.C. STA. 19+80.72
P.T. STA. 22+54.01

**95** — ℄ CONST. WARNER ROAD (CH 156)
P.I. Sta. 27+69.62
Δ = 7° 50′ 44″ (LT)
Dc = 2° 25′ 32″
R = 2,362.12′
T = 161.98′
L = 323.44′
E = 5.55′
C = 323.19′
C.B. = S 80° 11′ 33″ E
D.S. = 45 MPH
$e_{max}$ = NC
P.C. STA. 26+07.65
P.T. STA. 29+31.09

**96** — ℄ R/W & CONST. I.R. 277/U.S. 224
P.I. Sta. 280+91.67
Δ = 6° 22′ 18″ (RT)
Dc = 1° 00′ 00″
R = 5,729.58′
T = 318.91′
L = 637.17′
E = 8.87′
C = 636.84′
C.B. = N 87° 52′ 24″ E
P.C. STA. 277+72.76
P.T. STA. 284+09.93

**97** — ℄ R/W WARNER ROAD (CH 156)
P.I. Sta. 106+34.16
Δ = 4° 15′ 45″ (RT)
Dc = 0° 59′ 42″
R = 5,757.59′
T = 214.27′
L = 428.33′
E = 3.99′
C = 428.24′
C.B. = S 77° 44′ 24″ E
P.C. Sta. 104+19.89
P.T. Sta. 108+48.22

CALCULATED ZJP
CHECKED PJF

# CURVE DATA

SUM-77 / 277 / 224
VARIOUS

26
1288

O:\2017\2017258\ProjectData\SUM\106002\Design\Roadway\Sheets\106002_GB103.dgn Sheet 1/13/2021 1:54:01 PM pfry

## REFERENCE POINT TABLE

| POINT NUMBER | NORTHING | EASTING | ELEVATION | DESCRIPTION |
|---|---|---|---|---|
| 1 | 484175.1336 | 2246592.4640 | | P.C. STA. 70+99.52, ℄ CONST. ARLINGTON RD RAMP D |
| 2 | 484591.1161 | 2246563.5315 | | P.T. STA. 75+16.71, ℄ CONST. ARLINGTON RD RAMP D |
| 3 | 485892.5095 | 2246544.2290 | | POT. STA. 88+18.25, ℄ CONST. ARLINGTON RD RAMP D |
| 4 | 484545.7197 | 2246465.2701 | | P.T. STA. 374+77.72, ℄ R/W & CONST. I.R. 77 |
| 5 | 486205.3353 | 2246473.8442 | | P.C. STA. 391+37.36, ℄ R/W & CONST. I.R. 77 |
| 6 | 487526.4588 | 2246440.2986 | | P.T. STA. 404+59.11, ℄ R/W & CONST. I.R. 77 |
| 7 | 489904.8574 | 2246307.1152 | | P.C. STA. 428+41.24, ℄ R/W & CONST. I.R. 77 |
| 8 | 489899.6607 | 2245234.6758 | | POT STA. 15+00.00, ℄ CONST. WARNER ROAD |
| 9 | 489819.5188 | 2245708.6708 | | P.C. STA. 19+80.72, ℄ CONST. WARNER ROAD |
| 10 | 489761.1853 | 2245975.5517 | | P.T. STA. 22+54.01, ℄ CONST. WARNER ROAD |
| 11 | 489723.2462 | 2246116.5283 | | P.I. STA. 24+00.00, ℄ CONST. WARNER ROAD |
| 12 | 489673.9605 | 2246318.2437 | | P.C. STA. 26+07.65, ℄ CONST. WARNER ROAD |
| 13 | 489618.9086 | 2246636.7127 | | P.T. STA. 29+31.09, ℄ CONST. WARNER ROAD |
| 14 | 489588.7123 | 2246929.6804 | | POT. STA. 32+25.61, ℄ CONST. WARNER ROAD |
| 15 | 491870.3195 | 2246058.9248 | | P.T. STA. 448+23.91, ℄ R/W & CONST. I.R. 77 |
| 16 | 493950.0697 | 2245635.3091 | | POT. STA. 469+42.49, ℄ CONST. SB I.R. 77 |
| 17 | 493957.0543 | 2245670.6249 | | POT. STA. 469+46.96, ℄ CONST. NB I.R. 77 |
| 18 | 494232.5084 | 2245620.2164 | | P.I. STA. 472+26.99, ℄ CONST. NB I.R. 77 |
| 19 | 494493.5993 | 2245568.5715 | | P.C. STA. 474+93.14, ℄ CONST. NB I.R. 77 |
| 20 | 496335.7241 | 2244651.3327 | | P.T. STA. 495+75.59, ℄ CONST. NB I.R. 77 |
| 21 | 497149.0356 | 2243925.4052 | | T.S. STA. 506+65.75, ℄ CONST. NB I.R. 77 |
| 22 | 497454.9717 | 2243667.9273 | | S.C. STA. 510+65.75, ℄ CONST. NB I.R. 77 |
| 23 | 498635.1129 | 2243220.4015 | | C.S. STA. 523+44.42, ℄ CONST. NB I.R. 77 |
| 24 | 499034.8494 | 2243210.2786 | | S.T. STA. 527+44.42, ℄ CONST. NB I.R. 77 |
| 25 | 494255.4316 | 2245570.3612 | | P.C. STA. 472+54.68, ℄ CONST. SB I.R. 77 |
| 26 | 496042.6269 | 2244664.3344 | | P.T. STA. 492+81.37, ℄ CONST. SB I.R. 77 |
| 27 | 496730.5401 | 2244050.5999 | | T.S. STA. 502+03.04, ℄ CONST. SB I.R. 77 |
| 28 | 497035.0104 | 2243791.3152 | | S.C. STA. 506+03.04, ℄ CONST. SB I.R. 77 |
| 29 | 498999.6848 | 2243190.1089 | | S.T. STA. 527+01.37, ℄ CONST. SB I.R. 77 |
| 30 | 494608.7304 | 2245593.2191 | | P.C. STA. 576+00.00, ℄ CONST. RAMP C |
| 31 | 495014.2364 | 2245494.1186 | | P.T. STA. 580+17.46, ℄ CONST. RAMP C |
| 32 | 495303.3781 | 2245419.2142 | | T.S. STA. 583+16.40, ℄ CONST. RAMP C |
| 33 | 495497.9106 | 2245371.9565 | | S.C. STA. 585+16.40, ℄ CONST. RAMP C |
| 34 | 496272.0202 | 2245440.0918 | | P.C.C. STA.593+03.36, ℄ CONST. RAMP C |
| 35 | 496697.4694 | 2245883.1851 | | P.C.C. STA. 599+38.22, ℄ CONST. RAMP C |
| 36 | 496747.2335 | 2246076.3039 | | C.S. STA. 601+37.81, ℄ CONST. RAMP C |
| 37 | 496774.3413 | 2246274.4146 | | S.T. STA. 603+37.81, ℄ CONST. RAMP C |
| 38 | 496811.4667 | 2246602.3860 | | POT. STA. 606+67.88, ℄ CONST. RAMP C |
| 39 | 495519.1619 | 2244987.0480 | | P.C. STA. 86+63.69, ℄ CONST. RAMP A |
| 40 | 495844.4475 | 2244744.1555 | | C.S. STA. 90+70.00, ℄ CONST. RAMP A |
| 41 | 496064.8743 | 2244540.8455 | | S.C. STA. 93+70.00, ℄ CONST. RAMP A |
| 42 | 496463.7241 | 2243564.1774 | | C.S. STA. 104+55.37, ℄ CONST. RAMP A |
| 43 | 496484.9861 | 2243364.2194 | | S.C. STA. 106+55.37, ℄ CONST. RAMP A |
| 44 | 496443.9767 | 2242607.0991 | | P.T. STA. 114+13.78, ℄ CONST. RAMP A |
| 45 | 495498.0807 | 2245209.0686 | | P.C. STA. 285+64.96, ℄ CONST. RAMP B-2 |
| 46 | 496229.8529 | 2244680.6227 | | P.T. STA. 294+71.25, ℄ CONST. RAMP B-2 |
| 47 | 496459.1548 | 2244453.3072 | | P.C. STA. 297+94.13, ℄ CONST. RAMP B-2 |
| 48 | 496677.6384 | 2244247.7729 | | P.T. STA. 300+94.13, ℄ CONST. RAMP B-2 |
| 49 | 497003.2398 | 2243957.1549 | | T.S. STA. 305+30.56, ℄ CONST. RAMP B-2 |
| 50 | 497142.5277 | 2243814.1752 | | S.C. STA. 307+30.56, ℄ CONST. RAMP B-2 |
| 51 | 497186.5228 | 2243741.3509 | | P.C.C. STA. 7+36.18 AH/STA. 308+15.67 BK, ℄ CONST. RAMP B-2 |
| 52 | 497050.3734 | 2243154.7886 | | C.S. STA. 13+87.73, ℄ CONST. RAMP B-2 |
| 53 | 496640.9541 | 2242755.2338 | | S.C. STA. 19+62.73, ℄ CONST. RAMP B-2 |
| 54 | 496531.3856 | 2242502.0769 | | C.S. STA. 22+39.81, ℄ CONST. RAMP B-2 |
| 55 | 496496.2576 | 2242280.0138 | | S.T. STA. 24+64.81, ℄ CONST. RAMP B-2 |
| 56 | 496393.0930 | 2241368.6410 | | POT. STA. 33+82.00, ℄ CONST. RAMP B-2 |
| 57 | 496568.4870 | 2245608.8974 | | P.C. STA. 781+45.30, ℄ CONST. RAMP C-2 |
| 58 | 496461.0336 | 2245506.6932 | | C.S. STA. 782+93.84, ℄ CONST. RAMP C-2 |
| 59 | 496336.8003 | 2245422.7528 | | S.T. STA. 784+43.84, ℄ CONST. RAMP C-2 |
| 60 | 496304.0380 | 2245402.1766 | | T.S. STA. 784+82.53, ℄ CONST. RAMP C-2 |
| 61 | 496108.9780 | 2245247.7128 | | S.C. STA. 787+32.53, ℄ CONST. RAMP C-2 |
| 62 | 496053.9794 | 2244856.8482 | | C.S. STA. 791+47.33, ℄ CONST. RAMP C-2 |
| 63 | 496131.0262 | 2244728.5027 | | S.C. STA. 792+97.33, ℄ CONST. RAMP C-2 |
| 64 | 496698.1540 | 2244095.5911 | | P.T. STA. 801+48.92, ℄ CONST. RAMP C-2 |
| 65 | 496623.3315 | 2244535.9286 | | P.C. STA. 678+94.49, ℄ CONST. RAMP C-1 |
| 66 | 496632.5719 | 2244959.3679 | | C.S. STA. 683+18.39, ℄ CONST. RAMP C-1 |
| 67 | 496591.0988 | 2245153.1986 | | S.C. STA. 685+18.39, ℄ CONST. RAMP C-1 |
| 68 | 496147.4898 | 2244992.4727 | | C.S. STA. 691+94.95, ℄ CONST. RAMP C-1 |
| 69 | 496317.1687 | 2244751.4376 | | S.T. STA. 694+94.95, ℄ CONST. RAMP C-1 |
| 70 | 496842.0676 | 2244263.7309 | | POT. STA. 702+11.45, ℄ CONST. RAMP C-1 |

## REFERENCE POINT TABLE

| POINT NUMBER | NORTHING | EASTING | ELEVATION | DESCRIPTION |
|---|---|---|---|---|
| 71 | 496828.0761 | 2245787.3473 | | P.C. STA. 887+98.38, ℄ CONST. RAMP D |
| 72 | 496817.7974 | 2245069.4023 | | C.S. STA. 895+17.13, ℄ CONST. RAMP D |
| 73 | 496836.6915 | 2244870.3379 | | S.C. STA. 897+17.13, ℄ CONST. RAMP D |
| 74 | 496869.2675 | 2244689.3204 | | C.S. STA. 899+01.12, ℄ CONST. RAMP D |
| 75 | 496923.4667 | 2244496.9074 | | S.C. STA. 901+01.12, ℄ CONST. RAMP D |
| 76 | 497321.4073 | 2243864.3866 | | C.S. STA. 908+55.05, ℄ CONST. RAMP D |
| 77 | 497471.2587 | 2243732.0718 | | S.C. STA. 910+55.05, ℄ CONST. RAMP D |
| 78 | 498016.6287 | 2243411.5740 | | P.T. STA. 916+89.75, ℄ CONST. RAMP D |
| 79 | 496726.3451 | 2243984.6614 | | POT. STA. 402+43.78, ℄ CONST. RAMP B-1 |
| 80 | 496915.2771 | 2243809.1164 | | T.S. STA. 405+01.68, ℄ CONST. RAMP B-1 |
| 81 | 497051.9009 | 2243663.5669 | | S.C. STA. 407+01.68, ℄ CONST. RAMP B-1 |
| 82 | 497118.2015 | 2243531.3378 | | P.C.C. STA. 408+50.17, ℄ CONST. RAMP B-1 |
| 83 | 496678.2415 | 2243349.7117 | | C.S. STA. 415+62.45, ℄ CONST. RAMP B-1 |
| 84 | 496642.0046 | 2243544.6717 | | S.C. STA. 417+62.45, ℄ CONST. RAMP B-1 |
| 85 | 496659.6556 | 2244105.7176 | | P.T. STA. 423+24.13, ℄ CONST. RAMP B-1 |
| 86 | 498217.5877 | 2243200.2424 | | POT. STA. 219+25.00, ℄ CONST. RAMP B |
| 87 | 497660.9093 | 2243301.9133 | | C.S. STA. 213+58.80, ℄ CONST. RAMP B |
| 88 | 497288.6263 | 2243221.9336 | | S.C. STA. 209+73.39, ℄ CONST. RAMP B |
| 89 | 497120.8007 | 2243113.4657 | | T.S. STA. 207+73.39, ℄ CONST. RAMP B |
| 90 | 496979.3139 | 2243012.3901 | | S.T. STA. 205+99.50, ℄ CONST. RAMP B |
| 91 | 496821.3612 | 2242889.9089 | | C.S. STA. 203+99.50, ℄ CONST. RAMP B |
| 92 | 496570.2088 | 2242472.4382 | | S.C. STA. 199+05.36, ℄ CONST. RAMP B |
| 93 | 496536.0032 | 2242275.5101 | | S.T. STA. 197+05.36, ℄ CONST. RAMP B |
| 94 | 496351.2535 | 2241134.7009 | | POT. STA. 222+63.19, ℄ R/W & CONST. I.R. 277/U.S. 224 |
| 95 | 496861.3677 | 2246620.6030 | | P.C. STA. 277+72.76, ℄ R/W & CONST. I.R. 277/U.S. 224 |
| 96 | 498599.8475 | 2243197.9074 | | C.S. STA. 523+01.37, ℄ CONST. SB I.R. 77 |
| 97 | 497858.4760 | 2243271.9494 | | S.T. STA. 215+58.80, ℄ CONST. RAMP B |
| 98 | 496884.9995 | 2247257.0030 | | P.T. STA. 284+09.93, ℄ R/W & CONST. I.R. 277/U.S. 224 |
| 99 | 489887.0313 | 2245342.9437 | | POT. STA. 99+63.27, ℄ R/W WARNER ROAD (CH 156) |
| 100 | 489806.7298 | 2245792.4473 | | P.C. STA. 104+19.89, ℄ R/W WARNER ROAD (CH 156) |
| 101 | 489715.7948 | 2246210.9162 | | P.T. STA. 108+48.22, ℄ R/W WARNER ROAD (CH 156) |
| 102 | 489648.7680 | 2246472.1339 | | P.I. STA. 111+17.90, ℄ R/W WARNER ROAD (CH 156) |
| 103 | 489581.5704 | 2246929.5039 | | POT. STA. 115+80.18, ℄ R/W WARNER ROAD (CH 156) |

CALCULATED ATR
CHECKED PJF

# CENTERLINE REFERENCE TIES

SUM-77 / 277 / 224
VARIOUS



D:\2017\2017258\ProjectData\SUM\106002\Design\Roadway\Sheets\106002_GB104.dgn Sheet 1/13/2021 5:54:28 PM pfry

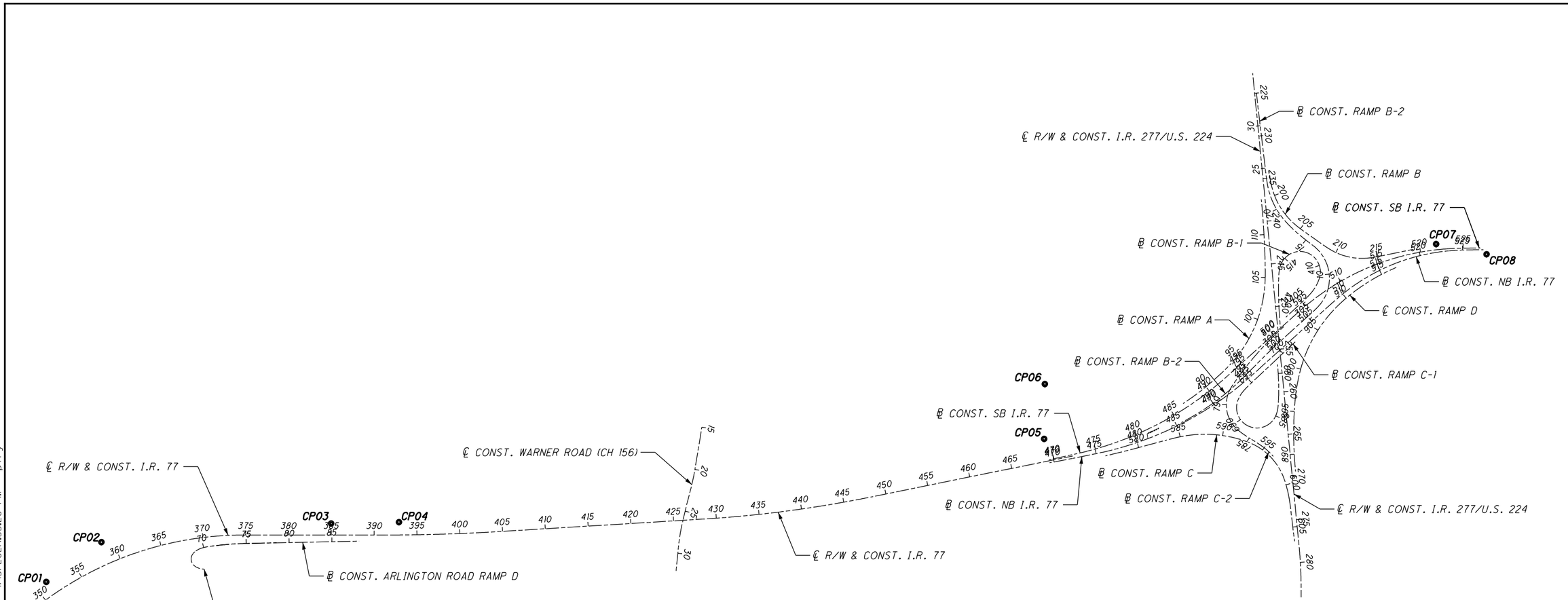


## CONTROL POINT TABLE

| POINT NUMBER | NORTHING | EASTING | ELEVATION | DESCRIPTION |
|---|---|---|---|---|
| CP01 | 482237.3791 | 2247000.8985 | 1065.99 | CONCRETE MONUMENT |
| CP02 | 482883.6931 | 2246539.4389 | 1072.64 | CONCRETE MONUMENT |
| CP03 | 485566.6495 | 2246336.2535 | 1117.76 | CONCRETE MONUMENT |
| CP04 | 486357.9587 | 2246323.9152 | 1121.63 | CONCRETE MONUMENT |
| CP05 | 493895.1420 | 2245390.8980 | 1073.53 | CONCRETE MONUMENT |
| CP06 | 493906.9643 | 2244750.3816 | 1090.46 | CONCRETE MONUMENT |
| CP07 | 498481.9448 | 2243140.4162 | 1064.39 | CONCRETE MONUMENT |
| CP08 | 499070.7218 | 2243262.6440 | 1076.40 | CONCRETE MONUMENT |
| | | | | |

NOTE: NORTHING AND EASTING COORDINATES SHOWN IN THE TABLE ABOVE ARE LISTED IN GROUND COORDINATES.

FOR GEOMETRIC PLANS, SEE SHEETS 13 - 22

HORIZONTAL SCALE IN FEET
0 300 600 1200

CALCULATED ATR
CHECKED PJF

# CONTROL POINT KEY PLAN

SUM-77 / 277 / 224
VARIOUS



O:\2017\2017258\ProjectData\SUM\106002\Design\Roadway\Sheets\106002_GBI05.dgn Sheet 1/13/2021 1:55:20 PM pfry

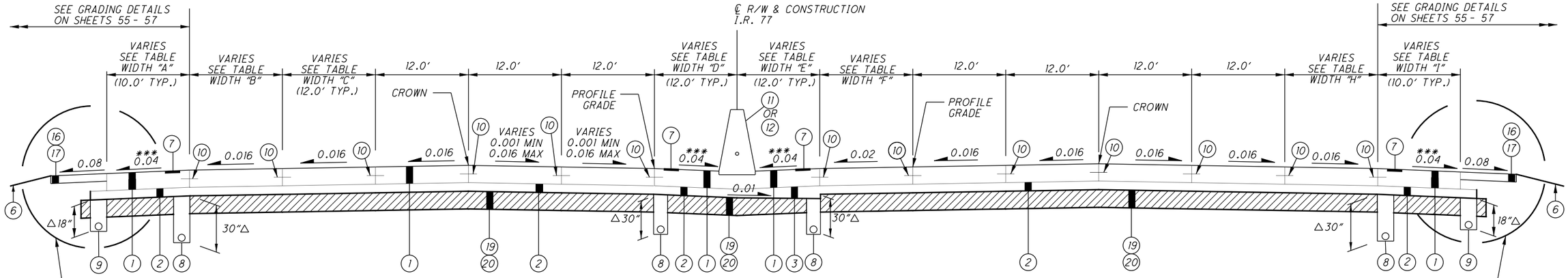


SEE EDGE DETAILS ON SHEET 54
SEE GUARDRAIL INSTALLATION DETAIL ON SHEET 52
SEE CURB DETAIL "A" ON SHEET 54
SEE BARRIER DETAIL "A" ON SHEET 54
SEE NOISE BARRIER C PLANS ON SHEETS 1082 - 1091
SEE NOISE BARRIER E PLANS ON SHEETS 1092 - 1100

## I.R. 77 NORMAL SECTION

LIMITING STATIONS

STA. 391+37.36 TO STA. 425+05.16
STA. 427+10.73 TO STA. 429+01.43
STA. 431+16.15 TO STA. 469+46.33

SEE EDGE DETAILS ON SHEET 54
SEE GUARDRAIL INSTALLATION DETAIL ON SHEET 52
SEE CURB DETAIL "A" ON SHEET 54
SEE BARRIER DETAIL "A" ON SHEET 54
SEE NOISE BARRIER G PLANS ON SHEETS 1101 - 1109

FOR EXISTING LEGEND, SEE SHEET 59
FOR SUPERELEVATION TABLES, SEE SHEETS 805 - 806
FOR WIDTH TABLE, SEE SHEET 36

△ - OR AS SHOWN IN UNDERDRAIN PLANS, SHEETS 922 - 925

⬡ - PROJECT WAS ORIGINALLY DESIGNED AS DUAL PAVEMENT, HOWEVER THE RIGID PAVEMENT OPTION HAS NOW BEEN REMOVED FROM THE PROJECT. ANY AND ALL REFERENCE THROUGHOUT THE PLANS TO RIGID PAVEMENT OPTION ARE NOW CONSIDERED NULL AND VOID.

NOTE 'A'
TACK COAT SHALL BE APPLIED BETWEEN THE MULTIPLE LIFTS OF ITEM 302.

* 0.04 OR RATE OF PAVEMENT SLOPE IF GREATER.

** FOR HIGH SIDE SHOULDER SLOPES, SEE SHOULDER DETAIL "A" ON SHEET 52 .

*** FOR SHOULDER SLOPES APPROACHING WARNER ROAD BRIDGE AND THE TUSCARAWAS RIVER BRIDGE SEE SUPERELEVATION TABLES ON SHEETS 805 - 806 .

## PROPOSED LEGEND

(1) ~~RIGID PAVEMENT OPTION USING:~~
~~ITEM 452 - 12" NON-REINFORCED CONCRETE PAVEMENT, CLASS QC 1P WITH QC/QA~~ ⬡
-OR-
FLEXIBLE PAVEMENT OPTION USING:
ITEM 442 - 1½" ASPHALT CONCRETE SURFACE COURSE, 12.5MM, TYPE A (447), AS PER PLAN
ITEM 442 - ANTI-SEGREGATION EQUIPMENT
ITEM 407 - NON-TRACKING TACK COAT (SEE NOTE 'A' ON THIS SHEET)
ITEM 442 - 1¾" ASPHALT CONCRETE INTERMEDIATE COURSE, 19MM, TYPE A (446), AS PER PLAN
ITEM 442 - ANTI-SEGREGATION EQUIPMENT
ITEM 407 - NON-TRACKING TACK COAT (SEE NOTE 'A' ON THIS SHEET)
ITEM 302 - 8" ASPHALT CONCRETE BASE, PG64-22

(2) ITEM 304 - 6" AGGREGATE BASE

(3) ITEM 304 - VARIABLE DEPTH AGGREGATE BASE (6" MINIMUM)

(4) ITEM 204 - SUBGRADE COMPACTION

(5) ITEM 622 - CONCRETE BARRIER, SINGLE SLOPE, TYPE B1

(6) ITEM 659 - SEEDING AND MULCHING

(7) ~~RIGID OPTION:~~
~~ITEM 618 - RUMBLE STRIPS, SHOULDER (CONCRETE)~~ ⬡
-OR-
FLEXIBLE OPTION:
ITEM 618 - RUMBLE STRIPS, SHOULDER (ASPHALT CONCRETE)

(8) ITEM 605 - 6" SHALLOW PIPE UNDERDRAINS WITH GEOTEXTILE FABRIC

(9) ITEM 605 - 6" BASE PIPE UNDERDRAINS WITH GEOTEXTILE FABRIC

(10) ~~LONGITUDINAL JOINT AS PER BP-2.1 (FOR RIGID PAVEMENT OPTION)~~ ⬡

(11) ITEM 622 - CONCRETE BARRIER, SINGLE SLOPE, TYPE B1 (4" ITS MULTICELL CONDUIT PER SCD RM-4.3)

(12) ITEM 622 - CONCRETE BARRIER, SINGLE SLOPE, TYPE C1 (4" ITS MULTICELL CONDUIT PER SCD RM-4.3)

(13) ITEM 622 - CONCRETE BARRIER, SINGLE SLOPE, TYPE D

(14) ITEM 441 - 2" ASPHALT CONCRETE INTERMEDIATE COURSE, TYPE 1, (448), (UNDER GUARDRAIL), AS PER PLAN

(15) ITEM 209 - LINEAR GRADING, AS PER PLAN

(16) ITEM 617 - COMPACTED AGGREGATE, AS PER PLAN
ITEM 617 - SHOULDER PREPARATION
ITEM 617 - WATER

(17) ITEM 408 - PRIME COAT, AS PER PLAN

(18) ITEM 606 - GUARDRAIL, TYPE MGS

(19) ITEM 206 - CEMENT
ITEM 206 - CURING COAT
ITEM 206 - CEMENT STABILIZED SUBGRADE, 12" DEEP (SEE SHEET 69)

(20) ITEM 204 - PROOF ROLLING

(21) ITEM 601 - CONCRETE SLOPE PROTECTION

(22) ITEM 601 - PAVED GUTTER, TYPE 1-2, AS PER PLAN

(23) ITEM 622 - CONCRETE BARRIER, SINGLE SLOPE, TYPE D, AS PER PLAN

(24) ITEM 526 - REINFORCED CONCRETE APPROACH SLABS WITH QC/QA (T=15"), AS PER PLAN

(25) ITEM 526 - REINFORCED CONCRETE APPROACH SLABS WITH QC/QA (T=17")

(26) ITEM 609 - CURB, TYPE 4-C, AS PER PLAN

(27) ITEM 202 - PAVEMENT REMOVED

(28) ITEM 441 - 1¼" ASPHALT CONCRETE SURFACE COURSE, TYPE 1, (448), PG64-22

(29) ITEM 441 - 1¾" ASPHALT CONCRETE INTERMEDIATE COURSE, TYPE 2, (448)

(30) ITEM 302 - 4" ASPHALT CONCRETE BASE, PG64-22

(31) ITEM 407 - NON-TRACKING TACK COAT (SEE NOTE 'A' ON THIS SHEET)

(32) ITEM 254 - PAVEMENT PLANING, ASPHALT CONCRETE

(33) ITEM 442 - 1½" ASPHALT CONCRETE SURFACE COURSE, 12.5MM, TYPE A (447), AS PER PLAN
ITEM 442 - ANTI-SEGREGATION EQUIPMENT

(34) ITEM 442 - 1¾" ASPHALT CONCRETE INTERMEDIATE COURSE, 19MM, TYPE A (446), AS PER PLAN
ITEM 442 - ANTI-SEGREGATION EQUIPMENT

(35) ITEM 302 - 8" ASPHALT CONCRETE BASE, PG64-22

(36) ITEM 601 - 12" ROCK CHANNEL PROTECTION, TYPE D WITH AGGREGATE FILTER, AS PER PLAN

(37) ITEM 671 - EROSION CONTROL MAT, TYPE G

(38) ITEM 836 - SEEDING AND EROSION CONTROL WITH TURF REINFORCING MAT, TYPE 1

(39) ITEM 601 - 18" ROCK CHANNEL PROTECTION, TYPE C WITH AGGREGATE FILTER, AS PER PLAN

(40) ITEM 618 - RUMBLE STRIPS, SHOULDER (ASPHALT CONCRETE)

| REVISIONS | | |
|---|---|---|
| NO. | DATE | DESCRIPTION |
| 5 | 04/22/21 | REVISED ITEM 601 DESCRIPTION |
| 6 | 04/26/21 | REVISED ITEM 601 DESCRIPTION |

# TYPICAL SECTIONS

SUM-77/277/224
VARIOUS

29
1288

O:\2017\2017258\ProjectData\SUM\106002\Design\Roadway\Sheets\106002_GY001.dgn Sheet 4/26/2021 8:50:33 AM pfry

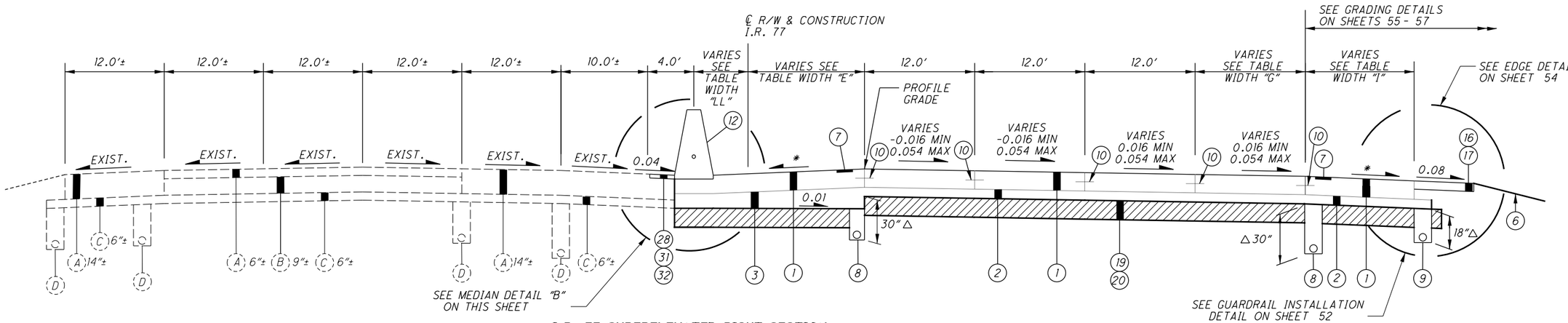


**I.R. 77 SUPERELEVATED RIGHT SECTION**

LIMITING STATIONS
STA. 371+50.00 TO STA. 378+94.12

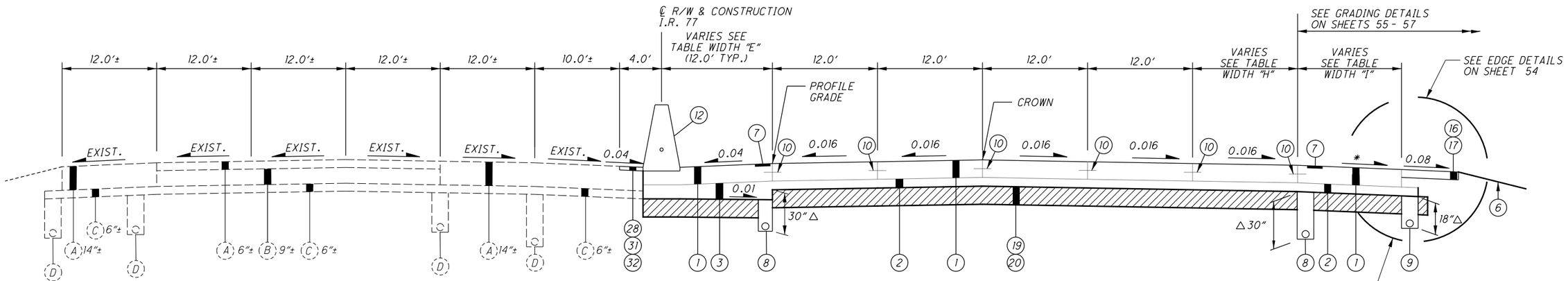


**I.R. 77 NORMAL CROWN SECTION**

LIMITING STATIONS
STA. 378+94.12 TO STA. 391+37.36

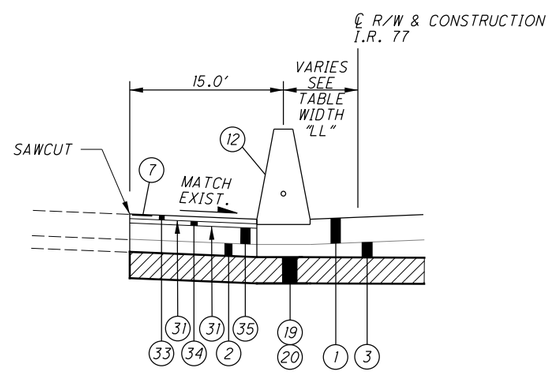


**MEDIAN DETAIL "B"**

N.T.S.
LIMITING STATIONS

STA 375+92.94 TO STA. 376+20.24

* 0.04 OR RATE OF PAVEMENT SLOPE IF GREATER.

** FOR HIGH SIDE SHOULDER SLOPES, SEE SHOULDER DETAIL "A" ON SHEET 52 .

*** SLOPE VARIES TO MEET THE TOE OF THE EXISTING MEDIAN BARRIER.

FOR PROPOSED LEGEND, SEE SHEET 29
FOR EXISTING LEGEND, SEE SHEET 59
FOR SUPERELEVATION TABLES, SEE SHEET 804
FOR GORE DETAILS, SEE SHEETS 865 - 868
FOR WIDTH TABLE, SEE SHEET 36

△ - OR AS SHOWN IN UNDERDRAIN PLANS, SHEET 922

# TYPICAL SECTIONS

SUM-77/277/224
VARIOUS



O:\2017\2017258\ProjectData\SUM\106002\Design\Roadway\Sheets\106002_GY002.dgn Sheet 1/15/2021 4:50:03 PM lkirkland

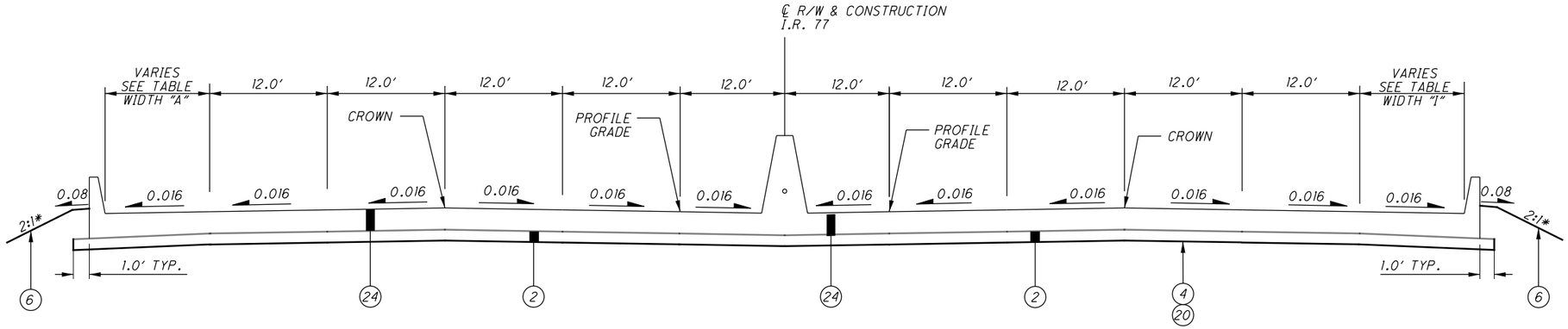


## PROPOSED APPROACH SLAB NORMAL SECTION - I.R. 77 ♦

LIMITING STATIONS

STA. 425+30.16 TO STA. 425+55.16
STA. 426+60.73 TO STA. 426+85.73
STA. 429+01.43 TO STA. 429+28.48
STA. 430+89.09 TO STA. 431+16.15

♦ STRUCTURE LIMITS
SUM-77-0802L/R
STA. 425+55.16 TO STA. 426+60.73
SUM-77-0810L/R
STA. 429+28.48 TO STA. 430+89.09

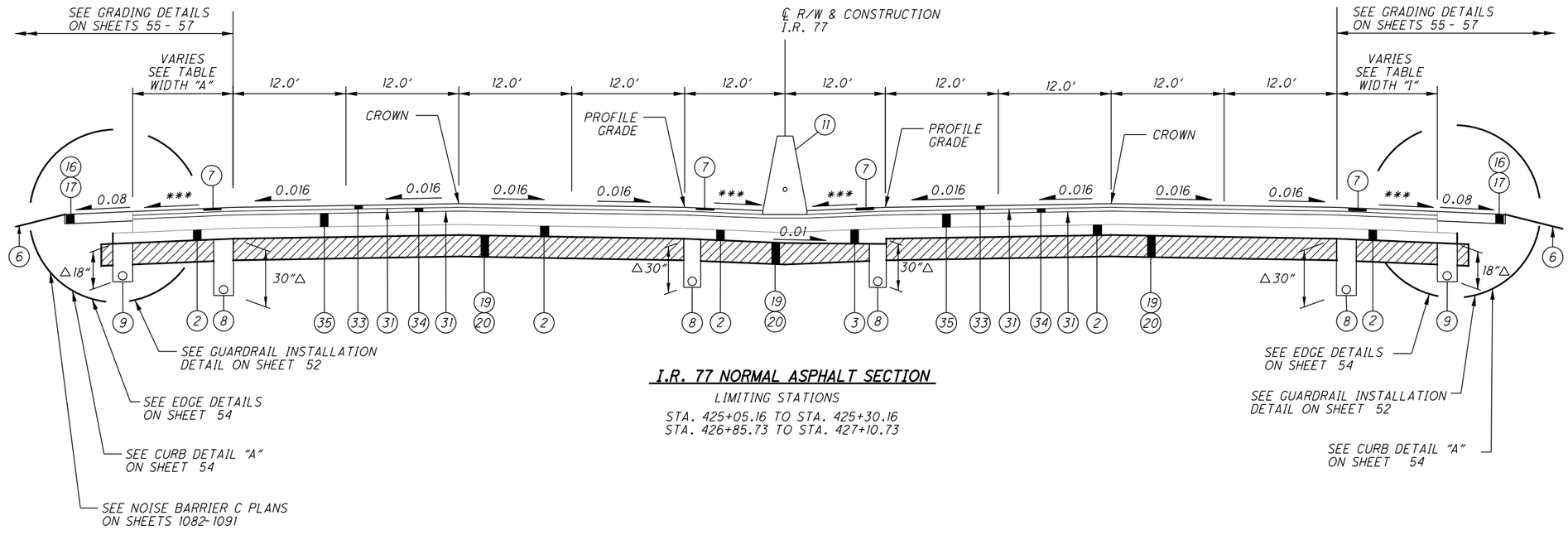


## I.R. 77 NORMAL ASPHALT SECTION

LIMITING STATIONS

STA. 425+05.16 TO STA. 425+30.16
STA. 426+85.73 TO STA. 427+10.73

△ - OR AS SHOWN IN UNDERDRAIN PLANS, SHEET 924

*** FOR SHOULDER SLOPES APPROACHING WARNER ROAD BRIDGE SEE SUPERELEVATION TABLES ON SHEETS 805 - 806

FOR PROPOSED LEGEND, SEE SHEET 29
FOR SUPERELEVATION TABLES, SEE SHEETS 805 - 806
FOR WIDTH TABLE, SEE SHEET 36
FOR STRUCTURE 0802 PLANS, SEE SHEETS 1155 - 1180
FOR STRUCTURE 0810 PLANS, SEE SHEETS 1181 - 1224

# TYPICAL SECTIONS

SUM-77 / 277 / 224
VARIOUS



O:\2017\2017258\ProjectData\SUM\106002\Design\Roadway\Sheets\106002_GY003.dgn Sheet 1/15/2021 4:50:04 PM lkirkland

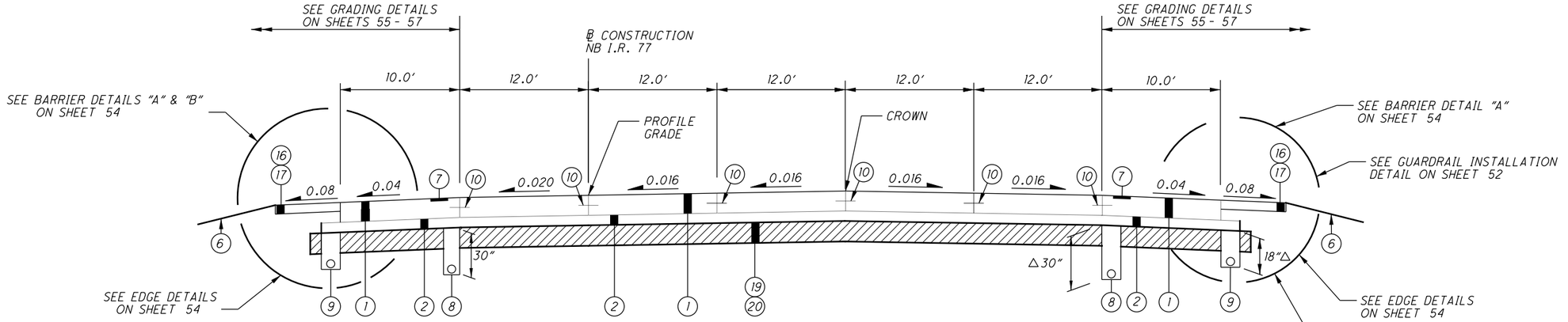


**NB I.R. 77 NORMAL SECTION**

LIMITING STATIONS

STA. 469+46.96 TO STA. 471+31.58

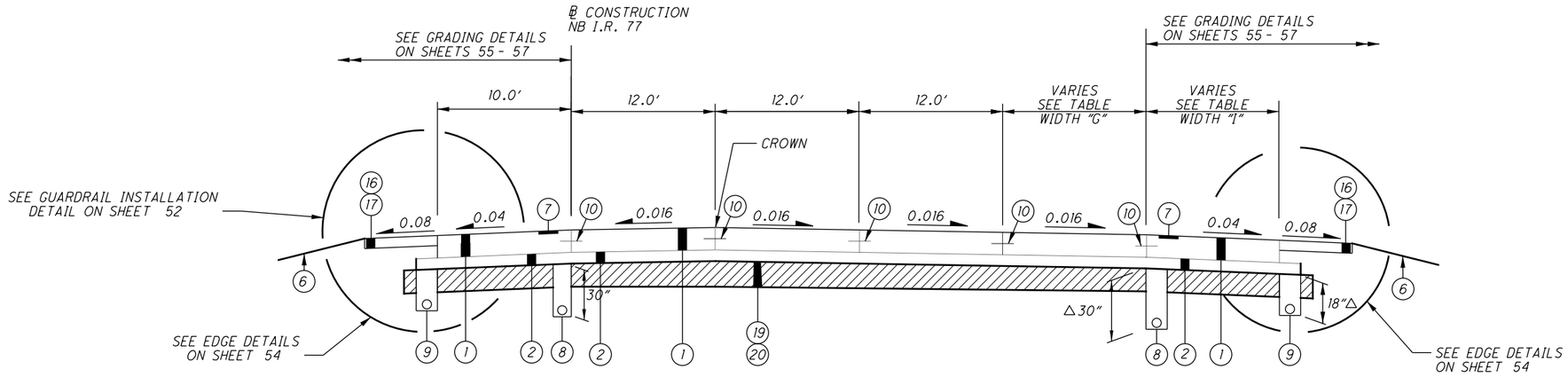


**NB I.R. 77 NORMAL SECTION**

LIMITING STATIONS

STA. 498+26.99 TO STA. 506+12.86

FOR PROPOSED LEGEND, SEE SHEET 29
FOR GORE DETAILS, SEE SHEET 859
FOR WIDTH TABLE, SEE SHEET 36

* 0.04 OR RATE OF PAVEMENT SLOPE IF GREATER.

** FOR HIGH SIDE SHOULDER SLOPES, SEE SHOULDER DETAIL "A" ON SHEET 52.

△ - OR AS SHOWN IN UNDERDRAIN PLANS, SHEETS 925 - 926, 928

TYPICAL SECTIONS

SUM-77/277/224
VARIOUS

32
1288

O:\2017\2017258\ProjectData\SUM\106002\Design\Roadway\Sheets\106002_GY004.dgn Sheet 1/15/2021 4:50:05 PM Ikirkland

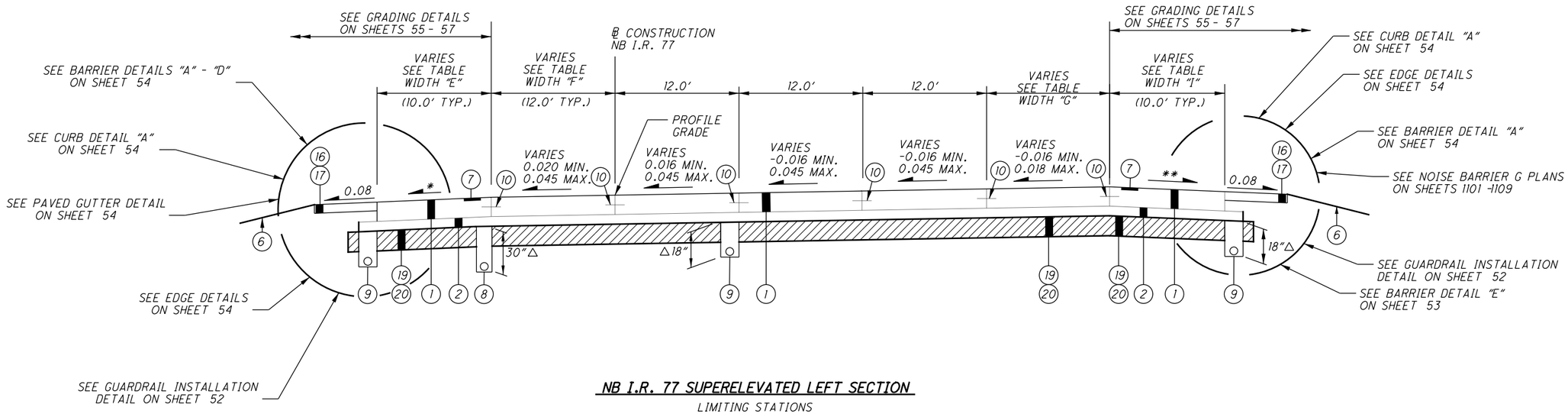


**NB I.R. 77 SUPERELEVATED LEFT SECTION**

LIMITING STATIONS

STA. 471+31.58 TO STA. 498+26.99

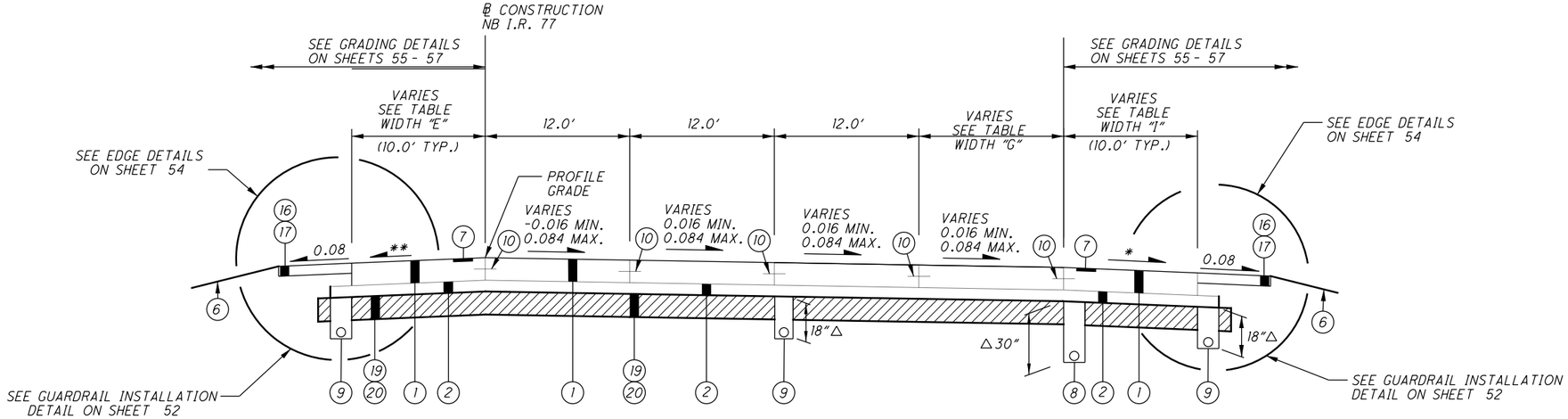


**NB I.R. 77 SUPERELEVATED RIGHT SECTION**

LIMITING STATIONS

STA. 506+12.86 TO STA. 514+85.00 ***

FOR PROPOSED LEGEND, SEE SHEET 29
FOR SUPERELEVATION TABLES, SEE SHEETS 807 - 810
FOR GORE DETAILS, SEE SHEETS 848 - 849 , 854 , 858 - 859 , 863 - 864
FOR WIDTH TABLE, SEE SHEET 36

* 0.04 OR RATE OF PAVEMENT SLOPE IF GREATER.

** FOR HIGH SIDE SHOULDER SLOPES, SEE SHEET "A" ON SHEET 52.

*** END WORK AT STA. 514+85.00 (I.R. 77 NB), WORK PAST THAT STATION IS TO BE CONSTRUCTED BY OTHERS AS PART OF THE SUM-76/77/8-8.42/9.77/0.00 DB (PID 102329) PROJECT.

△- OR AS SHOWN IN UNDERDRAIN PLANS, SHEETS 926 -929

# TYPICAL SECTIONS

SUM-77/277/224
VARIOUS



O:\2017\2017258\ProjectData\SUM\106002\Design\Roadway\Sheets\106002_GY005.dgn Sheet 1/15/2021 4:50:06 PM lkirkland

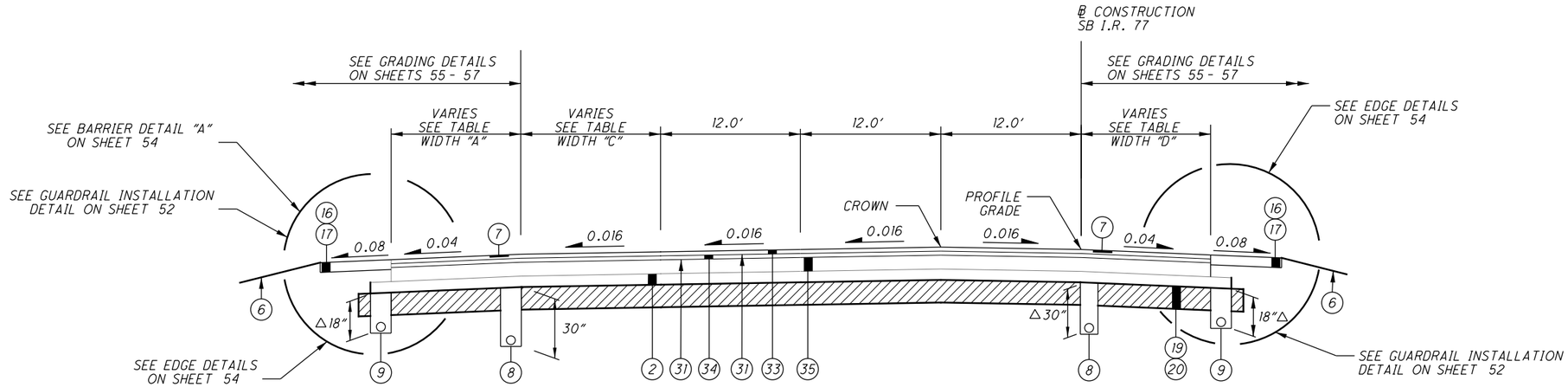


**SB I.R. 77 NORMAL ASPHALT SECTION**

LIMITING STATIONS

STA. 495+04.54 TO STA. 500+95.48

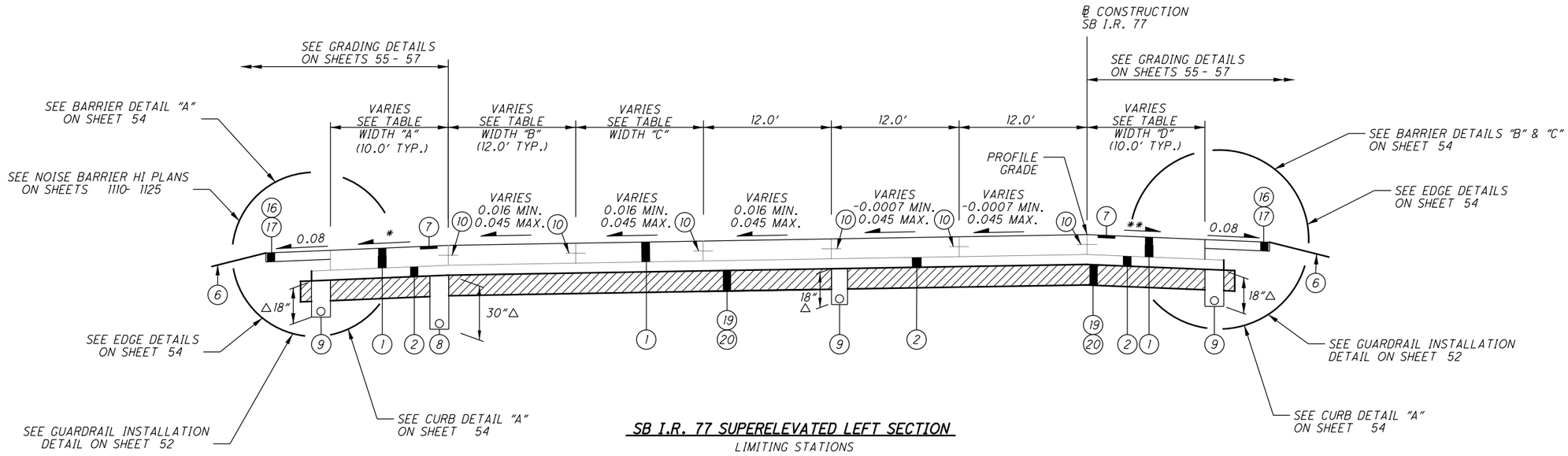


**SB I.R. 77 SUPERELEVATED LEFT SECTION**

LIMITING STATIONS

STA. 469+42.49 TO STA. 494+44.48

FOR PROPOSED LEGEND, SEE SHEET 29
FOR SUPERELEVATION TABLES, SEE SHEETS 811 - 813
FOR GORE DETAILS, SEE SHEETS 841 - 842 , 861
FOR WIDTH TABLE, SEE SHEET 36

* 0.04 OR RATE OF PAVEMENT SLOPE IF GREATER.

** FOR HIGH SIDE SHOULDER SLOPES, SEE SHOULDER DETAIL "A" ON SHEET 52.

△- OR AS SHOWN IN UNDERDRAIN PLANS, SHEETS 925 - 928

# TYPICAL SECTIONS

SUM-77/277/224
VARIOUS



O:\2017\2017258\ProjectData\SUM\106002\Design\Roadway\Sheets\106002_GY006.dgn Sheet 1/15/2021 4:50:06 PM lkirkland

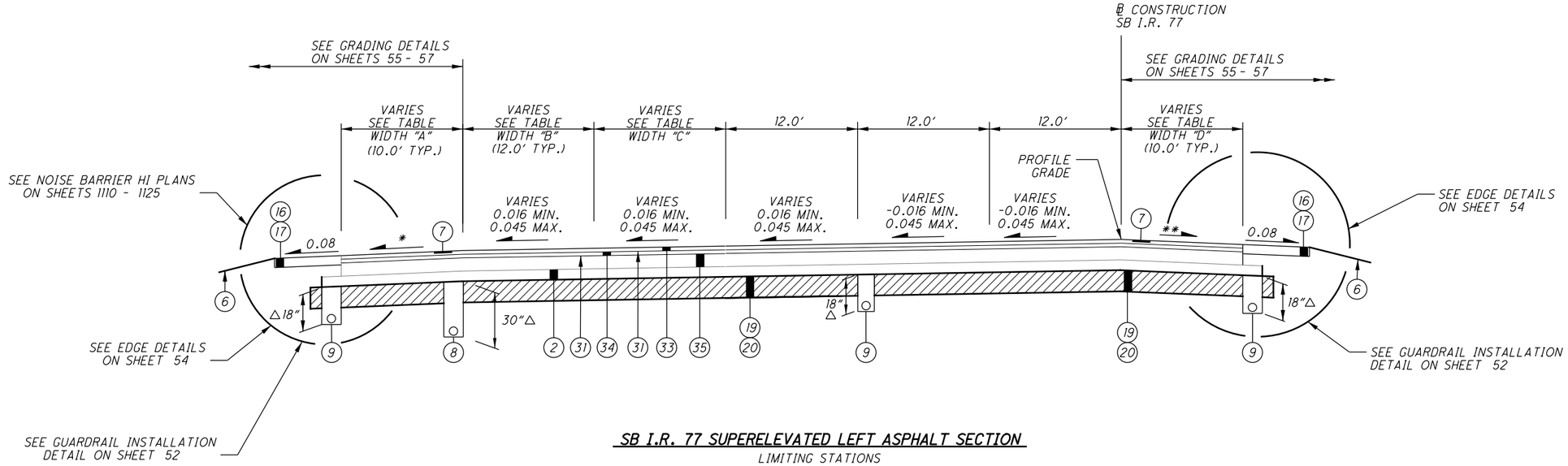


**SB I.R. 77 SUPERELEVATED LEFT ASPHALT SECTION**

LIMITING STATIONS

STA. 494+44.48 TO STA. 495+04.54

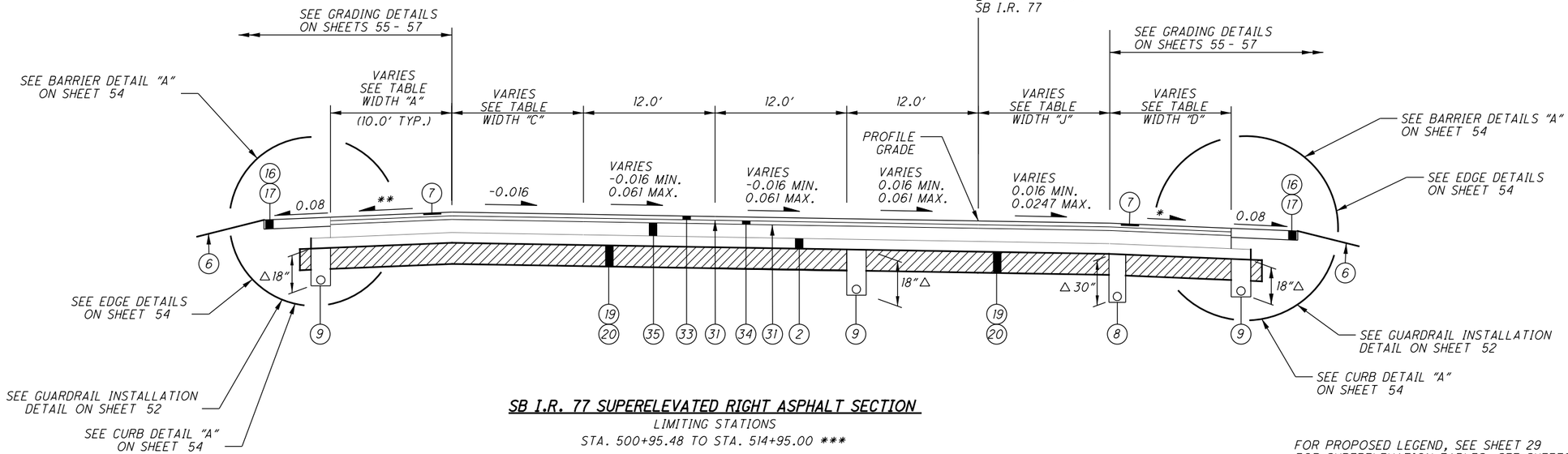


**SB I.R. 77 SUPERELEVATED RIGHT ASPHALT SECTION**

LIMITING STATIONS

STA. 500+95.48 TO STA. 514+95.00 ***

*FOR PROPOSED LEGEND, SEE SHEET 29*
*FOR SUPERELEVATION TABLES, SEE SHEETS 813 - 815*
*FOR GORE DETAILS, SEE SHEETS 842 , 845 - 846*
*FOR WIDTH TABLE, SEE SHEET 36*

* 0.04 OR RATE OF PAVEMENT SLOPE IF GREATER.

** FOR HIGH SIDE SHOULDER SLOPES, SEE SHOULDER DETAIL "A" ON SHEET 52.

*** END WORK AT STA. 514+95.00 (I.R. 77 SB), WORK PAST THAT STATION IS TO BE CONSTRUCTED BY OTHERS AS PART OF THE SUM-76/77/8-8.42/9.77/0.00 DB (PID 102329) PROJECT.

△- OR AS SHOWN IN UNDERDRAIN PLANS, SHEETS 927-929

**TYPICAL SECTIONS**

**SUM-77/277/224**
**VARIOUS**



O:\2017\2017258\ProjectData\SUM\106002\Design\Roadway\Sheets\106002_GY007.dgn Sheet 1/15/2021 4:50:07 PM lkirkland

# I.R. 77 WIDTH TABLE

| ROAD | WIDTH "A" | | | | WIDTH "B" | | | | WIDTH "C" | | | | WIDTH "D" | | | | WIDTH "J" | | | |
|---|---|---|---|---|---|---|---|---|---|---|---|---|---|---|---|---|---|---|---|---|
| | STATION | | WIDTH (FT.) | | STATION | | WIDTH (FT.) | | STATION | | WIDTH (FT.) | | STATION | | WIDTH (FT.) | | STATION | | WIDTH (FT.) | |
| | FROM | TO | FROM | TO | FROM | TO | FROM | TO | FROM | TO | FROM | TO | FROM | TO | FROM | TO | FROM | TO | FROM | TO |
| | | | | | | | | | | | | | | | | | 500+95.48 | 501+48.92 | 0.0 | 0.0 |
| SB I.R. 77 | 391+37.36 | 392+00.00 | 12.3 | 10.0 | 391+37.36 | 425+05.16 | 0.0 | 0.0 | 391+37.36 | 392+00.00 | 12.6 | 12.0 | 391+37.36 | 392+00.00 | 17.6 | 18.0 | 501+48.92 | 503+95.44 | 12.0 | 12.0 |
| | 392+00.00 | 423+55.00 | 10.0 | 10.0 | | | | | 392+00.00 | 425+05.16 | 12.0 | 12.0 | 392+00.00 | 398+00.00 | 18.0 | 12.0 | 503+95.44 | 504+95.44 | 12.0 | 0.0 |
| | 423+55.00 | 425+49.49 | 10.0 | 17.8 | 427+10.73 | 429+01.43 | 0.0 | 0.0 | | | | | 398+00.00 | 425+05.16 | 12.0 | 12.0 | 504+95.44 | 514+95.00 | 0.0 | 0.0 |
| | 425+49.49 | 425+55.17 | 17.8 | 17.8 | | | | | 427+10.73 | 429+01.43 | 12.0 | 12.0 | | | | | | | | |
| | | | | | 431+16.15 | 431+50.00 | 0.0 | 0.0 | | | | | 427+10.73 | 429+01.43 | 12.0 | 12.0 | | | | |
| | 426+60.73 | 427+60.00 | 17.8 | 17.8 | 431+50.00 | 439+90.00 | 0.0 | 12.0 | 431+16.15 | 469+46.33 | 12.0 | 12.0 | | | | | | | | |
| | 427+60.00 | 427+67.00 | 17.8 | 17.5 | 439+90.00 | 469+46.33 | 12.0 | 12.0 | 469+42.49 | 486+63.69 | 12.0 | 12.0 | 431+16.15 | 469+46.33 | 12.0 | 12.0 | | | | |
| | 427+67.00 | 429+28.48 | 17.5 | 17.5 | 469+42.49 | 486+63.69 | 12.0 | 12.0 | 486+63.69 | 494+44.48 | 0.0 | 0.0 | | | | | | | | |
| | | | | | 486+63.69 | 495+04.54 | 0.0 | 0.0 | 494+44.48 | 502+43.78 | 0.0 | 16.0 | 469+42.49 | 469+72.42 | 9.1 | 10.0 | | | | |
| | 430+89.09 | 431+50.00 | 17.5 | 17.5 | | | | | 502+43.78 | 514+95.00 | 0.0 | 0.0 | 469+72.42 | 495+04.54 | 10.0 | 10.0 | | | | |
| | 431+50.00 | 431+80.00 | 17.5 | 17.1 | | | | | | | | | 495+04.54 | 496+94.61 | 10.0 | 10.0 | | | | |
| | 431+80.00 | 432+13.00 | 17.1 | 10.0 | | | | | | | | | 496+94.61 | 501+48.92 | SEE GORE DETAIL | | | | | |
| | 432+13.00 | 468+67.50 | 10.0 | 10.0 | | | | | | | | | 501+48.92 | 503+95.44 | 8.0 | 8.0 | | | | |
| | 468+67.50 | 468+90.00 | 10.0 | 5.5 (NDC 10') | | | | | | | | | 503+95.44 | 504+95.44 | 8.0 | 10.0 | | | | |
| | 468+90.00 | 469+46.33 | 5.5 (NDC 10') | 5.5 (NDC 10') | | | | | | | | | 504+95.44 | 507+75.00 | 10.0 | 10.0 | | | | |
| | 469+42.49 | 470+12.50 | 5.5 (NDC 10') | 5.5 (NDC 10') | | | | | | | | | 507+75.00 | 507+94.00 | 10.0 | 7.0 (NDC 10') | | | | |
| | 471+12.50 | 471+25.00 | 5.5 (NDC 10') | 10.0 | | | | | | | | | 507+94.00 | 509+25.00 | 7.0 (NDC 10') | 7.0 (NDC 10') | | | | |
| | 471+25.00 | 486+63.69 | 10.0 | 10.0 | | | | | | | | | 509+25.00 | 510+00.00 | 7.0 (NDC 10') | 10.0 | | | | |
| | 486+63.69 | 494+44.48 | SEE GORE DETAIL | | | | | | | | | | 510+00.00 | 514+95.00 | 10.0 | 10.0 | | | | |
| | 494+44.48 | 495+44.48 | 10.0 | 8.0 | | | | | | | | | | | | | | | | |
| | 495+44.48 | 502+43.78 | 8.0 | 8.0 | | | | | | | | | | | | | | | | |
| | 502+43.78 | 506+28.88 | SEE GORE DETAIL | | | | | | | | | | | | | | | | | |
| | 506+28.88 | 514+95.00 | 10.0 | 10.0 | | | | | | | | | | | | | | | | |
| | | | | | | | | | | | | | | | | | | | | |
| | | | | | | | | | | | | | | | | | | | | |

| NB I.R. 77 | WIDTH "E" | | | | WIDTH "F" | | | | WIDTH "G" | | | | WIDTH "H" | | | | WIDTH "I" | | | |
|---|---|---|---|---|---|---|---|---|---|---|---|---|---|---|---|---|---|---|---|---|
| | STATION | | WIDTH (FT.) | | STATION | | WIDTH (FT.) | | STATION | | WIDTH (FT.) | | STATION | | WIDTH (FT.) | | STATION | | WIDTH (FT.) | |
| | FROM | TO | FROM | TO | FROM | TO | FROM | TO | FROM | TO | FROM | TO | FROM | TO | FROM | TO | FROM | TO | FROM | TO |
| | 371+50.00 | 380+50.00 | 20.3 | 12.0 | 391+37.36 | 425+05.16 | 0.0 | 0.0 | 371+50.00 | 374+77.72 | 12.7 | 12.0 | 378+94.12 | 388+24.90 | 0.0 | 0.0 | 371+50.00 | 371+67.11 | 11.9 | 12.0 |
| | 380+50.00 | 425+05.16 | 12.0 | 12.0 | | | | | 374+77.72 | 378+94.12 | 12.0 | 12.0 | 388+24.90 | 415+60.00 | 12.0 | 12.0 | 371+67.11 | 388+24.90 | SEE GORE DETAILS | |
| | | | | | 427+10.73 | 429+01.43 | 0.0 | 0.0 | | | | | 415+60.00 | 424+00.00 | 12.0 | 0.0 | 388+24.90 | 392+12.50 | 10.0 | 10.0 |
| | 427+10.73 | 429+01.43 | 12.0 | 12.0 | | | | | 471+31.58 | 476+00.00 | 12.0 | 12.0 | 424+00.00 | 425+05.16 | 0.0 | 0.0 | 392+12.50 | 393+25.00 | 10.0 | 5.5 (NDC 10') |
| | | | | | 431+16.15 | 459+50.00 | 0.0 | 0.0 | 476+00.00 | 502+11.45 | 0.0 | 0.0 | | | | | 393+25.00 | 394+40.00 | 5.5 (NDC 10') | 5.5 (NDC 10') |
| | 431+16.15 | 451+10.00 | 12.0 | 12.0 | 459+50.00 | 460+50.00 | 0.0 | 12.0 | 502+11.45 | 508+11.45 | 12.0 | 0.0 | 427+10.73 | 429+01.43 | 0.0 | 0.0 | 394+40.00 | 394+62.50 | 5.5 (NDC 10') | 10.0 |
| | 451+10.00 | 459+50.00 | 12.0 | 24.0 | 460+50.00 | 469+46.33 | 12.0 | 12.0 | 508+11.45 | 514+85.00 | 0.0 | 0.0 | | | | | 394+62.50 | 424+25.00 | 10.0 | 10.0 |
| | 459+50.00 | 460+50.00 | 24.0 | 12.0 | | | | | | | | | 431+16.15 | 469+46.33 | 0.0 | 0.0 | 424+25.00 | 424+61.65 | 10.0 | 17.3 |
| | 460+50.00 | 469+46.33 | 12.0 | 12.0 | 471+31.58 | 485+64.96 | 12.0 | 12.0 | | | | | | | | | 424+61.65 | 425+55.17 | 17.3 | 17.3 |
| | | | | | 485+64.96 | 498+26.99 | 0.0 | 0.0 | | | | | | | | | | | | |
| | 471+31.58 | 485+64.96 | 10.0 | 10.0 | | | | | | | | | | | | | 426+60.73 | 426+65.00 | 17.3 | 17.3 |
| | 485+64.96 | 494+84.83 | SEE GORE DETAIL | | | | | | | | | | | | | | 426+65.00 | 426+69.25 | 17.3 | 17.5 |
| | 494+84.83 | 498+26.99 | 10.0 | 10.0 | | | | | | | | | | | | | 426+69.25 | 429+28.48 | 17.5 | 17.5 |
| | | | | | | | | | | | | | | | | | | | | |
| | 506+12.86 | 514+12.50 | 10.0 | 10.0 | | | | | | | | | | | | | 430+89.09 | 431+22.50 | 17.5 | 17.5 |
| | 514+12.50 | 514+85.00 | 10.0 | 7.1 | | | | | | | | | | | | | 431+22.50 | 433+10.00 | 17.5 | 10.0 |
| | | | | | | | | | | | | | | | | | 433+10.00 | 467+02.50 | 10.0 | 10.0 |
| | WIDTH "LL" | | | | | | | | | | | | | | | | 467+02.50 | 468+15.00 | 10.0 | 5.5 (NDC 10') |
| | STATION | | WIDTH (FT.) | | | | | | | | | | | | | | 468+15.00 | 469+23.83 | 5.5 (NDC 10') | 5.5 (NDC 10') |
| | FROM | TO | FROM | TO | | | | | | | | | | | | | 469+23.83 | 469+46.33 | 5.5 (NDC 10') | 10.0 |
| | 371+50.00 | 377+02.12 | 4.9 | 0.0 | | | | | | | | | | | | | | | | |
| | 377+02.12 | 380+50.00 | 0.0 | 0.0 | | | | | | | | | | | | | 471+31.58 | 476+00.00 | 10.0 | 10.0 |
| | | | | | | | | | | | | | | | | | 476+00.00 | 481+17.43 | SEE GORE DETAILS | |
| | | | | | | | | | | | | | | | | | 481+17.43 | 493+70.87 | 10.0 | 10.0 |
| | | | | | | | | | | | | | | | | | 493+70.87 | 502+11.45 | SEE GORE DETAILS | |
| | | | | | | | | | | | | | | | | | 502+11.45 | 507+11.53 | 8.0 | 8.0 |
| | | | | | | | | | | | | | | | | | 507+11.53 | 507+42.24 | 8.0 | 8.6 |
| | | | | | | | | | | | | | | | | | 507+42.24 | 514+85.00 | SEE GORE DETAILS | |
| | | | | | | | | | | | | | | | | | | | | |

TYPICAL SECTIONS

SUM-77/277/224
VARIOUS

36
1288

O:\2017\2017258\ProjectData\SUM\106002\Design\Roadway\Sheets\106002_GY008.dgn Sheet 1/15/2021 4:50:08 PM Ikirkland

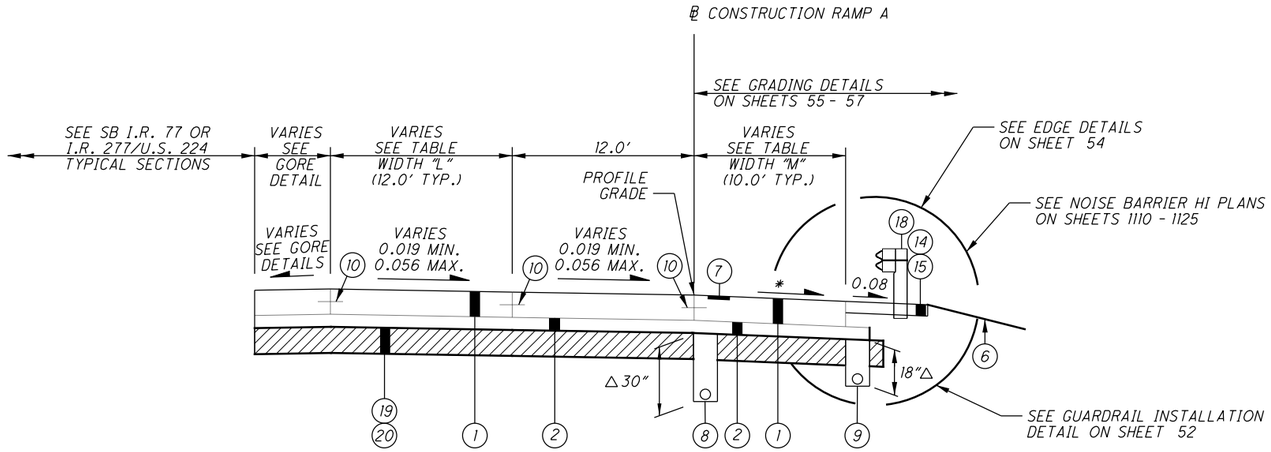


**RAMP A SUPERELEVATED RIGHT SECTION** □

LIMITING STATIONS
STA. 86+63.69 TO STA. 94+31.91
STA. 105+73.19 TO STA. 114+13.78

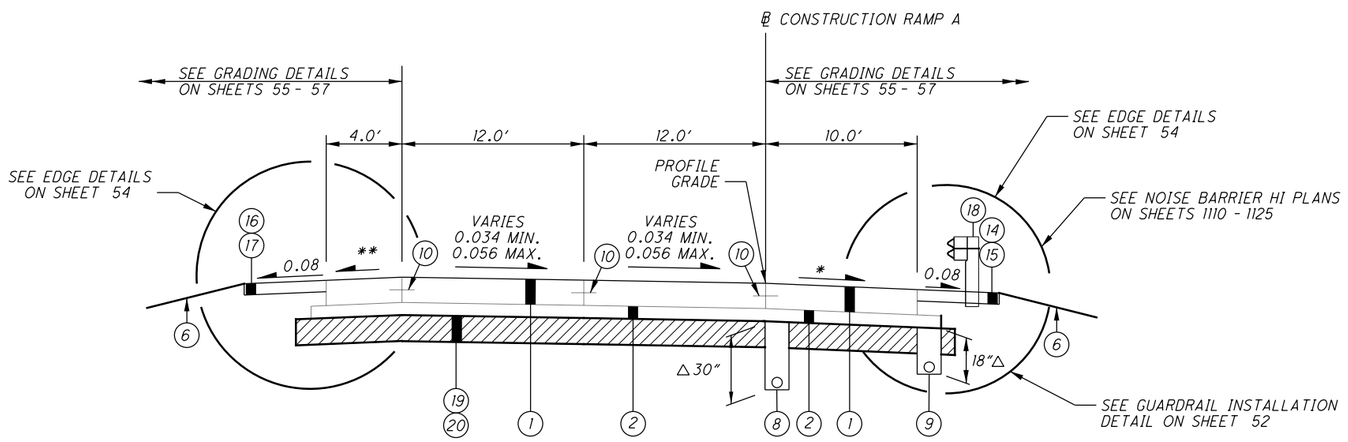


**RAMP A SUPERELEVATED RIGHT SECTION** □

LIMITING STATIONS
STA. 94+31.91 TO STA. 105+73.19

**RAMP A WIDTH TABLE**

| | WIDTH "L" | | | | WIDTH "M" | | | |
|---|---|---|---|---|---|---|---|---|
| | STATION | | WIDTH (FT.) | | STATION | | WIDTH (FT.) | |
| | FROM | TO | FROM | TO | FROM | TO | FROM | TO |
| RAMP A | 86+63.69 | 94+31.91 | 12.0 | 12.0 | 86+63.69 | 94+31.91 | 10.0 | 10.0 |
| | 105+73.19 | 108+89.94 | 12.0 | 12.0 | 105+73.19 | 114+03.67 | 10.0 | 10.0 |
| | 108+89.94 | 114+13.78 | SEE GORE DETAIL | | 114+03.67 | 114+13.78 | 10.0 | 10.4 |

FOR PROPOSED LEGEND, SEE SHEET 29
FOR SUPERELEVATION TABLES, SEE SHEETS 816 - 818
FOR GORE DETAILS, SEE SHEETS 841 - 844

* 0.04 OR RATE OF PAVEMENT SLOPE IF GREATER.

** FOR HIGH SIDE SHOULDER SLOPES, SEE SHOULDER DETAIL "A" ON SHEET 52.

△- OR AS SHOWN IN UNDERDRAIN PLANS, SHEETS 927 - 928 , 930

□ RAMP A IS SHOWN IN THE DIRECTION OF TRAVEL, NOT THE DIRECTION OF INCREASING STATIONING

# TYPICAL SECTIONS

SUM-77/277/224
VARIOUS

37
1288

O:\2017\2017258\ProjectData\SUM\106002\Design\Roadway\Sheets\106002_GY009.dgn Sheet 1/15/2021 4:50:09 PM lkirkland

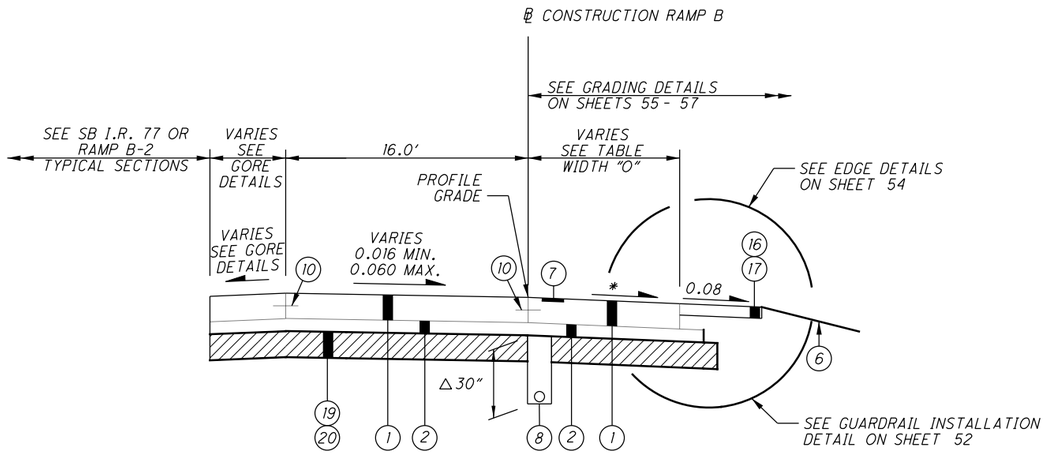


**RAMP B SUPERELEVATED RIGHT SECTION** □

LIMITING STATIONS
STA. 197+05.36 TO STA. 205+85.71

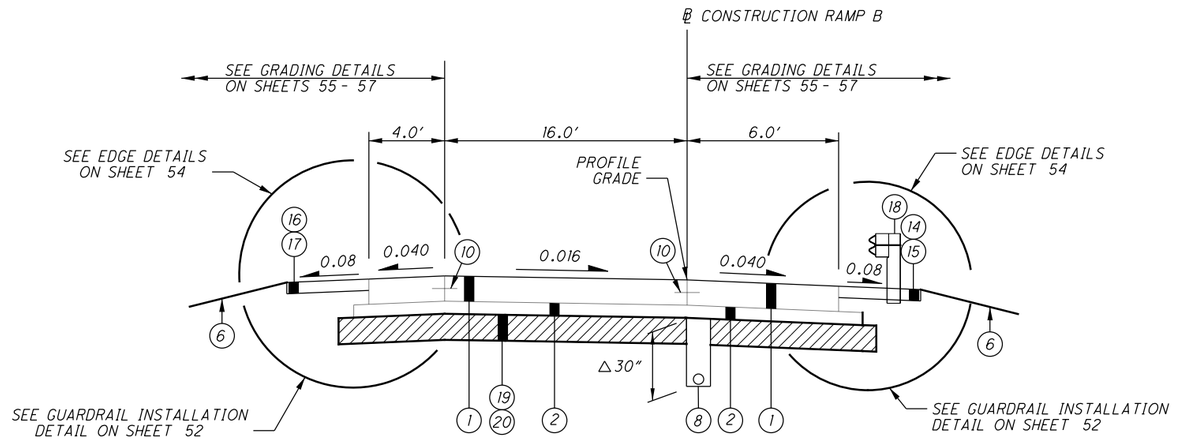


**RAMP B NORMAL SECTION** □

LIMITING STATIONS
STA. 205+99.50 TO STA. 207+73.39

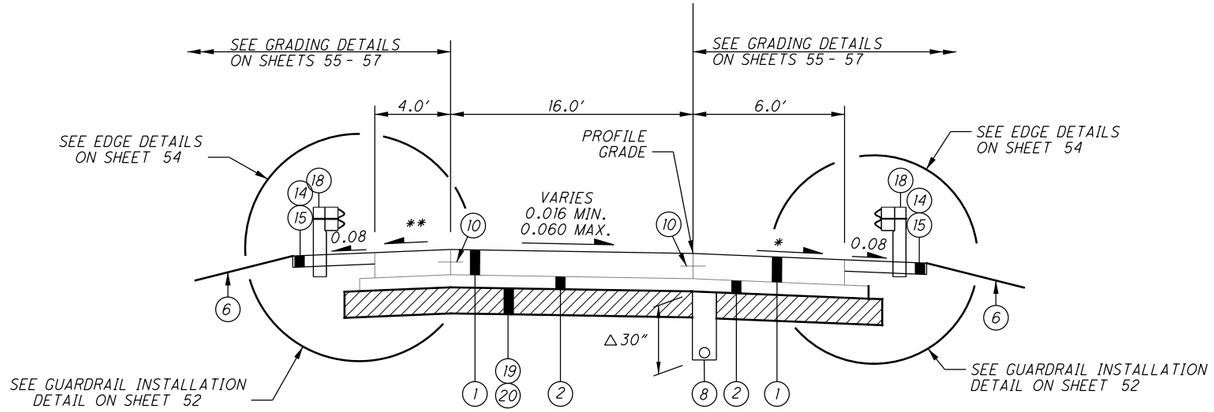


**RAMP B SUPERELEVATED RIGHT SECTION** □

LIMITING STATIONS
STA. 205+85.71 TO STA. 205+99.50
STA. 207+73.39 TO STA. 214+90.00 ***

**RAMP B WIDTH TABLE**

| | WIDTH "O" | | | |
|---|---|---|---|---|
| | STATION | | WIDTH (FT.) | |
| | FROM | TO | FROM | TO |
| RAMP B | 197+05.36 | 198+05.36 | 10.0 | 8.0 |
| | 198+05.36 | 203+99.50 | 8.0 | 8.0 |
| | 203+99.50 | 204+49.50 | 8.0 | 6.0 |
| | 204+49.50 | 205+85.71 | 6.0 | 6.0 |
| | | | | |
| | | | | |
| | | | | |

FOR PROPOSED LEGEND, SEE SHEET 29
FOR SUPERELEVATION TABLES, SEE SHEET 819
FOR GORE DETAILS, SEE SHEETS 845 , 850 - 851

* 0.04 OR RATE OF PAVEMENT SLOPE IF GREATER.

** FOR HIGH SIDE SHOULDER SLOPES, SEE SHOULDER DETAIL ON SHEET 52.

*** END WORK AT STA. 214+90.00, WORK PAST THAT STATION IS TO BE CONSTRUCTED BY OTHERS AS PART OF THE SUM-76/77/8-8.42/9.77/0.00 DB (PID 102329) PROJECT.

△- OR AS SHOWN IN UNDERDRAIN PLANS, SHEETS 929 - 930

□ RAMP B IS SHOWN IN THE DIRECTION OF TRAVEL, NOT THE DIRECTION OF INCREASING STATIONING

# TYPICAL SECTIONS

SUM-77/277/224
VARIOUS



O:\2017\2017258\ProjectData\SUM\106002\Design\Roadway\Sheets\106002_GY010.dgn Sheet 1/15/2021 4:50:10 PM lkirkland

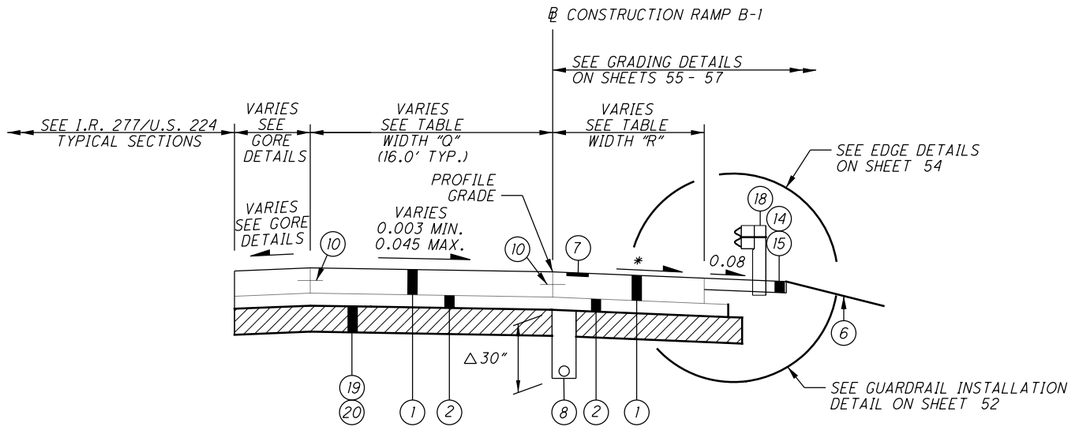


## RAMP B-1 SUPERELEVATED RIGHT SECTION □

LIMITING STATIONS
STA. 418+55.68 TO STA. 421+51.12

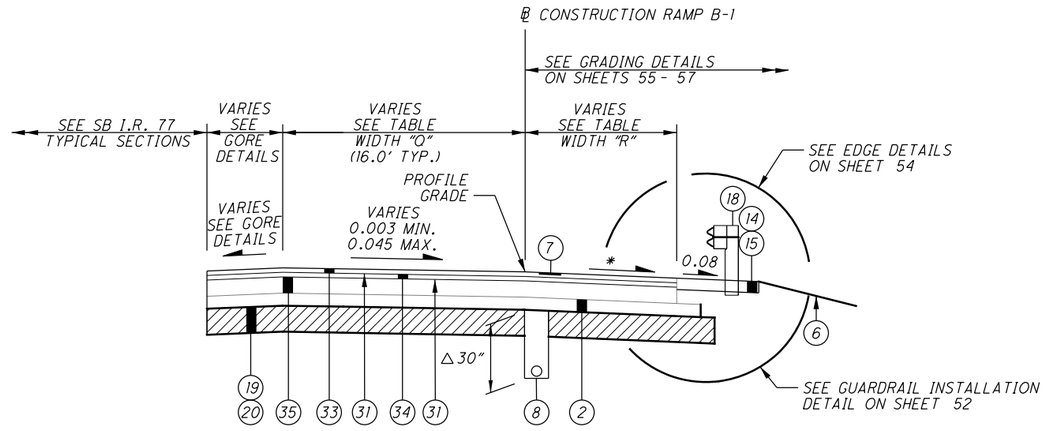


## RAMP B-1 SUPERELEVATED RIGHT ASPHALT SECTION □

LIMITING STATIONS
STA. 402+43.78 TO STA. 406+31.76

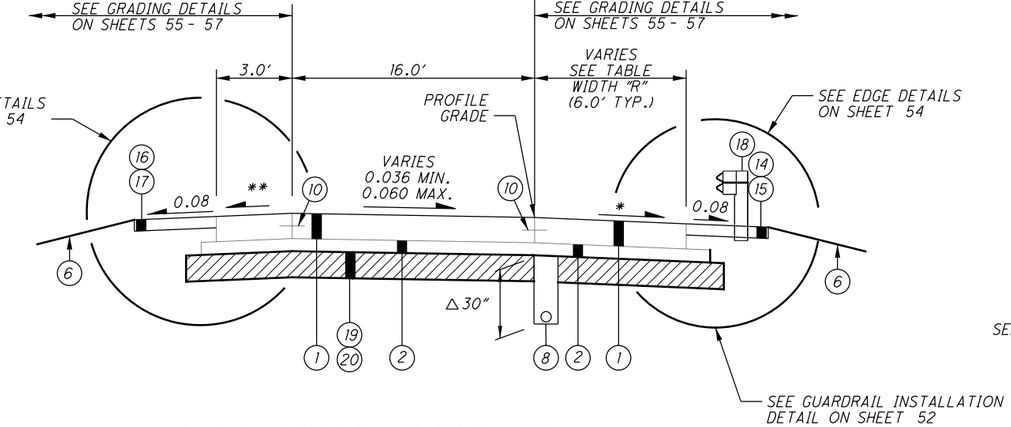


## RAMP B-1 SUPERELEVATED RIGHT SECTION □

LIMITING STATIONS
STA. 406+31.76 TO STA. 418+55.68

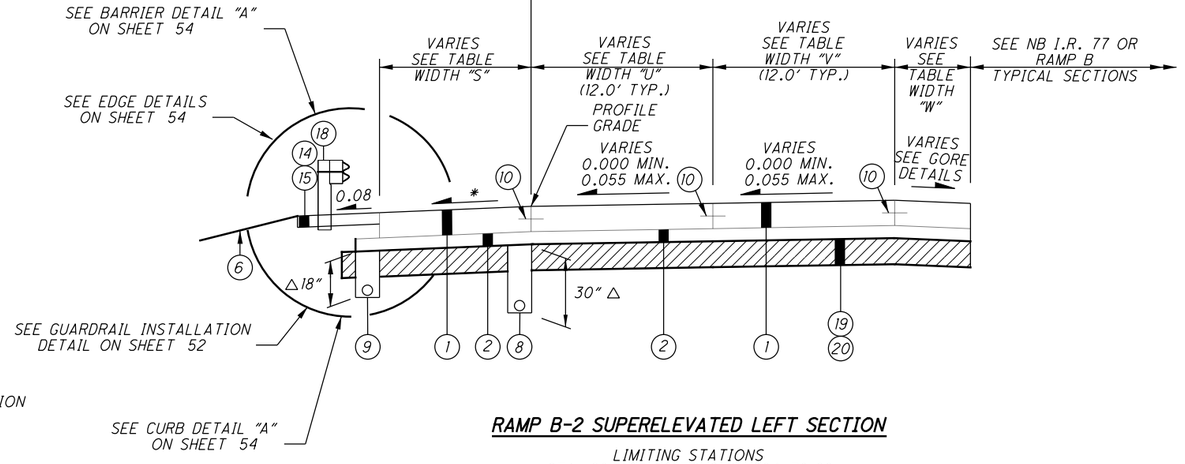


## RAMP B-2 SUPERELEVATED LEFT SECTION

LIMITING STATIONS
STA. 285+64.96 TO STA. 294+78.29
STA. 15+45.66 TO STA. 16+67.86

**RAMP B-1 WIDTH TABLE**

| | WIDTH "Q" | | | | WIDTH "R" | | | |
|---|---|---|---|---|---|---|---|---|
| | STATION | | WIDTH (FT.) | | STATION | | WIDTH (FT.) | |
| | FROM | TO | FROM | TO | FROM | TO | FROM | TO |
| RAMP B-1 | 402+43.78 | 406+31.76 | 16.0 | 16.0 | 402+43.78 | 405+01.68 | 8.0 | 8.0 |
| | | | | | 405+01.68 | 405+51.68 | 8.0 | 6.0 |
| | 418+55.68 | 421+51.12 | 16.0 | 12.5 | 405+51.68 | 417+55.68 | 6.0 | 6.0 |
| | | | | | 417+55.68 | 418+55.68 | 6.0 | 10.0 |
| | | | | | 418+55.68 | 421+40.51 | 10.0 | 10.0 |
| | | | | | | | | |
| | | | | | | | | |

FOR PROPOSED LEGEND, SEE SHEET 29
FOR SUPERELEVATION TABLES, SEE SHEETS 820 - 823, 825
FOR GORE DETAILS, SEE SHEETS 846 - 850
FOR RAMP B-2 WIDTH TABLE, SEE SHEET 41

* 0.04 OR RATE OF PAVEMENT SLOPE IF GREATER.

** FOR HIGH SIDE SHOULDER SLOPES, SEE SHOULDER DETAIL ON SHEET 52.

△- OR AS SHOWN IN UNDERDRAIN PLANS, SHEETS 927 - 930

□ RAMP B-1 IS SHOWN IN THE DIRECTION OF TRAVEL, NOT THE DIRECTION OF INCREASING STATIONING

# TYPICAL SECTIONS

SUM-77/277/224
VARIOUS



O:\2017\2017258\ProjectData\SUM\106002\Design\Roadway\Sheets\106002_GY011.dgn Sheet 1/15/2021 4:50:10 PM kirkland

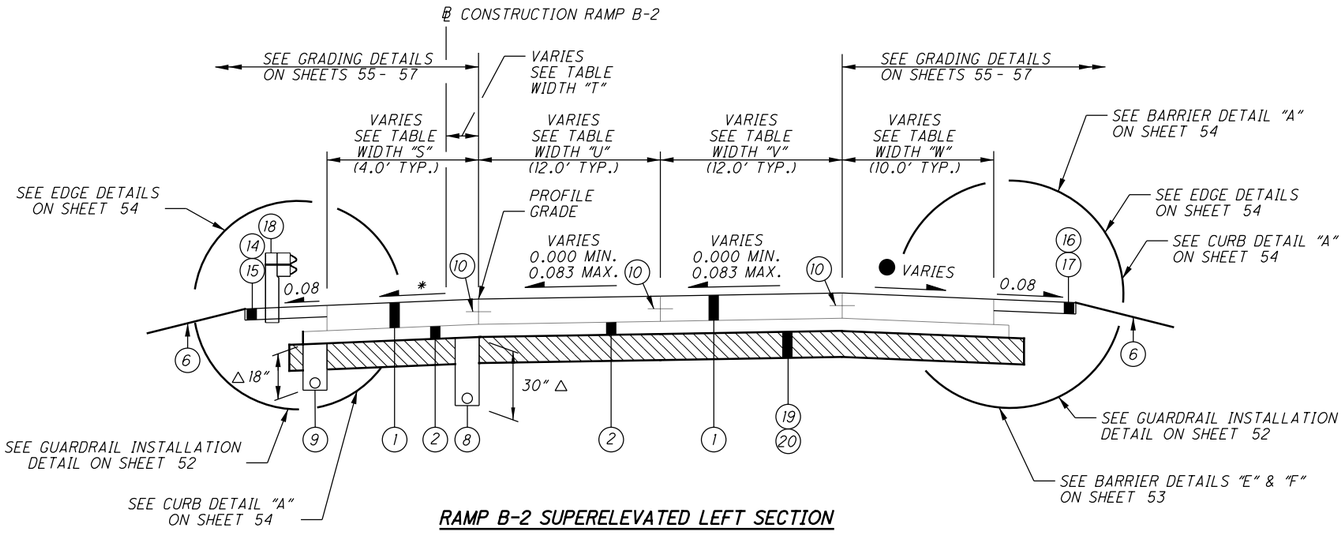


**RAMP B-2 SUPERELEVATED LEFT SECTION**

LIMITING STATIONS
STA. 294+78.29 TO STA. 296+87.10
STA. 305+30.56 TO STA. 307+95.29
STA. 9+83.20 TO STA. 15+45.66

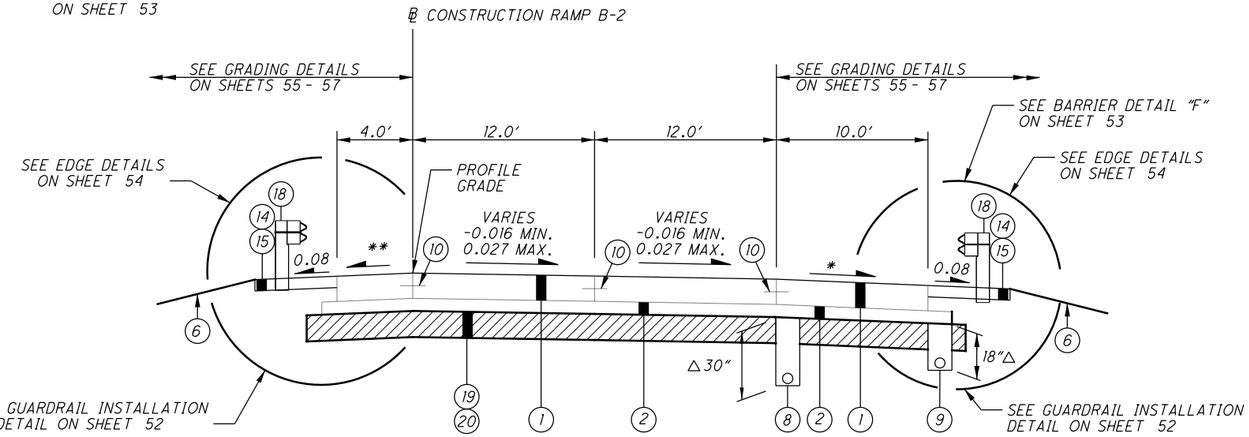


**RAMP B-2 SUPERELEVATED RIGHT SECTION**

LIMITING STATIONS
STA. 296+87.10 TO STA. 302+75.29

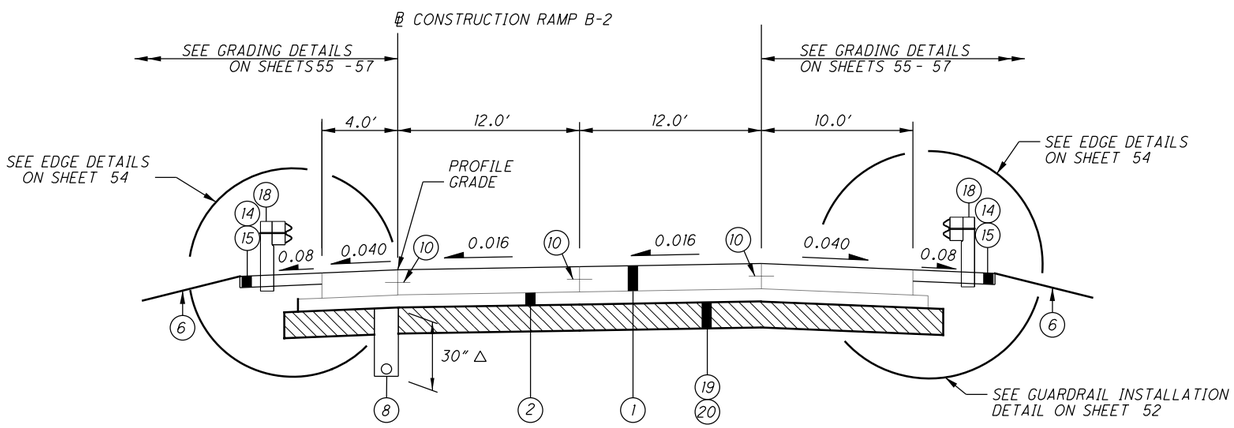


**RAMP B-2 NORMAL SECTION**

LIMITING STATIONS
STA. 302+75.29 TO STA. 305+30.56

NOTE

BRIDGE/APPROACH SLAB LIMITS
STA. 307+95.29 TO STA. 9+83.20
(SKEW/NO WORK)

FOR PROPOSED LEGEND, SEE SHEET 29
FOR SUPERELEVATION TABLES, SEE SHEETS 823 - 825
FOR GORE DETAILS, SEE SHEETS 849 - 850
FOR WIDTH TABLE, SEE SHEET 41

* 0.04 OR RATE OF PAVEMENT SLOPE IF GREATER.

** FOR HIGH SIDE SHOULDER SLOPES, SEE SHOULDER DETAIL "A" ON SHEET 52.

△- OR AS SHOWN IN UNDERDRAIN PLANS, SHEETS 927 - 930

● SEE SHOULDER DETAILS "A" AND "B" ON SHEET 52

TYPICAL SECTIONS

SUM-77/277/224
VARIOUS

40
1288

O:\2017\2017258\ProjectData\SUM\106002\Design\Roadway\Sheets\106002_GY012.dgn Sheet 1/15/2021 4:50:11 PM Ikirkland

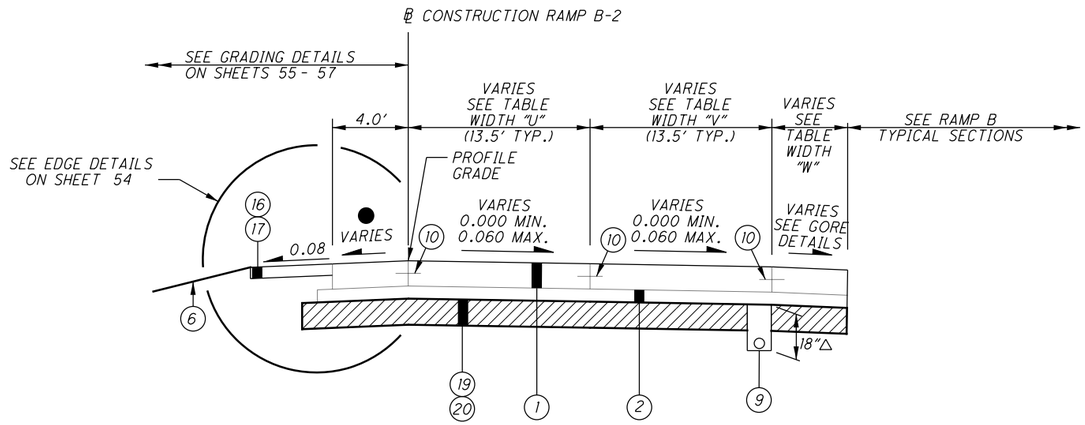


**RAMP B-2 SUPERELEVATED RIGHT SECTION**

LIMITING STATIONS
STA. 16+67.86 TO STA. 23+18.45

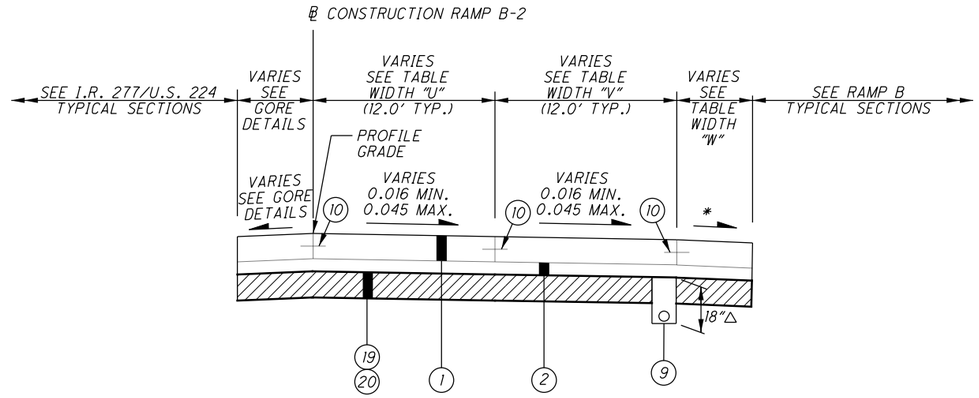


**RAMP B-2 SUPERELEVATED RIGHT SECTION**

LIMITING STATIONS
STA. 23+18.45 TO STA. 24+64.81

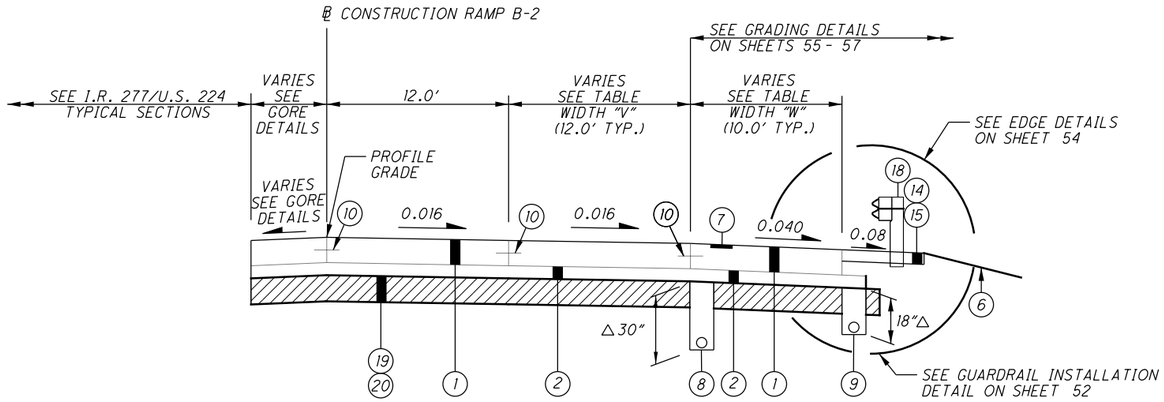


**RAMP B-2 NORMAL SECTION**

LIMITING STATIONS
STA. 24+64.81 TO STA. 33+82.00

FOR PROPOSED LEGEND, SEE SHEET 29
FOR SUPERELEVATION TABLES, SEE SHEETS 825- 826
FOR GORE DETAILS, SEE SHEETS 850 - 853

* 0.04 OR RATE OF PAVEMENT SLOPE IF GREATER.

△- OR AS SHOWN IN UNDERDRAIN PLANS, SHEET 930

● SEE SHOULDER DETAILS "A" AND "C" ON SHEET 52

## RAMP B-2 WIDTH TABLE

| | WIDTH "S" | | | | WIDTH "T" | | | | WIDTH "U" | | | | WIDTH "V" | | | | WIDTH "W" | | | |
|---|---|---|---|---|---|---|---|---|---|---|---|---|---|---|---|---|---|---|---|---|
| | STATION | | WIDTH (FT.) | | STATION | | WIDTH (FT.) | | STATION | | WIDTH (FT.) | | STATION | | WIDTH (FT.) | | STATION | | WIDTH (FT.) | |
| | FROM | TO | FROM | TO | FROM | TO | FROM | TO | FROM | TO | FROM | TO | FROM | TO | FROM | TO | FROM | TO | FROM | TO |
| | 285+64.96 | 292+80.00 | 10.0 | 10.0 | 294+78.29 | 296+87.10 | 0.0 | 0.0 | 285+64.96 | 296+87.10 | 12.0 | 12.0 | 285+64.96 | 290+91.54 | SEE GORE DETAIL | | 285+64.96 | 294+78.29 | SEE GORE DETAIL | |
| | 292+80.00 | 292+90.00 | 10.0 | 12.0 | | | | | | | | | 290+91.54 | 296+87.10 | 12.0 | 12.0 | 294+78.29 | 296+87.10 | 10.0 | 10.0 |
| | 292+90.00 | 294+28.29 | 12.0 | 12.0 | 305+30.56 | 307+30.56 | 0.0 | 0.5 | 305+30.56 | 307+30.56 | 12.0 | 13.5 | | | | | | | | |
| | 294+28.29 | 296+28.29 | 12.0 | 4.0 | 307+30.56 | 307+95.29 | 0.5 | 0.5 | 307+30.56 | 307+95.29 | 13.5 | 13.5 | 305+30.56 | 307+30.56 | 12.0 | 13.5 | 305+30.56 | 306+50.00 | 10.0 | 10.0 |
| RAMP B-2 | 296+28.29 | 296+87.10 | 4.0 | 4.0 | | | | | | | | | 307+30.56 | 307+95.29 | 13.5 | 13.5 | 306+50.00 | 308+00.00 | 10.0 | 4.0 (NDC 10') |
| | | | | | 9+83.20 | 10+00.00 | 0.5 | 0.5 | 9+83.20 | 15+45.66 | 13.5 | 13.5 | | | | | | | | |
| | 305+30.56 | 307+95.29 | 4.0 | 4.0 | 10+00.00 | 11+00.00 | 0.5 | 0.0 | | | | | 9+83.20 | 22+39.81 | 13.5 | 13.5 | 9+83.20 | 10+00.00 | 4.0 (NDC 10') | 4.0 (NDC 10') |
| | | | | | 11+00.00 | 15+45.66 | 0.0 | 0.0 | 16+67.86 | 22+39.81 | 13.5 | 13.5 | 22+39.81 | 24+64.81 | 13.5 | 12.0 | 10+00.00 | 10+30.00 | 4.0 (NDC 10') | 10.0 |
| | 9+83.20 | 16+67.86 | 4.0 | 4.0 | | | | | 22+39.81 | 24+64.81 | 13.5 | 12.0 | 24+64.81 | 32+64.81 | 28.0 | 12.0 | 10+30.00 | 15+45.66 | 10.0 | 10.0 |
| | | | | | | | | | | | | | 32+64.81 | 33+82.00 | 12.0 | 12.0 | 15+45.66 | 24+64.81 | SEE GORE DETAIL | |
| | | | | | | | | | | | | | | | | | 24+64.81 | 33+39.75 | 10.0 | 10.0 |
| | | | | | | | | | | | | | | | | | 33+39.75 | 33+82.00 | 10.0 | 10.9 |

TYPICAL SECTIONS

SUM-77/277/224
VARIOUS



O:\2017\2017258\ProjectData\SUM\106002\Design\Roadway\Sheets\106002_GY013.dgn Sheet 1/15/2021 4:50:12 PM lkirkland

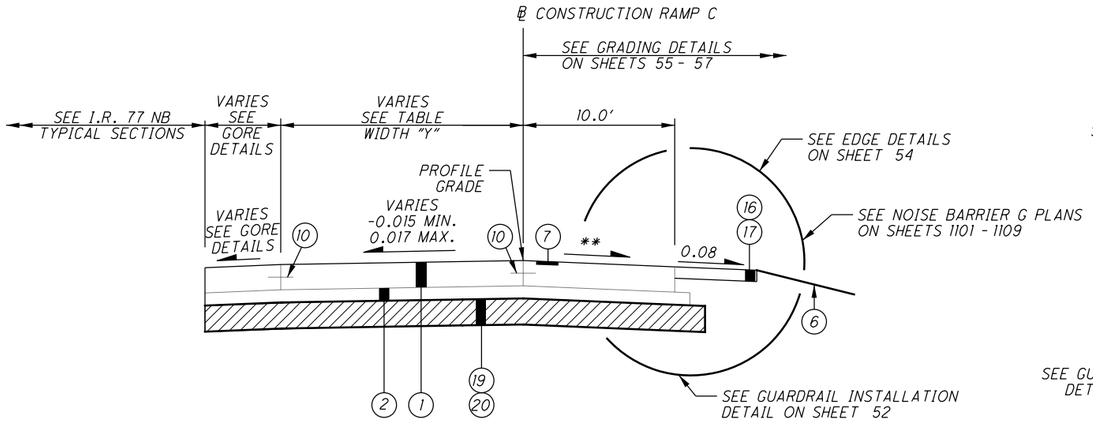


## RAMP C SUPERELEVATED LEFT/RIGHT SECTION

LIMITING STATIONS
STA. 576+00.00 TO STA. 581+24.01

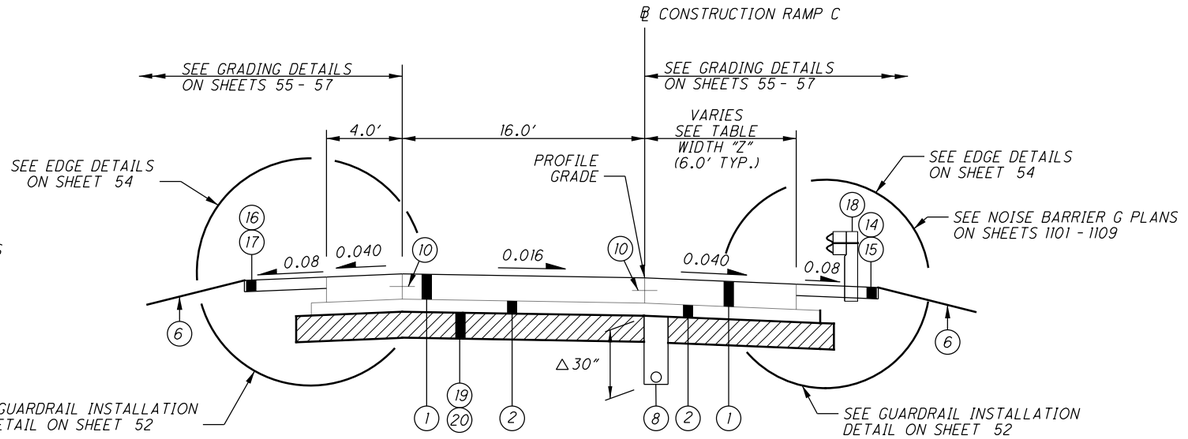


## RAMP C NORMAL SECTION

LIMITING STATIONS
STA. 581+28.66 TO STA. 583+16.40

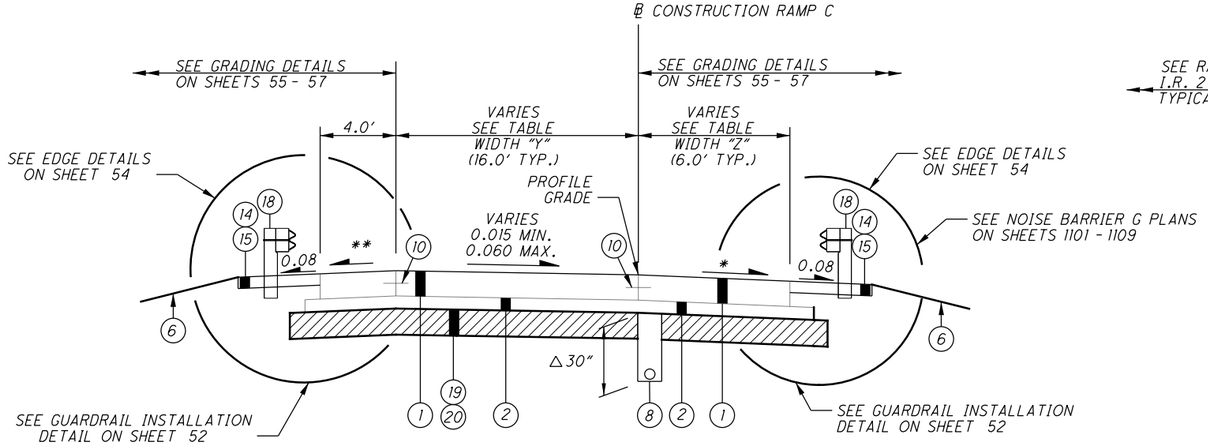


## RAMP C SUPERELEVATED RIGHT SECTION

LIMITING STATIONS
STA. 581+24.01 TO STA. 581+28.66
STA. 583+16.40 TO STA. 592+97.65
STA. 596+40.00 TO STA. 600+63.43

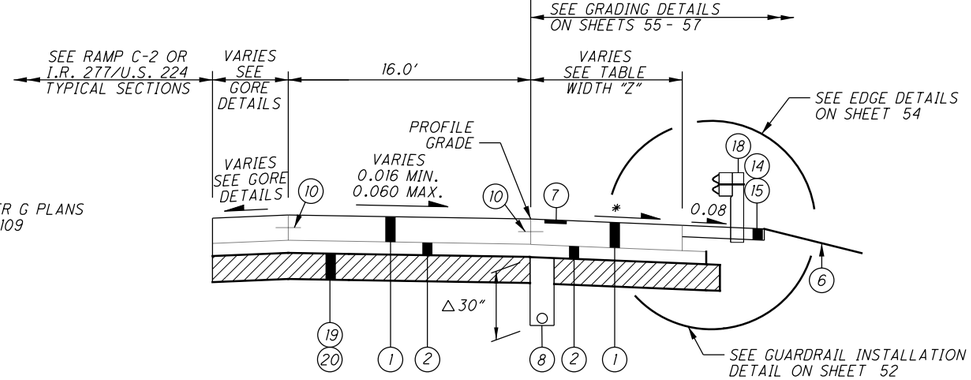


## RAMP C SUPERELEVATED RIGHT/NORMAL SECTION

LIMITING STATIONS
STA. 592+97.65 TO STA. 596+40.00
STA. 600+63.43 TO STA. 606+67.88

**RAMP C WIDTH TABLE**

| | WIDTH "Y" | | | | WIDTH "Z" | | | |
|---|---|---|---|---|---|---|---|---|
| | STATION | | WIDTH (FT.) | | STATION | | WIDTH (FT.) | |
| RAMP C | 576+00.00 | 577+52.62 | 12.0 | 14.0 | 581+24.01 | 582+24.01 | 10.0 | 6.0 |
| | 577+52.62 | 581+24.01 | 12.0 | 16.0 | 582+24.01 | 602+87.81 | 6.0 | 6.0 |
| | 581+24.01 | 581+28.66 | 16.0 | 16.0 | 602+87.81 | 603+37.81 | 6.0 | 8.0 |
| | | | | | 603+37.81 | 606+67.88 | 8.0 | 8.0 |
| | 583+16.40 | 592+97.65 | 16.0 | 16.0 | | | | |
| | | | | | | | | |
| | 596+40.00 | 600+60.00 | 28.0 | 16.0 | | | | |
| | 600+60.00 | 600+63.43 | 16.0 | 16.0 | | | | |
| | | | | | | | | |

FOR PROPOSED LEGEND, SEE SHEET 29
FOR SUPERELEVATION TABLES, SEE SHEETS 827 - 829
FOR GORE DETAILS, SEE SHEETS 854 - 856, 860

* 0.04 OR RATE OF PAVEMENT SLOPE IF GREATER.

** FOR HIGH SIDE SHOULDER SLOPES, SEE SHOULDER DETAIL "A" ON SHEET 52.

△- OR AS SHOWN IN UNDERDRAIN PLANS, SHEETS 926 - 927, 931

# TYPICAL SECTIONS

SUM-77/277/224
VARIOUS



O:\2017\2017258\ProjectData\SUM\106002\Design\Roadway\Sheets\106002_GY014.dgn Sheet 1/15/2021 4:50:13 PM lkirkland

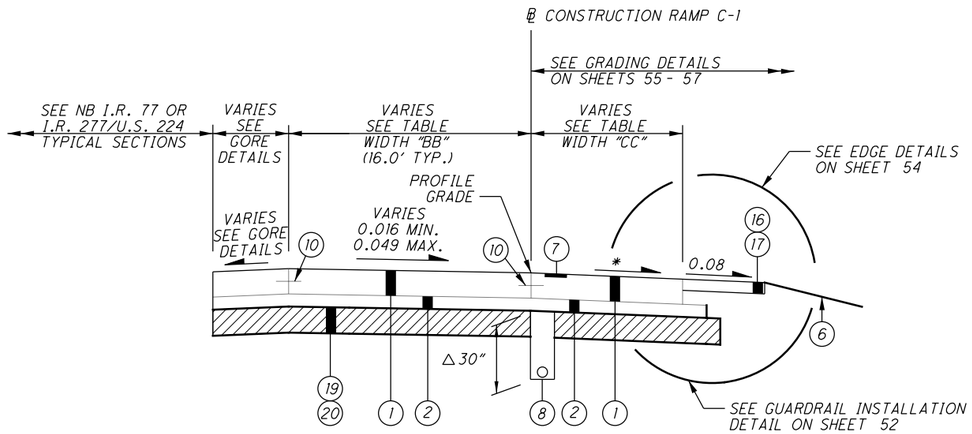


**RAMP C-1 SUPERELEVATED RIGHT SECTION**

LIMITING STATIONS
STA. 679+55.23 TO STA. 682+95.50
STA. 693+69.53 TO STA. 694+94.95

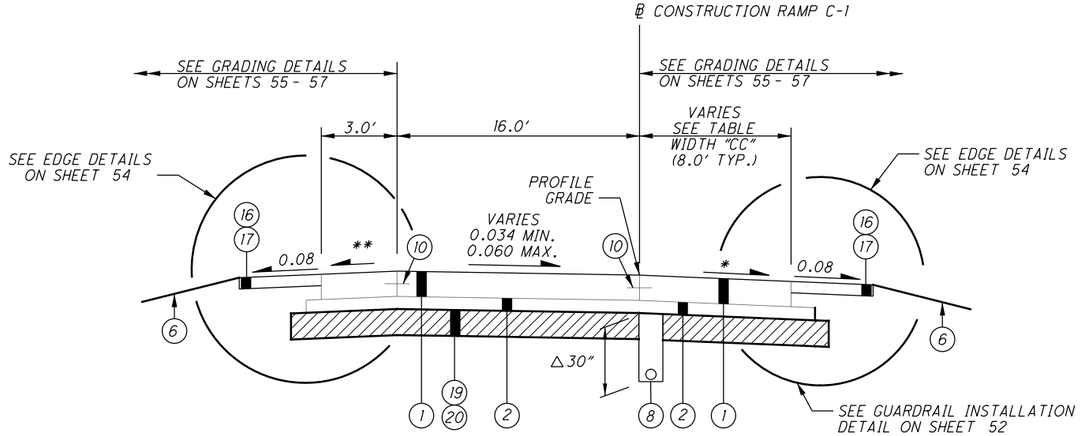


**RAMP C-1 SUPERELEVATED RIGHT SECTION**

LIMITING STATIONS
STA. 682+95.50 TO STA. 693+69.53

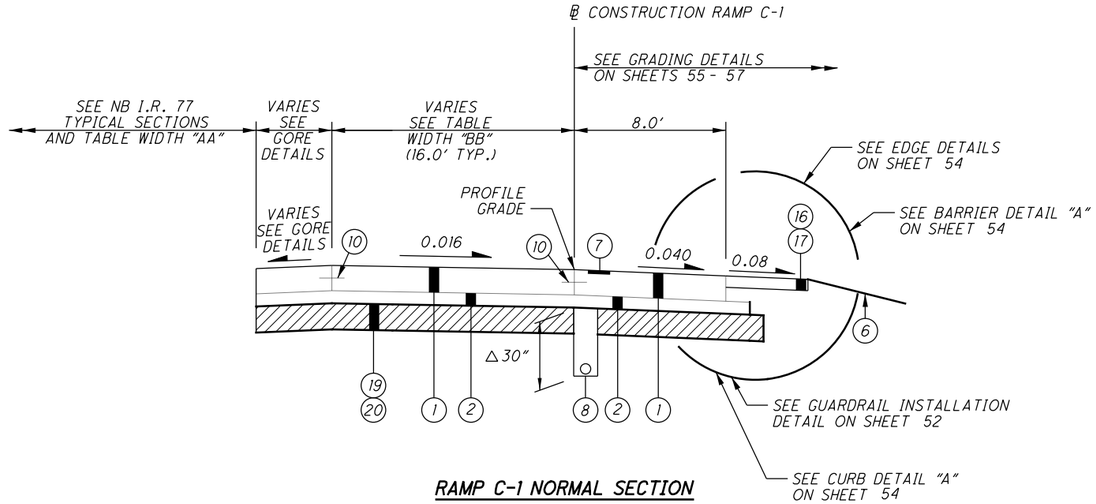


**RAMP C-1 NORMAL SECTION**

LIMITING STATIONS
STA. 694+94.95 TO STA. 702+11.45

**RAMP C-1 WIDTH TABLE**

| | WIDTH "BB" | | | | WIDTH "CC" | | | |
|---|---|---|---|---|---|---|---|---|
| | STATION | | WIDTH (FT.) | | STATION | | WIDTH (FT.) | |
| | 679+55.23 | 680+48.74 | SEE GORE DETAILS | | 679+55.23 | 680+00.00 | 6.8 | 6.8 |
| | 680+48.74 | 682+95.50 | 16.0 | 16.0 | 680+00.00 | 680+32.00 | 6.8 | 8.0 |
| RAMP C-1 | | | | | 680+32.00 | 682+95.50 | 8.0 | 8.0 |
| | 693+69.53 | 700+11.57 | 16.0 | 16.0 | 682+95.50 | 683+45.50 | 8.0 | 6.0 |
| | 700+11.57 | 702+11.45 | SEE GORE DETAILS | | 683+45.50 | 694+44.95 | 6.0 | 6.0 |
| | | | | | 694+44.95 | 694+94.95 | 6.0 | 8.0 |
| | | | | | | | | |

FOR PROPOSED LEGEND, SEE SHEET 29
FOR SUPERELEVATION TABLES, SEE SHEETS 830 - 831
FOR GORE DETAILS, SEE SHEETS 857 - 859

* 0.04 OR RATE OF PAVEMENT SLOPE IF GREATER.

** FOR HIGH SIDE SHOULDER SLOPES, SEE SHOULDER DETAIL "A" ON SHEET 52.

△- OR AS SHOWN IN UNDERDRAIN PLANS, SHEETS 927 - 928 , 931

TYPICAL SECTIONS

SUM-77/277/224
VARIOUS



O:\2017\2017258\ProjectData\SUM\106002\Design\Roadway\Sheets\106002_GY015.dgn Sheet 1/15/2021 4:50:14 PM lkirkland

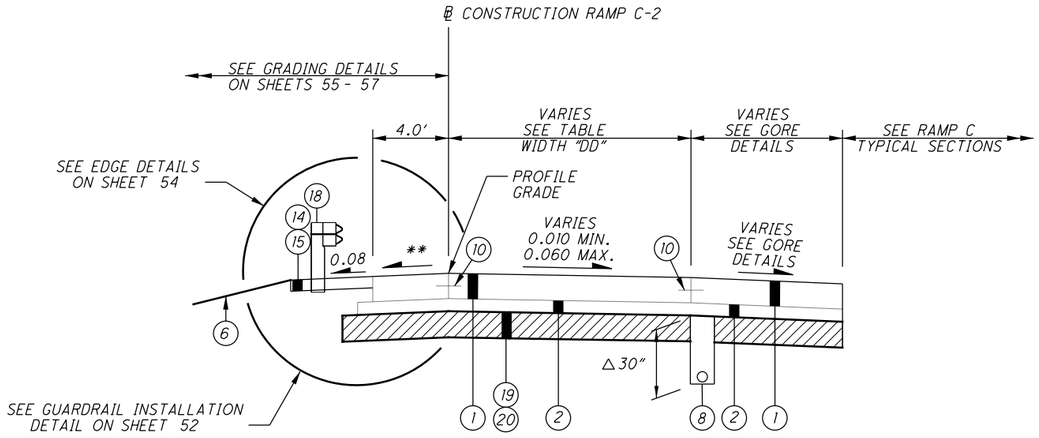


**RAMP C-2 SUPERELEVATED RIGHT SECTION** □

LIMITING STATIONS
STA. 781+45.30 TO STA. 784+43.84
STA. 784+82.53 TO STA. 785+02.08

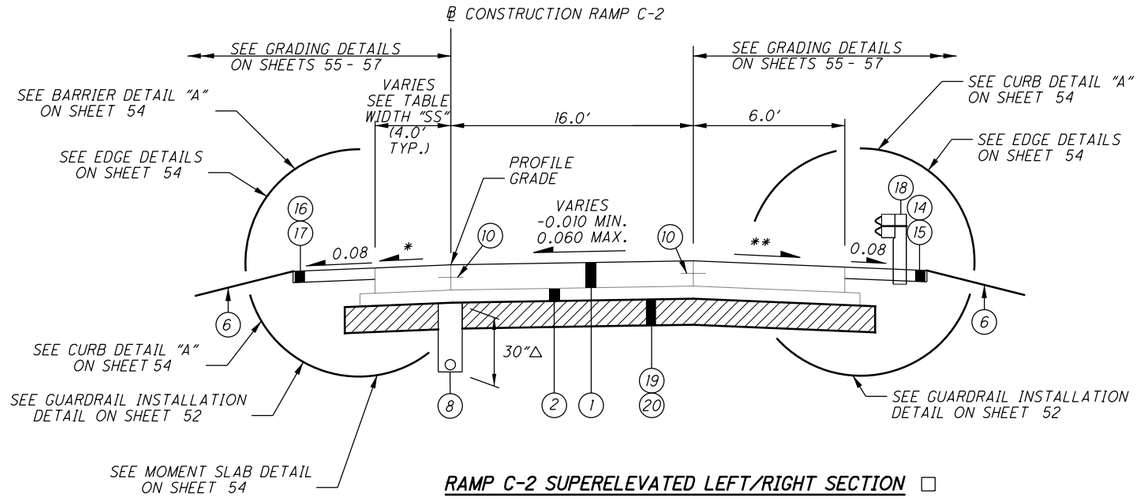


**RAMP C-2 SUPERELEVATED LEFT/RIGHT SECTION** □

LIMITING STATIONS
STA. 785+02.08 TO STA. 788+82.95
STA. 793+17.70 TO STA. 796+95.44

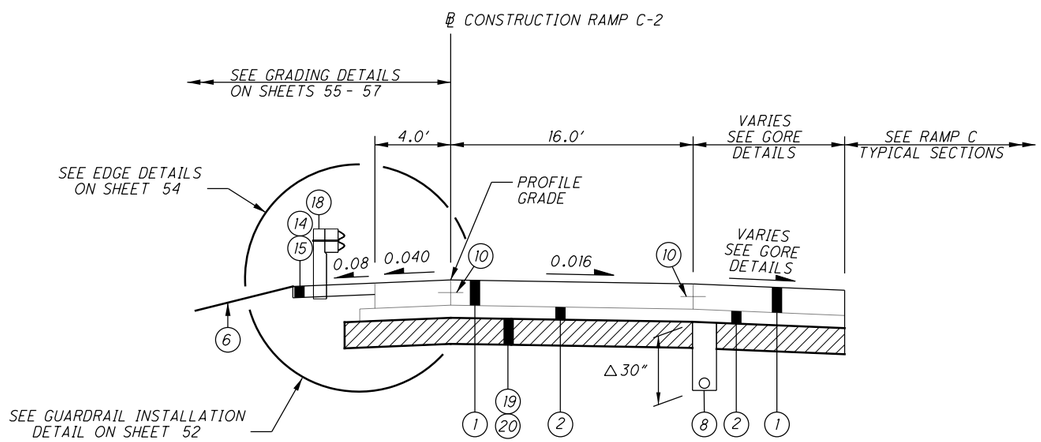


**RAMP C-2 NORMAL SECTION** □

LIMITING STATIONS
STA. 784+43.84 TO STA. 784+82.53

FOR PROPOSED LEGEND, SEE SHEET 29
FOR SUPERELEVATION TABLES, SEE SHEETS 832 - 834
FOR GORE DETAILS, SEE SHEETS 860 - 861
FOR WIDTH TABLE, SEE SHEET 45

* 0.04 OR RATE OF PAVEMENT SLOPE IF GREATER.

** FOR HIGH SIDE SHOULDER SLOPES, SEE SHOULDER DETAIL "A" ON SHEET 52.

△- OR AS SHOWN IN UNDERDRAIN PLANS, SHEETS 927 - 928 , 931

□ RAMP C-2 IS SHOWN IN THE DIRECTION OF TRAVEL, NOT THE DIRECTION OF INCREASING STATIONING

# TYPICAL SECTIONS

SUM-77/277/224
VARIOUS



O:\2017\2017258\ProjectData\SUM\106002\Design\Roadway\Sheets\106002_GY016.dgn Sheet 1/15/2021 4:50:15 PM lkirkland

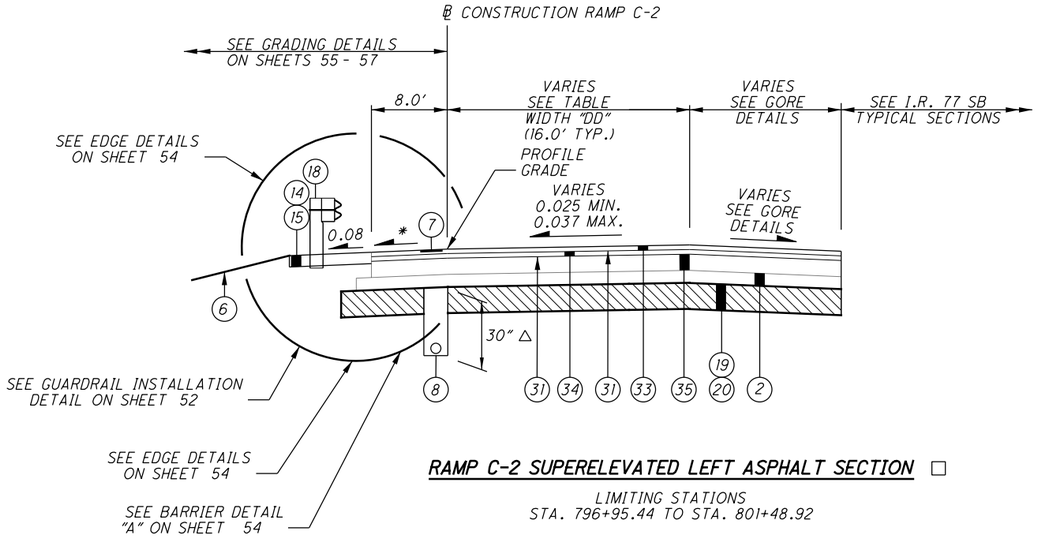


**RAMP C-2 SUPERELEVATED LEFT ASPHALT SECTION** □

LIMITING STATIONS
STA. 796+95.44 TO STA. 801+48.92

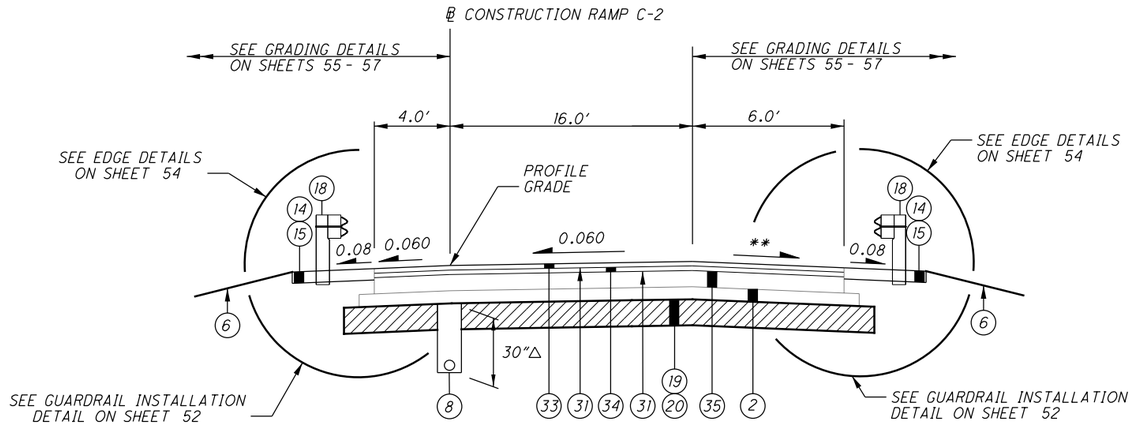


**RAMP C-2 SUPERELEVATED LEFT ASPHALT SECTION** □

LIMITING STATIONS
STA. 788+82.95 TO STA. 789+07.95

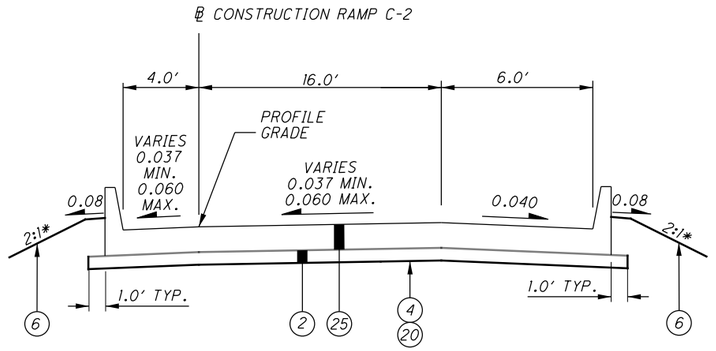


STRUCTURE LIMITS
SUM-77-0927R
STA. 789+37.95 TO STA. 792+85.70

**PROPOSED APPROACH SLAB SUPERELEVATED LEFT SECTION - RAMP C-2** □ ♦

LIMITING STATIONS
STA 789+07.95 TO STA. 789+37.95
STA 792+85.70 TO STA. 793+17.70

**RAMP C-2 WIDTH TABLE**

| | WIDTH "DD" | | | | WIDTH "SS" | | | |
|---|---|---|---|---|---|---|---|---|
| | STATION | | WIDTH (FT.) | | STATION | | WIDTH (FT.) | |
| | 781+45.30 | 782+90.99 | SEE GORE DETAIL | | 785+02.08 | 788+82.95 | 4.0 | 4.0 |
| | 782+90.99 | 784+43.84 | 16.0 | 16.0 | | | | |
| | | | | | 793+17.70 | 795+95.44 | 4.0 | 4.0 |
| RAMP C-2 | 784+82.53 | 785+02.08 | 16.0 | 16.0 | 795+95.44 | 796+95.44 | 4.0 | 8.0 |
| | | | | | | | | |
| | 796+95.44 | 799+74.46 | 16.0 | 16.0 | | | | |
| | 799+74.46 | 801+48.92 | SEE GORE DETAIL | | | | | |
| | | | | | | | | |

FOR PROPOSED LEGEND, SEE SHEET 29
FOR SUPERELEVATION TABLES, SEE SHEETS 833 - 834
FOR GORE DETAILS, SEE SHEET 861

* 0.04 OR RATE OF PAVEMENT SLOPE IF GREATER.

** FOR HIGH SIDE SHOULDER SLOPES, SEE SHOULDER DETAIL "A" ON SHEET 52.

△ - OR AS SHOWN IN UNDERDRAIN PLANS, SHEETS 927 - 928

□ RAMP C-2 IS SHOWN IN THE DIRECTION OF TRAVEL, NOT THE DIRECTION OF INCREASING STATIONING





O:\2017\2017258\ProjectData\SUM\106002\Design\Roadway\Sheets\106002_GY017.dgn Sheet 1/15/2021 4:50:16 PM lkirkland

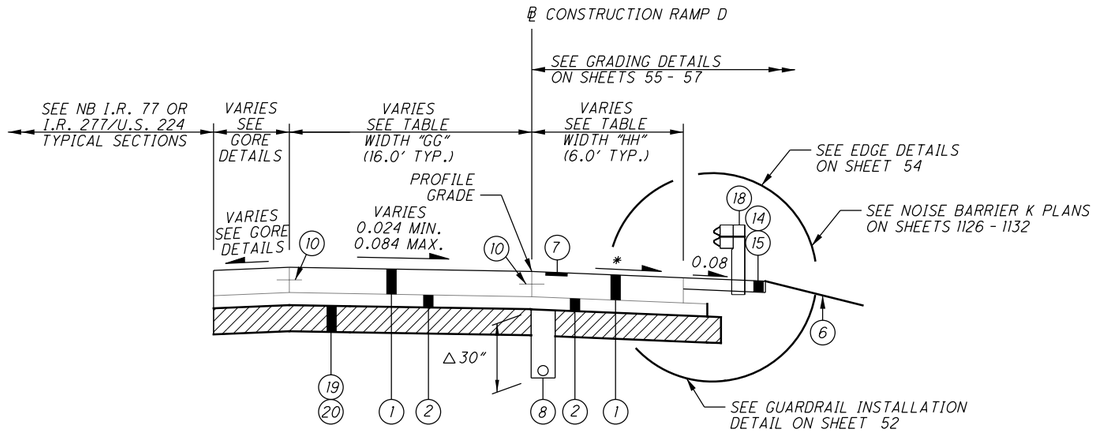


## RAMP D SUPERELEVATED RIGHT SECTION

LIMITING STATIONS
STA. 887+98.38 TO STA. 892+66.83
STA. 907+63.81 TO STA. 914+89.43 ***

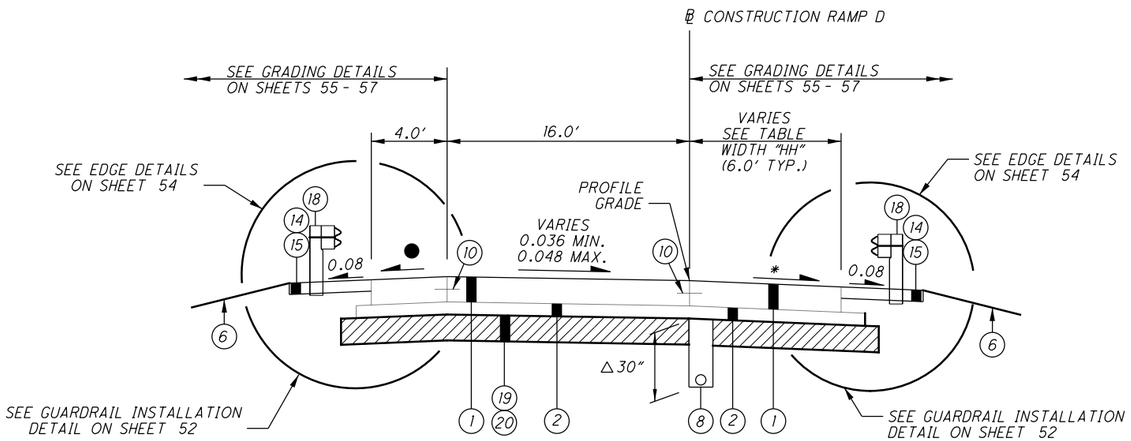


## RAMP D SUPERELEVATED RIGHT SECTION

LIMITING STATIONS
STA. 892+66.83 TO STA. 907+63.81

### RAMP D WIDTH TABLE

| | WIDTH "GG" | | | | WIDTH "HH" | | | |
|---|---|---|---|---|---|---|---|---|
| | STATION | | WIDTH (FT.) | | STATION | | WIDTH (FT.) | |
| RAMP D | 887+98.38 | 889+33.61 | 12.0 | 14.0 | 887+98.38 | 892+66.83 | 10.0 | 10.0 |
| | 889+33.61 | 892+66.83 | 12.0 | 16.0 | 892+66.83 | 893+66.83 | 10.0 | 6.0 |
| | | | | | 893+66.83 | 910+05.05 | 6.0 | 6.0 |
| | 907+63.81 | 914+89.43 | 16.0 | 16.0 | 910+05.05 | 910+55.05 | 6.0 | 8.0 |
| | | | | | 910+55.05 | 914+75.00 | 8.0 | 8.0 |
| | | | | | 914+75.00 | 914+89.43 | 8.0 | 7.4 |
| | | | | | | | | |
| | | | | | | | | |

FOR PROPOSED LEGEND, SEE SHEET 29
FOR SUPERELEVATION TABLES, SEE SHEETS 835 - 838
FOR GORE DETAILS, SEE SHEETS 862 - 864

* 0.04 OR RATE OF PAVEMENT SLOPE IF GREATER.

*** END WORK AT STA. 914+89.43 , WORK PAST THAT STATION IS TO BE CONSTRUCTED BY OTHERS AS PART OF THE SUM-76/77/8-8.42/9.77/0.00 DB (PID 102329) PROJECT.

△- OR AS SHOWN IN UNDERDRAIN PLANS, SHEETS 928 - 929 , 931

● SEE SHOULDER DETAILS "A" AND "D" ON SHEET 52





O:\2017\2017258\ProjectData\SUM\106002\Design\Roadway\Sheets\106002_GY018.dgn Sheet 1/15/2021 4:50:16 PM lkirkland

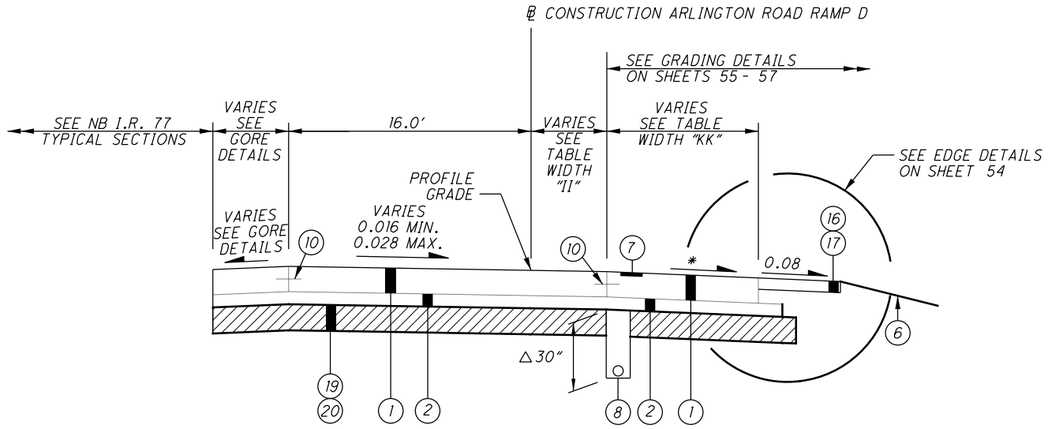


## ARLINGTON ROAD RAMP D SUPERELEVATED RIGHT SECTION

LIMITING STATIONS
STA. 71+69.06 TO STA. 75+25.24

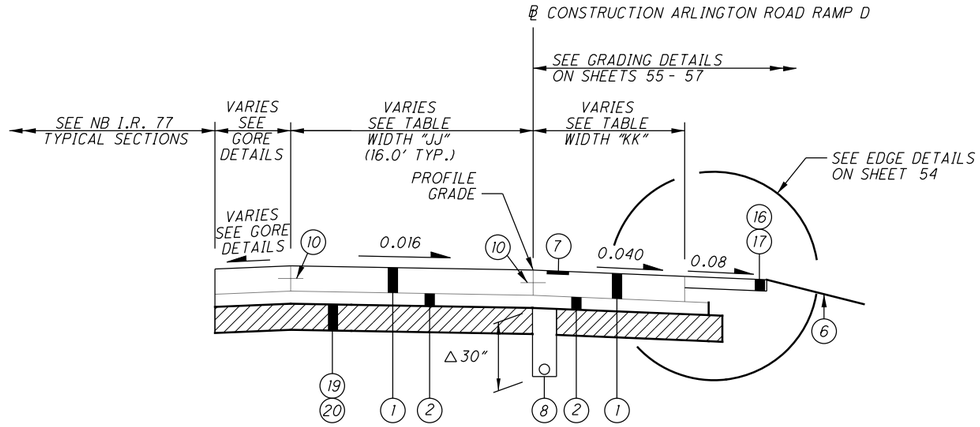


## ARLINGTON ROAD RAMP D SUPERELEVATED RIGHT SECTION

LIMITING STATIONS
STA. 75+25.24 TO STA. 88+18.25

FOR PROPOSED LEGEND, SEE SHEET 29
FOR SUPERELEVATION TABLES, SEE SHEET 839
FOR GORE DETAILS, SEE SHEETS 865 - 868

* 0.04 OR RATE OF PAVEMENT SLOPE IF GREATER.

** FOR HIGH SIDE SHOULDER SLOPES, SEE SHOULDER DETAIL "A" ON SHEET 52.

△- OR AS SHOWN IN UNDERDRAIN PLANS, SHEET 922

### ARLINGTON ROAD RAMP D WIDTH TABLE

| | WIDTH "II" | | | | WIDTH "JJ" | | | | WIDTH "KK" | | | |
|---|---|---|---|---|---|---|---|---|---|---|---|---|
| | STATION | | WIDTH (FT.) | | STATION | | WIDTH (FT.) | | STATION | | WIDTH (FT.) | |
| ARLINGTON ROAD RAMP D | 71+69.06 | 74+47.06 | 5.6 | 0.0 | 75+25.24 | 86+18.37 | 16.0 | 16.0 | 71+69.06 | 72+67.31 | 9.9 | 6.0 |
| | 74+47.06 | 75+25.24 | 0.0 | 0.0 | 86+18.37 | 88+18.25 | 16.0 | 12.0 | 72+67.31 | 81+17.83 | 6.0 | 6.0 |
| | | | | | | | | | 81+17.83 | 81+67.80 | 6.0 | 8.0 |
| | | | | | | | | | 81+67.80 | 87+18.15 | 8.0 | 8.0 |
| | | | | | | | | | 87+18.15 | 88+18.25 | 8.0 | 10.0 |
| | | | | | | | | | | | | |

# TYPICAL SECTIONS

SUM-77/277/224
VARIOUS



O:\2017\2017258\ProjectData\SUM\106002\Design\Roadway\Sheets\106002_GY019.dgn Sheet 1/15/2021 4:50:17 PM lkirkland

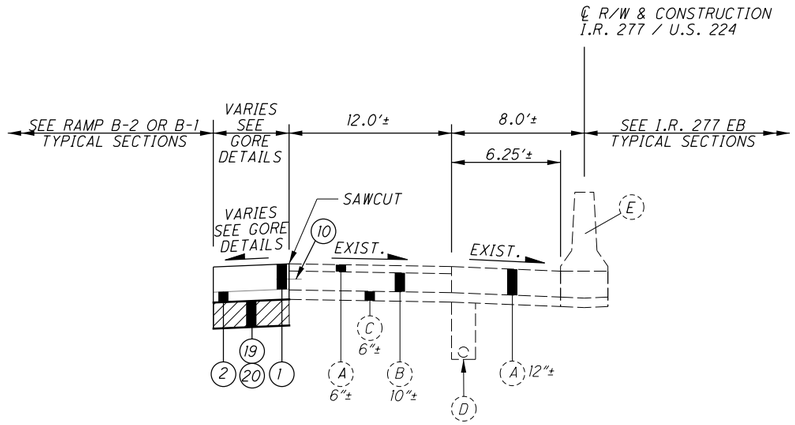


**I.R. 277/U.S. 224 WB NORMAL SECTION**

LIMITING STATIONS

STA. 225+00.00 TO STA. 235+63.23
STA. 247+80.74 TO STA. 250+78.79

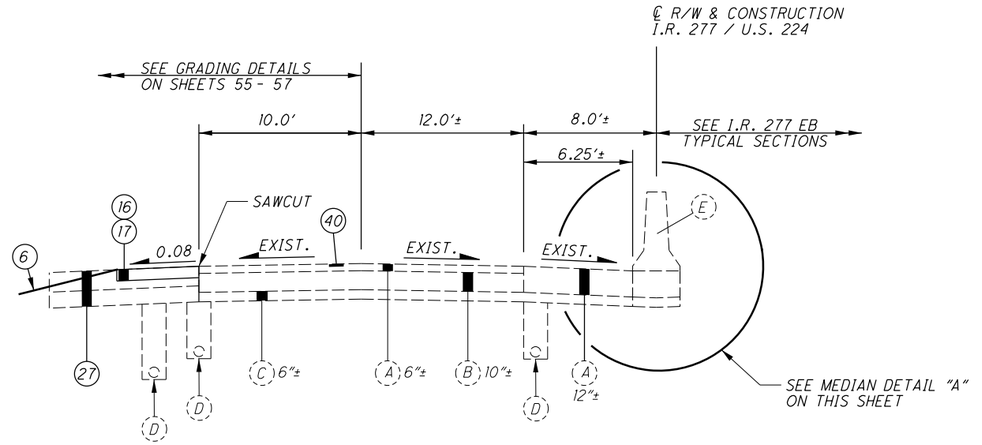


**I.R. 277/U.S. 224 WB NORMAL SECTION**

LIMITING STATIONS

STA. 235+63.23 TO STA. 247+80.74

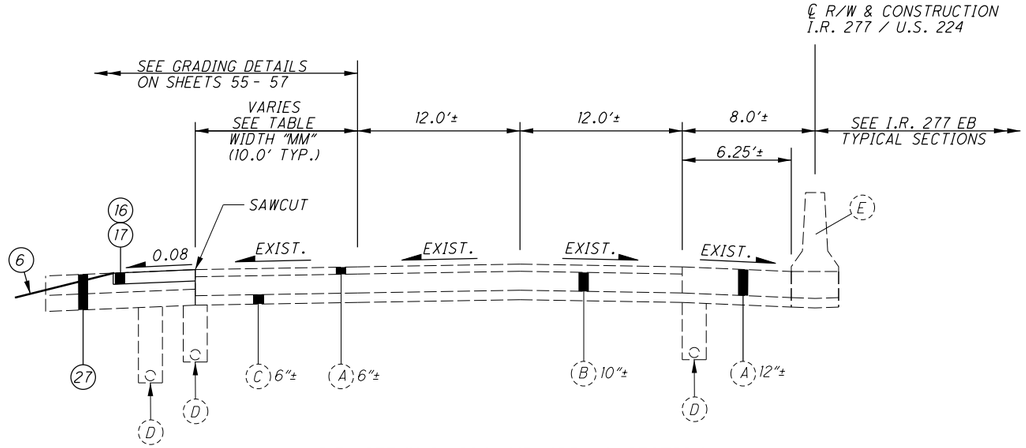


**I.R. 277/U.S. 224 WB NORMAL SECTION**

LIMITING STATIONS

STA. 257+05.96 TO STA. 264+70.74

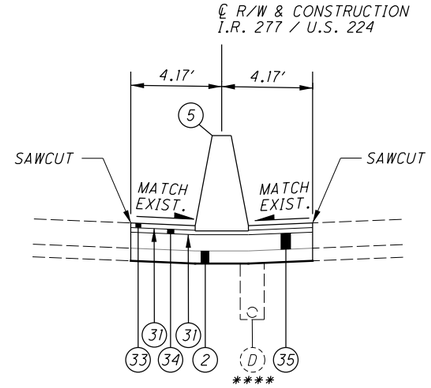


**MEDIAN DETAIL "A"**

N.T.S.

LIMITING STATIONS

STA. 241+20.00 TO STA. 242+80.00

NOTE

BRIDGE/APPROACH SLAB LIMITS
STA. 250+94.27 TO STA. 257+01.49 (SKEW)

FOR PROPOSED LEGEND, SEE SHEET 29
FOR EXISTING LEGEND, SEE SHEET 59
FOR GORE DETAILS, SEE SHEETS 847 , 851 -853 ,862
FOR WIDTH TABLE, SEE SHEET 49

**** EXISTING UNDERDRAIN TO REMAIN

TYPICAL SECTIONS

SUM-77/277/224
VARIOUS

48
1288

O:\2017\2017258\ProjectData\SUM\106002\Design\Roadway\Sheets\106002_GY020.dgn Sheet 1/15/2021 4:50:18 PM lkirkland

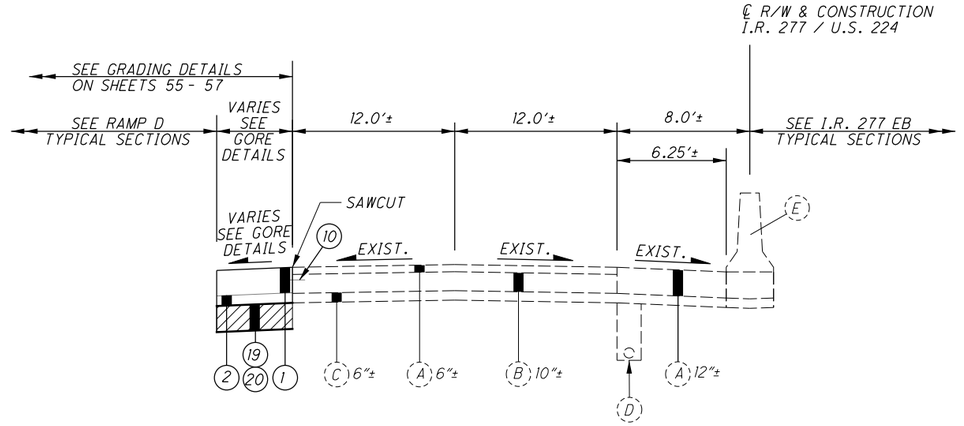


**I.R. 277/U.S. 224 WB NORMAL SECTION**

LIMITING STATIONS
STA. 264+70.74 TO STA. 269+40.00

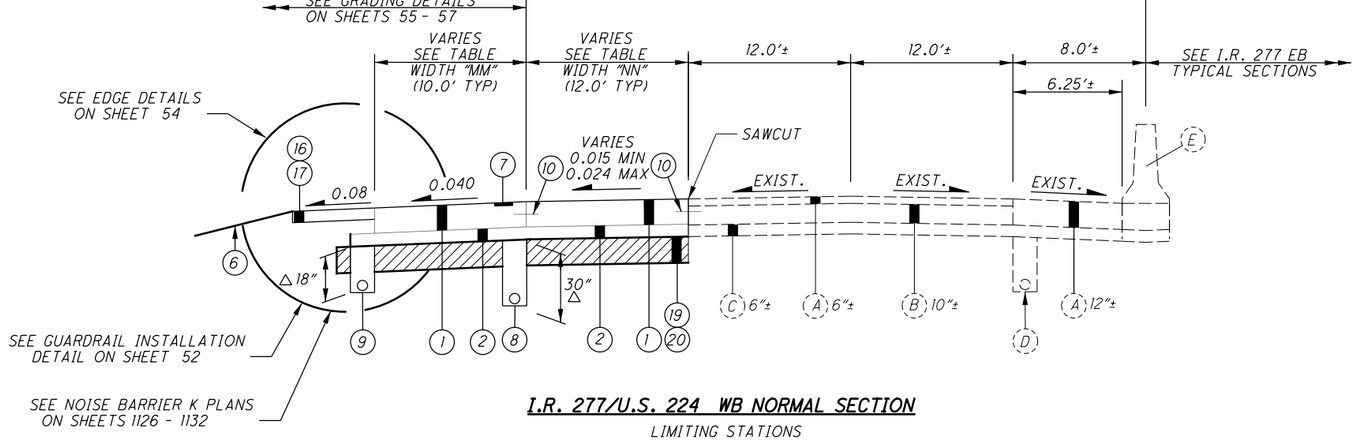


**I.R. 277/U.S. 224 WB NORMAL SECTION**

LIMITING STATIONS
STA. 269+40.00 TO STA. 273+25.00

**I.R. 277 WESTBOUND WIDTH TABLE**

| | WIDTH "MM" | | | | WIDTH "NN" | | | |
|---|---|---|---|---|---|---|---|---|
| | STATION | | WIDTH (FT.) | | STATION | | WIDTH (FT.) | |
| I.R. 277 WB | 257+05.96 | 257+55.96 | 20.0 | 10.0 | 269+40.00 | 272+95.00 | 12.0 | 12.0 |
| | 257+55.96 | 264+70.74 | 10.0 | 10.0 | 272+95.00 | 273+25.00 | 12.0 | 11.9 |
| | | | | | | | | |
| | 269+40.00 | 272+95.00 | 10.0 | 10.0 | | | | |
| | 272+95.00 | 273+25.00 | 10.0 | 11.2 | | | | |
| | | | | | | | | |

FOR PROPOSED LEGEND, SEE SHEET 29
FOR EXISTING LEGEND, SEE SHEET 59
FOR SUPERELEVATION TABLES, SEE SHEET 835
FOR GORE DETAILS, SEE SHEET 862

△- OR AS SHOWN IN UNDERDRAIN PLANS, SHEET 931

TYPICAL SECTIONS

SUM-77/277/224
VARIOUS



O:\2017\2017258\ProjectData\SUM\106002\Design\Roadway\Sheets\106002_GY021.dgn Sheet 1/15/2021 4:50:19 PM lkirkland

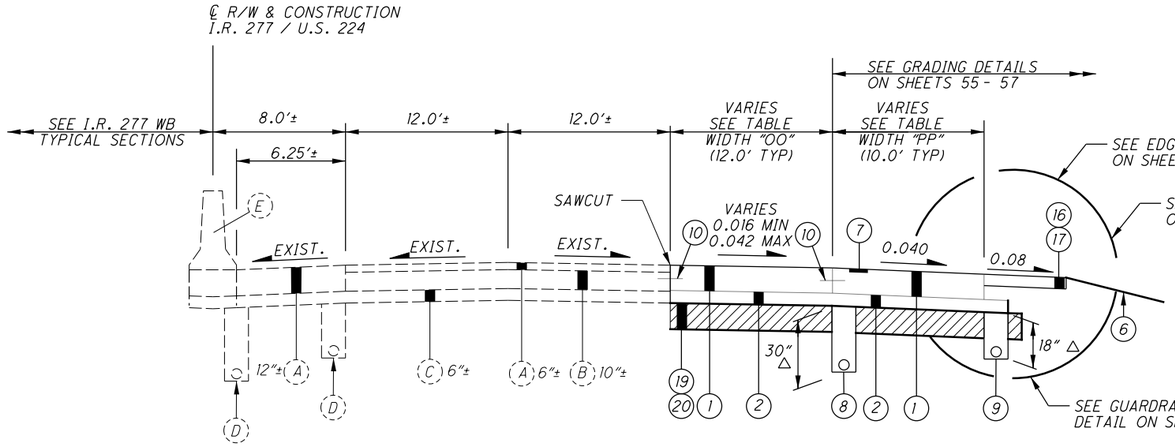


**I.R. 277/U.S. 224 EB NORMAL SECTION**

LIMITING STATIONS

STA. 237+00.00 TO STA. 237+37.85
STA. 277+50.00 TO 279+50.00

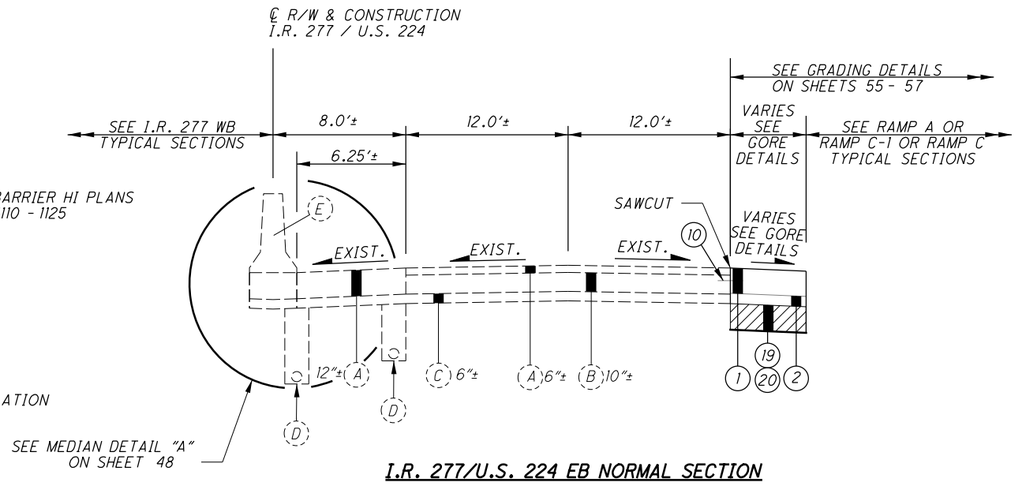


**I.R. 277/U.S. 224 EB NORMAL SECTION**

LIMITING STATIONS

STA. 237+37.85 TO STA. 245+79.53
STA. 257+26.04 TO STA. 260+76.94
STA. 271+44.10 TO STA. 277+50.00

NO WORK
STA. 260+76.94 TO STA. 271+44.10

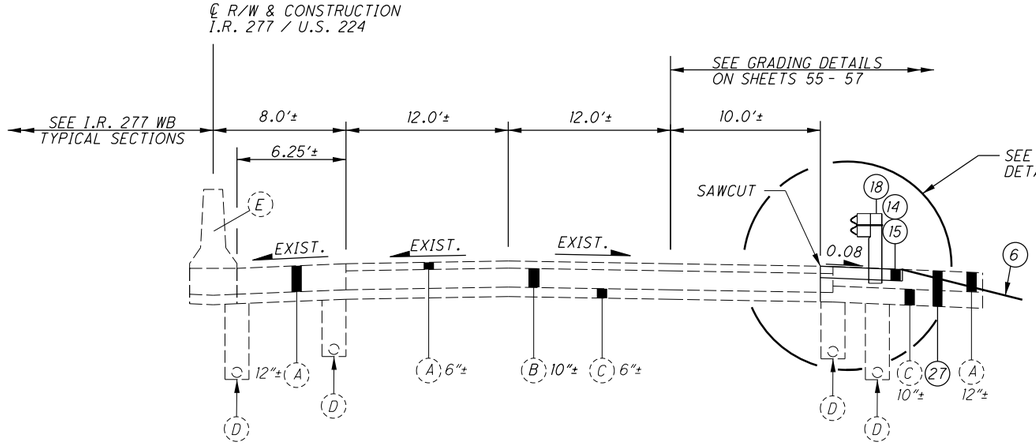


**I.R. 277/U.S. 224 EB NORMAL SECTION**

LIMITING STATIONS

STA. 245+79.53 TO STA. 249+95.00

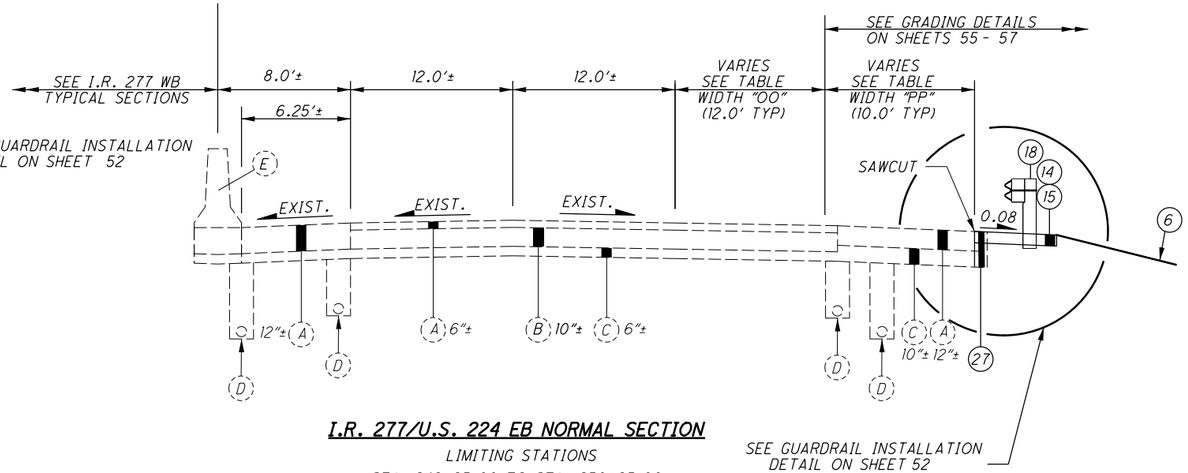


**I.R. 277/U.S. 224 EB NORMAL SECTION**

LIMITING STATIONS

STA. 249+95.00 TO STA. 250+95.00

**I.R. 277 EASTBOUND WIDTH TABLE**

| | WIDTH "OO" | | | | WIDTH "PP" | | | |
|---|---|---|---|---|---|---|---|---|
| | STATION | | WIDTH (FT.) | | STATION | | WIDTH (FT.) | |
| I.R. 277 EB | 237+00.00 | 237+37.85 | 11.4 | 12.0 | 237+00.00 | 237+37.85 | 11.9 | 10.4 |
| | | | | | | | | |
| | 249+95.00 | 250+95.00 | 0.0 | 12.0 | 249+95.00 | 250+95.00 | 10.0 | 8.0 |
| | | | | | | | | |
| | 277+50.00 | 279+50.00 | 16.0 | 12.0 | 277+50.00 | 277+80.00 | 8.0 | 8.0 |
| | | | | | 277+80.00 | 279+50.00 | 8.0 | 11.4 |
| | | | | | | | | |

NOTE

BRIDGE/APPROACH SLAB LIMITS
STA. 250+94.27 TO STA. 257+01.49 (SKEW)

FOR PROPOSED LEGEND, SEE SHEET 29
FOR EXISTING LEGEND, SEE SHEET 59
FOR SUPERELEVATION TABLES, SEE SHEETS 818 , 829
FOR GORE DETAILS, SEE SHEETS 843 - 844 , 855 - 857

△ - OR AS SHOWN IN UNDERDRAIN PLANS, SHEETS 928 , 930 - 931

TYPICAL SECTIONS

SUM-77/277/224
VARIOUS



O:\2017\2017258\ProjectData\SUM\106002\Design\Roadway\Sheets\106002_GY022.dgn Sheet 1/15/2021 4:50:19 PM lkirkland

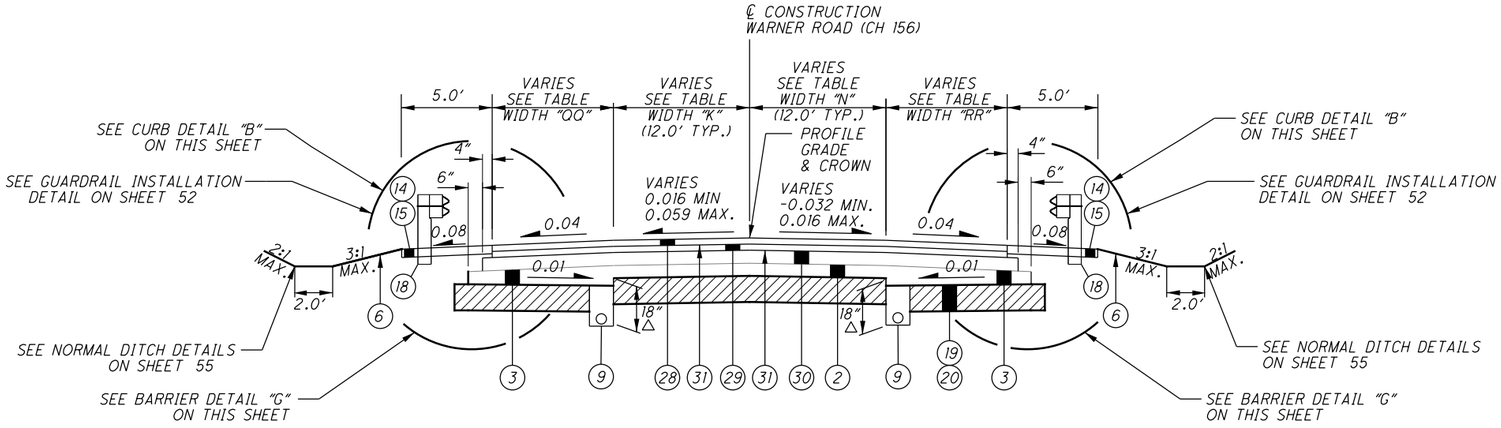


## WARNER ROAD NORMAL SECTION

LIMITING STATIONS

STA. 24+50.00 TO STA. 27+70.00

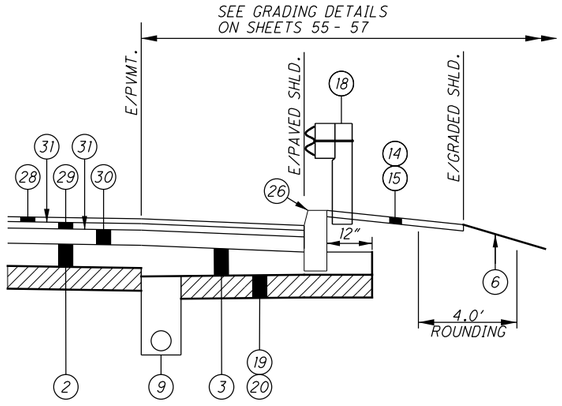


## CURB DETAIL "B"

N.T.S.
LIMITING STATIONS

WARNER RD.
STA. 25+01.85 LT. TO STA. 25+20.00 LT.
STA. 25+13.44 RT. TO STA. 25+31.58 RT.
STA. 26+88.48 LT. TO STA. 27+06.73 LT.
STA. 26+98.84 RT. TO STA. 27+16.82 RT.

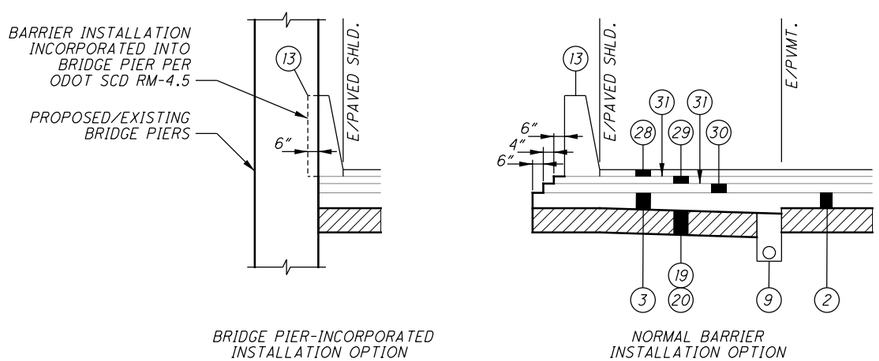


BRIDGE PIER-INCORPORATED
INSTALLATION OPTION

NORMAL BARRIER
INSTALLATION OPTION

FOR LOCATIONS, SEE BRIDGE PLANS
ON SHEETS 1155 - 1180

## BARRIER DETAIL "G"

N.T.S.
LIMITING STATIONS

WARNER RD.
STA. 25+20.00 LT. TO STA. 26+88.48 LT.
STA. 25+31.58 RT. TO STA. 26+98.84 RT.

## WARNER ROAD WIDTH TABLE

| | WIDTH "K" | | | | WIDTH "N" | | | | WIDTH "OO" | | | | WIDTH "RR" | | | |
|---|---|---|---|---|---|---|---|---|---|---|---|---|---|---|---|---|
| | STATION | | WIDTH (FT.) | | STATION | | WIDTH (FT.) | | STATION | | WIDTH (FT.) | | STATION | | WIDTH (FT.) | |
| WARNER ROAD | 24+50.00 | 24+66.00 | 12.5 | 12.0 | 24+50.00 | 24+89.00 | 10.9 | 12.0 | 24+50.00 | 24+63.23 | 4.0 | 4.0 | 24+50.00 | 25+03.51 | 4.0 | 4.0 |
| | 24+66.00 | 27+53.50 | 12.0 | 12.0 | 24+89.00 | 27+53.50 | 12.0 | 12.0 | 24+63.23 | 24+70.60 | 4.0 | 3.0 (NDC 4') | 25+03.51 | 25+13.44 | 4.0 | 6.0 |
| | 27+53.50 | 27+70.00 | 12.0 | 11.7 | 27+53.50 | 27+70.00 | 12.0 | 11.5 | 24+70.60 | 26+07.65 | 3.0 (NDC 4') | 3.0 (NDC 4') | 25+13.44 | 26+07.65 | 6.0 | 6.0 |
| | | | | | | | | | 26+07.65 | 26+88.48 | 3.0 (NDC 4') | 1.6 (NDC 4') | 26+07.65 | 27+16.82 | 6.0 | 8.5 |
| | | | | | | | | | 26+88.48 | 27+38.16 | 1.6 (NDC 4') | 1.6 (NDC 4') | 27+16.82 | 27+70.00 | 8.5 | 6.4 |
| | | | | | | | | | 27+38.16 | 27+48.86 | 1.6 (NDC 4') | 2.0 (NDC 4') | | | | |
| | | | | | | | | | 27+48.86 | 27+70.00 | 2.0 (NDC 4') | 2.0 (NDC 4') | | | | |
| | | | | | | | | | | | | | | | | |

FOR SUPERELEVATION TABLES, SEE SHEET 840

FOR PROPOSED LEGEND, SEE SHEET 29

△ - OR AS SHOWN IN UNDERDRAIN PLANS, SHEET 932

TYPICAL SECTIONS

SUM-77/277/224
VARIOUS



O:\2017\2017258\ProjectData\SUM\106002\Design\Roadway\Sheets\106002_GY035.dgn Sheet 1/15/2021 4:50:20 PM Ikirkland

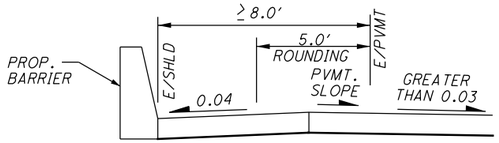


LANE SUPERELEVATION >0.03 (WITH BARRIER)

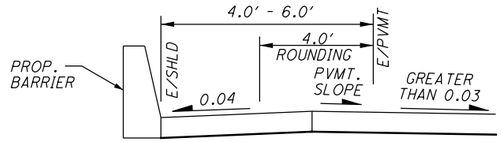


LANE SUPERELEVATION >0.03 (WITH BARRIER)

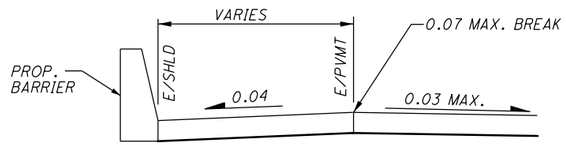


LANE SUPERELEVATION 0.03 MAX (WITH BARRIER)

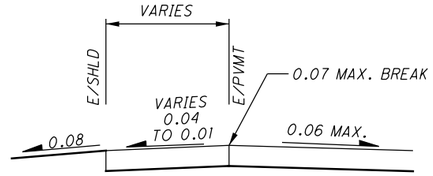


LANE SUPERELEVATION 0.06 MAX (W/O BARRIER)

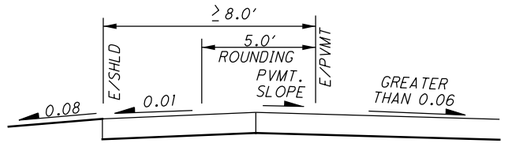


LANE SUPERELEVATION >0.06 (W/O BARRIER)

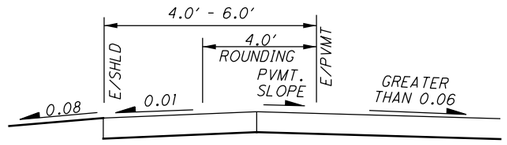


LANE SUPERELEVATION >0.06 (W/O BARRIER)

## SHOULDER DETAIL "A"

N.T.S.

2.0′ LT./RT. S.R. 77, I.R. 277
2.0′ RAMP B, B-2, C, C-2, D LT. SIDE
2.0′ SINGLE LANE RAMP RT. SIDE
2.0′ MIN. LT./RT. WARNER RD.

NOTE: LT./RT. DETERMINED LOOKING DIRECTION OF TRAVEL

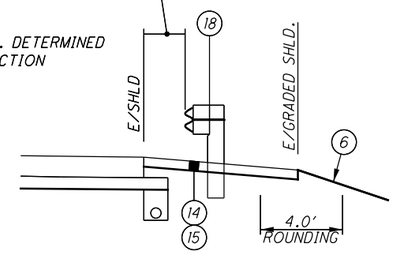


## UNCURBED ROADWAY GUARDRAIL INSTALLATION DETAIL

SEE PLANS FOR LOCATIONS

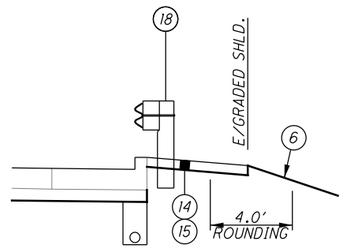


## CURBED ROADWAY GUARDRAIL INSTALLATION DETAIL

SEE PLANS FOR LOCATIONS

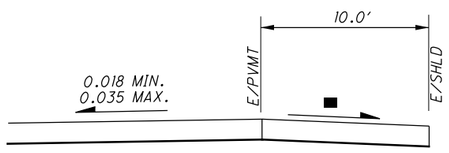


## SHOULDER DETAIL "B"

N.T.S.
STA. 294+78.29 TO STA. 295+78.29 (RAMP B-2 RT)

STA. 294+78.29 @ -0.0499 ■
STA. 295+78.29 @ 0.0400

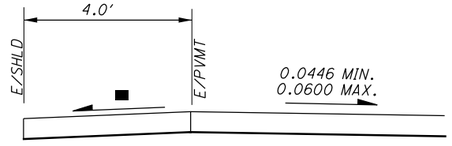


## SHOULDER DETAIL "C"

N.T.S.
STA. 22+39.81 TO STA. 23+18.45 (RAMP B-2 LT)

STA. 22+39.81 @ 0.0100 ■
STA. 23+18.45 @ -0.0038

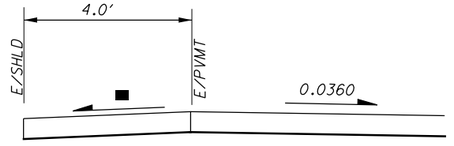


## SHOULDER DETAIL "D"

N.T.S.
STA. 892+66.83 TO STA. 893+31.83 (RAMP D LT)

STA. 892+66.83 @ -0.0305 ■
STA. 893+31.83 @ 0.0340

FOR PROPOSED LEGEND, SEE SHEET 29

TYPICAL SECTIONS

SUM-77/277/224
VARIOUS



O:\2017\2017258\ProjectData\SUM\106002\Design\Roadway\Sheets\106002_GY023.dgn Sheet 1/15/2021 4:50:21 PM lkirkland

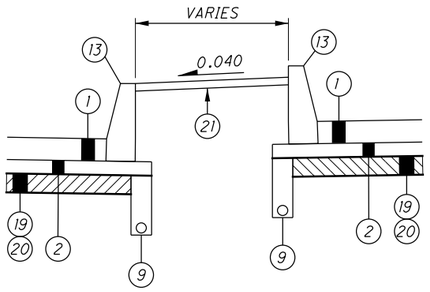


**BARRIER DETAIL "E"**

FOR PAVEMENT EDGE EXTENSIONS,
SEE BARRIER DETAIL "A" ON SHEET 54
N.T.S.
LIMITING STATIONS

℄ CONST. NB I.R. 77
STA. 494+84.83 LT. TO STA. 496+00.00 LT.

℄ CONST. RAMP B-2
STA. 294+77.53 RT. TO STA. 295+92.53 RT.

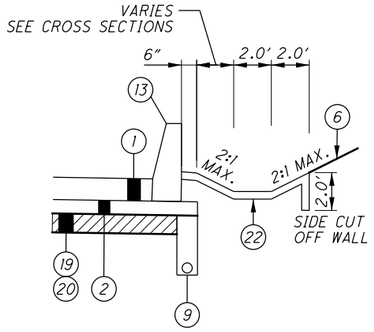


**BARRIER DETAIL "F"**

FOR PAVEMENT EDGE EXTENSIONS,
SEE BARRIER DETAIL "A" ON SHEET 54
N.T.S.
LIMITING STATIONS

℄ CONST. RAMP B-2
STA. 295+92.53 RT. TO STA. 297+50.00 RT.

FOR PROPOSED LEGEND, SEE SHEET 29

TYPICAL SECTIONS

SUM-77/277/224
VARIOUS



O:\2017\2017258\ProjectData\SUM\106002\Design\Roadway\Sheets\106002_GY034.dgn Sheet 1/15/2021 4:50:22 PM Ikirkland

⬡ - PROJECT WAS ORIGINALLY DESIGNED AS DUAL PAVEMENT, HOWEVER THE RIGID PAVEMENT OPTION HAS NOW BEEN REMOVED FROM THE PROJECT. ANY AND ALL REFERENCE THROUGHOUT THE PLANS TO RIGID PAVEMENT OPTION ARE NOW CONSIDERED NULL AND VOID.

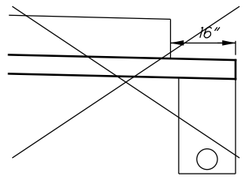


⬡ ~~(RIGID PAVEMENT OPTION)~~

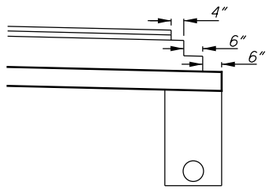


(FLEXIBLE PAVEMENT OPTION)

## EDGE DETAILS

N.T.S.

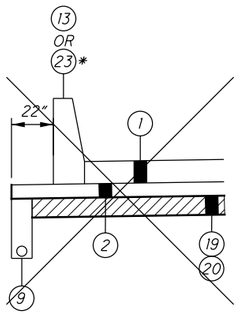


⬡ ~~(RIGID PAVEMENT OPTION)~~

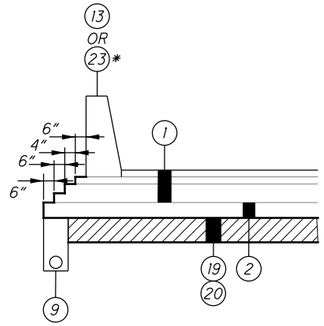


(FLEXIBLE PAVEMENT OPTION)

## BARRIER DETAIL "A" (FLEXIBLE & ~~RIGID~~ PAVEMENT) ⬡

N.T.S.
LIMITING STATIONS

STA. 393+75.00 RT. TO STA. 394+40.00 RT. (℄ R/W & CONST. I.R. 77)
STA. 393+85.00 LT. TO STA. 394+54.30 LT. (℄ R/W & CONST. I.R. 77)
STA. 468+65.00 RT. TO STA. 469+23.83 RT. (℄ R/W & CONST. I.R. 77)
STA. 469+15.00 LT. TO STA. 469+65.40 LT. (℄ R/W & CONST. I.R. 77)
STA. 491+00.00 RT. TO STA. 491+59.27 RT. (℄ NB CONST. I.R. 77) *
STA. 469+72.74 RT. TO STA. 470+07.74 RT. (℄ SB CONST. I.R. 77) *
STA. 470+07.74 RT. TO STA. 473+95.11 RT. (℄ SB CONST. I.R. 77) *
STA. 500+45.03 LT. TO STA. 502+00.00 LT. (℄ SB CONST. I.R. 77)
STA. 508+04.86 RT. TO STA. 508+73.02 RT. (℄ SB CONST. I.R. 77)
STA. 508+63.78 LT. TO STA. 509+30.71 LT. (℄ SB CONST. I.R. 77)
STA. 292+31.83 LT. TO STA. 292+80.00 LT. (RAMP B-2) *
STA. 9+99.70 RT. TO STA. 14+00.00 RT. (RAMP B-2)
STA. 698+64.18 RT. TO STA. 700+28.18 RT. (RAMP C-1)
STA. 793+17.70 LT. TO STA. 793+51.56 LT. (RAMP C-2)
STA. 794+85.00 RT. TO STA. 795+19.05 RT. (RAMP C-2)
STA. 799+78.00 RT. TO STA. 801+34.00 RT. (RAMP C-2)

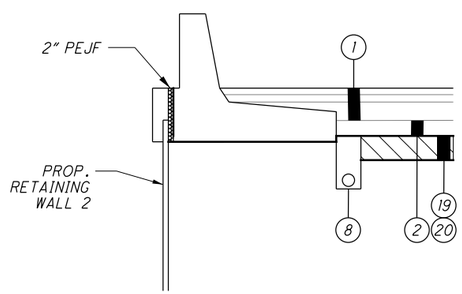


## MOMENT SLAB DETAIL

N.T.S.
LIMITING STATIONS

RAMP C-2
STA. 793+17.70 RT. TO STA. 794+85.02 RT.

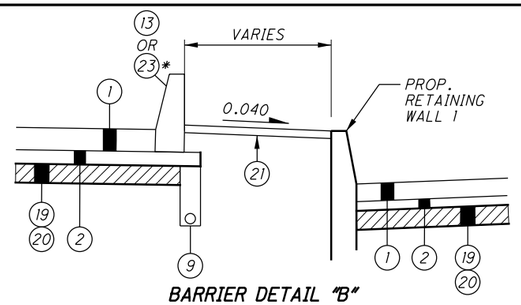


## BARRIER DETAIL "B"

FOR PAVEMENT EDGE EXTENSIONS,
SEE BARRIER DETAIL "A" ON THIS SHEET
N.T.S.
LIMITING STATIONS

℄ CONST. NB I.R. 77:
STA. 469+77.00 LT. TO STA. 473+00.00 LT.

℄ CONST. SB I.R. 77:
STA. 469+72.74 RT. TO STA. 470+07.74 RT. *
STA. 470+07.74 TO STA. 472+95.25 RT.

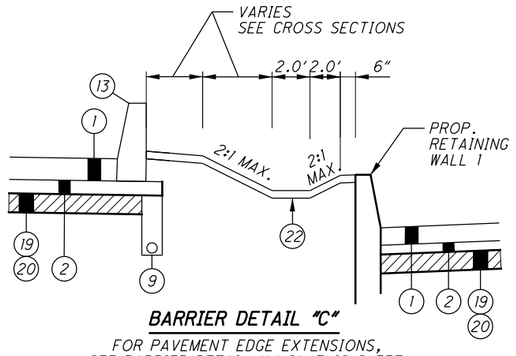


## BARRIER DETAIL "C"

FOR PAVEMENT EDGE EXTENSIONS,
SEE BARRIER DETAIL "A" ON THIS SHEET
N.T.S.
LIMITING STATIONS

℄ CONST. NB I.R. 77
STA. 473+00.00 LT. TO STA. 474+00.00 LT.

℄ CONST. SB I.R. 77
STA. 472+95.25 RT. TO STA. 473+95.11 RT.

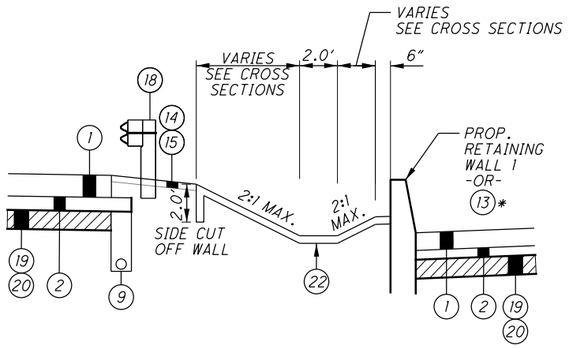


## BARRIER DETAIL "D"

FOR PAVEMENT EDGE EXTENSIONS,
SEE BARRIER DETAIL "A" ON THIS SHEET
N.T.S.
LIMITING STATIONS

℄ CONST. NB I.R. 77
STA. 474+00.00 LT. TO STA. 475+50.00 LT.
STA. 475+50.00 LT. TO STA. 475+64.00 LT. *

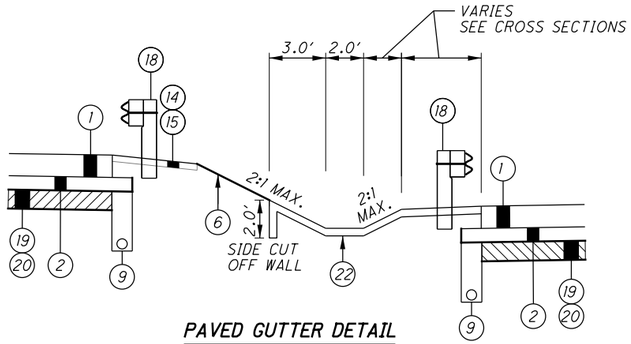


## PAVED GUTTER DETAIL

N.T.S.
LIMITING STATIONS

℄ CONST. NB I.R. 77
STA. 475+64.00 LT. TO STA. 476+50.00 LT.

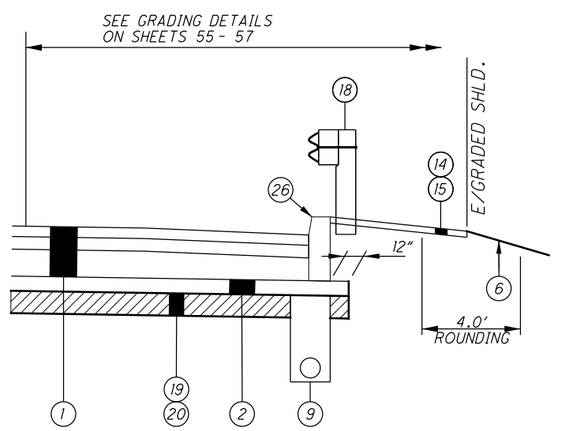


## CURB DETAIL "A"

N.T.S.
LIMITING STATIONS

NORTHBOUND I.R. 77
STA. 475+64.00 LT. TO STA. 476+05.00 LT.
STA. 490+82.07 RT. TO STA. 491+00.00 RT.
STA. 515+46.36 LT. TO STA. 515+64.47 LT.

℄ R/W & CONST. I.R. 77
STA. 393+56.92 RT. TO STA. 393+75.00 RT.
STA. 394+54.30 LT. TO STA. 394+72.51 LT.
STA. 424+88.47 RT. TO STA. 425+06.61 RT.
STA. 426+62.18 RT. TO STA. 426+84.43 RT.
STA. 427+09.41 LT. TO STA. 427+52.06 LT.
STA. 428+68.64 RT. TO STA. 428+84.65 RT.
STA. 430+98.14 RT. TO STA. 431+22.50 RT.
STA. 431+34.35 LT. TO STA. 431+80.00 LT.
STA. 468+46.85 RT. TO STA. 468+65.00 RT.

SOUTHBOUND I.R. 77
STA. 469+62.50 LT. TO STA. 469+80.65 LT.
STA. 473+95.11 RT. TO STA. 474+13.21 RT.
STA. 501+34.03 RT. TO STA. 501+52.18 RT.
STA. 502+00.00 LT. TO STA. 502+18.14 LT.
STA. 508+73.02 RT. TO STA. 508+91.21 RT.
STA. 509+30.71 LT. TO STA. 509+48.56 LT.

RAMP B-2
STA 292+13.63 LT. TO STA. 292+31.83 LT.
STA. 292+80.00 LT. TO STA. 294+28.29 LT.
STA. 307+49.11 LT. TO STA. 307+88.67 LT.
STA. 7+48.73 RT. TO STA. 7+65.76 RT.

RAMP C-1
STA. 698+46.04 RT. TO STA. 698+64.18 RT.

RAMP C-2
STA. 793+51.56 LT. TO STA. 793+69.60 LT.
STA. 795+19.05 RT. TO STA. 795+37.22 RT.

RAMP D
STA. 915+28.63 RT. TO STA. 915+46.83 RT.

FOR PROPOSED LEGEND, SEE SHEET 29

TYPICAL SECTIONS

SUM-77/277/224
VARIOUS



0:\2017\2017258\ProjectData\SUM\106002\Design\Roadway\Sheets\106002_GY024.dgn Sheet 1/15/2021 4:50:23 PM Ikirkland

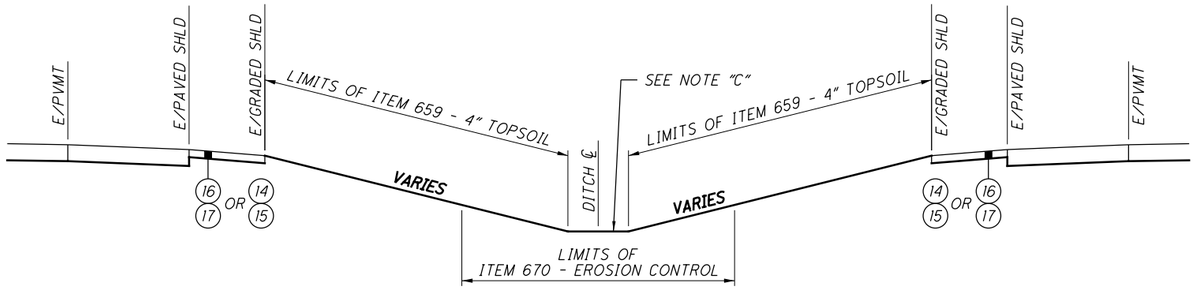


## VEGETATED BIOFILTER DETAIL A

FOR LOCATIONS, SEE PROJECT SITE PLANS ON SHEETS 444 - 452

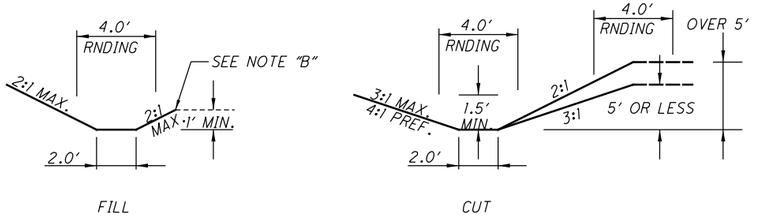


## NORMAL DITCH DETAILS

N.T.S.

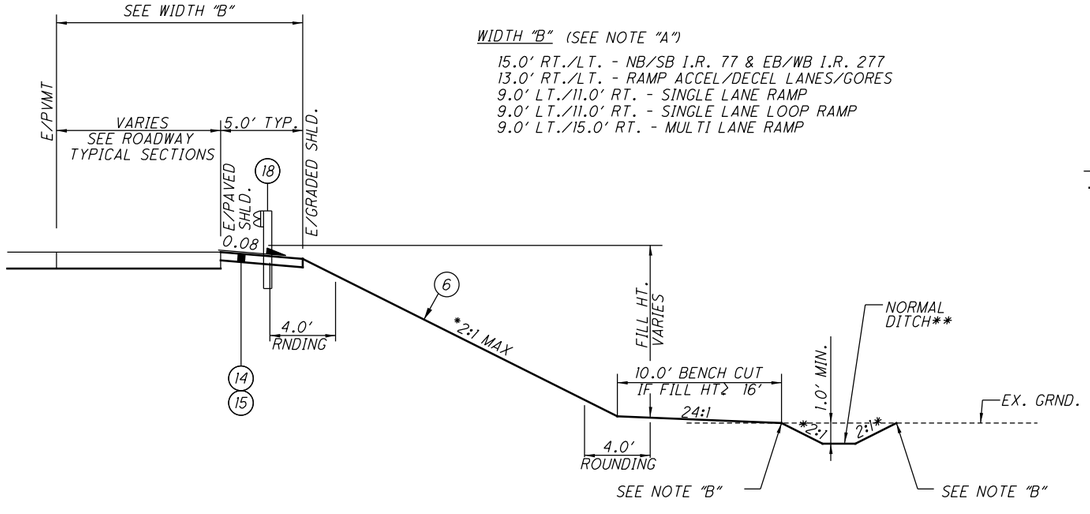


WIDTH "B" (SEE NOTE "A")

15.0' RT./LT. - NB/SB I.R. 77 & EB/WB I.R. 277
13.0' RT./LT. - RAMP ACCEL/DECEL LANES/GORES
9.0' LT./11.0' RT. - SINGLE LANE RAMP
9.0' LT./11.0' RT. - SINGLE LANE LOOP RAMP
9.0' LT./15.0' RT. - MULTI LANE RAMP

## FILL SECTION - CASE 1 (BARRIER GRADING)

NOTE "A"

ALL DIMENSIONS ARE DEFINED LOOKING IN DIRECTION OF TRAVEL

NOTE "B"

4.0' ROUNDING

NOTE "C"

ALL DITCHES LOCATED WITHIN LIMITS OF VBF SHALL BE TRAPEZOIDAL AND NOT HAVE ROUNDING

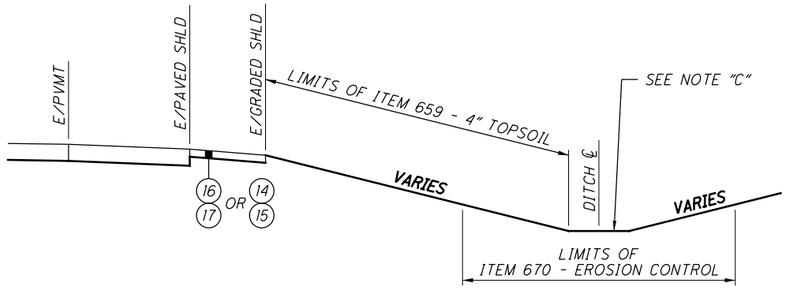


## VEGETATED BIOFILTER DETAIL B

FOR LOCATIONS, SEE PROJECT SITE PLANS ON SHEETS 444 - 452

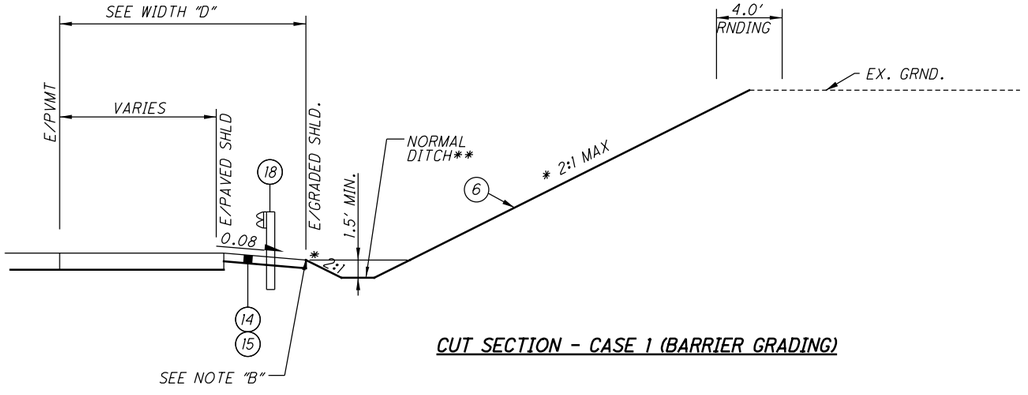


## CUT SECTION - CASE 1 (BARRIER GRADING)

WIDTH "D" (SEE NOTE "A")

15.0' RT./LT. - NB/SB I.R. 77 & EB/WB I.R. 277
13.0' RT./LT. - RAMP ACCEL/DECEL LANES/GORES
9.0' LT./11.0' RT. - SINGLE LANE RAMP
9.0' LT./11.0' RT. - SINGLE LANE LOOP RAMP
9.0' LT./15.0' RT. - MULTI LANE RAMP

** SEE NORMAL DITCH DETAIL ON THIS SHEET.
* OR AS SHOWN ON CROSS SECTIONS

FOR PROPOSED LEGEND, SEE SHEET 29

# TYPICAL SECTIONS - GRADING DETAILS

SUM-77/277/224
VARIOUS



O:\2017\2017258\ProjectData\SUM\106002\Design\Roadway\Sheets\106002_GY025.dgn Sheet 1/15/2021 4:50:23 PM lkirkland

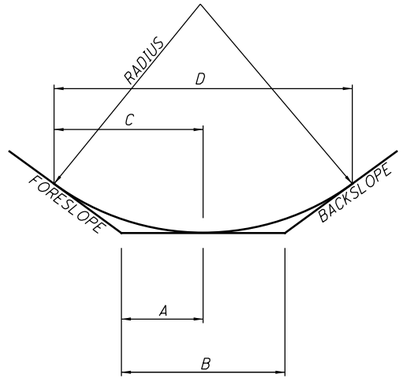


| FORESLOPE | 20' RADIUS | | BACKSLOPE 6:1 | | 4:1 | | 3:1 | |
|---|---|---|---|---|---|---|---|---|
| | A | C | B* | D | B* | D | B* | D |
| 8:1 | 1'3" | 2'6" | 2'11" | 5'9" | 3'8" | 7'4" | 4'6" | 8'10" |
| 6:1 | 1'8" | 3'3" | 3'4" | 6'7" | 4'1" | 8'2" | 4'11" | 9'7" |
| 4:1 | 2'6" | 4'10" | 4'1" | 8'2" | 4'11" | 9'8' | | |
| 3:1 | 3'3" | 6'4" | 4'11" | 9'7" | | | | |

**RECOVERABLE DITCH DETAIL**

NOTE "A"

ALL DIMENSIONS ARE DEFINED LOOKING IN DIRECTION OF TRAVEL

NOTE "B"

SEE CROSS SECTIONS FOR GRADING TRANSITIONS FROM MAINLINE TO RAMP WIDTHS

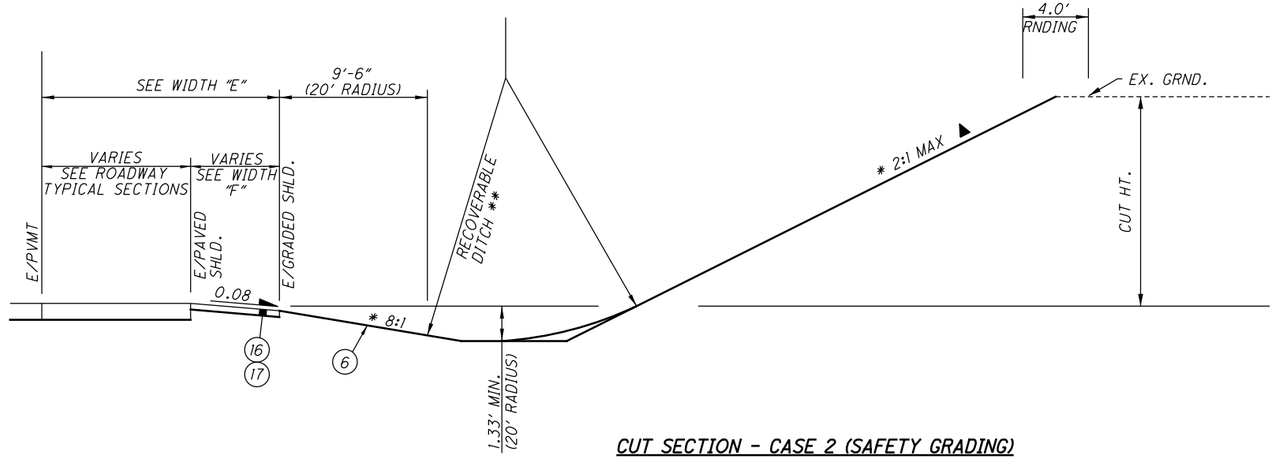


**CUT SECTION - CASE 2 (SAFETY GRADING)**

WIDTH "E" (SEE NOTE "A")

10.0' RT./LT. - NB/SB I.R. 77 & EB/WB I.R. 277
8.0' RT./LT. - RAMP ACCEL/DECEL LANES/GORES
6.0' LT./8.0' RT. - SINGLE LANE RAMP
6.0' LT./8.0' RT. - SINGLE LANE LOOP RAMP
6.0' LT./10.0' RT. - MULTI LANE RAMP

WIDTH "F" (SEE NOTE "A")

0.0' RT./LT. - NB/SB I.R. 77 & EB/WB I.R. 277
0.0' RT./LT. - RAMP ACCEL/DECEL LANES/GORES
2.0' RT./LT. - SINGLE LANE RAMP
3.0' LT./2.0' RT. - SINGLE LANE LOOP RAMP
2.0' LT./0.0' RT. - MULTI LANE RAMP

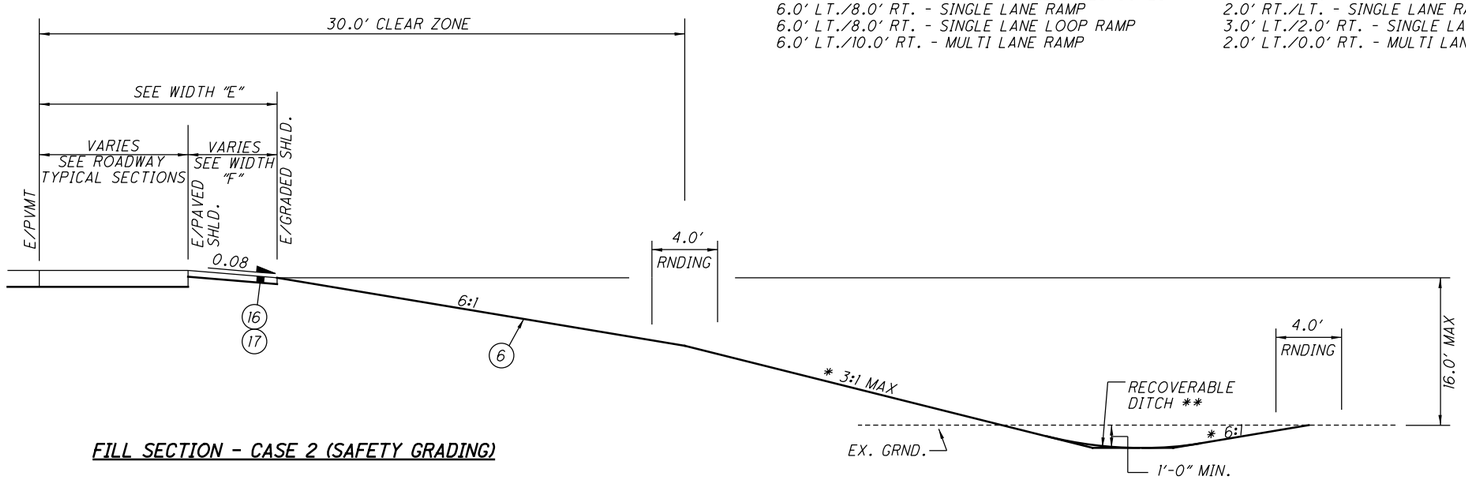


**FILL SECTION - CASE 2 (SAFETY GRADING)**

** SEE RECOVERABLE DITCH DETAIL ON THIS SHEET
* OR AS SHOWN ON CROSS SECTIONS

▲

| APPROXIMATE CUT BACKSLOPE (SEE CROSS SECTIONS FOR ACTUAL SLOPES) | |
|---|---|
| BACKSLOPE | CUT HEIGHT |
| 2:1 | > 15' |
| 3:1 | 12' TO 15' |
| 4:1 | 8' TO 11' |
| 6:1 | < 8' |

NOTE: IF BACKSLOPE IS GREATER THAN 3:1, USE 40' RADIUS.

FOR PROPOSED LEGEND, SEE SHEET 29

# TYPICAL SECTIONS - GRADING DETAILS

SUM-77/277/224
VARIOUS



O:\2017\2017258\ProjectData\SUM\106002\Design\Roadway\Sheets\106002_GY026.dgn Sheet 1/15/2021 4:50:24 PM Ikirkland

WIDTH "G" (SEE NOTE "A")

NB/SB I.R. 77 & EB/WB I.R. 277
15.0' LT./RT. (>6:1)
10.0' LT./RT. (≤6:1)

RAMP ACCEL/DECEL LANES/GORES
13.0' RT. (>6:1)
8.0' RT. (≤6:1)

SINGLE LANE RAMPS
9.0' LT./ 11.0' RT. (>6:1)
6.0' LT./ 8.0' RT. (≤6:1)

SINGLE LANE LOOP RAMPS
9.0' LT./ 11.0' RT. (>6:1)
6.0' LT./ 8.0' RT (≤6:1)

MULTILANE RAMPS
9.0' LT./ 15.0' RT. (>6:1)
6.0' LT./ 10.0' RT (≤6:1)

WIDTH "H" (SEE NOTE "A")

NB/SB I.R. 77 & EB/WB I.R. 277
5.0' LT./RT. (>6:1)
0.0' LT./RT. (≤6:1)

RAMP ACCEL/DECEL LANES/GORES
5.0' RT. (>6:1)
0.0' RT. (≤6:1)

SINGLE LANE RAMPS
5.0' LT./RT. (>6:1)
2.0' LT./RT. (≤6:1)

SINGLE LANE LOOP RAMPS
5.0' LT./RT. (>6:1)
3.0' LT. (≤6:1)
2.0' RT. (≤6:1)

MULTILANE RAMPS
5.0' LT./RT. (>6:1)
2.0' LT. (≤6:1)
0.0' RT. (≤6:1)

NOTE "A"

ALL DIMENSIONS ARE DEFINED LOOKING IN DIRECTION OF TRAVEL

NOTE "B"

SEE CROSS SECTIONS FOR GRADING TRANSITIONS FROM MAINLINE TO RAMP WIDTHS

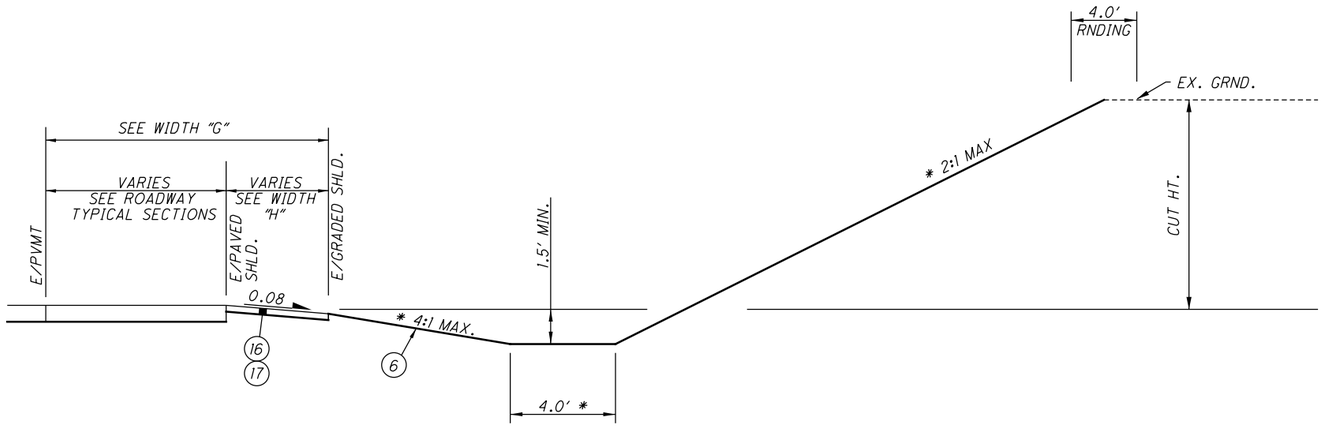


CUT SECTION - CASE 3 (CLEAR ZONE GRADING)

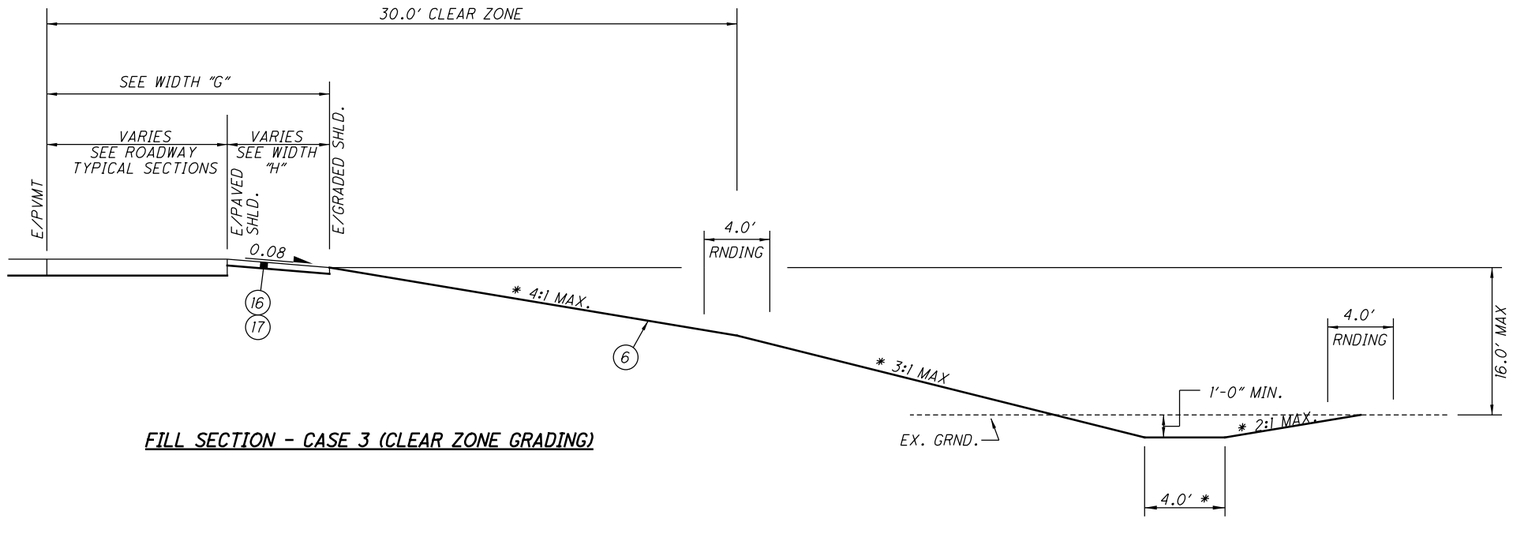


FILL SECTION - CASE 3 (CLEAR ZONE GRADING)

* OR AS SHOWN ON CROSS SECTIONS

FOR PROPOSED LEGEND, SEE SHEET 29

TYPICAL SECTIONS - GRADING DETAILS

SUM-77/277/224
VARIOUS



O:\2017\2017258\ProjectData\SUM\106002\Design\Roadway\Sheets\106002_GY038.dgn Sheet 1/15/2021 4:50:25 PM Ikirkland

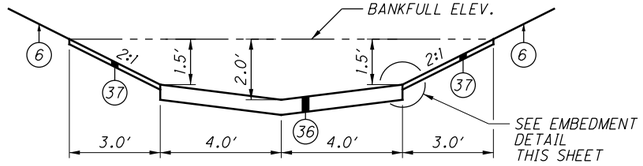


**STREAM DETAIL #1 - RAMP A**

LIMITING STATIONS
STA. 87+50.00 TO STA. 90+50.00
STA. 91+50.00 TO STA. 91+90.00

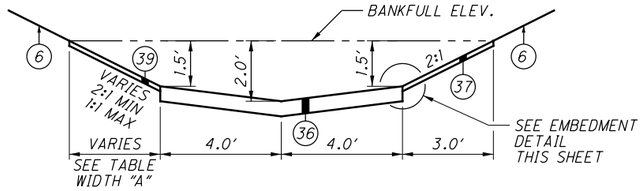


**STREAM DETAIL #2 - RAMP A**

LIMITING STATIONS
STA. 90+50.00 TO STA. 91+50.00

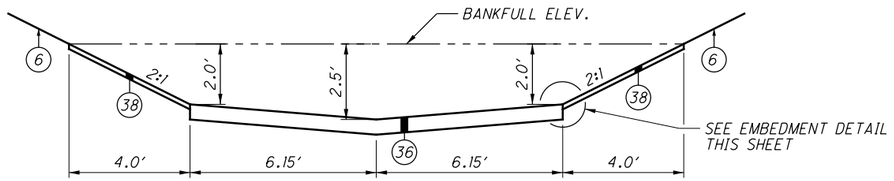


**STREAM DETAIL #3 - RAMP B**

LIMITING STATIONS
STA. 209+50.00 TO STA. 210+00.00

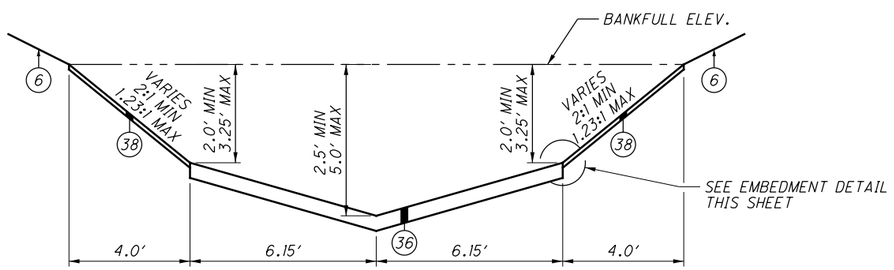


**STREAM DETAIL #4 - RAMP B**

LIMITING STATIONS
STA. 208+50.00 TO STA. 209+50.00
STA. 207+50.00 TO STA. 208+00.00

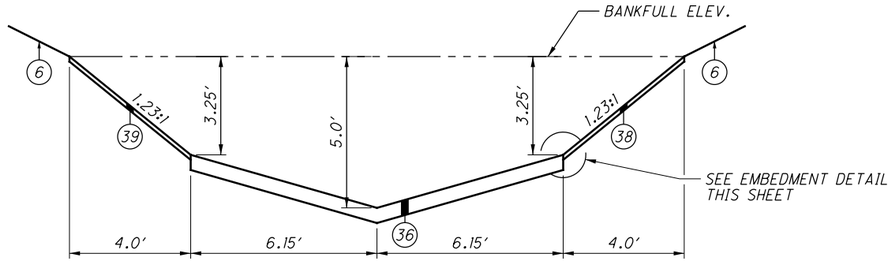


**STREAM DETAIL #5 - RAMP B**

LIMITING STATIONS
STA. 208+00.00 TO STA. 208+50.00

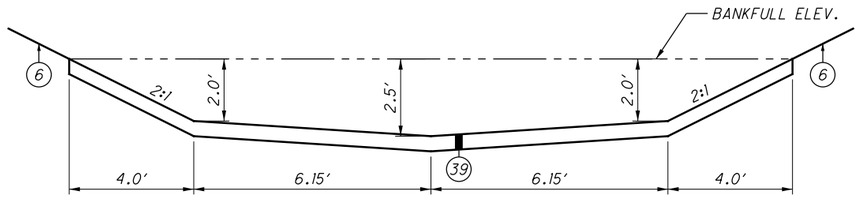


**STREAM DETAIL #6 - RAMP B**

LIMITING STATIONS
STA. 207+00.00 TO STA. 207+50.00

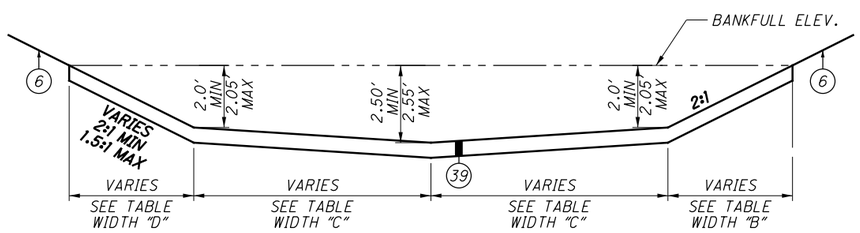


**STREAM DETAIL #7 - RAMP B**

LIMITING STATIONS
STA. 206+25.00 TO STA. 207+00.00

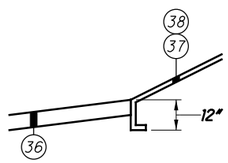


**EMBEDMENT DETAIL**

**RAMP A STREAM WIDTH TABLE**

| | WIDTH "A" | | | |
|---|---|---|---|---|
| | STATION | | WIDTH (FT.) | |
| | FROM | TO | FROM | TO |
| RAMP A | 87+00.00 | 90+50.00 | 3.0 | 3.0 |
| | 90+50.00 | 91+00.00 | 3.0 | 1.5 |
| | 91+00.00 | 91+50.00 | 1.5 | 3.0 |
| | 91+50.00 | 91+90.00 | 3.0 | 3.0 |

**RAMP B STREAM WIDTH TABLE**

| | WIDTH "B" | | | |
|---|---|---|---|---|
| | STATION | | WIDTH (FT.) | |
| | FROM | TO | FROM | TO |
| | 206+50.00 | 207+00.00 | 4.10 | 4.00 |
| | 207+00.00 | 210+00.00 | 4.00 | 4.00 |
| | WIDTH "C" | | | |
| | STATION | | WIDTH (FT.) | |
| RAMP B | FROM | TO | FROM | TO |
| | 206+50.00 | 207+00.00 | 4.56 | 6.15 |
| | 207+00.00 | 210+00.00 | 6.15 | 6.15 |
| | WIDTH "D" | | | |
| | STATION | | WIDTH (FT.) | |
| | FROM | TO | FROM | TO |
| | 206+50.00 | 207+00.00 | 3.08 | 4.00 |
| | 207+00.00 | 210+00.00 | 4.00 | 4.00 |

FOR PROPOSED LEGEND, SEE SHEET 29

# TYPICAL SECTIONS - STREAM DETAILS

SUM-77/277/224
VARIOUS



O:\2017\2017258\ProjectData\SUM\106002\Design\Roadway\Sheets\106002_GY036.dgn Sheet 1/15/2021 4:50:26 PM lkirkland

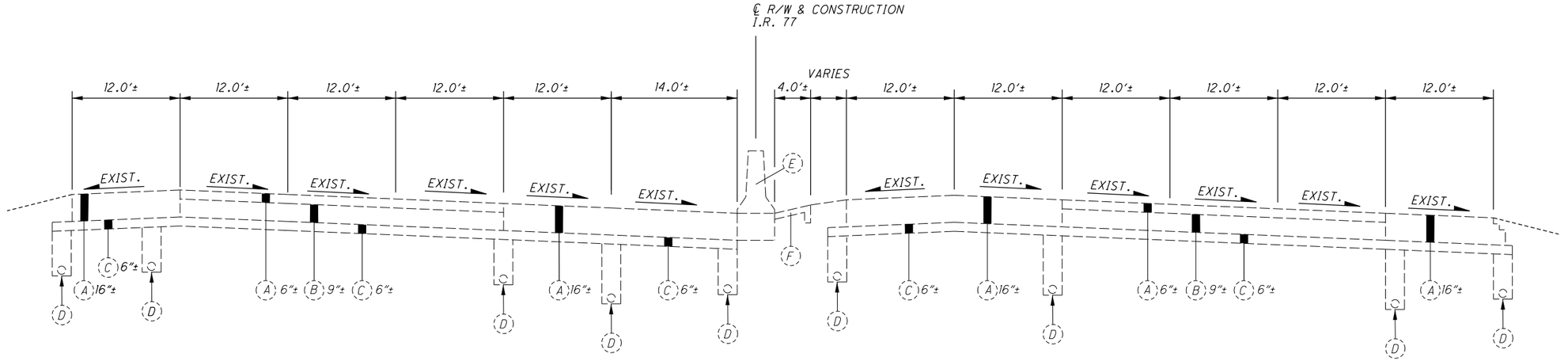


**EXISTING SUPERELEVATED RIGHT SECTION - I.R. 77**

LIMITING STATIONS

STA. 371+50.00TO STA. 372.58.00

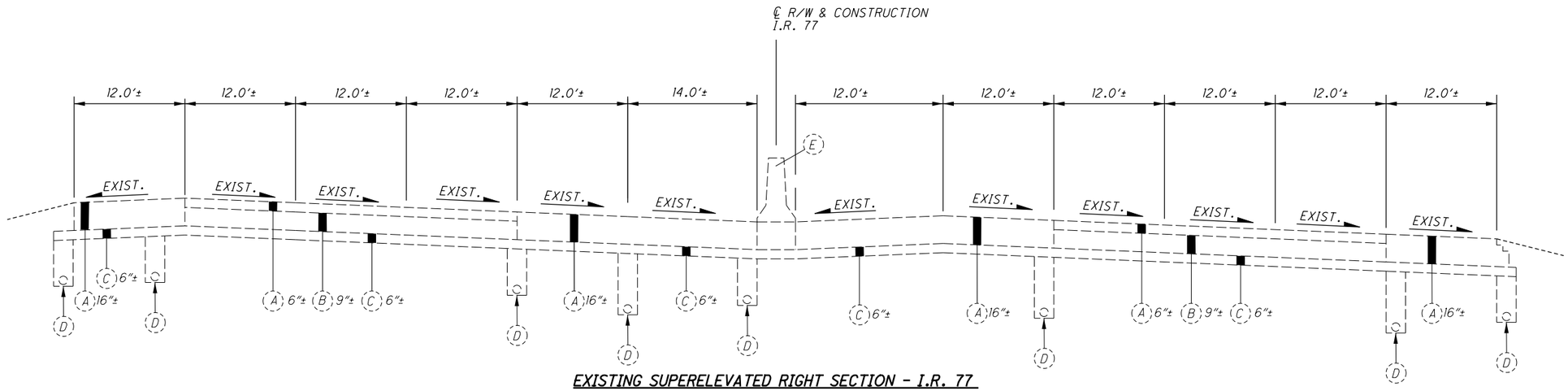


**EXISTING SUPERELEVATED RIGHT SECTION - I.R. 77**

LIMITING STATIONS

STA. 372+58.00 TO STA. 377+58.00

(A) EXISTING ASPHALT
(B) EXISTING CONCRETE
(C) EXISTING AGGREGATE BASE
(D) EXISTING UNDERDRAIN
(E) EXISTING B-50 BARRIER
(F) EXISTING RIPRAP USING 6" REINFORCED CONCRETE
(G) EXISTING WING-WALL

TYPICAL SECTIONS

SUM-77/277/224
VARIOUS

59
1288

O:\2017\2017258\ProjectData\SUM\106002\Design\Roadway\Sheets\106002_GY027.dgn Sheet 1/15/2021 4:50:26 PM lkirkland

FOR EXISTING LEGEND, SEE SHEET 59

(##.##) = DIMENSIONS OF ORIGINAL LANE CONFIGURATION/PAVEMENT COMPOSITION WHEN DIFFERS FROM CURRENT STRIPING CONFIGURATION

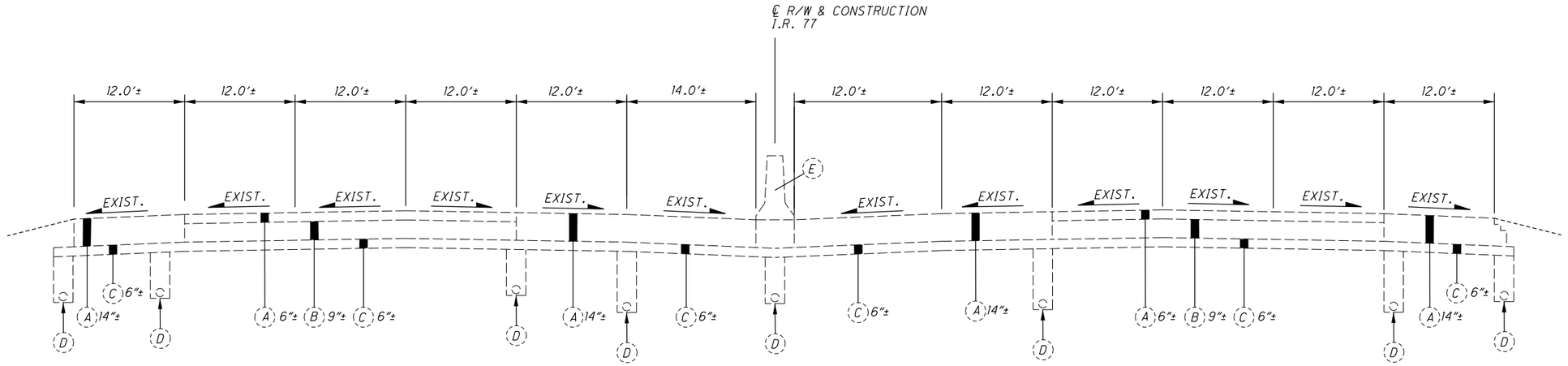


**EXISTING NORMAL SECTION - I.R. 77**

LIMITING STATIONS
STA. 377+58.00 TO STA. 399+50.00

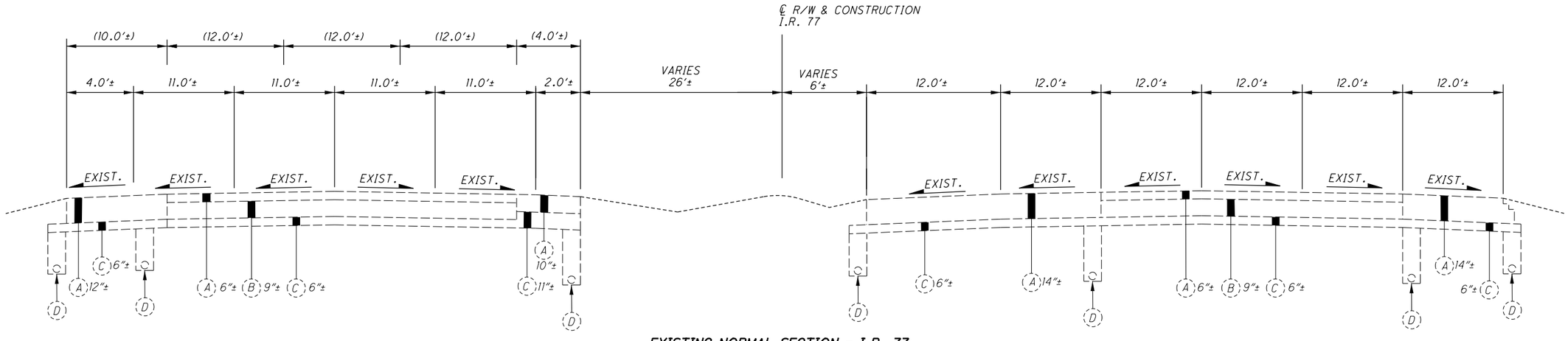


**EXISTING NORMAL SECTION - I.R. 77**

LIMITING STATIONS
STA. 399+50.00 TO STA. 418+00.00

TYPICAL SECTIONS

SUM-77/277/224
VARIOUS

60
1288

O:\2017\2017258\ProjectData\SUM\106002\Design\Roadway\Sheets\106002_GY028.dgn Sheet 1/15/2021 4:50:27 PM lkirkland

FOR EXISTING LEGEND, SEE SHEET 59

(##.##) = DIMENSIONS OF ORIGINAL LANE CONFIGURATION/PAVEMENT COMPOSITION WHEN DIFFERS FROM CURRENT STRIPING CONFIGURATION

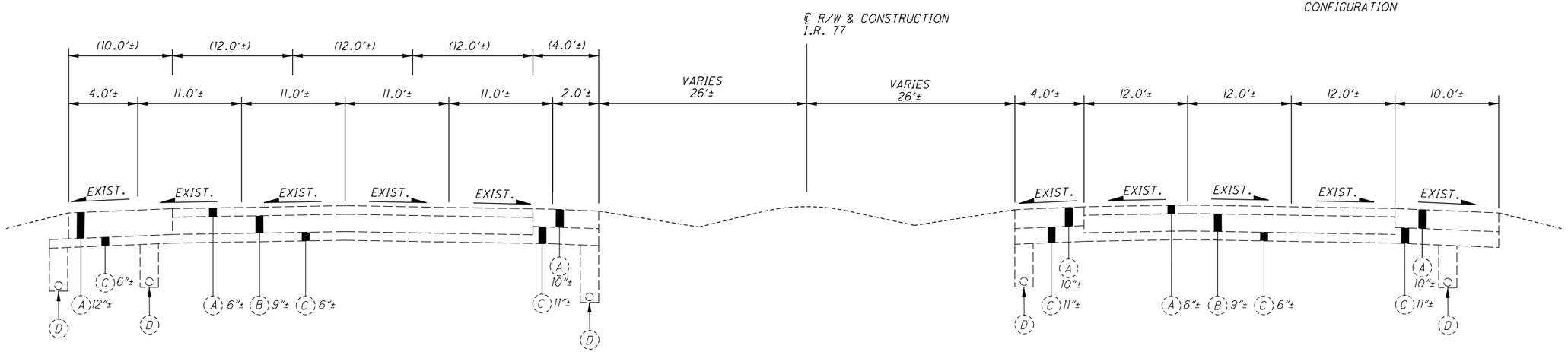


**EXISTING NORMAL SECTION - I.R. 77**

LIMITING STATIONS

STA. 418+00.00 TO STA. 472+00.00 (I.R. 77 SB)
STA. 418+00.00 TO STA. 475+00.00 (I.R. 77 NB)

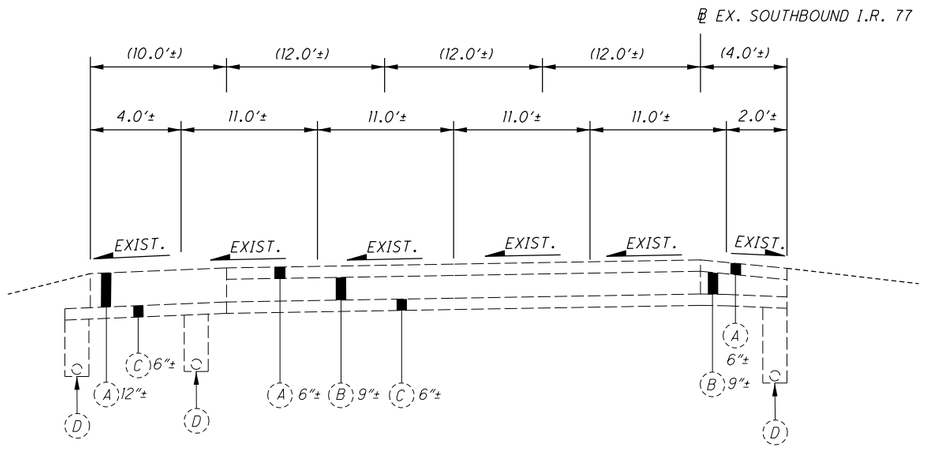


**EXISTING SUPERELEVATED LEFT SECTION - SOUTHBOUND I.R. 77**

LIMITING STATIONS

STA. 472+00.00 TO STA. 495+50.00

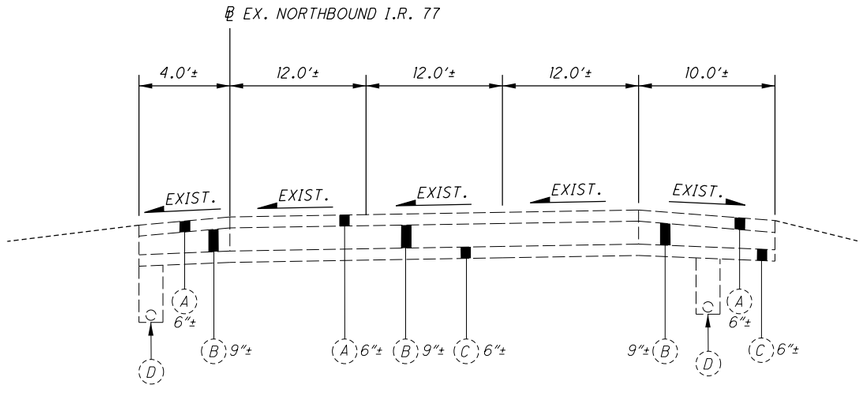


**EXISTING SUPERELEVATED LEFT SECTION - NORTHBOUND I.R. 77**

LIMITING STATIONS

STA. 475+00.00 TO STA. 498+50.00

TYPICAL SECTIONS

SUM-77/277/224
VARIOUS

61
1288

O:\2017\2017258\ProjectData\SUM\106002\Design\Roadway\Sheets\106002_GY029.dgn Sheet 1/15/2021 4:50:28 PM Ikirkland

FOR EXISTING LEGEND, SEE SHEET 59

(##.##) = DIMENSIONS OF ORIGINAL LANE CONFIGURATION/PAVEMENT COMPOSITION WHEN DIFFERS FROM CURRENT STRIPING CONFIGURATION

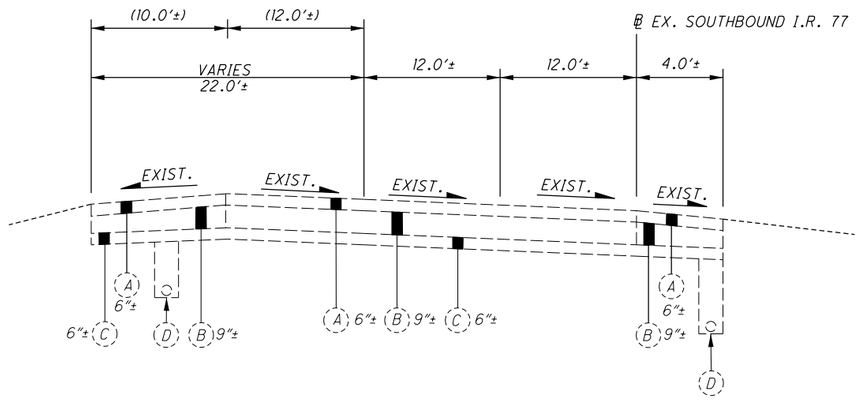


**EXISTING SUPERELEVATED RIGHT SECTION - SOUTHBOUND I.R. 77**

LIMITING STATIONS
STA. 495+50.00 TO STA. 515+59.18

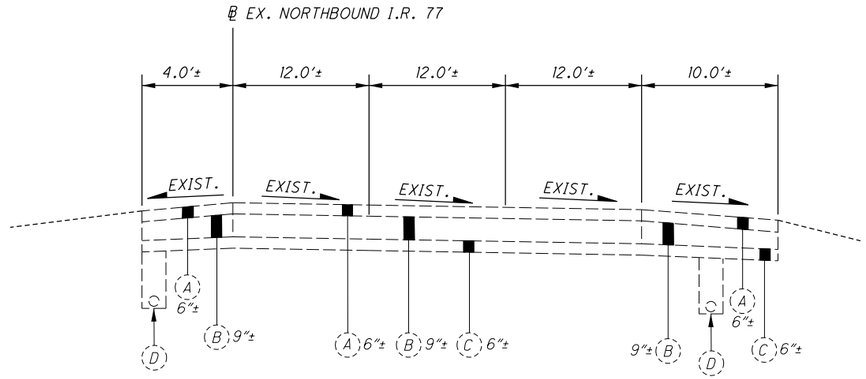


**EXISTING SUPERELEVATED RIGHT SECTION - NORTHBOUND I.R. 77**

LIMITING STATIONS
STA. 498+50.00 TO STA. 515+62.72

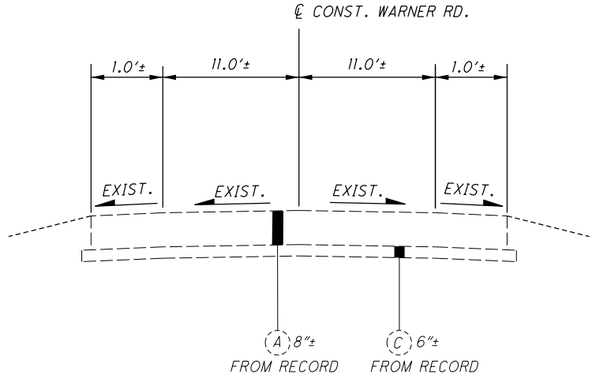


**EXISTING WARNER ROAD NORMAL SECTION**

LIMITING STATIONS
STA. 24+50.00 TO STA. 27+70.00

TYPICAL SECTIONS

SUM-77/277/224
VARIOUS

62
1288

O:\2017\2017258\ProjectData\SUM\106002\Design\Roadway\Sheets\106002_GY030.dgn Sheet 1/15/2021 4:50:28 PM lkirkland

FOR EXISTING LEGEND, SEE SHEET 59

(##.##) = DIMENSIONS OF ORIGINAL LANE CONFIGURATION/PAVEMENT COMPOSITION WHEN DIFFERS FROM CURRENT STRIPING CONFIGURATION

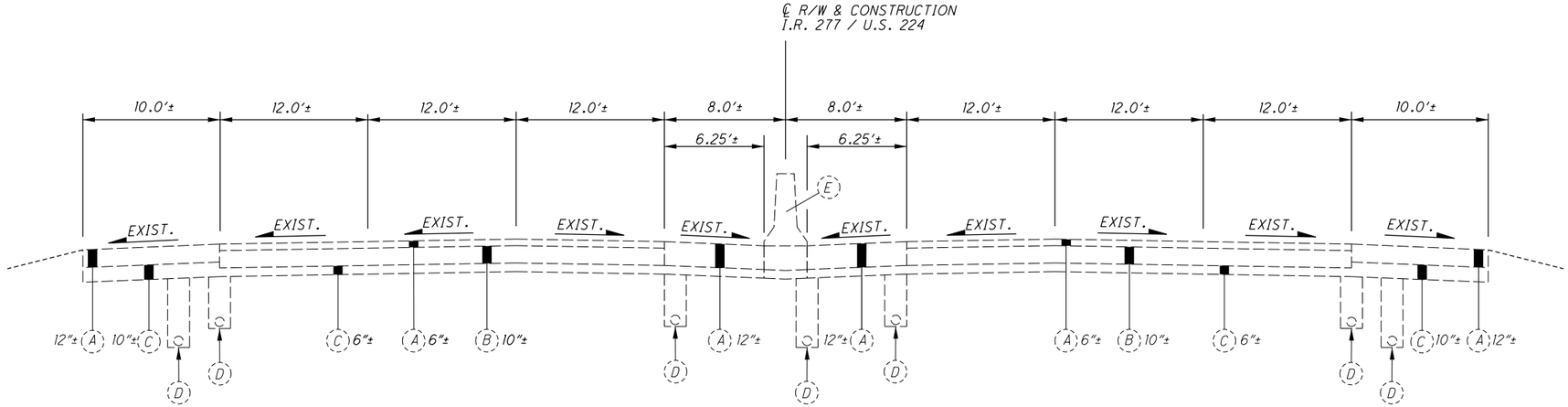


**EXISTING NORMAL SECTION - I.R. 277/U.S. 224**

LIMITING STATIONS

STA. 225+00.00 TO STA. 229+00.00
STA. 271+00.00 TO STA 281+00.00

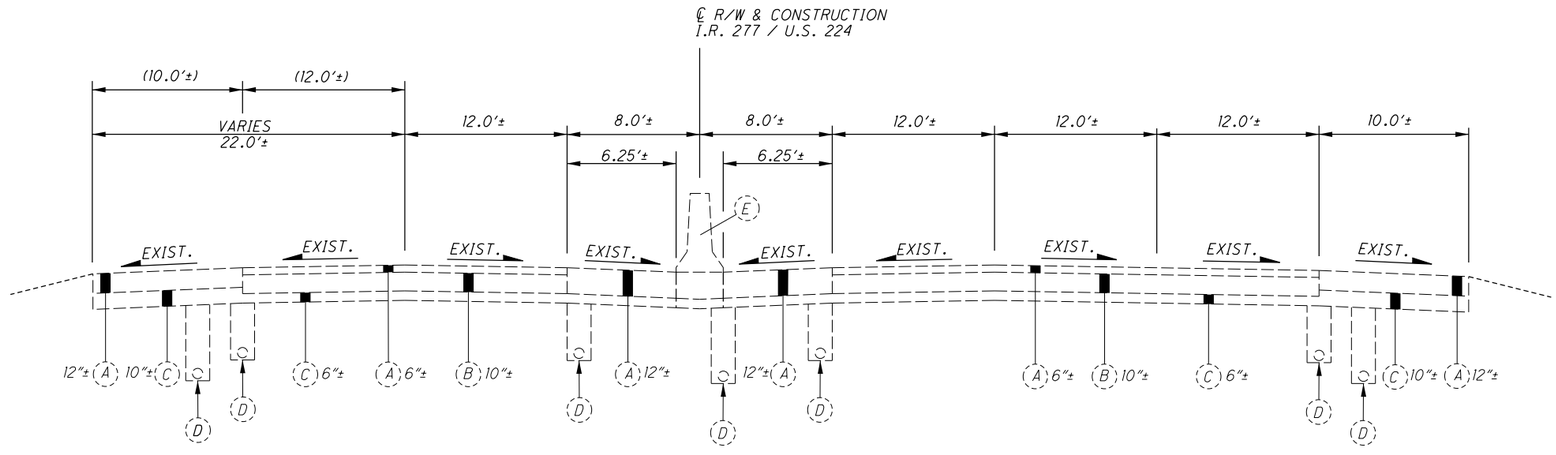


**EXISTING NORMAL SECTION - I.R. 277/U.S. 224**

LIMITING STATIONS

STA. 229+00.00 TO STA. 250+91.71

TYPICAL SECTIONS

SUM-77/277/224
VARIOUS

63
1288

O:\2017\2017258\ProjectData\SUM\106002\Design\Roadway\Sheets\106002_GY031.dgn Sheet 1/15/2021 4:50:29 PM lkirkland

FOR EXISTING LEGEND, SEE SHEET 59

(##.##) = DIMENSIONS OF ORIGINAL LANE CONFIGURATION/PAVEMENT COMPOSITION WHEN DIFFERS FROM CURRENT STRIPING CONFIGURATION

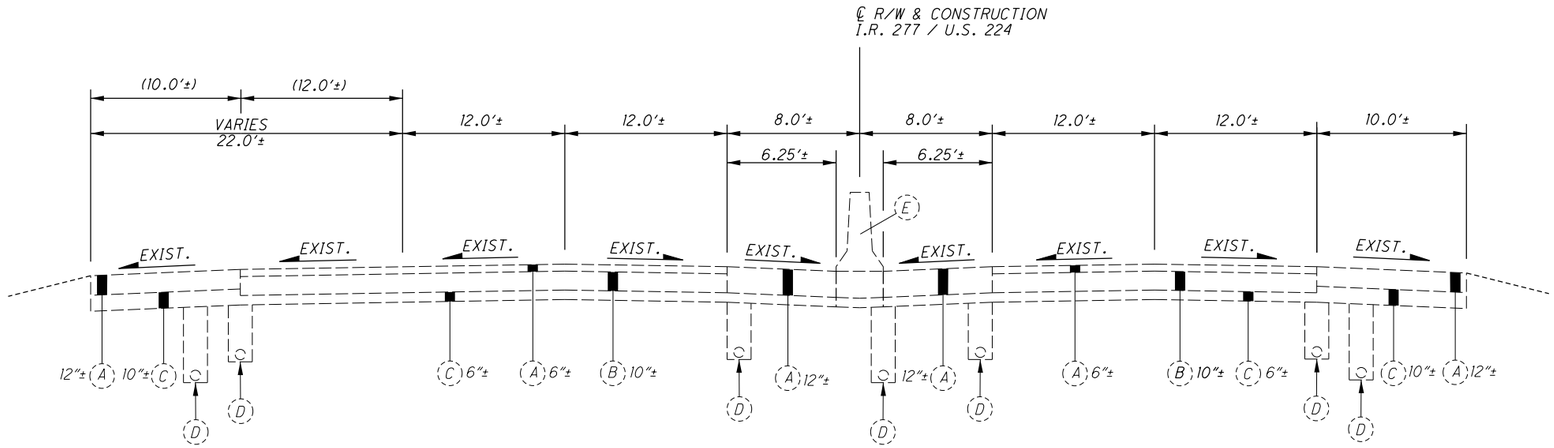


**EXISTING NORMAL SECTION - I.R. 277/U.S. 224**

LIMITING STATIONS
STA. 257+02.91 TO STA. 271+00.00

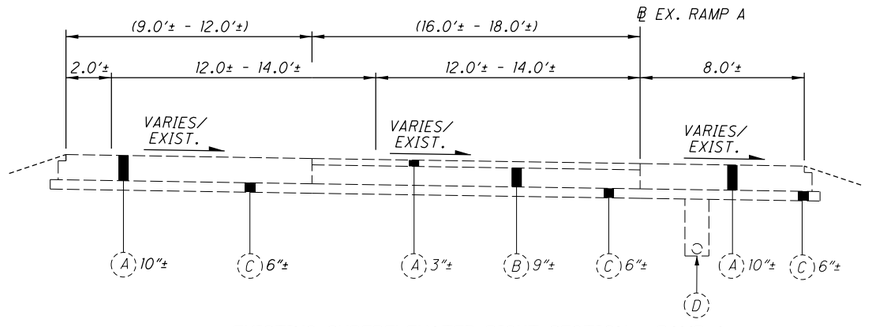


**EXISTING SUPERELEVATED RIGHT SECTION - RAMP A**

LIMITING STATIONS
STA. 0+00.00 TO STA. 16+50.00

TYPICAL SECTIONS

SUM-77/277/224
VARIOUS

64
1288

O:\2017\2017258\ProjectData\SUM\106002\Design\Roadway\Sheets\106002_GY032.dgn Sheet 1/15/2021 4:50:30 PM lkirkland

FOR EXISTING LEGEND, SEE SHEET 59

(##.##) = DIMENSIONS OF ORIGINAL LANE CONFIGURATION/PAVEMENT COMPOSITION WHEN DIFFERS FROM CURRENT STRIPING CONFIGURATION

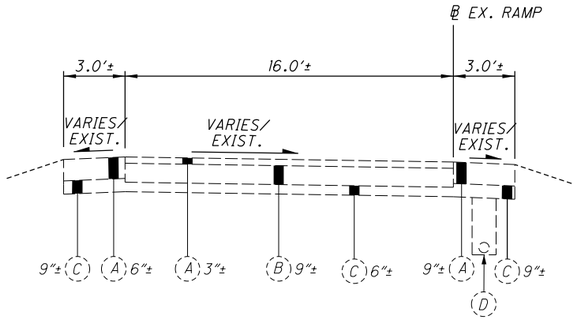


**EXISTING SUPERELEVATED RIGHT SECTION - RAMPS**

LIMITING STATIONS
STA. 0+00.00 TO STA. 13+50.00 (RAMP B)
STA. 0+00.00 TO STA. 17+90.00 (RAMP B1)
STA. 0+00.00 TO STA. 25+17.54 (RAMP C)
STA. 0+00.00 TO STA. 18+62.36 (RAMP C1)
STA. 0+00.00 TO STA. 21+60.12 (RAMP D)

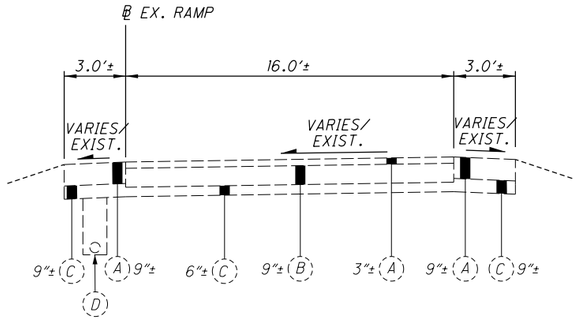


**EXISTING SUPERELEVATED LEFT SECTION - RAMPS**

LIMITING STATIONS
STA. 0+00.00 TO STA. 17+81.12 (RAMP C2)

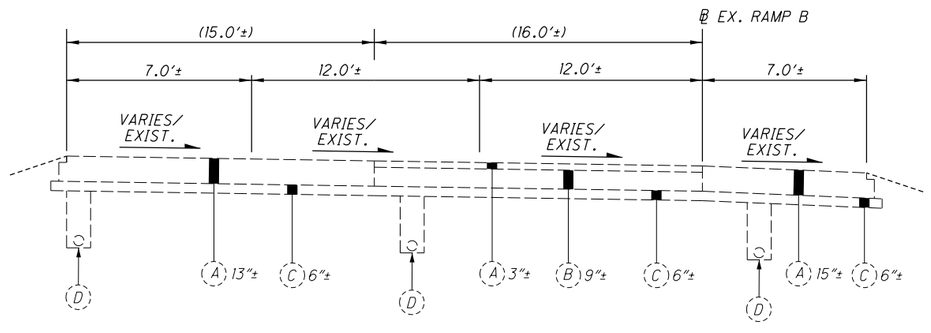


**EXISTING SUPERELEVATED RIGHT SECTION - RAMP B**

LIMITING STATIONS
STA. 13+50.00 TO STA. 27+95.00

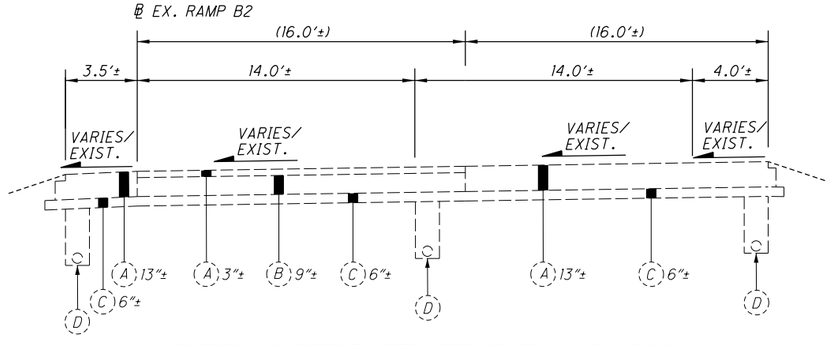


**EXISTING SUPERELEVATED LEFT SECTION - RAMP B2**

LIMITING STATIONS
STA. 0+00.00 TO STA. 7+15.59
STA. 9+83.29 TO STA. 15+42.67

TYPICAL SECTIONS

SUM-77/277/224
VARIOUS

65
1288

O:\2017\2017258\ProjectData\SUM\106002\Design\Roadway\Sheets\106002_GY033.dgn Sheet 1/15/2021 4:50:31 PM lkirkland

# GENERAL

## UTILITIES

LISTED BELOW ARE ALL UTILITIES LOCATED WITHIN THE PROJECT CONSTRUCTION LIMITS TOGETHER WITH THEIR RESPECTIVE OWNERS:

AKRON SEWER MAINTENANCE
ATTN: ROB SCARLATELLI/
SCOTT DAVENPORT
2460 AKRON PENINSULA RD.
AKRON, OH 44313
(330) 375-2666

CITY OF AKRON TRAFFIC
1420 TRIPLETT BLVD, BUILDING 2
AKRON, OH 44306
(330) 375-2851
traffic@akronohio.gov

AKRON WATER DISTRIBUTION
ATTN: TONY PUGLIA
1460 TRIPLETT BLVD.
AKRON, OH 44306
(330) 375-2420
tpuglia@akronohio.gov

AT&T OHIO
ATTN: LUCIE HINSHAW
50 WEST BOWERY STREET, 6TH FLOOR
AKRON, OH 44308
(330) 384-3048
lb2785@att.com

CHARTER COMMUNICATION
(SPECTRUM/TIME WARNER)
ATTN: JIM LONG
1200 BROWNSTONE AVE.
AKRON, OH 44310
(330) 622-4106

CROWN CASTLE (LIGHTOWER)
ATTN: ED DALY/BILL DARDEN
15565 NEO PARKWAY
GARFIELD HEIGHTS, OH 44128
(585) 397-5988
Ed.Daly@crowncastle.com
Bill.Darden@crowncastle.com

EVERFLOW EASTERN PARTNERS LP
ATTN: GEORGE STRAWN II
29093 S.R. 62
SALEM, OH 44460
(330) 537-3863
gstrawn59@gmail.com

DOMINION EAST OHIO
ATTN: 2nd Floor Relocation Design
320 SPRINGSIDE DRIVE, SUITE 320
AKRON, OH 44333
(330) 664-2409
Relocation@dominionenergy.com

EVERSTREAM
ATTN: ROB WOOD
1228 EUCLID AVE., SUITE 250
CLEVELAND, OH 44115
(216) 923-2209 (OFFICE)
(440) 728-0542 (CELL)
rwood@everstream.net

FIRST ENERGY (OHIO EDISON)
ATTN: AMANDA TURNER
1910 WEST MARKET STREET, BLDG. 1
AKRON, OH 44313
(330) 436-4093
turnera@firstenergycorp.com

ODOT ITS
(NON-OUPS MEMBER)
(614) 387-4113
FAX: (614) 887-4134
cen.its.lab@dot.ohio.gov
NOTE: CONTRACTOR SHALL CONTACT IF MARKING OF ITS INFRASTRUCTURE IS NEEDED. CONTRACTOR SHALL THEN MARK THROUGHOUT PROJECT DURATION IN ACCORDANCE WITH SS 809.

ODOT DISTRICT 4
ATTN: DAVID KONEVAL
2088 SOUTH ARLINGTON ROAD
AKRON, OH 44306
(330) 786-3146
dave.koneval@dot.ohio.gov

OHIO EDISON (TRANSMISSION)
ATTN: MARY WALTON
76 SOUTH MAIN STREET
AKRON, OH 44308-1890
(330) 384-4928
(321) 626-1079 (CELL)
mwalton@firstenergycorp.com

THE UNDERGROUND UTILITIES ON THIS PLAN HAVE BEEN LOCATED BY USING A SUBSURFACE UTILITY ENGINEERING COMPANY [SUE]. IF THERE ARE ANY DISCREPANCIES BETWEEN FIELD MARKINGS AND WHAT THE PLAN INDICATES, PLEASE CONTACT MATTHEW STEELE OF ODOT DISTRICT 4, PROJECT UTILITY COORDINATOR 330-786-4832, PRIOR TO ANY SUBSURFACE WORK BEING INITIATED.

## WORK AROUND DOMINION ENERGY FACILITIES

IT IS THE CONTRACTOR'S RESPONSIBILITY TO MAINTAIN THE LATERAL AND SUBJACENT SUPPORT OF DOMINION ENERGY'S PIPELINE(S), IN COMPLIANCE TO 29 CFR, PART 1926, SUBPART P, (SAFE EXCAVATION & SHORING). ONE-FOOT MINIMUM VERTICAL AND HORIZONTAL CLEARANCE MUST BE MAINTAINED BETWEEN DOMINION ENERGY OHIO'S (DEO) EXISTING PIPELINE(S) AND ALL OTHER IMPROVEMENTS. EXTREME CARE SHOULD BE TAKEN NOT TO HARM ANY DEO FACILITY (PIPELINES, ETC.) OR APPURTENANCE (PIPE COATING, TRACER WIRE, CATHODIC PROTECTION TEST STATION WIRES & DEVICES, VALVE BOXES, ETC.). DEO FACILITIES MUST BE PROTECTED WITH A TARP DURING BRIDGE CONSTRUCTION. THE CONTRACTOR WILL BE RESPONSIBLE AND LIABLE FOR ENSURING THAT ALL DEO EXISTING FACILITIES, ABOVE AND BELOW GROUND, REMAIN UNDAMAGED, ACCESSIBLE AND IN WORKING ORDER. THE CROSSING OF DEO'S PIPELINE WITH ANOTHER STEEL FACILITY MAY CREATE A POTENTIAL CORROSION ISSUE FOR THE PROPOSED FACILITY AND THE EXISTING DEO FACILITY. PLEASE CONTACT DOMINION ENERGY OHIO'S CORROSION DEPARTMENT: DAVE CUTLIP (330-266-2121), RICK MCDONALD (330-266-2122), OR AL HUMRICHOUSER (330-478-3757).

## ROUNDING

THE ROUNDING AT SLOPE BREAKPOINTS SHOWN ON THE TYPICAL SECTIONS APPLIES TO ALL CROSS-SECTIONS EVEN THOUGH OTHERWISE SHOWN.

## CLEARING AND GRUBBING

ALTHOUGH THERE ARE NO TREES OR STUMPS SPECIFICALLY MARKED FOR REMOVAL WITHIN THE LIMITS OF THE PROJECT, LUMP SUM QUANTITY IS INCLUDED IN THE GENERAL SUMMARY FOR ITEM 201, CLEARING AND GRUBBING. ALL PROVISIONS AS SET FORTH IN THE SPECIFICATIONS UNDER THIS ITEM ARE INCLUDED IN THE LUMP SUM PRICE BID FOR ITEM 201, CLEARING AND GRUBBING.

## BENCHING OF FOUNDATION SLOPES

ALTHOUGH CROSS-SECTIONS INDICATE SPECIFIC DIMENSIONS FOR PROPOSED BENCHING OF THE EMBANKMENT FOUNDATIONS IN CERTAIN AREAS, NO WAIVER OF THE SPECIFICATIONS IS INTENDED. BENCH ALL OTHER SLOPED EMBANKMENT AREAS AS SET FORTH IN SECTION 203.05 OF THE CONSTRUCTION AND MATERIAL SPECIFICATIONS (C&MS). NO ADDITIONAL PAYMENT WILL BE MADE FOR BENCHING REQUIRED UNDER THE PROVISIONS OF SECTION 203.05

## MONUMENT ASSEMBLIES

CONSTRUCT MONUMENT ASSEMBLIES IN ACCORDANCE WITH THE DETAILS SHOWN ON THE STANDARD CONSTRUCTION DRAWINGS AND AT THE LOCATIONS SHOWN ON SHEET NO. 1283 .

THE FOLLOWING QUANTITIES HAVE BEEN PROVIDED:

| | |
|---|---|
| ITEM 623 - MONUMENT ASSEMBLY | 12 EACH |
| ITEM 623 - MONUMENT BOX ADJUSTED TO GRADE | 2 EACH |

## FENCE LENGTHS

THE LENGTHS OF FENCE SHOWN IN THE PLANS ARE HORIZONTAL DIMENSIONS. MEASUREMENTS OF THE FINAL QUANTITIES WILL BE IN ACCORDANCE WITH ITEM 607.

## WORK LIMITS

THE WORK LIMITS SHOWN ON THESE PLANS ARE FOR PHYSICAL CONSTRUCTION ONLY. PROVIDE THE INSTALLATION AND OPERATION OF ALL WORK ZONE TRAFFIC CONTROL AND WORK ZONE TRAFFIC CONTROL DEVICES REQUIRED BY THESE PLANS WHETHER INSIDE OR OUTSIDE THESE WORK LIMITS.

## SURVEYING PARAMETERS

PRIMARY PROJECT CONTROL MONUMENTS GOVERN ALL POSITIONING ON ODOT PROJECTS. SEE SHEETS 27 OF THE PLANS FOR A TABLE CONTAINING PROJECT CONTROL INFORMATION.

USE THE FOLLOWING PROJECT CONTROL, VERTICAL POSITIONING, AND HORIZONTAL POSITIONING PARAMETERS FOR ALL SURVEYING:

PROJECT CONTROL

POSITIONING METHOD: GPS
MONUMENT TYPE: TYPE A & TYPE B

VERTICAL POSITIONING

ORTHOMETRIC HEIGHT DATUM: NAVD 88
GEOID: 2012B

HORIZONTAL POSITIONING

REFERENCE FRAME: NAD 83 (2011) (EPOCH: 2010.0000)
ELLIPSOID: GRS80
MAP PROJECTION: LAMBERT CONFORMAL CONIC
COORDINATE SYSTEM: OHIO NORTH ZONE (3401)
COMBINED SCALE FACTOR: 0.99989474882
ORIGIN OF COORDINATE
SYSTEM: EASTING (X): 0, NORTHING (Y): 0

USE THE POSITIONING METHODS AND MONUMENT TYPE USED IN THE ORIGINAL SURVEY TO RESTORE ALL MONUMENTS RELATED TO PRIMARY PROJECT CONTROL THAT ARE DAMAGED OR DESTROYED BY CONSTRUCTION ACTIVITIES. RESTORE THE DAMAGED OR DESTROYED MONUMENTS IN ACCORDANCE WITH CMS 623.

UNITS ARE IN U.S. SURVEY FEET.

## AIRWAY/HIGHWAY CLEARANCE FOR AIRPORTS AND HELIPORTS

THIS PROJECT HAS BEEN IDENTIFIED AS BEING WITHIN THE INFLUENCE AREA OF A PUBLIC USE AIRPORT OR HELIPORT. NO TEMPORARY STRUCTURES OR CONSTRUCTION EQUIPMENT AT MAXIMUM OPERATING HEIGHT SHALL EXCEED A HEIGHT OF 100 FT OR LESS FOR STRUCTURES AND 100-88 FT FOR LIGHT TOWERS, HEIGHT OF TEMPORARY EQUIPMENT USED TO INSTALL LIGHT TOWERS IS NOT TO EXCEED THE ERECTED PLAN SPECIFIED HEIGHT OF THE LIGHT TOWER. IF ANY TEMPORARY STRUCTURES OR CONSTRUCTION EQUIPMENT WILL EXCEED THIS HEIGHT, FURTHER COORDINATION WITH THE FEDERAL AVIATION ADMINISTRATION (FAA), AND THE ODOT OFFICE OF AVIATION, WILL BE NECESSARY PRIOR TO ERECTING SUCH TEMPORARY STRUCTURES OR OPERATING SUCH EQUIPMENT ON THE PROJECT. THE CONTRACTOR WILL BE REQUIRED TO FILE A NEW FAA FORM 7460-1, ADVISING THE FAA THAT AERONAUTICAL STUDY NUMBERS VARYING FROM 2021-AGL-1137 TO 2021-AGL-5443-OE IS BEING RESUBMITTED AND THAT AN ALTERATION TO THE ORIGINAL SUBMISSION IS REQUESTED.

NOTIFY THE ODOT OFFICE OF AVIATION WHEN RESUBMITTING FAA FORM 7460-1. NO TEMPORARY STRUCTURES OR CONSTRUCTION EQUIPMENT SHALL EXCEED THE PERMISSIBLE HEIGHT, UNTIL A COPY OF THE FAA APPROVAL AND THE ODOT OFFICE OF AVIATION PERMIT HAS BEEN FURNISHED TO THE PROJECT ENGINEER.

FAA APPROVAL MAY TAKE UP TO 45 DAYS. ALL SUBMISSIONS SHALL BE DIRECTED TO THESE OFFICES:

FEDERAL AVIATION ADMINISTRATION
SOUTHWEST REGIONAL OFFICE
OBSTRUCTION EVALUATION GROUP
10101 HILLWOOD PARKWAY
FORT WORTH, TX 76177
FAX: (817) 222-5920
http://ceaaa.faa.gov

OHIO DEPARTMENT OF TRANSPORTATION
OFFICE OF AVIATION
2829 WEST DUBLIN-GRANVILLE ROAD
COLUMBUS, OHIO 43235

## FAA COORDINATION

CRANES FOR ERECTION OF LIGHT TOWER WORK:

NOTIFY THE AKRON FULTON INTERNATIONAL AIRPORT MANAGER AT (330) 733-4760 AT LEAST 3 BUSINESS DAYS PRIOR TO ERECTION OF CRANE(S) AND AGAIN WHEN CRANE(S) IS NO LONGER ON SITE.

CRANES FOR ERECTION OF LIGHT TOWER WORK:

CRANES ARE TO BE MARKED/LIGHTED IN ACCORDANCE WITH FAA ADVISORY CIRCULAR 70/7460-1 M, OBSTRUCTION MARKING AND LIGHTING, FLAGS/RED LIGHTS-CHAPTERS 3 (MARKED) 4, 5 (RED), 14 (TEMPORARY), AND 15.

CRANES FOR STRUCTURE WORK:

NOTIFY THE AKRON FULTON INTERNATIONAL AIRPORT MANAGER AT (330) 733-4760 AT LEAST 3 BUSINESS DAYS PRIOR TO ERECTION OF CRANE(S) AND AGAIN WHEN CRANE(S) IS NO LONGER ON SITE. NOTIFY THE AKRON FULTON INTERNATIONAL AIR TRAFFIC CONTROL TOWER AT (330) 492-3801 AT LEAST 3 BUSINESS DAYS PRIOR TO ERECTION OF CRANE(S) AND AGAIN WHEN CRANE(S) IS NO LONGER ON SITE. IN THE CASE AIR TRAFFIC CONTROL OF THE AKRON FULTON INTERNATIONAL AIRPORT WOULD REQUEST THE IMMEDIATE LOWERING OF CRANE, PROVIDE AIR TRAFFIC CONTROL TOWER THE CONTACT INFORMATION FOR ONSITE OPERATOR.

CRANES FOR STRUCTURE WORK:

CRANES ARE TO BE MARKED/LIGHTED IN ACCORDANCE WITH FAA ADVISORY CIRCULAR 70/7460-1 M, OBSTRUCTION MARKING AND LIGHTING, FLAGS/RED LIGHTS-CHAPTERS 3 (MARKED) 4, 5 (RED), 14 (TEMPORARY), AND 15.

LIGHTING:

FAA ADVISORY CIRCULAR 70/7460-1 M OBSTRUCTION LIGHTING REPORT ANY FAILURE OR MALFUNCTION THAT LASTS MORE THAN THIRTY MINUTES AND AFFECTS THE TOP LIGHT OR FLASHING OBSTRUCTION LIGHT TO (877) 487-6867 AND WHEN RESTORED NOTIFY THE SAME NUMBER.

QUANTITIES CARRIED TO GENERAL NOTES SUBSUMMARY ON SHEET 73

| REVISIONS | | |
|---|---|---|
| NO. | DATE | DESCRIPTION |
| 2 | 04/28/21 | FAA COORDINATION NOTE ADDED & AIRWAY CLEARANCE NOTE REVISED |

CALCULATED ATR
CHECKED PJF

GENERAL NOTES

SUM-77/277/224
VARIOUS



O:\2017\2017258\ProjectData\SUM\106002\Design\Roadway\Sheets\106002_GN001.dgn 106002GN001 4/28/2021 8:05:02 AM pfry

## GENERAL (CONTINUED)

## ITEM 619 - FIELD OFFICE TYPE C, AS PER PLAN

### 619.01 DESCRIPTION:

THIS WORK CONSISTS OF PROVIDING, MAINTAINING, AND SUBSEQUENTLY REMOVING A FIELD OFFICE FOR THE EXCLUSIVE USE OF THE DEPARTMENT FOR THE DURATION OF THE CONTRACT AT A LOCATION APPROVED BY THE ENGINEER.

### 619.02 GENERAL

FURNISH A COMPLETELY FUNCTIONAL FIELD OFFICE OF THE TYPE SPECIFIED IN THE CONTRACT PRIOR TO BEGINNING WORK.

THE FIELD OFFICE WILL BE A SUITE TYPE OFFICE (NO TRAILER OR MODULAR OFFICE) WITH A MINIMUM OF 3,000 SQUARE FEET AND AT GROUND LEVEL WITH A MINIMUM CEILING HEIGHT OF EIGHT (8) FEET. PROVIDE TWO (2) OUTSIDE DOORS, LOCKABLE VANDAL PROOF CYLINDER TYPE DEAD BOLTS AND LOCKABLE WINDOWS. THE FLOOR SPACE WILL BE DIVIDED INTO A RESTROOM, ONE GENERAL OFFICE AREA (MINIMUM 400 SQUARE FEET), NOT LESS THAN THREE INDIVIDUAL OFFICES (MINIMUM 300 SQUARE FEET EACH), AND ONE CONFERENCE ROOM (MINIMUM 500 SQUARE FEET), AS DEEMED NECESSARY BY THE ENGINEER.

FURNISH EACH FIELD OFFICE WITH A MEANS FOR MAINTAINING ROOM TEMPERATURE BETWEEN 68°F AND 80°F.

FURNISH ELECTRIC SERVICE FOR EACH FIELD OFFICE.

FURNISH NEAT, SANITARY, ENCLOSED TOILET ACCOMMODATIONS CONNECTED TO AN EXISTING SANITARY SEWER LINE FOR THE USE OF THE OCCUPANTS OF THE FIELD OFFICE, MEETING APPLICABLE STATE AND LOCAL CODES AND ORDINANCES. FURNISH ASSOCIATED LAVATORY AND SANITARY SUPPLIES. POTABLE HOT AND COLD RUNNING WATER WILL BE PROVIDED IN THE RESTROOM FOR SANITARY PURPOSES.

FURNISH TRASH COLLECTION SERVICE / DUMPSTER.

FURNISH PROFESSIONAL, BONDED AND INSURED JANITORIAL SERVICE WITH A WEEKLY CLEANING OF THE ENTIRE OFFICE TO INCLUDE THE RESTROOM FACILITIES FOR THE DURATION OF THE PROJECT.

FURNISH BOTTLED DRINKING WATER SERVICE WITH A HOT AND COLD DISPENSER AND ASSOCIATED SUPPLIES.

PROVIDE A LOCKABLE WOOD OR METAL STORAGE BOX OF SUFFICIENT SIZE TO STORE A NUCLEAR DENSITY GAUGE AND AN ELECTRICAL CONNECTION FOR THE GAUGE.

TELEPHONE SERVICE AND TELEPHONES, INCLUDING ALL NECESSARY WIRING, WILL BE SUPPLIED AT EACH DESK, THE CONFERENCE ROOM, AND THE GENERAL OFFICE AREA INTERCONNECTED BETWEEN TELEPHONES. ALL TELEPHONES WILL BE EQUIPPED WITH SPEAKER PHONE AND TWO (2) LINE CAPABILITIES WITH TWO (2) LINE SERVICE AT EACH LOCATION. A TOTAL OF THREE (3) OUTSIDE LINES WILL BE PROVIDED, ONE OF WHICH WILL BE DEDICATED FOR THE USE OF THE FACSIMILE MACHINE. THE TWO (2) LINES FOR THE TELEPHONE WILL HAVE THE ABILITY TO AUTOMATICALLY TRANSFER TO THE NEXT LINE IF ANOTHER LINE IS IN USE.

PROVIDE A BROADBAND INTERNET CONNECTION CAPABLE OF MINIMUM DOWNLOAD SPEEDS GREATER THAN 10 MBPS, UPLOAD SPEEDS GREATER THAN 2 MBPS, AND NETWORK LATENCY LESS THAN 50 MILLISECONDS. WHEN MULTIPLE BROADBAND SERVICES ARE AVAILABLE, THE FOLLOWING IS THE PREFERRED ORDER: CABLE, DSL, CELLULAR, AND WIRELESS RADIO. SATELLITE COMMUNICATION IS NOT COMPATIBLE WITH ODOT VPN CONNECTION AND WILL NOT BE ACCEPTED. SUPPLY ALL WIRING, ROUTERS, MODEMS (CAPABLE TO BE CONFIGURED IN BRIDGE MODE), SOFTWARE, AND INCIDENTALS NECESSARY TO CONNECT FIVE (5) PERSONAL COMPUTERS AT SEPARATE LOCATIONS, DESIGNATED BY THE PROJECT ENGINEER, THROUGHOUT THE OFFICE TO THE SYSTEM.

PROVIDE THE FOLLOWING OFFICE FURNITURE AND EQUIPMENT:

1. SIX (6) TELEPHONES WITH SPEAKER PHONE AND TWO (2) LINE CONNECTION.

2. ONE (1) DIGITAL ANSWERING MACHINE WITH TIME / DATE STAMP.

3. ONE (1) MULTI-FUNCTION COLOR COPIER THAT IS SET UP FOR SCANNING, PRINTING, FAXING, AND COPYING WITH THE FOLLOWING SPECIFICATIONS:
   - A. COLOR PRINT/COPY/SCAN
   - B. COPY/PRINT SPEED: 30 PPM (LETTER), 15 PPM (LEGAL), 15 PPM (LEDGER), OR HIGHER.
   - C. DUPLEX PRINTING SUPPORT
   - D. AUTOMATIC DOCUMENT FEEDER WITH 50 SHEET DUPLEXING DOCUMENT FEEDER
   - E. COPIER MEMORY: 1 GB
   - F. INSTALLED HDD: 40 GB
   - G. DATA ENCRYPTION AND HDD ERASE SUPPORT INCLUDED WITH MACHINE
   - H. INTERNAL STAPLER SUPPORT
   - I. PAPER CAPACITY: 250 SHEET X 2 TRAYS, 50 SHEET BYPASS TRAY
   - J. NETWORK INTERFACE: 10/100 BASE-TX, 1000 BASE-TX
   - K. ANALOG FAX SUPPORT INCLUDED WITH MACHINE
   - L. COLOR SCANNING WITH THE FOLLOWING REQUIREMENTS:
     - I. RESOLUTION: 600 X 600 DPI
     - II. SCAN AREA UP TO 11" X 17"
     - III. SCANNING PROTOCOL SUPPORT - TCP/IP, SMTP, SMB, FTP, POP3, NCP
     - IV. FILE SCAN TYPES SUPPORTED: SINGLE PAGE TIFF, JPEG, PDF, MULTI-PAGE TIFF, PDF, AND OCR PDF
     - V. SCANNING SUPPORT FOR SCAN-TO-EMAIL, HDD, SMB (FOLDER), URL, AND TWAIN
   - M. NETWORK PROTOCOL SUPPORT FOR TCP/IP
   - N. CLIENT AND SERVER PRINT DRIVER SUPPORT FOR PCL PRINT DRIVERS
   - O. SERVER OPERATING SYSTEM SUPPORT FOR WINDOWS SERVER 2008 AND WINDOWS SERVER 2008 R2 (32 BIT/64 BIT)
   - P. CLIENT PRINT DRIVER SUPPORT FOR WINDOWS XP/WINDOWS 7 (BOTH PCL 32 BIT/64 BIT)
   - Q. MINIMUM PRINT/COPY RESOLUTION OF 600 X 600 DPI
   - R. SECURE PRINTING WITH PASSWORD OR PIN FROM CLIENT TO COPIER
   - S. PROVIDE THE COPIER WITH ALL NECESSARY TONER, PAPER SUPPLIES, AND A SERVICE CONTRACT WITH A RESPONSE TIME OF 24 HOURS OR LESS FOR MAINTENANCE AND SUPPLIES OF THE COPY MACHINE.

4. EIGHT (8) PRINTING DESK CALCULATORS WITH TAPE.

5. EIGHT (8) DESK AND CHAIR SETS.

6. TEN (10) STACKABLE CHAIRS.

7. EIGHT (8) WORK TABLES, 30" X 72"

8. ONE (1) DRAFTING/PLAN TABLE WITH A MINIMUM 36" X 60" WORKING SURFACE WITH AN APPROPRIATE ADJUSTABLE HEIGHT DRAFTING CHAIR.

9. THREE (3), 4-DRAWER, LOCKABLE, LEGAL SIZE METAL FILING CABINETS.

10. FOUR (4), 2-DRAWER, LOCKABLE, LEGAL SIZE METAL FILING CABINETS.

11. THREE (3) PORTABLE, TYPE 2-A:10-BC, FIVE POUND SIZE FIRE EXTINGUISHERS.

12. THREE (3) PLAN RACKS, EACH CAPABLE OF HANDLING THE BREAKDOWN OF 22 X 34 INCH SIZED PLANS INTO TEN SECTIONS.

13. TWENTY (20) ALL-WEATHER PARKING SPACES.

14. EIGHT (8) 24-QUART WASTE BASKETS WITH APPROPRIATE SIZED TRASH BAGS.

15. ONE NEW PROJECTOR TO BE USED BY THE PROJECT WITH THE FOLLOWING SPECIFICATIONS:
   - A. NATIVE RESOLUTION - 1920 X 1080
   - B. ENGINE TYPE - LCD
   - C. ASPECT RATION - 16:9
   - D. RATED CONTRAST RATIO - 70,000:1
   - E. RATED BRIGHTNESS - 2500 ANSI LUMENS
   - F. ZOOM - OPTICAL
   - G. COMPUTER INTERFACES - ANALOG VGA, HDMI, MHL
   - H. VIDEO INTERFACES - COMPONENT, COMPOSITE, HDMI, MHL
   - I. SUPPORTED VIDEO FORMATS - 480P, 720P, 1080I, 576I, 576P, 480I, 1080P
   - J. USB PORTS
   - K. WIRELESS REMOTE CONTROL
   - L. BUILT IN SPEAKERS
   - M. ALL ACCESSORIES NECESSARY TO OPERATE

16. ONE NEW TELEVISION WITH THE FOLLOWING SPECIFICATIONS:
   - A. DIAGONAL SCREEN SIZE - 55"
   - B. NATIVE RESOLUTION - 1920 X 1080
   - C. HDMI PORTS - 3
   - D. VIDEO INTERFACES - COMPOSITE, HDMI, USB
   - E. ALL ACCESSORIES NECESSARY TO OPERATE
   - F. ALL HARDWARE NECESSARY TO HANG THE TELEVISION ON THE WALL

EXPENSES FOR THE OPERATION OF THE FIELD OFFICE TO INCLUDE BUT NOT BE LIMITED TO ELECTRICAL SERVICE, HEATING/COOLING, RUNNING WATER SERVICE, SEWER SERVICE, TELEPHONE SERVICE, JANITORIAL SERVICE, BOTTLED WATER SERVICE, HIGH SPEED ONLINE SERVICE, ETC. WILL BE THE RESPONSIBILITY OF THE CONTRACTOR. THE CONTRACTOR WILL ALSO PROVIDE ALL NECESSARY SUPPLIES AND MAINTENANCE FOR ALL EQUIPMENT THAT THE CONTRACTOR IS REQUIRED TO FURNISH.

FURNISH A CONCRETE CYLINDER CURING BOX CAPABLE OF HOLDING AT LEAST EIGHT 6X12 INCH (150X300MM) CYLINDERS AT 73 DEGREES F (23 DEGREES C) +/- 3 DEGREES NO MATTER WHAT THE AMBIENT TEMPERATURE IS WHEN CONSTRUCTING EITHER PORTLAND CEMENT CONCRETE PAVEMENT OVER 10,000 SQUARE YARDS (8,000 SQUARE METERS) OR OVER 50 CUBIC YARDS (38 CUBIC METERS) OF BRIDGE STRUCTURE REPAIR OR REPLACEMENT CONCRETE. THE BOX WILL HAVE A SEALED LID.

THE CONTRACTOR WILL RETAIN RESPONSIBILITY FOR RISK OF LOSS OR DAMAGE TO SAID FIELD OFFICE, FURNISHINGS, AND EQUIPMENT WHILE THE OFFICE IS IN USE FOR THIS CONTRACT.

THE FIELD OFFICE WILL BE APPROVED IN ADVANCE BY THE ENGINEER AND FULLY OPERATIONAL WITHIN 30 DAYS AFTER THE SIGNING AND EXECUTION OF THE CONTRACT OR PRIOR TO THE START OF ANY CONSTRUCTION WORK, WHICHEVER COMES FIRST.

### 619.03 METHOD OF MEASUREMENT

THE DEPARTMENT WILL MEASURE FIELD OFFICE, TYPE C, AS PER PLAN BY THE NUMBER OF MONTHS THE OFFICE IS MAINTAINED. A PARTIAL MONTH AT THE END OF THE PROJECT WILL BE PAID AS A FULL MONTH.

### 619.04 BASIS OF PAYMENT

THE DEPARTMENT WILL PAY FOR ACCEPTED QUANTITIES AT THE CONTRACT PRICE AS FOLLOWS:

| ITEM | UNIT | DESCRIPTION |
|---|---|---|
| 619 | MONTH | FIELD OFFICE, TYPE C, AS PER PLAN |

## ROADWAY

## CONNECTION BETWEEN EXISTING AND PROPOSED GUARDRAIL

WHEN IT IS NECESSARY TO SPLICE PROPOSED GUARDRAIL TO EXISTING GUARDRAIL, ONLY THE EXISTING GUARDRAIL SHALL BE CUT, DRILLED, OR PUNCHED. THE CONNECTION SHALL BE MADE USING A W-BEAM, BEAM SPLICE AS SHOWN IN AASHTO M 180-12, EXCEPT THE BEAM WASHERS ARE NOT TO BE USED. PAYMENT SHALL BE INCLUDED IN THE CONTRACT PRICE FOR THE RESPECTIVE GUARDRAIL ITEMS.

## PAVING UNDER GUARDRAIL

THIS OPERATION SHALL INCLUDE PREPARATION OF THE GRADED SHOULDER USING 209, LINEAR GRADING AS PER PLAN, AND PAVING UNDER THE GUARDRAIL USING 441 ASPHALT CONCRETE INTERMEDIATE COURSE, TYPE 1, (448), (UNDER GUARDRAIL), AS PER PLAN.

ITEM 209, LINEAR GRADING AS PER PLAN, SHALL CONSIST OF EXCAVATING TOPSOIL, AND PLACING GRANULAR MATERIAL.

ALL COLLECTED DEBRIS AND TOPSOIL, INCLUDING RHIZOMES, ROOTS AND OTHER VEGETATIVE PLANT MATERIAL SHALL BE REMOVED AND DISPOSED OF AS SPECIFIED IN 105.17.

THE REMOVED MATERIAL SHALL BE REPLACED WITH COMPACTABLE GRANULAR MATERIAL CONFORMING TO 703.16 PLACED TO GRADE AS DETAILED ON THE TYPICAL SECTION OR AS APPROVED BY THE ENGINEER.

ALL EQUIPMENT, MATERIALS AND LABOR REQUIRED TO PERFORM THE WORK OUTLINED ABOVE SHALL BE INCLUDED FOR PAYMENT UNDER ITEM 209, LINEAR GRADING, AS PER PLAN.

PAVING UNDER GUARDRAIL SHALL CONSIST OF PLACING ITEM 441 TO THE DEPTH SPECIFIED USING ONE OF THE FOLLOWING METHODS:

METHOD A:
1. SET GUARDRAIL POSTS
2. PLACE ITEM 441

METHOD B:
1. PLACE ITEM 441
2. BORE ASPHALT AT POST LOCATIONS (MAY BE OMITTED IF STEEL POSTS ARE USED)
3. SET GUARDRAIL POSTS
4. PATCH AROUND POSTS. THE MATERIALS USED FOR PATCHING SHALL BE AN ASPHALT CONCRETE APPROVED BY THE ENGINEER. PATCHED AREAS SHALL BE COMPACTED USING EITHER HAND OR MECHANICAL METHODS. FINISHED SURFACES SHALL BE SMOOTH AND SLOPED TO DRAIN AWAY FROM THE POSTS.

ALL EQUIPMENT, MATERIALS AND LABOR REQUIRED TO PERFORM THE WORK OUTLINED ABOVE, WITH THE EXCEPTION OF SETTING GUARDRAIL POSTS, SHALL BE INCLUDED FOR PAYMENT UNDER ITEM 441, ASPHALT CONCRETE, INTERMEDIATE COURSE, TYPE 1, (448), (UNDER GUARDRAIL), AS PER PLAN.

## ITEM 606 - ANCHOR ASSEMBLY, MGS TYPE E

THIS ITEM SHALL CONSIST OF FURNISHING AND INSTALLING ANY OF THE GUARDRAIL END TERMINALS FOR TYPE MGS GUARDRAIL AS LISTED ON ROADWAY ENGINEERING'S WEB PAGE UNDER ROADSIDE SAFETY DEVICES FOR APPROVED GUARDRAIL END TREATMENTS. INSTALLATION SHALL BE AT THE LOCATIONS SPECIFIED IN THE PLANS, IN ACCORDANCE WITH THE MANUFACTURER'S SPECIFICATIONS.

THE FACE OF THE TYPE E IMPACT HEAD SHALL BE COVERED WITH A SHEET OF TYPE G REFLECTIVE SHEETING, PER CMS 730.19.

REFER TO THE MANUFACTURER'S INSTRUCTIONS REGARDING THE INSTALLATION OF, AND THE GRADING AROUND THE FOUNDATION TUBES AND GROUND STRUT. THE TOP OF ANY FOUNDATION TUBE SHOULD BE LESS THAN 4 INCHES ABOVE THE GROUND. THE PLACEMENT OF THE FOUNDATION TUBES SHOULD BE AN APPROPRIATE DEPTH BELOW THE LEVEL LINE IN ORDER TO MAINTAIN THE FINISHED GUARDRAIL HEIGHT OF 31 INCHES FROM THE EDGE OF THE SHOULDER.

ON-SITE GRADING IS REQUIRED IF THE TOP OF THE FOUNDATION TUBES OR TOP OF THE GROUND STRUT DOES PROJECT MORE THAN 4 INCHES ABOVE THE GROUND LINE.

PAYMENT FOR THE ABOVE WORK SHALL BE MADE AT THE UNIT PRICE BID FOR ITEM 606, ANCHOR ASSEMBLY, MGS TYPE E, EACH, AND SHALL INCLUDE ALL LABOR, TOOLS, EQUIPMENT AND MATERIALS NECESSARY TO CONSTRUCT A COMPLETE AND FUNCTIONAL ANCHOR ASSEMBLY SYSTEM, INCLUDING ALL RELATED TRANSITIONS, REFLECTIVE SHEETING, HARDWARE, GRADING, EMBANKMENT AND EXCAVATION NOT SEPARATELY SPECIFIED, AS REQUIRED BY THE MANUFACTURER.

CALCULATED ATR
CHECKED PJF

GENERAL NOTES

SUM-77/277/224
VARIOUS



D:\2017\2017258\ProjectData\SUM\106002\Design\Roadway\Sheets\106002_GN007.dgn 106002GN007 1/15/2021 3:38:36 PM lkirkland

## ROADWAY (CONTINUED)

### ITEM 606 - IMPACT ATTENUATOR, TYPE 1 (UNIDIRECTIONAL)

THIS ITEM SHALL CONSIST OF FURNISHING AND INSTALLING ANY ONE OF THE TYPE 1 IMPACT ATTENUATORS AS LISTED ON THE OFFICE OF ROADWAY ENGINEERING'S WEB PAGE. INSTALLATION SHALL BE AT THE LOCATIONS SPECIFIED IN THE PLANS, IN ACCORDANCE WITH THE MANUFACTURER'S SPECIFICATIONS.

THE FACE OF THE TYPE 1 IMPACT HEAD SHALL BE COVERED WITH A SHEET OF TYPE G REFLECTIVE SHEETING, PER CMS 730.19. PAYMENT FOR THE ABOVE WORK SHALL BE MADE AT THE UNIT PRICE BID FOR ITEM 606, IMPACT ATTENUATOR, TYPE 1, UNIDIRECTIONAL, EACH, AND SHALL INCLUDE ALL LABOR, TOOLS, EQUIPMENT AND MATERIALS NECESSARY TO CONSTRUCT A COMPLETE AND FUNCTIONAL IMPACT ATTENUATOR SYSTEM, INCLUDING ALL RELATED TRANSITIONS, HARDWARE, REFLECTIVE SHEETING AND GRADING, NOT SEPARATELY SPECIFIED, AS REQUIRED BY THE MANUFACTURER.

### ITEM 606 - IMPACT ATTENUATOR, TYPE 3 UNIDIRECTIONAL

THIS ITEM SHALL CONSIST OF FURNISHING AND INSTALLING ANY OF THE TYPE 3 IMPACT ATTENUATORS AS LISTED ON THE OFFICE OF ROADWAY ENGINEERING'S WEB PAGE (REFER TO THE POSTED SHOP DRAWINGS FOR THE MOST CURRENT APPROVED PRODUCT MODELS). WHEN BI-DIRECTIONAL DESIGNS ARE SPECIFIED, THE CONTRACTOR SHALL SUPPLY APPROPRIATE TRANSITIONS. THE FACE OF THE IMPACT HEAD SHALL BE COVERED WITH TYPE G REFLECTIVE SHEETING, PER CMS 730.19.

TYPE 3 IMPACT ATTENUATORS ARE NECESSARY AT THE FOLLOWING LOCATIONS:

1. SB I.R. 77/RAMP C-2 GORE

PAYMENT FOR THE ABOVE WORK SHALL BE MADE AT THE UNIT PRICE BID FOR THE ITEM 606, IMPACT ATTENUATOR, TYPE 3 [60 MPH, TEST LEVEL 3 (TL-3), 90" HAZARD WIDTH, ASPHALT FOUNDATION, ATTENUATOR MANUFACTURER'S GUARDRAIL TRANSITION AND BACKUP SUPPORT, UNIDIRECTIONAL] EACH, AND SHALL INCLUDE ALL LABOR, TOOLS, EQUIPMENT, AND MATERIALS NECESSARY TO CONSTRUCT A COMPLETE AND FUNCTIONAL IMPACT ATTENUATOR SYSTEM, INCLUDING ALL RELATED BACKUPS/BACKSTOPS, TRANSITIONS, HARDWARE, AND GRADING, NOT SEPARATELY SPECIFIED, AS REQUIRED BY THE MANUFACTURER. INSTALLATION SHALL BE AT THE LOCATIONS SPECIFIED IN THE PLANS, IN ACCORDANCE WITH THE MANUFACTURER'S SPECIFICATIONS.

### ITEM 606 - IMPACT ATTENUATOR, TYPE 3 UNIDIRECTIONAL

THIS ITEM SHALL CONSIST OF FURNISHING AND INSTALLING ANY OF THE TYPE 3 IMPACT ATTENUATORS AS LISTED ON THE OFFICE OF ROADWAY ENGINEERING'S WEB PAGE (REFER TO THE POSTED SHOP DRAWINGS FOR THE MOST CURRENT APPROVED PRODUCT MODELS). WHEN BI-DIRECTIONAL DESIGNS ARE SPECIFIED, THE CONTRACTOR SHALL SUPPLY APPROPRIATE TRANSITIONS. THE FACE OF THE IMPACT HEAD SHALL BE COVERED WITH TYPE G REFLECTIVE SHEETING, PER CMS 730.19.

TYPE 3 IMPACT ATTENUATORS ARE NECESSARY AT THE FOLLOWING LOCATIONS:

1. WB I.R. 277/U.S. 224/RAMP D GORE

PAYMENT FOR THE ABOVE WORK SHALL BE MADE AT THE UNIT PRICE BID FOR THE ITEM 606, IMPACT ATTENUATOR, TYPE 3 [65 MPH, TEST LEVEL 3 (TL-3), 69" HAZARD WIDTH, ASPHALT FOUNDATION, ATTENUATOR MANUFACTURER'S GUARDRAIL TRANSITION AND BACKUP SUPPORT, UNIDIRECTIONAL] EACH, AND SHALL INCLUDE ALL LABOR, TOOLS, EQUIPMENT, AND MATERIALS NECESSARY TO CONSTRUCT A COMPLETE AND FUNCTIONAL IMPACT ATTENUATOR SYSTEM, INCLUDING ALL RELATED BACKUPS/BACKSTOPS, TRANSITIONS, HARDWARE, AND GRADING, NOT SEPARATELY SPECIFIED, AS REQUIRED BY THE MANUFACTURER. INSTALLATION SHALL BE AT THE LOCATIONS SPECIFIED IN THE PLANS, IN ACCORDANCE WITH THE MANUFACTURER'S SPECIFICATIONS.

### ITEM 606 - IMPACT ATTENUATOR, TYPE 3 UNIDIRECTIONAL

THIS ITEM SHALL CONSIST OF FURNISHING AND INSTALLING ANY OF THE TYPE 3 IMPACT ATTENUATORS AS LISTED ON THE OFFICE OF ROADWAY ENGINEERING'S WEB PAGE (REFER TO THE POSTED SHOP DRAWINGS FOR THE MOST CURRENT APPROVED PRODUCT MODELS). WHEN BI-DIRECTIONAL DESIGNS ARE SPECIFIED, THE CONTRACTOR SHALL SUPPLY APPROPRIATE TRANSITIONS. THE FACE OF THE IMPACT HEAD SHALL BE COVERED WITH TYPE G REFLECTIVE SHEETING, PER CMS 730.19.

TYPE 3 IMPACT ATTENUATORS ARE NECESSARY AT THE FOLLOWING LOCATIONS:

1. NB I.R. 77/RAMP B-2 GORE

PAYMENT FOR THE ABOVE WORK SHALL BE MADE AT THE UNIT PRICE BID FOR THE ITEM 606, IMPACT ATTENUATOR, TYPE 3 [70 MPH, TEST LEVEL 3 (TL-3), 48" HAZARD WIDTH, ASPHALT FOUNDATION, ATTENUATOR MANUFACTURER'S CONCRETE BARRIER TRANSITION AND BACKUP SUPPORT, UNIDIRECTIONAL] EACH, AND SHALL INCLUDE ALL LABOR, TOOLS, EQUIPMENT, AND MATERIALS NECESSARY TO CONSTRUCT A COMPLETE AND FUNCTIONAL IMPACT ATTENUATOR SYSTEM, INCLUDING ALL RELATED BACKUPS/BACKSTOPS, TRANSITIONS, HARDWARE, AND GRADING, NOT SEPARATELY SPECIFIED, AS REQUIRED BY THE MANUFACTURER. INSTALLATION SHALL BE AT THE LOCATIONS SPECIFIED IN THE PLANS, IN ACCORDANCE WITH THE MANUFACTURER'S SPECIFICATIONS.

### ITEM 607 - FENCE, MISC.: TEMPORARY FENCE

THIS ITEM SHALL CONSIST OF INSTALLATION AND REMOVAL OF TEMPORARY FENCE AS PER ODOT SCD NBS-1-09. ALL FURNISHING, ERECTING, MAINTAINING, AND REMOVING OF TEMPORARY FENCE SHALL BE INCLUDED IN THE CONTRACT PRICE BID FOR ITEM 607 - FENCE, MISC.: TEMPORARY FENCE (FT).

QUANTITIES CARRIED TO GENERAL NOTES SUBSUMMARY ON SHEET 73

### ITEM 622 - CONCRETE BARRIER, SINGLE SLOPE, TYPE D, AS PER PLAN

THIS ITEMS SHALL CONSIST OF CONSTRUCTING SINGLE SLOPE TYPE D BARRIER AS PER STD. DWG. RM-4.5 EXCEPT THAT THE HEIGHT OF THE BARRIER SHALL BE 57" INSTEAD OF 42". THE 12" BARRIER TOP WIDTH AND 5.25:1 FACE SLOPE SHALL BE MAINTAINED THEREBY WIDENING THE OVERALL BASE TO 22-7/8"INSTEAD OF 20". THIS ITEM SHALL ALSO INCLUDE ANY TRANSITION FROM 57" TO 42" CONCRETE BARRIER, SINGLE SLOPE, TYPE D.

### ITEM 622 - CONCRETE BARRIER END SECTION, TYPE D, AS PER PLAN

THIS ITEMS SHALL CONSIST OF CONSTRUCTING SINGLE SLOPE TYPE D BARRIER AS PER STD. DWG. RM-4.6 EXCEPT THAT THE HEIGHT OF THE BARRIER SHALL BE 57" INSTEAD OF 42". THE 12" BARRIER TOP WIDTH AND 5.25:1 FACE SLOPE SHALL BE MAINTAINED THEREBY WIDENING THE OVERALL BASE TO 22-7/8"INSTEAD OF 20".

### ITEM 622 - CONCRETE BARRIER, END ANCHORAGE, REINFORCED, TYPE D, AS PER PLAN

THIS ITEMS SHALL CONSIST OF CONSTRUCTING SINGLE SLOPE TYPE D BARRIER AS PER STD. DWG. RM-4.5 EXCEPT THAT THE HEIGHT OF THE BARRIER SHALL BE 57" INSTEAD OF 42". THE 12" BARRIER TOP WIDTH AND 5.25:1 FACE SLOPE SHALL BE MAINTAINED THEREBY WIDENING THE OVERALL BASE TO 22-7/8"INSTEAD OF 20".

### ITEM SPECIAL - VERTICAL CLEARANCE

AFTER ALL CONSTRUCTION HAS BEEN COMPLETED, A REGISTERED SURVEYOR WILL TAKE VERTICAL CLEARANCE MEASUREMENTS AT LOCATIONS INDICATED ON THE APPROVED ODOT FORM (AVAILABLE IN THE DISTRICT 4 STRUCTURES AND PAVEMENT OFFICE). THE FINAL MEASUREMENTS SHALL BE RECORDED ON THE FORM AND SUBMITTED TO THE PROJECT ENGINEER AND THE DISTRICT 4 STRUCTURES AND PAVEMENT ENGINEER. THE RECORD SHALL BEAR THE SEAL OF THE LICENSED SURVEYOR WHO HAS TAKEN THE MEASUREMENTS. THIS WORK SHALL BE PERFORMED AT THE FOLLOWING STRUCTURE:

SUM-077-0744
SUM-077-0802L/R
SUM-077-0887
SUM-077-0927R
SUM-077-0958L
SUM-277-0369

THE FOLLOWING QUANTITY HAS BEEN PROVIDED:

SPECIAL - VERTICAL CLEARANCE 6 EACH

| REVISIONS | | |
|---|---|---|
| NO. | DATE | DESCRIPTION |
| 8 | 04/30/21 | ADDED TEMPORARY FENCE QUANTITY |

### ITEM 622 - CONCRETE BARRIER, END ANCHORAGE, REINFORCED, TYPE C1, AS PER PLAN

THIS ITEM SHALL CONSIST OF CONSTRUCTING REINFORCED END ANCHORAGES AS PER ODOT SCD RM-4.3 AND THE BARRIER DETAIL BELOW. THE Y401 REINFORCEMENT BARS SHALL BE SPACED AS SHOWN IN THE DETAIL. ALL MATERIALS, LABOR AND OTHER INCIDENTALS NECESSARY TO CONSTRUCT THIS ANCHOR SHALL BE INCLUDED IN THE CONTRACT PRICE BID FOR ITEM 622 - CONCRETE BARRIER, END ANCHORAGE, REINFORCED, TYPE C1, AS PER PLAN (EACH).

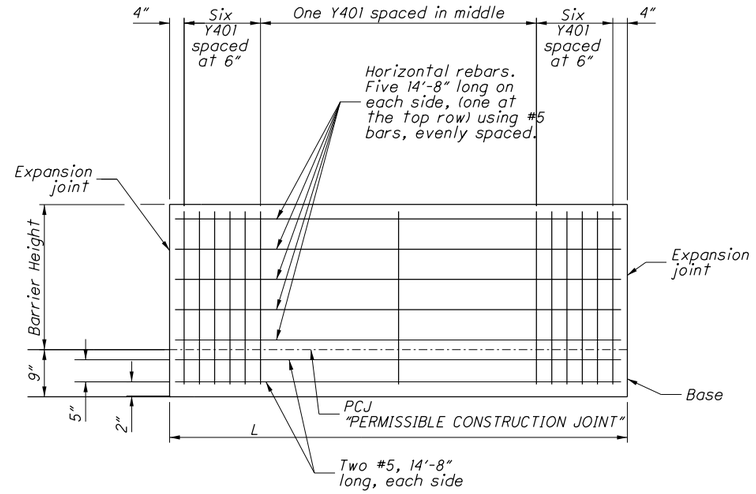


ELEVATION

| TYPE C1 | | | |
|---|---|---|---|
| STATION | L | h | y |
| 394+81.04 (℄ R/W & CONST. I.R. 77) | 8.96' | 8.75" | 30.00" |
| 423+28.00 (℄ R/W & CONST. I.R. 77) | 11.14' | 8.00" | 30.00" |
| 425+10.00 (℄ R/W & CONST. I.R. 77) | 20.16' | 7.81" | 29.75" |
| 431+16.15 (℄ R/W & CONST. I.R. 77) | 23.85' | 8.44" | 30.00" |

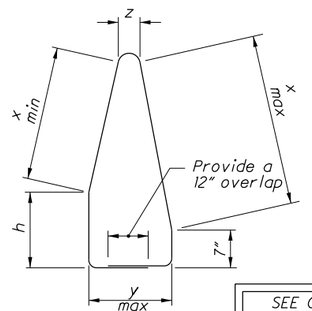


Y401 #4

SEE OFFICE CALCULATIONS FOR DIMENSION OF THE Y401 REINFORCEMENT BARS ON ITEM 622 - CONCRETE BARRIER, END ANCHORAGE, REINFORCED, TYPE C1.

CALCULATED ATR
CHECKED PJF

GENERAL NOTES

SUM-77/277/224
VARIOUS



O:\2017\2017258\ProjectData\SUM\106002\Design\Roadway\Sheets\106002_GN002.dgn 106002GN002 4/30/2021 12:21:06 PM Ikirkland

## ROADWAY (CONTINUED)

### ITEM 204 - EXCAVATION OF SUBGRADE AND PROOF ROLLING

CONSTRUCT THE SUBGRADE AS FOLLOWS AND IN THE FOLLOWING SEQUENCE:

1. SHAPE THE SUBGRADE TO WITHIN 0.2 FEET OF THE PLAN SUBGRADE ELEVATION.
2. EXCAVATE AND REPLACE UNSUITABLE SUBGRADE ACCORDING TO SECTION 204.05 OF THE CONSTRUCTION AND MATERIAL SPECIFICATIONS (C&MS). THE EXCAVATION LIMITS ARE SHOWN AND LABELED ON THE CROSS SECTIONS AS UNSUITABLE SUBGRADE. REPLACE WITH ITEM 204 EMBANKMENT.
3. CHEMICALLY STABILIZE THE SUBGRADE ACCORDING TO SECTION 206 OF THE C&MS USING CEMENT.
4. PROOF ROLL THE STABILIZED AREAS ACCORDING TO SECTION 204.06 OF THE C&MS TO VERIFY STABILITY.
5. FINE GRADE THE SUBGRADE TO THE SPECIFIED GRADE.

### ITEM 204 - PROOF ROLLING

THE FOLLOWING QUANTITY IS PROVIDED IN THE GENERAL SUMMARY TO ADDRESS LOCATIONS REQUIRING PROOF ROLLING. SEE TYPICAL PLAN SHEETS 29 - 54 FOR ADDITIONAL INFORMATION.

ITEM 204 - PROOF ROLLING 156 HOURS.

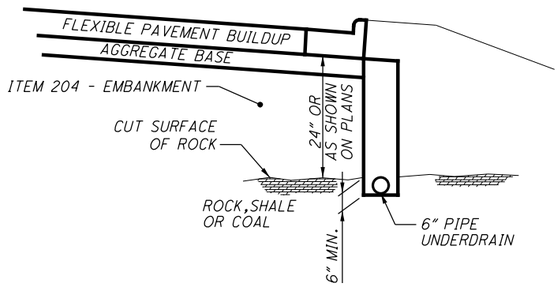


### DETAIL - ROCK UNDERCUT/ROCK CUT UNDERDRAIN

NOT TO SCALE

NOTE:

SOIL BORINGS WITHIN THE PROJECT LIMITS REVEAL THE PRESENCE OF ROCK. WHEN ROCK IS ENCOUNTERED WITHIN 24 INCHES OF THE BOTTOM OF THE PROPOSED PAVEMENT, CONTRACTOR SHALL EXCAVATE THE ROCK ACCORDING TO 204.05 AND REPLACE WITH ITEM 204 EMBANKMENT.

ROCK UNDERCUT IS ANTICIPATED AT THE FOLLOWING LOCATIONS:

| | |
|---|---|
| NB IR-77 | STA. 477+00.00 TO STA. 478+00.00 |
| RAMP C | STA. 577+00.00 TO STA. 578+00.00 |

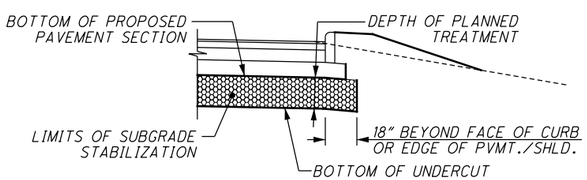


TYPICAL PAVEMENT SUBGRADE CROSS SECTION

PAVEMENT SUBGRADE IMPROVEMENT SCHEDULE

| ALIGNMENT | BEGIN STATION | END STATION | SUBGRADE METHOD | DEPTH OF TREATMENT | SIDE | UNDERCUT REASON |
|---|---|---|---|---|---|---|
| IR-77 | 371+50.00 | 391+37.36 | CEMENT | 12" | R | |
| | 391+37.36 | 425+30.16 | CEMENT | 12" | L/R | |
| | 426+85.73 | 429+01.43 | CEMENT | 12" | L/R | |
| | 431+16.15 | 469+46.33 | CEMENT | 12" | L/R | |
| NB IR-77 | 469+46.96 | 514+85.00 | CEMENT | 12" | L/R | |
| SB IR-77 | 469+42.49 | 514+95.00 | CEMENT | 12" | L/R | |
| WB IR-277/US-224 | 225+00.00 | 235+63.23 | CEMENT | 12" | L | |
| | 247+80.74 | 250+78.79 | CEMENT | 12" | L | |
| | 264+70.74 | 273+25.00 | CEMENT | 12" | L | |
| EB IR-277/US-224 | 237+00.00 | 245+79.53 | CEMENT | 12" | R | |
| | 257+26.04 | 260+76.94 | CEMENT | 12" | R | |
| | 271+44.10 | 279+50.00 | CEMENT | 12" | R | |
| RAMP A | 86+63.69 | 114+13.78 | CEMENT | 12" | L/R | |
| RAMP B | 197+05.36 | 214+90.00 | CEMENT | 12" | L/R | |
| RAMP B-1 | 402+43.78 | 421+51.12 | CEMENT | 12" | L/R | |
| RAMP B-2 | 285+64.96 | 307+95.29 | CEMENT | 12" | L/R | |
| | 9+83.20 | 33+82.00 | CEMENT | 12" | L/R | |
| RAMP C | 576+00.00 | 606+67.88 | CEMENT | 12" | L/R | |
| RAMP C-1 | 679+55.23 | 702+11.45 | CEMENT | 12" | L/R | |
| RAMP C-2 | 781+45.30 | 789+07.95 | CEMENT | 12" | L/R | |
| | 793+17.70 | 801+48.92 | CEMENT | 12" | L/R | |
| RAMP D | 887+98.38 | 914+89.43 | CEMENT | 12" | L/R | |
| ARLINGTON ROAD RAMP D | 71+69.06 | 88+18.25 | CEMENT | 12" | L/R | |
| WARNER ROAD | 24+50.00 | 27+70.00 | CEMENT | 12" | L/R | |

### WETLAND AREA UNDERCUT

NEW EMBANKMENT CONSTRUCTION OVER EXISTING WETLANDS ARE TO BE EXCAVATED TO REMOVE SILT AND ORGANIC MATERIAL. THE EXCAVATION SHOULD BE 2 FEET DEEP FOR A WIDTH OF THE EXISTING WETLAND WITH A 1:1 SLOPE. THE ESTIMATED LENGTHS AND WIDTHS OF THIS WORK WERE USED TO DETERMINE THE CONTINGENCY QUANTITIES BELOW FOR USE AS DIRECTED BY THE ENGINEER. THE FOLLOWING CONTINGENCY QUANTITIES HAVE BEEN INCLUDED FOR THIS WORK:

| | |
|---|---|
| ITEM 203 - EXCAVATION | 100 CY |
| ITEM 204 - GRANULAR MATERIAL, TYPE C | 100 CY |

### ROADSIDE DITCH UNDERCUT

NEW EMBANKMENT CONSTRUCTION OVER EXISTING DITCHES ARE TO BE EXCAVATED TO REMOVE SILT AND ORGANIC MATERIAL. THE EXCAVATION SHOULD BE 2 FEET DEEP FOR A WIDTH OF THE EXISTING DITCH WITH A 1:1 SLOPE. THE ESTIMATED LENGTHS AND WIDTHS OF THIS WORK WERE USED TO DETERMINE THE CONTINGENCY QUANTITIES BELOW FOR USE AS DIRECTED BY THE ENGINEER. THE FOLLOWING CONTINGENCY QUANTITIES HAVE BEEN INCLUDED FOR THIS WORK:

| | |
|---|---|
| ITEM 203 - EXCAVATION | 16,300 CY |
| ITEM 203 - EMBANKMENT | 16,300 CY |

## PAVEMENT

### ELIMINATION OF RIGID PAVEMENT OPTION

PROJECT WAS ORIGINALLY DESIGNED AS DUAL PAVEMENT, HOWEVER THE RIGID PAVEMENT OPTION HAS NOW BEEN REMOVED FROM THE PROJECT. ANY AND ALL REFERENCE THROUGHOUT THE PLANS TO RIGID PAVEMENT OPTION ARE NOW CONSIDERED NULL AND VOID.

### ITEM 442 - ASPHALT CONCRETE INTERMEDIATE COURSE, 19MM, TYPE A (446), AS PER PLAN

ON THIS PROJECT SUPPLY A 19MM INTERMEDIATE COURSE MEETING THE REQUIREMENTS OF 442 EXCEPT AS MODIFIED BELOW.

MODIFY TABLE 442.02-2 AS FOLLOWS:

| Sieve Size | | 9.5 mm mix | 12.5 mm mix | 19 mm mix |
|---|---|---|---|---|
| | | Total Percent Passing | | |
| 1 1/2 inch | (38 mm) | - | - | 100 |
| 3/4 inch | (19 mm) | - | 100 | 95 to 100 |
| 1/2 inch | (12.5 mm) | 100 | 95 to 100 | 90 to 100 |
| 3/8 inch | (9.5 mm) | 90 to 100 | 96 max | 96 max |
| No. 4 | (4.75 mm) | 70 max | 52 to 65 | 60 max |
| No. 8 | (2.36 mm) | 34 to 52 | 34 to 45 | 34 to 45 |
| No. 200 | (75 µm) | 2 to 8 | 2 to 8 | 2 to 8 |

MODIFY TABLE 442.02-3 AS FOLLOWS:

APPLY 14.0 FOR A VMA (PERCENT MINIMUM) FOR A 19MM MIX.

APPLY 5.3 PERCENT FOR THE MINIMUM TOTAL ASPHALT BINDER CONTENT FOR A 19MM MIX.

MODIFY THE 442 INTERMEDIATE COURSE REQUIREMENTS OF TABLES 401.04-1 AND 401.04-2 AS FOLLOWS:

APPLY 3.5 PERCENT FOR THE TOTAL VIRGIN ASPHALT BINDER CONTENT, MINIMUM.

USE A PG64-22 IF USING 25 PERCENT OR LESS RAP.
USE PG64-28 IF USING GREATER THAN 25 PERCENT RAP.

QUANTITIES CARRIED TO GENERAL NOTES SUBSUMMARY ON SHEET 73

CALCULATED ATR
CHECKED PJF

GENERAL NOTES

SUM-77/277/224
VARIOUS



O:\2017\2017258\ProjectData\SUM\106002\Design\Roadway\Sheets\106002_GN003.dgn 106002GN003 1/15/2021 3:38:38 PM lkirkland

## PAVEMENT (CONTINUED)

### CONTRACTION AND/OR EXPANSION JOINTS

ALTHOUGH SPECIFIC LOCATIONS OF CERTAIN CONTRACTION AND EXPANSION JOINTS HAVE BEEN DETAILED ON THIS PLAN, NO WAIVER OF THE SPECIFICATIONS IS INTENDED. IN ALL CASES, THE PROVISION OF EXPANSION JOINTS AT ALL MAJOR STRUCTURES INCLUDING THE MAXIMUM SPACING BETWEEN CONTRACTION JOINTS IS IN ACCORDANCE WITH STANDARD CONSTRUCTION DRAWING BP-2.2 AND THE SPECIFICATIONS.

### PART-WIDTH CONSTRUCTION

BECAUSE OF THE NECESSITY TO BUILD THIS PROJECT UNDER TRAFFIC AND TO CONSTRUCT THE FULL PAVEMENT WIDTH IN STAGES, EXERCISE CARE TO PREVENT THE CONSTRUCTION OF A BUTT JOINT IN THE BASE COURSES. LAP LONGITUDINAL JOINTS AS SHOWN ON STANDARD CONSTRUCTION DRAWING BP-3.1.

### MEDIAN AND/OR CURBING ON APPROACH SLABS

WITHIN THE LIMITS OF THE APPROACH SLAB, TRANSITION THE SHAPE OF THE MEDIAN AND/OR CURBING ON APPROACH SLABS FROM THE STANDARD SECTION ON THE APPROACHES TO THE SECTION USED ON THE BRIDGE.

### PAVING IN THE VICINITY OF SUM-77-0887

CONTRACTOR WILL NEED TO VARY THE THICKNESS OF THE ITEM 304 - AGGREGATE BASE, AS PER PLAN LAYER IN THE VICINITY OF THE EXISTING FOOTER FOR THE EXISTING SUM-77-0887 BRIDGE PIER IN THE MEDIAN OF I.R. 77.

### ITEM 408 - PRIME COAT, AS PER PLAN

APPLY "MC-70" AT A RATE OF 0.4 GALLONS PER SQUARE YARD, OR AS DETERMINED BY THE ENGINEER, TO THE COMPLETED COMPACTED AGGREGATE SHOULDER.

### ITEM 442 - ASPHALT CONCRETE SURFACE COURSE, 12.5 MM, TYPE A (447), AS PER PLAN

703.05 DO NOT USE COARSE AGGREGATE FROM A SOURCE DESIGNATED 'SR' OR 'SRH' ACCORDING TO THE OFFICE OF MATERIALS MANAGEMENT (OMM) IN ANY JOB MIX FORMULA (JMF) FOR THIS ITEM.

### ITEM 609 - CURB, TYPE 4-C, AS PER PLAN

THE REQUIREMENTS OF CMS 609 AND SCD BP-5.1 WILL APPLY WITH THE EXCEPTION THAT JOINT SEALER WILL BE REQUIRED WHEN ADJACENT TO FLEXIBLE PAVEMENT.

### ITEM 617 - COMPACTED AGGREGATE, AS PER PLAN

IN LOW SHOULDER AREAS EXCEEDING 1", AND ADJACENT TO THE SAFETY EDGE, OR AS DIRECTED BY THE ENGINEER, RECYCLED ASPHALT PAVEMENT (RAP) SHALL BE USED IN AREAS ADJACENT TO THE PAVED BERM. THE RAP SHALL HAVE A MINIMUM PG CONTENT OF 4.5% AND MEET THE FOLLOWING GRADATION. ONCE THE STOCKPILE MEETS THE GRADATION, THE PG CONTENT OF THE RAP SHALL BE DETERMINED PER 441.03. THE RAP ANALYSIS MUST BE SUBMITTED TO THE ENGINEER FOR APPROVAL 2 WEEKS PRIOR TO USE. METHOD OF MEASUREMENT SHALL BE AS PER 617.06. PLACEMENT AND COMPACTION SHALL MEET THE REQUIREMENTS OF ITEM 617. ALL MATERIALS, LABOR, EQUIPMENT, TOOLS AND INCIDENTALS NECESSARY TO COMPLETE THE WORK SHALL BE INCLUDED IN THE UNIT PRICE BID FOR ITEM 617 COMPACTED AGGREGATE, AS PER PLAN.

MODIFIED GRADATION SHALL APPLY:

| SIEVE | TOTAL PERCENT PASSING |
|---|---|
| 1- 1/2 " | 100 |
| 3/4 " | 50-100 |
| NO. 4 | 35-70 |
| NO. 30 | 9-33 |
| NO. 200 | 0-13 |

## DRAINAGE

### CROSSINGS AND CONNECTIONS TO EXISTING PIPES AND UTILITIES

WHERE PLANS PROVIDE FOR A PROPOSED CONDUIT TO BE CONNECTED TO, OR CROSS OVER OR UNDER AN EXISTING SEWER OR UNDERGROUND UTILITY, THE CONTRACTOR SHALL LOCATE THE EXISTING PIPES OR UTILITIES BOTH AS TO LINE AND GRADE BEFORE STARTING TO LAY THE PROPOSED CONDUIT.

IF IT IS DETERMINED THAT THE ELEVATION OF THE EXISTING CONDUIT, OR EXISTING APPURTENANCE TO BE CONNECTED, DIFFERS FROM THE PLAN ELEVATION OR RESULTS IN A CHANGE IN THE PLAN CONDUIT SLOPE, THE ENGINEER SHALL BE NOTIFIED BEFORE STARTING CONSTRUCTION OF ANY PORTION OF THE PROPOSED CONDUIT WHICH WILL BE AFFECTED BY THE VARIANCE IN THE EXISTING ELEVATIONS.

IF IT IS DETERMINED THAT THE PROPOSED CONDUIT WILL INTERSECT AN EXISTING SEWER OR UNDERGROUND UTILITY IF CONSTRUCTED AS SHOWN ON THE PLAN, THE ENGINEER SHALL BE NOTIFIED BEFORE STARTING CONSTRUCTION OF ANY PORTION OF THE PROPOSED CONDUIT WHICH WOULD BE AFFECTED BY THE INTERFERENCE WITH AN EXISTING FACILITY.

PAYMENT FOR ALL THE OPERATIONS DESCRIBED ABOVE SHALL BE INCLUDED IN THE CONTRACT PRICE FOR THE PERTINENT 611 CONDUIT ITEM.

### REVIEW OF DRAINAGE FACILITIES

BEFORE ANY WORK IS STARTED ON THE PROJECT AND AGAIN BEFORE FINAL ACCEPTANCE BY THE STATE, REPRESENTATIVES OF THE STATE AND THE CONTRACTOR, ALONG WITH LOCAL REPRESENTATIVES, SHALL MAKE AN INSPECTION OF ALL EXISTING SEWERS WHICH ARE TO REMAIN IN SERVICE AND WHICH MAY BE AFFECTED BY THE WORK. THE CONDITION OF THE EXISTING CONDUITS AND THEIR APPURTENANCE SHALL BE DETERMINED FROM FIELD OBSERVATIONS. RECORDS OF THE INSPECTION SHALL BE KEPT IN WRITING BY THE STATE.

ALL NEW CONDUITS, INLETS, CATCH BASINS, AND MANHOLES CONSTRUCTED AS A PART OF THE PROJECT SHALL BE FREE OF ALL FOREIGN MATTER AND IN A CLEAN CONDITION BEFORE THE PROJECT WILL BE ACCEPTED BY THE STATE.

ALL EXISTING SEWERS INSPECTED INITIALLY BY THE ABOVE MENTIONED PARTIES SHALL BE MAINTAINED AND LEFT IN A CONDITION REASONABLY COMPARABLE TO THAT DETERMINED BY THE ORIGINAL INSPECTION. ANY CHANGE IN THE CONDITION RESULTING FROM THE CONTRACTOR'S OPERATIONS SHALL BE CORRECTED BY THE CONTRACTOR TO THE SATISFACTION OF THE ENGINEER.

PAYMENT FOR ALL OPERATIONS DESCRIBED ABOVE SHALL BE INCLUDED IN THE CONTRACT PRICE FOR THE PERTINENT 611 CONDUIT ITEMS.

### EXISTING SUBSURFACE DRAINAGE

PROVIDE UNOBSTRUCTED OUTLETS FOR ALL EXISTING UNDERDRAINS OR AGGREGATE DRAINS ENCOUNTERED DURING CONSTRUCTION.

PROVIDE AN OUTLET PER STANDARD CONSTRUCTION DRAWING DM-1.1 FOR ALL UNDERDRAINS THAT OUTLET TO A SLOPE. UNDERDRAINS THAT CAN BE CONNECTED TO THE NEW OR EXISTING UNDERDRAINS AT THE END OF THE PROJECT LIMITS AS WELL AS ALL NECESSARY BENDS OR BRANCHES REQUIRED FOR CONNECTION ARE INCLUDED IN THE BASIS OF PAYMENT FOR UNCLASSIFIED PIPE UNDERDRAINS.

THE FOLLOWING ESTIMATED QUANTITIES HAVE BEEN PROVIDED FOR THE WORK NOTED ABOVE:

| | | |
|---|---|---|
| 601, | TIED CONCRETE BLOCK MAT WITH TYPE I UNDERLAYMENT | 8 SQ. YD. |
| 611, | 6" CONDUIT, TYPE F | 40 FT. |
| 611, | PRECAST REINFORCED CONCRETE OUTLET | 4 EACH |
| 605, | 6" UNCLASSIFIED PIPE UNDERDRAINS WITH GEOTEXTILE FABRIC | 40 FT. |

### TEMPORARY DRAINAGE ITEMS

TEMPORARY DRAINAGE ITEMS LABELED ON THE MAINTENANCE OF TRAFFIC PLAN ARE ITEMIZED ON THE MOT PLANS. PAYMENT FOR THE TEMPORARY DRAINAGE ITEMS ARE ITEMIZED AND CARRIED TO THE MAINTENANCE OF TRAFFIC GENERAL SUMMARY.

### PROPOSED MEDIAN STORM SEWER

STORM SEWERS NOTED AS "OFFSET" SHALL BE LOCATED WITHIN THE PROPOSED INLETS TO AVOID CONFLICT WITH ANY LIGHT POLE FOUNDATIONS OR SIGN TRUSS FOUNDATIONS.

### ITEM SPECIAL - FILL AND PLUG EXISTING CONDUIT

THIS ITEM SHALL CONSIST OF THE CONSTRUCTION OF BULKHEADS IN AN EXISTING 15", 18", 24", AND 30" DIAMETER CONDUIT AND FILLING THE AREA THUS SEALED OFF WITH ITEM 613, SAND OR OTHER MATERIAL APPROVED BY THE ENGINEER.

BULKHEADS SHALL BE LOCATED AT THE LIMITS OF THE AREA TO BE FILLED AS INDICATED ON THE PLANS. THE BULKHEADS SHALL CONSIST OF BRICK OR CONCRETE MASONRY WITH A MINIMUM THICKNESS OF 12 INCHES.

THE FILL MATERIAL SHALL BE PUMPED INTO PLACE, OR PLACED BY OTHER MEANS APPROVED BY THE ENGINEER, SO THAT, AFTER SETTLEMENT, AT LEAST 90 PERCENT OF THE CROSS-SECTIONAL AREA OF THE CONDUIT, FOR ITS ENTIRE LENGTH, SHALL BE FILLED. THE LENGTH OF FILLED AND PLUGGED CONDUIT TO BE PAID FOR SHALL BE THE ACTUAL NUMBER OF FEET (MEASURED ALONG THE CENTERLINE OF EACH CONDUIT FROM OUTER FACE TO OUTER FACE OF BULKHEADS) FILLED AND PLUGGED AS DESCRIBED ABOVE.

IN LIEU OF FILLING AND PLUGGING THE EXISTING CONDUIT, THE PIPE MAY BE CRUSHED AND BACKFILLED IN ACCORDANCE WITH THE PROVISIONS OF 203, OR IT MAY BE REMOVED. THE LENGTH, MEASURED AS PROVIDED ABOVE, SHALL BE PAID FOR AT THE CONTRACT PRICE PER FOOT FOR, ITEM SPECIAL, FILL AND PLUG EXISTING CONDUIT.

### ITEM 611 - CONDUIT BORED OR JACKED

WHERE IT IS SPECIFIED THAT A CONDUIT BE INSTALLED BY THE METHOD OF BORING OR JACKING, NO TRENCH EXCAVATION SHALL BE CLOSER THAN 10 FEET TO THE EDGE OF PAVEMENT. PROVIDE A STEEL CASING PIPE CONFORMING TO 748.06. JOINTS WITH A CIRCUMFERENCIAL FULLY PENETRATING B-U4B WELD THAT IS PERFORMED BY AN ODOT APPROVED FIELD WELDER OR MACHINED INTERLOCKING JOINTS ARE PERMITTED. THE INSTALLED CASING PIPE IS THE STORM WATER CONVEYANCE CARRIER UNLESS OTHERWISE SPECIFIED IN THE PLANS. HYDROSTATIC TESTING IS NOT REQUIRED FOR THE CASING PIPE.

### ITEM 611 - INLET, NO. 3 FOR SINGLE SLOPE BARRIER, TYPE C1, AS PER PLAN

INLET, NO. 3 FOR SINGLE SLOPE BARRIER, TYPE C1, AS PER PLAN SHALL BE CONSTRUCTED IN CONFORMANCE WITH ITEM 611 AND ACCORDING TO STANDARD CONSTRUCTION DRAWING I-2.2, EXCEPT THAT SECTION C-C OF THE AFOREMENTIONED STANDARD DRAWING THE MINIMUM DEPTH IS 24" VERSUS 32".

### ITEM 611 - MANHOLE RECONSTRUCTED TO GRADE, AS PER PLAN

MANHOLE RECONSTRUCTED TO GRADE, AS PER PLAN SHALL BE CONSTRUCTED IN CONFORMANCE WITH ITEM 611 EXCEPT THAT A NEW MANHOLE CASTING SHALL BE PROVIDED.

### ITEM 611 - CONDUIT, MISC.: 18" TYPE B, 748.06, OPEN CUT

748.06 CONDUIT TO BE INSTALLED WITH AN OPEN CUT ON EITHER SIDE OF ITEM 611 - 18" CONDUIT, TYPE B, 748.06, BORED OR JACKED. STORM SEWER PIPE P-54.

### ITEM 611 - CONDUIT, MISC.: 30" TYPE A, 748.06, OPEN CUT

748.06 CONDUIT TO BE INSTALLED WITH AN OPEN CUT ON EITHER SIDE OF ITEM 611 - 30" CONDUIT, TYPE A, 748.06, BORED OR JACKED. CULVERTS RAMP B STA. 211+13.00 AND RAMP C-2 STA. 784+60.00

### UNRECORDED STORM WATER DRAINAGE

FURNISH A CONTINUANCE FOR ALL UNRECORDED STORM WATER DRAINAGE, SUCH AS ROOF DRAINS, FOOTER DRAINS, OR YARD DRAINS, DISTURBED BY THE WORK. FURNISH EITHER AN OPEN CONTINUANCE OR AN UNOBSTRUCTED CONTINUANCE BY CONNECTING A CONDUIT THROUGH THE CURB OR INTO A DRAINAGE STRUCTURE. THE LOCATION, TYPE, SIZE AND GRADE OF THE NEEDED CONDUIT TO REPLACE OR EXTEND AN EXISTING DRAIN WILL BE DETERMINED BY THE ENGINEER. ALL SUCH CONTINUANCE REQUIRES A RIGHT OF WAY USE PERMIT.

THE FOLLOWING CONDUIT TYPES MAY BE USED: 707.33, 707.41 NON-PERFORATED, 707.42, 707.43, 707.45, 707.46, 707.47, 707.51, 707.52 SDR35.

THE FOLLOWING ESTIMATED QUANTITIES HAVE BEEN PROVIDED FOR USE AS DIRECTED BY THE ENGINEER FOR THE WORK NOTED ABOVE:

| | |
|---|---|
| 611, 6" CONDUIT, TYPE B, FOR DRAINAGE CONNECTION | 200 FT. |
| 611, 6" CONDUIT, TYPE C, FOR DRAINAGE CONNECTION | 200 FT. |
| 611, 6" CONDUIT, TYPE E, FOR DRAINAGE CONNECTION | 200 FT. |
| 611, 6" CONDUIT, TYPE F, FOR DRAINAGE CONNECTION | 200 FT. |

### ITEM SPECIAL - MISCELLANEOUS METAL

EXISTING CASTINGS MAY PROVE TO BE UNSUITABLE FOR REUSE, AS DETERMINED BY THE ENGINEER. IT SHALL BE THE CONRACTOR'S RESPONSIBILITY TO PROVIDE THE CASTINGS OF THE REQUIRED TYPE, SIZE AND STRENGTH (HEAVY OR LIGHT DUTY) FOR THE PARTICULAR STRUCTURE IN QUESTION. ALL MATERIAL SHALL MEET ITEM 611 OF THE SPECIFICATIONS AND SHALL HAVE THE PRIOR APPROVAL OF THE ENGINEER.

THE FOLLOWING ESTIMATED QUANTITY HAS BEEN PROVIDED FOR USE AS DIRECTED BY THE ENGINEER.

SPECIAL, MISCELLANEOUS METAL 10,000 POUNDS

THE CONTRACTOR IS CAUTIONED TO USE EXTREME CARE IN THE REMOVAL, STORAGE AND REPLACEMENT OF ALL EXISTING CASTINGS. CASTINGS DAMAGED BY THE NEGLIGENCE OF THE CONTRACTOR, AS DETERMINED BY THE ENGINEER, SHALL BE REPLACED WITH THE PROPER NEW CASTINGS AT THE EXPENSE OF THE CONTRACTOR.

QUANTITIES CARRIED TO GENERAL NOTES SUBSUMMARY ON SHEET 73

CALCULATED ATR
CHECKED PJF

# GENERAL NOTES

SUM-77 / 277 / 224
VARIOUS

| REVISIONS | | |
|---|---|---|
| NO. | DATE | DESCRIPTION |
| 1 | 04/28/21 | DELETED PRESSURE RELIEF JOINT NOTE |



O:\2017\2017258\ProjectData\SUM\106002\Design\Roadway\Sheets\106002_GN004.dgn 106002GN004 4/28/2021 9:34:18 AM pfry

## DRAINAGE (CONTINUED)

### ITEM 611 - CATCH BASIN NO. 3, AS PER PLAN

CATCH BASIN NO. 3, AS PER PLAN SHALL BE CONSTRUCTED IN CONFORMANCE WITH ITEM 611 AND ACCORDING TO STANDARD CONSTRUCTION DRAWING CB-2.1, EXCEPT THAT SECTION A-A OF THE AFOREMENTIONED STANDARD DRAWING SHALL BE MODIFIED AS SHOWN AND THAT NO BRICK OR CONCRETE BLOCK CONSTRUCTION SHALL BE PERMITTED.

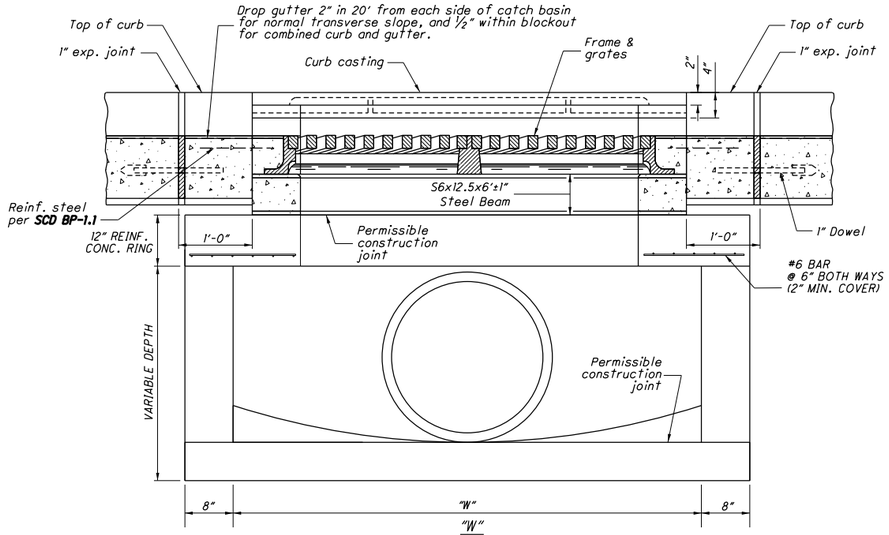


36" DIAMETER CONDUIT = 64"

CATCH BASIN NO. 3, AS PER PLAN

N.T.S.

### ITEM 611 - CATCH BASIN NO. 6, AS PER PLAN

CATCH BASIN NO. 6, AS PER PLAN SHALL BE CONSTRUCTED IN CONFORMANCE WITH ITEM 611 AND ACCORDING TO STANDARD CONSTRUCTION DRAWING CB-2.3, EXCEPT THAT SECTION B-B OF THE AFOREMENTIONED STANDARD DRAWING SHALL BE MODIFIED AS SHOWN AND THAT NO BRICK OR CONCRETE BLOCK CONSTRUCTION SHALL BE PERMITTED.

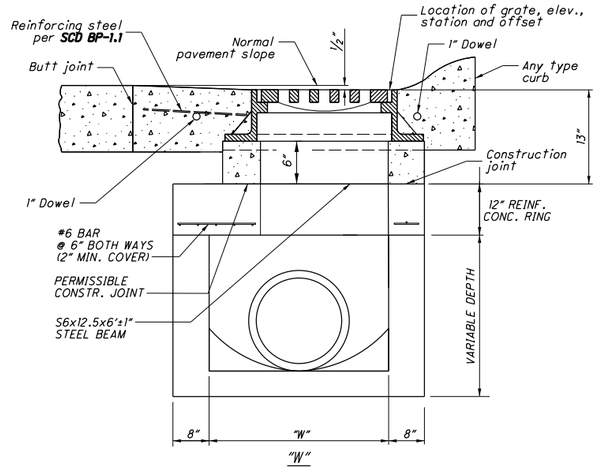


30" DIAMETER CONDUIT = 42"

CATCH BASIN NO. 6, AS PER PLAN

N.T.S.

CALCULATED ATR
CHECKED PJF

GENERAL NOTES

SUM-77 / 277 / 224
VARIOUS

71
1288

O:\2017\2017258\ProjectData\SUM\106002\Design\Roadway\Sheets\106002_GN006.dgn 106002GN006 1/15/2021 3:38:40 PM Ikirkland

## EROSION CONTROL

### SEEDING AND MULCHING

SEEDING AND MULCHING SHALL BE APPLIED TO ALL AREAS OF EXPOSED SOIL BETWEEN THE RIGHT-OF-WAY LINES, AND WITHIN THE CONSTRUCTION LIMITS FOR AREAS OUTSIDE THE RIGHT-OF-WAY LINES COVERED BY WORK AGREEMENT OR SLOPE EASEMENT. QUANTITY CALCULATIONS FOR SEEDING AND MULCHING ARE BASED ON THESE LIMITS.

FOR SEEDING AND MULCHING QUANTITIES, SEE SHEETS 1GS00345GS00091

### ITEM 601 - PAVED GUTTER, TYPE 1-2, AS PER PLAN

THIS ITEM SHALL CONSIST OF CONSTRUCTING CONCRETE PAVED GUTTER AS PER STANDARD CONSTRUCTION DRAWING DM-2.1 AND THE DETAILS AS SHOWN ON SHEETS 1GY345GY2415 THE LOCATIONS SHOWN IN THE PLANS. THE GUTTER SHALL BE CONSTRUCTED TO THE DIMENSIONS SHOWN IN THE DETAIL. A SIDE CUTOFF WALL SHALL BE CONSTRUCTED AS SHOWN PER THE DETAIL FOR THE ENTIRE LENGTH OF THE GUTTER. END CUTOFF WALLS SHALL BE AS PER STANDARD DRAWING DM-2.1. PEJF (PREFORMED EXPANSION JOINT FILLER) SHALL BE PER CMS 516 AND IS INCLUDED IN THE COST OF THE PAVED GUTTER.

ALL LABOR, EQUIPMENT AND MATERIALS NECESSARY TO COMPLETE THE ABOVE-DESCRIBED WORK SHALL BE INCLUDED IN THE CONTRACT PRICE BID FOR ITEM 601 - PAVED GUTTER, TYPE 1-2, AS PER PLAN.

### ITEM 601 - ROCK CHANNEL PROTECTION, TYPE D WITH AGGREGATE FILTER, AS PER PLAN

THIS ITEM SHALL CONSIST OF PLACING ROCK CHANNEL PROTECTION WITH AGGREGATE FILTER PER CMS ITEM 601.09 AND ITEM 703.19 EXCEPT THAT ALL MATERIALS SHALL BE NATURAL STONE.

### ITEM 601 - ROCK CHANNEL PROTECTION, TYPE C WITH AGGREGATE FILTER, AS PER PLAN

THIS ITEM SHALL CONSIST OF PLACING ROCK CHANNEL PROTECTION WITH AGGREGATE FILTER PER CMS ITEM 601.09 AND ITEM 703.19 EXCEPT THAT ALL MATERIALS SHALL BE NATURAL STONE.

## WATER QUALITY

### POST CONSTRUCTION STORM WATER TREATMENT

THIS PLAN UTILIZES STRUCTURAL BEST MANAGEMENT PRACTICES (BMP'S) FOR POST CONSTRUCTION STORM WATER TREATMENT.

### VEGETATED FILTER STRIP

THIS PLAN UTILIZES VEGETATED FILTER STRIP(S) FOR POST CONSTRUCTION STORM WATER TREATMENT. PLACE EITHER ITEM 660 SODDING OR ITEM 659 SEEDING AND MULCHING WITH A 4-INCH LIFT OF TOPSOIL AND ITEM 670, SLOPE EROSION PROTECTION TO ALL DISTURBED AREAS DESIGNATED AS VEGETATED FILTER STRIPS, THE EDGE OF SHOULDER, AND THE FORESLOPE AS SPECIFIED IN THE PLANS.

### VEGETATED BIOFILTER

THIS PLAN UTILIZES VEGETATED BIOFILTER(S) FOR POST CONSTRUCTION STORM WATER TREATMENT. PLACE EITHER ITEM 660 SODDING OR ITEM 659 SEEDING AND MULCHING WITH A 4-INCH LIFT OF TOPSOIL AS SHOWN IN THE PLANS TO ANY DISTURBED AREA ON THE SHOULDER AND FORESLOPE DRAINING TO A VEGETATED BIOFILTER. THE DITCH FOR EACH VEGETATED BIOFILTER SHALL BE TRAPEZOIDAL, AS SHOWN IN THE PLAN CROSS SECTIONS. PROVIDE ITEM 670 AS SPECIFIED IN THE PLANS. ALL DITCHES LOCATED WITHIN LIMITS OF VEGETATED BIOFILTER SHALL BE TRAPEZOIDAL AND NOT HAVE ROUNDING.

## SANITARY SEWER

### SUMMIT COUNTY D.O.E.S. SANITARY SEWER NOTES

ALL SEWER WORK ITEMS AND CONSTRUCTION SHALL CONFORM TO ODOT ITEM 611 AND THE SUMMIT COUNTY D.O.E.S. CONSTRUCTION AND MATERIAL SPECIFICATIONS AND APPLICABLE DETAILS. WHERE THERE IS CONTRADICTION, THE SUMMIT COUNTY D.O.E.S. SPECIFICATIONS WILL TAKE PRECEDENCE.

### ITEM 611 - MANHOLE ADJUSTED TO GRADE, AS PER PLAN (SANITARY)

THIS ITEM SHALL INCLUDE ALL LABOR, TOOLS, EQUIPMENT, MATERIALS AND INCIDENTALS NECESSARY FOR ADJUSTMENT OF THE SANITARY MANHOLES IN ACCORDANCE WITH ODOT ITEM 611 AND THE SUMMIT COUNTY DEPARTMENT OF ENVIRONMENT SERVICES (D.O.E.S.) DETAIL ON THIS SHEET.

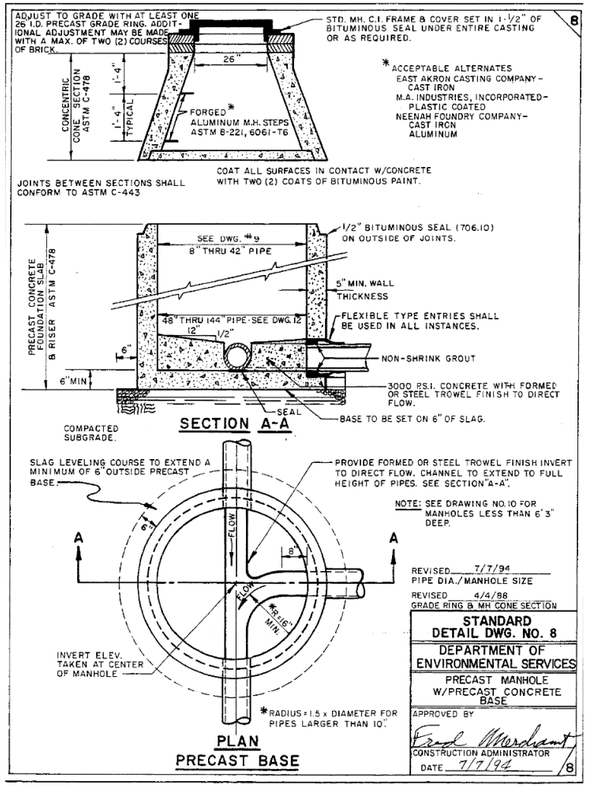


### CITY OF AKRON SANITARY SEWER NOTES

ALL SEWER WORK ITEMS AND CONSTRUCTION SHALL CONFORM TO ODOT ITEM 611 AND THE CITY OF AKRON CONSTRUCTION AND MATERIAL SPECIFICATIONS AND APPLICABLE DETAILS. WHERE THERE IS CONTRADICTION, THE CITY OF AKRON SPECIFICATIONS WILL TAKE PRECEDENCE.

### ITEM 611 - MANHOLE NO. 3, AS PER PLAN (SANITARY)

THIS ITEM SHALL CONSIST OF CONSTRUCTING A SANITARY SEWER MANHOLE IN ACCORDANCE WITH ODOT ITEM 611 AND ODOT STANDARD CONSTRUCTION DRAWING MH-1.2 EXCEPT THAT A SEALED AND WATER-TIGHT LID MUST BE PROVIDED DUE TO THE PROXIMITY OF THE ADJACENT STREAM. THIS ITEM SHALL INCLUDE ALL LABOR, TOOLS, EQUIPMENT, MATERIALS AND INCIDENTALS NECESSARY FOR CONSTRUCTION OF THE SANITARY MANHOLES.

## ENVIRONMENTAL

### WETLAND IMPACTS/AVOIDANCE

FOR WETLAND IMPACTS, PLEASE REFER TO THE NOTE SHOWN ON SHEET 1DE18

### TEMPORARY WETLAND IMPACT

TEMPORARY ACCESS FILLS IN WETLAND A MUST BE REMOVED ENTIRELY AND WETLAND A MUST BE RETURNED TO PRE-CONSTRUCTION CONTOURS. ANY TOPSOIL REMOVED FROM THE WETLAND WILL BE STOCKPILED AND REPLACED POST-CONSTRUCTION. THE AREAS SURROUNDING THE STOCKPILES ARE TO BE PROTECTED FROM SEDIMENT WITH THE USE OF PERIMETER CONTROL DEVICES SUCH AS EARTH, STRAW BALES OR SILT FENCES. THESE PERIMETER CONTROL DEVICES SHALL BE MAINTAINED FOR THE DURATION OF THE PROJECT. RESTORE ALL STOCKPILE AND PLACEMENT AREAS UPON COMPLETION OF THE PROJECT. ANY BARE AREAS WITHIN THE TEMPORARY WETLAND IMPACT BOUNDARIES WILL NEED TO BE RESEEDED WITH A NATIVE, NON-INVASIVE SPECIES SEED MIX. ERNMX-128 SEASONALLY FLOODED WILDLIFE FOOD MIX OR EQUIVALENT AT A SEEDING RATE OF 20 LB PER ACRE OR 1/2 LB PER 1,000 SQ FT.

### BEST MANAGEMENT PRACTICES/SOIL EROSION AND SEDIMENTATION CONTROL

ALL SOIL EROSION AND SEDIMENT CONTROL MEASURES AS SPECIFIED IN THE STORM WATER POLLUTION PREVENTION PLAN SHALL BE IN PLACE PRIOR TO ANY EXCAVATION, GRADING OR FILLING OPERATIONS AND INSTALLATION OF PROPOSED STRUCTURES OR UTILITIES. THEY SHALL REMAIN IN PLACE UNTIL CONSTRUCTION IS COMPLETE AND THE AREA IS STABILIZED AS ACCEPTED BY THE ENGINEER.

### ENDANGERED BAT HABITAT REMOVAL

THIS PROJECT IS LOCATED WITHIN THE KNOWN HABITAT RANGES OF THE FEDERALLY LISTED AND PROTECTED INDIANA BAT, AND NORTHERN LONG-EARED BAT. NO TREES SHALL BE REMOVED UNDER THIS PROJECT FROM APRIL 1 THROUGH SEPTEMBER 30. ALL NECESSARY TREE REMOVAL SHALL OCCUR FROM OCTOBER 1 THROUGH MARCH 31. THIS REQUIREMENT IS NECESSARY TO AVOID AND MINIMIZE IMPACTS TO THESE SPECIES AS REQUIRED BY THE ENDANGERED SPECIES ACT (ESA). FOR THE PURPOSES OF THIS NOTE, A TREE IS DEFINED AS: A LIVE, DYING, OR DEAD WOODY PLANT, WITH A TRUNK THREE INCHES OR GREATER IN DIAMETER AT A HEIGHT OF 4.5 FEET ABOVE THE GROUND SURFACE, AND WITH A MINIMUM HEIGHT OF 13 FEET.

CALCULATED ATR
CHECKED PJF

# GENERAL NOTES

SUM-77 / 277 / 224
VARIOUS

| REVISIONS | | |
|---|---|---|
| NO. | DATE | DESCRIPTION |
| 4 | 04/20/21 | WETLAND NOTE REVISED |
| 5 | 04/22/21 | ROCK CHANNEL PROT. NOTE ADDED |
| 6 | 04/26/21 | ROCK CHANNEL PROT. NOTE ADDED |

72
1288

O:\2017\2017258\ProjectData\SUM\106002\Design\Roadway\Sheets\106002_GN005.dgn 106002GN005 4/26/2021 8:54:49 AM pfry

| SHEET NO. | 201 CLEARING AND GRUBBING | | 203 EXCAVATION | 203 EMBANKMENT | 204 GRANULAR MATERIAL, TYPE C | 204 PROOF ROLLING | | 601 TIED CONCRETE BLOCK MAT WITH TYPE I UNDERLAYMENT | | 605 6" UNCLASSIFIED PIPE UNDERDRAINS WITH GEOTEXTILE FABRIC | | 611 6" CONDUIT, TYPE B | 611 6" CONDUIT, TYPE C | 611 6" CONDUIT, TYPE E | 611 6" CONDUIT, TYPE F | 611 PRECAST REINFORCED CONCRETE OUTLET | SPECIAL MISCELLANEOUS METAL | | 623 MONUMENT ASSEMBLY | 623 MONUMENT BOX ADJUSTED TO GRADE | | SPECIAL VERTICAL CLEARANCE |
|---|---|---|---|---|---|---|---|---|---|---|---|---|---|---|---|---|---|---|---|---|---|---|
| | LS | | CY | CY | CY | HR | | SY | | FT | | FT | FT | FT | FT | EACH | LB | | EACH | EACH | | EACH |
| 66 | LS | | | | | | | | | | | | | | | | | | 12 | 2 | | |
| 68 | | | | | | | | | | | | | | | | | | | | | | 6 |
| 69 | | | 16400 | 16300 | 100 | 156 | | | | | | | | | | | | | | | | |
| 70 | | | | | | | | 8 | | 40 | | 200 | 200 | 200 | 240 | 4 | 10000 | | | | | |
| **TOTALS CARRIED TO GENERAL SUMMARY** | LS | | 16400 | 16300 | 100 | 156 | | 8 | | 40 | | 200 | 200 | 200 | 240 | 4 | 10000 | | 12 | 2 | | 6 |

| SHEET NO. |
|---|
| **TOTALS CARRIED TO GENERAL SUMMARY** |

CALCULATED LRK
CHECKED PJF

# GENERAL NOTES SUBSUMMARY

SUM-77/277/224
VARIOUS

73
1288

O:\2017\2017258\ProjectData\SUM\106002\Design\Roadway\Sheets\106002_GS01.dgn Sheet lkirkland 1/15/2021 3:38:44 PM

## MAINTENANCE OF TRAFFIC

THIS ITEM SHALL CONSIST OF MAINTENANCE OF TRAFFIC ON EXISTING ROADWAYS AND RAMPS IN ACCORDANCE WITH THE OHIO MANUAL OF UNIFORM TRAFFIC CONTROL DEVICES FOR STREETS AND HIGHWAYS, CURRENT EDITION, LATEST REVISION, THE SPECIFICATIONS AND THE FOLLOWING:

1. A MINIMUM OF ONE ELEVEN FOOT LANE IN EACH DIRECTION SHALL BE MAINTAINED ON THE EXISTING, TEMPORARY OR COMPLETED PAVEMENT DURING CONSTRUCTION OF THE WORK.

2. THE CONTRACTOR SHALL INFORM THE DISTRICT OFFICE (330) 786-2208, EIGHTEEN (18) DAYS PRIOR TO THE BEGINNING OF WORK.

3. UNDER NO CIRCUMSTANCES SHALL THE CONTRACTOR BE PERMITTED TO HAVE SUCCESSIVE WORK ZONES UNLESS THE DISTANCE BETWEEN THE DRUMS, BARRICADES OR CONES EXCEEDS TWO (2) MILES RURAL OR ONE (1) MILE URBAN.

4. FOR ROUTES NOT ON THE PERMITTED LANE CLOSURE CHART, ONLY DURING OFF-PEAK PERIODS (ie ANY PERIOD OTHER THAN 6-8AM AND 3-6PM) SHALL THE CONTRACTOR INSTALL AND SUBSEQUENTLY RESET ALL TRAFFIC CONTROL NECESSARY FOR THE WORK ZONE FOR EACH CONSTRUCTION PHASE.

5. A QUANTITY OF 100 CU. YDS. OF ITEM 614 ASPHALT CONCRETE FOR MAINTAINING TRAFFIC SHALL BE PROVIDED FOR USE IN MAINTAINING PAVEMENT, SHOULDERS AND OTHER LOCATIONS AS DIRECTED BY THE ENGINEER.

6. PRIOR TO OPENING TO TRAFFIC EACH LANE SHALL BE IN A SAFE, PASSABLE CONDITION. ALL TRANSVERSE JOINTS SHALL EXTEND ACROSS THE FULL LANE AND SHOULDER WIDTH AND EACH LANE SHALL BE FREE FROM UNEVEN LONGITUDINAL JOINTS. THE CONTRACTOR SHALL PROVIDE ASPHALT WEDGES FOR TRANSVERSE JOINTS WHEREVER THERE ARE PAVEMENT ELEVATION DIFFERENCES.

7. THE CONTRACTOR SHALL PLACE THE SIGNS: W8-1 [BUMP] PER OMUTCD 2C.28; W8-11 [UNEVEN LANES] PER OMUCTD 6F.45; AND W6-3 [TWO-WAY TRAFFIC] PER OMUTCD 6F.32. PAYMENT FOR THESE SIGNS SHALL BE INCIDENTAL TO THE LUMP SUM ITEM 614- MAINTAINING TRAFFIC. AN ESTIMATED QUANTITY OF FIFTEEN (15) ITEM 614 WORK ZONE MARKING SIGNS HAS BEEN INCLUDED IN THE PLANS PER CMS 614.04.

8. THE CONTRACTOR SHALL SET A WORK ZONE AT THE REQUEST OF THE ENGINEER TO ALLOW THE LAYOUT OF THE PARTIAL/FULL DEPTH PAVEMENT REPAIR AREAS. THIS WORK IS INCIDENTAL TO ITEM 614 MAINTAINING TRAFFIC.

## ADVANCED NOTICE TO PAVE

THE CONTRACTOR SHALL SUBMIT FOR APPROVAL TO THE DISTRICT CONSTRUCTION ENGINEER A DETAILED SCHEDULE 15 DAYS PRIOR TO THE PLACEMENT OF THE OVERLAY COURSES, ON HOW THEY PROPOSE TO PROSECUTE THE PAVING OPERATIONS. THE DETAILS SHALL SHOW THE ORDER OF PERFORMANCE OF EACH STAGE (START TO FINISH) OF THE WORK INCLUDING THE MAINTENANCE OF TRAFFIC THAT WILL BE USED.

## WINTER TIME LIMITATIONS

ALL RAMPS SHALL BE OPEN AND TRAFFIC SHALL BE MAINTAINED AS DESCRIBED IN THE SEQUENCE OF CONSTRUCTION AND AS DETAILED IN THE PLANS BETWEEN OCTOBER 15 AND APRIL 1. SHOULD THE CONTRACTOR FAIL TO MEET THESE REQUIREMENTS, A DISINCENTIVE SHALL BE ASSESSED IN THE AMOUNT OF $325 PER MINUTE PER LANE.

## TIME LIMITATION ON A DETOUR

A MINIMUM OF ONE LANE OF TRAFFIC IN EACH DIRECTION SHALL BE MAINTAINED AT ALL TIMES, EXCEPT AS FOLLOWS:

| ROAD OR RAMP CLOSURE | DURATION OF CLOSURE (CALENDAR DAYS) | DISCINCENTIVE ($ PER CALENDAR DAY) |
|---|---|---|
| WARNER RD. | 1x - 30 DAYS* | $2,250 |
| WARNER RD. | 3x - 45 DAYS EACH* | $2,250 |
| RAMP B | 45 DAYS | $16,250 |
| RAMP B-1 | 45 DAYS | $3,250 |
| RAMP B-2 | 45 DAYS | $16,500 |
| RAMP C-1 | 45 DAYS | $7,000 |
| RAMP C-2 | 270 DAYS | $5,250 |
| RAMP D | 45 DAYS | $8,250 |
| PHASE 2 | 270 DAYS** | $16,500 |
| PHASE 1B | 30 DAYS | $7,000 |
| RAMP C | 45 DAYS | &4,000 |

* - WARNER ROAD IS PERMITTED TO CLOSE AS FOLLOWS:
-PHASE 1 - 45 DAYS FOR MEDIAN BRIDGE WORK.
-PHASE 1 - 30 DAYS FOR WARNER RD. LOWERING.
-PHASE 2 - 45 DAYS FOR NB OUTSIDE BRIDGE WORK.
-PHASE 3 - 45 DAYS FOR SB OUTSIDE BRIDGE WORK.

THE WARNER RD DETOUR SHALL NOT TAKE PLACE IN AUGUST OF ANY YEAR. THE CONTRACTOR SHALL COORDINATE THE WARNER RD CLOSURE WITH THE FIRESTONE COUNTRY CLUB. WARNER RD SHALL NOT BE CLOSED DURING ANY MAJOR GOLF EVENTS. EXPECTED DATES:
2021 - 6/18 THRU 6/28
2022 - 7/1 THRU 7/20
2023+ - TO BE DETERMINED
BRIDGESTONE GOLF CONTACT:
DON PADGETT III
EXECUTIVE DIRECTOR
BRIDGESTONE SENIOR PLAYERS
ADDRESS: 440. E WARNER ROAD
AKRON, OH 44319
PHONE: 330 245 2305
EMAIL: DPADGETT@PGATOURHO.COM

** - THIS DETOUR SHALL BE IN EFFECT FOR PHASE 2 WHEN RAMP B-2 IS INACESSIBLE TO NON-CONTRAFLOW NB 77 TRAFFIC.

## DETOUR NOTIFICATION

THE CONTRACTOR SHALL ADVISE THE ODOT DISTRICT OFFICE (330-786-3148) EIGHTEEN (18) DAYS IN ADVANCE OF WHEN THE DETOUR ROUTE SHOULD BE IN EFFECT. ALL WORK ZONE DEVICES REQUIRED SHALL BE FURNISHED, ERECTED, MAINTAINED, AND SUBSEQUENTLY REMOVED BY THE CONTRACTOR. PAYMENT FOR ALL WORK ASSOCIATED WITH THE DETOUR SHALL BE INCLUDED UNDER THE LUMP SUM BID FOR ITEM 614, DETOUR SIGNING.

## LANE CLOSURES

DURATION OF LANE CLOSURES AND RESTRICTIONS SHALL BE AS PER THE PERMITTED LANE CLOSURE CHART. THE PERMITTED LANE CLOSURE CHART USED FOR THIS PROJECT SHALL BE THE MOST CURRENT CHART AVAILABLE ON THE DATE THIS PROJECT SELLS.

THE CHART CAN BE FOUND AT: http://plcm.dot.state.oh.us

SHOULD THE CONTRACTOR FAIL TO MEET ANY OF THE REQUIREMENTS IN THE CHART, THE CONTRACTOR SHALL BE ASSESSED DISINCENTIVES IN THE AMOUNT OF $10,000 PER HOUR OR PORTION THEREOF THAT THE LANE REDUCTION REMAINS BEYOND THE SPECIFIED LIMIT.

## NOTICE OF CLOSURE SIGN

NOTICE OF CLOSURE SIGNS (W20-H13) SHALL BE ERECTED BY THE CONTRACTOR PRIOR TO THE SCHEDULED ROAD OR RAMP CLOSURE IN ACCORDANCE WITH THE NOTICE OF CLOSURE TIME TABLE BELOW. AT THE APPROVAL OF THE ENGINEER, PORTABLE CHANGEABLE MESSAGE SIGNS MAY BE USED IN LIEU OF THE STANDARD FLATSHEET SIGN FOR CLOSURE DURATIONS OF LESS THAN 1 WEEK.

THE SIGNS SHALL BE ERECTED ON THE RIGHT-HAND SIDE OF THE ROAD/RAMP FACING TRAFFIC. THEY SHALL BE PLACED SO AS NOT TO INTERFERE WITH THE VISIBILITY OF ANY OTHER TRAFFIC CONTROL SIGNS. ON ROADWAYS, THEY SHOULD BE ERECTED AT OR NEAR THE POINT OF CLOSURE. THE SIGNS MAY BE ERECTED ANYWHERE ON RAMPS AS LONG AS THEY ARE VISIBLE TO THE MOTORISTS USING THE RAMP. ON ENTRANCE RAMPS, THE SIGN SHALL BE ERECTED WELL IN ADVANCE OF THE MERGE AREA TO AVOID DISTRACTING MOTORISTS.

| NOTICE OF CLOSURE SIGN TIME TABLE | | |
|---|---|---|
| ITEM | DURATION OF CLOSURE | SIGN DISPLAYED TO PUBLIC |
| RAMP & ROAD CLOSURES | >= 2 WEEKS | 14 CALENDAR DAYS PRIOR TO CLOSURE |
| | > 12 HOURS & < 2 WEEKS | 7 CALENDAR DAYS PRIOR TO CLOSURE |
| | < 12 HOURS | 2 BUSINESS DAYS PRIOR TO CLOSURE |

THE SIGN SHALL DISPLAY THE DATE OF THE CLOSURE IN MMM-DD FORMAT AND THE NUMBER OF DAYS OF THE CLOSURE. THE LAST LINE OF THE W20-H13 SIGN LISTS A PHONE NUMBER WHICH A MOTORIST MAY CALL FOR ADDITIONAL INFORMATION. THIS IS TO BE A SPECIFIC OFFICE WITHIN THE DISTRICT RATHER THAN THE GENERAL SWITCHBOARD NUMBER.

## SEQUENCE OF CONSTRUCTION

SEE TABLE ON SHEET 74A FOR REVISED SEQUENCE OF CONSTRUCTION.

PRE-PHASE 1 (NO SHEETS PROVIDED)

1. UTILIZE ALLOWABLE LANE CLOSURES IN ACCORDANCE WITH THE PERMITTED LANE CLOSURE CHART TO INSTALL THE FOLLOWING STORM CROSSINGS:

| PIPE REFERENCE | SIZE | ALIGNMENT | STATION | SIDE |
|---|---|---|---|---|
| P-11 | 15" | CL I-77 | 425+00.00 | LT |
| P-63 | 15" | CL I-77 | 427+40.00 | LT |
| P-12 | 15" | CL I-77 | 428+50.00 | LT |
| P-14 | 15" | CL I-77 | 432+50.00 | LT |
| P-18 | 15" | CL I-77 | 444+10.00 | LT |
| P-22 | 24" | CL I-77 | 458+10.00 | RT |
| P-28 | 42" | BL I-77 SB | 492+00.00 | RT/LT |
| P-42 | 15" | BL I-77 SB | 494+00.00 | RT/LT |

2. INSTALL ALL PROPOSED OVERHEAD SIGN STRUCTURES, FOUNDATIONS AND TEMPORARY GUIDE SIGNS. PROVIDE POSITIVE PROTECTION WHEN WORKING WITHIN THE CLEAR ZONE.

3. INSTALL TEMPORARY PAVEMENT ON I-77 NORTHBOUND BETWEEN STATIONS 504+32 AND 508+49 AND ON I-77 SOUTHBOUND BETWEEN STATIONS 505+70 AND 513+15 FOR USE IN PHASE 1.

PHASE 1 (SHEETS 128 TO 156)

1. SHIFT NB AND SB I-77 LANES ONTO THE OUTSIDE SHOULDERS.

2. CONSTRUCT THE NB I-77 CROSSOVER PAVEMENT, AND RECONSTRUCT THE MEDIAN AND INSIDE LANES OF I-77 NB AND SB INCLUDING INSIDE CONSTRUCTION OF STRUCTURES SUM-77-0802L (SB I-77 OVER WARNER RD.), SUM-77-0802R (NB I-77 OVER WARNER RD.), SUM-77-0810L (SB I-77 OVER TUSCARAWAS RIVER), AND SUM-77-810R (NB I-77 OVER TUSCARAWAS RIVER).

3. CLOSE THE OUTSIDE LANE OF RAMP A.

4. BEGIN CONSTRUCTION OF RAMP B-2 WHILE MAINTAINING ACCESS TO EXISTING RAMP B-2.

5. SHIFT RAMP C TRAFFIC ONTO THE OUTSIDE SHOULDER. CONSTRUCT THE INSIDE HALF OF THE RAMP, INCLUDING TEMPORARY PAVEMENT FOR MAINTAINING TRAFFIC IN THE NEXT PHASE.

6. CLOSE AND DETOUR RAMP C-2 TRAFFIC. CONSTRUCT RAMP C-2 INCLUDING STRUCTURE SUM-77-0927R (RAMP C-2 OVER I-77 NB). WHEN REMOVING OR SETTING BEAMS THE CONTRACTOR MAY CLOSE I-77 AND DETOUR TRAFFIC UTILIZING RAMP C, US 224, KELLY AVE. AND RAMP D NIGHTLY BETWEEN 12:00 AM AND 4:00 AM. THE DETOUR WILL UTILIZE 3 PCMS. PAYMENT SHALL BE INCLUDED IN ITEM 614 - MAINTAINING TRAFFIC. NIGHTLY SINGLE LANE CLOSURES SHALL BE PERMISSIBLE ON I-77 NB, CONTRACTOR SHALL FOLLOW ODOT PLCM REGARDING CLOSURE TIMES AND DURATIONS.

7. MAINTAIN TRAFFIC ON ALL OTHER RAMPS.

8. CLOSE AND DETOUR WARNER RD. TRAFFIC. CONSTRUCT WARNER RD. UNDER I-77.

| REVISIONS | | |
|---|---|---|
| NO. | DATE | DESCRIPTION |
| 2 | 04/05/21 | REVISED NOTE TO ALLOW DETOUR |
| 4 | 04/20/21 | REVISED SEQUENCE OF CONSTRUCTION |
| 8 | 04/30/21 | REVISED WARNER RD CLOSURES |

CALCULATED JAR
CHECKED JML

# MOT PLAN NOTES

SUM-77/277/224
VARIOUS



N:\03\60\06744-08\106002_SUM-76-10.95\Design\MOT\Sheets\106002_MN001.dgn Sheet 4/30/2021 11:31:53 AM awhite

CALCULATED JML | CHECKED TAG

## COOPERATION BETWEEN CONTRACTORS

THE CONTRACTOR SHALL BE ADVISED THAT PROJECT SUM-76/77/8-08.42/09.77/00.00 (PID 102329) MAY BE ONGOING IN AN AREA IMMEDIATELY ADJACENT TO AND WITHIN THE PROJECT LIMITS OF THIS PROJECT AND SHALL HAVE PRIORITY TO THIS PROJECT. THE CONTRACTOR SHALL SCHEDULE HIS WORK SO AS TO CAUSE A MINIMUM OF DELAY OR CONFLICT WITH THE OTHER PROJECTS.

TO AVOID CONFLICTING WORK ZONES WITH THE ADJACENT PROJECT (PID 102329), THE SEQUENCE OF CONSTRUCTION WILL BE REVISED PER THE TABLE BELOW. A 24 FOOT LATERAL TRAFFIC SHIFT WILL BE REQUIRED TO PERFORM PHASES 2B AND 2D WHILE NORTHBOUND TRAFFIC IS IN THE PHASE 3 PATTERN. THE SHIFT WILL BE PER MT-102.10. THE ESTIMATED QUANTITIES BELOW ARE FOR THE TRAFFIC SHIFT:

| | |
|---|---|
| ITEM 614 WORK ZONE EDGE LINE, CLASS I, 6" AS PER PLAN | 1.5 MILE |
| ITEM 614 WORK ZONE LANE LINE, CLASS I, 6"AS PER PLAN | 0.7 MILE |
| ITEM 614 WORK ZONE CHANNELZING LINE, CLASS I, 12" AS PER PLAN | 4224 FT |
| ITEM 614 PORTABLE BARRIER, UNANCHORED | 1800 FT |
| ITEM 614 OBJECT MARKER, ONE WAY | 36 EACH |
| ITEM 614 BARRIER REFLECTOR, TYPE 1, 1 WAY | 36 EACH |

SEQUENCE OF CONSTRUCTION

| PRECEDING PHASE | PHASE | DESCRIPTION | SUCCEDING PHASE | ANTICIPATED CONSTRUCTION YEAR |
|---|---|---|---|---|
| BEGIN WORK | PRE-PHASE 1 | STORM DRAINAGE CROSSINGS, TEMPORARY PAVEMENT, GUIDE SIGNS, OVERHEAD SIGN STRUCTURES, PROCUREMENT (I.E. STUCTURAL STEEL, NOISE BARRIER, ETC.) | 1 | 2021 |
| PRE-PHASE 1 | 1 | CONSTRUCT CROSSOVER PAVEMENT, RECONSTRUCT THE MEDIAN AND INSIDE LANES OF I-77 NB & SB INCLUDING STRUCTURES. | PRE-PHASE 2 | 2021-2022 |
| 1 | PRE-PHASE 2 | INSTALL DMS SIGN ON I-77 AND REPLACE SIGN TRUSS ON I-277. | 3 | 2022 |
| PRE-PHASE 2 | 3* | CONSTRUCT OUTSIDE PORTION OF I-77 SB FOR THE ENTIRE LENGTH OF THE PROJECT. CONSTRUCT PHASE 3 CROSSOVERS. | 1A | 2022-2023 |
| 3 | 1A | RAMP B-2 | 1B | 2023 |
| 1A | 1B | LEFT SIDE OF I-77 NB BETWEEN STA. 469+50 AND 783+00. | 1C | 2023 |
| 1B | 1C | INSIDE HALF OF THE I-77 NB PAVEMENT THROUGH THE I-277 INTERCHANGE. | 2 | 2023 |
| 1B | 2E | INSIDE PORTION OF MAINLINE I-77 NB FROM STA. 513+50 TO THE WATERLOO ROAD BRIDGE. | 2 | 2023 |
| 1C/2E | 2* | I-77 NB OUTSIDE PAVEMENT RECONSTRUCTION SOUTH OF THE I-277 INTERCHANGE. | 4 | 2023-2024 |
| 2 | 4 | SURFACE COURSE AND FINAL PAVMEENT MARKINGS. | COMPLETION | 2024 |

* SHALL INCLUDE SUB-PHASES EXCEPT AS NOTED IN THE TABLE BELOW

| PHASE | DESCRIPTION | CONSTRAINTS | ANTICIPATED CONSTRUCTION YEAR |
|---|---|---|---|
| 2B | RAMP C-1, THE OUTSIDE PORTION OF I-77 NB IN THE AREA OF THE ACCELERATION LANE, OUTSIDE PORTIION OF I-277 EB IN THE AREA OF THE DECELERATION AREA | CONSTRUCTED WHILE THE RAMP IS CLOSED FOR PID 102329 | 2022 |
| 2C | OPENING RAMP C-1 | DUE TO PID 102329, PHASE MAY NOT BE NEEDED | 2022 |
| 2D | RAMP D, THE OUTSIDE PORTION OF I-77 NB IN THE AREA OF THE ACCELERATION LANE, OUTSIDE PORTION OF I-277 EB IN THE AREA OF THE DECELERATION AREA | CONSTRUCTED WHILE THE RAMP IS CLOSED FOR PID 102329 | 2022 |
| 2F | OPENING RAMP D | DUE TO PID 102329, PHASE MAY NOT BE NEEDED | 2022 |
| 3 | RAMP B | CONSTRUCTED WHILE THE RAMP IS CLOSED FOR PID 102329 | 2023 |

REVISIONS

| NO. | DATE | DESCRIPTION |
|---|---|---|
| 4 | 04/20/21 | REVISED SEQUENCE OF CONSTRUCTION |

MOT PLAN NOTES

SUM-77 / 277 / 224
VARIOUS

74A
1288

N:\03\60\06744-08\106002-SUM-76-10.95\Design\MOT\Sheets\106002_MN012.dgn Sheet 4/21/2021 3:09:05 PM jlacher

PHASE 1A (SHEETS 171 TO 174)

1. MAINTAIN THE NB MOT FROM PHASE 1 EXCEPT AS INDICATED BELOW.

2. CONSTRUCT THE TEMPORARY SIGNAL AT THE KELLY AVE. AND US-224 WB RAMPS INTERSECTION FOR USE WHILE RAMP B-2 IS CLOSED AND TRAFFIC IS DETOURED.

3. CLOSE RAMP B-2 AND DETOUR TRAFFIC. CONSTRUCT RAMP B-2 FROM I-77 NB TO THE RAMP B GORE.

PHASE 1B (SHEETS 175 TO 180)

1. OPEN THE NEW RAMP B-2. CONTINUE CONSTRUCTION OF INSIDE NB-77 PAVEMENT.

PHASE 1C (SHEETS 181 TO 185)

1. SHIFT THE TEMPORARY EXIT TO RAMP B-2 TO THE SOUTH. CONSTRUCT THE REMAINDER OF THE RAMP B-2 GORE.

WINTER SHUTDOWN SEASON 1 (SHEETS 186 TO 190)

~~1. OPEN RAMP C-2.~~

2. AT THE END OF THE FIRST CONSTRUCTION SEASON, REOPEN WARNER RD. WITH THE FINAL PERMANENT PAVEMENT MARKINGS PLACED PER THE TRAFFIC CONTROL PLAN. MAINTAIN THE I-77 NB AND SB TRAFFIC IN THEIR PHASE 1 MOT LANE ARRANGEMENT.

PRE-PHASE 2 (NO SHEETS PROVIDED)

1. THE CONTRACTOR SHALL PRIORITIZE INSTALLING THE DMS TRUSS SIGN AT STATION 424+07 EARLY IN THE PHASE 2 CONSTRUCTION. THE INTENT IS TO UTILIZE THE DMS TRUSS TO ASSIST IN INFORMING THE TRAVELING PUBLIC OF CHANGES DUE TO MOT PATTERNS. THE CONTRACTOR SHALL UTILIZE A PCMS ASSEMBLY AT STATION 424+07 DURING PHASE 1 AND OVER WINTER BETWEEN PHASES 1 AND 2. THE PCMS ASSEMBLY SHALL BE EQUIPPED WITH A MODEM THAT SHALL BE PROVIDED BY CENTRAL OFFICE. ONCE THE DMS TRUSS HAS BEEN CONSTRUCTED AND THE ITS EQUIPMENT HAS BEEN RELOCATED AND IS COMPLETELY FUNCTIONAL, THE CONTRACTOR MAY REMOVE THE PCMS ASSEMBLY. ALL EQUIPMENT, LABOR, AND MATERIALS REQUIRED TO FURNISH, INSTALL, AND SUBSEQUENTLY REMOVE THE PCMS ASSEMBLY AND MODEM SHALL BE INCIDENTAL TO ITEM 614 - MAINTAINING TRAFFIC.

PRE-PHASE 2 (SHEETS 200 TO 202)

1. CLOSE THE INSIDE LANE OF EB I-277/US-224. SHIFT THE SINGLE WB US-224 THRU LANE ONTO THE OUTSIDE EXISTING PAVEMENT. REMOVE AND REPLACE THE EXISTING MEDIAN BARRIER, MEDIAN PAVEMENT, AND OVER HEAD SIGN TRUSS.

PHASE 2 (SHEETS 203 TO 230)

1. MAINTAIN I-77 SB TRAFFIC IN THE PHASE 1 MOT LANE ARRANGEMENT. SHIFT THE INSIDE LANE OF I-77 NB INTO A CONTRAFLOW LANE ON THE SB SIDE OF I-77 USING THE NB CROSSOVERS CONSTRUCTED IN THE PREVIOUS PHASE. SHIFT THE RIGHT TWO LANES OF I-77 NB TO THE INSIDE SHOULDER AND LANES COMPLETED IN PHASE 1. CONSTRUCT THE I-77 NB OUTSIDE SHOULDER AND LANES FROM THE SOUTHERN PROJECT LIMITS TO THE RAMP C-1 GORE.

2. CLOSE AND DETOUR RAMP B TRAFFIC. CONSTRUCT RAMP B.

PHASE 2 CONT'D

3. SHIFT RAMP C TRAFFIC ONTO THE INSIDE SHOULDER AND TEMPORARY PAVEMENT CONSTRUCTED IN THE PREVIOUS PHASE. CONSTRUCT THE OUTSIDE HALF OF THE RAMP.

4. MAINTAIN TRAFFIC ON ALL OTHER RAMPS.

PHASE 2A (SHEETS 231 TO 237)

1. MAINTAIN PHASE 2 MOT TRAFFIC PATTERNS EXCEPT AS INDICATED BELOW.

2. REOPEN RAMP B.

3. SHIFT RAMP B-2 TRAFFIC ONTO THE INSIDE SHOULDER. CONSTRUCT THE OUTSIDE HALF OF RAMP B-2 FROM THE RAMP B GORE TO US-224/I-227 WB.

4. SHIFT US-224/I-227 WB TRAFFIC ONTO THE INSIDE SHOULDER.

5. CONSTRUCT THE OUTSIDE SHOULDER AND LANES OF US-224/I-227 WB FROM THE RAMP B-1 GORE TO THE WESTERN LIMITS OF CONSTRUCTION.

PHASE 2B (SHEETS 238 TO 242)

1. MAINTAIN PHASE 2A MOT TRAFFIC PATTERNS EXCEPT AS INDICATED BELOW.

2. SHIFT RAMP B-2 BACK TO ITS NORMAL ALIGNMENT.

3. SHIFT US-224/I-227 WB BACK TO ITS NORMAL ALIGNMENT.

4. CLOSE AND DETOUR RAMP C-1 TRAFFIC. CONSTRUCT RAMP C-1 AND THE I-77 NB OUTSIDE SHOULDER AND LANES FROM RAMP C-1 TO THE RAMP D GORE.

PHASE 2C (SHEETS 243 TO 246)

1. MAINTAIN PHASE 2B MOT TRAFFIC PATTERNS EXCEPT AS INDICATED BELOW.

2. REOPEN RAMP C-1.

PHASE 2D (SHEETS 247 TO 251)

1. MAINTAIN PHASE 2C MOT TRAFFIC PATTERNS EXCEPT AS INDICATED BELOW.

2. MODIFY THE SIGNAL TIMINGS OF THE EXISTING SIGNAL AT THE INTERSECTION OF S. MAIN ST. AND US-224 WB RAMPS WHEN RAMP D IS CLOSED AND TRAFFIC IS DETOURED.

3. CLOSE AND DETOUR RAMP D TRAFFIC. CONSTRUCT RAMP D AND OUTSIDE HALF OF THE APPROACH SLAB OF I-77 NB OVER E. WATERLOO RD.

PHASE 2E (SHEETS 252 TO 254)

1. MAINTAIN PHASE 2D MOT TRAFFIC PATTERNS EXCEPT AS INDICATED BELOW.

2. SHIFT I-77 NB TRAFFIC TO THE OUTSIDE SHOULDER AND LANES BETWEEN THE RAMP D GORE AND I-77 NB OVER E. WATERLOO RD. AND CONSTRUCT THE INSIDE HALF OF THE APPROACH SLAB OF I-77 NB OVER E. WATERLOO RD.

PHASE 2F (SHEETS 255 TO 260)

1. MAINTAIN PHASE 2E MOT TRAFFIC PATTERNS EXCEPT AS INDICATED BELOW.

2. RESTORE I-77 NB TRAFFIC TO THE PHASE 2 LANE ARRANGEMENT NORTH OF THE RAMP D GORE AND REOPEN RAMP D.

PHASE 2G (SHEETS 261 TO 266)

1. MAINTAIN PHASE 2F MOT TRAFFIC PATTERNS EXCEPT AS INDICATED BELOW.

2. CLOSE THE RIGHT LANE OF US-224 EB APPROACHING THE RAMP C GORE AND SHIFT RAMP C INTO THE CLOSED LANE. CONSTRUCT THE OUTSIDE SHOULDER AND LANES OF US-224 EB FROM RAMP C TO S. ARLINGTON ST.

PHASE 2H (SHEETS 267 TO 276)

1. MAINTAIN PHASE 2G MOT TRAFFIC PATTERNS EXCEPT AS INDICATED BELOW.

2. PLACE THE RIGHT LANE OF US-224 EB AND RAMP C-2 TO THEIR FINAL LANE ARRANGEMENT. REMOVE THE RAMP C TEMPORARY PAVEMENT.

3. SHIFT RAMP C TRAFFIC AT THE I-77 NB/RAMP C GORE ONTO THE OUTSIDE PAVEMENT. CONSTRUCT THE REMAINDER OF THE I-77 NB/RAMP C GORE.

PHASE 2I (SHEETS 277 TO 279)

1. THIS PHASE MAY OCCUR AT ANY POINT AFTER PHASE 2 WHEN THE S. ARLINGTON RD. TO I-77 NB RAMPS TEMPORARY PAVEMENT IS COMPLETE.

2. MAINTAIN PHASE 2 MOT TRAFFIC PATTERNS EXCEPT AS INDICATED BELOW.

3. USING TEMPORARY PAVEMENT, SHIFT THE S. ARLINGTON RD. TO I-77 NB RAMPS ONTO I-77 NB. CONSTRUCT THE S. ARLINGTON RD. TO I-77 NB RAMP, GORE, AND PORTIONS OF I-77 NB OUTSIDE LANES.

PHASE 2J (SHEETS 280 TO 284)

1. MAINTAIN PHASE 2I MOT TRAFFIC PATTERNS EXCEPT AS INDICATED BELOW.

2. SHIFT THE S. ARLINGTON RD. TO I-77 NB RAMP TRAFFIC ONTO THE COMPLETED PAVEMENT AND REMOVE THE TEMPORARY PAVEMENT.

WINTER SHUTDOWN SEASON 2 (NOT SHEETS PROVIDED)

1. AT THE END OF THE SECOND CONSTRUCTION SEASON, MAINTAIN THE I-77 SB LANES IN THE PHASE 2 LANE ARRANGEMENT. PLACE THE NB LANES IN THE PHASE 3 LANE ARRANGEMENT. REOPEN ALL RAMPS.

2. REMOVE THE NB CROSSOVERS AND RECONSTRUCT THE NB INSIDE SHOULDER FROM APPROXIMATELY STA. 371+50 TO STA. 372+57.

3. PRIOR TO PHASE 3, CONSTRUCT THE SB CROSSOVERS.

PHASE 3 (SHEETS 318 TO 346)

1. SHIFT I-77 NB TRAFFIC ONTO THE OUTSIDE NEWLY CONSTRUCTED PAVEMENT COMPLETED IN THE PREVIOUS PHASE. SHIFT THE INSIDE THIRD LANE OF I-77 SB INTO A CONTRAFLOW LANE ON THE NB SIDE OF I-77 USING THE SB CROSSOVERS CONSTRUCTED PRIOR TO THIS PHASE. SHIFT THE RIGHT TWO LANES OF I-77 SB TO THE INSIDE NEWLY CONSTRUCTED PAVEMENT COMPLETED IN PHASE 2. CONSTRUCT THE I-77 SB OUTSIDE SHOULDER AND LANES. RECONSTRUCT THE I-77 NB SHOULDER FROM APPROXIMATELY STA. 368+00 TO STA. 370+00.

2. CLOSE AND DETOUR RAMP B-1 TRAFFIC. CONSTRUCT RAMP B-1.

3. CLOSE THE OUTSIDE THIRD LANE OF US-224/I-277 EB. UTILIZE A DROP LANE AT THE US-224/I-277 EB AND RAMP A GORE. SHIFT RAMP A TRAFFIC TO THE INSIDE OF RAMP A. CONSTRUCT THE OUTSIDE HALF OF RAMP A AND INSTALL TEMPORARY PAVEMENT TO BE UTILIZED WITH PHASE 3B.

PHASE 3A (SHEETS 352 TO 358)

1. MAINTAIN PHASE 3 MOT TRAFFIC PATTERNS EXCEPT AS INDICATED BELOW.

2. REOPEN RAMP B-1.

PHASE 3B (SHEETS 359 TO 364)

1. MAINTAIN PHASE 3A MOT TRAFFIC PATTERNS EXCEPT AS INDICATED BELOW.

2. SHIFT RAMP A TRAFFIC ONTO THE OUTSIDE NEWLY CONSTRUCTED PAVEMENT AND TEMPORARY PAVEMENT COMPLETED IN PHASE 3. CONSTRUCT THE INSIDE OF RAMP A, THE RAMP A/US-224 EB/I-77 EB GORE, AND THE RAMP A/I-77 SB GORE.

POST PHASE 3B (NO SHEETS PROVIDED)

AT ANY POINT AFTER PHASE 3B HAS BEEN COMPLETED UTILIZE A SHOULDER CLOSURE PER ODOT STANDARD CONSTRUCTION DRAWING MT-95.45 TO CLOSE THE OUTSIDE SHOULDER OF RAMP A FROM APPROXIMATE STATION 107+50 TO STATION 112+00. REMOVE THE TEMPORARY PAVEMENT USED IN A PREVIOUS PHASE, PREFORM FINAL GRADING, AND INSTALL THE REMAINDER OF THE MISSING GUARDRAIL.

PHASE 4 (SHEETS 393 TO 401)

1. CONSTRUCT FINAL PAVEMENT WEARING COURSE AND INSTALL ALL FINAL PAVEMENT MARKINGS AND TRAFFIC CONTROL DEVICES UTILIZING ALLOWABLE LANE CLOSURES IN ACCORDANCE WITH THE PERMITTED LANE CLOSURE CHART.

2. PLACE ALL LANES AND RAMPS INTO THEIR FINAL LANE CONFIGURATION.

3. CLOSE THE I-77 SB INSIDE LANE FROM STA. 368+00 TO STA. 373+00 IN ORDER TO REMOVE THE SOUTHERN SB CROSSOVER, RECONSTRUCT THE I-77 SB INSIDE SHOULDER, AND CONSTRUCT THE MEDIAN BARRIER. UPON COMPLETION, REOPEN ALL I-77 SB LANES.

4. REMOVE THE NORTHERN I-77 SB CROSSOVER UTILIZING SHOULDER CLOSURES IN ACCORDANCE WITH MT-95.45 AND PLACE FINAL GUARD RAIL.

CALCULATED JAR | CHECKED JML

# MOT PLAN NOTES

SUM-77 / 277 / 224
VARIOUS

| REVISIONS | | |
|---|---|---|
| NO. | DATE | DESCRIPTION |
| 4 | 04/20/21 | REVISED SEQUENCE OF CONSTRUCTION |

75
1288

N:\03\60\06744-08\106002_SUM-76-10.95\Design\MOT\Sheets\106002_MN002.dgn Sheet 4/20/2021 2:47:22 PM jlacher

### DRUM REQUIREMENTS

IN ADDITION TO THE REQUIREMENTS OF THE PLANS, SPECIFICATION AND PROPOSAL, DRUMS FURNISHED BY THE CONTRACTOR SHALL BE NEW AND UNUSED AT THE TIME OF ARRIVAL ON THE PROJECT. ANY DRUMS BROUGHT ON THE PROJECT, WHICH HAVE PREVIOUSLY BEEN USED ELSEWHERE, WILL NOT BE ACCEPTED.

PAYMENT FOR DRUMS SHALL BE INCLUDED IN THE LUMP SUM PRICE BID FOR MAINTAINING TRAFFIC UNLESS SEPARATELY ITEMIZED.

### METHOD OF PAYMENT

ALL WORK AND TRAFFIC CONTROL DEVICES SHALL BE IN ACCORDANCE WITH C&MS 614 AND OTHER APPLICABLE PORTIONS OF THE SPECIFICATIONS, AS WELL AS THE OHIO MANUAL OF UNIFORM TRAFFIC CONTROL DEVICES. PAYMENT FOR ALL LABOR, EQUIPMENT AND MATERIALS SHALL BE INCLUDED IN THE LUMP SUM CONTRACT PRICE FOR ITEM 614, MAINTAINING TRAFFIC, UNLESS SEPARATELY ITEMIZED IN THE PLAN.

ITEM 614 - MAINTAINING TRAFFIC LS

## DUST CONTROL

THE CONTRACTOR SHALL FURNISH AND APPLY WATER FOR DUST CONTROL AS DIRECTED BY THE ENGINEER. THE FOLLOWING ESTIMATED QUANTITIES HAVE BEEN INCLUDED FOR DUST CONTROL PURPOSES:

ITEM 616 - WATER 1,400 M. GAL.

## PRIOR TO FINAL PAVEMENT MARKINGS

THE FOLLOWING ESTIMATED QUANTITIES HAVE BEEN CARRIED TO THE GENERAL SUMMARY FOR USE WHILE INSTALLING THE FINAL WEARING COURSE PRIOR TO INSTALLING THE FINAL PAVEMENT MARKINGS PER THE TRAFFIC CONTROL PLAN:

ITEM 614 - WORK ZONE LANE LINE, CLASS II, 6"
24 MI.
ITEM 614 - WORK ZONE GORE MARKING, CLASS II
25,500 FT.

## ITEM 622, PORTABLE BARRIER, 50", AS PER PLAN

THIS WORK SHALL CONSIST OF FURNISHING, MAINTAINING, AND SUBSEQUENTLY REMOVING A 50-INCH PORTABLE BARRIER AT THE LOCATIONS SHOWN ON THE PLANS. FOR DETAILS, SEE SCD RM-4.1.

PORTABLE STEEL BARRIER IS AN APPROVED ALTERNATIVE TO PORTABLE CONCRETE BARRIER. FOR INFORMATION ON APPROVED VENDORS, SEE THE APPROVED PRODUCTS LIST MAINTAINED BY THE OFFICE OF ROADWAY ENGINEERING.

PORTABLE BARRIER, 32 INCHES HIGH WITH AN 18-INCH MINIMUM HEIGHT GLARE SCREEN MAY BE USED AT THE OPTION OF THE CONTRACTOR. THE GLARE SCREEN SHALL BE CONSTRUCTED USING ONE OF THE SCREENS PROVIDED ON THE APPROVED LIST, AVAILABLE ON THE OFFICE OF ROADWAY ENGINEERING WEBSITE.

PADDLE OR INTERMITTENT TYPE GLARE SCREENS SHALL BE DESIGNED USING A 20 DEGREE CUT-OFF ANGLE BASED ON TANGENT ALIGNMENT. THAT SPACING SHALL BE USED THROUGHOUT THE BARRIER LENGTH WITHOUT REGARD TO BARRIER CURVATURE.

THE GLARE SCREEN SYSTEM SHALL BE SECURELY FASTENED TO THE 32-INCH PORTABLE BARRIER USING THE HARDWARE AND PROCEDURES SPECIFIED BY THE MANUFACTURER.

FOR DIRECTIONS ON HOW TO INSTALL THE GLARE SCREEN AND THE BARRIER, SEE THE MANUFACTURER'S INSTRUCTIONS.

PAYMENT SHALL INCLUDE ALL LABOR, MATERIAL, AND EQUIPMENT NECESSARY TO PERFORM THE WORK AND SHALL BE PAID FOR AT THE CONTRACT PRICE PER FOOT FOR ITEM 622, PORTABLE BARRIER, 50", AS PER PLAN.

## ITEM 614, WORK ZONE INCREASED PENALTIES SIGN (R11-H5A)

R11-H5A-48 SIGNS SHALL BE FURNISHED, ERECTED, AND MAINTAINED IN GOOD CONDITION AND/OR REPLACED AS NECESSARY AND SUBSEQUENTLY REMOVED BY THE CONTRACTOR. SIGNS SHALL BE MOUNTED AT THE APPROPRIATE OFFSETS AND ELEVATIONS AS PRESCRIBED BY THE OHIO MANUAL OF UNIFORM TRAFFIC CONTROL DEVICES. THEY SHALL BE MAINTAINED ON SUPPORTS MEETING CURRENT SAFETY CRITERIA.

THE SIGNS MAY BE ERECTED OR UNCOVERED NO MORE THAN FOUR HOURS BEFORE THE ACTUAL START OF WORK. THE SIGNS SHALL BE REMOVED OR COVERED NO LATER THAN FOUR HOURS FOLLOWING RESTORATION OF ALL LANES TO TRAFFIC WITH NO RESTRICTIONS, OR SOONER AS DIRECTED BY THE ENGINEER. TEMPORARY SIGN COVERING AND UNCOVERING DUE TO TEMPORARY LANE RESTORATIONS SHALL BE GUIDED BY THE FOUR-HOUR LIMITATIONS STATED ABOVE. SUCH LANE RESTORATIONS SHOULD BE EXPECTED TO REMAIN IN EFFECT FOR 30 OR MORE CONSECUTIVE CALENDAR DAYS, SUCH AS DURING WINTER SHUTDOWNS.

THE SIGNS ON THE MAINLINE SHALL BE DUAL MOUNTED UNLESS NOT PHYSICALLY POSSIBLE. THE FIRST SIGN SHALL BE PLACED BETWEEN THE ROAD WORK AHEAD (W20-1) SIGN AND THE NEXT SIGN IN THE SEQUENCE. SIGNS SHALL BE ERECTED ON EACH ENTRANCE RAMP AND EVERY 2 MILES THROUGH THE CONSTRUCTION WORK LIMITS. SIGNS ON THE MAINLINE SHALL BE R11-H5A-48. SIGNS USED ON THE RAMPS SHALL BE R11-H5A-24. R11-H5A-24 SIGNS MAY BE USED IN THE MEDIAN IN LIEU OF R11-H5A-48 SIGNS IF IT IS NOT PHYSICALLY POSSIBLE TO PROVIDE R11-H5A-48 SIGNS IN THE MEDIAN.

THE CONTRACTOR MAY USE SIGNS AND SUPPORTS IN USED, BUT GOOD, CONDITION PROVIDED THE SIGNS MEET CURRENT ODOT SPECIFICATIONS. SIGN FACES SHALL BE RETROREFLECTORIZED WITH TYPE G SHEETING COMPLYING WITH THE REQUIREMENTS OF C&MS 730.19.

WORK ZONE INCREASED PENALTIES SIGNS AND SUPPORTS WILL BE MEASURED AS THE NUMBER OF SIGN INSTALLATIONS, INCLUDING THE SIGN AND NECESSARY SUPPORTS. IF A SIGN AND SUPPORT COMBINATION IS REMOVED AND REERECTED AT ANOTHER LOCATION AS DIRECTED BY THE ENGINEER, IT SHALL BE CONSIDERED ANOTHER UNIT.

PAYMENT FOR ACCEPTED QUANTITIES, COMPLETE, IN PLACE WILL BE MADE AT THE CONTRACT UNIT PRICE. PAYMENT SHALL BE FULL COMPENSATION FOR ALL MATERIALS, LABOR, INCIDENTALS AND EQUIPMENT FOR FURNISHING, ERECTING, MAINTAINING, COVERING DURING SUSPENSION OF WORK, AND REMOVAL OF THE SIGN AND SUPPORT.

ITEM 614 - WORK ZONE INCREASED PENALTIES SIGN
13 EACH

## APPROVED MAINTENANCE OF TRAFFIC (MOT) POLICY EXCEPTION(S)

PORTIONS OF THE MOT PLANS AS DESCRIBED BELOW HAVE BEEN APPROVED BY THE MOT EXCEPTION COMMITTEE (MOTEC) OR THE PROJECT IMPACT ADVISORY COUNCIL (PIAC) PER TRAFFIC MANAGEMENT IN WORK ZONES POLICY (21-008(P)) AND STANDARD PROCEDURE (123-001(SP)).

APPROVED MOT EXCEPTION(S) INCLUDE:

1. LESS THAN 2' OFFSET BETWEEN LANE AND BARRIER, AND BARRIER AND WORK ZONE ON I-77 SOUTHBOUND BENEATH THE RAMP B-2 BRIDGE IN PHASES 1 AND 3. 1' OFFSETS MUST BE UTILIZED IN ORDER TO CONSTRUCT THIS AREA IN TWO HALVES.

2. LESS THAN 2' OFFSETS BETWEEN LANE AND BARRIER, AND BARRIER AND WORK ZONE ON I-77 NORTHBOUND AND SOUTHBOUND ON THE TUSCARAWAS RIVER BRIDGE. LESS THAN 2' OFFSET MUST BE UTILIZED IN ORDER TO ACCOMODATE CONSTRUCTION OF THE BRIDGE.

3. ASPHALT CONSTRUCTION SHALL BE REQUIRED ON I-77 SOUTHBOUND FROM THE I-77 SOUTHBOUND/RAMP A GORE TO THE WATERLOO APPROACH SLAB. LANE ARRANGEMENTS AND PAVEMENT WIDTHS WILL NOT ALLOW FOR JOINTS TO BE LOCATED ON FUTURE LANE LINES.

A MAINTENANCE OF TRAFFIC MEETING SHALL BE HELD A MINIMUM OF 30 CALENDAR DAYS PRIOR TO IMPLEMENTATION OF EACH APPROVED MOT EXCEPTION. THIS MEETING SHALL INCLUDE THE DISTRICT WORK ZONE TRAFFIC MANAGER AND REPRESENTATIVES FROM THE CITY OF AKRON, AS WELL AS THE CONTRACTOR, WORKSITE TRAFFIC SUPERVISOR (WTS) AND ANY SUBCONTRACTORS INVOLVED WITH TEMPORARY TRAFFIC CONTROL.

IN ADDITION TO ANY NOTIFICATIONS REQUIRED IN OTHER NOTES, THE CONTRACTOR SHALL NOTIFY THE PROJECT ENGINEER AT LEAST 3 BUSINESS DAYS IN ADVANCE OF IMPLEMENTATION OF THE APPROVED MOT EXCEPTION(S) REFERENCED ABOVE SO THAT THE PROJECT ENGINEER CAN SEND EMAIL NOTIFICATION TO THE OFFICE OF ROADWAY ENGINEERING, STATEWIDE TMC, DWZTM AND SPECIAL HAULING PERMITS AT LEAST 2 BUSINESS DAYS IN ADVANCE OF THE IMPLEMENTATION OF THE APPROVED MOT EXCEPTION(S) REFERENCED ABOVE. REFERENCE "EXCEPTION REQUEST APPROVAL DATED [__/__/____] FOR PID 106002 NOTIFICATION AND OTHER CORRESPONDENCE.

ANY CHANGES TO THE MOT THAT IMPACT THE PREVIOUSLY APPROVED MOT EXCEPTION(S) LISTED ABOVE SHALL BE APPROVED IN WRITING BY THE APPLICABLE ODOT CENTRAL OFFICE COMMITTEE (MOTEC OR PIAC). IN THE EVENT THAT SUCH CHANGES ARE PROPOSED, THE REQUEST SHALL BE COORDINATED THROUGH THE DISTRICT WORK ZONE TRAFFIC MANAGER (DWZTM) A MINIMUM OF 30 CALENDAR DAYS PRIOR TO THE DESIRED IMPLEMENTATION DATE. IF THE DISTRICT AGREES WITH THE PROPOSED CHANGES THE DWZTM SHALL SEEK APPROVAL FROM THE APPLICABLE ODOT CENTRAL OFFICE COMMITEE. IN THE EVENT THE PROPOSED CHANGES ARE APPROVED IN WRITING, THE CLOSURES ARE STILL SUBJECT TO NOTIFICATION REQUIREMENTS WITHIN THIS NOTE PRIOR TO IMPLEMENTATION.

CALCULATED JAR CHECKED JML

# MOT PLAN NOTES

SUM-77 / 277 / 224
VARIOUS



N:\03\60\06744-08\106002_SUM-76-10.95\Design\MOT\Sheets\106002_MN003.dgn Sheet 1/31/2021 5:25:50 PM jrettig

## WORK ZONE SPEED ZONES (WZSZS)

THE FOLLOWING WORK ZONE SPEED ZONE (WZSZ) SPEED LIMIT REVISION(S) HAVE BEEN APPROVED FOR USE ON THIS PROJECT WHEN WORK ZONE CONDITIONS AND FACTORS ARE MET AS DESCRIBED BELOW:

| WZSZ REVISION NUMBER(S) | CTE-RTE-SEC | DIRECTION |
|---|---|---|
| -- | SUM-77-VAR | NORTHBOUND |
| -- | SUM-77-VAR | SOUTHBOUND |

POTENTIAL WZSZ LOCATIONS SHALL HAVE AN ORIGINAL (PRECONSTRUCTION) POSTED SPEED LIMIT OF 55 MPH OR GREATER, A QUALIFYING WORK ZONE CONDITION OF AT LEAST 0.5 MILE IN LENGTH, AN EXPECTED WORK DURATION OF AT LEAST THREE HOURS, AND A WORK ZONE CONDITION IN PLACE THAT REDUCES THE EXISTING FUNCTIONALITY OF THE TRAVEL LANES OR SHOULDERS (I.E., LANE CLOSURE, LANE SHIFT, CROSSOVER, CONTRAFLOW AND/OR SHOULDER CLOSURE). THE LENGTH OF THE WORK ZONE CONDITION IS MEASURED FROM THE BEGINNING OF THE TAPER FOR THE SUBJECT WORK ZONE CONDITION IMPACTING THE TRAVEL LANES AND/OR SHOULDER TO THE END OF THE DOWNSTREAM TAPER, WHERE DRIVERS ARE RETURNED TO TYPICAL ALIGNMENT. AN EXPECTED WORK DURATION OF AT LEAST THREE HOURS IS REQUIRED TO BALANCE THE ADDITIONAL EXPOSURE CREATED BY INSTALLING AND REMOVING WZSZ SIGNING WITH THE TIME NEEDED TO COMPLETE THE WORK.

IF THE WORK ZONE MEETS THESE MINIMUM CRITERIA, IT SHALL BE ANALYZED FURTHER USING TABLE 1 BELOW TO DETERMINE IF AND WHEN IT QUALIFIES FOR A SPEED LIMIT REDUCTION. DEPENDING ON THE ORIGINAL POSTED SPEED LIMIT, THE TYPE OF TEMPORARY TRAFFIC CONTROL USED, AND WHETHER OR NOT WORKERS ARE PRESENT, A WARRANTED WZSZ WILL VARY IN THE APPROVED SPEED LIMIT TO BE POSTED OVER TIME.

C&MS ITEM 614, PARAGRAPH 614.02(B), INDICATES THAT TWO DIRECTIONS OF A DIVIDED HIGHWAY ARE CONSIDERED SEPARATE HIGHWAY SECTIONS. THEREFORE, IF THE WORK ON A MULTI-LANE DIVIDED HIGHWAY IS LIMITED TO ONLY ONE DIRECTION, A SPEED LIMIT REDUCTION IN THE DIRECTION OF THE WORK DOES NOT AUTOMATICALLY CONSTITUTE A SPEED LIMIT REDUCTION IN THE OPPOSITE DIRECTION. EACH DIRECTION SHALL BE ANALYZED INDEPENDENTLY FROM EACH OTHER.

ALL WZSZS FLUCTUATE BETWEEN TWO APPROVED REDUCED SPEED LIMITS OR BETWEEN AN APPROVED REDUCED SPEED LIMIT AND THE ORIGINAL POSTED SPEED LIMIT. ONLY ONE OF TWO SIGNING STRATEGIES SHALL BE USED TO IMPLEMENT A WZSZ.

WZSZS USING DSL SIGN ASSEMBLIES SHALL BE IN ACCORDANCE WITH THE NOTE, APPROVED LIST, SUPPLEMENTAL SPECIFICATIONS (SS) 808 AND 908, AND TRAFFIC SCD MT-104.10.

ONLY ONE WARRANTED SPEED LIMIT APPLIES AT ANY ONE TIME; SPEED LIMIT REDUCTIONS ARE NOT CUMULATIVE. WZSZS SHALL NOT BE USED FOR MOVING/MOBILE ACTIVITIES, AS DEFINED IN OMUTCD PART 6.

WHEN LOOKING UP THE WARRANTED WORK ZONE SPEED LIMITS, ALWAYS USE THE ORIGINAL, PRECONSTRUCTION, POSTED SPEED LIMIT. DO NOT USE A PRIOR OR CURRENT WORK ZONE SPEED LIMIT AS A LOOK UP VALUE IN THE TABLE. POSITIVE PROTECTION IS GENERALLY REGARDED AS PORTABLE BARRIER OR OTHER RIGID BARRIER IN USE ALONG THE WORK AREA WITHIN THE SUBJECT WARRANTED WORK ZONE CONDITION. WITHOUT POSITIVE PROTECTION IS GENERALLY REGARDED AS USING DRUMS, CONES, SHADOW VEHICLE, ETC., ALONG THE WORK AREA WITHIN THE SUBJECT WARRANTED WORK ZONE CONDITION. WORKERS ARE CONSIDERED AS BEING PRESENT WHEN ON-SITE, WORKING WITHIN THE SUBJECT WARRANTED WORK ZONE CONDITION. WHEN THE WORK ZONE CONDITION REDUCING THE EXISTING FUNCTIONALITY OF THE TRAVEL LANES OR SHOULDERS IS REMOVED, THE SPEED LIMIT DISPLAYED SHALL RETURN TO THE ORIGINAL POSTED SPEED LIMIT.

TABLE 1: WARRANTED WORK ZONE SPEED LIMITS (MPH) FOR WORK ZONES ON HIGH-SPEED (55 MPH OR GREATER) MULTI-LANE HIGHWAYS

| ORIGINAL POSTED SPEED LIMIT | WITH POSITIVE PROTECTION | | WITHOUT POSITIVE PROTECTION | |
|---|---|---|---|---|
| | WORKERS PRESENT | WORKERS NOT PRESENT | WORKERS PRESENT | WORKERS NOT PRESENT |
| 70 | 60 | 65 | 55 | 65 |
| 65 | 55 | 60 | 50 | 60 |
| 60 | 55 | 60 | 50 | 60 |
| 55 | 50 | 55 | 45 | 55 |

THE FOLLOWING ESTIMATED QUANTITY HAS BEEN CARRIED TO THE GENERAL SUMMARY.

ITEM 808 - DIGITAL SPEED LIMIT (DSL) SIGN ASSEMBLY
288 SIGN MNTH
ASSUMING 8 DSL SIGN ASSEMBLY(IES) FOR 36 MONTH(S)

## FLOODLIGHTING

FLOODLIGHTING OF THE WORK SITE FOR OPERATIONS CONDUCTED DURING NIGHTTIME PERIODS SHALL BE ACCOMPLISHED SO THAT THE LIGHTS DO NOT CAUSE GLARE TO THE DRIVERS ON THE ROADWAY. TO ENSURE THE ADEQUACY OF THE FLOODLIGHT PLACEMENT, THE CONTRACTOR AND THE ENGINEER SHALL DRIVE THROUGH THE WORK SITE EACH NIGHT WHEN THE LIGHTING IS IN PLACE AND OPERATIVE PRIOR TO COMMENCING ANY WORK. IF GLARE IS DETECTED, THE LIGHT PLACEMENT AND SHIELDING SHALL BE ADJUSTED TO THE SATISFACTION OF THE ENGINEER BEFORE WORK PROCEEDS.

PAYMENT FOR ALL LABOR, EQUIPMENT AND MATERIALS SHALL BE INCLUDED IN THE LUMP SUM CONTRACT PRICE FOR ITEM 614, MAINTAINING TRAFFIC.

## ITEM 614, WORK ZONE CROSSOVER LIGHTING SYSTEM

THIS WORK SHALL CONSIST OF FURNISHING, ERECTING, OPERATING, MAINTAINING AND REMOVING A WORK ZONE LIGHTING SYSTEM FOR A SINGLE CROSSOVER, OR OVERLAPPING A PAIR OF CROSSOVERS. THE SYSTEM SHALL BE AS SHOWN ON TRAFFIC SCD MT-100.00. THE CONTRACTOR SHALL ARRANGE FOR AND PAY FOR POWER. ALL MATERIALS AND CONSTRUCTION SHALL COMPLY WITH APPLICABLE PORTIONS OF 625 AND 725 EXCEPT: THE PERFORMANCE TEST OF 625.19F, AND CERTIFIED DRAWING REQUIREMENT OF 625.04, ARE WAIVED AND USED MATERIALS IN GOOD CONDITION ARE ACCEPTABLE.

POLES WHICH ARE NOT PROTECTED BY GUARDRAIL OR PORTABLE BARRIER SHALL BE LOCATED OUTSIDE THE CLEAR ZONE, AND SHOULD BE LOCATED AT LEAST 30 FEET (PREFERABLY 40 FEET) FROM THE EDGE OF PAVEMENT WHEN POSSIBLE. ADDITIONAL POLE LINES, CABLES AND APPURTENANCES NECESSARY TO FURNISH POWER TO THE LIGHTING SYSTEM SHALL BE INCLUDED IN THIS ITEM. SERVICE POLES SHALL BE POSITIONED WITH THE SAME CONSTRAINTS AS THE LIGHTING POLES AS A MINIMUM.

PAYMENT WILL BE MADE AT THE UNIT PRICE PER EACH FOR ITEM 614, WORK ZONE CROSSOVER LIGHTING SYSTEM THROUGHOUT ALL PHASES OF WORK WHEN THE CROSSOVER ROADWAYS ARE USED.

ITEM 614 - WORK ZONE CROSSOVER LIGHTING SYSTEM
2 EACH

## ITEM 614, WORK ZONE IMPACT ATTENUATOR FOR 24" WIDE HAZARDS (UNIDIRECTIONAL OR BIDIRECTIONAL), AS PER PLAN

THIS ITEM SHALL CONSIST OF FURNISHING AND INSTALLING A NONGATING IMPACT ATTENUATOR. FURNISH AN IMPACT ATTENUATOR FROM THE OFFICE OF ROADWAY ENGINEERING'S APPROVED LIST FOR WORK ZONE IMPACT ATTENUATORS, FROM THE ROADWAY STANDARDS APPROVED PRODUCTS WEB PAGE.

INSTALLATION SHALL BE AT THE LOCATIONS SPECIFIED IN THE PLANS IN ACCORDANCE WITH THE MANUFACTURER'S SPECIFICATIONS.

THE CONTRACTOR SHALL REPAIR OR REPLACE A DAMAGED UNIT WITHIN 24 HOURS OF A DAMAGING IMPACT.

WHEN BIDIRECTIONAL DESIGNS ARE SPECIFIED, THE CONTRACTOR SHALL SUPPLY APPROPRIATE TRANSITIONS.

WHEN GATING IMPACT ATTENUATORS ARE DESIRED, THE CONTRACTOR SHALL SUBMIT DOCUMENTATION TO THE ENGINEER FOR ACCEPTANCE.

THE COST FOR THE ADDITIONAL BARRIER REQUIRED FOR A GATING IMPACT ATTENUATOR SHALL BE INCLUDED IN THE COST OF THE GATING IMPACT ATTENUATOR.

PAYMENT FOR THE ABOVE WORK SHALL BE MADE AT THE UNIT PRICE BID AND SHALL INCLUDE ALL LABOR, TOOLS, EQUIPMENT AND MATERIALS NECESSARY TO CONSTRUCT AND MAINTAIN A COMPLETE AND FUNCTIONAL IMPACT ATTENUATOR SYSTEM, INCLUDING ALL RELATED BACKUPS, TRANSITIONS, LEVELING PADS, HARDWARE AND GRADING, NOT SEPARATELY SPECIFIED, AS REQUIRED BY THE MANUFACTURER.

CALCULATED JAR CHECKED JML

# MOT PLAN NOTES

SUM-77 / 277 / 224
VARIOUS

77
1288

N:\03\60\06744-08\106002_SUM-76-10.95\Design\MOT\Sheets\106002_MN004.dgn Sheet 2/2/2021 11:16:50 AM jrettig

**ITEM 614, PORTABLE CHANGEABLE MESSAGE SIGN, AS PER PLAN**

THE CONTRACTOR SHALL FURNISH, INSTALL, MAINTAIN AND REMOVE, WHEN NO LONGER NEEDED, A PORTABLE CHANGEABLE MESSAGE SIGN, THE SIGN SHALL BE OF A TYPE SHOWN ON A LIST OF APPROVED PCMS UNITS AVAILABLE ON THE OFFICE OF MATERIALS MANAGEMENT WEB PAGE. THE LIST CONTAINS CLASS A AND B UNITS WITH MINIMUM LEGIBILITY DISTANCE OF 800 FEET AND 650 FEET RESPECTIVELY.

EACH SIGN SHALL BE TRAILER MOUNTED AND EQUIPPED WITH A FUNCTIONAL DIMMING MECHANISM TO DIM THE SIGN DURING DARKNESS AND A TAMPER AND VANDAL PROOF ENCLOSURE. EACH SIGN SHALL BE PROVIDED WITH APPROPRIATE TRAINING AND OPERATION INSTRUCTIONS TO ENABLE ON-SITE PERSONNEL TO OPERATE AND TROUBLESHOOT THE UNIT. THE SIGN SHALL ALSO BE CAPABLE OF BEING POWERED BY AN ELECTRICAL SERVICE DROP FROM A LOCAL UTILITY COMPANY. PCMS TRAILERS SHOULD BE DELINEATED.

PLACEMENT, OPERATION, MAINTENANCE AND ALL ACTIVATION OF THE SIGNS BY THE CONTRACTOR SHALL BE AS DIRECTED BY THE ENGINEER. THE PCMS SHALL BE LOCATED IN A HIGHLY VISIBLE POSITION YET PROTECTED FROM TRAFFIC. THE PCMS SHOULD NOT BE LOCATED IN THE MEDIAN OF THE HIGHWAY UNLESS IT IS PROTECTED FROM BOTH DIRECTIONS OF TRAFFIC. THE PCMS SHALL BE LOCATED. IN A HIGHLY VISIBLE POSITION YET PROTECTED FROM TRAFFIC. THE CONTRACTOR SHALL, AT THE DIRECTION OF THE ENGINEER, RELOCATE THE PCMS TO IMPROVE THE VISIBILITY OR ACCOMMODATE CHANGED CONDITIONS. WHEN NOT IN USE, THE PCMS WILL BE OFF. ADDITIONALLY WHEN NOT IN USE FOR EXTENDED PERIODS OF TIME, THE PCMS SHALL BE TURNED, FACING AWAY FROM ALL TRAFFIC AND SHALL DISPLAY ONE OR MORE TYPE G YELLOW REFLECTIVE SHEETING SURFACES OF 9-INCH BY 15-INCH MINIMUM SIZE FACING TRAFFIC.

THE ENGINEER SHALL BE PROVIDED ACCESS TO EACH SIGN UNIT AND SHALL BE PROVIDED WITH APPROPRIATE TRAINING AND OPERATION INSTRUCTIONS TO ENABLE PERSONNEL TO OPERATE AND TROUBLESHOOT THE UNIT AND TO REVISE SIGN MESSAGES, IF NECESSARY.

ALL MESSAGES TO BE DISPLAYED ON THE SIGN WILL BE PROVIDED BY THE CONTRACTOR. A LIST OF ALL PROPOSED PREPROGRAMMED MESSAGES WILL BE GIVEN TO THE ENGINEER PRIOR TO CONSTRUCTION. THE SIGN SHALL HAVE THE CAPABILITY TO STORE UP TO 99 MESSAGES. MESSAGE MEMORY OR PRE-PROGRAMMED DISPLAYS SHALL NOT BE LOST AS A RESULT OF POWER FAILURES TO THE ON-BOARD COMPUTER. THE SIGN LEGEND SHALL BE CAPABLE OF BEING CHANGED IN THE FIELD. THREE LINE PRESENTATION FORMATS WITH UP TO OF SIX MESSAGE PHASES SHALL BE SUPPORTED. PCMS FORMAT SHALL PERMIT THE COMPLETE MESSAGE FOR EACH PHASE TO BE READ AT LEAST TWICE.

THE PCMS SHALL CONTAIN AN ACCURATE CLOCK AND PROGRAMMING LOGIC WHICH WILL ALLOW THE SIGN TO BE ACTIVATED, DE-ACTIVATED OR MESSAGES CHANGED AUTOMATICALLY AT DIFFERENT TIMES OF THE DAY FOR DIFFERENT DAYS OF THE WEEK.

THE PCMS SHALL CONTAIN A CELLULAR TELEPHONE DATA LINK WHICH WILL [IN ACTIVE CELLULAR AREAS] ALLOW REMOTE SIGN ACTIVATION, DEACTIVATION, MESSAGE CHANGES, MESSAGE ADDITIONS AND REVISIONS TO TIME OF DAY PROGRAMS. THE SYSTEM SHALL ALSO PERMIT VERIFICATION OF CURRENT AND PROGRAMMED MESSAGES.

THE PCMS UNIT SHALL BE MAINTAINED IN GOOD WORKING ORDER BY THE CONTRACTOR IN ACCORDANCE WITH THE PROVISIONS OF 614.07. THE CONTRACTOR SHALL PRIOR TO ACTIVATING THE UNIT, MAKE ARRANGEMENTS WITH AN AUTHORIZED SERVICE AGENT FOR THE PCMS TO ASSURE PROMPT SERVICE IN THE EVENT OF FAILURE. ANY FAILURE SHALL NOT RESULT IN THE SIGN BEING OUT OF SERVICE FOR MORE THAN 12 HOURS INCLUDING WEEKENDS. FAILURE TO COMPLY MAY RESULT IN AN ORDER TO STOP WORK AND OPEN ALL TRAFFIC LANES AND/OR IN THE DEPARTMENT TAKING APPROPRIATE ACTION TO SAFELY CONTROL TRAFFIC. THE ENTIRE COST TO CONTROL TRAFFIC ACCRUED BY THE DEPARTMENT WILL BE DEDUCTED FROM MONEYS DUE, OR TO BECOME DUE THE CONTRACTOR ON HIS CONTRACT.

THE CONTRACTOR SHALL BE RESPONSIBLE FOR 24 HOURS PER DAY OPERATION AND MAINTENANCE OF THESE SIGNS ON THE PROJECT FOR THE DURATION OF THEIR USE. THE REQUIREMENT TO FURNISH, INSTALL, MAINTAIN AND REMOVE A PCMS UNIT ON THIS PROJECT SHALL NOT IN ANY WAY RELIEVE THE CONTRACTOR OF HIS RESPONSIBILITIES AS OUTLINED IN 614.02.

PAYMENT FOR THE ABOVE DESCRIBED ITEM SHALL BE AT THE CONTRACT UNIT PRICE. PAYMENT SHALL INCLUDE ALL LABOR, MATERIALS, EQUIPMENT, FUELS, LUBRICATING OILS, SOFTWARE, HARDWARE AND INCIDENTALS TO PERFORM THE ABOVE DESCRIBED WORK.

ITEM 614 - PORTABLE CHANGEABLE MESSAGE SIGN, AS PER PLAN 144 SIGN MONTH(S)
ASSUMING 4 PCM SIGN ASSEMBLY(IES) FOR 36 MONTH(S)

**MAINTENANCE OF TRAFFIC SIGNAL/FLASHER INSTALLATION**

THE CONTRACTOR SHALL BE RESPONSIBLE FOR MAINTAINING TRAFFIC SIGNAL/FLASHER INSTALLATIONS WITHIN THE PROJECT UNDER THE FOLLOWING CONDITIONS:

1. EXISTING SIGNAL/FLASHER INSTALLATIONS WHICH THE PLANS REQUIRE THE CONTRACTOR TO ADJUST, MODIFY, ADD ONTO OR REMOVE, OR WHICH THE CONTRACTOR ACTUALLY ADJUSTS, MODIFIES OR OTHERWISE DISTURBS. THE CONTRACTOR SHALL BE RESPONSIBLE FOR THE ENTIRE INSTALLATION (AT AN INTERSECTION) FROM THE TIME HIS OPERATIONS FIRST DISTURB THE INSTALLATION UNTIL THE INSTALLATION HAS BEEN SUBSEQUENTLY REMOVED OR MODIFIED AND THE WORK IS ACCEPTED.

2. NEW OR REUSED SIGNAL/FLASHER INSTALLATIONS OR DEVICES, INSTALLED BY THE CONTRACTOR. THE CONTRACTOR SHALL BE RESPONSIBLE FOR MAINTENANCE OF THESE FROM THE TIME OF INSTALLATION UNTIL THE WORK IS ACCEPTED.

THE CONTRACTOR SHALL CORRECT AS QUICKLY AS POSSIBLE ALL OUTAGES OR MALFUNCTIONS. HE SHALL PROVIDE THE MAINTAINING AGENCY AND THE ENGINEER SUCH ADDRESSES AND PHONE NUMBERS WHERE HIS MAINTENANCE FORCES CAN BE CONTACTED. THE CONTRACTOR SHALL PROVIDE ONE OR MORE PERSONS TO RECEIVE ALL CALLS AND DISPATCH THE NECESSARY MAINTENANCE FORCES TO CORRECT OUTAGES. SUCH A PERSON OR PERSONS MAY BE USED TO PERFORM OTHER DUTIES AS LONG AS PROMPT ATTENTION IS GIVEN TO THESE CALLS AND A PERSON IS READILY AVAILABLE CONTINUOUSLY 24 HOURS A DAY, 7 DAYS A WEEK. ALL LAMP OUTAGES, CABLE OUTAGES, ELECTRICAL FAILURES, EQUIPMENT MALFUNCTIONS AND MISALIGNED SIGNAL HEADS SHALL BE CORRECTED TO THE SATISFACTION OF THE ENGINEER WITH THE SIGNAL BACK TO SERVICE WITHIN FOUR HOURS AFTER THE CONTRACTOR HAS BEEN NOTIFIED OF THE OUTAGE.

IN THE EVENT NEW SIGNALS ARE DAMAGED PRIOR TO ACCEPTANCE, ALL DAMAGED EQUIPMENT EXCEPT POLES AND CONTROL EQUIPMENT SHALL BE REPLACED BY THE CONTRACTOR TO THE SATISFACTION OF THE ENGINEER WITH THE SIGNAL BACK IN SERVICE WITHIN 8 HOURS AFTER THE CONTRACTOR'S NOTIFICATION OF THE OUTAGE. THE CONTRACTOR SHALL ARRANGE FOR FULL TRAFFIC CONTROL UNTIL THE SIGNAL IS BACK IN OPERATION.

IF POLES AND/OR CONTROL EQUIPMENT ARE DAMAGED AND MUST BE REPLACED, THE CONTRACTOR SHALL MAKE TEMPORARY REPAIRS AS NECESSARY TO BRING THE SIGNAL BACK INTO FULL OPERATION WITHIN THE ALLOWED 8-HOUR PERIOD, AND SHALL MAKE PERMANENT REPAIRS OR REPLACEMENT AS SOON THEREAFTER AS POSSIBLE.

NONE OF THE ABOVE SHALL BE CONSTRUED AS COLLECTIVE OR CONSECUTIVE OUTAGE TIME PERIODS AT ANY ONE LOCATION. THAT IS, WHERE MORE THAN ONE OUTAGE OCCURS AT ANY ONE LOCATION THEN THE ALLOTTED TIME LIMIT SHALL BE FOR THE WORST SINGLE OUTAGE.

WHERE OUTAGES ARE THE DIRECT RESULT OF A VEHICLE ACCIDENT THE RESPONSE OF THE CONTRACTOR SHALL BE AS OUTLINED ABOVE. THE CONTRACTOR SHALL BE RESPONSIBLE FOR COLLECTION OF ANY COMPENSATION FOR THIS WORK FROM THOSE PARTIES RESPONSIBLE FOR THE DAMAGE.

WHERE THE CONTRACTOR HAS FAILED TO, OR CANNOT RESPOND TO, AN OUTAGE OR SIGNAL EQUIPMENT MALFUNCTION, AT THESE LOCATIONS WITHIN HIS RESPONSIBILITY, WITHIN PERIODS AS SPECIFIED ABOVE, THE ENGINEER MAY INVOKE THE PROVISIONS OF SECTION 105.15 AND ANY SUBSEQUENT BILLINGS TO THE STATE OR THE CITY OF AKRON FOR POLICE SERVICES AND MAINTENANCE SERVICES BY CITY FORCES SHALL BE DEDUCTED FROM MONIES DUE OR TO BECOME DUE THE CONTRACTOR IN ACCORDANCE WITH PROVISIONS OF SECTION 105.15.

THE CONTRACTOR SHALL PROVIDE THE MAINTENANCE SERVICE ENTIRELY WITH HIS FORCES OR HE MAY CHOOSE TO ENTER INTO A COOPERATIVE UNDERSTANDING WITH THE LOCAL MAINTAINING AGENCY TO PROVIDE THE MAINTENANCE. THE CONTRACTOR SHALL INFORM THE ENGINEER, IN WRITING, OF THE MAINTENANCE METHOD SELECTED.

THE CONTRACTOR SHALL BE RESPONSIBLE FOR ANY DAMAGE TO ANY TRAFFIC SIGNAL COMPONENTS REQUIRED TO BE HANDLED DURING THE RELOCATION OF POLES AND REVISIONS TO THE SIGNAL SYSTEM. WHEN A TRAFFIC SIGNAL MUST BE TAKEN OUT OF SERVICE BY THE CONTRACTOR, DUE TO CONSTRUCTION PROCEDURES, THIS OUTAGE SHALL NOT EXCEED 2 HOURS AND SHALL NOT INCLUDE THE HOURS OF 6AM-9AM AND 3PM-6PM. ANY SIGNALIZED INTERSECTION, WHERE THE SIGNAL IS OUT OF SERVICE DUE TO CONSTRUCTION PROCEDURES, OR DUE TO AN OUTAGE OR MALFUNCTION OF EQUIPMENT AS DESCRIBED ABOVE, SHALL BE PROTECTED, BY THE CONTRACTOR, BY THE INSTALLATION OF TEMPORARY "STOP" SIGNS, EXCEPT FOR THE FOLLOWING INTERSECTIONS WHICH SHALL BE PROTECTED BY OFF-DUTY CITY OF AKRON POLICE, HIRED BY THE CONTRACTOR:

1. W. 224/277 EXIT RAMP AT S. MAIN ST. (THE CONTRACTOR SHALL COORDINATE WITH THE CITY OF AKRON REGARDING MAINTENANCE OF THIS SIGNAL).

2. W. 224 ENTRANCE RAMP AT KELLY AVE.

ANY VEHICULAR TRAFFIC SIGNAL HEAD, EITHER NEW OR EXISTING WHICH WILL BE OUT OF OPERATION SHALL BE COVERED IN THE MANNER DESCRIBED IN 632.25.

THE CONTRACTOR SHALL MAINTAIN COMPLETE RECORDS OF MALFUNCTIONS INCLUDING:

1. TIME OF NOTIFICATION OF MALFUNCTION;

2. TIME OF WORK CREWS ARRIVAL TO CORRECT THE MALFUNCTION;

3. ACTIONS TAKEN TO CORRECT THE MALFUNCTION, INCLUDING A LIST OF PARTS REPAIRED OR REPLACED;

4. A DIAGNOSIS OF REASON FOR THE MALFUNCTION AND PROBABILITY OF REOCCURRENCE;

5. TIME OF COMPLETION OF THE REPAIR AND SYSTEM RESTORED TO FULL SERVICE.

A COPY OF THESE RECORDS SHALL BE PROVIDED TO THE ENGINEER WITHIN THREE (3) WORKING DAYS FOLLOWING COMPLETION OF EACH REPAIR.

ALL COSTS RESULTING FROM THE ABOVE REQUIREMENTS SHALL BE CONSIDERED TO BE INCLUDED IN THE LUMP SUM PRICE BID FOR ITEM 614, MAINTAINING TRAFFIC.

CALCULATED JAR CHECKED JML

**MOT PLAN NOTES**

**SUM-77/277/224 VARIOUS**



N:\03\60\06744-08\06002_SUM-76-10.95\Design\MOT\Sheets\06002_MN005.dgn Sheet 1/31/2021 5:25:54 PM jrettig

**WORKSITE TRAFFIC SUPERVISOR**

SUBJECT TO APPROVAL OF THE ENGINEER, THE CONTRACTOR SHALL EMPLOY AND IDENTIFY (SOMEONE OTHER THAN THE SUPERINTENDENT) A PREQUALIFIED WORKSITE TRAFFIC SUPERVISOR (WTS) BEFORE STARTING WORK IN THE FIELD. THE WTS SHALL BE TRAINED IN ACCORDANCE WITH CMS 614.03, SHALL HAVE SUCCESSFULLY COMPLETED ODOT ADMINISTERED WTS TESTING (AND RE-TESTING WHEN APPLICABLE) AND BE LISTED ON THE ODOT PREQUALIFIED WTS ROSTER. PREQUALIFICATION EXPIRES EVERY 5 YEARS. RE-TESTING SHALL BE SUCCESSFULLY REPEATED EVERY 5 YEARS TO REMAIN PREQUALIFIED.

THE NAME OF THE PREQUALIFIED WTS AND RELATED 24-HOUR CONTACT INFORMATION SHALL BE PROVIDED TO THE ENGINEER AT THE PRECONSTRUCTION CONFERENCE. IF THE DESIGNATED WTS WILL NOT BE AVAILABLE FULL TIME (24/7), THE CONTRACTOR MAY DESIGNATE AN ALTERNATE (SECONDARY) WTS TO BE AVAILABLE WHEN THE PRIMARY IS OFF DUTY; HOWEVER THE PRIMARY WTS SHALL REMAIN THE POINT OF CONTACT AT ALL TIMES. ANY ALTERNATE (SECONDARY) WTS IS SUBJECT TO THE SAME TRAINING, PREQUALIFICATION AND OTHER REQUIREMENTS OUTLINED WITHIN THIS PLAN NOTE. AT ALL TIMES THE ENGINEER, OR ENGINEER'S REPRESENTATIVES, MUST BE INFORMED OF WHO THE PRIMARY WTS (AND SECONDARY WTS, IF APPLICABLE) IS AT THE CURRENT TIME.

THE WTS POSITION HAS THE PRIMARY RESPONSIBILITY OF IMPLEMENTING THE TRAFFIC MANAGEMENT PLAN (TMP), MONITORING THE SAFETY AND MOBILITY OF THE ENTIRE WORK ZONE, AND CORRECTING TEMPORARY TRAFFIC CONTROL (TTC) DEFICIENCIES FOR THE ENTIRE WORK ZONE. THE WTS, AND ALTERNATE WTS WHEN ON DUTY, SHALL HAVE SUFFICIENT AUTHORITY TO EFFECTIVELY CARRY OUT THE IDENTIFIED WTS RESPONSIBILITIES AND DUTIES. THE DUTIES OF THE WTS ARE AS FOLLOWS:

1. BE AVAILABLE ON A 24-HOUR PER DAY BASIS.

2. BE ON SITE FOR ALL EMERGENCY TCC NEEDS WITHIN ONE HOUR OF NOTIFICATION BY POLICE OR PROJECT STAFF AND EFFECT CORRECTIVE MEASURES IMMEDIATELY ON EXISTING WORK ZONE TTC DEVICES.

3. ATTEND PRECONSTRUCTION MEETING AND ALL PROJECT MEETINGS WHERE TCC MANAGEMENT IS DISCUSSED.

4. BE AVAILABLE ON SITE FOR OTHER MEETINGS OR DISCUSSIONS WITH THE ENGINEER UPON REQUEST.

5. BE AWARE OF ALL EXISTING AND PROPOSED TCC OPERATIONS OF THE CONTRACTOR, SUBCONTRACTORS AND SUPPLIERS, AND ENSURE COORDINATION OCCURS BETWEEN THEM TO ELIMINATE CONFLICTING TEMPORARY AND/OR PERMANENT TRAFFIC CONTROL.

6. COORDINATE PROJECT ACTIVITIES WITH ALL LAW ENFORCEMENT OFFICERS (LEOS). THE WTS SHALL ALSO BE THE MAIN CONTACT PERSON WITH THE LEOS WHILE LEOS ARE ON THE PROJECT.

7. COORDINATE AND FACILITATE MEETINGS WITH ODOT PERSONNEL, LEOS AND OTHER APPLICABLE ENTITIES BEFORE EACH PLAN PHASE SWITCH TO DISCUSS THE WORK ZONE TCC FOR IMPLEMENTING THE PHASE SWITCH. SUBMIT A WRITTEN DETAIL OF MOT OPERATIONS AND SCHEDULE OF EVENTS TO IMPLEMENT THE SWITCH BETWEEN PHASE PLANS TO THE ENGINEER 5 CALENDAR DAYS PRIOR TO THIS MEETING.

8. BE PRESENT, ON SITE FOR, AND INVOLVED WITH, EACH TTC SET UP/TAKE DOWN AND EACH PHASE CHANGE IN ACCORDANCE WITH CMS 614.03.

9. ON CONTINUAL BASIS ENSURE THAT THE TTC ZONE AND ALL RELATED DEVICES ARE INSTALLED, MAINTAINED, AND REMOVED IN COMPLIANCE WITH THE CONTRACT DOCUMENTS.

10. ON A CONTINUAL BASIS FACILITATE CORRECTIVE ACTION(S) NECESSARY TO BRING DEFICIENT TCC ZONES AND ALL RELATED DEVICES INTO COMPLIANCE WITH CONTRACT DOCUMENTS IN THE TIMEFRAME DETERMINED BY THE ENGINEER.

11. INSPECT, EVALUATE, PROPOSE NECESSARY MODIFICATIONS TO, AND DOCUMENT THE EFFECTIVENESS OF, THE TTC DEVICES AND TRAFFIC OPERATIONS ON A DAILY BASIS (7 DAYS A WEEK). IN ADDITION, PERFORM ONE WEEKLY NIGHT INSPECTION OF THE WORK ZONE SETUP FOR DAYTIME WORK OPERATIONS; AND ONE DAYTIME INSPECTION PER WEEK FOR NIGHTTIME PROJECTS. THIS SHALL INCLUDE (BUT NOT BE LIMITED TO) DOCUMENTATION ON THE FOLLOWING PROJECT EVENTS:

    A. INITIAL TTC SETUP (DAY AND NIGHT REVIEW).

    B. DAILY TTC SETUP AND REMOVAL.

    C. WHEN CONSTRUCTION STAGING CAUSES A CHANGE IN THE TTC SETUP.

    D. CRASH OCCURRENCES WITHIN THE CONSTRUCTION AREA AND WITHIN THE INFLUENCE AREA(S) APPROACHING THE WORK ZONE.

    E. REMOVAL OF TTC DEVICES AT THE END OF A PHASE OR PROJECT.

    F. ALL OTHER EMERGENCY TTC NEEDS.

12. COMPLETE THE DEPARTMENT APPROVED LONG TERM INSPECTION FORM (CA-D-8) AFTER EACH INSPECTION AS REQUIRED IN # 11 AND SUBMIT IT TO THE ENGINEER THE FOLLOWING WORK DAY. THESE REPORTS SHALL INCLUDE A CHECKLIST OF ALL TTC MAINTENANCE ITEMS TO BE REVIEWED. A COPY OF THE FORM WILL BE PROVIDED AT THE PRECONSTRUCTION MEETING. ANY DEFICIENCIES OBSERVED SHALL BE NOTED, ALONG WITH RECOMMENDED OR COMPLETED CORRECTIVE ACTIONS AND THE DATES BY WHICH SUCH CORRECTIONS WERE, OR WILL BE, COMPLETED. A COPY OF THE CURRENT CA-D-8 DOCUMENT CAN BE FOUND ON THE OFFICE OF CONSTRUCTION ADMINISTRATION'S INSPECTION FORMS WEBSITE.

13. HAVE COPIES OF THE ODOT TEMPORARY TRAFFIC CONTROL MANUAL AND CONTRACT DOCUMENTS AVAILABLE AT ALL TIMES ON THE PROJECT.

THE DEPARTMENT WILL DEDUCT:

A. THE PRORATED DAILY AMOUNT OF ITEM 614 MAINTAINING TRAFFIC FOR ANY DAY IN WHICH THE WTS FAILS TO PERFORM THE DUTIES SET FORTH ABOVE. THE PRORATED DAILY AMOUNT WILL BE EQUAL TO THE ORIGINAL BID AMOUNT FOR ITEM 614 MAINTAINING TRAFFIC DIVIDED BY THE DIFFERENCE BETWEEN THE ORIGINAL COMPLETION DATE AND THE FIRST DAY OF WORK, IN CALENDAR DAYS.

B. 1% OF THE ORIGINAL BID AMOUNT FOR ITEM 614 MAINTAINING TRAFFIC FOR ANY DAY THAT A TTC ISSUE IS IDENTIFIED IN THE FIELD AND IS NOT CORRECTED IN THE GIVEN TIMEFRAME PER THE ENGINEER. DEDUCTION B SHALL NOT APPLY TO SITUATIONS COVERED BY DEDUCTION C.

C. 1% OF THE ORIGINAL BID AMOUNT FOR ITEM 614 MAINTAINING TRAFFIC FOR ANY DAY THAT A LANE OR RAMP IS BLOCKED (FULLY OR PARTIALLY) WITHOUT TTC, AS DETERMINED BY THE ENGINEER. THIS DEDUCTION SHALL BE IN ADDITION TO ANY OTHER DISINCENTIVES ESTABLISHED FOR UNAUTHORIZED LANE USE.

FOR DAYS IN WHICH MORE THAN ONE DEDUCTION LISTED ABOVE OCCUR, THE HIGHEST DEDUCTION AMOUNT WILL APPLY.

IF THREE OR MORE TOTAL DAYS RESULT IN TTC ISSUES DESCRIBED IN DEDUCTION B OR C ABOVE, THE PRIMARY WTS SHALL BE IMMEDIATELY REMOVED FROM THE WORK IN ACCORDANCE WITH C&MS 108.05. UPON REMOVAL THE ENGINEER SHALL NOTIFY ODOT CENTRAL OFFICE (WTSPREQUALIFICATION@DOT.OHIO.GOV) TO REGISTER A REMOVAL AGAINST THE STATEWIDE PREQUALIFICATION FOR THE PRIMARY WTS. THREE REMOVALS SHALL CAUSE STATEWIDE DISQUALIFICATION FOR ANY PREVIOUSLY PREQUALIFIED WTS.

PAYMENT FOR THE ABOVE REQUIREMENTS, RESPONSIBILITIES AND DUTIES SHALL BE INCLUDED IN THE LUMP SUM PRICE BID FOR ITEM 614, MAINTAINING TRAFFIC.

CALCULATED JAR
CHECKED JML

# MOT PLAN NOTES

SUM-77/277/224
VARIOUS



N:\03\60\06744-08\106002-SUM-76-10.95\Design\MOT\Sheets\106002_MN006.dgn Sheet 1/31/2021 5:25:56 PM jrettig

## TRAFFIC INCIDENT MANAGEMENT (TIM) DURING MOT

OHIO TIM IS OHIO'S TRAFFIC INCIDENT MANAGEMENT PROGRAM WHICH IS COMMITTED TO MAINTAINING THE SAFE AND EFFECTIVE FLOW OF TRAFFIC DURING EMERGENCIES AS TO PREVENT FURTHER DAMAGE, INJURY OR UNDUE DELAY OF THE MOTORING PUBLIC. IN ADDITION TO COMPLYING WITH THE PROVISION OF OMUTCD CHAPTER 6I, CONTROL OF TRAFFIC THROUGH TRAFFIC INCIDENT MANAGEMENT AREAS, THE CONTRACTOR SHALL ACTIVELY PARTICIPATE IN TIM PLANNING AND IMPLEMENTATION AS OUTLINED BELOW.

1. SUPERINTENDENT SHALL IDENTIFY THE INDIVIDUAL PERSONS ON THE PROJECT WHO WILL, OR MAY NEED TO, PERFORM THE DUTIES HEREIN. AT A MINIMUM, INCLUDE THE SUPERINTENDENT, FOREMEN AND SUPERVISORS (OR EQUIVALENT) AS WELL AS THE WORKSITE TRAFFIC SUPERVISOR (WTS; IF APPLICABLE TO THE PROJECT). THESE INDIVIDUALLY IDENTIFIED PERSONS SHALL COLLECTIVELY BE KNOWN AS CONTRACTOR TRAFFIC INCIDENT MANAGEMENT (TIM) CONTACTS. NOTIFY THE PROJECT ENGINEER OF THE CONTRACTOR TIM CONTACTS (ALONG WITH CONTACT INFORMATION FOR EACH) AT OR BEFORE THE PRECONSTRUCTION MEETING.

2. SUPERINTENDENT SHALL NOTIFY THE ENGINEER IMMEDIATELY IF ANY CONTRACTOR TIM CONTACT IS ADDED, REMOVED OR THE CONTACT INFORMATION CHANGES OVER THE COURSE OF THE PROJECT.

3. PRIOR THE FIRST DAY OF WORK IN THE FIELD, EACH CONTRACTOR TIM CONTACT ON THE PROJECT SHALL HAVE ATTENDED AND SUCCESSFULLY COMPLETED OHIO TIM TRAINING PROVIDED BY THE DEPARTMENT OR DESIGNEE. TRAINING INFORMATION CAN BE FOUND AT WWW.OHIOTIM.COM.

4. SUPERINTENDENT, AT A MINIMUM, SHALL ATTEND AND ACTIVELY PARTICIPATE IN A DEPARTMENT SCHEDULED TIM MEETING BEFORE CONSTRUCTION WORK BEGINS AND BEFORE EACH PHASE CHANGE. THESE MEETINGS WILL RESULT IN A DEPARTMENT ISSUED PROJECT SPECIFIC TRAFFIC INCIDENT MANAGEMENT PLAN (TIMP). AT THE TIM MEETINGS THE ATTENDING CONTRACTOR TIM CONTACTS SHALL:

   A. COLLABORATE WITH ODOT AND SAFETY FORCES;

   B. SHARE PROJECT SPECIFIC DETAILS THAT IMPACT TIM RESPONDERS; AND

   C. RECOMMEND WAYS TO INCORPORATE NECESSARY EMERGENCY ACCESS AND OTHER TIM ELEMENTS FOR TIM RESPONDERS GIVEN PROJECT SPECIFIC WORK BEING COMPLETED AND PROJECT SPECIFIC PHASING.

5. CONTRACTOR TIM CONTACTS SHALL IMPLEMENT COMPONENTS OF THE RESULTING TIMP (SUCH AS APPROVED EMERGENCY INGRESS/EGRESS POINTS, ETC), AS DIRECTED BY THE ENGINEER IN ACCORDANCE WITH 109.05.

6. CONTRACTOR TIM CONTACTS SHALL PERFORM, AT A MINIMUM, THE FOLLOWING FUNCTIONS WHEN AN INCIDENT/CRASH OCCURS:

   A. IF OBSERVED OR PRESENT WHEN OCCURS, CALL 911 AND THEN NOTIFY THE TRAFFIC MANAGEMENT CENTER (TMC) TO PROVIDE THE FOLLOWING:

      I. LOCATION, INCLUDING MILEPOST NUMBER AND DIRECTION OF TRAVEL

      II. NUMBER AND TYPE OF VEHICLES INVOLVED, IF KNOWN

      III. ESTIMATED EXTENT OF DAMAGE OR INJURY, IF KNOWN

      IV. ESTIMATED NUMBER OF PATIENTS INVOLVED, IF KNOWN

      V. ANY POTENTIAL HAZARDOUS CONDITIONS, IF KNOWN

      VI. THE PLACARD NUMBER ON ANY HAZARDOUS MATERIALS PLACARD FROM A SAFE DISTANCE, IF APPLICABLE AND VISIBLE

   B. FOLLOWING AN INCIDENT/CRASH:

      I. INITIATE TRAFFIC MANAGEMENT/PROVIDE TEMPORARY TRAFFIC CONTROL AS INDICATED IN THE TIMP, AS DIRECTED BY THE ENGINEER IN ACCORDANCE WITH 109.05.

      II. RECOMMEND ROADWAY REPAIR NEEDS.

      III. PROVIDE REPAIR RESOURCES AND INITIATE REPAIRS, AS DIRECTED BY THE ENGINEER IN ACCORDANCE WITH 109.05.

      IV. ATTEND AND PARTICIPATE IN AN AFTER ACTION REVIEW (AAR).

ALL COSTS, UNLESS OTHERWISE SPECIFIED, RESULTING FROM THE ABOVE REQUIREMENTS SHALL BE CONSIDERED TO BE INCLUDED IN THE LUMP SUM PRICE FOR ITEM 614, MAINTAINING TRAFFIC. FAILURE TO PERFORM THE REQUIREMENTS OF THIS PLAN NOTE WILL RESULT IN A DAILY FINE OF 2% OF ITEM 614, MAINTAINING TRAFFIC AND MAY RESULT IN ONE OR MORE CONTRACTOR TIM CONTACTS BEING REMOVED FROM THE LIST OF OHIO TIM TRAINED INDIVIDUALS (AT THE SOLE DISCRETION OF THE OHIO TIM EXECUTIVE COMMITTEE). IN THE EVENT AN INDIVIDUAL IS REMOVED FROM THE OHIO TIM TRAINED LIST, THE INDIVIDUAL WILL BE REMOVED FROM CONTRACTOR TIM CONTACT RESPONSIBILITIES ON ALL PROJECTS.

## ITEM 614, WORK ZONE RAISED PAVEMENT MARKER, AS PER PLAN

WORK ZONE RAISED PAVEMENT MARKERS, AS PER PLAN, AND THEIR INSTALLATION SHALL CONFORM TO C&MS 614 OR C&MS 621 AS SPECIFIED HEREIN.

RAISED PAVEMENT MARKERS IN USE DURING THE SNOW-PLOWING SEASON SHALL CONFORM TO 621.

RAISED PAVEMENT MARKERS IN USE DURING THE NON-SNOW-PLOW SEASON SHALL CONFORM TO EITHER 614 OR TO 621.

THE SNOW-PLOWING SEASON SHALL RUN FROM OCTOBER 15 THROUGH APRIL 1.

IF PROJECT DELAYS, NOT THE FAULT OF ODOT, CAUSE THE WORK TO EXTEND INTO THE SNOW-PLOWING SEASON, THE CONTRACTOR SHALL BE RESPONSIBLE FOR REPLACING WORK ZONE RAISED PAVEMENT MARKERS (WZRPMS) CONFORMING TO C&MS 614, WITH RAISED PAVEMENT MARKERS CONFORMING TO 621, AS DETERMINED BY THE ENGINEER, AT THE CONTRACTOR'S EXPENSE.

THIS ITEM SHALL INCLUDE PURCHASE, INSTALLATION AND REMOVAL OF ITEM 614 WORK ZONE RAISED PAVEMENT MARKER, AS PER PLAN, INCLUDING FILLING OF ANY DEPRESSIONS CREATED IN THE PAVEMENT AS PER C&MS 621.08.

RESURFACING OF THE TRANSITION AREAS SHALL BE PERFORMED AT THE TIME THAT THE SURFACE COURSE IS BEING APPLIED TO THE ENTIRE PROJECT. PRIOR TO APPLICATION OF THE SURFACE COURSE ON THE PROJECT, THE EXISTING PAVEMENT WITHIN THE TRANSITION AREA SHALL BE REMOVED TO A DEPTH NECESSARY TO REACH THE LEVEL OF THE INTERMEDIATE COURSE OF THE PAVEMENT, AS DETERMINED BY THE ENGINEER.

THE FOLLOWING BID ITEMS HAVE BEEN QUANTIFIED IN THE MOT SUBSUMMARY:

ITEM 614 - WORK ZONE RAISED PAVEMENT MARKER, AS PER PLAN

PAYMENT FOR RESURFACING WITHIN THE TRANSITION AREA SHALL BE PAID FOR UNDER THE APPROPRIATE BID ITEMS FOR THE WORK REQUIRED, AS PROVIDED FOR IN THE PLANS.

## ITEM 614, MAINTAINING TRAFFIC, MISC.: WORK ZONE RAISED PAVEMENT MARKERS ON PERMANENT CONCRETE SURFACES

RAISED PAVEMENT MARKERS IN WORK ZONES, INSTALLED ON PERMANENT CONCRETE SURFACES, SHALL BE ITEM 614 WORK ZONE RAISED PAVEMENT MARKERS. WZRPMS ARE INTENDED FOR USE ONLY DURING THE NON-SNOW-PLOWING SEASON. WZRPMS SHALL NOT BE PROVIDED DURING THE SNOW-PLOWING SEASON.

THE SNOW-PLOWING SEASON SHALL RUN FROM OCTOBER 15 THROUGH APRIL 1.

WHERE A TEMPORARY ALIGNMENT WILL REMAIN IN USE THROUGH THE WINTER, THE WZRPMS SHALL BE REMOVED PRIOR TO THE BEGINNING OF THE SNOW-PLOWING SEASON AND REPLACED APPROXIMATELY APRIL 1, OR AS OTHERWISE DETERMINED BY THE ENGINEER.

THE FOLLOWING ESTIMATED QUANTITIES HAVE BEEN CARRIED TO THE GENERAL SUMMARY FOR USE ON CONCRETE SURFACES:

| | |
|---|---|
| ITEM 614 - MAINTAINING TRAFFIC, MISC.: WORK ZONE RAISED PAVEMENT MARKERS ON PERMANENT CONCRETE SURFACES | 150 EACH |

CALCULATED JAR CHECKED JML

# MOT PLAN NOTES

SUM-77 / 277 / 224
VARIOUS



N:\03\60\06744-08\06002_SUM-76-10.95\Design\MOT\Sheets\06002_MN007.dgn Sheet 1/31/2021 5:25:58 PM jrettig

**DELINEATION OF PORTABLE AND PERMANENT BARRIER**

BARRIER REFLECTORS AND OBJECT MARKERS SHALL BE INSTALLED ON ALL PORTABLE BARRIER (PB) USED FOR TRAFFIC CONTROL; AND, ON PERMANENT CONCRETE BARRIER (INCLUDING BRIDGE PARAPETS) LOCATED WITHIN 5 FEET OF THE EDGE OF THE ADJACENT TRAVEL LANE.

BARRIER REFLECTORS SHALL CONFORM TO C&MS 626, EXCEPT THAT THE SPACING SHALL BE AS PER TRAFFIC SCD MT-101.70. OBJECT MARKERS AND THEIR INSTALLATION SHALL CONFORM TO C&MS 614.03 AND SCD MT-101.70. WHEN THE PB CONTAINS GLARE SCREEN, ONE SET OF THREE VERTICAL STRIPES OF SHEETING SHALL BE CONSIDERED EQUIVALENT TO AN OBJECT MARKER, ONE-WAY.

INCREASED BARRIER DELINEATION, AS SPECIFIED HEREIN, SHALL BE INSTALLED ON ALL PB AND PERMANENT CONCRETE BARRIER LOCATED WITHIN 5 FEET OF THE EDGE OF THE TRAVELED LANE UNDER EITHER OF THE FOLLOWING CONDITIONS: ALONG TAPERS AND TRANSITION AREAS; OR ALONG CURVES (OUTSIDE ONLY) WITH DEGREE OF CURVATURE GREATER THAN OR EQUAL TO 3 DEGREES.

THE INCREASED BARRIER DELINEATION SHALL CONSIST OF EITHER DELINEATION PANELS OR THE TRIPLE STACKING OF WORK ZONE BARRIER REFLECTORS.

DELINEATION PANELS SHALL CONSIST OF PANELS OF DELINEATION, APPROXIMATELY 34 INCHES LONG AND 6 INCHES WIDE AND SHALL BE "CRIMPED." PANELS SHALL BE INSTALLED AND SPACED PER TRAFFIC SCD MT-101.70.

TRIPLE-STACKED BARRIER REFLECTORS SHALL CONSIST OF ALIGNING THREE BARRIER REFLECTORS VERTICALLY, AT LOCATIONS WHERE A SINGLE BARRIER REFLECTOR WOULD BE OTHERWISE ATTACHED. THERE SHALL BE NO OPEN SPACE BETWEEN THE ADJACENT BARRIER REFLECTORS. THE TRIPLESTACKED BARRIER REFLECTORS SHALL CONFORM TO C&MS 626, EXCEPT THAT THEY SHALL BE SPACED AND ALIGNED PER TRAFFIC SCD MT-101.70.

THE FOLLOWING ESTIMATED QUANTITIES HAVE BEEN CARRIED TO THE GENERAL SUMMARY FOR USE ON PERMANENT BARRIER:

| | |
|---|---|
| ITEM 614 - BARRIER REFLECTOR, TYPE 1, ONE WAY | 619 EACH |
| ITEM 614 - OBJECT MARKER, ONE-WAY | 619 EACH |
| ITEM 614 - INCREASED BARRIER DELINEATION | 30,950 FT |

THE FOLLOWING BID ITEMS HAVE BEEN INCLUDED WITH THE MOT SUBSUMARRY FOR USE ON TEMPORARY BARRIER:

ITEM 614 - BARRIER REFLECTOR, TYPE 1, ONE WAY
ITEM 614 - OBJECT MARKER, ONE-WAY
ITEM 614 - INCREASED BARRIER DELINEATION

PAYMENT SHALL BE FULL COMPENSATION FOR ALL MATERIAL, LABOR, INCIDENTALS AND EQUIPMENT NECESSARY FOR FURNISHING, INSTALLING, MAINTAINING AND REMOVING EACH OF THE ABOVE ITEMS.

ALONG RUNS OF INCREASED BARRIER DELINEATION WHERE THIS ITEM IS PROVIDED, THE QUANTITY SHALL BE MEASURED AS THE ENTIRE LENGTH OF THE RUN OF INCREASED BARRIER DELINEATION, INCLUDING THE SPACES BETWEEN THE INDIVIDUAL DELINEATION PANELS OR STACKS OF BARRIER REFLECTORS.

**DELINEATION OF TEMPORARY AND PERMANENT GUARDRAIL**

BARRIER REFLECTORS SHALL BE INSTALLED ON ALL TEMPORARY GUARDRAIL USED FOR TRAFFIC CONTROL AND ON ALL PERMANENT GUARDRAIL LOCATED WITHIN 5 FEET OF THE EDGE OF THE ADJACENT TRAVEL LANE. BARRIER REFLECTORS SHALL CONFORM TO C&MS 626 AND THE SPACING SHALL BE APPROXIMATELY 50 FEET.

OBJECT MARKERS SHALL BE INSTALLED ON ALL TEMPORARY AND PERMANENT GUARDRAIL LOCATED WITHIN 5 FEET OF THE EDGE OF THE ADJACENT TRAVEL LANE. GUARDRAIL-MOUNTING OF OBJECT MARKERS SHALL BE MADE BY INSTALLING THE OBJECT MARKERS ON THE EXTENSION BLOCKS RATHER THAN DIRECTLY ONTO THE GUARDRAIL ITSELF. OBJECT MARKERS SHALL CONFORM TO C&MS 614.03 AND THE SPACING SHALL BE APPROXIMATELY 50 FEET WITH A 25 FOOT OFFSET FROM THE BARRIER REFLECTORS.

THE FOLLOWING ESTIMATED QUANTITIES HAVE BEEN CARRIED TO THE GENERAL SUMMARY FOR USE ON PERMANENT GUARDRAIL:

| | |
|---|---|
| ITEM 614 - BARRIER REFLECTOR, TYPE 2, ONE WAY | 240 EACH |
| ITEM 614 - OBJECT MARKER, ONE-WAY | 240 EACH |
| ITEM 614 - INCREASED BARRIER DELINEATION | 12,000 FT |

PAYMENT SHALL BE FULL COMPENSATION FOR ALL MATERIAL, LABOR, INCIDENTALS AND EQUIPMENT NECESSARY FOR FURNISHING, INSTALLING, MAINTAINING AND REMOVING THE ABOVE ITEM(S).

**PORTABLE BARRIER PLACEMENT**

DURING THE PLACEMENT OF THE PORTABLE BARRIER, TRAFFIC WILL BE PROHIBITED FROM OCCUPYING THE TRAVEL LANE ADJACENT TO THE BARRIER. THE BARRIER WILL BE PLACED AT NIGHT PER THE WORK HOUR RESTRICTION NOTE AND IN ACCORDANCE WITH THE PERMITTED LANE CLOSURE MAP. THE CLOSURE OF THE ADJACENT LANE WILL BE PER THE STANDARD DRAWING MT-95.30.

THE CONTRACTOR WILL SUBMIT A PLAN TO THE ENGINEER FOR APPROVAL SEVEN (7) DAYS IN ADVANCE OF THE PLANNED LANE CLOSURE. WORK WILL NOT BEGIN UNTIL APPROVAL OF THE PLANS HAS BEEN GRANTED.

ALL COSTS INVOLVED IN PLACING THE PORTABLE CONCRETE BARRIER WILL BE INCLUDED IN THE CONTRACT PRICE BID FOR ITEM 622 PORTABLE CONCRETE BARRIER.

**ITEM 615, LAW ENFORCEMENT OFFICER (WITH PATROL CAR) FOR ASSISTANCE DURING CONSTRUCTION OPERATIONS**

USE OF LAW ENFORCEMENT OFFICERS (LEOS) BY CONTRACTORS OTHER THAN THE USES SPECIFIED BELOW WILL NOT BE PERMITTED AT PROJECT COST. LEOS SHOULD NOT BE USED WHERE THE OMUTCD INTENDS THAT FLAGGERS BE USED.

IN ADDITION TO THE REQUIREMENTS OF CMS 614 AND THE OMUTCD, A UNIFORMED LEO WITH AN OFFICIAL PATROL CAR (CAR WITH TOP-MOUNTED EMERGENCY FLASHING LIGHTS AND COMPLETE MARKINGS OF THE APPROPRIATE LAW ENFORCEMENT AGENCY) SHALL BE PROVIDED FOR THE FOLLOWING TRAFFIC CONTROL TASKS:

- DURING THE ENTIRE ADVANCE PREPARATION AND CLOSURE SEQUENCE WHERE COMPLETE BLOCKAGE OF TRAFFIC IS REQUIRED.
- DURING A TRAFFIC SIGNAL INSTALLATION WHEN IMPACTING THE NORMAL FUNCTION OF THE SIGNAL OR THE FLOW OF TRAFFIC OR WHEN TRAFFIC NEEDS TO BE DIRECTED THROUGH AN ENERGIZED TRAFFIC SIGNAL CONTRARY TO THE SIGNAL DISPLAY (E.G., DIRECTING MOTORISTS THROUGH A RED LIGHT).
- FOR LANE CLOSURES: DURING INITIAL SET-UP PERIODS, TEAR DOWN PERIODS, SUBSTANTIAL SHIFTS OF A CLOSURE POINT OR WHEN NEW LANE CLOSURE ARRANGEMENTS ARE INITIATED FOR LONG-TERM LANE CLOSURES/SHIFTS (FOR THE FIRST AND LAST DAY OF MAJOR CHANGES IN TRAFFIC CONTROL SETUP).

LEOS SHOULD NOT FORGO THEIR TRAFFIC CONTROL RESPONSIBILITIES TO APPREHEND MOTORISTS FOR ROUTINE TRAFFIC VIOLATIONS. HOWEVER, IF A MOTORIST'S ACTIONS ARE CONSIDERED TO BE RECKLESS, THEN PURSUIT OF THE MOTORIST IS APPROPRIATE.

IN GENERAL LEOS SHOULD BE POSITIONED IN ADVANCE OF AND ON THE SAME SIDE AS THE LANE RESTRICTION OR AT THE POINT OF ROAD CLOSURE, AND TO MANUALLY CONTROL TRAFFIC MOVEMENTS THROUGH SIGNALIZED INTERSECTIONS IN WORK ZONE.

THE LEOS WORK AT THE DIRECTION OF THE ENGINEER. THE CONTRACTOR IS RESPONSIBLE FOR SECURING THE SERVICES OF THE LEOS WITH THE APPROPRIATE AGENCIES AND COMMUNICATING THE INTENTIONS OF THE PLANS WITH RESPECT TO DUTIES OF THE LEOS. THE ENGINEER SHALL HAVE FINAL CONTROL OVER THE LEOS' DUTIES AND PLACEMENT, AND WILL RESOLVE ANY ISSUES THAT MAY ARISE BETWEEN THE TWO PARTIES.

THE LEO SHALL REPORT IN TO THE CONTRACTOR PRIOR TO THE START OF THE SHIFT, IN ORDER TO RECEIVE INSTRUCTIONS REGARDING SPECIFIC WORK ASSIGNMENTS DURING HIS/HER SHIFT. THE LEO IS EXPECTED TO STAY AT THE PROJECT SITE FOR THE ENTIRE DURATION OF HIS/HER SHIFT. THE LEO SHALL REPORT TO THE CONTRACTOR AT THE END OF HIS/HER SHIFT. ONCE THE LEO HAS COMPLETED THE DUTIES DESCRIBED ABOVE AND STILL HAS TIME REMAINING ON HIS/HER SHIFT, THE LEO MAY BE ASKED TO PATROL THROUGH THE WORK ZONE (WITH FLASHING LIGHTS OFF) OR BE PLACED AT A LOCATION TO DETER MOTORISTS FROM SPEEDING. SHOULD IT BE NECESSARY TO LEAVE THE PROJECT SITE, THE LEO SHALL NOTIFY THE ENGINEER. THE CONTRACTOR SHALL PROVIDE THE LEO WITH A TWO-WAY COMMUNICATION DEVICE WHICH SHALL BE RETURNED TO THE CONTRACTOR AT THE END OF HIS/HER SHIFT.

LEOS (WITH PATROL CAR) REQUIRED BY THE TRAFFIC MAINTENANCE TASKS ABOVE SHALL BE PAID FOR ON A UNIT PRICE (HOURLY) BASIS UNDER ITEM 614, LAW ENFORCEMENT OFFICER (WITH PATROL CAR) FOR ASSISTANCE. THE FOLLOWING ESTIMATED QUANTITIES HAVE BEEN CARRIED TO THE GENERAL SUMMARY.

| | |
|---|---|
| ITEM 614 - LAW ENFORCEMENT OFFICER WITH PATROL CAR FOR ASSISTANCE | 850 HOURS |

THE HOURS PAID SHALL INCLUDE ANY MINIMUM SHOW-UP TIME REQUIRED BY THE LAW ENFORCEMENT AGENCY INVOLVED.

ANY ADDITIONAL COSTS (ADMINISTRATIVE OR OTHERWISE) INCURRED BY THE CONTRACTOR TO OBTAIN THE SERVICES OF AN LEO ARE INCLUDED WITH THE BID UNIT PRICE FOR ITEM 614, LAW ENFORCEMENT OFFICER WITH PATROL CAR FOR ASSISTANCE.

CALCULATED JAR CHECKED JML

# MOT PLAN NOTES

SUM-77/277/224
VARIOUS



N:\03\60\06744-08\06002_SUM-76-10.95\Design\MOT\Sheets\06002_MN008.dgn Sheet 1/31/2021 5:26:00 PM jrettig

## NOTIFICATION OF TRAFFIC RESTRICTIONS

THROUGHOUT THE DURATION OF THE PROJECT, THE CONTRACTOR SHALL NOTIFY THE PROJECT ENGINEER IN WRITING OF ALL TRAFFIC RESTRICTIONS AND UPCOMING MAINTENANCE OF TRAFFIC CHANGES. THE CONTRACTOR SHALL ENSURE THE WRITING OF ALL TRAFFIC RESTRICTIONS AND UPCOMING MAINTENANCE OF TRAFFIC CHANGES. THE CONTRACTOR SHALL ENSURE THE WRITTEN NOTIFICATION IS SUBMITTED IN A TIMELY MANNER TO ALLOW THE PROJECT ENGINEER TO MEET THE REQUIRED TIME FRAMES SET FORTH IN THE TABLE BELOW TO INFORM THE SPECIAL HAULING PERMITS SECTION (HAULING.PERMITS@DOT.OHIO.GOV) AND THE DISTRICT PUBLIC INFORMATION OFFICE (PIO). THIS NOTIFICATION SHALL BE RECEIVED BY THE PROJECT ENGINEER PRIOR TO THE PHYSICAL SETUP OF ANY APPLICABLE SIGNS OR MESSAGE BOARDS.

INFORMATION SHOULD INCLUDE, BUT IS NOT LIMITED TO, ALL CONSTRUCTION ACTIVITIES THAT IMPACT OR INTERFERE WITH TRAFFIC AND SHALL LIST THE SPECIFIC LOCATION, TYPE OF WORK, ROAD STATUS, DATE AND TIME OF RESTRICTION, DURATION OF RESTRICTION, NUMBER OF LANES MAINTAINED, NUMBER OF LANES CLOSED, MINIMUM VERTICAL CLEARANCE, MINIMUM WIDTH OF DRIVABLE PAVEMENT, DETOUR ROUTES, IF APPLICABLE, AND ANY OTHER INFORMATION REQUESTED BY THE PROJECT ENGINEER.

NOTIFICATION TIME TABLE

| ITEM | DURATION OF CLOSURE | NOTICE DUE TO PERMITS AND PIO |
|---|---|---|
| RAMP & ROAD CLOSURES | >= 2 WEEKS | 21 CALENDAR DAYS PRIOR TO CLOSURE |
| | > 12 HOURS & < 2 WEEKS | 14 CALENDAR DAYS PRIOR TO CLOSURE |
| | < 12 HOURS | 4 CALENDAR DAYS PRIOR TO CLOSURE |
| LANE CLOSURES & RESTRICTIONS | >= 2 WEEKS | 14 CALENDAR DAYS PRIOR TO CLOSURE |
| | < 2 WEEKS | 5 BUSINESS DAYS PRIOR TO CLOSURE |
| START OF CONSTRUCTION & TRAFFIC PATTERN CHANGES | N/A | 14 CALENDAR DAYS PRIOR TO IMPLEMENTATION |

ANY UNFORESEEN CONDITIONS NOT SPECIFIED IN THE PLANS REQUIRING TRAFFIC RESTRICTIONS SHALL ALSO BE REPORTED TO THE PROJECT ENGINEER USING THE NOTIFICATION TIME TABLE.

## ITEM 614 - WORK ZONE LANE LINE, CLASS I, 6", AS PER PLAN
## ITEM 614 - WORK ZONE EDGE LINE, CLASS I, 6", AS PER PLAN
## ITEM 614 - WORK ZONE CHANNELIZING LINE, CLASS I, 12", AS PER PLAN
## ITEM 614 - WORK ZONE DOTTED LINE, CLASS I, AS PER PLAN

IN ADDITION TO THE REQUIREMENTS OF 614.11:

1. ALL CLASS I EDGE LINES, LANE LINES, AND DOTTED LINES SHALL BE 6 INCHES WIDE AND CHANNELIZING MARKINGS SHALL BE 12 INCHES WIDE.

2. ALL CLASS I PAVEMENT MARKINGS SHALL BE SPRAY THERMOPLASTIC PER ODOT SPECIFICATION 648.

3. ALL CLASS I PAVEMENT MARKINGS SHALL CONTAIN WET REFLECTIVE BEADS AT AN APPLICATION RATE PER ODOT SPECIFICATION TABLE 614.11-1.

4. ALL CLASS I PAVEMENT MARKINGS SHALL NOT BE RECESSED.

PAYMENT FOR ALL MATERIAL, LABOR, EQUIPMENT, AND INCIDENTALS NECESSARY TO ACCOMPLISH THE ABOVE REQUIREMENTS SHALL BE INCLUDED WITH ITEM 614 - WORK ZONE PAVEMENT MARKING, CLASS I, AS PER PLAN.

## COOPERATION BETWEEN CONTRACTORS

THE CONTRACTOR SHALL BE ADVISED THAT PROJECT SUM-76/77/8-08.42/09.77/00.00 (PID 102329) MAY BE ONGOING IN AN AREA IMMEDIATELY ADJACENT TO AND WITHIN THE PROJECT LIMITS OF THIS PROJECT AND SHALL HAVE PRIORITY TO THIS PROJECT. THE CONTRACTOR SHALL SCHEDULE HIS WORK SO AS TO CAUSE A MINIMUM OF DELAY OR CONFLICT WITH THE OTHER PROJECTS (IT MAY BE NECESSARY TO REVERSE PHASES 2 AND 3 IN ORDER TO BETTER ALIGN WITH PID 102329). IN ACCORDANCE WITH 105.08, THE CONTRACTOR SHALL ARRANGE WITH THE OTHER CONTRACTORS APPROVAL OF THE ENGINEER. THE CONTRACTOR SHALL RECEIVE DAILY APPROVALS FROM THE ENGINEER PRIOR TO COMMENCING ANY OPERATIONS. ANY CONFLICT BETWEEN CONTRACTORS INVOLVING WORK SCHEDULES, WORK AREA, OR COOPERATION SHALL BE RESOLVED BY THE ENGINEER. COMPENSATION FOR THE ABOVE COOPERATION SHALL BE INCIDENTAL TO THE VARIOUS PAY ITEMS INCLUDED WITHIN THIS PROJECT.

## ITS MESSAGE BOARDS

THE EXISTING ITS MESSAGE BOARDS IN THE VICINITY OF THE PROJECT WILL BE UTILIZED TO PROVIDE SUPPLEMENTAL INFORMATION TO THE TRAVELING PUBLIC. THE CONTRACTOR WILL NOTIFY THE PROJECT ENGINEER ONE (1) WEEK IN ADVANCE OF ANY PHASE CHANGE ON I-77. THE PROJECT ENGINEER WILL COORDINATE WITH THE DISTRICT PUBLIC INFORMATION OFFICE TO GET THE ITS MESSAGE BOARDS ADJUSTED.

## ITEM 614, MAINTAINING TRAFFIC, MISC.: RUMBLE STRIPS

THE RUMBLE STRIPS WILL BE PLACED AS SHOWN IN THE PLAN OR AS DIRECTED BY THE ENGINEER. RUMBLE STRIPS WILL BE INSTALLED EITHER ON TOP OF THE PAVEMENT USING HEAT-FUSED PREFORMED PLASTIC MATERIAL OR MILLED INTO THE PAVEMENT.

HEAT-FUSED PREFORMED PLASTIC RUMBLE STRIPS WILL BE FOUR [4] INCHES WIDE AND ONE HALF [0.5] INCH THICK IN PLACE. MILLED RUMBLE STRIPS WILL BE FOUR [4] INCHES WIDE AND ONE HALF [0.5] INCH INTO THE PAVEMENT. THE RUMBLE STRIPS WILL TRAVERSE THE TOTAL LANE WIDTH. THERE WILL BE TWO SECTIONS OF RUMBLE STRIPS. THE RUMBLE STRIPS MAY HAVE TO GO ACROSS TWO OR THREE LANES OF TRAFFIC.

THE FIRST RUMBLE STRIP SECTION SHOULD BE PLACED BEFORE THE ADVANCE WARNING DEVICES, THERE WILL BE TEN [10] TRANSVERSE STRIPS SIX [6] FEET APART. THE SECOND SECTION SHOULD BE PLACED A MINIMUM OF 250 FEET IN ADVANCE OF THE TRAFFIC CONDITION, THERE WILL BE TEN [10] TRANSVERSE STRIPS FIVE [5] FEET APART.

MATERIAL USED FOR THE RUMBLE STRIPS WILL BE 740.08 HEAT-FUSED PREFORMED PLASTIC MATERIAL, 125 MILS MINIMUM THICKNESS, ON THE ODOT APPROVED LIST. THE MANUFACTURERS RECOMMENDATIONS MUST BE FOLLOWED FOR INSTALLATION.

MILLED RUMBLE STRIPS, ALTHOUGH SELF-CLEANING TO A LIMITED EXTENT, SHOULD BE INSPECTED PERIODICALLY TO DETERMINE IF DEBRIS NEEDS TO BE REMOVED OR IF THEY NEED TO BE RE-MILLED.

RUMBLE STRIPS WILL BE REMOVED WHEN THEY ARE NO LONGER NEEDED AS DETERMINED BY THE ENGINEER. WHEN THE MILLED RUMBLE STRIPS ARE NO LONGER NEEDED, THE ENTIRE WIDTH OF THE LANE CONTAINING THE STRIPS WILL BE MILLED TO A DEPTH OF 1 1/4" AND RESURFACED WITH ITEM 448 ASPHALT CONCRETE SURFACE COURSE TYPE 1, PG 64-22.

A W8-H16-48 SIGN [RUMBLE STRIPS] WILL BE DUAL MOUNTED APPROXIMATELY 500 FEET IN ADVANCE OF THE RUMBLE STRIP INSTALLATION. THE PROVISION, ERECTION, MAINTENANCE AND REMOVAL OF THE SIGNS AND SUPPORTS WILL BE INCLUDED IN THE COST OF THE RUMBLE STRIPS.

THIS ITEM WILL BE PAID FOR BY THE FOOT AT ONE HALF [0.5] INCH THICKNESS FOR 740.08 HEAT-FUSED PREFORMED PLASTIC OR ONE HALF [0.5] INCHES OF MILLED THICKNESS. THIS WILL INCLUDE ALL LABOR MATERIALS AND EQUIPMENT FOR THE INSTALLATION, MAINTENANCE AND REMOVAL OF THE RUMBLE STRIPS.

ITEM SPECIAL - RUMBLE STRIPS 2,880 FOOT

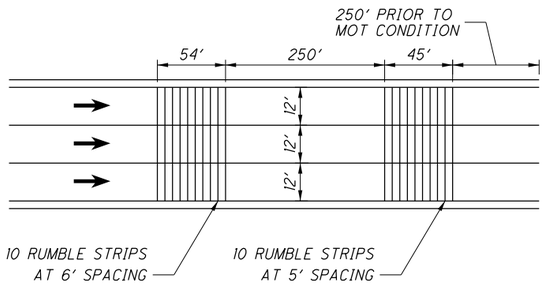


**RUMBLE STRIP PLACEMENT DETAIL**
(NOT TO SCALE)

## ITEM 614, MAINTAINING TRAFFIC, MISC.: "SNAP" MILL AND FILL

MAINTENANCE OF TRAFFIC ON THE SHOULDERS WILL REQUIRE THE EXISTING "SNAPS" TO BE MILLED AND FILLED. PAYMENT FOR THIS ITEM SHALL INCLUDE ALL OF THE FOLLOWING: REMOVAL OF THE EXISTING "SNAPS" BY MILLING 1 1/2" DEEP AND 2' WIDE; TACK COATING ALL EXPOSED MILLED SURFACES; AND PAVING THE MILLED AREA WITH 1 1/2" OF ITEM 422 - ASPHALT CONCRETE SURFACE COURSE, 12.5 MM TYPE A, (488). ALL LABOR, EQUIPMENT, MATERIALS, AND INCIDENTALS NEEDED TO COMPLETE THE ABOVE MENTIONED WORK SHALL BE INCLUDED IN THE UNIT PRICE BID FOR ITEM 614 - MAINTAINING TRAFFIC, MISC.: "SNAP" MILL AND FILL. THIS WILL OCCUR IN THE FOLLOWING PHASES AND LOCATIONS:

PHASE 1
- I-77 NB OUTSIDE STA. 353+00 TO STA. 395+00

PHASE 2 AND SUBPHASES
- I-277 EB INSIDE STA. 249+00 TO STA. 284+00
- I-277 EB OUTSIDE STA. 271+00 TO STA. 281+00
- I-277 WB INSIDE STA. 221+00 TO STA. 278+50
- I-277 WB OUTSIDE STA. 221+00 TO 278+50

ITEM 614 - MAINTAINING TRAFFIC, MISC.: "SNAP" MILL AND FILL 20,000 FT

## ITEM 614, MAINTAINING TRAFFIC, MISC.: BRIDGE DECK AND PAVEMENT PATCHING

THIS WORK WILL BE AS DIRECTED BY THE ENGINEER AND WILL INCLUDE ALL ASSOCIATED MOT COSTS WITH THE ACTIVITY. THE COST FOR EACH ITEM SHALL BE $1.00. THE FIXED AMOUNT SHOWN IN THE PROPOSAL IS INCLUDED (AS ANY OTHER BID ITEMS) IN THE TOTAL BID AMOUNT. THIS FIXED AMOUNT IS THE DEPARTMENT'S ESTIMATE OF THE TOTAL COST OF BRIDGE DECK AND PAVEMENT PATCHING WORK REQUIRED TO BE PERFORMED WITHIN THE WORK LIMITS AS DIRECTED BY THE ENGINEER. C&MS TABLE 104.02-2 DOES NOT APPLY TO REDUCTIONS IN THIS CONTRACT ITEM. FORCE ACCOUNT RECORDS SHALL BE KEPT TO TRACK AND ULTIMATELY DETERMINE THE AMOUNT OF THE PAY ITEM USED. THE WORK ITEM SHALL INCLUDE ALL WORK, AS DIRECTED BY THE ENGINEER, NEEDED TO RE-ESTABLISH A REASONABLY SAFE AND PASSABLE CONDITION OF THE DECK AND/OR PAVEMENT FOR THE DURATION OF THE REQUIRED UPCOMING MOT PHASES. THE CONTRACTOR SHALL MEET WITH THE ENGINEER TO ESTABLISH THE WORK AFTER EXECUTION OF THE CONTRACT. THE CONTRACTOR'S PROPOSED PHASING AND PHASING DURATIONS WILL ASSIST THE ENGINEER IN DETERMINING THE EXTENT OF THE WORK. THIS WORK IS ONLY INTENDED TO ESTABLISH A SAFE AND DRIVABLE CONDITION FOR THE DURATION OF THE PROJECT. THIS DOES NOT RELIEVE THE CONTRACTOR OF THE RESPONSIBILITIES OF 614.02B.

ITEM 614 - MAINTAINING TRAFFIC, MISC: BRIDGE DECK AND PAVEMENT PATCHING 100,000 EACH

CALCULATED JAR CHECKED JML

# MOT PLAN NOTES

SUM-77 / 277 / 224
VARIOUS

| REVISIONS | | |
|---|---|---|
| NO. | DATE | DESCRIPTION |
| 4 | 04/20/21 | REVISED SEQUENCE OF CONSTRUCTION |
| 9 | 05/04/21 | REVISED ITEM 614 NOTE |

82
1288

N:\03\60\06744-08\06002_SUM-76-10.95\Design\MOT\Sheets\06002_MN009.dgn Sheet 5/4/2021 3:10:55 PM jlacher

**ITEM 615 PAVEMENT FOR MAINTAINING TRAFFIC, CLASS B, APP, TYPE 1:**
**ITEM 615 PAVEMENT FOR MAINTAINING TRAFFIC, CLASS B, APP, TYPE 2:**
**ITEM 615 PAVEMENT FOR MAINTAINING TRAFFIC, CLASS B, APP, TYPE 3:**
**ITEM 615 PAVEMENT FOR MAINTAINING TRAFFIC, CLASS B, APP, TYPE 4:**

THIS ITEM SHALL BE UTILIZED FOR THE PAVEMENT REPAIRS NEEDED DURING THIS CONSTRUCTION PROCESS. ALL AREAS TO BE REPAIRED SHALL BE LOCATED BY THE ENGINEER. IT IS LIKELY THAT REPAIRS WILL BE NEEDED PRIOR TO EACH PHASE SWITCH. GREAT CARE SHALL BE TAKEN TO MAINTAIN THE EXISTING PAVEMENT CROSS SLOPE AS WELL AS ALL LONGITUDINAL SLOPES. THE TYPE OF REPAIR SHALL BE DETERMINED BY THE PROJECT ENGINEER. PAYMENT FOR ALL LABOR, EQUIPMENT AND MATERIALS, UNLESS SEPARATELY ITEMIZED, REQUIRED FOR MAINTENANCE OF TRAFFIC FOR PAVEMENT REPAIRS SHALL BE INCLUDED IN THE LUMP SUM CONTRACT PRICE FOR ITEM 614, MAINTAINING TRAFFIC.

TYPE 1 - IS TO BE USED WHEN YOU NEED TO MILL & FILL AN AREA OF VARYING LENGTH AND HAVE AN AVERAGE WIDTH OF NOT LESS THAN 2 FEET.

TYPE 2 - IS TO BE USED FOR FIXING THE LONGITUDINAL JOINT ISSUES OF VARYING LENGTH AND HAVE A CONSISTENT WIDTH OF 2 FEET.

TYPE 3 - IS TO BE USED FOR DEEPER REPAIRS (POTHOLES) OF VARYING LENGTH AND WILL HAVE AN AVERAGE WIDTH OF NOT LESS THAN 4 FEET.

TYPE 4 - IS TO BE USED FOR COMPOSITE PAVEMENT REPAIRS OF VARYING LENGTH AND WILL HAVE AN AVERAGE WIDTH OF NOT LESS THAN 3 FEET.

ALL COSTS, UNLESS SEPARATELY ITEMIZED, ASSOCIATED WITH REMOVING AND REPLACING PAVEMENT AND TACK COAT FOR THE REPAIRS SHALL BE INCIDENTAL TO ITEM 615 PAVEMENT FOR MAINTAINING TRAFFIC, CLASS B, AS PER PLAN.

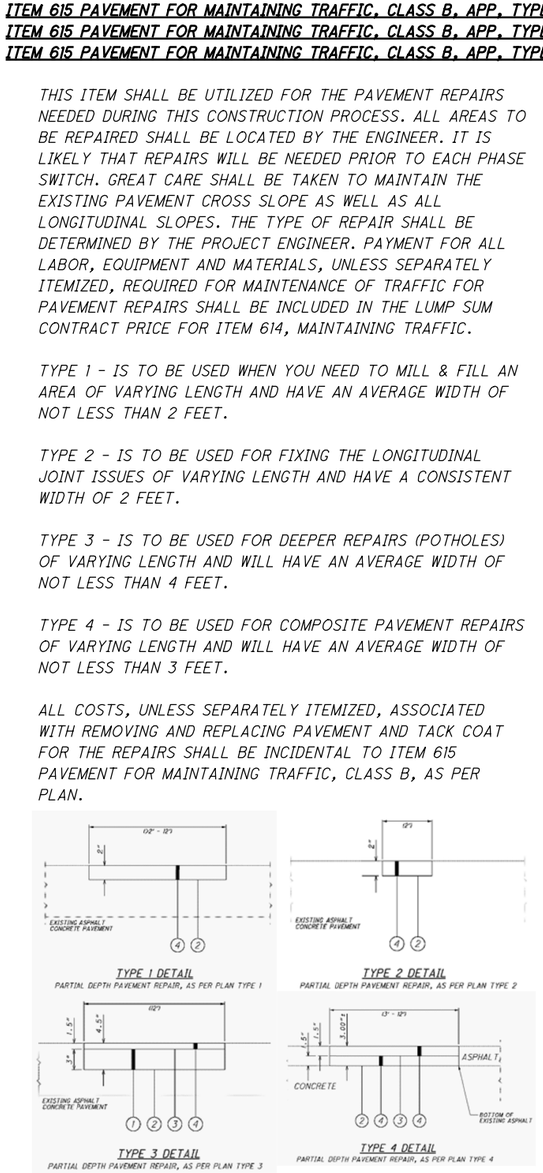


**LEGEND:**

(1) ITEM 301 - ASPHALT CONCRETE BASE, PG64-22 (3) ITEM 407- TACK COAT FOR INTERMEDIATE @ 0.05 PER SY.YD.
(2) ITEM 407 - TACK COAT @0.075 PER SY. YD. (4) ITEM 441 -TYPE 1 (AS DESCRIBED IN CMS 615.05)

ITEM 615 PAVEMENT FOR MAINTAINING TRAFFIC, CLASS B, APP, TYPE 1: 1,000 SY
ITEM 615 PAVEMENT FOR MAINTAINING TRAFFIC, CLASS B, APP, TYPE 2: 1,000 SY
ITEM 615 PAVEMENT FOR MAINTAINING TRAFFIC, CLASS B, APP, TYPE 3: 1,000 SY

**EARTHWORK FOR MAINTAINING TRAFFIC**

THE FOLLOWING QUANTITIES HAVE BEEN INCLUDED IN THE PLAN FOR INFORMATION ONLY:

EXCAVATION FOR MAINTAINING TRAFFIC 7,200 CU. YD.
EMBANKMENT FOR MAINTAINING TRAFFIC 4,900 CU. YD.

WHEN UNDERCUTS ARE NECESSARY FOR MAINLINE PAVEMENT OR EMBANKMENT CONSTRUCTION, EVALUATE THE NEED FOR TEMPORARY ROAD UNDERCUTS IF WITHIN A CLOSE PROXIMITY TO THE MAINLINE UNDERCUTS. A GEOTECHNICAL EVALUATION SHOULD BE CONSIDERED TO DETERMINE IF THE EXISTING SOIL CONDITIONS ARE ADEQUATE TO SUPPORT THE TEMPORARY ROAD. ADDITIONAL SOIL BORINGS ALONG THE TEMPORARY ROAD ARE NOT NORMALLY REQUIRED.

THE ABOVE ESTIMATED QUANTITIES ARE OUTSIDE OF THE PERMANENT EXCAVATION OR EMBANKMENT LIMITS INCLUDED IN THE ROADWAY PLANS.

**ITEM SPECIAL - FILL AND PLUG EXISTING CONDUIT**

THIS ITEM SHALL CONSIST OF THE CONSTRUCTION OF BULKHEADS IN AN EXISTING 15-18 IN DIAMETER CONDUIT AND FILLING THE AREA THUS SEALED OFF WITH ITEM 613, SAND OR OTHER MATERIAL APPROVED BY THE ENGINEER.

BULKHEADS SHALL BE LOCATED AT THE LIMITS OF THE AREA TO BE FILLED AS INDICATED ON THE PLANS. THE BULKHEADS SHALL CONSIST OF BRICK OR CONCRETE MASONRY WITH A MINIMUM THICKNESS OF 12 INCHES.

THE FILL MATERIAL SHALL BE PUMPED INTO PLACE, OR PLACED BY OTHER MEANS APPROVED BY THE ENGINEER, SO THAT, AFTER SETTLEMENT, AT LEAST 90 PERCENT OF THE CROSS-SECTIONAL AREA OF THE CONDUIT, FOR ITS ENTIRE LENGTH, SHALL BE FILLED. THE LENGTH OF FILLED AND PLUGGED CONDUIT TO BE PAID FOR SHALL BE THE ACTUAL NUMBER OF FEET (MEASURED ALONG THE CENTERLINE OF EACH CONDUIT FROM OUTER FACE TO OUTER FACE OF BULKHEADS) FILLED AND PLUGGED AS DESCRIBED ABOVE.

IN LIEU OF FILLING AND PLUGGING THE EXISTING CONDUIT, THE PIPE MAY BE CRUSHED AND BACKFILLED IN ACCORDANCE WITH THE PROVISIONS OF 203, OR IT MAY BE REMOVED. THE LENGTH, MEASURED AS PROVIDED ABOVE, SHALL BE PAID FOR AT THE CONTRACT PRICE PER FOOT FOR, ITEM SPECIAL, FILL AND PLUG EXISTING CONDUIT.

**ITEM 411 - STABILIZED CRUSHED AGGREGATE**

THE CONTRACTOR SHALL FURNISH STABILIZED CRUSHED AGGREGATE ADJACENT TO TEMPORARY PAVEMENT IN ACCORDANCE WITH CMS 411 AND AS DIRECTED BY THE ENGINEER. THE FOLLOWING ESTIMATED QUANTITY HAS BEEN INCLUDED IN THE MAINTENANCE OF TRAFFIC GENERAL SUMMARY:

ITEM 411 - STABILIZED CRUSHED AGGREGATE 650 CY

**CROSSOVER CONSTRUCTION AND REMOVAL**

IN ADDITION TO THE REQUIREMENTS OF 615:

ON THIS PROJECT THE CLASS A PAVEMENT FOR MAINTAINING TRAFFIC SHALL BE CONSTRUCTED AS CALLED OUT IN THE DETAILED CROSSOVER PLANS. THE EXISTING PAVEMENT/SHOULDER SHALL BE SAWCUT AS PER 203.04(E).

UPON COMPLETION OF THE PROJECT, THE CONTRACTOR SHALL REMOVE THE PAVEMENT FOR MAINTAINING TRAFFIC INCLUDING ANY TEMPORARY DRAINAGE FACILITIES. THE AFFECTED EXISTING EARTH MEDIAN AND PAVED SHOULDERS SHALL BE RESTORED TO THEIR ORIGINAL CONDITION AS DIRECTED BY THE ENGINEER AND AS PER 615.08.

PAVEMENT FOR MAINTAINING TRAFFIC SHALL NOT BE OPENED TO TRAFFIC UNTIL ALL WORK ZONE TRAFFIC CONTROL DEVICES, SIGNS, PAVEMENT MARKINGS AND PORTABLE CONCRETE BARRIERS HAVE BEEN ERECTED AND APPROVED BY THE ENGINEER.

ALTHOUGH ESTIMATES FOR TEMPORARY EXCAVATION AND EMBANKMENT MAY BE SHOWN ON THE PLAN DETAILS, THESE ITEMS SHALL BE CONSIDERED INCIDENTAL TO, AND INCLUDED WITH PAYMENT FOR ITEM 615 ROADS FOR MAINTAINING TRAFFIC.

TEMPORARY DRAINAGE ITEMS LABELED ON THE DETAILED CROSSOVER PLANS ARE ITEMIZED ON THE MOT PLANS. PAYMENT FOR THE TEMPORARY DRAINAGE ITEMS AND THE SUBSEQUENT REMOVALS/ABANDONMENT'S ARE ITEMIZED AND CARRIED TO THE MAINTENANCE OF TRAFFIC GENERAL SUMMARY.

THE FOLLOWING ITEMS ARE INCLUDED IN THE MAINTENANCE OF TRAFFIC GENERAL SUMMARY TO PREPARE THE EXISTING I-77 SB INSIDE SHOULDER FOR THE NB CROSSOVER IN PHASE 1 FROM I-77 STA. 369+02 TO STA. 372+57.

ITEM 254 - 1.5" PAVEMENT PLANING, ASPHALT CONCRETE 505 SY
ITEM 441 - 1.5" ASPHALT CONCRETE SURFACE COURSE, TYPE 1, (448), PG64-22 21 CY

ANY ADDITIONAL ITEMS OF WORK NOT SPECIFICALLY LISTED WHICH ARE REQUIRED TO CONSTRUCT OR REMOVE THE CROSSOVERS SHALL BE INCLUDED IN THE LUMP SUM BID FOR ITEM 615 - ROADS FOR MAINTAINING TRAFFIC.

**CONCRETE MEDIAN BARRIER REMOVAL AND REPLACEMENT**

A PORTION OF THE EXISTING CONCRETE MEDIAN BARRIER SHALL BE REMOVED IN ORDER TO CONSTRUCT THE CROSS-OVERS, AND SUBSEQUENTLY REPLACED. THE LOCATIONS OF THE CROSSOVERS ARE SHOWN ON THE DETAILED MAINTENANCE OF TRAFFIC PLANS. IMMEDIATELY FOLLOWING THE REMOVAL OF THE CROSSOVERS, THE CONTRACTOR SHALL RECONSTRUCT THE CONCRETE MEDIAN. THE FOLLOWING ITEMS ARE INCLUDED IN THE MAINTENANCE OF TRAFFIC GENERAL SUMMARY FOR THE REMOVAL AND REPLACEMENT OF THE CONCRETE MEDIAN BARRIER:

ITEM 202 - CONCRETE BARRIER REMOVED 450 FT
ITEM 611 - INLET NO. 3 FOR SINGLE SLOPE BARRIER, TYPE B1, AS PER PLAN 1 EACH
ITEM 611 - 15" CONDUIT, TYPE B, AS PER PLAN, 706.02 10 FT
ITEM 622 - CONCRETE BARRIER, SINGLE SLOPE, TYPE B1 450 FT
ITEM 622 - CONCRETE BARRIER, END ANCHORAGE, REINFORCED, TYPE B1 2 EACH

RECONSTRUCT THE MEDIAN BARRIER INLET ABANDONED IN PHASE 1 AT THE SAME STATION AND OFFSET AS THE EXISTING INLET AS INDICATED IN THE PLANS. FULLY REMOVE ANY REMAINING PORTIONS OF THE EXISTING INLET STRCUTURE WHICH WERE NOT REMOVED DURING THE ABANDONMENT. RECONSTRUCT THE ENTIRE INLET STRUCTURE ACCORDING TO SCD I-2.1. ALL LABOR AND MATERIALS FOR THIS WORK SHALL BE INCLUDED IN THE BID PRICE FOR:
INLET NO. 3 FOR SINGLE SLOPE BARRIER, TYPE B1, AS PER PLAN

RECONNECT THE EXISTING 15" RCP STORM SEWER PIPE TO THE WEST AND PROVIDE A MASONRY COLLAR PER SCD DM-1.1 WHERE THE NEW CONDIUT CONNECTS TO THE EXISTING CONDUIT. ALL LABOR AND MATERIALS FOR THIS WORK SHALL BE INCLUDED IN THE BID PRICE FOR:
15" CONDUIT, TYPE B, AS PER PLAN, 706.02

**PAVEMENT RESTORATION FOR PIPE INSTALLATIONS DURING MOT**

THE FOLLOWING ESTIMATED QUANTITY HAS BEEN PROVIDED IN THE MOT GENERAL SUMMARY FOR PAVEMENT RESTORATION FOLLOWING THE INSTALLTION OF ITEM 611 DRAINAGE CONDUIT DURING MOT OPERATIONS.

ITEM 302 - ASPHALT CONCRETE BASE, PG64-22 110 CY

THE ABOVE QUANTITY IS BASED ON A 301 THICKNESS OF 7.75 INCHES AND A PAVEMENT RESTORATION WIDTH THAT INCLUDES THE TRENCH WIDTH PLUS TWO FEET ON EACH SIDE OF THE TRENCH. BACKFILL THE TRENCH WITH ITEM 613 - LOW STRENGTH MORTAR BACKFILL ACCORDING TO THE DETAIL BELOW. PROVIDE LSM BACKFILL AND ANY MATERIALS USED OUTSIDE THE LIMITS STATED ABOVE AT NO ADDITIONAL COST.

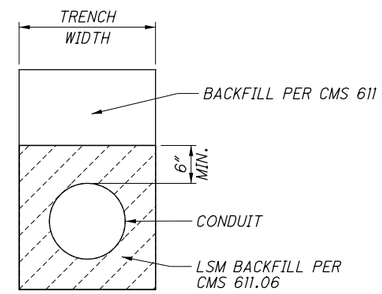


CALCULATED JAR CHECKED JML

# MOT PLAN NOTES

SUM-77 / 277 / 224
VARIOUS

83
1288

N:\03\60\06744-08\106002_SUM-76-10.95\Design\MOT\Sheets\106002_MN010.dgn Sheet 1/31/2021 5:26:03 PM jrettig

## ITEM 614, SPECIAL - WORK ZONE TRAFFIC SIGNAL

THE CONTRACTOR SHALL INSTALL A TEMPORARY TRAFFIC SIGNAL AT THE INTERSECTION OF KELLY AVE. AND US-224 WESTBOUND RAMPS DURING PHASE 1B WHEN RAMP B2 IS CLOSED AND TRAFFIC IS DETOURED. THE LAYOUT AND MATERIALS USED FOR THE TEMPORARY SIGNAL SHALL BE DETERMINED BY THE CONTRACTOR'S MEANS AND METHODS. AT A MINIMUM, THE FOLLOWING REQUIREMENTS SHALL BE MET:

- THE PAVEMENT MARKINGS OF NORTHBOUND KELLY AVE. SHALL BE RESTRIPED TO A NORTHBOUND LEFT TURN LANE AND NORTHBOUND THROUGH LANE FROM THE US-224 EASTBOUND OFF-RAMP/STARLIGHT DR. INTERSECTION TO THE US-224 WESTBOUND RAMP INTERSECTION AS DETAILED ON THIS SHEET. STOP LINES SHALL BE PROVIDED ON KELLY AVE. FOR THE NORTHBOUND AND SOUTHBOUND APPROACHES AT THE TEMPORARY SIGNAL.

- THE TEMPORARY SIGNAL SHALL BE COMPLAINT WITH REQUIREMENTS IN THE OMUTCD, LATEST EDITION.

- STOP LINE VEHICLE DETECTION SHALL BE PROVIDED FOR THE FOLLOWING APPROACH LANES:
  - NORTHBOUND KELLY AVE: LEFT TURN LANE.
  - WESTBOUND US-224 OFF RAMP: ALL APPROACH LANES. PROVIDE 10 SEC. DELAY FOR RIGHT LANE.

- A MINIMUM OF TWO SIGNAL HEADS WITH 12 INCH INDICATIONS SHALL BE PROVIDED PER APPROACH AS DETAILED ON THIS SHEET.

- SIGNAL HEADS SHALL BE PLACED NO CLOSER THAN 40 FEET AND NO FARTHER THAN 180 FEET FROM THE STOP LINE OF THE APPROACH, AND THE PRIMARY SIGNAL HEADS SHALL BE CENTERED ON THE APPROACH LANES.

- PHASING AND TIMINGS SHALL BE PROVIDED AS DETAILED IN THE TIMING CHART PROVIDED ON THIS SHEET.

PEDESTRIAN ACCOMMODATIONS ARE NOT REQUIRED FOR THIS TEMPORARY SIGNAL. THE CONTRACTOR SHALL SUBMIT THE TEMPORARY TRAFFIC SIGNAL DESIGN TO THE ENGINEER FOR APPROVAL PRIOR TO INSTALLING ANY TEMPORARY TRAFFIC SIGNAL COMPONENTS.

ADDITIONALLY, THE CONTRACTOR SHALL MODIFY THE SIGNAL TIMINGS OF THE EXISTING TRAFFIC SIGNAL AT S. MAIN ST. AND US-224 WESTBOUND RAMPS DURING PHASE 2 WHEN RAMP D IS CLOSED AND TRAFFIC IS DETOURED. THE SOUTHBOUND (PHASE 2) MAXIMUM GREEN TIME SHALL BE REDUCED TO 30 SECONDS AND THE EASTBOUND (PHASE 4) MAXIMUM GREEN TIME SHALL BE INCREASED TO 30 SECONDS.

PAYMENT FOR ITEM 614 - SPECIAL - WORK ZONE TRAFFIC SIGNAL SHALL BE PAID PER EACH AND SHALL INCLUDE ALL MATERIAL AND LABOR NECESSARY TO PROVIDE A FULLY FUNCTIONING AND ACCEPTED TEMPORARY TRAFFIC SIGNAL, AND TO PROVIDE TIMING MODIFICATIONS TO THE EXISTING SIGNAL, AS INDICATED ABOVE. PAYMENT SHALL INCLUDE THE COST OF PERMITS, POWER SERVICE, MAINTENANCE, COORDINATION, AND ADDITIONAL SIGNAL TIMING ADJUSTMENTS TO THE TEMPORARY SIGNAL OR PERMANENT SIGNAL INDICATED ABOVE, AS DIRECTED BY THE ENGINEER DURING CONSTRUCTION. PAVEMENT MARKINGS, AS SHOWN IN THE DETAIL ON THIS SHEET, SHALL BE QUANTIFIED SEPARATELY IN THE MOT SUBSUMMARY AND PAID FOR UNDER THE APPLICABLE WORK ZONE PAVEMENT MARKING ITEMS. WORK ZONE SIGNS, AS SHOWN IN THE DETAIL ON THIS SHEET, SHALL BE INCLUDED WITH THE LUMP SUM PAY ITEM FOR MAINTAINING TRAFFIC.

ITEM 614 - SPECIAL - WORK ZONE TRAFFIC SIGNAL 1 EA

## KELLY AVE. SIGNING AND PAVEMENT MARKING MODIFICATION DETAIL
(NOT TO SCALE)

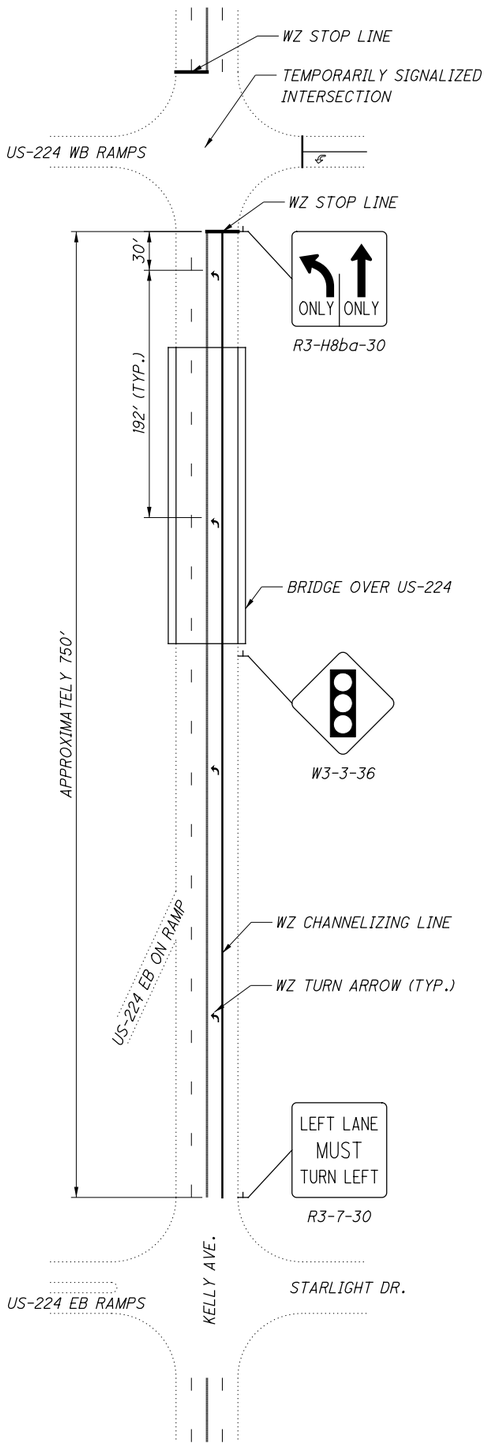


## MINIMUM REQUIRED SIGNAL HEADS DETAIL

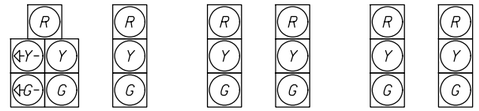


## PHASING DIAGRAM

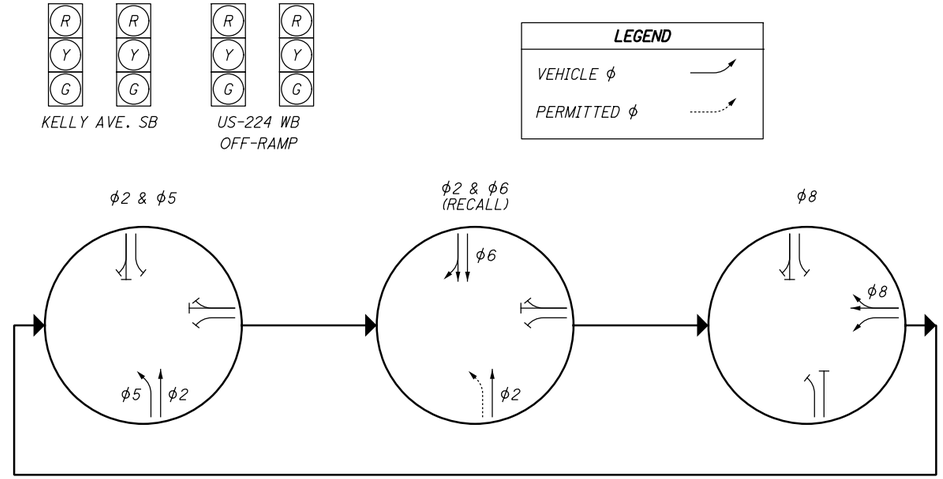


## TEMPORARY SIGNAL TIMING CHART

INTERSECTION: Kelly Avenue & US 224 Westbound Ramps
MAINTAINING AGENCY: ODOT District 4

START UP

START IN: -
TIME FOR: FLASH , ALL RED (SEC.): 9, 6
FIRST PHASE(S): -
COLOR DISPLAYED: -

DUAL ENTRY: YES | PHASES: 2 + 6
REST IN RED: RING 1 - | RING 2 -

| OVERLAP | A | B | C | D |
|---|---|---|---|---|
| PHASES | - | - | - | - |

| INTERVAL OR FEATURE | | | CONTROLLER MOVEMENT NO. | | | | | | | |
|---|---|---|---|---|---|---|---|---|---|---|
| INTERSECTION MOVEMENT (PHASE) | | | 1 | 2 | 3 | 4 | 5 | 6 | 7 | 8 |
| DIRECTION | | | - | NB | - | - | NBLT | SB | - | WB |
| MINIMUM GREEN (INITIAL) | | (SEC.) | - | 20 | - | - | 7 | 20 | - | 10 |
| ADDED INITIAL | | *(SEC./ACTUATION) | - | - | - | - | - | - | - | - |
| MAXIMUM INITIAL | | (SEC.) | - | 20 | - | - | 7 | 20 | - | 10 |
| PASSAGE TIME (PRESET GAP) | | (SEC.) | - | 1 | - | - | 3 | 1 | - | 3 |
| TIME BEFORE REDUCTION | | *(SEC.) | - | - | - | - | - | - | - | - |
| MINIMUM GAP | | *(SEC.) | - | - | - | - | - | - | - | - |
| TIME TO REDUCE | | *(SEC.) | - | - | - | - | - | - | - | - |
| MAXIMUM GREEN I | | (SEC.) | - | 35 | - | - | 35 | 35 | - | 16 |
| MAXIMUM GREEN II | | (SEC.) | - | 27 | - | - | 27 | 27 | - | 15 |
| YELLOW CHANGE | | (SEC.) | - | 4 | - | - | 3.5 | 4 | - | 4 |
| ALL RED CLEARANCE | | (SEC.) | - | 1 | - | - | 1.5 | 1 | - | 2 |
| DELAYED GREEN (LPI) # | | (SEC.) | - | - | - | - | - | - | - | - |
| WALK | | (SEC.) | - | - | - | - | - | - | - | - |
| PEDESTRIAN CLEARANCE | | (SEC.) | - | - | - | - | - | - | - | - |
| RECALL | MAXIMUM | (ON/OFF) | - | OFF | - | - | OFF | OFF | - | OFF |
| | MINIMUM | (ON/OFF) | - | ON | - | - | OFF | ON | - | OFF |
| | PEDESTRIAN | (ON/OFF) | - | - | - | - | - | - | - | - |
| MEMORY | | (ON/OFF) | - | OFF | - | - | OFF | OFF | - | OFF |

*VOLUME DENSITY CONTROLS

TIMING CHART NOTES:
1. MAXIUMUM GREEN I SHALL OPERATE FROM 06:00 - 09:30 AND 14:30 - 18:00 MONDAY THROUGH FRIDAY.
2. MAXIUMUM GREEN II SHALL OPERATE FROM 09:30 - 14:30 AND 18:00 - 20:00 MONDAY THROUGH FRIDAY, 10:00 - 19:00 SATURDAY, AND 11:00 - 18:30 SUNDAY.

CALCULATED JAR CHECKED JML

MOT PLAN NOTES

SUM-77/277/224
VARIOUS



N:\03\60\06744-08\06002_SUM-76-10.95\Design\MOT\Sheets\06002_MN01.dgn Sheet 2/2/2021 11:05:35 AM jrettig

| SHEET NUM. | | | | | | | | | | | | PART. | | ITEM | ITEM EXT | GRAND TOTAL | UNIT | DESCRIPTION | SEE SHEET NO. |
|---|---|---|---|---|---|---|---|---|---|---|---|---|---|---|---|---|---|---|---|
| 74 | 76 | 77 | 78 | 80 | 81 | 82 | 83 | 84 | 113 | 114 | 74A | 01/IMS/PV | 02/IMS/PV | | | | | | |
| | | | | | | | | | | | | | | | | | | MAINTENANCE OF TRAFFIC | |
| | | | | | | | 450 | | | | | 405 | 45 | 202 | 30700 | 450 | FT | CONCRETE BARRIER REMOVED | |
| | | | | | | | | | | 1,674 | | 1,507 | 167 | 202 | 35100 | 1,674 | FT | PIPE REMOVED, 24" AND UNDER | |
| | | | | | | | | | | 1 | | 1 | | 202 | 58000 | 1 | EACH | MANHOLE REMOVED | |
| | | | | | | | | | | 13 | | 12 | 1 | 202 | 58100 | 13 | EACH | CATCH BASIN REMOVED | |
| | | | | | | | | | | 1 | | 1 | | 202 | 58400 | 1 | EACH | INLET ABANDONED | |
| | | | | | | | | | | 3 | | 3 | | 202 | 58500 | 3 | EACH | CATCH BASIN ABANDONED | |
| | | | | | | | | | | 8 | | 7 | 1 | SPECIAL | 20270000 | 8 | FT | FILL AND PLUG EXISTING CONDUIT, 15" | 83 |
| | | | | | | | | | | 135 | | 122 | 13 | SPECIAL | 20270000 | 135 | FT | FILL AND PLUG EXISTING CONDUIT, 18" | 83 |
| | | | | | | | 505 | | | | | 455 | 50 | 254 | 01000 | 505 | SY | PAVEMENT PLANING, ASPHALT CONCRETE, 1.5" | |
| | | | | | | | 110 | | | | | 99 | 11 | 302 | 46000 | 110 | CY | ASPHALT CONCRETE BASE, PG64-22 | |
| | | | | | | | 650 | | | | | 585 | 65 | 411 | 10000 | 650 | CY | STABILIZED CRUSHED AGGREGATE | |
| | | | | | | | 21 | | | | | 19 | 2 | 441 | 50000 | 21 | CY | ASPHALT CONCRETE SURFACE COURSE, TYPE 1, (448), PG64-22 | |
| | | | | | | | | | | 584 | | 526 | 58 | 611 | 04400 | 584 | FT | 12" CONDUIT, TYPE B | |
| | | | | | | | | | | 741 | | 667 | 74 | 611 | 04600 | 741 | FT | 12" CONDUIT, TYPE C | |
| | | | | | | | | | | 28 | | 25 | 3 | 611 | 05900 | 28 | FT | 15" CONDUIT, TYPE B | |
| | | | | | | | 10 | | | | | 9 | 1 | 611 | 05901 | 10 | FT | 15" CONDUIT, TYPE B, AS PER PLAN, 706.02 | 83 |
| | | | | | | | | | | 74 | | 67 | 7 | 611 | 06100 | 74 | FT | 15" CONDUIT, TYPE C | |
| | | | | | | | | | | 10 | | 9 | 1 | 611 | 06100 | 10 | FT | 15" CONDUIT, TYPE C, 706.02 | |
| | | | | | | | | | | 162 | | 146 | 16 | 611 | 07400 | 162 | FT | 18" CONDUIT, TYPE B | |
| | | | | | | | | | | 218 | | 196 | 22 | 611 | 07600 | 218 | FT | 18" CONDUIT, TYPE C | |
| | | | | | | | | | | 1 | | 1 | | 611 | 98370 | 1 | EACH | CATCH BASIN, NO. 6 | |
| | | | | | | | | | | 1 | | 1 | | 611 | 98410 | 1 | EACH | CATCH BASIN, NO. 8 | |
| | | | | | | | | | | 14 | | 13 | 1 | 611 | 98470 | 14 | EACH | CATCH BASIN, NO. 2-2B | |
| | | | | | | | 1 | | | | | 1 | | 611 | 99101 | 1 | EACH | INLET, NO. 3 FOR SINGLE SLOPE BARRIER, TYPE B1, AS PER PLAN | 83 |
| | | | | | | | | | | 1 | | 1 | | 611 | 99574 | 1 | EACH | MANHOLE, NO. 3 | |
| | | | | | 850 | | | | | | | 765 | 85 | 614 | 11110 | 850 | HOUR | LAW ENFORCEMENT OFFICER WITH PATROL CAR FOR ASSISTANCE | |
| | | | | | | | | 1 | | | | 1 | | SPECIAL | 61411300 | 1 | EACH | WORK ZONE TRAFFIC SIGNAL | 84 |
| | | | | | 42,950 | | | | 135,265 | | | 160,394 | 17,821 | 614 | 11630 | 178,215 | FT | INCREASED BARRIER DELINEATION | |
| | | | | | | | | | 50 | | | 45 | 5 | 614 | 12381 | 50 | EACH | WORK ZONE IMPACT ATTENUATOR, 24" WIDE HAZARDS, (UNIDIRECTIONAL), AS PER PLAN | 77 |
| LS | | | | | | | | | | | | | | 614 | 12420 | LS | | DETOUR SIGNING | |
| | | | | | | | | | 18 | | | 16 | 2 | 614 | 12470 | 18 | EACH | WORK ZONE SPEED LIMIT SIGN | |
| | 13 | | | | | | | | | | | 12 | 1 | 614 | 12484 | 13 | EACH | WORK ZONE INCREASED PENALTIES SIGN | |
| | | 2 | | | | | | | | | | 2 | | 614 | 12756 | 2 | EACH | WORK ZONE CROSSOVER LIGHTING SYSTEM | |
| | | | | | | | | | 6,416 | | | 5,774 | 642 | 614 | 12801 | 6,416 | EACH | WORK ZONE RAISED PAVEMENT MARKER, AS PER PLAN | 80 |
| 100 | | | | | | | | | | | | 90 | 10 | 614 | 13001 | 100 | CY | ASPHALT CONCRETE FOR MAINTAINING TRAFFIC, AS PER PLAN | 74 |
| | | | | | 619 | | | | 2,478 | | 36 | 2,820 | 313 | 614 | 13310 | 3,133 | EACH | BARRIER REFLECTOR, TYPE 1, 1 WAY | |
| | | | | | | | | | 233 | | | 210 | 23 | 614 | 13310 | 233 | EACH | BARRIER REFLECTOR, TYPE 1, BIDIRECTIONAL | |
| | | | | | 240 | | | | | | | 216 | 24 | 614 | 13312 | 240 | EACH | BARRIER REFLECTOR, TYPE 2, 1 WAY | |
| | | | | | 859 | | | | 2,711 | | 36 | 3,245 | 361 | 614 | 13350 | 3,606 | EACH | OBJECT MARKER, ONE WAY | |
| | | | | 150 | | | | | | | | 135 | 15 | 614 | 18000 | 150 | EACH | MAINTAINING TRAFFIC, MISC.: WORK ZONE RAISED PAVEMENT MARKERS ON PERMANENT CONCRETE SURFACES | 80 |
| | | | | | | 100,000 | | | | | | 90,000 | 10,000 | 614 | 18000 | 100,000 | EACH | MAINTAINING TRAFFIC, MISC.: BRIDGE DECK AND PAVEMENT PATCHING | 82 |
| | | | | | | 2,880 | | | | | | 2,592 | 288 | 614 | 18030 | 2,880 | FT | MAINTAINING TRAFFIC, MISC.: RUMBLE STRIPS | 82 |
| | | | | | | 20,000 | | | | | | 18,000 | 2,000 | 614 | 18030 | 20,000 | FT | MAINTAINING TRAFFIC, MISC.: "SNAP" MILL AND FILL | 82 |
| | | | 144 | | | | | | | | | 130 | 14 | 614 | 18601 | 144 | SNMT | PORTABLE CHANGEABLE MESSAGE SIGN, AS PER PLAN | 78 |
| | | | | | | | | | 27.7 | | 0.7 | 25.6 | 2.8 | 614 | 20011 | 28.4 | MILE | WORK ZONE LANE LINE, CLASS I, 6", AS PER PLAN | 82 |
| | 24 | | | | | | | | | | | 22 | 2 | 614 | 20410 | 24 | MILE | WORK ZONE LANE LINE, CLASS II, 6" | |
| | | | | | | | | | 78.9 | | 1.5 | 72.4 | 8 | 614 | 22011 | 80.4 | MILE | WORK ZONE EDGE LINE, CLASS I, 6", AS PER PLAN | 82 |
| | | | | | | | | | 108,460 | | 4,224 | 101,415 | 11,269 | 614 | 23011 | 112,684 | FT | WORK ZONE CHANNELIZING LINE, CLASS I, 12", AS PER PLAN | 82 |
| | | | | | | | | | 43,361 | | | 39,025 | 4,336 | 614 | 24001 | 43,361 | FT | WORK ZONE DOTTED LINE, CLASS I, AS PER PLAN | 82 |
| | 25,500 | | | | | | | | | | | 22,950 | 2,550 | 614 | 28000 | 25,500 | FT | WORK ZONE GORE MARKING, CLASS II | |

CALCULATED JJAR
CHECKED SSR

# MAINTENANCE OF TRAFFIC GENERAL SUMMARY

SUM-77 / 277 / 224
VARIOUS

| REVISIONS | | |
|---|---|---|
| NO. | DATE | DESCRIPTION |
| 4 | 04/20/21 | REVISED SEQUENCE OF CONSTRUCTION |



N:\03\60\06744-08\106002-SUM-76-10.95\Design\MOT\Sheets\106002_MG001.dgn Sheet 4/20/2021 11:23 PM jlacher

| SHEET NUM. | | | | | | | | | | | | PART. | | ITEM | ITEM EXT | GRAND TOTAL | UNIT | DESCRIPTION | SEE SHEET NO. |
|---|---|---|---|---|---|---|---|---|---|---|---|---|---|---|---|---|---|---|---|
| 74 | 76 | 77 | 78 | 80 | 81 | 82 | 83 | 84 | 113 | 114 | 74A | 01/IMS/PV | 02/IMS/PV | | | | | | |
| | | | | | | | | | | | | | | | | | | MAINTENANCE OF TRAFFIC | |
| | | | | | | | | | | | | | | 615 | 10000 | LS | | ROADS FOR MAINTAINING TRAFFIC | |
| | | | | | | | | | 12,728 | | | 11,455 | 1,273 | 615 | 20000 | 12,728 | SY | PAVEMENT FOR MAINTAINING TRAFFIC, CLASS A | |
| | | | | | | | 1,000 | | | | | 900 | 100 | 615 | 25001 | 1,000 | SY | PAVEMENT FOR MAINTAINING TRAFFIC, CLASS B, AS PER PLAN, TYPE 1 | 83 |
| | | | | | | | 1,000 | | | | | 900 | 100 | 615 | 25001 | 1,000 | SY | PAVEMENT FOR MAINTAINING TRAFFIC, CLASS B, AS PER PLAN, TYPE 2 | 83 |
| | | | | | | | 1,000 | | | | | 900 | 100 | 615 | 25001 | 1,000 | SY | PAVEMENT FOR MAINTAINING TRAFFIC, CLASS B, AS PER PLAN, TYPE 3 | 83 |
| | 1,400 | | | | | | | | | | | 1,260 | 140 | 616 | 10000 | 1,400 | MGAL | WATER | |
| | | | | | | | 450 | | | | | 405 | 45 | 622 | 10100 | 450 | FT | CONCRETE BARRIER, SINGLE SLOPE, TYPE B1 | |
| | | | | | | | 2 | | | | | 2 | | 622 | 25006 | 2 | EACH | CONCRETE BARRIER, END ANCHORAGE, REINFORCED, TYPE B1 | |
| | | | | | | | | | 11,670 | | | 10,503 | 1,167 | 622 | 41011 | 11,670 | FT | PORTABLE BARRIER, 50", AS PER PLAN | 76 |
| | | | | | | | | | 6 | | | 5 | 1 | 622 | 41050 | 6 | EACH | PORTABLE BARRIER, "Y" CONNECTOR | |
| | | | | | | | | | 122,995 | | 1,800 | 112,315 | 12,480 | 622 | 41100 | 124,795 | FT | PORTABLE BARRIER, UNANCHORED | |
| | | | | | | | | | 600 | | | 540 | 60 | 622 | 41110 | 600 | FT | PORTABLE BARRIER, ANCHORED | |
| | | | | | | | | | 1,443 | | | 1,299 | 144 | 630 | 80200 | 1,443 | SF | SIGN, GROUND MOUNTED EXTRUSHEET | |
| | | | | | | | | | 2,344 | | | 2,110 | 234 | 630 | 80224 | 2,344 | SF | SIGN, OVERHEAD EXTRUSHEET | |
| | | 288 | | | | | | | | | | 259 | 29 | 808 | 18700 | 288 | SNMT | DIGITAL SPEED LIMIT (DSL) SIGN ASSEMBLY | |

CALCULATED JAR CHECKED SSR

# MAINTENANCE OF TRAFFIC GENERAL SUMMARY

SUM-77/277/224
VARIOUS

| REVISIONS | | |
|---|---|---|
| NO. | DATE | DESCRIPTION |
| 4 | 04/20/21 | REVISED SEQUENCE OF CONSTRUCTION |

86
1288

N:\03\60\06744-08\106002_SUM-76-10.95\Design\MOT\Sheets\106002_MG002.dgn Sheet 4/20/2021 2:12:49 PM jlacher

| SHEET NO. | STATION TO STATION | | | | | 614 INCREASED BARRIER DELINEATION FT | 614 WORK ZONE IMPACT ATTENUATOR, 24" WIDE HAZARDS, (UNIDIRECTIONAL), AS PER PLAN EACH | 614 WORK ZONE SPEED LIMIT SIGN EACH | 614 WORK ZONE RAISED PAVEMENT MARKER, AS PER PLAN EACH | 615 PAVEMENT FOR MAINTAINING TRAFFIC, CLASS A SY | 614 BARRIER REFLECTOR, TYPE 1, 1-WAY EACH | 614 BARRIER REFLECTOR, TYPE 1, BIDIRECTIONAL EACH | 614 OBJECT MARKER, ONE WAY EACH | 614 WORK ZONE LANE LINE, CLASS 1, 6", AS PER PLAN MILE | 614 WORK ZONE EDGE LINE, CLASS 1, 6", AS PER PLAN, WHITE MILE | 614 WORK ZONE EDGE LINE, CLASS 1, 6", AS PER PLAN, YELLOW MILE | 614 WORK ZONE CHANNELIZING LINE, CLASS 1, 12", AS PER PLAN FT | 614 WORK ZONE DOTTED LINE, CLASS 1, AS PER PLAN FT | | | 622 PORTABLE BARRIER, UNANCHORED, 32" FT | 622 PORTABLE BARRIER, 50", AS PER PLAN FT | 622 PORTABLE BARRIER, ANCHORED, 32" FT | | 622 PORTABLE BARRIER, "Y" CONNECTOR EACH | 630 SIGN, GROUND MOUNTED EXTRUSHEET SF | 630 SIGN, OVERHEAD EXTRUSHEET SF |
|---|---|---|---|---|---|---|---|---|---|---|---|---|---|---|---|---|---|---|---|---|---|---|---|---|---|---|---|---|---|---|
| | PRE-PHASE 1 | | | | | | | | | | | | | | | | | | | | | | | | | | | | | |
| 130-131 | 366+77 | RT | | 372+95 | RT | | | | | 94 | | | | | | | | | | | | | | | | | | | | |
| 132 | 389+08 | LT | | 393+75 | LT | | | | | 35 | | | | | | | | | | | | | | | | | | | | |
| 134 | 412+50 | RT | | 418+21 | RT | | | | | 42 | | | | | | | | | | | | | | | | | | | | |
| 135-136 | 435+53 | RT | | 441+24 | RT | | | | | 58 | | | | | | | | | | | | | | | | | | | | |
| 136-137 | 446+09 | RT | | 449+71 | RT | | | | | 27 | | | | | | | | | | | | | | | | | | | | |
| 137-138 | 451+79 | RT | | 467+74 | RT | | | | | 315 | | | | | | | | | | | | | | | | | | | | |
| 138 | 469+23 | RT | | 474+21 | RT | | | | | 86 | | | | | | | | | | | | | | | | | | | | |
| 138-140 | 470+70 | LT | | 488+62 | LT | | | | | 383 | | | | | | | | | | | | | | | | | | | | |
| 139-140 | 485+57 | RT | | 489+68 | RT | | | | | 46 | | | | | | | | | | | | | | | | | | | | |
| 140 | 492+00 | RT | | 493+94 | RT | | | | | 34 | | | | | | | | | | | | | | | | | | | | |
| 140 | 495+48 | LT | | 499+22 | LT | | | | | 82 | | | | | | | | | | | | | | | | | | | | |
| 141 | 502+72 | RT | | 508+50 | RT | | | | | 154 | | | | | | | | | | | | | | | | | | | | |
| | PHASE 1 | | | | | | | | | | | | | | | | | | | | | | | | | | | | | |
| 128 | I-77 NB | | | | | | | | | | | | | | | | | | | | | | | | | | | | | |
| | 340+00 | RT | | | | | | 2 | | | | | | | | | | | | | | | | | | | | | | |
| 129 | I-77 NB | | | | | | | | | | | | | | | | | | | | | | | | | | | | | |
| | 350+50 | RT | | 358+00 | RT | | | | 75 | | | | | | | | 1500 | | | | | | | | | | | | | |
| | 353+50 | RT | | 358+00 | RT | | | | 23 | | | | | | | 450 | | | | | | | | | | | | | | |
| | 353+50 | RT | | 356+81 | RT | | | | 17 | | | | | | | | 331 | | | | | | | | | | | | | |
| | 354+80 | RT | | 356+81 | RT | | | | 10 | | | | | | | | 201 | | | | | | | | | | | | | |
| | 355+82 | RT | | 358+00 | RT | | | | 11 | | | | | | 218 | | | | | | | | | | | | | | | |
| | 356+81 | RT | | 358+00 | RT | | | | 6 | | | | | | | | | 119 | | | | | | | | | | | | |
| | 357+40 | RT | | 358+00 | RT | 60 | 1 | | | | 1 | | 1 | | | | | | | | 60 | | | | | | | | | |
| 130 | I-77 NB | | | | | | | | | | | | | | | | | | | | | | | | | | | | | |
| | 358+00 | RT | | 371+00 | RT | 1300 | | | 260 | | 26 | | 26 | | 1300 | 1300 | 2600 | | | | 1300 | | | | | | | | | |
| | 358+00 | RT | | 366+71 | RT | | | | 44 | | | | | | | | | 871 | | | | | | | | | | | | |
| | 359+85 | RT | | 366+09 | RT | | | | | 209 | | | | | | | | | | | | | | | | | | | | |
| | I-77 SB | | | | | | | | | | | | | | | | | | | | | | | | | | | | | |
| | 366+00 | LT | | 371+00 | LT | 500 | | | 8 | | 10 | | 10 | 1000 | | 500 | | | | | 500 | | | | | | | | | |
| | 366+09 | RT | | 371+00 | L/R | | | | | 891 | | | | | | | | | | | | | | | | | | | | |
| | 366+32 | LT | | 371+00 | LT | | | | | | | | | | | | | 468 | | | | | | | | | | | | |
| | 366+50 | LT | | | | | | | | | | | | | | | | | | | | | | | | | | | | 96 |
| 131 | I-77 NB | | | | | | | | | | | | | | | | | | | | | | | | | | | | | |
| | 371+00 | RT | | 384+00 | RT | 1300 | | | 2 | | 26 | | 26 | | | 1300 | | | | | 1300 | | | | | | | | | |
| | 371+00 | RT | | 371+50 | RT | | | | 5 | 32 | | | | | | | 100 | | | | | | | | | | | | | |
| | 371+00 | RT | | 375+27 | RT | | | | 2 | | | | | | 427 | | | | | | | | | | | | | | | |
| | 371+50 | RT | | 384+00 | RT | | | | 21 | | | | | 2500 | | | | | | | | | | | | | | | | |
| | 375+27 | RT | | 384+00 | RT | | | | | | | | | | | | | 873 | | | | | | | | | | | | |
| | I-77 SB | | | | | | | | | | | | | | | | | | | | | | | | | | | | | |
| | 371+00 | LT | | 374+78 | LT | | | | | | | | | | | | | 378 | | | | | | | | | | | | |
| | 371+00 | LT | | 375+65 | LT | | | | 8 | | | | | 930 | | | | | | | | | | | | | | | | |
| | 371+00 | LT | | 384+00 | LT | 1300 | | | 42 | | 26 | | 26 | | | 1300 | | | | | 1300 | | | | | | | | | |
| | 374+78 | LT | | 384+00 | LT | | | | 42 | | | | | | 922 | | | | | | | | | | | | | | | |
| | 375+65 | LT | | 384+00 | LT | | | | 84 | | | | | | | | 1670 | | | | | | | | | | | | | |
| | 380+00 | LT | | | | | | | | | | | | | | | | | | | | | | | | | | | 82.5 | |
| | TOTALS CARRIED TO SHEET 113 | | | | | 4460 | 1 | 2 | 660 | 2488 | 89 | | 89 | 4430 | 2867 | 4850 | 6402 | 2709 | | | 4460 | | | | | | 83 | 96 | | |

CALCULATED JAR
CHECKED SSR

# MAINTENANCE OF TRAFFIC SUBSUMMARY

SUM-77 / 277 / 224

87
1288

N:\03\60\06744-08\106002_SUM-76-10.95\Design\MOT\Sheets\106002_MSI00.dgn Sheet 1/31/2021 5:26:26 PM jrettig

| SHEET NO. | STATION TO STATION | 614 INCREASED BARRIER DELINEATION | 614 WORK ZONE IMPACT ATTENUATOR, 24" WIDE HAZARDS, (UNIDIRECTIONAL), AS PER PLAN | 614 WORK ZONE SPEED LIMIT SIGN | 614 WORK ZONE RAISED PAVEMENT MARKER, AS PER PLAN | 615 PAVEMENT FOR MAINTAINING TRAFFIC, CLASS A | 614 BARRIER REFLECTOR, TYPE 1, 1-WAY | 614 BARRIER REFLECTOR, TYPE 1, BIDIRECTIONAL | 614 OBJECT MARKER, ONE WAY | 614 WORK ZONE LANE LINE, CLASS 1, 6", AS PER PLAN | 614 WORK ZONE EDGE LINE, CLASS 1, 6", AS PER PLAN, WHITE | 614 WORK ZONE EDGE LINE, CLASS 1, 6", AS PER PLAN, YELLOW | 614 WORK ZONE CHANNELIZING LINE, CLASS 1, 12", AS PER PLAN | 614 WORK ZONE DOTTED LINE, CLASS 1, AS PER PLAN | | | 622 PORTABLE BARRIER, UNANCHORED, 32" | 622 PORTABLE BARRIER, 50", AS PER PLAN | 622 PORTABLE BARRIER, ANCHORED, 32" | | 622 PORTABLE BARRIER, "Y" CONNECTOR | 630 SIGN, GROUND MOUNTED EXTRUSHEET | 630 SIGN, OVERHEAD EXTRUSHEET |
|---|---|---|---|---|---|---|---|---|---|---|---|---|---|---|---|---|---|---|---|---|---|---|---|---|
| | | FT | EACH | EACH | EACH | SY | EACH | EACH | EACH | MILE | MILE | MILE | FT | FT | | | FT | FT | FT | | EACH | SF | SF |
| | PHASE 1 CONT'D | | | | | | | | | | | | | | | | | | | | | | |
| 132 | I-77 NB | | | | | | | | | | | | | | | | | | | | | | |
| | 384+00 RT – 397+00 RT | 1300 | | | 22 | | 26 | | 26 | 2600 | | 1300 | | | | | 1300 | | | | | | |
| | 384+00 RT – 386+80 RT | | | | | | | | | | | | | 280 | | | | | | | | | |
| | 386+80 RT – 397+00 RT | | | | | | | | | | 1020 | | | | | | | | | | | | |
| | 393+00 RT | | | 2 | | | | | | | | | | | | | | | | | | | |
| | I-77 SB | | | | | | | | | | | | | | | | | | | | | | |
| | 384+00 LT – 397+00 LT | 1300 | | | 125 | | 26 | | 26 | | 1300 | 1300 | | | | | 1300 | | | | | | |
| | 384+00 LT – 394+00 LT | | | | 100 | | | | | | | | 2000 | | | | | | | | | | |
| | 390+00 LT | | | | | | | | | | | | | | | | | | | | | | 48 |
| | 393+00 LT | | | 2 | | | | | | | | | | | | | | | | | | | |
| | 394+00 LT – 397+00 LT | | | | 6 | | | | | 600 | | | | | | | | | | | | | |
| | | | | | | | | | | | | | | | | | | | | | | | |
| 133 | I-77 NB | | | | | | | | | | | | | | | | | | | | | | |
| | 397+00 RT – 410+00 RT | 1300 | | | 22 | | 26 | | 26 | 2600 | 1300 | 1300 | | | | | 1300 | | | | | | |
| | I-77 SB | | | | | | | | | | | | | | | | | | | | | | |
| | 397+00 LT – 410+00 LT | 1300 | 1 | | 22 | | 26 | | 26 | 2600 | 1300 | 1300 | | | | | 1300 | | | | | | |
| | | | | | | | | | | | | | | | | | | | | | | | |
| 134 | I-77 NB | | | | | | | | | | | | | | | | | | | | | | |
| | 410+00 RT – 423+00 RT | 1300 | 1 | | 22 | | 26 | | 26 | 2600 | 1300 | 1300 | | | | | 1300 | | | | | | |
| | 419+00 RT | | | | | | | | | | | | | | | | | | | | | 90 | |
| | 419+00 RT | | | | | | | | | | | | | | | | | | | | | 90 | |
| | I-77 SB | | | | | | | | | | | | | | | | | | | | | | |
| | 410+00 LT – 423+00 LT | 1300 | | | 22 | | 26 | | 26 | 2600 | 1300 | 1300 | | | | | 1300 | | | | | | |
| | 417+65 LT | | | | | | | | | | | | | | | | | | | | | | 48 |
| | | | | | | | | | | | | | | | | | | | | | | | |
| 135 | I-77 NB | | | | | | | | | | | | | | | | | | | | | | |
| | 423+00 RT – 436+00 RT | | | | 22 | | | | | 2600 | 1300 | 1300 | | | | | | | | | | | |
| | 423+00 RT – 429+20 RT | 620 | | | | | 13 | | 13 | | | | | | | | 620 | | | | | | |
| | 429+20 RT – 430+80 RT | 160 | | | | | 3 | | 3 | | | | | | | | | | 160 | | | | |
| | 430+80 RT – 436+00 RT | 520 | | | | | 10 | | 10 | | | | | | | | 520 | | | | | | |
| | I-77 SB | | | | | | | | | | | | | | | | | | | | | | |
| | 423+00 LT – 436+00 LT | | | | 22 | | | | | 2600 | 1300 | 1300 | | | | | | | | | | | |
| | 423+00 LT – 429+40 LT | 640 | | | | | 13 | | 13 | | | | | | | | 640 | | | | | | |
| | 429+40 LT – 431+00 LT | 160 | | | | | 3 | | 3 | | | | | | | | | | 160 | | | | |
| | 431+00 LT – 436+00 LT | 500 | | | | | 10 | | 10 | | | | | | | | 500 | | | | | | |
| | | | | | | | | | | | | | | | | | | | | | | | |
| 136 | I-77 NB | | | | | | | | | | | | | | | | | | | | | | |
| | 436+00 RT – 449+00 RT | 1300 | | | 22 | | 26 | | 26 | 2600 | 1300 | 1300 | | | | | 1300 | | | | | | |
| | 437+00 RT | | | 2 | | | | | | | | | | | | | | | | | | | |
| | I-77 SB | | | | | | | | | | | | | | | | | | | | | | |
| | 436+00 LT – 449+00 LT | 1300 | | | 22 | | 26 | | 26 | 2600 | 1300 | 1300 | | | | | 1300 | | | | | | |
| | 437+00 LT | | | 2 | | | | | | | | | | | | | | | | | | | |
| | | | | | | | | | | | | | | | | | | | | | | | |
| 137 | I-77 NB | | | | | | | | | | | | | | | | | | | | | | |
| | 449+00 RT – 462+00 RT | 1300 | 1 | | 22 | | 26 | | 26 | 2600 | 1300 | 1300 | | | | | 1300 | | | | | | |
| | 451+00 RT | | | | | | | | | | | | | | | | | | | | | 90 | |
| | 451+00 RT | | | | | | | | | | | | | | | | | | | | | 98 | |
| | I-77 SB | | | | | | | | | | | | | | | | | | | | | | |
| | 449+00 LT – 462+00 LT | 1300 | 1 | | 22 | | 26 | | 26 | 2600 | 1300 | 1300 | | | | | 1300 | | | | | | |
| | | | | | | | | | | | | | | | | | | | | | | | |
| 138 | I-77 NB | | | | | | | | | | | | | | | | | | | | | | |
| | 462+00 RT – 475+00 RT | 1300 | | | 22 | | 26 | | 26 | 2600 | 1300 | 1300 | | | | | 1300 | | | | | | |
| | 474+00 RT | | | | | | | | | | | | | | | | | | | | | 72 | |
| | 474+00 RT – 475+00 RT | | | | | | | | | | | | | 100 | | | | | | | | | |
| | 474+21 RT – 475+00 RT | | | | | 35 | | | | | | | | | | | | | | | | | |
| | I-77 SB | | | | | | | | | | | | | | | | | | | | | | |
| | 462+00 LT – 475+00 LT | 1300 | | | 22 | | 26 | | 26 | 2600 | 1300 | 1300 | | | | | 1300 | | | | | | |
| | 470+70 LT – 475+00 LT | 430 | | | | | 9 | | 9 | | | | | | | | 430 | | | | | | |
| | | | | | | | | | | | | | | | | | | | | | | | |
| | TOTALS CARRIED TO SHEET 113 | 18630 | 4 | 8 | 517 | 35 | 373 | | 373 | 34400 | 17920 | 18200 | 2000 | 380 | | | 18310 | | 320 | | | 440 | 96 |

CALCULATED JAR
CHECKED SSR

# SUMMARY OF TRAFFIC MAINTENANCE

SUM-77 / 277 / 224



N:\03\60\06744-08\06002_SUM-76-10.95\Design\MOT\Sheets\06002_MS101.dgn Sheet 1/31/2021 5:26:27 PM jrettig

| SHEET NO. | STATION TO STATION | | | | | 614 INCREASED BARRIER DELINEATION FT | 614 WORK ZONE IMPACT ATTENUATOR, 24" WIDE HAZARDS, (UNIDIRECTIONAL), AS PER PLAN EACH | 614 WORK ZONE SPEED LIMIT SIGN EACH | 614 WORK ZONE RAISED PAVEMENT MARKER, AS PER PLAN EACH | 615 PAVEMENT FOR MAINTAINING TRAFFIC, CLASS A SY | 614 BARRIER REFLECTOR, TYPE 1, 1-WAY EACH | 614 BARRIER REFLECTOR, TYPE 1, BIDIRECTIONAL EACH | 614 OBJECT MARKER, ONE WAY EACH | 614 WORK ZONE LANE LINE, CLASS 1, 6", AS PER PLAN MILE | 614 WORK ZONE EDGE LINE, CLASS 1, 6", AS PER PLAN, WHITE MILE | 614 WORK ZONE EDGE LINE, CLASS 1, 6", AS PER PLAN, YELLOW MILE | 614 WORK ZONE CHANNELIZING LINE, CLASS 1, 12", AS PER PLAN FT | 614 WORK ZONE DOTTED LINE, CLASS 1, AS PER PLAN FT | | | 622 PORTABLE BARRIER, UNANCHORED, 32" FT | 622 PORTABLE BARRIER, 50", AS PER PLAN FT | 622 PORTABLE BARRIER, ANCHORED, 32" FT | | 622 PORTABLE BARRIER, "Y" CONNECTOR EACH | 630 SIGN, GROUND MOUNTED EXTRUSHEET SF | 630 SIGN, OVERHEAD EXTRUSHEET SF |
|---|---|---|---|---|---|---|---|---|---|---|---|---|---|---|---|---|---|---|---|---|---|---|---|---|---|---|---|---|---|
| | PHASE 1 CONT'D | | | | | | | | | | | | | | | | | | | | | | | | | | | | |
| 139 | I-77 NB | | | | | | | | | | | | | | | | | | | | | | | | | | | | |
| | 475+00 | LT | | 488+00 | LT | | | | | 2810 | | | | | | | | | | | | | | | | | | | |
| | 475+00 | RT | | 488+00 | RT | 1300 | | | 22 | | 26 | | 26 | 2600 | | 1300 | | | | | 1300 | | | | | | | | |
| | 475+00 | RT | | 477+51 | RT | | | | | | | | | | | | | 251 | | | | | | | | | | | |
| | 477+51 | RT | | 480+00 | RT | | | | 6 | | | | | | | | 249 | | | | | | | | | | | | |
| | 480+00 | RT | | 488+00 | RT | | | | | | | | | | 800 | | | | | | | | | | | | | | |
| | 480+50 | RT | | 484+00 | RT | 350 | 1 | | | | 7 | | 7 | | | | | | | | 350 | | | | 1 | | | | |
| | RAMP C | | | | | | | | | | | | | | | | | | | | | | | | | | | | |
| | 575+00 | RT | | 588+00 | RT | | | | | | | | | | 1300 | | | | | | | | | | | | | | |
| | 577+63 | LT | | 580+05 | LT | | | | 6 | | | | | | | | 242 | | | | | | | | | | | | |
| | 580+05 | LT | | 588+00 | LT | | | | 10 | | | | | | | 795 | | | | | | | | | | | | | |
| | 580+50 | LT | | 588+00 | LT | 750 | | | | | 15 | | 15 | | | | | | | | 750 | | | | | | | | |
| | 581+23 | LT | | 588+00 | LT | | | | | 1032 | | | | | | | | | | | | | | | | | | | |
| | I-77 SB | | | | | | | | | | | | | | | | | | | | | | | | | | | | |
| | 475+00 | LT | | 488+00 | LT | 2600 | | | 22 | | 52 | | 52 | 2600 | 1300 | 1300 | | | | | 2600 | | | | | | | | |
| | 475+00 | RT | | 486+09 | RT | | | | | 469 | | | | | | | | | | | | | | | | | | | |
| | 447+50 | LT | | | | | | 2 | | | | | | | | | | | | | | | | | | | | | |
| | | | | | | | | | | | | | | | | | | | | | | | | | | | | | |
| 140 | I-77 NB | | | | | | | | | | | | | | | | | | | | | | | | | | | | |
| | 488+00 | LT | | 492+02 | LT | | | | | 440 | | | | | | | | | | | | | | | | | | | |
| | 488+00 | RT | | 501+00 | RT | 1300 | | | 22 | | 26 | | 26 | 2600 | | 1300 | | | | | 1300 | | | | | | | | |
| | 488+00 | RT | | 495+06 | RT | | | | | | | | | | 706 | | | | | | | | | | | | | | |
| | 488+05 | RT | | | | | | 2 | | | | | | | | | | | | | | | | | | | | | |
| | 495+06 | RT | | 500+53 | RT | | | | | | | | | | | | | 547 | | | | | | | | | | | |
| | 496+00 | RT | | | | | | | | | | | | | | | | | | | | | | | | | | 99 | |
| | 496+00 | RT | | 499+00 | RT | | | | | | | | | | | | | 300 | | | | | | | | | | | |
| | 499+00 | RT | | 501+00 | RT | | | | | | | | | | | | 200 | | | | | | | | | | | | |
| | 500+53 | RT | | 501+00 | RT | | | | | | | | | | 47 | | | | | | | | | | | | | | |
| | I-77 SB | | | | | | | | | | | | | | | | | | | | | | | | | | | | |
| | 488+00 | LT | | 493+95 | LT | | | | 5 | | | | | 595 | | | | | | | | | | | | | | | |
| | 488+00 | LT | | 501+00 | LT | 1300 | | | 11 | | 26 | | 26 | 1300 | | 1300 | | | | | 1300 | | | | | | | | |
| | 492+00 | LT | | 496+95 | LT | | | | | 59 | | | | | | | | | | | | | | | | | | | |
| | 493+95 | LT | | 496+95 | LT | | | | 8 | | | | | | | | 300 | | | | | | | | | | | | |
| | 496+95 | LT | | 501+00 | LT | | | | | | | | | | 405 | | | | | | | | | | | | | | |
| | RAMP A | | | | | | | | | | | | | | | | | | | | | | | | | | | | |
| | 88+00 | RT | | 97+00 | RT | | | | | | | | | | 900 | | | | | | | | | | | | | | |
| | 93+83 | RT | | 96+30 | RT | | | | 6 | | | | | | | | 247 | | | | | | | | | | | | |
| | US-244/I-277 EB | | | | | | | | | | | | | | | | | | | | | | | | | | | | |
| | 258+00 | RT | | 258+50 | RT | | | | 3 | | | | | | | | 50 | | | | | | | | | | | | |
| | | | | | | | | | | | | | | | | | | | | | | | | | | | | | |
| 141 | I-77 NB | | | | | | | | | | | | | | | | | | | | | | | | | | | | |
| | 501+00 | RT | | 503+60 | RT | 260 | | | | | 5 | | 5 | | | | | | | | 260 | | | | | | | | |
| | 501+00 | RT | | 505+00 | RT | | | | | | | | | | | 400 | | | | | | | | | | | | | |
| | 501+00 | RT | | 503+50 | RT | | | | 6 | | | | | | | | 250 | | | | | | | | | | | | |
| | 501+00 | RT | | 514+00 | RT | | | | 22 | | | | | 2600 | | | | | | | | | | | | | | | |
| | 501+00 | RT | | 508+50 | RT | | | | | | | | | | 750 | | | | | | | | | | | | | | |
| | 501+05 | RT | | 503+50 | RT | | | | 6 | | | | | | | | 245 | | | | | | | | | | | | |
| | 502+50 | RT | | | | | | | | | | | | | | | | | | | | | | | | | | | 105 |
| | 503+50 | RT | | 514+00 | RT | | | | | | | | | | | 1050 | | | | | | | | | | | | | |
| | 503+50 | RT | | 505+00 | RT | | | | | | | | | | 150 | | | | | | | | | | | | | | |
| | 507+81 | RT | | 511+81 | RT | | | | 10 | | | | | | | | 400 | | | | | | | | | | | | |
| | 508+50 | RT | | 511+81 | RT | | | | 8 | | | | | | | | 331 | | | | | | | | | | | | |
| | 511+81 | RT | | 514+00 | RT | | | | | | | | | | 219 | | | 219 | | | | | | | | | | | |
| | | | | | | | | | | | | | | | | | | | | | | | | | | | | | |
| | | | | | | | | | | | | | | | | | | | | | | | | | | | | | |
| | | | | | | | | | | | | | | | | | | | | | | | | | | | | | |
| | | | | | | | | | | | | | | | | | | | | | | | | | | | | | |
| | | | | | | | | | | | | | | | | | | | | | | | | | | | | | |
| | | | | | | | | | | | | | | | | | | | | | | | | | | | | | |
| | TOTALS CARRIED TO SHEET 113 | | | | | 7860 | 1 | 4 | 173 | 4810 | 157 | | 157 | 12295 | 6577 | 7445 | 2514 | 1317 | | | 7860 | | | | 1 | 99 | 105 | | |

CALCULATED JAR
CHECKED SSR

# SUMMARY OF TRAFFIC MAINTENANCE

# SUM-77/277/224



N:\03\60\06744-08\06002_SUM-76-10.95\Design\MOT\Sheets\06002_MS102.dgn Sheet 1/31/2021 5:26:29 PM jrettig

| SHEET NO. | STATION TO STATION | 614 INCREASED BARRIER DELINEATION FT | 614 WORK ZONE IMPACT ATTENUATOR, 24" WIDE HAZARDS, (UNIDIRECTIONAL), AS PER PLAN EACH | 614 WORK ZONE SPEED LIMIT SIGN EACH | 614 WORK ZONE RAISED PAVEMENT MARKER, AS PER PLAN EACH | 615 PAVEMENT FOR MAINTAINING TRAFFIC, CLASS A SY | 614 BARRIER REFLECTOR, TYPE 1, 1-WAY EACH | 614 BARRIER REFLECTOR, TYPE 1, BIDIRECTIONAL EACH | 614 OBJECT MARKER, ONE WAY EACH | 614 WORK ZONE LANE LINE, CLASS 1, 6", AS PER PLAN MILE | 614 WORK ZONE EDGE LINE, CLASS 1, 6", AS PER PLAN, WHITE MILE | 614 WORK ZONE EDGE LINE, CLASS 1, 6", AS PER PLAN, YELLOW MILE | 614 WORK ZONE CHANNELIZING LINE, CLASS 1, 12", AS PER PLAN FT | 614 WORK ZONE DOTTED LINE, CLASS 1, AS PER PLAN FT | | | 622 PORTABLE BARRIER, UNANCHORED, 32" FT | 622 PORTABLE BARRIER, 50", AS PER PLAN FT | 622 PORTABLE BARRIER, ANCHORED, 32" FT | | 622 PORTABLE BARRIER, "Y" CONNECTOR EACH | 630 SIGN, GROUND MOUNTED EXTRUSHEET SF | 630 SIGN, OVERHEAD EXTRUSHEET SF |
|---|---|---|---|---|---|---|---|---|---|---|---|---|---|---|---|---|---|---|---|---|---|---|---|---|
| | PHASE 1 CONT'D | | | | | | | | | | | | | | | | | | | | | | | |
| 141 | I-77 SB | | | | | | | | | | | | | | | | | | | | | | | |
| | 501+00 LT 504+58 LT | | | | | | | | | | 358 | | | 358 | | | | | | | | | | |
| | 501+00 LT 514+00 LT | 1300 | | | 11 | | 26 | | 26 | 1300 | | 1300 | | | | | | 1300 | | | | | | |
| | 504+58 LT 505+67 LT | | | | 3 | | | | | | | | 109 | | | | | | | | | | | |
| | 505+67 LT 514+00 LT | | | | | | | | | | 833 | | | | | | | | | | | | | |
| | 509+30 LT 514+00 LT | 470 | | | | | 10 | | 10 | | | | | | | | | 470 | | | | | | |
| | RAMP B | | | | | | | | | | | | | | | | | | | | | | | |
| | 213+24 RT 213+42 RT | | | | | | | | | | | 18 | | | | | | | | | | | | |
| | | | | | | | | | | | | | | | | | | | | | | | | |
| 142 | I-77 NB | | | | | | | | | | | | | | | | | | | | | | | |
| | 514+00 527+00 | | | | 76 | | | | | | 1300 | 1300 | | | | | | | | | | | | |
| | 514+00 520+40 | | | | 10 | | | | | 1280 | | | | | | | | | | | | | | |
| | 514+00 516+11 | | | | | | | | | | | | | 211 | | | | | | | | | | |
| | 520+40 527+00 | | | | 66 | | | | | | | | 1320 | | | | | | | | | | | |
| | I-77 SB | | | | | | | | | | | | | | | | | | | | | | | |
| | 514+00 514+70 | 70 | 1 | | | | 2 | | 2 | | | | | | | | | 70 | | | | | | |
| | 514+00 514+39 | | | | | | | | | | 39 | | | | | | | | | | | | | |
| | 514+00 524+00 | | | | 8 | | | | | 1000 | | | | | | | | | | | | | | |
| | 514+00 527+00 | | | | 15 | | | | | | | 1300 | | | | | | | | | | | | |
| | 514+00 518+60 | 460 | 1 | | | | 9 | | 9 | | | | | | | | | 460 | | | | | | |
| | 514+39 517+56 | | | | 8 | | | | | | | | 317 | | | | | | | | | | | |
| | 517+56 526+19 | | | | 11 | | | | | | 863 | | | | | | | | | | | | | |
| | 517+56 524+00 | | | | | | | | | | | | | 644 | | | | | | | | | | |
| | 524+00 527+00 | | | | 30 | | | | | | | | 600 | | | | | | | | | | | |
| | 526+19 527+00 | | | | 4 | | | | | | | | 81 | | | | | | | | | | | |
| | RAMP B | | | | | | | | | | | | | | | | | | | | | | | |
| | 213+42 217+56 | | | | | | | | | | 414 | | | | | | | | | | | | | |
| | 213+42 214+27 | | | | 1 | | | | | | | 85 | | | | | | | | | | | | |
| | 214+27 217+56 | | | | 8 | | | | | | | | 329 | | | | | | | | | | | |
| | | | | | | | | | | | | | | | | | | | | | | | | |
| 143 | I-77 NB | | | | | | | | | | | | | | | | | | | | | | | |
| | 324+56 324+90 | | | | 33 | | | | | | 34 | 34 | | | | | | | | | | | | |
| | 324+56 327+90 | | | | 33 | | | | | | | | 668 | | | | | | | | | | | |
| | I-77 SB | | | | | | | | | | | | | | | | | | | | | | | |
| | 324+56 334+80 | | | | 154 | | | | | | | | 3072 | | | | | | | | | | | |
| | 324+56 331+80 | | | | 51 | | | | | | | 724 | | | | | | | | | | | | |
| | 324+66 327+25 | | | | 7 | | | | | | | | 259 | | | | | | | | | | | |
| | 326+37 330+95 | | | | 42 | | | | | | 458 | | | | | | | | | | | | | |
| | | | | | | | | | | | | | | | | | | | | | | | | |
| 144 | I-77 SB | | | | | | | | | | | | | | | | | | | | | | | |
| | 342+00 | | | 2 | | | | | | | | | | | | | | | | | | | | |
| | | | | | | | | | | | | | | | | | | | | | | | | |
| 145 | I-77 SB | | | | | | | | | | | | | | | | | | | | | | | 56 |
| | TOTALS CARRIED TO SHEET 113 | 2300 | 2 | 2 | 571 | | 47 | | 47 | 3580 | 4299 | 4761 | 6755 | 1213 | | | 2300 | | | | | | | 56 |

CALCULATED JAR
CHECKED SSR

# SUMMARY OF TRAFFIC MAINTENANCE

SUM-77 / 277 / 224



N:\03\60\06744-08\06002_SUM-76-10.95\Design\MOT\Sheets\06002_MS103.dgn Sheet 1/31/2021 5:26:31 PM jrettig

| SHEET NO. | STATION TO STATION | 614 INCREASED BARRIER DELINEATION | 614 WORK ZONE IMPACT ATTENUATOR, 24" WIDE HAZARDS, (UNIDIRECTIONAL), AS PER PLAN | 614 WORK ZONE SPEED LIMIT SIGN | 614 WORK ZONE RAISED PAVEMENT MARKER, AS PER PLAN | 615 PAVEMENT FOR MAINTAINING TRAFFIC, CLASS A | 614 BARRIER REFLECTOR, TYPE 1, 1-WAY | 614 BARRIER REFLECTOR, TYPE 1, BIDIRECTIONAL | 614 OBJECT MARKER, ONE WAY | 614 WORK ZONE LANE LINE, CLASS 1, 6", AS PER PLAN | 614 WORK ZONE EDGE LINE, CLASS 1, 6", AS PER PLAN, WHITE | 614 WORK ZONE EDGE LINE, CLASS 1, 6", AS PER PLAN, YELLOW | 614 WORK ZONE CHANNELIZING LINE, CLASS 1, 12", AS PER PLAN | 614 WORK ZONE DOTTED LINE, CLASS 1, AS PER PLAN | | | 622 PORTABLE BARRIER, UNANCHORED, 32" | 622 PORTABLE BARRIER, 50", AS PER PLAN | 622 PORTABLE BARRIER, ANCHORED, 32" | | 622 PORTABLE BARRIER, "Y" CONNECTOR | 630 SIGN, GROUND MOUNTED EXTRUSHEET | 630 SIGN, OVERHEAD EXTRUSHEET |
|---|---|---|---|---|---|---|---|---|---|---|---|---|---|---|---|---|---|---|---|---|---|---|---|---|
| | | FT | EACH | EACH | EACH | SY | EACH | EACH | EACH | MILE | MILE | MILE | FT | FT | | | FT | FT | FT | | EACH | SF | SF |
| | PHASE 1 CONT'D | | | | | | | | | | | | | | | | | | | | | | |
| 149 | US-224/I-277 EB | | | | | | | | | | | | | | | | | | | | | | |
| | 233+00 RT — 242+00 RT | | | | | | | | | | | | | 900 | | | | | | | | | |
| | 237+75 RT | | | | | | | | | | | | | | | | | | | | | | 48 |
| | 241+25 RT — 242+00 RT | | | | | | | | | | 75 | | | | | | | | | | | | |
| 150 | US-224/I-277 EB | | | | | | | | | | | | | | | | | | | | | | |
| | 242+00 RT — 243+00 RT | | | | | | | | | | 100 | | | 100 | | | | | | | | | |
| | 243+00 RT — 244+65 RT | | | | 4 | | | | | | | | 165 | | | | | | | | | | |
| | 243+90 RT | | | | | | | | | | | | | | | | | | | | | | 9 |
| | RAMP A | | | | | | | | | | | | | | | | | | | | | | |
| | 108+52 RT — 106+90 RT | | | | 4 | | | | | | | | 162 | | | | | | | | | | |
| | 108+52 RT — 97+00 RT | | | | | | | | | | 1152 | | | | | | | | | | | | |
| 151 | US-224/I-277 EB | | | | | | | | | | | | | | | | | | | | | | |
| | 258+50 RT — 267+90 RT | | | | 47 | | | | | | | | 940 | | | | | | | | | | |
| | 261+00 RT — 270+00 RT | | | | 94 | | | | | | 900 | 900 | | | | | | | | | | | |
| | 267+90 RT — 270+00 RT | | | | 2 | | | | | 210 | | | | | | | | | | | | | |
| | 269+50 RT — 270+00 RT | 50 | 1 | | | | 1 | | 1 | | | | | | | | 50 | | | | | | |
| | RAMP C | | | | | | | | | | | | | | | | | | | | | | |
| | 597+00 R/L — 599+14 R/L | 214 | | | 3 | | 4 | | 4 | | 214 | 214 | | | | | 214 | | | | | | |
| | 597+00 LT — 599+14 LT | | | | | 289 | | | | | | | | | | | | | | | | | |
| 152 | US-224/I-277 EB | | | | | | | | | | | | | | | | | | | | | | |
| | 270+00 RT — 283+00 RT | | | | 28 | | | | | | | 1300 | | | | | | | | | | | |
| | 270+00 RT — 277+50 RT | | | | 6 | | | | | 750 | | | | | | | | | | | | | |
| | 270+00 RT — 274+24 RT | | | | | | | | | | 424 | | | | | | | | | | | | |
| | 270+00 RT — 273+30 RT | 330 | | | | | 7 | | 7 | | | | | | | | 330 | | | | | | |
| | 274+24 RT — 283+00 RT | | | | 22 | | | | | | | | 876 | | | | | | | | | | |
| | 277+50 RT — 283+00 RT | | | | 83 | | | | | | 550 | | 1100 | | | | | | | | | | |
| | RAMP C | | | | | | | | | | | | | | | | | | | | | | |
| | 599+14 LT — 602+50 LT | 336 | | | | | 7 | | 7 | | | | | | | | 336 | | | | | | |
| | 599+14 LT — 600+65 LT | | | | | 242 | | | | | | | | | | | | | | | | | |
| | 599+14 LT — 603+42 LT | | | | 5 | | | | | | | 428 | | | | | | | | | | | |
| | 599+14 RT — 606+68 RT | | | | | | | | | | 754 | | | | | | | | | | | | |
| | 603+42 LT — 606+68 LT | | | | 16 | | | | | | | 326 | | | | | | | | | | | |
| 153 | US-224/I-277 EB | | | | | | | | | | | | | | | | | | | | | | |
| | 283+00 RT — 285+05 RT | | | | 55 | | | | | | 205 | 205 | 205 | | | | | | | | | | |
| | 283+00 RT — 288+05 RT | | | | 51 | | | | | | | | 1010 | | | | | | | | | | |
| 156 | RAMP C | | | | | | | | | | | | | | | | | | | | | | |
| | 588+00 LT — 592+98 LT | | | | | 836 | | | | | | | | | | | | | | | | | |
| | 588+00 L/R — 597+00 L/R | 900 | | | 11 | | 18 | | 18 | | 900 | 900 | | | | | 900 | | | | | | |
| | 596+40 LT — 597+00 LT | | | | | 16 | | | | | | | | | | | | | | | | | |
| | RAMP C-2 | | | | | | | | | | | | | | | | | | | | | | |
| | 781+45 RT — 784+60 RT | | | | | 149 | | | | | | | | | | | | | | | | | |
| | TOTALS CARRIED TO SHEET 113 | 1830 | 1 | | 431 | 1532 | 37 | | 37 | 960 | 5274 | 4273 | 4458 | 1000 | | | 1830 | | | | | | 57 |

CALCULATED JAR
CHECKED SSR

# SUMMARY OF TRAFFIC MAINTENANCE

SUM-77 / 277 / 224



N:\03\60\06744-08\06002_SUM-76-10.95\Design\MOT\Sheets\06002_MS104.dgn Sheet 1/31/2021 5:26:33 PM jrettig

| SHEET NO. | STATION TO STATION | | | | | 614 INCREASED BARRIER DELINEATION FT | 614 WORK ZONE IMPACT ATTENUATOR, 24" WIDE HAZARDS, (UNIDIRECTIONAL), AS PER PLAN EACH | 614 WORK ZONE SPEED LIMIT SIGN EACH | 614 WORK ZONE RAISED PAVEMENT MARKER, AS PER PLAN EACH | 615 PAVEMENT FOR MAINTAINING TRAFFIC, CLASS A SY | 614 BARRIER REFLECTOR, TYPE 1, 1-WAY EACH | 614 BARRIER REFLECTOR, TYPE 1, BIDIRECTIONAL EACH | 614 OBJECT MARKER, ONE WAY EACH | 614 WORK ZONE LANE LINE, CLASS 1, 6", AS PER PLAN MILE | 614 WORK ZONE EDGE LINE, CLASS 1, 6", AS PER PLAN, WHITE MILE | 614 WORK ZONE EDGE LINE, CLASS 1, 6", AS PER PLAN, YELLOW MILE | 614 WORK ZONE CHANNELIZING LINE, CLASS 1, 12", AS PER PLAN FT | 614 WORK ZONE DOTTED LINE, CLASS 1, AS PER PLAN FT | | | 622 PORTABLE BARRIER, UNANCHORED, 32" FT | 622 PORTABLE BARRIER, 50", AS PER PLAN FT | 622 PORTABLE BARRIER, ANCHORED, 32" FT | | 622 PORTABLE BARRIER, "Y" CONNECTOR EACH | 630 SIGN, GROUND MOUNTED EXTRUSHEET SF | 630 SIGN, OVERHEAD EXTRUSHEET SF |
|---|---|---|---|---|---|---|---|---|---|---|---|---|---|---|---|---|---|---|---|---|---|---|---|---|---|---|---|---|---|
| | PHASE 1A | | | | | | | | | | | | | | | | | | | | | | | | | | | | |
| 171 | I-77 NB | | | | | | | | | | | | | | | | | | | | | | | | | | | | |
| | 496+00 | RT | | 501+00 | RT | 500 | | | | | 10 | | 10 | | | 500 | | | | | 500 | | | | | | | | |
| 172 | I-77 NB | | | | | | | | | | | | | | | | | | | | | | | | | | | | |
| | 501+00 | RT | | 509+00 | RT | 800 | | | | | 16 | | 16 | | | | | | | | 800 | | | | | | | | |
| | 501+00 | RT | | 503+50 | RT | | | | | | | | | | | 250 | | | | | | | | | | | | | |
| | RAMP B | | | | | | | | | | | | | | | | | | | | | | | | | | | | |
| | 211+50 | RT | | 213+34 | RT | | | | 1 | | | | | | | 184 | | | | | | | | | | | | | |
| 173 | RAMP B | | | | | | | | | | | | | | | | | | | | | | | | | | | | |
| | 213+34 | RT | | 213+63 | RT | | | | | | | | | | | 29 | | | | | | | | | | | | | |
| 174 | RAMP B | | | | | | | | | | | | | | | | | | | | | | | | | | | | |
| | 206+29 | RT | | 211+50 | RT | | | | 4 | | | | | | | 521 | | | | | | | | | | | | | |
| | 207+00 | RT | | 208+50 | RT | 150 | | | | | 3 | | 3 | | | | | | | | 150 | | | | | | | | |
| | PHASE 1B | | | | | | | | | | | | | | | | | | | | | | | | | | | | |
| 175 | I-77 NB | | | | | | | | | | | | | | | | | | | | | | | | | | | | |
| | 451+10 | RT | | 462+00 | RT | | | | | | | | | | | | | | 1090 | | | | | | | | | | |
| 176 | I-77 NB | | | | | | | | | | | | | | | | | | | | | | | | | | | | |
| | 462+00 | RT | | 475+00 | RT | | | | | | | | | | | | | | 1300 | | | | | | | | | | |
| | 463+00 | RT | | | | | | | | | | | | | | | | | | | | | | | | | | 88 | |
| | 469+50 | RT | | 475+00 | RT | 550 | | | 5 | | 11 | | 11 | 550 | 550 | 550 | | | | | 550 | | | | | | | | |
| 177 | I-77 NB | | | | | | | | | | | | | | | | | | | | | | | | | | | | |
| | 475+00 | RT | | 488+00 | RT | | | | | | | | | | | 1300 | | | | | | | | | | | | | |
| | 475+00 | RT | | 483+50 | RT | 850 | | | | | 17 | | 17 | | | | | | | | 850 | | | | | | | | |
| | 475+00 | RT | | 476+65 | RT | | | | 1 | | | | | 165 | | | | | 165 | | | | | | | | | | |
| | 475+00 | RT | | 476+00 | RT | | | | | | | | | | 100 | | | | | | | | | | | | | | |
| | 483+00 | RT | | 487+00 | RT | | | | | | | | | | | | | | 400 | | | | | | | | | | |
| | 487+00 | RT | | 488+00 | RT | | | | 5 | | | | | | | | 200 | | | | | | | | | | | | |
| 178 | I-77 NB | | | | | | | | | | | | | | | | | | | | | | | | | | | | |
| | 488+00 | L/R | | 501+00 | L/R | | | | | | | | | | | 1300 | | | | | | | | | | | | | |
| | 488+00 | RT | | 488+50 | RT | | | | 3 | | | | | | | | 100 | | | | | | | | | | | | |
| | 488+50 | L/R | | 501+00 | L/R | | | | | | | | | | 1250 | 1250 | | | | | | | | | | | | | |
| | 488+60 | L/R | | 497+70 | L/R | 890 | 1 | | | | 18 | | 18 | | | | | | | | 890 | | | | | | | | |
| | 488+60 | RT | | 501+00 | RT | 1240 | | | | | 25 | | 25 | | | | | | | | 1240 | | | | | | | | |
| 179 | I-77 NB | | | | | | | | | | | | | | | | | | | | | | | | | | | | |
| | 501+00 | RT | | 513+50 | RT | 1250 | | | | | 25 | | 25 | | | | | | | | 1250 | | | | | | | | |
| | 501+00 | RT | | 514+00 | RT | | | | | | | | | | | 1300 | | | | | | | | | | | | | |
| | RAMP B-2 | | | | | | | | | | | | | | | | | | | | | | | | | | | | |
| | 301+00 | RT | | 308+80 | RT | | | | 6 | | | | | | 780 | 780 | | | | | | | | | | | | | |
| | 8+00 | RT | | 10+00 | RT | | | | 2 | | | | | | 200 | 200 | | | | | | | | | | | | | |
| 180 | RAMP B-2 | | | | | | | | | | | | | | | | | | | | | | | | | | | | |
| | 10+00 | RT | | 14+10 | RT | | | | 3 | | | | | | 410 | 410 | | | | | | | | | | | | | |
| TOTALS CARRIED TO SHEET 113 | | | | | | 6230 | 1 | | 30 | | 125 | | 125 | 715 | 3290 | 8574 | 300 | 2955 | | | 6230 | | | | | 88 | | | |

CALCULATED JAR
CHECKED SSR

# SUMMARY OF TRAFFIC MAINTENANCE

SUM-77 / 277 / 224

92
1288

N:\03\60\06744-08\06002_SUM-76-10.95\Design\MOT\Sheets\06002_MS105.dgn Sheet 1/31/2021 5:26:34 PM jrettig

| SHEET NO. | STATION TO STATION | 614 INCREASED BARRIER DELINEATION FT | 614 WORK ZONE IMPACT ATTENUATOR, 24" WIDE HAZARDS, (UNIDIRECTIONAL), AS PER PLAN EACH | 614 WORK ZONE SPEED LIMIT SIGN EACH | 614 WORK ZONE RAISED PAVEMENT MARKER, AS PER PLAN EACH | 615 PAVEMENT FOR MAINTAINING TRAFFIC, CLASS A SY | 614 BARRIER REFLECTOR, TYPE 1, 1-WAY EACH | 614 BARRIER REFLECTOR, TYPE 1, BIDIRECTIONAL EACH | 614 OBJECT MARKER, ONE WAY EACH | 614 WORK ZONE LANE LINE, CLASS 1, 6", AS PER PLAN MILE | 614 WORK ZONE EDGE LINE, CLASS 1, 6", AS PER PLAN, WHITE MILE | 614 WORK ZONE EDGE LINE, CLASS 1, 6", AS PER PLAN, YELLOW MILE | 614 WORK ZONE CHANNELIZING LINE, CLASS 1, 12", AS PER PLAN FT | 614 WORK ZONE DOTTED LINE, CLASS 1, AS PER PLAN FT | | | 622 PORTABLE BARRIER, UNANCHORED, 32" FT | 622 PORTABLE BARRIER, 50", AS PER PLAN FT | 622 PORTABLE BARRIER, ANCHORED, 32" FT | | 622 PORTABLE BARRIER, "Y" CONNECTOR EACH | 630 SIGN, GROUND MOUNTED EXTRUSHEET SF | 630 SIGN, OVERHEAD EXTRUSHEET SF |
|---|---|---|---|---|---|---|---|---|---|---|---|---|---|---|---|---|---|---|---|---|---|---|---|---|
| | PHASE 1C | | | | | | | | | | | | | | | | | | | | | | | |
| 181 | I-77 NB | | | | | | | | | | | | | | | | | | | | | | | |
| | 451+10 RT – 462+00 RT | | | | 9 | | | | | 1090 | | | | 1090 | | | | | | | | | | |
| | | | | | | | | | | | | | | | | | | | | | | | | |
| 182 | I-77 NB | | | | | | | | | | | | | | | | | | | | | | | |
| | 462+00 RT – 475+00 RT | | | | 11 | | | | | 1300 | | | | 1300 | | | | | | | | | | |
| | 463+00 RT | | | | | | | | | | | | | | | | | | | | | | 30 | |
| | 463+00 RT | | | | | | | | | | | | | | | | | | | | | | 102 | |
| | 469+50 RT – 475+00 RT | | | | | | | | | | 550 | 550 | | | | | | | | | | | | |
| | 474+00 RT | | | | | | | | | | | | | | | | | | | | | | 102 | |
| | 474+00 RT – 475+00 RT | | | | | | | | | | | | | 100 | | | | | | | | | | |
| | | | | | | | | | | | | | | | | | | | | | | | | |
| 183 | I-77 NB | | | | | | | | | | | | | | | | | | | | | | | |
| | 475+00 L/R – 488+00 L/R | | | | | | | | | | | 1300 | | | | | | | | | | | | |
| | 475+00 RT – 479+00 RT | | | | 3 | | | | | 400 | | | | 400 | | | | | | | | | | |
| | 475+00 RT – 477+50 RT | | | | | | | | | | 250 | | | 250 | | | | | | | | | | |
| | 479+00 RT – 481+00 RT | | | | 10 | | | | | | | | 400 | | | | | | | | | | | |
| | 481+00 L/R – 488+00 L/R | 1400 | 1 | | | | 28 | | 28 | | 700 | 700 | | | | | 1400 | | | | 1 | | | |
| | | | | | | | | | | | | | | | | | | | | | | | | |
| 184 | I-77 NB | | | | | | | | | | | | | | | | | | | | | | | |
| | 488+00 LT – 491+76 LT | | | | | | | | | | | 376 | | | | | | | | | | | | |
| | 488+00 LT – 491+90 LT | 390 | | | | | 8 | | 8 | | 390 | | | | | | 390 | | | | | | | |
| | 488+00 RT – 488+50 RT | | | | | | | | | | | 50 | | | | | | | | | | | | |
| | | | | | | | | | | | | | | | | | | | | | | | | |
| | | | | | | | | | | | | | | | | | | | | | | | | |
| | | | | | | | | | | | | | | | | | | | | | | | | |
| | PHASE 1 OVER WINTER | | | | | | | | | | | | | | | | | | | | | | | |
| 186 | RAMP C-2 | | | | | | | | | | | | | | | | | | | | | | | |
| | 789+00 LT – 800+32 LT | | | | 14 | | | | | | | 1132 | | | | | | | | | | | | |
| | 789+00 LT – 800+24 LT | | | | | | | | | | 1124 | | | | | | | | | | | | | |
| | I-77 SB | | | | | | | | | | | | | | | | | | | | | | | |
| | 499+65 LT – 500+35 LT | 70 | 1 | | | | 2 | | 2 | | | | | | | | 70 | | | | | | | |
| | 500+20 LT – 501+00 LT | | | | 4 | | | | | | | | 160 | | | | | | | | | | | |
| | | | | | | | | | | | | | | | | | | | | | | | | |
| 187 | I-77 SB | | | | | | | | | | | | | | | | | | | | | | | |
| | 501+00 LT – 502+79 LT | | | | 9 | | | | | | | | 358 | | | | | | | | | | | |
| | 501+00 LT – 506+96 LT | | | | 2 | | | | | | | 179 | | | | | | | | | | | | |
| | 502+79 LT – 506+96 LT | | | | | | | | | | | | | 417 | | | | | | | | | | |
| | | | | | | | | | | | | | | | | | | | | | | | | |
| 188 | RAMP C | | | | | | | | | | | | | | | | | | | | | | | |
| | 597+00 LT – 599+14 LT | | | | 3 | | | | | | | 214 | | 214 | | | | | | | | | | |
| | | | | | | | | | | | | | | | | | | | | | | | | |
| 189 | RAMP C | | | | | | | | | | | | | | | | | | | | | | | |
| | 599+14 LT – 602+00 LT | | | | 4 | | | | | | | 286 | | 286 | | | | | | | | | | |
| | | | | | | | | | | | | | | | | | | | | | | | | |
| 190 | RAMP C / C-2 | | | | | | | | | | | | | | | | | | | | | | | |
| | 789+00 LT – 782+49 LT | | | | 8 | | | | | | 651 | 651 | | | | | | | | | | | | |
| | 595+40 LT – 597+00 LT | | | | 2 | | | | | | | 160 | | 160 | | | | | | | | | | |
| | | | | | | | | | | | | | | | | | | | | | | | | |
| | TOTALS CARRIED TO SHEET 113 | 1860 | 2 | | 79 | | 38 | | 38 | 2790 | 3665 | 5598 | 918 | 4217 | | | 1860 | | | | 1 | 234 | | |

CALCULATED JAR
CHECKED SSR

# MAINTENANCE OF TRAFFIC SUBSUMMARY

SUM-77 / 277 / 224

93
1288

N:\03\60\06744-08\106002_SUM-76-10.95\Design\MOT\Sheets\106002_MS106.dgn Sheet 1/31/2021 5:26:36 PM jrettig

| SHEET NO. | STATION TO STATION | 614 INCREASED BARRIER DELINEATION FT | 614 WORK ZONE IMPACT ATTENUATOR, 24" WIDE HAZARDS, (UNIDIRECTIONAL), AS PER PLAN EACH | 614 WORK ZONE SPEED LIMIT SIGN EACH | 614 WORK ZONE RAISED PAVEMENT MARKER, AS PER PLAN EACH | 615 PAVEMENT FOR MAINTAINING TRAFFIC, CLASS A SY | 614 BARRIER REFLECTOR, TYPE 1, 1-WAY EACH | 614 BARRIER REFLECTOR, TYPE 1, BIDIRECTIONAL EACH | 614 OBJECT MARKER, ONE WAY EACH | 614 WORK ZONE LANE LINE, CLASS 1, 6", AS PER PLAN MILE | 614 WORK ZONE EDGE LINE, CLASS 1, 6", AS PER PLAN, WHITE MILE | 614 WORK ZONE EDGE LINE, CLASS 1, 6", AS PER PLAN, YELLOW MILE | 614 WORK ZONE CHANNELIZING LINE, CLASS 1, 12", AS PER PLAN FT | 614 WORK ZONE DOTTED LINE, CLASS 1, AS PER PLAN FT | | | 622 PORTABLE BARRIER, UNANCHORED, 32" FT | 622 PORTABLE BARRIER, 50", AS PER PLAN FT | 622 PORTABLE BARRIER, ANCHORED, 32" FT | | 622 PORTABLE BARRIER, "Y" CONNECTOR EACH | 630 SIGN, GROUND MOUNTED EXTRUSHEET SF | 630 SIGN, OVERHEAD EXTRUSHEET SF |
|---|---|---|---|---|---|---|---|---|---|---|---|---|---|---|---|---|---|---|---|---|---|---|---|---|
| | PRE-PHASE 2 | | | | | | | | | | | | | | | | | | | | | | | |
| 200 | US-224/I-277 EB | | | | | | | | | | | | | | | | | | | | | | | |
| | 229+90 RT – 242+00 RT | | | | | | | | | | | | 1210 | | | | | | | | | | | |
| | 229+90 RT – 237+70 RT | | | | | | | | | | | | | | 780 | | | | | | | | | |
| | 239+70 RT – 242+00 RT | 230 | 1 | | | | 5 | | 5 | | | | | | | | | 230 | | | | | | |
| | US-224/I-277 WB | | | | | | | | | | | | | | | | | | | | | | | |
| | 231+85 LT – 234+85 LT | | | | 15 | | | | | | | | | 300 | | | | | | | | | | |
| | 231+85 LT – 242+00 LT | | | | 51 | | | | | | | | 1015 | | | | | | | | | | | |
| | 234+85 LT – 242+00 LT | | | | 36 | | | | | | 715 | | | | | | | | | | | | | |
| | 240+70 LT – 242+00 LT | 130 | | | | | 3 | | 3 | | | | | | | | | 130 | | | | | | |
| 201 | US-224/I-277 EB | | | | | | | | | | | | | | | | | | | | | | | |
| | 242+00 RT – 244+50 RT | 250 | | | | | 5 | | 5 | | | | 250 | | | | | 250 | | | | | | |
| | US-224/I-277 WB | | | | | | | | | | | | | | | | | | | | | | | |
| | 242+00 LT – 247+50 LT | | | | 24 | | | | | | 550 | | | | | | | | | | | | | |
| | 242+00 LT – 250+75 LT | | | | 53 | | | | | | | | 875 | | | | | | | | | | | |
| | 242+00 LT – 245+20 LT | 320 | 1 | | | | 7 | | 7 | | | | | | | | | 320 | | | | | | |
| | 247+50 LT – 250+75 LT | | | | 16 | | | | | | | | | 325 | | | | | | | | | | |
| 202 | US-224/I-277 WB | | | | | | | | | | | | | | | | | | | | | | | |
| | 250+75 LT – 256+35 LT | | | | 56 | | | | | | | | 560 | 560 | | | | | | | | | | |
| | | | | | | | | | | | | | | | | | | | | | | | | |
| | PHASE 2 | | | | | | | | | | | | | | | | | | | | | | | |
| 203 | I-77 NB | | | | | | | | | | | | | | | | | | | | | | | |
| | 324+00 RT | | | | | | | | | | | | | | | | | | | | | | 180 | |
| | 334+00 RT | | | | | | | | | | | | | | | | | | | | | | 84 | |
| | 341+00 RT | | | 2 | | | | | | | | | | | | | | | | | | | | |
| | 344+25 RT | | | | | | | | | | | | | | | | | | | | | | | 48 |
| | | | | | | | | | | | | | | | | | | | | | | | | |
| 204 | I-77 NB | | | | | | | | | | | | | | | | | | | | | | | |
| | 345+20 RT – 358+00 RT | | | | 128 | | | | | | | | | 2560 | | | | | | | | | | |
| | 348+20 RT – 358+00 RT | | | | 49 | | | | | | | | 980 | | | | | | | | | | | |
| | 348+20 RT – 356+00 RT | | | | 39 | | | | | | 780 | | | | | | | | | | | | | |
| | 354+37 RT – 356+00 RT | | | | | | | | | | | | | 163 | | | | | | | | | | |
| | 354+47 RT – 358+00 RT | | | | | | | | | | 353 | | | | | | | | | | | | | |
| | 356+00 RT – 358+00 RT | | | | | | | | | | | | | | 200 | | | | | | | | | |
| | | | | | | | | | | | | | | | | | | | | | | | | |
| 205 | I-77 NB | | | | | | | | | | | | | | | | | | | | | | | |
| | 358+00 RT – 371+00 RT | | | | | | | | | | | | 1300 | | | | | | | | | | | |
| | 358+00 RT – 364+65 RT | | | | 22 | | | | | | | | | 865 | | | | | | | | | | |
| | 358+00 RT – 359+00 RT | | | | 3 | | | | | | | | | 100 | | | | | | | | | | |
| | 358+00 RT – 366+80 RT | | | | | | | | | | | | | | 880 | | | | | | | | | |
| | 358+00 RT – 371+00 RT | | | | | | | | | | 1300 | | | | | | | | | | | | | |
| | 359+00 RT – 369+00 RT | | | | 8 | | | | | 1000 | | | | | | | | | | | | | | |
| | 364+50 RT – 371+00 RT | 650 | 1 | | | | 13 | | 13 | | | | | | | | | 650 | | | | | | |
| | 364+65 RT – 368+50 RT | | | | 20 | | | | | | | | | 770 | | | | | | | | | | |
| | 367+30 RT – 371+00 RT | 370 | 1 | | | | 8 | | 8 | | | | | | | | | 370 | | | | | | |
| | 368+32 RT – 371+00 RT | | | | 4 | | | | | | | | 268 | | | | | | | | | | | |
| | 368+50 RT – 371+00 RT | | | | | | | | | | 250 | | 250 | | | | | | | | | | | |
| | 368+80 RT – 371+00 RT | 220 | 1 | | | | 5 | | 5 | | | | | | | | | 220 | | | | | | |
| | 369+00 RT – 371+00 RT | | | | 10 | | | | | | | | | 200 | | | | | | | | | | |
| | 369+14 RT – 371+00 RT | | | | | | | | | | 186 | | | | | | | | | | | | | |
| | | | | | | | | | | | | | | | | | | | | | | | | |
| 206 | I-77 NB | | | | | | | | | | | | | | | | | | | | | | | |
| | 371+00 R/L – 384+00 R/L | 2600 | | | 135 | | 52 | | 52 | | 3900 | 3900 | | | | | | 2600 | | | | | | |
| | 371+00 RT – 375+00 RT | 400 | | | | | 8 | | 8 | | | | | | | | | 400 | | | | | | |
| | 371+00 RT – 380+85 RT | | | | 50 | | | | | | | | | 985 | | | | | | | | | | |
| | 372+40 CL | | 1 | | | | | | | | | | | | | | | | | | | | | |
| | 380+85 RT – 384+00 RT | | | | 3 | | | | | 315 | | | | | | | | | | | | | | |
| | I-77 SB | | | | | | | | | | | | | | | | | | | | | | | |
| | 378+50 LT | | | | | | | | | | | | | | | | | | | | | | | 190.5 |
| | | | | | | | | | | | | | | | | | | | | | | | | |
| | TOTALS CARRIED TO SHEET 113 | 5170 | 6 | 2 | 722 | | 106 | | 106 | 1315 | 8034 | 10608 | 6828 | 1860 | | | | 5170 | | | | | 264 | 239 |

CALCULATED JAR
CHECKED SSR

# MAINTENANCE OF TRAFFIC SUBSUMMARY

SUM-77 / 277 / 224



N:\03\60\06744-08\106002_SUM-76-10.95\Design\MOT\Sheets\106002_MS200.dgn Sheet 1/31/2021 5:26:37 PM jrettig

# SUMMARY OF TRAFFIC SUBSUMMARY

MAINTENANCE

SUM-77 / 277 / 224

CALCULATED JAR
CHECKED SSR

| SHEET NO. | STATION TO STATION | 614 INCREASED BARRIER DELINEATION FT | 614 WORK ZONE IMPACT ATTENUATOR, 24" WIDE HAZARDS, (UNIDIRECTIONAL), AS PER PLAN EACH | 614 WORK ZONE SPEED LIMIT SIGN EACH | 614 WORK ZONE RAISED PAVEMENT MARKER, AS PER PLAN EACH | 615 PAVEMENT FOR MAINTAINING TRAFFIC, CLASS A SY | 614 BARRIER REFLECTOR, TYPE 1, 1-WAY EACH | 614 BARRIER REFLECTOR, TYPE 1, BIDIRECTIONAL EACH | 614 OBJECT MARKER, ONE WAY EACH | 614 WORK ZONE LANE LINE, CLASS 1, 6", AS PER PLAN MILE | 614 WORK ZONE EDGE LINE, CLASS 1, 6", AS PER PLAN, WHITE MILE | 614 WORK ZONE EDGE LINE, CLASS 1, 6", AS PER PLAN, YELLOW MILE | 614 WORK ZONE CHANNELIZING LINE, CLASS 1, 12", AS PER PLAN FT | 614 WORK ZONE DOTTED LINE, CLASS 1, AS PER PLAN FT | | | 622 PORTABLE BARRIER, UNANCHORED, 32" FT | 622 PORTABLE BARRIER, 50", AS PER PLAN FT | 622 PORTABLE BARRIER, ANCHORED, 32" FT | | 622 PORTABLE BARRIER, "Y" CONNECTOR EACH | 630 SIGN, GROUND MOUNTED EXTRUSHEET SF | 630 SIGN, OVERHEAD EXTRUSHEET SF |
|---|---|---|---|---|---|---|---|---|---|---|---|---|---|---|---|---|---|---|---|---|---|---|---|---|
| | PHASE 2 CONT'D | | | | | | | | | | | | | | | | | | | | | | | |
| 207 | I-77 NB | | | | | | | | | | | | | | | | | | | | | | | |
| | 384+00 RT 397+00 RT | | | | 11 | | | | | 1300 | 2600 | 2600 | | | | | | | | | | | | |
| | 384+00 RT 387+06 RT | | | | 4 | | | | | | 306 | 306 | | | | | | | | | | | | |
| | 384+00 RT 387+60 RT | 720 | | | | | 15 | | 15 | | | | | | | | 720 | | | | | | | |
| | 387+06 RT 397+00 RT | | | | 25 | | | | | | | | 1988 | | | | | | | | | | | |
| 208 | I-77 NB | | | | | | | | | | | | | | | | | | | | | | | |
| | 397+00 RT 410+00 RT | | | | 44 | | | | | 1300 | 2600 | 2600 | 2600 | | | | | | | | | | | |
| | 402+50 RT 410+00 RT | 750 | 1 | | | | 15 | | 15 | | | | | | | | 750 | | | | | | | |
| | I-77 SB | | | | | | | | | | | | | | | | | | | | | | | |
| | 404+60 LT 410+00 LT | 540 | | | | | 11 | | 11 | | | | | | | | 540 | | | | | | | |
| 209 | I-77 NB | | | | | | | | | | | | | | | | | | | | | | | |
| | 410+00 RT 423+00 RT | 1300 | | | 11 | | 26 | | 26 | 1300 | 2600 | 2600 | | | | | 1300 | | | | | | | |
| | 410+00 RT 415+00 RT | | | | 13 | | | | | | | | 1000 | | | | | | | | | | | |
| | 415+00 RT 423+00 RT | | | | | | | | | | | | | 800 | | | | | | | | | | |
| | I-77 SB | | | | | | | | | | | | | | | | | | | | | | | |
| | 410+00 LT 415+30 LT | 530 | | | | | 11 | | 11 | | | | | | | | 530 | | | | | | | |
| 210 | I-77 NB | | | | | | | | | | | | | | | | | | | | | | | |
| | 423+00 RT 436+00 RT | 1300 | | | 11 | | 26 | | 26 | 1300 | 2600 | 2600 | | | | | 1300 | | | | | | | |
| | 424+40 LT 431+60 LT | 720 | 1 | | | | 15 | | 15 | | | | | | | | 440 | | 280 | | | | | |
| 211 | I-77 NB | | | | | | | | | | | | | | | | | | | | | | | |
| | 436+00 RT 449+00 RT | 1300 | | | 11 | | 26 | | 26 | 1300 | 2600 | 2600 | | | | | 1300 | | | | | | | |
| | 440+00 RT | | | | | | | | | | | | | | | | | | | | | | | 173 |
| 212 | I-77 NB | | | | | | | | | | | | | | | | | | | | | | | |
| | 449+00 RT 462+00 RT | 1300 | 1 | | 11 | | 26 | | 26 | 1300 | 2600 | 2600 | | | | | 1300 | | | | | | | |
| | I-77 SB | | | | | | | | | | | | | | | | | | | | | | | |
| | 453+75 LT 462+00 LT | 825 | | | | | 17 | | 17 | | | | | | | | 825 | | | | | | | |
| 213 | I-77 NB | | | | | | | | | | | | | | | | | | | | | | | |
| | 462+00 RT 475+00 RT | 1300 | | | 11 | | 26 | | 26 | 1300 | 2600 | 2600 | | | | | 1300 | | | | | | | |
| | 463+00 RT | | | | | | | | | | | | | | | | | | | | | | | 80 |
| | 463+00 RT | | | | | | | | | | | | | | | | | | | | | | | 150 |
| | 469+40 RT 475+00 RT | 560 | | | | | 11 | | 11 | | | | | | | | 560 | | | | | | | |
| | 473+30 RT 475+00 RT | | | | | | | | | | | | | 170 | | | | | | | | | | |
| | I-77 SB | | | | | | | | | | | | | | | | | | | | | | | |
| | 462+00 LT 464+25 LT | 225 | | | | | 5 | | 5 | | | | | | | | 225 | | | | | | | |
| 214 | I-77 NB | | | | | | | | | | | | | | | | | | | | | | | |
| | 475+00 RT 477+50 RT | 250 | | | | | 5 | | 5 | | 250 | | | 250 | | | 250 | | | | | | | |
| | 475+00 L/R 488+00 L/R | 1300 | | | 11 | | 26 | | 26 | 1300 | 1300 | 2600 | | | | | 1300 | | | | | | | |
| | 476+00 RT | | | | | | | | | | | | | | | | | | | | | | | 88 |
| | 476+00 RT | | | | | | | | | | | | | | | | | | | | | | | 117 |
| | 477+50 RT 480+30 RT | | | | 7 | | | | | | | | 280 | | | | | | | | | | | |
| | 480+30 RT 488+00 RT | 770 | 1 | | | | 15 | | 15 | | 770 | | | | | | 770 | | | | | 1 | | |
| | RAMP C | | | | | | | | | | | | | | | | | | | | | | | |
| | 577+50 LT 588+00 LT | 1050 | | | | | 21 | | 21 | | 1050 | | | | | | 1050 | | | | | | | |
| | 577+50 LT 580+35 LT | | | | 7 | | | | | | | | 285 | | | | | | | | | | | |
| | 580+35 LT 588+00 LT | | | | 10 | | | | | | | 765 | | | | | | | | | | | | |
| | 580+40 LT 588+00 LT | 760 | | | | | 15 | | 15 | | | | | | | | 760 | | | | | | | |
| | TOTALS CARRIED TO SHEET 113 | 15500 | 4 | | 187 | | 312 | | 312 | 10400 | 21876 | 21871 | 6153 | 1220 | | | 15220 | | 280 | | | 1 | | 608 |



N:\03\60\06744-08\06002_SUM-76-10.95\Design\MOT\Sheets\06002_MS201.dgn Sheet 1/31/2021 5:26:41 PM jrettig

| SHEET NO. | STATION TO STATION | 614 INCREASED BARRIER DELINEATION FT | 614 WORK ZONE IMPACT ATTENUATOR, 24" WIDE HAZARDS, (UNIDIRECTIONAL), AS PER PLAN EACH | 614 WORK ZONE SPEED LIMIT SIGN EACH | 614 WORK ZONE RAISED PAVEMENT MARKER, AS PER PLAN EACH | 615 PAVEMENT FOR MAINTAINING TRAFFIC, CLASS A SY | 614 BARRIER REFLECTOR, TYPE 1, 1-WAY EACH | 614 BARRIER REFLECTOR, TYPE 1, BIDIRECTIONAL EACH | 614 OBJECT MARKER, ONE WAY EACH | 614 WORK ZONE LANE LINE, CLASS 1, 6", AS PER PLAN MILE | 614 WORK ZONE EDGE LINE, CLASS 1, 6", AS PER PLAN, WHITE MILE | 614 WORK ZONE EDGE LINE, CLASS 1, 6", AS PER PLAN, YELLOW MILE | 614 WORK ZONE CHANNELIZING LINE, CLASS 1, 12", AS PER PLAN FT | 614 WORK ZONE DOTTED LINE, CLASS 1, AS PER PLAN FT | | | 622 PORTABLE BARRIER, UNANCHORED, 32" FT | 622 PORTABLE BARRIER, 50", AS PER PLAN FT | 622 PORTABLE BARRIER, ANCHORED, 32" FT | | 622 PORTABLE BARRIER, "Y" CONNECTOR EACH | 630 SIGN, GROUND MOUNTED EXTRUSHEET SF | 630 SIGN, OVERHEAD EXTRUSHEET SF |
|---|---|---|---|---|---|---|---|---|---|---|---|---|---|---|---|---|---|---|---|---|---|---|---|---|
| | PHASE 2 CONT'D | | | | | | | | | | | | | | | | | | | | | | | |
| 215 | RAMP B-2 | | | | | | | | | | | | | | | | | | | | | | | |
| | 488+00 LT 501+00 LT | | | | | | | | | 1300 | 1300 | | | | | | | | | | | | | |
| | 489+65 LT 490+25 LT | 60 | 1 | | | | 2 | | 2 | | | | | | | | 60 | | | | | | | |
| | I-77 NB | | | | | | | | | | | | | | | | | | | | | | | |
| | 488+00 L/R 501+00 L/R | | | | 11 | | | | | 1300 | | 1300 | | | | | | | | | | | | |
| | 488+00 LT 494+60 LT | 660 | | | | | 13 | | 13 | | | | | | | | 660 | | | | | | | |
| | 488+00 RT 493+90 RT | 590 | | | | | 12 | | 12 | | 590 | | | | | | 590 | | | | | | | |
| | 493+90 RT 496+65 RT | | | | | | | | | | | | 275 | | | | | | | | | | | |
| | 496+65 RT 501+00 RT | | | | | | | | | | 435 | | | 435 | | | | | | | | | | |
| | RAMP C-1 | | | | | | | | | | | | | | | | | | | | | | | |
| | 693+13 LT 696+65 LT | | | | 9 | | | | | | 352 | | 352 | | | | | | | | | | | |
| | US-224/I-277 WB | | | | | | | | | | | | | | | | | | | | | | | |
| | 254+00 LT 258+50 LT | | | | | | | | | | 450 | 450 | | | | | | | | | | | | |
| | 254+00 LT 256+00 LT | | | | | | | | | | | | | 200 | | | | | | | | | | |
| | 256+00 LT 258+50 LT | | | | 2 | | | | | 250 | | | | | | | | | | | | | | |
| | | | | | | | | | | | | | | | | | | | | | | | | |
| 216 | RAMP B-2 | | | | | | | | | | | | | | | | | | | | | | | |
| | 301+00 RT 308+00 RT | | | | | | | | | | 700 | 700 | | | | | | | | | | | | |
| | 7+20 RT 10+00 RT | | | | | | | | | | 280 | 280 | | | | | | | | | | | | |
| | I-77 NB | | | | | | | | | | | | | | | | | | | | | | | |
| | 501+00 L/R 514+00 L/R | | | | | | | | | | 1300 | 1300 | | | | | | | | | | | | |
| | 501+00 RT 512+00 RT | | | | 9 | | | | | 1100 | | | | | | | | | | | | | | |
| | 501+00 RT 507+50 RT | | | | | | | | | | | | | 650 | | | | | | | | | | |
| | 512+00 RT 514+00 RT | | | | | | | | | | | | 200 | | | | | | | | | | | |
| | RAMP D | | | | | | | | | | | | | | | | | | | | | | | |
| | 904+32 LT 914+05 LT | | | | 12 | | | | | | | 973 | | | | | | | | | | | | |
| | US-224/I-277 WB | | | | | | | | | | | | | | | | | | | | | | | |
| | 250+75 LT 254+00 LT | | | | | | | | | | 325 | 325 | | | | | | | | | | | | |
| | 250+75 LT 251+15 LT | | | | 2 | | | | | | | | 80 | | | | | | | | | | | |
| | 251+15 LT 254+00 LT | | | | | | | | | | | | | 285 | | | | | | | | | | |
| | I-77 SB | | | | | | | | | | | | | | | | | | | | | | | |
| | 510+00 LT 514+00 LT | 800 | | | 3 | | 16 | | 16 | 400 | 400 | 400 | | | | | 800 | | | | | | | |
| | | | | | | | | | | | | | | | | | | | | | | | | |
| 217 | I-77 NB | | | | | | | | | | | | | | | | | | | | | | | |
| | 514+00 RT 520+55 RT | | | | | | | | | | | 655 | | | | | | | | | | | | |
| | 514+00 RT 523+55 RT | | | | | | | | | | | | 955 | | | | | | | | | | | |
| | 514+00 RT 517+35 RT | | | | 4 | | | | | | 335 | 335 | | | | | | | | | | | | |
| | 517+35 RT 520+40 RT | | | | 8 | | | | | | | | 610 | | | | | | | | | | | |
| | 520+40 RT 523+55 RT | | | | | | | | | | | | 315 | | | | | | | | | | | |
| | I-77 SB | | | | | | | | | | | | | | | | | | | | | | | |
| | 514+00 LT 522+60 LT | 860 | 1 | | | | 17 | | 17 | | | | | | | | 860 | | | | | | | |
| | 514+00 LT 527+00 LT | | | | 11 | | | | | 1300 | 1300 | 1300 | | | | | | | | | | | | |
| | 514+00 LT 518+00 LT | | | | | | | | | | | | 400 | | | | | | | | | | | |
| | 514+00 LT 514+60 LT | 60 | 1 | | | | 1 | | 1 | | | | | | | | 60 | | | | | | | |
| | TOTALS CARRIED TO SHEET 113 | 3030 | 3 | | 71 | | 61 | | 61 | 5650 | 7767 | 8018 | 3187 | 1570 | | | 3030 | | | | | | | |

CALCULATED JAR
CHECKED SSR

# MAINTENANCE OF TRAFFIC SUBSUMMARY

SUM-77 / 277 / 224



N:\03\60\06744-08\106002_SUM-76-10.95\Design\MOT\Sheets\106002_MS202.dgn Sheet 1/31/2021 5:26:44 PM jrettig

| SHEET NO. | STATION TO STATION | | | | | 614 INCREASED BARRIER DELINEATION FT | 614 WORK ZONE IMPACT ATTENUATOR, 24" WIDE HAZARDS, (UNIDIRECTIONAL), AS PER PLAN EACH | 614 WORK ZONE SPEED LIMIT SIGN EACH | 614 WORK ZONE RAISED PAVEMENT MARKER, AS PER PLAN EACH | 615 PAVEMENT FOR MAINTAINING TRAFFIC, CLASS A SY | 614 BARRIER REFLECTOR, TYPE 1, 1-WAY EACH | 614 BARRIER REFLECTOR, TYPE 1, BIDIRECTIONAL EACH | 614 OBJECT MARKER, ONE WAY EACH | 614 WORK ZONE LANE LINE, CLASS 1, 6", AS PER PLAN MILE | 614 WORK ZONE EDGE LINE, CLASS 1, 6", AS PER PLAN, WHITE MILE | 614 WORK ZONE EDGE LINE, CLASS 1, 6", AS PER PLAN, YELLOW MILE | 614 WORK ZONE CHANNELIZING LINE, CLASS 1, 12", AS PER PLAN FT | 614 WORK ZONE DOTTED LINE, CLASS 1, AS PER PLAN FT | | | 622 PORTABLE BARRIER, UNANCHORED, 32" FT | 622 PORTABLE BARRIER, 50", AS PER PLAN FT | 622 PORTABLE BARRIER, ANCHORED, 32" FT | | 622 PORTABLE BARRIER, "Y" CONNECTOR EACH | 630 SIGN, GROUND MOUNTED EXTRUSHEET SF | 630 SIGN, OVERHEAD EXTRUSHEET SF |
|---|---|---|---|---|---|---|---|---|---|---|---|---|---|---|---|---|---|---|---|---|---|---|---|---|---|---|---|---|---|
| | PHASE 2 CONT'D | | | | | | | | | | | | | | | | | | | | | | | | | | | | |
| 218 | I-77 SB | | | | | | | | | | | | | | | | | | | | | | | | | | | | |
| | 324+50 | LT | | 324+55 | LT | | | | | | | | | 5 | 5 | | | | | | | | | | | | | | |
| | 324+50 | LT | | 328+95 | LT | | | | 22 | | | | | | | 445 | | | | | | | | | | | | | |
| | 324+55 | LT | | 329+75 | LT | | | | 26 | | | | | | | | 520 | | | | | | | | | | | | |
| | 324+55 | LT | | 328+95 | LT | | | | 22 | | | | | | | | 440 | | | | | | | | | | | | |
| | 325+85 | LT | | 338+00 | LT | | | | | | | | | | 1215 | | | | | | | | | | | | | | |
| | 326+45 | LT | | 329+75 | LT | | | | 8 | | | | | | | | 330 | | | | | | | | | | | | |
| | 328+95 | LT | | 331+95 | LT | | | | 15 | | | | | | | | 300 | | | | | | | | | | | | |
| | 329+75 | LT | | 338+00 | LT | | | | | | | | | | | | | 825 | | | | | | | | | | | |
| 219 | I-77 SB | | | | | | | | | | | | | | | | | | | | | | | | | | | | |
| | 338+00 | LT | | 346+50 | LT | | | | | | | | | | 850 | | | | | | | | | | | | | | |
| | 338+00 | LT | | 340+35 | LT | | | | | | | | | | | | | 235 | | | | | | | | | | | |
| | 340+35 | LT | | 346+50 | LT | | | | 15 | | | | | | | | 615 | | | | | | | | | | | | |
| | 340+35 | LT | | M.L. A-A | LT | | | | | | | | | | 1065 | | | | | | | | | | | | | | |
| | 349+55 | LT | | M.L. A-A | LT | | | | | | | | | | | | | 145 | | | | | | | | | | | |
| 220 | I-77 SB | | | | | | | | | | | | | | | | | | | | | | | | | | | | |
| | M.L. A-A | LT | | EXIST. | LT | | | | | | | | | | 635 | | | 635 | | | | | | | | | | | |
| 223 | US-224/I-277 WB | | | | | | | | | | | | | | | | | | | | | | | | | | | | |
| | 218+00 | LT | | 229+00 | LT | | | | 96 | | | | | | 1100 | | 1100 | | | | | | | | | | | | |
| | 221+00 | LT | | 227+40 | LT | | | | 32 | | | | | | | 640 | | | | | | | | | | | | | |
| | 224+90 | LT | | 229+00 | LT | 410 | | | | | 8 | | 8 | | | | | | | | 410 | | | | | | | | |
| | 227+40 | LT | | 229+00 | LT | | | | | | | | | | | | 160 | | | | | | | | | | | | |
| 224 | RAMP B-2 | | | | | | | | | | | | | | | | | | | | | | | | | | | | |
| | 18+60 | L/R | | 29+80 | L/R | 1120 | | | | | 22 | | 22 | | 1120 | | | | | | 1120 | | | | | | | | |
| | 18+60 | L/R | | 24+65 | LT | | | | 8 | | | | | | | 605 | | | | | | | | | | | | | |
| | 24+65 | L/R | | 29+80 | LT | | | | 13 | | | | | | | | 515 | | | | | | | | | | | | |
| | US-224/I-277 WB | | | | | | | | | | | | | | | | | | | | | | | | | | | | |
| | 235+65 | LT | | 242+00 | LT | | | | 62 | | | | | | 635 | 635 | | | | | | | | | | | | | |
| | US-224/I-277 EB | | | | | | | | | | | | | | | | | | | | | | | | | | | | |
| | 237+70 | RT | | | | | | | | | | | | | | | | | | | | | | | | | | | 42 |
| | 242+00 | RT | | | | | | | | | | | | | | | | | | | | | | | | | | | 80 |
| | 242+00 | RT | | | | | | | | | | | | | | | | | | | | | | | | | | | 148 |
| | 242+00 | RT | | | | | | | | | | | | | | | | | | | | | | | | | | | 98 |
| 225 | US-224/I-277 WB | | | | | | | | | | | | | | | | | | | | | | | | | | | | |
| | 242+00 | LT | | 249+55 | LT | | | | | | | | | | 755 | | | | | | | | | | | | | | |
| | 242+00 | LT | | 250+75 | LT | | | | | | | | | | | 875 | | | | | | | | | | | | | |
| | 248+30 | LT | | 250+75 | LT | | | | | | | | | | 245 | | | | | | | | | | | | | | |
| | 249+55 | LT | | 250+75 | LT | | | | 6 | | | | | | | | 240 | | | | | | | | | | | | |
| | TOTALS CARRIED TO SHEET 113 | | | | | 1530 | | | 325 | | 30 | | 30 | 5 | 7625 | 3200 | 4220 | 1840 | | | 1530 | | | | | | | | 368 |

CALCULATED JAR
CHECKED SSR

# MAINTENANCE OF TRAFFIC SUBSUMMARY

SUM-77 / 277 / 224

97
1288

N:\03\60\06744-08\106002_SUM-76-10.95\Design\MOT\Sheets\106002_MS203.dgn Sheet1 1/31/2025 5:26:45 PM jrettig

| SHEET NO. | STATION TO STATION | 614 INCREASED BARRIER DELINEATION FT | 614 WORK ZONE IMPACT ATTENUATOR, 24" WIDE HAZARDS, (UNIDIRECTIONAL), AS PER PLAN EACH | 614 WORK ZONE SPEED LIMIT SIGN EACH | 614 WORK ZONE RAISED PAVEMENT MARKER, AS PER PLAN EACH | 615 PAVEMENT FOR MAINTAINING TRAFFIC, CLASS A SY | 614 BARRIER REFLECTOR, TYPE 1, 1-WAY EACH | 614 BARRIER REFLECTOR, TYPE 1, BIDIRECTIONAL EACH | 614 OBJECT MARKER, ONE WAY EACH | 614 WORK ZONE LANE LINE, CLASS 1, 6", AS PER PLAN MILE | 614 WORK ZONE EDGE LINE, CLASS 1, 6", AS PER PLAN, WHITE MILE | 614 WORK ZONE EDGE LINE, CLASS 1, 6", AS PER PLAN, YELLOW MILE | 614 WORK ZONE CHANNELIZING LINE, CLASS 1, 12", AS PER PLAN FT | 614 WORK ZONE DOTTED LINE, CLASS 1, AS PER PLAN FT | | | 622 PORTABLE BARRIER, UNANCHORED, 32" FT | 622 PORTABLE BARRIER, 50", AS PER PLAN FT | 622 PORTABLE BARRIER, ANCHORED, 32" FT | | 622 PORTABLE BARRIER, "Y" CONNECTOR EACH | 630 SIGN, GROUND MOUNTED EXTRUSHEET SF | 630 SIGN, OVERHEAD EXTRUSHEET SF |
|---|---|---|---|---|---|---|---|---|---|---|---|---|---|---|---|---|---|---|---|---|---|---|---|---|
| | PHASE 2 CONT'D | | | | | | | | | | | | | | | | | | | | | | | |
| 226 | US-224 WB | | | | | | | | | | | | | | | | | | | | | | | |
| | 258+50 LT 268+00 LT | | | | | | | | | | | 950 | | | | | | | | | | | | |
| | 258+50 LT 270+00 LT | | | | 10 | | | | | 1150 | | 1150 | | | | | | | | | | | | |
| | 268+00 LT 270+00 LT | | | | 5 | | | | | | | | 200 | | | | | | | | | | | |
| | RAMP D | | | | | | | | | | | | | | | | | | | | | | | |
| | 268+00 LT 270+00 LT | | | | 5 | | | | | | | | 200 | | | | | | | | | | | |
| | RAMP C | | | | | | | | | | | | | | | | | | | | | | | |
| | 597+00 LT 599+10 LT | 420 | | | 3 | | 8 | | 8 | | 210 | 210 | | | | | 420 | | | | | | | |
| | | | | | | | | | | | | | | | | | | | | | | | | |
| 227 | US-224 WB | | | | | | | | | | | | | | | | | | | | | | | |
| | 270+00 LT 281+90 LT | | | | 55 | | | | | | | | 1190 | | | | | | | | | | | |
| | 270+00 LT 278+90 LT | | | | 40 | | | | | | | | 890 | | | | | | | | | | | |
| | 270+00 LT 272+00 LT | | | | 2 | | | | | 200 | | | | | | | | | | | | | | |
| | 270+00 LT 278+90 LT | | | | 35 | | | | | | | 890 | | | | | | | | | | | | |
| | 272+00 LT 281+90 LT | | | | 50 | | | | | | | | 990 | | | | | | | | | | | |
| | RAMP C | | | | | | | | | | | | | | | | | | | | | | | |
| | 599+10 LT 600+30 LT | 120 | | | 2 | | 2 | | 2 | | | 120 | | | | | 120 | | | | | | | |
| | 599+10 LT 603+40 LT | 430 | | | | | 9 | | 9 | | 430 | | | | | | 430 | | | | | | | |
| | 600+30 LT 603+40 LT | | | | 8 | | | | | | | | 310 | | | | | | | | | | | |
| | US-224 EB | | | | | | | | | | | | | | | | | | | | | | | |
| | 271+45 RT 274+25 RT | | | | | | | | | | | | 280 | | | | | | | | | | | |
| | 274+25 RT 283+00 RT | | | | | | | | | | 875 | | | | | | | | | | | | | |
| | 274+25 RT 279+95 RT | 570 | | | | | 11 | | 11 | | | | | | | | 570 | | | | | | | |
| | | | | | | | | | | | | | | | | | | | | | | | | |
| 228 | US-224 EB | | | | | | | | | | | | | | | | | | | | | | | |
| | 283+00 RT 284+10 RT | | | | | | | | | | 110 | | | | | | | | | | | | | |
| | | | | | | | | | | | | | | | | | | | | | | | | |
| 229 | RAMP B-2 | | | | | | | | | | | | | | | | | | | | | | | |
| | 10+00 L/R 18+40 L/R | | | | 9 | | | | | | 840 | 840 | | | | | | | | | | | | |
| | 11+50 RT 18+40 RT | 690 | 1 | | | | 14 | | 14 | | | | | | | | 690 | | | | | | | |
| | | | | | | | | | | | | | | | | | | | | | | | | |
| 230 | RAMP C-2 | | | | | | | | | | | | | | | | | | | | | | | |
| | 784+55 LT 786+05 LT | | | | 2 | | | | | | | 150 | | | | | | | | | | | | |
| | 784+55 LT 786+10 LT | | | | 4 | | | | | | | | 155 | | | | | | | | | | | |
| | RAMP C | | | | | | | | | | | | | | | | | | | | | | | |
| | 588+00 LT 592+40 LT | 440 | | | 6 | | 9 | | 9 | | | 440 | | | | | 440 | | | | | | | |
| | 588+00 LT 597+00 LT | 900 | | | | | 18 | | 18 | | 900 | | | | | | 900 | | | | | | | |
| | 592+40 LT 593+45 LT | | | | 3 | | | | | | | | 105 | | | | | | | | | | | |
| | 593+45 LT 597+00 LT | | | | 5 | | | | | | | 355 | | | | | | | | | | | | |
| | 593+45 LT 596+40 LT | | | | | | | | | | | | | 295 | | | | | | | | | | |
| | 593+50 LT 597+00 LT | 350 | | | | | 7 | | 7 | | | | | | | | 350 | | | | | | | |
| | TOTALS CARRIED TO SHEET 113 | 3920 | 1 | | 244 | | 78 | | 78 | 1350 | 4315 | 4155 | 4320 | 295 | | | 3920 | | | | | | | |

CALCULATED JAR
CHECKED SSR

# MAINTENANCE OF TRAFFIC SUBSUMMARY

SUM-77 / 277 / 224



N:\03\60\06744-08\106002_SUM-76-10.95\Design\MOT\Sheets\106002_MS204.dgn Sheet1 1/31/2025 5:26:47 PM jrettig

| SHEET NO. | STATION TO STATION | 614 INCREASED BARRIER DELINEATION FT | 614 WORK ZONE IMPACT ATTENUATOR, 24" WIDE HAZARDS, (UNIDIRECTIONAL), AS PER PLAN EACH | 614 WORK ZONE SPEED LIMIT SIGN EACH | 614 WORK ZONE RAISED PAVEMENT MARKER, AS PER PLAN EACH | 615 PAVEMENT FOR MAINTAINING TRAFFIC, CLASS A SY | 614 BARRIER REFLECTOR, TYPE 1, 1-WAY EACH | 614 BARRIER REFLECTOR, TYPE 1, BIDIRECTIONAL EACH | 614 OBJECT MARKER, ONE WAY EACH | 614 WORK ZONE LANE LINE, CLASS 1, 6", AS PER PLAN MILE | 614 WORK ZONE EDGE LINE, CLASS 1, 6", AS PER PLAN, WHITE MILE | 614 WORK ZONE EDGE LINE, CLASS 1, 6", AS PER PLAN, YELLOW MILE | 614 WORK ZONE CHANNELIZING LINE, CLASS 1, 12", AS PER PLAN FT | 614 WORK ZONE DOTTED LINE, CLASS 1, AS PER PLAN FT | | | 622 PORTABLE BARRIER, UNANCHORED, 32" FT | 622 PORTABLE BARRIER, 50", AS PER PLAN FT | 622 PORTABLE BARRIER, ANCHORED, 32" FT | | 622 PORTABLE BARRIER, "Y" CONNECTOR EACH | 630 SIGN, GROUND MOUNTED EXTRUSHEET SF | 630 SIGN, OVERHEAD EXTRUSHEET SF |
|---|---|---|---|---|---|---|---|---|---|---|---|---|---|---|---|---|---|---|---|---|---|---|---|---|
| | PHASE 2A | | | | | | | | | | | | | | | | | | | | | | | |
| 231 | US-224/I-277 WB | | | | | | | | | | | | | | | | | | | | | | | |
| | 220+80 LT – 229+00 LT | | | | | | | | | | 820 | 820 | | | | | | | | | | | | |
| | 220+80 LT – 225+00 LT | | | | 11 | | | | | | | | 840 | | | | | | | | | | | |
| | 225+00 LT – 229+00 LT | 800 | | | | | 16 | | 16 | | 400 | 400 | | | | | 800 | | | | | | | |
| | 226+20 LT – 229+00 LT | | | | | | | | | | | | | 280 | | | | | | | | | | |
| | US-224/I-277 EB | | | | | | | | | | | | | | | | | | | | | | | |
| | 228+50 RT | | | | | | | | | | | | | | | | | | | | | | | 51 |
| | | | | | | | | | | | | | | | | | | | | | | | | |
| 232 | RAMP B / RAMP B-2 | | | | | | | | | | | | | | | | | | | | | | | |
| | 229+00 LT – 234+20 LT | 520 | | | 7 | | 10 | | 10 | | 520 | 520 | | 520 | | | 520 | | | | | | | |
| | 197+00 L/R – 203+00 L/R | 600 | | | 8 | | 12 | | 12 | | 600 | 600 | 600 | | | | 600 | | | | | | | |
| | 199+70 RT – 203+00 RT | | | | 8 | | | | | | | | 330 | | | | | | | | | | | |
| | US-224/I-277 WB | | | | | | | | | | | | | | | | | | | | | | | |
| | 229+00 LT – 242+00 LT | 1300 | | | | | 26 | | 26 | | | | | | | | 1300 | | | | | | | |
| | 229+00 LT – 238+90 LT | | | | | | | | | | 990 | 990 | | | | | | | | | | | | |
| | | | | | | | | | | | | | | | | | | | | | | | | |
| 233 | US-224/I-277 WB | | | | | | | | | | | | | | | | | | | | | | | |
| | 242+00 LT – 248+90 LT | 690 | 1 | | | | 14 | | 14 | | | | | | | | 690 | | | | | 1 | | |
| | RAMP B-1 | | | | | | | | | | | | | | | | | | | | | | | |
| | 418+00 RT – 419+70 RT | 170 | | | | | 3 | | 3 | | | | | | | | 170 | | | | | | | |
| | | | | | | | | | | | | | | | | | | | | | | | | |
| 234 | RAMP B | | | | | | | | | | | | | | | | | | | | | | | |
| | 203+00 RT – 211+50 RT | | | | | | | | | | 850 | | | | | | | | | | | | | |
| | 203+00 RT – 205+90 RT | 290 | | | 11 | | 6 | | 6 | | | 290 | 580 | | | | 290 | | | | | | | |
| | 205+90 RT – 211+50 RT | | | | 7 | | | | | | | 560 | | | | | | | | | | | | |
| | RAMP B-2 | | | | | | | | | | | | | | | | | | | | | | | |
| | 10+00 RT – 15+50 RT | | | | 7 | | | | | | 550 | 550 | | | | | | | | | | | | |
| | 12+90 RT – 15+50 RT | 260 | 1 | | | | 5 | | 5 | | | | | | | | 260 | | | | | | | |
| | | | | | | | | | | | | | | | | | | | | | | | | |
| 235 | RAMP B-2 | | | | | | | | | | | | | | | | | | | | | | | |
| | 305+80 RT – 308+00 RT | | | | 3 | | | | | | 220 | 220 | | | | | | | | | | | | |
| | 7+20 RT – 10+00 RT | | | | 4 | | | | | | 280 | 280 | | | | | | | | | | | | |
| | RAMP B | | | | | | | | | | | | | | | | | | | | | | | |
| | 211+50 L/R – 213+20 L/R | | | | 2 | | | | | | 170 | 170 | | | | | | | | | | | | |
| | I-77 SB | | | | | | | | | | | | | | | | | | | | | | | |
| | 513+30 LT – 513+90 LT | 70 | 1 | | | | 2 | | 2 | | | | | | | | 70 | | | | | | | |
| | | | | | | | | | | | | | | | | | | | | | | | | |
| 236 | I-77 SB | | | | | | | | | | | | | | | | | | | | | | | |
| | 518+30 LT – 527+00 LT | | | | | | | | | | | | 870 | | | | | | | | | | | |
| | RAMP B | | | | | | | | | | | | | | | | | | | | | | | |
| | 213+20 RT – 218+30 RT | | | | | | | | | | 510 | | | | | | | | | | | | | |
| | 213+20 RT – 215+90 RT | | | | 3 | | | | | | | 270 | | | | | | | | | | | | |
| | 215+90 RT – 218+30 RT | | | | | | | | | | | | 240 | | | | | | | | | | | |
| | | | | | | | | | | | | | | | | | | | | | | | | |
| 237 | I-77 SB | | | | | | | | | | | | | | | | | | | | | | | |
| | 324+65 LT – 326+75 LT | | | | | | | | | | | | 210 | | | | | | | | | | | |
| | 326+45 LT – 329+70 LT | | | | | | | | | | | | | 325 | | | | | | | | | | |
| | 326+75 LT – 329+70 LT | | | | | | | | | | | | | 295 | | | | | | | | | | |
| | TOTALS CARRIED TO SHEET 113 | 4700 | 3 | | 71 | | 94 | | 94 | | 5910 | 5670 | 3670 | 1420 | | | 4700 | | | | 1 | | 51 | |

CALCULATED JAR
CHECKED SSR

# MAINTENANCE OF TRAFFIC SUBSUMMARY

SUM-77 / 277 / 224



N:\03\60\06744-08\106002_SUM-76-10.95\Design\MOT\Sheets\106002_MS205.dgn Sheet1 1/31/2021 5:26:48 PM jrettig

| SHEET NO. | STATION TO STATION | 614 INCREASED BARRIER DELINEATION FT | 614 WORK ZONE IMPACT ATTENUATOR, 24" WIDE HAZARDS, (UNIDIRECTIONAL), AS PER PLAN EACH | 614 WORK ZONE SPEED LIMIT SIGN EACH | 614 WORK ZONE RAISED PAVEMENT MARKER, AS PER PLAN EACH | 615 PAVEMENT FOR MAINTAINING TRAFFIC, CLASS A SY | 614 BARRIER REFLECTOR, TYPE 1, 1-WAY EACH | 614 BARRIER REFLECTOR, TYPE 1, BIDIRECTIONAL EACH | 614 OBJECT MARKER, ONE WAY EACH | 614 WORK ZONE LANE LINE, CLASS I, 6", AS PER PLAN MILE | 614 WORK ZONE EDGE LINE, CLASS I, 6", AS PER PLAN, WHITE MILE | 614 WORK ZONE EDGE LINE, CLASS I, 6", AS PER PLAN, YELLOW MILE | 614 WORK ZONE CHANNELIZING LINE, CLASS I, 12", AS PER PLAN FT | 614 WORK ZONE DOTTED LINE, CLASS I, AS PER PLAN FT | | | 622 PORTABLE BARRIER, UNANCHORED, 32" FT | 622 PORTABLE BARRIER, 50", AS PER PLAN FT | 622 PORTABLE BARRIER, ANCHORED, 32" FT | | 622 PORTABLE BARRIER, "Y" CONNECTOR EACH | 630 SIGN, GROUND MOUNTED EXTRUSHEET SF | 630 SIGN, OVERHEAD EXTRUSHEET SF |
|---|---|---|---|---|---|---|---|---|---|---|---|---|---|---|---|---|---|---|---|---|---|---|---|---|
| | PHASE 2B | | | | | | | | | | | | | | | | | | | | | | | |
| 238 | I-77 NB | | | | | | | | | | | | | | | | | | | | | | | |
| | 493+90 RT 501+00 RT | 710 | | | | | 14 | | 14 | | 710 | | | | | | 710 | | | | | | | |
| | US-224 EB | | | | | | | | | | | | | | | | | | | | | | | |
| | 253+50 RT 258+50 RT | | | | | | | | | | 500 | 500 | | | | | | | | | | | | |
| | 253+50 RT 254+75 RT | | | | | | | | | | | | 125 | | | | | | | | | | | |
| | 254+70 RT 258+50 RT | 380 | 1 | | | | 8 | | 8 | | | | | | | | 380 | | | | | | | |
| | 254+75 RT 258+50 RT | | | | 3 | | | | | 375 | | | | | | | | | | | | | | |
| | | | | | | | | | | | | | | | | | | | | | | | | |
| 239 | I-77 NB | | | | | | | | | | | | | | | | | | | | | | | |
| | 501+00 RT 510+65 RT | | | | | | | | | | 965 | | | | | | | | | | | | | |
| | 501+00 RT 508+40 RT | 740 | | | | | 15 | | 15 | | | | | | | | 740 | | | | | | | |
| | RAMP D | | | | | | | | | | | | | | | | | | | | | | | |
| | 904+70 LT 908+70 LT | 400 | | | | | 8 | | 8 | | | | | | | | 400 | | | | | | | |
| | US-224 EB | | | | | | | | | | | | | | | | | | | | | | | |
| | 250+75 RT 253+50 RT | | | | 2 | | | | | 275 | 275 | 275 | | | | | | | | | | | | |
| | | | | | | | | | | | | | | | | | | | | | | | | |
| 240 | US-224 EB | | | | | | | | | | | | | | | | | | | | | | | |
| | 245+60 RT 250+75 RT | | | | 26 | | | | | | | | 515 | | | | | | | | | | | |
| | 248+65 RT 250+75 RT | | | | 20 | | | | | | 210 | 210 | | | | | | | | | | | | |
| | | | | | | | | | | | | | | | | | | | | | | | | |
| 241 | US-224 EB | | | | | | | | | | | | | | | | | | | | | | | |
| | 258+50 RT 267+90 RT | | | | 8 | | | | | 940 | 940 | 940 | | | | | | | | | | | | |
| | 258+50 RT 262+90 RT | 440 | | | | | 9 | | 9 | | | | | | | | 440 | | | | | | | |
| | | | | | | | | | | | | | | | | | | | | | | | | |
| | | | | | | | | | | | | | | | | | | | | | | | | |
| | | | | | | | | | | | | | | | | | | | | | | | | |
| | PHASE 2C | | | | | | | | | | | | | | | | | | | | | | | |
| 243 | RAMP C-1 | | | | | | | | | | | | | | | | | | | | | | | |
| | 691+00 LT 693+95 LT | | | | 4 | | | | | | | 295 | | | | | | | | | | | | |
| | 691+00 LT 696+70 LT | | | | | | | | | | 570 | | | | | | | | | | | | | |
| | 691+95 LT 693+95 LT | 200 | 1 | | | | 4 | | 4 | | | | | | | | 200 | | | | | | | |
| | 693+95 LT 696+70 LT | | | | 7 | | | | | | | | 275 | | | | | | | | | | | |
| | I-77 NB | | | | | | | | | | | | | | | | | | | | | | | |
| | 493+90 RT 496+70 RT | | | | | | | | | | | | 470 | | | | | | | | | | | |
| | 496+70 RT 501+00 RT | | | | | | | | | | 430 | | | 430 | | | | | | | | | | |
| | US-224 EB | | | | | | | | | | | | | | | | | | | | | | | |
| | 253+75 RT 258+50 RT | | | | | | | | | | 475 | | | | | | | | | | | | | |
| | 253+75 RT 256+40 RT | | | | | | | | | | | | | 265 | | | | | | | | | | |
| | 256+40 RT 258+50 RT | | | | 10 | | | | | | | | 420 | | | | | | | | | | | |
| | | | | | | | | | | | | | | | | | | | | | | | | |
| 244 | I=77 NB | | | | | | | | | | | | | | | | | | | | | | | |
| | 501+00 RT 506+65 RT | | | | | | | | | | | | | 565 | | | | | | | | | | |
| | 501+00 RT 510+65 RT | | | | | | | | | | 965 | | | | | | | | | | | | | |
| | US-224 EB | | | | | | | | | | | | | | | | | | | | | | | |
| | 250+75 RT 253+75 RT | | | | | | | | | | 300 | | | 300 | | | | | | | | | | |
| | | | | | | | | | | | | | | | | | | | | | | | | |
| 245 | US-224 EB | | | | | | | | | | | | | | | | | | | | | | | |
| | 256+40 RT 260+40 RT | | | | 10 | | | | | | | | 400 | | | | | | | | | | | |
| | RAMP C-1 | | | | | | | | | | | | | | | | | | | | | | | |
| | 678+20 LT 686+00 LT | | | | | | | | | | 780 | | | | | | | | | | | | | |
| | 678+20 LT 678+60 LT | | | | | | | | | | | | | 40 | | | | | | | | | | |
| | 678+60 LT 682+95 LT | | | | 11 | | | | | | | | 435 | | | | | | | | | | | |
| | 682+95 LT 686+00 LT | | | | 4 | | | | | | | 305 | | | | | | | | | | | | |
| | | | | | | | | | | | | | | | | | | | | | | | | |
| 246 | RAMP C-1 | | | | | | | | | | | | | | | | | | | | | | | |
| | 686+00 LT 691+00 LT | | | | 6 | | | | | | 500 | 500 | | | | | | | | | | | | |
| | | | | | | | | | | | | | | | | | | | | | | | | |
| | | | | | | | | | | | | | | | | | | | | | | | | |
| | | | | | | | | | | | | | | | | | | | | | | | | |
| | TOTALS CARRIED TO SHEET 113 | 2870 | 2 | | 111 | | 58 | | 58 | 1590 | 7620 | 3025 | 2640 | 1600 | | | 2870 | | | | | | | |

CALCULATED JAR
CHECKED SSR

# MAINTENANCE OF TRAFFIC SUBSUMMARY

SUM-77 / 277 / 224



N:\03\60\06744-08\06002_SUM-76-10.95\Design\MOT\Sheets\06002_MS206.dgn Sheet 1/31/2021 5:26:50 PM jrettig

| SHEET NO. | STATION TO STATION | 614 INCREASED BARRIER DELINEATION FT | 614 WORK ZONE IMPACT ATTENUATOR, 24" WIDE HAZARDS, (UNIDIRECTIONAL), AS PER PLAN EACH | 614 WORK ZONE SPEED LIMIT SIGN EACH | 614 WORK ZONE RAISED PAVEMENT MARKER, AS PER PLAN EACH | 615 PAVEMENT FOR MAINTAINING TRAFFIC, CLASS A SY | 614 BARRIER REFLECTOR, TYPE 1, 1-WAY EACH | 614 BARRIER REFLECTOR, TYPE 1, BIDIRECTIONAL EACH | 614 OBJECT MARKER, ONE WAY EACH | 614 WORK ZONE LANE LINE, CLASS I, 6", AS PER PLAN MILE | 614 WORK ZONE EDGE LINE, CLASS I, 6", AS PER PLAN, WHITE MILE | 614 WORK ZONE EDGE LINE, CLASS I, 6", AS PER PLAN, YELLOW MILE | 614 WORK ZONE CHANNELIZING LINE, CLASS I, 12", AS PER PLAN FT | 614 WORK ZONE DOTTED LINE, CLASS I, AS PER PLAN FT | | | 622 PORTABLE BARRIER, UNANCHORED, 32" FT | 622 PORTABLE BARRIER, 50", AS PER PLAN FT | 622 PORTABLE BARRIER, ANCHORED, 32" FT | | 622 PORTABLE BARRIER, "Y" CONNECTOR EACH | 630 SIGN, GROUND MOUNTED EXTRUSHEET SF | 630 SIGN, OVERHEAD EXTRUSHEET SF |
|---|---|---|---|---|---|---|---|---|---|---|---|---|---|---|---|---|---|---|---|---|---|---|---|---|
| | PHASE 2D | | | | | | | | | | | | | | | | | | | | | | | |
| 247 | I-77 NB | | | | | | | | | | | | | | | | | | | | | | | |
| | 505+00 RT 514+00 RT | 900 | 1 | | | | 18 | | 18 | | | | | | | | 900 | | | | | | | |
| 248 | I-77 NB | | | | | | | | | | | | | | | | | | | | | | | |
| | 514+00 RT 515+90 RT | 190 | | | | | 4 | | 4 | | | | | | | | 190 | | | | | | | |
| 249 | US-224 WB | | | | | | | | | | | | | | | | | | | | | | | |
| | 256+00 LT 270+00 LT | 500 | | | | | 10 | | 10 | | | | | | | | 500 | | | | | | | |
| 250 | US-224 WB | | | | | | | | | | | | | | | | | | | | | | | |
| | 270+00 LT 281+00 LT | 1400 | 1 | | | | 28 | | 28 | | | | | | | | 1400 | | | | | | | |
| | 275+00 LT 281+60 LT | | | | | | | | | | 660 | | | 660 | | | | | | | | | | |
| | PHASE 2E | | | | | | | | | | | | | | | | | | | | | | | |
| 252 | I-77 NB | | | | | | | | | | | | | | | | | | | | | | | |
| | 492+85 RT 501+00 RT | | | | 41 | | | | | | | | 815 | | | | | | | | | | | |
| | 494+85 RT 501+00 RT | | | | 31 | | | | | | | 615 | | | | | | | | | | | | |
| | 494+85 RT 496+45 RT | | | | 10 | | | | | | | | 200 | | | | | | | | | | | |
| | 496+45 RT 501+00 RT | | | | | | | | | | | | | 455 | | | | | | | | | | |
| 253 | I-77 NB | | | | | | | | | | | | | | | | | | | | | | | |
| | 501+00 RT 514+00 RT | | | | 195 | | | | | | 1300 | 1300 | 1300 | | | | | | | | | | | |
| | 501+00 RT 506+70 RT | | | | | | | | | | | | | 570 | | | | | | | | | | |
| | 510+50 RT 514+00 RT | 350 | 1 | | | | 7 | | 7 | | | | | | | | 350 | | | | | | | |
| 254 | I-77 NB | | | | | | | | | | | | | | | | | | | | | | | |
| | 514+00 RT 516+05 RT | 205 | | | | | 4 | | 4 | | | | | | | | 205 | | | | | | | |
| | 514+00 RT 522+10 RT | | | | 40 | | | | | | | 810 | | | | | | | | | | | | |
| | 514+00 RT 523+60 RT | | | | 48 | | | | | | | | 960 | | | | | | | | | | | |
| | 514+00 RT 518+70 RT | | | | 23 | | | | | | 470 | | | | | | | | | | | | | |
| | PHASE 2F | | | | | | | | | | | | | | | | | | | | | | | |
| 255 | I-77 NB | | | | | | | | | | | | | | | | | | | | | | | |
| | 494+85 RT 501+00 RT | | | | 5 | | | | | 615 | | 615 | | | | | | | | | | | | |
| | 494+85 RT 496+65 RT | | | | | | | | | | | | 180 | | | | | | | | | | | |
| | 496+45 RT 501+00 RT | | | | | | | | | | 455 | | | | | | | | | | | | | |
| | 496+65 RT 501+00 RT | | | | | | | | | | | | | 435 | | | | | | | | | | |
| 256 | I-77 NB | | | | | | | | | | | | | | | | | | | | | | | |
| | 501+00 RT 514+00 RT | | | | | | | | | | 1300 | 1300 | | | | | | | | | | | | |
| | 501+00 RT 512+90 RT | | | | 10 | | | | | 1190 | | | | | | | | | | | | | | |
| | 501+00 RT 507+40 RT | | | | | | | | | | | | | 640 | | | | | | | | | | |
| | 512+90 RT 514+00 RT | | | | 6 | | | | | | | | 110 | | | | | | | | | | | |
| | RAMP D | | | | | | | | | | | | | | | | | | | | | | | |
| | 900+40 RT 914+05 RT | | | | | | | | | | 1365 | | | | | | | | | | | | | |
| | 900+40 LT 910+55 LT | | | | 13 | | | | | | | 1015 | | | | | | | | | | | | |
| | 910+55 LT 914+05 LT | | | | 9 | | | | | | | | 350 | | | | | | | | | | | |
| | TOTALS CARRIED TO SHEET 113 | 3545 | 3 | | 431 | | 71 | | 71 | 1805 | 5550 | 5655 | 3915 | 2760 | | | 3545 | | | | | | | |

CALCULATED JAR
CHECKED SSR

# SUMMARY OF TRAFFIC MAINTENANCE

SUM-77 / 277 / 224



N:\03\60\06744-08\06002_SUM-76-10.95\Design\MOT\Sheets\06002_MS207.dgn Sheet 1/31/2021 5:26:51 PM jrettig

| SHEET NO. | STATION TO STATION | 614 INCREASED BARRIER DELINEATION FT | 614 WORK ZONE IMPACT ATTENUATOR, 24" WIDE HAZARDS, (UNIDIRECTIONAL), AS PER PLAN EACH | 614 WORK ZONE SPEED LIMIT SIGN EACH | 614 WORK ZONE RAISED PAVEMENT MARKER, AS PER PLAN EACH | 615 PAVEMENT FOR MAINTAINING TRAFFIC, CLASS A SY | 614 BARRIER REFLECTOR, TYPE 1, 1-WAY EACH | 614 BARRIER REFLECTOR, TYPE 1, BIDIRECTIONAL EACH | 614 OBJECT MARKER, ONE WAY EACH | 614 WORK ZONE LANE LINE, CLASS I, 6", AS PER PLAN MILE | 614 WORK ZONE EDGE LINE, CLASS I, 6", AS PER PLAN, WHITE MILE | 614 WORK ZONE EDGE LINE, CLASS I, 6", AS PER PLAN, YELLOW MILE | 614 WORK ZONE CHANNELIZING LINE, CLASS I, 12", AS PER PLAN FT | 614 WORK ZONE DOTTED LINE, CLASS I, AS PER PLAN FT | | | 622 PORTABLE BARRIER, UNANCHORED, 32" FT | 622 PORTABLE BARRIER, 50", AS PER PLAN FT | 622 PORTABLE BARRIER, ANCHORED, 32" FT | | 622 PORTABLE BARRIER, "Y" CONNECTOR EACH | 630 SIGN, GROUND MOUNTED EXTRUSHEET SF | 630 SIGN, OVERHEAD EXTRUSHEET SF |
|---|---|---|---|---|---|---|---|---|---|---|---|---|---|---|---|---|---|---|---|---|---|---|---|---|
| | PHASE 2F CONT'D | | | | | | | | | | | | | | | | | | | | | | | |
| 257 | I-77 NB | | | | | | | | | | | | | | | | | | | | | | | |
| | 514+00 LT – 520+60 LT | | | | 33 | | | | | | | | 660 | | | | | | | | | | | |
| | 514+00 RT – 523+60 RT | | | | 96 | | | | | | | | | 1920 | | | | | | | | | | |
| | 514+00 RT – 515+90 RT | | | | 10 | | | | | | 190 | | | | | | | | | | | | | |
| | 514+00 RT – 515+80 RT | | | | | | | | | | 180 | | | | | | | | | | | | | |
| | 515+90 RT – 523+60 RT | | | | 39 | | | | | | | | | 770 | | | | | | | | | | |
| 258 | US-224 WB | | | | | | | | | | | | | | | | | | | | | | | |
| | 264+70 LT – 270+00 LT | | | | 13 | | | | | | | | | 530 | | | | | | | | | | |
| | RAMP D | | | | | | | | | | | | | | | | | | | | | | | |
| | 887+40 LT – 900+40 LT | | | | | | | | | | 1300 | | | | | | | | | | | | | |
| | 887+40 LT – 892+70 LT | | | | 13 | | | | | | | | | 530 | | | | | | | | | | |
| | 892+70 LT – 900+40 LT | | | | 10 | | | | | | | | 770 | | | | | | | | | | | |
| 259 | US-224 WB | | | | | | | | | | | | | | | | | | | | | | | |
| | 270+00 LT – 273+25 LT | | | | | | | | | | 325 | | | | | | | | | | | | | |
| | 270+00 LT – 271+30 LT | | | | 6 | | | | | | | | | 260 | | | | | | | | | | |
| | 271+30 LT – 283+00 LT | | | | | | | | | | | | | | 1170 | | | | | | | | | |
| 260 | US-224 WB | | | | | | | | | | | | | | | | | | | | | | | |
| | 283+00 LT – 283+50 LT | | | | | | | | | | | | | | 50 | | | | | | | | | |
| | PHASE 2G | | | | | | | | | | | | | | | | | | | | | | | |
| 264 | US-224 EB | | | | | | | | | | | | | | | | | | | | | | | |
| | 248+60 RT – 255+20 RT | | | | | | | | | | | | | | 660 | | | | | | | | | |
| | 248+60 RT – 256+40 RT | | | | | | | | | | 780 | | | | | | | | | | | | | |
| | 255+20 RT – 256+40 RT | | | | 6 | | | | | | | | | 240 | | | | | | | | | | |
| 265 | US-224 EB | | | | | | | | | | | | | | | | | | | | | | | |
| | 256+40 RT – 257+20 RT | | | | 4 | | | | | | | | | 160 | | | | | | | | | | |
| | 256+40 RT – 256+50 RT | | | | | | | | | | 10 | | | | | | | | | | | | | |
| | 257+20 RT – 270+00 RT | | | | | | | | | | 1280 | | | | | | | | | | | | | |
| 266 | US-224 EB | | | | | | | | | | | | | | | | | | | | | | | |
| | 270+00 RT – 271+45 RT | | | | | | | | | | 145 | | | | | | | | | | | | | |
| | 271+45 RT – 280+50 RT | | | | | | | | | | | | | 905 | | | | | | | | | | |
| | 273+10 RT – 280+50 RT | | | | | | | | | | 740 | | | | | | | | | | | | | |
| | 273+10 RT – 281+20 RT | 810 | | | | | 16 | | 16 | | | | | | | | | 810 | | | | | | |
| | RAMP C | | | | | | | | | | | | | | | | | | | | | | | |
| | 599+90 LT – 602+30 LT | 240 | | | 6 | | 5 | | 5 | | 240 | | | 240 | | | | 240 | | | | | | |
| | TOTALS CARRIED TO SHEET 113 | 1050 | | | 236 | | 21 | | 21 | | 5190 | 1430 | 5555 | 1880 | | | | 1050 | | | | | | |

CALCULATED JAR
CHECKED SSR

# MAINTENANCE OF TRAFFIC SUBSUMMARY

SUM-77 / 277 / 224

102
1288

N:\03\60\06744-08\106002_SUM-76-10.95\Design\MOT\Sheets\106002_MS208.dgn Sheet1 1/31/2021 5:26:53 PM jrettig

| SHEET NO. | STATION TO STATION | 614 INCREASED BARRIER DELINEATION FT | 614 WORK ZONE IMPACT ATTENUATOR, 24" WIDE HAZARDS, (UNIDIRECTIONAL), AS PER PLAN EACH | 614 WORK ZONE SPEED LIMIT SIGN EACH | 614 WORK ZONE RAISED PAVEMENT MARKER, AS PER PLAN EACH | 615 PAVEMENT FOR MAINTAINING TRAFFIC, CLASS A SY | 614 BARRIER REFLECTOR, TYPE 1, 1-WAY EACH | 614 BARRIER REFLECTOR, TYPE 1, BIDIRECTIONAL EACH | 614 OBJECT MARKER, ONE WAY EACH | 614 WORK ZONE LANE LINE, CLASS I, 6", AS PER PLAN MILE | 614 WORK ZONE EDGE LINE, CLASS I, 6", AS PER PLAN, WHITE MILE | 614 WORK ZONE EDGE LINE, CLASS I, 6", AS PER PLAN, YELLOW MILE | 614 WORK ZONE CHANNELIZING LINE, CLASS I, 12", AS PER PLAN FT | 614 WORK ZONE DOTTED LINE, CLASS I, AS PER PLAN FT | | | 622 PORTABLE BARRIER, UNANCHORED, 32" FT | 622 PORTABLE BARRIER, 50", AS PER PLAN FT | 622 PORTABLE BARRIER, ANCHORED, 32" FT | | 622 PORTABLE BARRIER, "Y" CONNECTOR EACH | 630 SIGN, GROUND MOUNTED EXTRUSHEET SF | 630 SIGN, OVERHEAD EXTRUSHEET SF |
|---|---|---|---|---|---|---|---|---|---|---|---|---|---|---|---|---|---|---|---|---|---|---|---|---|
| | PHASE 2H | | | | | | | | | | | | | | | | | | | | | | | |
| 267 | I-77 NB | | | | | | | | | | | | | | | | | | | | | | | |
| | 466+75 RT – 469+75 RT | | | | | | | | | | | | | | 300 | | | | | | | | | |
| | 466+75 RT – 475+00 RT | | | | | | | | | | 825 | | | | | | | | | | | | | |
| | 469+75 RT – 471+20 RT | | | | 8 | | | | | | | | 290 | | | | | | | | | | | |
| | 471+20 RT – 475+00 RT | 760 | 1 | | 5 | | 15 | | 15 | | 380 | 380 | | | | | 760 | | | | 1 | | | |
| 268 | I-77 NB | | | | | | | | | | | | | | | | | | | | | | | |
| | 475+00 RT – 481+50 RT | 650 | | | | | 13 | | 13 | | 650 | | | | | | 650 | | | | | | | |
| | 476+00 RT | | | | | | | | | | | | | | | | | | | | | | | 33 |
| | RAMP C | | | | | | | | | | | | | | | | | | | | | | | |
| | 575+00 L/R – 582+00 L/R | 700 | | | | | 14 | | 14 | | | | | | | | 700 | | | | | | | |
| | 575+00 L/R – 588+00 L/R | | | | 16 | | | | | | 1300 | 1300 | | | | | | | | | | | | |
| 269 | RAMP C | | | | | | | | | | | | | | | | | | | | | | | |
| | 588+00 LT – 592+95 LT | | | | 6 | | | | | | | 495 | | | | | | | | | | | | |
| | 588+00 LT – 597+00 LT | | | | | | | | | | 900 | | | | | | | | | | | | | |
| | 592+95 LT – 595+00 LT | | | | 10 | | | | | | | | 410 | | | | | | | | | | | |
| | 592+95 LT – 597+00 LT | | | | 5 | | | | | | | 405 | | | | | | | | | | | | |
| | 595+00 LT – 597+00 LT | | | | | | | | | | | | | | 200 | | | | | | | | | |
| | RAMP C-2 | | | | | | | | | | | | | | | | | | | | | | | |
| | 785+00 RT – 786+10 RT | | | | 2 | | | | | | 110 | 110 | | | | | | | | | | | | |
| 274 | RAMP C | | | | | | | | | | | | | | | | | | | | | | | |
| | 597+00 LT – 599+20 LT | | | | 3 | | | | | | 220 | 220 | | | 220 | | | | | | | | | |
| 275 | RAMP C | | | | | | | | | | | | | | | | | | | | | | | |
| | 599+20 LT – 606+70 LT | | | | 10 | | | | | | 750 | 750 | | | | | | | | | | | | |
| | 599+20 LT – 601+40 LT | | | | | | | | | | | | | | 220 | | | | | | | | | |
| | US-224 EB | | | | | | | | | | | | | | | | | | | | | | | |
| | 277+50 RT – 283+00 RT | | | | 14 | | | | | | 550 | | 550 | | | | | | | | | | | |
| 276 | US-224 EB | | | | | | | | | | | | | | | | | | | | | | | |
| | 283+00 RT – 284+85 RT | | | | 5 | | | | | | 185 | | 185 | | | | | | | | | | | |
| | PHASE 2I | | | | | | | | | | | | | | | | | | | | | | | |
| 277 | I-71 NB | | | | | | | | | | | | | | | | | | | | | | | |
| | 366+35 RT – 370+20 RT | | | | 5 | | | | | | | 385 | | | | | | | | | | | | |
| | 366+35 RT – 371+00 RT | | | | | | | | | | 465 | | | | | | | | | | | | | |
| | 367+90 RT – 371+00 RT | 310 | 1 | | | | 6 | | 6 | | | | | | | | 310 | | | | | | | |
| | 370+20 RT – 371+00 RT | | | | 2 | | | | | | | | 80 | | | | | | | | | | | |
| 278 | I-71 NB | | | | | | | | | | | | | | | | | | | | | | | |
| | 371+00 RT – 375+30 RT | | | | 5 | | | | | | | | 430 | | | | | | | | | | | |
| | 371+00 RT – 384+00 RT | 1300 | | | | | 26 | | 26 | | 1300 | | | | | | 1300 | | | | | | | |
| | 375+30 RT – 384+00 RT | | | | | | | | | | | | | | 870 | | | | | | | | | |
| 279 | I-71 NB | | | | | | | | | | | | | | | | | | | | | | | |
| | 384+00 RT – 384+90 RT | 90 | | | | | 2 | | 2 | | 90 | | | | 90 | | 90 | | | | | | | |
| | TOTALS CARRIED TO SHEET 113 | 3810 | 2 | | 96 | | 76 | | 76 | | 7725 | 4045 | 1945 | | 1900 | | 3810 | | | | 1 | | | 33 |

CALCULATED JAR
CHECKED SSR

# MAINTENANCE OF TRAFFIC SUBSUMMARY

## SUM-77 / 277 / 224



N:\03\60\06744-08\106002_SUM-76-10.95\Design\MOT\Sheets\106002_MS209.dgn Sheet 2/2/2021 11:06:00 AM jrettig

| SHEET NO. | STATION TO STATION | 614 INCREASED BARRIER DELINEATION | 614 WORK ZONE IMPACT ATTENUATOR, 24" WIDE HAZARDS, (UNIDIRECTIONAL), AS PER PLAN | 614 WORK ZONE SPEED LIMIT SIGN | 614 WORK ZONE RAISED PAVEMENT MARKER, AS PER PLAN | 615 PAVEMENT FOR MAINTAINING TRAFFIC, CLASS A | 614 BARRIER REFLECTOR, TYPE 1, 1-WAY | 614 BARRIER REFLECTOR, TYPE 1, BIDIRECTIONAL | 614 OBJECT MARKER, ONE WAY | 614 WORK ZONE LANE LINE, CLASS 1, 6", AS PER PLAN | 614 WORK ZONE EDGE LINE, CLASS 1, 6", AS PER PLAN, WHITE | 614 WORK ZONE EDGE LINE, CLASS 1, 6", AS PER PLAN, YELLOW | 614 WORK ZONE CHANNELIZING LINE, CLASS 1, 12", AS PER PLAN | 614 WORK ZONE DOTTED LINE, CLASS 1, AS PER PLAN | | | 622 PORTABLE BARRIER, UNANCHORED, 32" | 622 PORTABLE BARRIER, 50", AS PER PLAN | 622 PORTABLE BARRIER, ANCHORED, 32" | | 622 PORTABLE BARRIER, "Y" CONNECTOR | 630 SIGN, GROUND MOUNTED EXTRUSHEET | 630 SIGN, OVERHEAD EXTRUSHEET |
|---|---|---|---|---|---|---|---|---|---|---|---|---|---|---|---|---|---|---|---|---|---|---|---|---|
| | | FT | EACH | EACH | EACH | SY | EACH | EACH | EACH | MILE | MILE | MILE | FT | FT | | | FT | FT | FT | | EACH | SF | SF |
| | PHASE 2J | | | | | | | | | | | | | | | | | | | | | | |
| 280 | I-77 NB | | | | | | | | | | | | | | | | | | | | | | |
| | 368+35 RT – 369+75 RT | | | | 7 | | | | | | | | 420 | | | | | | | | | | |
| | 369+75 RT – 371+00 RT | | | | 2 | | | | | | | 125 | | | | | | | | | | | |
| 281 | I-77 NB | | | | | | | | | | | | | | | | | | | | | | |
| | 371+00 RT – 384+00 RT | | | | 16 | | | | | | 1300 | 1300 | | | | | | | | | | | |
| | 375+30 RT – 384+00 RT | | | | | | | | | | 870 | | | | | | | | | | | | |
| 282 | I-77 NB | | | | | | | | | | | | | | | | | | | | | | |
| | 384+00 RT – 384+80 RT | | | | | | | | | | 80 | | | | | | | | | | | | |
| | 384+00 RT – 387+00 RT | | | | 4 | | | | | | | 300 | | | | | | | | | | | |
| | 384+00 RT – 397+00 RT | | | | | | | | | | 1300 | | | | | | | | | | | | |
| | 387+00 RT – 397+00 RT | | | | 25 | | | | | | | | 1000 | | | | | | | | | | |
| | 391+35 RT – 397+00 RT | | | | | | | | | | | | 565 | | | | | | | | | | |
| 283 | I-77 NB | | | | | | | | | | | | | | | | | | | | | | |
| | 397+00 RT – 411+00 RT | | | | 35 | | | | | | 1400 | | 2800 | | | | | | | | | | |
| | 402+50 RT – 411+00 RT | 850 | 1 | | | | 17 | | 17 | | | | | | | | 850 | | | | | | |
| 284 | I-77 NB | | | | | | | | | | | | | | | | | | | | | | |
| | 411+00 – 415+00 | | | | 10 | | | | | | | | 800 | | | | | | | | | | |
| | 411+00 – 423+00 | 1200 | | | | | 24 | | 24 | | 1200 | | | | | | 1200 | | | | | | |
| | 415+00 – 423+00 | | | | | | | | | | | | | 800 | | | | | | | | | |
| | TOTALS CARRIED TO SHEET 113 | 2050 | 1 | | 99 | | 41 | | 41 | | 6150 | 1725 | 5585 | 800 | | | 2050 | | | | | | |

CALCULATED JAR
CHECKED SSR

# SUMMARY OF TRAFFIC MAINTENANCE

SUM-77 / 277 / 224



N:\03\60\06744-08\06002_SUM-76-10.95\Design\MOT\Sheets\06002_MS210.dgn Sheet 1/31/2021 5:26:57 PM jrettig

| SHEET NO. | STATION TO STATION | | | | | 614 INCREASED BARRIER DELINEATION FT | 614 WORK ZONE IMPACT ATTENUATOR, 24" WIDE HAZARDS, (UNIDIRECTIONAL), AS PER PLAN EACH | 614 WORK ZONE SPEED LIMIT SIGN EACH | 614 WORK ZONE RAISED PAVEMENT MARKER, AS PER PLAN EACH | 615 PAVEMENT FOR MAINTAINING TRAFFIC, CLASS A SY | 614 BARRIER REFLECTOR, TYPE 1, 1-WAY EACH | 614 BARRIER REFLECTOR, TYPE 1, BIDIRECTIONAL EACH | 614 OBJECT MARKER, ONE WAY EACH | 614 WORK ZONE LANE LINE, CLASS I, 6", AS PER PLAN MILE | 614 WORK ZONE EDGE LINE, CLASS I, 6", AS PER PLAN, WHITE MILE | 614 WORK ZONE EDGE LINE, CLASS I, 6", AS PER PLAN, YELLOW MILE | 614 WORK ZONE CHANNELIZING LINE, CLASS I, 12", AS PER PLAN FT | 614 WORK ZONE DOTTED LINE, CLASS I, AS PER PLAN FT | | | 622 PORTABLE BARRIER, UNANCHORED, 32" FT | 622 PORTABLE BARRIER, 50", AS PER PLAN FT | 622 PORTABLE BARRIER, ANCHORED, 32" FT | | 622 PORTABLE BARRIER, "Y" CONNECTOR EACH | 630 SIGN, GROUND MOUNTED EXTRUSHEET SF | 630 SIGN, OVERHEAD EXTRUSHEET SF |
|---|---|---|---|---|---|---|---|---|---|---|---|---|---|---|---|---|---|---|---|---|---|---|---|---|---|---|---|---|---|
| | PRE-PHASE 3 | | | | | | | | | | | | | | | | | | | | | | | | | | | | |
| | I-77 | | | | | | | | | | | | | | | | | | | | | | | | | | | | |
| 320 | 368+23 | L/R | | 371+00 | L/R | | | | | 480 | | | | | | | | | | | | | | | | | | | |
| 321 | 371+00 | L/R | | 371+92 | L/R | | | | | 102 | | | | | | | | | | | | | | | | | | | |
| | I-77 NB | | | | | | | | | | | | | | | | | | | | | | | | | | | | |
| 329 | 477+00 | LT | | 488+00 | LT | | | | | 2071 | | | | | | | | | | | | | | | | | | | |
| 330 | 488+00 | LT | | 496+95 (77 SB) | RT | | | | | 1004 | | | | | | | | | | | | | | | | | | | |
| | PHASE 3 | | | | | | | | | | | | | | | | | | | | | | | | | | | | |
| 319 | I-77 NB | | | | | | | | | | | | | | | | | | | | | | | | | | | | |
| | 356+35 | RT | | 358+00 | RT | | | | 4 | | | | | 320 | 160 | 160 | | 160 | | | | | | | | | | | |
| | I-77 SB | | | | | | | | | | | | | | | | | | | | | | | | | | | | |
| | 356+05 | LT | | 358+00 | LT | | | | 5 | | | | | | | | 195 | | | | | | | | | | | | |
| 320 | I-77 NB | | | | | | | | | | | | | | | | | | | | | | | | | | | | |
| | 358+00 | RT | | 371+00 | RT | | | | 22 | | | | | 2600 | 1300 | 1300 | | | | | | | | | | | | | |
| | 358+00 | RT | | 366+10 | RT | | | | | | | | | | | | | 810 | | | | | | | | | | | |
| | I-77 SB | | | | | | | | | | | | | | | | | | | | | | | | | | | | |
| | 358+50 | LT | | 363+45 | LT | | | | | | | | | | 495 | | | | | | | | | | | | | | |
| | 359+05 | LT | | 371+00 | LT | | | | 10 | | | | | 1195 | | 1195 | | | | | | | | | | | | | |
| | 359+05 | LT | | 370+60 | LT | | | | 29 | | | | | | | | 2310 | | | | | | | | | | | | |
| | 363+45 | LT | | 368+80 | LT | | | | 26 | | | | | | | | 1070 | | | | | | | | | | | | |
| | 363+45 | LT | | 371+00 | LT | | | | | | | | | | 755 | | | | | | | | | | | | | | |
| | 366+80 | LT | | 371+00 | LT | | | | | | | | | | | | | 420 | | | | | | | | | | | |
| | 368+30 | LT | | 371+00 | LT | 270 | | | | | | 5 | 5 | | | | | | | | | | | | 270 | | | | |
| | 370+60 | LT | | 371+00 | LT | | | | | | | | | | 40 | 40 | | | | | | | | | | | | | |
| | 366+50 | LT | | 371+00 | LT | 450 | | | | | 9 | | 9 | | | | | | | | | | | 450 | | | | | | |
| 321 | I-77 NB | | | | | | | | | | | | | | | | | | | | | | | | | | | | |
| | 371+00 | RT | | 384+00 | RT | | | | 22 | | | | | 2600 | | 1300 | | | | | | | | | | | | | |
| | 371+00 | RT | | 378+00 | RT | | | | | | | | | | 700 | | | | | | | | | | | | | | |
| | 371+55 | RT | | 384+00 | RT | | | | 31 | | | | | | 1245 | | 1245 | | | | | | | | | | | | |
| | 378+00 | RT | | 384+00 | RT | | | | 15 | | | | | | | | 600 | | | | | | | | | | | | |
| | I-77 SB | | | | | | | | | | | | | | | | | | | | | | | | | | | | |
| | 371+00 | LT | | 371+80 | LT | | | | | | | | | | | | | 80 | | | | | | | | | | | |
| | 371+00 | L/R | | 384+00 | L/R | 1300 | | | | | | 26 | 26 | | 2600 | 2600 | | | | | | | | | 1300 | | | | |
| | 371+00 | LT | | 371+80 | LT | | | | 1 | | | | | 80 | | | | | | | | | | | | | | | |
| | 371+00 | LT | | 372+90 | LT | 190 | | | | | 4 | | 4 | | | | | | | | | | | 190 | | | | | | |
| | 371+80 | LT | | 384+00 | LT | | | | 61 | | | | | | | | 1220 | | | | | | | | | | | | |
| 322 | I-77 NB | | | | | | | | | | | | | | | | | | | | | | | | | | | | |
| | 384+00 | RT | | 397+00 | RT | | | | 22 | | | | | 2600 | 1300 | 1300 | | | | | | | | | | | | | |
| | 384+00 | RT | | 391+40 | RT | | | | | | | | | | | | 740 | | | | | | | | | | | | |
| | 384+00 | RT | | 387+20 | RT | | | | 8 | | | | | | | | 320 | | | | | | | | | | | | |
| | 391+40 | RT | | 397+00 | RT | | | | 4 | | | | | 560 | | | | | | | | | | | | | | | |
| | I-77 SB | | | | | | | | | | | | | | | | | | | | | | | | | | | | |
| | 384+00 | L/R | | 397+00 | L/R | 1300 | | | | | | 26 | 26 | | 2600 | 2600 | | | | | | | | | 1300 | | | | |
| | 384+00 | LT | | 394+00 | LT | | | | 50 | | | | | | | | 1000 | | | | | | | | | | | | |
| | 391+00 | LT | | 397+00 | LT | 600 | | | | | 12 | | 12 | | | | | | | | | | | 600 | | | | | | |
| | 394+00 | LT | | 397+00 | LT | | | | 2 | | | | | 300 | | | | | | | | | | | | | | | |
| | TOTALS CARRIED TO SHEET 113 | | | | | 4110 | | | 312 | 3657 | 25 | 57 | 82 | 10255 | 11195 | 10495 | 8700 | 1470 | | | | 1240 | 2870 | | | | | | |

CALCULATED JAR
CHECKED SSR

# MAINTENANCE OF TRAFFIC SUBSUMMARY

SUM-77 / 277 / 224



N:\03\60\06744-08\106002_SUM-76-10.95\Design\MOT\Sheets\106002_MS300.dgn Sheet+ 1/31/2021 5:26:58 PM jrettig

| SHEET NO. | STATION TO STATION | 614 INCREASED BARRIER DELINEATION | 614 WORK ZONE IMPACT ATTENUATOR, 24" WIDE HAZARDS, (UNIDIRECTIONAL), AS PER PLAN | 614 WORK ZONE SPEED LIMIT SIGN | 614 WORK ZONE RAISED PAVEMENT MARKER, AS PER PLAN | 615 PAVEMENT FOR MAINTAINING TRAFFIC, CLASS A | 614 BARRIER REFLECTOR, TYPE 1, 1-WAY | 614 BARRIER REFLECTOR, TYPE 1, BIDIRECTIONAL | 614 OBJECT MARKER, ONE WAY | 614 WORK ZONE LANE LINE, CLASS 1, 6", AS PER PLAN | 614 WORK ZONE EDGE LINE, CLASS 1, 6", AS PER PLAN, WHITE | 614 WORK ZONE EDGE LINE, CLASS 1, 6", AS PER PLAN, YELLOW | 614 WORK ZONE CHANNELIZING LINE, CLASS 1, 12", AS PER PLAN | 614 WORK ZONE DOTTED LINE, CLASS 1, AS PER PLAN | | | 622 PORTABLE BARRIER, UNANCHORED, 32" | 622 PORTABLE BARRIER, 50", AS PER PLAN | 622 PORTABLE BARRIER, ANCHORED, 32" | | 622 PORTABLE BARRIER, "Y" CONNECTOR | 630 SIGN, GROUND MOUNTED EXTRUSHEET | 630 SIGN, OVERHEAD EXTRUSHEET |
|---|---|---|---|---|---|---|---|---|---|---|---|---|---|---|---|---|---|---|---|---|---|---|---|---|
| | | FT | EACH | EACH | EACH | SY | EACH | EACH | EACH | MILE | MILE | MILE | FT | FT | | | FT | FT | FT | | EACH | SF | SF |
| | PHASE 3 CONT'D | | | | | | | | | | | | | | | | | | | | | | |
| 323 | I-77 NB | | | | | | | | | | | | | | | | | | | | | | |
| | 397+00 RT 410+00 RT | | | | 33 | | | | | 3900 | 1300 | 1300 | | | | | | | | | | | |
| | I-77 SB | | | | | | | | | | | | | | | | | | | | | | |
| | 397+00 L/R 410+00 L/R | 2600 | 1 | | 11 | | 26 | 26 | 52 | 1300 | 2600 | 2600 | | | | | 1300 | 1300 | | | | | |
| | | | | | | | | | | | | | | | | | | | | | | | |
| 324 | I-77 NB | | | | | | | | | | | | | | | | | | | | | | |
| | 410+00 RT 423+00 RT | | | | 22 | | | | | 2600 | 1300 | 1300 | | | | | | | | | | | |
| | 410+00 RT 415+60 RT | | | | 5 | | | | | 560 | | | | | | | | | | | | | |
| | 415+60 RT 423+00 RT | | | | | | | | | | | | | 740 | | | | | | | | | |
| | I-77 SB | | | | | | | | | | | | | | | | | | | | | | |
| | 410+00 L/R 423+00 L/R | 2600 | | | 11 | | 26 | 26 | 52 | 1300 | 2600 | 2600 | | | | | 1300 | 1300 | | | | | |
| | | | | | | | | | | | | | | | | | | | | | | | |
| 325 | I-77 NB | | | | | | | | | | | | | | | | | | | | | | |
| | 423+00 RT 436+00 RT | | | | 22 | | | | | 2600 | 1300 | 1300 | | | | | | | | | | | |
| | 423+00 RT 424+00 RT | | | | | | | | | | | | | 100 | | | | | | | | | |
| | I-77 SB | | | | | | | | | | | | | | | | | | | | | | |
| | 423+00 L/R 436+00 L/R | 2600 | | | 11 | | 26 | 26 | 52 | 1300 | 2600 | 2600 | | | | | 1300 | 1300 | | | | | |
| | | | | | | | | | | | | | | | | | | | | | | | |
| 326 | I-77 NB | | | | | | | | | | | | | | | | | | | | | | |
| | 436+00 RT 449+00 RT | | | | 22 | | | | | 2600 | 1300 | 1300 | | | | | | | | | | | |
| | I-77 SB | | | | | | | | | | | | | | | | | | | | | | |
| | 436+00 L/R 449+00 L/R | 2600 | | | 11 | | 26 | 26 | 52 | 1300 | 2600 | 2600 | | | | | 1300 | 1300 | | | | | |
| | | | | | | | | | | | | | | | | | | | | | | | |
| 327 | I-77 NB | | | | | | | | | | | | | | | | | | | | | | |
| | 449+00 RT 462+00 RT | | | | 22 | | | | | 2600 | 1300 | 1300 | | | | | | | | | | | |
| | I-77 SB | | | | | | | | | | | | | | | | | | | | | | |
| | 449+00 L/R 462+00 L/R | 2600 | 1 | | 11 | | 26 | 26 | 52 | 1300 | 2600 | 2600 | | | | | 1300 | 1300 | | | | | |
| | | | | | | | | | | | | | | | | | | | | | | | |
| 328 | I-77 NB | | | | | | | | | | | | | | | | | | | | | | |
| | 462+00 RT 475+00 RT | | | | 22 | | | | | 2600 | 1300 | 1300 | | | | | | | | | | | |
| | 463+00 RT | | | | | | | | | | | | | | | | | | | | | | 242 |
| | 472+30 RT 475+00 RT | | | | | | | | | | | | | 270 | | | | | | | | | |
| | I-77 SB | | | | | | | | | | | | | | | | | | | | | | |
| | 462+00 L/R 475+00 L/R | 2600 | | | 11 | | 26 | 26 | 52 | 1300 | 2600 | 2600 | | | | | 1300 | 1300 | | | | | |
| | 474+30 RT 475+00 RT | 70 | | | | | 1 | | 1 | | | | | | | | 70 | | | | | | |
| | | | | | | | | | | | | | | | | | | | | | | | |
| 329 | I-77 NB | | | | | | | | | | | | | | | | | | | | | | |
| | 475+00 RT 488+00 RT | | | | 22 | | | | | 2600 | | 1300 | | | | | | | | | | | |
| | 475+00 RT 476+95 RT | | | | | | | | | | | | | 195 | | | | | | | | | |
| | 476+00 RT | | | | | | | | | | | | | | | | | | | | | | 275 |
| | 476+95 RT 481+20 RT | | | | 11 | | | | | | | | 425 | | | | | | | | | | |
| | 480+00 RT 486+50 RT | | | | | | | | | | | | | 650 | | | | | | | | | |
| | 481+20 RT 488+00 RT | | | | | | | | | | 780 | | | | | | | | | | | | |
| | 486+50 RT 488+00 RT | | | | 4 | | | | | | | | 150 | | | | | | | | | | |
| | RAMP C | | | | | | | | | | | | | | | | | | | | | | |
| | 576+95 LT 581+25 LT | | | | 11 | | | | | | | | 430 | | | | | | | | | | |
| | 576+95 LT 588+00 LT | | | | | | | | | | 1105 | | | | | | | | | | | | |
| | 581+25 LT 588+00 LT | | | | 8 | | | | | | | 675 | | | | | | | | | | | |
| | TOTALS CARRIED TO SHEET 113 | 15670 | 2 | | 270 | | 157 | 156 | 313 | 27860 | 25285 | 25375 | 1005 | 1955 | | | 7870 | 7800 | | | | | 517 |

CALCULATED JAR
CHECKED SSR

# MAINTENANCE OF TRAFFIC SUBSUMMARY

SUM-77 / 277 / 224

106
1288

N:\03\60\06744-08\106002_SUM-76-10.95\Design\MOT\Sheets\106002_MS30I.dgn Sheet 1/31/2025:27:00 PM jrettig

| SHEET NO. | STATION TO STATION | | | | | 614 INCREASED BARRIER DELINEATION | 614 WORK ZONE IMPACT ATTENUATOR, 24" WIDE HAZARDS, (UNIDIRECTIONAL), AS PER PLAN | 614 WORK ZONE SPEED LIMIT SIGN | 614 WORK ZONE RAISED PAVEMENT MARKER, AS PER PLAN | 615 PAVEMENT FOR MAINTAINING TRAFFIC, CLASS A | 614 BARRIER REFLECTOR, TYPE 1, 1-WAY | 614 BARRIER REFLECTOR, TYPE 1, BIDIRECTIONAL | 614 OBJECT MARKER, ONE WAY | 614 WORK ZONE LANE LINE, CLASS 1, 6", AS PER PLAN | 614 WORK ZONE EDGE LINE, CLASS 1, 6", AS PER PLAN, WHITE | 614 WORK ZONE EDGE LINE, CLASS 1, 6", AS PER PLAN, YELLOW | 614 WORK ZONE CHANNELIZING LINE, CLASS 1, 12", AS PER PLAN | 614 WORK ZONE DOTTED LINE, CLASS 1, AS PER PLAN | | | 622 PORTABLE BARRIER, UNANCHORED, 32" | 622 PORTABLE BARRIER, 50", AS PER PLAN | 622 PORTABLE BARRIER, ANCHORED, 32" | | 622 PORTABLE BARRIER, "Y" CONNECTOR | 630 SIGN, GROUND MOUNTED EXTRUSHEET | 630 SIGN, OVERHEAD EXTRUSHEET |
|---|---|---|---|---|---|---|---|---|---|---|---|---|---|---|---|---|---|---|---|---|---|---|---|---|---|---|---|---|---|
| | | | | | | FT | EACH | EACH | EACH | SY | EACH | EACH | EACH | MILE | MILE | MILE | FT | FT | | | FT | FT | FT | | EACH | SF | SF |
| | PHASE 3 CONT'D | | | | | | | | | | | | | | | | | | | | | | | | | | | | |
| 329 | I-77 SB | | | | | | | | | | | | | | | | | | | | | | | | | | | | |
| | 475+00 | L/R | | 488+00 | L/R | 1300 | | | | | 26 | | 26 | | 2600 | 2600 | | | | | 1300 | | | | | | | | |
| | 475+00 | LT | | 485+15 | LT | | | | 11 | | | | | 1015 | | | | | | | | | | | | | | | |
| | 475+00 | RT | | 485+90 | RT | 1090 | 1 | | | | 22 | | 22 | | | | | | | | 1090 | | | | | | | | |
| | 475+00 | RT | | 485+00 | RT | 1000 | | | | | | 20 | 20 | | | | | | | | | 1000 | | | | | | | |
| | 475+60 | RT | | 486+70 | RT | 1110 | 1 | | | | 22 | | 22 | | | | | | | | 1110 | | | | | | | | |
| | 485+00 | RT | | 488+00 | RT | 300 | | | | | 6 | | 6 | | | | | | | | 300 | | | | | | | | |
| | 485+15 | LT | | 488+00 | LT | | | | 14 | | | | | | | | 285 | | | | | | | | | | | | |
| 330 | I-77 NB | | | | | | | | | | | | | | | | | | | | | | | | | | | | |
| | 488+00 | | | 501+00 | | | | | 22 | | | | | 2600 | | | | | | | | | | | | | | | |
| | 488+00 | | | 494+70 | | | | | | | | | | | | 670 | 670 | | | | | | | | | | | | |
| | 488+00 | | | 493+70 | | | | | | | | | | | 570 | | | | | | | | | | | | | | |
| | 490+95 | | | 494+70 | | | | | 9 | | | | | | | | 375 | | | | | | | | | | | | |
| | 490+95 | | | 494+85 | | | | | 10 | | | | | | | | 390 | | | | | | | | | | | | |
| | 493+70 | | | 501+00 | | | | | | | | | | | 730 | | 730 | | | | | | | | | | | | |
| | 493+70 | | | 500+10 | | | | | 16 | | | | | | | | 640 | | | | | | | | | | | | |
| | 494+85 | | | 501+00 | | | | | | | | | | | | 615 | | | | | | | | | | | | | |
| | RAMP B-2 | | | | | | | | | | | | | | | | | | | | | | | | | | | | |
| | 294+70 | RT | | 301+00 | RT | | | | 5 | | | | | 630 | 630 | 630 | | | | | | | | | | | | | |
| | RAMP C-1 | | | | | | | | | | | | | | | | | | | | | | | | | | | | |
| | 691+00 | LT | | 693+70 | LT | | | | 3 | | | | | | 270 | 270 | | | | | | | | | | | | | |
| | RAMP C-2 | | | | | | | | | | | | | | | | | | | | | | | | | | | | |
| | 789+00 | LT | | 796+95 | LT | | | | 10 | | | | | | 795 | 795 | | | | | | | | | | | | | |
| | I-77 SB | | | | | | | | | | | | | | | | | | | | | | | | | | | | |
| | 488+00 | LT | | 497+00 | LT | 900 | | | | | 18 | | 18 | | 900 | | | | | | 900 | | | | | | | | |
| | 488+00 | LT | | 494+45 | LT | | | | 16 | | | | | | | | 645 | | | | | | | | | | | | |
| | 488+00 | RT | | 489+35 | RT | | | | | | | | | | 135 | 135 | | | | | | | | | | | | | |
| | 488+00 | RT | | 489+60 | RT | 160 | 1 | | | | 3 | | 3 | | | | | | | | 160 | | | | | | | | |
| | 488+00 | RT | | 496+95 | RT | | | | 11 | | | | | | | 895 | | | | | | | | | | | | | |
| | 489+35 | RT | | 491+10 | RT | | | | 4 | | | | | | | | 175 | | | | | | | | | | | | |
| | 489+35 | RT | | 501+00 | RT | | | | | | | | | | | | 1165 | | | | | | | | | | | | |
| | 491+00 | LT | | 494+45 | LT | | | | 9 | | | | | | | | 345 | | | | | | | | | | | | |
| | 494+30 | LT | | 501+00 | LT | 670 | | | | | 13 | | 13 | | | | | | | | 670 | | | | | | | | |
| | 494+45 | LT | | 496+95 | LT | | | | 3 | | | | | | | 250 | | | | | | | | | | | | | |
| | 494+45 | LT | | 501+00 | LT | | | | | | | | | | 655 | | | | | | | | | | | | | | |
| | 496+95 | RT | | 498+65 | RT | | | | 9 | | | | | | | | 740 | | | | | | | | | | | | |
| | 496+95 | RT | | 501+00 | RT | | | | 5 | | | | | | | 405 | | | | | | | | | | | | | |
| | 497+10 | LT | | | | | | | | | | | | | | | | | | | | | | | | | | 25 | |
| | 498+65 | RT | | 501+00 | RT | | | | | | | | | | | | | 235 | | | | | | | | | | | |
| | US-224 WB | | | | | | | | | | | | | | | | | | | | | | | | | | | | |
| | 253+50 | LT | | 258+50 | LT | | | | | | | | | | 500 | 500 | | 500 | | | | | | | | | | | |
| | 253+50 | LT | | 256+10 | LT | 260 | | | | | 5 | | 5 | | | | | | | | 260 | | | | | | | | |
| | US-224 EB | | | | | | | | | | | | | | | | | | | | | | | | | | | | |
| | 253+50 | RT | | 258+50 | RT | | | | 4 | | | | | 500 | 500 | 500 | | | | | | | | | | | | | |
| | 253+50 | RT | | 255+20 | RT | | | | | | | | | | | | | 170 | | | | | | | | | | | |
| | 255+20 | RT | | 258+50 | RT | | | | 16 | | | | | | | | 660 | | | | | | | | | | | | |
| | TOTALS CARRIED TO SHEET 113 | | | | | 6790 | 3 | | 177 | | 115 | 20 | 135 | 4745 | 8285 | 8265 | 6820 | 905 | | | 5790 | 1000 | | | | 25 | | | |

CALCULATED JAR
CHECKED SSR

# MAINTENANCE OF TRAFFIC SUBSUMMARY

SUM-77 / 277 / 224

107
1288

N:\03\60\06744-08\06002_SUM-76-10.95\Design\MOT\Sheets\06002_MS302.dgn Sheet 1/31/2021 5:27:02 PM jrettig

| SHEET NO. | STATION TO STATION | | | | | 614 INCREASED BARRIER DELINEATION FT | 614 WORK ZONE IMPACT ATTENUATOR, 24" WIDE HAZARDS, (UNIDIRECTIONAL), AS PER PLAN EACH | 614 WORK ZONE SPEED LIMIT SIGN EACH | 614 WORK ZONE RAISED PAVEMENT MARKER, AS PER PLAN EACH | 615 PAVEMENT FOR MAINTAINING TRAFFIC, CLASS A SY | 614 BARRIER REFLECTOR, TYPE 1, 1-WAY EACH | 614 BARRIER REFLECTOR, TYPE 1, BIDIRECTIONAL EACH | 614 OBJECT MARKER, ONE WAY EACH | 614 WORK ZONE LANE LINE, CLASS 1, 6", AS PER PLAN MILE | 614 WORK ZONE EDGE LINE, CLASS 1, 6", AS PER PLAN, WHITE MILE | 614 WORK ZONE EDGE LINE, CLASS 1, 6", AS PER PLAN, YELLOW MILE | 614 WORK ZONE CHANNELIZING LINE, CLASS 1, 12", AS PER PLAN FT | 614 WORK ZONE DOTTED LINE, CLASS 1, AS PER PLAN FT | | | 622 PORTABLE BARRIER, UNANCHORED, 32" FT | 622 PORTABLE BARRIER, 50", AS PER PLAN FT | 622 PORTABLE BARRIER, ANCHORED, 32" FT | | 622 PORTABLE BARRIER, "Y" CONNECTOR EACH | 630 SIGN, GROUND MOUNTED EXTRUSHEET SF | 630 SIGN, OVERHEAD EXTRUSHEET SF |
|---|---|---|---|---|---|---|---|---|---|---|---|---|---|---|---|---|---|---|---|---|---|---|---|---|---|---|---|---|---|
| | PHASE 3 CONT'D | | | | | | | | | | | | | | | | | | | | | | | | | | | | |
| 331 | RAMP B-2 | | | | | | | | | | | | | | | | | | | | | | | | | | | | |
| | 301+00 | RT | | 308+00 | RT | | | | 15 | | | | | 700 | 700 | 700 | | | | | | | | | | | | | |
| | 7+20 | RT | | 10+00 | RT | | | | 5 | | | | | 280 | 280 | 280 | | | | | | | | | | | | | |
| | RAMP D | | | | | | | | | | | | | | | | | | | | | | | | | | | | |
| | 900+50 | LT | | 907+65 | LT | | | | 9 | | | | | | 715 | 715 | | | | | | | | | | | | | |
| | I-77 NB | | | | | | | | | | | | | | | | | | | | | | | | | | | | |
| | 501+00 | RT | | 514+00 | RT | | | | 22 | | | | | 2600 | | 1300 | | | | | | | | | | | | | |
| | 501+00 | RT | | 502+10 | RT | | | | | | | | | | | | 110 | | | | | | | | | | | | |
| | 501+00 | RT | | 507+40 | RT | | | | | | | | | | 640 | | | | | | | | | | | | | | |
| | 502+10 | RT | | 508+10 | RT | | | | | | | | | | | | | 600 | | | | | | | | | | | |
| | 507+40 | RT | | 514+00 | RT | | | | 17 | | | | | | 660 | | 1320 | | | | | | | | | | | | |
| | RAMP B | | | | | | | | | | | | | | | | | | | | | | | | | | | | |
| | 211+50 | RT | | 213+50 | RT | | | | 2 | | | | | | 200 | 200 | | | | | | | | | | | | | |
| | I-77 SB | | | | | | | | | | | | | | | | | | | | | | | | | | | | |
| | 501+00 | L/R | | 514+00 | L/R | 1300 | | | | | 26 | | 26 | | 1300 | 1300 | | | | | | | | 1300 | | | | | |
| | 501+00 | LT | | 504+50 | LT | | | | | | | | | | | | 350 | | | | | | | | | | | | |
| | 502+00 | LT | | | | | | | | | | | | | | | | | | | | | | | | | | 30 | |
| | 504+50 | LT | | 514+00 | LT | | | | 8 | | | | | 950 | | | | | | | | | | | | | | | |
| | 507+00 | LT | | | | | | | | | | | | | | | | | | | | | | | | | | 25 | |
| | 512+00 | LT | | | | | | | | | | | | | | | | | | | | | | | | | | 30 | |
| | US-224 WB | | | | | | | | | | | | | | | | | | | | | | | | | | | | |
| | 250+70 | LT | | 253+50 | LT | 280 | | | | | 5 | | 5 | | 280 | 280 | | | | | | | | 280 | | | | | |
| | 252+00 | LT | | 253+50 | LT | | | | | | | | | | | | | 150 | | | | | | | | | | | |
| | US-224 EB | | | | | | | | | | | | | | | | | | | | | | | | | | | | |
| | 250+70 | RT | | 253+50 | RT | | | | 2 | | | | | 280 | 280 | 280 | | 280 | | | | | | | | | | | |
| | | | | | | | | | | | | | | | | | | | | | | | | | | | | | |
| 332 | I-77 NB | | | | | | | | | | | | | | | | | | | | | | | | | | | | |
| | 514+00 | RT | | 526+15 | RT | | | | 20 | | | | | 2430 | 1215 | 1215 | | | | | | | | | | | | | |
| | 514+00 | RT | | 514+70 | RT | | | | | | | | | | | | 70 | | | | | | | | | | | | |
| | 514+70 | RT | | 523+50 | RT | | | | | | | | | | | | | 880 | | | | | | | | | | | |
| | I-77 SB | | | | | | | | | | | | | | | | | | | | | | | | | | | | |
| | 514+00 | LT | | 526+15 | LT | | | | | | | | | | 1215 | | | | | | | | | | | | | | |
| | 514+00 | LT | | 515+30 | LT | | | | 2 | | | | | | | 130 | | | | | | | | | | | | | |
| | 514+00 | LT | | 518+00 | LT | 400 | 1 | | | | 8 | | 8 | | | | | | | | | | | 400 | | | | | |
| | 514+00 | LT | | 515+85 | LT | | | | 2 | | | | | 185 | 185 | | | | | | | | | | | | | | |
| | 514+00 | RT | | 527+00 | RT | | | | | | | | | | | 1300 | | | | | | | | | | | | | |
| | 515+30 | LT | | 523+90 | LT | | | | 22 | | | | | | | | 860 | | | | | | | | | | | | |
| | 515+85 | LT | | 526+15 | LT | | | | 26 | | | | | | | | 2060 | | | | | | | | | | | | |
| | 517+00 | LT | | | | | | | | | | | | | | | | | | | | | | | | | | 25 | |
| | 526+15 | LT | | 527+00 | LT | | | | 4 | | | | | 170 | | | 85 | | | | | | | | | | | | |
| | | | | | | | | | | | | | | | | | | | | | | | | | | | | | |
| 333 | I-77 SB | | | | | | | | | | | | | | | | | | | | | | | | | | | | |
| | 324+60 | LT | | 329+45 | LT | | | | 5 | | | | | | | | 485 | | | | | | | | | | | | |
| | 324+60 | LT | | 333+25 | LT | | | | 14 | | | | | 1730 | | 865 | | | | | | | | | | | | | |
| | 328+40 | LT | | 333+25 | LT | | | | | | | | | | 385 | | | | | | | | | | | | | | |
| | 329+45 | LT | | 333+25 | LT | | | | 3 | | | | | 380 | | | | | | | | | | | | | | | |
| | TOTALS CARRIED TO SHEET 113 | | | | | 1980 | 1 | | 178 | | 39 | | 39 | 9705 | 8055 | 8565 | 5340 | 1910 | | | 1980 | | | | | 110 | | | |

CALCULATED JAR
CHECKED SSR

# MAINTENANCE OF TRAFFIC SUBSUMMARY

SUM-77 / 277 / 224

108
1288

N:\03\60\06744-08\106002_SUM-76-10.95\Design\MOT\Sheets\106002_MS303.dgn Sheet 1/31/2021 5:27:05 PM jrettig

| SHEET NO. | STATION TO STATION | 614 INCREASED BARRIER DELINEATION | 614 WORK ZONE IMPACT ATTENUATOR, 24" WIDE HAZARDS, (UNIDIRECTIONAL), AS PER PLAN | 614 WORK ZONE SPEED LIMIT SIGN | 614 WORK ZONE RAISED PAVEMENT MARKER, AS PER PLAN | 615 PAVEMENT FOR MAINTAINING TRAFFIC, CLASS A | 614 BARRIER REFLECTOR, TYPE 1, 1-WAY | 614 BARRIER REFLECTOR, TYPE 1, BIDIRECTIONAL | 614 OBJECT MARKER, ONE WAY | 614 WORK ZONE LANE LINE, CLASS 1, 6", AS PER PLAN | 614 WORK ZONE EDGE LINE, CLASS 1, 6", AS PER PLAN, WHITE | 614 WORK ZONE EDGE LINE, CLASS 1, 6", AS PER PLAN, YELLOW | 614 WORK ZONE CHANNELIZING LINE, CLASS 1, 12", AS PER PLAN | 614 WORK ZONE DOTTED LINE, CLASS 1, AS PER PLAN | | | 622 PORTABLE BARRIER, UNANCHORED, 32" | 622 PORTABLE BARRIER, 50", AS PER PLAN | 622 PORTABLE BARRIER, ANCHORED, 32" | | 622 PORTABLE BARRIER, "Y" CONNECTOR | 630 SIGN, GROUND MOUNTED EXTRUSHEET | 630 SIGN, OVERHEAD EXTRUSHEET |
|---|---|---|---|---|---|---|---|---|---|---|---|---|---|---|---|---|---|---|---|---|---|---|---|---|
| | | FT | EACH | EACH | EACH | SY | EACH | EACH | EACH | MILE | MILE | MILE | FT | FT | | | FT | FT | FT | | EACH | SF | SF |
| | PHASE 3 CONT'D | | | | | | | | | | | | | | | | | | | | | | |
| 337 | US-224/I-277 EB | | | | | | | | | | | | | | | | | | | | | | |
| | 212+35 RT 216+00 RT | | | | 3 | | | | | 365 | 365 | 365 | | 365 | | | | | | | | | |
| | | | | | | | | | | | | | | | | | | | | | | | |
| 338 | US-224/I-277 EB | | | | | | | | | | | | | | | | | | | | | | |
| | 216+00 RT 229+00 RT | | | | | | | | | | 1300 | 1300 | | | | | | | | | | | |
| | 216+00 RT 224+90 RT | | | | 7 | | | | | 890 | | | | | | | | | | | | | |
| | 216+00 RT 220+15 RT | | | | | | | | | | | | | 415 | | | | | | | | | |
| | 221+40 RT 229+00 RT | 760 | 1 | | | | 15 | | 15 | | | | | | | | 760 | | | | | | |
| | 224+90 RT 229+00 RT | | | | | | | | | | | | 410 | | | | | | | | | | |
| | 228+50 RT | | | | | | | | | | | | | | | | | | | | | | 118 |
| | US-224/I-277 WB | | | | | | | | | | | | | | | | | | | | | | |
| | 225+00 LT 229+00 LT | | | | 13 | | | | | 400 | 400 | 400 | 800 | | | | | | | | | | |
| | 226+15 LT 229+00 LT | | | | | | | | | | | | | 285 | | | | | | | | | |
| | | | | | | | | | | | | | | | | | | | | | | | |
| 339 | US-224/I-277 EB | | | | | | | | | | | | | | | | | | | | | | |
| | 229+00 RT 242+00 RT | 1300 | | | | | 26 | | 26 | | 1300 | 1300 | | | | | 1300 | | | | | | |
| | 229+00 RT 233+50 RT | | | | | | | | | | | | 450 | | | | | | | | | | |
| | 233+50 RT 242+00 RT | | | | 7 | | | | | 850 | | | | | | | | | | | | | |
| | 240+10 RT 242+00 RT | | | | | | | | | | | | | 190 | | | | | | | | | |
| | US-224/I-277 WB | | | | | | | | | | | | | | | | | | | | | | |
| | 229+00 LT 232+15 LT | | | | 11 | | | | | 315 | 315 | | 315 | 315 | | | | | | | | | |
| | 229+00 LT 235+65 LT | | | | | | | | | | | | 665 | | | | | | | | | | |
| | 229+00 LT 242+00 LT | | | | | | | | | | | 1300 | | | | | | | | | | | |
| | 235+65 LT 242+00 LT | | | | | | | | | | 835 | | | | | | | | | | | | |
| | RAMP A | | | | | | | | | | | | | | | | | | | | | | |
| | 109+50 LT 114+04 LT | | | | | 168 | | | | | | | | | | | | | | | | | |
| | RAMP B | | | | | | | | | | | | | | | | | | | | | | |
| | 23+20 RT 26+65 RT | | | | 12 | | | | | 345 | 345 | 345 | 345 | | | | | | | | | | |
| | 23+20 RT 24+65 RT | | | | | | | | | | | | 145 | | | | | | | | | | |
| | RAMP B-2 | | | | | | | | | | | | | | | | | | | | | | |
| | 198+50 RT 203+00 RT | | | | 21 | | | | | 450 | 450 | 450 | 900 | | | | | | | | | | |
| | | | | | | | | | | | | | | | | | | | | | | | |
| 340 | US-224 EB | | | | | | | | | | | | | | | | | | | | | | |
| | 242+00 RT 250+75 RT | | | | 7 | | | | | 875 | | 875 | | | | | | | | | | | |
| | 242+00 RT 244+35 RT | 235 | | | | | 5 | | 5 | | 235 | | | 235 | | | 235 | | | | | | |
| | 244+35 RT 245+80 RT | | | | 4 | | | | | | | | 145 | | | | | | | | | | |
| | 245+80 RT 250+75 RT | | | | | | | | | | 495 | | | | | | | | | | | | |
| | 249+60 RT 250+75 RT | | | | | | | | | | | | | 115 | | | | | | | | | |
| | RAMP A | | | | | | | | | | | | | | | | | | | | | | |
| | 97+00 RT 103+70 RT | | | | 8 | | | | | | | 670 | | | | | | | | | | | |
| | 97+00 RT 107+20 RT | 1020 | | | | | 20 | | 20 | | 1020 | | | | | | 1020 | | | | | | |
| | 103+70 RT 107+20 RT | | | | 9 | | | | | | | | 350 | | | | | | | | | | |
| | 107+89 LT 109+50 LT | | | | | 38 | | | | | | | | | | | | | | | | | |
| | US-224 WB | | | | | | | | | | | | | | | | | | | | | | |
| | 242+00 LT 250+75 LT | | | | | | | | | | 875 | 875 | | | | | | | | | | | |
| | 244+50 LT 250+75 LT | 625 | | | | | 13 | | 13 | | | | | | | | 625 | | | | | | |
| | | | | | | | | | | | | | | | | | | | | | | | |
| 341 | US-224 EB | | | | | | | | | | | | | | | | | | | | | | |
| | 258+50 RT 270+00 RT | | | | | | | | | | | 1150 | | | | | | | | | | | |
| | 258+50 RT 266+90 RT | | | | | | | | | | | | 840 | | | | | | | | | | |
| | 258+50 RT 260+75 RT | | | | 6 | | | | | | | | 225 | | | | | | | | | | |
| | 260+75 RT 270+00 RT | | | | | | | | | | 925 | | | | | | | | | | | | |
| | 266+90 RT 270+00 RT | | | | 3 | | | | | 310 | | | | | | | | | | | | | |
| | RAMP C-1 | | | | | | | | | | | | | | | | | | | | | | |
| | 680+70 LT 682+95 LT | | | | 6 | | | | | | | | 225 | | | | | | | | | | |
| | 680+70 LT 686+00 LT | | | | | | | | | | 530 | | | | | | | | | | | | |
| | 682+95 LT 686+00 LT | | | | 4 | | | | | | | 305 | | | | | | | | | | | |
| | | | | | | | | | | | | | | | | | | | | | | | |
| | | | | | | | | | | | | | | | | | | | | | | | |
| | TOTALS CARRIED TO SHEET 113 | 3940 | 1 | | 121 | 206 | 79 | | 79 | 4800 | 9390 | 9335 | 5815 | 1920 | | | 3940 | | | | | | 118 |

CALCULATED JAR
CHECKED SSR

# MAINTENANCE OF TRAFFIC SUBSUMMARY

## SUM-77 / 277 / 224



N:\03\60\06744-08\106002_SUM-76-10.95\Design\MOT\Sheets\106002_MS304.dgn Sheet 1/31/2025 5:27:07 PM jrettig

| SHEET NO. | STATION TO STATION | | | | | 614 INCREASED BARRIER DELINEATION FT | 614 WORK ZONE IMPACT ATTENUATOR, 24" WIDE HAZARDS, (UNIDIRECTIONAL), AS PER PLAN EACH | 614 WORK ZONE SPEED LIMIT SIGN EACH | 614 WORK ZONE RAISED PAVEMENT MARKER, AS PER PLAN EACH | 615 PAVEMENT FOR MAINTAINING TRAFFIC, CLASS A SY | 614 BARRIER REFLECTOR, TYPE 1, 1-WAY EACH | 614 BARRIER REFLECTOR, TYPE 1, BIDIRECTIONAL EACH | 614 OBJECT MARKER, ONE WAY EACH | 614 WORK ZONE LANE LINE, CLASS 1, 6", AS PER PLAN MILE | 614 WORK ZONE EDGE LINE, CLASS 1, 6", AS PER PLAN, WHITE MILE | 614 WORK ZONE EDGE LINE, CLASS 1, 6", AS PER PLAN, YELLOW MILE | 614 WORK ZONE CHANNELIZING LINE, CLASS 1, 12", AS PER PLAN FT | 614 WORK ZONE DOTTED LINE, CLASS 1, AS PER PLAN FT | | | 622 PORTABLE BARRIER, UNANCHORED, 32" FT | 622 PORTABLE BARRIER, 50", AS PER PLAN FT | 622 PORTABLE BARRIER, ANCHORED, 32" FT | | 622 PORTABLE BARRIER, "Y" CONNECTOR EACH | 630 SIGN, GROUND MOUNTED EXTRUSHEET SF | 630 SIGN, OVERHEAD EXTRUSHEET SF |
|---|---|---|---|---|---|---|---|---|---|---|---|---|---|---|---|---|---|---|---|---|---|---|---|---|---|---|---|---|---|
| | PHASE 3 CONT'D | | | | | | | | | | | | | | | | | | | | | | | | | | | | |
| 341 | RAMP C | | | | | | | | | | | | | | | | | | | | | | | | | | | | |
| | 597+00 | L/R | | 599+10 | L/R | | | | 3 | | | | | | 210 | 210 | | 210 | | | | | | | | | | | |
| | US-224 WB | | | | | | | | | | | | | | | | | | | | | | | | | | | | |
| | 258+50 | LT | | 264+70 | LT | | | | | | | | | | 620 | | | | | | | | | | | | | | |
| | 258+50 | LT | | 270+00 | LT | | | | | | | | | | | 1150 | | | | | | | | | | | | | |
| | 258+50 | LT | | 263+45 | LT | | | | | | | | | | | | | 495 | | | | | | | | | | | |
| | 263+45 | LT | | 270+00 | LT | | | | 5 | | | | | 655 | | | | | | | | | | | | | | | |
| | 264+70 | LT | | 270+00 | LT | | | | 13 | | | | | | | | 530 | | | | | | | | | | | | |
| | 268+85 | LT | | 270+00 | LT | | | | | | | | | | 115 | | | | | | | | | | | | | | |
| | RAMP D | | | | | | | | | | | | | | | | | | | | | | | | | | | | |
| | 888+55 | LT | | 900+50 | LT | | | | | | | | | | 1195 | | | | | | | | | | | | | | |
| | 888+55 | LT | | 892+65 | LT | | | | 10 | | | | | | | | 410 | | | | | | | | | | | | |
| | 892+65 | LT | | 900+50 | LT | | | | 10 | | | | | | | 785 | | | | | | | | | | | | | |
| | | | | | | | | | | | | | | | | | | | | | | | | | | | | | |
| 342 | US-224 EB | | | | | | | | | | | | | | | | | | | | | | | | | | | | |
| | 270+00 | RT | | 283+00 | RT | | | | 11 | | | | | 1300 | | 1300 | | | | | | | | | | | | | |
| | 270+00 | RT | | 271+45 | RT | | | | | | | | | | 145 | | | | | | | | | | | | | | |
| | 271+45 | RT | | 280+60 | RT | | | | | | | | | | | | 915 | | | | | | | | | | | | |
| | 271+45 | RT | | 277+50 | RT | | | | 15 | | | | | | | | 605 | | | | | | | | | | | | |
| | 271+45 | RT | | 283+00 | RT | | | | | | | | | | 1155 | | | | | | | | | | | | | | |
| | 280+60 | RT | | 283+00 | RT | | | | 2 | | | | | 240 | | | | | | | | | | | | | | | |
| | RAMP C | | | | | | | | | | | | | | | | | | | | | | | | | | | | |
| | 599+10 | LT | | 600+60 | LT | | | | 2 | | | | | | 150 | 150 | | 150 | | | | | | | | | | | |
| | US-224 WB | | | | | | | | | | | | | | | | | | | | | | | | | | | | |
| | 270+00 | LT | | 283+00 | LT | | | | 11 | | | | | 1300 | 1300 | 1300 | | | | | | | | | | | | | |
| | 270+00 | LT | | 271+85 | LT | | | | | | | | | | | | 185 | | | | | | | | | | | | |
| | 271+85 | LT | | 283+00 | LT | | | | | | | | | | | | | 1115 | | | | | | | | | | | |
| | | | | | | | | | | | | | | | | | | | | | | | | | | | | | |
| 343 | US-224 EB | | | | | | | | | | | | | | | | | | | | | | | | | | | | |
| | 283+00 | RT | | 288+05 | RT | | | | 8 | | | | | 1010 | 505 | 505 | | | | | | | | | | | | | |
| | US-224 WB | | | | | | | | | | | | | | | | | | | | | | | | | | | | |
| | 283+00 | LT | | 286+00 | LT | | | | 3 | | | | | 300 | 300 | 300 | | 300 | | | | | | | | | | | |
| | | | | | | | | | | | | | | | | | | | | | | | | | | | | | |
| 345 | RAMP B | | | | | | | | | | | | | | | | | | | | | | | | | | | | |
| | 203+00 | RT | | 211+50 | RT | | | | | | | | | | 850 | | | | | | | | | | | | | | |
| | 203+00 | RT | | 205+85 | RT | | | | 7 | | | | | | | | 285 | | | | | | | | | | | | |
| | 205+85 | RT | | 211+50 | RT | | | | 7 | | | | | | | 565 | | | | | | | | | | | | | |
| | RAMP B-2 | | | | | | | | | | | | | | | | | | | | | | | | | | | | |
| | 10+00 | | | 15+50 | | | | | | | | | | | 550 | | | | | | | | | | | | | | |
| | 10+00 | | | 18+40 | | | | | 18 | | | | | 840 | | 840 | | | | | | | | | | | | | |
| | 15+50 | | | 18+40 | | | | | | | | | | | | | 290 | | | | | | | | | | | | |
| | | | | | | | | | | | | | | | | | | | | | | | | | | | | | |
| 346 | RAMP C | | | | | | | | | | | | | | | | | | | | | | | | | | | | |
| | 588+00 | LT | | 593+00 | LT | | | | 6 | | | | | | | 500 | | | | | | | | | | | | | |
| | 588+00 | LT | | 597+00 | LT | | | | | | | | | | 900 | | | | | | | | | | | | | | |
| | 593+00 | LT | | 596+40 | LT | | | | 9 | | | | | | | | 340 | | | | | | | | | | | | |
| | 595+00 | LT | | 597+00 | LT | | | | 3 | | | | | | | 200 | | | | | | | | | | | | | |
| | 596+40 | LT | | 597+00 | LT | | | | | | | | | | | | | 60 | | | | | | | | | | | |
| | RAMP C-2 | | | | | | | | | | | | | | | | | | | | | | | | | | | | |
| | 782+90 | LT | | 789+00 | LT | | | | 8 | | | | | | | 610 | | | | | | | | | | | | | |
| | 782+90 | LT | | 785+00 | LT | | | | | | | | | | | | 210 | | | | | | | | | | | | |
| | 785+00 | LT | | 789+00 | LT | | | | | | | | | | 400 | | | | | | | | | | | | | | |
| | RAMP C-1 | | | | | | | | | | | | | | | | | | | | | | | | | | | | |
| | 686+00 | LT | | 691+00 | LT | | | | 6 | | | | | | 500 | 500 | | | | | | | | | | | | | |
| | | | | | | | | | | | | | | | | | | | | | | | | | | | | | |
| | | | | | | | | | | | | | | | | | | | | | | | | | | | | | |
| | | | | | | | | | | | | | | | | | | | | | | | | | | | | | |
| | | | | | | | | | | | | | | | | | | | | | | | | | | | | | |
| | TOTALS CARRIED TO SHEET 113 | | | | | | | | 157 | | | | | 5645 | 8895 | 8915 | 3770 | 2330 | | | | | | | | | | | |

CALCULATED JAR
CHECKED SSR

# MAINTENANCE OF TRAFFIC SUBSUMMARY

SUM-77 / 277 / 224



N:\03\60\06744-08\106002_SUM-76-10.95\Design\MOT\Sheets\106002_MS305.dgn Sheet1 1/31/2021 5:27:09 PM jrettig

# SUMMARY OF TRAFFIC MAINTENANCE

| SHEET NO. | STATION TO STATION | 614 INCREASED BARRIER DELINEATION FT | 614 WORK ZONE IMPACT ATTENUATOR, 24" WIDE HAZARDS, (UNIDIRECTIONAL), AS PER PLAN EACH | 614 WORK ZONE SPEED LIMIT SIGN EACH | 614 WORK ZONE RAISED PAVEMENT MARKER, AS PER PLAN EACH | 615 PAVEMENT FOR MAINTAINING TRAFFIC, CLASS A SY | 614 BARRIER REFLECTOR, TYPE 1, 1-WAY EACH | 614 BARRIER REFLECTOR, TYPE 1, BIDIRECTIONAL EACH | 614 OBJECT MARKER, ONE WAY EACH | 614 WORK ZONE LANE LINE, CLASS I, 6", AS PER PLAN MILE | 614 WORK ZONE EDGE LINE, CLASS I, 6", AS PER PLAN, WHITE MILE | 614 WORK ZONE EDGE LINE, CLASS I, 6", AS PER PLAN, YELLOW MILE | 614 WORK ZONE CHANNELIZING LINE, CLASS I, 12", AS PER PLAN FT | 614 WORK ZONE DOTTED LINE, CLASS I, AS PER PLAN FT | | | 622 PORTABLE BARRIER, UNANCHORED, 32" FT | 622 PORTABLE BARRIER, 50", AS PER PLAN FT | 622 PORTABLE BARRIER, ANCHORED, 32" FT | | 622 PORTABLE BARRIER, "Y" CONNECTOR EACH | 630 SIGN, GROUND MOUNTED EXTRUSHEET SF | 630 SIGN, OVERHEAD EXTRUSHEET SF |
|---|---|---|---|---|---|---|---|---|---|---|---|---|---|---|---|---|---|---|---|---|---|---|---|---|
| | PHASE 3A | | | | | | | | | | | | | | | | | | | | | | | |
| 352 | I-77 SB | | | | | | | | | | | | | | | | | | | | | | | |
| | 494+40 LT – 501+00 LT | 660 | | | | | 13 | | 13 | | 660 | | | | | | 660 | | | | | | | |
| | 494+40 LT – 497+45 LT | | | | | | | | | | | | | 305 | | | | | | | | | | |
| | 497+45 LT – 501+00 LT | | | | | | | | | | | | 355 | | | | | | | | | | | |
| | 497+30 LT | | | | | | | | | | | | | | | | | | | | | | 25 | |
| | US-224 WB | | | | | | | | | | | | | | | | | | | | | | | |
| | 253+50 LT – 258+50 LT | | | | | | | | | | 500 | 500 | | 500 | | | | | | | | | | |
| | | | | | | | | | | | | | | | | | | | | | | | | |
| 353 | I-77 SB | | | | | | | | | | | | | | | | | | | | | | | |
| | 501+00 LT – 506+30 LT | | | | | | | | | | | | 530 | | | | | | | | | | | |
| | 501+00 LT – 506+65 LT | | | | | | | | | | 565 | | | | | | | | | | | | | |
| | 501+00 LT – 506+50 LT | 550 | 1 | | | | 11 | | 11 | | | | | | | | 550 | | | | | | | |
| | 503+20 LT – 506+65 LT | | | | 9 | | | | | | | | 345 | | | | | | | | | | | |
| | 502+10 LT | | | | | | | | | | | | | | | | | | | | | | 25 | |
| | 507+15 LT | | | | | | | | | | | | | | | | | | | | | | 25 | |
| | 512+15 LT | | | | | | | | | | | | | | | | | | | | | | 25 | |
| | RAMP B-1 | | | | | | | | | | | | | | | | | | | | | | | |
| | 406+65 RT – 408+75 RT | | | | 3 | | | | | | 210 | 210 | | | | | | | | | | | | |
| | US-224 WB | | | | | | | | | | | | | | | | | | | | | | | |
| | 250+75 LT – 253+50 LT | | | | | | | | | | 275 | 275 | 275 | | | | | | | | | | | |
| | | | | | | | | | | | | | | | | | | | | | | | | |
| 354 | US-224 WB | | | | | | | | | | | | | | | | | | | | | | | |
| | 242+00 LT – 247+80 LT | | | | | | | | | | 580 | | | | | | | | | | | | | |
| | 242+00 LT – 250+75 LT | | | | | | | | | | | 875 | | | | | | | | | | | | |
| | 247+80 LT – 250+75 LT | | | | 7 | | | | | | | | 295 | | | | | | | | | | | |
| | RAMP B-1 | | | | | | | | | | | | | | | | | | | | | | | |
| | 414+50 RT – 421+50 RT | | | | | | | | | | 700 | | | | | | | | | | | | | |
| | 414+50 RT – 418+55 RT | | | | 5 | | | | | | | 405 | | | | | | | | | | | | |
| | 418+55 RT – 421+50 RT | | | | 7 | | | | | | | | 295 | | | | | | | | | | | |
| | | | | | | | | | | | | | | | | | | | | | | | | |
| 355 | US-224 WB | | | | | | | | | | | | | | | | | | | | | | | |
| | 258+50 LT – 264+70 LT | | | | | | | | | | 620 | | | | | | | | | | | | | |
| | 258+50 LT – 259+55 LT | | | | | | | | | | | | | 105 | | | | | | | | | | |
| | 258+50 LT – 263+45 LT | | | | | | | | | | | 495 | | | | | | | | | | | | |
| | 259+55 LT – 263+45 LT | | | | 3 | | | | | 390 | | | | | | | | | | | | | | |
| | | | | | | | | | | | | | | | | | | | | | | | | |
| 358 | RAMP B-1 | | | | | | | | | | | | | | | | | | | | | | | |
| | 408+75 RT – 414+50 RT | | | | 7 | | | | | | 575 | 575 | | | | | | | | | | | | |
| | | | | | | | | | | | | | | | | | | | | | | | | |
| | | | | | | | | | | | | | | | | | | | | | | | | |
| | | | | | | | | | | | | | | | | | | | | | | | | |
| | PHASE 3B | | | | | | | | | | | | | | | | | | | | | | | |
| 359 | I-77 SB | | | | | | | | | | | | | | | | | | | | | | | |
| | 470+00 LT – 475+00 LT | 500 | | | 4 | | 10 | | 10 | 500 | 500 | | | | | | 500 | | | | | | | |
| | | | | | | | | | | | | | | | | | | | | | | | | |
| 360 | I-77 SB | | | | | | | | | | | | | | | | | | | | | | | |
| | 475+00 LT – 488+00 LT | 1300 | | | | | 26 | | 26 | | 1300 | | | | | | 1300 | | | | | | | |
| | 475+00 LT – 483+00 LT | | | | 7 | | | | | 800 | | | | | | | | | | | | | | |
| | 483+00 LT – 488+00 LT | | | | | | | | | | | | 500 | | | | | | | | | | | |
| | 485+40 LT – 488+00 LT | | | | 7 | | | | | | | | 260 | | | | | | | | | | | |
| | | | | | | | | | | | | | | | | | | | | | | | | |
| | | | | | | | | | | | | | | | | | | | | | | | | |
| | | | | | | | | | | | | | | | | | | | | | | | | |
| | | | | | | | | | | | | | | | | | | | | | | | | |
| | | | | | | | | | | | | | | | | | | | | | | | | |
| | | | | | | | | | | | | | | | | | | | | | | | | |
| | | | | | | | | | | | | | | | | | | | | | | | | |
| | | | | | | | | | | | | | | | | | | | | | | | | |
| | TOTALS CARRIED TO SHEET 113 | 3010 | 1 | | 59 | | 60 | | 60 | 1690 | 6485 | 3335 | 2855 | 910 | | | 3010 | | | | | | 100 | |

CALCULATED JAR
CHECKED SSR

SUM-77 / 277 / 224



N:\03\60\06744-08\06002_SUM-76-10.95\Design\MOT\Sheets\06002_MS306.dgn Sheet 1/31/2021 5:27:11 PM jrettig

# SUMMARY OF TRAFFIC SUBSUMMARY

MAINTENANCE

SUM-77 / 277 / 224

CALCULATED JAR
CHECKED SSR

| SHEET NO. | STATION TO STATION | 614 INCREASED BARRIER DELINEATION FT | 614 WORK ZONE IMPACT ATTENUATOR, 24" WIDE HAZARDS, (UNIDIRECTIONAL), AS PER PLAN EACH | 614 WORK ZONE SPEED LIMIT SIGN EACH | 614 WORK ZONE RAISED PAVEMENT MARKER, AS PER PLAN EACH | 615 PAVEMENT FOR MAINTAINING TRAFFIC, CLASS A SY | 614 BARRIER REFLECTOR, TYPE 1, 1-WAY EACH | 614 BARRIER REFLECTOR, TYPE 1, BIDIRECTIONAL EACH | 614 OBJECT MARKER, ONE WAY EACH | 614 WORK ZONE LANE LINE, CLASS 1, 6", AS PER PLAN MILE | 614 WORK ZONE EDGE LINE, CLASS 1, 6", AS PER PLAN, WHITE MILE | 614 WORK ZONE EDGE LINE, CLASS 1, 6", AS PER PLAN, YELLOW MILE | 614 WORK ZONE CHANNELIZING LINE, CLASS 1, 12", AS PER PLAN FT | 614 WORK ZONE DOTTED LINE, CLASS 1, AS PER PLAN FT | | | 622 PORTABLE BARRIER, UNANCHORED, 32" FT | 622 PORTABLE BARRIER, 50", AS PER PLAN FT | 622 PORTABLE BARRIER, ANCHORED, 32" FT | | 622 PORTABLE BARRIER, "Y" CONNECTOR EACH | 630 SIGN, GROUND MOUNTED EXTRUSHEET SF | 630 SIGN, OVERHEAD EXTRUSHEET SF |
|---|---|---|---|---|---|---|---|---|---|---|---|---|---|---|---|---|---|---|---|---|---|---|---|---|
| | PHASE 3B CONT'D | | | | | | | | | | | | | | | | | | | | | | | |
| 361 | I-77 SB | | | | | | | | | | | | | | | | | | | | | | | |
| | 488+00 LT 489+30 LT | | | | | | | | | | | | 130 | | | | | | | | | | | |
| | 489+30 LT 490+10 LT | 80 | | | | | 2 | | 2 | | 80 | | | | | | 80 | | | | | | | |
| | RAMP A | | | | | | | | | | | | | | | | | | | | | | | |
| | 87+30 RT 90+90 RT | 360 | 1 | | | | 7 | | 7 | | | | | | | | 360 | | | | | | | |
| | 87+30 RT 97+00 RT | | | | | | | | | | 970 | | | | | | | | | | | | | |
| | 87+30 RT 89+30 RT | | | | 5 | | | | | | | | 200 | | | | | | | | | | | |
| | 89+30 RT 97+00 RT | | | | 10 | | | | | | | 770 | | | | | | | | | | | | |
| 362 | US-224 EB | | | | | | | | | | | | | | | | | | | | | | | |
| | 224+90 RT 229+00 RT | | | | 3 | | | | | | | | 410 | | | | | | | | | | | |
| | 227+90 RT 229+00 RT | | | | 3 | | | | | | 110 | | 110 | | | | | | | | | | | |
| 363 | US-224 EB | | | | | | | | | | | | | | | | | | | | | | | |
| | 229+00 RT 238+70 RT | | | | 48 | | | | | | | | 1940 | | | | | | | | | | | |
| | 229+00 RT 242+00 RT | | | | | | | | | | 1300 | | | | | | | | | | | | | |
| | 238+70 RT 242+00 RT | | | | 4 | | | | | | 330 | 330 | | | | | | | | | | | | |
| | 239+10 RT 242+00 RT | 580 | 1 | | | | 12 | | 12 | | | | | | | | 580 | | | | | | 1 | |
| 364 | US-224 EB | | | | | | | | | | | | | | | | | | | | | | | |
| | 242+00 RT 250+90 RT | 890 | | | | | 18 | | 18 | | 890 | | | | | | 890 | | | | | | | |
| | 250+00 RT 251+90 RT | | | | | | | | | | | | | 190 | | | | | | | | | | |
| | RAMP A | | | | | | | | | | | | | | | | | | | | | | | |
| | 97+00 L/R 109+50 L/R | 1250 | | | 15 | | 25 | | 25 | | 1250 | 1250 | | | | | 1250 | | | | | | | |
| | PHASE 4 | | | | | | | | | | | | | | | | | | | | | | | |
| 395 | I-77 NB / I-77 SB | | | | | | | | | | | | | | | | | | | | | | | |
| | 366+00 L/R 371+00 L/R | 1000 | 1 | | | | 20 | | 20 | | | 500 | | | | | 1000 | | | | | | | |
| 396 | I-77 NB | | | | | | | | | | | | | | | | | | | | | | | |
| | 371+00 RT 375+00 RT | 400 | | | | | 8 | | 8 | | | | | | | | 400 | | | | | | | |
| | I-77 SB | | | | | | | | | | | | | | | | | | | | | | | |
| | 371+00 LT 376+60 LT | 560 | 1 | | | | 11 | | 11 | | | | | | | | 560 | | | | | | | |
| | 371+00 LT 384+00 LT | | | | | | | | | | | 1300 | | | | | | | | | | | | |
| | 383+45 LT 384+00 LT | | | | | | | | | | | | | 55 | | | | | | | | | | |
| 397 | I-77 SB | | | | | | | | | | | | | | | | | | | | | | | |
| | 384+00 LT 391+80 LT | | | | | | | | | | | 780 | | 780 | | | | | | | | | | |
| 399 | I 77 NB / I-77 SB | | | | | | | | | | | | | | | | | | | | | | | |
| | 472+50 R/L 475+00 R/L | 500 | 1 | | | | 10 | | 10 | | | | | | | | 500 | | | | | | | |
| 400 | I 77 NB / I-77 SB | | | | | | | | | | | | | | | | | | | | | | | |
| | 475+00 R/L 488+00 R/L | 2600 | | | | | 52 | | 52 | | | | | | | | 2600 | | | | | | | |
| 401 | I-77 NB | | | | | | | | | | | | | | | | | | | | | | | |
| | 488+00 RT 492+50 RT | 450 | | | | | 9 | | 9 | | | | | | | | 450 | | | | | | | |
| | I-77 SB | | | | | | | | | | | | | | | | | | | | | | | |
| | 488+00 LT 495+70 LT | 750 | | | | | 15 | | 15 | | | | | | | | 750 | | | | | | | |
| | TOTALS CARRIED TO SHEET 113 | 9420 | 5 | | 88 | | 189 | | 189 | | 4930 | 4930 | 2790 | 1025 | | | 9420 | | | | | 1 | | |



N:\03\60\06744-08\06002_SUM-76-10.95\Design\MOT\Sheets\06002_MS307.dgn Sheet 1/31/2021 5:27:12 PM jrettig

| SHEET NO. | STATION TO STATION | 614 INCREASED BARRIER DELINEATION FT | 614 WORK ZONE IMPACT ATTENUATOR, 24" WIDE HAZARDS, (UNIDIRECTIONAL), AS PER PLAN EACH | 614 WORK ZONE SPEED LIMIT SIGN EACH | 614 WORK ZONE RAISED PAVEMENT MARKER, AS PER PLAN EACH | 615 PAVEMENT FOR MAINTAINING TRAFFIC, CLASS A SY | 614 BARRIER REFLECTOR, TYPE 1, 1-WAY EACH | 614 BARRIER REFLECTOR, TYPE 1, BIDIRECTIONAL EACH | 614 OBJECT MARKER, ONE WAY EACH | 614 WORK ZONE LANE LINE, CLASS 1, 6", AS PER PLAN MILE | 614 WORK ZONE EDGE LINE, CLASS 1, 6", AS PER PLAN, WHITE MILE | 614 WORK ZONE EDGE LINE, CLASS 1, 6", AS PER PLAN, YELLOW MILE | 614 WORK ZONE CHANNELIZING LINE, CLASS 1, 12", AS PER PLAN FT | 614 WORK ZONE DOTTED LINE, CLASS 1, AS PER PLAN FT | | | 622 PORTABLE BARRIER, UNANCHORED, 32" FT | 622 PORTABLE BARRIER, 50", AS PER PLAN FT | 622 PORTABLE BARRIER, ANCHORED, 32" FT | | 622 PORTABLE BARRIER, "Y" CONNECTOR EACH | 630 SIGN, GROUND MOUNTED EXTRUSHEET SF | 630 SIGN, OVERHEAD EXTRUSHEET SF |
|---|---|---|---|---|---|---|---|---|---|---|---|---|---|---|---|---|---|---|---|---|---|---|---|
| | | | | | | | | | | | | | | | | | | | | | | | |
| | | | | | | | | | | | | | | | | | | | | | | | |
| | | | | | | | | | | | | | | | | | | | | | | | |
| | | | | | | | | | | | | | | | | | | | | | | | |
| | TOTALS 87 | 4460 | 1 | 2 | 660 | 2488 | 89 | | 89 | 4430 | 2867 | 4850 | 6402 | 2709 | | | 4460 | | | | | 83 | 96 |
| | TOTALS 88 | 18630 | 4 | 8 | 517 | 35 | 373 | | 373 | 34400 | 17920 | 18200 | 2000 | 380 | | | 18310 | | 320 | | | 440 | 96 |
| | TOTALS 89 | 7860 | 1 | 4 | 173 | 4810 | 157 | | 157 | 12295 | 6577 | 7445 | 2514 | 1317 | | | 7860 | | | | 1 | 99 | 105 |
| | TOTALS 90 | 2300 | 2 | 2 | 571 | | 47 | | 47 | 3580 | 4299 | 4761 | 6755 | 1213 | | | 2300 | | | | | | 56 |
| | TOTALS 91 | 1830 | 1 | | 431 | 1532 | 37 | | 37 | 960 | 5274 | 4273 | 4458 | 1000 | | | 1830 | | | | | | 57 |
| | TOTALS 92 | 6230 | 1 | | 30 | | 125 | | 125 | 715 | 3290 | 8574 | 300 | 2955 | | | 6230 | | | | | 88 | |
| | TOTALS 93 | 1860 | 2 | | 79 | | 38 | | 38 | 2790 | 3665 | 5598 | 918 | 4217 | | | 1860 | | | | 1 | 234 | |
| | TOTALS 94 | 5170 | 6 | 2 | 722 | | 106 | | 106 | 1315 | 8034 | 10608 | 6828 | 1860 | | | 5170 | | | | | 264 | 239 |
| | TOTALS 95 | 15500 | 4 | | 187 | | 312 | | 312 | 10400 | 21876 | 21871 | 6153 | 1220 | | | 15220 | | 280 | | 1 | | 608 |
| | TOTALS 96 | 3030 | 3 | | 71 | | 61 | | 61 | 5650 | 7767 | 8018 | 3187 | 1570 | | | 3030 | | | | | | |
| | TOTALS 97 | 1530 | | | 325 | | 30 | | 30 | 5 | 7625 | 3200 | 4220 | 1840 | | | 1530 | | | | | | 368 |
| | TOTALS 98 | 3920 | 1 | | 244 | | 78 | | 78 | 1350 | 4315 | 4155 | 4320 | 295 | | | 3920 | | | | | | |
| | TOTALS 99 | 4700 | 3 | | 71 | | 94 | | 94 | | 5910 | 5670 | 3670 | 1420 | | | 4700 | | | | 1 | | 51 |
| | TOTALS 100 | 2870 | 2 | | 111 | | 58 | | 58 | 1590 | 7620 | 3025 | 2640 | 1600 | | | 2870 | | | | | | |
| | TOTALS 101 | 3545 | 3 | | 431 | | 71 | | 71 | 1805 | 5550 | 5655 | 3915 | 2760 | | | 3545 | | | | | | |
| | TOTALS 102 | 1050 | | | 236 | | 21 | | 21 | | 5190 | 1430 | 5555 | 1880 | | | 1050 | | | | | | |
| | TOTALS 103 | 3810 | 2 | | 96 | | 76 | | 76 | | 7725 | 4045 | 1945 | 1900 | | | 3810 | | | | 1 | | 33 |
| | TOTALS 104 | 2050 | 1 | | 99 | | 41 | | 41 | | 6150 | 1725 | 5585 | 800 | | | 2050 | | | | | | |
| | TOTALS 105 | 4110 | | | 312 | 3657 | 25 | 57 | 82 | 10255 | 11195 | 10495 | 8700 | 1470 | | | 1240 | 2870 | | | | | |
| | TOTALS 106 | 15670 | 2 | | 270 | | 157 | 156 | 313 | 27860 | 25285 | 25375 | 1005 | 1955 | | | 7870 | 7800 | | | | | 517 |
| | TOTALS 107 | 6790 | 3 | | 177 | | 115 | 20 | 135 | 4745 | 8285 | 8265 | 6820 | 905 | | | 5790 | 1000 | | | | 25 | |
| | TOTALS 108 | 1980 | 1 | | 178 | | 39 | | 39 | 9705 | 8055 | 8565 | 5340 | 1910 | | | 1980 | | | | | 110 | |
| | TOTALS 109 | 3940 | 1 | | 121 | 206 | 79 | | 79 | 4800 | 9390 | 9335 | 5815 | 1920 | | | 3940 | | | | | | 118 |
| | TOTALS 110 | | | | 157 | | | | | 5645 | 8895 | 8915 | 3770 | 2330 | | | | | | | | | |
| | TOTALS 111 | 3010 | 1 | | 59 | | 60 | | 60 | 1690 | 6485 | 3335 | 2855 | 910 | | | 3010 | | | | | 100 | |
| | TOTALS 112 | 9420 | 5 | | 88 | | 189 | | 189 | | 4930 | 4930 | 2790 | 1025 | | | 9420 | | | | 1 | | |
| | GRAND TOTALS | 135265 | 50 | 18 | 6416 | 12728 | 2478 | 233 | 2711 | 145985 | 214174 | 202318 | 108460 | 43361 | | | 122995 | 11670 | 600 | | 6 | 1443 | 2344 |
| | TOTAL (FT) | | | | | | | | | 145985 | 214174 | 202318 | | | | | | | | | | | |
| | TOTAL (MI) | | | | | | | | | 27.65 | 40.57 | 38.32 | | | | | | | | | | | |
| | TOTALS CARRIED TO GENERAL SUMMARY | 135265 | 50 | 18 | 6416 | 12728 | 2478 | 233 | 2711 | 27.65 | 40.57 | 38.32 | 108460 | 43361 | | | 122995 | 11670 | 600 | | 6 | 1443 | 2344 |

CALCULATED JAR
CHECKED SSR

# MAINTENANCE OF TRAFFIC SUBSUMMARY

SUM-77 / 277 / 224



N:\03\60\067744-08\106002_SUM-76-10.95\Design\MOT\Sheets\106002_MS400.dgn Sheet 2/2/2021 11:06:03 AM jrettig

| SHEET NO. | STATION TO STATION | | | | | 611 12" CONDUIT, TYPE B FT | 611 12" CONDUIT, TYPE C FT | 611 15" CONDUIT, TYPE B FT | 611 15" CONDUIT, TYPE C FT | 611 15" CONDUIT, TYPE C, 706.02 FT | 611 18" CONDUIT, TYPE B FT | 611 18" CONDUIT, TYPE C FT | | 611 CATCH BASIN, NO. 6 EACH | 611 CATCH BASIN, NO. 8 EACH | 611 CATCH BASIN, NO. 2-2B EACH | 611 MANHOLE, NO. 3 EACH | | 202 PIPE REMOVED, 24" AND UNDER FT | SPECIAL FILL AND PLUG EXISTING CONDUIT FT | | 202 MANHOLE REMOVED EACH | 202 CATCH BASIN REMOVED EACH | 202 INLET ABANDONED EACH | 202 CATCH BASIN ABANDONED EACH | | |
|---|---|---|---|---|---|---|---|---|---|---|---|---|---|---|---|---|---|---|---|---|---|---|---|---|---|---|---|
| | PHASE 2 | | | | | | | | | | | | | | | | | | | | | | | | | | |
| | SOUTHERN CROSSOVER (NB) | | | | | | | | | | | | | | | | | | | | | | | | | | |
| 286 | 11+98.44 | LT | | | | | | | | | | | | | | | | | | | | | | 1 | | | |
| | 11+98.44 | LT | | 12+24.50 | RT | 36 | | | | | | | | | | 1 | | | 36 | | | | 1 | | | | |
| | 12+24.50 | RT | | 14+00.00 | RT | | 174 | | | | | | | | | 1 | | | 174 | | | | 1 | | | | |
| | | | | | | | | | | | | | | | | | | | | | | | | | | | |
| 287 | 14+00.00 | RT | | 16+00.00 | RT | | 198 | | | | | | | | 1 | | | | 198 | | | | 1 | | | | |
| | | | | | | | | | | | | | | | | | | | | | | | | | | | |
| | | | | | | | | | | | | | | | | | | | | | | | | | | | |
| | NORTHERN CROSSOVER (NB) | | | | | | | | | | | | | | | | | | | | | | | | | | |
| 294-295 | 22+51.76 | RT | | 27+19.44 | RT | 470 | | | | | | | | | | 1 | | | 470 | | | | 1 | | | | |
| | 27+19.44 | RT | | 27+24.44 | RT | | | | | 5 | | | | | | 1 | | | 5 | | | | | | | 1 | |
| | | | | | | | | | | | | | | | | | | | | | | | | | | | |
| 295-296 | 28+59.57 | RT | | 30+76.76 | RT | | | | | 5 | | 218 | | | | | 1 | | 223 | | | 1 | | | | | |
| | | | | | | | | | | | | | | | | | | | | | | | | | | | |
| 296 | 30+76.76 | RT | | 32+10.76 | RT | | | | | | 135 | | | | | 1 | | | | 135 | | | | | | 1 | |
| | 32+10.43 | LT | | 32+10.43 | RT | | | 28 | | | | | | | | 1 | | | 28 | | | | 1 | | | | |
| | 32+10.43 | RT | | 32+10.76 | RT | | | | 8 | | | | | | | 1 | | | | 8 | | | | | | 1 | |
| | | | | | | | | | | | | | | | | | | | | | | | | | | | |
| | | | | | | | | | | | | | | | | | | | | | | | | | | | |
| | PHASE 3 | | | | | | | | | | | | | | | | | | | | | | | | | | |
| | SOUTHERN CROSSOVER (SB) | | | | | | | | | | | | | | | | | | | | | | | | | | |
| 366 | 368+06.19 | LT | | 200+00.00 | RT | | 18 | | | | | | | | | 1 | | | 18 | | | | 1 | | | | |
| | 200+00.00 | RT | | 201+87.26 | RT | | 185 | | | | | | | | | 1 | | | 185 | | | | 1 | | | | |
| | 201+87.26 | RT | | 202+60.00 | LT | 78 | | | | | | | | 1 | | | | | 78 | | | | 1 | | | | |
| | | | | | | | | | | | | | | | | | | | | | | | | | | | |
| 366-367 | 202+60.00 | LT | | 203+50.00 | LT | | 90 | | | | | | | | | 1 | | | 90 | | | | 1 | | | | |
| | | | | | | | | | | | | | | | | | | | | | | | | | | | |
| | | | | | | | | | | | | | | | | | | | | | | | | | | | |
| | NORTHERN CROSSOVER (SB) | | | | | | | | | | | | | | | | | | | | | | | | | | |
| 374-375 | 476+53.44 | LT | | 476+53.74 | LT | | 8 | | | | | | | | | 1 | | | 8 | | | | 1 | | | | |
| | | | | | | | | | | | | | | | | | | | | | | | | | | | |
| 375 | 105+00.00 | LT | | 105+66.24 | LT | | | | 66 | | | | | | | 1 | | | 66 | | | | 1 | | | | |
| | 105+66.24 | LT | | 105+64.27 | RT | | | | | | 27 | | | | | 1 | | | 27 | | | | 1 | | | | |
| | 105+66.24 | LT | | 106+34.00 | LT | | 68 | | | | | | | | | 1 | | | 68 | | | | 1 | | | | |
| | | | | | | | | | | | | | | | | | | | | | | |

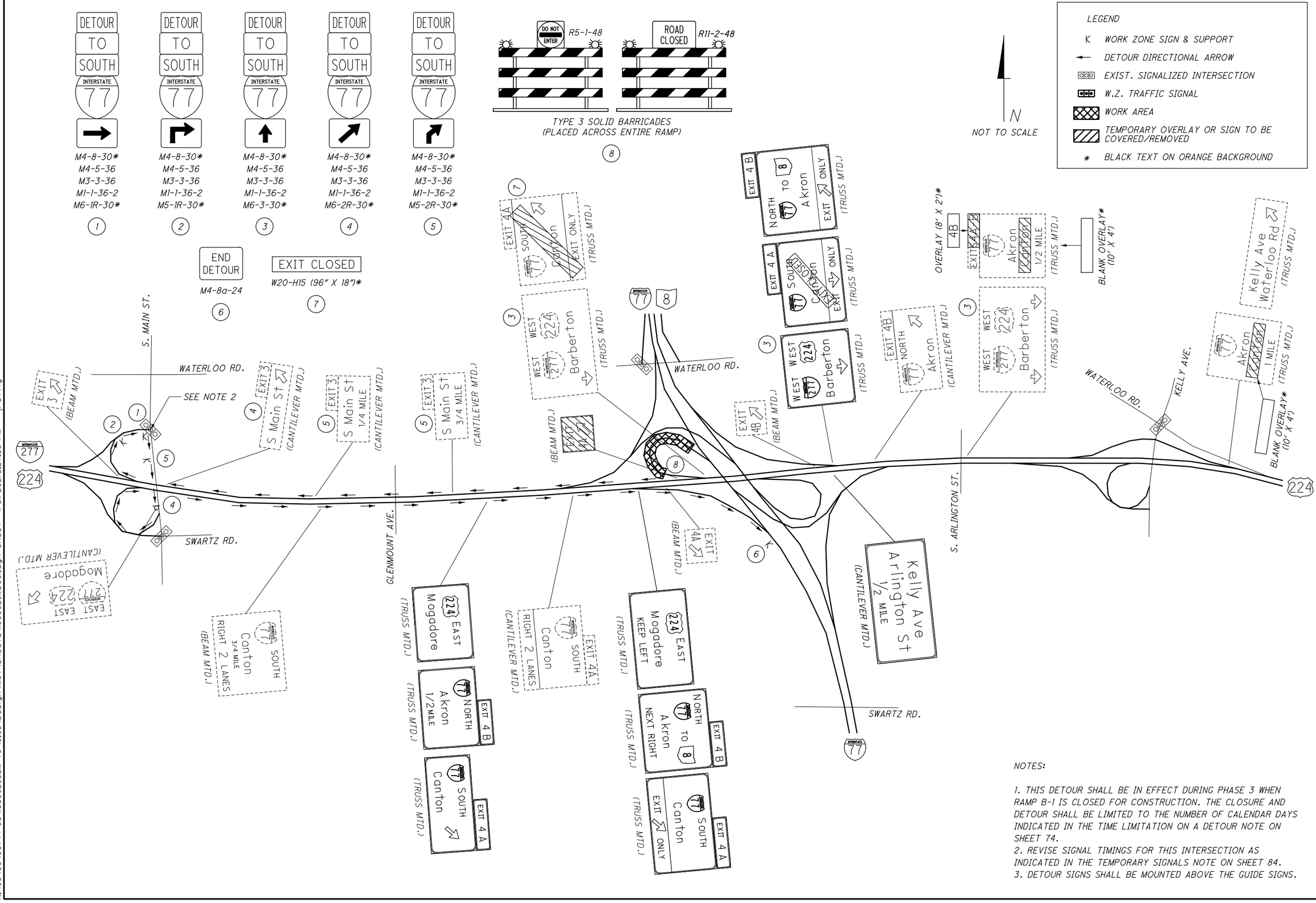
DETOUR TO SOUTH INTERSTATE 77
M4-8-30* M4-5-36 M3-3-36 M1-1-36-2 M6-1R-30*
M4-8-30* M4-5-36 M3-3-36 M1-1-36-2 M5-1R-30*
M4-8-30* M4-5-36 M3-3-36 M1-1-36-2 M6-3-30*
M4-8-30* M4-5-36 M3-3-36 M1-1-36-2 M6-2R-30*
M4-8-30* M4-5-36 M3-3-36 M1-1-36-2 M5-2R-30*
1 2 3 4 5
END DETOUR
M4-8a-24
6
EXIT CLOSED
W20-H15 (96" X 18")*
7
DO NOT ENTER R5-1-48
ROAD CLOSED R11-2-48
TYPE 3 SOLID BARRICADES (PLACED across ENTIRE RAMP)
8
N
NOT TO SCALE
LEGEND
K WORK ZONE SIGN & SUPPORT
DETOUR DIRECTIONAL ARROW
EXIST. SIGNALIZED INTERSECTION
W.Z. TRAFFIC SIGNAL
WORK AREA
TEMPORARY OVERLAY OR SIGN TO BE COVERED/REMOVED
* BLACK TEXT ON ORANGE BACKGROUND
S. MAIN ST.
WATERLOO RD.
SEE NOTE 2
SWARTZ RD.
GLENMOUNT AVE.
S. ARLINGTON ST.
KELLY AVE.
EXIT 3 (BEAM MTD.)
S Main St 1/4 MILE (CANTILEVER MTD.)
S Main St 3/4 MILE (CANTILEVER MTD.)
EXIT 4A (BEAM MTD.)
EXIT 4B (BEAM MTD.)
WEST 224 Barberton (TRUSS MTD.)
EXIT 4A SOUTH 77 Canton (TRUSS MTD.)
EXIT 4B NORTH 77 Akron (TRUSS MTD.)
OVERLAY (8' X 21')*
BLANK OVERLAY* (10' X 41')
EXIT 4B NORTH 77 Akron 1/2 MILE (TRUSS MTD.)
WEST 224 WEST 277 Barberton (TRUSS MTD.)
EXIT 4B NORTH 77 Akron (CANTILEVER MTD.)
Kelly Ave Waterloo Rd (TRUSS MTD.)
77 Akron Canton 1 MILE (TRUSS MTD.)
Kelly Ave Arlington St 1/2 MILE (CANTILEVER MTD.)
224 EAST Mogadore KEEP LEFT (TRUSS MTD.)
NORTH 77 TO 8 Akron NEXT RIGHT (TRUSS MTD.)
EXIT 4B
SOUTH 77 Canton EXIT ONLY
EXIT 4A
224 EAST Mogadore (TRUSS MTD.)
NORTH 77 Akron 1/2 MILE (TRUSS MTD.)
EXIT 4B
SOUTH 77 Canton 3/4 MILE RIGHT 2 LANES (BEAM MTD.)
SOUTH 77 Canton RIGHT 2 LANES (CANTILEVER MTD.)
EXIT 4A
SOUTH 77 Canton EXIT ONLY
EXIT 4A
WEST EAST 277 224 Mogadore (CANTILEVER MTD.)
NOTES:
1. THIS DETOUR SHALL BE IN EFFECT DURING PHASE 3 WHEN RAMP B-1 IS CLOSED FOR CONSTRUCTION. THE CLOSURE AND DETOUR SHALL BE LIMITED TO THE NUMBER OF CALENDAR DAYS INDICATED IN THE TIME LIMITATION ON A DETOUR NOTE ON SHEET 74.
2. REVISE SIGNAL TIMINGS FOR THIS INTERSECTION AS INDICATED IN THE TEMPORARY SIGNALS NOTE ON SHEET 84.
3. DETOUR SIGNS SHALL BE MOUNTED ABOVE THE GUIDE SIGNS.
CALCULATED JAR
CHECKED DRB
MOT DETOUR PLAN - RAMP B-1
SUM-77 / 277 / 224
VARIOUS
115
1288
N:\03\60\06744-08\06002_SUM-76-10.95\Design\MOT\Sheets\06002_MD001.dgn Sheet 1/31/2021 5:27:38 PM jrettig

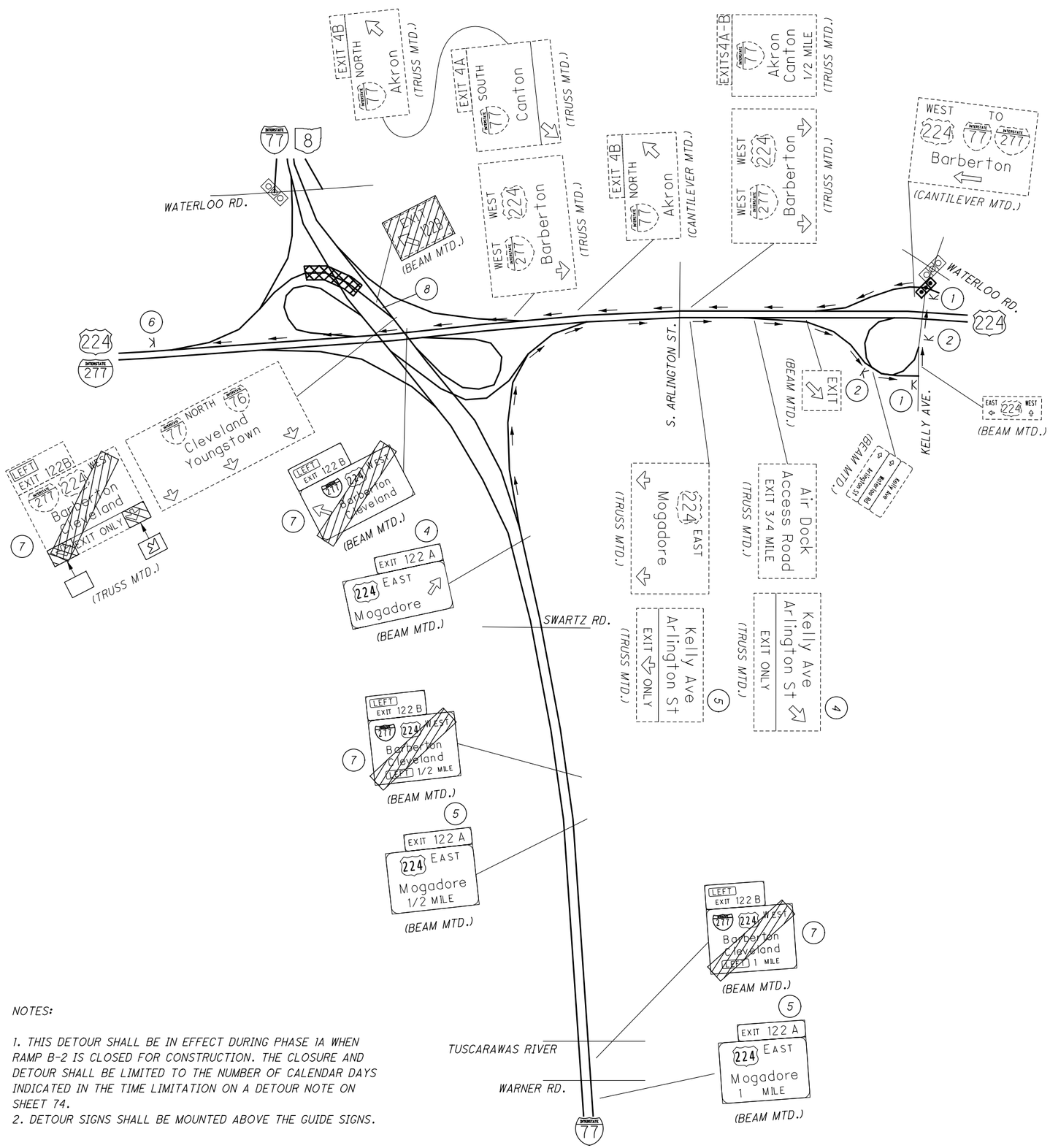


N

NOT TO SCALE

LEGEND

- K WORK ZONE SIGN & SUPPORT
- DETOUR DIRECTIONAL ARROW
- EXIST. SIGNALIZED INTERSECTION
- W.Z. TRAFFIC SIGNAL
- WORK AREA
- TEMPORARY OVERLAY OR SIGN TO BE COVERED/REMOVED
- * BLACK TEXT ON ORANGE BACKGROUND

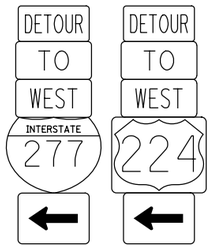


M4-8-30* M4-5-36 M3-4-36 M1-1-36-3 M6-IL-30*

1

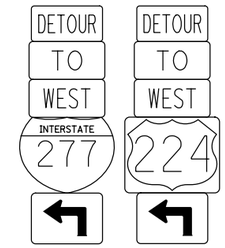


M4-8-30* M4-5-36 M3-4-36 M1-1-36-3 M5-IL-30*

2

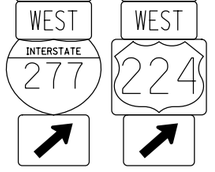


M4-8-30* M4-5-36 M3-4-36 M1-1-36-3 M6-2R-30*

4

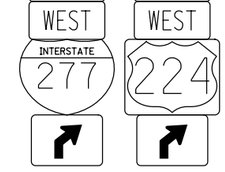


M4-8-30* M4-5-36 M3-4-36 M1-1-36-3 M5-2R-30*

5

M4-8a-24

6

W20-H15 (96" X 18")*

7

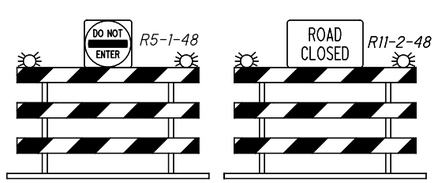


TYPE 3 SOLID BARRICADES (PLACED ACROSS ENTIRE RAMP)

8

NOTES:

1. THIS DETOUR SHALL BE IN EFFECT DURING PHASE 1A WHEN RAMP B-2 IS CLOSED FOR CONSTRUCTION. THE CLOSURE AND DETOUR SHALL BE LIMITED TO THE NUMBER OF CALENDAR DAYS INDICATED IN THE TIME LIMITATION ON A DETOUR NOTE ON SHEET 74.
2. DETOUR SIGNS SHALL BE MOUNTED ABOVE THE GUIDE SIGNS.

# MOT DETOUR PLAN - RAMP B-2

SUM-77 / 277 / 224
VARIOUS

CALCULATED JAR
CHECKED DRB

116
1288

N:\03\60\06744-08\106002_SUM-76-10.95\Design\MOT\Sheets\106002_MD002.dgn Sheet 1/31/2021 5:27:40 PM jrettig

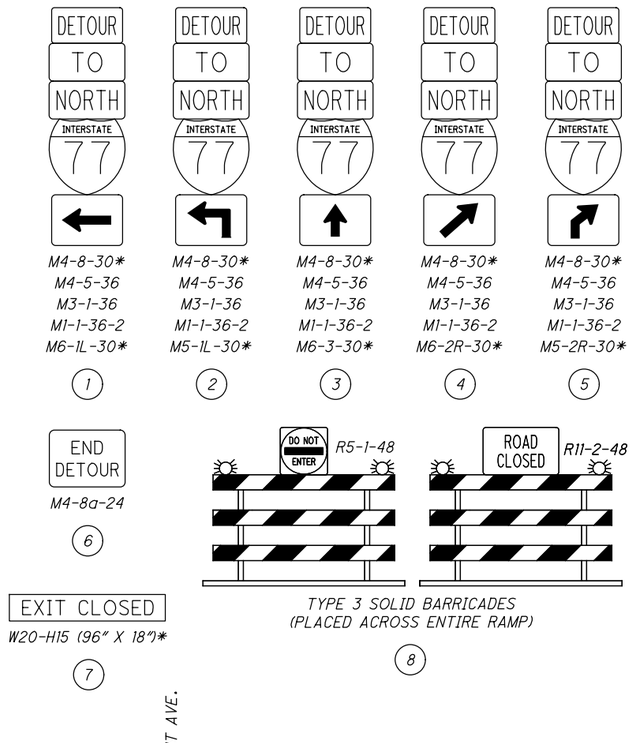


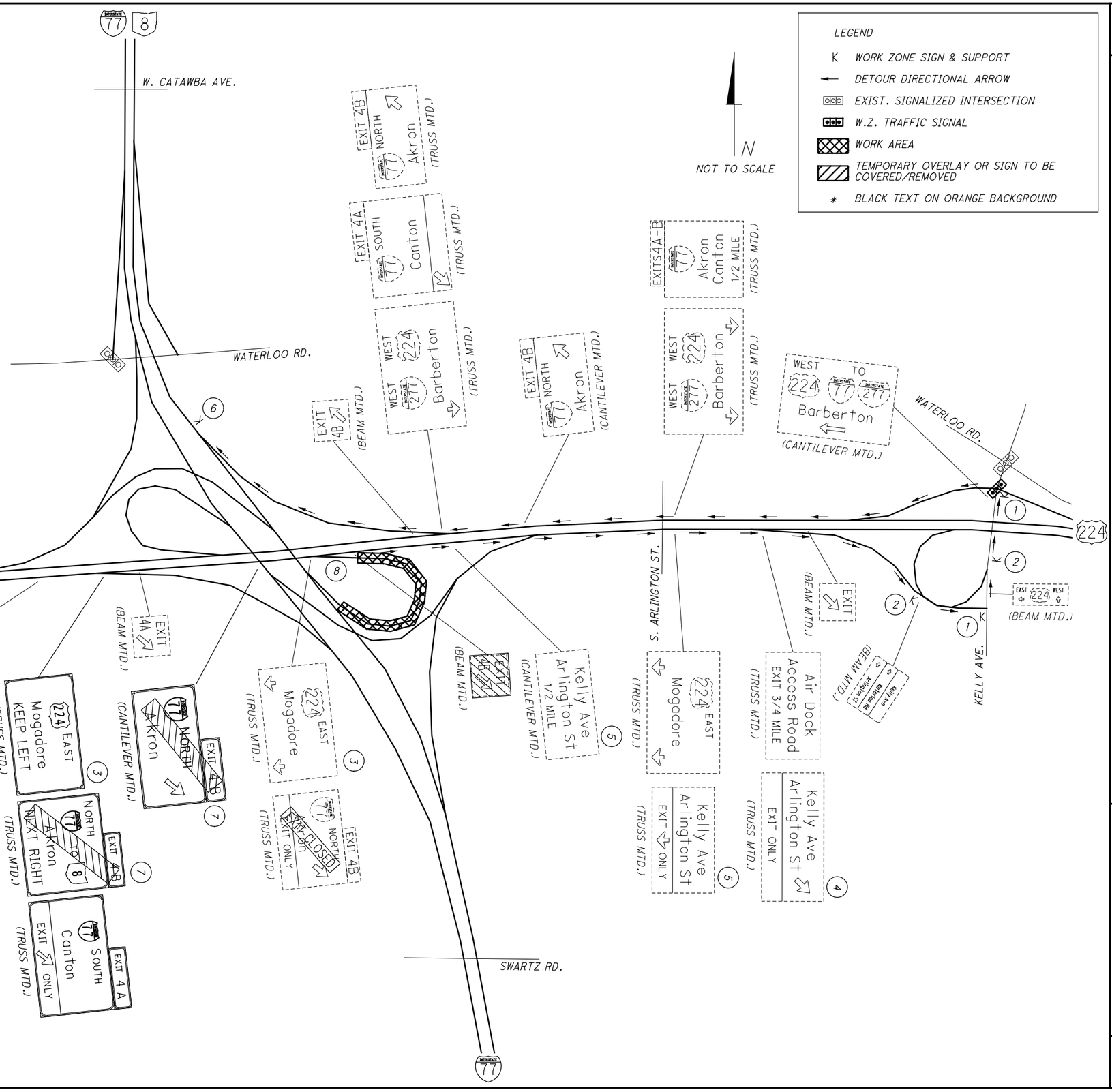


NOTES:

1. THIS DETOUR SHALL BE IN EFFECT DURING PHASE 2B WHEN RAMP C-1 IS CLOSED FOR CONSTRUCTION. THE CLOSURE AND DETOUR SHALL BE LIMITED TO THE NUMBER OF CALENDAR DAYS INDICATED IN THE TIME LIMITATION ON A DETOUR NOTE ON SHEET 74.
2. DETOUR SIGNS SHALL BE MOUNTED ABOVE THE GUIDE SIGNS.

CALCULATED JAR CHECKED DRB

# MOT DETOUR PLAN - RAMP C-1

SUM-77 / 277 / 224
VARIOUS

117
1288

N:\03\60\006744-08\I06002-SUM-76-10.95\Design\MOT\Sheets\I06002-MD003.dgn Sheet 1 3/3/2021 5:27:44 PM jrettig

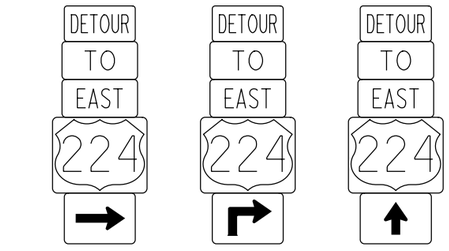


M4-8-30*
M4-5-36
M3-2-36
M1-4-36-3
M6-1R-30*

(1)




M4-8-30*
M4-5-36
M3-2-36
M1-4-36-3
M5-1R-30*

(2)




M4-8-30*
M4-5-36
M3-2-36
M1-4-36-3
M6-3-30*

(3)

M4-8-30*
M4-5-36
M3-2-36
M1-4-36-3
M6-2R-30*

(4)

M4-8-30*
M4-5-36
M3-2-36
M1-4-36-3
M5-2R-30*

(5)

M4-8a-24

(6)

W20-H15 (96" X 18")*

(7)




TYPE 3 SOLID BARRICADES
(PLACED ACROSS ENTIRE RAMP)

(8)

LEGEND

K WORK ZONE SIGN & SUPPORT

DETOUR DIRECTIONAL ARROW

EXIST. SIGNALIZED INTERSECTION

W.Z. TRAFFIC SIGNAL

WORK AREA

TEMPORARY OVERLAY OR SIGN TO BE COVERED/REMOVED

* BLACK TEXT ON ORANGE BACKGROUND

N

NOT TO SCALE

NOTES:

1. THIS DETOUR SHALL BE IN EFFECT DURING PHASE 1 WHEN RAMP C-2 IS CLOSED FOR CONSTRUCTION. THE CLOSURE AND DETOUR SHALL BE LIMITED TO THE NUMBER OF CALENDAR DAYS INDICATED IN THE TIME LIMITATION ON A DETOUR NOTE ON SHEET 74.
2. DETOUR SIGNS SHALL BE MOUNTED ABOVE THE GUIDE SIGNS.
3. RAMP C-2 BRIDGE CONSTRUCTION WILL REQUIRE MULTIPLE NIGHTLY CLOSURES ON NB I-77. CONTRACTOR SHALL FOLLOW ODOT PLCM REGARDING APPROPRIATE CLOSURE TIMES AND DURATIONS.

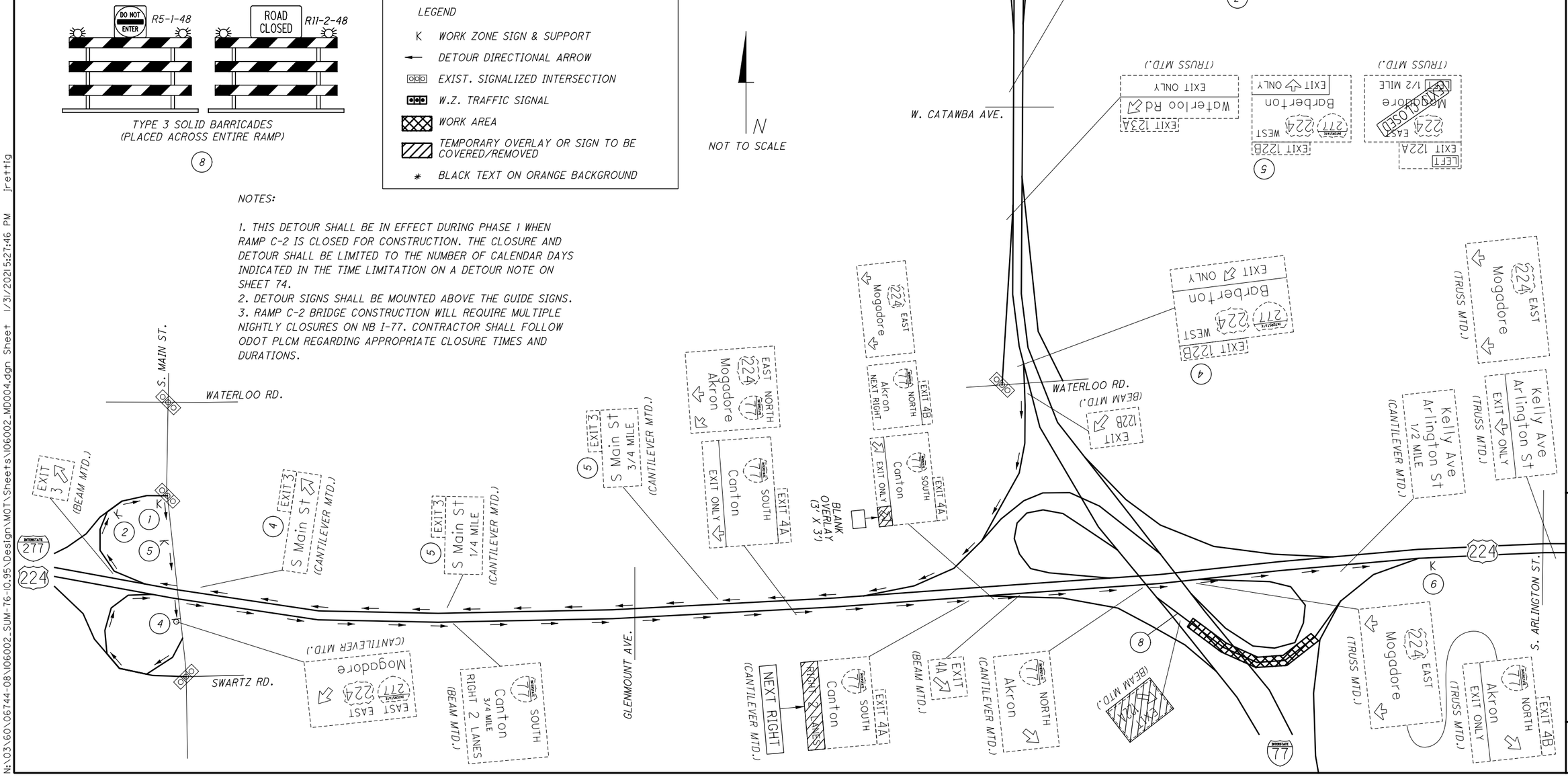


CALCULATED JAR CHECKED DRB

# MOT DETOUR PLAN - RAMP C-2

SUM-77 / 277 / 224
VARIOUS

118
1288

N:\03\90\06744-08\106002.SUM-76-10.95\Design\MOT\Sheets\106002_MD0004.dgn Sheet 1/31/2021 5:27:46 PM jrettig

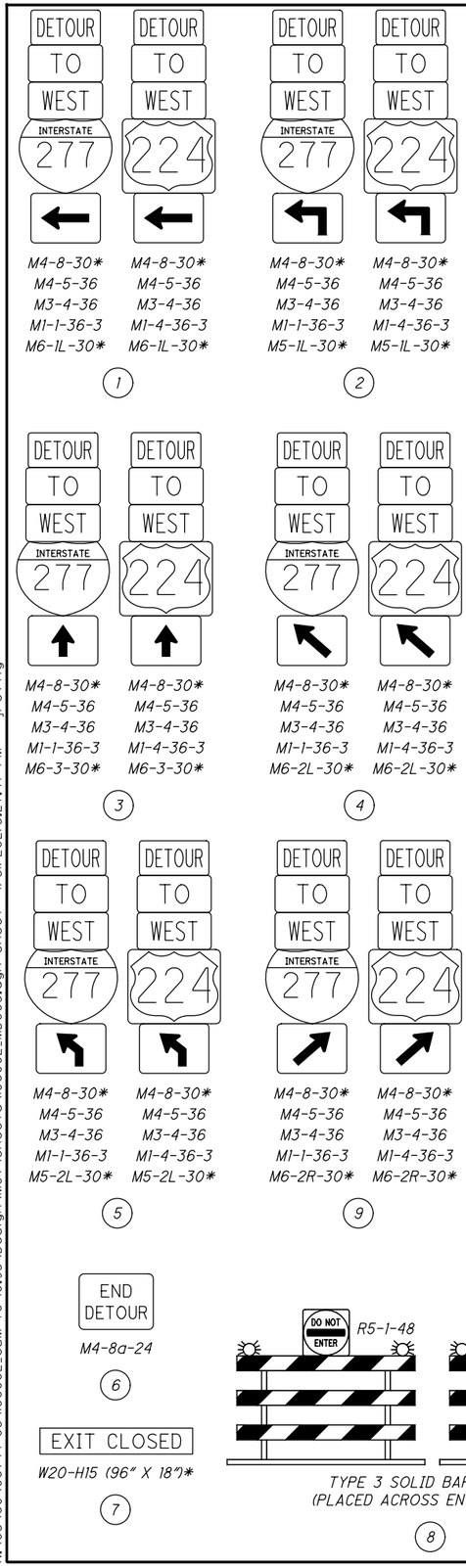


LEGEND

- K — WORK ZONE SIGN & SUPPORT
- ← — DETOUR DIRECTIONAL ARROW
- EXIST. SIGNALIZED INTERSECTION
- W.Z. TRAFFIC SIGNAL
- WORK AREA
- TEMPORARY OVERLAY OR SIGN TO BE COVERED/REMOVED
- * — BLACK TEXT ON ORANGE BACKGROUND

N

NOT TO SCALE

NOTES:

1. THIS DETOUR SHALL BE IN EFFECT DURING PHASE 2 WHEN RAMP B IS CLOSED FOR CONSTRUCTION. THE CLOSURE AND DETOUR SHALL BE LIMITED TO THE NUMBER OF CALENDAR DAYS INDICATED IN THE TIME LIMITATION ON A DETOUR NOTE ON SHEET 74.
2. DETOUR SIGNS SHALL BE MOUNTED ABOVE THE GUIDE SIGNS.

CALCULATED EMB
CHECKED JAR

# MOT DETOUR PLAN - RAMP B

SUM-77 / 277 / 224
VARIOUS



N:\03\60\06744-08\106002-SUM-76-10.95\Design\MOT\Sheets\106002_MD005.dgn Sheet 1/31/2021 5:27:47 PM jrettig

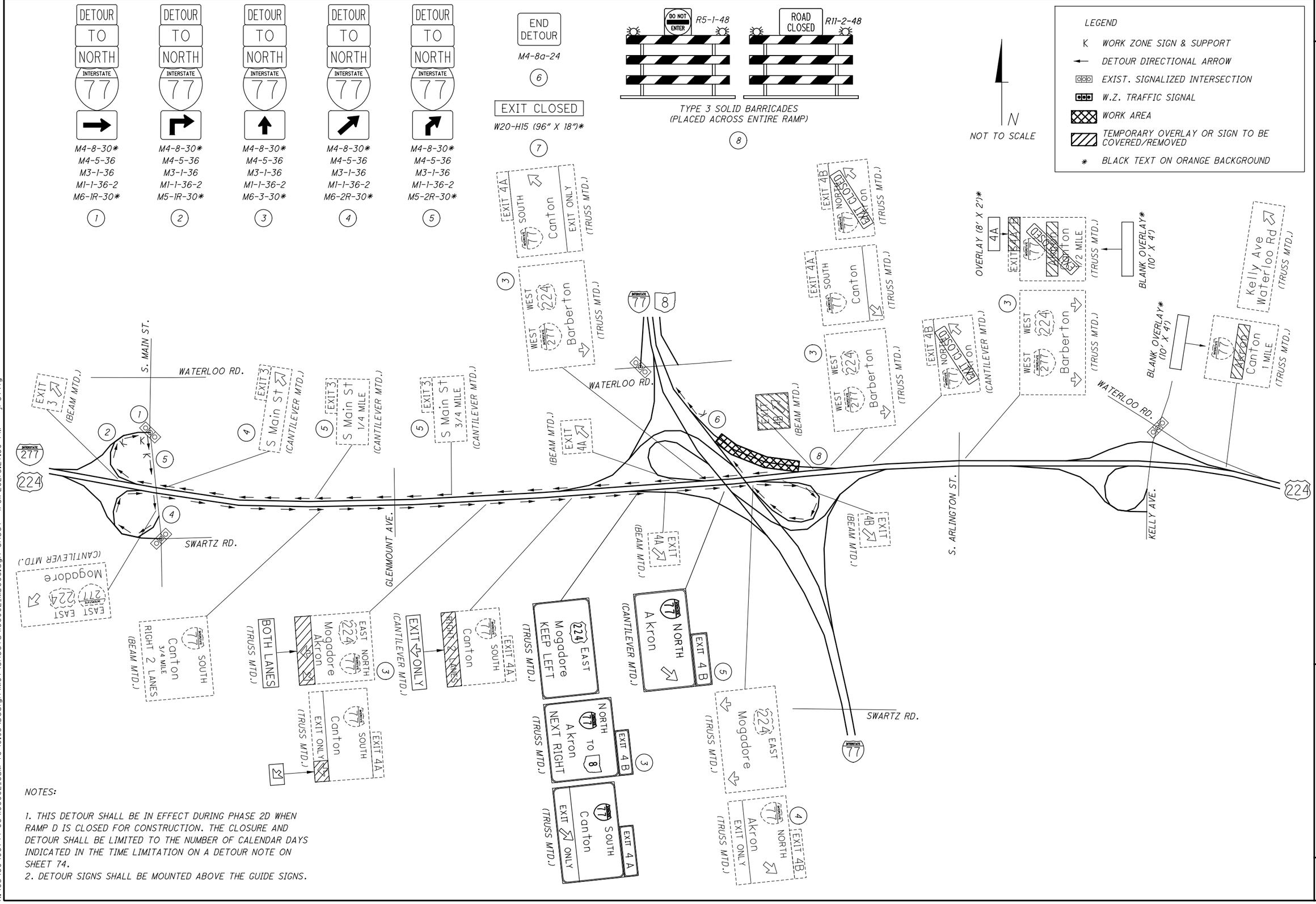


CALCULATED EMB
CHECKED JAR

# DETOUR PLAN - RAMP D

## MOT DE

SUM-77 / 277 / 224
VARIOUS

120
1288

N:\03\60\06744-08\06002_SUM-76-10.95\Design\MOT\Sheets\06002_MD006.dgn Sheet 1/31/2021 5:27:50 PM jrettig

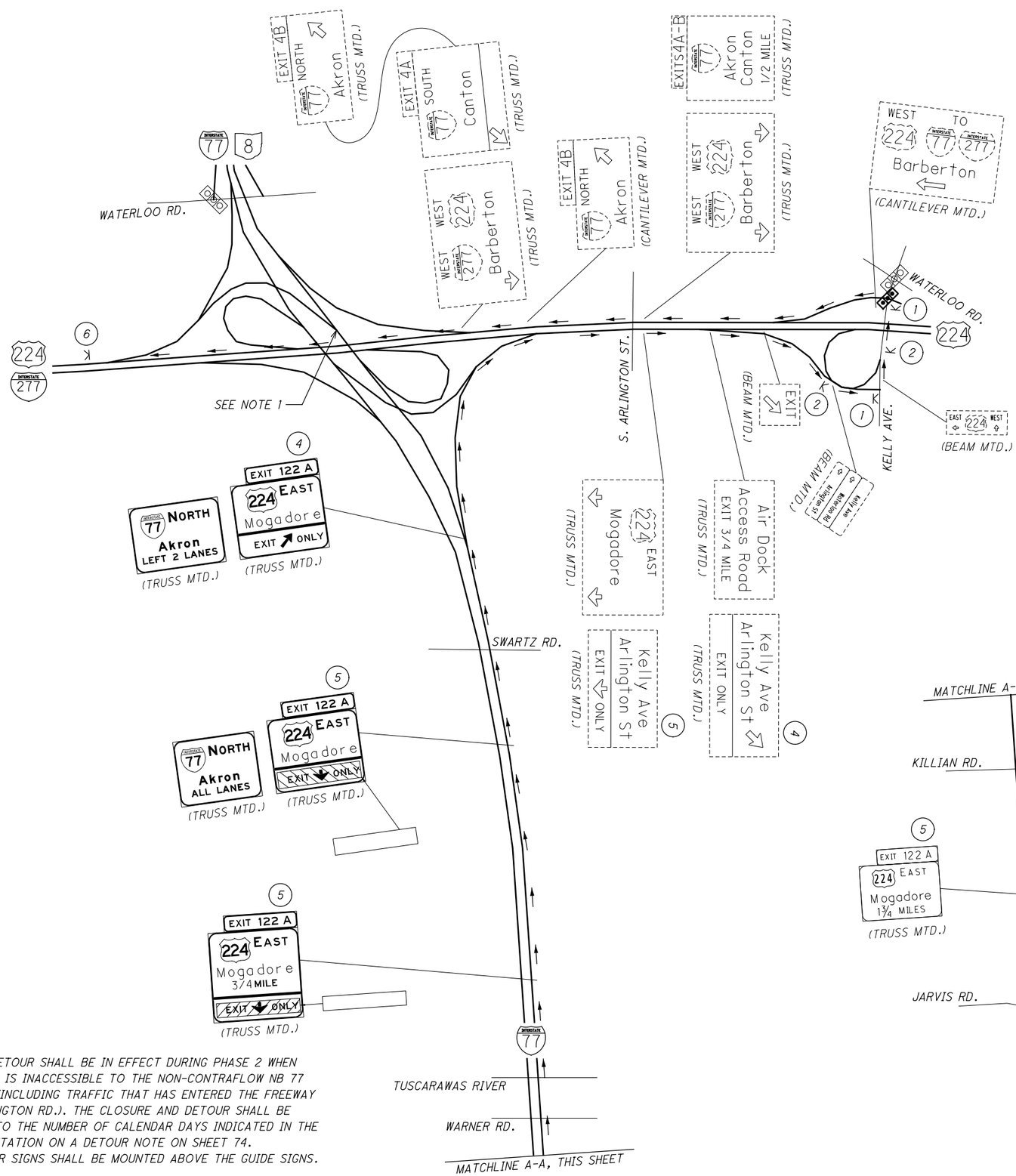


NOT TO SCALE

LEGEND

- K WORK ZONE SIGN & SUPPORT
- DETOUR DIRECTIONAL ARROW
- EXIST. SIGNALIZED INTERSECTION
- W.Z. TRAFFIC SIGNAL
- WORK AREA
- TEMPORARY OVERLAY OR SIGN TO BE COVERED/REMOVED
- * BLACK TEXT ON ORANGE BACKGROUND

DETOUR TO WEST INTERSTATE 277 — M4-8-30* M4-5-36 M3-4-36 M1-1-36-3 M6-IL-30*

DETOUR TO WEST 224 — M4-8-30* M4-5-36 M3-4-36 M1-4-36-3 M6-IL-30*

(1)

DETOUR TO WEST INTERSTATE 277 — M4-8-30* M4-5-36 M3-4-36 M1-1-36-3 M5-IL-30*

DETOUR TO WEST 224 — M4-8-30* M4-5-36 M3-4-36 M1-4-36-3 M5-IL-30*

(2)

DETOUR TO WEST INTERSTATE 277 — M4-8-30* M4-5-36 M3-4-36 M1-1-36-3 M6-2R-30*

DETOUR TO WEST 224 — M4-8-30* M4-5-36 M3-4-36 M1-4-36-3 M6-2R-30*

(4)

DETOUR TO WEST INTERSTATE 277 — M4-8-30* M4-5-36 M3-4-36 M1-1-36-3 M5-2R-30*

DETOUR TO WEST 224 — M4-8-30* M4-5-36 M3-4-36 M1-4-36-3 M5-2R-30*

(5)

END DETOUR — M4-8a-24

(6)

NOTES:

1. THIS DETOUR SHALL BE IN EFFECT DURING PHASE 2 WHEN RAMP B-2 IS INACCESSIBLE TO THE NON-CONTRAFLOW NB 77 TRAFFIC (INCLUDING TRAFFIC THAT HAS ENTERED THE FREEWAY VIA ARLINGTON RD.). THE CLOSURE AND DETOUR SHALL BE LIMITED TO THE NUMBER OF CALENDAR DAYS INDICATED IN THE TIME LIMITATION ON A DETOUR NOTE ON SHEET 74.
2. DETOUR SIGNS SHALL BE MOUNTED ABOVE THE GUIDE SIGNS.

CALCULATED JAR CHECKED DRB

# MOT DETOUR PLAN - NB 77 TO WB 277/224

SUM-77/277/224
VARIOUS

120A
1288

N:\03\60\06744-08\106002_SUM-76-10.95\Design\MOT\Sheets\106002_MD011.dgn Sheet 2/1/2021 3:2:45 PM jrettig

N

NOT TO SCALE

NOTES:

1. THIS DETOUR SHALL BE IN EFFECT DURING PHASE 2 WHEN RAMP B IS CLOSED FOR CONSTRUCTION. THE CLOSURE AND DETOUR SHALL BE LIMITED TO THE NUMBER OF CALENDAR DAYS INDICATED IN THE TIME LIMITATION ON A DETOUR NOTE ON SHEET 74.
2. DETOUR SIGNS SHALL BE MOUNTED ABOVE THE GUIDE SIGNS.

PERKINS ST.
FORGE ST.
MARKET ST.
BUCHTEL AVE.
CARROLL ST.
EXCHANGE ST.
BEACON ST.
JOHNSTON ST.
INMAN ST.
HOLY CROSS BLVD.
BROWN ST.
BOULEVARD ST.
PRINCETON ST.
S. MAIN ST.
SWEITZER AVE
WOLF LEDGES PKWY
GRANT ST.
LAKE SHORE BLVD.
MANCHESTER RD.
EAST AVE.
MORSE ST.
JASON AVE.
BATTLES AVE.
KENMORE BLVD.
WILBETH RD.
WATERLOO RD.
MANCHESTER RD.
MAIN ST.
GLENMOUNT AVE.
ARLINGTON ST.
KELLY AVE.
EMMITT RD.

INTERSTATE 77 · INTERSTATE 76 · INTERSTATE 277 · 8 · 224

DETOUR TO WEST — INTERSTATE 277 — INTERSTATE 224

| 1 | 2 | 3 |
|---|---|---|
| M4-8-30* | M4-8-30* | M4-8-30* |
| M4-5-36 | M4-5-36 | M4-5-36 |
| M3-4-36 | M3-4-36 | M3-4-36 |
| M1-1-36-3 | M1-4-36-3 | M1-1-36-3 |
| M6-3-30* | M6-3-30* | M5-2R-30* |
| 1 | 2 | 3 |

| 4 | |
|---|---|
| M4-8-30* | M4-8-30* |
| M4-5-36 | M4-5-36 |
| M3-4-36 | M3-4-36 |
| M1-1-36-3 | M1-4-36-3 |
| M6-2R-30* | M6-2R-30* |
| 4 | |

DO NOT ENTER R5-1-48

ROAD CLOSED R11-2-48

TYPE 3 SOLID BARRICADES
(PLACED ACROSS ENTIRE RAMP)

LEGEND

- K WORK ZONE SIGN & SUPPORT
- ← DETOUR DIRECTIONAL ARROW
- EXIST. SIGNALIZED INTERSECTION
- W.Z. TRAFFIC SIGNAL
- WORK AREA
- TEMPORARY OVERLAY OR SIGN TO BE COVERED/REMOVED
- * BLACK TEXT ON ORANGE BACKGROUND
- (4) EXISTING SIGN

CALCULATED EMB
CHECKED JAR

# MOT DETOUR PLAN - RAMP B DIVERSION

SUM-77 / 277 / 224
VARIOUS

121
1288

N:\03\60\06744-08\06002_SUM-76-10.95\Design\MOT\Sheets\06002_MDOT.dgn Sheet 1/31/2021 2:27:55 PM jrettig

D3-1-48 (BLACK/ORANGE)
WARNER RD
DETOUR
M4-9L-30
1

D3-1-48 (BLACK/ORANGE)
WARNER RD
DETOUR
M4-H9BL-30
2

D3-1-48 (BLACK/ORANGE)
WARNER RD
DETOUR
M4-H9T-30
3

D3-1-48 (BLACK/ORANGE)
WARNER RD
DETOUR
M4-H9BR-30
4

D3-1-48 (BLACK/ORANGE)
WARNER RD
DETOUR
M4-9R-30
5

TYPE A WARNING LIGHT
ROAD WORK AHEAD
W20-1-36
6

TYPE A WARNING LIGHT
ROAD CLOSED AHEAD
1000 FEET
W20-3-36
W16-2P-24
7

ROAD CLOSED AHEAD
500 FEET
W20-3-36
W16-2P-24
8

R11-3A-60
TYPE "B"
ROAD CLOSED
1.5 MILE AHEAD
LOCAL TRAFFIC ONLY
DETOUR
M4-10R-48
10' TYPE 3 SOLID BARRICADE
(PLACED ON SHOULDER)
9

R11-3A-60
TYPE "B"
ROAD CLOSED
0.1 MILE AHEAD
LOCAL TRAFFIC ONLY
DETOUR
M4-10L-48
10' TYPE 3 SOLID BARRICADE
(PLACED ON SHOULDER)
10

R11-2-48
TYPE "B"
ROAD CLOSED
10' TYPE 3 SOLID BARRICADE
(PLACED ACROSS ENTIRE ROAD)
11

D3-1-48 (BLACK/ORANGE)
WARNER RD
END DETOUR
M4-8a-24
12

N
NOT TO SCALE

LEGEND

- K WORK ZONE SIGN & SUPPORT
- DETOUR DIRECTIONAL ARROW
- EXIST. SIGNALIZED INTERSECTION
- W.Z. TRAFFIC SIGNAL
- WORK AREA
- TEMPORARY OVERLAY OR SIGN TO BE COVERED/REMOVED
- * BLACK TEXT ON ORANGE BACKGROUND

NOTES:

1. THIS DETOUR SHALL BE IN EFFECT DURING PHASE 1 WHEN WARNER RD IS CLOSED FOR CONSTRUCTION. THE CLOSURE AND DETOUR SHALL BE LIMITED TO THE NUMBER OF CALENDAR DAYS INDICATED IN THE TIME LIMITATION ON A DETOUR NOTE ON SHEET 74.

WARNER RD CLOSED WEST OF ARLINGTON RD FOLLOW DETOUR
SPECIAL (48" X 48") (BLACK/ORANGE)
13

WARNER RD OPEN TO FIRESTONE CC AND METRO PARK
SPECIAL (48" X 48") (BLACK/ORANGE)
14

R11-3A-60
TYPE "B"
ROAD CLOSED
0.5 MILE AHEAD
LOCAL TRAFFIC ONLY
DETOUR
M4-10R-48
10' TYPE 3 SOLID BARRICADE
(PLACED ON SHOULDER)
15

S. MAIN ST.
HARRINGTON RD.
ARLINGTON RD.
E. WARNER RD.
PLEASANT VALLEY DR.
JOPLIN DR.
BENDER AVE.
OTTER DR.
BALTON DR.
DENMAN DR.
DELORA DR.
KIRBY DR.
INGLESIDE DR.
WELLOCK DR.
FLOWERDALE DR.
FALCON AVE.
LAKOTA AVE.
RADNOR AVE.
PORTAGE LAKES DR.
LEICESTER DR.
WYMORE AVE.
WEIL AVE.
ORGAN AVE.
OSTEND AVE.
RAMP AVE.
MUSKOKA DR.
MOUND DR.
CHAMPIONS WAY
FIRESTONE GOLF COURSE DR.
LAFORCE DR.
SHERATON CIR.
SHERATON DR.
ARCHMERE DR.
BUENA VISTA DR.
ELDORADO DR.
CHENOWETH DR.
KILLIAN RD.
CONLIN DR.
N. BENDER AVE.
S. BENDER AVE.
WILLOWEDGE DR.
DERLING RD.
LAKEWAY ST.
LINDA ST.
ELMO ST.
COTTAGE GROVE RD.
COLOPY ST.
BUTTERCUP AVE.
COSMOS AVE.
DAISY AVE.
ELDERBERRY AVE.
FORGET ME NOT ST.
N. JASMINE AVE.
INTERSTATE 77
1500'
500'
,005'

CALCULATED EMB
CHECKED JAR

MOT DETOUR PLAN - WARNER ROAD

SUM-77 / 277 / 224
VARIOUS

122
1288

N:\03\60\06744-08\06002_SUM-76-10.95\Design\MOT\Sheets\06002_MD008.dgn Sheet 1/31/2021 5:27:57 PM jrettig

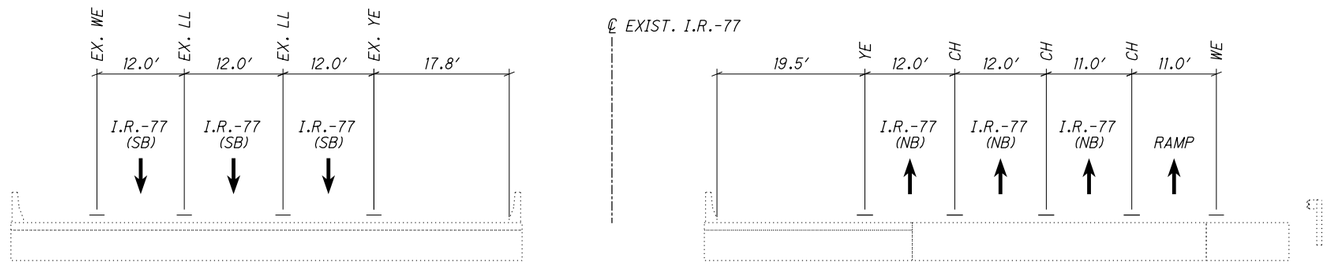


SECTION A-A
(NOT TO SCALE)

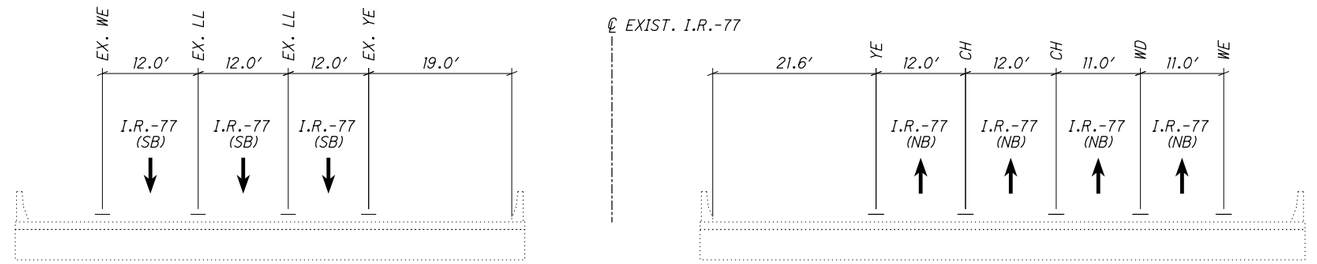


SECTION B-B
(NOT TO SCALE)

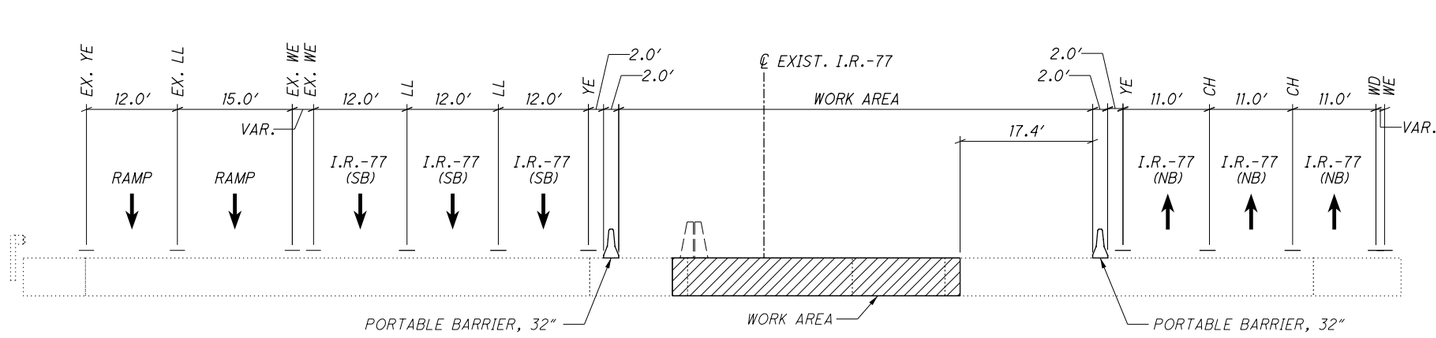


SECTION C-C
(NOT TO SCALE)

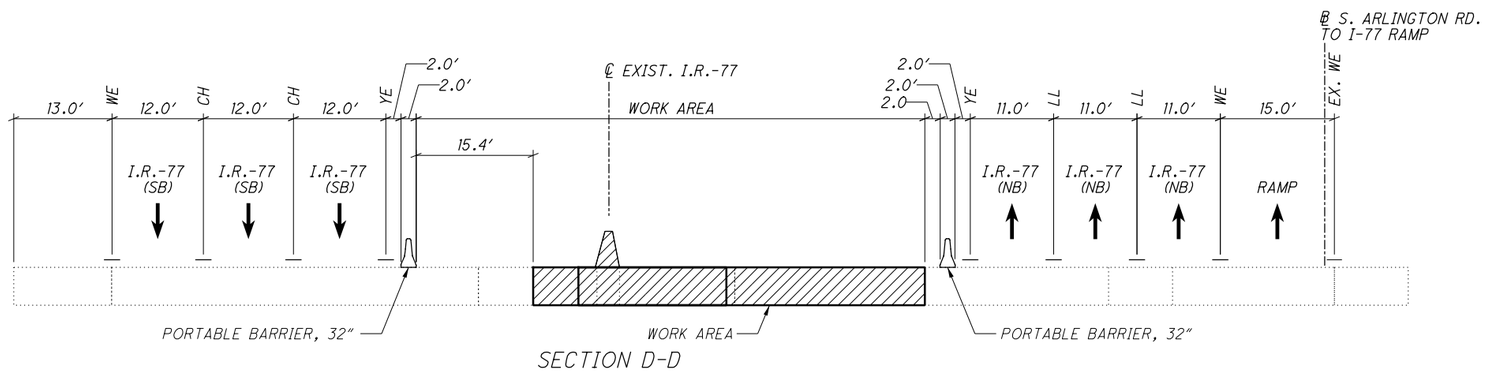


SECTION D-D
(NOT TO SCALE)

CALCULATED EMB
CHECKED JML

# MAINTENANCE OF TRAFFIC TYPICAL SECTIONS - PHASE 1

SUM-77 / 277 / 224
VARIOUS

123
1288

N:\03\60\066744-08\106002_SUM-76-10.95\Design\MOT\Sheets\106002_MY100.dgn Sheet 1/31/2021 5:27:58 PM jrettig

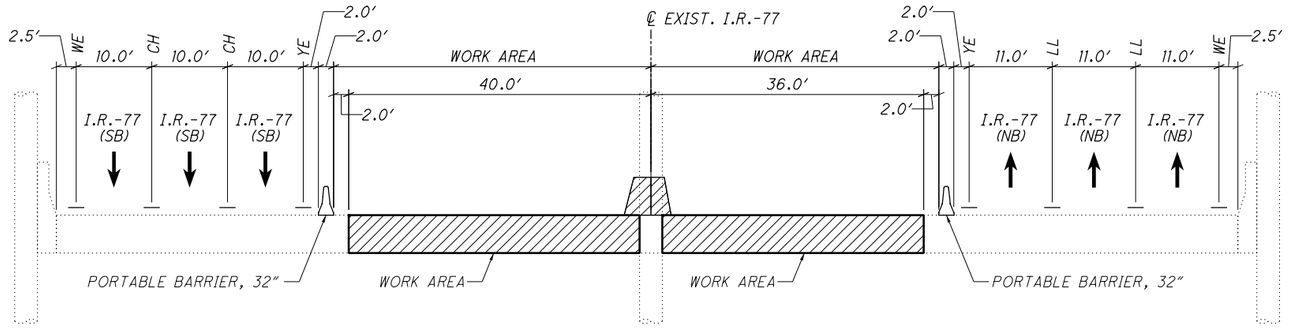


SECTION E-E
(NOT TO SCALE)

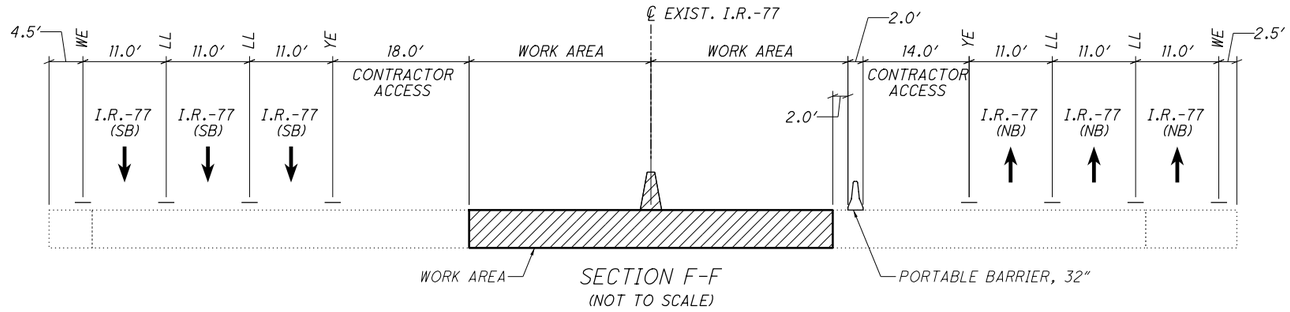


SECTION F-F
(NOT TO SCALE)

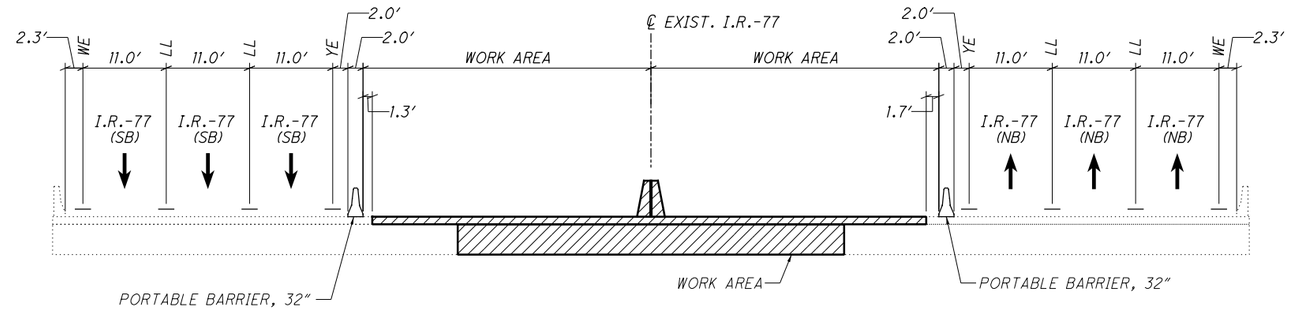


SECTION G-G
(NOT TO SCALE)

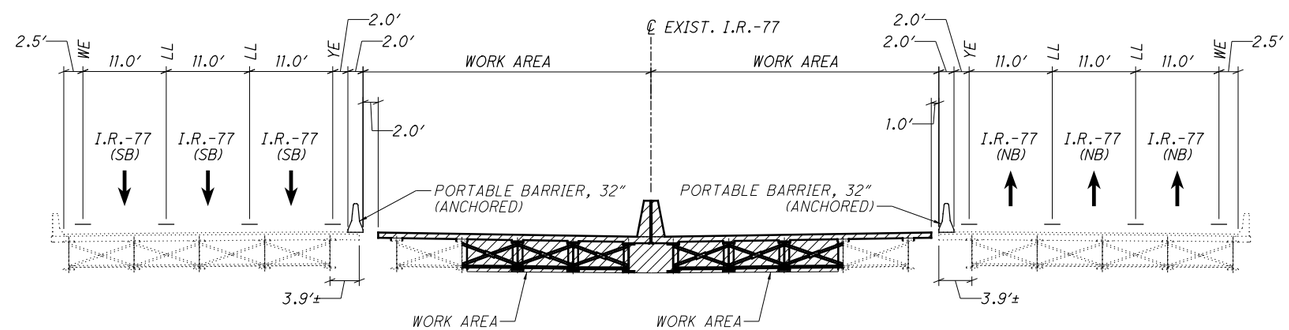


SECTION H-H
(NOT TO SCALE)

CALCULATED EMB
CHECKED JML

# MAINTENANCE OF TRAFFIC TYPICAL SECTIONS - PHASE 1

SUM-77 / 277 / 224
VARIOUS



N:\03\60\06744-08\06002_SUM-76-10.95\Design\MOT\Sheets\06002_MY101.dgn Sheet 1/31/2021 5:28:00 PM jrettig

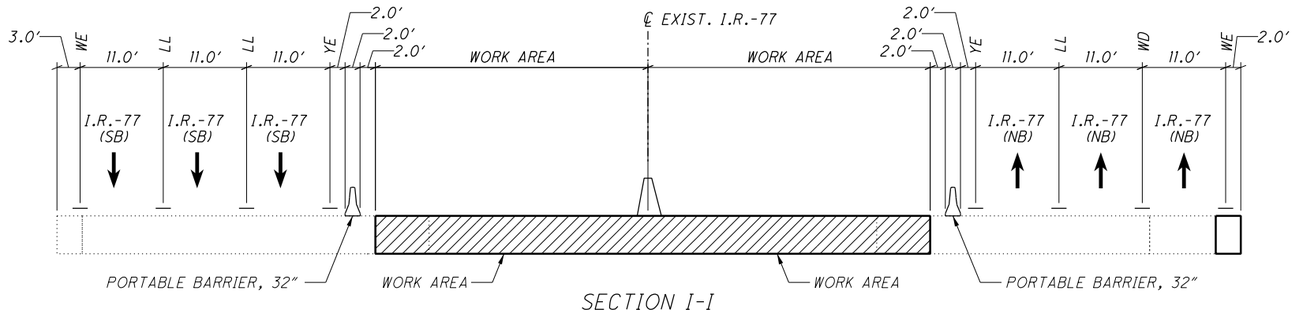


SECTION I-I
(NOT TO SCALE)

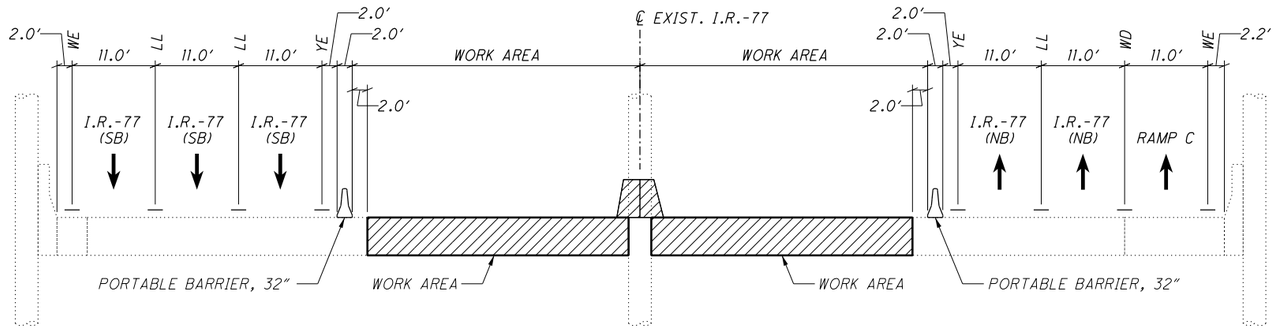


SECTION J-J
(NOT TO SCALE)

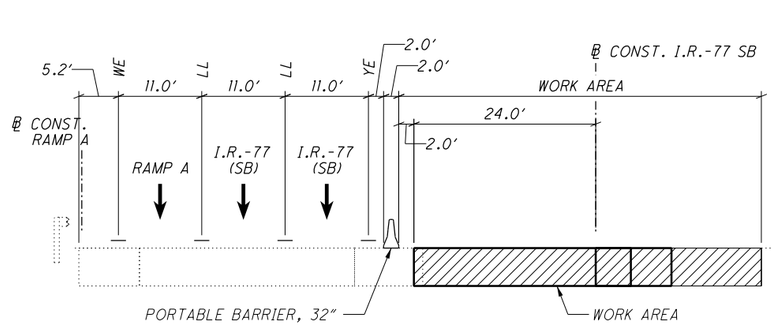


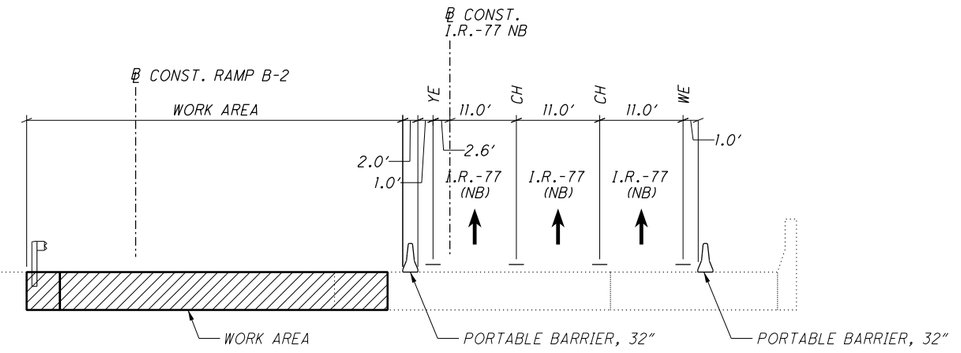


SECTION K-K
(NOT TO SCALE)

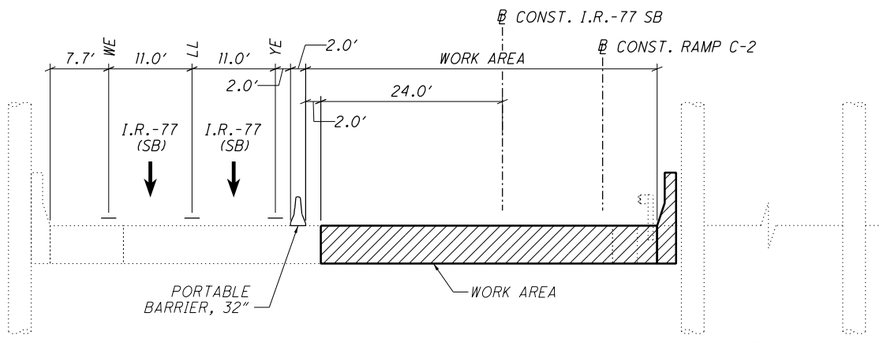


SECTION L2-L2
(NOT TO SCALE)

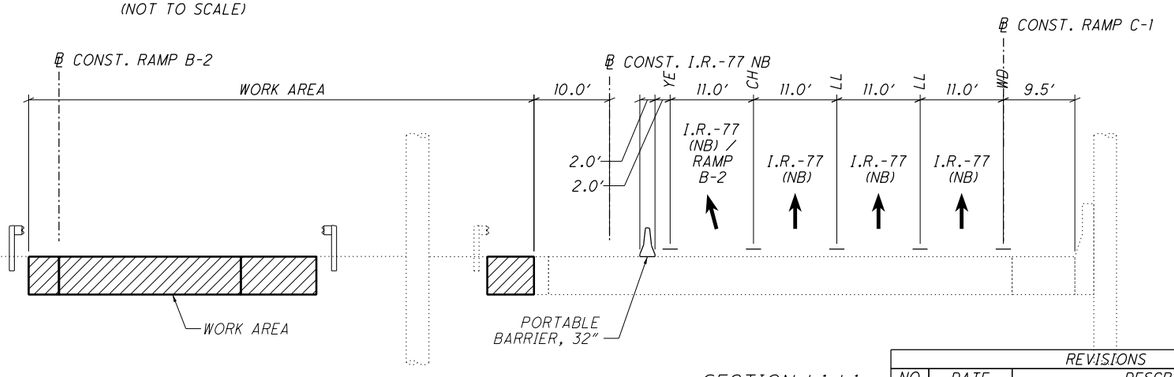


SECTION L1-L1
(NOT TO SCALE)

| REVISIONS | | |
|---|---|---|
| NO. | DATE | DESCRIPTION |
| 8 | 04/30/21 | I-77 NB LANE SHIFT/SIGNING CHANGES |

CALCULATED EMB
CHECKED JML

# MAINTENANCE OF TRAFFIC TYPICAL SECTIONS - PHASE 1

SUM-77 / 277 / 224
VARIOUS

125
1288

N:\03\60\06744-08\06002_SUM-76-10.95\Design\MOT\Sheets\06002_MY102.dgn Sheet 4/30/2021 11:47:41 AM gwhite

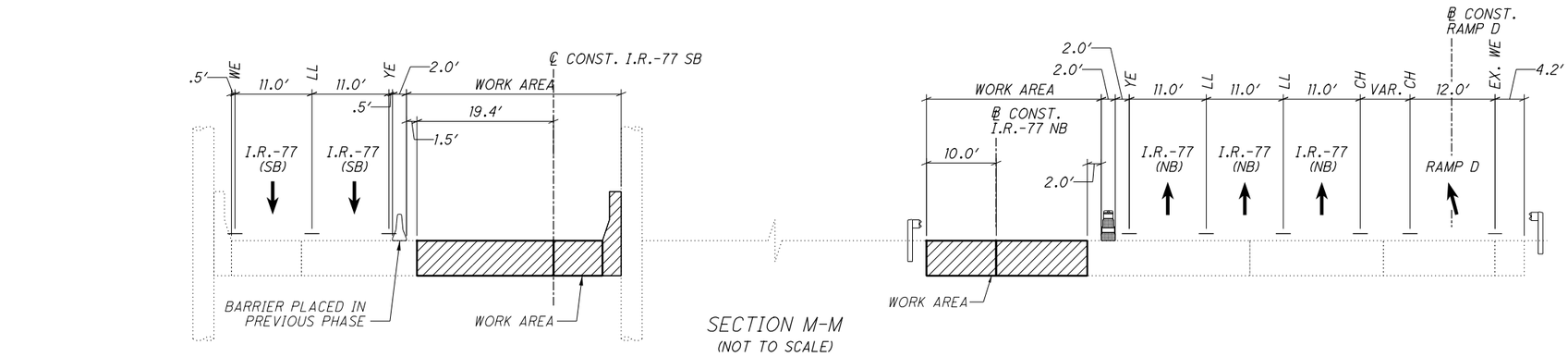


SECTION M-M
(NOT TO SCALE)

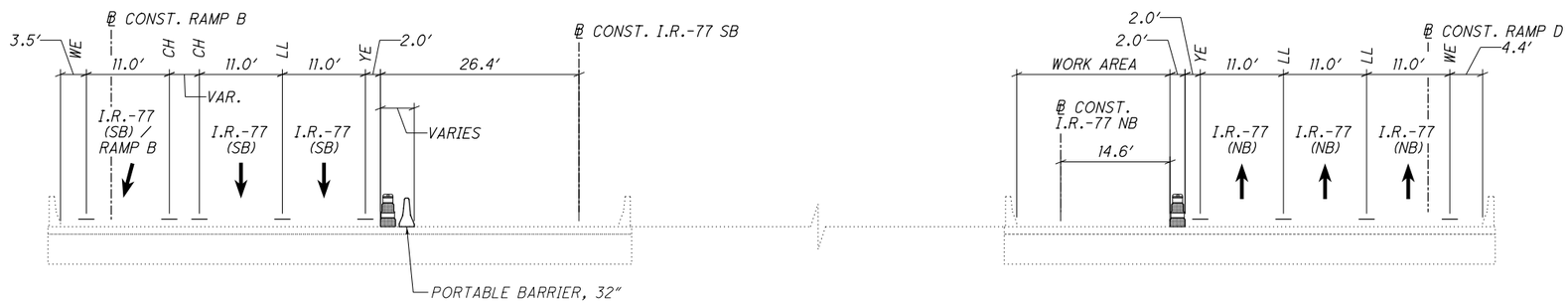


SECTION N-N
(NOT TO SCALE)

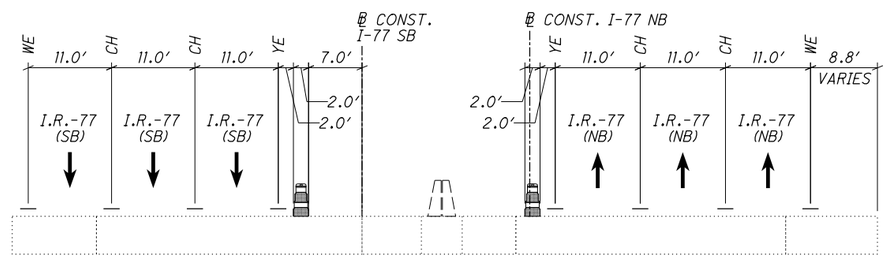


SECTION O-O
(NOT TO SCALE)

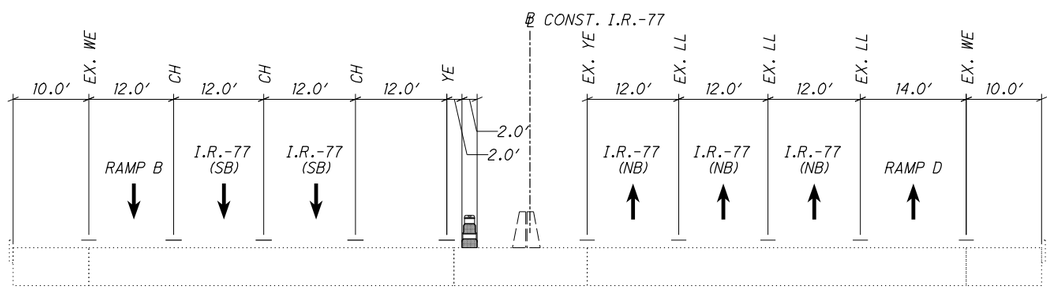


SECTION P-P
(NOT TO SCALE)

CALCULATED EMB
CHECKED JML

# MAINTENANCE OF TRAFFIC TYPICAL SECTIONS - PHASE 1

SUM-77 / 277 / 224
VARIOUS

126
1288

N:\03\60\06744-08\106002_SUM-76-10.95\Design\MOT\Sheets\106002_MY103.dgn Sheet 1/31/2021 5:28:04 PM jrettig

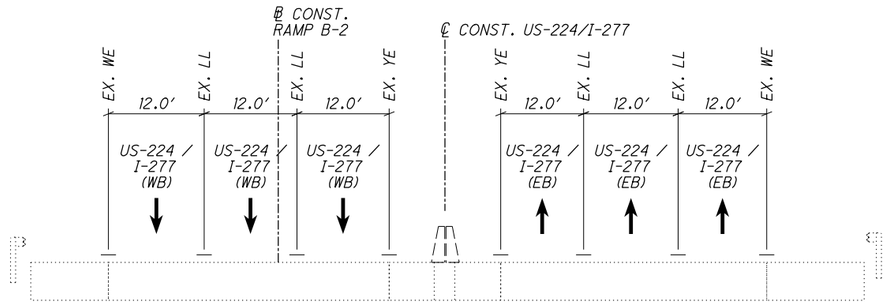


SECTION Q-Q
(NOT TO SCALE)

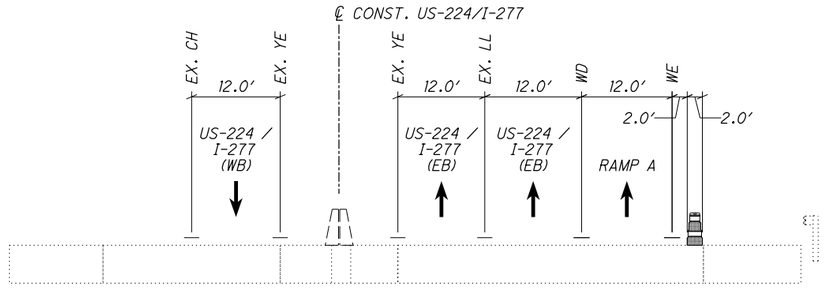


SECTION R-R
(NOT TO SCALE)

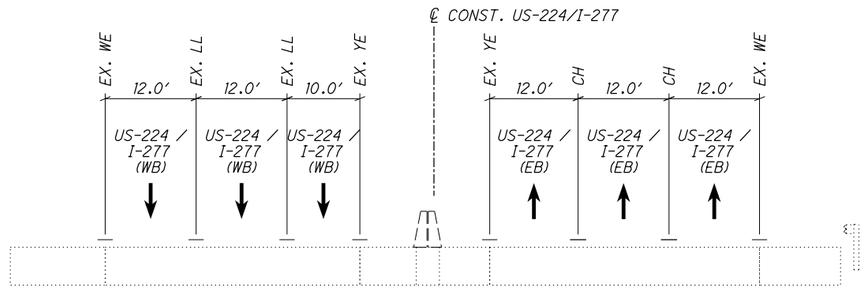


SECTION S-S
(NOT TO SCALE)

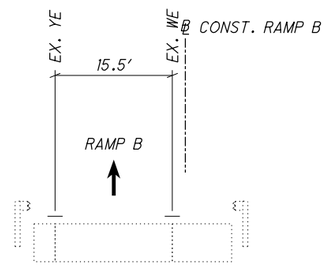


SECTION T-T
(NOT TO SCALE)

CALCULATED EMB
CHECKED JML

# MAINTENANCE OF TRAFFIC TYPICAL SECTIONS - PHASE 1

SUM-77 / 277 / 224
VARIOUS

127
1288

N:\03\60\06744-08\106002_SUM-76-10.95\Design\MOT\Sheets\106002_MY104.dgn Sheet 1/31/2021 5:28:06 PM jrettig

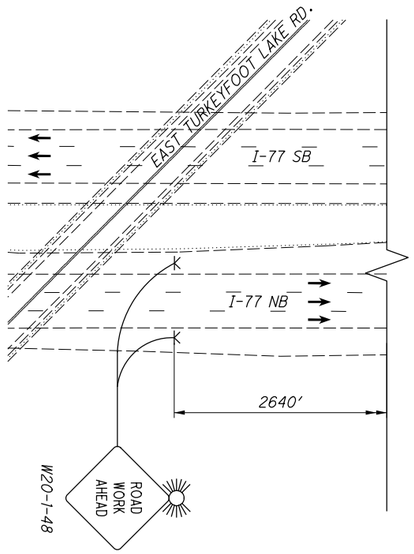


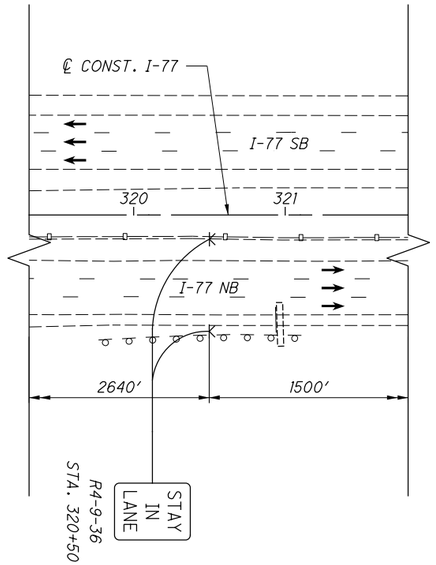


| DRUM SPACING CHART (MAX SPACING) | | |
|---|---|---|
| SPEED (MPH) | 55 | 65 |
| TAPER (FT) | 55 | 65 |
| TANGENT (FT) | 80 | 120 |

## MOT LEGEND

| EXIST. | PROP. | |
|---|---|---|
| | | W.Z. Y CONNECTOR |
| | | W.Z. PORTABLE BARRIER |
| | | W.Z. IMPACT ATTENUATOR |
| | K | W.Z. SIGN |
| | | W.Z. TYPE 3 BARRICADE |
| | → | W.Z. FLOW ARROW |
| | ••• | W.Z. DRUM |
| | | WORK AREA |
| | WD | W.Z. DOTTED LINE, WHITE |
| | WE | W.Z. EDGE LINE, WHITE |
| | YE | W.Z. EDGE LINE, YELLOW |
| | LL | W.Z. LANE LINE |
| | CH | W.Z. CHANNELIZING LINE |
| | M# | MOT TEMP. DRAINAGE STRUCTURE |
| | | TYPE 'A' WARNING LIGHT |
| | | TYPE 'B' WARNING LIGHT |
| | | TEMPORARY PAVEMENT |

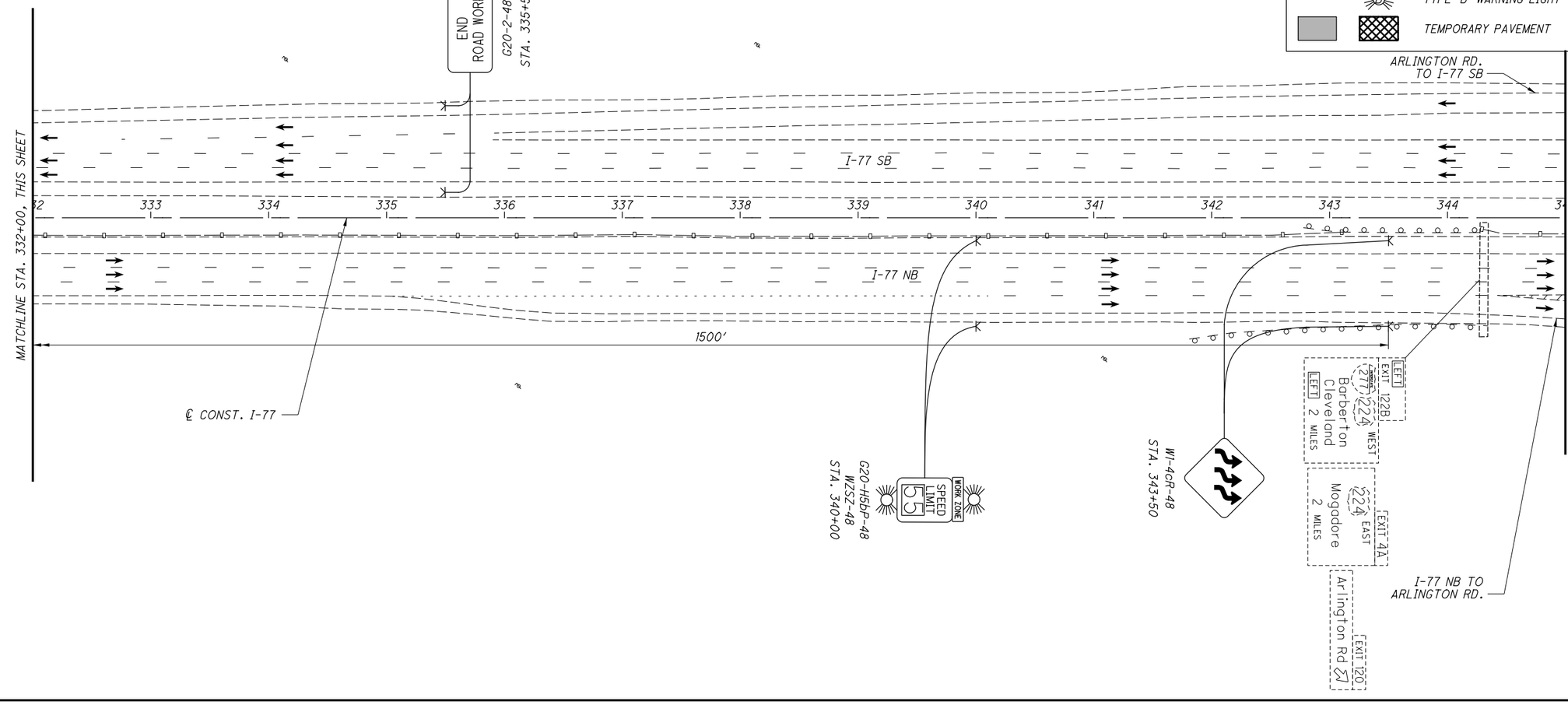


HORIZONTAL SCALE IN FEET
0 25 50 100

CALCULATED . CHECKED .

# MAINTENANCE OF TRAFFIC PLAN - PHASE 1
## I-77 - STA. 332+00 TO STA. 345+00

SUM-77 / 277 / 224
VARIOUS

128
1288

N:\03\69\06744-08\06002_SUM-76-10.95\Design\MOT\Sheets\06002_MP105.dgn Sheet 1/31/2021 5:28:29 PM jrettig

NOTES:

1. SEE SHEET 128 FOR MOT LEGEND AND DRUM SPACING CHART.
2. SEE SHEETS 123-191 FOR TYPICAL SECTIONS.

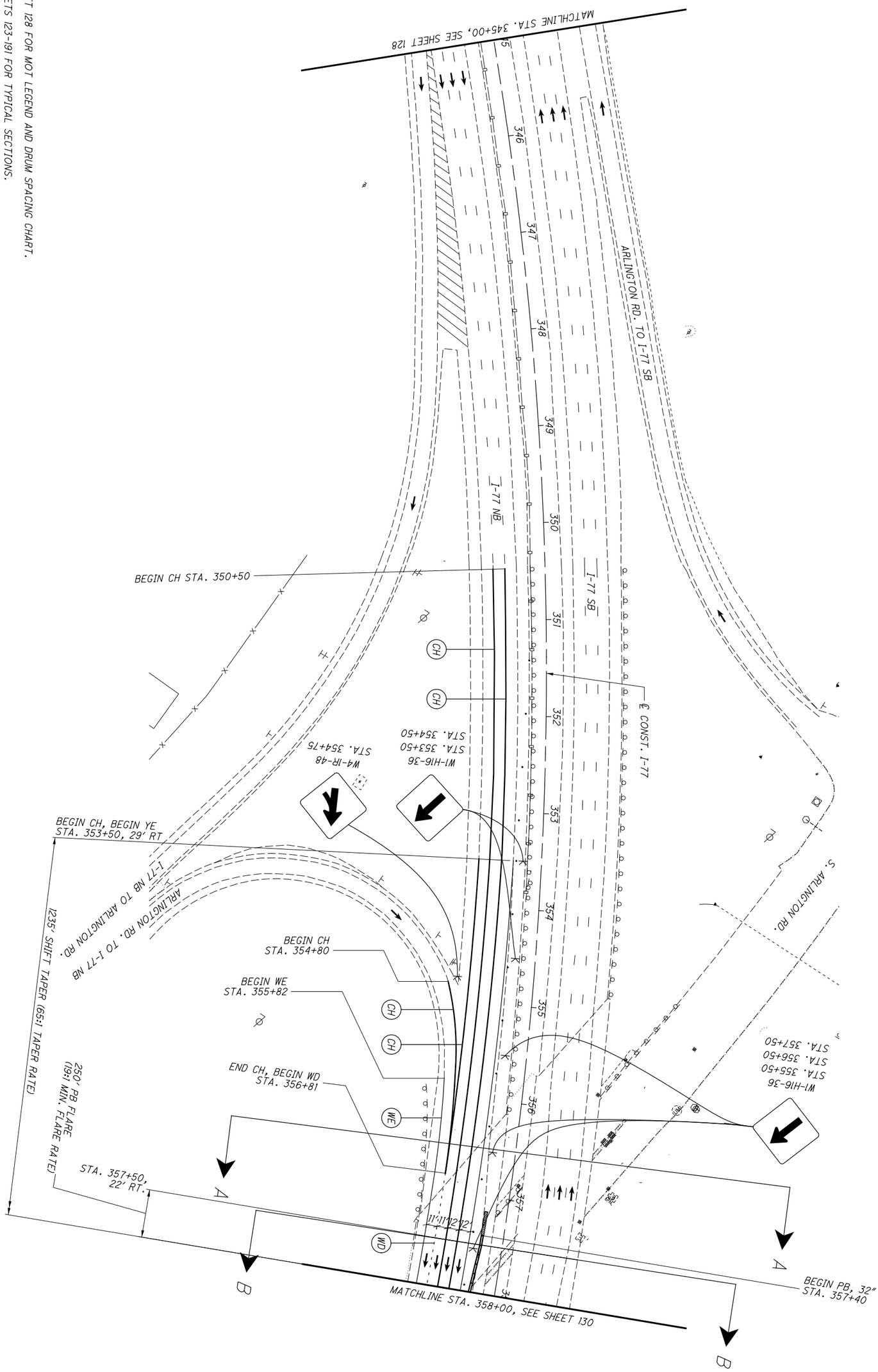


| | | | | |
|---|---|---|---|---|
| 129 / 1288 | SUM-77 / 277 / 224<br>VARIOUS | MAINTENANCE OF TRAFFIC PLAN - PHASE 1<br>I-77 - STA. 345+00 TO STA. 358+00 | CALCULATED .<br>CHECKED . | 0 50<br>25 100<br>HORIZONTAL SCALE IN FEET |

N:\03\60\06744-08\106002_SUM-76-10.95\Design\MOT\Sheets\106002_MP107.dgn Sheet 1/31/2021 5:28:41 PM jrettig

NOTES:

1. SEE SHEET 128 FOR MOT LEGEND AND DRUM SPACING CHART.
2. SEE SHEETS 123-191 FOR TYPICAL SECTIONS.
3. SHIFT SIGNS SO ARROWS ARE CENTERED OVER LANE.
4. SEE SHEETS 285-240 FOR SOUTHERN COSSOVER (NB).

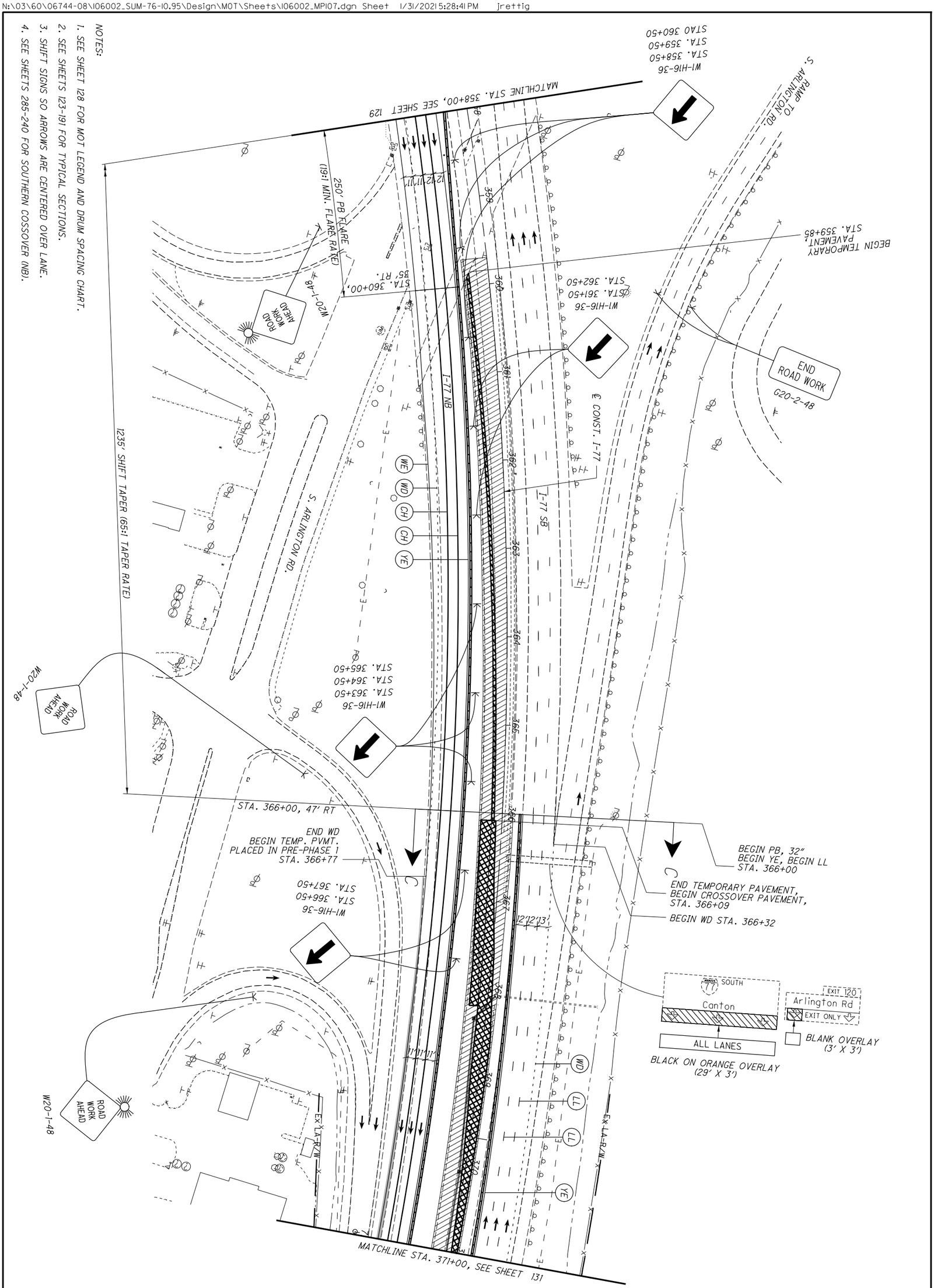


| | | | | |
|---|---|---|---|---|
| 130 / 1288 | SUM-77 / 277 / 224<br>VARIOUS | MAINTENANCE OF TRAFFIC PLAN - PHASE 1<br>I-77 - STA. 358+00 TO STA. 371+00 | CALCULATED .<br>CHECKED . | 0 50<br>25 100<br>HORIZONTAL SCALE IN FEET |

NOTES:

1. SEE SHEET 128 FOR MOT LEGEND AND DRUM SPACING CHART.
2. SEE SHEETS 123-191 FOR TYPICAL SECTIONS.

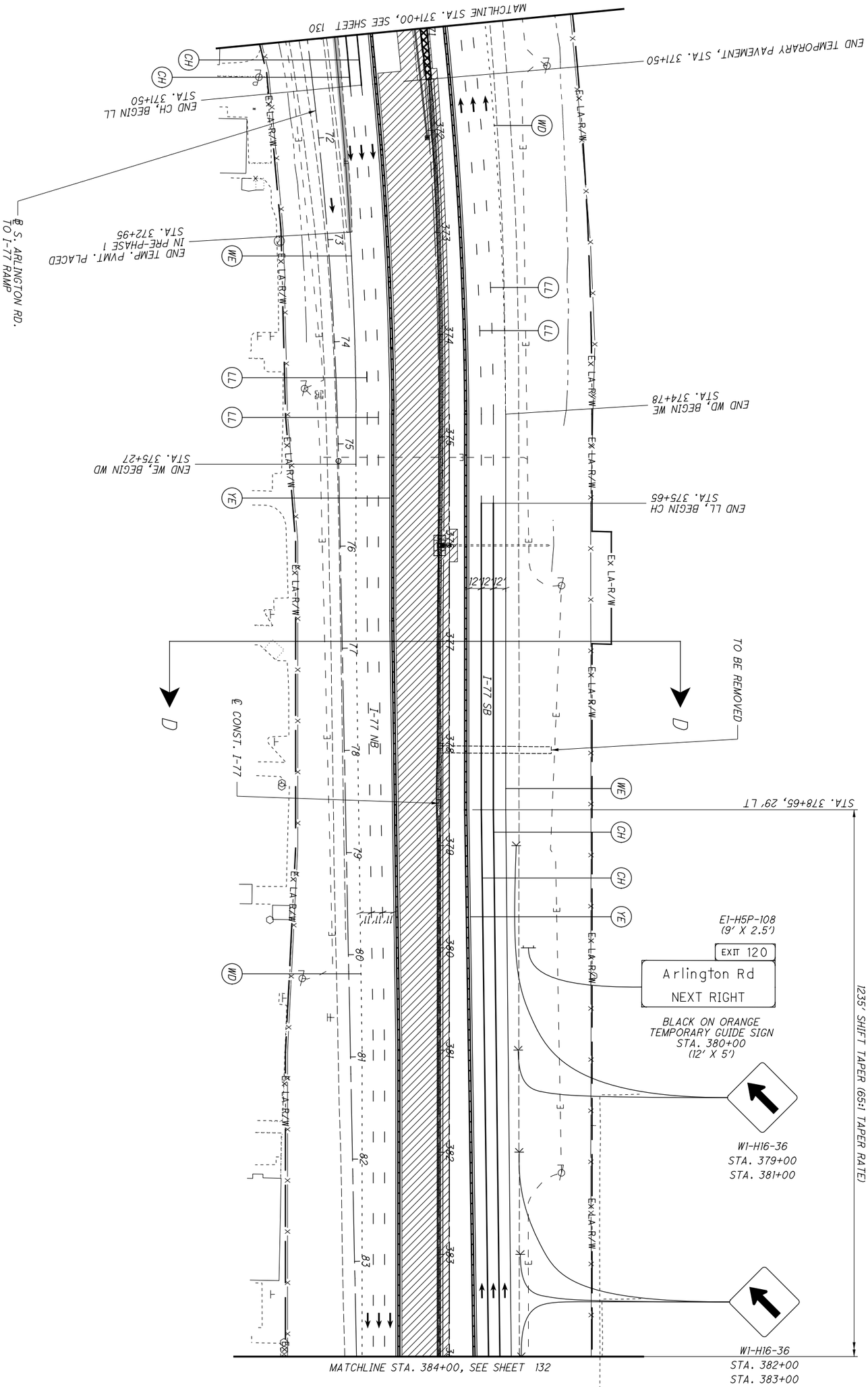


| | | | | |
|---|---|---|---|---|
| 131 / 1288 | SUM-77/277/224<br>VARIOUS | MAINTENANCE OF TRAFFIC PLAN - PHASE 1<br>I-77 - STA. 371+00 TO STA. 384+00 | CALCULATED .<br>CHECKED . | 0 50 100<br>25<br>HORIZONTAL SCALE IN FEET |

NOTES:

1. SEE SHEET 128 FOR MOT LEGEND AND DRUM SPACING CHART.
2. SEE SHEETS 123-191 FOR TYPICAL SECTIONS.

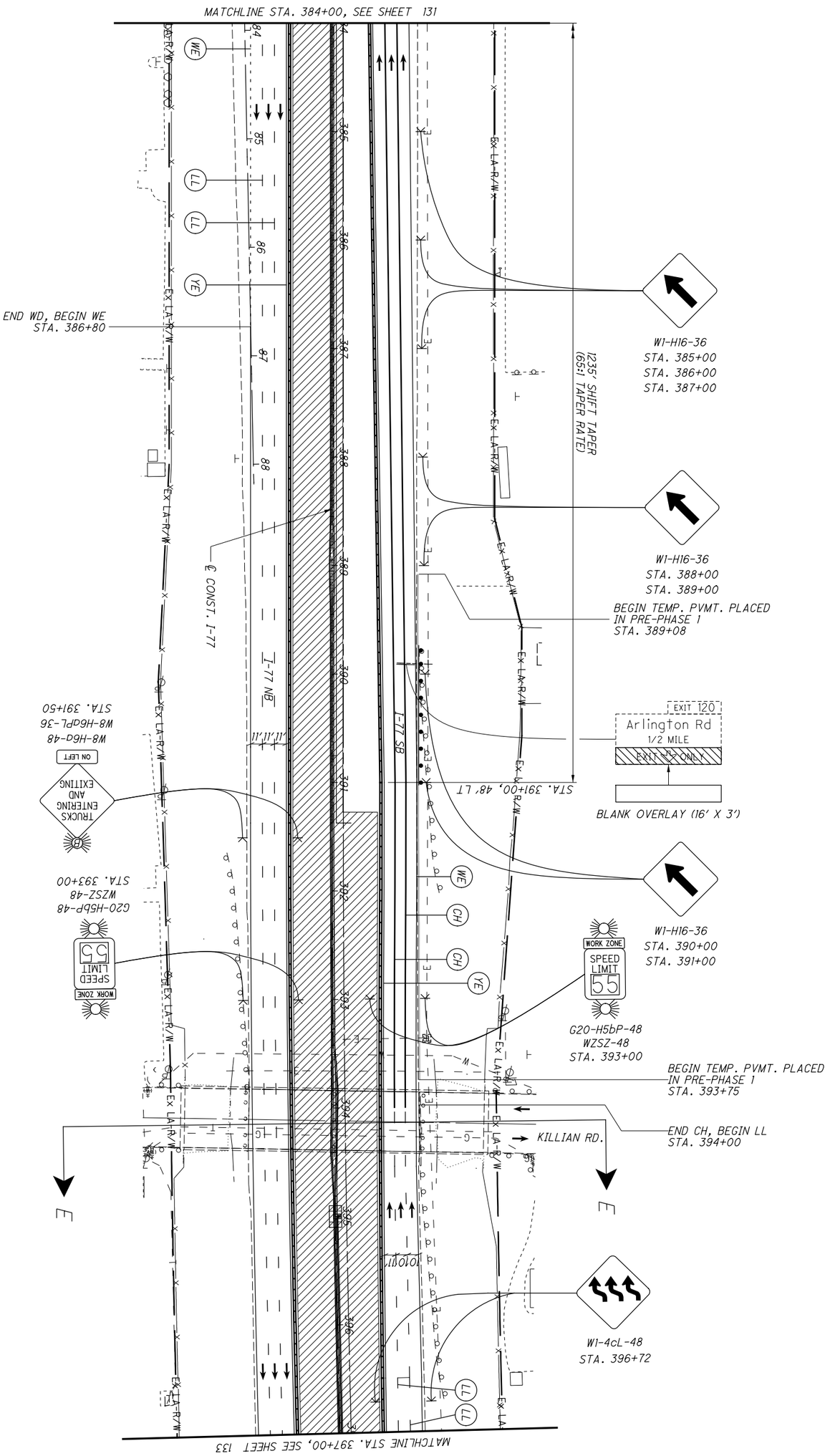


| | | | | |
|---|---|---|---|---|
| 132 / 1288 | SUM-77 / 277 / 224<br>VARIOUS | MAINTENANCE OF TRAFFIC PLAN - PHASE 1<br>I-77 - STA. 384+00 TO STA. 397+00 | CALCULATED .<br>CHECKED . | 0 50<br>25 100<br>HORIZONTAL SCALE IN FEET |

NOTES:

1. SEE SHEET 128 FOR MOT LEGEND AND DRUM SPACING CHART.

2. SEE SHEETS 123-191 FOR TYPICAL SECTIONS.

3. INSTALL CONTRACTOR ACCESS POINTS PER ODOT STANDARD CONSTRUCTION DRAWING MT-103.10. ACCESS POINTS MAY BE RELOCATED AT THE APPROVAL OF THE ENGINEER, AS NECESSARY TO ACCOMPLISH CONSTRUCTION ACTIVITIES. CONTRACTOR ACCESS POINTS ARE SHOWN FOR INFORMATIONAL PURPOSES AND THE LOCATION CAN BE ADJUSTED AT THE APPROVAL OF THE ENGINEER.

HORIZONTAL SCALE IN FEET
0 25 50 100

CALCULATED .
CHECKED .

**MAINTENANCE OF TRAFFIC PLAN - PHASE 1**
**I-77 - STA. 397+00 TO STA. 410+00**

**SUM-77/277/224**
**VARIOUS**

133
1288

N:\03\60\06744-08\106002_SUM-76-10.95\Design\MOT\Sheets\106002_MPI10.dgn Sheet 1/31/2021 5:28:53 PM jrettig

NOTES:

1. SEE SHEET 128 FOR MOT LEGEND AND DRUM SPACING CHART.
2. MAINTAIN 11' LANES. REDUCE OFFSETS TO PROPOSED AND TEMPORARY BARRIER FROM 2' TO 1.5' ON THE TUSCARAWAS RIVER BRIDGE TO ACCOMODATE CONSTRUCTION.
3. INSTALL CONTRACTOR ACCESS POINTS PER ODOT STANDARD CONSTRUCTION DRAWING MT-103.10. ACCESS POINTS MAY BE RELOCATED AT THE APPROVAL OF THE ENGINEER AS NECESSARY TO ACCOMPLISH CONSTRUCTION ACTIVITIES. CONTRACTOR ACCESS POINTS ARE SHOWN FOR INFORMATIONAL PURPOSES AND THE LOCATION CAN BE ADJUSTED AT THE APPROVAL OF THE ENGINEER.

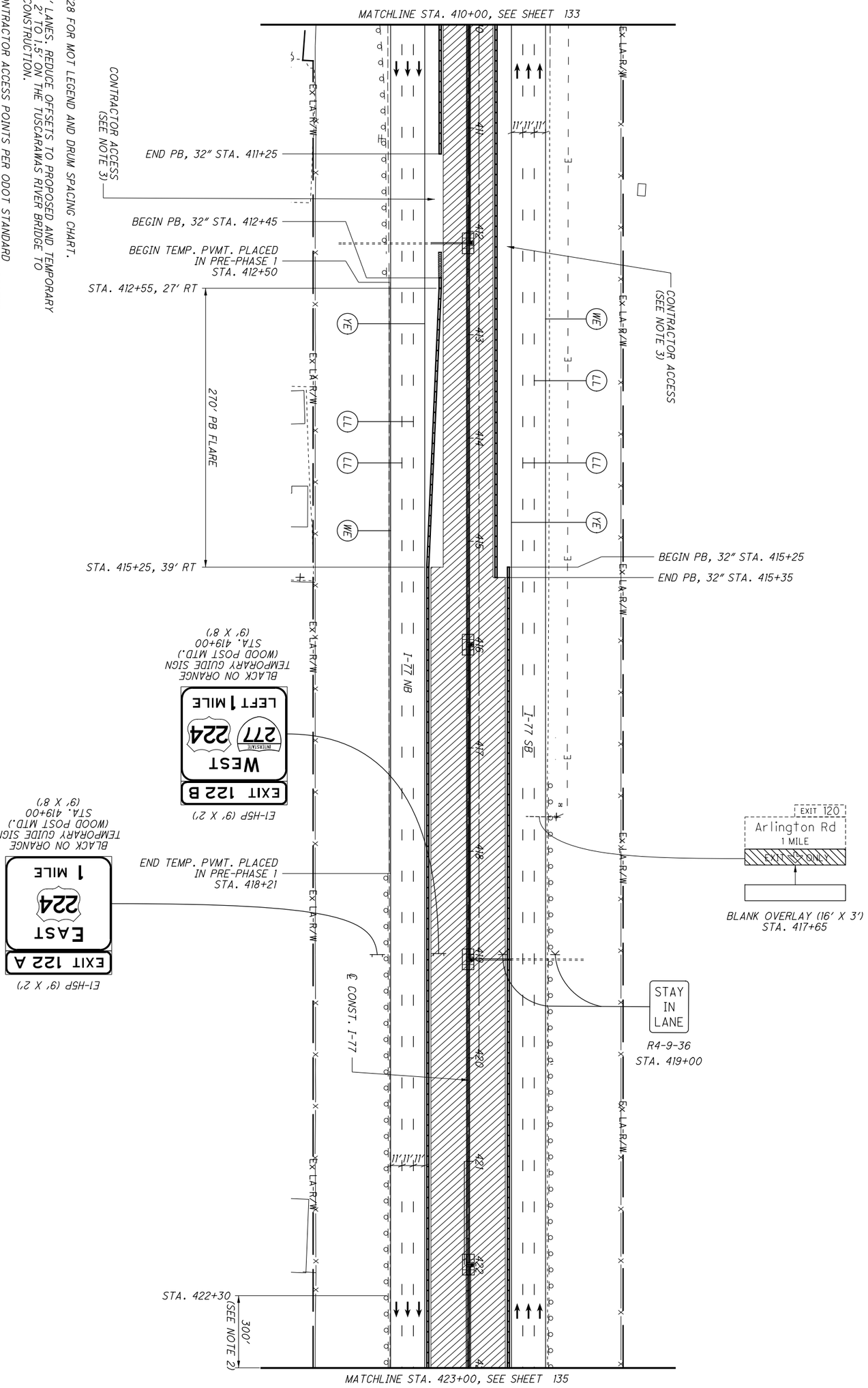


| | | | | |
|---|---|---|---|---|
| 134 / 1288 | SUM-77/277/224<br>VARIOUS | MAINTENANCE OF TRAFFIC PLAN - PHASE 1<br>I-77 - STA. 410+00 TO STA. 423+00 | CALCULATED .<br>CHECKED . | 0 50<br>25 100<br>HORIZONTAL SCALE IN FEET |

NOTES:

1. SEE SHEET 128 FOR MOT LEGEND AND DRUM SPACING CHART.
2. SEE SHEETS 123-191 FOR TYPICAL SECTIONS.
3. MAINTAIN 11' LANES. REDUCE OFFSETS TO PROPOSED AND TEMPORARY BARRIER FROM 2' TO 1.5' ON THE TUSCARAWAS RIVER BRIDGE TO ACCOMODATE CONSTRUCTION.

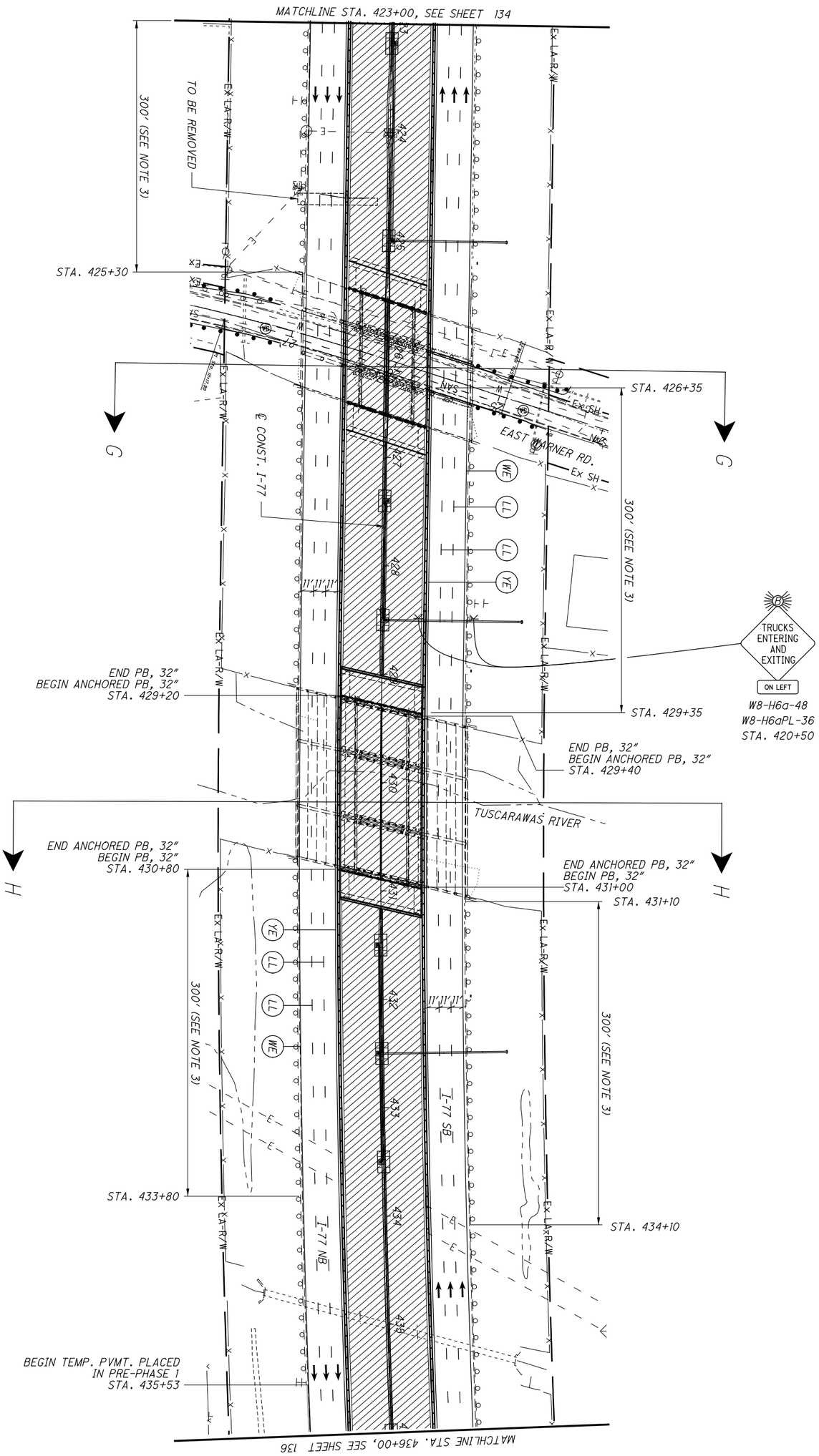


| | | | |
|---|---|---|---|
| 135 / 1288 | SUM-77/277/224<br>VARIOUS | MAINTENANCE OF TRAFFIC PLAN - PHASE 1<br>I-77 - STA. 423+00 TO STA. 436+00 | CALCULATED .<br>CHECKED .<br>0 50<br>25 100<br>HORIZONTAL SCALE IN FEET |

N:\03\60\06744-08\I06002_SUM-76-I0.95\Design\MOT\Sheets\I06002_MPI13.dgn Sheet 1/31/20215:29:06 PM jrettig

NOTES:

1. SEE SHEET 128 FOR MOT LEGEND AND DRUM SPACING CHART.

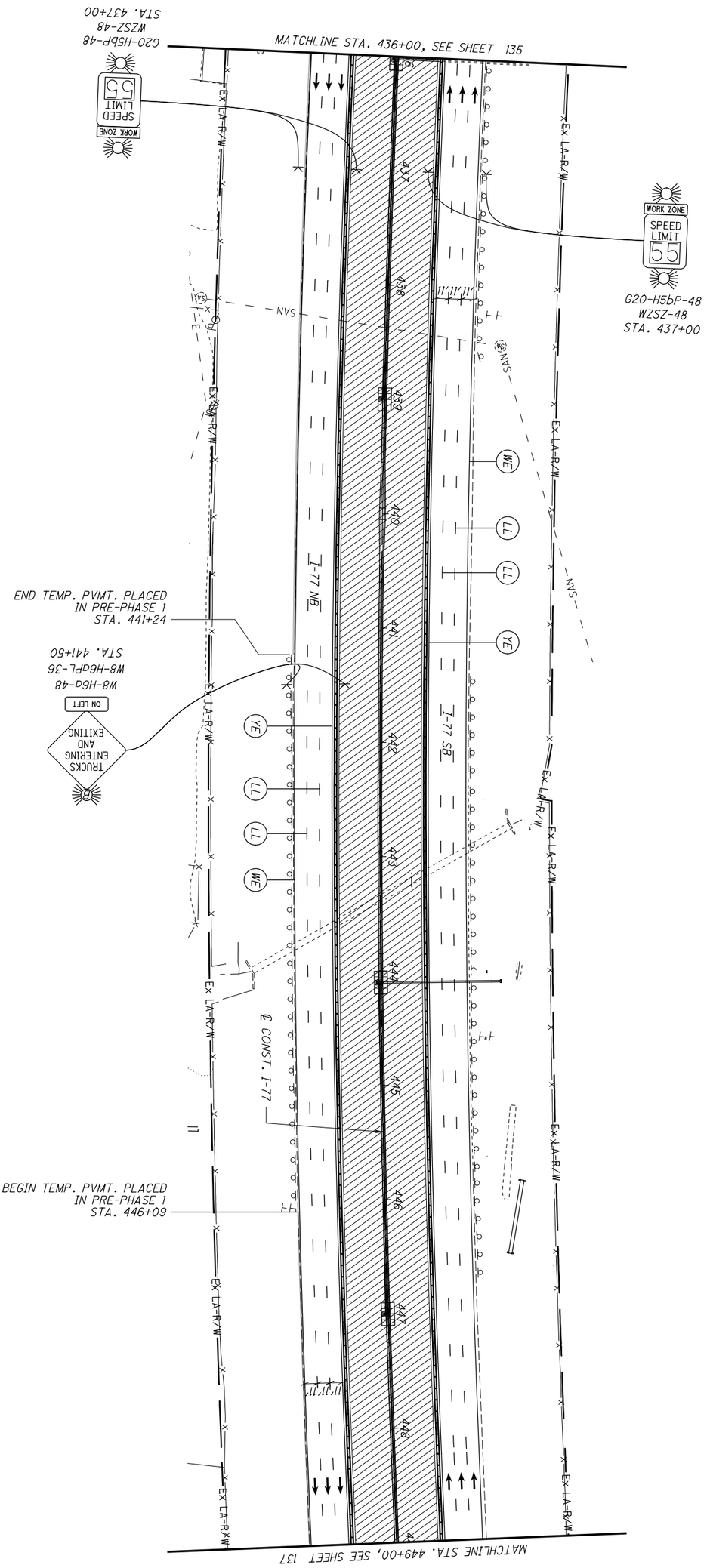


| | | | | |
|---|---|---|---|---|
| 136 / 1288 | SUM-77 / 277 / 224<br>VARIOUS | MAINTENANCE OF TRAFFIC PLAN - PHASE 1<br>I-77 - STA. 436+00 TO STA. 449+00 | CALCULATED .<br>CHECKED . | 0 50<br>25 100<br>HORIZONTAL SCALE IN FEET |

NOTES:

1. SEE SHEET 128 FOR MOT LEGEND AND DRUM SPACING CHART.
2. SEE SHEETS 123-191 FOR TYPICAL SECTIONS.
3. INSTALL CONTRACTOR ACCESS POINTS PER ODOT STANDARD CONSTRUCTION DRAWING MT-103.10. ACCESS POINTS MAY BE RELOCATED AT THE APPROVAL OF THE ENGINEER, AS NECESSARY TO ACCOMPLISH CONSTRUCTION ACTIVITIES. CONTRACTOR ACCESS POINTS ARE SHOWN FOR INFORMATIONAL PURPOSES AND THE LOCATION CAN BE ADJUSTED AT THE APPROVAL OF THE ENGINEER.

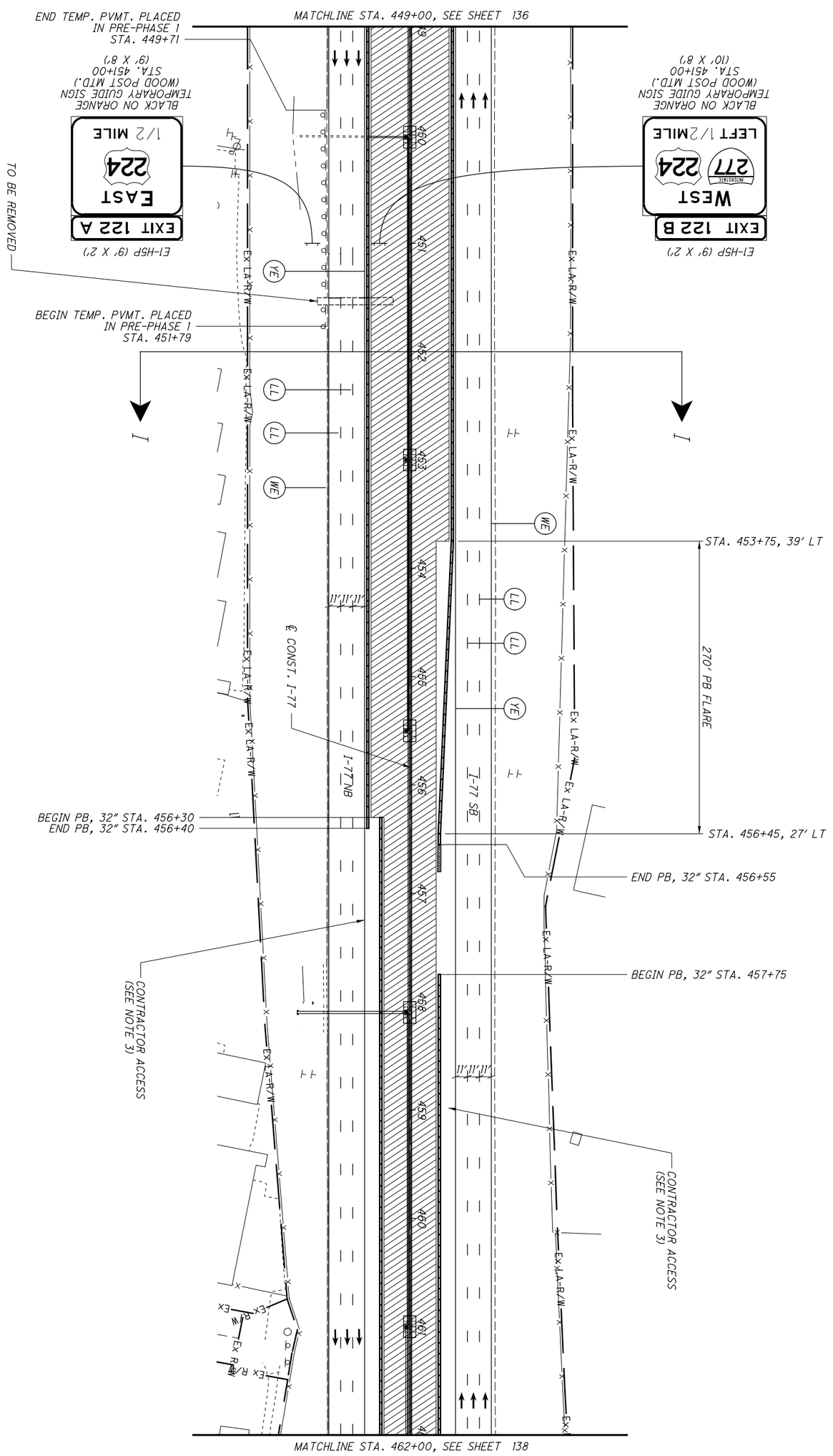


| | | | | |
|---|---|---|---|---|
| 137 / 1288 | SUM-77 / 277 / 224<br>VARIOUS | MAINTENANCE OF TRAFFIC PLAN - PHASE 1<br>I-77 - STA. 449+00 TO STA. 462+00 | CALCULATED .<br>CHECKED . | 0 50<br>25 100<br>HORIZONTAL SCALE IN FEET |

NOTES:

1. SEE SHEET 128 FOR MOT LEGEND AND DRUM SPACING CHART.
2. SEE SHEETS 123-191 FOR TYPICAL SECTIONS.

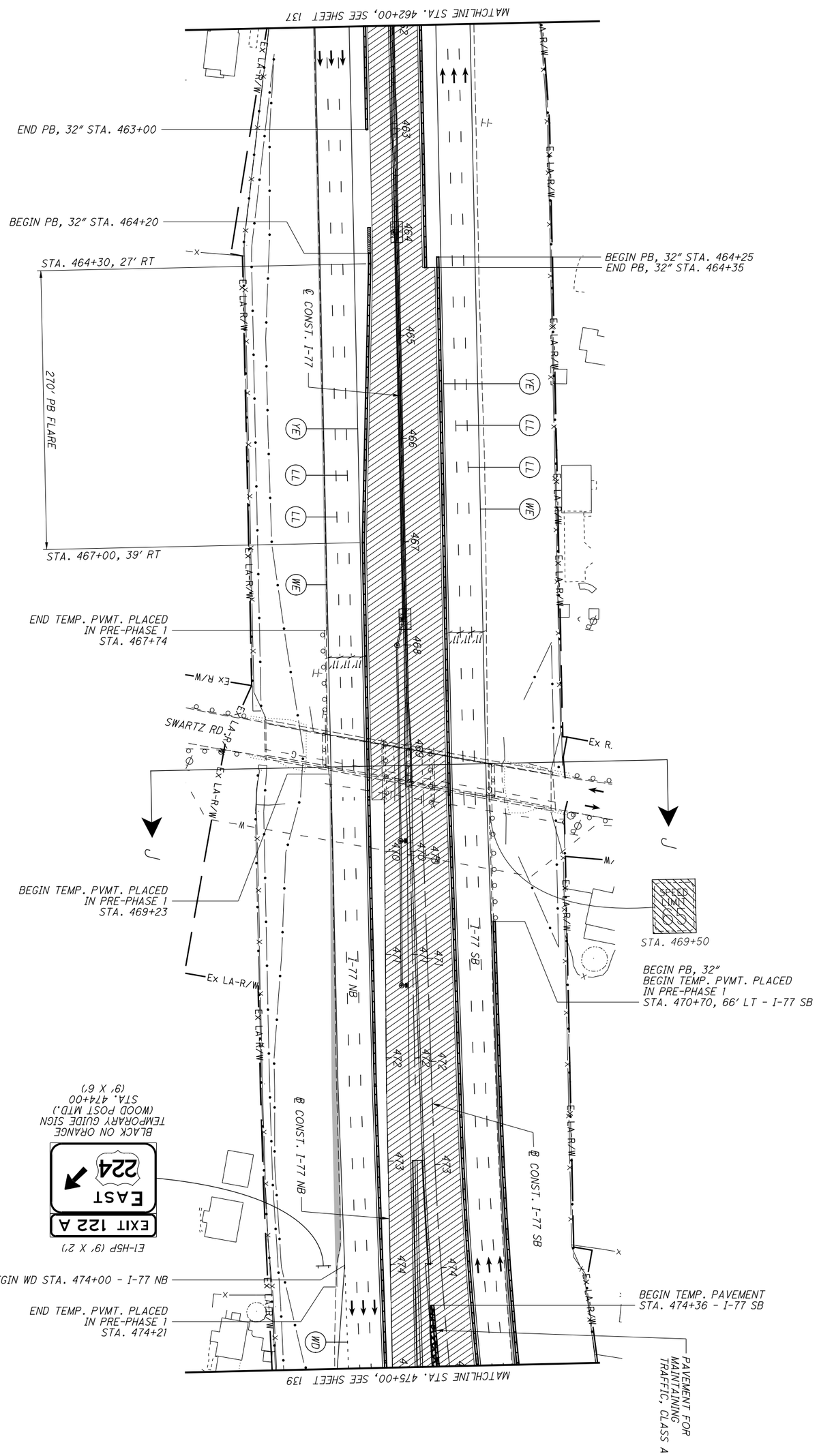


| | | | |
|---|---|---|---|
| 138 / 1288 | SUM-77 / 277 / 224<br>VARIOUS | MAINTENANCE OF TRAFFIC PLAN - PHASE 1<br>I-77 - STA. 462+00 TO STA. 475+00 | CALCULATED .<br>CHECKED .<br>0 50 / 25 100<br>HORIZONTAL SCALE IN FEET |

N:\03\60\06744-08\I06002_SUM-76-10.95\Design\MOT\Sheets\I06002_MPII6.dgn Sheet 4/30/2021 11:42:28 AM awhite

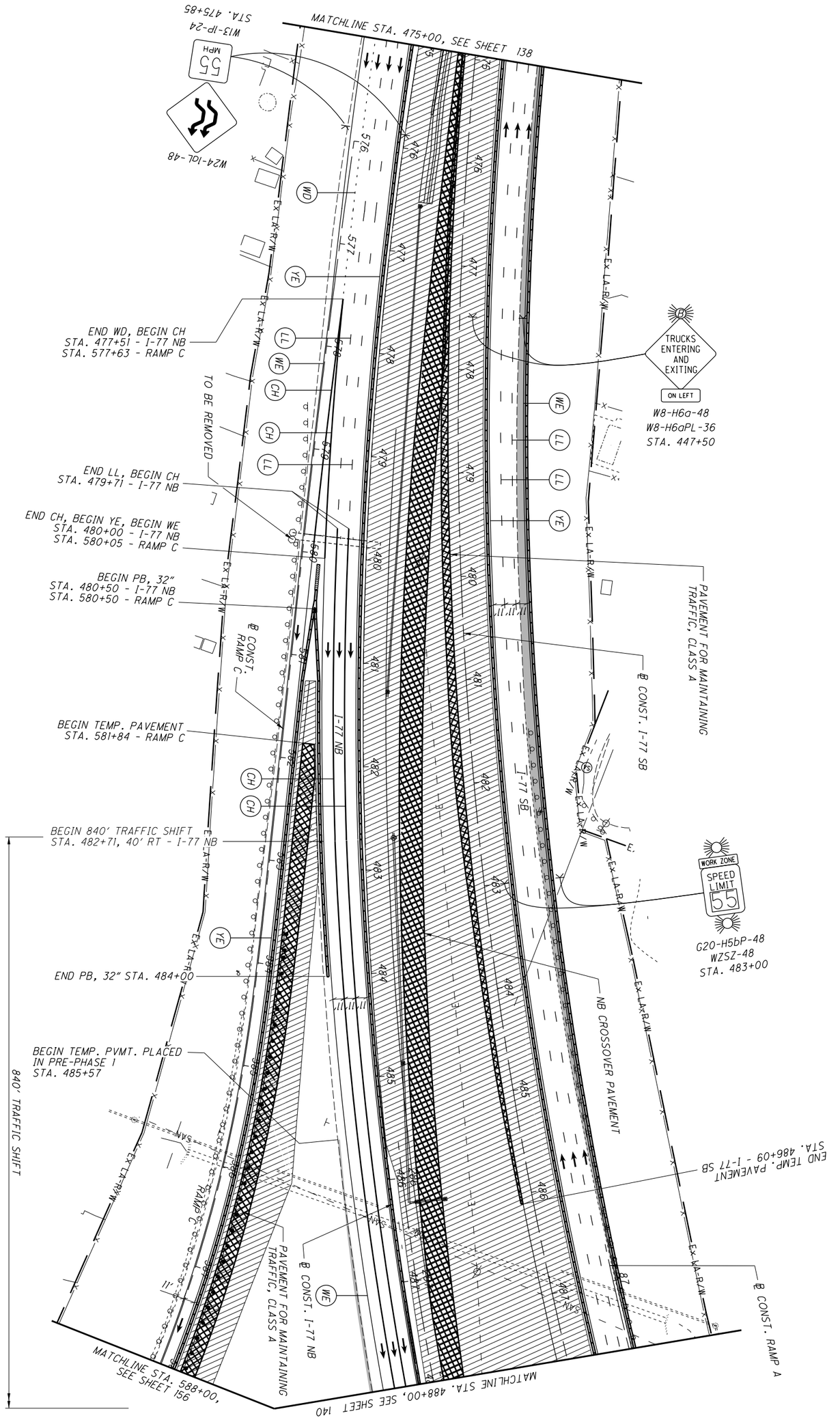


NOTES:

1. SEE SHEET 128 FOR MOT LEGEND AND DRUM SPACING CHART.
2. SEE SHEETS 157-170 FOR RAMP C CROSS SECTIONS.
3. SEE SHEETS 294-297 FOR NORTHERN CROSSOVER (NB).

| NO. | DATE | REVISIONS DESCRIPTION |
|---|---|---|
| 8 | 04/30/21 | I-77 NB LANE SHIFT/SIGNING CHANGES |

| | | | | |
|---|---|---|---|---|
| 1288 | SUM-77/277/224 VARIOUS | MAINTENANCE OF TRAFFIC PLAN - PHASE 1 I-77 - STA. 475+00 TO STA. 488+00 | CALCULATED . CHECKED . | 0 50 25 100 HORIZONTAL SCALE IN FEET |

NOTES:

1. SEE SHEET 128 FOR MOT LEGEND AND DRUM SPACING CHART.
2. SEE SHEETS 123-191 FOR TYPICAL SECTIONS.
3. SEE SHEETS 116 AND 118 FOR ADDITIONAL DETAILS.

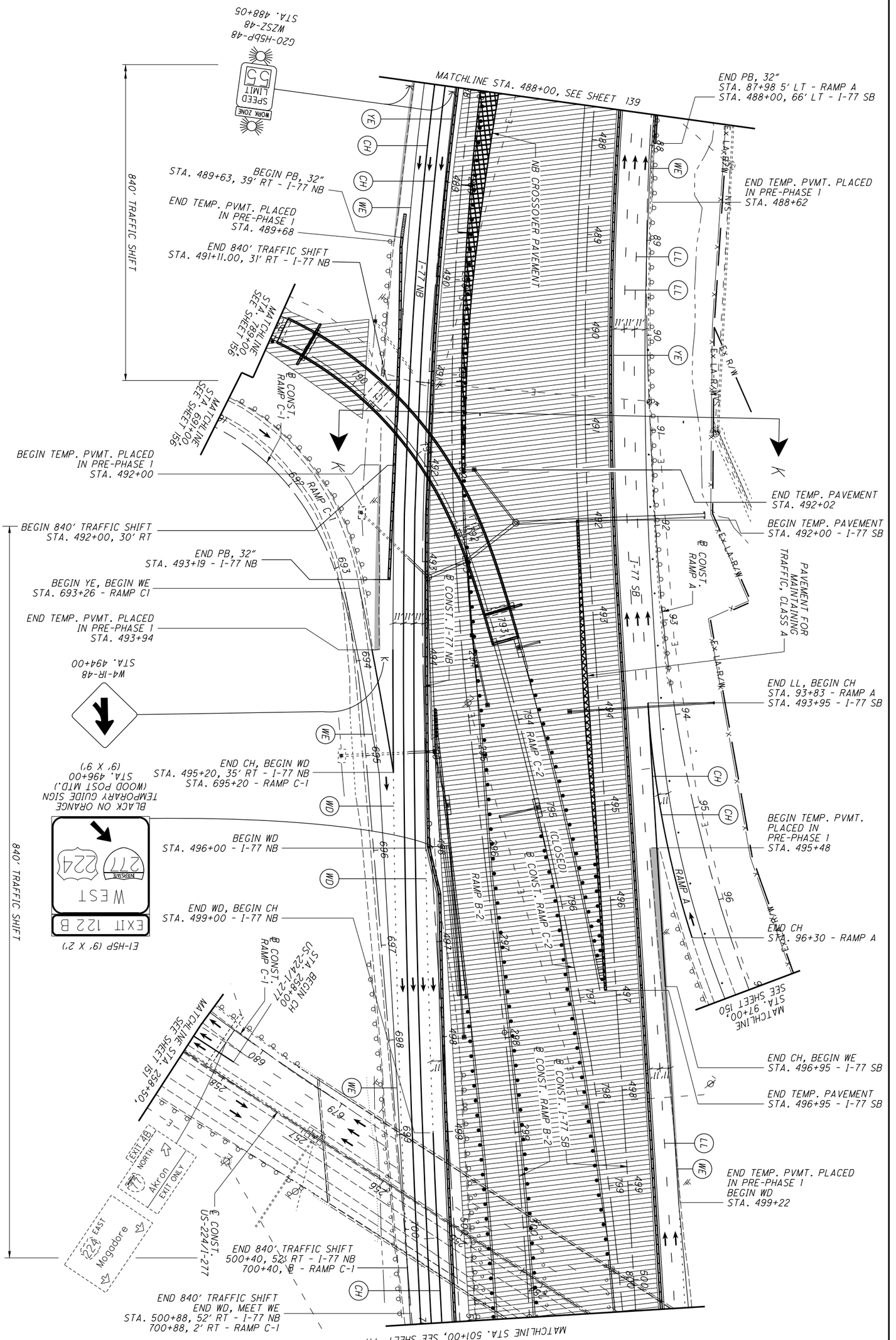


| NO. | DATE | REVISIONS DESCRIPTION |
|---|---|---|
| 8 | 04/30/21 | I-77 NB LANE SHIFT/SIGNING CHANGES |

| | | | | |
|---|---|---|---|---|
| 140 / 1288 | SUM-77/277/224 VARIOUS | MAINTENANCE OF TRAFFIC PLAN - PHASE 1 I-77 - STA. 488+00 TO STA. 501+00 | CALCULATED . CHECKED . | 0 50 25 100 HORIZONTAL SCALE IN FEET |

N:\03\60\06744-08\I06002_SUM-76-I0.95\Design\MOT\Sheets\I06002_MPII8.dgn Sheet 4/30/2021 11:45:43 AM awhite

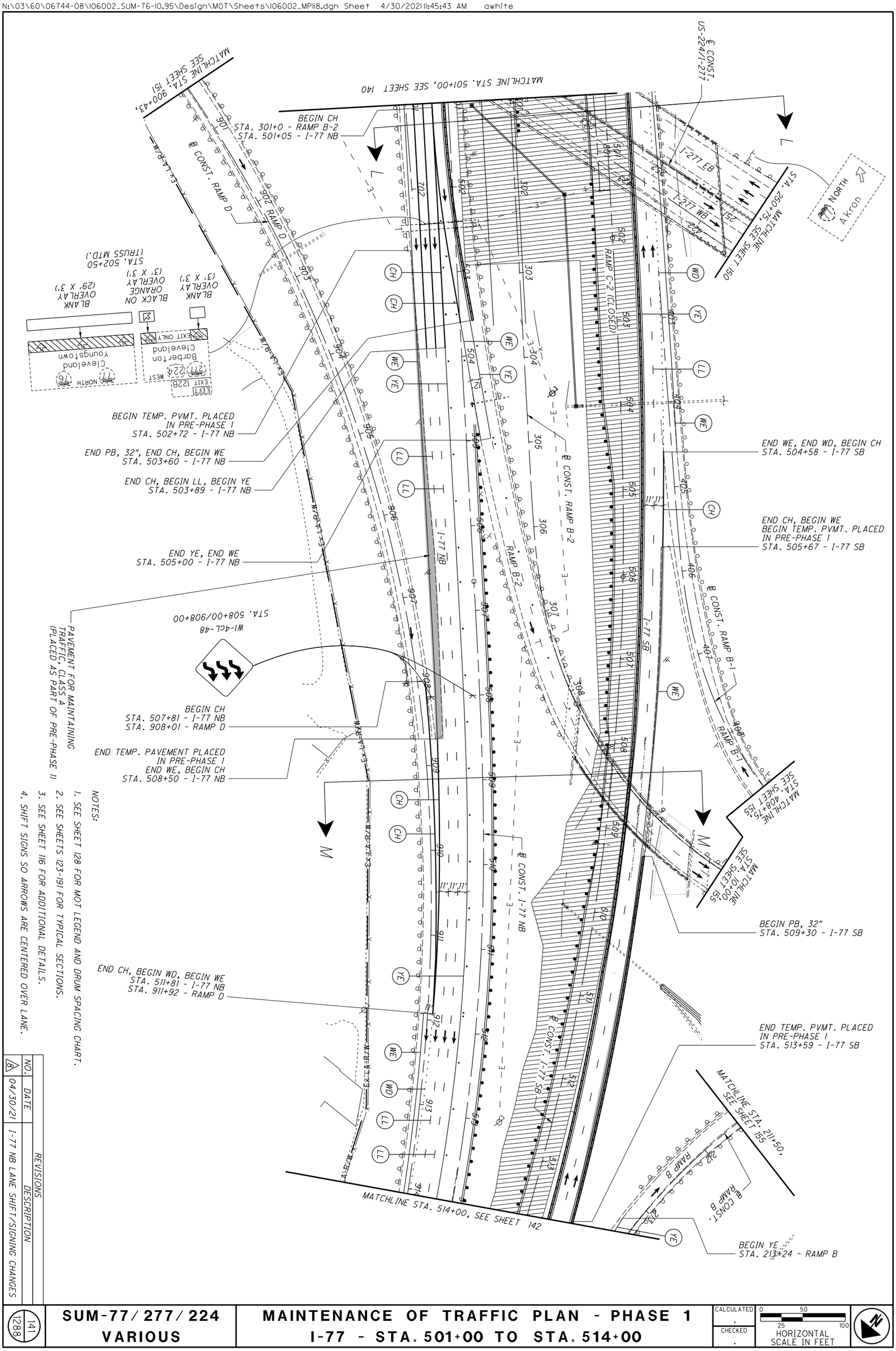


NOTES:

1. SEE SHEET 128 FOR MOT LEGEND AND DRUM SPACING CHART.
2. SEE SHEETS 123-191 FOR TYPICAL SECTIONS.
3. SEE SHEET 116 FOR ADDITIONAL DETAILS.
4. SHIFT SIGNS SO ARROWS ARE CENTERED OVER LANE.

| NO. | DATE | REVISIONS DESCRIPTION |
|---|---|---|
| 8 | 04/30/21 | I-77 NB LANE SHIFT/SIGNING CHANGES |

| | | | | |
|---|---|---|---|---|
| 141 / 1288 | SUM-77/277/224 VARIOUS | MAINTENANCE OF TRAFFIC PLAN - PHASE 1 I-77 - STA. 501+00 TO STA. 514+00 | CALCULATED . CHECKED . | 0 50 25 100 HORIZONTAL SCALE IN FEET |

N:\03\60\06744-08\I06002_SUM-76-10.95\Design\MOT\Sheets\I06002_MPI19.dgn Sheet 1/31/2021 5:30:16 PM jrettig

NOTES:

1. SEE SHEET 128 FOR MOT LEGEND AND DRUM SPACING CHART.
2. SEE SHEETS 123-191 FOR TYPICAL SECTIONS.

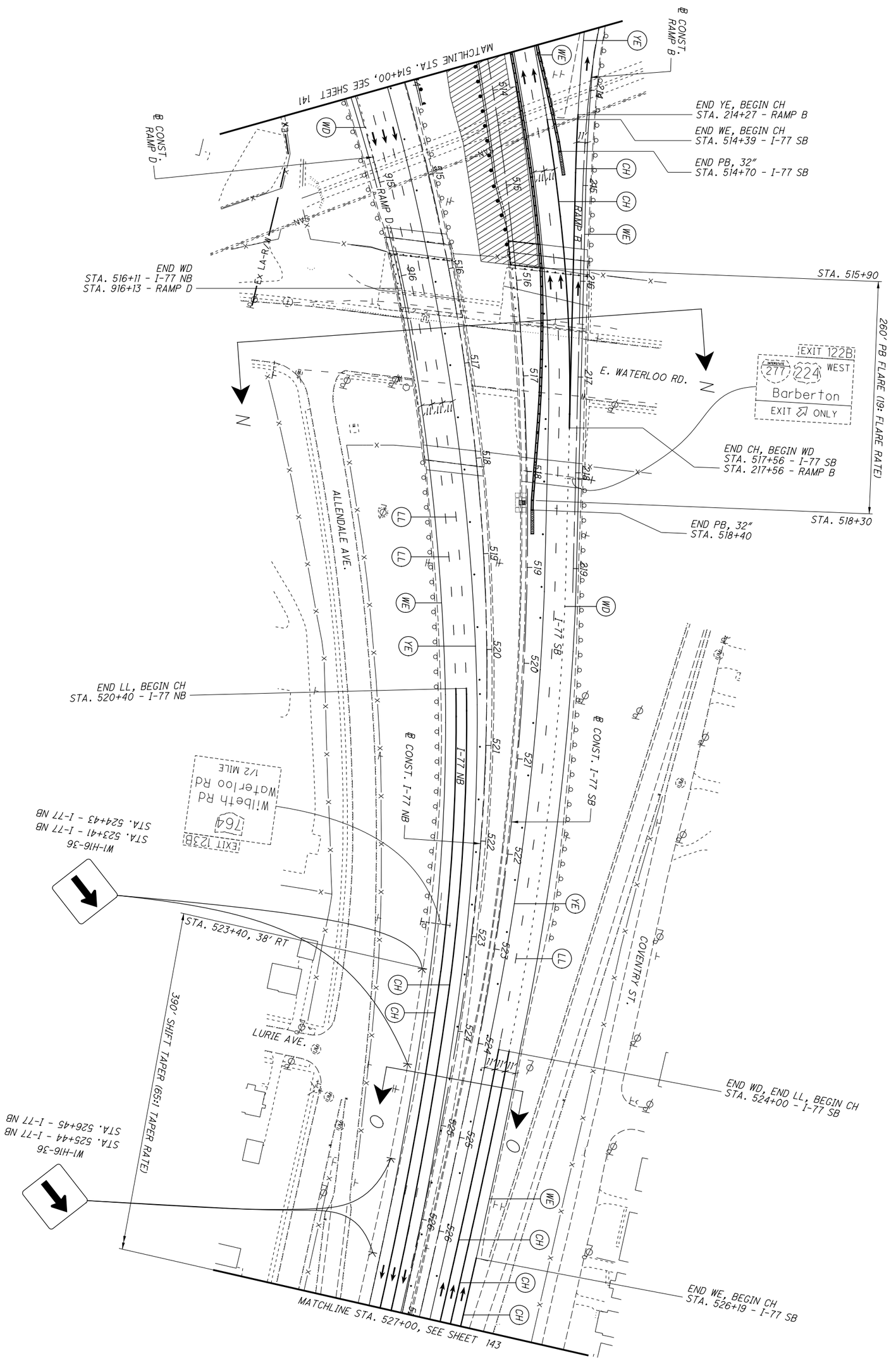


| | | | | |
|---|---|---|---|---|
| 142 / 1288 | SUM-77 / 277 / 224<br>VARIOUS | MAINTENANCE OF TRAFFIC PLAN - PHASE 1<br>I-77 - STA. 514+00 TO STA. 527+00 | CALCULATED .<br>CHECKED . | 0 50<br>25 100<br>HORIZONTAL SCALE IN FEET |

NOTES:

1. SEE SHEET 128 FOR MOT LEGEND AND DRUM SPACING CHART.
2. SEE SHEETS 123-191 FOR TYPICAL SECTIONS.
3. SHIFT SIGNS SO ARROWS ARE CENTERED OVER LANE.

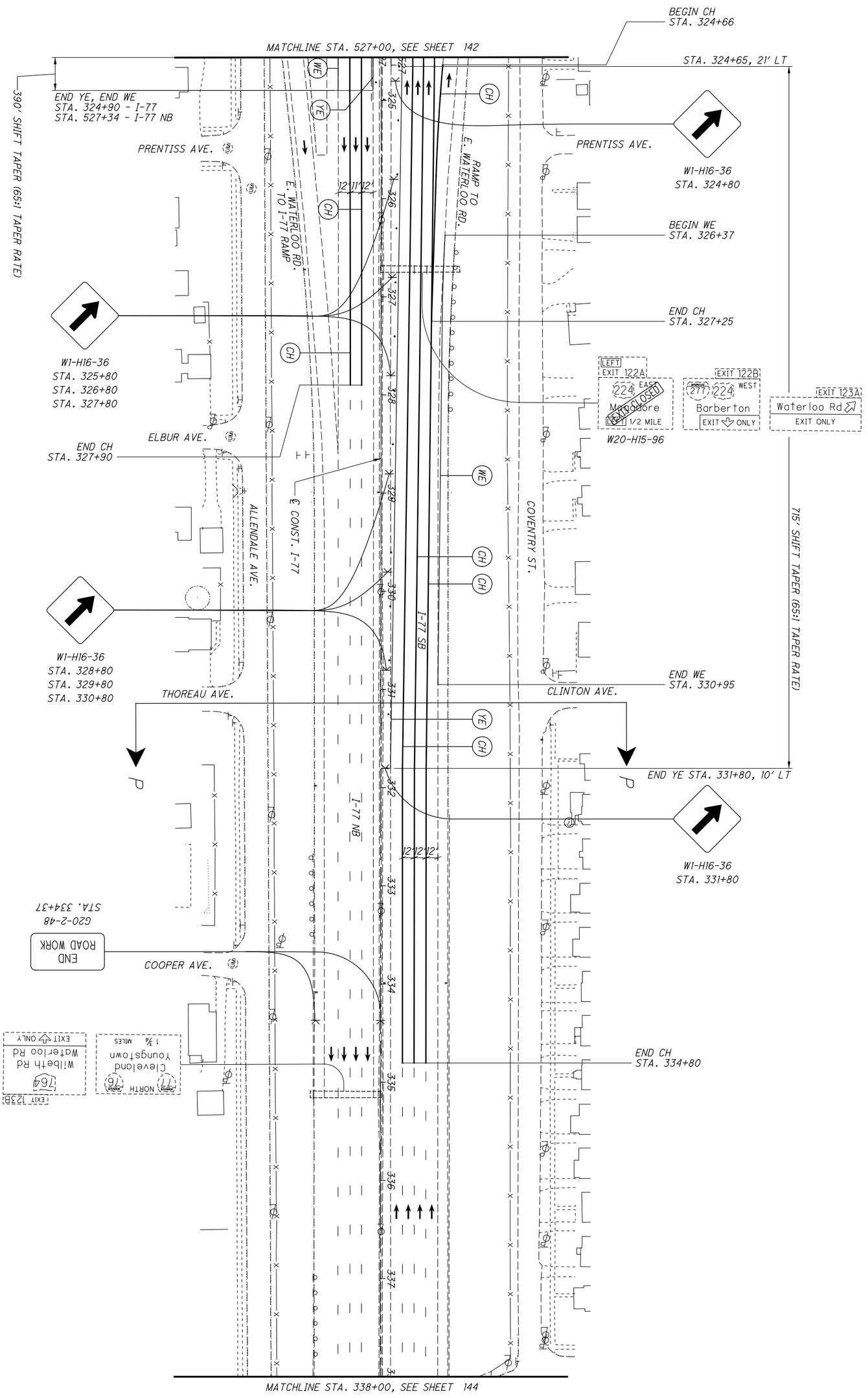


| | | | | |
|---|---|---|---|---|
| 143 / 1288 | SUM-77 / 277 / 224<br>VARIOUS | MAINTENANCE OF TRAFFIC PLAN - PHASE 1<br>I-77 - STA. 527+00 TO STA. 338+00 | CALCULATED .<br>CHECKED . | 0 50<br>25 100<br>HORIZONTAL SCALE IN FEET |

N:\03\60\06744-08\I06002_SUM-76-10.95\Design\MOT\Sheets\I06002_MP121.dgn Sheet 1/31/2021 5:30:23 PM jrettig

NOTES:

1. SEE SHEET 128 FOR MOT LEGEND AND DRUM SPACING CHART.

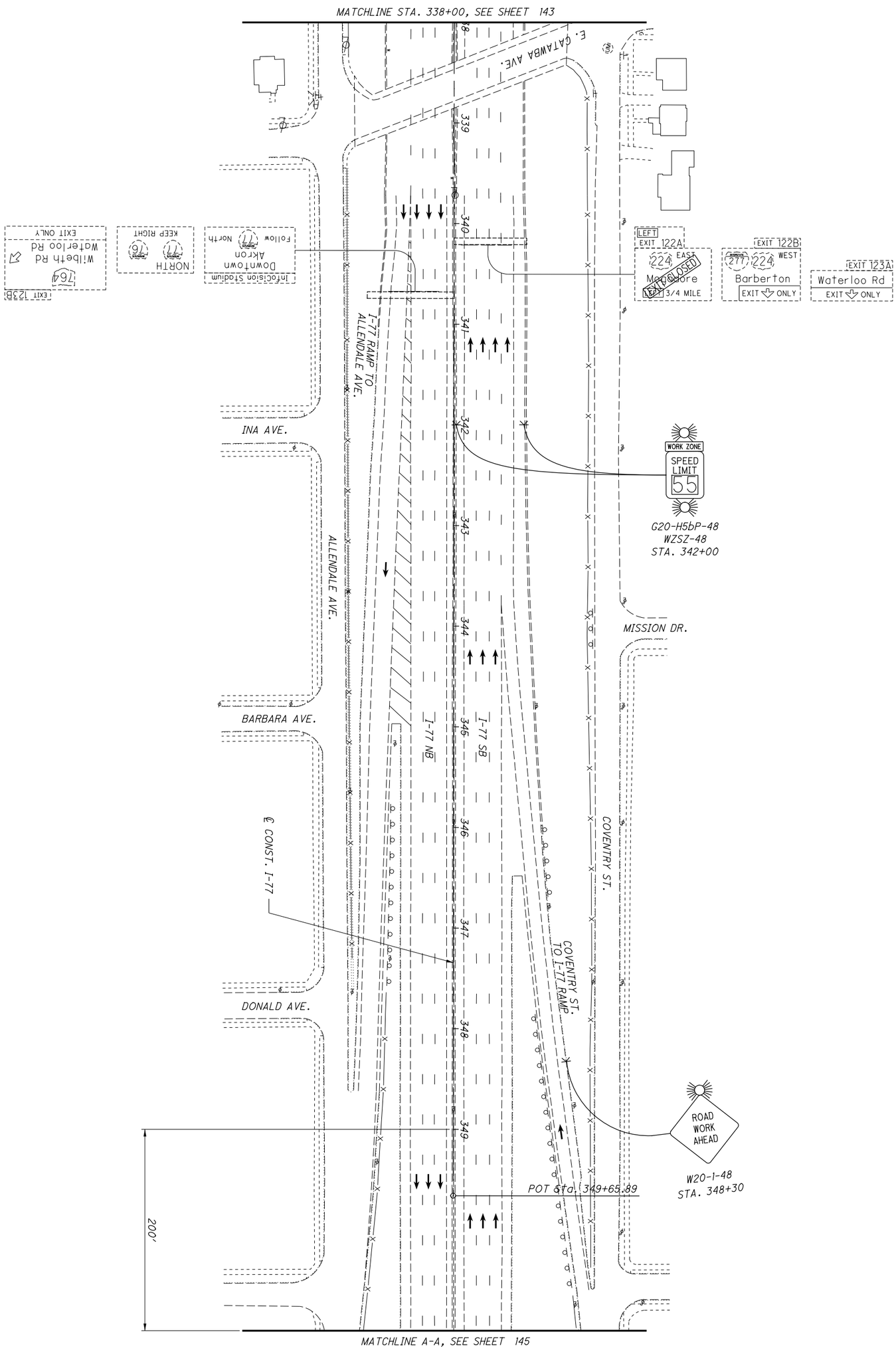


| | | | | |
|---|---|---|---|---|
| 144 / 1288 | SUM-77/277/224<br>VARIOUS | MAINTENANCE OF TRAFFIC PLAN - PHASE 1<br>I-77 - STA. 338+00 TO M.L. A-A | CALCULATED .<br>CHECKED . | 0 50<br>25 100<br>HORIZONTAL SCALE IN FEET |

NOTES:

1. SEE SHEET 128 FOR MOT LEGEND AND DRUM SPACING CHART.

HORIZONTAL SCALE IN FEET
0 25 50 100

CALCULATED .
CHECKED .

# MAINTENANCE OF TRAFFIC PLAN - PHASE 1
## I-77 - M.L. A-A TO NORTH LIMITS

SUM-77/277/224
VARIOUS

145
1288

N:\03\60\06744-08\106002_SUM-76-10.95\Design\MOT\Sheets\106002_MPI22.dgn Sheet 1/31/2021 5:30:26 PM jrettig

NOTES:

1. SEE SHEET 128 FOR MOT LEGEND AND DRUM SPACING CHART.

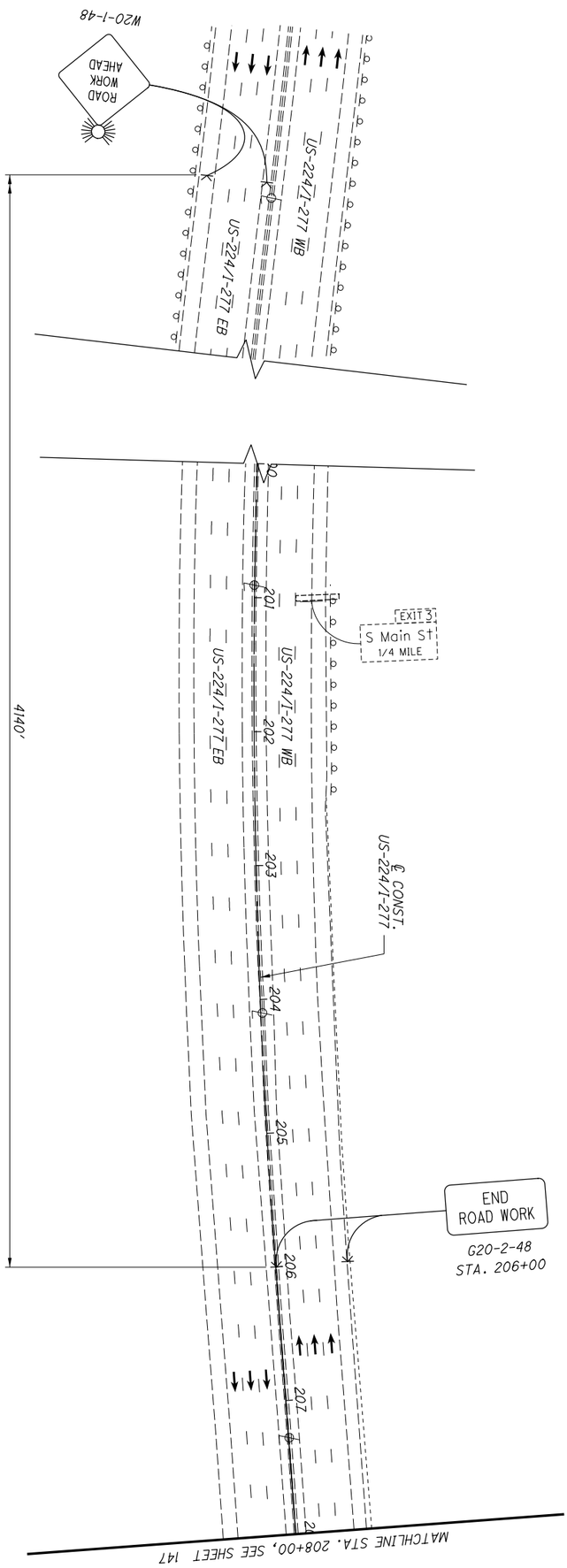

NOTES:

1. SEE SHEET 128 FOR MOT LEGEND AND DRUM SPACING CHART.

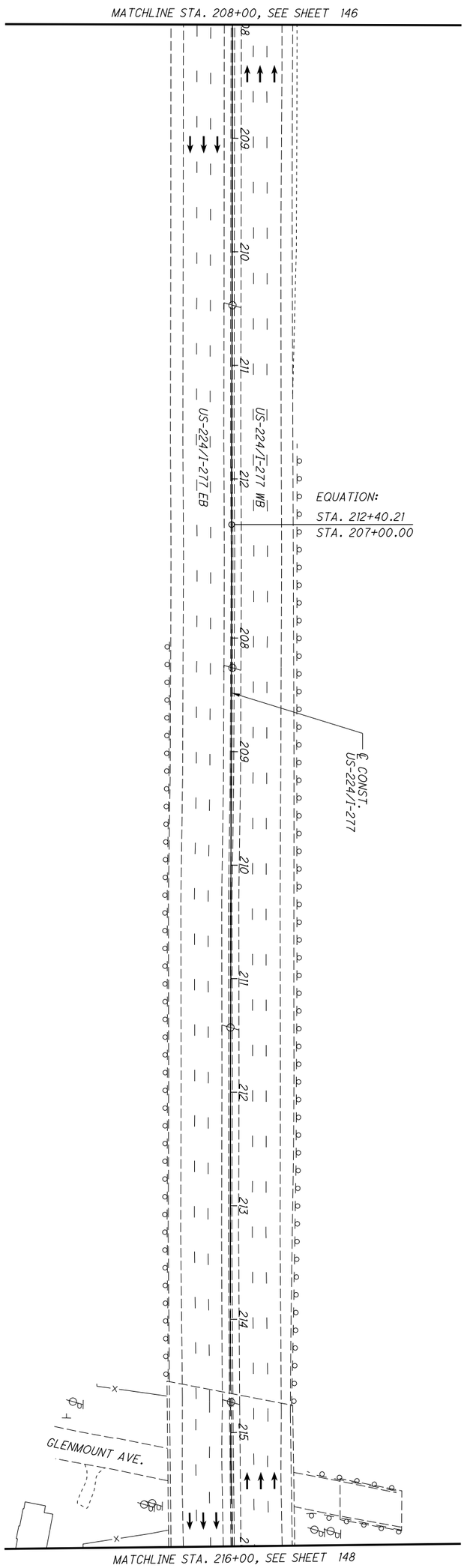

NOTES:

1. SEE SHEET 128 FOR MOT LEGEND AND DRUM SPACING CHART.
2. SEE SHEETS 123-191 FOR TYPICAL SECTIONS.
3. SHIFT SIGNS SO ARROWS ARE CENTERED OVER LANE.

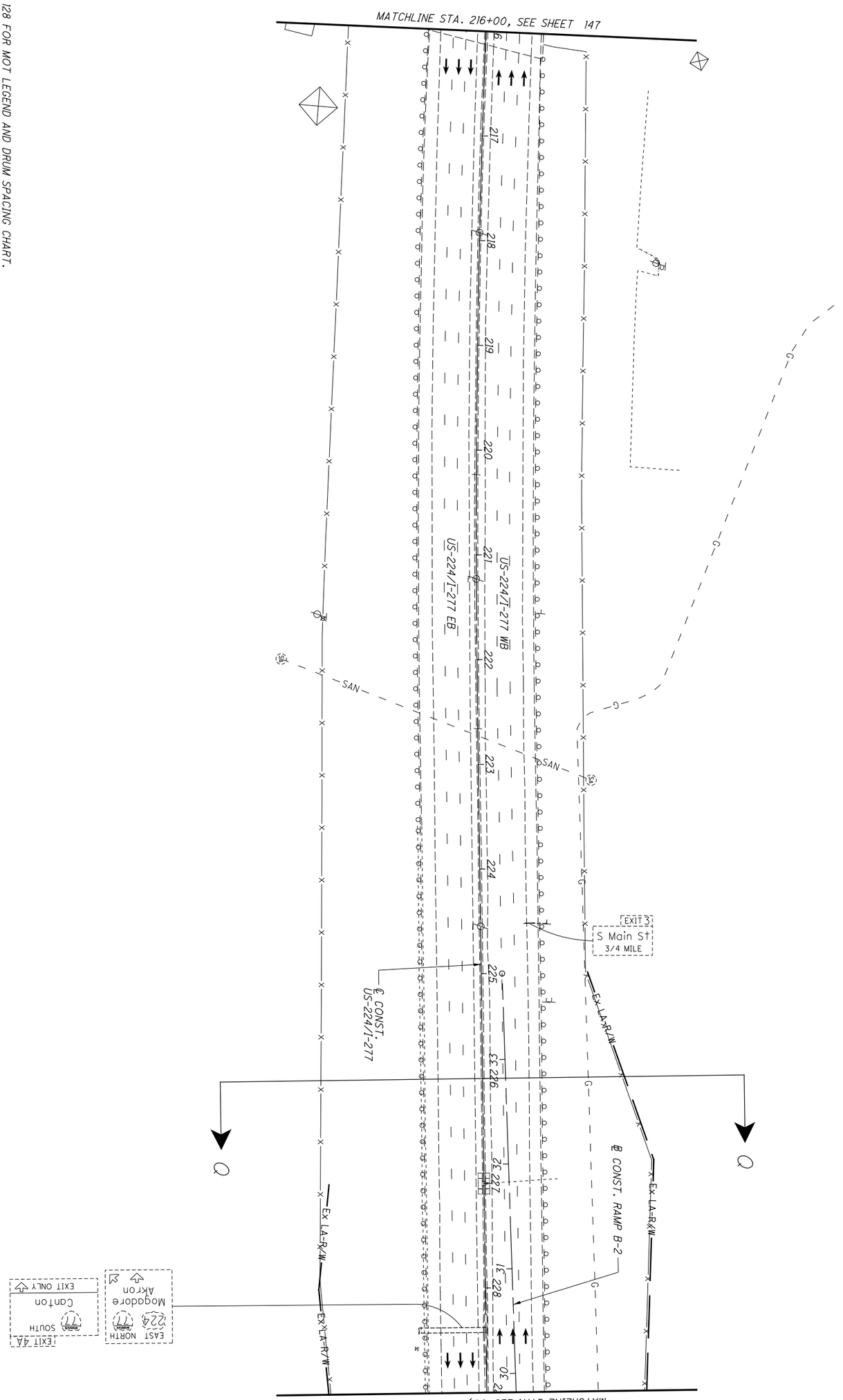


| | | | | |
|---|---|---|---|---|
| 148 / 1288 | SUM-77/277/224<br>VARIOUS | MAINTENANCE OF TRAFFIC PLAN - PHASE 1<br>US-224/I-277 - STA. 216+00 TO STA. 229+00 | CALCULATED .<br>CHECKED . | 0 50<br>25 100<br>HORIZONTAL SCALE IN FEET |

NOTES:

1. SEE SHEET 128 FOR MOT LEGEND AND DRUM SPACING CHART.

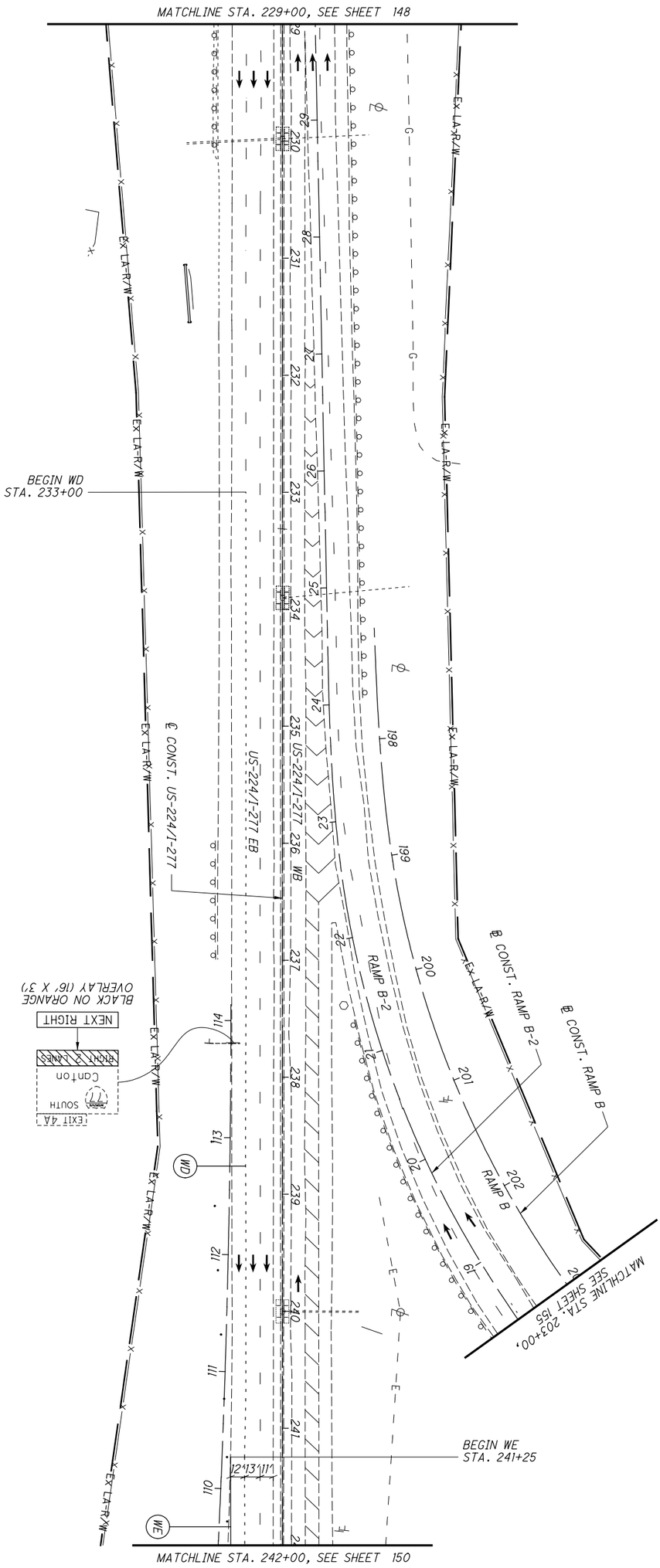


| | | | | |
|---|---|---|---|---|
| 149 / 1288 | SUM-77 / 277 / 224<br>VARIOUS | MAINTENANCE OF TRAFFIC PLAN - PHASE 1<br>US-224/I-277 - STA. 229+00 TO STA. 242+00 | CALCULATED .<br>CHECKED . | 0 50<br>25 100<br>HORIZONTAL SCALE IN FEET |

N:\03\60\06744-08\106002_SUM-76-10.95\Design\MOT\Sheets\106002_MPI45.dgn Sheet 1/31/2021 5:30:43 PM jrettig

NOTES:

1. SEE SHEET 128 FOR MOT LEGEND AND DRUM SPACING CHART.
2. SEE SHEETS 123-191 FOR TYPICAL SECTIONS.
3. SHIFT SIGNS SO ARROWS ARE CENTERED OVER LANE.

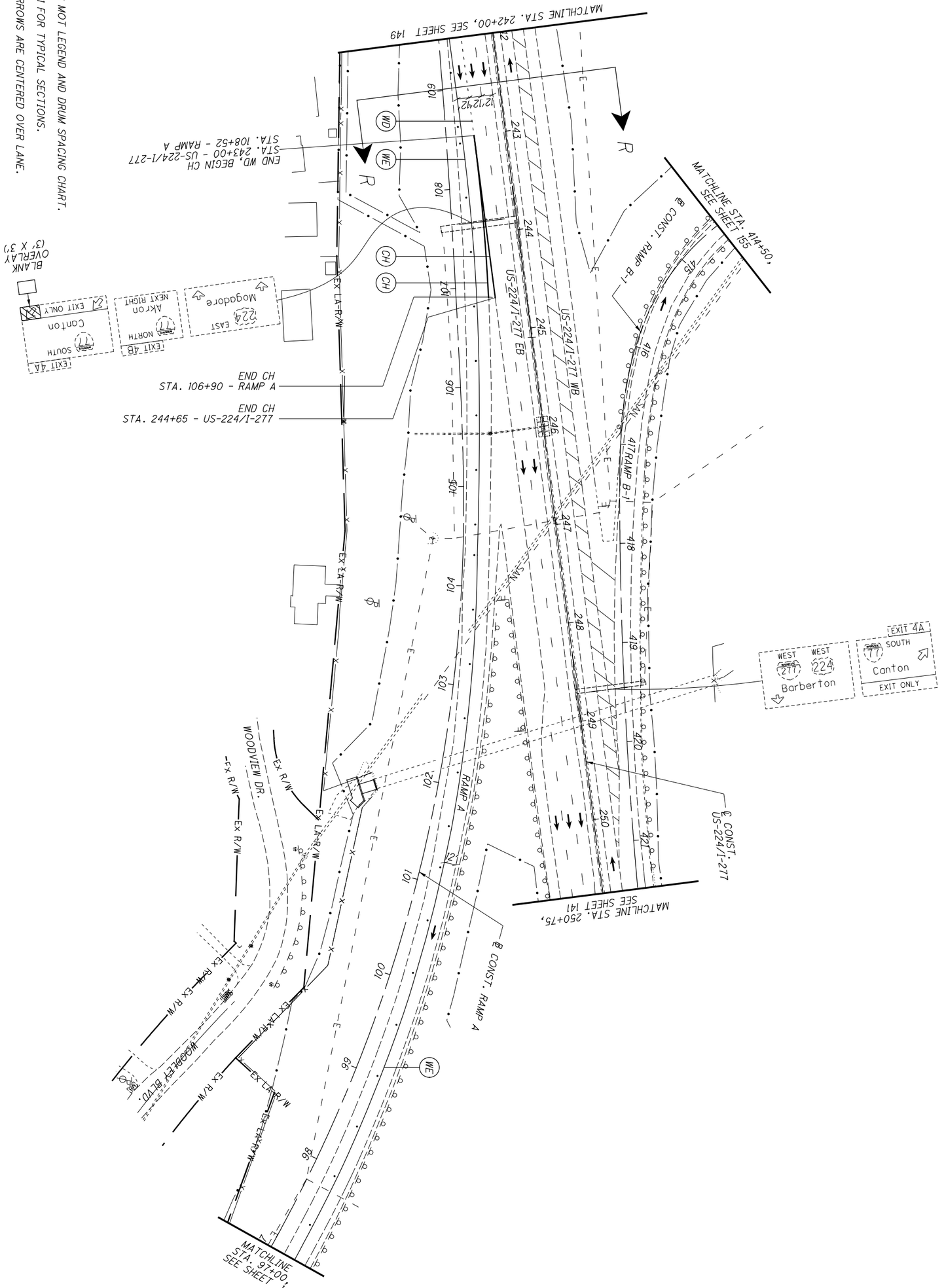


| | | | | |
|---|---|---|---|---|
| 150 / 1288 | SUM-77/277/224<br>VARIOUS | MAINTENANCE OF TRAFFIC PLAN - PHASE 1<br>US-224/I-277 - STA. 242+00 TO STA. 250+75 | CALCULATED .<br>CHECKED . | 0 50<br>25 100<br>HORIZONTAL SCALE IN FEET |

NOTES:

1. SEE SHEET 128 FOR MOT LEGEND AND DRUM SPACING CHART.

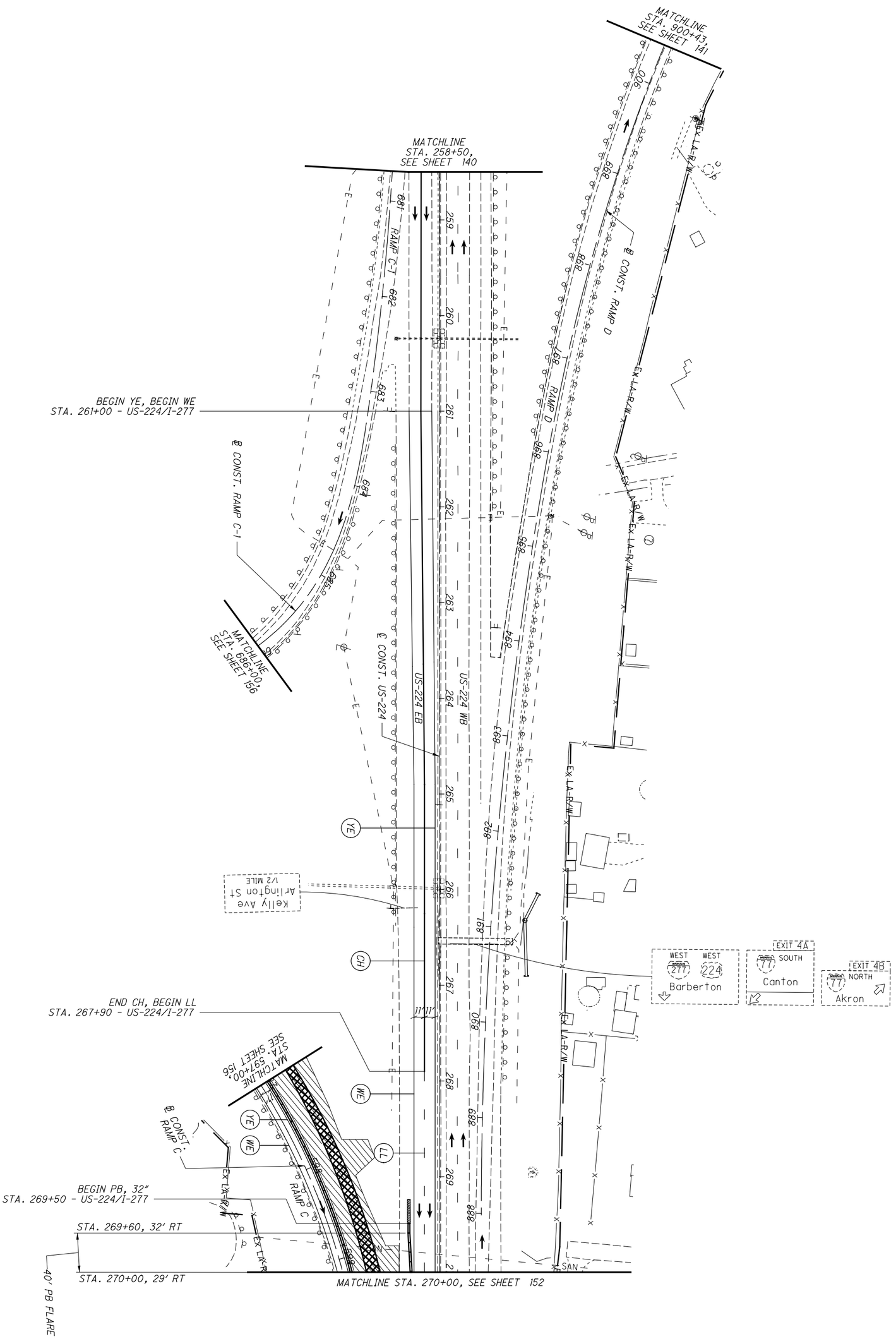


| | | | | |
|---|---|---|---|---|
| 151 / 1288 | SUM-77 / 277 / 224<br>VARIOUS | MAINTENANCE OF TRAFFIC PLAN - PHASE 1<br>US-224 - STA. 258+50 TO STA. 270+00 | CALCULATED .<br>CHECKED . | 0 50<br>25 100<br>HORIZONTAL SCALE IN FEET |

NOTES:

1. SEE SHEET 128 FOR MOT LEGEND AND DRUM SPACING CHART.

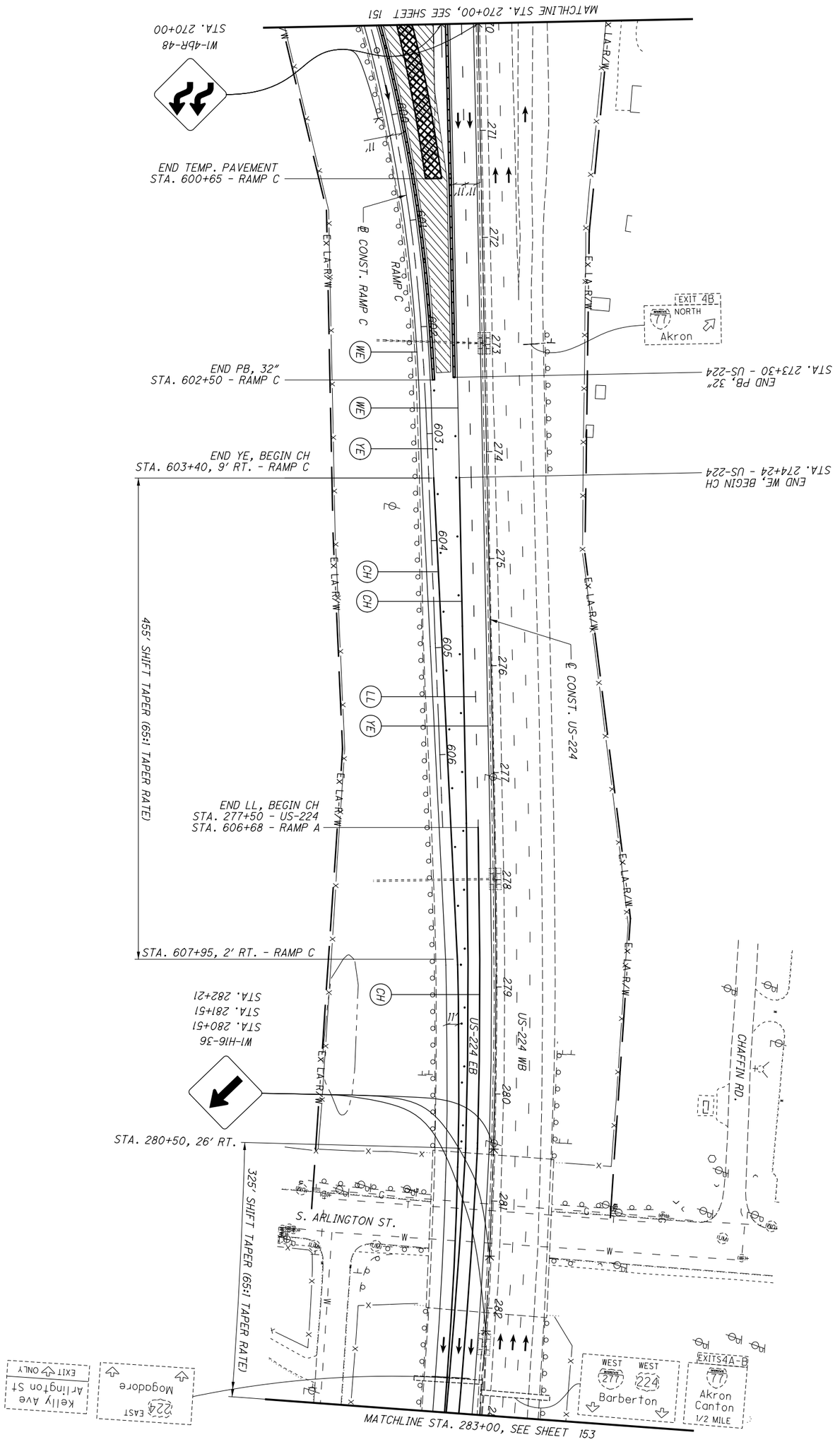


| | | | | |
|---|---|---|---|---|
| 152 / 1288 | SUM-77 / 277 / 224<br>VARIOUS | MAINTENANCE OF TRAFFIC PLAN - PHASE 1<br>US-224 - STA. 270+00 TO STA. 283+00 | CALCULATED .<br>CHECKED . | 0 50<br>25 100<br>HORIZONTAL SCALE IN FEET |

NOTES:

1. SEE SHEET 128 FOR MOT LEGEND AND DRUM SPACING CHART.
2. SEE SHEETS 123-191 FOR TYPICAL SECTIONS.

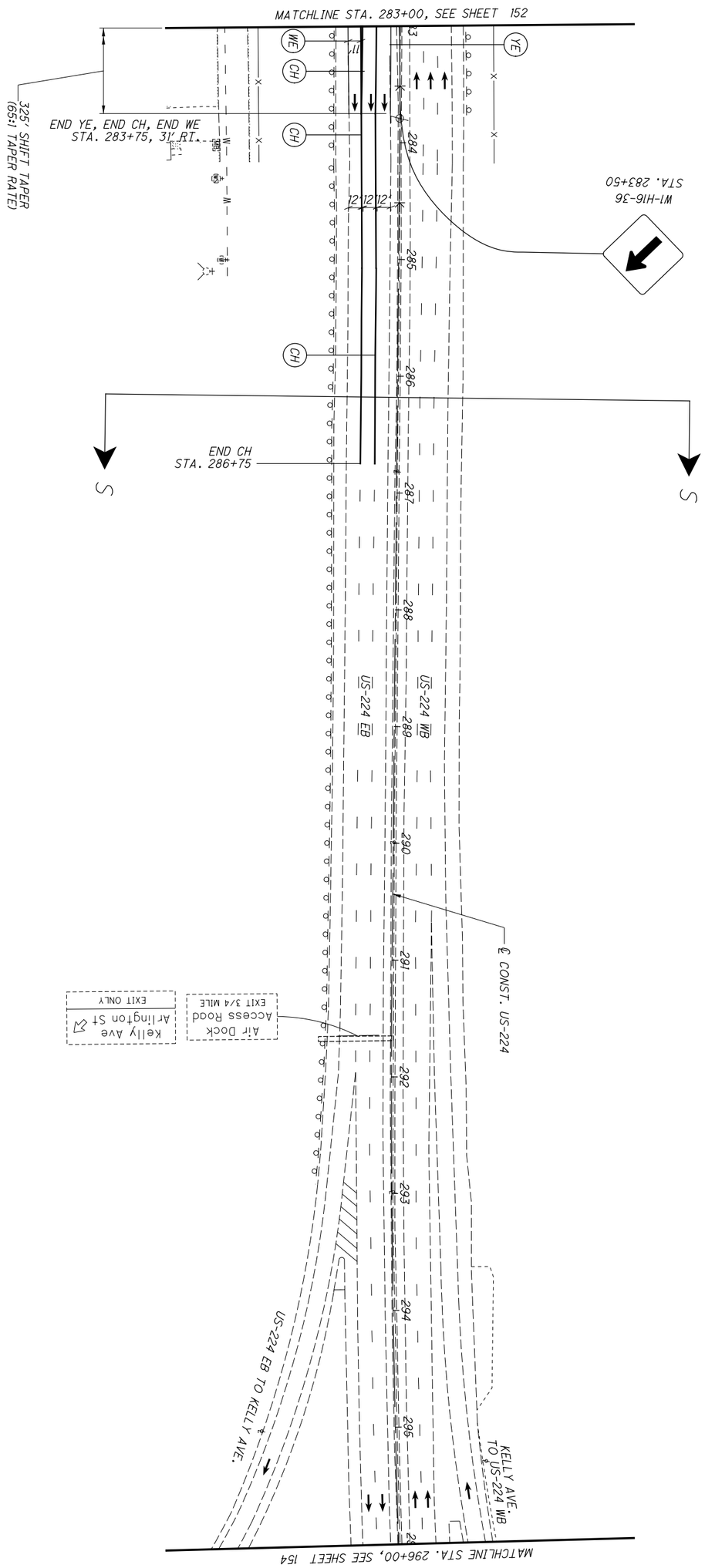


| | | | | |
|---|---|---|---|---|
| 153 / 1288 | SUM-77 / 277 / 224<br>VARIOUS | MAINTENANCE OF TRAFFIC PLAN - PHASE 1<br>US-224 - STA. 283+00 TO STA. 296+00 | CALCULATED .<br>CHECKED . | 0 50<br>25 100<br>HORIZONTAL SCALE IN FEET |

NOTES:

1. SEE SHEET 128 FOR MOT LEGEND AND DRUM SPACING CHART.

HORIZONTAL SCALE IN FEET
0 25 50 100

CALCULATED .
CHECKED .

# TRAFFIC PLAN - PHASE 1

## MAINTENANCE OF TRAFFIC PLAN - PHASE 1
## US-224 - STA. 296+00 TO EAST LIMITS

SUM-77/277/224
VARIOUS

154
1288

N:\03\60\06744-08\106002_SUM-76-10.95\Design\MOT\Sheets\106002_MPH49.dgn Sheet 1/31/2021 5:31:01 PM jrettig

NOTES:

1. SEE SHEET 128 FOR MOT LEGEND AND DRUM SPACING CHART.
2. SEE SHEETS 123-191 FOR TYPICAL SECTIONS.

HORIZONTAL SCALE IN FEET
0 25 50 100

CALCULATED .
CHECKED .

MAINTENANCE OF TRAFFIC PLAN - PHASE 1
RAMP B - STA. 203+00 TO STA. 211+50

SUM-77/277/224
VARIOUS

155
1288

N:\03\60\06744-08\06002_SUM-76-10.95\Design\MOT\Sheets\06002_MPI60.dgn Sheet 1/31/2021 5:31:03 PM jrettig

NOTES:

1. SEE SHEET 128 FOR MOT LEGEND AND DRUM SPACING CHART.
2. SEE SHEETS 157-170 FOR RAMP C CROSS SECTIONS.
3. SEE SHEET 118 FOR ADDITIONAL DETAILS.

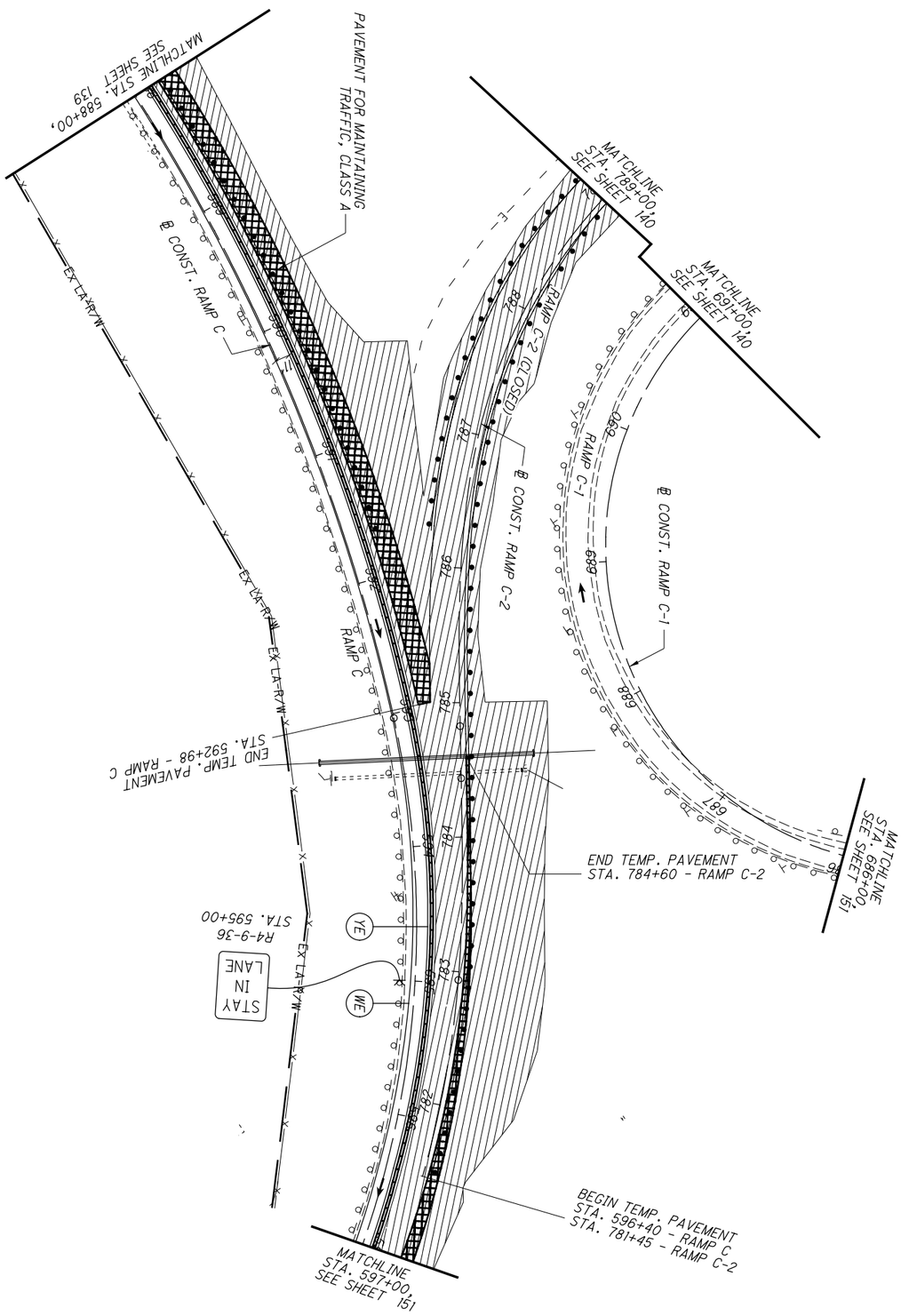


| | | | | |
|---|---|---|---|---|
| 156 / 1288 | SUM-77 / 277 / 224<br>VARIOUS | MAINTENANCE OF TRAFFIC PLAN - PHASE 1<br>RAMP C - STA. 588+00 TO STA. 597+00 | CALCULATED .<br>CHECKED . | 0 50<br>25 100<br>HORIZONTAL SCALE IN FEET |

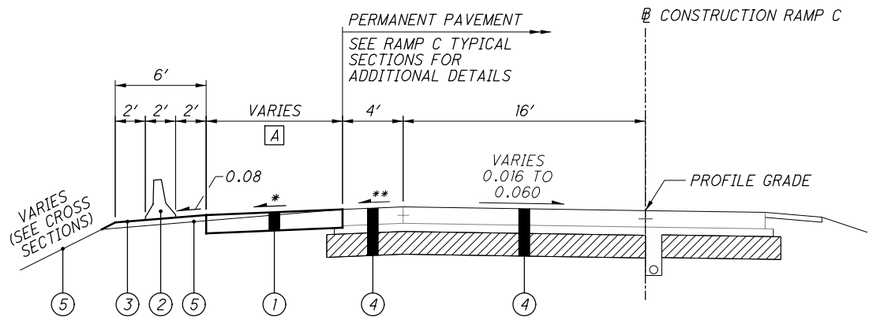


A 11.0′ FROM STA. 581+22.52 TO STA. 581+84.12

VARIES
11.0′ AT STA. 581+84.12 TO
15.0′ AT STA. 582+14.15

15.0′ FROM STA. 582+14.15 TO STA. 592+70.54

VARIES
15.0′ AT STA. 592+70.54 TO
8.9′ AT STA. 592+97.65

## RAMP C TEMPORARY PAVEMENT SECTION

STA. 581+22.52 TO STA. 592+97.65

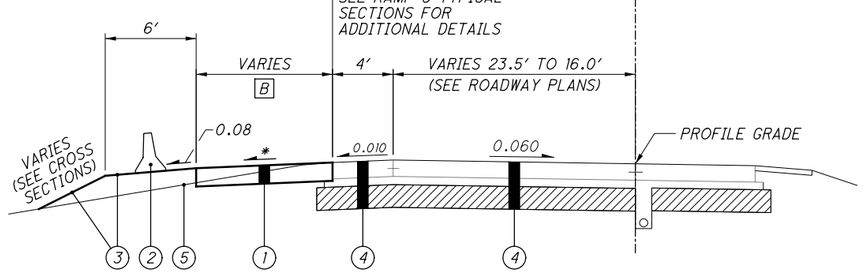


B VARIES
7.8′ AT STA. 596+40.00 TO
15.0′ AT STA. 599+74.24

15.0′ FROM STA. 599+74.24 TO STA. 600+26.97

VARIES
15.0′ AT STA. 600+26.97 TO
9.9′ AT STA. 600+65.37

## RAMP C TEMPORARY PAVEMENT SECTION

STA. 596+40.00 TO STA. 600+65.37

LEGEND

(1) ITEM 615 - PAVEMENT FOR MAINTAINING TRAFFIC, CLASS A

(2) ITEM 622 - PORTABLE BARRIER, 32″

(3) ITEM 659 - SEEDING AND MULCHING (TEMPORARY GRADING)

(4) PERMANENT PAVEMENT - SEE RAMP C TYPICAL SECTIONS FOR DETAILS

(5) PERMANENT GRADING - SEE CROSS SECTIONS FOR ADDITIONAL INFORMATION

* VARIES 0.040 MAX. TO 0.010 MIN.
TEMPORARY PAVEMENT CROSS SLOPE SHALL MATCH PERMANENT PAVEMENT SHOULDER SLOPE

** VARIES 0.040 MAX. TO 0.010 MIN.
SEE ROADWAY TYPICAL SECTIONS FOR HIGH SIDE SHOULDER SLOPES

TYPICAL SECTIONS - RAMP C TEMPORARY PAVEMENT

SUM-77 / 277 / 224
VARIOUS

157
1288

N:\03\60\06744-08\106002_SUM-76-10.95\Design\MOT\Sheets\106002_MY401.dgn Sheet 1/31/2021 5:31:13 PM jrettig

| SEEDING END WIDTH | SEEDING SQ. YDS. |
|---|---|
| 7 | 22 |
| 1 | 3 |
| 0 | 0 |
| 0 | |
| *25 | |

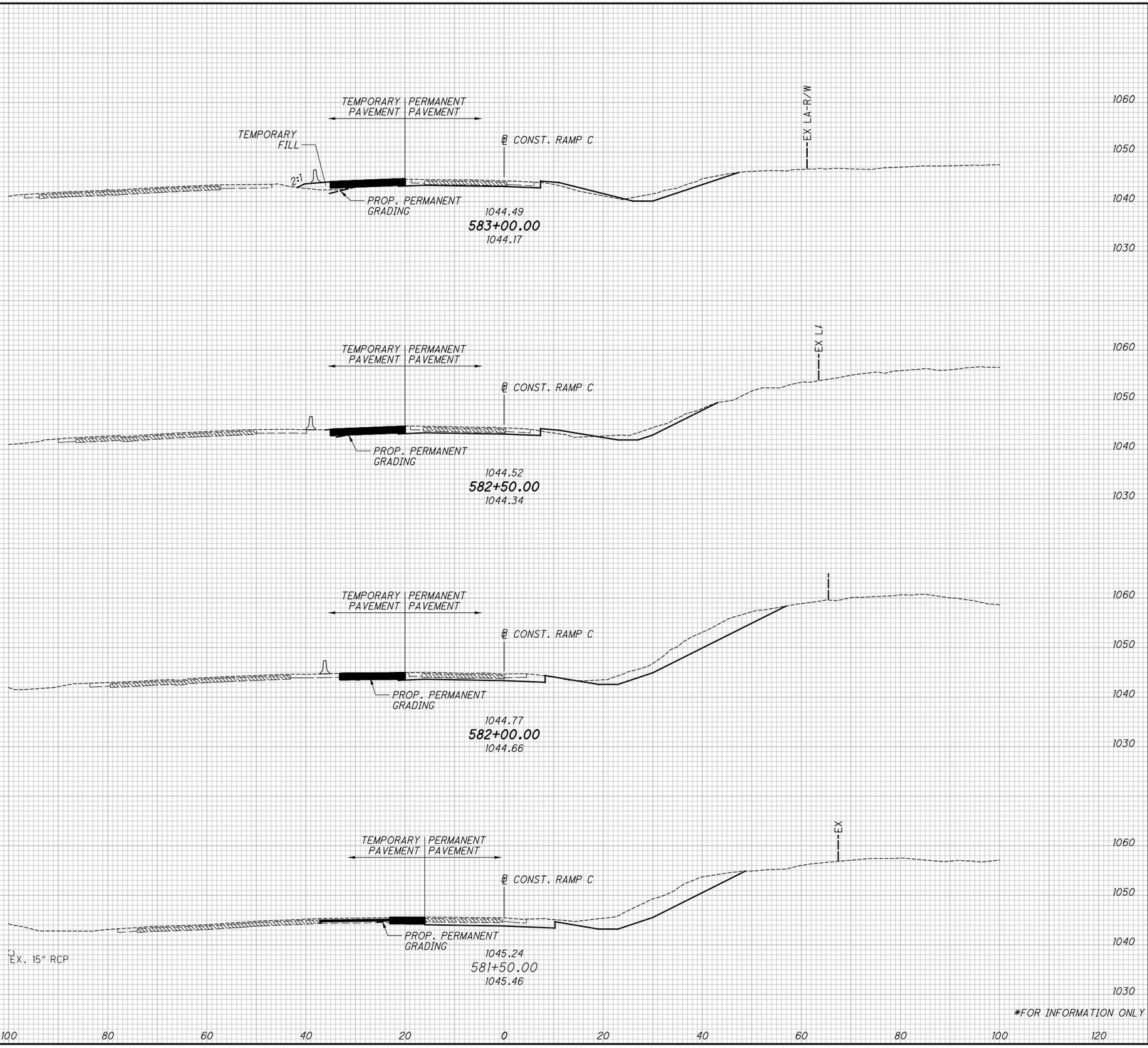


| END AREA CUT | END AREA FILL | VOLUME CUT | VOLUME FILL |
|---|---|---|---|
| 6 | 9 | 12 | 8 |
| 7 | 0 | 12 | 0 |
| 6 | 0 | 6 | 0 |
| 0 | 0 | | |
| | | *30 | *8 |

CALCULATED KMC
CHECKED SSR

CROSS SECTIONS RAMP C
STA. 581+50.00 TO STA. 583+00.00

SUM-77 / 277 / 224
VARIOUS

158
1288

N:\03\60\06744-08\106002_SUM-76-10.95\Design\MOT\Sheets\106002_XMI05.dgn Design 1/31/2021 5:31:16 PM jrettig

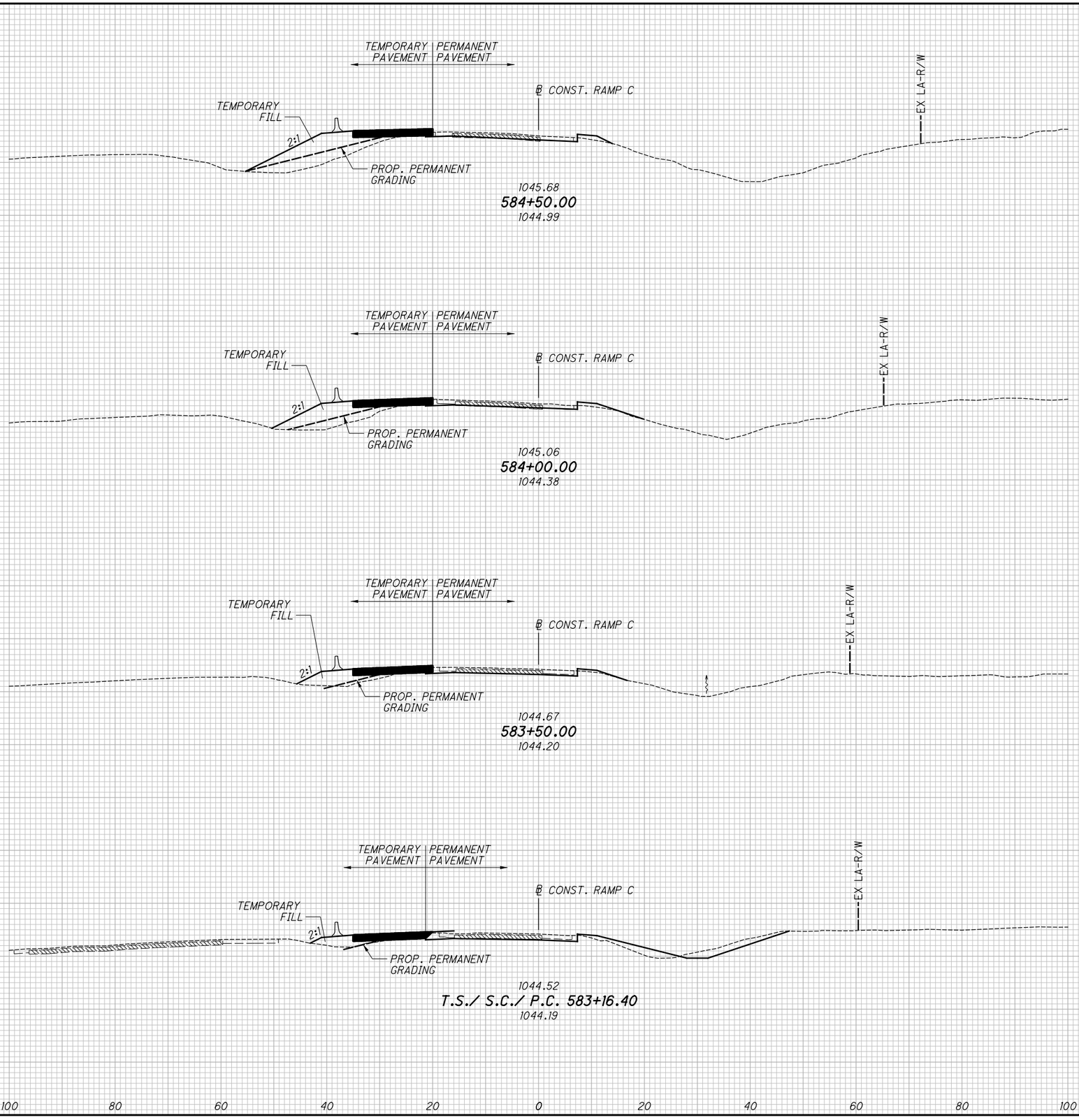


| SEEDING END WIDTH | SEEDING SQ. YDS. | END AREA CUT | END AREA FILL | VOLUME CUT | VOLUME FILL |
|---|---|---|---|---|---|
| 22 | 107 | 3 | 47 | 6 | 81 |
| 17 | 77 | 3 | 40 | 6 | 60 |
| 11 | 37 | 3 | 25 | 4 | 26 |
| 8 | 14 | 3 | 16 | 3 | 7 |
| | *235 | | | *19 | *174 |

*FOR INFORMATION ONLY

CALCULATED KMC
CHECKED SSR

CROSS SECTIONS RAMP C
STA. 583+16.40 TO STA. 584+50.00

SUM-77 / 277 / 224
VARIOUS

159
1288

N:\03\60\06744-08\106002_SUM-76-10.95\Design\MOT\Sheets\106002_XMI05.dgn Design 1/31/2021 5:31:20 PM jrettig

| SEEDING | | END AREA | | VOLUME | |
|---|---|---|---|---|---|
| END WIDTH | SQ. YDS. | CUT | FILL | CUT | FILL |
| 9 | 88 | 2 | 8 | 4 | 56 |
| 23 | 85 | 2 | 53 | 3 | 67 |
| 23 | 41 | 2 | 53 | 1 | 31 |
| 23 | 124 | 2 | 52 | 5 | 92 |
| *338 | | | | *13 | *246 |

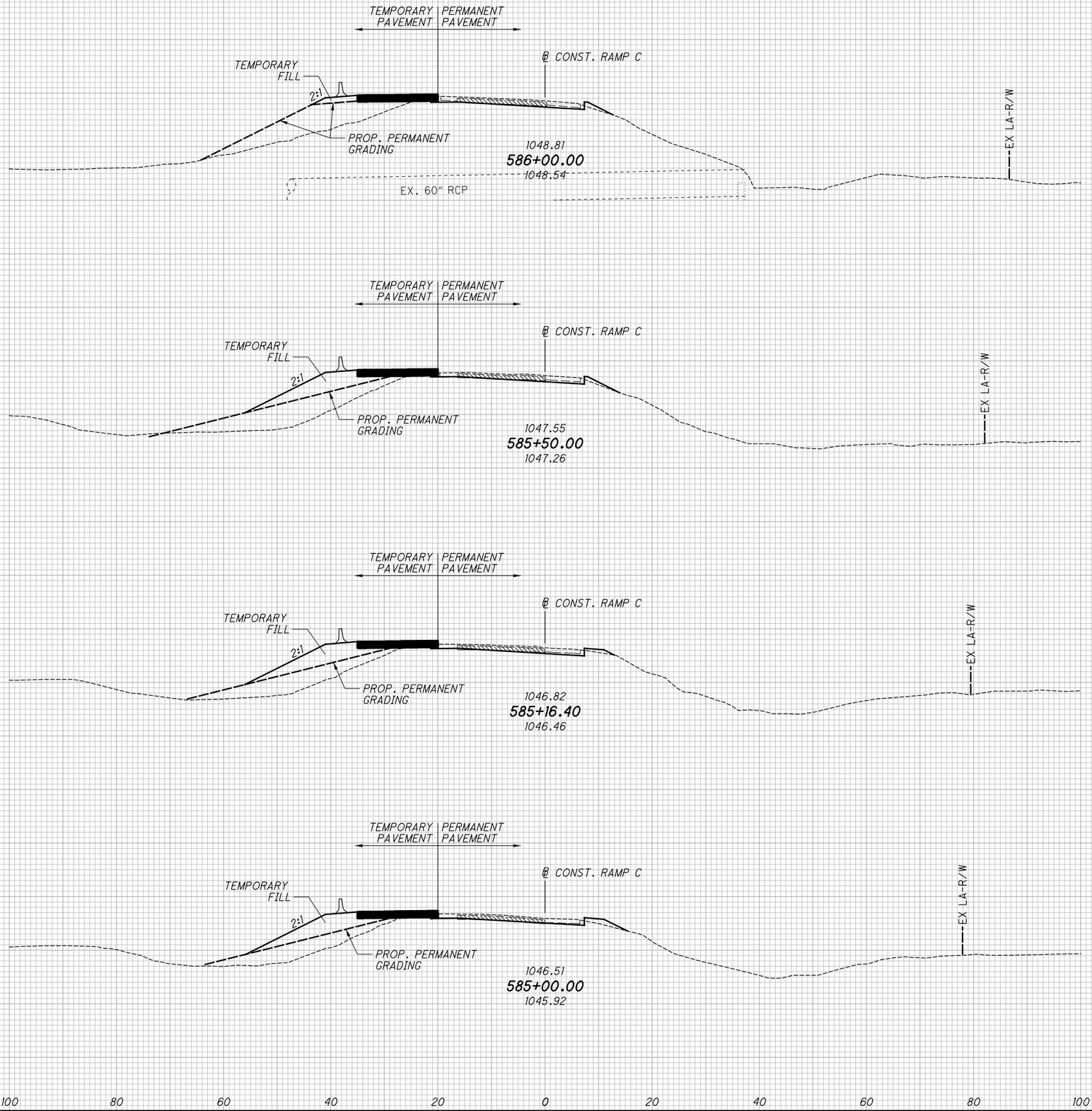


*FOR INFORMATION ONLY

CALCULATED KMC
CHECKED SSR

# CROSS SECTIONS RAMP C
## STA. 585+00.00 TO STA. 586+00.00

SUM-77/277/224
VARIOUS

160
1288

N:\03\60\06744-08\06002_SUM-76-10.95\Design\MOT\Sheets\06002_XM05.dgn Design 1/31/2021 5:31:23 PM jrettig

| SEEDING END WIDTH | SEEDING SQ. YDS. | END AREA CUT | END AREA FILL | VOLUME CUT | VOLUME FILL |
|---|---|---|---|---|---|
| 9 | 49 | 3 | 8 | 7 | 15 |
| 9 | 49 | 5 | 8 | 7 | 15 |
| 9 | 49 | 3 | 8 | 6 | 15 |
| 9 | 49 | 3 | 8 | 5 | 15 |
| *196 | | | | *25 | *60 |

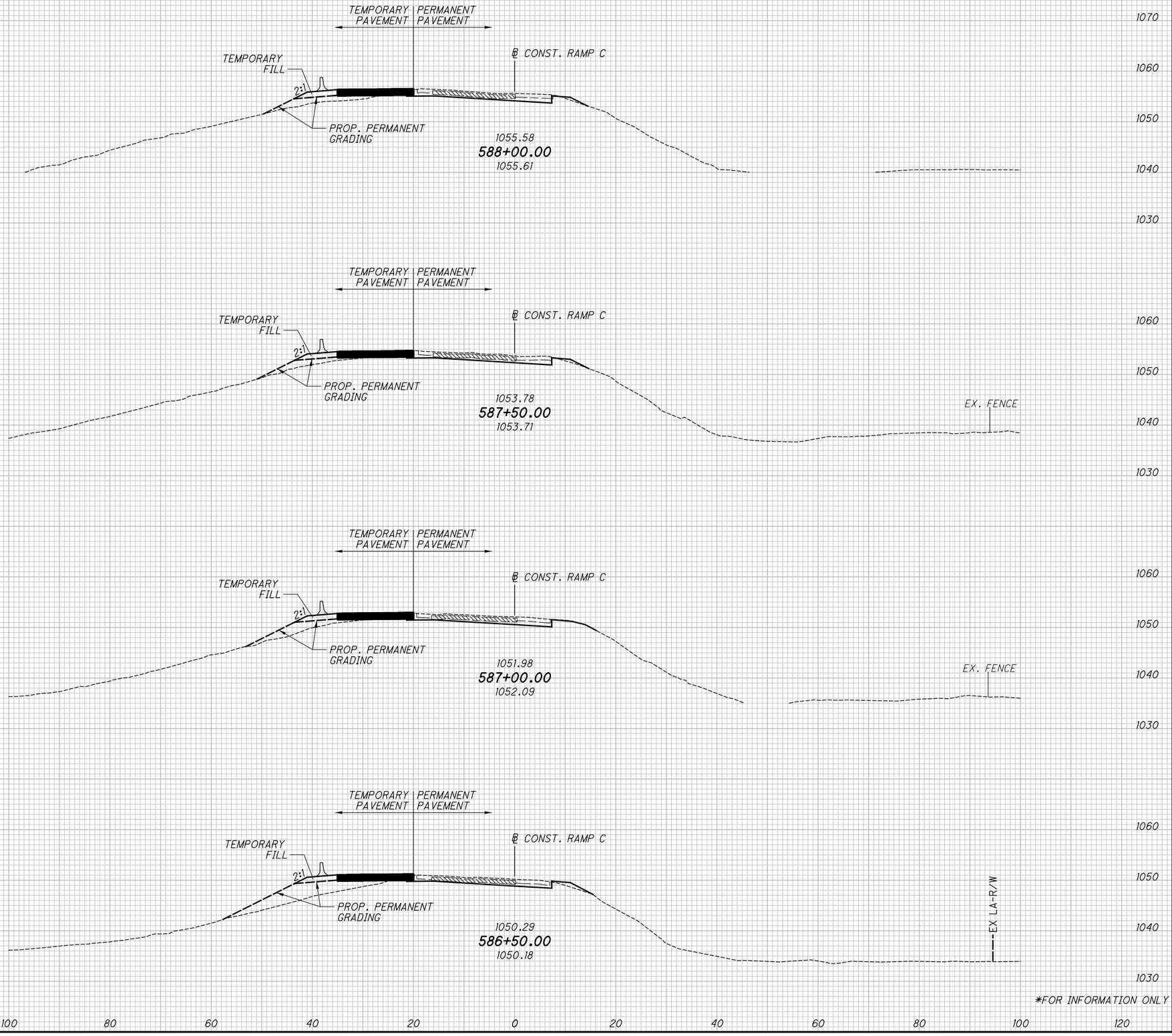


*FOR INFORMATION ONLY

CALCULATED KMC
CHECKED SSR

# CROSS SECTIONS RAMP C
## STA. 586+50.00 TO STA. 588+00.00

SUM-77 / 277 / 224
VARIOUS

161
1288

N:\03\60\06744-08\106002_SUM-76-10.95\Design\MOT\Sheets\106002_XMI05.dgn Design 1/31/2021 5:31:25 PM jrettig

| SEEDING END WIDTH | SEEDING SQ. YDS. | END AREA CUT | END AREA FILL | VOLUME CUT | VOLUME FILL |
|---|---|---|---|---|---|
| 9 | 49 | 2 | 8 | 6 | 15 |
| 9 | 49 | 5 | 8 | 11 | 15 |
| 9 | 49 | 7 | 8 | 11 | 15 |
| 9 | 49 | 5 | 8 | 11 | 15 |
| *196 | | | | *35 | *60 |

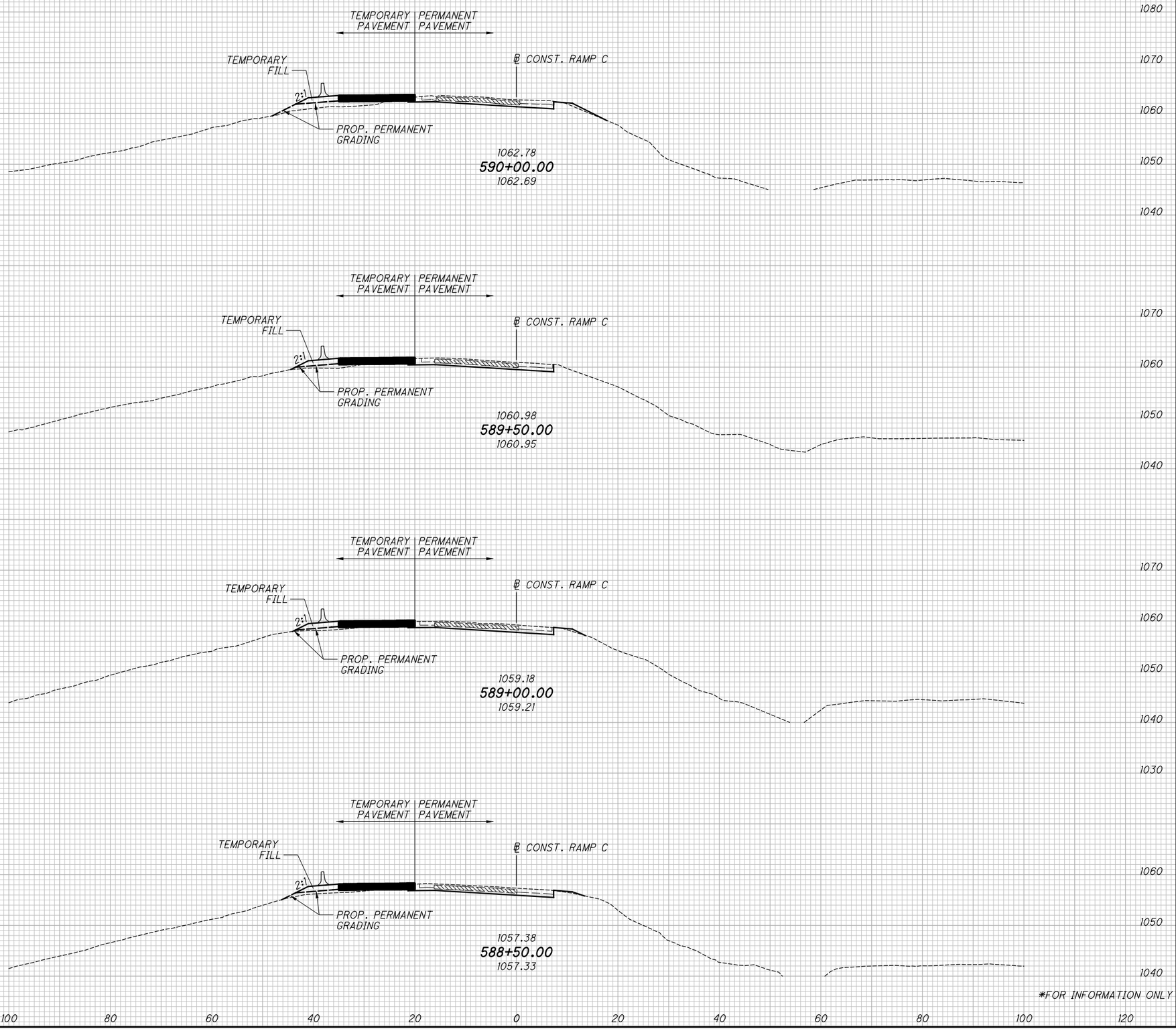


*FOR INFORMATION ONLY

CALCULATED KMC
CHECKED SSR

CROSS SECTIONS RAMP C
STA. 588+50.00 TO STA. 590+00.00

SUM-77 / 277 / 224
VARIOUS

162
1288

N:\03\60\06744-08\106002_SUM-76-10.95\Design\MOT\Sheets\106002_XMI05.dgn Design 1/31/2021 5:31:27 PM jrettig

| SEEDING END WIDTH | SEEDING SQ. YDS. | END AREA CUT | END AREA FILL | VOLUME CUT | VOLUME FILL |
|---|---|---|---|---|---|
| 8 | 46 | 5 | 13 | 6 | 19 |
| 9 | 49 | 2 | 8 | 4 | 15 |
| 9 | 49 | 3 | 8 | 5 | 15 |
| 9 | 49 | 2 | 8 | 5 | 15 |
| *193 | | | | *20 | *64 |

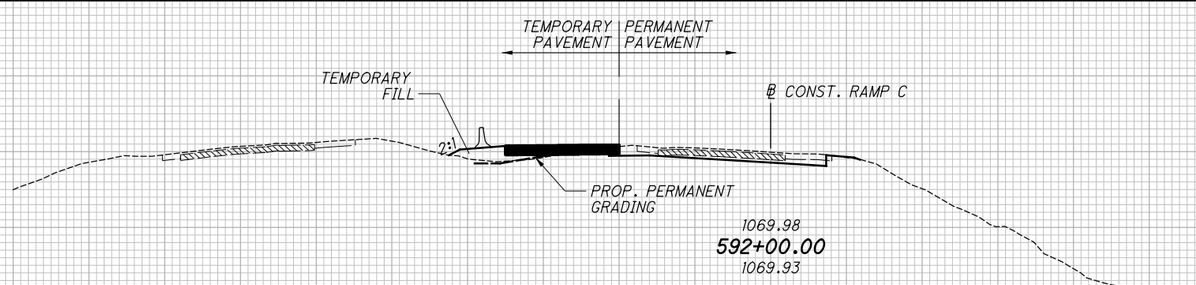


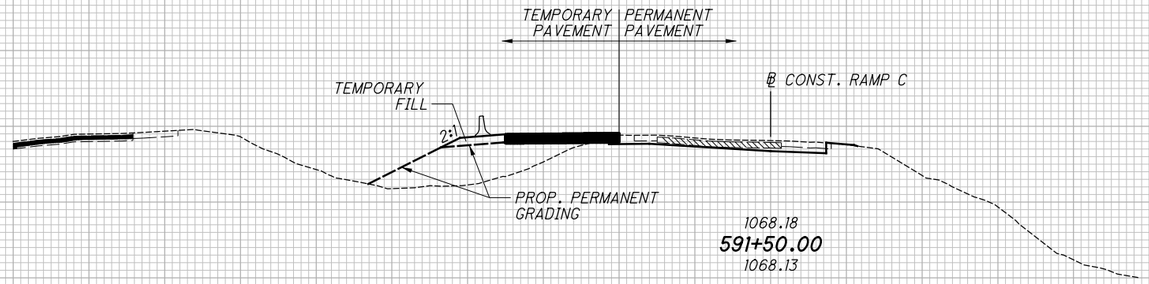


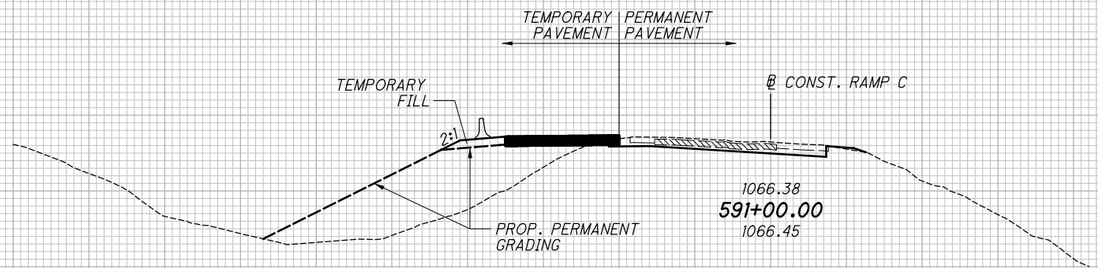


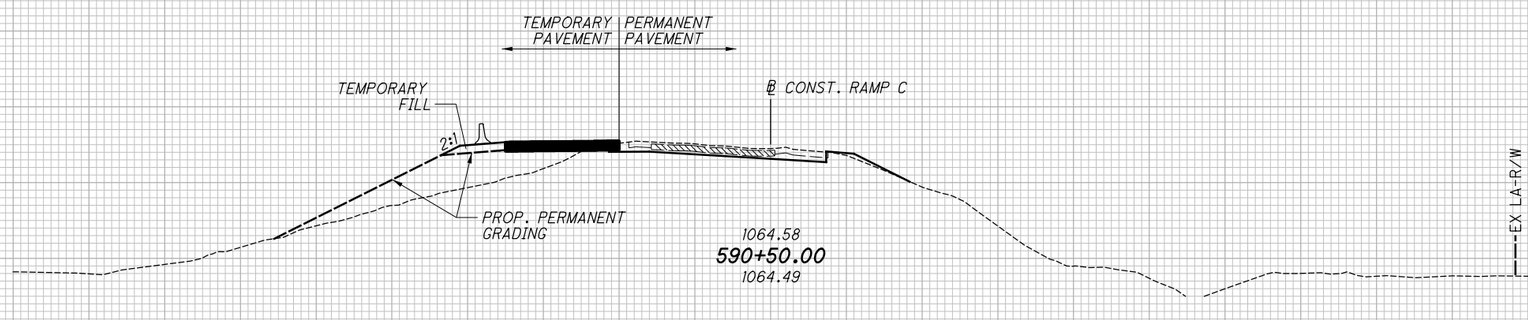


1080 1070 1060 1050 1090 1040 120 100 80 60 40 20 0 20 40 60 80 100 120

*FOR INFORMATION ONLY

CALCULATED KMC
CHECKED SSR

# CROSS SECTIONS RAMP C
## STA. 590+50.00 TO STA. 592+00.00

SUM-77/277/224
VARIOUS

163
1288

jrettig
N:\03\60\06744-08\06002_SUM-76-10.95\Design\MOT\Sheets\06002_XM05.dgn Design 1/31/2021 5:31:29 PM

| SEEDING END WIDTH | SEEDING SQ. YDS. |
|---|---|
| 6 | 39 |
| 8 | |
| | 42 |
| 8 | |
| | 245 |
| 3 | |
| | 31 |
| | *357 |

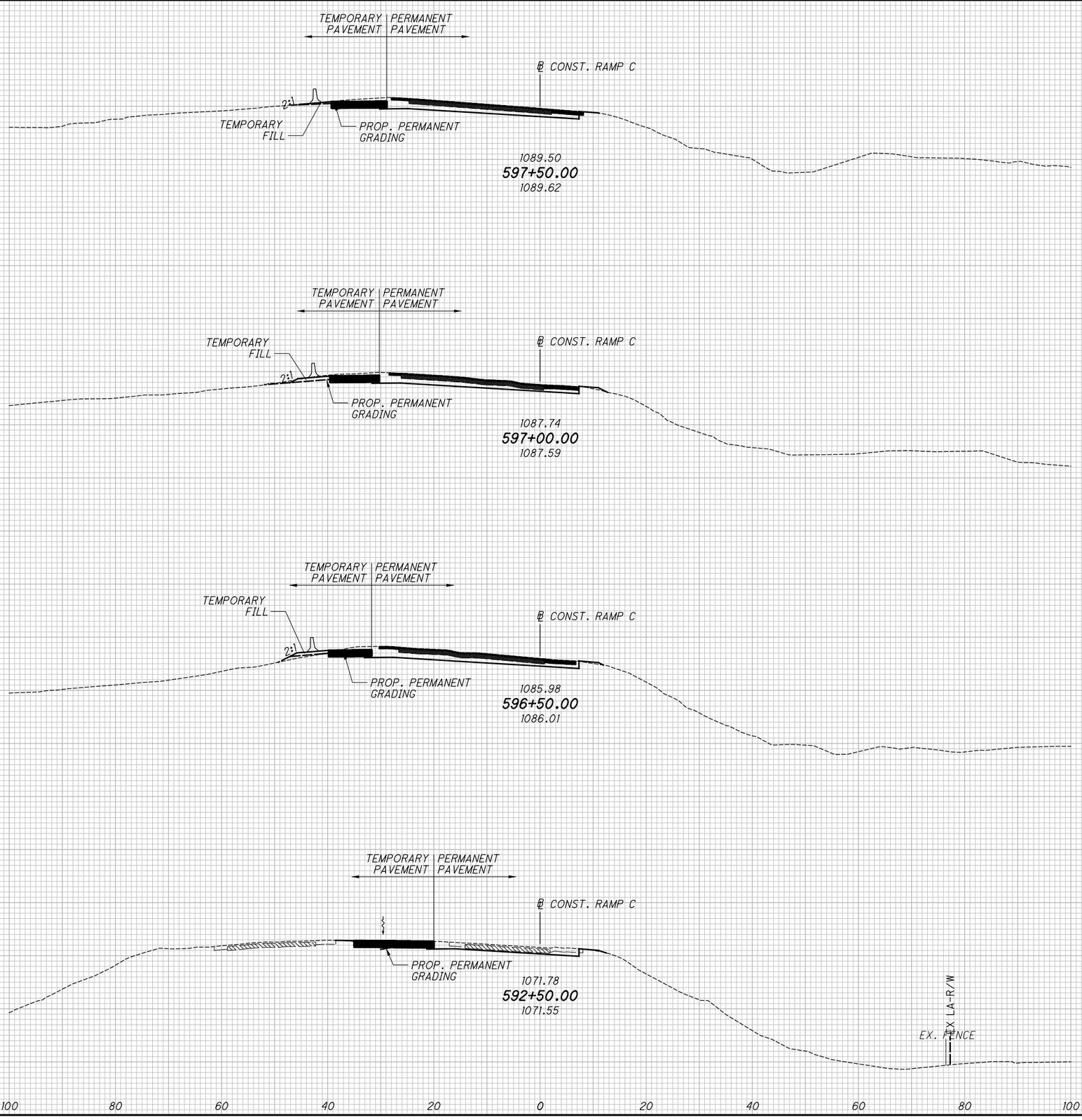


| END AREA CUT | END AREA FILL | VOLUME CUT | VOLUME FILL |
|---|---|---|---|
| 9 | 0 | 15 | 0 |
| 7 | 0 | | |
| 6 | 4 | 12 | 4 |
| 5 | 0 | | |
| | | 9 | 12 |
| | | *36 | *16 |

CALCULATED KMC
CHECKED SSR

**CROSS SECTIONS RAMP C**
**STA. 592+50.00 TO STA. 597+50.00**

**SUM-77 / 277 / 224**
**VARIOUS**

164
1288

N:\03\60\06744-08\06002_SUM-76-10.95\Design\MOT\Sheets\06002_XM105.dgn Design 1/31/2021 5:31:31 PM jrettig

| SEEDING END WIDTH | SEEDING SQ. YDS. | END AREA CUT | END AREA FILL | VOLUME CUT | VOLUME FILL |
|---|---|---|---|---|---|
| 8 | 45 | 4 | 2 | 8 | 4 |
| 9 | | 8 | 3 | | |
| 8 | 35 | 11 | 2 | 18 | 5 |
| 7 | 39 | 10 | 1 | 19 | 3 |
| | 36 | | | 18 | 1 |
| | *155 | | | *63 | *13 |

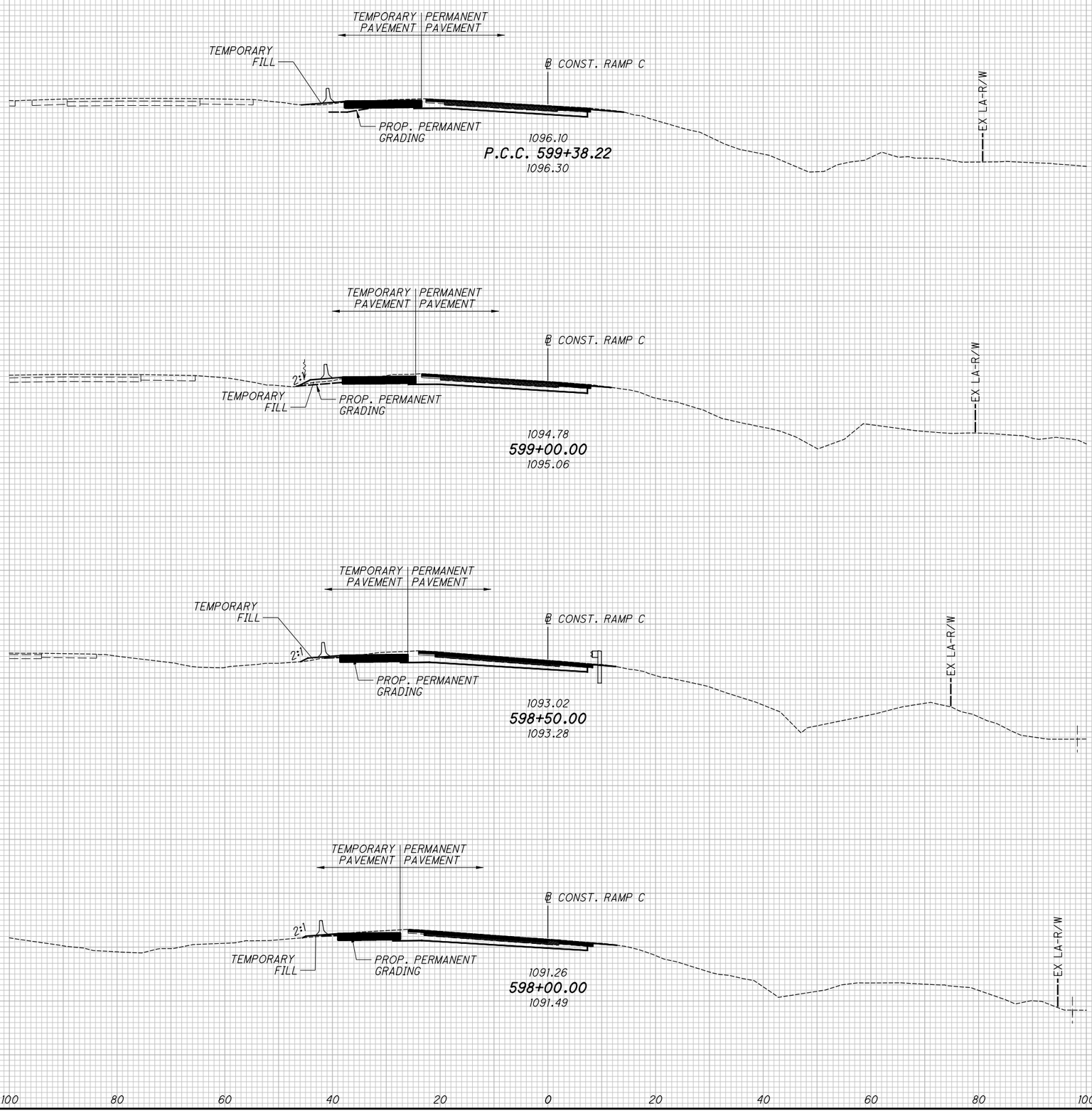


*FOR INFORMATION ONLY

CALCULATED KMC
CHECKED SSR

CROSS SECTIONS RAMP C
STA. 598+00.00 TO STA. 599+38.22

SUM-77 / 277 / 224
VARIOUS

165
1288

N:\03\60\06744-08\106002_SUM-76-10.95\Design\MOT\Sheets\106002_XMI05.dgn Design 1/31/2021 5:31:33 PM jrettig

| SEEDING | |
|---|---|
| END WIDTH | SQ. YDS. |
| 0 | 11 |
| 4 | 27 |
| 6 | 9 |
| *47 | |

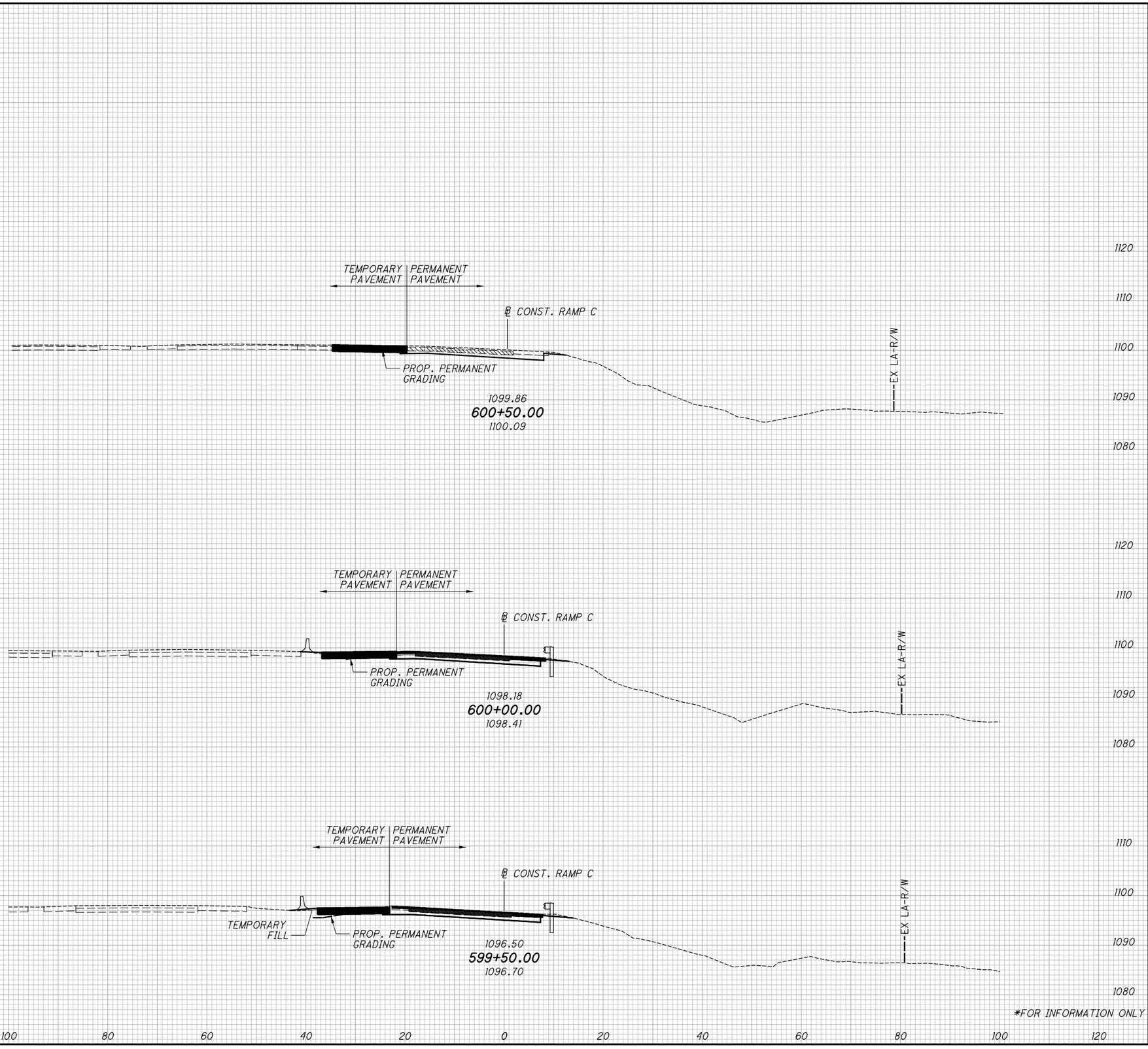


| END AREA | |
|---|---|
| CUT | FILL |
| 18 | 0 |
| 4 | 1 |
| 4 | 1 |
| | |
| *29 | *4 |

| VOLUME | |
|---|---|
| CUT | FILL |
| 20 | 1 |
| 7 | 2 |
| 2 | 1 |

CALCULATED KMC
CHECKED SSR

# CROSS SECTIONS RAMP C
## STA. 599+50.00 TO STA. 600+50.00

SUM-77 / 277 / 224
VARIOUS

166
1288

N:\03\60\06744-08\106002_SUM-76-10.95\Design\MOT\Sheets\106002_XMI05.dgn Design 1/31/2021 5:31:36 PM jrettig

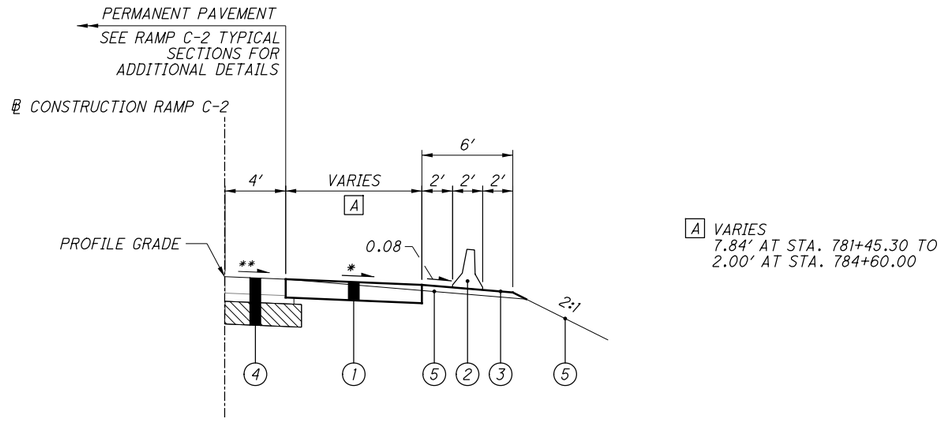


A VARIES
7.84′ AT STA. 781+45.30 TO
2.00′ AT STA. 784+60.00

## RAMP C-2 - TEMPORARY PAVEMENT SECTION

STA. 781+45.30 TO STA. 784+60.00

LEGEND

(1) ITEM 615 - PAVEMENT FOR MAINTAINING TRAFFIC, CLASS A

(2) ITEM 622 - PORTABLE BARRIER, 32″

(3) ITEM 659 - SEEDING AND MULCHING (TEMPORARY GRADING)

(4) PERMANENT PAVEMENT - SEE RAMP C-2 TYPICAL SECTIONS FOR DETAILS

(5) PERMANENT GRADING - SEE CROSS SECTIONS FOR ADDITIONAL INFORMATION

* VARIES 0.040 MAX. TO 0.010 MIN.
TEMPORARY PAVEMENT CROSS SLOPE SHALL MATCH PERMANENT PAVEMENT SHOULDER SLOPE

** VARIES 0.040 MAX. TO 0.010 MIN.
SEE ROADWAY TYPICAL SECTIONS FOR HIGH SIDE SHOULDER SLOPES

TYPICAL SECTIONS - RAMP C-2 TEMPORARY PAVEMENT

SUM-77 / 277 / 224
VARIOUS

167
1288

N:\03\60\06744-08\106002_SUM-76-10.95\Design\MOT\Sheets\106002_MT402.dgn Sheet 1/31/2021 5:31:42 PM jrettig

| SEEDING END WIDTH | SEEDING SQ. YDS. | END AREA CUT | END AREA FILL | VOLUME CUT | VOLUME FILL |
|---|---|---|---|---|---|
| 7 | 41 | 5 | 2 | 10 | 6 |
| 7 | 4 | 6 | 4 | 1 | 1 |
| 7 | 7 | 6 | 3 | | |
| | *45 | | | *11 | *7 |

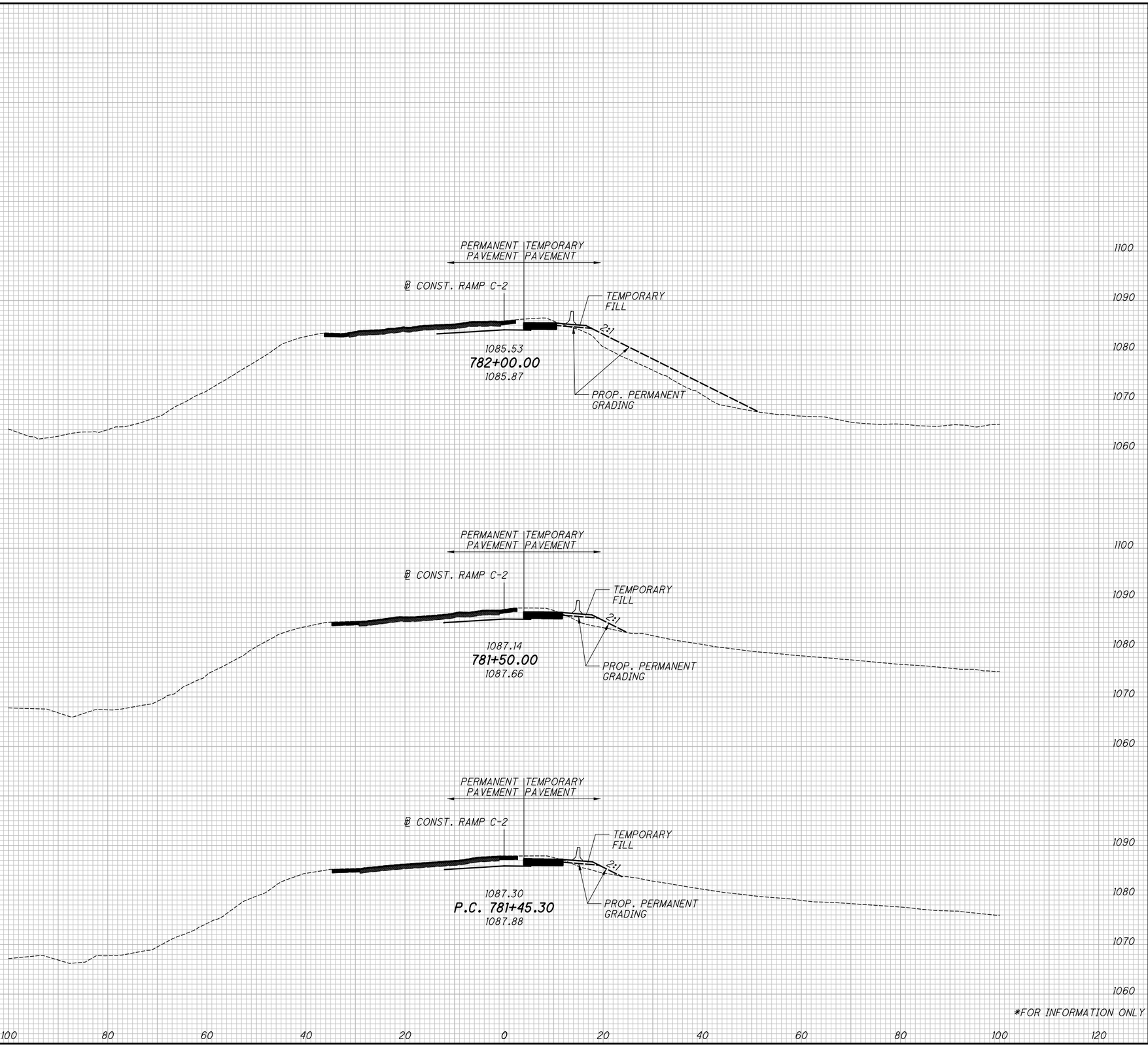


*FOR INFORMATION ONLY

CALCULATED KMC
CHECKED SSR

CROSS SECTIONS RAMP C-2
STA. 781+45.30 TO STA. 782+00.00

SUM-77 / 277 / 224
VARIOUS

168
1288

N:\03\60\06744-08\106002-SUM-76-10.95\Design\MOT\Sheets\106002_XMI07.dgn Design 1/31/2021 5:31:43 PM jrettig

| SEEDING | |
|---|---|
| END WIDTH | SQ. YDS. |
| 7 | 5 |
| 7 | 34 |
| 7 | 40 |
| | *79 |

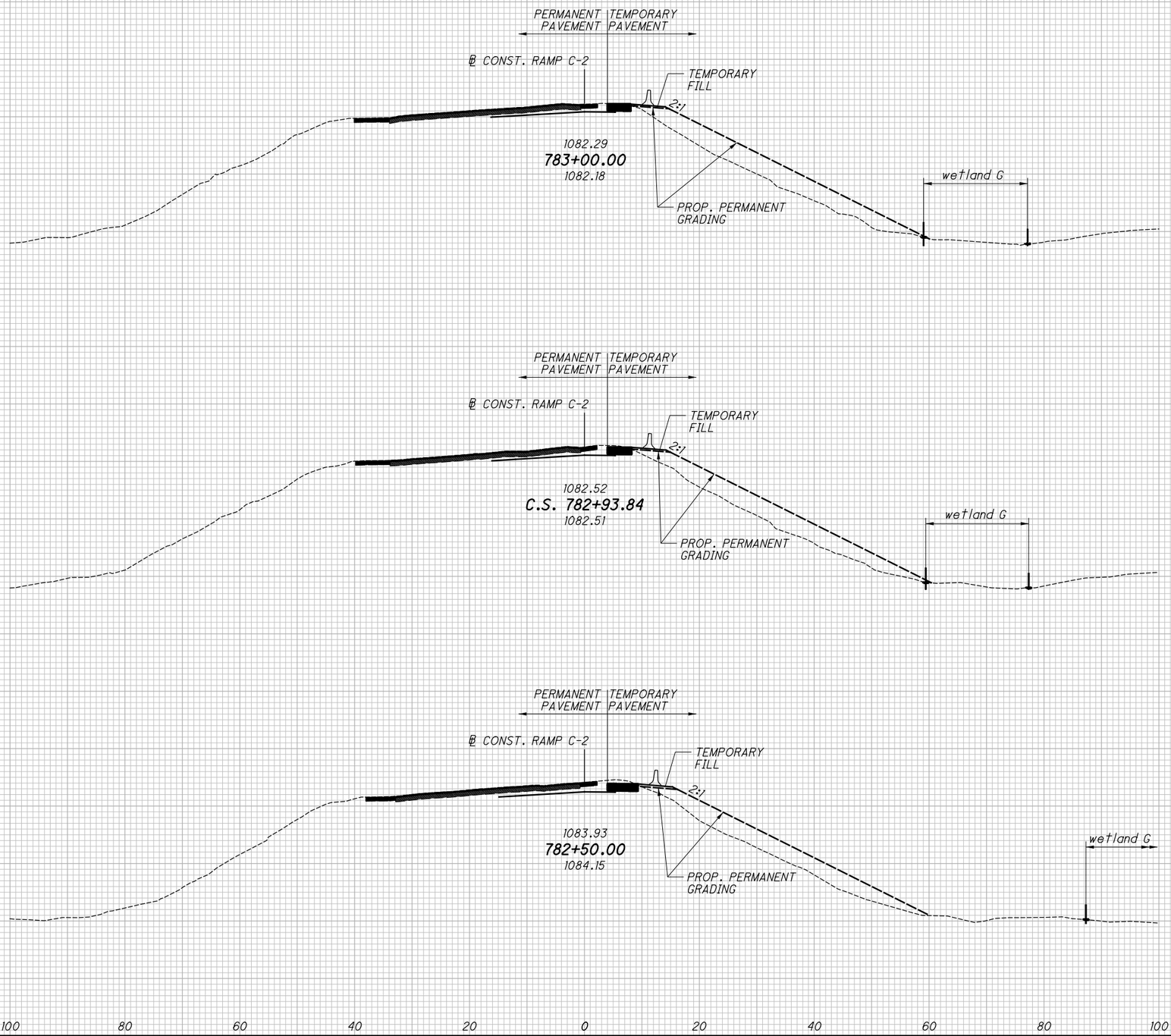


| END AREA | |
|---|---|
| CUT | FILL |
| 3 | 2 |
| 3 | 2 |
| 4 | 2 |
| | |

| VOLUME | |
|---|---|
| CUT | FILL |
| 1 | 0 |
| 6 | 3 |
| 8 | 4 |
| *15 | *7 |

*FOR INFORMATION ONLY

CALCULATED KMC
CHECKED SSR

CROSS SECTIONS RAMP C-2
STA. 782+50.00 TO STA. 783+00.00

SUM-77/277/224
VARIOUS

169
1288

jrettig
N:\03\60\06744-08\06002_SUM-76-10.95\Design\MOT\Sheets\06002_XM107.dgn Design 1/31/2021 5:31:45 PM

| SEEDING | |
|---|---|
| END WIDTH | SQ. YDS. |
| | |
| 6 | 35 |
| 6 | |
| | 37 |
| | *72 |

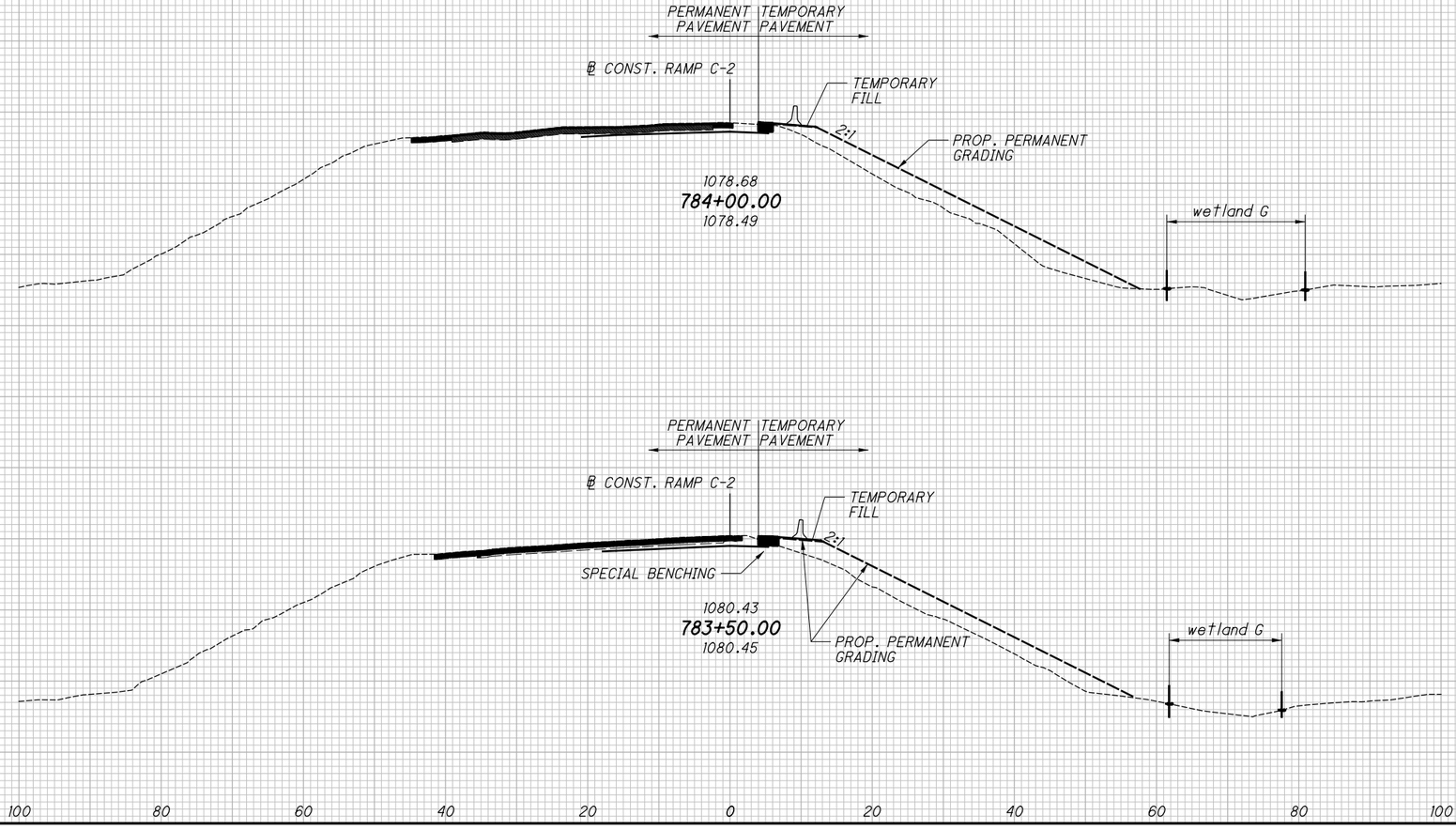


| END AREA | | VOLUME | |
|---|---|---|---|
| CUT | FILL | CUT | FILL |
| | | | |
| 1 | 0 | | |
| | | 1 | 1 |
| 0 | 1 | | |
| | | 3 | 3 |
| | | *4 | *4 |

*FOR INFORMATION ONLY

CALCULATED KMC
CHECKED SSR

# CROSS SECTIONS RAMP C-2
## STA. 783+50.00 TO STA. 784+00.00

SUM-77/277/224
VARIOUS

170
1288

jrettig
N:\03\60\06744-08\06002_SUM-76-10.95\Design\MOT\Sheets\06002_XM107.dgn Design 1/31/2021 5:31:47 PM

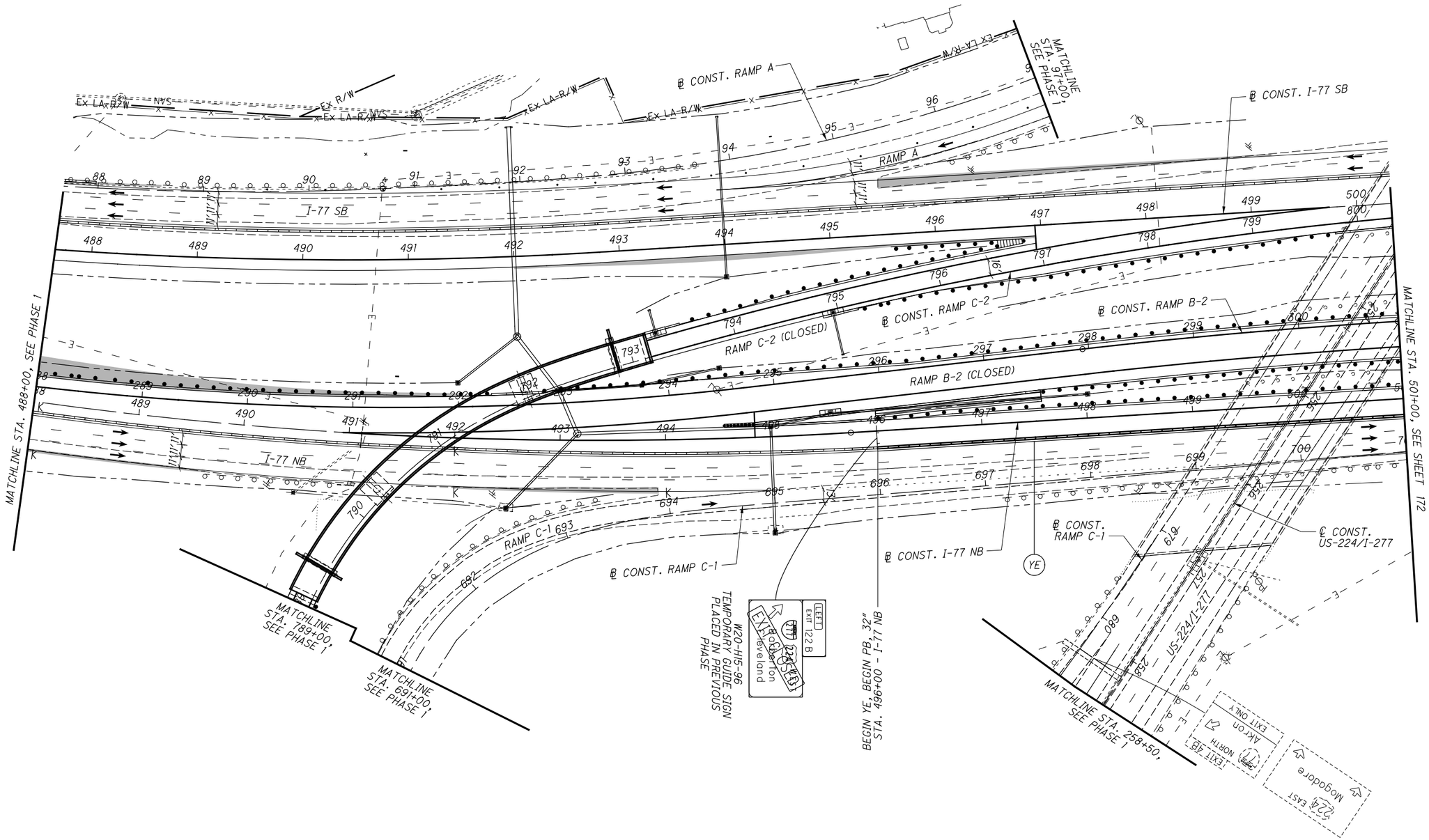


*NOTES:*

*1. SEE SHEET 128 FOR MOT LEGEND AND DRUM SPACING CHART.*

*2. MOT SIGNS AND DEVICES ARE EXISTING FROM PHASE 1 UNLESS OTHERWISE NOTED.*

*3. SEE SHEETS 116 AND 118 FOR ADDITIONAL DETAILS.*

HORIZONTAL SCALE IN FEET
0 25 50 100

CALCULATED .
CHECKED .

**MAINTENANCE OF TRAFFIC PLAN - PHASE 1A**
**I-77 - STA. 488+00 TO STA. 501+00**

**SUM-77/277/224**
**VARIOUS**

171
1288

N:\03\60\06744-08\106002-SUM-76-10.95\Design\MOT\Sheets\106002_MPI70.dgn Sheet 1/31/2021 5:31:52 PM jrettig

N:\03\60\06744-08\106002_SUM-76-10.95\Design\MOT\Sheets\106002_MP171.dgn Sheet 1/31/2021 5:31:58 PM jrettig

NOTES:

1. SEE SHEET 128 FOR MOT LEGEND AND DRUM SPACING CHART.
2. MOT SIGNS AND DEVICES ARE EXISTING FROM PHASE I UNLESS OTHERWISE NOTED.
3. SEE SHEETS 116 AND 118 FOR ADDITIONAL DETAILS.

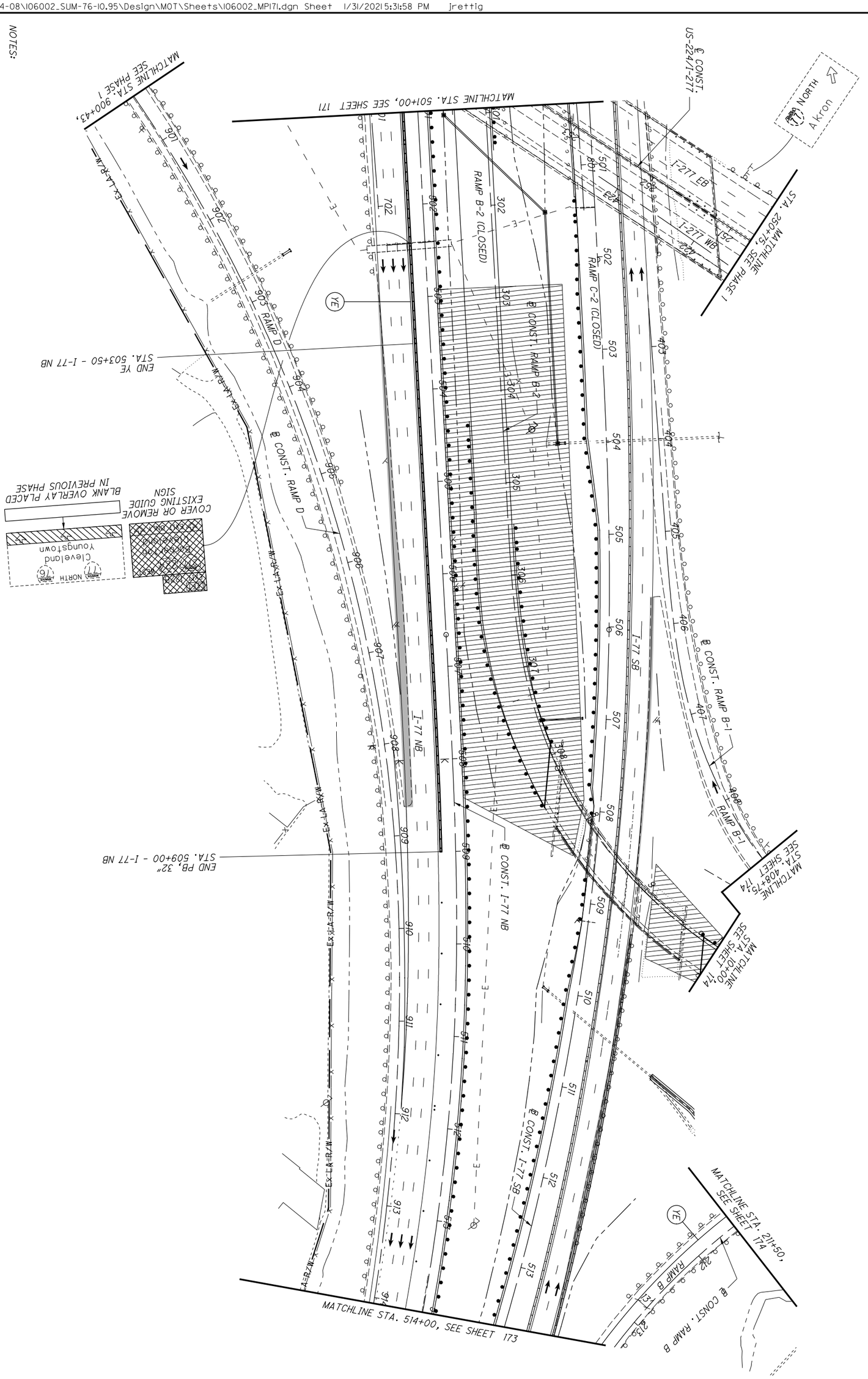


| 172 / 1288 | SUM-77 / 277 / 224<br>VARIOUS | MAINTENANCE OF TRAFFIC PLAN - PHASE 1A<br>I-77 - STA. 501+00 TO STA. 514+00 | CALCULATED .<br>CHECKED . | 0 50<br>25 100<br>HORIZONTAL SCALE IN FEET |
|---|---|---|---|---|

N:\03\60\06744-08\106002_SUM-76-10.95\Design\MOT\Sheets\106002_MPI72.dgn Sheet 1/31/2021 5:32:01 PM jrettig

NOTES:

1. SEE SHEET 128 FOR MOT LEGEND AND DRUM SPACING CHART.
2. MOT SIGNS AND DEVICES ARE EXISTING FROM PHASE 1 UNLESS OTHERWISE NOTED.

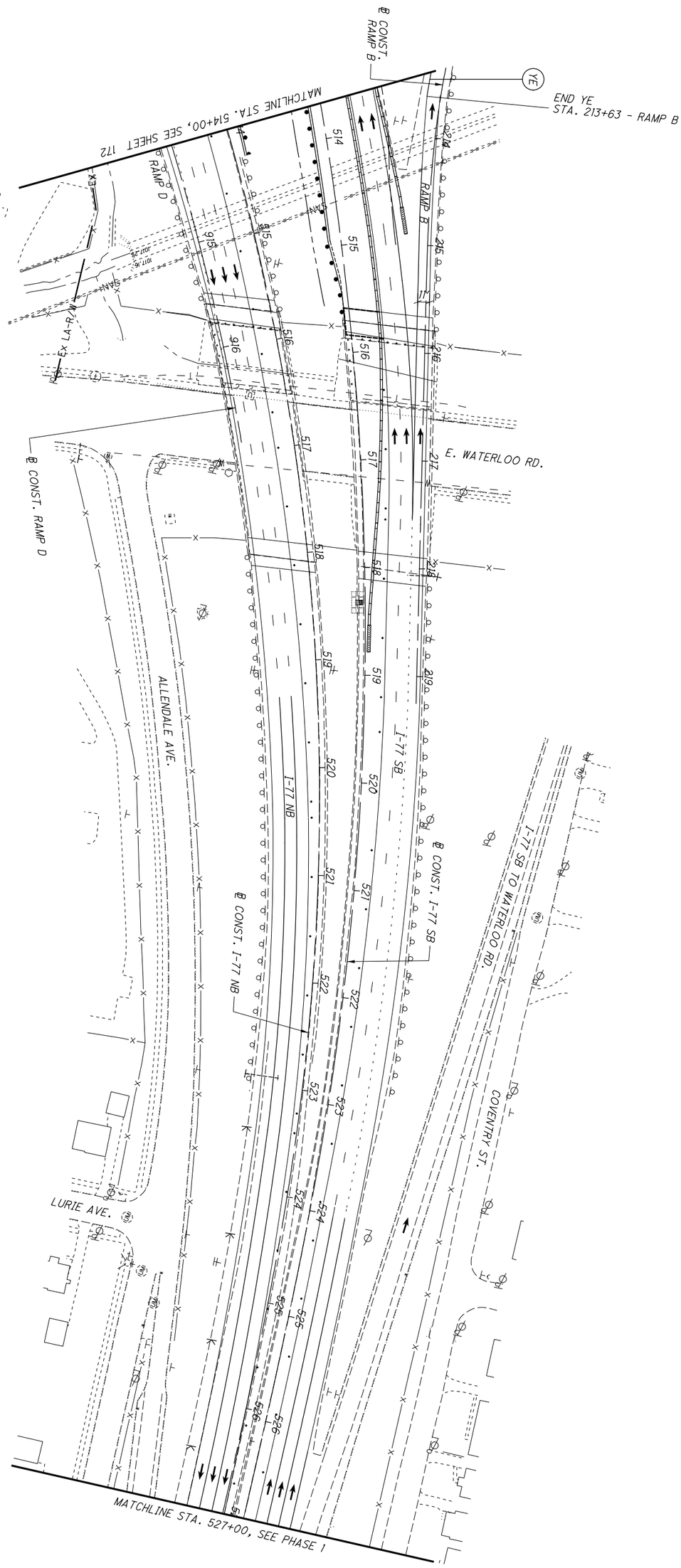


| | | | | |
|---|---|---|---|---|
| 173 / 1288 | SUM-77 / 277 / 224<br>VARIOUS | MAINTENANCE OF TRAFFIC PLAN - PHASE 1A<br>I-77 - STA. 514+00 TO STA. 527+00 | CALCULATED .<br>CHECKED . | 0 50<br>25 100<br>HORIZONTAL SCALE IN FEET |

NOTES:

1. SEE SHEET 128 FOR MOT LEGEND AND DRUM SPACING CHART.
2. MOT SIGNS AND DEVICES ARE EXISTING FROM PHASE 1 UNLESS OTHERWISE NOTED.
3. SEE SHEET 116 FOR ADDITIONAL DETAILS.

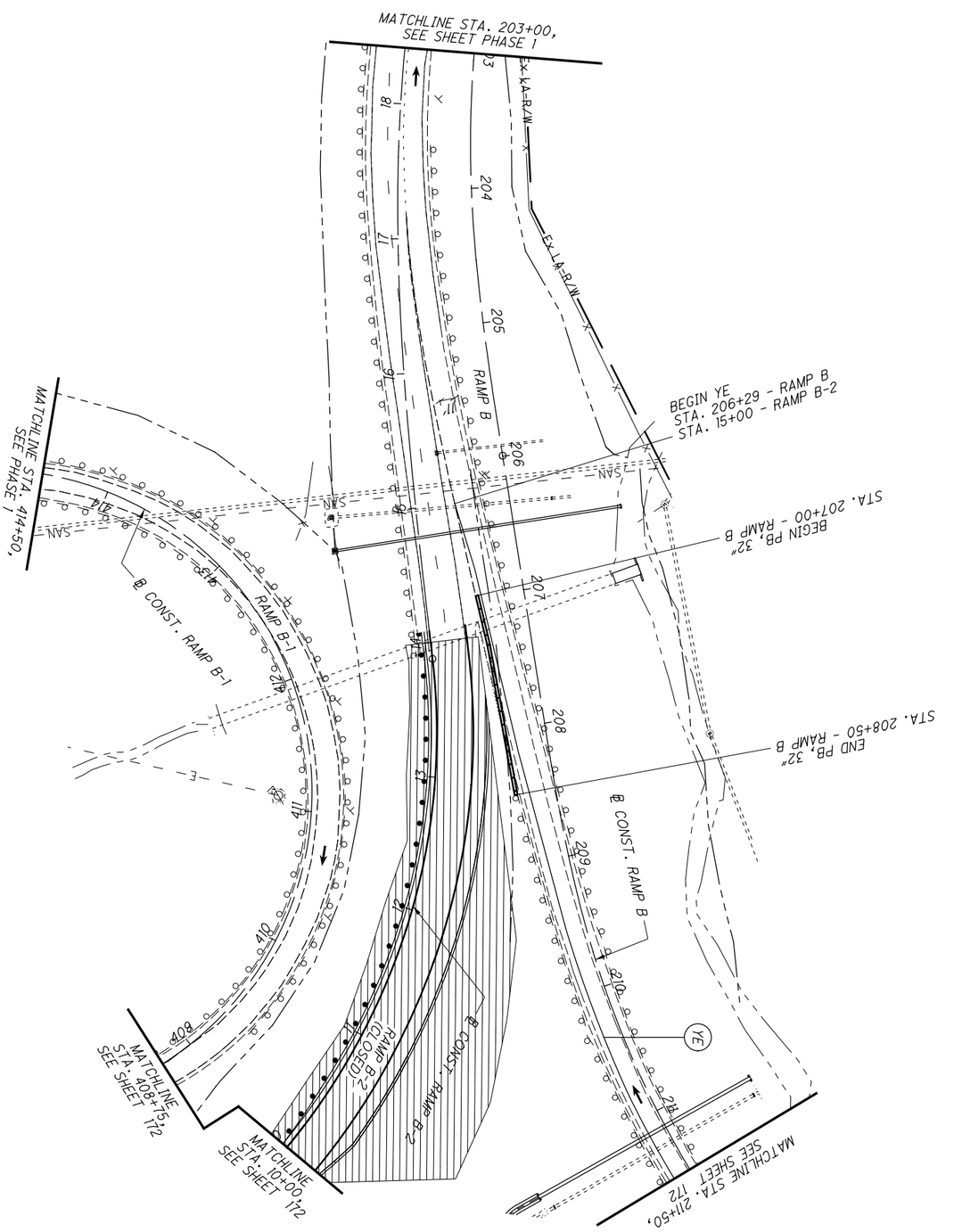


| | | | | |
|---|---|---|---|---|
| 174 / 1288 | SUM-77 / 277 / 224<br>VARIOUS | MAINTENANCE OF TRAFFIC PLAN - PHASE 1A<br>RAMP B - STA. 203+00 TO STA. 211+50 | CALCULATED .<br>CHECKED . | 0 50<br>25 100<br>HORIZONTAL SCALE IN FEET |

N:\03\60\06744-08\I06002_SUM-76-I0.95\Design\MOT\Sheets\I06002_MPI79.dgn Sheet 1/31/2021 5:32:07 PM jrettig

NOTES:

1. SEE SHEET 128 FOR MOT LEGEND AND DRUM SPACING CHART.
2. MOT SIGNS AND DEVICES ARE EXISTING FROM PHASE 1 UNLESS OTHERWISE NOTED.

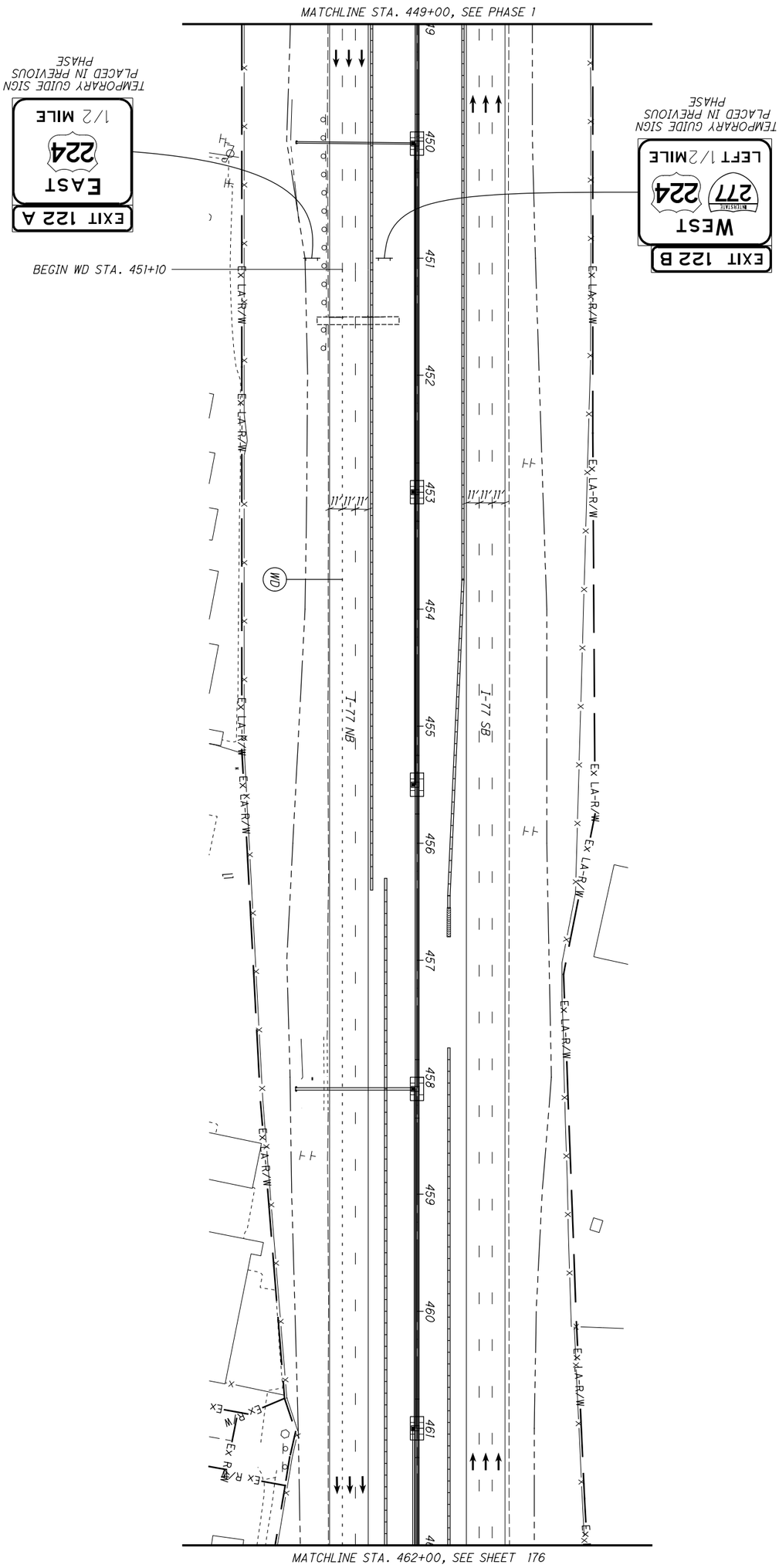


| | | | | |
|---|---|---|---|---|
| 175 / 1288 | SUM-77 / 277 / 224<br>VARIOUS | MAINTENANCE OF TRAFFIC PLAN - PHASE 1B<br>I-77 - STA. 449+00 TO STA. 462+00 | CALCULATED .<br>CHECKED . | 0 50<br>25 100<br>HORIZONTAL SCALE IN FEET |

N:\03\60\06744-08\106002_SUM-76-10.95\Design\MOT\Sheets\106002_MPI80.dgn Sheet 1/31/2021 5:32:11 PM jrettig

NOTES:

1. SEE SHEET 128 FOR MOT LEGEND AND DRUM SPACING CHART.
2. MOT SIGNS AND DEVICES ARE EXISTING FROM PHASE 1 UNLESS OTHERWISE NOTED.

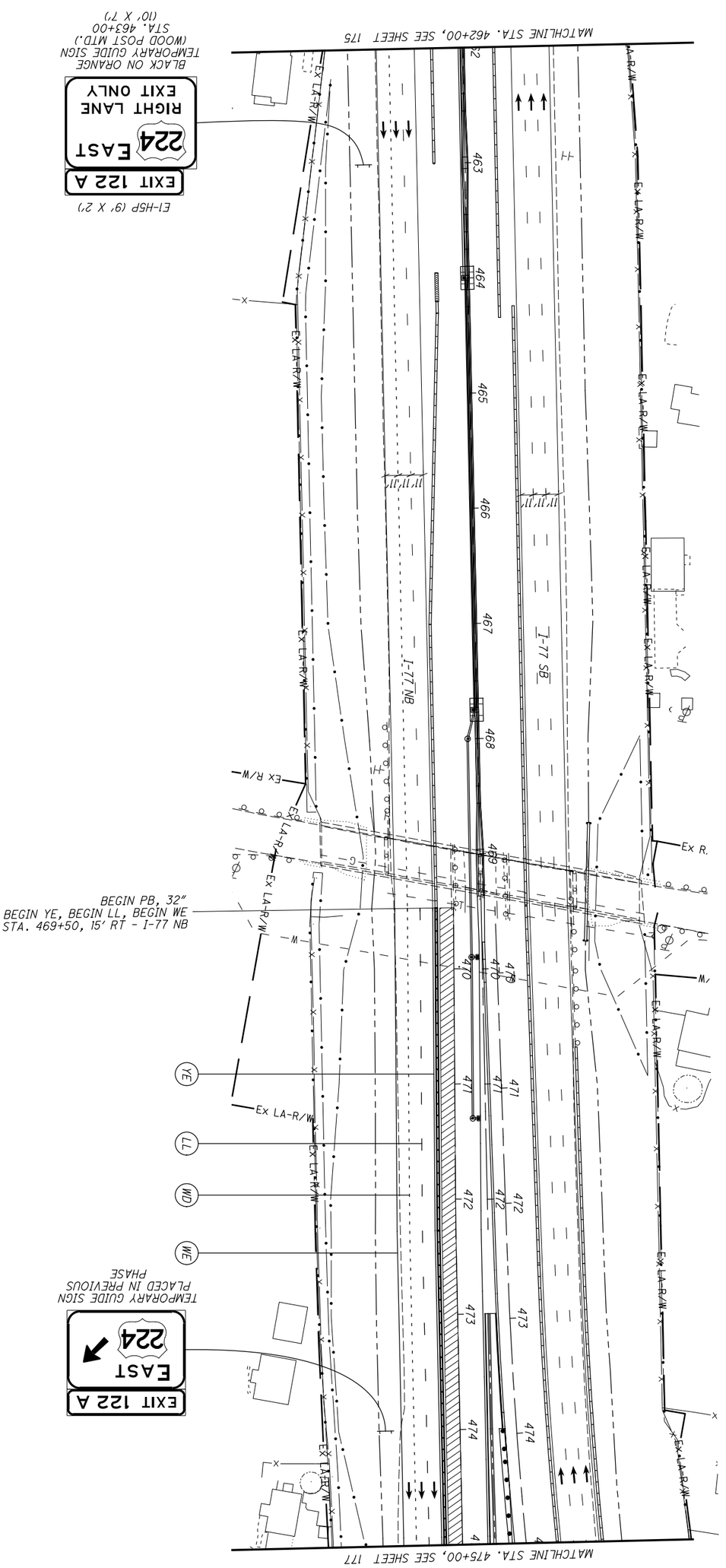


| | | | | |
|---|---|---|---|---|
| 176 / 1288 | SUM-77 / 277 / 224<br>VARIOUS | MAINTENANCE OF TRAFFIC PLAN - PHASE 1B<br>I-77 - STA. 462+00 TO STA. 475+00 | CALCULATED .<br>CHECKED . | 0 50<br>25 100<br>HORIZONTAL SCALE IN FEET |

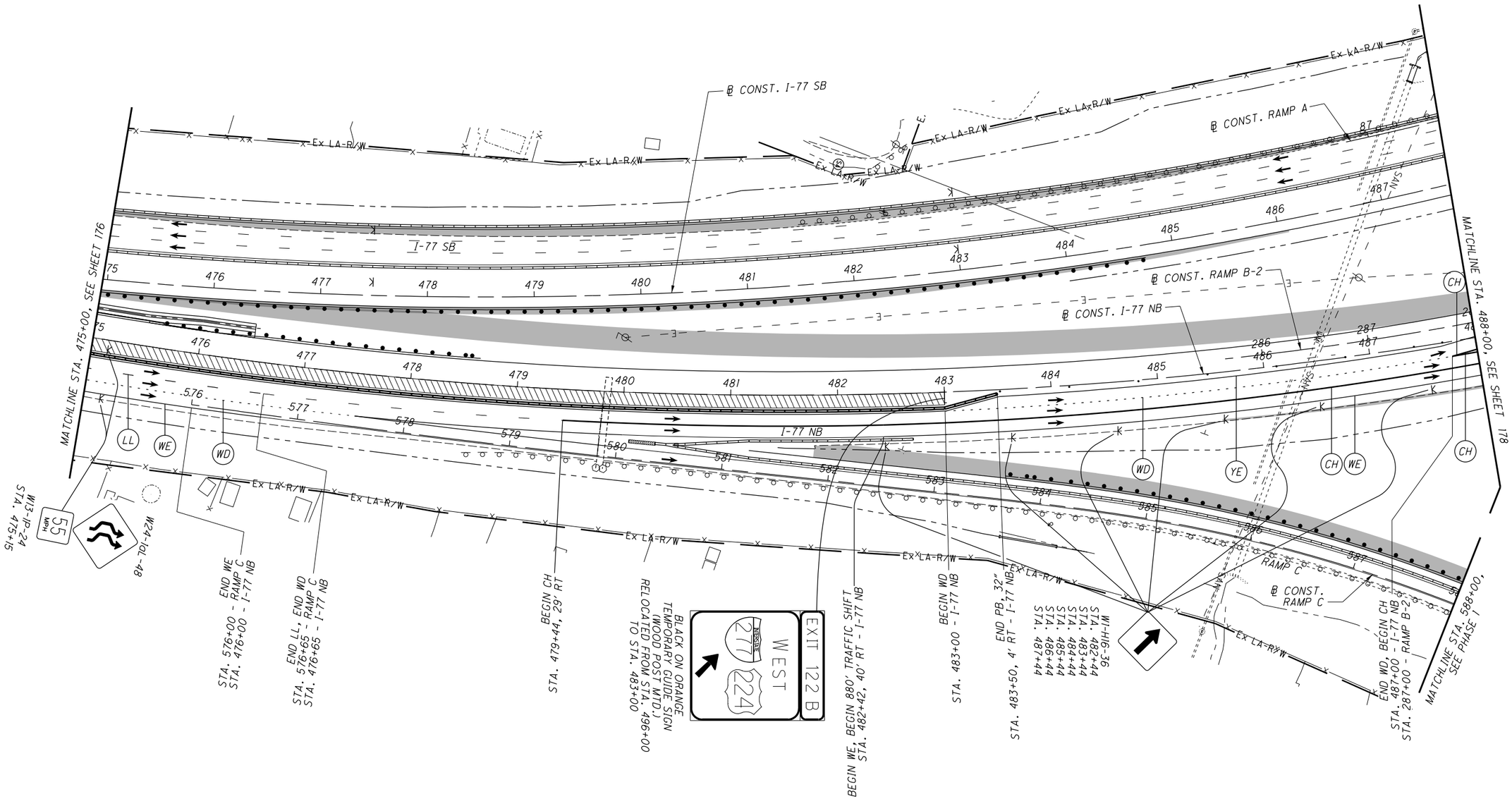


NOTES:

1. SEE SHEET 128 FOR MOT LEGEND AND DRUM SPACING CHART.
2. SEE SHEETS 157-170 FOR RAMP C CROSS SECTIONS.
3. MOT SIGNS AND DEVICES ARE EXISTING FROM PHASE 1 UNLESS OTHERWISE NOTED.

| REVISIONS | | |
|---|---|---|
| NO. | DATE | DESCRIPTION |
| 6 | 04/23/21 | I-77 NB LANE SHIFT/SIGNING CHANGES |
| | | |

HORIZONTAL SCALE IN FEET
0 25 50 100

CALCULATED .
CHECKED .

# MAINTENANCE OF TRAFFIC PLAN - PHASE 1B
## I-77 - STA. 475+00 TO STA. 488+00

SUM-77/277/224
VARIOUS

177
1288

N:\03\60\06744-08\06002_SUM-76-10.95\Design\MOT\Sheets\06002_MP1B.dgn Sheet 4/22/2021 3:42:30 PM jlacher

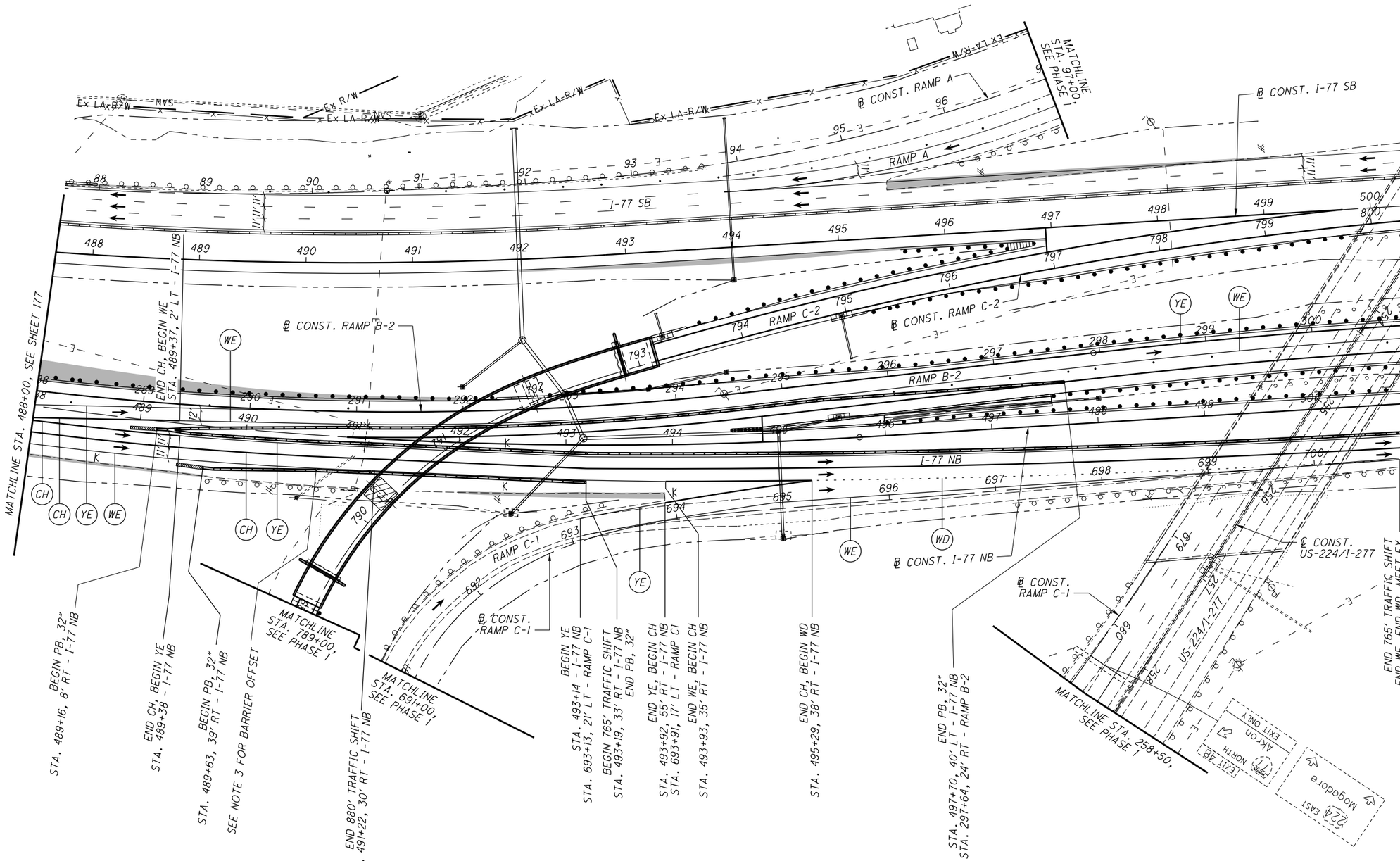


NOTES:

1. SEE SHEET 128 FOR MOT LEGEND AND DRUM SPACING CHART.
2. MOT SIGNS AND DEVICES ARE EXISTING FROM PHASE I UNLESS OTHERWISE NOTED.
3. OFFSET TO NB RIGHT BARRIER IS 1' FROM STA. 490+69 TO STA. 493+19.

| REVISIONS | | |
|---|---|---|
| NO. | DATE | DESCRIPTION |
| 6 | 04/23/21 | I-77 NB LANE SHIFT/SIGNING CHANGES |
| | | |

HORIZONTAL SCALE IN FEET
0 25 50 100

CALCULATED . CHECKED .

# MAINTENANCE OF TRAFFIC PLAN - PHASE 1B
## I-77 - STA. 488+00 TO STA. 501+00

SUM-77/277/224
VARIOUS

178
1288

N:\03\60\06744-08\106002-SUM-76-10.95\Design\MOT\Sheets\106002-MPI82.dgn Sheet 4/22/2021 3:43:54 PM jlacher

N:\03\60\06744-08\I06002_SUM-76-10.95\Design\MOT\Sheets\I06002_MPI83.dgn Sheet 4/22/2021 3:44:25 PM jlacher

NOTES:
1. SEE SHEET 128 FOR MOT LEGEND AND DRUM SPACING CHART.
2. MOT SIGNS AND DEVICES ARE EXISTING FROM PHASE I UNLESS OTHERWISE NOTED.

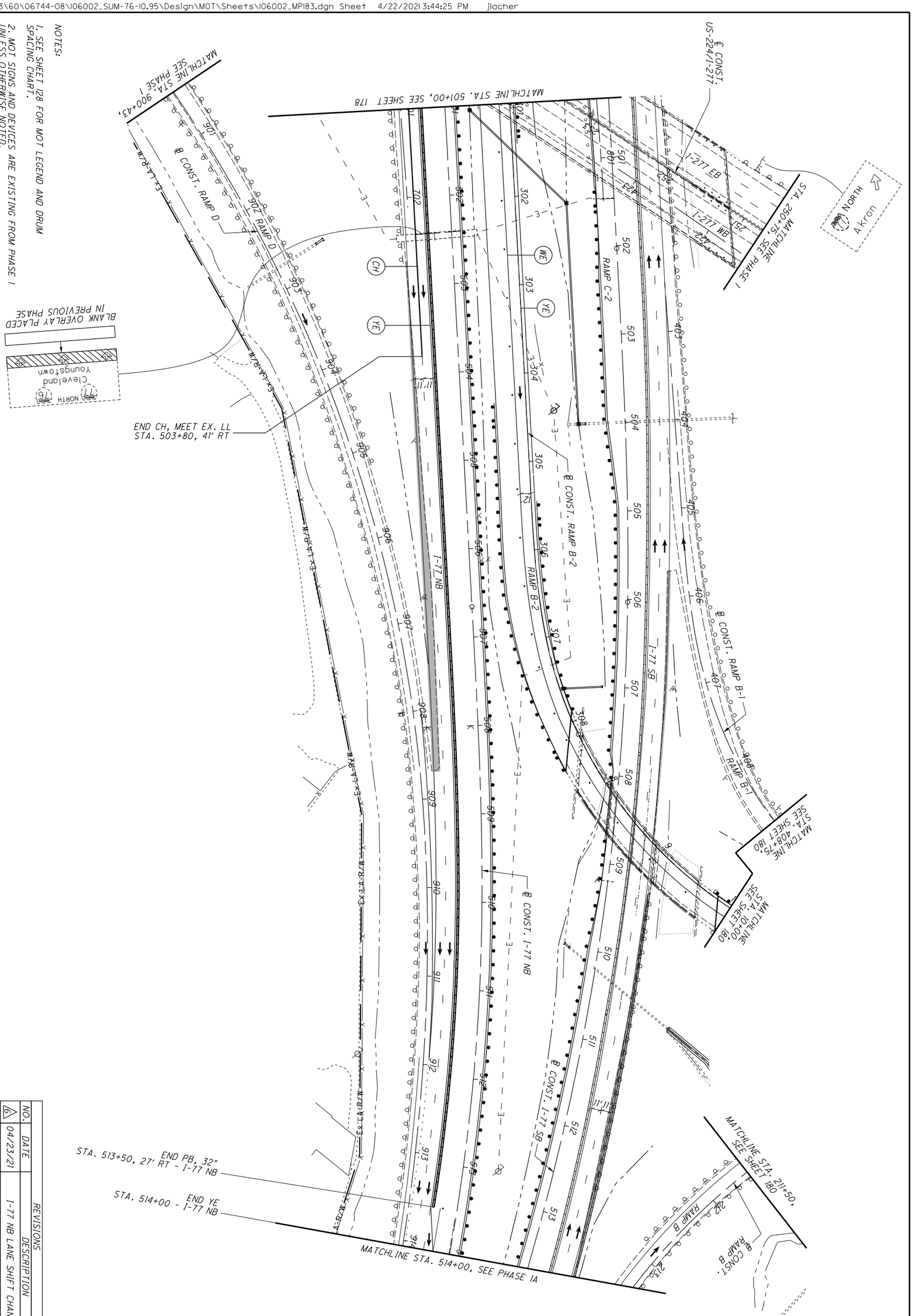


| NO. | DATE | REVISIONS DESCRIPTION |
|---|---|---|
| 6 | 04/23/21 | I-77 NB LANE SHIFT CHANGES |

| | | | | | |
|---|---|---|---|---|---|
| 1288 | 179 | SUM-77/277/224 VARIOUS | MAINTENANCE OF TRAFFIC PLAN - PHASE 1B I-77 - STA. 501+00 TO STA. 514+00 | CALCULATED . CHECKED . | 0 50 25 100 HORIZONTAL SCALE IN FEET |

N:\03\60\06744-08\I06002_SUM-76-10.95\Design\MOT\Sheets\I06002_MPI84.dgn Sheet 1/31/2021 5:32:27 PM jrettig

NOTES:

1. SEE SHEET 128 FOR MOT LEGEND AND DRUM SPACING CHART.
2. MOT SIGNS AND DEVICES ARE EXISTING FROM PHASE 1 UNLESS OTHERWISE NOTED.

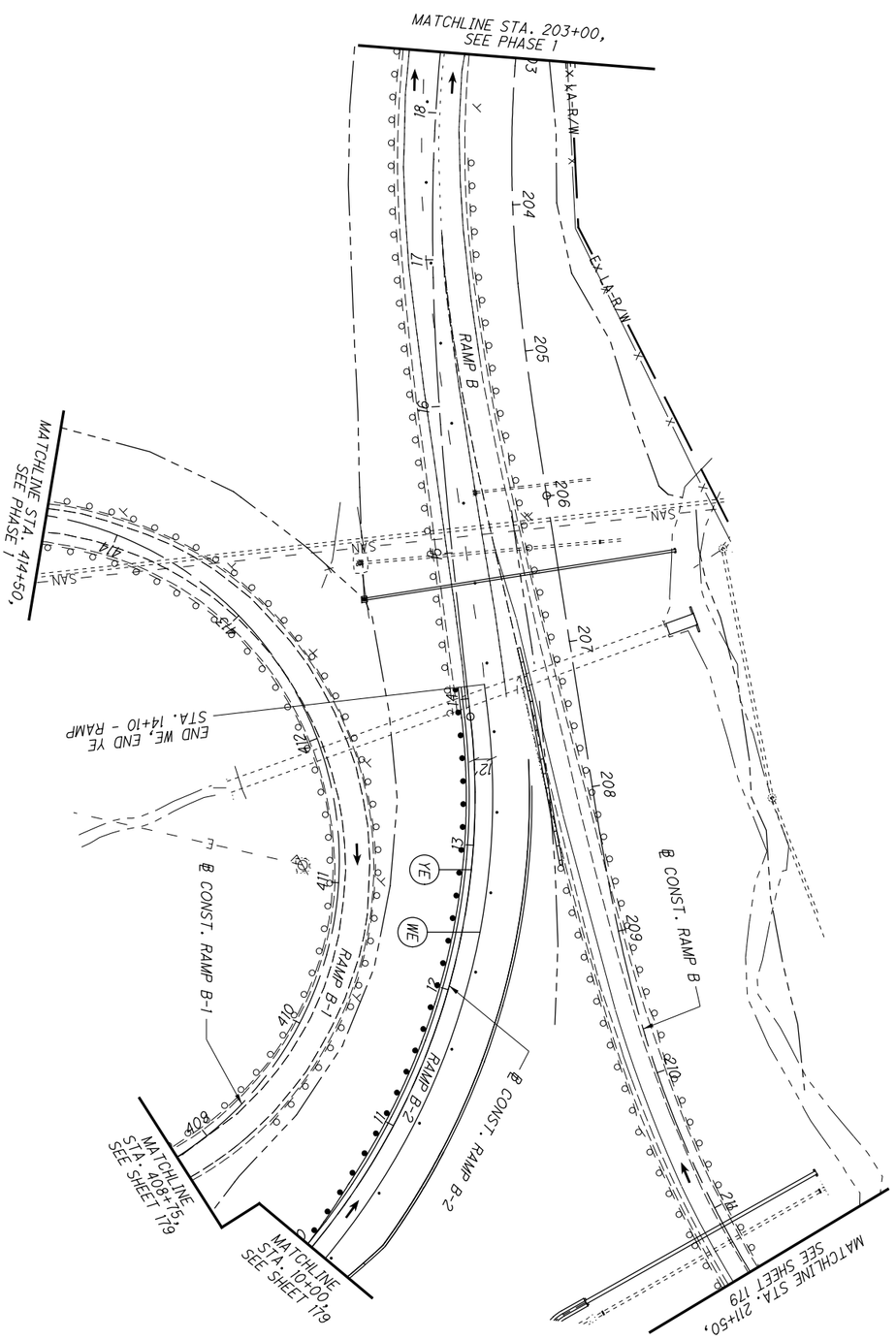


| | | | | |
|---|---|---|---|---|
| 180 / 1288 | SUM-77 / 277 / 224<br>VARIOUS | MAINTENANCE OF TRAFFIC PLAN - PHASE 1B<br>RAMP B - STA. 203+00 TO STA. 211+50 | CALCULATED .<br>CHECKED . | 0 50<br>25 100<br>HORIZONTAL SCALE IN FEET |

NOTES:

1. SEE SHEET 128 FOR MOT LEGEND AND DRUM SPACING CHART.
2. MOT SIGNS AND DEVICES ARE EXISTING FROM PHASE 1 UNLESS OTHERWISE NOTED.

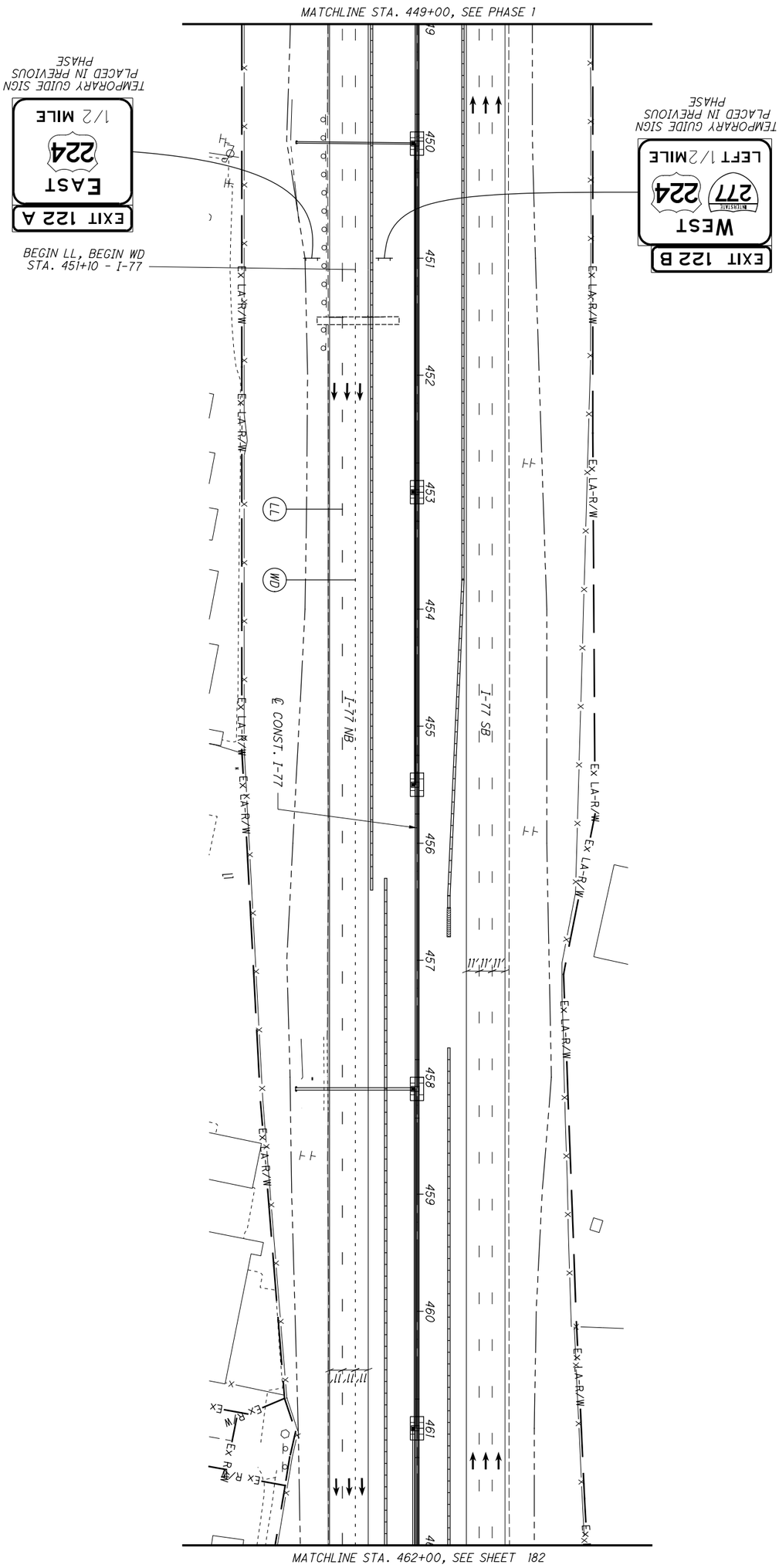


| | | | | |
|---|---|---|---|---|
| 181 / 1288 | SUM-77/277/224<br>VARIOUS | MAINTENANCE OF TRAFFIC PLAN - PHASE 1C<br>I-77 - STA. 449+00 TO STA. 462+00 | CALCULATED .<br>CHECKED . | 0 50<br>25 100<br>HORIZONTAL SCALE IN FEET |

NOTES:

1. SEE SHEET 128 FOR MOT LEGEND AND DRUM SPACING CHART.
2. MOT SIGNS AND DEVICES ARE EXISTING FROM PHASE 1 UNLESS OTHERWISE NOTED.

HORIZONTAL SCALE IN FEET
0 25 50 100

CALCULATED .
CHECKED .

# MAINTENANCE OF TRAFFIC PLAN - PHASE 1C
## I-77 - STA. 462+00 TO STA. 475+00

SUM-77 / 277 / 224
VARIOUS

182
1288

N:\03\60\06744-08\106002-SUM-76-10.95\Design\MOT\Sheets\106002_MPI89.dgn Sheet 1/31/2021 5:32:33 PM jrettig

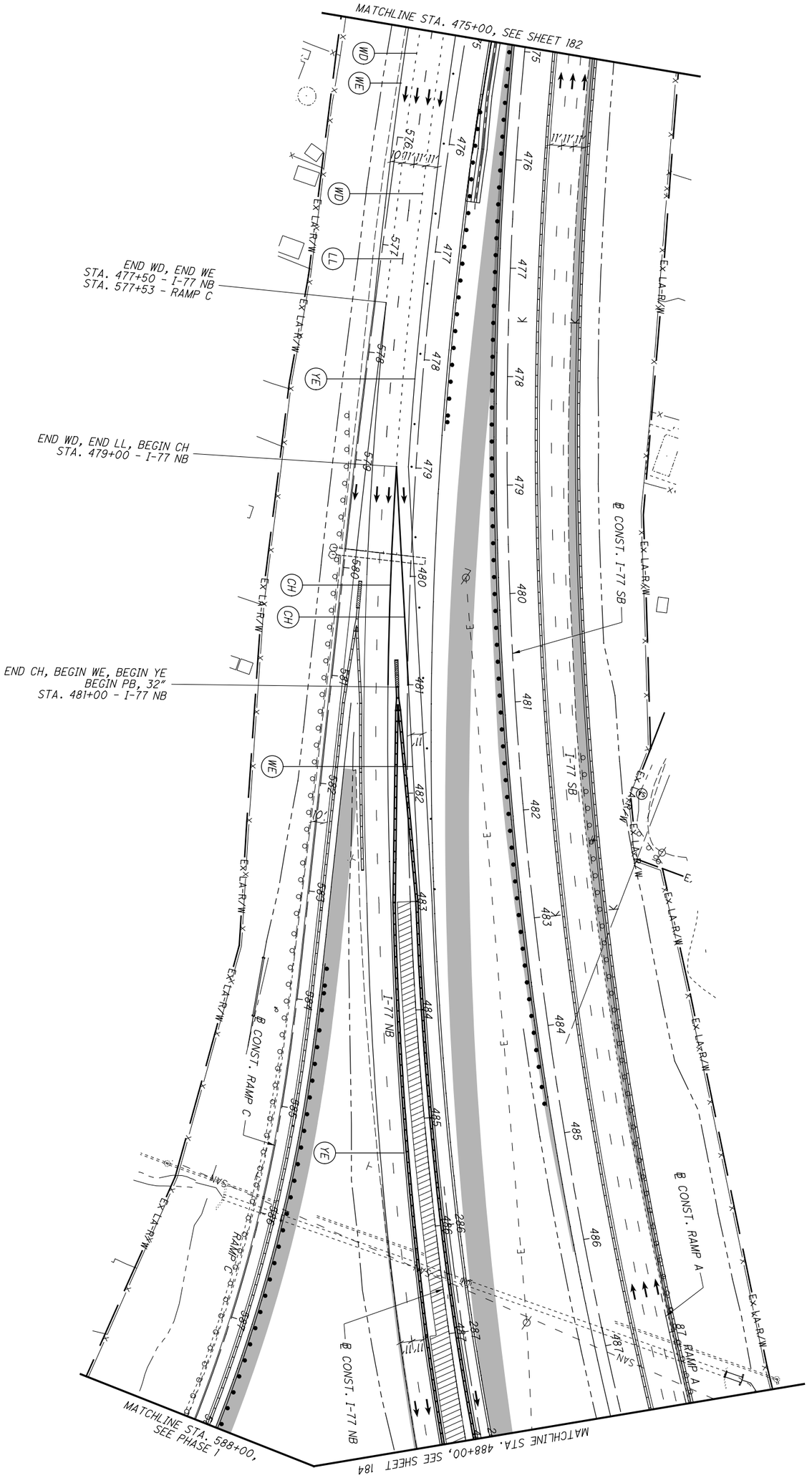


NOTES:

1. SEE SHEET 128 FOR MOT LEGEND AND DRUM SPACING CHART.
2. MOT SIGNS AND DEVICES ARE EXISTING FROM PHASE 1 UNLESS OTHERWISE NOTED.

| | | | | |
|---|---|---|---|---|
| 183 / 1288 | SUM-77 / 277 / 224<br>VARIOUS | MAINTENANCE OF TRAFFIC PLAN - PHASE 1C<br>I-77 - STA. 475+00 TO STA. 488+00 | CALCULATED .<br>CHECKED . | 0 50<br>25 100<br>HORIZONTAL SCALE IN FEET |

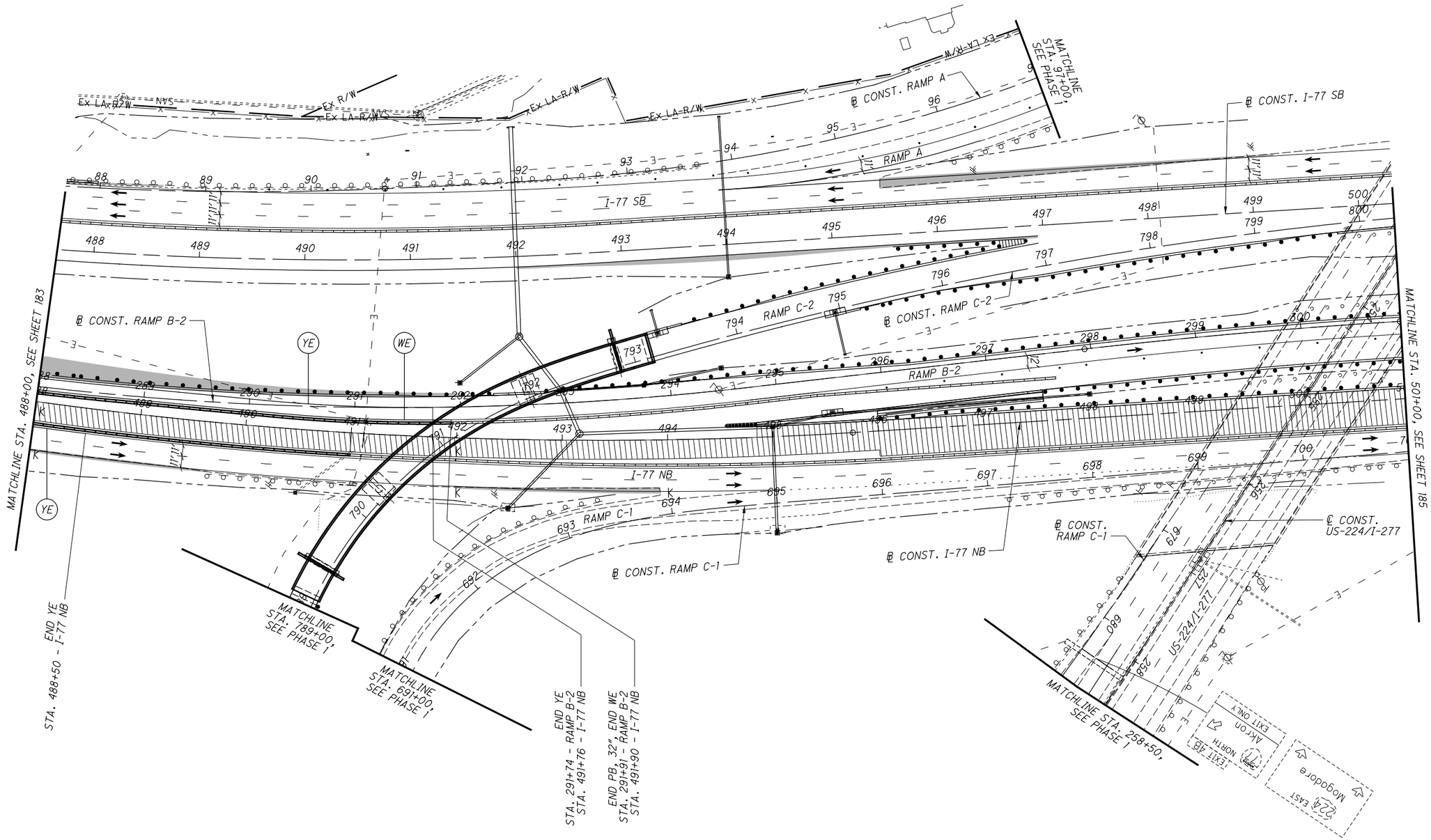


NOTES:

1. SEE SHEET 128 FOR MOT LEGEND AND DRUM SPACING CHART.
2. MOT SIGNS AND DEVICES ARE EXISTING FROM PHASE 1 UNLESS OTHERWISE NOTED.

HORIZONTAL SCALE IN FEET
0 25 50 100

CALCULATED .
CHECKED .

# MAINTENANCE OF TRAFFIC PLAN - PHASE 1C
## I-77 - STA. 488+00 TO STA. 501+00

SUM-77/277/224
VARIOUS

184
1288

N:\03\60\06744-08\106002-SUM-76-10.95\Design\MOT\Sheets\106002-MPI9I.dgn Sheet 1/31/2021 5:32:40 PM jrettig

N:\03\60\06744-08\106002_SUM-76-10.95\Design\MOT\Sheets\106002_MPI92.dgn Sheet 1/31/2021 5:32:46 PM jrettig

NOTES:
1. SEE SHEET 128 FOR MOT LEGEND AND DRUM SPACING CHART.
2. MOT SIGNS AND DEVICES ARE EXISTING FROM PHASE 1 UNLESS OTHERWISE NOTED.

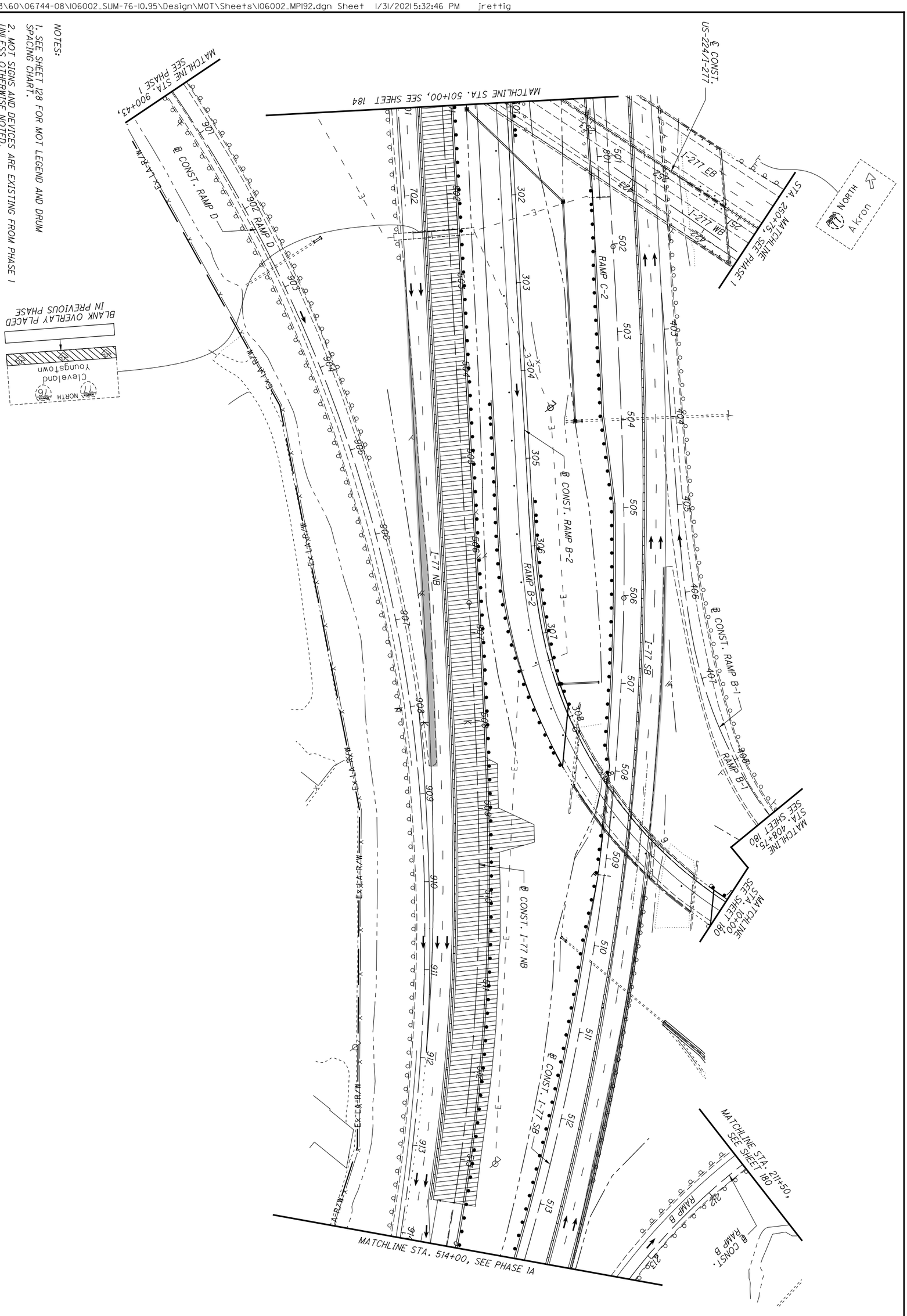


| | | | | |
|---|---|---|---|---|
| 185 / 1288 | SUM-77 / 277 / 224<br>VARIOUS | MAINTENANCE OF TRAFFIC PLAN - PHASE 1C<br>I-77 - STA. 501+00 TO STA. 514+00 | CALCULATED .<br>CHECKED . | 0 50<br>25 100<br>HORIZONTAL SCALE IN FEET |

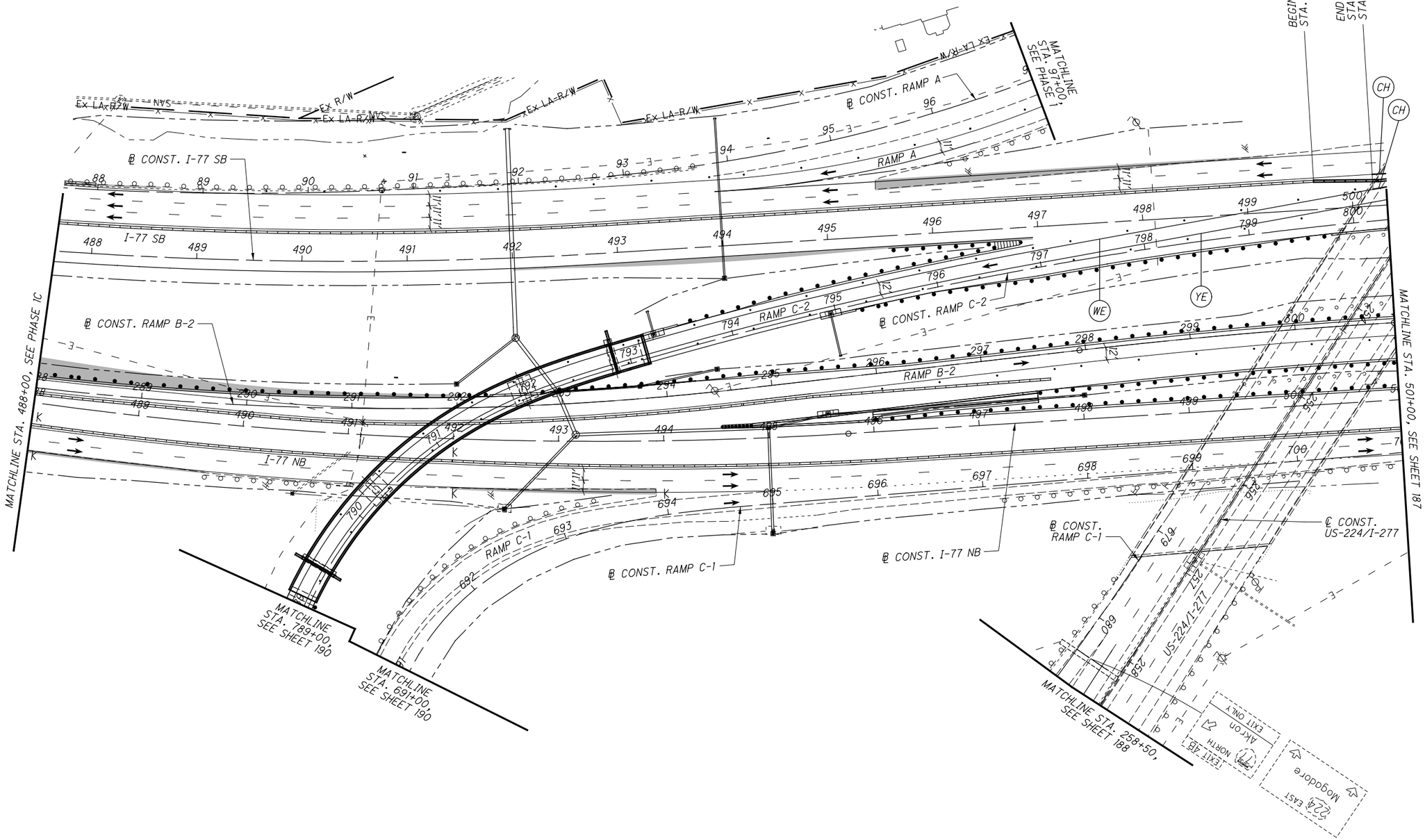


NOTES:

1. SEE SHEET 128 FOR MOT LEGEND AND DRUM SPACING CHART.
2. MOT SIGNS AND DEVICES ARE EXISTING FROM PHASE 1 UNLESS OTHERWISE NOTED.

HORIZONTAL SCALE IN FEET
0 25 50 100

CALCULATED .
CHECKED .

# MAINTENANCE OF TRAFFIC PLAN - WINTER
## I-77 - STA. 488+00 TO STA. 501+00

SUM-77/277/224
VARIOUS

186
1288

N:\03\60\06744-08\106002-SUM-76-10.95\Design\MOT\Sheets\106002_MPI95.dgn Sheet 1/31/2021 5:32:51 PM jrettig

N:\03\60\06744-08\I06002_SUM-76-I0.95\Design\MOT\Sheets\I06002_MPI96.dgn Sheet 1/31/2021 5:33:14 PM jrettig

NOTES:

1. SEE SHEET 128 FOR MOT LEGEND AND DRUM SPACING CHART.
2. MOT SIGNS AND DEVICES ARE EXISTING FROM PHASE I UNLESS OTHERWISE NOTED.
3. SEE SHEETS 123-191 FOR TYPICAL SECTIONS.

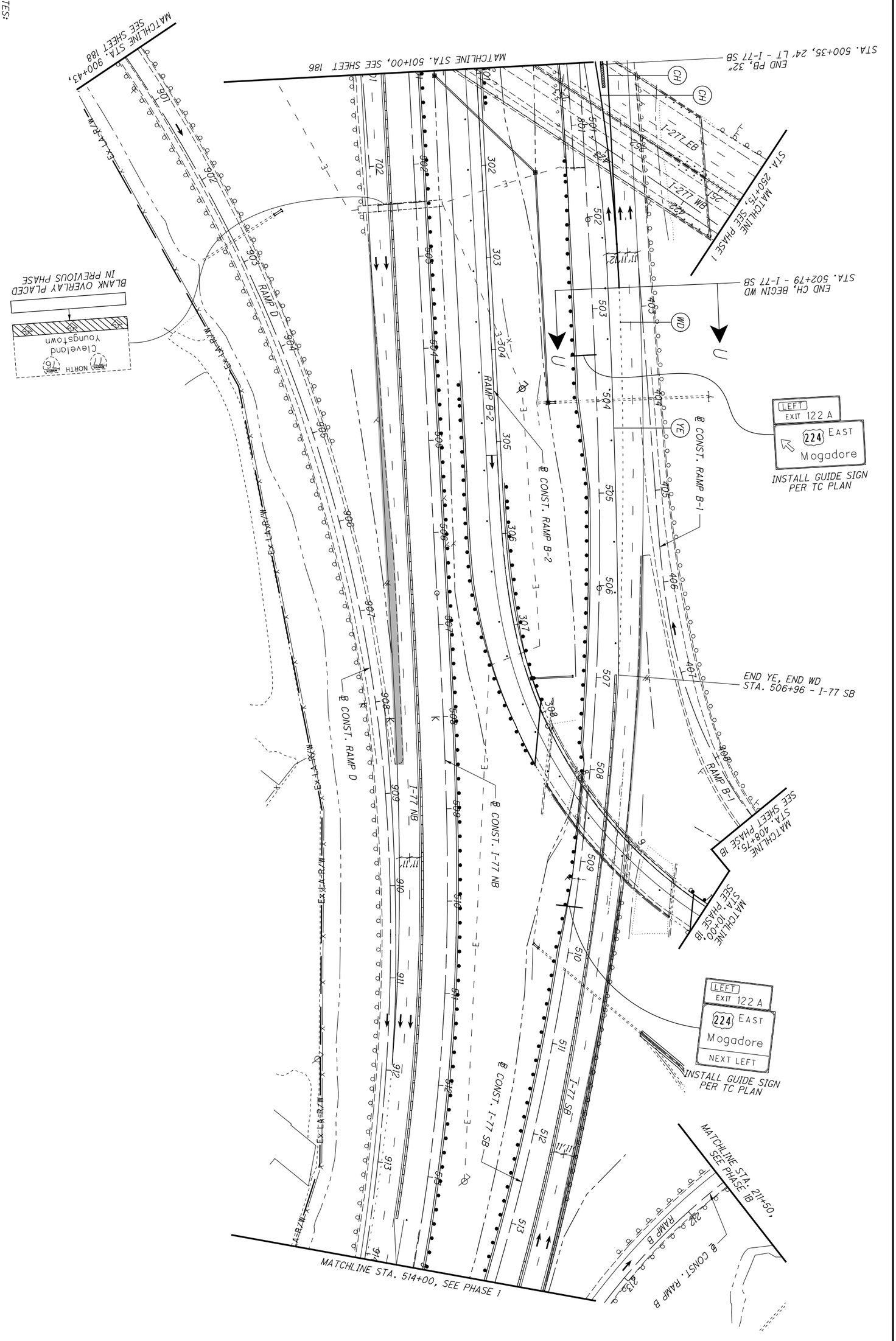


| | | | | |
|---|---|---|---|---|
| 187 / 1288 | SUM-77 / 277 / 224<br>VARIOUS | MAINTENANCE OF TRAFFIC PLAN - WINTER<br>I-77 - STA. 501+00 TO STA. 514+00 | CALCULATED .<br>CHECKED . | 0 50<br>25 100<br>HORIZONTAL SCALE IN FEET |

NOTES:

1. SEE SHEET 128 FOR MOT LEGEND AND DRUM SPACING CHART.
2. MOT SIGNS AN DEVICES ARE EXISTING FROM PHASE 1 UNLESS OTHERWISE NOTED.

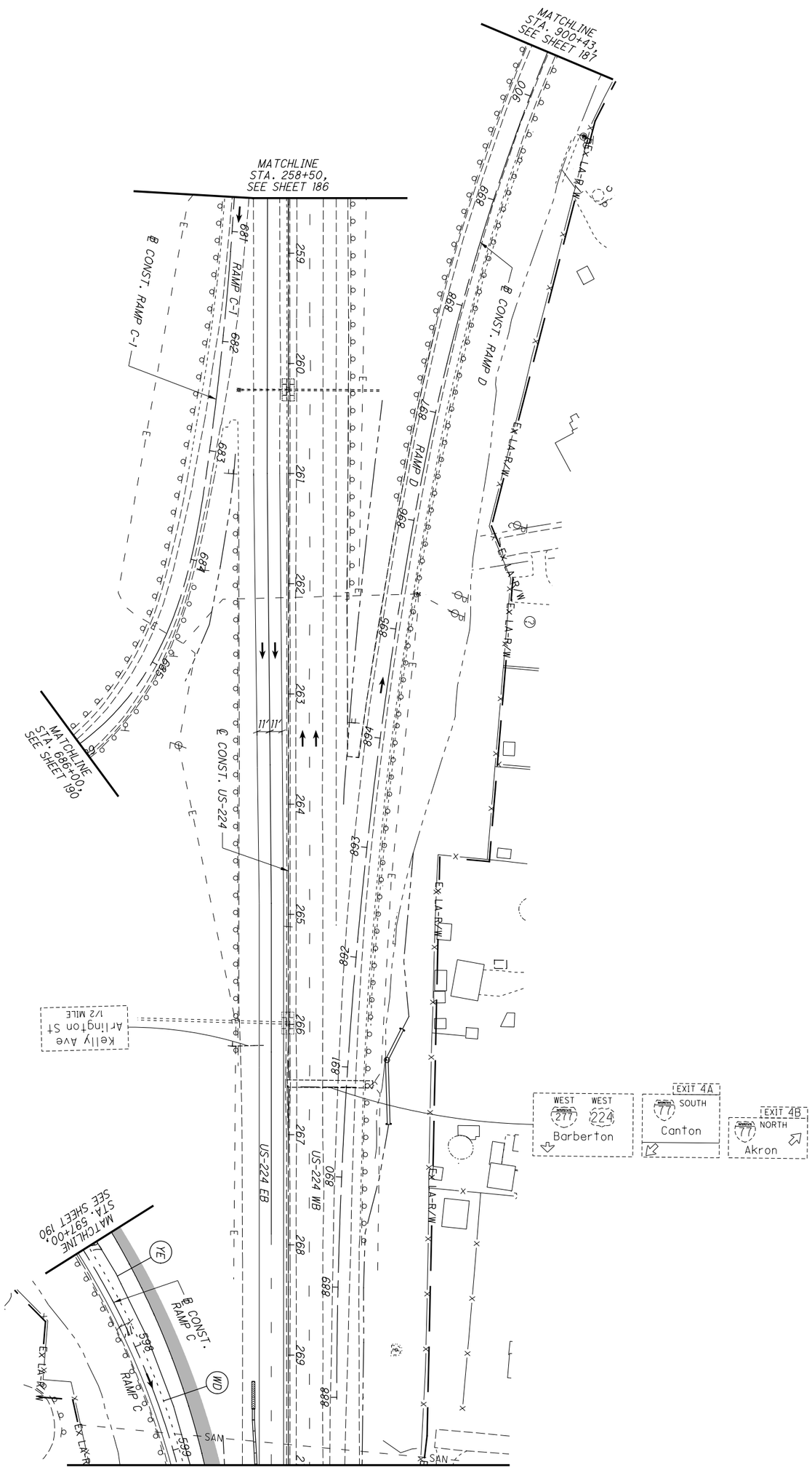


| | | | | |
|---|---|---|---|---|
| 188 / 1288 | SUM-77 / 277 / 224<br>VARIOUS | MAINTENANCE OF TRAFFIC PLAN - WINTER<br>US-224 - STA. 258+50 TO STA. 270+00 | CALCULATED .<br>CHECKED . | 0 50<br>25 100<br>HORIZONTAL SCALE IN FEET |

N:\03\60\06744-08\106002_SUM-76-10.95\Design\MOT\Sheets\106002_MPI98.dgn Sheet 1/31/2021 5:33:41 PM jrettig

NOTES:

1. SEE SHEET 128 FOR MOT LEGEND AND DRUM SPACING CHART.
2. MOT SIGNS AN DEVICES ARE EXISTING FROM PHASE 1 UNLESS OTHERWISE NOTED.

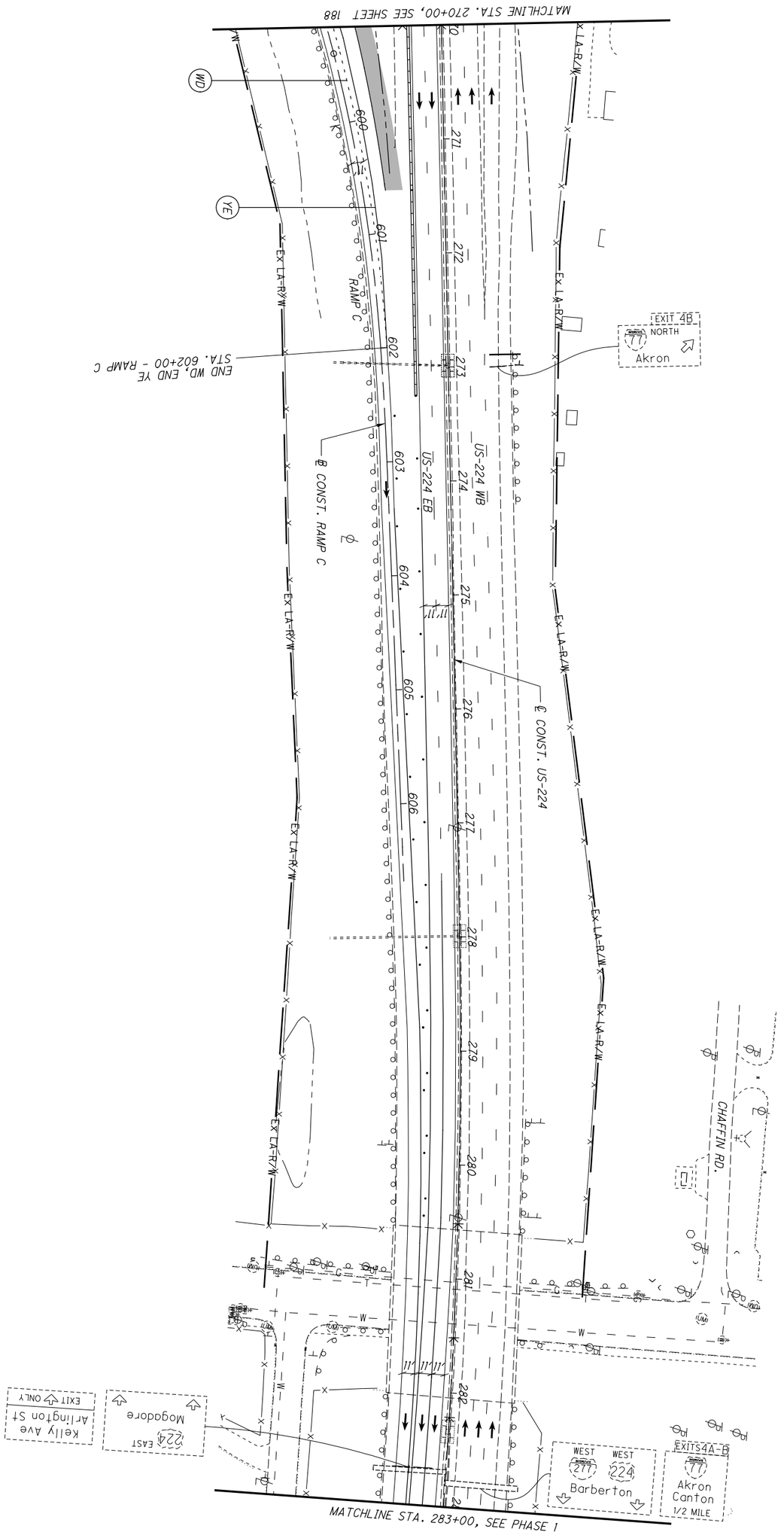


| | | | | |
|---|---|---|---|---|
| 189 / 1288 | SUM-77 / 277 / 224<br>VARIOUS | MAINTENANCE OF TRAFFIC PLAN - WINTER<br>US-224 - STA. 270+00 TO STA. 283+00 | CALCULATED .<br>CHECKED . | 0 50<br>25 100<br>HORIZONTAL SCALE IN FEET |

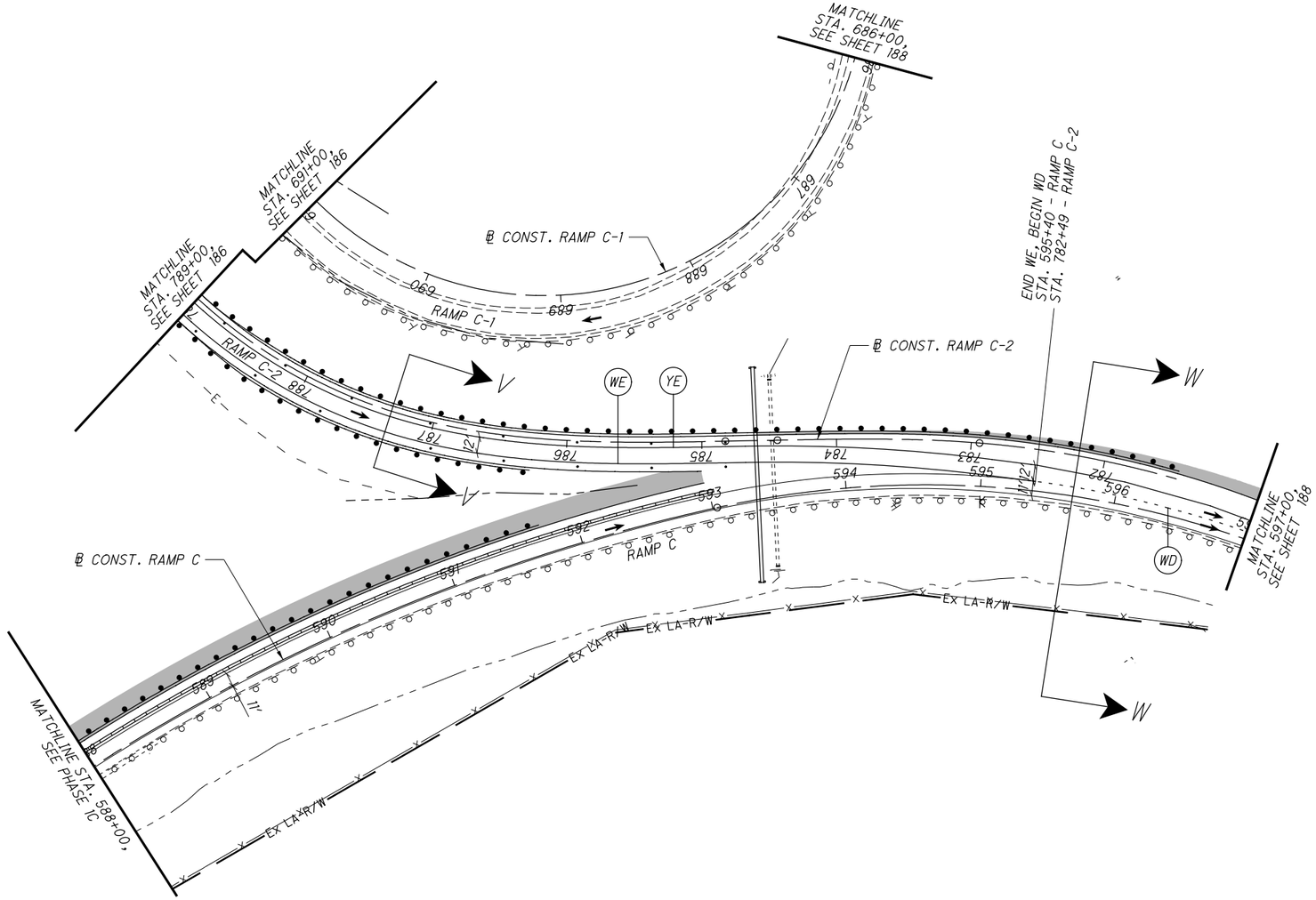


NOTES:

1. SEE SHEET 128 FOR MOT LEGEND AND DRUM SPACING CHART.
2. SEE SHEETS -1--1 FOR RAMP C CROSS SECTIONS.
3. MOT SIGNS AND DEVICES ARE EXISTING FROM PHASE 1 UNLESS OTHERWISE NOTED.
4. SEE SHEETS 123-191 FOR TYPICAL SECTIONS.

N

HORIZONTAL SCALE IN FEET
0 25 50 100

CALCULATED .
CHECKED .

# MAINTENANCE OF TRAFFIC PLAN - WINTER
## RAMP C - STA. 588+00 TO STA. 597+00

SUM-77 / 277 / 224
VARIOUS

190
1288

N:\03\60\06744-08\I06002_SUM-76-10.95\Design\MOT\Sheets\I06002_MPI99.dgn Sheet 1/31/2025 5:33:43 PM jrettig

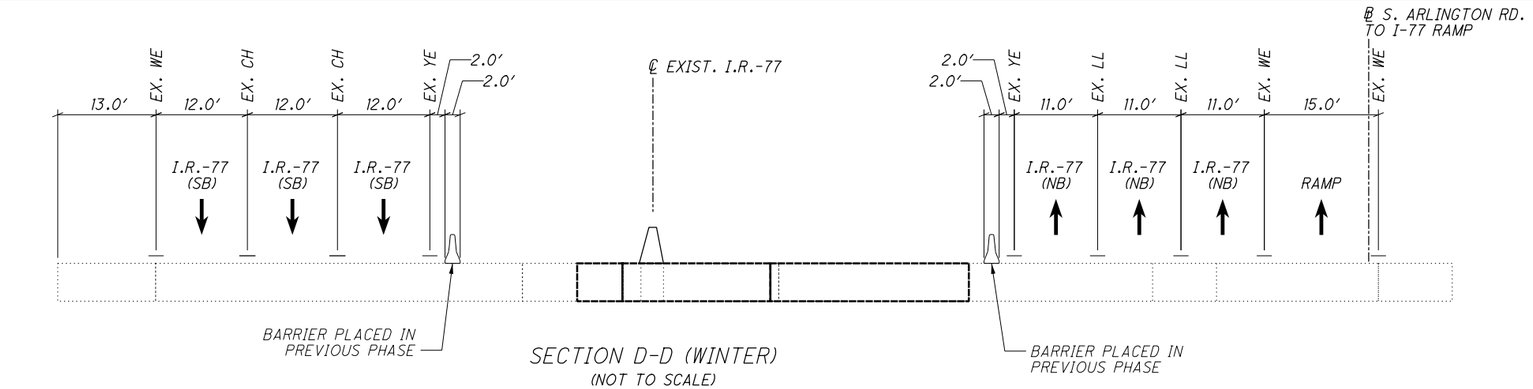


SECTION D-D (WINTER)
(NOT TO SCALE)

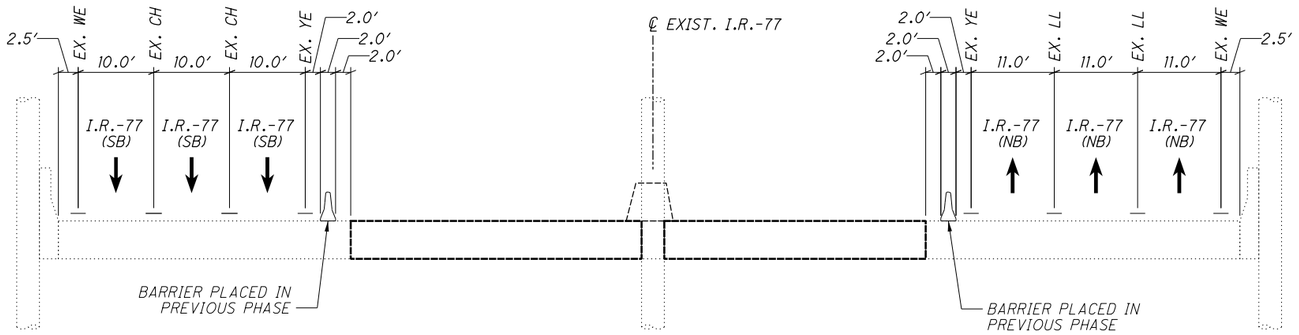


SECTION E-E (WINTER)
(NOT TO SCALE)

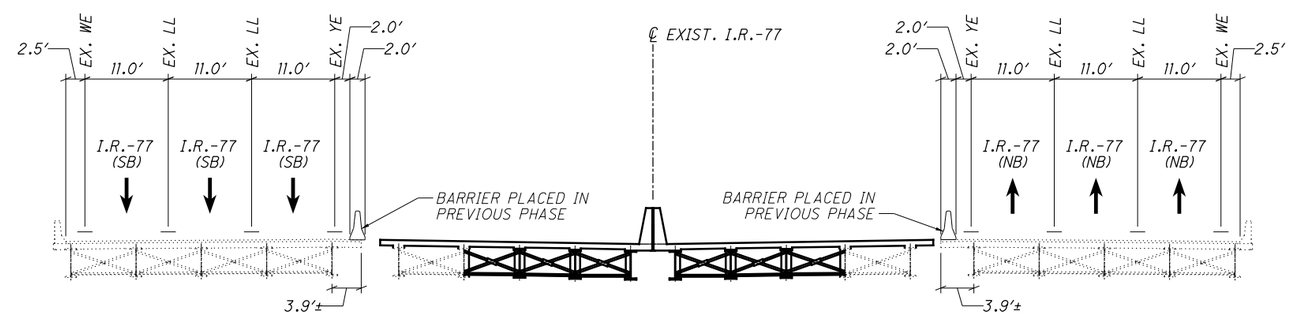


SECTION H-H (WINTER)
(NOT TO SCALE)

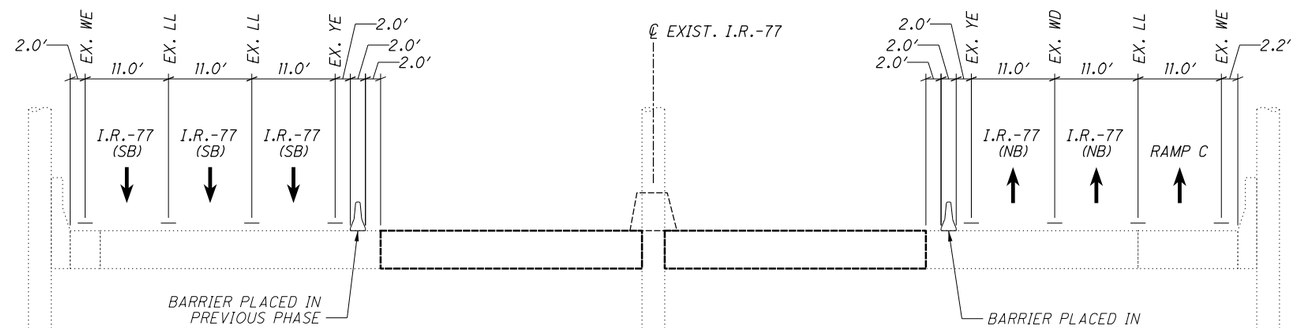


SECTION J-J (WINTER)
(NOT TO SCALE)

CALCULATED EMB
CHECKED JAR

# MAINTENANCE OF TRAFFIC TYPICAL SECTIONS - PHASE 1

SUM-77 / 277 / 224
VARIOUS

191
1288

N:\03\60\06744-08\106002_SUM-76-10.95\Design\MOT\Sheets\106002_MY105.dgn Sheet 1/31/2021 5:33:48 PM jrettig

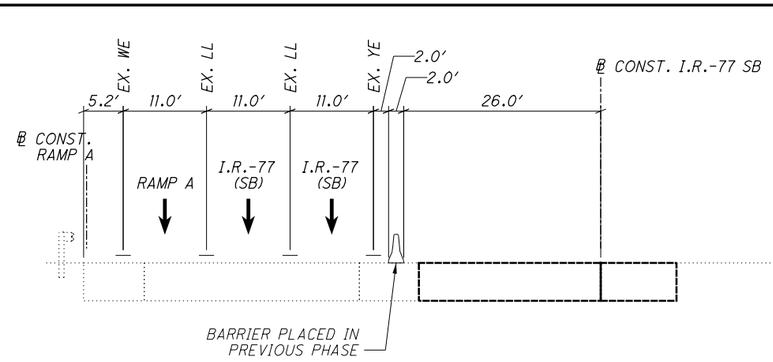


SECTION K-K (WINTER)
(NOT TO SCALE)

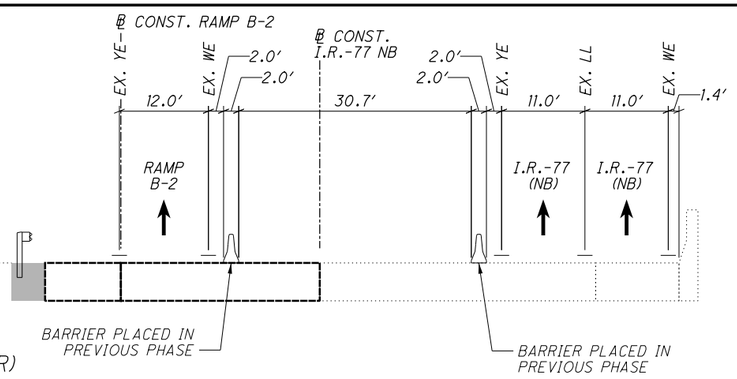


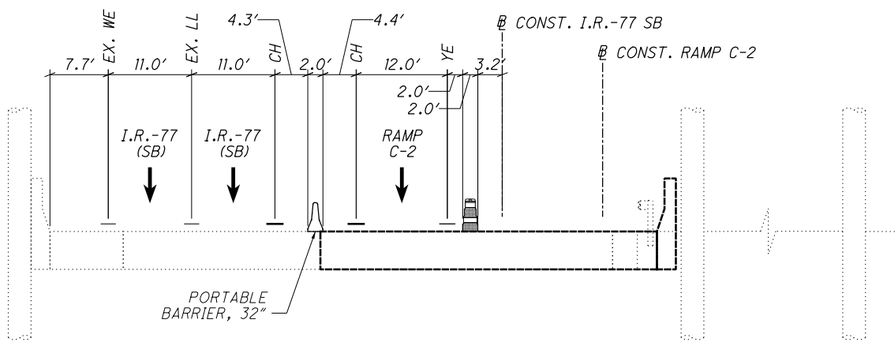


SECTION L2-L2 (WINTER)
(NOT TO SCALE)

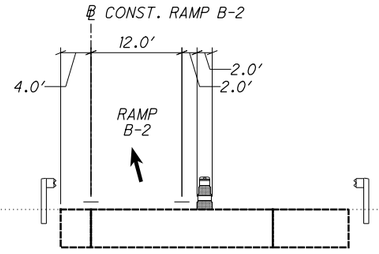


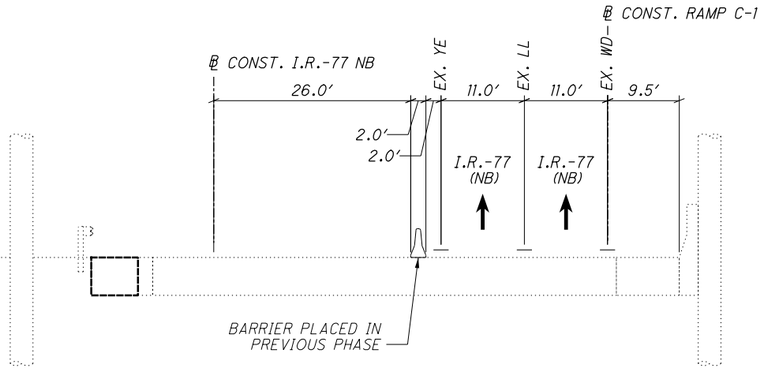


SECTION L1-L1 (WINTER)
(NOT TO SCALE)

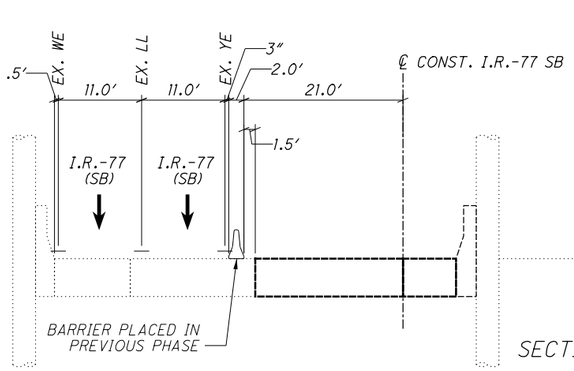


SECTION M-M (WINTER)
(NOT TO SCALE)

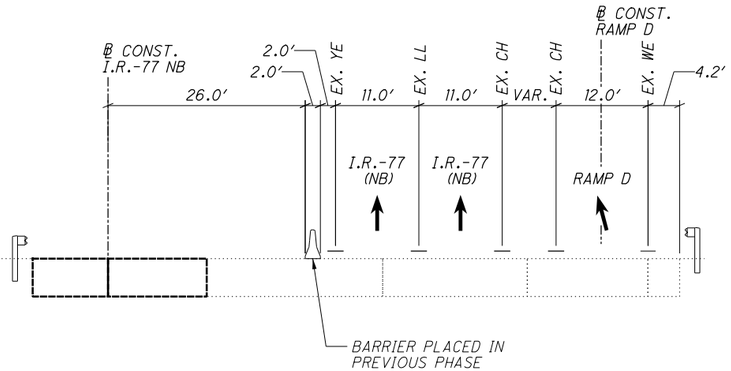


CALCULATED EMB
CHECKED JAR

# MAINTENANCE OF TRAFFIC TYPICAL SECTIONS - PHASE 1

SUM-77 / 277 / 224
VARIOUS

192
1288

N:\03\60\06744-08\106002_SUM-76-10.95\Design\MOT\Sheets\106002_MY106.dgn Sheet 1/31/2021 5:33:50 PM jrettig

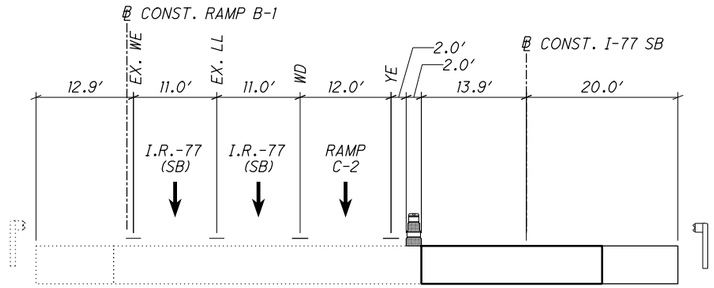


SECTION U-U (WINTER)
(NOT TO SCALE)

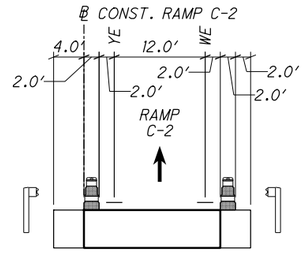


SECTION V-V (WINTER)
(NOT TO SCALE)

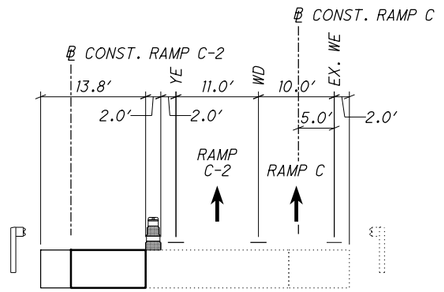


SECTION W-W (WINTER)
(NOT TO SCALE)

CALCULATED EMB
CHECKED JAR

MAINTENANCE OF TRAFFIC TYPICAL SECTIONS - PHASE 1

SUM-77/277/224
VARIOUS

193
1288

N:\03\60\06744-08\106002_SUM-76-10.95\Design\MOT\Sheets\106002_MY107.dgn Sheet 1/31/2021 5:33:52 PM jrettig

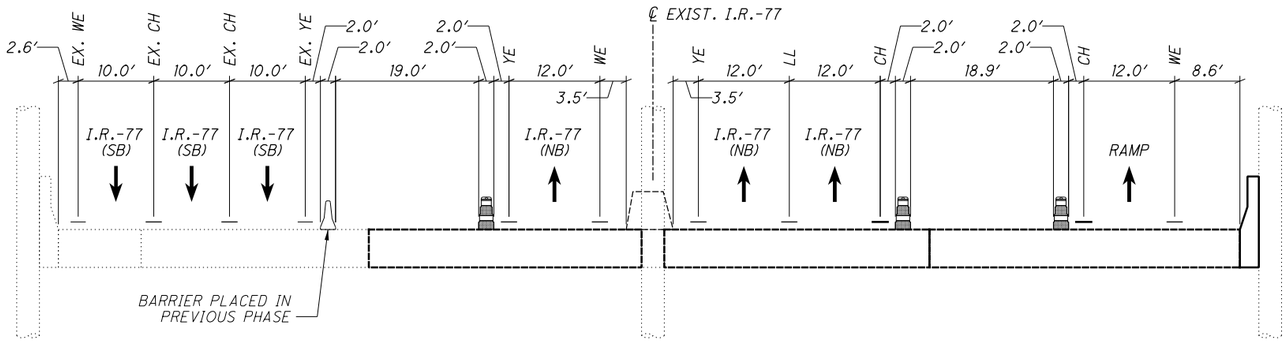


SECTION A-A
(NOT TO SCALE)

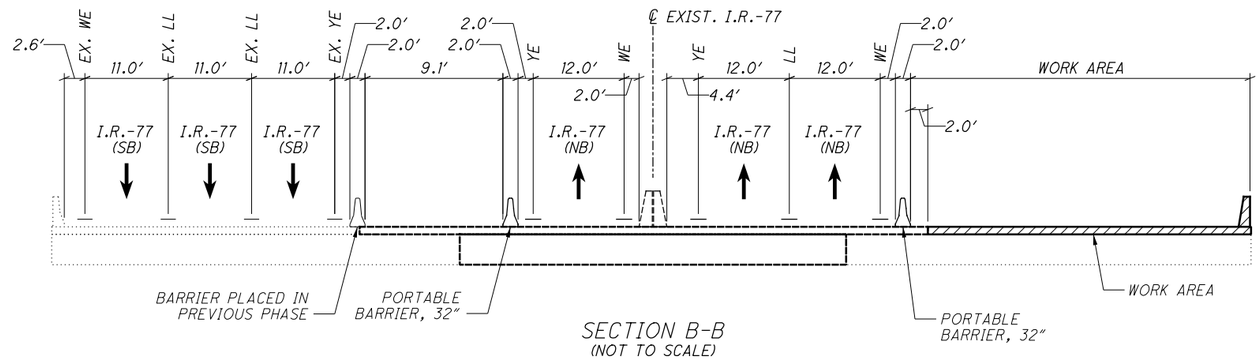


SECTION B-B
(NOT TO SCALE)

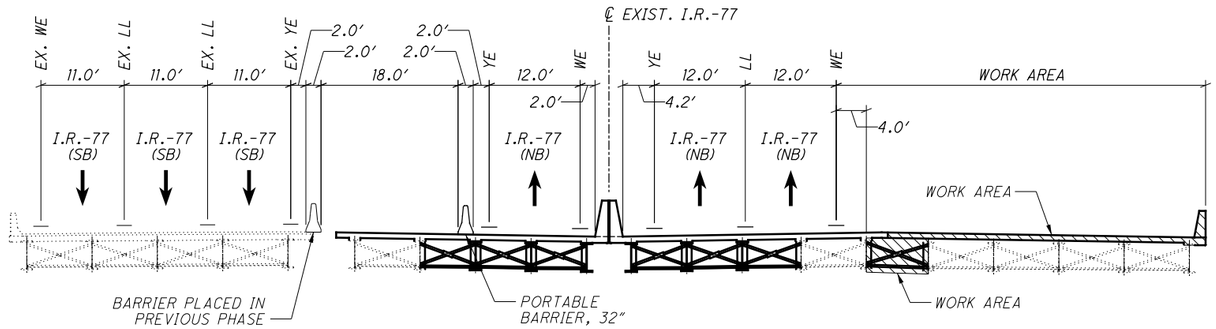


SECTION C-C
(NOT TO SCALE)

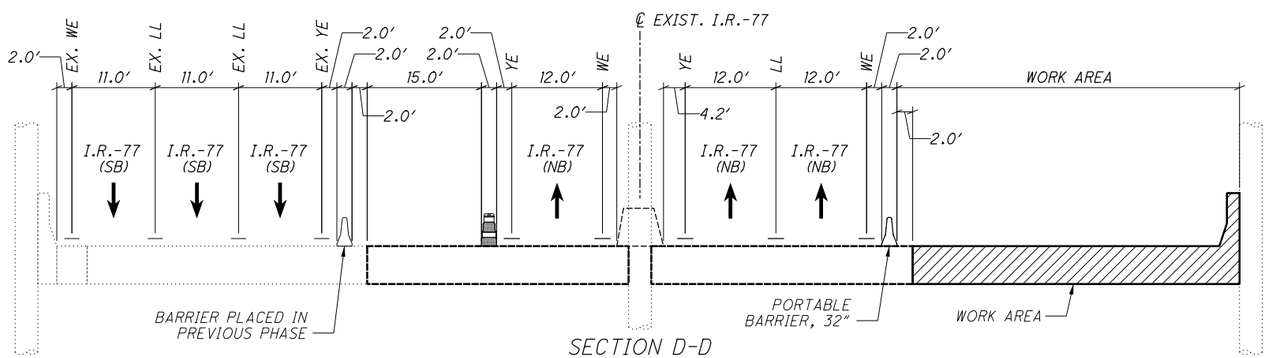


SECTION D-D
(NOT TO SCALE)

CALCULATED EMB
CHECKED JML

# TRAFFIC TYPICAL SECTIONS - PHASE 2

## MAINTENANCE OF TRAFFIC

SUM-77 / 277 / 224
VARIOUS

194
1288

N:\03\60\06744-08\106002-SUM-76-10.95\Design\MOT\Sheets\106002_MY200.dgn Sheet 1/31/2021 5:34:08 PM jrettig

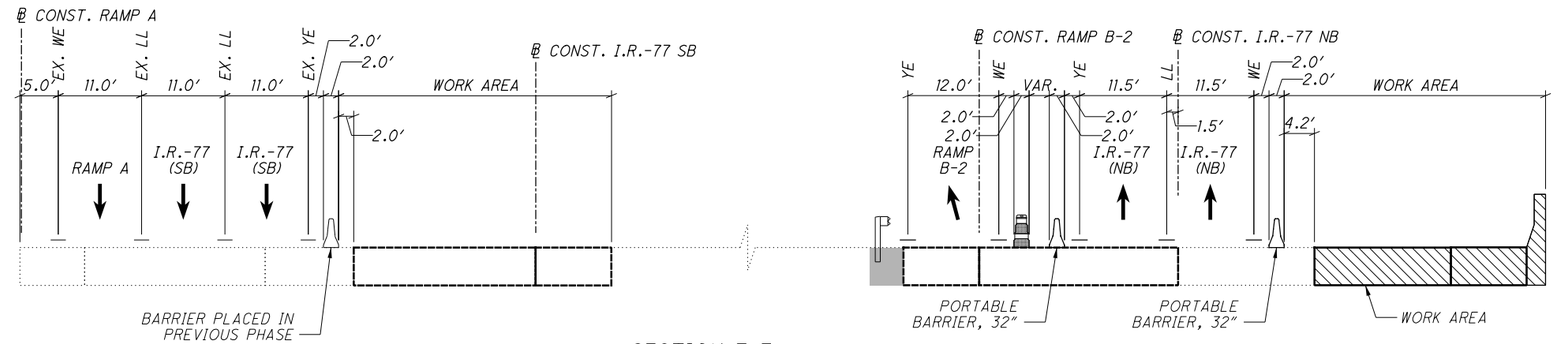


SECTION E-E
(NOT TO SCALE)

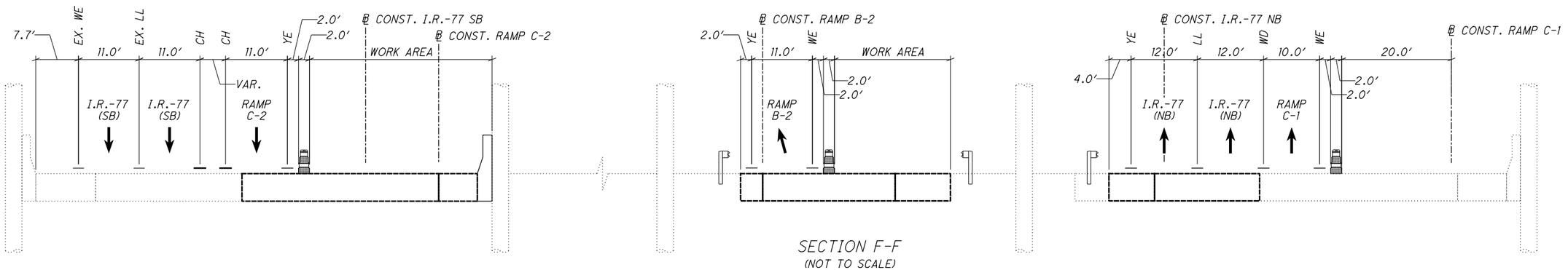


SECTION F-F
(NOT TO SCALE)

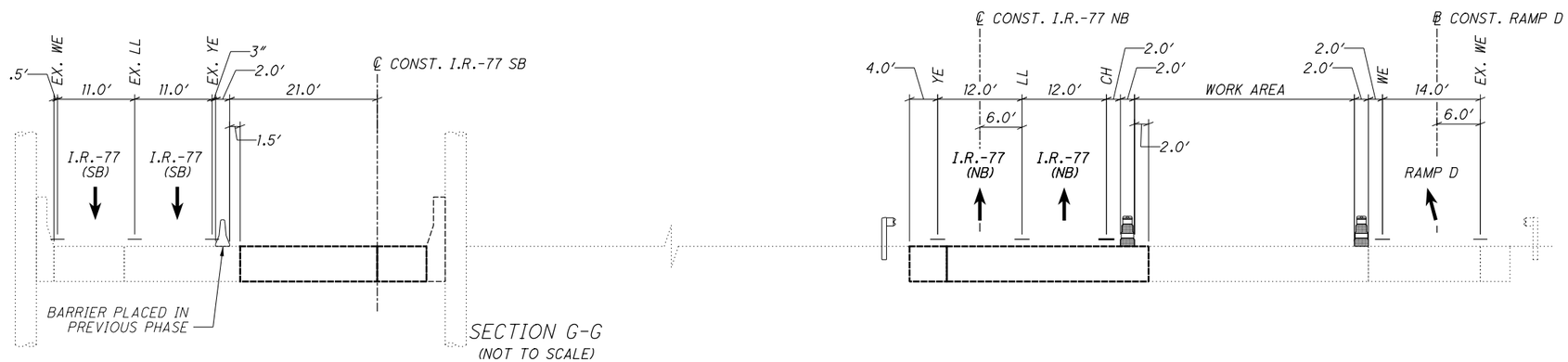


SECTION G-G
(NOT TO SCALE)

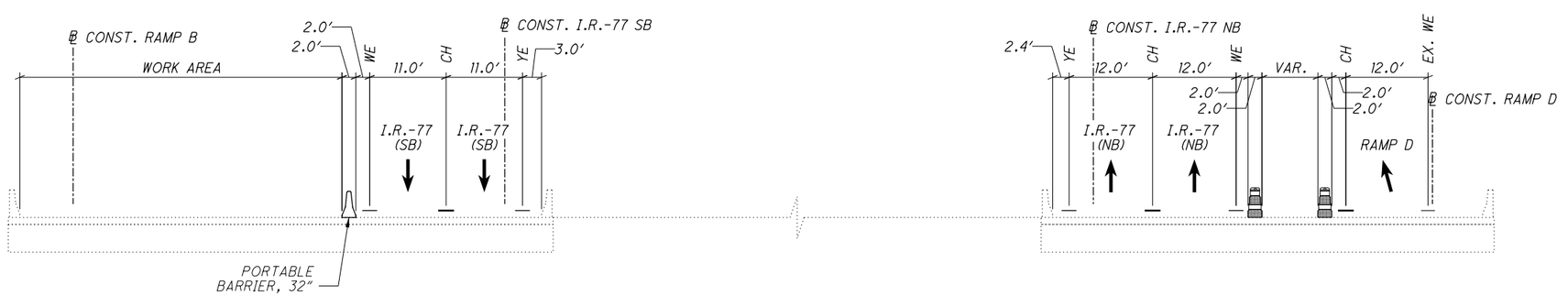


SECTION H-H
(NOT TO SCALE)

CALCULATED EMB
CHECKED JML

# TRAFFIC TYPICAL SECTIONS - PHASE 2

## MAINTENANCE OF TRAFFIC

SUM-77 / 277 / 224
VARIOUS

195
1288

N:\03\60\06744-08\106002_SUM-76-10.95\Design\MOT\Sheets\106002_MY201.dgn Sheet 1/31/2021 5:34:10 PM jrettig

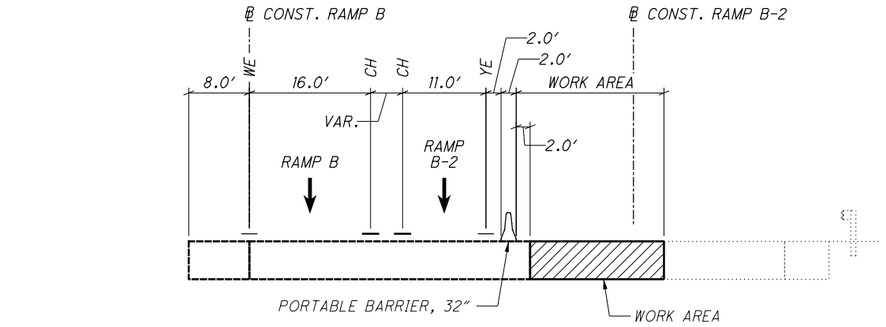


SECTION I-I
(NOT TO SCALE)

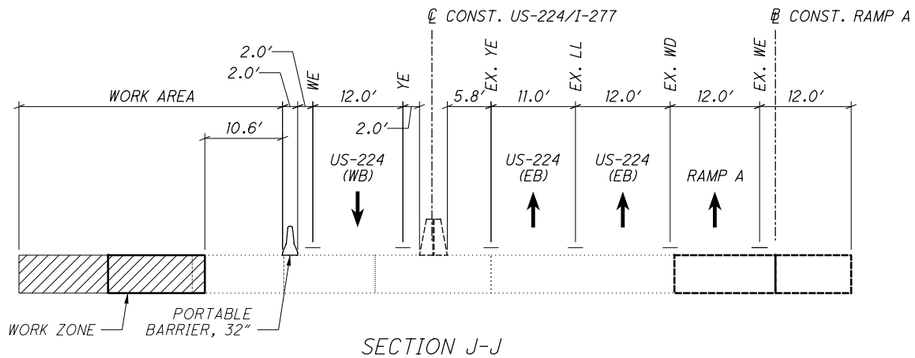


SECTION J-J
(NOT TO SCALE)

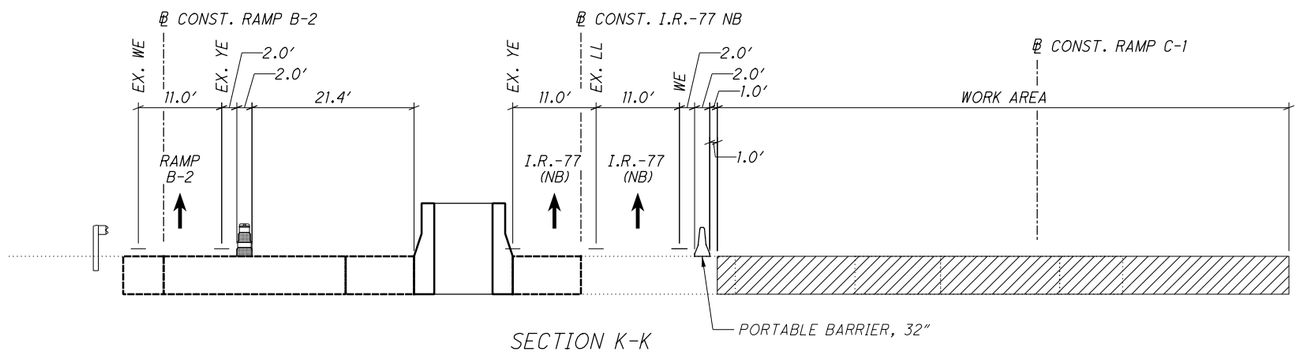


SECTION K-K
(NOT TO SCALE)

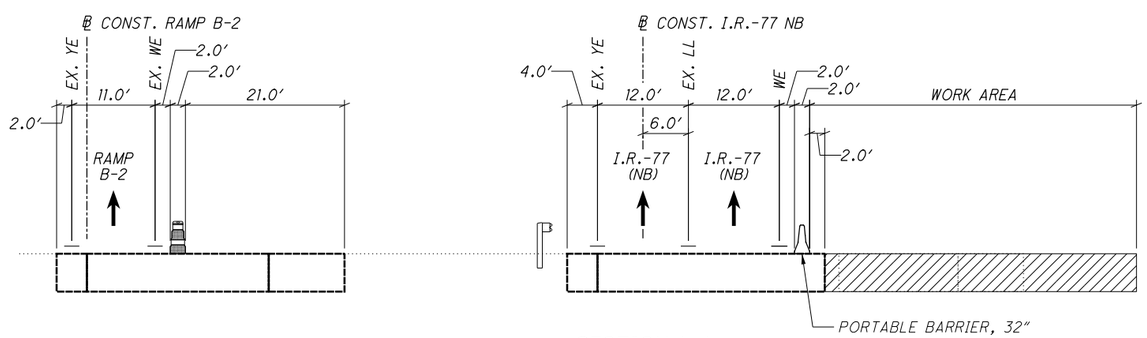


SECTION L-L
(NOT TO SCALE)

CALCULATED EMB
CHECKED JML

# TRAFFIC TYPICAL SECTIONS - PHASE 2

## MAINTENANCE OF TRAFFIC

SUM-77 / 277 / 224
VARIOUS

196
1288

N:\03\60\06744-08\106002_SUM-76-10.95\Design\MOT\Sheets\106002_MY202.dgn Sheet 1/31/2021 5:34:12 PM jrettig

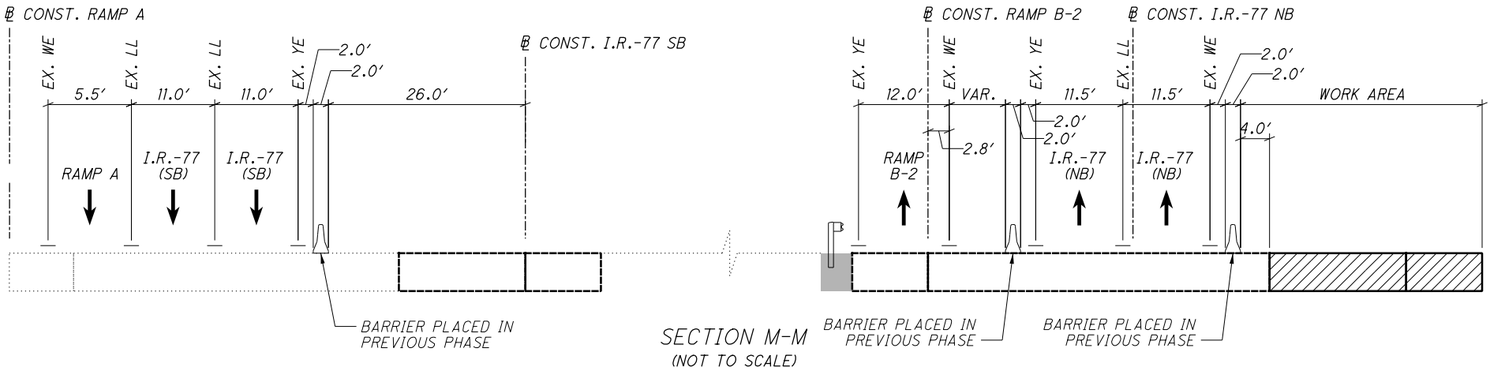


SECTION M-M
(NOT TO SCALE)

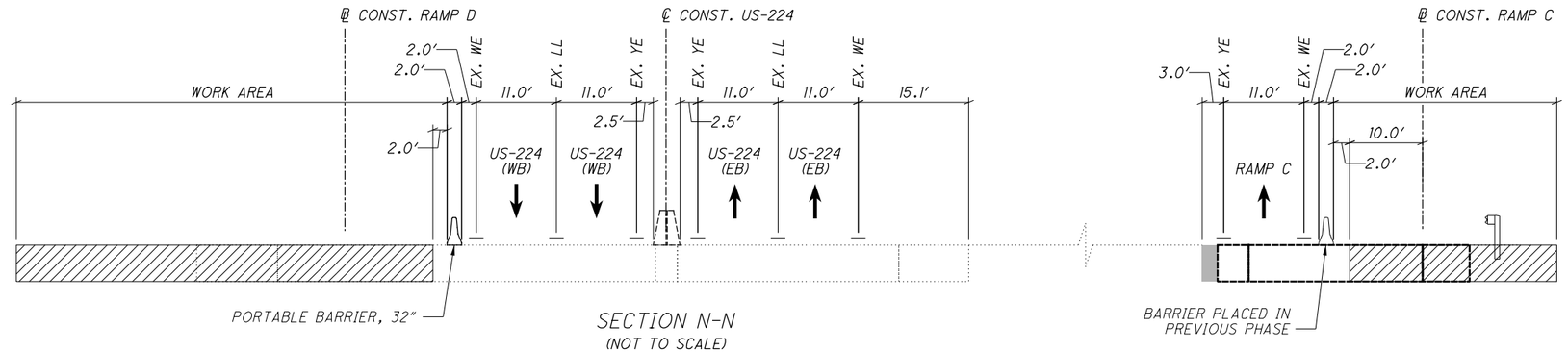


SECTION N-N
(NOT TO SCALE)

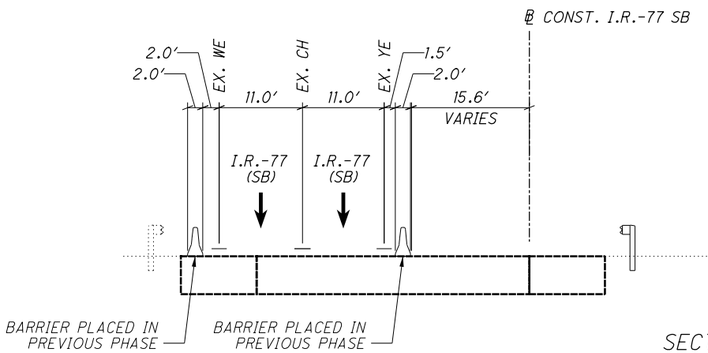


SECTION O-O
(NOT TO SCALE)

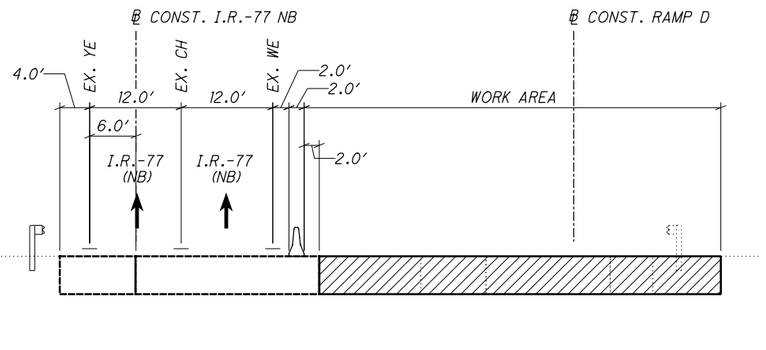


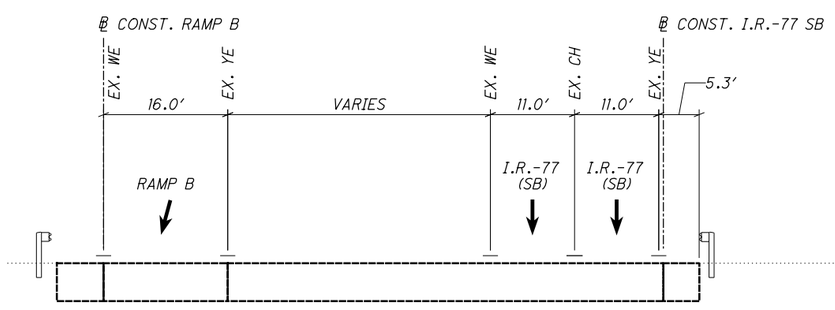


SECTION P-P
(NOT TO SCALE)

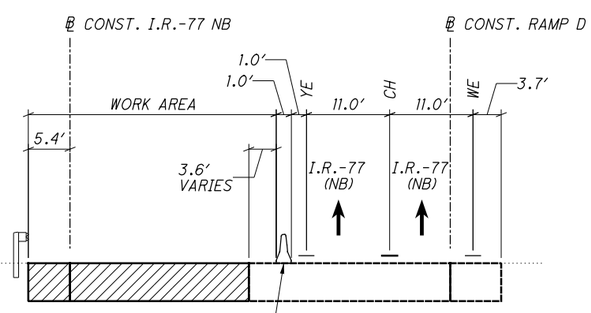


CALCULATED EMB
CHECKED JML

# TRAFFIC TYPICAL SECTIONS - PHASE 2

## MAINTENANCE OF TRAFFIC

SUM-77 / 277 / 224
VARIOUS

197
1288

N:\03\60\06744-08\106002_SUM-76-10.95\Design\MOT\Sheets\106002_MY203.dgn Sheet 1/31/2021 5:34:15 PM jrettig

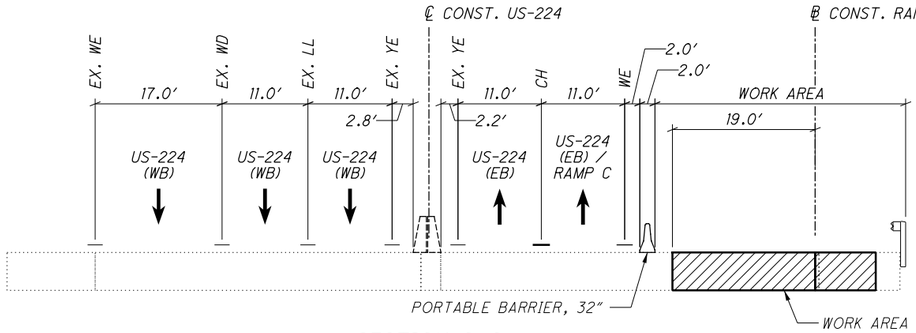


SECTION Q-Q
(NOT TO SCALE)

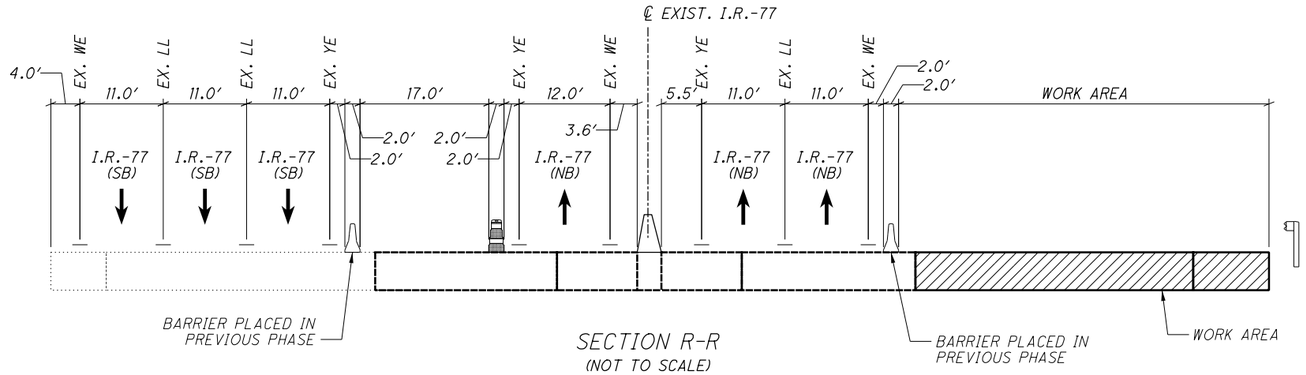


SECTION R-R
(NOT TO SCALE)

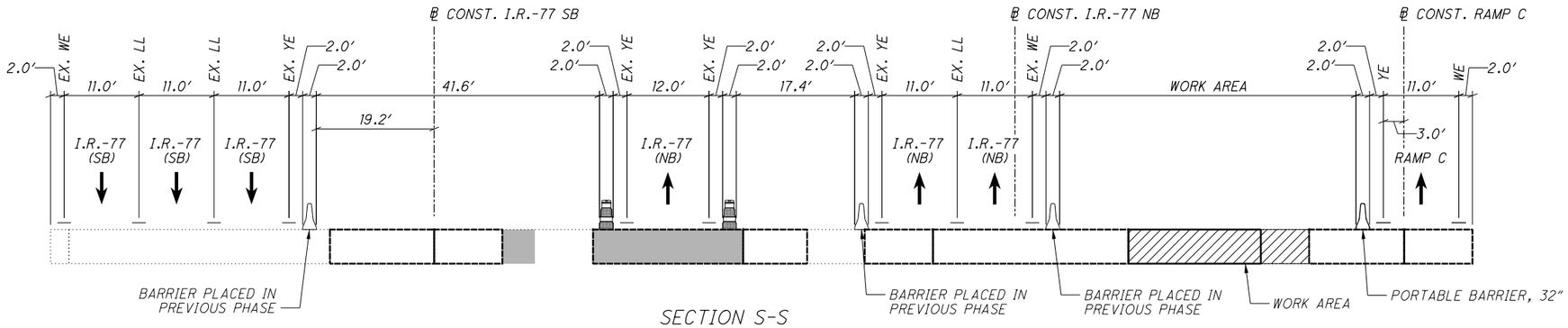


SECTION S-S
(NOT TO SCALE)

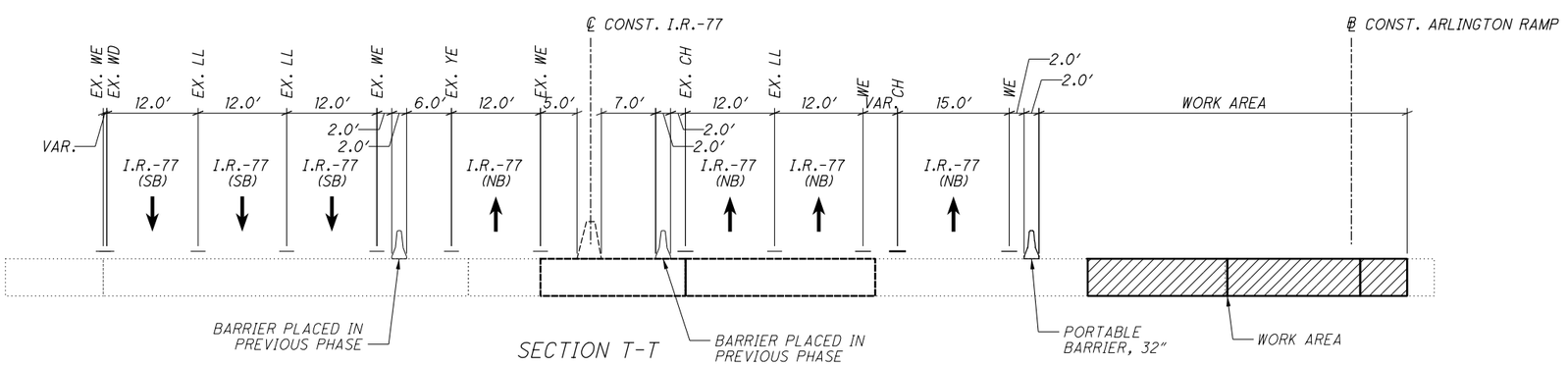


SECTION T-T
(NOT TO SCALE)

CALCULATED EMB
CHECKED JML

# TRAFFIC TYPICAL SECTIONS - PHASE 2

## MAINTENANCE OF TRAFFIC

SUM-77/277/224
VARIOUS

198
1288

N:\03\60\06744-08\106002_SUM-76-10.95\Design\MOT\Sheets\106002_MY204.dgn Sheet 1/31/2021 5:34:16 PM jrettig

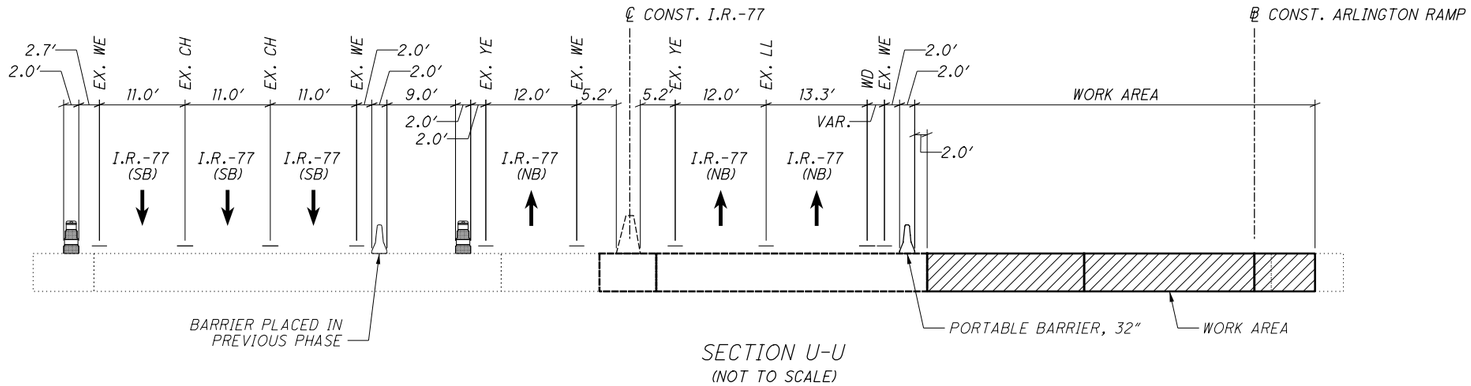


SECTION U-U
(NOT TO SCALE)

CALCULATED EMB
CHECKED JML

# MAINTENANCE OF TRAFFIC TYPICAL SECTIONS - PHASE 2

SUM-77 / 277 / 224
VARIOUS

199
1288

N:\03\60\06744-08\106002_SUM-76-I0.95\Design\MOT\Sheets\106002_MY205.dgn Sheet 1/31/2021 5:34:18 PM jrettig

N:\03\60\06744-08\I06002_SUM-76-I0.95\Design\MOT\Sheets\I06002_MP504.dgn Sheet 1/31/2021 5:34:39 PM jrettig

NOTES:

1. SEE SHEET 128 FOR MOT LEGEND AND DRUM SPACING CHART.

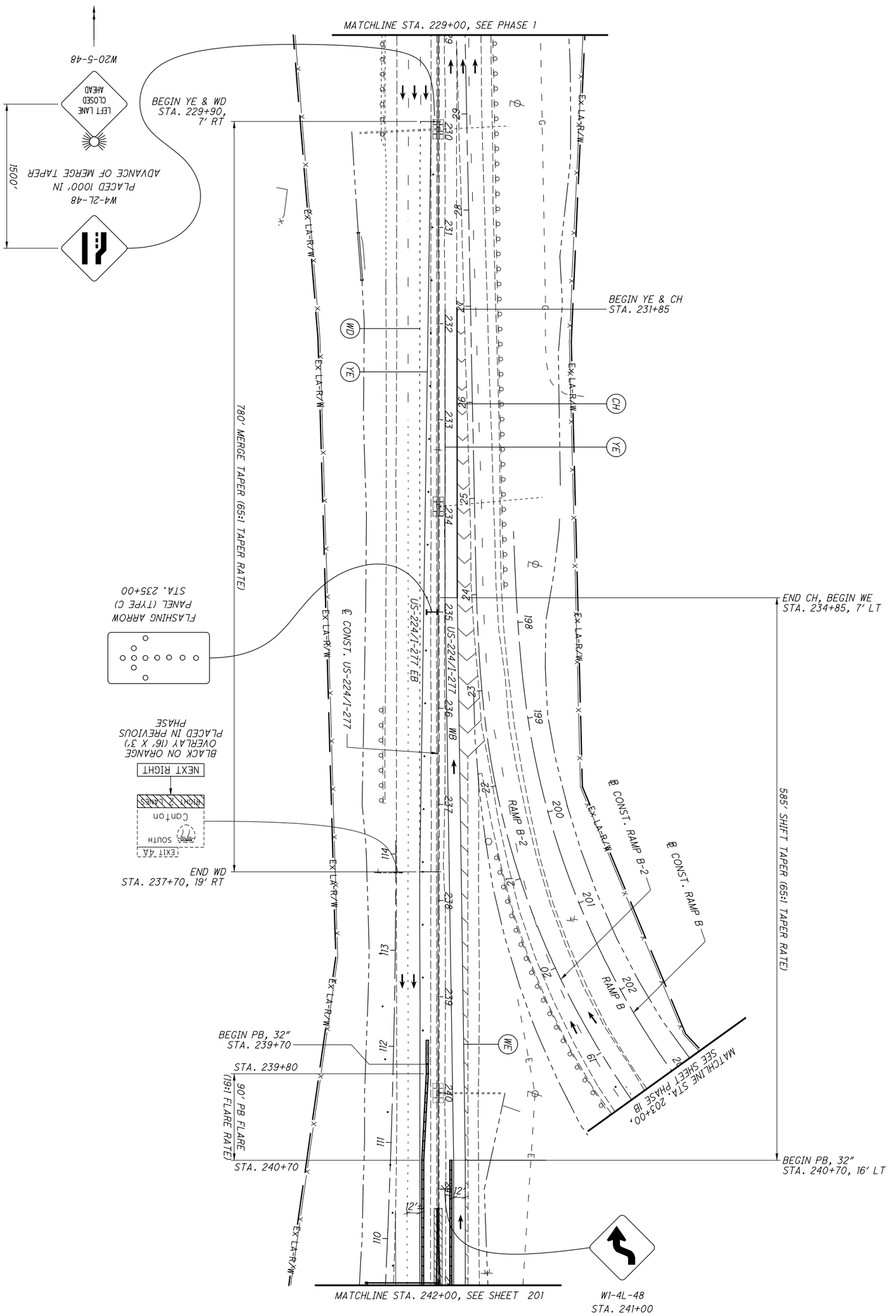


| | | | | |
|---|---|---|---|---|
| 200 / 1288 | SUM-77/277/224<br>VARIOUS | MAINTENANCE OF TRAFFIC - PRE-PHASE 2<br>US-224/I-277 - STA. 229+00 TO STA. 242+00 | CALCULATED .<br>CHECKED . | 0 50<br>25 100<br>HORIZONTAL SCALE IN FEET |

N:\03\60\06744-08\I06002_SUM-76-I0.95\Design\MOT\Sheets\I06002_MP505.dgn Sheet 1/31/2021 5:34:43 PM jrettig

NOTES:

1. SEE SHEET 128 FOR MOT LEGEND AND DRUM SPACING CHART.
2. SEE SHEETS 123-191 FOR TYPICAL SECTIONS.
3. SHIFT SIGNS SO ARROWS ARE CENTERED OVER LANE.

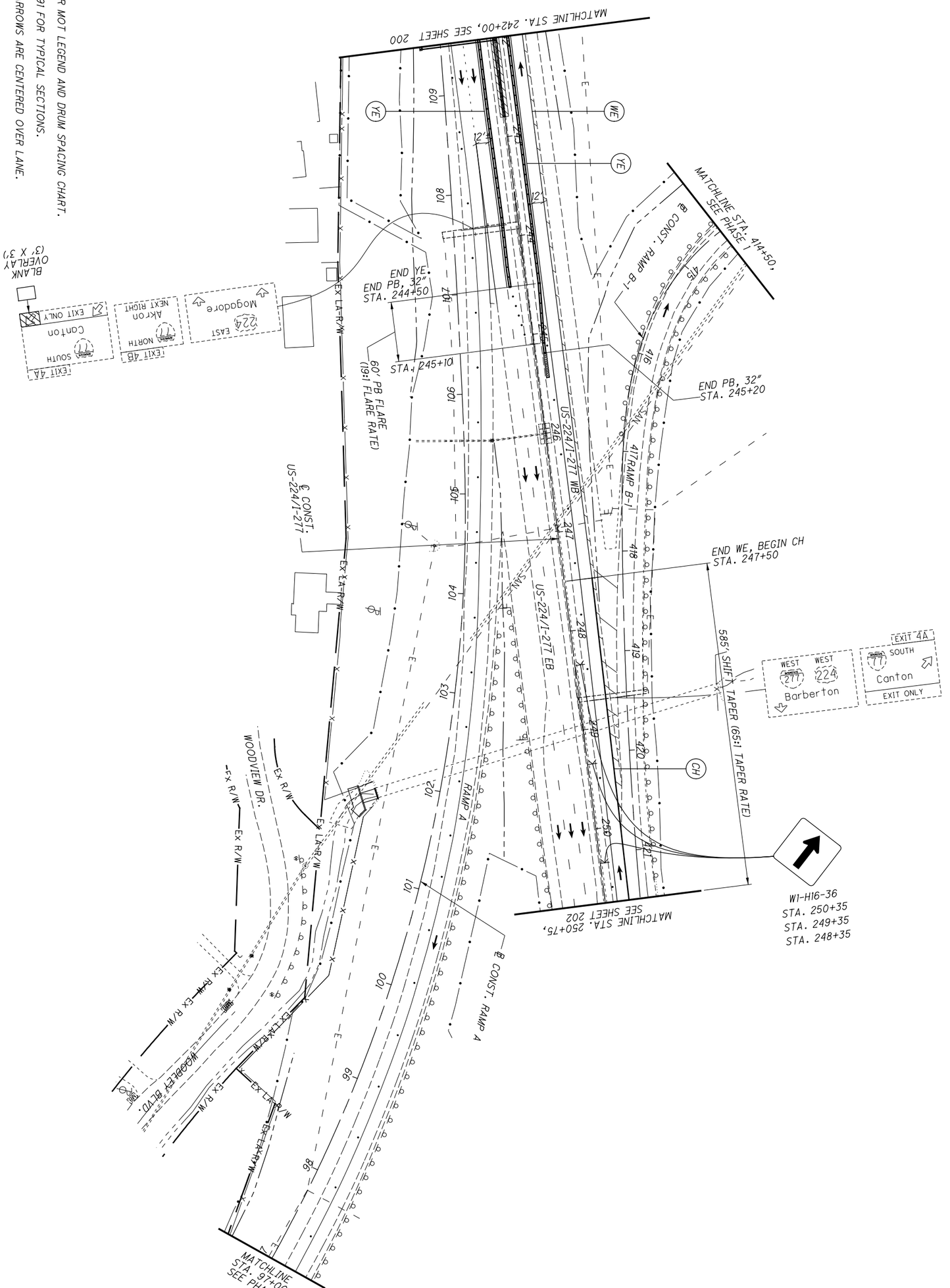


| 201 / 1288 | SUM-77/277/224 VARIOUS | MAINTENANCE OF TRAFFIC - PRE-PHASE 2 US-224/I-277 - STA. 242+00 TO STA. 250+75 | CALCULATED . CHECKED . | 0 50 25 100 HORIZONTAL SCALE IN FEET | N |
|---|---|---|---|---|---|

NOTES:

1. SEE SHEET 128 FOR MOT LEGEND AND DRUM SPACING CHART.

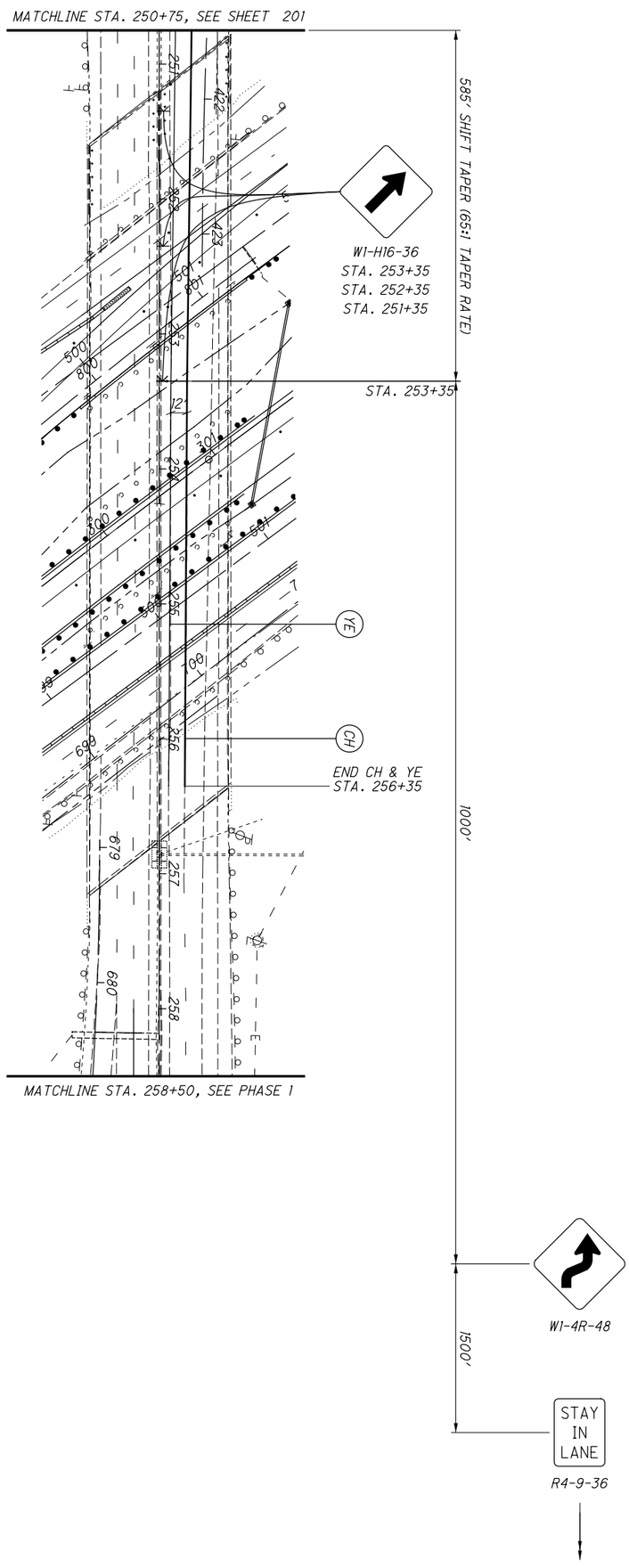

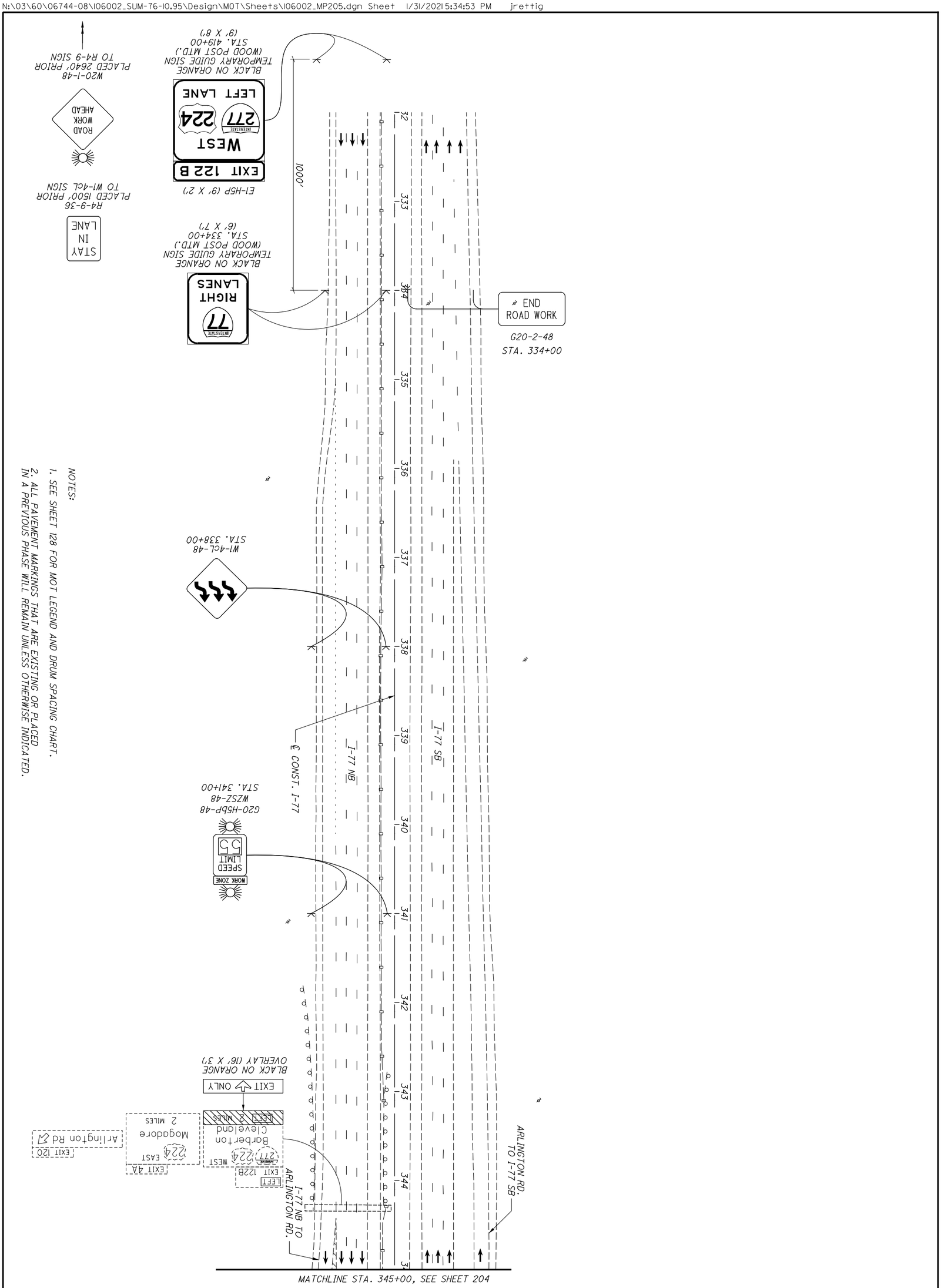


NOTES:

1. SEE SHEET 128 FOR MOT LEGEND AND DRUM SPACING CHART.
2. ALL PAVEMENT MARKINGS THAT ARE EXISTING OR PLACED IN A PREVIOUS PHASE WILL REMAIN UNLESS OTHERWISE INDICATED.

| | | | | |
|---|---|---|---|---|
| 203 / 1288 | SUM-77 / 277 / 224<br>VARIOUS | MAINTENANCE OF TRAFFIC PLAN - PHASE 2<br>I-77 - STA. 332+00 TO STA. 345+00 | CALCULATED .<br>CHECKED . | 0 50<br>25 100<br>HORIZONTAL SCALE IN FEET |

NOTES:

1. SEE SHEET 128 FOR MOT LEGEND AND DRUM SPACING CHART.
2. ALL PAVEMENT MARKINGS THAT ARE EXISTING OR PLACED IN A PREVIOUS PHASE WILL REMAIN UNLESS OTHERWISE INDICATED.

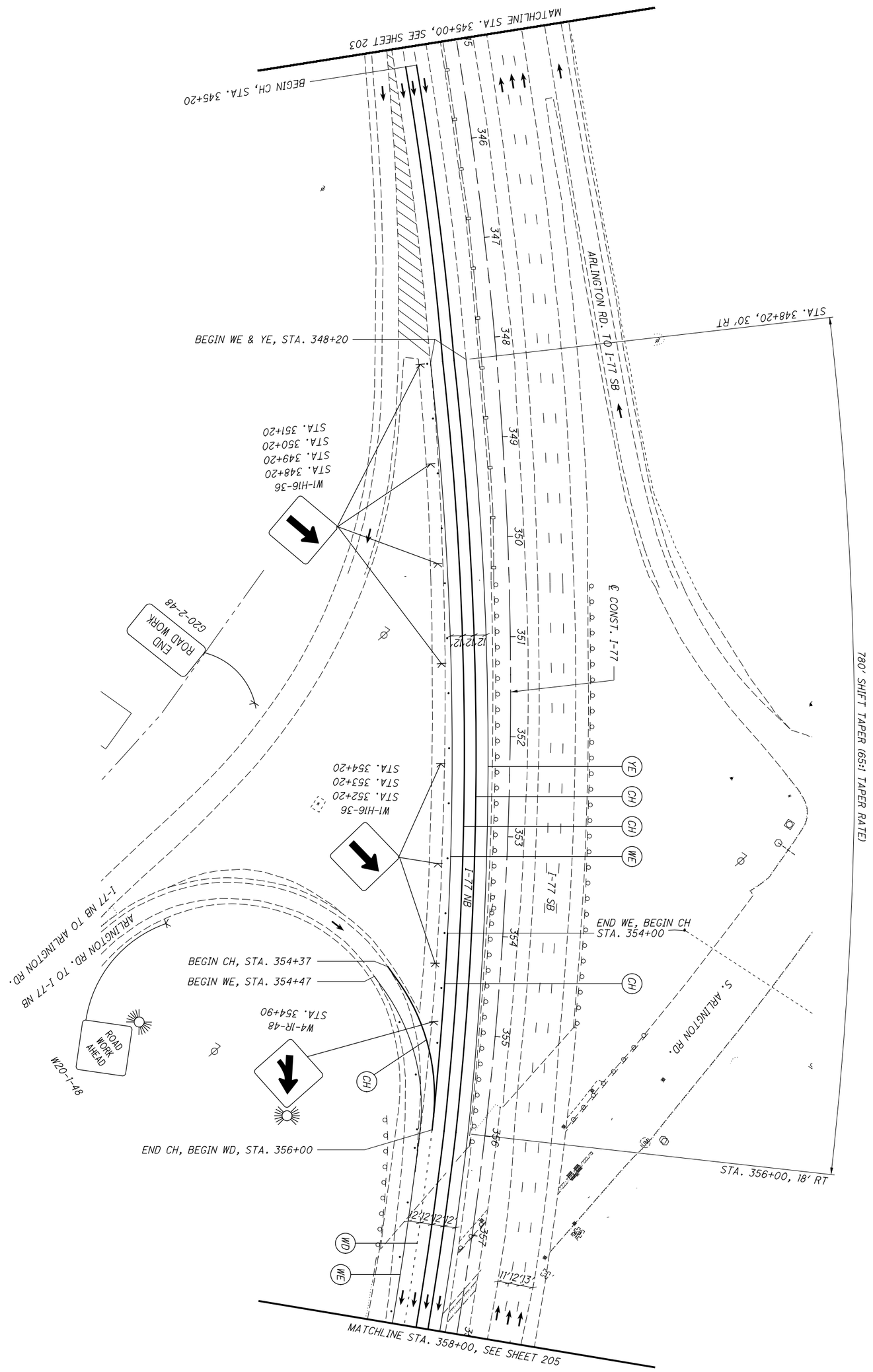


| | | | | |
|---|---|---|---|---|
| 204 / 1288 | SUM-77/277/224<br>VARIOUS | MAINTENANCE OF TRAFFIC PLAN - PHASE 2<br>I-77 - STA. 345+00 TO STA. 358+00 | CALCULATED .<br>CHECKED . | 0 50<br>25 100<br>HORIZONTAL SCALE IN FEET |

N:\03\60\06744-08\I06002_SUM-76-I0.95\Design\MOT\Sheets\I06002_MP207.dgn Sheet 1/31/2021 5:35:00 PM jrettig

NOTES:

1. SEE SHEET 128 FOR MOT LEGEND AND DRUM SPACING CHART.
2. ALL PAVEMENT MARKINGS THAT ARE EXISTING OR PLACED IN A PREVIOUS PHASE WILL REMAIN UNLESS OTHERWISE INDICATED.
3. SEE SHEETS 285-240 FOR SOUTHERN CROSSOVER (NB).

MATCHLINE STA. 358+00, SEE SHEET 204

ROAD WORK AHEAD

END CH, BEGIN LL, 63' RT STA. 359+00

FLASHING ARROW PANEL (TYPE C) STA. 360+00

S. ARLINGTON RD.

780' RAMP MERGE (65:1 TAPER RATE)

I-77 NB

I-77 SB

℄ CONST. I-77

W.Z. IMPACT ATTENUATOR

BEGIN PB STA. 364+50

STA. 364+60, 73' RT

BEGIN CH, STA. 364+65

W1-4bL-48 STA. 367+00

NORTH Akron

RELOCATED SIGN FROM GORE

ROAD WORK AHEAD

540' PB FLARE (19:1 MIN FLARE RATE)

END WD STA. 366+80, 51' RT

BEGIN PB STA. 367+30

W.Z. IMPACT ATTENUATOR

ONLY ONLY

R3-H8cg-48 STA. 367+80

SOUTH Canton

EXIT 120 Arlington Rd

EXIT ONLY

ALL LANES

OVERLAY PLACED IN PREVIOUS PHASE

OVERLAY PLACED IN PREVIOUS PHASE

END CH, BEGIN WE, YE STA. 368+50

BEGIN PB, 32" STA. 368+80

END LL, BEGIN CH, STA. 369+00

W.Z. IMPACT ATTENUATOR

E5-H2dL-48 STA. 369+40

EXIT

EX. LA R/W

STA. 370+00, 45' RT

ROAD CLOSED

R11-2-48 STA. 368+80

BEGIN YE, STA. 368+32

BEGIN WE, STA. 369+14

MATCHLINE STA. 371+00, SEE SHEET 206

RAMP TO S. ARLINGTON RD.

END ROAD WORK

| | | | |
|---|---|---|---|
| 205 / 1288 | SUM-77/277/224 VARIOUS | MAINTENANCE OF TRAFFIC PLAN - PHASE 2 I-77 - STA. 358+00 TO STA. 371+00 | CALCULATED . CHECKED . 0 50 25 100 HORIZONTAL SCALE IN FEET |

NOTES:

1. SEE SHEET 128 FOR MOT LEGEND AND DRUM SPACING CHART.
2. ALL PAVEMENT MARKINGS THAT ARE EXISTING OR PLACED IN A PREVIOUS PHASE WILL REMAIN UNLESS OTHERWISE INDICATED.

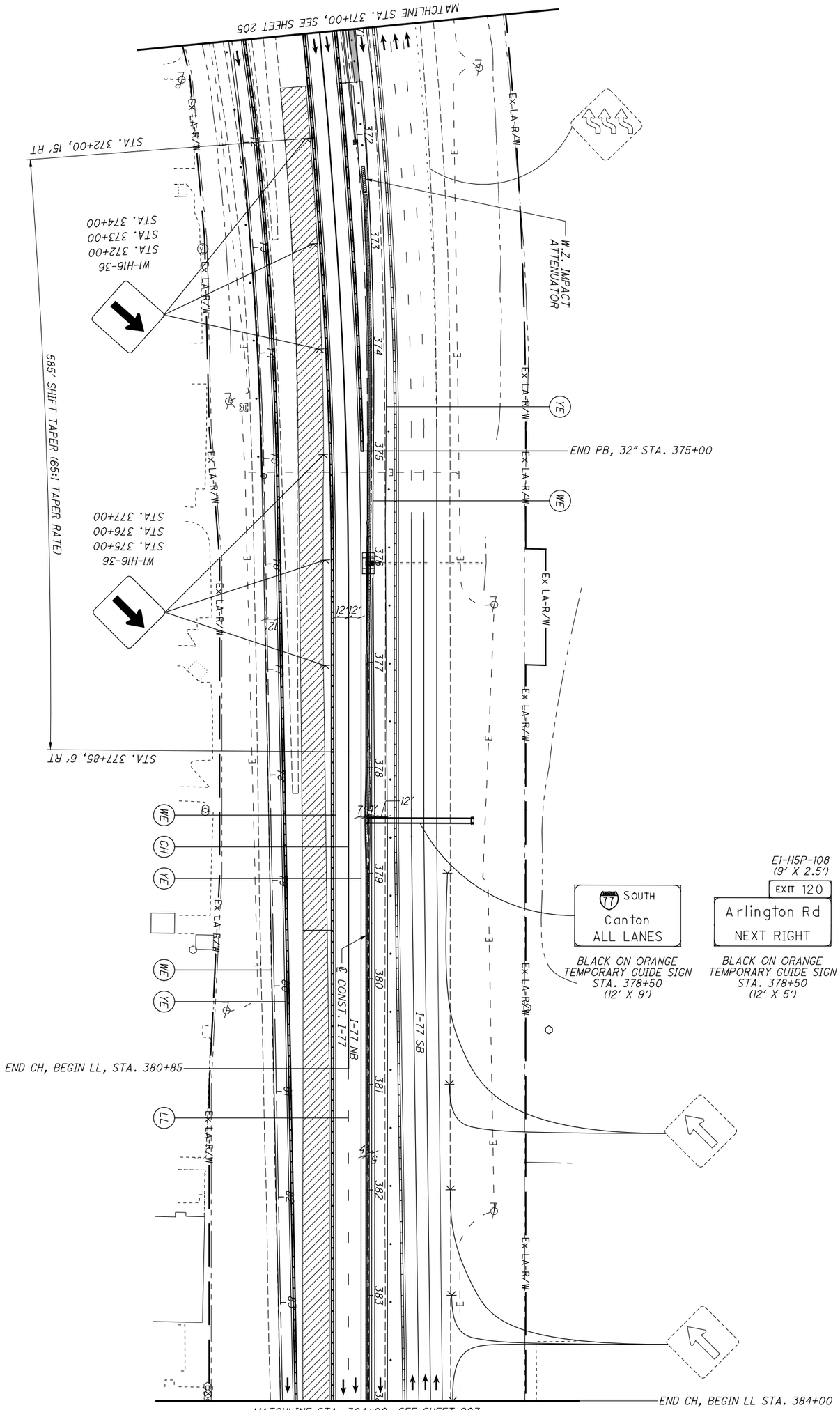


| 206 / 1288 | SUM-77 / 277 / 224<br>VARIOUS | MAINTENANCE OF TRAFFIC PLAN - PHASE 2<br>I-77 - STA. 371+00 TO STA. 384+00 | CALCULATED .<br>CHECKED . | 0 50<br>25 100<br>HORIZONTAL SCALE IN FEET | N |
|---|---|---|---|---|---|

NOTES:

1. SEE SHEET 128 FOR MOT LEGEND AND DRUM SPACING CHART.
2. ALL PAVEMENT MARKINGS THAT ARE EXISTING OR PLACED IN A PREVIOUS PHASE WILL REMAIN UNLESS OTHERWISE INDICATED.
3. SEE SHEETS 194-199 FOR TYPICAL SECTIONS.
4. MAINTAIN MINIMUM OF 2' OFFSET FROM CENTER PIER BARRIER.

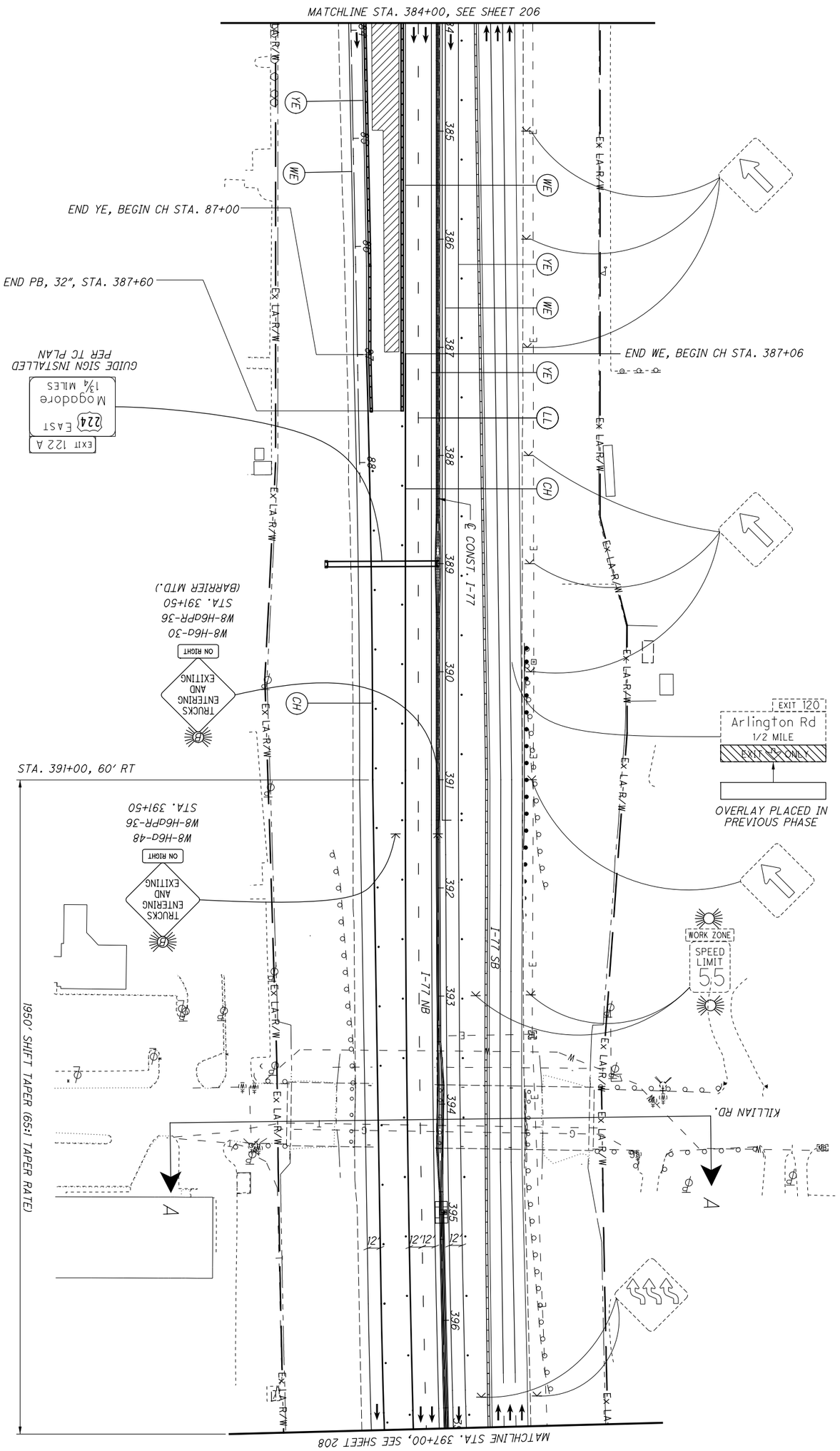


| | | | | |
|---|---|---|---|---|
| 207 / 1288 | SUM-77 / 277 / 224<br>VARIOUS | MAINTENANCE OF TRAFFIC PLAN - PHASE 2<br>I-77 - STA. 384+00 TO STA. 397+00 | CALCULATED .<br>CHECKED . | 0 50<br>25 100<br>HORIZONTAL SCALE IN FEET |

NOTES:

1. SEE SHEET 128 FOR MOT LEGEND AND DRUM SPACING CHART.
2. ALL PAVEMENT MARKINGS THAT ARE EXISTING OR PLACED IN A PREVIOUS PHASE WILL REMAIN UNLESS OTHERWISE INDICATED.

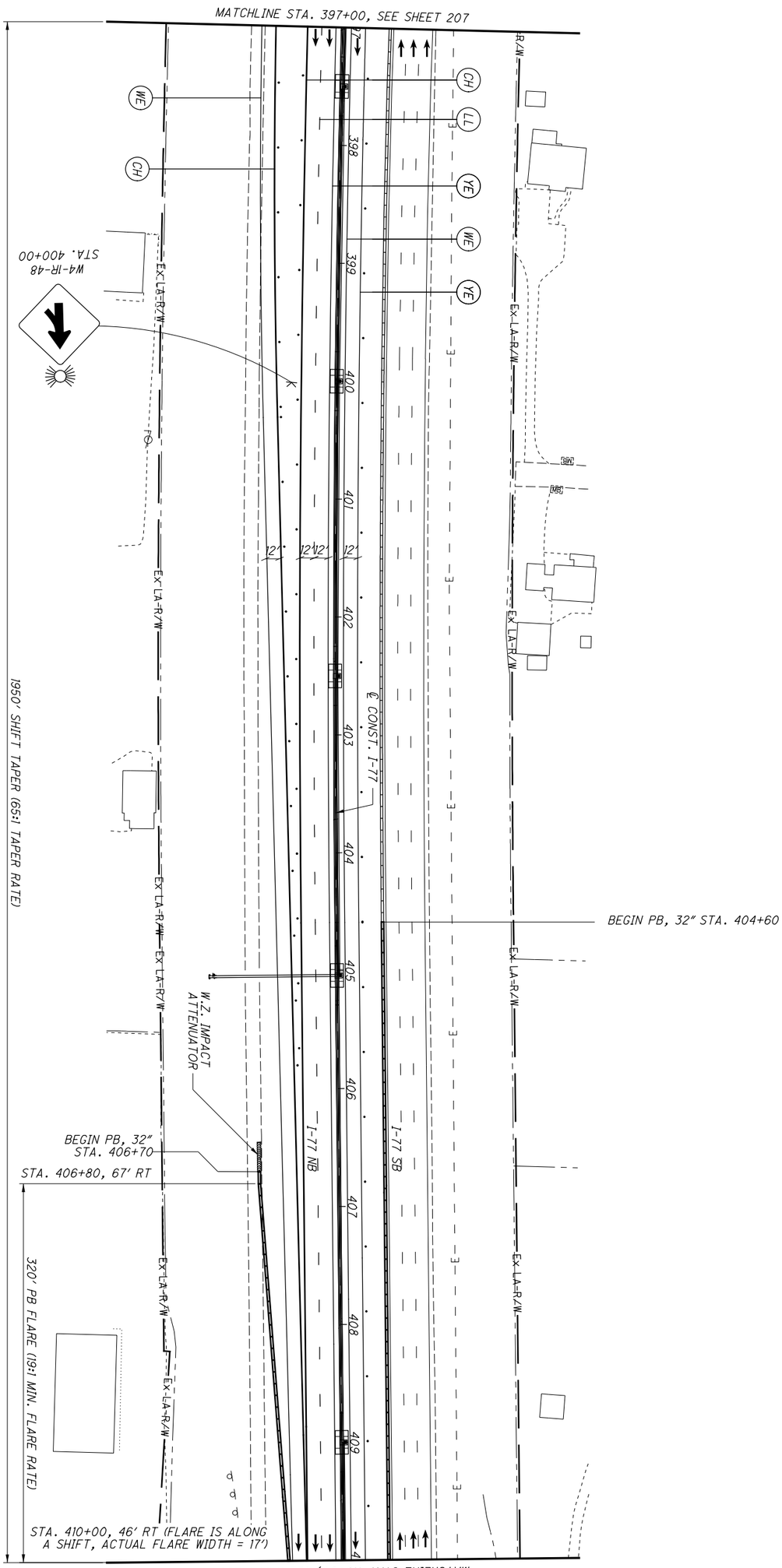

NOTES:

1. SEE SHEET 128 FOR MOT LEGEND AND DRUM SPACING CHART.
2. ALL PAVEMENT MARKINGS THAT ARE EXISTING OR PLACED IN A PREVIOUS PHASE WILL REMAIN UNLESS OTHERWISE INDICATED.

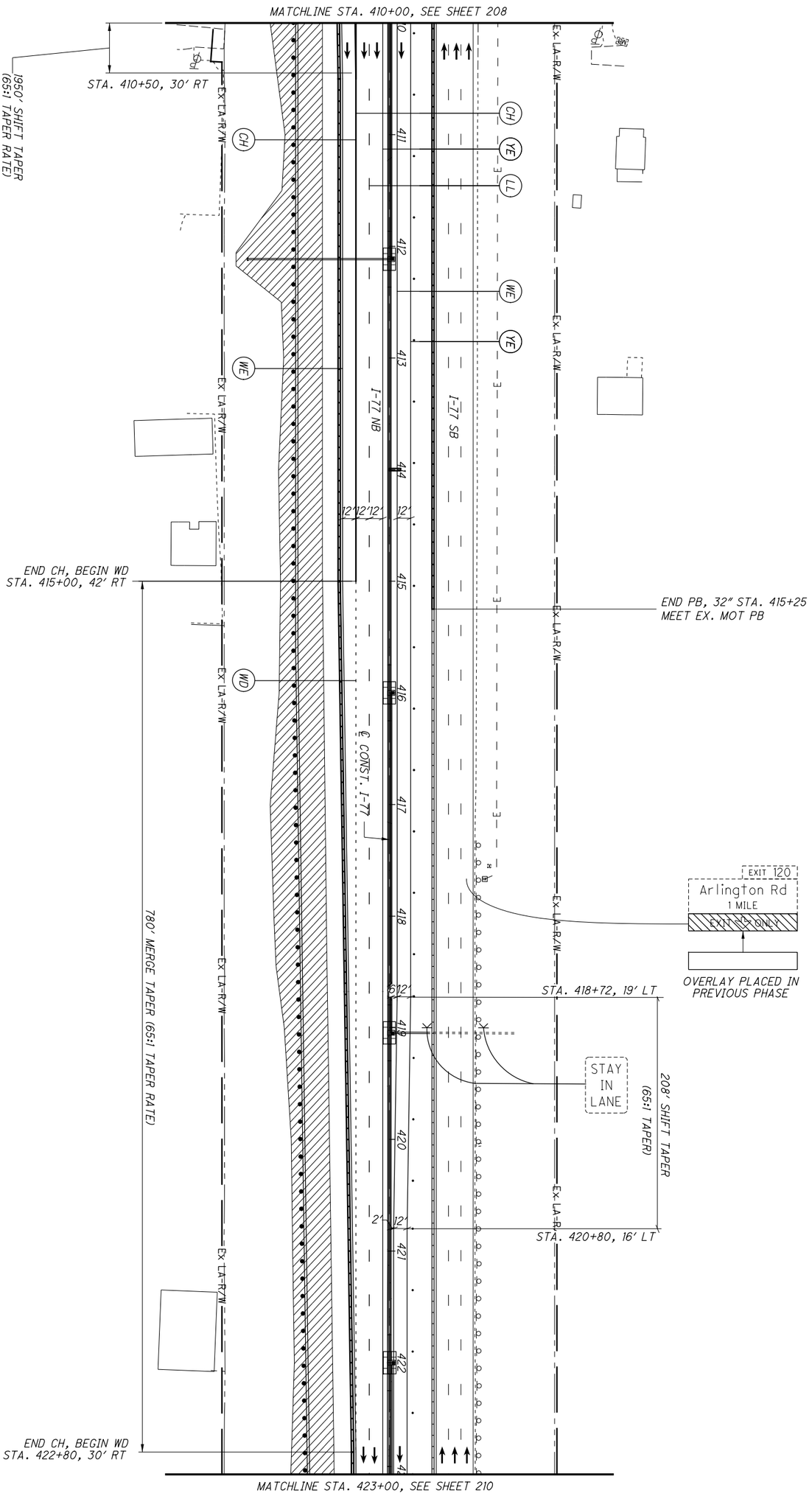

NOTES:

1. SEE SHEET 128 FOR MOT LEGEND AND DRUM SPACING CHART.
2. ALL PAVEMENT MARKINGS THAT ARE EXISTING OR PLACED IN A PREVIOUS PHASE WILL REMAIN UNLESS OTHERWISE INDICATED.
3. SEE SHEETS 194-199 FOR TYPICAL SECTIONS.

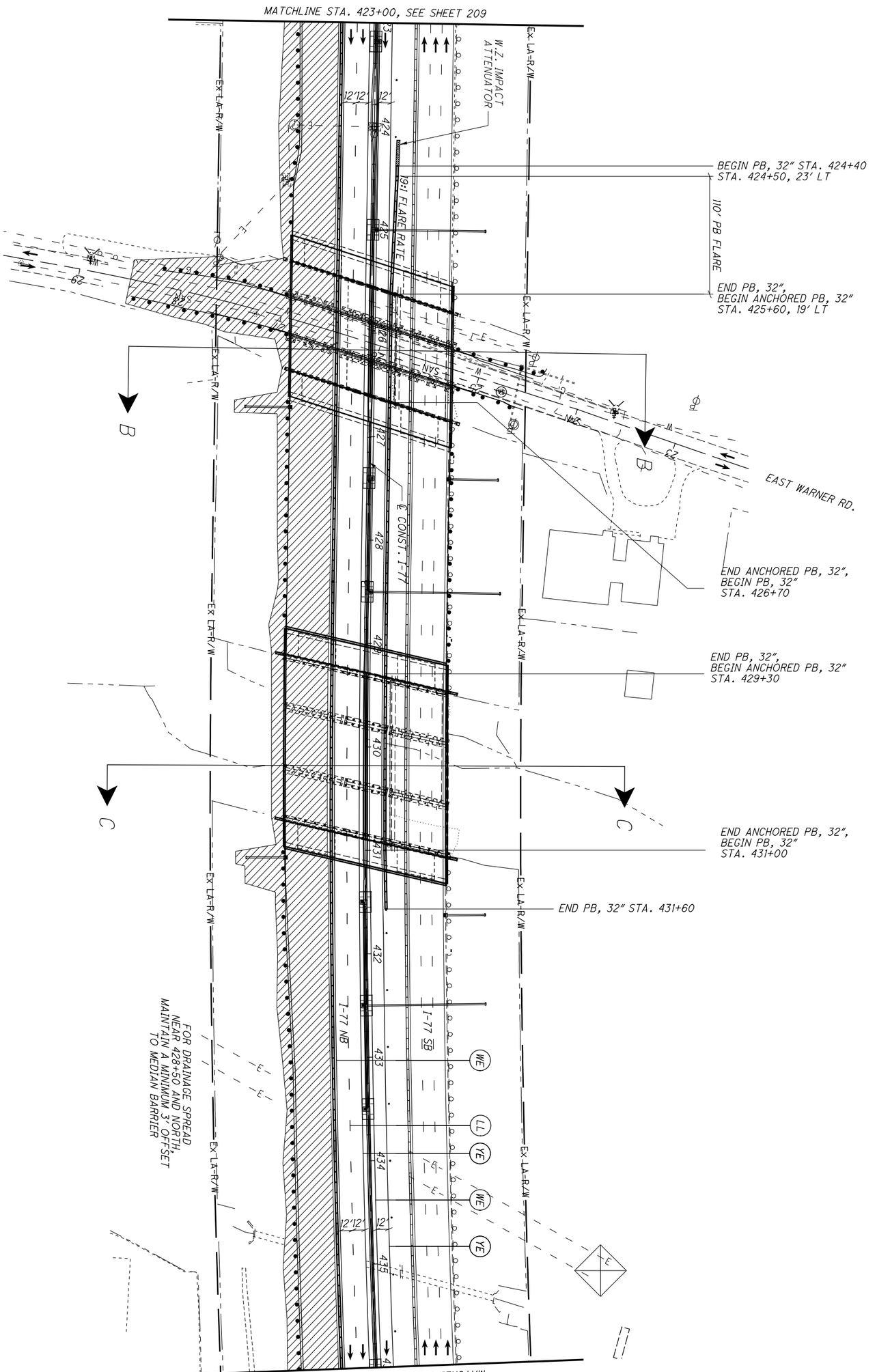

NOTES:

1. SEE SHEET 128 FOR MOT LEGEND AND DRUM SPACING CHART.
2. ALL PAVEMENT MARKINGS THAT ARE EXISTING OR PLACED IN A PREVIOUS PHASE WILL REMAIN UNLESS OTHERWISE INDICATED.

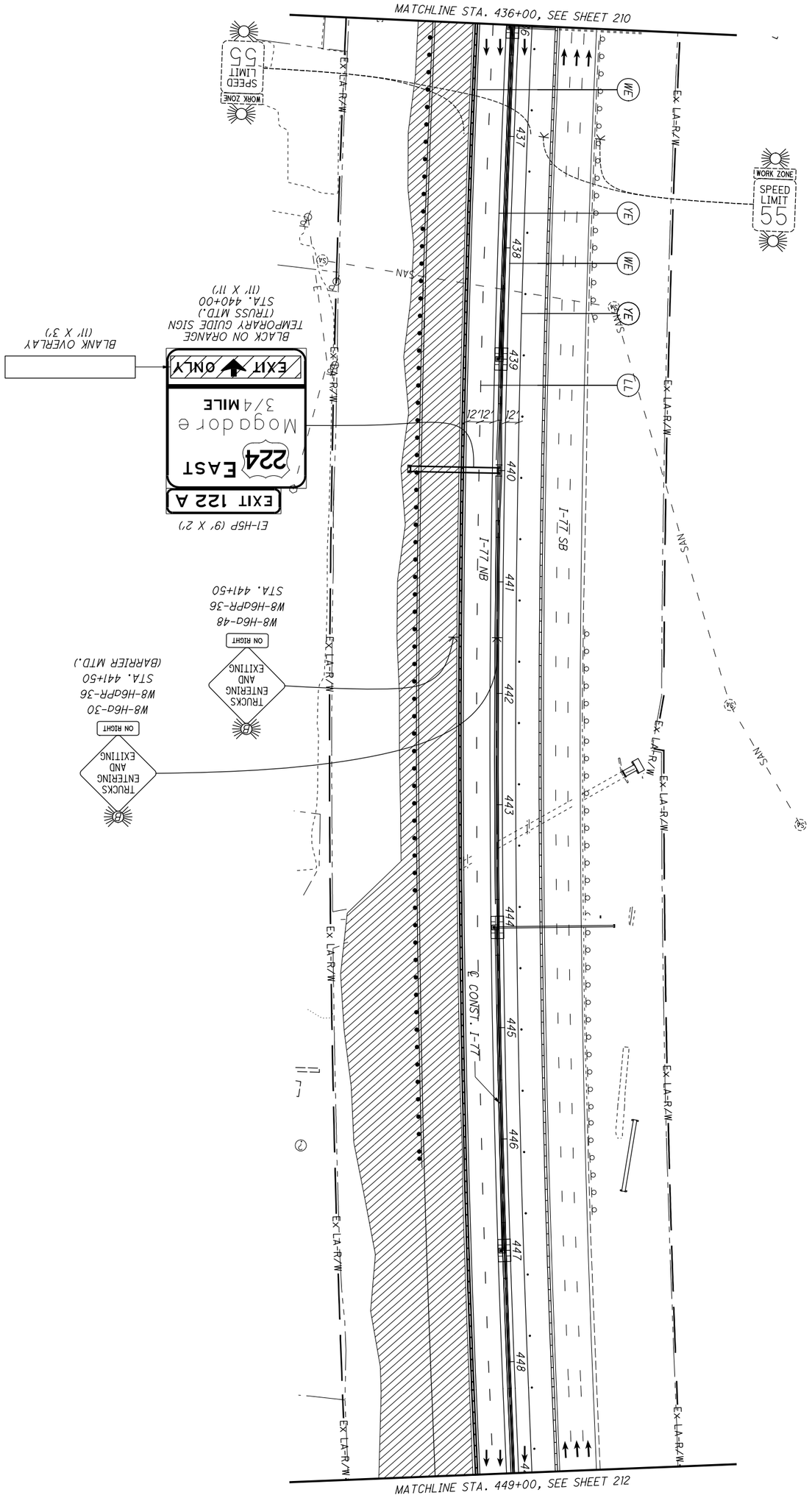


| | | | | |
|---|---|---|---|---|
| 211 / 1288 | SUM-77 / 277 / 224<br>VARIOUS | MAINTENANCE OF TRAFFIC PLAN - PHASE 2<br>I-77 - STA. 436+00 TO STA. 449+00 | CALCULATED .<br>CHECKED . | 0 50<br>25 100<br>HORIZONTAL SCALE IN FEET |

NOTES:

1. SEE SHEET 128 FOR MOT LEGEND AND DRUM SPACING CHART.
2. ALL PAVEMENT MARKINGS THAT ARE EXISTING OR PLACED IN A PREVIOUS PHASE WILL REMAIN UNLESS OTHERWISE INDICATED.
3. INSTALL CONTRACTOR ACCESS POINTS PER ODOT STANDARD CONSTRUCTION DRAWING MT-103.10. ACCESS POINTS MAY BE RELOCATED AT THE APPROVAL OF THE ENGINEER, AS NECESSARY TO ACCOMPLISH CONSTRUCTION ACTIVITIES. CONTRACTOR ACCESS POINTS ARE SHOWN FOR INFORMATIONAL PURPOSES AND THE LOCATION CAN BE ADJUSTED AT THE APPROVAL OF THE ENGINEER.

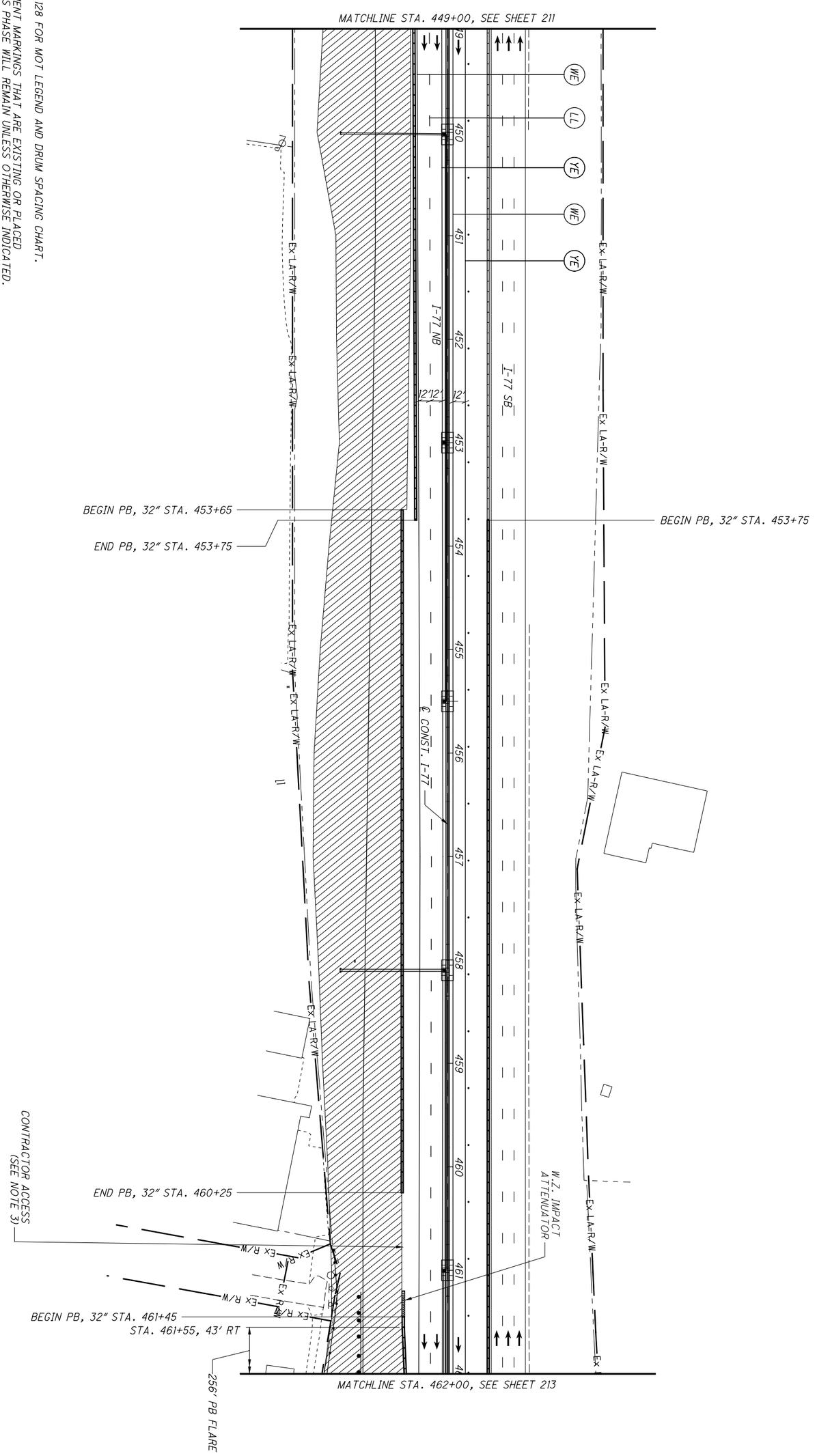


| | | | | |
|---|---|---|---|---|
| 212 / 1288 | SUM-77 / 277 / 224<br>VARIOUS | MAINTENANCE OF TRAFFIC PLAN - PHASE 2<br>I-77 - STA. 449+00 TO STA. 462+00 | CALCULATED .<br>CHECKED . | 0 50<br>25 100<br>HORIZONTAL SCALE IN FEET |

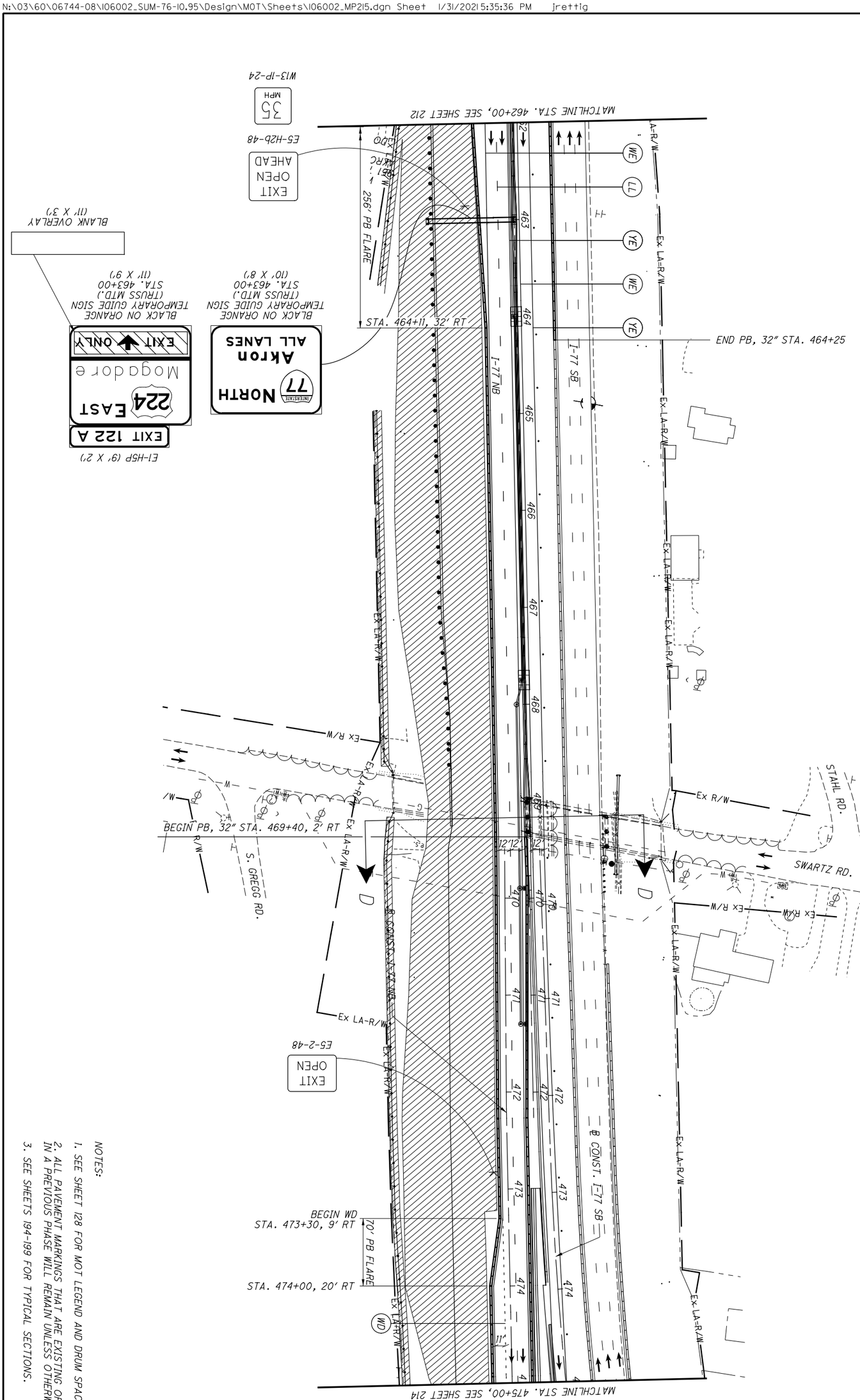


NOTES:

1. SEE SHEET 128 FOR MOT LEGEND AND DRUM SPACING CHART.
2. ALL PAVEMENT MARKINGS THAT ARE EXISTING OR PLACED IN A PREVIOUS PHASE WILL REMAIN UNLESS OTHERWISE INDICATED.
3. SEE SHEETS 194-199 FOR TYPICAL SECTIONS.

| | | | |
|---|---|---|---|
| 213 / 1288 | SUM-77/277/224 VARIOUS | MAINTENANCE OF TRAFFIC PLAN - PHASE 2 I-77 - STA. 462+00 TO STA. 475+00 | CALCULATED . CHECKED . 0 50 25 100 HORIZONTAL SCALE IN FEET |

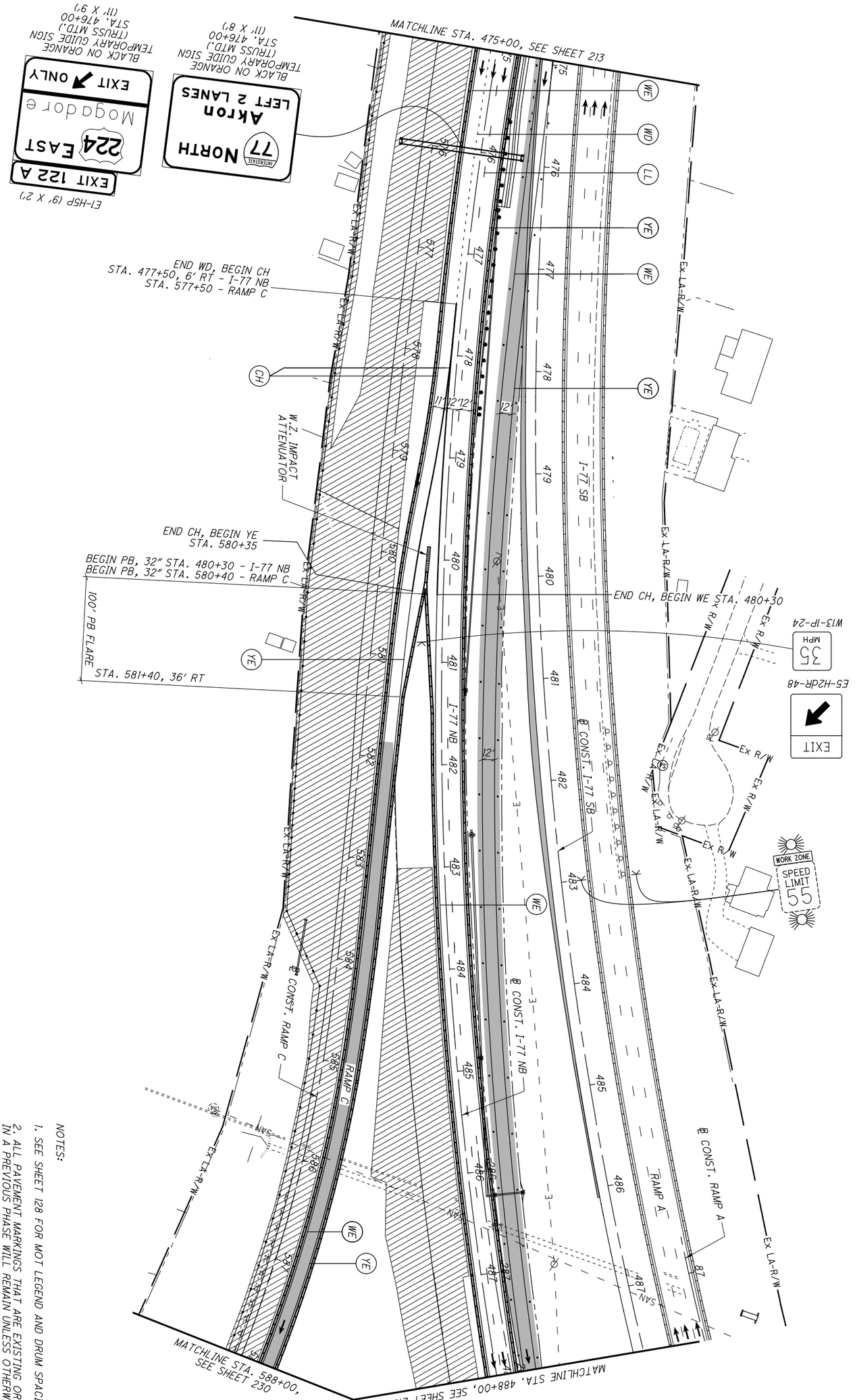


NOTES:

1. SEE SHEET 128 FOR MOT LEGEND AND DRUM SPACING CHART.
2. ALL PAVEMENT MARKINGS THAT ARE EXISTING OR PLACED IN A PREVIOUS PHASE WILL REMAIN UNLESS OTHERWISE INDICATED.
3. SEE SHEETS 293-261 FOR NORTHERN CROSSOVER (NB).

| | | | | |
|---|---|---|---|---|
| 214 / 1288 | SUM-77/277/224<br>VARIOUS | MAINTENANCE OF TRAFFIC PLAN - PHASE 2<br>I-77 - STA. 475+00 TO STA. 488+00 | CALCULATED .<br>CHECKED . | 0 50<br>25 100<br>HORIZONTAL SCALE IN FEET |

N:\03\60\06744-08\I06002_SUM-76-10.95\Design\MOT\Sheets\I06002_MP2I7.dgn Sheet 1/31/2021 5:35:55 PM jrettig

NOTES:

1. SEE SHEET 128 FOR MOT LEGEND AND DRUM SPACING CHART.
2. ALL PAVEMENT MARKINGS THAT ARE EXISTING OR PLACED IN A PREVIOUS PHASE WILL REMAIN UNLESS OTHERWISE INDICATED.
3. SEE SHEETS 194-199 FOR TYPICAL SECTIONS.

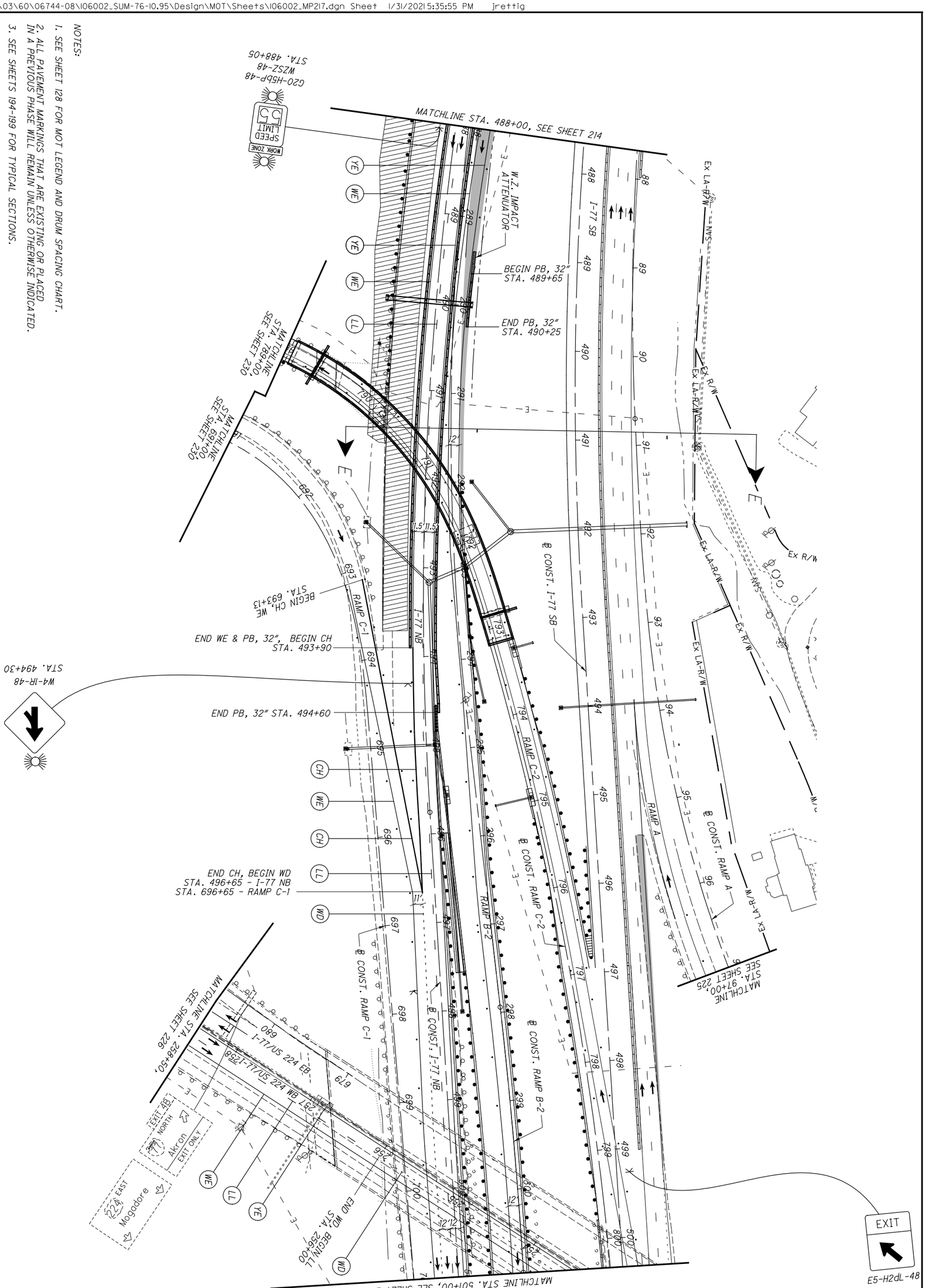


| | | | |
|---|---|---|---|
| 215 / 1288 | SUM-77/277/224<br>VARIOUS | MAINTENANCE OF TRAFFIC PLAN - PHASE 2<br>I-77 - STA. 488+00 TO STA. 501+00 | CALCULATED .<br>CHECKED .<br>0 50<br>25 100<br>HORIZONTAL SCALE IN FEET |

NOTES:

1. SEE SHEET 128 FOR MOT LEGEND AND DRUM SPACING CHART.
2. ALL PAVEMENT MARKINGS THAT ARE EXISTING OR PLACED IN A PREVIOUS PHASE WILL REMAIN UNLESS OTHERWISE INDICATED.
3. SEE SHEETS 194-199 FOR TYPICAL SECTIONS.

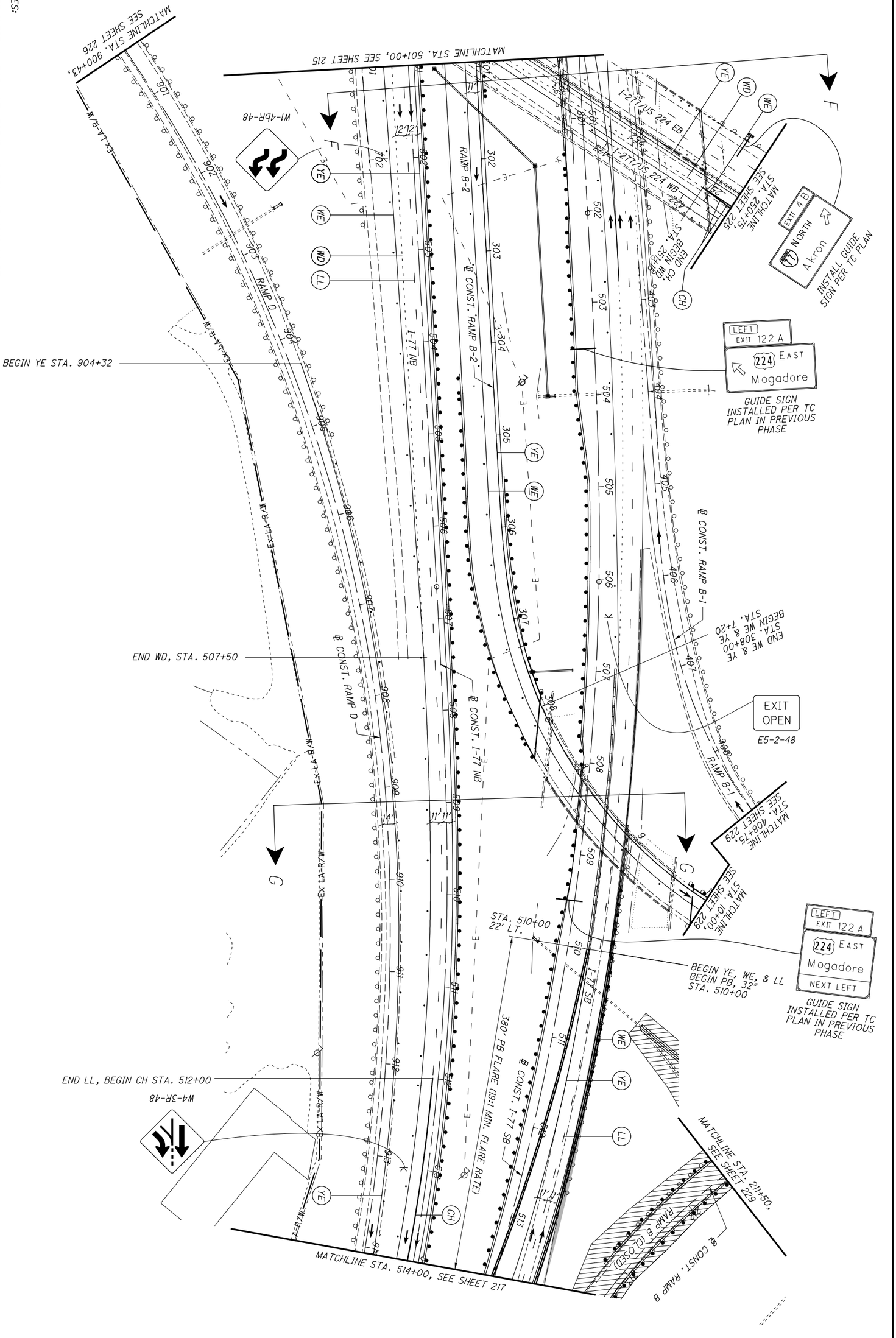


| 216 / 1288 | SUM-77 / 277 / 224 VARIOUS | MAINTENANCE OF TRAFFIC PLAN - PHASE 2 I-77 - STA. 501+00 TO STA. 514+00 | CALCULATED . CHECKED . | 0 50 25 100 HORIZONTAL SCALE IN FEET |
|---|---|---|---|---|

N:\03\60\06744-08\106002_SUM-76-10.95\Design\MOT\Sheets\106002_MP219.dgn Sheet 1/31/2021 5:36:41 PM jrettig

NOTES:

1. SEE SHEET 128 FOR MOT LEGEND AND DRUM SPACING CHART.
2. ALL PAVEMENT MARKINGS THAT ARE EXISTING OR PLACED IN A PREVIOUS PHASE WILL REMAIN UNLESS OTHERWISE INDICATED.
3. SEE SHEETS 194-199 FOR TYPICAL SECTIONS.
4. SEE RAMP B DETOUR SHEET 119 FOR ADDITIONAL SIGNS.

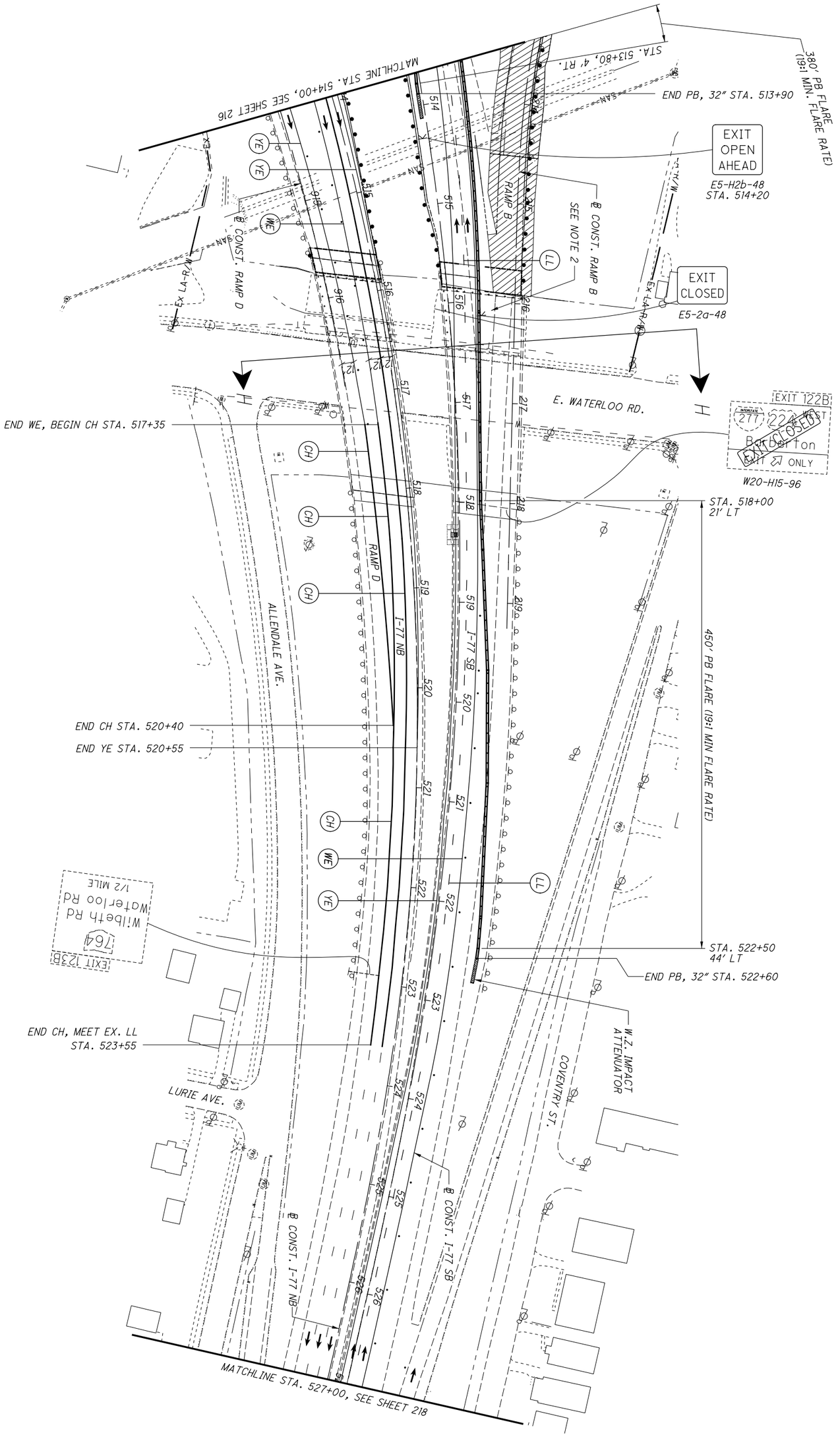


| 217 / 1288 | SUM-77 / 277 / 224<br>VARIOUS | MAINTENANCE OF TRAFFIC PLAN - PHASE 2<br>I-77 - STA. 514+00 TO STA. 527+00 | CALCULATED .<br>CHECKED . | 0 50<br>25 100<br>HORIZONTAL SCALE IN FEET | N |
|---|---|---|---|---|---|

N:\03\60\06744-08\I06002_SUM-76-I0.95\Design\MOT\Sheets\I06002_MP220.dgn Sheet 1/31/2021 5:36:54 PM jrettig

NOTES:

1. SEE SHEET 128 FOR MOT LEGEND AND DRUM SPACING CHART.
2. ALL PAVEMENT MARKINGS THAT ARE EXISTING OR PLACED IN A PREVIOUS PHASE WILL REMAIN UNLESS OTHERWISE INDICATED.

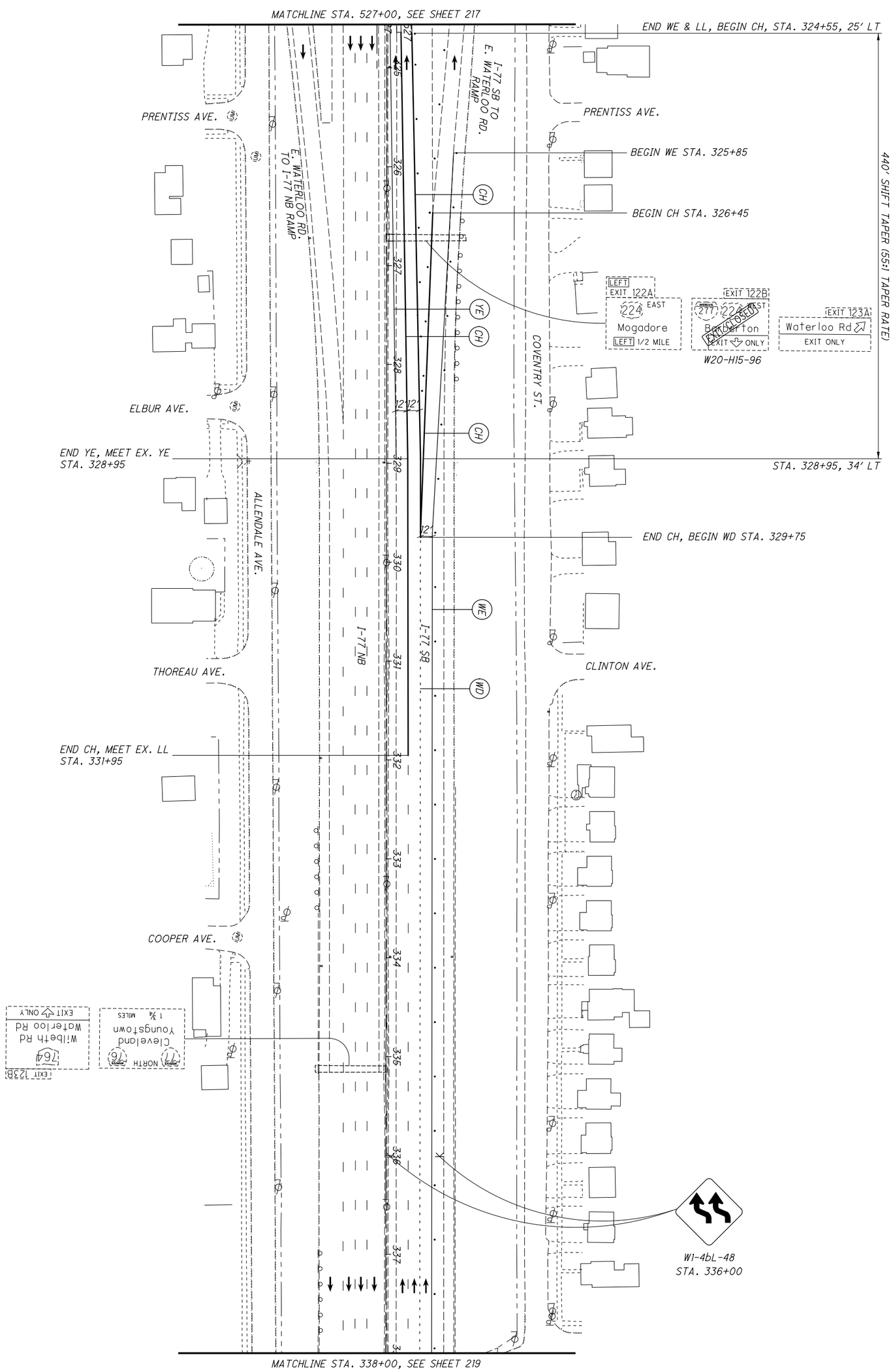


| | | | |
|---|---|---|---|
| 218 / 1288 | SUM-77/277/224<br>VARIOUS | MAINTENANCE OF TRAFFIC PLAN - PHASE 2<br>I-77 - STA. 527+00 TO STA. 328+00 | CALCULATED .<br>CHECKED .<br>0 50<br>25 100<br>HORIZONTAL SCALE IN FEET |

NOTES:

1. SEE SHEET 128 FOR MOT LEGEND AND DRUM SPACING CHART.
2. ALL PAVEMENT MARKINGS THAT ARE EXISTING OR PLACED IN A PREVIOUS PHASE WILL REMAIN UNLESS OTHERWISE INDICATED.

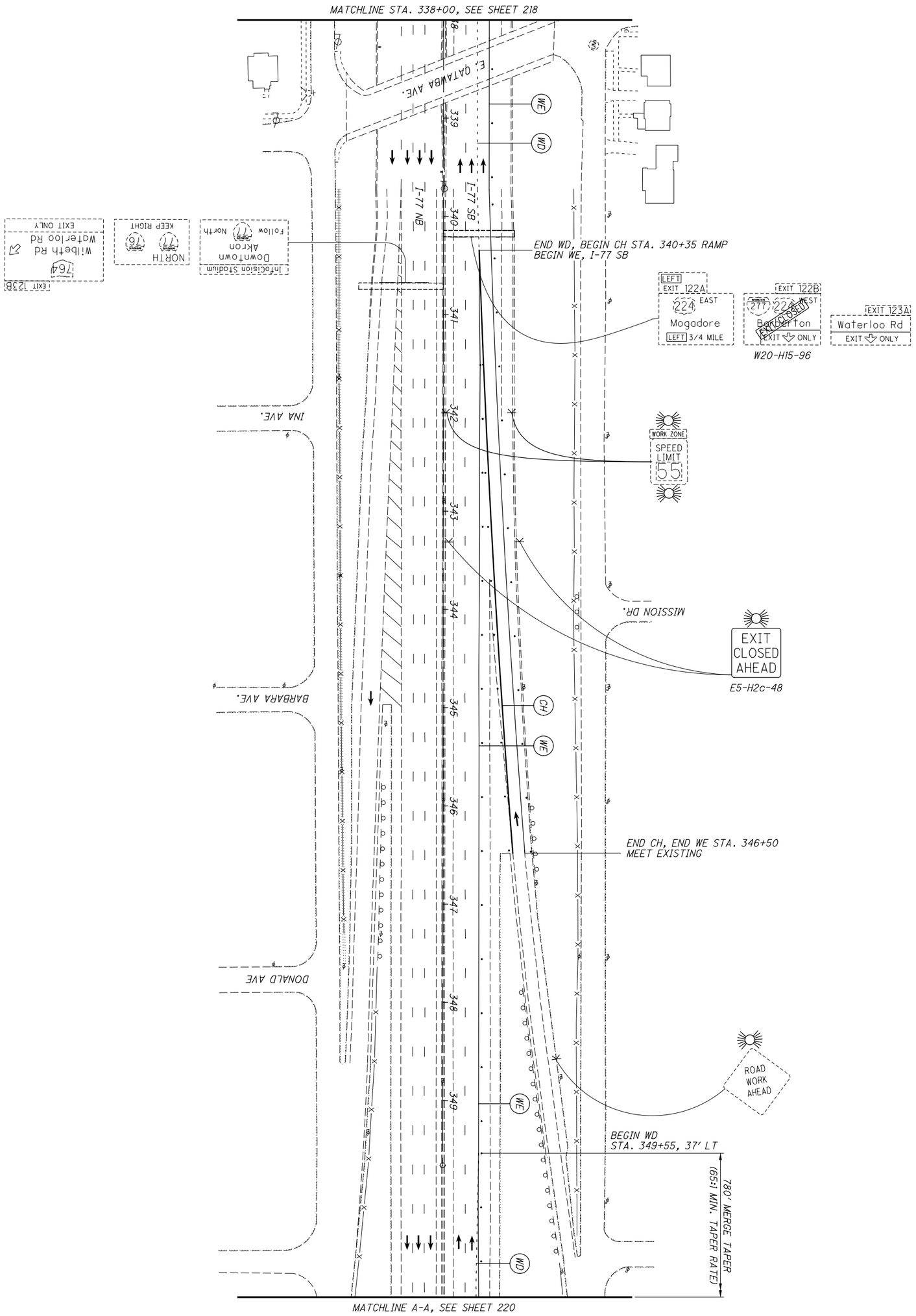


| 219 / 1288 | SUM-77/277/224<br>VARIOUS | MAINTENANCE OF TRAFFIC PLAN - PHASE 2<br>I-77 - STA. 338+00 TO M.L. A-A | CALCULATED .<br>CHECKED . | 0 50<br>25 100<br>HORIZONTAL SCALE IN FEET | N |
|---|---|---|---|---|---|

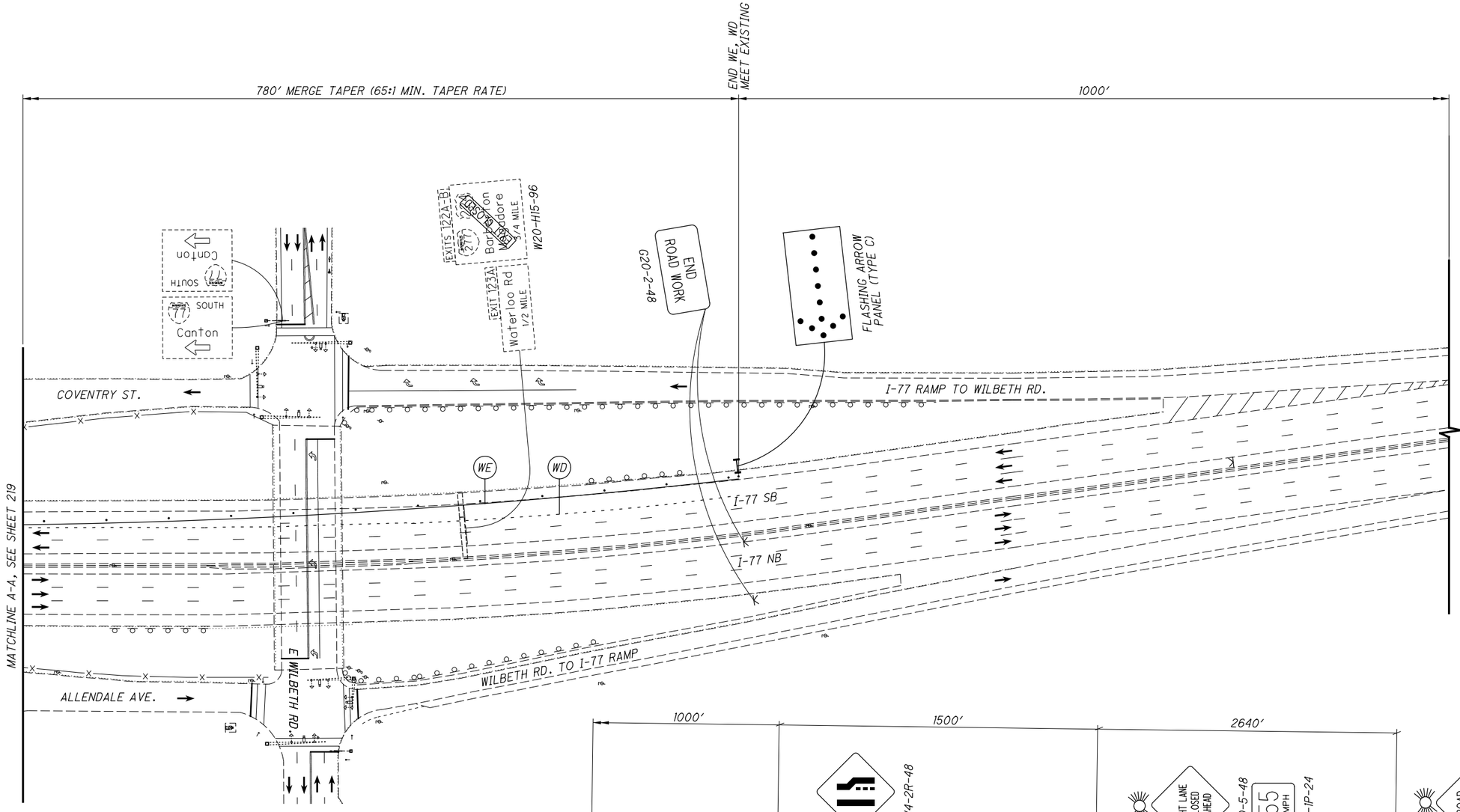


NOTES:

1. SEE SHEET 128 FOR MOT LEGEND AND DRUM SPACING CHART.

2. ALL PAVEMENT MARKINGS THAT ARE EXISTING OR PLACED IN A PREVIOUS PHASE WILL REMAIN UNLESS OTHERWISE INDICATED.

HORIZONTAL SCALE IN FEET
0 25 50 100

CALCULATED .
CHECKED .

# MAINTENANCE OF TRAFFIC PLAN - PHASE 2
## I-77 - M.L. A-A TO NORTH LIMITS

SUM-77/277/224
VARIOUS

220
1288

N:\03\60\06744-08\06002_SUM-76-10.95\Design\MOT\Sheets\06002_MP222.dgn Sheet 1/31/2021 5:37:01 PM jrettig

NOTES:

1. SEE SHEET 128 FOR MOT LEGEND AND DRUM SPACING CHART.
2. ALL PAVEMENT MARKINGS THAT ARE EXISTING OR PLACED IN A PREVIOUS PHASE WILL REMAIN UNLESS OTHERWISE INDICATED.
3. SEE SHEET 146 FOR OTHER PREVIOUSLY PLACED ADVANCE WARNING SIGNS.

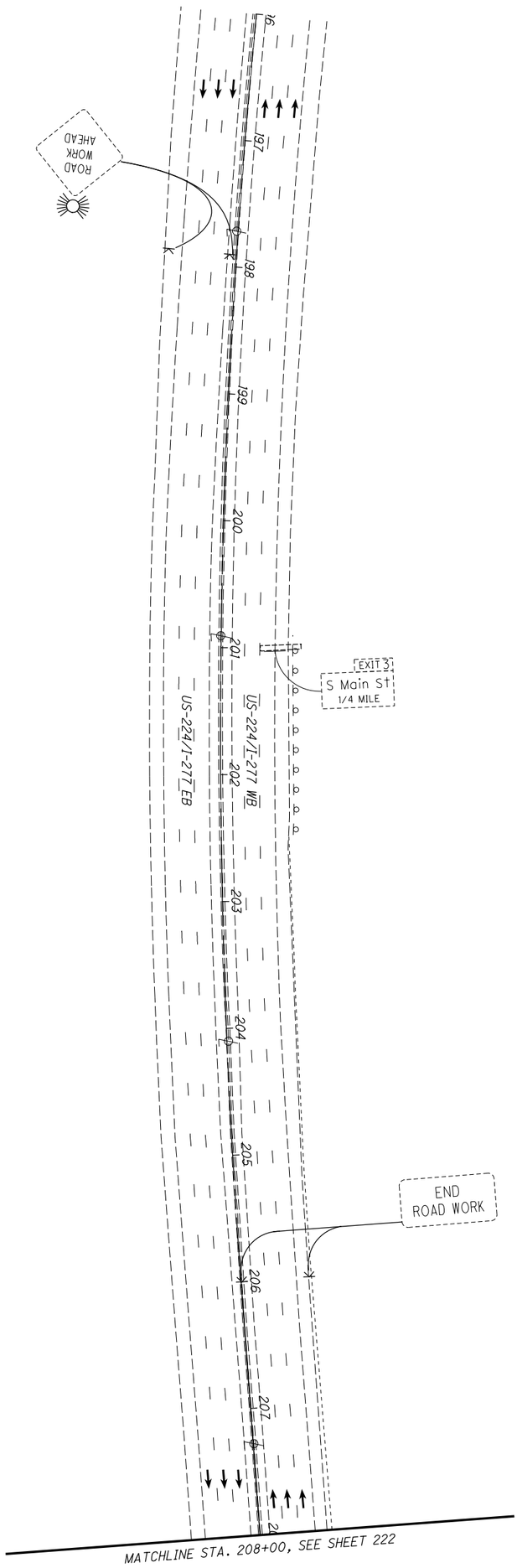


| | | | | |
|---|---|---|---|---|
| 221 / 1288 | **SUM-77/277/224**<br>**VARIOUS** | **MAINTENANCE OF TRAFFIC PLAN - PHASE 2**<br>**US 224/I-277 - STA. 196+00 TO STA. 208+00** | CALCULATED .<br>CHECKED . | 0 50<br>25 100<br>HORIZONTAL SCALE IN FEET |

NOTES:

1. SEE SHEET 128 FOR MOT LEGEND AND DRUM SPACING CHART.
2. ALL PAVEMENT MARKINGS THAT ARE EXISTING OR PLACED IN A PREVIOUS PHASE WILL REMAIN UNLESS OTHERWISE INDICATED.

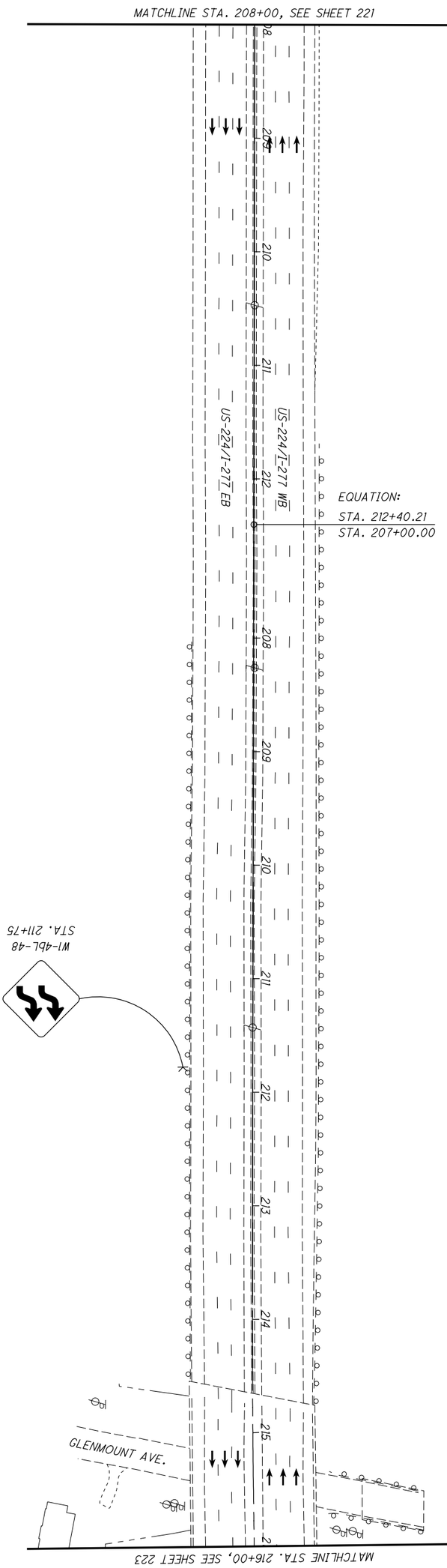

NOTES:

1. SEE SHEET 128 FOR MOT LEGEND AND DRUM SPACING CHART.
2. ALL PAVEMENT MARKINGS THAT ARE EXISTING OR PLACED IN A PREVIOUS PHASE WILL REMAIN UNLESS OTHERWISE INDICATED.

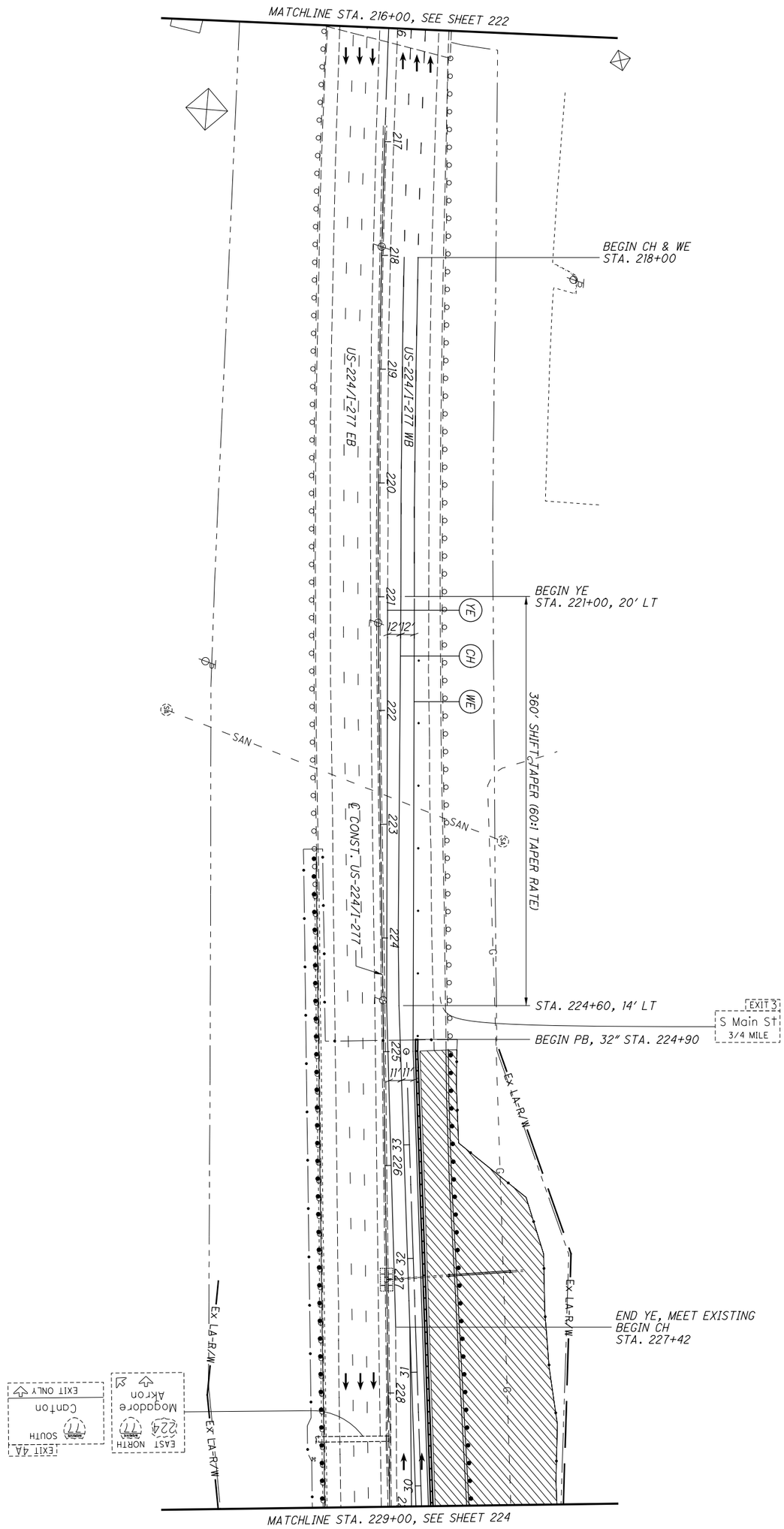


| | | | | |
|---|---|---|---|---|
| 223 / 1288 | SUM-77 / 277 / 224<br>VARIOUS | MAINTENANCE OF TRAFFIC PLAN - PHASE 2<br>US-224 / I-277 - STA. 216+00 TO STA. 229+00 | CALCULATED .<br>CHECKED . | 0 50<br>25 100<br>HORIZONTAL SCALE IN FEET |

NOTES:

1. SEE SHEET 128 FOR MOT LEGEND AND DRUM SPACING CHART.
2. ALL PAVEMENT MARKINGS THAT ARE EXISTING OR PLACED IN A PREVIOUS PHASE WILL REMAIN UNLESS OTHERWISE INDICATED.

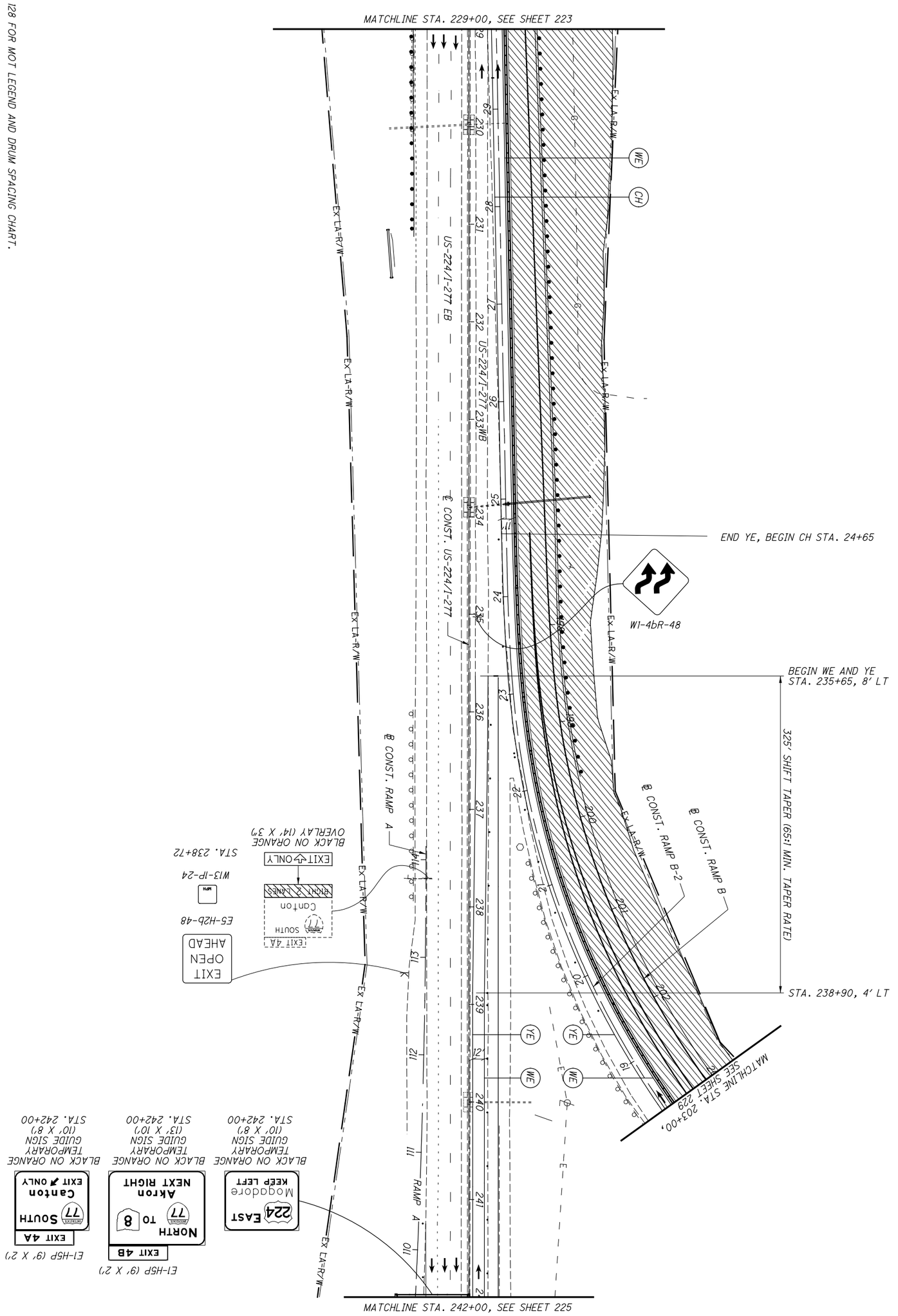


| | | | | |
|---|---|---|---|---|
| 224 / 1288 | SUM-77 / 277 / 224<br>VARIOUS | MAINTENANCE OF TRAFFIC PLAN - PHASE 2<br>US-224/I-277 - STA. 229+00 TO STA. 242+00 | CALCULATED .<br>CHECKED . | 0 50<br>25 100<br>HORIZONTAL SCALE IN FEET |

N:\03\60\06744-08\I06002_SUM-76-10.95\Design\MOT\Sheets\I06002_MP227.dgn Sheet 1/31/2021 5:37:21 PM jrettig

NOTES:

1. SEE SHEET 128 FOR MOT LEGEND AND DRUM SPACING CHART.
2. ALL PAVEMENT MARKINGS THAT ARE EXISTING OR PLACED IN A PREVIOUS PHASE WILL REMAIN UNLESS OTHERWISE INDICATED.

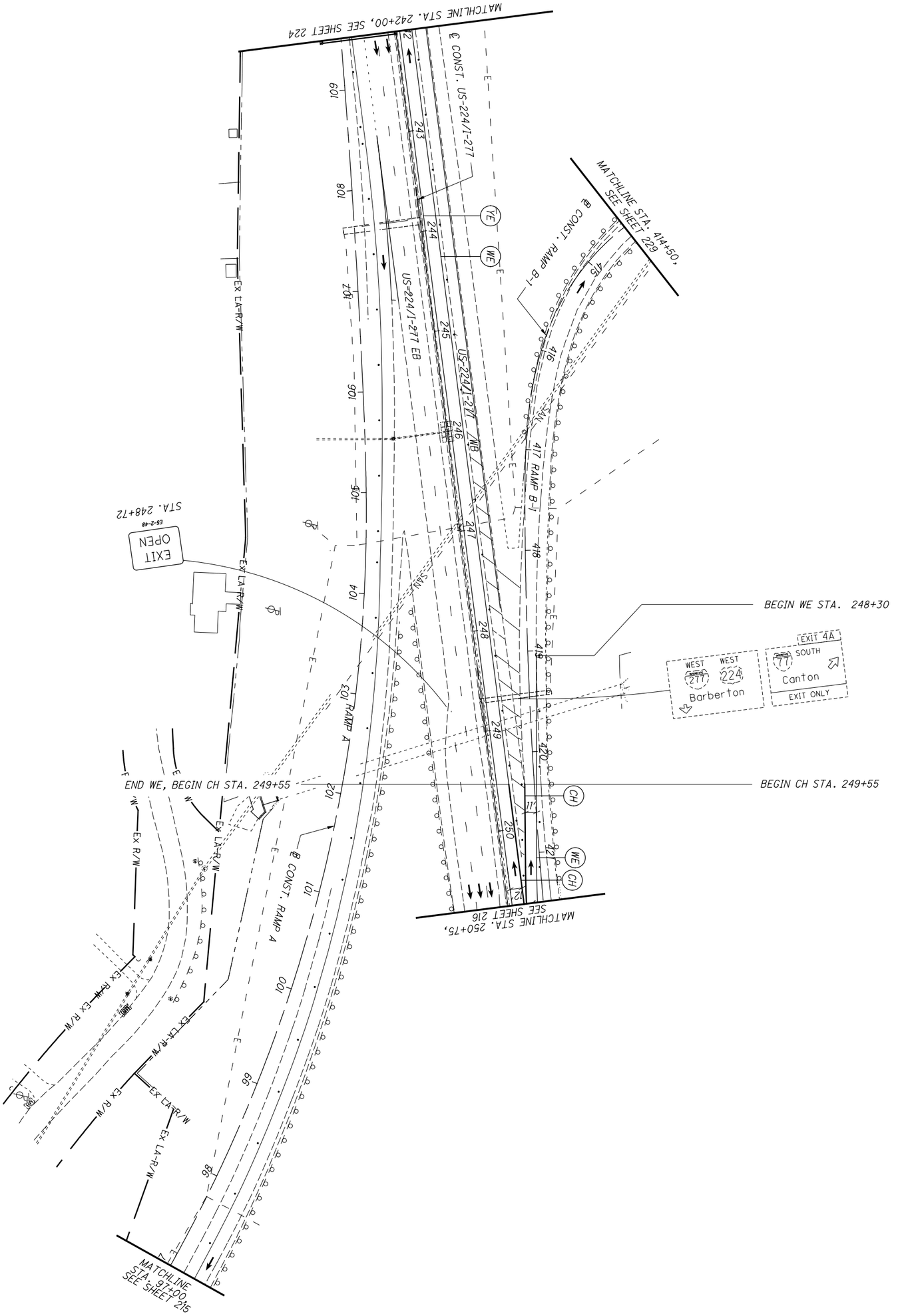


| | | | | |
|---|---|---|---|---|
| 225 / 1288 | SUM-77/277/224<br>VARIOUS | MAINTENANCE OF TRAFFIC PLAN - PHASE 2<br>US-224/I-277 - STA. 242+00 TO STA. 250+75 | CALCULATED .<br>CHECKED . | 0 50<br>25 100<br>HORIZONTAL SCALE IN FEET |

NOTES:

1. SEE SHEET 128 FOR MOT LEGEND AND DRUM SPACING CHART.
2. ALL PAVEMENT MARKINGS THAT ARE EXISTING OR PLACED IN A PREVIOUS PHASE WILL REMAIN UNLESS OTHERWISE INDICATED.

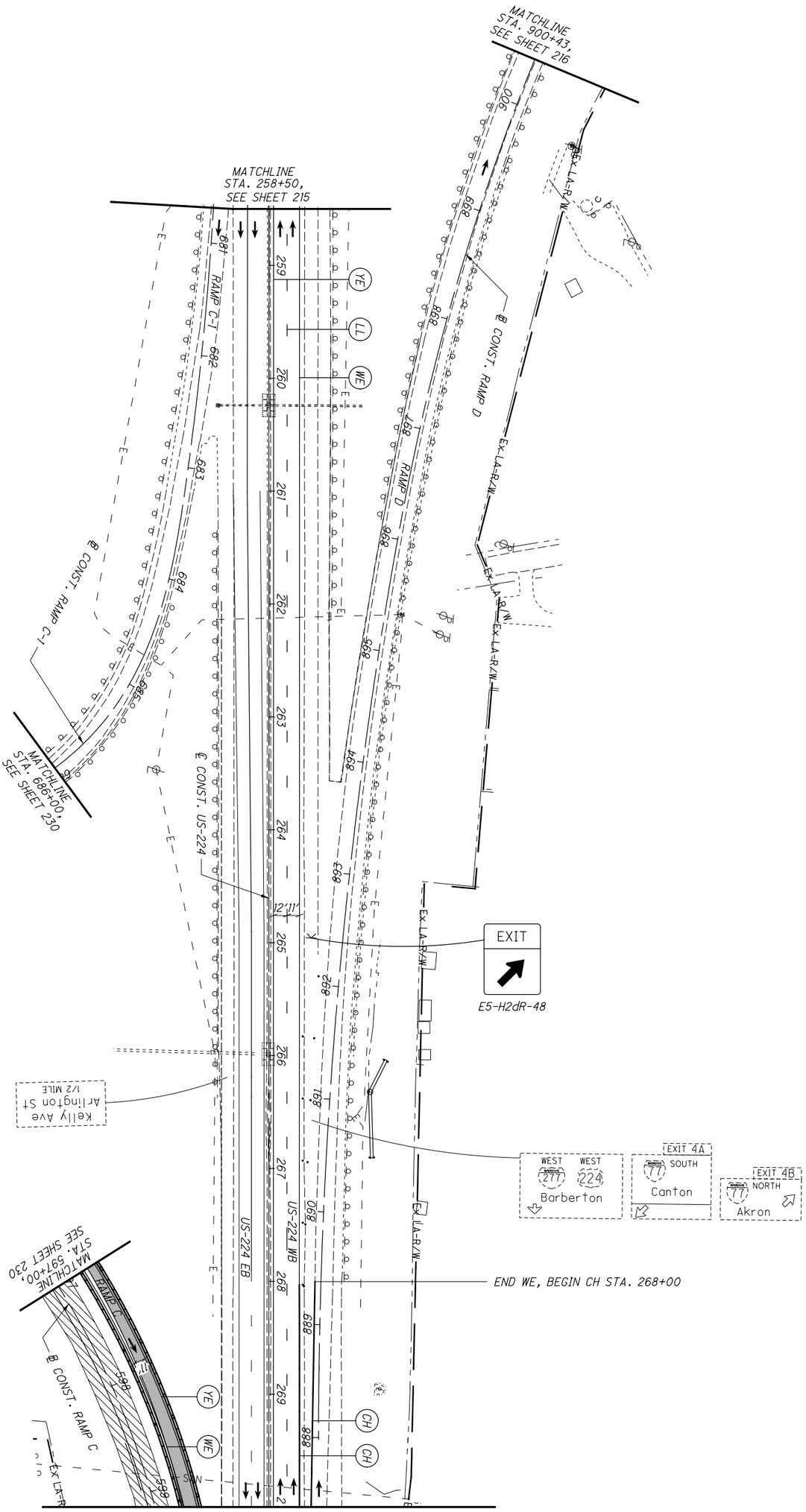

N:\03\60\06744-08\106002_SUM-76-10.95\Design\MOT\Sheets\106002_MP229.dgn Sheet 1/31/2021 5:37:43 PM jrettig

NOTES:

1. SEE SHEET 128 FOR MOT LEGEND AND DRUM SPACING CHART.
2. ALL PAVEMENT MARKINGS THAT ARE EXISTING OR PLACED IN A PREVIOUS PHASE WILL REMAIN UNLESS OTHERWISE INDICATED.

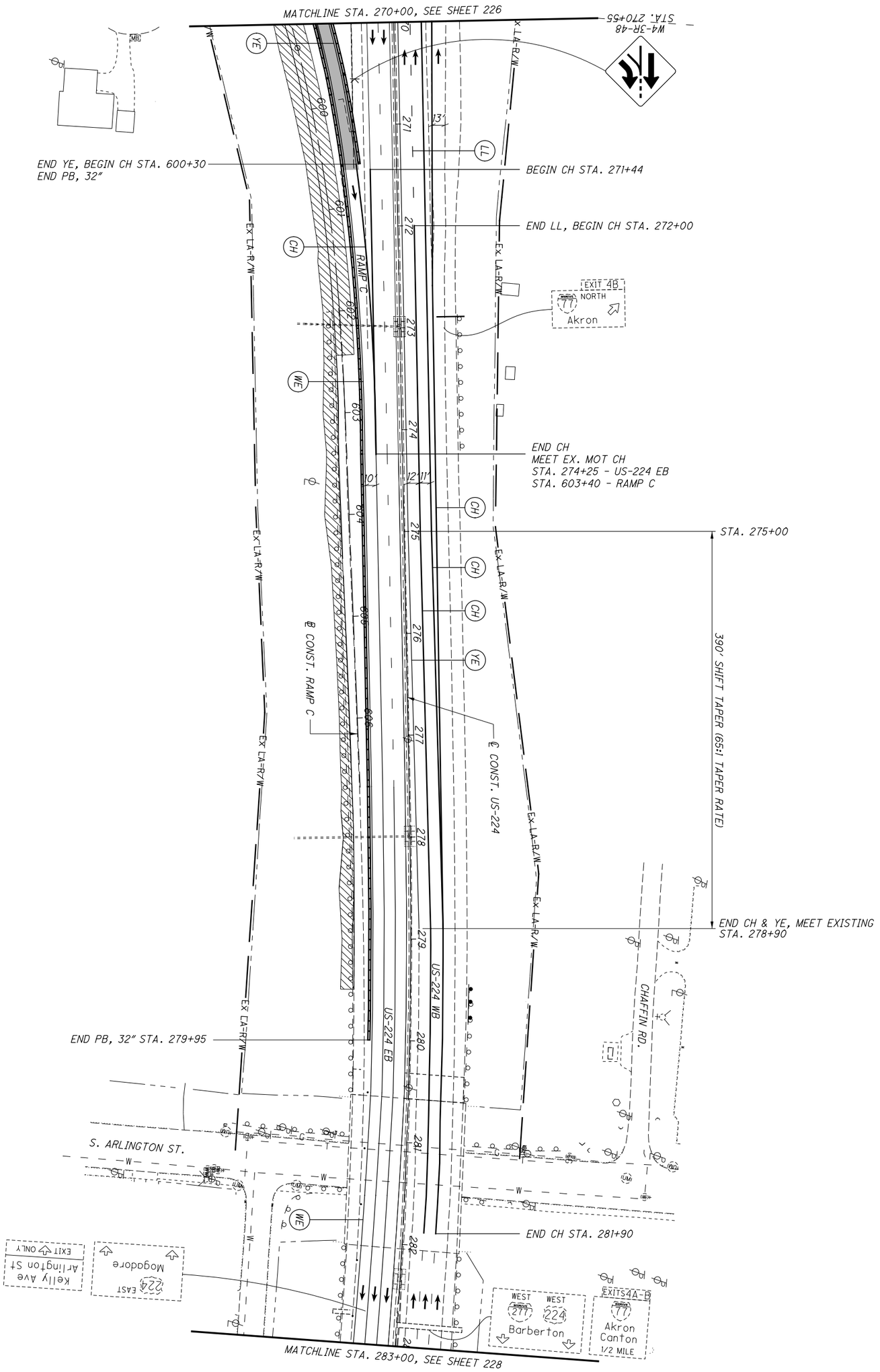


| | | | | |
|---|---|---|---|---|
| 227 / 1288 | SUM-77 / 277 / 224<br>VARIOUS | MAINTENANCE OF TRAFFIC PLAN - PHASE 2<br>US-224 - STA. 270+00 TO STA. 283+00 | CALCULATED .<br>CHECKED . | 0 50<br>25 100<br>HORIZONTAL SCALE IN FEET |

NOTES:

1. SEE SHEET 128 FOR MOT LEGEND AND DRUM SPACING CHART.
2. ALL PAVEMENT MARKINGS THAT ARE EXISTING OR PLACED IN A PREVIOUS PHASE WILL REMAIN UNLESS OTHERWISE INDICATED.

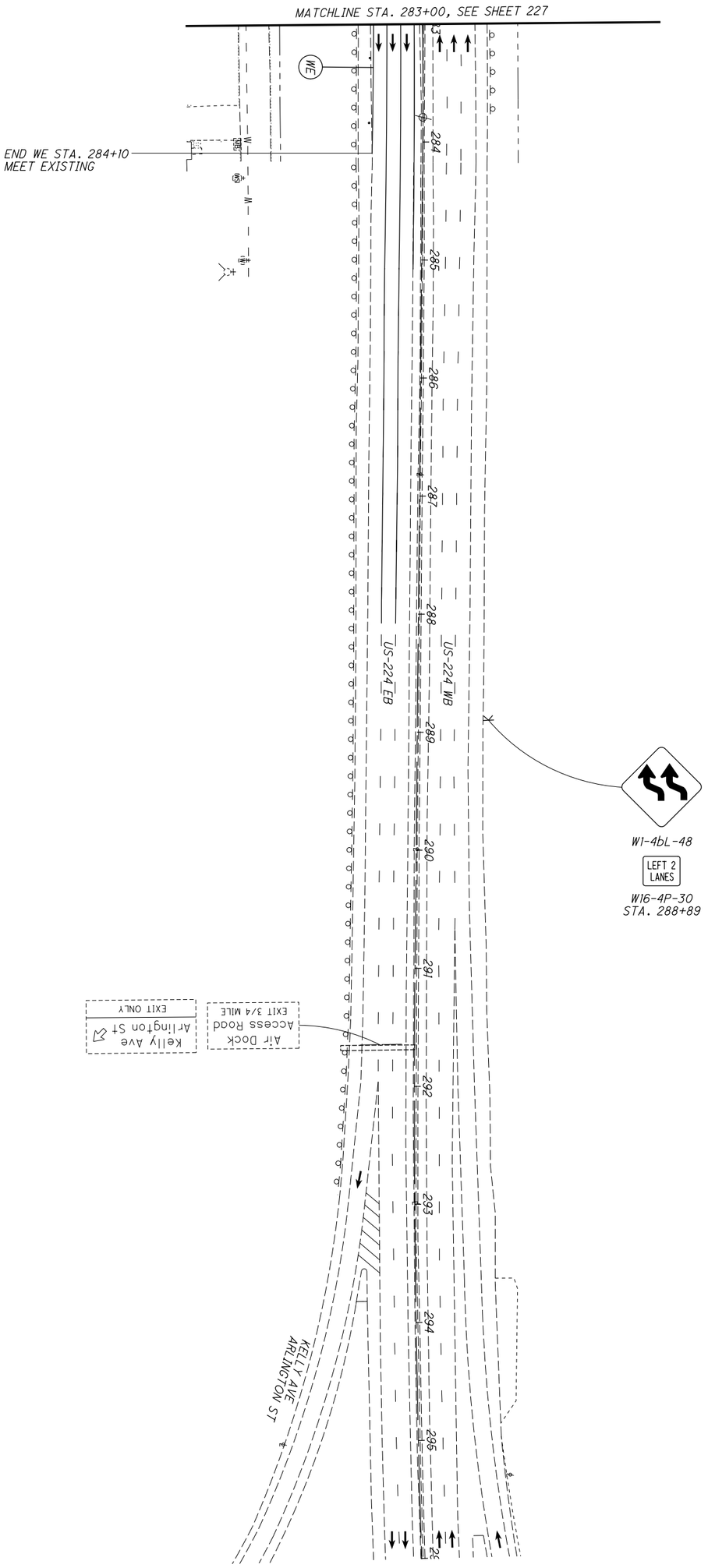

NOTES:

1. SEE SHEET 128 FOR MOT LEGEND AND DRUM SPACING CHART.
2. ALL PAVEMENT MARKINGS THAT ARE EXISTING OR PLACED IN A PREVIOUS PHASE WILL REMAIN UNLESS OTHERWISE INDICATED.

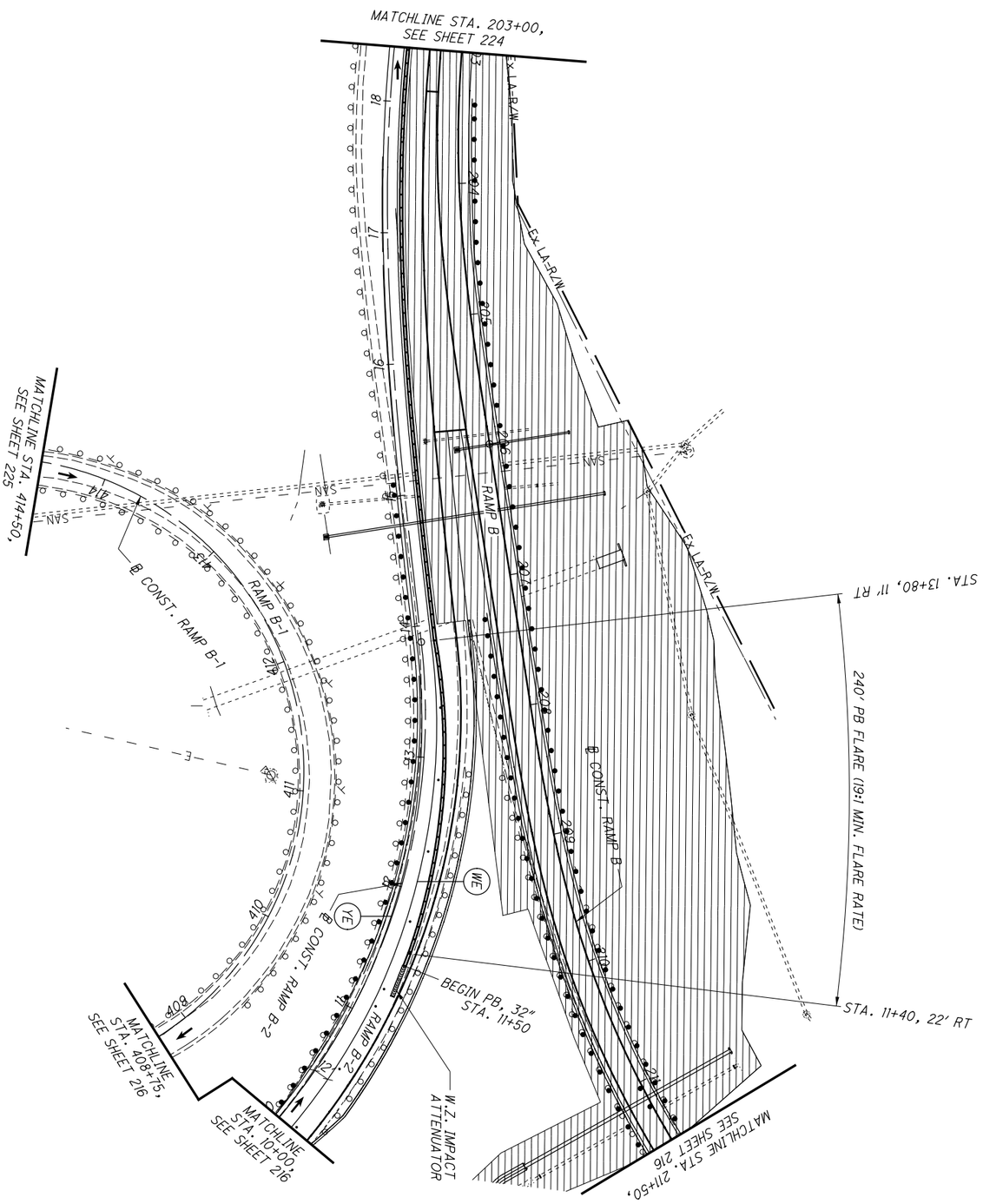




| SUM-77/277/224 VARIOUS | MAINTENANCE OF TRAFFIC PLAN - PHASE 2 RAMP B - STA. 203+00 TO STA. 211+50 | CALCULATED . CHECKED . | 0 50 25 100 HORIZONTAL SCALE IN FEET |
|---|---|---|---|

NOTES:

1. SEE SHEET 128 FOR MOT LEGEND AND DRUM SPACING CHART.
2. ALL PAVEMENT MARKINGS THAT ARE EXISTING OR PLACED IN A PREVIOUS PHASE WILL REMAIN UNLESS OTHERWISE INDICATED.

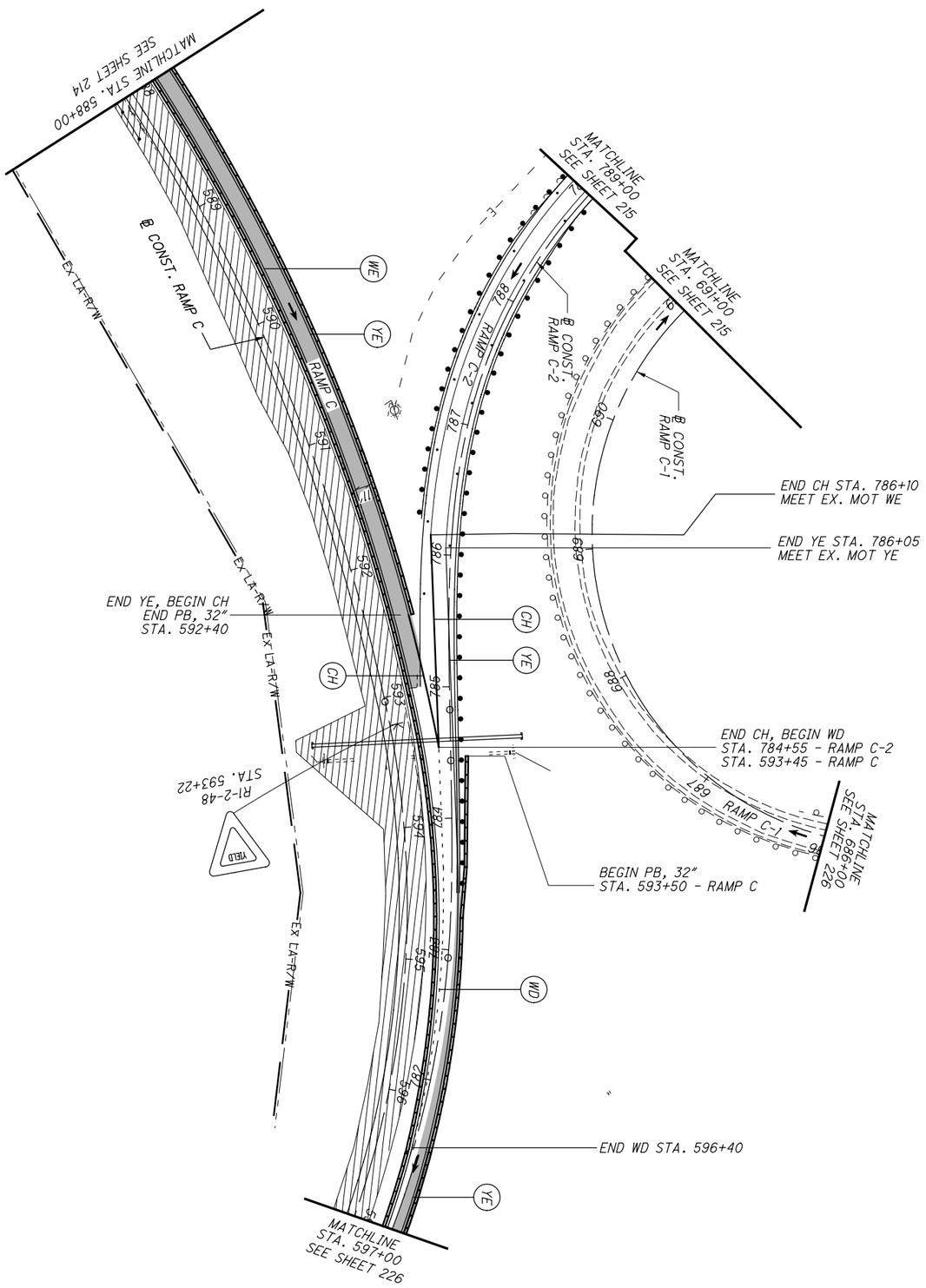


| 230 / 1288 | SUM-77 / 277 / 224 VARIOUS | MAINTENANCE OF TRAFFIC PLAN - PHASE 2 RAMP C - STA. 588+00 TO STA. 597+00 | CALCULATED . CHECKED . | 0 50 25 100 HORIZONTAL SCALE IN FEET | N |
|---|---|---|---|---|---|

NOTES:

1. SEE SHEET 128 FOR MOT LEGEND AND DRUM SPACING CHART.
2. ALL PAVEMENT MARKINGS THAT ARE EXISTING OR PLACED IN A PREVIOUS PHASE WILL REMAIN UNLESS OTHERWISE INDICATED.

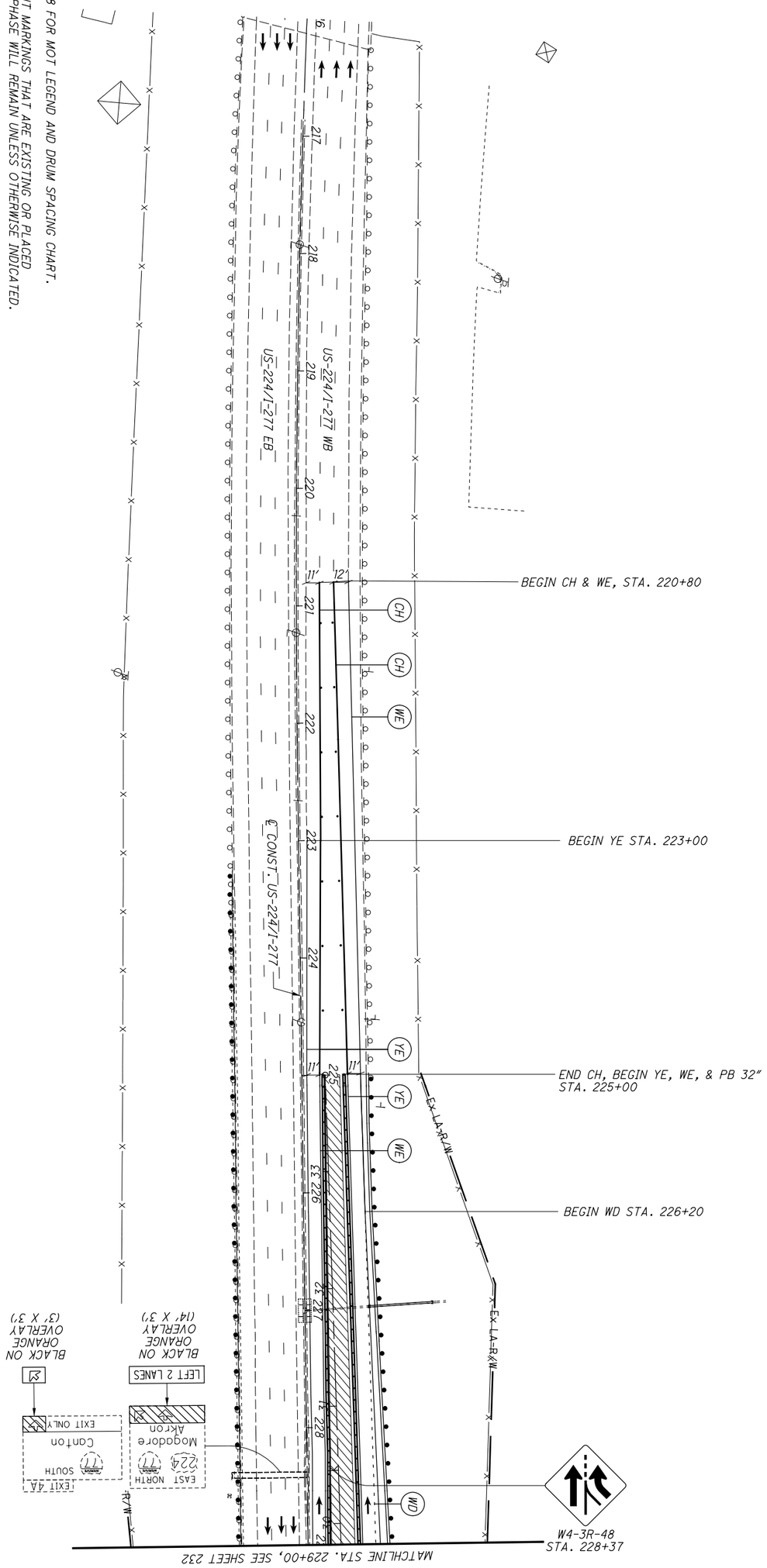


| | | | | |
|---|---|---|---|---|
| 231 / 1288 | SUM-77/277/224 VARIOUS | MAINTENANCE OF TRAFFIC PLAN - PHASE 2A US-224/I-277 - STA. 216+00 TO STA. 229+00 | CALCULATED . CHECKED . | 0 50 25 100 HORIZONTAL SCALE IN FEET |

N:\03\60\06744-08\I06002_SUM-76-I0.95\Design\MOT\Sheets\I06002_MP235.dgn Sheet 1/31/2021 5:39:03 PM jrettig

NOTES:

1. SEE SHEET 128 FOR MOT LEGEND AND DRUM SPACING CHART.
2. ALL PAVEMENT MARKINGS THAT ARE EXISTING OR PLACED IN A PREVIOUS PHASE WILL REMAIN UNLESS OTHERWISE INDICATED.
3. SEE SHEETS 194-199 FOR TYPICAL SECTIONS.

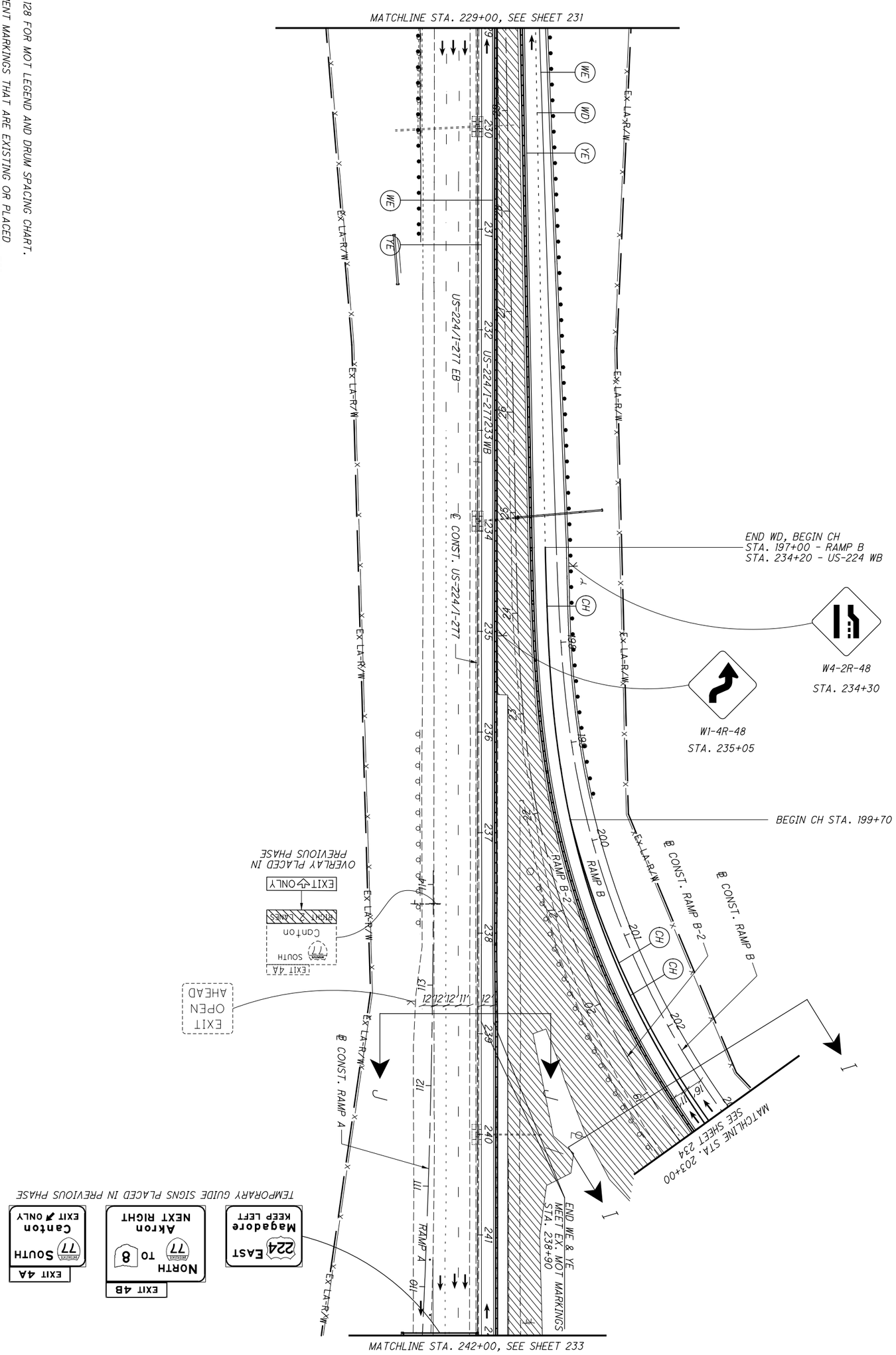


| | | | | |
|---|---|---|---|---|
| 232 / 1288 | SUM-77 / 277 / 224<br>VARIOUS | MAINTENANCE OF TRAFFIC PLAN - PHASE 2A<br>US-224 / I-277 - STA. 229+00 TO STA. 242+00 | CALCULATED .<br>CHECKED . | 0 50<br>25 100<br>HORIZONTAL SCALE IN FEET |

N:\03\60\06744-08\106002_SUM-76-10.95\Design\MOT\Sheets\106002_MP280.dgn Sheet 1/31/2021 5:39:24 PM jrettig

NOTES:

1. SEE SHEET 128 FOR MOT LEGEND AND DRUM SPACING CHART.
2. ALL PAVEMENT MARKINGS THAT ARE EXISTING OR PLACED IN A PREVIOUS PHASE WILL REMAIN UNLESS OTHERWISE INDICATED.

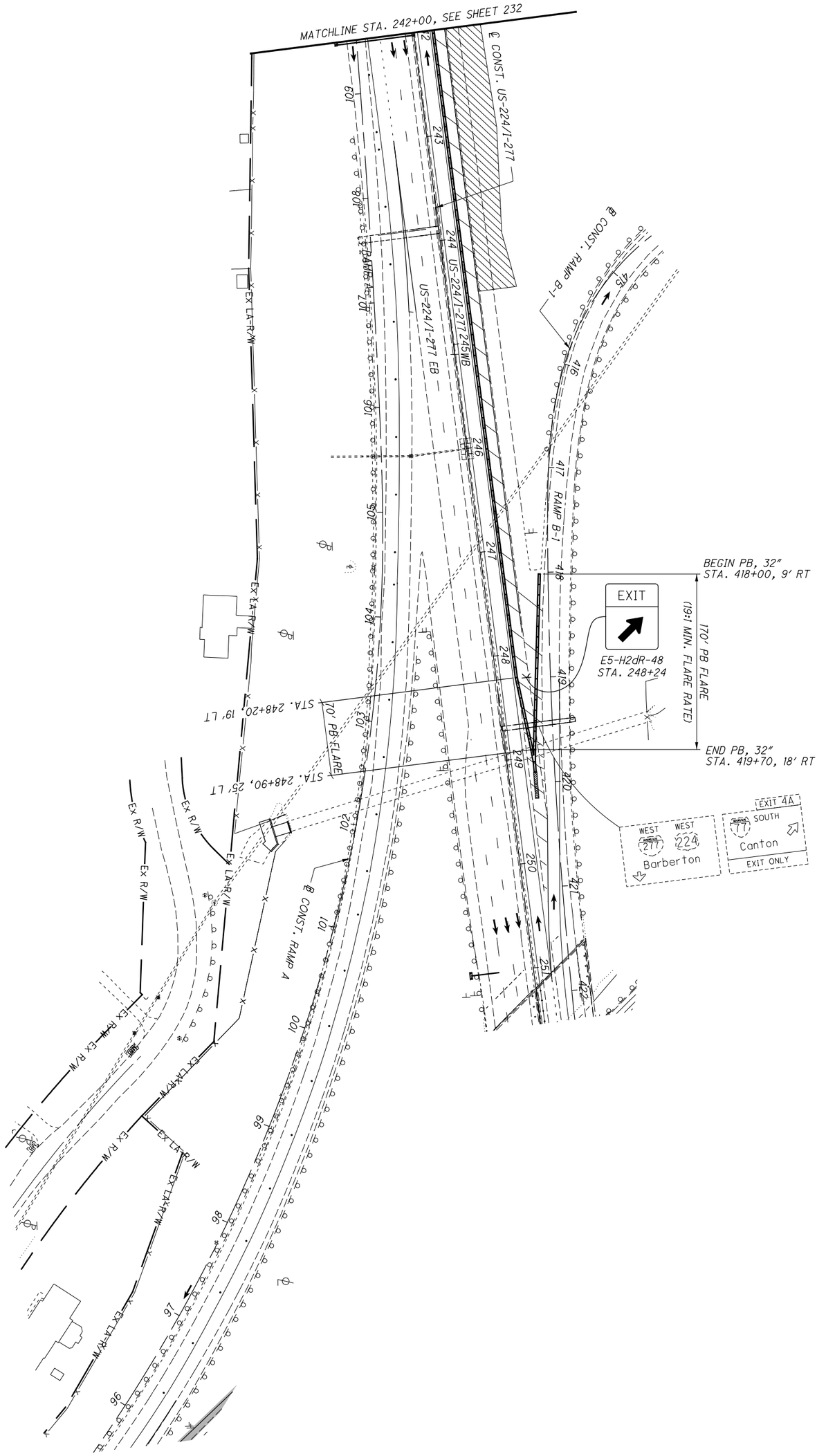


| | | | | |
|---|---|---|---|---|
| 233 / 1288 | SUM-77/277/224 VARIOUS | MAINTENANCE OF TRAFFIC PLAN - PHASE 2A US-224/I-277 - STA. 242+00 TO STA. 250+75 | CALCULATED . CHECKED . | 0 50 25 100 HORIZONTAL SCALE IN FEET |

N:\03\60\06744-08\I06002_SUM-76-10.95\Design\MOT\Sheets\I06002_MP236.dgn Sheet 1/31/2021 5:39:48 PM jrettig

NOTES:

1. SEE SHEET 128 FOR MOT LEGEND AND DRUM SPACING CHART.
2. ALL PAVEMENT MARKINGS THAT ARE EXISTING OR PLACED IN A PREVIOUS PHASE WILL REMAIN UNLESS OTHERWISE INDICATED.

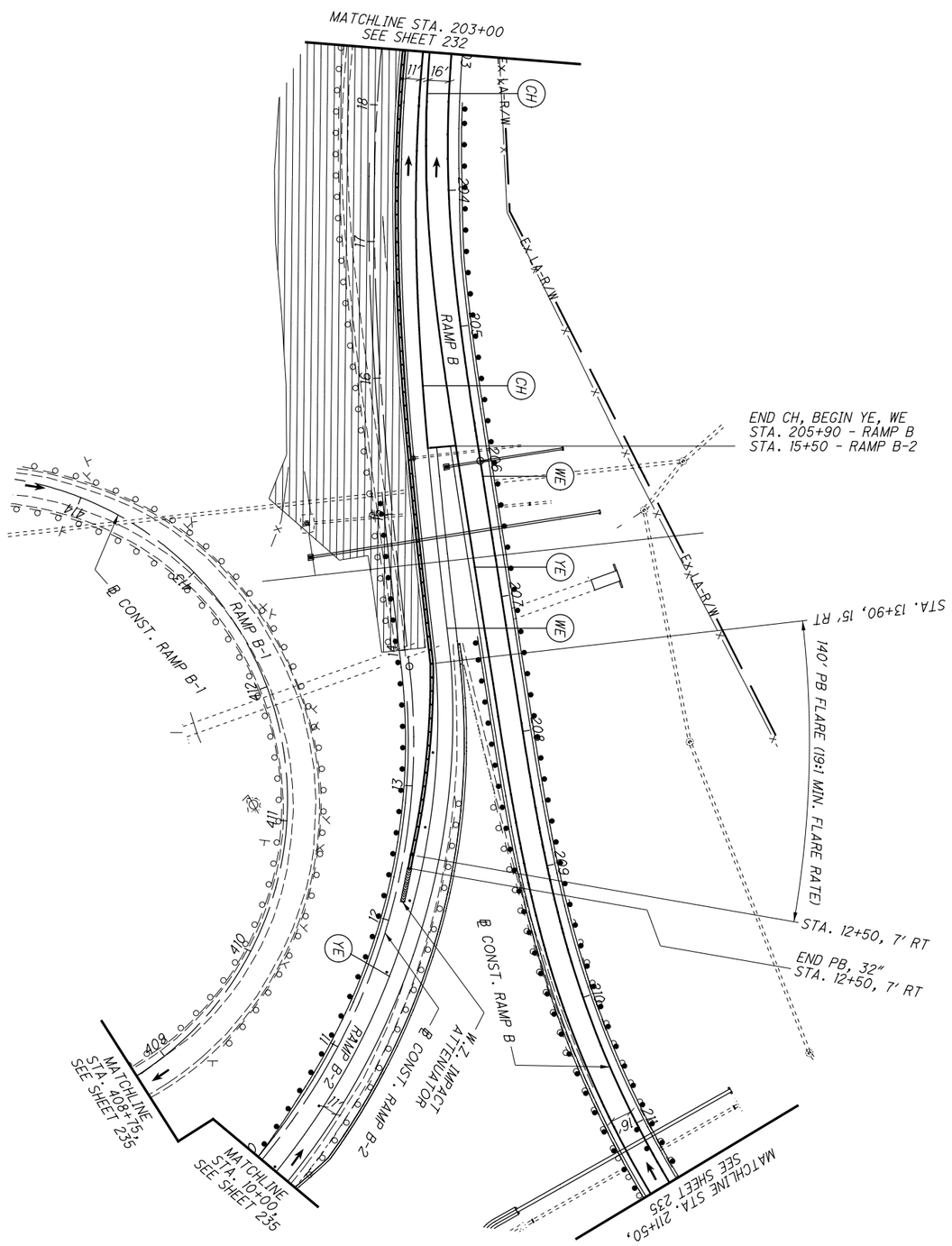


| | | | | |
|---|---|---|---|---|
| 234 / 1288 | SUM-77 / 277 / 224<br>VARIOUS | MAINTENANCE OF TRAFFIC PLAN - PHASE 2A<br>RAMP B - STA. 203+00 TO STA. 211+50 | CALCULATED .<br>CHECKED . | 0 50<br>25 100<br>HORIZONTAL SCALE IN FEET |

N:\03\60\06744-08\106002_SUM-76-10.95\Design\MOT\Sheets\106002_MP239.dgn Sheet 1/31/2021 5:39:58 PM jrettig

NOTES:

1. SEE SHEET 128 FOR MOT LEGEND AND DRUM SPACING CHART.
2. ALL PAVEMENT MARKINGS THAT ARE EXISTING OR PLACED IN A PREVIOUS PHASE WILL REMAIN UNLESS OTHERWISE INDICATED.

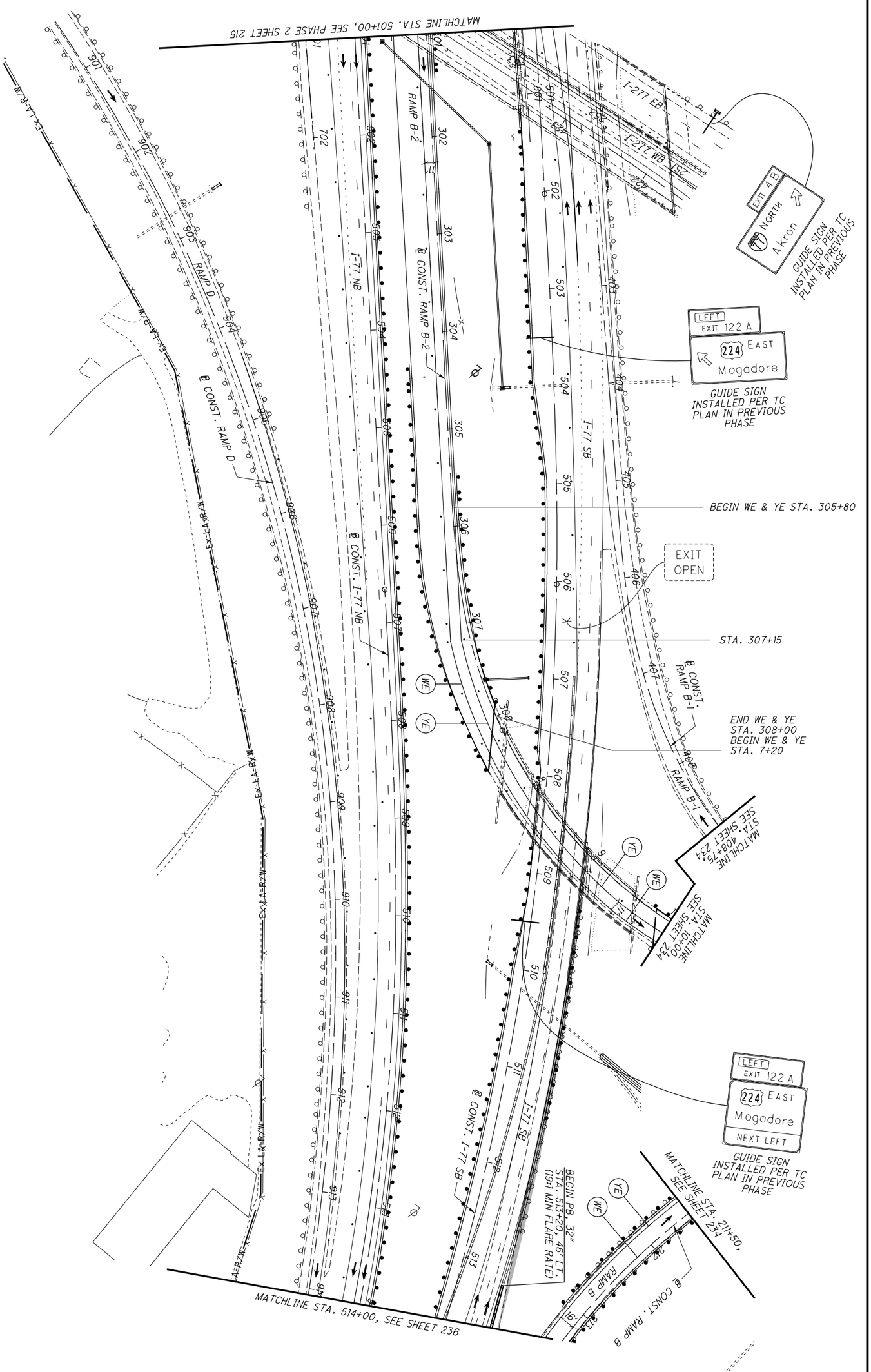


| | | | | |
|---|---|---|---|---|
| 235 / 1288 | SUM-77 / 277 / 224<br>VARIOUS | MAINTENANCE OF TRAFFIC PLAN - PHASE 2A<br>I-77 - STA. 501+00 TO STA. 514+00 | CALCULATED .<br>CHECKED . | 0 50<br>25 100<br>HORIZONTAL SCALE IN FEET |

N:\03\60\06744-08\I06002_SUM-76-I0.95\Design\MOT\Sheets\I06002_MP237.dgn Sheet 1/31/2021 5:40:06 PM jrettig

NOTES:

1. SEE SHEET 128 FOR MOT LEGEND AND DRUM SPACING CHART.
2. ALL PAVEMENT MARKINGS THAT ARE EXISTING OR PLACED IN A PREVIOUS PHASE WILL REMAIN UNLESS OTHERWISE INDICATED.

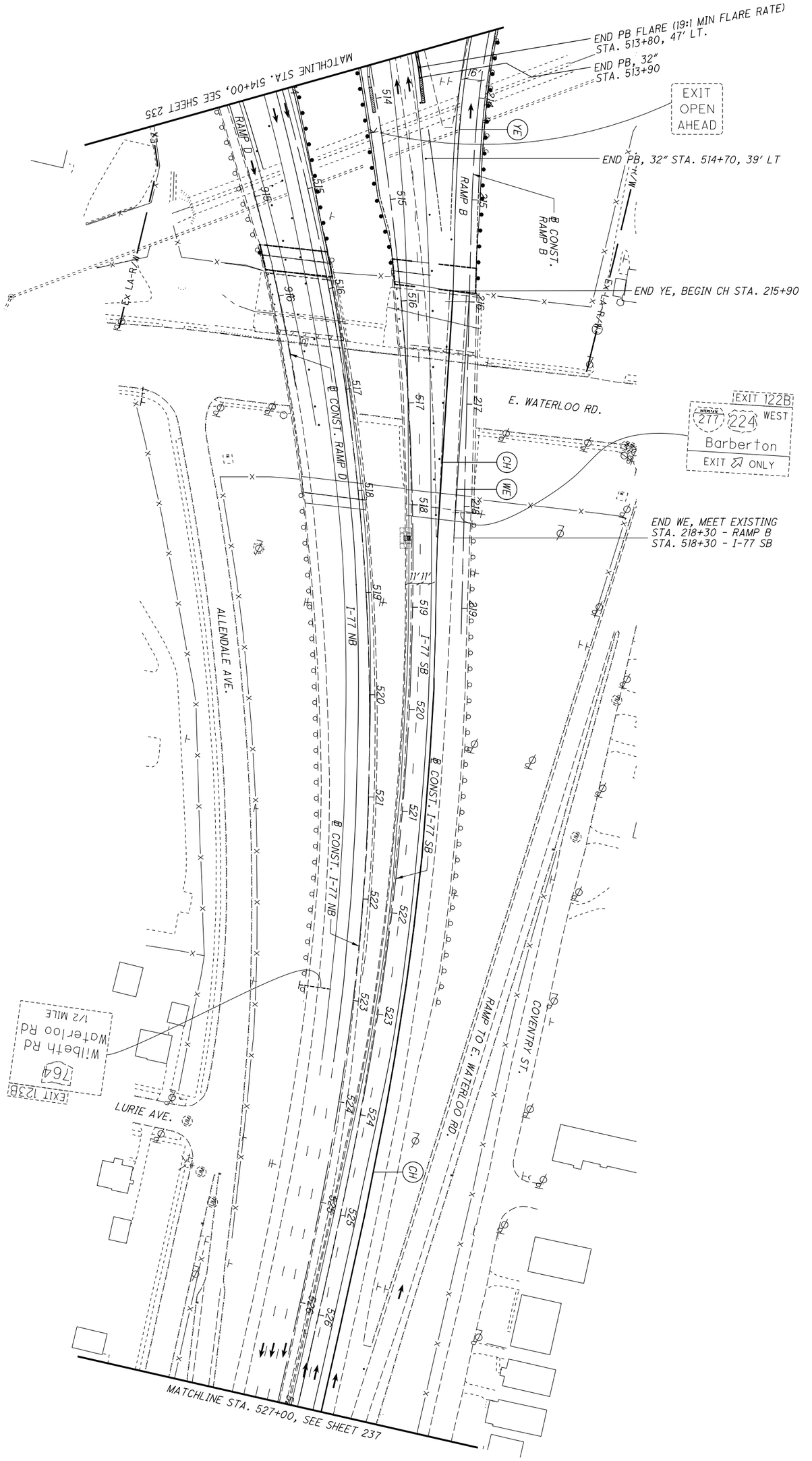


| | | | | |
|---|---|---|---|---|
| 236 / 1288 | SUM-77 / 277 / 224<br>VARIOUS | MAINTENANCE OF TRAFFIC PLAN - PHASE 2A<br>I-77 - STA. 514+00 TO STA. 527+00 | CALCULATED .<br>CHECKED . | 0 50<br>25 100<br>HORIZONTAL SCALE IN FEET |

N:\03\60\06744-08\I06002_SUM-76-I0.95\Design\MOT\Sheets\I06002_MP238.dgn Sheet 1/31/2021 5:40:29 PM jrettig

NOTES:

1. SEE SHEET 128 FOR MOT LEGEND AND DRUM SPACING CHART.
2. ALL PAVEMENT MARKINGS THAT ARE EXISTING OR PLACED IN A PREVIOUS PHASE WILL REMAIN UNLESS OTHERWISE INDICATED.

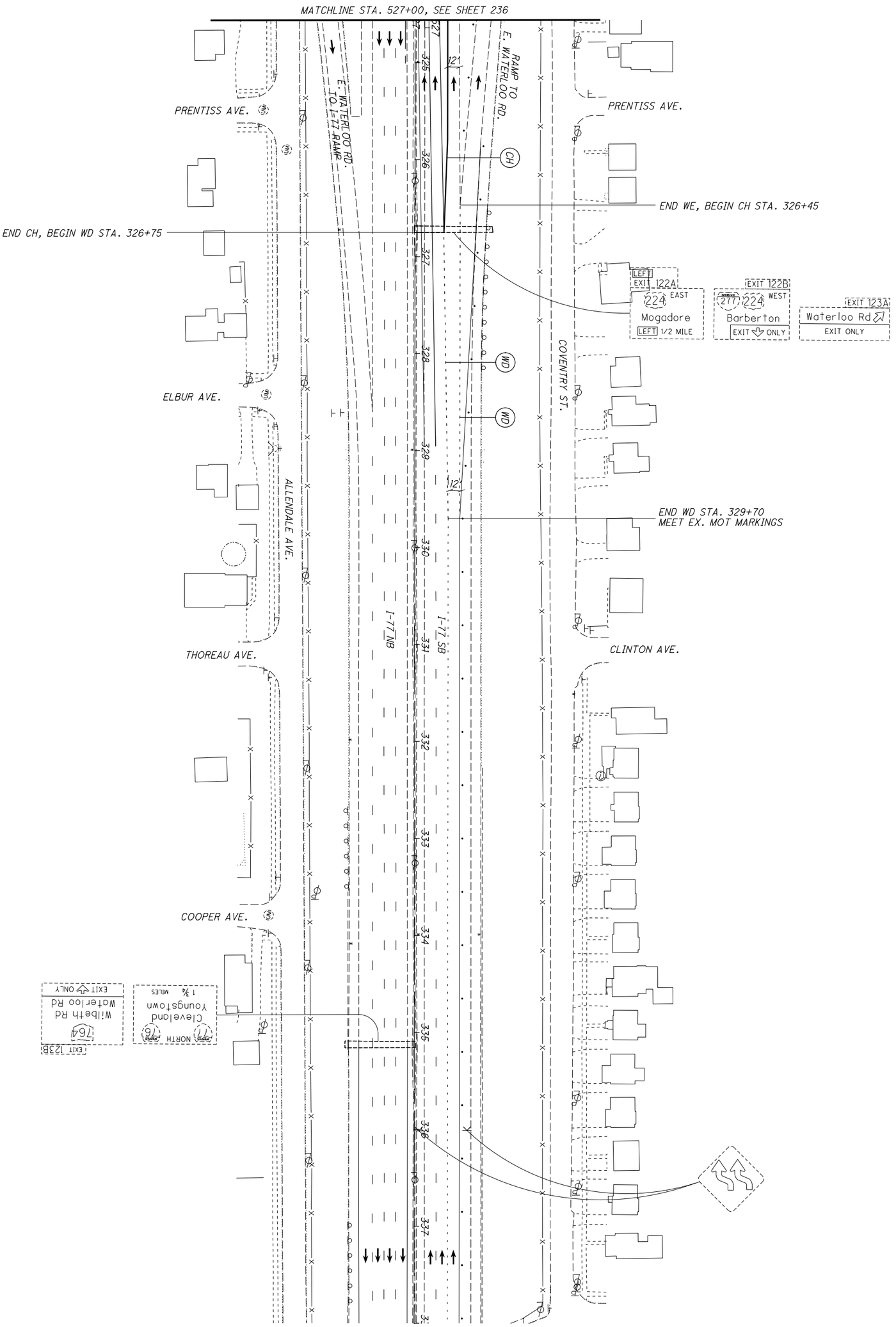


| | | | | |
|---|---|---|---|---|
| 237 / 1288 | SUM-77 / 277 / 224<br>VARIOUS | MAINTENANCE OF TRAFFIC PLAN - PHASE 2A<br>I-77 - STA. 527+00 TO STA. 338+00 | CALCULATED .<br>CHECKED . | 0 50<br>25 100<br>HORIZONTAL SCALE IN FEET |

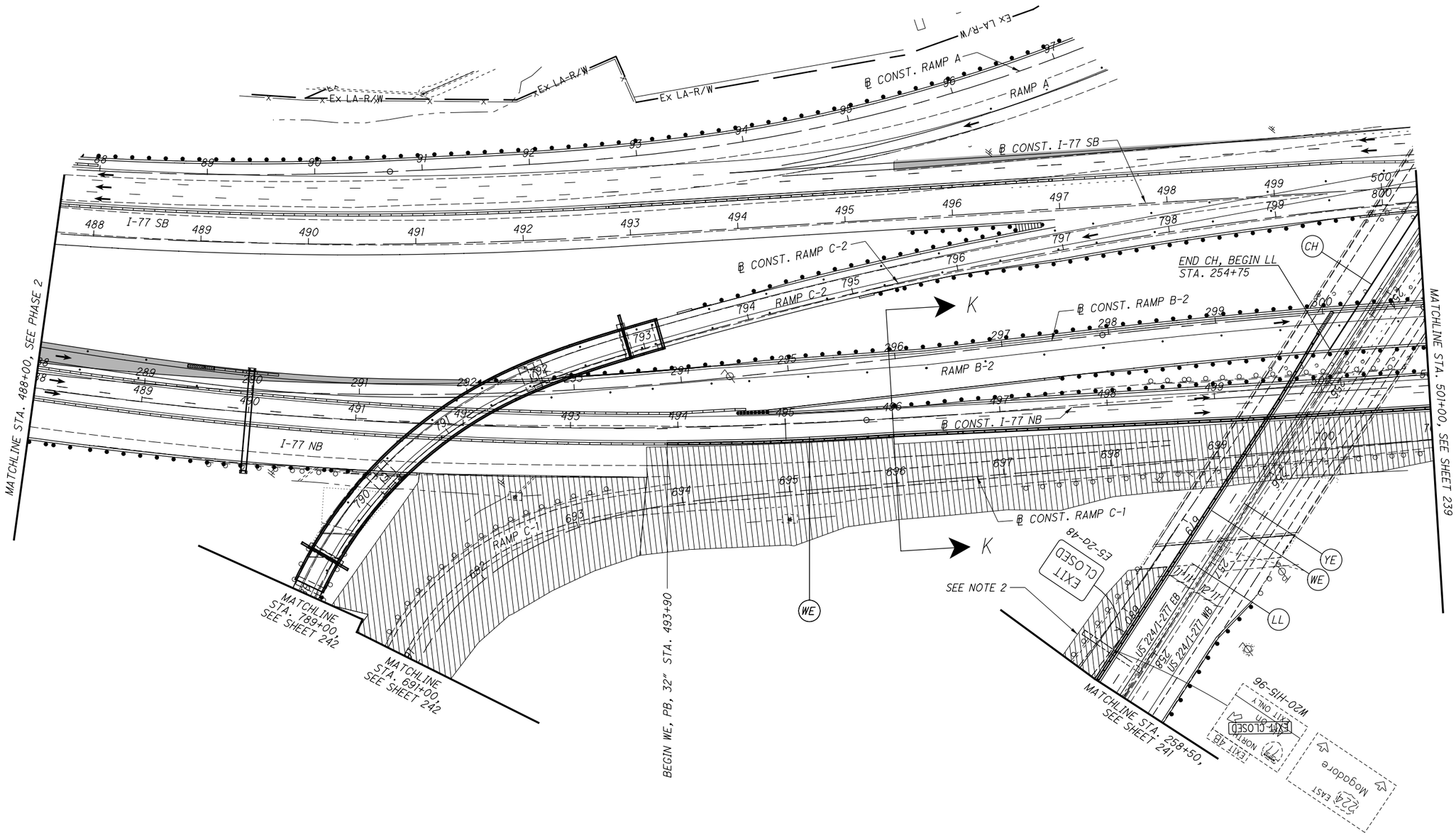


NOTES:

1. SEE SHEET 128 FOR MOT LEGEND AND DRUM SPACING CHART.
2. ALL PAVEMENT MARKINGS THAT ARE EXISTING OR PLACED IN A PREVIOUS PHASE WILL REMAIN UNLESS OTHERWISE INDICATED.
3. SEE SHEETS 194-199 FOR TYPICAL SECTIONS.
4. SEE RAMP C-1 DETOUR ON SHEET 117 FOR ADDITIONAL SIGNS.

HORIZONTAL SCALE IN FEET
0 25 50 100

CALCULATED .
CHECKED .

MAINTENANCE OF TRAFFIC PLAN - PHASE 2B
I-77 - STA. 488+00 TO STA. 501+00

SUM-77/277/224
VARIOUS

238
1288

N:\03\60\06744-08\106002_SUM-76-10.95\Design\MOT\Sheets\106002_MP240.dgn Sheet 1/31/2021 5:40:50 PM jrettig

NOTES:

1. SEE SHEET 128 FOR MOT LEGEND AND DRUM SPACING CHART.
2. ALL PAVEMENT MARKINGS THAT ARE EXISTING OR PLACED IN A PREVIOUS PHASE WILL REMAIN UNLESS OTHERWISE INDICATED.
3. SEE SHEETS 194-199 FOR TYPICAL SECTIONS.

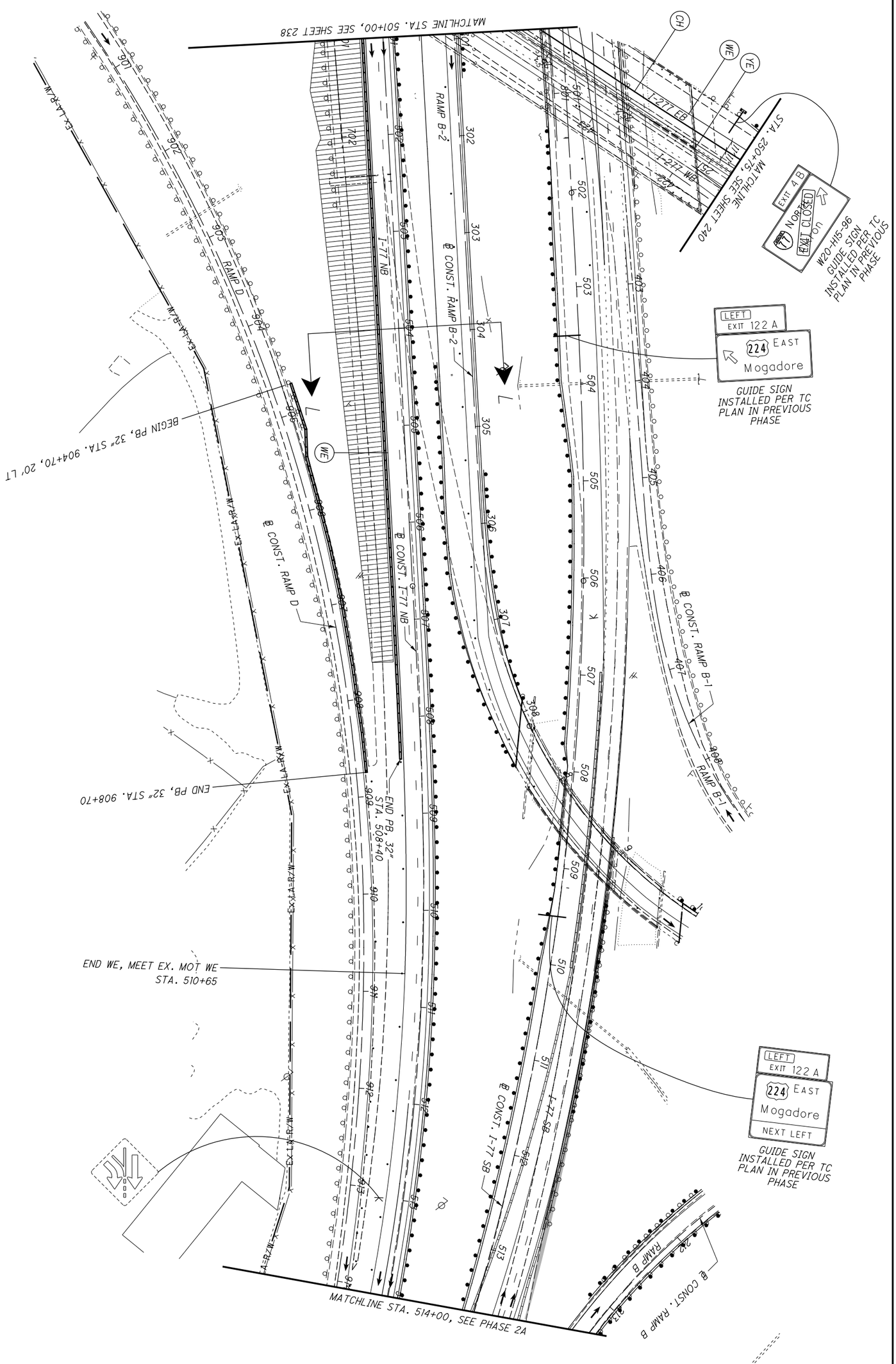


| | | | | |
|---|---|---|---|---|
| 239 / 1288 | SUM-77 / 277 / 224<br>VARIOUS | MAINTENANCE OF TRAFFIC PLAN - PHASE 2B<br>I-77 - STA. 501+00 TO STA. 514+00 | CALCULATED .<br>CHECKED . | 0 50<br>25 100<br>HORIZONTAL SCALE IN FEET |

NOTES:

1. SEE SHEET 128 FOR MOT LEGEND AND DRUM SPACING CHART.
2. ALL PAVEMENT MARKINGS THAT ARE EXISTING OR PLACED IN A PREVIOUS PHASE WILL REMAIN UNLESS OTHERWISE INDICATED.

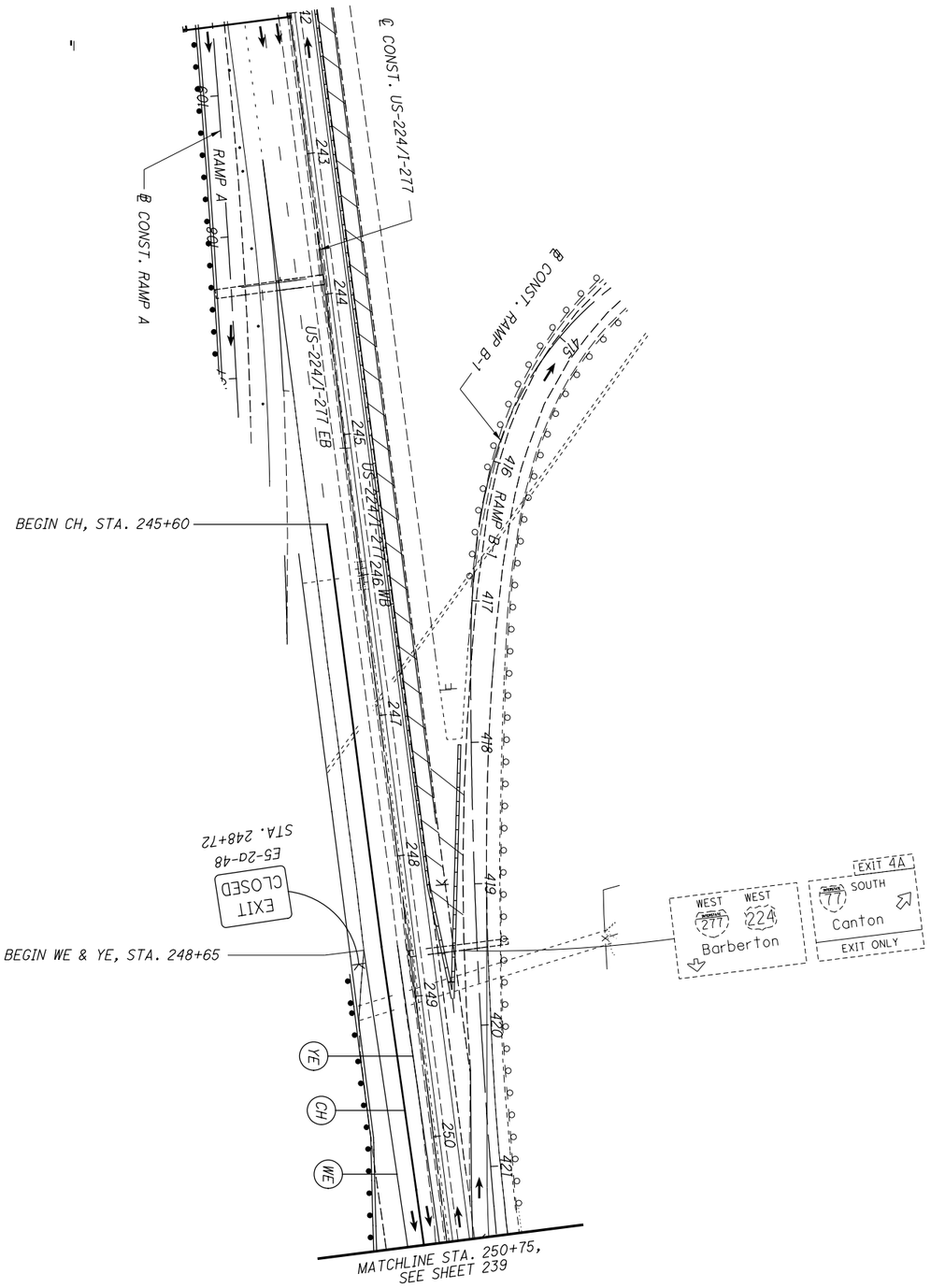

NOTES:

1. SEE SHEET 128 FOR MOT LEGEND AND DRUM SPACING CHART.
2. ALL PAVEMENT MARKINGS THAT ARE EXISTING OR PLACED IN A PREVIOUS PHASE WILL REMAIN UNLESS OTHERWISE INDICATED.

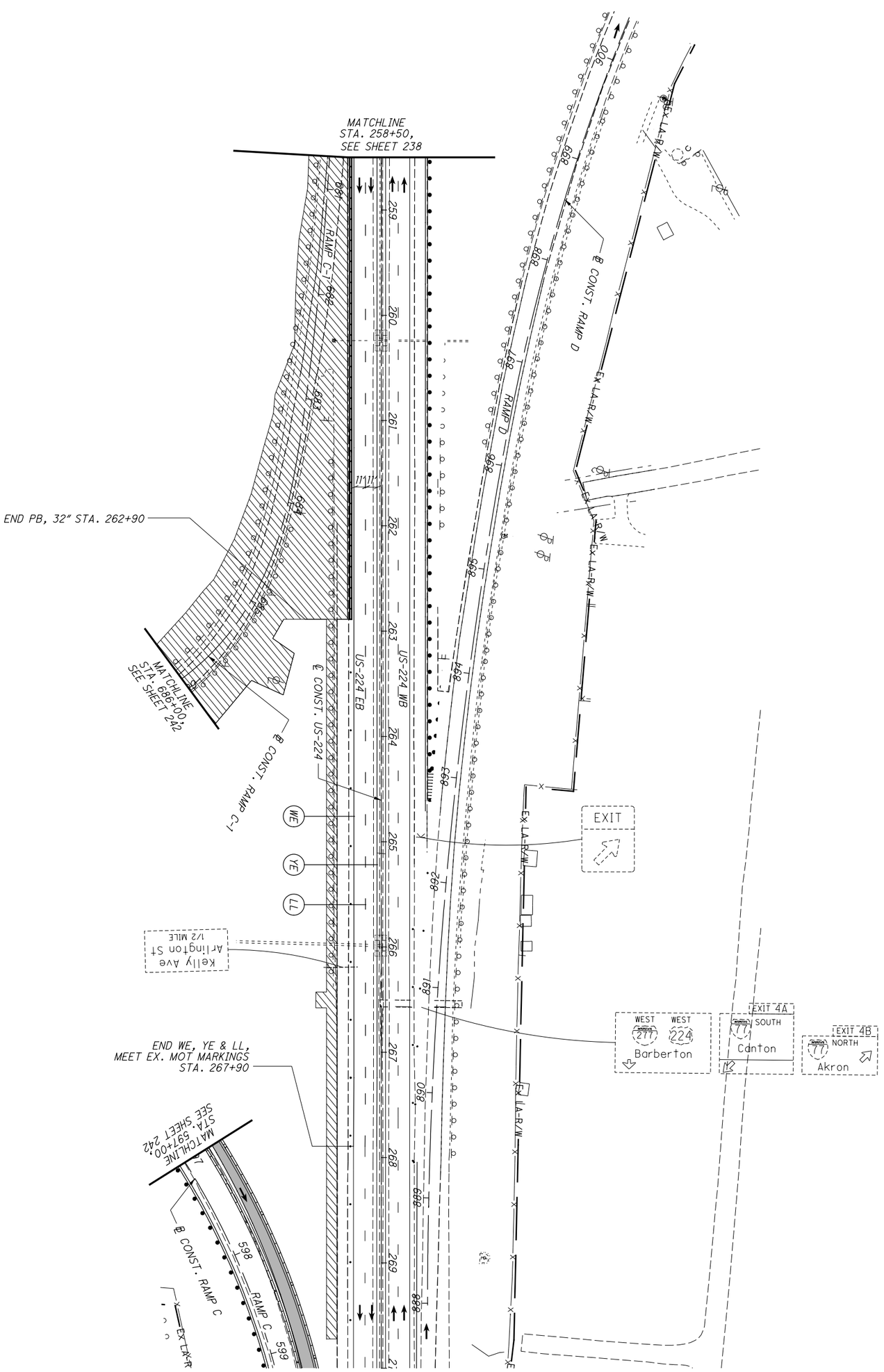


| 241 / 1288 | SUM-77 / 277 / 224<br>VARIOUS | MAINTENANCE OF TRAFFIC PLAN - PHASE 2B<br>US-224 - STA. 258+50 TO STA. 270+00 | CALCULATED .<br>CHECKED . | 0 50<br>25 100<br>HORIZONTAL SCALE IN FEET | N |
|---|---|---|---|---|---|

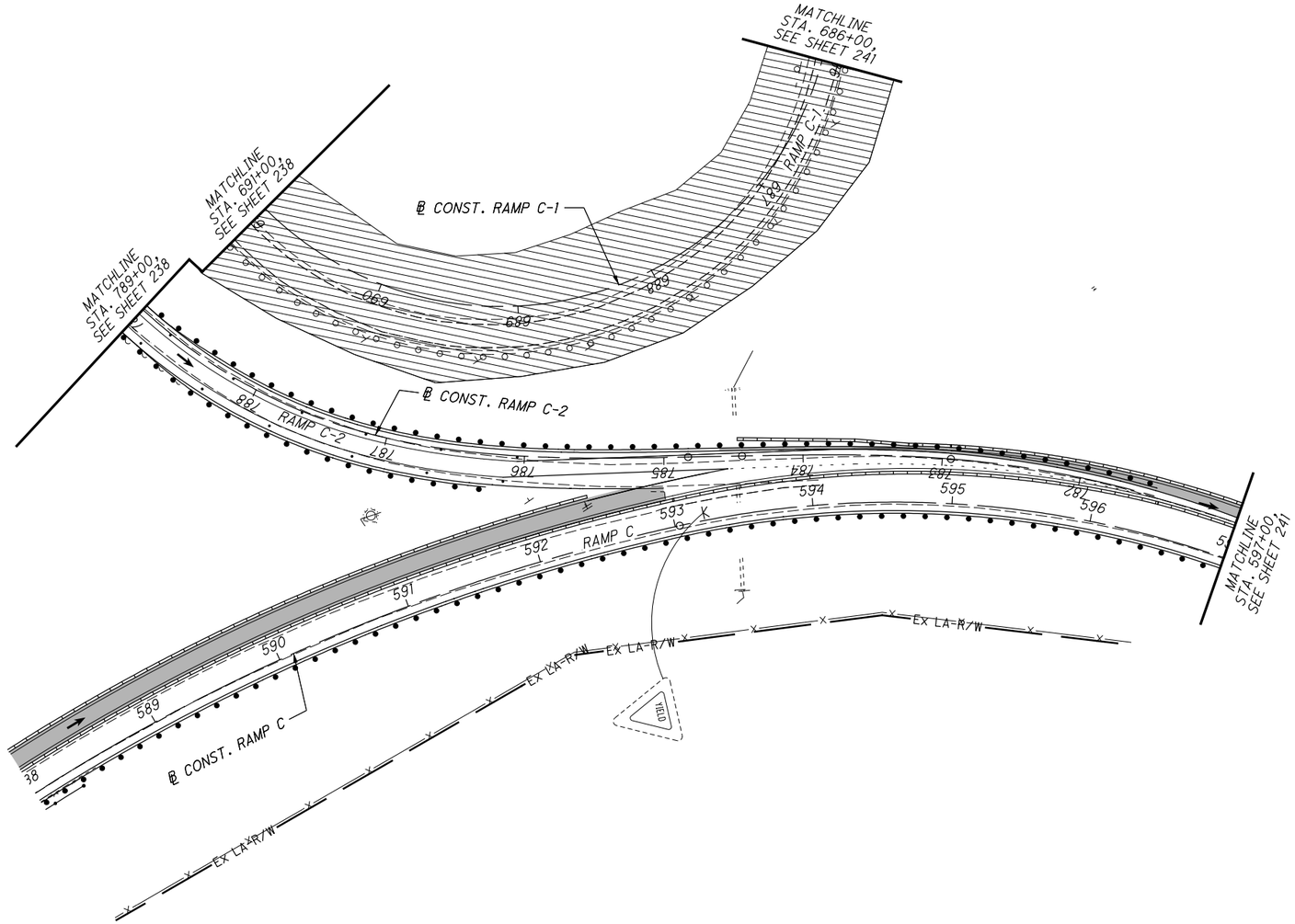


NOTES:

1. SEE SHEET 128 FOR MOT LEGEND AND DRUM SPACING CHART.

2. ALL PAVEMENT MARKINGS THAT ARE EXISTING OR PLACED IN A PREVIOUS PHASE WILL REMAIN UNLESS OTHERWISE INDICATED.

HORIZONTAL SCALE IN FEET
0 25 50 100

CALCULATED .
CHECKED .

MAINTENANCE OF TRAFFIC PLAN - PHASE 2B
RAMP C - STA. 588+00 TO STA. 597+00

SUM-77/277/224
VARIOUS

242
1288

N:\03\60\06744-08\106002_SUM-76-I0.95\Design\MOT\Sheets\106002_MP244.dgn Sheet 1/31/2021 5:41:44 PM jrettig

NOTES:

1. SEE SHEET 128 FOR MOT LEGEND AND DRUM SPACING CHART.
2. ALL PAVEMENT MARKINGS THAT ARE EXISTING OR PLACED IN A PREVIOUS PHASE WILL REMAIN UNLESS OTHERWISE INDICATED.
3. SEE SHEETS 194-199 FOR TYPICAL SECTIONS.

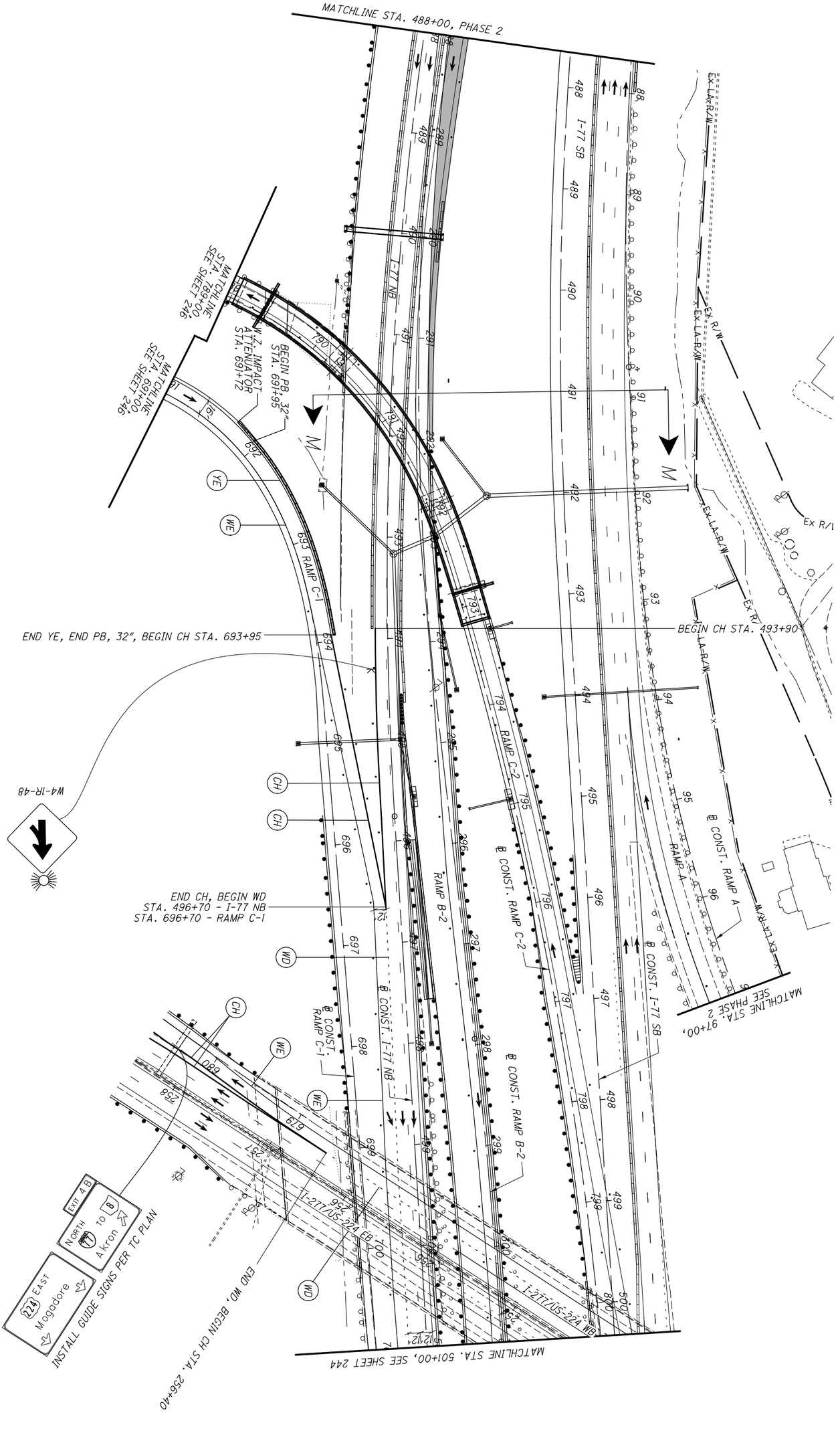


| | | | |
|---|---|---|---|
| 243 / 1288 | SUM-77 / 277 / 224<br>VARIOUS | MAINTENANCE OF TRAFFIC PLAN - PHASE 2C<br>I-77 - STA. 488+00 TO STA. 501+00 | CALCULATED .<br>CHECKED .<br>0 50<br>25 100<br>HORIZONTAL SCALE IN FEET |

N:\03\60\06744-08\I06002_SUM-76-I0.95\Design\MOT\Sheets\I06002_MP247.dgn Sheet 1/31/2021 5:42:02 PM jrettig

NOTES:

1. SEE SHEET 128 FOR MOT LEGEND AND DRUM SPACING CHART.
2. ALL PAVEMENT MARKINGS THAT ARE EXISTING OR PLACED IN A PREVIOUS PHASE WILL REMAIN UNLESS OTHERWISE INDICATED.

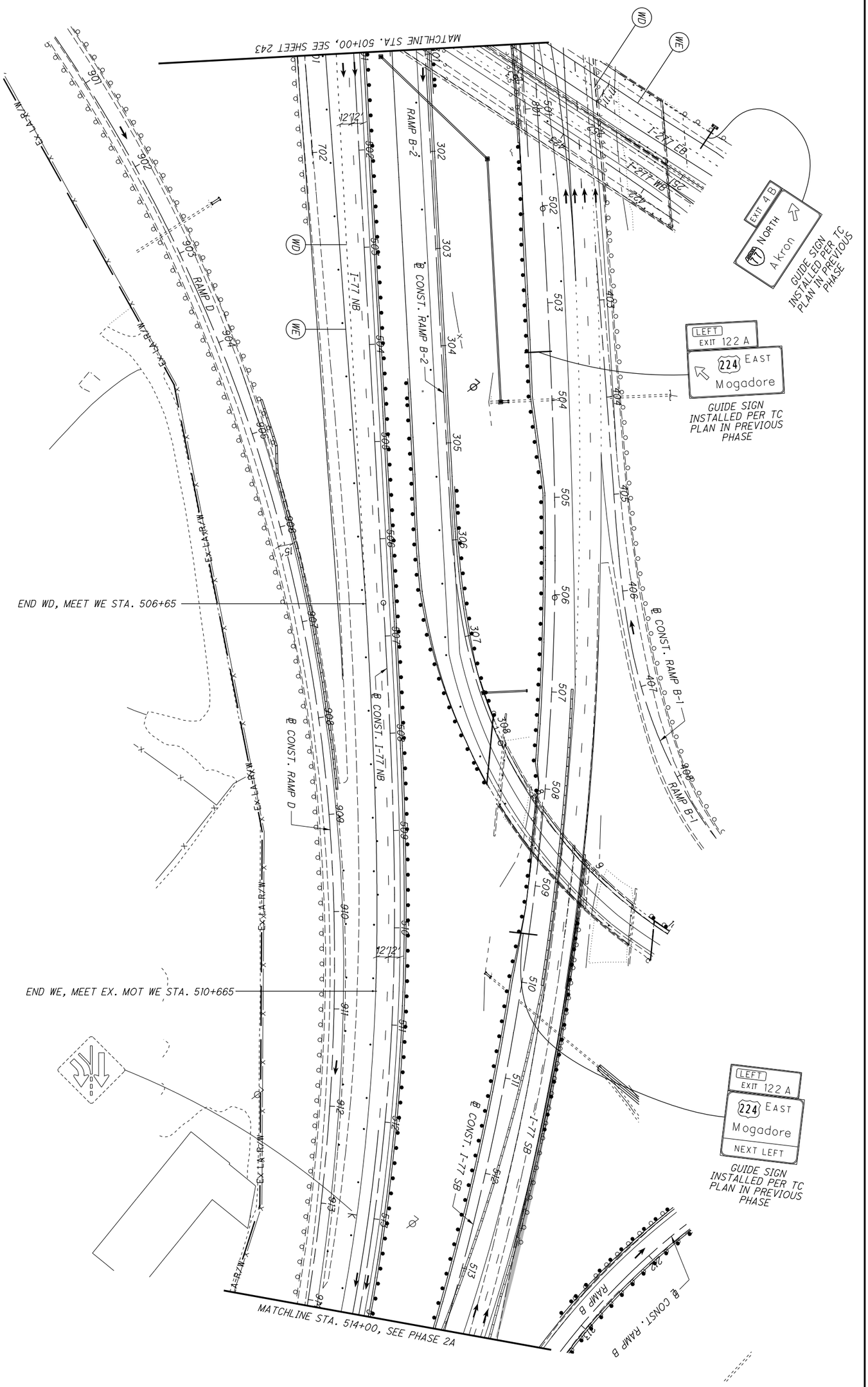


| | | | | |
|---|---|---|---|---|
| 244 / 1288 | SUM-77 / 277 / 224<br>VARIOUS | MAINTENANCE OF TRAFFIC PLAN - PHASE 2C<br>I-77 - STA. 501+00 TO STA. 514+00 | CALCULATED .<br>CHECKED . | 0 50<br>25 100<br>HORIZONTAL SCALE IN FEET |

NOTES:

1. SEE SHEET 128 FOR MOT LEGEND AND DRUM SPACING CHART.
2. ALL PAVEMENT MARKINGS THAT ARE EXISTING OR PLACED IN A PREVIOUS PHASE WILL REMAIN UNLESS OTHERWISE INDICATED.

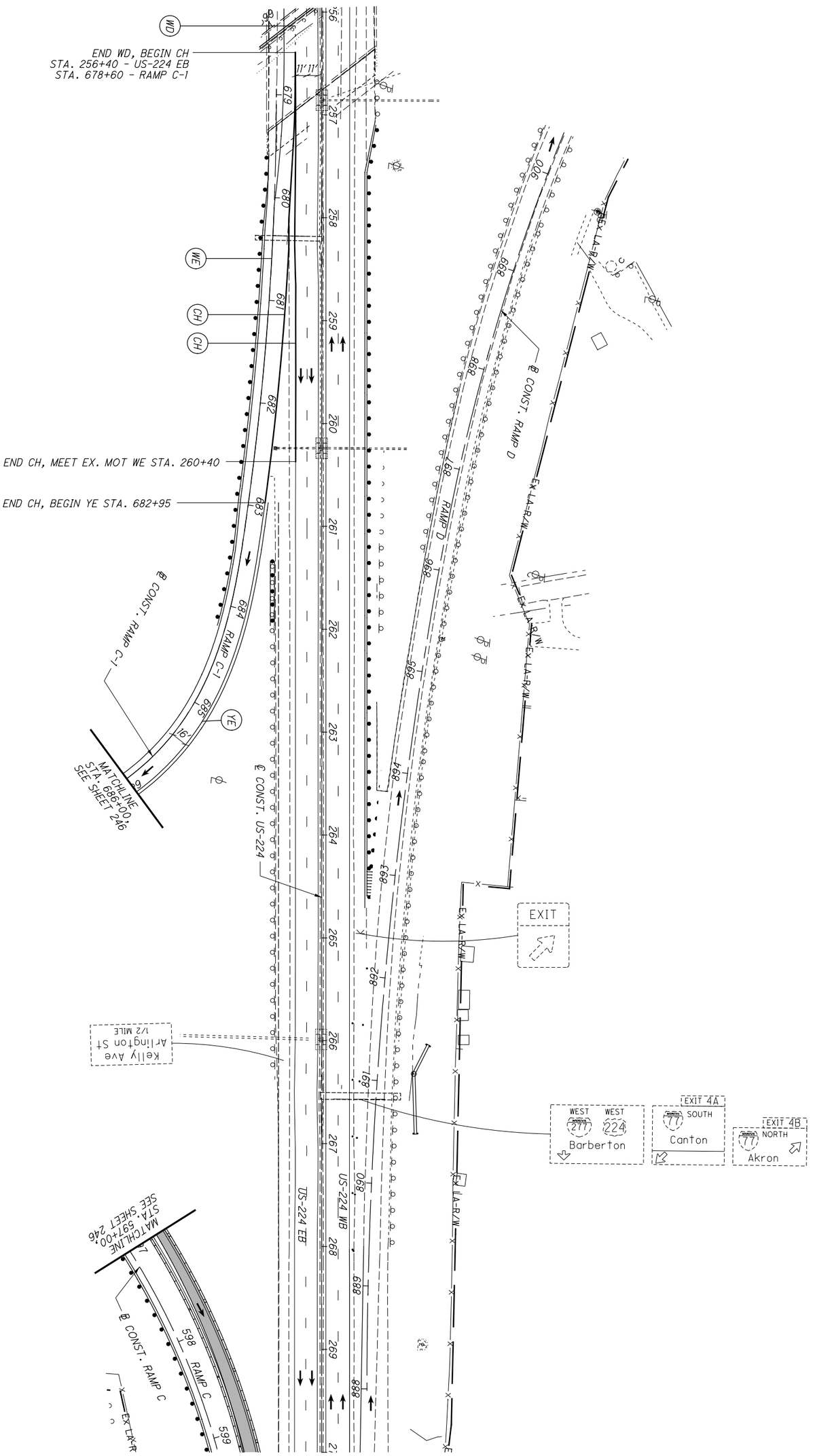


| | | | | |
|---|---|---|---|---|
| 245 / 1288 | SUM-77 / 277 / 224<br>VARIOUS | MAINTENANCE OF TRAFFIC PLAN - PHASE 2C<br>I-77 - STA. 256+00 TO STA. 270+00 | CALCULATED .<br>CHECKED . | 0 50<br>25 100<br>HORIZONTAL SCALE IN FEET |

NOTES:

1. SEE SHEET 128 FOR MOT LEGEND AND DRUM SPACING CHART.

2. ALL PAVEMENT MARKINGS THAT ARE EXISTING OR PLACED IN A PREVIOUS PHASE WILL REMAIN UNLESS OTHERWISE INDICATED.

N:\03\60\06744-08\106002_SUM-76-10.95\Design\MOT\Sheets\106002_MP248.dgn Sheet 1/31/2021 5:42:15 PM jrettig

HORIZONTAL SCALE IN FEET
0 25 50 100

CALCULATED .
CHECKED .

MAINTENANCE OF TRAFFIC PLAN - PHASE 2C
RAMP C - STA. 588+00 TO STA. 597+00

SUM-77/277/224
VARIOUS

246
1288

N:\03\60\06744-08\106002_SUM-76-10.95\Design\MOT\Sheets\106002_MP253.dgn Sheet 1/31/2021 5:42:22 PM jrettig

NOTES:

1. SEE SHEET 128 FOR MOT LEGEND AND DRUM SPACING CHART.
2. ALL PAVEMENT MARKINGS THAT ARE EXISTING OR PLACED IN A PREVIOUS PHASE WILL REMAIN UNLESS OTHERWISE INDICATED.
3. SEE SHEETS 194-199 FOR TYPICAL SECTIONS.

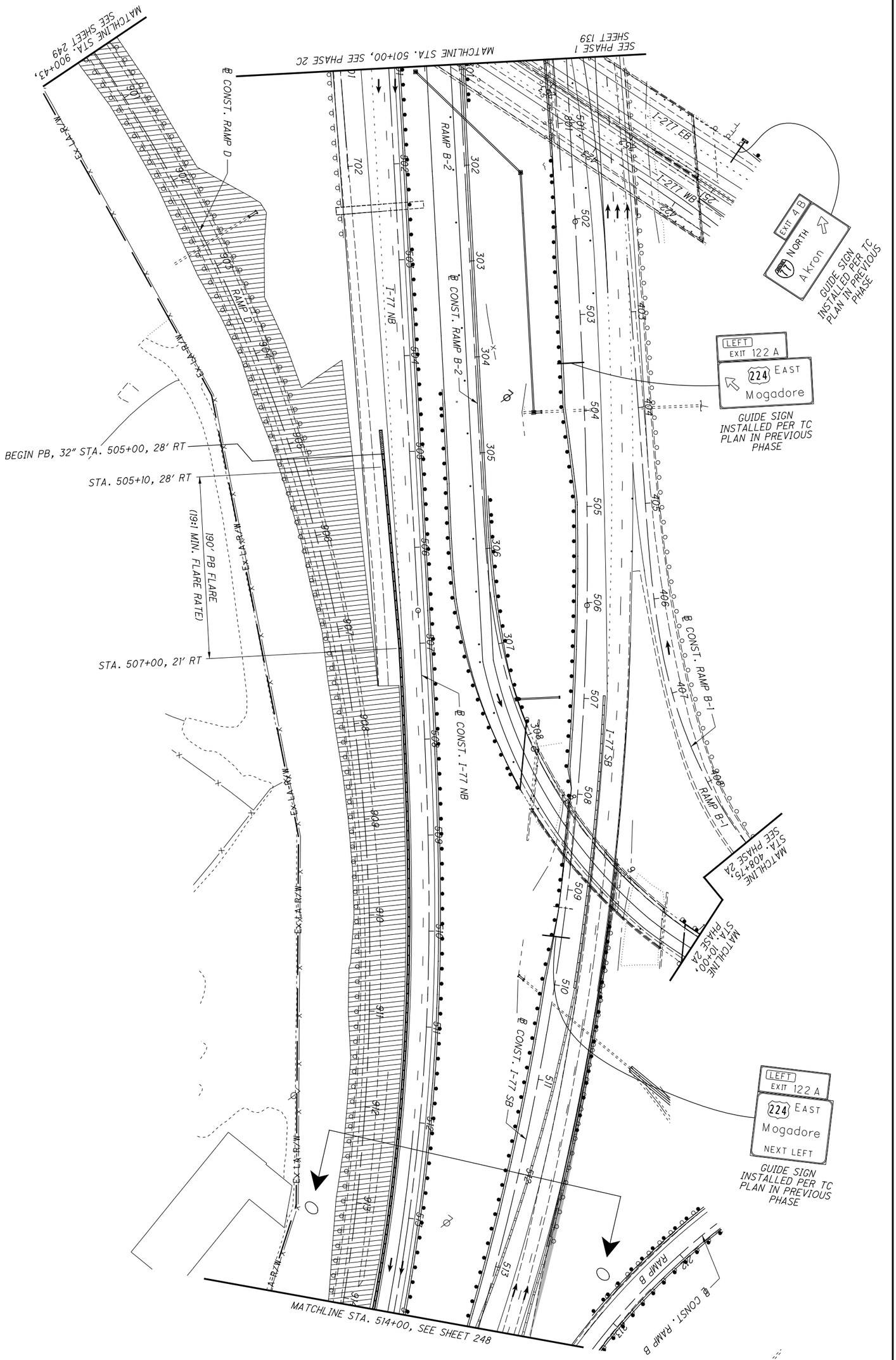


| 247 / 1288 | SUM-77 / 277 / 224 VARIOUS | MAINTENANCE OF TRAFFIC PLAN - PHASE 2D I-77 - STA. 501+00 TO STA. 514+00 | CALCULATED . CHECKED . | 0 50 25 100 HORIZONTAL SCALE IN FEET |
|---|---|---|---|---|

N:\03\60\06744-08\106002_SUM-76-10.95\Design\MOT\Sheets\106002_MP254.dgn Sheet 1/31/2021 5:42:32 PM jrettig

NOTES:

1. SEE SHEET 128 FOR MOT LEGEND AND DRUM SPACING CHART.
2. ALL PAVEMENT MARKINGS THAT ARE EXISTING OR PLACED IN A PREVIOUS PHASE WILL REMAIN UNLESS OTHERWISE INDICATED.

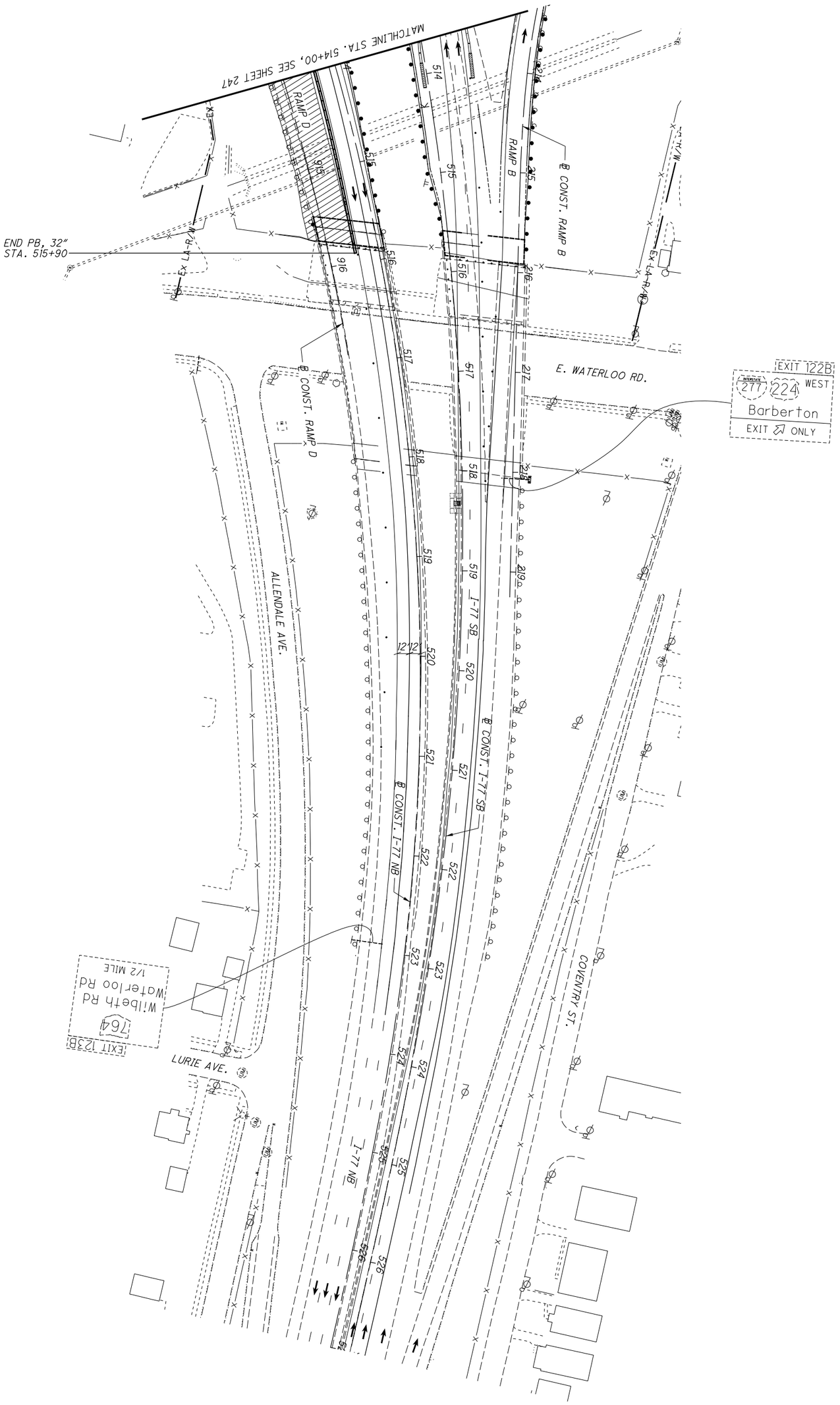


| | | | | |
|---|---|---|---|---|
| 248 / 1288 | SUM-77 / 277 / 224<br>VARIOUS | MAINTENANCE OF TRAFFIC PLAN - PHASE 2D<br>I-77 - STA. 514+00 TO STA. 527+00 | CALCULATED .<br>CHECKED . | 0 50<br>25 100<br>HORIZONTAL SCALE IN FEET |

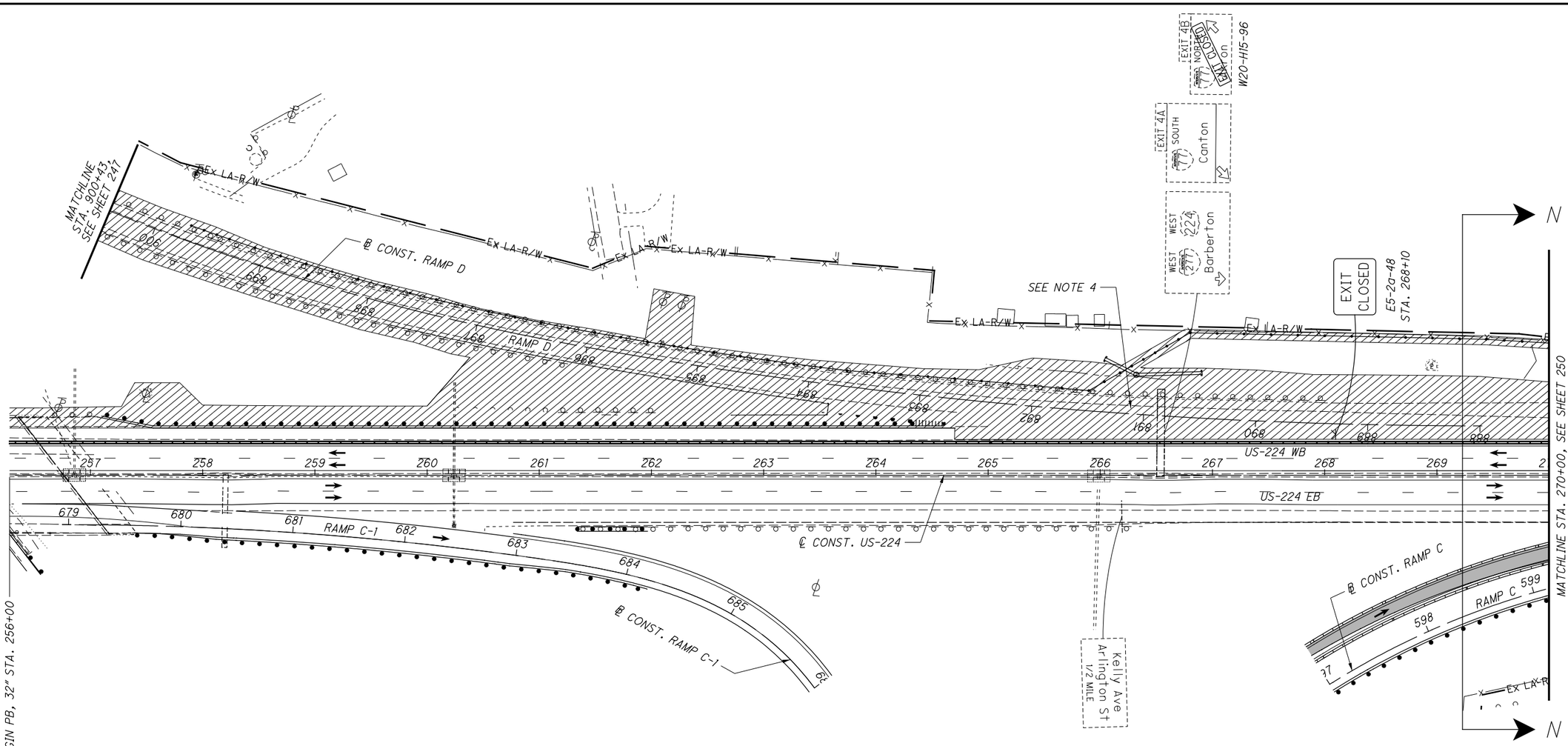


NOTES:

1. SEE SHEET 128 FOR MOT LEGEND AND DRUM SPACING CHART.
2. ALL PAVEMENT MARKINGS THAT ARE EXISTING OR PLACED IN A PREVIOUS PHASE WILL REMAIN UNLESS OTHERWISE INDICATED.
3. SEE SHEETS 194-199 FOR TYPICAL SECTIONS.
4. SEE RAMP D DETOUR ON SHEET 120 FOR ADDITIONAL SIGNS.

HORIZONTAL SCALE IN FEET
0 25 50 100
CALCULATED .
CHECKED .

# MAINTENANCE OF TRAFFIC PLAN - PHASE 2D
## US-224 - STA. 258+50 TO STA. 270+00

SUM-77/277/224
VARIOUS

249
1288

N:\03\60\06744-08\106002_SUM-76-10.95\Design\MOT\Sheets\106002_MP25i.dgn Sheet 1/31/2021 5:42:35 PM jrettig

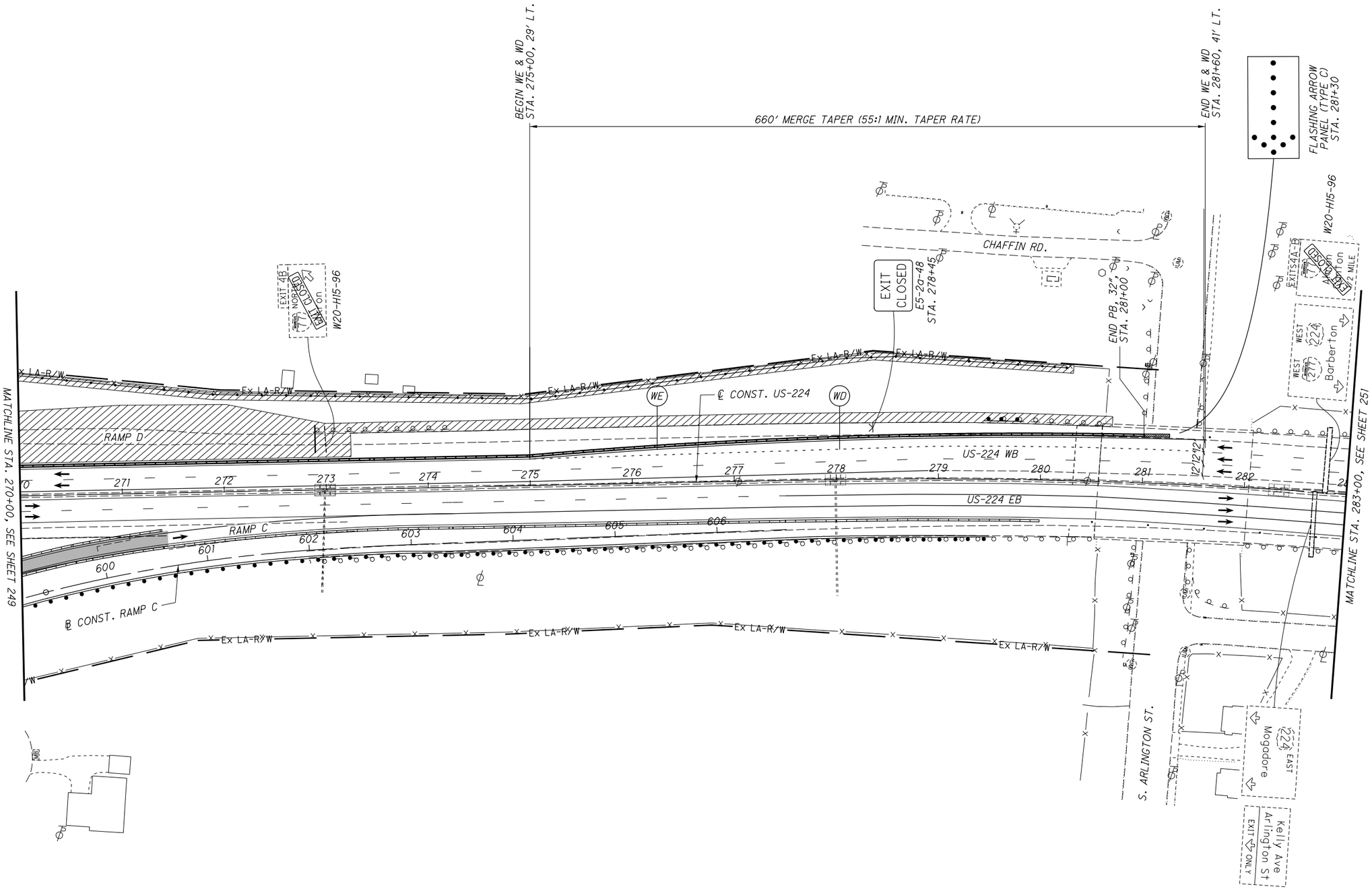


NOTES:

1. SEE SHEET 128 FOR MOT LEGEND AND DRUM SPACING CHART.

2. ALL PAVEMENT MARKINGS THAT ARE EXISTING OR PLACED IN A PREVIOUS PHASE WILL REMAIN UNLESS OTHERWISE INDICATED.

HORIZONTAL SCALE IN FEET
0 25 50 100

CALCULATED .
CHECKED .

# TRAFFIC PLAN - PHASE 2D

## MAINTENANCE OF TRAFFIC
## US-224 - STA. 270+00 TO STA. 283+00

SUM-77/277/224
VARIOUS

250
1288

N:\03\60\06744-08\106002_SUM-76-10.95\Design\MOT\Sheets\106002_MP252.dgn Sheet 1/31/2021 5:42:42 PM jrettig

NOTES:

1. SEE SHEET 128 FOR MOT LEGEND AND DRUM SPACING CHART.
2. ALL PAVEMENT MARKINGS THAT ARE EXISTING OR PLACED IN A PREVIOUS PHASE WILL REMAIN UNLESS OTHERWISE INDICATED.

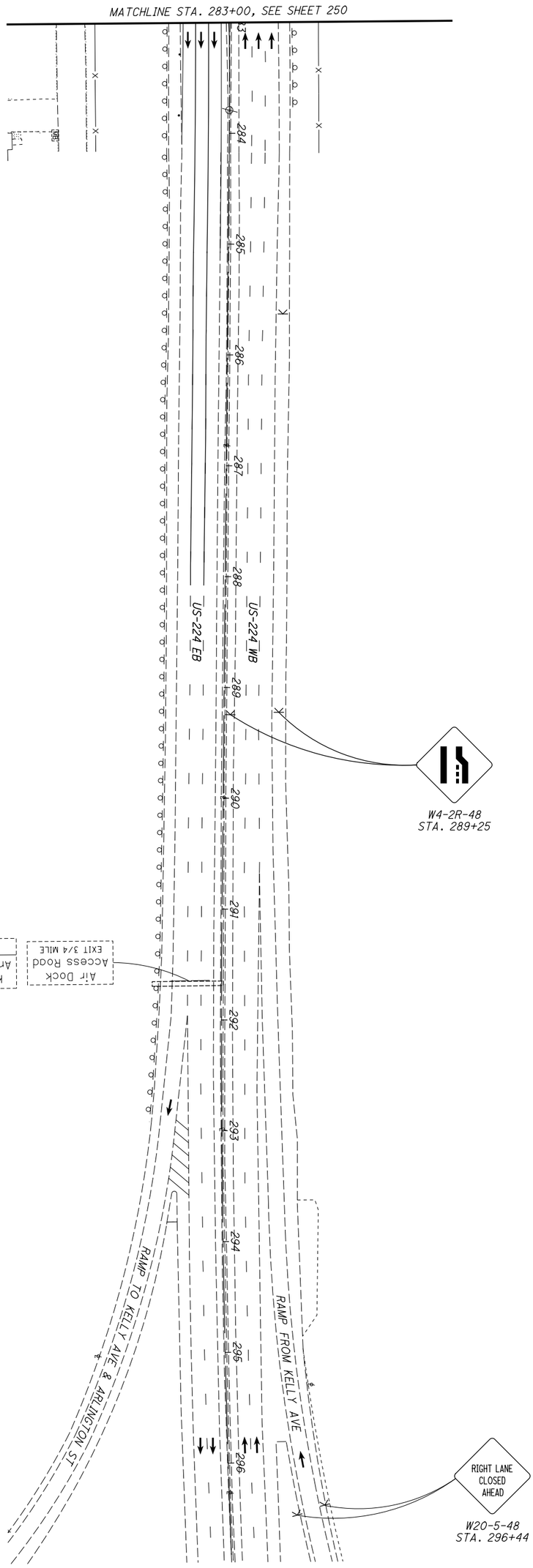


| | | | | |
|---|---|---|---|---|
| 251 / 1288 | SUM-77/277/224<br>VARIOUS | MAINTENANCE OF TRAFFIC PLAN - PHASE 2D<br>US-224 - STA. 283+00 TO STA. 296+00 | CALCULATED .<br>CHECKED . | 0 50<br>25 100<br>HORIZONTAL SCALE IN FEET |

N:\03\60\06744-08\I06002_SUM-76-I0.95\Design\MOT\Sheets\I06002_MP292.dgn Sheet 1/31/2021 5:43:21 PM jrettig

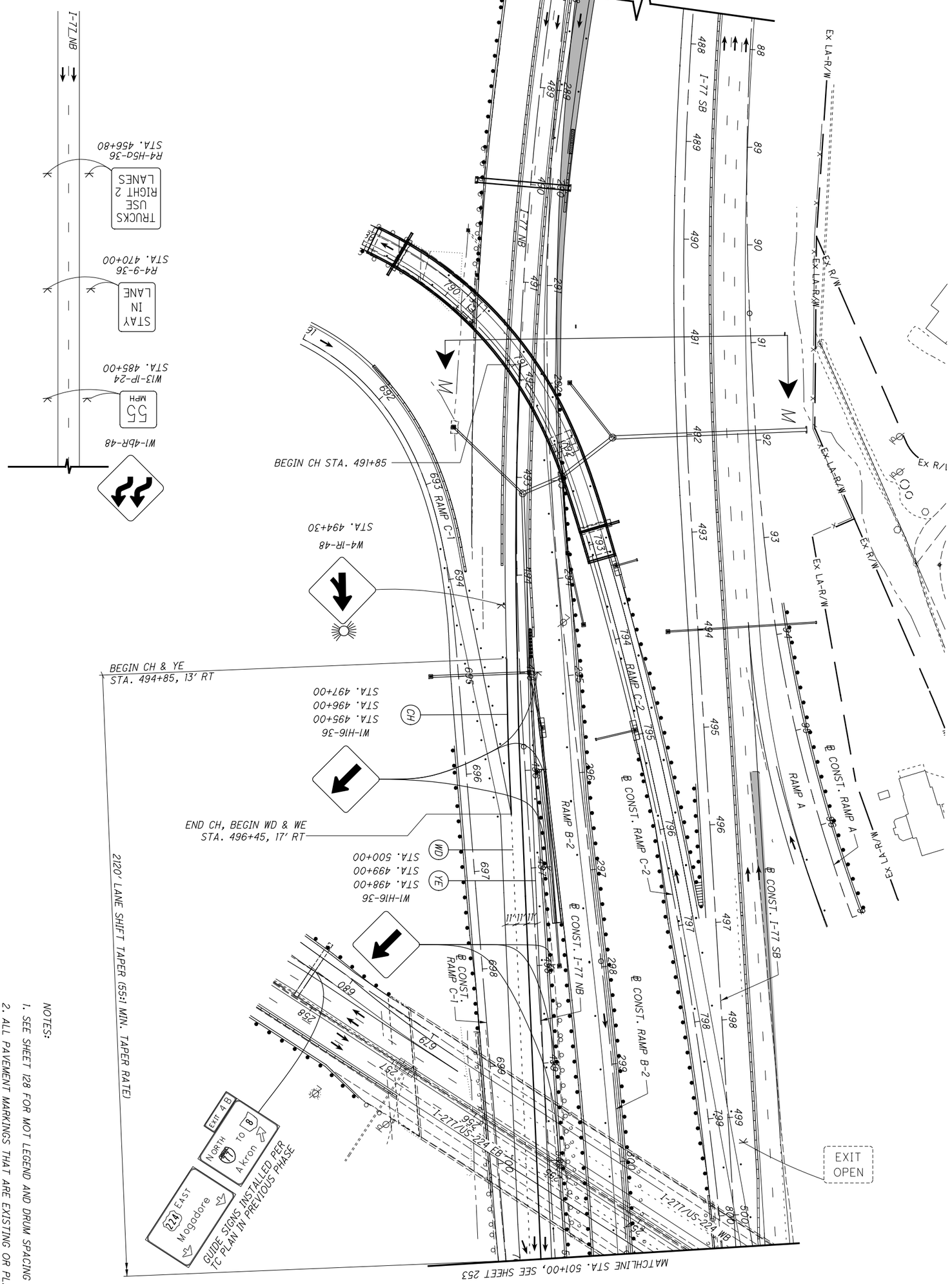


NOTES:

1. SEE SHEET 128 FOR MOT LEGEND AND DRUM SPACING CHART.
2. ALL PAVEMENT MARKINGS THAT ARE EXISTING OR PLACED IN A PREVIOUS PHASE WILL REMAIN UNLESS OTHERWISE INDICATED.
3. SEE SHEETS 194-199 FOR TYPICAL SECTIONS.

| | | | | |
|---|---|---|---|---|
| 252 / 1288 | SUM-77 / 277 / 224<br>VARIOUS | MAINTENANCE OF TRAFFIC PLAN - PHASE 2E<br>I-77 - STA. 488+00 TO STA. 501+00 | CALCULATED .<br>CHECKED . | 0 50<br>25 100<br>HORIZONTAL SCALE IN FEET |

N:\03\60\06744-08\106002_SUM-76-10.95\Design\MOT\Sheets\106002_MP255.dgn Sheet 1/31/2021 5:43:44 PM jrettig

NOTES:

1. SEE SHEET 128 FOR MOT LEGEND AND DRUM SPACING CHART.
2. ALL PAVEMENT MARKINGS THAT ARE EXISTING OR PLACED IN A PREVIOUS PHASE WILL REMAIN UNLESS OTHERWISE INDICATED.

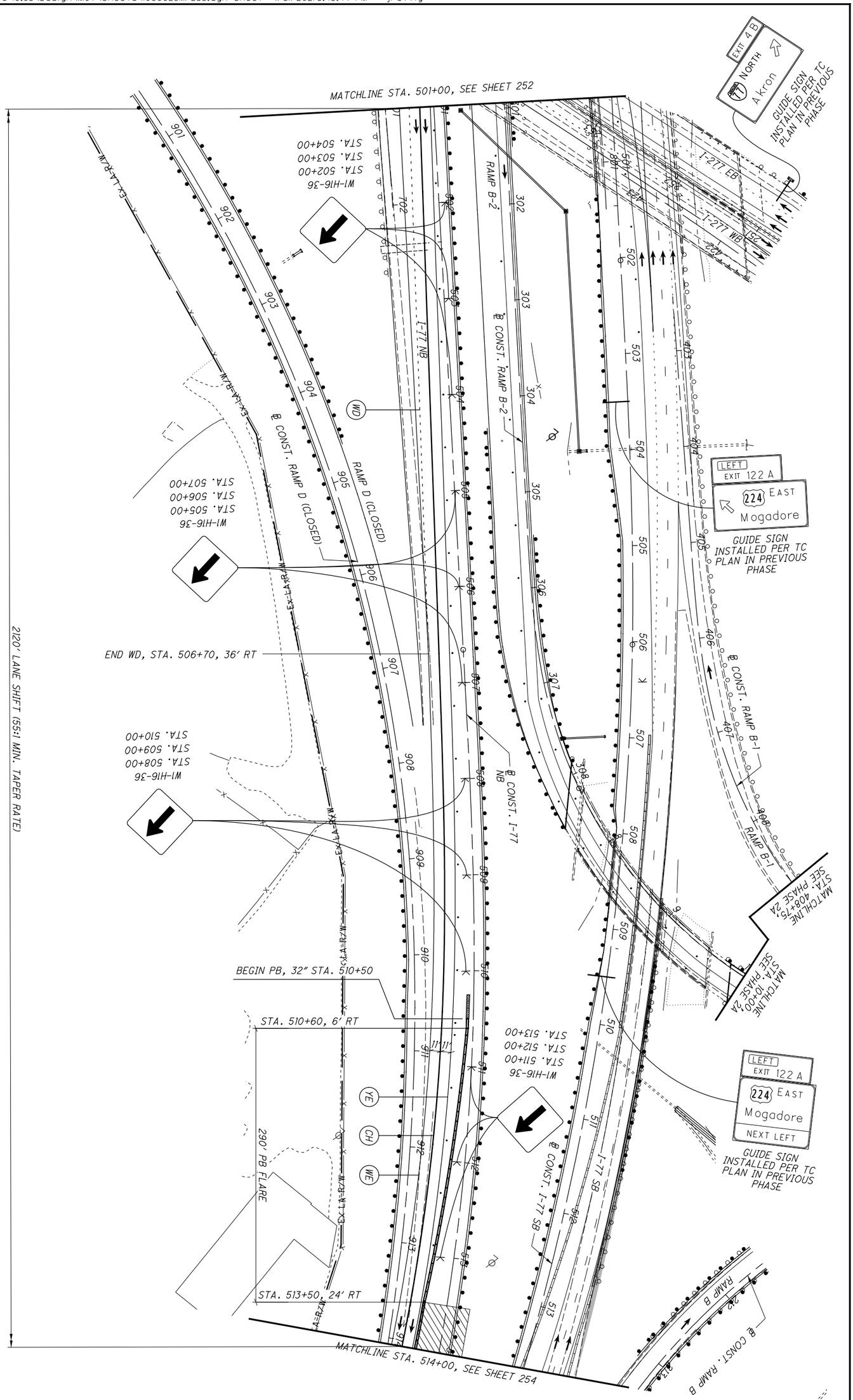


| 253 / 1288 | SUM-77 / 277 / 224 VARIOUS | MAINTENANCE OF TRAFFIC PLAN - PHASE 2E I-77 - STA. 501+00 TO STA. 514+00 | CALCULATED . CHECKED . | 0 50 25 100 HORIZONTAL SCALE IN FEET |
|---|---|---|---|---|

N:\03\60\06744-08\106002_SUM-76-10.95\Design\MOT\Sheets\106002_MP256.dgn Sheet 1/31/2021 5:44:08 PM jrettig

NOTES:

1. SEE SHEET 128 FOR MOT LEGEND AND DRUM SPACING CHART.
2. ALL PAVEMENT MARKINGS THAT ARE EXISTING OR PLACED IN A PREVIOUS PHASE WILL REMAIN UNLESS OTHERWISE INDICATED.
3. SEE SHEETS 194-199 FOR TYPICAL SECTIONS.

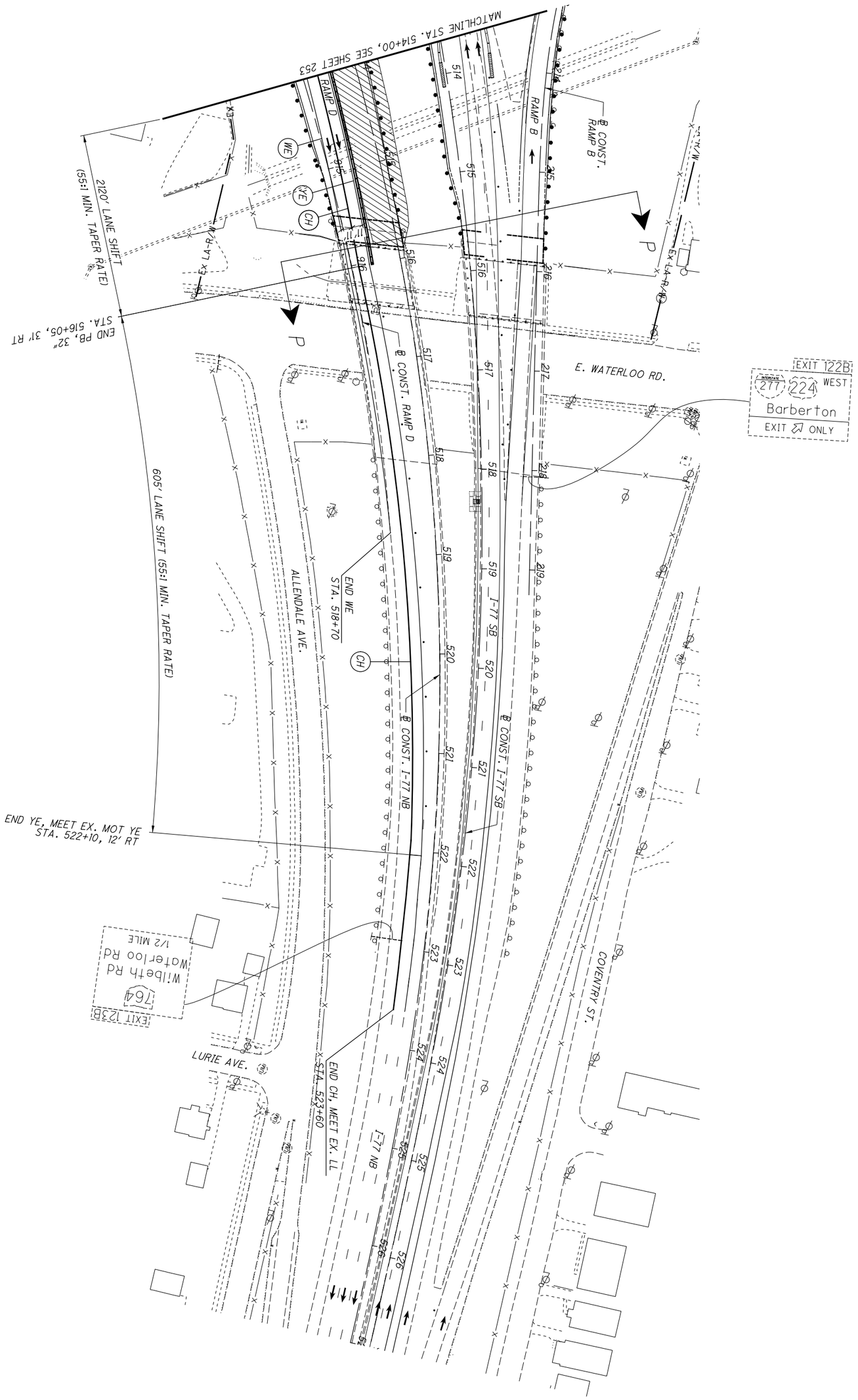


| | | | | |
|---|---|---|---|---|
| 254 / 1288 | SUM-77 / 277 / 224<br>VARIOUS | MAINTENANCE OF TRAFFIC PLAN - PHASE 2E<br>I-77 - STA. 514+00 TO STA. 527+00 | CALCULATED .<br>CHECKED . | 0 50<br>25 100<br>HORIZONTAL SCALE IN FEET |

NOTES:

1. SEE SHEET 128 FOR MOT LEGEND AND DRUM SPACING CHART.
2. ALL PAVEMENT MARKINGS THAT ARE EXISTING OR PLACED IN A PREVIOUS PHASE WILL REMAIN UNLESS OTHERWISE INDICATED.
3. SEE SHEETS 194-199 FOR TYPICAL SECTIONS.

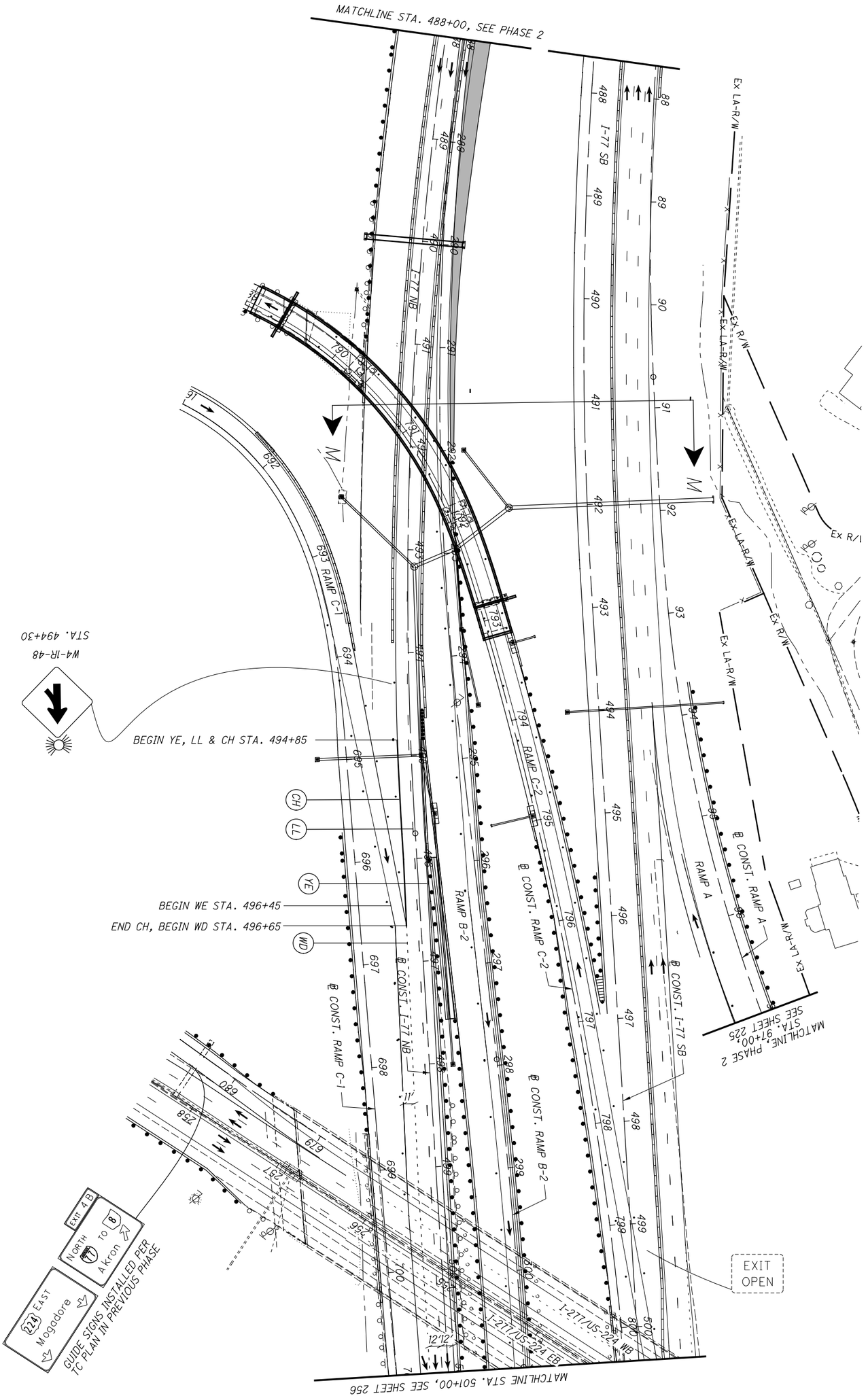


| 255 / 1288 | SUM-77 / 277 / 224<br>VARIOUS | MAINTENANCE OF TRAFFIC PLAN - PHASE 2F<br>I-77 - STA. 488+00 TO STA. 501+00 | CALCULATED .<br>CHECKED . | 0 50<br>25 100<br>HORIZONTAL SCALE IN FEET |
|---|---|---|---|---|

N:\03\60\06744-08\106002_SUM-76-10.95\Design\MOT\Sheets\106002_MP257.dgn Sheet 1/31/2021 5:44:22 PM jrettig

NOTES:

1. SEE SHEET 128 FOR MOT LEGEND AND DRUM SPACING CHART.
2. ALL PAVEMENT MARKINGS THAT ARE EXISTING OR PLACED IN A PREVIOUS PHASE WILL REMAIN UNLESS OTHERWISE INDICATED.

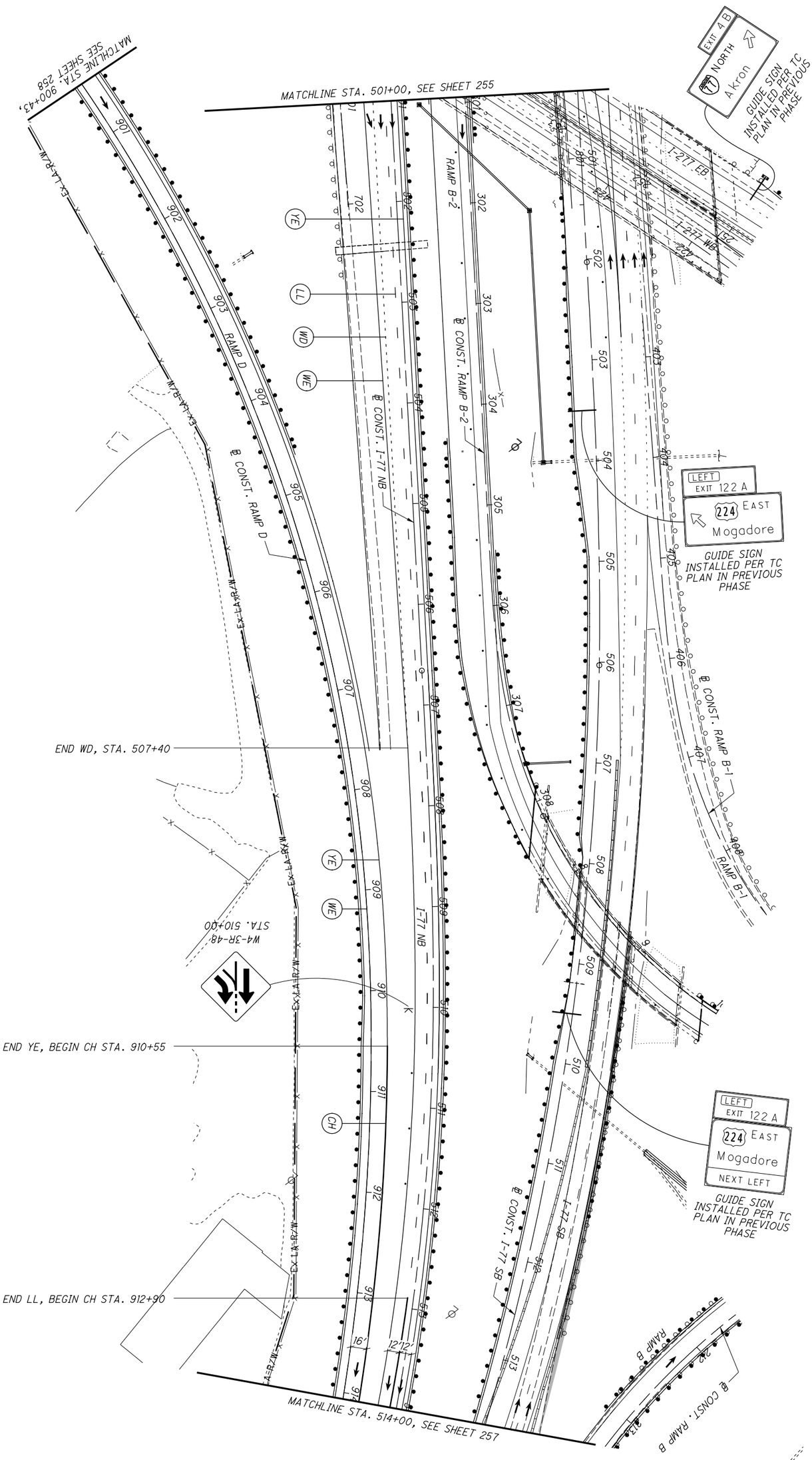


| | | | | |
|---|---|---|---|---|
| 256 / 1288 | SUM-77 / 277 / 224<br>VARIOUS | MAINTENANCE OF TRAFFIC PLAN - PHASE 2F<br>I-77 - STA. 501+00 TO STA. 514+00 | CALCULATED .<br>CHECKED . | 0 50<br>25 100<br>HORIZONTAL SCALE IN FEET |

N:\03\60\06744-08\I06002_SUM-76-I0.95\Design\MOT\Sheets\I06002_MP258.dgn Sheet 1/31/2021 5:44:29 PM jrettig

NOTES:

1. SEE SHEET 128 FOR MOT LEGEND AND DRUM SPACING CHART.
2. ALL PAVEMENT MARKINGS THAT ARE EXISTING OR PLACED IN A PREVIOUS PHASE WILL REMAIN UNLESS OTHERWISE INDICATED.

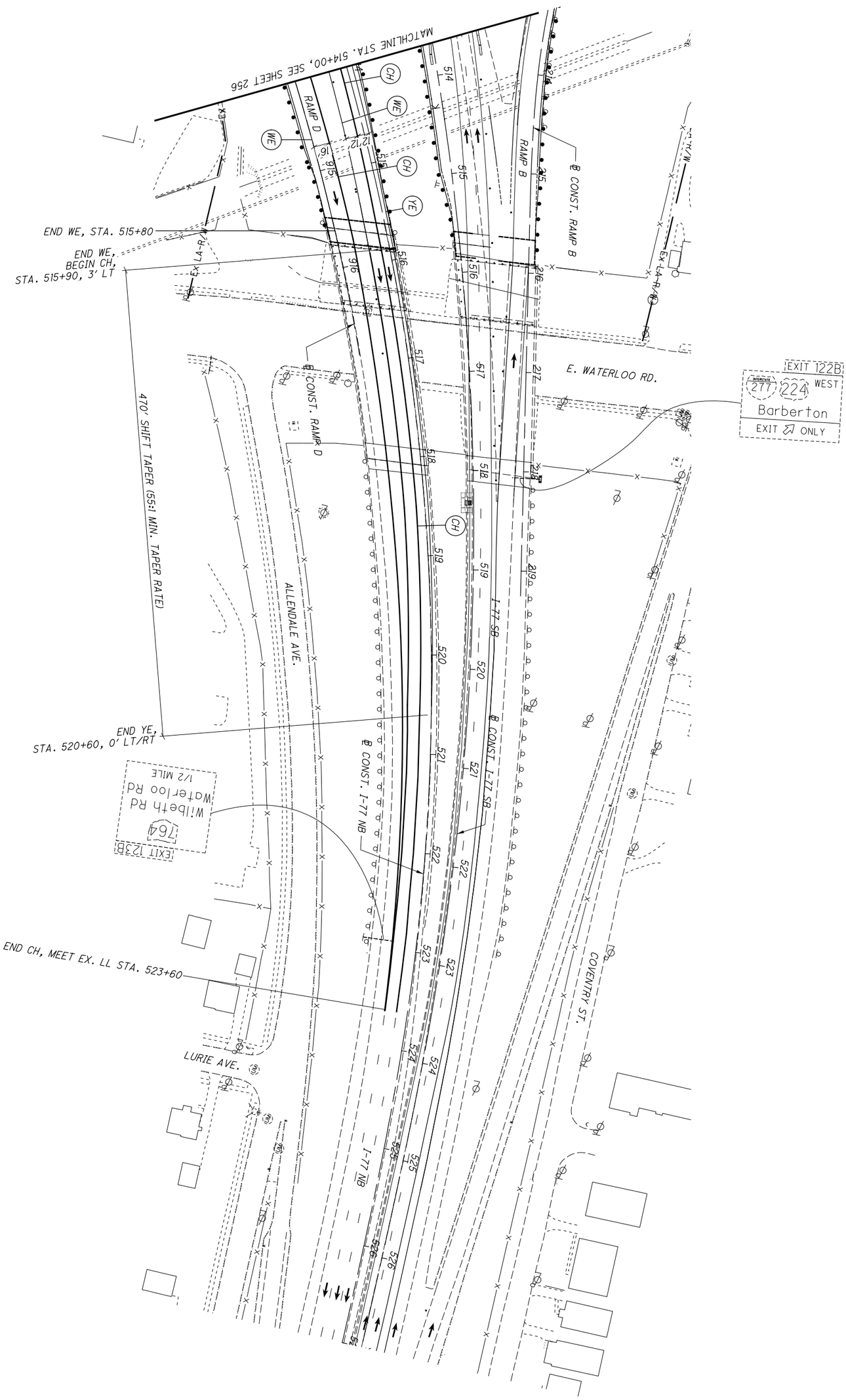


| | | | | |
|---|---|---|---|---|
| 257 / 1288 | SUM-77 / 277 / 224<br>VARIOUS | MAINTENANCE OF TRAFFIC PLAN - PHASE 2F<br>I-77 - STA. 514+00 TO STA. 527+00 | CALCULATED .<br>CHECKED . | 0 50<br>25 100<br>HORIZONTAL SCALE IN FEET |

N:\03\60\06744-08\I06002_SUM-76-10.95\Design\MOT\Sheets\I06002_MP259.dgn Sheet 1/31/2021 5:44:33 PM jrettig

NOTES:

1. SEE SHEET 128 FOR MOT LEGEND AND DRUM SPACING CHART.
2. ALL PAVEMENT MARKINGS THAT ARE EXISTING OR PLACED IN A PREVIOUS PHASE WILL REMAIN UNLESS OTHERWISE INDICATED.

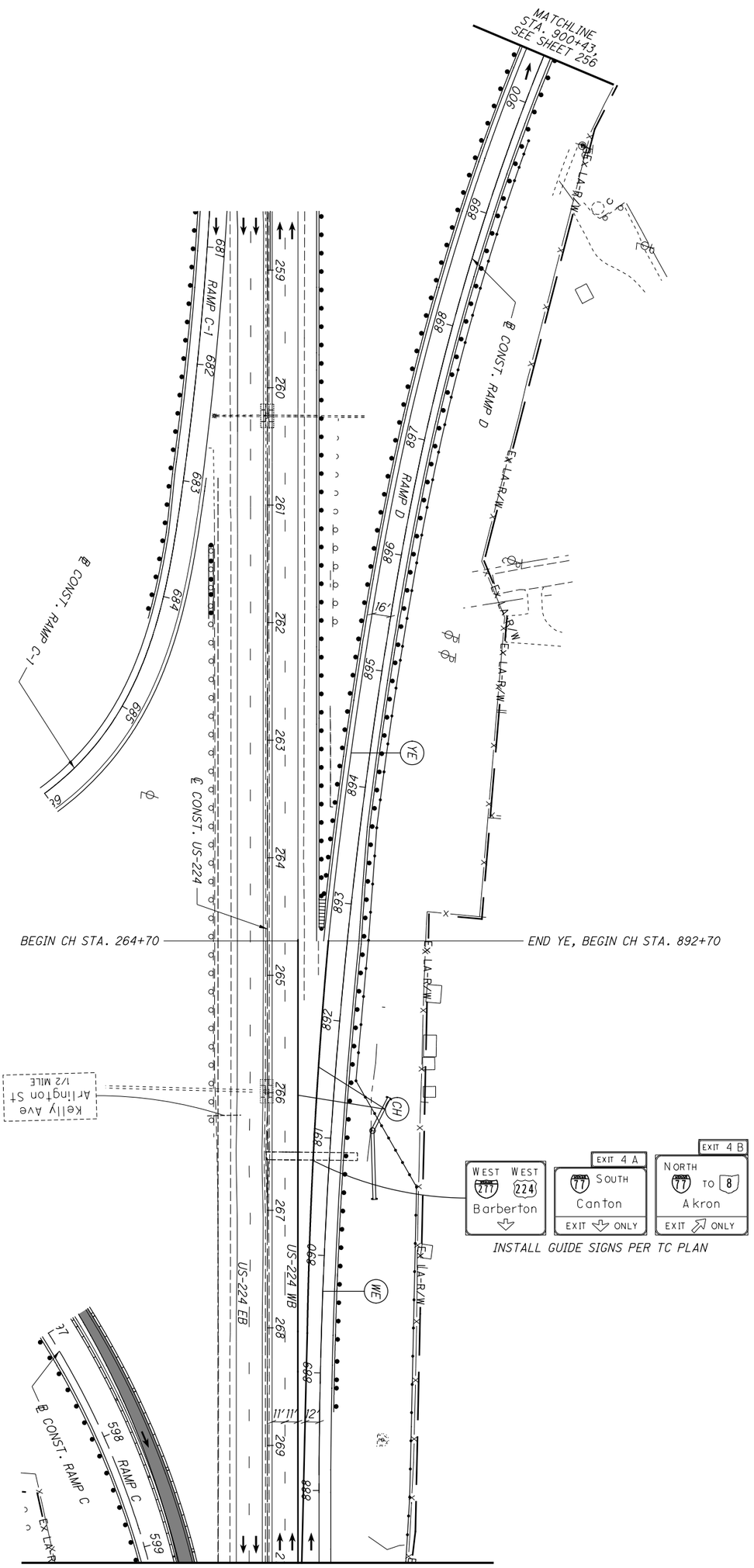


| | | | | |
|---|---|---|---|---|
| 258 / 1288 | SUM-77 / 277 / 224<br>VARIOUS | MAINTENANCE OF TRAFFIC PLAN - PHASE 2F<br>US-224 - STA. 258+50 TO STA. 270+00 | CALCULATED .<br>CHECKED . | 0 50<br>25 100<br>HORIZONTAL SCALE IN FEET |

N:\03\60\06744-08\106002_SUM-76-10.95\Design\MOT\Sheets\106002_MP260.dgn Sheet 1/31/2021 5:44:38 PM jrettig

NOTES:

1. SEE SHEET 128 FOR MOT LEGEND AND DRUM SPACING CHART.
2. ALL PAVEMENT MARKINGS THAT ARE EXISTING OR PLACED IN A PREVIOUS PHASE WILL REMAIN UNLESS OTHERWISE INDICATED.

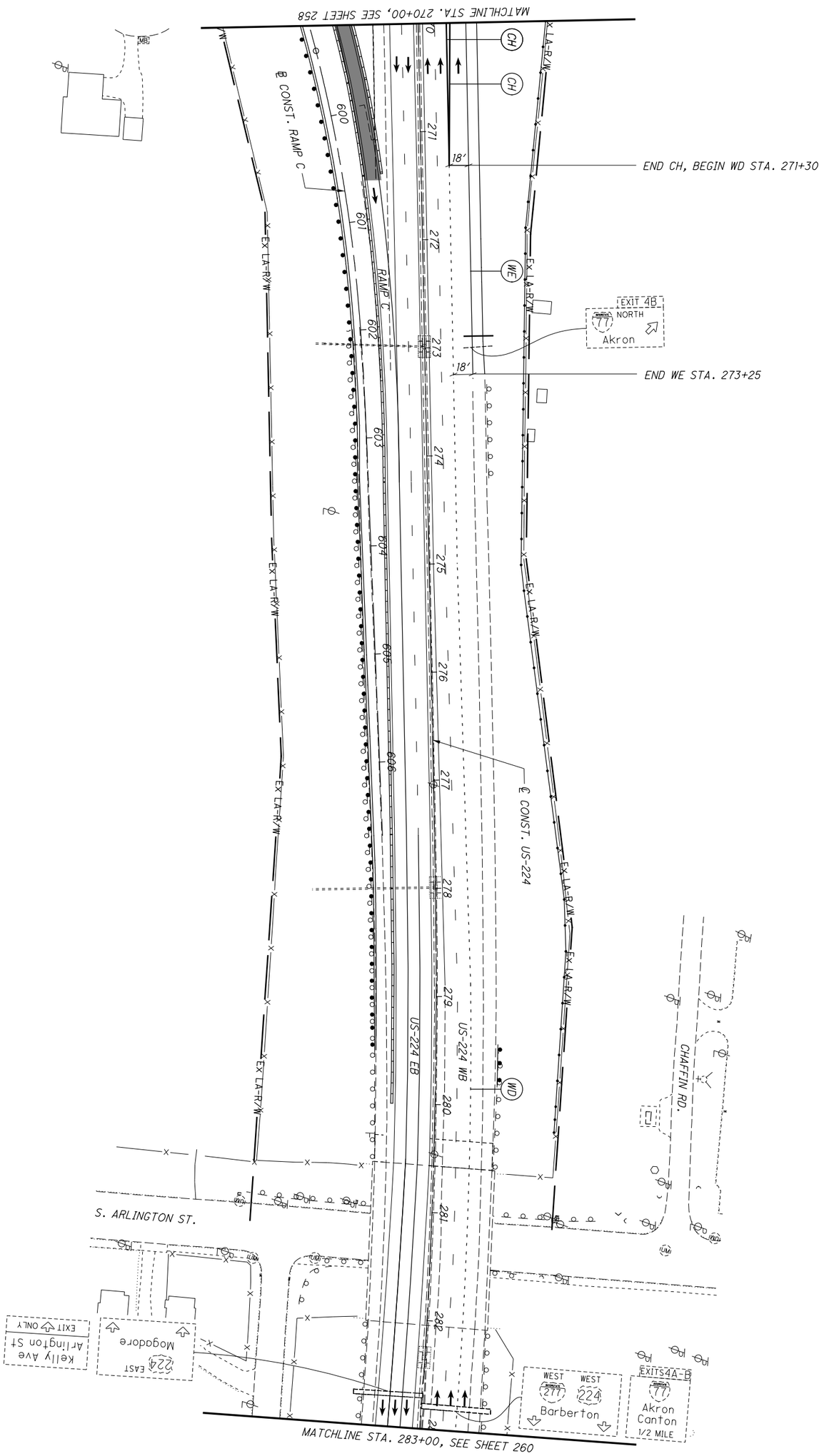


| | | | | |
|---|---|---|---|---|
| 259 / 1288 | SUM-77 / 277 / 224<br>VARIOUS | MAINTENANCE OF TRAFFIC PLAN - PHASE 2F<br>US-224 - STA. 270+00 TO STA. 283+00 | CALCULATED .<br>CHECKED . | 0 50<br>25 100<br>HORIZONTAL SCALE IN FEET |

NOTES:

1. SEE SHEET 128 FOR MOT LEGEND AND DRUM SPACING CHART.
2. ALL PAVEMENT MARKINGS THAT ARE EXISTING OR PLACED IN A PREVIOUS PHASE WILL REMAIN UNLESS OTHERWISE INDICATED.

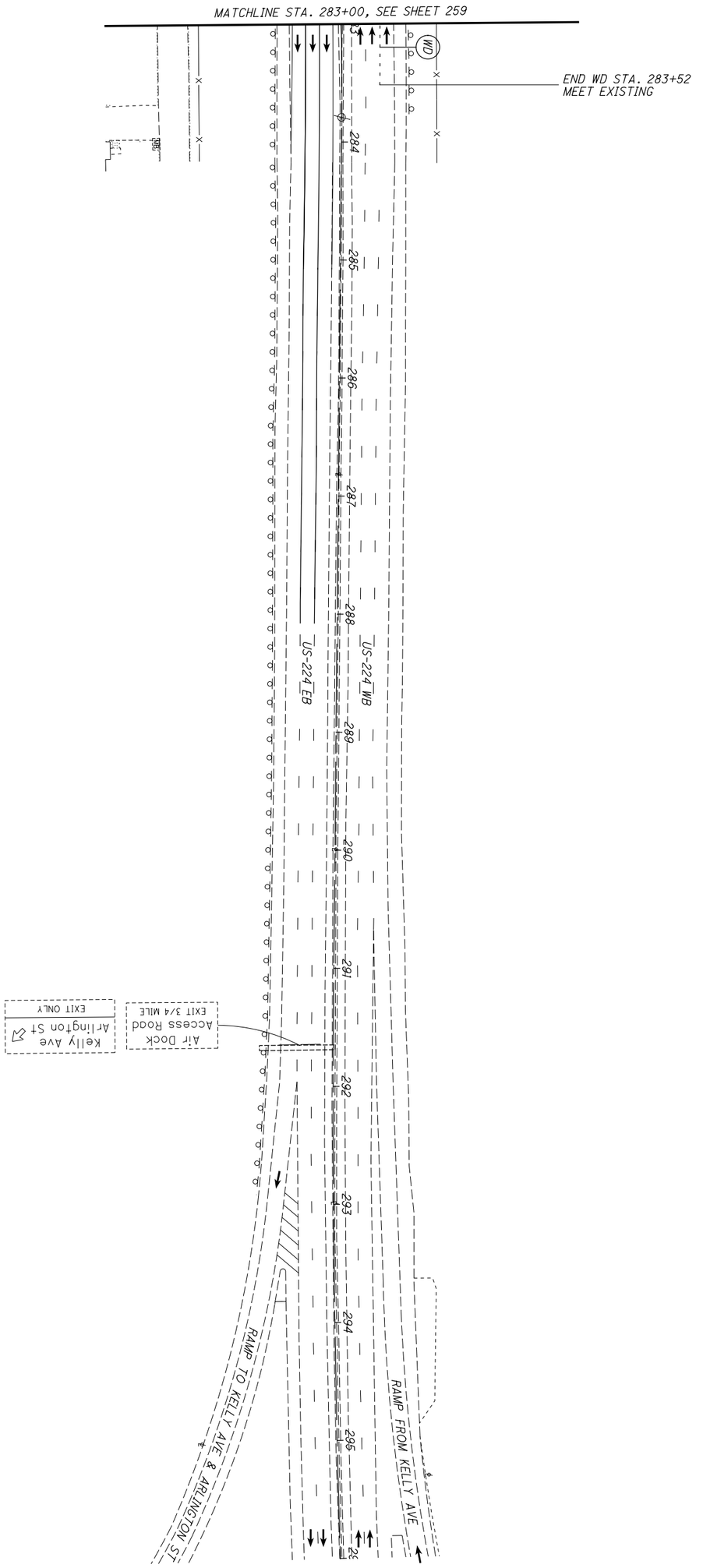


| | | | | |
|---|---|---|---|---|
| 260 / 1288 | SUM-77 / 277 / 224<br>VARIOUS | MAINTENANCE OF TRAFFIC PLAN - PHASE 2F<br>US-224 - STA. 283+00 TO STA. 296+00 | CALCULATED .<br>CHECKED . | 0 50<br>25 100<br>HORIZONTAL SCALE IN FEET |

N:\03\60\06744-08\I06002_SUM-76-I0.95\Design\MOT\Sheets\I06002_MP283.dgn Sheet 1/31/2021 5:45:04 PM jrettig

NOTES:

1. SEE SHEET 128 FOR MOT LEGEND AND DRUM SPACING CHART.
2. ALL PAVEMENT MARKINGS THAT ARE EXISTING OR PLACED IN A PREVIOUS PHASE WILL REMAIN UNLESS OTHERWISE INDICATED.

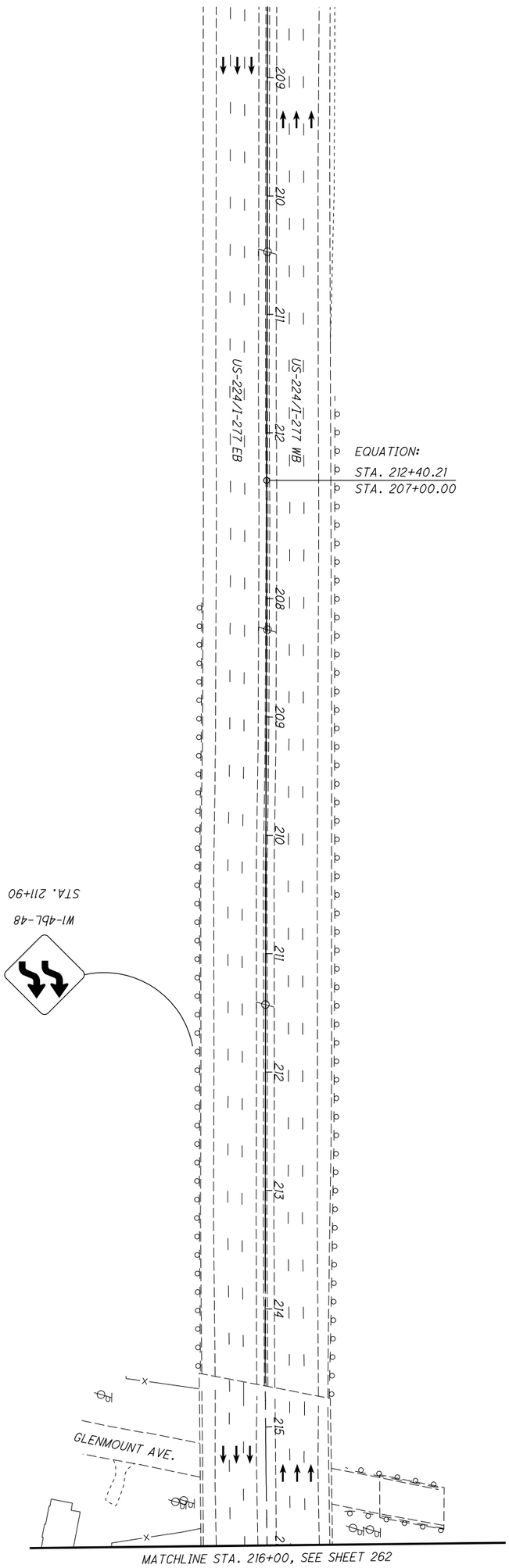


| | | | | |
|---|---|---|---|---|
| 261 / 1288 | SUM-77/277/224<br>VARIOUS | MAINTENANCE OF TRAFFIC PLAN - PHASE 2G<br>US-224/I-277 - STA. 209+00 TO STA. 216+00 | CALCULATED .<br>CHECKED . | 0 50<br>25 100<br>HORIZONTAL SCALE IN FEET |

NOTES:

1. SEE SHEET 128 FOR MOT LEGEND AND DRUM SPACING CHART.
2. ALL PAVEMENT MARKINGS THAT ARE EXISTING OR PLACED IN A PREVIOUS PHASE WILL REMAIN UNLESS OTHERWISE INDICATED.

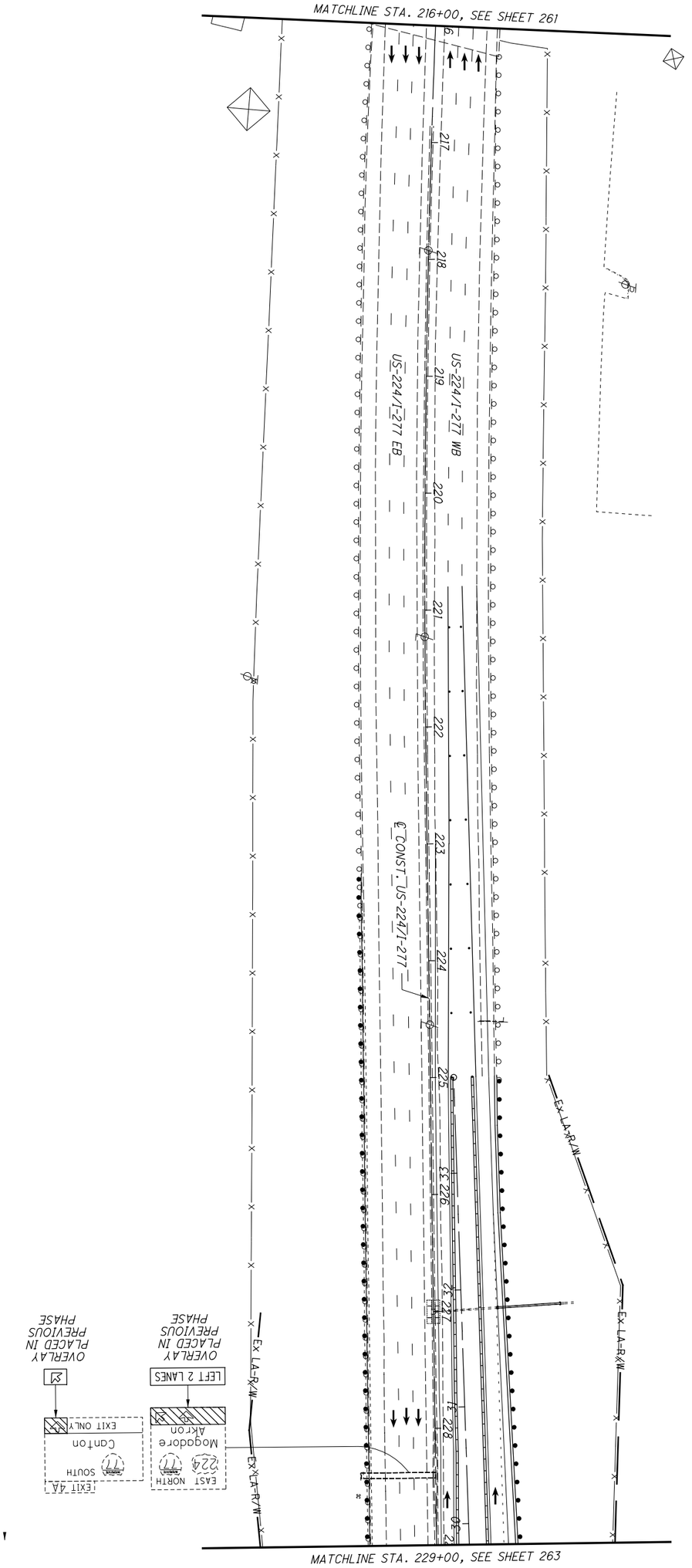


| | | | | |
|---|---|---|---|---|
| 262 / 1288 | SUM-77/277/224<br>VARIOUS | MAINTENANCE OF TRAFFIC PLAN - PHASE 2G<br>US-224/I-277 - STA. 216+00 TO STA. 229+00 | CALCULATED .<br>CHECKED . | 0 50<br>25 100<br>HORIZONTAL SCALE IN FEET |

N:\03\60\06744-08\I06002_SUM-76-10.95\Design\MOT\Sheets\I06002_MP285.dgn Sheet 1/31/2021 5:45:11 PM jrettig

NOTES:

1. SEE SHEET 128 FOR MOT LEGEND AND DRUM SPACING CHART.
2. ALL PAVEMENT MARKINGS THAT ARE EXISTING OR PLACED IN A PREVIOUS PHASE WILL REMAIN UNLESS OTHERWISE INDICATED.

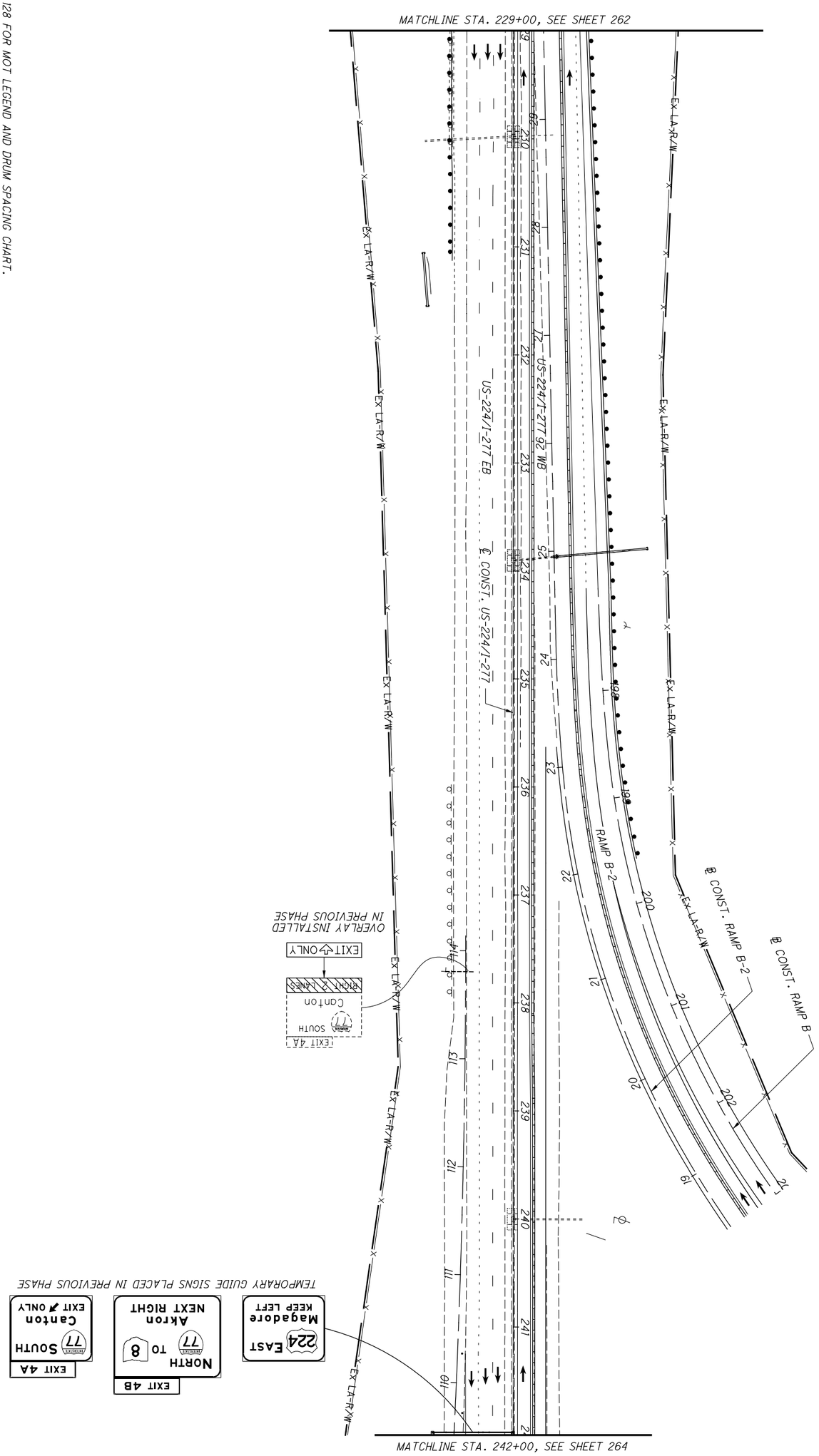


| | | | | |
|---|---|---|---|---|
| 263 / 1288 | SUM-77 / 277 / 224<br>VARIOUS | MAINTENANCE OF TRAFFIC PLAN - PHASE 2G<br>US-224/I-277 - STA. 229+00 TO STA. 242+00 | CALCULATED .<br>CHECKED . | 0 50<br>25 100<br>HORIZONTAL SCALE IN FEET |

N:\03\60\06744-08\I06002_SUM-76-I0.95\Design\MOT\Sheets\I06002_MP286.dgn Sheet 1/31/2021 5:45:14 PM jrettig

NOTES:

1. SEE SHEET 128 FOR MOT LEGEND AND DRUM SPACING CHART.
2. ALL PAVEMENT MARKINGS THAT ARE EXISTING OR PLACED IN A PREVIOUS PHASE WILL REMAIN UNLESS OTHERWISE INDICATED.

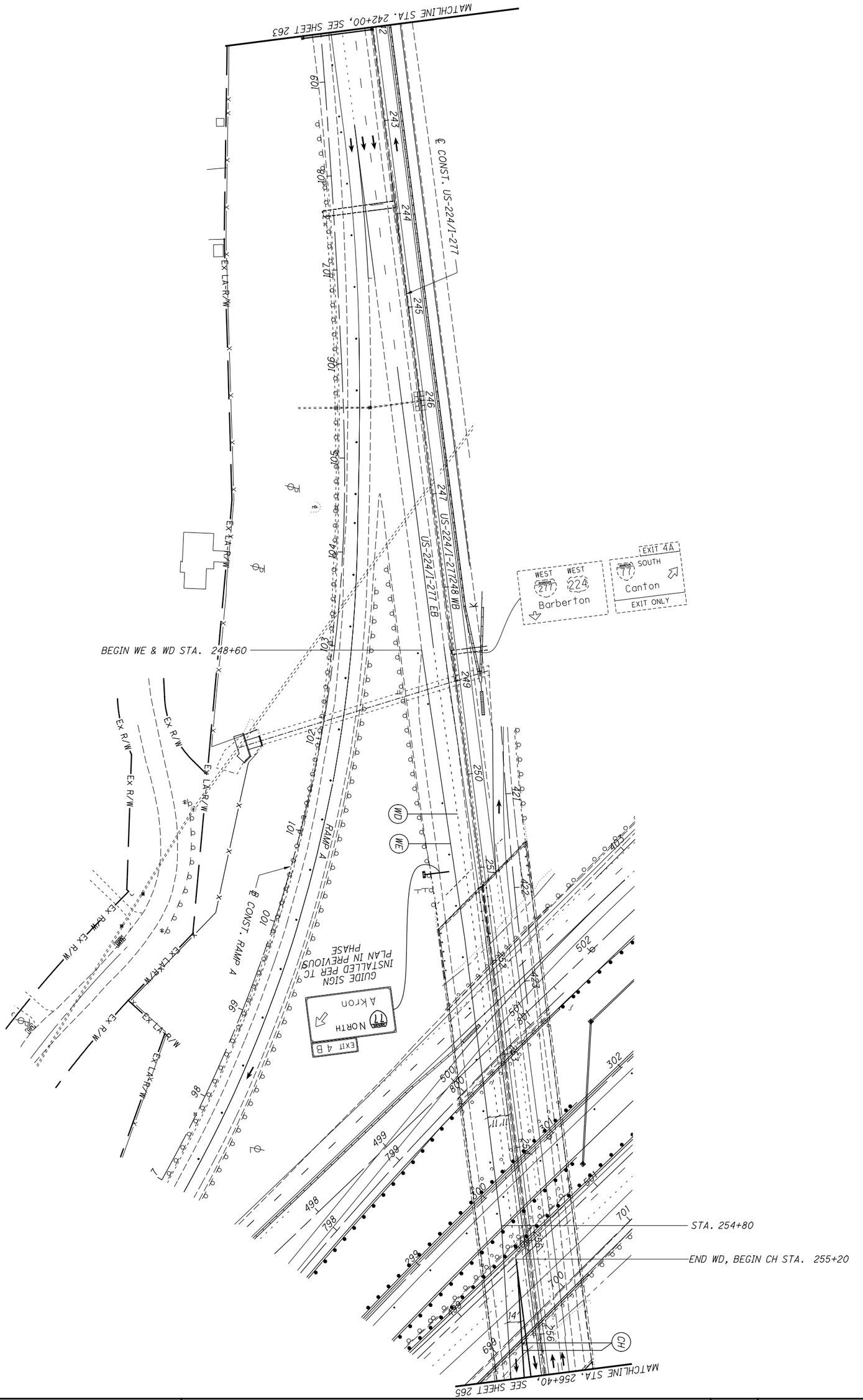


| | | | | |
|---|---|---|---|---|
| 264 / 1288 | SUM-77 / 277 / 224<br>VARIOUS | MAINTENANCE OF TRAFFIC PLAN - PHASE 2G<br>US-224/I-277 - STA. 242+00 TO STA. 256+40 | CALCULATED .<br>CHECKED . | 0 50<br>25 100<br>HORIZONTAL SCALE IN FEET |

N:\03\60\06744-08\I06002_SUM-76-I0.95\Design\MOT\Sheets\I06002_MP262.dgn Sheet 1/31/2021 5:45:37 PM jrettig

NOTES:

1. SEE SHEET 128 FOR MOT LEGEND AND DRUM SPACING CHART.
2. ALL PAVEMENT MARKINGS THAT ARE EXISTING OR PLACED IN A PREVIOUS PHASE WILL REMAIN UNLESS OTHERWISE INDICATED.

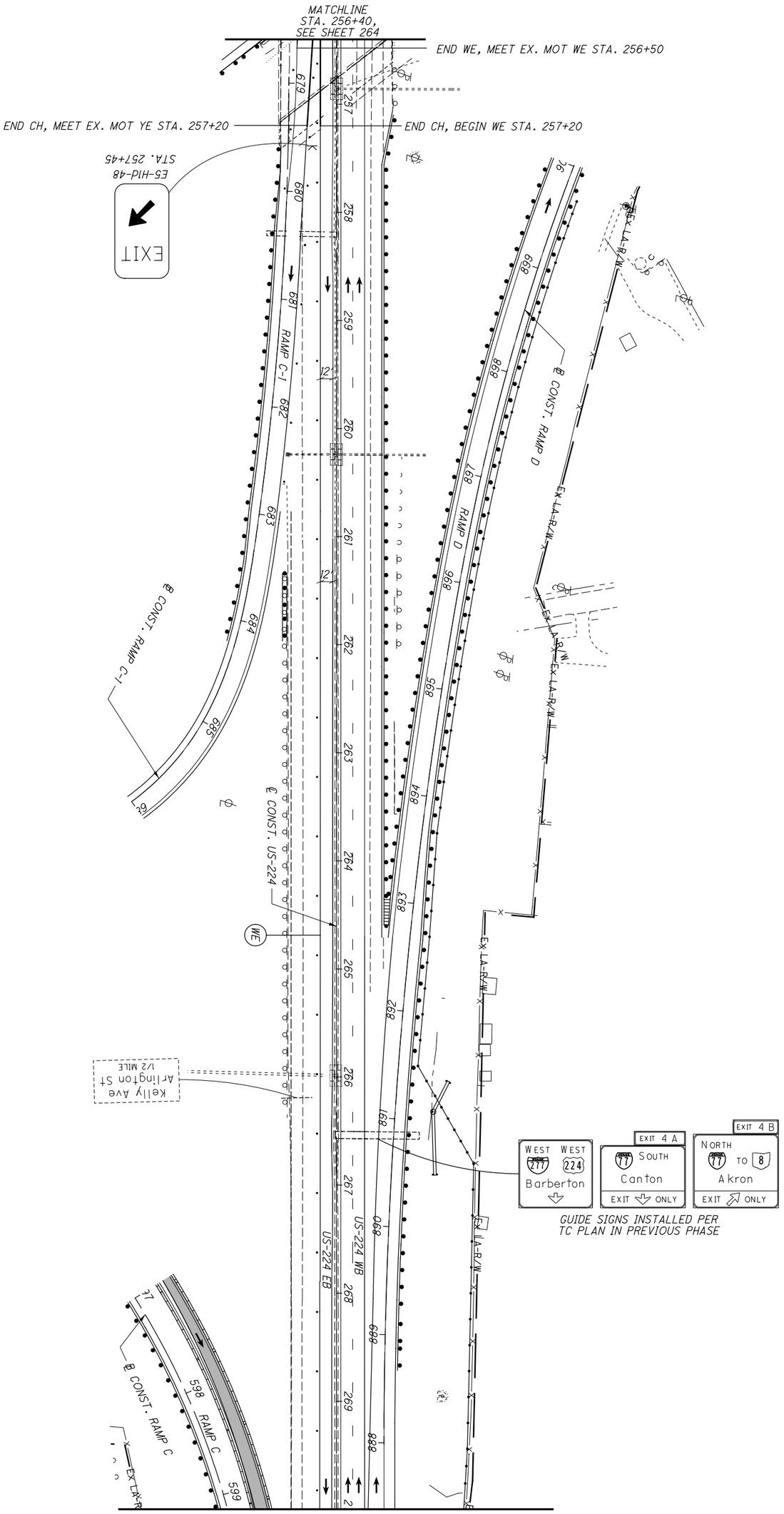


| | | | | |
|---|---|---|---|---|
| 265 / 1288 | SUM-77 / 277 / 224<br>VARIOUS | MAINTENANCE OF TRAFFIC PLAN - PHASE 2G<br>US-224 - STA. 256+40 TO STA. 270+00 | CALCULATED .<br>CHECKED . | 0 50<br>25 100<br>HORIZONTAL SCALE IN FEET |

N:\03\60\06744-08\106002_SUM-76-10.95\Design\MOT\Sheets\106002_MP263.dgn Sheet 1/31/2021 5:45:43 PM jrettig

NOTES:

1. SEE SHEET 128 FOR MOT LEGEND AND DRUM SPACING CHART.
2. ALL PAVEMENT MARKINGS THAT ARE EXISTING OR PLACED IN A PREVIOUS PHASE WILL REMAIN UNLESS OTHERWISE INDICATED.
3. SEE SHEETS 194-199 FOR TYPICAL SECTIONS.

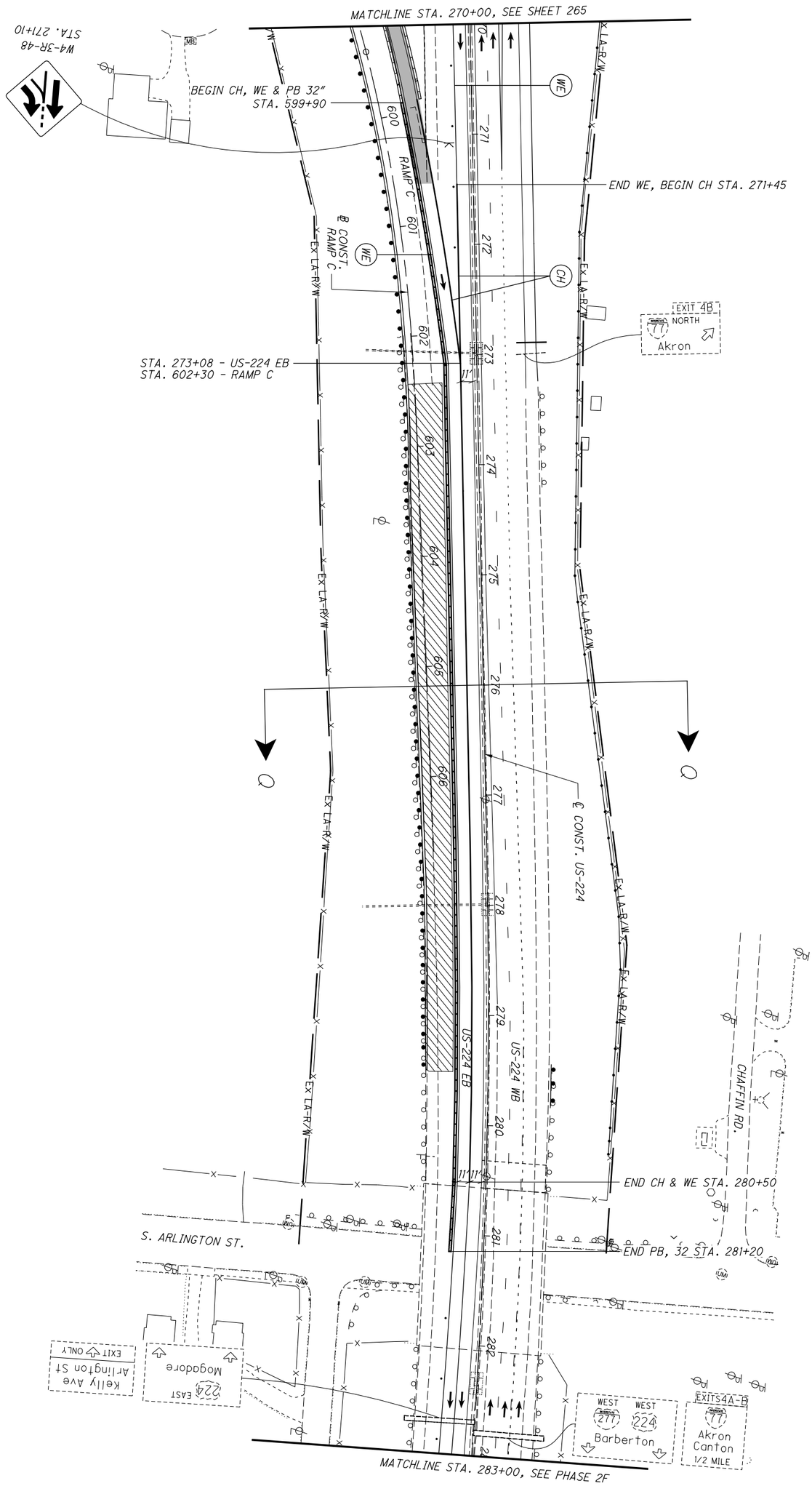


| | | | | |
|---|---|---|---|---|
| 266 / 1288 | SUM-77 / 277 / 224<br>VARIOUS | MAINTENANCE OF TRAFFIC PLAN - PHASE 2G<br>US-224 - STA. 270+00 TO STA. 283+00 | CALCULATED .<br>CHECKED . | 0 50<br>25 100<br>HORIZONTAL SCALE IN FEET |

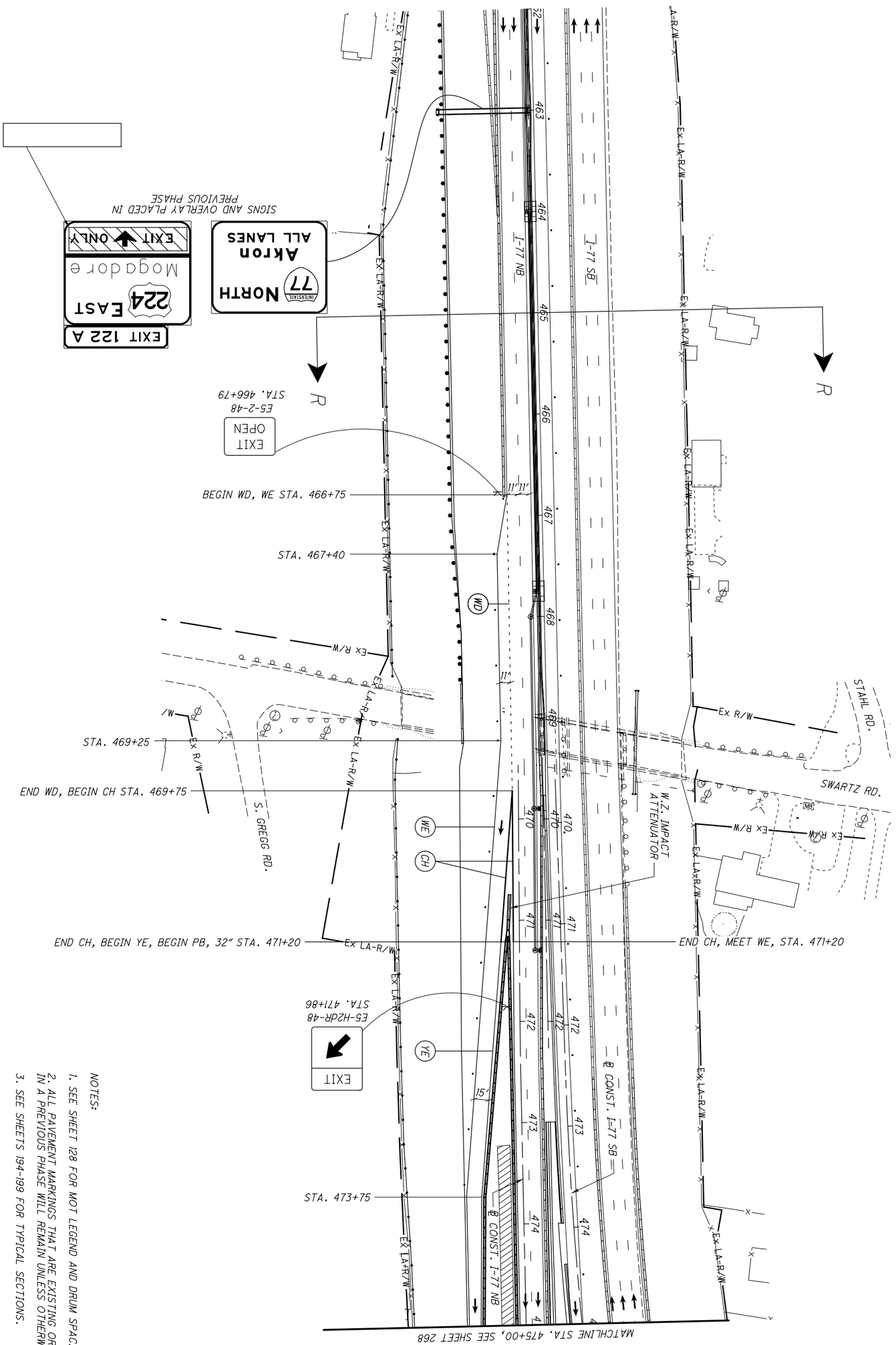


NOTES:

1. SEE SHEET 128 FOR MOT LEGEND AND DRUM SPACING CHART.
2. ALL PAVEMENT MARKINGS THAT ARE EXISTING OR PLACED IN A PREVIOUS PHASE WILL REMAIN UNLESS OTHERWISE INDICATED.
3. SEE SHEETS 194-199 FOR TYPICAL SECTIONS.

| | | | | |
|---|---|---|---|---|
| 267 / 1288 | SUM-77 / 277 / 224<br>VARIOUS | MAINTENANCE OF TRAFFIC PLAN - PHASE 2H<br>I-77 - STA. 462+00 TO STA. 475+00 | CALCULATED .<br>CHECKED . | 0 50<br>25 100<br>HORIZONTAL SCALE IN FEET |

N:\03\60\06744-08\I06002_SUM-76-I0.95\Design\MOT\Sheets\I06002_MP266.dgn Sheet 2/2/2021 11:06:10 AM jrettig

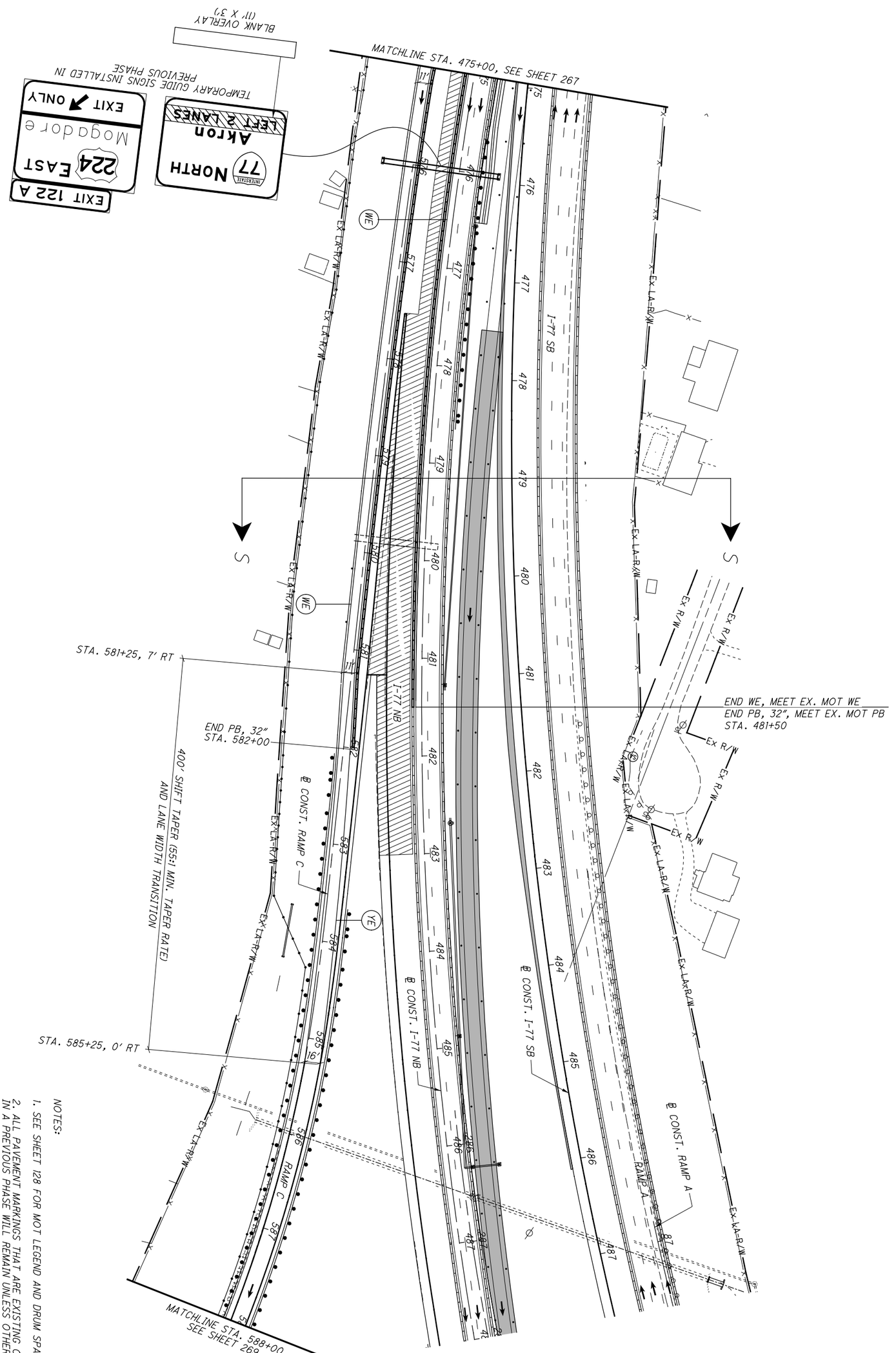


NOTES:

1. SEE SHEET 128 FOR MOT LEGEND AND DRUM SPACING CHART.
2. ALL PAVEMENT MARKINGS THAT ARE EXISTING OR PLACED IN A PREVIOUS PHASE WILL REMAIN UNLESS OTHERWISE INDICATED.
3. SEE SHEETS 194-199 FOR TYPICAL SECTIONS.

| | | | | |
|---|---|---|---|---|
| 268 / 1288 | SUM-77 / 277 / 224<br>VARIOUS | MAINTENANCE OF TRAFFIC PLAN - PHASE 2H<br>I-77 - STA. 475+00 TO STA. 488+00 | CALCULATED .<br>CHECKED . | 0 50<br>25 100<br>HORIZONTAL SCALE IN FEET |

NOTES:

1. SEE SHEET 128 FOR MOT LEGEND AND DRUM SPACING CHART.
2. ALL PAVEMENT MARKINGS THAT ARE EXISTING OR PLACED IN A PREVIOUS PHASE WILL REMAIN UNLESS OTHERWISE INDICATED.

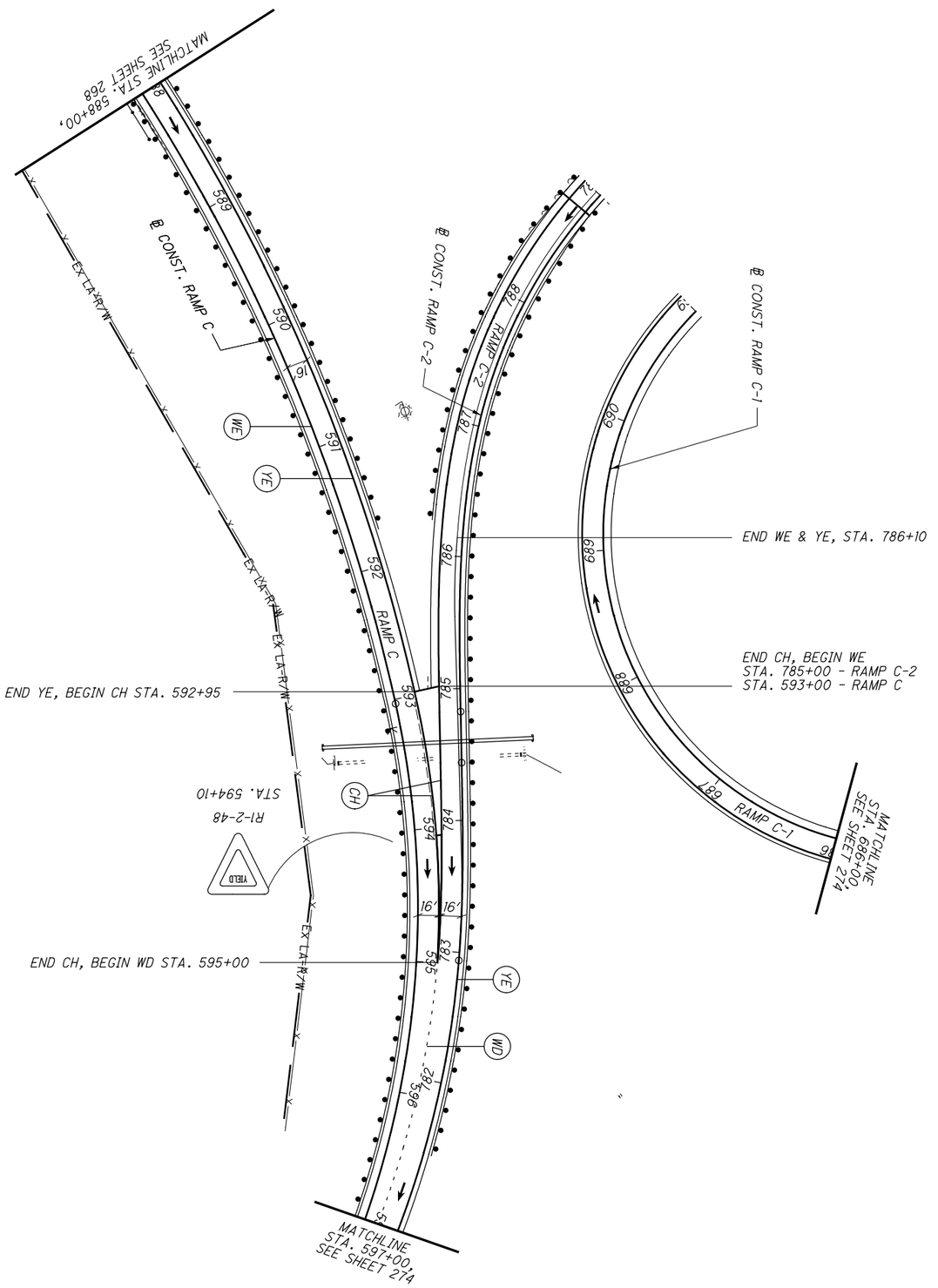

NOTES:

1. SEE SHEET 128 FOR MOT LEGEND AND DRUM SPACING CHART.
2. ALL PAVEMENT MARKINGS THAT ARE EXISTING OR PLACED IN A PREVIOUS PHASE WILL REMAIN UNLESS OTHERWISE INDICATED.

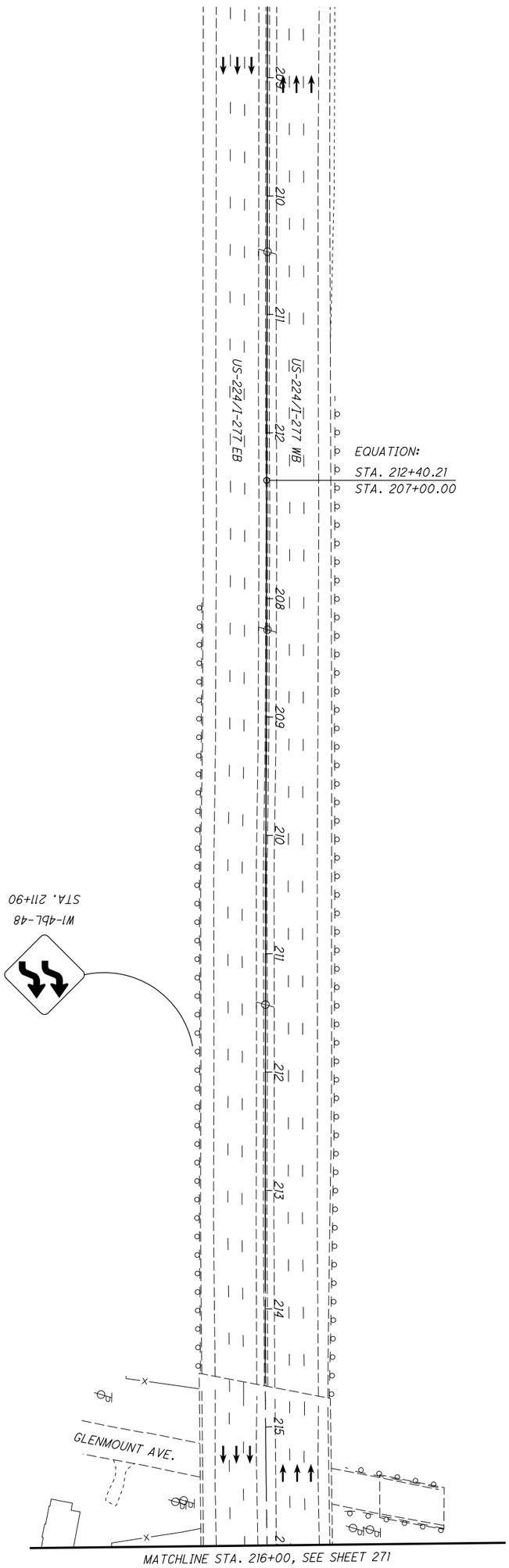


| | | | | |
|---|---|---|---|---|
| 270 / 1288 | SUM-77/277/224<br>VARIOUS | MAINTENANCE OF TRAFFIC PLAN - PHASE 2H<br>US-224/I-277 - STA. 209+00 TO STA. 216+00 | CALCULATED .<br>CHECKED . | 0 50<br>25 100<br>HORIZONTAL SCALE IN FEET |

NOTES:

1. SEE SHEET 128 FOR MOT LEGEND AND DRUM SPACING CHART.
2. ALL PAVEMENT MARKINGS THAT ARE EXISTING OR PLACED IN A PREVIOUS PHASE WILL REMAIN UNLESS OTHERWISE INDICATED.

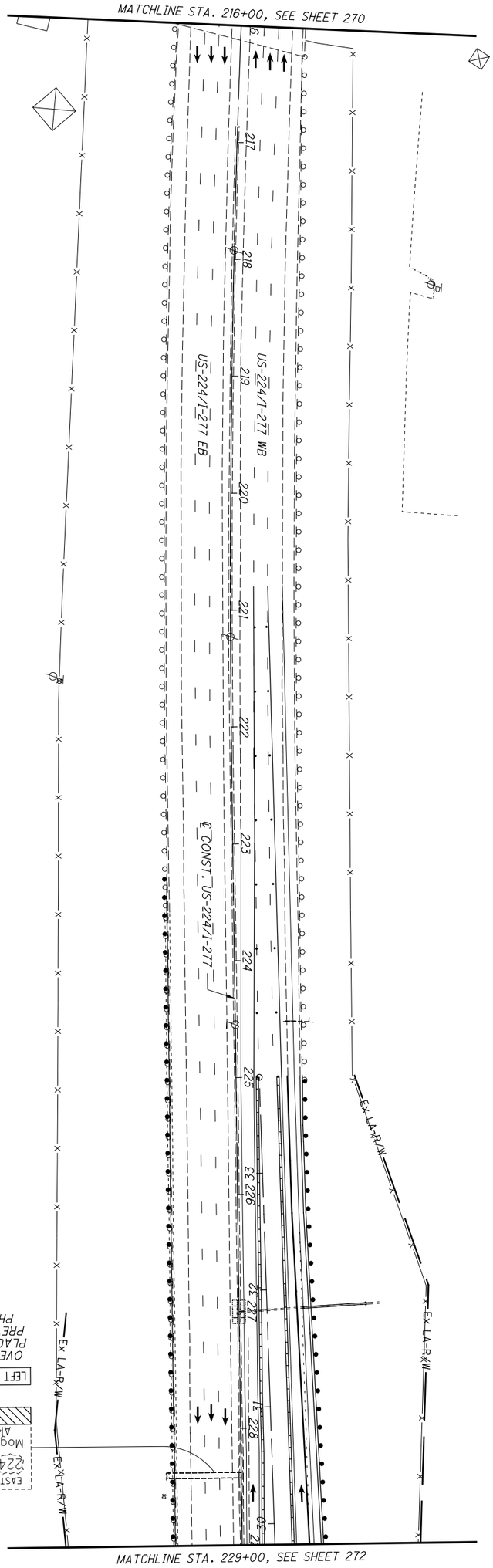


| | | | | |
|---|---|---|---|---|
| 271 / 1288 | SUM-77/277/224<br>VARIOUS | MAINTENANCE OF TRAFFIC PLAN - PHASE 2H<br>US-224/I-277 - STA. 216+00 TO STA. 229+00 | CALCULATED .<br>CHECKED . | 0 50<br>25 100<br>HORIZONTAL SCALE IN FEET |

NOTES:

1. SEE SHEET 128 FOR MOT LEGEND AND DRUM SPACING CHART.
2. ALL PAVEMENT MARKINGS THAT ARE EXISTING OR PLACED IN A PREVIOUS PHASE WILL REMAIN UNLESS OTHERWISE INDICATED.

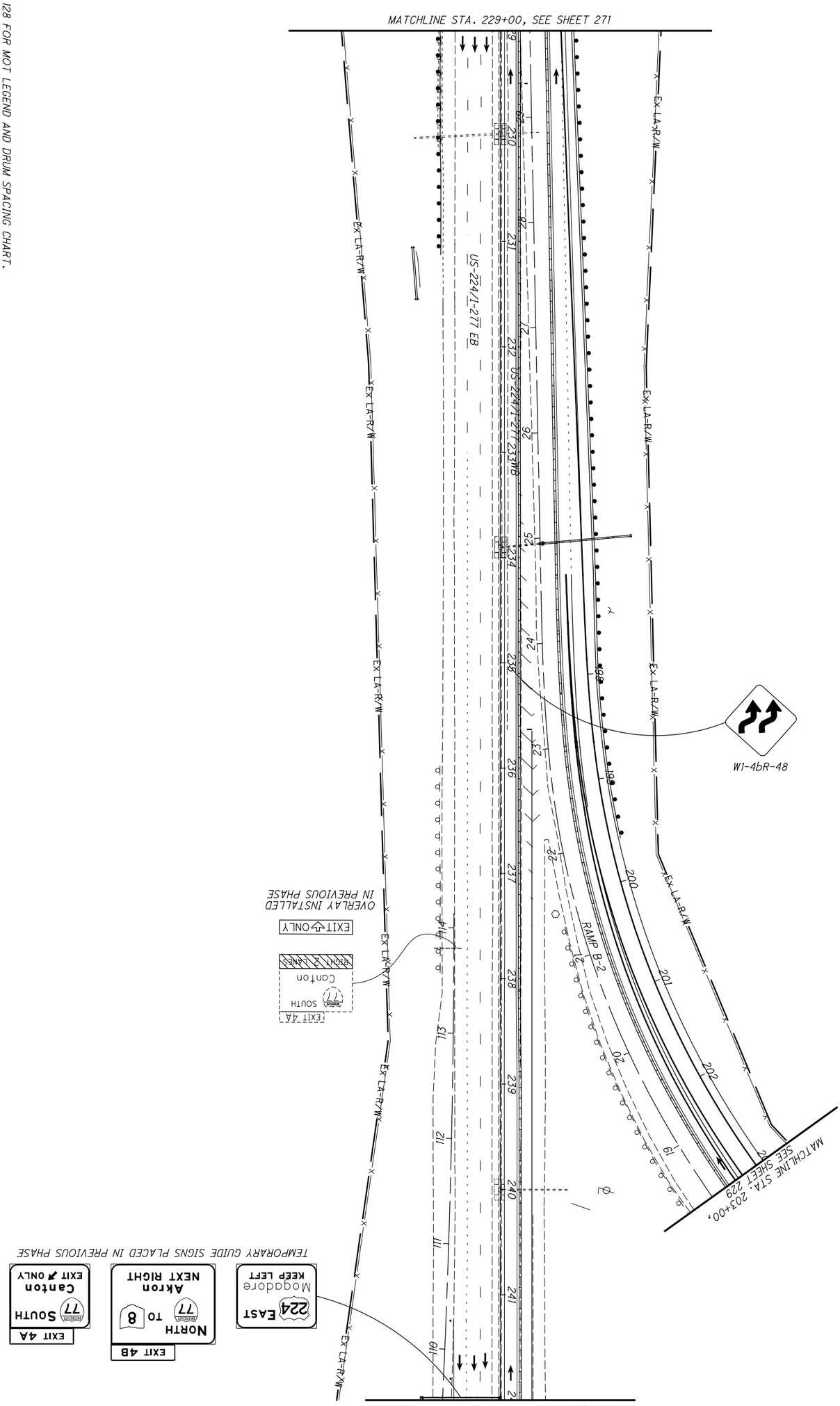


| | | | | |
|---|---|---|---|---|
| 272 / 1288 | SUM-77 / 277 / 224<br>VARIOUS | MAINTENANCE OF TRAFFIC PLAN - PHASE 2H<br>US-224 / I-277 - STA. 229+00 TO STA. 242+00 | CALCULATED .<br>CHECKED . | 0 50<br>25 100<br>HORIZONTAL SCALE IN FEET |

N:\03\60\06744-08\106002_SUM-76-10.95\Design\MOT\Sheets\106002_MP290.dgn Sheet 1/31/2021 5:46:33 PM jrettig

NOTES:

1. SEE SHEET 128 FOR MOT LEGEND AND DRUM SPACING CHART.
2. ALL PAVEMENT MARKINGS THAT ARE EXISTING OR PLACED IN A PREVIOUS PHASE WILL REMAIN UNLESS OTHERWISE INDICATED.

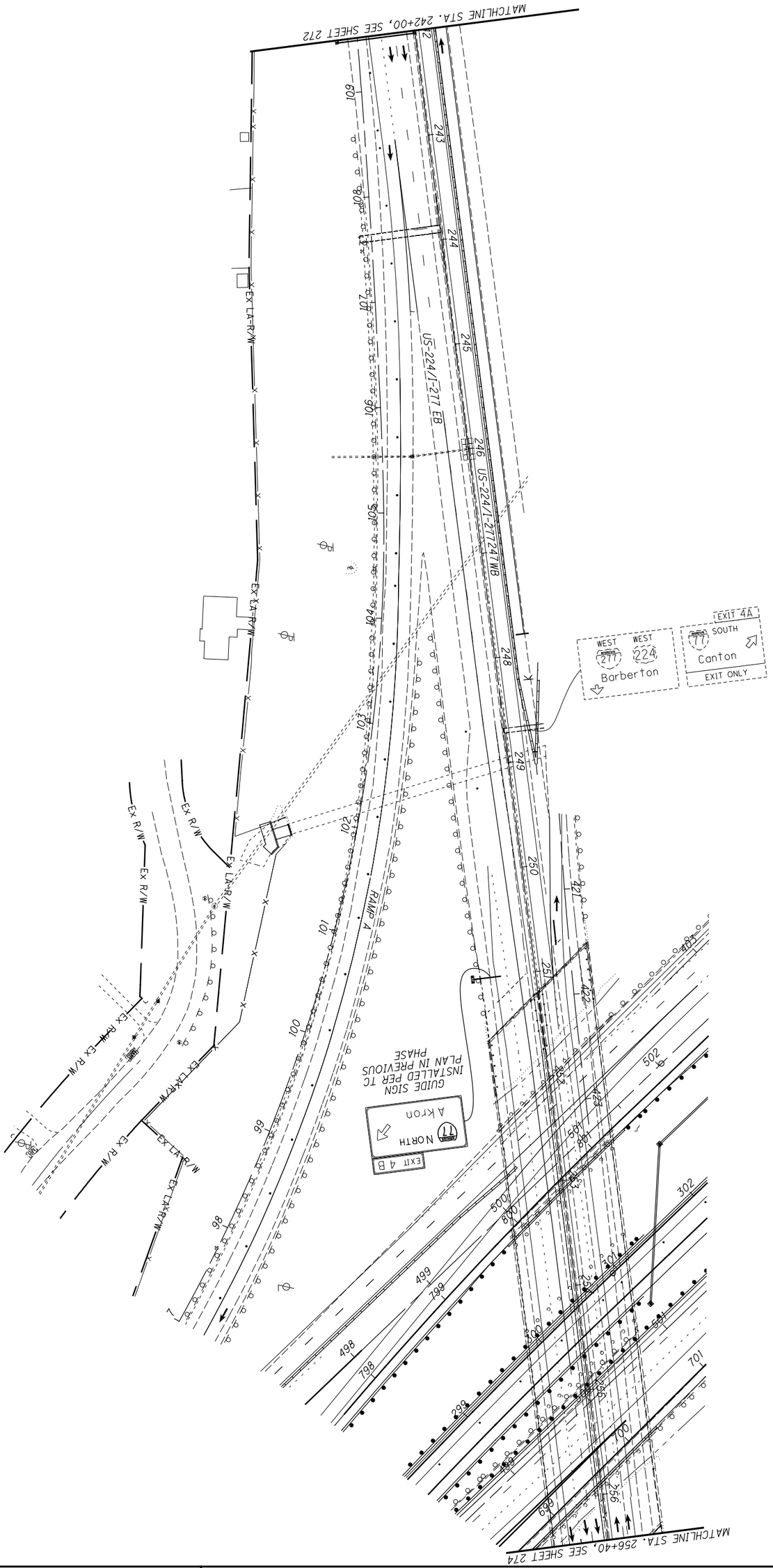


| | | | | |
|---|---|---|---|---|
| 273 / 1288 | SUM-77 / 277 / 224<br>VARIOUS | MAINTENANCE OF TRAFFIC PLAN - PHASE 2H<br>US-224 / I-277 - STA. 242+00 TO STA. 256+40 | CALCULATED .<br>CHECKED . | 0 50<br>25 100<br>HORIZONTAL SCALE IN FEET |

NOTES:

1. SEE SHEET 128 FOR MOT LEGEND AND DRUM SPACING CHART.
2. ALL PAVEMENT MARKINGS THAT ARE EXISTING OR PLACED IN A PREVIOUS PHASE WILL REMAIN UNLESS OTHERWISE INDICATED.

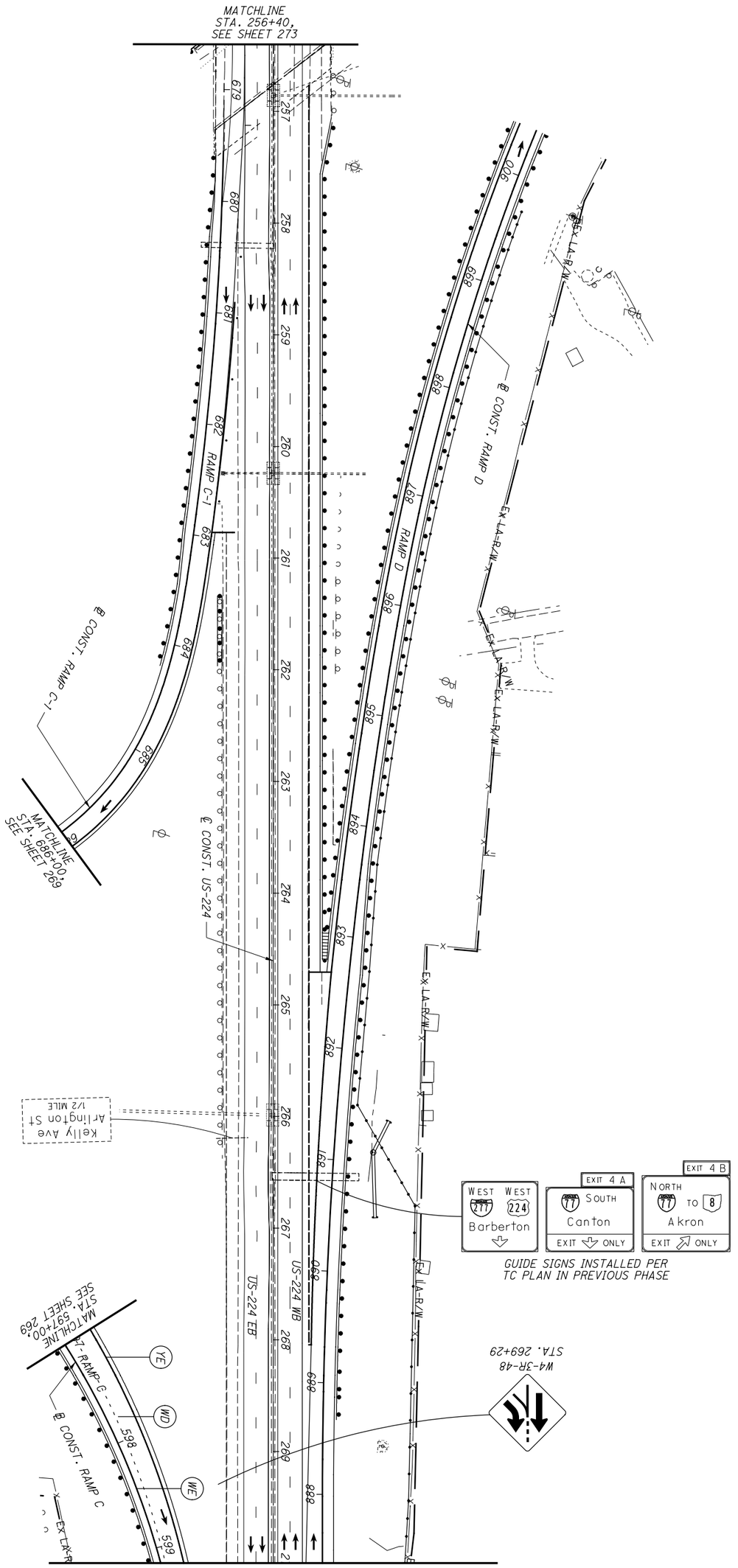


| | | | | |
|---|---|---|---|---|
| 274 / 1288 | SUM-77 / 277 / 224<br>VARIOUS | MAINTENANCE OF TRAFFIC PLAN - PHASE 2H<br>US-224 - STA. 256+40 TO STA. 270+00 | CALCULATED .<br>CHECKED . | 0 50<br>25 100<br>HORIZONTAL SCALE IN FEET |

NOTES:

1. SEE SHEET 128 FOR MOT LEGEND AND DRUM SPACING CHART.
2. ALL PAVEMENT MARKINGS THAT ARE EXISTING OR PLACED IN A PREVIOUS PHASE WILL REMAIN UNLESS OTHERWISE INDICATED.

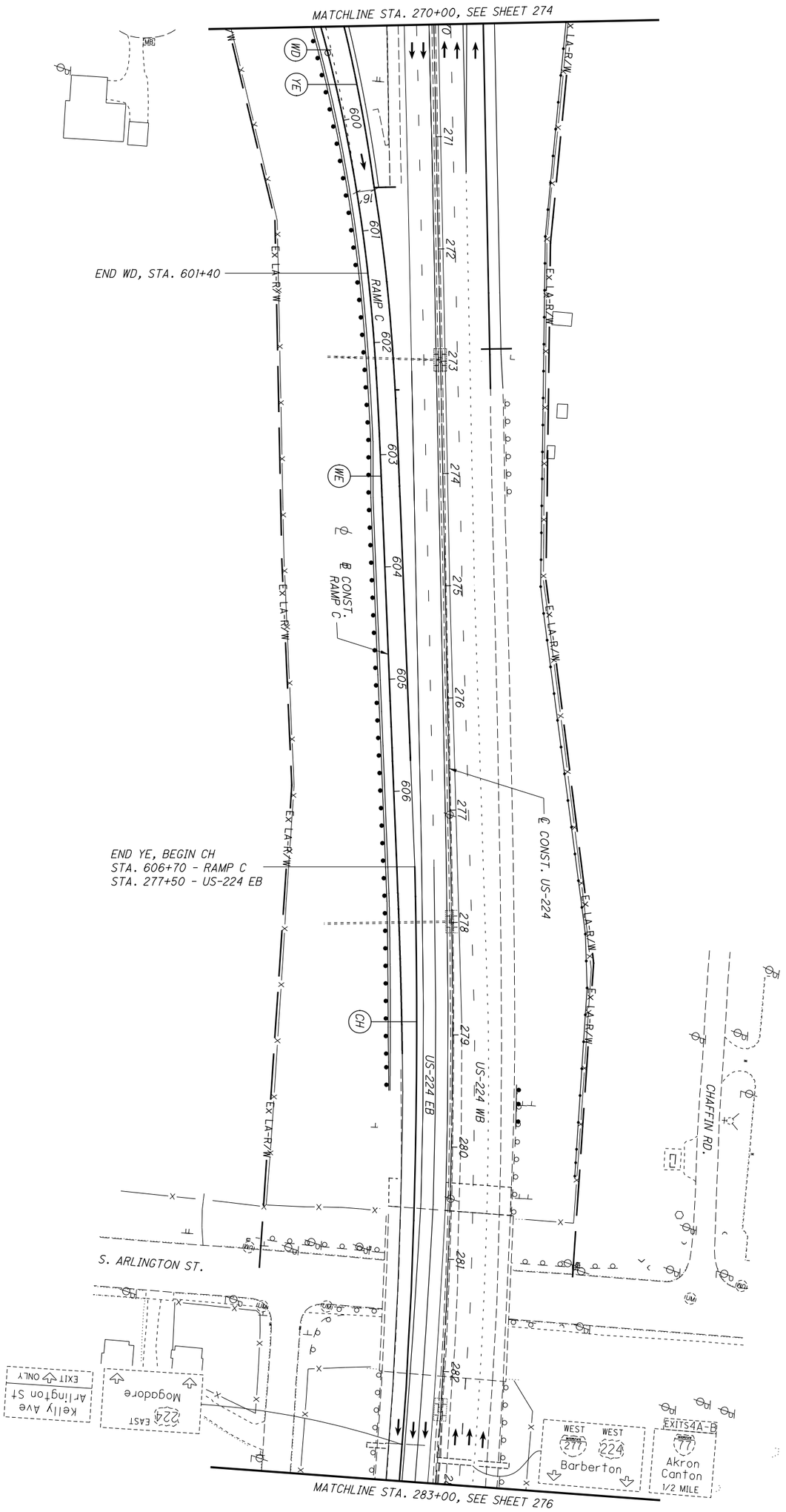

NOTES:

1. SEE SHEET 128 FOR MOT LEGEND AND DRUM SPACING CHART.
2. ALL PAVEMENT MARKINGS THAT ARE EXISTING OR PLACED IN A PREVIOUS PHASE WILL REMAIN UNLESS OTHERWISE INDICATED.

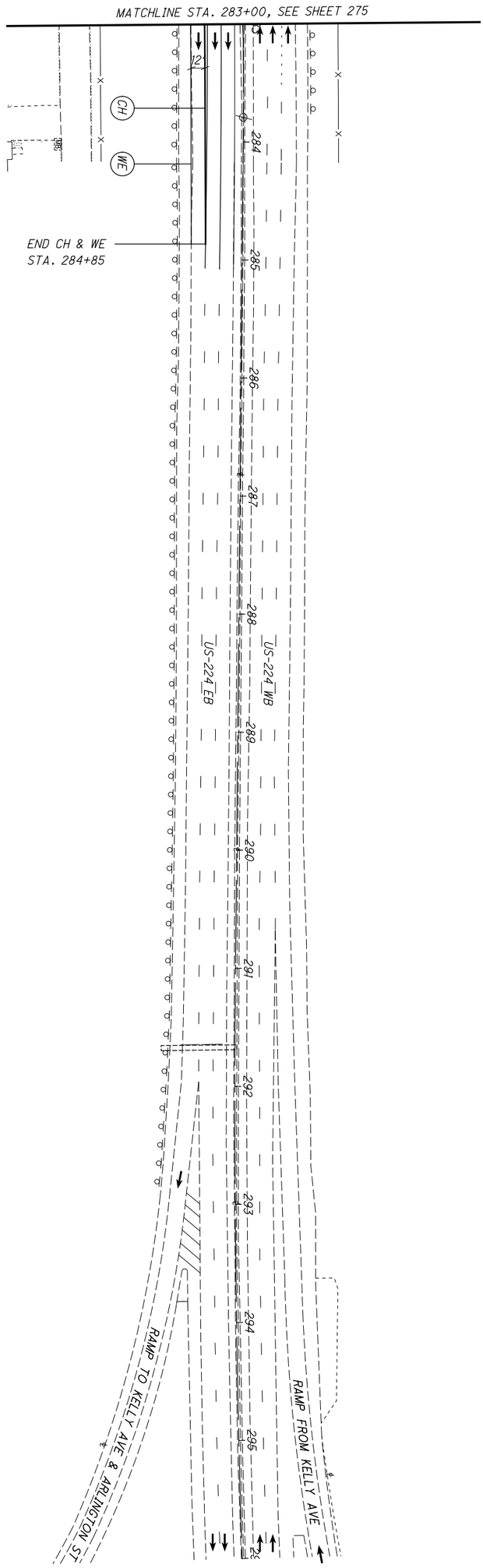

N:\03\60\06744-08\106002_SUM-76-10.95\Design\MOT\Sheets\106002_MP271.dgn Sheet 1/31/2021 5:47:13 PM jrettig

NOTES:

1. SEE SHEET 128 FOR MOT LEGEND AND DRUM SPACING CHART.
2. ALL PAVEMENT MARKINGS THAT ARE EXISTING OR PLACED IN A PREVIOUS PHASE WILL REMAIN UNLESS OTHERWISE INDICATED.

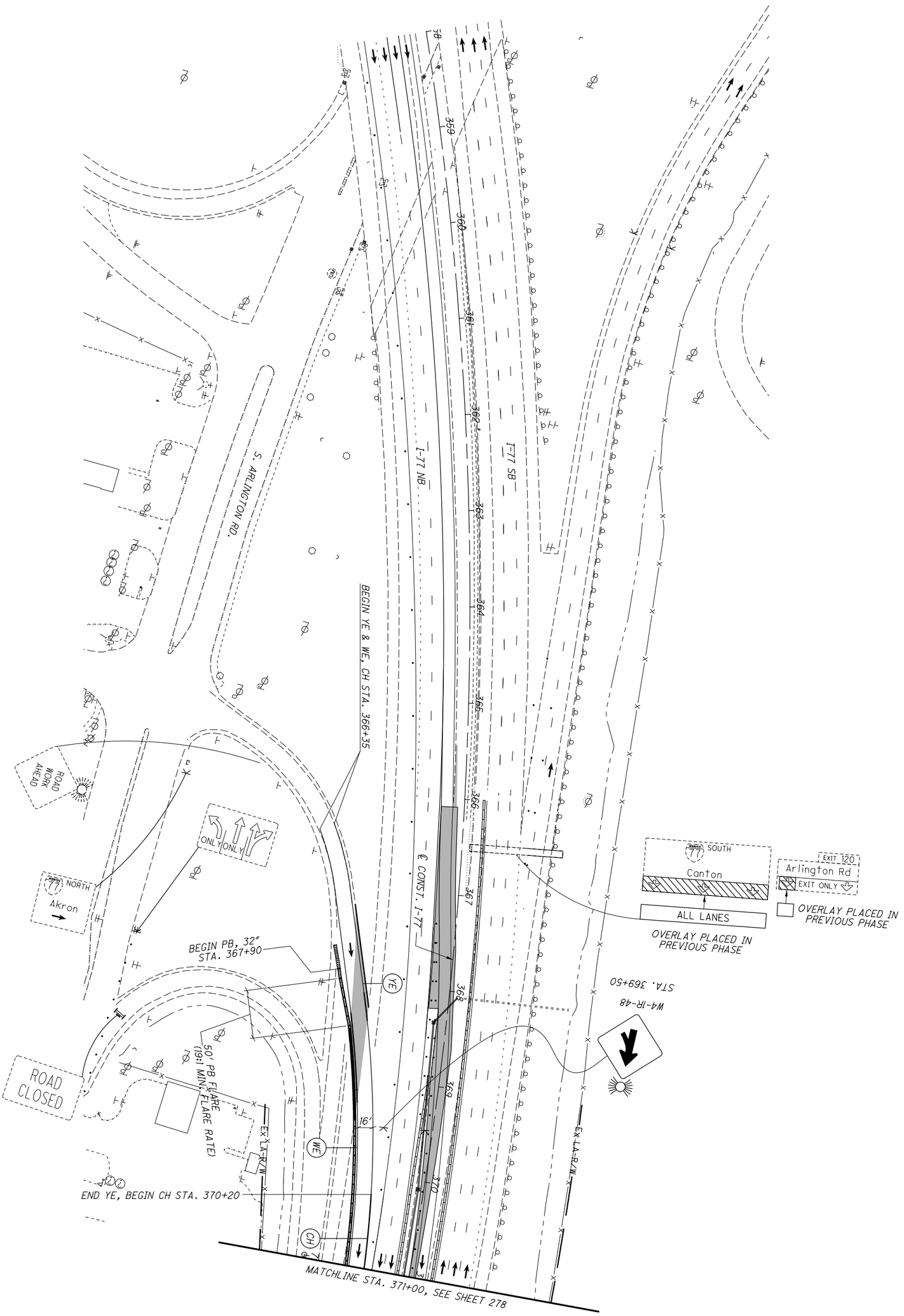


| | | | | |
|---|---|---|---|---|
| 277 / 1288 | SUM-77 / 277 / 224<br>VARIOUS | MAINTENANCE OF TRAFFIC PLAN - PHASE 2I<br>I-77 - STA. 358+00 TO STA. 371+00 | CALCULATED .<br>CHECKED . | 0 50<br>25 100<br>HORIZONTAL SCALE IN FEET |

NOTES:

1. SEE SHEET 128 FOR MOT LEGEND AND DRUM SPACING CHART.
2. ALL PAVEMENT MARKINGS THAT ARE EXISTING OR PLACED IN A PREVIOUS PHASE WILL REMAIN UNLESS OTHERWISE INDICATED.
3. SEE SHEETS 194-199 FOR TYPICAL SECTIONS.

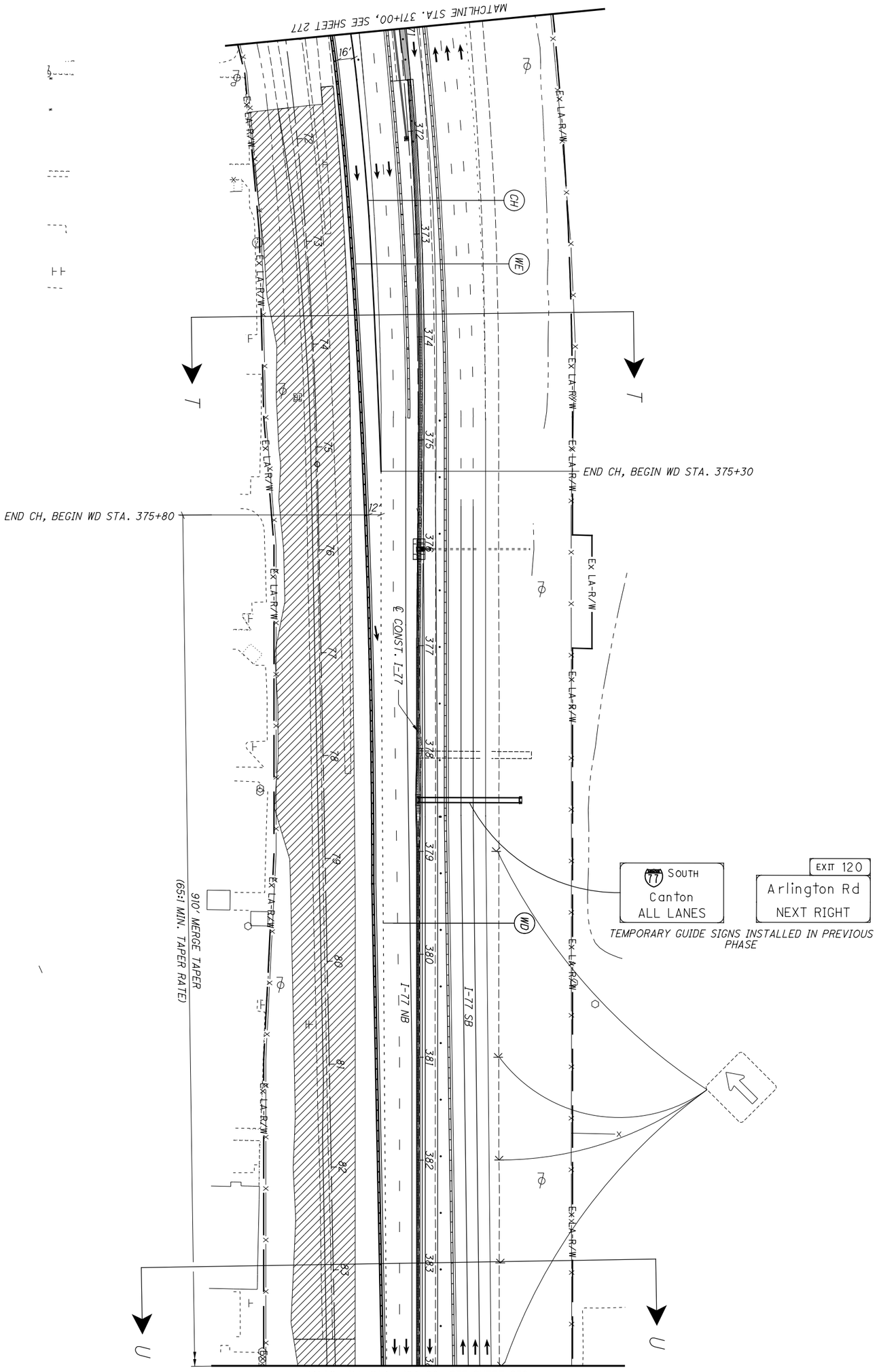


| | | | | |
|---|---|---|---|---|
| 278 / 1288 | SUM-77 / 277 / 224<br>VARIOUS | MAINTENANCE OF TRAFFIC PLAN - PHASE 2I<br>I-77 - STA. 371+00 TO STA. 384+00 | CALCULATED .<br>CHECKED . | 0 50<br>25 100<br>HORIZONTAL SCALE IN FEET |

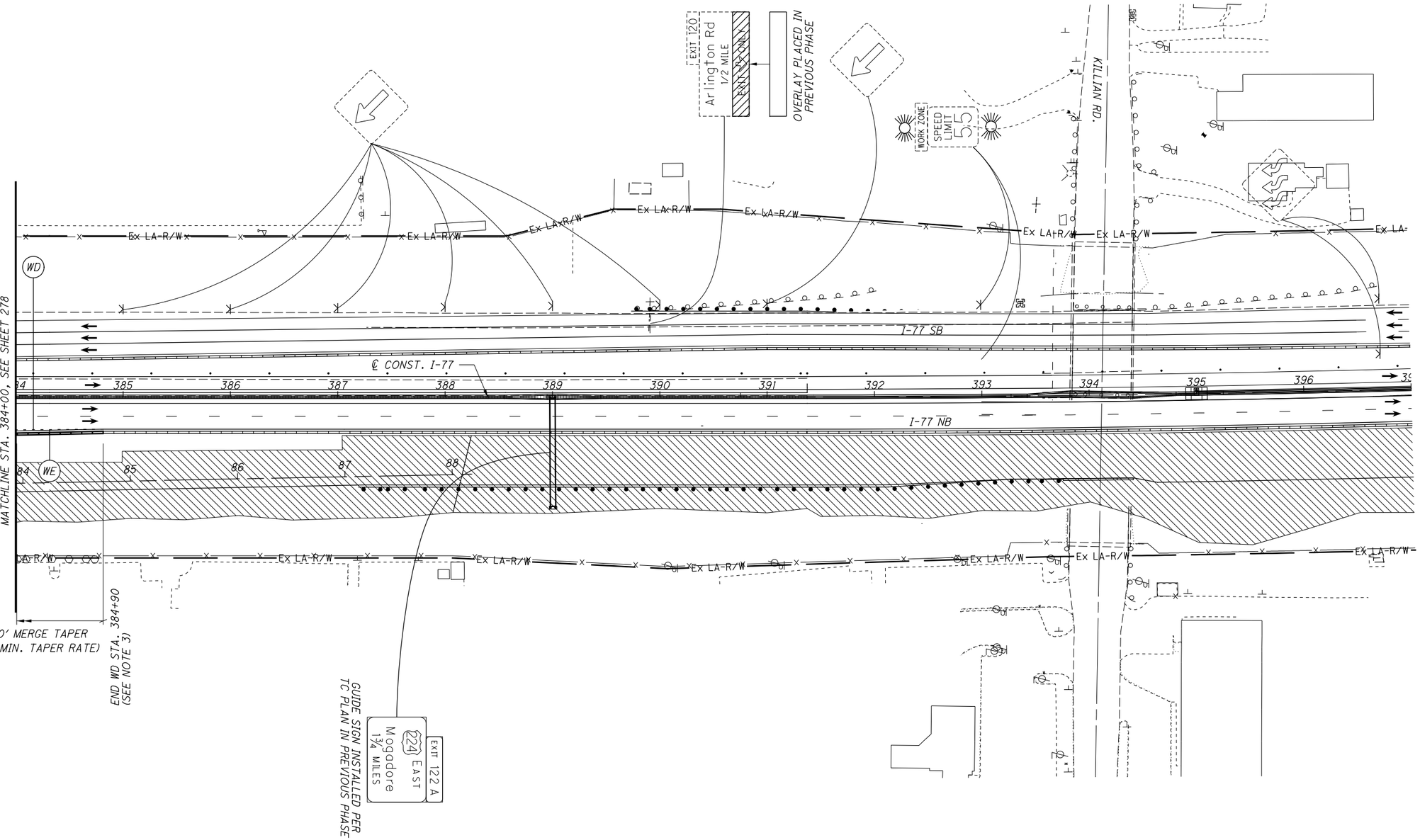


NOTES:

1. SEE SHEET 128 FOR MOT LEGEND AND DRUM SPACING CHART.

2. ALL PAVEMENT MARKINGS THAT ARE EXISTING OR PLACED IN A PREVIOUS PHASE WILL REMAIN UNLESS OTHERWISE INDICATED.

3. THE NORTHBOUND TEMPORARY BARRIER AND EDGE LINE SHALL CONTINUE TO STA. 422+80 AS SHOWN ON SHEET 209.

| REVISIONS | | |
|---|---|---|
| NO. | DATE | DESCRIPTION |
| 2 | 04/05/21 | CLARIFIED PORTABLE BARRIER LIMITS |

HORIZONTAL SCALE IN FEET
0 25 50 100

CALCULATED . CHECKED .

# TRAFFIC PLAN - PHASE 2I

## MAINTENANCE OF TRAFFIC STA. 384+00 TO STA. 397+00

## I-77 - STA. 384+00 TO STA. 397+00

SUM-77/277/224
VARIOUS

279
1288

N:\03\60\06744-08\06002_SUM-76-10.95\Design\MOT\Sheets\06002_MP273.dgn Sheet 4/6/2021 8:13:37 AM sriffle

N:\03\60\06744-08\I06002_SUM-76-I0.95\Design\MOT\Sheets\I06002_MP274.dgn Sheet 1/31/2021 5:47:44 PM jrettig

NOTES:

1. SEE SHEET 128 FOR MOT LEGEND AND DRUM SPACING CHART.
2. ALL PAVEMENT MARKINGS THAT ARE EXISTING OR PLACED IN A PREVIOUS PHASE WILL REMAIN UNLESS OTHERWISE INDICATED.

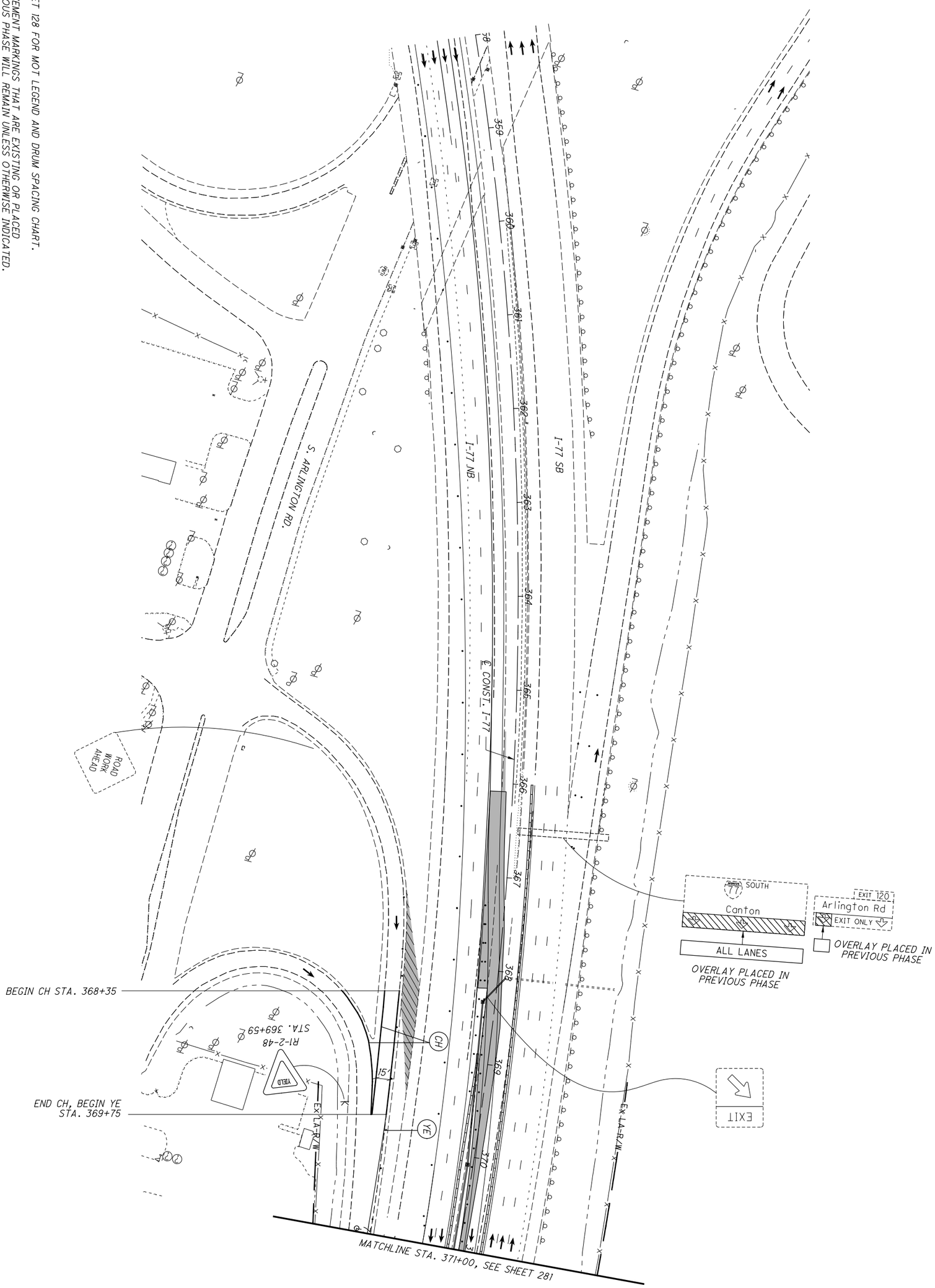


| | | | | |
|---|---|---|---|---|
| 280 / 1288 | SUM-77 / 277 / 224<br>VARIOUS | MAINTENANCE OF TRAFFIC PLAN - PHASE 2J<br>I-77 - STA. 358+00 TO STA. 371+00 | CALCULATED .<br>CHECKED . | 0 50<br>25 100<br>HORIZONTAL SCALE IN FEET |

N:\03\60\06744-08\106002_SUM-76-10.95\Design\MOT\Sheets\106002_MP275.dgn Sheet 1/31/2021 5:47:49 PM jrettig

NOTES:

1. SEE SHEET 128 FOR MOT LEGEND AND DRUM SPACING CHART.
2. ALL PAVEMENT MARKINGS THAT ARE EXISTING OR PLACED IN A PREVIOUS PHASE WILL REMAIN UNLESS OTHERWISE INDICATED.

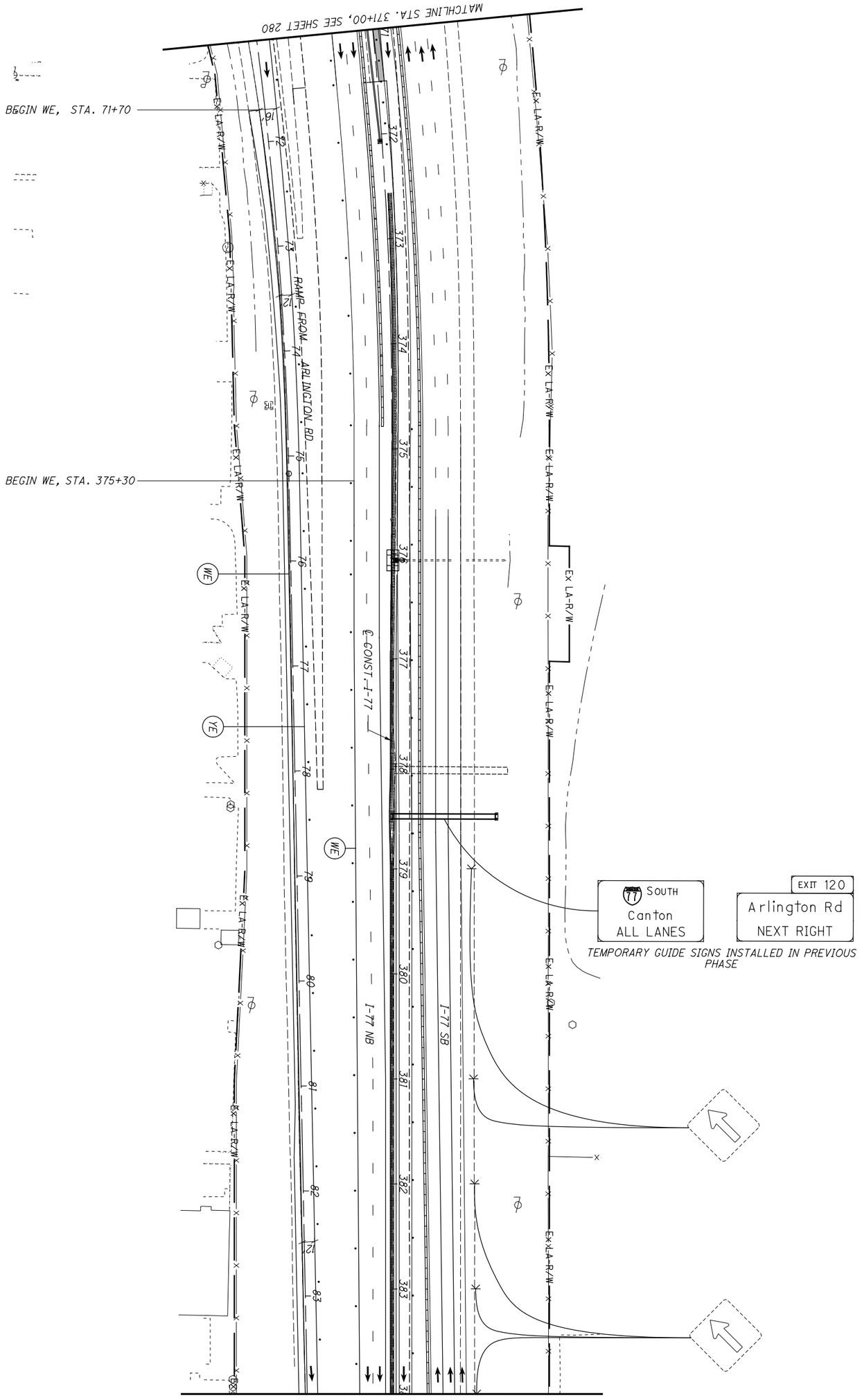


| | | | | |
|---|---|---|---|---|
| 281 / 1288 | SUM-77 / 277 / 224<br>VARIOUS | MAINTENANCE OF TRAFFIC PLAN - PHASE 2J<br>I-77 - STA. 371+00 TO STA. 384+00 | CALCULATED .<br>CHECKED . | 0 50<br>25 100<br>HORIZONTAL SCALE IN FEET |

N:\03\60\06744-08\I06002_SUM-76-I0.95\Design\MOT\Sheets\I06002_MP276.dgn Sheet 1/31/2021 5:47:52 PM jrettig

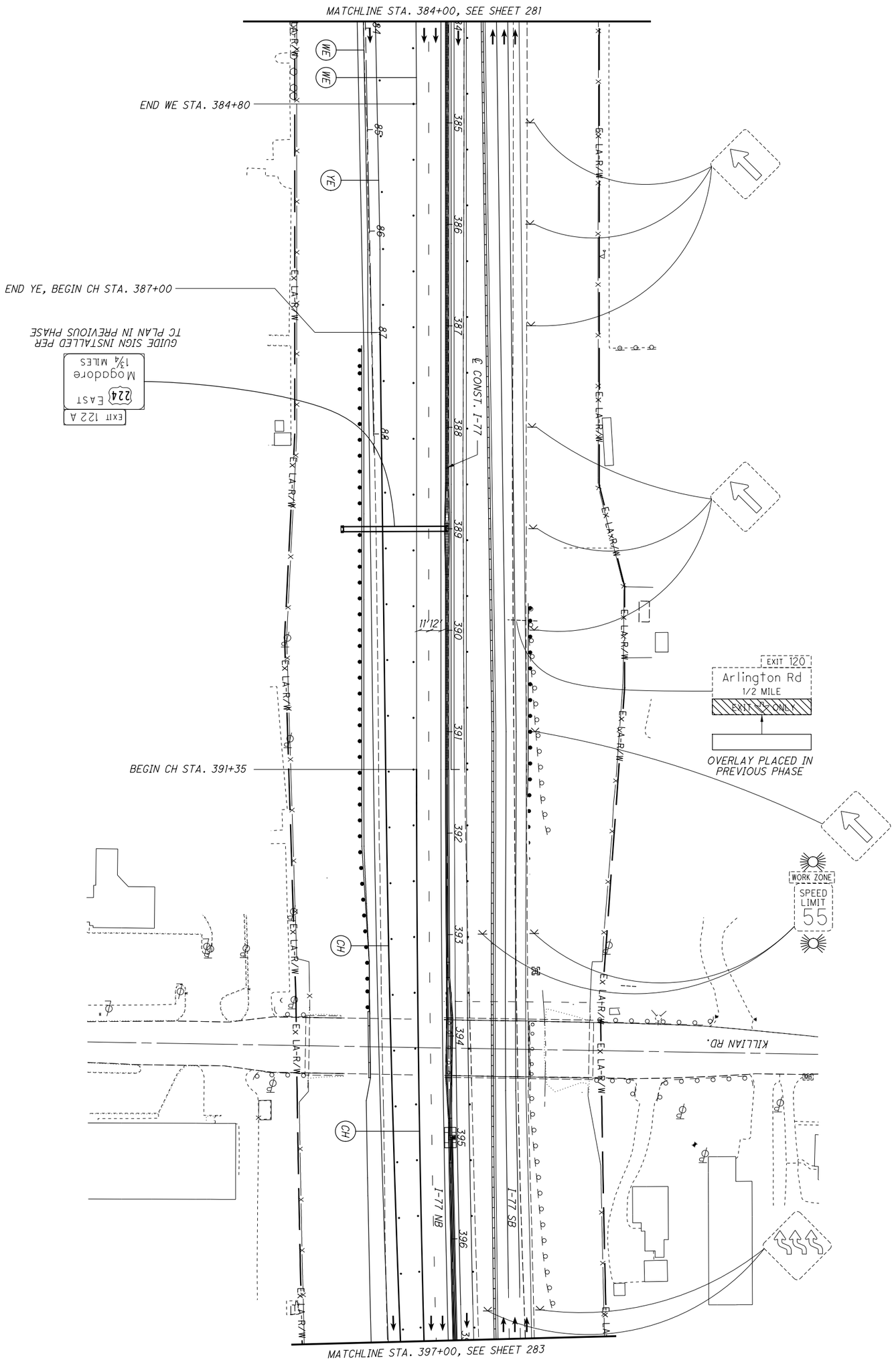


NOTES:

1. SEE SHEET 128 FOR MOT LEGEND AND DRUM SPACING CHART.
2. ALL PAVEMENT MARKINGS THAT ARE EXISTING OR PLACED IN A PREVIOUS PHASE WILL REMAIN UNLESS OTHERWISE INDICATED.

| | | | | |
|---|---|---|---|---|
| 282 / 1288 | SUM-77 / 277 / 224<br>VARIOUS | MAINTENANCE OF TRAFFIC PLAN - PHASE 2J<br>I-77 - STA. 384+00 TO STA. 397+00 | CALCULATED .<br>CHECKED . | 0 50<br>25 100<br>HORIZONTAL SCALE IN FEET |

N:\03\60\06744-08\I06002_SUM-76-I0.95\Design\MOT\Sheets\I06002_MP294.dgn Sheet 1/31/2021 5:47:59 PM jrettig

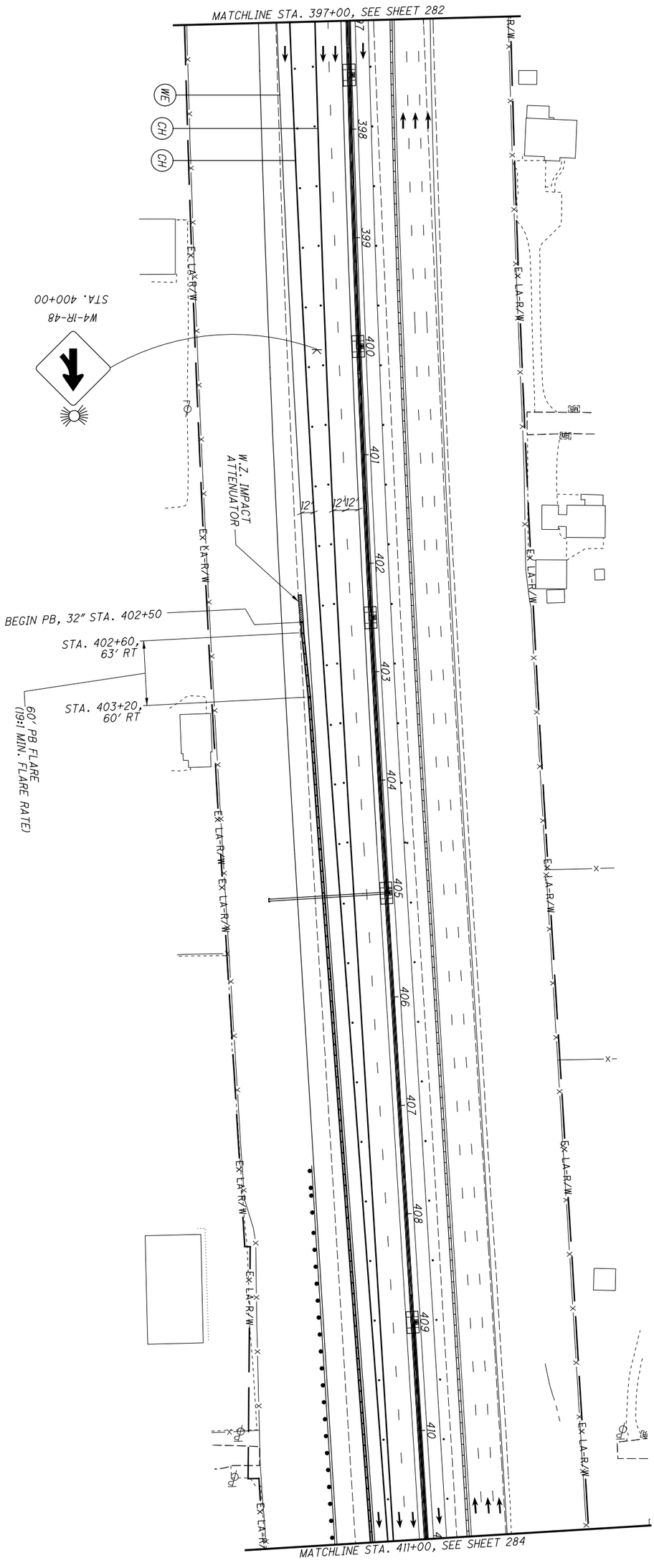


NOTES:

1. SEE SHEET 128 FOR MOT LEGEND AND DRUM SPACING CHART.
2. ALL PAVEMENT MARKINGS THAT ARE EXISTING OR PLACED IN A PREVIOUS PHASE WILL REMAIN UNLESS OTHERWISE INDICATED.

| | | | | |
|---|---|---|---|---|
| 283 / 1288 | SUM-77 / 277 / 224<br>VARIOUS | MAINTENANCE OF TRAFFIC PLAN - PHASE 2J<br>I-77 - STA. 3397+00 TO STA. 411+00 | CALCULATED .<br>CHECKED . | 0 50<br>25 100<br>HORIZONTAL SCALE IN FEET |

N:\03\60\06744-08\I06002_SUM-76-I0.95\Design\MOT\Sheets\I06002_MP295.dgn Sheet 1/31/2021 5:48:03 PM jrettig

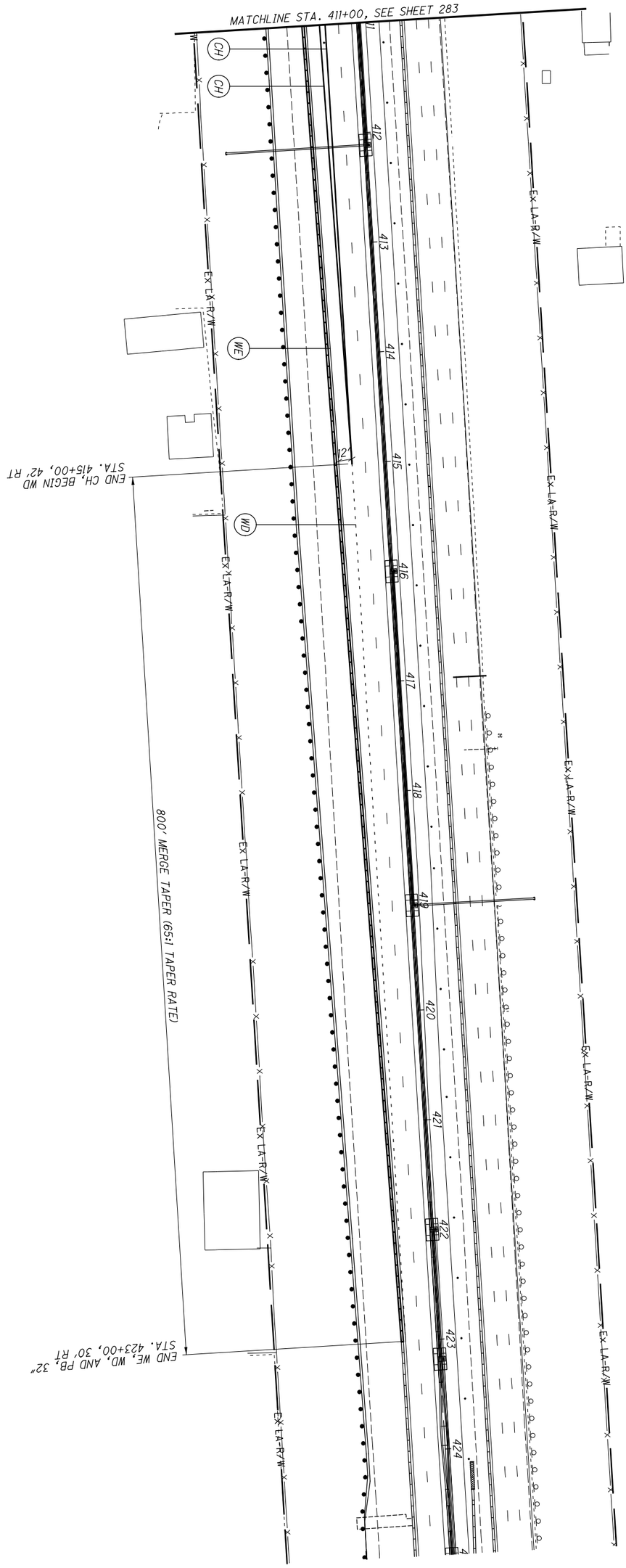


NOTES:

1. SEE SHEET 128 FOR MOT LEGEND AND DRUM SPACING CHART.
2. ALL PAVEMENT MARKINGS THAT ARE EXISTING OR PLACED IN A PREVIOUS PHASE WILL REMAIN UNLESS OTHERWISE INDICATED.

| | | | | |
|---|---|---|---|---|
| 284 / 1288 | SUM-77 / 277 / 224<br>VARIOUS | MAINTENANCE OF TRAFFIC PLAN - PHASE 2J<br>I-77 - STA. 411+00 TO STA. 424+00 | CALCULATED .<br>CHECKED . | 0 50<br>25 100<br>HORIZONTAL SCALE IN FEET |

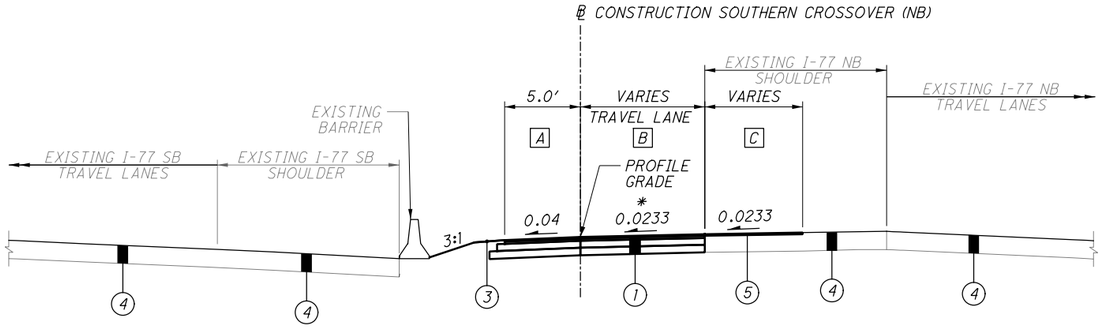


## SOUTHERN CROSSOVER (NB) - WIDENING EXISTING PAVEMENT

STA. 10+12.00 TO STA. 12+09.80

A VARIES
5.0' AT STA. 11+50.00 TO
3.0 AT STA. 11+98.04

B VARIES
0.0' AT STA. 10+12.00 TO
3.4' AT STA. 12+09.80

C VARIES
12.0' AT STA. 10+12.00 TO
0.0' AT STA. 12+09.80

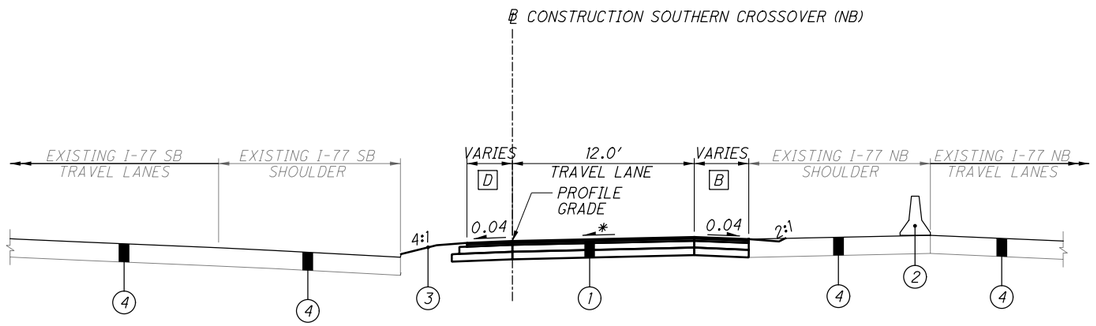


## SOUTHERN CROSSOVER (NB) PAVEMENT SECTION

STA. 12+09.80 TO STA. 12+94.21

D VARIES
3.0' AT STA. 12+09.80 TO
0.0 AT STA. 12+94.21

E VARIES
0.0' AT STA. 12+09.80 TO
5.0' AT STA. 12+94.21

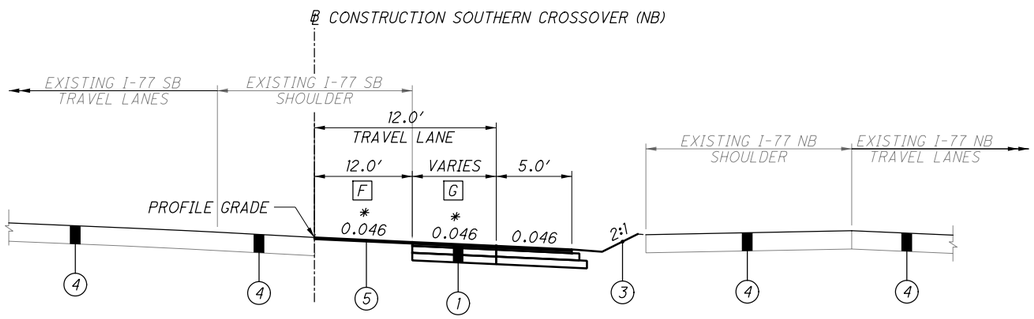


## SOUTHERN CROSSOVER (NB) - WIDENING EXISTING PAVEMENT

STA. 12+94.21 TO STA. 16+50.37

F VARIES
0.0' AT STA. 12+94.21 TO
12.0' AT STA. 15+42.82

G VARIES
12.0' AT STA. 12+94.21 TO
0.0' AT STA. 16+50.37

LEGEND

(1) ITEM 615 - PAVEMENT FOR MAINTAINING TRAFFIC, CLASS A

(2) ITEM 622 - PORTABLE BARRIER, 32"

(3) ITEM 659 - SEEDING AND MULCHING (TEMPORARY GRADING)

(4) PERMANENT PAVEMENT

(5) ITEM 254 - PAVEMENT PLANING, ASPHALT CONCRETE
ITEM 441 - ASPHALT CONCRETE SURFACE COURSE, TYPE 1, (448), PG64-22

* TRANSITIONS FROM 0.0233 TO -0.0460,
STA. 11+98.04 TO STA. 13+89.04

# TYPICAL SECTIONS - SOUTHERN CROSSOVER (NB) PAVEMENT

SUM-77 / 277 / 224
VARIOUS



N:\03\60\06744-08\106002_SUM-76-10.95\Design\MOT\Sheets\106002_MY501.dgn Sheet 1/31/2021 5:48:18 PM jrettig

**NOTE:**
**CONTRACTOR TO FIELD VERIFY THE ELEVATIONS AND COORDINATE WITH THE ENGINEER DURING CONSTRUCTION.**

EX. ELECTRIC, ODOT DISTRICT 4, O.L.E.

PC Sta. 10+00.00 = 366+08.61, 11.88' RT.

PRC Sta. 11+17.92

SB I-77

NB I-77

C1 C2 D-2

DND

ABANDON INLET AND CONNECT PIPES THROUGH

END TAPER +53.45. 3.0' LT.

℄ CONST. SOUTHERN CROSSOVER (NB)

BEGIN TAPER +50.00. 5.0' LT.

SOUTHERN CROSSOVER (NB)

℄ CONST. I-77

TEMP. CB-2-2B

TEMP. 12"

MATCHLINE STA. 14+00.00, SEE SHEET 287

365 366 367 368 369 370

5' 12' 12'

**BEGIN WORK SOUTHERN CROSSOVER (NB) STA. 10+12.00**

| | |
|---|---|
| P.I. Sta. 10+58.98 | P.I. Sta. 13+85.32 |
| Δ = 3° 23' 15" (LT) | Δ = 13° 11' 42" (RT) |
| Dc = 2° 52' 22" | Dc = 2° 28' 41" |
| R = 1,994.50' | R = 2,312.00' |
| T = 58.98' | T = 267.41' |
| L = 117.92' | L = 532.45' |
| E = 0.87' | E = 15.41' |
| C = 117.90' | C = 531.27' |
| C.B. = N 14° 29' 47" W | C.B. = N 9° 35' 33" W |

NOTES:

1. SEE SHEET 128 FOR MOT LEGEND.

**BEGIN PROFILE SOUTHERN CROSSOVER (NB) STA. 10+12.00**

GRAPHIC GRADE

P.V.I. STA 12+96.95
ELEV = 1,090.62'
146.09' VC

GRAPHIC GRADE

PROPOSED PROFILE SOUTHERN CROSSOVER (NB)

EXISTING GROUND

STA 12+23.91 ELEV = 1,089.47'

NB CROSSOVER STA 12+24.50, 16.33' RT = IR-77 STA 368+34.10, 13.08' RT
TEMP. CB-2-2B, GRATE ELEV 1089.37
TEMP. 12" (N) 1086.37
TEMP. 12" (SW) 1085.37

STA 13+69.99 ELEV = 1,092.69'

+1.56 % +2.83 %

TEMP. 174'-12" TYPE C @ 1.81%

NB CROSSOVER STA 14+00.00, 19.74' RT = IR-77 STA 370+08.51, 5.86' RT
TEMP. CB-2-2B, GRATE ELEV 1092.52
TEMP. 12" (S) 1089.52
TEMP. 12" (N) 1089.52

MATCHLINE STA. 14+00.00

1,086.59

1,086.55 1,086.67 1,086.87 1,087.09 1,087.31 1,087.53 1,087.84 1,088.16 1,088.48 1,088.79 1,089.10 1,089.41 1,089.74 1,090.10 1,090.49 1,090.92 1,091.38 1,091.88 1,092.41 1,092.97 1,093.54

1,086.60 1,086.73 1,087.01 1,087.36 1,087.40 1,087.28 1,087.68 1,087.53 1,087.90 1,088.02 1,088.27 1,088.69 1,089.26 1,092.84 1,094.19 1,090.68 1,091.24 1,091.82 1,092.41 1,092.95 1,093.54

1,105 1,100 1,095 1,090 1,085 1,080 1,075

10+00 11+00 12+00 13+00 14+00

HORIZONTAL SCALE IN FEET 0 10 20 40

CALCULATED KMC CHECKED SSR

**PLAN & PROFILE - SOUTHERN CROSSOVER (NB)**
**PHASE 2 - STA. 10+00.00 TO STA. 14+00.00**

**SUM-77 / 277 / 224**
**VARIOUS**

286
1288

N:\03\60\06744-08\106002_SUM-76-10.95\Design\MOT\Sheets\106002_MH50i.dgn Sheet 1/31/2021 5:48:24 PM jrettig

NOTES:

1. SEE SHEET 128 FOR MOT LEGEND.

**END WORK SOUTHERN CROSSOVER (NB) STA. 16+50.37**

**NOTE:**

**CONTRACTOR TO FIELD VERIFY THE ELEVATIONS AND COORDINATE WITH THE ENGINEER DURING CONSTRUCTION.**

**C3**

P.I. Sta. 16+69.59
Δ = 0° 57′ 10″ (RT)
Dc = 2° 28′ 41″
R = 2,312.00′
T = 19.23′
L = 38.45′
E = 0.08′
C = 38.45′
C.B. = N 2° 31′ 06″ W

**C4**

P.I. Sta. 17+80.65
Δ = 2° 40′ 02″ (RT)
Dc = 1° 27′ 09″
R = 3,944.88′
T = 91.84′
L = 183.64′
E = 1.07′
C = 183.62′
C.B. = N 0° 42′ 30″ W

**C2**

P.I. Sta. 13+85.32
Δ = 13° 11′ 42″ (RT)
Dc = 2° 28′ 41″
R = 2,312.00′
T = 267.41′
L = 532.45′
E = 15.41′
C = 531.27′
C.B. = N 9° 35′ 33″ W

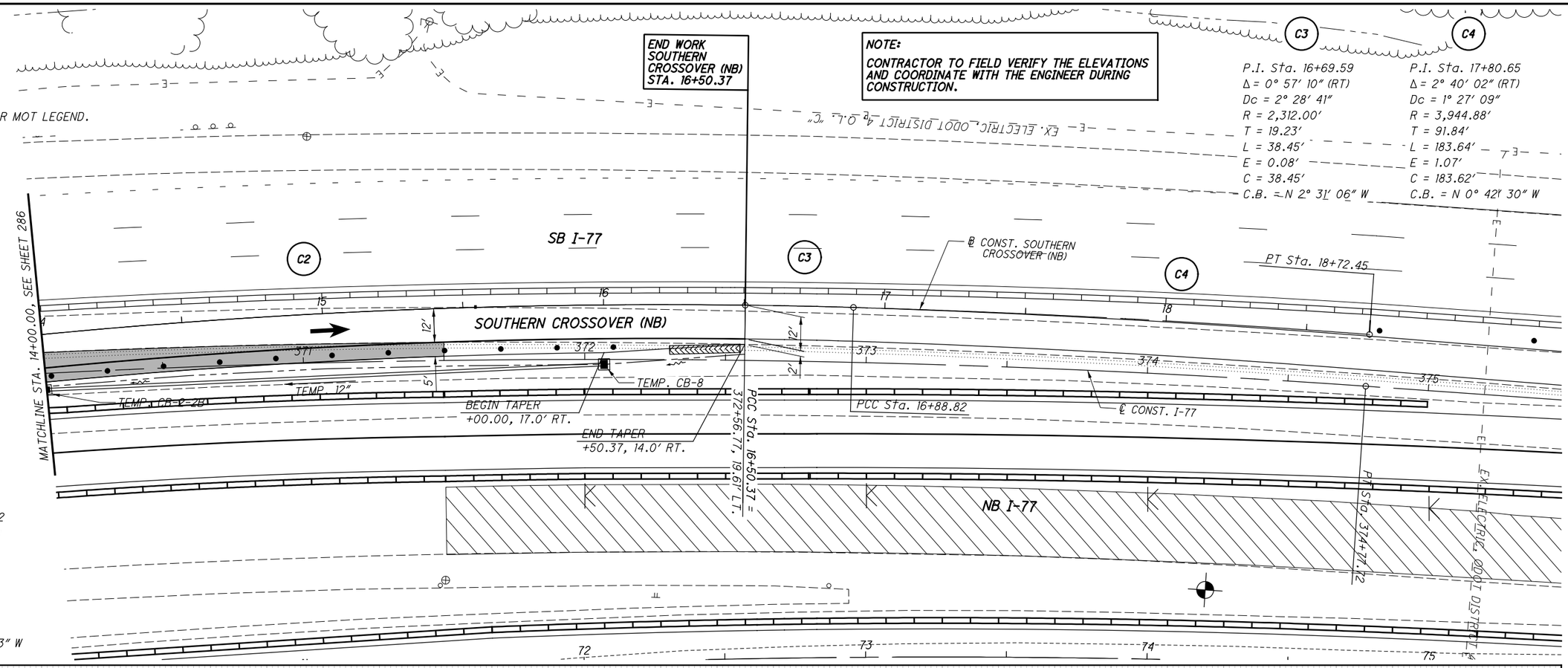


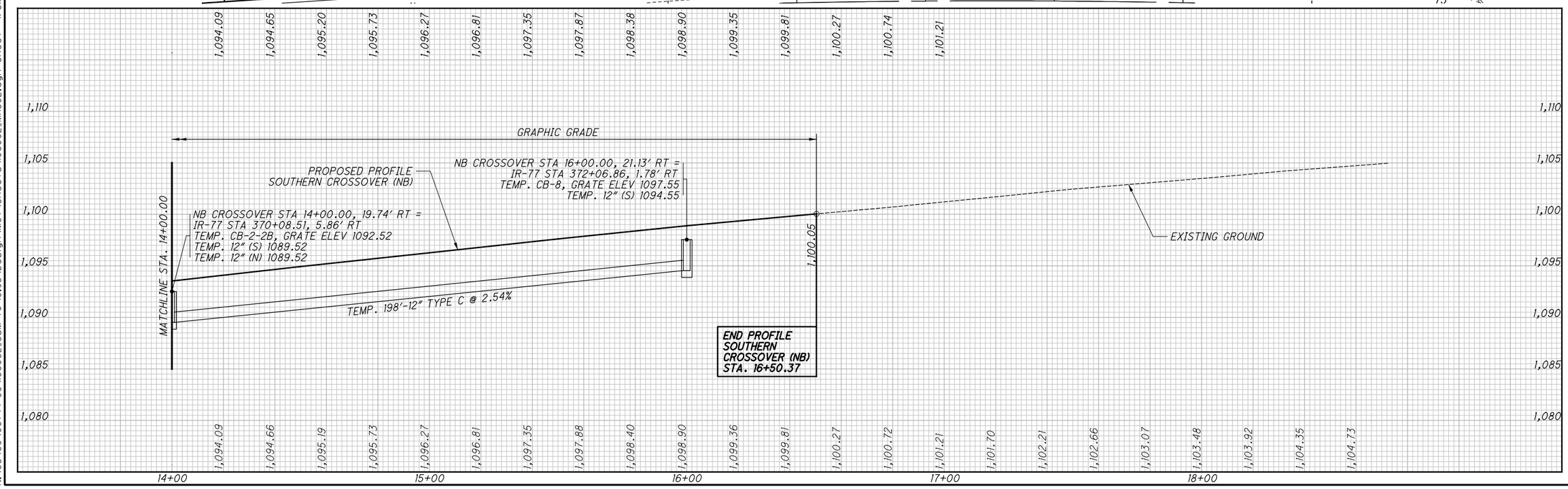


HORIZONTAL SCALE IN FEET
0 10 20 40

CALCULATED KMC
CHECKED SSR

**SOUTHERN CROSSOVER (NB)**
**14+00.00 TO STA. 18+72.45**

**PLAN & PROFILE - SOUTHERN CROSSOVER (NB)**
**PHASE 2 - STA. 14+00.00 TO STA. 18+72.45**

**SUM-77/277/224**
**VARIOUS**

287
1288

N:\03\60\06744-08\I06002_SUM-76-10.95\Design\MOT\Sheets\I06002_MH502.dgn Sheet 1/31/2021 5:48:28 PM jrettig

| SEEDING | | END AREA | | VOLUME | |
|---|---|---|---|---|---|
| END WIDTH | SQ. YDS. | CUT | FILL | CUT | FILL |
| 5 | 35 | 8 | 3 | 14 | 6 |
| 8 | 34 | 7 | 4 | 11 | 6 |
| 8 | *69 | 9 | 4 | *25 | *12 |

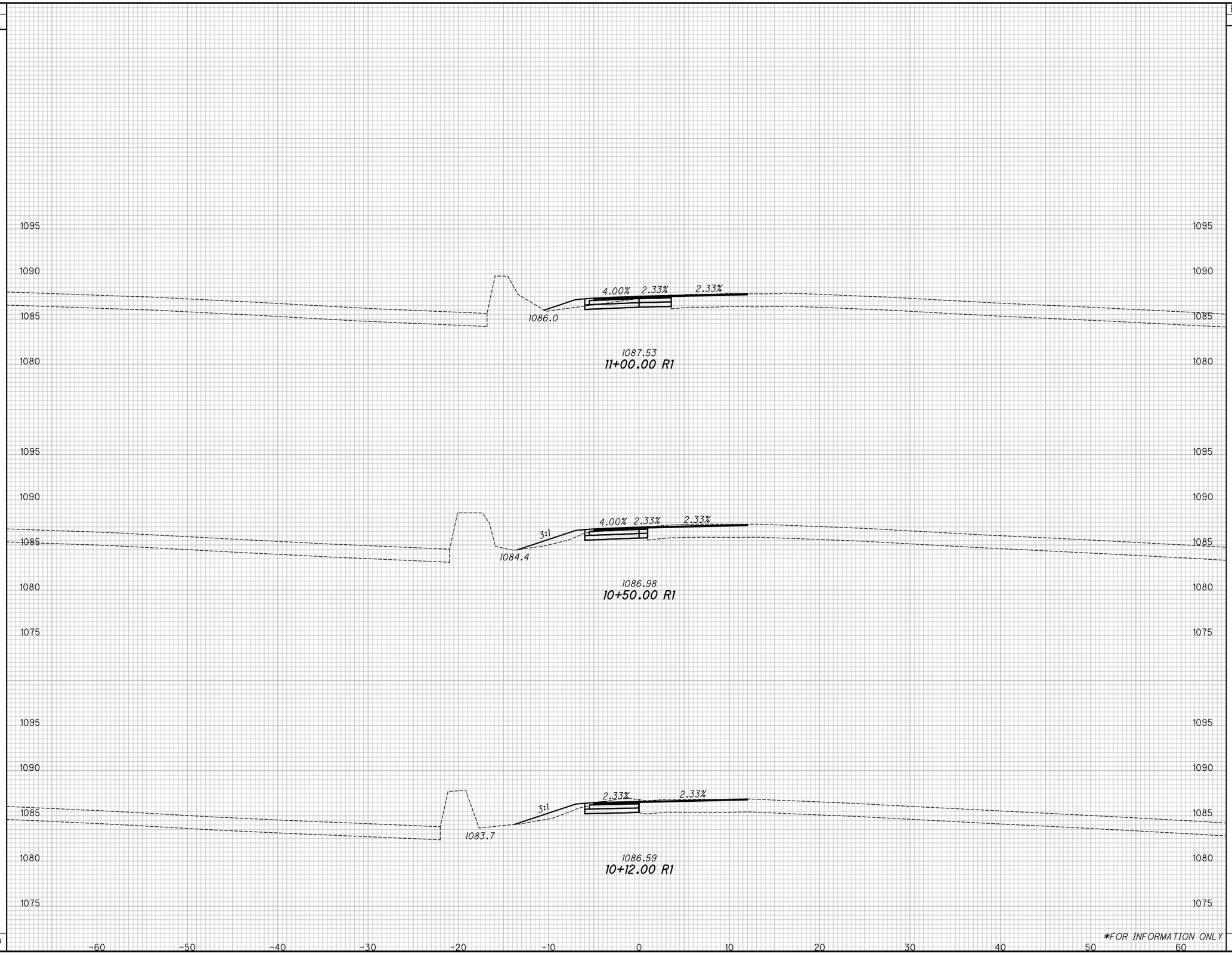


CALCULATED KMC
CHECKED SSR

# CROSS SECTIONS - SOUTHERN CROSSOVER (NB)
## PHASE 2 - STA. 10+12.00 TO STA. 11+00.00

SUM-77/277/224
VARIOUS

288
1288

N:\03\60\06744-08\106002-SUM-76-10.95\Design\MOT\Basemaps\106002_BM510.dgn BLP_MOT_NB02 1/31/2021 5:48:46 PM jrettig

| SEEDING | |
|---|---|
| END WIDTH | SQ. YDS. |
| | 6 |
| | 28 |
| | 4 |
| | 13 |
| | 1 |
| | 16 |
| | *57 |

| END AREA | |
|---|---|
| CUT | FILL |
| 22 | 0 |
| 11 | 2 |
| 11 | 1 |

| VOLUME | |
|---|---|
| CUT | FILL |
| 31 | 2 |
| 20 | 3 |
| 18 | 4 |
| *69 | *9 |

CALCULATED KMC
CHECKED SSR

1100
1095
1090
1085
1080

4.00% 0.44% 4.00% 2%
1089.7
TEMP. 12" TYPE C

1089.91
12+50.00 R1

NB CROSSOVER STA 11+98.44, 8.61' LT =
IR-77 STA 368+06.19, 9.74' LT
EX. I-3-B, GRATE ELEV 1087.79
(ABANDON INLET AND CONNECT PIPES THROUGH)
EX. 15" RCP W 1082.44
TEMP. 12" (NE) 1082.69

NB CROSSOVER STA 12+24.50, 16.33' RT =
IR-77 STA 368+34.10, 13.08' RT
TEMP. CB-2-2B, GRATE ELEV 1089.37
TEMP. 12" (N) 1086.37
TEMP. 12" (SW) 1085.37

4.00% 2.33% 2.33%
TEMP. 36'-12" TYPE B @ 7.44%
EX. 15" RCP (DND)

1089.10
12+00.00 R1

4.00% 2.33% 2.33%

1088.32
11+50.00 R1

-60 -50 -40 -30 -20 -10 0 10 20 30 40 50 60

*FOR INFORMATION ONLY

# CROSS SECTIONS - SOUTHERN CROSSOVER (NB)
## PHASE 2 - STA. 11+50.00 TO STA. 12+50.00

SUM-77/277/224
VARIOUS

289
1288

N:\03\60\06744-08\106002_SUM-76-10.95\Design\MOT\Basemaps\106002_BM510.dgn BLP_MOT_NB02 1/31/2021 5:48:47 PM jrettig

| SEEDING END WIDTH | SEEDING SQ. YDS. | END AREA CUT | END AREA FILL | VOLUME CUT | VOLUME FILL |
|---|---|---|---|---|---|
| 4 | 22 | 23 | 0 | 46 | 0 |
| 4 | 27 | 27 | 0 | 52 | 0 |
| 5 | 33 | 29 | 0 | 47 | 0 |
| | *82 | | | *145 | 0 |

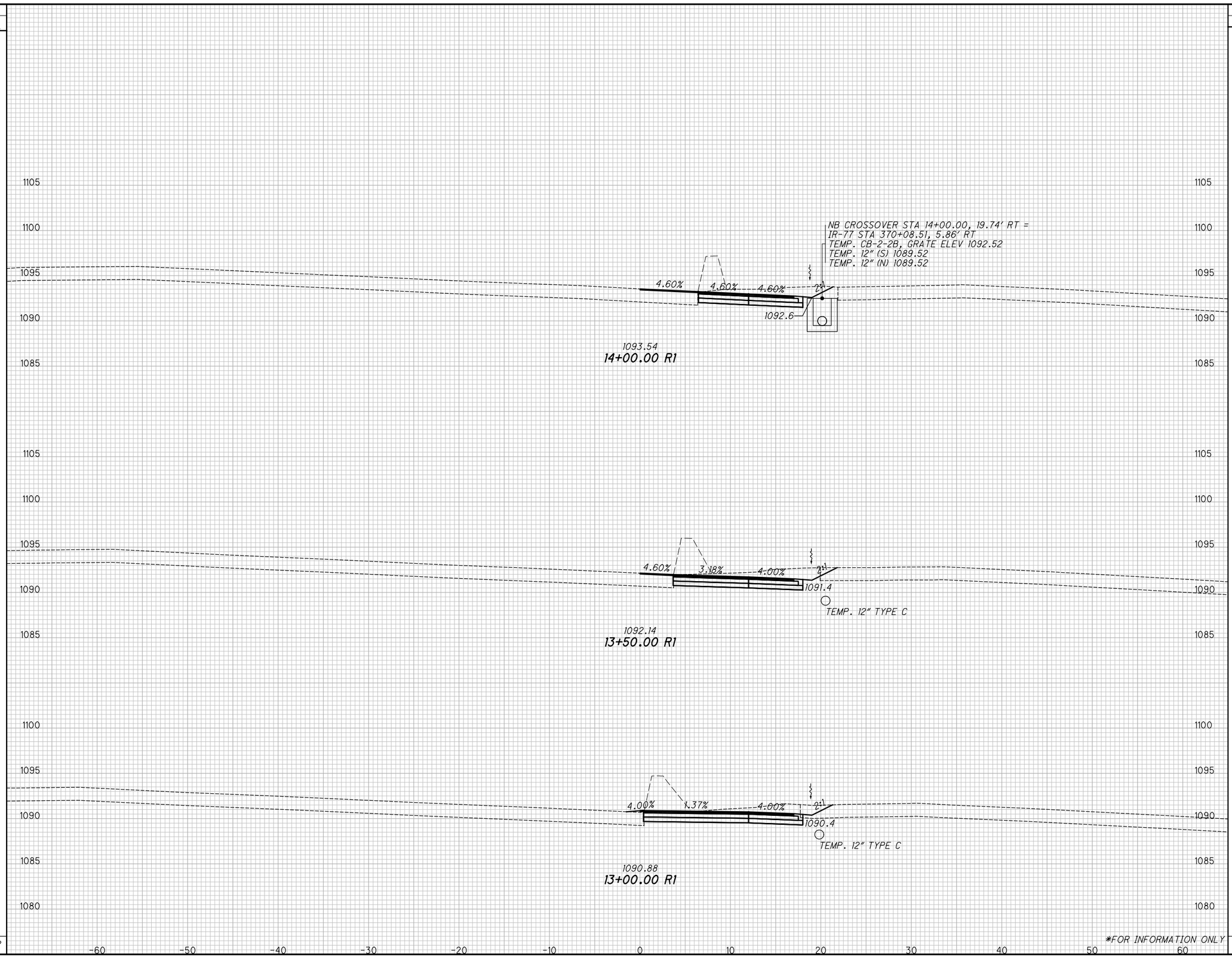


N:\03\60\06744-08\106002-SUM-76-10.95\Design\MOT\Basemaps\106002_BM510.dgn BLP_MOT_NB02 1/31/2021 5:48:47 PM jrettig

CALCULATED KMC
CHECKED SSR

# CROSS SECTIONS - SOUTHERN CROSSOVER (NB)
## PHASE 2 - STA. 13+00.00 TO STA. 14+00.00

SUM-77/277/224
VARIOUS

290
1288

| SEEDING | | END AREA | | VOLUME | |
|---|---|---|---|---|---|
| END WIDTH | SQ. YDS. | CUT | FILL | CUT | FILL |
| 8 | 40 | 12 | 0 | 23 | 0 |
| 7 | 35 | 13 | 0 | 26 | 0 |
| 6 | 26 | 15 | 0 | 35 | 0 |
| *101 | | | | *84 | *0 |

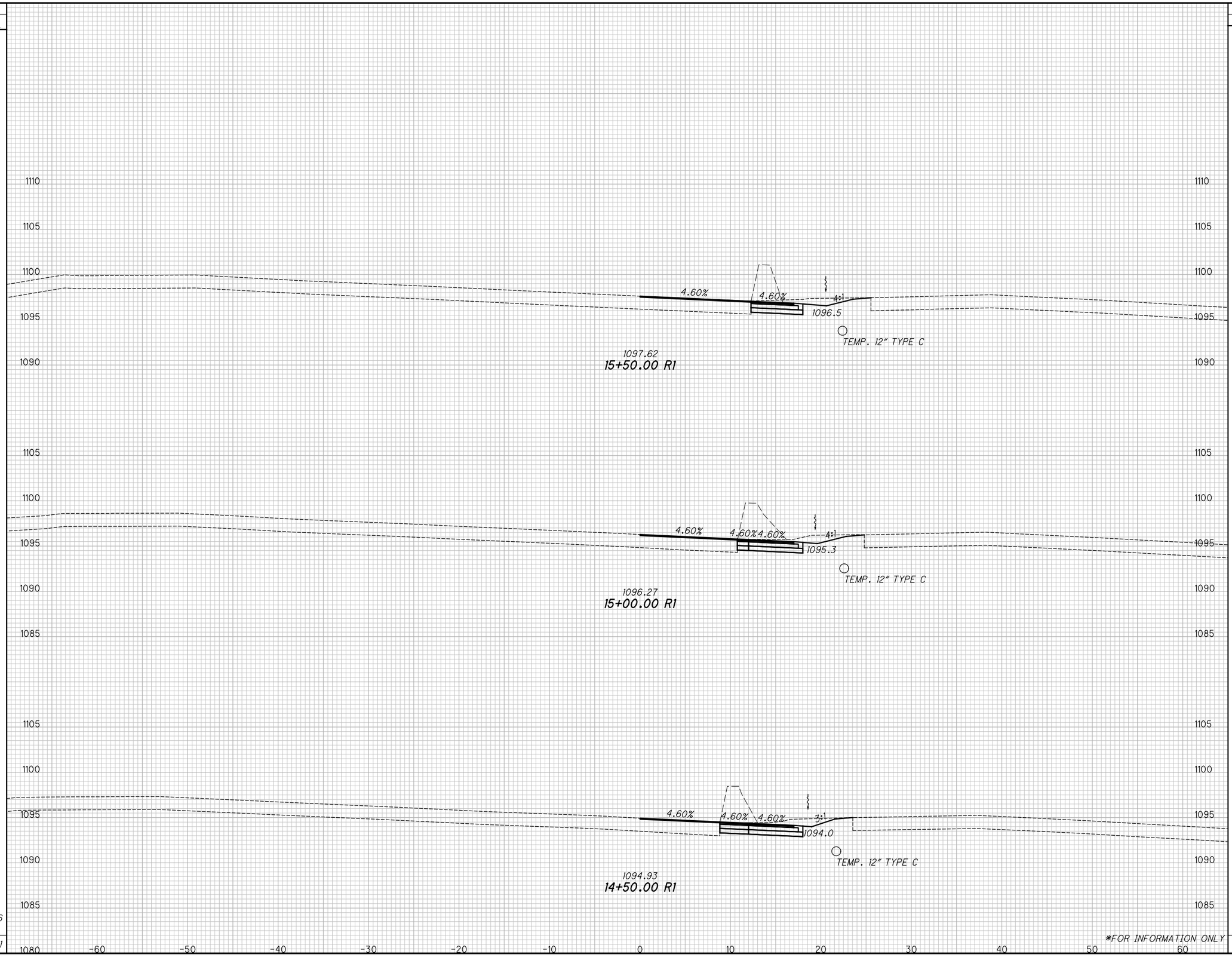


CALCULATED KMC
CHECKED SSR

# CROSS SECTIONS - SOUTHERN CROSSOVER (NB)
## PHASE 2 - STA. 14+50.00 TO STA. 15+50.00

SUM-77/277/224
VARIOUS

291
1288

N:\03\60\06744-08\106002-SUM-76-10.95\Design\MOT\Basemaps\106002_BM510.dgn BLP_MOT_NB02 1/31/2021 5:48:48 PM jrettig

| SEEDING END WIDTH | SEEDING SQ. YDS. | END AREA CUT | END AREA FILL | VOLUME CUT | VOLUME FILL |
|---|---|---|---|---|---|
| | | | | | |
| 0 | 0 | 0 | 0 | 0 | 0 |
| | | | | | |
| 0 | 22 | 0 | 0 | 10 | 0 |
| | | | | | |
| 8 | 43 | 11 | 0 | 21 | 0 |
| | *65 | | | *31 | *0 |

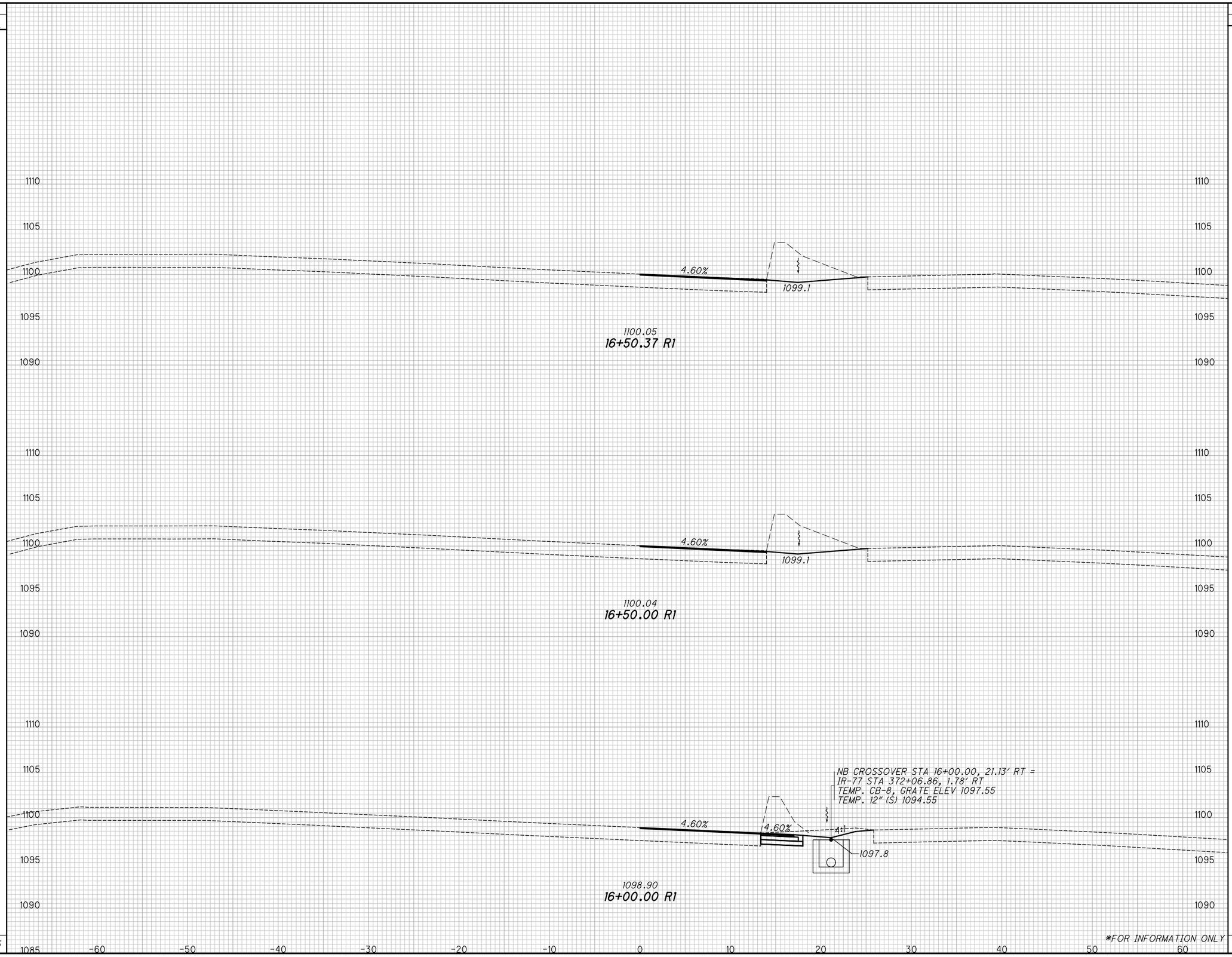


*FOR INFORMATION ONLY

CALCULATED KMC
CHECKED SSR

CROSS SECTIONS - SOUTHERN CROSSOVER (NB)
PHASE 2 - STA. 16+00.00 TO STA. 16+50.37

SUM-77/277/224
VARIOUS

292
1288

N:\03\60\06744-08\106002-SUM-76-10.95\Design\MOT\Basemaps\106002_BM510.dgn BLP_MOT_NB02 1/31/2021 5:48:48 PM jrettig

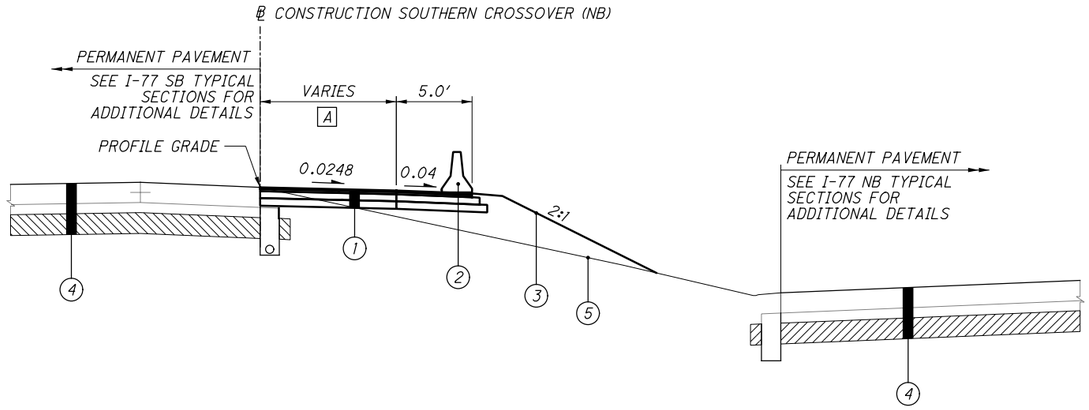


## NORTHERN CROSSOVER (NB) - WIDENING EXISTING PAVEMENT

STA. 20+70.76 TO STA. 22+93.05

A VARIES
0.0′ AT STA. 20+70.67 TO
12.0 AT STA. 22+93.05

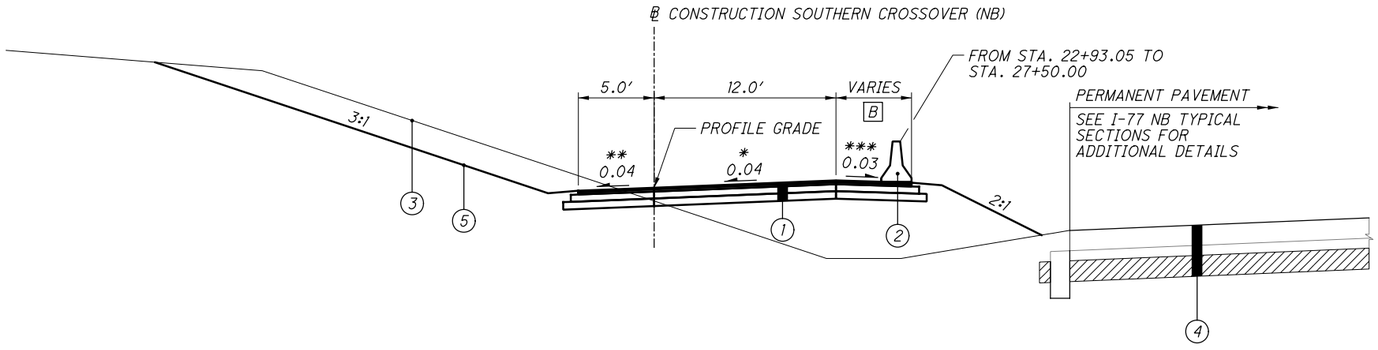


## NORTHERN CROSSOVER (NB) PAVEMENT SECTION

STA. 22+93.05 TO STA. 34+34.89

B 5.0′ FROM STA. 22+93.05 TO STA. 33+20.41

VARIES
5.0′ AT STA. 33+20.41 TO
0.0 AT STA. 34+34.89

* TRANSITIONS FROM -0.0248 TO 0.04,
STA. 23+56.22 TO STA. 25+38.22

TRANSITIONS FROM 0.04 TO 0.0545,
STA. 31+50.00 TO STA. 32+00.00

0.0545,
STA. 32+00.00 TO STA. 34+34.89

** TRANSITIONS FROM -0.0526 TO -0.0615,
STA. 23+56.22 TO STA. 24+00.00

TRANSITIONS FROM -0.0615 TO 0.04,
STA. 24+00.00 TO STA. 24+50.00

TRANSITIONS FROM 0.04 TO 0.0545,
STA. 31+50.00 TO STA. 32+00.00

0.0545,
STA. 32+00.00 TO STA. 34+34.89

*** TRANSITIONS FROM 0.04 TO 0.03,
STA. 23+56.22 TO STA. 25+38.22

TRANSITIONS FROM 0.03 TO -.0244,
STA. 31+50.00 TO STA. 34+34.89

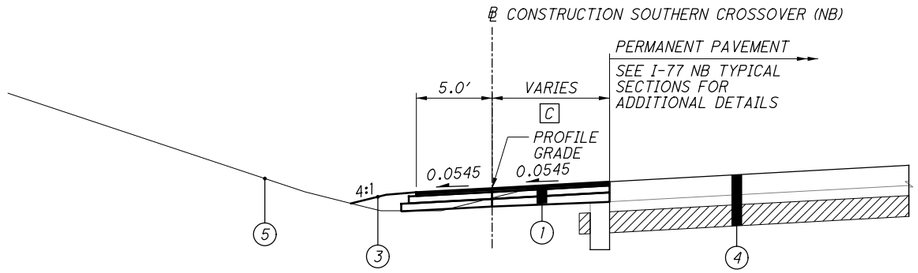


## NORTHERN CROSSOVER (NB) - WIDENING EXISTING PAVEMENT

STA. 34+34.89 TO STA. 36+89.84

C VARIES
12.0′ AT STA. 34+34.89 TO
0.0′ AT STA. 36+89.84

LEGEND

1. ITEM 615 - PAVEMENT FOR MAINTAINING TRAFFIC, CLASS A
2. ITEM 622 - PORTABLE BARRIER, 32″
3. ITEM 659 - SEEDING AND MULCHING (TEMPORARY GRADING)
4. PERMANENT PAVEMENT - SEE I-77 TYPICAL SECTIONS FOR DETAILS
5. PERMANENT GRADING - SEE CROSS SECTIONS FOR ADDITIONAL INFORMATION

PHASE 2 - STA. 14+00.00 TO STA. 18+72.45

SUM-77/277/224
VARIOUS

293
1288

N:\03\60\06744-08\106002_SUM-76-10.95\Design\MOT\Sheets\106002_MY601.dgn Sheet 1/31/2021 5:49:06 PM jrettig

C1

P.I. Sta. 21+90.95
Δ = 1° 45′ 11″ (LT)
Dc = 0° 27′ 33″
R = 12,480.18′
T = 190.95′
L = 381.86′
E = 1.46′
C = 381.85′
C.B. = N 13° 41′ 13″ W

C2

P.I. Sta. 29+69.04
Δ = 16° 48′ 15″ (LT)
Dc = 1° 26′ 29″
R = 3,975.36′
T = 587.18′
L = 1,165.93′
E = 43.13′
C = 1,161.76′
C.B. = N 22° ~~57′ 56″~~ W

BEGIN WORK NORTHERN CROSSOVER (NB) STA. 20+70.66

NOTES:

1. SEE SHEET 128 FOR MOT LEGEND.

PC Sta. 472+54.68

PC Sta. 20+00.00 = 473+95.23, ~~4.0′~~ LT.

SB I-77

℄ CONST. SB I-77

℄ CONST. NORTHERN CROSSOVER (NB)

PCC Sta. 23+81.86

NORTHERN CROSSOVER (NB)

5′

12′

5′

MATCHLINE STA. 24+00.00, SEE SHEET 295

PC Sta. 474+93.14

TEMP. CB-2-2B

STUB PIPE

TEMP. 12″

NB I-77

℄ CONST. NB I-77

PC Sta. 576+00.00

4%D

GRAPHIC GRADE

P.V.I STA 24+29.15
ELEV = 1,054.36′
272.19′ VC

PROPOSED PROFILE NORTHERN CROSSOVER (NB)

STA 22+93.05
ELEV = 1,054.32′

EXISTING GROUND

1,053.86

BEGIN PROFILE NORTHERN CROSSOVER (NB) STA. 20+70.66

NB CROSSOVER STA 22+51.76, 35.73′ RT =
NB IR-77 STA 476+53.74, 23.67′ LT
TEMP. CB-2-2B, GRATE ELEV 1046.77
TEMP. 12″ (N) 1043.01
TEMP. 12″ (W) 1043.01 (STUB)

TEMP. 470′-12″ TYPE B @ 1.00%

MATCHLINE STA. 24+00.00

HORIZONTAL SCALE IN FEET

CALCULATED KMC
CHECKED SSR

PLAN & PROFILE - NORTHERN CROSSOVER (NB)
PHASE 2 - STA. 20+70.66 TO STA. 24+00.00

SUM-77/277/224
VARIOUS

294
1288

N:\03\60\06744-08\106002_SUM-76-10.95\Design\MOT\Sheets\106002_MH60L.dgn Sheet 1/31/2025 5:49:12 PM jrettig

C2

P.I. Sta. 29+69.04
Δ = 16° 48′ 15″ (LT)
Dc = 1° 26′ 29″
R = 3,975.36′
T = 587.18′
L = 1,165.93′
E = 43.13′
C = 1,161.76′
C.B. = N 22° 57′ 56″ W

NOTES:

1. SEE SHEET 128 FOR MOT LEGEND.

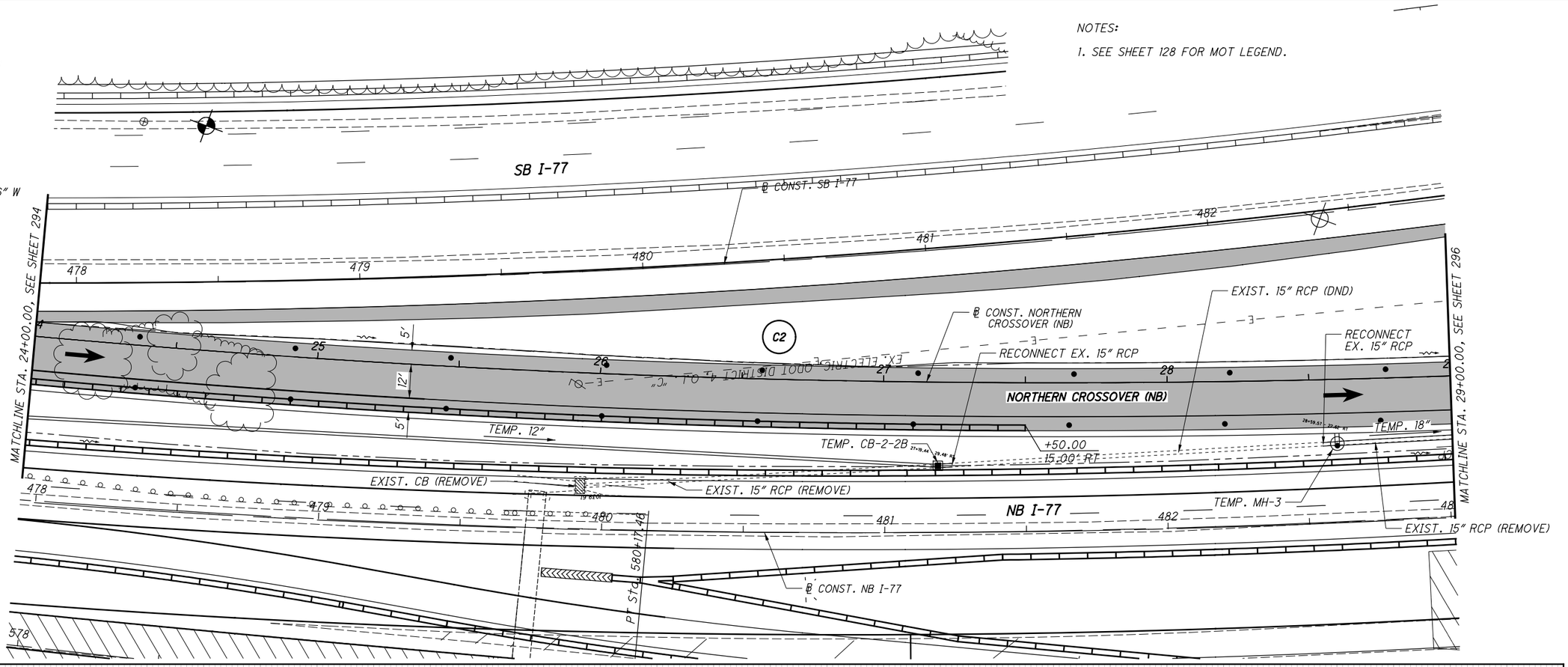


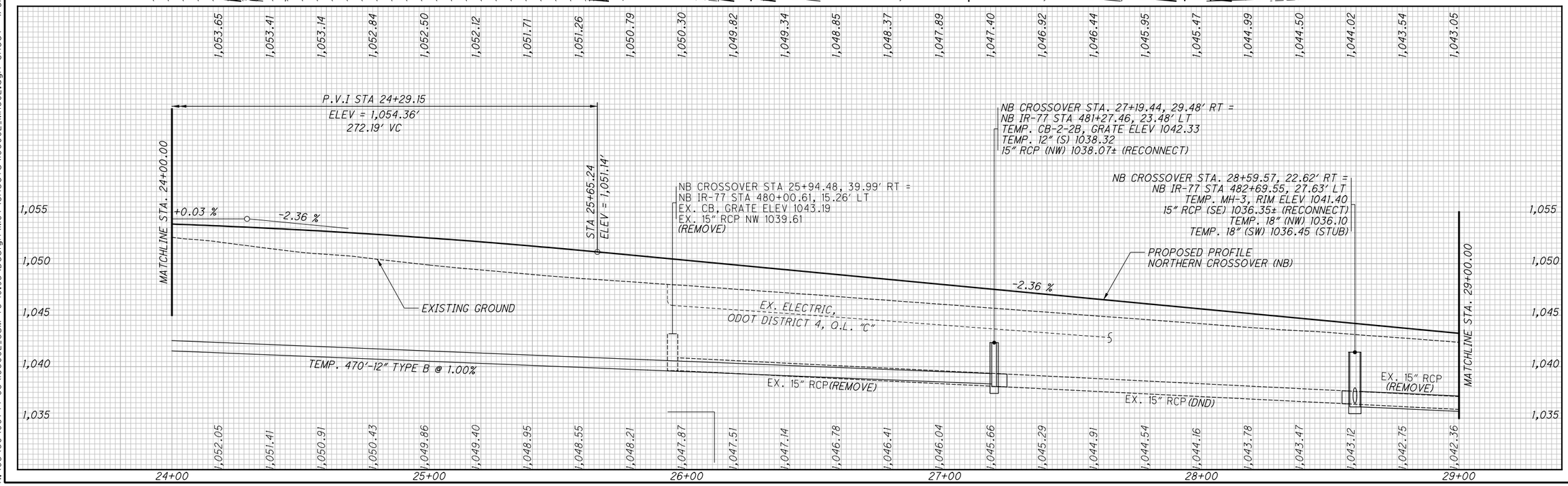


CALCULATED KMC
CHECKED SSR

HORIZONTAL SCALE IN FEET
0 10 20 40

# PLAN & PROFILE - NORTHERN CROSSOVER (NB)
## PHASE 2 - STA. 24+00.00 TO STA. 29+00.00

SUM-77/277/224
VARIOUS

295
1288

N:\03\60\06744-08\106002-SUM-76-10.95\Design\MOT\Sheets\106002-MH602.dgn Sheet 1/31/2021 5:49:15 PM jrettig

C2

P.I. Sta. 29+69.04
Δ = 16° 48′ 15″ (LT)
Dc = 1° 26′ 29″
R = 3,975.36′
T = 587.18′
L = 1,165.93′
E = 43.13′
C = 1,161.76′
C.B. = N 22° 57′ 56″ W

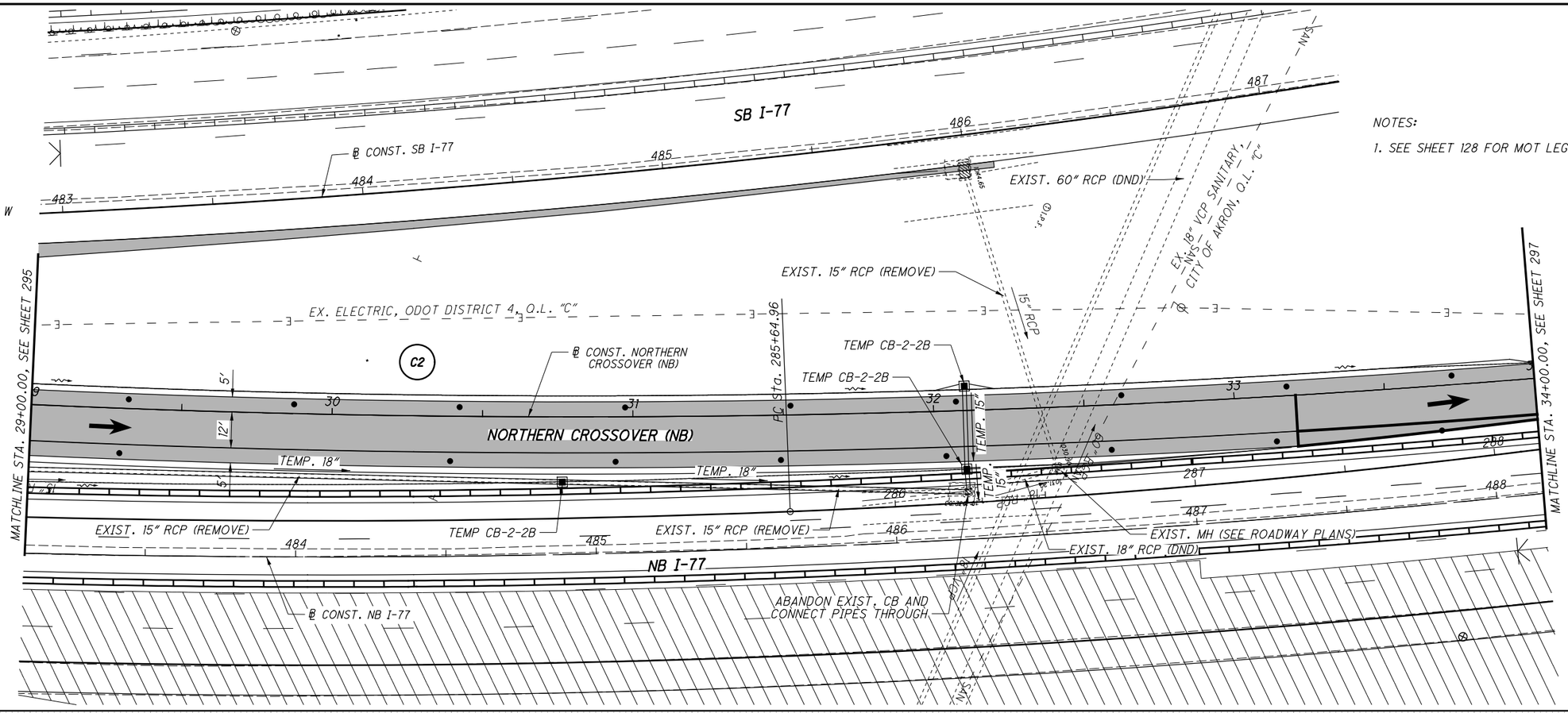


NOTES:

1. SEE SHEET 128 FOR MOT LEGEND.

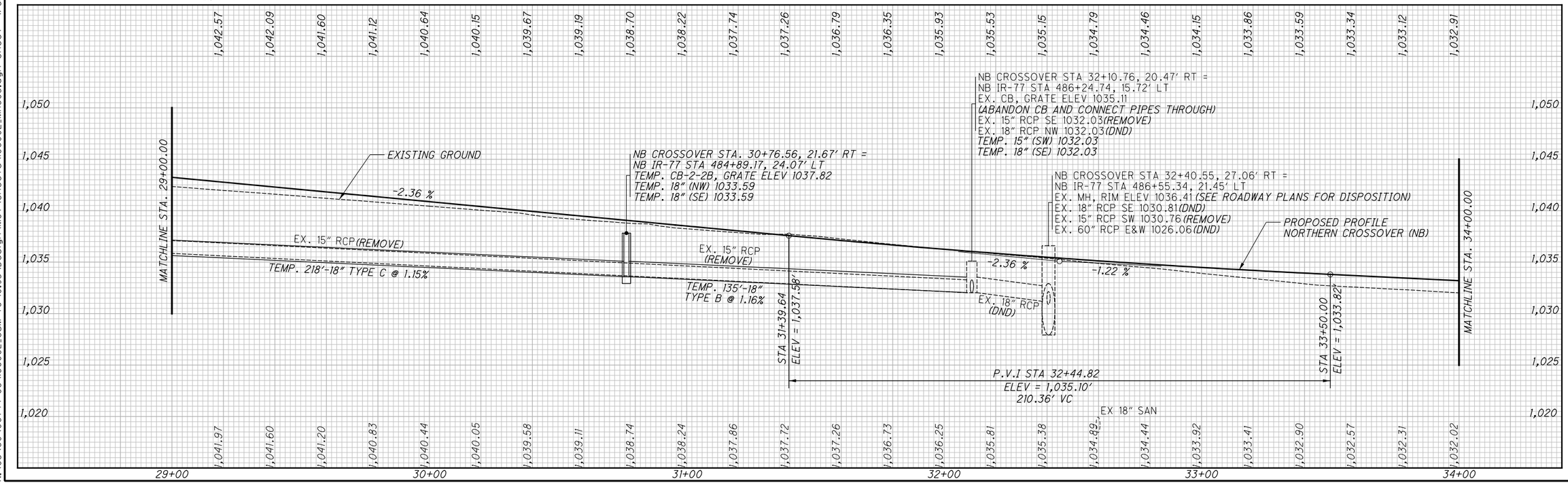


| CALCULATED | CHECKED |
|---|---|
| KMC | SSR |

HORIZONTAL SCALE IN FEET
0 10 20 40

# PLAN & PROFILE - NORTHERN CROSSOVER (NB)

## PHASE 2 - STA. 29+00.00 TO STA. 34+00.00

SUM-77/277/224
VARIOUS

296
1288

N:\03\60\06744-08\106002_SUM-76-10.95\Design\MOT\Sheets\106002_MH603.dgn Sheet 1/31/2021 5:49:17 PM jrettig

SB I-77

@ CONST. SB I-77

C2

P.I. Sta. 29+69.04
Δ = 16° 48′ 15″ (LT)
Dc = 1° 26′ 29″
R = 3,975.36′
T = 587.18′
L = 1,165.93′
E = 43.13′
C = 1,161.76′
C.B. = N 22° 57′ 56″ W

C3

P.I. Sta. 36+65.19
Δ = 8° 07′ 01″ (LT)
Dc = 3° 27′ 47″
R = 1,654.50′
T = 117.39′
L = 234.39′
E = 4.16′
C = 234.19′
C.B. = N 35° 25′ 34″ W

END WORK NORTHERN CROSSOVER (NB) STA. 36+89.57

EX. ELECTRIC, ODOT DISTRICT 4, O.L. "C"

30" RCP

PCC Sta. 35+47.79

PT Sta. 37+82.18 = 292+00.00, 9.00' LT.

@ CONST. NORTHERN CROSSOVER (NB)

TIE INTO PROP. PERMANENT DITCH

@ CONST. RAMP B-2

RAMP C-2

MATCHLINE STA. 34+00.00, SEE SHEET 296

NORTHERN CROSSOVER (NB)

NB I-77

BEGIN TAPER
+25.64, 12.0' RT.

END TAPER
+89.80, 10.0' RT.

@ CONST. NB I-77

24" RCP

18" RCP

CS Sta. 791+47.33

NOTES:

1. SEE SHEET 128 FOR MOT LEGEND.

END PROFILE
NORTHERN
CROSSOVER (NB)
STA. 36+89.57

GRAPHIC GRADE

P.V.I. STA 34+50.00
ELEV = 1,032.60'

MATCHLINE STA. 34+00.00

-1.22 %

PROPOSED PROFILE
NORTHERN CROSSOVER (NB)

EX. ELECTRIC,
ODOT DISTRICT 4, O.L. "C"

EX. ELEC.

EXISTING GROUND

STA 37+23.13, 19.39' RT
EX. CB, GRATE ELEV 1029.43
EX. 18" RCP SE 1026.93
EX. 24" RCP NW 1023.10
EX. 30" RCP SW 1025.93

1,032.73 1,032.57 1,032.41 1,032.26 1,032.05 1,031.83 1,031.61 1,031.38 1,031.16 1,030.96 1,030.76 1,030.57 1,030.40 1,030.23

1,031.72 1,031.44 1,031.26 1,031.23 1,031.24 1,031.23 1,031.23 1,031.26 1,031.06 1,030.89 1,030.71 1,030.54 1,030.39 1,030.22 1,030.09 1,029.95 1,029.81 1,029.69 1,029.55

1,050 1,045 1,040 1,035 1,030 1,025 1,020

34+00 35+00 36+00 37+00

HORIZONTAL SCALE IN FEET
0 10 20 40

CALCULATED KMC
CHECKED SSR

# PLAN & PROFILE - NORTHERN CROSSOVER (NB)
## PHASE 2 - STA. 34+00.00 TO STA. 36+89.57

SUM-77/277/224
VARIOUS

297
1288

N:\03\60\06744-08\106002_SUM-76-10.95\Design\MOT\Sheets\106002_MH604.dgn Sheet 1/31/2021 5:49:9 PM jrettig

| SEEDING | | END AREA | | VOLUME | |
|---|---|---|---|---|---|
| END WIDTH | SQ. YDS. | CUT | FILL | CUT | FILL |
| 8 | 44 | 4 | 9 | 7 | 14 |
| 7 | 23 | 4 | 6 | 5 | 5 |
| 7 | *67 | 6 | 4 | *12 | *19 |

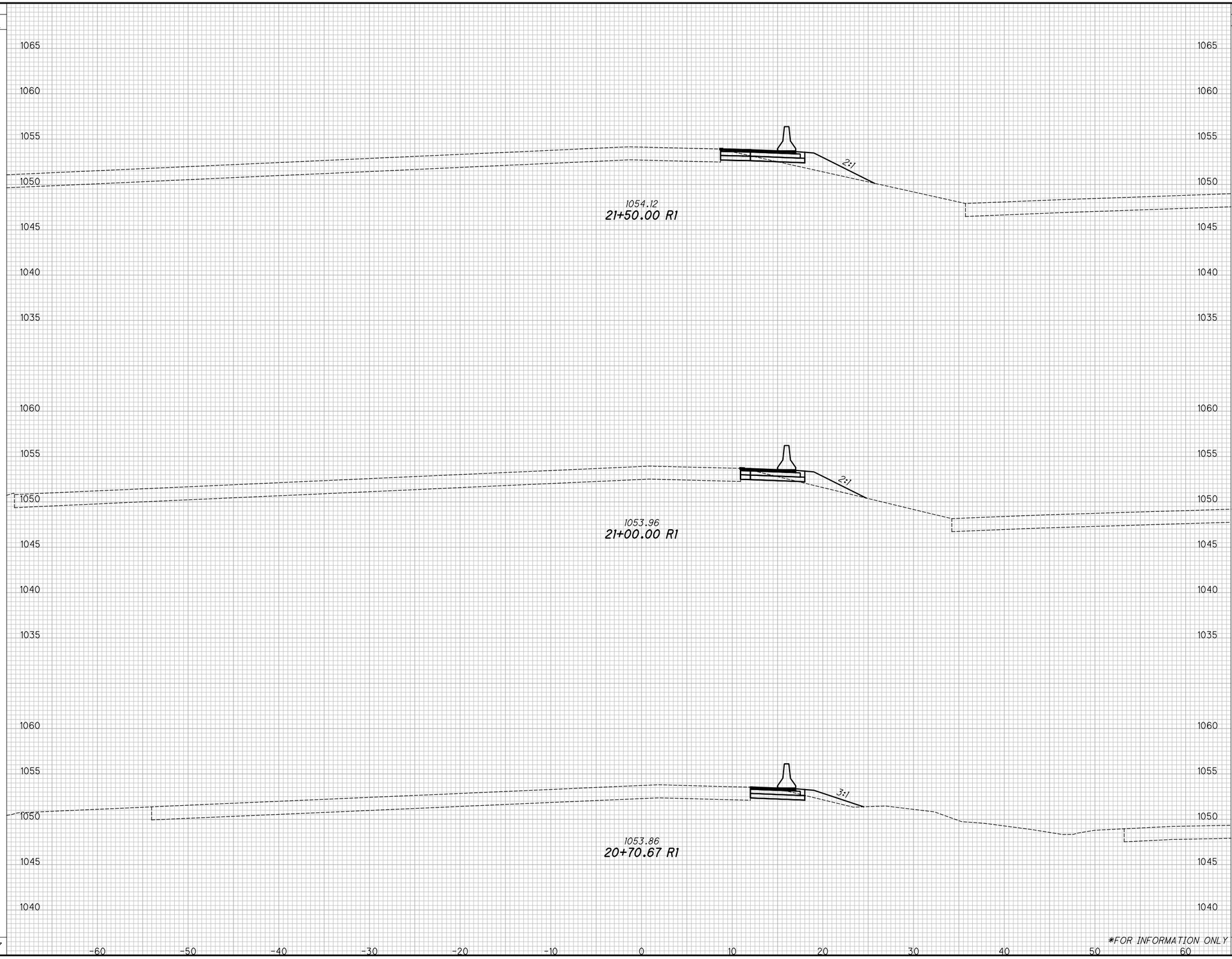


*FOR INFORMATION ONLY

CALCULATED KMC
CHECKED SSR

# CROSS SECTIONS - NORTHERN CROSSOVER (NB)
## PHASE 2 - STA. 20+70.67 TO STA. 21+50.00

SUM-77/277/224
VARIOUS

298
1288

N:\03\60\06744-08\006002_SUM-76-10.95\Design\MOT\Basemaps\006002_BM510.dgn BLP_MOT_NB01 1/31/2021 5:49:35 PM jrettig

| SEEDING | |
|---|---|
| END WIDTH | SQ. YDS. |
| 12 | 61 |
| 10 | 50 |
| | *111 |

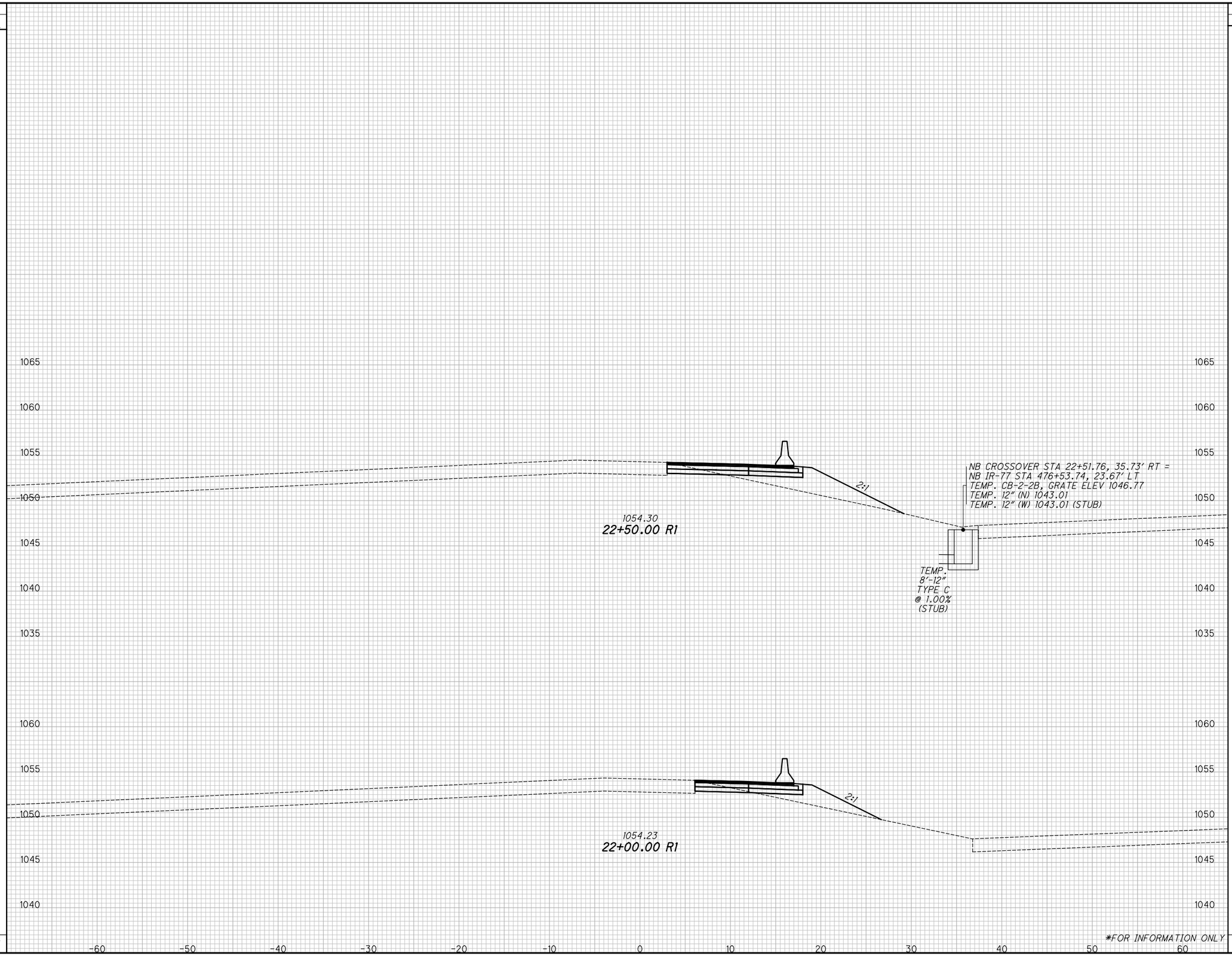


| END AREA | | VOLUME | |
|---|---|---|---|
| CUT | FILL | CUT | FILL |
| 4 | 24 | | |
| 4 | 13 | | |
| | | 7 | 34 |
| | | 7 | 20 |
| | | *14 | *54 |

CALCULATED KMC
CHECKED SSR

# CROSS SECTIONS - NORTHERN CROSSOVER (NB)
## PHASE 2 - STA. 22+00.00 TO STA. 22+50.00

SUM-77 / 277 / 224
VARIOUS

299
1288

N:\03\60\06744-08\06002_SUM-76-10.95\Design\MOT\Basemaps\106002_BM510.dgn BLP_MOT_NB01 1/31/2025 5:49:36 PM jrettig

| SEEDING | | END AREA | | VOLUME | |
|---|---|---|---|---|---|
| END WIDTH | SQ. YDS. | CUT | FILL | CUT | FILL |
| 17 | 95 | 7 | 121 | | |
| 17 | 81 | 6 | 98 | | |
| | *176 | | | 9 | 113 |
| | | | | *21 | *316 |

CALCULATED KMC
CHECKED SSR

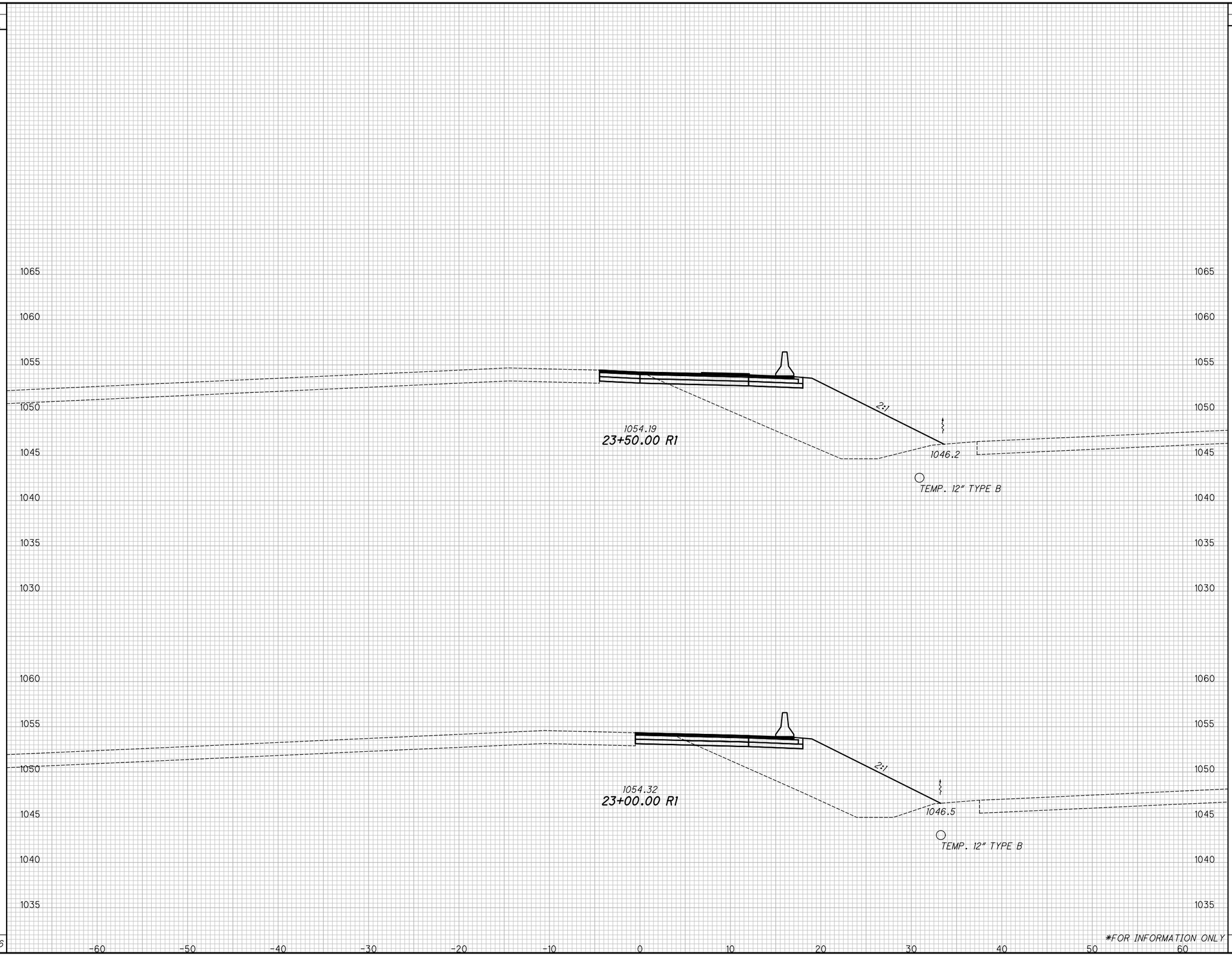


*FOR INFORMATION ONLY

# CROSS SECTIONS - NORTHERN CROSSOVER (NB)
## PHASE 2 - STA. 23+00.00 TO STA. 23+50.00

SUM-77 / 277 / 224
VARIOUS

300
1288

N:\03\60\06744-08\06002_SUM-76-10.95\Design\MOT\Basemaps\06002_BM510.dgn BLP_MOT_NB01 1/31/2025 5:49:36 PM jrettig

| SEEDING | |
|---|---|
| END WIDTH | SQ. YDS. |
| 18 | 99 |
| 18 | 97 |
| | *196 |

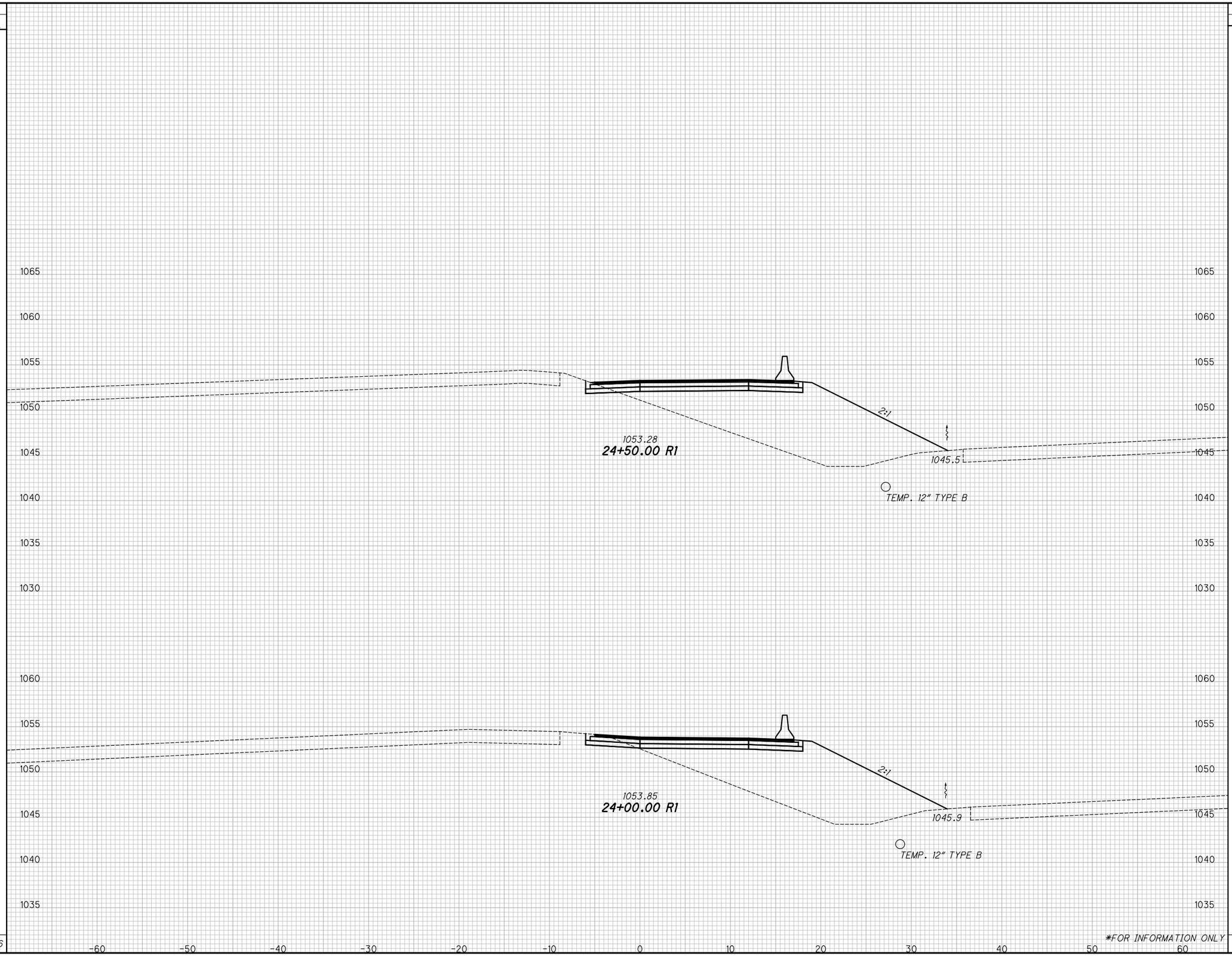


| END AREA | | VOLUME | |
|---|---|---|---|
| CUT | FILL | CUT | FILL |
| 3 | 158 | | |
| 5 | 142 | | |
| | | 7 | 278 |
| | | 11 | 244 |
| | | *18 | *522 |

*FOR INFORMATION ONLY

CALCULATED KMC
CHECKED SSR

# CROSS SECTIONS - NORTHERN CROSSOVER (NB)
## PHASE 2 - STA. 24+00.00 TO STA. 24+50.00

SUM-77 / 277 / 224
VARIOUS

301
1288

N:\03\60\06744-08\I06002_SUM-76-10.95\Design\MOT\Basemaps\I06002_BM5I0.dgn BLP_MOT_NB0I 1/31/2021 5:49:37 PM jrettig

| SEEDING | |
|---|---|
| END WIDTH | SQ. YDS. |
| 18 | |
| | 102 |
| 19 | |
| | 101 |
| | *203 |

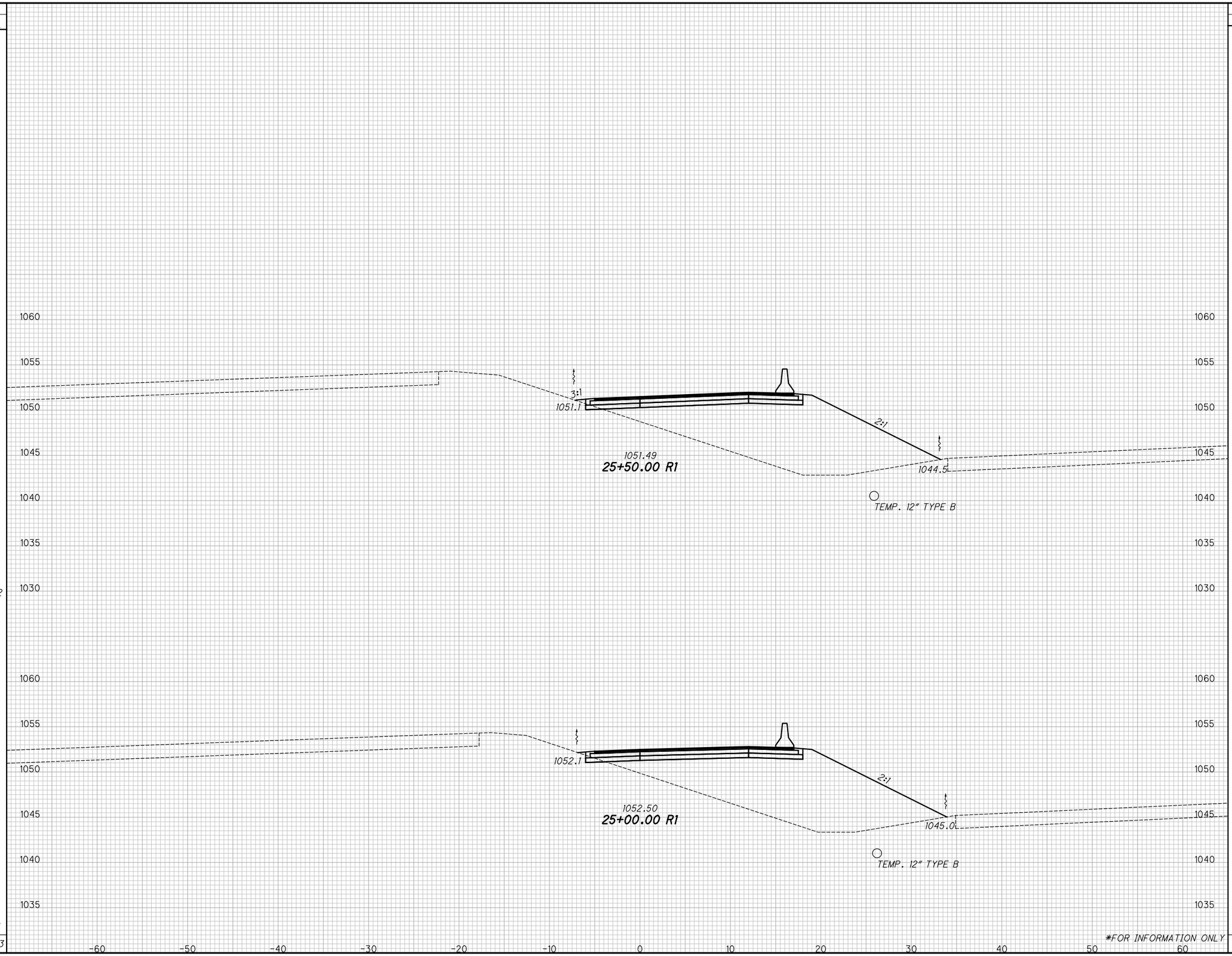


| END AREA | | VOLUME | |
|---|---|---|---|
| CUT | FILL | CUT | FILL |
| 1 | 165 | | |
| | | 2 | 306 |
| 1 | 166 | | |
| | | 4 | 300 |
| | | *6 | *606 |

CALCULATED KMC
CHECKED SSR

# CROSS SECTIONS - NORTHERN CROSSOVER (NB)
## PHASE 2 - STA. 25+00.00 TO STA. 25+50.00

SUM-77/277/224
VARIOUS

302
1288

N:\03\60\06744-08\106002_SUM-76-10.95\Design\MOT\Basemaps\106002_BM510.dgn BLP_MOT_NB01 1/31/2021 5:49:37 PM jrettig

| SEEDING END WIDTH | SEEDING SQ. YDS. |
|---|---|
| 13 | |
| | 77 |
| 14 | |
| | 85 |
| 16 | |
| | 95 |
| | *203 |

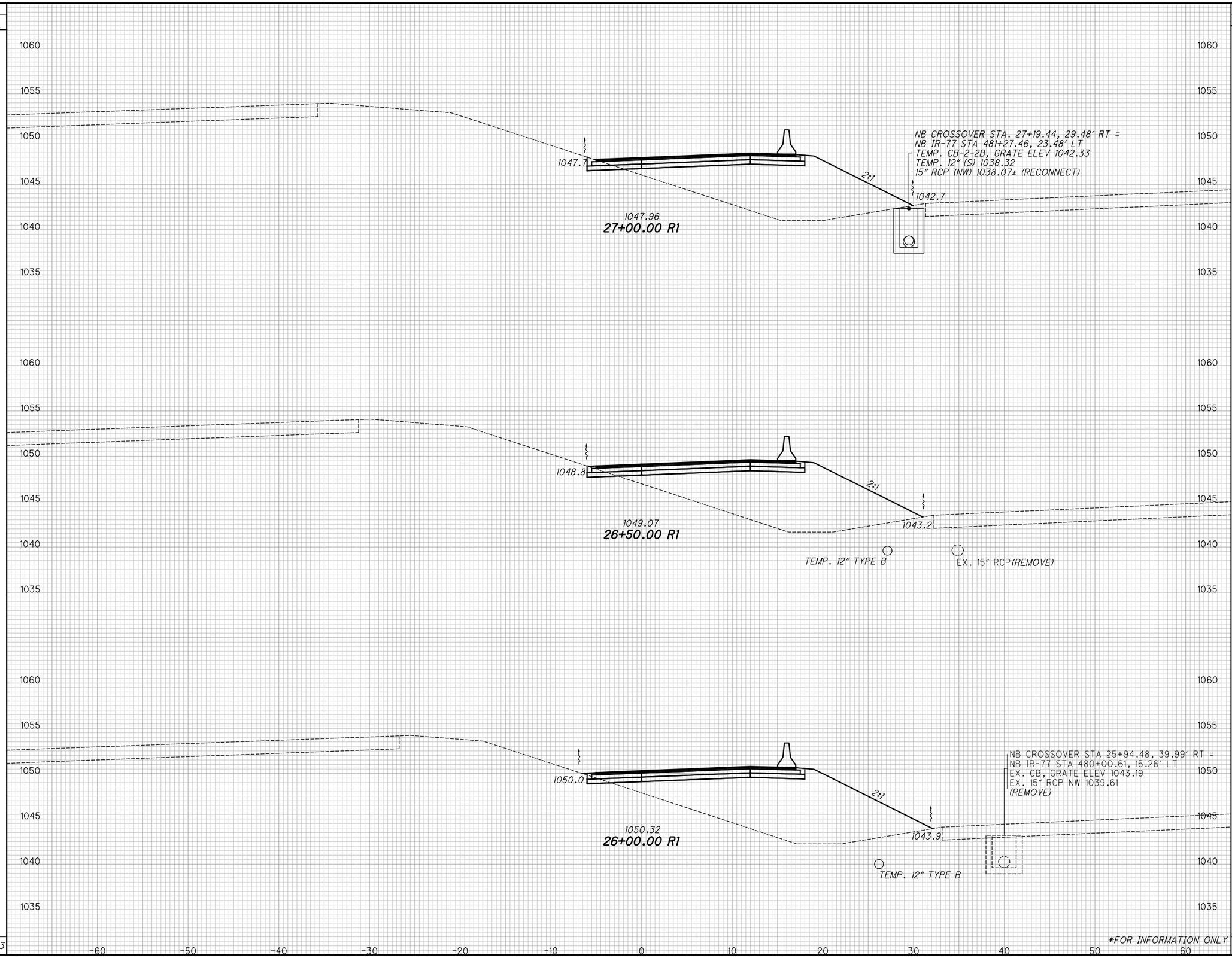


| END AREA CUT | END AREA FILL | VOLUME CUT | VOLUME FILL |
|---|---|---|---|
| 3 | 117 | | |
| | | 5 | 231 |
| 2 | 132 | | |
| | | 3 | 258 |
| 1 | 147 | | |
| | | 2 | 289 |
| | | *10 | *778 |

CALCULATED KMC
CHECKED SSR

# CROSS SECTIONS - NORTHERN CROSSOVER (NB)
## PHASE 2 - STA. 26+00.00 TO STA. 27+00.00

SUM-77 / 277 / 224
VARIOUS

303
1288

N:\03\60\06744-08\I06002_SUM-76-10.95\Design\MOT\Basemaps\I06002_BM510.dgn BLP_MOT_NB01 1/31/2021 5:49:38 PM jrettig

N:\03\60\06744-08\106002_SUM-76-10.95\Design\MOT\Basemaps\106002_BM510.dgn BLP_MOT_NB01 1/31/2021 5:49:39 PM jrettig

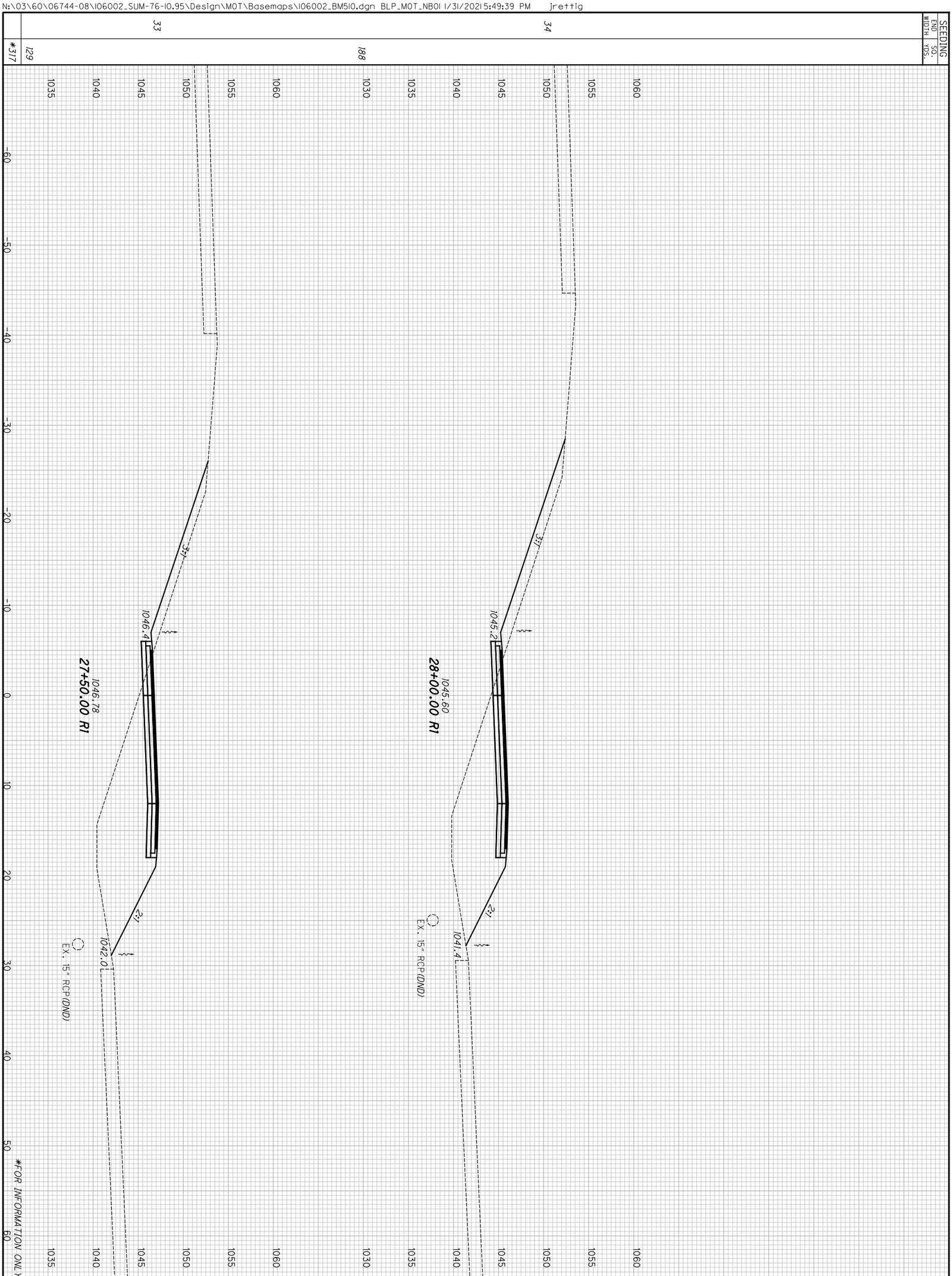


304
1288

**SUM-77/277/224**
**VARIOUS**

**CROSS SECTIONS - NORTHERN CROSSOVER (NB)**
**PHASE 2 - STA. 27+50.00 TO STA. 28+00.00**

CALCULATED KMC
CHECKED SSR

| SEEDING | | END AREA | | VOLUME | |
|---|---|---|---|---|---|
| END WIDTH | SQ. YDS. | CUT | FILL | CUT | FILL |
| 37 | 201 | 51 | 65 | 85 | 131 |
| 36 | 195 | 41 | 77 | 64 | 155 |
| | *396 | | | *149 | *286 |

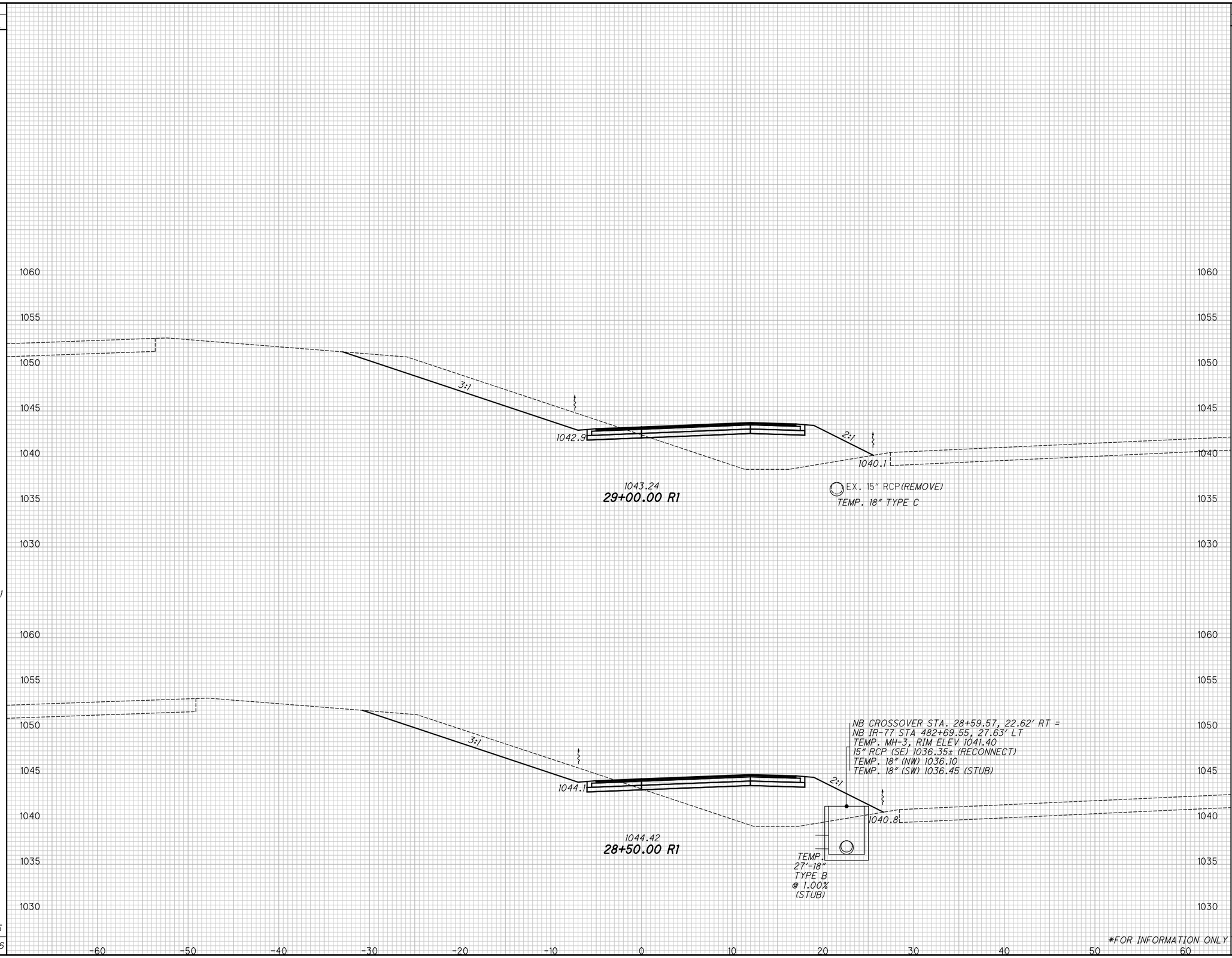


*FOR INFORMATION ONLY

CALCULATED KMC
CHECKED SSR

# CROSS SECTIONS - NORTHERN CROSSOVER (NB)
## PHASE 2 - STA. 28+50.00 TO STA. 29+00.00

SUM-77 / 277 / 224
VARIOUS

305
1288

N:\03\60\06744-08\06002_SUM-76-10.95\Design\MOT\Basemaps\106002_BM510.dgn BLP_MOT_NB01 1/31/2025:49:39 PM jrettig

N:\03\60\06744-08\I06002_SUM-76-10.95\Design\MOT\Basemaps\I06002_BM510.dgn BLP_MOT_NB01 1/31/2021 5:49:40 PM jrettig

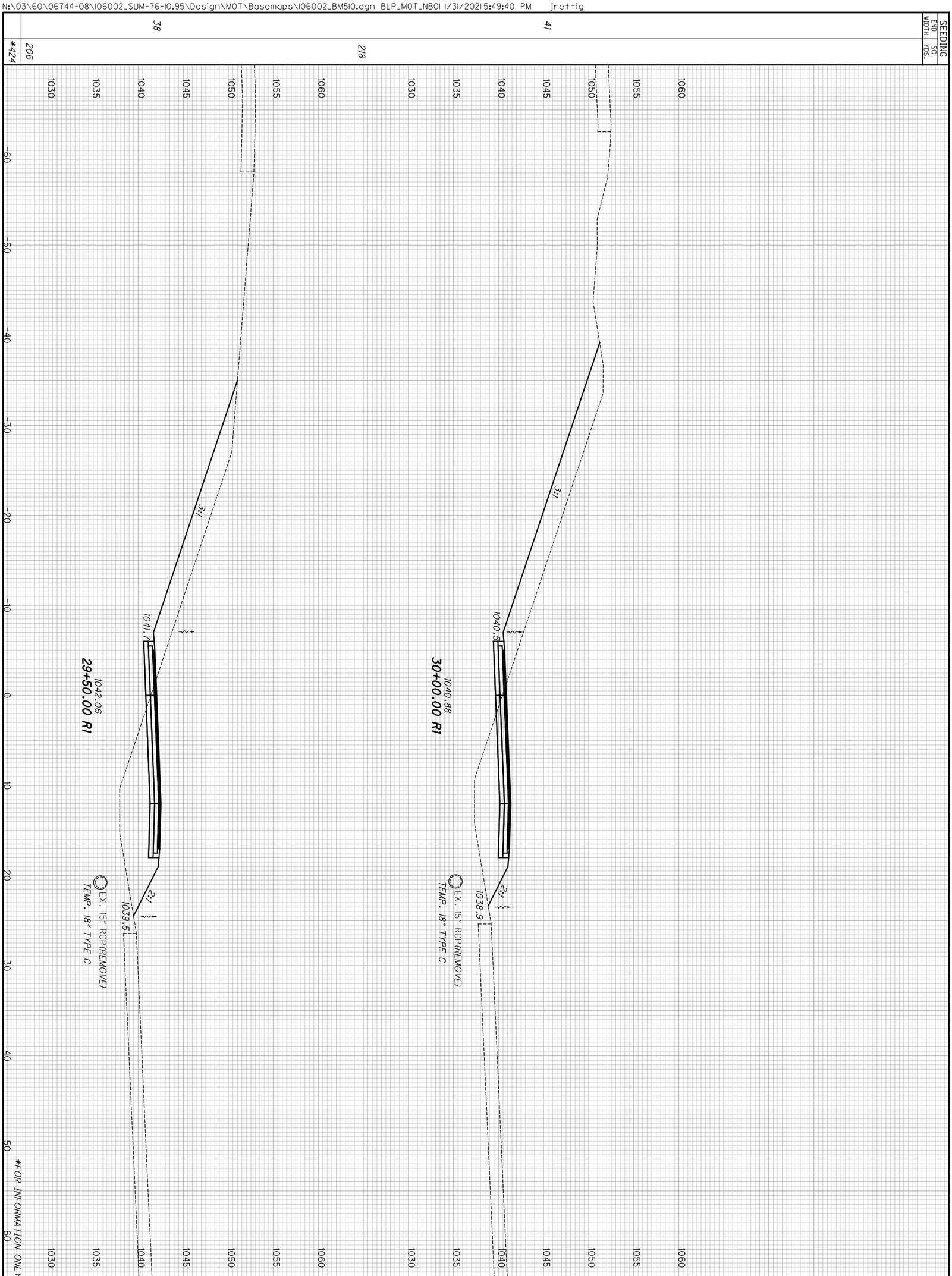


306
1288

**SUM-77/277/224**
**VARIOUS**

**CROSS SECTIONS - NORTHERN CROSSOVER (NB)**
**PHASE 2 - STA. 29+50.00 TO STA. 30+00.00**

CALCULATED KMC
CHECKED SSR

| SEEDING | |
|---|---|
| END WIDTH | SQ. YDS. |
| 44 | |
| | 242 |
| 43 | |
| | 233 |
| | *475 |

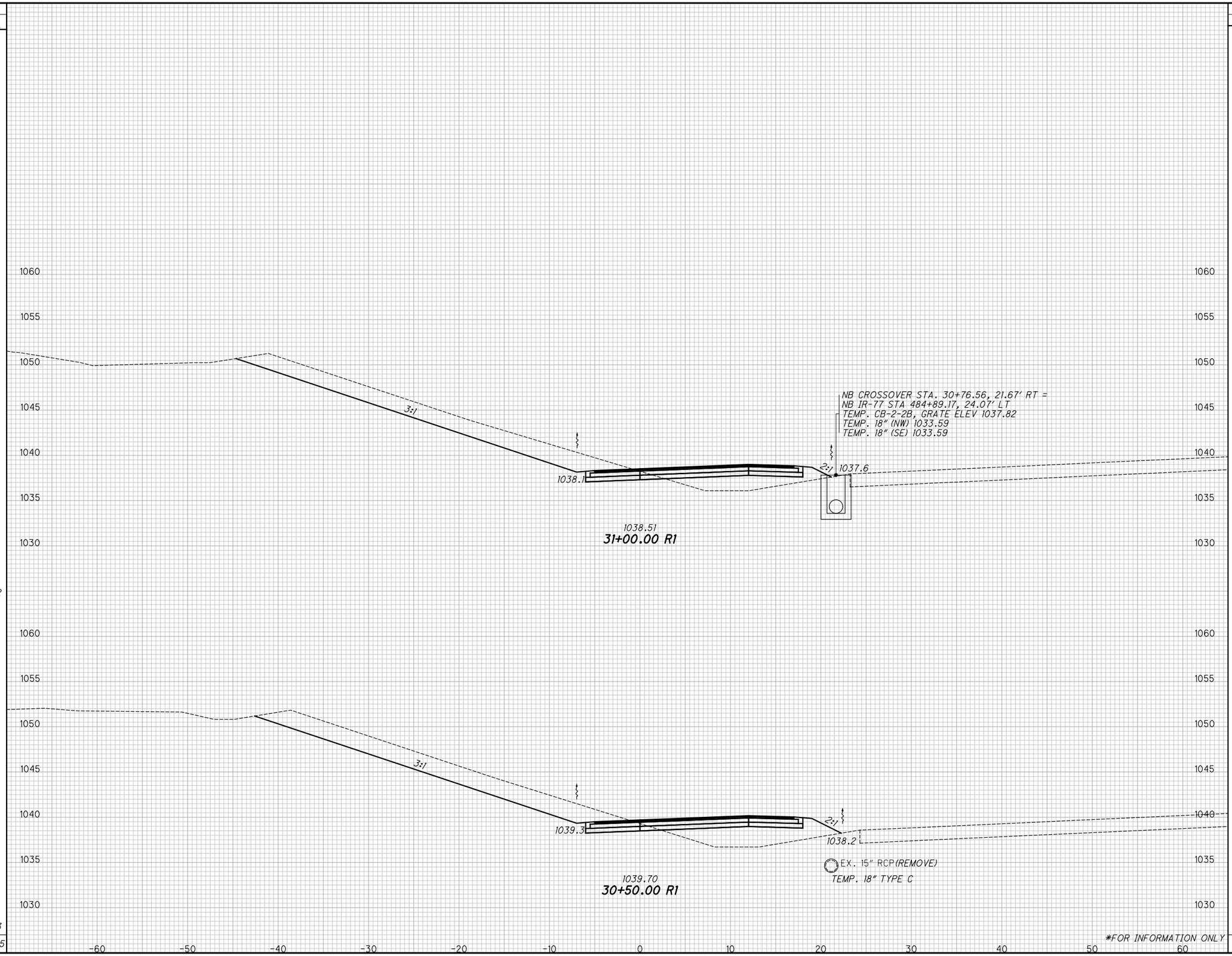


| END AREA | | VOLUME | |
|---|---|---|---|
| CUT | FILL | CUT | FILL |
| 81 | 21 | | |
| | | 150 | 48 |
| 81 | 31 | | |
| | | 150 | 68 |
| | | *300 | *116 |

*FOR INFORMATION ONLY

CALCULATED KMC
CHECKED SSR

# CROSS SECTIONS - NORTHERN CROSSOVER (NB)
## PHASE 2 - STA. 30+50.00 TO STA. 31+00.00

SUM-77 / 277 / 224
VARIOUS

307
1288

N:\03\60\06744-08\I06002_SUM-76-10.95\Design\MOT\Basemaps\I06002_BM510.dgn BLP_MOT_NB01 1/31/2025:49:40 PM jrettig

| SEEDING | |
|---|---|
| END WIDTH | SQ. YDS. |
| 45 | |
| | 244 |
| 43 | |
| | 241 |
| | *485 |

NB CROSSOVER STA. 32+10.43, 8.14' LT =
NB IR-77 STA 486+25.20, 50.92' LT
TEMP. CB-2-2B, GRATE ELEV 1035.53
TEMP. 15" (NE) 1032.28

NB CROSSOVER STA. 32+10.43, 19.49' RT =
NB IR-77 STA 486+24.57, 23.29' LT
TEMP. CB-2-2B, GRATE ELEV 1036.13
TEMP. 15" (SW) 1032.09
TEMP. 15" (NE) 1032.09

NB CROSSOVER STA 32+10.76, 20.47' RT =
NB IR-77 STA 486+24.74, 15.72' LT
EX. CB, GRATE ELEV 1035.11
(ABANDON CB AND CONNECT PIPES THROUGH)
EX. 15" RCP SE 1032.03(REMOVE)
EX. 18" RCP NW 1032.03(DND)
TEMP. 15" (SW) 1032.03
TEMP. 18" (SE) 1032.03

EX. 15" RCP(REMOVE)

3:1

1035.8

2:1

1036.3

TEMP. 28'-15" TYPE B @ 0.68%

TEMP. 8'-15" TYPE C @ 0.75%

1036.25
32+00.00 R1

3:1

2:1

1037.0

1037.0

EX. 15" RCP(REMOVE)

TEMP. 18" TYPE B

1037.34
31+50.00 R1

*FOR INFORMATION ONLY

| END AREA | | VOLUME | |
|---|---|---|---|
| CUT | FILL | CUT | FILL |
| | | | |
| 119 | 8 | | |
| | | 216 | 17 |
| 114 | 10 | | |
| | | 181 | 29 |
| | | *397 | *46 |

CALCULATED KMC
CHECKED SSR

# CROSS SECTIONS - NORTHERN CROSSOVER (NB)
## PHASE 2 - STA. 31+50.00 TO STA. 32+00.00

SUM-77 / 277 / 224
VARIOUS

308
1288

N:\03\60\06744-08\106002_SUM-T6-10.95\Design\MOT\Basemaps\106002_BM510.dgn BLP_MOT_NB01 1/31/2025:49:41PM jrettig

| SEEDING | |
|---|---|
| END WIDTH | SQ. YDS. |
| 50 | |
| 289 | |
| 54 | |
| 275 | |
| *564 | |

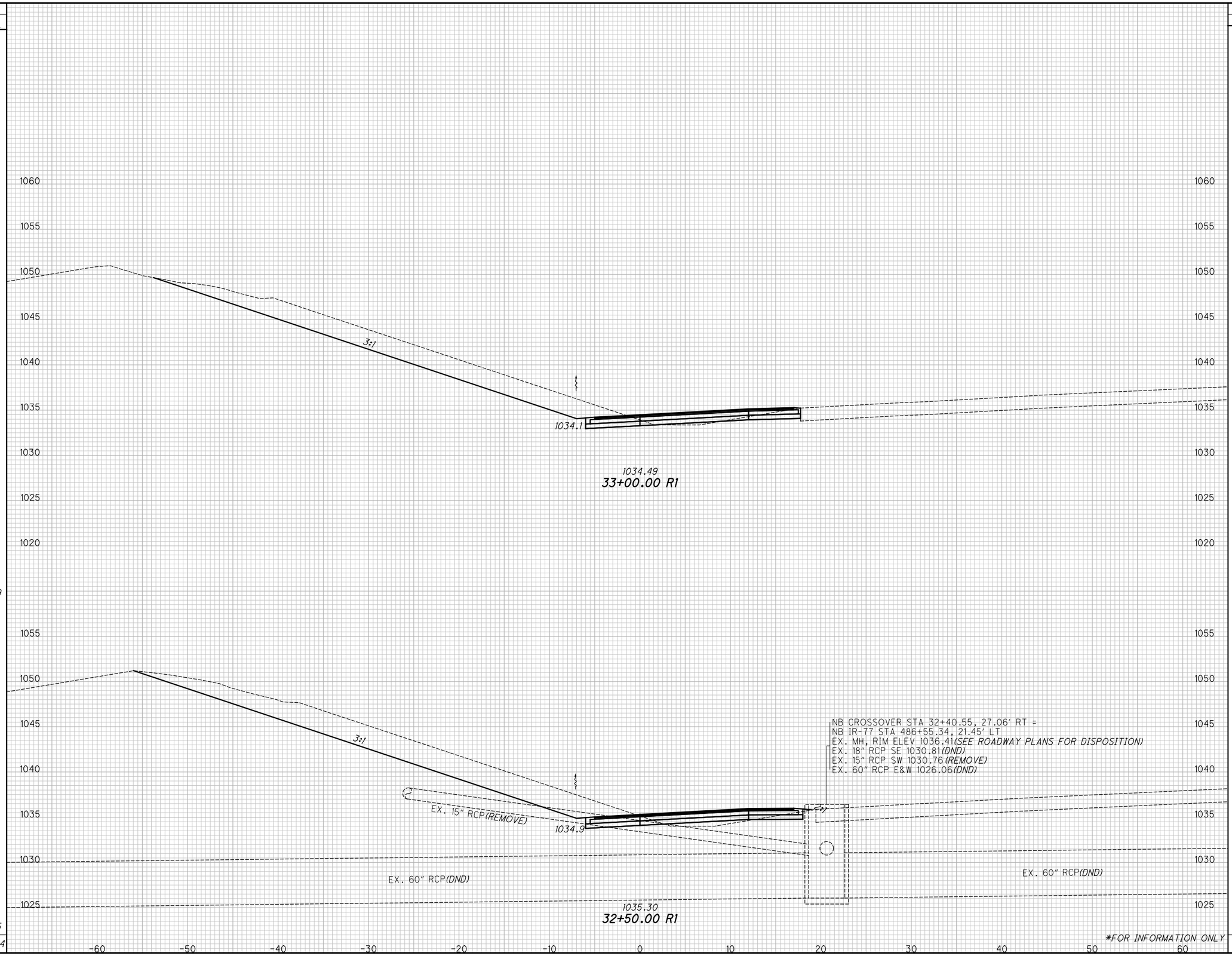


| END AREA | |
|---|---|
| CUT | FILL |
| 105 | 1 |
| 125 | 3 |
| *FOR INFORMATION ONLY | |

| VOLUME | |
|---|---|
| CUT | FILL |
| 213 | 4 |
| 226 | 10 |
| *439 | *14 |

CALCULATED KMC
CHECKED SSR

# CROSS SECTIONS - NORTHERN CROSSOVER (NB)
## PHASE 2 - STA. 32+50.00 TO STA. 33+00.00

SUM-77 / 277 / 224
VARIOUS

309
1288

N:\03\60\06744-08\06002_SUM-76-10.95\Design\MOT\Basemaps\106002_BM510.dgn BLP_MOT_NB01 1/31/2021 5:49:41 PM jrettig

N:\03\60\06744-08\I06002_SUM-76-I0.95\Design\MOT\Basemaps\I06002_BM5I0.dgn BLP_MOT_NB0I I/3I/2021 5:49:42 PM jrettig

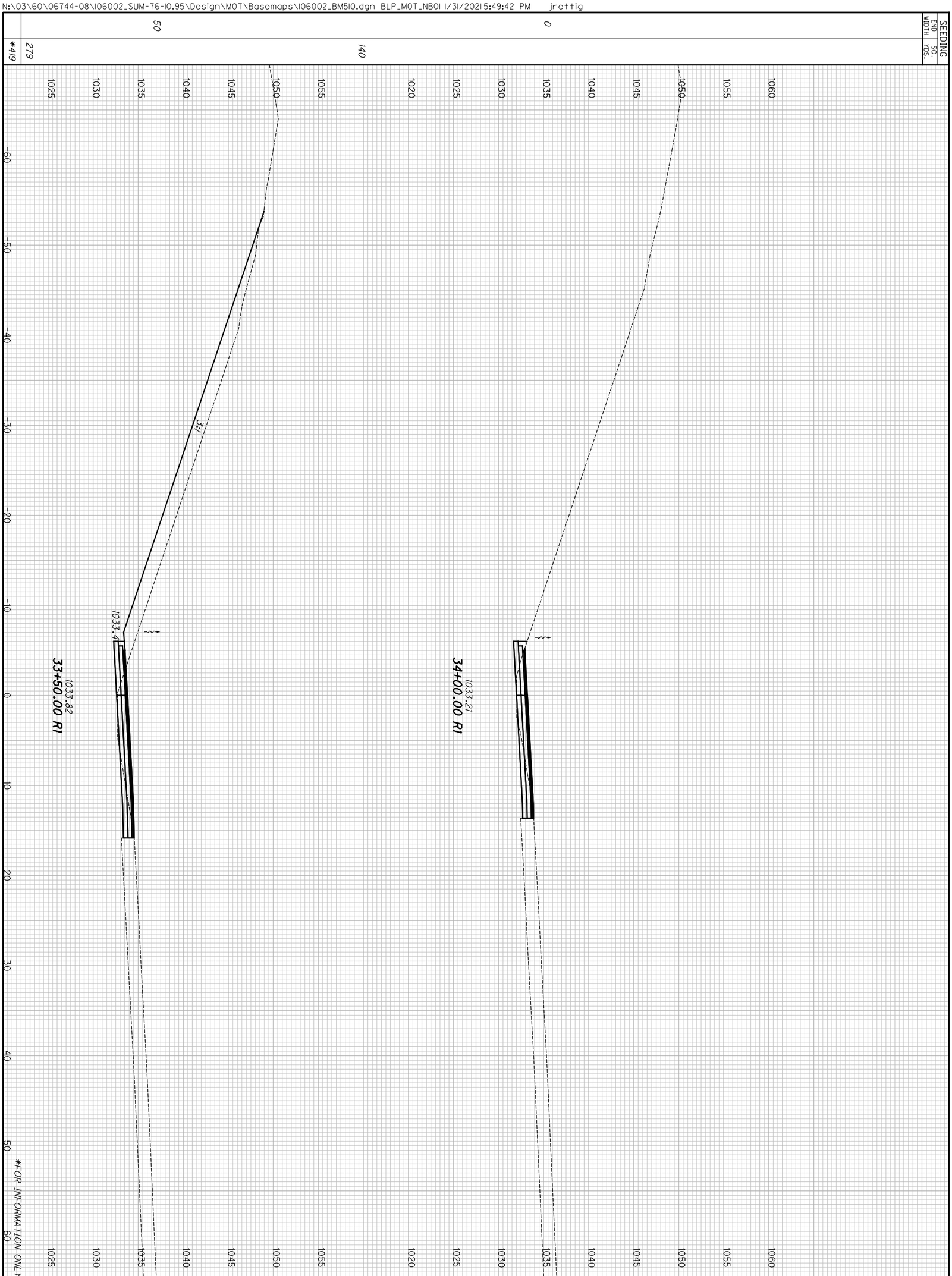


| | | |
|---|---|---|
| 310 / 1288 | SUM-77/277/224<br>VARIOUS | CROSS SECTIONS - NORTHERN CROSSOVER (NB)<br>PHASE 2 - STA. 33+50.00 TO STA. 34+00.00 |

CALCULATED KMC
CHECKED SSR

N:\03\60\06744-08\I06002_SUM-76-10.95\Design\MOT\Basemaps\I06002_BM510.dgn BLP_MOT_NB01 1/31/2021 5:49:42 PM jrettig

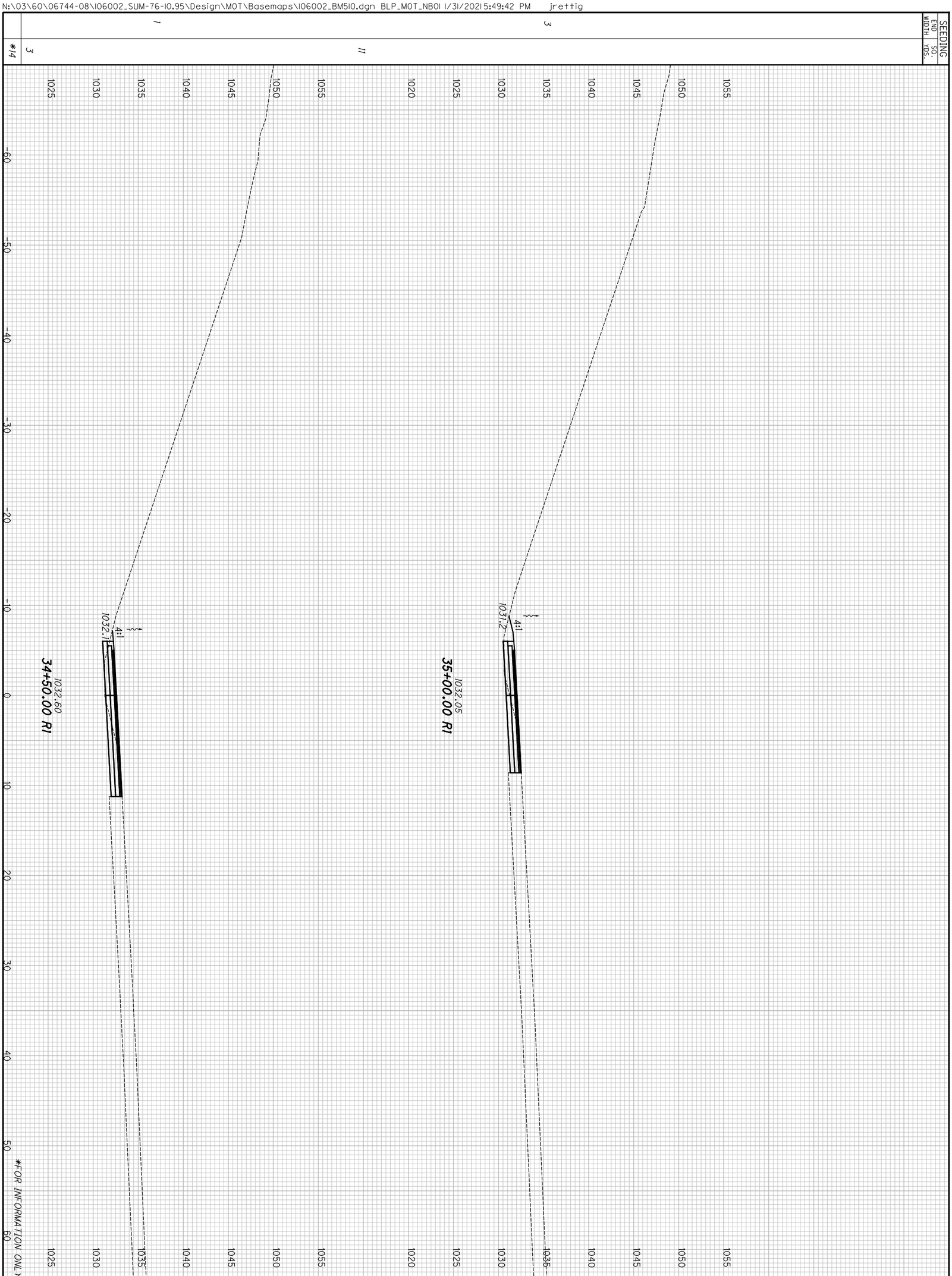


| SEEDING END WIDTH | SEEDING SQ. YDS. | END AREA CUT | END AREA FILL | VOLUME CUT | VOLUME FILL |
|---|---|---|---|---|---|
| *14 | 3 | 10 | 0 | *37 | *2 |
| 1 | 3 | 9 | 2 | 19 | 0 |
| 11 | | | | 18 | 2 |

| | | |
|---|---|---|
| 311 / 1288 | SUM-77 / 277 / 224<br>VARIOUS | CROSS SECTIONS - NORTHERN CROSSOVER (NB)<br>PHASE 2 - STA. 34+50.00 TO STA. 35+00.00 |

CALCULATED KMC
CHECKED SSR

N:\03\60\06744-08\106002_SUM-76-10.95\Design\MOT\Basemaps\106002_BM510.dgn BLP_MOT_NB01 1/31/2021 5:49:43 PM jrettig

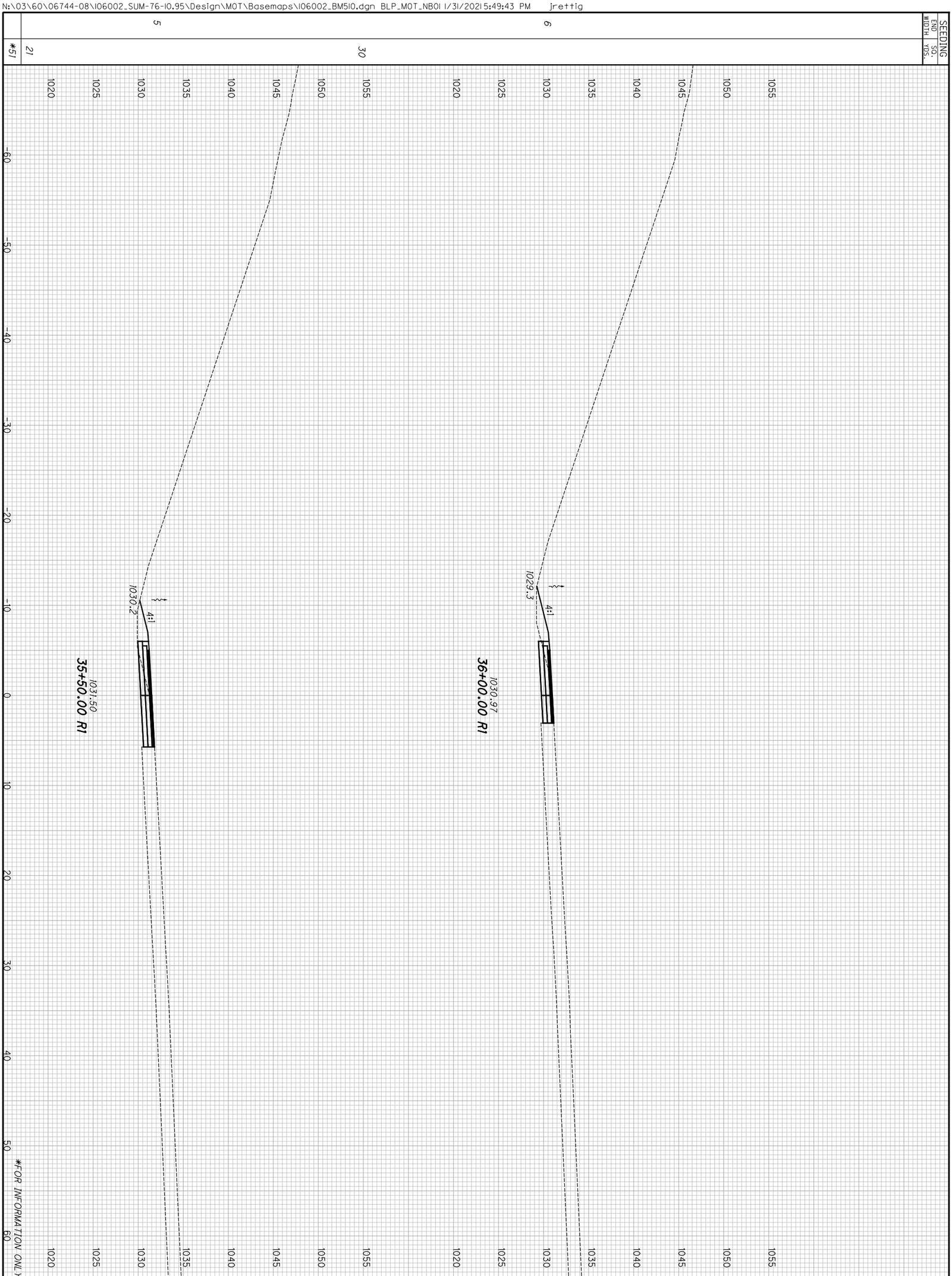


| | | |
|---|---|---|
| 312 / 1288 | SUM-77 / 277 / 224<br>VARIOUS | CROSS SECTIONS - NORTHERN CROSSOVER (NB)<br>PHASE 2 - STA. 35+50.00 TO STA. 36+00.00 |

CALCULATED KMC
CHECKED SSR

| SEEDING | |
|---|---|
| END WIDTH | SQ. YDS. |
| 7 | |
| | 31 |
| 7 | |
| | 36 |
| | *67 |

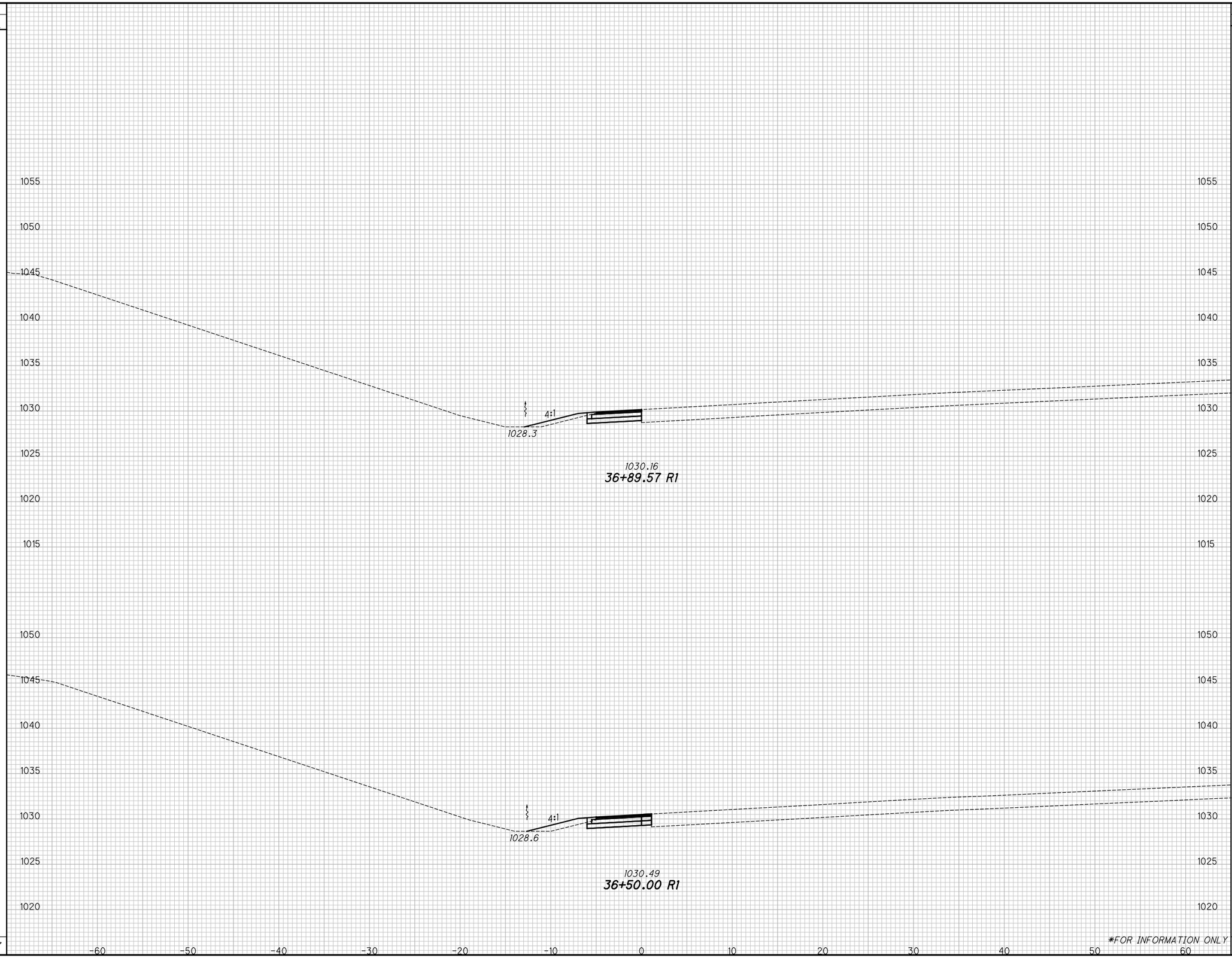


| END AREA | |
|---|---|
| CUT | FILL |
| 7 | 3 |
| 8 | 3 |
| | |

| VOLUME | |
|---|---|
| CUT | FILL |
| 11 | 4 |
| 16 | 6 |
| *27 | *10 |

*FOR INFORMATION ONLY

CALCULATED KMC
CHECKED SSR

# CROSS SECTIONS - NORTHERN CROSSOVER (NB)
## PHASE 2 - STA. 36+50.00 TO STA. 36+89.57

SUM-77/277/224
VARIOUS

313
1288

N:\03\60\06744-08\106002_SUM-76-10.95\Design\MOT\Basemaps\106002_BM510.dgn BLP_MOT_NB01 1/31/2021 5:49:44 PM jrettig

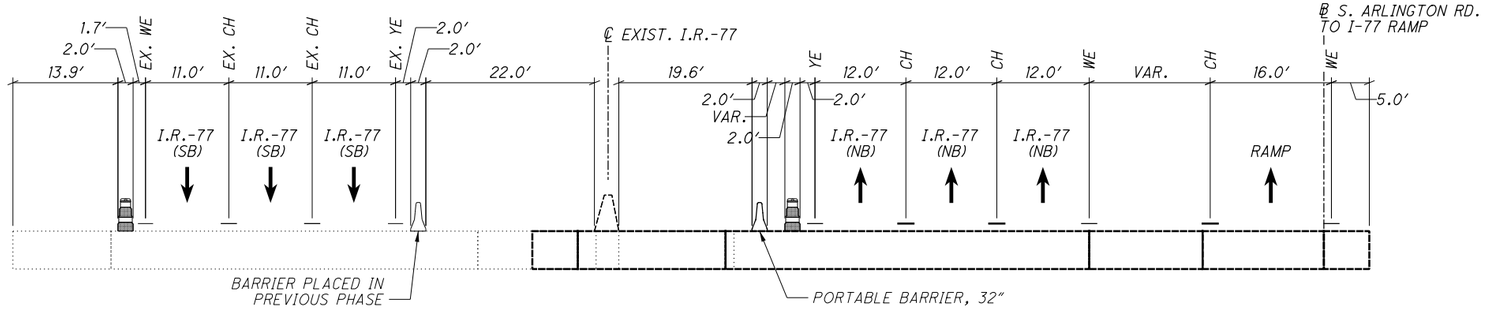


I-77 STA. 377+00 (WINTER)
(NOT TO SCALE)

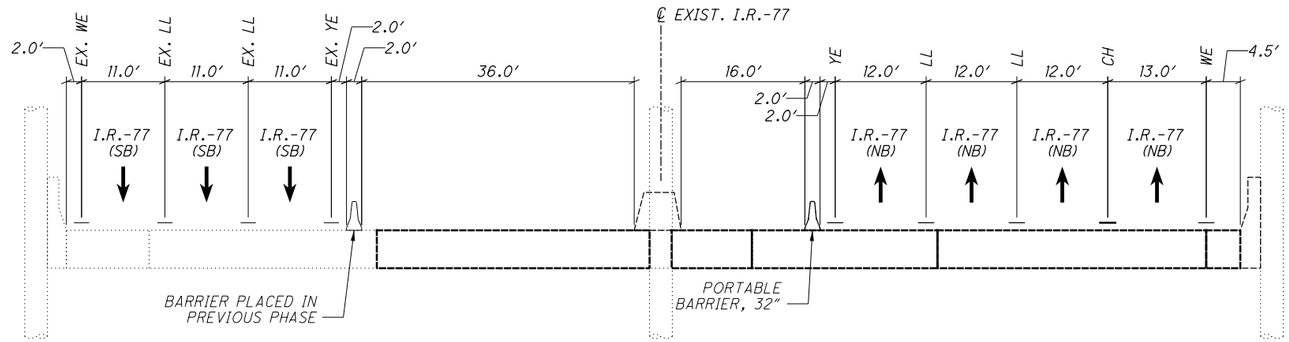


SECTION A-A (WINTER)
(NOT TO SCALE)

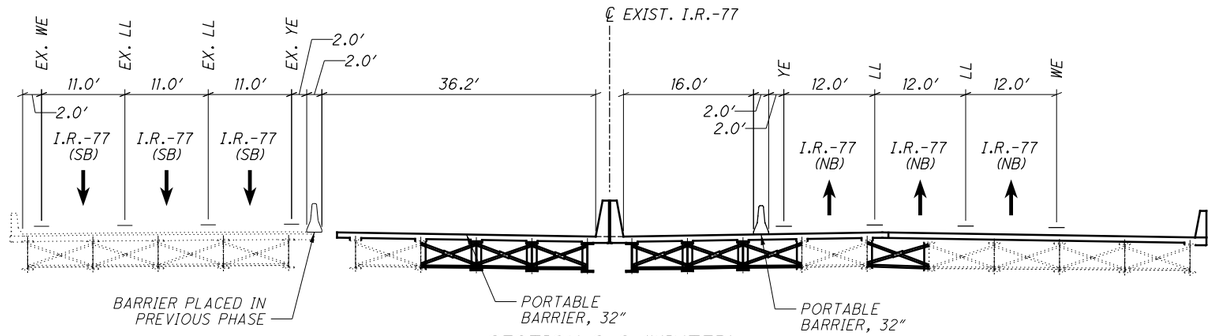


SECTION C-C (WINTER)
(NOT TO SCALE)

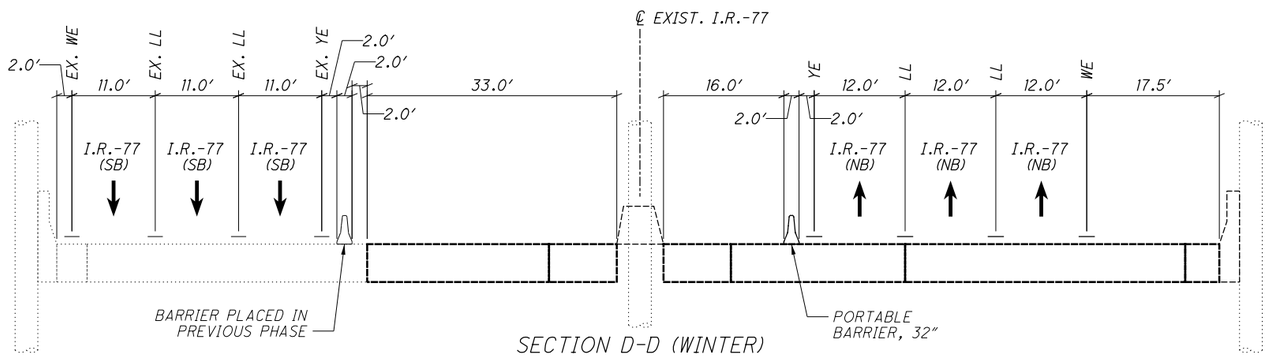


SECTION D-D (WINTER)
(NOT TO SCALE)

CALCULATED EMB
CHECKED JAR

# MAINTENANCE OF TRAFFIC TYPICAL SECTIONS - PHASE 2

SUM-77 / 277 / 224
VARIOUS

314
1288

N:\03\60\06744-08\06002_SUM-76-10.95\Design\MOT\Sheets\06002_MY206.dgn Sheet 1/31/2021 5:50:02 PM jrettig

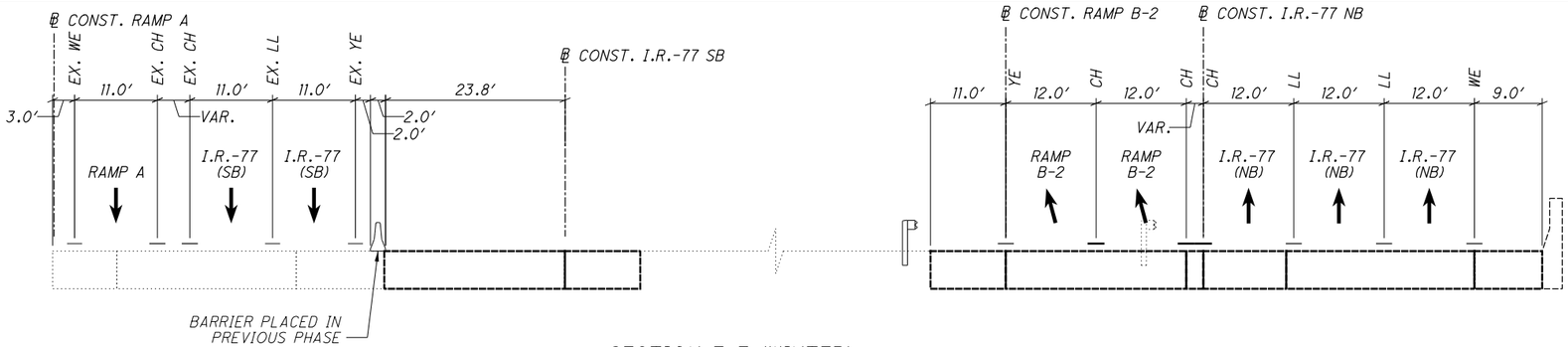


SECTION E-E (WINTER)
(NOT TO SCALE)




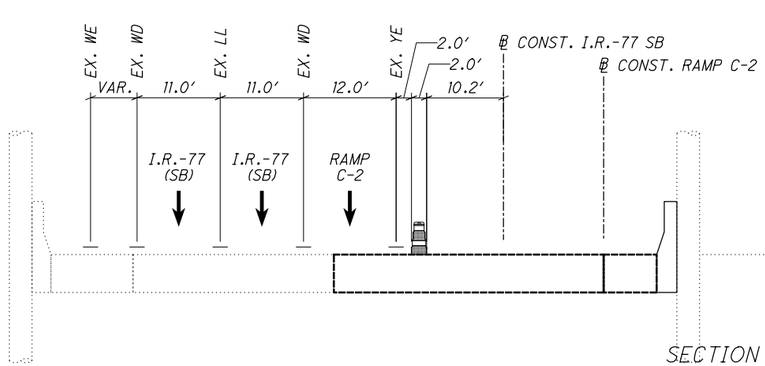


SECTION F2-F2 (WINTER)
(NOT TO SCALE)

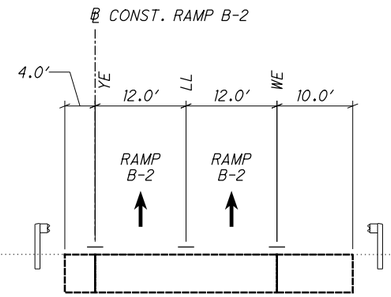


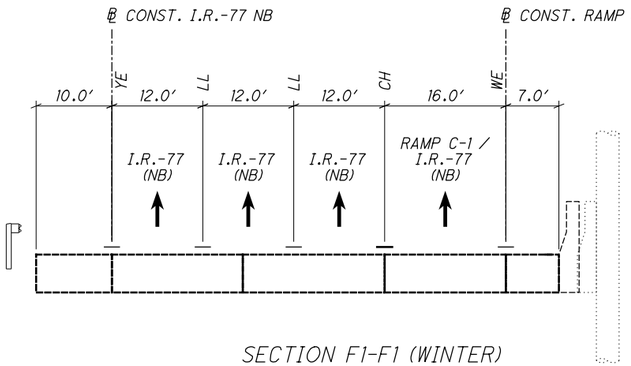


SECTION F1-F1 (WINTER)
(NOT TO SCALE)

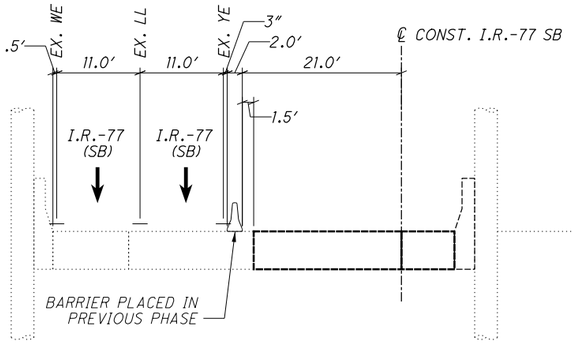


SECTION G-G (WINTER)
(NOT TO SCALE)

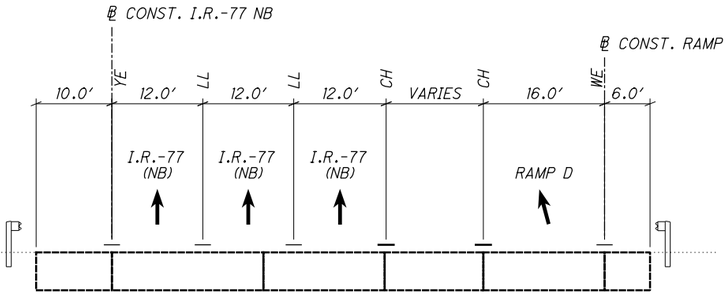


CALCULATED EMB
CHECKED JAR

# TRAFFIC TYPICAL SECTIONS - PHASE 2

## MAINTENANCE OF TRAFFIC

SUM-77 / 277 / 224
VARIOUS

315
1288

N:\03\60\06744-08\106002_SUM-76-10.95\Design\MOT\Sheets\106002_MY207.dgn Sheet 1/31/2021 5:50:04 PM jrettig

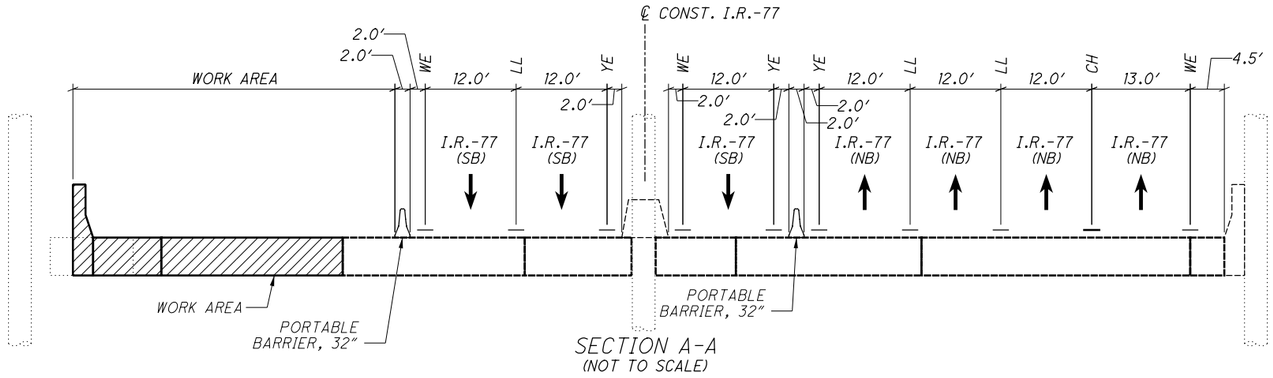


SECTION A-A
(NOT TO SCALE)

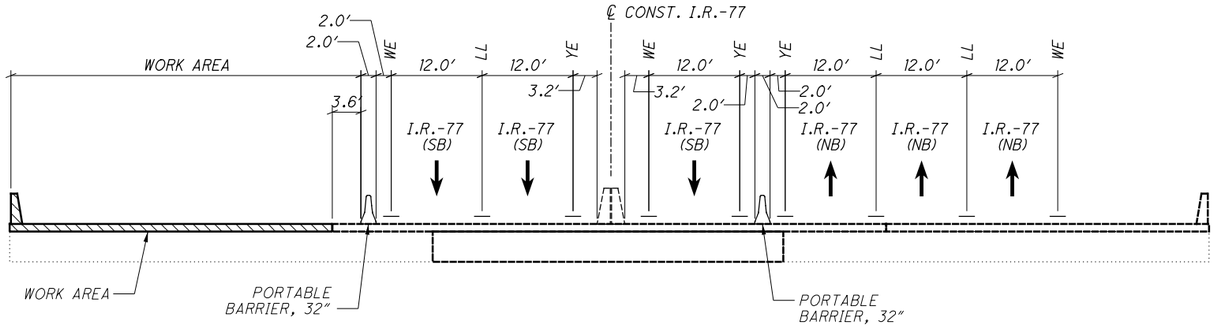


SECTION B-B
(NOT TO SCALE)

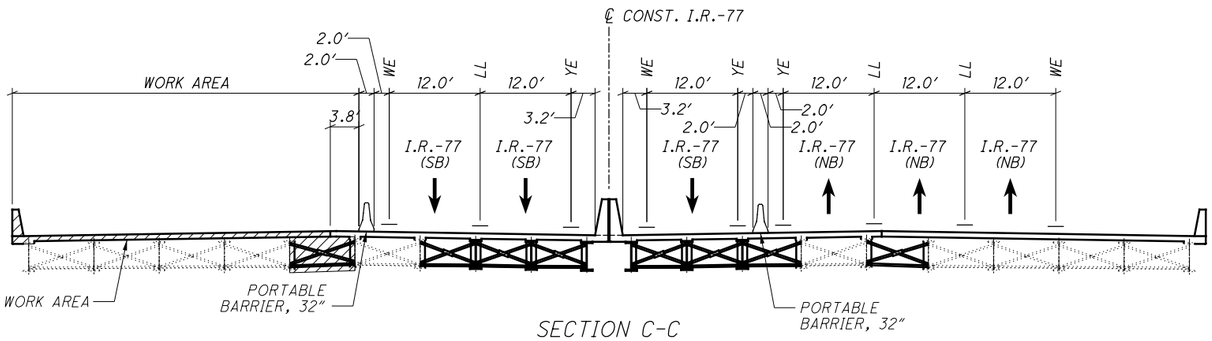


SECTION C-C
(NOT TO SCALE)

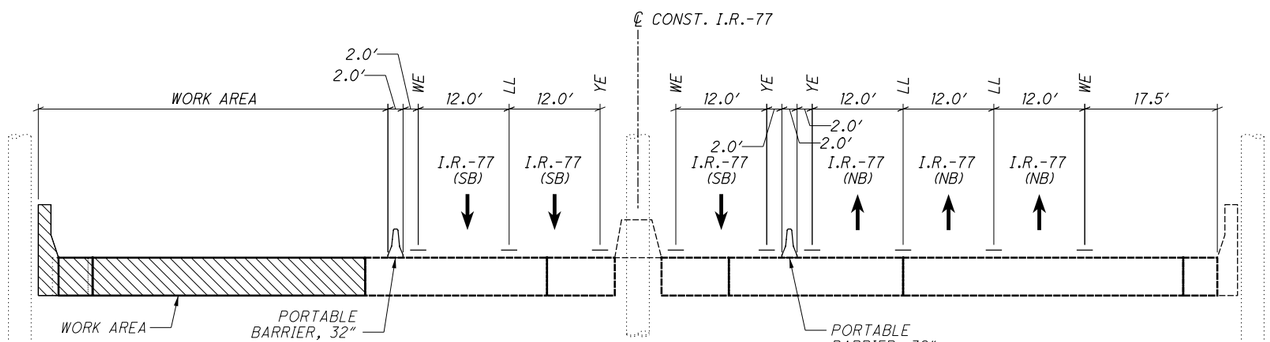


SECTION D-D
(NOT TO SCALE)

CALCULATED EMB
CHECKED JML

# TRAFFIC TYPICAL SECTIONS - PHASE 3

## MAINTENANCE OF TRAFFIC

SUM-77 / 277 / 224
VARIOUS

316
1288

N:\03\60\06744-08\106002_SUM-76-10.95\Design\MOT\Sheets\106002_MY300.dgn Sheet 1/31/2021 5:50:19 PM jrettig

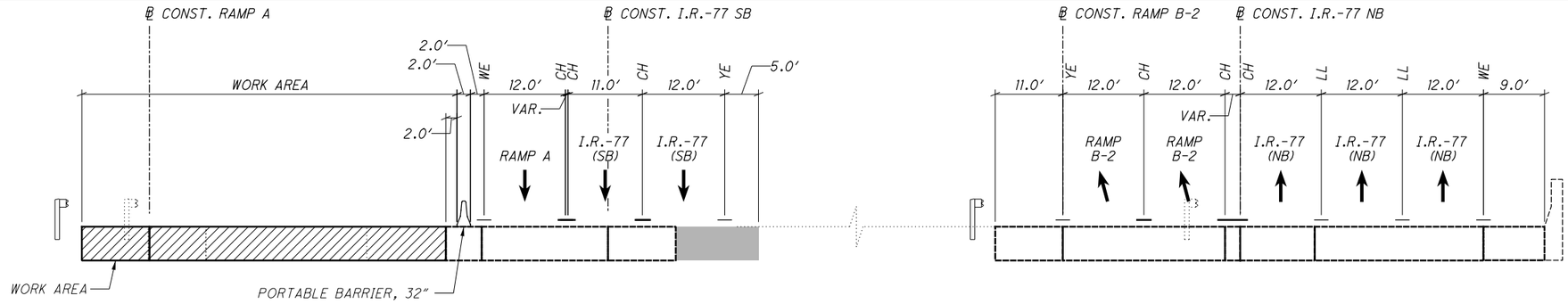


SECTION E-E
(NOT TO SCALE)

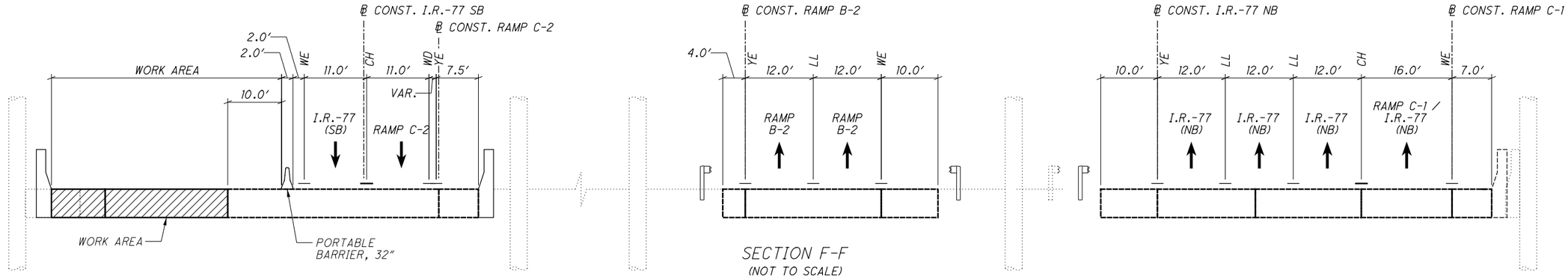


SECTION F-F
(NOT TO SCALE)

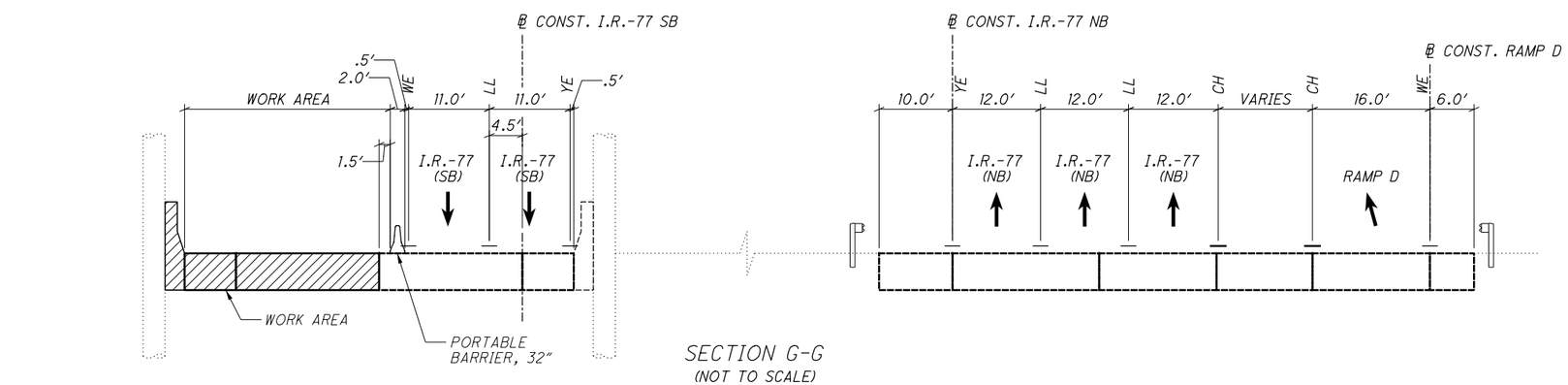


SECTION G-G
(NOT TO SCALE)

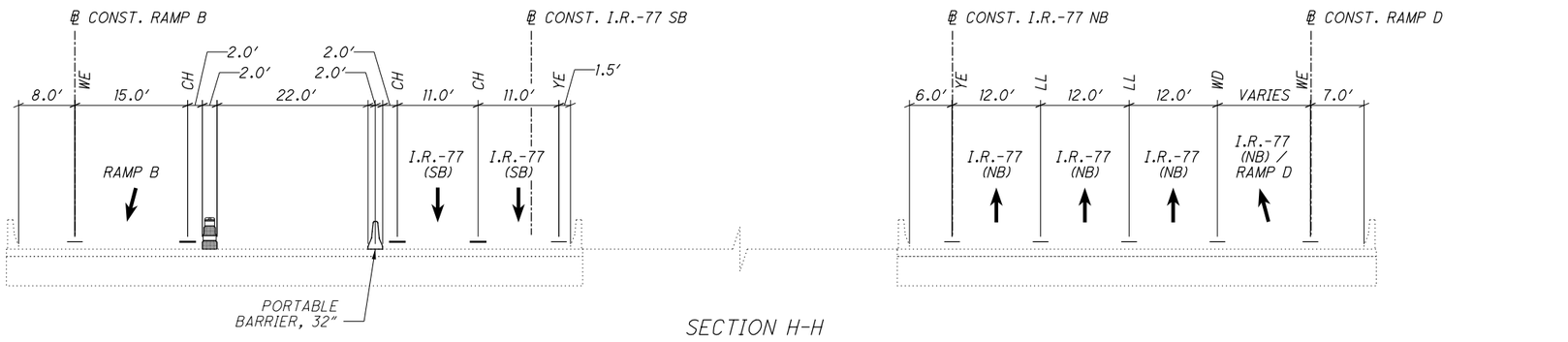


SECTION H-H
(NOT TO SCALE)

CALCULATED EMB
CHECKED JML

# MAINTENANCE OF TRAFFIC TYPICAL SECTIONS - PHASE 3

SUM-77 / 277 / 224
VARIOUS

317
1288

N:\03\60\06744-08\106002_SUM-76-10.95\Design\MOT\Sheets\106002_MY301.dgn Sheet 1/31/2021 5:50:21 PM jrettig

N:\03\60\06744-08\106002_SUM-76-10.95\Design\MOT\Sheets\106002_MP305.dgn Sheet 1/31/2021 5:50:43 PM jrettig

NOTES:

1. SEE SHEET 128 FOR MOT LEGEND AND DRUM SPACING CHART.
2. ALL PAVEMENT MARKINGS THAT ARE EXISTING OR PLACED IN A PREVIOUS PHASE WILL REMAIN UNLESS OTHERWISE INDICATED.

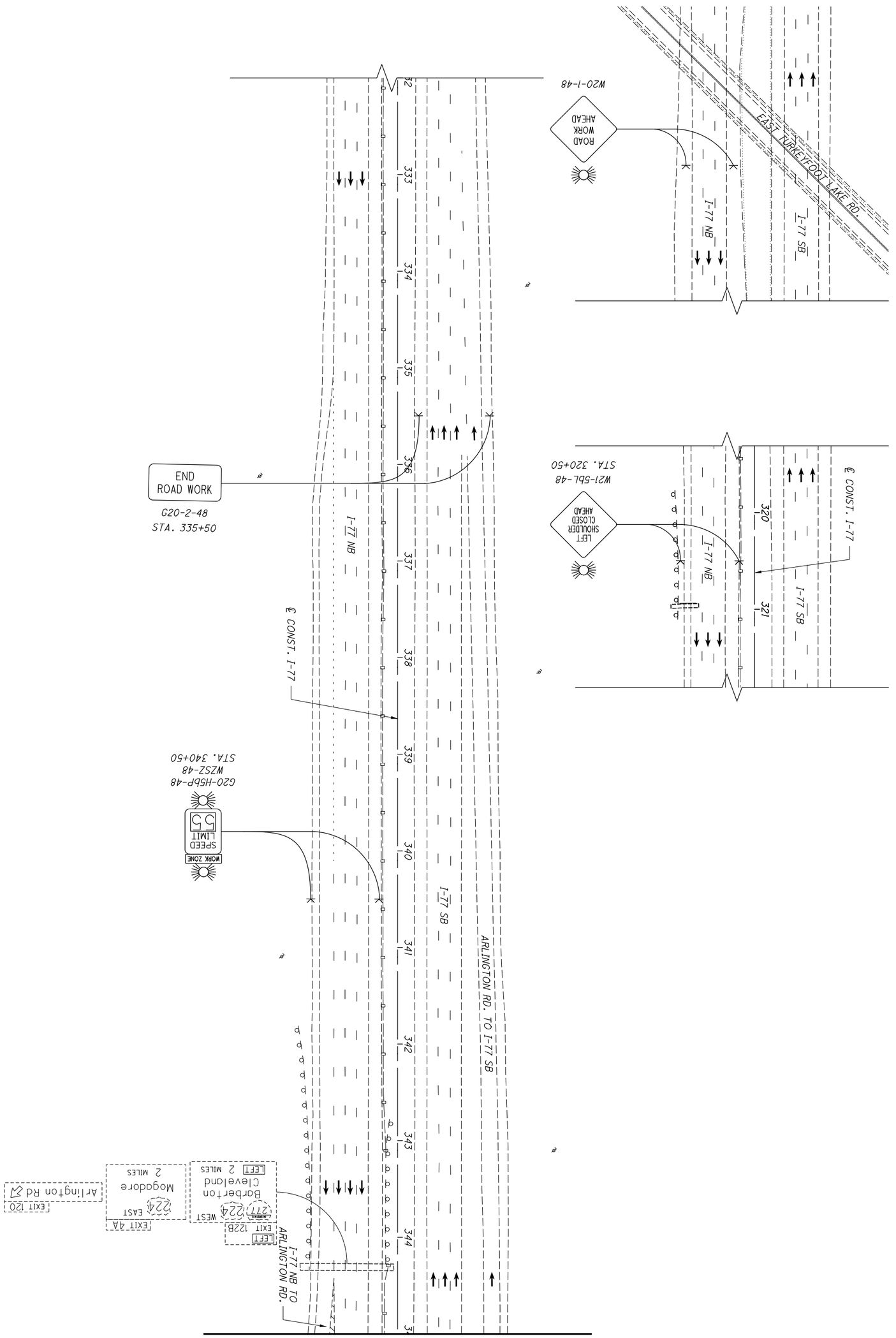


| 318 / 1288 | SUM-77 / 277 / 224<br>VARIOUS | MAINTENANCE OF TRAFFIC PLAN - PHASE 3<br>I-77 - STA. 332+00 TO STA. 345+00 | CALCULATED .<br>CHECKED . | 0 50<br>25 100<br>HORIZONTAL SCALE IN FEET | N |
|---|---|---|---|---|---|

N:\03\60\06744-08\I06002_SUM-76-10.95\Design\MOT\Sheets\I06002_MP306.dgn Sheet 1/31/2021 5:50:49 PM jrettig

NOTES:

1. SEE SHEET 128 FOR MOT LEGEND AND DRUM SPACING CHART.
2. ALL PAVEMENT MARKINGS THAT ARE EXISTING OR PLACED IN A PREVIOUS PHASE WILL REMAIN UNLESS OTHERWISE INDICATED.

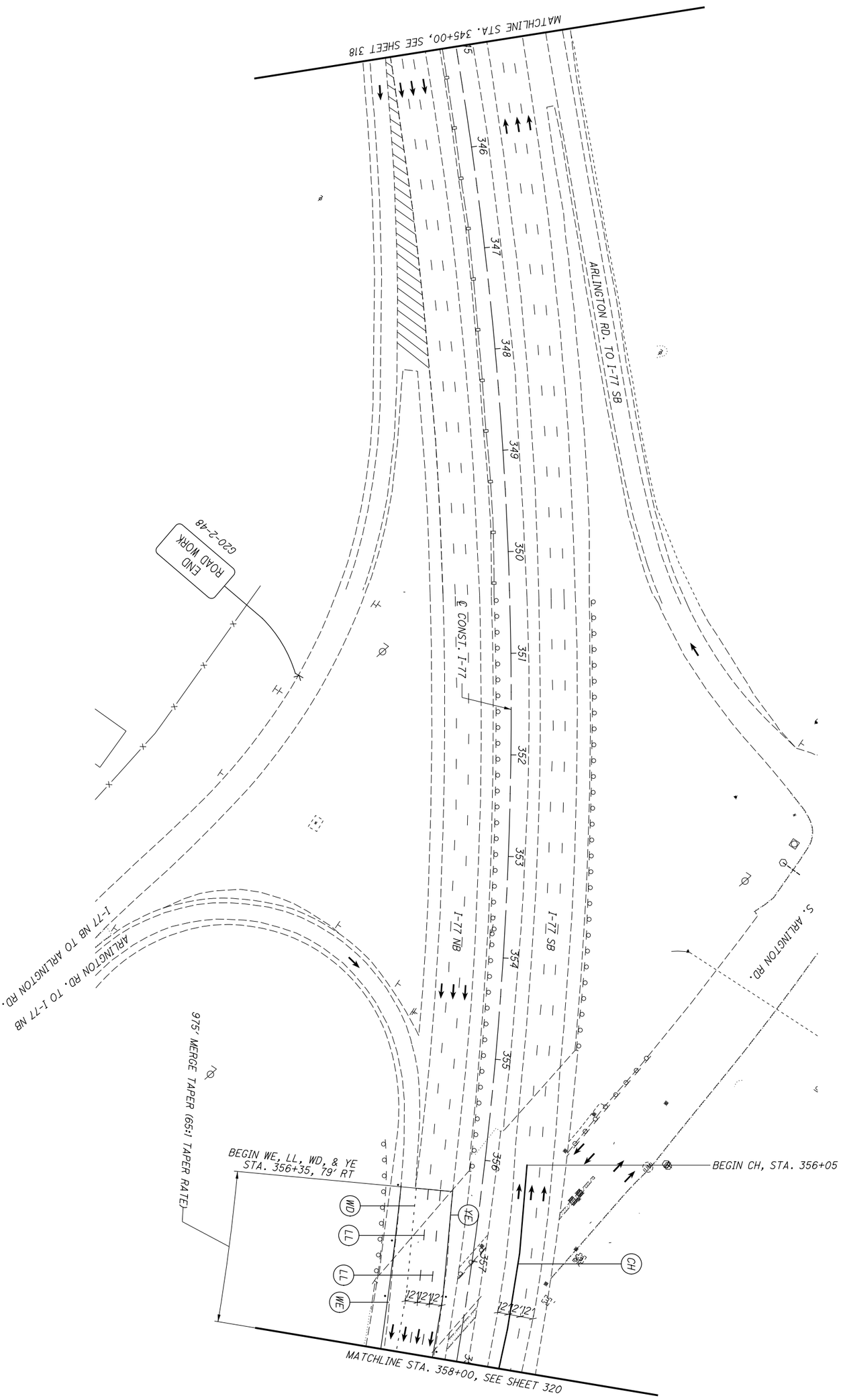


| | | | | |
|---|---|---|---|---|
| 319 / 1288 | SUM-77/277/224<br>VARIOUS | MAINTENANCE OF TRAFFIC PLAN - PHASE 3<br>I-77 - STA. 345+00 TO STA. 358+00 | CALCULATED .<br>CHECKED . | 0 50<br>25 100<br>HORIZONTAL SCALE IN FEET |

N:\03\60\06744-08\I06002_SUM-76-I0.95\Design\MOT\Sheets\I06002_MP307.dgn Sheet 1/31/2021 5:50:51 PM jrettig

NOTES:

1. SEE SHEET 128 FOR MOT LEGEND AND DRUM SPACING CHART.
2. ALL PAVEMENT MARKINGS THAT ARE EXISTING OR PLACED IN A PREVIOUS PHASE WILL REMAIN UNLESS OTHERWISE INDICATED.
3. SEE SHEETS 366-367 FOR SOUTHERN CROSSOVER (SB).

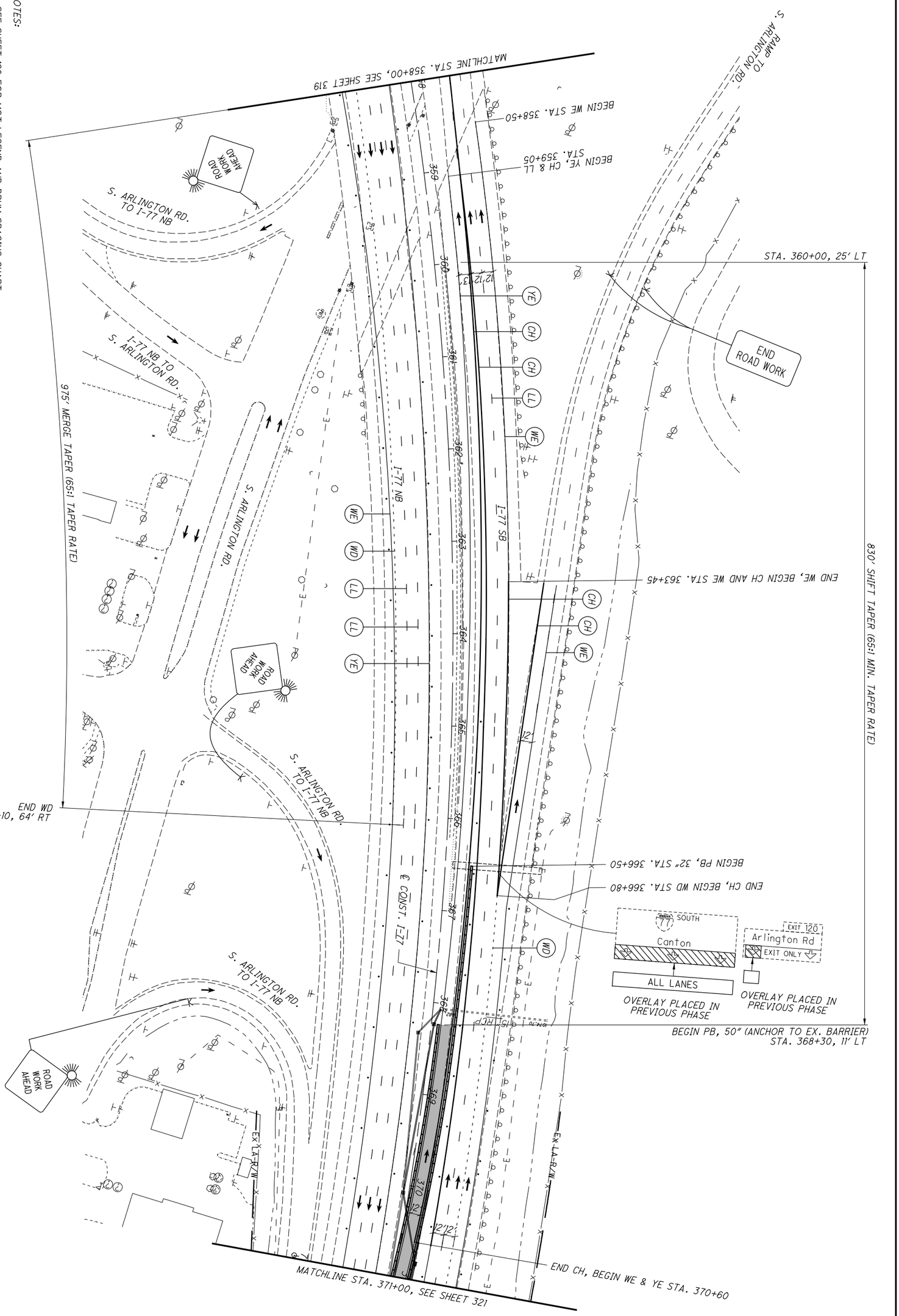


| | | | | |
|---|---|---|---|---|
| 320 / 1288 | SUM-77 / 277 / 224<br>VARIOUS | MAINTENANCE OF TRAFFIC PLAN - PHASE 3<br>I-77 - STA. 358+00 TO STA. 371+00 | CALCULATED .<br>CHECKED . | 0 50<br>25 100<br>HORIZONTAL SCALE IN FEET |

NOTES:

1. SEE SHEET 128 FOR MOT LEGEND AND DRUM SPACING CHART.
2. ALL PAVEMENT MARKINGS THAT ARE EXISTING OR PLACED IN A PREVIOUS PHASE WILL REMAIN UNLESS OTHERWISE INDICATED.
3. SEE SHEETS 366-367 FOR SOUTHERN CROSSOVER (SB).

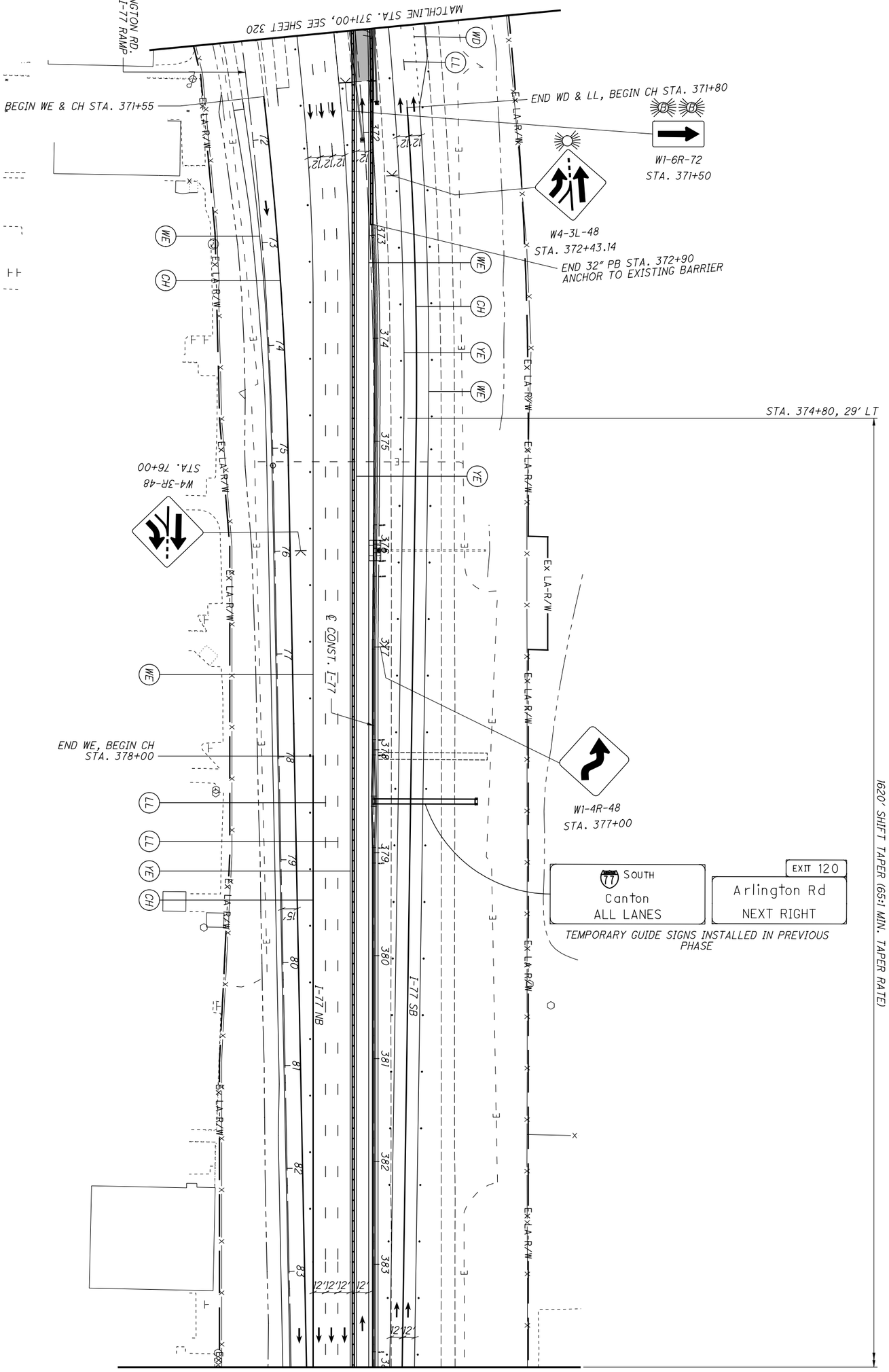


| | | | | |
|---|---|---|---|---|
| 321 / 1288 | SUM-77 / 277 / 224<br>VARIOUS | MAINTENANCE OF TRAFFIC PLAN - PHASE 3<br>I-77 - STA. 371+00 TO STA. 384+00 | CALCULATED .<br>CHECKED . | 0 50<br>25 100<br>HORIZONTAL SCALE IN FEET |

NOTES:

1. SEE SHEET 128 FOR MOT LEGEND AND DRUM SPACING CHART.
2. ALL PAVEMENT MARKINGS THAT ARE EXISTING OR PLACED IN A PREVIOUS PHASE WILL REMAIN UNLESS OTHERWISE INDICATED.
3. SEE SHEETS 316-317 FOR TYPICAL SECTIONS.

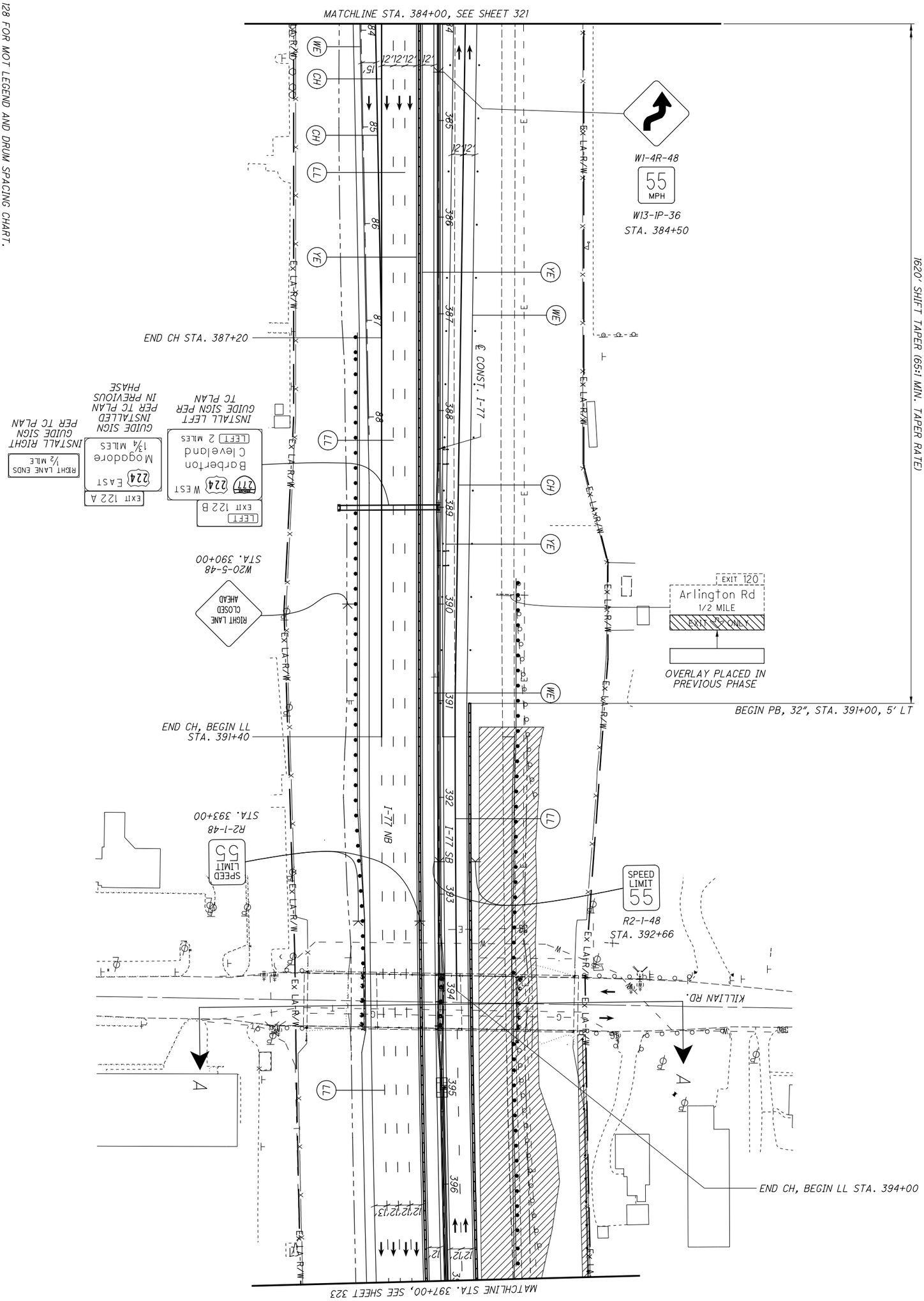


| | | | | |
|---|---|---|---|---|
| 322 / 1288 | SUM-77 / 277 / 224<br>VARIOUS | MAINTENANCE OF TRAFFIC PLAN - PHASE 3<br>I-77 - STA. 384+00 TO STA. 397+00 | CALCULATED .<br>CHECKED . | 0 50<br>25 100<br>HORIZONTAL SCALE IN FEET |

NOTES:

1. SEE SHEET 128 FOR MOT LEGEND AND DRUM SPACING CHART.
2. ALL PAVEMENT MARKINGS THAT ARE EXISTING OR PLACED IN A PREVIOUS PHASE WILL REMAIN UNLESS OTHERWISE INDICATED.
3. INSTALL CONTRACTOR ACCESS POINTS PER ODOT STANDARD CONSTRUCTION DRAWING MT-103.10. ACCESS POINTS MAY BE RELOCATED AT THE APPROVAL OF THE ENGINEER, AS NECESSARY TO ACCOMPLISH CONSTRUCTION ACTIVITIES. CONTRACTOR ACCESS POINTS ARE SHOWN FOR INFORMATIONAL PURPOSES AND THE LOCATION CAN BE ADJUSTED AT THE APPROVAL OF THE ENGINEER.

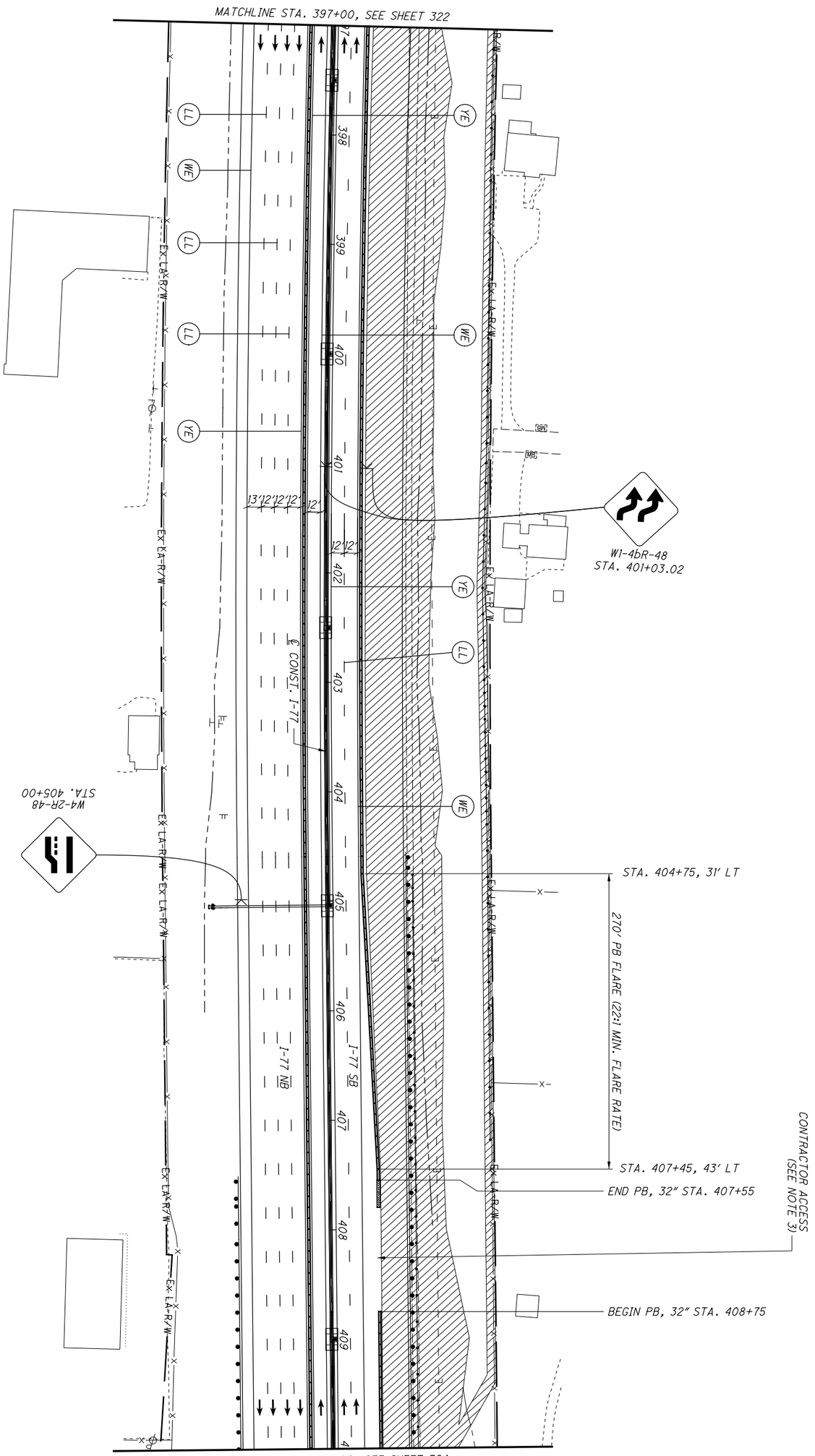


| | | | | |
|---|---|---|---|---|
| 323 / 1288 | SUM-77 / 277 / 224<br>VARIOUS | MAINTENANCE OF TRAFFIC PLAN - PHASE 3<br>I-77 - STA. 397+00 TO STA. 410+00 | CALCULATED .<br>CHECKED . | 0 50<br>25 100<br>HORIZONTAL SCALE IN FEET |

NOTES:

1. SEE SHEET 128 FOR MOT LEGEND AND DRUM SPACING CHART.
2. ALL PAVEMENT MARKINGS THAT ARE EXISTING OR PLACED IN A PREVIOUS PHASE WILL REMAIN UNLESS OTHERWISE INDICATED.

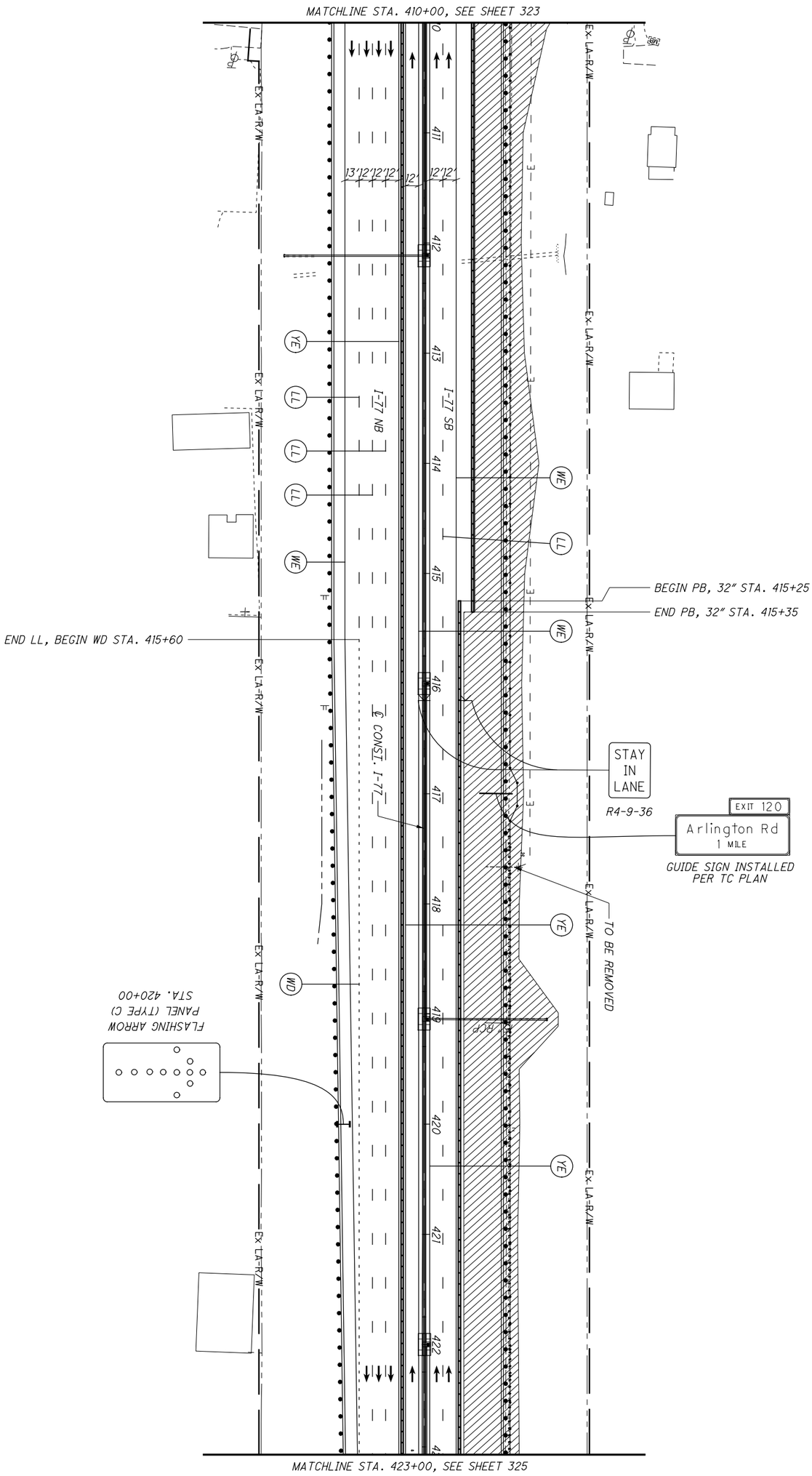

N:\03\60\06744-08\106002_SUM-76-10.95\Design\MOT\Sheets\106002_MP312.dgn Sheet 1/31/2021 5:51:11 PM jrettig

NOTES:

1. SEE SHEET 128 FOR MOT LEGEND AND DRUM SPACING CHART.
2. ALL PAVEMENT MARKINGS THAT ARE EXISTING OR PLACED IN A PREVIOUS PHASE WILL REMAIN UNLESS OTHERWISE INDICATED.
3. SEE SHEETS 316-317 FOR TYPICAL SECTIONS.

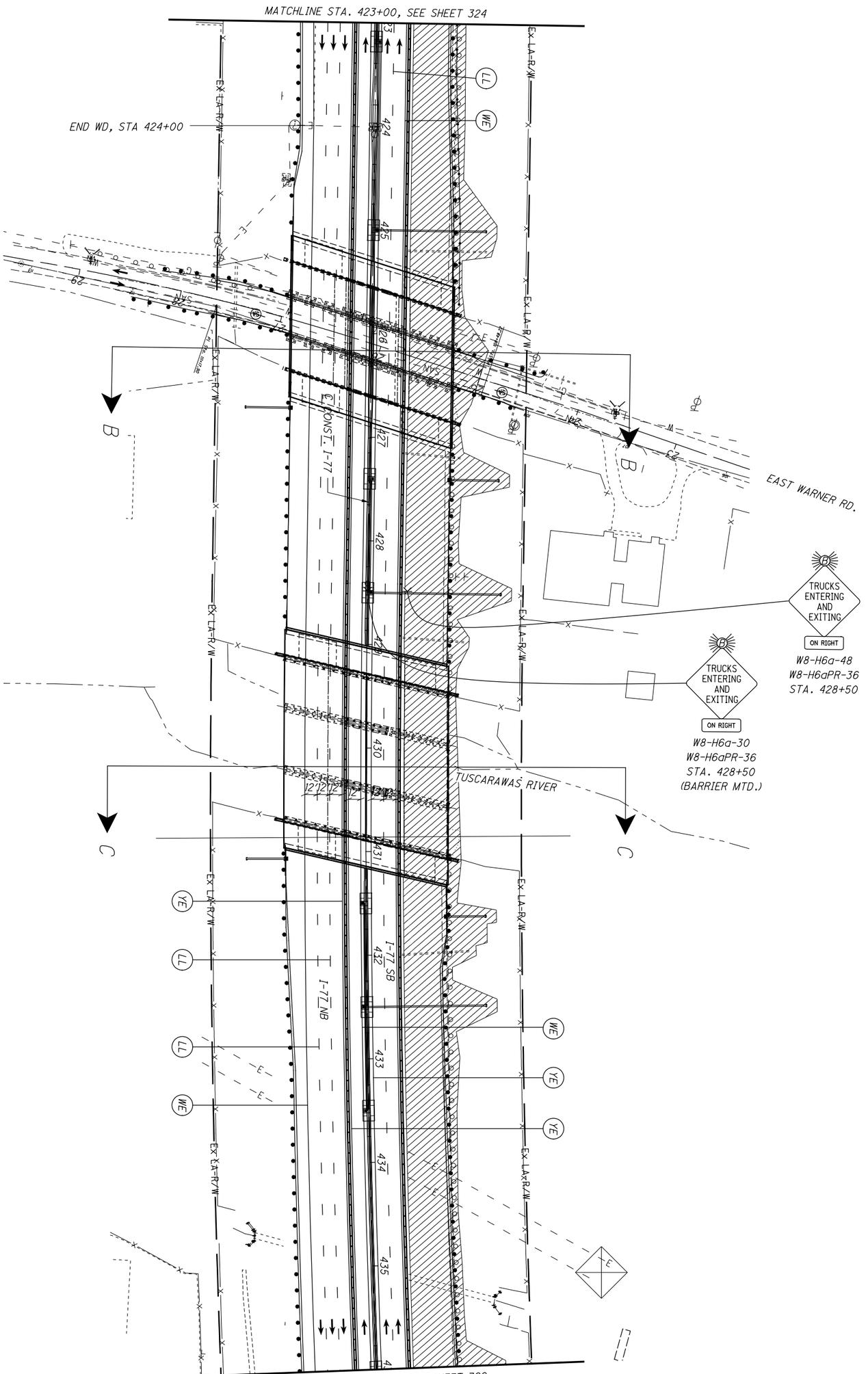


| | | | | |
|---|---|---|---|---|
| 325 / 1288 | SUM-77/277/224<br>VARIOUS | MAINTENANCE OF TRAFFIC PLAN - PHASE 3<br>I-77 - STA. 423+00 TO STA. 436+00 | CALCULATED .<br>CHECKED . | 0 50<br>25 100<br>HORIZONTAL SCALE IN FEET |

NOTES:

1. SEE SHEET 128 FOR MOT LEGEND AND DRUM SPACING CHART.
2. ALL PAVEMENT MARKINGS THAT ARE EXISTING OR PLACED IN A PREVIOUS PHASE WILL REMAIN UNLESS OTHERWISE INDICATED.

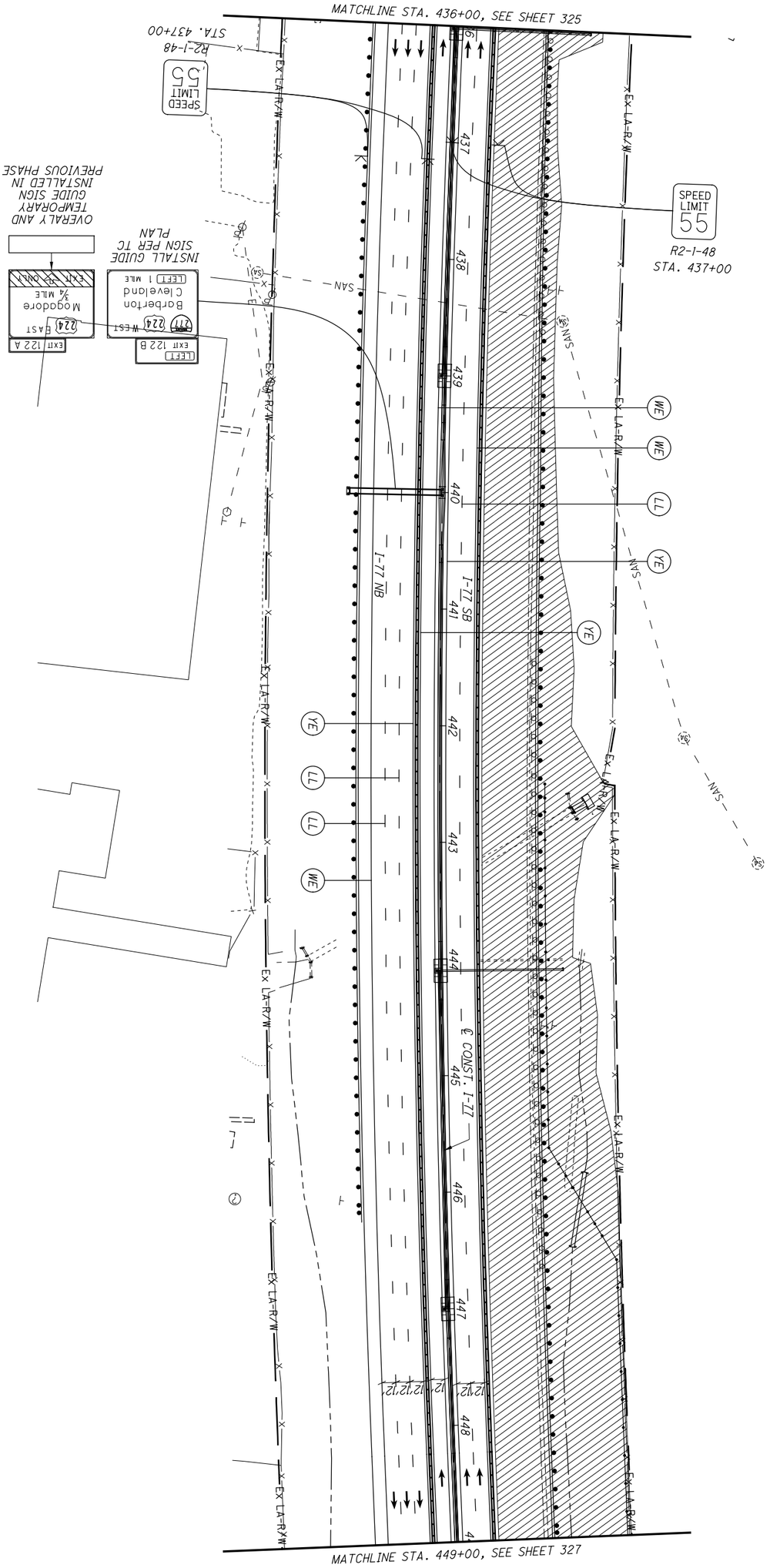


| | | | | |
|---|---|---|---|---|
| 326 / 1288 | SUM-77 / 277 / 224<br>VARIOUS | MAINTENANCE OF TRAFFIC PLAN - PHASE 3<br>I-77 - STA. 436+00 TO STA. 449+00 | CALCULATED .<br>CHECKED . | 0 50<br>25 100<br>HORIZONTAL SCALE IN FEET |

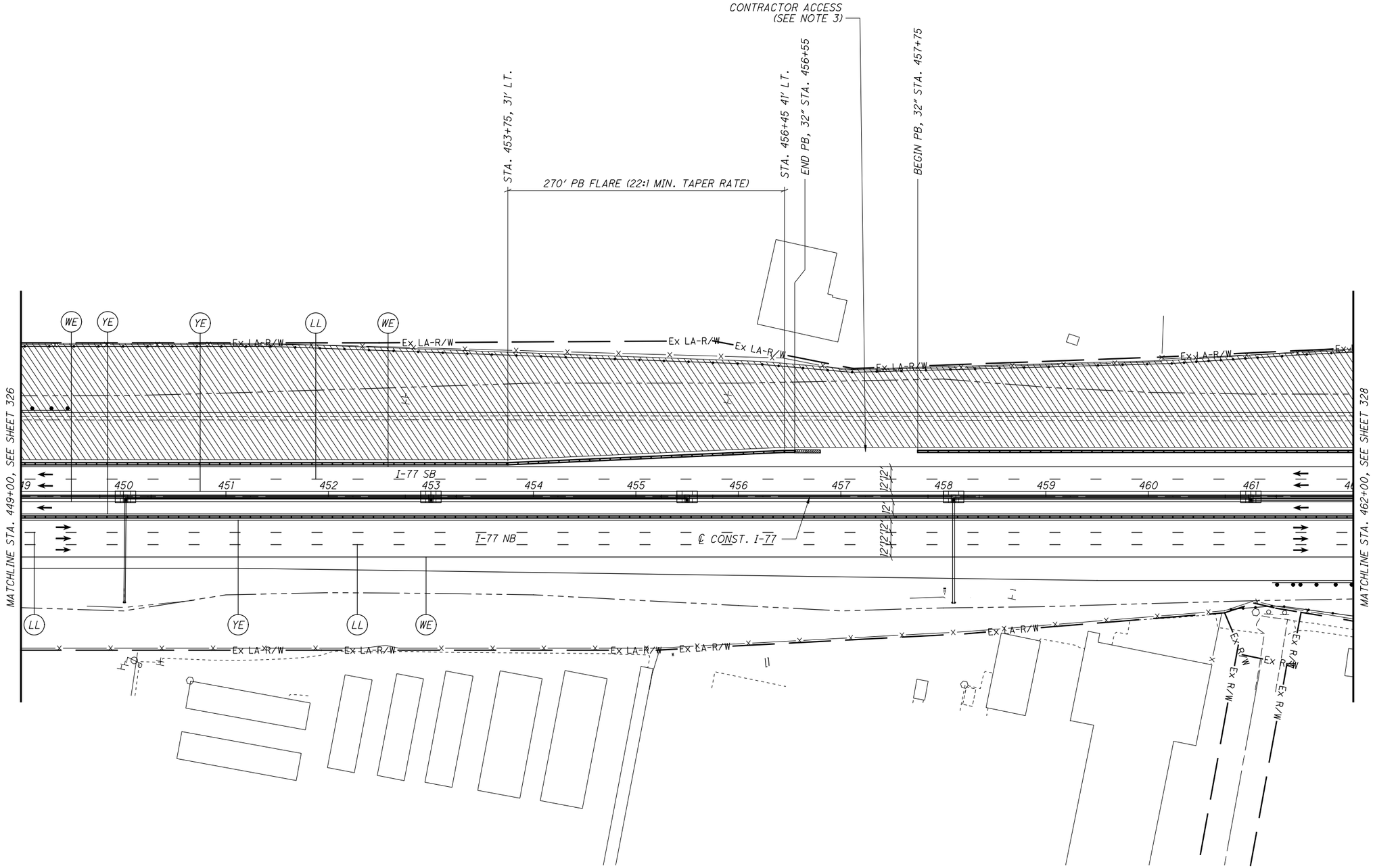


NOTES:

1. SEE SHEET 128 FOR MOT LEGEND AND DRUM SPACING CHART.

2. ALL PAVEMENT MARKINGS THAT ARE EXISTING OR PLACED IN A PREVIOUS PHASE WILL REMAIN UNLESS OTHERWISE INDICATED.

3. INSTALL CONTRACTOR ACCESS POINTS PER ODOT STANDARD CONSTRUCTION DRAWING MT-103.10. ACCESS POINTS MAY BE RELOCATED AT THE APPROVAL OF THE ENGINEER, AS NECESSARY TO ACCOMPLISH CONSTRUCTION ACTIVITIES. CONTRACTOR ACCESS POINTS ARE SHOWN FOR INFORMATIONAL PURPOSES AND THE LOCATION CAN BE ADJUSTED AT THE APPROVAL OF THE ENGINEER.

HORIZONTAL SCALE IN FEET
0 25 50 100

CALCULATED .
CHECKED .

# MAINTENANCE OF TRAFFIC PLAN - PHASE 3
## I-77 - STA. 449+00 TO STA. 462+00

SUM-77/277/224
VARIOUS

327
1288

N:\03\60\06744-08\106002-SUM-76-10.95\Design\MOT\Sheets\106002-MP314.dgn Sheet 1/31/2021 5:51:42 PM jrettig

N:\03\60\06744-08\I06002_SUM-76-I0.95\Design\MOT\Sheets\I06002_MP3I5.dgn Sheet 1/3I/2021 5:52:06 PM jrettig

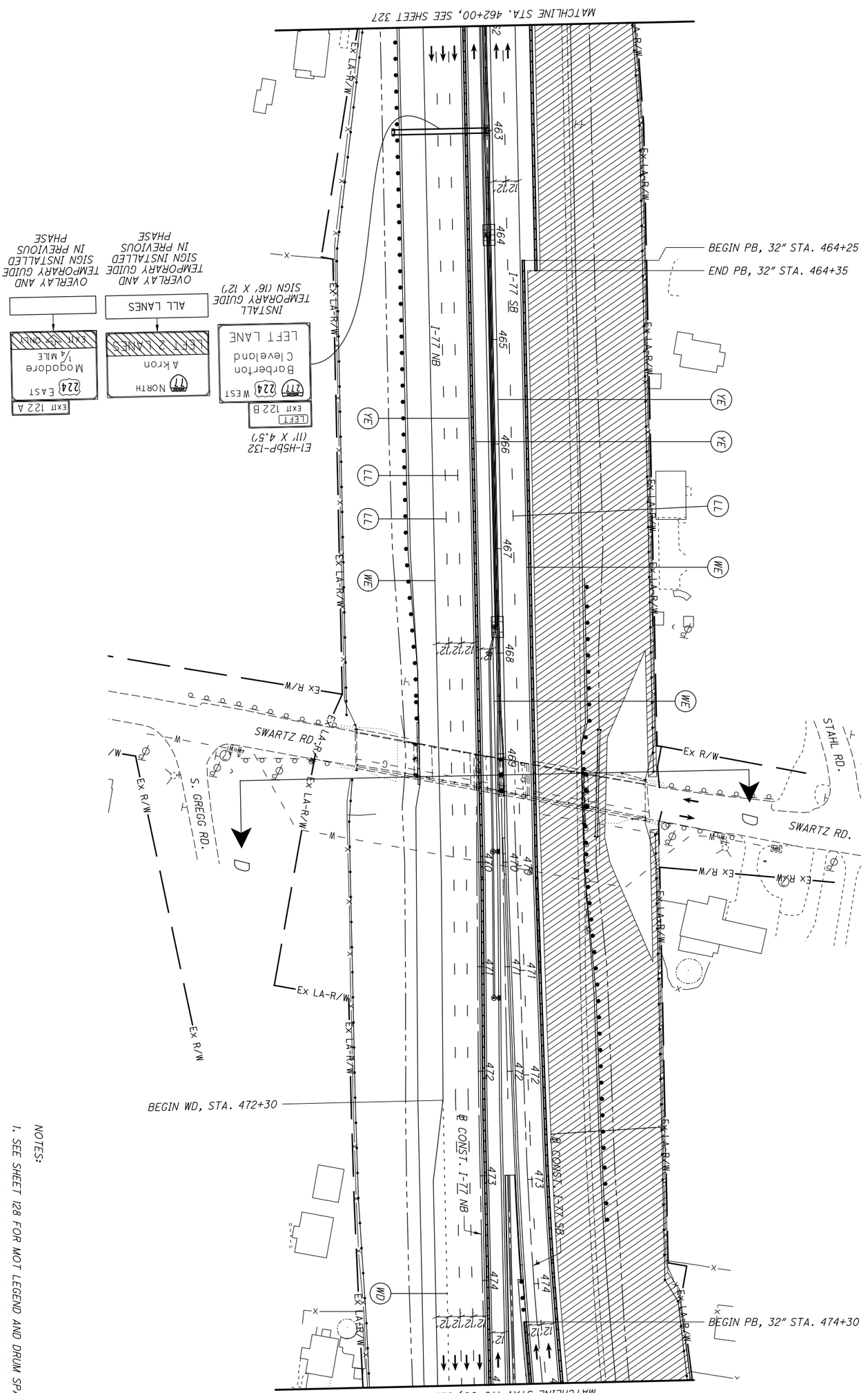


NOTES:

1. SEE SHEET 128 FOR MOT LEGEND AND DRUM SPACING CHART.
2. ALL PAVEMENT MARKINGS THAT ARE EXISTING OR PLACED IN A PREVIOUS PHASE WILL REMAIN UNLESS OTHERWISE INDICATED.
3. SEE SHEETS 316-317 FOR TYPICAL SECTIONS.

| | | | | |
|---|---|---|---|---|
| 328 / 1288 | SUM-77/277/224<br>VARIOUS | MAINTENANCE OF TRAFFIC PLAN - PHASE 3<br>I-77 - STA. 462+00 TO STA. 475+00 | CALCULATED .<br>CHECKED . | 0 50<br>25 100<br>HORIZONTAL SCALE IN FEET |

N:\03\60\06744-08\I06002_SUM-76-10.95\Design\MOT\Sheets\I06002_MP316.dgn Sheet 1/31/2021 5:52:14 PM jrettig

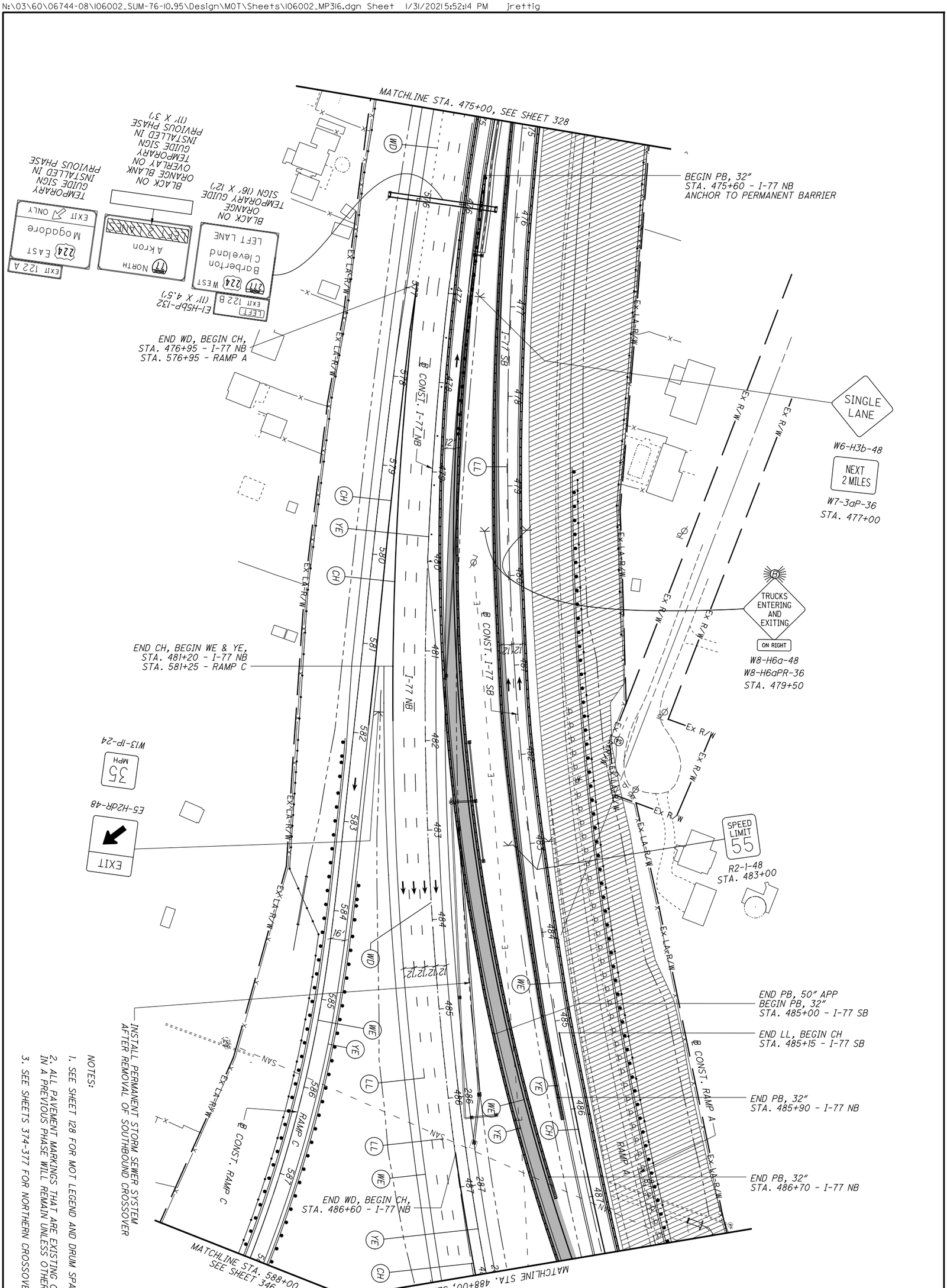


NOTES:

1. SEE SHEET 128 FOR MOT LEGEND AND DRUM SPACING CHART.
2. ALL PAVEMENT MARKINGS THAT ARE EXISTING OR PLACED IN A PREVIOUS PHASE WILL REMAIN UNLESS OTHERWISE INDICATED.
3. SEE SHEETS 374-377 FOR NORTHERN CROSSOVER (SB).

| | | | | |
|---|---|---|---|---|
| 329 / 1288 | SUM-77/277/224<br>VARIOUS | MAINTENANCE OF TRAFFIC PLAN - PHASE 3<br>I-77 - STA. 475+00 TO STA. 488+00 | CALCULATED .<br>CHECKED . | 0 50<br>25 100<br>HORIZONTAL SCALE IN FEET |

N:\03\60\06744-08\I06002_SUM-76-I0.95\Design\MOT\Sheets\I06002_MP3I7.dgn Sheet 1/31/2021 5:52:19 PM jrettig

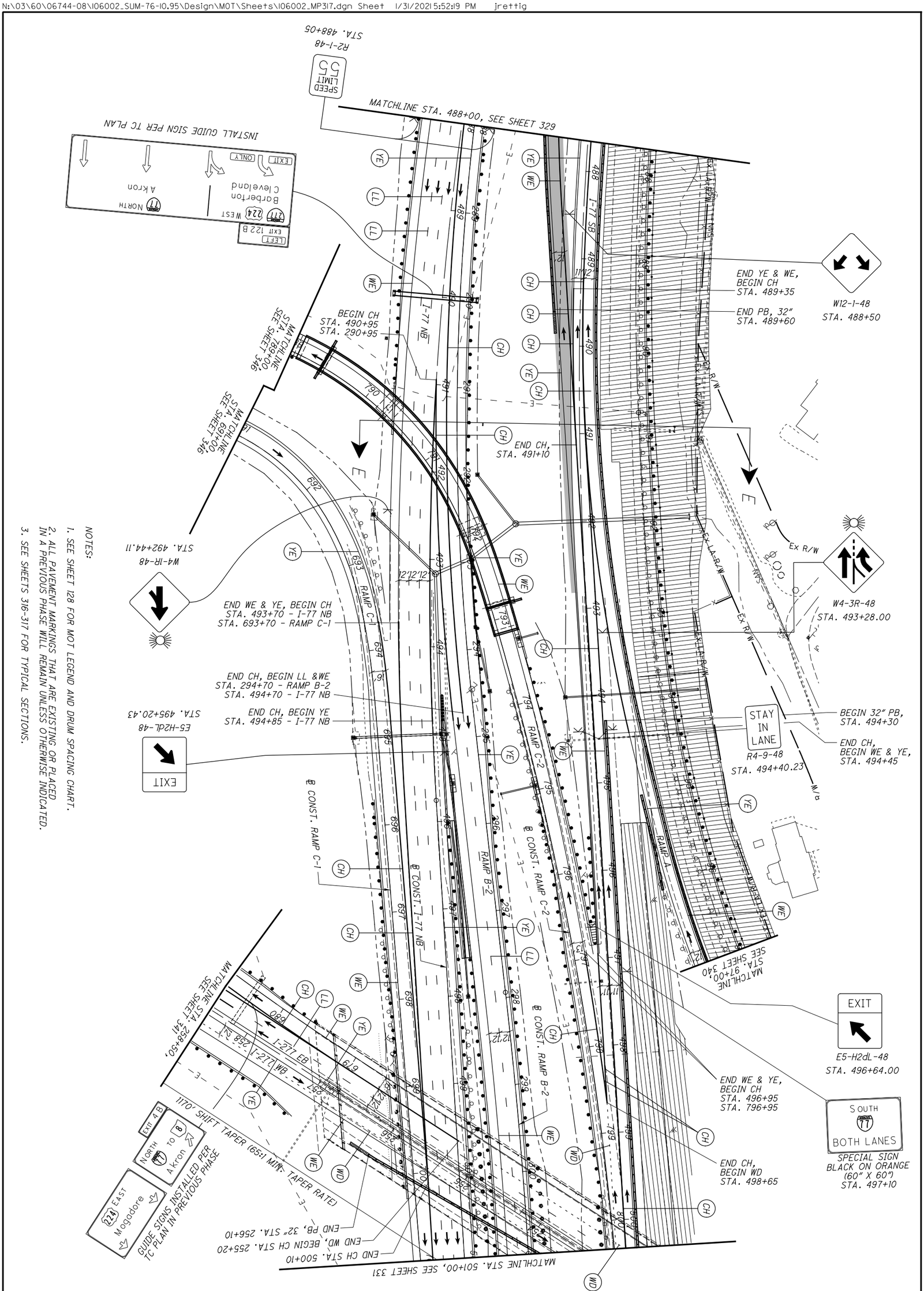


NOTES:

1. SEE SHEET I28 FOR MOT LEGEND AND DRUM SPACING CHART.
2. ALL PAVEMENT MARKINGS THAT ARE EXISTING OR PLACED IN A PREVIOUS PHASE WILL REMAIN UNLESS OTHERWISE INDICATED.
3. SEE SHEETS 316-317 FOR TYPICAL SECTIONS.

| | | | |
|---|---|---|---|
| 330 / 1288 | SUM-77 / 277 / 224<br>VARIOUS | MAINTENANCE OF TRAFFIC PLAN - PHASE 3<br>I-77 - STA. 488+00 TO STA. 501+00 | CALCULATED .<br>CHECKED .<br>0 50<br>25 100<br>HORIZONTAL SCALE IN FEET |

N:\03\60\06744-08\I06002_SUM-76-I0.95\Design\MOT\Sheets\I06002_MP3I8.dgn Sheet 1/31/2021 5:52:25 PM jrettig

NOTES:

1. SEE SHEET 128 FOR MOT LEGEND AND DRUM SPACING CHART.
2. ALL PAVEMENT MARKINGS THAT ARE EXISTING OR PLACED IN A PREVIOUS PHASE WILL REMAIN UNLESS OTHERWISE INDICATED.
3. SEE SHEETS 316-317 FOR TYPICAL SECTIONS.

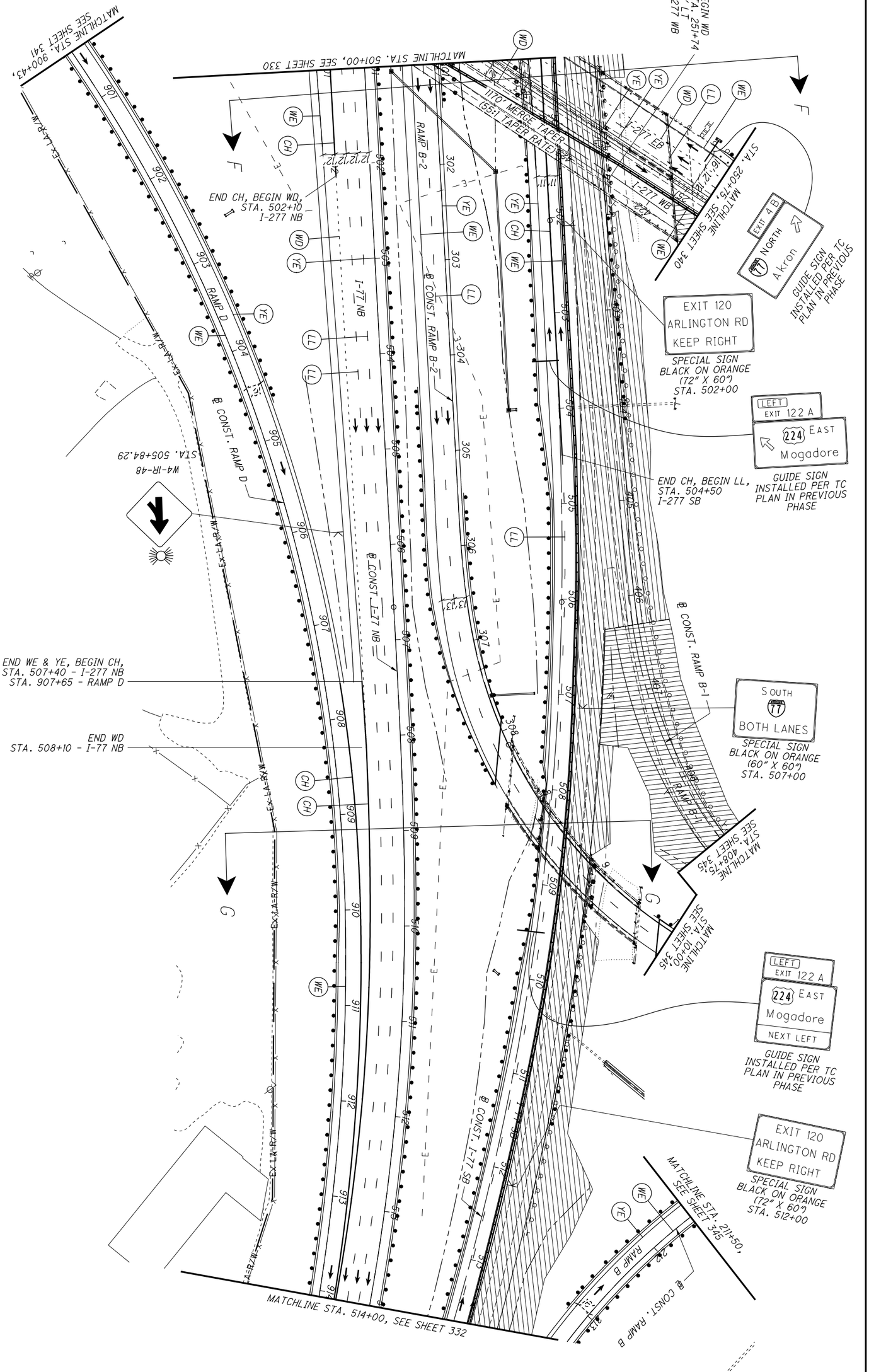


| 331 / 1288 | SUM-77 / 277 / 224 VARIOUS | MAINTENANCE OF TRAFFIC PLAN - PHASE 3 I-77 - STA. 501+00 TO STA. 514+00 | CALCULATED . CHECKED . | 0 50 25 100 HORIZONTAL SCALE IN FEET |
|---|---|---|---|---|

NOTES:

1. SEE SHEET 128 FOR MOT LEGEND AND DRUM SPACING CHART.
2. ALL PAVEMENT MARKINGS THAT ARE EXISTING OR PLACED IN A PREVIOUS PHASE WILL REMAIN UNLESS OTHERWISE INDICATED.
3. SEE SHEETS 316-317 FOR TYPICAL SECTIONS.

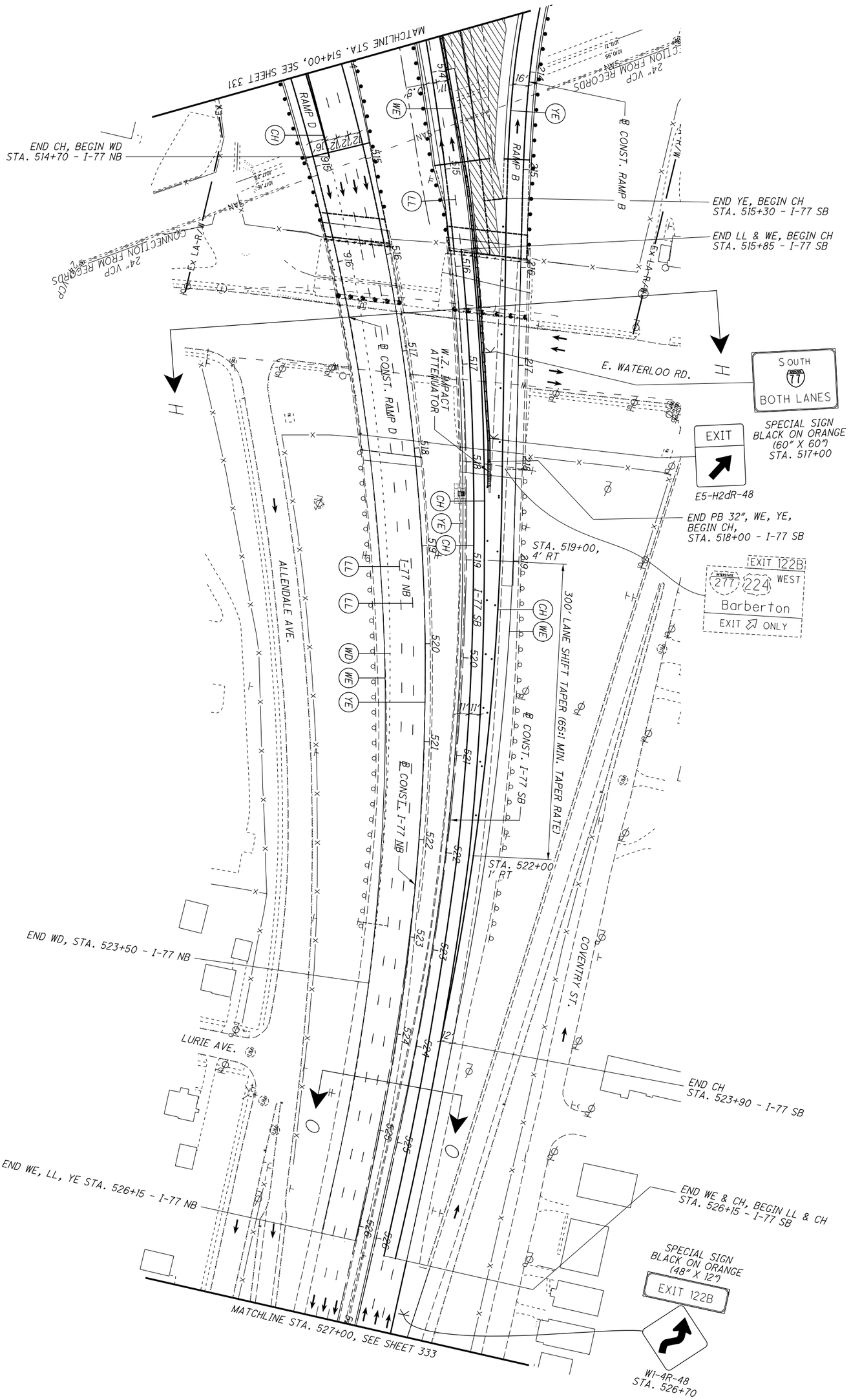


| | | | |
|---|---|---|---|
| 332 / 1288 | SUM-77 / 277 / 224<br>VARIOUS | MAINTENANCE OF TRAFFIC PLAN - PHASE 3<br>I-77 - STA. 514+00 TO STA. 527+00 | CALCULATED .<br>CHECKED .<br>0 50<br>25 100<br>HORIZONTAL SCALE IN FEET |

N:\03\60\06744-08\106002_SUM-76-10.95\Design\MOT\Sheets\106002_MP320.dgn Sheet 1/31/2021 5:52:36 PM jrettig

NOTES:

1. SEE SHEET 128 FOR MOT LEGEND AND DRUM SPACING CHART.
2. ALL PAVEMENT MARKINGS THAT ARE EXISTING OR PLACED IN A PREVIOUS PHASE WILL REMAIN UNLESS OTHERWISE INDICATED.

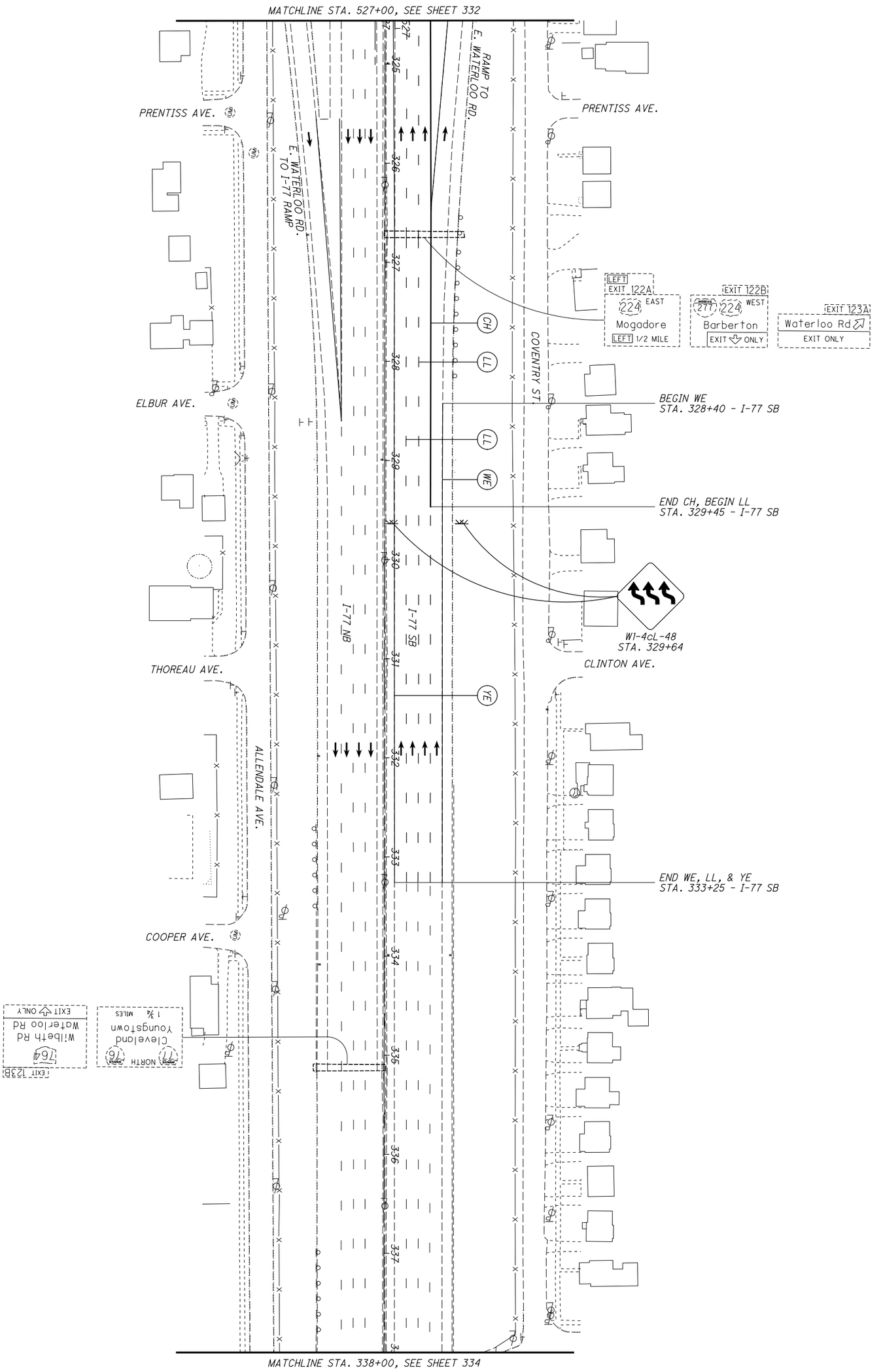


| | | | | |
|---|---|---|---|---|
| 333 / 1288 | SUM-77 / 277 / 224<br>VARIOUS | MAINTENANCE OF TRAFFIC PLAN - PHASE 3<br>I-77 - STA. 527+00 TO STA. 338+00 | CALCULATED .<br>CHECKED . | 0 50<br>25 100<br>HORIZONTAL SCALE IN FEET |

NOTES:

1. SEE SHEET 128 FOR MOT LEGEND AND DRUM SPACING CHART.
2. ALL PAVEMENT MARKINGS THAT ARE EXISTING OR PLACED IN A PREVIOUS PHASE WILL REMAIN UNLESS OTHERWISE INDICATED.

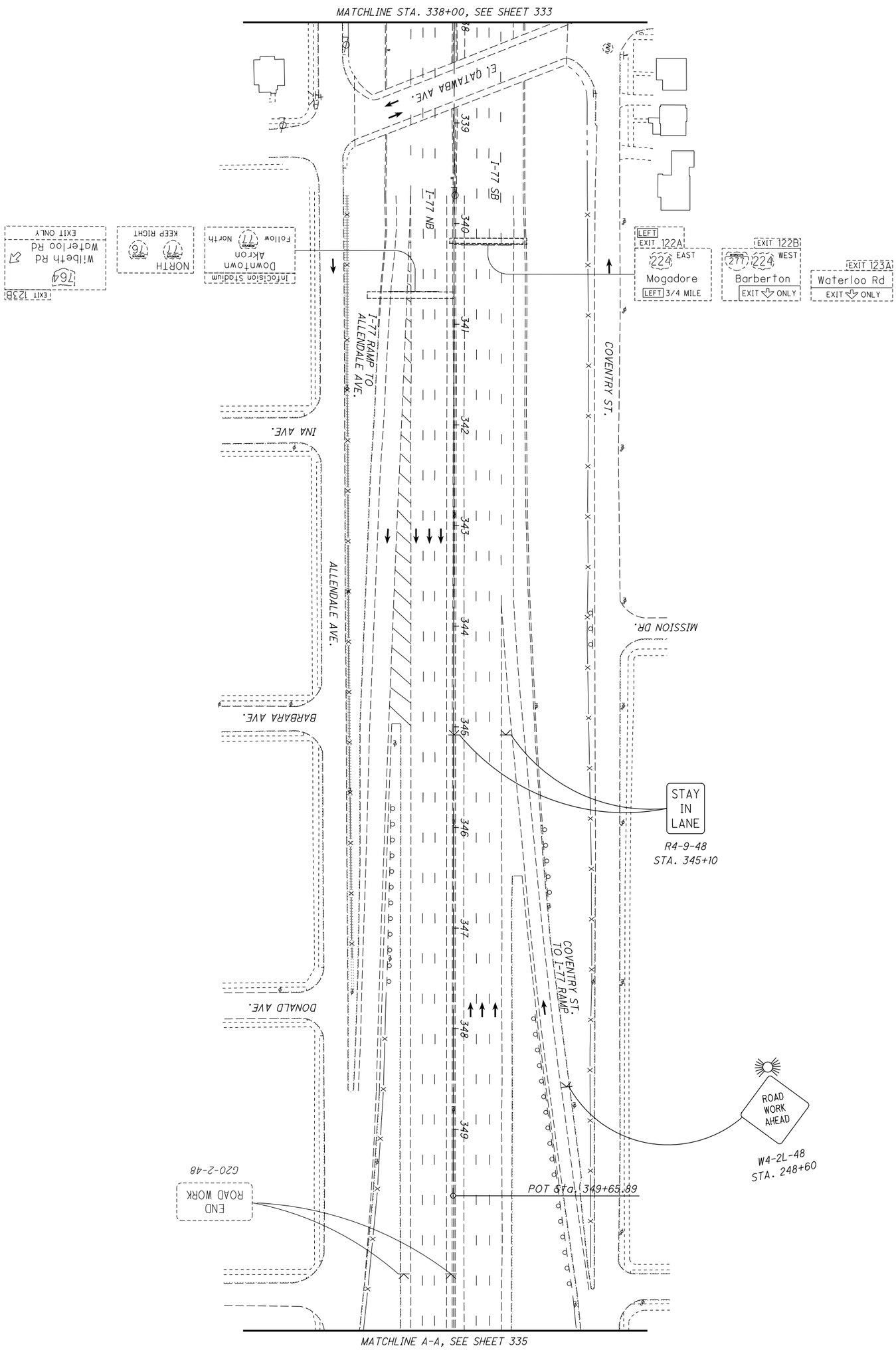


| | | | | |
|---|---|---|---|---|
| 334 / 1288 | SUM-77 / 277 / 224<br>VARIOUS | MAINTENANCE OF TRAFFIC PLAN - PHASE 3<br>I-77 - STA. 338+00 TO M.L. A-A | CALCULATED .<br>CHECKED . | 0 50<br>25 100<br>HORIZONTAL SCALE IN FEET |

NOTES:

1. SEE SHEET 128 FOR MOT LEGEND AND DRUM SPACING CHART.
2. ALL PAVEMENT MARKINGS THAT ARE EXISTING OR PLACED IN A PREVIOUS PHASE WILL REMAIN UNLESS OTHERWISE INDICATED.

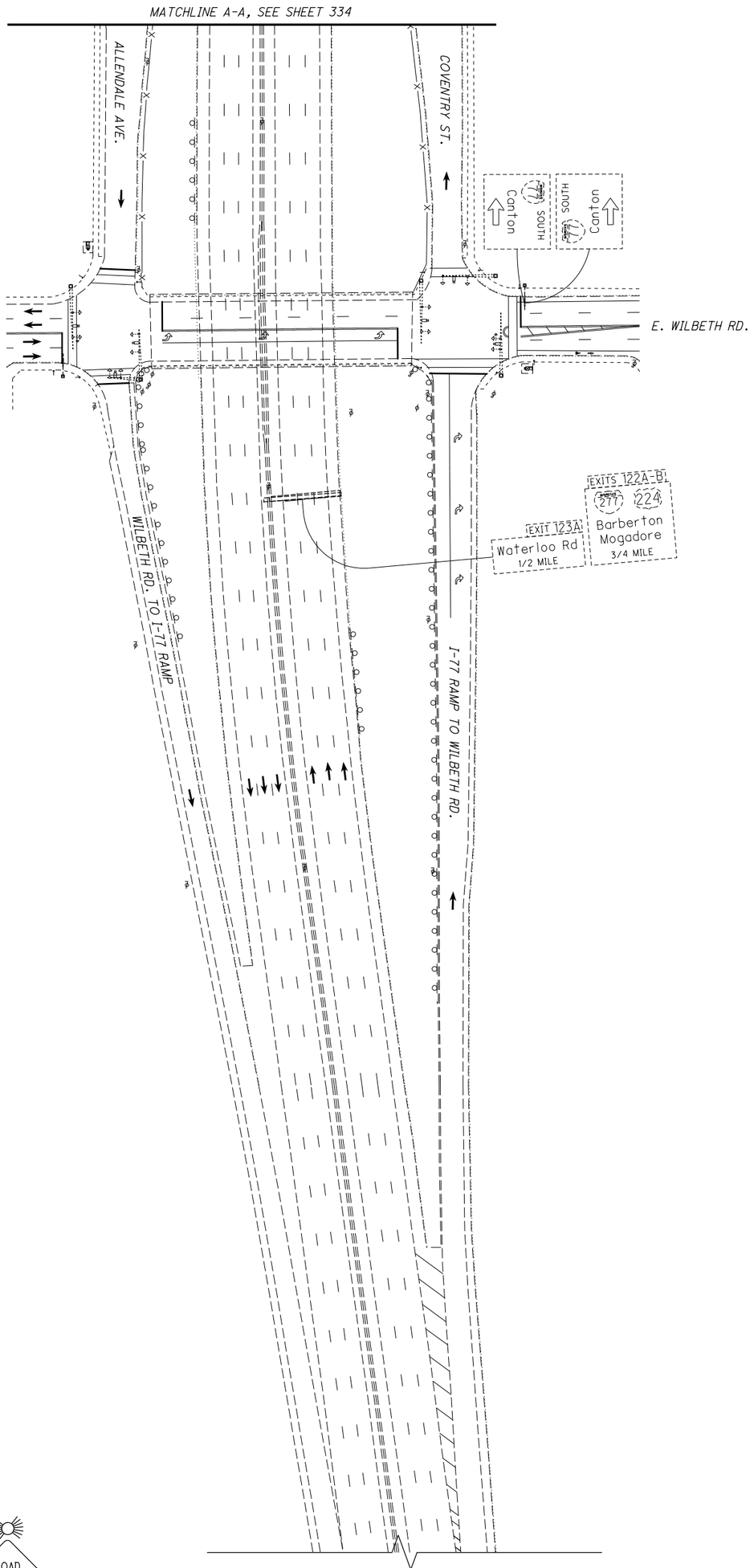


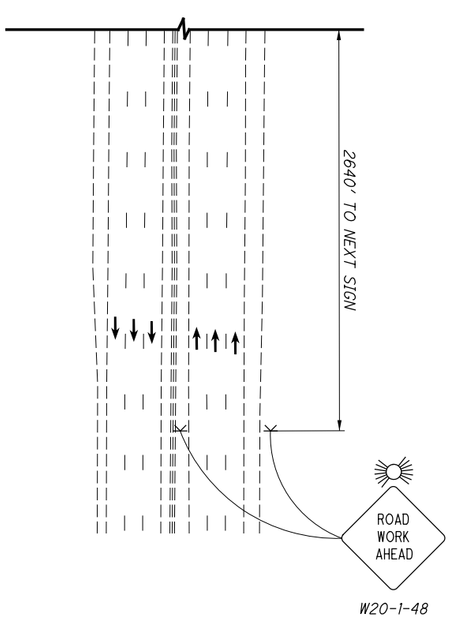


| | | | | |
|---|---|---|---|---|
| 335 / 1288 | SUM-77 / 277 / 224<br>VARIOUS | MAINTENANCE OF TRAFFIC PLAN - PHASE 3<br>I-77 - M.L. A-A TO NORTH LIMITS | CALCULATED .<br>CHECKED . | 0 50<br>25 100<br>HORIZONTAL SCALE IN FEET |

NOTES:

1. SEE SHEET 128 FOR MOT LEGEND AND DRUM SPACING CHART.
2. ALL PAVEMENT MARKINGS THAT ARE EXISTING OR PLACED IN A PREVIOUS PHASE WILL REMAIN UNLESS OTHERWISE INDICATED.

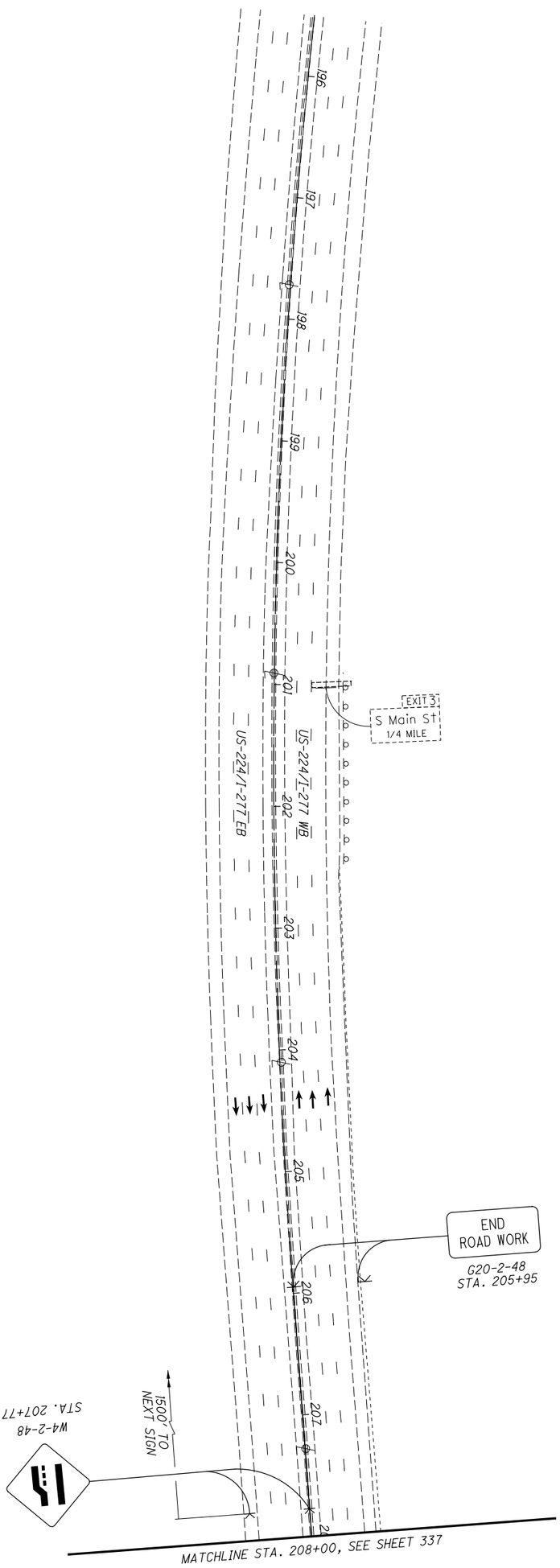


| | | | | |
|---|---|---|---|---|
| 336 / 1288 | SUM-77/277/224<br>VARIOUS | MAINTENANCE OF TRAFFIC PLAN - PHASE 3<br>US-224/I-277 - STA. 195+50 TO STA. 208+00 | CALCULATED .<br>CHECKED . | 0 50<br>25 100<br>HORIZONTAL SCALE IN FEET |

NOTES:

1. SEE SHEET 128 FOR MOT LEGEND AND DRUM SPACING CHART.
2. ALL PAVEMENT MARKINGS THAT ARE EXISTING OR PLACED IN A PREVIOUS PHASE WILL REMAIN UNLESS OTHERWISE INDICATED.

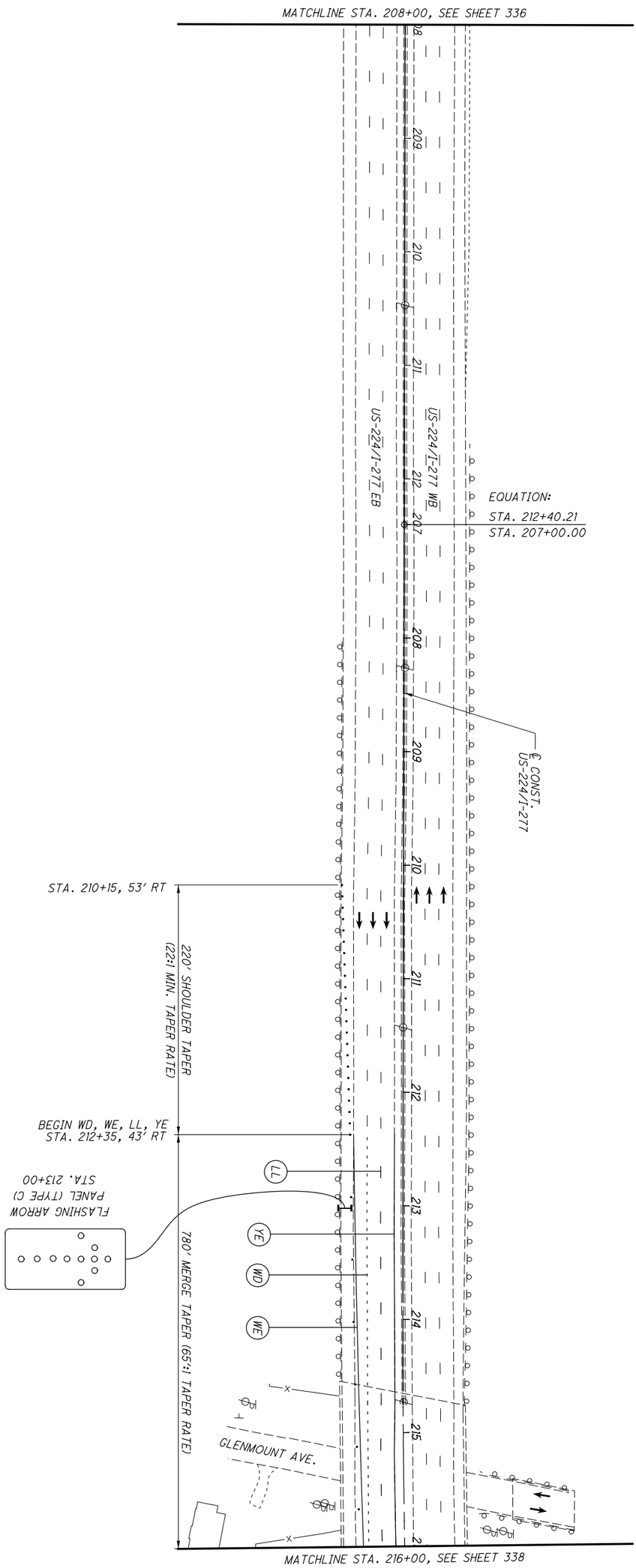

NOTES:

1. SEE SHEET 128 FOR MOT LEGEND AND DRUM SPACING CHART.
2. ALL PAVEMENT MARKINGS THAT ARE EXISTING OR PLACED IN A PREVIOUS PHASE WILL REMAIN UNLESS OTHERWISE INDICATED.

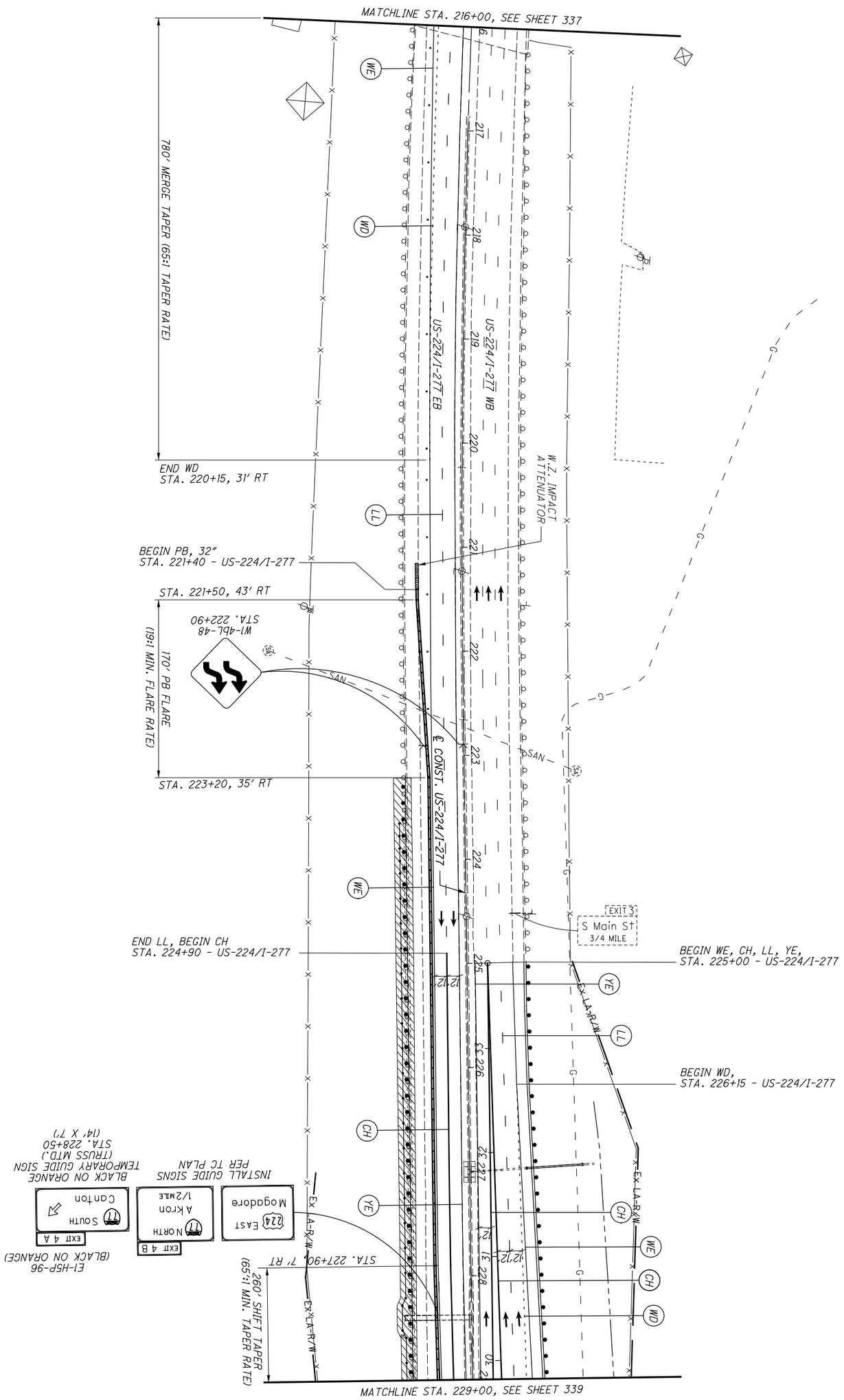


| | | | | |
|---|---|---|---|---|
| 338 / 1288 | SUM-77/277/224<br>VARIOUS | MAINTENANCE OF TRAFFIC PLAN - PHASE 3<br>US-224/I-277 - STA. 216+00 TO STA. 229+00 | CALCULATED .<br>CHECKED . | 0 50<br>25 100<br>HORIZONTAL SCALE IN FEET |

NOTES:

1. SEE SHEET 128 FOR MOT LEGEND AND DRUM SPACING CHART.
2. ALL PAVEMENT MARKINGS THAT ARE EXISTING OR PLACED IN A PREVIOUS PHASE WILL REMAIN UNLESS OTHERWISE INDICATED.
3. SEE SHEETS 347-351 FOR RAMP A CROSS SECTIONS.

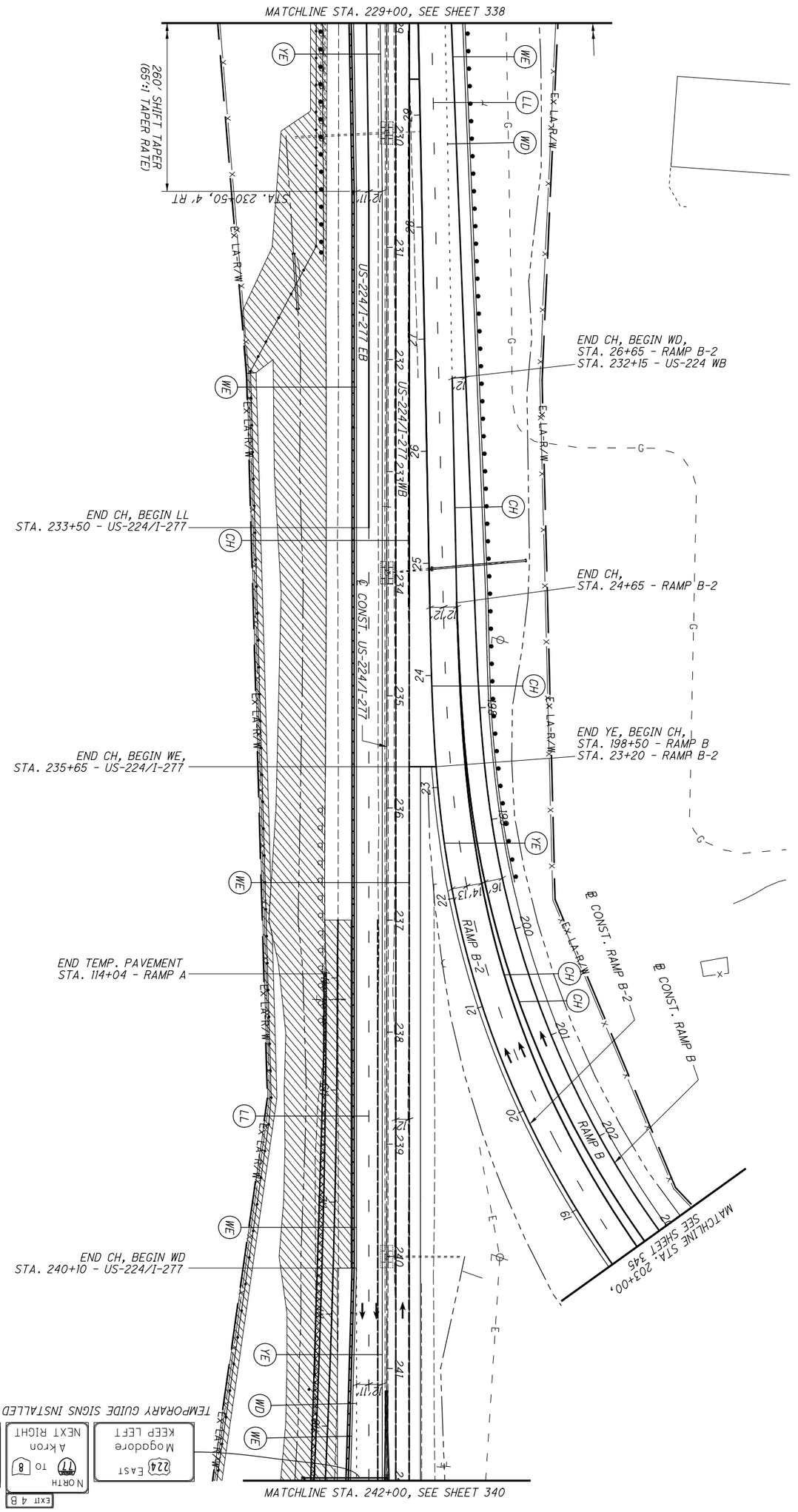


| | | | | |
|---|---|---|---|---|
| 339 / 1288 | SUM-77/277/224 VARIOUS | MAINTENANCE OF TRAFFIC PLAN - PHASE 3 US-224/I-277 - STA. 229+00 TO STA. 242+00 | CALCULATED . CHECKED . | 0 50 25 100 HORIZONTAL SCALE IN FEET |

NOTES:

1. SEE SHEET 128 FOR MOT LEGEND AND DRUM SPACING CHART.
2. ALL PAVEMENT MARKINGS THAT ARE EXISTING OR PLACED IN A PREVIOUS PHASE WILL REMAIN UNLESS OTHERWISE INDICATED.
3. SEE SHEETS 316-317 FOR TYPICAL SECTIONS.

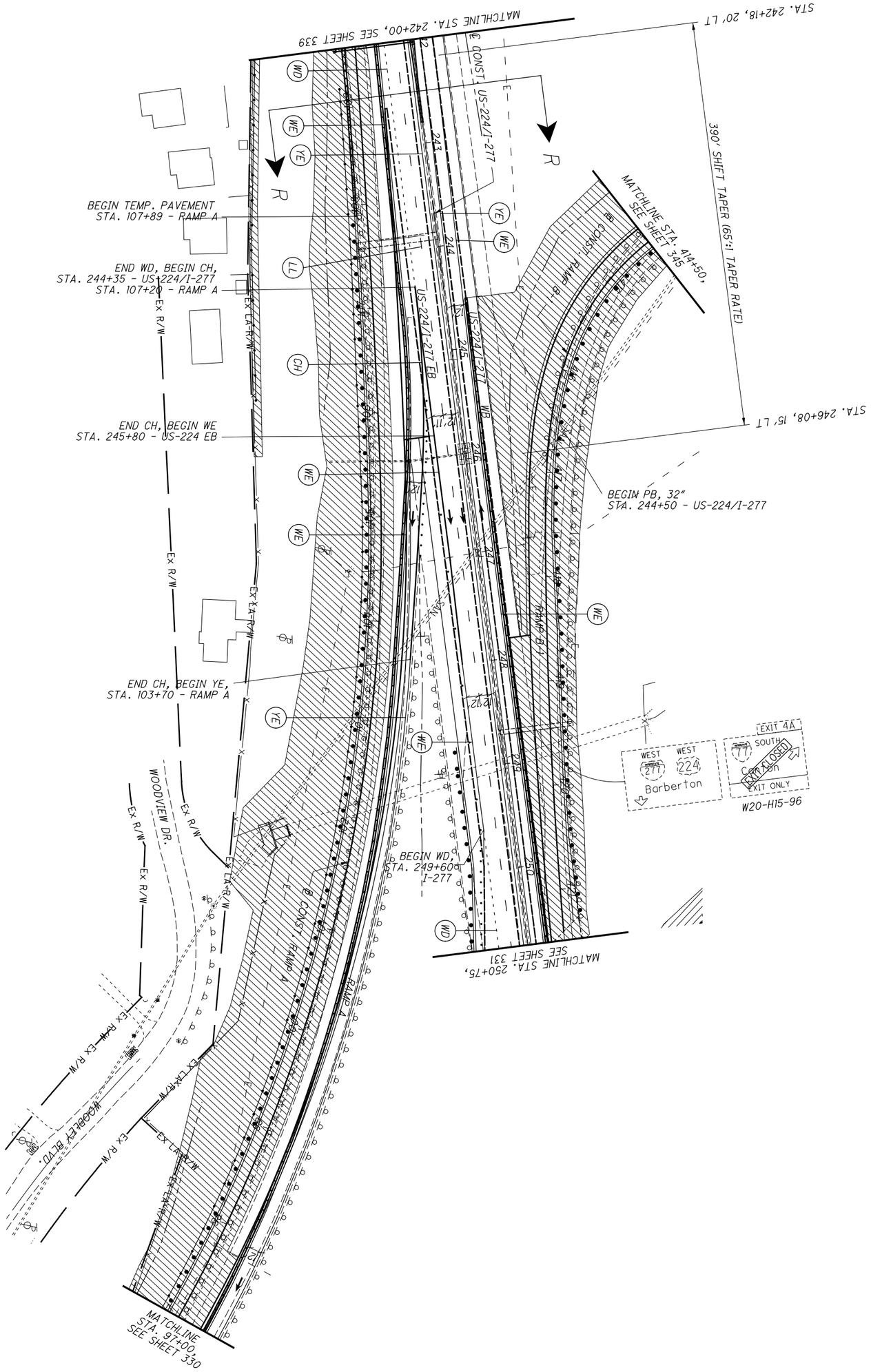


| 340 / 1288 | SUM-77/277/224 VARIOUS | MAINTENANCE OF TRAFFIC PLAN - PHASE 3 US-224/I-277 - STA. 242+00 TO STA. 250+75 | CALCULATED . CHECKED . | 0 50 25 100 HORIZONTAL SCALE IN FEET | N |
|---|---|---|---|---|---|

NOTES:

1. SEE SHEET 128 FOR MOT LEGEND AND DRUM SPACING CHART.
2. ALL PAVEMENT MARKINGS THAT ARE EXISTING OR PLACED IN A PREVIOUS PHASE WILL REMAIN UNLESS OTHERWISE INDICATED.

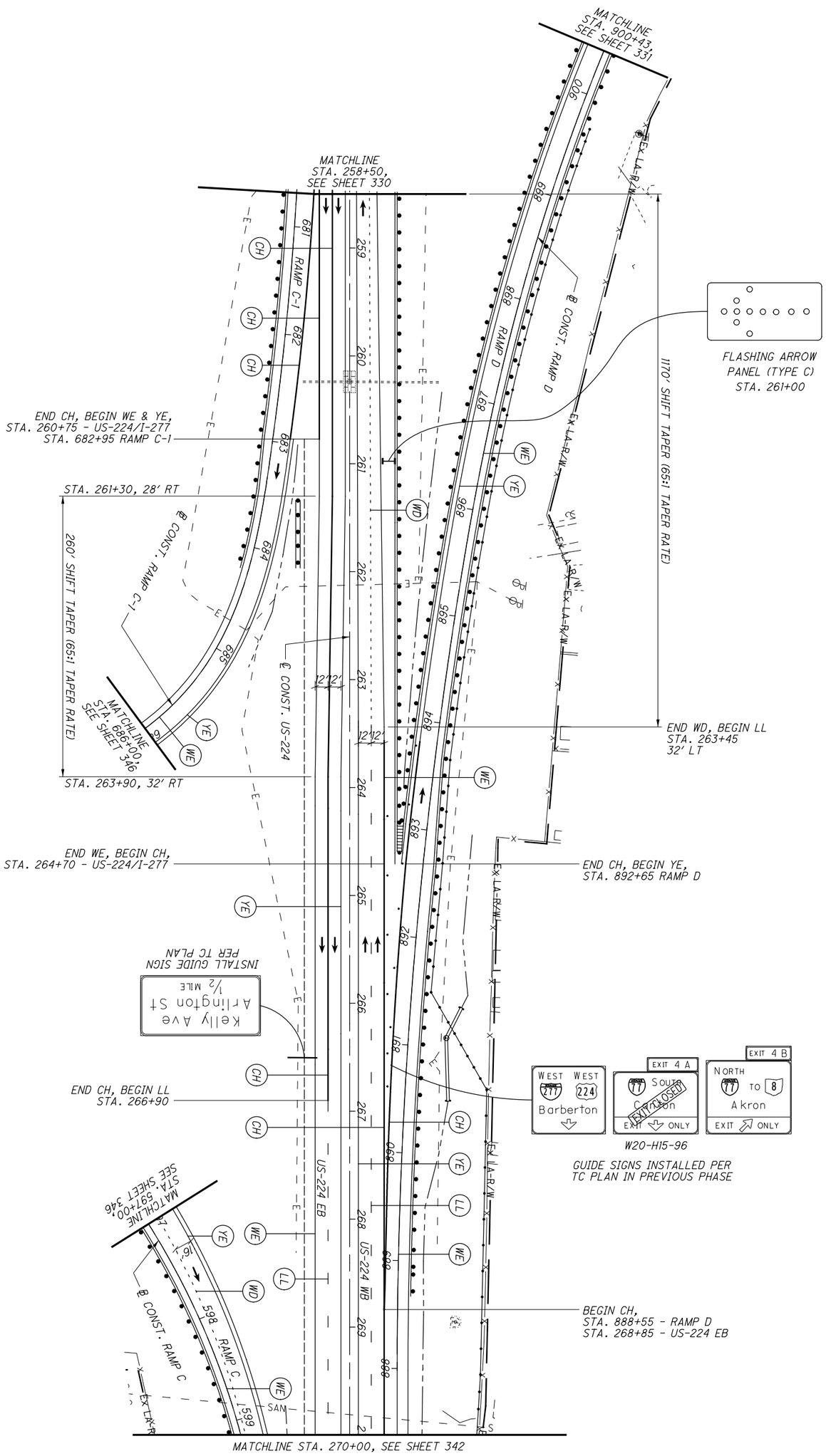


| | | | | |
|---|---|---|---|---|
| 341 / 1288 | SUM-77/277/224 VARIOUS | MAINTENANCE OF TRAFFIC PLAN - PHASE 3 US-224 - STA. 258+50 TO STA. 270+00 | CALCULATED . CHECKED . | 0 50 25 100 HORIZONTAL SCALE IN FEET |

NOTES:

1. SEE SHEET 128 FOR MOT LEGEND AND DRUM SPACING CHART.
2. ALL PAVEMENT MARKINGS THAT ARE EXISTING OR PLACED IN A PREVIOUS PHASE WILL REMAIN UNLESS OTHERWISE INDICATED.

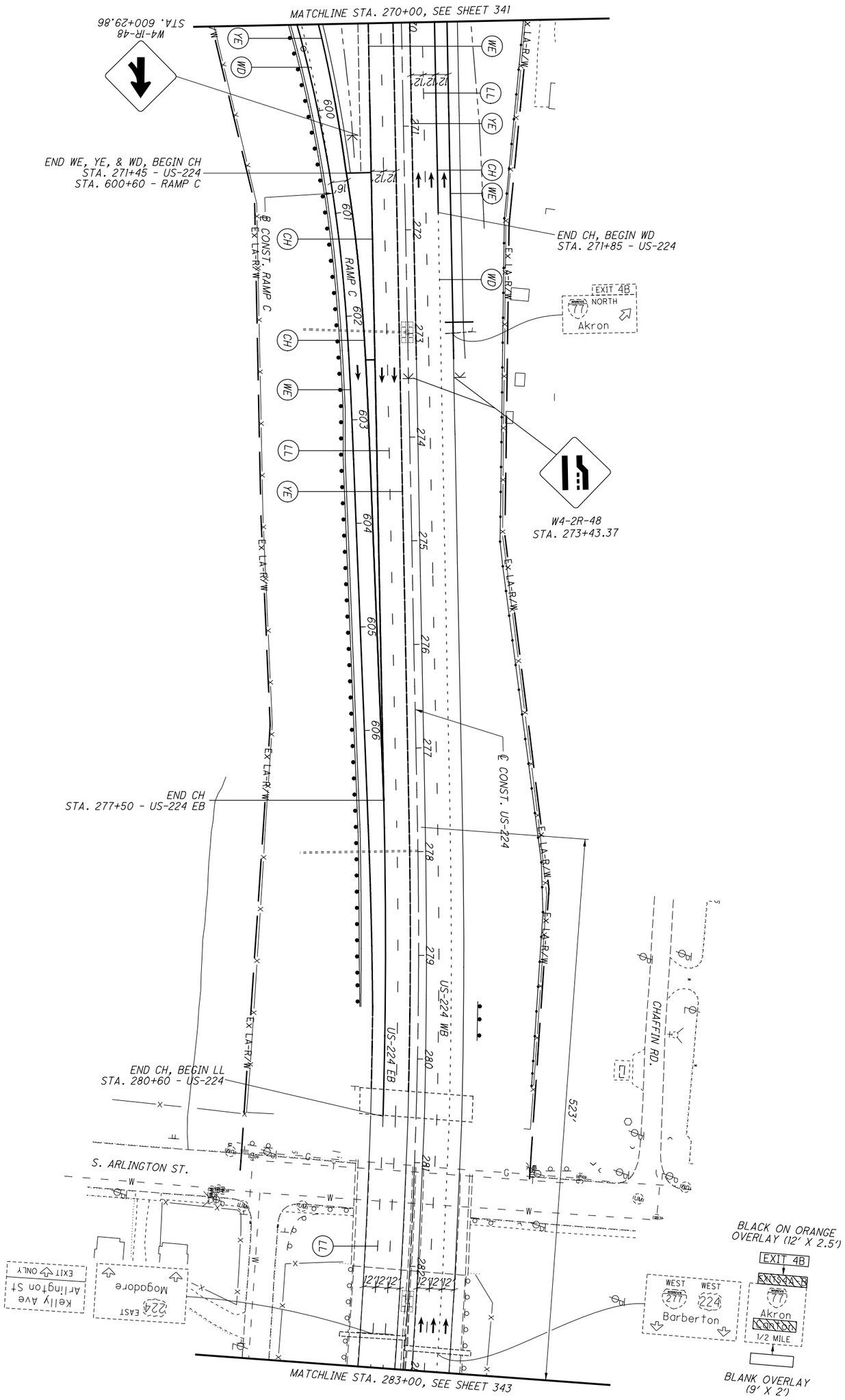


| | | | | |
|---|---|---|---|---|
| 342 / 1288 | SUM-77/277/224<br>VARIOUS | MAINTENANCE OF TRAFFIC PLAN - PHASE 3<br>US-224 - STA. 270+00 TO STA. 283+00 | CALCULATED .<br>CHECKED . | 0 50<br>25 100<br>HORIZONTAL SCALE IN FEET |

NOTES:

1. SEE SHEET 128 FOR MOT LEGEND AND DRUM SPACING CHART.
2. ALL PAVEMENT MARKINGS THAT ARE EXISTING OR PLACED IN A PREVIOUS PHASE WILL REMAIN UNLESS OTHERWISE INDICATED.
3. SEE SHEETS 316-317 FOR TYPICAL SECTIONS.

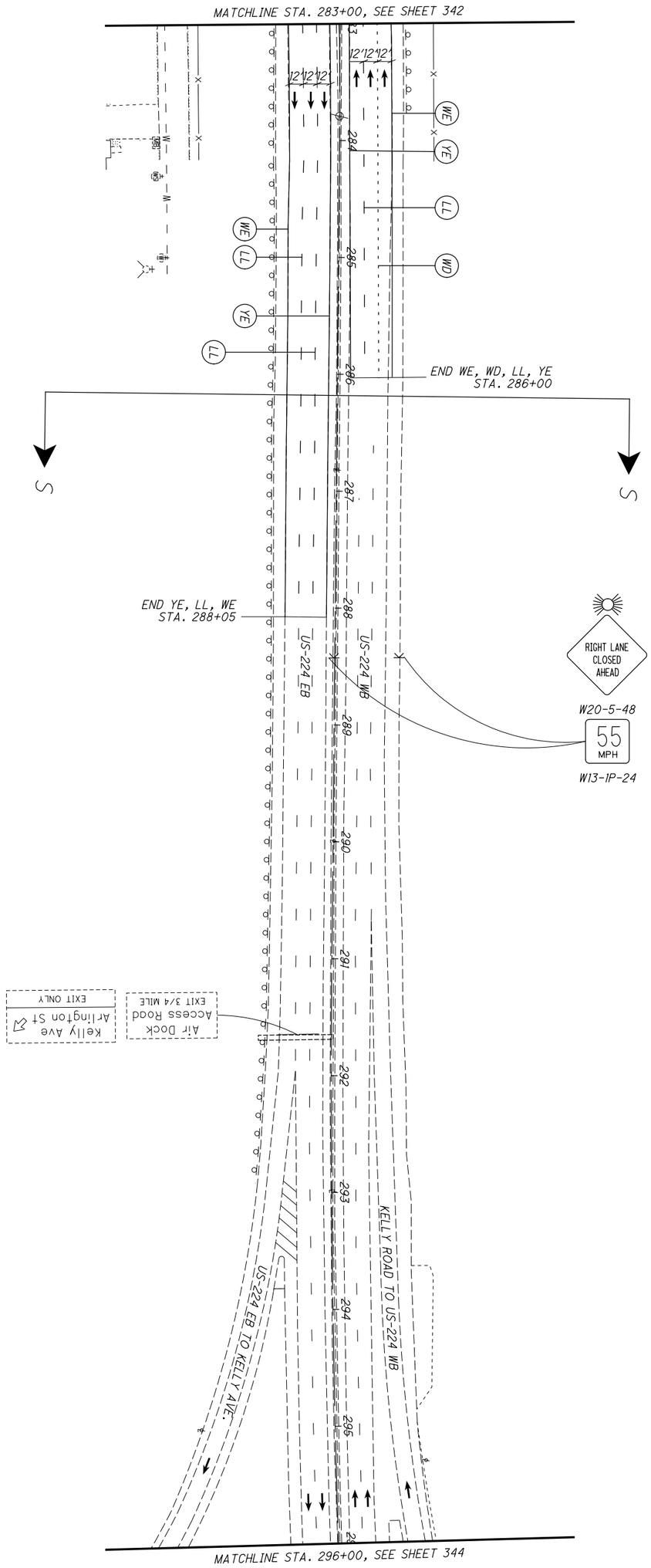


| | | | | |
|---|---|---|---|---|
| 343 / 1288 | SUM-77/277/224<br>VARIOUS | MAINTENANCE OF TRAFFIC PLAN - PHASE 3<br>US-224 - STA. 283+00 TO STA. 296+00 | CALCULATED .<br>CHECKED . | 0 50<br>25 100<br>HORIZONTAL SCALE IN FEET |

NOTES:

1. SEE SHEET 128 FOR MOT LEGEND AND DRUM SPACING CHART.

2. ALL PAVEMENT MARKINGS THAT ARE EXISTING OR PLACED IN A PREVIOUS PHASE WILL REMAIN UNLESS OTHERWISE INDICATED.

HORIZONTAL SCALE IN FEET
0 25 50 100

CALCULATED .
CHECKED .

MAINTENANCE OF TRAFFIC PLAN - PHASE 3
US-224 - STA. 296+00 TO EAST LIMITS

SUM-77/277/224
VARIOUS

344
1288

N:\03\60\06744-08\06002_SUM-76-10.95\Design\MOT\Sheets\06002_MP349.dgn Sheet 1/31/2021 5:53:16 PM jrettig

NOTES:

1. SEE SHEET 128 FOR MOT LEGEND AND DRUM SPACING CHART.
2. ALL PAVEMENT MARKINGS THAT ARE EXISTING OR PLACED IN A PREVIOUS PHASE WILL REMAIN UNLESS OTHERWISE INDICATED.
3. SEE SHEETS 316-317 FOR TYPICAL SECTIONS.

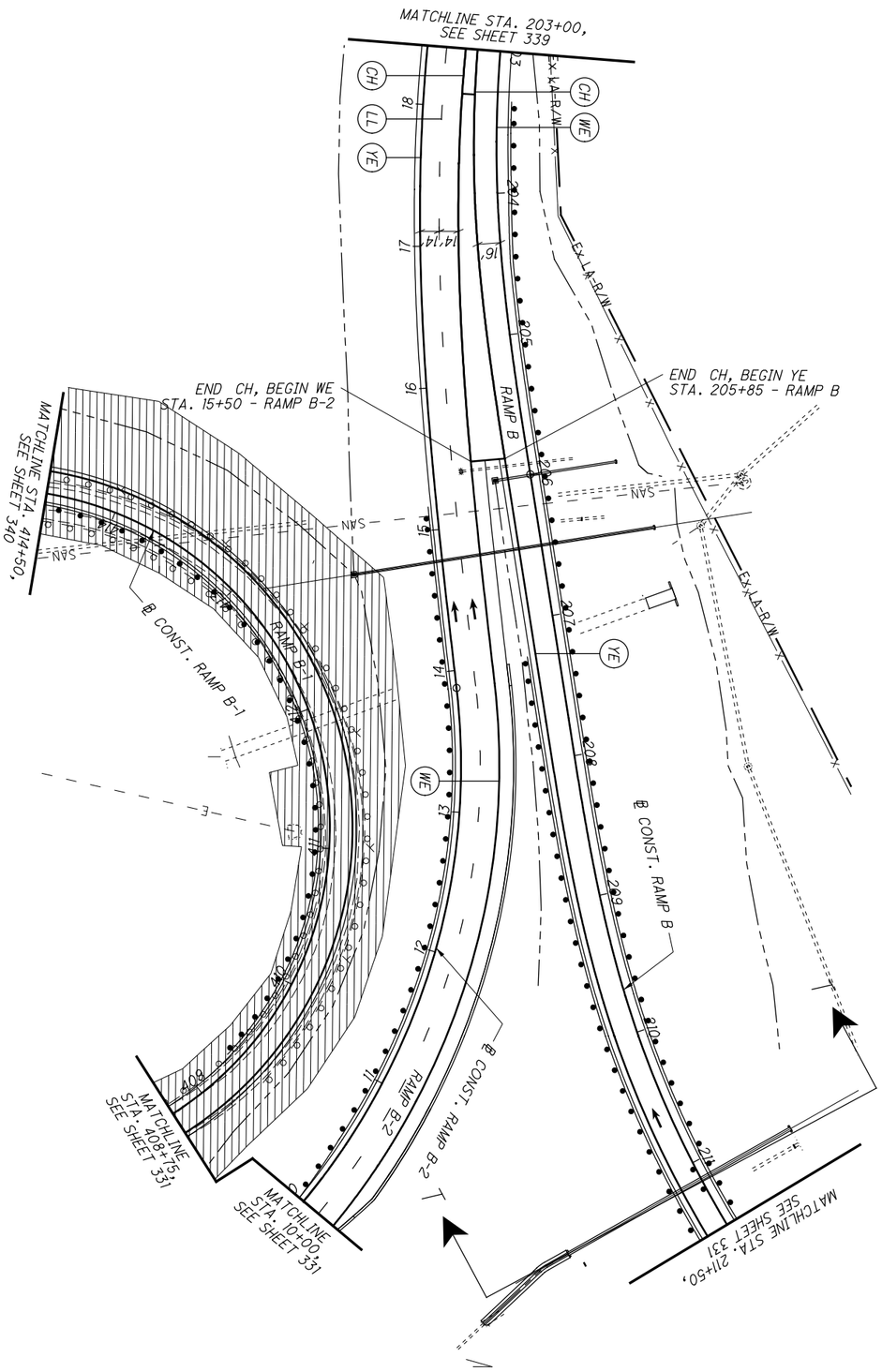


| | | | | |
|---|---|---|---|---|
| 345 / 1288 | SUM-77/277/224<br>VARIOUS | MAINTENANCE OF TRAFFIC PLAN - PHASE 3<br>RAMP B - STA. 203+00 TO STA. 211+50 | CALCULATED .<br>CHECKED . | 0 50<br>25 100<br>HORIZONTAL SCALE IN FEET |

NOTES:

1. SEE SHEET 128 FOR MOT LEGEND AND DRUM SPACING CHART.
2. ALL PAVEMENT MARKINGS THAT ARE EXISTING OR PLACED IN A PREVIOUS PHASE WILL REMAIN UNLESS OTHERWISE INDICATED.

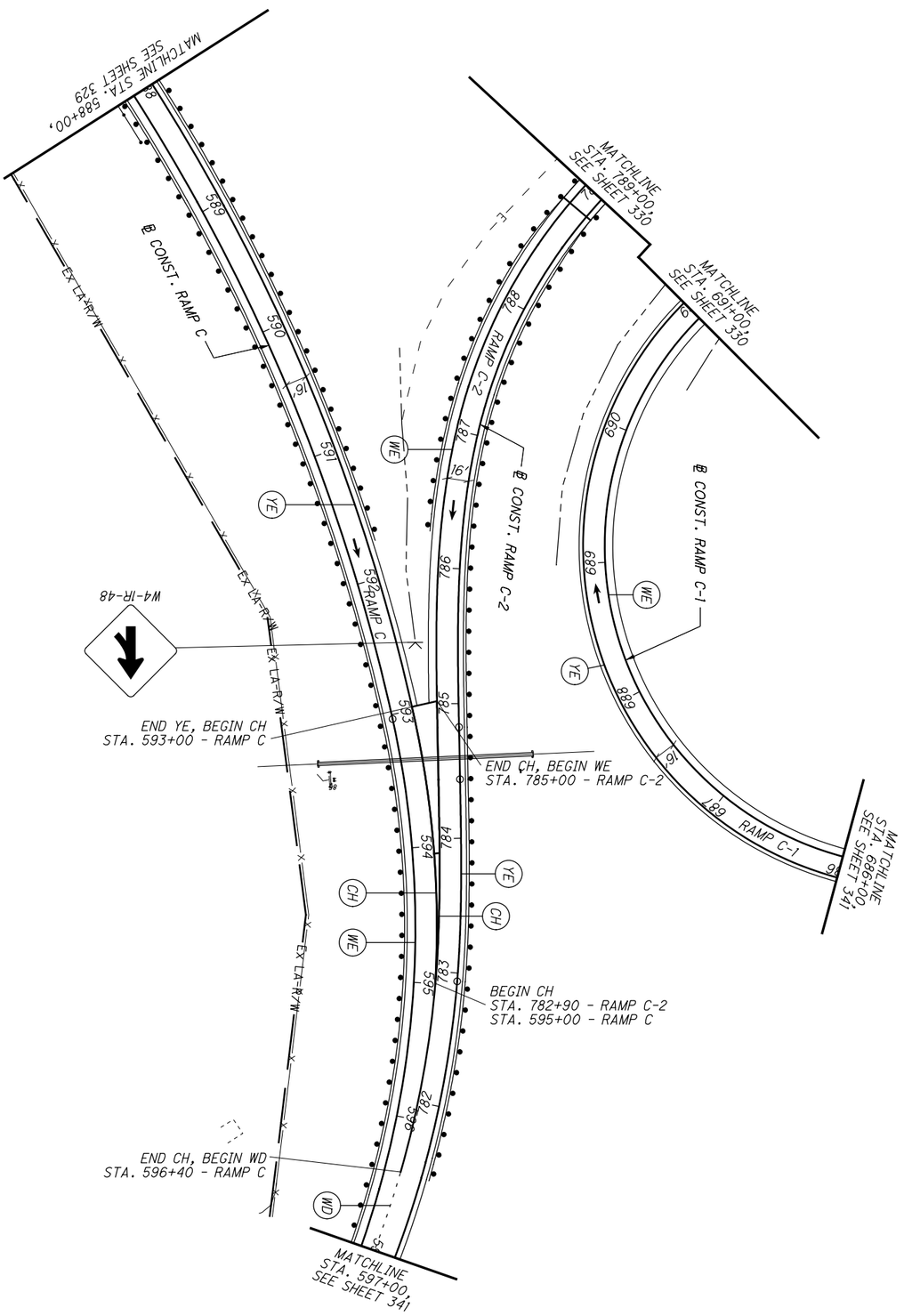


| | | | | |
|---|---|---|---|---|
| 346 / 1288 | SUM-77 / 277 / 224<br>VARIOUS | MAINTENANCE OF TRAFFIC PLAN - PHASE 3<br>RAMP C - STA. 588+00 TO STA. 597+00 | CALCULATED .<br>CHECKED . | 0 50<br>25 100<br>HORIZONTAL SCALE IN FEET |

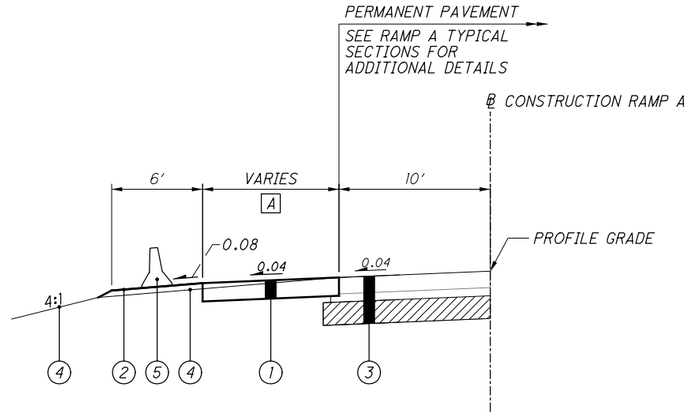


## RAMP A - TEMPORARY PAVEMENT SECTION

STA. 107+89.21 TO STA. 114+03.67

A 2.0′ FROM STA. 107+89.21 TO STA. 109+02.47

VARIES
2.00′ AT STA. 109+02.47 TO
4.26′ AT STA. 111+13.28

4.26′ AT STA. 111+13.28 TO
2.00′ AT STA. 113+24.08

2.0′ FROM STA. 113+24.08 TO STA. 114+03.67

LEGEND

(1) ITEM 615 - PAVEMENT FOR MAINTAINING TRAFFIC, CLASS A

(2) ITEM 659 - SEEDING AND MULCHING (TEMPORARY GRADING)

(3) PERMANENT PAVEMENT - SEE RAMP A TYPICAL SECTIONS FOR DETAILS

(4) PERMANENT GRADING - SEE CROSS SECTIONS FOR ADDITIONAL INFORMATION

(5) ITEM 622 - PORTABLE BARRIER, 32″

TYPICAL SECTIONS- RAMP A TEMPORARY PAVEMENT

SUM-77 / 277 / 224
VARIOUS

347
1288

N:\03\60\06744-08\106002_SUM-76-10.95\Design\MOT\Sheets\106002_MY701.dgn Sheet 1/31/2021 5:53:26 PM jrettig

| SEEDING END WIDTH | SEEDING SQ. YDS. |
|---|---|
| 9 | 50 |
| 9 | 47 |
| 9 | 47 |
| 9 | |
| *144 | |

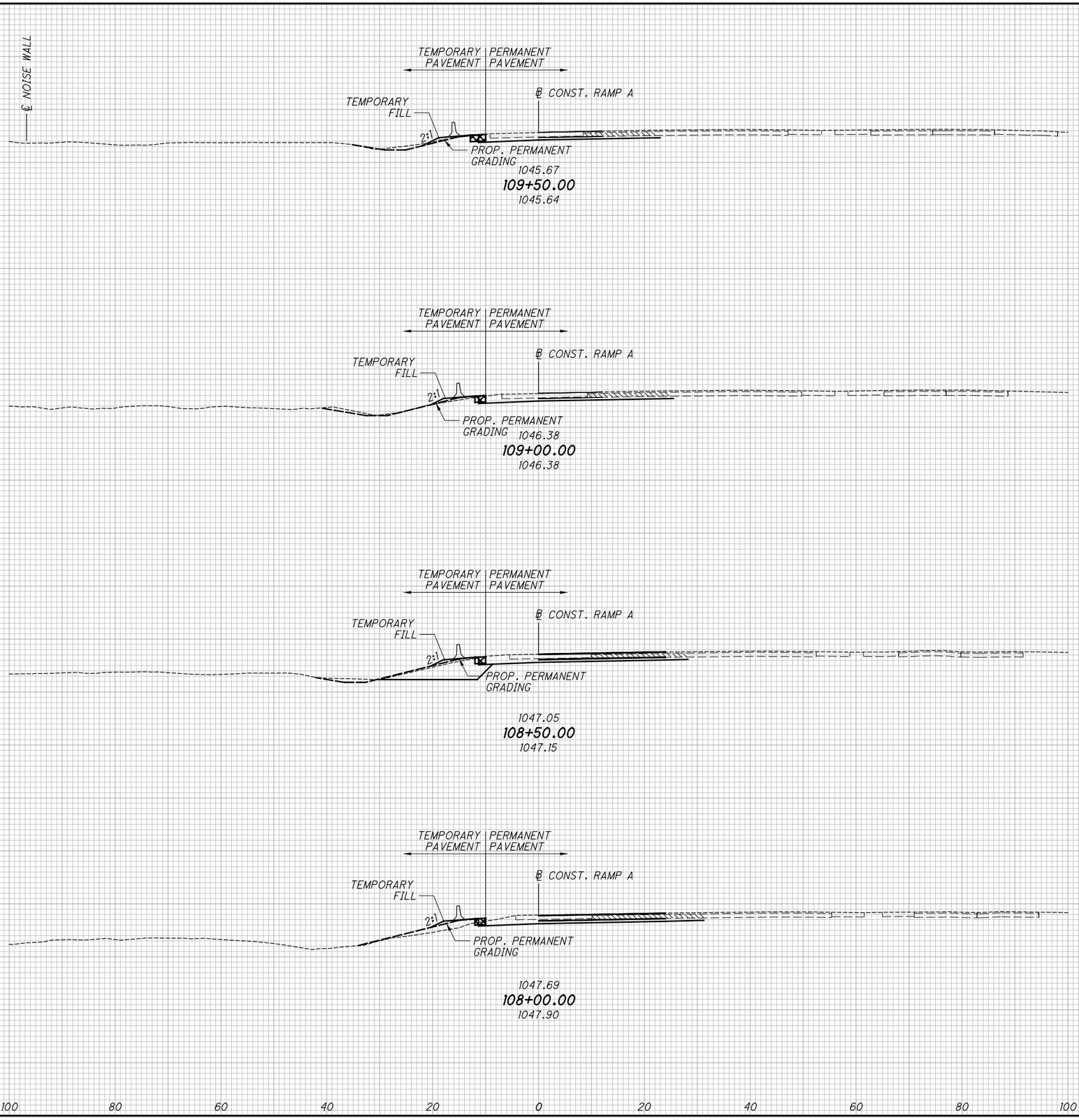


*FOR INFORMATION ONLY

| END AREA CUT | END AREA FILL | VOLUME CUT | VOLUME FILL |
|---|---|---|---|
| 2 | 2 | | |
| 1 | 2 | 3 | 4 |
| 1 | 2 | 2 | 4 |
| 0 | 2 | 1 | 4 |
| | | *6 | *12 |

CALCULATED KMC
CHECKED SSR

# CROSS SECTIONS RAMP A
## STA. 108+00.00 TO STA. 109+50.00

SUM-77 / 277 / 224
VARIOUS

348
1288

N:\03\60\06744-08\06002_SUM-76-10.95\Design\MOT\Sheets\06002_XM10L.dgn Design 1/31/2021 5:53:28 PM jrettig

| SEEDING END WIDTH | SEEDING SQ. YDS. | END AREA CUT | END AREA FILL | VOLUME CUT | VOLUME FILL |
|---|---|---|---|---|---|
| 9 | 55 | 4 | 0 | 6 | 0 |
| 11 | 58 | 3 | 0 | 6 | 0 |
| 10 | 57 | 3 | 0 | 6 | 1 |
| 10 | 54 | 3 | 1 | 5 | 3 |
| 40 | *224 | | | *23 | *4 |

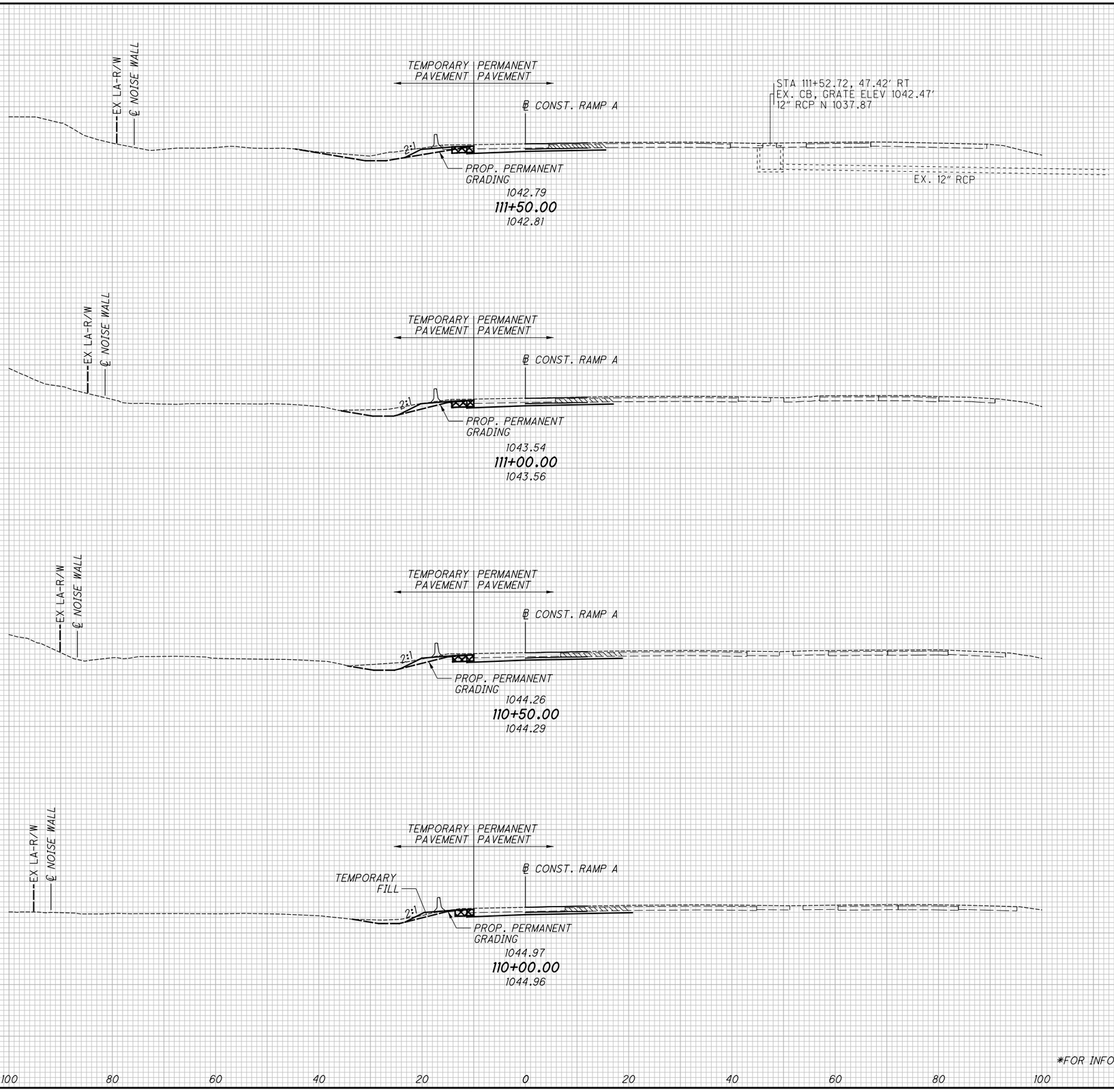


*FOR INFORMATION ONLY

CALCULATED KMC
CHECKED SSR

# CROSS SECTIONS RAMP A
## STA. 110+00.00 TO STA. 111+50.00

SUM-77 / 277 / 224
VARIOUS

349
1288

N:\03\60\06744-08\06002_SUM-76-10.95\Design\MOT\Sheets\06002_XM10L.dgn Design 1/31/2021 5:53:33 PM jrettig

| SEEDING END WIDTH | SEEDING SQ. YDS. |
|---|---|
| 8 | 47 |
| 9 | |
| 9 | 49 |
| 9 | 50 |
| 9 | 51 |
| *197 | |

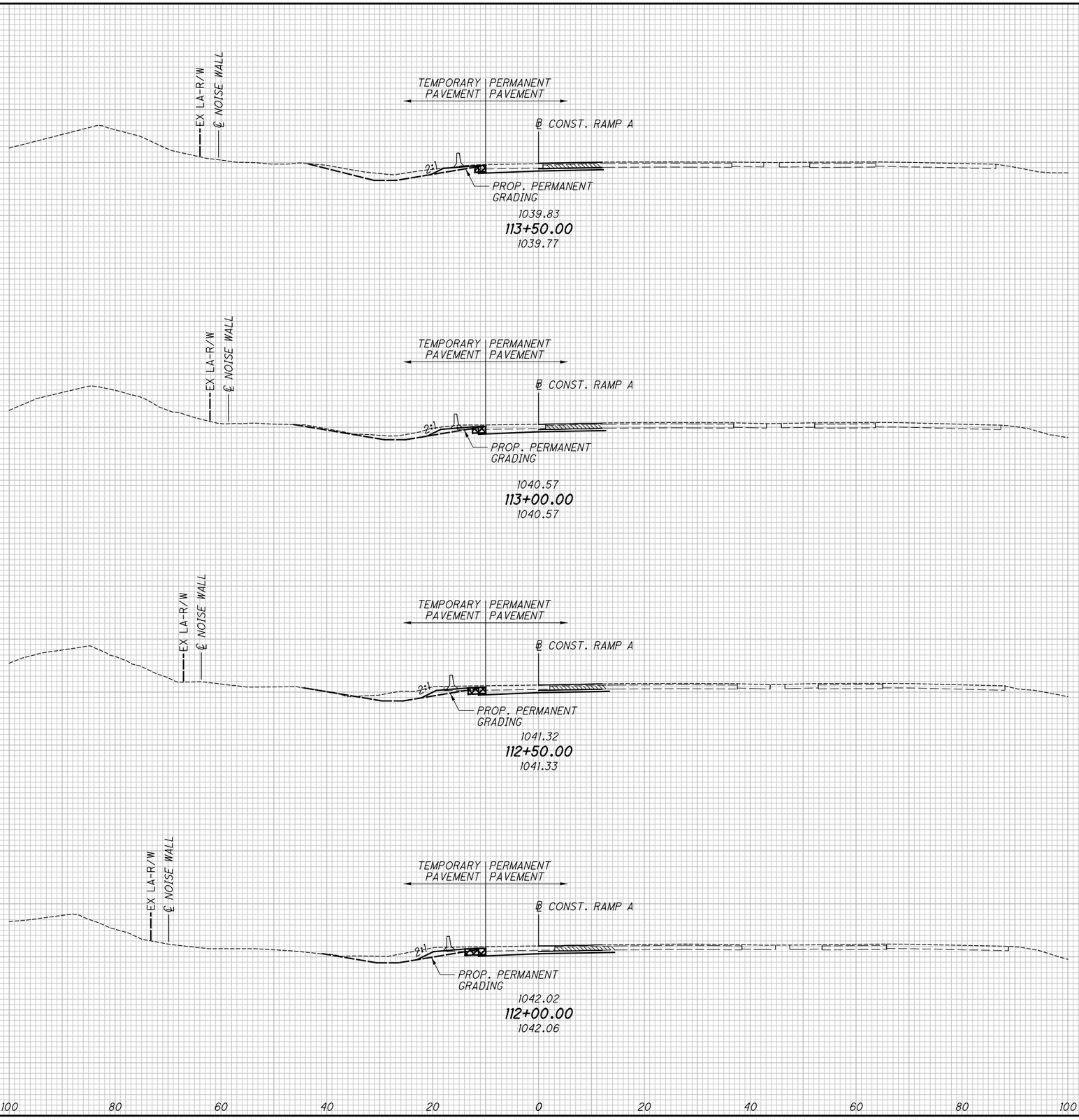


| END AREA CUT | END AREA FILL | VOLUME CUT | VOLUME FILL |
|---|---|---|---|
| 1 | 0 | | |
| | | 3 | 0 |
| 2 | 0 | | |
| 3 | 0 | | |
| | | 5 | 0 |
| 3 | 0 | | |
| | | 6 | 0 |
| 3 | 0 | | |
| | | 6 | 0 |
| *20 | *0 | | |

*FOR INFORMATION ONLY

CALCULATED KMC
CHECKED SSR

CROSS SECTIONS RAMP A
STA. 112+00.00 TO STA. 113+50.00

SUM-77/277/224
VARIOUS

350
1288

N:\03\60\06744-08\06002_SUM-76-10.95\Design\MOT\Sheets\06002_XM10L.dgn Design 1/31/2021 5:53:36 PM jrettig

N:\03\60\06744-08\106002_SUM-76-10.95\Design\MOT\Sheets\106002_XM101.dgn Design 1/31/2021 5:53:38 PM jrettig

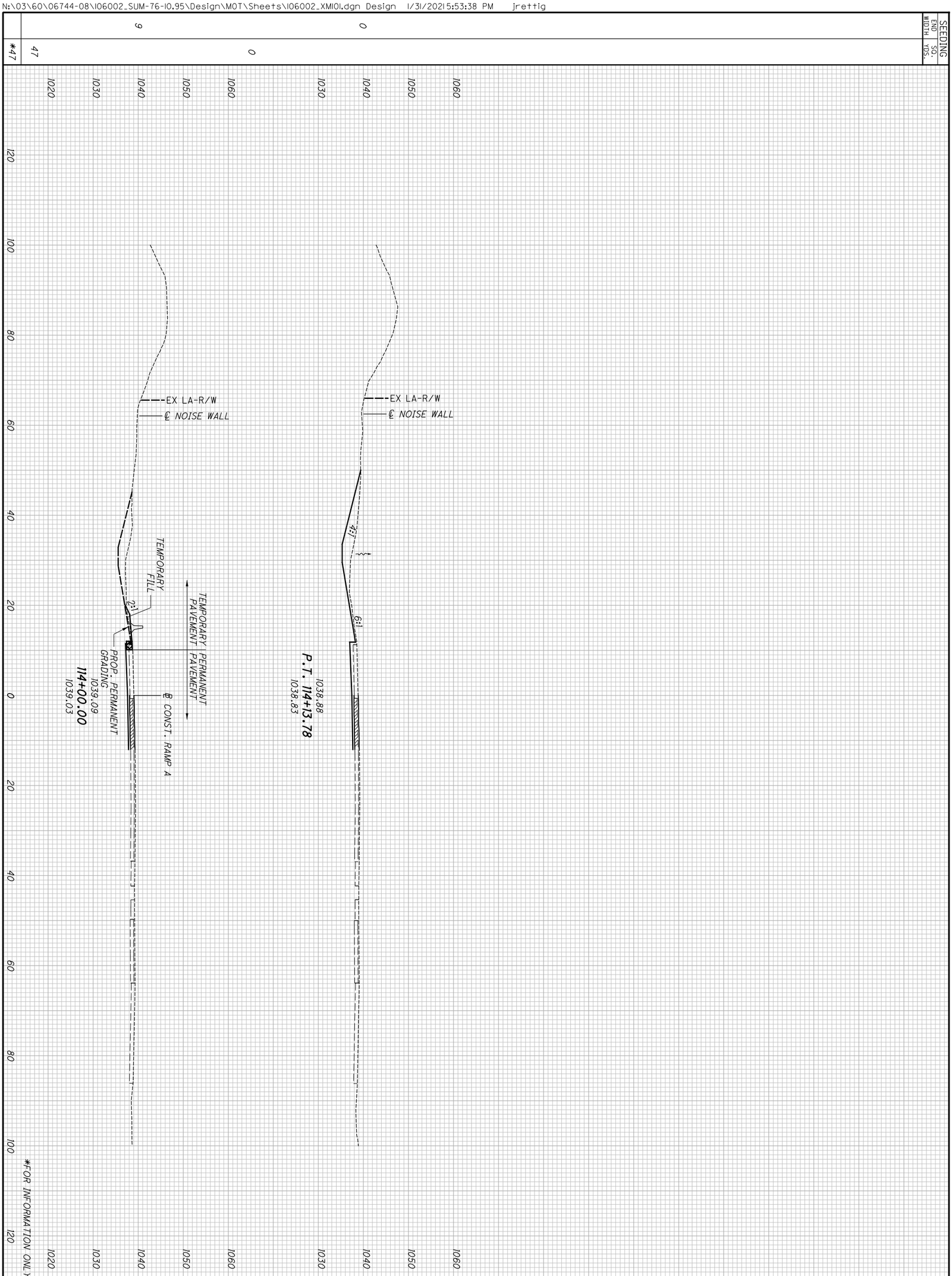


| SEEDING | | END AREA | | VOLUME | |
|---|---|---|---|---|---|
| END WIDTH | SQ. YDS. | CUT | FILL | CUT | FILL |
| *47 | 47 | 0 | 0 | 0 | 0 |
| | | 1 | 2 | 2 | 2 |

| | | |
|---|---|---|
| 351 / 1288 | **SUM-77 / 277 / 224**<br>**VARIOUS** | **CROSS SECTIONS RAMP A**<br>**STA. 114+00.00 TO STA. 114+13.78** |

CALCULATED KMC
CHECKED SSR

N:\03\60\06744-08\I06002_SUM-76-I0.95\Design\MOT\Sheets\I06002_MP382.dgn Sheet 1/31/2021 5:54:02 PM jrettig

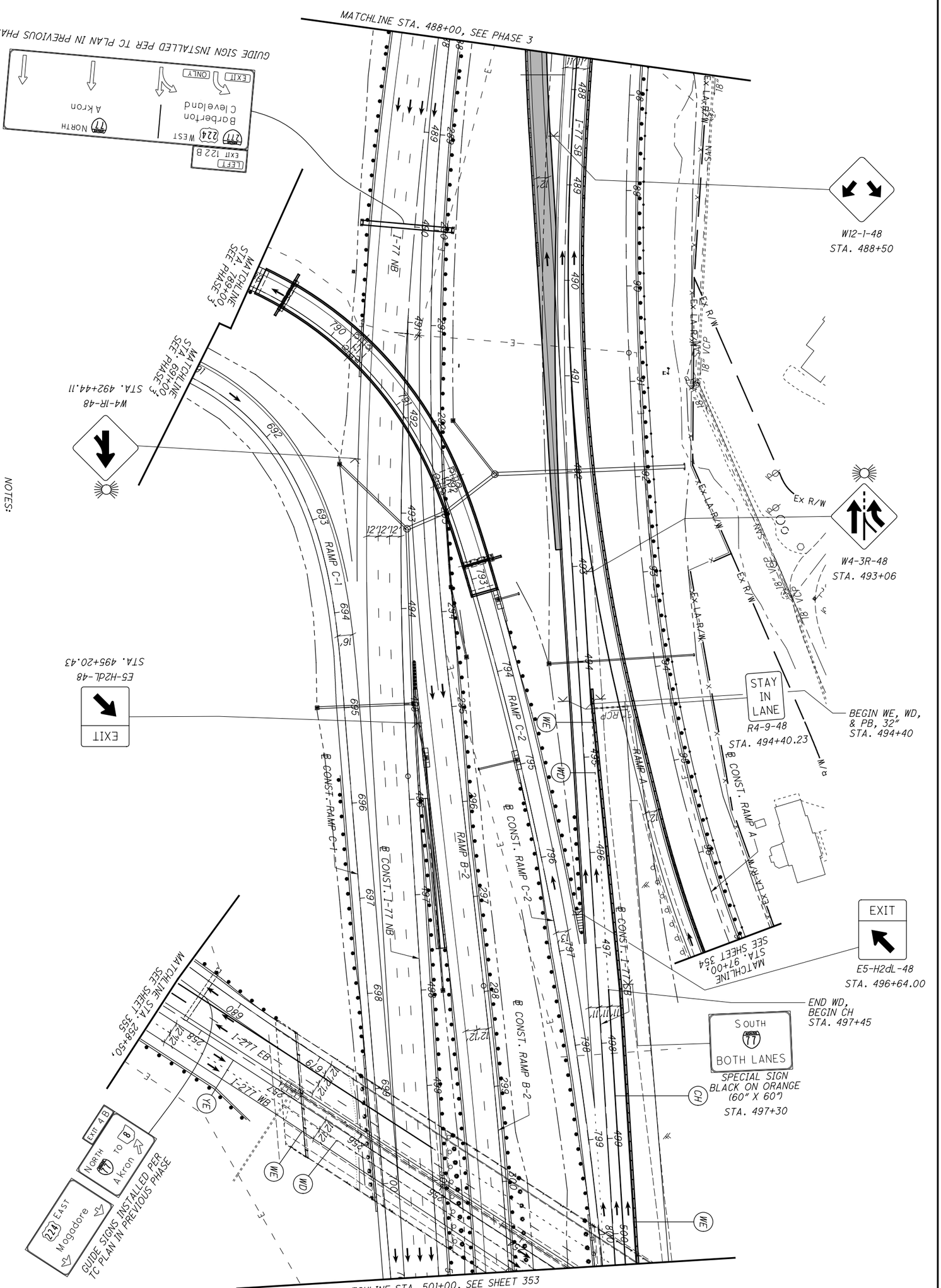


NOTES:

1. SEE SHEET I28 FOR MOT LEGEND AND DRUM SPACING CHART.
2. ALL PAVEMENT MARKINGS THAT ARE EXISTING OR PLACED IN A PREVIOUS PHASE WILL REMAIN UNLESS OTHERWISE INDICATED.

| | | | |
|---|---|---|---|
| 352 / 1288 | SUM-77 / 277 / 224<br>VARIOUS | MAINTENANCE OF TRAFFIC PLAN - PHASE 3A<br>I-77 - STA. 488+00 TO STA. 501+00 | CALCULATED .<br>CHECKED . |

0 50 100
25
HORIZONTAL SCALE IN FEET

N:\03\60\06744-08\106002_SUM-76-10.95\Design\MOT\Sheets\106002_MP383.dgn Sheet 1/31/2021 5:54:09 PM jrettig

NOTES:

1. SEE SHEET 128 FOR MOT LEGEND AND DRUM SPACING CHART.
2. ALL PAVEMENT MARKINGS THAT ARE EXISTING OR PLACED IN A PREVIOUS PHASE WILL REMAIN UNLESS OTHERWISE INDICATED.

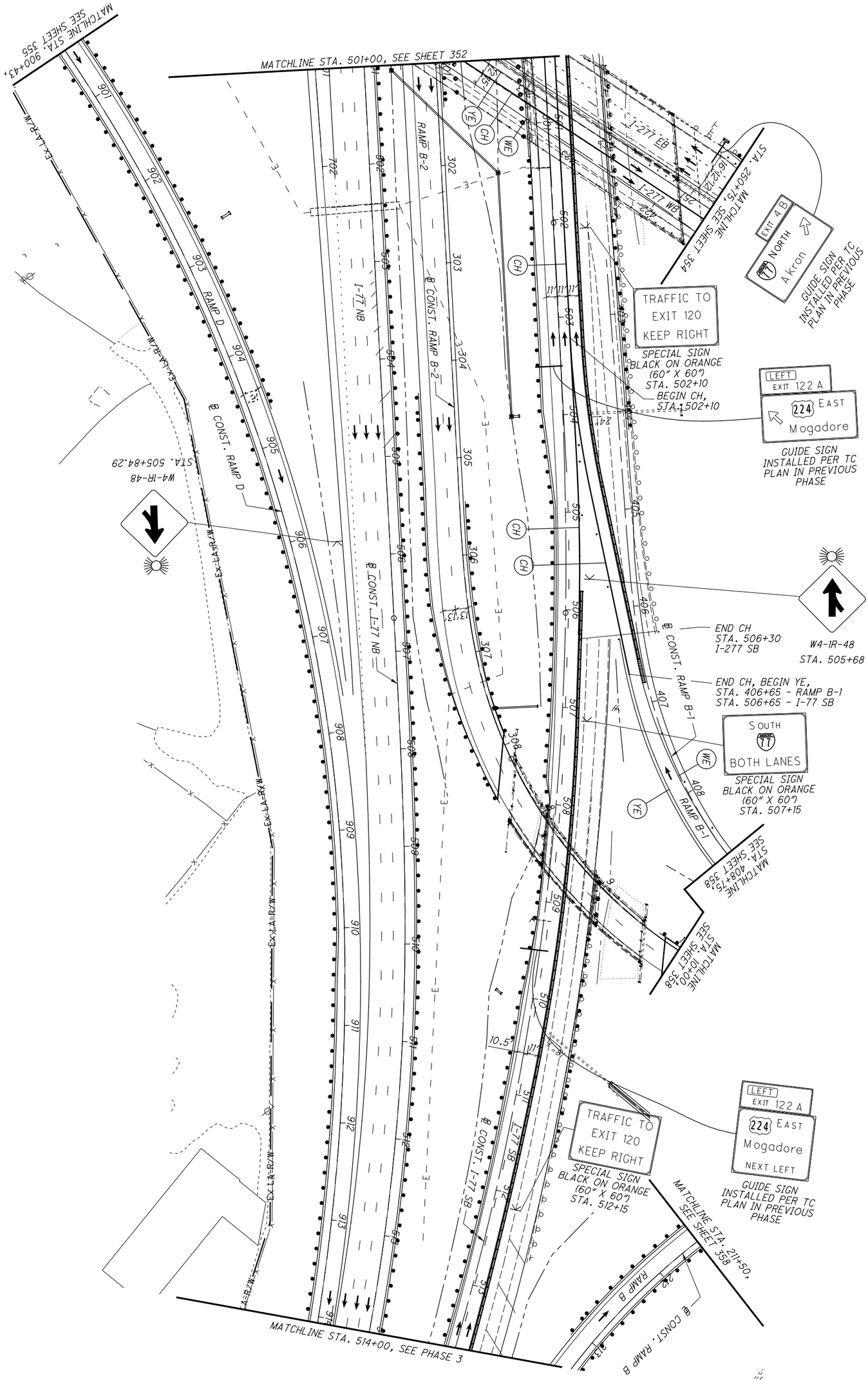


| | | | | |
|---|---|---|---|---|
| 353 / 1288 | SUM-77 / 277 / 224<br>VARIOUS | MAINTENANCE OF TRAFFIC PLAN - PHASE 3A<br>I-77 - STA. 501+00 TO STA. 514+00 | CALCULATED .<br>CHECKED . | 0 50<br>25 100<br>HORIZONTAL SCALE IN FEET |

N:\03\60\06744-08\106002_SUM-76-10.95\Design\MOT\Sheets\106002_MP392.dgn Sheet 1/31/2021 5:54:14 PM jrettig

NOTES:

1. SEE SHEET 128 FOR MOT LEGEND AND DRUM SPACING CHART.
2. ALL PAVEMENT MARKINGS THAT ARE EXISTING OR PLACED IN A PREVIOUS PHASE WILL REMAIN UNLESS OTHERWISE INDICATED.

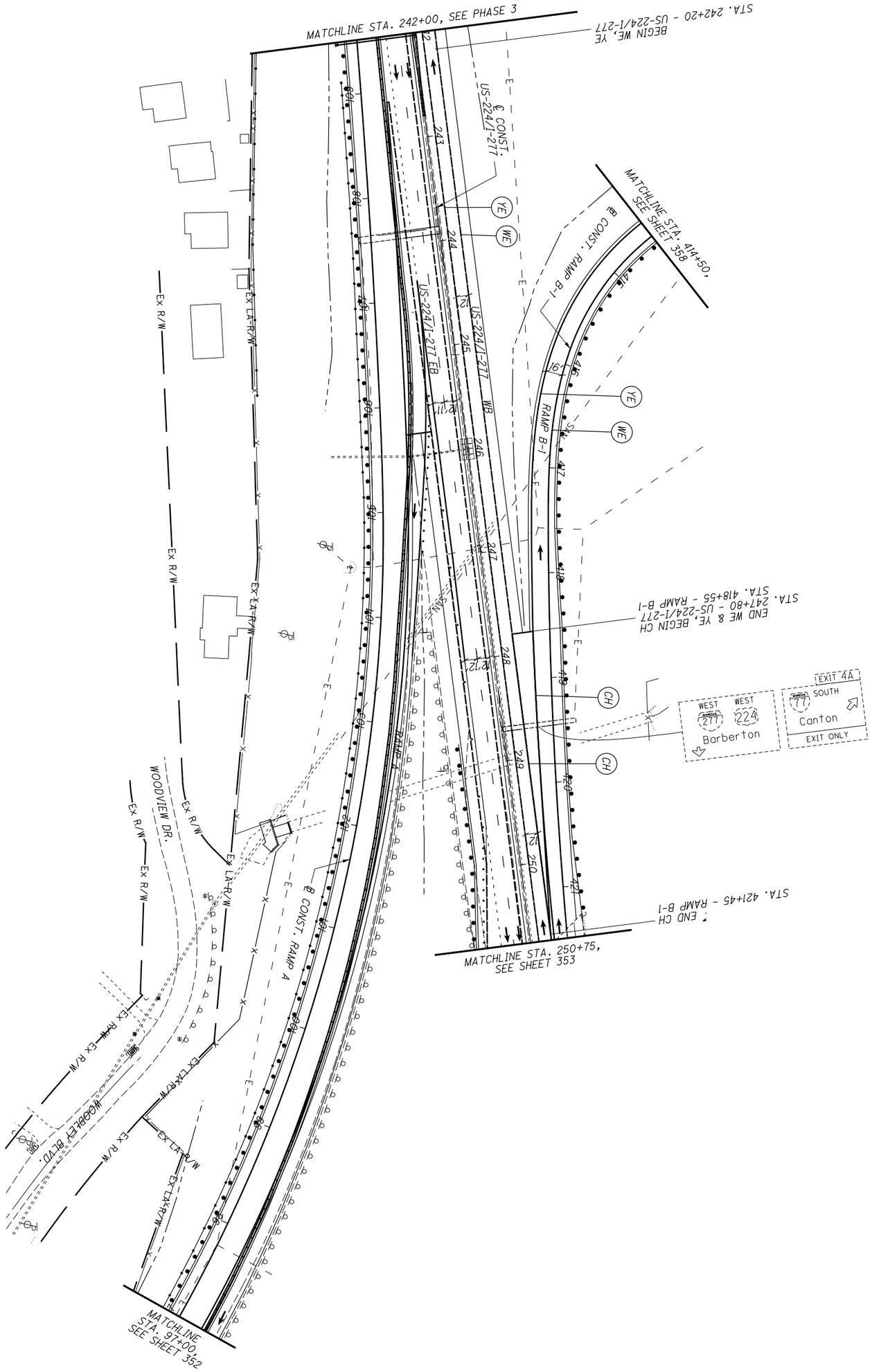


| | | | | |
|---|---|---|---|---|
| 354 / 1288 | SUM-77/277/224<br>VARIOUS | MAINTENANCE OF TRAFFIC PLAN - PHASE 3A<br>US-224/I-277 - STA. 242+00 TO STA. 250+75 | CALCULATED .<br>CHECKED . | 0 50<br>25 100<br>HORIZONTAL SCALE IN FEET |

N:\03\60\06744-08\106002_SUM-76-10.95\Design\MOT\Sheets\106002_MP393.dgn Sheet 1/31/2021 5:54:17 PM jrettig

NOTES:

1. SEE SHEET 128 FOR MOT LEGEND AND DRUM SPACING CHART.
2. ALL PAVEMENT MARKINGS THAT ARE EXISTING OR PLACED IN A PREVIOUS PHASE WILL REMAIN UNLESS OTHERWISE INDICATED.

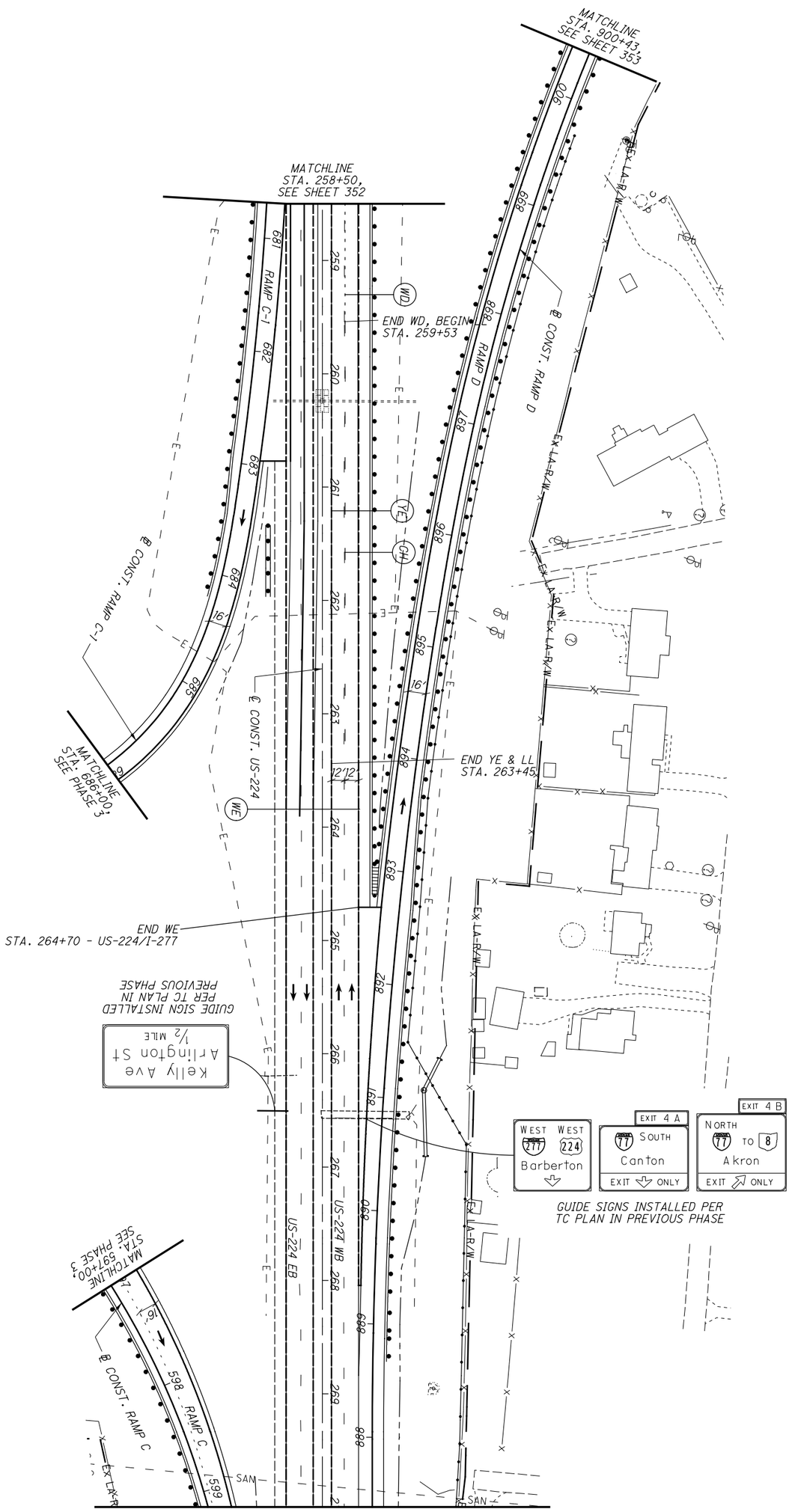


| | | | | |
|---|---|---|---|---|
| 355 / 1288 | SUM-77 / 277 / 224<br>VARIOUS | MAINTENANCE OF TRAFFIC PLAN - PHASE 3A<br>US-224 - STA. 258+50 TO STA. 270+00 | CALCULATED .<br>CHECKED . | 0 50<br>25 100<br>HORIZONTAL SCALE IN FEET |

NOTES:

1. SEE SHEET 128 FOR MOT LEGEND AND DRUM SPACING CHART.

2. ALL PAVEMENT MARKINGS THAT ARE EXISTING OR PLACED IN A PREVIOUS PHASE WILL REMAIN UNLESS OTHERWISE INDICATED.

HORIZONTAL SCALE IN FEET
0 25 50 100

CALCULATED .
CHECKED .

# MAINTENANCE OF TRAFFIC PLAN - PHASE 3A
## US-224 - STA. 270+00 TO STA. 283+00

SUM-77/277/224
VARIOUS

356
1288

N:\03\60\06744-08\06002_SUM-76-10.95\Design\MOT\Sheets\06002_MP394.dgn Sheet 2/2/2021 11:25:51 AM jrettig

N:\03\60\06744-08\I06002_SUM-76-I0.95\Design\MOT\Sheets\I06002_MP395.dgn Sheet 1/31/2021 5:54:23 PM jrettig

NOTES:

1. SEE SHEET 128 FOR MOT LEGEND AND DRUM SPACING CHART.
2. ALL PAVEMENT MARKINGS THAT ARE EXISTING OR PLACED IN A PREVIOUS PHASE WILL REMAIN UNLESS OTHERWISE INDICATED.

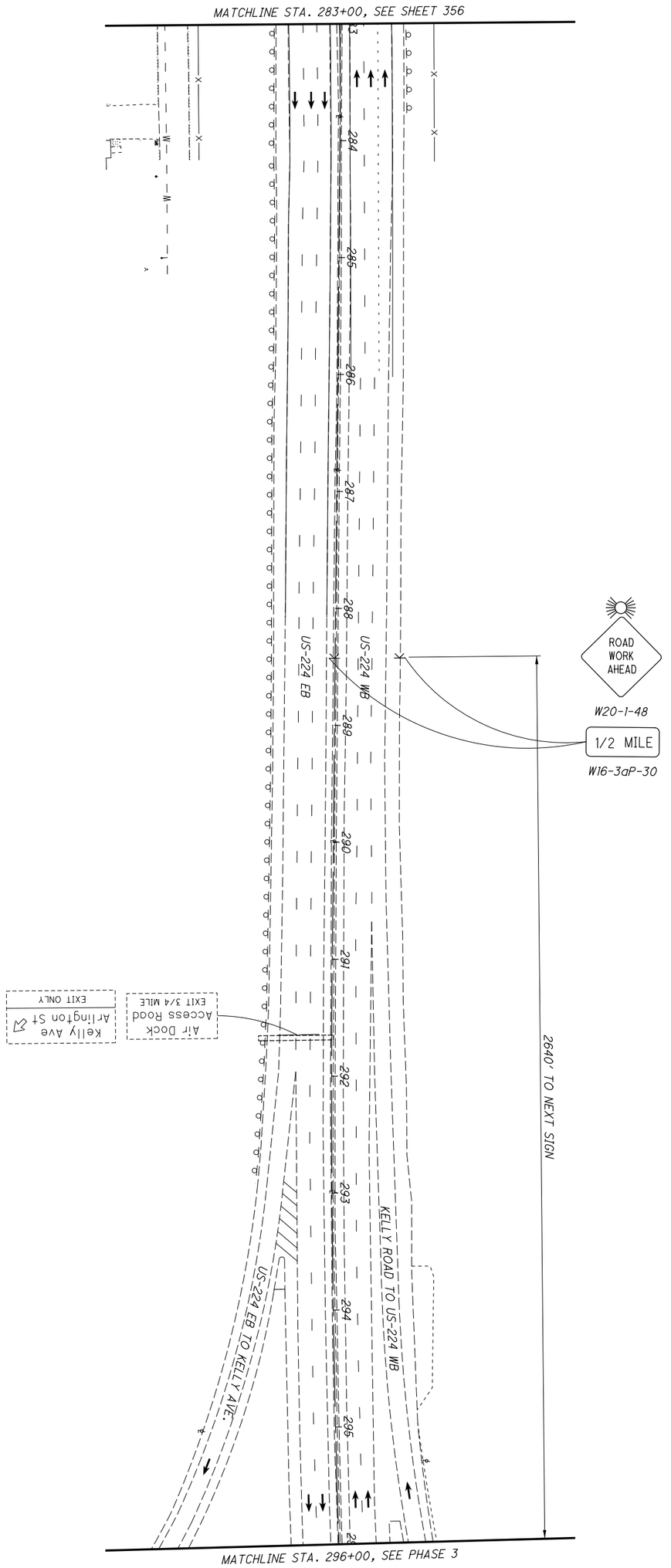


| | | | | |
|---|---|---|---|---|
| 357 / 1288 | SUM-77/277/224<br>VARIOUS | MAINTENANCE OF TRAFFIC PLAN - PHASE 3A<br>US-224 - STA. 283+00 TO STA. 296+00 | CALCULATED .<br>CHECKED . | 0 50<br>25 100<br>HORIZONTAL SCALE IN FEET |

N:\03\60\06744-08\I06002_SUM-76-10.95\Design\MOT\Sheets\I06002_MP397.dgn Sheet 1/31/2021 5:54:27 PM jrettig

NOTES:

1. SEE SHEET 128 FOR MOT LEGEND AND DRUM SPACING CHART.
2. ALL PAVEMENT MARKINGS THAT ARE EXISTING OR PLACED IN A PREVIOUS PHASE WILL REMAIN UNLESS OTHERWISE INDICATED.

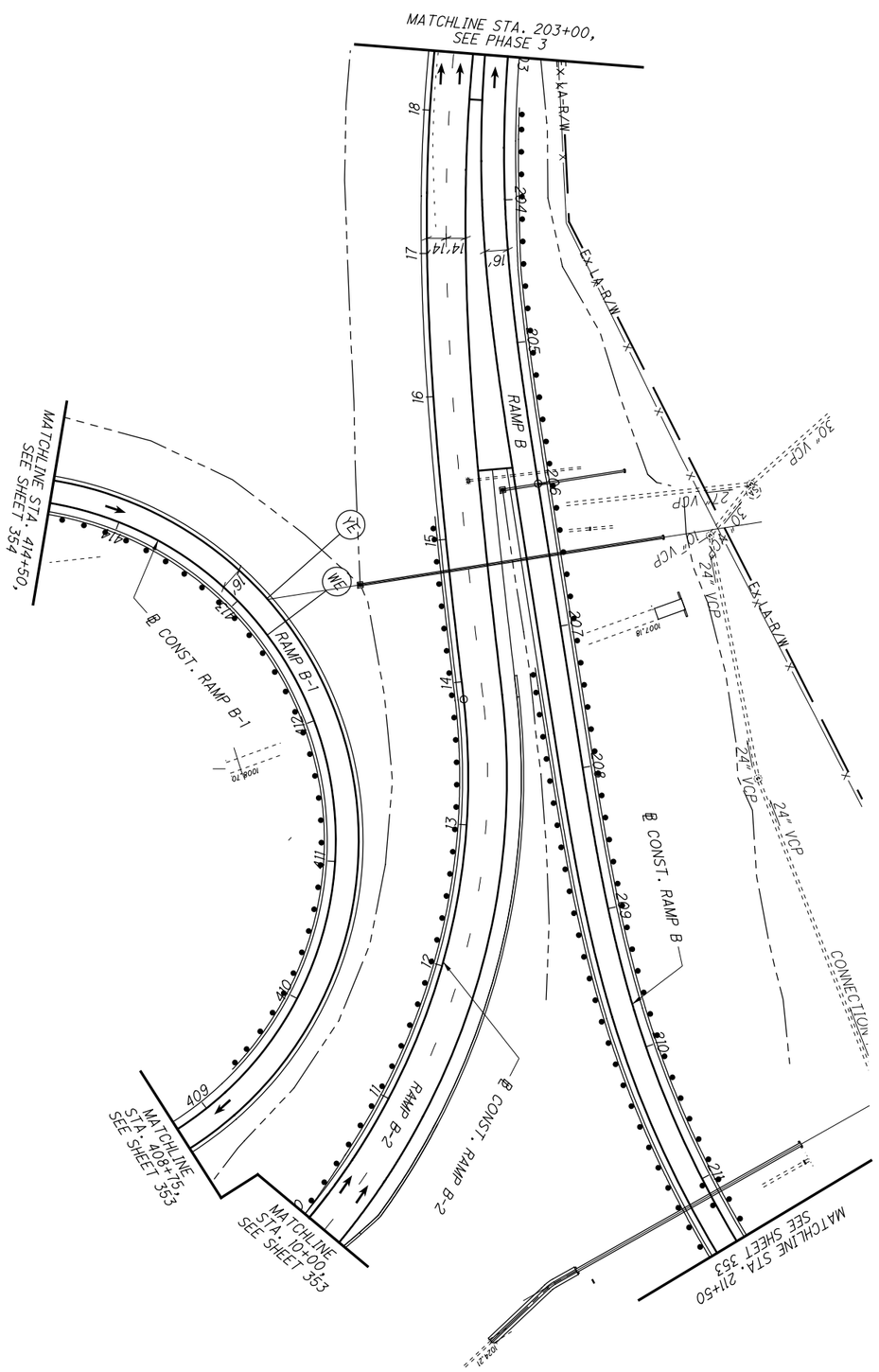


| | | | | |
|---|---|---|---|---|
| 358 / 1288 | SUM-77 / 277 / 224<br>VARIOUS | MAINTENANCE OF TRAFFIC PLAN - PHASE 3A<br>RAMP B - STA. 203+00 TO STA. 211+50 | CALCULATED .<br>CHECKED . | 0 50<br>25 100<br>HORIZONTAL SCALE IN FEET |

N:\03\60\06744-08\I06002_SUM-76-I0.95\Design\MOT\Sheets\I06002_MP425.dgn Sheet 1/31/2021 5:54:50 PM jrettig

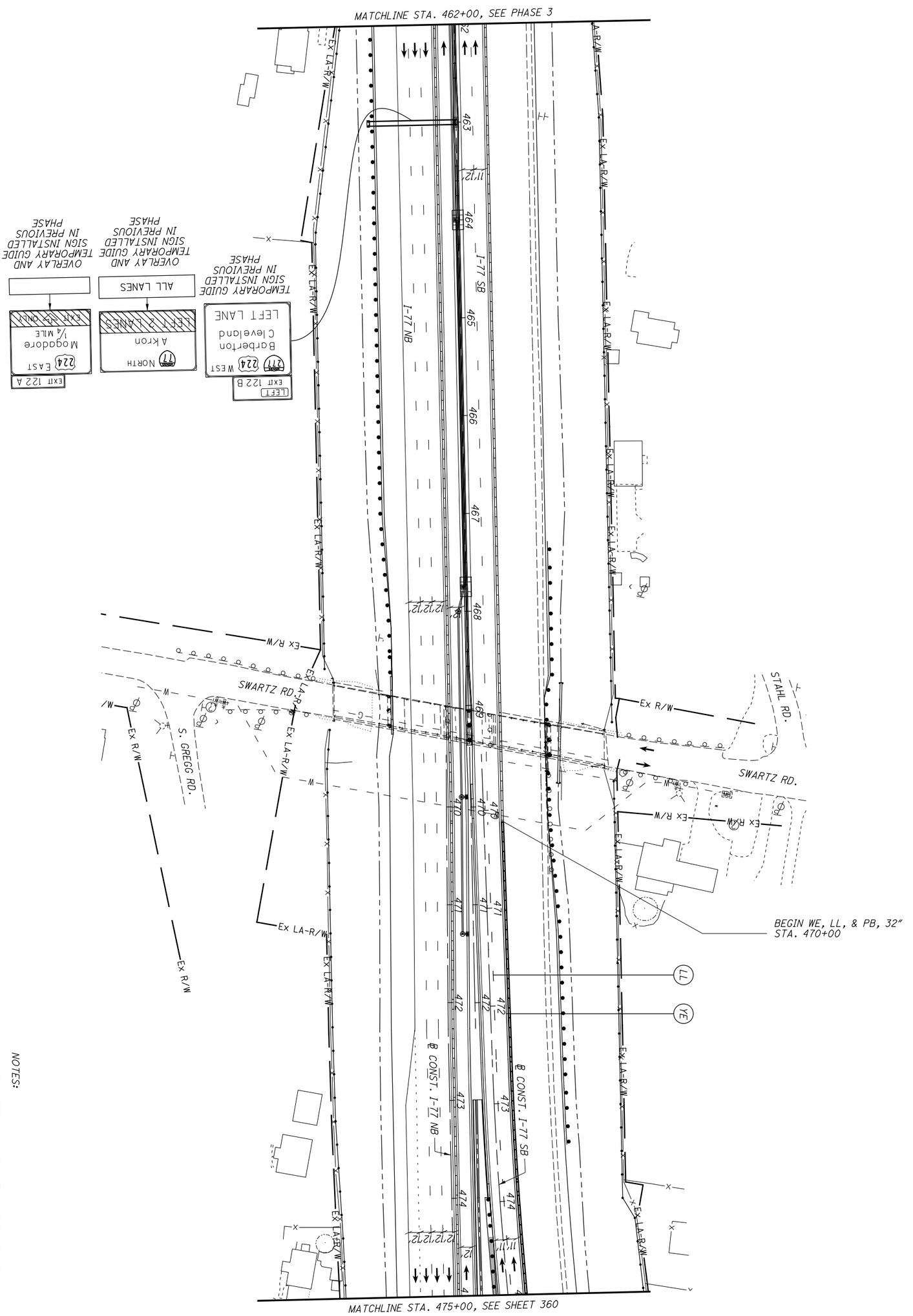


NOTES:

1. SEE SHEET 128 FOR MOT LEGEND AND DRUM SPACING CHART.
2. ALL PAVEMENT MARKINGS THAT ARE EXISTING OR PLACED IN A PREVIOUS PHASE WILL REMAIN UNLESS OTHERWISE INDICATED.

| | | | | |
|---|---|---|---|---|
| 359 / 1288 | SUM-77 / 277 / 224<br>VARIOUS | MAINTENANCE OF TRAFFIC PLAN - PHASE 3B<br>I-77 - STA. 462+00 TO STA. 475+00 | CALCULATED .<br>CHECKED . | 0 50<br>25 100<br>HORIZONTAL SCALE IN FEET |

N:\03\60\06744-08\106002_SUM-76-10.95\Design\MOT\Sheets\106002_MP426.dgn Sheet 1/31/2021 5:54:57 PM jrettig

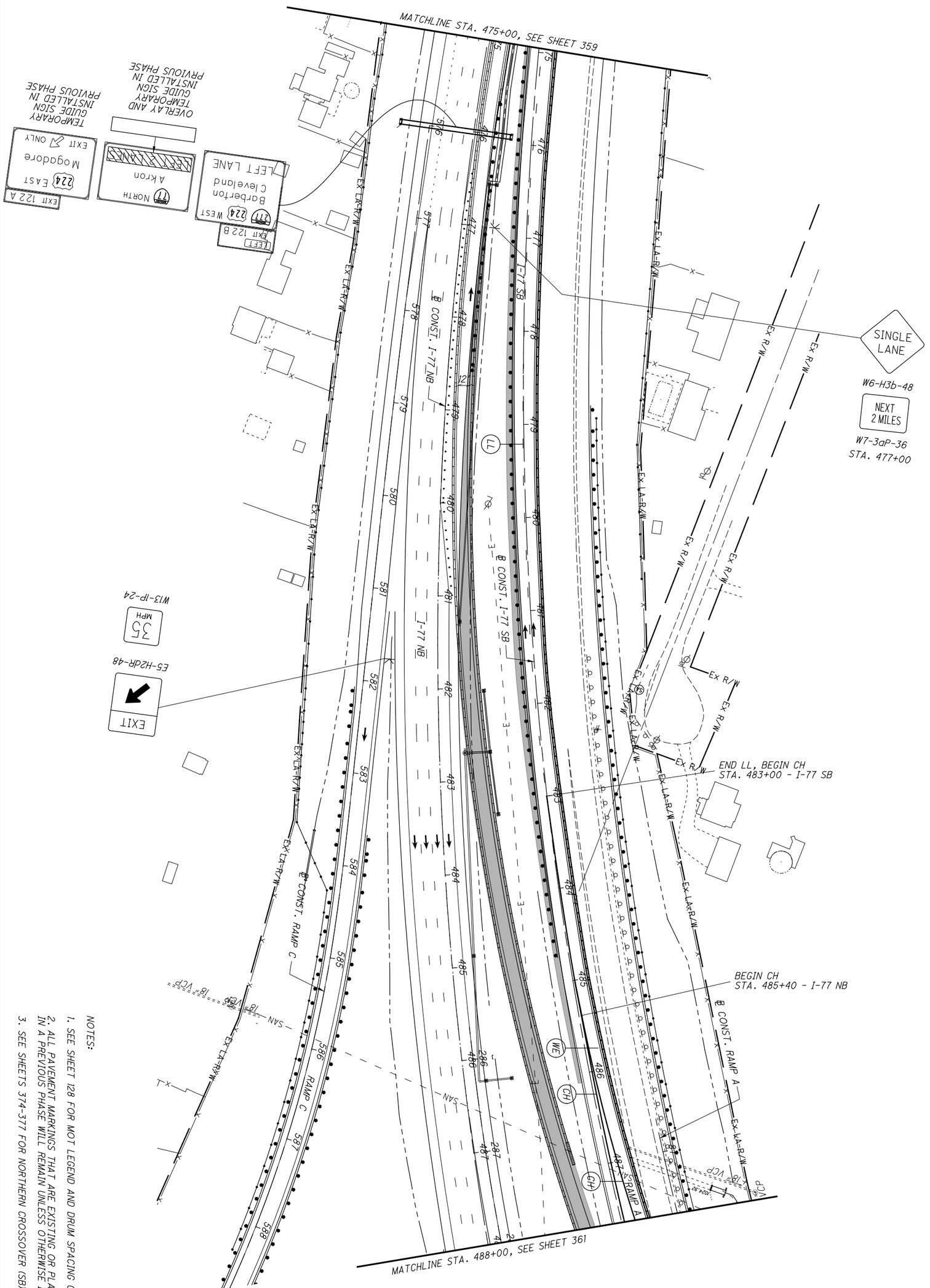


NOTES:

1. SEE SHEET 128 FOR MOT LEGEND AND DRUM SPACING CHART.
2. ALL PAVEMENT MARKINGS THAT ARE EXISTING OR PLACED IN A PREVIOUS PHASE WILL REMAIN UNLESS OTHERWISE INDICATED.
3. SEE SHEETS 374-377 FOR NORTHERN CROSSOVER (SB).

| | | | | |
|---|---|---|---|---|
| 360 / 1288 | SUM-77/277/224<br>VARIOUS | MAINTENANCE OF TRAFFIC PLAN - PHASE 3B<br>I-77 - STA. 475+00 TO STA. 488+00 | CALCULATED .<br>CHECKED . | 0 50<br>25 100<br>HORIZONTAL SCALE IN FEET |

N:\03\60\06744-08\I06002_SUM-76-I0.95\Design\MOT\Sheets\I06002_MP427.dgn Sheet 1/31/2021 5:55:00 PM jrettig

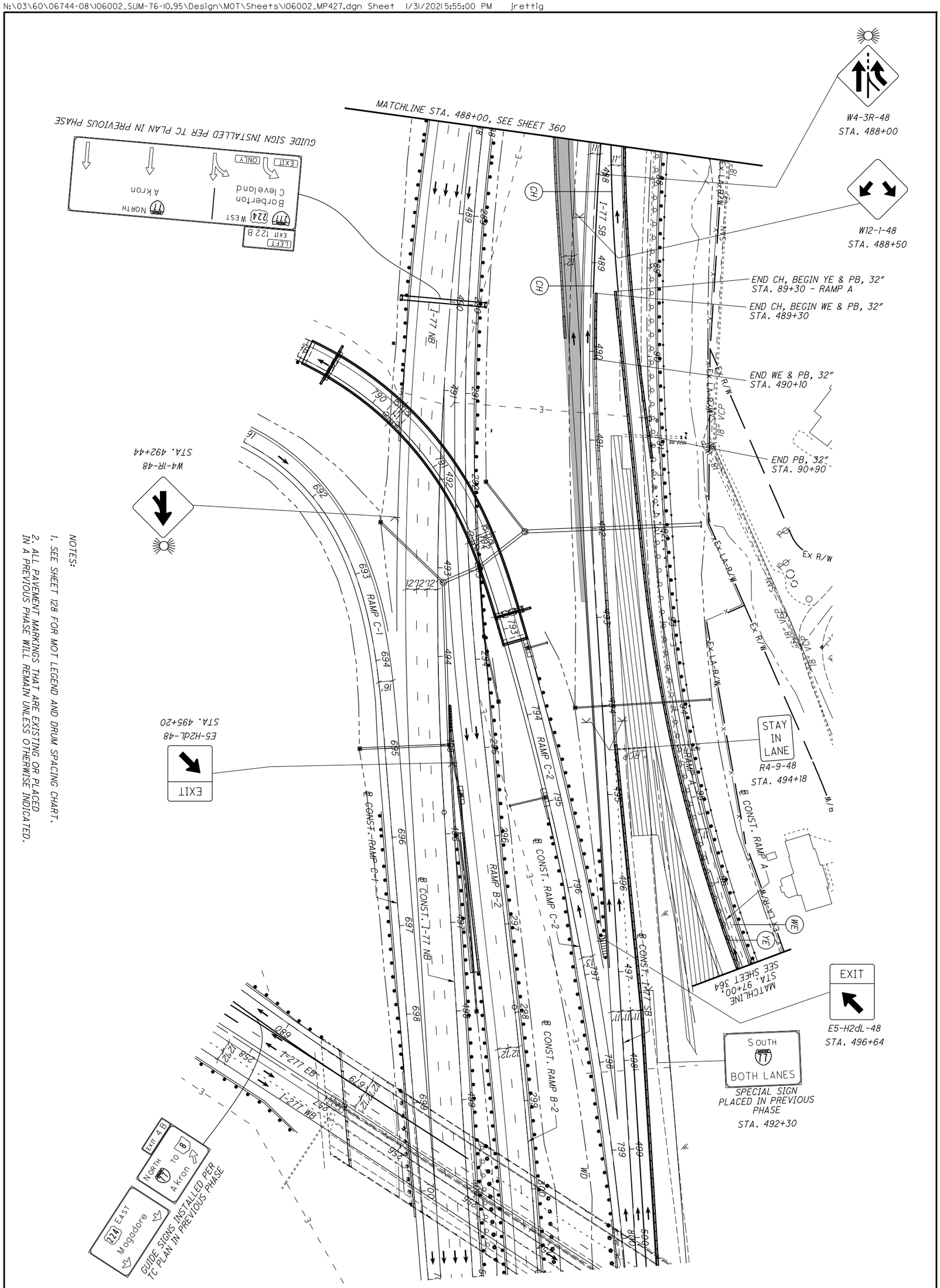


NOTES:

1. SEE SHEET 128 FOR MOT LEGEND AND DRUM SPACING CHART.
2. ALL PAVEMENT MARKINGS THAT ARE EXISTING OR PLACED IN A PREVIOUS PHASE WILL REMAIN UNLESS OTHERWISE INDICATED.

| | | | |
|---|---|---|---|
| 361 / 1288 | SUM-77 / 277 / 224<br>VARIOUS | MAINTENANCE OF TRAFFIC PLAN - PHASE 3B<br>I-77 - STA. 488+00 TO STA. 501+00 | CALCULATED .<br>CHECKED .<br>0 50<br>25 100<br>HORIZONTAL SCALE IN FEET |

NOTES:

1. SEE SHEET 128 FOR MOT LEGEND AND DRUM SPACING CHART.
2. ALL PAVEMENT MARKINGS THAT ARE EXISTING OR PLACED IN A PREVIOUS PHASE WILL REMAIN UNLESS OTHERWISE INDICATED.

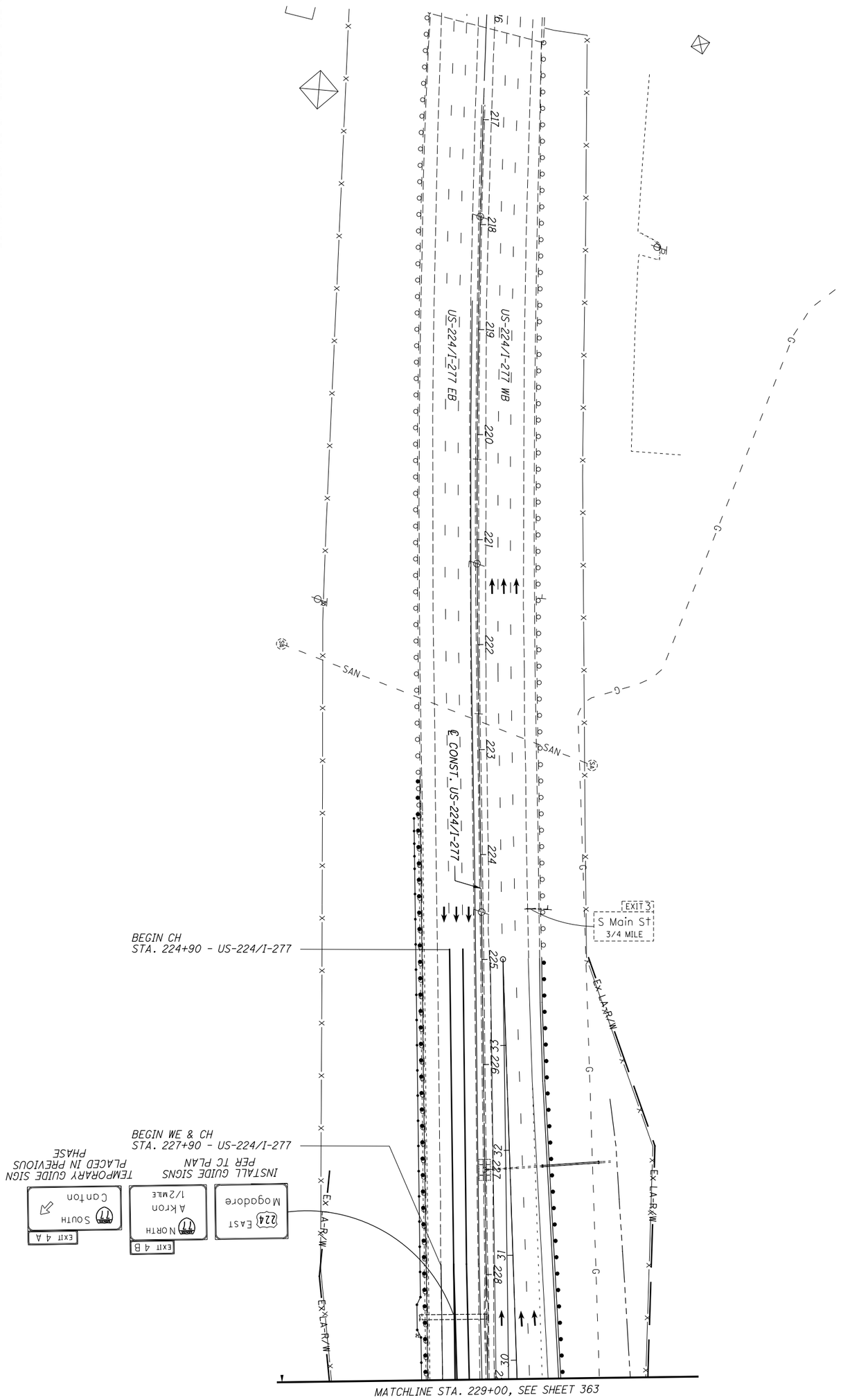


| 362 / 1288 | SUM-77/277/224 VARIOUS | MAINTENANCE OF TRAFFIC PLAN - PHASE 3B US-224/I-277 - STA. 216+00 TO STA. 229+00 | CALCULATED . CHECKED . | 0 50 25 100 HORIZONTAL SCALE IN FEET | N |
|---|---|---|---|---|---|

N:\03\60\06744-08\I06002_SUM-76-I0.95\Design\MOT\Sheets\I06002_MP429.dgn Sheet 1/31/2021 5:55:08 PM jrettig

NOTES:

1. SEE SHEET 128 FOR MOT LEGEND AND DRUM SPACING CHART.
2. ALL PAVEMENT MARKINGS THAT ARE EXISTING OR PLACED IN A PREVIOUS PHASE WILL REMAIN UNLESS OTHERWISE INDICATED.

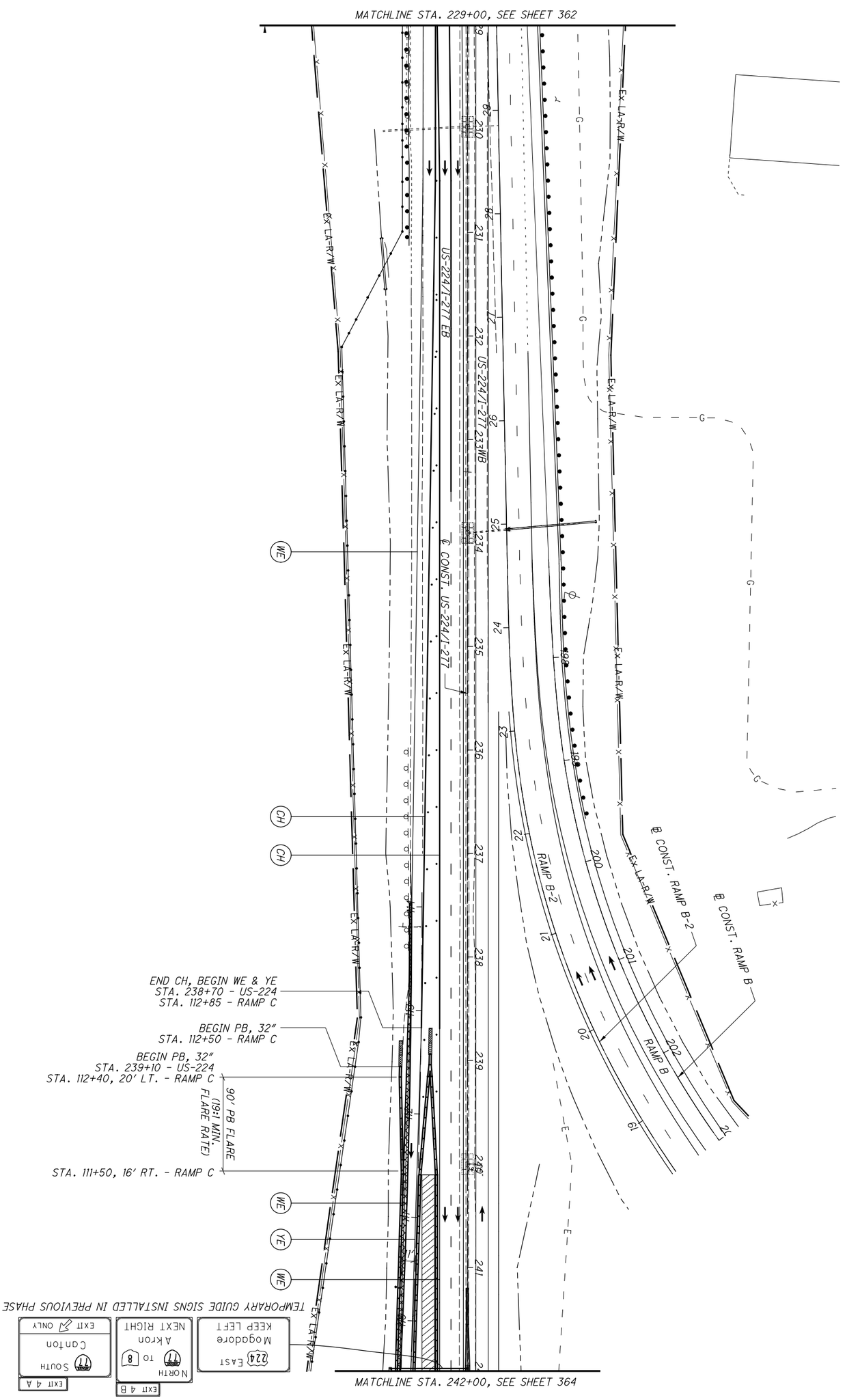


| | | | | |
|---|---|---|---|---|
| 363 / 1288 | SUM-77 / 277 / 224<br>VARIOUS | MAINTENANCE OF TRAFFIC PLAN - PHASE 3B<br>US-224 / I-277 - STA. 229+00 TO STA. 242+00 | CALCULATED .<br>CHECKED . | 0 50<br>25 100<br>HORIZONTAL SCALE IN FEET |

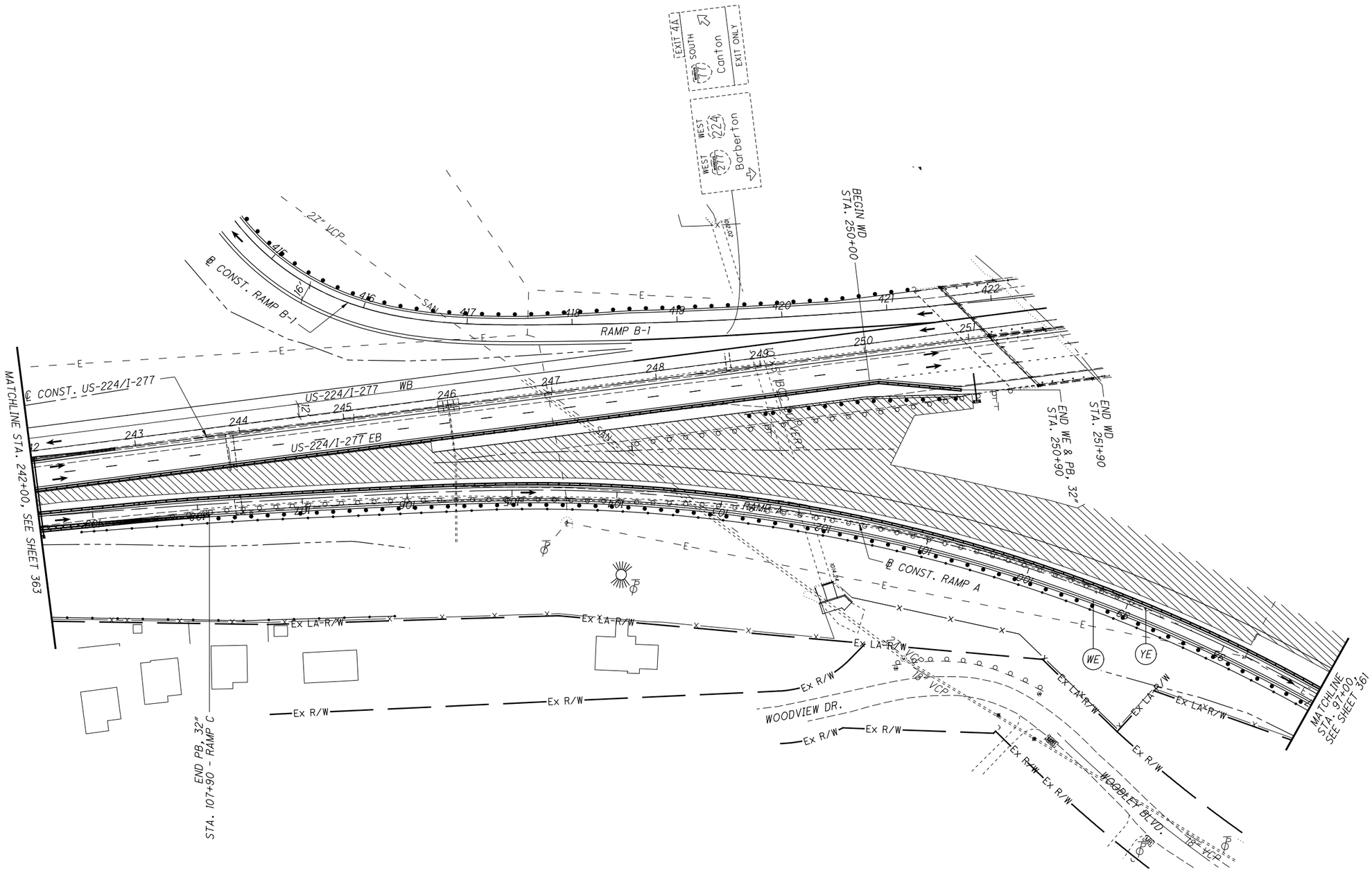


NOTES:

1. SEE SHEET 128 FOR MOT LEGEND AND DRUM SPACING CHART.

2. ALL PAVEMENT MARKINGS THAT ARE EXISTING OR PLACED IN A PREVIOUS PHASE WILL REMAIN UNLESS OTHERWISE INDICATED.

HORIZONTAL SCALE IN FEET
0 25 50 100

CALCULATED .
CHECKED .

# MAINTENANCE OF TRAFFIC PLAN - PHASE 3B
## US-224/I-277 - STA. 242+00 TO STA. 250+75

SUM-77/277/224
VARIOUS

364
1288

N:\03\60\06744-08\06002_SUM-76-10.95\Design\MOT\Sheets\06002_MP430.dgn Sheet 1/31/2021 5:55:12 PM jrettig

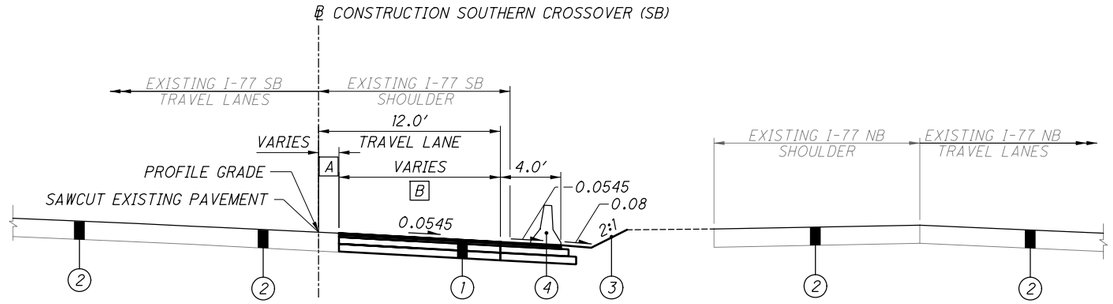


## SOUTHERN CROSSOVER (SB) - REPLACING EXISTING SHOULDER

STA. 200+00.00 TO STA. 201+00.45

A VARIES
1.35′ AT STA. 200+00.00 TO
0.0′ AT STA. 201+00.45

B VARIES
10.65′ AT STA. 200+00.00 TO
12.0′ AT STA. 201+00.45

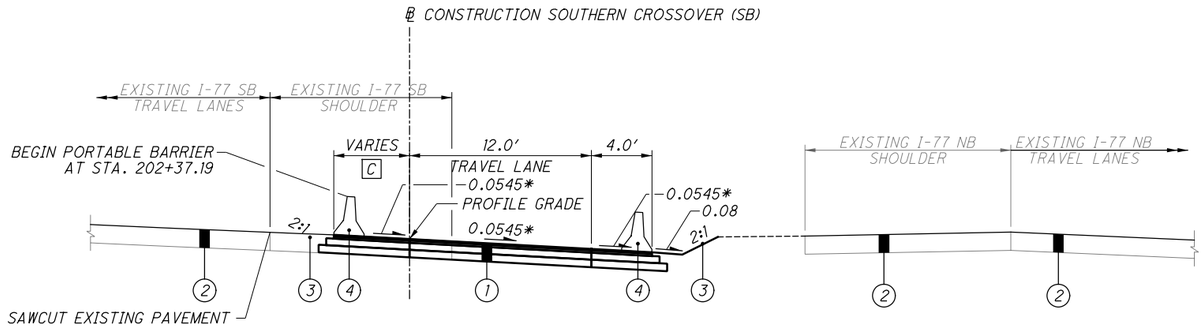


## SOUTHERN CROSSOVER (SB) PAVEMENT SECTION

STA. 201+00.45 TO STA. 203+28.40

C VARIES
0.0′ AT STA. 201+00.45 TO
5.0′ AT STA. 202+37.19

* TRANSITIONS FROM 0.0545 TO -0.0219,
STA. 201+00.45 TO STA. 203+28.40

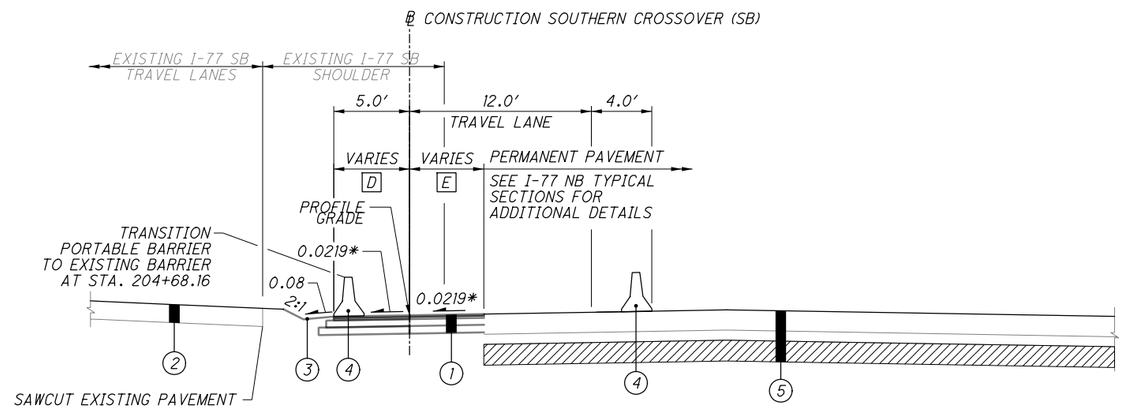


## SOUTHERN CROSSOVER (SB) - WIDENING EXISTING PAVEMENT

STA. 203+28.40 TO STA. 206+56.46

D ITEM 615 VARIES
5.0′ AT STA. 203+28.40 TO
0.0′ AT STA. 204+68.16

E ITEM 615 VARIES
4.9′ AT STA. 203+48.40 TO
0.0′ AT STA. 204+11.18

* TRANSITIONS FROM 0.0219 TO 0.0351,
STA. 203+28.40 TO STA. 206+56.46
TEMPORARY PAVEMENT CROSS SLOPE
SHALL MATCH PERMANENT PAVEMENT
SHOULDER SLOPE

LEGEND

(1) ITEM 615 - PAVEMENT FOR MAINTAINING TRAFFIC, CLASS A

(2) PERMANENT PAVEMENT

(3) ITEM 659 - SEEDING AND MULCHING (TEMPORARY GRADING)

(4) ITEM 622 - PORTABLE BARRIER, 32"

(5) PERMANENT PAVEMENT - SEE I-77 TYPICAL SECTIONS FOR DETAILS

# TYPICAL SECTIONS - SOUTHERN CROSSOVER (SB) PAVEMENT

SUM-77/277/224
VARIOUS

365
1288

N:\03\60\067744-08\106002_SUM-76-10.95\Design\MOT\Sheets\106002_MY801.dgn Sheet 1/31/2021 5:55:45 PM jrettig

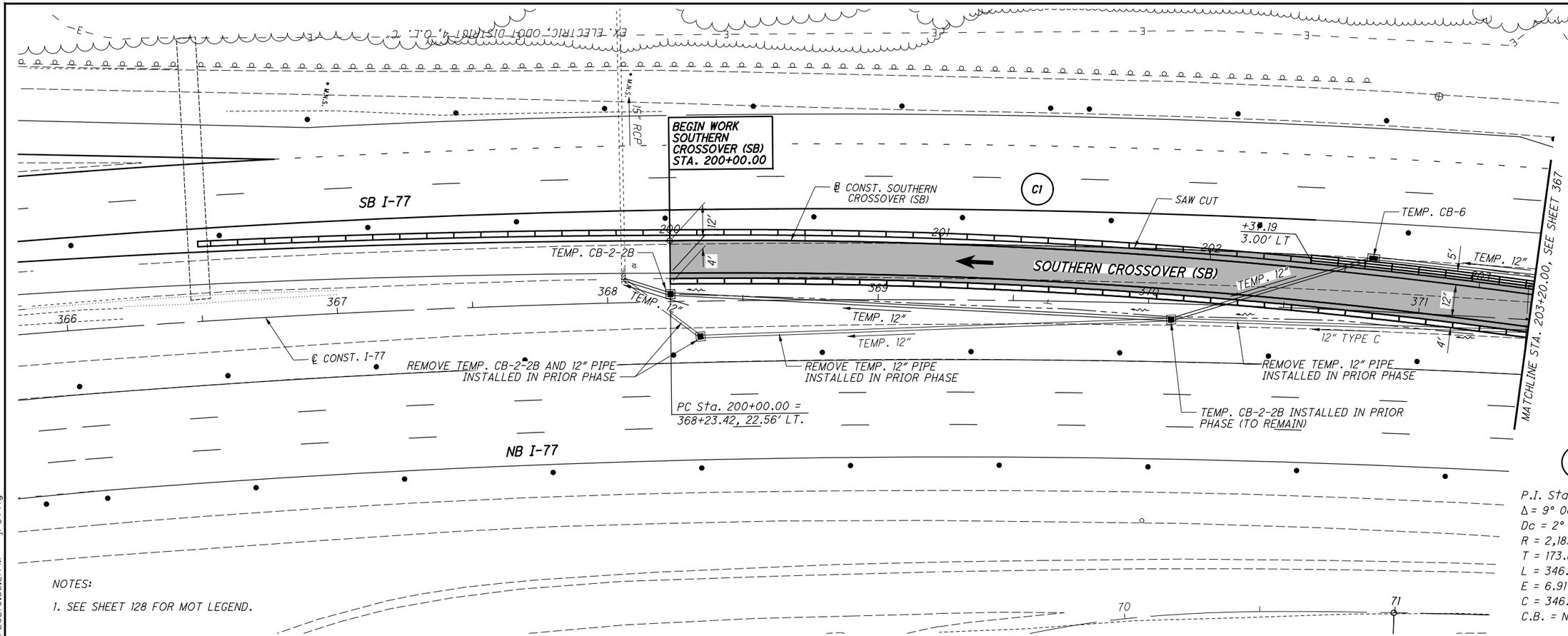


C1

P.I. Sta. 201+73.82
Δ = 9° 06' 10" (RT)
Dc = 2° 37' 26"
R = 2,183.54'
T = 173.82'
L = 346.91'
E = 6.91'
C = 346.54'
C.B. = N 4° 15' 23" W

NOTES:

1. SEE SHEET 128 FOR MOT LEGEND.

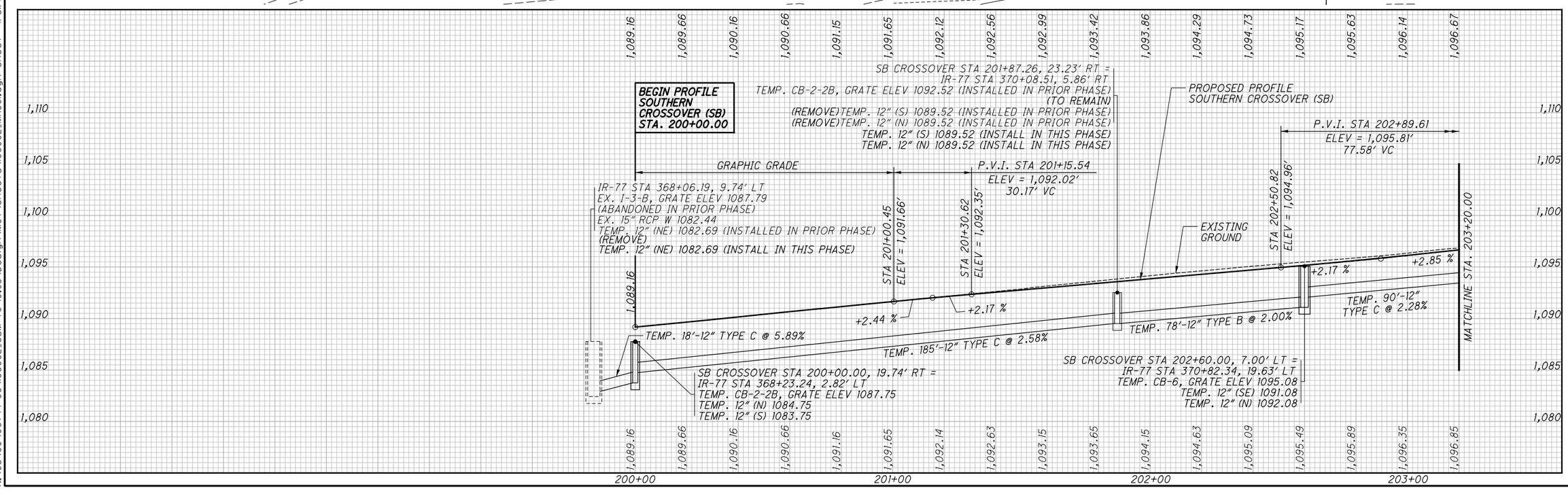


N:\03\60\06744-08\I06002_SUM-76-10.95\Design\MOT\Sheets\I06002_MH80I.dgn Sheet 1/31/2021 5:55:21 PM jrettig

HORIZONTAL SCALE IN FEET
0 10 20 40

CALCULATED KMC
CHECKED SSR

SUM-77/277/224
VARIOUS

PLAN & PROFILE - SOUTHERN CROSSOVER (SB)
PHASE 3 - STA. 200+00.00 TO STA. 203+20.00

366
1288

NOTES:

1. SEE SHEET 128 FOR MOT LEGEND.

C1

P.I. Sta. 201+73.82
Δ = 9° 06′ 10″ (RT)
Dc = 2° 37′ 26″
R = 2,183.54′
T = 173.82′
L = 346.91′
E = 6.91′
C = 346.54′
C.B. = N 4° 15′ 23″ W

END WORK SOUTHERN CROSSOVER (SB) STA. 206+56.46

SB I-77

MATCHLINE STA. 203+20.00, SEE SHEET 366

TEMP. 12″

TEMP. CB-2-2B

℄ CONST. SOUTHERN CROSSOVER (SB)

+68.16
3.00′ LT

372 373 374 375 376 37

205 206

N 0° 17′ 42″ E

SOUTHERN CROSSOVER (SB)

POT Sta. 206+56.46

15″ RCP

M.M.S.

℄ CONST. I-77

12′

12′

4′

TEMP. 12″

REMOVE. TEMP. CB-8 AND 12″ PIPE INSTALLED IN PRIOR PHASE

PT Sta. 203+46.91

PT Sta. 374+77.72

NB I-77

EX. ELECTRIC ODOT DISTRICT 4 Q.L. "C"

DISTRICT 4 ODOT ELECTRIC

72 73 74 75 76

END PROFILE SOUTHERN CROSSOVER (SB) STA. 206+56.46

1,097.24 1,097.81 1,098.37 1,098.88 1,099.38 1,099.86 1,100.31 1,100.76 1,101.19 1,101.62 1,102.03 1,102.44 1,102.85 1,103.23 1,103.61 1,103.99

1,115
1,110
1,105
1,100
1,095
1,090
1,085

GRAPHIC GRADE

1,104.29

SB CROSSOVER STA 203+50.00, 8.00′ LT =
IR-77 STA 371+72.12, 15.01′ LT
TEMP. CB-2-2B, GRATE ELEV 1097.13
TEMP. 12″ (S) 1094.13

PROPOSED PROFILE SOUTHERN CROSSOVER (SB)

MATCHLINE STA. 203+20.00

STA 203+28.40
ELEV = 1,096.91′

EXISTING GROUND

TEMP. 90′-12″ TYPE C @ 2.28%

1,097.18 1,097.62 1,098.15 1,098.68 1,099.38 1,099.85 1,100.30 1,100.76 1,101.18 1,101.61 1,102.04 1,102.45 1,102.84 1,103.22 1,103.60 1,103.99

204+00 205+00 206+00

HORIZONTAL SCALE IN FEET
0 10 20 40

CALCULATED KMC
CHECKED SSR

PLAN & PROFILE - SOUTHERN CROSSOVER (SB)
PHASE 3 - STA. 203+20.00 TO STA. 206+56.46

SUM-77 / 277 / 224
VARIOUS

367
1288

N:\03\60\06744-08\106002-SUM-76-10.95\Design\MOT\Sheets\106002_MH802.dgn Sheet 1/31/2021 5:55:24 PM jrettig

| SEEDING | |
|---|---|
| END WIDTH | SQ. YDS. |
| 16 | 96 |
| 19 | 103 |
| 19 | |
| · | *199 |

| END AREA | |
|---|---|
| CUT | FILL |
| 1 | 4 |
| 2 | 3 |
| 5 | 1 |
| · | · |

| VOLUME | |
|---|---|
| CUT | FILL |
| 3 | 6 |
| 6 | 4 |
| *9 | *10 |

CALCULATED KMC
CHECKED SSR

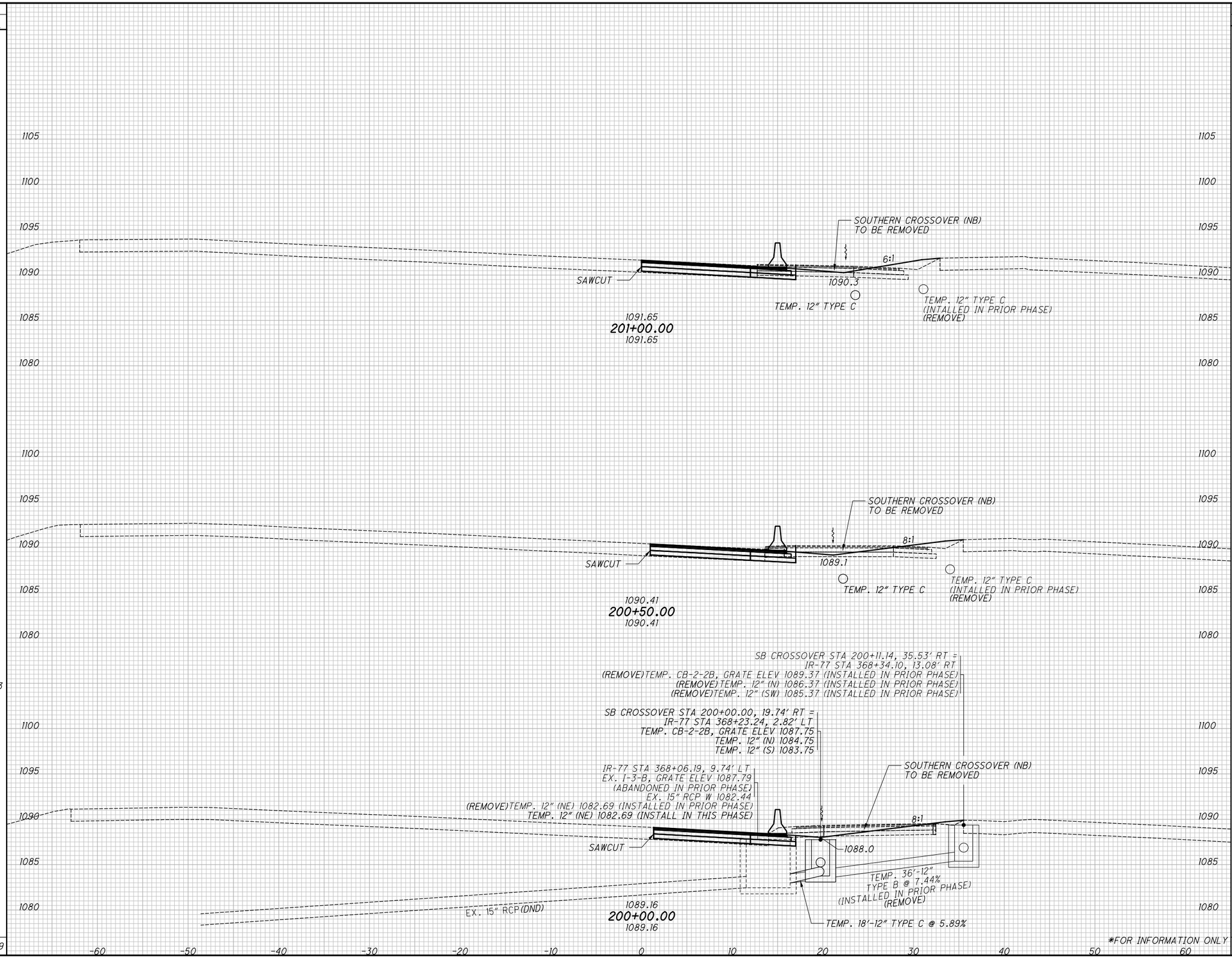


*FOR INFORMATION ONLY

# CROSS SECTIONS - SOUTHERN CROSSOVER (SB)
## PHASE 3 - STA. 200+00.00 TO STA. 201+00.00

SUM-77/277/224
VARIOUS

368
1288

N:\03\60\06744-08\106002_SUM-76-10.95\Design\MOT\Basemaps\106002_BM513.dgn BLP_MOT_SB02 1/31/2021 5:55:44 PM jrettig

| SEEDING | |
|---|---|
| END WIDTH | SQ. YDS. |
| 3 | 19 |
| 4 | 44 |
| 11 | 77 |
| · | *140 |

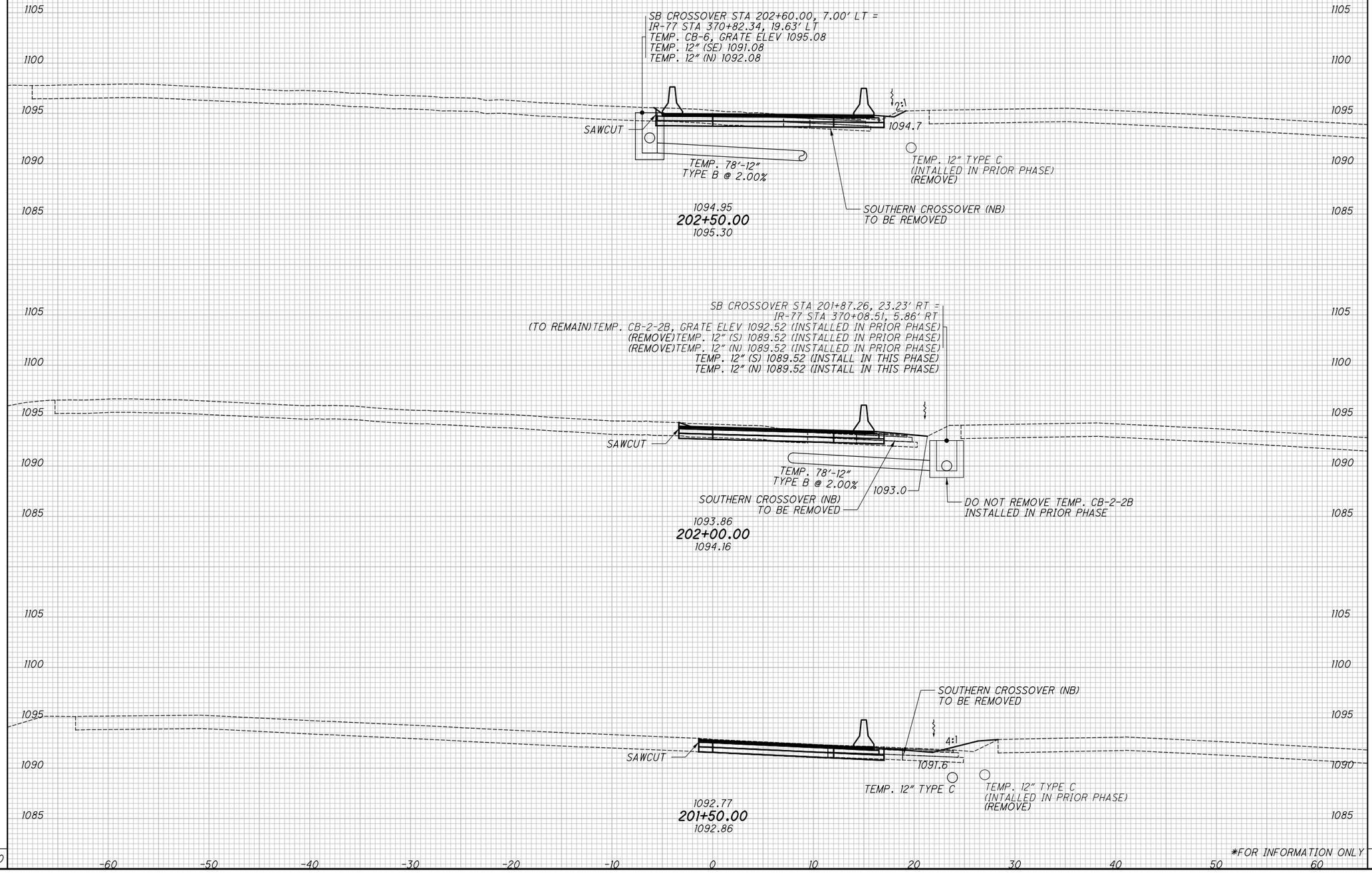


*FOR INFORMATION ONLY

| END AREA | | VOLUME | |
|---|---|---|---|
| CUT | FILL | CUT | FILL |
| 3 | 0 | | |
| | | 4 | 0 |
| 1 | 0 | | |
| 1 | 3 | | |
| | | 2 | 3 |
| · | · | *8 | *9 |
| | | 2 | 6 |

CALCULATED KMC
CHECKED SSR

# CROSS SECTIONS - SOUTHERN CROSSOVER (SB)
## PHASE 3 - STA. 201+50.00 TO STA. 202+50.00

SUM-77 / 277 / 224
VARIOUS

369
1288

N:\03\60\06744-08\06002_SUM-76-10.95\Design\MOT\Basemaps\06002_BM5i3.dgn BLP_MOT_SB02 1/31/2021 5:55:44 PM jrettig

| SEEDING | |
|---|---|
| END WIDTH | SQ. YDS. |
| 8 | 39 |
| 6 | 26 |
| 4 | 18 |
| . | *83 |

| END AREA | |
|---|---|
| CUT | FILL |
| 0 | 0 |
| 1 | 0 |
| 10 | 0 |
| . | . |

| VOLUME | |
|---|---|
| CUT | FILL |
| 1 | 0 |
| 10 | 0 |
| 12 | 0 |
| *23 | *0 |

CALCULATED KMC
CHECKED SSR

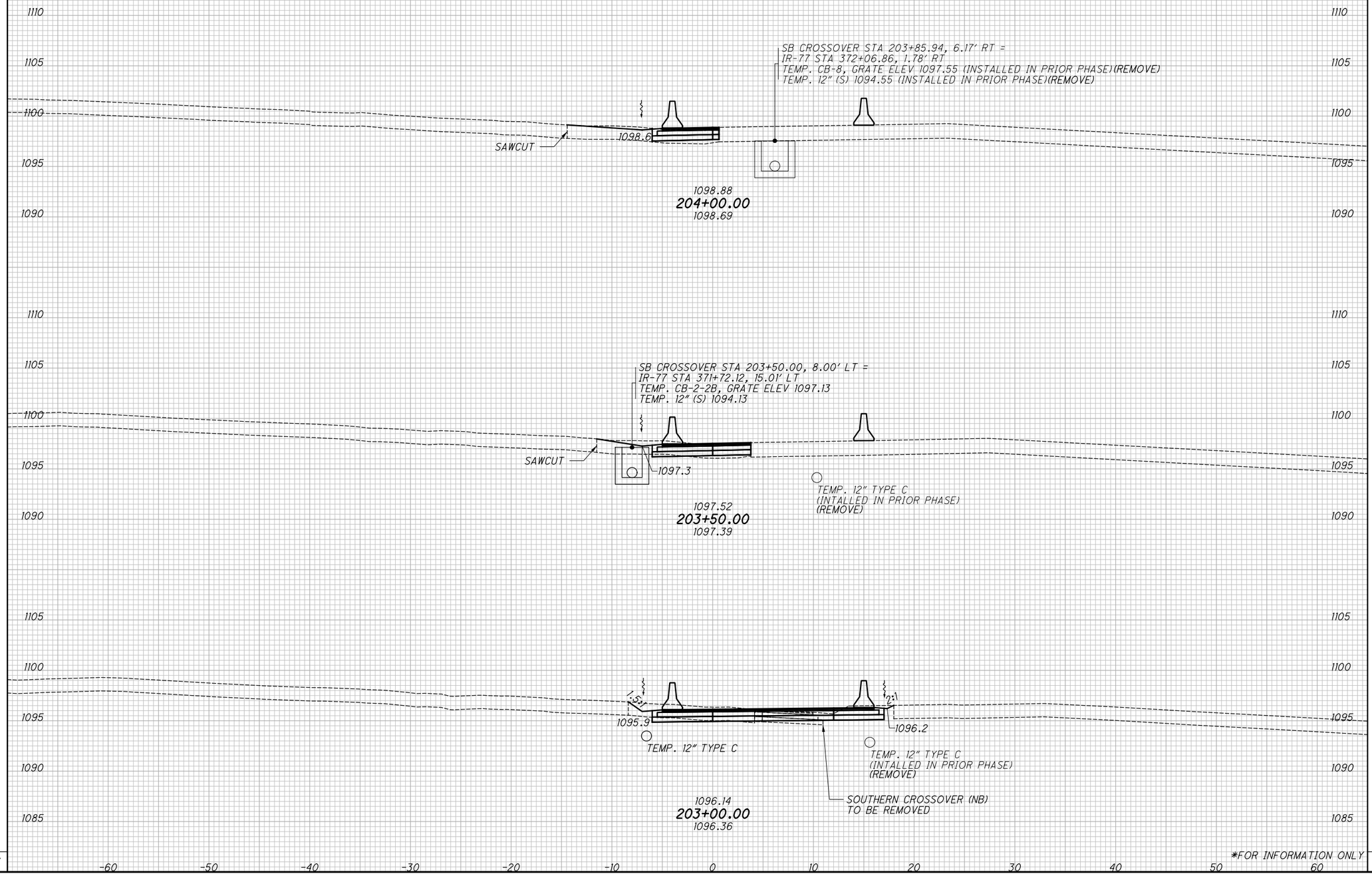


*FOR INFORMATION ONLY

# CROSS SECTIONS - SOUTHERN CROSSOVER (SB)
## PHASE 3 - STA. 203+00.00 TO STA. 204+00.00

SUM-77/277/224
VARIOUS

370
1288

N:\03\60\06744-08\106002_SUM-76-10.95\Design\MOT\Basemaps\106002_BM513.dgn BLP_MOT_SB02 1/31/2021 5:55:44 PM jrettig

| SEEDING | |
|---|---|
| END WIDTH | SQ. YDS. |
| 0 | 0 |
| 0 | 0 |
| 0 | 0 |
| 0 | 0 |
| 24 | *24 |

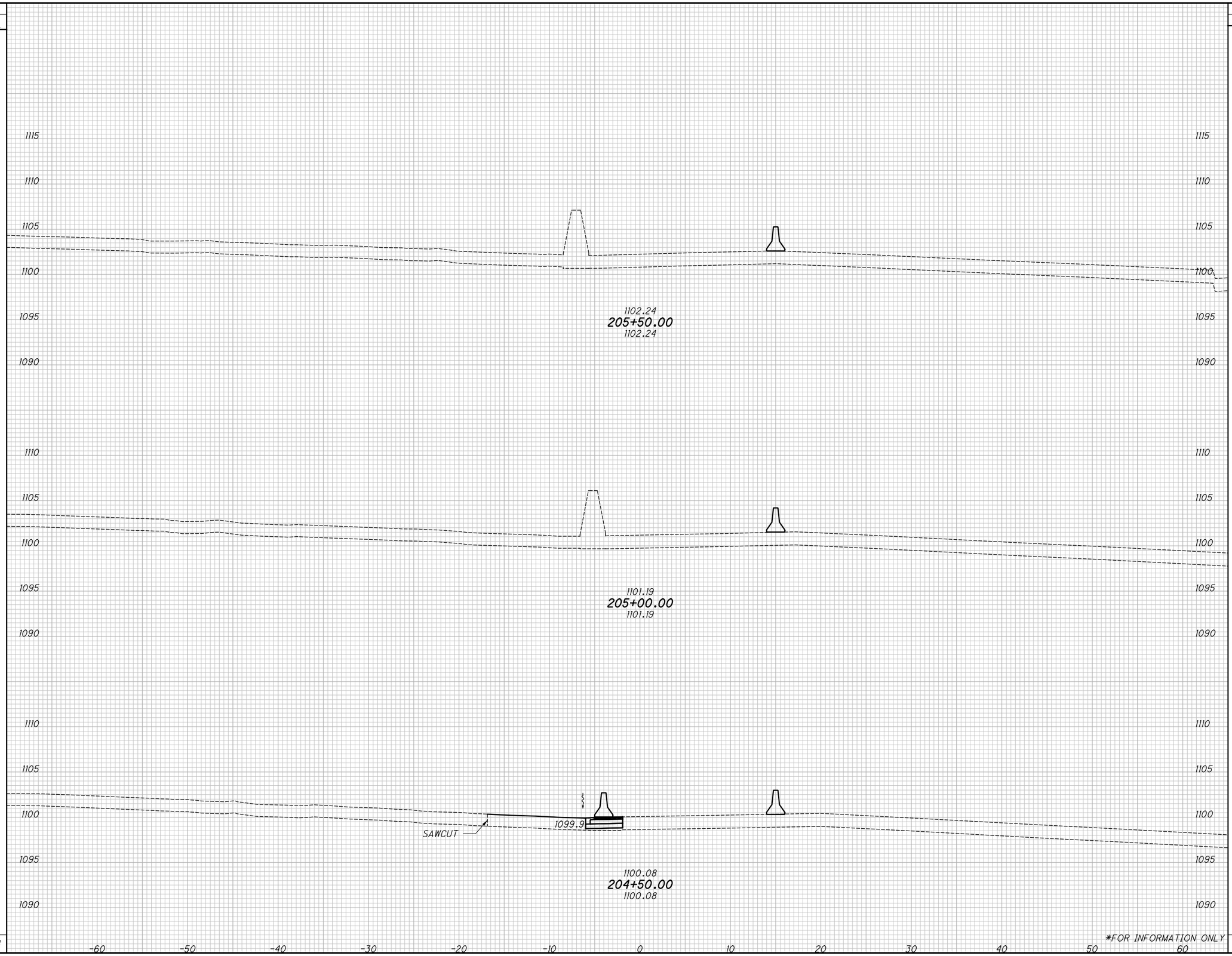


| END AREA | |
|---|---|
| CUT | FILL |
| 0 | 0 |
| 0 | 0 |
| 0 | 0 |
| 0 | 0 |
| . | . |

| VOLUME | |
|---|---|
| CUT | FILL |
| 0 | 0 |
| 0 | 0 |
| 0 | 0 |
| 0 | 0 |
| *0 | *0 |

*FOR INFORMATION ONLY

CALCULATED KMC
CHECKED SSR

# CROSS SECTIONS - SOUTHERN CROSSOVER (SB)
## PHASE 3 - STA. 204+50.00 TO STA. 205+50.00

SUM-77/277/224
VARIOUS

3.71
12.88

N:\03\60\06744-08\06002_SUM-76-10.95\Design\MOT\Basemaps\06002_BM5I3.dgn BLP_MOT_SB02 1/31/2021 5:55:45 PM jrettig

N:\03\60\06744-08\I06002_SUM-76-I0.95\Design\MOT\Basemaps\I06002_BM5I3.dgn BLP_MOT_SB02 1/31/2021 5:55:45 PM jrettig

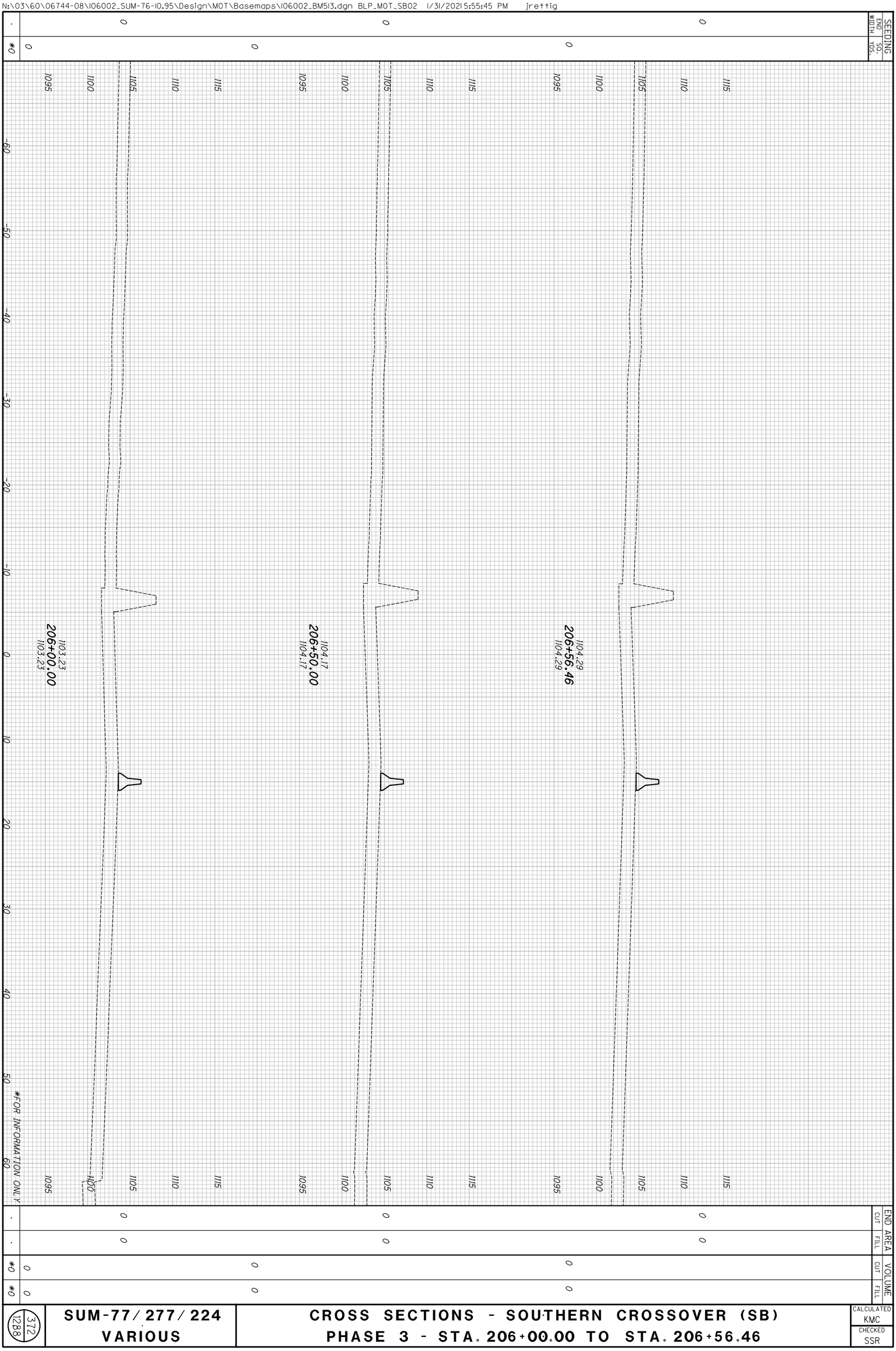


| | | |
|---|---|---|
| 372 / 1288 | SUM-77 / 277 / 224<br>VARIOUS | CROSS SECTIONS - SOUTHERN CROSSOVER (SB)<br>PHASE 3 - STA. 206+00.00 TO STA. 206+56.46 |

CALCULATED KMC
CHECKED SSR

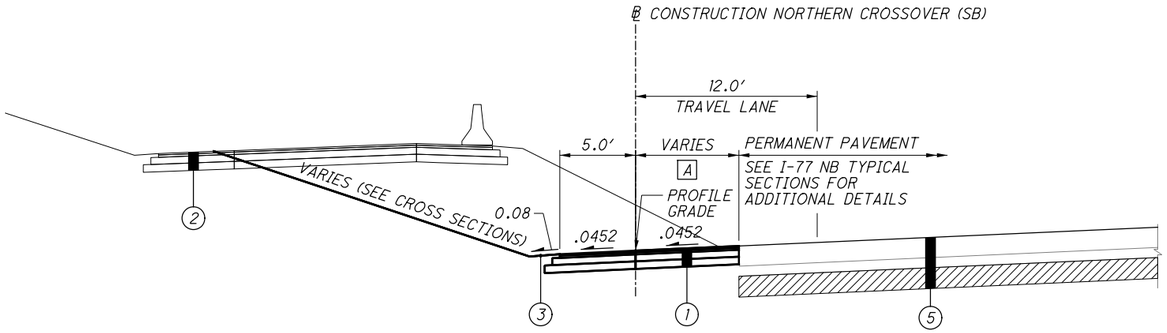


## NORTHERN CROSSOVER (SB) - WIDENING EXISTING PAVEMENT

STA. 100+00.00 TO STA. 103+97.73

A ITEM 615 VARIES
0.0′ AT STA. 100+00.00 TO
12.0′ AT STA. 103+97.73

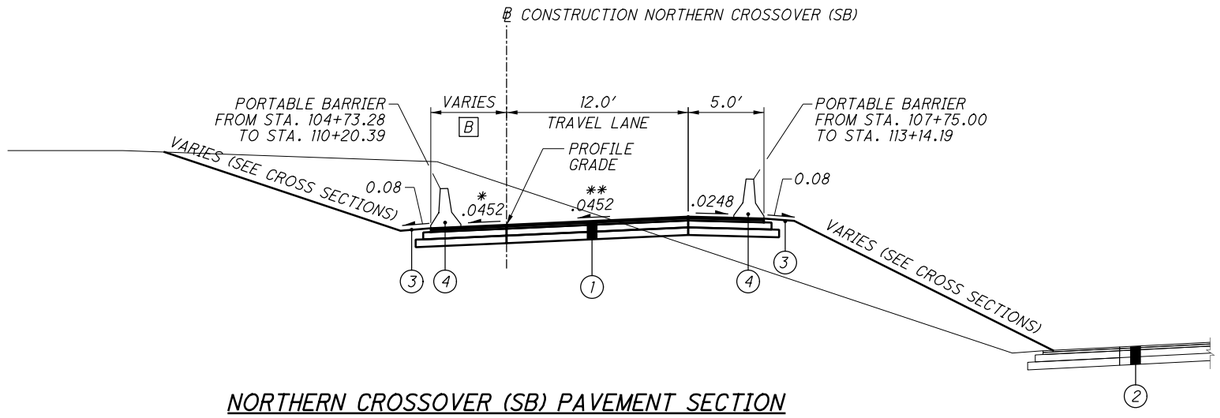


## NORTHERN CROSSOVER (SB) PAVEMENT SECTION

STA. 103+97.73 TO STA. 113+39.12

B VARIES
5.0′ AT STA. 103+97.73 TO
STA. 112+75.06
5.0′ AT STA. 112+75.06 TO
0.0′ AT STA. 113+39.12

* TRANSITIONS FROM 0.0452 TO -0.0556,
STA. 111+43.12 TO STA. 112+75.06

** TRANSITIONS FROM 0.0452 TO -0.0248,
STA. 112+75.06 TO STA. 113+39.12

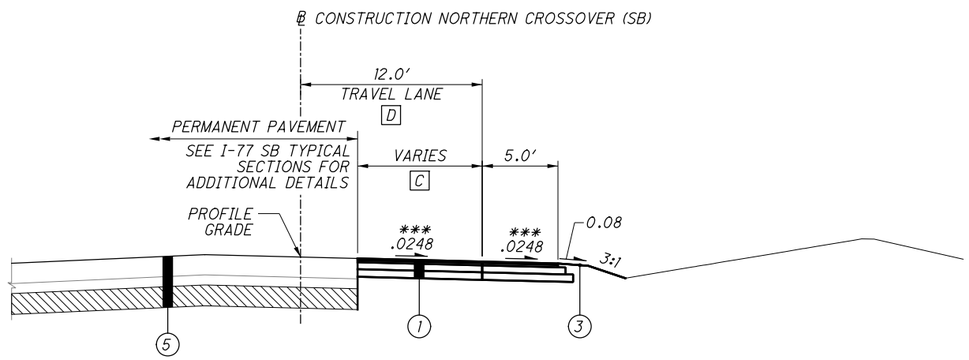


## NORTHERN CROSSOVER (SB) - WIDENING EXISTING PAVEMENT

STA. 113+39.12 TO STA. 116+11.65

C ITEM 615 VARIES
12.0′ AT STA. 113+39.12 TO
1.5′ AT STA. 116+11.65

D TRAVEL LANE VARIES
12.0′ AT STA. 115+46.65 TO
11.0′ AT STA. 116+11.65

*** TRANSITIONS FROM 0.0248 TO 0.040,
STA. 114+76.06 TO STA. 116+11.65
TEMPORARY PAVEMENT CROSS SLOPE
SHALL MATCH PERMANENT PAVEMENT
SHOULDER SLOPE

LEGEND

(1) ITEM 615 - PAVEMENT FOR MAINTAINING TRAFFIC, CLASS A

(2) TEMPORARY PAVEMENT (TO BE REMOVED)

(3) ITEM 659 - SEEDING AND MULCHING (TEMPORARY GRADING)

(4) ITEM 622 - PORTABLE BARRIER, 32"

(5) PERMANENT PAVEMENT - SEE I-77 TYPICAL SECTIONS FOR DETAILS

# TYPICAL SECTIONS - NORTHERN CROSSOVER (SB) PAVEMENT

SUM-77/277/224
VARIOUS

373
1288

N:\03\60\06744-08\06002_SUM-76-10.95\Design\MOT\Sheets\06002_MY901.dgn Sheet 1/31/2021 5:55:59 PM jrettig

NOTES:

1. SEE SHEET 128 FOR MOT LEGEND.

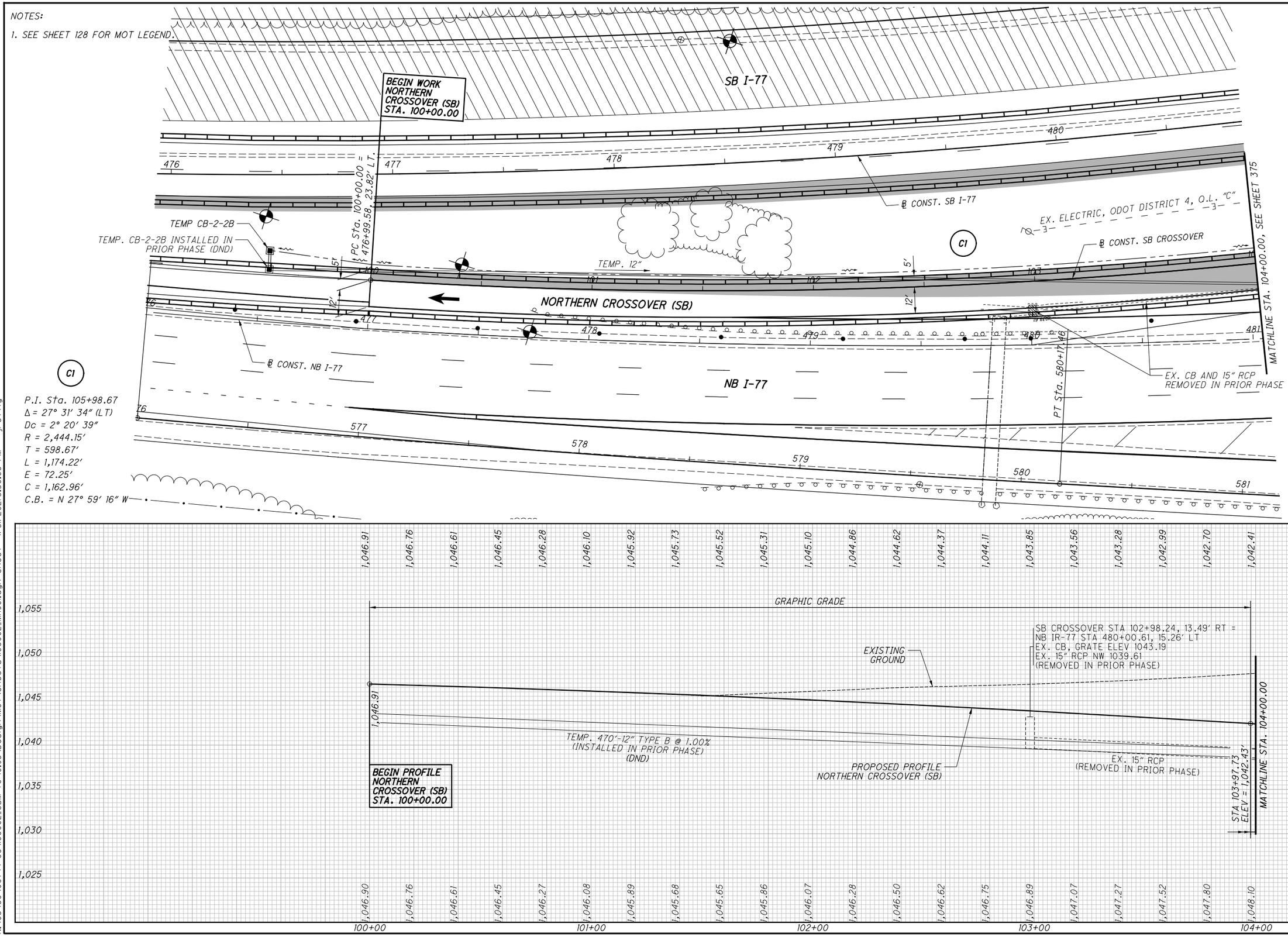


HORIZONTAL SCALE IN FEET
0 10 20 40

CALCULATED KMC
CHECKED SSR

PLAN & PROFILE - NORTHERN CROSSOVER (SB)
PHASE 3 - STA. 100+00.00 TO STA. 104+00.00

SUM-77/277/224
VARIOUS

374
1288

N:\03\60\06744-08\106002_SUM-76-10.95\Design\MOT\Sheets\106002_MH901.dgn Sheet 1/31/2021 5:56:08 PM jrettig

NOTES:

1. SEE SHEET 128 FOR MOT LEGEND.

C1

P.I. Sta. 105+98.67
Δ = 27° 31′ 34″ (LT)
Dc = 2° 20′ 39″
R = 2,444.15′
T = 598.67′
L = 1,174.22′
E = 72.25′
C = 1,162.96′
C.B. = N 27° 59′ 16″ W

SB I-77

NB I-77

MATCHLINE STA. 104+00.00, SEE SHEET 374

MATCHLINE STA. 109+00.00, SEE SHEET 376

℄ CONST. SB I-77

℄ CONST. NB I-77

℄ CONST. NORTHERN CROSSOVER (SB)

EX. ELECTRIC, ODOT DISTRICT 4, O.L. "C"

NORTHERN CROSSOVER (SB)

TEMP. CB-2-2B
+73.28
3.00′ LT

TEMP. 15″

TEMP. CB-2-2B

TEMP. 12″

TEMP. CB-2-2B

TEMP. 12″

TEMP. 18″

5′

12′

4′

5′

TEMP. 18″

ABANDON TEMP. CB-2-2B
INSTALLED IN PRIOR PHASE

TEMP. MH-3 INSTALLED
IN PRIOR PHASE (DND)

15″ RCP

+75.00
15.00′ RT

PC Sta. 285+64.96

TIE INTO
PERMANENT
PROPOSED DITCH

ABANDON TEMP. CB-2-2B
INSTALLED IN PRIOR PHASE
AND CONNECT PIPES THROUGH

TEMP. 18″

481 482 483 484 485 486 280

SB CROSSOVER STA. 104+24.07, 12.16′ RT =
NB IR-77 STA 481+27.46, 23.48′ LT
TEMP. CB-2-2B, GRATE ELEV 1042.33
(INSTALLED IN PRIOR PHASE)
(ABANDON CB AND CONNECT PIPES THROUGH)
TEMP. 12″ (S) 1038.32 (INSTALLED IN PRIOR PHASE)(DND)
15″ RCP (NW) 1038.07± (RECONNECTED IN PRIOR PHASE)(DND)

SB CROSSOVER
STA 105+00.00, 8.15′ LT
TEMP. CB-2-2B
GRATE ELEV 1040.92
TEMP. 15″ (NW) 1038.17

SB CROSSOVER STA 105+64.27, 18.53′ RT =
NB IR-77 STA 482+69.55, 27.63′ LT
TEMP. MH-3, RIM ELEV 1041.40 (INSTALLED IN PRIOR PHASE)(DND)
15″ RCP (SE) 1036.35± (RECONNECTED IN PRIOR PHASE)(DND)
TEMP. 18″ (NW) 1036.10 (INSTALLED IN PRIOR PHASE)(DND)
TEMP. 18″ (SW) 1036.45 (INSTALL IN THIS PHASE)

SB CROSSOVER STA 105+66.24, 8.15′ LT
TEMP. CB-2-2B, GRATE ELEV 1040.72
TEMP. 12″ (NW) 1037.72
TEMP. 15″ (SE) 1037.47
TEMP. 18″ (NE) 1036.72

SB CROSSOVER STA 106+34.00, 8.15′ LT
TEMP. CB-2-2B, GRATE ELEV 1040.92
TEMP. 12″ (SE) 1038.42

SB CROSSOVER STA 107+78.28, 44.01′ RT =
NB IR-77 STA 484+89.17, 24.07′ LT
TEMP. CB-2-2B, GRATE ELEV 1037.82
(INSTALLED IN PRIOR PHASE)
(ABANDON CB AND CONNECT PIPES THROUGH)
TEMP. 18″ (SE) 1033.59 (INSTALLED IN PRIOR PHASE)(DND)
TEMP. 18″ (NW) 1033.59 (INSTALLED IN PRIOR PHASE)(DND)

PROPOSED PROFILE
NORTHERN CROSSOVER (SB)

EXISTING GROUND

-1.47 %

+1.18 %

+1.18 %

EX. 15″ RCP (RT) (DND)

TEMP. 12″ TYPE B
(INSTALLED IN PRIOR PHASE)
(DND)

TEMP. 66′-15″ TYPE C @ 1.06% (LT)

P.V.I STA. 105+50.04
ELEV = 1,040.21′
304.62′ VC

EX. 15″ RCP (RT)
(REMOVED IN PRIOR PHASE)

TEMP. 68′-12″ TYPE C @ 1.03% (LT)

STA 107+02.35
ELEV = 1,042.00′

EX. ELECTRIC,
ODOT DISTRICT 4, O.L. "C"

TEMP. 218′-18″
TYPE C @ 1.15% (RT)
(INSTALLED IN PRIOR PHASE)
(DND)

TEMP. 135′-18″ TYPE B @ 1.16%
(INSTALLED IN PRIOR PHASE)
(DND)

1,042.14 1,041.90 1,041.70 1,041.53 1,041.40 1,041.30 1,041.24 1,041.21 1,041.21 1,041.26 1,041.33 1,041.44 1,041.59 1,041.77 1,041.98 1,042.22 1,042.46 1,042.69 1,042.93 1,043.17 1,043.40 1,043.64 1,043.88 1,044.11 1,044.35

1,047.65 1,047.12 1,046.58 1,046.04 1,045.53 1,045.08 1,044.63 1,044.19 1,043.74 1,043.29 1,042.75 1,042.19 1,041.39 1,041.84 1,042.20 1,042.58 1,042.99 1,043.41 1,043.86 1,044.33 1,044.82 1,045.32 1,045.86 1,046.40 1,046.99

1,050 1,055 1,045 1,040 1,035 1,030 1,025

104+00 105+00 106+00 107+00 108+00 109+00

HORIZONTAL SCALE IN FEET
0 10 20 40

CALCULATED KMC
CHECKED SSR

PLAN & PROFILE - NORTHERN CROSSOVER (SB)
PHASE 3 - STA. 104+00.00 TO STA. 109+00.00

SUM-77/277/224
VARIOUS

375
1288

N:\03\60\06744-08\06002_SUM-76-10.95\Design\MOT\Sheets\06002_MH902.dgn Sheet 1/31/2021 5:56:11 PM jrettig

NOTES:

1. SEE SHEET 128 FOR MOT LEGEND.

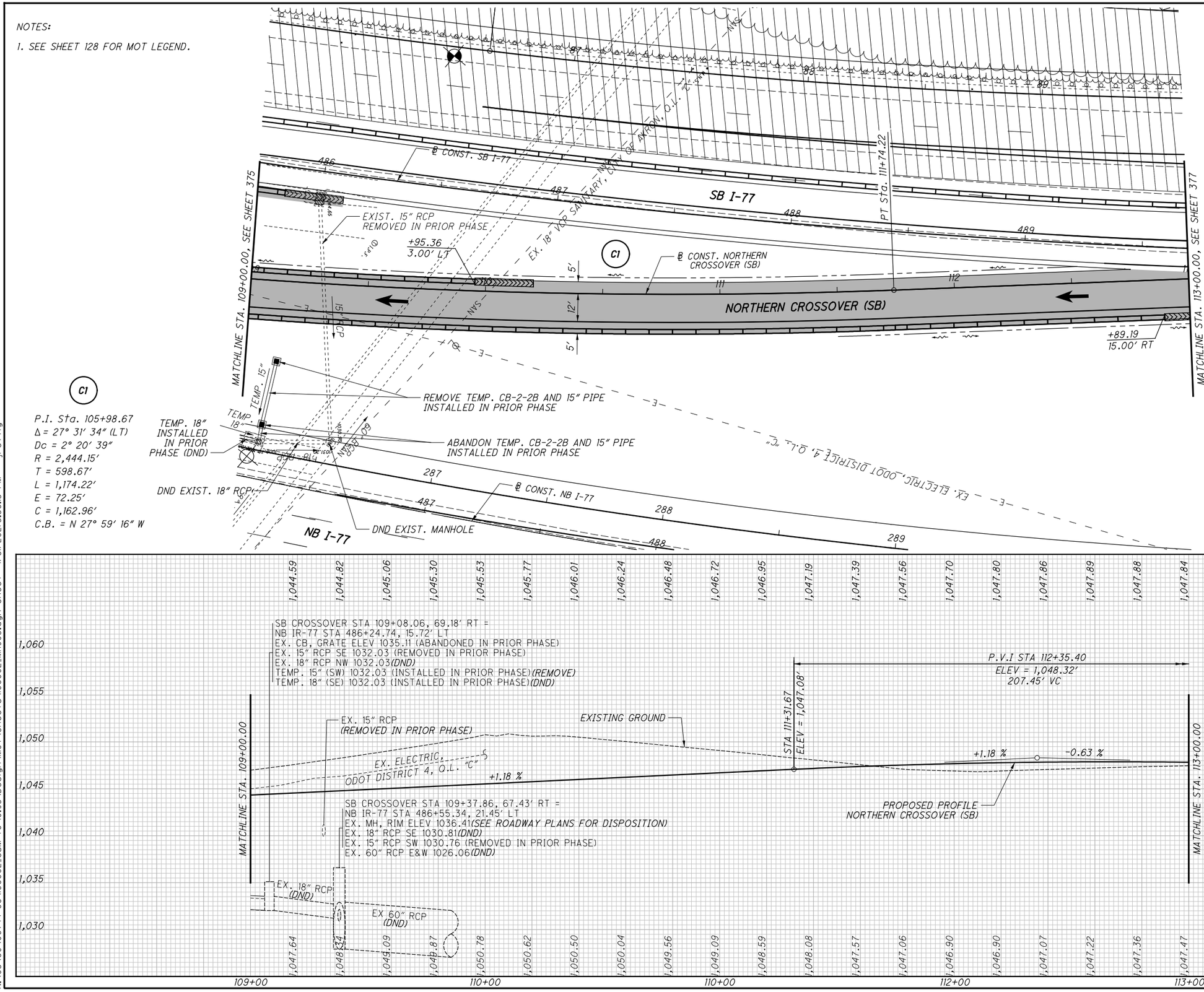


C1

P.I. Sta. 105+98.67
Δ = 27° 31' 34" (LT)
Dc = 2° 20' 39"
R = 2,444.15'
T = 598.67'
L = 1,174.22'
E = 72.25'
C = 1,162.96'
C.B. = N 27° 59' 16" W

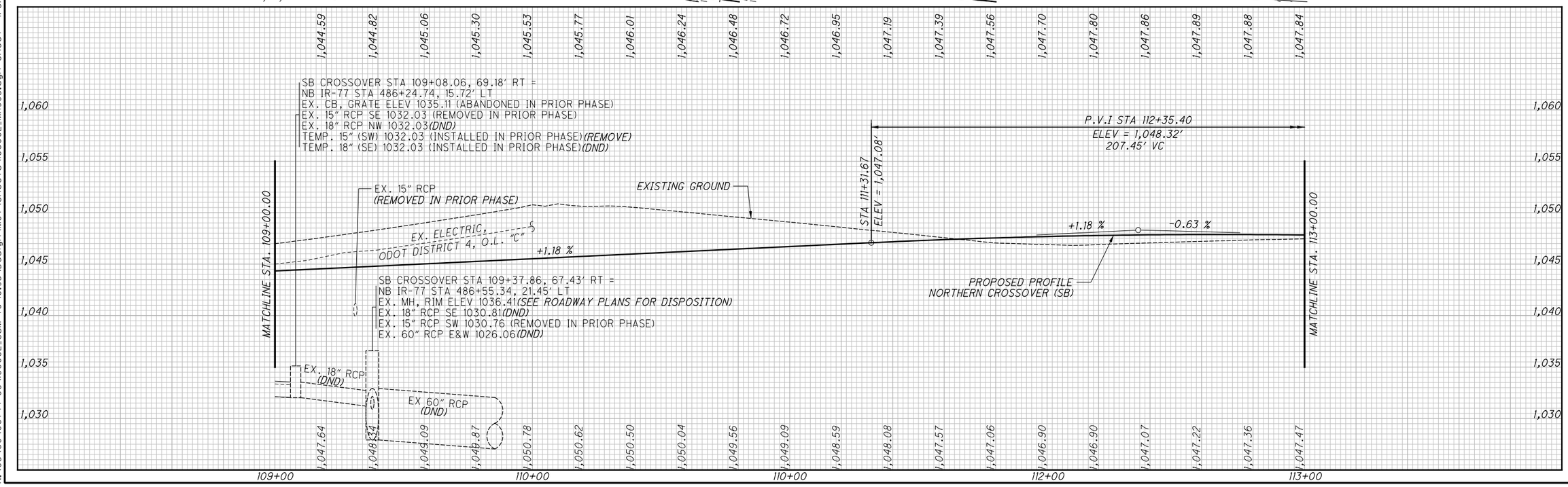


HORIZONTAL SCALE IN FEET
0 10 20 40

CALCULATED KMC
CHECKED SSR

PLAN & PROFILE - NORTHERN CROSSOVER (SB)
PHASE 3 - STA. 109+00.00 TO STA. 113+00.00

SUM-77/277/224
VARIOUS

376
1288

N:\03\60\06744-08\06002_SUM-76-10.95\Design\MOT\Sheets\06002_MH903.dgn Sheet 1/31/2021 5:56:13 PM jrettig

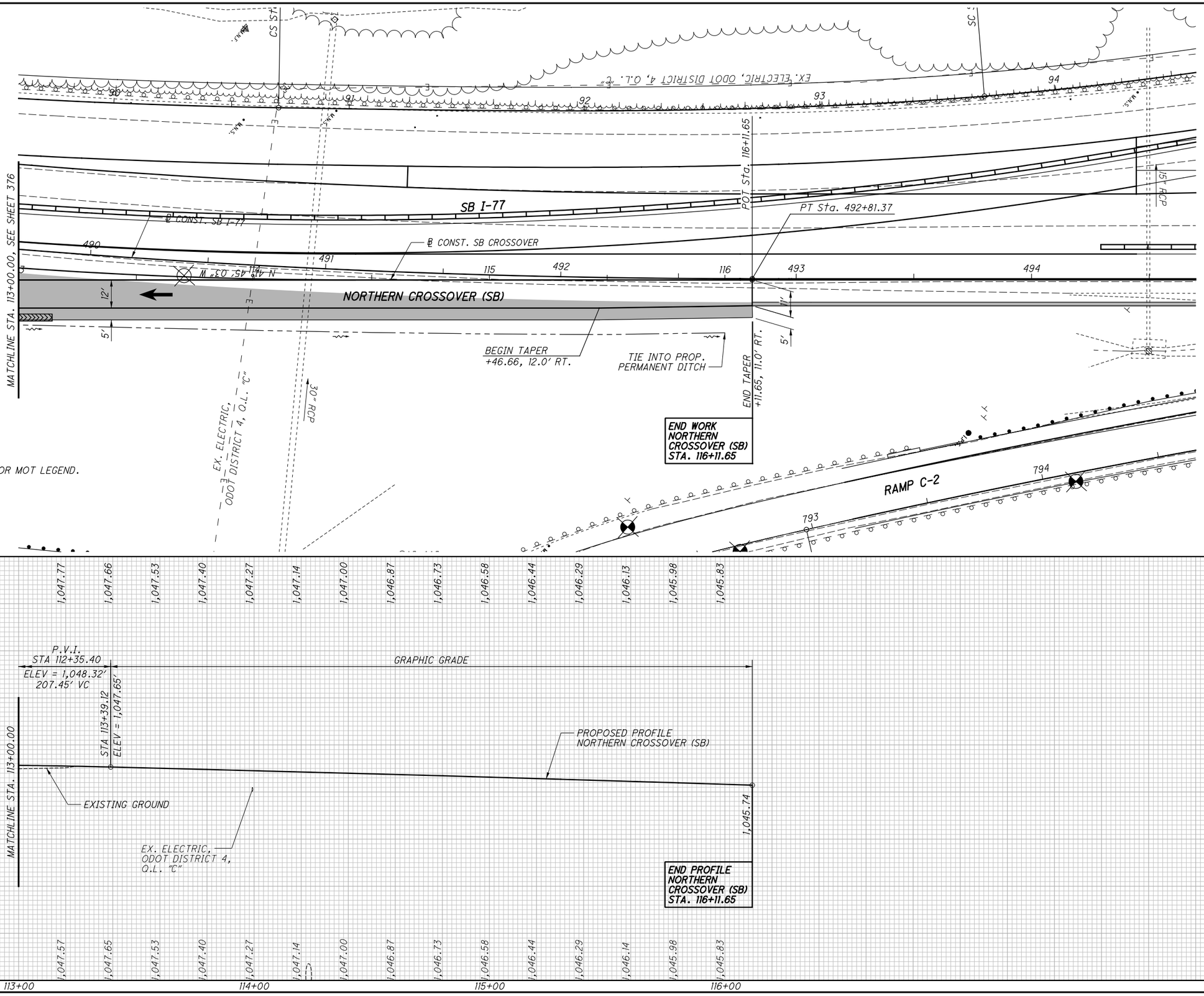


HORIZONTAL SCALE IN FEET
0 10 20 40

CALCULATED KMC
CHECKED SSR

PLAN & PROFILE - NORTHERN CROSSOVER (SB)
PHASE 3 - STA. 113+00.00 TO STA. 116+11.65

SUM-77/277/224
VARIOUS

377
1288

N:\03\60\06744-08\106002_SUM-76-10.95\Design\MOT\Sheets\106002_MH904.dgn Sheet 1/31/2021 5:56:16 PM jrettig

| SEEDING | |
|---|---|
| END WIDTH | SQ. YDS. |
| 26 | 142 |
| 25 | |
| *142 | |

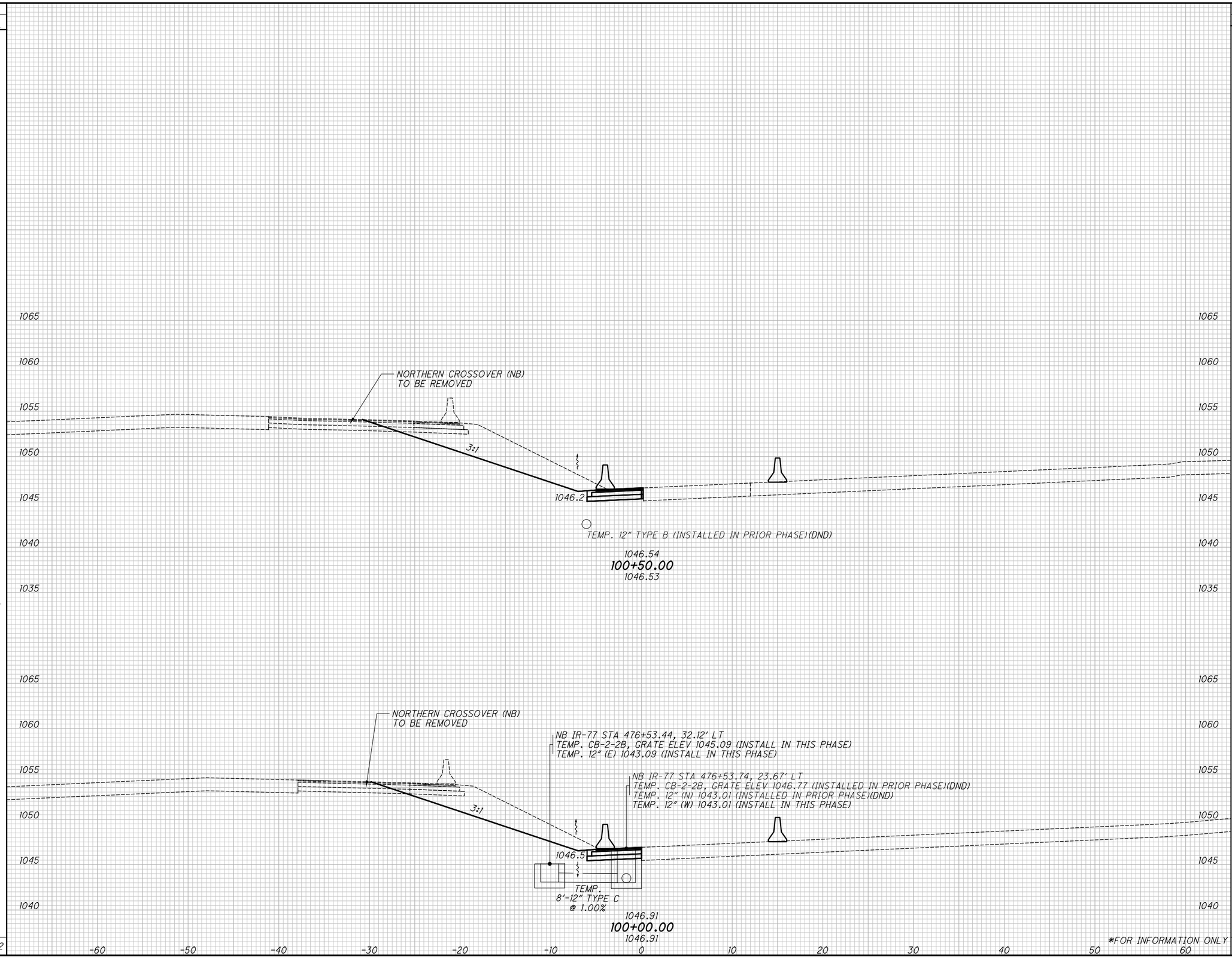


| END AREA | |
|---|---|
| CUT | FILL |
| 54 | 0 |
| 45 | 0 |
| *92 | *0 |

| VOLUME | |
|---|---|
| CUT | FILL |
| 92 | 0 |
| *92 | *0 |

| CALCULATED | CHECKED |
|---|---|
| KMC | SSR |

# CROSS SECTIONS - NORTHERN CROSSOVER (SB)
## PHASE 3 - STA. 100+00.00 TO STA. 100+50.00

SUM-77 / 277 / 224
VARIOUS



N:\03\60\06744-08\06002_SUM-76-10.95\Design\MOT\Basemaps\06002_BM5ll.dgn CL_P_MOT_SB00l 1/31/2021 5:56:37 PM jrettig

| SEEDING | |
|---|---|
| END WIDTH | SQ. YDS. |
| 27 | 148 |
| 27 | 146 |
| | *294 |

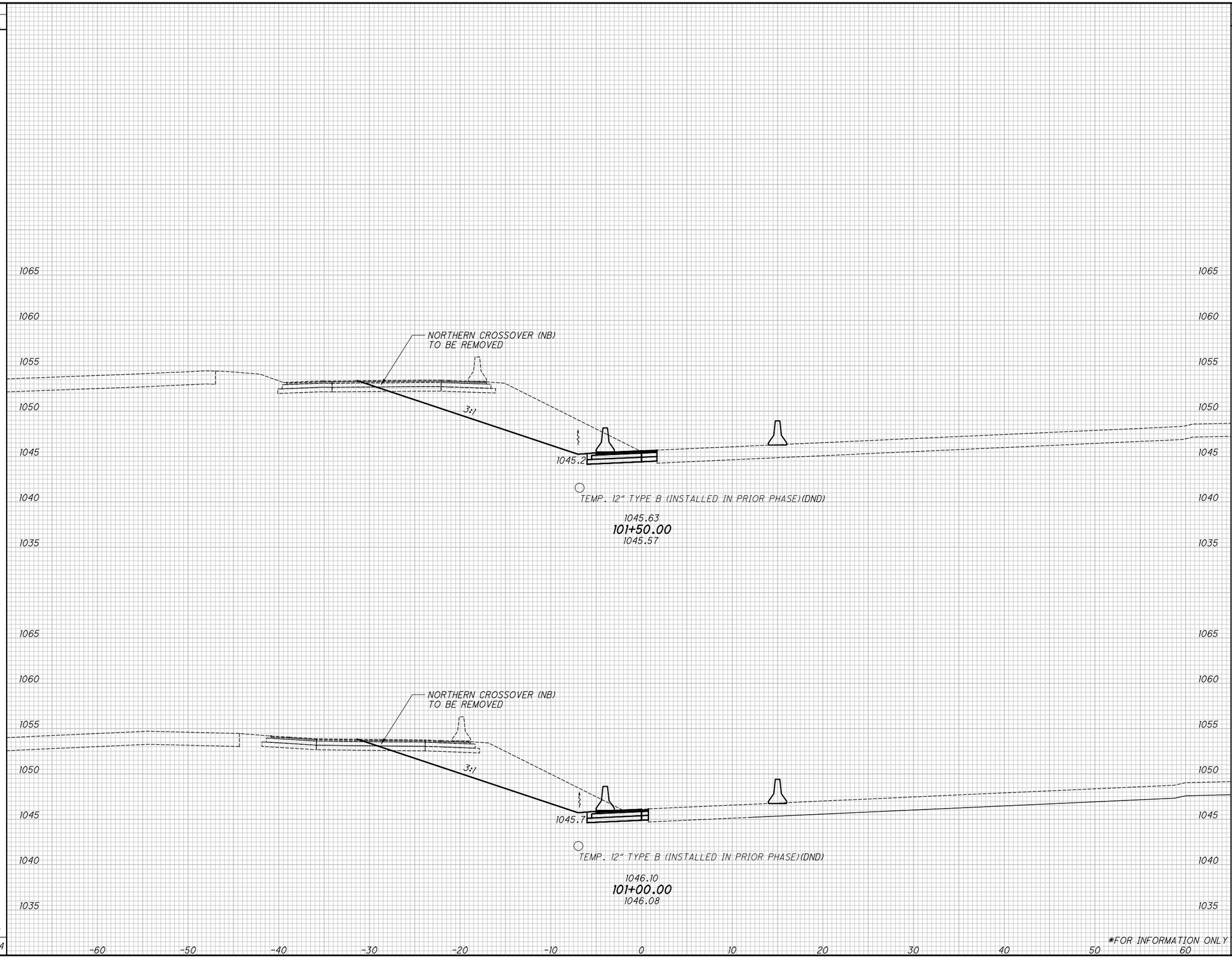


| END AREA | | VOLUME | |
|---|---|---|---|
| CUT | FILL | CUT | FILL |
| 86 | 0 | | |
| 70 | 0 | | |
| | | 144 | 0 |
| | | 115 | 0 |
| | | *259 | *0 |

CALCULATED KMC
CHECKED SSR

# CROSS SECTIONS - NORTHERN CROSSOVER (SB)
## PHASE 3 - STA. 101+00.00 TO STA. 101+50.00

SUM-77/277/224
VARIOUS

379
1288

N:\03\60\06744-08\106002-SUM-76-10.95\Design\MOT\Basemaps\106002_BM5ll.dgn CL_P_MOT_SB001 1/31/2021 5:56:37 PM jrettig

| SEEDING | |
|---|---|
| END WIDTH | SQ. YDS. |
| 25 | |
| 141 | |
| 26 | |
| 146 | |
| *287 | |

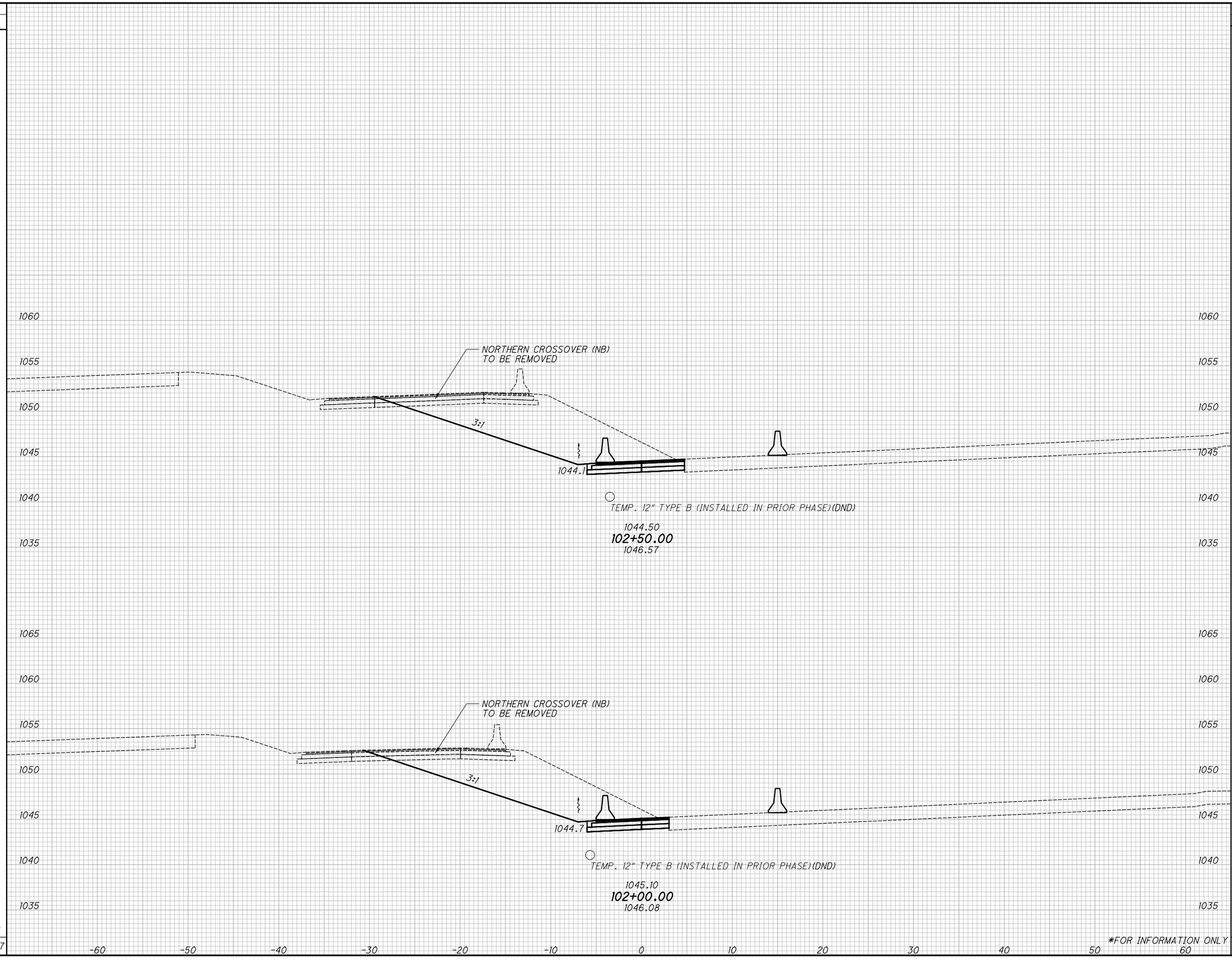


| END AREA | |
|---|---|
| CUT | FILL |
| 113 | 0 |
| 101 | 0 |
| *FOR INFORMATION ONLY | |

| VOLUME | |
|---|---|
| CUT | FILL |
| 198 | 0 |
| 173 | 0 |
| *371 | *0 |

CALCULATED KMC
CHECKED SSR

# CROSS SECTIONS - NORTHERN CROSSOVER (SB)
## PHASE 3 - STA. 102+00.00 TO STA. 102+50.00

SUM-77/277/224
VARIOUS

380
1288

N:\03\60\06744-08\106002-SUM-76-10.95\Design\MOT\Basemaps\106002_BM5ll.dgn CL_P_MOT_SB001 1/31/2021 5:56:37 PM jrettig

| SEEDING | | END AREA | | VOLUME | |
|---|---|---|---|---|---|
| END WIDTH | SQ. YDS. | CUT | FILL | CUT | FILL |
| 20 | 114 | 127 | 0 | 231 | 0 |
| 21 | 123 | 122 | 0 | 220 | 0 |
| 23 | 132 | 116 | 0 | 212 | 0 |
| | *369 | | | *663 | *0 |

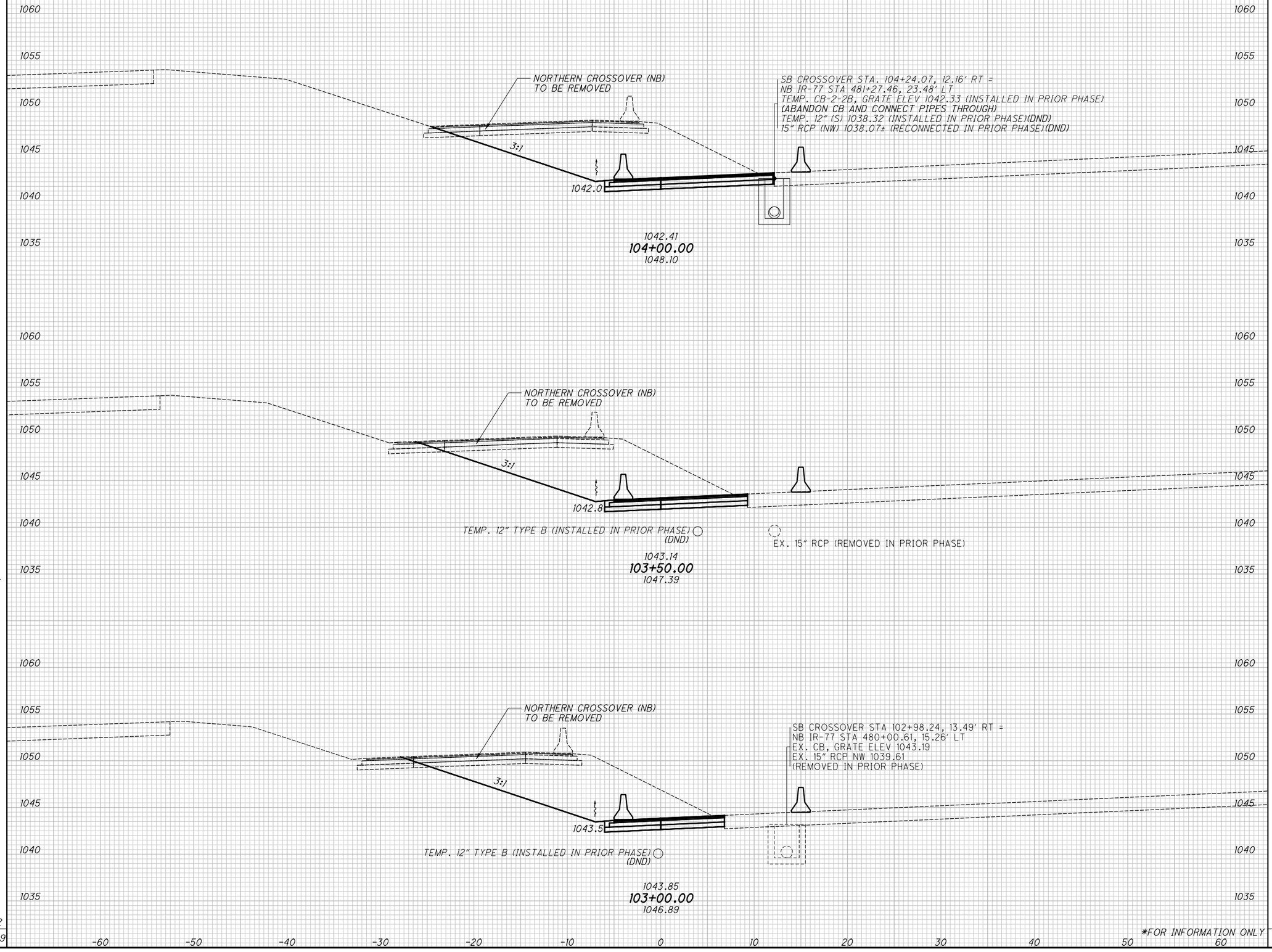


CALCULATED KMC
CHECKED SSR

# CROSS SECTIONS - NORTHERN CROSSOVER (SB)
## PHASE 3 - STA. 103+00.00 TO STA. 104+00.00

SUM-77 / 277 / 224
VARIOUS

381
1288

N:\03\60\06744-08\106002_SUM-76-10.95\Design\MOT\Basemaps\106002_BM511.dgn CL_P_MOT_SB001 1/31/2021 5:56:38 PM jrettig

| SEEDING | |
|---|---|
| END WIDTH | SQ. YDS. |
| 12 | |
| | 81 |
| 17 | |
| 102 | |
| *183 | |

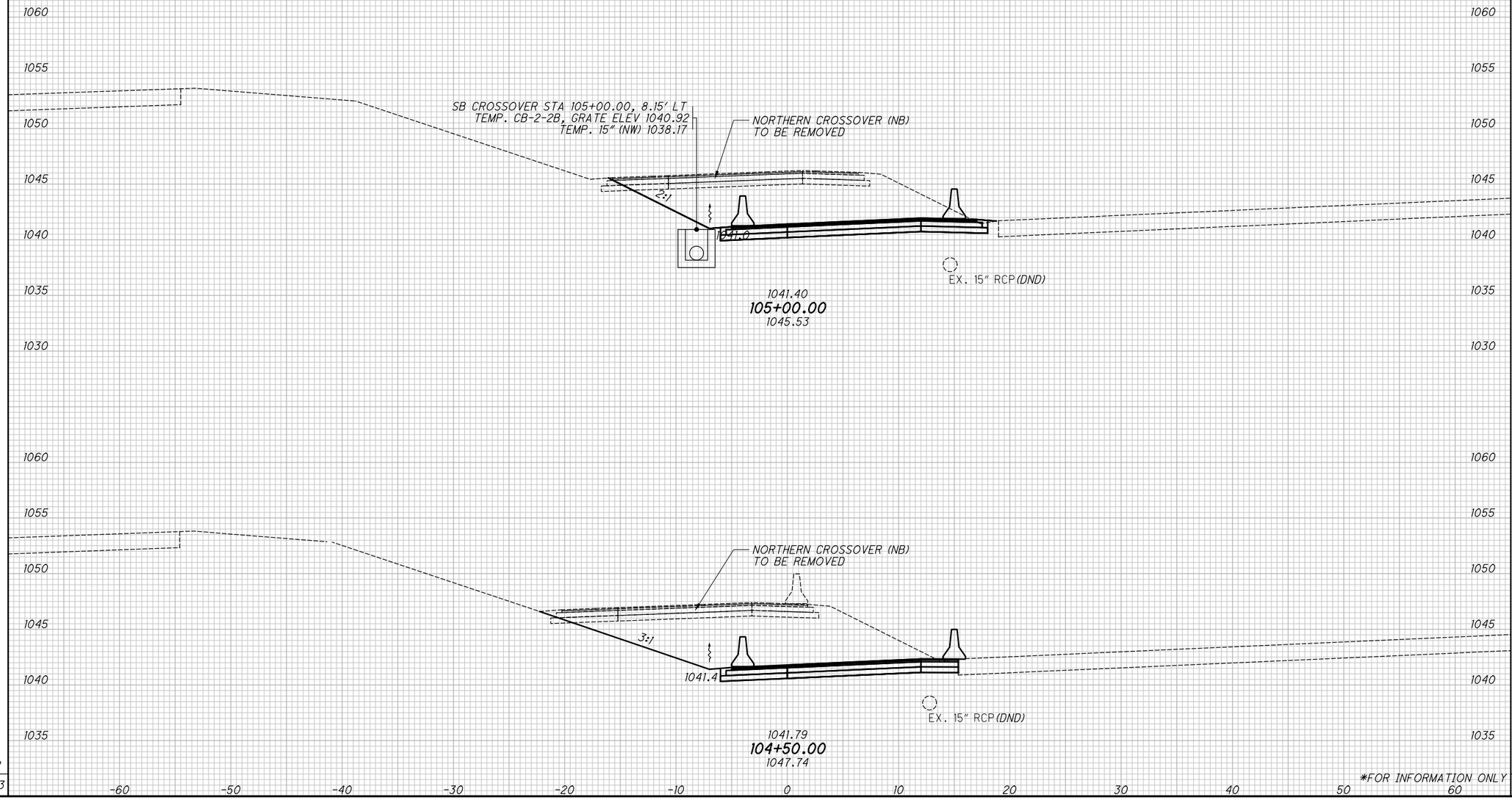


| END AREA | | VOLUME | |
|---|---|---|---|
| CUT | FILL | CUT | FILL |
| 112 | 0 | | |
| | | 221 | 0 |
| 127 | 0 | | |
| | | 235 | 0 |
| | | *456 | *0 |

CALCULATED KMC
CHECKED SSR

**CROSS SECTIONS - NORTHERN CROSSOVER (SB)**
**PHASE 3 - STA. 104+50.00 TO STA. 105+00.00**

**SUM-77 / 277 / 224**
**VARIOUS**

382
1288

N:\03\60\06744-08\106002_SUM-76-10.95\Design\MOT\Basemaps\106002_BM511.dgn CL_P_MOT_SB001 1/31/2021 5:56:38 PM jrettig

| SEEDING | |
|---|---|
| END WIDTH | SQ. YDS. |
| 20 | 93 |
| 13 | 69 |
| | *162 |

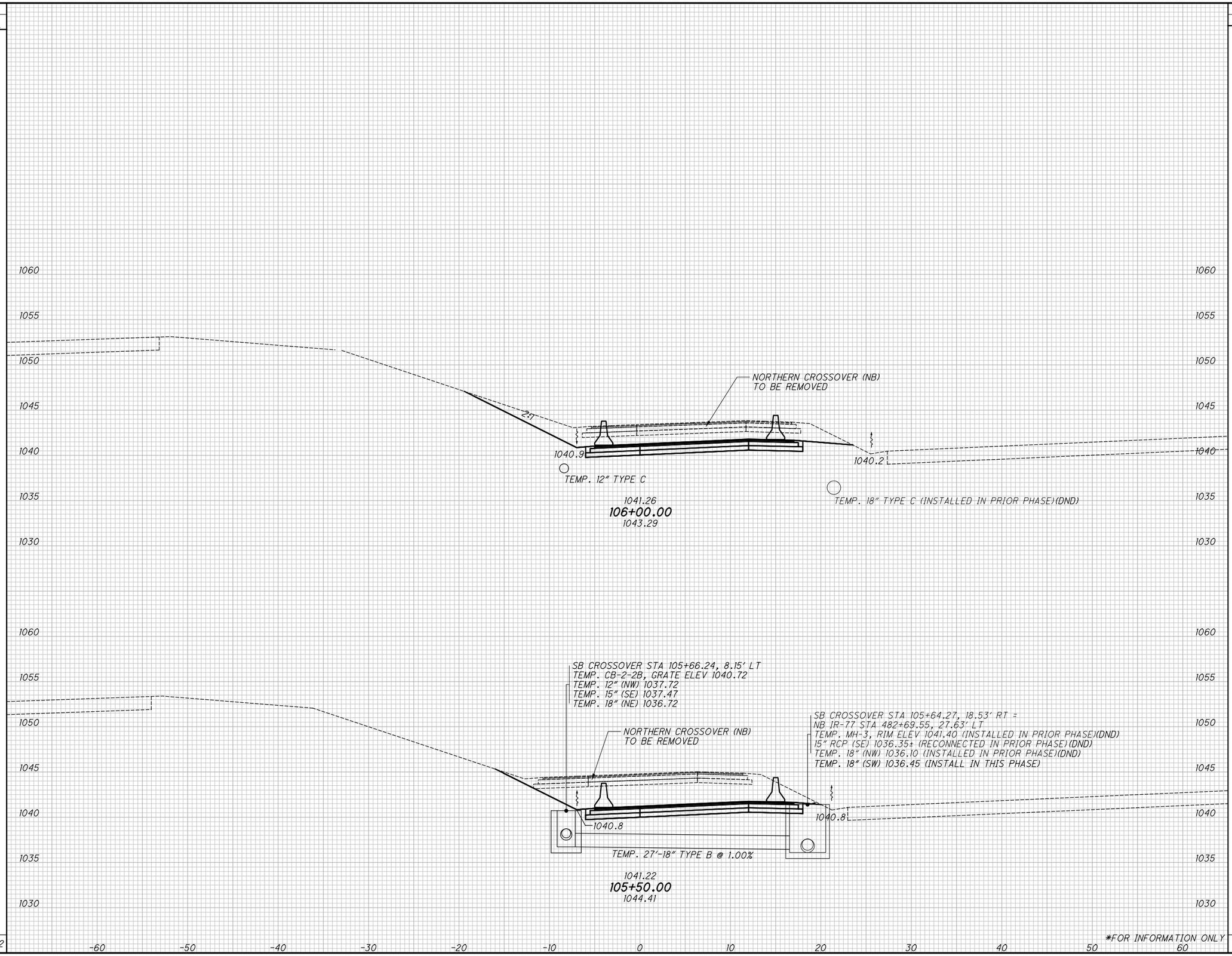


| END AREA | | VOLUME | |
|---|---|---|---|
| CUT | FILL | CUT | FILL |
| 73 | 0 | | |
| 94 | 0 | 155 | 0 |
| | | 191 | 0 |
| | | *346 | *0 |

| CALCULATED | CHECKED |
|---|---|
| KMC | SSR |

# CROSS SECTIONS - NORTHERN CROSSOVER (SB)
## PHASE 3 - STA. 105+50.00 TO STA. 106+00.00

SUM-77/277/224
VARIOUS



N:\03\60\06744-08\106002_SUM-76-10.95\Design\MOT\Basemaps\106002_BM5ii.dgn CL_P_MOT_SB001 1/31/2021 5:56:38 PM jrettig

| SEEDING | |
|---|---|
| END WIDTH | SQ. YDS. |
| 39 | 183 |
| 27 | 132 |
| | *315 |

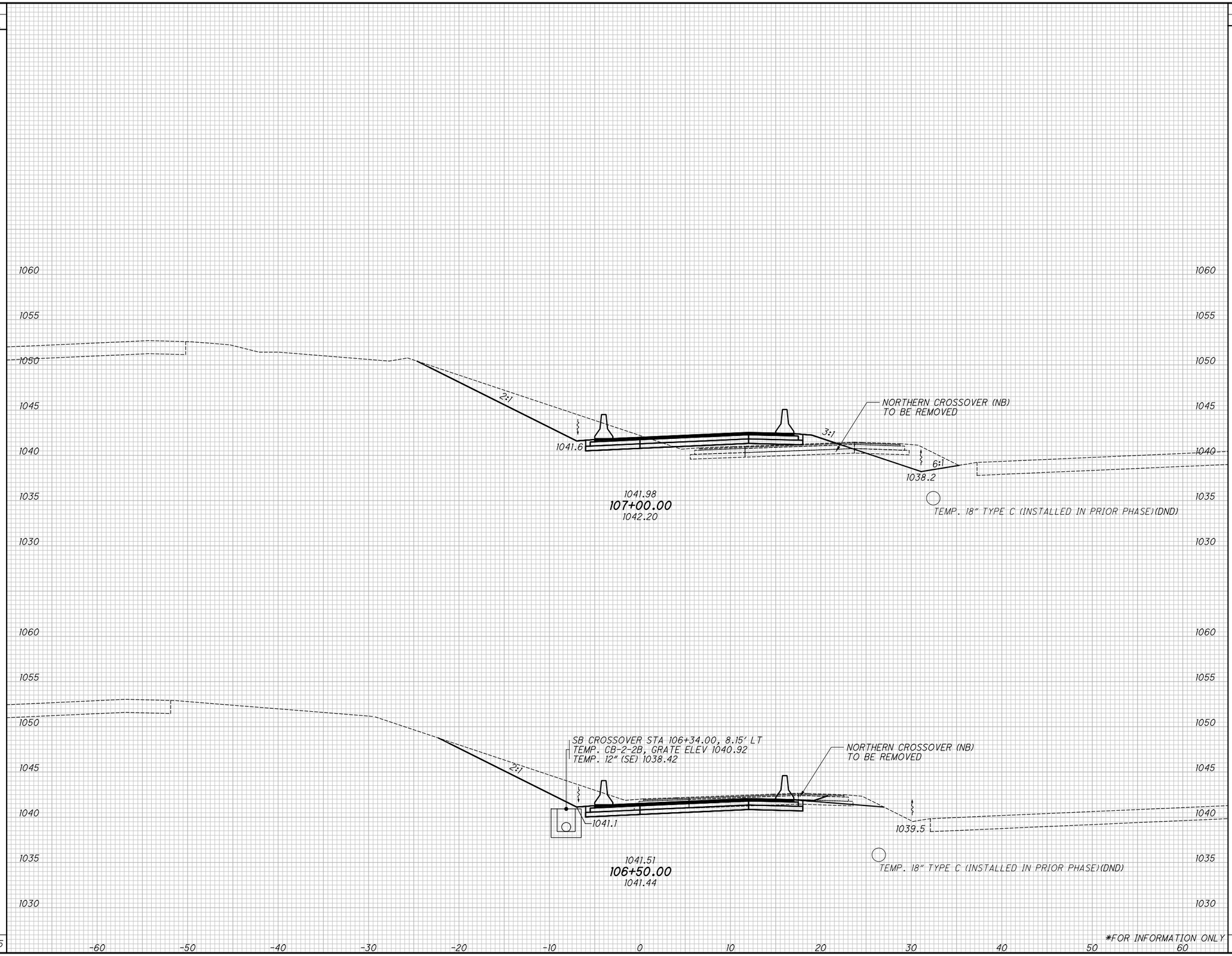


| END AREA | |
|---|---|
| CUT | FILL |
| 60 | 5 |
| 47 | 1 |
| | |
| *FOR INFORMATION ONLY | |

| VOLUME | |
|---|---|
| CUT | FILL |
| 99 | 6 |
| 111 | 1 |
| *210 | *7 |

CALCULATED KMC
CHECKED SSR

# CROSS SECTIONS - NORTHERN CROSSOVER (SB)
## PHASE 3 - STA. 106+50.00 TO STA. 107+00.00

SUM-77 / 277 / 224
VARIOUS

384
1288

N:\03\60\06744-08\106002_SUM-76-10.95\Design\MOT\Basemaps\106002_BM5ii.dgn CL_P_MOT_SB00ii 1/31/2021 5:56:39 PM jrettig

| SEEDING | |
|---|---|
| END WIDTH | SQ. YDS. |
| | |
| 55 | |
| | 280 |
| 46 | |
| | 235 |
| | *515 |

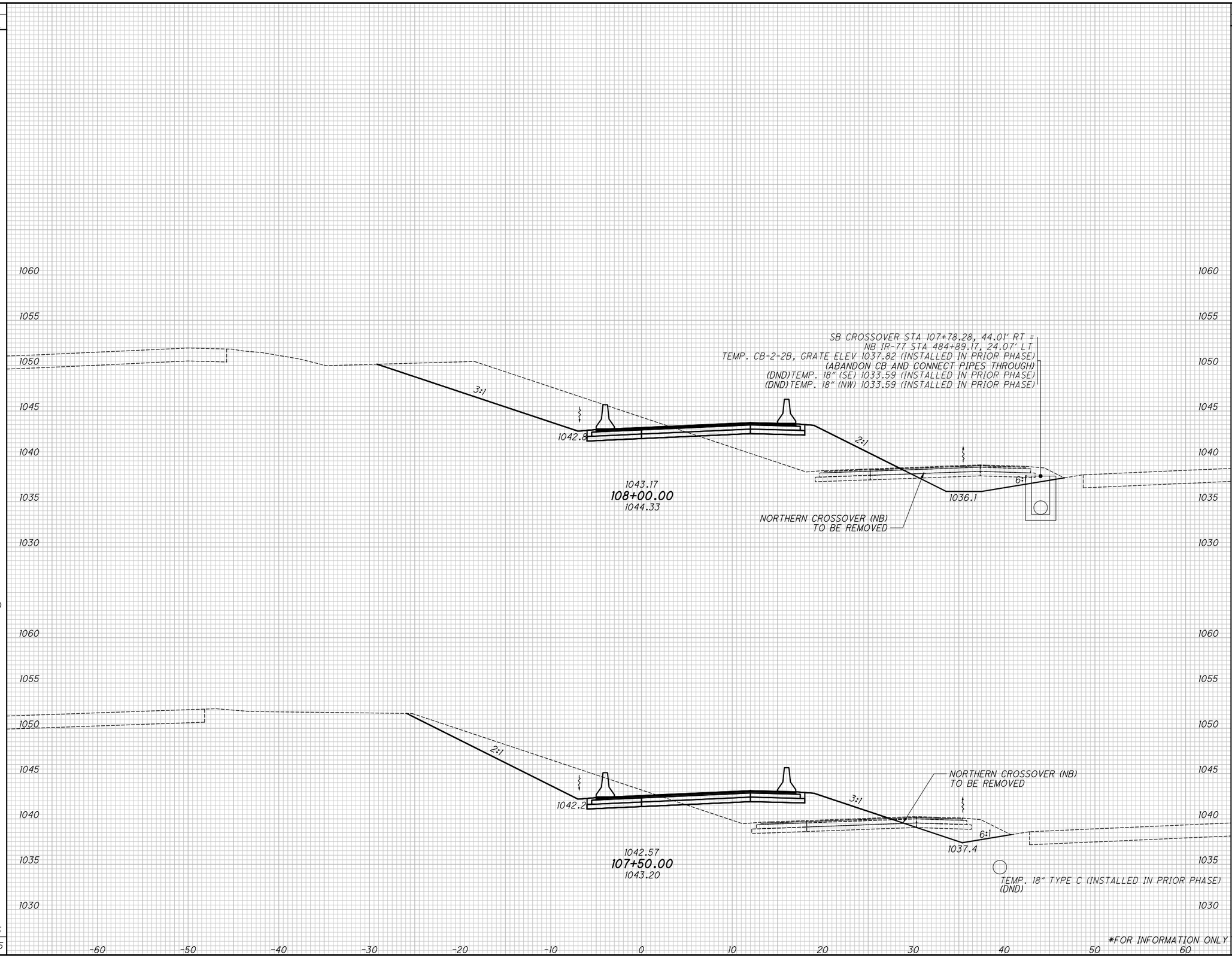


| END AREA | | VOLUME | |
|---|---|---|---|
| CUT | FILL | CUT | FILL |
| | | | |
| 116 | 54 | | |
| | | 173 | 84 |
| 71 | 37 | | |
| | | 121 | 39 |
| | | *294 | *123 |

CALCULATED KMC
CHECKED SSR

# CROSS SECTIONS - NORTHERN CROSSOVER (SB)
## PHASE 3 - STA. 107+50.00 TO STA. 108+00.00

SUM-77/277/224
VARIOUS

385
1288

N:\03\60\06744-08\106002_SUM-76-10.95\Design\MOT\Basemaps\106002_BM5ll.dgn CL_P_MOT_SB00l l/31/2021 5:56:39 PM jrettig

| SEEDING | |
|---|---|
| END WIDTH | SQ. YDS. |
| 62 | 332 |
| 58 | 312 |
| | *644 |

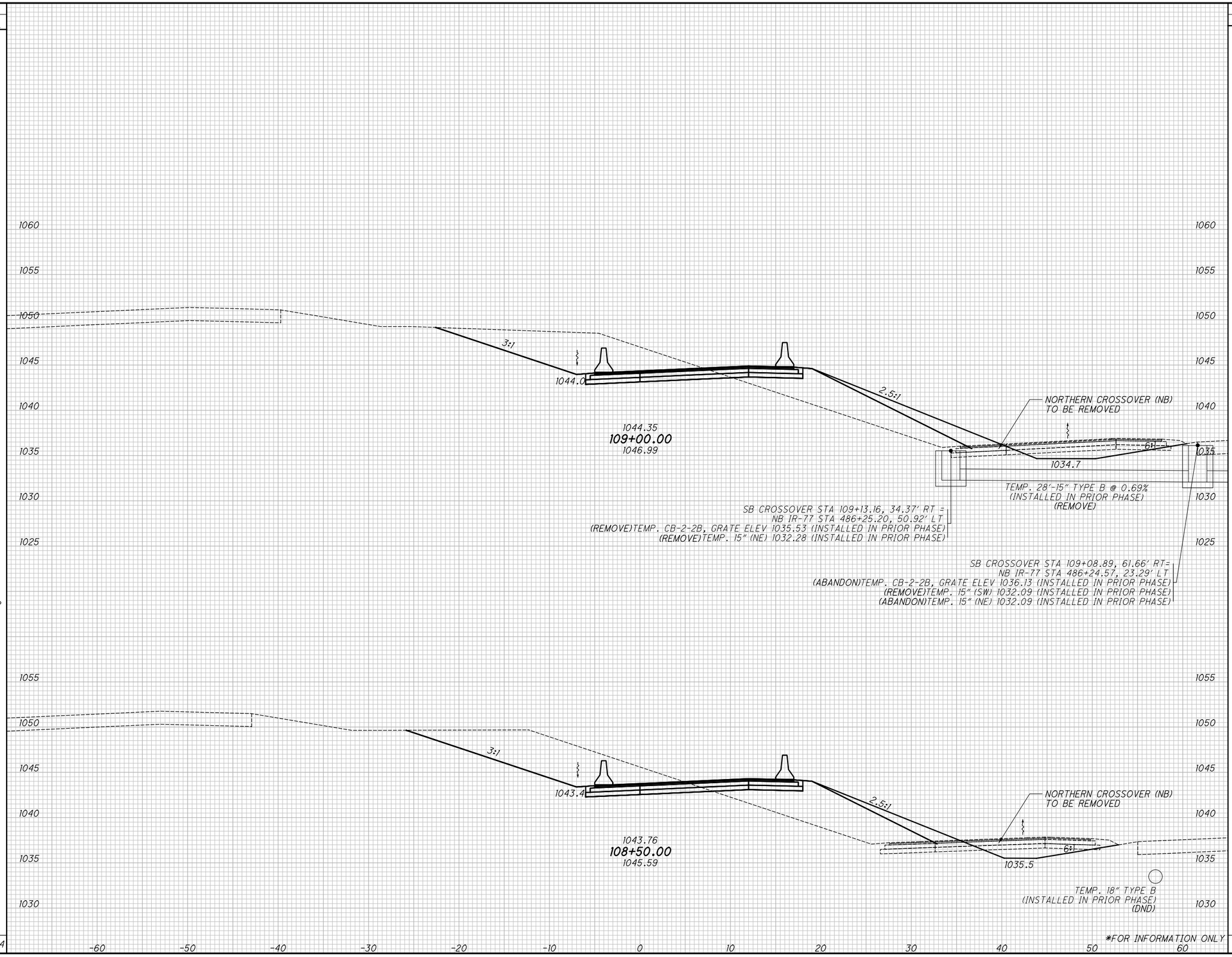


*FOR INFORMATION ONLY

| END AREA | | VOLUME | |
|---|---|---|---|
| CUT | FILL | CUT | FILL |
| 98 | 73 | | |
| 106 | 73 | | |
| 190 | 135 | | |
| 206 | 118 | | |
| *396 | *253 | | |

CALCULATED KMC
CHECKED SSR

# CROSS SECTIONS - NORTHERN CROSSOVER (SB)
## PHASE 3 - STA. 108+50.00 TO STA. 109+00.00

SUM-77/277/224
VARIOUS

386
1288

N:\03\60\06744-08\106002-SUM-76-10.95\Design\MOT\Basemaps\106002_BM5ll.dgn CL_P_MOT_SB001 1/31/2021 5:56:39 PM jrettig

| SEEDING END WIDTH | SEEDING SQ. YDS. | END AREA CUT | END AREA FILL | VOLUME CUT | VOLUME FILL |
|---|---|---|---|---|---|
| 61 | | | | | |
| | 347 | | | 231 | 143 |
| 64 | | | | | |
| | 350 | | | 206 | 141 |
| | *697 | | | *437 | *284 |

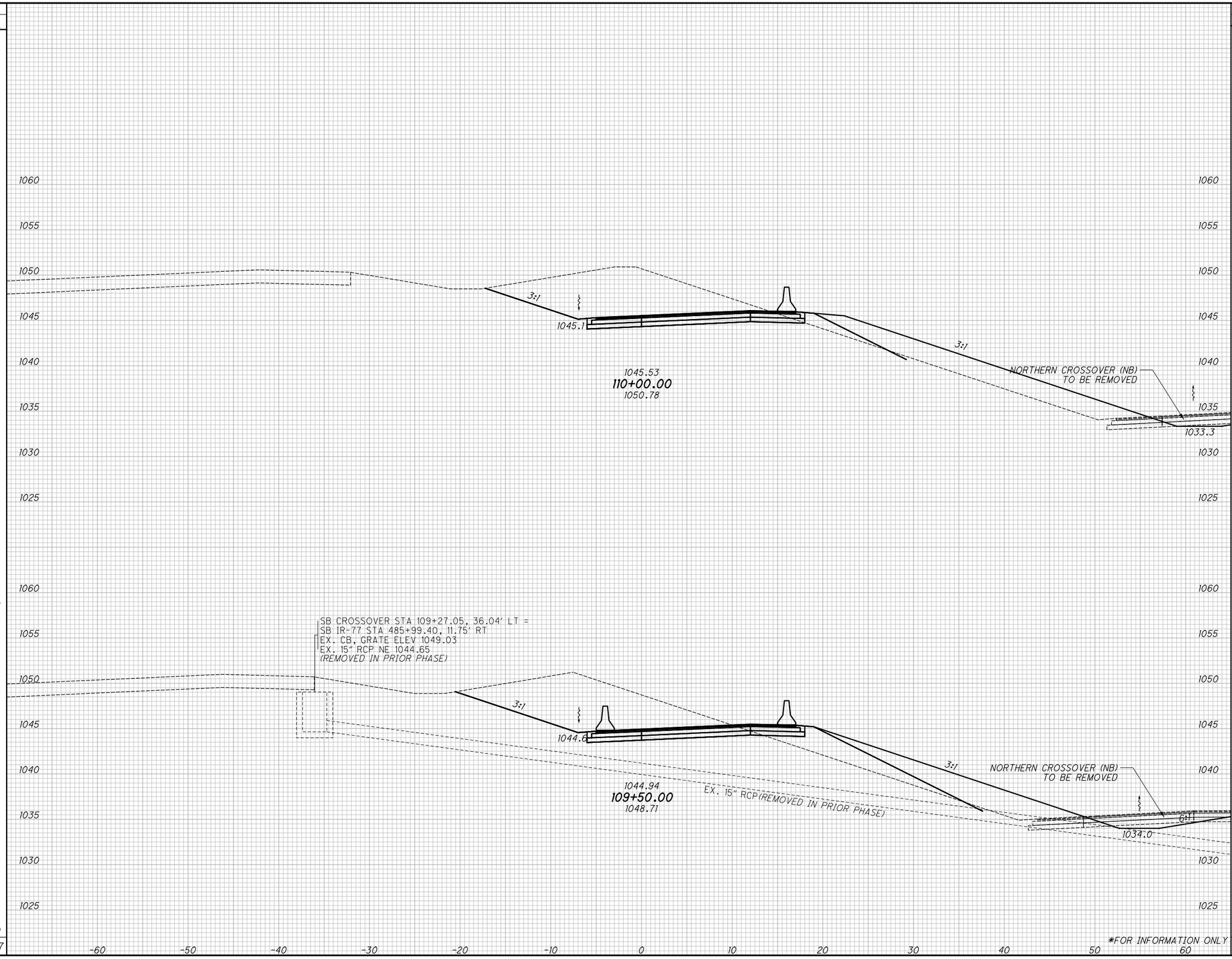


*FOR INFORMATION ONLY

CALCULATED KMC
CHECKED SSR

CROSS SECTIONS - NORTHERN CROSSOVER (SB)
PHASE 3 - STA. 109+50.00 TO STA. 110+00.00

SUM-77/277/224
VARIOUS

387
1288

N:\03\60\06744-08\106002_SUM-76-10.95\Design\MOT\Basemaps\106002_BM5ii.dgn CL_P_MOT_SB001 1/31/2021 5:56:40 PM jrettig

| SEEDING END WIDTH | SEEDING SQ. YDS. | END AREA CUT | END AREA FILL | VOLUME CUT | VOLUME FILL |
|---|---|---|---|---|---|
| 18 | 80 | 101 | 0 | 203 | 0 |
| 11 | 198 | 118 | 0 | 226 | 69 |
| | *278 | | | *429 | *69 |

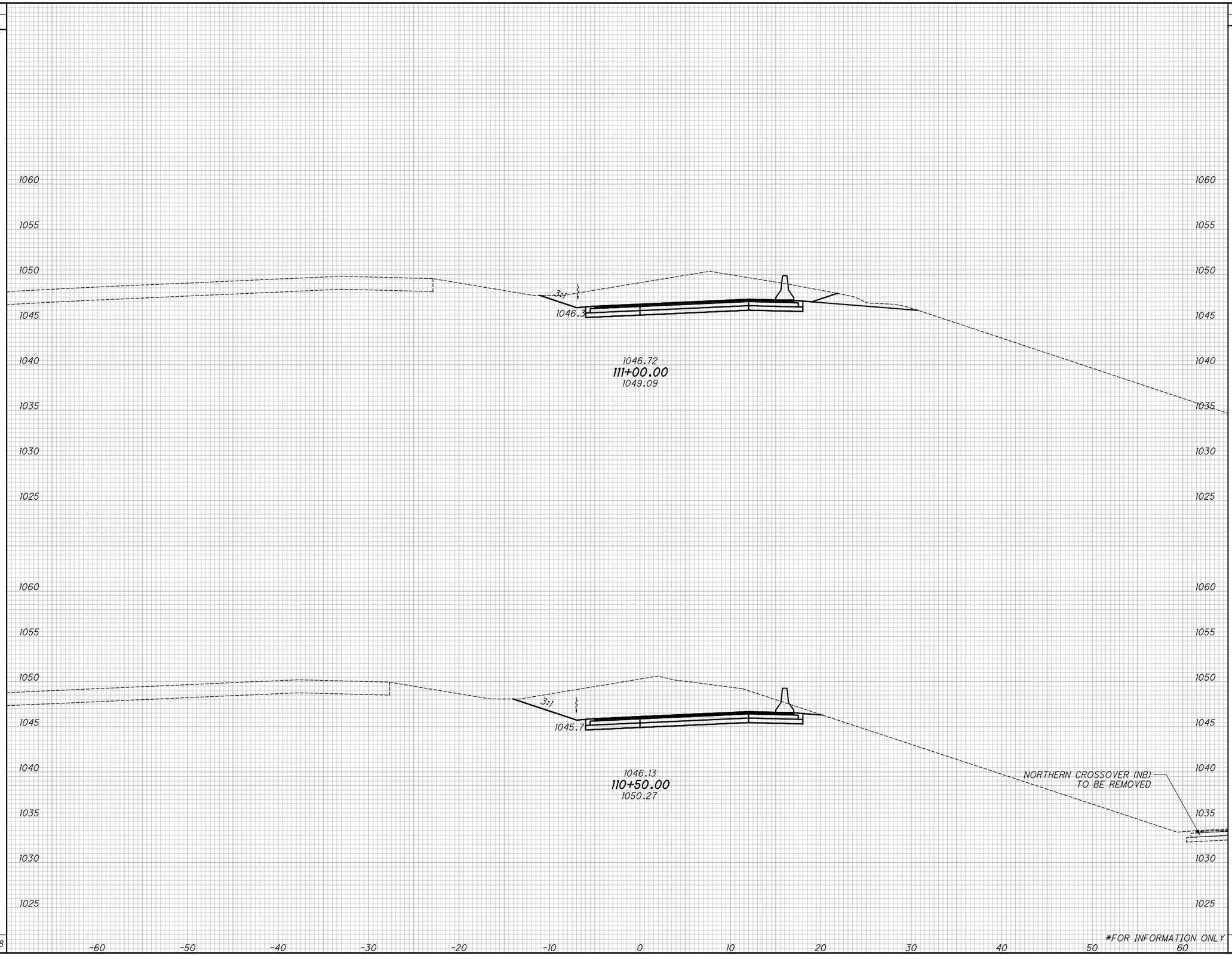


*FOR INFORMATION ONLY

CALCULATED KMC
CHECKED SSR

CROSS SECTIONS - NORTHERN CROSSOVER (SB)
PHASE 3 - STA. 110+50.00 TO STA. 111+00.00

SUM-77/277/224
VARIOUS

388
1288

emaps SUM0002_RVSH.dgn CL P_NOT_SB001 1/31/2021 5:56:40 PM jcutting

| SEEDING | |
|---|---|
| END WIDTH | SQ. YDS. |
| 6 | 41 |
| 9 | 75 |
| | *116 |

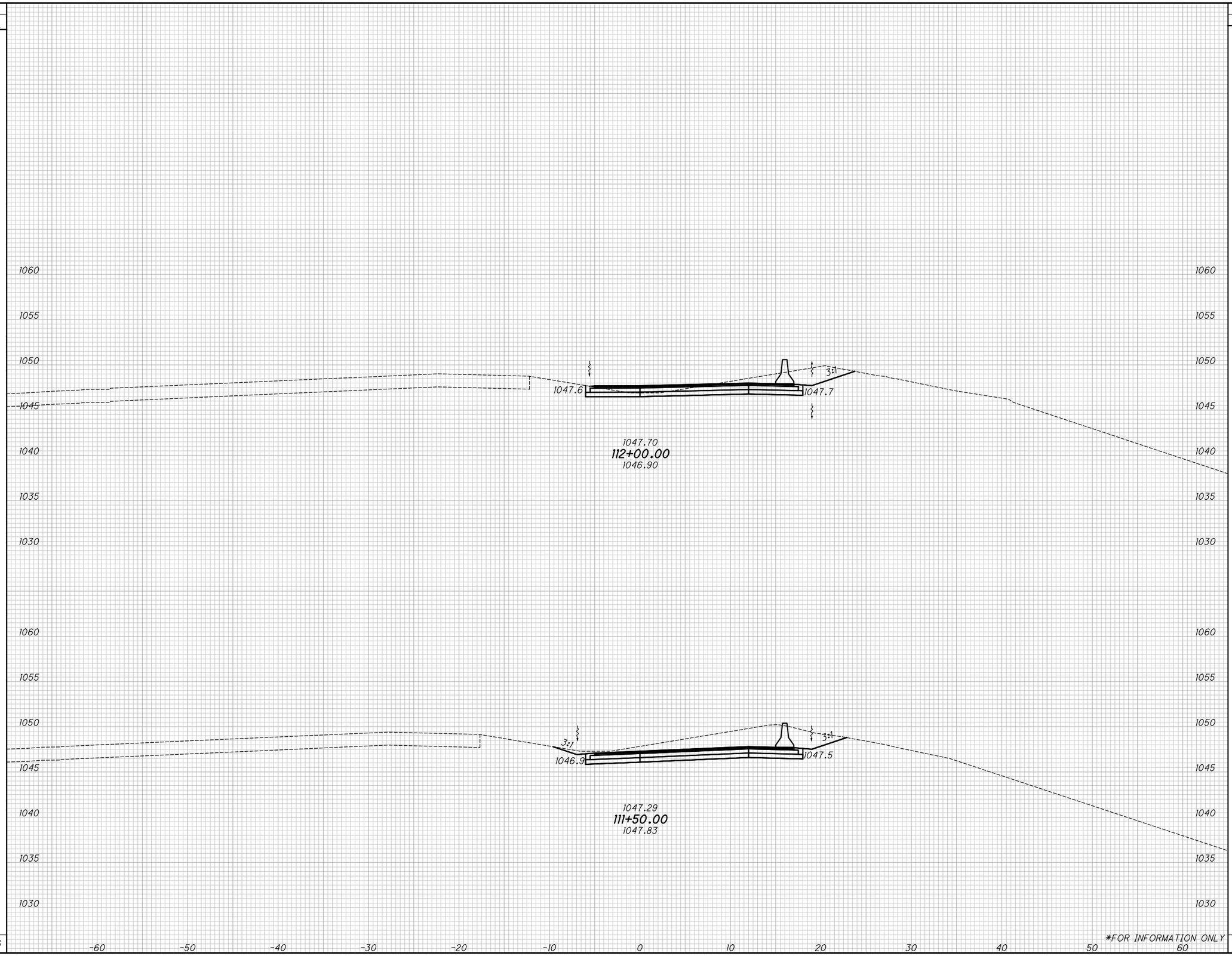


| END AREA | | VOLUME | |
|---|---|---|---|
| CUT | FILL | CUT | FILL |
| 37 | 0 | | |
| 66 | 0 | 95 | 0 |
| | | 155 | 0 |
| | | *250 | *0 |

CALCULATED KMC
CHECKED SSR

# CROSS SECTIONS - NORTHERN CROSSOVER (SB)
## PHASE 3 - STA. 111+50.00 TO STA. 112+00.00

SUM-77/277/224
VARIOUS

389
1288

N:\03\60\06744-08\106002_SUM-76-10.95\Design\MOT\Basemaps\106002_BM511.dgn CL_P_MOT_SB001 1/31/2021 5:56:40 PM jrettig

| SEEDING END WIDTH | SEEDING SQ. YDS. |
|---|---|
| 2 | 10 |
| 1 | 20 |
| 6 | 33 |
| | *63 |

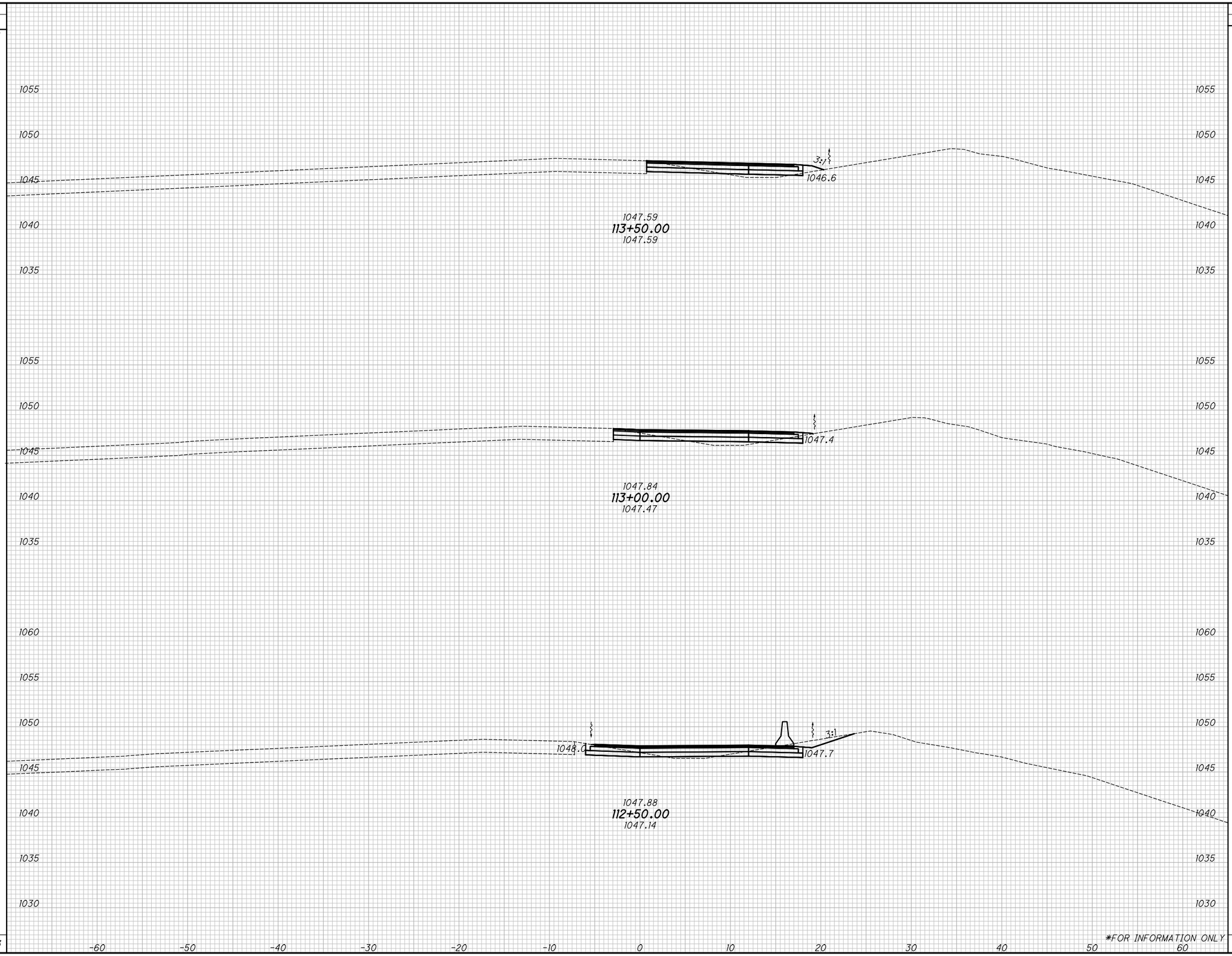


| END AREA CUT | END AREA FILL | VOLUME CUT | VOLUME FILL |
|---|---|---|---|
| 6 | 2 | | |
| | | 12 | 4 |
| 7 | 2 | | |
| | | 21 | 2 |
| 16 | 0 | | |
| | | 49 | 0 |
| | | *82 | *6 |

*FOR INFORMATION ONLY

CALCULATED KMC
CHECKED SSR

# CROSS SECTIONS - NORTHERN CROSSOVER (SB)
## PHASE 3 - STA. 112+50.00 TO STA. 113+50.00

SUM-77/277/224
VARIOUS

390
1288

emaps\8106002_RW41.dgn GL_B_MOT_SB001 1/31/2021 5:56:40 PM jsattig

| SEEDING | |
|---|---|
| END WIDTH | SQ. YDS. |
| 5 | 27 |
| 5 | 23 |
| 4 | 17 |
| | *67 |

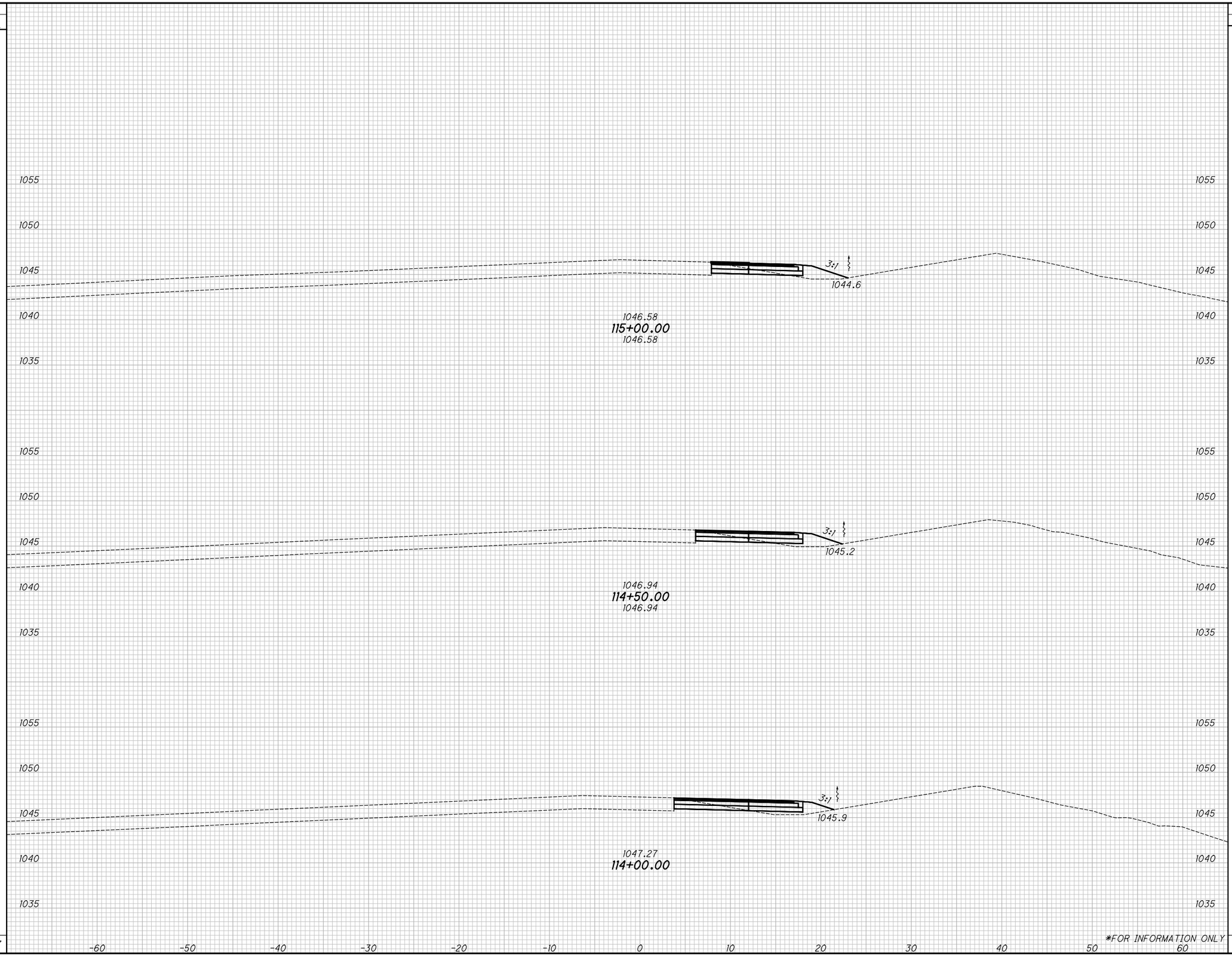


| END AREA | |
|---|---|
| CUT | FILL |
| 5 | 5 |
| 5 | 5 |
| 5 | 4 |
| | |

| VOLUME | |
|---|---|
| CUT | FILL |
| 9 | 9 |
| 9 | 8 |
| 10 | 6 |
| *28 | *23 |

*FOR INFORMATION ONLY

CALCULATED KMC
CHECKED SSR

# CROSS SECTIONS - NORTHERN CROSSOVER (SB)
## PHASE 3 - STA. 114+00.00 TO STA. 115+00.00

SUM-77/277/224
VARIOUS

391
1288

N:\03\60\06744-08\106002_SUM-76-10.95\Design\MOT\Basemaps\106002_BM5ii.dgn CL_P_MOT_SB001 1/31/2021 5:56:41 PM jrettig

N:\03\60\06744-08\I06002_SUM-76-10.95\Design\MOT\Basemaps\I06002_BM5II.dgn CL_P_MOT_SB00I 1/3I/2021 5:56:4I PM jrettig

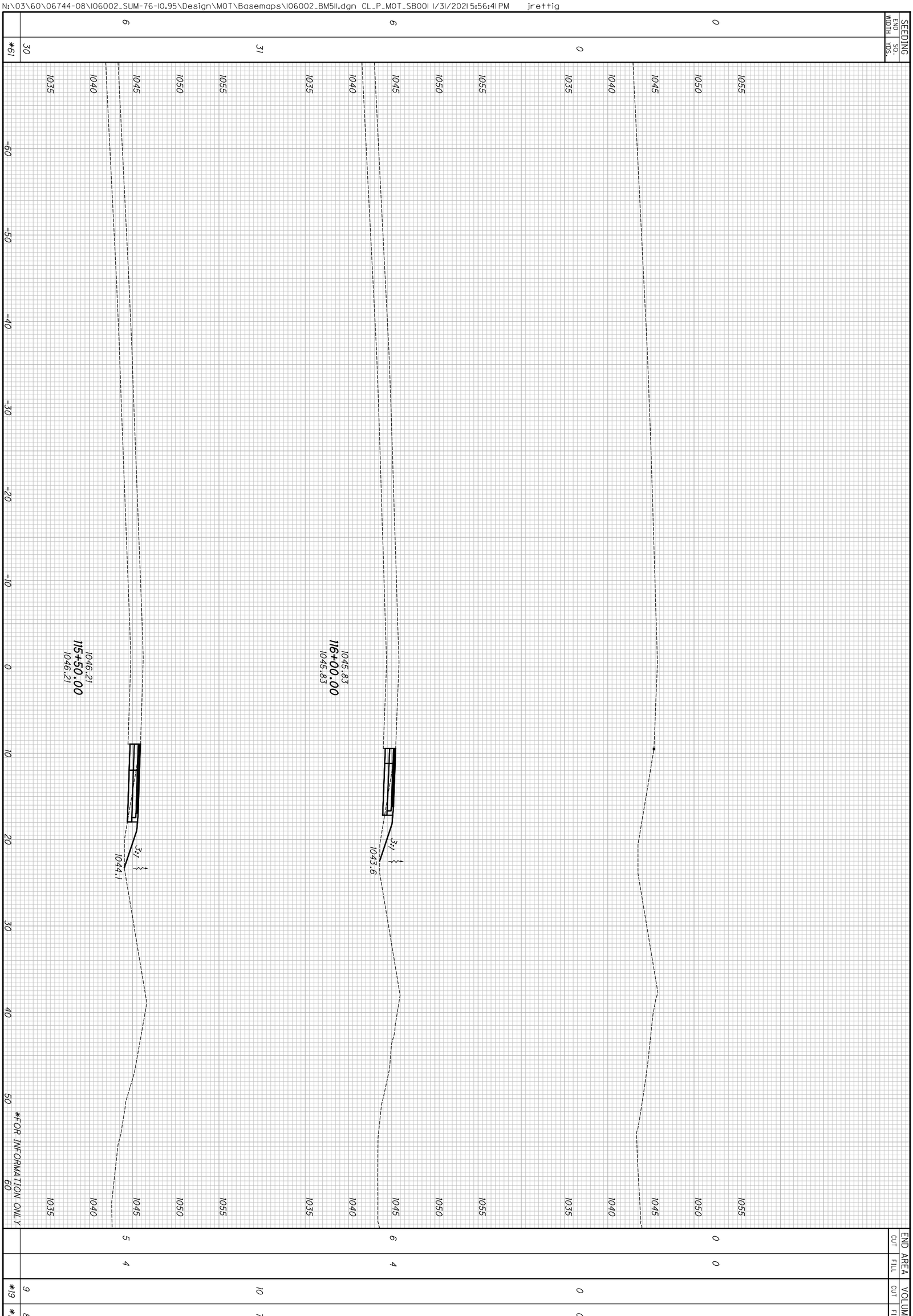


| | |
|---|---|
| 392 / 1288 | SUM-77 / 277 / 224 VARIOUS |
| CROSS SECTIONS - NORTHERN CROSSOVER (SB) PHASE 3 - STA. 115+50.00 TO STA. 116+00.00 | CALCULATED KMC / CHECKED SSR |

N:\03\60\06744-08\I06002_SUM-76-I0.95\Design\MOT\Sheets\I06002_MP405.dgn Sheet 1/31/2021 5:56:47 PM jrettig

NOTES:

1. SEE SHEET 128 FOR MOT LEGEND AND DRUM SPACING CHART.
2. ALL PAVEMENT MARKINGS THAT ARE EXISTING OR PLACED IN A PREVIOUS PHASE WILL REMAIN UNLESS OTHERWISE INDICATED.

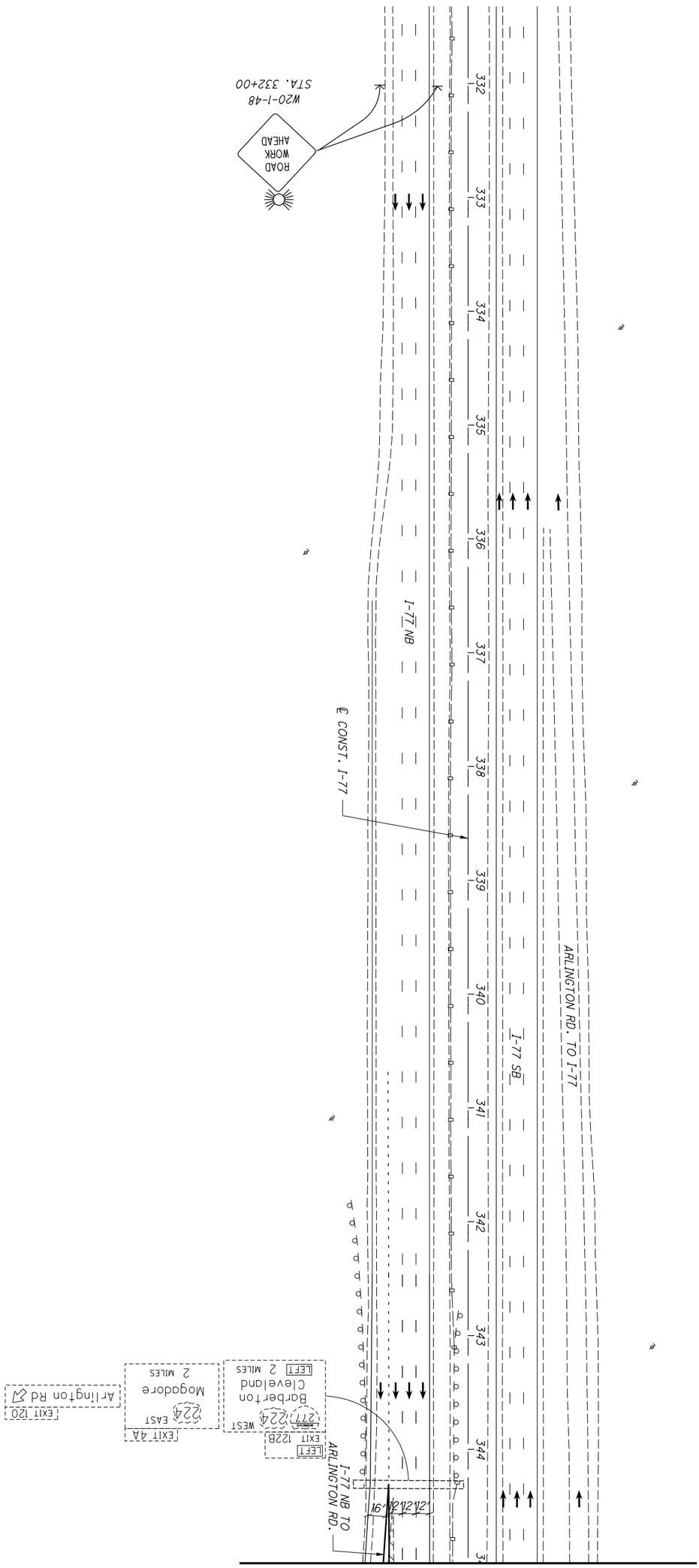


| | | | | |
|---|---|---|---|---|
| 393 / 1288 | SUM-77/277/224<br>VARIOUS | MAINTENANCE OF TRAFFIC PLAN - PHASE 4<br>I-77 - SOUTH LIMITS TO STA. 345+00 | CALCULATED .<br>CHECKED . | 0 50<br>25 100<br>HORIZONTAL SCALE IN FEET |

N:\03\60\06744-08\I06002_SUM-76-I0.95\Design\MOT\Sheets\I06002_MP406.dgn Sheet 1/31/2021 5:56:50 PM jrettig

NOTES:

1. SEE SHEET 128 FOR MOT LEGEND AND DRUM SPACING CHART.
2. ALL PAVEMENT MARKINGS THAT ARE EXISTING OR PLACED IN A PREVIOUS PHASE WILL REMAIN UNLESS OTHERWISE INDICATED.

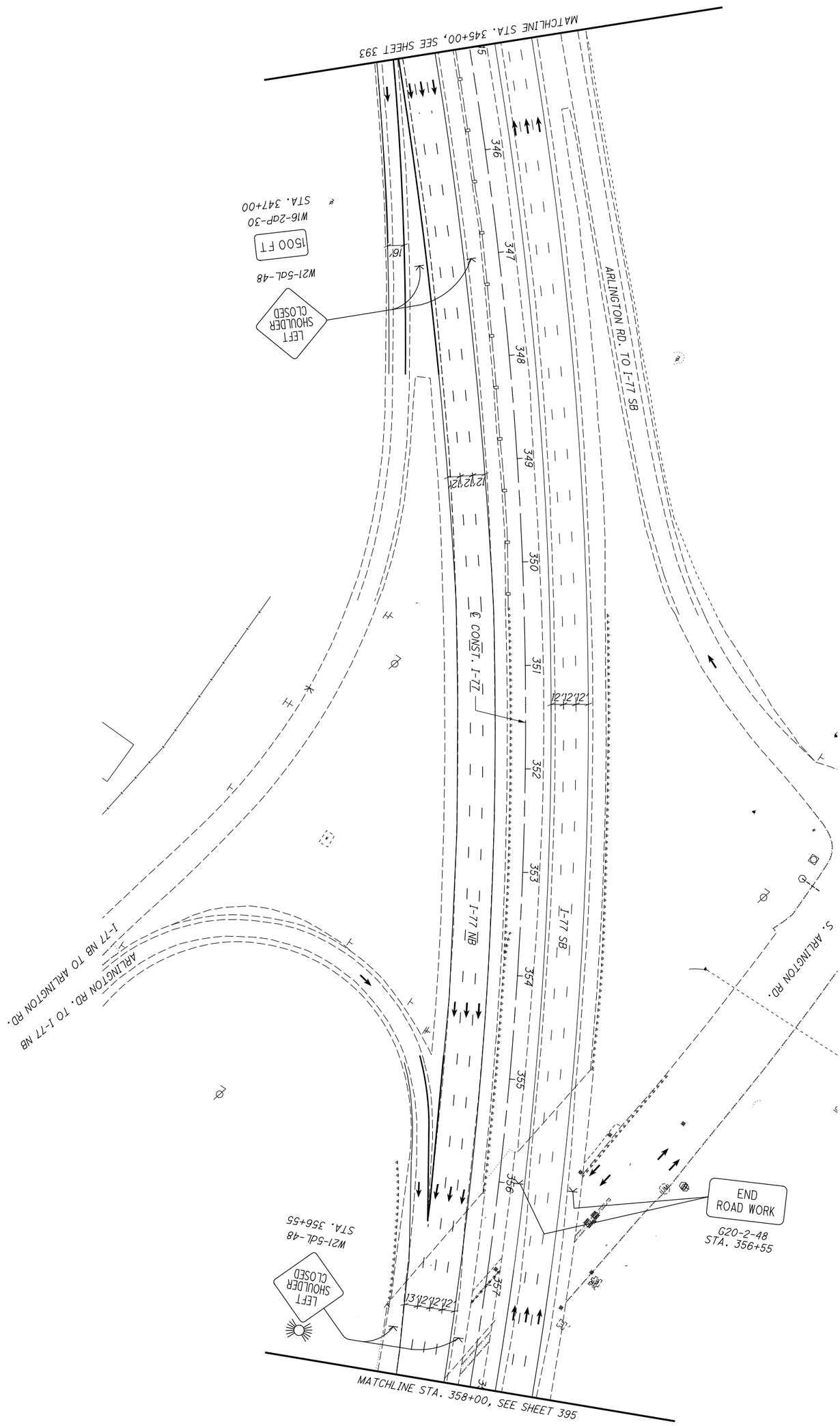


| 394 / 1288 | SUM-77/277/224 VARIOUS | MAINTENANCE OF TRAFFIC PLAN - PHASE 4 I-77 - STA. 345+00 TO STA. 358+00 | CALCULATED . CHECKED . | 0 50 25 100 HORIZONTAL SCALE IN FEET |
|---|---|---|---|---|

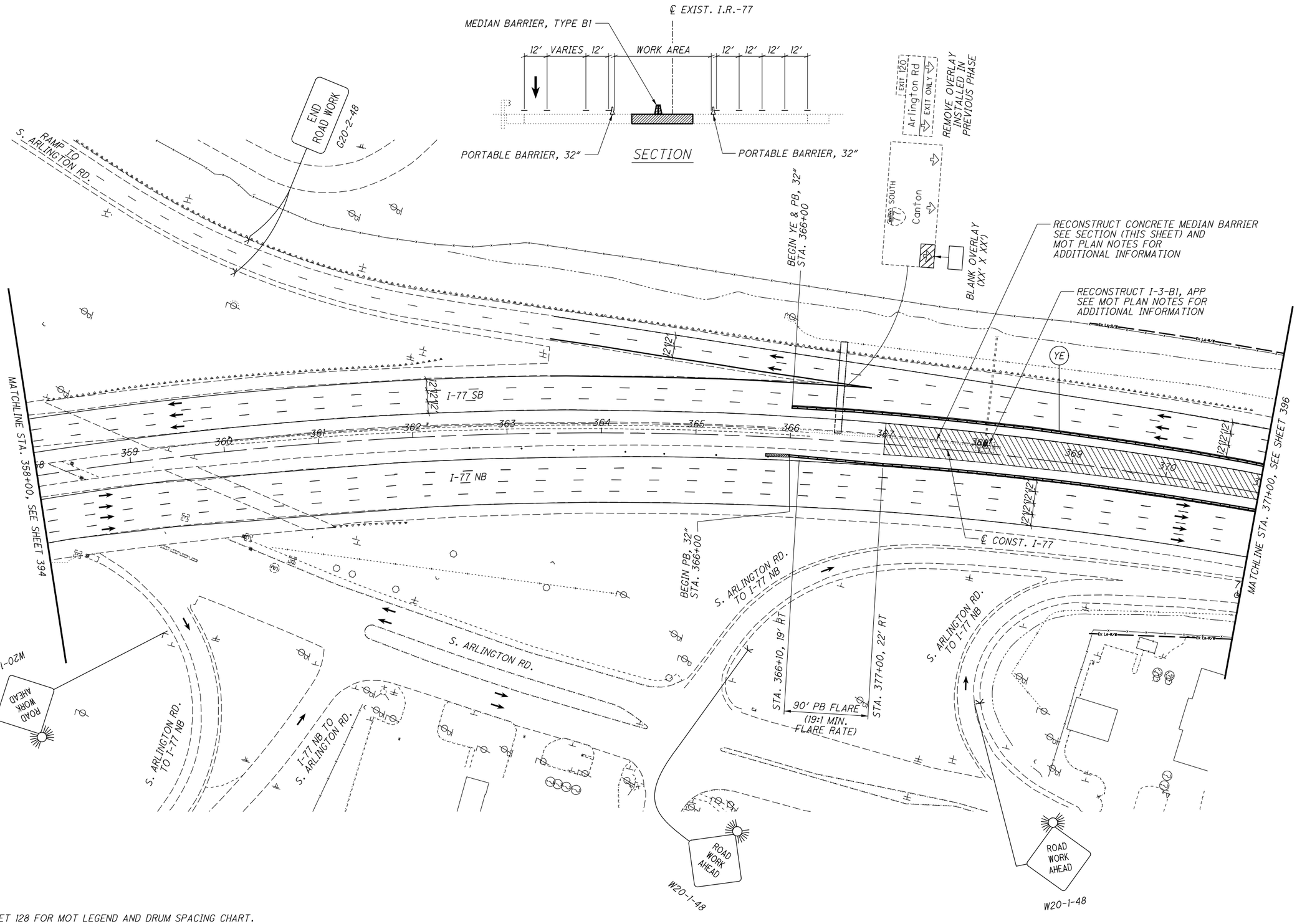


NOTES:

1. SEE SHEET 128 FOR MOT LEGEND AND DRUM SPACING CHART.

2. ALL PAVEMENT MARKINGS THAT ARE EXISTING OR PLACED IN A PREVIOUS PHASE WILL REMAIN UNLESS OTHERWISE INDICATED.

N

HORIZONTAL SCALE IN FEET
0 25 50 100

CALCULATED .
CHECKED .

# MAINTENANCE OF TRAFFIC PLAN - PHASE 4
## I-77 - STA. 358+00 TO STA. 371+00

SUM-77/277/224
VARIOUS

395
1288

N:\03\60\06744-08\06002_SUM-76-10.95\Design\MOT\Sheets\06002_MP407.dgn Sheet 1/31/2021 5:56:54 PM jrettig

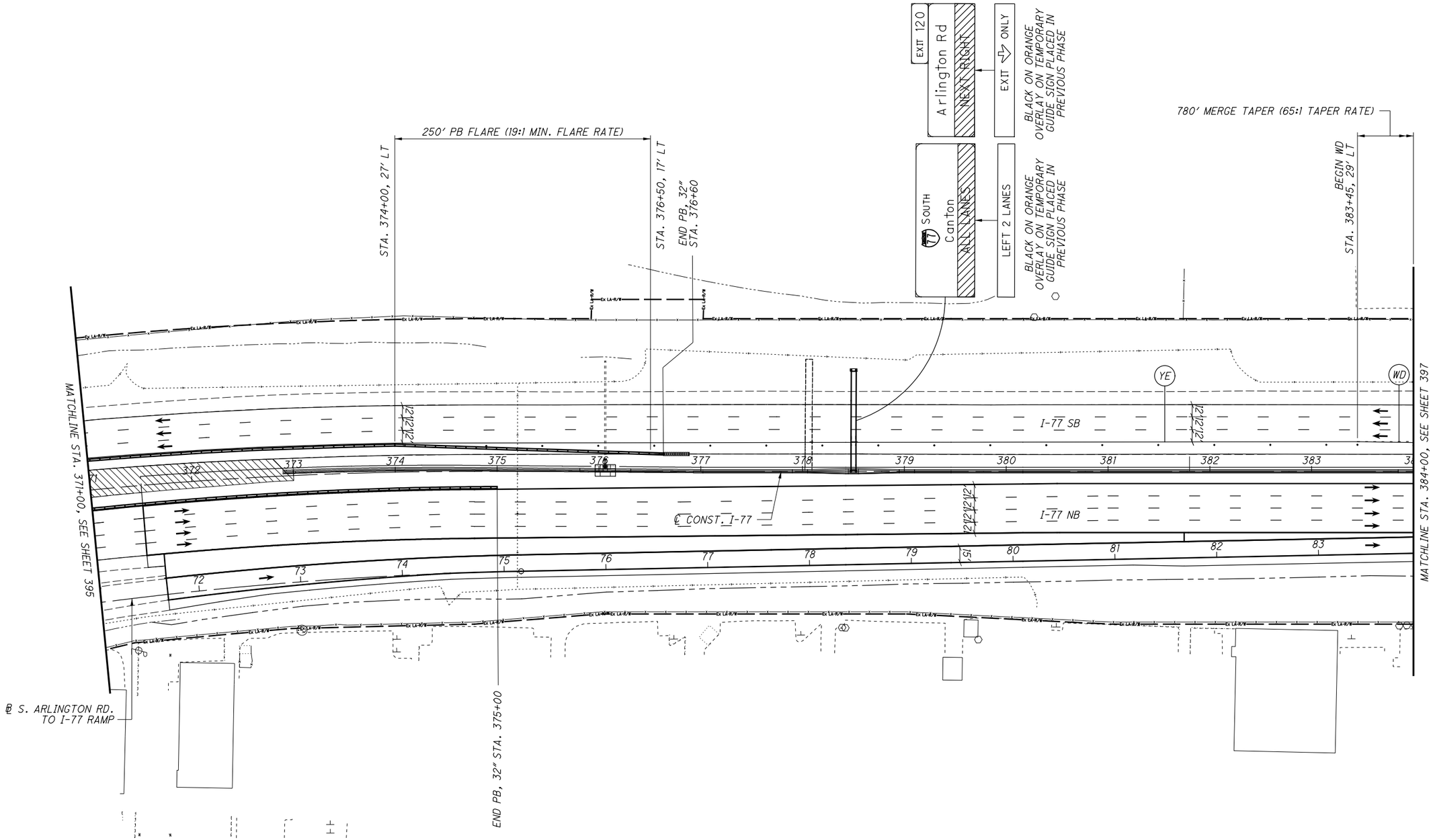


NOTES:

1. SEE SHEET 128 FOR MOT LEGEND AND DRUM SPACING CHART.

2. ALL PAVEMENT MARKINGS THAT ARE EXISTING OR PLACED IN A PREVIOUS PHASE WILL REMAIN UNLESS OTHERWISE INDICATED.

HORIZONTAL SCALE IN FEET
0 25 50 100

CALCULATED .
CHECKED .

# MAINTENANCE OF TRAFFIC PLAN - PHASE 4
## I-77 - STA. 371+00 TO STA. 384+00

SUM-77/277/224
VARIOUS

396
1288

N:\03\60\06744-08\106002_SUM-76-10.95\Design\MOT\Sheets\106002_MP408.dgn Sheet 1/31/2021 5:56:57 PM jrettig

NOTES:

1. SEE SHEET 128 FOR MOT LEGEND AND DRUM SPACING CHART.
2. ALL PAVEMENT MARKINGS THAT ARE EXISTING OR PLACED IN A PREVIOUS PHASE WILL REMAIN UNLESS OTHERWISE INDICATED.

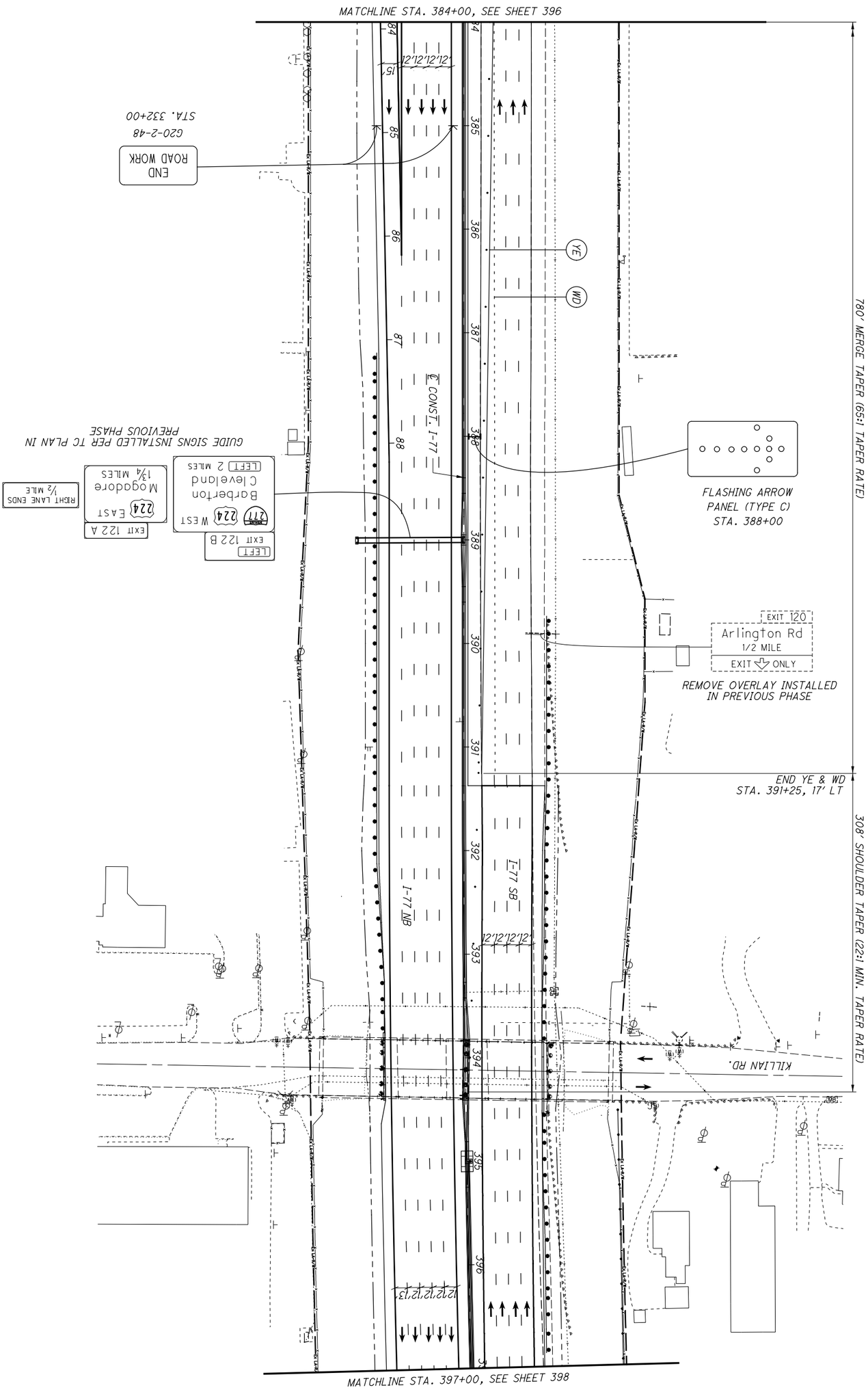


| | | | | |
|---|---|---|---|---|
| 397 / 1288 | SUM-77 / 277 / 224<br>VARIOUS | MAINTENANCE OF TRAFFIC PLAN - PHASE 4<br>I-77 - STA. 384+00 TO STA. 397+00 | CALCULATED .<br>CHECKED . | 0 50<br>25 100<br>HORIZONTAL SCALE IN FEET |

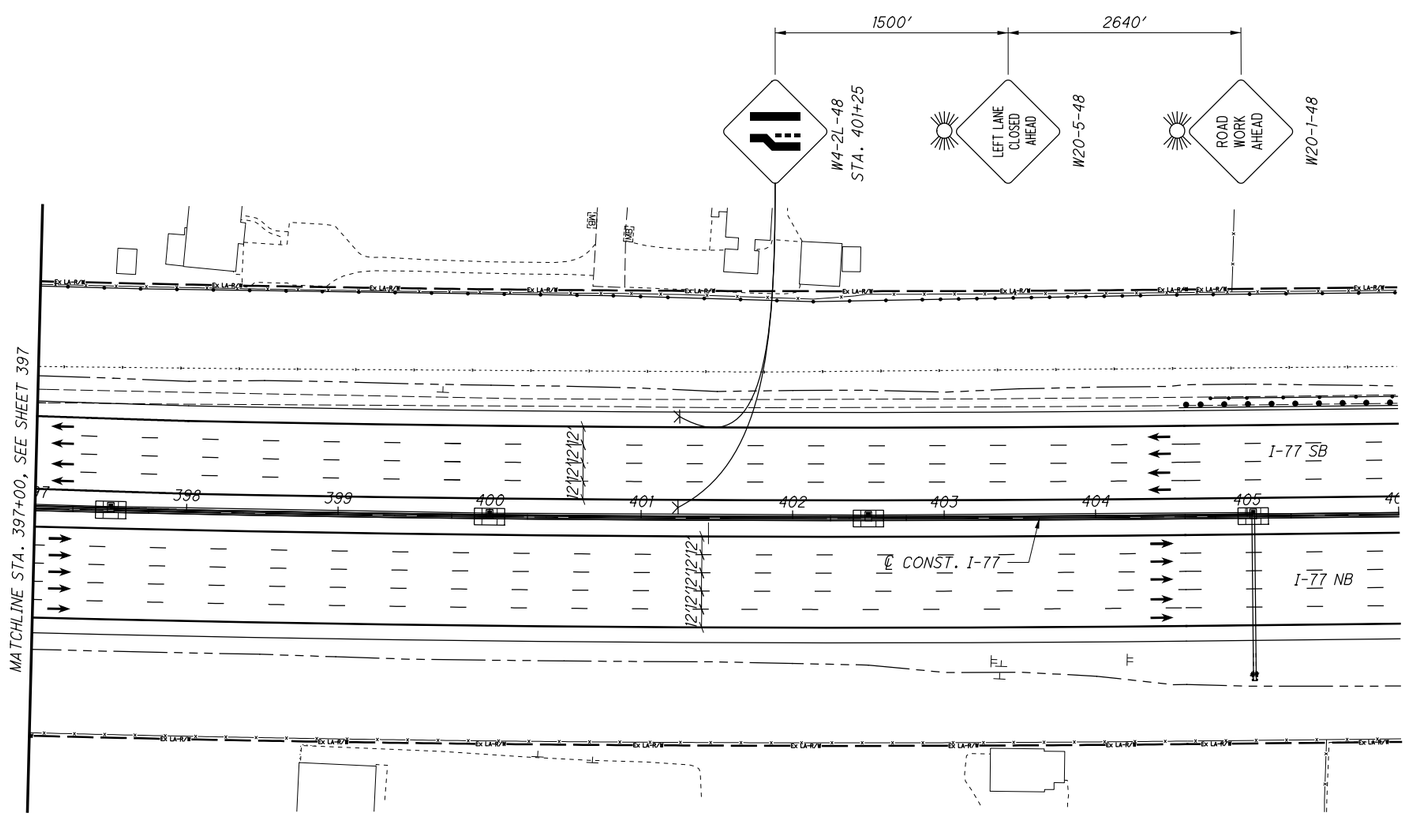


NOTES:

1. SEE SHEET 128 FOR MOT LEGEND AND DRUM SPACING CHART.

2. ALL PAVEMENT MARKINGS THAT ARE EXISTING OR PLACED IN A PREVIOUS PHASE WILL REMAIN UNLESS OTHERWISE INDICATED.

N

0 25 50 100
HORIZONTAL SCALE IN FEET

CALCULATED .
CHECKED .

# MAINTENANCE OF TRAFFIC PLAN - PHASE 4
## I-77 - STA. 397+00 TO STA. 445+00

SUM-77/277/224
VARIOUS

398
1288

N:\03\60\06744-08\106002_SUM-76-10.95\Design\MOT\Sheets\106002_MP410.dgn Sheet 1/31/2021 5:57:08 PM jrettig

N:\03\60\06744-08\106002_SUM-76-10.95\Design\MOT\Sheets\106002_MP415.dgn Sheet 1/31/2021 5:57:30 PM jrettig

NOTES:

1. SEE SHEET 128 FOR MOT LEGEND AND DRUM SPACING CHART.
2. PAVEMENT MARKINGS AND SIGNS INSTALLED PER TC PLAN.

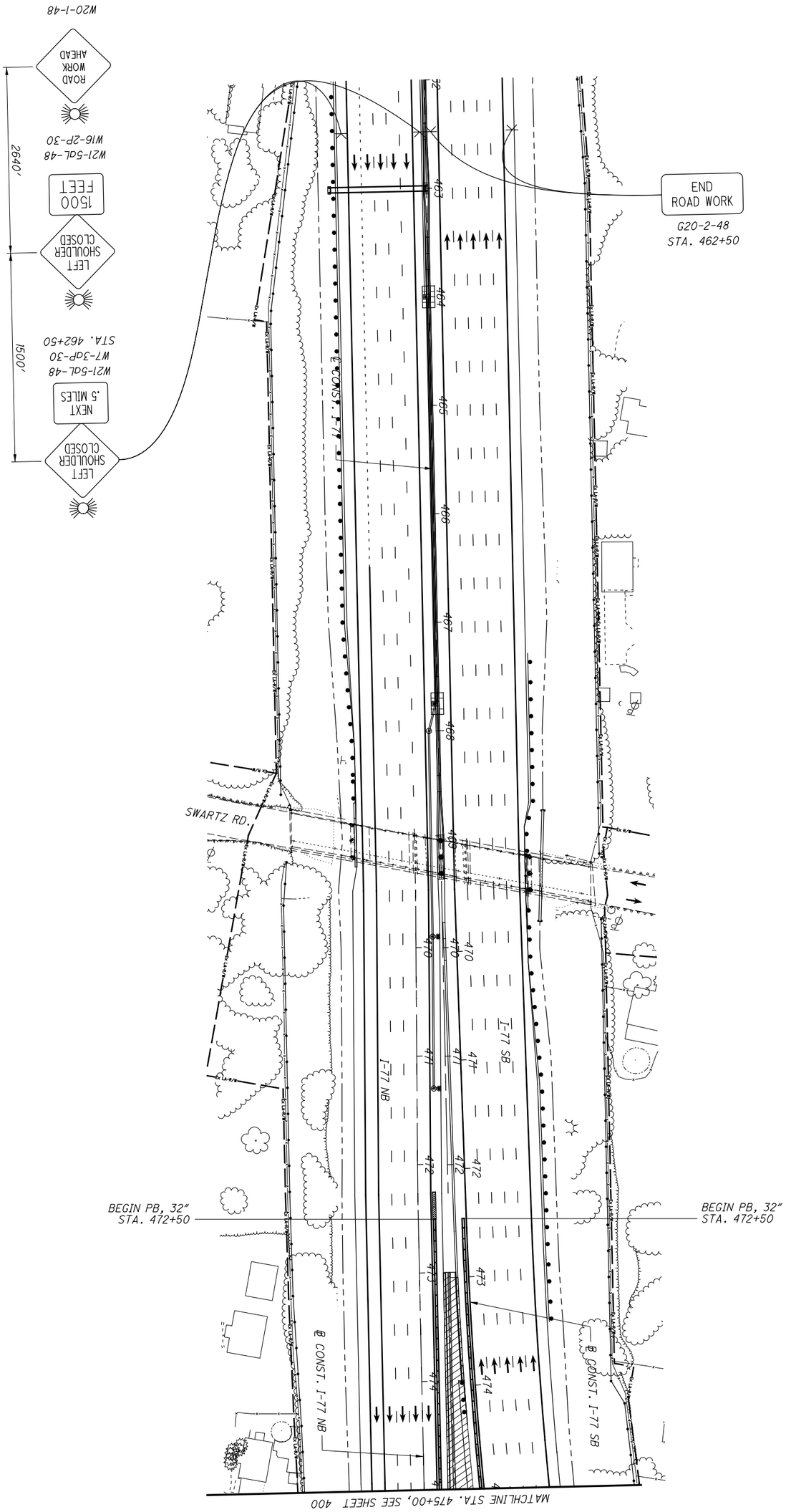


| | | | | |
|---|---|---|---|---|
| 399 / 1288 | SUM-77 / 277 / 224<br>VARIOUS | MAINTENANCE OF TRAFFIC PLAN - PHASE 4<br>I-77 - STA. 462+00 TO STA. 475+00 | CALCULATED .<br>CHECKED . | 0 50<br>25 100<br>HORIZONTAL SCALE IN FEET |

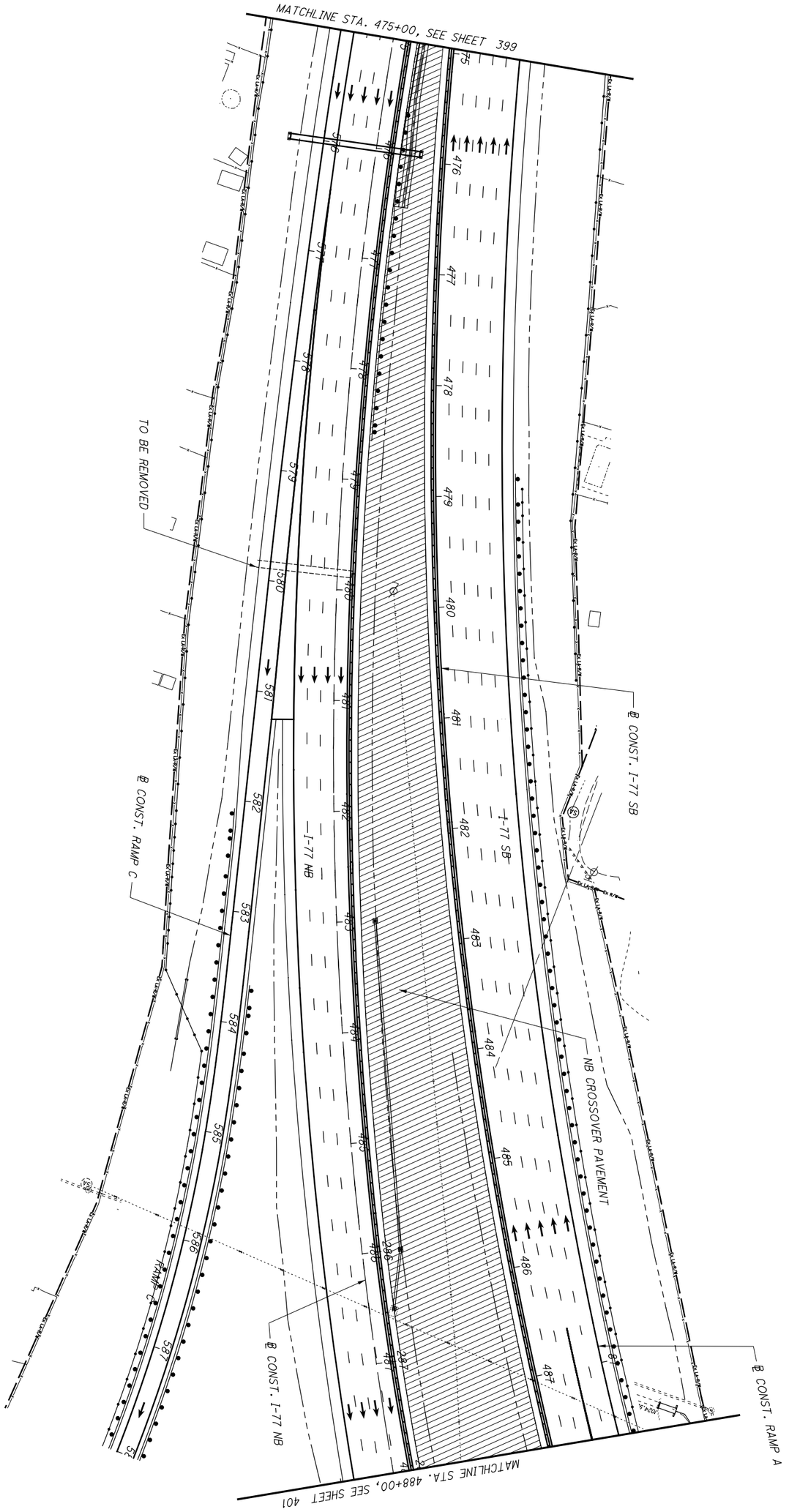


NOTES:

1. SEE SHEET 128 FOR MOT LEGEND AND DRUM SPACING CHART.
2. PAVEMENT MARKINGS AND SIGNS INSTALLED PER TC PLAN.

| | | | | |
|---|---|---|---|---|
| 400 / 1288 | SUM-77 / 277 / 224<br>VARIOUS | MAINTENANCE OF TRAFFIC PLAN - PHASE 4<br>I-77 - STA. 475+00 TO STA. 488+00 | CALCULATED .<br>CHECKED . | 0 50<br>25 100<br>HORIZONTAL SCALE IN FEET |

NOTES:

1. SEE SHEET 128 FOR MOT LEGEND AND DRUM SPACING CHART.
2. PAVEMENT MARKINGS AND SIGNS INSTALLED PER TC PLAN.

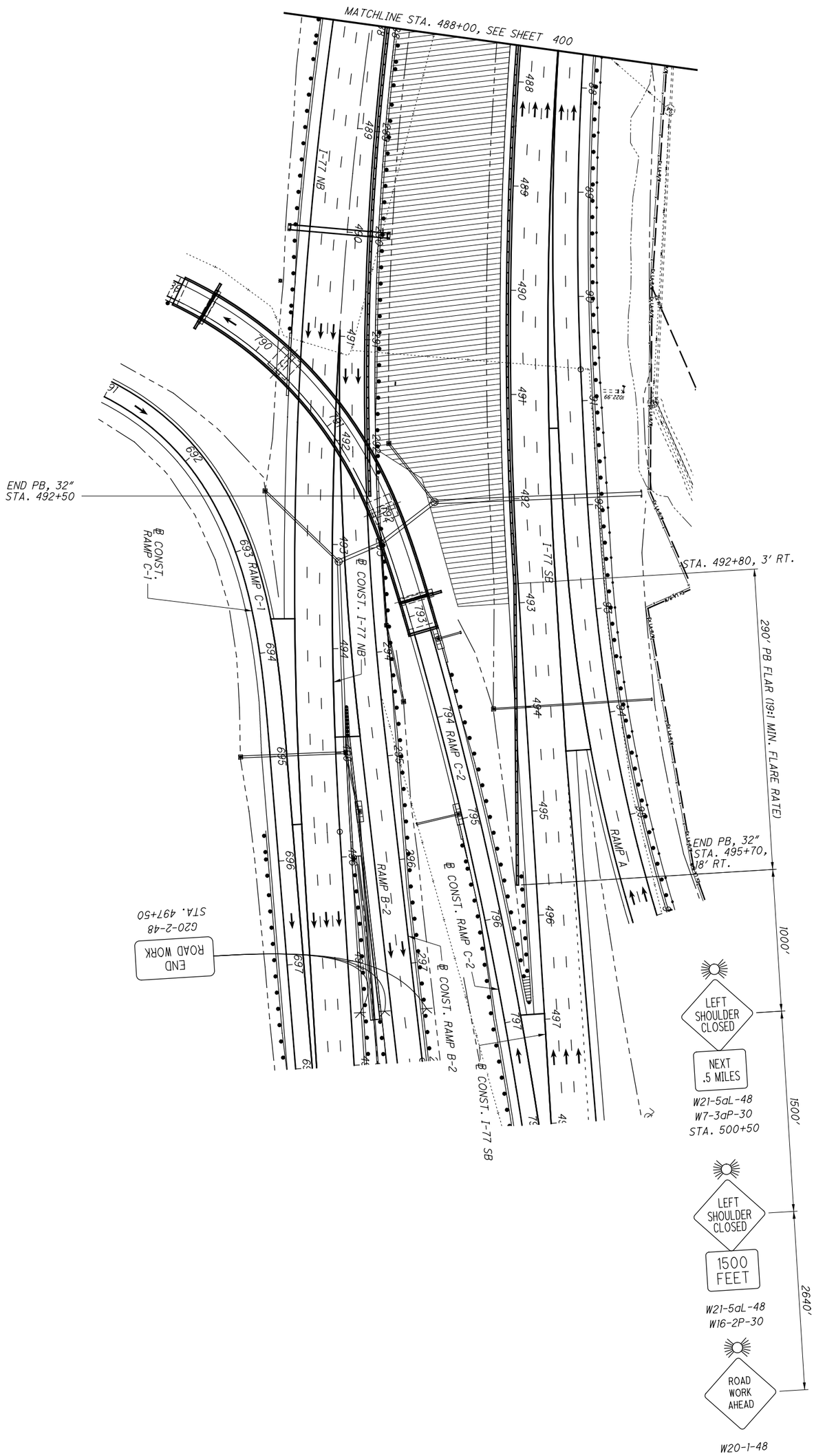


| | | | |
|---|---|---|---|
| 401 / 1288 | SUM-77 / 277 / 224<br>VARIOUS | MAINTENANCE OF TRAFFIC PLAN - PHASE 4<br>I-77 - STA. 488+00 TO STA. 501+00 | CALCULATED .<br>CHECKED .<br>0 50<br>25 100<br>HORIZONTAL SCALE IN FEET |

| SHEET NUMBER | | | | | | | | | PARTICIPATION | | | | | | ITEM | ITEM EXT. | GRAND TOTAL | UNIT | DESCRIPTION | SEE SHEET NO. |
|---|---|---|---|---|---|---|---|---|---|---|---|---|---|---|---|---|---|---|---|---|
| OFFICE CALCS | 73 | | 407 | | 410 | | 416 | | 01/IMS/PV | 02/IMS/PV | 03/IMS/BR | 04/IMS/BR | 05/IMS/BR | 06/IMS/BR | | | | | | |
| | | | | | | | | | | | | | | | | | | | ROADWAY | |
| | LS | | | | | | | | LS | LS | | | | | 201 | 11000 | LS | | CLEARING AND GRUBBING | 66 |
| | | | 20 | | 9 | | | | 26 | 3 | | | | | 202 | 20010 | 29 | EACH | HEADWALL REMOVED | |
| | | | 233574 | | | | | | 210217 | 23357 | | | | | 202 | 23000 | 233574 | SY | PAVEMENT REMOVED | |
| | | | 3750 | | | | | | 3375 | 375 | | | | | 202 | 30700 | 3750 | FT | CONCRETE BARRIER REMOVED | |
| | | | 169 | | | | | | 152 | 17 | | | | | 202 | 32000 | 169 | FT | CURB REMOVED | |
| | | | 86 | | | | | | 77 | 9 | | | | | 202 | 32700 | 86 | SY | GUTTER REMOVED | |
| | | | 4526 | | 16 | | | | 4088 | 454 | | | | | 202 | 35100 | 4542 | FT | PIPE REMOVED, 24" AND UNDER | |
| | | | 168 | | | | | | 151 | 17 | | | | | 202 | 35200 | 168 | FT | PIPE REMOVED, OVER 24" | |
| | | | 34740 | | | | | | 31266 | 3474 | | | | | 202 | 38000 | 34740 | FT | GUARDRAIL REMOVED | |
| | | | 2027 | | | | | | 1824 | 203 | | | | | 202 | 48000 | 2027 | FT | CABLE BARRIER REMOVED | |
| | | | 36 | | | | | | 32 | 4 | | | | | 202 | 58100 | 36 | EACH | CATCH BASIN REMOVED | |
| | | | 3 | | | | | | 3 | | | | | | 202 | 58200 | 3 | EACH | INLET REMOVED | |
| | | | 1 | | | | | | 1 | | | | | | 202 | 58500 | 1 | EACH | CATCH BASIN ABANDONED | |
| | | | 586 | | | | | | 527 | 59 | | | | | SPECIAL | 20270000 | 586 | FT | FILL AND PLUG EXISTING CONDUIT, 15" | 70 |
| | | | 360 | | | | | | 324 | 36 | | | | | SPECIAL | 20270000 | 360 | FT | FILL AND PLUG EXISTING CONDUIT, 18" | 70 |
| | | | | | 308 | | | | 277 | 31 | | | | | SPECIAL | 20270000 | 308 | FT | FILL AND PLUG EXISTING CONDUIT, 24" | 70 |
| | | | 214 | | | | | | 193 | 21 | | | | | SPECIAL | 20270000 | 214 | FT | FILL AND PLUG EXISTING CONDUIT, 30" | 70 |
| | | | 10998 | | | | | | 9898 | 1100 | | | | | 202 | 75000 | 10998 | FT | FENCE REMOVED | |
| | 16400 | | | | | | 155465 | | 154679 | 17186 | | | | | 203 | 10000 | 171865 | CY | EXCAVATION | |
| | 16300 | | | | | | 85050 | | 91215 | 10135 | | | | | 203 | 20000 | 101350 | CY | EMBANKMENT | |
| 2071 | | | | | | | | | 1864 | 207 | | | | | 204 | 10000 | 2071 | SY | SUBGRADE COMPACTION | |
| | | | | | | | 935 | | 842 | 93 | | | | | 204 | 13000 | 935 | CY | EXCAVATION OF SUBGRADE | |
| | | | | | | | 935 | | 842 | 93 | | | | | 204 | 20000 | 935 | CY | EMBANKMENT | |
| | 100 | | | | | | | | 90 | 10 | | | | | 204 | 30020 | 100 | CY | GRANULAR MATERIAL, TYPE C | |
| | 156 | | | | | | | | 140 | 16 | | | | | 204 | 45000 | 156 | HOUR | PROOF ROLLING | 69 |
| 7629 | | | | | | | | | 6866 | 763 | | | | | 206 | 10500 | 7629 | TON | CEMENT | |
| 294563 | | | | | | | | | 265107 | 29456 | | | | | 206 | 11000 | 294563 | SY | CURING COAT | |
| 294563 | | | | | | | | | 265107 | 29456 | | | | | 206 | 15010 | 294563 | SY | CEMENT STABILIZED SUBGRADE, 12 INCHES DEEP | |
| LS | | | | | | | | | LS | LS | | | | | 206 | 30000 | LS | | MIXTURE DESIGN FOR CHEMICALLY STABILIZED SOILS | |
| 376 | | | | | | | | | 338 | 38 | | | | | 209 | 60201 | 376 | STA | LINEAR GRADING, AS PER PLAN | 67 |
| | | | 32678 | | | | | | 29410 | 3268 | | | | | 606 | 15050 | 32678 | FT | GUARDRAIL, TYPE MGS | |
| | | | 2870 | | | | | | 2583 | 287 | | | | | 606 | 15100 | 2870 | FT | GUARDRAIL, TYPE MGS WITH LONG POSTS | |
| | | | 250 | | | | | | 225 | 25 | | | | | 606 | 15150 | 250 | FT | GUARDRAIL, TYPE MGS HALF POST SPACING | |
| | | | 50 | | | | | | 45 | 5 | | | | | 606 | 15250 | 50 | FT | GUARDRAIL, TYPE MGS QUARTER POST SPACING | |
| | | | 25 | | | | | | 23 | 2 | | | | | 606 | 15550 | 25 | FT | GUARDRAIL, BARRIER DESIGN, TYPE MGS | |
| | | | 1 | | | | | | 1 | | | | | | 606 | 20050 | 1 | EACH | ROUNDED END SECTION | |
| | | | 22 | | | | | | 20 | 2 | | | | | 606 | 26150 | 22 | EACH | ANCHOR ASSEMBLY, MGS TYPE E (MASH 2016) | 67 |
| | | | 22 | | | | | | 20 | 2 | | | | | 606 | 26550 | 22 | EACH | ANCHOR ASSEMBLY, MGS TYPE T | |
| | | | 24 | | | | | | 22 | 2 | | | | | 606 | 35002 | 24 | EACH | MGS BRIDGE TERMINAL ASSEMBLY, TYPE 1 | |
| | | | 17 | | | | | | 15 | 2 | | | | | 606 | 35102 | 17 | EACH | MGS BRIDGE TERMINAL ASSEMBLY, TYPE 2 | |
| | | | 1 | | | | | | 1 | | | | | | 606 | 60002 | 1 | EACH | IMPACT ATTENUATOR, TYPE 1 (UNIDIRECTIONAL) | 68 |
| | | | 1 | | | | | | 1 | | | | | | 606 | 60040 | 1 | EACH | IMPACT ATTENUATOR, TYPE 3 UNIDIRECTIONAL (60 MPH, 90" WIDTH) | 68 |
| | | | 1 | | | | | | 1 | | | | | | 606 | 60040 | 1 | EACH | IMPACT ATTENUATOR, TYPE 3 UNIDIRECTIONAL (65 MPH, 69" WIDTH) | 68 |
| | | | 1 | | | | | | 1 | | | | | | 606 | 60040 | 1 | EACH | IMPACT ATTENUATOR, TYPE 3 UNIDIRECTIONAL (70 MPH, 48" WIDTH) | 68 |
| | | | 1518 | | | | | | 1366 | 152 | | | | | 607 | 23000 | 1518 | FT | FENCE, TYPE CLT | |
| | | | 1518 | | | | | | 1366 | 152 | | | | | 607 | 70000 | 1518 | FT | FENCELINE SEEDING AND MULCHING | |
| | | | 9982 | | | | | | 8984 | 998 | | | | | 607 | 98000 | 9982 | FT | FENCE, MISC.: TEMPORARY FENCE | 68 |
| 2100 | | | | | | | | | 1890 | 210 | | | | | 622 | 10100 | 2100 | FT | CONCRETE BARRIER, SINGLE SLOPE, TYPE B1 | |
| 5708 | | | | | | | | | 5137 | 571 | | | | | 622 | 10140 | 5708 | FT | CONCRETE BARRIER, SINGLE SLOPE, TYPE C1 | |
| | | | 1983 | | | | | | 1785 | 198 | | | | | 622 | 10160 | 1983 | FT | CONCRETE BARRIER, SINGLE SLOPE, TYPE D | |
| | | | 71 | | | | | | 64 | 7 | | | | | 622 | 10161 | 71 | FT | CONCRETE BARRIER, SINGLE SLOPE, TYPE D, AS PER PLAN | 68 |
| 3 | | | | | | | | | 3 | | | | | | 622 | 10200 | 3 | EACH | BARRIER TRANSITION | 907 |
| | | | 23 | | | | | | 21 | 2 | | | | | 622 | 25000 | 23 | EACH | CONCRETE BARRIER END SECTION, TYPE D | |
| | | | 3 | | | | | | 3 | | | | | | 622 | 25001 | 3 | EACH | CONCRETE BARRIER END SECTION, TYPE D, AS PER PLAN | 68 |
| 14 | | | | | | | | | 13 | 1 | | | | | 622 | 25006 | 14 | EACH | CONCRETE BARRIER, END ANCHORAGE, REINFORCED, TYPE B1 | |
| 56 | | | | | | | | | 50 | 6 | | | | | 622 | 25014 | 56 | EACH | CONCRETE BARRIER, END ANCHORAGE, REINFORCED, TYPE C1 | |
| 4 | | | | | | | | | 4 | | | | | | 622 | 25015 | 4 | EACH | CONCRETE BARRIER, END ANCHORAGE, REINFORCED, TYPE C1, AS PER PLAN | 68 |

REVISIONS

| NO. | DATE | DESCRIPTION |
|---|---|---|
| 8 | 04/30/21 | ADDED TEMPORARY FENCE QUANTITY |

CALCULATED LRK
CHECKED PJF

# GENERAL SUMMARY

SUM-77 / 277 / 224
VARIOUS

402
1288

D:\2017\2017258\ProjectData\SUM\06002\Design\Roadway\Sheets\06002_GG001.dgn Sheet 4/30/2021 2:26:53 PM lkirkland

| SHEET NUMBER | | | | | | | | | | | PARTICIPATION | | | | | | ITEM | ITEM EXT. | GRAND TOTAL | UNIT | DESCRIPTION | SEE SHEET NO. |
|---|---|---|---|---|---|---|---|---|---|---|---|---|---|---|---|---|---|---|---|---|---|---|
| OFFICE CALCS | 73 | 407 | 408 | 410 | 416 | 444 | 911 | 1158 | 1184 | 1228 | 01/IMS/PV | 02/IMS/PV | 03/IMS/BR | 04/IMS/BR | 05/IMS/BR | 06/IMS/BR | | | | | | |
| | | | | | | | | | | | | | | | | | | | | | ROADWAY (CONTINUED) | |
| | | 9 | | | | | | | | | 8 | 1 | | | | | 622 | 25050 | 9 | EACH | CONCRETE BARRIER, END ANCHORAGE, REINFORCED, TYPE D | |
| | | 2 | | | | | | | | | 2 | | | | | | 622 | 25051 | 2 | EACH | CONCRETE BARRIER, END ANCHORAGE, REINFORCED, TYPE D, AS PER PLAN | 68 |
| | 12 | | | | | | | | | | 11 | 1 | | | | | 623 | 38500 | 12 | EACH | MONUMENT ASSEMBLY | |
| | 2 | | | | | | | | | | 2 | | | | | | 623 | 39500 | 2 | EACH | MONUMENT BOX ADJUSTED TO GRADE | |
| | 6 | | | | | | | | | | 5 | 1 | | | | | SPECIAL | 69098000 | 6 | EACH | VERTICAL CLEARANCE | 68 |
| | | | | | | | | | | | | | | | | | | | | | ~~ROADWAY (RIGID PAVEMENT OPTION)~~ | |
| | ~~16400~~ | | | | ~~160956~~ | | | | | | ~~159620~~ | ~~17736~~ | | | | | ~~203~~ | ~~10000~~ | ~~177356~~ | ~~CY~~ | ~~EXCAVATION~~ | |
| | ~~16300~~ | | | | ~~85288~~ | | | | | | ~~91429~~ | ~~10159~~ | | | | | ~~203~~ | ~~20000~~ | ~~101588~~ | ~~CY~~ | ~~EMBANKMENT~~ | |
| | | | | | | | | | | | | | | | | | | | | | EROSION CONTROL | |
| | | | | 8 | | | | | | | 7 | 1 | | | | | 601 | 11000 | 8 | SY | RIPRAP, TYPE D | |
| | | | | | | | | 310 | | 210 | | | 202 | 108 | 210 | | 601 | 20000 | 520 | SY | CRUSHED AGGREGATE SLOPE PROTECTION | |
| 272 | | | | | | | | | | | 245 | 27 | | | | | 601 | 21000 | 272 | SY | CONCRETE SLOPE PROTECTION | |
| | 8 | | 128 | | | | | | | | 122 | 14 | | | | | 601 | 21050 | 136 | SY | TIED CONCRETE BLOCK MAT WITH TYPE 1 UNDERLAYMENT | |
| | | | 94 | | | | | | | | 85 | 9 | | | | | 601 | 21060 | 94 | SY | TIED CONCRETE BLOCK MAT WITH TYPE 2 UNDERLAYMENT | |
| | | | | | | | 21 | | | | | | | | | 21 | 601 | 28101 | 21 | CY | DUMPED ROCK FILL, AS PER PLAN | 910 |
| | | | | 26 | | | | | | | 23 | 3 | | | | | 601 | 32000 | 26 | CY | ROCK CHANNEL PROTECTION, TYPE A WITH FILTER | |
| | | | | 61 | | | | | | | 55 | 6 | | | | | 601 | 32100 | 61 | CY | ROCK CHANNEL PROTECTION, TYPE B WITH FILTER | |
| | | | 12 | | | | | | | | 11 | 1 | | | | | 601 | 32104 | 12 | CY | ROCK CHANNEL PROTECTION, TYPE B WITH GEOTEXTILE FABRIC | |
| | | | | 7 | | | | | | | 6 | 1 | | | | | 601 | 32110 | 7 | CY | ROCK CHANNEL PROTECTION, TYPE B WITH AGGREGATE FILTER | |
| | | | | | | | | | 637 | | | | 414 | 223 | | | 601 | 32200 | 637 | CY | ROCK CHANNEL PROTECTION, TYPE C WITH FILTER | |
| | | | 70 | | | | | | | | 63 | 7 | | | | | 601 | 32204 | 70 | CY | ROCK CHANNEL PROTECTION, TYPE C WITH GEOTEXTILE FABRIC | |
| | | | 17 | 3 | | | | | | | 18 | 2 | | | | | 601 | 32210 | 20 | CY | ROCK CHANNEL PROTECTION, TYPE C WITH AGGREGATE FILTER | |
| | | | 177 | | | | | | | | 159 | 18 | | | | | 601 | 32211 | 177 | CY | ROCK CHANNEL PROTECTION, TYPE C WITH AGGREGATE FILTER, AS PER PLAN | 72 |
| | | | 249 | | | | | | | | 224 | 25 | | | | | 601 | 32311 | 249 | CY | ROCK CHANNEL PROTECTION, TYPE D WITH AGGREGATE FILTER, AS PER PLAN | 72 |
| | | | | 78 | | | | | | | 70 | 8 | | | | | 601 | 37500 | 78 | FT | PAVED GUTTER, TYPE 1-2 | |
| | | | 507 | | | | | | | | 456 | 51 | | | | | 601 | 37501 | 507 | FT | PAVED GUTTER, TYPE 1-2, AS PER PLAN | 72 |
| | | | | | 3 | | | | | | 3 | | | | | | 659 | 00100 | 3 | EACH | SOIL ANALYSIS TEST | |
| | | | | | 25156 | | | | | | 22640 | 2516 | | | | | 659 | 00300 | 25156 | CY | TOPSOIL | |
| | | | | | 226634 | | | | | | 203971 | 22663 | | | | | 659 | 10000 | 226634 | SY | SEEDING AND MULCHING | |
| | | | | | 11332 | | | | | | 10199 | 1133 | | | | | 659 | 14000 | 11332 | SY | REPAIR SEEDING AND MULCHING | |
| | | | | | 11332 | | | | | | 10199 | 1133 | | | | | 659 | 15000 | 11332 | SY | INTER-SEEDING | |
| | | | | | 31.62 | | | | | | 28.46 | 3.16 | | | | | 659 | 20000 | 31.62 | TON | COMMERCIAL FERTILIZER | |
| | | | | | 46.83 | | | | | | 42.15 | 4.68 | | | | | 659 | 31000 | 46.83 | ACRE | LIME | |
| | | | | | 1255 | | | | | | 1130 | 125 | | | | | 659 | 35000 | 1255 | MGAL | WATER | |
| | | | | | 7312 | | | | | | 6581 | 731 | | | | | 670 | 00500 | 7312 | SY | SLOPE EROSION PROTECTION | |
| | | | 20260 | | | | | | | | 18234 | 2026 | | | | | 670 | 00700 | 20260 | SY | DITCH EROSION PROTECTION | |
| | | | 242 | | | | | | | | 218 | 24 | | | | | 671 | 15060 | 242 | SY | EROSION CONTROL MAT, TYPE G | |
| | | | | | | LS | | | | | LS | LS | | | | | 832 | 15000 | LS | | STORM WATER POLLUTION PREVENTION PLAN | |
| | | | | | | LS | | | | | LS | LS | | | | | 832 | 15002 | LS | | STORM WATER POLLUTION PREVENTION INSPECTIONS | |
| | | | | | | LS | | | | | LS | LS | | | | | 832 | 15010 | LS | | STORM WATER POLLUTION PREVENTION INSPECTION SOFTWARE | |
| | | | | | | 1150000 | | | | | 1035000 | 115000 | | | | | 832 | 30000 | 1150000 | EACH | EROSION CONTROL | 72 |
| | | | 5435 | | | | | | | | 4892 | 543 | | | | | 836 | 10000 | 5435 | SY | SEEDING AND EROSION CONTROL WITH TURF REINFORCING MAT, TYPE 1 | |
| | | | 299 | | | | | | | | 269 | 30 | | | | | 836 | 10020 | 299 | SY | SEEDING AND EROSION CONTROL WITH TURF REINFORCING MAT, TYPE 2 | |

| REVISIONS | | |
|---|---|---|
| NO. | DATE | DESCRIPTION |
| 4 | 04/20/21 | REVISED RIPRAP, TYPE D QUANTITY |
| 5 | 04/22/21 | UPDATED SEEDING QUANTITIES & REVISED ITEM 601 QUANTITIES |
| 6 | 04/26/21 | REVISED ITEM 601 QUANTITY |

CALCULATED LRK
CHECKED PJF

# GENERAL SUMMARY

SUM-77 / 277 / 224
VARIOUS

403
1288

D:\2017\2017258\ProjectData\SUM\06002\Design\Roadway\Sheets\06002_GG002.dgn Sheet 4/26/2021 9:46:18 AM pfry

| SHEET NUMBER | | | | | | | | | PARTICIPATION | | | | | | ITEM | ITEM EXT. | GRAND TOTAL | UNIT | DESCRIPTION | SEE SHEET NO. |
|---|---|---|---|---|---|---|---|---|---|---|---|---|---|---|---|---|---|---|---|---|
| | 73 | | | 409 | 410 | | 911 | | 01/IMS/PV | 02/IMS/PV | 03/IMS/BR | 04/IMS/BR | 05/IMS/BR | 06/IMS/BR | | | | | | |
| | | | | | | | | | | | | | | | | | | | DRAINAGE | |
| | | | | 12.2 | 11.7 | | | | 21.5 | 2.4 | | | | | 602 | 20000 | 23.9 | CY | CONCRETE MASONRY | |
| | | | | | | | | | | | | | | | | | | | | |
| | | | | 65167 | | | | | 58650 | 6517 | | | | | 605 | 11110 | 65167 | FT | 6" SHALLOW PIPE UNDERDRAINS WITH GEOTEXTILE FABRIC | |
| | 40 | | | 1953 | | | | | 1794 | 199 | | | | | 605 | 13410 | 1993 | FT | 6" UNCLASSIFIED PIPE UNDERDRAINS WITH GEOTEXTILE FABRIC | |
| | | | | 70071 | | | | | 63064 | 7007 | | | | | 605 | 14020 | 70071 | FT | 6" BASE PIPE UNDERDRAINS WITH GEOTEXTILE FABRIC | |
| | | | | | | | | | | | | | | | | | | | | |
| | | | | 1464 | | | | | 1318 | 146 | | | | | 611 | 00510 | 1464 | FT | 6" CONDUIT, TYPE F FOR UNDERDRAIN OUTLETS | |
| | 200 | | | 2948 | | | | | 2833 | 315 | | | | | 611 | 00900 | 3148 | FT | 6" CONDUIT, TYPE B | |
| | 200 | | | | | | | | 180 | 20 | | | | | 611 | 01100 | 200 | FT | 6" CONDUIT, TYPE C | |
| | 200 | | | | | | | | 180 | 20 | | | | | 611 | 01400 | 200 | FT | 6" CONDUIT, TYPE E | |
| | 240 | | | | | | | | 216 | 24 | | | | | 611 | 01500 | 240 | FT | 6" CONDUIT, TYPE F | |
| | | | | | | | | | | | | | | | | | | | | |
| | | | | 4428 | | | | | 3985 | 443 | | | | | 611 | 05900 | 4428 | FT | 15" CONDUIT, TYPE B | |
| | | | | 9 | | | | | 8 | 1 | | | | | 611 | 05900 | 9 | FT | 15" CONDUIT, TYPE B, 706.02 | |
| | | | | 327 | | | | | 294 | 33 | | | | | 611 | 06100 | 327 | FT | 15" CONDUIT, TYPE C | |
| | | | | 665 | | | | | 599 | 66 | | | | | 611 | 06700 | 665 | FT | 15" CONDUIT, TYPE F | |
| | | | | | 7 | | | | 6 | 1 | | | | | 611 | 07200 | 7 | FT | 18" CONDUIT, TYPE A, 706.02 | |
| | | | | | | | | | | | | | | | | | | | | |
| | | | | 1054 | | | | | 949 | 105 | | | | | 611 | 07400 | 1054 | FT | 18" CONDUIT, TYPE B | |
| | | | | 121 | | | | | 109 | 12 | | | | | 611 | 07600 | 121 | FT | 18" CONDUIT, TYPE C | |
| | | | | 40 | | | | | 36 | 4 | | | | | 611 | 08200 | 40 | FT | 18" CONDUIT, TYPE F | |
| | | | | 554 | | | | | 499 | 55 | | | | | 611 | 08900 | 554 | FT | 21" CONDUIT, TYPE B | |
| | | | | 297 | | | | | 267 | 30 | | | | | 611 | 09100 | 297 | FT | 21" CONDUIT, TYPE C | |
| | | | | | | | | | | | | | | | | | | | | |
| | | | | 103 | | | | | 93 | 10 | | | | | 611 | 10200 | 103 | FT | 24" CONDUIT, TYPE A | |
| | | | | | 10 | | | | 9 | 1 | | | | | 611 | 10200 | 10 | FT | 24" CONDUIT, TYPE A, 706.02 | |
| | | | | 101 | | | | | 91 | 10 | | | | | 611 | 10400 | 101 | FT | 24" CONDUIT, TYPE B | |
| | | | | 8 | | | | | 7 | 1 | | | | | 611 | 10400 | 8 | FT | 24" CONDUIT, TYPE B, 706.02 | |
| | | | | 183 | | | | | 165 | 18 | | | | | 611 | 13400 | 183 | FT | 30" CONDUIT, TYPE B | |
| | | | | | | | | | | | | | | | | | | | | |
| | | | | 90 | | | | | 81 | 9 | | | | | 611 | 13600 | 90 | FT | 30" CONDUIT, TYPE C | |
| | | | | 44 | | | | | 40 | 4 | | | | | 611 | 16400 | 44 | FT | 36" CONDUIT, TYPE B | |
| | | | | 130 | | | | | 117 | 13 | | | | | 611 | 16600 | 130 | FT | 36" CONDUIT, TYPE C | |
| | | | | | 16 | | | | 14 | 2 | | | | | 611 | 23600 | 16 | FT | 60" CONDUIT, TYPE A, 706.02 | |
| | | | | | 12 | | | | 11 | 1 | | | | | 611 | 25000 | 12 | FT | 66" CONDUIT, TYPE A, 706.02 | |
| | | | | | | | | | | | | | | | | | | | | |
| | | | | | 20 | | | | 18 | 2 | | | | | 611 | 30000 | 20 | FT | 96" CONDUIT, TYPE A, 707.02, 707.03 OR 707.04 | |
| | | | | | | | 16 | | | | | | | 16 | 611 | 95001 | 16 | FT | 10' X 5' CONDUIT, TYPE A, 706.05, AS PER PLAN | 911 |
| | | | | | 317 | | | | 285 | 32 | | | | | 611 | 96550 | 317 | FT | FIELD PAVING OF EXISTING PIPE, 96" 707.02, 707.03 OR 707.04 | |
| | | | | | 20 | | | | 18 | 2 | | | | | 611 | 96560 | 20 | FT | CONDUIT, FIELD PAVING OF PIPE, 96" 707.02, 707.03 OR 707.04 | |
| | | | | | | | | | | | | | | | | | | | | |
| | | | | 460 | | | | | 414 | 46 | | | | | 611 | 96600 | 460 | FT | CONDUIT, BORED OR JACKED, 15", TYPE B, 748.06 | 70 |
| | | | | 155 | | | | | 140 | 15 | | | | | 611 | 96600 | 155 | FT | CONDUIT, BORED OR JACKED, 18", TYPE B, 748.06 | 70 |
| | | | | 102 | | | | | 92 | 10 | | | | | 611 | 96600 | 102 | FT | CONDUIT, BORED OR JACKED, 24", TYPE B, 748.06 | 70 |
| | | | | | 294 | | | | 265 | 29 | | | | | 611 | 96600 | 294 | FT | CONDUIT, BORED OR JACKED, 30", TYPE A, 748.06 | 70 |
| | | | | 199 | | | | | 179 | 20 | | | | | 611 | 96600 | 199 | FT | CONDUIT, BORED OR JACKED, 42", TYPE B, 748.06 | 70 |
| | | | | | | | | | | | | | | | | | | | | |
| | | | | 22 | | | | | 20 | 2 | | | | | 611 | 97400 | 22 | FT | CONDUIT, MISC.: 18", TYPE B, 748.06, OPEN CUT | 70 |
| | | | | | 46 | | | | 41 | 5 | | | | | 611 | 97400 | 46 | FT | CONDUIT, MISC.: 30", TYPE A, 748.06, OPEN CUT | 70 |
| | | | | | | | | | | | | | | | | | | | | |
| | | | | 1 | | | | | 1 | | | | | | 611 | 98151 | 1 | EACH | CATCH BASIN, NO. 3, AS PER PLAN | 71 |
| | | | | 6 | | | | | 5 | 1 | | | | | 611 | 98180 | 6 | EACH | CATCH BASIN, NO. 3A | |
| | | | | 2 | | | | | 2 | | | | | | 611 | 98370 | 2 | EACH | CATCH BASIN, NO. 6 | |
| | | | | 1 | | | | | 1 | | | | | | 611 | 98371 | 1 | EACH | CATCH BASIN, NO. 6, AS PER PLAN | 71 |
| | | | | 13 | | | | | 12 | 1 | | | | | 611 | 98410 | 13 | EACH | CATCH BASIN, NO. 8 | |
| | | | | | | | | | | | | | | | | | | | | |
| | | | | 7 | | | | | 6 | 1 | | | | | 611 | 99100 | 7 | EACH | INLET, NO. 3 FOR SINGLE SLOPE BARRIER, TYPE B1 | |
| | | | | 21 | | | | | 19 | 2 | | | | | 611 | 99110 | 21 | EACH | INLET, NO. 3 FOR SINGLE SLOPE BARRIER, TYPE C1 | |
| | | | | 1 | | | | | 1 | | | | | | 611 | 99111 | 1 | EACH | INLET, NO. 3 FOR SINGLE SLOPE BARRIER, TYPE C1, AS PER PLAN | 70 |
| | | | | 3 | | | | | 3 | | | | | | 611 | 99114 | 3 | EACH | INLET, NO. 3 FOR SINGLE SLOPE BARRIER, TYPE D | |
| | | | | | | | | | | | | | | | | | | | | |
| | | | | 6 | | | | | 5 | 1 | | | | | 611 | 99574 | 6 | EACH | MANHOLE, NO. 3 | |
| | | | | 1 | | | | | 1 | | | | | | 611 | 99661 | 1 | EACH | MANHOLE RECONSTRUCTED TO GRADE, AS PER PLAN | 70 |
| | | | | | | | | | | | | | | | | | | | | |
| | 4 | | | 64 | | | | | 61 | 7 | | | | | 611 | 99710 | 68 | EACH | PRECAST REINFORCED CONCRETE OUTLET | |
| | 10000 | | | | | | | | 9000 | 1000 | | | | | SPECIAL | 61199820 | 10000 | LB | MISCELLANEOUS METAL | 70 |

| REVISIONS | | |
|---|---|---|
| NO. | DATE | DESCRIPTION |
| 6 | 04/26/21 | REVISED CONDUITS, BORED OR JACKED |

CALCULATED LRK
CHECKED PJF

# GENERAL SUMMARY

SUM-77 / 277 / 224
VARIOUS

404
1288

D:\2017\2017258\ProjectData\SUM\06002\Design\Roadway\Sheets\06002_GG003.dgn Sheet 4/26/2021 10:33:30 AM pfry

| SHEET NUMBER | | | | | | | | | PARTICIPATION | | | | | | ITEM | ITEM EXT. | GRAND TOTAL | UNIT | DESCRIPTION | SEE SHEET NO. |
|---|---|---|---|---|---|---|---|---|---|---|---|---|---|---|---|---|---|---|---|---|
| OFFICE CALCS | OFFICE CALCS | | | | 409 | | | | 01/IMS/PV | 02/IMS/PV | 03/IMS/BR | 04/IMS/BR | 05/IMS/BR | 06/IMS/BR | | | | | | |
| | | | | | | | | | | | | | | | | | | | PAVEMENT | |
| 567 | | | | | | | | | 510 | 57 | | | | | 254 | 01000 | 567 | SY | PAVEMENT PLANING, ASPHALT CONCRETE, 1 1/4" | |
| 3914 | 60048 | | | | | | | | 57566 | 6396 | | | | | 302 | 46000 | 63962 | CY | ASPHALT CONCRETE BASE, PG64-22 | |
| 4911 | 45836 | | | | | | | | 45672 | 5075 | | | | | 304 | 20000 | 50747 | CY | AGGREGATE BASE | |
| 2956 | 44384 | | | | | | | | 42606 | 4734 | | | | | 407 | 20000 | 47340 | GAL | NON-TRACKING TACK COAT | |
| 1792 | | | | | | | | | 1613 | 179 | | | | | 408 | 10001 | 1792 | GAL | PRIME COAT, AS PER PLAN | 70 |
| 61 | | | | | | | | | 55 | 6 | | | | | 441 | 50000 | 61 | CY | ASPHALT CONCRETE SURFACE COURSE, TYPE 1, (448), PG64-22 | |
| 61 | | | | | | | | | 55 | 6 | | | | | 441 | 50300 | 61 | CY | ASPHALT CONCRETE INTERMEDIATE COURSE, TYPE 2, (448) | |
| 1156 | | | | | | | | | 1040 | 116 | | | | | 441 | 50701 | 1156 | CY | ASPHALT CONCRETE INTERMEDIATE COURSE, TYPE 1, (448), (UNDER GUARDRAIL), AS PER PLAN | 67 |
| 1041 | 16399 | | | | | | | | 15696 | 1744 | | | | | 442 | 00100 | 17440 | CY | ANTI-SEGREGATION EQUIPMENT | |
| 813 | 12964 | | | | | | | | 12399 | 1378 | | | | | 442 | 10101 | 13777 | CY | ASPHALT CONCRETE INTERMEDIATE COURSE, 19 MM, TYPE A (446), AS PER PLAN | 69 |
| 690 | 10972 | | | | | | | | 10496 | 1166 | | | | | 442 | 10301 | 11662 | CY | ASPHALT CONCRETE SURFACE COURSE, 12.5 MM, TYPE A (447), AS PER PLAN | 70 |
| 212 | 537 | | | | | | | | 674 | 75 | | | | | 609 | 24511 | 749 | FT | CURB, TYPE 4-C, AS PER PLAN | 70 |
| 250 | | | | | | | | | 225 | 25 | | | | | 617 | 10101 | 250 | CY | COMPACTED AGGREGATE, AS PER PLAN | 70 |
| 4479 | | | | | | | | | 4031 | 448 | | | | | 617 | 20000 | 4479 | SY | SHOULDER PREPARATION | |
| 13 | | | | | | | | | 12 | 1 | | | | | 617 | 25000 | 13 | MGAL | WATER | |
| 1 | 12 | | | | | | | | 12 | 1 | | | | | 618 | 40600 | 13 | MILE | RUMBLE STRIPS, SHOULDER (ASPHALT CONCRETE) | |
| ~~45835~~ | | | | | | | | | ~~41252~~ | ~~4583~~ | | | | | ~~304~~ | ~~20000~~ | ~~45835~~ | ~~CY~~ | ~~PAVEMENT (RIGID PAVEMENT OPTION)~~<br>~~AGGREGATE BASE~~ | |
| ~~266109~~ | | | | | | | | | ~~239498~~ | ~~26611~~ | | | | | ~~452~~ | ~~15020~~ | ~~266109~~ | ~~SY~~ | ~~12" NON-REINFORCED CONCRETE PAVEMENT, CLASS QC 1P WITH QC/QA~~ | |
| ~~537~~ | | | | | | | | | ~~483~~ | ~~54~~ | | | | | ~~609~~ | ~~24511~~ | ~~537~~ | ~~FT~~ | ~~CURB, TYPE 4-C, AS PER PLAN~~ | ~~70~~ |
| ~~12~~ | | | | | | | | | ~~11~~ | ~~1~~ | | | | | ~~618~~ | ~~40700~~ | ~~12~~ | ~~MILE~~ | ~~RUMBLE STRIPS, SHOULDER (CONCRETE)~~ | |
| | | | | | | | | | | | | | | | | | | | SANITARY SEWER | |
| | | | | | 126 | | | | 113 | 13 | | | | | 611 | 12100 | 126 | FT | 27" CONDUIT, TYPE C, 707.48 (SANITARY) | |
| | | | | | 1 | | | | 1 | | | | | | 611 | 99574 | 1 | EACH | MANHOLE, NO. 3 (SANITARY) | |
| | | | | | 2 | | | | 2 | | | | | | 611 | 99575 | 2 | EACH | MANHOLE, NO. 3, AS PER PLAN (SANITARY) | 72 |
| | | | | | 2 | | | | 2 | | | | | | 611 | 99655 | 2 | EACH | MANHOLE ADJUSTED TO GRADE, AS PER PLAN (SANITARY) | 72 |

| REVISIONS | | |
|---|---|---|
| NO. | DATE | DESCRIPTION |
| 7 | 04/28/21 | DELETED PRESSURE RELIEF JOINT ITEM |

CALCULATED LRK
CHECKED PJF

# GENERAL SUMMARY

SUM-77 / 277 / 224
VARIOUS



O:\2017\2017258\ProjectData\SUM\06002\Design\Roadway\Sheets\06002_GG004.dgn Sheet 4/28/2021 9:47:38 AM pfry

| SHEET NUMBER | | | | | | | | | PARTICIPATION | | | | | | ITEM | ITEM EXT. | GRAND TOTAL | UNIT | DESCRIPTION | SEE SHEET NO. |
|---|---|---|---|---|---|---|---|---|---|---|---|---|---|---|---|---|---|---|---|---|
| 1083 | 1092 | 1093 | | 1102 | 1110 | 1112 | | 1126 | 01/IMS/PV | 02/IMS/PV | 03/IMS/BR | 04/IMS/BR | 05/IMS/BR | 06/IMS/BR | | | | | | |
| | | | | | | | | | | | | | | | | | | | *LIGHTING* | |
| | | | | | | | | | | | | | | | | | | | *FOR LIGHTING GENERAL SUMMARY* | *1040* |
| | | | | | | | | | | | | | | | | | | | *TRAFFIC SURVEILLANCE* | |
| | | | | | | | | | | | | | | | | | | | *FOR TRAFFIC SURVEILLANCE GENERAL SUMMARY* | *1021* |
| | | | | | | | | | | | | | | | | | | | *TRAFFIC CONTROL* | |
| | | | | | | | | | | | | | | | | | | | *FOR TRAFFIC CONTROL GENERAL SUMMARY* | *936-937* |
| | | | | | | | | | | | | | | | | | | | *RETAINING WALLS* | |
| | | | | | | | | | | | | | | | | | | | *FOR RETAINING WALL 1 GENERAL SUMMARY* | *1136* |
| | | | | | | | | | | | | | | | | | | | *FOR RETAINING WALL 2 GENERAL SUMMARY* | *1147* |
| | | | | | | | | | | | | | | | | | | | *NOISE BARRIERS* | |
| *64584* | | *43600* | | *48504* | *42715* | *76855* | | *41282* | | *317540* | | | | | *SPECIAL* | *60610210* | *317540* | *SF* | *NOISE BARRIER (REFLECTIVE)* | *1080* |
| | *5376* | | | | | | | | | *5376* | | | | | *SPECIAL* | *60610920* | *5376* | *SF* | *NOISE BARRIER (REFLECTIVE), INFINITY WALL* | *1080* |
| | | | | | | | | | | | | | | | | | | | *STRUCTURE 20 FOOT SPAN AND UNDER* | |
| | | | | | | | | | | | | | | | | | | | *FOR 10' X 5' CONCRETE BOX CULVERT GENERAL SUMMARY* | *911* |
| | | | | | | | | | | | | | | | | | | | *STRUCTURE OVER 20 FOOT SPAN* | |
| | | | | | | | | | | | | | | | | | | | *FOR SUM-077-0802L/R GENERAL SUMMARY* | *1158* |
| | | | | | | | | | | | | | | | | | | | *FOR SUM-077-0810L/R GENERAL SUMMARY* | *1184* |
| | | | | | | | | | | | | | | | | | | | *FOR SUM-077-0927R GENERAL SUMMARY* | *1228* |
| | | | | | | | | | | | | | | | | | | | *MAINTENANCE OF TRAFFIC* | |
| | | | | | | | | | | | | | | | | | | | *FOR MAINTENANCE OF TRAFFIC GENERAL SUMMARY* | *85-86* |
| | | | | | | | | | *LS* | *LS* | | | | | *108* | *10000* | *LS* | | *INCIDENTALS* | |
| | | | | | | | | | *LS* | *LS* | | | | | *614* | *11000* | *LS* | | *CPM PROGRESS SCHEDULE* | |
| | | | | | | | | | *32* | *4* | | | | | *619* | *16021* | *36* | *MNTH* | *MAINTAINING TRAFFIC* | |
| | | | | | | | | | *LS* | *LS* | | | | | *623* | *10000* | *LS* | | *FIELD OFFICE, TYPE C, AS PER PLAN* | *67* |
| | | | | | | | | | *LS* | *LS* | | | | | *624* | *10000* | *LS* | | *CONSTRUCTION LAYOUT STAKES AND SURVEYING* | |
| | | | | | | | | | | | | | | | | | | | *MOBILIZATION* | |

| REVISIONS | | |
|---|---|---|
| NO. | DATE | DESCRIPTION |
| 1 | 03/15/21 | FIELD OFFICE MONTHS REVISED |

CALCULATED LRK
CHECKED PJF

# GENERAL SUMMARY

SUM-77 / 277 / 224
VARIOUS

406
1288

D:\2017\2017258\ProjectData\SUM\106002\Design\Roadway\Sheets\106002_GG005.dgn Sheet 3/15/2021 11:54:40 AM pfry

| SHEET NO. | 202 HEADWALL REMOVED EACH | 202 PAVEMENT REMOVED SY | 202 CONCRETE BARRIER REMOVED FT | 202 CURB REMOVED FT | | 202 PIPE REMOVED, 24" AND UNDER FT | 202 PIPE REMOVED, OVER 24" FT | | 202 GUARDRAIL REMOVED FT | 202 CABLE BARRIER REMOVED FT | | 202 CATCH BASIN REMOVED EACH | 202 INLET REMOVED EACH | 202 CATCH BASIN ABANDONED EACH | | SPECIAL FILL AND PLUG EXISTING CONDUIT, 15" FT | SPECIAL FILL AND PLUG EXISTING CONDUIT, 18" FT | SPECIAL FILL AND PLUG EXISTING CONDUIT, 30" FT | | 202 FENCE REMOVED FT | 202 GUTTER REMOVED SY | 607 FENCE, MISC.: TEMPORARY FENCE FT | 606 GUARDRAIL, TYPE MGS FT | 606 GUARDRAIL, TYPE MGS WITH LONG POSTS FT |
|---|---|---|---|---|---|---|---|---|---|---|---|---|---|---|---|---|---|---|---|---|---|---|---|---|
| 417 | | | 804 | | | | | | | | | | | 1 | | | | | | | | | | |
| 419 | | | | | | | | | | | | 36 | 3 | | | | | | | | | | | |
| 423 | | | | | | | | | | | | | | | | 586 | 360 | 214 | | 10998 | | 9982 | | |
| 424 | | | | | | | | | | | | | | | | | | | | | | | 31504 | 2270 |
| 425 | | | | | | | | | | | | | | | | | | | | | | | 1174 | 600 |
| 426 | | | | | | | | | 18524 | 2027 | | | | | | | | | | | | | | |
| 427 | | | | | | | | | 16216 | | | | | | | | | | | | | | | |
| 428 | 20 | | | | | | | | | | | | | | | | | | | | | | | |
| 431 | | | | | | 4526 | 168 | | | | | | | | | | | | | | 86 | | | |
| 443 | | 233574 | 2946 | 169 | | | | | | | | | | | | | | | | | | | | |
| TOTALS CARRIED TO GENERAL SUMMARY | 20 | 233574 | 3750 | 169 | | 4526 | 168 | | 34740 | 2027 | | 36 | 3 | 1 | | 586 | 360 | 214 | | 10998 | 86 | 9982 | 32678 | 2870 |

| SHEET NO. | 606 GUARDRAIL, TYPE MGS HALF POST SPACING FT | 606 GUARDRAIL, TYPE MGS QUARTER POST SPACING FT | 606 GUARDRAIL, BARRIER DESIGN, TYPE MGS FT | 606 ROUNDED END SECTION EACH | 606 ANCHOR ASSEMBLY, MGS TYPE E (MASH 2016) EACH | 606 ANCHOR ASSEMBLY, MGS TYPE T EACH | 606 MGS BRIDGE TERMINAL ASSEMBLY, TYPE 1 EACH | 606 MGS BRIDGE TERMINAL ASSEMBLY, TYPE 2 EACH | 606 IMPACT ATTENUATOR, TYPE 1 (UNIDIRECTIONAL) EACH | 606 IMPACT ATTENUATOR, TYPE 3 UNIDIRECTIONAL (60 MPH, 90" WIDTH) EACH | 606 IMPACT ATTENUATOR, TYPE 3 UNIDIRECTIONAL (65 MPH, 69" WIDTH) EACH | 606 IMPACT ATTENUATOR, TYPE 3 UNIDIRECTIONAL (70 MPH, 48" WIDTH) EACH | 607 FENCE, TYPE CLT FT | 607 FENCELINE SEEDING AND MULCHING FT | 622 CONCRETE BARRIER, SINGLE SLOPE, TYPE D FT | 622 CONCRETE BARRIER, SINGLE SLOPE, TYPE D, AS PER PLAN FT | 622 CONCRETE BARRIER END SECTION, TYPE D EACH | 622 CONCRETE BARRIER END SECTION, TYPE D, AS PER PLAN EACH | 622 CONCRETE BARRIER, END ANCHORAGE, REINFORCED, TYPE D EACH | 622 CONCRETE BARRIER, END ANCHORAGE, REINFORCED, TYPE D, AS PER PLAN EACH | 626* BARRIER REFLECTOR, TYPE 1, ONE-WAY EACH | 626* BARRIER REFLECTOR, TYPE 1, BI-DIRECTIONAL EACH | 626* BARRIER REFLECTOR, TYPE 3, ONE-WAY EACH | 626* BARRIER REFLECTOR, TYPE 3, BI-DIRECTIONAL EACH |
|---|---|---|---|---|---|---|---|---|---|---|---|---|---|---|---|---|---|---|---|---|---|---|---|---|
| 417 | | | | | | | | | | | | | | | 1983 | 71 | 23 | 3 | 9 | 2 | | | | |
| 423 | | | | | | | | | | | | | 1518 | 1518 | | | | | | | | | | |
| 424 | 200 | 50 | 25 | | 21 | 18 | 20 | 16 | 1 | 1 | 1 | | | | | | | | | | | | | |
| 425 | 50 | | | 1 | 1 | 4 | 4 | 1 | | | | 1 | | | | | | | | | 266 | 4 | 451 | 6 |
| * QUANTITY CARRIED TO TRAFFIC CONTROL GENERAL SUMMARY ON SHEET 936 | | | | | | | | | | | | | | | | | | | | | | | | |
| TOTALS CARRIED TO GENERAL SUMMARY | 250 | 50 | 25 | 1 | 22 | 22 | 24 | 17 | 1 | 1 | 1 | 1 | 1518 | 1518 | 1983 | 71 | 23 | 3 | 9 | 2 | 266 | 4 | 451 | 6 |

CALCULATED LRK
CHECKED PJF

REVISIONS

| NO. | DATE | DESCRIPTION |
|---|---|---|
| 8 | 04/30/21 | ADDED TEMPORARY FENCE QUANTITY |

# ROADWAY SUBSUMMARY

SUM-77 / 277 / 224
VARIOUS

407
1288

D:\2017\2017258\ProjectData\SUM\106002\Design\Roadway\Sheets\106002_GS001.dgn Sheet 4/30/2021 2:27:35 PM lkirkland

| SHEET NO. | 601 ROCK CHANNEL PROTECTION, TYPE C WITH AGGREGATE FILTER, AS PER PLAN CY | 601 ROCK CHANNEL PROTECTION, TYPE D WITH AGGREGATE FILTER, AS PER PLAN CY | 601 TIED CONCRETE BLOCK MAT WITH TYPE 1 UNDERLAYMENT SY | 601 TIED CONCRETE BLOCK MAT WITH TYPE 2 UNDERLAYMENT SY | 601 ROCK CHANNEL PROTECTION, TYPE B WITH GEOTEXTILE FABRIC CY | 601 ROCK CHANNEL PROTECTION, TYPE C WITH GEOTEXTILE FABRIC CY | 601 ROCK CHANNEL PROTECTION, TYPE C WITH AGGREGATE FILTER CY | 601 PAVED GUTTER, TYPE 1-2, AS PER PLAN FT | | 670 DITCH EROSION PROTECTION SY | | | 671 EROSION CONTROL MAT, TYPE G SY | | | | 836 SEEDING AND EROSION CONTROL WITH TURF REINFORCING MAT, TYPE 1 SY | 836 SEEDING AND EROSION CONTROL WITH TURF REINFORCING MAT, TYPE 2 SY | | | | |
|---|---|---|---|---|---|---|---|---|---|---|---|---|---|---|---|---|---|---|---|---|---|---|
| 420 | | | | 47 | | 21 | 7 | | | 8628 | | | | | | | 3823 | 299 | | | | |
| 421 | 17 | 122 | | | | 8 | 2 | | | 7616 | | | 242 | | | | 594 | | | | | |
| 422 | 160 | 127 | | 47 | 12 | 41 | 8 | 507 | | 4016 | | | | | | | 1018 | | | | | |
| 432 | | | 8 | | | | | | | | | | | | | | | | | | | |
| 433 | | | 22 | | | | | | | | | | | | | | | | | | | |
| 434 | | | 24 | | | | | | | | | | | | | | | | | | | |
| 435 | | | 14 | | | | | | | | | | | | | | | | | | | |
| 436 | | | 14 | | | | | | | | | | | | | | | | | | | |
| 437 | | | 18 | | | | | | | | | | | | | | | | | | | |
| 438 | | | 28 | | | | | | | | | | | | | | | | | | | |
| TOTALS CARRIED TO GENERAL SUMMARY | 177 | 249 | 128 | 94 | 12 | 70 | 17 | 507 | | 20260 | | | 242 | | | | 5435 | 299 | | | | |

| SHEET NO. |
|---|
| TOTALS CARRIED TO GENERAL SUMMARY |

| REVISIONS | | |
|---|---|---|
| NO. | DATE | DESCRIPTION |
| 5 | 04/22/21 | REVISED ITEM 601 - RCP QUANTITY |
| 6 | 04/26/21 | REVISED ITEM 601 - RCP QUANTITY |

CALCULATED LRK
CHECKED PJF

# EROSION CONTROL SUBSUMMARY

SUM-77/277/224
VARIOUS

408
1288

O:\2017\2017258\ProjectData\SUM\106002\Design\Roadway\Sheets\106002_GS003.dgn Sheet 4/26/2021 9:34:07 AM pfry

| SHEET NO. | 602 CONCRETE MASONRY | | 605 6" SHALLOW PIPE UNDERDRAINS WITH GEOTEXTILE FABRIC | 605 6" UNCLASSIFIED PIPE UNDERDRAINS WITH GEOTEXTILE FABRIC | 605 6" BASE PIPE UNDERDRAINS WITH GEOTEXTILE FABRIC | 611 CONDUIT, BORED OR JACKED, 24", TYPE B, 748.06 | 611 6" CONDUIT, TYPE F FOR UNDERDRAIN OUTLETS | 611 6" CONDUIT, TYPE B | 611 15" CONDUIT, TYPE B | 611 15" CONDUIT, TYPE B, 706.02 | 611 15" CONDUIT, TYPE C | 611 15" CONDUIT, TYPE F | 611 18" CONDUIT, TYPE B | 611 18" CONDUIT, TYPE C | 611 18" CONDUIT, TYPE F | 611 21" CONDUIT, TYPE B | 611 21" CONDUIT, TYPE C | 611 24" CONDUIT, TYPE A | 611 24" CONDUIT, TYPE B | 611 24" CONDUIT, TYPE B, 706.02 | 611 30" CONDUIT, TYPE B | 611 30" CONDUIT, TYPE C |
|---|---|---|---|---|---|---|---|---|---|---|---|---|---|---|---|---|---|---|---|---|---|---|---|
| | CY | | FT | FT | FT | FT | FT | FT | FT | FT | FT | FT | FT | FT | FT | FT | FT | FT | FT | FT | FT | FT | FT |
| 428 | 9.4 | | | | | | | | | | | | | | | | | | | | | | |
| 429 | 2.8 | | | | | 102 | | | 2788 | | | 249 | 1054 | 71 | | 456 | | 103 | | | | | |
| 430 | | | | | | | | | 1640 | 9 | 327 | 416 | | 50 | 40 | 98 | 297 | | 101 | 8 | 183 | 90 | |
| 432 | | | 8408 | 761 | 7575 | | 108 | 480 | | | | | | | | | | | | | | | |
| 433 | | | 8401 | | 5895 | | 223 | 355 | | | | | | | | | | | | | | | |
| 434 | | | 5932 | | 4821 | | 262 | 324 | | | | | | | | | | | | | | | |
| 435 | | | 11038 | 213 | 9384 | | 161 | 329 | | | | | | | | | | | | | | | |
| 436 | | | 8872 | 74 | 13783 | | 216 | 356 | | | | | | | | | | | | | | | |
| 437 | | | 12652 | | 13307 | | 255 | 462 | | | | | | | | | | | | | | | |
| 438 | | | 9415 | 218 | 12863 | | 231 | 382 | | | | | | | | | | | | | | | |
| 439 | | | 449 | 687 | 2443 | | 8 | 260 | | | | | | | | | | | | | | | |
| **TOTALS CARRIED TO GENERAL SUMMARY** | 12.2 | | 65167 | 1953 | 70071 | 102 | 1464 | 2948 | 4428 | 9 | 327 | 665 | 1054 | 121 | 40 | 554 | 297 | 103 | 101 | 8 | 183 | 90 | |

| SHEET NO. | 611 36" CONDUIT, TYPE B | 611 36" CONDUIT, TYPE C | 611 CONDUIT, BORED OR JACKED, 15", TYPE B, 748.06 | 611 CONDUIT, BORED OR JACKED, 18", TYPE B, 748.06 | 611 CONDUIT, BORED OR JACKED, 42", TYPE B, 748.06 | 611 CONDUIT, MISC.: 18", TYPE B, 748.06, OPEN CUT | 611 27" CONDUIT, TYPE C, 707.48 (SANITARY) | 611 CATCH BASIN, NO. 3, AS PER PLAN | 611 CATCH BASIN, NO. 3A | 611 CATCH BASIN, NO. 6 | 611 CATCH BASIN, NO. 6, AS PER PLAN | 611 CATCH BASIN, NO. 8 | 611 INLET, NO. 3 FOR SINGLE SLOPE BARRIER, TYPE B1 | 611 INLET, NO. 3 FOR SINGLE SLOPE BARRIER, TYPE C1 | 611 INLET, NO. 3 FOR SINGLE SLOPE BARRIER, TYPE C1, AS PER PLAN | 611 INLET, NO. 3 FOR SINGLE SLOPE BARRIER, TYPE D | 611 MANHOLE, NO. 3 | 611 MANHOLE, NO. 3 (SANITARY) | 611 MANHOLE, NO. 3, AS PER PLAN (SANITARY) | 611 MANHOLE ADJUSTED TO GRADE, AS PER PLAN (SANITARY) | 611 MANHOLE RECONSTRUCTED TO GRADE, AS PER PLAN | 611 PRECAST REINFORCED CONCRETE OUTLET |
|---|---|---|---|---|---|---|---|---|---|---|---|---|---|---|---|---|---|---|---|---|---|---|
| | FT | FT | FT | FT | FT | FT | FT | EACH | EACH | EACH | EACH | EACH | EACH | EACH | EACH | EACH | EACH | EACH | EACH | EACH | EACH | EACH |
| 417 | | | | | | | | | | | | | 7 | 8 | | | | | | | | |
| 418 | | | | | | | | 1 | 6 | 2 | 1 | 13 | | 13 | 1 | 3 | 6 | | | | | |
| 419 | | | | | | | | | | | | | | | | | | | | | 1 | |
| 429 | 44 | 65 | 340 | | 199 | | | | | | | | | | | | | | | | | |
| 430 | | 65 | 120 | 155 | | 22 | | | | | | | | | | | | | | | | |
| 431 | | | | | | | 126 | | | | | | | | | | | 1 | 2 | 2 | | |
| 432 | | | | | | | | | | | | | | | | | | | | | | 4 |
| 433 | | | | | | | | | | | | | | | | | | | | | | 11 |
| 434 | | | | | | | | | | | | | | | | | | | | | | 12 |
| 435 | | | | | | | | | | | | | | | | | | | | | | 7 |
| 436 | | | | | | | | | | | | | | | | | | | | | | 7 |
| 437 | | | | | | | | | | | | | | | | | | | | | | 9 |
| 438 | | | | | | | | | | | | | | | | | | | | | | 14 |
| **TOTALS CARRIED TO GENERAL SUMMARY** | 44 | 130 | 460 | 155 | 199 | 22 | 126 | 1 | 6 | 2 | 1 | 13 | 7 | 21 | 1 | 3 | 6 | 1 | 2 | 2 | 1 | 64 |

CALCULATED LRK
CHECKED PJF

# DRAINAGE SUBSUMMARY

SUM-77 / 277 / 224
VARIOUS

REVISIONS

| NO. | DATE | DESCRIPTION |
|---|---|---|
| 6 | 04/26/21 | REVISED CONDUITS, BORED OR JACKED |

409
1288

D:\2017\2017258\ProjectData\SUM\06002\Design\Roadway\Sheets\06002_GS010.dgn Sheet 4/26/2021 10:25:08 AM pfry

| SHEET NO. | 202 PIPE REMOVED, 24" AND UNDER FT | | 202 HEADWALL REMOVED EACH | | SPECIAL FILL AND PLUG EXISTING CONDUIT, 24" FT | | 601 ROCK CHANNEL PROTECTION, TYPE A WITH FILTER CY | | 601 ROCK CHANNEL PROTECTION, TYPE B WITH FILTER CY | | 601 ROCK CHANNEL PROTECTION, TYPE B WITH AGGREGATE FILTER CY | | 601 ROCK CHANNEL PROTECTION, TYPE C WITH AGGREGATE FILTER CY | | 601 PAVED GUTTER, TYPE 1-2 FT | | 602 CONCRETE MASONRY CY | | 601 RIPRAP, TYPE D SY | | | |
|---|---|---|---|---|---|---|---|---|---|---|---|---|---|---|---|---|---|---|---|---|---|---|
| 908 | | | 1 | | | | 26 | | | | | | | | | | 2.4 | | 8 | | | |
| 909 | | | 1 | | | | | | 21 | | | | | | | | 1.9 | | | | | |
| 916 | | | 1 | | | | | | 40 | | | | | | | | 4.4 | | | | | |
| 917 | | | 1 | | | | | | | | | | | | | | 0.43 | | | | | |
| 918 | | | 1 | | | | | | | | | | | | | | 0.31 | | | | | |
| 919 | 8 | | 2 | | 169 | | | | | | 6.13 | | | | 78 | | 1.12 | | | | | |
| 920 | 8 | | 2 | | 139 | | | | | | | | 2.22 | | | | 1.12 | | | | | |
| **TOTALS CARRIED TO GENERAL SUMMARY** | 16 | | 9 | | 308 | | 26 | | 61 | | 7 | | 3 | | 78 | | 11.7 | | 8 | | | |

| SHEET NO. | 611 18" CONDUIT, TYPE A, 706.02 FT | | 611 24" CONDUIT, TYPE A, 706.02 FT | | 611 CONDUIT, BORED OR JACKED, 30", TYPE A, 748.06 FT | | 611 CONDUIT, MISC.: 30", TYPE A, 748.06, OPEN CUT FT | | 611 60" CONDUIT, TYPE A, 706.02 FT | | 611 66" CONDUIT, TYPE A, 706.02 FT | | 611 96" CONDUIT, TYPE A, 707.02, 707.03 OR 707.04 FT | | 611 FIELD PAVING OF EXISTING PIPE, 96" 707.02, 707.03 OR 707.04 FT | | 611 CONDUIT, FIELD PAVING OF PIPE, 96" 707.02, 707.03 OR 707.04 FT | | | | | |
|---|---|---|---|---|---|---|---|---|---|---|---|---|---|---|---|---|---|---|---|---|---|---|
| 908 | | | | | | | | | | | 12 | | | | | | | | | | | |
| 909 | | | | | | | | | 16 | | | | | | | | | | | | | |
| 916 | | | | | | | | | | | | | 20 | | 317 | | 20 | | | | | |
| 917 | | | 10 | | | | | | | | | | | | | | | | | | | |
| 918 | 7 | | | | | | | | | | | | | | | | | | | | | |
| 919 | | | | | 156 | | 24 | | | | | | | | | | | | | | | |
| 920 | | | | | 138 | | 22 | | | | | | | | | | | | | | | |
| **TOTALS CARRIED TO GENERAL SUMMARY** | 7 | | 10 | | 294 | | 46 | | 16 | | 12 | | 20 | | 317 | | 20 | | | | | |

CALCULATED CJC
CHECKED PJF

# CULVERT SUBSUMMARY

SUM-77/277/224
VARIOUS

| REVISIONS | | |
|---|---|---|
| NO. | DATE | DESCRIPTION |
| 4 | 04/20/21 | ADDED RIPRAP, TYPE D ITEM & QTY |

410
1288

D:\2017\2017258\ProjectData\SUM\06002\Design\Roadway\Sheets\06002_GS002.dgn Sheet 4/20/2021 4:18:06 PM pfry

| SHEET NO. | STATION TO STATION | | 203 EXCAVATION | 203 EXCAVATION (SPECIAL BENCHING) | 203 EXCAVATION (STREAM UNDERCUT) | 203 EMBANKMENT | 203 EMBANKMENT (SPECIAL BENCHING) | 203 EMBANKMENT (STREAM UNDERCUT) | 204 EXCAVATION OF SUBGRADE | 204 EMBANKMENT | | 659 SEEDING AND MULCHING (SM) | | 659 SOIL ANALYSIS TEST | 659 TOPSOIL (4" FOR VEGETATED FILTER STRIPS & VEGETATED BIOFILTERS) | 659 TOPSOIL (111*(SM))/(1000) - (4" FOR VFS & VBF) | 659 REPAIR SEEDING AND MULCHING (0.05*(SM)) | 659 INTER-SEEDING (0.05*(SM)) | 659 COMM. FERTILIZER [(30*(SM))+ (20*.05*(SM))*9 /(1000*2000) | 659 LIME (SM)/14840) | 659 WATER [(2*300*(SM)) +(300*0.05*(SM))*9 /(1000*1000) | 670 SLOPE EROSION PROTECTION | | |
|---|---|---|---|---|---|---|---|---|---|---|---|---|---|---|---|---|---|---|---|---|---|---|---|---|
| | | | CY | CY | CY | CY | CY | CY | CY | CY | | SY | | EACH | CY | CY | SY | SY | TON | ACRE | MGAL | SY | | |
| | I.R. 77 | | | | | | | | | | | | | | | | | | | | | | | |
| 520 | 370+00.00 | 371+50.00 | 57 | | | 0 | | | | | | 28 | | | | | | | | | | | | |
| 521 | 372+00.00 | 373+50.00 | 169 | | | 5 | | | | | | 0 | | | | | | | | | | | | |
| 522 | 374+00.00 | 375+00.00 | 156 | | | 15 | | | | | | 0 | | | | | | | | | | | | |
| 523 | 376+00.00 | 379+00.00 | 248 | | | 11 | | | | | | 0 | | | | | | | | | | | | |
| 524 | 380+00.00 | 383+00.00 | 90 | | | 25 | | | | | | 0 | | | | | | | | | | | | |
| 525 | 384+00.00 | 387+00.00 | 126 | | | 10 | | | | | | 0 | | | | | | | | | | | | |
| 526 | 388+00.00 | 390+00.00 | 218 | | | 26 | | | | | | 737 | | | | | | | | | | | | |
| 527 | 391+00.00 | 391+50.00 | 207 | | | 3 | | | | | | 481 | | | | | | | | | | | | |
| 528 | 392+00.00 | 393+00.00 | 377 | | | 15 | | | | | | 931 | | | | | | | | | | | | |
| 529 | 393+50.00 | 394+50.00 | 423 | | | 15 | | | | | | 1000 | | | | | | | | | | | | |
| 530 | 395+00.00 | 396+00.00 | 724 | | | 18 | | | | | | 1609 | | | | | | | | | | | | |
| 531 | 396+50.00 | 397+50.00 | 651 | | | 13 | | | | | | 1286 | | | | | | | | | | | | |
| 532 | 398+00.00 | 399+00.00 | 627 | | | 8 | | | | | | 1103 | | | | | | | | | | | | |
| 533 | 399+50.00 | 400+50.00 | 822 | | | 0 | | | | | | 1192 | | | | | | | | | | | | |
| 534 | 401+00.00 | 402+00.00 | 813 | | | 0 | | | | | | 958 | | | | | | | | | | | | |
| 535 | 402+50.00 | 403+50.00 | 794 | | | 5 | | | | | | 1042 | | | | | | | | | | | | |
| 536 | 404+00.00 | 405+00.00 | 969 | 196 | | 124 | 196 | | | | | 1639 | | | | | | | | | | | | |
| 537 | 406+00.00 | 408+00.00 | 1120 | | | 116 | | | | | | 1705 | | | | | | | | | | | | |
| 538 | 409+00.00 | 411+00.00 | 896 | 54 | | 59 | 54 | | | | | 1261 | | | | | | | | | | | | |
| 539 | 412+00.00 | 415+00.00 | 1576 | 54 | | 102 | 54 | | | | | 1767 | | | | | | | | | | | | |
| 540 | 416+00.00 | 418+00.00 | 1272 | | | 33 | | | | | | 1384 | | | 11 | | | | | | | | | |
| 541 | 419+00.00 | 421+00.00 | 1647 | 239 | | 329 | 239 | | | | | 1361 | | | | | | | | | | | | |
| 542 | 422+00.00 | 425+00.00 | 1643 | 239 | | 367 | 239 | | | | | 1512 | | | | | | | | | | | | |
| 543 | 425+30.16 | 426+85.73 | 315 | | | 40 | | | | | | 132 | | | | | | | | | | | | |
| 544 | 427+00.00 | 428+50.00 | 710 | | | 28 | | | | | | 356 | | | | | | | | | | | | |
| 545 | 429+00.00 | 429+28.48 | 123 | | | 35 | | | | | | 72 | | | | | | | | | | | | |
| 546 | 430+89.09 | 432+00.00 | 484 | | | 92 | | | | | | 386 | | | | | | | | | | | | |
| 547 | 432+50.00 | 434+00.00 | 679 | | | 50 | | | | | | 548 | | | | | | | | | | | | |
| 548 | 434+50.00 | 435+50.00 | 533 | | | 28 | | | | | | 430 | | | | | | | | | | | | |
| 549 | 436+00.00 | 437+00.00 | 518 | | | 35 | | | | | | 514 | | | | | | | | | | | | |
| 550 | 437+50.00 | 439+00.00 | 848 | | | 35 | | | | | | 633 | | | | | | | | | | | | |
| 551 | 439+50.00 | 441+00.00 | 856 | 40 | | 128 | 40 | | | | | 869 | | | | | | | | | | | | |
| 552 | 441+50.00 | 443+00.00 | 896 | 622 | | 474 | 622 | | | | | 1256 | | | | | | | | | | | | |
| 553 | 443+50.00 | 445+00.00 | 985 | 424 | | 479 | 424 | | | | | 1625 | | | | | | | | | | | | |
| 554 | 445+50.00 | 447+00.00 | 1624 | 28 | | 102 | 28 | | | | | 2050 | | | | | | | | | | | | |
| 555 | 447+50.00 | 449+00.00 | 1301 | | | 50 | | | | | | 1930 | | | | | | | | | | | | |
| 556 | 450+00.00 | 453+00.00 | 2818 | | | 42 | | | | | | 3634 | | | | | | | | | | | | |
| 557 | 454+00.00 | 457+00.00 | 3103 | | | 186 | | | | | | 4201 | | | 214 | | | | | | | 1965 | | |
| 558 | 458+00.00 | 460+00.00 | 2215 | | | 348 | | | | | | 2656 | | | 22 | | | | | | | 46 | | |
| 559 | 461+00.00 | 462+00.00 | 2045 | | | 180 | | | | | | 1967 | | | | | | | | | | | | |
| 560 | 463+00.00 | 464+00.00 | 2815 | | | 83 | | | | | | 2316 | | | | | | | | | | | | |
| 561 | 465+00.00 | 466+00.00 | 3044 | | | 45 | | | | | | 2389 | | | | | | | | | | | | |
| 562 | 467+00.00 | 468+00.00 | 2616 | | | 7 | | | | | | 1966 | | | | | | | | | | | | |
| 563 | 469+00.00 | | 411 | | | 0 | | | | | | 190 | | | | | | | | | | | | |
| SUBTOTALS CARRIED TO SHEET 416 | | | 44564 | 1896 | | 3766 | 1896 | | | | | 51116 | | | 247 | | | | | | | 2011 | | |

CALCULATED ATR
CHECKED PJF

# EARTHWORK SUBSUMMARY AND CALCULATIONS

SUM-77 / 277 / 224
VARIOUS

411
1288

D:\2017\2017258\ProjectData\SUM\06002\Design\Roadway\Sheets\06002_GS004.dgn Sheet 1/16/2021 2:09:36 PM pfry

| SHEET NO. | STATION TO STATION | | 203 EXCAVATION CY | 203 EXCAVATION (SPECIAL BENCHING) CY | 203 EXCAVATION (STREAM UNDERCUT) CY | 203 EMBANKMENT CY | 203 EMBANKMENT (SPECIAL BENCHING) CY | 203 EMBANKMENT (STREAM UNDERCUT) CY | 204 EXCAVATION OF SUBGRADE CY | 204 EMBANKMENT CY | | 659 SEEDING AND MULCHING (SM) SY | | 659 SOIL ANALYSIS TEST EACH | 659 TOPSOIL (4" FOR VEGETATED FILTER STRIPS & VEGETATED BIOFILTERS) CY | 659 TOPSOIL (111*(SM))/(1000) - (4" FOR VFS & VBF) CY | 659 REPAIR SEEDING AND MULCHING (0.05*(SM)) SY | 659 INTER-SEEDING (0.05*(SM)) SY | 659 COMM. FERTILIZER [(30*(SM))+ (20*.05*(SM))*9 /(1000*2000) TON | 659 LIME (SM)/14840) ACRE | 659 WATER [(2*300*(SM)) +(300*0.05*(SM))*9 /(1000*1000) MGAL | 670 SLOPE EROSION PROTECTION SY | | |
|---|---|---|---|---|---|---|---|---|---|---|---|---|---|---|---|---|---|---|---|---|---|---|---|---|
| | NB I.R. 77 | | | | | | | | | | | | | | | | | | | | | | | |
| 564 | 469+46.96 | 471+00.00 | 1244 | | | 8 | | | | | | 1189 | | | | | | | | | | | | |
| 565 | 472+00.00 | 473+00.00 | 1077 | | | 24 | | | | | | 1176 | | | | | | | | | | | | |
| 566 | 474+00.00 | 475+00.00 | 584 | | | 4 | | | | | | 587 | | | | | | | | | | | | |
| 567 | 475+50.00 | 476+50.00 | 506 | | | 1 | | | 109 | 109 | | 206 | | | | | | | | | | | | |
| 568 | 477+00.00 | 478+00.00 | 517 | | | 0 | | | 547 | 547 | | 247 | | | | | | | | | | | | |
| 569 | 478+50.00 | 479+50.00 | 536 | | | 0 | | | | | | 258 | | | | | | | | | | | | |
| 570 | 480+00.00 | 481+00.00 | 627 | | | 1 | | | | | | 278 | | | | | | | | | | | | |
| 571 | 481+50.00 | 482+50.00 | 622 | | | 1 | | | | | | 380 | | | | | | | | | | | | |
| 572 | 483+00.00 | 484+00.00 | 760 | | | 1 | | | | | | 684 | | | 43 | | | | | | | | | |
| 573 | 484+50.00 | 485+50.00 | 999 | | | 7 | | | | | | 1299 | | | 55 | | | | | | | | | |
| 574 | 486+00.00 | 487+00.00 | 169 | | | 0 | | | | | | 644 | | | 44 | | | | | | | | | |
| 575 | 487+50.00 | 488+50.00 | 179 | | | 1 | | | | | | 569 | | | 16 | | | | | | | | | |
| 576 | 489+00.00 | 490+00.00 | 129 | | | 1 | | | | | | 430 | | | | | | | | | | | | |
| 577 | 490+50.00 | 491+50.00 | 152 | | | 0 | | | | | | 381 | | | | | | | | | | | | |
| 578 | 492+00.00 | 493+00.00 | 188 | | | 0 | | | | | | 297 | | | | | | | | | | | | |
| 579 | 493+50.00 | 494+50.00 | 84 | | | 0 | | | | | | 14 | | | | | | | | | | | | |
| 580 | 495+00.00 | 495+75.99 | 63 | | | 18 | | | | | | 0 | | | | | | | | | | | | |
| 581 | 496+00.00 | 498+00.00 | 196 | | | 52 | | | | | | 311 | | | | | | | | | | | | |
| 582 | 499+00.00 | 501+00.00 | 253 | | | 49 | | | | | | 555 | | | 11 | | | | | | | | | |
| 583 | 502+00.00 | 504+00.00 | 267 | | | 37 | | | | | | 972 | | | 31 | | | | | | | | | |
| 584 | 505+00.00 | 507+00.00 | 325 | | | 20 | | | | | | 708 | | | 3 | | | | | | | | | |
| 585 | 507+50.00 | 508+50.00 | 127 | | | 47 | | | | | | 336 | | | | | | | | | | | | |
| 586 | 509+00.00 | 510+50.00 | 118 | | | 38 | | | | | | 264 | | | | | | | | | | | | |
| 587 | 510+65.75 | 512+00.00 | 94 | | | 76 | | | | | | 302 | | | | | | | | | | | | |
| 588 | 512+50.00 | 513+50.00 | 62 | | | 49 | | | | | | 236 | | | | | | | | | | | | |
| 589 | 514+00.00 | 514+85.00 | 29 | | | 21 | | | | | | 134 | | | | | | | | | | | | |
| | SB I.R. 77 | | | | | | | | | | | | | | | | | | | | | | | |
| 591 | 469+42.49 | 472+00.00 | 2836 | | | 0 | | | | | | 1624 | | | | | | | | | | | | |
| 592 | 472+54.68 | 473+50.00 | 1626 | | | 0 | | | | | | 867 | | | | | | | | | | | | |
| 593 | 474+00.00 | 475+00.00 | 1954 | | | 0 | | | | | | 1214 | | | | | | | | | | | | |
| 594 | 475+50.00 | 476+50.00 | 1839 | | | 6 | | | | | | 1350 | | | | | | | | | | | | |
| 595 | 477+00.00 | 478+00.00 | 1483 | | | 22 | | | | | | 1364 | | | | | | | | | | | | |
| 596 | 478+50.00 | 480+00.00 | 1862 | | | 145 | | | | | | 1872 | | | | | | | | | | | | |
| 597 | 480+50.00 | 482+00.00 | 1640 | | | 547 | | | | | | 2075 | | | | | | | | | | | | |
| 598 | 482+50.00 | 483+50.00 | 1111 | 212 | | 1003 | 212 | | | | | 1797 | | | 97 | | | | | | | | | |
| 599 | 484+00.00 | 485+00.00 | 482 | 334 | | 1118 | 334 | | | | | 1547 | | | 17 | | | | | | | | | |
| 600 | 485+50.00 | 486+50.00 | 457 | 216 | | 1009 | 216 | | | | | 1456 | | | 21 | | | | | | | | | |
| 601 | 487+00.00 | 488+00.00 | 423 | | | 3 | | | | | | 595 | | | 21 | | | | | | | | | |
| 602 | 488+50.00 | 489+50.00 | 476 | | | 6 | | | | | | 627 | | | 21 | | | | | | | | | |
| 603 | 490+00.00 | 491+00.00 | 463 | | | 3 | | | | | | 631 | | | 21 | | | | | | | | | |
| 604 | 491+50.00 | 492+81.37 | 362 | | | 5 | | | | | | 577 | | | 22 | | | | | | | | | |
| 605 | 493+00.00 | 495+00.00 | 379 | | | 67 | | | | | | 911 | | | | | | | | | | | | |
| 606 | 496+00.00 | 498+00.00 | 376 | | | 35 | | | | | | 1134 | | | 100 | | | | | | | | 372 | |
| 607 | 499+00.00 | 502+00.00 | 541 | | | 48 | | | | | | 1007 | | | 74 | | | | | | | | 445 | |
| 608 | 502+03.04 | 503+50.00 | 340 | | | 91 | | | | | | 951 | | | 74 | | | | | | | | | |
| 609 | 504+00.00 | 505+50.00 | 198 | | | 78 | | | | | | 692 | | | 52 | | | | | | | | | |
| 610 | 506+00.00 | 506+50.00 | 118 | | | 35 | | | | | | 297 | | | 11 | | | | | | | | | |
| 611 | 507+00.00 | 508+00.00 | 205 | | | 10 | | | | | | 469 | | | | | | | | | | | | |
| 612 | 508+50.00 | 509+50.00 | 446 | | | 63 | | | | | | 1006 | | | | | | | | | | | | |
| 613 | 510+00.00 | 511+50.00 | 729 | | | 107 | | | | | | 1422 | | | 48 | | | | | | | | | |
| 614 | 512+00.00 | 513+00.00 | 691 | | | 71 | | | | | | 1295 | | | 23 | | | | | | | | | |
| 615 | 513+50.00 | 514+95.00 | 321 | | | 46 | | | | | | 743 | | | 17 | | | | | | | | | |
| SUBTOTALS CARRIED TO SHEET 416 | | | 31265 | 762 | | 4974 | 762 | | 656 | 656 | | 39980 | | | 822 | | | | | | | 817 | | |

CALCULATED ATR
CHECKED PJF

# EARTHWORK SUBSUMMARY AND CALCULATIONS

SUM-77 / 277 / 224
VARIOUS

412
1288

D:\2017\2017258\ProjectData\SUM\106002\Design\Roadway\Sheets\106002_GS005.dgn Sheet 1/16/2021 2:09:37 PM pfry

| SHEET NO. | STATION TO STATION | | 203 EXCAVATION CY | 203 EXCAVATION (SPECIAL BENCHING) CY | 203 EXCAVATION (STREAM UNDERCUT) CY | 203 EMBANKMENT CY | 203 EMBANKMENT (SPECIAL BENCHING) CY | 203 EMBANKMENT (STREAM UNDERCUT) CY | 204 EXCAVATION OF SUBGRADE CY | 204 EMBANKMENT CY | | 659 SEEDING AND MULCHING (SM) SY | | 659 SOIL ANALYSIS TEST EACH | 659 TOPSOIL (4" FOR VEGETATED FILTER STRIPS & VEGETATED BIOFILTERS) CY | 659 TOPSOIL (111*(SM))/(1000) - (4" FOR VFS & VBF) CY | 659 REPAIR SEEDING AND MULCHING (0.05*(SM)) SY | 659 INTER-SEEDING (0.05*(SM)) SY | 659 COMM. FERTILIZER [(30*(SM))+ (20*.05*(SM))*9 /(1000*2000) TON | 659 LIME (SM)/14840) ACRE | 659 WATER [(2*300*(SM)) +(300*0.05*(SM))*9 /(1000*1000) MGAL | 670 SLOPE EROSION PROTECTION SY | | |
|---|---|---|---|---|---|---|---|---|---|---|---|---|---|---|---|---|---|---|---|---|---|---|---|---|---|
| | I.R. 277/U.S. 224 | | | | | | | | | | | | | | | | | | | | | | | | |
| 617 | 223+00.00 | 225+00.00 | | | | | | | | | | | | | | | | | | | | | | | |
| 618 | 226+00.00 | 228+00.00 | | | | | | | | | | | | | | | | | | | | | | | |
| 619 | 229+00.00 | 230+00.00 | 67 | | | 0 | | | | | | 178 | | | | | | | | | | | | | |
| 620 | 231+00.00 | 233+00.00 | 587 | | | 0 | | | | | | 1461 | | | 50 | | | | | | | | | | |
| 621 | 234+00.00 | 236+00.00 | 676 | | | 26 | | | | | | 1630 | | | 68 | | | | | | | | | | |
| 622 | 237+00.00 | 240+00.00 | 313 | | | 90 | | | | | | 1284 | | | 55 | | | | | | | | | | |
| 623 | 241+00.00 | 243+00.00 | 282 | | | 54 | | | | | | 1150 | | | | | | | | | | | | | |
| 624 | 244+00.00 | 246+00.00 | 216 | | | 79 | | | | | | 839 | | | 32 | | | | | | | | | | |
| 625 | 247+00.00 | 248+00.00 | 163 | | | 57 | | | | | | 593 | | | 29 | | | | | | | | | | |
| 626 | 249+00.00 | 250+00.00 | 149 | | | 287 | | | | | | 800 | | | 28 | | | | | | | | | | |
| 627 | 250+94.27 | 257+01.49 | 0 | | | 22 | | | | | | 109 | | | | | | | | | | | | | |
| 628 | 258+00.00 | 259+00.00 | 0 | | | 100 | | | | | | 444 | | | | | | | | | | | | | |
| 629 | 260+00.00 | 262+00.00 | 466 | | | 78 | | | | | | 1197 | | | 53 | | | | | | | | | | |
| 630 | 263+00.00 | 265+00.00 | 21 | | | 34 | | | | | | 173 | | | 3 | | | | | | | | | | |
| 631 | 266+00.00 | 268+00.00 | | | | | | | | | | | | | | | | | | | | | | | |
| 632 | 269+00.00 | 271+00.00 | 205 | | | 50 | | | | | | 1050 | | | | | | | | | | | | | |
| 633 | 272+00.00 | 274+00.00 | 15 | | | 7 | | | | | | 160 | | | | | | | | | | | | | |
| 634 | 275+00.00 | 277+00.00 | | | | | | | | | | | | | | | | | | | | | | | |
| 635 | 277+72.76 | 278+50.00 | 28 | | | 5 | | | | | | 205 | | | | | | | | | | | | | |
| 636 | 279+00.00 | 280+00.00 | 15 | | | 0 | | | | | | 69 | | | | | | | | | | | | | |
| 637 | 280+31.79 | | | | | | | | | | | | | | | | | | | | | | | | |
| | | | | | | | | | | | | | | | | | | | | | | | | | |
| | | | | | | | | | | | | | | | | | | | | | | | | | |
| | RAMP A | | | | | | | | | | | | | | | | | | | | | | | | |
| 638 | 86+63.69 | 87+50.00 | 208 | 361 | 88 | 1114 | 361 | 88 | | | | 1123 | | | | | | | | | | | | | |
| 639 | 88+00.00 | 89+00.00 | 313 | 411 | 213 | 1160 | 411 | 213 | | | | 1225 | | | | | | | | | | | | | |
| 640 | 89+50.00 | 90+50.00 | 241 | 309 | 155 | 1012 | 309 | 155 | | | | 937 | | | | | | | | | | | | | |
| 641 | 90+70.00 | 91+50.00 | 147 | 324 | 90 | 915 | 324 | 90 | | | | 768 | | | | | | | | | | | | | |
| 642 | 91+90.00 | 92+50.00 | 178 | 339 | | 626 | 339 | | | | | 684 | | | | | | | | | | | | | |
| 643 | 93+00.00 | 93+70.00 | 117 | 277 | | 568 | 277 | | | | | 536 | | | | | | | | | | | | | |
| 644 | 94+00.00 | 95+00.00 | 118 | 373 | | 895 | 373 | | | | | 850 | | | | | | | | | | | | | |
| 645 | 95+50.00 | 97+00.00 | 707 | 475 | | 1301 | 475 | | | | | 1686 | | | 63 | | | | | | | | | | |
| 646 | 97+50.00 | 98+50.00 | 706 | 412 | | 1425 | 412 | | | | | 1889 | | | 14 | | | | | | | | | | |
| 647 | 99+00.00 | 100+00.00 | 483 | 642 | | 1698 | 642 | | | | | 1919 | | | | | | | | | | | | | |
| 648 | 100+50.00 | 101+50.00 | 277 | 775 | | 1600 | 775 | | | | | 1872 | | | | | | | | | | | | | |
| 649 | 102+00.00 | 103+00.00 | 406 | 784 | | 1208 | 784 | | | | | 1688 | | | 44 | | | | | | | | | | |
| 650 | 103+50.00 | 104+50.00 | 279 | 602 | | 305 | 602 | | | | | 777 | | | | | | | | | | | | | |
| 651 | 104+55.37 | 105+50.00 | 192 | 727 | | 293 | 727 | | | | | 819 | | | | | | | | | | | | | |
| 652 | 106+00.00 | 107+00.00 | 199 | 292 | | 103 | 292 | | | | | 690 | | | | | | | | | | | | | |
| 653 | 107+50.00 | 109+50.00 | 204 | | | 49 | | | | | | 1027 | | | 6 | | | | | | | | | | |
| 654 | 110+00.00 | 111+50.00 | 227 | | | 6 | | | | | | 727 | | | 32 | | | | | | | | | | |
| 655 | 112+00.00 | 113+50.00 | 255 | | | 2 | | | | | | 823 | | | 40 | | | | | | | | | | |
| 656 | 114+00.00 | 114+13.78 | 27 | | | 0 | | | | | | 65 | | | 3 | | | | | | | | | | |
| | | | | | | | | | | | | | | | | | | | | | | | | | |
| | | | | | | | | | | | | | | | | | | | | | | | | | |
| | RAMP B | | | | | | | | | | | | | | | | | | | | | | | | |
| 657 | 197+05.36 | 198+50.00 | 418 | | | 201 | | | | | | 806 | | | 12 | | | | | | | | | | |
| 658 | 199+00.00 | 200+00.00 | 1099 | | | 0 | | | | | | 584 | | | 16 | | | | | | | | | | |
| 659 | 200+50.00 | 202+00.00 | 1909 | | | 0 | | | | | | 856 | | | 28 | | | | | | | | | | |
| 660 | 202+50.00 | 203+99.50 | 441 | | | 236 | | | | | | 511 | | | 7 | | | | | | | | | | |
| 661 | 204+00.00 | 205+00.00 | 121 | 101 | | 2329 | 101 | | | | | 905 | | | | | | | | | | | | | |
| 662 | 205+50.00 | 205+99.50 | 28 | 204 | | 1397 | 204 | | | | | 451 | | | | | | | | | | | | | |
| 663 | 206+00.00 | 206+25.00 | 19 | 238 | 15 | 1655 | 238 | 15 | | | | 483 | | | | | | | | | | | | | |
| 664 | 206+50.00 | 207+00.00 | 358 | 558 | 148 | 3479 | 558 | 148 | | | | 1333 | | | | | | | | | | | | | |
| 665 | 207+50.00 | 207+73.39 | 170 | 255 | 37 | 1271 | 255 | 37 | | | | 806 | | | | | | | | | | | | | |
| 666 | 208+00.00 | 208+50.00 | 320 | 516 | 64 | 1634 | 516 | 64 | | | | 1684 | | | | | | | | | | | | | |
| 667 | 209+00.00 | 209+50.00 | 231 | 641 | 110 | 669 | 641 | 110 | | | | 1162 | | | | | | | | | | | | | |
| 668 | 209+73.39 | 210+00.00 | 215 | 589 | 98 | 329 | 589 | 98 | | | | 824 | | | | | | | | | | | | | |
| | | | | | | | | | | | | | | | | | | | | | | | | | |
| SUBTOTALS CARRIED TO SHEET 416 | | | 13816 | 10205 | 1018 | 28369 | 10205 | 1018 | | | | 41852 | | | 583 | | | | | | | | | | |

CALCULATED ATR
CHECKED PJF

# EARTHWORK SUBSUMMARY AND CALCULATIONS

SUM-77 / 277 / 224
VARIOUS

413
1288

D:\2017\2017258\ProjectData\SUM\06002\Design\Roadway\Sheets\06002_GS006.dgn Sheet 1/6/2021 2:09:38 PM pfry

| SHEET NO. | STATION TO STATION | | 203 EXCAVATION CY | 203 EXCAVATION (SPECIAL BENCHING) CY | 203 EXCAVATION (STREAM UNDERCUT) CY | 203 EMBANKMENT CY | 203 EMBANKMENT (SPECIAL BENCHING) CY | 203 EMBANKMENT (STREAM UNDERCUT) CY | 204 EXCAVATION OF SUBGRADE CY | 204 EMBANKMENT CY | | 659 SEEDING AND MULCHING (SM) SY | | 659 SOIL ANALYSIS TEST EACH | 659 TOPSOIL (4" FOR VEGETATED FILTER STRIPS & VEGETATED BIOFILTERS) CY | 659 TOPSOIL (1111*(SM))/(1000) - (4" FOR VFS & VBF) CY | 659 REPAIR SEEDING AND MULCHING (0.05*(SM)) SY | 659 INTER-SEEDING (0.05*(SM)) SY | 659 COMM. FERTILIZER [(30*(SM))+ (20*.05*(SM))*9 /(1000*2000) TON | 659 LIME (SM)/14840) ACRE | 659 WATER [(2*300*(SM)) +(300*0.05*(SM))*9 /(1000*1000) MGAL | 670 SLOPE EROSION PROTECTION SY | | |
|---|---|---|---|---|---|---|---|---|---|---|---|---|---|---|---|---|---|---|---|---|---|---|---|---|
| | RAMP B | | | | | | | | | | | | | | | | | | | | | | | |
| 669 | 210+50.00 | 211+00.00 | 113 | | | 2 | | | | | | 270 | | | | | | | | | | | | |
| 670 | 211+50.00 | 212+50.00 | 225 | | | 9 | | | | | | 519 | | | | | | | | | | | | |
| 671 | 213+00.00 | 213+58.80 | 72 | | | 12 | | | | | | 313 | | | | | | | | | | | | |
| 672 | 214+00.00 | 214+90.00 | 26 | | | 53 | | | | | | 299 | | | | | | | | | | | | |
| 673 | 215+00.00 | 215+58.80 | 0 | | | 0 | | | | | | 0 | | | | | | | | | | | | |
| | RAMP B-1 | | | | | | | | | | | | | | | | | | | | | | | |
| 674 | 402+43.78 | 403+50.00 | 160 | | | 11 | | | | | | 454 | | | 25 | | | | | | | | 212 | |
| 675 | 404+00.00 | 405+01.68 | 143 | | | 9 | | | | | | 457 | | | 35 | | | | | | | | 304 | |
| 676 | 405+50.00 | 407+00.00 | 458 | | | 8 | | | | | | 631 | | | 36 | | | | | | | | 336 | |
| 677 | 407+01.68 | 408+50.00 | 618 | | | 7 | | | | | | 791 | | | 27 | | | | | | | | 247 | |
| 678 | 408+50.17 | 409+50.00 | 601 | | | 0 | | | | | | 775 | | | 25 | | | | | | | | | |
| 679 | 410+00.00 | 411+00.00 | 441 | | | 14 | | | | | | 722 | | | 15 | | | | | | | | | |
| 680 | 411+50.00 | 412+50.00 | 389 | | | 37 | | | | | | 1123 | | | | | | | | | | | | |
| 681 | 413+00.00 | 414+00.00 | 348 | 192 | | 316 | 192 | | | | | 1337 | | | 76 | | | | | | | | | |
| 682 | 414+50.00 | 415+50.00 | 162 | 158 | | 434 | 158 | | | | | 1019 | | | 69 | | | | | | | | 156 | |
| 683 | 415+62.45 | 416+50.00 | 164 | 20 | | 279 | 20 | | | | | 896 | | | 54 | | | | | | | | 229 | |
| 684 | 417+00.00 | 417+62.45 | 47 | | | 57 | | | | | | 427 | | | 10 | | | | | | | | 92 | |
| 685 | 418+00.00 | 419+00.00 | 19 | | | 74 | | | | | | 344 | | | | | | | | | | | | |
| 686 | 419+50.00 | 420+50.00 | 49 | | | 14 | | | | | | 272 | | | | | | | | | | | | |
| 687 | 421+00.00 | 421+40.51 | 18 | | | 5 | | | | | | 74 | | | | | | | | | | | | |
| | RAMP B-2 | | | | | | | | | | | | | | | | | | | | | | | |
| 688 | 285+64.96 | 286+50.00 | 879 | | | 0 | | | | | | 950 | | | 19 | | | | | | | | | |
| 689 | 287+00.00 | 288+00.00 | 1035 | | | 0 | | | | | | 1078 | | | 20 | | | | | | | | | |
| 690 | 288+50.00 | 289+50.00 | 1310 | | | 0 | | | | | | 1136 | | | 12 | | | | | | | | | |
| 691 | 290+00.00 | 291+00.00 | 1721 | | | 0 | | | | | | 1183 | | | 6 | | | | | | | | | |
| 692 | 291+50.00 | 292+50.00 | 4689 | | | 0 | | | | | | 1042 | | | | | | | | | | | | |
| 693 | 293+00.00 | 294+00.00 | 3186 | | | 0 | | | | | | 416 | | | | | | | | | | | | |
| 694 | 294+50.00 | 295+00.00 | 1613 | | | 0 | | | | | | 338 | | | | | | | | | | | | |
| 695 | 295+50.00 | 296+50.00 | 1810 | | | 0 | | | | | | 253 | | | | | | | | | | | | |
| 696 | 297+00.00 | 297+94.13 | 1149 | | | 0 | | | | | | 433 | | | | | | | | | | | | |
| 697 | 298+00.00 | 299+00.00 | 1354 | | | 0 | | | | | | 789 | | | | | | | | | | | | |
| 698 | 299+50.00 | 300+50.00 | 697 | | | 7 | | | | | | 799 | | | | | | | | | | | | |
| 699 | 300+94.13 | 301+50.00 | 137 | | | 283 | | | | | | 624 | | | 28 | | | | | | | | | |
| 700 | 302+00.00 | 303+00.00 | 147 | | | 1930 | | | | | | 1052 | | | 102 | | | | | | | | | |
| 701 | 303+50.00 | 304+50.00 | 51 | | | 3370 | | | | | | 1156 | | | 112 | | | | | | | | | |
| 702 | 305+00.00 | 305+50.00 | 46 | 65 | | 2395 | 65 | | | | | 908 | | | 77 | | | | | | | | | |
| 703 | 306+00.00 | 307+30.56 | 43 | 663 | | 2229 | 663 | | | | | 1409 | | | 104 | | | | | | | | | |
| 704 | 307+50.00 | 9+83.20 | 41 | 75 | | 34 | 75 | | | | | 172 | | | | | | | | | | | | |
| 705 | 10+00.00 | 11+00.00 | 155 | 823 | | 828 | 823 | | | | | 1270 | | | | | | | | | | | | |
| 706 | 11+50.00 | 13+00.00 | 102 | 559 | | 411 | 559 | | | | | 1044 | | | | | | | | | | | | |
| 707 | 13+50.00 | 14+50.00 | 93 | | | 162 | | | | | | 479 | | | | | | | | | | | | |
| 708 | 15+00.00 | 16+50.00 | 981 | | | 24 | | | | | | 1470 | | | 96 | | | | | | | | 879 | |
| 709 | 17+00.00 | 18+50.00 | 1764 | | | 0 | | | | | | 1592 | | | | | | | | | | | | |
| 710 | 19+00.00 | 20+00.00 | 1054 | | | 0 | | | | | | 945 | | | 71 | | | | | | | | | |
| 711 | 20+50.00 | 22+00.00 | 482 | | | 11 | | | | | | 452 | | | 17 | | | | | | | | | |
| 712 | 22+39.81 | 24+00.00 | 137 | | | 10 | | | | | | 64 | | | | | | | | | | | | |
| 713 | 24+50.00 | 25+50.00 | 209 | 219 | | 547 | 219 | | | | | 726 | | | | | | | | | | | | |
| 714 | 26+00.00 | 27+50.00 | 248 | 508 | | 1687 | 508 | | | | | 1389 | | | | | | | | | | | | |
| 715 | 28+00.00 | 29+00.00 | 138 | 481 | | 1890 | 481 | | | | | 1345 | | | | | | | | | | | | |
| 716 | 29+50.00 | 30+50.00 | 125 | 524 | | 1389 | 524 | | | | | 1450 | | | | | | | | | | | | |
| 717 | 31+00.00 | 32+00.00 | 134 | 705 | | 701 | 705 | | | | | 1335 | | | | | | | | | | | | |
| 718 | 32+50.00 | 33+50.00 | 39 | 147 | | 85 | 147 | | | | | 276 | | | | | | | | | | | | |
| 719 | 33+82.00 | | 0 | | | 0 | | | | | | 0 | | | | | | | | | | | | |
| SUBTOTALS CARRIED TO SHEET 416 | | | 29622 | 5139 | | 19334 | 5139 | | | | | 38298 | | | 1036 | | | | | | | | 2455 | |

CALCULATED ATR
CHECKED PJF

# EARTHWORK SUBSUMMARY AND CALCULATIONS

SUM-77/277/224
VARIOUS

414
1288

D:\2017\20172581\ProjectData\SUM\06002\Design\Roadway\Sheets\06002_GS007.dgn Sheet 1/16/2021 2:09:39 PM pfry

| SHEET NO. | STATION TO STATION | | 203 EXCAVATION CY | 203 EXCAVATION (SPECIAL BENCHING) CY | 203 EXCAVATION (STREAM UNDERCUT) CY | 203 EMBANKMENT CY | 203 EMBANKMENT (SPECIAL BENCHING) CY | 203 EMBANKMENT (STREAM UNDERCUT) CY | 204 EXCAVATION OF SUBGRADE CY | 204 EMBANKMENT CY | | 659 SEEDING AND MULCHING (SM) SY | | 659 SOIL ANALYSIS TEST EACH | 659 TOPSOIL (4" FOR VEGETATED FILTER STRIPS & VEGETATED BIOFILTERS) CY | 659 TOPSOIL (111*(SM))/(1000) - (4" FOR VFS & VBF) CY | 659 REPAIR SEEDING AND MULCHING (0.05*(SM)) SY | 659 INTER-SEEDING (0.05*(SM)) SY | 659 COMM. FERTILIZER [(30*(SM))+ (20*.05*(SM))*9 /(1000*2000) TON | 659 LIME (SM)/14840) ACRE | 659 WATER [(2*300*(SM)) +(300*0.05*(SM))*9 /(1000*1000) MGAL | 670 SLOPE EROSION PROTECTION SY | | |
|---|---|---|---|---|---|---|---|---|---|---|---|---|---|---|---|---|---|---|---|---|---|---|---|---|---|
| | RAMP C | | | | | | | | | | | | | | | | | | | | | | | | |
| 720 | 576+00.00 | 577+00.00 | 189 | | | 8 | | | 135 | 135 | | 455 | | | | | | | | | | | | | |
| 721 | 577+50.00 | 578+50.00 | 186 | | | 8 | | | 144 | 144 | | 537 | | | | | | | | | | | | | |
| 722 | 579+00.00 | 580+00.00 | 388 | | | 0 | | | | | | 656 | | | | | | | | | | | | | |
| 723 | 580+17.46 | 581+00.00 | 460 | | | 0 | | | | | | 634 | | | | | | | | | | | | | |
| 724 | 581+50.00 | 582+50.00 | 388 | | | 22 | | | | | | 977 | | | | | | | | | | | | | |
| 725 | 583+00.00 | 583+50.00 | 70 | 46 | | 57 | 46 | | | | | 604 | | | 23 | | | | | | | | | | |
| 726 | 584+00.00 | 585+00.00 | 16 | 242 | | 222 | 242 | | | | | 641 | | | 45 | | | | | | | | | | |
| 727 | 585+16.40 | 586+00.00 | 39 | 348 | | 523 | 348 | | | | | 872 | | | 21 | | | | | | | | | | |
| 728 | 586+50.00 | 587+50.00 | 82 | 171 | | 194 | 171 | | | | | 798 | | | | | | | | | | | | | |
| 729 | 588+00.00 | 589+00.00 | 91 | 14 | | 88 | 14 | | | | | 705 | | | | | | | | | | | | | |
| 730 | 589+50.00 | 591+00.00 | 122 | 330 | | 829 | 330 | | | | | 1344 | | | | | | | | | | | | | |
| 731 | 591+50.00 | 592+50.00 | 91 | 50 | | 102 | 50 | | | | | 467 | | | | | | | | | | | | | |
| 732 | 593+00.00 | 593+50.00 | 41 | | | 6 | | | | | | 112 | | | | | | | | | | | | | |
| 733 | 594+00.00 | 595+00.00 | 55 | | | 8 | | | | | | 178 | | | | | | | | | | | | | |
| 734 | 595+50.00 | 596+50.00 | 152 | | | 20 | | | | | | 419 | | | | | | | | | | | | | |
| 735 | 597+00.00 | 598+50.00 | 305 | | | 7 | | | | | | 703 | | | | | | | | | | | | | |
| 736 | 599+00.00 | 600+00.00 | 174 | | | 3 | | | | | | 411 | | | | | | | | | | | | | |
| 737 | 600+50.00 | 601+50.00 | 55 | | | 2 | | | | | | 184 | | | | | | | | | | | | | |
| 738 | 602+00.00 | 603+00.00 | 27 | | | 12 | | | | | | 204 | | | | | | | | | | | | | |
| 739 | 603+37.81 | 604+00.00 | 10 | | | 13 | | | | | | 181 | | | | | | | | | | | | | |
| 740 | 604+50.00 | 605+50.00 | 19 | | | 12 | | | | | | 178 | | | | | | | | | | | | | |
| 741 | 606+00.00 | 606+67.88 | 8 | | | 5 | | | | | | 79 | | | | | | | | | | | | | |
| | RAMP C-1 | | | | | | | | | | | | | | | | | | | | | | | | |
| 742 | 679+55.23 | 680+00.00 | 45 | | | 0 | | | | | | 112 | | | | | | | | | | | | | |
| 743 | 680+50.00 | 681+00.00 | 58 | | | 0 | | | | | | 136 | | | | | | | | | | | | | |
| 744 | 681+50.00 | 682+50.00 | 52 | | | 29 | | | | | | 245 | | | | | | | | | | | | | |
| 745 | 683+00.00 | 683+50.00 | 96 | | | 35 | | | | | | 373 | | | 10 | | | | | | | | | 91 | |
| 746 | 684+00.00 | 685+00.00 | 176 | | | 47 | | | | | | 646 | | | 32 | | | | | | | | | 301 | |
| 747 | 685+18.39 | 686+00.00 | 249 | | | 38 | | | | | | 986 | | | 39 | | | | | | | | | 366 | |
| 748 | 686+50.00 | 688+00.00 | 388 | 161 | | 147 | 161 | | | | | 1525 | | | 60 | | | | | | | | | 556 | |
| 749 | 688+50.00 | 689+50.00 | 381 | 160 | | 170 | 160 | | | | | 1111 | | | 56 | | | | | | | | | 367 | |
| 750 | 690+00.00 | 691+00.00 | 588 | 7 | | 26 | 7 | | | | | 1184 | | | 56 | | | | | | | | | 94 | |
| 751 | 691+50.00 | 692+50.00 | 852 | | | 0 | | | | | | 1196 | | | 28 | | | | | | | | | | |
| 752 | 693+00.00 | 694+50.00 | 599 | | | 3 | | | | | | 946 | | | | | | | | | | | | | |
| 753 | 694+94.95 | 696+00.00 | 126 | | | 15 | | | | | | 524 | | | | | | | | | | | | | |
| 754 | 696+50.00 | 697+50.00 | 88 | | | 9 | | | | | | 442 | | | 8 | | | | | | | | | | |
| 755 | 698+00.00 | 699+00.00 | 60 | | | 3 | | | | | | 319 | | | | | | | | | | | | | |
| 756 | 699+50.00 | 701+00.00 | 49 | | | 3 | | | | | | 358 | | | | | | | | | | | | | |
| 757 | 701+50.00 | 702+11.45 | 25 | | | 0 | | | | | | 115 | | | | | | | | | | | | | |
| | RAMP C-2 | | | | | | | | | | | | | | | | | | | | | | | | |
| 758 | 781+45.30 | 782+50.00 | 131 | 615 | | 484 | 615 | | | | | 898 | | | | | | | | | | | | | |
| 759 | 782+93.84 | 783+50.00 | 52 | 556 | | 494 | 556 | | | | | 745 | | | | | | | | | | | | | |
| 760 | 784+00.00 | 784+50.00 | 31 | 128 | | 144 | 128 | | | | | 337 | | | | | | | | | | | | | |
| 761 | 784+82.53 | 786+00.00 | 34 | | | 110 | | | | | | 516 | | | | | | | | | | | | | |
| 762 | 786+50.00 | 787+50.00 | 18 | | | 110 | | | | | | 511 | | | | | | | | | | | | | |
| 763 | 788+00.00 | 789+00.00 | 42 | 31 | | 21 | 31 | | | | | 295 | | | | | | | | | | | | | |
| 764 | 789+07.95 | 793+15.70 | 114 | 221 | | 177 | 221 | | | | | 460 | | | | | | | | | | | | | |
| 765 | 793+50.00 | 794+50.00 | 169 | | | 525 | | | | | | 653 | | | | | | | | | | | | | |
| 766 | 795+00.00 | 796+00.00 | 476 | | | 186 | | | | | | 981 | | | 19 | | | | | | | | | 178 | |
| 767 | 796+50.00 | 798+00.00 | 250 | | | 38 | | | | | | 749 | | | 8 | | | | | | | | | 76 | |
| 768 | 798+50.00 | 799+50.00 | 249 | | | 0 | | | | | | 550 | | | | | | | | | | | | | |
| 769 | 800+00.00 | 801+00.00 | 277 | | | 13 | | | | | | 720 | | | | | | | | | | | | | |
| 770 | 801+48.92 | | 0 | | | 0 | | | | | | 0 | | | | | | | | | | | | | |
| SUBTOTALS CARRIED TO SHEET 416 | | | 8643 | 3080 | | 4968 | 3080 | | 279 | 279 | | 28972 | | | 405 | | | | | | | | 2029 | | |

CALCULATED ATR
CHECKED PJF

# EARTHWORK SUBSUMMARY AND CALCULATIONS

SUM-77/277/224
VARIOUS

415
1288

D:\2017\20172581\ProjectData\SUM\06002\Design\Roadway\Sheets\06002_GS008.dgn Sheet 1/16/2021 2:09:41 PM pfry

| SHEET NO. | STATION TO STATION | | 203 EXCAVATION CY | 203 EXCAVATION (SPECIAL BENCHING) CY | 203 EXCAVATION (STREAM UNDERCUT) CY | 203 EMBANKMENT CY | 203 EMBANKMENT (SPECIAL BENCHING) CY | 203 EMBANKMENT (STREAM UNDERCUT) CY | 204 EXCAVATION OF SUBGRADE CY | 204 EMBANKMENT CY | | 659 SEEDING AND MULCHING (SM) SY | | 659 SOIL ANALYSIS TEST EACH | 659 TOPSOIL (4" FOR VEGETATED FILTER STRIPS & VEGETATED BIOFILTERS) CY | 659 TOPSOIL (111*(SM))/(1000) - (4" FOR VFS & VBF) CY | 659 REPAIR SEEDING AND MULCHING (0.05*(SM)) SY | 659 INTER-SEEDING (0.05*(SM)) SY | 659 COMM. FERTILIZER [(30*(SM))+ (20*.05*(SM))*9 /(1000*2000) TON | 659 LIME (SM)/14840) ACRE | 659 WATER [(2*300*(SM)) +(300*0.05*(SM))*9 /(1000*1000) MGAL | 670 SLOPE EROSION PROTECTION SY | | |
|---|---|---|---|---|---|---|---|---|---|---|---|---|---|---|---|---|---|---|---|---|---|---|---|---|---|
| | RAMP D | | | | | | | | | | | | | | | | | | | | | | | | |
| 771 | 887+98.38 | 888+50.00 | 87 | | | 20 | | | | | | 392 | | | | | | | | | | | | | |
| 772 | 889+00.00 | 890+00.00 | 532 | | | 8 | | | | | | 798 | | | | | | | | | | | | | |
| 773 | 890+50.00 | 891+50.00 | 642 | | | 33 | | | | | | 864 | | | | | | | | | | | | | |
| 774 | 892+00.00 | 893+50.00 | 463 | | | 29 | | | | | | 773 | | | | | | | | | | | | | |
| 775 | 894+00.00 | 895+17.13 | 241 | | | 8 | | | | | | 456 | | | 14 | | | | | | | | | | |
| 776 | 895+50.00 | 897+00.00 | 206 | | | 23 | | | | | | 571 | | | 18 | | | | | | | | | | |
| 777 | 897+17.13 | 898+00.00 | 69 | | | 14 | | | | | | 251 | | | | | | | | | | | | | |
| 778 | 898+50.00 | 899+50.00 | 77 | | | 17 | | | | | | 317 | | | | | | | | | | | | | |
| 779 | 900+00.00 | 901+01.12 | 82 | | | 18 | | | | | | 358 | | | | | | | | | | | | | |
| 780 | 901+50.00 | 903+00.00 | 115 | 450 | | 185 | 450 | | | | | 881 | | | | | | | | | | | | | |
| 781 | 903+50.00 | 905+00.00 | 126 | | | 103 | | | | | | 666 | | | | | | | | | | | | | |
| 782 | 905+50.00 | 907+00.00 | 168 | | | 64 | | | | | | 552 | | | | | | | | | | | | | |
| 783 | 907+50.00 | 908+55.05 | 193 | | | 7 | | | | | | 228 | | | | | | | | | | | | | |
| 784 | 909+00.00 | 910+50.00 | 42 | | | 21 | | | | | | 181 | | | | | | | | | | | | | |
| 785 | 910+55.05 | 912+00.00 | 1 | | | 155 | | | | | | 263 | | | | | | | | | | | | | |
| 786 | 912+50.00 | 913+50.00 | 0 | | | 125 | | | | | | 206 | | | | | | | | | | | | | |
| 787 | 914+00.00 | 915+00.00 | 1 | | | 16 | | | | | | 73 | | | | | | | | | | | | | |
| | ARLINGTON RD. RAMP D | | | | | | | | | | | | | | | | | | | | | | | | |
| 788 | 70+99.52 | 72+50.00 | 182 | | | 3 | | | | | | 479 | | | | | | | | | | | | | |
| 789 | 73+00.00 | 74+50.00 | 282 | | | 13 | | | | | | 708 | | | | | | | | | | | | | |
| 790 | 75+00.00 | 76+00.00 | 160 | | | 14 | | | | | | 499 | | | | | | | | | | | | | |
| 791 | 76+50.00 | 78+00.00 | 285 | | | 24 | | | | | | 848 | | | | | | | | | | | | | |
| 792 | 78+50.00 | 80+00.00 | 125 | | | 27 | | | | | | 683 | | | 28 | | | | | | | | | | |
| 793 | 80+50.00 | 81+50.00 | 71 | | | 20 | | | | | | 473 | | | 21 | | | | | | | | | | |
| 794 | 82+00.00 | 83+00.00 | 93 | | | 16 | | | | | | 511 | | | 21 | | | | | | | | | | |
| 795 | 83+50.00 | 84+50.00 | 93 | | | 10 | | | | | | 494 | | | 24 | | | | | | | | | | |
| 796 | 85+00.00 | 86+00.00 | 111 | | | 10 | | | | | | 475 | | | 27 | | | | | | | | | | |
| 797 | 86+50.00 | 87+50.00 | 88 | | | 7 | | | | | | 511 | | | 9 | | | | | | | | | | |
| 798 | 88+00.00 | 88+18.25 | 6 | | | 0 | | | | | | 53 | | | | | | | | | | | | | |
| | WARNER ROAD | | | | | | | | | | | | | | | | | | | | | | | | |
| 799 | 24+00.00 | 25+00.00 | 124 | | | 34 | | | | | | 386 | | | | | | | | | | | | | |
| 800 | 25+50.00 | 26+00.00 | 89 | | | 0 | | | | | | 76 | | | | | | | | | | | | | |
| 801 | 26+07.65 | 26+50.00 | 162 | | | 1 | | | | | | 129 | | | | | | | | | | | | | |
| 802 | 27+00.00 | 27+50.00 | 76 | | | 37 | | | | | | 219 | | | | | | | | | | | | | |
| 803 | 27+70.00 | 28+50.00 | 13 | | | 27 | | | | | | 217 | | | | | | | | | | | | | |
| 1065 - 1132 | NOISE WALLS | | | | | | | | | | | 11825 | | | | | | | | | | | | | |
| **SUBTOTALS THIS SHEET** | | | 5005 | 450 | | 1089 | 450 | | | | | 26416 | | | 162 | | | | | | | | | | |
| **SUBTOTALS SHEET 411** | | | 44564 | 1896 | | 3766 | 1896 | | | | | 51116 | | | 247 | | | | | | | | | 2011 | |
| **SUBTOTALS SHEET 412** | | | 31265 | 762 | | 4974 | 762 | | 656 | 656 | | 39980 | | | 822 | | | | | | | | | 817 | |
| **SUBTOTALS SHEET 413** | | | 13816 | 10205 | 1018 | 28369 | 10205 | 1018 | | | | 41852 | | | 583 | | | | | | | | | | |
| **SUBTOTALS SHEET 414** | | | 29622 | 5139 | | 19334 | 5139 | | | | | 38298 | | | 1036 | | | | | | | | | 2455 | |
| **SUBTOTALS SHEET 415** | | | 8643 | 3080 | | 4968 | 3080 | | 279 | 279 | | 28972 | | | 405 | | | | | | | | | 2029 | |
| **SUBTOTALS FOR SEEDING AND MULCHING CALCULATIONS** | | | | | | | | | | | | 226634 | | 3 | 3255 | 21901 | 11332 | 11332 | 31.62 | 46.83 | 1255 | | | | |
| **TOTALS CARRIED TO THE GENERAL SUMMARY (FLEXIBLE)** | | | 155465 | | | 85050 | | | | | | | | | | | | | | | | | | | |
| ~~**0.75" PVMT. THICKNESS ADJUSTMENT**~~ | | | ~~5491~~ | -- | -- | ~~238~~ | -- | -- | 935 | 935 | | 226634 | | 3 | 25156 | | 11332 | 11332 | 31.62 | 46.83 | 1255 | 7312 | | |
| ~~**TOTALS CARRIED TO THE GENERAL SUMMARY (RIGID)**~~ | | | ~~160956~~ | | | ~~85288~~ | | | | | | | | | | | | | | | | | | | |

REVISIONS

| NO. | DATE | DESCRIPTION |
|---|---|---|
| 5 | 04/22/21 | UPDATED SEEDING QUANTITIES |

CALCULATED ATR
CHECKED PJF

# EARTHWORK SUBSUMMARY AND CALCULATIONS

SUM-77/277/224
VARIOUS

416
1288

0:\2017\2017258\Project Data\SUM\06002\Design\Roadway\Sheets\06002_GS009.dgn Sheet 4/22/2021 10:11:54 AM pfry

| REF. NO. | SHEET NO. | STATION FROM | STATION TO | SIDE | | 202 CATCH BASIN ABANDONED EACH | 202 CONCRETE BARRIER REMOVED FT | | | 611 INLET, NO. 3 FOR SINGLE SLOPE BARRIER, TYPE B1 EACH | 611 INLET, NO. 3 FOR SINGLE SLOPE BARRIER, TYPE C1 EACH | | 622 CONCRETE BARRIER, SINGLE SLOPE, TYPE D FT | 622 CONCRETE BARRIER, SINGLE SLOPE, TYPE D, AS PER PLAN FT | 622 CONCRETE BARRIER END SECTION, TYPE D EACH | 622 CONCRETE BARRIER END SECTION, TYPE D, AS PER PLAN EACH | 622 CONCRETE BARRIER, END ANCHORAGE, REINFORCED, TYPE D EACH | 622 CONCRETE BARRIER, END ANCHORAGE, REINFORCED, TYPE D, AS PER PLAN EACH | | | | |
|---|---|---|---|---|---|---|---|---|---|---|---|---|---|---|---|---|---|---|---|---|---|---|
| AB-1 | 487 | 105+52.61 (RAMP A) | | RT | | 1 | | | | | | | | | | | | | | | | |
| B-1 | 457 | 393+75.00 (I.R. 77) | 394+40.00 (I.R. 77) | RT | | | 60 | | | | | | 36 | | 1 | | 1 | | | | | |
| B-2 | 457 | 393+85.00 (I.R. 77) | 394+54.30 (I.R. 77) | LT | | | 68 | | | | | | 40 | | 1 | | 1 | | | | | |
| B-3 | 469 | 468+65.00 (I.R. 77) | 469+23.83 (I.R. 77) | RT | | | 52 | | | | | | 30 | | 1 | | 1 | | | | | |
| B-4 | 469 | 469+15.00 (I.R. 77) | 469+65.40 (I.R. 77) | LT | | | 49 | | | | | | 22 | | 1 | | 1 | | | | | |
| B-5 | 469 | 469+72.74 (SB I.R. 77) | 473+95.11 (SB I.R. 77) | RT | | | | | | | | | 374 | 20 | 1 | | | 1 | | | | |
| B-6 | 472 | 475+50.00 (NB I.R. 77) | 475+64.00 (NB I.R. 77) | LT | | | | | | | | | | | 1 | | | | | | | |
| B-7 | 473 | 491+00.00 (NB I.R. 77) | 491+59.27 (NB I.R. 77) | RT | | | 59 | | | | | | | 31 | | 1 | | 1 | | | | |
| B-8 | 473 | 494+84.83 (NB I.R. 77) | 496+00.00 (NB I.R. 77) | LT | | | | | | | | | 87 | | 2 | | | | | | | |
| B-9 | 478 | 500+45.03 (SB I.R. 77) | 502+00.00 (SB I.R. 77) | LT | | | 156 | | | | | | 126 | | 1 | | 1 | | | | | |
| B-10 | 478 | 508+04.86 (SB I.R. 77) | 508+73.02 (SB I.R. 77) | RT | | | 67 | | | | | | 40 | | 2 | | | | | | | |
| B-11 | 478 | 508+62.79 (SB I.R. 77) | 509+30.71 (SB I.R. 77) | LT | | | 61 | | | | | | 40 | | 1 | | 1 | | | | | |
| B-12 | 492 | 292+31.83 (RAMP B-2) | 292+80.00 (RAMP B-2) | LT | | | 71 | | | | | | | 20 | | 2 | | | | | | |
| B-13 | 492 - 493 | 294+77.53 (RAMP B-2) | 297+50.00 (RAMP B-2) | RT | | | | | | | | | 245 | | 2 | | | | | | | |
| B-14 | 494 | 9+99.70 (RAMP B-2) | 14+00.00 (RAMP B-2) | RT | | | | | | | | | 401 | | | | 2 | | | | | |
| B-15 | 500 | 698+64.18 (RAMP C-1) | 700+28.18 (RAMP C-1) | RT | | | 161 | | | | | | 135 | | 1 | | 1 | | | | | |
| B-16 | 503 | 793+37.64 (RAMP C-2) | 793+51.56 (RAMP C-2) | LT | | | | | | | | | | | 1 | | | | | | | |
| B-17 | 503 | 795+05.04 (RAMP C-2) | 795+19.05 (RAMP C-2) | RT | | | | | | | | | | | 1 | | | | | | | |
| B-18 | 503 | 799+78.00 (RAMP C-2) | 801+34.00 (RAMP C-2) | RT | | | | | | | | | 127 | | 2 | | | | | | | |
| B-19 | 509 | 25+31.58 (WARNER RD) | 26+98.84 (WARNER RD) | RT | | | | | | | | | 140 | | 2 | | | | | | | |
| B-20 | 509 | 25+20.00 (WARNER RD) | 26+88.48 (WARNER RD) | LT | | | | | | | | | 140 | | 2 | | | | | | | |
| D-1 | 457 | 395+00.00 (I.R. 77) | | LT | | | | | | | 1 | | | | | | | | | | | |
| D-2 | 457 | 397+50.00 (I.R. 77) | | LT | | | | | | | 1 | | | | | | | | | | | |
| D-3 | 457 | 400+00.00 (I.R. 77) | | LT | | | | | | 1 | | | | | | | | | | | | |
| D-4 | 457 | 402+50.00 (I.R. 77) | | LT | | | | | | 1 | | | | | | | | | | | | |
| D-5 | 459 | 405+04.00 (I.R. 77) | | LT | | | | | | 1 | | | | | | | | | | | | |
| D-6 | 459 | 409+00.00 (I.R. 77) | | LT | | | | | | 1 | | | | | | | | | | | | |
| D-7 | 459 | 412+11.50 (I.R. 77) | | LT | | | | | | 1 | | | | | | | | | | | | |
| D-8 | 461 | 416+00.00 (I.R. 77) | | LT | | | | | | 1 | | | | | | | | | | | | |
| D-9 | 461 | 419+04.50 (I.R. 77) | | LT | | | | | | 1 | | | | | | | | | | | | |
| D-10 | 461 | 422+00.00 (I.R. 77) | | LT | | | | | | | 1 | | | | | | | | | | | |
| D-11 | 461 | 425+00.00 (I.R. 77) | | LT | | | | | | | 1 | | | | | | | | | | | |
| D-12 | 463 | 428+50.00 (I.R. 77) | | LT | | | | | | | 1 | | | | | | | | | | | |
| D-13 | 463 | 431+50.00 (I.R. 77) | | RT | | | | | | | 1 | | | | | | | | | | | |
| D-14 | 463 | 432+50.00 (I.R. 77) | | RT | | | | | | | 1 | | | | | | | | | | | |
| D-15 | 463 | 433+50.00 (I.R. 77) | | RT | | | | | | | 1 | | | | | | | | | | | |
| **TOTALS CARRIED TO SUBSUMMARY SHEET** | | | | **407 409** | | 1 | 804 | | | 7 | 8 | | 1983 | 71 | 23 | 3 | 9 | 2 | | | | |

CALCULATED CJC
CHECKED PJF

# ESTIMATED QUANTITIES

SUM-77 / 277 / 224
VARIOUS



D:\2017\2017258\ProjectData\SUM\106002\Design\Roadway\Sheets\106002_G000I.dgn Sheet1 1/16/2021 12:02:49 PM pfry

| REF. NO. | SHEET NO. | STATION FROM | STATION TO | SIDE | | 611 CATCH BASIN, NO. 3, AS PER PLAN EA | 611 CATCH BASIN, NO. 3A EA | | 611 CATCH BASIN, NO. 6 EA | 611 CATCH BASIN, NO. 6, AS PER PLAN EA | | 611 CATCH BASIN, NO. 8 EA | | 611 INLET, NO. 3 FOR SINGLE SLOPE BARRIER, TYPE C1 EA | 611 INLET, NO. 3 FOR SINGLE SLOPE BARRIER, TYPE C1, AS PER PLAN EA | | 611 INLET, NO. 3 FOR SINGLE SLOPE BARRIER, TYPE D EA | | 611 MANHOLE, NO. 3 EA | | | |
|---|---|---|---|---|---|---|---|---|---|---|---|---|---|---|---|---|---|---|---|---|---|---|
| D-16 | 463 | 436+02.00 (I.R. 77) | | RT | | | | | | | | | | 1 | | | | | | | | |
| D-17 | 463 | 439+00.00 (I.R. 77) | | RT | | | | | | | | | | 1 | | | | | | | | |
| D-18 | 465 | 444+10.00 (I.R. 77) | | RT | | | | | | | | | | 1 | | | | | | | | |
| D-19 | 465 | 447+00.00 (I.R. 77) | | RT | | | | | | | | | | 1 | | | | | | | | |
| D-20 | 465 | 450+02.00 (I.R. 77) | | RT | | | | | | | | | | 1 | | | | | | | | |
| D-21 | 467 | 453+00.00 (I.R. 77) | | RT | | | | | | | | | | 1 | | | | | | | | |
| D-22 | 467 | 458+10.00 (I.R. 77) | | RT | | | | | | | | | | 1 | | | | | | | | |
| D-23 | 467 | 461+00.00 (I.R. 77) | | RT | | | | | | | | | | 1 | | | | | | | | |
| D-24 | 469 | 464+00.00 (I.R. 77) | | RT | | | | | | | | | | 1 | | | | | | | | |
| D-25 | 469 | 467+75.00 (I.R. 77) | | RT | | | | | | | | | | 1 | | | | | | | | |
| D-26 | 492 | 286+00.00 (RAMP B-2) | | LT | | | | | | | | 1 | | | | | | | | | | |
| D-27 | 492 | 292+00.00 (RAMP B-2) | | LT | | | | | | | | 1 | | | | | | | | | | |
| D-28 | 492 | 292+58.27 (RAMP B-2) | | LT | | | | | | | | | | | | | | | | 1 | | |
| D-29 | 492 | 493+16.33 (NB I.R. 77) | | LT | | | | | | | | | | | | | | | | 1 | | |
| D-30 | 492 | 292+96.00 (RAMP B-2) | | LT | | 1 | | | | | | | | | | | | | | | | |
| D-31 | 473 | 492+50.00 (NB I.R. 77 ) | | RT | | | | | | | | 1 | | | | | | | | | | |
| D-32 | 492 | 294+50.00 (RAMP B-2) | | LT | | | | | | | | 1 | | | | | | | | | | |
| D-33 | 473 | 495+00.00 (NB I.R. 77) | | LT | | | | | | 1 | | | | | | | | | | | | |
| D-34 | 500 | 495+00.30 (NB I.R. 77) | | RT | | | | | | | | 1 | | | | | | | | | | |
| D-35 | 493 | 297+94.13 (RAMP B-2) | | RT | | | | | | | | 1 | | | | | | | | | | |
| D-36 | 493 | 301+00.00 (RAMP B-2) | | RT | | | | | | | | 1 | | | | | | | | | | |
| D-37 | 478 | 801+48.91 (RAMP C-2) | | RT | | | | | | | | 1 | | | | | | | | | | |
| D-38 | 478 | 504+00.00 (SB I.R. 77) | | RT | | | | | | | | 1 | | | | | | | | | | |
| D-39 | 488 | 206+00.00 (RAMP B) | | RT | | | | | | | | 1 | | | | | | | | | | |
| D-40 | 492 | 293+75.00 (RAMP B-2) | | LT | | | 1 | | | | | | | | | | | | | | | |
| D-41 | 493 | 295+50.00 (RAMP B-2) | | RT | | | | | | | | | | | | | | 1 | | | | |
| D-42 | 477 | 494+00.00 (SB I.R. 77) | | RT | | | | | | | | 1 | | | | | | | | | | |
| D-43 | 503 | 794+95.02 (RAMP C-2) | | RT | | | | | | | | | | | | | | 1 | | | | |
| D-44 | 494 | 307+60.94 (RAMP B-2) | | LT | | | 1 | | | | | | | | | | | | | | | |
| D-45 | 503 | 793+27.70 (RAMP C-2) | | LT | | | | | | | | | | | | | | 1 | | | | |
| D-46 | 461 | 427+40.06 (I.R. 77) | | LT | | | 1 | | | | | | | | | | | | | | | |
| D-47 | 463 | 431+63.18 (I.R. 77) | | RT | | | 1 | | | | | | | | | | | | | | | |
| D-48 | 461 | 426+72.66 (I.R. 77) | | RT | | | 1 | | | | | | | | | | | | | | | |
| D-49 | 463 | 431+06.54 (I.R. 77) | | RT | | | 1 | | | | | | | | | | | | | | | |
| D-54 | 494 | 14+74.90 (RAMP B-2) | | LT | | | | | | | | 1 | | | | | | | | | | |
| D-55 | 472 | 483+00.00 (NB I.R. 77) | | LT | | | | | | | | 1 | | | | | | | | | | |
| D-56 | 453 | 376+06.24 (I.R. 77) | | LT | | | | | | | | | | | | 1 | | | | | | |
| D-57 | 469 | 471+30.00 (NB I.R. 77) | | LT | | | | | 1 | | | | | | | | | | | | | |
| D-58 | 469 | 471+30.00 (NB I.R. 77) | | LT | | | | | | | | | | | | | | | | 1 | | |
| D-59 | 469 | 469+90.00 (NB I.R. 77) | | LT | | | | | 1 | | | | | | | | | | | | | |
| D-60 | 469 | 469+90.00 (NB I.R. 77) | | LT | | | | | | | | | | | | | | | | 1 | | |
| D-61 | 469 | 468+00.00 (I.R. 77) | | RT | | | | | | | | | | | | | | | | 1 | | |
| D-62 | 467 | 455+50.00 (I.R. 77) | | RT | | | | | | | | | | 1 | | | | | | | | |
| D-63 | 461 | 427+40.00 (I.R. 77) | | LT | | | | | | | | | | 1 | | | | | | | | |
| D-64 | 461 | 423+18.00 (I.R. 77) | | LT | | | | | | | | | | 1 | | | | | | | | |
| D-70 | 504 | 891+08.82 (RAMP D) | | RT | | | | | | | | | | | | | | | | 1 | | |
| **TOTALS CARRIED TO SUBSUMMARY SHEET** | | | | **409** | | 1 | 6 | | 2 | 1 | | 13 | | 13 | 1 | | 3 | | | 6 | | |

CALCULATED CJC
CHECKED PJF

# ESTIMATED QUANTITIES

SUM-77 / 277 / 224
VARIOUS

418
1288

D:\2017\2017258\ProjectData\SUM\106002\Design\Roadway\Sheets\106002_GQ015.dgn Sheet 1/16/2021 2:02:51 PM pfry

| REF. NO. | SHEET NO. | STATION FROM | STATION TO | SIDE | | 202 CATCH BASIN REMOVED | | 202 INLET REMOVED | | 611 MANHOLE RECONSTRUCTED TO GRADE, AS PER PLAN | | | | | | | | | | | | |
|---|---|---|---|---|---|---|---|---|---|---|---|---|---|---|---|---|---|---|---|---|---|---|
| | | | | | | EA | | EA | | EA | | | | | | | | | | | | |
| DJ-1 | 492 | 286+55.15 (RAMP B-2) | | LT | | | | | | 1 | | | | | | | | | | | | |
| DR-1 | 457 | 395+16.73 (I.R. 77) | | LT | | | | 1 | | | | | | | | | | | | | | |
| DR-2 | 457 | 399+06.76 (I.R. 77) | | LT | | | | 1 | | | | | | | | | | | | | | |
| DR-3 | 457 | 400+03.46 (I.R. 77) | | LT | | 1 | | | | | | | | | | | | | | | | |
| DR-4 | 459 | 405+04.20 (I.R. 77) | | LT | | 1 | | | | | | | | | | | | | | | | |
| DR-5 | 459 | 412+11.65 (I.R. 77) | | LT | | 1 | | | | | | | | | | | | | | | | |
| DR-6 | 461 | 419+04.03 (I.R. 77) | | RT | | 1 | | | | | | | | | | | | | | | | |
| DR-7 | 461 | 419+04.51 (I.R. 77) | | LT | | 1 | | | | | | | | | | | | | | | | |
| DR-8 | 461 | 425+19.36 (I.R. 77) | | LT | | 1 | | | | | | | | | | | | | | | | |
| DR-9 | 461 | 427+12.48 (I.R. 77) | | RT | | 1 | | | | | | | | | | | | | | | | |
| DR-10 | 463 | 428+91.17 (I.R. 77) | | LT | | 1 | | | | | | | | | | | | | | | | |
| DR-11 | 463 | 423+01.72 (I.R. 77) | | RT | | 1 | | | | | | | | | | | | | | | | |
| DR-12 | 463 | 436+02.21 (I.R. 77) | | RT | | 1 | | | | | | | | | | | | | | | | |
| DR-13 | 463 | 436+01.97 (I.R. 77) | | LT | | 1 | | | | | | | | | | | | | | | | |
| DR-14 | 465 | 444+01.29 (I.R. 77) | | RT | | 1 | | | | | | | | | | | | | | | | |
| DR-15 | 465 | 444+01.91 (I.R. 77) | | LT | | 1 | | | | | | | | | | | | | | | | |
| DR-16 | 465 | 450+01.82 (I.R. 77) | | RT | | 1 | | | | | | | | | | | | | | | | |
| DR-17 | 467 | 458+01.39 (I.R. 77) | | RT | | 1 | | | | | | | | | | | | | | | | |
| DR-18 | 467 | 458+01.16 (I.R. 77) | | LT | | 1 | | | | | | | | | | | | | | | | |
| DR-19 | 467 | 463+01.06 (I.R. 77) | | RT | | 1 | | | | | | | | | | | | | | | | |
| DR-20 | 467 | 463+01.84 (I.R. 77) | | LT | | 1 | | | | | | | | | | | | | | | | |
| DR-21 | 469 | 468+00.62 (I.R. 77) | | RT | | 1 | | | | | | | | | | | | | | | | |
| DR-22 | 469 | 468+00.83 (I.R. 77) | | LT | | 1 | | | | | | | | | | | | | | | | |
| DR-23 | 472 | 480+00.61 (I.R. 77) | | LT | | 1 | | | | | | | | | | | | | | | | |
| DR-24 | 492 | 286+24.58 (RAMP B-2) | | LT | | 1 | | | | | | | | | | | | | | | | |
| DR-25 | 476 | 485+99.41 (SB I.R. 77) | | RT | | 1 | | | | | | | | | | | | | | | | |
| DR-26 | 473 | 490+51.22 (NB I.R. 77) | | RT | | 1 | | | | | | | | | | | | | | | | |
| DR-27 | 492 | 291+40.49 (RAMP B-2) | | RT | | 1 | | | | | | | | | | | | | | | | |
| DR-28 | 473 | 492+50.00 (NB I.R. 77) | | RT | | 1 | | | | | | | | | | | | | | | | |
| DR-29 | 492 | 493+26.17 (NB I.R. 77) | | LT | | 1 | | | | | | | | | | | | | | | | |
| DR-30 | 492 | 294+93.48 (RAMP B-2) | | RT | | 1 | | | | | | | | | | | | | | | | |
| DR-31 | 500 | 694+97.93 (RAMP C-1) | | RT | | 1 | | | | | | | | | | | | | | | | |
| DR-32 | 477 | 494+49.80 (I.R. 77) | | RT | | 1 | | | | | | | | | | | | | | | | |
| DR-33 | 474 | 504+56.97 (I.R. 77) | | LT | | 1 | | | | | | | | | | | | | | | | |
| DR-34 | 503 | 797+28.34 (RAMP C-2) | | LT | | 1 | | | | | | | | | | | | | | | | |
| DR-36 | 453 | 376+06.24 (I.R. 77) | | LT | | | | 1 | | | | | | | | | | | | | | |
| DR-38 | 495 | 24+95.06 (RAMP B-2) | | RT | | 1 | | | | | | | | | | | | | | | | |
| DR-39 | 500 | 782+42.06 (RAMP C-1) | | LT | | 1 | | | | | | | | | | | | | | | | |
| DR-40 | 494 | 15+39.31 (RAMP B-2) | | RT | | 1 | | | | | | | | | | | | | | | | |
| DR-41 | 494 | 14+99.40 (RAMP B-2) | | LT | | 1 | | | | | | | | | | | | | | | | |
| TOTALS CARRIED TO SUBSUMMARY SHEET | | | | 407<br>409 | | 36 | | 3 | | 1 | | | | | | | | | | | | |

CALCULATED CJC
CHECKED PJF

# ESTIMATED QUANTITIES

SUM-77 / 277 / 224
VARIOUS



D:\2017\20171258\ProjectData\SUM\106002\Design\Roadway\Sheets\106002_G0002.dgn Sheet 1/16/2021 2:02:52 PM pfry

| REF. NO. | SHEET NO. | STATION FROM | STATION TO | SIDE | | | | | 601 TIED CONCRETE BLOCK MAT WITH TYPE 2 UNDERLAYMENT SY | | 601 ROCK CHANNEL PROTECTION, TYPE C WITH GEOTEXTILE FABRIC CY | | 601 ROCK CHANNEL PROTECTION, TYPE C WITH AGGREGATE FILTER CY | | | | 670 DITCH EROSION PROTECTION SY | | | | 836 SEEDING AND EROSION CONTROL WITH TURF REINFORCING MAT, TYPE 1 SY | 836 SEEDING AND EROSION CONTROL WITH TURF REINFORCING MAT, TYPE 2 SY |
|---|---|---|---|---|---|---|---|---|---|---|---|---|---|---|---|---|---|---|---|---|---|---|
| E-1 | 507 | 71+69.06 (ARL RAMP D) | 72+50.00 (ARL RAMP D) | RT | | | | | | | | | | | | | | | | | 98.32 | |
| E-2 | 507 | 72+50.00 (ARL RAMP D) | 77+50.00 (ARL RAMP D) | RT | | | | | | | | | | | | | 609.31 | | | | | |
| E-3 | 507 , 508 | 78+50.00 (ARL RAMP D) | 83+50.00 (ARL RAMP D) | RT | | | | | | | | | | | | | 611.13 | | | | | |
| E-4 | 508 | 83+50.00 (ARL RAMP D) | 87+00.00 (ARL RAMP D) | RT | | | | | | | | | | | | | 427.85 | | | | | |
| E-5 | 459 | 405+04.00 (I.R. 77) | | RT | | | | | | | 1.56 | | | | | | | | | | | |
| E-6 | 455 , 457 | 389+50.00 (I.R. 77) | 399+00.00 (I.R. 77) | RT | | | | | | | | | | | | | 1165.30 | | | | | |
| E-7 | 459 | 412+11.50 (I.R. 77) | | RT | | | | | | | 1.33 | | | | | | | | | | | |
| E-8 | 457 , 459 | 399+00.00 (I.R. 77) | 404+59.11 (I.R. 77) | RT | | | | | | | | | | | | | | | | | 906.04 | |
| E-9 | 461 | 419+05.00 (I.R. 77) | | LT | | | | | | | 1.33 | | | | | | | | | | | |
| E-10 | 457 | 391+37.36 (I.R. 77) | 395+00.00 (I.R. 77) | LT | | | | | | | | | | | | | 442.22 | | | | | |
| E-11 | 461 | 425+00.00 (I.R. 77) | | LT | | | | | | | 1.33 | | | | | | | | | | | |
| E-12 | 463 | 428+50.00 (I.R. 77) | | LT | | | | | | | 1.33 | | | | | | | | | | | |
| E-13 | 457 , 459 | 395+00.00 (I.R. 77) | 408+00.00 (I.R. 77) | LT | | | | | | | | | | | | | | | | | 2088.81 | |
| E-14 | 463 | 432+50.00 (I.R. 77) | | LT | | | | | | | 1.33 | | | | | | | | | | | |
| E-15 | 459 | 404+59.11 (I.R. 77) | 405+00.00 (I.R. 77) | RT | | | | | | | | | | | | | | | | | | 50.01 |
| E-16 | 463 | 436+02.00 (I.R. 77) | | LT | | | | | | | 1.33 | | | | | | | | | | | |
| E-17 | 459 | 405+00.00 (I.R. 77) | 406+00.00 (I.R. 77) | RT | | | | | | | | | | | | | | | | | 200.01 | |
| E-18 | 465 | 444+10.00 (I.R. 77) | | LT | | | | | | | | | 1.33 | | | | | | | | | |
| E-19 | 507 | 71+50.00 (ARL RAMP D) | 71+69.06 (ARL RAMP D) | RT | | | | | | | | | | | | | 23.82 | | | | | |
| E-20 | 465 | 450+01.00 (I.R. 77) | | RT | | | | | | | 1.33 | | | | | | | | | | | |
| E-21 | 461 | 416+51.33 (I.R. 77) | 418+00.00 (I.R. 77) | RT | | | | | | | | | | | | | 123.89 | | | | | |
| E-22 | 467 | 458+10.00 (I.R. 77) | | RT | | | | | | | 1.56 | | | | | | | | | | | |
| E-23 | 461 | 418+00.00 (I.R. 77) | 418+40.68 (I.R. 77) | RT | | | | | | | | | | | | | 34.08 | | | | | |
| E-24 | 465 | 444+01.12 (I.R. 77) | 445+00.00 (I.R. 77) | RT | | | | | | | | | | | | | 161.45 | | | | | |
| E-25 | 465 | 445+00.00 (I.R. 77) | 447+00.00 (I.R. 77) | RT | | | | | | | | | | | | | | | | | | 248.50 |
| E-26 | 469 | 468+68.00 (I.R. 77) | 468+75.00 (I.R. 77) | LT | | | | | | | 1.56 | | | | | | | | | | | |
| E-27 | 465 | 447+00.00 (I.R. 77) | 450+00.00 (I.R. 77) | RT | | | | | | | | | | | | | 485.05 | | | | | |
| E-28 | 477 | 492+00.00 (SB I.R. 77) | | LT | | | | | | | | | 5.50 | | | | | | | | | |
| E-29 | 465 | 450+00.00 (I.R. 77) | 451+00.00 (I.R. 77) | RT | | | | | | | | | | | | | | | | | 163.07 | |
| E-30 | 465 , 467 | 451+00.00 (I.R. 77) | 454+00.00 (I.R. 77) | RT | | | | | | | | | | | | | 600.07 | | | | | |
| E-31 | 465 | 444+09.35 (I.R. 77) | 445+72.75 (I.R. 77) | LT | | | | | | | | | | | | | | | | | 205.79 | |
| E-32 | 465 | 446+50.00 (I.R. 77) | 447+50.00 (I.R. 77) | LT | | | | | | | | | | | | | | | | | 160.62 | |
| E-33 | 465 | 447+50.00 (I.R. 77) | 449+00.00 (I.R. 77) | LT | | | | | | | | | | | | | 240.87 | | | | | |
| E-34 | 465 , 467 | 449+00.00 (I.R. 77) | 458+00.00 (I.R. 77) | LT | | | | | | | | | | | | | 1800.44 | | | | | |
| E-35 | 463 | 431+82.86 (I.R. 77) | | LT | | | | | 23.63 | | | | | | | | | | | | | |
| E-36 | 467 , 469 | 458+00.00 (I.R. 77) | 464+00.00 (I.R. 77) | LT | | | | | | | | | | | | | 967.38 | | | | | |
| E-37 | 463 | 431+25.24 (I.R. 77) | | RT | | | | | 23.28 | | | | | | | | | | | | | |
| E-38 | 467 , 469 | 458+00.00 (I.R. 77) | 464+00.00 (I.R. 77) | RT | | | | | | | | | | | | | 733.46 | | | | | |
| E-39 | 488 | 206+00.00 (RAMP B) | | LT | | | | | | | 1.33 | | | | | | | | | | | |
| E-40 | 469 | 469+75.00 (SB I.R. 77) | 471+00.00 (SB I.R. 77) | LT | | | | | | | | | | | | | 104.38 | | | | | |
| E-41 | 497 | 582+50.00 (RAMP C) | 583+65.35 (RAMP C) | RT | | | | | | | | | | | | | 96.41 | | | | | |
| E-42 | 477 | 494+00.00 (SB I.R. 77) | | LT | | | | | | | 1.33 | | | | | | | | | | | |
| E-43 | 503 | 794+95.00 (RAMP C-2) | | RT | | | | | | | 1.33 | | | | | | | | | | | |
| E-44 | 494 | 307+74.76 (RAMP B-2) | | LT | | | | | | | 1.33 | | | | | | | | | | | |
| E-45 | 503 | 793+27.70 (RAMP C-2) | | LT | | | | | | | 1.33 | | | | | | | | | | | |
| TOTALS CARRIED TO SUBSUMMARY SHEET | | | | 408 | | | | | 47 | | 21 | | 7 | | | | 8628 | | | | 3823 | 299 |

CALCULATED CJC
CHECKED PJF

# ESTIMATED QUANTITIES

SUM-77 / 277 / 224
VARIOUS

420
1288

0:\2017\2017258\ProjectData\SUM\106002\Design\Roadway\Sheets\106002_G0007.dgn Sheet 1/6/2021 2:02:53 PM pfry

| REF. NO. | SHEET NO. | STATION FROM | STATION TO | SIDE | 601 ROCK CHANNEL PROTECTION, TYPE C WITH AGGREGATE FILTER, AS PER PLAN CY | | 601 ROCK CHANNEL PROTECTION, TYPE D WITH AGGREGATE FILTER, AS PER PLAN CY | | | | 601 ROCK CHANNEL PROTECTION, TYPE C WITH GEOTEXTILE FABRIC CY | | 601 ROCK CHANNEL PROTECTION, TYPE C WITH AGGREGATE FILTER CY | | | | 670 DITCH EROSION PROTECTION SY | | 671 EROSION CONTROL MAT, TYPE G SY | | 836 SEEDING AND EROSION CONTROL WITH TURF REINFORCING MAT, TYPE 1 SY | |
|---|---|---|---|---|---|---|---|---|---|---|---|---|---|---|---|---|---|---|---|---|---|---|---|
| E-46 | 461 | 427+40.06 (I.R. 77) | | LT | | | | | | | 1.33 | | | | | | | | | | | | |
| E-47 | 463 | 431+63.18 (I.R. 77) | | LT | | | | | | | 1.33 | | | | | | | | | | | | |
| E-48 | 461 | 426+72.66 (I.R. 77) | | RT | | | | | | | 1.33 | | | | | | | | | | | | |
| E-49 | 463 | 431+06.54 (I.R. 77) | | RT | | | | | | | 1.33 | | | | | | | | | | | | |
| E-50 | 495 | 25+00.81 (RAMP B-2) | | RT | | | | | | | 1.33 | | | | | | | | | | | | |
| E-51 | 496 | 31+85.70 (RAMP B-2) | | RT | | | | | | | 1.33 | | | | | | | | | | | | |
| E-53 | 476 | 480+50.00 (SB I.R. 77) | 482+00.00 (SB I.R. 77) | LT | | | | | | | | | 1.56 | | | | 122.40 | | | | | | |
| E-54 | 488 | 206+00.00 (RAMP B) | | LT | | | | | | | | | | | | | | | | | | | |
| E-55 | 476 | 482+00.00 (SB I.R. 77) | 484+50.00 (SB I.R. 77) | LT | | | | | | | | | | | | | | | | | 203.47 | | |
| E-56 | 476 | 484+50.00 (SB I.R. 77) | 487+00.00 (SB I.R. 77) | LT | | | | | | | | | | | | | 297.82 | | | | | | |
| E-57 | 472 | 481+43.00 (NB I.R. 77) | 483+00.00 (NB I.R. 77) | LT | | | | | | | | | | | | | 250.69 | | | | | | |
| E-58 | 472 | 483+00.00 (NB I.R. 77) | 286+00.00 (RAMP B-2) | LT | | | | | | | | | | | | | 363.39 | | | | | | |
| E-59 | 492 | 286+00.00 (RAMP B-2) | 290+50.00 (RAMP B-2) | LT | | | | | | | | | | | | | 545.60 | | | | | | |
| E-60 | 472 | 483+00.00 (NB I.R. 77) | 486+50.00 (NB I.R. 77) | RT | | | | | | | | | | | | | 297.05 | | | | | | |
| E-61 | 472 , 473 | 486+50.00 (NB I.R. 77) | 488+50.00 (NB I.R. 77) | RT | | | | | | | | | | | | | 249.08 | | | | | | |
| E-62 | 476 , 477 | 484+00.00 (SB I.R. 77) | 493+00.00 (NB I.R. 77) | RT | | | | | | | | | | | | | 754.36 | | | | | | |
| E-63 | 477 | 493+00.00 (SB I.R 77) | 494+00.00 (SB I.R. 77) | RT | | | | | | | | | | | | | 150.36 | | | | | | |
| E-64 | 477 | 494+00.00 (SB I.R. 77) | 495+57.00 (SB I.R. 77) | RT | | | | | | | | | | | | | 131.12 | | | | | | |
| E-65 | 492 | 290+50.00 (RAMP B-2) | 292+00.00 (RAMP B-2) | LT | | | | | | | | | | | | | 181.88 | | | | | | |
| E-66 | 473 | 490+92.96 (NB I.R. 77) | 492+50.00 (NB I.R. 77) | RT | | | | | | | | | | | | | 195.29 | | | | | | |
| E-67 | 473 | 492+50.00 (NB I.R. 77) | 493+50.00 (NB I.R. 77) | RT | | | | | | | | | | | | | 125.21 | | | | | | |
| E-68 | 492 , 493 | 294+50.00 (RAMP B-2) | 296+06.92 (RAMP B-2) | LT | | | | | | | | | | | | | 130.72 | | | | | | |
| E-69 | 493 | 297+50.00 (RAMP B-2) | 299+51.15 (RAMP B-2) | RT | | | | | | | | | | | | | 166.66 | | | | | | |
| E-70 | 500 | 689+00.00 (RAMP C-1) | 692+00.00 (RAMP C-1) | LT | | | | | | | | | | | | | 287.89 | | | | | | |
| E-71 | 500 | 692+00.00 (RAMP C-1) | 692+47.47 (RAMP C-1) | LT | | | | | | | | | | | | | 47.38 | | | | | | |
| E-72 | 500 | 690+50.00 (RAMP C-1) | 692+50.00 (RAMP C-1) | RT | | | | | | | | | | | | | 222.52 | | | | | | |
| E-73 | 500 | 693+50.00 (RAMP C-1) | 694+97.52 (RAMP C-1) | RT | | | | | | | | | | | | | 247.29 | | | | | | |
| E-74 | 500 | 694+97.52 (RAMP C-1) | 696+50.00 (RAMP C-1) | RT | | | | | | | | | | | | | 186.62 | | | | | | |
| E-75 | 500 | 696+50.00 (RAMP C-1) | 697+50.00 (RAMP C-1) | RT | | | | | | | | | | | | | 83.34 | | | | | | |
| E-76 | 493 | 301+00.00 (RAMP B-2) | 305+50.00 (RAMP B-2) | RT | | | | | | | | | | | | | 375.12 | | | | | | |
| E-77 | 474 | 507+50.00 (NB I.R. 77) | 508+50.00 (NB I.R. 77) | LT | | | | | | | | | | | | | 85.08 | | | | | | |
| E-78 | 503 | 799+91.89 (RAMP C-2) | 801+48.91 (RAMP C-2) | RT | | | | | | | | | | | | | 129.76 | | | | | | |
| E-79 | 478 | 500+88.15 (SB I.R. 77) | 504+00.00 (SB I.R. 77) | RT | | | | | | | | | | | | | 261.01 | | | | | | |
| E-80 | 478 | 504+00.00 (SB I.R. 77) | 507+00.00 (SB I.R. 77) | RT | | | | | | | | | | | | | 248.94 | | | | | | |
| E-81 | 504 | 887+98.38 (RAMP D) | 890+78.60 (RAMP D) | RT | | | | | | | | | | | | | | | | | 306.84 | | |
| E-82 | 504 | 894+00.00 (RAMP D) | 896+50.00 (RAMP D) | LT | | | | | | | | | | | | | 210.81 | | | | | | |
| E-83 | 504 | 896+50.00 (RAMP D) | 897+00.00 (RAMP D) | LT | | | | | | | | | | | | | | | | | 42.68 | | |
| E-84 | 498 | 591+50.00 (RAMP C) | 592+50.00 (RAMP C) | LT | | | | | | | | | | | | | 180.49 | | | | | | |
| E-85 | 499 | 600+00.00 (RAMP C) | 600+50.00 (RAMP C) | LT | | | | | | | | | | | | | 42.77 | | | | | | |
| E-86 | 485 | 87+71.89 (RAMP A) | 91+90.00 (RAMP A) | LT | 16.73 | | 121.97 | | | | | | | | | | | | 241.99 | | | | |
| E-87 | 485 | 92+00.00 (RAMP A) | 92+50.00 (RAMP A) | LT | | | | | | | | | | | | | | | | | 40.82 | | |
| E-88 | 480 , 481 | 113+00.00 (RAMP A) | 232+00.00 (I.R. 277) | LT/RT | | | | | | | | | | | | | 796.47 | | | | | | |
| E-89 | 486 | 98+00.00 (RAMP A) | 99+00.00 (RAMP A) | LT | | | | | | | | | | | | | 80.83 | | | | | | |
| E-90 | 477 | 496+00.00 (SB I.R. 77) | 498+00.00 (SB I.R. 77) | LT | | | | | | | | | | | | | 167.68 | | | | | | |
| **TOTALS CARRIED TO SUBSUMMARY SHEET** | | | | **408** | 17 | | 122 | | | | 8 | | 2 | | | | 7616 | | 242 | | 594 | | |

REVISIONS

| NO. | DATE | DESCRIPTION |
|---|---|---|
| 5 | 04/22/21 | REVISED ITEM 601 - RCP QUANTITY |
| 6 | 04/26/21 | REVISED ITEM 601 - RCP QUANTITY |

CALCULATED CJC
CHECKED PJF

# ESTIMATED QUANTITIES

SUM-77/277/224
VARIOUS

421
1288

0:\2017\20I7258\ProjectData\SUM\06002\Design\Roadway\Sheets\06002_G0008.dgn Sheet 4/26/2021 9:21:53 AM pfry

| REF. NO. | SHEET NO. | STATION FROM | STATION TO | SIDE | 601 ROCK CHANNEL PROTECTION, TYPE C WITH AGGREGATE FILTER, AS PER PLAN (CY) | | 601 ROCK CHANNEL PROTECTION, TYPE D WITH AGGREGATE FILTER, AS PER PLAN (CY) | | 601 TIED CONCRETE BLOCK MAT WITH TYPE 2 UNDERLAYMENT (SY) | 601 ROCK CHANNEL PROTECTION, TYPE B WITH GEOTEXTILE FABRIC (CY) | 601 ROCK CHANNEL PROTECTION, TYPE C WITH GEOTEXTILE FABRIC (CY) | | 601 ROCK CHANNEL PROTECTION, TYPE C WITH AGGREGATE FILTER (CY) | | 601 PAVED GUTTER, TYPE 1-2, AS PER PLAN (FT) | | 670 DITCH EROSION PROTECTION (SY) | | | | 836 SEEDING AND EROSION CONTROL WITH TURF REINFORCING MAT, TYPE 1 (SY) | |
|---|---|---|---|---|---|---|---|---|---|---|---|---|---|---|---|---|---|---|---|---|---|---|---|
| E-91 | 494 | 11+97.63 (RAMP B-2) | 13+50.00 (RAMP B-2) | RT | | | | | | | | | | | | | 145.02 | | | | | |
| E-92 | 478 , 479 | 510+00.00 (SB I.R. 77) | 514+95.00 (SB I.R. 77) | RT | | | | | | | | | | | | | 408.44 | | | | | |
| E-93 | 479 | 512+00.00 (SB I.R. 77) | 513+00.00 (SB I.R. 77) | LT | | | | | | | | | | | | | 93.99 | | | | | |
| E-94 | 479 | 514+00.00 (SB I.R. 77) | 514+95.00 (SB I.R. 77) | LT | | | | | | | | | | | | | 80.99 | | | | | |
| E-96 | 483 , 484 | 269+40.00 (I.R. 277) | 272+00.00 (I.R. 277) | LT | | | | | | | | | | | | | 318.02 | | | | | |
| E-97 | 487 | 109+50.00 (RAMP A) | 113+00.00 (RAMP A) | LT | | | | | | | | | | | | | 290.89 | | | | | |
| E-99 | 486 | 99+00.00 (RAMP A) | 99+54.51 (RAMP A) | LT | | | | | | | 37.82 | | | | | | | | | | | |
| E-100 | 486 | 102+00.00 (RAMP A) | 103+50.00 (RAMP A) | RT | | | | | | | | | | | | | 130.61 | | | | | |
| E-101 | 486 | 101+50.00 (RAMP A) | 102+00.00 (RAMP A) | RT | | | | | | | | | | | | | | | | | 44.46 | |
| E-102 | 485 | 87+00.00 (RAMP A) | 87+50.00 (RAMP A) | LT | | | | | | | | | | | | | | | | | 59.75 | |
| E-103 | 495 | 26+50.00 (RAMP B-2) | 29+00.00 (RAMP B-2) | RT | | | | | | | | | | | | | | | | | 209.31 | |
| E-104 | 488 , 489 | 206+25.00 (RAMP B) | 210+50.00 (RAMP B) | LT | 159.77 | | 126.56 | | | | | | | | | | | | | | 223.37 | |
| E-105 | 488 | 206+00.00 (RAMP B) | 206+18.25 (RAMP B) | LT | | | | | | | | | 7.67 | | | | | | | | | |
| E-106 | 488 | 204+50.00 (RAMP B) | 206+00.00 (RAMP B) | LT | | | | | | | | | | | | | 131.15 | | | | | |
| E-107 | 488 | 198+00.00 (RAMP B) | 203+00.00 (RAMP B) | LT | | | | | | | | | | | | | 406.98 | | | | | |
| E-108 | 488 | 25+00.00 (RAMP B-2) | 198+00.00 (RAMP B) | RT/LT | | | | | | | | | | | | | | | | | 108.09 | |
| E-109 | 495 | 25+00.00 (RAMP B-2) | 26+50.00 (RAMP B-2) | RT | | | | | | | | | | | | | 183.34 | | | | | |
| E-110 | 490 | 413+00.00 (RAMP B-1) | 416+50.00 (RAMP B-1) | RT | | | | | | | | | | | | | 361.20 | | | | | |
| E-111 | 490 | 408+50.17 (RAMP B-1) | 411+00.00 (RAMP B-1) | RT | | | | | | | | | | | | | 240.16 | | | | | |
| E-112 | 494 | 14+00.00 (RAMP B-2) | | RT | | | | | 6.67 | | | | | | | | | | | | | |
| E-113 | 494 | 14+00.00 (RAMP B-2) | 15+30.60 (RAMP B-2) | RT | | | | | | | | | | | | | 105.83 | | | | | |
| E-114 | 494 | 16+21.88 (RAMP B-2) | 14+80.11 (RAMP B-2) | LT | | | | | | | | | | | | | 177.32 | | | | | |
| E-115 | 495 | 19+00.00 (RAMP B-2) | 21+00.00 (RAMP B-2) | LT | | | | | | | | | | | | | 257.70 | | | | | |
| E-116 | 495 , 496 | 29+00.00 (RAMP B-2) | 31+00.00 (RAMP B-2) | RT | | | | | | | | | | | | | 244.52 | | | | | |
| E-117 | 490 | 411+00.00 (RAMP B-1) | 413+00.00 (RAMP B-1) | RT | | | | | | | | | | | | | 208.23 | | | | | |
| E-118 | 481 | 240+00.00 (I.R. 277) | 241+00.00 (I.R. 277) | LT | | | | | | | | | | | | | 84.96 | | | | | |
| E-119 | 469 , 472 | 473+00.00 (NB I.R. 77) | 476+50.00 (NB I.R. 77) | LT | | | | | | | | | | | 348.97 | | | | | | | |
| E-120 | 493 | 295+92.25 (RAMP B-2) | 297+50.00 (RAMP B-2) | RT | | | | | | | | | | | 157.75 | | | | | | | |
| E-121 | 494 | 9+98.08 (RAMP B-2) | | LT | | | | | 39.81 | | | | | | | | | | | | | |
| E-123 | 465 | 445+72.75 (I.R. 77) | 445+85.64 (I.R. 77) | LT | | | | | | 7.22 | | | | | | | | | | | | |
| E-126 | 480 | 230+97.30 (I.R. 277) | 231+05.28 (I.R. 277) | RT | | | | | | | 1.78 | | | | | | | | | | | |
| E-127 | 497 | 583+65.35 (RAMP C) | 584+20.81 (RAMP C) | RT | | | | | | | 1.33 | | | | | | | | | | | |
| E-128 | 504 | 891+38.08 (RAMP D) | 891+47.42 (RAMP D) | RT | | | | | | 4.63 | | | | | | | | | | | | |
| E-131 | 487 | 106+00.00 (RAMP A) | 107+50.00 (RAMP A) | LT | | | | | | | | | | | | | 125.14 | | | | | |
| E-133 | 480 | 231+55.13 (I.R. 277) | 232+00.00 (I.R. 277) | RT | | | | | | | | | | | | | | | | | 55.00 | |
| E-134 | 480 | 230+00.00 (I.R. 277) | 230+97.30 (I.R. 277) | RT | | | | | | | | | | | | | | | | | 125.40 | |
| E-135 | 497 | 584+26.89 (RAMP C) | 584+50.00 (RAMP C) | RT | | | | | | | | | | | | | 21.29 | | | | | |
| E-136 | 504 | 891+39.15 (RAMP D) | 893+00.00 (RAMP D) | RT | | | | | | | | | | | | | | | | | 192.02 | |
| **TOTALS CARRIED TO SUBSUMMARY SHEET** | | | | **408** | 160 | | 127 | | 47 | 12 | 41 | | 8 | | 507 | | 4016 | | | | 1018 | |

| REVISIONS | | |
|---|---|---|
| NO. | DATE | DESCRIPTION |
| 5 | 04/22/21 | REVISED ITEM 601 - RCP QUANTITY |
| 6 | 04/26/21 | REVISED ITEM 601 - RCP QUANTITY |

CALCULATED CJC
CHECKED PJF

# ESTIMATED QUANTITIES

SUM-77/277/224
VARIOUS

422
1288

0:\2017\20172581\ProjectData\SUM\106002\Design\Roadway\Sheets\106002_G0009.dgn Sheet 4/26/2021 9:29:20 AM pfry

| REF. NO. | SHEET NO. | STATION FROM | STATION TO | SIDE | | SPECIAL FILL AND PLUG EXISTING CONDUIT, 15" FT | SPECIAL FILL AND PLUG EXISTING CONDUIT, 18" FT | SPECIAL FILL AND PLUG EXISTING CONDUIT, 30" FT | | 202 FENCE REMOVED FT | | 607 FENCE, TYPE CL T FT | 607 FENCELINE SEEDING AND MULCHING FT | | 607 FENCE, MISC.: TEMPORARY FENCE FT | | | | | | | |
|---|---|---|---|---|---|---|---|---|---|---|---|---|---|---|---|---|---|---|---|---|---|---|
| F-1 | 1262 | 394+44.76 (I.R. 77) | 394+52.39 (I.R. 77) | LT | | | | | | | | 12 | 12 | | | | | | | | | |
| F-2 | 1263 | 407+19.12 (I.R. 77) | 407+69.10 (I.R. 77) | LT | | | | | | | | 50 | 50 | | | | | | | | | |
| F-3 | 1264 | 446+11.52 (I.R. 77) | 446+61.98 (I.R. 77) | LT | | | | | | | | 50 | 50 | | | | | | | | | |
| F-4 | 1265 | 460+30.84 (I.R. 77) | 460+80.59 (I.R. 77) | RT | | | | | | | | 50 | 50 | | | | | | | | | |
| F-5 | 1266 | 469+16.39 (I.R. 77) | 469+23.99 (I.R. 77) | LT | | | | | | | | 11 | 11 | | | | | | | | | |
| F-6 | 1266 | 469+62.86 (SB I.R. 77) | 469+74.92 (SB I.R. 77) | LT | | | | | | | | 15 | 15 | | | | | | | | | |
| F-7 | 1266 | 468+55.82 (I.R. 77) | 468+68.03 (I.R. 77) | RT | | | | | | | | 15 | 15 | | | | | | | | | |
| F-8 | 1266 | 469+08.95 (I.R. 77) | 469+18.21 (I.R. 77) | RT | | | | | | | | 11 | 11 | | | | | | | | | |
| F-9 | 1267 | 480+72.73 (SB I.R. 77) | 481+24.33 (SB I.R. 77) | LT | | | | | | | | 50 | 50 | | | | | | | | | |
| F-10 | 1267 | 583+59.12 (RAMP C) | 584+08.84 (RAMP C) | RT | | | | | | | | 50 | 50 | | | | | | | | | |
| F-11 | 1268 | 87+52.08 (RAMP A) | 92+38.86 (RAMP A) | LT | | | | | | | | 477 | 477 | | | | | | | | | |
| F-12 | 1268 | 93+01.79 (RAMP A) | 98+46.73 (RAMP A) | LT | | | | | | | | 527 | 527 | | | | | | | | | |
| F-13 | 1269 | 231+60.95 (I.R. 277/224) | 232+10.61 (I.R. 277/224) | RT | | | | | | | | 50 | 50 | | | | | | | | | |
| F-14 | 1270 | 105+66.09 (RAMP A) | 106+17.26 (RAMP A) | RT | | | | | | | | 50 | 50 | | | | | | | | | |
| F-15 | 1271 | 890+62.72 (RAMP D) | 891+13.56 (RAMP D) | RT | | | | | | | | 50 | 50 | | | | | | | | | |
| F-16 | 1272 | 280+23.33 (I.R. 277/224) | 280+64.06 (I.R. 277/224) | LT | | | | | | | | 50 | 50 | | | | | | | | | |
| FP-8 | 461 | DR-8 | PR-8 | LT | | 82 | | | | | | | | | | | | | | | | |
| FP-9 | 461 | DR-9 | PR-9 | LT | | 88 | | | | | | | | | | | | | | | | |
| FP-10 | 463 | DR-10 | PR-10 | LT | | 86 | | | | | | | | | | | | | | | | |
| FP-11 | 463 | PR-11 | PR-11A | LT | | 78 | | | | | | | | | | | | | | | | |
| FP-15 | 465 | DR-15 | PR-15 | LT | | 79 | | | | | | | | | | | | | | | | |
| FP-17 | 467 | DR-17 | PR-17 | RT | | | 76 | | | | | | | | | | | | | | | |
| FP-26 | 473 | DR-26 | DR-27 | LT/RT | | | 120 | | | | | | | | | | | | | | | |
| FP-27 | 477 | PR-27A | PR-27 | LT/RT | | | | 214 | | | | | | | | | | | | | | |
| FP-32 | 477 | DR-32 | PR-32 | LT/RT | | 130 | | | | | | | | | | | | | | | | |
| FP-39 | 500 | DR-39 | EX-2 | LT | | 43 | | | | | | | | | | | | | | | | |
| FP-41 | 488 , 494 | DR-41 | PR-41 | LT/RT | | | 164 | | | | | | | | | | | | | | | |
| FR-1 | 1262 - 1263 | 394+52.16 (I.R. 77) | 407+69.10 (I.R. 77) | LT | | | | | | 1311 | | | | | 1311 | | | | | | | |
| FR-2 | 1264 - 1266 | 446+11.52 (I.R. 77) | 469+23.44 (I.R. 77) | LT | | | | | | 2319 | | | | | 2319 | | | | | | | |
| FR-3 | 1265 - 1266 | 460+30.84 (I.R. 77) | 468+67.45 (I.R. 77) | RT | | | | | | 845 | | | | | 845 | | | | | | | |
| FR-4 | 1266 - 1267 | 469+62.43 (SB I.R. 77) | 481+24.33 (SB I.R. 77) | LT | | | | | | 1137 | | | | | 1137 | | | | | | | |
| FR-5 | 1266 - 1267 | 469+17.32 (I.R. 77) | 584+08.84 (RAMP C) | RT | | | | | | 1497 | | | | | 1497 | | | | | | | |
| FR-6 | 1268 | 87+52.08 (RAMP A) | 92+38.86 (RAMP A) | LT | | | | | | 480 | | | | | | | | | | | | |
| FR-7 | 1268 | 93+01.79 (RAMP A) | 98+46.73 (RAMP A) | LT | | | | | | 536 | | | | | | | | | | | | |
| FR-8 | 1269 - 1270 | 231+60.95 (I.R. 277/224) | 245+73.76 (I.R. 277/224) | RT | | | | | | 1420 | | | | | 1420 | | | | | | | |
| FR-9 | 1271 - 1272 | 266+30.23 (I.R. 277/224) | 280+64.06 (I.R. 277/224) | LT | | | | | | 1453 | | | | | 1453 | | | | | | | |
| TOTALS CARRIED TO SUBSUMMARY SHEET | | | | 407 | | 586 | 360 | 214 | | 10998 | | 1518 | 1518 | | 9982 | | | | | | | |

CALCULATED CJC
CHECKED PJF

# ESTIMATED QUANTITIES

SUM-77 / 277 / 224
VARIOUS

| REVISIONS | | |
|---|---|---|
| NO. | DATE | DESCRIPTION |
| 8 | 04/30/21 | ADDED TEMPORARY FENCE QUANTITY |



D:\2017\20172581\ProjectData\SUM\106002\Design\Roadway\Sheets\106002_GO030.dgn Sheet 4/30/2021 2:27:55 PM lkirkland

| REF. NO. | SHEET NO. | STATION FROM | STATION TO | SIDE | 606 GUARDRAIL, TYPE MGS | 606 GUARDRAIL, TYPE MGS WITH LONG POSTS | 606 GUARDRAIL, TYPE MGS HALF POST SPACING | 606 GUARDRAIL, TYPE MGS QUARTER POST SPACING | 606 GUARDRAIL, BARRIER DESIGN, TYPE MGS | 606 MGS BRIDGE TERMINAL ASSEMBLY, TYPE 1 | 606 MGS BRIDGE TERMINAL ASSEMBLY, TYPE 2 | 606 ROUNDED END SECTION | 606 ANCHOR ASSEMBLY, MGS TYPE T | 606 ANCHOR ASSEMBLY, MGS TYPE E (MASH 2016) | 606 IMPACT ATTENUATOR, TYPE 3 UNIDIRECTIONAL (60 MPH, 90" WIDTH) | 606 IMPACT ATTENUATOR, TYPE 3 UNIDIRECTIONAL (65 MPH, 69" WIDTH) | 606 IMPACT ATTENUATOR, TYPE 3 UNIDIRECTIONAL (70 MPH, 48" WIDTH) | 606 IMPACT ATTENUATOR, TYPE 1 (UNIDIRECTIONAL) | 626 BARRIER REFLECTOR, TYPE 1, ONE-WAY | 626 BARRIER REFLECTOR, TYPE 1, BI-DIRECTIONAL | 626 BARRIER REFLECTOR, TYPE 3, ONE-WAY | 626 BARRIER REFLECTOR, TYPE 3, BI-DIRECTIONAL |
|---|---|---|---|---|---|---|---|---|---|---|---|---|---|---|---|---|---|---|---|---|---|---|
| | | | | | FT | FT | FT | FT | FT | EACH | EACH | EACH | EACH | EACH | EACH | EACH | EACH | EACH | EACH | EACH | EACH | EACH |
| G-1 | 455 , 457 | 387+19.56 (I.R. 77) | 393+75.00 (I.R. 77) | RT | 575.00 | | | | | 1 | | | | 1 | | | | | | | | |
| G-2 | 457 | 394+54.30 (I.R. 77) | 396+86.59 (I.R. 77) | LT | 150.00 | | | | | 1 | | | | 1 | | | | | | | | |
| G-3 | 459 , 461 | 407+50.59 (I.R. 77) | 425+06.61 (I.R. 77) | RT | 1675.00 | | | | | 1 | | | | 1 | | | | | | | | |
| G-4 | 459 , 461 | 404+55.95 (I.R. 77) | 425+53.84 (I.R. 77) | LT | 2087.50 | | | | | | 1 | | 1 | | | | | | | | | |
| G-5 | 461 , 463 | 426+62.18 (I.R. 77) | 428+86.69 (I.R. 77) | RT | 202.36 | | | | | 1 | 1 | | | | | | | | | | | |
| G-6 | 461 , 463 | 427+09.41 (I.R. 77) | 429+20.46 (I.R. 77) | LT | 188.23 | | | | | 1 | 1 | | | | | | | | | | | |
| G-7 | 463 , 465 | 430+96.10 (I.R. 77) | 446+23.71 (I.R. 77) | RT | 1525.00 | | | | | | 1 | | 1 | | | | | | | | | |
| G-8 | 463 , 465 | 431+32.29 (I.R. 77) | 449+48.04 (I.R. 77) | LT | 1725.00 | | | | | 1 | | | | 1 | | | | | | | | |
| G-9 | 467 , 469 | 461+21.17 (I.R. 77) | 468+65.00 (I.R. 77) | RT | 662.50 | | | | | 1 | | | | 1 | | | | | | | | |
| G-10 | 469 | 467+30.42 (I.R. 77) | 469+15.00 (I.R. 77) | LT | 175.00 | | | | | | 1 | | 1 | | | | | | | | | |
| G-11 | 469 | 469+62.50 (SB I.R. 77) | 473+45.51 (SB I.R. 77) | LT | 300.00 | | | | | 1 | | | | 1 | | | | | | | | |
| G-12 | 472 | 475+64.00 (NB I.R. 77) | 478+63.75 (NB I.R. 77) | LT | 287.50 | | | | | | 1 | | 1 | | | | | | | | | |
| G-13 | 473 | 487+97.20 (NB I.R. 77) | 491+00.00 (NB I.R. 77) | RT | 225.00 | | | | | 1 | | | | 1 | | | | | | | | |
| G-14 | 473 - 475 | 496+00.00 (NB I.R. 77) | 514+85.00 (NB I.R. 77) | LT | 1790.33 | | 50.00 | 50.00 | | | 1 | | | | | | | | | | | |
| G-15 | 469 , 476 | 473+95.11 (SB I.R. 77) | 484+73.31 (SB I.R. 77) | RT | 1000.00 | | | | | 1 | | | | 1 | | | | | | | | |
| G-15A | 477 | 495+57.46 (SB I.R. 77) | 496+84.41 (SB I.R. 77) | RT | 37.50 | | 50.00 | | | | | | 1 | | 1 | | | | | | | |
| G-16 | 478 - 479 | 508+73.02 (SB I.R. 77) | 514+95.00 (SB I.R. 77) | RT | 595.3 | | | | | 1 | | | | | | | | | | | | |
| G-17 | 478 - 479 | 509+30.71 (SB I.R. 77) | 511+46.12 (SB I.R. 77) | LT | 137.50 | | | | | 1 | | | | 1 | | | | | | | | |
| G-18 | 480 | 223+25.02 (I.R. 277/224) | 231+12.50 (I.R. 277/224) | RT | | 775.00 | | | | | | | 1 | | | | | | | | | |
| G-19 | 482 | 248+78.78 (I.R. 277/224) | 250+85.44 (I.R. 277/224) | RT | 150.00 | | | | | | | | | 1 | | | | | | | | |
| G-20 | 482 - 483 | 257+10.03 (I.R. 277/224) | 264+61.85 (I.R. 277/224) | LT | 675.78 | | 50.00 | | | | | | | | | 1 | | | | | | |
| G-20A | 484 | 279+44.11 (I.R. 277/224) | 279+81.23 (I.R. 277/224) | LT | | 25.00 | | | | | | | 1 | | | | | | | | | |
| G-21 | 483 | 261+32.00 (I.R. 277/224) | 261+96.50 (I.R. 277/224) | RT | | | | | 25.00 | | | | | | | | | 1 | | | | |
| G-22 | 485 - 487 | 478+80.33 (SB I.R. 77) | 111+39.67 (RAMP A) | LT | 3162.50 | | | | | | | | 1 | 1 | | | | | | | | |
| G-23 | 488 - 489 | 203+35.49 (RAMP B) | 214+90.00 (RAMP B) | LT | 984.00 | 150.00 | | | | | | | 1 | | | | | | | | | |
| G-24 | 488 - 489 | 207+26.23 (RAMP B) | 213+07.52 (RAMP B) | RT | 525.00 | | | | | | | | 1 | 1 | | | | | | | | |
| G-25 | 490 | 409+32.36 (RAMP B-1) | 421+30.69 (RAMP B-1) | LT | 1162.50 | | | | | | 1 | | 1 | | | | | | | | | |
| G-26 | 490 | 502+00.00 (SB I.R. 77) | 404+19.09 (RAMP B-1) | LT | 137.50 | | | | | 1 | | | | 1 | | | | | | | | |
| G-27 | 492 | 288+11.17 (RAMP B-2) | 292+31.83 (RAMP B-2) | LT | 337.50 | | | | | 1 | | | | 1 | | | | | | | | |
| G-28 | 492 - 493 | 292+80.00 (RAMP B-2) | 301+40.65 (RAMP B-2) | LT | 850.00 | | | | | | 1 | | 1 | | | | | | | | | |
| G-28A | 493 | 297+50.00 (RAMP B-2) | 300+99.84 (RAMP B-2) | RT | 337.50 | | | | | | 1 | | 1 | | | | | | | | | |
| G-29 | 493 - 494 | 305+45.15 (RAMP B-2) | 307+88.67 (RAMP B-2) | LT | 162.50 | | | | | 1 | | | | 1 | | | | | | | | |
| G-30 | 493 - 494 | 304+31.85 (RAMP B-2) | 7+65.76 (RAMP B-2) | RT | 350.00 | | | | | 1 | | | | 1 | | | | | | | | |
| G-31 | 494 | 9+81.21 (RAMP B-2) | 15+16.41 (RAMP B-2) | LT | 525.00 | | | | | | 1 | | 1 | | | | | | | | | |
| G-32 | 495 - 496 | 22+03.60 (RAMP B-2) | 33+81.95 (RAMP B-2) | RT | 980.55 | 131.95 | | | | | | | | 1 | | | | | | | | |
| G-33 | 497 - 499 | 582+07.62 (RAMP C) | 279+50.00 (I.R. 277/224) | RT | 2337.50 | 250.00 | | | | | | | | 1 | | | | | | | | |
| G-34 | 497 - 498 | 583+64.85 (RAMP C) | 591+72.95 (RAMP C) | LT | 750.00 | | | | | | | | 1 | 1 | | | | | | | | |
| G-35 | 500 | 679+60.74 (RAMP C-1) | 684+21.24 (RAMP C-1) | RT | 450.00 | | | | | | 1 | | 1 | | | | | | | | | |
| G-36 | 500 | 695+70.21 (RAMP C-1) | 698+64.18 (RAMP C-1) | RT | 212.50 | | | | | 1 | | | | 1 | | | | | | | | |
| G-37 | 502 | 596+40.56 (RAMP C) | 789+07.95 (RAMP C-2) | RT/LT | 500.00 | 250.00 | | | | | 1 | | 1 | | | | | | | | | |
| G-38 | 502 | 786+26.05 (RAMP C-2) | 789+07.95 (RAMP C-2) | LT | 287.50 | | | | | | 1 | | 1 | | | | | | | | | |
| G-39 | 503 | 793+51.56 (RAMP C-2) | 796+59.71 (RAMP C-2) | LT | 235.69 | | 50.00 | | | 1 | | | | | | | | | | | | |
| G-40 | 503 | 795+19.05 (RAMP C-2) | 799+78.00 (RAMP C-2) | RT | 435.80 | | | | | 1 | 1 | | | | | | | | | | | |
| G-41 | 478 | 501+34.03 (SB I.R. 77) | 508+04.86 (SB I.R. 77) | RT | 647.71 | | | | | 1 | 1 | | | | | | | | | | | |
| G-42 | 504 - 506 | 888+67.17 (RAMP D) | 914+89.25 (RAMP D) | RT | 1967.40 | 587.58 | | | | | | | | 1 | | | | | | | | |
| TOTALS CARRIED TO SUBSUMMARY SHEET | | | | 407 | 31504 | 2170 | 200 | 50 | 25 | 20 | 16 | | 18 | 21 | 1 | 1 | | 1 | | | | |

CALCULATED CJC
CHECKED PJF

# ESTIMATED QUANTITIES

SUM-77 / 277 / 224
VARIOUS

424
1288

D:\2017\2017258\ProjectData\SUM\06002\Design\Roadway\Sheets\06002_G0010.dgn Sheet 1/16/2021 2:02:57 PM pfry

| REF. NO. | SHEET NO. | STATION FROM | STATION TO | SIDE | 606 GUARDRAIL, TYPE MGS | 606 GUARDRAIL, TYPE MGS WITH LONG POSTS | 606 GUARDRAIL, TYPE MGS HALF POST SPACING | 606 GUARDRAIL, TYPE MGS QUARTER POST SPACING | 606 GUARDRAIL, BARRIER DESIGN, TYPE MGS | 606 MGS BRIDGE TERMINAL ASSEMBLY, TYPE 1 | 606 MGS BRIDGE TERMINAL ASSEMBLY, TYPE 2 | 606 ROUNDED END SECTION | 606 ANCHOR ASSEMBLY, MGS TYPE T | 606 ANCHOR ASSEMBLY, MGS TYPE E (MASH 2016) | 606 IMPACT ATTENUATOR, TYPE 3 UNIDIRECTIONAL (60 MPH, 90" WIDTH) | 606 IMPACT ATTENUATOR, TYPE 3 UNIDIRECTIONAL (65 MPH, 69" WIDTH) | 606 IMPACT ATTENUATOR, TYPE 3 UNIDIRECTIONAL (70 MPH, 48" WIDTH) | 606 IMPACT ATTENUATOR, TYPE 1 (UNIDIRECTIONAL) | 626 BARRIER REFLECTOR, TYPE 1, ONE-WAY | 626 BARRIER REFLECTOR, TYPE 1, BI-DIRECTIONAL | 626 BARRIER REFLECTOR, TYPE 3, ONE-WAY | 626 BARRIER REFLECTOR, TYPE 3, BI-DIRECTIONAL |
|---|---|---|---|---|---|---|---|---|---|---|---|---|---|---|---|---|---|---|---|---|---|---|---|
| | | | | | FT | FT | FT | FT | FT | EACH | EACH | EACH | EACH | EACH | EACH | EACH | EACH | EACH | EACH | EACH | EACH | EACH | EACH |
| G-43 | 504 - 505 | 893+01.77 (RAMP D) | 904+64.95 (RAMP D) | LT | 512.50 | 600.00 | 50.00 | | | | | | 1 | | | | | | | | | | |
| G-44 | 509 | 24+40.09 (WARNER RD) | 25+31.58 (WARNER RD) | RT | 60.74 | | | | | 1 | | 1 | 1 | | | | | | | | | | |
| G-45 | 509 | 24+58.25 (WARNER RD) | 25+20.00 (WARNER RD) | LT | 25.00 | | | | | 1 | | | 1 | | | | | | | | | | |
| G-46 | 509 | 26+98.84 (WARNER RD) | 28+21.81 (WARNER RD) | RT | 100.00 | | | | | 1 | | | | | | | | | | | | | |
| G-47 | 509 | 26+88.48 (WARNER RD) | 28+45.93 (WARNER RD) | LT | 75.00 | | | | | 1 | | | | 1 | | | | | | | | | |
| G-48 | 473 | 494+54.51 (NB I.R. 77) | 494+84.83 (NB I.R. 77) | LT | | | | | | | | | | | | | | 1 | | | | | |
| G-49 | 455 , 457 | 389+73.71 (I.R. 77) | 393+85.00 (I.R. 77) | LT | 400.00 | | | | | | 1 | | 1 | | | | | | | | | | |
| REFLECTORS | | | | | | | | | | | | | | | | | | | | | | | |
| | 453 - 469 | 371+50.00 (I.R. 77) | G-15 | LT | | | | | | | | | | | | | | | 103 | | 11 | | |
| | 453 - 472 | 371+50.00 (I.R. 77) | G-12 | RT | | | | | | | | | | | | | | | 104 | | 4 | | |
| | 481 | 241+20.00 (I.R. 277/224) | 242+80.00 (I.R. 277/224) | LT/RT | | | | | | | | | | | | | | | 6 | | | | |
| | 455 - 457 | G-1 | B-1 | RT | | | | | | | | | | | | | | | 1 | | 7 | | |
| | 457 | B-2 | G-2 | LT | | | | | | | | | | | | | | | 1 | | 3 | | |
| | 459 - 465 | G-3 | G-7 | RT | | | | | | | | | | | | | | | 4 | | 36 | | |
| | 459 - 465 | G-4 | G-8 | LT | | | | | | | | | | | | | | | 4 | | 42 | | |
| | 467 - 469 | G-9 | B-3 | RT | | | | | | | | | | | | | | | 1 | | 8 | | |
| | 469 | G-10 | G-11 | LT | | | | | | | | | | | | | | | 1 | | 6 | | |
| | 473 | G-13 | B-7 | RT | | | | | | | | | | | | | | | 1 | | 4 | | |
| | 473 - 475 | G-48 | G-14 | LT | | | | | | | | | | | | | | | 1 | | 20 | | |
| | 477 | G-15A | | RT | | | | | | | | | | | | | | | | | 2 | | |
| | 478 | B-9 | G-26 | LT | | | | | | | | | | | | | | | 2 | | 3 | | |
| | 478 - 479 | B-11 | G-17 | LT | | | | | | | | | | | | | | | 1 | | 3 | | |
| | 480 | G-18 | | RT | | | | | | | | | | | | | | | | | 9 | | |
| | 482 | G-19 | | RT | | | | | | | | | | | | | | | | | 3 | | |
| | 482 - 483 | G-20 | | LT | | | | | | | | | | | | | | | | | 9 | | |
| | 483 | G-21 | | RT | | | | | | | | | | | | | | | | | 2 | | |
| | 484 | G-20A | | LT | | | | | | | | | | | | | | | | | 1 | | |
| | 485 - 487 | G-22 | | LT | | | | | | | | | | | | | | | | | 33 | | |
| | 488 - 489 | G-23 | | LT | | | | | | | | | | | | | | | | | 20 | | |
| | 488 - 489 | G-24 | | RT | | | | | | | | | | | | | | | | | 11 | | |
| | 490 | G-25 | | LT | | | | | | | | | | | | | | | | | 20 | | |
| | 492 - 493 | G-27 | G-28 | LT | | | | | | | | | | | | | | | | | 14 | | |
| | 492 - 493 | B-13 | G-28A | RT | | | | | | | | | | | | | | | 3 | | 5 | | |
| | 493 - 494 | G-29 | | LT | | | | | | | | | | | | | | | | | 5 | | |
| | 493 - 494 | G-30 | | RT | | | | | | | | | | | | | | | | | 8 | | |
| | 494 | G-31 | | LT | | | | | | | | | | | | | | | | | 12 | | |
| | 494 | B-14 | | RT | | | | | | | | | | | | | | | 10 | | | | |
| | 495 - 496 | G-32 | | RT | | | | | | | | | | | | | | | | | 14 | | |
| | 497 - 499 | G-33 | | RT | | | | | | | | | | | | | | | | | 34 | | |
| | 497 - 498 | G-34 | | LT | | | | | | | | | | | | | | | | | 9 | | |
| | 500 | G-35 | | RT | | | | | | | | | | | | | | | | | 6 | | |
| | 500 | G-36 | B-15 | RT | | | | | | | | | | | | | | | 2 | | 4 | | |
| | 502 - 503 | G-37 | G-16 | RT | | | | | | | | | | | | | | | 12 | | 32 | | |
| | 502 - 503 | G-38 | G-39 | LT | | | | | | | | | | | | | | | 9 | | 10 | | |
| | 504 - 506 | G-42 | | RT | | | | | | | | | | | | | | | | | 27 | | |
| | 504 - 505 | G-43 | | LT | | | | | | | | | | | | | | | | | 13 | | |
| | 509 | G-44 | G-46 | RT | | | | | | | | | | | | | | | | 2 | | 3 | |
| | 509 | G-45 | G-47 | LT | | | | | | | | | | | | | | | | 2 | | 3 | |
| **TOTALS CARRIED TO SUBSUMMARY SHEET** | | | | **407** | 1174 | 600 | 50 | | | 4 | 1 | 1 | 4 | 1 | | | 1 | | 266 | 4 | 450 | 6 | |

CALCULATED CJC
CHECKED PJF

# ESTIMATED QUANTITIES

SUM-77 / 277 / 224
VARIOUS



D:\2017\2017258\ProjetData\SUM\06002\Design\Roadway\Sheets\06002_G001.dgn Sheet 1/6/2021 2:03:01 PM pfry

| REF. NO. | SHEET NO. | STATION FROM | STATION TO | SIDE | 202 GUARDRAIL REMOVED FT | 202 CABLE BARRIER REMOVED FT |
|---|---|---|---|---|---|---|
| GR-1 | 457 | 391+64.60 (I.R. 77) | 393+83.82 (I.R. 77) | RT | 222 | |
| GR-2 | 457 | 394+53.25 (I.R. 77) | 396+70.61 (I.R. 77) | LT | 218 | |
| GR-2A | 457 | 399+29.71 (I.R. 77) | 399+61.46 (I.R. 77) | LT/RT | 32 | |
| GR-3 | 457 , 459 , 461 | 400+57.96 (I.R. 77) | 420+85.10 (I.R. 77) | LT | | 2027 |
| GR-4 | 459 | 409+23.14 (I.R. 77) | 412+49.28 (I.R. 77) | RT | 327 | |
| GR-5 | 461 | 417+32.05 (I.R. 77) | 425+79.05 (I.R. 77) | LT | 848 | |
| GR-5A | 461 | 418+21.43 (I.R. 77) | 425+31.61 (I.R. 77) | RT | 711 | |
| GR-6 | 461 | 422+18.57 (I.R. 77) | 425+50.77 (I.R. 77) | RT | 333 | |
| GR-7 | 461 | 424+01.54 (I.R. 77) | 425+63.08 (I.R. 77) | LT | 162 | |
| GR-8 | 461 , 463 | 427+28.93 (I.R. 77) | 429+27.50 (I.R. 77) | RT | 201 | |
| GR-9 | 461 , 463 | 426+68.43 (I.R. 77) | 428+64.11 (I.R. 77) | LT | 199 | |
| GR-10 | 461 , 463 | 426+36.86 (I.R. 77) | 429+13.66 (I.R. 77) | RT | 278 | |
| GR-11 | 461 , 463 | 426+84.09 (I.R. 77) | 429+46.73 (I.R. 77) | LT | 263 | |
| GR-12 | 463 | 430+67.48 (I.R. 77) | 435+53.23 (I.R. 77) | RT | 489 | |
| GR-13 | 463 | 431+05.31 (I.R. 77) | 438+65.08 (I.R. 77) | LT | 757 | |
| GR-14 | 463 | 430+90.52 (I.R. 77) | 432+98.00 (I.R. 77) | LT | 209 | |
| GR-15 | 465 | 441+23.87 (I.R. 77) | 446+08.86 (I.R. 77) | RT | 488 | |
| GR-16 | 465 | 441+38.04 (I.R. 77) | 446+70.42 (I.R. 77) | LT | 530 | |
| GR-17 | 465 , 467 | 449+77.10 (I.R. 77) | 451+78.85 (I.R. 77) | RT | 196 | |
| GR-18 | 465 , 467 | 450+11.23 (I.R. 77) | 451+87.02 (I.R. 77) | RT | 170 | |
| GR-19 | 469 | 465+31.73 (I.R. 77) | 469+47.29 (I.R. 77) | RT | 416 | |
| GR-20 | 469 | 467+84.00 (I.R. 77) | 468+69.58 (I.R. 77) | RT | 86 | |
| GR-21 | 469 | 469+62.07 (SB I.R. 77) | 470+67.58 (SB I.R. 77) | LT | 106 | |
| GR-22 | 469 | 468+85.82 (I.R. 77) | 472+85.31 (SB I.R. 77) | LT | 404 | |
| GR-23 | 472 | 477+73.18 (NB I.R. 77) | 480+10.90 (NB I.R. 77) | LT | 238 | |
| GR-24 | 473 | 489+67.54 (NB I.R. 77) | 490+92.73 (NB I.R. 77) | RT | 127 | |
| GR-25 | 474 - 475 | 507+81.44 (NB I.R. 77) | 514+85.00 (NB I.R. 77) | LT | 706 | |
| GR-26 | 478 - 479 | 508+71.58 (SB I.R. 77) | 514+95.00 (SB I.R. 77) | RT | 623 | |
| GR-27 | 478 - 479 | 509+26.38 (SB I.R. 77) | 512+64.32 (SB I.R. 77) | LT | 344 | |
| GR-28 | 480 | 223+25.02 (I.R. 277/224) | 230+07.75 (I.R. 277/224) | RT | 682 | |
| GR-28A | 481 | 235+97.60 (I.R. 277/224) | 238+00.92 (I.R. 277/224) | RT | 204 | |
| GR-29 | 482 | 247+69.22 (I.R. 277/224) | 250+85.44 (I.R. 277/224) | RT | 317 | |
| GR-30 | 482 - 483 | 257+10.03 (I.R. 277/224) | 262+03.66 (I.R. 277/224) | LT | 494 | |
| GR-30A | 484 | 279+50.47 (I.R. 277/224) | 279+81.23 (I.R. 277/224) | LT | 32 | |
| GR-31 | 485 - 487 | 481+51.60 (SB I.R. 77) | 108+60.29 (RAMP A) | LT | 2701 | |
| GR-32 | 486 | 95+97.00 (RAMP A) | 103+74.62 (RAMP A) | RT | 800 | |
| GR-33 | 488 - 489 | 203+66.73 (RAMP B) | 214+90.00 (RAMP B) | RT/LT | 1124 | |
| GR-34 | 489 | 208+46.49 (RAMP B) | 212+84.68 (RAMP B) | RT | 452 | |
| GR-35 | 490 | 501+98.59(SB I.R. 77) | 421+31.97 (RAMP B-1) | LT | 1882 | |
| GR-36A | 492 | 289+99.41 (RAMP B-2) | 291+51.12 (RAMP B-2) | RT | 153 | |
| **TOTALS CARRIED TO SUBSUMMARY SHEET** | | | | **407** | 18524 | 2027 |

CALCULATED CJC
CHECKED PJF

# ESTIMATED QUANTITIES

SUM-77 / 277 / 224
VARIOUS

426
1288

D:\2017\2017258\ProjectData\SUM\106002\Design\Roadway\Sheets\106002_GQ02.dgn Sheet 1/16/2021 12:03:03 PM pfry

| REF. NO. | SHEET NO. | STATION FROM | STATION TO | SIDE | 202 GUARDRAIL REMOVED | 202 CABLE BARRIER REMOVED | | | | | | | | | | | | | | | | |
|---|---|---|---|---|---|---|---|---|---|---|---|---|---|---|---|---|---|---|---|---|---|---|
| | | | | | FT | FT | | | | | | | | | | | | | | | | |
| GR-36 | 490 | 409+34.76 (RAMP B-1) | 416+90.65 (RAMP B-1) | RT | 804 | | | | | | | | | | | | | | | | | |
| GR-37 | 493 - 494 | 298+30.38 (RAMP B-2) | 307+94.03 (RAMP B-2) | RT/LT | 966 | | | | | | | | | | | | | | | | | |
| GR-38 | 493 - 494 | 306+15.37 (RAMP B-2) | 7+69.82 (RAMP B-2) | RT | 250 | | | | | | | | | | | | | | | | | |
| GR-39 | 494 | 9+94.28 (RAMP B-2) | 12+96.47 (RAMP B-2) | RT | 323 | | | | | | | | | | | | | | | | | |
| GR-40 | 494 - 495 | 9+73.83 (RAMP B-2) | 21+32.09 (RAMP B-2) | LT | 1164 | | | | | | | | | | | | | | | | | |
| GR-41 | 495 - 496 | 24+05.10 (RAMP B-2) | 33+81.95 (RAMP B-2) | RT | 977 | | | | | | | | | | | | | | | | | |
| GR-42 | 497 - 499 | 578+55.92 (RAMP C) | 279+50.00 (I.R. 277/224) | RT | 2989 | | | | | | | | | | | | | | | | | |
| GR-43 | 497 - 498 | 583+77.93 (RAMP C) | 591+80.23 (RAMP C) | LT | 814 | | | | | | | | | | | | | | | | | |
| GR-44 | 500 | 679+57.99 (RAMP C-1) | 686+24.97 (RAMP C-1) | RT | 646 | | | | | | | | | | | | | | | | | |
| GR-45 | 500 | 684+20.18 (RAMP C-1) | 693+38.64 (RAMP C-1) | LT | 1017 | | | | | | | | | | | | | | | | | |
| GR-46 | 500 | 697+14.82 (RAMP C-1) | 698+66.02 (RAMP C-1) | RT | 152 | | | | | | | | | | | | | | | | | |
| GR-47 | 500 | 700+24.92 (RAMP C-1) | 502+74.57 (NB I.R. 77) | RT | 246 | | | | | | | | | | | | | | | | | |
| GR-48 | 502 | 596+71.47 (RAMP C) | 789+56.23 (RAMP C-2) | RT/LT | 841 | | | | | | | | | | | | | | | | | |
| GR-49 | 502 | 785+93.94 (RAMP C-2) | 789+41.06 (RAMP C-2) | LT | 367 | | | | | | | | | | | | | | | | | |
| GR-50 | 503 | 791+63.57 (RAMP C-2) | 793+47.91 (RAMP C-2) | LT | 189 | | | | | | | | | | | | | | | | | |
| GR-51 | 503 | 792+21.88 (RAMP C-2) | 795+73.23 (RAMP C-2) | RT | 351 | | | | | | | | | | | | | | | | | |
| GR-52 | 503 | 799+71.29 (RAMP C-2) | 502+58.32 (SB I.R. 77) | RT | 287 | | | | | | | | | | | | | | | | | |
| GR-53 | 504 - 506 | 889+38.43 (RAMP D) | 914+89.19 (RAMP D) | RT | 2538 | | | | | | | | | | | | | | | | | |
| GR-54 | 504 - 505 | 896+13.82 (RAMP D) | 905+19.37 (RAMP D) | LT | 915 | | | | | | | | | | | | | | | | | |
| GR-55 | 509 | 27+31.88 (WARNER RD) | 28+21.81 (WARNER RD) | RT | 91 | | | | | | | | | | | | | | | | | |
| GR-56 | 483 | 261+34.45 (I.R. 277/224) | 261+96.50 (I.R. 277/224) | RT | 63 | | | | | | | | | | | | | | | | | |
| GR-57 | 455 , 457 | 389+77.05 (I.R. 77) | 392+02.08 (I.R. 77) | LT | 226 | | | | | | | | | | | | | | | | | |
| TOTALS CARRIED TO SUBSUMMARY SHEET | | | | 407 | 16216 | | | | | | | | | | | | | | | | | |

CALCULATED CJC
CHECKED PJF

# ESTIMATED QUANTITIES

SUM-77 / 277 / 224
VARIOUS



O:\2017\2017258\ProjectData\SUM\06002\Design\Roadway\Sheets\06002_G0013.dgn Sheet 1/16/2021 2:03:04 PM pfry

| REF. NO. | SHEET NO. | STATION FROM | STATION TO | SIDE | | 202 HEADWALL REMOVED EA | | 602 CONCRETE MASONRY CY | | | | | | | | | | | | | | |
|---|---|---|---|---|---|---|---|---|---|---|---|---|---|---|---|---|---|---|---|---|---|---|
| HR-4 | 459 | 405+03.96 (I.R. 77) | | RT. | | 1 | | | | | | | | | | | | | | | | |
| HR-5 | 459 | 412+11.76 (I.R. 77) | | RT | | 1 | | | | | | | | | | | | | | | | |
| HR-7 | 461 | 419+04.88 (I.R. 77) | | LT | | 1 | | | | | | | | | | | | | | | | |
| HR-8 | 461 | 425+19.64 (I.R. 77) | | LT | | 1 | | | | | | | | | | | | | | | | |
| HR-9 | 461 | 427+22.50 (I.R. 77) | | LT | | 1 | | | | | | | | | | | | | | | | |
| HR-10 | 463 | 428+98.36 (I.R. 77) | | LT | | 1 | | | | | | | | | | | | | | | | |
| HR-11 | 463 | 431+96.79 (I.R. 77) | | LT | | 1 | | | | | | | | | | | | | | | | |
| HR-13 | 463 | 436+02.13 (I.R. 77) | | LT | | 1 | | | | | | | | | | | | | | | | |
| HR-15 | 465 | 444+01.51 (I.R. 77) | | LT | | 1 | | | | | | | | | | | | | | | | |
| HR-16 | 465 | 450+01.01 (I.R. 77) | | RT | | 1 | | | | | | | | | | | | | | | | |
| HR-17 | 467 | 458+01.27 (I.R. 77) | | RT | | 1 | | | | | | | | | | | | | | | | |
| HR-27 | 477 | 490+98.85 (SB I.R. 77) | | LT | | 1 | | | | | | | | | | | | | | | | |
| HR-32 | 477 | 494+49.55 (SB I.R. 77) | | LT | | 1 | | | | | | | | | | | | | | | | |
| HR-33 | 474 | 504+50.80 (NB I.R. 77) | | LT | | 1 | | | | | | | | | | | | | | | | |
| HR-34 | 503 | 797+24.43 (RAMP C-2) | | RT | | 1 | | | | | | | | | | | | | | | | |
| HR-35 | 478 | 503+99.81 (SB I.R. 77) | | RT | | 1 | | | | | | | | | | | | | | | | |
| HR-36 | 496 | 31+86.07 (RAMP B-2) | | RT | | 1 | | | | | | | | | | | | | | | | |
| HR-38 | 495 | 24+98.76 (RAMP B-2) | | RT | | 1 | | | | | | | | | | | | | | | | |
| HR-40 | 488 | 15+41.24 (RAMP B-2) | | RT | | 1 | | | | | | | | | | | | | | | | |
| HR-41 | 488 | 14+96.76 (RAMP B-2) | | RT | | 1 | | | | | | | | | | | | | | | | |
| HW-5 | 459 | 405+04.00 (I.R. 77) | | RT | | | | 0.39 | | | | | | | | | | | | | | |
| HW-7 | 459 | 412+11.50 (I.R. 77) | | RT | | | | 0.27 | | | | | | | | | | | | | | |
| HW-9 | 461 | 419+05.00 (I.R. 77) | | LT | | | | 0.27 | | | | | | | | | | | | | | |
| HW-11 | 461 | 425+00.00 (I.R. 77) | | LT | | | | 0.27 | | | | | | | | | | | | | | |
| HW-12 | 463 | 428+50.00 (I.R. 77) | | LT | | | | 0.27 | | | | | | | | | | | | | | |
| HW-14 | 463 | 432+50.00 (I.R. 77) | | LT | | | | 0.27 | | | | | | | | | | | | | | |
| HW-16 | 463 | 436+02.00 (I.R. 77) | | LT | | | | 0.27 | | | | | | | | | | | | | | |
| HW-18 | 465 | 444+10.00 (I.R. 77) | | LT | | | | 0.27 | | | | | | | | | | | | | | |
| HW-20 | 465 | 450+01.00 (I.R. 77) | | RT | | | | 0.27 | | | | | | | | | | | | | | |
| HW-22 | 467 | 458+10.00 (I.R. 77) | | RT | | | | 0.46 | | | | | | | | | | | | | | |
| HW-25 | 469 | 468+75.00 (I.R. 77) | | LT. | | | | 0.46 | | | | | | | | | | | | | | |
| HW-26 | 469 | 469+75.00 (SB I.R. 77) | | LT | | | | 0.46 | | | | | | | | | | | | | | |
| HW-28 | 477 | 91+92.43 (RAMP A) | | LT | | | | 0.92 | | | | | | | | | | | | | | |
| HW-39 | 488 | 206+00.00 (RAMP B) | | LT | | | | 0.27 | | | | | | | | | | | | | | |
| HW-42 | 477 | 93+94.24 (RAMP A) | | LT | | | | 0.27 | | | | | | | | | | | | | | |
| HW-43 | 503 | 794+95.02 (RAMP C-2) | | RT | | | | 0.27 | | | | | | | | | | | | | | |
| HW-44 | 494 | 307+74.41 (RAMP B-2) | | LT | | | | 0.27 | | | | | | | | | | | | | | |
| HW-45 | 503 | 793+25.64 (RAMP C-2) | | LT | | | | 0.27 | | | | | | | | | | | | | | |
| HW-46 | 461 | 427+40.06 (I.R. 77) | | LT | | | | 0.27 | | | | | | | | | | | | | | |
| HW-47 | 463 | 431+63.18 (I.R. 77) | | LT | | | | 0.27 | | | | | | | | | | | | | | |
| HW-48 | 461 | 426+72.66 (I.R. 77) | | RT | | | | 0.27 | | | | | | | | | | | | | | |
| HW-49 | 463 | 431+06.54 (I.R. 77) | | RT | | | | 0.27 | | | | | | | | | | | | | | |
| HW-50 | 495 | 25+00.81 (RAMP B-2) | | RT | | | | 0.27 | | | | | | | | | | | | | | |
| HW-51 | 496 | 31+85.70 (RAMP B-2) | | RT | | | | 0.27 | | | | | | | | | | | | | | |
| HW-54 | 488 | 206+50.00 (RAMP B) | | LT | | | | 0.33 | | | | | | | | | | | | | | |
| HW-70 | 504 | 890+50.00 (RAMP D) | | RT | | | | 0.6 | | | | | | | | | | | | | | |
| HW-71 | 504 | 891+38.08 (RAMP D) | | RT | | | | 0.6 | | | | | | | | | | | | | | |
| TOTALS CARRIED TO SUBSUMMARY SHEET | | | | 407<br>409 | | 20 | | 9.4 | | | | | | | | | | | | | | |

CALCULATED CJC
CHECKED PJF

# ESTIMATED QUANTITIES

SUM-77 / 277 / 224
VARIOUS

428
1288

0:\2017\2017258\ProjectData\SUM\106002\Design\Roadway\Sheets\106002_G0006.dgn Sheet 1/6/2021 2:03:05 PM pfry

| REF. NO. | SHEET NO. | STATION FROM | STATION TO | SIDE | 611 15" CONDUIT, TYPE B FT | 611 CONDUIT, BORED OR JACKED, 15", TYPE B, 748.06 FT | | 611 15" CONDUIT, TYPE F FT | 611 18" CONDUIT, TYPE B FT | 611 18" CONDUIT, TYPE C FT | | 611 21" CONDUIT, TYPE B FT | | 611 24" CONDUIT, TYPE A FT | 611 CONDUIT, BORED OR JACKED, 24", TYPE B, 748.06 FT | | 611 36" CONDUIT, TYPE B FT | 611 36" CONDUIT, TYPE C FT | 611 CONDUIT, BORED OR JACKED, 42", TYPE B, 748.06 FT | | 602 CONCRETE MASONRY CY | |
|---|---|---|---|---|---|---|---|---|---|---|---|---|---|---|---|---|---|---|---|---|---|---|
| HW-102 | 465 | 446+50.00 (I.R. 77) | | LT | | | | | | | | | | | | | | | | | | 0.76 | |
| HW-105 | 480 | 231+55.13 (I.R. 277) | | RT | | | | | | | | | | | | | | | | | | 0.33 | |
| HW-106 | 497 | 583+65.35 (RAMP C) | | RT | | | | | | | | | | | | | | | | | | 0.27 | |
| HW-112 | 465 | 445+85.63 (I.R. 77) | | LT | | | | | | | | | | | | | | | | | | 0.76 | |
| HW-115 | 480 | 231+05.28 (I.R. 277) | | RT | | | | | | | | | | | | | | | | | | 0.33 | |
| HW-116 | 497 | 584+20.81 (RAMP C) | | RT | | | | | | | | | | | | | | | | | | 0.27 | |
| P-1 | 457 | D-1 | D-2 | LT | 250 | | | | | | | | | | | | | | | | | | |
| P-2 | 457 | D-2 | D-3 | LT | | | | | 250 | | | | | | | | | | | | | | |
| P-3 | 457 | D-3 | D-4 | LT | | | | | 250 | | | | | | | | | | | | | | |
| P-4 | 457 , 459 | D-4 | D-5 | LT | | | | | 254 | | | | | | | | | | | | | | |
| P-5 | 459 | D-5 | HW-5 | RT | | | | | | | | 110 | | | | | | | | | | | |
| P-6 | 459 | D-6 | D-7 | LT | 312 | | | | | | | | | | | | | | | | | | |
| P-7 | 459 | D-7 | P-7A | RT | 88 | | | | | | | | | | | | | | | | | | |
| P-7A | 459 | P-7 | HW-7 | RT | | | | 44 | | | | | | | | | | | | | | | |
| P-8 | 461 | D-8 | D-9 | LT | 305 | | | | | | | | | | | | | | | | | | |
| P-9 | 461 | D-9 | P-9A | LT | 73 | | | | | | | | | | | | | | | | | | |
| P-9A | 461 | P-9 | HW-9 | LT | | | | 38 | | | | | | | | | | | | | | | |
| P-10 | 461 | D-10 | D-64 | LT | 118 | | | | | | | | | | | | | | | | | | |
| P-11 | 461 | D-11 | P-11A | LT | | 76 | | | | | | | | | | | | | | | | | |
| P-11A | 461 | P-11 | HW-11 | LT | | | | 33 | | | | | | | | | | | | | | | |
| P-12 | 463 | D-12 | P-12A | LT | | 76 | | | | | | | | | | | | | | | | | |
| P-12A | 463 | P-12 | HW-12 | LT | | | | 55 | | | | | | | | | | | | | | | |
| P-13 | 463 | D-13 | D-14 | RT | 100 | | | | | | | | | | | | | | | | | | |
| P-14 | 463 | D-14 | P-14A | LT | | 81 | | | | | | | | | | | | | | | | | |
| P-14A | 463 | P-14 | HW-14 | LT | | | | 38 | | | | | | | | | | | | | | | |
| P-15 | 463 | D-15 | D-14 | RT | 100 | | | | | | | | | | | | | | | | | | |
| P-16 | 463 | D-16 | P-16A | LT | 79 | | | | | | | | | | | | | | | | | | |
| P-16A | 463 | P-16 | HW-16 | LT | | | | 41 | | | | | | | | | | | | | | | |
| P-17 | 463 | D-17 | D-16 | RT | 298 | | | | | | | | | | | | | | | | | | |
| P-18 | 465 | D-18 | HW-18 | LT | | 107 | | | | | | | | | | | | | | | | | |
| P-19 | 465 | D-19 | D-18 | RT | 290 | | | | | | | | | | | | | | | | | | |
| P-20 | 465 | D-20 | HW-20 | RT | 102 | | | | | | | | | | | | | | | | | | |
| P-21 | 465 , 467 | D-21 | D-20 | RT | 298 | | | | | | | | | | | | | | | | | | |
| P-22 | 467 | D-22 | HW-22 | RT | | | | | | | | | | | 102 | | | | | | | | |
| P-23 | 467 | D-23 | D-22 | RT | | | | | | | | 290 | | | | | | | | | | | |
| P-24 | 467 , 469 | D-24 | D-23 | RT | | | | | 300 | | | | | | | | | | | | | | |
| P-25 | 469 | D-25 | D-24 | RT | 375 | | | | | | | | | | | | | | | | | | |
| P-26 | 469 | HW-26 | HW-25 | LT | | | | | | | | | | 103 | | | | | | | | | |
| P-26A | 492 | D-26 | DJ-1 | LT | | | | | | | | 56 | | | | | | | | | | | |
| P-27 | 492 | D-27 | D-28 | LT | | | | | | 71 | | | | | | | | | | | | | |
| P-28 | 477 | D-28 | HW-28 | LT | | | | | | | | | | | | | | | | 199 | | | |
| P-29 | 492 | D-29 | D-30 | LT/RT | | | | | | | | | | | | | | 44 | | | | | |
| P-30 | 492 | D-30 | D-28 | LT | | | | | | | | | | | | | | | 65 | | | | |
| **TOTALS CARRIED TO SUBSUMMARY SHEET** | | | | **409** | 2788 | 340 | | 249 | 1054 | 71 | | 456 | | 103 | 102 | | 44 | 65 | 199 | | 2.8 | | |

CALCULATED CJC
CHECKED PJF

# ESTIMATED QUANTITIES

SUM-77 / 277 / 224
VARIOUS

REVISIONS

| NO. | DATE | DESCRIPTION |
|---|---|---|
| 6 | 04/26/21 | REVISED CONDUITS, BORED OR JACKED |

429
1288

0:\2017\2017258\ProjectData\SUM\106002\Design\Roadway\Sheets\106002_G0003.dgn Sheet 4/26/2021 10:15:06 AM pfry

| REF. NO. | SHEET NO. | STATION FROM | STATION TO | SIDE | 611 15" CONDUIT, TYPE B FT | 611 CONDUIT, BORED OR JACKED, 15", TYPE B, 748.06 FT | 611 15" CONDUIT, TYPE C FT | 611 15" CONDUIT, TYPE F FT | 611 15" CONDUIT, TYPE B, 706.02 FT | 611 18" CONDUIT, TYPE C FT | 611 18" CONDUIT, TYPE F FT | 611 21" CONDUIT, TYPE B FT | 611 21" CONDUIT, TYPE C FT | 611 24" CONDUIT, TYPE B FT | | 611 30" CONDUIT, TYPE B FT | 611 30" CONDUIT, TYPE C FT | 611 24" CONDUIT, TYPE B, 706.02 FT | 611 36" CONDUIT, TYPE C FT | 611 CONDUIT, BORED OR JACKED, 18", TYPE B, 748.06 FT | 611 CONDUIT, MISC.: 18", TYPE B, 748.06, OPEN CUT FT | |
|---|---|---|---|---|---|---|---|---|---|---|---|---|---|---|---|---|---|---|---|---|---|---|
| P-31 | 473 | D-31 | D-29 | LT | | | | | | | | 98 | | | | | | | | | | |
| P-32 | 492 | D-32 | D-40 | LT | 75 | | | | | | | | | | | | | | | | | |
| P-33 | 492 | D-33 | D-29 | RT | | | | | | | | | | | | 183 | | | | | | |
| P-34 | 500 | D-34 | D-33 | RT | | | | | | | | | | 101 | | | | | | | | |
| P-35 | 493 | D-35 | D-41 | RT | 244 | | | | | | | | | | | | | | | | | |
| P-36 | 493 | D-36 | D-37 | LT/RT | 152 | | | | | | | | | | | | | | | | | |
| P-37 | 478 | D-37 | D-38 | RT | | | 250 | | | | | | | | | | | | | | | |
| P-38 | 478 | D-38 | 503+99.77 (I.R. 77) | RT | | | | | | | | | | | | | | 8 | | | | |
| P-39 | 488 | D-39 | P-39A | RT | 30 | | | | | | | | | | | | | | | | | |
| P-39A | 488 | P-39 | HW-39 | LT | | | | 62 | | | | | | | | | | | | | | |
| P-40 | 492 | D-40 | D-30 | LT | 79 | | | | | | | | | | | | | | | | | |
| P-41 | 493 | D-41 | D-33 | RT | 58 | | | | | | | | | | | | | | | | | |
| P-42 | 477 | D-42 | P-42A | LT/RT | | 120 | | | | | | | | | | | | | | | | |
| P-42A | 477 | P-42 | HW-42 | LT | | | | 35 | | | | | | | | | | | | | | |
| P-43 | 503 | D-43 | HW-43 | RT | | | | 43 | | | | | | | | | | | | | | |
| P-44 | 494 | D-44 | HW-44 | LT | | | | 45 | | | | | | | | | | | | | | |
| P-45 | 503 | D-45 | HW-45 | LT | | | 22 | | | | | | | | | | | | | | | |
| P-46 | 461 | D-46 | HW-46 | LT | | | | 51 | | | | | | | | | | | | | | |
| P-47 | 463 | D-47 | HW-47 | LT | | | | 41 | | | | | | | | | | | | | | |
| P-48 | 461 | D-48 | HW-48 | RT | | | | 47 | | | | | | | | | | | | | | |
| P-49 | 463 | D-49 | HW-49 | RT | | | | 41 | | | | | | | | | | | | | | |
| P-50 | 495 | 24+94.84 (RAMP B-2) | HW-38 | RT | 87 | | | | | | | | | | | | | | | | | |
| P-51 | 496 | 31+73.91 (RAMP B-2) | P-51A | RT | 7 | | | | | | | | | | | | | | | | | |
| P-51A | 496 | P-51A | HW-51 | RT | | | | 51 | | | | | | | | | | | | | | |
| P-54 | 494 , 488 | D-54 | P-54A | LT/RT | | | | | | | | | | | | | | | | | 155 | 22 |
| P-54A | 488 | P-54 | HW-54 | LT | | | | | | | 40 | | | | | | | | | | | |
| P-55 | 472 | D-55 | D-26 | LT | | | | | | | | | 297 | | | | | | | | | |
| P-56 | 453 | D-56 | 376+06.22 (I.R. 77) | LT | | | | | 9 | | | | | | | | | | | | | |
| P-57 | 469 | D-57 | D-58 | LT | 5 | | | | | | | | | | | | | | | | | |
| P-58 | 469 | D-58 | D-60 | LT | 140 | | | | | | | | | | | | | | | | | |
| P-59 | 469 | D-59 | D-60 | LT | 5 | | | | | | | | | | | | | | | | | |
| P-60 | 469 | D-60 | D-61 | RT | 190 | | | | | | | | | | | | | | | | | |
| P-61 | 469 | D-61 | D-25 | RT | 26 | | | | | | | | | | | | | | | | | |
| P-62 | 467 | D-62 | D-21 | RT | 250 | | | | | | | | | | | | | | | | | |
| P-63 | 461 , 463 | D-63 | D-12 | LT | 110 | | | | | | | | | | | | | | | | | |
| P-64 | 461 | D-64 | D-11 | LT | 182 | | | | | | | | | | | | | | | | | |
| P-70 | 504 | HW-70 | D-70 | RT | | | | | | | | | | | | | 59 | | | | | |
| P-71 | 504 | D-70 | HW-71 | RT | | | | | | | | | | | | | 31 | | | | | |
| P-102 | 465 | HW-102 | HW-112 | LT | | | | | | | | | | | | | | | | 65 | | |
| P-105 | 480 | HW-105 | HW-115 | RT | | | | | | 50 | | | | | | | | | | | | |
| P-106 | 497 | HW-106 | HW-116 | RT | | | 55 | | | | | | | | | | | | | | | |
| TOTALS CARRIED TO SUBSUMMARY SHEET | | | | 409 | 1640 | 120 | 327 | 416 | 9 | 50 | 40 | 98 | 297 | 101 | | 183 | 90 | 8 | 65 | 155 | 22 | |

CALCULATED CJC
CHECKED PJF

# ESTIMATED QUANTITIES

SUM-77 / 277 / 224
VARIOUS



0:\2017\2017258\ProjectData\SUM\106002\Design\Roadway\Sheets\106002_G0004.dgn Sheet 1/16/2021 2:03:07 PM pfry

| REF. NO. | SHEET NO. | STATION FROM | STATION TO | SIDE | | 202 PIPE REMOVED, 24" AND UNDER FT | 202 PIPE REMOVED, OVER 24" FT | | 202 GUTTER REMOVED SY | | 611 MANHOLE ADJUSTED TO GRADE, AS PER PLAN (SANITARY) EACH | 611 MANHOLE, NO. 3 (SANITARY) EACH | 611 MANHOLE, NO. 3, AS PER PLAN (SANITARY) EACH | 611 27" CONDUIT, TYPE C, 707.48 (SANITARY) FT | | | | | | | |
|---|---|---|---|---|---|---|---|---|---|---|---|---|---|---|---|---|---|---|---|---|---|
| PR-1 | 457 | DR-1 | DR-2 | LT | | 390 | | | | | | | | | | | | | | | |
| PR-2 | 457 | DR-2 | DR-3 | LT | | 94 | | | | | | | | | | | | | | | |
| PR-3 | 457 , 459 | DR-3 | DR-4 | LT | | 501 | | | | | | | | | | | | | | | |
| PR-4 | 459 | DR-4 | HR-4 | RT | | 111 | | | | | | | | | | | | | | | |
| PR-5 | 459 | DR-5 | HR-5 | LT/RT | | 131 | | | | | | | | | | | | | | | |
| PR-6 | 461 | DR-6 | DR-7 | LT/RT | | 27 | | | | | | | | | | | | | | | |
| PR-7 | 461 | DR-7 | HR-7 | LT | | 98 | | | | | | | | | | | | | | | |
| PR-8 | 461 | FP-8 | HR-8 | LT | | 27 | | | | | | | | | | | | | | | |
| PR-9 | 461 | FP-9 | HR-9 | LT | | 45 | | | | | | | | | | | | | | | |
| PR-10 | 463 | FP-10 | HR-10 | LT | | 37 | | | | | | | | | | | | | | | |
| PR-11 | 463 | DR-11 | FP-11 | LT | | 12 | | | | | | | | | | | | | | | |
| PR-11A | 463 | FP-11 | HR-11 | LT | | 34 | | | | | | | | | | | | | | | |
| PR-12 | 463 | DR-12 | DR-13 | LT/RT | | 26 | | | | | | | | | | | | | | | |
| PR-13 | 463 | DR-13 | HR-13 | LT | | 103 | | | | | | | | | | | | | | | |
| PR-14 | 465 | DR-14 | DR-15 | LT/RT | | 27 | | | | | | | | | | | | | | | |
| PR-15 | 465 | FP-15 | HR-15 | LT | | 12 | | | | | | | | | | | | | | | |
| PR-16 | 465 | DR-16 | HR-16 | RT | | 96 | | | | | | | | | | | | | | | |
| PR-17 | 467 | FP-17 | HR-17 | RT | | 6 | | | | | | | | | | | | | | | |
| PR-18 | 467 | DR-18 | DR-17 | LT/RT | | 27 | | | | | | | | | | | | | | | |
| PR-19 | 467 | DR-19 | DR-17 | RT | | 500 | | | | | | | | | | | | | | | |
| PR-20 | 467 | DR-20 | DR-19 | LT/RT | | 27 | | | | | | | | | | | | | | | |
| PR-21 | 467 , 469 | DR-21 | DR-19 | RT | | 500 | | | | | | | | | | | | | | | |
| PR-22 | 469 | DR-22 | DR-21 | LT/RT | | 27 | | | | | | | | | | | | | | | |
| PR-23 | 472 | DR-23 | DR-24 | LT | | 621 | | | | | | | | | | | | | | | |
| PR-24 | 492 | DR-24 | DJ-1 | LT | | 31 | | | | | | | | | | | | | | | |
| PR-25 | 476 | DR-25 | DJ-1 | RT | | 104 | | | | | | | | | | | | | | | |
| PR-27 | 477 | FP-27 | HR-27 | LT | | | 6 | | | | | | | | | | | | | | |
| PR-27A | 492 | DR-27 | FP-27 | LT/RT | | | 40 | | | | | | | | | | | | | | |
| PR-28 | 473 | DR-28 | DR-29 | LT/RT | | 112 | | | | | | | | | | | | | | | |
| PR-29 | 492 | DR-29 | DR-27 | LT | | 182 | | | | | | | | | | | | | | | |
| PR-30 | 492 | DR-30 | DR-29 | LT | | 174 | | | | | | | | | | | | | | | |
| PR-31 | 500 | DR-31 | DR-30 | LT | | 105 | | | | | | | | | | | | | | | |
| PR-32 | 477 | FP-32 | HR-32 | LT | | 8 | | | | | | | | | | | | | | | |
| PR-33 | 474 | DR-33 | HR-33 | LT | | 44 | | | | | | | | | | | | | | | |
| PR-34 | 503 | DR-34 | HR-34 | LT/RT | | 43 | | | | | | | | | | | | | | | |
| PR-35 | 478 | HR-35 | 503+99.77 (SB I.R 77) | RT | | 19 | | | | | | | | | | | | | | | |
| PR-36 | 496 | 31+83.91 (RAMP B-2) | HR-36 | RT | | 66 | | | | | | | | | | | | | | | |
| PR-37 | 495 | 24+94.84 (RAMP B-2) | DR-38 | RT | | 2 | | | | | | | | | | | | | | | |
| PR-38 | 495 | DR-38 | HR-38 | RT | | 55 | | | | | | | | | | | | | | | |
| PR-39 | 453 | DR-36 | 376+06.22 (I.R. 77) | LT | | 8 | | | | | | | | | | | | | | | |
| PR-40 | 488 , 494 | DR-40 | HR-40 | LT/RT | | 80 | | | | | | | | | | | | | | | |
| PR-41 | 488 | FP-41 | HR-41 | LT | | 14 | | | | | | | | | | | | | | | |
| R-1 | 465 | 445+19.63 (I.R. 77) | 446+01.78 (I.R. 77) | LT | | | | | 50.23 | | | | | | | | | | | | |
| R-2 | 478 - 479 | 510+71.80 (SB I.R. 77) | 211+25.80 (RAMP B) | LT/RT | | | | | 35.02 | | | | | | | | | | | | |
| SA-1 | 486 | 101+34.90 (RAMP A) | | LT | | | | | | | | | 1 | | | | | | | | |
| SA-2 | 486 | 102+00.00 (RAMP A) | | LT | | | | | | | | | 1 | | | | | | | | |
| SA-3 | 486 | 102+50.00 (RAMP A) | | LT | | | | | | | | 1 | | | | | | | | | |
| SJ-1 | 509 | 24+75.22 (WARNER RD) | | LT | | | | | | | 1 | | | | | | | | | | |
| SJ-2 | 509 | 27+24.75 (WARNER RD) | | LT | | | | | | | 1 | | | | | | | | | | |
| SP-1 | 486 | SA-1 | SA-2 | LT | | | | | | | | | | 62 | | | | | | | |
| SP-2 | 486 | SA-2 | SA-3 | LT | | | | | | | | | | 64 | | | | | | | |
| SR-1 | 486 | SA-1 | SA-3 | LT | | | 122 | | | | | | | | | | | | | | |
| TOTALS CARRIED TO SUBSUMMARY SHEET | | | | 407 409 | | 4526 | 168 | | 86 | | 2 | 1 | 2 | 126 | | | | | | | |

CALCULATED C.JC
CHECKED PJF

# ESTIMATED QUANTITIES

SUM-77 / 277 / 224
VARIOUS



0:\2017\20172581Project Data\SUM\106002\Design\Roadway\Sheets\106002_G0005.dgn Sheet 1/16/2021 2:03:08 PM pfry

| REF. NO. | SHEET NO. | STATION FROM | STATION TO | SIDE | 601 TIED CONCRETE BLOCK MAT WITH TYPE I UNDERLAYMENT SY | | 605 6" SHALLOW PIPE UNDERDRAINS WITH GEOTEXTILE FABRIC FT | | 605 6" UNCLASSIFIED PIPE UNDERDRAINS WITH GEOTEXTILE FABRIC FT | | 605 6" BASE PIPE UNDERDRAINS WITH GEOTEXTILE FABRIC FT | | 611 6" CONDUIT, TYPE B FT | | 611 6" CONDUIT, TYPE F FOR UNDERDRAIN OUTLETS FT | | 611 PRECAST REINFORCED CONCRETE OUTLET EACH | | FOR INFORMATION ONLY 6" PLUG EACH | 6" X 6" TEE EACH | 6" X 6" CROSS EACH | 6" - 90° BEND EACH |
|---|---|---|---|---|---|---|---|---|---|---|---|---|---|---|---|---|---|---|---|---|---|---|
| U-1 | 922 | 383+89.45 (I.R. 77) | U-25 | RT | | | 591 | | | | | | 48 | | | | | | 1 | 1 | | 1 |
| U-2 | 932 | 24+50.00 (WARNER RD) | U-93 | RT | | | | | 19 | | | | | | | | | | 1 | | | |
| U-3 | 932 | 425+45.00 (I.R. 77) | U-92 | LT | | | | | 40 | | | | | | | | | | 1 | 1 | | |
| U-4 | 932 | 425+40.00 (I.R. 77) | U-92 | LT | | | | | 35 | | | | | | | | | | 1 | | | 1 |
| U-5 | 932 | 425+25.00 (I.R. 77) | D-11 | LT | | | | | 20 | | | | 8 | | 5 | | | | 1 | | | 2 |
| U-6 | 932 | 425+17.00 (I.R. 77) | U-87 | RT | | | | | 17 | | | | | | | | | | 1 | 1 | | |
| U-7 | 932 | 429+13.26 (I.R. 77) | U-102 | LT | | | | | 58 | | | | | | | | | | 1 | 1 | | |
| U-8 | 932 | 429+09.41 (I.R. 77) | U-102 | LT | | | | | 54 | | | | | | | | | | 1 | | | 1 |
| U-9 | 932 | 428+98.93 (I.R. 77) | D-12 | LT | | | | | 44 | | | | 8 | | 5 | | | | 1 | | | 2 |
| U-10 | 932 | 428+93.71 (I.R. 77) | U-99 | RT | | | | | 44 | | | | | | | | | | 1 | 1 | | |
| U-11 | 932 | 428+83.33 (I.R. 77) | U-100 | RT | | | | | 42 | | | | | | | | | | 1 | 1 | | |
| U-12 | 932 | 428+79.56 (I.R. 77) | U-100 | RT | | | | | 39 | | | | | | | | | | 1 | | 1 | |
| U-13 | 927 | 693+69.53 (RAMP C-1) | U-15 | CENTER | | | | | 132 | | | | | | | | | | | 1 | | |
| U-14 | 927 | 693+62.87 (RAMP C-1) | U-211 | LT | | | | | 127 | | | | | | | | | | 1 | | | 1 |
| U-15 | 927 | 694+94.95 (RAMP C-1) | D-34 | RT | | | | | | | | | 8 | | 23 | | | | | | | 1 |
| U-16 | 922 | 395+00.00 (I.R. 77) | U-286 | RT | | | | | | | | | 60 | | | | | | | | | |
| U-17 | 926 | 583+50.00 (RAMP C) | U-319 | CENTER | | | | | 34 | | | | | | | | | | | | | |
| U-18 | 929 | 509+01.61 (I.R. SB 77) | U-252 | LT | | | | | | | | | 34 | | | | | | | | | |
| U-19 | 922 | 72+25.00 (RAMP D ARL) | U-22 | RT | | | | | 56 | | | | | | | | | | | 1 | | |
| U-20 | 922 | 375+17.87 (I.R. 77) | U-316 | RT | | | | | | | 347 | | 25 | | | | | | 1 | | | |
| U-21 | 922 | 375+18.11 (I.R. 77) | U-20 | RT | | | 346 | | | | | | | | | | | | 1 | | | |
| U-22 | 922 | 75+11.71 (RAMP D ARL) | OUTLET | LT | 2 | | | | | | 342 | | 31 | | 14 | | 1 | | 1 | 1 | | |
| U-23 | 922 | 75+11.71 (RAMP D ARL) | U-19 | RT | | | 287 | | | | | | | | | | | | 1 | | | |
| U-24 | 922 | 377+93.12 (I.R. 77) | U-26 | RT | | | | | | | 269 | | 42 | | | | | | 1 | | | 1 |
| U-25 | 922 | 383+89.70 (I.R. 77) | U-137 | RT | | | 783 | | | | | | | | | | | | 1 | | | |
| U-26 | 922 | 82+18.45 (RAMP D ARL) | OUTLET | LT | 2 | | | | | | 702 | | 22 | | 18 | | 1 | | 1 | 1 | | |
| U-27 | 922 | 83+95.00 (RAMP D ARL) | U-139 | CENTER | | | 795 | | | | | | | | | | | | 1 | | | |
| U-28 | 922 | 83+95.00 (RAMP D ARL) | U-27 | RT | | | | | | | 227 | | 8 | | | | | | 1 | 1 | | 1 |
| U-29 | 922 | 383+99.45 (I.R. 77) | U-286 | RT | | | | | | | 1101 | | | | | | | | 1 | 1 | | |
| U-30 | 922 | 384+00.00 (I.R. 77) | U-31 | RT | | | 425 | | | | | | 12 | | | | | | 1 | 1 | | 1 |
| U-31 | 922 | 84+05.00 (RAMP D ARL) | U-16 | CENTER | | | 1090 | | | | | | | | | | | | 1 | 1 | | |
| U-32 | 922 | 84+05.00 (RAMP D ARL) | U-31 | RT | | | | | | | 801 | | 10 | | | | | | 1 | 1 | | 1 |
| U-33 | 922 , 923 | 391+37.36 (I.R. 77) | U-34 | LT | | | | | | | 860 | | 10 | | | | | | | | | 1 |
| U-34 | 922 , 923 | 391+37.36 (I.R. 77) | D-3 | LT | | | 860 | | | | | | 60 | | | | | | | 1 | | |
| U-35 | 922 | 391+37.36 (I.R. 77) | D-1 | LT | | | 362 | | | | | | 15 | | | | | | | | | 1 |
| U-36 | 922 , 923 | 395+05.00 (I.R. 77) | D-2 | LT | | | 244 | | | | | | 13 | | | | | | 1 | | | 1 |
| U-37 | 922 , 923 | 395+05.00 (I.R. 77) | D-2 | RT | | | 245 | | | | | | 12 | | | | | | 1 | | | 1 |
| U-38 | 922 | 394+62.50 (I.R. 77) | U-286 | RT | | | | | | | 38 | | 10 | | | | | | 1 | | | 1 |
| U-39 | 922 , 923 | 395+05.00 (I.R. 77) | U-40 | RT | | | | | | | 997 | | 12 | | | | | | 1 | | | 1 |
| U-40 | 922 , 923 | 395+05.00 (I.R. 77) | OUTLET | RT | 2 | | 997 | | | | | | 10 | | 19 | | 1 | | 1 | 1 | | |
| U-41 | 922 , 923 | 395+05.00 (I.R. 77) | U-40 | RT | | | | | | | 998 | | | | | | | | 1 | 1 | | |
| U-42 | 923 | 397+55.00 (I.R. 77) | D-3 | LT | | | 245 | | | | | | | | | | | | 1 | 1 | | |
| U-43 | 923 | 397+55.00 (I.R. 77) | D-3 | RT | | | 245 | | | | | | 12 | | | | | | 1 | | | 1 |
| U-44 | 923 | 400+05.00 (I.R. 77) | U-45 | LT | | | | | | | 893 | | | | | | | | 1 | 1 | | |
| U-45 | 923 | 400+05.00 (I.R. 77) | OUTLET | LT | 2 | | 893 | | | | | | 10 | | 24 | | 1 | | 1 | | | 1 |
| TOTALS CARRIED TO SUBSUMMARY SHEET | | | | 408 409 | 8 | | 8408 | | 761 | | 7575 | | 480 | | 108 | | 4 | | 36 | 20 | 1 | 21 |

CALCULATED DRJ
CHECKED PJF

# UNDERDRAIN QUANTITIES

SUM-77 / 277 / 224
VARIOUS



D:\2017\2017258\ProjectData\SUM\06002\Design\Roadway\Sheets\06002_GQ100.dgn Sheet 1/16/2021 2:03:09 PM pfry

| REF. NO. | SHEET NO. | STATION FROM | STATION TO | SIDE | 601 TIED CONCRETE BLOCK MAT WITH TYPE I UNDERLAYMENT SY | | 605 6" SHALLOW PIPE UNDERDRAINS WITH GEOTEXTILE FABRIC FT | | 605 6" UNCLASSIFIED PIPE UNDERDRAINS WITH GEOTEXTILE FABRIC FT | | 605 6" BASE PIPE UNDERDRAINS WITH GEOTEXTILE FABRIC FT | | 611 6" CONDUIT, TYPE B FT | | 611 6" CONDUIT, TYPE F FOR UNDERDRAIN OUTLETS FT | | 611 PRECAST REINFORCED CONCRETE OUTLET EACH | | FOR INFORMATION ONLY 6" PLUG EACH | 6" X 6" TEE EACH | 6" X 6" CROSS EACH | 6" - 90° BEND EACH |
|---|---|---|---|---|---|---|---|---|---|---|---|---|---|---|---|---|---|---|---|---|---|---|
| U-46 | 923 | 400+05.00 (I.R. 77) | D-4 | LT | | | 245 | | | | | | 12 | | | | | | 1 | | | 1 |
| U-47 | 923 | 400+05.00 (I.R. 77) | D-4 | RT | | | 245 | | | | | | 12 | | | | | | 1 | | | 1 |
| U-48 | 923 | 402+55.00 (I.R 77) | D-5 | LT | | | 249 | | | | | | 12 | | | | | | 1 | | | 1 |
| U-49 | 923 | 402+55.00 (I.R 77) | D-5 | RT | | | 244 | | | | | | 12 | | 5 | | | | 1 | | | 2 |
| U-50 | 923 | 405+09.00 (I.R. 77) | D-6 | LT | | | 391 | | | | | | 12 | | | | | | 1 | | | 1 |
| U-51 | 923 | 405+09.00 (I.R. 77) | D-6 | RT | | | 391 | | | | | | 12 | | | | | | 1 | | | 1 |
| U-52 | 923 | 405+09.00 (I.R. 77) | U-53 | RT | | | | | | | 391 | | 12 | | | | | | 1 | | | 1 |
| U-53 | 923 | 405+09.00 (I.R. 77) | OUTLET | RT | 2 | | 391 | | | | | | 10 | | 20 | | 1 | | 1 | 1 | | |
| U-54 | 923 | 405+09.00 (I.R. 77) | U-53 | RT | | | | | | | 391 | | | | | | | | 1 | 1 | | |
| U-55 | 923 | 409+05.00 (I.R. 77) | U-56 | LT | | | | | | | 295 | | | | | | | | 1 | 1 | | |
| U-56 | 923 | 409+05.00 (I.R. 77) | OUTLET | LT | 2 | | 295 | | | | | | 10 | | 24 | | 1 | | 1 | | | 1 |
| U-57 | 923 | 409+05.00 (I.R. 77) | D-7 | LT | | | 307 | | | | | | 12 | | | | | | 1 | | | 1 |
| U-58 | 923 | 409+05.00 (I.R. 77) | D-7 | RT | | | 302 | | | | | | 12 | | 5 | | | | 1 | | | 2 |
| U-59 | 923 | 409+05.00 (I.R. 77) | U-60 | RT | | | | | | | 302 | | 12 | | | | | | 1 | | | 1 |
| U-60 | 923 | 409+05.00 (I.R. 77) | OUTLET | RT | 2 | | 301 | | | | | | 10 | | 12 | | 1 | | 1 | 1 | | |
| U-61 | 923 | 409+05.00 (I.R. 77) | U-60 | RT | | | | | | | 302 | | | | | | | | 1 | 1 | | |
| U-62 | 923 | 412+06.50 (I.R. 77) | U-63 | LT | | | | | | | 394 | | | | | | | | 1 | 1 | | |
| U-63 | 923 | 412+06.50 (I.R. 77) | OUTLET | LT | 2 | | 393 | | | | | | 10 | | 27 | | 1 | | 1 | | | 1 |
| U-64 | 923 | 412+16.50 (I.R. 77) | D-8 | LT | | | 384 | | | | | | 12 | | | | | | 1 | | | 1 |
| U-65 | 923 | 412+16.50 (I.R. 77) | D-8 | RT | | | 384 | | | | | | 12 | | | | | | 1 | | | 1 |
| U-66 | 923 | 412+16.50 (I.R. 77) | U-67 | RT | | | | | | | 383 | | 11 | | | | | | 1 | | | 1 |
| U-67 | 923 | 412+16.50 (I.R. 77) | OUTLET | RT | 2 | | 383 | | | | | | 10 | | 21 | | 1 | | 1 | 1 | | |
| U-68 | 923 | 412+16.50 (I.R. 77) | U-67 | RT | | | | | | | 384 | | | | | | | | 1 | 1 | | |
| U-69 | 923 | 416+05.00 (I.R. 77) | U-70 | LT | | | | | | | 295 | | | | | | | | 1 | 1 | | |
| U-70 | 923 | 416+05.00 (I.R. 77) | OUTLET | LT | 2 | | 295 | | | | | | 10 | | 19 | | 1 | | 1 | | | 1 |
| U-71 | 923 | 416+05.00 (I.R. 77) | D-9 | LT | | | 294 | | | | | | 9 | | 5 | | | | 1 | | | 2 |
| U-72 | 923 | 416+05.00 (I.R. 77) | D-9 | RT | | | 300 | | | | | | 12 | | | | | | 1 | | | 1 |
| U-73 | 923 | 416+05.00 (I.R. 77) | U-74 | RT | | | | | | | 295 | | 7 | | | | | | 1 | | | 1 |
| U-74 | 923 | 416+05.00 (I.R. 77) | OUTLET | RT | 2 | | 295 | | | | | | 10 | | 16 | | 1 | | 1 | 1 | | |
| U-75 | 923 | 416+05.00 (I.R. 77) | U-74 | RT | | | | | | | 295 | | | | | | | | 1 | 1 | | |
| U-76 | 923 , 924 | 419+10.00 (I.R. 77) | U-77 | LT | | | | | | | 290 | | | | | | | | 1 | 1 | | |
| U-77 | 923 , 924 | 419+10.00 (I.R. 77) | OUTLET | LT | 2 | | 290 | | | | | | 10 | | 18 | | 1 | | 1 | | | 1 |
| U-78 | 923 , 924 | 419+10.00 (I.R. 77) | D-10 | LT | | | 290 | | | | | | 12 | | | | | | 1 | | | 1 |
| U-79 | 923 , 924 | 419+10.00 (I.R. 77) | D-10 | RT | | | 290 | | | | | | 12 | | | | | | 1 | | | 1 |
| U-80 | 923 , 924 | 419+05.00 (I.R. 77) | U-81 | RT | | | | | | | 295 | | 3 | | | | | | 1 | | | 1 |
| U-81 | 923 , 924 | 419+05.00 (I.R. 77) | OUTLET | RT | 2 | | 295 | | | | | | 10 | | 16 | | 1 | | 1 | 1 | | |
| U-82 | 923 , 924 | 419+05.00 (I.R. 77) | U-81 | RT | | | | | | | 295 | | | | | | | | 1 | 1 | | |
| U-83 | 922 | 388+29.90 (I.R. 77) | U-16 | RT | | | | | | | 671 | | | | | | | | 1 | 1 | | |
| U-84 | 932 | 422+05.00 (I.R. 77) | U-85 | LT | | | | | | | 290 | | | | | | | | 1 | 1 | | |
| U-85 | 932 | 422+05.00 (I.R. 77) | OUTLET | LT | 2 | | 290 | | | | | | 16 | | 15 | | 1 | | 1 | | | 1 |
| U-86 | 932 | 422+05.00 (I.R. 77) | D-11 | LT | | | 290 | | | | | | 8 | | 5 | | | | 1 | | | 2 |
| U-87 | 932 | 422+05.00 (I.R. 77) | D-11 | RT | | | 295 | | | | | | 12 | | | | | | 1 | | | |
| U-88 | 932 | 422+05.00 (I.R. 77) | OUTLET | RT | 2 | | 272 | | | | | | 17 | | 15 | | 1 | | 1 | | | |
| U-89 | 932 | 422+05.00 (I.R. 77) | U-88 | RT | | | | | | | 55 | | 2 | | | | | | 1 | 1 | | 1 |
| U-90 | 932 | 422+05.00 (I.R. 77) | U-88 | RT | | | | | | | 272 | | | | | | | | 1 | | | |
| **TOTALS CARRIED TO SUBSUMMARY SHEET** | | | | 408<br>409 | 22 | | 8401 | | | | 5895 | | 355 | | 223 | | 11 | | 45 | 17 | | 30 |

CALCULATED DRJ
CHECKED PJF

# UNDERDRAIN QUANTITIES

SUM-77 / 277 / 224
VARIOUS

433
1288

D:\2017\2017258\ProjectData\SUM\06002\Design\Roadway\Sheets\06002_G010l.dgn Sheet 1/16/2021 2:03:10 PM pfry

| REF. NO. | SHEET NO. | STATION FROM | STATION TO | SIDE | 601 TIED CONCRETE BLOCK MAT WITH TYPE I UNDERLAYMENT SY | | 605 6" SHALLOW PIPE UNDERDRAINS WITH GEOTEXTILE FABRIC FT | | 605 6" UNCLASSIFIED PIPE UNDERDRAINS WITH GEOTEXTILE FABRIC FABRIC FT | | 605 6" BASE PIPE UNDERDRAINS WITH GEOTEXTILE FABRIC FT | | 611 6" CONDUIT, TYPE B FT | | 611 6" CONDUIT, TYPE F FOR UNDERDRAIN OUTLETS FT | | 611 PRECAST REINFORCED CONCRETE OUTLET EACH | | FOR INFORMATION ONLY 6" PLUG EACH | 6" X 6" TEE EACH | 6" X 6" CROSS EACH | 6" - 90° BEND EACH |
|---|---|---|---|---|---|---|---|---|---|---|---|---|---|---|---|---|---|---|---|---|---|---|
| U-91 | 926 , 927 | 483+04.97 (I.R. NB 77) | U-103 | LT | | | | | | | 293 | | | | | | | | 1 | 1 | | |
| U-92 | 932 | 425+05.00 (I.R. 77) | OUTLET | LT | 2 | | | | | | | | 16 | | 15 | | 1 | | | | | |
| U-93 | 932 | 27+70.00 (WARNER RD) | EX-1 | RT | | | | | | | 314 | | 4 | | 12 | | | | 1 | 1 | | 1 |
| U-94 | 932 | 27+70.00 (WARNER RD) | OUTLET | LT | 2 | | | | | | 319 | | 4 | | 14 | | 1 | | 1 | | | 1 |
| U-95 | 932 | 427+18.23 (I.R. 77) | D-46 | LT | | | | | | | 11 | | | | 10 | | | | 1 | | | |
| U-96 | 932 | 427+13.29 (I.R. 77) | OUTLET | LT | 2 | | 132 | | | | | | 18 | | 13 | | 1 | | 1 | | | 1 |
| U-97 | 932 | 427+52.06 (I.R. 77) | U-96 | LT | | | | | | | 93 | | | | | | | | 1 | 1 | | |
| U-98 | 932 | 426+98.68 (I.R. 77) | D-12 | LT | | | 147 | | | | | | 8 | | 5 | | | | 1 | | | 2 |
| U-99 | 932 | 426+91.46 (I.R. 77) | D-12 | RT | | | 159 | | | | | | 12 | | | | | | 1 | | | |
| U-100 | 932 | 426+76.72 (I.R. 77) | OUTLET | RT | 2 | | 164 | | | | | | 18 | | 13 | | 1 | | 1 | | | |
| U-101 | 932 | 426+78.01 (I.R. 77) | U-100 | RT | | | | | | | 163 | | | | | | | | 1 | | | |
| U-102 | 932 | 428+55.00 (I.R. 77) | OUTLET | LT | 2 | | | | | | | | 18 | | 14 | | 1 | | | | | |
| U-103 | 926 , 927 | 483+04.97 (I.R. NB 77) | D-23 | LT | | | 294 | | | | | | 10 | | 13 | | | | 1 | 1 | | |
| U-104 | 932 | 431+37.46 (I.R. 77) | D-47 | LT | | | | | | | 16 | | | | 10 | | | | 1 | | | |
| U-105 | 932 | 431+33.34 (I.R. 77) | OUTLET | LT | 2 | | 111 | | | | | | 10 | | 20 | | 1 | | 1 | | | 1 |
| U-106 | 932 | 431+21.90 (I.R. 77) | D-13 | LT | | | 28 | | | | | | 12 | | | | | | 1 | | | 1 |
| U-107 | 932 | 431+16.37 (I.R. 77) | D-13 | RT | | | 34 | | | | | | 12 | | | | | | 1 | | | 1 |
| U-108 | 932 | 431+05.22 (I.R 77) | OUTLET | RT | 2 | | 145 | | | | | | 12 | | 16 | | 1 | | 1 | | | |
| U-109 | 932 | 431+11.51 (I.R. 77) | U-108 | RT | | | | | | | 139 | | | | | | | | 1 | | | |
| U-110 | 932 | 431+68.21 (I.R. 77) | U-105 | LT | | | | | | | 77 | | | | | | | | 1 | 1 | | |
| U-111 | 932 | 431+55.00 (I.R. 77) | D-14 | LT | | | 90 | | | | | | 12 | | 5 | | | | 1 | | | 2 |
| U-112 | 932 | 431+55.00 (I.R. 77) | D-14 | RT | | | 95 | | | | | | 12 | | | | | | 1 | | | |
| U-113 | 932 | 433+45.00 (I.R. 77) | U-114 | LT | | | | | | | 90 | | | | | | | | 1 | 1 | | |
| U-114 | 932 | 433+45.00 (I.R. 77) | OUTLET | LT | 2 | | 90 | | | | | | 10 | | 19 | | 1 | | 1 | 1 | | |
| U-115 | 932 | 433+45.00 (I.R. 77) | U-114 | LT | | | | | | | 89 | | 2 | | | | | | 1 | | | 1 |
| U-116 | 932 | 433+45.00 (I.R. 77) | D-14 | LT | | | 90 | | | | | | 12 | | 5 | | | | 1 | | | 2 |
| U-117 | 932 | 433+45.00 (I.R. 77) | U-112 | RT | | | 95 | | | | | | | | | | | | 1 | 1 | | |
| U-118 | 932 | 433+45.00 (I.R. 77) | U-108 | RT | | | 95 | | | | | | | | | | | | 1 | 1 | | |
| U-119 | 932 | 433+45.00 (I.R. 77) | U-108 | RT | | | | | | | 96 | | | | | | | | 1 | | 1 | |
| U-120 | 924 | 435+95.00 (I.R. 77) | U-121 | LT | | | | | | | 244 | | | | | | | | 1 | 1 | | |
| U-121 | 924 | 435+95.00 (I.R. 77) | OUTLET | LT | 2 | | 243 | | | | | | 10 | | 18 | | 1 | | 1 | 1 | | |
| U-122 | 924 | 435+95.00 (I.R. 77) | U-121 | LT | | | | | | | 244 | | 3 | | | | | | 1 | | | 1 |
| U-123 | 924 | 435+95.00 (I.R. 77) | D-15 | LT | | | 245 | | | | | | 12 | | | | | | 1 | | | 1 |
| U-124 | 924 | 435+95.00 (I.R. 77) | D-15 | RT | | | 245 | | | | | | 12 | | | | | | 1 | | | 1 |
| U-125 | 924 | 435+95.00 (I.R. 77) | OUTLET | RT | 2 | | 246 | | | | | | 10 | | 18 | | 1 | | 1 | | | 1 |
| U-126 | 924 | 435+95.00 (I.R. 77) | U-125 | RT | | | | | | | 246 | | | | | | | | 1 | 1 | | |
| U-127 | 924 | 444+05.00 (I.R. 77) | U-128 | LT | | | | | | | 794 | | | | | | | | 1 | 1 | | |
| U-128 | 924 | 444+05.00 (I.R. 77) | OUTLET | LT | 2 | | 794 | | | | | | 10 | | 15 | | 1 | | 1 | 1 | | |
| U-129 | 924 | 444+05.00 (I.R. 77) | U-128 | LT | | | | | | | 794 | | 7 | | | | | | 1 | | | 1 |
| U-130 | 924 | 438+95.00 (I.R. 77) | D-16 | LT | | | 288 | | | | | | 12 | | 5 | | | | 1 | | | 2 |
| U-131 | 924 | 438+95.00 (I.R. 77) | D-16 | RT | | | 293 | | | | | | 12 | | | | | | 1 | | | 1 |
| U-132 | 924 | 443+95.00 (I.R. 77) | OUTLET | RT | 2 | | 799 | | | | | | 10 | | 22 | | 1 | | 1 | | | 1 |
| U-133 | 924 | 443+95.00 (I.R. 77) | U-132 | RT | | | | | | | 799 | | | | | | | | 1 | 1 | | |
| U-134 | 924 | 444+05.00 (I.R. 77) | D-17 | LT | | | 505 | | | | | | 12 | | | | | | 1 | | | 1 |
| U-135 | 924 | 444+05.00 (I.R. 77) | D-17 | RT | | | 505 | | | | | | 12 | | | | | | 1 | | | 1 |
| TOTALS CARRIED TO SUBSUMMARY SHEET | | | | 408 409 | 24 | | 5932 | | | | 4821 | | 324 | | 262 | | 12 | | 43 | 15 | 1 | 24 |

CALCULATED XXX CHECKED XXX

# UNDERDRAIN QUANTITIES

SUM-77 / 277 / 224
VARIOUS



D:\2017\2017258\ProjectData\SUM\106002\Design\Roadway\Sheets\106002_GI02.dgn Sheet 1/16/2021 12:03:11 PM pfry

| REF. NO. | SHEET NO. | STATION FROM | STATION TO | SIDE | 601 TIED CONCRETE BLOCK MAT WITH TYPE I UNDERLAYMENT SY | | 605 6" SHALLOW PIPE UNDERDRAINS WITH GEOTEXTILE FABRIC FT | | 605 6" UNCLASSIFIED PIPE UNDERDRAINS WITH GEOTEXTILE FABRIC FT | | 605 6" BASE PIPE UNDERDRAINS WITH GEOTEXTILE FABRIC FT | | 611 6" CONDUIT, TYPE B FT | | 611 6" CONDUIT, TYPE F FOR UNDERDRAIN OUTLETS FT | | 611 PRECAST REINFORCED CONCRETE OUTLET EACH | | FOR INFORMATION ONLY 6" PLUG EACH | 6" X 6" TEE EACH | 6" X 6" CROSS EACH | 6" - 90° BEND EACH |
|---|---|---|---|---|---|---|---|---|---|---|---|---|---|---|---|---|---|---|---|---|---|---|
| U-136 | 932 | 425+02.71 (I.R. 77) | U-88 | RT | | | | | 26 | | | | | | | | | | 1 | 1 | | |
| U-137 | 922 | 376+06.25 (I.R. 77) | U-24 | RT | | | | | 83 | | | | | | | | | | | 1 | | |
| U-138 | 932 | 424+97.21 (I.R. 77) | U-88 | RT | | | | | 21 | | | | | | | | | | 1 | | 1 | |
| U-139 | 922 | 76+00.00 (RAMP D ARL) | U-26 | CENTER | | | | | 83 | | | | | | | | | | | 1 | | |
| U-141 | 924 , 925 | 453+95.00 (I.R. 77) | U-142 | LT | | | | | | | 978 | | | | | | | | 1 | 1 | | |
| U-142 | 924 , 925 | 453+95.00 (I.R. 77) | OUTLET | LT | 2 | | 978 | | | | | | 10 | | 12 | | 1 | | 1 | 1 | | |
| U-143 | 924 , 925 | 453+95.00 (I.R. 77) | U-142 | LT | | | | | | | 978 | | 12 | | | | | | 1 | | | 1 |
| U-144 | 924 , 925 | 446+95.00 (I.R. 77) | D-18 | LT | | | 280 | | | | | | 12 | | 5 | | | | 1 | | | 2 |
| U-145 | 924 , 925 | 446+95.00 (I.R. 77) | D-18 | RT | | | 285 | | | | | | 12 | | | | | | 1 | | | 1 |
| U-146 | 924 , 925 | 446+95.00 (I.R. 77) | OUTLET | RT | 2 | | 296 | | | | | | 10 | | 18 | | 1 | | 1 | | | 1 |
| U-147 | 924 , 925 | 446+95.00 (I.R. 77) | U-146 | RT | | | | | | | 296 | | | | | | | | 1 | 1 | | |
| U-148 | 925 | 449+97.00 (I.R. 77) | D-19 | LT | | | 297 | | | | | | 12 | | | | | | 1 | | | 1 |
| U-149 | 925 | 449+97.00 (I.R. 77) | D-19 | RT | | | 297 | | | | | | 12 | | | | | | 1 | | | 1 |
| U-150 | 925 | 449+97.00 (I.R. 77) | OUTLET | RT | 2 | | 297 | | | | | | 10 | | 25 | | 1 | | 1 | | | 1 |
| U-151 | 925 | 449+97.00 (I.R. 77) | U-150 | RT | | | | | | | 298 | | | | | | | | 1 | 1 | | |
| U-152 | 925 | 452+95.00 (I.R. 77) | D-20 | LT | | | 293 | | | | | | 12 | | | | | | 1 | | | 1 |
| U-153 | 925 | 452+95.00 (I.R. 77) | D-20 | RT | | | 287 | | | | | | 9 | | 5 | | | | 1 | | | 2 |
| U-154 | 925 | 458+00.00 (I.R. 77) | OUTLET | RT | 2 | | 793 | | | | | | 10 | | 24 | | 1 | | 1 | | | 1 |
| U-155 | 925 | 458+00.00 (I.R. 77) | U-154 | RT | | | | | | | 793 | | | | | | | | 1 | 1 | | |
| U-156 | 925 | 458+00.00 (I.R. 77) | D-21 | LT | | | 500 | | | | | | 12 | | | | | | 1 | | | 1 |
| U-157 | 925 | 458+00.00 (I.R. 77) | D-21 | RT | | | 500 | | | | | | 15 | | | | | | 1 | | | 1 |
| U-158 | 925 | 458+00.00 (I.R. 77) | U-159 | LT | | | | | | | 400 | | | | | | | | 1 | 1 | | |
| U-159 | 925 | 458+00.00 (I.R. 77) | OUTLET | LT | 2 | | 400 | | | | | | 10 | | 24 | | 1 | | 1 | 1 | | |
| U-160 | 925 | 458+00.00 (I.R. 77) | U-159 | LT | | | | | | | 400 | | 12 | | | | | | 1 | | | 1 |
| U-161 | 925 | 467+70.00 (I.R. 77) | U-162 | LT | | | | | | | 960 | | | | | | | | 1 | 1 | | |
| U-162 | 925 | 467+70.00 (I.R. 77) | OUTLET | LT | 2 | | 960 | | | | | | 10 | | 24 | | 1 | | 1 | 1 | | |
| U-163 | 925 | 467+70.00 (I.R. 77) | U-162 | LT | | | | | | | 960 | | 12 | | | | | | 1 | | | 1 |
| U-164 | 925 | 460+95.00 (I.R. 77) | D-22 | LT | | | 285 | | | | | | 12 | | | | | | 1 | | | 1 |
| U-165 | 925 | 460+95.00 (I.R. 77) | U-166 | RT | | | | | | | 126 | | 2 | | | | | | 1 | 1 | | 1 |
| U-166 | 925 | 460+95.00 (I.R. 77) | D-22 | RT | | | 281 | | | | | | 19 | | 5 | | | | 1 | | | 2 |
| U-167 | 925 | 467+70.00 (I.R. 77) | OUTLET | RT | 2 | | 955 | | | | | | 10 | | 19 | | 1 | | 1 | | | 1 |
| U-168 | 925 | 466+99.56 (I.R. 77) | U-167 | RT | | | | | | | 885 | | | | | | | | 1 | 1 | | |
| U-169 | 925 | 463+95.00 (I.R. 77) | D-23 | RT | | | 295 | | | | | | 12 | | | | | | 1 | | | 1 |
| U-170 | 925 | 463+95.00 (I.R. 77) | D-23 | RT | | | 295 | | | | | | 12 | | | | | | 1 | 1 | | |
| U-171 | 925 | 463+95.00 (I.R. 77) | U-170 | RT | | | | | | | 295 | | 12 | | | | | | 1 | | | 1 |
| U-172 | 925 | 467+70.00 (I.R. 77) | D-24 | LT | | | 370 | | | | | | 12 | | | | | | 1 | | | 1 |
| U-173 | 925 | 467+70.00 (I.R. 77) | D-24 | RT | | | 370 | | | | | | 12 | | | | | | 1 | 1 | | |
| U-174 | 925 | 467+70.00 (I.R. 77) | U-173 | RT | | | | | | | 370 | | 12 | | | | | | 1 | | | 1 |
| U-175 | 925 | 468+67.50 (I.R. 77) | U-339 | LT | | | | | | | 93 | | 10 | | | | | | 1 | | | 1 |
| U-176 | 925 , 926 | 478+41.90 (I.R. SB 77) | U-339 | LT | | | 1061 | | | | | | | | | | | | 1 | 1 | | |
| U-177 | 925 , 926 | 478+41.90 (I.R. SB 77) | U-339 | LT | | | | | | | 1064 | | | | | | | | 1 | 1 | | |
| U-178 | 925 | 469+46.73 (I.R. SB 77) | U-340 | LT | | | 176 | | | | | | | | | | | | | 1 | | |
| U-179 | 925 , 926 | 472+63.00 (I.R. NB 77) | D-25 | LT | | | 487 | | | | | | 12 | | | | | | 1 | 1 | | |
| U-180 | 925 , 926 | 472+63.00 (I.R. NB 77) | U-341 | LT | | | | | | | 488 | | | | | | | | 1 | 1 | | |
| **TOTALS CARRIED TO SUBSUMMARY SHEET** | | | | **408 409** | 14 | | 11038 | | 213 | | 9384 | | 329 | | 161 | | 7 | | 41 | 21 | 1 | 26 |

CALCULATED DRJ
CHECKED PJF

# UNDERDRAIN QUANTITIES

SUM-77 / 277 / 224
VARIOUS



D:\2017\201728\ProjectData\SUM\06002\Design\Roadway\Sheets\06002_G103.dgn Sheet 1/16/2021 2:03:12 PM pfry

| REF. NO. | SHEET NO. | STATION FROM | STATION TO | SIDE | 601 TIED CONCRETE BLOCK MAT WITH TYPE I UNDERLAYMENT SY | | 605 6" SHALLOW PIPE UNDERDRAINS WITH GEOTEXTILE FABRIC FT | | 605 6" UNCLASSIFIED PIPE UNDERDRAINS WITH GEOTEXTILE FABRIC FT | | 605 6" BASE PIPE UNDERDRAINS WITH GEOTEXTILE FABRIC FT | | 611 6" CONDUIT, TYPE B FT | | 611 6" CONDUIT, TYPE F FOR UNDERDRAIN OUTLETS FT | | 611 PRECAST REINFORCED CONCRETE OUTLET EACH | | FOR INFORMATION ONLY 6" PLUG EACH | 6" X 6" TEE EACH | 6" X 6" CROSS EACH | 6" - 90° BEND EACH |
|---|---|---|---|---|---|---|---|---|---|---|---|---|---|---|---|---|---|---|---|---|---|---|
| U-181 | 925 , 926 | 472+27.58 (I.R. NB 77) | U-341 | RT | | | 452 | | | | | | | | | | | | | | | 1 |
| U-182 | 925 , 926 | 478+41.90 (I.R. SB 77) | U-178 | RT | | | | | | | 911 | | 9 | | | | | | 1 | 1 | | 1 |
| U-183 | 925 | 469+85.83 (I.R. NB 77) | U-179 | LT | | | | | | | 48 | | 10 | | | | | | 1 | 1 | | 3 |
| U-184 | 925 , 926 | 472+26.99 (I.R. NB 77) | U-181 | RT | | | | | | | 280 | | 10 | | | | | | 1 | 1 | | 1 |
| U-185 | 926 | 478+41.97 (I.R. SB 77) | U-176 | LT | | | | | | | 706 | | 10 | | | | | | 1 | 1 | | 1 |
| U-186 | 926 | 472+73.15 (I.R. NB 77) | U-323 | LT | | | | | | | 426 | | 1 | | | | | | 1 | | | 2 |
| U-187 | 926 | 472+73.15 (I.R. NB 77) | D-126 | LT | | | 1024 | | | | | | 10 | | 13 | | | | 1 | 1 | | |
| U-188 | 926 | 472+73.15 (I.R. NB 77) | U-324 | RT | | | | | | | 427 | | | | | | | | 1 | | | |
| U-189 | 926 | 472+73.15 (I.R. NB 77) | U-325 | RT | | | | | | | 429 | | | | | | | | 1 | | | |
| U-190 | 926 | 472+73.15 (I.R. NB 77) | U-326 | RT | | | | | | | 429 | | | | | | | | 1 | | | |
| U-191 | 926 | 577+52.62 (RAMP C) | U-318 | LT/RT | | | 530 | | | | | | 15 | | | | | | 1 | | | 2 |
| U-192 | 926 , 927 | 478+52.00 (I.R. SB 77) | U-193 | LT | | | | | | | 784 | | | | | | | | 1 | 1 | | |
| U-193 | 926 , 927 | 478+52.00 (I.R. SB 77) | OUTLET | LT | 2 | | 785 | | | | | | 10 | | 12 | | 1 | | 1 | 1 | | |
| U-194 | 926 , 927 | 478+52.00 (I.R. SB 77) | U-193 | LT | | | | | | | 788 | | 12 | | | | | | 1 | 1 | | |
| U-195 | 926 , 927 | 478+52.00 (I.R. SB 77) | U-194 | LT | | | | | | | 793 | | 24 | | | | | | 1 | | | 1 |
| U-196 | 926 , 927 | 478+52.00 (I.R. SB 77) | OUTLET | RT | 2 | | | | | | 499 | | | | 34 | | 1 | | 1 | | | 1 |
| U-197 | 926 , 927 | 481+17.43 (I.R. NB 77) | OUTLET | RT | 2 | | | | | | 488 | | | | 19 | | 1 | | 1 | | | 1 |
| U-198 | 927 , 931 | 592+45.00 (RAMP C) | U-17 | CENTER | | | 895 | | | | | | | | | | | | | | | |
| U-199 | 927 | 483+55.00 (I.R. SB 77) | D-42 | RT | | | | | | | 1047 | | | | 21 | | | | 1 | | | 1 |
| U-200 | 927 | 486+55.00 (I.R. SB 77) | U-208 | LT | | | | | | | 774 | | | | | | | | 1 | 1 | | |
| U-201 | 927 | 486+55.00 (I.R. SB 77) | U-208 | LT | | | 784 | | | | | | 48 | | | | | | 1 | 1 | | |
| U-202 | 927 | 486+55.00 (I.R. SB 77) | U-201 | LT | | | | | | | 788 | | 24 | | | | | | 1 | | | 1 |
| U-203 | 927 | 286+61.87 (RAMP B-2) | U-204 | LT | | | | | | | 626 | | | | | | | | 1 | 1 | | |
| U-204 | 927 | 286+04.88 (RAMP B-2) | D-30 | CENTER | | | 685 | | | | | | 12 | | 6 | | | | 1 | 1 | | |
| U-205 | 927 | 486+05.00 (I.R. NB 77) | U-206 | RT | | | | | | | 653 | | 12 | | | | | | 1 | 1 | | |
| U-206 | 927 | 486+05.00 (I.R. NB 77) | U-204 | CENTER | | | 651 | | | | | | 32 | | | | | | 1 | 2 | | |
| U-207 | 927 | 88+75.56 (RAMP A) | U-201 | RT | | | | | | | 561 | | | | | | | | 1 | 1 | | |
| U-208 | 927 | 486+55.00 (I.R. SB 77) | OUTLET | CENTER | 2 | | 776 | | | | | | 10 | | 12 | | 1 | | 1 | 1 | | |
| U-209 | 927 , 928 | 94+36.91 (RAMP A) | U-210 | LT | | | | | | | 104 | | | | | | | | 1 | | 1 | |
| U-210 | 927 , 928 | 94+36.91 (RAMP A) | OUTLET | CENTER | 2 | | 104 | | | | | | 10 | | 12 | | 1 | | 1 | 1 | | |
| U-211 | 927 | 694+94.95 (RAMP C-1) | U-15 | LT | | | | | | | | | 16 | | | | | | | | | |
| U-212 | 927 , 928 | 494+49.48 (I.R. SB 77) | U-213 | LT | | | | | | | 351 | | | | | | | | 1 | 1 | | |
| U-213 | 927 , 928 | 494+49.48 (I.R. SB 77) | OUTLET | LT | 2 | | 351 | | | | | | 8 | | 24 | | 1 | | 1 | 1 | | |
| U-214 | 927 , 928 | 494+56.54 (I.R. SB 77) | U-217 | CENTER | | | 692 | | | | | | 12 | | | | | | | 1 | | 1 |
| U-215 | 927 , 928 | 494+05.00 (I.R. SB 77) | U-214 | RT | | | | | | | 290 | | 10 | | | | | | 1 | 1 | | 1 |
| U-216 | 927 | 793+16.70 (RAMP C-2) | D-43 | CENTER | | | 164 | | | | | | 3 | | 10 | | | | 1 | | | 1 |
| U-217 | 927 , 928 | 795+00.13 (RAMP C-2) | OUTLET | CENTER | 2 | | 800 | | | | | | 8 | | 19 | | 1 | | 1 | 1 | | |
| U-218 | 927 | 293+01.02 (RAMP B-2) | D-40 | LT | | | | | 74 | | | | | | | | | | 1 | | | |
| U-219 | 927 | 295+29.19 (RAMP B-2) | D-40 | LT | | | | | | | 144 | | | | 10 | | | | 1 | | | |
| U-220 | 927 | 486+05.00 (I.R. NB 77) | U-225 | RT | | | | | | | 648 | | | | | | | | 1 | 1 | | |
| U-221 | 927 | 295+50.81 (RAMP B-2) | U-224 | RT | | | | | | | 262 | | | | | | | | 1 | 1 | | |
| U-222 | 927 | 494+95.00 (I.R. NB 77) | D-29 | CENTER | | | 179 | | | | | | 6 | | | | | | 1 | | | 1 |
| U-223 | 927 | 494+95.00 (I.R. NB 77) | U-205 | RT | | | | | | | 240 | | | | | | | | 1 | | | |
| U-224 | 927 | 292+56.62 (RAMP B-2) | U-204 | RT | | | | | | | 34 | | 24 | | | | | | 1 | | | |
| U-225 | 927 | 494+95.00 (I.R. NB 77) | D-31 | RT | | | | | | | 253 | | 10 | | 24 | | | | 1 | | | 3 |
| TOTALS CARRIED TO SUBSUMMARY SHEET | | | | 408 409 | 14 | | 8872 | | 74 | | 13783 | | 356 | | 216 | | 7 | | 41 | 25 | 1 | 23 |

CALCULATED DRJ
CHECKED PJF

# UNDERDRAIN QUANTITIES

SUM-77 / 277 / 224
VARIOUS

436
1288

0:\2017\2017258\ProjectData\SUM\06002\Design\Roadway\Sheets\06002_GI04.dgn Sheet 1/16/2021 2:03:13 PM pfry

| REF. NO. | SHEET NO. | STATION FROM | STATION TO | SIDE | 601 TIED CONCRETE BLOCK MAT WITH TYPE I UNDERLAYMENT SY | | 605 6" SHALLOW PIPE UNDERDRAINS WITH GEOTEXTILE FABRIC FT | | 605 6" UNCLASSIFIED PIPE UNDERDRAINS WITH GEOTEXTILE FABRIC FT | | 605 6" BASE PIPE UNDERDRAINS WITH GEOTEXTILE FABRIC FT | | 611 6" CONDUIT, TYPE B FT | | 611 6" CONDUIT, TYPE F FOR UNDERDRAIN OUTLETS FT | | 611 PRECAST REINFORCED CONCRETE OUTLET EACH | | FOR INFORMATION ONLY 6" PLUG EACH | 6" X 6" TEE EACH | 6" X 6" CROSS EACH | 6" - 90° BEND EACH |
|---|---|---|---|---|---|---|---|---|---|---|---|---|---|---|---|---|---|---|---|---|---|---|
| U-226 | 927 , 931 | 783+89.12 (RAMP C-2) | OUTLET | LT/CEN | 2 | | 511 | | | | | | 20 | | 11 | | 1 | | 1 | | | 3 |
| U-227 | 927 , 931 | 688+05.00 (RAMP C-1) | U-13 | CENTER | | | 558 | | | | | | | | | | | | 1 | | | |
| U-228 | 927 , 928 | 300+94.13 (RAMP B-2) | D-41 | RT | | | | | | | 532 | | | | 10 | | | | 1 | | | |
| U-229 | 927 , 928 | 501+00.00 (I.R. NB 77) | U-230 | LT | | | | | | | 595 | | | | | | | | 1 | 1 | | |
| U-230 | 927 , 928 | 501+00.00 (I.R. NB 77) | D-33 | CENTER | | | 595 | | | | | | 10 | | 5 | | | | 1 | 1 | | |
| U-231 | 927 , 928 | 501+94.76 (I.R. NB 77) | U-230 | RT | | | | | | | 738 | | 36 | | | | | | 1 | | | 3 |
| U-232 | 927 , 928 | 696+11.41 (RAMP C-1) | U-233 | LT | | | | | | | 108 | | 16 | | | | | | 1 | | | 1 |
| U-233 | 927 , 928 | 701+95.00 (RAMP C-1) | D-34 | CENTER | | | 692 | | | | | | 8 | | 25 | | | | 1 | 1 | | 1 |
| U-234 | 927 , 928 | 701+95.00 (RAMP C-1) | U-233 | RT | | | | | | | 692 | | | | | | | | 1 | 1 | | |
| U-235 | 927 , 928 | 300+94.13 (RAMP B-2) | D-40 | LT/RT | | | 718 | | | | | | 36 | | | | | | 1 | | | 2 |
| U-236 | 928 , 930 | 104+13.60 (RAMP A) | U-210 | LT | | | | | | | 866 | | | | | | | | 1 | | | |
| U-237 | 928 , 930 | 104+13.60 (RAMP A) | U-210 | CENTER | | | 872 | | | | | | | | | | | | 1 | | | |
| U-238 | 928 | 796+95.44(RAMP C-2) | U-214 | LT | | | | | | | 241 | | 2 | | | | | | 1 | 1 | | 1 |
| U-239 | 928 | 495+46.00 (I.R. SB 77) | U-213 | LT | | | 254 | | | | | | 7 | | | | | | 1 | | | 1 |
| U-240 | 928 | 498+05.00 (I.R. SB 77) | U-241 | LT | | | | | | | 697 | | 8 | | | | | | 1 | 1 | | 1 |
| U-241 | 928 | 498+05.00 (I.R. SB 77) | OUTLET | LT | 2 | | 892 | | | | | | 6 | | 33 | | 1 | | 1 | 1 | | |
| U-242 | 928 | 498+05.00 (I.R. SB 77) | U-241 | LT | | | | | | | 398 | | 15 | | | | | | 1 | 1 | | 1 |
| U-243 | 928 | 796+95.44 (RAMP C-2) | U-217 | RT | | | | | | | 604 | | | | | | | | 1 | 1 | | |
| U-244 | 928 , 931 | 683+06.47 (RAMP C-1) | U-303 | LT | | | | | | | 342 | | 13 | | | | | | 1 | | | 1 |
| U-245 | 928 , 931 | 269+40.00 (I.R. 277) | OUTLET | LT | 2 | | | | | | 1235 | | 10 | | 14 | | 1 | | 1 | | | 3 |
| U-246 | 928 , 930 | 251+34.47 (I.R. 277) | OUTLET | RT | 2 | | | | | | 335 | | | | 20 | | 1 | | 1 | | | 1 |
| U-247 | 928 | 308+14.55 (RAMP B-2) | U-255 | RT | | | | | | | 289 | | 12 | | | | | | 1 | 1 | | 1 |
| U-248 | 928 | 507+36.56 (I.R. NB 77) | U-258 | RT | | | | | | | 71 | | 12 | | | | | | 1 | | | 1 |
| U-249 | 928 , 930 | 421+40.51 (RAMP B-1) | OUTLET | CENTER | 2 | | 541 | | | | | | 6 | | 31 | | 1 | | 1 | | | 1 |
| U-250 | 928 , 930 | 421+31.93 (RAMP B-1) | U-249 | LT | | | | | | | 326 | | 8 | | | | | | 1 | 1 | | 1 |
| U-251 | 928 | 907+58.86 (RAMP D) | U-270 | LT | | | | | | | 71 | | 16 | | | | | | 1 | | | 1 |
| U-252 | 928 , 929 | 503+05.00 (I.R. SB 77) | U-253 | LT | | | | | | | 599 | | 12 | | | | | | 1 | | 1 | |
| U-252A | 928 | 502+03.04 (I.R. SB 77) | U-217 | LT | | | | | | | 97 | | 24 | | | | | | 1 | | | 1 |
| U-253 | 928 , 929 | 503+05.00 (I.R. SB 77) | OUTLET | RT | 2 | | 597 | | | | | | 7 | | 21 | | 1 | | 1 | | 1 | |
| U-254 | 928 | 503+05.00 (I.R. SB 77) | U-253 | RT | | | | | | | 469 | | 10 | | | | | | 1 | 1 | | 1 |
| U-255 | 928 | 307+91.51 (RAMP B-2) | D-36 | CEN/RT | | | 691 | | | | | | 34 | | 12 | | | | 1 | | | 3 |
| U-256 | 928 | 306+90.85 (RAMP B-2) | U-255 | RT | | | | | | | 596 | | | | | | | | 1 | 1 | | |
| U-257 | 928 | 508+95.00 (I.R. NB 77) | U-258 | LT | | | | | | | 790 | | | | | | | | 1 | 1 | | |
| U-258 | 928 | 506+65.75 (I.R. NB 77) | D-36 | CENTER | | | 561 | | | | | | 10 | | 18 | | | | | | | 2 |
| U-259 | 928 | 507+36.56 (I.R. NB 77) | U-260 | RT | | | | | | | 537 | | 12 | | | | | | 1 | | | 1 |
| U-260 | 928 | 507+36.56 (I.R. NB 77) | OUTLET | RT | 2 | | 537 | | | | | | 8 | | 18 | | 1 | | 1 | 1 | | |
| U-261 | 928 | 507+37.03 (I.R. NB 77) | U-260 | RT | | | | | | | 537 | | | | | | | | 1 | 1 | | |
| U-262 | 928 , 931 | 897+55.00 (RAMP D) | U-270 | CENTER | | | 933 | | | | | | | | | | | | 1 | | | |
| U-263 | 930 | 247+75.74 (I.R. 277) | OUTLET | LT | 2 | | 976 | | | | | | | | 19 | | 1 | | 1 | | | 1 |
| U-264 | 926 , 927 | 483+04.97 (I.R. NB 77) | U-103 | RT | | | 296 | | | | | | 24 | | | | | | 1 | | | 1 |
| U-265 | 928 - 930 | 415+95.00 (RAMP B-1) | U-241 | CENTER | | | 893 | | | | | | | | | | | | 1 | | | |
| U-266 | 928 , 929 | 504+49.51 (I.R. SB 77) | U-18 | LT | | | | | | | 458 | | 10 | | | | | | 1 | 1 | | 2 |
| U-267 | 928 , 929 | 514+85.00 (I.R. NB 77) | U-268 | RT | | | | | | | 740 | | 24 | | | | | | 1 | | | 1 |
| U-268 | 928 , 929 | 514+85.00 (I.R. NB 77) | U-270 | RT | | | 734 | | | | | | 40 | | | | | | 1 | 1 | | |
| U-269 | 928 , 929 | 911+04.13 (RAMP D) | U-268 | LT | | | | | | | 344 | | | | | | | | 1 | 1 | | |
| U-270 | 928 , 929 | 914+89.43 (RAMP D) | OUTLET | CENTER | 2 | | 801 | | | | | | 6 | | 18 | | 1 | | 1 | | 1 | |
| TOTALS CARRIED TO SUBSUMMARY SHEET | | | | 408 409 | 18 | | 12652 | | | | 13307 | | 462 | | 255 | | 9 | | 45 | 19 | 3 | 37 |

CALCULATED DRJ
CHECKED PJF

# UNDERDRAIN QUANTITIES

SUM-77 / 277 / 224
VARIOUS



D:\2017\2017258\ProjectData\SUM\106002\Design\Roadway\Sheets\106002_GI05.dgn Sheet 1/16/2021 2:03:15 PM pfry

| REF. NO. | SHEET NO. | STATION FROM | STATION TO | SIDE | 601 TIED CONCRETE BLOCK MAT WITH TYPE I UNDERLAYMENT SY | | 605 6" SHALLOW PIPE UNDERDRAINS WITH GEOTEXTILE FABRIC FT | | 605 6" UNCLASSIFIED PIPE UNDERDRAINS WITH GEOTEXTILE FABRIC FT | | 605 6" BASE PIPE UNDERDRAINS WITH GEOTEXTILE FABRIC FT | | 611 6" CONDUIT, TYPE B FT | | 611 6" CONDUIT, TYPE F FOR UNDERDRAIN OUTLETS FT | | 611 PRECAST REINFORCED CONCRETE OUTLET EACH | | FOR INFORMATION ONLY 6" PLUG EACH | 6" X 6" TEE EACH | 6" X 6" CROSS EACH | 6" - 90° BEND EACH |
|---|---|---|---|---|---|---|---|---|---|---|---|---|---|---|---|---|---|---|---|---|---|---|
| U-271 | 929 , 930 | 9+88.71 (RAMP B-2) | OUTLET | CENTER | 2 | | 679 | | | | | | 4 | | 20 | | 1 | | 1 | 1 | | |
| U-272 | 929 , 930 | 9+95.65 (RAMP B-2) | U-271 | RT | | | | | | | 682 | | 14 | | | | | | 1 | | | 1 |
| U-273 | 929 , 930 | 10+30.00 (RAMP B-2) | D-39 | RT | | | | | | | 527 | | 6 | | | | | | 1 | 1 | | |
| U-274 | 929 | 514+95.00 (I.R. SB 77) | U-18 | LT | | | | | | | 603 | | | | | | | | 1 | | | |
| U-275 | 929 | 514+95.00 (I.R. SB 77) | U-252 | LT | | | | | | | 596 | | | | | | | | 1 | | | |
| U-276 | 929 | 514+95.00 (I.R. SB 77) | U-253 | CENTER | | | 593 | | | | | | | | | | | | 1 | | | |
| U-277 | 929 | 514+95.00 (I.R. SB 77) | U-253 | RT | | | | | | | 591 | | | | | | | | 1 | 1 | | |
| U-278 | 929 | 514+62.10 (I.R. NB 77) | OUTLET | LT | 2 | | | | | | 564 | | | | 12 | | 1 | | 1 | | | 1 |
| U-279 | 929 | 914+75.00 (RAMP D) | OUTLET | RT | 2 | | | | | | 418 | | | | 19 | | 1 | | 1 | | | 1 |
| U-280 | 929 , 930 | 208+36.29 (RAMP B) | U-281 | CENTER | | | 444 | | | | | | | | | | | | 1 | 1 | | |
| U-281 | 929 | 214+90.00 (RAMP B) | OUTLET | CENTER | 2 | | 210 | | | | | | 6 | | 11 | | 1 | | 1 | | | |
| U-282 | 930 | 208+26.29 (RAMP B) | OUTLET | CENTER | 2 | | 221 | | | | | | 6 | | 12 | | 1 | | 1 | | | 1 |
| U-283 | 930 | 205+95.00 (RAMP B) | OUTLET | CENTER | | | 890 | | | | | | 10 | | 19 | | | | 1 | 1 | | |
| U-284 | 930 | 203+95.00 (RAMP B) | U-283 | LT | | | | | | | 684 | | | | | | | | 1 | 1 | | |
| U-285 | 930 | 205+85.71 (RAMP B) | U-283 | RT | | | | | | | 308 | | 16 | | | | | | 1 | 1 | | 1 |
| U-286 | 922 | 395+00.00 (I.R. 77) | D-1 | RT | | | | | | | | | 12 | | | | | | | | | |
| U-288 | 930 | 16+72.93 (RAMP B-2) | U-283 | RT | | | 773 | | | | | | 16 | | | | | | 1 | 1 | | |
| U-289 | 930 | 16+72.82 (RAMP B-2) | U-289 | RT | | | | | | | 783 | | 12 | | | | | | 1 | 1 | | |
| U-290 | 930 | 237+95.00 (I.R. 277) | U-289 | LT | | | | | | | 378 | | 26 | | | | | | 1 | | | 3 |
| U-291 | 930 | 24+70.00 (RAMP B-2) | U-292 | RT | | | | | | | 912 | | | | | | | | 1 | 1 | | |
| U-292 | 930 | 24+69.80 (RAMP B-2) | OUTLET | RT | 2 | | 912 | | | | | | 11 | | 11 | | 1 | | 1 | 1 | | |
| U-293 | 930 | 24+69.48 (RAMP B-2) | U-292 | RT | | | | | | | 695 | | 2 | | | | | | 1 | 1 | | 1 |
| U-294 | 930 | 24+70.09 (RAMP B-2) | U-292 | CENTER | | | | | | | 912 | | 24 | | | | | | 1 | | | 1 |
| U-295 | 930 | 245+79.53 (I.R. 277) | U-320 | RT | | | | | | | 842 | | 12 | | | | | | 1 | 1 | | 1 |
| U-296 | 930 | 104+23.60 (RAMP A) | U-320 | LT | | | 926 | | | | | | | | | | | | 1 | | | |
| U-297 | 930 | 104+23.60 (RAMP A) | U-300 | CENTER | | | | | | | 1026 | | | | | | | | 1 | 1 | | |
| U-298 | 930 | 247+95.20 (I.R. 277) | U-296 | RT | | | | | | | 533 | | 38 | | | | | | 1 | 1 | | 3 |
| U-300 | 930 | 237+00.00 (I.R. 277) | OUTLET | RT | 2 | | | | | | | | 12 | | 18 | | 1 | | | | | |
| U-301 | 931 | 682+95.50 (RAMP C-1) | U-303 | RT | | | | | | | 263 | | 8 | | | | | | 1 | 1 | | 1 |
| U-302 | 931 | 260+76.94 (I.R. 277) | U-244 | LT | | | | | | | 133 | | 8 | | | | | | | 1 | | 1 |
| U-303 | 928 , 931 | 683+06.47 (RAMP C-1) | OUTLET | CENTER | 2 | | 339 | | | | | | 7 | | 15 | | 1 | | 1 | 1 | | |
| U-304 | 931 | 683+16.47 (RAMP C-1) | OUTLET | CENTER | 2 | | 486 | | | | | | 6 | | 19 | | 1 | | 1 | | | 1 |
| U-305 | 931 | 894+05.02 (RAMP D) | OUTLET | CENTER | 2 | | 345 | | | | | | 6 | | 11 | | 1 | | 1 | | | 1 |
| U-306 | 931 | 273+25.00 (I.R. 277) | OUTLET | CENTER | 2 | | 986 | | | | | | 6 | | 16 | | 1 | | | | | 1 |
| U-307 | 931 | 891+66.12 (RAMP D) | U-306 | LT | | | | | | | 101 | | 16 | | | | | | 1 | 1 | | 1 |
| U-309 | 931 | 597+80.00 (RAMP C) | U-310 | LT | | | | | | | 493 | | 16 | | | | | | 1 | 1 | | 1 |
| U-310 | 931 | 600+45.00 (RAMP C) | OUTLET | CENTER | 2 | | 795 | | | | | | 6 | | 12 | | 1 | | 1 | | | 1 |
| U-311 | 931 | 279+50.00 (I.R. 277) | OUTLET | RT | 2 | | 816 | | | | | | 6 | | 16 | | 1 | | | | | 1 |
| U-312 | 931 | 602+74.37 (RAMP C) | U-311 | LT | | | | | | | 213 | | 16 | | | | | | 1 | 1 | | |
| U-313 | 931 | 277+49.68 (I.R. 277) | U-311 | RT | | | | | | | 606 | | 24 | | | | | | 1 | 1 | | 1 |
| U-314 | 922 | 371+50.00 (I.R 77) | U-20 | RT | | | | | 17 | | | | | | | | | | 1 | 1 | | |
| U-315 | 922 | 371+50.00 (I.R 77) | U-21 | RT | | | | | 17 | | | | | | | | | | 1 | | 1 | |
| U-316 | 922 | 371+67.11 (I.R. 77) | U-22 | RT | | | | | | | | | 24 | | | | | | | 1 | | |
| U-317 | 922 | 72+17.82 (RAMP D ARL) | U-22 | RT | | | | | 49 | | | | | | | | | | 1 | 1 | | |
| U-318 | 926 | 582+83.01 (RAMP C) | U-319 | CENTER | | | | | 33 | | | | | | | | | | | | | |
| U-319 | 926 | 583+16.39 (RAMP C) | OUTLET | RT | 2 | | | | | | | | 6 | | 20 | | 1 | | | 1 | | |
| U-320 | 930 | 113+50.00 (RAMP A) | U-300 | CENTER | | | | | 102 | | | | | | | | | | | | | 1 |
| **TOTALS CARRIED TO SUBSUMMARY SHEET** | | | | 408 409 | 28 | | 9415 | | 218 | | 12863 | | 382 | | 231 | | 14 | | 38 | 26 | 1 | 25 |

CALCULATED DRJ CHECKED PJF

# UNDERDRAIN QUANTITIES

SUM-77 / 277 / 224
VARIOUS



D:\2017\2017258\Project Data\SUM\106002\Design\Roadway\Sheets\106002_GQ106.dgn Sheet1 1/16/2021 2:03:16 PM pfry

| REF. NO. | SHEET NO. | STATION FROM | STATION TO | SIDE | 601 TIED CONCRETE BLOCK MAT WITH TYPE I UNDERLAYMENT SY | | 605 6" SHALLOW PIPE UNDERDRAINS WITH GEOTEXTILE FABRIC FT | | 605 6" UNCLASSIFIED PIPE UNDERDRAINS WITH GEOTEXTILE FABRIC FT | | 605 6" BASE PIPE UNDERDRAINS WITH GEOTEXTILE FABRIC FT | | 611 6" CONDUIT, TYPE B FT | | 611 6" CONDUIT, TYPE F FOR UNDERDRAIN OUTLETS FT | | 611 PRECAST REINFORCED CONCRETE OUTLET EACH | | FOR INFORMATION ONLY 6" PLUG EACH | 6" X 6" TEE EACH | 6" X 6" CROSS EACH | 6" - 90° BEND EACH |
|---|---|---|---|---|---|---|---|---|---|---|---|---|---|---|---|---|---|---|---|---|---|---|
| U-321 | 925 , 926 | 478+41.90 (I.R. SB 77) | U-178 | LT | | | | | | | 892 | | 24 | | | | | | 1 | | | 2 |
| U-322 | 926 | 472+63.00 (I.R. NB 77) | U-181 | RT | | | | | | | 35 | | 24 | | | | | | 1 | | | 2 |
| U-323 | 926 | 477+00.00 (I.R. NB 77) | U-327 | LT | | | 99 | | | | | | | | | | | | | | | |
| U-324 | 926 | 477+00.00 (I.R. NB 77) | U-328 | RT | | | 100 | | | | | | | | | | | | | | | |
| U-325 | 926 | 477+00.00 (I.R. NB 77) | U-329 | RT | | | 101 | | | | | | | | | | | | | | | |
| U-326 | 926 | 577+00.00 (RAMP C) | U-330 | RT | | | 100 | | | | | | | | | | | | | | | |
| U-327 | 926 | 478+00.00 (I.R. NB 77) | U-331 | LT | | | | | 149 | | | | | | | | | | | | | |
| U-328 | 926 | 478+00.00 (I.R. NB 77) | U-332 | RT | | | | | 150 | | | | | | | | | | | | | |
| U-329 | 926 | 478+00.00 (I.R. NB 77) | U-333 | RT | | | | | 151 | | | | | | | | | | | | | |
| U-330 | 926 | 578+00.00 (RAMP C) | U-334 | RT | | | | | 150 | | | | | | | | | | | | | |
| U-331 | 926 | 479+50.00 (I.R. NB 77) | U-187 | LT | | | | | | | 348 | | | | | | | | | 1 | | |
| U-332 | 926 | 479+50.00 (I.R. NB 77) | U-187 | RT | | | | | | | 351 | | 24 | | | | | | | | | 1 |
| U-333 | 926 | 479+50.00 (I.R. NB 77) | U-328 | RT | | | | | | | 169 | | 24 | | | | | | | 1 | | 1 |
| U-334 | 926 | 579+50.00 (RAMP C) | U-191 | RT | | | | | | | 224 | | 8 | | | | | | | 1 | | 1 |
| U-335 | 927 | 286+04.92 (RAMP B-2) | U-204 | LT | | | | | | | 37 | | 10 | | | | | | 1 | 1 | | 1 |
| U-336 | 927 | 291+33.79 (RAMP B-2) | U-206 | RT | | | | | | | 119 | | | | | | | | 1 | 1 | | |
| U-337 | 927 | 494+49.48 (I.R. SB 77) | U-214 | LT | | | | | | | 7 | | 12 | | | | | | 1 | | | 2 |
| U-339 | 925 | 467+75.00 (I.R. 77) | U-340 | LT | | | | | | | | | 60 | | | | | | | | | |
| U-340 | 925 | 467+75.00 (I.R. 77) | D-25 | LT | | | | | | | | | 12 | | | | | | | | | |
| U-341 | 925 | 467+75.00 (I.R. 77) | U-179 | RT | | | | | | | | | 60 | | | | | | | | | |
| U-342 | 925 , 926 | 471+25.83 (I.R. NB 77) | D-59 | LT | | | | | | | 132 | | 1 | | 4 | | | | 1 | | | |
| U-343 | 926 | 472+63.00 (I.R. NB 77) | D-57 | LT | | | | | | | 129 | | 1 | | 4 | | | | 1 | | | |
| U-344 | 927 | 293+03.47 (RAMP B-2) | U-235 | CENTER | | | | | 72 | | | | | | | | | | 1 | 1 | | |
| U-345 | 927 | 493+04.36 (I.R. NB 77) | D-29 | CENTER | | | 49 | | | | | | | | | | | | 1 | | | |
| U-346 | 930 | 15+45.66 (RAMP B-2) | U-273 | RT | | | | | 15 | | | | | | | | | | 1 | | | |
| **TOTALS CARRIED TO SUBSUMMARY SHEET** | | | | **409** | | | 449 | | 687 | | 2443 | | 260 | | 8 | | | | 10 | 6 | | 10 |

CALCULATED DRJ
CHECKED PJF

# UNDERDRAIN QUANTITIES

SUM-77 / 277 / 224
VARIOUS

439
1288

0:\2017\2017258\ProjectData\SUM\106002\Design\Roadway\Sheets\106002_GQ107.dgn Sheet 1/16/2021 12:03:16 PM pfry

| STATION TO STATION | | SIDE | LENGTH | AVERAGE WIDTH W | SURFACE AREA A A=LxW | CADD AREAS | | 202 PAVEMENT REMOVED (ASPHALT) | 202 PAVEMENT REMOVED (COMPOSITE) | | 202 CONCRETE BARRIER REMOVED | 202 CURB REMOVED | | | | | | | | |
|---|---|---|---|---|---|---|---|---|---|---|---|---|---|---|---|---|---|---|---|---|
| | | | | | | | | SY | SY | | FT | FT | | | | | | | | |
| I.R. 77 | | | | | | | | | | | | | | | | | | | | |
| 371+50.00 | 425+14.88 | RT | 5364.88 | 36.00 | 193135.68 | | | | 21460 | | | | | | | | | | | |
| 371+50.00 | 418+00.00 | RT IN | 4650.00 | 24.00 | 111600.00 | | | 12400 | | | | | | | | | | | | |
| 371+50.00 | 372+95.23 | RT OUT | 145.23 | 12.00 | 1742.76 | | | 194 | | | | | | | | | | | | |
| 371+50.00 | 399+35.53 | LT/RT | 2785.53 | | | | | | | | 2786 | | | | | | | | | |
| 388+24.90 | 418+00.00 | RT OUT | 2975.10 | 12.00 | 35701.20 | | | 3967 | | | | | | | | | | | | |
| 418+00.00 | 425+32.73 | RT OUT | 732.73 | 10.00 | 7327.30 | | | 815 | | | | | | | | | | | | |
| 418+00.00 | 425+46.04 | RT IN | 746.04 | 4.00 | 2984.16 | | | 332 | | | | | | | | | | | | |
| | | | | | | | | | | | | | | | | | | | | |
| 426+71.88 | 428+94.41 | RT | 222.53 | 36.00 | 8011.08 | | | | 891 | | | | | | | | | | | |
| 426+53.10 | 429+22.56 | RT IN | 269.46 | 4.00 | 1077.84 | | | 120 | | | | | | | | | | | | |
| 426+39.75 | 429+12.98 | RT OUT | 273.23 | 10.00 | 2732.30 | | | 304 | | | | | | | | | | | | |
| | | | | | | | | | | | | | | | | | | | | |
| 431+01.68 | 469+46.33 | RT | 3844.65 | 36.00 | 138407.40 | | | | 15379 | | | | | | | | | | | |
| 430+82.85 | 469+46.33 | RT IN | 3863.48 | 4.00 | 15453.92 | | | 1718 | | | | | | | | | | | | |
| 430+72.79 | 469+46.33 | RT OUT | 3873.54 | 10.00 | 38735.40 | | | 4304 | | | | | | | | | | | | |
| | | | | | | | | | | | | | | | | | | | | |
| 375+92.24 | 376+20.24 | LT IN | 28.00 | 13.50 | 378.00 | | | 42 | | | | | | | | | | | | |
| | | | | | | | | | | | | | | | | | | | | |
| 391+37.36 | 425+44.14 | LT | 3406.78 | 36.00 | 122644.08 | | | | 13628 | | | | | | | | | | | |
| 391+37.36 | 399+50.00 | LT IN | 812.64 | 26.00 | 21128.64 | | | 2348 | | | | | | | | | | | | |
| 391+37.36 | 399+50.00 | LT OUT | 812.64 | 12.00 | 9751.68 | | | 1084 | | | | | | | | | | | | |
| 399+50.00 | 418+00.00 | LT OUT | 1850.00 | 12.00 | 22200.00 | | | 2467 | | | | | | | | | | | | |
| 399+50.00 | 407+50.00 | LT IN | 800.00 | 10.00 | 8000.00 | | | 889 | | | | | | | | | | | | |
| 407+50.00 | 418+00.00 | LT IN | 1050.00 | 4.00 | 4200.00 | | | 467 | | | | | | | | | | | | |
| 418+00.00 | 425+62.89 | LT IN | 762.89 | 4.00 | 3051.56 | | | 340 | | | | | | | | | | | | |
| 418+00.00 | 425+76.21 | LT OUT | 776.21 | 10.00 | 7762.10 | | | 863 | | | | | | | | | | | | |
| | | | | | | | | | | | | | | | | | | | | |
| 427+01.15 | 429+15.35 | LT | 214.20 | 36.00 | 7711.20 | | | | 857 | | | | | | | | | | | |
| 426+69.91 | 429+34.62 | LT IN | 264.71 | 4.00 | 1058.84 | | | 118 | | | | | | | | | | | | |
| 426+83.29 | 429+44.37 | LT OUT | 261.08 | 10.00 | 2610.80 | | | 291 | | | | | | | | | | | | |
| | | | | | | | | | | | | | | | | | | | | |
| 431+24.09 | 469+46.33 | LT | 3822.24 | 36.00 | 137600.64 | | | | 15289 | | | | | | | | | | | |
| 430+95.64 | 469+46.33 | LT IN | 3850.69 | 4.00 | 15402.76 | | | 1712 | | | | | | | | | | | | |
| 431+05.83 | 469+46.33 | LT OUT | 3840.50 | 10.00 | 38405.00 | | | 4268 | | | | | | | | | | | | |
| | | | | | | | | | | | | | | | | | | | | |
| NB I.R. 77 | | | | | | | | | | | | | | | | | | | | |
| 469+46.96 | 475+00.00 | RT | 553.04 | 36.00 | 19909.44 | | | | 2213 | | | | | | | | | | | |
| 469+46.96 | 475+00.00 | RT | 553.04 | 10.00 | 5530.40 | | | 615 | | | | | | | | | | | | |
| 469+46.96 | 475+00.00 | LT/RT | 553.04 | 4.00 | 2212.16 | | | 246 | | | | | | | | | | | | |
| 475+00.00 | 514+85.00 | RT | 3985.00 | 36.00 | 143460.00 | | | | 15940 | | | | | | | | | | | |
| 475+00.00 | 496+84.34 | LT/RT | 2184.34 | 4.00 | 8737.36 | | | | 971 | | | | | | | | | | | |
| 481+74.26 | 493+90.86 | RT | 1216.60 | 10.00 | 12166.00 | | | | 1352 | | | | | | | | | | | |
| 504+94.42 | 514+85.00 | LT | 990.58 | 4.00 | 3962.32 | | | | 441 | | | | | | | | | | | |
| 506+00.38 | 508+47.43 | RT | 247.05 | 10.00 | 2470.50 | | | | 275 | | | | | | | | | | | |
| | | | | | | | | | | | | | | | | | | | | |
| SB I.R. 77 | | | | | | | | | | | | | | | | | | | | |
| 469+42.49 | 472+00.00 | LT | 257.51 | 36.00 | 9270.36 | | | | 1031 | | | | | | | | | | | |
| 469+42.49 | 472+00.00 | LT | 257.51 | 10.00 | 2575.10 | | | 287 | | | | | | | | | | | | |
| 469+42.49 | 472+00.00 | LT | 257.51 | 4.00 | 1030.04 | | | 115 | | | | | | | | | | | | |
| 472+00.00 | 514+95.00 | LT | 4295.00 | 36.00 | 154620.00 | | | | 17180 | | | | | | | | | | | |
| 472+00.00 | 479+98.77 | LT | 798.77 | 10.00 | 7987.70 | | | 888 | | | | | | | | | | | | |
| 472+00.00 | 496+83.59 | LT/RT | 2483.59 | 4.00 | 9934.36 | | | | 1104 | | | | | | | | | | | |
| 505+68.78 | 514+31.65 | LT | 862.87 | 10.00 | 8628.70 | | | | 959 | | | | | | | | | | | |
| 505+39.37 | 514+95.00 | RT | 955.63 | 4.00 | 3822.52 | | | | 425 | | | | | | | | | | | |
| | | | | | | | | | | | | | | | | | | | | |
| MAINLINE MEDIAN/SHOULDER PAVEMENT VARIABILITY | | | | | | 24743.99 | | 2750 | | | | | | | | | | | | |
| | | | | | | | | | | | | | | | | | | | | |
| **SUBTOTALS CARRIED TO SHEET** | | | | | | **443** | | 153339 | | | 2786 | | | | | | | | | |

CALCULATED LRK
CHECKED PJF

**PAVEMENT REMOVAL CALCULATIONS**

**SUM-77 / 277 / 224**
**VARIOUS**

440
1288

0:\2017\20172581\ProjectData\SUM\106002\Design\Roadway\Sheets\106002_CC001.dgn Sheet 1/14/2021 8:9:57 AM pfry

| STATION TO STATION | | SIDE | LENGTH | AVERAGE WIDTH W | SURFACE AREA A A=LxW | CADD AREAS | | 202 PAVEMENT REMOVED (ASPHALT) SY | 202 PAVEMENT REMOVED (COMPOSITE) SY | | 202 CONCRETE BARRIER REMOVED FT | 202 CURB REMOVED FT | | | | | | | | |
|---|---|---|---|---|---|---|---|---|---|---|---|---|---|---|---|---|---|---|---|---|
| EXISTING RAMP A | | | | | | | | | | | | | | | | | | | | |
| 237+00.00 (I.R. 277) | 05+10.21 | LT/RT | | | | 16307.21 | | | 1812 | | | | | | | | | | | |
| 237+00.00 (I.R. 277) | 243+53.95 (I.R. 277) | RT | 653.95 | 8.00 | 5231.60 | | | 582 | | | | | | | | | | | | |
| 01+74.46 | 14+44.39 | RT | 1269.93 | 8.00 | 10159.44 | | | 1129 | | | | | | | | | | | | |
| 05+10.21 | 14+44.39 | LT | 934.18 | 12.00 | 11210.16 | | | 1246 | | | | | | | | | | | | |
| 05+10.21 | 14+44.39 | LT | 934.18 | 16.00 | 14946.88 | | | | 1661 | | | | | | | | | | | |
| 479+98.77 (SB I.R. 77) | 495+46.33 (SB I.R. 77) | LT | | | | 22891.11 | | | 2544 | | | | | | | | | | | |
| 479+98.77 (SB I.R. 77) | 495+46.33 (SB I.R. 77) | LT | 1547.56 | 10.00 | 15475.60 | | | 1720 | | | | | | | | | | | | |
| EXISTING RAMP B | | | | | | | | | | | | | | | | | | | | |
| 514+31.65 (SB I.R. 77) | 514+95.00 (SB I.R. 77) | LT | | | | 3566.98 | | | 397 | | | | | | | | | | | |
| 04+93.90 | 11+06.64 | LT | 612.74 | 16.00 | 9803.84 | | | | 1090 | | | | | | | | | | | |
| 04+93.90 | 12+10.40 | LT | 716.50 | 3.00 | 2149.50 | | | 239 | | | | 129 | | | | | | | | |
| 04+93.90 | 13+43.03 | RT | 849.13 | 7.00 | 5943.91 | | | 661 | | | | | | | | | | | | |
| 11+06.64 | 12+10.40 | LT | 103.76 | 15.00 | 1556.40 | | | | 173 | | | | | | | | | | | |
| 12+10.40 | 13+43.03 | LT | 132.63 | 12.00 | 1591.56 | | | | 177 | | | | | | | | | | | |
| 13+43.03 | 20+02.20 | LT | 659.17 | 16.00 | 10546.72 | | | | 1172 | | | | | | | | | | | |
| 13+43.03 | 20+02.20 | LT | 659.17 | 15.00 | 9887.55 | | | 1099 | | | | | | | | | | | | |
| 13+43.03 | 27+97.76 | RT | 1454.73 | 7.00 | 10183.11 | | | 1132 | | | | | | | | | | | | |
| 13+43.03 | 20+02.20 | LT | | | | 4642.58 | | | 516 | | | | | | | | | | | |
| 20+02.20 | 27+97.76 | LT | | | | 18311.05 | | | 2035 | | | | | | | | | | | |
| EXISTING RAMP B1 | | | | | | | | | | | | | | | | | | | | |
| 00+48.22 | 03+84.29 | LT | | | | 7863.44 | | | 874 | | | | | | | | | | | |
| 00+48.22 | 15+96.61 | RT | 1548.39 | 7.00 | 10838.73 | | | 1205 | | | | | | | | | | | | |
| 03+84.29 | 15+96.61 | LT | 1212.32 | 16.00 | 19397.12 | | | | 2156 | | | | | | | | | | | |
| 03+84.29 | 15+96.61 | LT | 1212.32 | 3.00 | 3636.96 | | | 405 | | | | | | | | | | | | |
| 495+47.77 (SB I.R. 77) | 505+68.78 (SB I.R. 77) | LT | | | | 23791.14 | | | 2644 | | | | | | | | | | | |
| EXISTING RAMP B2 | | | | | | | | | | | | | | | | | | | | |
| 496+84.34 (NB I.R. 77) | 504+94.42 (NB I.R. 77) | LT | | | | 16436.16 | | | 1827 | | | | | | | | | | | |
| 04+01.70 | 07+29.60 | RT | 327.90 | 16.00 | 5246.40 | | | | 583 | | | | | | | | | | | |
| 04+01.70 | 07+55.22 | RT | 353.52 | 16.00 | 5656.32 | | | 629 | | | | | | | | | | | | |
| 04+01.70 | 07+11.80 | LT | 310.1 | 3.50 | 1085.35 | | | 121 | | | | 19 | | | | | | | | |
| 09+82.07 | 15+42.67 | LT | 560.6 | 8.50 | 4765.1 | | | 530 | | | | 21 | | | | | | | | |
| 09+87.61 | 15+42.67 | RT | 555.06 | 16.00 | 8880.96 | | | | 987 | | | | | | | | | | | |
| 09+95.83 | 14+11.03 | RT | 415.2 | 16.00 | 6643.2 | | | 739 | | | | | | | | | | | | |
| 14+11.03 | 15+42.67 | RT | 131.64 | | | 1870.48 | | 208 | | | | | | | | | | | | |
| EXISTING RAMP C | | | | | | | | | | | | | | | | | | | | |
| 473+83.49 (NB I.R. 77) | 481+74.26 (NB I.R. 77) | RT | | | | 17678.96 | | | 1965 | | | | | | | | | | | |
| 04+77.58 | 23+12.82 | LT | 1835.24 | 16.00 | 29363.84 | | | | 3263 | | | | | | | | | | | |
| 04+77.58 | 15+83.15 | LT | 1105.57 | 3.00 | 3316.71 | | | 369 | | | | | | | | | | | | |
| 04+77.58 | 25+17.54 | RT | 2039.96 | 7.00 | 14279.72 | | | 1587 | | | | | | | | | | | | |
| 15+83.15 | 23+12.82 | LT | | | | 9787.64 | | | 1088 | | | | | | | | | | | |
| 15+83.15 | 23+12.82 | LT | 729.67 | 3.00 | 2189.01 | | | 244 | | | | | | | | | | | | |
| 23+12.82 | 279+50.00 (I.R. 277) | RT/LT | | | | 9184.86 | | | 1021 | | | | | | | | | | | |
| 273+13.40 (I.R. 277) | 279+50.00 (I.R. 277) | RT | 636.60 | 7.00 | 4456.20 | | | 496 | | | | | | | | | | | | |
| **SUBTOTALS CARRIED TO SHEET** | | | | | | **443** | | 42326 | | | | 169 | | | | | | | | |

CALCULATED LRK
CHECKED PJF

# PAVEMENT REMOVAL CALCULATIONS

SUM-77 / 277 / 224
VARIOUS



0:\2017\20172581\ProjectData\SUM\06002\Design\Roadway\Sheets\06002_CC002.dgn Sheet 1/14/2021 8:19:58 AM pfry

| STATION TO STATION | | SIDE | LENGTH | AVERAGE WIDTH W | SURFACE AREA A A=LxW | CADD AREAS | | 202 PAVEMENT REMOVED (ASPHALT) SY | 202 PAVEMENT REMOVED (COMPOSITE) SY | | 202 CONCRETE BARRIER REMOVED FT | 202 CURB REMOVED FT | | | | | | | | |
|---|---|---|---|---|---|---|---|---|---|---|---|---|---|---|---|---|---|---|---|---|
| EXISTING RAMP C1 | | | | | | | | | | | | | | | | | | | | |
| 00+65.17 | 03+85.97 | LT | | | | 8417.31 | | | 936 | | | | | | | | | | | |
| 00+67.91 | 15+23.17 | RT | 1455.26 | 5.00 | 7276.30 | | | 809 | | | | | | | | | | | | |
| 03+85.97 | 15+23.17 | LT | 1137.20 | 16.00 | 18195.20 | | | | 2022 | | | | | | | | | | | |
| 03+85.97 | 15+23.17 | LT | 1137.20 | 3.00 | 3411.60 | | | 380 | | | | | | | | | | | | |
| 493+90.86 (NB I.R. 77) | 506+00.41 (NB I.R. 77) | RT | | | | 30987.45 | | | 3444 | | | | | | | | | | | |
| EXISTING RAMP C2 | | | | | | | | | | | | | | | | | | | | |
| 496+83.59 (SB I.R. 77) | 505+39.37 (SB I.R. 77) | RT | | | | 17660.69 | | | 1963 | | | | | | | | | | | |
| 4+64.69 | 09+25.10 | LT | 460.41 | 3.00 | 1381.23 | | | 154 | | | | | | | | | | | | |
| 4+64.69 | 09+40.55 | RT | 475.86 | 16.00 | 7613.76 | | | | 846 | | | | | | | | | | | |
| 4+64.69 | 09+61.64 | RT | 496.95 | 6.00 | 2981.70 | | | 332 | | | | | | | | | | | | |
| 12+06.21 | 16+48.92 | LT | 442.71 | 3.00 | 1328.13 | | | 148 | | | | | | | | | | | | |
| 12+10.90 | 16+48.92 | RT | 438.02 | 16.00 | 7008.32 | | | | 779 | | | | | | | | | | | |
| 12+16.53 | 16+48.92 | RT | 432.39 | 6.00 | 2594.34 | | | 289 | | | | | | | | | | | | |
| EXISTING RAMP D | | | | | | | | | | | | | | | | | | | | |
| 04+62.26 | 273+25.00 (I.R. 277) | LT | | | | 13031.23 | | | 1448 | | | | | | | | | | | |
| 268+21.55 (I.R. 277) | 273+25.00 (I.R. 277) | LT | | | | 5966.38 | | 663 | | | | | | | | | | | | |
| 00+00.00 | 19+50.45 | RT | 1950.45 | 7.00 | 13653.15 | | | 1518 | | | | | | | | | | | | |
| 04+62.26 | 19+50.45 | LT | 1488.19 | 16.00 | 23811.04 | | | | 2646 | | | | | | | | | | | |
| 04+62.26 | 19+50.45 | LT | 1488.19 | 3.00 | 4464.57 | | | 497 | | | | | | | | | | | | |
| 508+47.43 (NB I.R. 77) | 514+85.00 (NB I.R. 77) | RT | | | | 20347.58 | | | 2261 | | | | | | | | | | | |
| RAMP PAVEMENT VARIABILITY | | | | | | 7464.40 | | 830 | | | | | | | | | | | | |
| I.R. 277/U.S. 224 | | | | | | | | | | | | | | | | | | | | |
| 225+00.00 | 228+68.89 | LT | 368.89 | 24.00 | 8853.36 | | | | 984 | | | | | | | | | | | |
| 225+00.00 | 228+68.89 | LT | 368.89 | 10.00 | 3688.90 | | | 410 | | | | | | | | | | | | |
| 228+68.89 | 235+63.23 | LT | 694.34 | 12.00 | 8332.08 | | | | 926 | | | | | | | | | | | |
| 235+63.23 | 247+80.74 | LT | 1217.51 | 2.00 | 2435.02 | | | | 271 | | | | | | | | | | | |
| 236+69.26 | 247+22.80 | LT | 1053.54 | 10.00 | 10535.40 | | | 1171 | | | | | | | | | | | | |
| 247+80.74 | 250+78.79 | LT | 298.05 | 12.00 | 3576.60 | | | | 398 | | | | | | | | | | | |
| 257+25.96 | 263+55.40 | LT | 629.44 | 10.00 | 6294.40 | | | 700 | | | | | | | | | | | | |
| 257+50.96 | 264+70.74 | LT | 719.78 | 2.00 | 1439.56 | | | | 160 | | | | | | | | | | | |
| 264+70.74 | 273+25.00 | LT | 854.26 | 12.00 | 10251.12 | | | | 1140 | | | | | | | | | | | |
| 237+00.00 | 245+79.53 | RT | 879.53 | 12.00 | 10554.36 | | | | 1173 | | | | | | | | | | | |
| 245+79.53 | 250+05.00 | RT | 425.47 | 2.00 | 850.94 | | | | 95 | | | | | | | | | | | |
| 246+92.36 | 250+56.72 | RT | 364.36 | 10.00 | 3643.6 | | | 405 | | | | | | | | | | | | |
| 271+44.10 | 279+50.00 | RT | 805.90 | 12.00 | 9670.8 | | | | 1075 | | | | | | | | | | | |
| 241+20.00 | 242+80.00 | LT/RT | 160.00 | 8.33 | 1332.8 | | | 149 | | | 160 | | | | | | | | | |
| **SUBTOTALS CARRIED TO SHEET** | | | | | | **443** | | 31022 | | | 160 | | | | | | | | | |

CALCULATED LRK
CHECKED PJF

# PAVEMENT REMOVAL CALCULATIONS

SUM-77 / 277 / 224
VARIOUS



D:\2017\2017258\ProjectData\SUM\06002\Design\Roadway\Sheets\06002_GC003.dgn Sheet 1/14/2021 8:19:58 AM pfry

| STATION TO STATION | | SIDE | LENGTH | AVERAGE WIDTH W | SURFACE AREA A A=LxW | CADD AREAS | | 202 PAVEMENT REMOVED (ASPHALT) SY | 202 PAVEMENT REMOVED (COMPOSITE) SY | | 202 CONCRETE BARRIER REMOVED FT | 202 CURB REMOVED FT | | | | | | | |
|---|---|---|---|---|---|---|---|---|---|---|---|---|---|---|---|---|---|---|---|
| ARLINGTON RD RAMP D | | | | | | | | | | | | | | | | | | | |
| 71+69.06 | 72+94.22 | LT | 125.16 | 20.00 | 2503.20 | | | | 279 | | | | | | | | | | |
| 71+69.06 | 72+94.22 | LT | 125.16 | 3.00 | 375.48 | | | 42 | | | | | | | | | | | |
| 71+69.06 | 72+94.22 | RT | 125.16 | 10.00 | 1251.60 | | | 140 | | | | | | | | | | | |
| 72+94.22 | 88+18.25 | LT | | | | 34896.64 | | | 3878 | | | | | | | | | | |
| 72+94.22 | 88+18.25 | RT | 1524.03 | 10.00 | 15240.30 | | | 1694 | | | | | | | | | | | |
| WARNER RD | | | | | | | | | | | | | | | | | | | |
| 24+50.00 | 27+70.00 | LT/RT | 320.00 | 24.00 | 7680.00 | | | 854 | | | | | | | | | | | |
| SUBTOTALS THIS SHEET | | | | | | | | 6887 | | | | | | | | | | | |
| SUBTOTALS SHEET | | 440 | | | | | | 153339 | | | 2786 | | | | | | | | |
| SUBTOTALS SHEET | | 441 | | | | | | 42326 | | | | 169 | | | | | | | |
| SUBTOTALS SHEET | | 442 | | | | | | 31022 | | | 160 | | | | | | | | |
| TOTALS CARRIED TO SHEET | | 407 | | | | | | 233574 | | | 2946 | 169 | | | | | | | |

CALCULATED LRK
CHECKED PJF

# PAVEMENT REMOVAL CALCULATIONS

SUM-77 / 277 / 224
VARIOUS



O:\2017\2017258\ProjectData\SUM\06002\Design\Roadway\Sheets\06002_GC004.dgn Sheet 1/14/2021 8:19:59 AM pfry

## PROJECT DESCRIPTION

PROJECT CONSISTS OF THE FULL DEPTH RECONSTRUCTION OF 2.7 MILES OF I-77, INCLUDING AN ADDITIONAL THROUGH LANE, AND RECONSTRUCTION OF THE I-77/I-277/US-224 INTERCHANGE IN SUMMIT COUNTY. PROJECT ALSO INCLUDES THE RECONSTRUCTION OF THE RAMP C-2 BRIDGE OVER NORTHBOUND I-77, WIDENING OF THE I-77 BRIDGES OVER WARNER ROAD AND WIDENING AND REDECKING OF THE I-77 BRIDGES OVER THE TUSCARAWAS RIVER.

* LONGITUDE: W81° 29' 39.1"
* LATITUDE: N41° 0' 22.3"

* LONGITUDE AND LATITUDE TO APPROX. CENTER OF PROJECT

**BMP'S**

POST-CONSTRUCTION STORM WATER BEST MANAGEMENT PRACTICES (BMP) FOR REDEVELOPMENT PROJECTS UTILIZING VEGETATED BIOFILTERS & VEGETATED FILTER STRIPS REQUIRE WATER QUALITY TREATMENT.

TREATMENT AREA REQUIRED = 0.200 x 120.12 EDA ACRES = 24.02 ACRES

PROPOSED VEGETATED BIOFILTERS & VEGETATED FILTER STRIPS TREAT A TOTAL AREA OF 24.05 ACRES OF CONTRIBUTING ODOT DRAINAGE AREA.

SEE SHEET 452 FOR BMP LOCATION TABLE.

LEGEND

- WETLAND AREA IMPACTED
- WETLAND AREA NOT TO BE DISTURBED
- ITEM 670 - DITCH EROSION PROTECTION (VEGETATED BIOFILTER PER DETAIL ON SHEET 55)
- ITEM 670 - SLOPE EROSION PROTECTION (VEGETATED FILTER STRIP W/ 4" ITEM 659 - TOPSOIL)
- ITEM 670 - DITCH EROSION PROTECTION
- ITEM 836 - SEEDING AND EROSION CONTROL W/ TURF REINFORCING MAT, TYPE 1
- ITEM 836 - SEEDING AND EROSION CONTROL W/ TURF REINFORCING MAT, TYPE 2
- ITEM 601 - ROCK CHANNEL PROTECTION
- TIED CONCRETE BLOCK
- ITEM 601 - RIPRAP
- CATCH BASIN No. 3A
- CATCH BASIN No. 3
- CATCH BASIN No. 8
- MANHOLE No. 3
- INLET No. 3
- INLET No. 3D

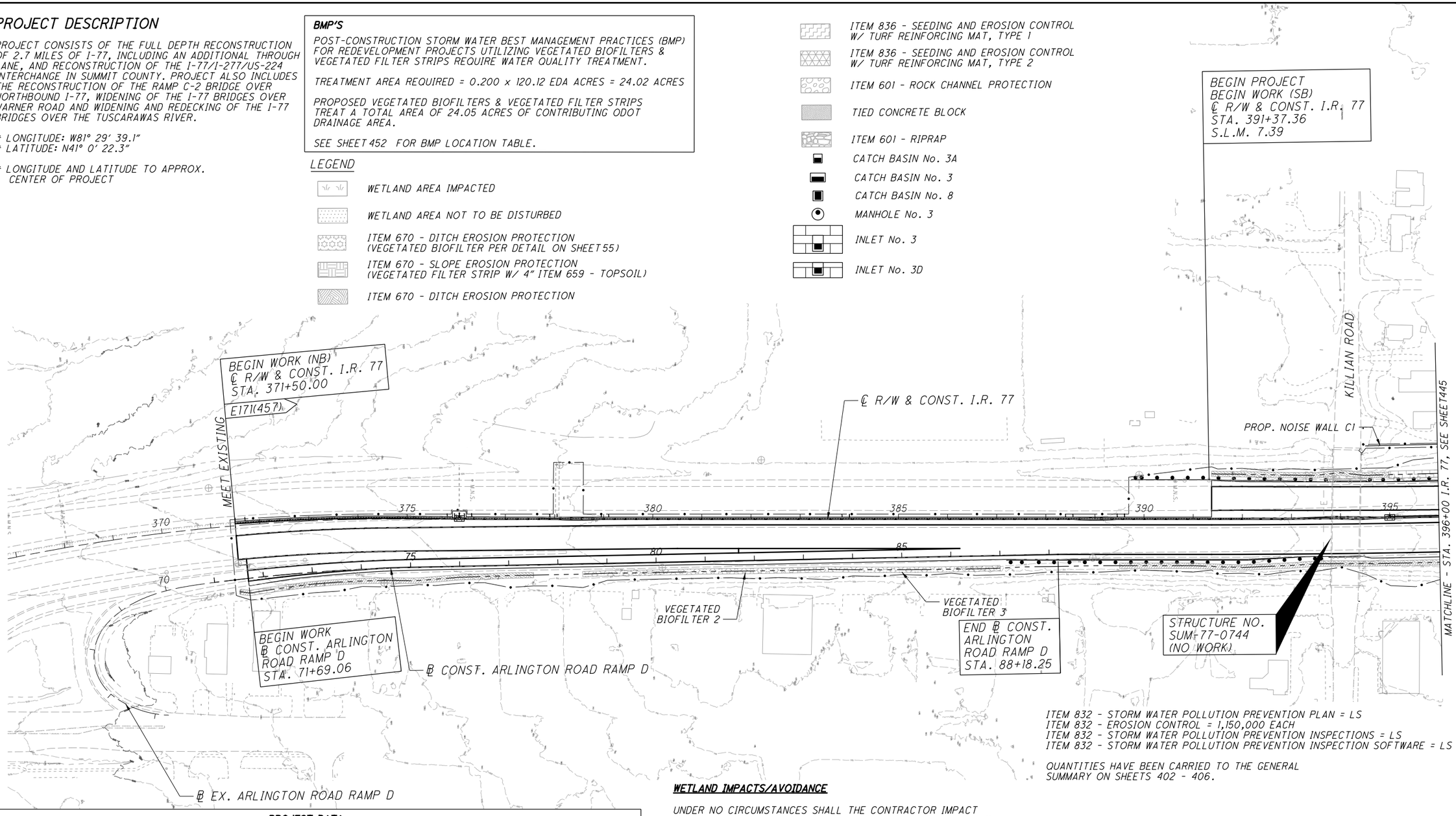


ITEM 832 - STORM WATER POLLUTION PREVENTION PLAN = LS
ITEM 832 - EROSION CONTROL = 1,150,000 EACH
ITEM 832 - STORM WATER POLLUTION PREVENTION INSPECTIONS = LS
ITEM 832 - STORM WATER POLLUTION PREVENTION INSPECTION SOFTWARE = LS

QUANTITIES HAVE BEEN CARRIED TO THE GENERAL SUMMARY ON SHEETS 402 - 406.

| PROJECT DATA | | | |
|---|---|---|---|
| TOTAL AREA OF PROJECT (RIGHT OF WAY) | 174.56 AC. | PRE-CONSTRUCTION RUNOFF COEFFICIENT | 0.64 |
| PROJECT EARTH DISTURBING ACTIVITIES | 120.12 AC. | POST CONSTRUCTION RUNOFF COEFFICIENT | 0.67 |
| CONTRACTOR EARTH DISTURBING ACTIVITIES | 1.00 AC. | IMPERVIOUS AREA FOR PRE-CONSTRUCTION | 63.04 AC. |
| NOI EARTH DISTURBING ACTIVITIES | 121.12 AC. | IMPERVIOUS AREA FOR POST CONSTRUCTION | 73.67 AC. |
| SOIL DATA | | SUMMIT COUNTY SOIL SURVEY (NRCS WEB SOIL SURVEY) | |
| IMMEDIATE RECEIVING STREAM(S) OR SURFACE WATER(S) | | TUSCARAWAS RIVER | |
| SUBSEQUENT RECEIVING STREAM(S) OR SURFACE WATER(S) | | MUSKINGUM RIVER | |

**WETLAND IMPACTS/AVOIDANCE**

UNDER NO CIRCUMSTANCES SHALL THE CONTRACTOR IMPACT THE REMAINING WETLANDS INDICATED ON THE PLAN. UNDER NO CIRCUMSTANCES SHALL THE CONTRACTOR STORE EQUIPMENT AND/OR MATERIALS WITHIN THESE WETLANDS.

TO PROTECT AND DELINEATE THE BOUNDARY OF THE EXISTING REMAINING WETLANDS, TEMPORARY CONSTRUCTION FENCE AND FILTER FABRIC FENCE (1,800 LINEAR FEET, PAYMENT FOR THIS ITEM WILL BE MADE UNDER ITEM 832, EROSION CONTROL) SHALL BE INSTALLED ALONG THE PROPOSED CONSTRUCTION LIMITS WITHIN THE WETLANDS AREA BY THE CONTRACTOR PRIOR TO THE START OF ANY CONSTRUCTION ACTIVITIES WITHIN THESE LIMITS AND ADJACENT AREA AND MAINTAINED BY THE CONTRACTOR THROUGHOUT PROJECT CONSTRUCTION.

| REVISIONS | | |
|---|---|---|
| NO. | DATE | DESCRIPTION |
| 4 | 04/20/21 | WETLAND NOTE REVISED |

FOR GEOMETRIC PLAN, SEE SHEETS 13 -22
FOR CURVE DATA, SEE SHEETS 23 -26

HORIZONTAL SCALE IN FEET
0 50 100 200

CALCULATED ZJP
CHECKED PJF

PROJECT SITE PLAN
BEGIN TO STA. 396+00 I.R. 77

SUM-77 / 277 / 224
VARIOUS



O:\2017\2017258\ProjectData\SUM\06002\Design\Drainage\Sheets\06002_DE001.dgn Sheet 4/20/2021 3:48:24 PM pfry

WETLAND AREA IMPACTED

WETLAND AREA NOT TO BE DISTURBED

ITEM 670 - DITCH EROSION PROTECTION
(VEGETATED BIOFILTER PER DETAIL ON SHEET 55)

ITEM 670 - SLOPE EROSION PROTECTION
(VEGETATED FILTER STRIP W/ 4" ITEM 659 - TOPSOIL)

ITEM 601 - RIPRAP

ITEM 670 - DITCH EROSION PROTECTION

ITEM 836 - SEEDING AND EROSION CONTROL
W/ TURF REINFORCING MAT, TYPE 1

ITEM 836 - SEEDING AND EROSION CONTROL
W/ TURF REINFORCING MAT, TYPE 2

ITEM 601 - ROCK CHANNEL PROTECTION

TIED CONCRETE BLOCK

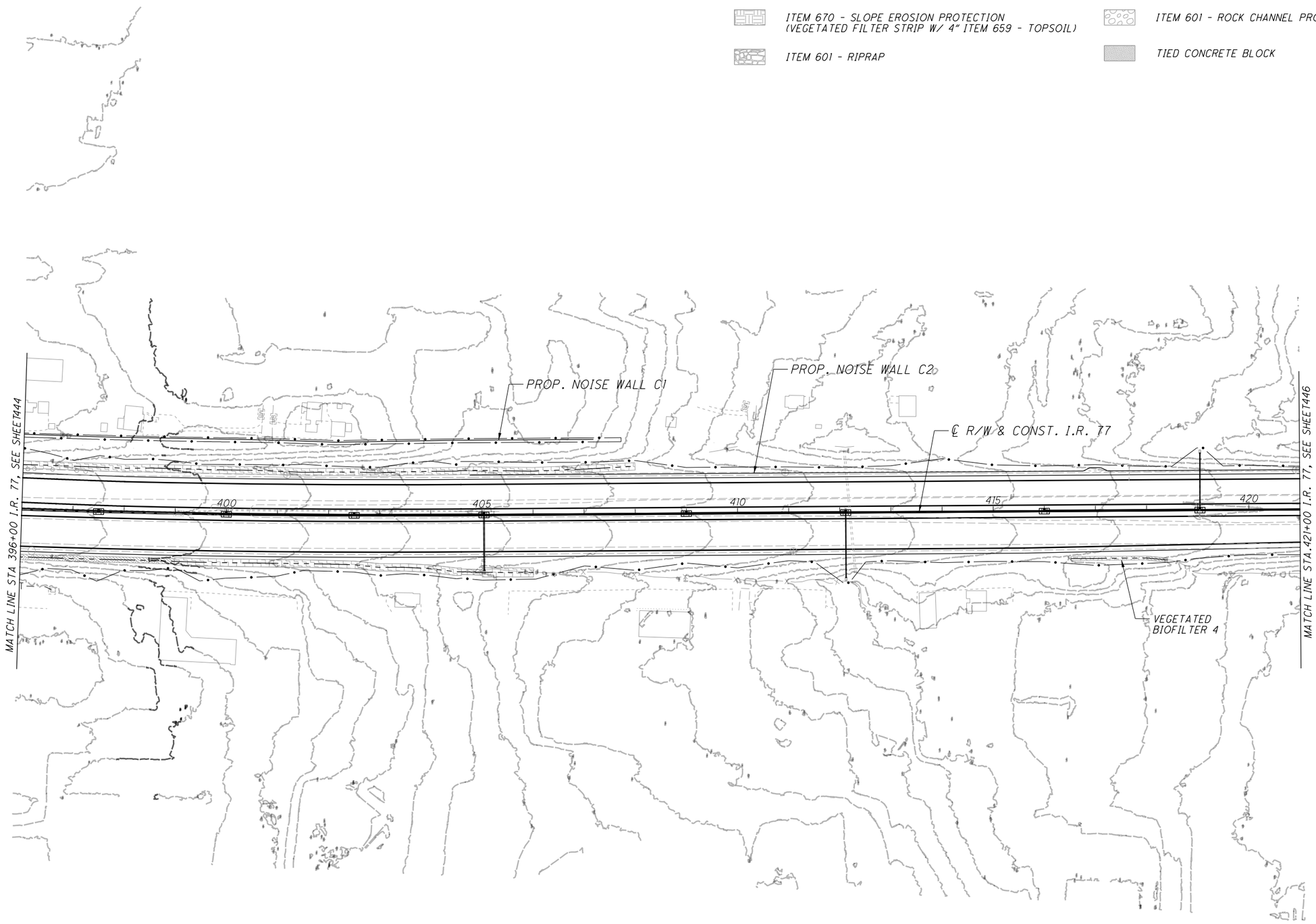


FOR GEOMETRIC PLAN, SEE SHEETS 13 -22
FOR CURVE DATA, SEE SHEETS 23-26

N

0 50 100 200
HORIZONTAL
SCALE IN FEET

CALCULATED ZJP
CHECKED PJF

PROJECT SITE PLAN
STA. 396+00 TO STA. 421+00

SUM-77/277/224
VARIOUS

445
1288

0:\2017\2017258\ProjectData\SUM\06002\Design\Drainage\Sheets\106002_DE002.dgn Design 1/15/2021 4:46:11 PM lkirkland

WETLAND AREA IMPACTED

WETLAND AREA NOT TO BE DISTURBED

ITEM 670 - DITCH EROSION PROTECTION (VEGETATED BIOFILTER PER DETAIL ON SHEET55)

ITEM 670 - SLOPE EROSION PROTECTION (VEGETATED FILTER STRIP W/ 4" ITEM 659 - TOPSOIL)

TIED CONCRETE BLOCK

ITEM 601 - RIPRAP

ITEM 670 - DITCH EROSION PROTECTION

ITEM 836 - SEEDING AND EROSION CONTROL W/ TURF REINFORCING MAT, TYPE 1

ITEM 836 - SEEDING AND EROSION CONTROL W/ TURF REINFORCING MAT, TYPE 2

ITEM 601 - ROCK CHANNEL PROTECTION

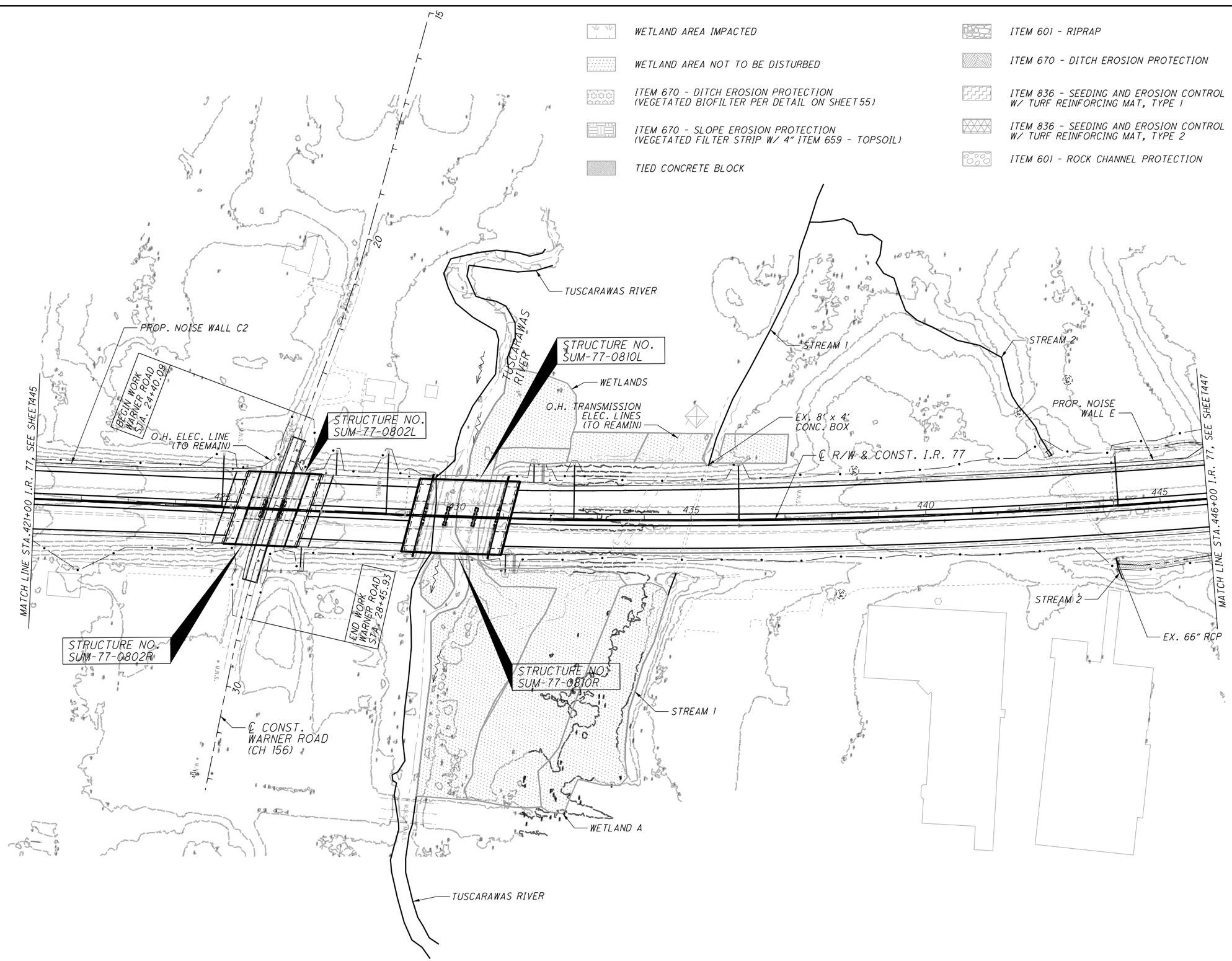


FOR GEOMETRIC PLAN, SEE SHEETS 13 -22
FOR CURVE DATA, SEE SHEETS 23 -26

HORIZONTAL SCALE IN FEET
0 50 100 200

CALCULATED ZJP
CHECKED PJF

# PROJECT SITE PLAN
## STA. 421+00 TO STA. 446+00

SUM-77/277/224
VARIOUS

446
1288

0:\2017\20172581\ProjectData\SUM\106002\Design\Drainage\Sheets\106002_DE003.dgn Design 1/15/2021 4:46:24 PM lkirkland

WETLAND AREA IMPACTED

WETLAND AREA NOT TO BE DISTURBED

ITEM 670 - DITCH EROSION PROTECTION
(VEGETATED BIOFILTER PER DETAIL ON SHEET55)

ITEM 670 - SLOPE EROSION PROTECTION
(VEGETATED FILTER STRIP W/ 4" ITEM 659 - TOPSOIL)

TIED CONCRETE BLOCK

ITEM 601 - RIPRAP

ITEM 670 - DITCH EROSION PROTECTION

ITEM 836 - SEEDING AND EROSION CONTROL
W/ TURF REINFORCING MAT, TYPE 1

ITEM 836 - SEEDING AND EROSION CONTROL
W/ TURF REINFORCING MAT, TYPE 2

ITEM 601 - ROCK CHANNEL PROTECTION

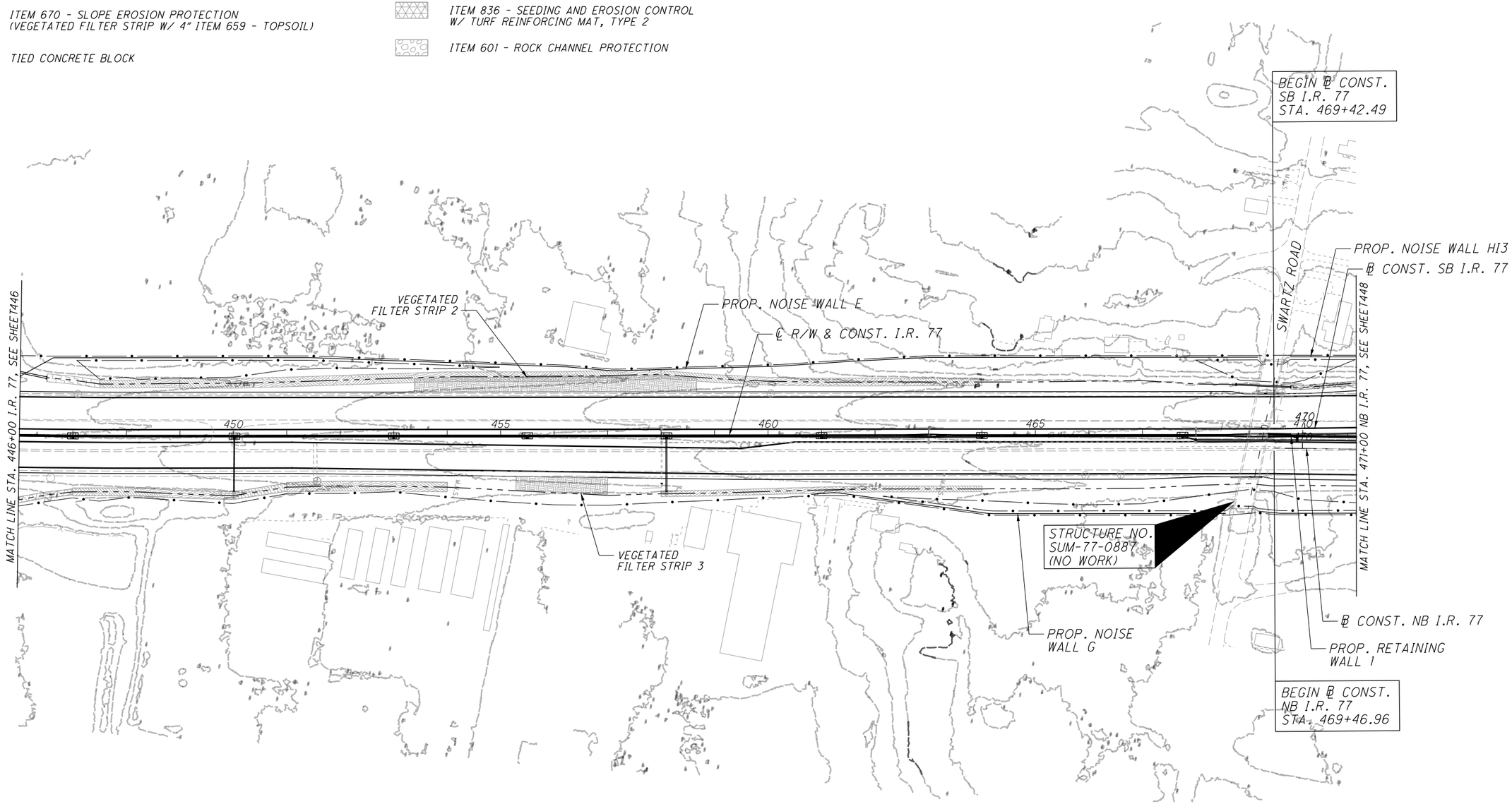


FOR GEOMETRIC PLAN, SEE SHEETS 13 -22
FOR CURVE DATA, SEE SHEETS 23-26

N

0 50 100 200
HORIZONTAL
SCALE IN FEET

CALCULATED ZJP
CHECKED PJF

PROJECT SITE PLAN
STA. 446+00 I.R. 77 TO STA. 471+00 NB I.R. 77

SUM-77/277/224
VARIOUS

447
1288

0:\2017\2017258\ProjectData\SUM\06002\Design\Drainage\Sheets\06002_DE004.dgn Design 1/15/2021 4:46:59 PM lkirkland

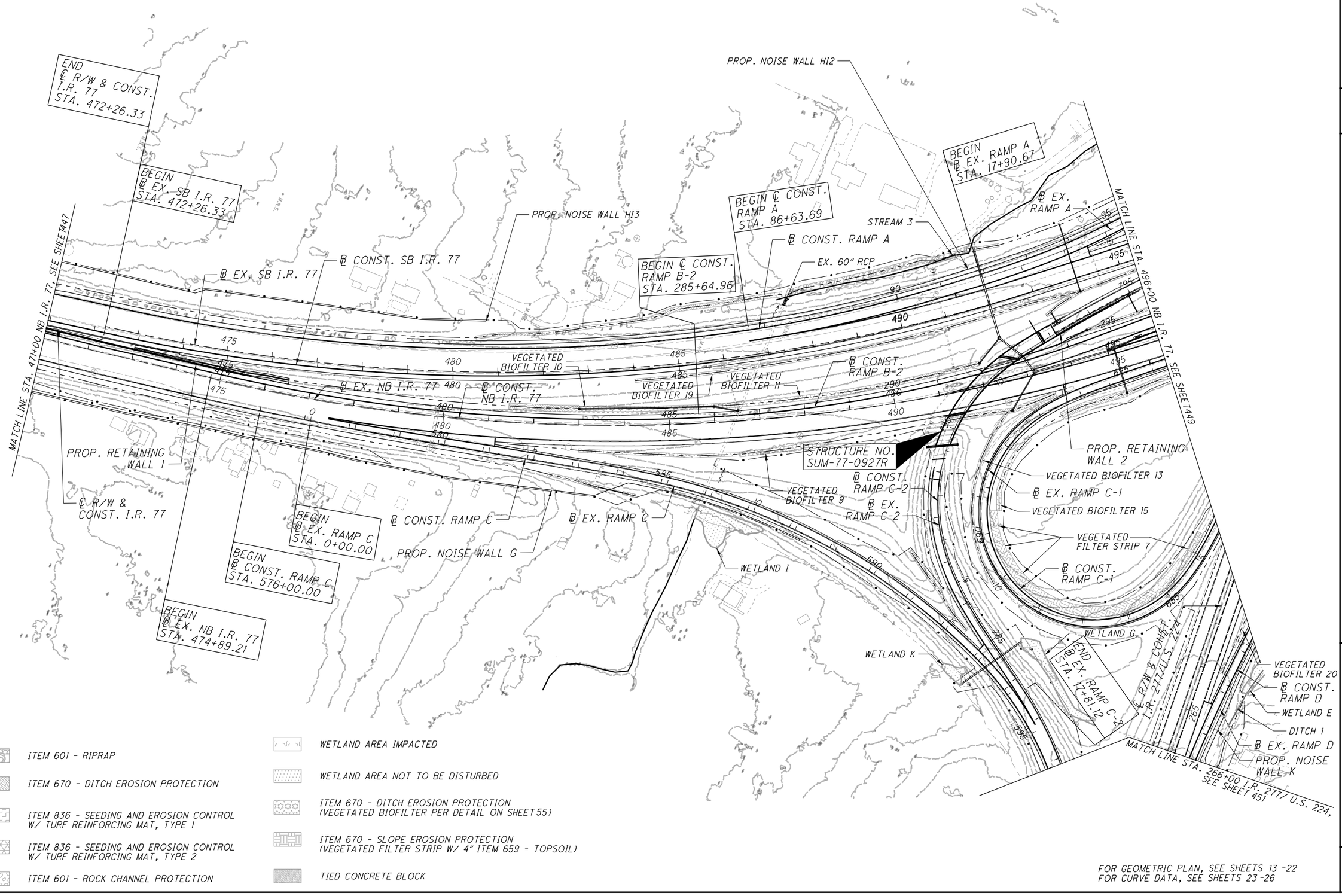


HORIZONTAL SCALE IN FEET
0 50 100 200

CALCULATED ZJP
CHECKED PJF

# PROJECT SITE PLAN
## STA. 471+00 TO STA. 496+00

SUM-77/277/224
VARIOUS

448
1288

0:\2017\2017258\Project Data\SUM\106002\Design\Drainage\Sheets\106002_DE005.dgn Design 1/15/2021 4:47:35 PM lkirkland

ITEM 601 - RIPRAP

ITEM 670 - DITCH EROSION PROTECTION

ITEM 836 - SEEDING AND EROSION CONTROL W/ TURF REINFORCING MAT, TYPE 1

ITEM 836 - SEEDING AND EROSION CONTROL W/ TURF REINFORCING MAT, TYPE 2

ITEM 601 - ROCK CHANNEL PROTECTION

WETLAND AREA IMPACTED

TIED CONCRETE BLOCK

WETLAND AREA NOT TO BE DISTURBED

ITEM 670 - DITCH EROSION PROTECTION (VEGETATED BIOFILTER PER DETAIL ON SHEET 55)

ITEM 670 - SLOPE EROSION PROTECTION (VEGETATED FILTER STRIP W/ 4" ITEM 659 - TOPSOIL)

PROP. NOISE WALL H11

MATCH LINE STA. 243+00, I.R. 277/ U.S. 224, SEE SHEET 450

℄ R/W & CONST. I.R. 277/ U.S. 224

VEGETATED FILTER STRIP 6

END ℄ EX. RAMP B-2 STA. 15+42.67

STREAM 4

VEGETATED FILTER STRIP 5

PROP. NOISE WALL H12

VEGETATED BIOFILTER 17

℄ EX. RAMP B-2

EX. 96" CMP

STREAM 3

℄ EX. RAMP B

END WORK RAMP B STA. 214+90.00

℄ EX. RAMP A

VEGETATED BIOFILTER 22

EX. 10' x 5' CONC. BOX

WETLAND B (DO NOT DISTURB)

END PROJECT END WORK ℄ CONST. SB I.R. 77 STA. 514+95.00 S.L.M. 9.74

BEGIN PROJECT SUM-76/77/8-8.42/9.77/0.00 DB (PID 102329)

E171 (457) E180 (428)

℄ CONST. RAMP B1

℄ EX. RAMP B1

STREAM 3

℄ CONST. RAMP B

EX. 84" TWIN CMP

STRUCTURE NO. SUM-77-0973L (NO WORK)

VEGETATED FILTER STRIP 4

VEGETATED BIOFILTER 8

STREAM 3

END ℄ CONST. RAMP B1 STA. 423+44.13

BEGIN ℄ EX. RAMP B-1 STA. 0+00.00

BEGIN ℄ CONST. RAMP B-1 STA. 402+43.78

END ℄ EX. RAMP B-1 STA. 17+90.88

℄ CONST. RAMP B-2

STRUCTURE NO. SUM-77-0958L

BEGIN ℄ EX. RAMP B STA. 0+00.00

END ℄ CONST. RAMP B STA. 219+25.00

VEGETATED BIOFILTER 24

VEGETATED FILTER STRIP 9

WETLAND F

℄ CONST. RAMP A

VEGETATED BIOFILTER 21

WETLAND C

VEGETATED BIOFILTER 23

℄ EX. SB I.R. 77

E. WATERLOO RD.

VEGETATED FILTER STRIP 8

MATCH LINE STA. 496+00, NB I.R. 77, SEE SHEET 448

℄ CONST. RAMP C-2

℄ CONST. SB I.R. 77

BEGIN ℄ EX. RAMP B-2 STA. 0+00.00

END ℄ CONST. RAMP C-2 STA. 801+48.92

BEGIN ℄ EX. RAMP C-2 STA. 0+00.00

℄ CONST. NB I.R. 77

℄ EX. RAMP C-2

℄ EX. NB I.R. 77

VEGETATED BIOFILTER 1

VEGETATED BIOFILTER 12

VEGETATED BIOFILTER 14

END ℄ CONST. RAMP C-1 STA. 702+11.45

WETLAND D

DITCH 1

℄ EX. RAMP D

END EX. ℄ RAMP C-1 STA. 18+62.36

℄ EX. RAMP C-1

BEGIN WORK ℄ CONST. RAMP C-1 STA. 678+94.49

℄ CONST. RAMP C-1

℄ CONST. RAMP D

END ℄ EX. RAMP D STA. 21+60.12

END WORK ℄ CONST. NB I.R. 77 STA. 514+85.00

STRUCTURE NO. SUM-77-0369 (NO WORK)

BEGIN ℄ EX. RAMP C-1 STA. 0+00.00

END WORK RAMP D STA. 914+89.43

STREAM

STRUCTURE NO. SUM-77-0973R (NO WORK)

PROP. NOISE WALL K

VEGETATED BIOFILTER 20

END ℄ CONST. RAMP D STA. 916+89.75

A STRUCTURE NO. SUM-277-0369

WETLAND E

FOR GEOMETRIC PLAN, SEE SHEETS 13 -22
FOR CURVE DATA, SEE SHEETS 23 -26

HORIZONTAL SCALE IN FEET
0 50 100 200

CALCULATED ZJP
CHECKED PJF

PROJECT SITE PLAN
STA. 496+00 TO STA. 521+00

SUM-77/277/224
VARIOUS

449
1288

D:\2017\2017258\ProjectData\SUM\06002\Design\Drainage\Sheets\06002_DE006.dgn Design 1/15/2021 4:48:09 PM Ikirkland

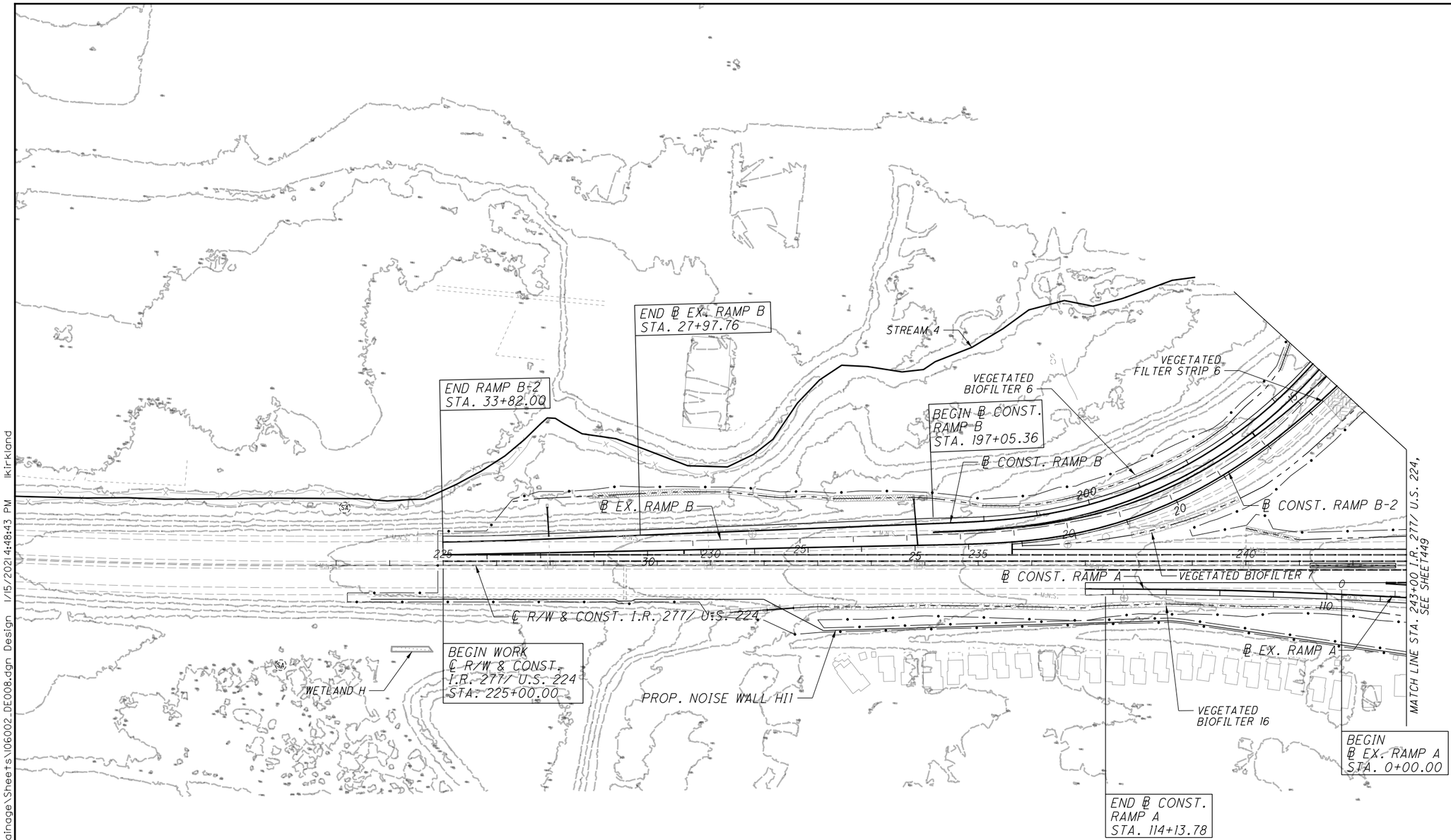


ITEM 601 - RIPRAP

ITEM 670 - DITCH EROSION PROTECTION

ITEM 836 - SEEDING AND EROSION CONTROL W/ TURF REINFORCING MAT, TYPE 1

ITEM 836 - SEEDING AND EROSION CONTROL W/ TURF REINFORCING MAT, TYPE 2

ITEM 601 - ROCK CHANNEL PROTECTION

WETLAND AREA IMPACTED

WETLAND AREA NOT TO BE DISTURBED

ITEM 670 - DITCH EROSION PROTECTION (VEGETATED BIOFILTER PER DETAIL ON SHEET 55)

ITEM 670 - SLOPE EROSION PROTECTION (VEGETATED FILTER STRIP W/ 4" ITEM 659 - TOPSOIL)

TIED CONCRETE BLOCK

FOR GEOMETRIC PLAN, SEE SHEETS 13 -22
FOR CURVE DATA, SEE SHEETS 23-26

HORIZONTAL SCALE IN FEET
0 50 100 200

CALCULATED ZJP
CHECKED PJF

# PROJECT SITE PLAN
## BEGIN TO STA. 243+00 I.R. 277/ U.S. 224

SUM-77/277/224
VARIOUS

450
1288

0:\2017\2017258\ProjectData\SUM\106002\Design\Drainage\Sheets\106002_DE008.dgn Design 1/15/2021 4:48:43 PM Ikirkland

ITEM 601 - RIPRAP

ITEM 670 - DITCH EROSION PROTECTION

ITEM 836 - SEEDING AND EROSION CONTROL W/ TURF REINFORCING MAT, TYPE 1

ITEM 836 - SEEDING AND EROSION CONTROL W/ TURF REINFORCING MAT, TYPE 2

ITEM 601 - ROCK CHANNEL PROTECTION

WETLAND AREA IMPACTED

WETLAND AREA NOT TO BE DISTURBED

ITEM 670 - DITCH EROSION PROTECTION (VEGETATED BIOFILTER PER DETAIL ON SHEET55)

ITEM 670 - SLOPE EROSION PROTECTION (VEGETATED FILTER STRIP W/ 4" ITEM 659 - TOPSOIL)

TIED CONCRETE BLOCK

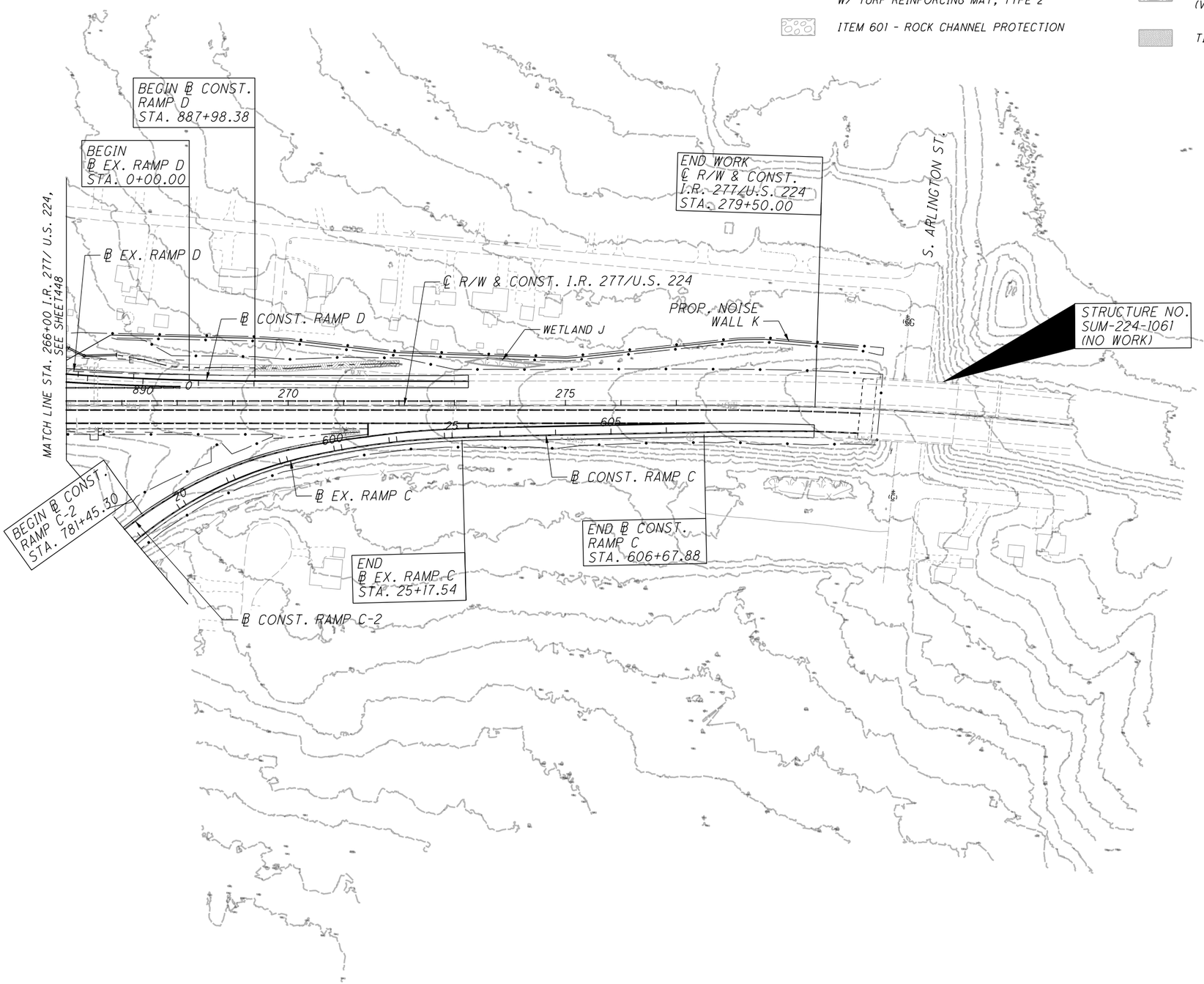


FOR GEOMETRIC PLAN, SEE SHEETS 13 -22
FOR CURVE DATA, SEE SHEETS 23-26

HORIZONTAL SCALE IN FEET
0 50 100 200

CALCULATED ZJP
CHECKED PJF

PROJECT SITE PLAN
STA. 266+00 TO END

SUM-77/277/224
VARIOUS

451
1288

0:\2017\2017258\ProjectData\SUM\106002\Design\Drainage\Sheets\106002_DE009.dgn Design 1/15/2021 4:48:55 PM lkirkland

| BMP TYPE | LOCATION | SIDE | DITCH WIDTH | STATION | LATITUDE | LONGITUDE | EDA CREDIT (ACRES) |
|---|---|---|---|---|---|---|---|
| BIOFILTER 1 | SB I.R. 77 | RT. | 4.0' | 510+00 | 41.027451° N | -81.503705° W | 1.57 |
| | | | | 514+95 | 41.028651° N | -81.504493° W | |
| BIOFILTER 2 | ARLINGTON ROAD RAMP D | RT. | 4.0' | 78+50 | 40.993156° N | -81.493466° W | 1.24 |
| | | | | 83+50 | 40.994528° N | -81.493472° W | |
| BIOFILTER 3 | ARLINGTON ROAD RAMP D | RT. | 4.0' | 83+50 | 40.994528° N | -81.493472° W | 0.77 |
| | | | | 87+00 | 40.995489° N | -81.493460° W | |
| BIOFILTER 4 | ℄ R/W & CONST. I.R. 77 | RT. | 4.0' | 416+50 | 41.003581° N | -81.493716° W | 0.24 |
| | | | | 418+00 | 41.003988° N | -81.493740° W | |
| BIOFILTER 6 | RAMP B | LT. | 4.0' | 198+00 | 41.025269° N | -81.508252° W | 1.02 |
| | | | | 203+00 | 41.025781° N | -81.506654° W | |
| BIOFILTER 7 | RAMP B2 | LT. | 4.0' | 19+00 | 41.025412° N | -81.506536° W | 0.54 |
| | | | | 21+00 | 41.025181° N | -81.507233° W | |
| BIOFILTER 8 | RAMP B1 | RT. | 4.0' | 408+50 | 41.026864° N | -81.503936° W | 0.72 |
| | | | | 411+00 | 41.026657° N | -81.504933° W | |
| BIOFILTER 9 | NB I.R. 77 | RT. | 4.0'<br>6.0'<br>8.0' | 483+00 | 41.021627° N | -81.497365° W | 1.68 |
| | | | | 488+50 | 41.023009° N | -81.498238° W | |
| BIOFILTER 10 | NB I.R. 77 | LT. | 5.0' | 483+00 | 41.021532° N | -81.497672° W | 0.91 |
| | | | | 486+00 | 41.022274° N | -81.498120° W | |
| BIOFILTER 11 | RAMP B2 | LT. | 5.0'<br>4.0' | 286+00 | 41.022274° N | -81.498120° W | 1.44 |
| | | | | 290+50 | 41.023318° N | -81.498962° W | |
| BIOFILTER 12 | RAMP B2 | RT. | 4.0' | 301+00 | 41.025579° N | -81.501312° W | 0.68 |
| | | | | 305+50 | 41.026520° N | -81.502368° W | |
| BIOFILTER 13 | RAMP C1 | LT. | 4.0' | 689+00 | 41.024260° N | -81.497721° W | 0.87 |
| | | | | 692+00 | 41.023889° N | -81.498802° W | |
| BIOFILTER 14 | RAMP C1 | RT. | 4.0' | 696+50 | 41.024834° N | -81.499932° W | 0.64 |
| | | | | 697+50 | 41.025035° N | -81.500179° W | |
| BIOFILTER 15 | RAMP C1 | RT. | 4.0' | 690+50 | 41.024110° N | -81.499103° W | 1.04 |
| | | | | 692+50 | 41.024104° N | -81.498907° W | |
| BIOFILTER 16 | ℄ R/W & CONST. I.R. 277 | RT. | 4.0'<br>6.0' | 232+00 | 41.024684° N | -81.509312° W | 2.29 |
| | | | | 242+00 | 41.024893° N | -81.505698° W | |
| BIOFILTER 17 | RAMP B1 | RT. | 4.0' | 413+00 | 41.026192° N | -81.505445° W | 0.69 |
| | | | | 416+50 | 41.025331° N | -81.504406° W | |
| BIOFILTER 19 | SB I.R. 77 | RT. | 4.0' | 484+00 | 41.021772° N | -81.498056° W | 0.87 |
| | | | | 493+00 | 41.023810° N | -81.499920° W | |
| BIOFILTER 20 | RAMP D | LT. | 4.0' | 894+00 | 41.025743° N | -81.498022° W | 0.38 |
| | | | | 896+50 | 41.025754° N | -81.498939° W | |
| BIOFILTER 21 | SB I.R. 77 | RT. | 4.0'<br>5.0' | 504+00 | 41.026137° N | -81.502456° W | 1.10 |
| | | | | 507+00 | 41.026728° N | -81.503205° W | |
| BIOFILTER 22 | RAMP A | RT. | 4.0' | 102+00 | 41.025046° N | -81.502941° W | 0.32 |
| | | | | 103+50 | 41.025067° N | -81.503508° W | |
| BIOFILTER 23 | RAMP B2 | LT. | 4.0'<br>5.0' | 301+50 | 41.025549° N | -81.501633° W | 1.03 |
| | | | | 304+60 | 41.026137° N | -81.502456° W | |
| BIOFILTER 24 | SB I.R. 77 | LT. | 4.0' | 496+00 | 41.024271° N | -81.500877° W | 0.46 |
| | | | | 498+00 | 41.024645° N | -81.501413° W | |

| BMP TYPE | LOCATION | SIDE | DITCH WIDTH | STATION | LATITUDE | LONGITUDE | EDA CREDIT (ACRES) |
|---|---|---|---|---|---|---|---|
| FILTER STRIP 2 | ℄ R/W & CONST. I.R. 77 | LT. | N/A | 453+38 | 41.013575° N | -81.495739° W | 0.90 |
| | | | | 458+67 | 41.015000° N | -81.496089° W | |
| FILTER STRIP 3 | ℄ R/W & CONST. I.R. 77 | RT. | N/A | 455+28 | 41.014179° N | -81.495213° W | 0.25 |
| | | | | 457+00 | 41.014645° N | -81.495306° W | |
| FILTER STRIP 4 | RAMP B1 | LT. | N/A | 402+87 | 41.025674° N | -81.502539° W | 0.56 |
| | | | | 408+50 | 41.026680° N | -81.504017° W | |
| FILTER STRIP 5 | RAMP B1 | LT. | N/A | 414+68 | 41.025706° N | -81.504890° W | 0.28 |
| | | | | 417+56 | 41.025459° N | -81.503995° W | |
| FILTER STRIP 6 | RAMP B2 | LT. | N/A | 15+16 | 41.026211° N | -81.505574° W | 0.29 |
| | | | | 16+67 | 41.025900° N | -81.505949° W | |
| FILTER STRIP 7 | RAMP C1 | RT. | N/A | 683+45 | 41.025282° N | -81.498754° W | 0.72 |
| | | | | 690+50 | 41.024080° N | -81.498253° W | |
| FILTER STRIP 8 | RAMP C2 | RT. | N/A | 795+45 | 41.024421° N | -81.500374° W | 0.15 |
| | | | | 796+95 | 41.024699° N | -81.500774° W | |
| FILTER STRIP 9 | SB I.R. 77 | LT. | N/A | 498+00 | 41.024686° N | -81.501350° W | 0.40 |
| | | | | 500+44 | 41.025183° N | -81.501945° W | |
| | | | | | TREATMENT PROVIDED | | 24.05 |
| | | | | | TREATMENT REQUIRED* | | 24.02 |

* CALCULATED PER L&D VOL. 2, SEC. 1115.7

FOR TYPICAL SECTIONS, SEE SHEET 55
FOR PROJECT SITE PLANS, SEE SHEETS 444 - 451

CALCULATED ATR
CHECKED CJC

# BMP TABLE

SUM-77 / 277 / 224
VARIOUS



O:\2017\2017258\ProjectData\SUM\106002\Design\Drainage\Sheets\106002_DE010.dgn Design 1/15/2021 4:48:58 PM lkirkland

(1) ℄ R/W & CONST. I.R. 77
P.I. Sta. 360+81.72
Δ = 43° 10′ 45″ (RT)
Dc = 1° 28′ 08″
R = 3,900.50′
T = 1,543.50′
L = 2,939.50′
E = 294.29′
C = 2,870.43′
C.B. = N 21° 17′ 37″ W
D.S. = 70 MPH
$e_{max}$ = 0.052
P.C. STA. 345+38.22
P.T. STA. 374+77.72

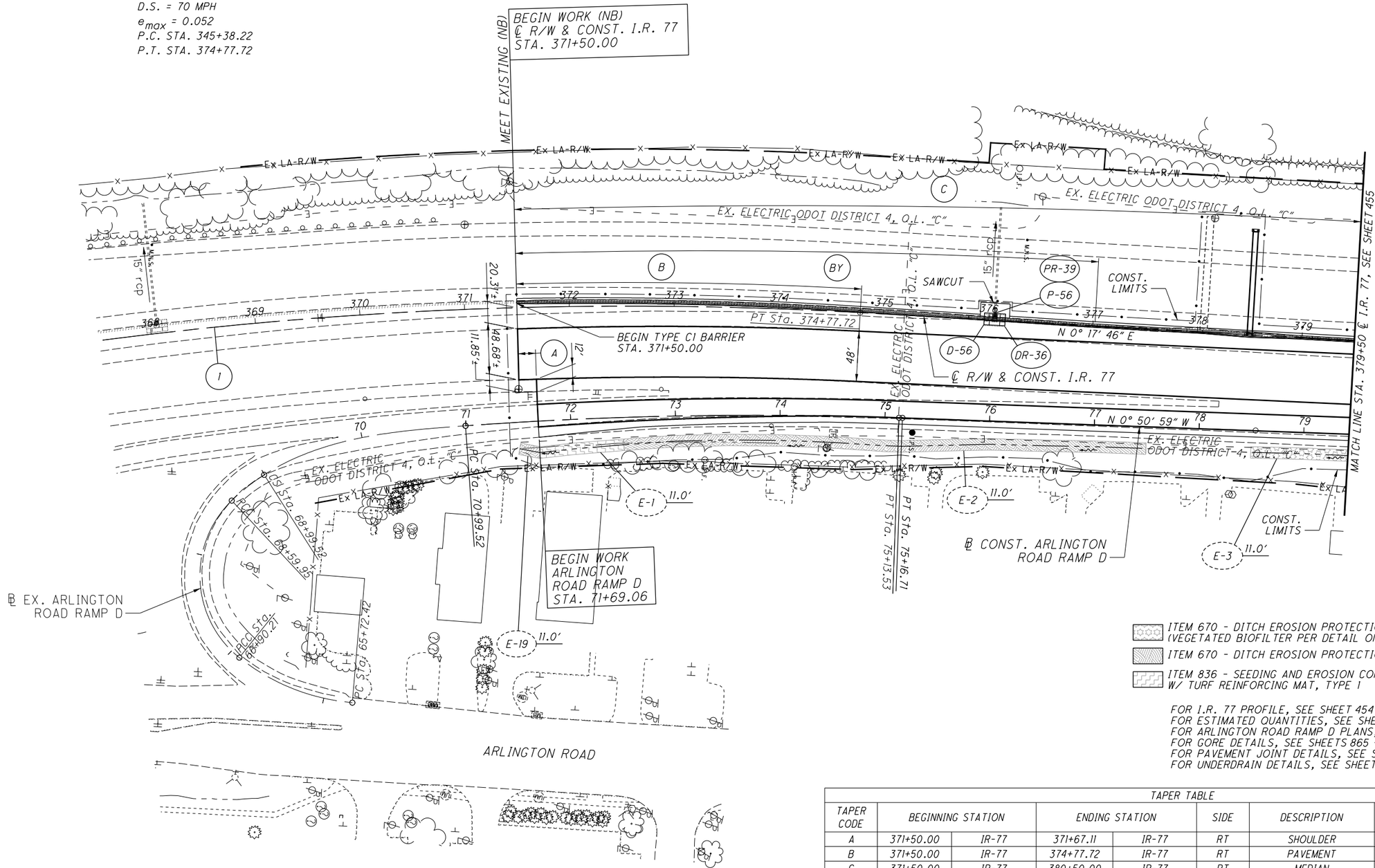


ITEM 670 - DITCH EROSION PROTECTION (VEGETATED BIOFILTER PER DETAIL ON SHEET 55)
ITEM 670 - DITCH EROSION PROTECTION
ITEM 836 - SEEDING AND EROSION CONTROL W/ TURF REINFORCING MAT, TYPE I

FOR I.R. 77 PROFILE, SEE SHEET 454
FOR ESTIMATED QUANTITIES, SEE SHEETS 417 - 439
FOR ARLINGTON ROAD RAMP D PLANS, SEE SHEETS 507- 508
FOR GORE DETAILS, SEE SHEETS 865 - 868
FOR PAVEMENT JOINT DETAILS, SEE SHEETS 893 - 896
FOR UNDERDRAIN DETAILS, SEE SHEET 922

TAPER TABLE

| TAPER CODE | BEGINNING STATION | | ENDING STATION | | SIDE | DESCRIPTION | BEGIN WIDTH | END WIDTH | TAPER RATE |
|---|---|---|---|---|---|---|---|---|---|
| A | 371+50.00 | IR-77 | 371+67.11 | IR-77 | RT | SHOULDER | 11.85′ | 12.00′ | 114:1 |
| B | 371+50.00 | IR-77 | 374+77.72 | IR-77 | RT | PAVEMENT | 48.68′ | 48.00′ | 482:1 |
| C | 371+50.00 | IR-77 | 380+50.00 | IR-77 | RT | MEDIAN | 20.31′ | 12.00′ | 108:1 |
| BY | 371+50.00 | IR-77 | 377+02.12 | IR-77 | LT | MEDIAN BARRIER | 4.94′ | 0.00′ | 112:1 |

HORIZONTAL SCALE IN FEET
0 25 50 100
CALCULATED LRK
CHECKED PJF

PLAN - I.R. 77
BEGIN TO STA. 379+50

SUM-77 / 277 / 224
VARIOUS

453
1288

0:\2017\2017258\ProjectData\SUM\06002\Design\Roadway\Sheets\06002_GP001.dgn Sheet 1/15/2021 10:21:26 AM pfry

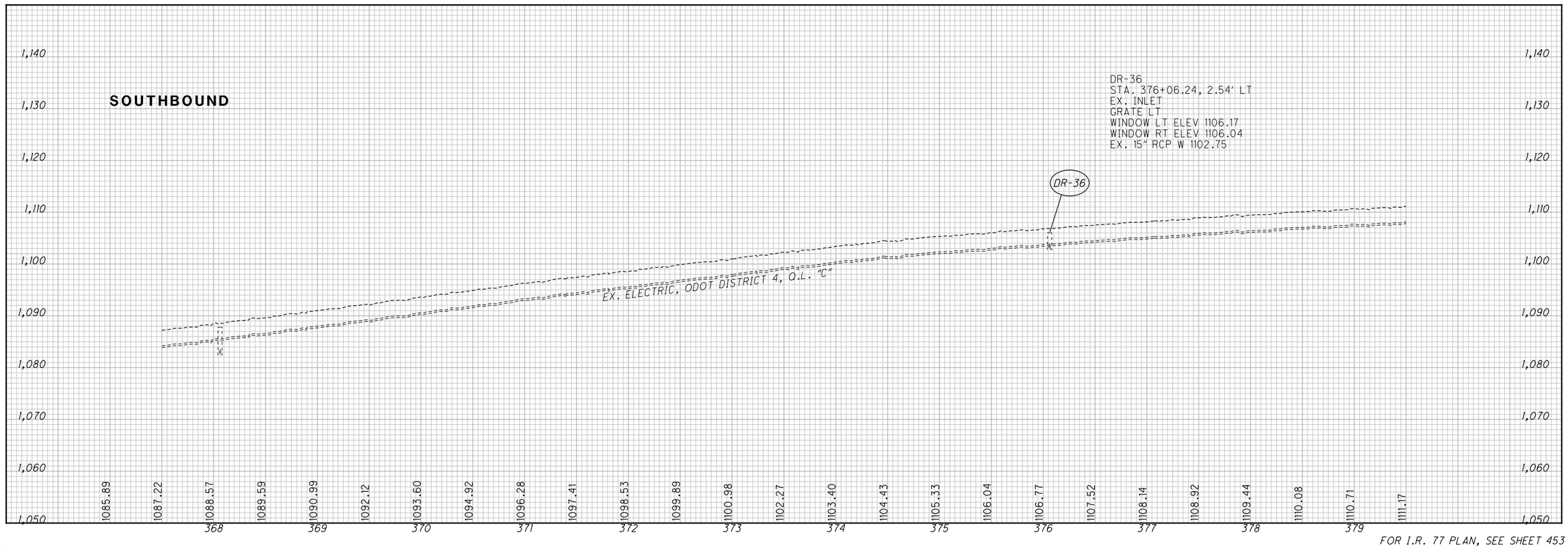


FOR I.R. 77 PLAN, SEE SHEET 453

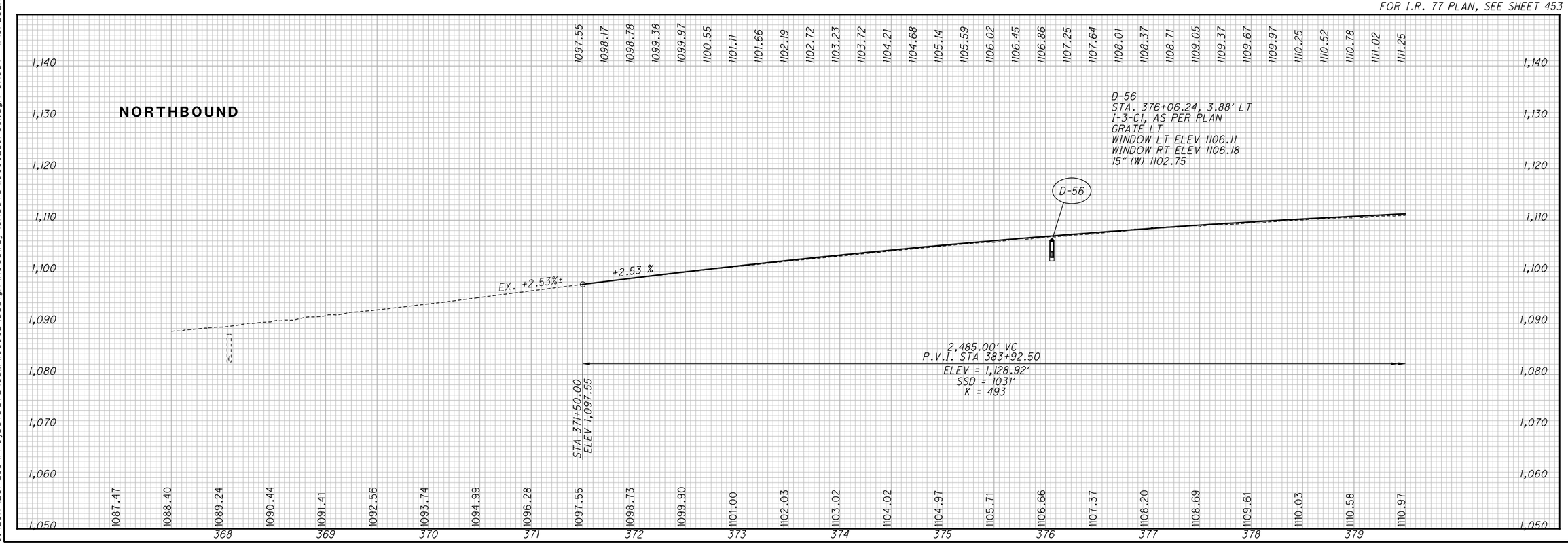


CALCULATED CJC
CHECKED PJF

# PROFILE - I.R. 77
# BEGIN TO STA. 379+50

SUM-77 / 277 / 224
VARIOUS

454
1288

O:\2017\2017258\ProjectData\SUM\106002\Design\Roadway\Sheets\106002_GF001.dgn Sheet 1/15/2021 10:29 AM pfry

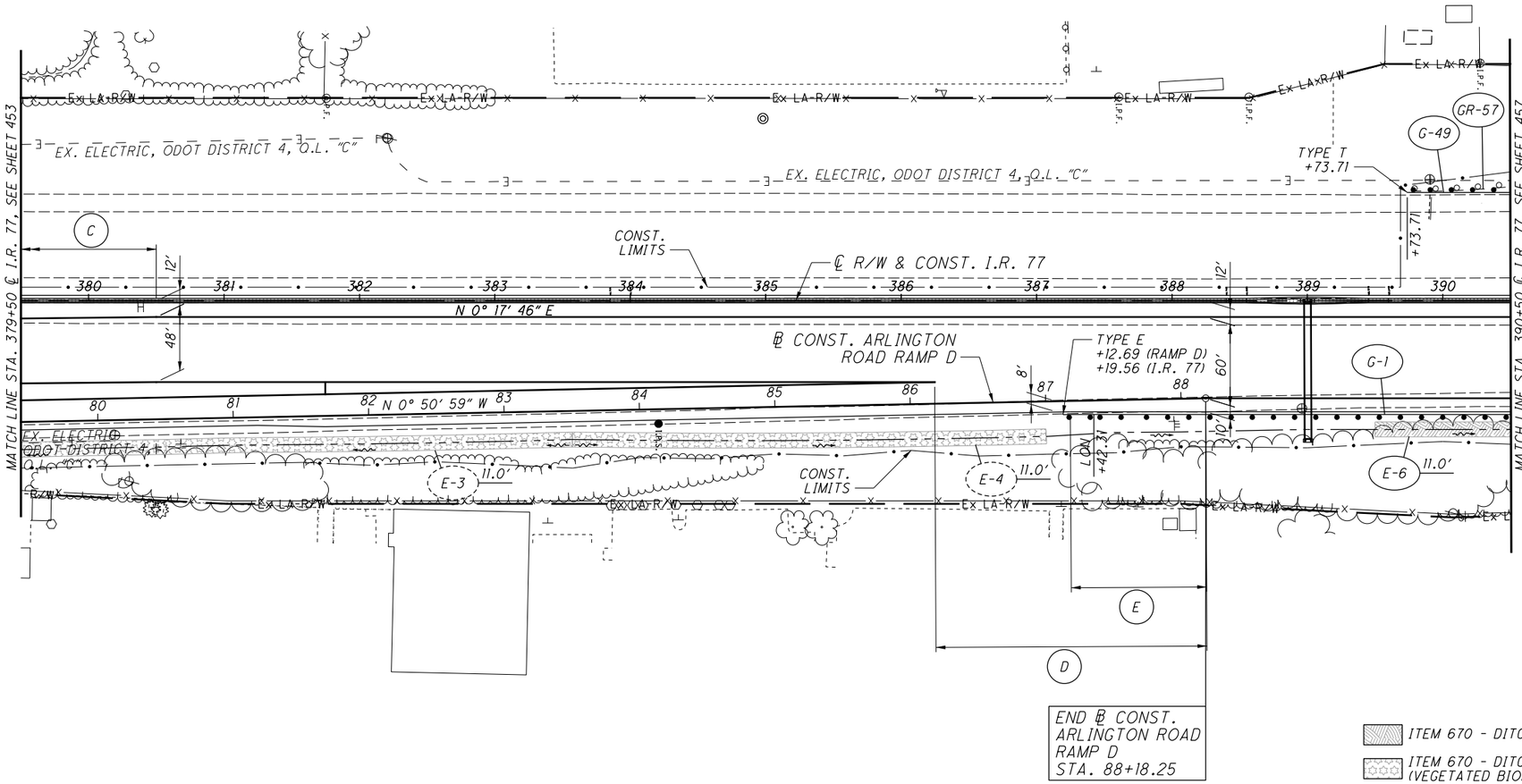


ITEM 670 - DITCH EROSION PROTECTION

ITEM 670 - DITCH EROSION PROTECTION (VEGETATED BIOFILTER PER DETAIL ON SHEET 55)

FOR I.R. 77 PROFILE, SEE SHEET 456
FOR ESTIMATED QUANTITIES, SEE SHEETS 417 - 439
FOR ARLINGTON ROAD RAMP D PLANS, SEE SHEETS 507- 508
FOR GORE DETAILS, SEE SHEETS 865 - 868
FOR PAVEMENT JOINT DETAILS, SEE SHEETS 893 - 896
FOR UNDERDRAIN DETAILS, SEE SHEET 922

TAPER TABLE

| TAPER CODE | BEGINNING STATION | | ENDING STATION | | SIDE | DESCRIPTION | BEGIN WIDTH | END WIDTH | TAPER RATE |
|---|---|---|---|---|---|---|---|---|---|
| C | 371+50.00 | IR-77 | 380+50.00 | IR-77 | RT | MEDIAN | 20.31' | 12.00' | 108:1 |
| D | 86+18.37 | ARL. RAMP D | 88+18.25 | ARL. RAMP D | RT | PAVEMENT | 16.00' | 12.00' | 50:1 |
| E | 87+18.15 | ARL. RAMP D | 88+18.25 | ARL. RAMP D | RT | SHOULDER | 8.00' | 10.00' | 50:1 |

HORIZONTAL SCALE IN FEET
0 25 50 100

CALCULATED LRK
CHECKED PJF

PLAN - I.R. 77
STA. 379+50 TO STA. 390+50

SUM-77/277/224
VARIOUS

455
1288

0:\2017\2017258\Project Data\SUM\06002\Design\Roadway\Sheets\06002_GP002.dgn Sheet 1/15/2021 2:48 AM pfry

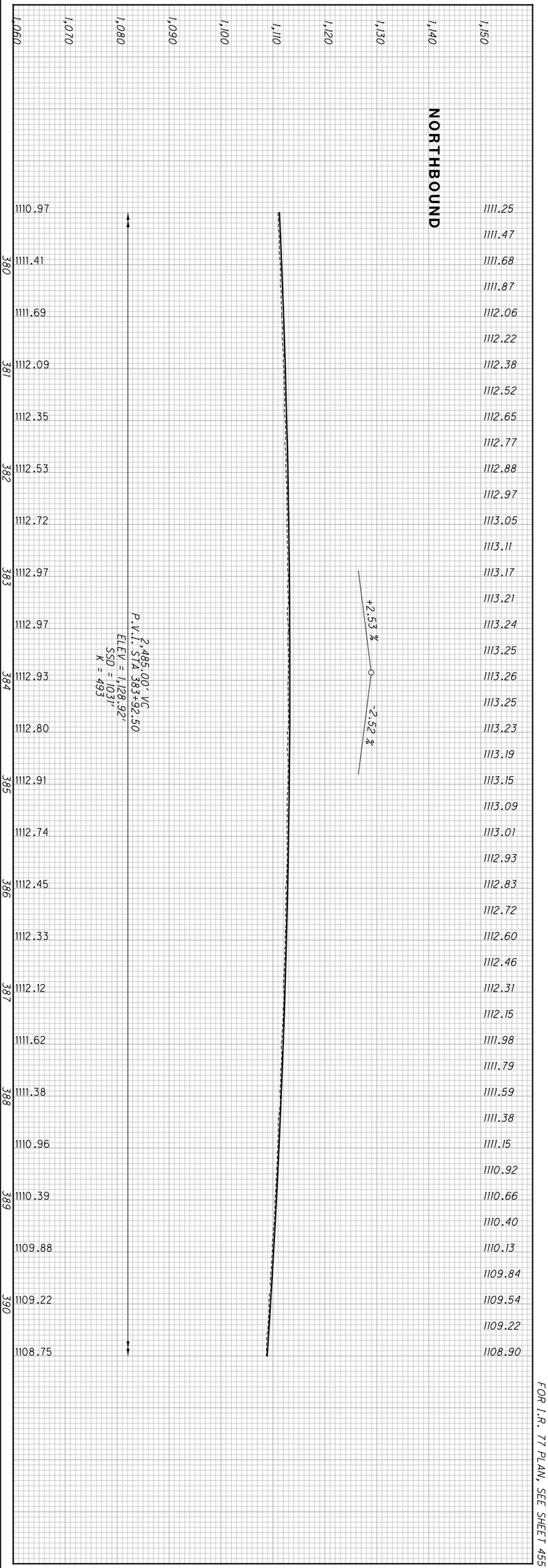


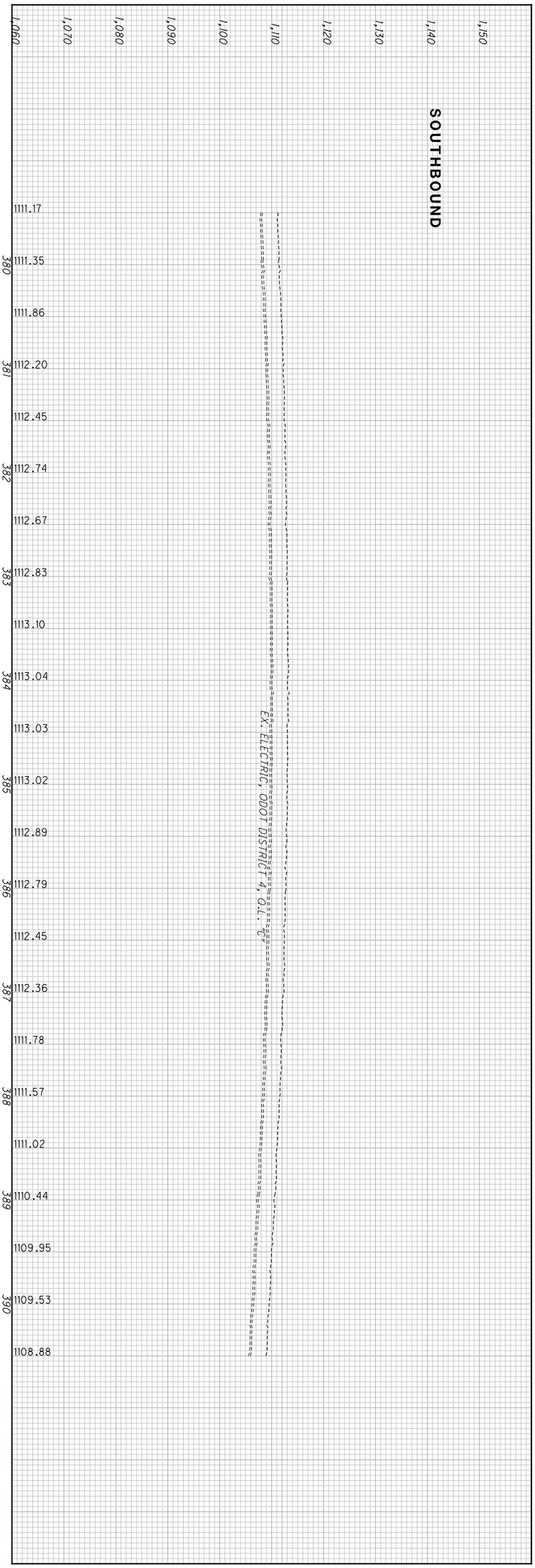


FOR I.R. 77 PLAN, SEE SHEET 455

| | | |
|---|---|---|
| 456 / 1288 | **SUM-77 / 277 / 224**<br>**VARIOUS** | **PROFILE - I.R. 77**<br>**STA. 379+50 TO STA. 390+50** |

CALCULATED CJC
CHECKED PJF

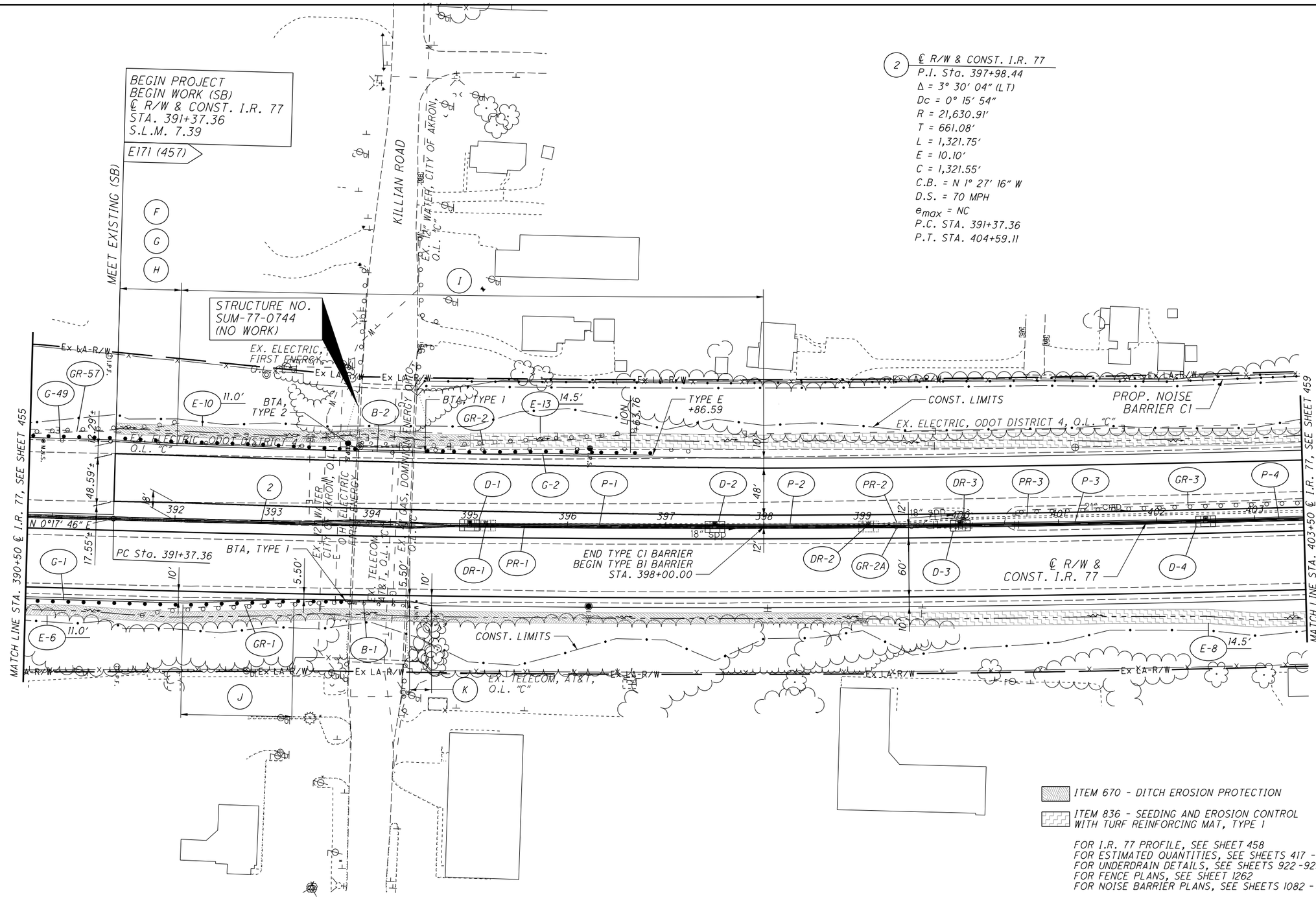


2 ℄ R/W & CONST. I.R. 77
P.I. Sta. 397+98.44
Δ = 3° 30' 04" (LT)
Dc = 0° 15' 54"
R = 21,630.91'
T = 661.08'
L = 1,321.75'
E = 10.10'
C = 1,321.55'
C.B. = N 1° 27' 16" W
D.S. = 70 MPH
$e_{max}$ = NC
P.C. STA. 391+37.36
P.T. STA. 404+59.11

ITEM 670 - DITCH EROSION PROTECTION

ITEM 836 - SEEDING AND EROSION CONTROL WITH TURF REINFORCING MAT, TYPE 1

FOR I.R. 77 PROFILE, SEE SHEET 458
FOR ESTIMATED QUANTITIES, SEE SHEETS 417 - 439
FOR UNDERDRAIN DETAILS, SEE SHEETS 922 -923
FOR FENCE PLANS, SEE SHEET 1262
FOR NOISE BARRIER PLANS, SEE SHEETS 1082 - 1091

TAPER TABLE

| TAPER CODE | BEGINNING STATION | | ENDING STATION | | SIDE | DESCRIPTION | BEGIN WIDTH | END WIDTH | TAPER RATE |
|---|---|---|---|---|---|---|---|---|---|
| F | 391+37.36 | IR-77 | 392+00.00 | IR-77 | LT | SHOULDER | 12.29' | 10.00' | 27:1 |
| G | 391+37.36 | IR-77 | 392+00.00 | IR-77 | LT | PAVEMENT | 48.59' | 48.00' | 106:1 |
| H | 391+37.36 | IR-77 | 392+00.00 | IR-77 | LT | MEDIAN | 17.55' | 18.00' | 139:1 |
| I | 392+00.00 | IR-77 | 398+00.00 | IR-77 | LT | MEDIAN | 18.00' | 12.00' | 100:1 |
| J | 392+12.50 | IR-77 | 393+25.00 | IR-77 | RT | SHOULDER | 10.00' | 5.50' | 25:1 |
| K | 394+40.00 | IR-77 | 394+62.50 | IR-77 | RT | SHOULDER | 5.50' | 10.00' | 5:1 |

N

0 25 50 100
HORIZONTAL SCALE IN FEET

CALCULATED LRK
CHECKED PJF

# PLAN - I.R. 77
# STA. 390+50 TO STA. 403+50

SUM-77 / 277 / 224
VARIOUS

457
1288

O:\2017\2017258\ProjectData\SUM\106002\Design\Roadway\Sheets\106002_GP003.dgn Sheet 1/15/2021 02:53 AM pfry

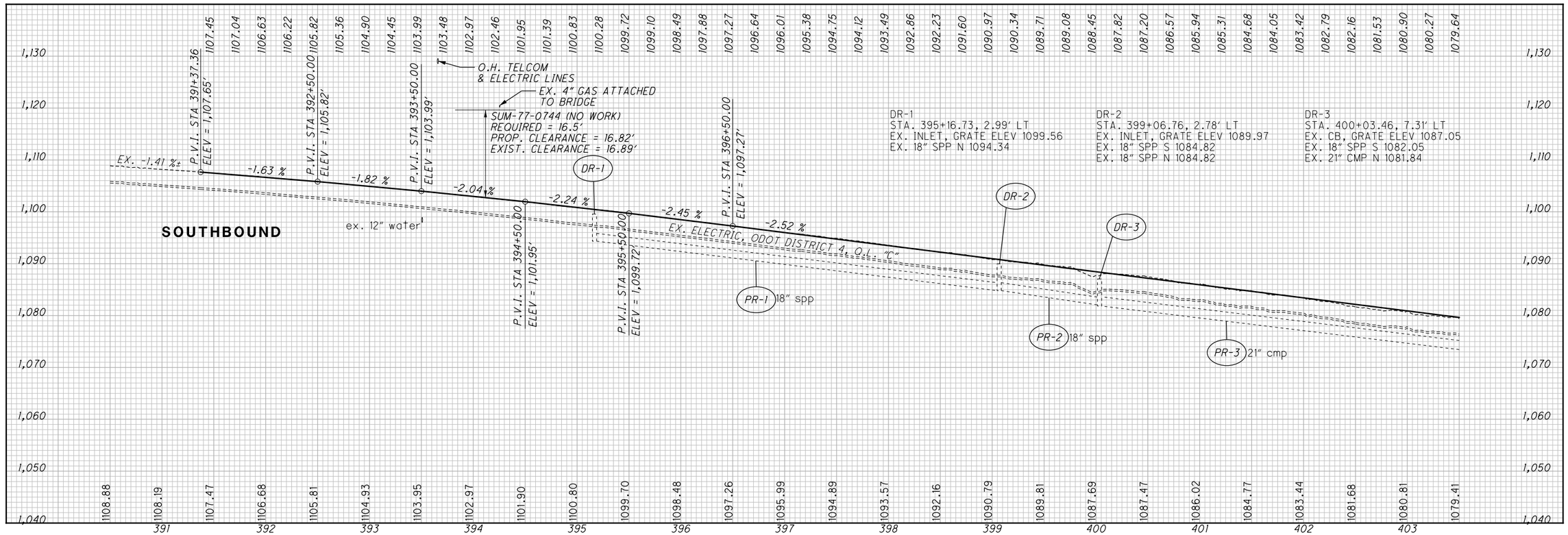


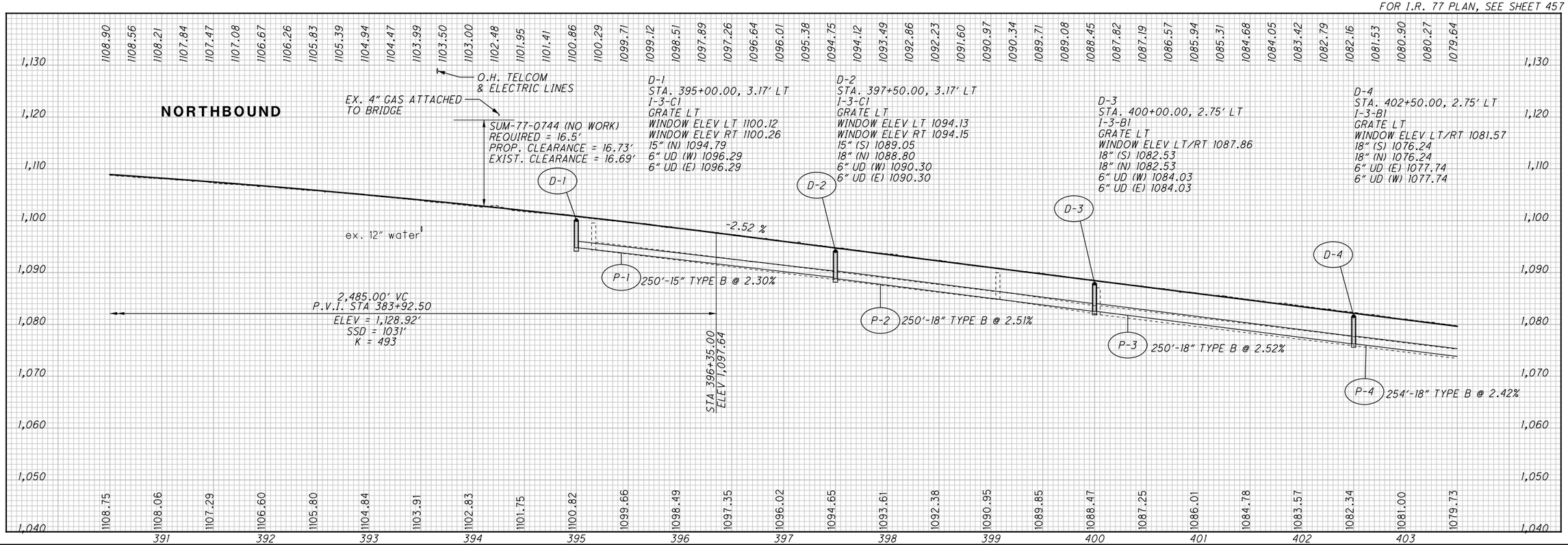


# PROFILE - I.R. 77
## STA. 390+50 TO STA. 403+50

CALCULATED CJC
CHECKED PJF

SUM-77/277/224
VARIOUS

458
1288

O:\2017\2017258\ProjectData\SUM\06002\Design\Roadway\Sheets\06002_GF003.dgn Sheet 1/15/2021 02:57 AM pfry

(2) ℄ R/W & CONST. I.R. 77
P.I. Sta. 397+98.44
Δ = 3° 30′ 04″ (LT)
Dc = 0° 15′ 54″
R = 21,630.91′
T = 661.08′
L = 1,321.75′
E = 10.10′
C = 1,321.55′
C.B. = N 1° 27′ 16″ W
D.S. = 70 MPH
$e_{max}$ = NC
P.C. STA. 391+37.36
P.T. STA. 404+59.11

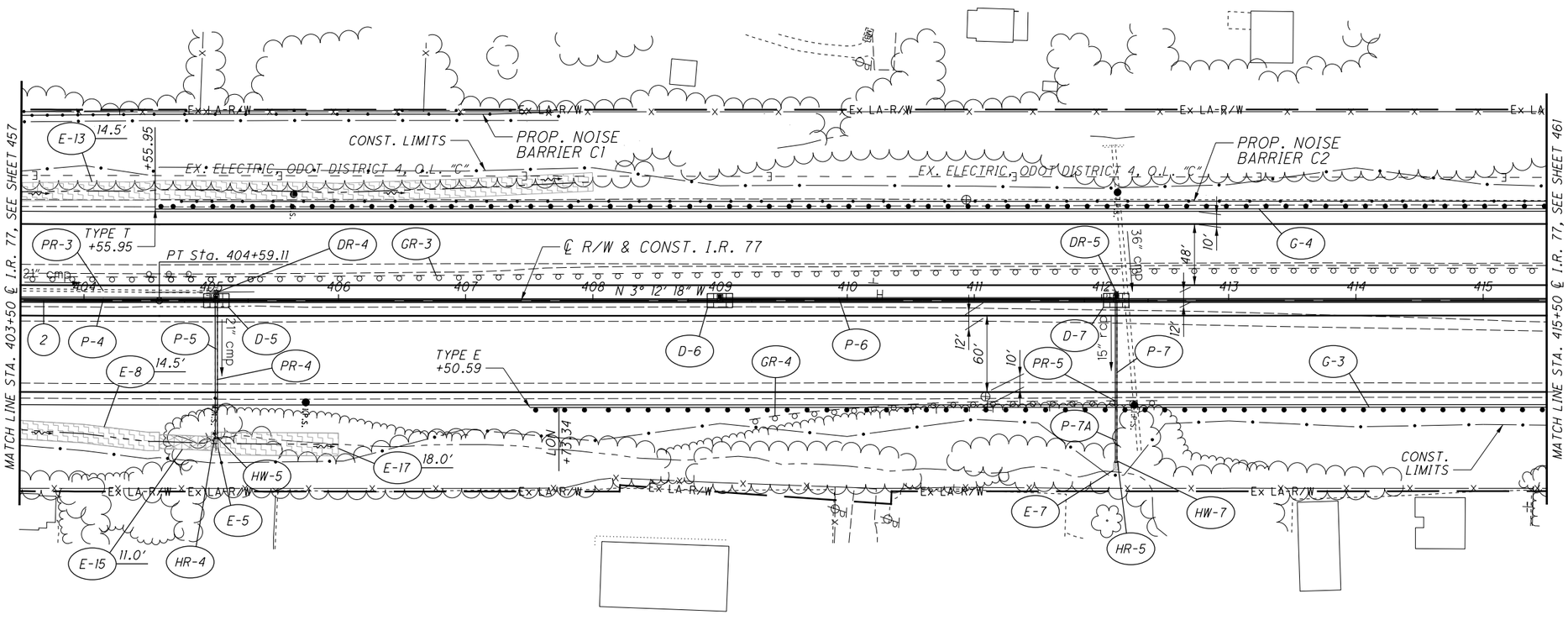


ITEM 670 - DITCH EROSION PROTECTION (VEGETATED BIOFILTER PER DETAIL ON SHEET55)

ITEM 601 - ROCK CHANNEL PROTECTION

ITEM 836 - SEEDING AND EROSION CONTROL WITH TURF REINFORCING MAT, TYPE 1

ITEM 836 - SEEDING AND EROSION CONTROL W/ TURF REINFORCING MAT, TYPE 2

FOR I.R. 77 PROFILE, SEE SHEET 460
FOR ESTIMATED QUANTITIES, SEE SHEETS 417 - 439
FOR UNDERDRAIN DETAILS, SEE SHEET 923
FOR FENCE PLANS, SEE SHEET 1263
FOR NOISE BARRIER PLANS, SEE SHEETS 1082 - 1091

HORIZONTAL SCALE IN FEET
0 25 50 100
CALCULATED LRK
CHECKED PJF

PLAN - I.R. 77
STA. 403+50 TO STA. 415+50

SUM-77/277/224
VARIOUS

459
1288

O:\2017\2017258\ProjectData\SUM\06002\Design\Roadway\Sheets\06002_GP004.dgn Sheet 1/15/2021 10:22:00 AM pfry

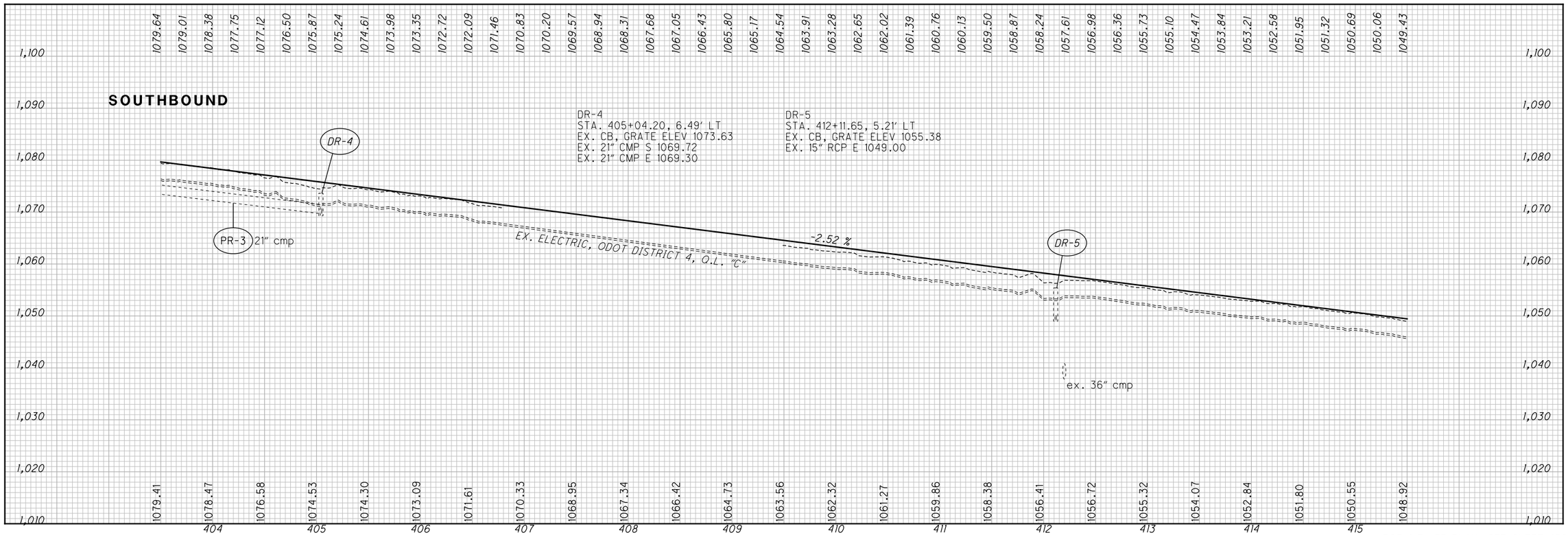


FOR I.R. 77 PLAN, SEE SHEET 459

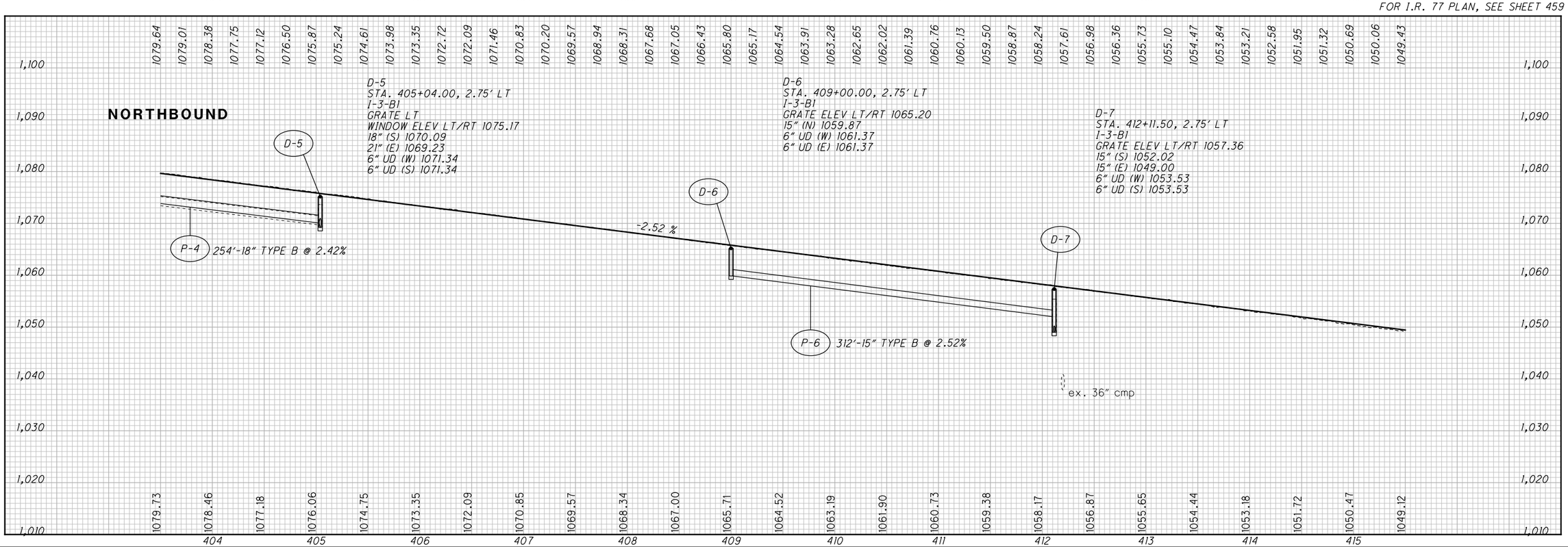


# PROFILE - I.R. 77
# STA. 403+50 TO STA. 415+50

CALCULATED CJC
CHECKED PJF

SUM-77/277/224
VARIOUS

460
1288

O:\2017\2017258\ProjectData\SUM\106002\Design\Roadway\Sheets\106002_GF004.dgn Sheet 1/15/2021 10:22:02 AM pfry

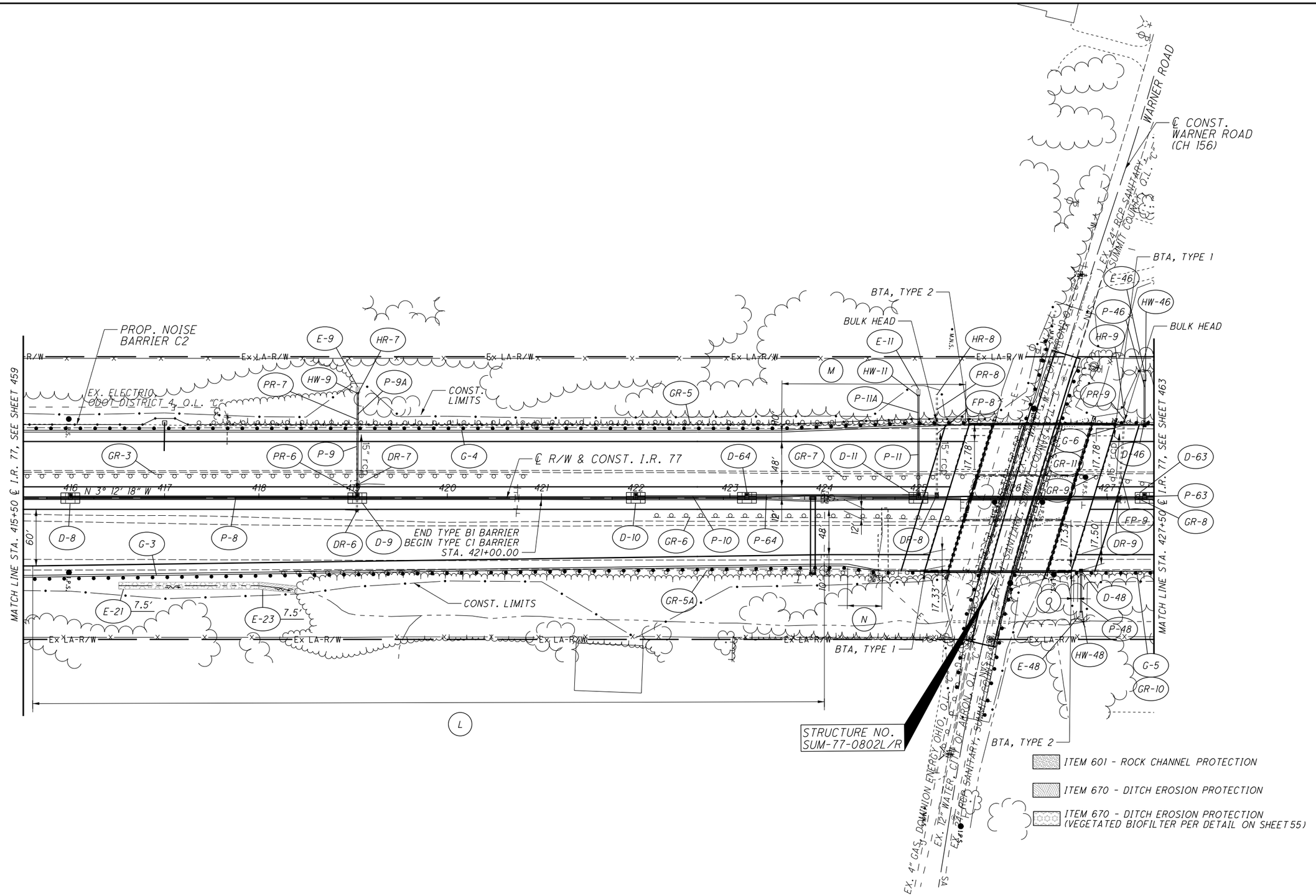


FOR I.R. 77 PROFILE, SEE SHEET 462
FOR ESTIMATED QUANTITIES, SEE SHEETS 417 - 439
FOR WARNER ROAD PLANS, SEE SHEET 509
FOR UNDERDRAIN DETAILS, SEE SHEETS 923 - 924, 932
FOR NOISE BARRIER PLANS, SEE SHEETS 1082 - 1091
FOR STRUCTURE PLANS, SEE SHEETS 1155 - 1180
FOR ITS PLANS, SEE SHEETS 1020 - 1036

TAPER TABLE

| TAPER CODE | BEGINNING STATION | | ENDING STATION | | SIDE | DESCRIPTION | BEGIN WIDTH | END WIDTH | TAPER RATE |
|---|---|---|---|---|---|---|---|---|---|
| L | 415+60.00 | IR-77 | 424+00.00 | IR-77 | RT | PAVEMENT | 60.00' | 48.00' | 70:1 |
| M | 423+55.00 | IR-77 | 425+49.49 | IR-77 | LT | SHOULDER | 10.00' | 17.78' | 25:1 |
| N | 424+25.00 | IR-77 | 424+61.65 | IR-77 | RT | SHOULDER | 10.00' | 17.33' | 5:1 |
| O | 426+65.00 | IR-77 | 426+69.25 | IR-77 | RT | SHOULDER | 17.33' | 17.50' | 25:1 |

HORIZONTAL SCALE IN FEET
0 25 50 100

CALCULATED LRK
CHECKED PJF

# PLAN - I.R. 77
# STA. 415+50 TO STA. 427+50

SUM-77 / 277 / 224
VARIOUS

461
1288

O:\2017\2017258\ProjectData\SUM\106002\Design\Roadway\Sheets\106002_GP005.dgn Sheet 1/15/2021 10:22:05 AM pfry

# PROFILE - I.R. 77
## STA. 415+50 TO STA. 427+50

CALCULATED CJC
CHECKED PJF

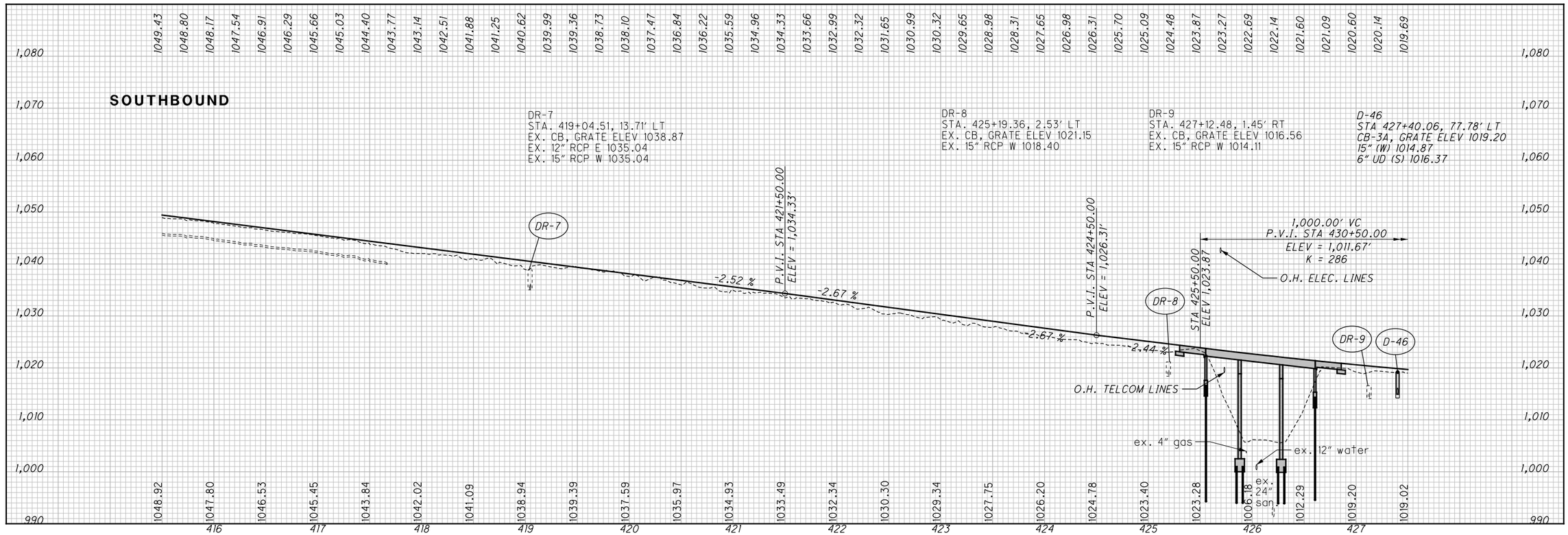


FOR I.R. 77 PLAN, SEE SHEET 461

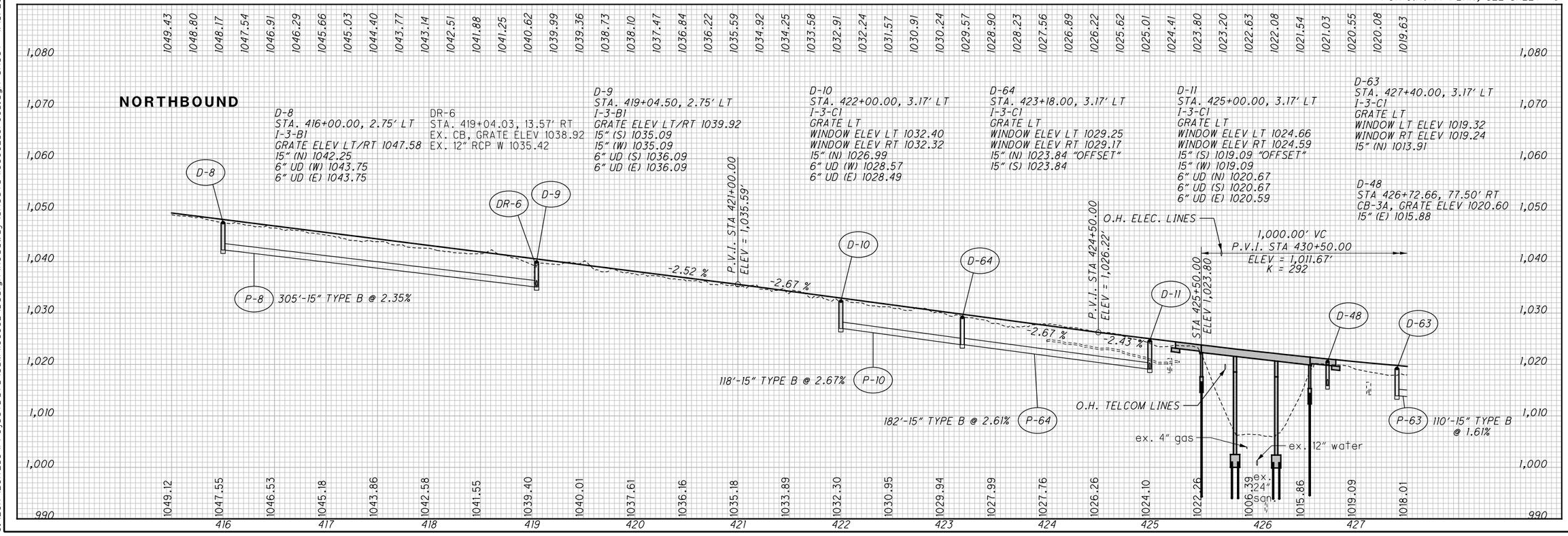


SUM-77 / 277 / 224
VARIOUS

462
1288

O:\2017\2017258\ProjectData\SUM\06002\Design\Roadway\Sheets\06002_GF005.dgn Sheet 1/15/2021 10:22:09 AM pfry

3 ℄ R/W & CONST. I.R. 77
P.I. Sta. 438+34.18
Δ = 7° 59′ 02″ (LT)
Dc = 0° 24′ 10″
R = 14,228.56′
T = 992.94′
L = 1,982.67′
E = 34.60′
C = 1,981.07′
C.B. = N 7° 11′ 49″ W
D.S. = 70 MPH
$e_{max}$ = NC
P.C. STA. 428+41.24
P.T. STA. 448+23.91

WETLANDS
O.H. ELEC. TRANSMISSION LINES
TUSCARAWAS RIVER
BULK HEAD
BTA, TYPE 2
BTA, TYPE 1
CONST. LIMITS
℄ R/W & CONST. I.R. 77
EX. 8" SANITARY, SUMMIT COUNTY, O.L.
EX. ELECTRIC, FIRST ENERGY, O.L. "C"
STRUCTURE NO. SUM-77-0810L/R
MATCH LINE STA. 427+50 ℄ I.R. 77, SEE SHEET 461
MATCH LINE STA. 439+50 ℄ I.R. 77, SEE SHEET 465
PC Sta. 428+41.24

ITEM 601 - ROCK CHANNEL PROTECTION
WETLAND
WETLAND AREA NOT TO BE DISTURBED
ITEM 601 - TIED CONCRETE BLOCK MAT WITH TYPE 2 UNDERLAYMENT

FOR I.R. 77 PROFILE, SEE SHEET 464
FOR ESTIMATED QUANTITIES, SEE SHEETS 417 - 439
FOR UNDERDRAIN DETAILS, SEE SHEETS 924 , 932
FOR STRUCTURE PLANS, SEE SHEETS 1181 - 1224

TAPER TABLE

| TAPER CODE | BEGINNING STATION | | ENDING STATION | | SIDE | DESCRIPTION | BEGIN WIDTH | END WIDTH | TAPER RATE |
|---|---|---|---|---|---|---|---|---|---|
| P | 427+60.00 | IR-77 | 427+67.00 | IR-77 | LT | SHOULDER | 17.78′ | 17.50′ | 25:1 |
| Q | 431+22.50 | IR-77 | 433+10.00 | IR-77 | RT | SHOULDER | 17.50′ | 10.00′ | 25:1 |
| R | 431+80.00 | IR-77 | 432+13.00 | IR-77 | LT | SHOULDER | 17.07′ | 10.00′ | 5:1 |
| S | 431+50.00 | IR-77 | 439+90.00 | IR-77 | LT | PAVEMENT | 48.00′ | 60.00′ | 70:1 |
| CG | 431+50.00 | SB IR-77 | 431+80.00 | SB IR-77 | LT | SHOULDER | 17.50′ | 17.07′ | 70:1 |

HORIZONTAL SCALE IN FEET
0 25 50 100
CALCULATED LRK
CHECKED PJF

PLAN - I.R. 77
STA. 427+50 TO STA. 439+50

SUM-77 / 277 / 224
VARIOUS

463
1288

D:\2017\2017258\ProjectData\SUM\06002\Design\Roadway\Sheets\06002_GP006.dgn Sheet 1/15/2021 10:22:13 AM pfry

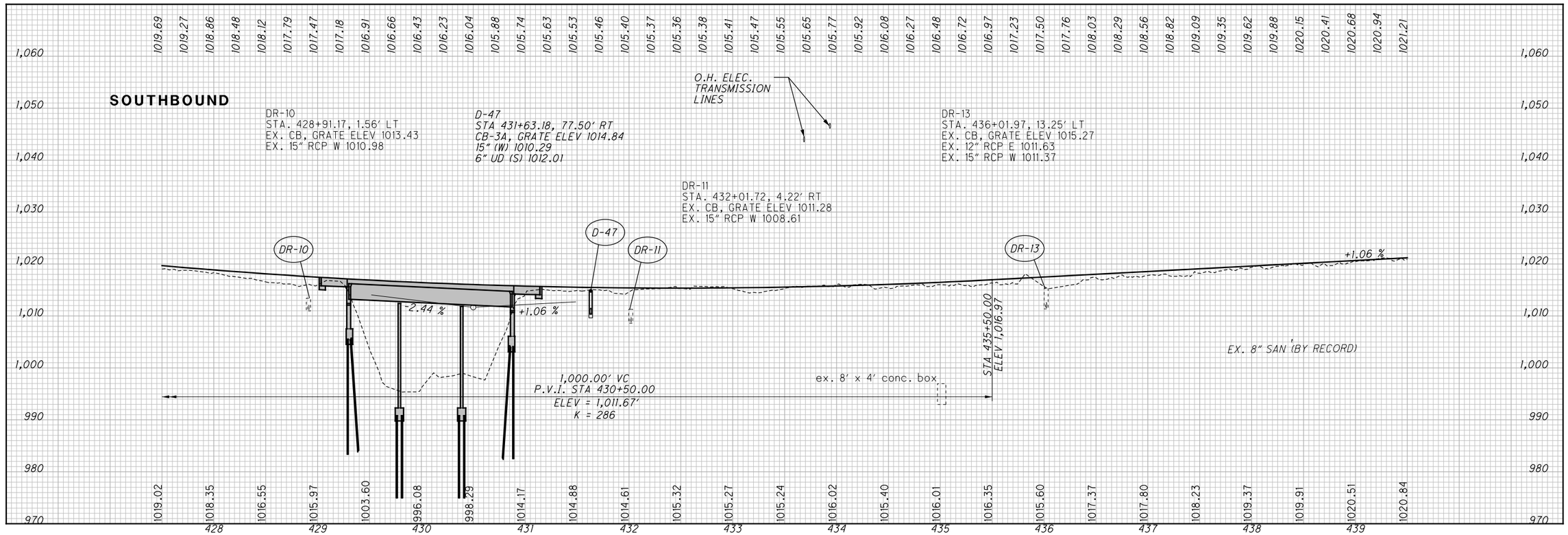


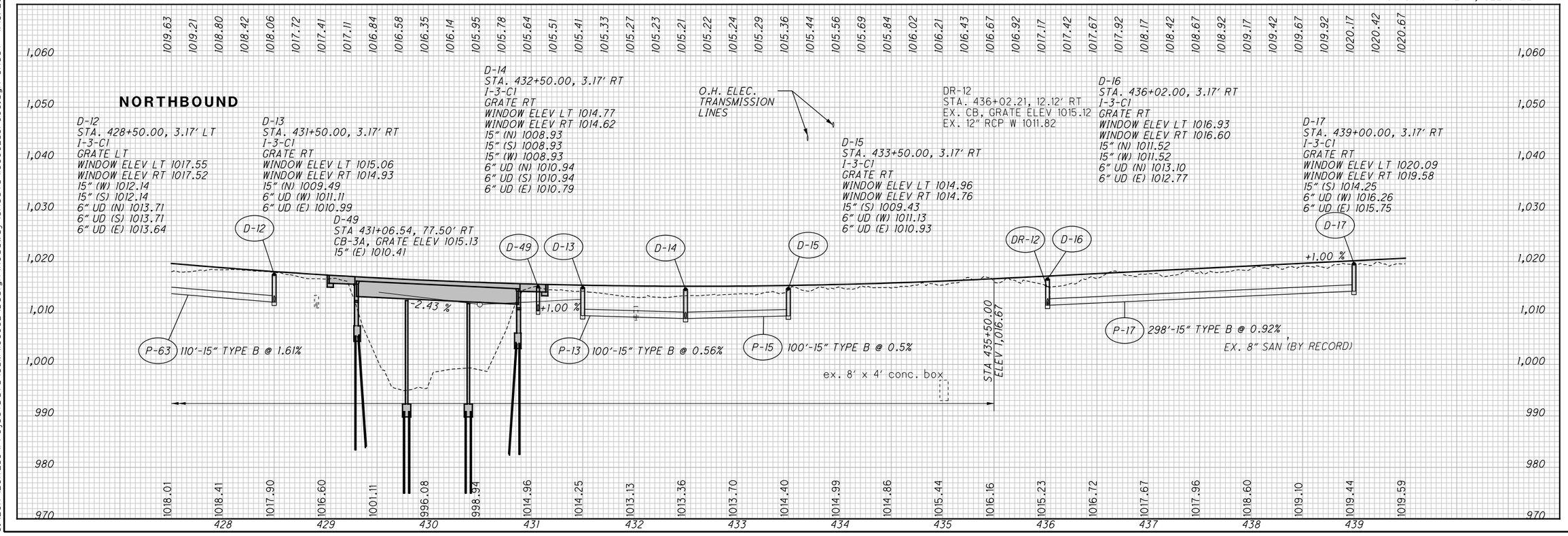


# PROFILE - I.R. 77
## STA. 427+50 TO STA. 439+50

CALCULATED CJC
CHECKED PJF

SUM-77 / 277 / 224
VARIOUS

464
1288

D:\2017\2017258\ProjectData\SUM\06002\Design\Roadway\Sheets\06002_GF006.dgn Sheet 1/15/2021 10:22:17 AM pfry

(3) ℄ R/W & CONST. I.R. 77
P.I. Sta. 438+34.18
Δ = 7° 59′ 02″ (LT)
Dc = 0° 24′ 10″
R = 14,228.56′
T = 992.94′
L = 1,982.67′
E = 34.60′
C = 1,981.07′
C.B. = N 7° 11′ 49″ W
D.S. = 70 MPH
$e_{max}$ = NC
P.C. STA. 428+41.24
P.T. STA. 448+23.91

ITEM 601 - ROCK CHANNEL PROTECTION

ITEM 670 - DITCH EROSION PROTECTION

ITEM 836 - SEEDING AND EROSION CONTROL WITH TURF REINFORCING MAT, TYPE 1

ITEM 836 - SEEDING AND EROSION CONTROL WITH TURF REINFORCING MAT, TYPE 2

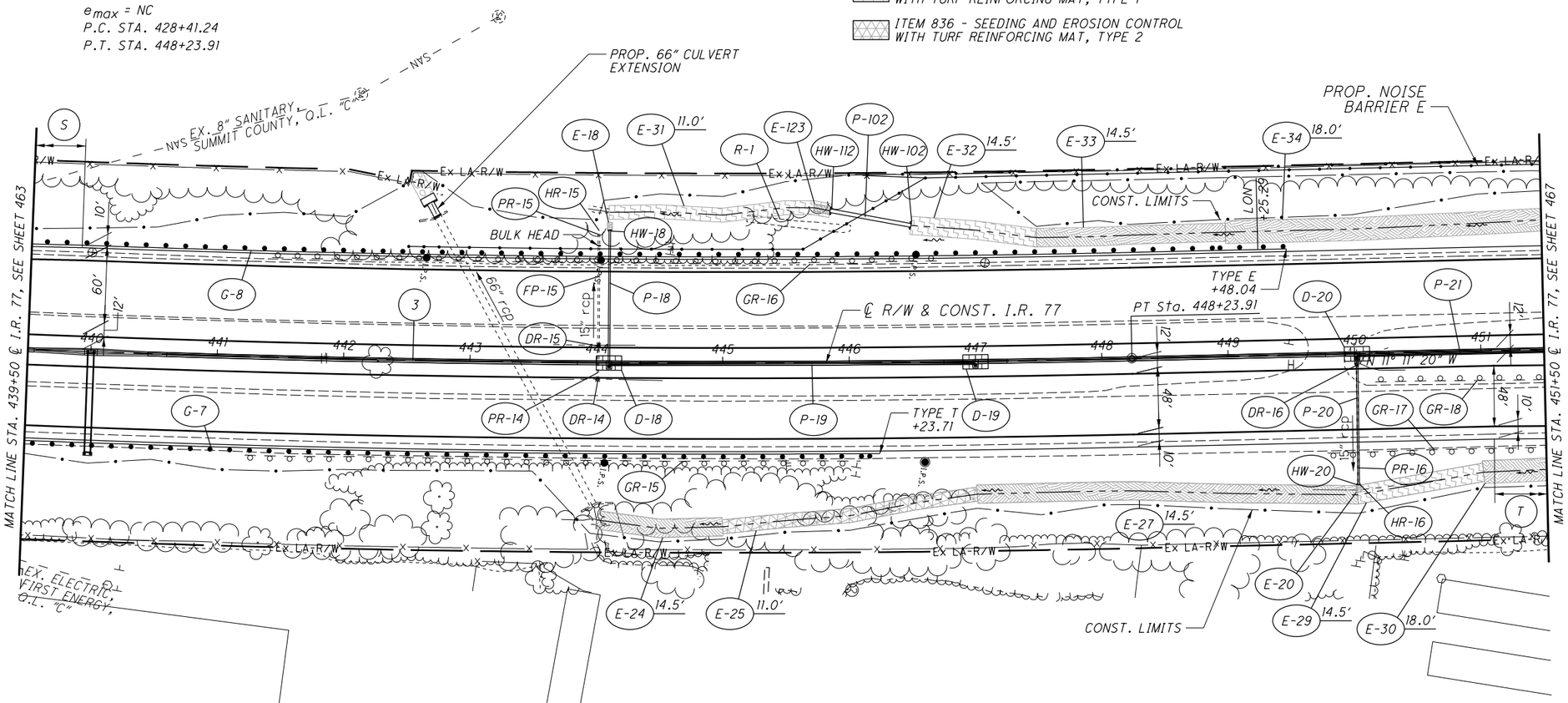


FOR I.R. 77 PROFILE, SEE SHEET 466
FOR ESTIMATED QUANTITIES, SEE SHEETS 417 - 439
FOR CULVERT DETAILS, SEE SHEET 908
FOR UNDERDRAIN DETAILS, SEE SHEETS 924 - 925
FOR FENCE PLANS, SEE SHEET 1264
FOR NOISE BARRIER PLANS, SEE SHEETS 1092 - 1100

TAPER TABLE

| TAPER CODE | BEGINNING STATION | | ENDING STATION | | SIDE | DESCRIPTION | BEGIN WIDTH | END WIDTH | TAPER RATE |
|---|---|---|---|---|---|---|---|---|---|
| S | 431+50.00 | I.R-77 | 439+90.00 | I.R-77 | LT | PAVEMENT | 48.00′ | 60.00′ | 70:1 |
| T | 451+10.00 | I.R-77 | 459+50.00 | I.R-77 | RT | MEDIAN | 12.00′ | 24.00′ | 70:1 |

HORIZONTAL SCALE IN FEET
0 25 50 100

CALCULATED LRK
CHECKED PJF

PLAN - I.R. 77
STA. 439+50 TO STA. 451+50

SUM-77/277/224
VARIOUS

465
1288

0:\2017\2017258\ProjectData\SUM\06002\Design\Roadway\Sheets\06002_GP007.dgn Sheet 1/15/2021 10:22:21 AM pfry

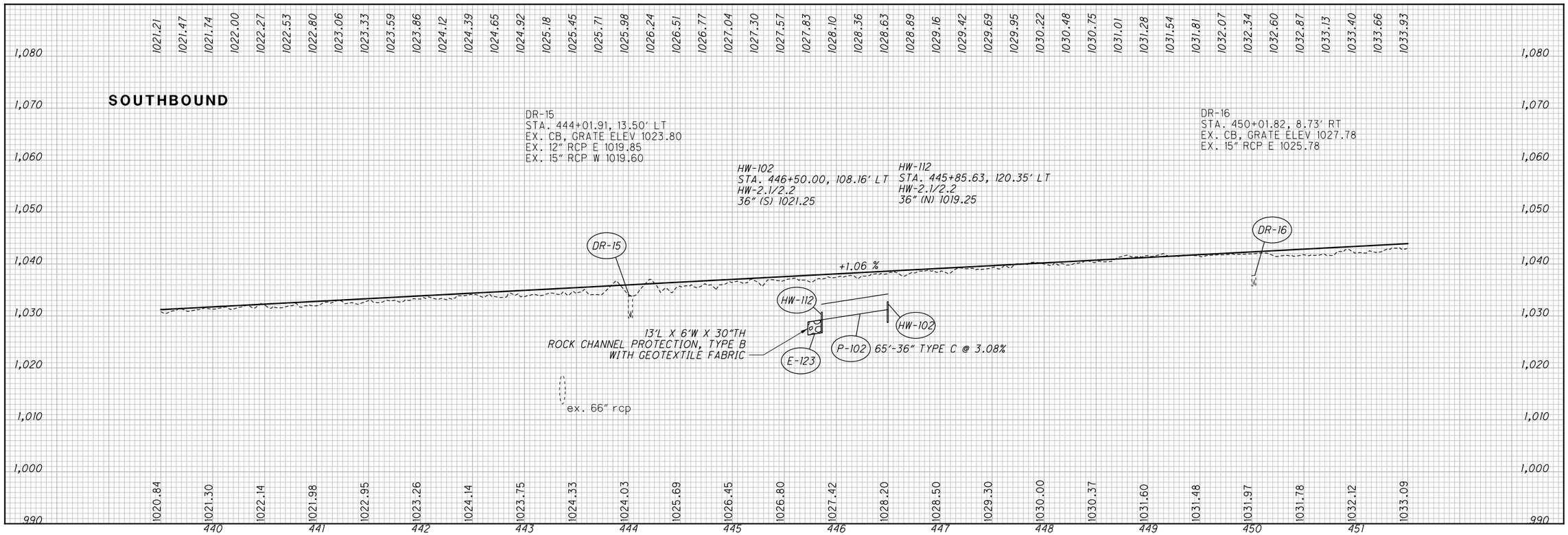


FOR I.R. 77 PLAN, SEE SHEET 465

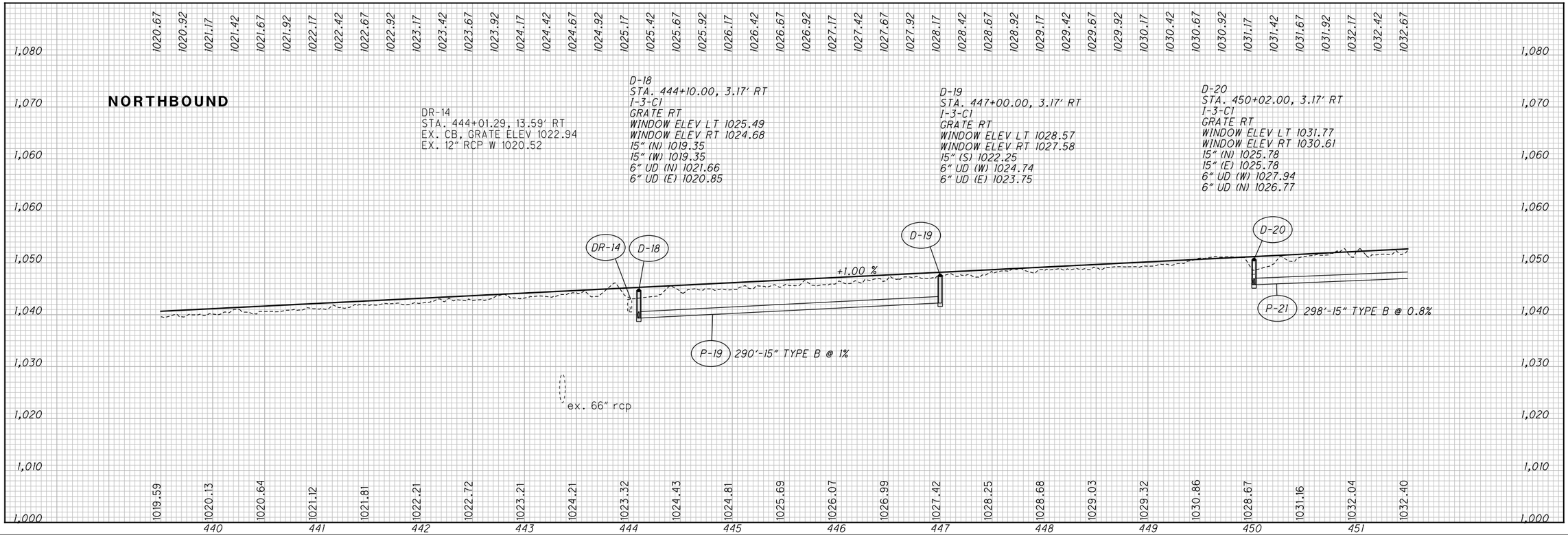


PROFILE - I.R. 77
STA. 439+50 TO STA. 451+50

CALCULATED CJC
CHECKED PJF

SUM-77/277/224
VARIOUS

466
1288

D:\2017\2017258\ProjectData\SUM\06002\Design\Roadway\Sheets\06002_GF007.dgn Sheet 1/15/2021 10:22:24 AM pfry

ITEM 670 - SLOPE EROSION PROTECTION
(VEGETATED FILTER STRIP W/ 4" ITEM 659 - TOPSOIL)

ITEM 601 - ROCK CHANNEL PROTECTION

ITEM 670 - DITCH EROSION PROTECTION

ITEM 670 - DITCH EROSION PROTECTION
(VEGETATED BIOFILTER PER DETAIL ON SHEET 55)

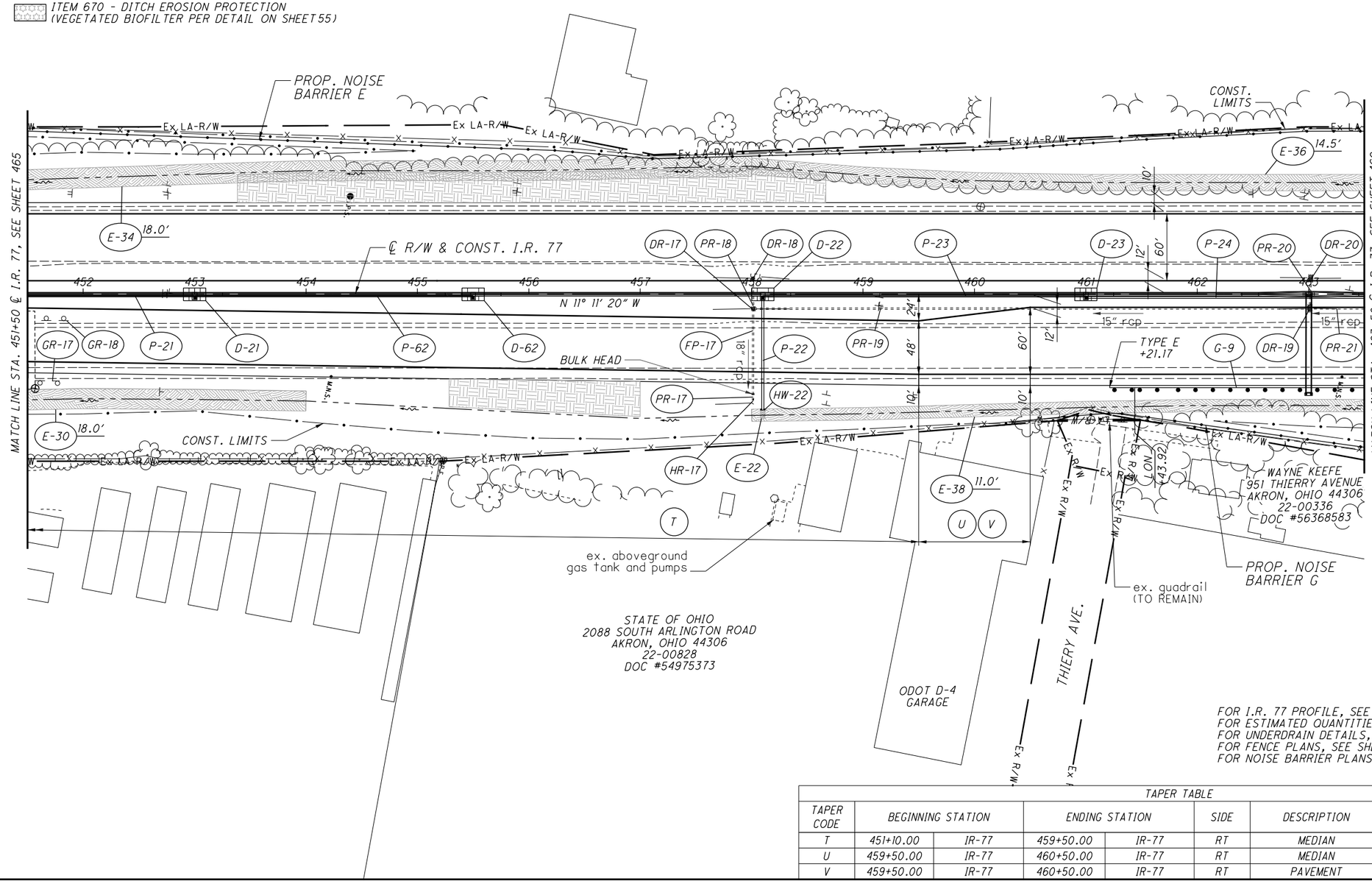


FOR I.R. 77 PROFILE, SEE SHEET 468
FOR ESTIMATED QUANTITIES, SEE SHEETS 417 - 439
FOR UNDERDRAIN DETAILS, SEE SHEET 925
FOR FENCE PLANS, SEE SHEET 1265
FOR NOISE BARRIER PLANS, SEE SHEETS 1092 - 1109

TAPER TABLE

| TAPER CODE | BEGINNING STATION | | ENDING STATION | | SIDE | DESCRIPTION | BEGIN WIDTH | END WIDTH | TAPER RATE |
|---|---|---|---|---|---|---|---|---|---|
| T | 451+10.00 | IR-77 | 459+50.00 | IR-77 | RT | MEDIAN | 12.00' | 24.00' | 70:1 |
| U | 459+50.00 | IR-77 | 460+50.00 | IR-77 | RT | MEDIAN | 24.00' | 12.00' | 8:1 |
| V | 459+50.00 | IR-77 | 460+50.00 | IR-77 | RT | PAVEMENT | 48.00' | 60.00' | 8:1 |

HORIZONTAL SCALE IN FEET
0 25 50 100

CALCULATED LRK
CHECKED PJF

# PLAN - I.R. 77
## STA. 451+50 TO STA. 463+50

SUM-77/277/224
VARIOUS

467
1288

0:\2017\2017258\ProjectData\SUM\06002\Design\Roadway\Sheets\06002_GP008.dgn Sheet 1/15/2021 10:22:28 AM pfry

# PROFILE - I.R. 77
## STA. 451+50 TO STA. 463+50

CALCULATED CJC
CHECKED PJF

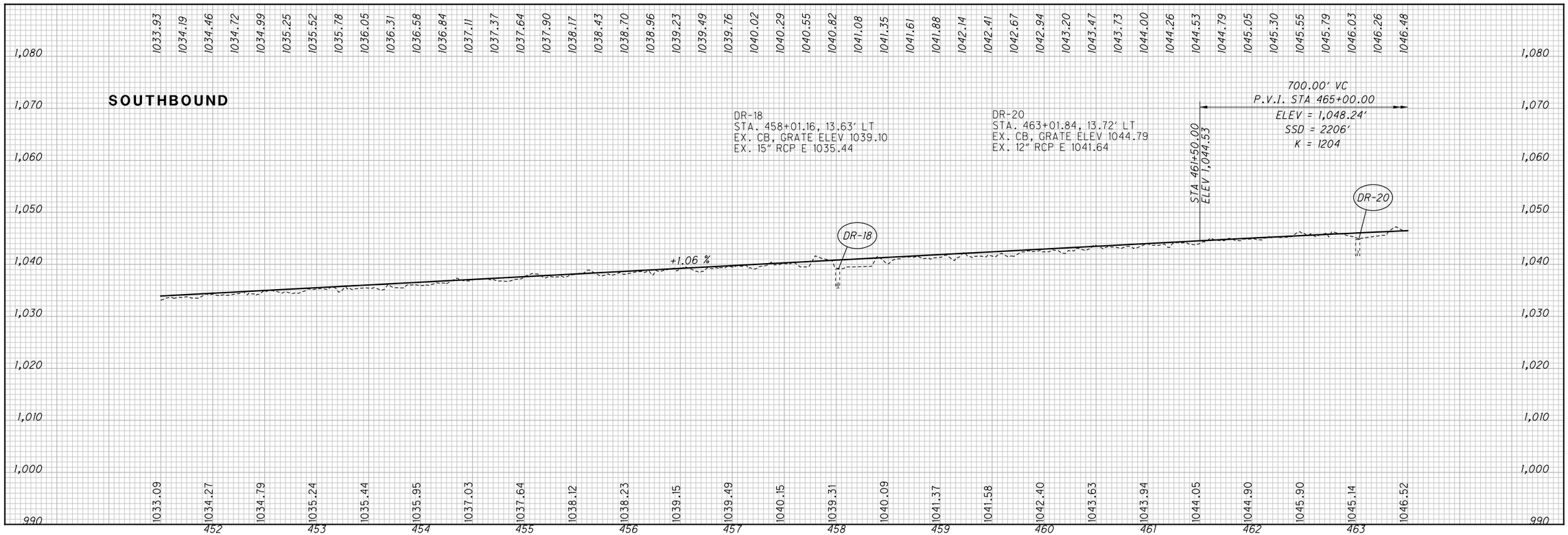


FOR I.R. 77 PLAN, SEE SHEET 467

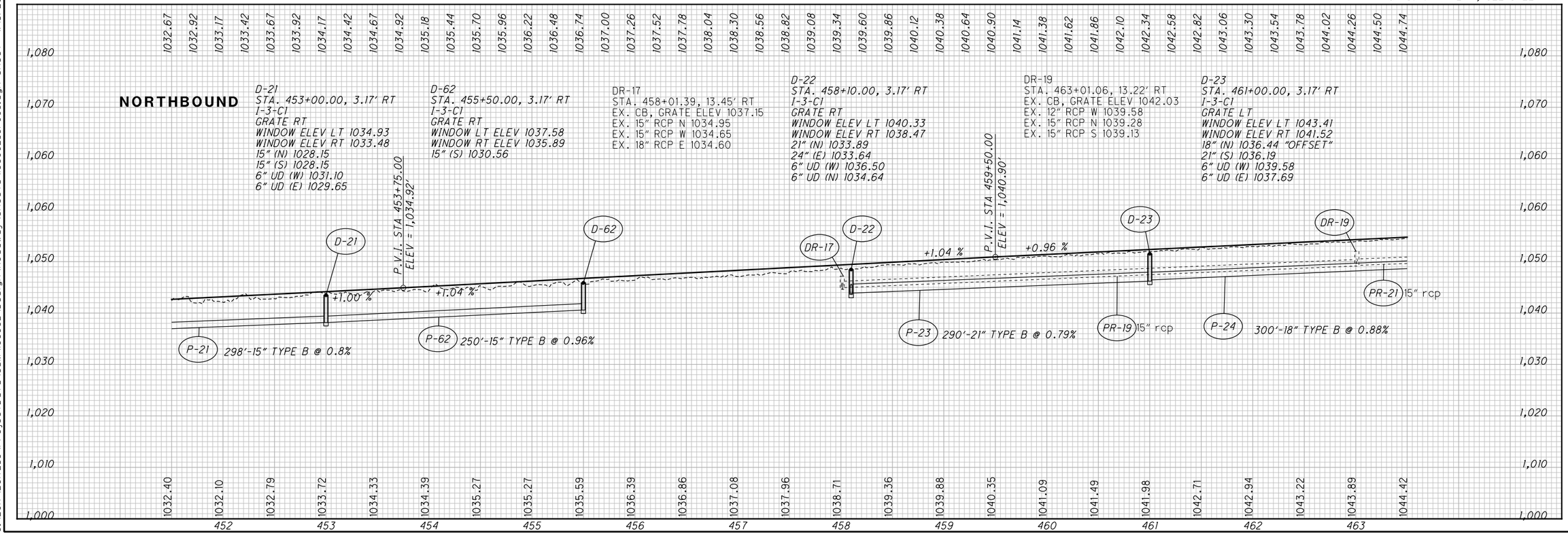


SUM-77 / 277 / 224
VARIOUS

468
1288

D:\2017\2017258\ProjectData\SUM\06002\Design\Roadway\Sheets\06002_GF008.dgn Sheet 1/15/2021 10:22:31 AM pfry

8 — ℄ CONST. SB I.R. 77
P.I. Sta. 482+91.41
Δ = 29° 44′ 36″ (LT)
Dc = 1° 28′ 03″
R = 3,904.07′
T = 1,036.73′
L = 2,026.68′
E = 135.31′
C = 2,004.00′
C.B. = N 26° 52′ 45″ W
D.S. = 70 MPH
$e_{max}$ = 0.0452
P.C. STA. 472+54.68
P.T. STA. 492+81.37

4 — ℄ CONST. NB I.R. 77
P.I. Sta. 485+59.78
Δ = 30° 33′ 43″ (LT)
Dc = 1° 28′ 03″
R = 3,904.07′
T = 1,066.64′
L = 2,082.45′
E = 143.09′
C = 2,057.85′
C.B. = N 26° 28′ 11″ W
D.S. = 70 MPH
$e_{max}$ = 0.0452
P.C. STA. 474+93.14
P.T. STA. 495+75.59

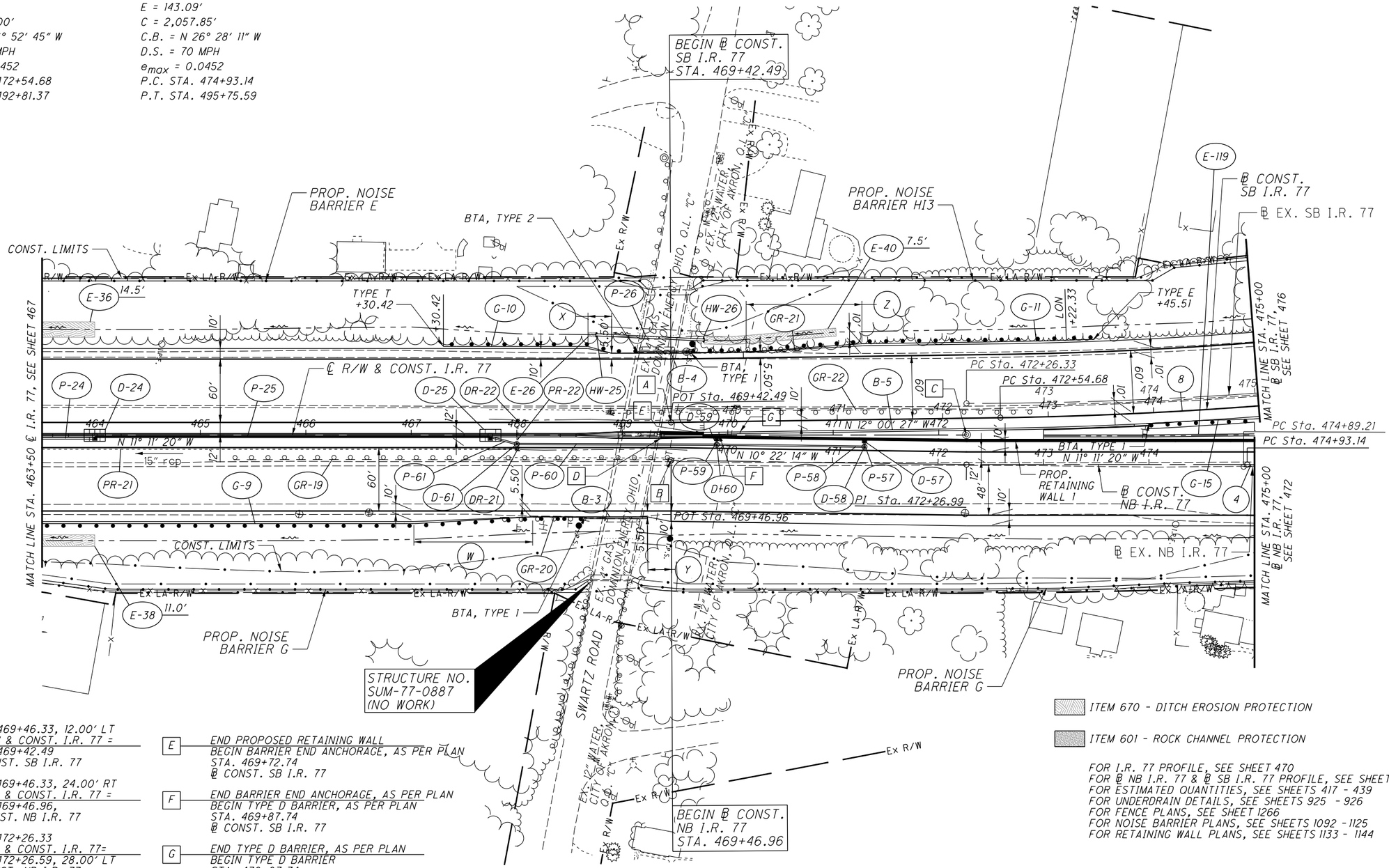


A — STA. 469+46.33, 12.00′ LT
℄ R/W & CONST. I.R. 77 =
STA. 469+42.49
℄ CONST. SB I.R. 77

B — STA. 469+46.33, 24.00′ RT
℄ R/W & CONST. I.R. 77 =
STA. 469+46.96,
℄ CONST. NB I.R. 77

C — STA. 472+26.33
℄ R/W & CONST. I.R. 77=
STA. 472+26.59, 28.00′ LT
℄ CONST. NB I.R. 77 =
STA. 472+22.29, 16.00′ RT
℄ CONST. SB I.R. 77

D — END TYPE C1 BARRIER
BEGIN PROPOSED RETAINING WALL T
STA. 469+36.72
℄ R/W & CONST. I.R. 77

E — END PROPOSED RETAINING WALL
BEGIN BARRIER END ANCHORAGE, AS PER PLAN
STA. 469+72.74
℄ CONST. SB I.R. 77

F — END BARRIER END ANCHORAGE, AS PER PLAN
BEGIN TYPE D BARRIER, AS PER PLAN
STA. 469+87.74
℄ CONST. SB I.R. 77

G — END TYPE D BARRIER, AS PER PLAN
BEGIN TYPE D BARRIER
STA. 470+07.74
℄ CONST. SB I.R. 77

ITEM 670 - DITCH EROSION PROTECTION

ITEM 601 - ROCK CHANNEL PROTECTION

FOR I.R. 77 PROFILE, SEE SHEET 470
FOR ℄ NB I.R. 77 & ℄ SB I.R. 77 PROFILE, SEE SHEET 471
FOR ESTIMATED QUANTITIES, SEE SHEETS 417 - 439
FOR UNDERDRAIN DETAILS, SEE SHEETS 925 - 926
FOR FENCE PLANS, SEE SHEET 1266
FOR NOISE BARRIER PLANS, SEE SHEETS 1092 - 1125
FOR RETAINING WALL PLANS, SEE SHEETS 1133 - 1144

TAPER TABLE

| TAPER CODE | BEGINNING STATION | | ENDING STATION | | SIDE | DESCRIPTION | BEGIN WIDTH | END WIDTH | TAPER RATE |
|---|---|---|---|---|---|---|---|---|---|
| W | 467+02.50 | IR-77 | 468+15.00 | IR-77 | RT | SHOULDER | 10.00′ | 5.50′ | 25:1 |
| X | 468+67.50 | IR-77 | 468+90.00 | IR-77 | LT | SHOULDER | 10.00′ | 5.50′ | 5:1 |
| Y | 469+23.83 | IR-77 | 469+46.33 | IR-77 | RT | SHOULDER | 5.50′ | 10.00′ | 5:1 |
| Z | 470+12.50 | SB IR-77 | 471+25.00 | SB IR-77 | LT | SHOULDER | 5.50′ | 10.00′ | 25:1 |

HORIZONTAL SCALE IN FEET
0 25 50 100

CALCULATED LRK
CHECKED PJF

PLAN - I.R. 77 / NB I.R. 77 / SB I.R. 77
STA. 463+50 TO STA. 475+00

SUM-77 / 277 / 224
VARIOUS

469
1288

0:\2017\2017258\Project Data\SUM\06002\Design\Roadway\Sheets\106002_GP009.dgn Sheet 1/15/2021 10:22:35 AM pfry

# PROFILE - I.R. 77
# STA. 463+50 TO STA. 469+46.33

CALCULATED CJC
CHECKED PJF

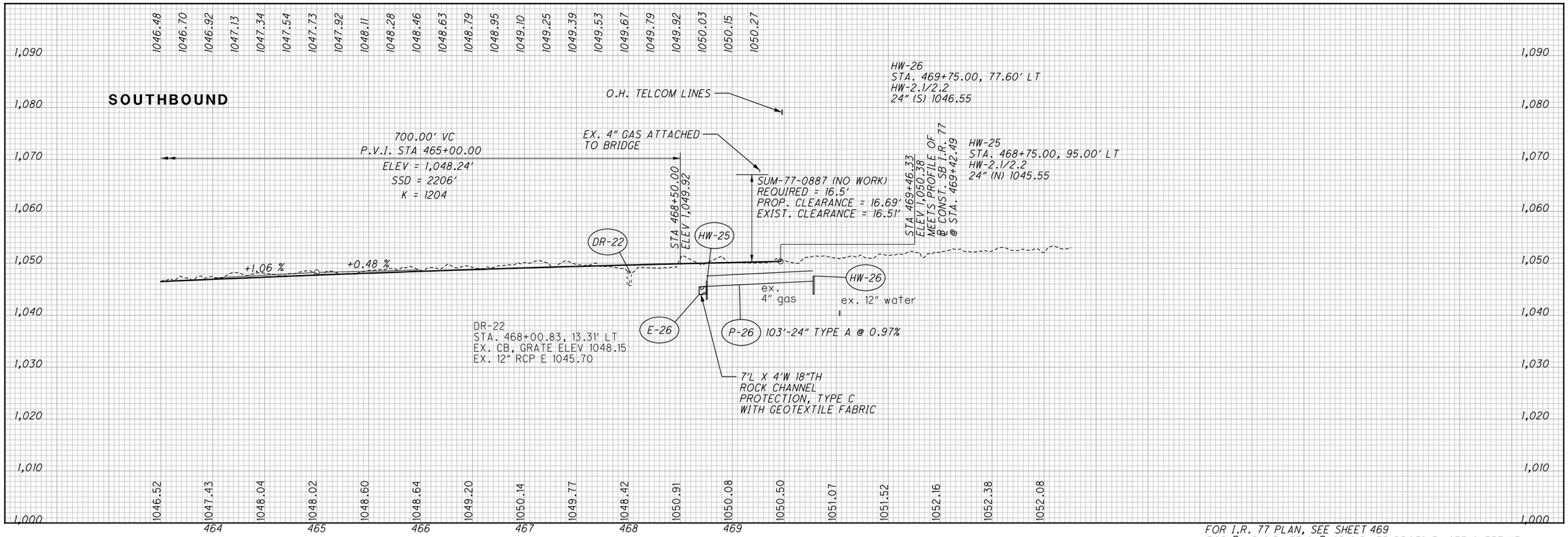


FOR I.R. 77 PLAN, SEE SHEET 469
FOR ℄ NB I.R. 77 & ℄ SB I.R. 77 PROFILE, SEE SHEET 471

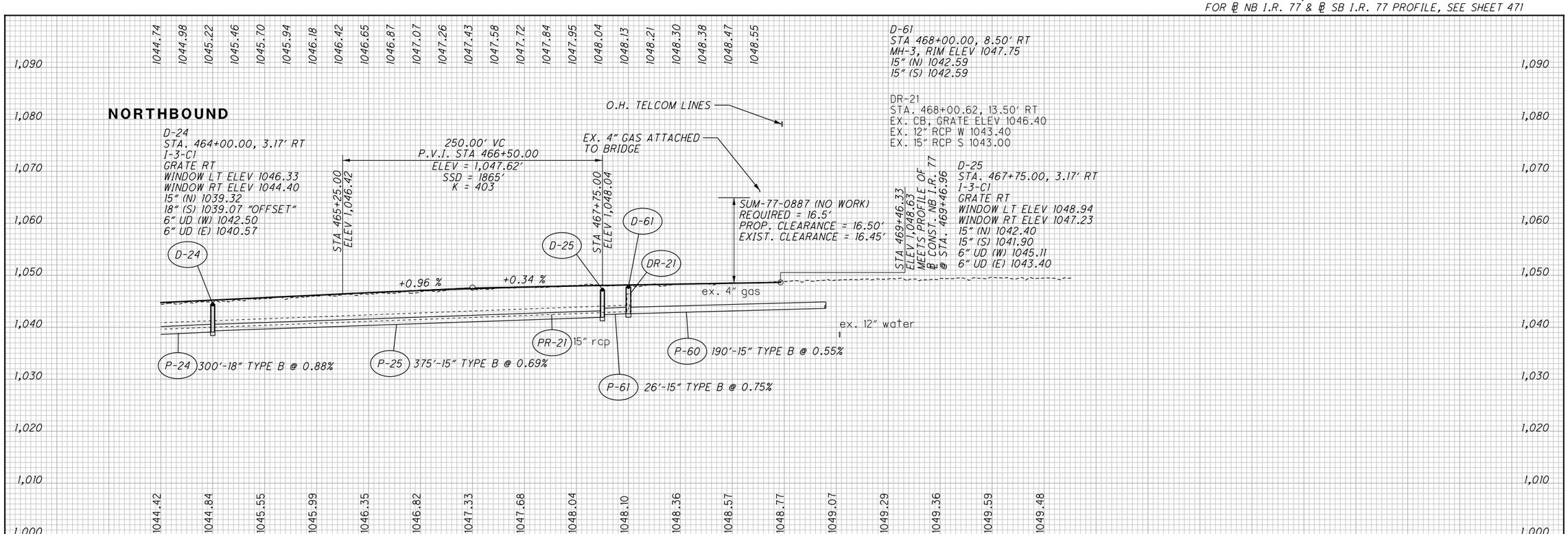


SUM-77 / 277 / 224
VARIOUS

STA. 469+46.33



O:\2017\20172581\ProjectData\SUM\106002\Design\Roadway\Sheets\106002_GF009.dgn Sheet 1/15/2021 10:22:38 AM pfry

## BASELINE SB I.R. 77

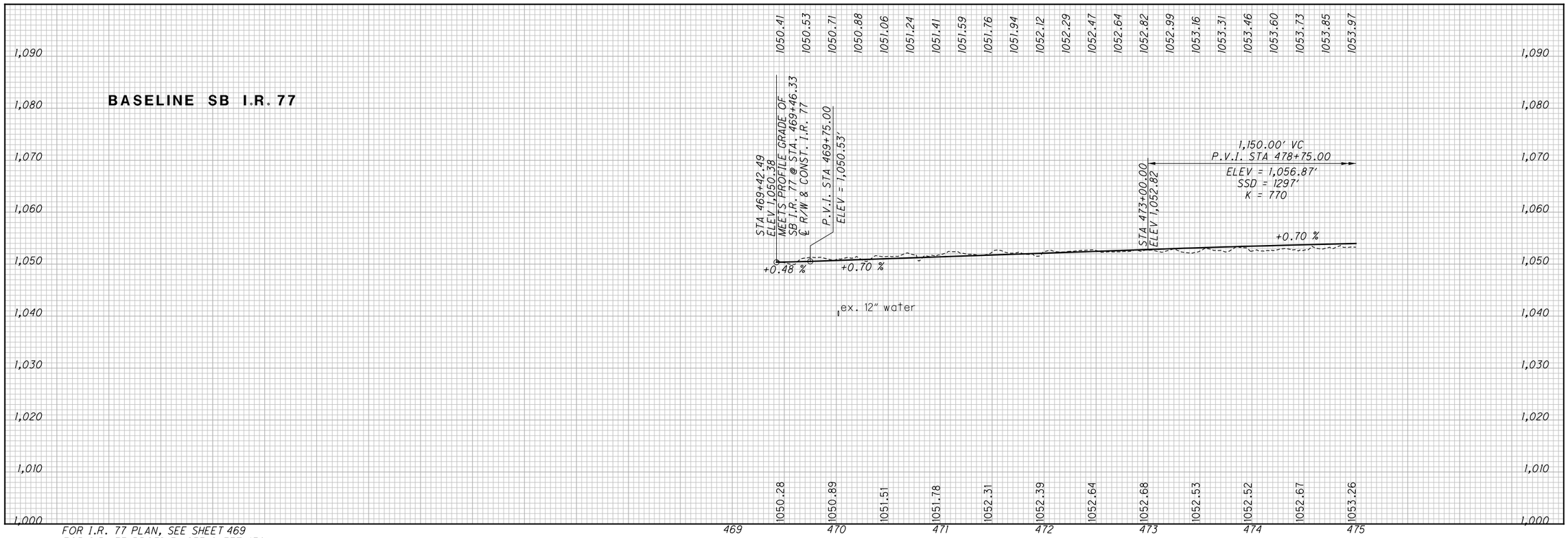


FOR I.R. 77 PLAN, SEE SHEET 469
FOR I.R. 77 PROFILE, SEE SHEET 470

## BASELINE NB I.R. 77

D-57
STA 471+30.00, 21.33' LT
CB-6, GRATE ELEV 1048.52
15" (E) 1044.87
6" UD (N) 1045.56

D-58
STA 471+30.00, 15.50' LT
MH-3, RIM ELEV 1048.82
15" (W) 1044.82
15" (S) 1044.82

D-59
STA 469+90.00, 21.33' LT
CB-6, GRATE ELEV 1048.09
15" (E) 1044.44
6" UD (N) 1045.13

D-60
STA 469+90.00, 15.50' LT
MH-3, RIM ELEV 1048.39
15" (W) 1044.39
15" (N) 1043.63
15" (S) 1043.63

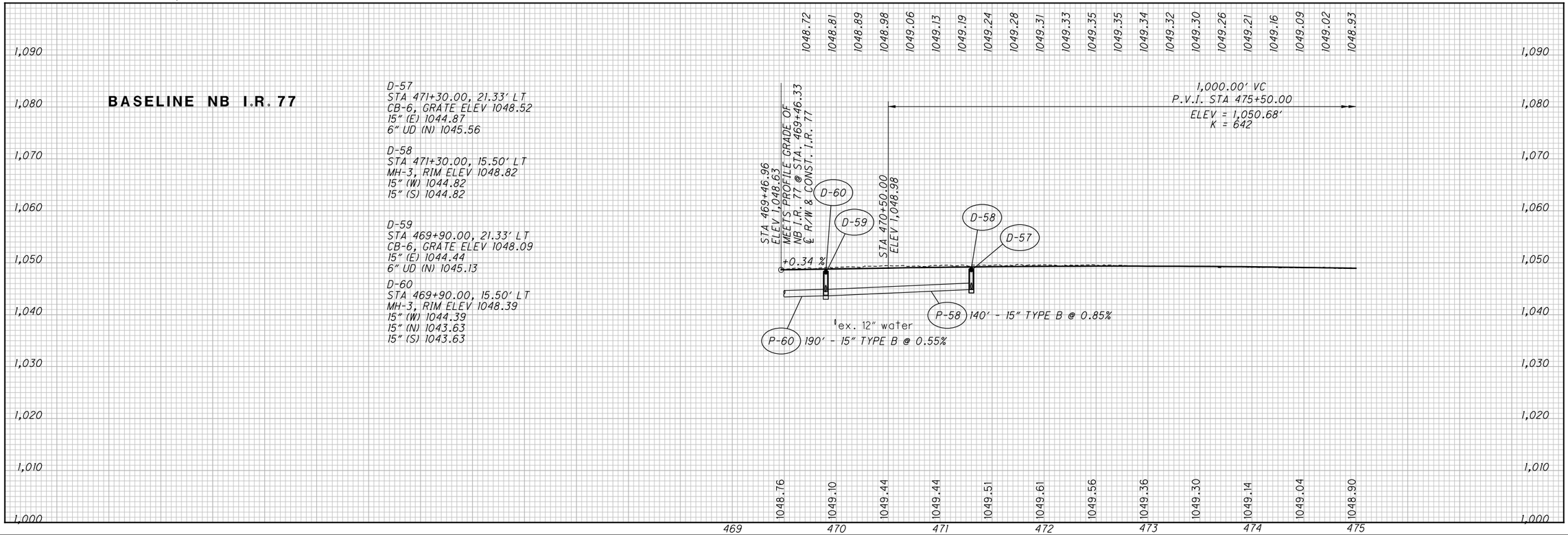


CALCULATED CJC
CHECKED PJF

# PROFILE - NB I.R. 77 / SB I.R. 77
## BEGIN TO STA. 475+00

SUM-77 / 277 / 224
VARIOUS

471
1288

D:\2017\2017258\ProjectData\SUM\06002\Design\Roadway\Sheets\06002_GF010.dgn Sheet 1/15/2021 10:22:49 AM pfry

FOR ESTIMATED QUANTITIES, SEE SHEETS 417 - 439
FOR RAMP B-2 PLANS, SEE SHEET 492
FOR RAMP C PLANS, SEE SHEET 497
FOR GORE DETAILS, SEE SHEETS 848 , 854
FOR PAVEMENT JOINT DETAILS, SEE SHEETS 869 ,885
FOR UNDERDRAIN DETAILS, SEE SHEETS 926 - 927
FOR FENCE PLANS, SEE SHEET 1267
FOR NOISE BARRIER PLANS, SEE SHEETS 1101 - 1109
FOR RETAINING WALL PLANS, SEE SHEETS 1133 - 1144
FOR LIGHTING PLANS, SEE SHEETS 1037 - 1064

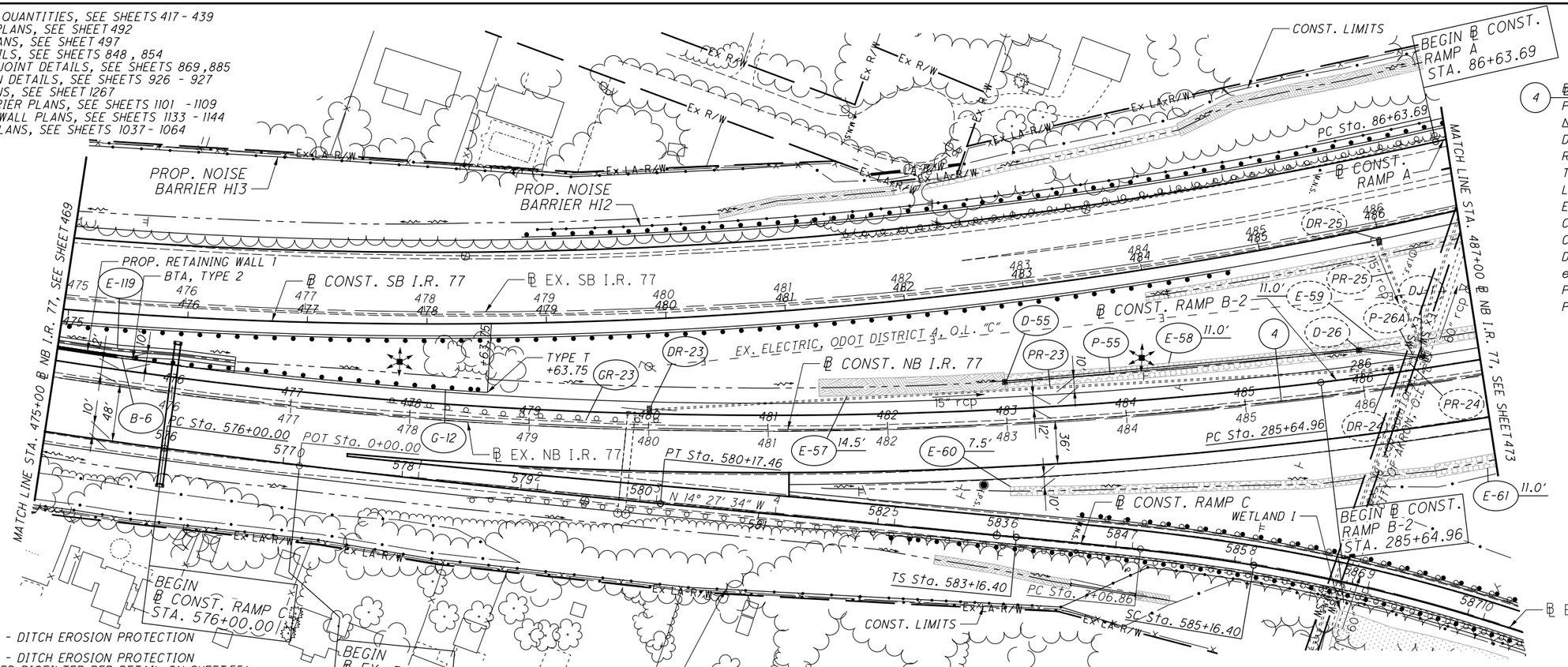


ITEM 670 - DITCH EROSION PROTECTION
ITEM 670 - DITCH EROSION PROTECTION (VEGETATED BIOFILTER PER DETAIL ON SHEET 55)
ITEM 836 - SEEDING AND EROSION CONTROL W/ TURF REINFORCING MAT, TYPE I
WETLAND AREA NOT TO BE DISTURBED

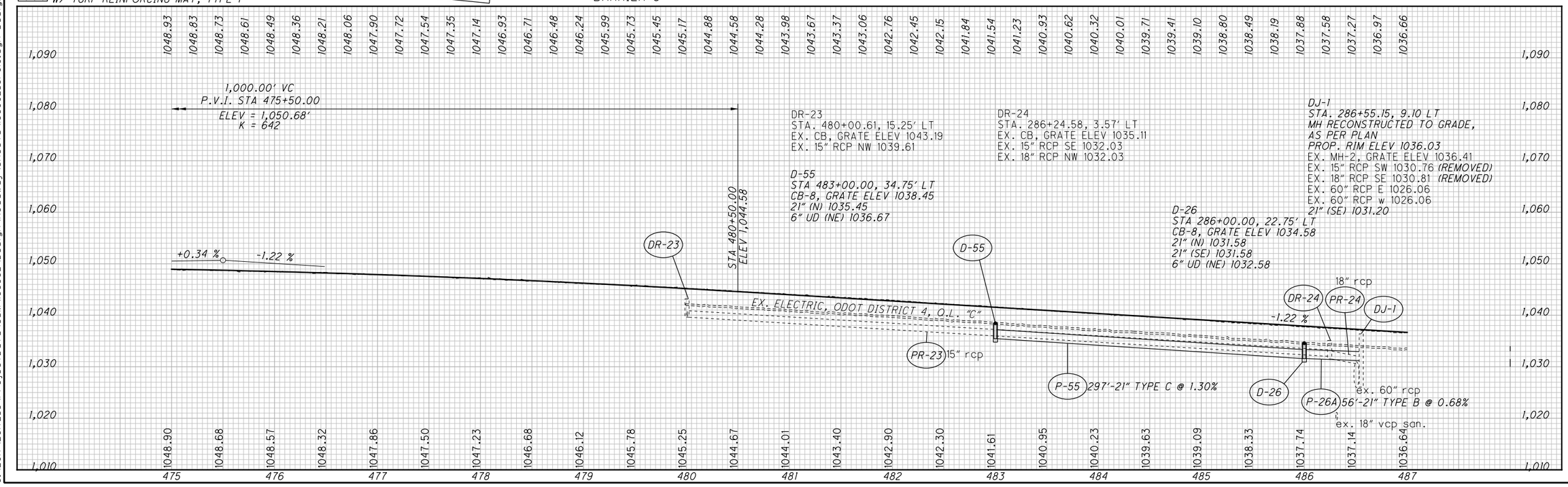


HORIZONTAL SCALE IN FEET
0 25 50 100
CALCULATED LRK
CHECKED PJF

# PLAN AND PROFILE - NB I.R. 77 STA. 475+00 TO STA. 487+00

SUM-77/277/224
VARIOUS

472
1288

0:\2017\2017258\ProjectData\SUM\106002\Design\Roadway\Sheets\106002_GP010.dgn Design 1/14/2021 7:51:32 AM pfry

4

℄ CONST. NB I.R. 77
P.I. Sta. 485+59.78
Δ = 30° 33′ 43″ (LT)
Dc = 1° 28′ 03″
R = 3,904.07′
T = 1,066.64′
L = 2,082.45′
E = 143.09′
C = 2,057.85′
C.B. = N 26° 28′ 11″ W
D.S. = 70 MPH
$e_{max}$ = 0.0452
P.C. STA. 474+93.14
P.T. STA. 495+75.59

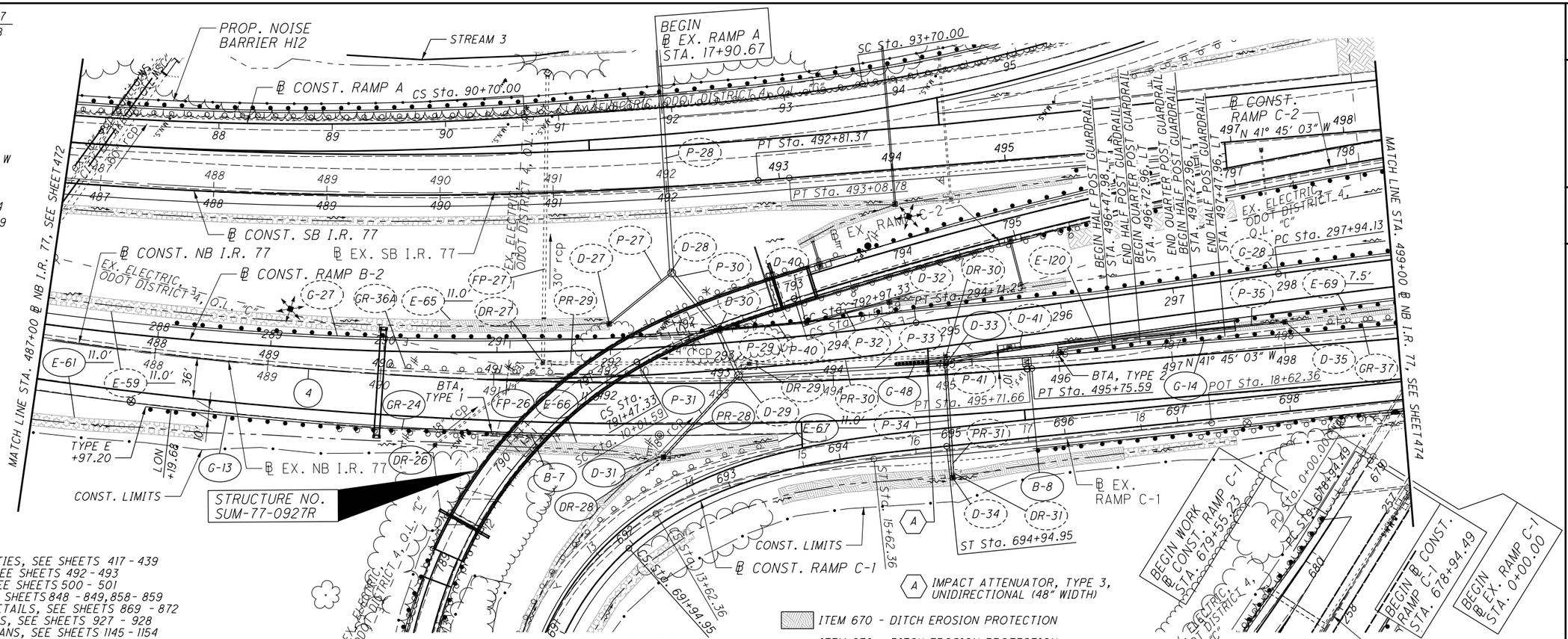


FOR ESTIMATED QUANTITIES, SEE SHEETS 417 - 439
FOR RAMP B-2 PLANS, SEE SHEETS 492 - 493
FOR RAMP C-1 PLANS, SEE SHEETS 500 - 501
FOR GORE DETAILS, SEE SHEETS 848 - 849, 858 - 859
FOR PAVEMENT JOINT DETAILS, SEE SHEETS 869 - 872
FOR UNDERDRAIN DETAILS, SEE SHEETS 927 - 928
FOR RETAINING WALL PLANS, SEE SHEETS 1145 - 1154
FOR STRUCTURE PLANS, SEE SHEETS 1225 - 1261
FOR LIGHTING PLANS, SEE SHEETS 1037 - 1064

(A) IMPACT ATTENUATOR, TYPE 3, UNIDIRECTIONAL (48" WIDTH)

ITEM 670 - DITCH EROSION PROTECTION

ITEM 670 - SLOPE EROSION PROTECTION (VEGETATED FILTER STRIP W/ 4" ITEM 659 - TOPSOIL)

ITEM 670 - DITCH EROSION PROTECTION (VEGETATED BIOFILTER PER DETAIL ON SHEET 55)

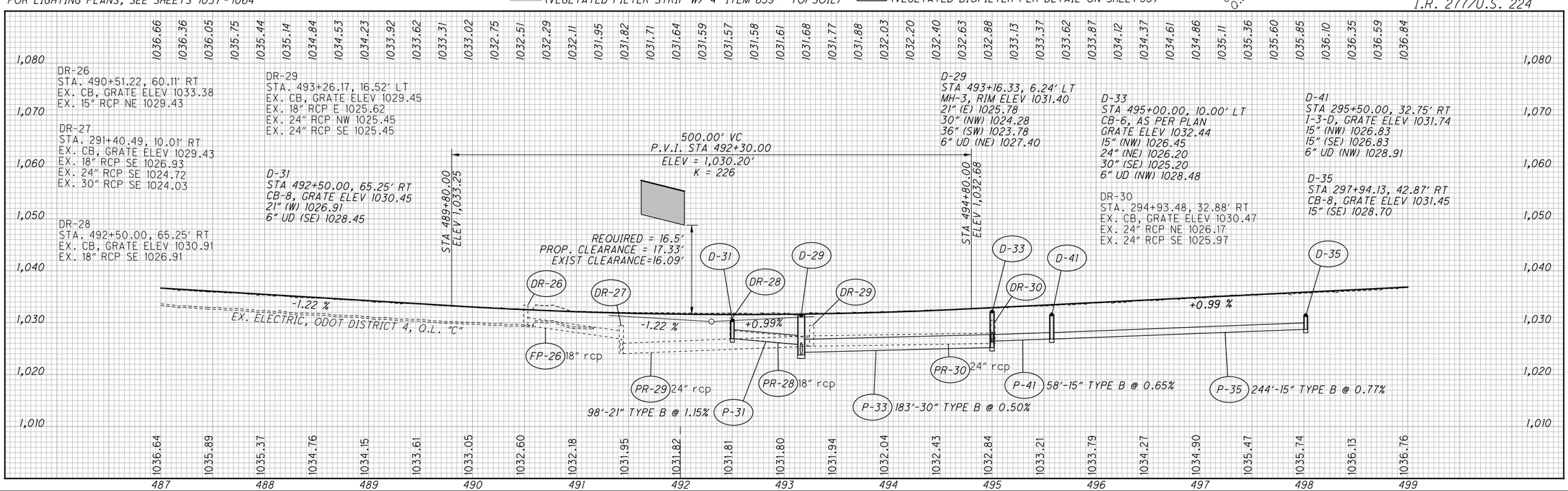


PLAN AND PROFILE - NB I.R. 77
STA. 487+00 TO STA. 499+00

SUM-77/277/224
VARIOUS

CALCULATED LRK
CHECKED PJF

HORIZONTAL SCALE IN FEET
0 25 50 100

473
1288

D:\2017\2017258\ProjectData\SUM\06002\Design\Roadway\Sheets\06002_GP01.dgn Design 1/14/2021 7:51:38 AM pfry

| TAPER TABLE | | | | | | | | |
|---|---|---|---|---|---|---|---|---|
| TAPER CODE | BEGINNING STATION | | ENDING STATION | | SIDE | DESCRIPTION | BEGIN WIDTH | END WIDTH | TAPER RATE |
| AA | 502+11.45 | NB IR-77 | 508+11.45 | NB IR-77 | RT | PAVEMENT | 48.00′ | 36.00′ | 50:1 |
| AB | 507+11.53 | NB IR-77 | 507+42.24 | NB IR-77 | RT | SHOULDER | 8.00′ | 8.61′ | 50:1 |

FOR ESTIMATED QUANTITIES, SEE SHEETS 417 - 439
FOR RAMP C-1 PLANS, SEE SHEETS 500 - 501
FOR RAMP D PLANS, SEE SHEET 505
FOR GORE DETAILS, SEE SHEETS 859, 863
FOR PAVEMENT JOINT DETAILS, SEE SHEETS 872, 891
FOR UNDERDRAIN DETAILS, SEE SHEETS 928 - 929
FOR LIGHTING PLANS, SEE SHEETS 1037 - 1064

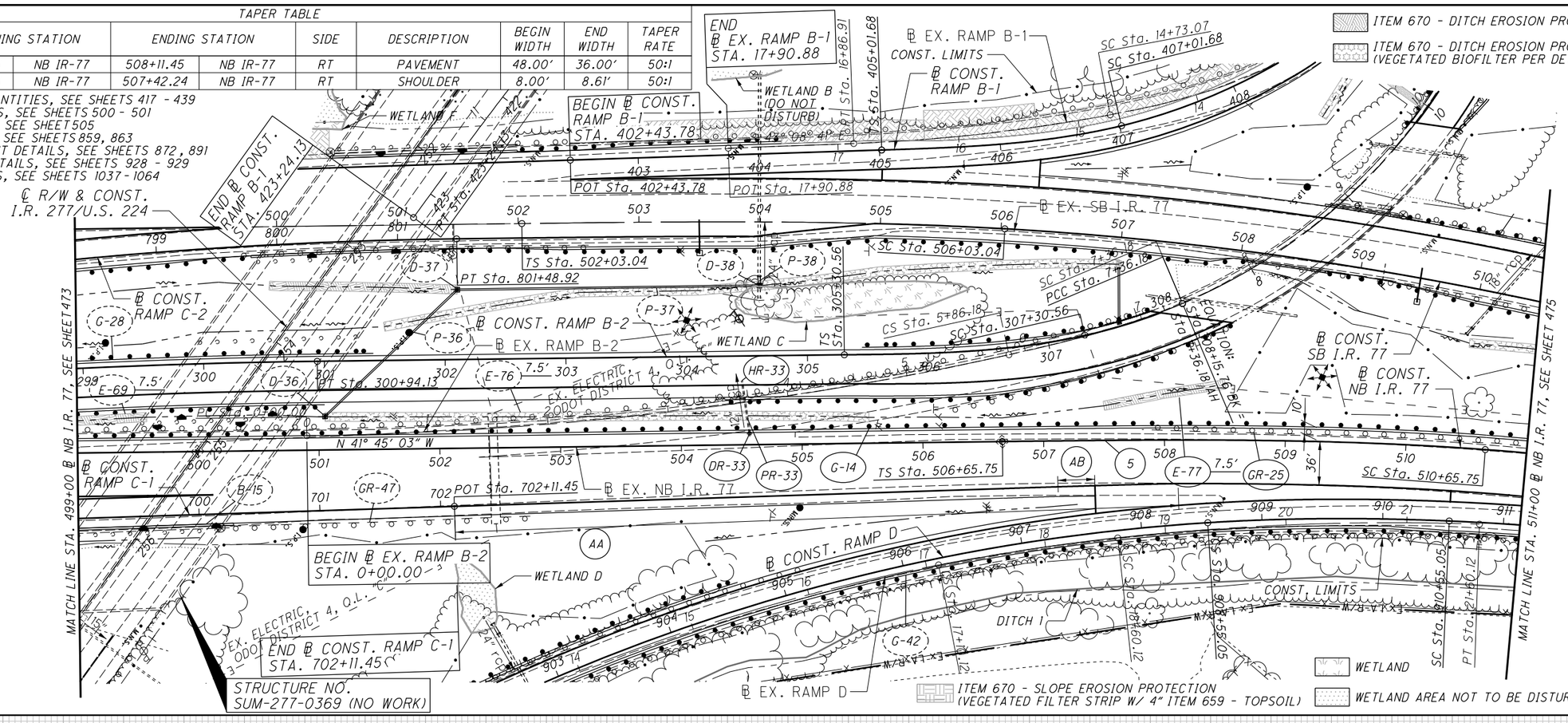


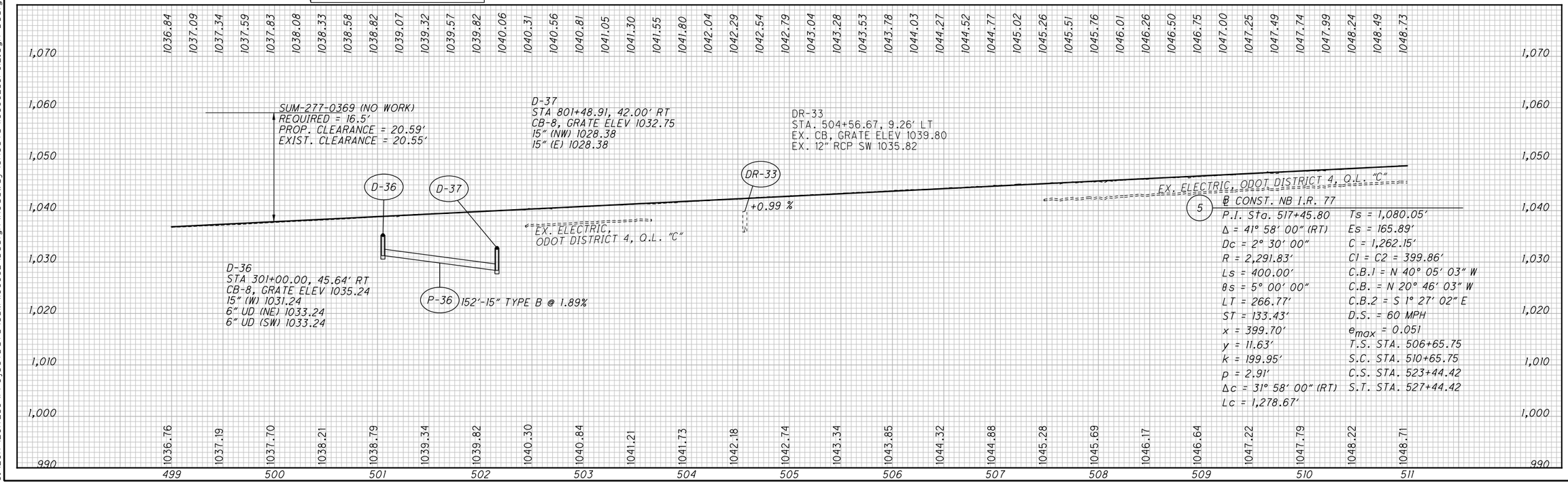


# PLAN AND PROFILE - NB I.R. 77
## STA. 499+00 TO STA. 511+00

SUM-77/277/224
VARIOUS



D:\2017\2017258\ProjectData\SUM\106002\Design\Roadway\Sheets\106002_GP012.dgn Design 1/14/2021 7:51:44 AM pfry

ITEM 670 - DITCH EROSION PROTECTION

ITEM 670 - DITCH EROSION PROTECTION (VEGETATED BIOFILTER PER DETAIL ON SHEET 55)

PROPOSED WORK (PAVEMENT, APPROACH SLAB, EARTHWORK, GUARDRAIL, ETC.) BY OTHERS (SUM-76/77/8-8.42/9.77/0.00 DB, PID 102329)

| TAPER TABLE | | | | | | | | |
|---|---|---|---|---|---|---|---|---|
| TAPER CODE | BEGINNING STATION | | ENDING STATION | | SIDE | DESCRIPTION | BEGIN WIDTH | END WIDTH | TAPER RATE |
| AC | 514+12.50 | NB IR-77 | 515+25.00 | NB IR-77 | LT | SHOULDER | 10.00′ | 5.50′ | 25:1 |
| AD | 914+75.00 | RAMP D | 915+06.25 | RAMP D | RT | SHOULDER | 8.00′ | 6.75′ | 25:1 |
| AE | 914+93.91 | RAMP D | 915+74.42 | RAMP D | RT | PAVEMENT | 16.00′ | 14.38′ | 50:1 |

FOR ESTIMATED QUANTITIES, SEE SHEETS 417 - 439
FOR RAMP D PLANS, SEE SHEETS 505 - 506
FOR GORE DETAILS, SEE SHEETS 863, 864
FOR PAVEMENT JOINT DETAILS, SEE SHEETS 891 - 892
FOR UNDERDRAIN DETAILS, SEE SHEET 929

NOTE 'A'
PROPOSED GUARDRAIL SHALL CONNECT TO THE GUARDRAIL AND BTA BEING INSTALLED BY OTHERS IN THE PID 102329 PROJECT

END PROJECT
END WORK
℄ CONST. SB I.R. 77
STA. 514+95.00
S.L.M. 9.74

BEGIN PROJECT
SUM-76/77/8-8.42/9.77/0.00 DB
(PID 102329)

END WORK
RAMP B
STA. 214+90.00

E171 (457) E180 (428)

SC Sta. 5+66.20
CS Sta. 213+58.80

CONST. LIMITS

℄ EX. SB I.R. 77

℄ CONST. SB I.R. 77

ST STD. 215+58.80
TS STD. 3+66.20

STRUCTURE NO. SUM-77-0973L (NO WORK)

END ℄ CONST. RAMP B STA. 219+25.00
POT Sta. 219+25.00

BEGIN ℄ EX. RAMP B STA. 0+00.00
POT Sta. 0+00.00

℄ CONST. RAMP B

℄ EX. NB I.R. 77

EX. ELECTRIC, ODOT DISTRICT 4, O.L. "C"

℄ CONST. NB I.R. 77

BTA, TYPE 1

EX. 24" vcp sa. (BY RECORDS)

EX. 84" cmp

EX. TELECOM. MH

MATCH LINE STA. 511+00 ℄ NB I.R. 77, SEE SHEET 474

CONST. LIMITS

DITCH 1

STREAM 4

WATERLOO RD.

PI Sta. 916+89.75

END WORK
℄ CONST. NB I.R. 77
STA. 514+85.00

END WORK
RAMP D
STA. 914+89.43

END ℄ CONST.
RAMP D
STA. 916+89.75

℄ CONST. RAMP D

STRUCTURE NO. SUM-77-0973R (NO WORK)

CS Sta. 523+01.37

CS Sta. 523+44.42

SEE NOTE 'A'

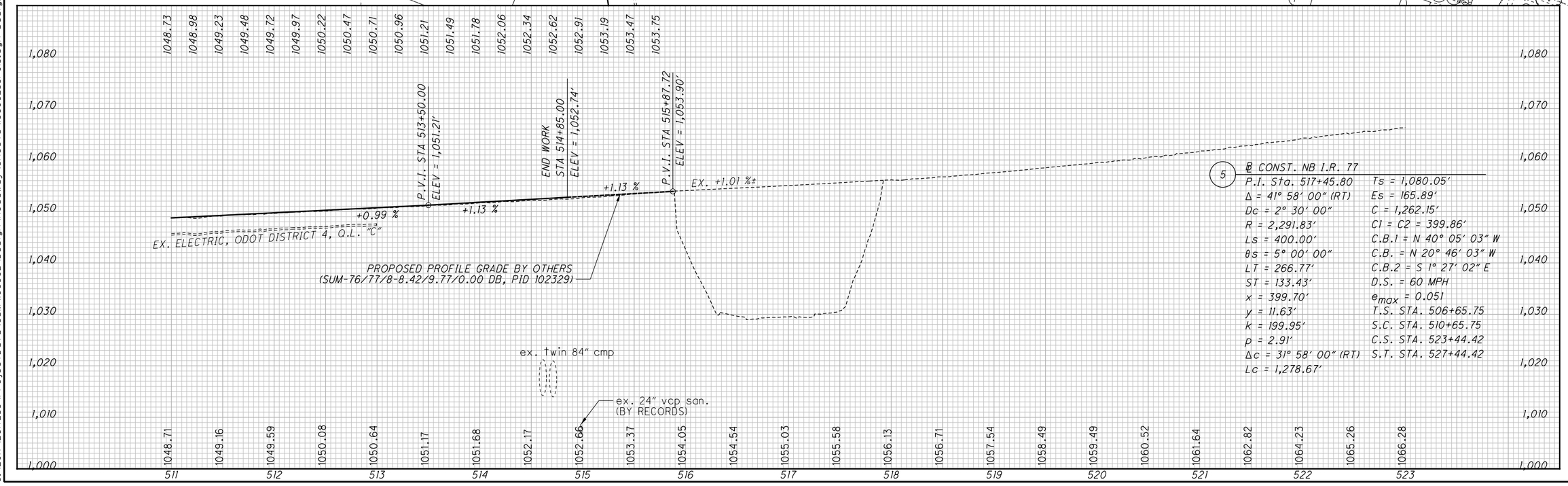


5 ℄ CONST. NB I.R. 77

| | |
|---|---|
| P.I. Sta. 517+45.80 | Ts = 1,080.05′ |
| Δ = 41° 58′ 00″ (RT) | Es = 165.89′ |
| Dc = 2° 30′ 00″ | C = 1,262.15′ |
| R = 2,291.83′ | C1 = C2 = 399.86′ |
| Ls = 400.00′ | C.B.1 = N 40° 05′ 03″ W |
| θs = 5° 00′ 00″ | C.B. = N 20° 46′ 03″ W |
| LT = 266.77′ | C.B.2 = S 1° 27′ 02″ E |
| ST = 133.43′ | D.S. = 60 MPH |
| x = 399.70′ | $e_{max}$ = 0.051 |
| y = 11.63′ | T.S. STA. 506+65.75 |
| k = 199.95′ | S.C. STA. 510+65.75 |
| p = 2.91′ | C.S. STA. 523+44.42 |
| Δc = 31° 58′ 00″ (RT) | S.T. STA. 527+44.42 |
| Lc = 1,278.67′ | |

HORIZONTAL SCALE IN FEET
0 25 50 100

CALCULATED LRK
CHECKED PJF

PLAN AND PROFILE - NB I.R. 77
STA. 511+00 TO END

SUM-77/277/224
VARIOUS

475
1288

D:\2017\2017258\ProjectData\SUM\06002\Design\Roadway\Sheets\06002_GP013.dgn Design 1/14/2021 7:51:54 AM pfry

8 — ℄ CONST. SB I.R. 77
P.I. Sta. 482+91.41
Δ = 29° 44′ 36″ (LT)
Dc = 1° 28′ 03″
R = 3,904.07′
T = 1,036.73′
L = 2,026.68′
E = 135.31′
C = 2,004.00′
C.B. = N 26° 52′ 45″ W
D.S. = 70 MPH
$e_{max}$ = 0.0452
P.C. STA. 472+54.68
P.T. STA. 492+81.37

FOR ESTIMATED QUANTITIES, SEE SHEETS 417 - 439
FOR RAMP A PLANS, SEE SHEET 485
FOR GORE DETAILS, SEE SHEET 841
FOR PAVEMENT JOINT DETAILS, SEE SHEET 875
FOR UNDERDRAIN DETAILS, SEE SHEETS 926 - 927
FOR FENCE PLANS, SEE SHEETS 1267- 1268
FOR NOISE BARRIER PLANS, SEE SHEETS 1110 -1125
FOR LIGHTING PLANS, SEE SHEETS 1037 - 1064

ITEM 670 - DITCH EROSION PROTECTION
ITEM 670 - DITCH EROSION PROTECTION (VEGETATED BIOFILTER PER DETAIL ON SHEET 55)
ITEM 836 - SEEDING AND EROSION CONTROL W/ TURF REINFORCING MAT, TYPE 1

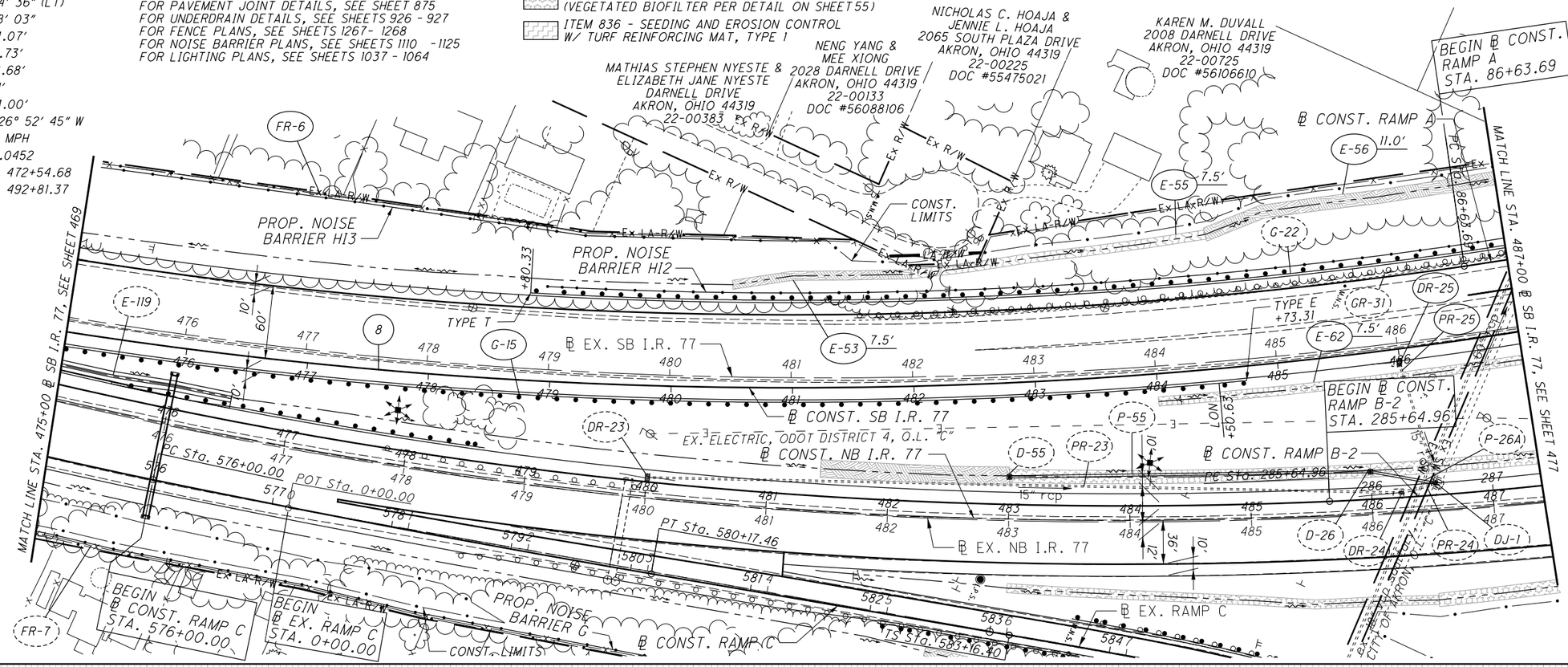


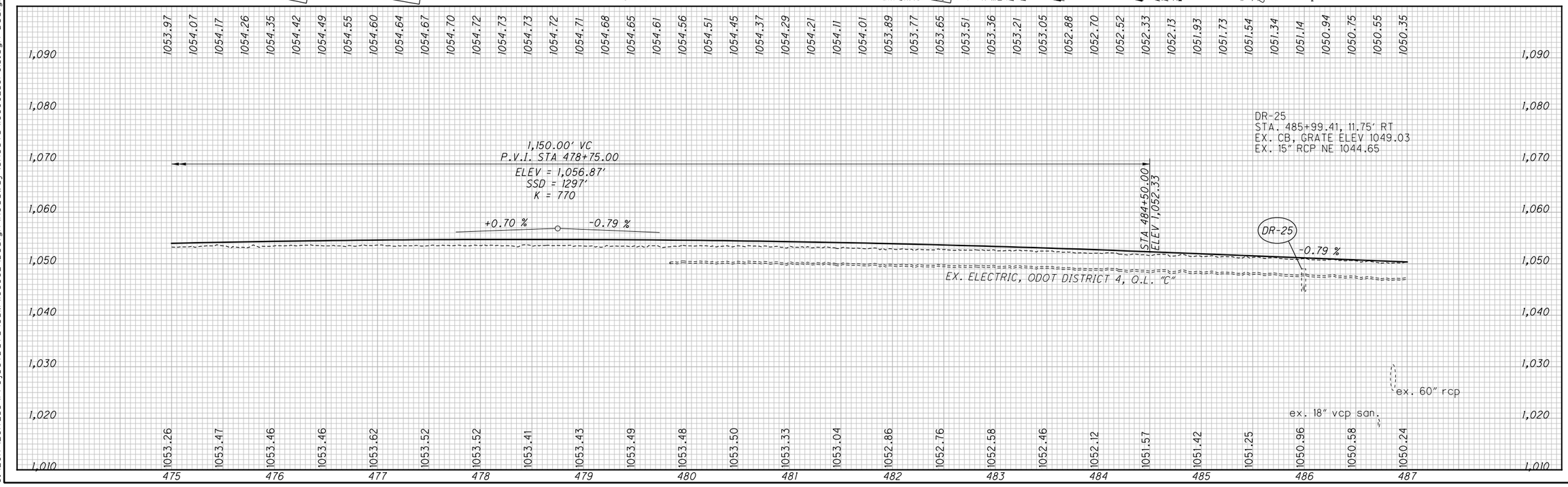


0:\2017\2017258\ProjectData\SUM\06002\Design\Roadway\Sheets\06002_GP015.dgn Design 1/15/2021 10:08:01 AM pfry

HORIZONTAL SCALE IN FEET
CALCULATED LRK
CHECKED PJF

PLAN AND PROFILE - SB I.R. 77
STA. 475+00 TO STA. 487+00

SUM-77 / 277 / 224
VARIOUS

476
1288

ITEM 601 - ROCK CHANNEL PROTECTION

ITEM 670 - DITCH EROSION PROTECTION

ITEM 670 - DITCH EROSION PROTECTION (VEGETATED BIOFILTER PER DETAIL ON SHEET 55)

ITEM 836 - SEEDING AND EROSION CONTROL W/ TURF REINFORCING MAT, TYPE I

RIPRAP & EROSION CONTROL MATTING PER STREAM PROTECTION DETAIL, SEE SHEET 58

ITEM 670 - SLOPE EROSION PROTECTION (VEGETATED FILTER STRIP W/ 4" ITEM 659 - TOPSOIL)

| TAPER TABLE | | | | | | | | | |
|---|---|---|---|---|---|---|---|---|---|
| TAPER CODE | BEGINNING STATION | | ENDING STATION | | SIDE | DESCRIPTION | BEGIN WIDTH | END WIDTH | TAPER RATE |
| AF | 494+44.48 | SB IR-77 | 495+44.48 | SB IR-77 | LT | SHOULDER | 10.00' | 8.00' | 50:1 |
| AG | 494+44.48 | SB IR-77 | 502+43.78 | SB IR-77 | LT | PAVEMENT | 36.00' | 52.00' | 50:1 |

(8) ℄ CONST. SB I.R. 77
P.I. Sta. 482+91.41
Δ = 29° 44' 36" (LT)
Dc = 1° 28' 03"
R = 3,904.07'
T = 1,036.73'
L = 2,026.68'
E = 135.31'
C = 2,004.00'
C.B. = N 26° 52' 45" W
D.S. = 70 MPH
$e_{max}$ = 0.0452
P.C. STA. 472+54.68
P.T. STA. 492+81.37

(A) IMPACT ATTENUATOR, TYPE 3, UNIDIRECTIONAL (90° WIDTH)

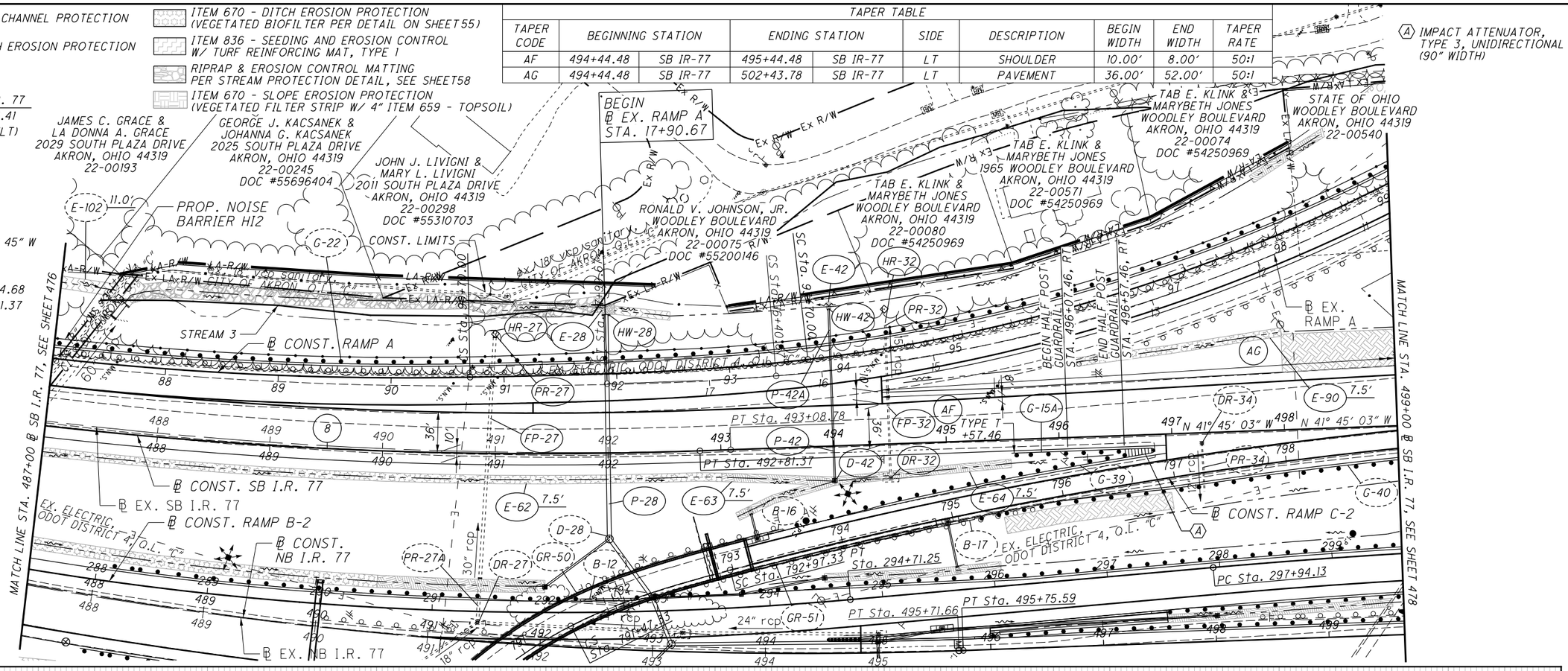


FOR ESTIMATED QUANTITIES, SEE SHEETS 417 - 439
FOR RAMP A PLANS, SEE SHEETS 485 - 486
FOR RAMP C-2 PLANS, SEE SHEET 503
FOR GORE DETAILS, SEE SHEETS 841 -842 , 861
FOR PAVEMENT JOINT DETAILS, SEE SHEETS 873 , 875 -876
FOR UNDERDRAIN DETAILS, SEE SHEETS 927 - 928
FOR FENCE PLANS, SEE SHEETS 1267- 1268
FOR NOISE BARRIER PLANS, SEE SHEETS 1110 -1125
FOR LIGHTING PLANS, SEE SHEETS 1037- 1064

D-28
STA 292+58.27, 64.86' LT
MH-3, RIM ELEV 1042.89
18" (SE) 1023.95
36" (N) 1023.45
42" (SW) 1022.95

D-42
STA 494+00.00, 30.75' RT
CB-8, GRATE ELEV 1041.00
15" (SW) 1037.50
6" UD (SW) 1039.50

DR-32
STA. 494+49.80, 30.75' RT
EX. CB, GRATE ELEV 1040.99
EX. 15" RCP SW 1037.14

DR-34
STA. 797+28.34, 25.89' LT
EX. CB, GRATE ELEV 1042.04
EX. 12" RCP NE 1036.87

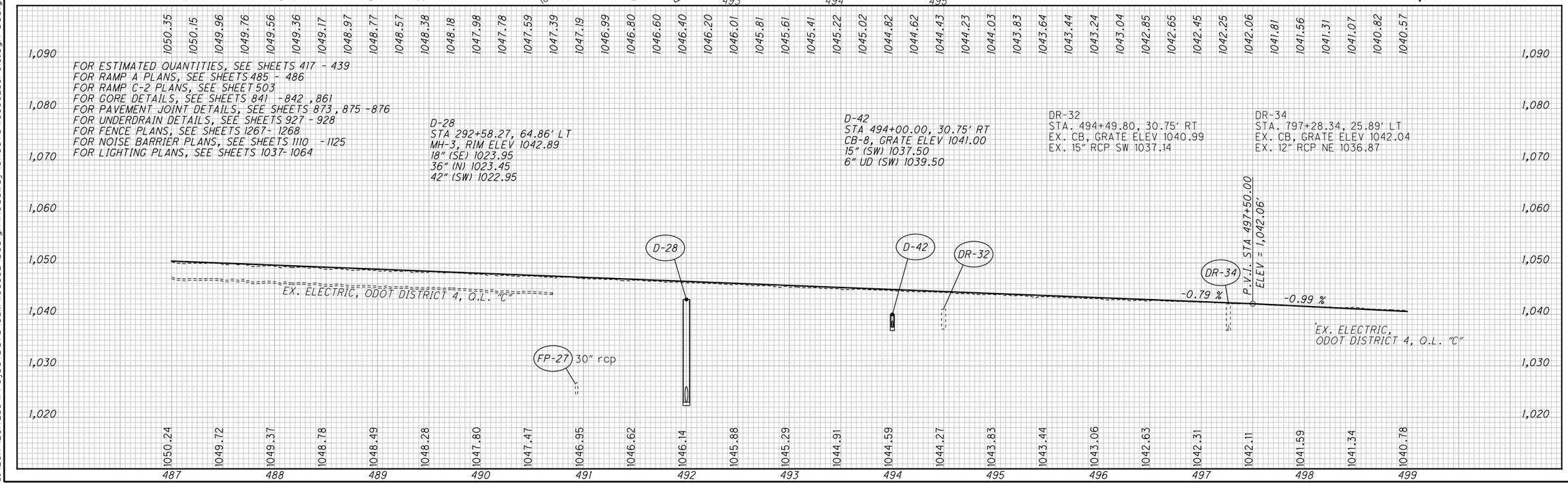


0:\2017\2017258\ProjectData\SUM\06002\Design\Roadway\Sheets\06002_GP016.dgn Design 1/15/2021 10:08:07 AM pfry

HORIZONTAL SCALE IN FEET
0 25 50 100

CALCULATED LRK
CHECKED PJF

PLAN AND PROFILE - SB I.R. 77
STA. 487+00 TO STA. 499+00

SUM-77 / 277 / 224
VARIOUS

477
1288

ITEM 601 - ROCK CHANNEL PROTECTION
ITEM 670 - DITCH EROSION PROTECTION
ITEM 670 - DITCH EROSION PROTECTION (VEGETATED BIOFILTER PER DETAIL ON SHEET 55)
ITEM 670 - SLOPE EROSION PROTECTION (VEGETATED FILTER STRIP W/ 4" ITEM 659 - TOPSOIL)
WETLAND
WETLAND AREA NOT TO BE DISTURBED

TAPER TABLE

| TAPER CODE | BEGINNING STATION | | ENDING STATION | | SIDE | DESCRIPTION | BEGIN WIDTH | END WIDTH | TAPER RATE |
|---|---|---|---|---|---|---|---|---|---|
| AG | 494+44.48 | SB IR-77 | 502+43.78 | SB IR-77 | LT | PAVEMENT | 36.00' | 52.00' | 50:1 |
| AH | 503+95.44 | SB IR-77 | 504+95.44 | SB IR-77 | RT | PAVEMENT | 48.00' | 36.00' | 8:1 |
| AI | 503+95.44 | SB IR-77 | 504+95.44 | SB IR-77 | RT | SHOULDER | 8.00' | 10.00' | 50:1 |
| AJ | 507+75.50 | SB IR-77 | 507+94.00 | SB IR-77 | RT | SHOULDER | 10.00' | 7.00' | 6:1 |
| AK | 509+25.00 | SB IR-77 | 510+00.00 | SB IR-77 | RT | SHOULDER | 7.00' | 10.00' | 25:1 |

HORIZONTAL SCALE IN FEET
0 25 50 100

CALCULATED LRK
CHECKED PJF

STRUCTURE NO. SUM-277-0369 (NO WORK)
STRUCTURE NO. SUM-77-0958L (NO WORK)
END WORK ℄ CONST. RAMP B-1 STA. 421+40.51
END ℄ CONST. RAMP B-1 STA. 423+24.13
BEGIN ℄ EX. RAMP B-1 STA. 0+00.00
END ℄ EX. RAMP B-1 STA. 17+90.88
℄ CONST. RAMP B-1
BEGIN ℄ CONST. RAMP B-1 STA. 402+43.78
℄ R/W & CONST. I.R. 277/U.S. 224
WETLAND F
WETLAND B (DO NOT DISTURB)
CONST. LIMITS
℄ CONST. RAMP B-2
℄ EX. RAMP B-1
℄ EX. SB I.R. 77
℄ CONST. SB I.R. 77
℄ CONST. RAMP C-2
BEGIN ℄ EX. RAMP C-2 STA. 0+00.00
END ℄ CONST. RAMP C-2 STA. 801+48.92
WETLAND C
BEGIN ℄ EX. RAMP B-2 STA. 0+00.00
℄ CONST. NB I.R. 77
℄ EX. NB I.R. 77
EX. ELECTRIC, ODOT DISTRICT 4, O.L. "C"
PROP. 18" CULVERT EXTENSION
BTA, TYPE 1
BTA, TYPE 2
MATCH LINE STA. 499+00 ℄ SB I.R. 77, SEE SHEET 477
MATCH LINE STA. 511+00 ℄ SB I.R. 77, SEE SHEET 479

FOR ESTIMATED QUANTITIES, SEE SHEETS 417 - 439
FOR RAMP B-1 PLANS, SEE SHEETS 490 - 491
FOR RAMP C-2 PLANS, SEE SHEET 503
FOR GORE DETAILS, SEE SHEETS 846 ,861
FOR PAVEMENT JOINT DETAILS, SEE SHEETS 873 - 874
FOR CULVERT DETAILS, SEE SHEET 918
FOR UNDERDRAIN DETAILS, SEE SHEETS 928 - 929
FOR LIGHTING PLANS, SEE SHEETS 1037- 1064

D-37
STA 801+48.91, 42.00' RT
CB-8, GRATE ELEV 1032.75
15" (NW) 1028.38
15" (E) 1028.38

D-38
STA 504+00.00, 52.72' RT
CB-8, GRATE ELEV 1028.07
15" (SE) 1025.66
24" (SW) 1024.91

9 ℄ CONST. SB I.R. 77
P.I. Sta. 515+02.63
Δ = 41° 58' 00" (RT)
Dc = 2° 00' 00"
R = 2,864.79'
Ls = 400.00'
θs = 4° 00' 00"
LT = 266.73'
ST = 133.40'
x = 399.81'
y = 9.31'
k = 199.97'
p = 2.33'
Δc = 33° 58' 00" (RT)
Lc = 1,698.33'
Ts = 1,299.59'
Es = 205.96'
C = 1,673.57'
C1 = C2 = 399.91'
C.B.1 = N 40° 25' 03" W
C.B. = N 20° 46' 03" W
C.B.2 = N 1° 07' 03" W
D.S. = 60 MPH
emax = 0.045
T.S. STA. 502+03.04
S.C. STA. 506+03.04
C.S. STA. 523+01.37
S.T. STA. 527+01.37

SUM-277-0369 (NO WORK)
REQUIRED = 16.5'
PROP. CLEARANCE = 16.66'
EXIST. CLEARANCE = 16.19'

SUM-77-0958L (NO WORK)
REQUIRED = 16.5'
PROP. CLEARANCE = 16.71'
EXIST. CLEARANCE = 15.98'

-0.99 %
-0.65 %
+2.83 %
STA 499+75.00 ELEV 1,039.83
250.00' VC
P.V.I. STA 501+00.00
ELEV = 1,038.59'
K = 735
STA 504+25.00 ELEV 1,037.78
STA 508+10.00 ELEV 1,033.98
490.00' VC
P.V.I. STA 510+55.00
ELEV = 1,032.39'
K = 141
ex. 24" rcp
ex. 18" rcp
P-37 250'-15" TYPE C @ 1.09%
EX. ELECTRIC, ODOT DISTRICT 4, O.L. "C"

# PLAN AND PROFILE - SB I.R. 77
# STA. 499+00 TO STA. 511+00
# SUM-77/277/224
# VARIOUS

478
1288

0:\2017\2017258\ProjectData\SUM\06002\Design\Roadway\Sheets\06002_GP017.dgn Design 1/15/2021 10:08:19 AM pfry

ITEM 670 - DITCH EROSION PROTECTION

ITEM 670 - DITCH EROSION PROTECTION (VEGETATED BIOFILTER PER DETAIL ON SHEET 55)

PROPOSED WORK (PAVEMENT, APPROACH SLAB, EARTHWORK, GUARDRAIL, ETC.) BY OTHERS (SUM-76/77/8-8.42/9.77/0.00 DB, PID 102329)

FOR ESTIMATED QUANTITIES, SEE SHEETS 417 - 439
FOR RAMP B PLANS, SEE SHEET 489
FOR GORE DETAILS, SEE SHEET 845
FOR PAVEMENT JOINT DETAILS, SEE SHEET 879
FOR UNDERDRAIN DETAILS, SEE SHEET 929
FOR LIGHTING PLANS, SEE SHEETS 1037-1064

NOTE 'A'
PROPOSED GUARDRAIL SHALL CONNECT TO THE GUARDRAIL AND BTA BEING INSTALLED BY OTHERS IN THE PID 102329 PROJECT

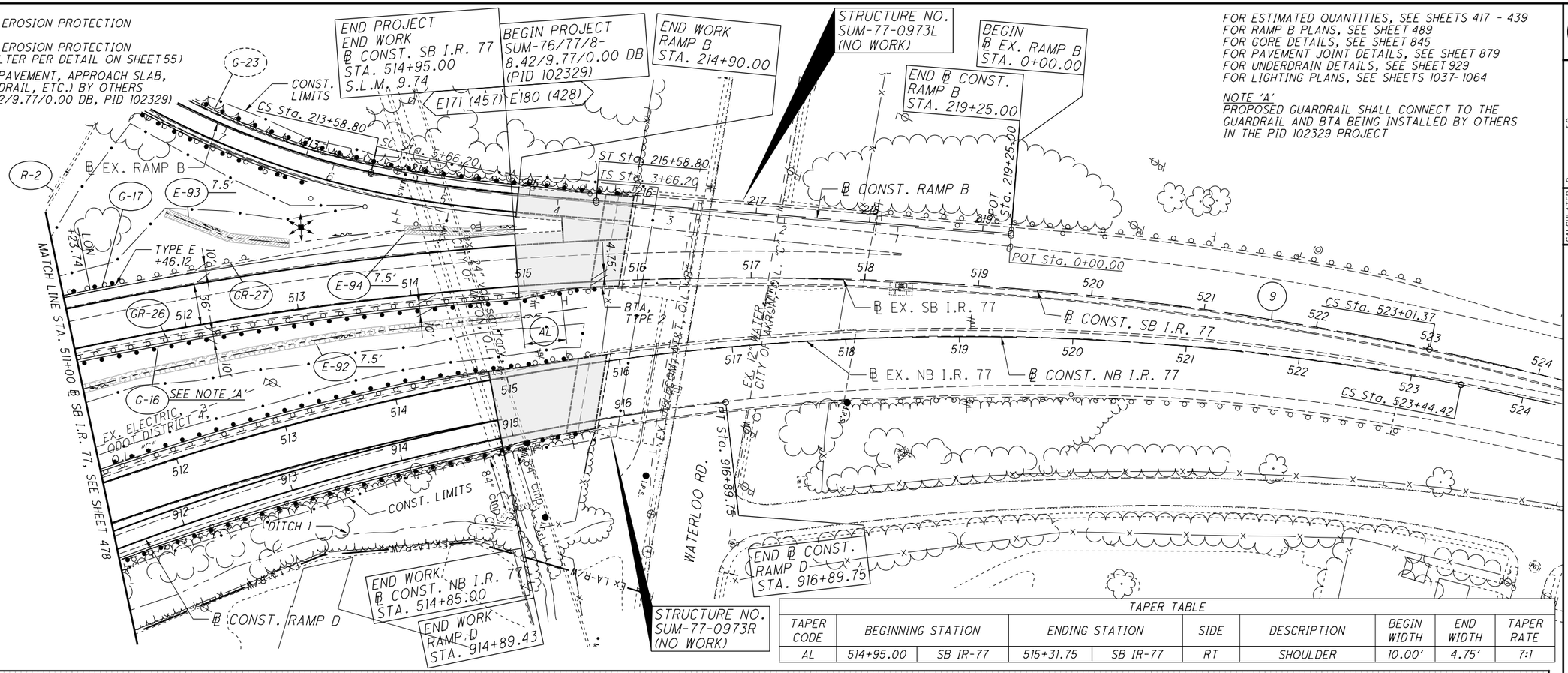


TAPER TABLE

| TAPER CODE | BEGINNING STATION | | ENDING STATION | | SIDE | DESCRIPTION | BEGIN WIDTH | END WIDTH | TAPER RATE |
|---|---|---|---|---|---|---|---|---|---|
| AL | 514+95.00 | SB IR-77 | 515+31.75 | SB IR-77 | RT | SHOULDER | 10.00' | 4.75' | 7:1 |

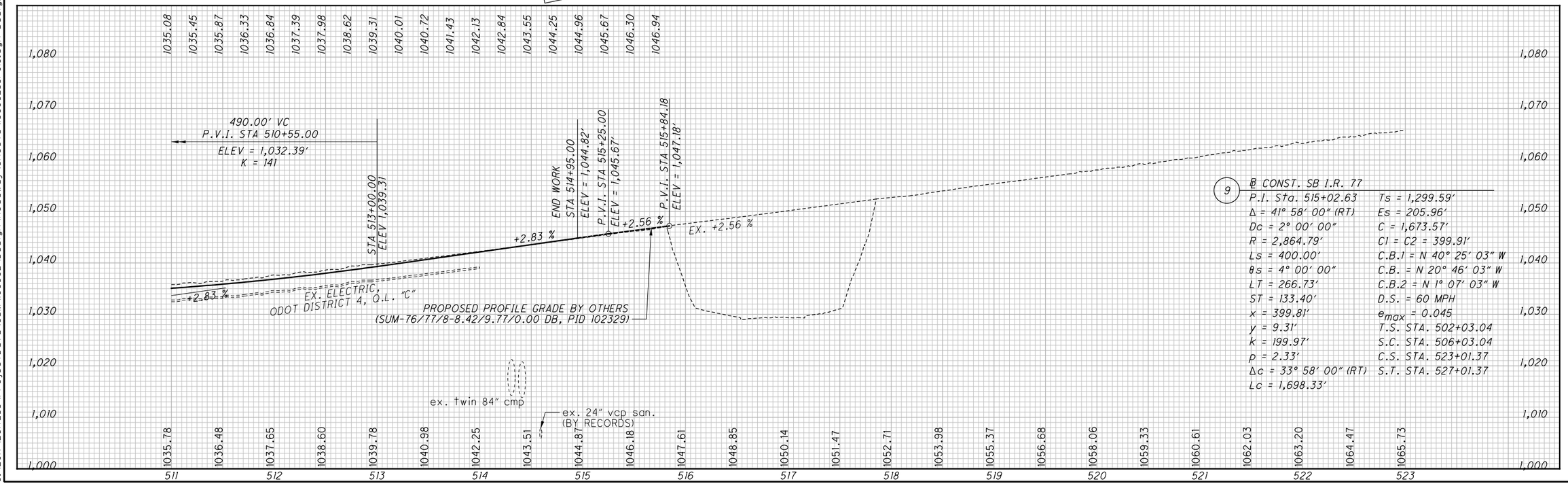


9 ℄ CONST. SB I.R. 77

| | |
|---|---|
| P.I. Sta. 515+02.63 | Ts = 1,299.59' |
| Δ = 41° 58' 00" (RT) | Es = 205.96' |
| Dc = 2° 00' 00" | C = 1,673.57' |
| R = 2,864.79' | C1 = C2 = 399.91' |
| Ls = 400.00' | C.B.1 = N 40° 25' 03" W |
| θs = 4° 00' 00" | C.B. = N 20° 46' 03" W |
| LT = 266.73' | C.B.2 = N 1° 07' 03" W |
| ST = 133.40' | D.S. = 60 MPH |
| x = 399.81' | $e_{max}$ = 0.045 |
| y = 9.31' | T.S. STA. 502+03.04 |
| k = 199.97' | S.C. STA. 506+03.04 |
| p = 2.33' | C.S. STA. 523+01.37 |
| Δc = 33° 58' 00" (RT) | S.T. STA. 527+01.37 |
| Lc = 1,698.33' | |

HORIZONTAL SCALE IN FEET
0 25 50 100

CALCULATED LRK
CHECKED PJF

# PLAN AND PROFILE - SB I.R. 77 STA. 511+00 TO END

SUM-77/277/224
VARIOUS

479
1288

O:\2017\2017258\ProjectData\SUM\06002\Design\Roadway\Sheets\06002_GP018.dgn Design 1/15/2021 10:08:30 AM pfry

ITEM 601 - ROCK CHANNEL PROTECTION

ITEM 670 - DITCH EROSION PROTECTION

ITEM 670 - DITCH EROSION PROTECTION (VEGETATED BIOFILTER PER DETAIL ON SHEET 55)

ITEM 836 - SEEDING AND EROSION CONTROL W/ TRUF REINFORCING MAT, TYPE I

END WORK RAMP B-2 STA. 33+82.00

END ℄ EX. RAMP B STA. 27+97.76

BEGIN ℄ CONST. RAMP B STA. 197+05.36

℄ CONST. RAMP B

STREAM 4

CONST. LIMITS

EX. 1 1/4" GAS, EVERFLOW EASTERN PARTNERS, LP, O.L. "D" (ABANDONED)

EX. 1 1/4" GAS, EVERFLOW EASTERN PARTNERS, LP, O.L. "D" (ABANDONED)

℄ CONST. RAMP B-2

℄ EX. RAMP B

POT Sta. 27+97.76

S 83° 32' 30" W

28 S 83° 15' 20" W 27

ST Sta. 197+05.36

ST Sta. 24+64.81

N 84° 41' 15" E

SAWCUT

SAWCUT

POT Sta. 33+82.00

CONNECT TO EXISTING GUARDRAIL, PER MGS-4.3 STA. 223+25.02

EX. 36" SANITARY SEWER, CITY OF AKRON, O.L.

BEGIN LONG POST GUARDRAIL STA. 223+25.02, RT.

BEGIN WORK (WB) I.R. 277/U.S. 224 STA. 225+00.00

CONST. LIMITS

PROP. NOISE BARRIER H11

℄ R/W & CONST. I.R. 277/U.S. 224

TYPE T +12.50

END LONG POST GUARDRAIL STA. 231+12.50, RT.

MATCH LINE STA. 234+50 ℄ I.R. 277/U.S. 224, SEE SHEET 481

I.P.S.

E-51 HR-36 HW-51 P-51A GR-41 PR-36 P-51 G-32 E-50 PR-38 HW-50 HR-38 P-50 PR-37 DR-38 E-88 11.0' E-134 11.0' P-105 HW-105 E-133 11.0' E-126 HW-115

Ex LA-R/W

10.92'

24'

15'

8'

12'

15"

———————— PROPOSED PAVEMENT STRIPING/EDGE LINE

FOR STORM SEWER PROFILE, SEE SHEET 921
FOR ESTIMATED QUANTITIES, SEE SHEETS 417 - 439
FOR RAMP B-2 PLANS, SEE SHEETS 495 - 496
FOR GORE DETAILS, SEE SHEETS 851 - 853
FOR PAVEMENT JOINT DETAILS, SEE SHEETS 882 - 884
FOR UNDERDRAIN DETAILS, SEE SHEET 930
FOR FENCE PLANS, SEE SHEET 1269
FOR NOISE BARRIER PLANS, SEE SHEETS 1110 - 1125
FOR LIGHTING PLANS, SEE SHEETS 1037- 1064

HORIZONTAL SCALE IN FEET
0 25 50 100

CALCULATED LRK
CHECKED PJF

# PLAN - I.R. 277/U.S. 224 BEGIN TO STA. 234+50

SUM-77/277/224
VARIOUS

480
1288

0:\2017\2017258\ProjectData\SUM\06002\Design\Roadway\Sheets\06002_GP020.dgn Sheet 1/15/2021 10:45:21 AM pfry

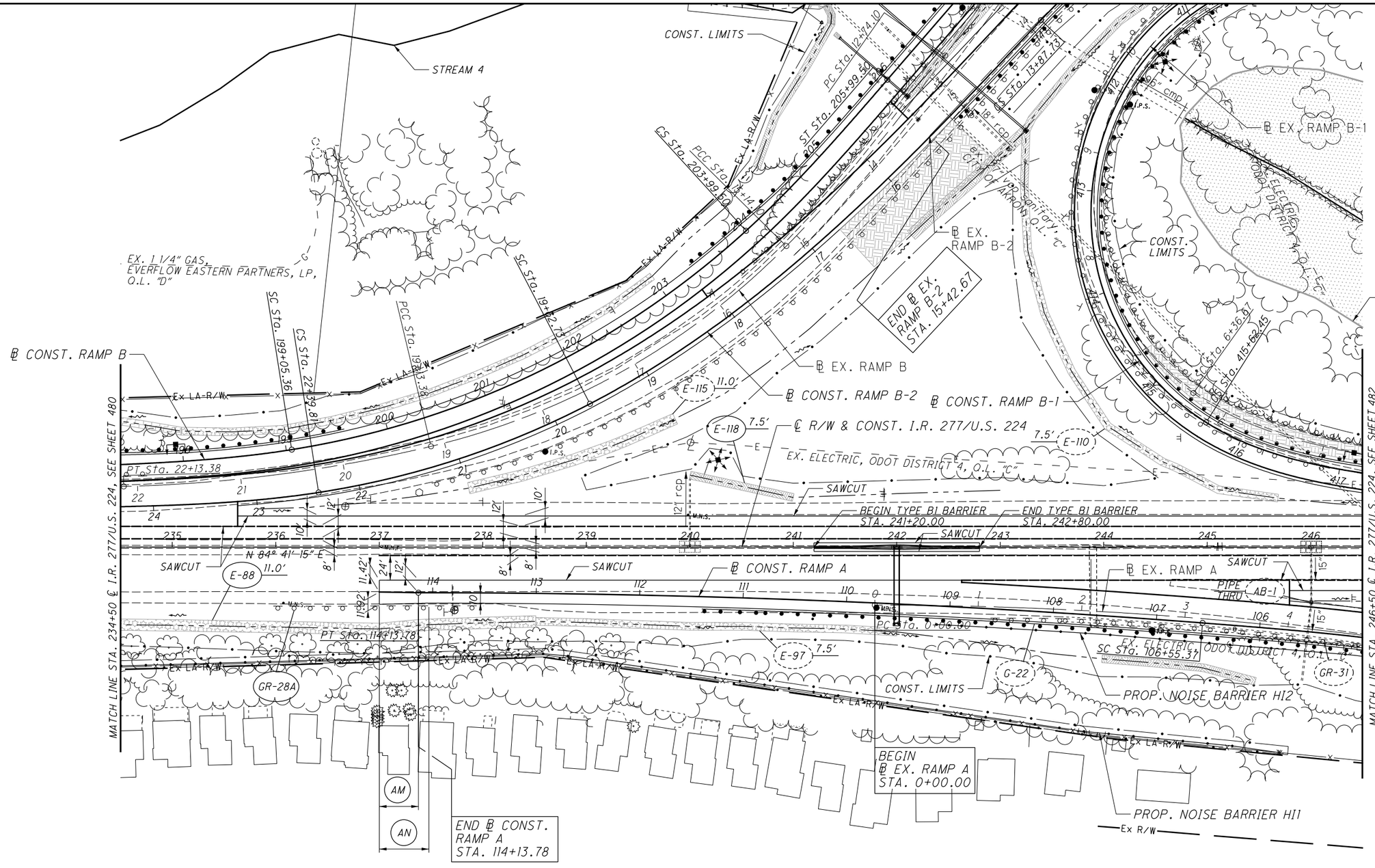


WETLAND

WETLAND AREA NOT TO BE DISTURBED

ITEM 670 - SLOPE EROSION PROTECTION (VEGETATED FILTER STRIP W/ 4" ITEM 659 - TOPSOIL)

ITEM 601 - ROCK CHANNEL PROTECTION

ITEM 670 - DITCH EROSION PROTECTION

ITEM 670 - DITCH EROSION PROTECTION (VEGETATED BIOFILTER PER DETAIL ON SHEET 55)

ITEM 836 - SEEDING AND EROSION CONTROL W/ TURF REINFORCING MAT, TYPE 1

FOR ESTIMATED QUANTITIES, SEE SHEETS 417 - 439
FOR RAMP A PLANS, SEE SHEET 487
FOR RAMP B-2 PLANS, SEE SHEET 495
FOR GORE DETAILS, SEE SHEETS 843 - 844 , 851
FOR PAVEMENT JOINT DETAILS, SEE SHEETS 877 - 878, 882
FOR UNDERDRAIN DETAILS, SEE SHEET 930
FOR FENCE PLANS, SEE SHEET 1270
FOR NOISE BARRIER PLANS, SEE SHEETS 1110 - 1125
FOR LIGHTING PLANS, SEE SHEETS 1037 - 1064

PROPOSED PAVEMENT STRIPING/EDGE LINE

TAPER TABLE

| TAPER CODE | BEGINNING STATION | | ENDING STATION | | SIDE | DESCRIPTION | BEGIN WIDTH | END WIDTH | TAPER RATE |
|---|---|---|---|---|---|---|---|---|---|
| AM | 237+00.00 | IR-277/US-224 | 237+37.85 | IR-277/US-224 | RT | PAVEMENT | 11.42' | 12.00' | 65:1 |
| AN | 237+00.00 | IR-277/US-224 | 237+47.95 | IR-277/US-224 | RT | SHOULDER | 11.92' | 10.00' | 25:1 |

N

0 25 50 100 HORIZONTAL SCALE IN FEET

CALCULATED LRK CHECKED PJF

# PLAN - I.R. 277/U.S. 224
## STA. 234+50 TO STA. 246+50

SUM-77/277/224
VARIOUS

481
1288

D:\2017\2017258\ProjectData\SUM\106002\Design\Roadway\Sheets\106002_GP02I.dgn Sheet 1/15/2021 10:15:24 AM pfry

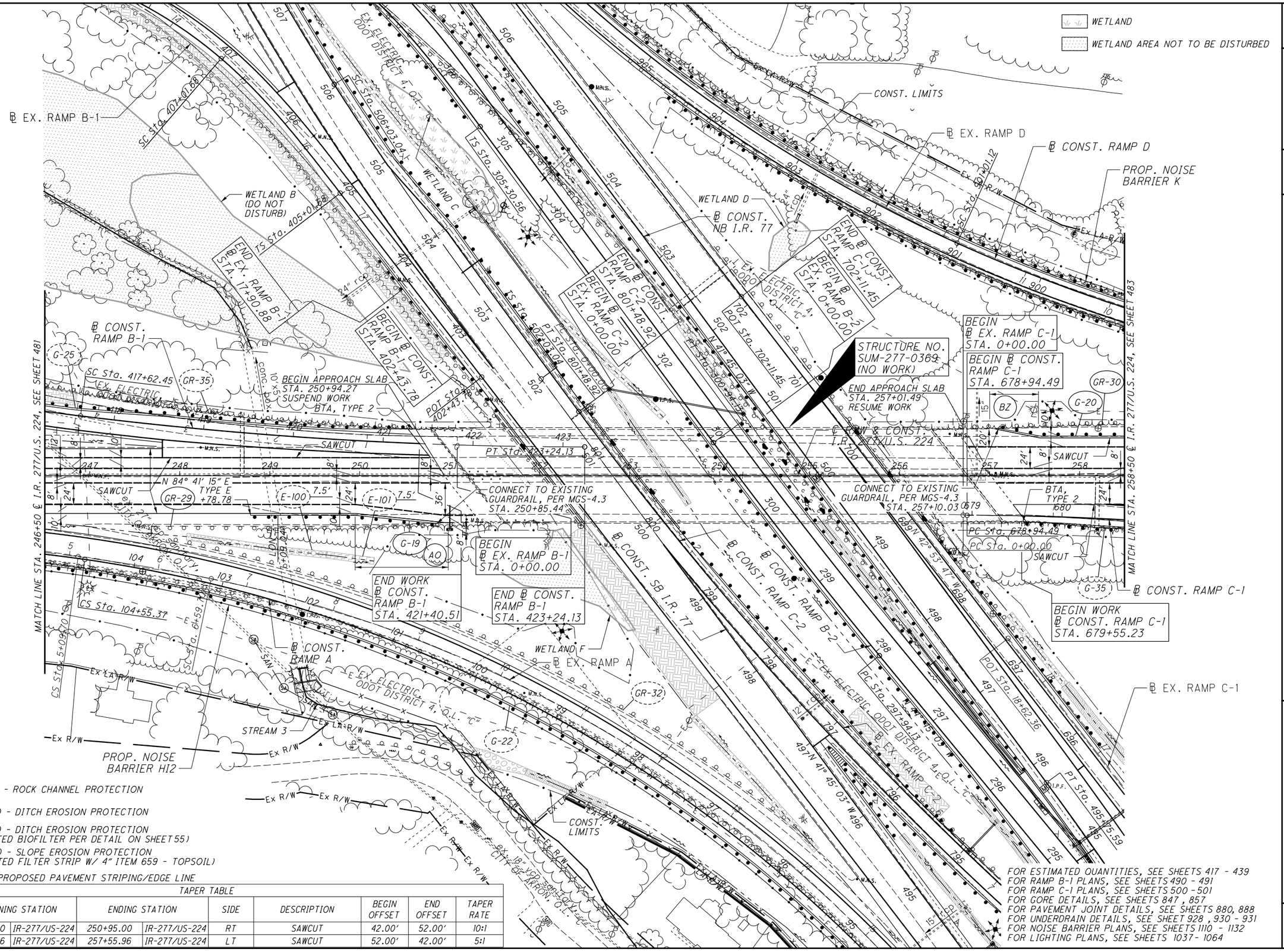


TAPER TABLE

| TAPER CODE | BEGINNING STATION | | ENDING STATION | | SIDE | DESCRIPTION | BEGIN OFFSET | END OFFSET | TAPER RATE |
|---|---|---|---|---|---|---|---|---|---|
| AO | 249+95.00 | IR-277/US-224 | 250+95.00 | IR-277/US-224 | RT | SAWCUT | 42.00' | 52.00' | 10:1 |
| BZ | 257+05.96 | IR-277/US-224 | 257+55.96 | IR-277/US-224 | LT | SAWCUT | 52.00' | 42.00' | 5:1 |

FOR ESTIMATED QUANTITIES, SEE SHEETS 417 - 439
FOR RAMP B-1 PLANS, SEE SHEETS 490 - 491
FOR RAMP C-1 PLANS, SEE SHEETS 500 - 501
FOR GORE DETAILS, SEE SHEETS 847 , 857
FOR PAVEMENT JOINT DETAILS, SEE SHEETS 880, 888
FOR UNDERDRAIN DETAILS, SEE SHEET 928 , 930 - 931
FOR NOISE BARRIER PLANS, SEE SHEETS 1110 - 1132
FOR LIGHTING PLANS, SEE SHEETS 1037- 1064

HORIZONTAL SCALE IN FEET
0 25 50 100

CALCULATED LRK
CHECKED PJF

PLAN - I.R. 277/U.S. 224
STA. 246+50 TO STA. 258+50

SUM-77/277/224
VARIOUS

482
1288

D:\2017\2017258\Project Data\SUM\06002\Design\Roadway\Sheets\06002_GP022.dgn Sheet 1/15/2021 10:45:27 AM pfry

ITEM 670 - DITCH EROSION PROTECTION

ITEM 670 - DITCH EROSION PROTECTION (VEGETATED BIOFILTER PER DETAIL ON SHEET 55)

ITEM 836 - SEEDING AND EROSION CONTROL W/ TURF REINFORCING MAT, TYPE 1

ITEM 670 - SLOPE EROSION PROTECTION (VEGETATED FILTER STRIP W/ 4" ITEM 659 - TOPSOIL)

(A) IMPACT ATTENUATOR, TYPE 3, UNIDIRECTIONAL (69" WIDTH)

FOR ESTIMATED QUANTITIES, SEE SHEETS 417 - 439
FOR RAMP C-1 PLANS, SEE SHEETS 500 - 501
FOR RAMP D PLANS, SEE SHEET 504
FOR GORE DETAILS, SEE SHEETS 857 , 862
FOR PAVEMENT JOINT DETAILS, SEE SHEETS 888 , 890
FOR UNDERDRAIN DETAILS, SEE SHEET 931
FOR FENCE PLANS, SEE SHEET 1271
FOR NOISE BARRIER PLANS, SEE SHEETS 1126 -1132
FOR LIGHTING PLANS, SEE SHEETS 1037- 1064

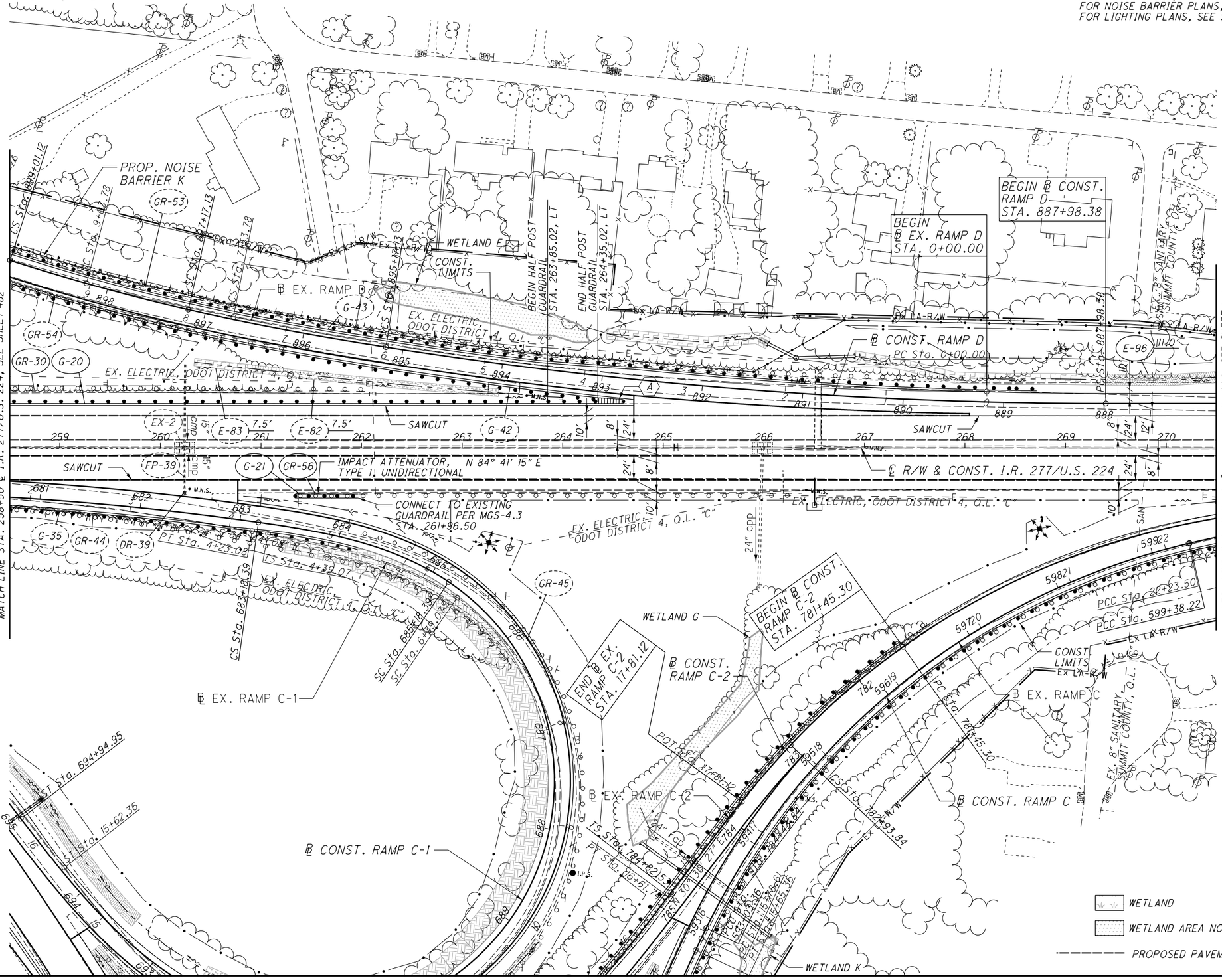


0:\2017\2017258\ProjectData\SUM\106002\Design\Roadway\Sheets\106002_GP023.dgn Sheet1 1/15/2021 04:53:30 AM pfry

HORIZONTAL SCALE IN FEET
0 25 50 100

CALCULATED LRK
CHECKED PJF

PLAN - I.R. 277/U.S. 224
STA. 258+50 TO STA. 270+50

SUM-77/277/224
VARIOUS

96 ℄ R/W & CONST. I.R. 277/U.S. 224
P.I. Sta. 280+91.67
Δ = 6° 22′ 18″ (RT)
Dc = 1° 00′ 00″
R = 5,729.58′
T = 318.91′
L = 637.17′
E = 8.87′
C = 636.84′
C.B. = N 87° 52′ 24″ E
P.C. STA. 277+72.76
P.T. STA. 284+09.93

END WORK (EB)
℄ R/W & CONST.
I.R. 277/U.S. 224
STA. 279+50.00

CONNECT TO EXISTING GUARDRAIL, PER MGS-4.3
STA. 279+81.23

BEGIN LONG POST GUARDRAIL
STA. 279+44.11, LT.

END LONG POST GUARDRAIL
STA. 279+81.23, LT.

PROP. NOISE BARRIER K

WETLAND J

CONST. LIMITS

TYPE T
+44.11

STRUCTURE NO.
SUM-224-1061
(NO WORK)

S. ARLINGTON ST.

MATCH LINE STA. 270+50 ℄ I.R. 277/U.S. 224, SEE SHEET 483

℄ R/W & CONST. I.R. 277/U.S. 224

N 84° 41′ 15″ E

℄ EX. RAMP C

℄ CONST. RAMP C

END
℄ EX. RAMP C
STA. 25+17.54

END ℄ CONST.
RAMP C
STA. 606+67.88

PT STA. 601+37.81

PT STA. 25+17.54

PT STA. 603+37.81

PT STA. 606+67.88

PT STA. 277+42.76

PT STA. 284+09.93

EX. 3" GAS, DOMINION ENERGY OHIO

EX. TELECOM, MCI/VERIZON, O.L.

EX. 16" WATER, CITY OF AKRON, O.L.

EX. 6" WATER, CITY OF AKRON, O.L. "D"

| TAPER TABLE | | | | | | | | | |
|---|---|---|---|---|---|---|---|---|---|
| TAPER CODE | BEGINNING STATION | | ENDING STATION | | SIDE | DESCRIPTION | BEGIN WIDTH | END WIDTH | TAPER RATE |
| AP | 272+95.00 | IR-277/US-224 | 273+25.00 | IR-277/US-224 | LT | PAVEMENT | 12.00′ | 11.89′ | 267:1 |
| AQ | 272+95.00 | IR-277/US-224 | 273+25.00 | IR-277/US-224 | LT | SHOULDER | 10.00′ | 11.19′ | 25:1 |
| AR | 277+50.00 | IR-277/US-224 | 279+50.00 | IR-277/US-224 | RT | PAVEMENT | 16.00′ | 12.00′ | 50:1 |
| AS | 277+80.00 | IR-277/US-224 | 279+50.00 | IR-277/US-224 | RT | SHOULDER | 8.00′ | 11.40′ | 50:1 |

FOR ESTIMATED QUANTITIES, SEE SHEETS 417 - 439
FOR RAMP C PLANS, SEE SHEET 499
FOR GORE DETAILS, SEE SHEETS 855 -856
FOR PAVEMENT JOINT DETAILS, SEE SHEETS 886 - 887
FOR UNDERDRAIN DETAILS, SEE SHEET 931
FOR FENCE PLANS, SEE SHEET 1272
FOR NOISE BARRIER PLANS, SEE SHEETS 1126 -1132
FOR LIGHTING PLANS, SEE SHEETS 1037- 1064

WETLAND
WETLAND AREA NOT TO BE DISTURBED
ITEM 670 - DITCH EROSION PROTECTION
PROPOSED PAVEMENT STRIPING/EDGE LINE

HORIZONTAL SCALE IN FEET
0 25 50 100

CALCULATED LRK
CHECKED PJF

PLAN - I.R. 277/U.S. 224
STA. 270+50 TO END

SUM-77/277/224
VARIOUS

484
1288

G:\2017\2017258\ProjectData\SUM\06002\Design\Roadway\Sheets\06002_GP024.dgn Sheet 1/15/2021 10:15:34 AM pfry

13 ℄ CONST. RAMP A
P.I. STA. 92+70.10
Ls = 300.00'
f s = 5° 37' 30"
LT = 200.10'
ST = 100.09'
x = 299.71'
y = 9.81'
k = 149.95'
p = 2.45'
C.S. STA. 90+70.00
S.C. STA. 93+70.00

12 ℄ CONST. RAMP A
P.I. Sta. 88+67.18
Δ = 8° 07' 34" (LT)
Dc = 2° 00' 00"
R = 2,864.79'
T = 203.49'
L = 406.31'
E = 7.22'
C = 405.96'
C.B. = N 36° 44' 56" W
D.S. = 60 MPH
e max = 0.045
P.C. STA. 86+63.69
C.S. STA. 90+70.00

NENG YANG & MEE XIONG
2028 DARNELL DRIVE
AKRON, OHIO 44319
22-00133
DOC #56088106

NICHOLAS C. HOAJA & JENNIE L. HOAJA
2065 SOUTH PLAZA DRIVE
AKRON, OHIO 44319
22-00225
DOC #55475021

KAREN M. DUVALL
2008 DARNELL DRIVE
AKRON, OHIO 44319
22-00725
DOC #56106610

JAMES C. GRACE & LA DONNA A. GRACE
2029 SOUTH PLAZA DRIVE
AKRON, OHIO 44319
22-00193

GEORGE J. KACSANEK & JOHANNA G. KACSANEK
2025 SOUTH PLAZA DRIVE
AKRON, OHIO 44319
22-00245
DOC #55696404

JOHN J. LIVIGNI & MARY L. LIVIGNI
2011 SOUTH PLAZA DRIVE
AKRON, OHIO 44319
22-00298
DOC #55310703

BEGIN ℄ CONST. RAMP A STA. 86+63.69

CONST. LIMITS

PROP. 60" CULVERT EXTENSION

PROP. NOISE BARRIER HI2

℄ EX. SB I.R. 77

℄ EX. NB I.R. 77

℄ CONST. RAMP A

STREAM 3

℄ CONST. NB I.R. 77

℄ CONST. SB I.R. 77

EX. ELECTRIC, ODOT DISTRICT 4, O.L. "C"

ex. 18" vcp sanitary, CITY OF AKRON, O.L. "C"

MATCH LINE STA. 92+50 ℄ RAMP A, SEE SHEET 486

ITEM 601 - ROCK CHANNEL PROTECTION

ITEM 670 - DITCH EROSION PROTECTION

ITEM 670 - DITCH EROSION PROTECTION (VEGETATED BIOFILTER PER DETAIL ON SHEET 55)

ITEM 836 - SEEDING AND EROSION CONTROL WITH TURF REINFORCING MAT, TYPE 1

RIPRAP & EROSION CONTROL MATTING PER STREAM PROTECTION DETAIL, SEE SHEET 58

FOR ESTIMATED QUANTITIES, SEE SHEETS 417 - 439
FOR SB I.R. 77 PLANS, SEE SHEETS 476 - 477
FOR GORE DETAILS, SEE SHEETS 841 - 842
FOR PAVEMENT JOINT DETAILS, SEE SHEETS 875 - 876
FOR CULVERT DETAILS, SEE SHEET 909
FOR UNDERDRAIN DETAILS, SEE SHEET 927
FOR FENCE PLANS, SEE SHEETS 1267 - 1268
FOR NOISE BARRIER PLANS, SEE SHEETS 1110 - 1125
FOR LIGHTING PLANS, SEE SHEETS 1037 - 1064

436.31' GRAPHIC GRADE

STA 86+63.69
ELEV = 1,047.92

STA 91+00.00
ELEV = 1,044.02

-0.72 %

EX. ELECTRIC, ODOT DISTRICT 4, O.L. "C"

30" rcp FP-27

ex. 60" rcp

ex. 18" vcp san

P-28 36" TYPE B

PLAN AND PROFILE - RAMP A
BEGIN ℄ RAMP A, STA. 86+63.69 TO STA. 92+50

SUM-77/277/224
VARIOUS

485
1288

CALCULATED LRK
CHECKED PJF

HORIZONTAL SCALE IN FEET
0 25 50 100

0:\2017\2017258\ProjectData\SUM\106002\Design\Roadway\Sheets\106002_GP103.dgn Sheet 1/15/2021 2:02:57 PM pfry

**13** ℄ CONST. RAMP A
P.I. STA. 92+70.10
Ls = 300.00'
f s = 5° 37' 30"
LT = 200.10'
ST = 100.09'
x = 299.71'
y = 9.81'
k = 149.95'
p = 2.45'
C.S. STA. 90+70.00
S.C. STA. 93+70.00

**14** ℄ CONST. RAMP A
P.I. Sta. 99+36.72
Δ = 40° 42' 05" (LT)
Dc = 3° 45' 00"
R = 1,527.89'
T = 566.72'
L = 1,085.37'
E = 101.72'
C = 1,062.69'
C.B. = N 66° 47' 16" W
D.S = 55 MPH (SSD = 50 MPH)
$e_{max}$ = 0.0555
S.C. STA. 93+70.00
C.S. STA. 104+55.37

**15** ℄ CONST. RAMP A
P.I. STA. 105+22.06
Ls = 200.00'
f s = 3° 45' 00"
LT = 133.36'
ST = 66.69'
x = 199.91'
y = 4.36'
k = 99.99'
p = 1.09'
C.S. STA. 104+55.37
S.C. STA. 106+55.37

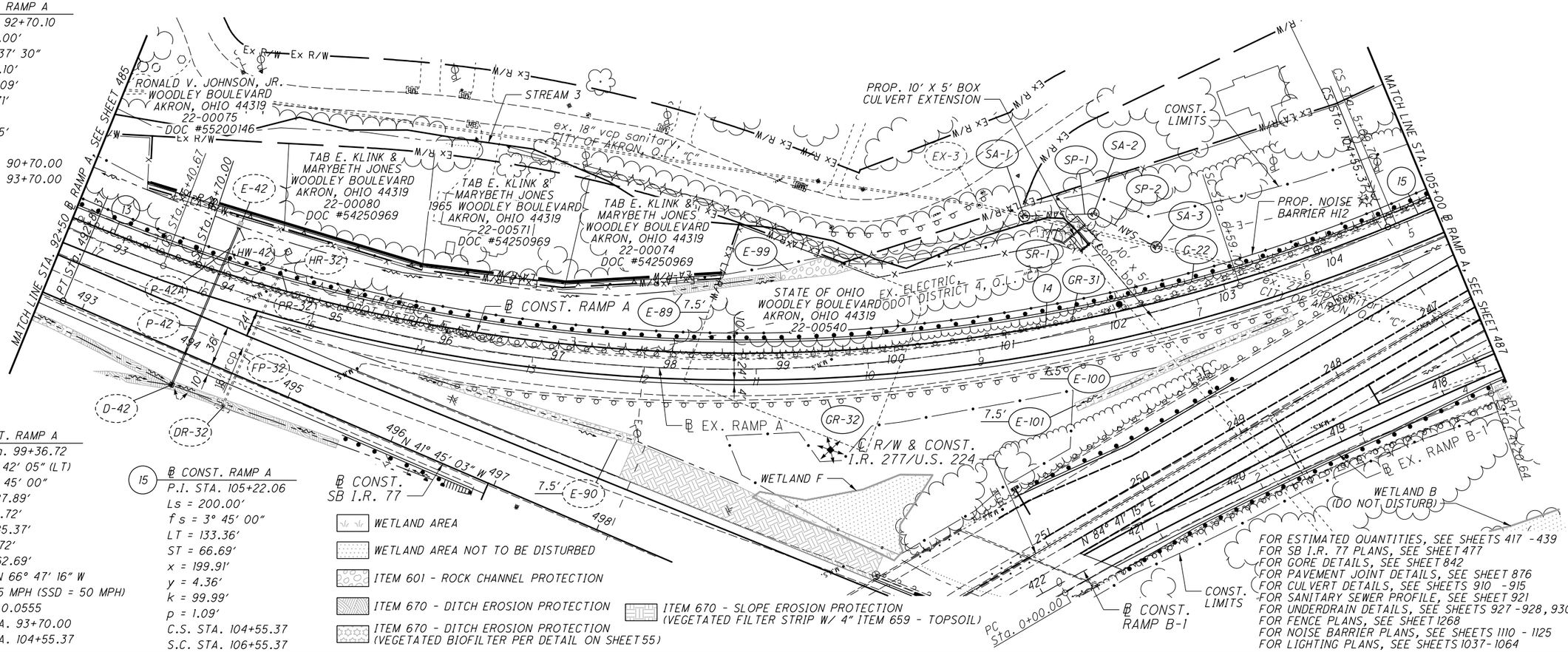


WETLAND AREA
WETLAND AREA NOT TO BE DISTURBED
ITEM 601 - ROCK CHANNEL PROTECTION
ITEM 670 - DITCH EROSION PROTECTION
ITEM 670 - DITCH EROSION PROTECTION (VEGETATED BIOFILTER PER DETAIL ON SHEET 55)
ITEM 670 - SLOPE EROSION PROTECTION (VEGETATED FILTER STRIP W/ 4" ITEM 659 - TOPSOIL)

FOR ESTIMATED QUANTITIES, SEE SHEETS 417 - 439
FOR SB I.R. 77 PLANS, SEE SHEET 477
FOR GORE DETAILS, SEE SHEET 842
FOR PAVEMENT JOINT DETAILS, SEE SHEET 876
FOR CULVERT DETAILS, SEE SHEETS 910 - 915
FOR SANITARY SEWER PROFILE, SEE SHEET 921
FOR UNDERDRAIN DETAILS, SEE SHEETS 927 - 928, 930
FOR FENCE PLANS, SEE SHEET 1268
FOR NOISE BARRIER PLANS, SEE SHEETS 1110 - 1125
FOR LIGHTING PLANS, SEE SHEETS 1037 - 1064

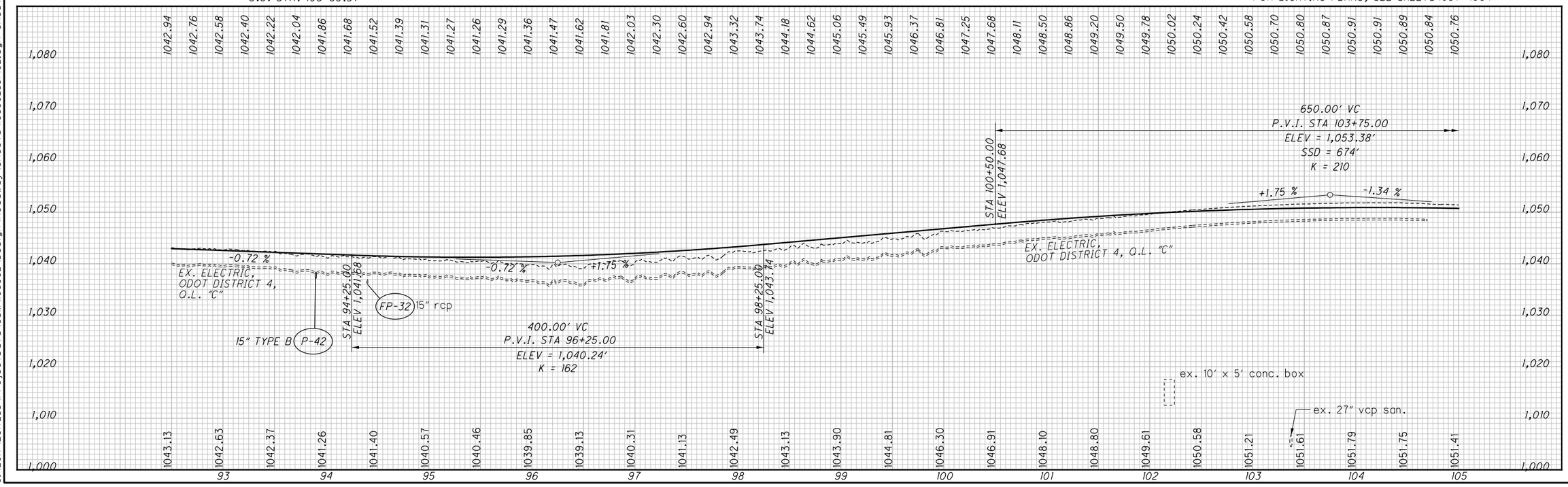


SUM-77 / 277 / 224
VARIOUS

PLAN AND PROFILE - RAMP A
STA. 92+50 TO STA. 105+00

HORIZONTAL SCALE IN FEET
0 25 50 100

CALCULATED LRK
CHECKED PJF

486
1288

0:\2017\2017258\ProjectData\SUM\106002\Design\Roadway\Sheets\106002_GP102.dgn Sheet 1/15/2021 2:03:02 PM pfry

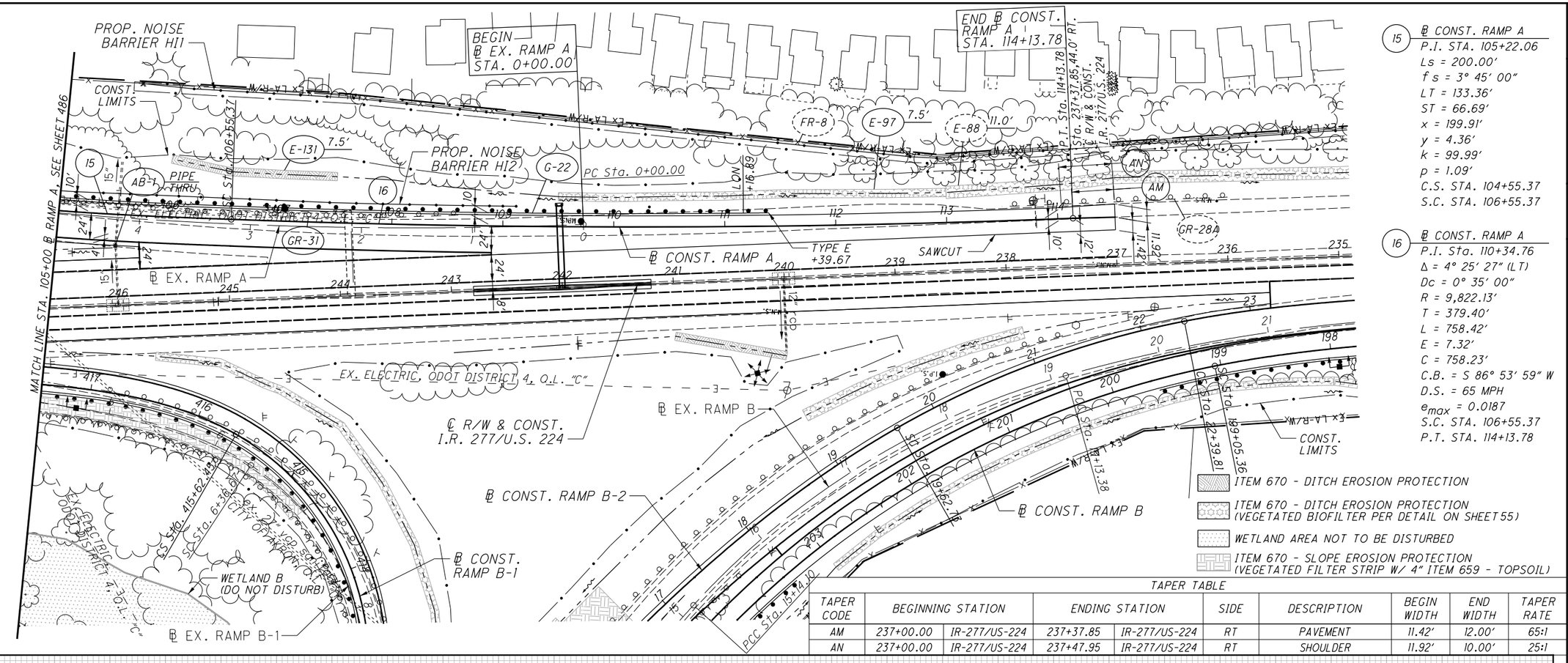


(15) ℄ CONST. RAMP A
P.I. STA. 105+22.06
Ls = 200.00'
f s = 3° 45' 00"
LT = 133.36'
ST = 66.69'
x = 199.91'
y = 4.36'
k = 99.99'
p = 1.09'
C.S. STA. 104+55.37
S.C. STA. 106+55.37

(16) ℄ CONST. RAMP A
P.I. Sta. 110+34.76
Δ = 4° 25' 27" (LT)
Dc = 0° 35' 00"
R = 9,822.13'
T = 379.40'
L = 758.42'
E = 7.32'
C = 758.23'
C.B. = S 86° 53' 59" W
D.S. = 65 MPH
$e_{max}$ = 0.0187
S.C. STA. 106+55.37
P.T. STA. 114+13.78

TAPER TABLE

| TAPER CODE | BEGINNING STATION | | ENDING STATION | | SIDE | DESCRIPTION | BEGIN WIDTH | END WIDTH | TAPER RATE |
|---|---|---|---|---|---|---|---|---|---|
| AM | 237+00.00 | IR-277/US-224 | 237+37.85 | IR-277/US-224 | RT | PAVEMENT | 11.42' | 12.00' | 65:1 |
| AN | 237+00.00 | IR-277/US-224 | 237+47.95 | IR-277/US-224 | RT | SHOULDER | 11.92' | 10.00' | 25:1 |

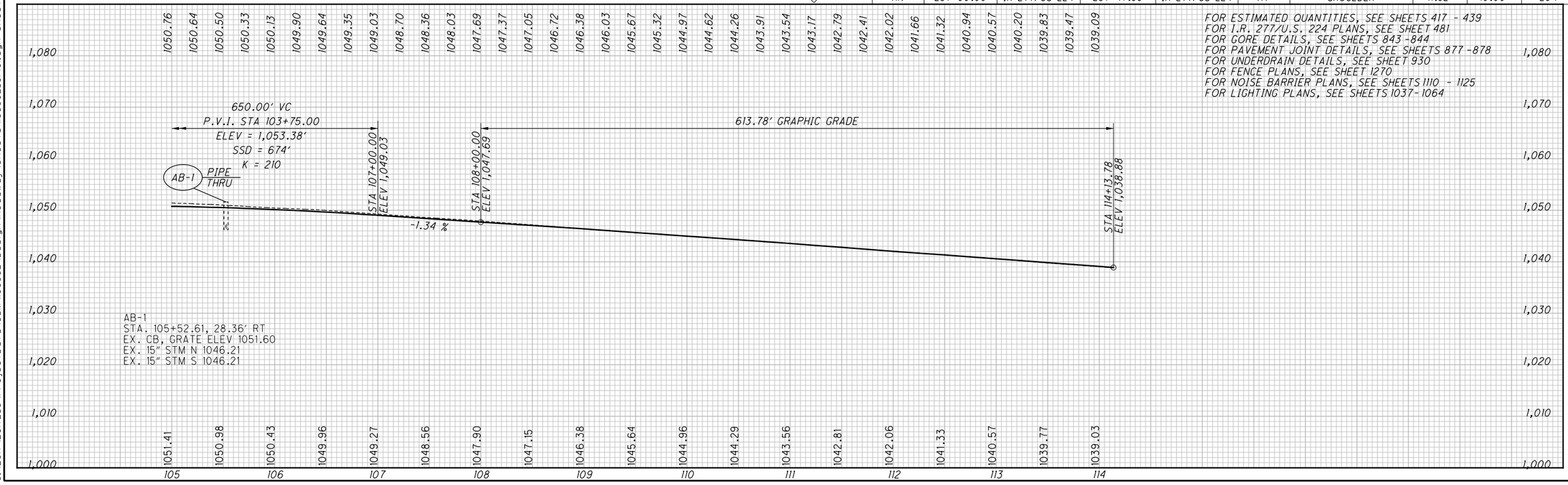


FOR ESTIMATED QUANTITIES, SEE SHEETS 417 - 439
FOR I.R. 277/U.S. 224 PLANS, SEE SHEET 481
FOR GORE DETAILS, SEE SHEETS 843 -844
FOR PAVEMENT JOINT DETAILS, SEE SHEETS 877 -878
FOR UNDERDRAIN DETAILS, SEE SHEET 930
FOR FENCE PLANS, SEE SHEET 1270
FOR NOISE BARRIER PLANS, SEE SHEETS 1110 - 1125
FOR LIGHTING PLANS, SEE SHEETS 1037- 1064

HORIZONTAL SCALE IN FEET
0 25 50 100
CALCULATED LRK
CHECKED PJF

PLAN AND PROFILE - RAMP A
STA. 105+00 TO END

SUM-77/277/224
VARIOUS

487
1288

0:\2017\2017258\Project Data\SUM\106002\Design\Roadway\Sheets\106002_GP101.dgn Sheet 1/15/2021 2:03:05 PM pfry

| TAPER TABLE | | | | | | | | |
|---|---|---|---|---|---|---|---|---|
| TAPER CODE | BEGINNING STATION | | ENDING STATION | | SIDE | DESCRIPTION | BEGIN WIDTH | END WIDTH | TAPER RATE |
| AT | 197+05.36 | RAMP B | 198+05.36 | RAMP B | LT | SHOULDER | 10.00′ | 8.00′ | 50:1 |
| AU | 203+99.50 | RAMP B | 204+49.50 | RAMP B | LT | SHOULDER | 8.00′ | 6.00′ | 25:1 |

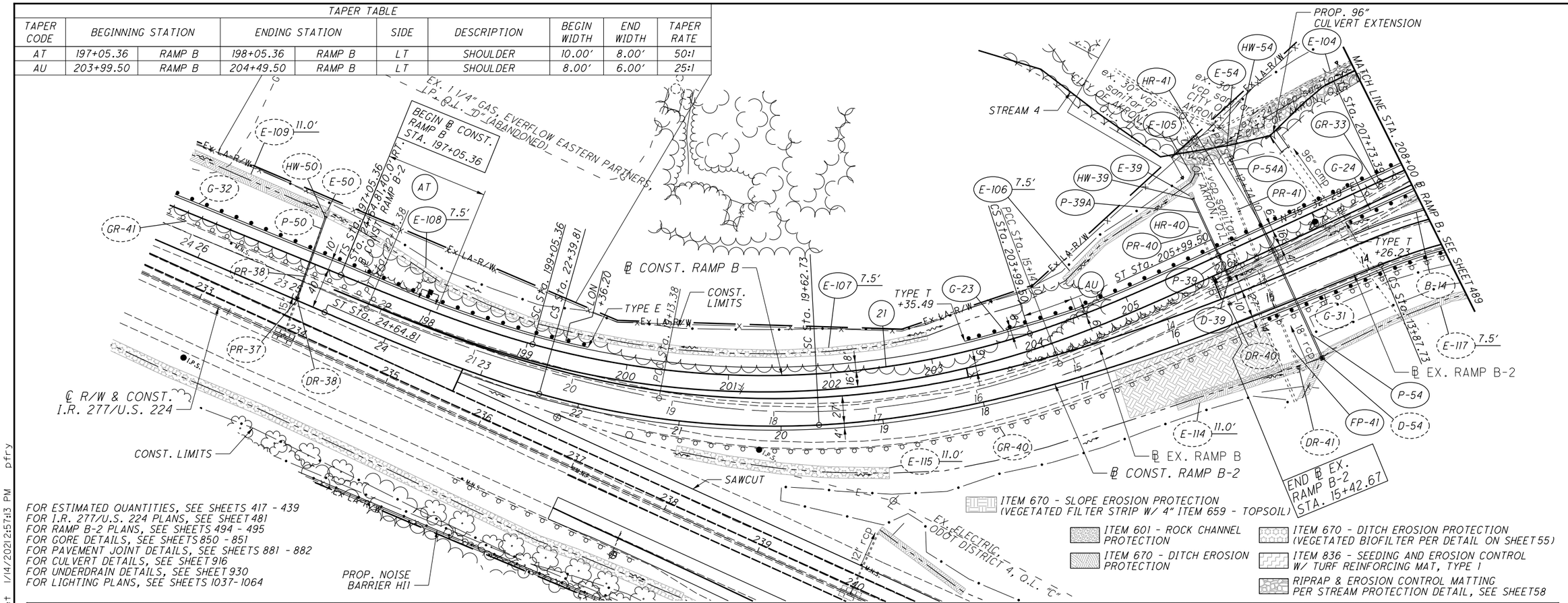


FOR ESTIMATED QUANTITIES, SEE SHEETS 417 - 439
FOR I.R. 277/U.S. 224 PLANS, SEE SHEET 481
FOR RAMP B-2 PLANS, SEE SHEETS 494 - 495
FOR GORE DETAILS, SEE SHEETS 850 - 851
FOR PAVEMENT JOINT DETAILS, SEE SHEETS 881 - 882
FOR CULVERT DETAILS, SEE SHEET 916
FOR UNDERDRAIN DETAILS, SEE SHEET 930
FOR LIGHTING PLANS, SEE SHEETS 1037- 1064

ITEM 670 - SLOPE EROSION PROTECTION (VEGETATED FILTER STRIP W/ 4" ITEM 659 - TOPSOIL)
ITEM 601 - ROCK CHANNEL PROTECTION
ITEM 670 - DITCH EROSION PROTECTION
ITEM 670 - DITCH EROSION PROTECTION (VEGETATED BIOFILTER PER DETAIL ON SHEET 55)
ITEM 836 - SEEDING AND EROSION CONTROL W/ TURF REINFORCING MAT, TYPE 1
RIPRAP & EROSION CONTROL MATTING PER STREAM PROTECTION DETAIL, SEE SHEET 58

21 ℄ CONST. RAMP B

| | |
|---|---|
| P.I. Sta. 201+73.97 | Ts = 468.61′ |
| Δ = 46° 51′ 17″ (LT) | Es = 78.40′ |
| Dc = 6° 45′ 00″ | C = 487.20′ |
| R = 848.83′ | C1 = C2 = 199.88′ |
| Ls = 200.00′ | C.B.1 = N 80° 08′ 47″ E |
| θs = 6° 45′ 00″ | C.B. = N 58° 58′ 07″ E |
| LT = 133.43′ | C.B.2 = S 37° 47′ 28″ W |
| ST = 66.75′ | D.S. = 50 MPH (SSD = 45 MPH) |
| x = 199.72′ | $e_{max}$ = 0.060 |
| y = 7.85′ | T.S. STA. 197+05.36 |
| k = 99.95′ | S.C. STA. 199+05.36 |
| p = 1.96′ | C.S. STA. 203+99.50 |
| Δc = 33° 21′ 17″ (LT) | S.T. STA. 205+99.50 |
| Lc = 494.14′ | |

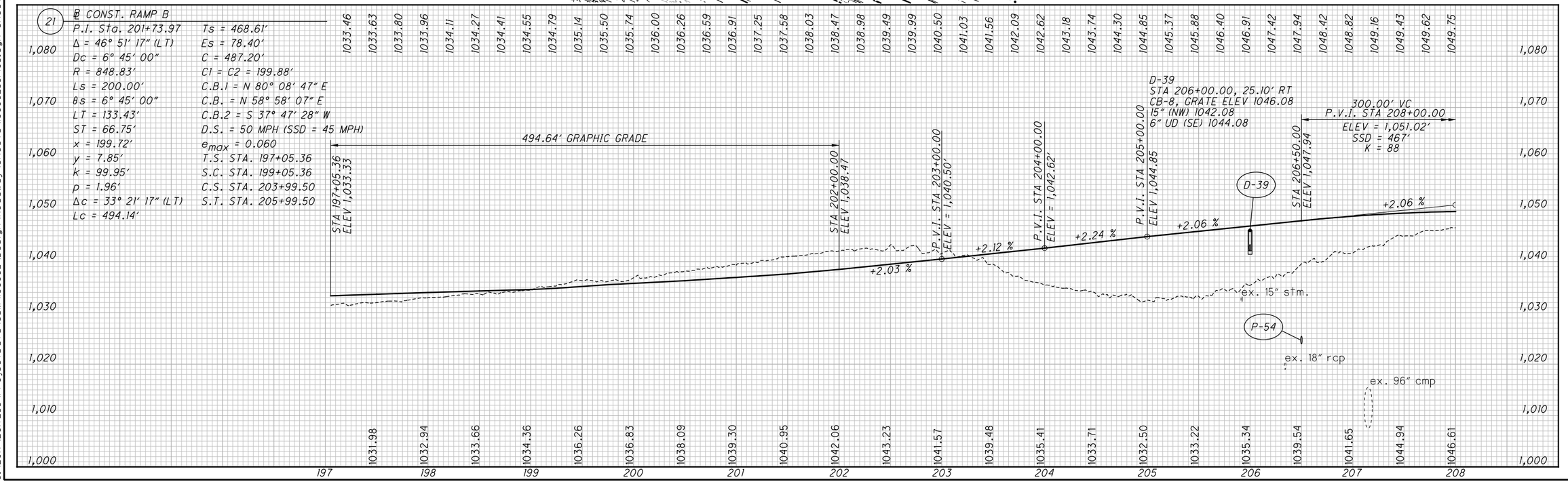


HORIZONTAL SCALE IN FEET
0 25 50 100
CALCULATED LRK
CHECKED PJF

# PLAN AND PROFILE - RAMP B
## BEGIN TO 208+00.00

SUM-77/277/224
VARIOUS

488
1288

0:\2017\2017258\ProjectData\SUM\06002\Design\Roadway\Sheets\06002_GPI05.dgn Sheet 1/14/2021 2:57:13 PM pfry

ITEM 670 - DITCH EROSION PROTECTION

RIPRAP & EROSION CONTROL MATTING PER STREAM PROTECTION DETAIL, SEE SHEET58

PROPOSED WORK (PAVEMENT, APPROACH SLAB, EARTHWORK, GUARDRAIL, ETC.) BY OTHERS (SUM-76/77/8-8.42/9.77/0.00 DB, PID 102329)

WETLAND AREA NOT TO BE DISTURBED

NOTE 'A'
PROPOSED GUARDRAIL SHALL CONNECT TO THE GUARDRAIL AND BTA BEING INSTALLED BY OTHERS IN THE PID 102329 PROJECT

FOR ESTIMATED QUANTITIES, SEE SHEETS 417 - 439
FOR SB I.R. 77 PLANS, SEE SHEET 479
FOR GORE DETAILS, SEE SHEET 845
FOR PAVEMENT JOINT DETAILS, SEE SHEET 879
FOR CULVERT DETAILS, SEE SHEET 919
FOR UNDERDRAIN DETAILS, SEE SHEETS 929 - 930
FOR LIGHTING PLANS, SEE SHEETS 1037- 1064

END WORK ℄ RAMP B STA. 214+90.00

BEGIN PROJECT SUM-76/77/8-8.42/9.77/0.00 DB (PID 102329)

END PROJECT END WORK ℄ CONST. SB I.R. 77 STA. 514+95.00 S.L.M. 9.74

BEGIN ℄ EX. RAMP B STA. 0+00.00

END ℄ CONST. RAMP B STA. 219+25.00

POT sta. 219+25.00, 48.0' LT. ℄ CONST. SB I.R. 77

POT sta. 0+00.00

STRUCTURE NO. SUM-77-0973L (NO WORK)

STRUCTURE NO. SUM-77-0973R (NO WORK)

WATERLOO RD.

EX. LA-R/W

CONST. LIMITS

E-104

ex. 24" vcp sanitary CITY OF AKRON, O.L. "D"

STREAM 4

℄ CONST. RAMP B

GR-33

SC sta. 209+73.65

ST sta. 10+78.65

MATCH LINE STA. 208+00 ℄ RAMP B, SEE SHEET 488

℄ EX. RAMP B

℄ EX. RAMP B-2

℄ CONST. RAMP B-2

℄ EX. RAMP B-1

℄ CONST. RAMP B-1

EX. ELECTRIC ODOT DISTRICT O.L. "C"

WETLAND B (DO NOT DISTURB)

CONST. LIMITS

E-91

7.5'

PROP. 30" CULVERT

24" rcp

R-2

E-93

7.5'

GR-34

G-24

SEE NOTE 'A'

G-23

22

SC sta. 213+58.80

ES sta. 8+78.65

BEGIN LONG POST GUARDRAIL STA. 212+50, LT.

CS sta. 213+58.80

ST sta. 215+58.80

Is.Sign 3+66.20

BEGIN LONG POST GUARDRAIL STA. 214+00, LT.

BTA, TYPE 2

TYPE E +07.52

LON +85.46

E-94

7.5'

CONST. LIMITS

℄ CONST. SB I.R. 77

END WORK ℄ CONST. NB I.R. STA. 514+85.00

84" cmp

EX. TELECOM, AT&T O.L.

WATER, CITY OF AKRON, O.L.

℄ CONST. NB I.R. 77

L3 L2 L1

209 210 211 212 213 214 215 216 217 218 219

513 514 515 516 517 518 519

N 17° 30" W

S 16° 59" E

23'

4'

16'

7'

6'

2'

11'

12'

41'

10'

3'

1'

4'

2'

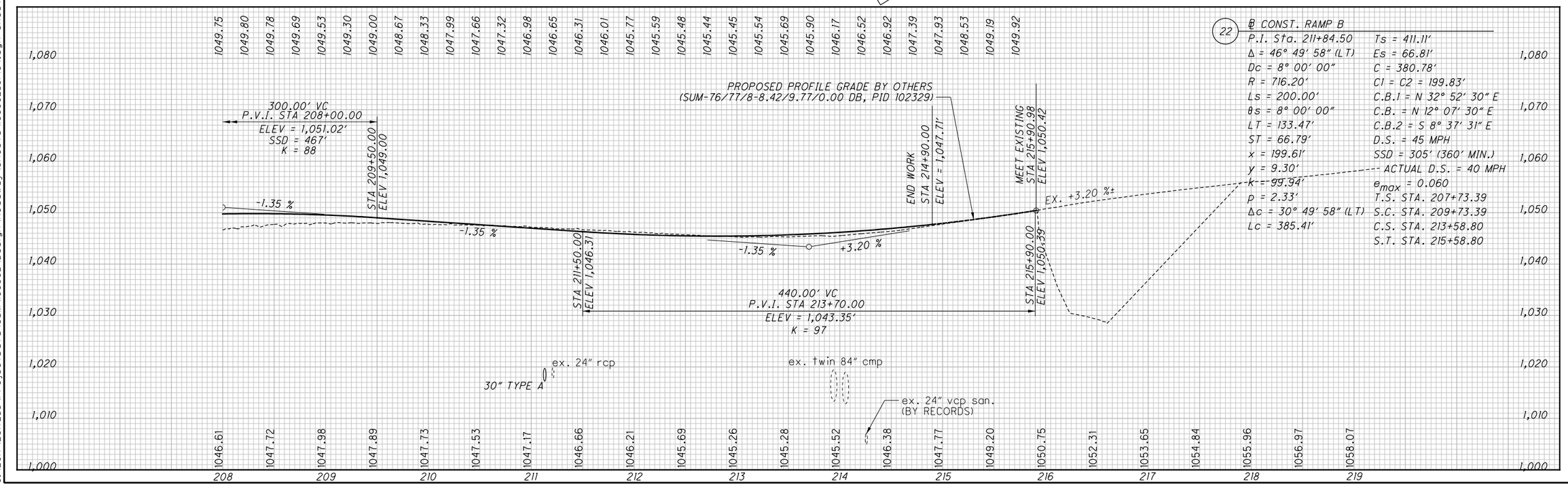


22 ℄ CONST. RAMP B

| | |
|---|---|
| P.I. Sta. 211+84.50 | Ts = 411.11' |
| Δ = 46° 49' 58" (LT) | Es = 66.81' |
| Dc = 8° 00' 00" | C = 380.78' |
| R = 716.20' | C1 = C2 = 199.83' |
| Ls = 200.00' | C.B.1 = N 32° 52' 30" E |
| θs = 8° 00' 00" | C.B. = N 12° 07' 30" E |
| LT = 133.47' | C.B.2 = S 8° 37' 31" E |
| ST = 66.79' | D.S. = 45 MPH |
| x = 199.61' | SSD = 305' (360' MIN.) |
| y = 9.30' | ACTUAL D.S. = 40 MPH |
| K = 99.94' | $e_{max}$ = 0.060 |
| p = 2.33' | T.S. STA. 207+73.39 |
| Δc = 30° 49' 58" (LT) | S.C. STA. 209+73.39 |
| Lc = 385.41' | C.S. STA. 213+58.80 |
| | S.T. STA. 215+58.80 |

HORIZONTAL SCALE IN FEET
0 25 50 100

CALCULATED LRK
CHECKED PJF

# PLAN AND PROFILE - RAMP B STA. 208+00 TO END

SUM-77 / 277 / 224
VARIOUS

489
1288

0:\2017\20172581\ProjectData\SUM\106002\Design\Roadway\Sheets\106002_GPI04.dgn Sheet 1/14/2021 2:57:31 PM pfry

FOR RAMP B-1 PROFILE, SEE SHEET 491
FOR ESTIMATED QUANTITIES, SEE SHEETS 417 - 439
FOR SB I.R. 77 PLANS, SEE SHEET 478
FOR I.R. 277/U.S. 224 PLANS, SEE SHEET 482
FOR GORE DETAILS, SEE SHEETS 846 - 847
FOR PAVEMENT JOINT DETAILS, SEE SHEETS 874 ,880
FOR UNDERDRAIN DETAILS, SEE SHEETS 928 - 930
FOR LIGHTING PLANS, SEE SHEETS 1037- 1064

℄ CONST. RAMP B-1
P.I. Sta. 407+76.50
Δ = 17° 26′ 53″ (LT)
Dc = 11° 45′ 00″
R = 487.62′
T = 74.83′
L = 148.49′
E = 5.71′
C = 147.92′
C.B. = N 63° 22′ 14″ W
D.S. = 40 MPH (SSD = 35 MPH)
$e_{max}$ = 0.060
S.C. STA. 407+01.68
P.C.C. STA. 408+50.17

℄ CONST. RAMP B-1
P.I. Sta. 438+65.75
Δ = 170° 56′ 49″ (LT)
Dc = 24° 00′ 00″
R = 238.73′
T = 3,015.57′
L = 712.28′
E = 2,786.28′
C = 475.98′
C.B. = S 22° 25′ 55″ W
D.S. = 30 MPH (SSD = 25 MPH)
$e_{max}$ = 0.060
P.C.C. STA. 408+50.17
C.S. STA. 415+62.45

℄ CONST. RAMP B-1
P.I. STA. 416+33.74
Ls = 200.00′
f s = 25° 15′ 00″
LT = 131.48′
ST = 71.29′
x = 195.95′
y = 30.41′
k = 99.36′
p = 6.58′
C.S. STA. 415+62.45
S.C. STA. 417+62.45

℄ CONST. RAMP B-1
P.I. Sta. 406+35.31
Ls = 200.00′
f s = 11° 45′ 00″
LT = 133.63′
ST = 66.93′
x = 199.16′
y = 13.63′
k = 99.86′
p = 3.41′
T.S. STA. 405+01.68
S.C. STA. 407+01.68

℄ CONST. RAMP B-1
P.I. Sta. 420+43.64
Δ = 7° 01′ 15″ (LT)
Dc = 1° 15′ 00″
R = 4,583.66′
T = 281.19′
L = 561.67′
E = 8.62′
C = 561.32′
C.B. = N 88° 11′ 53″ E
D.S. = 65 MPH
$e_{max}$ = 0.036
S.C. STA. 417+62.45
P.T. STA. 423+24.13

℄ CONST. NB I.R. 77

(A) Sta. 502+43.78, 52.00′ LT. ℄ CONST. SB I.R. 77

WETLAND

WETLAND AREA NOT TO BE DISTURBED

ITEM 670 - SLOPE EROSION PROTECTION (VEGETATED FILTER STRIP W/ 4" ITEM 659 - TOPSOIL)

ITEM 670 - DITCH EROSION PROTECTION (VEGETATED BIOFILTER PER DETAIL ON SHEET 55)

ITEM 601 - ROCK CHANNEL PROTECTION

ITEM 670 - DITCH EROSION PROTECTION

RIPRAP & EROSION CONTROL MATTING PER STREAM PROTECTION DETAIL, SEE SHEET 58

ITEM 836 - SEEDING AND EROSION CONTROL W/ TURF REINFORCING MAT, TYPE 2

TAPER TABLE

| TAPER CODE | BEGINNING STATION | | ENDING STATION | | SIDE | DESCRIPTION | BEGIN WIDTH | END WIDTH | TAPER RATE |
|---|---|---|---|---|---|---|---|---|---|
| AV | 405+01.68 | RAMP B-1 | 405+51.68 | RAMP B-1 | LT | SHOULDER | 8.00′ | 6.00′ | 25:1 |
| AW | 417+55.68 | RAMP B-1 | 418+55.68 | RAMP B-1 | LT | SHOULDER | 6.00′ | 10.00′ | 25:1 |
| AX | 418+55.68 | RAMP B-1 | 421+51.12 | RAMP B-1 | RT | PAVEMENT | 16.00′ | 12.45′ | 83:1 |

HORIZONTAL SCALE IN FEET
0 25 50 100

CALCULATED LRK
CHECKED PJF

PLAN - RAMP B-1
STA. 402+43.78 TO STA. 423+24.13

SUM-77/277/224
VARIOUS

490
1288

G:\2017\2017258\ProjectData\SUM\106002\Design\Roadway Sheets\106002_GP106.dgn Sheet1 1/15/2021 3:42:01 PM Ikirkland

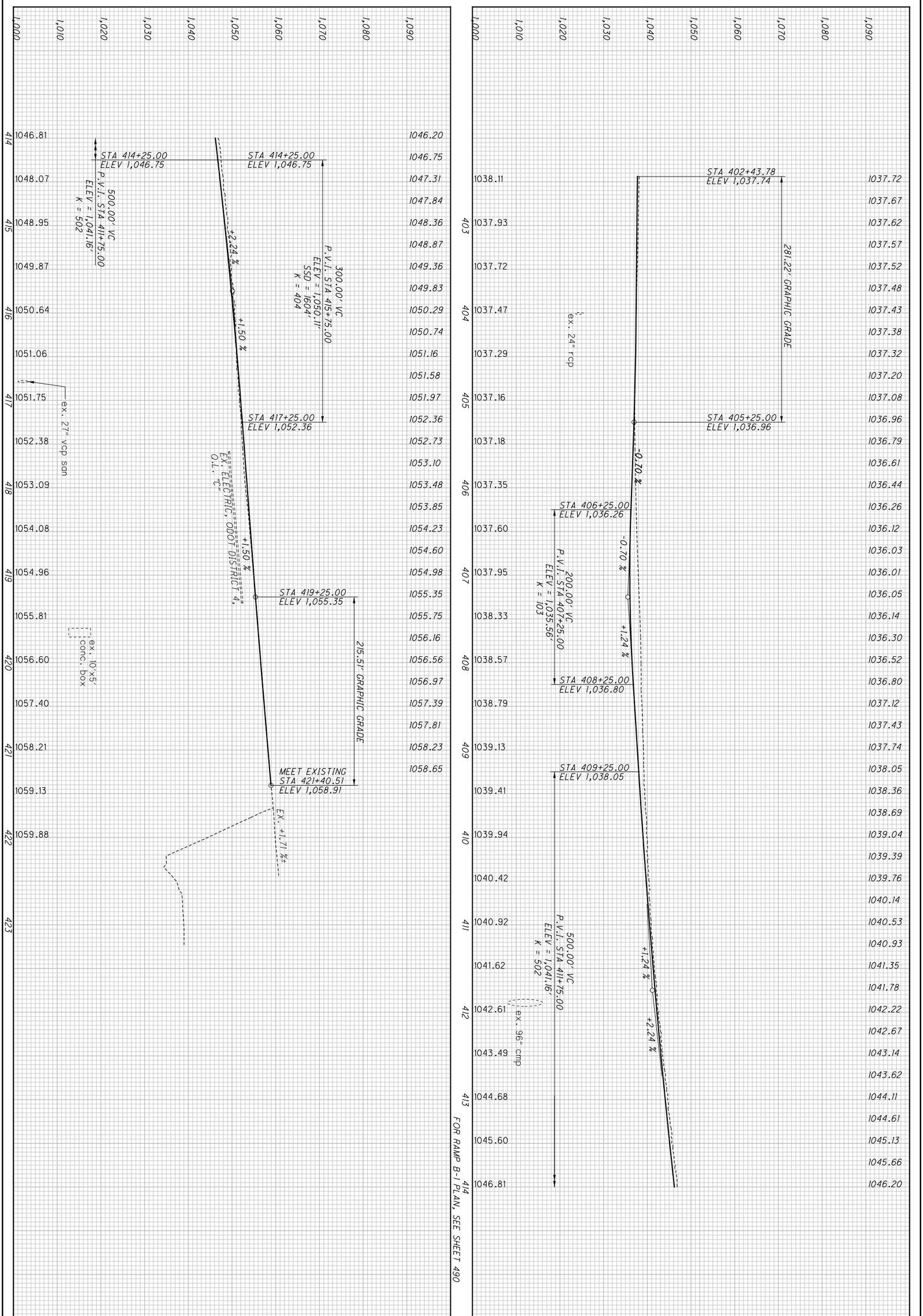


| | | |
|---|---|---|
| 491 / 1288 | **SUM-77 / 277 / 224**<br>**VARIOUS** | **PROFILE - RAMP B-1**<br>**STA. 402+43.78 TO STA. 423+24.13** |

CALCULATED CJC
CHECKED PJF

ITEM 601 - ROCK CHANNEL PROTECTION

ITEM 670 - DITCH EROSION PROTECTION

ITEM 670 - DITCH EROSION PROTECTION (VEGETATED BIOFILTER PER DETAIL ON SHEET 55)

ITEM 836 - SEEDING AND EROSION CONTROL W/ TURF REINFORCING MAT, TYPE 1

RIPRAP & EROSION CONTROL MATTING PER STREAM PROTECTION DETAIL, SEE SHEET 58

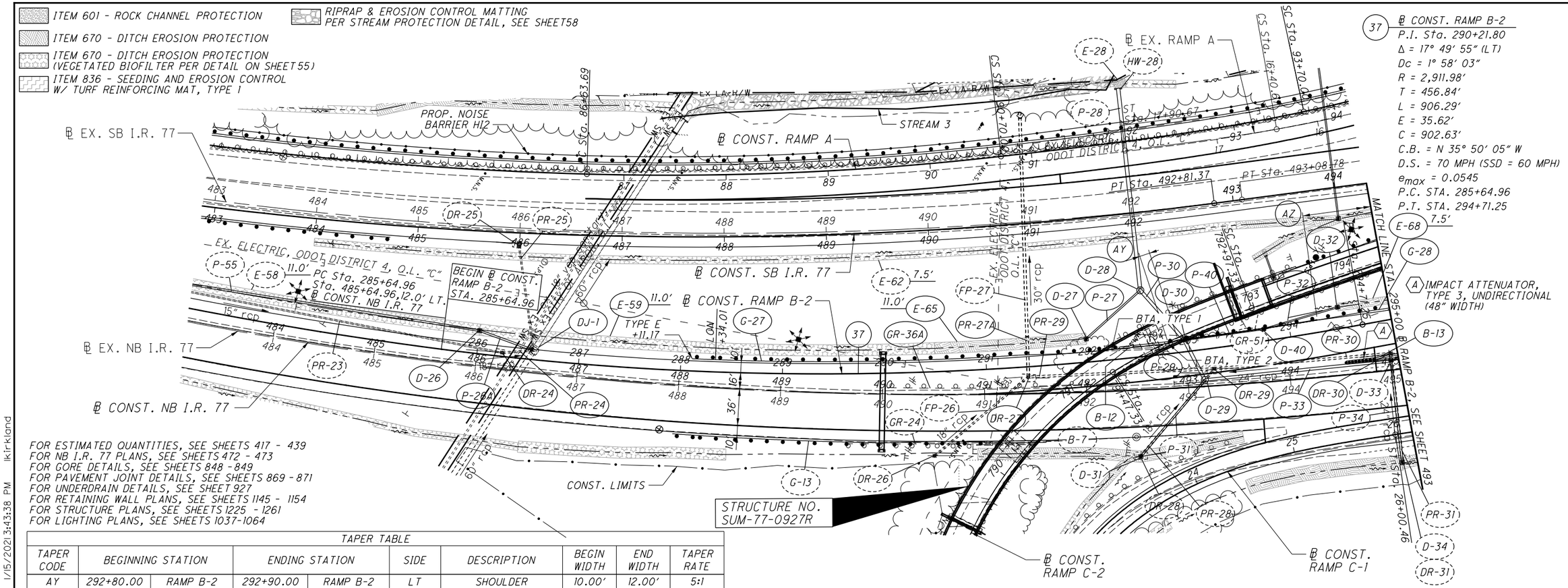


FOR ESTIMATED QUANTITIES, SEE SHEETS 417 - 439
FOR NB I.R. 77 PLANS, SEE SHEETS 472 - 473
FOR GORE DETAILS, SEE SHEETS 848 - 849
FOR PAVEMENT JOINT DETAILS, SEE SHEETS 869 - 871
FOR UNDERDRAIN DETAILS, SEE SHEET 927
FOR RETAINING WALL PLANS, SEE SHEETS 1145 - 1154
FOR STRUCTURE PLANS, SEE SHEETS 1225 - 1261
FOR LIGHTING PLANS, SEE SHEETS 1037-1064

TAPER TABLE

| TAPER CODE | BEGINNING STATION | | ENDING STATION | | SIDE | DESCRIPTION | BEGIN WIDTH | END WIDTH | TAPER RATE |
|---|---|---|---|---|---|---|---|---|---|
| AY | 292+80.00 | RAMP B-2 | 292+90.00 | RAMP B-2 | LT | SHOULDER | 10.00' | 12.00' | 5:1 |
| AZ | 294+28.29 | RAMP B-2 | 296+28.29 | RAMP B-2 | LT | SHOULDER | 12.00' | 4.00' | 25:1 |

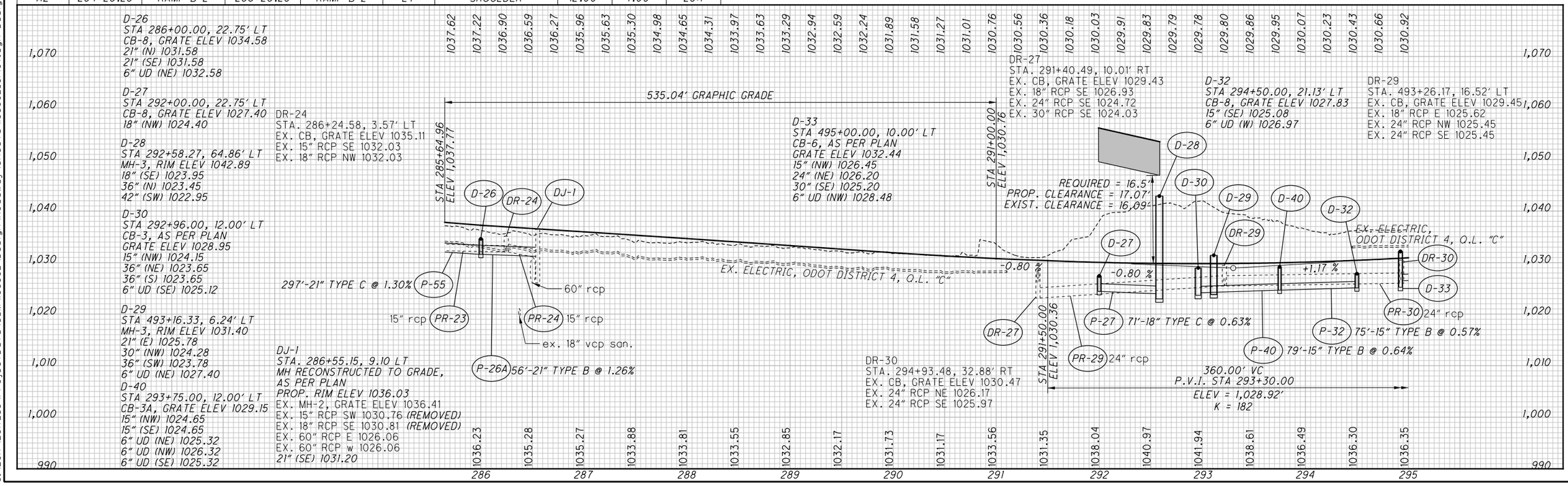


# PROFILE - RAMP B-2 TO STA. 295+00

CALCULATED LRK
CHECKED PJF

SUM-77/277/224
VARIOUS

492
1288

0:\2017\2017258\ProjectData\SUM\06002\Design\Roadway\Sheets\06002_GP107.dgn Design 1/15/2021 3:43:38 PM Ikirkland

39 ℄ CONST. RAMP B-2
P.I. STA. 306+64.20
Ls = 200.00'
f s = 12° 00' 01"
LT = 133.64'
ST = 66.95'
x = 199.12'
y = 13.92'
k = 99.85'
p = 3.49'
T.S. STA. 305+30.56
S.C. STA. 307+30.56

38 ℄ CONST. RAMP B-2
P.I. Sta. 299+44.16
Δ = 3° 00' 00" (RT)
Dc = 1° 00' 00"
R = 5,729.58'
T = 150.03'
L = 300.00'
E = 1.96'
C = 299.97'
C.B. = N 43° 15' 03" W
D.S. = 60 MPH
$e_{max}$ = 0.027
P.C. STA. 297+94.13
P.T. STA. 300+94.13

ITEM 670 - DITCH EROSION PROTECTION
ITEM 670 - DITCH EROSION PROTECTION (VEGETATED BIOFILTER PER DETAIL ON SHEET 55)
ITEM 670 - SLOPE EROSION PROTECTION (VEGETATED FILTER STRIP W/ 4" ITEM 659 - TOPSOIL)
WETLAND
WETLAND AREA NOT TO BE DISTURBED

STRUCTURE NO. SUM-277-0369 (NO WORK)

FOR ESTIMATED QUANTITIES, SEE SHEETS 417 - 439
FOR UNDERDRAIN DETAILS, SEE SHEETS 927 - 928
FOR LIGHTING PLANS, SEE SHEETS 1037-1064

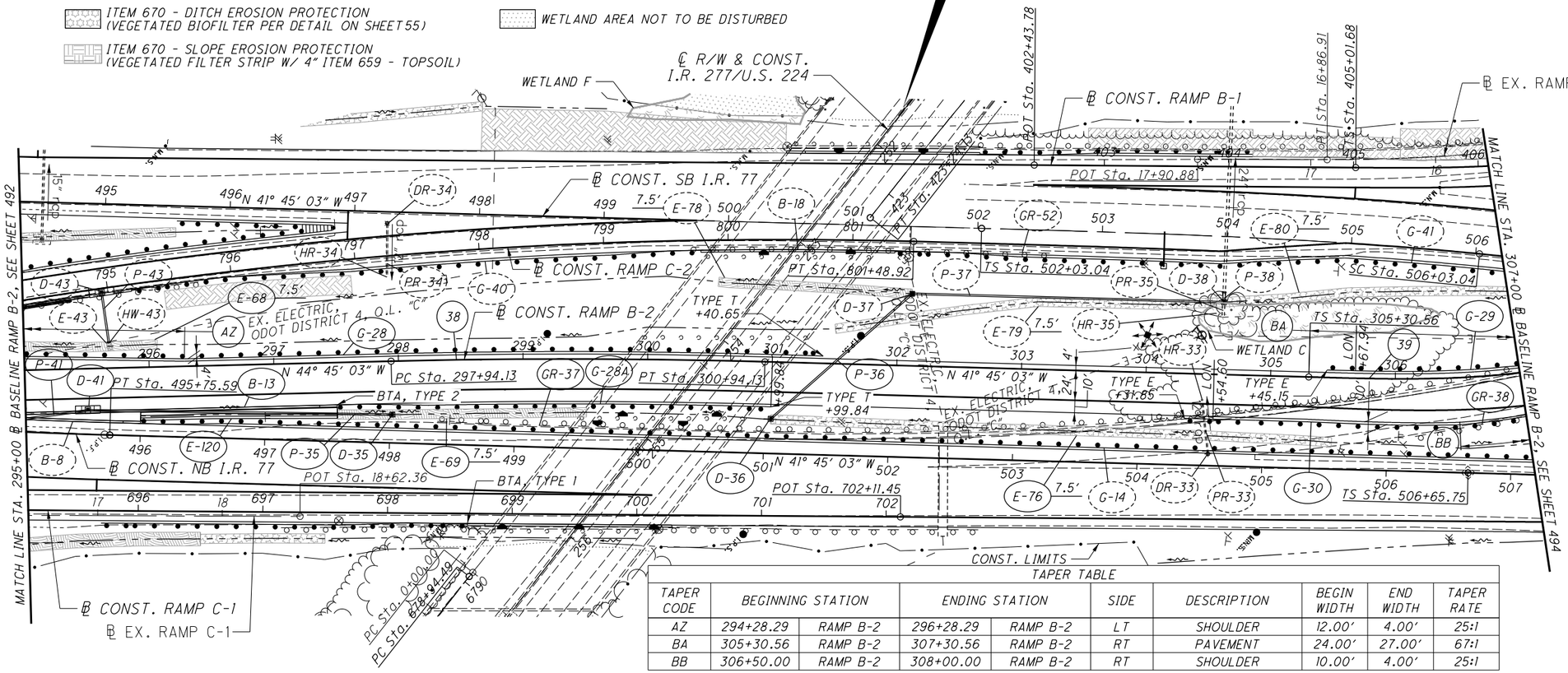


TAPER TABLE

| TAPER CODE | BEGINNING STATION | | ENDING STATION | | SIDE | DESCRIPTION | BEGIN WIDTH | END WIDTH | TAPER RATE |
|---|---|---|---|---|---|---|---|---|---|
| AZ | 294+28.29 | RAMP B-2 | 296+28.29 | RAMP B-2 | LT | SHOULDER | 12.00' | 4.00' | 25:1 |
| BA | 305+30.56 | RAMP B-2 | 307+30.56 | RAMP B-2 | RT | PAVEMENT | 24.00' | 27.00' | 67:1 |
| BB | 306+50.00 | RAMP B-2 | 308+00.00 | RAMP B-2 | RT | SHOULDER | 10.00' | 4.00' | 25:1 |

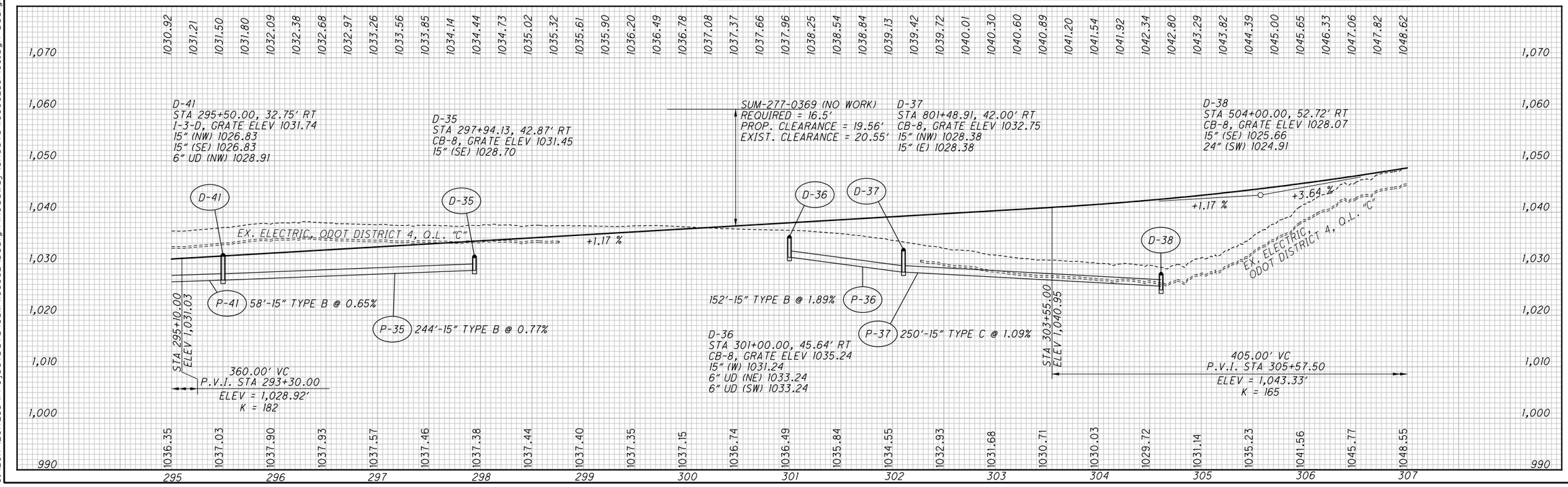


0: 2017\2017258\ProjectData\SUM\06002\Design\Roadway\Sheets\06002_GP108.dgn Design 1/15/2021 3:43:46 PM lkirkland

HORIZONTAL SCALE IN FEET
0 25 50 100
CALCULATED LRK
CHECKED PJF

PLAN AND PROFILE - RAMP B-2
STA. 295+00 TO STA. 307+00

SUM-77/277/224
VARIOUS

493
1288

| TAPER TABLE | | | | | | | | |
|---|---|---|---|---|---|---|---|---|
| TAPER CODE | BEGINNING STATION | | ENDING STATION | | SIDE | DESCRIPTION | BEGIN WIDTH | END WIDTH | TAPER RATE |
| BA | 305+30.56 | RAMP B-2 | 307+30.56 | RAMP B-2 | RT | PAVEMENT | 24.00′ | 27.00′ | 67:1 |
| BB | 306+50.00 | RAMP B-2 | 308+00.00 | RAMP B-2 | RT | SHOULDER | 10.00′ | 4.00′ | 25:1 |
| BC | 10+00.00 | RAMP B-2 | 10+30.00 | RAMP B-2 | RT | SHOULDER | 4.00′ | 10.00′ | 5:1 |

(40) ℄ CONST. RAMP B-2
P.I. Sta. 307+73.27
Δ = 10° 13′ 25″ (LT)
Dc = 12° 00′ 01″
(NDC Dc = 9° 00′ MAX.)
R = 477.46′
T = 42.71′
L = 85.19′
E = 1.91′
C = 85.08′
C.B. = N 58° 51′ 46″ W
D.S. = 35 MPH (45 MPH MIN.)
SSD = 205′ (360′ MIN.)
ACTUAL D.S. = 30 MPH
$e_{max}$ = 0.057
S.C. STA. 307+30.56
P.C.C. STA. 308+15.76 BK /
STA. 7+36.18 AH

(39) ℄ CONST. RAMP B-2
P.I. STA. 306+64.20
Ls = 200.00′
f s = 12° 00′ 01″
LT = 133.64′
ST = 66.95′
x = 199.12′
y = 13.92′
k = 99.85′
p = 3.49′
T.S. STA. 305+30.56
S.C. STA. 307+30.56

(42) ℄ CONST. RAMP B-2
P.I. STA. 17+73.39
Ls = 575.00′
f s = 19° 24′ 22″
LT = 385.66′
ST = 193.79′
x = 568.44′
y = 64.39′
k = 286.40′
p = 16.16′
C.S. STA. 13+87.73
S.C. STA. 19+62.73

ITEM 670 - SLOPE EROSION PROTECTION (VEGETATED FILTER STRIP W/ 4″ ITEM 659 - TOPSOIL)

ITEM 670 - DITCH EROSION PROTECTION

ITEM 836 - SEEDING AND EROSION CONTROL W/ TURF REINFORCING MAT, TYPE 1

RIPRAP & EROSION CONTROL MATTING PER STREAM PROTECTION DETAIL, SEE SHEET58

ITEM 670 - DITCH EROSION PROTECTION (VEGETATED BIOFILTER PER DETAIL ON SHEET55 )

WETLAND

WETLAND AREA NOT TO BE DISTURBED

ITEM 601 - TIED CONCRETE BLOCK MAT WITH TYPE 2 UNDERLAYMENT

℄ CONST. RAMP B-1
℄ EX. RAMP B-1
WETLAND B (DO NOT DISTURB)
CONST. LIMITS
EX. ELECTRIC, ODOT DISTRICT 4, O.L.
MATCH LINE STA. 307+00 ℄ RAMP B-2, SEE SHEET 493
MATCH LINE STA. 18+50 ℄ RAMP B-2, SEE SHEET 495
BTA, TYPE 1
BTA, TYPE 2
TYPE T
EQUATION: STA 308+15.76 BK = STA 7+36.18 AH
℄ CONST. NB I.R. 77
℄ CONST. SB I.R. 77
℄ CONST. RAMP D
℄ EX. RAMP D
℄ CONST. RAMP B
℄ EX. RAMP B
℄ CONST. RAMP B-2
CONST. LIMITS
STREAM 4
STRUCTURE NO. SUM-77-0958L (NO WORK)
GR-37 GR-38 GR-39 GR-40
G-29 G-30 G-31
P-44 D-44 P-54 P-39 P-40 P-41 P-54A
E-77 E-91 E-112 E-113 E-114 E-121
DR-41 FP-41 D-54 DR-40 D-39
HW-44 HW-39 HW-40 HW-41 HW-54
B-14 BA BB BC
SC Sta. 14+73.07
SC Sta. 407+01.68
SC Sta. 408+50.17
SC Sta. 12+73.07
SC Sta. 13+87.73
SC Sta. 15+14.10
SC Sta. 203+99.50
SC Sta. 205+39.10
SC Sta. 12+74.65
SC Sta. 209+73.39
ST Sta. 10+78.65
TS Sta. 207+73.39
PCCC Sta. 36.18
PCCC Sta. 15+14.10
PT Sta. 910+60.12
CS Sta. 908+65.05
PT Sta. 910+55.05
CS Sta. 910+65.75
96″ cmp
18″ RCP
11.0′
7.5′

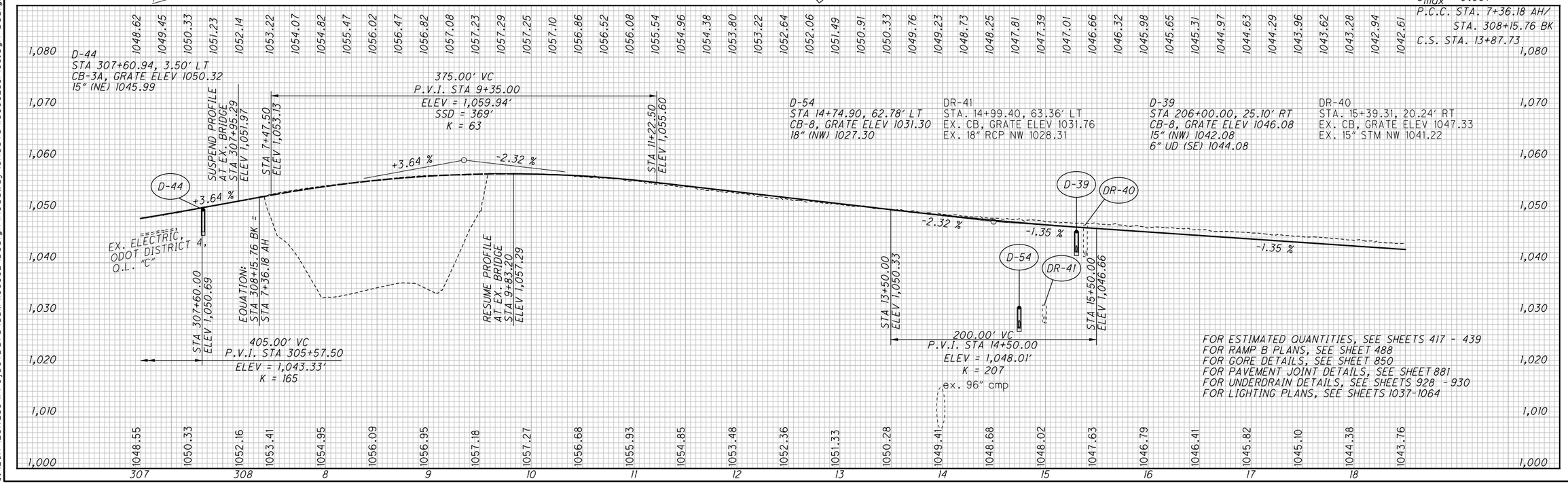


FOR ESTIMATED QUANTITIES, SEE SHEETS 417 - 439
FOR RAMP B PLANS, SEE SHEET 488
FOR GORE DETAILS, SEE SHEET 850
FOR PAVEMENT JOINT DETAILS, SEE SHEET 881
FOR UNDERDRAIN DETAILS, SEE SHEETS 928 - 930
FOR LIGHTING PLANS, SEE SHEETS 1037-1064

HORIZONTAL SCALE IN FEET
0 25 50 100

CALCULATED LRK
CHECKED PJF

# PLAN AND PROFILE - RAMP B-2
# STA. 307+00 TO STA. 18+50

SUM-77 / 277 / 224
VARIOUS

494
1288

D:\2017\20171258\Project Data\SUM\106002\Design\Roadway\Sheets\106002_GP109.dgn Design 1/15/2021 3:43:57 PM lkirkland

(42) ℄ CONST. RAMP B-2
P.I. STA. 17+73.39
Ls = 575.00'
f s = 19° 24' 22"
LT = 385.66'
ST = 193.79'
x = 568.44'
y = 64.39'
k = 286.40'
p = 16.16'
C.S. STA. 13+87.73
S.C. STA. 19+62.73

(43) ℄ CONST. RAMP B-2
P.I. Sta. 21+02.51
Δ = 18° 42' 10" (RT)
Dc = 6° 45' 00"
R = 848.83'
T = 139.78'
L = 277.08'
E = 11.43'
C = 275.85'
C.B. = S 66° 35' 48" W
D.S. = 50 MPH
$e_{max}$ = 0.060
S.C. STA. 19+62.73
C.S. STA. 22+39.81

(44) ℄ CONST. RAMP B-2
P.I. STA. 23+14.93
Ls = 225.00'
f s = 7° 35' 37"
LT = 150.14'
ST = 75.13'
x = 224.61'
y = 9.93'
k = 112.43'
p = 2.48'
C.S. STA. 22+39.81
S.T. STA. 24+64.81

| TAPER TABLE | | | | | | | | | |
|---|---|---|---|---|---|---|---|---|---|
| TAPER CODE | BEGINNING STATION | | ENDING STATION | | SIDE | DESCRIPTION | BEGIN WIDTH | END WIDTH | TAPER RATE |
| BD | 22+39.81 | RAMP B-2 | 24+64.81 | RAMP B-2 | RT | PAVEMENT | 27.00' | 24.00' | 75:1 |
| BE | 24+64.81 | RAMP B-2 | 32+64.81 | RAMP B-2 | RT | PAVEMENT | 40.00' | 24.00' | 50:1 |

ITEM 601 - ROCK CHANNEL PROTECTION
ITEM 670 - DITCH EROSION PROTECTION
ITEM 670 - DITCH EROSION PROTECTION (VEGETATED BIOFILTER PER DETAIL ON SHEET 55)
ITEM 836 - SEEDING AND EROSION CONTROL WITH TURF REINFORCING MAT, TYPE 1

FOR ESTIMATED QUANTITIES, SEE SHEETS 417 - 439
FOR I.R. 277/U.S. 224 PLANS, SEE SHEETS 480 - 481
FOR RAMP B PLANS, SEE SHEET 488
FOR GORE DETAILS, SEE SHEETS 850 - 853
FOR PAVEMENT JOINT DETAILS, SEE SHEETS 881 - 884
FOR UNDERDRAIN DETAILS, SEE SHEET 930
FOR LIGHTING PLANS, SEE SHEETS 1037 - 1064

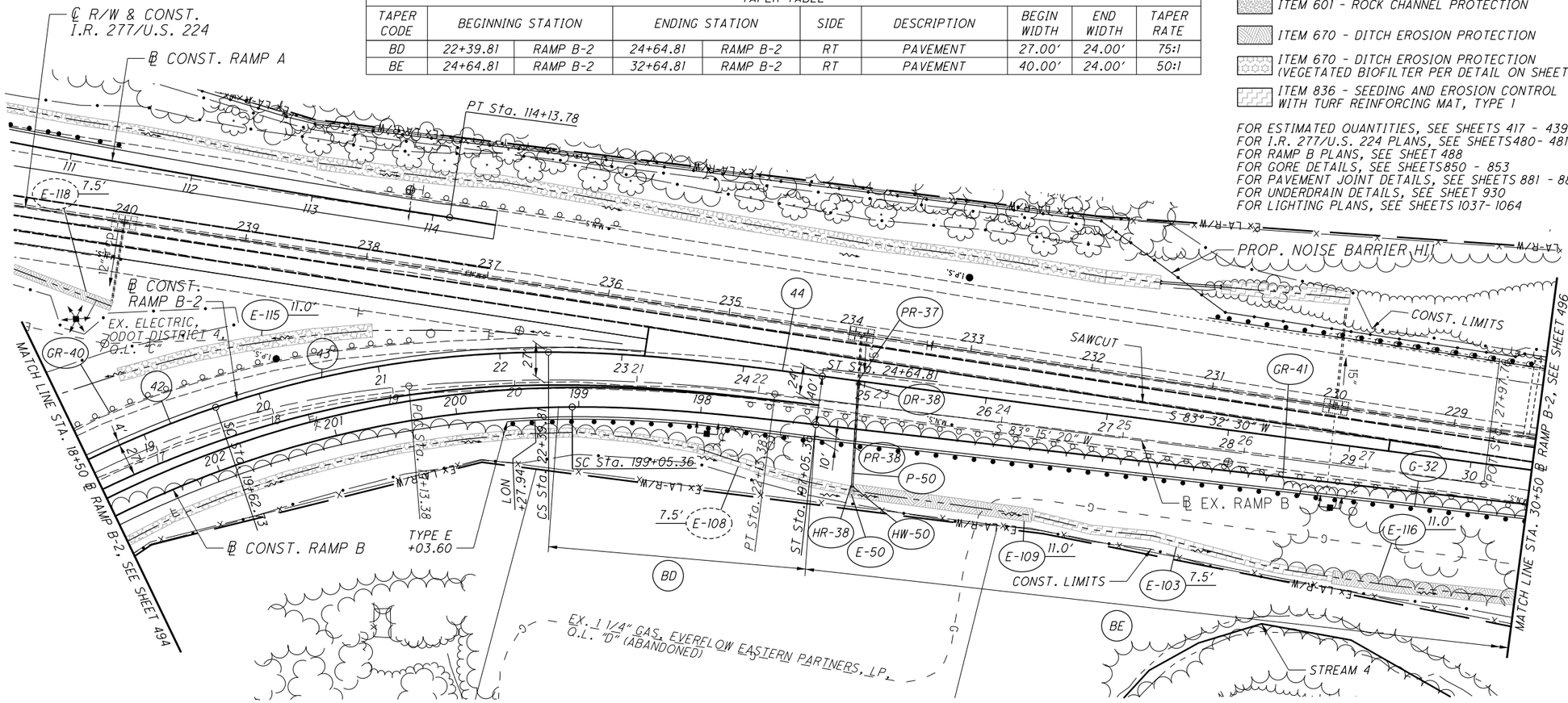


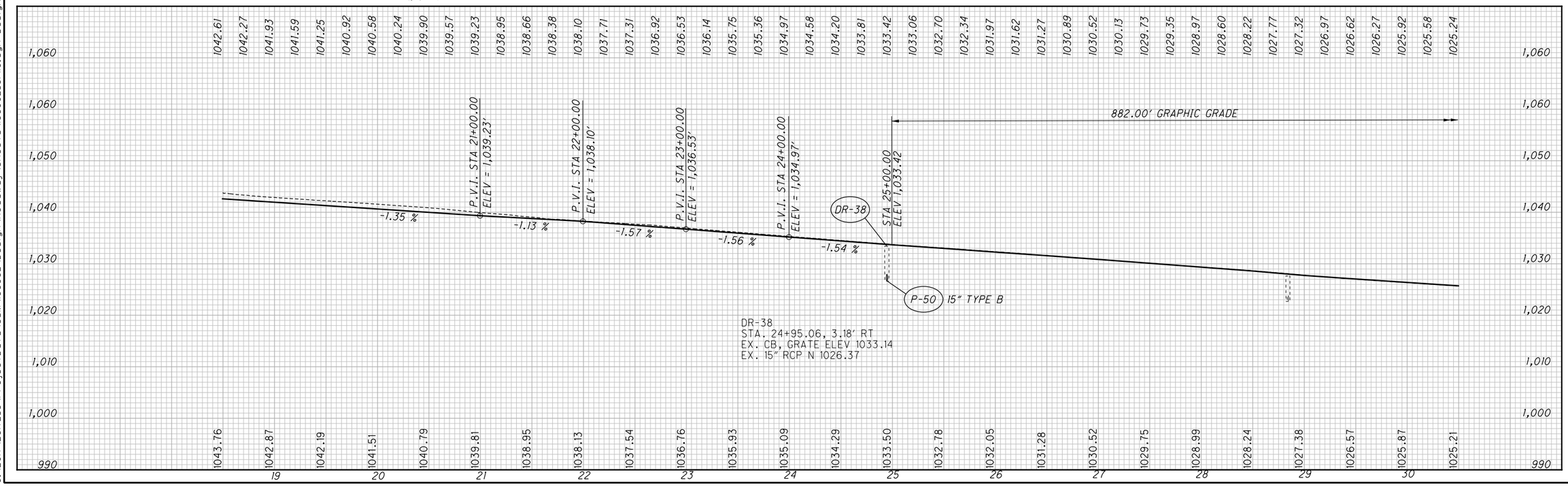


HORIZONTAL SCALE IN FEET
0 25 50 100
CALCULATED LRK
CHECKED PJF

PLAN AND PROFILE - RAMP B-2
STA. 18+50 TO STA. 30+50

SUM-77/277/224
VARIOUS

495
1288

0:\2017\2017258\ProjectData\SUM\06002\Design\Roadway\Sheets\06002_GP110.dgn Design 1/15/2021 3:44:04 PM lkirkland

ITEM 601 - ROCK CHANNEL PROTECTION

ITEM 670 - DITCH EROSION PROTECTION

| TAPER TABLE | | | | | | | | |
|---|---|---|---|---|---|---|---|---|
| TAPER CODE | BEGINNING STATION | | ENDING STATION | | SIDE | DESCRIPTION | BEGIN WIDTH | END WIDTH | TAPER RATE |
| BE | 24+64.81 | RAMP B-2 | 32+64.81 | RAMP B-2 | RT | PAVEMENT | 40.00′ | 24.00′ | 50:1 |
| BF | 33+39.75 | RAMP B-2 | 33+82.00 | RAMP B-2 | RT | SHOULDER | 10.00′ | 10.92′ | 46:1 |

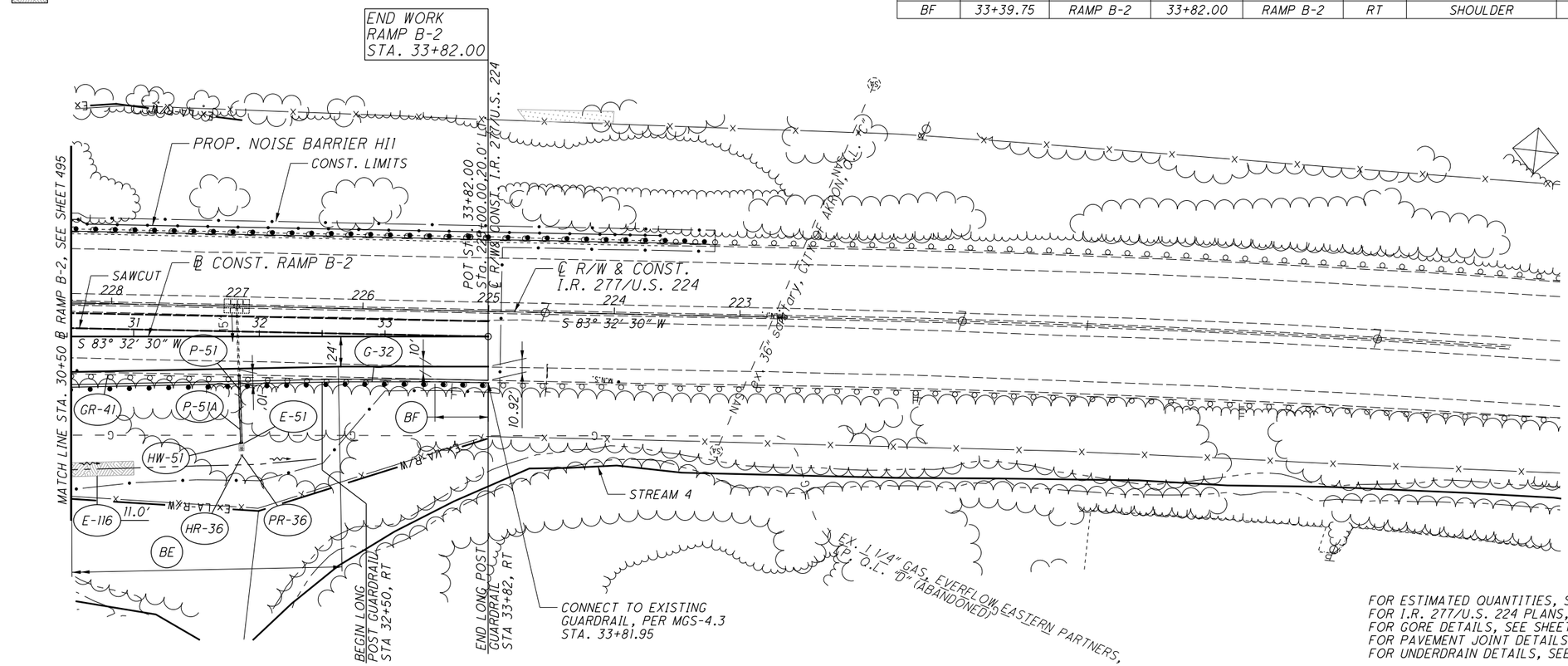


FOR ESTIMATED QUANTITIES, SEE SHEETS 417 - 439
FOR I.R. 277/U.S. 224 PLANS, SEE SHEET 480
FOR GORE DETAILS, SEE SHEET 853
FOR PAVEMENT JOINT DETAILS, SEE SHEET 884
FOR UNDERDRAIN DETAILS, SEE SHEET 930

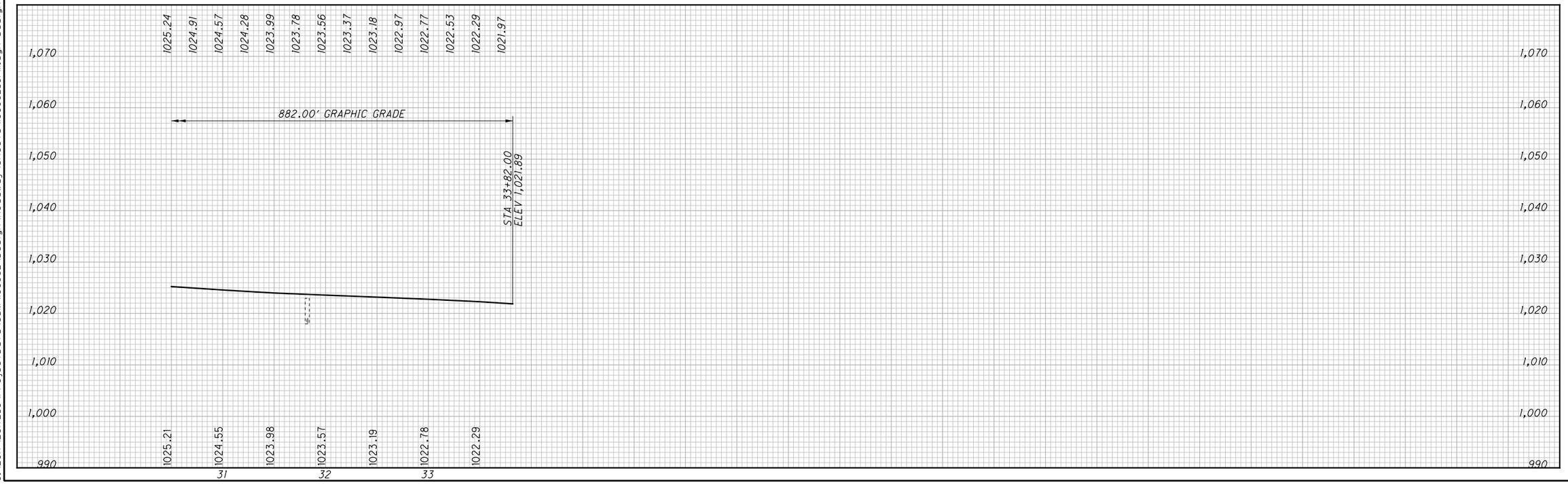


HORIZONTAL SCALE IN FEET
0 25 50 100

CALCULATED LRK
CHECKED PJF

PLAN AND PROFILE - RAMP B-2
STA. 30+50 TO END

SUM-77/277/224
VARIOUS

496
1288

D:\2017\2017258\ProjectData\SUM\06002\Design\Roadway\Sheets\06002_GPIII.dgn Design 1/15/2021 3:44:11 PM lkirkland

FOR ESTIMATED QUANTITIES, SEE SHEETS 417 - 439
FOR NB I.R. 77 PLANS, SEE SHEET 472
FOR GORE DETAILS, SEE SHEET 854
FOR PAVEMENT JOINT DETAILS, SEE SHEET 885
FOR UNDERDRAIN DETAILS, SEE SHEETS 926 - 927
FOR FENCE PLANS, SEE SHEET 1267
FOR NOISE BARRIER PLANS, SEE SHEETS 1101 - 1109
FOR LIGHTING PLANS, SEE SHEETS 1037- 1064

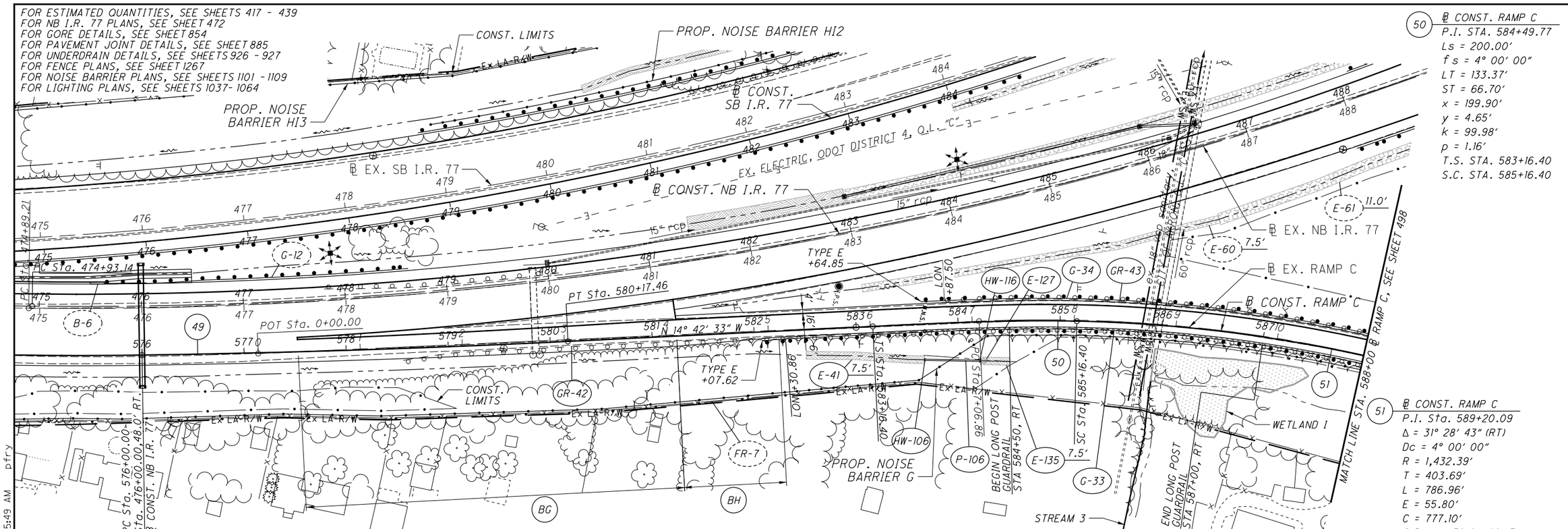


℄ CONST. RAMP C
P.I. STA. 584+49.77
Ls = 200.00'
f s = 4° 00' 00"
LT = 133.37'
ST = 66.70'
x = 199.90'
y = 4.65'
k = 99.98'
p = 1.16'
T.S. STA. 583+16.40
S.C. STA. 585+16.40

℄ CONST. RAMP C
P.I. Sta. 589+20.09
Δ = 31° 28' 43" (RT)
Dc = 4° 00' 00"
R = 1,432.39'
T = 403.69'
L = 786.96'
E = 55.80'
C = 777.10'
C.B. = N 5° 01' 48" E
D.S. = 60 MPH (SSD = 50 MPH)
$e_{max}$ = 0.060
S.C. STA. 585+16.40
P.C.C. STA. 593+03.36

| TAPER TABLE | | | | | | | | | |
|---|---|---|---|---|---|---|---|---|---|
| TAPER CODE | BEGINNING STATION | | ENDING STATION | | SIDE | DESCRIPTION | BEGIN WIDTH | END WIDTH | TAPER RATE |
| BG | 577+52.62 | RAMP C | 581+24.01 | RAMP C | LT | PAVEMENT | 12.00' | 16.00' | 93:1 |
| BH | 581+24.01 | RAMP C | 582+24.01 | RAMP C | RT | SHOULDER | 10.00' | 6.00' | 25:1 |

ITEM 670 - DITCH EROSION PROTECTION

WETLAND AREA NOT TO BE DISTURBED

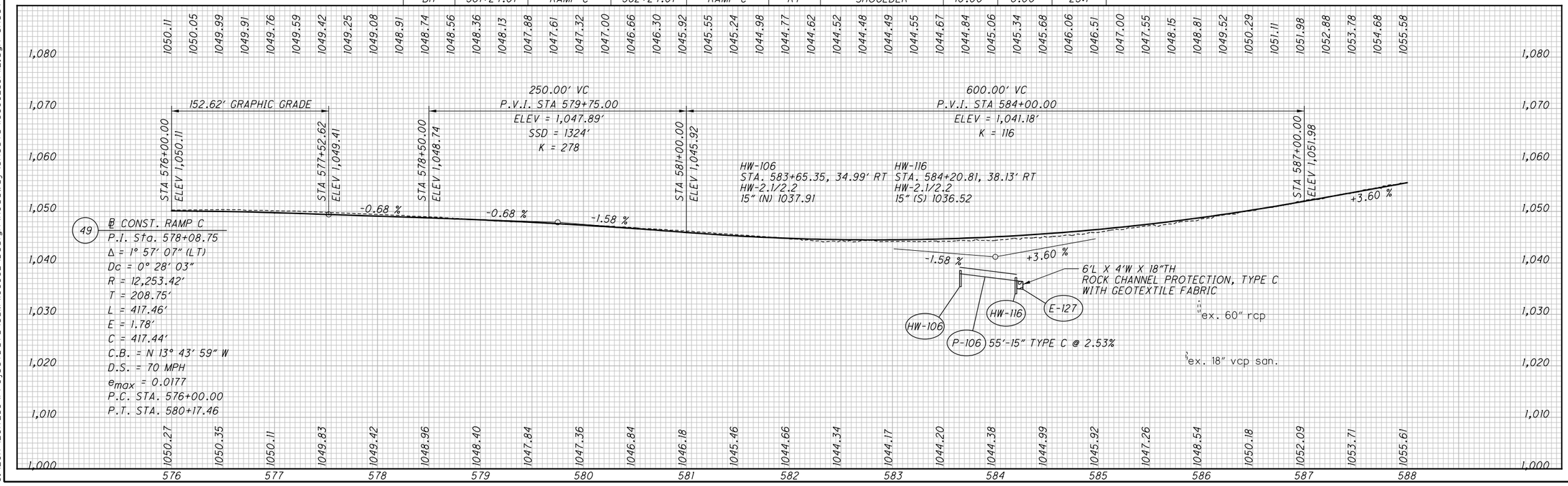


℄ CONST. RAMP C
P.I. Sta. 578+08.75
Δ = 1° 57' 07" (LT)
Dc = 0° 28' 03"
R = 12,253.42'
T = 208.75'
L = 417.46'
E = 1.78'
C = 417.44'
C.B. = N 13° 43' 59" W
D.S. = 70 MPH
$e_{max}$ = 0.0177
P.C. STA. 576+00.00
P.T. STA. 580+17.46

HORIZONTAL SCALE IN FEET
0 25 50 100

CALCULATED LRK
CHECKED PJF

# PLAN AND PROFILE - RAMP C
# BEGIN TO STA. 588+00

SUM-77 / 277 / 224
VARIOUS

497
1288

D:\2017\2017258\ProjectData\SUM\106002\Design\Roadway\Sheets\106002_GPlI2.dgn Sheet 1/14/2021 8:05:49 AM pfry

**51** ℄ CONST. RAMP C
P.I. Sta. 589+20.09
Δ = 31° 28′ 43″ (RT)
Dc = 4° 00′ 00″
R = 1,432.39′
T = 403.69′
L = 786.96′
E = 55.80′
C = 777.10′
C.B. = N 5° 01′ 48″ E
D.S. = 60 MPH (SSD = 50 MPH)
$e_{max}$ = 0.060
S.C. STA. 585+16.40
P.C.C. STA. 593+03.36

**52** ℄ CONST. RAMP C
P.I. Sta. 596+43.35
Δ = 50° 47′ 20″ (RT)
Dc = 8° 00′ 00″
R = 716.20′
T = 339.99′
L = 634.86′
E = 76.60′
C = 614.28′
C.B. = N 46° 09′ 50″ E
D.S. = 45 MPH
SSD = 305′ (360′ MIN.)
ACTUAL D.S. = 40 MPH
$e_{max}$ = 0.060
P.C.C. STA. 593+03.36
P.C.C. STA. 599+38.22

**53** ℄ CONST. RAMP C
P.I. Sta. 600+38.18
Δ = 7° 59′ 01″ (RT)
Dc = 4° 00′ 00″
R = 1,432.39′
T = 99.96′
L = 199.59′
E = 3.48′
C = 199.43′
C.B. = N 75° 33′ 00″ E
D.S. = 60 MPH (SSD = 50 MPH)
$e_{max}$ = 0.060
P.C.C. STA. 599+38.22
C.S. STA. 601+37.81

| TAPER TABLE | | | | | | | | | |
|---|---|---|---|---|---|---|---|---|---|
| TAPER CODE | BEGINNING STATION | | ENDING STATION | | SIDE | DESCRIPTION | BEGIN WIDTH | END WIDTH | TAPER RATE |
| B1 | 596+40.00 | RAMP C | 600+60.00 | RAMP C | LT | PAVEMENT | 28.00′ | 16.00′ | 35:1 |

ITEM 670 - DITCH EROSION PROTECTION
ITEM 836 - SEEDING AND EROSION CONTROL W/ TURF REINFORCING MAT, TYPE I
WETLAND
WETLAND AREA NOT TO BE DISTURBED

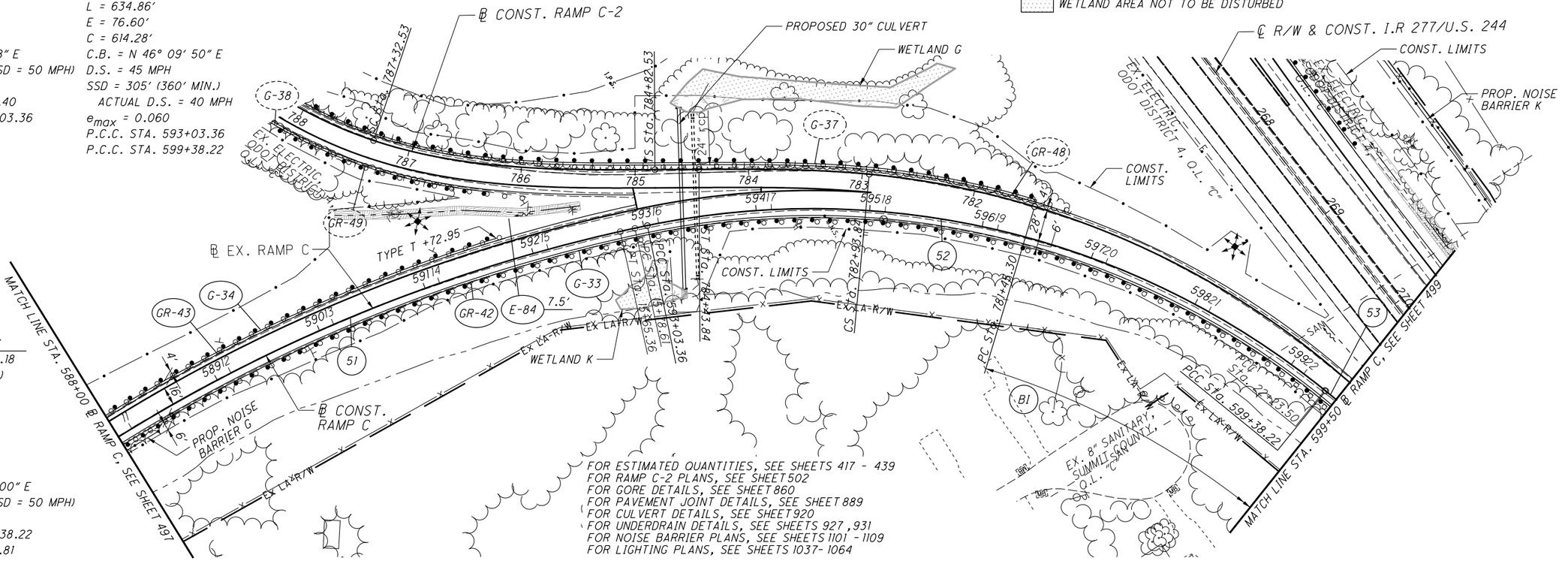


FOR ESTIMATED QUANTITIES, SEE SHEETS 417 - 439
FOR RAMP C-2 PLANS, SEE SHEET 502
FOR GORE DETAILS, SEE SHEET 860
FOR PAVEMENT JOINT DETAILS, SEE SHEET 889
FOR CULVERT DETAILS, SEE SHEET 920
FOR UNDERDRAIN DETAILS, SEE SHEETS 927, 931
FOR NOISE BARRIER PLANS, SEE SHEETS 1101 - 1109
FOR LIGHTING PLANS, SEE SHEETS 1037- 1064

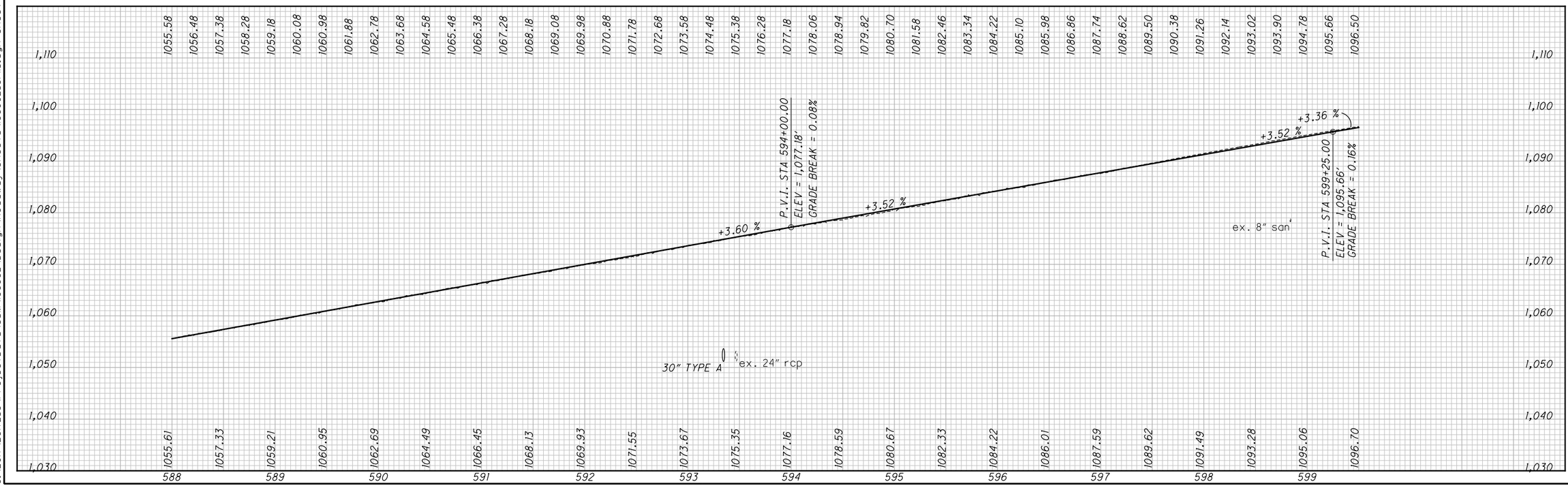


HORIZONTAL SCALE IN FEET
0 25 50 100
CALCULATED LRK
CHECKED PJF

PLAN - RAMP C
STA. 588+00 TO STA. 599+50

SUM-77 / 277 / 224
VARIOUS

498
1288

0:\2017\2017258\ProjectData\SUM\06002\Design\Roadway\Sheets\106002_GPII3.dgn Sheet 1/14/2021 8:05:52 AM pfry

ITEM 670 - DITCH EROSION PROTECTION

WETLAND AREA NOT TO BE DISTURBED

| TAPER TABLE | | | | | | | | |
|---|---|---|---|---|---|---|---|---|
| TAPER CODE | BEGINNING STATION | | ENDING STATION | | SIDE | DESCRIPTION | BEGIN WIDTH | END WIDTH | TAPER RATE |
| BI | 596+40.00 | RAMP C | 600+60.00 | RAMP C | LT | PAVEMENT | 28.00' | 16.00' | 35:1 |
| BJ | 602+87.81 | RAMP C | 603+37.81 | RAMP C | RT | SHOULDER | 6.00' | 8.00' | 25:1 |

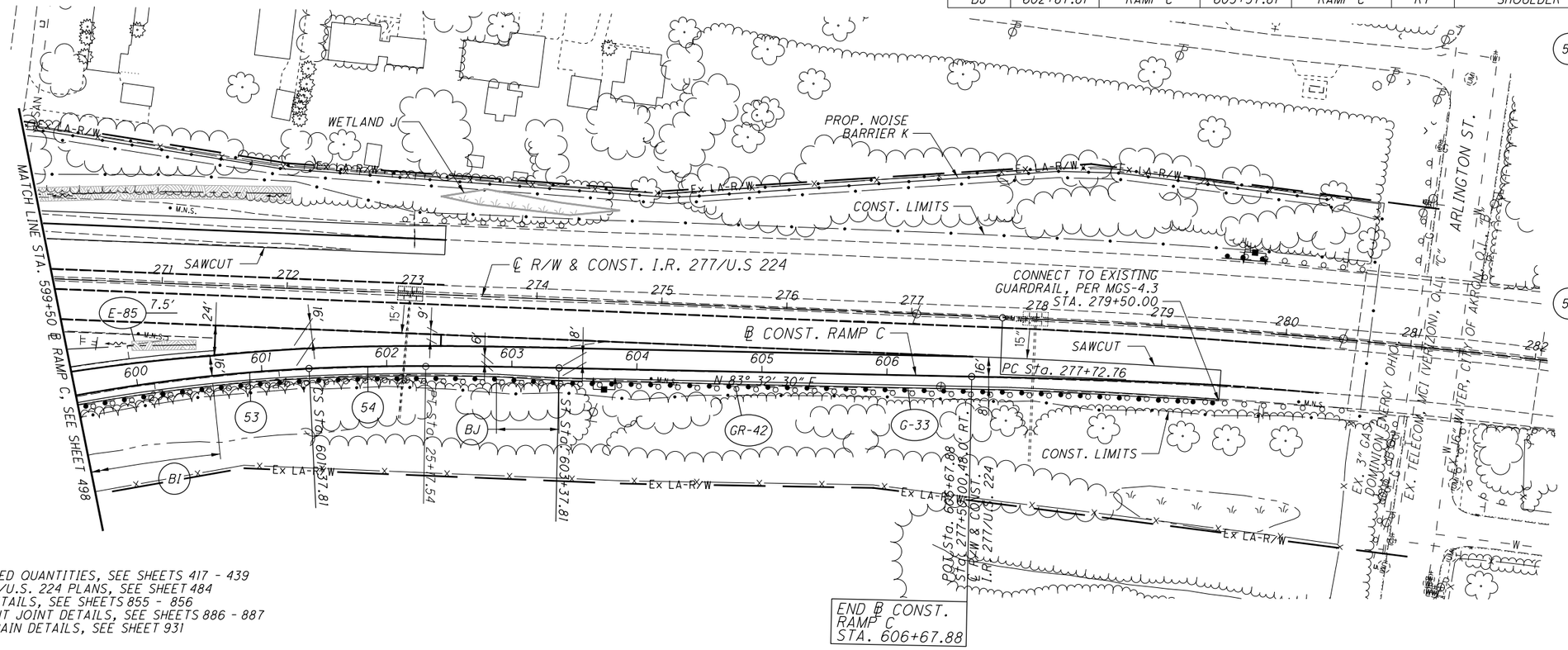


53 ℄ CONST. RAMP C
P.I. Sta. 600+38.18
Δ = 7° 59' 01" (RT)
Dc = 4° 00' 00"
R = 1,432.39'
T = 99.96'
L = 199.59'
E = 3.48'
C = 199.43'
C.B. = N 75° 33' 00" E
D.S. = 60 MPH (SSD = 50 MPH)
emax = 0.060
P.C.C. STA. 599+38.22
C.S. STA. 601+37.81

54 ℄ CONST. RAMP C
P.I. STA. 602+04.51
Ls = 200.00'
f s = 4° 00' 00"
LT = 133.37'
ST = 66.70'
x = 199.90'
y = 4.65'
k = 99.98'
p = 1.16'
C.S. STA. 601+37.81
S.T. STA. 603+37.81

FOR ESTIMATED QUANTITIES, SEE SHEETS 417 - 439
FOR I.R. 277/U.S. 224 PLANS, SEE SHEET 484
FOR GORE DETAILS, SEE SHEETS 855 - 856
FOR PAVEMENT JOINT DETAILS, SEE SHEETS 886 - 887
FOR UNDERDRAIN DETAILS, SEE SHEET 931

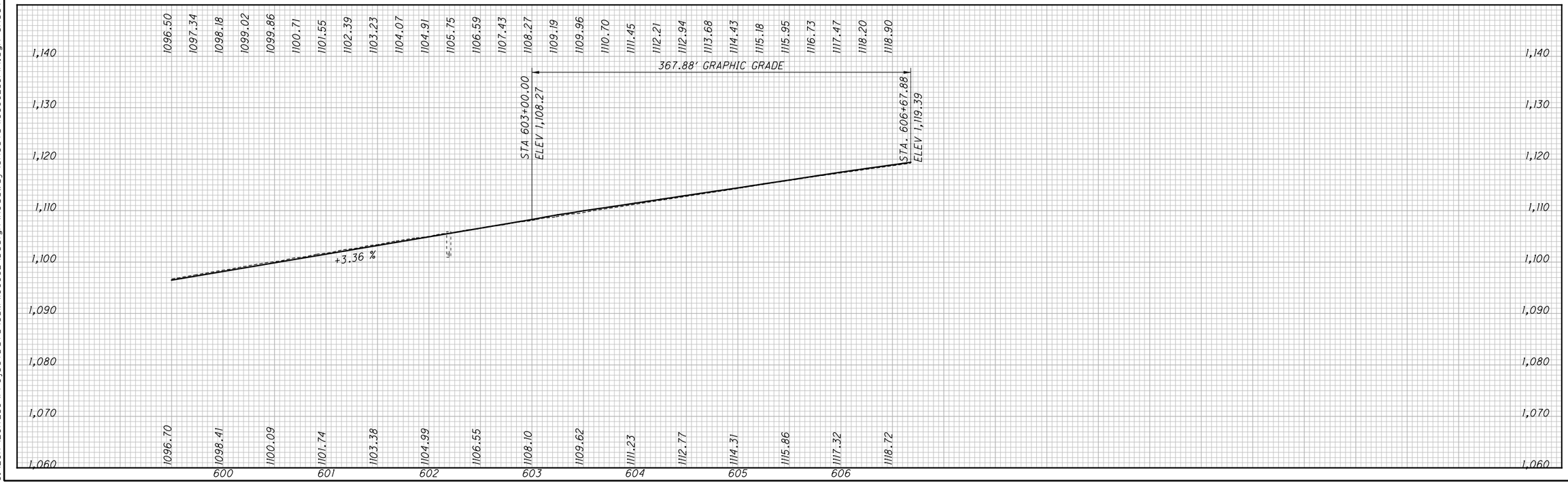


HORIZONTAL SCALE IN FEET
0 25 50 100
CALCULATED LRK
CHECKED PJF

PLAN AND PROFILE - RAMP C
STA. 599+50 TO END

SUM-77/277/224
VARIOUS

499
1288

0:\2017\2017258\ProjectData\SUM\106002\Design\Roadway\Sheets\106002_GPI14.dgn Sheet 1/14/2021 8:05:56 AM pfry

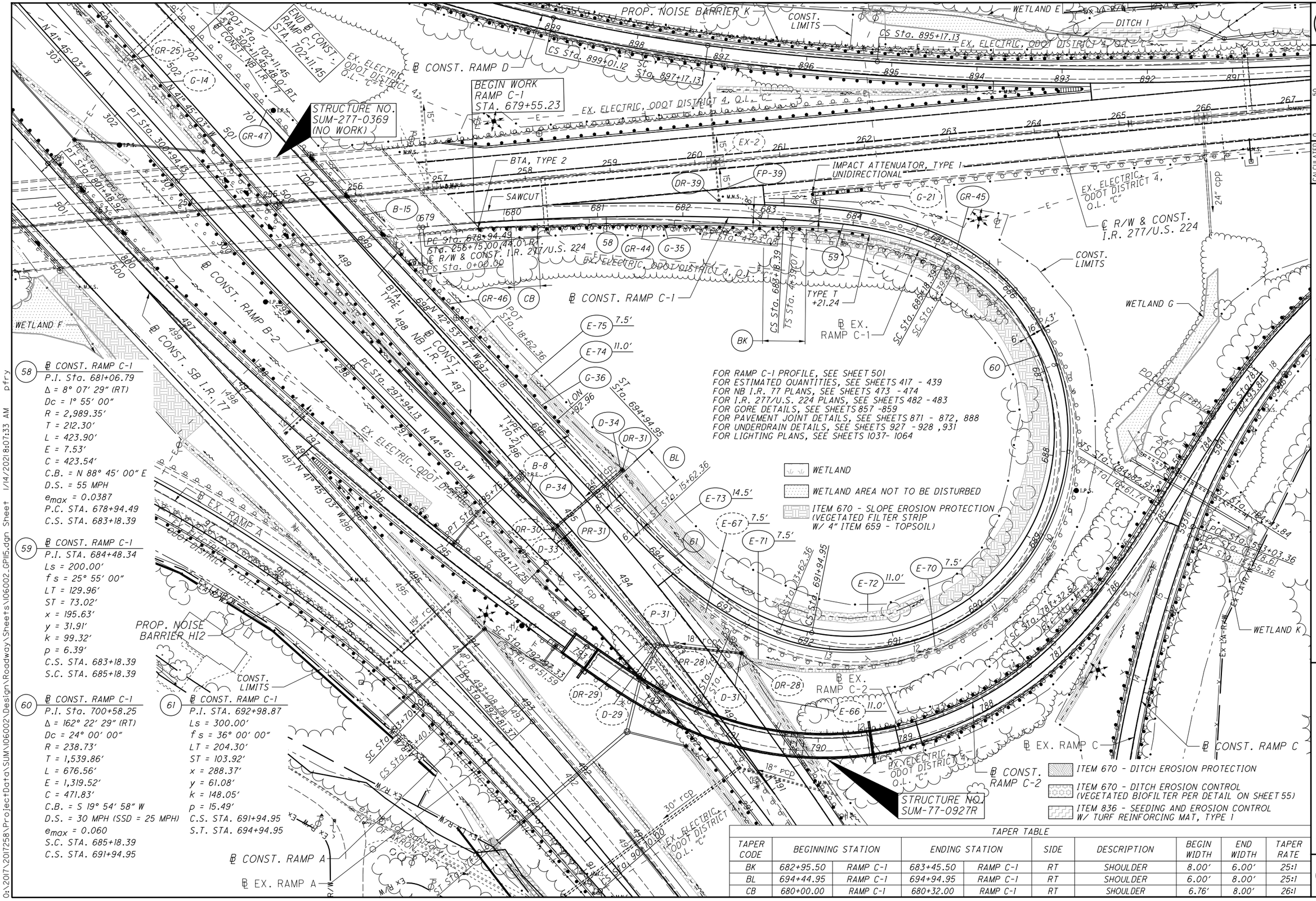
℄ CONST. RAMP C-1
P.I. Sta. 681+06.79
Δ = 8° 07′ 29″ (RT)
Dc = 1° 55′ 00″
R = 2,989.35′
T = 212.30′
L = 423.90′
E = 7.53′
C = 423.54′
C.B. = N 88° 45′ 00″ E
D.S. = 55 MPH
emax = 0.0387
P.C. STA. 678+94.49
C.S. STA. 683+18.39
℄ CONST. RAMP C-1
P.I. STA. 684+48.34
Ls = 200.00′
f s = 25° 55′ 00″
LT = 129.96′
ST = 73.02′
x = 195.63′
y = 31.91′
k = 99.32′
p = 6.39′
C.S. STA. 683+18.39
S.C. STA. 685+18.39
℄ CONST. RAMP C-1
P.I. Sta. 700+58.25
Δ = 162° 22′ 29″ (RT)
Dc = 24° 00′ 00″
R = 238.73′
T = 1,539.86′
L = 676.56′
E = 1,319.52′
C = 471.83′
C.B. = S 19° 54′ 58″ W
D.S. = 30 MPH (SSD = 25 MPH)
emax = 0.060
S.C. STA. 685+18.39
C.S. STA. 691+94.95
℄ CONST. RAMP C-1
P.I. STA. 692+98.87
Ls = 300.00′
f s = 36° 00′ 00″
LT = 204.30′
ST = 103.92′
x = 288.37′
y = 61.08′
k = 148.05′
p = 15.49′
C.S. STA. 691+94.95
S.T. STA. 694+94.95
FOR RAMP C-1 PROFILE, SEE SHEET 501
FOR ESTIMATED QUANTITIES, SEE SHEETS 417 - 439
FOR NB I.R. 77 PLANS, SEE SHEETS 473 -474
FOR I.R. 277/U.S. 224 PLANS, SEE SHEETS 482 -483
FOR GORE DETAILS, SEE SHEETS 857 -859
FOR PAVEMENT JOINT DETAILS, SEE SHEETS 871 - 872, 888
FOR UNDERDRAIN DETAILS, SEE SHEETS 927 -928 ,931
FOR LIGHTING PLANS, SEE SHEETS 1037- 1064
WETLAND
WETLAND AREA NOT TO BE DISTURBED
ITEM 670 - SLOPE EROSION PROTECTION (VEGETATED FILTER STRIP W/ 4" ITEM 659 - TOPSOIL)
ITEM 670 - DITCH EROSION PROTECTION
ITEM 670 - DITCH EROSION CONTROL (VEGETATED BIOFILTER PER DETAIL ON SHEET 55)
ITEM 836 - SEEDING AND EROSION CONTROL W/ TURF REINFORCING MAT, TYPE I
TAPER TABLE
TAPER CODE | BEGINNING STATION | | ENDING STATION | | SIDE | DESCRIPTION | BEGIN WIDTH | END WIDTH | TAPER RATE
BK | 682+95.50 | RAMP C-1 | 683+45.50 | RAMP C-1 | RT | SHOULDER | 8.00′ | 6.00′ | 25:1
BL | 694+44.95 | RAMP C-1 | 694+94.95 | RAMP C-1 | RT | SHOULDER | 6.00′ | 8.00′ | 25:1
CB | 680+00.00 | RAMP C-1 | 680+32.00 | RAMP C-1 | RT | SHOULDER | 6.76′ | 8.00′ | 26:1
PROP. NOISE BARRIER K
PROP. NOISE BARRIER H12
CONST. LIMITS
BEGIN WORK RAMP C-1 STA. 679+55.23
STRUCTURE NO. SUM-277-0369 (NO WORK)
STRUCTURE NO. SUM-77-0927R
END ℄ CONST. RAMP C-1 STA. 702+11.45
POT Sta. 702+11.45 ℄ CONST. NB I.R. 77
POT Sta. 18+62.36
POT Sta. 694+94.95
PC Sta. 678+94.49
PT Sta. 300+94.45
PC Sta. 256+75.00 44.0′ RT. ℄ R/W & CONST. I.R. 277/U.S. 224
PC Sta. 0+00.00
PT Sta. 423.90
PC Sta. 297+94.13
PT Sta. 294+71.25
PT Sta. 493+08.28
PT Sta. 492+81.37
CS Sta. 683+18.39
TS Sta. 684+39.07
SC Sta. 685+18.39
SC Sta. 691+94.95
CS Sta. 691+94.95
CS Sta. 695+76.15
CS Sta. 899+01.12
SC Sta. 897+17.13
CS Sta. 895+17.13
ST Sta. 694+94.95
TYPE T +70.24
TYPE T +21.24
TYPE T +70.24
℄ CONST. RAMP A
℄ EX. RAMP A
℄ CONST. RAMP B-2
℄ CONST. SB I.R. 77
℄ CONST. NB I.R. 77
℄ CONST. RAMP C-1
℄ EX. RAMP C-1
℄ EX. RAMP C-2
℄ CONST. RAMP C-2
℄ EX. RAMP C
℄ CONST. RAMP C
℄ R/W & CONST. I.R. 277/U.S. 224
EX. ELECTRIC, ODOT DISTRICT 4, Q.L. "C"
EX. ELECTRIC, ODOT DISTRICT 4, O.L. "C"
WETLAND E
WETLAND F
WETLAND G
WETLAND K
DITCH I
BTA, TYPE 2
BTA, TYPE 1
IMPACT ATTENUATOR, TYPE I UNIDIRECTIONAL
SAWCUT
24" CPP
18" RCP
24" RCP
30" RCP
18" FCP
24" FCP
EX. LA-R/W
58
59
60
61
BK
BL
CB
GR-25
G-14
GR-47
B-15
GR-46
GR-44
G-35
GR-45
G-21
FP-39
DR-39
EX-2
E-75 7.5′
E-74 11.0′
G-36
D-34
DR-31
P-34
PR-31
DR-30
D-33
P-31
DR-29
D-29
PR-28
DR-28
D-31
E-73 14.5′
E-67 7.5′
E-71 7.5′
E-72 11.0′
E-66 11.0′
E-70 7.5′
B-8
GR-45
HORIZONTAL SCALE IN FEET
0 25 50 100
CALCULATED LRK
CHECKED PJF
PLAN - RAMP C-1
STA. 678+94.49 TO STA. 702+11.45
SUM-77/277/224
VARIOUS
500
1288
0:\2017\2017258\Project Data\SUM\06002\Design\Roadway\Sheets\106002_GPI15.dgn Sheet1 1/14/2021 8:07:33 AM pfry

0:\2017\2017258\ProjectData\SUM\106002\Design\Roadway\Sheets\106002_GFI15.dgn Sheet 1/14/2021 8:07:40 AM pfry

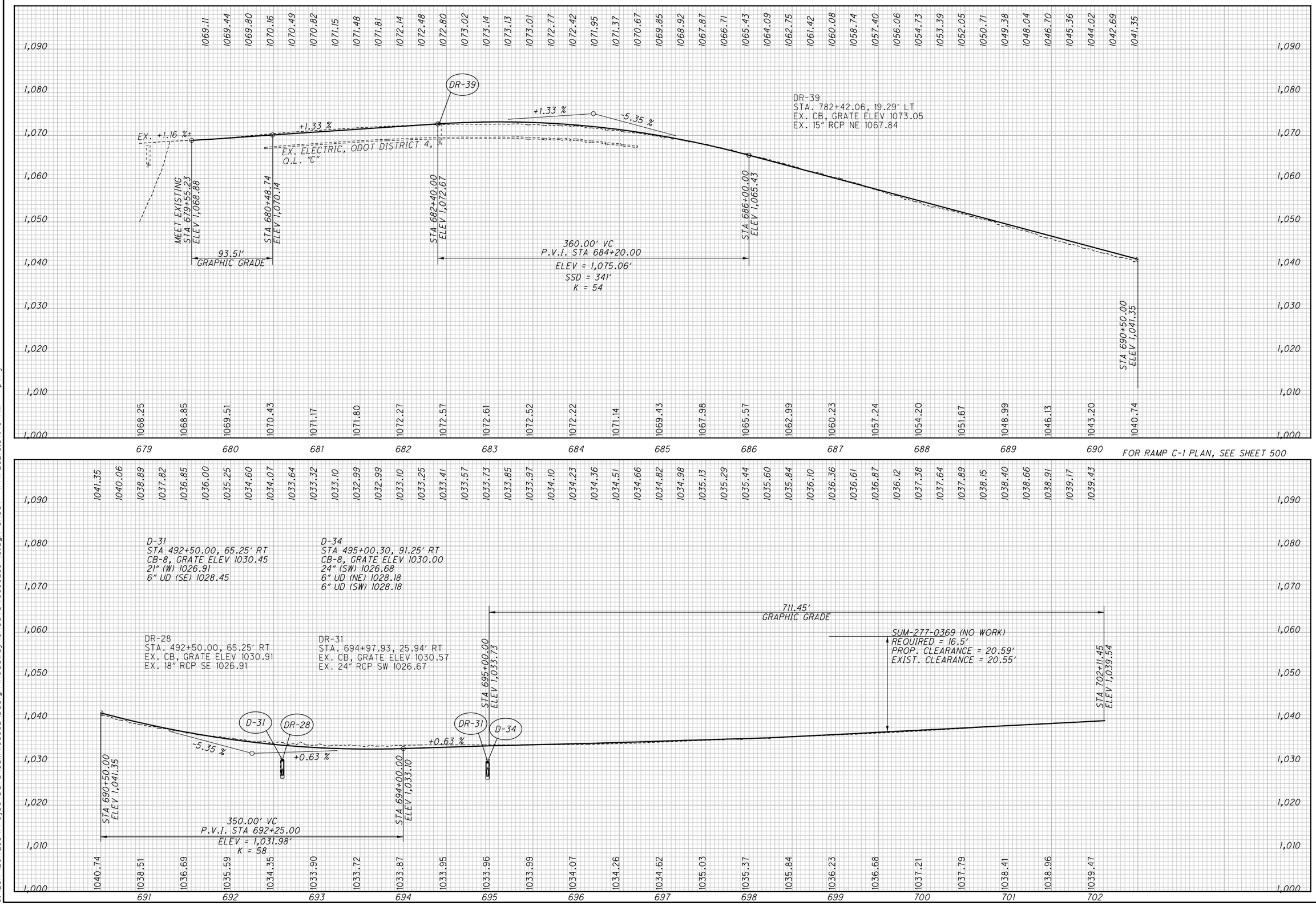


FOR RAMP C-1 PLAN, SEE SHEET 500




CALCULATED CJC
CHECKED PJF

# PROFILE - RAMP C-1

## STA. 678+94.99 TO STA. 702+11.45

SUM-77 / 277 / 224
VARIOUS

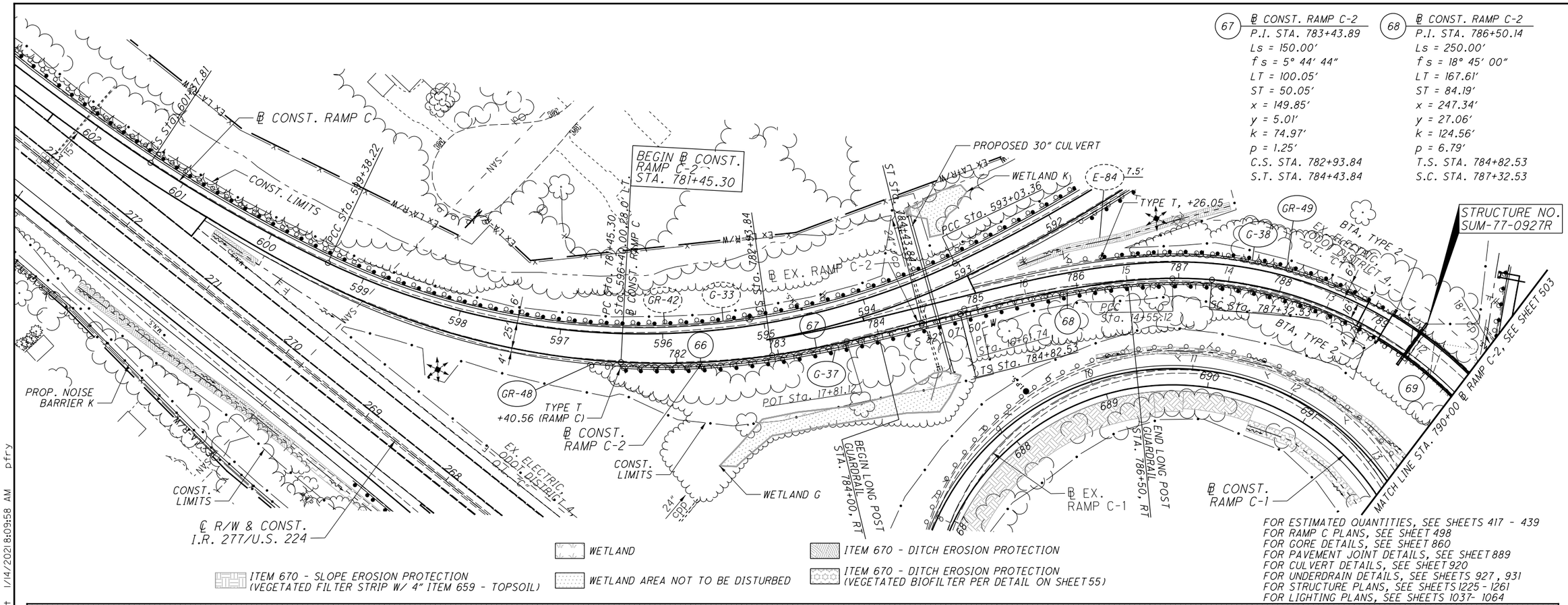
℄ CONST. RAMP C
BEGIN ℄ CONST. RAMP C-2 STA. 781+45.30
PROPOSED 30" CULVERT
WETLAND K
E-84
7.5'
TYPE T, +26.05
GR-49
G-38
EX. ELECTRIC, ODOT DISTRICT 4, O.L. "C"
BTA, TYPE 2
STRUCTURE NO. SUM-77-0927R
PCC Sta. 593+03.36
PCC Sta. 596+40.00, 28.0' LT
PC Sta. 781+45.30
℄ CONST. RAMP C
ST Sta. 784+43.84
24" CMP
℄ EX. RAMP C-2
ST Sta. 782+43.84
GR-42
G-33
GR-48
TYPE T +40.56 (RAMP C)
℄ CONST. RAMP C-2
CONST. LIMITS
WETLAND G
24" CMP
POT Sta. 17+81.12
G-37
PT Sta. 784+61.74
LTS Sta. 784+82.53
SC Sta. 787+32.53
PCC Sta. 784+55.12
BEGIN LONG POST GUARDRAIL STA. 784+00, RT
END LONG POST GUARDRAIL STA. 786+50, RT
℄ EX. RAMP C-1
℄ CONST. RAMP C-1
MATCH LINE STA. 790+00 ℄ RAMP C-2, SEE SHEET 503
PROP. NOISE BARRIER K
CONST. LIMITS
℄ R/W & CONST. I.R. 277/U.S. 224
EX. ELECTRIC, ODOT DISTRICT 4, O.L. "C"
CONST. LIMITS
EX. 24" CMP
EX. 18" CMP
EX. 12" CMP
EX. 24" CMP
EX. 30" CMP
EX. 36" CMP
EX. 42" CMP
EX. 48" CMP
EX. 54" CMP
EX. 60" CMP
EX. 72" CMP
EX. 84" CMP
EX. 96" CMP
EX. 108" CMP
EX. 120" CMP
EX. 132" CMP
EX. 144" CMP
EX. 156" CMP
EX. 168" CMP
EX. 180" CMP
EX. 192" CMP
EX. 204" CMP
EX.

| TAPER TABLE | | | | | | | | | |
|---|---|---|---|---|---|---|---|---|---|
| TAPER CODE | BEGINNING STATION | | ENDING STATION | | SIDE | DESCRIPTION | BEGIN WIDTH | END WIDTH | TAPER RATE |
| BX | 795+95.44 | RAMP C-2 | 796+95.44 | RAMP C-2 | RT | SHOULDER | 4.00' | 8.00' | 25:1 |

STRUCTURE NO. SUM-77-0927R

℄ CONST. RAMP B-2

℄ CONST. RAMP C-2
P.I. Sta. 789+63.04
Δ = 62° 13' 11" (RT)
Dc = 15° 00' 00"
(NDC Dc = 9° 00' MAX.)
R = 381.97'
T = 230.51'
L = 414.80'
E = 64.16'
C = 394.72'
C.B. = S 81° 59' 26" W
D.S. = 35 MPH (45 MPH MIN.)
SSD = 194' (360' MIN.)
ACTUAL D.S. = 29 MPH
emax = 0.060
S.C. STA. 787+32.53
C.S. STA. 791+47.33

℄ CONST. RAMP C-2
P.I. STA. 792+02.11
Ls = 150.00'
fs = 12° 22' 30"
LT = 95.72'
ST = 54.79'
x = 149.23'
y = 11.74'
k = 74.88'
p = 2.21'
C.S. STA. 791+47.33
S.C. STA. 792+97.33

FOR ESTIMATED QUANTITIES, SEE SHEETS 417 - 439
FOR SB I.R. 77 PLANS, SEE SHEETS 477 - 478
FOR GORE DETAILS, SEE SHEET 861
FOR PAVEMENT JOINT DETAILS, SEE SHEETS 873 - 874
FOR UNDERDRAIN DETAILS, SEE SHEETS 927 - 928
FOR RETAINING WALL PLANS, SEE SHEETS 1145 - 1154
FOR STRUCTURE PLANS, SEE SHEETS 1225 - 1261
FOR LIGHTING PLANS, SEE SHEETS 1037- 1064

ITEM 601 - ROCK CHANNEL PROTECTION
ITEM 670 - DITCH EROSION PROTECTION
ITEM 670 - DITCH EROSION PROTECTION (VEGETATED BIOFILTER PER DETAIL ON SHEET 55)
ITEM 670 - SLOPE EROSION PROTECTION (VEGETATED FILTER STRIP W/ 4" ITEM 659 - TOPSOIL)

WETLAND
WETLAND AREA NOT TO BE DISTURBED

(A) IMPACT ATTENUATOR, TYPE 3, UNIDIRECTIONAL (90" WIDTH)

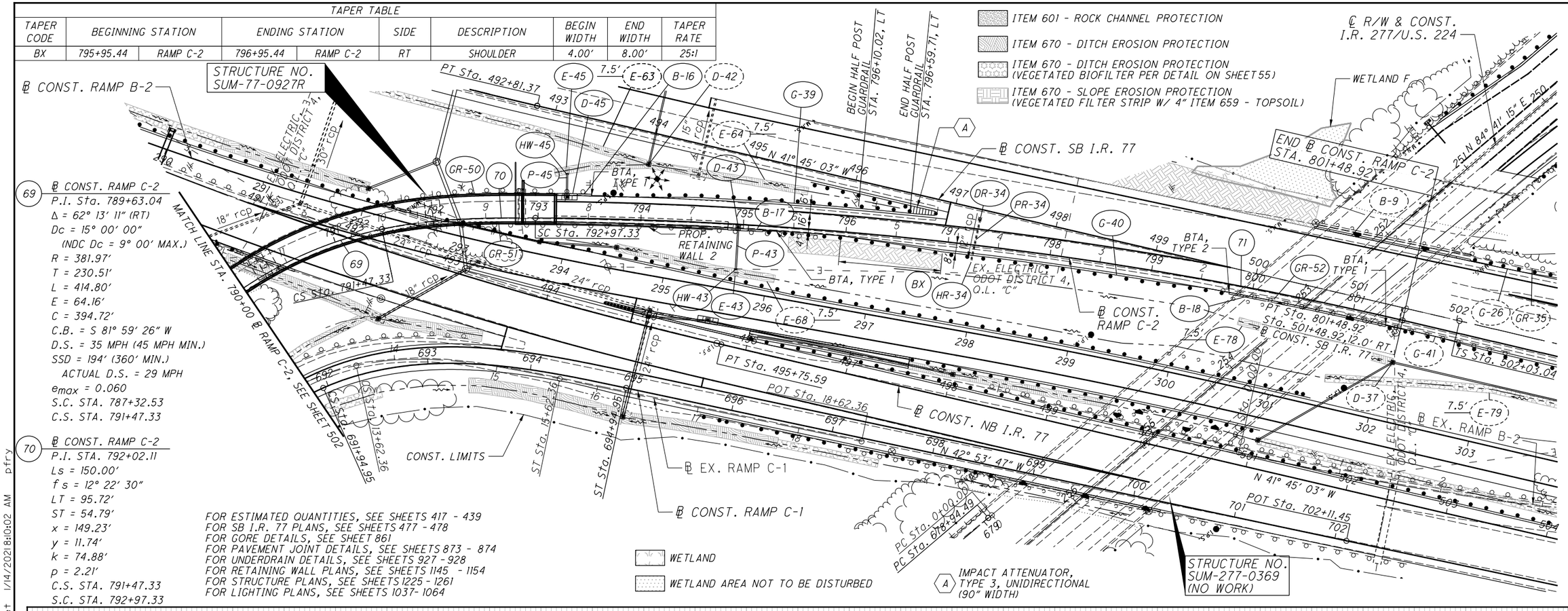


71 ℄ CONST. RAMP C-2
P.I. Sta. 797+24.90
Δ = 12° 46' 26" (RT)
Dc = 1° 30' 00"
R = 3,819.72'
T = 427.57'
L = 851.59'
E = 23.86'
C = 849.83'
C.B. = N 48° 08' 16" W
D.S. = 60 MPH (SSD = 55 MPH)
emax = 0.037
S.C. STA. 792+97.33
P.T. STA. 801+48.92

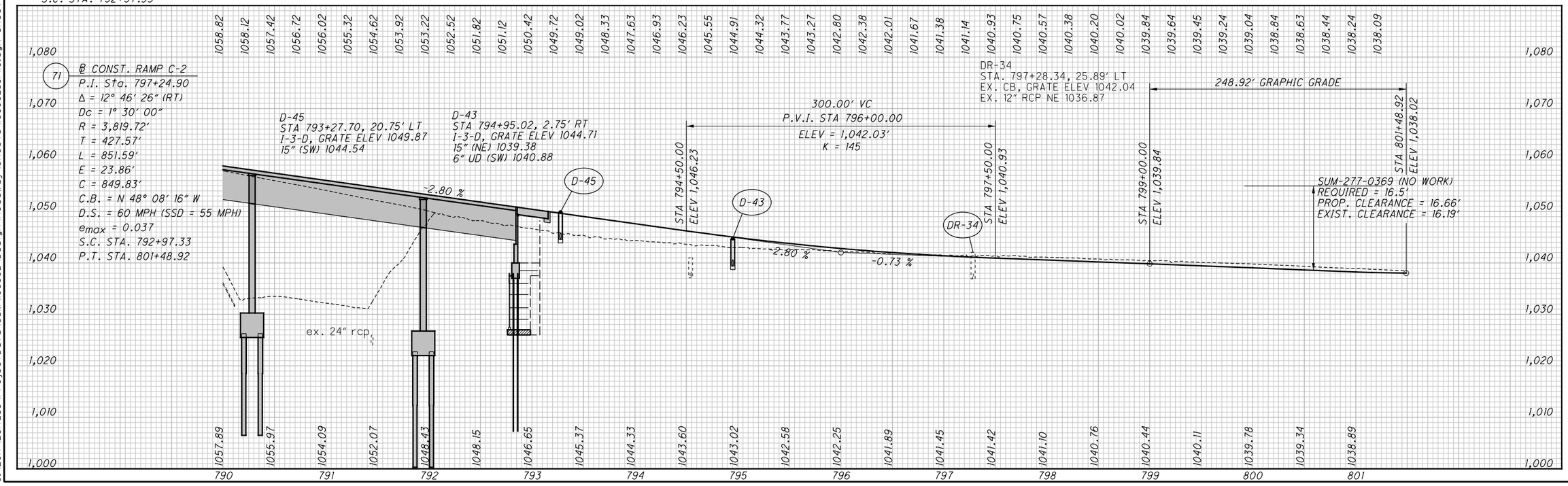


CALCULATED LRK
CHECKED PJF

PROFILE - RAMP C-2
790+00 TO END

PLAN AND PROFILE
STA. 790+00 TO END

SUM-77 / 277 / 224
VARIOUS

503
1288

0:\2017\2017258\ProjectData\SUM\06002\Design\Roadway\Sheets\06002_GP116.dgn Sheet 1/14/2021 8:10:02 AM pfry

(76) ℄ CONST. RAMP D
P.I. Sta. 891+58.50
Δ = 8° 59′ 04″ (RT)
Dc = 1° 15′ 00″
R = 4,583.66′
T = 360.12′
L = 718.75′
E = 14.12′
C = 718.02′
C.B. = S 89° 10′ 47″ W
D.S. = 65 MPH
emax = 0.036
P.C. STA. 887+98.38
C.S. STA. 895+17.13

(77) ℄ CONST. RAMP D
P.I. STA. 896+29.68
Ls = 200.00′
fs = 4° 00′ 00″
LT = 112.54′
ST = 87.54′
x = 199.87′
y = 6.11′
k = 99.98′
p = 0.44′
C.S. STA. 895+17.13
S.C. STA. 897+17.13

TAPER TABLE

| TAPER CODE | BEGINNING STATION | | ENDING STATION | | SIDE | DESCRIPTION | BEGIN WIDTH | END WIDTH | TAPER RATE |
|---|---|---|---|---|---|---|---|---|---|
| BM | 889+33.61 | RAMP D | 892+66.83 | RAMP D | LT | PAVEMENT | 12.00′ | 16.00′ | 83:1 |
| BN | 892+66.83 | RAMP D | 893+66.83 | RAMP D | RT | SHOULDER | 10.00′ | 6.00′ | 25:1 |

(A) IMPACT ATTENUATOR, TYPE 3, UNDIRECTIONAL (69″ WIDTH)

WETLAND

WETLAND AREA NOT TO BE DISTURBED

ITEM 670 - DITCH EROSION PROTECTION

ITEM 670 - DITCH EROSION PROTECTION (VEGETATED BIOFILTER PER DETAIL ON SHEET 55)

ITEM 836 - SEEDING AND EROSION CONTROL WITH TURF REINFORCING MAT, TYPE 1

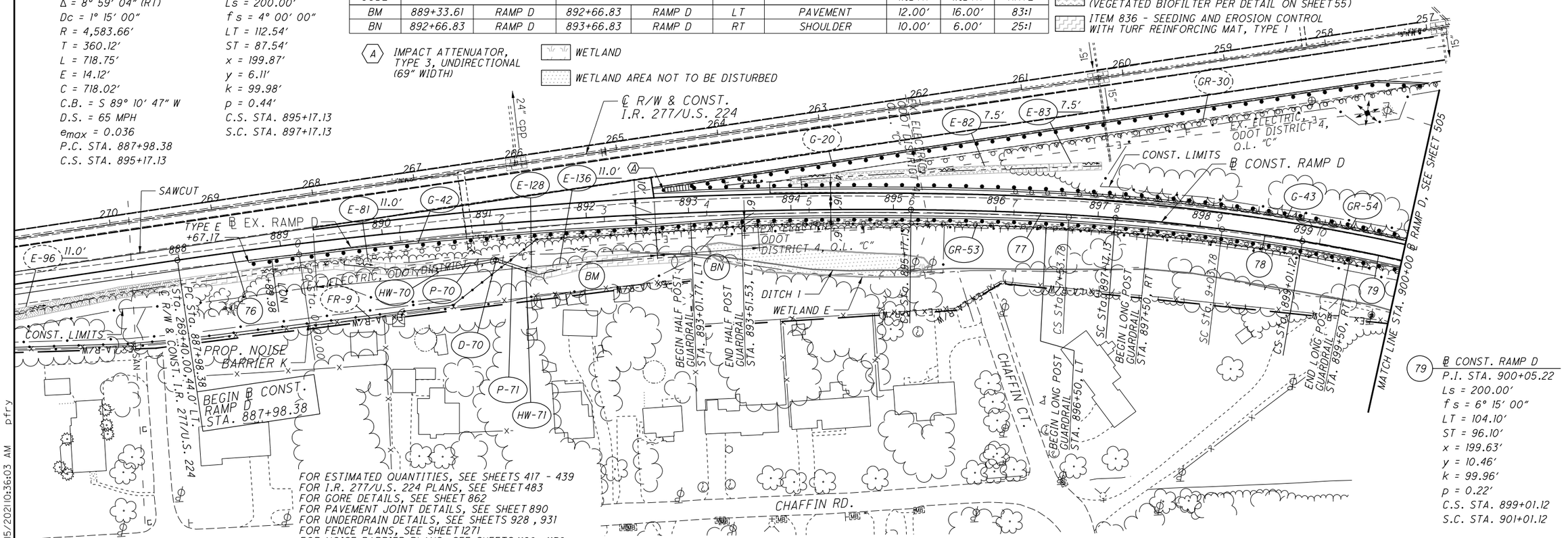


FOR ESTIMATED QUANTITIES, SEE SHEETS 417 - 439
FOR I.R. 277/U.S. 224 PLANS, SEE SHEET 483
FOR GORE DETAILS, SEE SHEET 862
FOR PAVEMENT JOINT DETAILS, SEE SHEET 890
FOR UNDERDRAIN DETAILS, SEE SHEETS 928 , 931
FOR FENCE PLANS, SEE SHEET 1271
FOR NOISE BARRIER PLANS, SEE SHEETS 1126 - 1132
FOR LIGHTING PLANS, SEE SHEETS 1037- 1064

(79) ℄ CONST. RAMP D
P.I. STA. 900+05.22
Ls = 200.00′
fs = 6° 15′ 00″
LT = 104.10′
ST = 96.10′
x = 199.63′
y = 10.46′
k = 99.96′
p = 0.22′
C.S. STA. 899+01.12
S.C. STA. 901+01.12

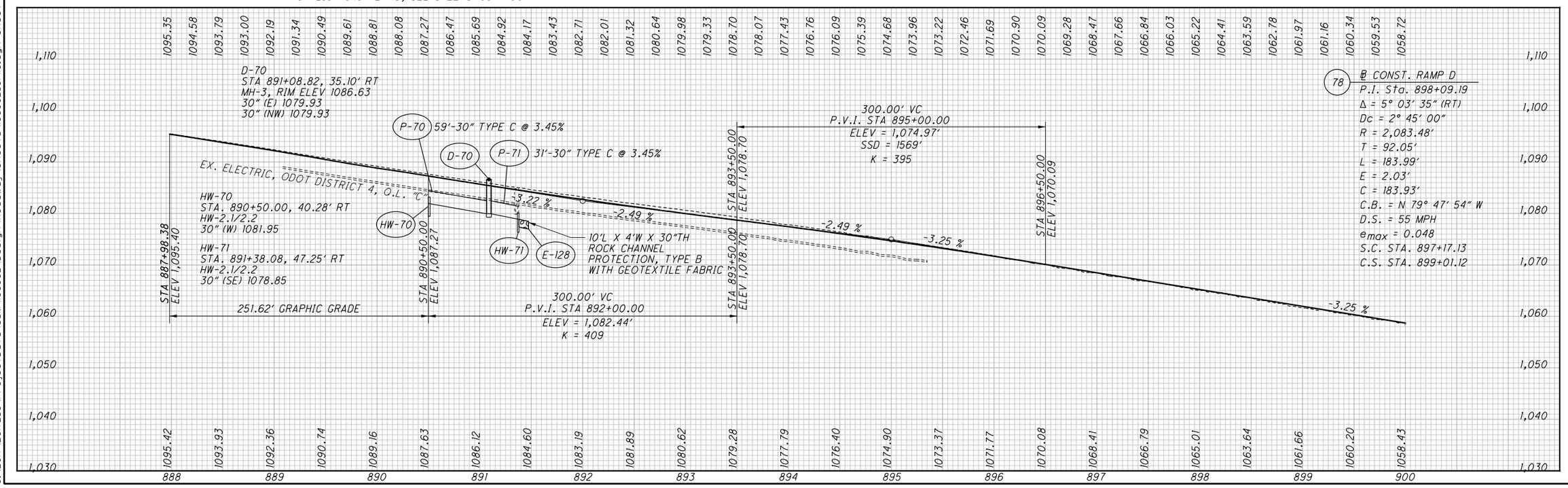


(78) ℄ CONST. RAMP D
P.I. Sta. 898+09.19
Δ = 5° 03′ 35″ (RT)
Dc = 2° 45′ 00″
R = 2,083.48′
T = 92.05′
L = 183.99′
E = 2.03′
C = 183.93′
C.B. = N 79° 47′ 54″ W
D.S. = 55 MPH
emax = 0.048
S.C. STA. 897+17.13
C.S. STA. 899+01.12

CALCULATED LRK
CHECKED PJF

HORIZONTAL SCALE IN FEET 0 25 50 100

# PLAN AND PROFILE - RAMP D
# BEGIN TO STA. 900+00

SUM-77 / 277 / 224
VARIOUS

504
1288

D:\2017\2017258\ProjectData\SUM\06002\Design\Roadway\Sheets\06002_GP118.dgn Sheet 1/15/2021 10:36:03 AM pfry

79 ℄ CONST. RAMP D
P.I. STA. 900+05.22
Ls = 200.00′
f s = 6° 15′ 00″
LT = 104.10′
ST = 96.10′
x = 199.63′
y = 10.46′
k = 99.96′
p = 0.22′
C.S. STA. 899+01.12
S.C. STA. 901+01.12

80 ℄ CONST. RAMP D
P.I. Sta. 904+84.89
Δ = 26° 23′ 16″ (RT)
Dc = 3° 30′ 00″
R = 1,637.02′
T = 383.77′
L = 753.93′
E = 44.38′
C = 747.29′
C.B. = N 57° 49′ 29″ W
D.S. = 50 MPH
$e_{max}$ = 0.048
S.C. STA. 901+01.12
C.S. STA. 908+55.05

81 ℄ CONST. RAMP D
P.I. STA. 909+49.98
Ls = 200.00′
f s = 6° 03′ 40″
LT = 105.26′
ST = 94.93′
x = 199.66′
y = 10.02′
k = 99.96′
p = 0.27′
C.S. STA. 908+55.05
S.C. STA. 910+55.05

82 ℄ CONST. RAMP D
P.I. Sta. 913+74.55
Δ = 16° 15′ 22″ (RT)
Dc = 2° 33′ 40″
R = 2,237.04′
T = 319.50′
L = 634.70′
E = 22.70′
C = 632.57′
C.B. = N 30° 26′ 29″ W
D.S. = 60 MPH
$e_{max}$ = 0.051
S.C. STA. 910+55.05
P.T. STA. 916+89.75

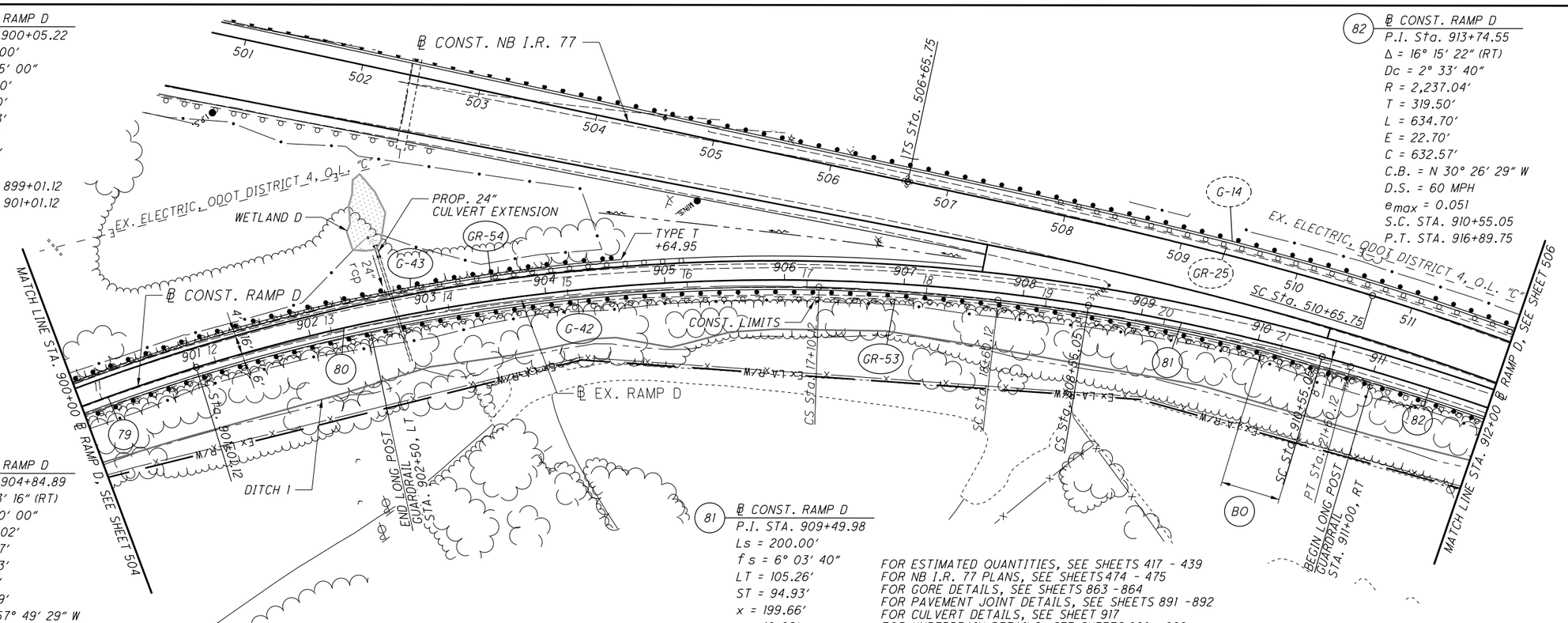


FOR ESTIMATED QUANTITIES, SEE SHEETS 417 - 439
FOR NB I.R. 77 PLANS, SEE SHEETS474 - 475
FOR GORE DETAILS, SEE SHEETS 863 - 864
FOR PAVEMENT JOINT DETAILS, SEE SHEETS 891 -892
FOR CULVERT DETAILS, SEE SHEET 917
FOR UNDERDRAIN DETAILS, SEE SHEETS 928 - 929

WETLAND

WETLAND AREA NOT TO BE DISTURBED

TAPER TABLE

| TAPER CODE | BEGINNING STATION | | ENDING STATION | | SIDE | DESCRIPTION | BEGIN WIDTH | END WIDTH | TAPER RATE |
|---|---|---|---|---|---|---|---|---|---|
| BO | 910+05.05 | RAMP D | 910+55.05 | RAMP D | RT | SHOULDER | 6.00′ | 8.00′ | 25:1 |

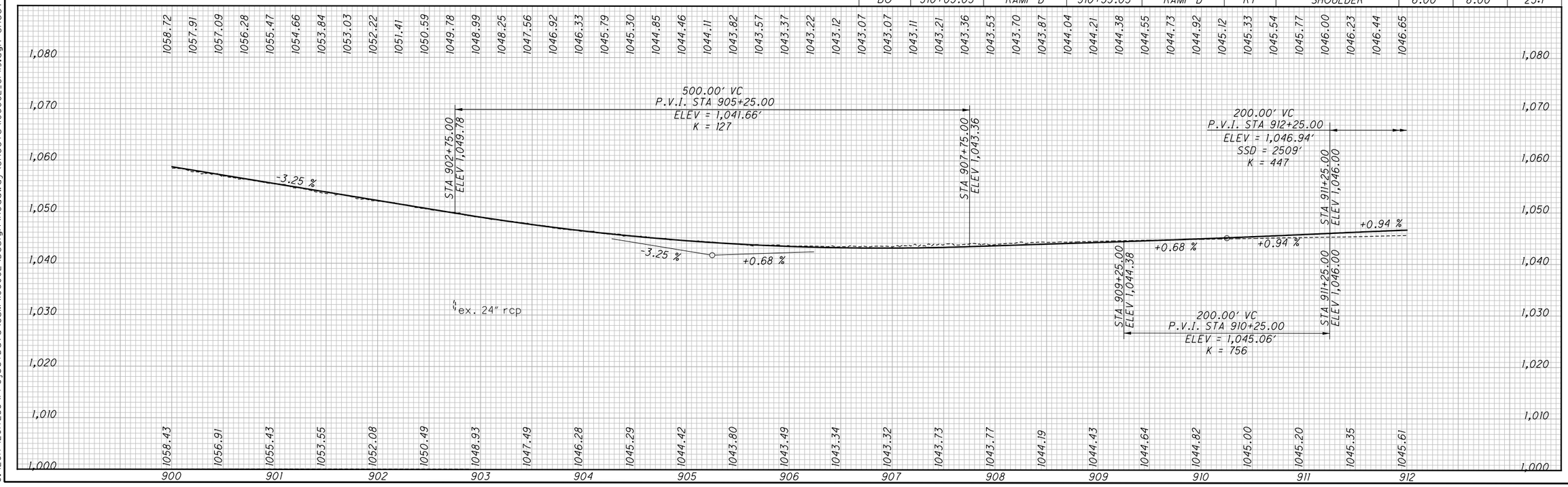


CALCULATED LRK
CHECKED PJF

HORIZONTAL SCALE IN FEET
0 25 50 100

PLAN AND PROFILE - RAMP D
STA. 900+00 TO STA. 912+00

SUM-77 / 277 / 224
VARIOUS

505
1288

D:\2017\2017258\ProjectData\SUM\06002\Design\Roadway\Sheets\06002_GPI9.dgn Sheet 1/15/2021 10:36:20 AM pfry

ITEM 670 - DITCH EROSION PROTECTION

ITEM 670 - DITCH EROSION PROTECTION (VEGETATED BIOFILTER PER DETAIL ON SHEET 55)

PROPOSED WORK (PAVEMENT, APPROACH SLAB, EARTHWORK, GUARDRAIL, ETC.) BY OTHERS (SUM-76/77/8-8.42/9.77/0.00 DB, PID 102329)

| TAPER TABLE | | | | | | | | |
|---|---|---|---|---|---|---|---|---|
| TAPER CODE | BEGINNING STATION | | ENDING STATION | | SIDE | DESCRIPTION | BEGIN WIDTH | END WIDTH | TAPER RATE |
| AD | 914+75.00 | RAMP D | 915+06.25 | RAMP D | RT | SHOULDER | 8.00' | 6.75' | 25:1 |
| AE | 914+93.91 | RAMP D | 915+74.42 | RAMP D | RT | PAVEMENT | 16.00' | 14.38' | 50:1 |

END PROJECT
END WORK
℄ CONST. SB I.R. 77
STA. 514+95.00
S.L.M. 9.74

BEGIN PROJECT
SUM-76/77/8-
8.42/9.77/0.00 DB
(PID 102329)

E171 (457) E180 (428)

℄ CONST. SB I.R. 77

℄ CONST. RAMP B

STRUCTURE NO.
SUM-77-0973L
(NO WORK)

END ℄ CONST.
RAMP B
STA. 219+25.00

BEGIN
℄ EX. RAMP B
STA. 0+00.00

POT Sta. 219+25.00

℄ POT Sta. 0+00.00

℄ EX. RAMP B

MATCH LINE STA. 912+00 ℄ RAMP D, SEE SHEET 505

EX. ELECTRIC, ODOT DISTRICT 4, O.L.

"C" CONST. LIMITS

EX. TELECOM AT&T O.L.

EX. 12" WATER CITY OF AKRON O.L.

G-42 SEE NOTE 'A'

GR-25 G-14

GR-53 AD

82

AE

6.75'

8'

BTA, TYPE 1

℄ CONST. RAMP D

℄ CONST. NB I.R. 77

DITCH I

END WORK
℄ CONST. NB I.R. 77
STA. 514+85.00

END WORK
RAMP D
STA. 914+89.43

END LONG POST-TO-POST GUARDRAIL
STA. 915+47.67, RT

WATERLOO RD.

PT Sta. 916+89.75
Sta. 516+89.75 48.0' RT.
℄ CONST. NB I.R. 77

ALLENDALE AVE.

BS Sta. 523+01.37

ES Sta. 523+44.42

STRUCTURE NO.
SUM-77-0973R
(NO WORK)

END ℄ CONST.
RAMP D
STA. 916+89.75

82 ℄ CONST. RAMP D
P.I. Sta. 913+74.55
Δ = 16° 15' 22" (RT)
Dc = 2° 33' 40"
R = 2,237.04'
T = 319.50'
L = 634.70'
E = 22.70'
C = 632.57'
C.B. = N 30° 26' 29" W
D.S. = 60 MPH
emax = 0.051
S.C. STA. 910+55.05
P.T. STA. 916+89.75

NOTE 'A'
PROPOSED GUARDRAIL SHALL CONNECT TO THE GUARDRAIL AND BTA BEING INSTALLED BY OTHERS IN THE PID 102329 PROJECT

FOR ESTIMATED QUANTITIES, SEE SHEETS 417 - 439
FOR NB I.R. 77 PLANS, SEE SHEET 475
FOR GORE DETAILS, SEE SHEET 864
FOR PAVEMENT JOINT DETAILS, SEE SHEET 892
FOR UNDERDRAIN DETAILS, SEE SHEET 929

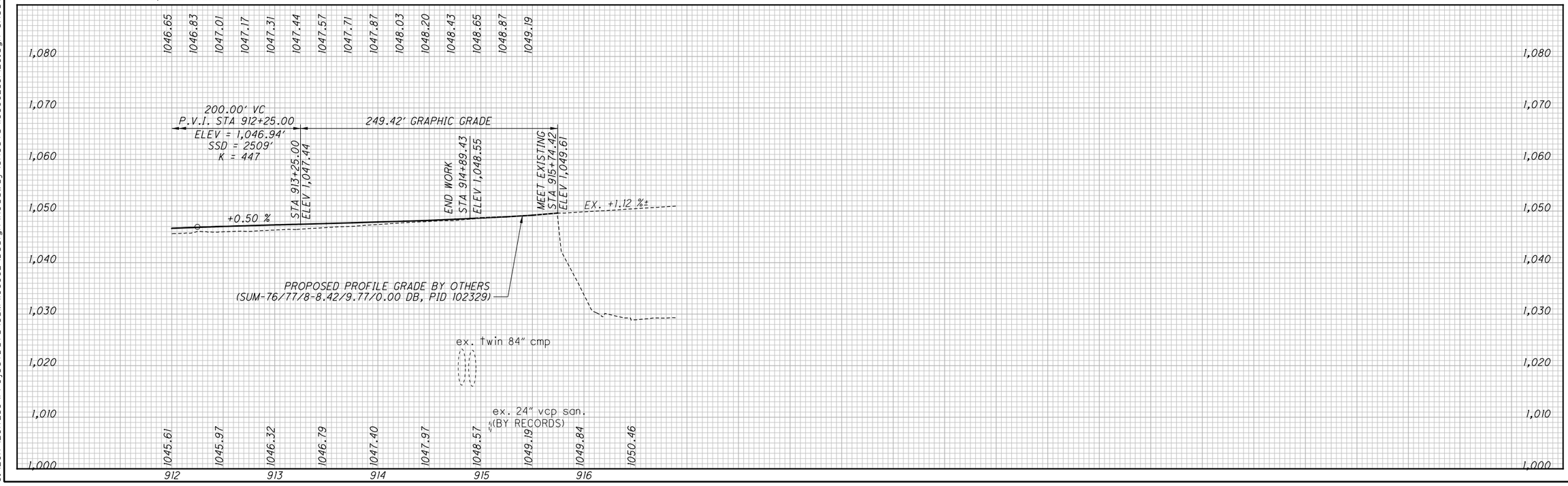


HORIZONTAL SCALE IN FEET
0 25 50 100

CALCULATED LRK
CHECKED PJF

# PLAN AND PROFILE - RAMP D
# STA. 912+00 TO END

SUM-77/277/224
VARIOUS

506
1288

D:\2017\2017258\ProjectData\SUM\106002\Design\Roadway\Sheets\106002_GP120.dgn Sheet1 1/15/2021 10:36:32 AM pfry

| TAPER TABLE | | | | | | | | | |
|---|---|---|---|---|---|---|---|---|---|
| TAPER CODE | BEGINNING STATION | | ENDING STATION | | SIDE | DESCRIPTION | BEGIN WIDTH | END WIDTH | TAPER RATE |
| BP | 71+69.06 | ARL. RAMP D | 72+67.31 | ARL. RAMP D | RT | SHOULDER | 9.93′ | 6.00′ | 25:1 |
| BQ | 71+69.06 | ARL. RAMP D | 74+47.06 | ARL. RAMP D | LT/RT | PAVEMENT | 21.56′ | 16.00′ | 50:1 |

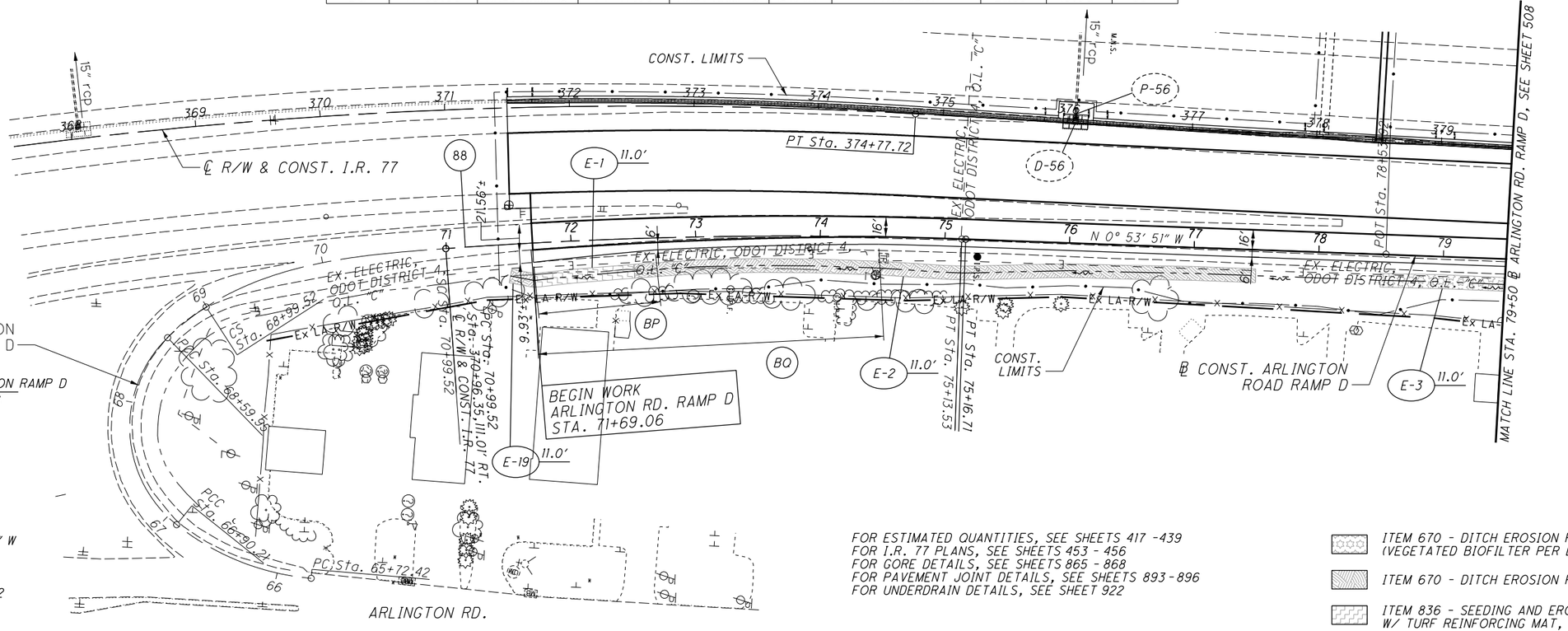


FOR ESTIMATED QUANTITIES, SEE SHEETS 417 -439
FOR I.R. 77 PLANS, SEE SHEETS 453 - 456
FOR GORE DETAILS, SEE SHEETS 865 - 868
FOR PAVEMENT JOINT DETAILS, SEE SHEETS 893-896
FOR UNDERDRAIN DETAILS, SEE SHEET 922

ITEM 670 - DITCH EROSION PROTECTION (VEGETATED BIOFILTER PER DETAIL ON SHEET 55)

ITEM 670 - DITCH EROSION PROTECTION

ITEM 836 - SEEDING AND EROSION CONTROL W/ TURF REINFORCING MAT, TYPE I

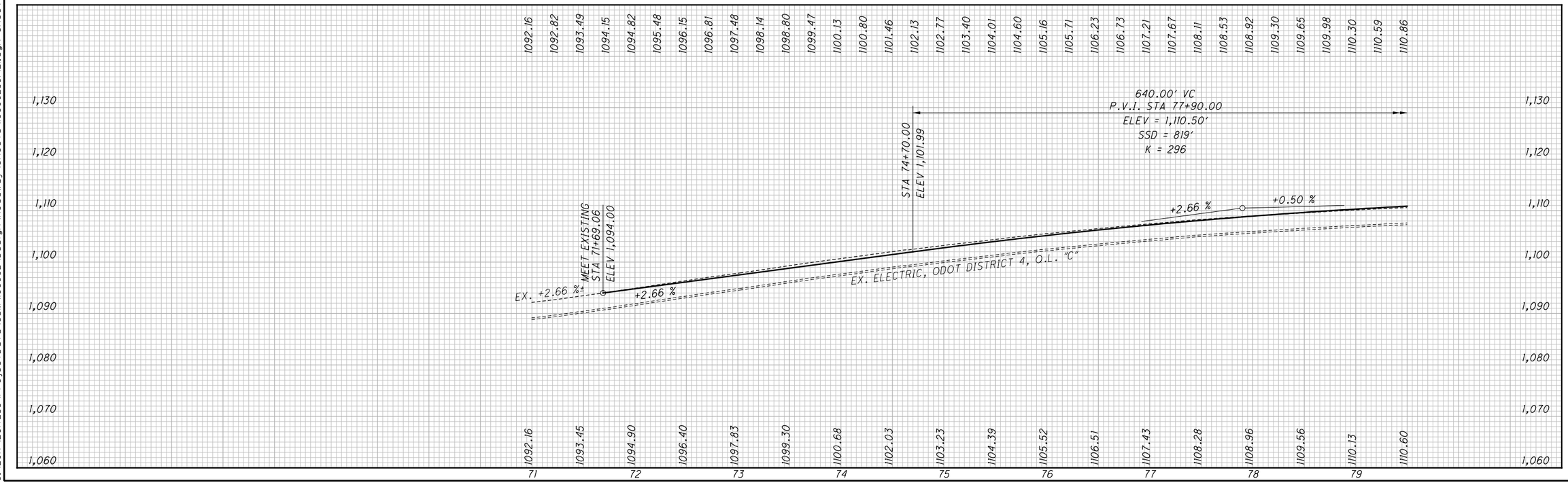


HORIZONTAL SCALE IN FEET
0 25 50 100

CALCULATED LRK
CHECKED PJF

PLAN AND PROFILE- ARLINGTON RD. RAMP D
BEGIN TO STA. 79+50

SUM-77/277/224
VARIOUS

507
1288

0:\2017\2017258\ProjectData\SUM\06002\Design\Roadway\Sheets\106002_GPI21.dgn Sheet1 1/14/2021 8:07 PM pfry

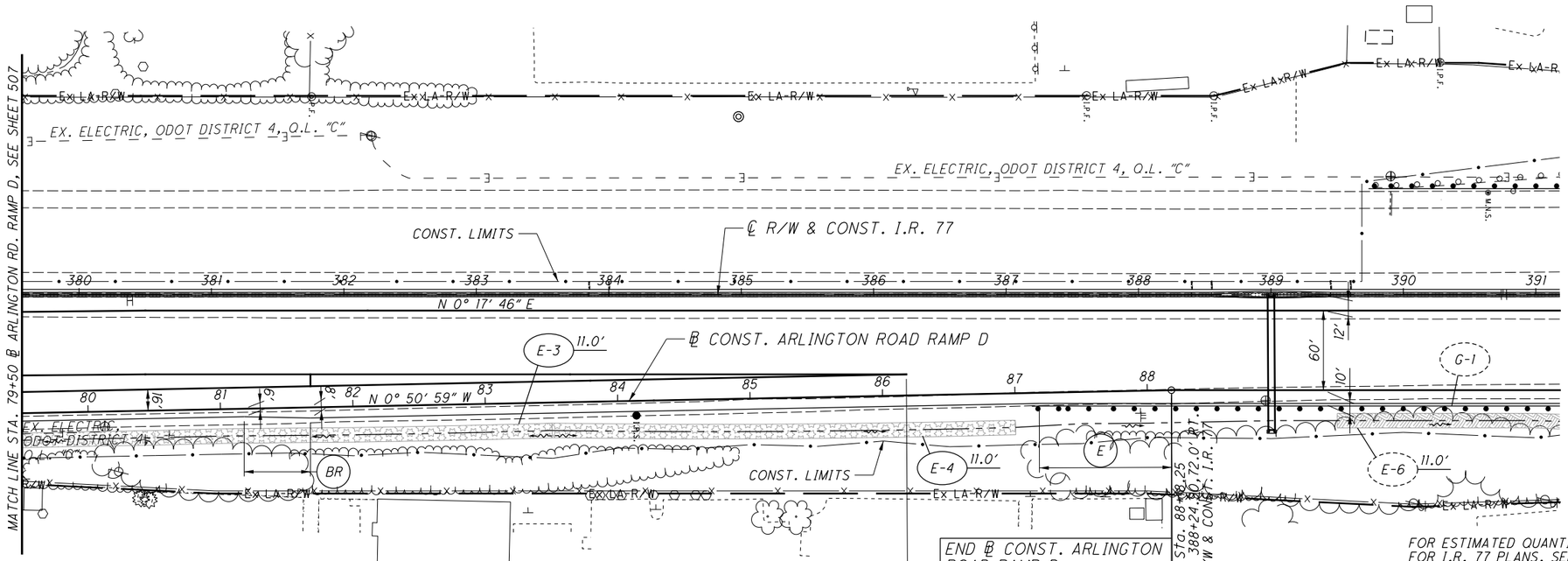


FOR ESTIMATED QUANTITIES, SEE SHEETS 417 -439
FOR I.R. 77 PLANS, SEE SHEETS 453 - 456
FOR GORE DETAILS, SEE SHEETS 865 - 868
FOR PAVEMENT JOINT DETAILS, SEE SHEETS 893-896
FOR UNDERDRAIN DETAILS, SEE SHEET 922

ITEM 670 - DITCH EROSION CONTROL

ITEM 670 - DITCH EROSION PROTECTION (VEGETATED BIOFILTER PER DETAIL ON SHEET 55)

TAPER TABLE

| TAPER CODE | BEGINNING STATION | | ENDING STATION | | SIDE | DESCRIPTION | BEGIN WIDTH | END WIDTH | TAPER RATE |
|---|---|---|---|---|---|---|---|---|---|
| D | 86+18.37 | ARL. RAMP D | 88+18.25 | ARL. RAMP D | RT | PAVEMENT | 16.00' | 12.00' | 50:1 |
| E | 87+18.15 | ARL. RAMP D | 88+18.25 | ARL. RAMP D | RT | SHOULDER | 8.00' | 10.00' | 50:1 |
| BR | 81+17.83 | ARL. RAMP D | 81+67.80 | ARL. RAMP D | RT | SHOULDER | 6.00' | 8.00' | 25:1 |

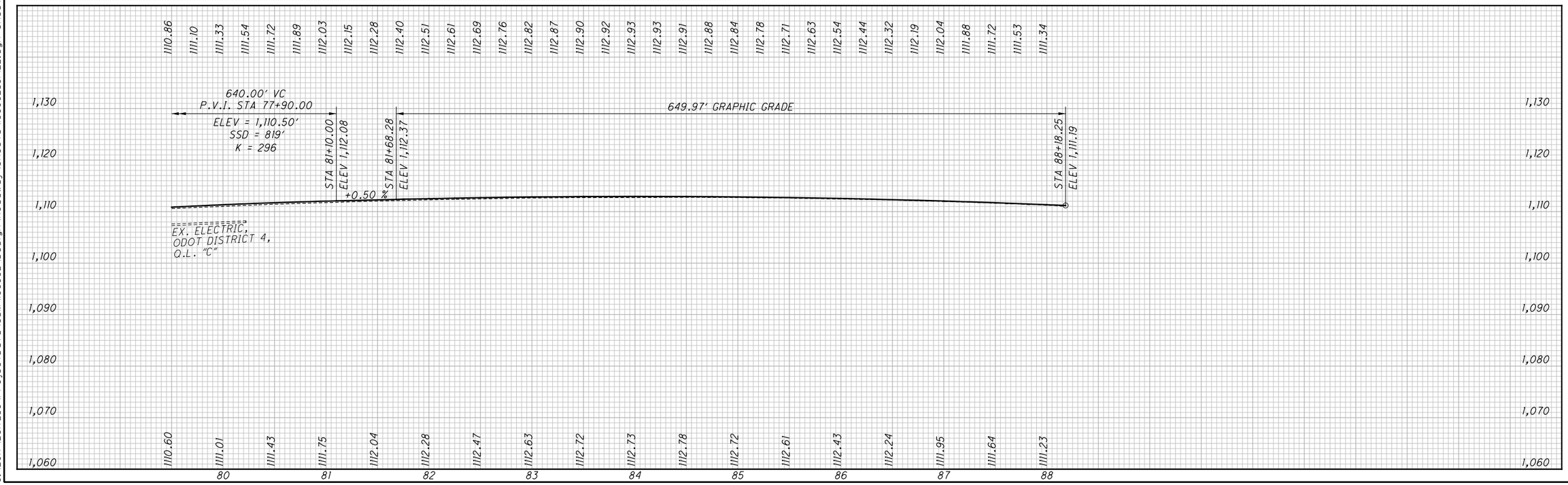


N

HORIZONTAL SCALE IN FEET
0 25 50 100

CALCULATED LRK
CHECKED PJF

# PLAN AND PROFILE - ARLINGTON RD. RAMP D STA. 79+50 TO END

SUM-77/277/224
VARIOUS

508
1288

0:\2017\20172581\ProjectData\SUM\106002\Design\Roadway\Sheets\106002_GP122.dgn Sheet 1/14/2021 2:19:29 PM pfry

| TAPER TABLE | | | | | | | | |
|---|---|---|---|---|---|---|---|---|
| TAPER CODE | BEGINNING STATION | | ENDING STATION | | SIDE | DESCRIPTION | BEGIN WIDTH | END WIDTH | TAPER RATE |
| BS | 24+63.23 | WARNER RD. | 24+70.60 | WARNER RD. | LT | SHOULDER | 4.00′ | 2.95′ | 7:1 |
| BT | 25+03.51 | WARNER RD. | 25+13.44 | WARNER RD. | RT | SHOULDER | 4.00′ | 5.99′ | 5:1 |
| BU | 26+07.65 | WARNER RD. | 26+88.48 | WARNER RD. | LT | SHOULDER | 2.95′ | 1.57′ | 59:1 |
| BV | 27+16.82 | WARNER RD. | 27+70.00 | WARNER RD. | RT | SHOULDER | 8.53′ | 6.40′ | 25:1 |
| BW | 27+38.16 | WARNER RD. | 27+48.86 | WARNER RD. | LT | SHOULDER | 1.57′ | 2.00′ | 25:1 |
| CA | 26+07.65 | WARNER RD. | 27+16.82 | WARNER RD. | RT | SHOULDER | 5.99′ | 8.53′ | 43:1 |
| CC | 24+50.00 | WARNER RD. | 24+66.00 | WARNER RD. | LT | PAVEMENT | 12.46′ | 12.00′ | 35:1 |
| CD | 24+50.00 | WARNER RD. | 24+89.00 | WARNER RD. | RT | PAVEMENT | 10.88′ | 12.00′ | 35:1 |
| CE | 27+53.50 | WARNER RD. | 27+70.00 | WARNER RD. | LT | PAVEMENT | 12.00′ | 11.73′ | 61:1 |
| CF | 27+53.50 | WARNER RD. | 27+70.00 | WARNER RD. | RT | PAVEMENT | 12.00′ | 11.53′ | 35:1 |

HORIZONTAL SCALE IN FEET (0, 10, 20, 40)

CALCULATED LRK CHECKED PJF

℄ CONST. WARNER ROAD (CH 156)

℄ R/W WARNER ROAD (CH 156)

BEGIN WORK WARNER ROAD STA. 24+40.09

CONST. LIMITS

PT Sta. 108+48.22

PC Sta. 26+07.65

PT Sta. 111+17.90

END WORK WARNER ROAD STA. 28+45.93

PT STA. 29+31.09

S 74° 56′ 15″ E

S 76° 16′ 11″ E

S 81° 38′ 30″ E

EX. 24″ RCP SANITARY, SUMMIT COUNTY, O.L. "C"

EX. 12″ WATER, CITY OF AKRON, O.L. "C"

EX. 4″ GAS, DOMINION ENERGY OHIO, O.L. "C"

(TO BE RELOCATED BY OWNER)

BTA, TYPE 1

TYPE T +58.25

TYPE T +46.47

TYPE E +45.93

12″ cmp

15″ rcp

18″ W

ROUNDED END SECTION

CONNECT TO EXISTING GUARDRAIL, PER MGS-4.3 STA. 28+21.81

EX. ELECTRIC, ODOT DISTRICT 4, O.L.

STRUCTURE NO. SUM-77-0802L

STRUCTURE NO. SUM-77-0802R

PROP. NOISE BARRIER C2

℄ R/W & CONST. I.R. 77

N 3° 12′ 18″ W

℄ R/W WARNER ROAD (CH 156)
P.I. Sta. 106+34.16
Δ = 4° 15′ 45″ (RT)
Dc = 0° 59′ 42″
R = 5,757.59′
T = 214.27′
L = 428.33′
E = 3.99′
C = 428.24′
C.B. = S 77° 44′ 24″ E
P.C. Sta. 104+19.89
P.T. Sta. 108+48.22

℄ CONST. WARNER ROAD (CH 156)
P.I. Sta. 27+69.62
Δ = 7° 50′ 44″ (LT)
Dc = 2° 25′ 32″
R = 2,362.12′
T = 161.98′
L = 323.44′
E = 5.55′
C = 323.19′
C.B. = S 80° 11′ 33″ E
D.S. = 45 MPH
$e_{max}$ = NC
P.C. STA. 26+07.65
P.T. STA. 29+31.09

FOR ESTIMATED QUANTITIES, SEE SHEETS 417 - 439
FOR I.R. 77 PLANS, SEE SHEET 461
FOR UNDERDRAIN DETAILS, SEE SHEET 932
FOR STRUCTURE PLANS, SEE SHEETS 1155 - 1180

EX-1
STA. 24+64.02, 22.75′ RT
EX. CB, GRATE ELEV 1003.59
EX. 12″ CMP W 1000.59
EX. 12″ CMP N 1000.44
6″ UD (W) 1001.59

SJ-1
STA. 24+75.22, 6.19 LT
SAN. MH ADJUSTED TO GRADE, AS PER PLAN
PROP. RIM ELEV 1005.09
EX. SAN MH, GRATE ELEV 1005.12
EX. 24″ RCP W 991.41
EX. 24″ RCP E 991.41

VERT. CLEARANCE
REQUIRED = 14.5′
SUM-77-0802R EXIST. = 14.20′
SUM-77-0802R PROP. = 14.64′
SUM-77-0802L EXIST. = 14.43′
SUM-77-0802L PROP. = 14.55′

SJ-2
STA. 27+24.75, 4.18 LT
SAN. MH ADJUSTED TO GRADE, AS PER PLAN
PROP. RIM ELEV 1006.75
EX. SAN MH, GRATE ELEV 1006.96
EX. 24″ RCP W 990.92
EX. 24″ RCP E 990.92

MEET EXISTING P.V.I. STA 24+50.00 ELEV = 1,005.13

MEET EXISTING P.V.I. STA 27+70.00 ELEV = 1,007.65

EX. +0.63 %±

+0.25 %

+0.35 %

+0.35 %

+1.60 %

+1.60 %

EX. +1.06 %±

P.V.I. STA 25+20.00 ELEV = 1,005.31 (NO VERTICAL CURVE)

STA 25+85.00 ELEV 1,005.54

STA 27+20.00 ELEV 1,006.86

135.00′ VC
P.V.I. STA 26+52.50
ELEV = 1,005.77′
K = 108

ex. 12″ cmp

ex. 24″ cmp

1,005.13 1,005.20 1,005.26 1005.33 1005.42 1005.50 1005.60 1005.75 1005.96 1006.22 1006.55 1006.93 1007.33

1004.82 1005.13 1005.43 1005.77 1006.13 1006.60 1006.96 1007.48 1007.91

24 25 26 27 28

1,025 1,020 1,015 1,010 1,005 1,000 995 990 985

# PLAN AND PROFILE - WARNER ROAD
# STA. 23+75.79 TO STA. 28+70.89

SUM-77 / 277 / 224
VARIOUS

509
1288

0:\2017\2017258\ProjectData\SUM\06002\Design\Roadway\Sheets\06002_GP050.dgn Sheet 1/14/2021 8:14:50 AM pfry

LEGEND

(##) - SEE SHEET NUMBER

0:\2017\2017258\ProjectData\SUM\06002\Design\Roadway\Sheets\06002_XL001.dgn Sheet 1/11/2021 6:43 PM pfry

HORIZONTAL SCALE IN FEET
0 50 100 200

CALCULATED ZJP
CHECKED PJF

# CROSS SECTION LAYOUT SHEET
## BEGIN TO STA. 396+00

SUM-77/277/224
VARIOUS

510
1288

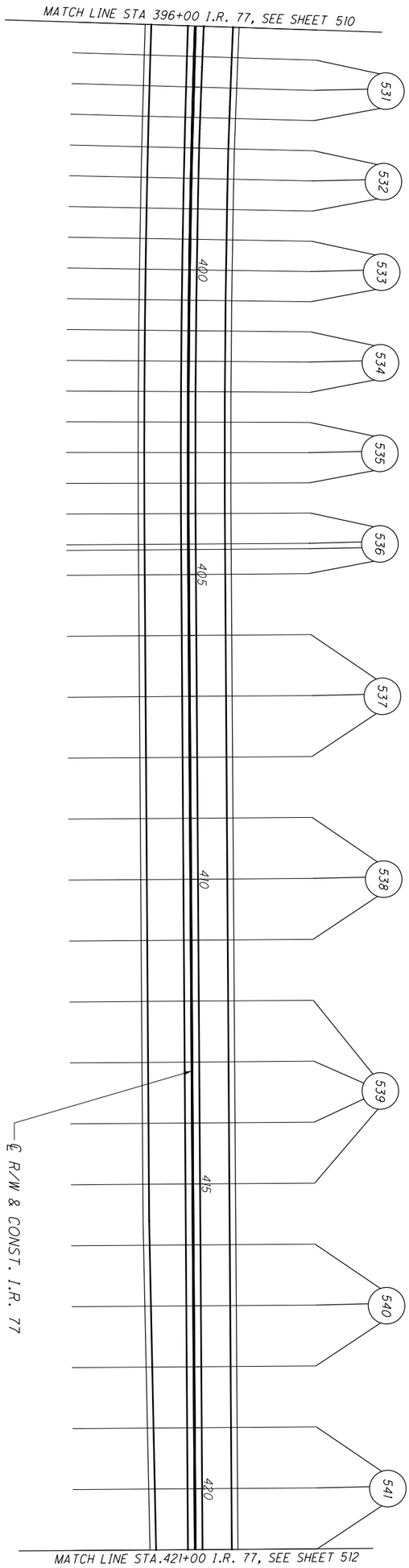


LEGEND

(##) - SEE SHEET NUMBER

| | | | | |
|---|---|---|---|---|
| 511 / 1288 | SUM-77/277/224<br>VARIOUS | CROSS SECTION LAYOUT SHEET<br>STA. 396+00 TO STA. 421+00 | CALCULATED ZJP<br>CHECKED PJF | 0 100<br>50 200<br>HORIZONTAL SCALE IN FEET |

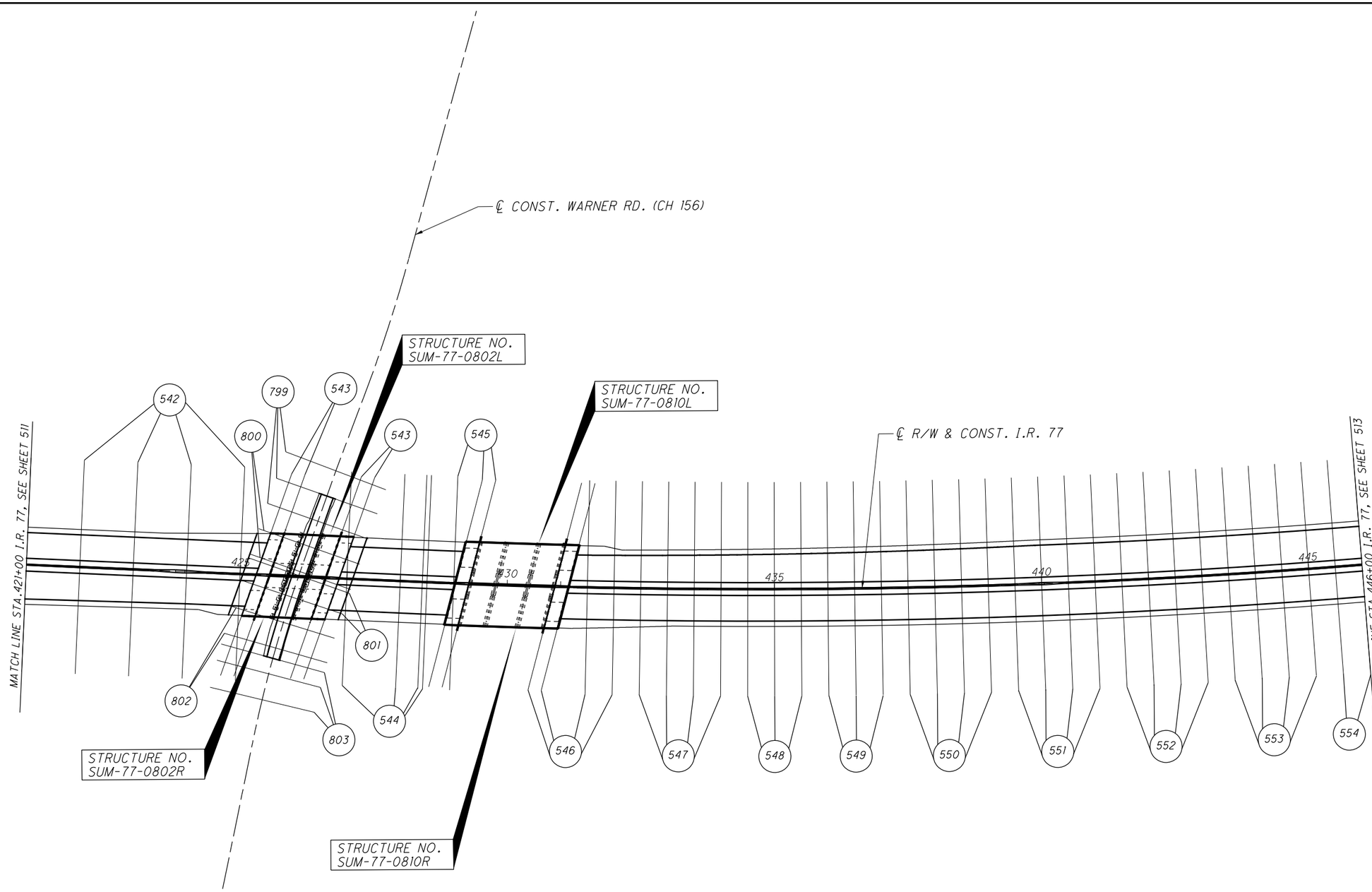


LEGEND

(##) - SEE SHEET NUMBER

N

0 50 100 200 HORIZONTAL SCALE IN FEET

CALCULATED ZJP | CHECKED PJF

# CROSS SECTION LAYOUT SHEET
## STA. 421+00 TO STA. 446+00

SUM-77/277/224
VARIOUS

512
1288

0:\2017\2017258\ProjectData\SUM\106002\Design\Roadway\Sheets\106002_XL003.dgn Design 1/11/2021 2:17:01 PM pfry

LEGEND

(##) - SEE SHEET NUMBER

0 50 100 200
HORIZONTAL SCALE IN FEET

CALCULATED ZJP
CHECKED PJF

# CROSS SECTION LAYOUT SHEET
## STA. 446+00 I.R. 77 TO STA. 471+00 NB I.R. 77

SUM-77/277/224
VARIOUS

513
1288

O:\2017\20172581\ProjectData\SUM\106002\Design\Roadway\Sheets\106002_XL004.dgn Design 1/11/2021 2:17:08 PM pfry

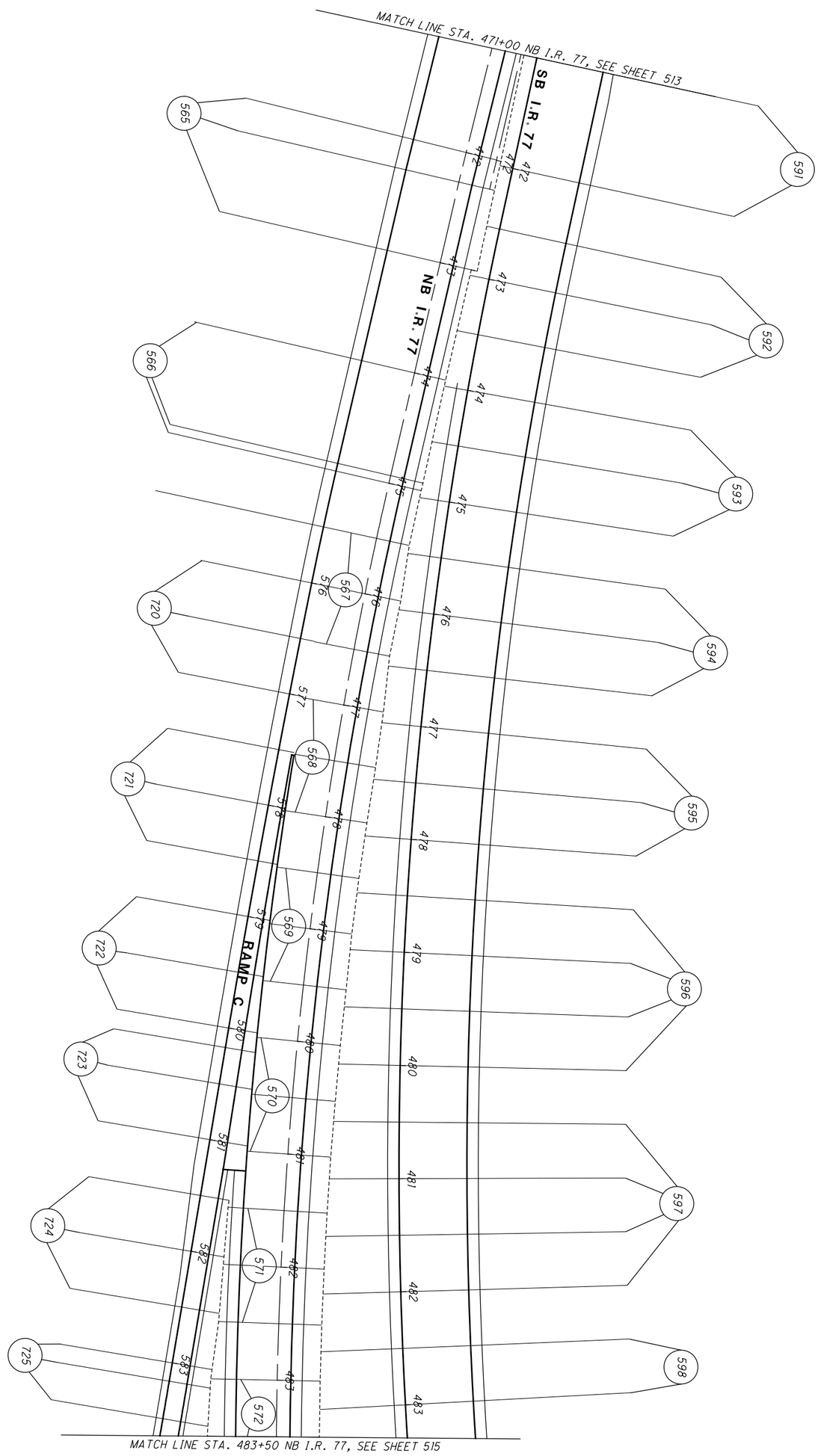


LEGEND

(##) - SEE SHEET NUMBER

------ MATCHLINE CROSS SECTION

| | | | | |
|---|---|---|---|---|
| 514 / 1288 | SUM-77 / 277 / 224<br>VARIOUS | CROSS SECTION LAYOUT SHEET<br>STA. 471+00 TO STA. 483+50 | CALCULATED ZJP<br>CHECKED PJF | 0 50<br>25 100<br>HORIZONTAL SCALE IN FEET |

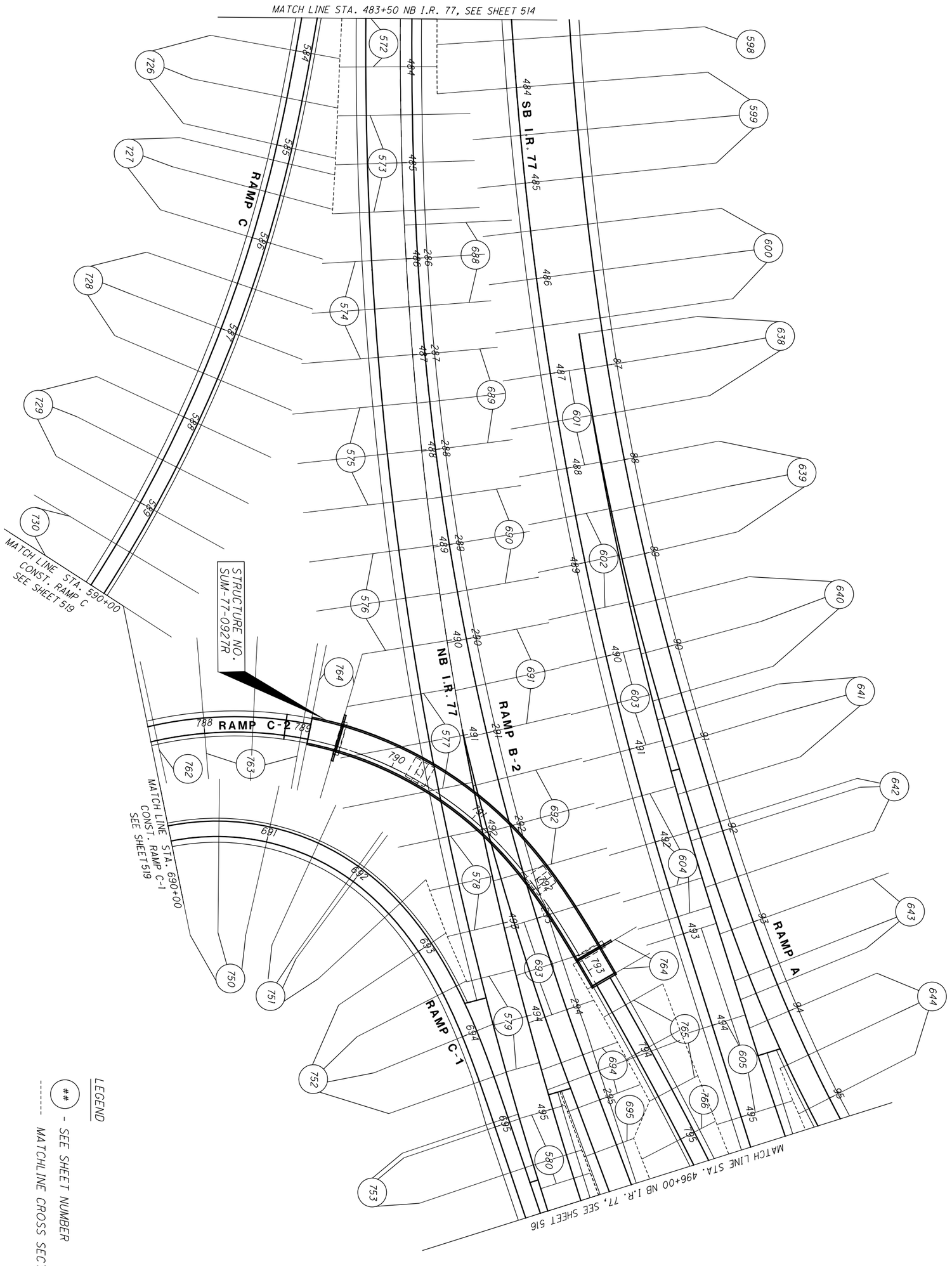


| | | | | |
|---|---|---|---|---|
| 515 / 1288 | SUM-77 / 277 / 224<br>VARIOUS | CROSS SECTION LAYOUT SHEET<br>STA. 483+50 TO STA. 496+00 | CALCULATED ZJP<br>CHECKED PJF | 0 50<br>25 100<br>HORIZONTAL SCALE IN FEET |

MATCH LINE STA. 101+50
CONST. RAMP A
SEE SHEET 518

MATCH LINE STA. 250+00
CONST. I.R. 277
SEE SHEET 518

RAMP A

I.R. 277 / U.S. 224

RAMP B-1

SB I.R. 77

RAMP C-2

RAMP B-2

NB I.R. 77

MATCH LINE STA. 496+00 NB I.R. 77, SEE SHEET 515

MATCH LINE STA. 506+50 NB I.R. 77, SEE SHEET 517

STRUCTURE NO.
SUM-277-0369
(NO WORK)

RAMP D

MATCH LINE STA. 258+00
CONST. I.R. 277
SEE SHEET 519

MATCH LINE STA. 899+50
CONST. RAMP D
SEE SHEET 519

LEGEND

(##) - SEE SHEET NUMBER

------ MATCHLINE CROSS SECTION

HORIZONTAL SCALE IN FEET
0 25 50 100

CALCULATED ZJP
CHECKED PJF

# CROSS SECTION LAYOUT SHEET
# STA. 496+00 TO STA. 506+50

SUM-77 / 277 / 224
VARIOUS

516
1288

D:\2017\20172581\ProjectData\SUM\06002\Design\Roadway\Sheets\06002_XL007.dgn Design 1/11/2021 2:17:14 PM pfry

MATCH LINE STA. 11+50 CONST. RAMP B-2
SEE SHEET 518

MATCH LINE STA. 210+00
CONST. RAMP B
SEE SHEET 518

RAMP B-1

RAMP B-2

RAMP B

RAMP D

SB I.R. 77

NB I.R. 77

MATCH LINE STA. 506+50 NB I.R. 77, SEE SHEET 516

STRUCTURE NO.
SUM-77-0973L
(NO WORK)

STRUCTURE NO.
SUM-77-0973R
(NO WORK)

A STRUCTURE NO.
SUM-77-0958L
(NO WORK)

LEGEND

(##) - SEE SHEET NUMBER

------- MATCHLINE CROSS SECTION

HORIZONTAL SCALE IN FEET
0 25 50 100

CALCULATED ZJP
CHECKED PJF

# CROSS SECTION LAYOUT SHEET
# STA. 506+50 TO END

SUM-77/277/224
VARIOUS

517
1288

O:\2017\20172581\ProjectData\SUM\106002\Design\Roadway\Sheets\106002_XL008.dgn Design 1/11/2021 2:17:16 PM pfry

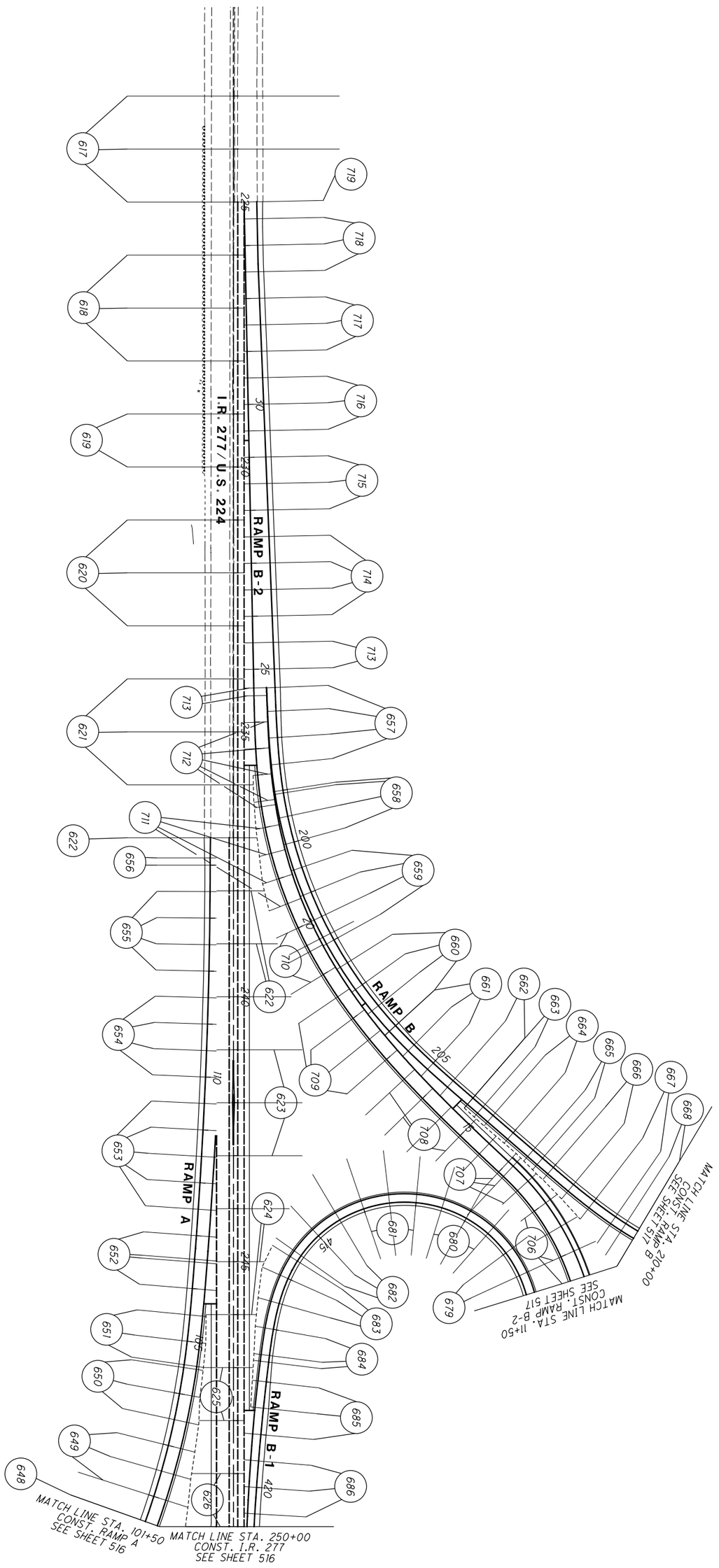


LEGEND

(##) - SEE SHEET NUMBER

------ MATCHLINE CROSS SECTION

| | | | | |
|---|---|---|---|---|
| 518 / 1288 | SUM-77/277/224<br>VARIOUS | CROSS SECTION LAYOUT SHEET<br>BEGIN TO STA. 250+00 I.R. 277/U.S. 224 | CALCULATED ZJP<br>CHECKED PJF | 0 100<br>25 100<br>HORIZONTAL SCALE IN FEET |

MATCH LINE STA. 899+50
CONST. RAMP D
SEE SHEET 516

MATCH LINE STA. 258+00
CONST. I.R. 277
SEE SHEET 516

RAMP D

I.R. 277 / U.S. 224

STRUCTURE NO.
SUM-224-1061
(NO WORK)

RAMP C-1

RAMP C-2

RAMP C

MATCH LINE STA. 690+00
CONST. RAMP C-1
SEE SHEET 515

MATCH LINE STA. 590+00
CONST. RAMP C
SEE SHEET 515

LEGEND

(##) - SEE SHEET NUMBER

------- MATCHLINE CROSS SECTION

N

0 50 100 200
HORIZONTAL
SCALE IN FEET

CALCULATED ZJP
CHECKED PJF

# CROSS SECTION LAYOUT SHEET
## STA. 258+00 TO END

SUM-77 / 277 / 224
VARIOUS

519
1288

D:\2017\2017258\Project Data\SUM\106002\Design\Roadway\Sheets\106002_XL010.dgn Design 1/11/2021 2:17:20 PM pfry

| SEEDING | |
|---|---|
| END WIDTH | SQ. YDS. |
| | 28 |
| 10 | |
| | 28 |

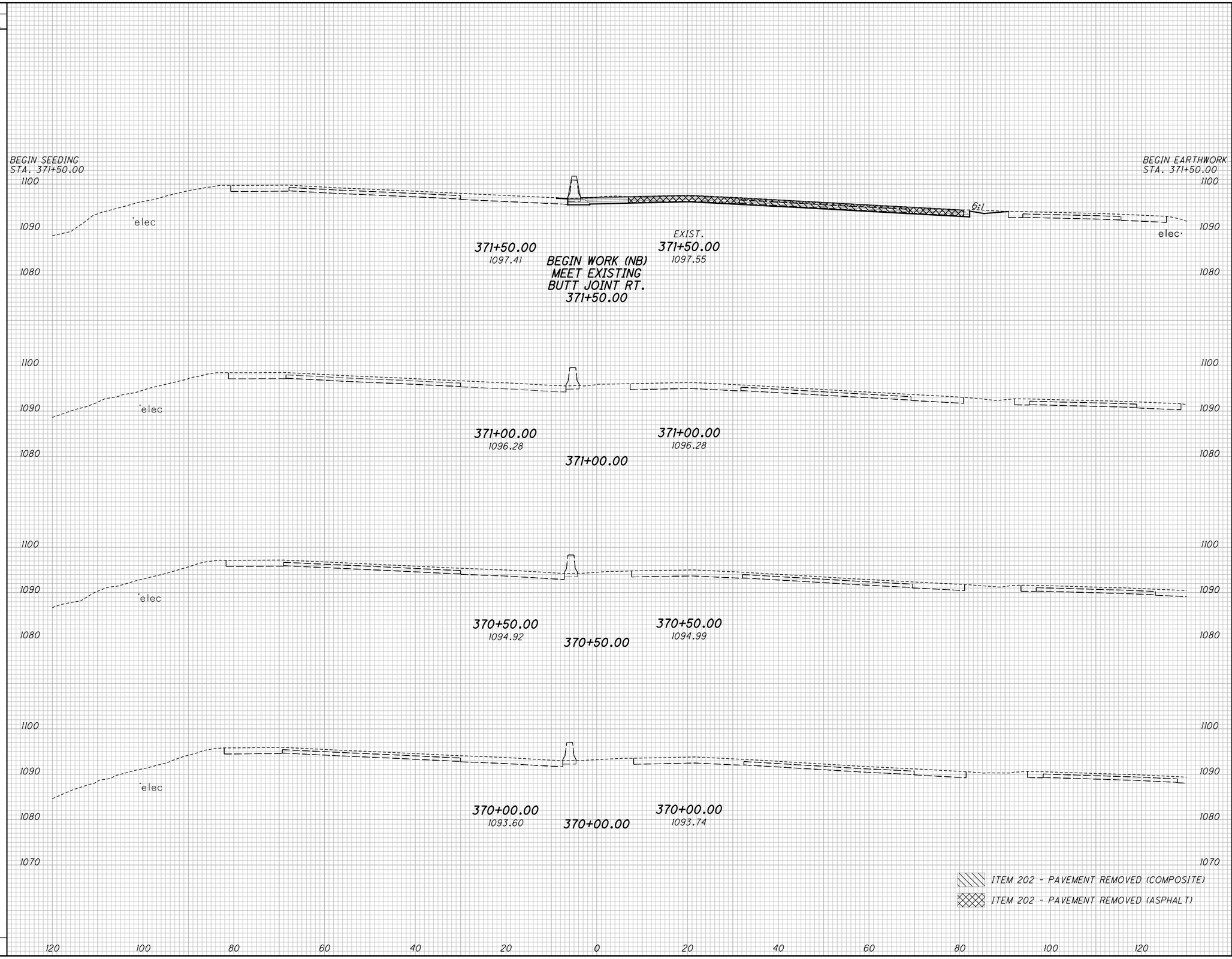


| END AREA | |
|---|---|
| CUT | FILL |
| 38 | 0 |
| | |

| VOLUME | |
|---|---|
| CUT | FILL |
| 57 | 0 |
| | |

CALCULATED CJC
CHECKED PJF

# CROSS SECTIONS - I.R. 77
## STA. 370+00.00 TO STA. 371+50.00

SUM-77 / 277 / 224
VARIOUS



O:\2017\20172581Project Data\SUM\106002\Design\Roadway\Sheets\106002_XS001.dgn Sheet 1/15/2021 9:15:37 AM pfry

| SEEDING | |
|---|---|
| END WIDTH | SQ. YDS. |
| | 0 |
| 0 | |
| | 0 |
| | 0 |
| 0 | |
| | 0 |
| 0 | |
| | 0 |
| 0 | |
| | 0 |

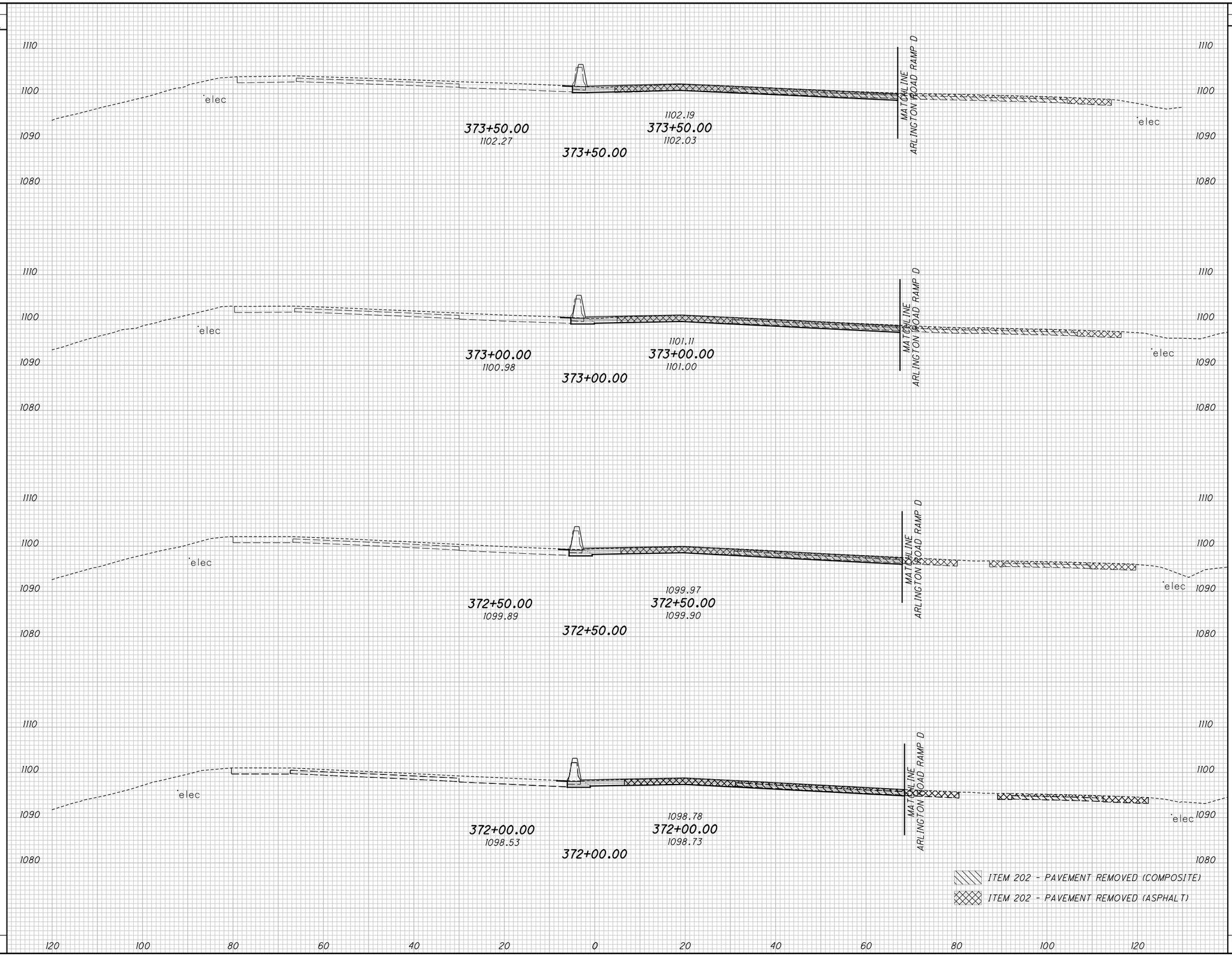


| END AREA | |
|---|---|
| CUT | FILL |
| 21 | 1 |
| 23 | 0 |
| 25 | 0 |
| 24 | 0 |
| 45 | 0 |
| 169 | 5 |

| VOLUME | |
|---|---|
| CUT | FILL |
| 39 | 4 |
| 41 | 1 |
| 44 | 0 |
| 45 | 0 |

CALCULATED CJC
CHECKED PJF

# CROSS SECTIONS - I.R. 77
# STA. 372+00.00 TO STA. 373+50.00

SUM-77 / 277 / 224
VARIOUS

521
1288

O:\2017\2017258\ProjectData\SUM\106002\Design\Roadway\Sheets\106002_XS001.dgn Sheet 1/15/2021 9:55:51 AM pfry

| SEEDING | |
|---|---|
| END WIDTH | SQ. YDS. |
| 0 | 0 |
| 0 | 0 |
| 0 | 0 |
| 0 | 0 |
| 0 | 0 |

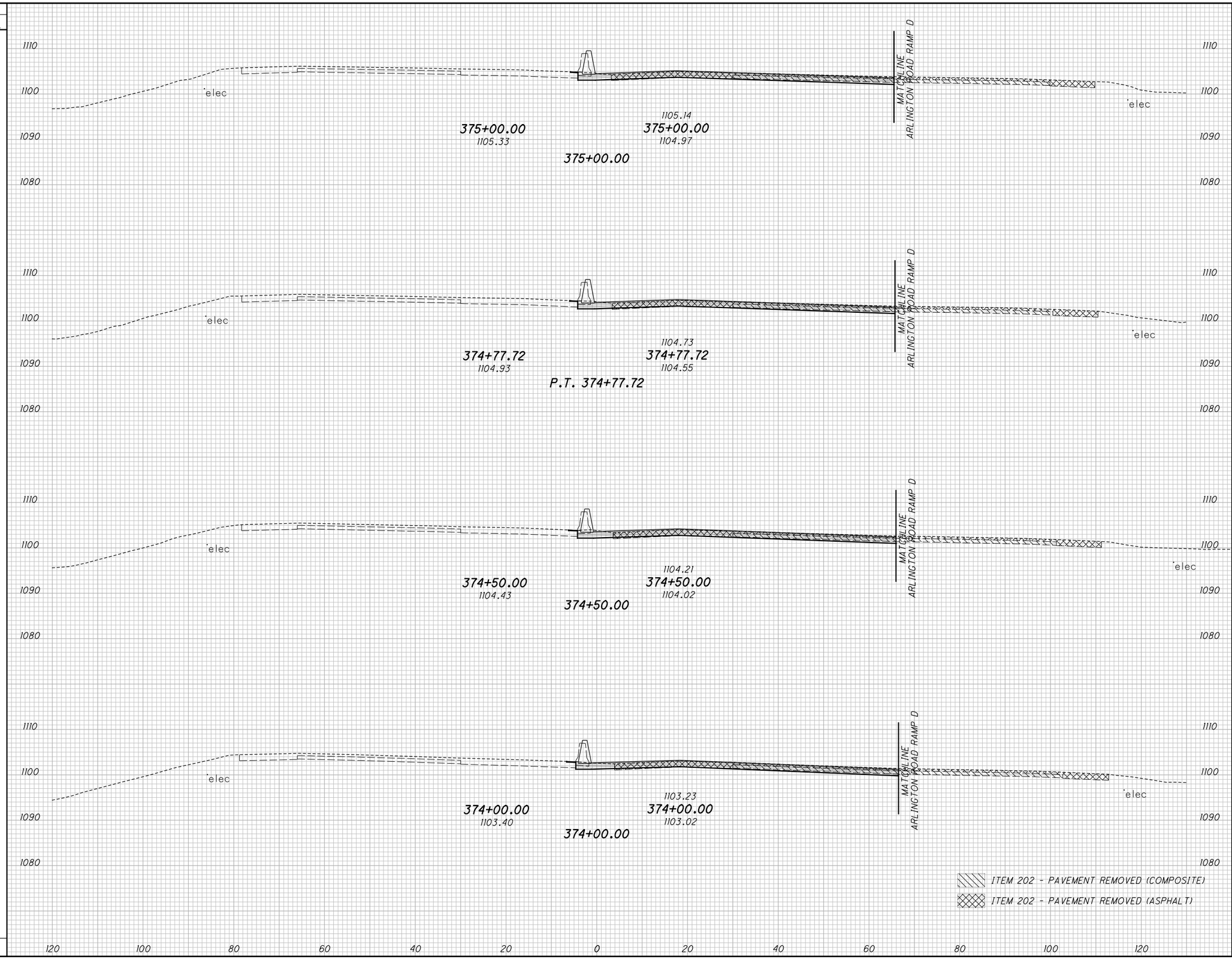


| END AREA | |
|---|---|
| CUT | FILL |
| 21 | 2 |
| 21 | 3 |
| 21 | 3 |
| 21 | 3 |
| | |

| VOLUME | |
|---|---|
| CUT | FILL |
| 78 | 4 |
| 17 | 2 |
| 22 | 3 |
| 39 | 6 |
| 156 | 15 |

CALCULATED CJC
CHECKED PJF

# CROSS SECTIONS - I.R. 77
## STA. 374+00.00 TO STA. 375+00.00

SUM-77 / 277 / 224
VARIOUS

522
1288

O:\2017\2017258\ProjectData\SUM\06002\Design\Roadway\Sheets\06002_XS001.dgn Sheet 1/15/2021 9:55:54 AM pfry

| SEEDING | |
|---|---|
| END WIDTH | SQ. YDS. |
| | 0 |
| | 0 |
| | 0 |
| | 0 |
| | 0 |
| | 0 |
| | 0 |

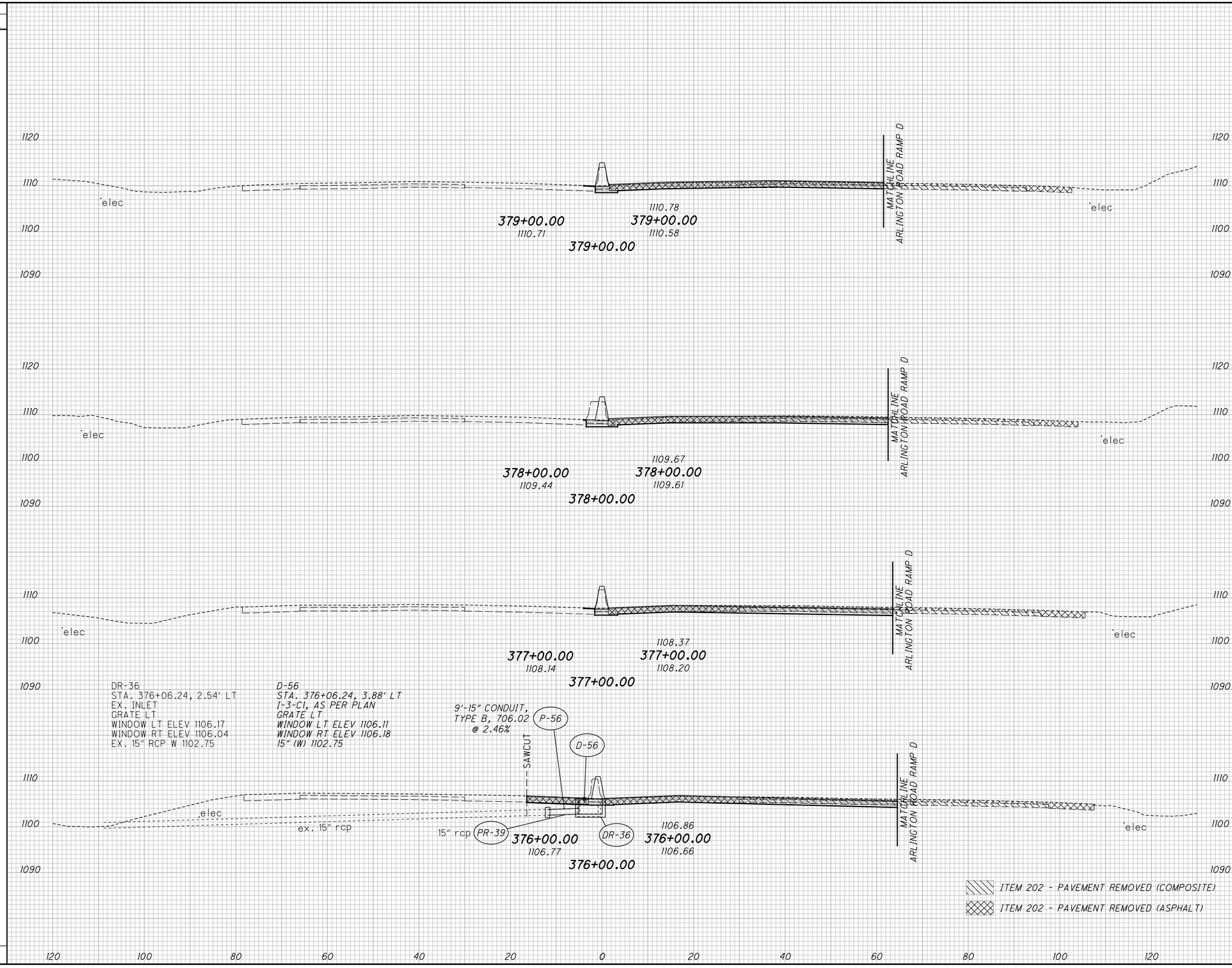


| END AREA | | VOLUME | |
|---|---|---|---|
| CUT | FILL | CUT | FILL |
| | | 22 | 9 |
| 7 | 1 | | |
| | | 54 | 2 |
| 22 | 0 | | |
| | | 87 | 0 |
| 25 | 0 | | |
| | | 85 | 0 |
| 21 | 0 | | |
| | | 248 | 11 |

CALCULATED CJC
CHECKED PJF

# CROSS SECTIONS - I.R. 77
## STA. 376+00.00 TO STA. 379+00.00

SUM-77 / 277 / 224
VARIOUS

523
1288

0:\2017\2017258\Project Data\SUM\106002\Design\Roadway\Sheets\106002_XS001.dgn Sheet 1/15/2021 9:55:57 AM pfry

| SEEDING END WIDTH | SEEDING SQ. YDS. | END AREA CUT | END AREA FILL | VOLUME CUT | VOLUME FILL |
|---|---|---|---|---|---|
| 0 | 0 | | | | |
| | | | | 24 | 4 |
| 0 | | 7 | 1 | | |
| | 0 | | | 24 | 4 |
| 0 | | 6 | 1 | | |
| | 0 | | | 22 | 6 |
| 0 | | 6 | 2 | | |
| | 0 | | | 20 | 11 |
| 0 | | 5 | 4 | | |
| | 0 | | | 90 | 25 |

CALCULATED CJC
CHECKED PJF

**CROSS SECTIONS - I.R. 77**
**STA. 380+00.00 TO STA. 383+00.00**

**SUM-77 / 277 / 224**
**VARIOUS**

524
1288

383+00.00
1112.83 elec
1113.17
383+00.00
1112.97
MATCHLINE ARLINGTON ROAD RAMP D
383+00.00

382+00.00
1112.74 elec
1112.88
382+00.00
1112.53
MATCHLINE ARLINGTON ROAD RAMP D
382+00.00

381+00.00
1112.20 elec
1112.38
381+00.00
1112.09
MATCHLINE ARLINGTON ROAD RAMP D
381+00.00

380+00.00
1111.35 elec
1111.68
380+00.00
1111.41
MATCHLINE ARLINGTON ROAD RAMP D
elec
380+00.00

ITEM 202 - PAVEMENT REMOVED (COMPOSITE)
ITEM 202 - PAVEMENT REMOVED (ASPHALT)

1120 1110 1100 1130 1120 1110 1100 1130 1120 1110 1100 1130 1120 1110 1100 1090

120 100 80 60 40 20 0 20 40 60 80 100 120

O:\2017\2017258\ProjectData\SUM\06002\Design\Roadway\Sheets\06002_XS001.dgn Sheet 1/15/2021 9:6:01 AM pfry

| SEEDING | |
|---|---|
| END WIDTH | SQ. YDS. |
| | 0 |
| 0 | |
| | 0 |
| 0 | |
| | 0 |
| 0 | |
| | 0 |
| 0 | |
| | 0 |




| END AREA | |
|---|---|
| CUT | FILL |
| | |
| 11 | 0 |
| | |
| 8 | 1 |
| | |
| 7 | 1 |
| | |
| 6 | 1 |
| | |

| VOLUME | |
|---|---|
| CUT | FILL |
| 39 | 0 |
| | |
| 35 | 2 |
| | |
| 28 | 4 |
| | |
| 24 | 4 |
| | |
| 126 | 10 |

CALCULATED CJC
CHECKED PJF

# CROSS SECTIONS - I.R. 77
# STA. 384+00.00 TO STA. 387+00.00

SUM-77 / 277 / 224
VARIOUS

525
1288

D:\2017\2017258\ProjectData\SUM\06002\Design\Roadway\Sheets\06002_XS001.dgn Sheet 1/15/2021 9:16:05 AM pfry

| SEEDING END WIDTH | SEEDING SQ. YDS. |
|---|---|
| | 272 |
| 22 | |
| | 256 |
| 24 | |
| | 209 |
| 26 | |
| 0 | |
| | 0 |
| 0 | |
| | 737 |




| END AREA CUT | END AREA FILL | VOLUME CUT | VOLUME FILL |
|---|---|---|---|
| | | 96 | 9 |
| 21 | 4 | | |
| | | 67 | 13 |
| 15 | 3 | | |
| | | 46 | 4 |
| AH 18 | 0 | | |
| BK 10 | 0 | | |
| | | 9 | 0 |
| 10 | 0 | | |
| | | 218 | 26 |

CALCULATED CJC
CHECKED PJF

# CROSS SECTIONS - I.R. 77
## STA. 388+00.00 TO STA. 390+00.00

SUM-77 / 277 / 224
VARIOUS

526
1288

D:\2017\2017258\ProjectData\SUM\06002\Design\Roadway\Sheets\06002_XS001.dgn Sheet 1/15/2021 9:16:08 AM pfry

| SEEDING END WIDTH | SEEDING SQ. YDS. | END AREA CUT | END AREA FILL | VOLUME CUT | VOLUME FILL |
|---|---|---|---|---|---|
| | 306 | | | 136 | 2 |
| 54 | | 67 | 0 | | |
| | 73 | | | 29 | 0 |
| 50 | | 57 | 1 | | |
| 22 | 102 | 30 | 1 | 42 | 1 |
| 27 | | 31 | 1 | | |
| | 481 | | | 207 | 3 |

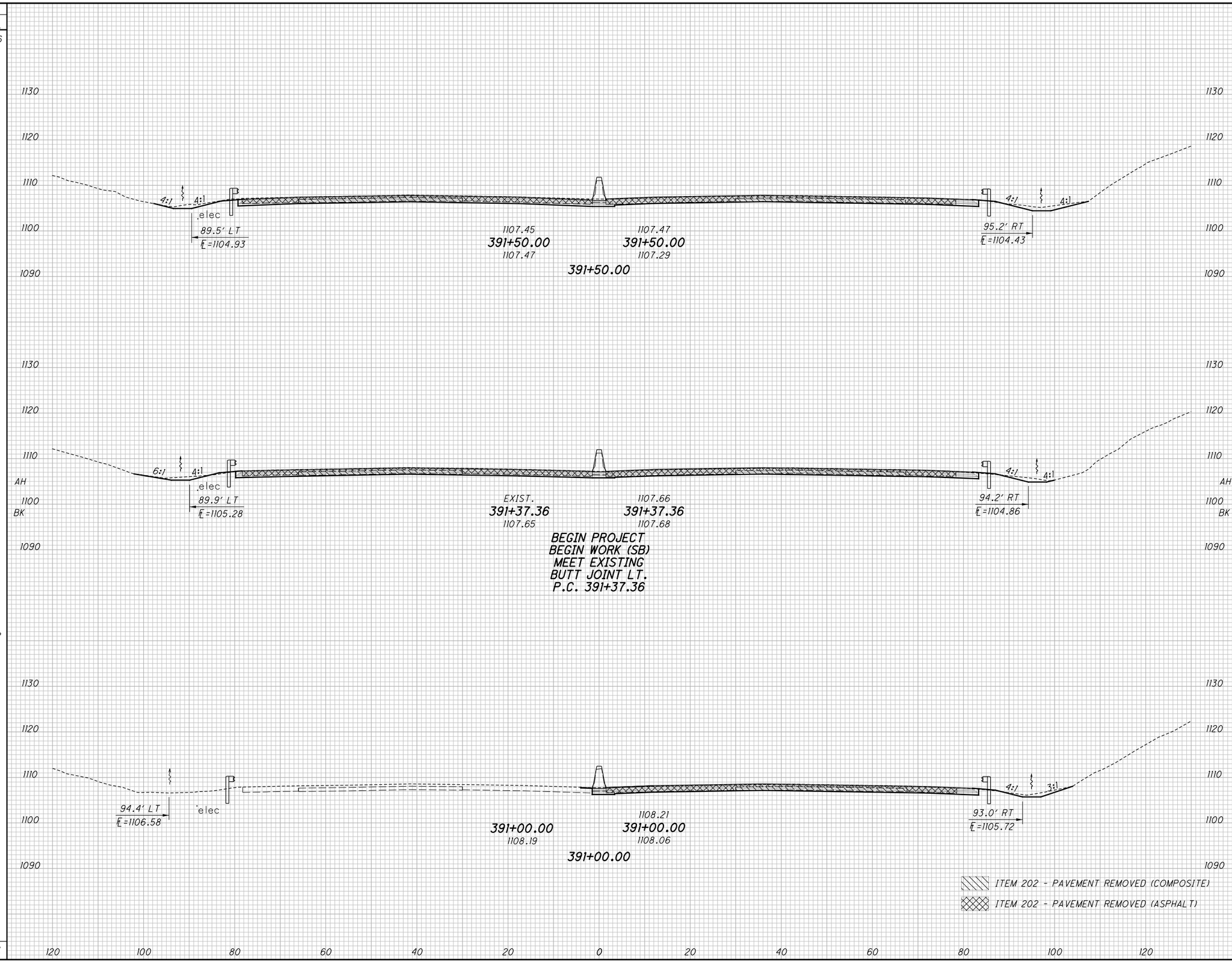


CALCULATED CJC
CHECKED PJF

# CROSS SECTIONS - I.R. 77
## STA. 391+00.00 TO STA. 391+50.00

SUM-77 / 277 / 224
VARIOUS

527
1288

0:\2017\2017258\ProjectData\SUM\06002\Design\Roadway\Sheets\06002_XS001.dgn Sheet 1/15/2021 9:6:11 AM pfry

| SEEDING END WIDTH | SEEDING SQ. YDS. | END AREA CUT | END AREA FILL | VOLUME CUT | VOLUME FILL |
|---|---|---|---|---|---|
| | 306 | | | 118 | 6 |
| 55 | | 64 | 3 | | |
| | 311 | | | 122 | 5 |
| 57 | | 68 | 2 | | |
| | 314 | | | 137 | 4 |
| 56 | | 80 | 2 | | |
| | 931 | | | 377 | 15 |

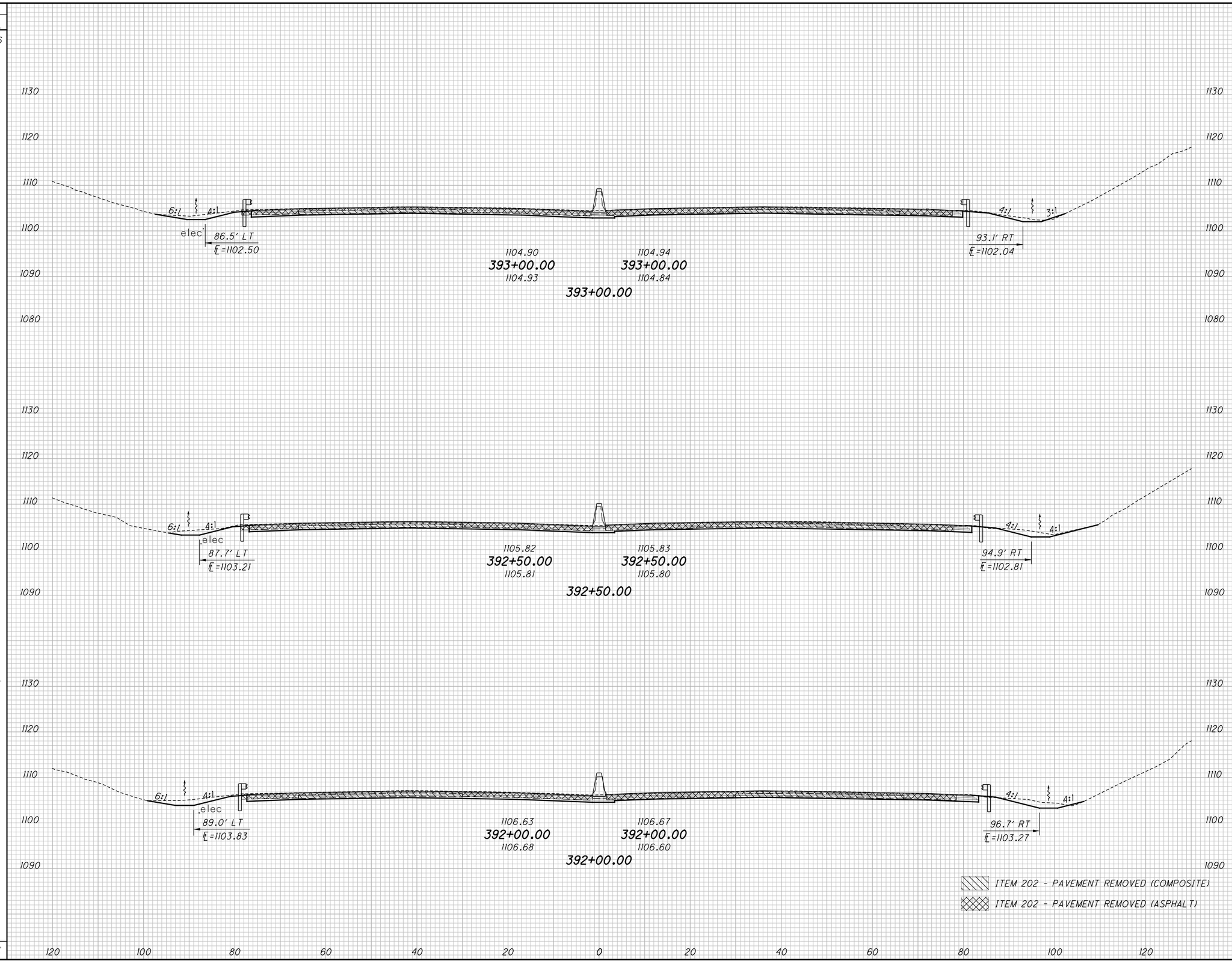


CALCULATED CJC
CHECKED PJF

# CROSS SECTIONS - I.R. 77
# STA. 392+00.00 TO STA. 393+00.00

SUM-77 / 277 / 224
VARIOUS

528
1288

0:\2017\2017258\ProjectData\SUM\106002\Design\Roadway\Sheets\106002_XS001.dgn Sheet 1/15/2021 9:6:13 AM pfry

| SEEDING END WIDTH | SEEDING SQ. YDS. | END AREA CUT | END AREA FILL | VOLUME CUT | VOLUME FILL |
|---|---|---|---|---|---|
| | 422 | | | 176 | 5 |
| 63 | | 77 | 1 | | |
| | 300 | | | 130 | 4 |
| 45 | | 63 | 3 | | |
| | 278 | | | 117 | 6 |
| 55 | | 63 | 3 | | |
| | 1000 | | | 423 | 15 |

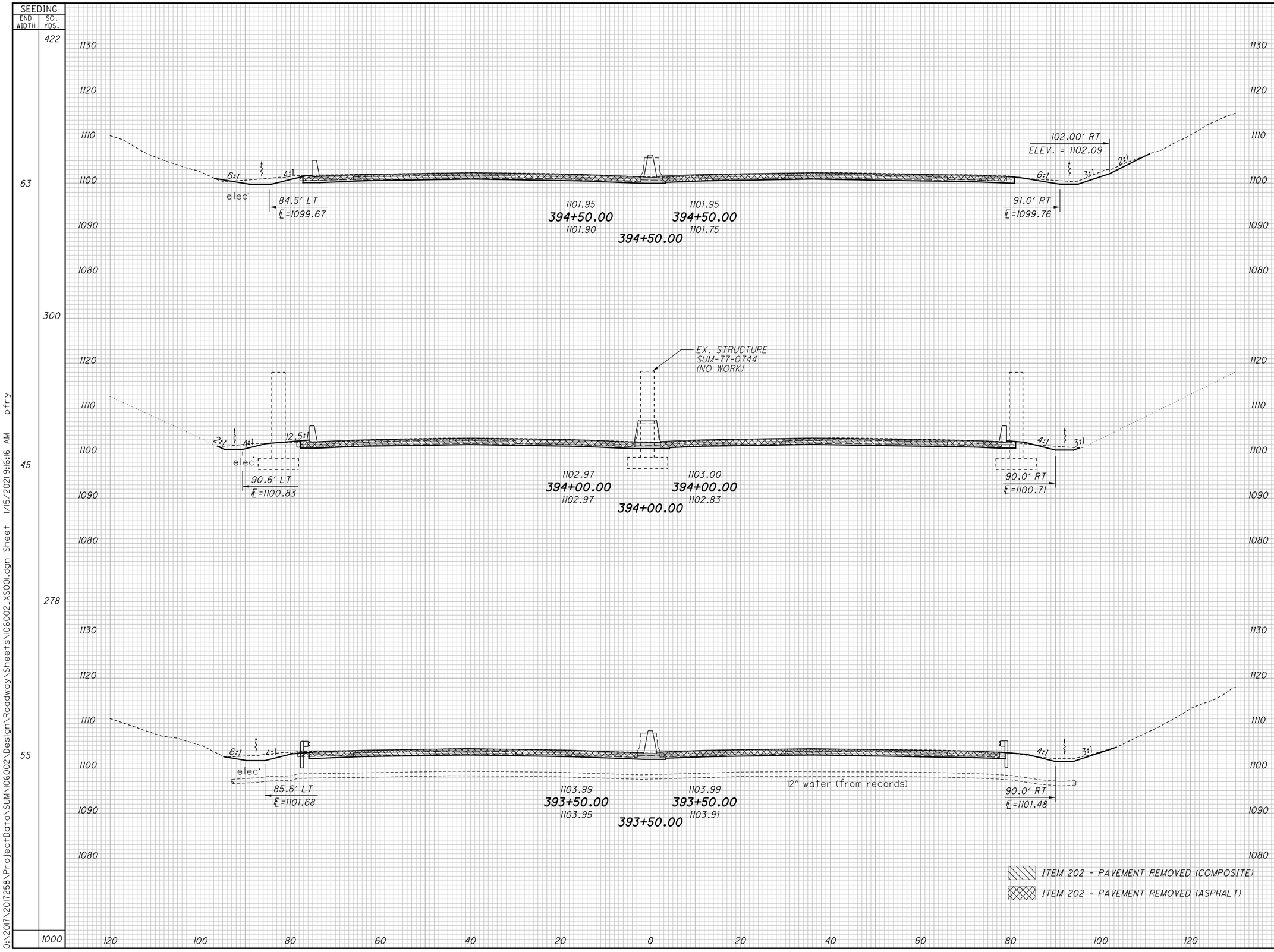


CALCULATED CJC
CHECKED PJF

# CROSS SECTIONS - I.R. 77
## STA. 393+50.00 TO STA. 394+50.00

SUM-77 / 277 / 224
VARIOUS

529
1288

O:\2017\2017258\ProjectData\SUM\06002\Design\Roadway\Sheets\06002_XS001.dgn Sheet 1/15/2021 9:16:16 AM pfry

| SEEDING END WIDTH | SEEDING SQ. YDS. | END AREA CUT | END AREA FILL | VOLUME CUT | VOLUME FILL |
|---|---|---|---|---|---|
| | 481 | | | 225 | 6 |
| 99 | | 134 | 3 | | |
| | 578 | | | 259 | 6 |
| 109 | | 146 | 3 | | |
| | 550 | | | 240 | 6 |
| 89 | | 113 | 4 | | |
| | 1609 | | | 724 | 18 |

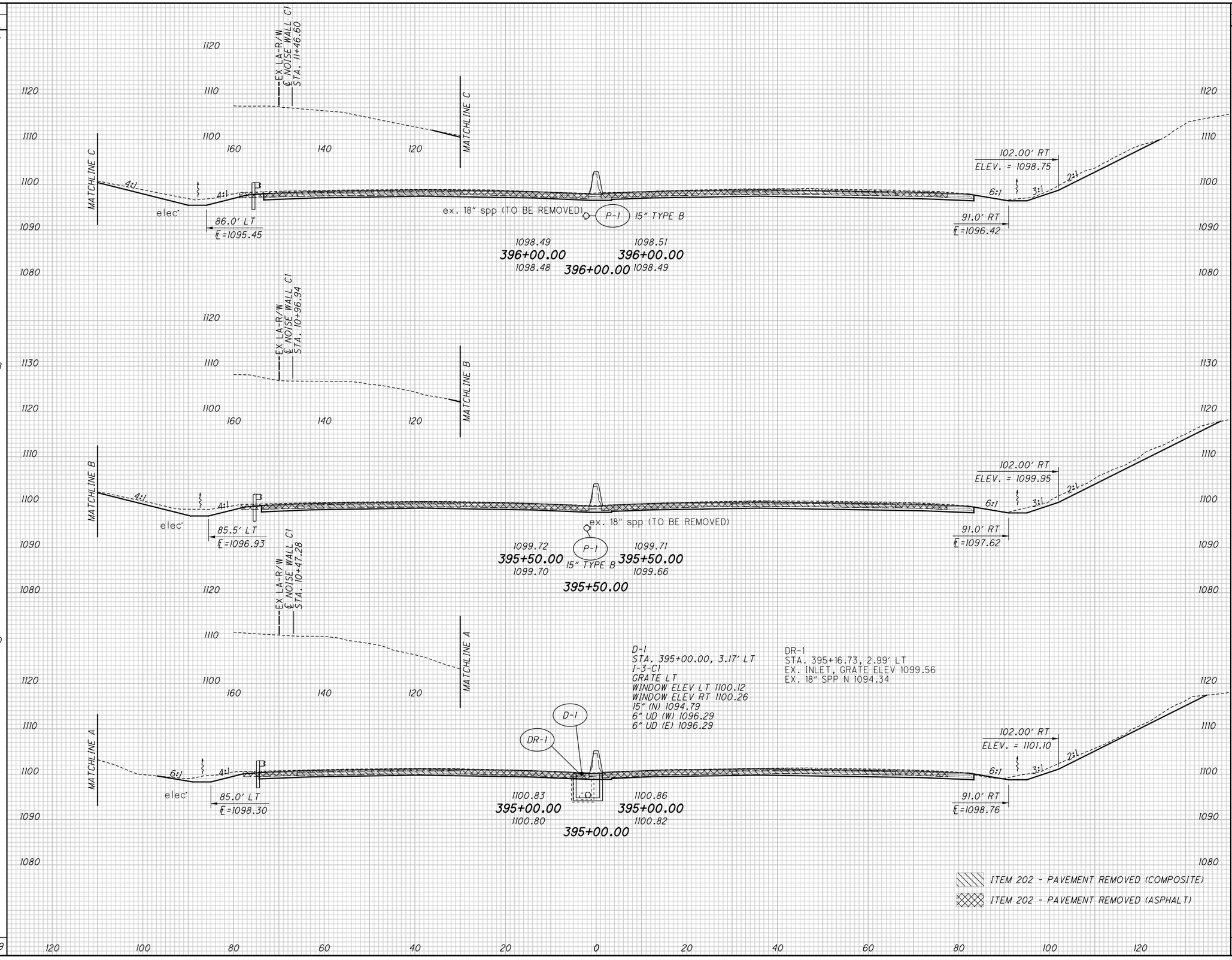


CALCULATED CJC
CHECKED PJF

# CROSS SECTIONS - I.R. 77
# STA. 395+00.00 TO STA. 396+00.00

SUM-77 / 277 / 224
VARIOUS

530
1288

0:\2017\2017258\ProjectData\SUM\06002\Design\Roadway\Sheets\06002_XS001.dgn Sheet 1/15/2021 9:6:19 AM pfry

| SEEDING END WIDTH | SEEDING SQ. YDS. | END AREA CUT | END AREA FILL | VOLUME CUT | VOLUME FILL |
|---|---|---|---|---|---|
| | 458 | | | 240 | 3 |
| 98 | | 136 | 1 | | |
| | 447 | | | 218 | 4 |
| 63 | | 99 | 3 | | |
| | 381 | | | 193 | 6 |
| 74 | | 109 | 3 | | |
| | 1286 | | | 651 | 13 |

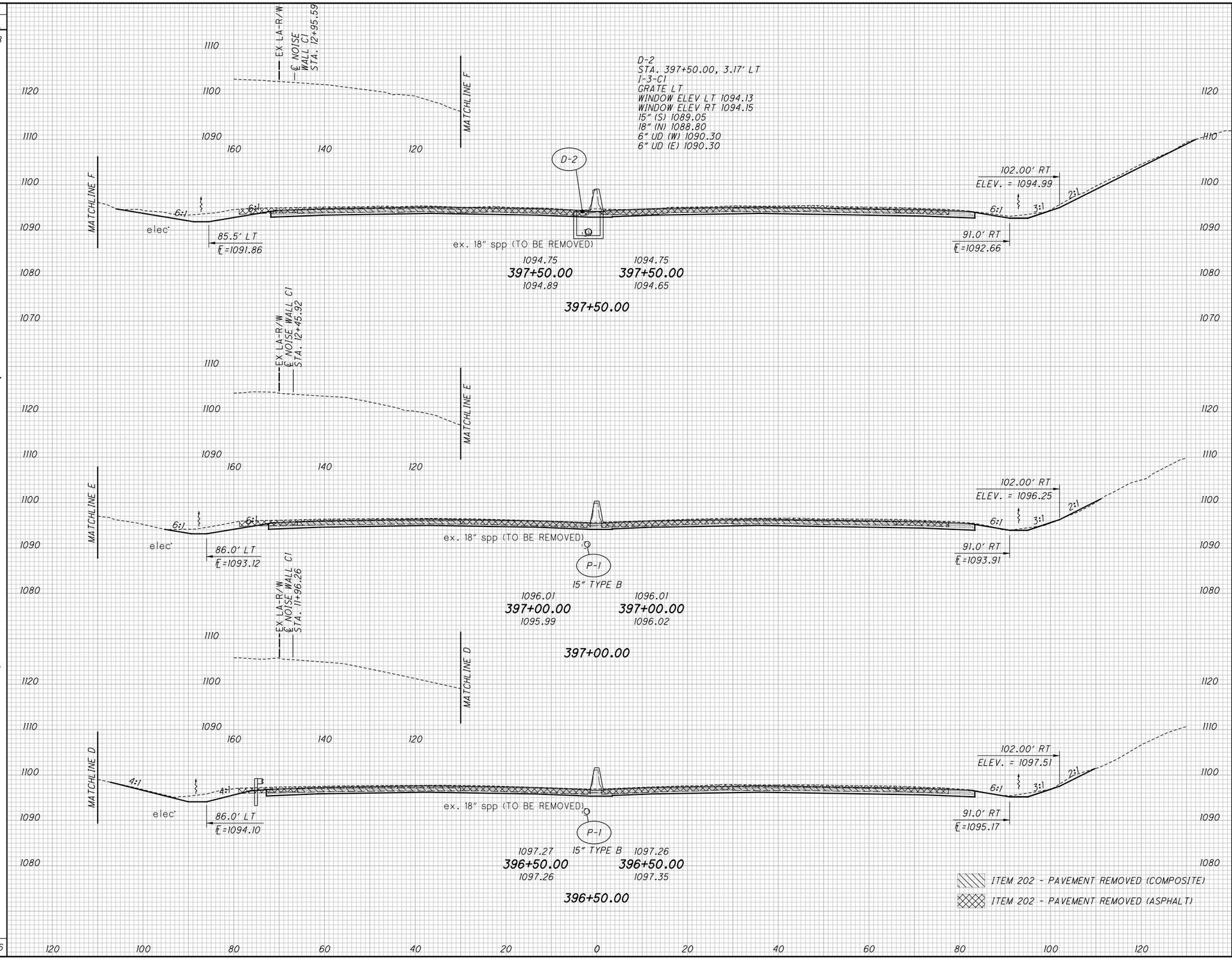


CALCULATED CJC
CHECKED PJF

# CROSS SECTIONS - I.R. 77
# STA. 396+50.00 TO STA. 397+50.00

SUM-77 / 277 / 224
VARIOUS

531
1288

0:\2017\2017258\ProjectData\SUM\06002\Design\Roadway\Sheets\06002_XS001.dgn Sheet 1/15/2021 9:6:24 AM pfry

| SEEDING END WIDTH | SEEDING SQ. YDS. |
|---|---|
| | 375 |
| 57 | |
| | 350 |
| 69 | |
| | 378 |
| 67 | |
| | 1103 |

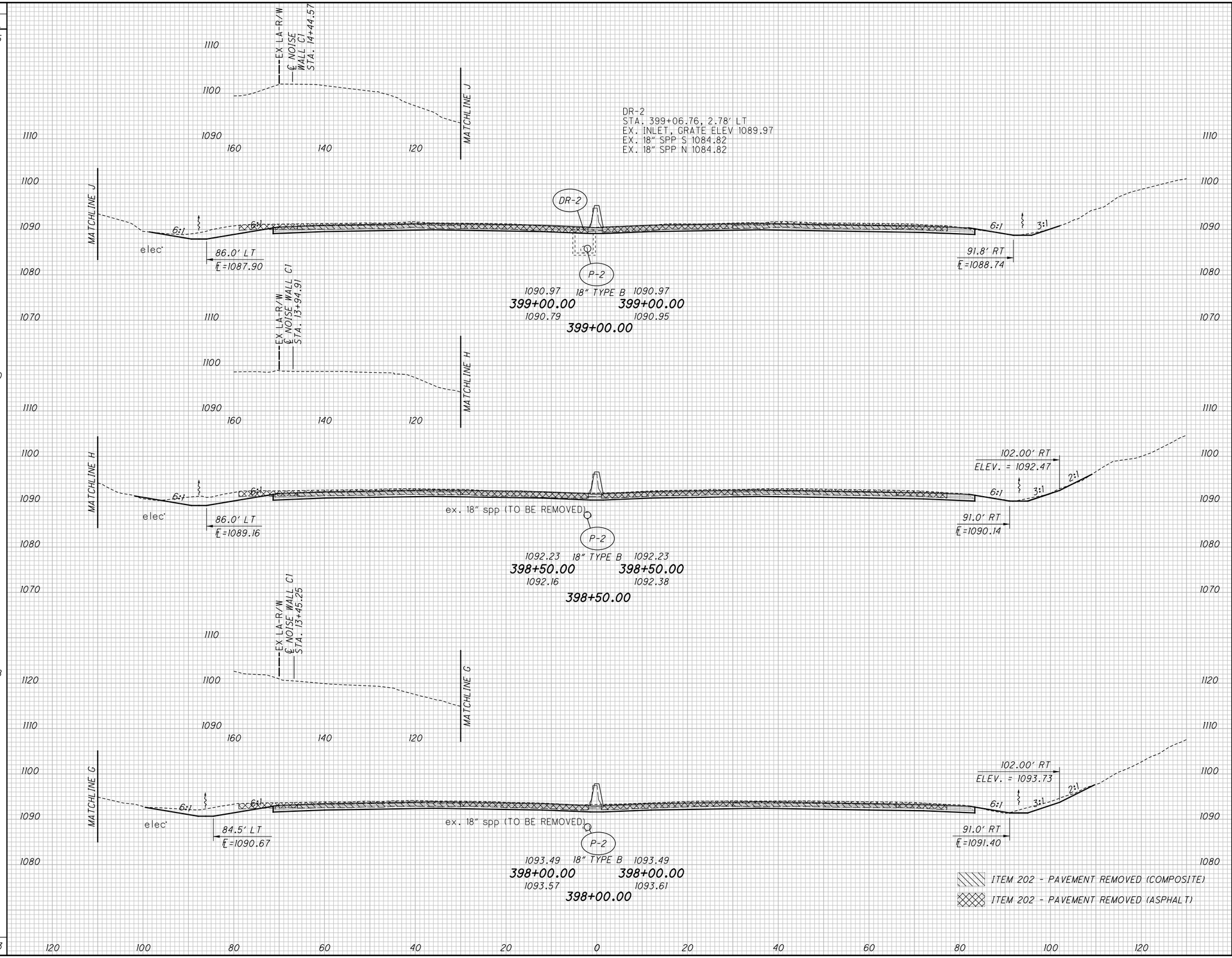


| END AREA CUT | END AREA FILL | VOLUME CUT | VOLUME FILL |
|---|---|---|---|
| | | 214 | 1 |
| 101 | 1 | | |
| | | 196 | 3 |
| 111 | 2 | | |
| | | 217 | 4 |
| 123 | 2 | | |
| | | 627 | 8 |

CALCULATED CJC
CHECKED PJF

# CROSS SECTIONS - I.R. 77
# STA. 398+00.00 TO STA. 399+00.00

SUM-77 / 277 / 224
VARIOUS

532
1288

0:\2017\2017258\ProjectData\SUM\06002\Design\Roadway\Sheets\06002_XS001.dgn Sheet 1/15/2021 9:6:29 AM pfry

| SEEDING END WIDTH | SEEDING SQ. YDS. |
|---|---|
| | 381 |
| 70 | |
| | 394 |
| 72 | |
| | 417 |
| 78 | |
| | 1192 |

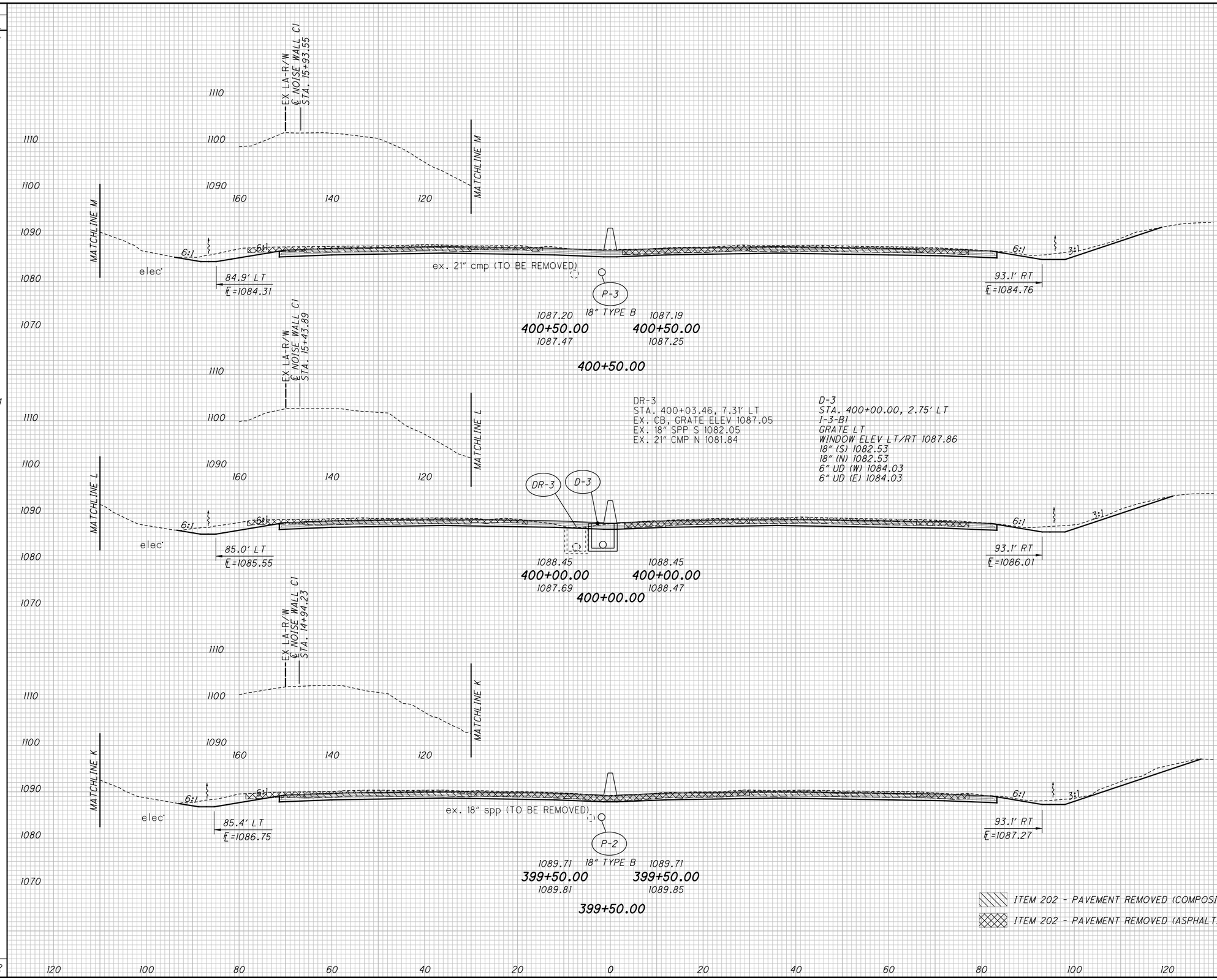


| END AREA CUT | END AREA FILL | VOLUME CUT | VOLUME FILL |
|---|---|---|---|
| | | 289 | 0 |
| 157 | 0 | | |
| | | 279 | 0 |
| 144 | 0 | | |
| | | 254 | 0 |
| 130 | 0 | | |
| | | 822 | 0 |

CALCULATED CJC
CHECKED PJF

# CROSS SECTIONS - I.R. 77
# STA. 399+50.00 TO STA. 400+50.00

SUM-77 / 277 / 224
VARIOUS

533
1288

0:\2017\2017258\ProjectData\SUM\06002\Design\Roadway\Sheets\06002_XS001.dgn Sheet 1/15/2021 9:6:34 AM pfry

| SEEDING END WIDTH | SEEDING SQ. YDS. | END AREA CUT | END AREA FILL | VOLUME CUT | VOLUME FILL |
|---|---|---|---|---|---|
| | 303 | | | 261 | 0 |
| 55 | | 147 | 0 | | |
| | 311 | | | 272 | 0 |
| 57 | | 147 | 0 | | |
| | 344 | | | 280 | 0 |
| 67 | | 155 | 0 | | |
| | 958 | | | 813 | 0 |

EX LA-R/W
℄ NOISE WALL C1
STA. 17+42.58
MATCHLINE O
elec
82.8' LT
℄=1080.88
ex. 21" cmp (TO BE REMOVED)
P-3 18" TYPE B
94.0' RT
℄=1080.83
1083.42 402+00.00 1083.44
1083.42 402+00.00 1083.57
402+00.00

EX LA-R/W
℄ NOISE WALL C1
STA. 16+92.90
MATCHLINE P
82.0' LT
℄=1082.28
93.1' RT
℄=1082.24
1084.68 401+50.00 1084.77
1084.68 401+50.00 1084.78
401+50.00

EX LA-R/W
℄ NOISE WALL C1
STA. 16+43.22
MATCHLINE N
84.0' LT
℄=1083.20
93.1' RT
℄=1083.50
1085.94 401+00.00 1086.02
1085.94 401+00.00 1086.01
401+00.00

ITEM 202 - PAVEMENT REMOVED (COMPOSITE)
ITEM 202 - PAVEMENT REMOVED (ASPHALT)

CALCULATED CJC
CHECKED PJF

# CROSS SECTIONS - I.R. 77
## STA. 401+00.00 TO STA. 402+00.00

SUM-77 / 277 / 224
VARIOUS

534
1288

O:\2017\2017258\Project Data\SUM\106002\Design\Roadway\Sheets\106002_XS001.dgn Sheet 1/15/2021 9:16:39 AM pfry

| SEEDING END WIDTH | SEEDING SQ. YDS. |
|---|---|
| | 381 |
| | |
| | |
| 64 | |
| | |
| | 344 |
| | |
| | |
| 60 | |
| | |
| | 317 |
| | |
| | |
| 54 | |
| | |
| | 1042 |

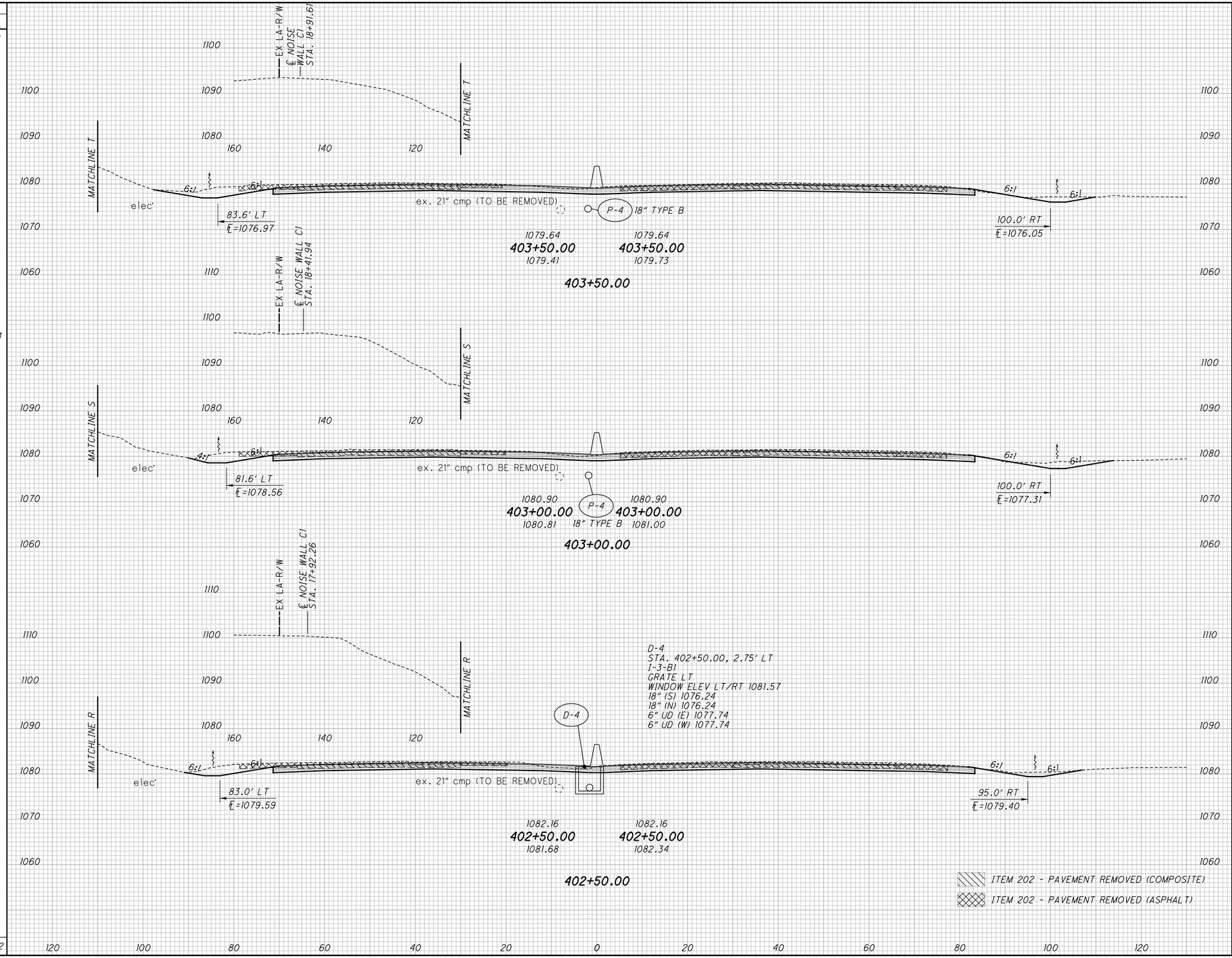


| END AREA CUT | END AREA FILL | VOLUME CUT | VOLUME FILL |
|---|---|---|---|
| | | 267 | 4 |
| | | | |
| | | | |
| 144 | 1 | | |
| | | | |
| | | 268 | 1 |
| | | | |
| | | | |
| 145 | 0 | | |
| | | | |
| | | 259 | 0 |
| | | | |
| | | | |
| 135 | 0 | | |
| | | | |
| | | 794 | 5 |

CALCULATED CJC
CHECKED PJF

# CROSS SECTIONS - I.R. 77
# STA. 402+50.00 TO STA. 403+50.00

SUM-77 / 277 / 224
VARIOUS

535
1288

0:\2017\2017258\ProjectData\SUM\06002\Design\Roadway\Sheets\06002_XS001.dgn Sheet 1/15/2021 9:6:43 AM pfry

| SEEDING END WIDTH | SEEDING SQ. YDS. |
|---|---|
| | 800 |
| | |
| 82 | |
| | 361 |
| | |
| 77 | |
| | 75 |
| | |
| 72 | |
| | 403 |
| | |
| 73 | |
| | 1639 |

DR-4
STA. 405+04.20, 6.49' LT
EX. CB, GRATE ELEV 1073.63
EX. 21" CMP S 1069.72
EX. 21" CMP E 1069.30

HW-5
STA. 405+04.00, 108.54' RT
HW-2.1/2.2
21" (W) 1068.02

D-5
STA. 405+04.00, 2.75' LT
I-3-B1
GRATE LT
WINDOW ELEV LT/RT 1075.17
18" (S) 1070.09
21" (E) 1069.23
6" UD (W) 1071.34
6" UD (S) 1071.34

| END AREA CUT | END AREA FILL | VOLUME CUT | VOLUME FILL |
|---|---|---|---|
| | | (139) | (139) |
| | | 459 | 81 |
| (75) | (75) | | |
| 128 | 33 | | |
| | | (57) | (57) |
| | | 208 | 31 |
| (0) | (0) | | |
| 147 | 8 | | |
| | | 47 | 3 |
| 131 | 7 | | |
| | | 255 | 9 |
| 144 | 3 | | |
| | | (196) | (196) |
| | | 969 | 124 |

CALCULATED CJC
CHECKED PJF

# CROSS SECTIONS - I.R. 77
# STA. 404+00.00 TO STA. 405+00.00

SUM-77 / 277 / 224
VARIOUS

536
1288

0:\2017\2017258\Project Data\SUM\106002\Design\Roadway\Sheets\106002_XS001.dgn Sheet 1/15/2021 9:16:48 AM pfry

| SEEDING END WIDTH | SEEDING SQ. YDS. |
|---|---|
| | 489 |
| 53 | |
| | 583 |
| 52 | |
| | 633 |
| 62 | |
| | 1705 |

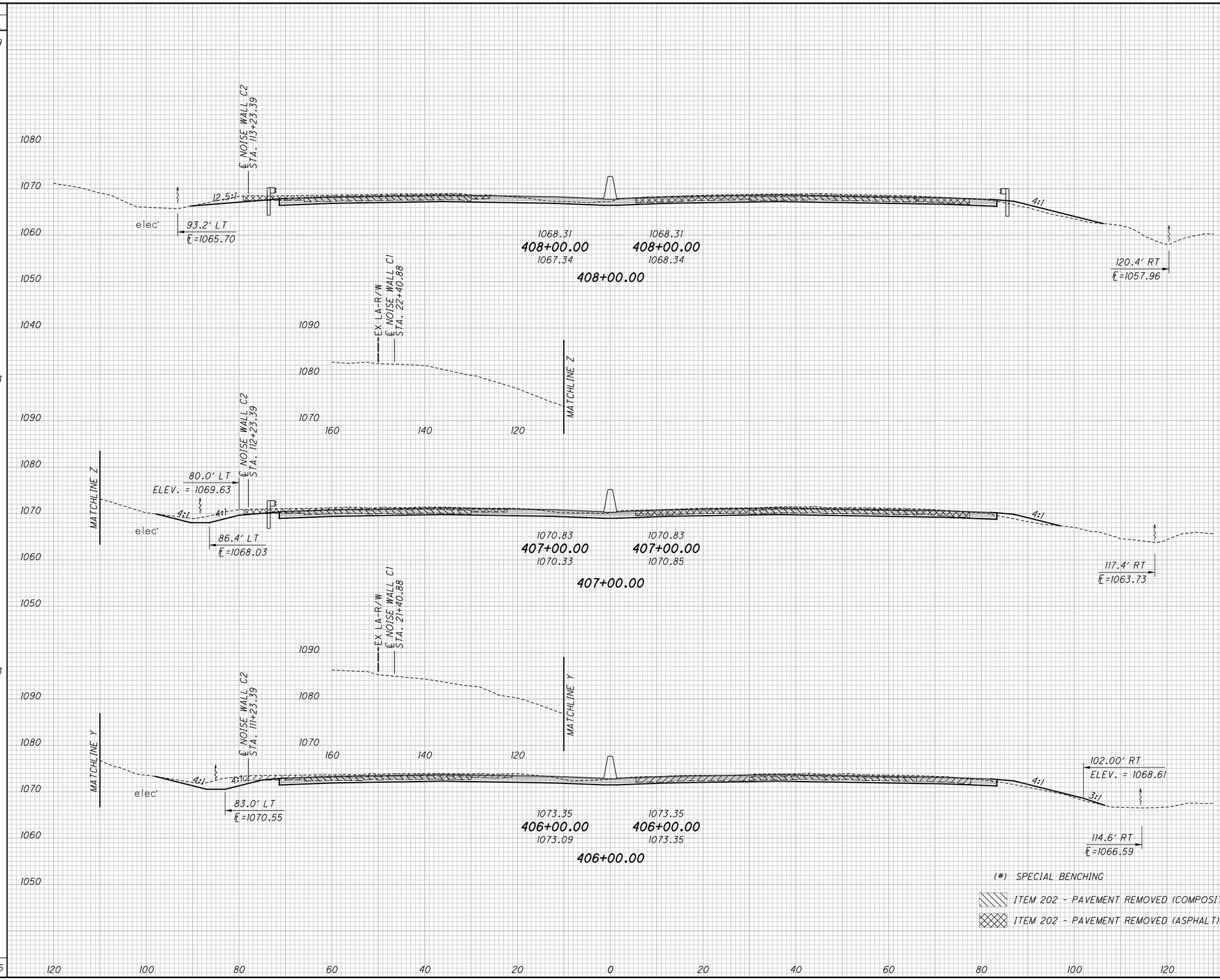


| END AREA CUT | END AREA FILL | VOLUME CUT | VOLUME FILL |
|---|---|---|---|
| | | 320 | 33 |
| 94 | 14 | | |
| | | 376 | 44 |
| 109 | 10 | | |
| | | 424 | 39 |
| (0) 120 | (0) 11 | | |
| | | 1120 | 116 |

CALCULATED CJC
CHECKED PJF

# CROSS SECTIONS - I.R. 77
## STA. 406+00.00 TO STA. 408+00.00

SUM-77 / 277 / 224
VARIOUS

537
1288

0:\2017\2017258\ProjectData\SUM\06002\Design\Roadway\Sheets\06002_XS001.dgn Sheet 1/15/2021 9:6:54 AM pfry

| SEEDING END WIDTH | SEEDING SQ. YDS. | END AREA CUT | END AREA FILL | VOLUME CUT | VOLUME FILL |
|---|---|---|---|---|---|
| | 378 | | | (54) | (54) |
| | | | | 267 | 37 |
| 32 | | (0) | (0) | | |
| | | 73 | 4 | | |
| | 433 | | | 309 | 11 |
| 46 | | 94 | 2 | | |
| | 450 | | | 320 | 11 |
| 35 | | 79 | 4 | | |
| | 1261 | | | (54) | (54) |
| | | | | 896 | 59 |

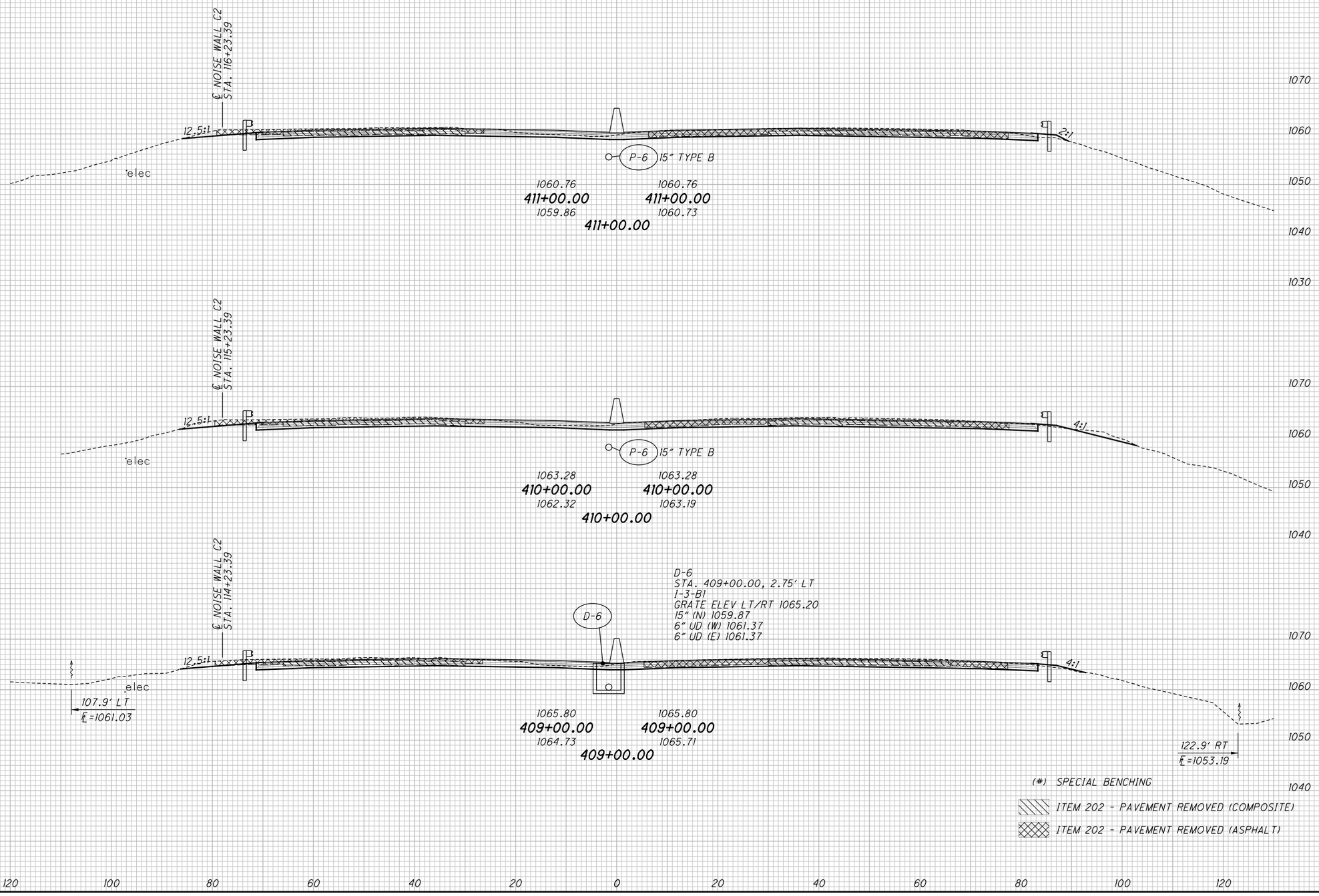


(#) SPECIAL BENCHING

ITEM 202 - PAVEMENT REMOVED (COMPOSITE)

ITEM 202 - PAVEMENT REMOVED (ASPHALT)

CALCULATED CJC
CHECKED PJF

# CROSS SECTIONS - I.R. 77
## STA. 409+00.00 TO STA. 411+00.00

SUM-77 / 277 / 224
VARIOUS

538
1288

0:\2017\2017258\ProjectData\SUM\106002\Design\Roadway\Sheets\106002_XS001.dgn Sheet 1/15/2021 9:6:58 AM pfry

| SEEDING END WIDTH | SEEDING SQ. YDS. |
|---|---|
| | 406 |
| 37 | |
| | 494 |
| 52 | |
| | 478 |
| 34 | |
| | 389 |
| 36 | |
| 1767 | |

(#) SPECIAL BENCHING

ITEM 202 - PAVEMENT REMOVED (COMPOSITE)

ITEM 202 - PAVEMENT REMOVED (ASPHALT)

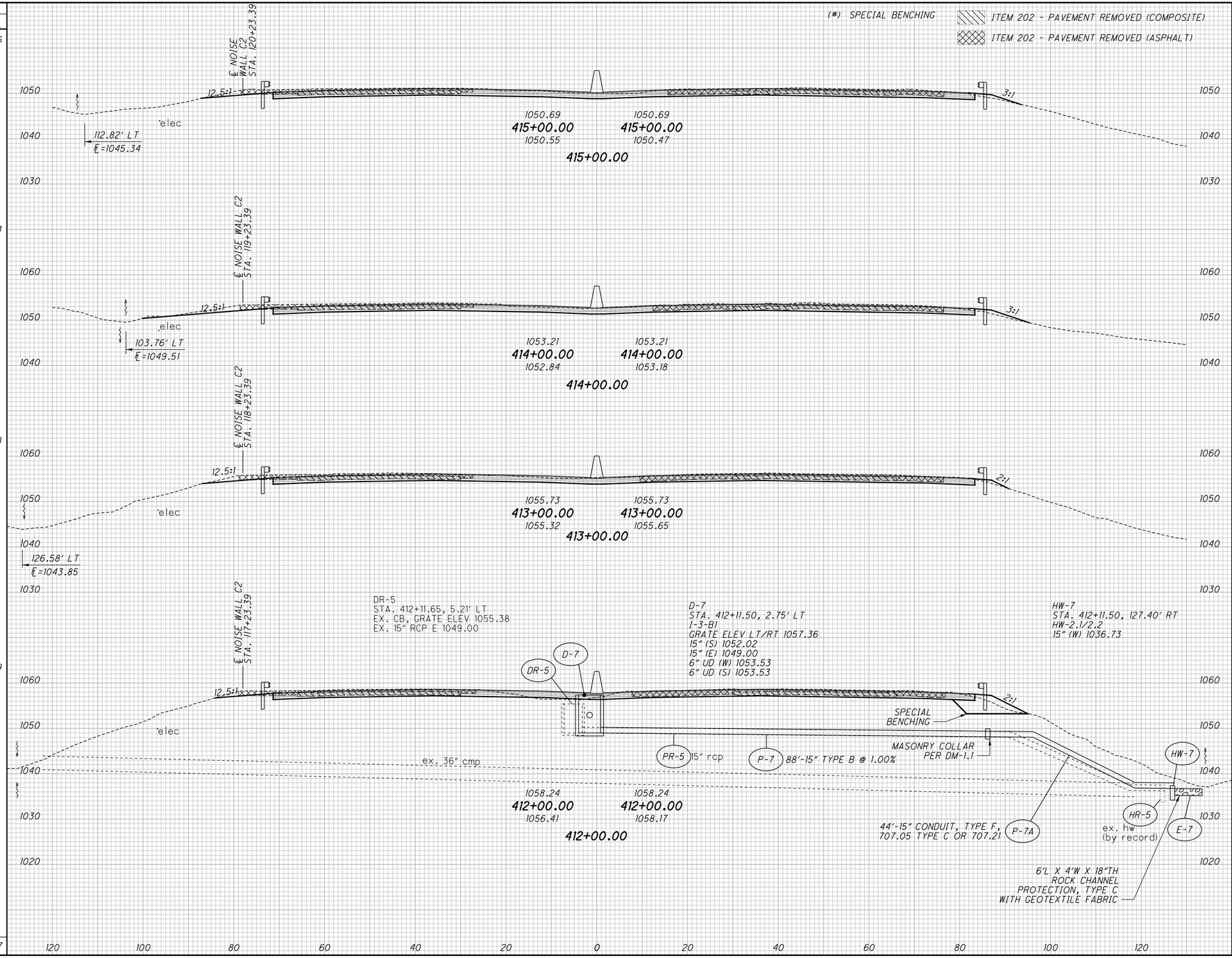


| END AREA CUT | END AREA FILL | VOLUME CUT | VOLUME FILL |
|---|---|---|---|
| | | 407 | 26 |
| 110 | 5 | | |
| | | 422 | 20 |
| 118 | 6 | | |
| | | 417 | 19 |
| (0) | (0) | | |
| 107 | 4 | | |
| | | (54) | (54) |
| | | 330 | 37 |
| (29) | (29) | | |
| 71 | 16 | | |
| | | (54) | (54) |
| | | 1576 | 102 |

CALCULATED CJC
CHECKED PJF

# CROSS SECTIONS - I.R. 77
# STA. 412+00.00 TO STA. 415+00.00

SUM-77 / 277 / 224
VARIOUS

539
1288

0:\2017\2017258\Project Data\SUM\06002\Design\Roadway\Sheets\06002_XS001.dgn Sheet 1/15/2021 9:17:01 AM pfry

| SEEDING END WIDTH | SEEDING SQ. YDS. |
|---|---|
| | 417 |
| 42 | |
| | 500 |
| 48 | |
| | 467 |
| 36 | |
| | 1384 |

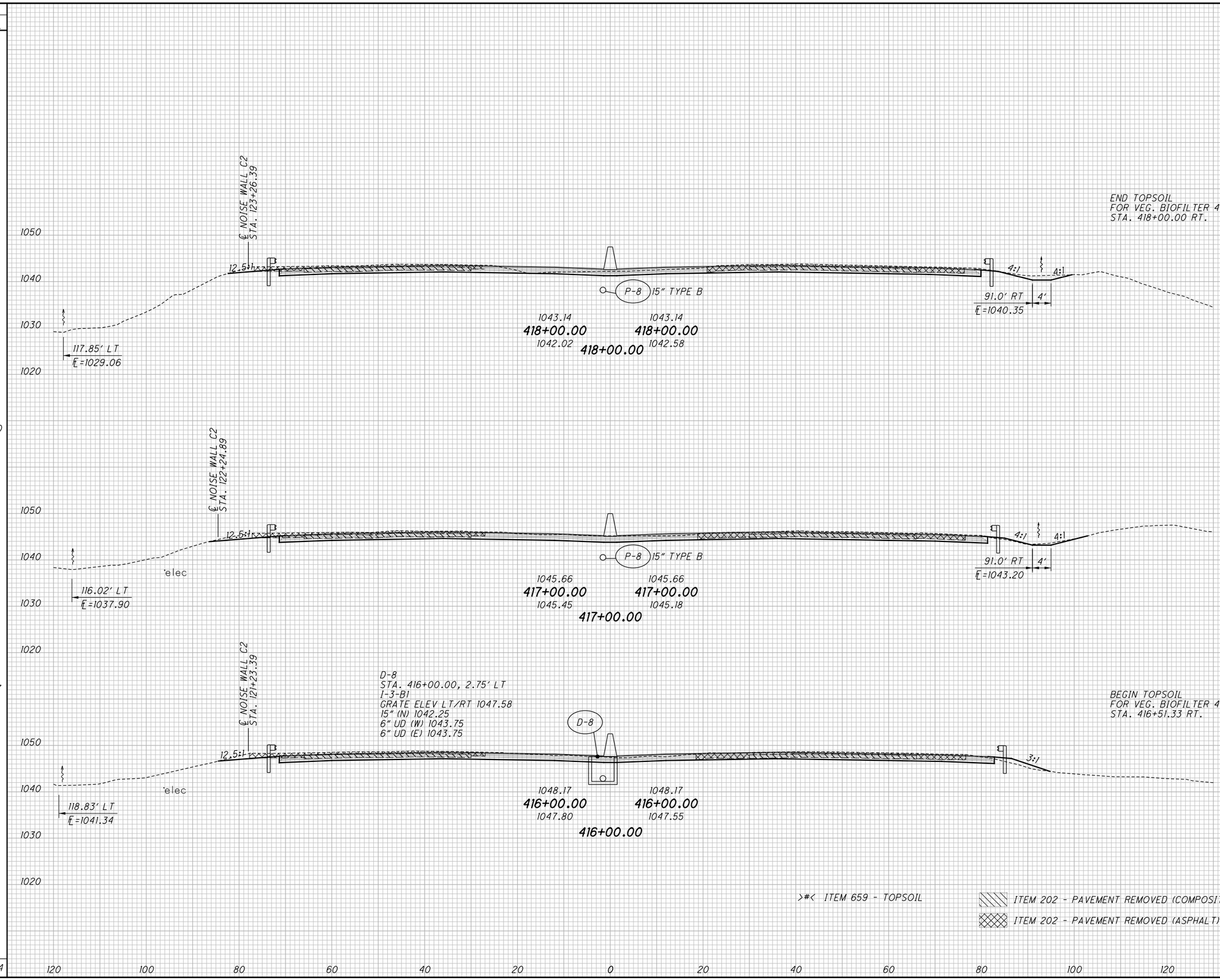


>#< ITEM 659 - TOPSOIL

ITEM 202 - PAVEMENT REMOVED (COMPOSITE)

ITEM 202 - PAVEMENT REMOVED (ASPHALT)

| END AREA CUT | END AREA FILL | VOLUME CUT | VOLUME FILL |
|---|---|---|---|
| | | 431 | 7 |
| | AH >0< | | |
| | BK >2< | | |
| 106 | 1 | | |
| | | | >7< |
| | | 417 | 6 |
| 119 | >2< 2 | | |
| | | | >4< |
| | >2< >0< | 424 | 20 |
| 110 | 9 | | |
| | | | >11< |
| | | 1272 | 33 |

CALCULATED CJC
CHECKED PJF

# CROSS SECTIONS - I.R. 77
## STA. 416+00.00 TO STA. 418+00.00

SUM-77 / 277 / 224
VARIOUS



D:\2017\2017258\ProjectData\SUM\06002\Design\Roadway\Sheets\06002_XS001.dgn Sheet 1/15/2021 9:17:05 AM pfry

| SEEDING | |
|---|---|
| END WIDTH | SQ. YDS. |
| | 706 |
| 27 | |
| | 311 |
| 29 | |
| | 344 |
| 33 | |
| | 1361 |

| END AREA | |
|---|---|
| CUT | FILL |
| | |
| (0) | (0) |
| 142 | 2 |
| 157 | 2 |
| 127 | 3 |
| | |

| VOLUME | |
|---|---|
| CUT | FILL |
| (239) | (239) |
| 567 | 313 |
| 554 | 7 |
| 526 | 9 |
| (239) | (239) |
| 1647 | 329 |

CALCULATED C.JC
CHECKED PJF

# CROSS SECTIONS - I.R. 77
# STA. 419+00.00 TO STA. 421+00.00

SUM-77 / 277 / 224
VARIOUS

541
1288

℄ NOISE WALL C2
STA. 126+26.39
12.5:1
12.5:1
1035.59 421+00.00 1034.93
1035.59 421+00.00 1035.18
421+00.00
119.7' LT
℄=1018.15
125.9' RT
℄=1010.50

℄ NOISE WALL C2
STA. 125+26.39
12.5:1
4:1
1038.10 420+00.00 1037.59
1038.10 420+00.00 1037.61
420+00.00
120.1' LT
℄=1023.10
121.1' RT
℄=1017.91

℄ NOISE WALL C2
STA. 124+26.39
12.5:1
4:1
HW-9
STA. 419+05.00, 111.90' LT
HW-2.1/2.2
15" (E) 1025.78
6'L X 4'W X 18"TH ROCK CHANNEL PROTECTION, TYPE C WITH GEOTEXTILE FABRIC
ex. hw (by record)
E-9
HR-7
HW-9
P-9A 38'-15" CONDUIT, TYPE F, 707.05 TYPE C OR 707.21
MASONRY COLLAR PER DM-1.1
119.89' LT
℄=1025.66
DR-7
STA. 419+04.51, 13.71' LT
EX. CB, GRATE ELEV 1038.87
EX. 12" RCP E 1035.04
EX. 15" RCP W 1035.04
D-9
STA. 419+04.50, 2.75' LT
I-3-B1
GRATE ELEV LT/RT 1039.92
15" (S) 1035.09
15" (W) 1035.09
6" UD (S) 1036.09
6" UD (E) 1036.09
DR-6
STA. 419+04.03, 13.57' RT
EX. CB, GRATE ELEV 1038.92
EX. 12" RCP W 1035.42
D-9
DR-7
DR-6
PR-6 12" rcp
1040.62 419+00.00 1038.94
1040.62 419+00.00 1039.40
419+00.00
15" rcp PR-7
P-9 73'-15" TYPE B @ 1.00%
121.9' RT
℄=1022.94

ITEM 202 - PAVEMENT REMOVED (COMPOSITE)
ITEM 202 - PAVEMENT REMOVED (ASPHALT)
(#) SPECIAL BENCHING

1040 1030 1020 1010 1000 1050 1040 1030 1020 1010
120 100 80 60 40 20 0 20 40 60 80 100 120

O:\2017\2017258\ProjectData\SUM\06002\Design\Roadway\Sheets\06002_XS001.dgn Sheet 1/15/2021 9:17:09 AM pfry

| SEEDING END WIDTH | SEEDING SQ. YDS. |
|---|---|
| | 62 |
| | 21 |
| | 322 |
| | 37 |
| | 389 |
| | 33 |
| | 739 |
| | 100 |
| | 1512 |

| REVISIONS NO. | DATE | DESCRIPTION |
|---|---|---|
| 6 | 04/26/21 | REVISED CONDUIT, BORED OR JACKED |

HW-11
STA. 425+00.00, 109.36' LT
HW-2.1/2.2
15" (E) 1012.27

℄ NOISE WALL C2
STA. 130+26.51

HW-11
E-11
3:1
MASONRY COLLAR PER DM-1.1
P-11A 33'-15" CONDUIT, TYPE F, 707.05 TYPE C OR 707.21
6'L X 4'W X 18"TH ROCK CHANNEL PROTECTION, TYPE C WITH GEOTEXTILE FABRIC
P-11 76'-15" TYPE B, BORED OR JACKED @ 1.00%
D-11
4:1

1025.09 | 425+00.00 | 1023.40
1025.01 | 425+00.00 | 1024.10
425+00.00

D-11
STA. 425+00.00, 3.17' LT
I-3-C1
GRATE LT
WINDOW ELEV LT 1024.66
WINDOW ELEV RT 1024.59
15" (S) 1019.09 "OFFSET"
15" (W) 1019.09
6" UD (N) 1020.67
6" UD (S) 1020.67
6" UD (E) 1020.59

elec

℄ NOISE WALL C2
STA. 129+26.43

12.5:1
ITS WORK PAD
85.3' RT
ELEV. = 1025.94
2:1
elec (by record)
P-64 15" TYPE B

1027.65 | 424+00.00 | 1026.20
1027.56 | 424+00.00 | 1027.76
424+00.00

D-64
STA. 423+18.00, 3.17' LT
I-3-C1
GRATE LT
WINDOW ELEV LT 1029.25
WINDOW ELEV RT 1029.17
15" (N) 1023.84 "OFFSET"
15" (S) 1023.84

℄ NOISE WALL C2
STA. 128+26.39

D-64
12.5:1
12.5:1

1030.32 | 423+00.00 | 1029.34
1030.24 | 423+00.00 | 1029.94
423+00.00

D-10
STA. 422+00.00, 3.17' LT
I-3-C1
GRATE LT
WINDOW ELEV LT 1032.40
WINDOW ELEV RT 1032.32
15" (N) 1026.99
6" UD (W) 1028.57
6" UD (E) 1028.49

MATCHLINE AA
2:1
2:1
EX LA-R/W
SPECIAL BENCHING
138.7' RT
℄=1006.75
132.8' RT
℄=1004.25
120
140
160

℄ NOISE WALL C2
STA. 127+26.39

D-10
12.5:1
ITS WORK PAD
90.0' RT
ELEV. = 1031.09
12.5:1
2:1
SPECIAL BENCHING
MATCHLINE AA

1032.99 | 422+00.00 | 1032.34
1032.91 | 422+00.00 | 1032.30
422+00.00

(#) SPECIAL BENCHING
ITEM 202 - PAVEMENT REMOVED (COMPOSITE)
ITEM 202 - PAVEMENT REMOVED (ASPHALT)

1030 1020 1010 1000 1040

120 100 80 60 40 20 0 20 40 60 80 100 120

| END AREA CUT | END AREA FILL | VOLUME CUT | VOLUME FILL |
|---|---|---|---|
| | | 156 | 10 |
| 105 | 16 | | |
| | | 428 | 35 |
| 126 | 3 | | |
| | | 494 | 9 |
| (0) | (0) | | |
| 141 | 2 | | |
| | | (239) | (239) |
| | | 565 | 313 |
| (129) | (129) | | |
| 164 | 167 | | |
| | | (239) | (239) |
| | | 1643 | 367 |

CALCULATED
CHECKED

CROSS SECTIONS - I.R. 77
STA. 422+00.00 TO STA. 425+00.00

SUM-77 / 277 / 224
VARIOUS

542
1288

0:\2017\2017258\ProjectData\SUM\06002\Design\Roadway\Sheets\106002_XS001.dgn Sheet 4/26/2021 10:55:10 AM pfry

| SEEDING END WIDTH | SEEDING SQ. YDS. |
|---|---|
| | 29 |
| 25 | |
| | 54 |
| 14 | |
| 0 | |
| 0 | |
| 19 | |
| | 49 |
| 16 | |
| | 132 |

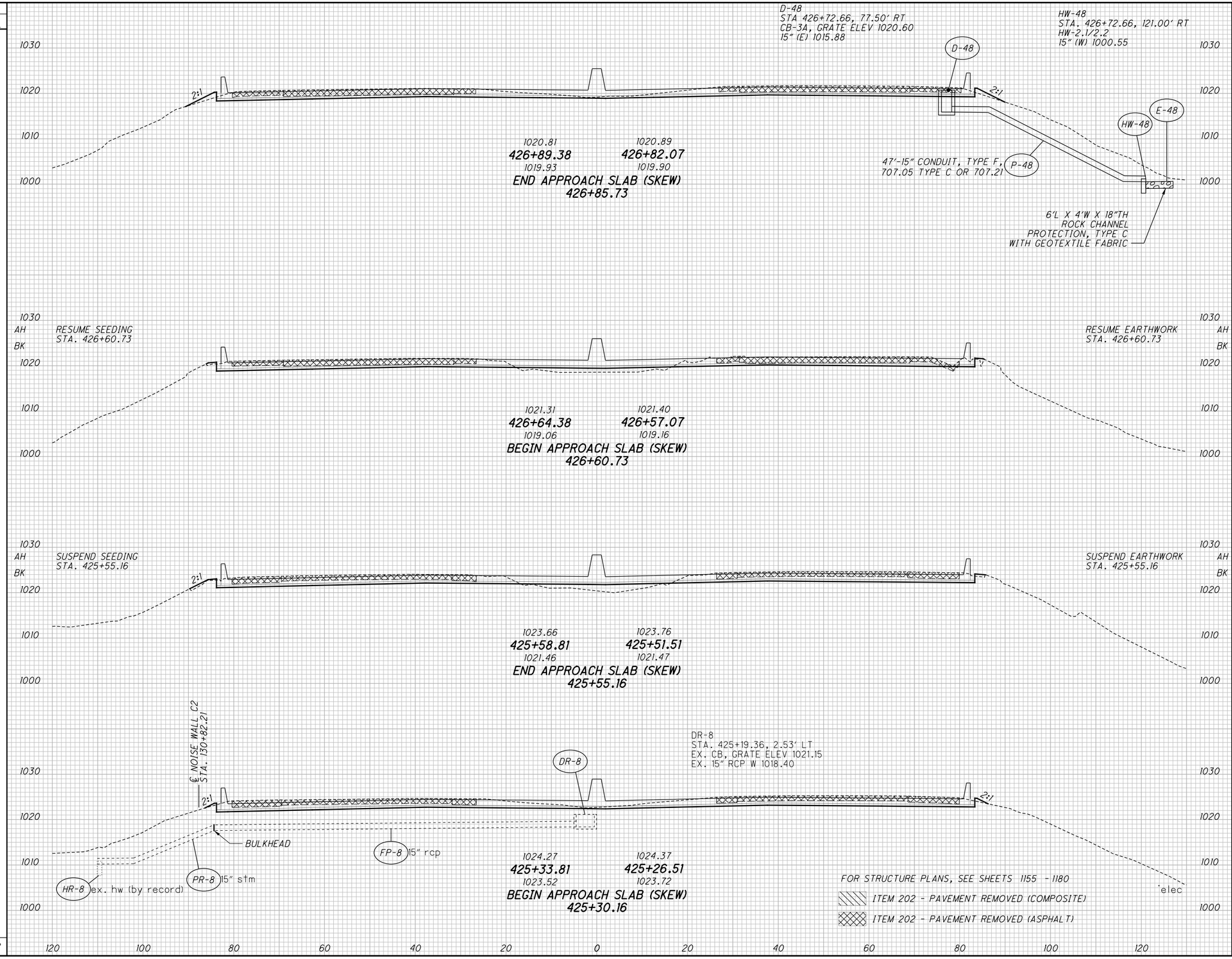


| END AREA CUT | END AREA FILL | VOLUME CUT | VOLUME FILL |
|---|---|---|---|
| | | 56 | 5 |
| 139 | 8 | | |
| | | 112 | 18 |
| 103 | 30 | | |
| 0 | 0 | | |
| 0 | 0 | | |
| 143 | 34 | | |
| | | 147 | 17 |
| 175 | 2 | | |
| | | 315 | 40 |

CALCULATED CJC
CHECKED PJF

# CROSS SECTIONS - I.R. 77
# STA. 425+30.16 TO STA. 426+85.73

SUM-77 / 277 / 224
VARIOUS

543
1288

0:\2017\2017258\ProjectData\SUM\106002\Design\Roadway\Sheets\106002_XS001.dgn Sheet 1/15/2021 9:17:19 AM pfry

| SEEDING END WIDTH | SEEDING SQ. YDS. |
|---|---|
| | 78 |
| | 20 |
| | 19 |
| | 19 |
| | 87 |
| | 19 |
| | 172 |
| | 12 |
| | 356 |

| REVISIONS NO. | DATE | DESCRIPTION |
|---|---|---|
| 6 | 04/26/21 | REVISED CONDUIT, BORED OR JACKED |

D-12
STA. 428+50.00, 3.17' LT
I-3-C1
GRATE LT
WINDOW ELEV LT 1017.55
WINDOW ELEV RT 1017.52
15" (W) 1012.14
15" (S) 1012.14
6" UD (N) 1013.71
6" UD (S) 1013.71
6" UD (E) 1013.64

MASONRY COLLAR PER DM-1.1

P-12 76'-15" TYPE B, BORED OR JACKED @ 1.00%

P-12A 55'-15" CONDUIT, TYPE F, 707.05 TYPE C OR 707.21

MATCHLINE CC

1018.12 428+50.00 1016.55
1018.06 428+50.00 1017.90
428+50.00

EX LA-R/W

E-12 HW-12

6'L X 4'W X 18"TH ROCK CHANNEL PROTECTION, TYPE C WITH GEOTEXTILE FABRIC

HW-12
STA. 428+50.00, 128.90' LT
HW-2.1/2.2
15" (E) 998.77

133.44' LT
℄=997.94

15" TYPE B P-63

1018.25 428+41.24 1016.93
1018.19 428+41.24 1018.10
P.C. 428+41.24

15" TYPE B P-63

1018.86 428+00.00 1018.35
1018.80 428+00.00 1018.41
428+00.00

6'L X 4'W X 18"TH ROCK CHANNEL PROTECTION, TYPE C WITH GEOTEXTILE FABRIC

EX LA-R/W

E-46 HW-46

MATCHLINE BB

HW-46
STA. 427+40.06, 125.26' LT
HW-2.1/2.2
15" (E) 999.37

129.52' LT
℄=998.98

HR-9 ex. hw (by record)

D-46
STA 427+40.06, 77.78' LT
CB-3A, GRATE ELEV 1019.20
15" (W) 1014.87
6" UD (S) 1016.37

D-46 D-63 DR-9

BULKHEAD

MATCHLINE END SKEWED APPROACH SLAB

FP-9 15" rcp (by record)

P-46 51'-15" CONDUIT, TYPE F, 707.05 TYPE C OR 707.21

PR-9 15" stm (by record)

MATCHLINE BB

1020.60 427+00.00 1019.20
1020.55 427+00.00 1019.09
427+00.00

DR-9
STA. 427+12.48, 1.45' RT
EX. CB, GRATE ELEV 1016.56
EX. 15" RCP W 1014.11

D-63
STA. 427+40.00, 3.17' LT
I-3-C1
GRATE LT
WINDOW LT ELEV 1019.32
WINDOW RT ELEV 1019.24
15" (N) 1013.91

ITEM 202 - PAVEMENT REMOVED (COMPOSITE)
ITEM 202 - PAVEMENT REMOVED (ASPHALT)

120 100 80 60 40 20 0 20 40 60 80 100 120

| END AREA CUT | END AREA FILL | VOLUME CUT | VOLUME FILL |
|---|---|---|---|
| | | 120 | 6 |
| 100 | 1 | | |
| | | 34 | 0 |
| 112 | 0 | | |
| 129 | 0 | | |
| | | 184 | 0 |
| | | 372 | 22 |
| 72 | 12 | | |
| | | 710 | 28 |

CALCULATED CJC
CHECKED PJF

CROSS SECTIONS - I.R. 77
STA. 427+00.00 TO STA. 428+50.00

SUM-77 / 277 / 224
VARIOUS

544
1288

0:\2017\2017258\ProjectData\SUM\06002\Design\Roadway\Sheets\06002_XS001.dgn Sheet 4/26/2021 10:56:34 AM pfry

| SEEDING END WIDTH | SEEDING SQ. YDS. | END AREA CUT | END AREA FILL | VOLUME CUT | VOLUME FILL |
|---|---|---|---|---|---|
| 0 | | 0 | 0 | | |
| 21 | | 116 | 63 | | |
| | 65 | | | 113 | 34 |
| 26 | | 128 | 10 | | |
| 7 | | | | 10 | 1 |
| 8 | | 30 | 5 | | |
| | 72 | | | 123 | 35 |

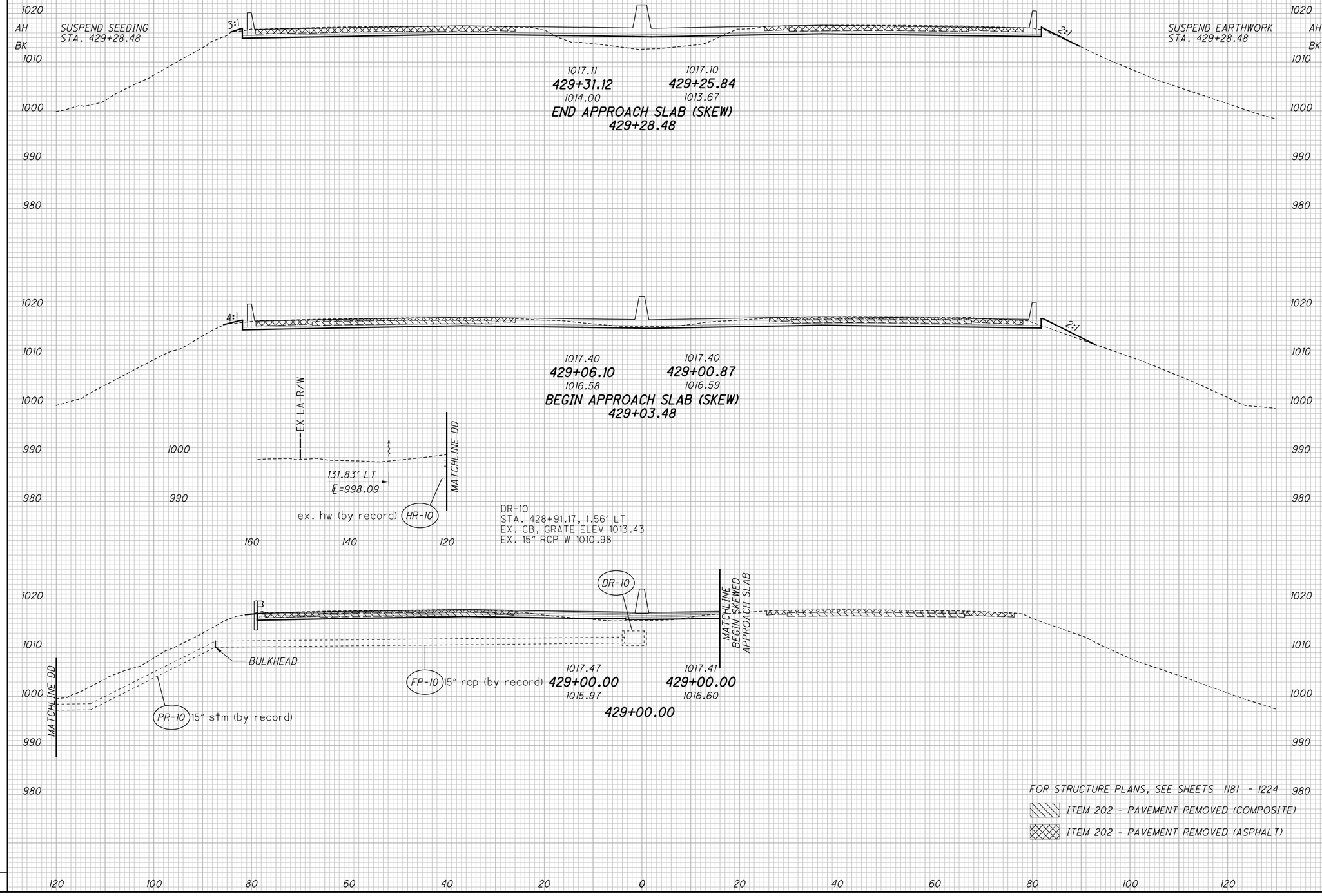


CALCULATED CJC
CHECKED PJF

# CROSS SECTIONS - I.R. 77
## STA. 429+00.00 TO STA. 429+28.48

SUM-77 / 277 / 224
VARIOUS

545
1288

O:\2017\2017258\ProjectData\SUM\06002\Design\Roadway\Sheets\106002_XS001.dgn Sheet 1/15/2021 9:17:31 AM pfry

| SEEDING END WIDTH | SEEDING SQ. YDS. |
|---|---|
| 20 | 128 |
| 21 | 114 |
| 19 | 80 |
| 27 | 64 |
| 0 | |
| | 386 |

| END AREA CUT | END AREA FILL | VOLUME CUT | VOLUME FILL |
|---|---|---|---|
| | | 122 | 30 |
| 57 | 24 | | |
| | | 116 | 25 |
| 68 | 3 | | |
| | | 134 | 4 |
| 134 | 3 | | |
| | | 112 | 33 |
| 107 | 68 | | |
| 0 | 0 | | |
| | | 484 | 92 |

CALCULATED CJC
CHECKED PJF

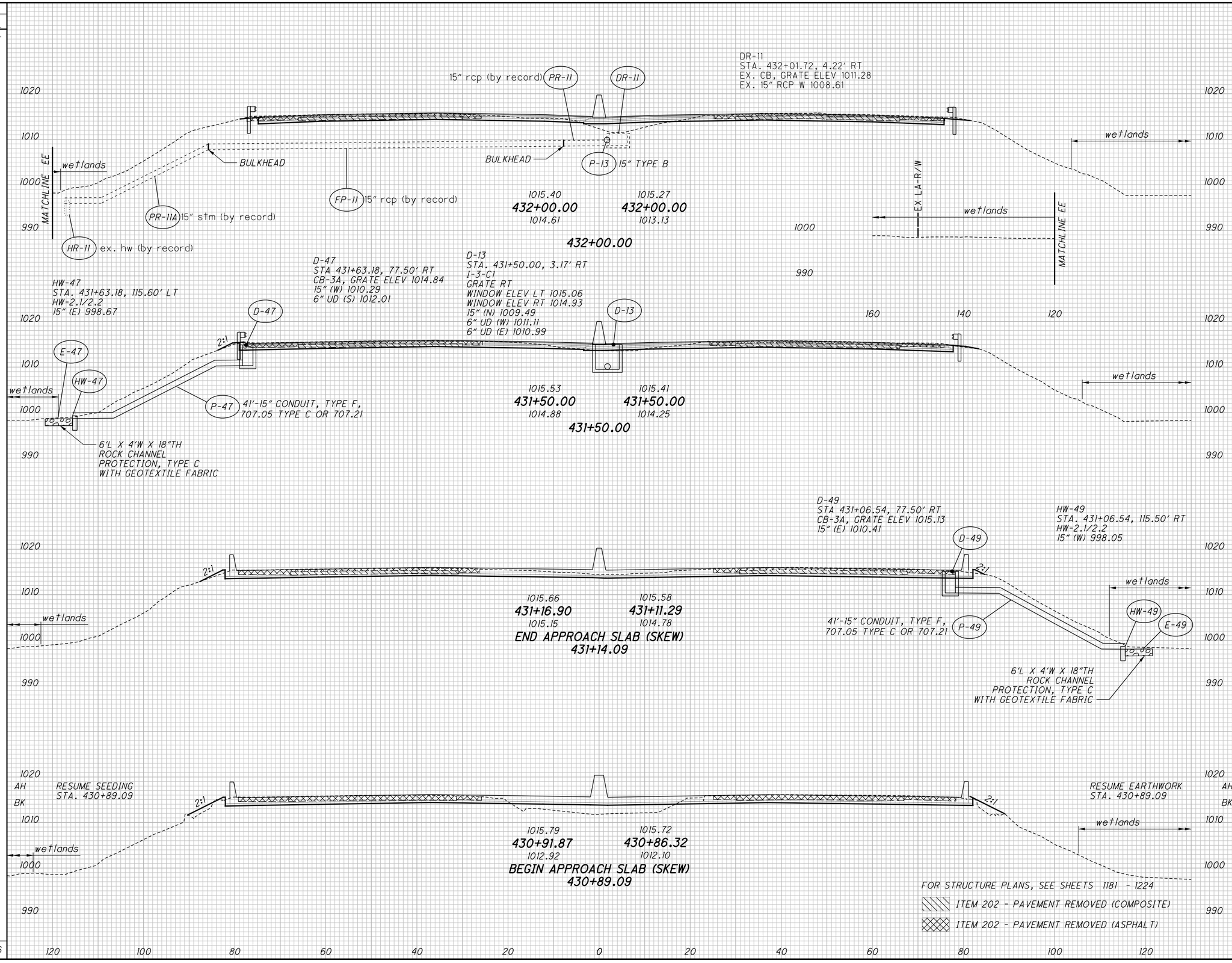


CROSS SECTIONS - I.R. 77
STA. 430+89.09 TO STA. 432+00.00

SUM-77 / 277 / 224
VARIOUS

546
1288

0:\2017\20172581\ProjectData\SUM\106002\Design\Roadway\Sheets\106002_XS001.dgn Sheet 1/15/2021 9:17:35 AM pfry

| REVISIONS | | |
|---|---|---|
| NO. | DATE | DESCRIPTION |
| 6 | 04/26/21 | REVISED CONDUIT, BORED OR JACKED |

| SEEDING | |
|---|---|
| END WIDTH | SQ. YDS. |
| 25 | 128 |
| 21 | 128 |
| 29 | 139 |
| 26 | 153 |
| | 548 |

| END AREA | |
|---|---|
| CUT | FILL |
| 112 | 5 |
| 95 | 9 |
| 73 | 6 |
| 75 | 8 |

| VOLUME | |
|---|---|
| CUT | FILL |
| 194 | 10 |
| 192 | 13 |
| 156 | 14 |
| 137 | 13 |
| 679 | 50 |

CALCULATED CJC
CHECKED PJF

1020
1010
1000
990

wetlands

1015.77
434+00.00
1016.02

1015.56
434+00.00
1014.99

434+00.00

D-15
STA. 433+50.00, 3.17' RT
I-3-C1
GRATE RT
WINDOW ELEV LT 1014.96
WINDOW ELEV RT 1014.76
15" (S) 1009.43
6" UD (W) 1011.13
6" UD (E) 1010.93

D-15

4:1

1015.55
433+50.00
1015.24

1015.36
433+50.00
1014.40

433+50.00

12.5:1

P-15 15" TYPE B

1015.41
433+00.00
1015.27

1015.24
433+00.00
1013.70

433+00.00

D-14
STA. 432+50.00, 3.17' RT
I-3-C1
GRATE RT
WINDOW ELEV LT 1014.77
WINDOW ELEV RT 1014.62
15" (N) 1008.93
15" (S) 1008.93
15" (W) 1008.93
6" UD (N) 1010.94
6" UD (S) 1010.94
6" UD (E) 1010.79

D-14

HW-14
STA. 432+50.00, 115.52' LT
HW-2.1/2.2
15" (E) 999.13

MASONRY COLLAR PER DM-1.1

P-14 81'-15" TYPE B, BORED OR JACKED @ 1.00%

P-14A 38'-15" CONDUIT, TYPE F, 707.05 TYPE C OR 707.21

HW-14

6'L X 4'W X 18"TH ROCK CHANNEL PROTECTION, TYPE C WITH GEOTEXTILE FABRIC

E-14

1015.36
432+50.00
1015.32

1015.21
432+50.00
1013.36

432+50.00

ITEM 202 - PAVEMENT REMOVED (COMPOSITE)

ITEM 202 - PAVEMENT REMOVED (ASPHALT)

120 100 80 60 40 20 0 20 40 60 80 100 120

# CROSS SECTIONS - I.R. 77
# STA. 432+50.00 TO STA. 434+00.00

SUM-77 / 277 / 224
VARIOUS



O:\2017\2017258\ProjectData\SUM\106002\Design\Roadway\Sheets\106002_XS001.dgn Sheet 4/26/2021 10:58:41 AM pfry

| SEEDING END WIDTH | SEEDING SQ. YDS. | END AREA CUT | END AREA FILL | VOLUME CUT | VOLUME FILL |
|---|---|---|---|---|---|
| | 147 | | | 168 | 11 |
| 25 | | 104 | 3 | | |
| | 147 | | | 185 | 7 |
| 28 | | 96 | 5 | | |
| | 136 | | | 180 | 10 |
| 21 | | 98 | 6 | | |
| | 430 | | | 533 | 28 |

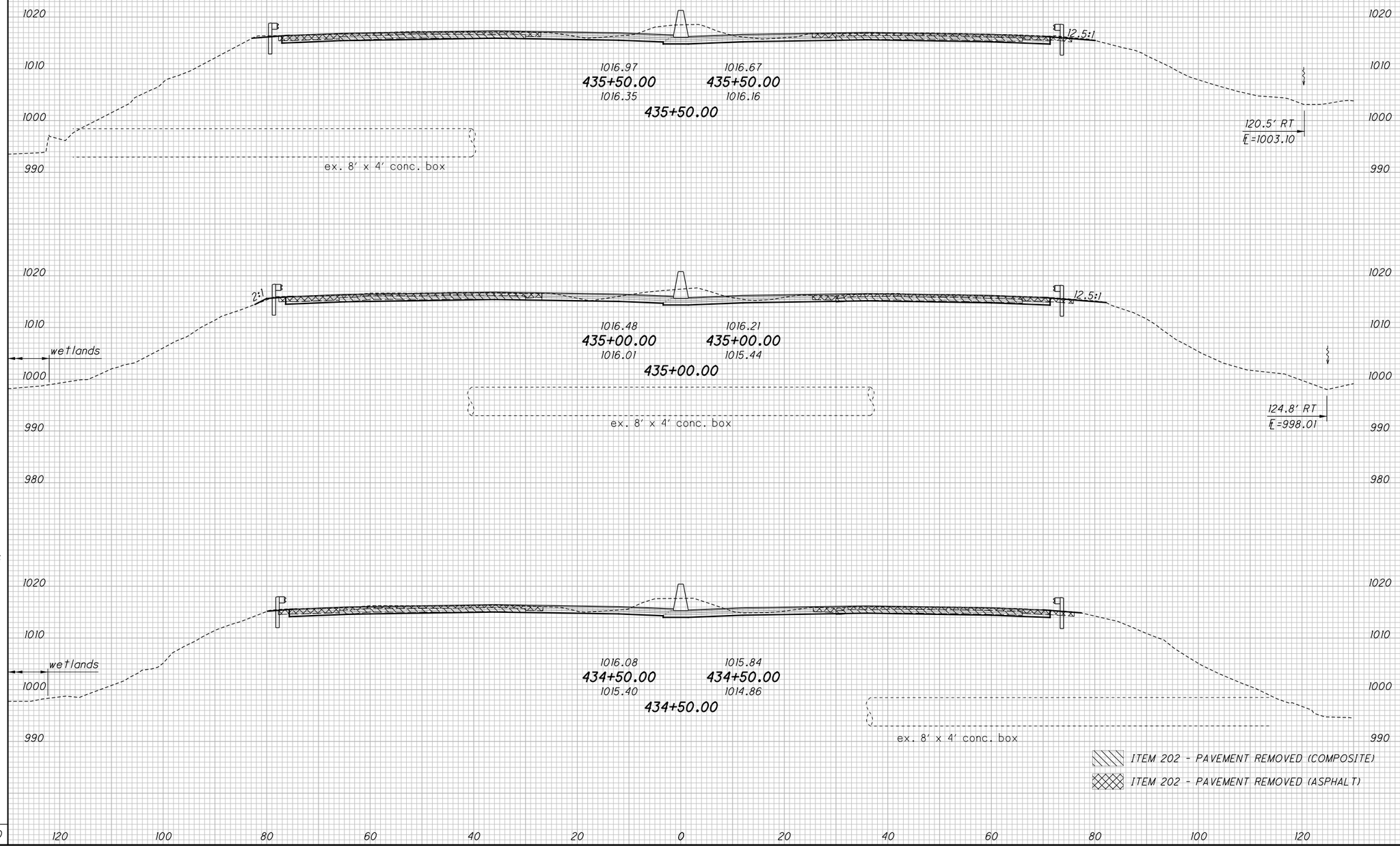


CALCULATED CJC
CHECKED PJF

# CROSS SECTIONS - I.R. 77
# STA. 434+50.00 TO STA. 435+50.00

SUM-77 / 277 / 224
VARIOUS

548
1288

0:\2017\2017258\ProjectData\SUM\106002\Design\Roadway\Sheets\106002_XS001.dgn Sheet 1/15/2021 9:17:46 AM pfry

| SEEDING END WIDTH | SEEDING SQ. YDS. |
|---|---|
| | 194 |
| 33 | |
| | 167 |
| 27 | |
| | 153 |
| 28 | |
| | 514 |

| END AREA CUT | END AREA FILL | VOLUME CUT | VOLUME FILL |
|---|---|---|---|
| | | 191 | 14 |
| 98 | 8 | | |
| | | 173 | 10 |
| 89 | 3 | | |
| | | 154 | 11 |
| 77 | 9 | | |
| | | 518 | 35 |

CALCULATED CJC
CHECKED PJF

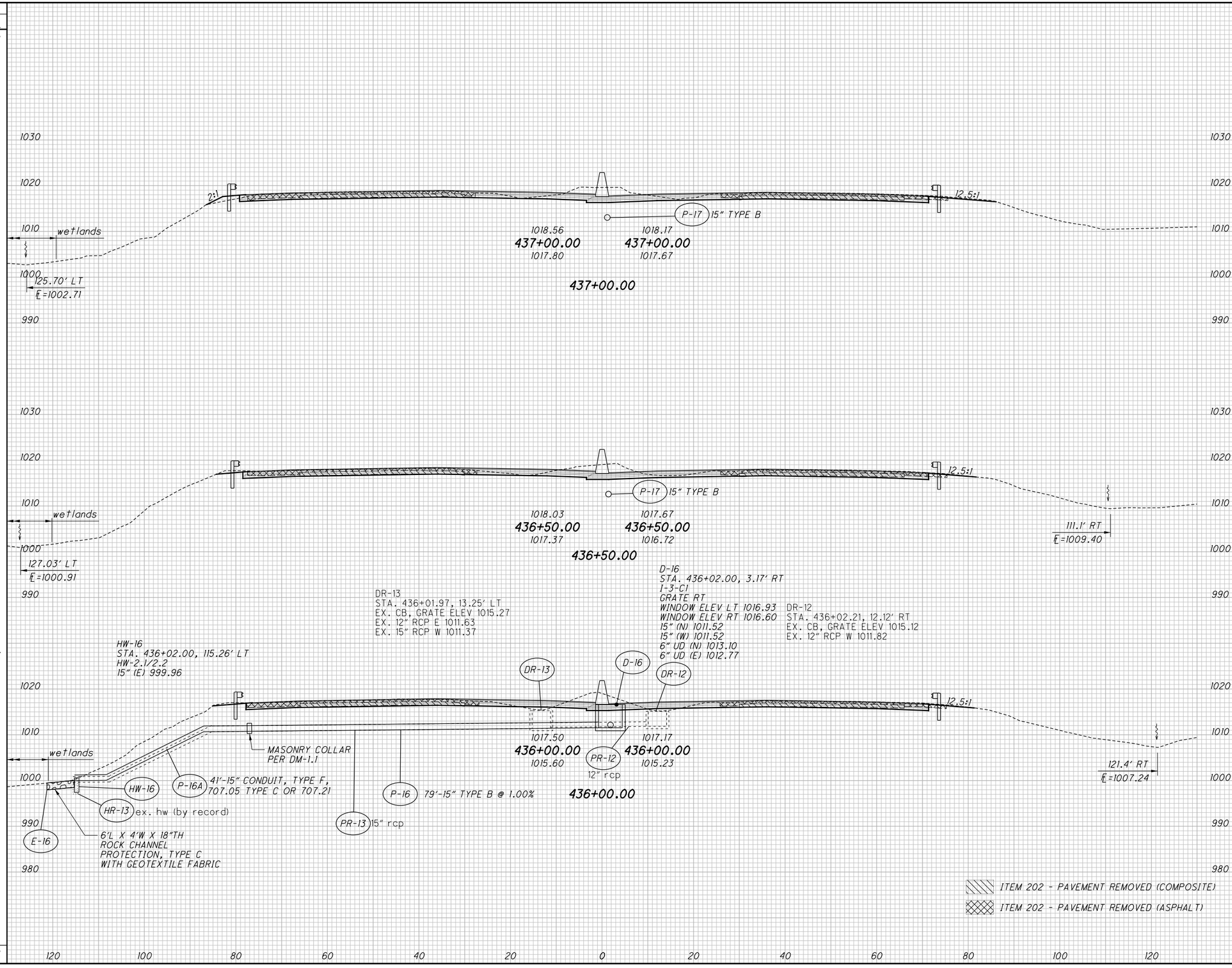


# CROSS SECTIONS - I.R. 77
# STA. 436+00.00 TO STA. 437+00.00

SUM-77 / 277 / 224
VARIOUS

549
1288

0:\2017\2017258\ProjectData\SUM\06002\Design\Roadway\Sheets\06002_XS001.dgn Sheet 1/15/2021 9:17:49 AM pfry

| SEEDING END WIDTH | SEEDING SQ. YDS. | END AREA CUT | END AREA FILL | VOLUME CUT | VOLUME FILL |
|---|---|---|---|---|---|
| | 158 | | | 214 | 10 |
| 30 | | 120 | 5 | | |
| | 156 | | | 219 | 8 |
| 26 | | 116 | 4 | | |
| | 144 | | | 211 | 7 |
| 26 | | 112 | 4 | | |
| | 175 | | | 204 | 10 |
| 37 | | 108 | 7 | | |
| | 633 | | | 848 | 35 |

CALCULATED CJC
CHECKED PJF

D-17
STA. 439+00.00, 3.17' RT
I-3-C1
GRATE RT
WINDOW ELEV LT 1020.09
WINDOW ELEV RT 1019.58
15" (S) 1014.25
6" UD (W) 1016.26
6" UD (E) 1015.75

ex. 8" san. (by record)

1020.68 439+00.00 1020.51
1020.17 439+00.00 1019.44
439+00.00

ex. 8" san. (by record)

1020.15 438+50.00 1019.91
1019.67 438+50.00 1019.10
438+50.00

112.00' LT
℄=1012.49

1019.62 438+00.00 1019.37
1019.17 438+00.00 1018.60
438+00.00

111.25' LT
℄=1007.45

1019.09 437+50.00 1018.23
1018.67 437+50.00 1017.96
437+50.00

ITEM 202 - PAVEMENT REMOVED (COMPOSITE)
ITEM 202 - PAVEMENT REMOVED (ASPHALT)

# CROSS SECTIONS - I.R. 77
# STA. 437+50.00 TO STA. 439+00.00

SUM-77 / 277 / 224
VARIOUS

550
1288

D:\2017\2017258\ProjectData\SUM\06002\Design\Roadway\Sheets\06002_XS001.dgn Sheet 1/15/2021 9:17:53 AM pfry

| SEEDING END WIDTH | SEEDING SQ. YDS. |
|---|---|
| 50 | 289 |
| | 228 |
| 32 | |
| | 183 |
| 34 | |
| | 169 |
| 27 | |
| | 869 |

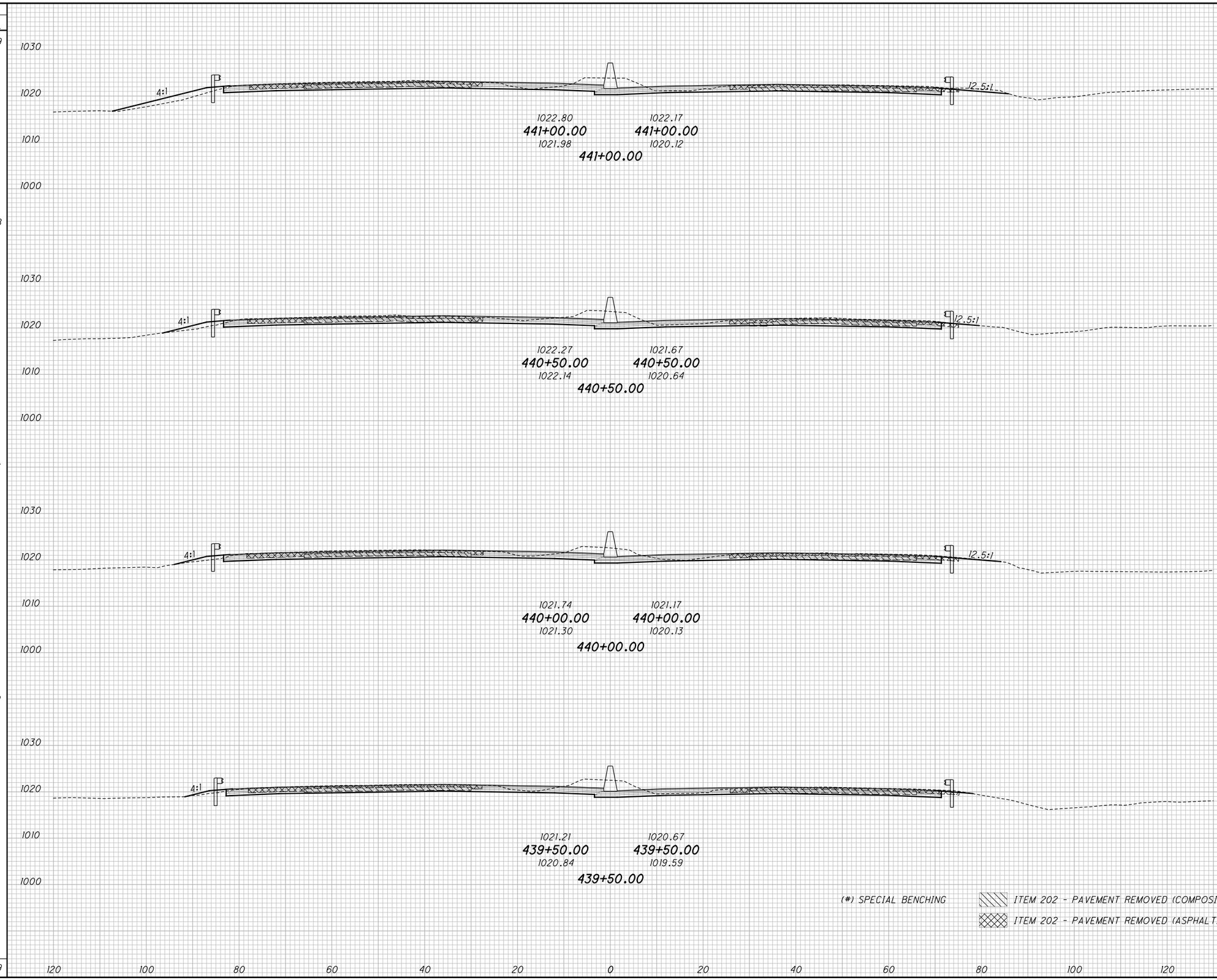


(#) SPECIAL BENCHING

ITEM 202 - PAVEMENT REMOVED (COMPOSITE)

ITEM 202 - PAVEMENT REMOVED (ASPHALT)

| END AREA CUT | END AREA FILL | VOLUME CUT | VOLUME FILL |
|---|---|---|---|
| | | (40) | (40) |
| | | 222 | 63 |
| (0) | (0) | | |
| 115 | 24 | | |
| | | 219 | 33 |
| 121 | 12 | | |
| 108 | 8 | 212 | 19 |
| 111 | 6 | 203 | 13 |
| | | (40) | (40) |
| | | 856 | 128 |

CALCULATED CJC
CHECKED PJF

# CROSS SECTIONS - I.R. 77
## STA. 439+50.00 TO STA. 441+00.00

SUM-77 / 277 / 224
VARIOUS

551
1288

0:\2017\2017258\ProjectData\SUM\06002\Design\Roadway\Sheets\06002_XS001.dgn Sheet 1/15/2021 9:17:57 AM pfry

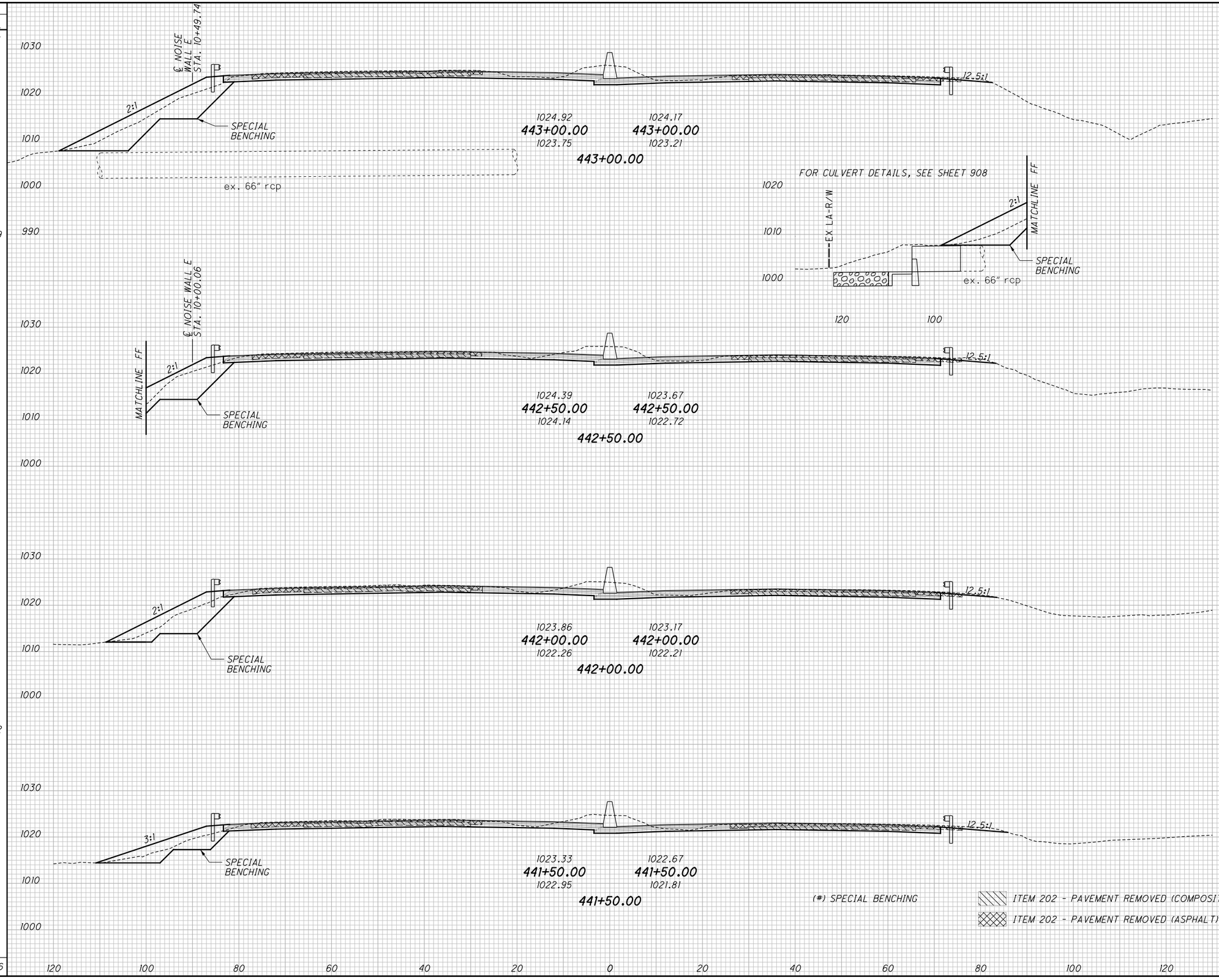


| SEEDING END WIDTH | SEEDING SQ. YDS. |
|---|---|
| | 314 |
| 61 | |
| | 339 |
| 61 | |
| | 311 |
| 51 | |
| | 292 |
| 54 | |
| | 1256 |

| END AREA CUT | END AREA FILL | VOLUME CUT | VOLUME FILL |
|---|---|---|---|
| | | (162) | (162) |
| | | 223 | 131 |
| (112) | (112) | | |
| 118 | 70 | | |
| | | (197) | (197) |
| | | 226 | 137 |
| (101) | (101) | | |
| 126 | 78 | | |
| | | (158) | (158) |
| | | 224 | 119 |
| (70) | (70) | | |
| 116 | 50 | | |
| | | (105) | (105) |
| | | 223 | 87 |
| (43) | (43) | | |
| 125 | 44 | | |
| | | (622) | (622) |
| | | 896 | 474 |

CALCULATED CJC
CHECKED PJF

# CROSS SECTIONS - I.R. 77
## STA. 441+50.00 TO STA. 443+00.00

SUM-77 / 277 / 224
VARIOUS

552
1288

0:\2017\20172581\Project Data\SUM\106002\Design\Roadway\Sheets\106002_XS001.dgn Sheet 1/15/2021 9:18:00 AM pfry

| SEEDING END WIDTH | SEEDING SQ. YDS. |
|---|---|
| | 494 |
| 83 | |
| | 472 |
| 87 | |
| | 378 |
| 49 | |
| | 281 |
| 52 | |
| | 1625 |

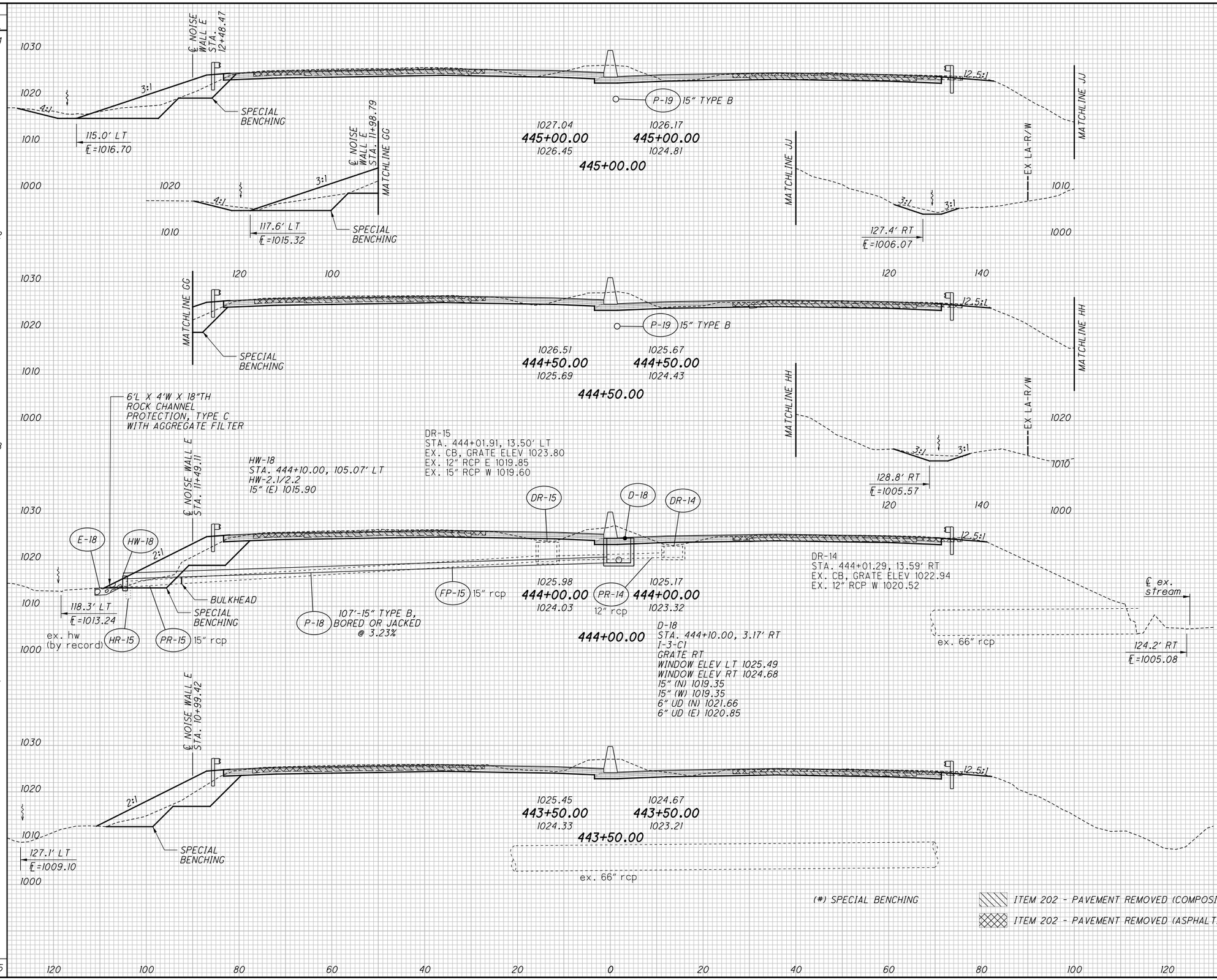


| END AREA CUT | END AREA FILL | VOLUME CUT | VOLUME FILL |
|---|---|---|---|
| | | (80) | (80) |
| | | 314 | 90 |
| (56) | (56) | | |
| 141 | 58 | | |
| | | (110) | (110) |
| | | 252 | 119 |
| (63) | (63) | | |
| 131 | 70 | | |
| | | (117) | (117) |
| | | 213 | 134 |
| (63) | (63) | | |
| 99 | 75 | | |
| | | (117) | (117) |
| | | 206 | 136 |
| (63) | (63) | | |
| 123 | 72 | | |
| | | (424) | (424) |
| | | 985 | 479 |

CALCULATED CJC
CHECKED PJF

# CROSS SECTIONS - I.R. 77
# STA. 443+50.00 TO STA. 445+00.00

SUM-77 / 277 / 224
VARIOUS

553
1288

0:\2017\2017258\ProjectData\SUM\06002\Design\Roadway\Sheets\06002_XS001.dgn Sheet 1/15/2021 9:18:03 AM pfry

| SEEDING END WIDTH | SEEDING SQ. YDS. |
|---|---|
| | 506 |
| | 109 |
| | 594 |
| | 105 |
| | 489 |
| | 71 |
| | 461 |
| | 95 |
| | 2050 |

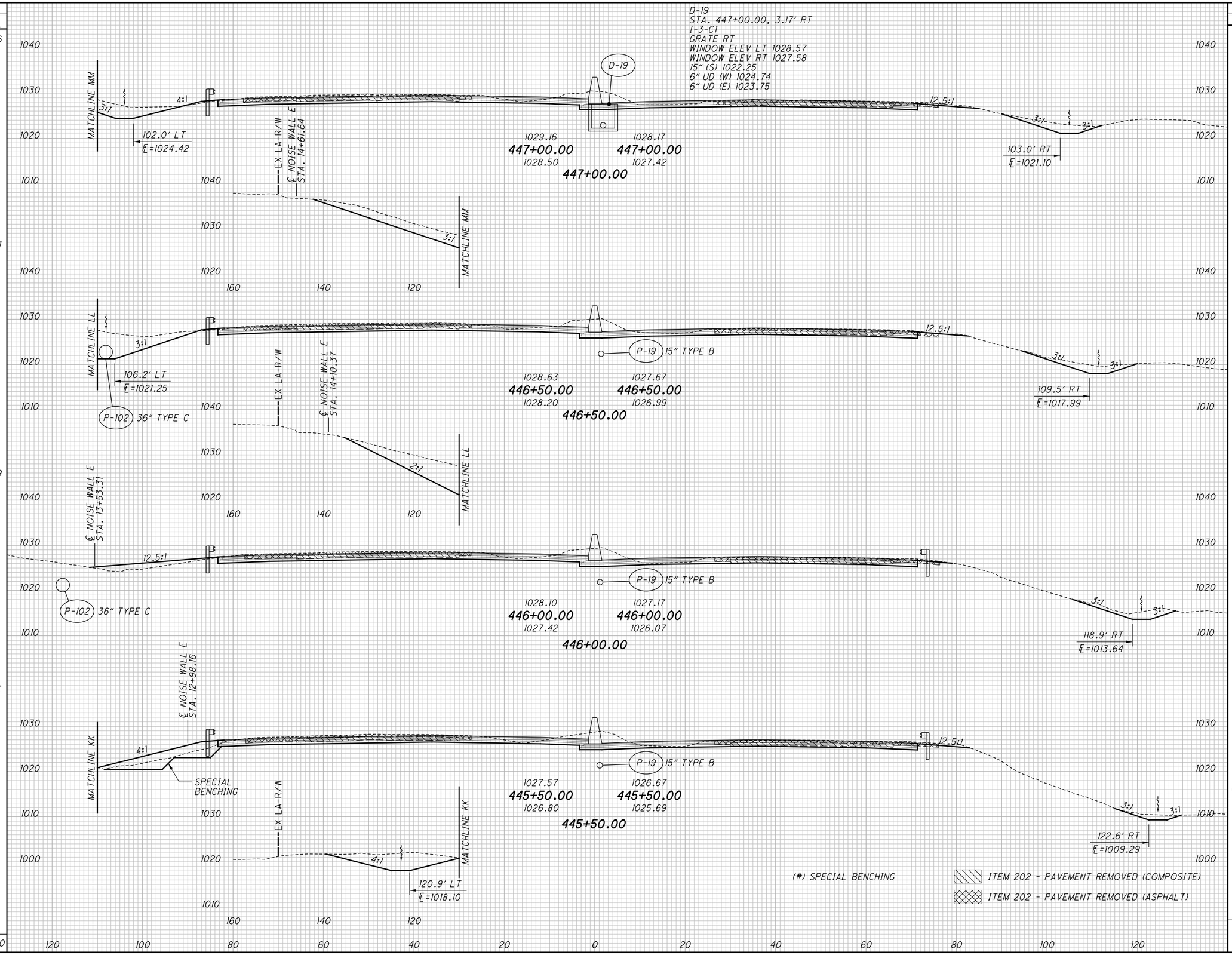


| END AREA CUT | END AREA FILL | VOLUME CUT | VOLUME FILL |
|---|---|---|---|
| | | 382 | 7 |
| | | 251 | 4 |
| | | 511 | 7 |
| | | 301 | 4 |
| | | 413 | 28 |
| (0) | (0) | | |
| 145 | 26 | | |
| | | (28) | (28) |
| | | 318 | 60 |
| (30) | (30) | | |
| 198 | 39 | | |
| | | (28) | (28) |
| | | 1624 | 102 |

CALCULATED CJC
CHECKED PJF

# CROSS SECTIONS - I.R. 77
# STA. 445+50.00 TO STA. 447+00.00

SUM-77 / 277 / 224
VARIOUS

554
1288

O:\2017\2017258\ProjectData\SUM\06002\Design\Roadway\Sheets\06002_XS001.dgn Sheet 1/15/2021 9:8:10 AM pfry

| SEEDING END WIDTH | SEEDING SQ. YDS. | END AREA CUT | END AREA FILL | VOLUME CUT | VOLUME FILL |
|---|---|---|---|---|---|
| | 822 | | | 459 | 28 |
| 63 | | 141 | 4 | | |
| | 537 | | | 411 | 11 |
| 64 | | 151 | 4 | | |
| | 177 | | | 136 | 4 |
| 69 | | 157 | 4 | | |
| | 394 | | | 295 | 7 |
| 73 | | 162 | 4 | | |
| | 1930 | | | 1301 | 50 |

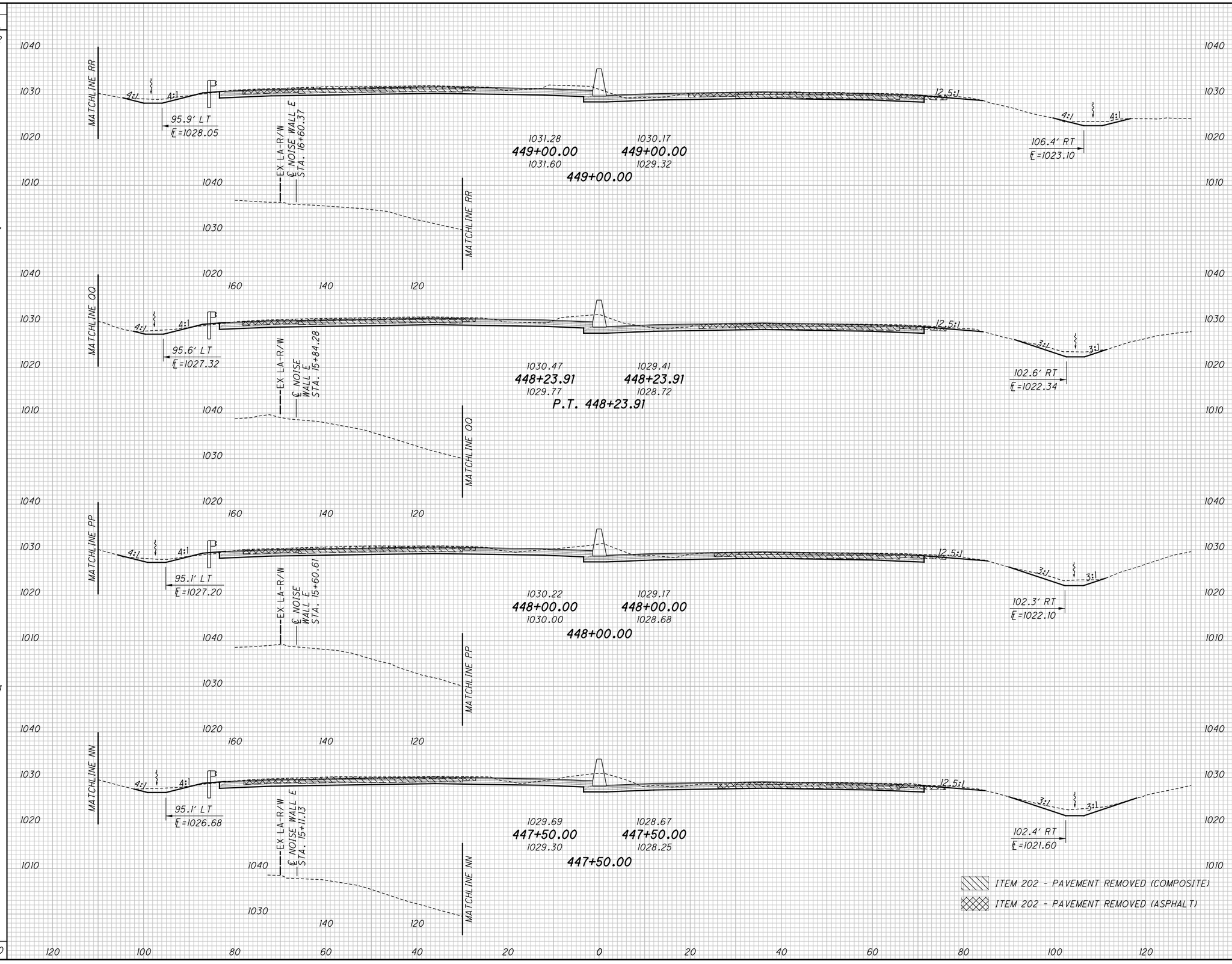


CALCULATED CJC
CHECKED PJF

# CROSS SECTIONS - I.R. 77
# STA. 447+50.00 TO STA. 449+00.00

SUM-77 / 277 / 224
VARIOUS

555
1288

O:\2017\2017258\ProjectData\SUM\106002\Design\Roadway\Sheets\106002_XS001.dgn Sheet 1/15/2021 9:8:14 AM pfry

| SEEDING END WIDTH | SEEDING SQ. YDS. |
|---|---|
| 77 | 900 |
| | 889 |
| 83 | |
| | 917 |
| 82 | |
| | 928 |
| 85 | |
| | 3634 |

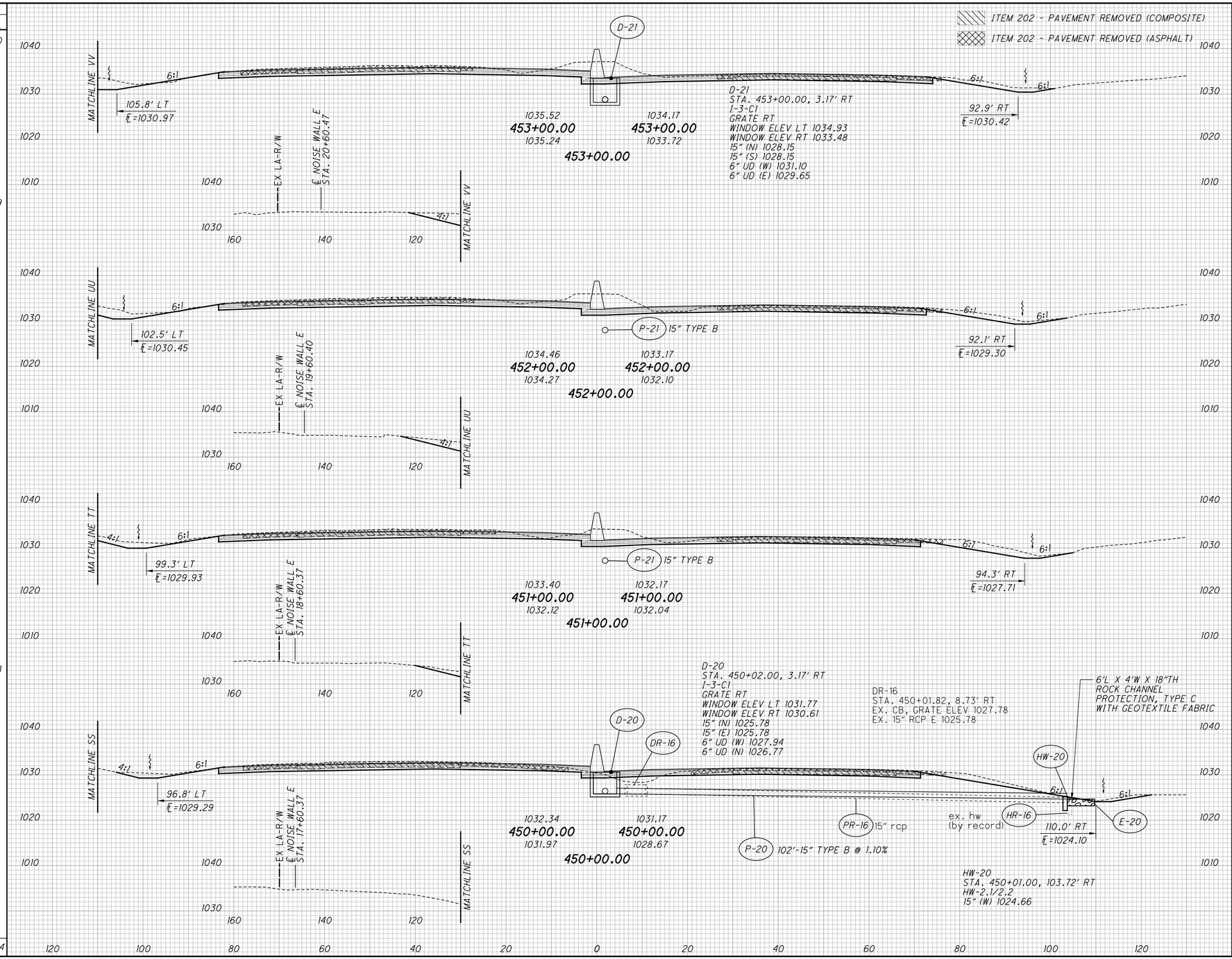


| END AREA CUT | END AREA FILL | VOLUME CUT | VOLUME FILL |
|---|---|---|---|
| | | 761 | 9 |
| 212 | 3 | | |
| | | 774 | 7 |
| 206 | 1 | | |
| | | 733 | 4 |
| 190 | 1 | | |
| | | 550 | 22 |
| 107 | 11 | | |
| | | 2818 | 42 |

CALCULATED CJC
CHECKED PJF

# CROSS SECTIONS - I.R. 77
# STA. 450+00.00 TO STA. 453+00.00

SUM-77 / 277 / 224
VARIOUS

556
1288

0:\2017\2017258\ProjectData\SUM\06002\Design\Roadway\Sheets\06002_XS001.dgn Sheet 1/15/2021 9:18:19 AM pfry

| SEEDING END WIDTH | SEEDING SQ. YDS. |
|---|---|
| | [333] |
| | 1039 |
| [29] | AH |
| [61] | BK |
| 96 | |
| | [644] |
| | 1078 |
| [55] | |
| 98 | |
| | [425] |
| | 1078 |
| [52] | AH |
| [27] | BK |
| [85] | |
| [27] | |
| 96 | |
| | [300] |
| | 1006 |
| [27] | |
| 85 | |
| | [178] |
| [25] | AH |
| [0] | BK |
| | [1965] |
| | 4201 |

| END AREA CUT | END AREA FILL | VOLUME CUT | VOLUME FILL |
|---|---|---|---|
| | | | >37< |
| | | 691 | 91 |
| | >10< | | |
| | >20< | | |
| 206 | 19 | | |
| | >18< | | |
| 224 | 10 | | |
| | | | >70< |
| | | 796 | 54 |
| | >17< | | |
| | >9< | | |
| | | | >9< |
| | >9< | | |
| 225 | 5 | | |
| | | | >33< |
| | | 785 | 13 |
| | >9< | | |
| 199 | 2 | | |
| | | | >19< |
| | >8< | | |
| | >0< | | |
| | | | >46< |
| | | 831 | 28 |
| | | | >214< |
| | | 3103 | 186 |

CALCULATED CJC
CHECKED PJF

# CROSS SECTIONS - I.R. 77
## STA. 454+00.00 TO STA. 457+00.00

SUM-77 / 277 / 224
VARIOUS

557
1288

END SLOPE EROSION PROTECTION FOR VEG. FILTER STRIP 3 STA. 457+00.00 RT.

END TOPSOIL FOR VEG. FILTER STRIP 3 STA. 457+00.00 RT.

EX LA-R/W

℄ NOISE WALL E STA. 24+60.98

111.0' LT ℄=1034.34

109.9' RT ℄=1032.66

1039.76 457+00.00 1039.49

1038.30 457+00.00 1037.08

457+00.00

℄ NOISE WALL E STA. 23+60.67

MATCHLINE YY

BEGIN SLOPE EROSION PROTECTION FOR VEG. FILTER STRIP 3 STA. 455+28.44 RT.

BEGIN TOPSOIL FOR VEG. FILTER STRIP 3 STA. 455+28.44 RT.

MATCHLINE XX

109.0' LT ℄=1032.55

99.5' RT ℄=1031.84

1037.64 455+00.00 1037.64

1036.22 455+00.00 1035.27

455+00.00

℄ NOISE WALL E STA. 22+60.61

D-62
STA. 455+50.00, 3.17' RT
I-3-C1
GRATE RT
WINDOW LT ELEV 1037.58
WINDOW RT ELEV 1035.89
15" (S) 1030.56

MATCHLINE WW

109.0' LT ℄=1031.49

94.3' RT ℄=1031.43

1036.58 454+00.00 1035.95

1035.18 454+00.00 1034.39

454+00.00

P-62 15" TYPE B

℄ NOISE WALL E STA. 21+60.54

BEGIN SLOPE EROSION PROTECTION FOR VEG. FILTER STRIP 2 STA. 453+38.46 LT.

BEGIN TOPSOIL FOR VEG. FILTER STRIP 2 STA. 453+38.46 LT.

MATCHLINE YY

109.0' LT ℄=1033.61

104.7' RT ℄=1032.25

1038.70 456+00.00 1038.23

1037.26 456+00.00 1036.39

456+00.00

>#< ITEM 659 - TOPSOIL

[#] ITEM 670 - SLOPE EROSION PROTECTION

ITEM 202 - PAVEMENT REMOVED (COMPOSITE)

ITEM 202 - PAVEMENT REMOVED (ASPHALT)

0:\2017\2017258\ProjectData\SUM\06002\Design\Roadway\Sheets\06002_XS001.dgn Sheet 1/15/2021 9:8:26 AM pfry

| SEEDING | |
|---|---|
| END WIDTH | SQ. YDS. |
| | 861 |
| 76 | |
| | 856 |
| 78 | |
| [0] [25] | |
| [46] 939 | |
| [31] 91 | |
| [46] | 2656 |

| REVISIONS | | |
|---|---|---|
| NO. | DATE | DESCRIPTION |
| 6 | 04/26/21 | REVISED CONDUIT, BORED OR JACKED |

>#< ITEM 659 - TOPSOIL

[#] ITEM 670 - SLOPE EROSION PROTECTION

ITEM 202 - PAVEMENT REMOVED (COMPOSITE)

ITEM 202 - PAVEMENT REMOVED (ASPHALT)

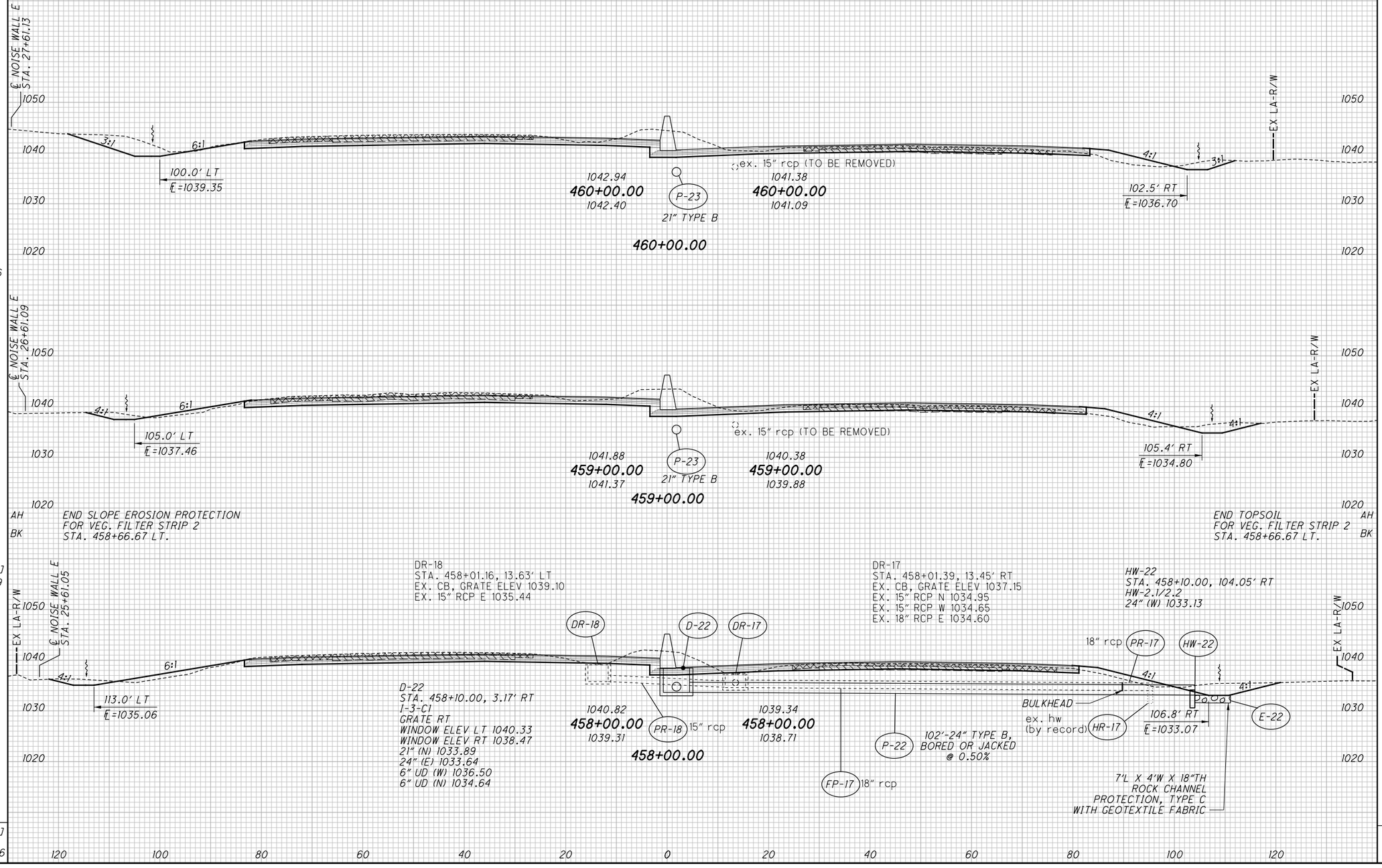


| END AREA | | VOLUME | |
|---|---|---|---|
| CUT | FILL | CUT | FILL |
| | | 856 | 106 |
| 211 | 29 | | |
| | | 720 | 120 |
| 178 | 36 | | |
| | | | >0< |
| | | | >8< |
| | | | >22< |
| | | 639 | 122 |
| | | | >10< |
| 167 | 30 | | |
| | | | >22< |
| | | 2215 | 348 |

CALCULATED CJC
CHECKED PJF

# CROSS SECTIONS - I.R. 77
# STA. 458+00.00 TO STA. 460+00.00

SUM-77 / 277 / 224
VARIOUS

558
1288

0:\2017\2017258\ProjectData\SUM\06002\Design\Roadway\Sheets\06002_XS001.dgn Sheet 4/26/2021 11:02:51 AM pfry

| SEEDING | |
|---|---|
| END WIDTH | SQ. YDS. |
| | 1039 |
| | 88 |
| | 928 |
| | 79 |
| | 1967 |

| END AREA | |
|---|---|
| CUT | FILL |
| | |
| | 272 |
| | 251 |
| | |

| VOLUME | |
|---|---|
| CUT | FILL |
| 1076 | 80 |
| | 26 |
| 969 | 100 |
| | 28 |
| 2045 | 180 |

CALCULATED CJC
CHECKED PJF

# CROSS SECTIONS - I.R. 77
## STA. 461+00.00 TO STA. 462+00.00

SUM-77 / 277 / 224
VARIOUS

559
1288

0:\2017\2017258\Project Data\SUM\06002\Design\Roadway\Sheets\06002_XS001.dgn Sheet 1/15/2021 9:8:35 AM pfry

| SEEDING | |
|---|---|
| END WIDTH | SQ. YDS. |
| | 1172 |
| | 107 |
| | 1144 |
| | 99 |
| | 2316 |

ITEM 202 - PAVEMENT REMOVED (COMPOSITE)

ITEM 202 - PAVEMENT REMOVED (ASPHALT)

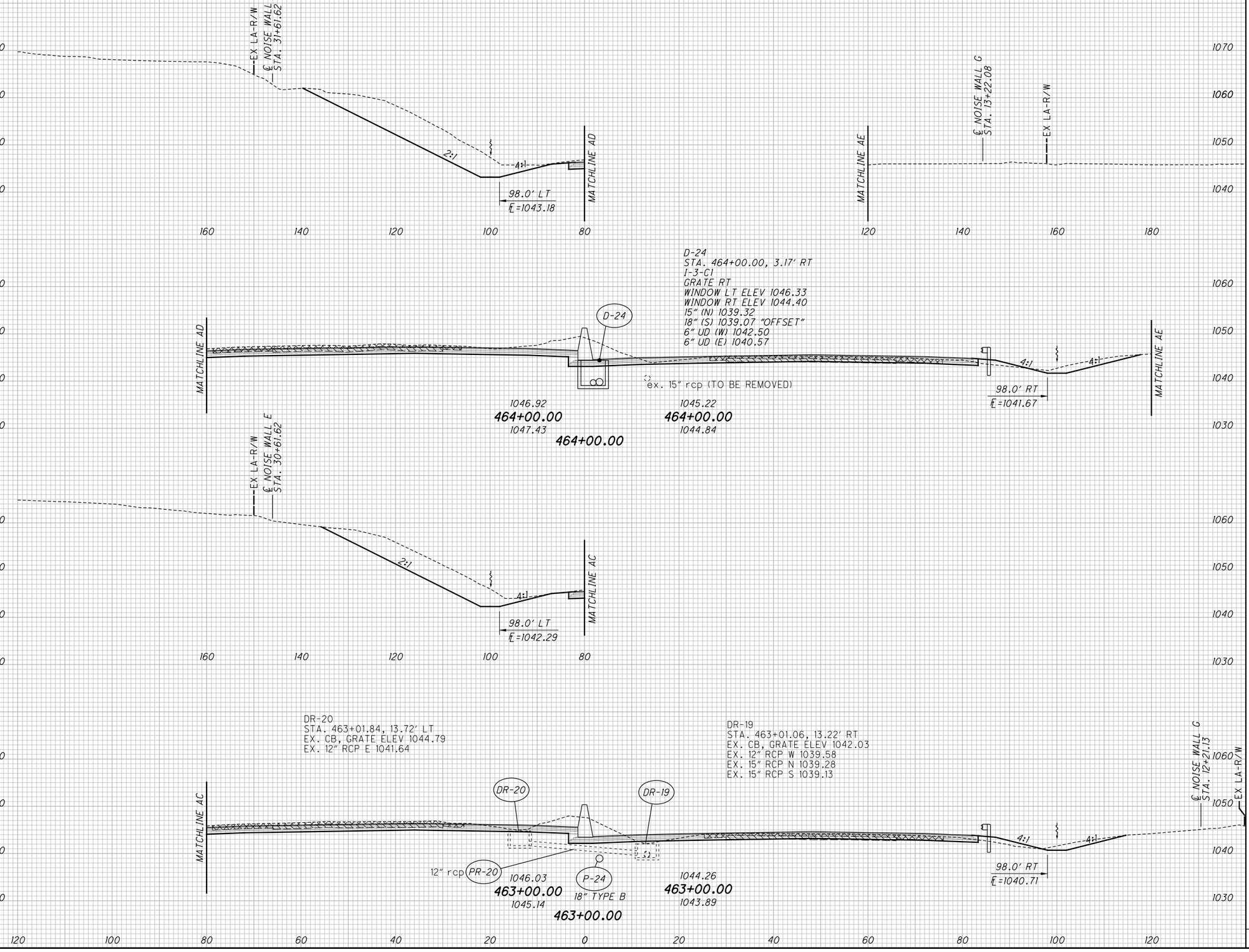


| END AREA | |
|---|---|
| CUT | FILL |
| | |
| | |
| 409 | 10 |
| | |
| | |

| VOLUME | |
|---|---|
| CUT | FILL |
| | |
| 1485 | 33 |
| | |
| 1330 | 50 |
| | |
| 2815 | 83 |

CALCULATED CJC
CHECKED PJF

# CROSS SECTIONS - I.R. 77
# STA. 463+00.00 TO STA. 464+00.00

SUM-77 / 277 / 224
VARIOUS

560
1288

D:\2017\2017258\ProjectData\SUM\106002\Design\Roadway\Sheets\106002_XS001.dgn Sheet 1/15/2021 9:8:39 AM pfry

| SEEDING | |
|---|---|
| END WIDTH | SQ. YDS. |
| | 1217 |
| | 107 |
| | 1172 |
| | 104 |
| | 2389 |

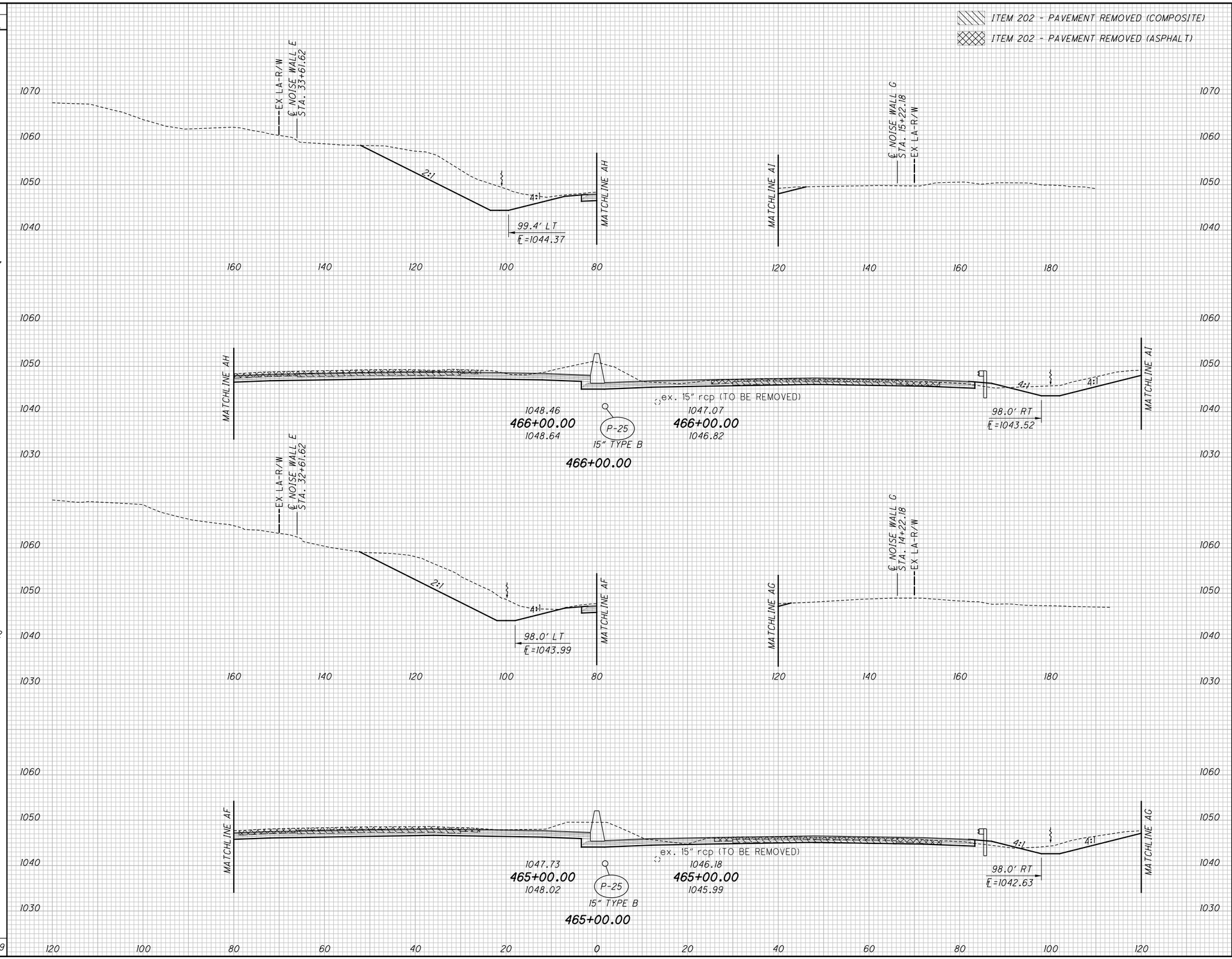


| END AREA | |
|---|---|
| CUT | FILL |
| 407 | 6 |
| 393 | 8 |

| VOLUME | |
|---|---|
| CUT | FILL |
| 1563 | 19 |
| 1481 | 26 |
| 3044 | 45 |

CALCULATED CJC
CHECKED PJF

# CROSS SECTIONS - I.R. 77
# STA. 465+00.00 TO STA. 466+00.00

SUM-77 / 277 / 224
VARIOUS

561
1288

O:\2017\2017258\ProjectData\SUM\106002\Design\Roadway\Sheets\106002_XS001.dgn Sheet 1/15/2021 9:18:43 AM pfry

| SEEDING | |
|---|---|
| END WIDTH | SQ. YDS. |
| | 783 |
| | 101 |
| | 1183 |
| | 112 |
| | 1966 |

| END AREA | |
|---|---|
| CUT | FILL |
| | |
| | |
| 378 | 0 |
| | |
| 437 | 4 |
| | |

| VOLUME | |
|---|---|
| CUT | FILL |
| 1107 | 0 |
| | |
| 1509 | 7 |
| | |
| 2616 | 7 |

CALCULATED CJC
CHECKED PJF

ITEM 202 - PAVEMENT REMOVED (COMPOSITE)
ITEM 202 - PAVEMENT REMOVED (ASPHALT)

EX LA-R/W
℄ NOISE WALL E STA. 35+61.62
2:1
2:1
MATCHLINE AL
94.0' LT
E=1045.17

D-25
STA. 467+75.00, 3.17' RT
I-3-C1
GRATE RT
WINDOW LT ELEV 1048.94
WINDOW RT ELEV 1047.23
15" (N) 1042.40
15" (S) 1041.90
6" UD (W) 1045.11
6" UD (E) 1043.40

DR-22
STA. 468+00.83, 13.31' LT
EX. CB, GRATE ELEV 1048.15
EX. 12" RCP E 1045.70

DR-21
STA. 468+00.62, 13.50' RT
EX. CB, GRATE ELEV 1046.40
EX. 12" RCP W 1043.40
EX. 15" RCP S 1043.00

D-61
STA 468+00.00, 8.50' RT
MH-3, RIM ELEV 1047.75
15" (N) 1042.59
15" (S) 1042.59

DR-22
PR-22 12" rcp
D-25
D-61
DR-21
MATCHLINE AL
MATCHLINE AM
4:1
4:1
91.7' RT
E=1045.32
1049.67
468+00.00
1048.42
1048.13
468+00.00
1048.10
468+00.00
P-61 26'-15" TYPE B @ 0.75%

℄ NOISE WALL G STA. 17+22.18
EX LA-R/W
MATCHLINE AM

EX LA-R/W
℄ NOISE WALL E STA. 34+61.62
2:1
4:1
MATCHLINE AJ
100.4' LT
E=1044.76

℄ NOISE WALL G STA. 16+22.18
EX LA-R/W
MATCHLINE AK

MATCHLINE AJ
(ex. 15" rcp (TO BE REMOVED)
1049.10
467+00.00
1050.14
P-25
15" TYPE B
467+00.00
1047.72
467+00.00
1047.68
4:1
4:1
97.0' RT
E=1044.42
MATCHLINE AK

# CROSS SECTIONS - I.R. 77
# STA. 467+00.00 TO STA. 468+00.00

SUM-77 / 277 / 224
VARIOUS

562
1288

0:\2017\2017258\ProjectData\SUM\06002\Design\Roadway\Sheets\06002_XS001.dgn Sheet 1/15/2021 9:8:47 AM pfry

| SEEDING END WIDTH | SEEDING SQ. YDS. |
|---|---|
| 34 | |
| | |
| | |
|

| SEEDING END WIDTH | SEEDING SQ. YDS. | END AREA CUT | END AREA FILL | VOLUME CUT | VOLUME FILL |
|---|---|---|---|---|---|
| | 539 | | | 504 | 6 |
| 45 | | 136 | 1 | | |
| | 467 | | | 480 | 2 |
| 39 | | 123 | 0 | | |
| | 183 | | | 260 | 0 |
| 23 | | 142 | 0 | | |
| | 1189 | | | 1244 | 8 |

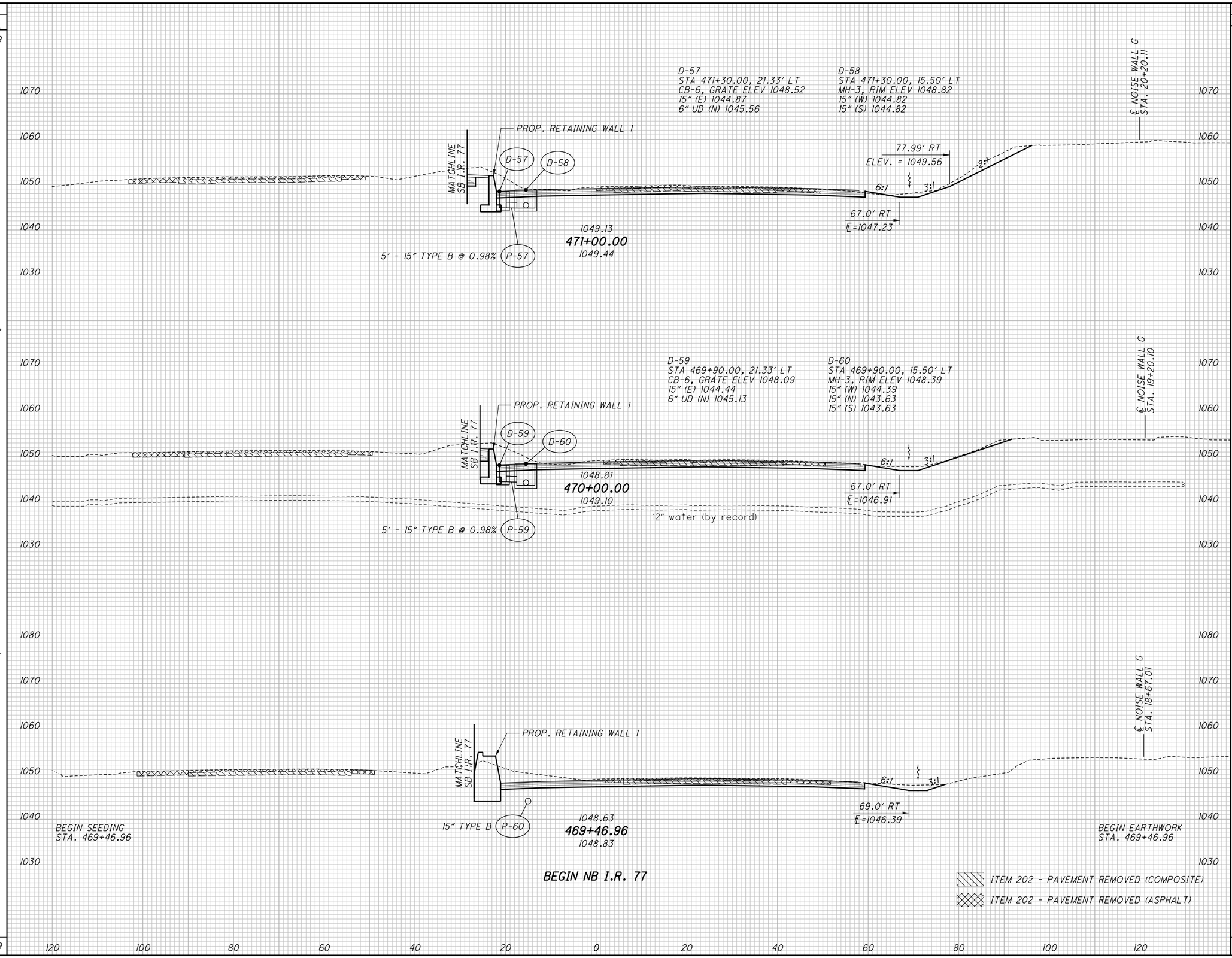


CALCULATED CJC
CHECKED PJF

# CROSS SECTIONS - NB I.R. 77
## STA. 469+46.96 TO STA. 471+00.00

SUM-77 / 277 / 224
VARIOUS

564
1288

0:\2017\2017258\ProjectData\SUM\06002\Design\Roadway\Sheets\06002_XS002.dgn Sheet 1/13/2021 5:56:32 PM pfry

| SEEDING END WIDTH | SEEDING SQ. YDS. | END AREA CUT | END AREA FILL | VOLUME CUT | VOLUME FILL |
|---|---|---|---|---|---|
| | 589 | | | 491 | 13 |
| 53 | | 160 | 5 | | |
| | 430 | | | 437 | 9 |
| 53 | | 163 | 2 | | |
| | 157 | | | 149 | 2 |
| 52 | | 136 | 2 | | |
| | 1176 | | | 1077 | 24 |

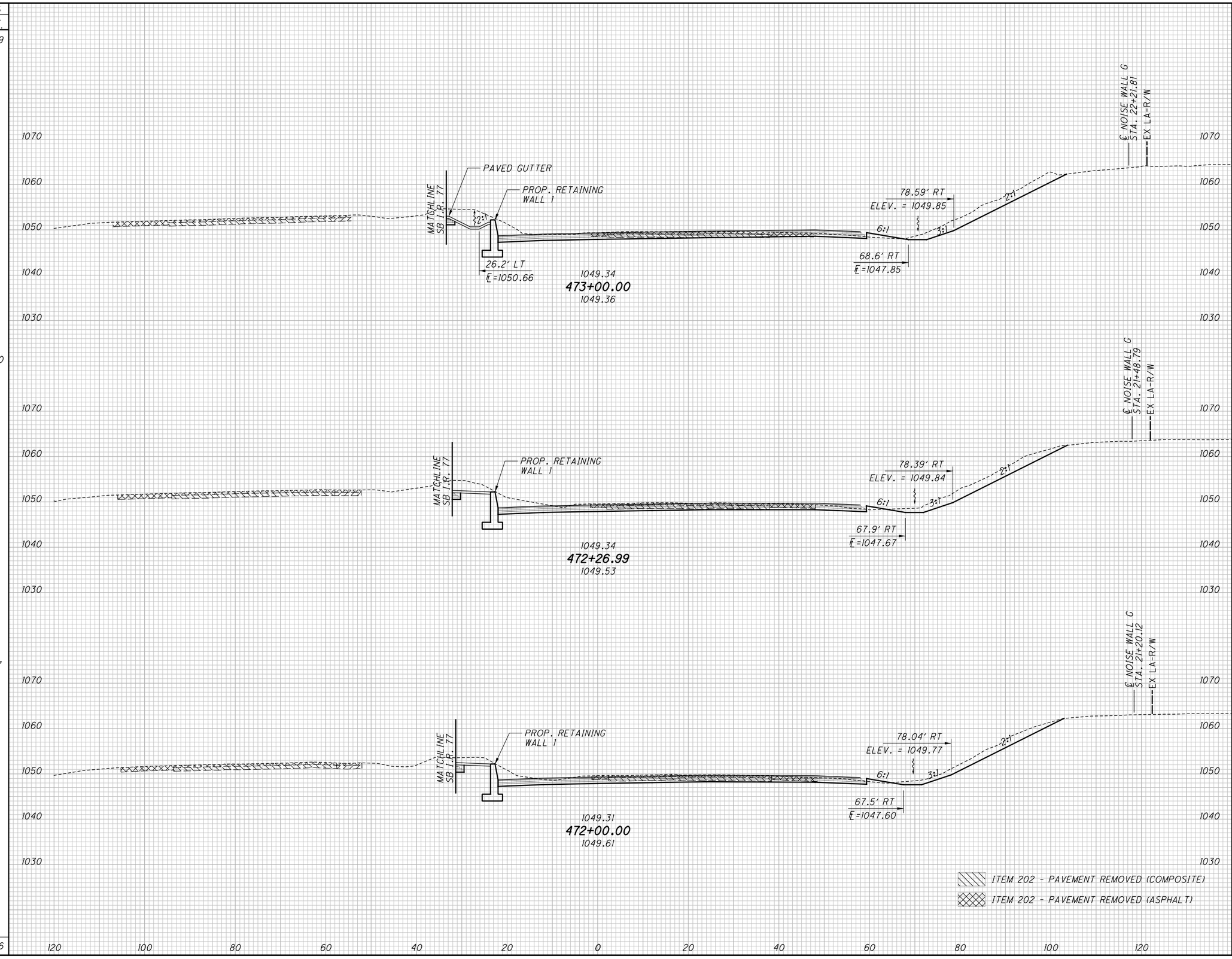


CALCULATED CJC
CHECKED PJF

# CROSS SECTIONS - NB I.R. 77
# STA. 472+00.00 TO STA. 473+00.00

SUM-77 / 277 / 224
VARIOUS

565
1288

0:\2017\2017258\Project Data\SUM\06002\Design\Roadway\Sheets\06002_XS002.dgn Sheet 1/13/2021 5:56:37 PM pfry

| SEEDING END WIDTH | SEEDING SQ. YDS. | END AREA CUT | END AREA FILL | VOLUME CUT | VOLUME FILL |
|---|---|---|---|---|---|
| | 142 | | | 182 | 1 |
| 26 | | 94 | 0 | | |
| | 21 | | | 26 | 0 |
| 29 | | 113 | 0 | | |
| | 424 | | | 376 | 3 |
| 53 | | 105 | 2 | | |
| | 587 | | | 584 | 4 |

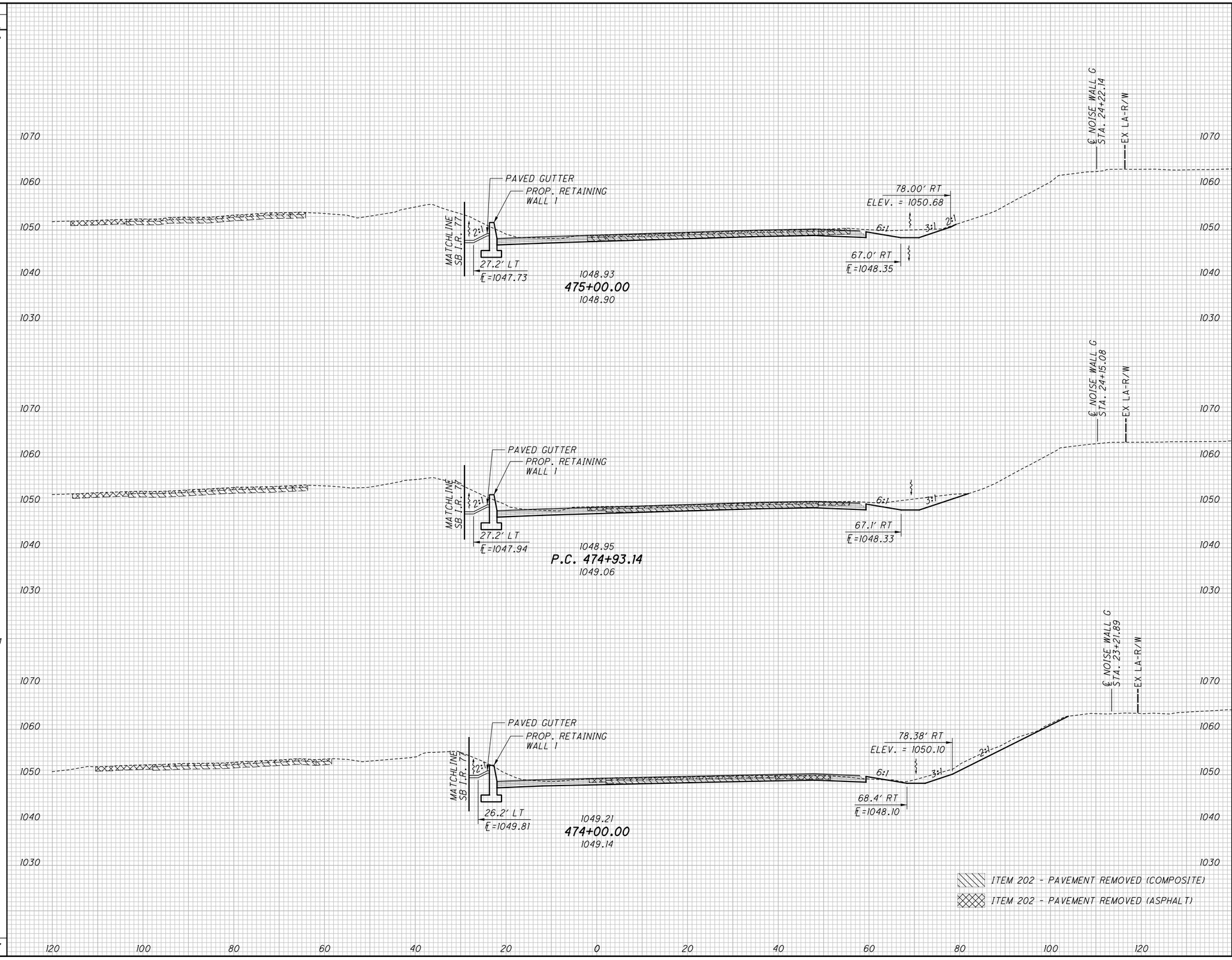


CALCULATED CJC
CHECKED PJF

# CROSS SECTIONS - NB I.R. 77
## STA. 474+00.00 TO STA. 475+00.00

SUM-77 / 277 / 224
VARIOUS

566
1288

0:\2017\2017258\Project Data\SUM\06002\Design\Roadway\Sheets\06002_XS002.dgn Sheet 1/13/2021 5:56:39 PM pfry

| SEEDING END WIDTH | SEEDING SQ. YDS. |
|---|---|
| | 67 |
| 10 | |
| 0 | |
| | 0 |
| 0 | |
| 25 | |
| | 139 |
| 25 | |
| | 206 |

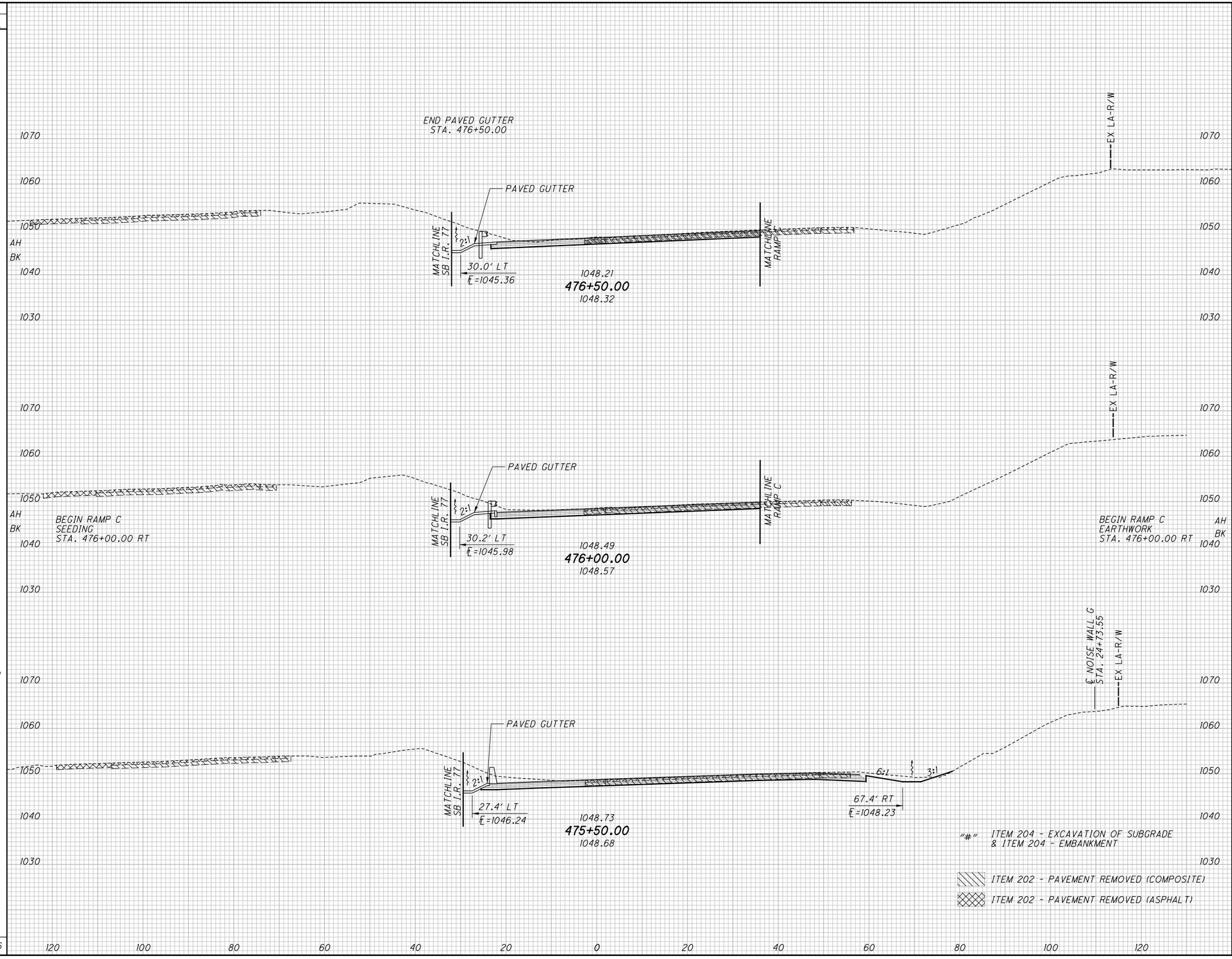


| END AREA CUT | END AREA FILL | VOLUME CUT | VOLUME FILL |
|---|---|---|---|
| | | "109" | "109" |
| | | 153 | 0 |
| "0" | "0" | | |
| 79 | 0 | | |
| | | 152 | 0 |
| AH 85 | | | |
| BK 114 | 0 | | |
| | | 201 | 1 |
| 103 | 1 | | |
| | | "109" | "109" |
| | | 506 | 1 |

"#" ITEM 204 - EXCAVATION OF SUBGRADE & ITEM 204 - EMBANKMENT

ITEM 202 - PAVEMENT REMOVED (COMPOSITE)

ITEM 202 - PAVEMENT REMOVED (ASPHALT)

CALCULATED CJC
CHECKED PJF

# CROSS SECTIONS - NB I.R. 77
# STA. 475+50.00 TO STA. 476+50.00

SUM-77 / 277 / 224
VARIOUS

567
1288

O:\2017\2017258\ProjectData\SUM\06002\Design\Roadway\Sheets\06002_XS002.dgn Sheet 1/13/2021 5:56:41 PM pfry

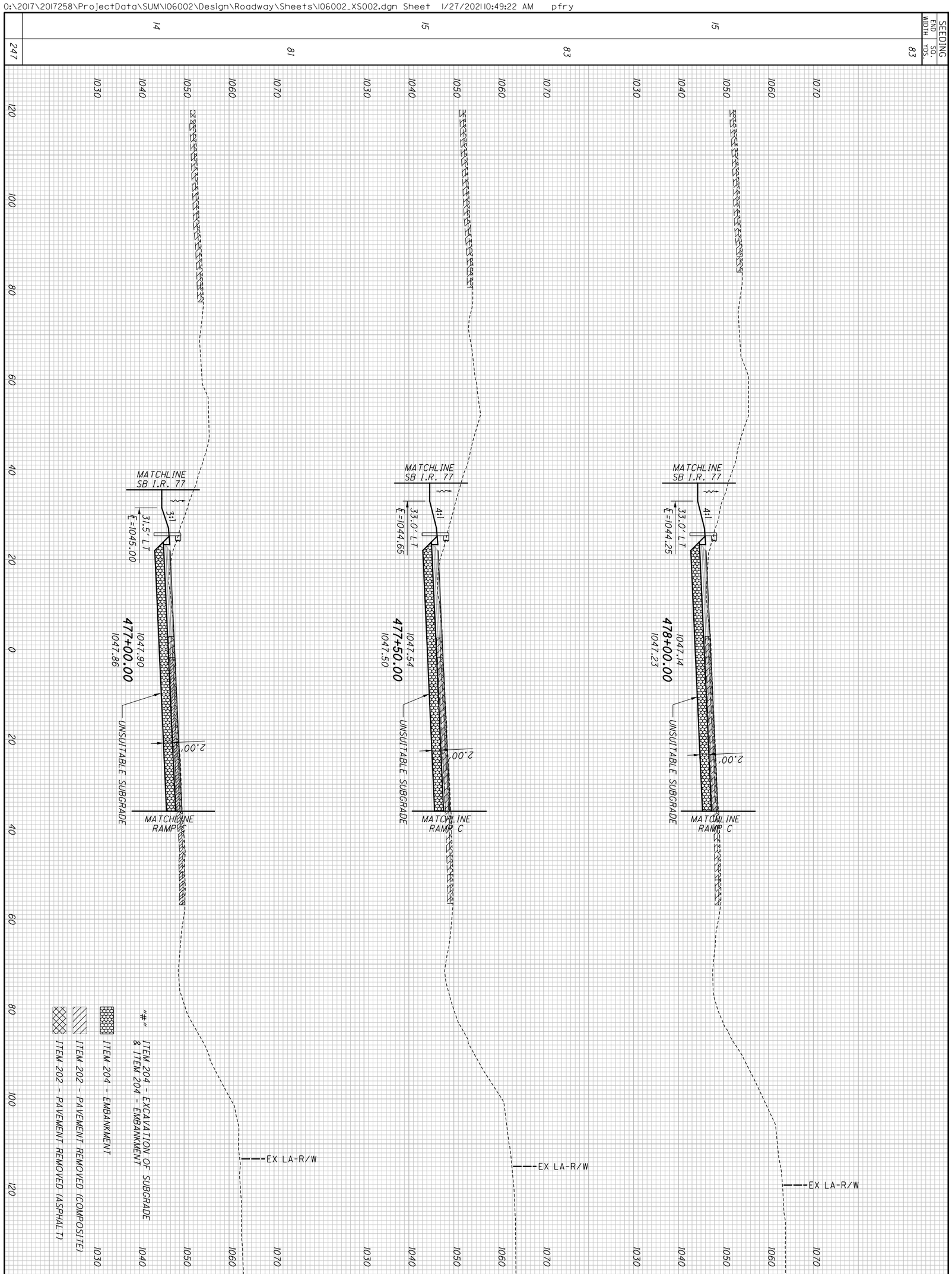


568
1288

**SUM-77/277/224**
**VARIOUS**

# CROSS SECTIONS - NB I.R. 77
## STA. 477+00.00 TO STA. 478+00.00

CALCULATED CJC
CHECKED PJF

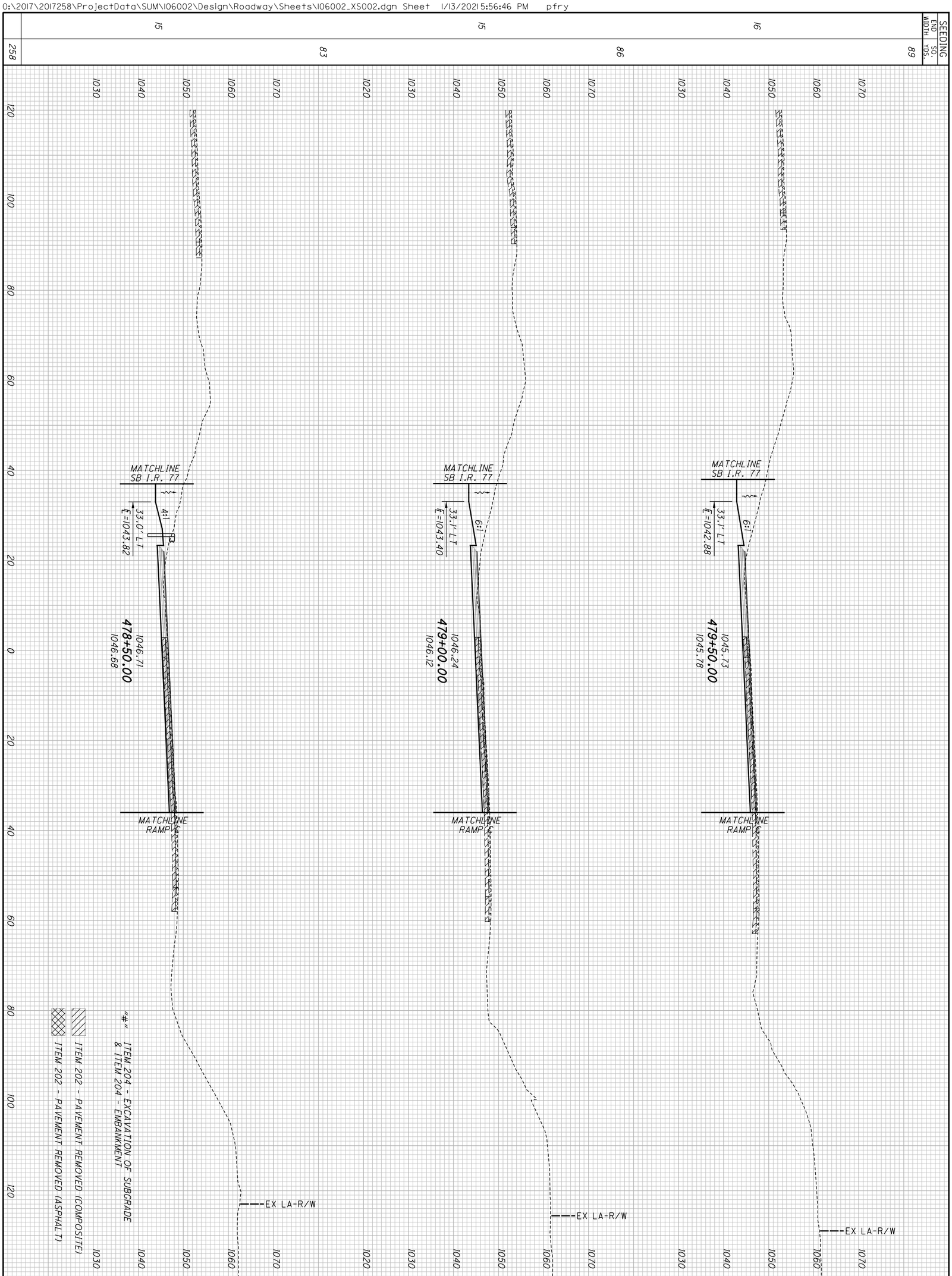
SEEDING
END WIDTH
SQ. YDS.
MATCHLINE SB I.R. 77
MATCHLINE RAMP C
33.0' LT
E=1043.82
4:1
478+50.00
1046.71
1046.68
33.1' LT
E=1043.40
6:1
479+00.00
1046.24
1046.12
33.1' LT
E=1042.88
6:1
479+50.00
1045.73
1045.78
EX LA-R/W
"#" ITEM 204 - EXCAVATION OF SUBGRADE & ITEM 204 - EMBANKMENT
ITEM 202 - PAVEMENT REMOVED (COMPOSITE)
ITEM 202 - PAVEMENT REMOVED (ASPHALT)
END AREA
CUT
FILL
VOLUME
CUT
FILL

| | | |

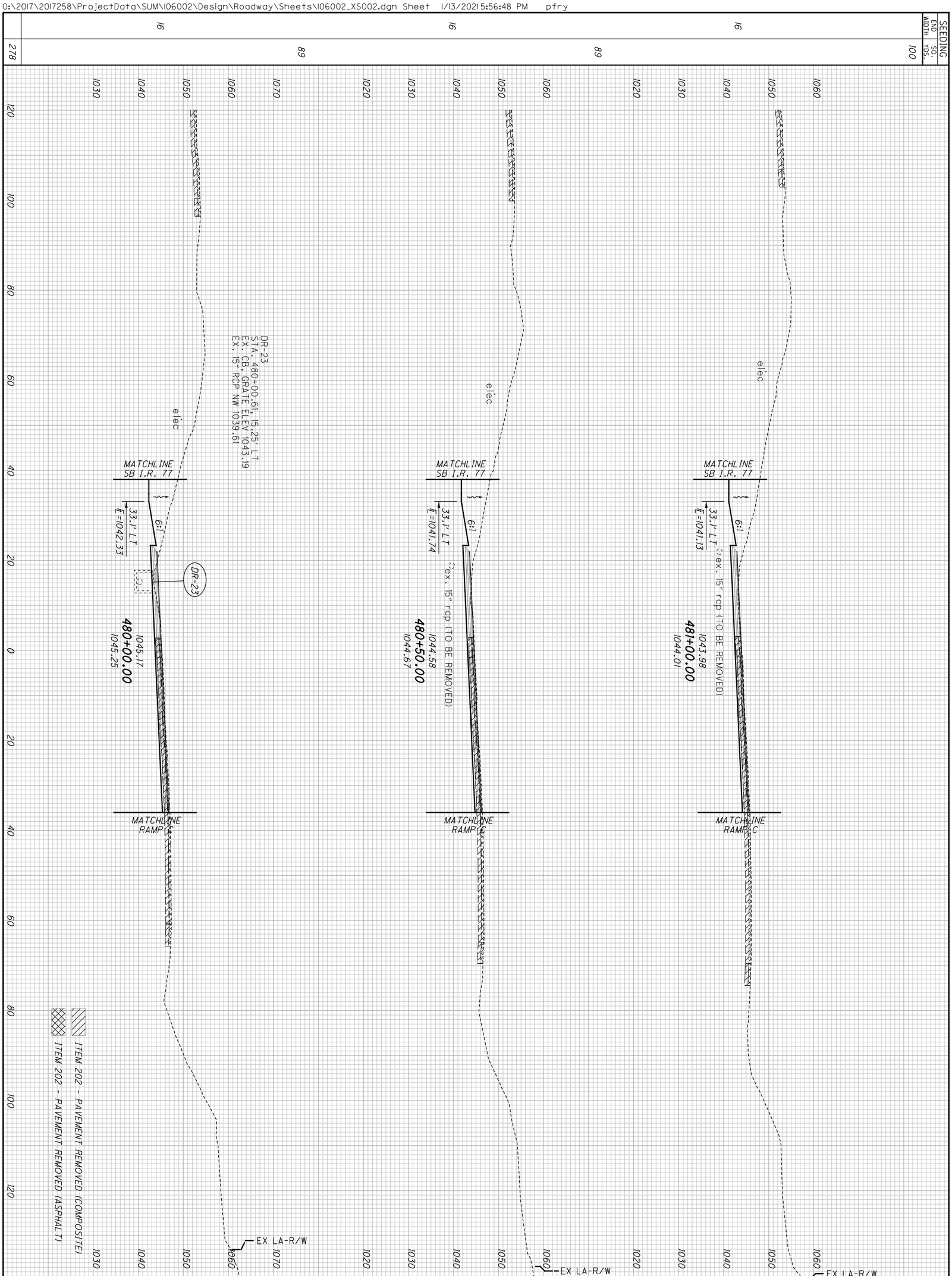


| | | |
|---|---|---|
| 570 / 1288 | **SUM-77/277/224**<br>**VARIOUS** | **CROSS SECTIONS - NB I.R. 77**<br>**STA. 480+00.00 TO STA. 481+00.00** |
| | | CALCULATED CJC<br>CHECKED PJF |

| SEEDING END WIDTH | SEEDING SQ. YDS. |
|---|---|
| | 144 |
| 23 | |
| | 122 |
| 21 | |
| | 114 |
| 20 | |
| | 380 |

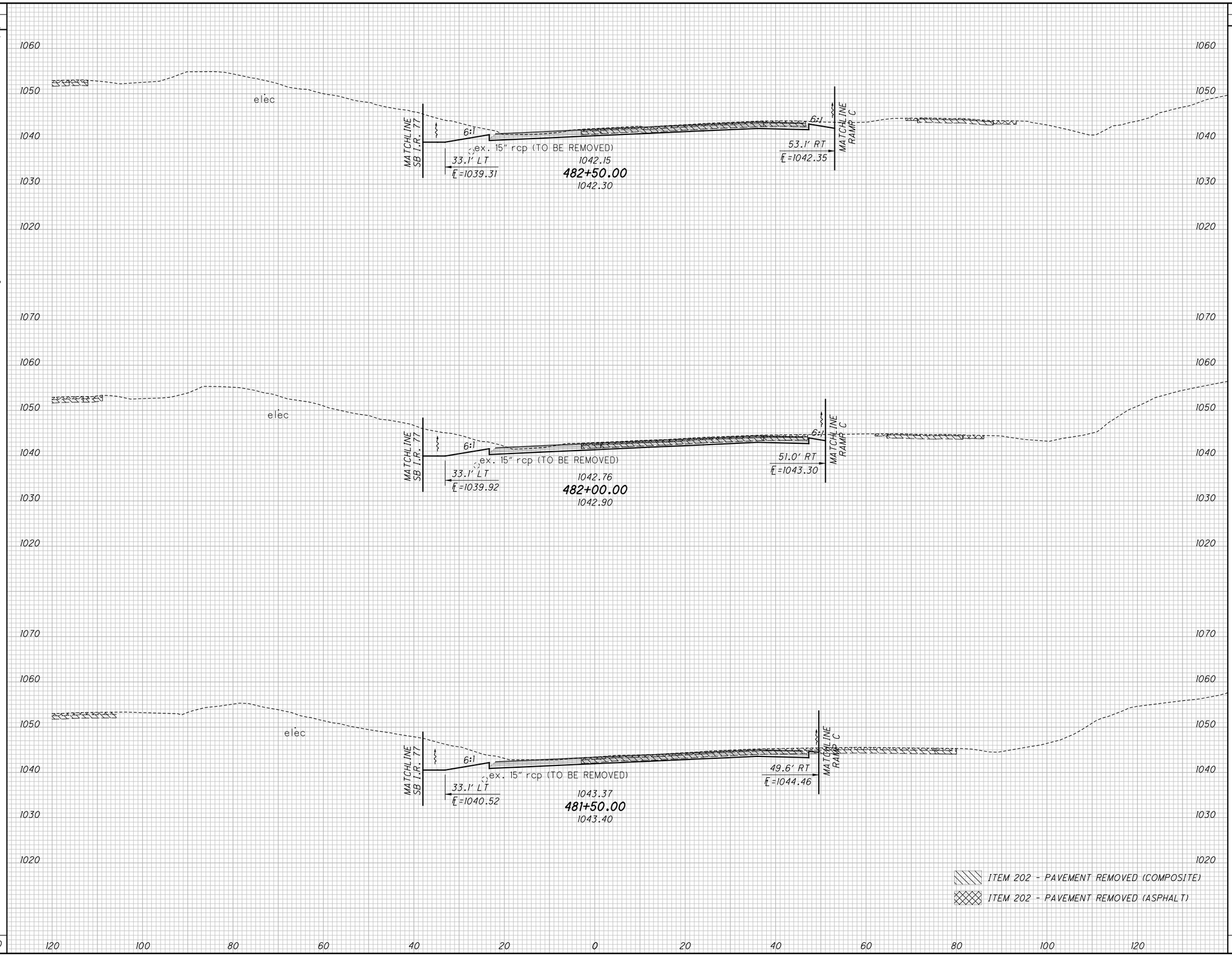


| END AREA CUT | END AREA FILL | VOLUME CUT | VOLUME FILL |
|---|---|---|---|
| | | 207 | 0 |
| 106 | 0 | | |
| | | 201 | 0 |
| 111 | 0 | | |
| | | 214 | 1 |
| 120 | 1 | | |
| | | 622 | 1 |

CALCULATED CJC
CHECKED PJF

# CROSS SECTIONS - NB I.R. 77
## STA. 481+50.00 TO STA. 482+50.00

SUM-77 / 277 / 224
VARIOUS



D:\2017\2017258\ProjectData\SUM\106002\Design\Roadway\Sheets\106002_XS002.dgn Sheet 1/13/2021 5:56:51 PM pfry

| SEEDING END WIDTH | SEEDING SQ. YDS. |
|---|---|
| | 336 |
| 34 | |
| | 181 |
| 31 | |
| | 167 |
| 29 | |
| | 684 |

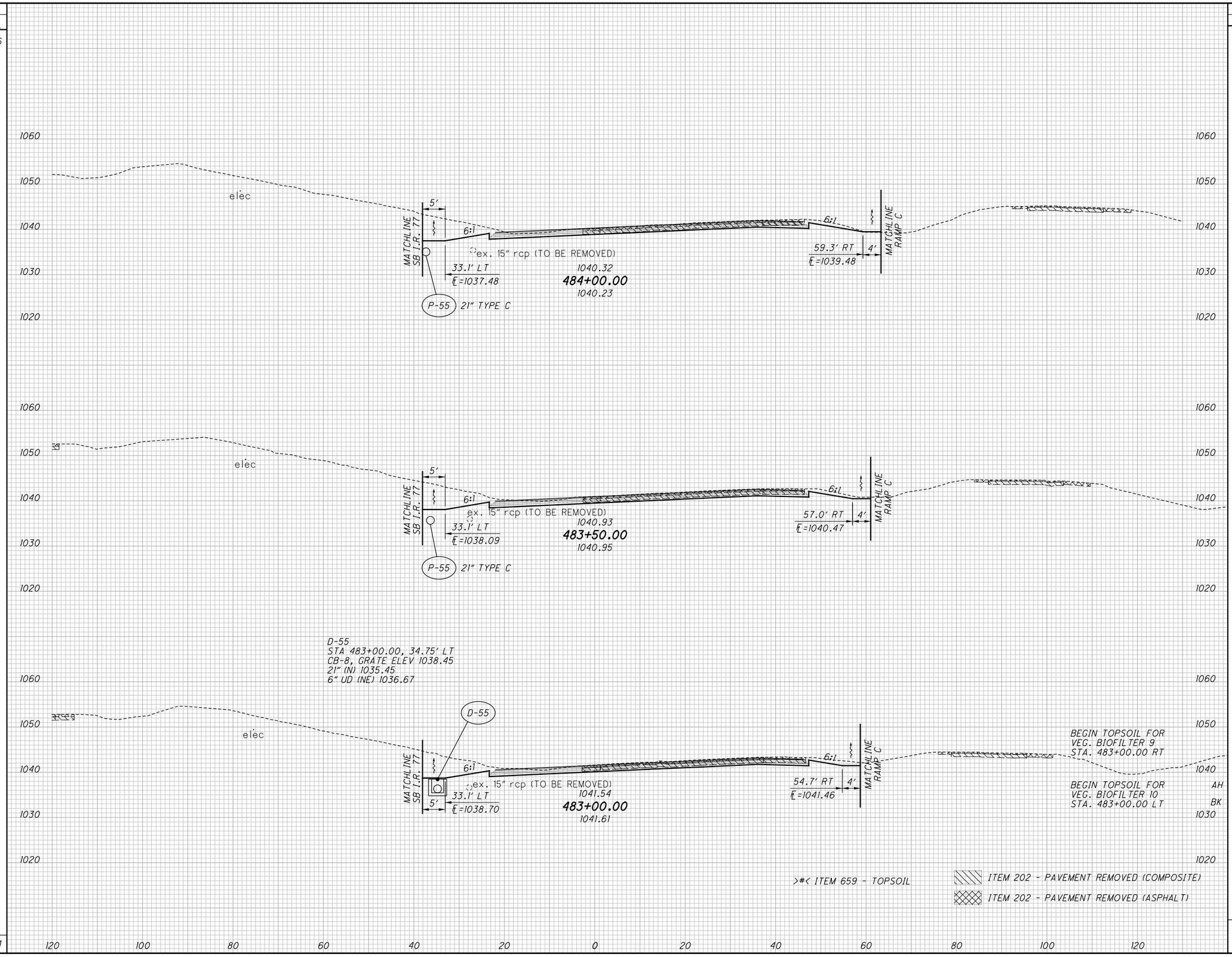


| END AREA CUT | END AREA FILL | VOLUME CUT | VOLUME FILL |
|---|---|---|---|
| | | | >16< |
| | | 327 | 1 |
| | >8< | | |
| 113 | 0 | | |
| | | | >14< |
| | | 214 | 0 |
| | >7< | | |
| 118 | 0 | | |
| | | | >13< |
| | | 219 | 0 |
| | >7< | | |
| | >0< | | |
| 118 | 0 | | |
| | | | >43< |
| | | 760 | 1 |

CALCULATED CJC
CHECKED PJF

**CROSS SECTIONS - NB I.R. 77**
**STA. 483+00.00 TO STA. 484+00.00**

**SUM-77 / 277 / 224**
**VARIOUS**

572
1288

0:\2017\2017258\Project Data\SUM\06002\Design\Roadway\Sheets\06002_XS002.dgn Sheet 1/13/2021 5:56:53 PM pfry

| SEEDING END WIDTH | SEEDING SQ. YDS. |
|---|---|
| | 136 |
| 35 | |
| | 160 |
| 98 | |
| 94 | |
| | 511 |
| 90 | |
| | 492 |
| 87 | |
| | 1299 |

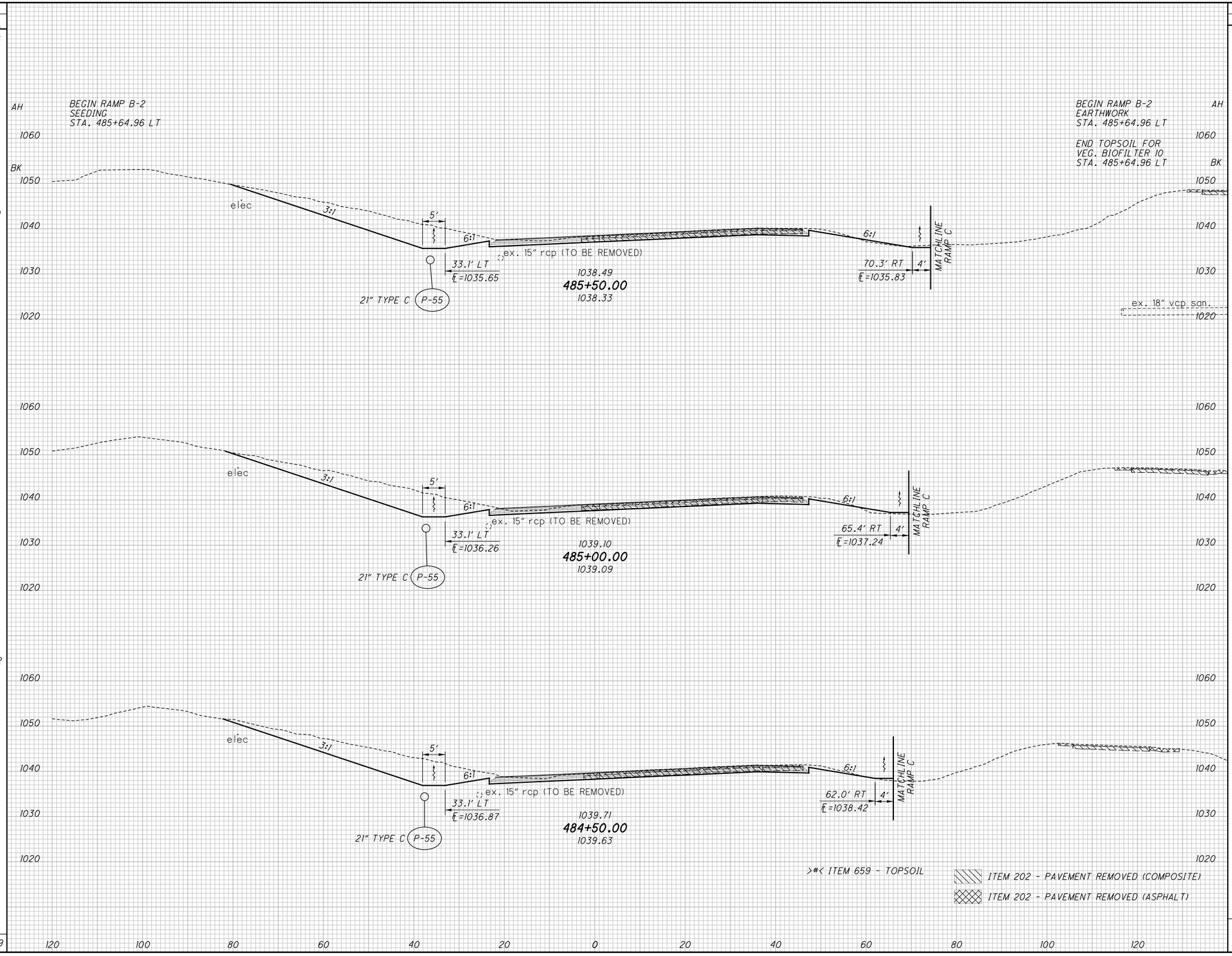


| END AREA CUT | END AREA FILL | VOLUME CUT | VOLUME FILL |
|---|---|---|---|
| | | | >10< |
| | | 38 | 0 |
| | >8< | | |
| 29 | 0 | | |
| | >12< | | |
| 226 | 0 | | |
| | | | >7< |
| | | 124 | 0 |
| | >12< | | |
| 220 | 0 | | |
| | | | >20< |
| | | 409 | 3 |
| 222 | >10< 3 | | |
| | | 428 | >18< 4 |
| 240 | >9< 1 | | |
| | | 999 | >55< 7 |

CALCULATED CJC
CHECKED PJF

# CROSS SECTIONS - NB I.R. 77
## STA. 484+50.00 TO STA. 485+50.00

SUM-77 / 277 / 224
VARIOUS

573
1288

D:\2017\2017258\ProjectData\SUM\06002\Design\Roadway\Sheets\06002_XS002.dgn Sheet 1/13/2021 5:56:56 PM pfry

| SEEDING END WIDTH | SEEDING SQ. YDS. |
|---|---|
| | 208 |
| 38 | |
| | 222 |
| 42 | |
| | 214 |
| 35 | |
| | 644 |

>#< ITEM 659 - TOPSOIL

ITEM 202 - PAVEMENT REMOVED (COMPOSITE)

ITEM 202 - PAVEMENT REMOVED (ASPHALT)

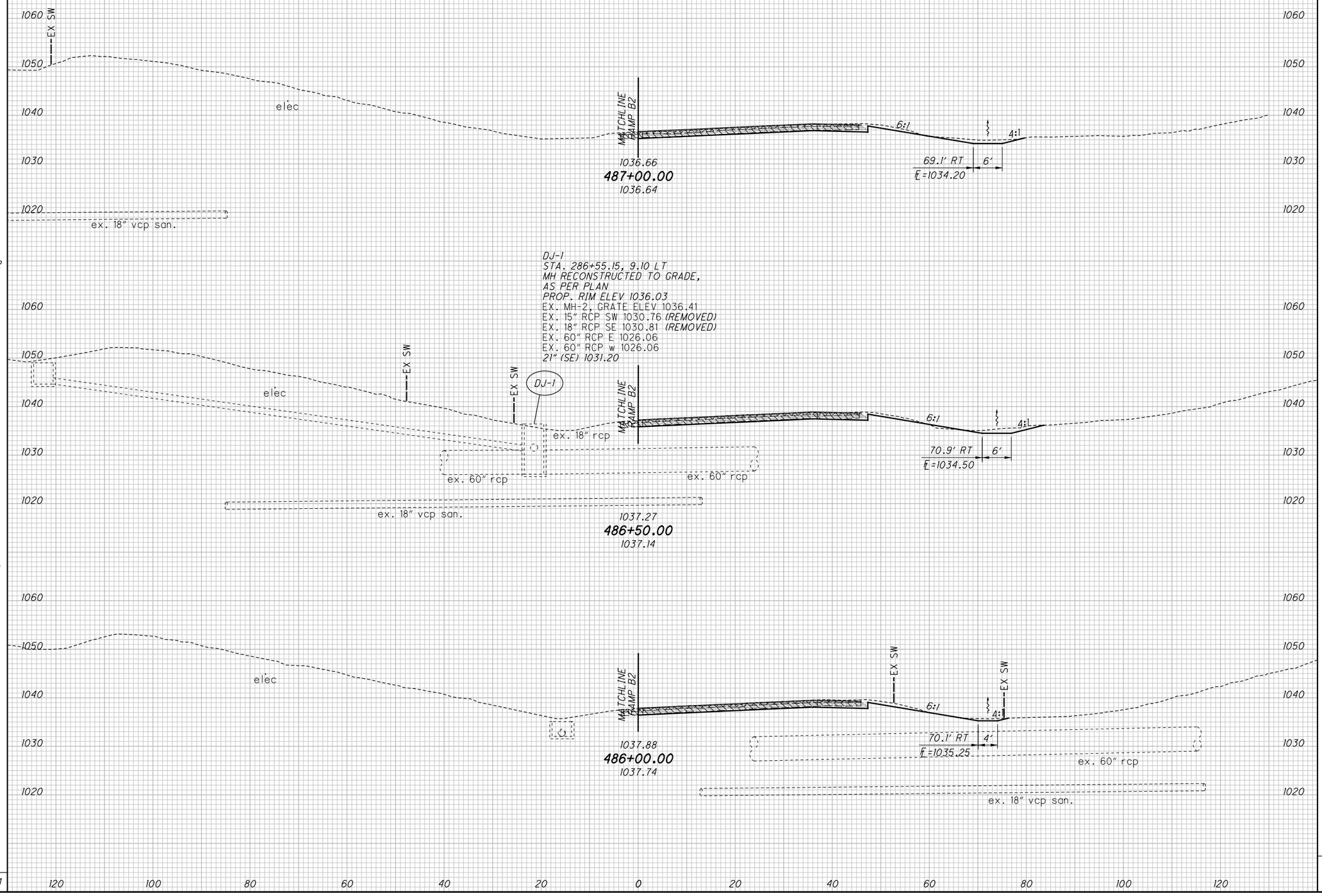


| END AREA CUT | END AREA FILL | VOLUME CUT | VOLUME FILL |
|---|---|---|---|
| | | | >14< |
| | | 56 | 0 |
| | >8< | | |
| 31 | 0 | | |
| | | | >15< |
| | | 57 | 0 |
| | >8< | | |
| 31 | 0 | | |
| | | | >15< |
| | | 56 | 0 |
| | >8< | | |
| 29 | 0 | | |
| | | | >44< |
| | | 169 | 0 |

CALCULATED CJC
CHECKED PJF

**CROSS SECTIONS - NB I.R. 77**
**STA. 486+00.00 TO STA. 487+00.00**

**SUM-77 / 277 / 224**
**VARIOUS**

574
1288

0:\2017\2017258\ProjectData\SUM\06002\Design\Roadway\Sheets\06002_XS002.dgn Sheet 1/13/2021 5:56:58 PM pfry

| SEEDING END WIDTH | SEEDING SQ. YDS. | END AREA CUT | END AREA FILL | VOLUME CUT | VOLUME FILL |
|---|---|---|---|---|---|
| | 175 | | | 51 | 1 |
| 35 | | 38 | 0 | | |
| | 194 | | | 68 | 0 |
| | 200 | | | 60 | >10< 0 |
| 37 | | 30 | >7< 0 | | |
| | 569 | | | 179 | >16< 1 |

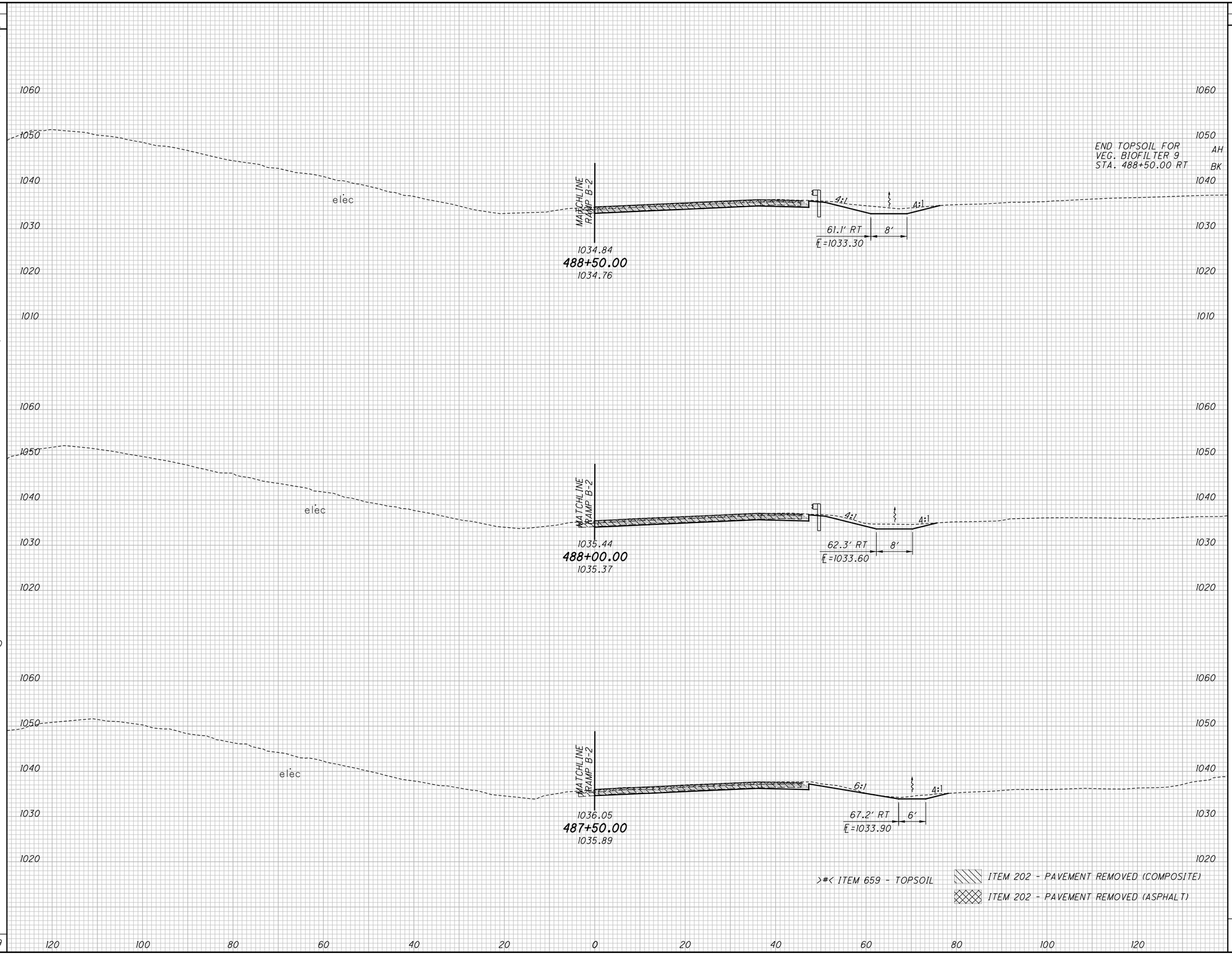


CALCULATED CJC
CHECKED PJF

# CROSS SECTIONS - NB I.R. 77
## STA. 487+50.00 TO STA. 488+50.00

SUM-77 / 277 / 224
VARIOUS

575
1288

D:\2017\2017258\ProjectData\SUM\106002\Design\Roadway\Sheets\106002_XS002.dgn Sheet 1/13/2021 5:57:01 PM pfry

| SEEDING END WIDTH | SEEDING SQ. YDS. | END AREA CUT | END AREA FILL | VOLUME CUT | VOLUME FILL |
|---|---|---|---|---|---|
| | 125 | | | 46 | 0 |
| 24 | | 23 | 0 | | |
| | 147 | | | 44 | 0 |
| 29 | | 25 | 0 | | |
| | 158 | | | 39 | 1 |
| 28 | | 17 | 1 | | |
| | 430 | | | 129 | 1 |

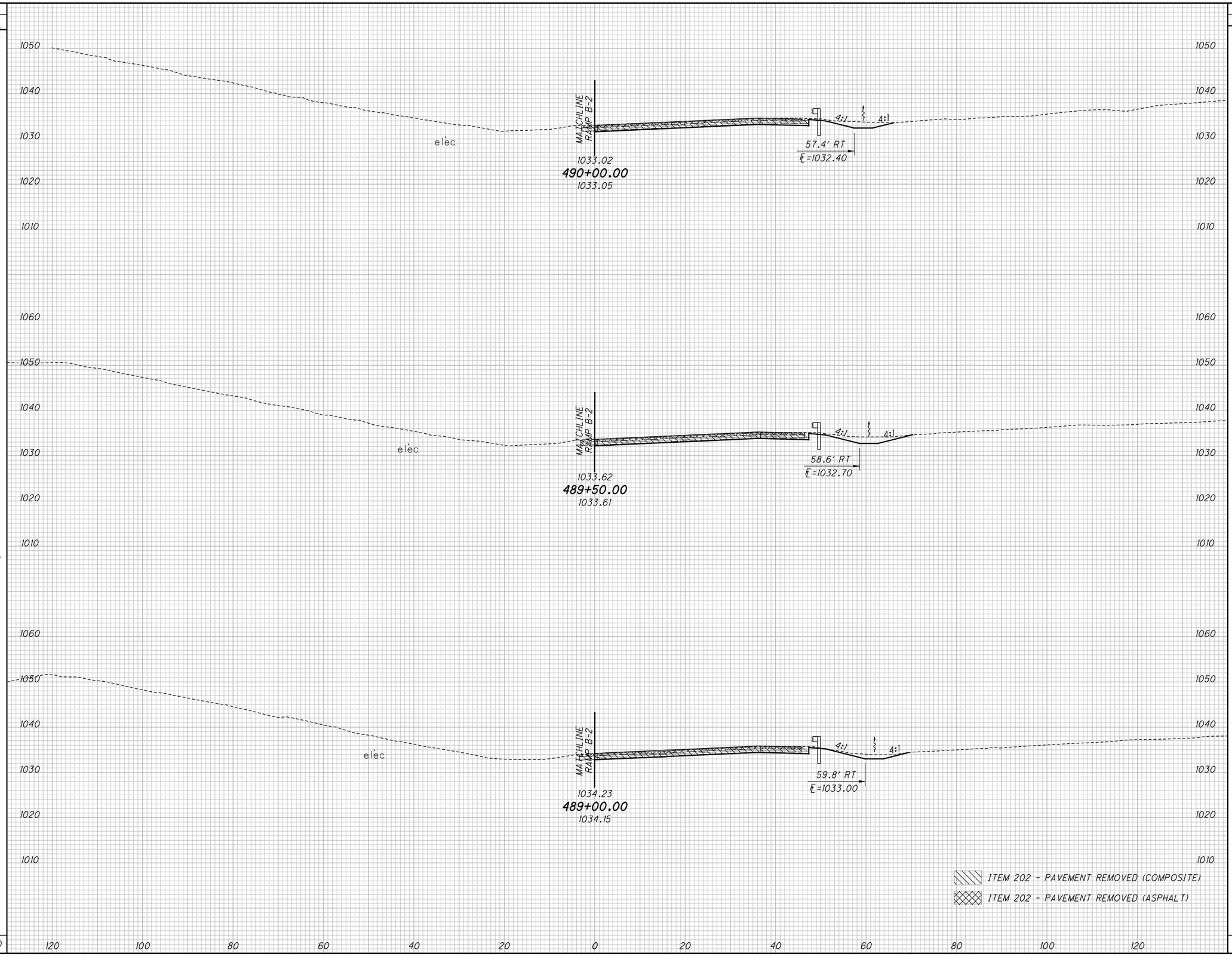


CALCULATED CJC
CHECKED PJF

# CROSS SECTIONS - NB I.R. 77
## STA. 489+00.00 TO STA. 490+00.00

SUM-77 / 277 / 224
VARIOUS

576
1288

O:\2017\2017258\ProjectData\SUM\06002\Design\Roadway\Sheets\06002_XS002.dgn Sheet 1/13/2021 5:57:03 PM pfry

| SEEDING END WIDTH | SEEDING SQ. YDS. |
|---|---|
| | 147 |
| 21 | |
| | 117 |
| 21 | |
| | 117 |
| 21 | |
| | 381 |

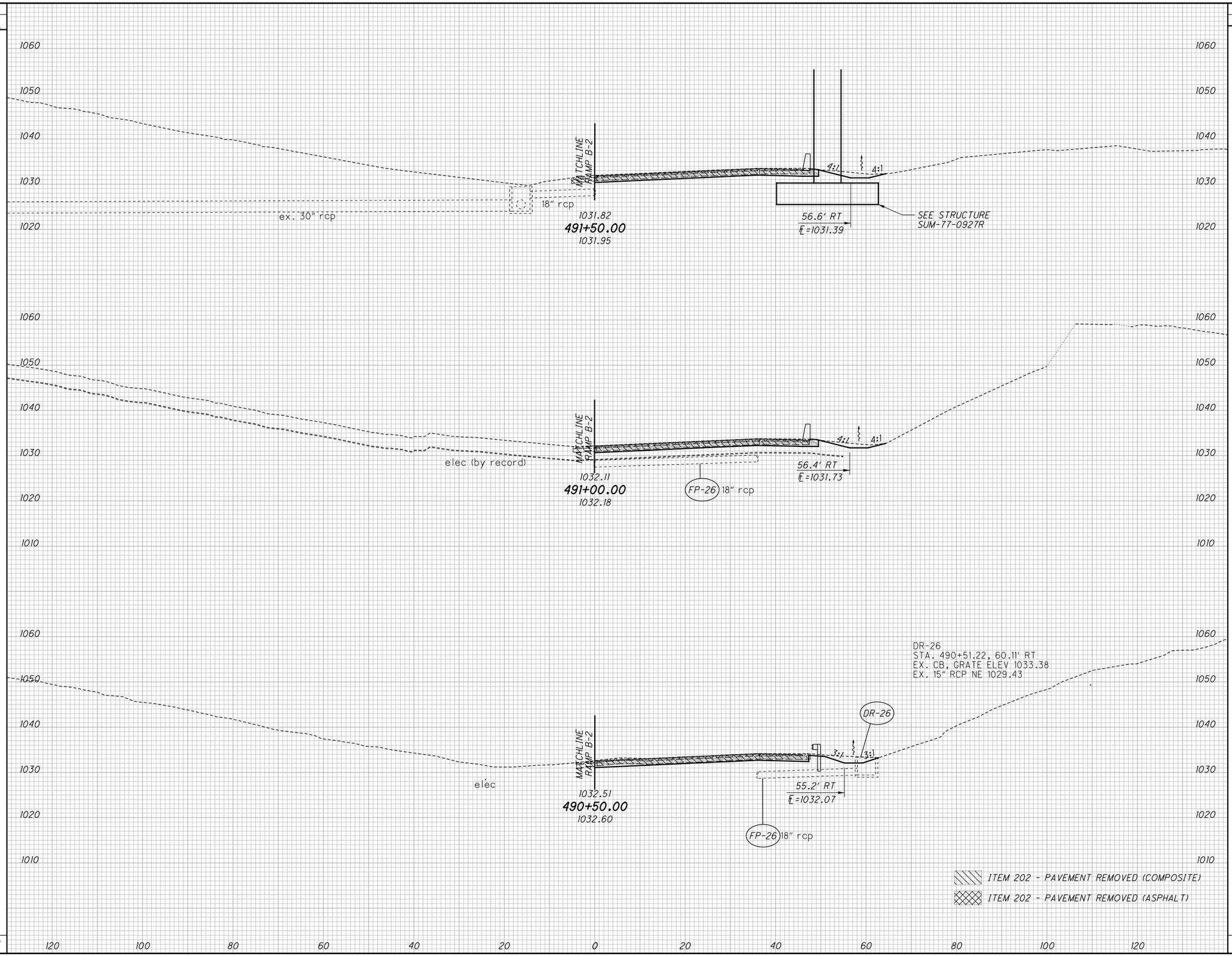


| END AREA CUT | END AREA FILL | VOLUME CUT | VOLUME FILL |
|---|---|---|---|
| | | 59 | 0 |
| 28 | 0 | | |
| | | 47 | 0 |
| 23 | 0 | | |
| | | 46 | 0 |
| 27 | 0 | | |
| | | 152 | 0 |

CALCULATED CJC
CHECKED PJF

# CROSS SECTIONS - NB I.R.77
## STA. 490+50.00 TO STA. 491+50.00

SUM-77 / 277 / 224
VARIOUS

577
1288

D:\2017\2017258\ProjectData\SUM\06002\Design\Roadway\Sheets\06002_XS002.dgn Sheet 1/13/2021 5:57:05 PM pfry

| SEEDING | |
|---|---|
| END WIDTH | SQ. YDS. |
| | 53 |
| 14 | |
| | 97 |
| 21 | |
| | 147 |
| 32 | |
| | 297 |

| END AREA | |
|---|---|
| CUT | FILL |
| 36 | 0 |
| 34 | 0 |
| 36 | 0 |

| VOLUME | |
|---|---|
| CUT | FILL |
| 58 | 0 |
| 65 | 0 |
| 65 | 0 |
| 188 | 0 |

CALCULATED CJC
CHECKED PJF

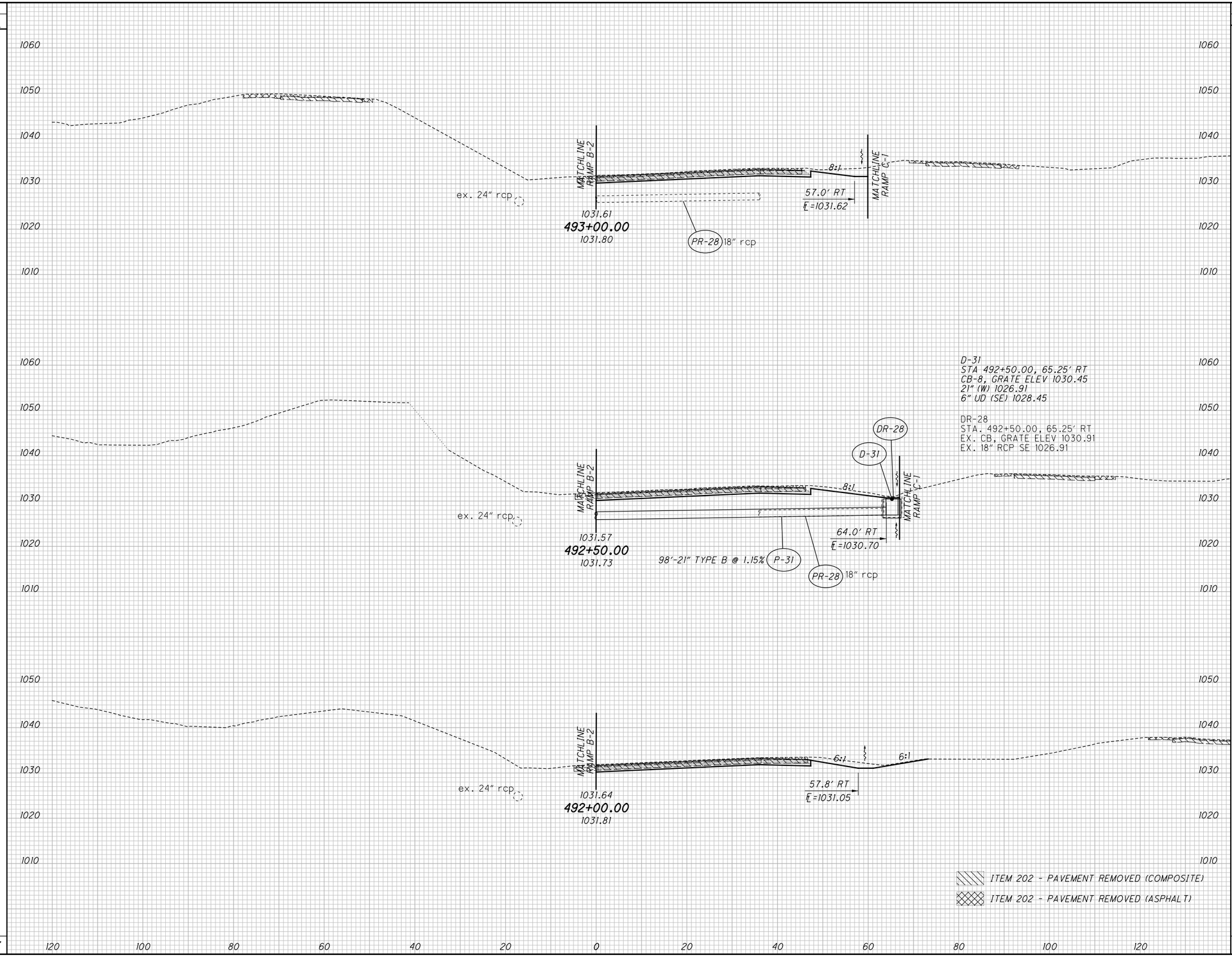


# CROSS SECTIONS - NB I.R. 77
# STA. 492+00.00 TO STA. 493+00.00

SUM-77 / 277 / 224
VARIOUS

578
1288

D:\2017\2017258\ProjectData\SUM\06002\Design\Roadway\Sheets\06002_XS002.dgn Sheet 1/13/2021 5:57:09 PM pfry

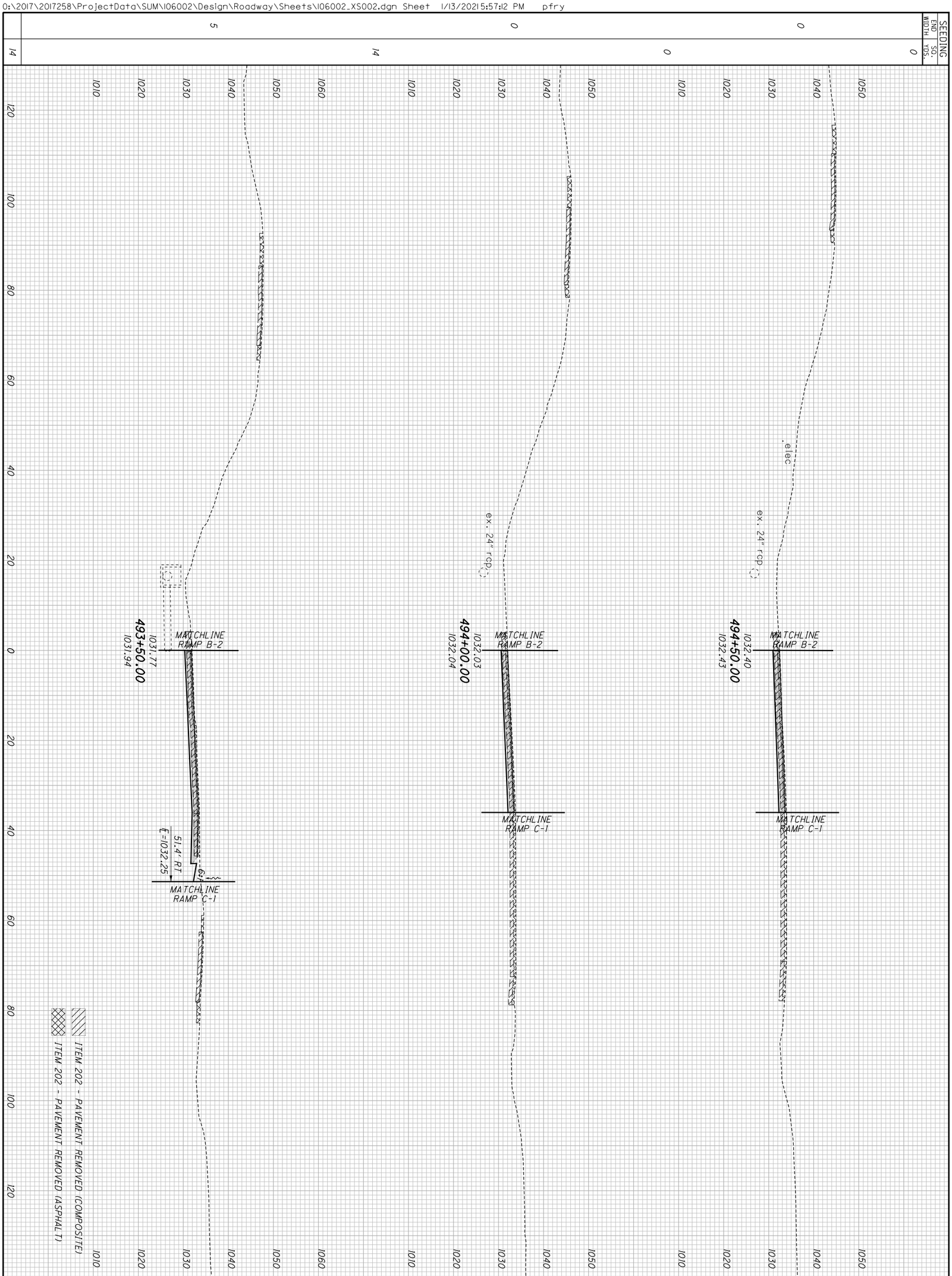


| 579 / 1288 | SUM-77/277/224 VARIOUS | CROSS SECTIONS - NB I.R. 77 STA. 493+50.00 TO STA. 494+50.00 | CALCULATED CJC / CHECKED PJF |
|---|---|---|---|

| SEEDING END WIDTH | SEEDING SQ. YDS. |
|---|---|
| | 0 |
| | 0 |
| | 0 |
| | 0 |

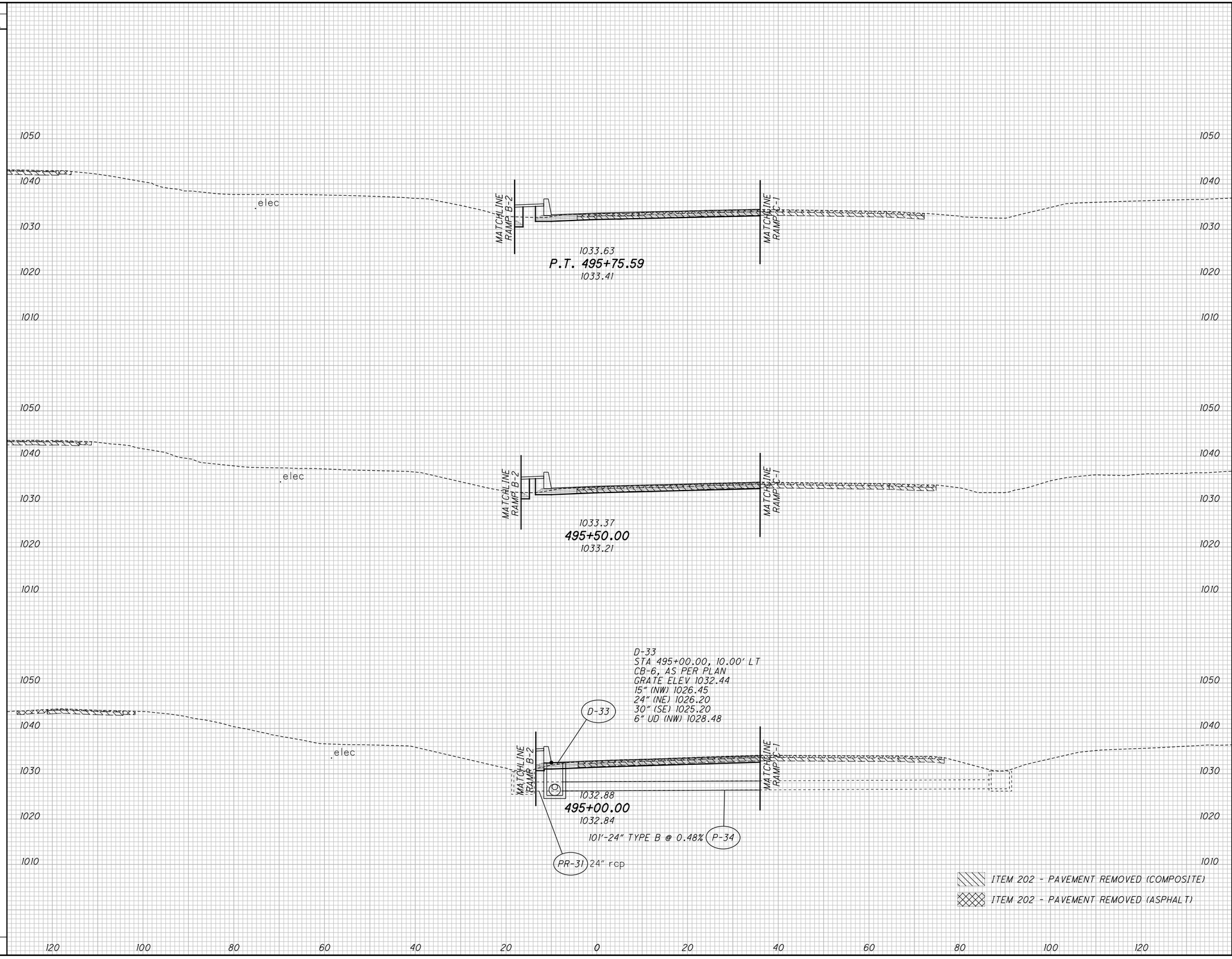


| END AREA CUT | END AREA FILL | VOLUME CUT | VOLUME FILL |
|---|---|---|---|
| | | 16 | 9 |
| 18 | 7 | | |
| | | 16 | 5 |
| 16 | 4 | | |
| | | 31 | 4 |
| 18 | 0 | | |
| | | 63 | 18 |

CALCULATED CJC
CHECKED PJF

# CROSS SECTIONS - NB I.R. 77
## STA. 495+00.00 TO STA. 495+75.59

SUM-77 / 277 / 224
VARIOUS

580
1288

D:\2017\2017258\ProjectData\SUM\06002\Design\Roadway\Sheets\06002_XS002.dgn Sheet 1/13/2021 5:57:4 PM pfry

| SEEDING END WIDTH | SEEDING SQ. YDS. |
|---|---|
| 13 | 161 |
| 7 | 111 |
| 0 | 39 |
| | 311 |

| END AREA CUT | END AREA FILL | VOLUME CUT | VOLUME FILL |
|---|---|---|---|
| 19 | 5 | 81 | 17 |
| 13 | 0 | 59 | 9 |
| 17 | 14 | 56 | 26 |
| | | 196 | 52 |

CALCULATED CJC
CHECKED PJF




# CROSS SECTIONS - NB I.R. 77
## STA. 496+00.00 TO STA. 498+00.00

SUM-77 / 277 / 224
VARIOUS

581
1288

D:\2017\2017258\ProjectData\SUM\106002\Design\Roadway\Sheets\106002_XS002.dgn Sheet 1/13/2021 5:57:17 PM pfry

| SEEDING END WIDTH | SEEDING SQ. YDS. |
|---|---|
| | 167 |
| 16 | |
| | 194 |
| 19 | |
| | 194 |
| 16 | |
| | 555 |

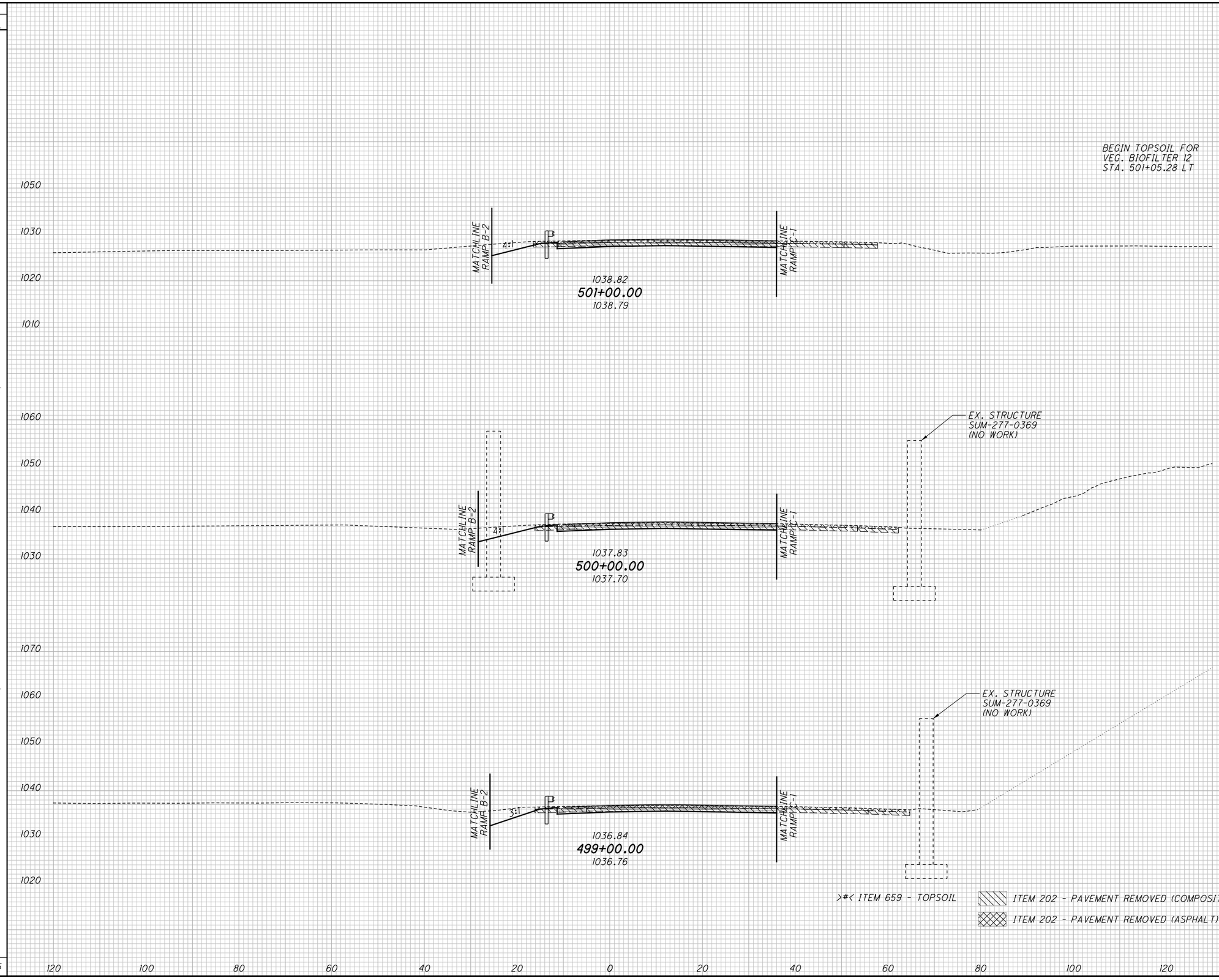


| END AREA CUT | END AREA FILL | VOLUME CUT | VOLUME FILL |
|---|---|---|---|
| | >11< | | |
| | | 72 | 15 |
| | AH >3< | | |
| | BK >0< | | |
| 21 | 4 | | |
| | | 87 | 17 |
| 26 | 5 | | |
| | | 94 | 17 |
| 25 | 4 | | |
| | >11< | | |
| | | 253 | 49 |

CALCULATED CJC
CHECKED PJF

# CROSS SECTIONS - NB I.R. 77
## STA. 499+00.00 TO STA. 501+00.00

SUM-77 / 277 / 224
VARIOUS

582
1288

D:\2017\2017258\ProjectData\SUM\106002\Design\Roadway\Sheets\106002_XS002.dgn Sheet 1/13/2021 5:57:19 PM pfry

| SEEDING END WIDTH | SEEDING SQ. YDS. |
|---|---|
| | 328 |
| 24 | |
| | 294 |
| 29 | |
| | 330 |
| 38 | |
| 18 | |
| | 20 |
| 14 | |
| | 972 |

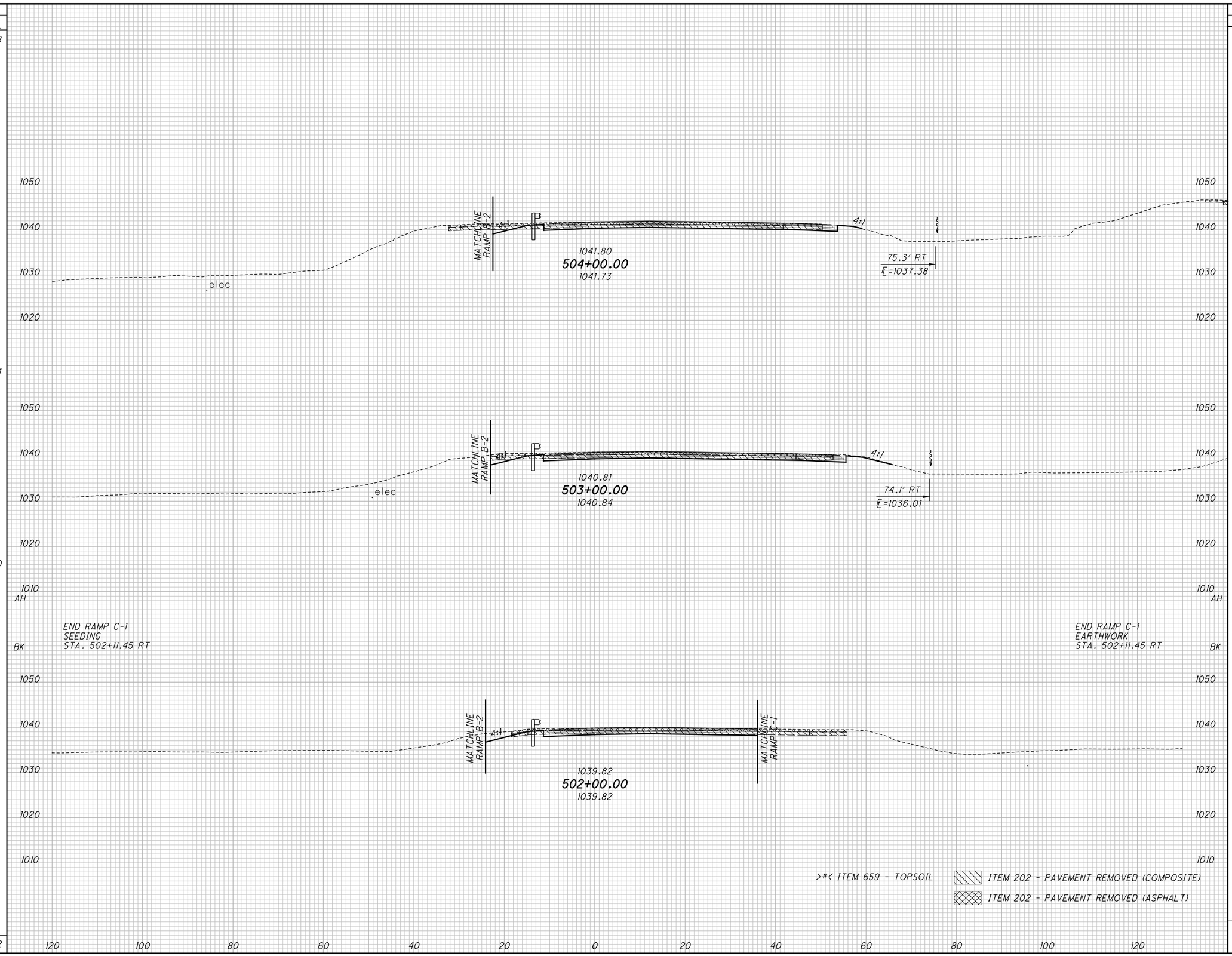


| END AREA CUT | END AREA FILL | VOLUME CUT | VOLUME FILL |
|---|---|---|---|
| | | | >9< |
| | | 98 | 13 |
| | >3< | | |
| 16 | 4 | | |
| | | | >11< |
| | | 72 | 13 |
| | >3< | | |
| 23 | 3 | | |
| | | | >10< |
| | | 89 | 10 |
| | >3< | | |
| 31 | 3 | | |
| | >3< | | |
| 20 | 3 | | |
| | | | >1< |
| | | 8 | 1 |
| | >3< | | |
| 18 | 4 | | |
| | | | >31< |
| | | 267 | 37 |

CALCULATED CJC
CHECKED PJF

# CROSS SECTIONS - NB I.R. 77
## STA. 502+00.00 TO STA. 504+00.00

SUM-77 / 277 / 224
VARIOUS

583
1288

0:\2017\2017258\ProjectData\SUM\06002\Design\Roadway\Sheets\06002_XS002.dgn Sheet 1/13/2021 5:57:21 PM pfry

| SEEDING END WIDTH | SEEDING SQ. YDS. | END AREA CUT | END AREA FILL | VOLUME CUT | VOLUME FILL |
|---|---|---|---|---|---|
| | 119 | | | 55 | 6 |
| 23 | | 33 | 3 | | |
| | 82 | | | 41 | 4 |
| 20 | | 31 | 3 | | |
| | 168 | | | 86 | 4 |
| 26 | | 40 | 0 | | |
| | 339 | | | 143 | >3< 6 |
| 35 | | 37 | >2< 3 | | |
| | 708 | | | 325 | >3< 20 |

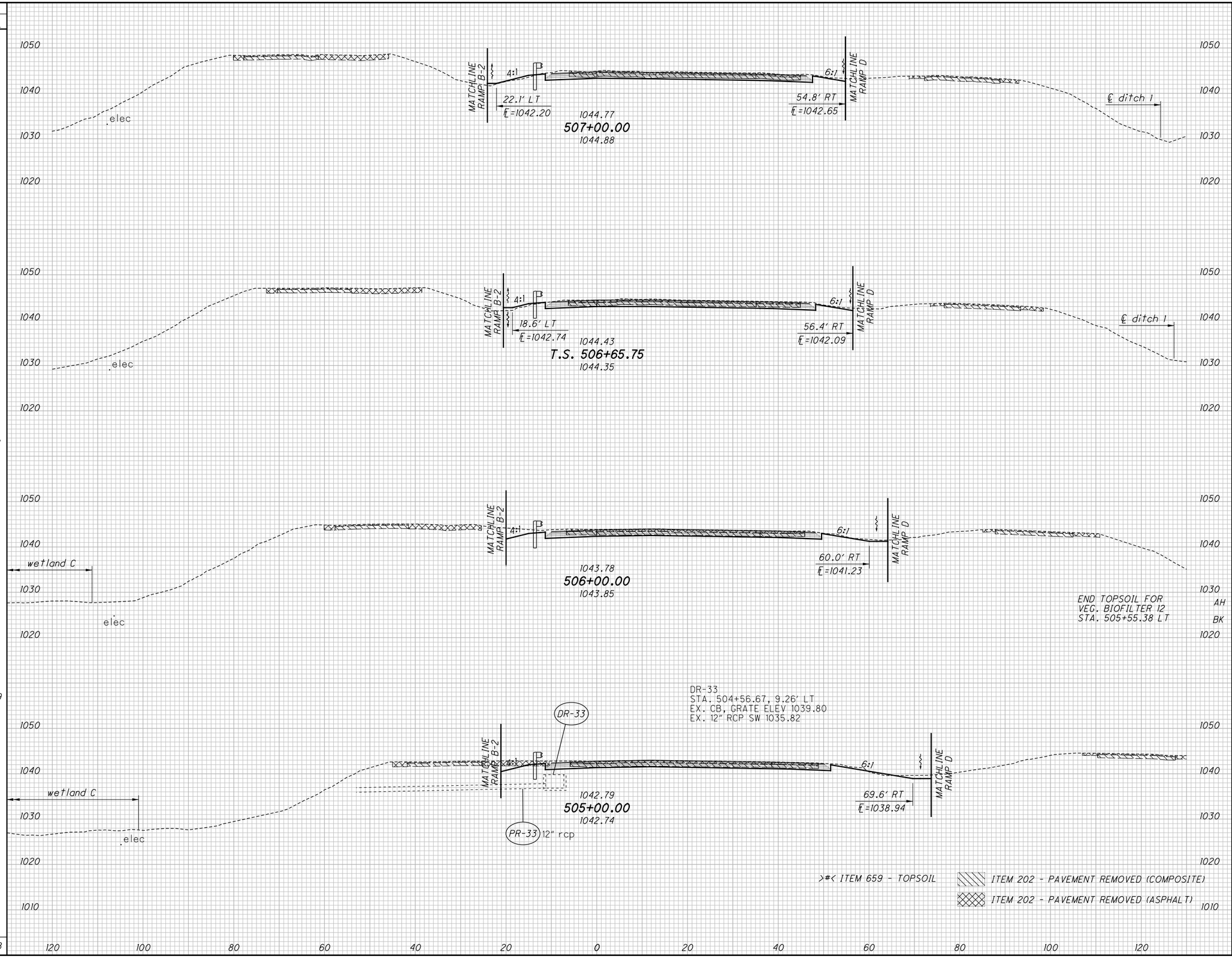


CALCULATED CJC
CHECKED PJF

# CROSS SECTIONS - NB I.R.77
## STA. 505+00.00 TO STA. 507+00.00

SUM-77/277/224
VARIOUS

584
1288

0:\2017\2017258\ProjectData\SUM\06002\Design\Roadway\Sheets\06002_XS002.dgn Sheet 1/13/2021 5:57:23 PM pfry

| SEEDING END WIDTH | SEEDING SQ. YDS. |
|---|---|
| 14 | 75 |
| | 122 |
| 30 | |
| | 139 |
| 20 | |
| | 336 |

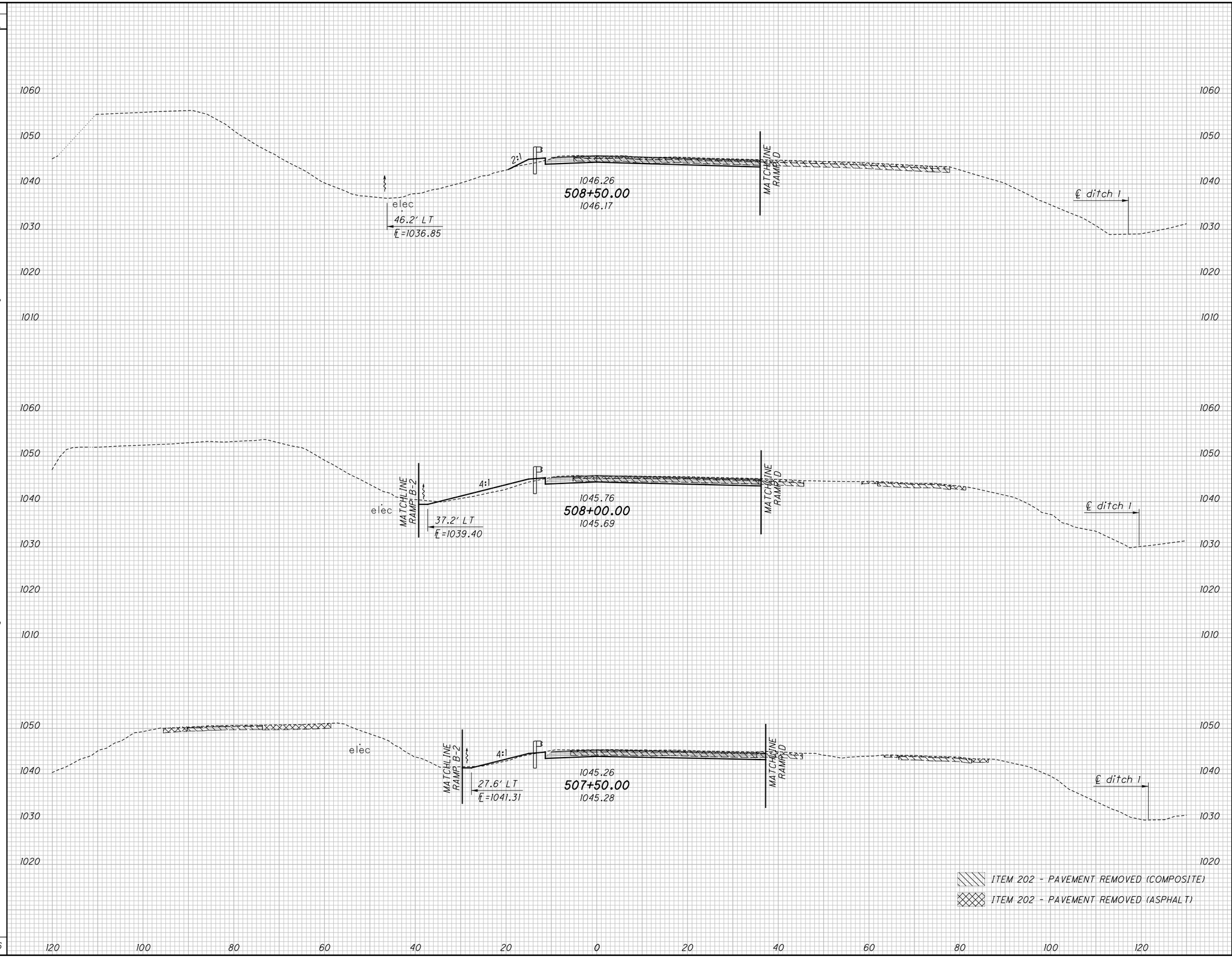


| END AREA CUT | END AREA FILL | VOLUME CUT | VOLUME FILL |
|---|---|---|---|
| | | 39 | 9 |
| 21 | 5 | | |
| | | 42 | 19 |
| 24 | 16 | | |
| | | 46 | 19 |
| 26 | 4 | | |
| | | 127 | 47 |

CALCULATED CJC
CHECKED PJF

# CROSS SECTIONS - NB I.R. 77
## STA. 507+50.00 TO STA. 508+50.00

SUM-77 / 277 / 224
VARIOUS

585
1288

D:\2017\2017258\ProjectData\SUM\06002\Design\Roadway\Sheets\06002_XS002.dgn Sheet 1/13/2021 5:57:26 PM pfry

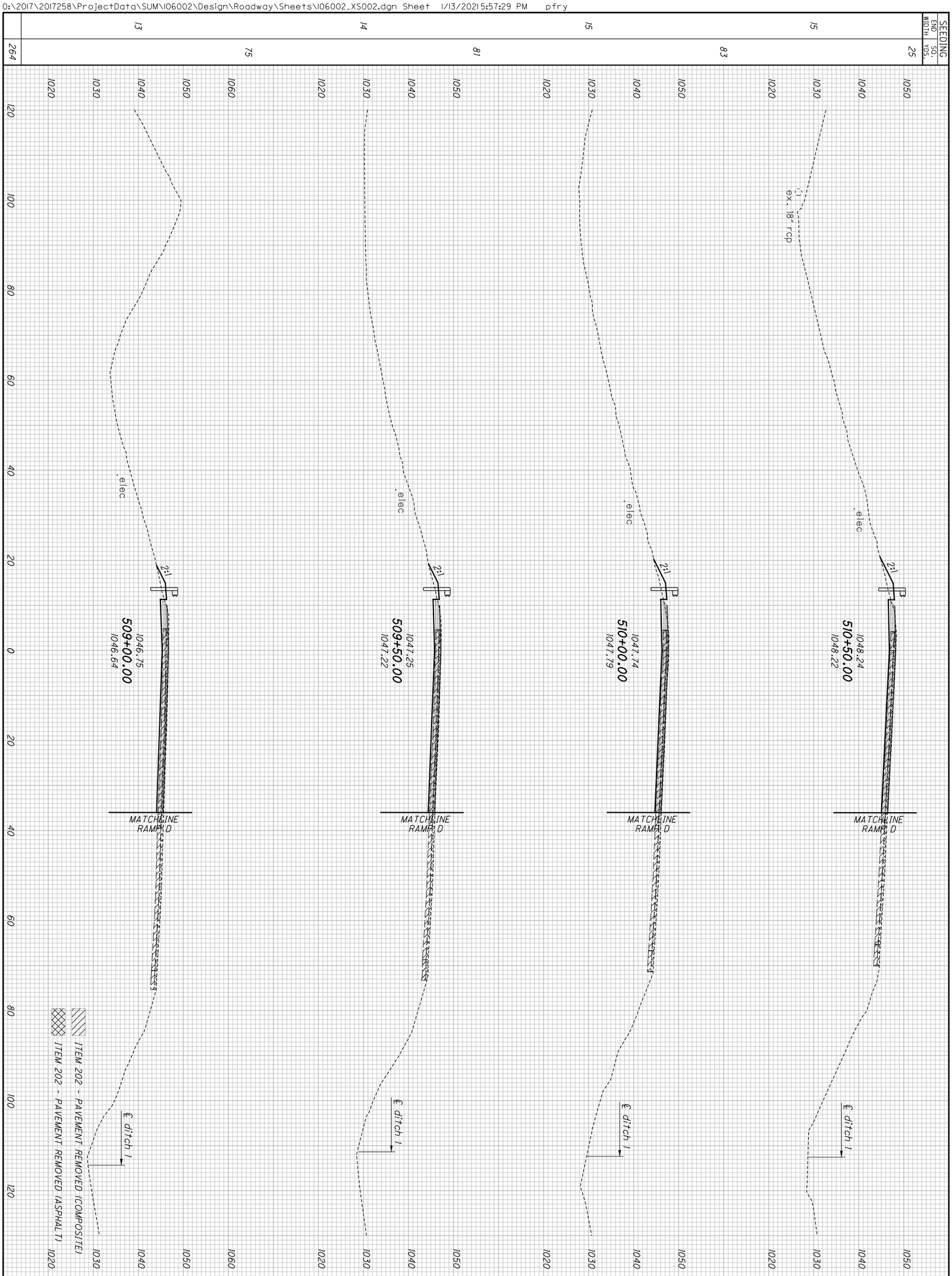


| | | |
|---|---|---|
| 586 / 1288 | **SUM-77 / 277 / 224**<br>**VARIOUS** | **CROSS SECTIONS - NB I.R. 77**<br>**STA. 509+00.00 TO STA. 510+50.00** |
| | | CALCULATED CJC<br>CHECKED PJF |

0:\2017\2017258\ProjectData\SUM\106002\Design\Roadway\Sheets\106002_XS002.dgn Sheet 1/13/2021 5:57:32 PM pfry

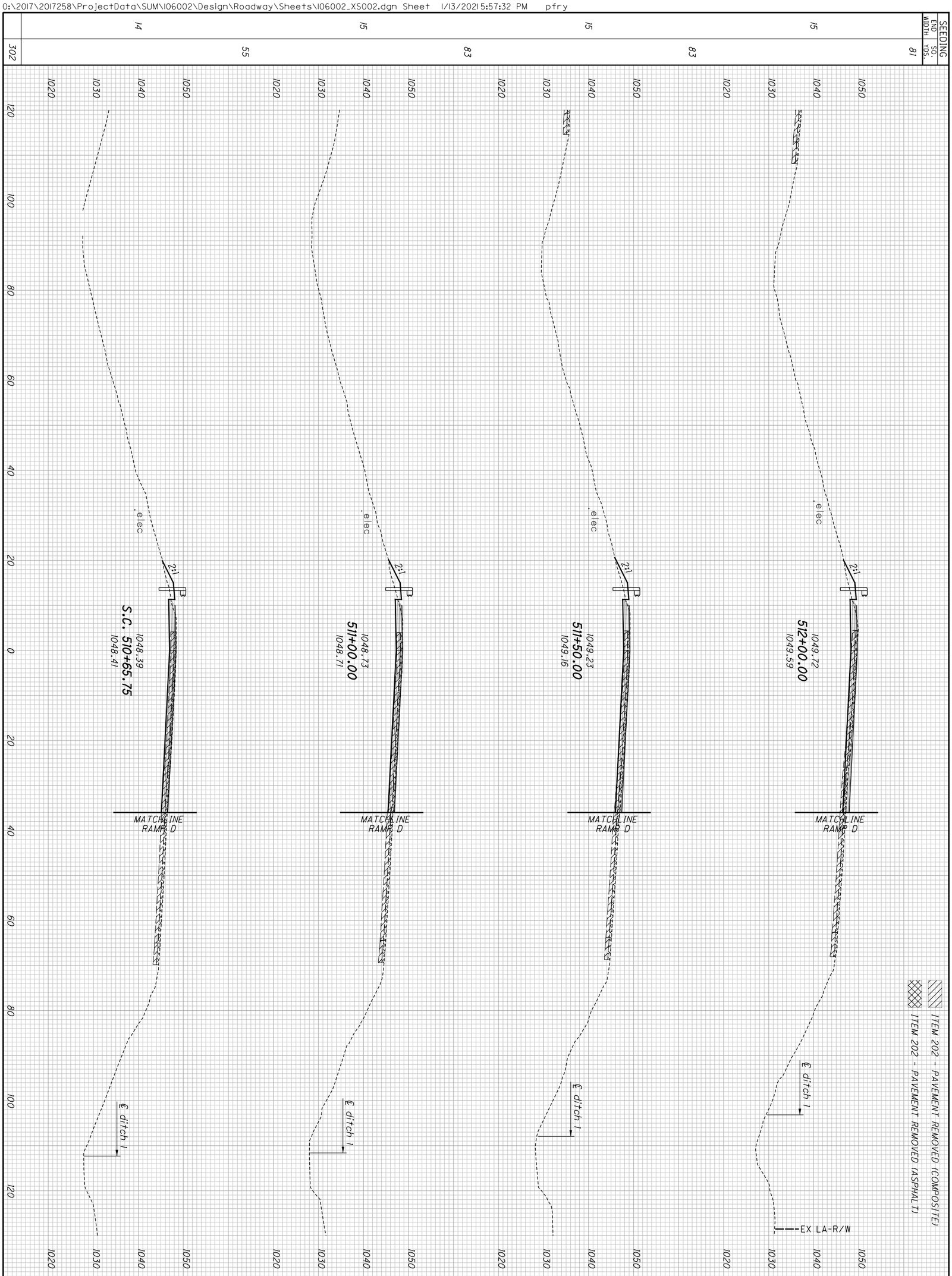


| SEEDING END WIDTH | SEEDING SQ. YDS. |
|---|---|
| 15 | 81 |
| 15 | 83 |
| 15 | 83 |
| 14 | 55 |
| 15 | 302 |

| END AREA CUT | END AREA FILL | VOLUME CUT | VOLUME FILL |
|---|---|---|---|
| 16 | 11 | 21 | 28 |
| 8 | 14 | 23 | 22 |
| 9 | 16 | 28 | 16 |
| 7 | 19 | 22 | 10 |
| | | 94 | 76 |

587
1288

**SUM-77/277/224**
**VARIOUS**

**CROSS SECTIONS - NB I.R. 77**
**STA. 510+65.75 TO STA. 512+00.00**

CALCULATED CJC
CHECKED PJF

O:\2017\2017258\ProjectData\SUM\106002\Design\Roadway\Sheets\106002_XS002.dgn Sheet 1/13/20215:57:35 PM pfry

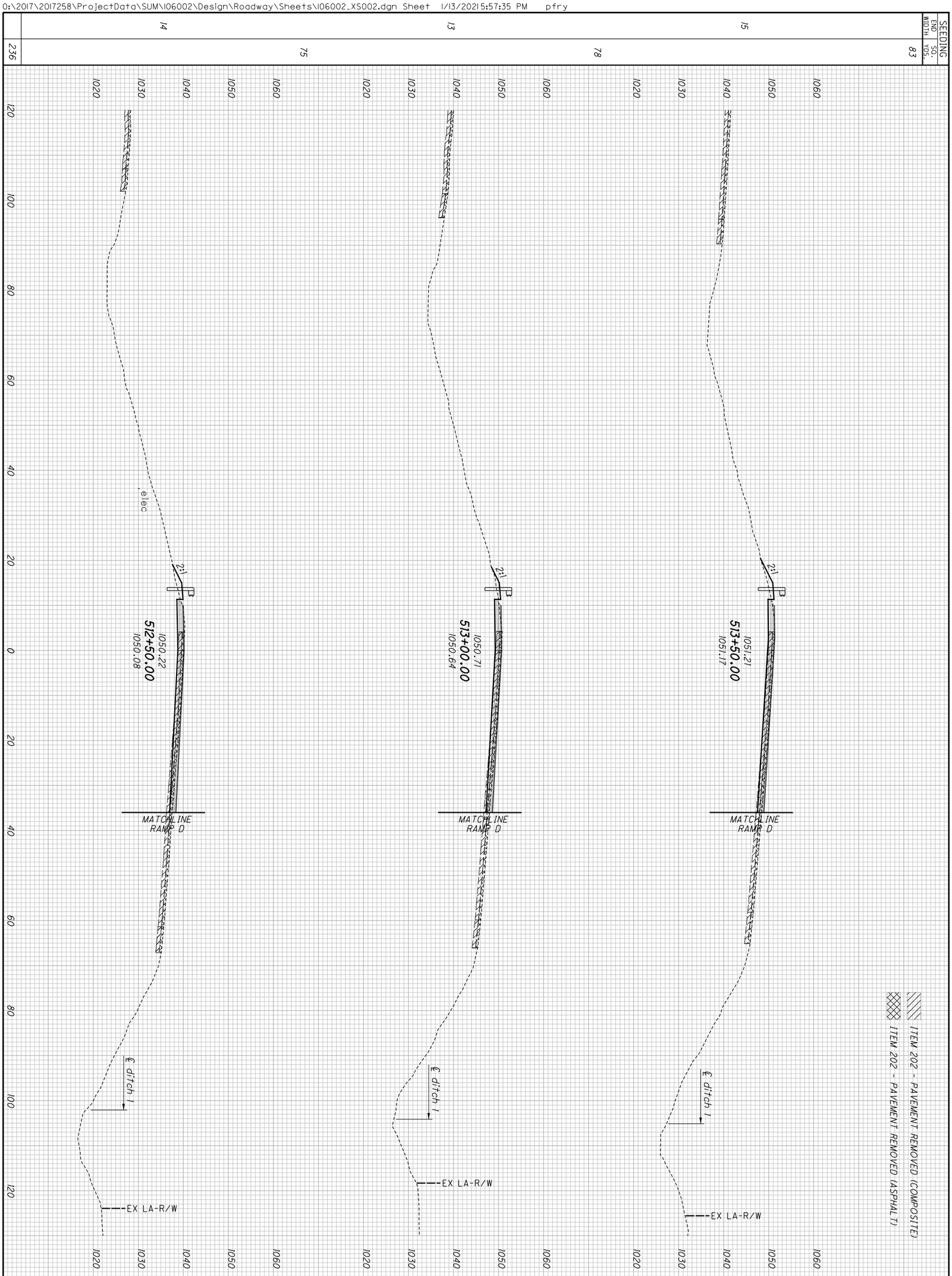


| | | |
|---|---|---|
| 588 / 1288 | **SUM-77 / 277 / 224**<br>**VARIOUS** | **CROSS SECTIONS - NB I.R. 77**<br>**STA. 512+50.00 TO STA. 513+50.00** |

CALCULATED CJC
CHECKED PJF

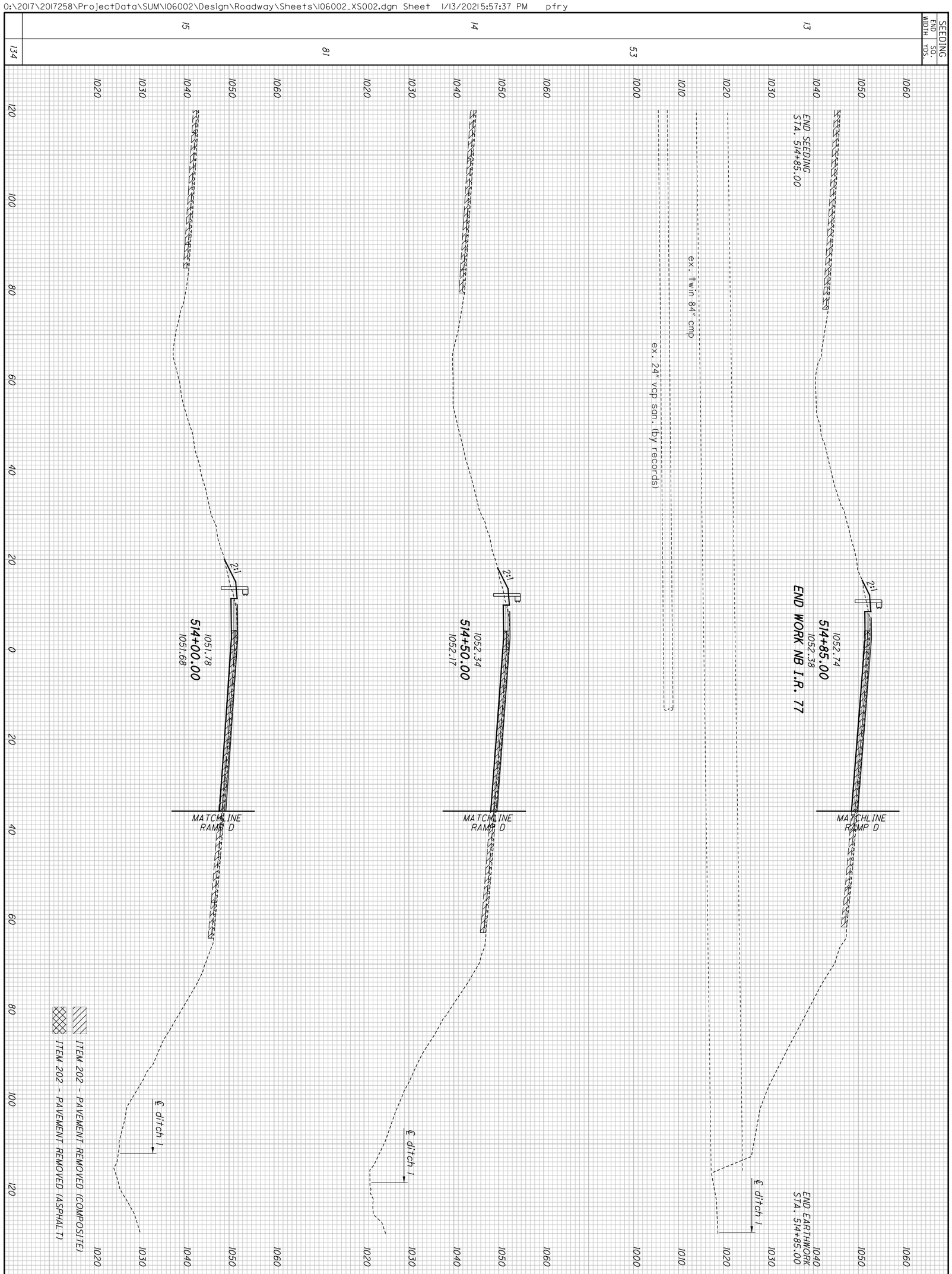


| | |
|---|---|
| 589 / 1288 | **SUM-77 / 277 / 224**<br>**VARIOUS** |
| | **CROSS SECTIONS - NB I.R. 77**<br>**STA. 514+00.00 TO STA. 514+85.00** |
| | CALCULATED CJC<br>CHECKED PJF |

| SEEDING | |
|---|---|
| END WIDTH | SQ. YDS. |

ITEM 202 - PAVEMENT REMOVED (COMPOSITE)

ITEM 202 - PAVEMENT REMOVED (ASPHALT)

1053.90
**515+87.72**
1053.90
MEET EXISTING
END APPROACH SLAB (SKEW)
(FUTURE BY OTHERS)

4:1
3:1
1053.62
**515+62.72**
1053.60
BEGIN APPROACH SLAB (SKEW)
(FUTURE BY OTHERS)

2:1
1053.47
**515+50.00**
1053.37
(FUTURE BY OTHERS)
MATCHLINE
BEGIN SKEWED
APPROACH SLAB

2:1
1052.91
**515+00.00**
1052.66
(FUTURE BY OTHERS)
MATCHLINE
RAMP D

ex. 24" vcp san. (by record)

1050 1040 1030 1020 1010

120 100 80 60 40 20 0 20 40 60 80 100 120

| END AREA | | VOLUME | |
|---|---|---|---|
| CUT | FILL | CUT | FILL |

CALCULATED CJC
CHECKED PJF

# CROSS SECTIONS - NB I.R. 77
## STA. 515+00.00 TO STA. 515+87.72

SUM-77 / 277 / 224
VARIOUS

590
1288

0:\2017\2017258\Project Data\SUM\106002\Design\Roadway\Sheets\106002_XS002.dgn Sheet 1/13/2021 5:57:40 PM pfry

| SEEDING END WIDTH | SEEDING SQ. YDS. |
|---|---|
| | 334 |
| 57 | |
| | 672 |
| 64 | |
| | 500 |
| 26 | |
| | 118 |
| 11 | |
| | 1624 |

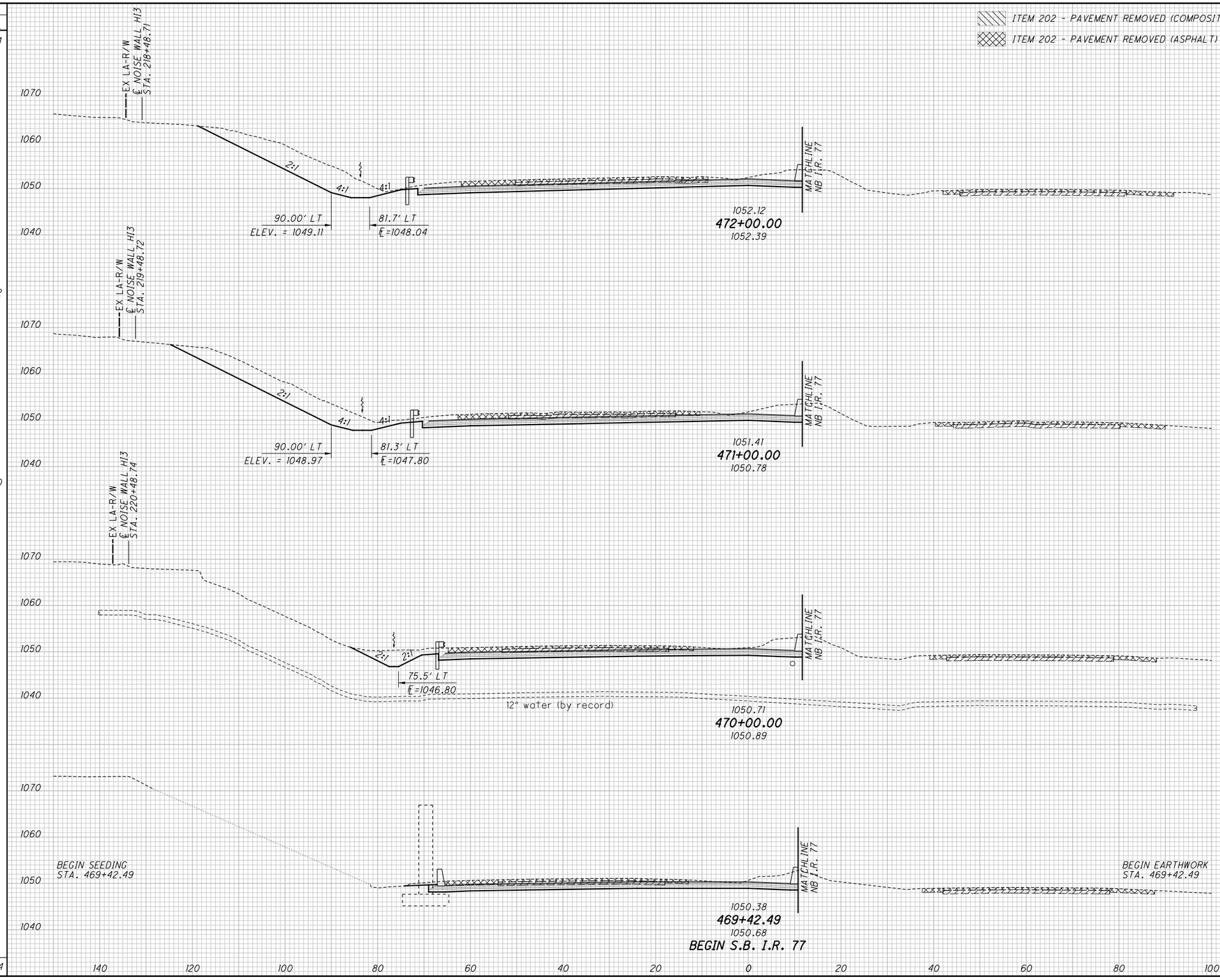


| END AREA CUT | END AREA FILL | VOLUME CUT | VOLUME FILL |
|---|---|---|---|
| | | 573 | 0 |
| 290 | 0 | | |
| | | 1100 | 0 |
| 304 | 0 | | |
| | | 865 | 0 |
| 163 | 0 | | |
| | | 298 | 0 |
| 117 | 0 | | |
| | | 2836 | 0 |

CALCULATED CJC
CHECKED PJF

# CROSS SECTIONS - SB I.R. 77
# STA. 469+42.49 TO STA. 472+00.00

SUM-77 / 277 / 224
VARIOUS

591
1288

0:\2017\2017258\ProjectData\SUM\106002\Design\Roadway\Sheets\106002_XS003.dgn Sheet 1/15/2021 9:2:14 AM pfry

| SEEDING END WIDTH | SEEDING SQ. YDS. |
|---|---|
| | 311 |
| 53 | |
| | 292 |
| 52 | |
| | 264 |
| 53 | |
| | 867 |

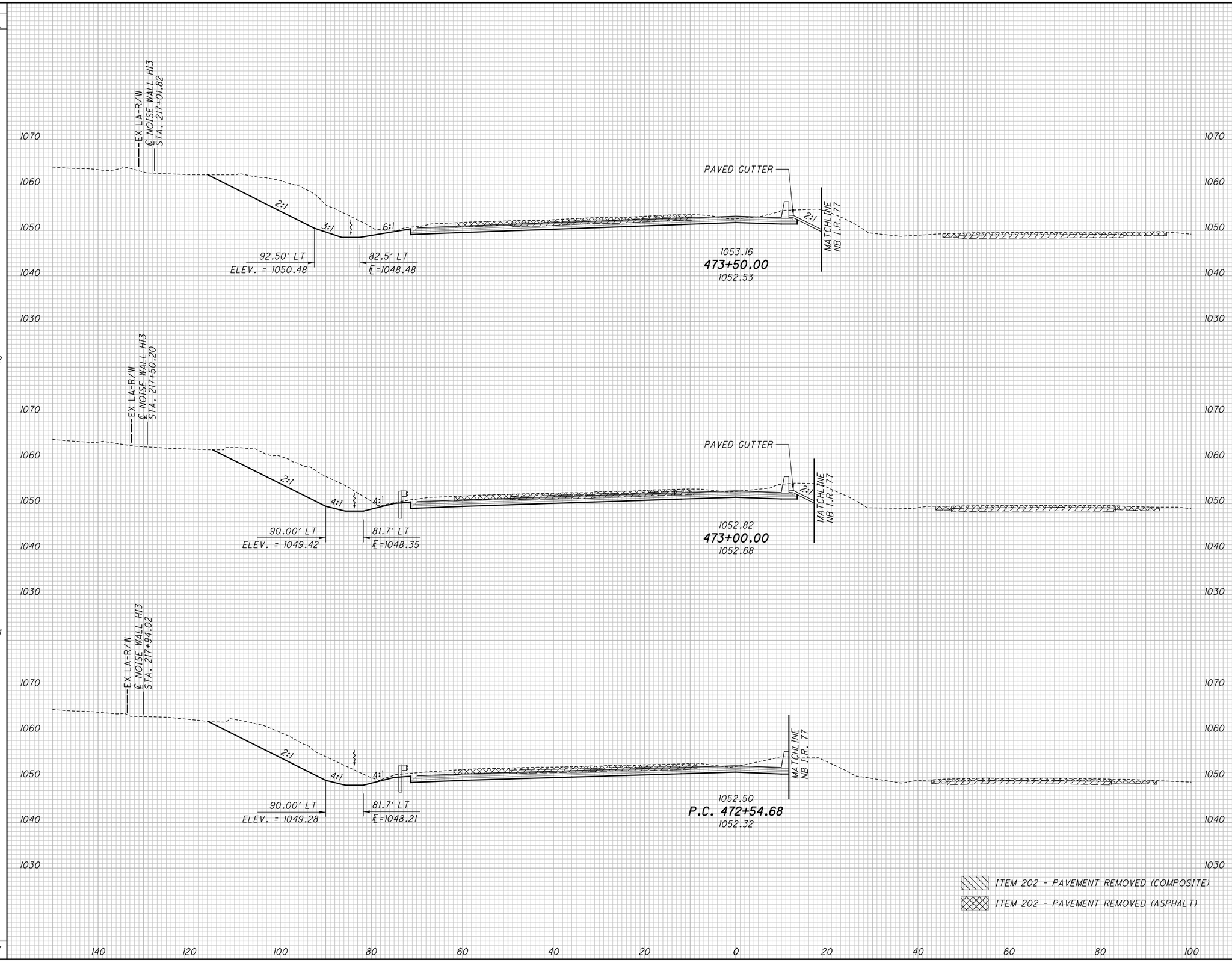


| END AREA CUT | END AREA FILL | VOLUME CUT | VOLUME FILL |
|---|---|---|---|
| | | 566 | 0 |
| 312 | 0 | | |
| | | 572 | 0 |
| 306 | 0 | | |
| | | 488 | 0 |
| 276 | 0 | | |
| | | 1626 | 0 |

CALCULATED CJC
CHECKED PJF

# CROSS SECTIONS - SB I.R. 77
# STA. 472+54.68 TO STA. 473+50.00

SUM-77 / 277 / 224
VARIOUS

592
1288

D:\2017\2017258\ProjectData\SUM\06002\Design\Roadway\Sheets\06002_XS003.dgn Sheet 1/15/2021 9:21:17 AM pfry

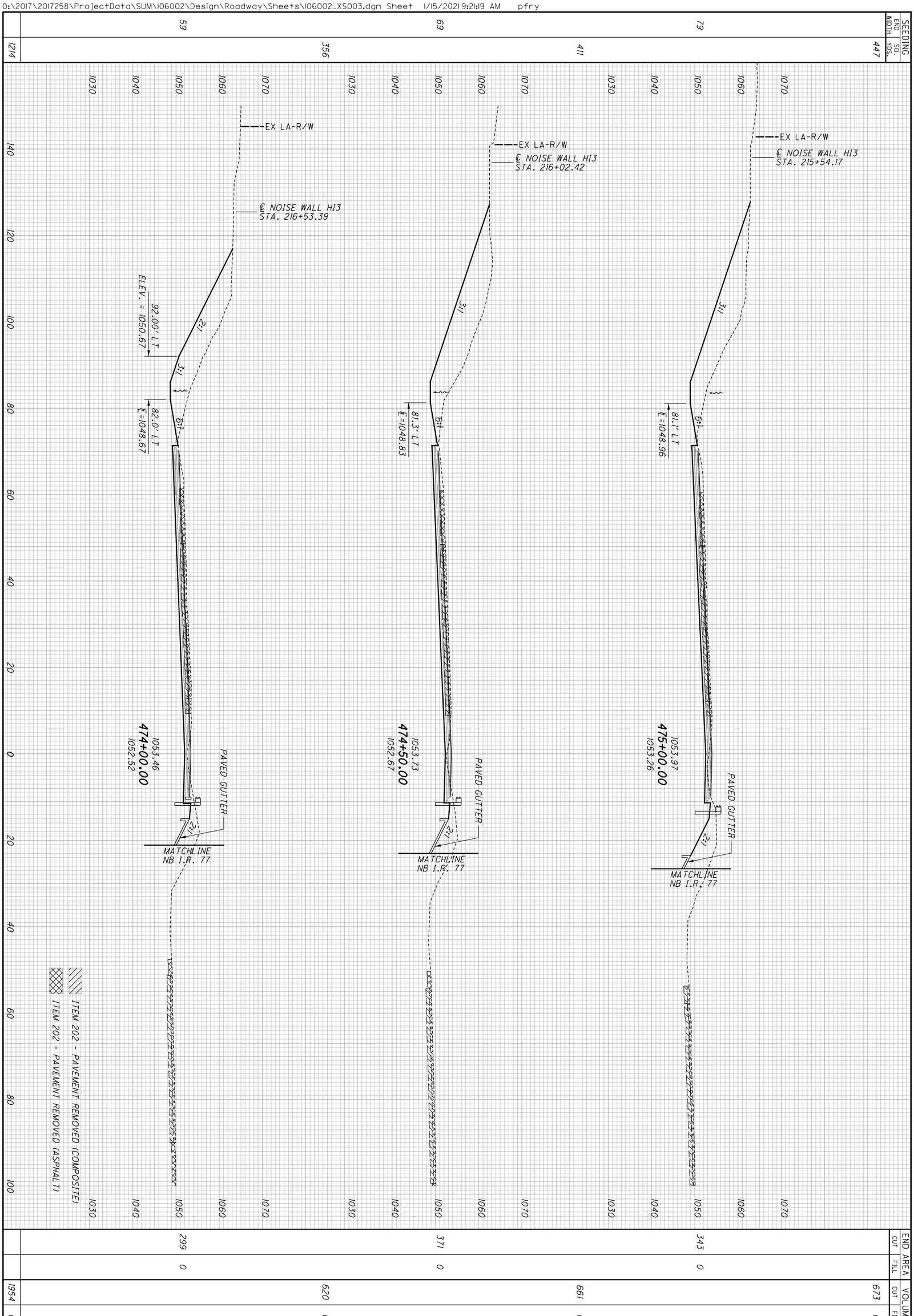


593
1288

**SUM-77/277/224**
**VARIOUS**

**CROSS SECTIONS - SB I.R. 77**
**STA. 474+00.00 TO STA. 475+00.00**

CALCULATED CJC
CHECKED PJF

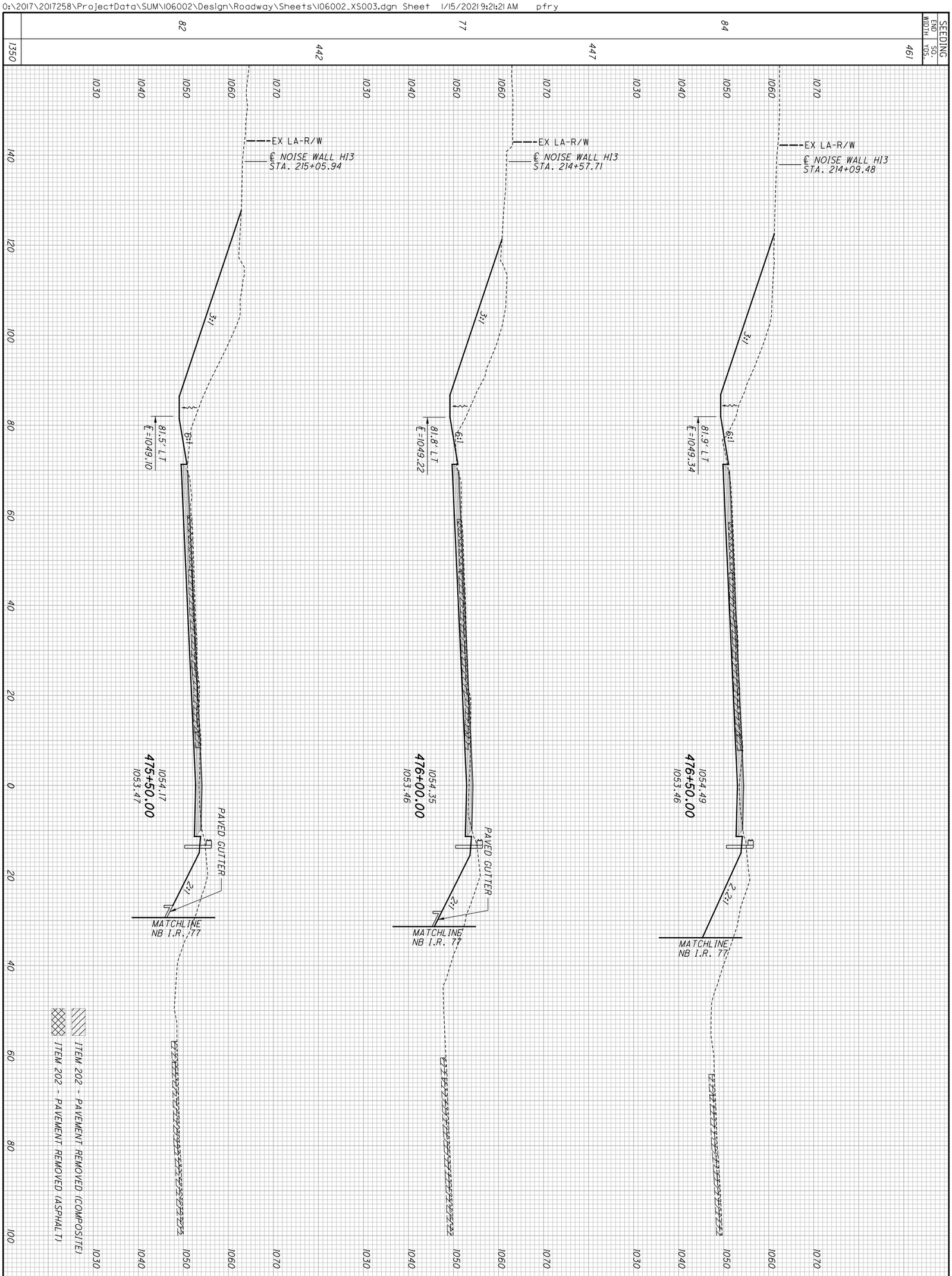


| | | |
|---|---|---|
| 1288 / 594 | **SUM-77/277/224**<br>**VARIOUS** | **CROSS SECTIONS - SB I.R. 77**<br>**STA. 475+50.00 TO STA. 476+50.00** |

CALCULATED CJC
CHECKED PJF

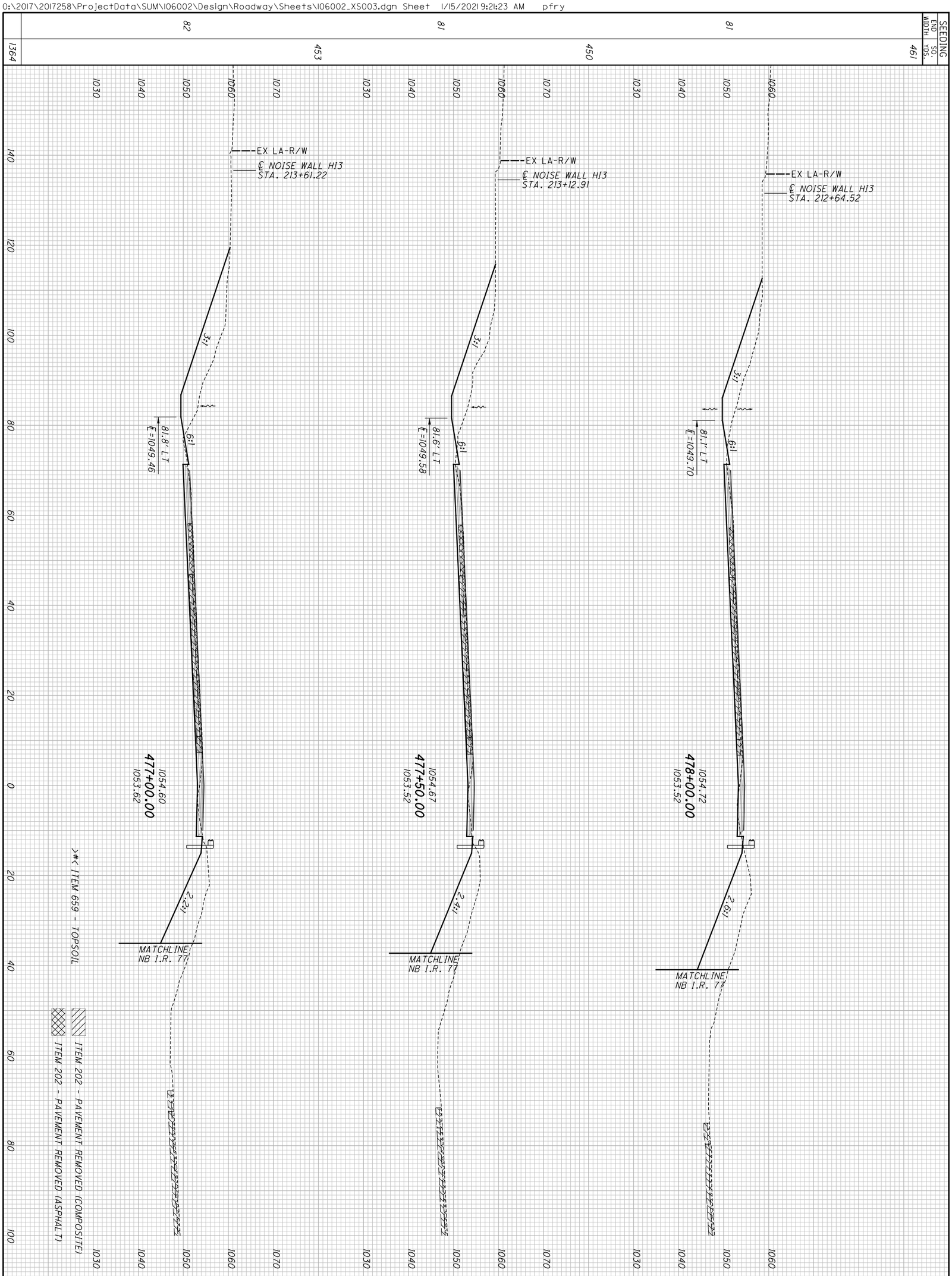


| | | | | |
|---|---|---|---|---|
| 1364 | 82 | 453 | 81 | 450 | 81 | 461 | SEEDING END WIDTH |
| | 1030 1040 1050 1060 1070 | | 1030 1040 1050 1060 1070 | | 1030 1040 1050 1060 | | SQ. YDS. |
| | 140 120 100 80 60 40 20 0 20 40 60 80 100 | | | | | | |
| | 282 | | 259 | | 257 | | END AREA CUT |
| | 2 | | 2 | | 2 | | FILL |
| 1483 | 501 | | 478 | | 504 | | VOLUME CUT |
| 22 | 4 | | 4 | | 14 | | FILL |

595
1288

**SUM-77/277/224**
**VARIOUS**

**CROSS SECTIONS - SB I.R. 77**
**STA. 477+00.00 TO STA. 478+00.00**

CALCULATED CJC
CHECKED PJF

| SEEDING END WIDTH | SEEDING SQ. YDS. |
|---|---|
| 84 | 464 |
| 84 | 467 |
| 85 | 469 |
| 85 | 472 |
| | 1872 |

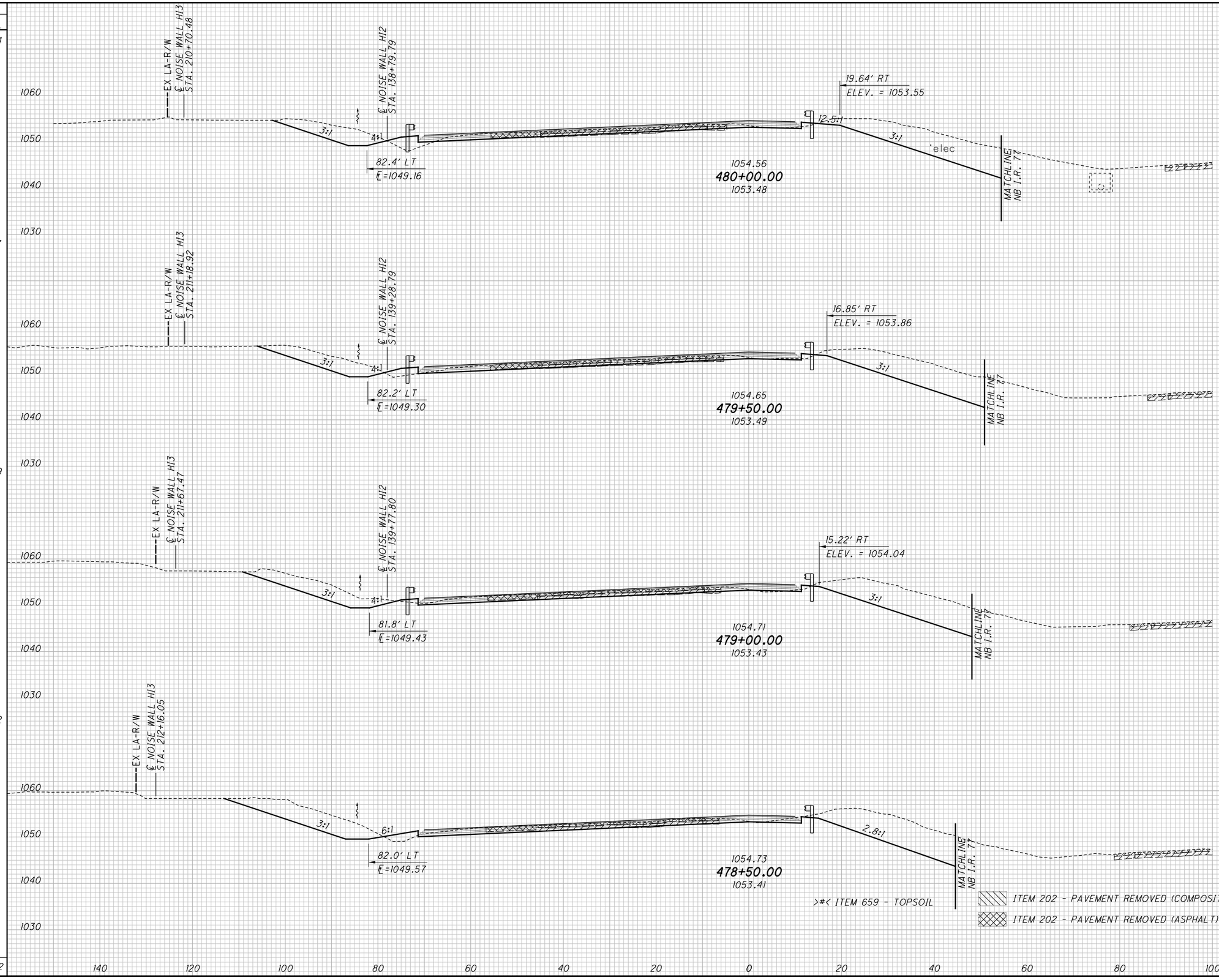


| END AREA CUT | END AREA FILL | VOLUME CUT | VOLUME FILL |
|---|---|---|---|
| | | 432 | 54 |
| 242 | 27 | | |
| | | 453 | 44 |
| 247 | 20 | | |
| | | 470 | 27 |
| 261 | 9 | | |
| | | 507 | 20 |
| 287 | 13 | | |
| | | 1862 | 145 |

CALCULATED CJC
CHECKED PJF

# CROSS SECTIONS - SB I.R. 77
## STA. 478+50.00 TO STA. 480+00.00

SUM-77 / 277 / 224
VARIOUS

596
1288

D:\2017\2017258\ProjectData\SUM\06002\Design\Roadway\Sheets\106002_XS003.dgn Sheet 1/15/2021 9:21:25 AM pfry

| SEEDING END WIDTH | SEEDING SQ. YDS. |
|---|---|
| | 553 |
| 95 | |
| | 522 |
| 93 | |
| | 514 |
| 92 | |
| | 486 |
| 83 | |
| | 2075 |

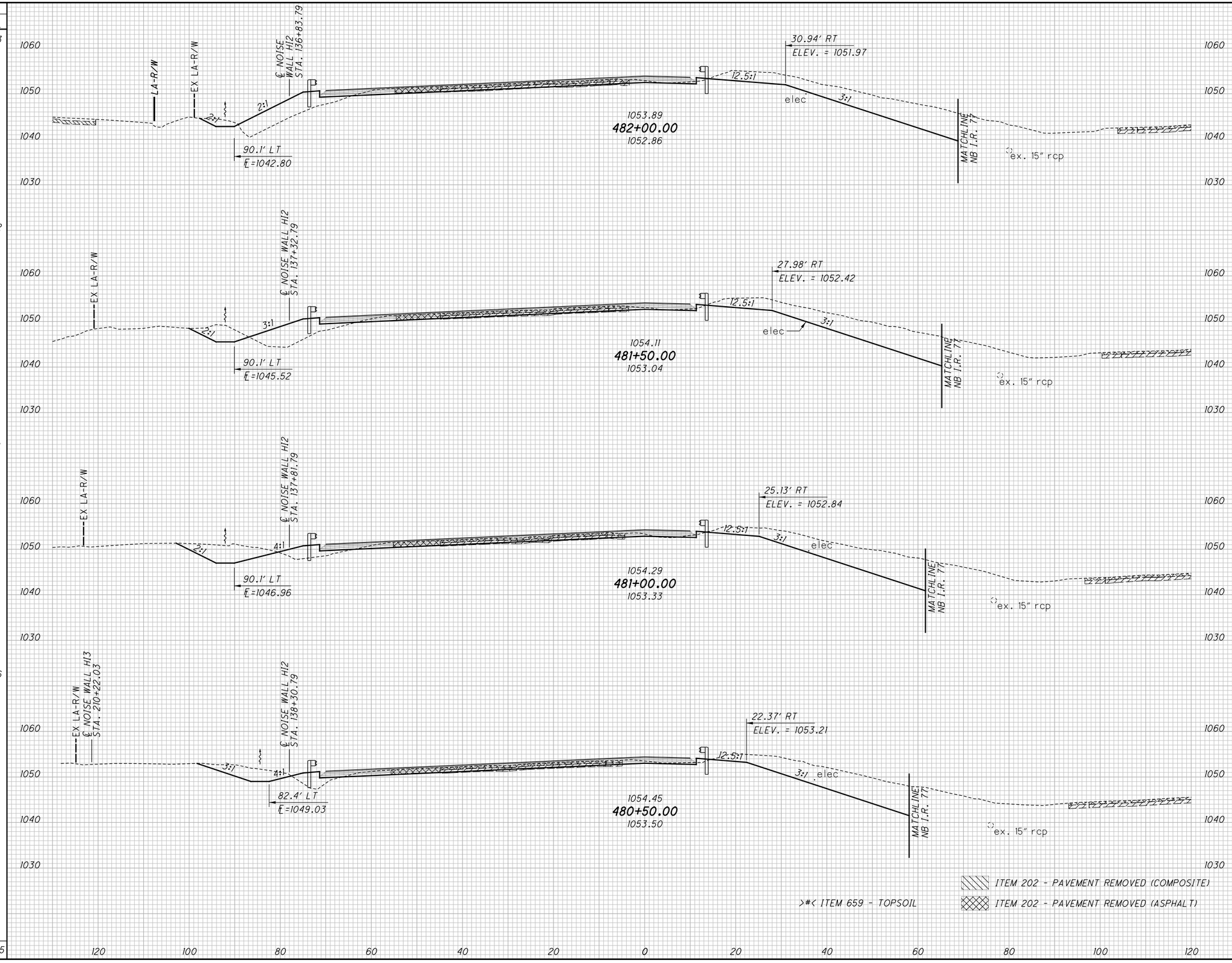


| END AREA CUT | END AREA FILL | VOLUME CUT | VOLUME FILL |
|---|---|---|---|
| | | 375 | 243 |
| 210 | 84 | | |
| | | 402 | 145 |
| 224 | 73 | | |
| | | 431 | 99 |
| 242 | 34 | | |
| | | 432 | 60 |
| 225 | 31 | | |
| | | 1640 | 547 |

CALCULATED CJC
CHECKED PJF

# CROSS SECTIONS - SB I.R. 77
## STA. 480+50.00 TO STA. 482+00.00

SUM-77 / 277 / 224
VARIOUS

597
1288

0:\2017\2017258\Project Data\SUM\06002\Design\Roadway\Sheets\06002_XS003.dgn Sheet 1/15/2021 9:21:27 AM pfry

| SEEDING END WIDTH | SEEDING SQ. YDS. |
|---|---|
| | 550 |
| 119 | |
| | 644 |
| 113 | |
| | 603 |
| 104 | |
| 1797 | |

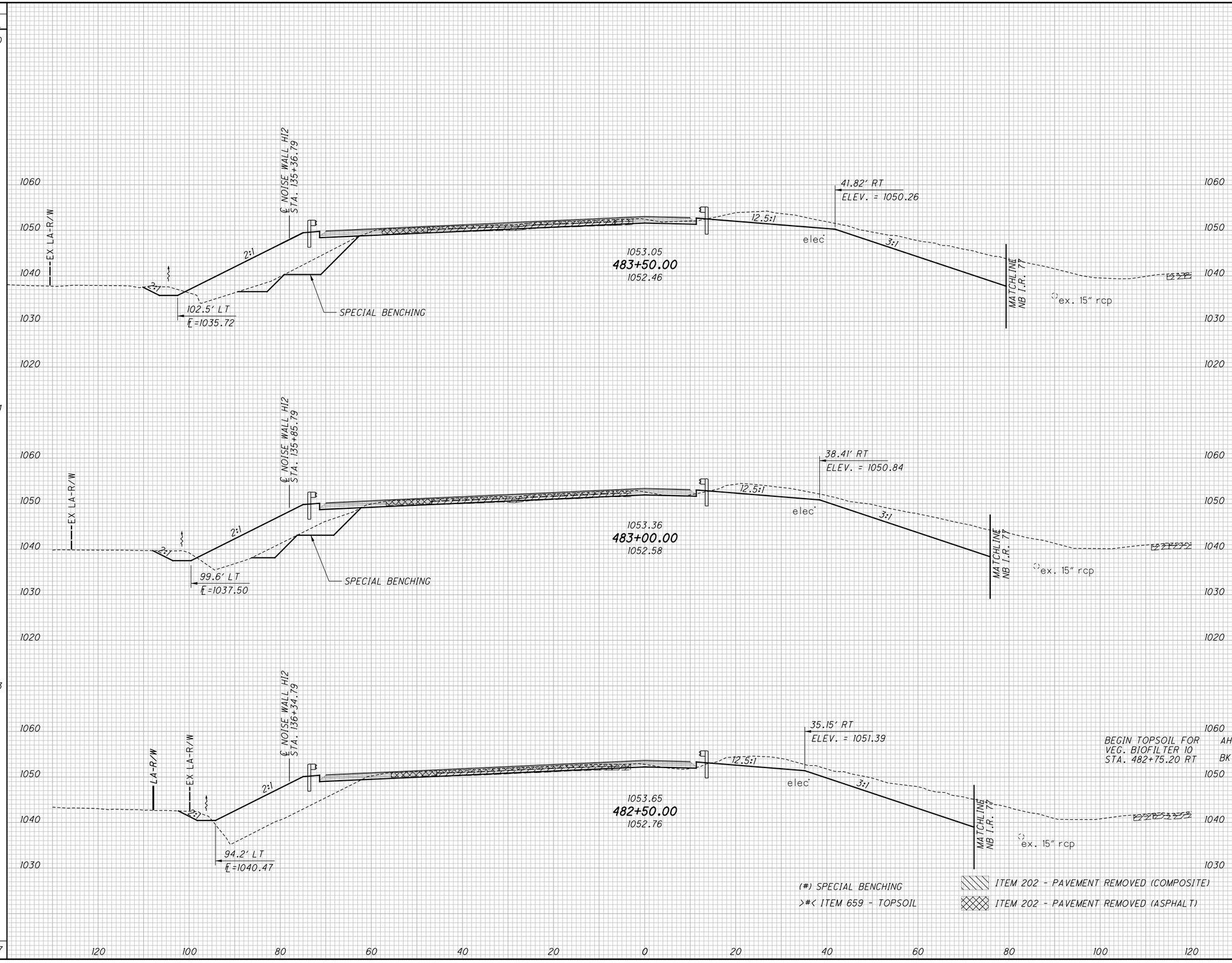


| END AREA CUT | END AREA FILL | VOLUME CUT | VOLUME FILL |
|---|---|---|---|
| | | | >41< |
| | | (101) | (101) |
| | | 296 | 356 |
| | >21< | | |
| (44) | (44) | | |
| 239 | 192 | | |
| | | | >38< |
| | | (76) | (76) |
| | | 428 | 330 |
| | >20< | | |
| (38) | (38) | | |
| 223 | 164 | | |
| | | | >18< |
| | | (35) | (35) |
| | | 387 | 317 |
| | >20< | | |
| | >0< | | |
| (0) | (0) | | |
| 195 | 178 | | |
| | | | >97< |
| | | (212) | (212) |
| | | 1111 | 1003 |

CALCULATED CJC
CHECKED PJF

CROSS SECTIONS - SB I.R. 77
STA. 482+50.00 TO STA. 483+50.00

SUM-77 / 277 / 224
VARIOUS

598
1288

0:\2017\2017258\Project Data\SUM\06002\Design\Roadway\Sheets\06002_XS003.dgn Sheet 1/15/2021 9:21:30 AM pfry

| SEEDING END WIDTH | SEEDING SQ. YDS. |
|---|---|
| | 567 |
| 100 | |
| | 519 |
| 87 | |
| | 461 |
| 79 | |
| | 1547 |

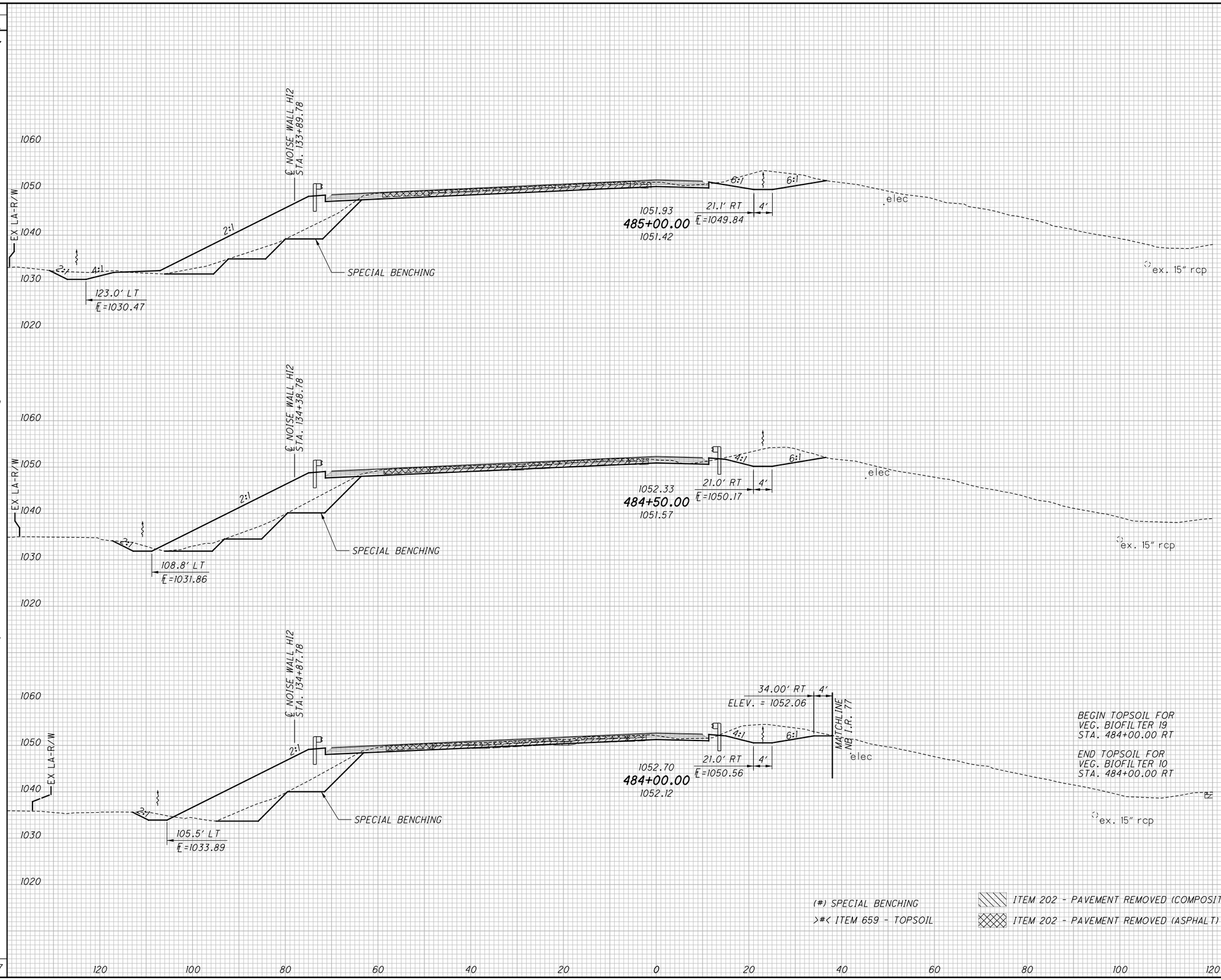


(#) SPECIAL BENCHING
>#< ITEM 659 - TOPSOIL

ITEM 202 - PAVEMENT REMOVED (COMPOSITE)
ITEM 202 - PAVEMENT REMOVED (ASPHALT)

| END AREA CUT | END AREA FILL | VOLUME CUT | VOLUME FILL |
|---|---|---|---|
| | | | >7< |
| | | (94) | (94) |
| | | 175 | 408 |
| | >4< | | |
| (63) | (63) | | |
| 91 | 191 | | |
| | | | >6< |
| | | (119) | (119) |
| | | 158 | 354 |
| | >2< | | |
| (66) | (66) | | |
| 80 | 191 | | |
| | | | >4< |
| | | (121) | (121) |
| | | 149 | 356 |
| | >2< | | |
| AH | | | |
| BK | >23< | | |
| (65) | (65) | | |
| 81 | 193 | | |
| | | | >17< |
| | | (334) | (334) |
| | | 482 | 1118 |

CALCULATED CJC
CHECKED PJF

# CROSS SECTIONS - SB I.R. 77
## STA. 484+00.00 TO STA. 485+00.00

SUM-77 / 277 / 224
VARIOUS

599
1288

0:\2017\2017258\ProjectData\SUM\06002\Design\Roadway\Sheets\06002_XS003.dgn Sheet 1/15/2021 9:21:32 AM pfry

| SEEDING END WIDTH | SEEDING SQ. YDS. |
|---|---|
| | 137 |
| 34 | |
| | 160 |
| 106 | |
| | 105 |
| | 581 |
| | 578 |
| 104 | |
| | 1456 |

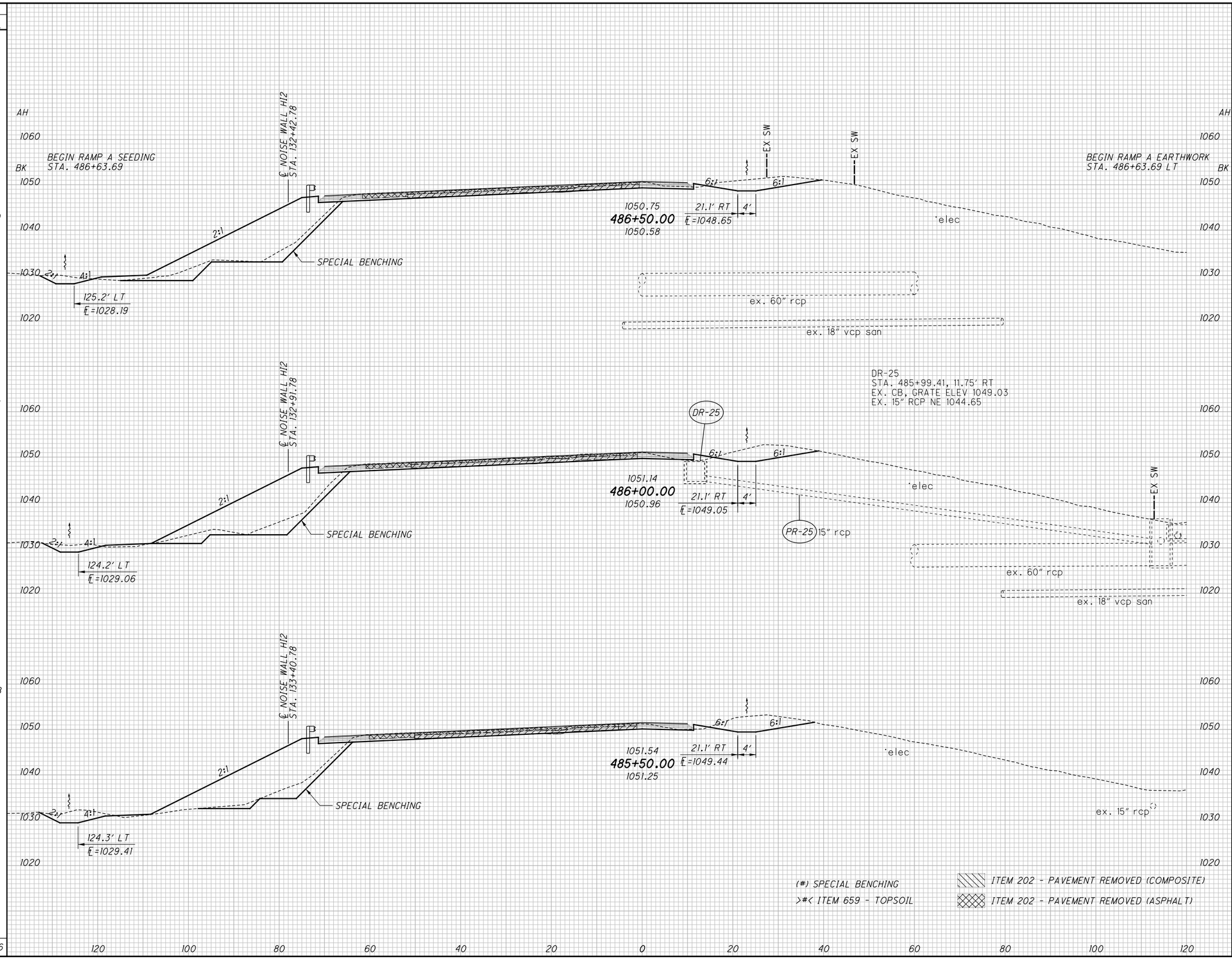


| END AREA CUT | END AREA FILL | VOLUME CUT | VOLUME FILL |
|---|---|---|---|
| | | | >5< |
| | | (0) | (0) |
| | | 89 | 1 |
| | >4< | | |
| (0) | (0) | | |
| AH 66 | 0 | | |
| | >4< | | |
| (44) | (44) | | |
| BK 90 | 235 | | |
| | | | >2< |
| | | (24) | (24) |
| | | 44 | 120 |
| | >4< | | |
| (49) | (49) | | |
| 82 | 239 | | |
| | | | >7< |
| | | (101) | (101) |
| | | 155 | 439 |
| | >4< | | |
| (60) | (60) | | |
| 85 | 235 | | |
| | | | >7< |
| | | (91) | (91) |
| | | 169 | 449 |
| | >4< | | |
| (38) | (38) | | |
| 98 | 250 | | |
| | | | >21< |
| | | (216) | (216) |
| | | 457 | 1009 |

CALCULATED CJC
CHECKED PJF

# CROSS SECTIONS - SB I.R. 77
# STA. 485+50.00 TO STA. 486+50.00

SUM-77 / 277 / 224
VARIOUS

600
1288

O:\2017\2017258\ProjectData\SUM\106002\Design\Roadway\Sheets\106002_XS003.dgn Sheet 1/15/2021 9:21:34 AM pfry

| SEEDING END WIDTH | SEEDING SQ. YDS. | END AREA CUT | END AREA FILL | VOLUME CUT | VOLUME FILL |
|---|---|---|---|---|---|
| | 206 | | | | >7< |
| | | | | 147 | 2 |
| 36 | | 83 | >4< 0 | | |
| | 197 | | | 145 | >7< 0 |
| 35 | | 74 | >4< 0 | | |
| | 192 | | | 131 | >7< 1 |
| 34 | | 67 | >4< 1 | | |
| | 595 | | | 423 | >21< 3 |

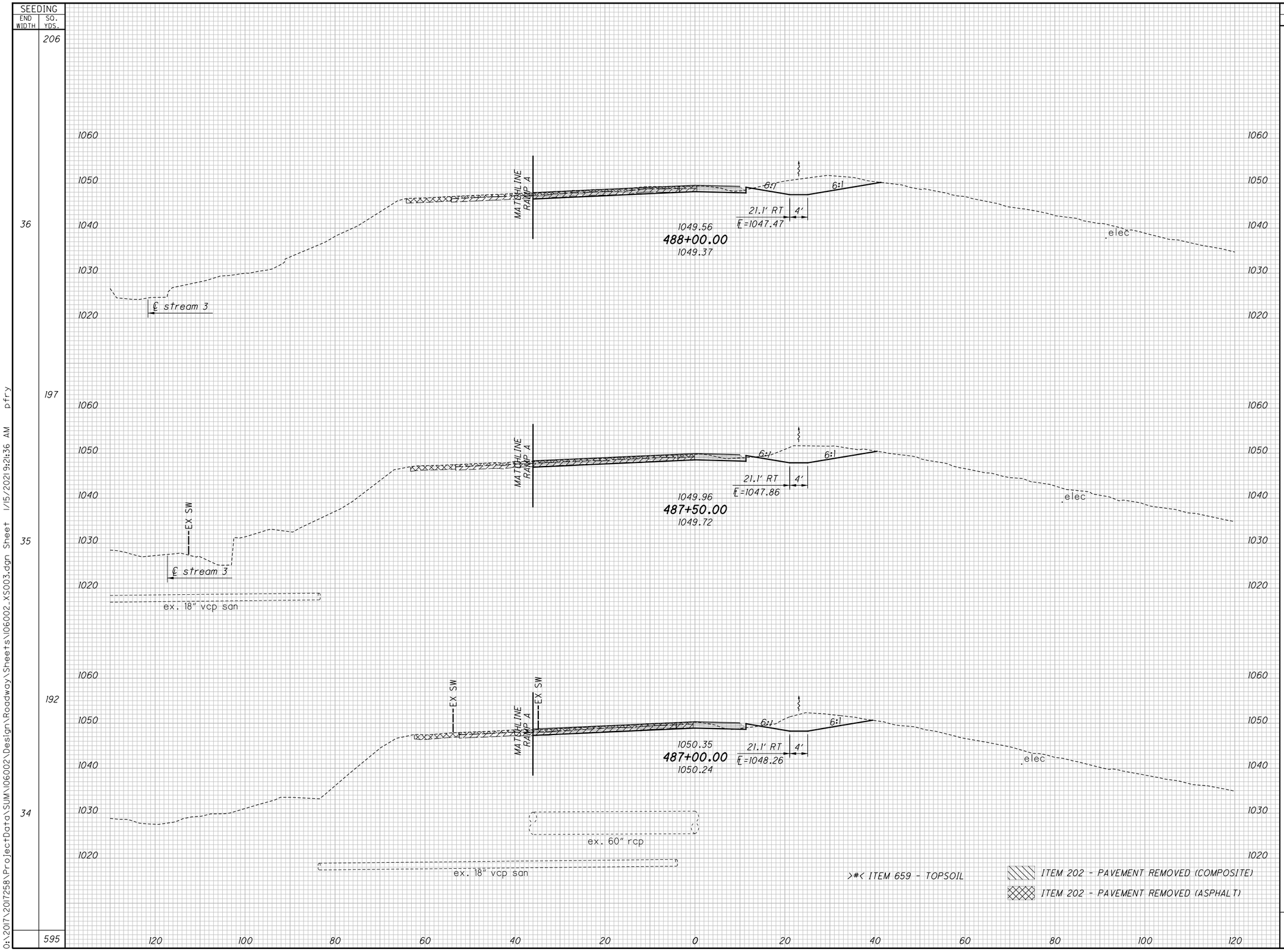


CALCULATED CJC
CHECKED PJF

# CROSS SECTIONS - SB I.R. 77
## STA. 487+00.00 TO STA. 488+00.00

SUM-77 / 277 / 224
VARIOUS

601
1288

0:\2017\2017258\ProjectData\SUM\106002\Design\Roadway\Sheets\106002_XS003.dgn Sheet 1/15/2021 9:21:36 AM pfry

| SEEDING END WIDTH | SEEDING SQ. YDS. | END AREA CUT | END AREA FILL | VOLUME CUT | VOLUME FILL |
|---|---|---|---|---|---|
| | 211 | | | | >7< |
| | | | | 169 | 1 |
| 38 | | 86 | >4< 1 | | |
| | 208 | | | | >7< |
| | | | | 158 | 2 |
| | | | | | |
| 37 | | 85 | >4< 1 | | |
| | 208 | | | 149 | >7< 3 |
| 38 | | 76 | >4< 2 | | |
| | | | | | |
| | 627 | | | 476 | >21< 6 |

CALCULATED CJC
CHECKED PJF

# CROSS SECTIONS - SB I.R. 77
## STA. 488+50.00 TO STA. 489+50.00

SUM-77 / 277 / 224
VARIOUS

602
1288

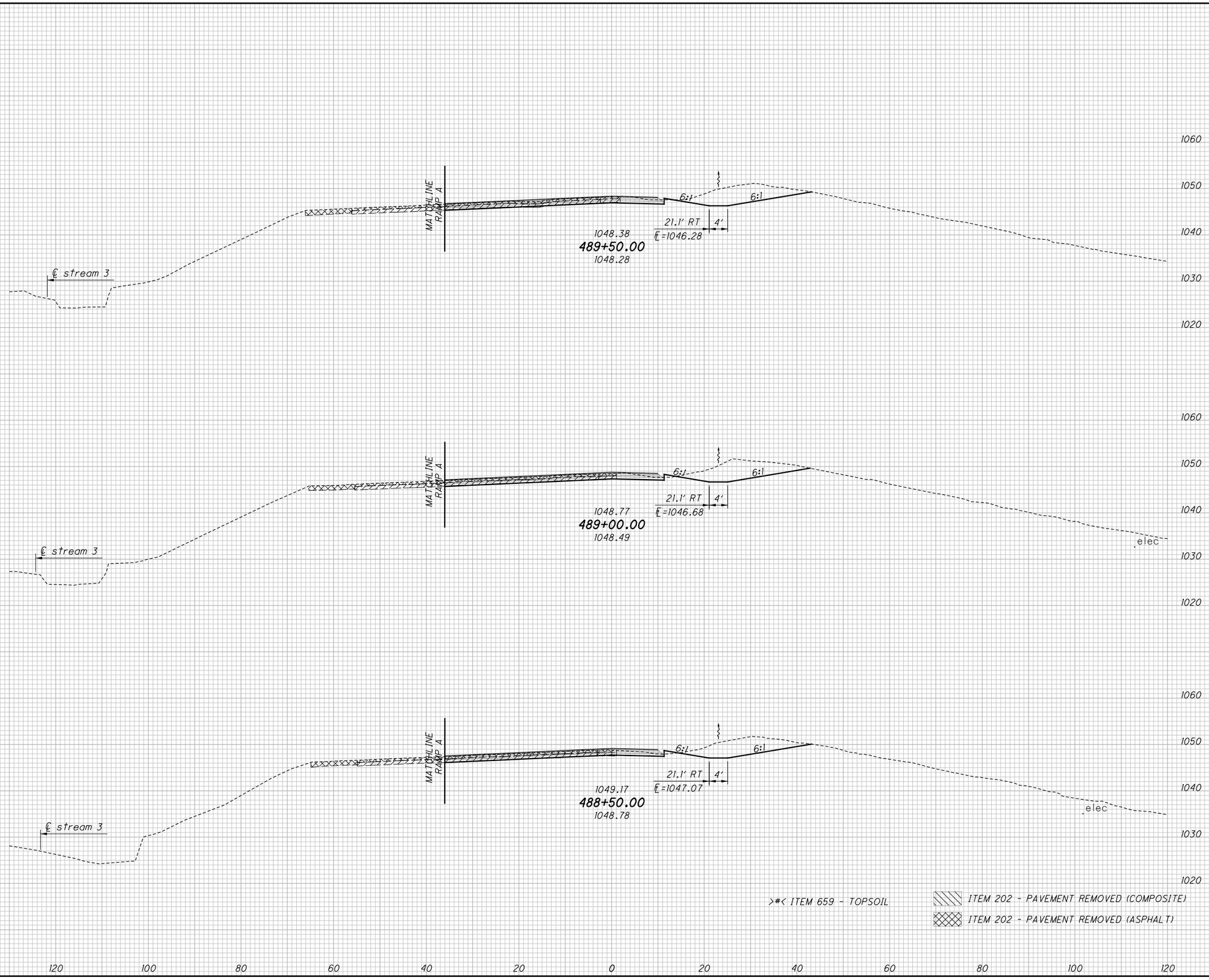


>#< ITEM 659 - TOPSOIL

ITEM 202 - PAVEMENT REMOVED (COMPOSITE)

ITEM 202 - PAVEMENT REMOVED (ASPHALT)

0:\2017\2017258\ProjectData\SUM\06002\Design\Roadway\Sheets\06002_XS003.dgn Sheet 1/15/2021 9:21:38 AM pfry

| SEEDING END WIDTH | SEEDING SQ. YDS. | END AREA CUT | END AREA FILL | VOLUME CUT | VOLUME FILL |
|---|---|---|---|---|---|
| | 206 | | | | >7< |
| | | | | 138 | 2 |
| 37 | | 80 | >4< 1 | | |
| | 211 | | | | >7< |
| | | | | 155 | 1 |
| 39 | | 87 | >4< 0 | | |
| | 214 | | | | >7< |
| | | | | 170 | 0 |
| 38 | | 97 | >4< 0 | | |
| | 631 | | | 463 | >21< 3 |

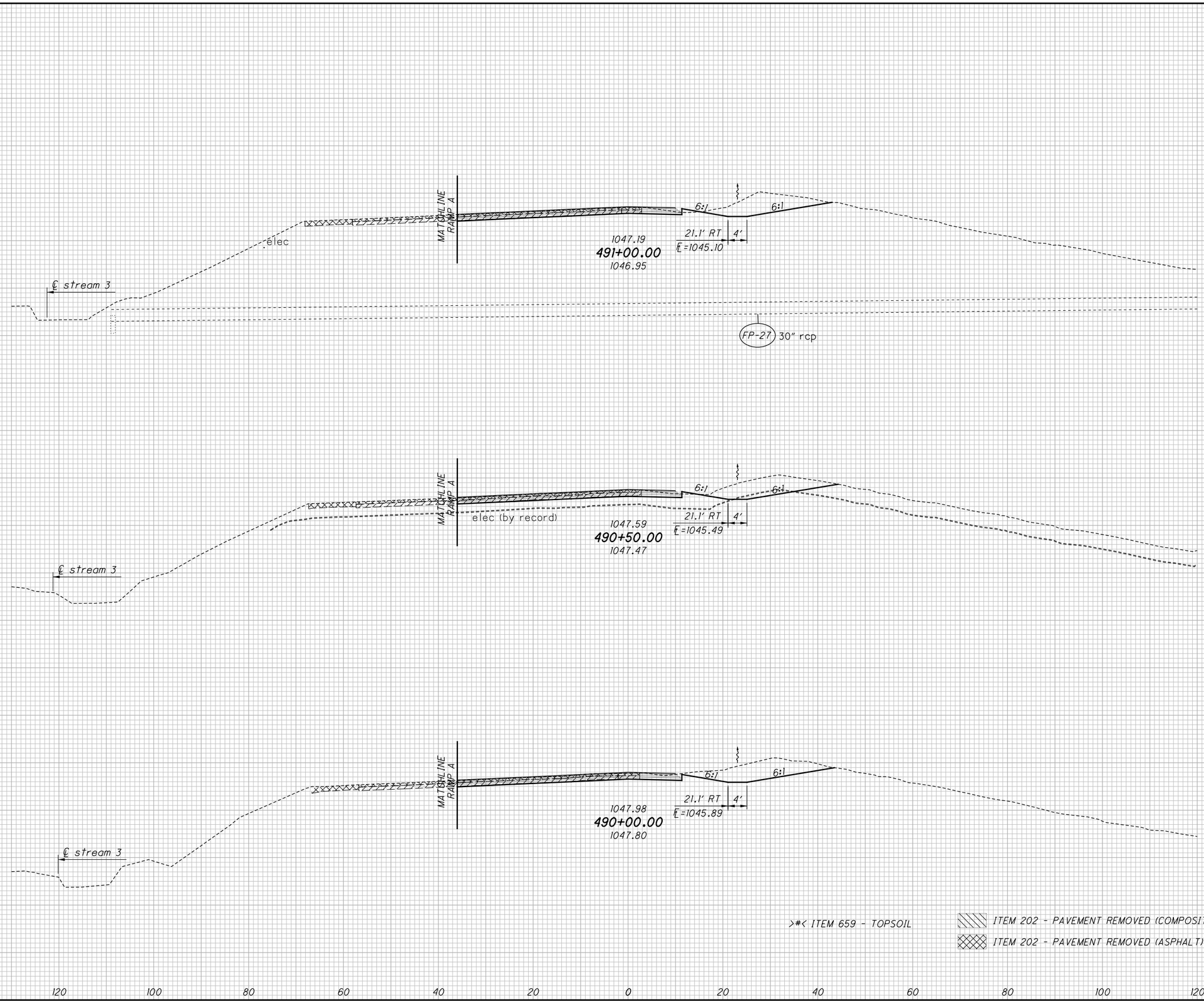


CALCULATED CJC
CHECKED PJF

# CROSS SECTIONS - SB I.R. 77
## STA. 490+00.00 TO STA. 491+00.00

SUM-77 / 277 / 224
VARIOUS

603
1288

0:\2017\2017258\ProjectData\SUM\106002\Design\Roadway\Sheets\106002_XS003.dgn Sheet 1/15/2021 9:21:40 AM pfry

| SEEDING END WIDTH | SEEDING SQ. YDS. |
|---|---|
| | 68 |
| 33 | |
| | 117 |
| 34 | |
| | 192 |
| 35 | |
| | 200 |
| 37 | |
| | 577 |

| END AREA CUT | END AREA FILL | VOLUME CUT | VOLUME FILL |
|---|---|---|---|
| | | | >3< |
| | | 40 | 0 |
| | >4< | | |
| 57 | 0 | | |
| | | | >5< |
| | | 72 | 1 |
| | >4< | | |
| 67 | 1 | | |
| | | | >7< |
| | | 124 | 2 |
| | >4< | | |
| 67 | 1 | | |
| | | | >7< |
| | | 126 | 2 |
| | >4< | | |
| 69 | 1 | | |
| | | | >22< |
| | | 362 | 5 |

CALCULATED CJC
CHECKED PJF

# CROSS SECTIONS - SB I.R. 77
## STA. 491+50.00 TO STA. 492+81.37

SUM-77 / 277 / 224
VARIOUS

604
1288

MATCHLINE RAMP A

1045.76
P.T. 492+81.37
1045.52
℄ =1043.51
21.1' RT
4'
6:1
6:1

1046.01
492+50.00
1045.88
℄ =1043.79
21.1' RT
4'

1046.40
492+00.00
1046.14
℄ =1044.25
21.1' RT
4'

1046.80
491+50.00
1046.62
℄ =1044.70
21.1' RT
4'

elec

D-28
STA 292+58.27, 64.86' LT
MH-3, RIM ELEV 1042.89
18" (SE) 1023.95
36" (N) 1023.45
42" (SW) 1022.95

199'-42" TYPE B, BORED OR JACKED @ 0.30% P-28

℄ stream 3

>#< ITEM 659 - TOPSOIL

ITEM 202 - PAVEMENT REMOVED (COMPOSITE)

ITEM 202 - PAVEMENT REMOVED (ASPHALT)

1060 1050 1040 1030 1020

120 100 80 60 40 20 0 20 40 60 80 100 120

O:\2017\2017258\ProjectData\SUM\06002\Design\Roadway\Sheets\06002_XS003.dgn Sheet 1/15/2021 9:21:42 AM pfry

| SEEDING END WIDTH | SEEDING SQ. YDS. |
|---|---|
| | 317 |
| 28 | |
| | 283 |
| 23 | |
| | 311 |
| 33 | |
| | 911 |

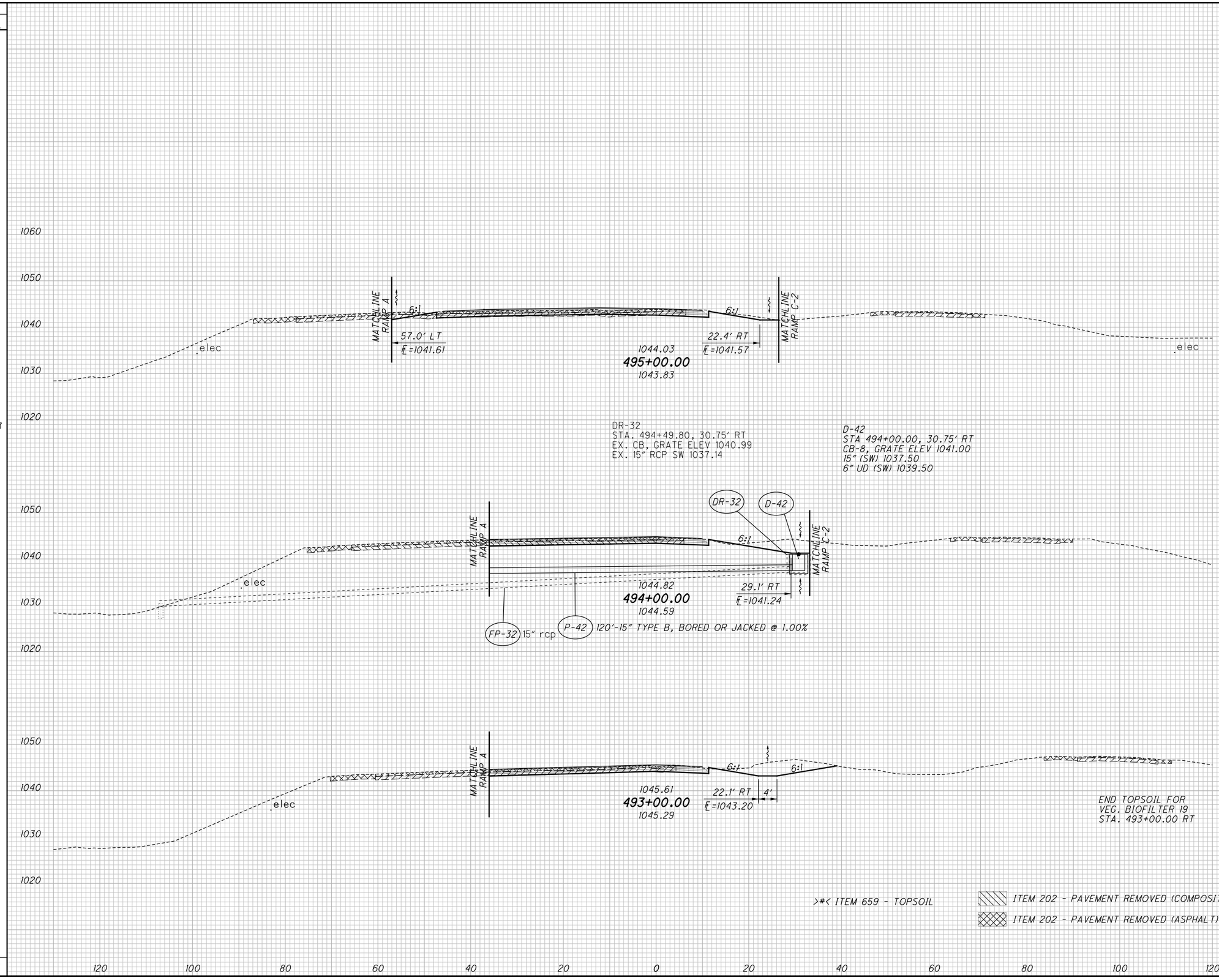


>#< ITEM 659 - TOPSOIL

ITEM 202 - PAVEMENT REMOVED (COMPOSITE)

ITEM 202 - PAVEMENT REMOVED (ASPHALT)

| END AREA CUT | END AREA FILL | VOLUME CUT | VOLUME FILL |
|---|---|---|---|
| | | 104 | 31 |
| 13 | 14 | | |
| | | 94 | 30 |
| 38 | 2 | | |
| | | 181 | 6 |
| 60 | >0< | AH | |
| | >4< | BK | |
| | 1 | | |
| | | 379 | 67 |

CALCULATED CJC
CHECKED PJF

# CROSS SECTIONS - SB I.R. 77
# STA. 493+00.00 TO STA. 495+00.00

SUM-77/277/224
VARIOUS

605
1288

D:\2017\2017258\Project Data\SUM\06002\Design\Roadway\Sheets\06002_XS003.dgn Sheet 1/15/2021 9:21:45 AM pfry

| SEEDING END WIDTH | SEEDING SQ. YDS. |
|---|---|
| | [372] |
| | 450 |
| [34] | |
| [0] | |
| 38 | |
| | |
| | |
| | |
| | |
| | 367 |
| | |
| | |
| | |
| | |
| 28 | |
| | 317 |
| | |
| | |
| | |
| | |
| 29 | |
| | |
| | |
| | [372] |
| | 1134 |

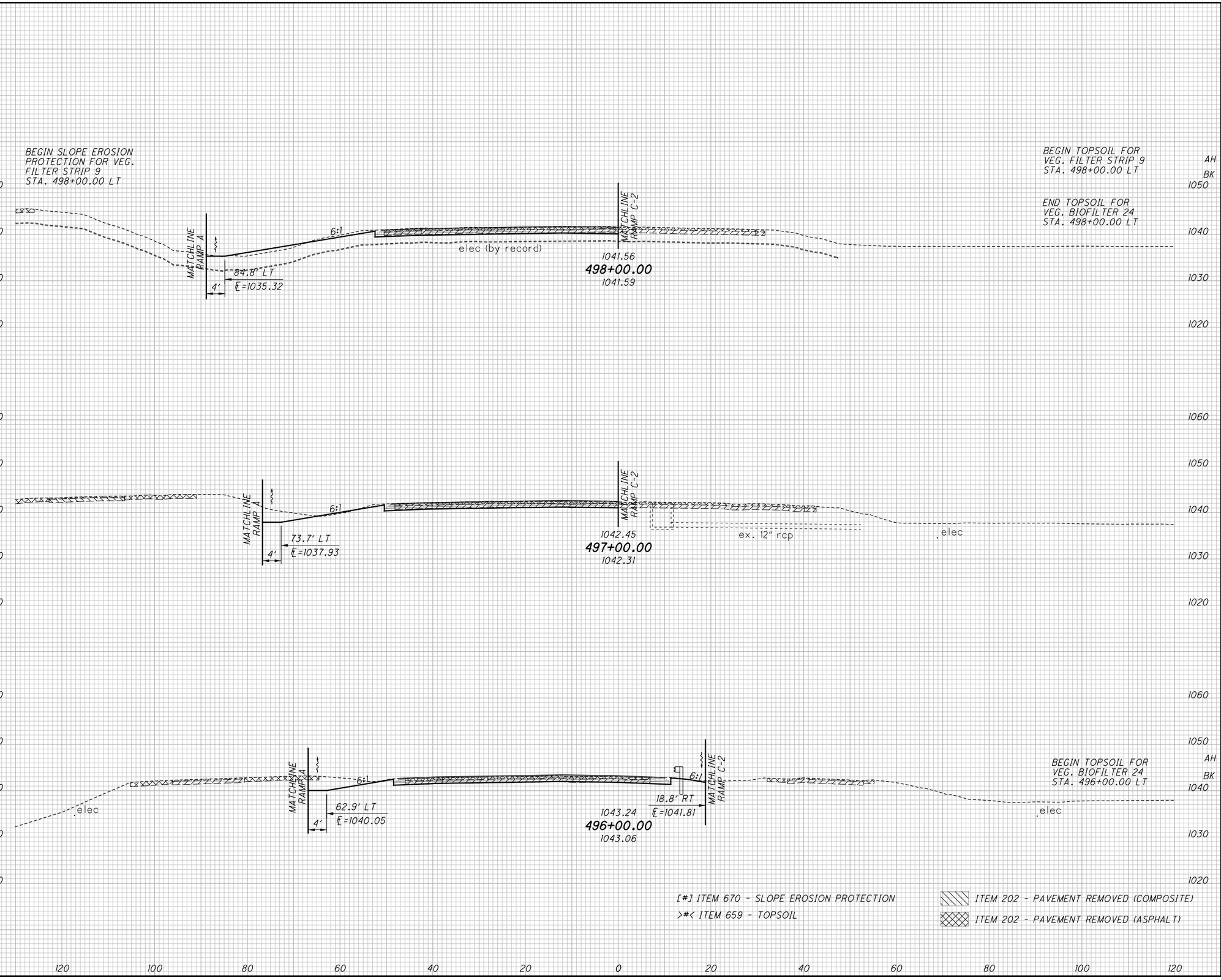


[#] ITEM 670 - SLOPE EROSION PROTECTION

>#< ITEM 659 - TOPSOIL

ITEM 202 - PAVEMENT REMOVED (COMPOSITE)

ITEM 202 - PAVEMENT REMOVED (ASPHALT)

| END AREA CUT | END AREA FILL | VOLUME CUT | VOLUME FILL |
|---|---|---|---|
| | | | >41< |
| | | 119 | 13 |
| | >11< | | |
| | >11< | | |
| 24 | 5 | | |
| | | | |
| | | | |
| | | | |
| | | | |
| | | | >35< |
| | | 111 | 13 |
| | | | |
| | | | |
| | | | |
| | | | |
| 36 | >8< | | |
| | 2 | | |
| | | | |
| | | | |
| | | | >24< |
| | | 146 | 9 |
| | | | |
| | | | |
| | | | |
| | | | |
| | >5< | | |
| | >0< | | |
| 43 | 3 | | |
| | | | |
| | | | |
| | | | |
| | | | |
| | | | >100< |
| | | 376 | 35 |

CALCULATED CJC
CHECKED PJF

# CROSS SECTIONS - SB I.R. 77
# STA. 496+00.00 TO STA. 498+00.00

SUM-77 / 277 / 224
VARIOUS

606
1288

0:\2017\2017258\Project Data\SUM\06002\Design\Roadway\Sheets\06002_XS003.dgn Sheet 1/15/2021 9:21:48 AM pfry

| SEEDING END WIDTH | SEEDING SQ. YDS. |
|---|---|
| | 20 |
| 60 | |
| | 318 |
| 52 | |
| 8 | |
| 46 | |
| 9 | |
| | 217 |
| [0] | |
| [25] | |
| | [123] |
| [25] | |
| 30 | |
| | [322] |
| | 406 |
| [33] | |
| 43 | |
| | [445] |
| | 1007 |

| END AREA CUT | END AREA FILL | VOLUME CUT | VOLUME FILL |
|---|---|---|---|
| | | | >1< |
| | | 8 | 3 |
| | >13< | | |
| 75 | 27 | | |
| | | | >25< |
| | | 131 | 40 |
| | >15< | | |
| | >0< | | |
| 63 | 15 | | |
| 36 | 1 | | |
| | | 70 | 1 |
| 41 | 0 | | |
| | | 167 | 0 |
| | >0< | | |
| | >8< | | |
| 49 | 0 | | |
| | | | >13< |
| | | | >35< |
| | | 165 | 4 |
| | >11< | | |
| 40 | 2 | | |
| | | | >74< |
| | | 541 | 48 |

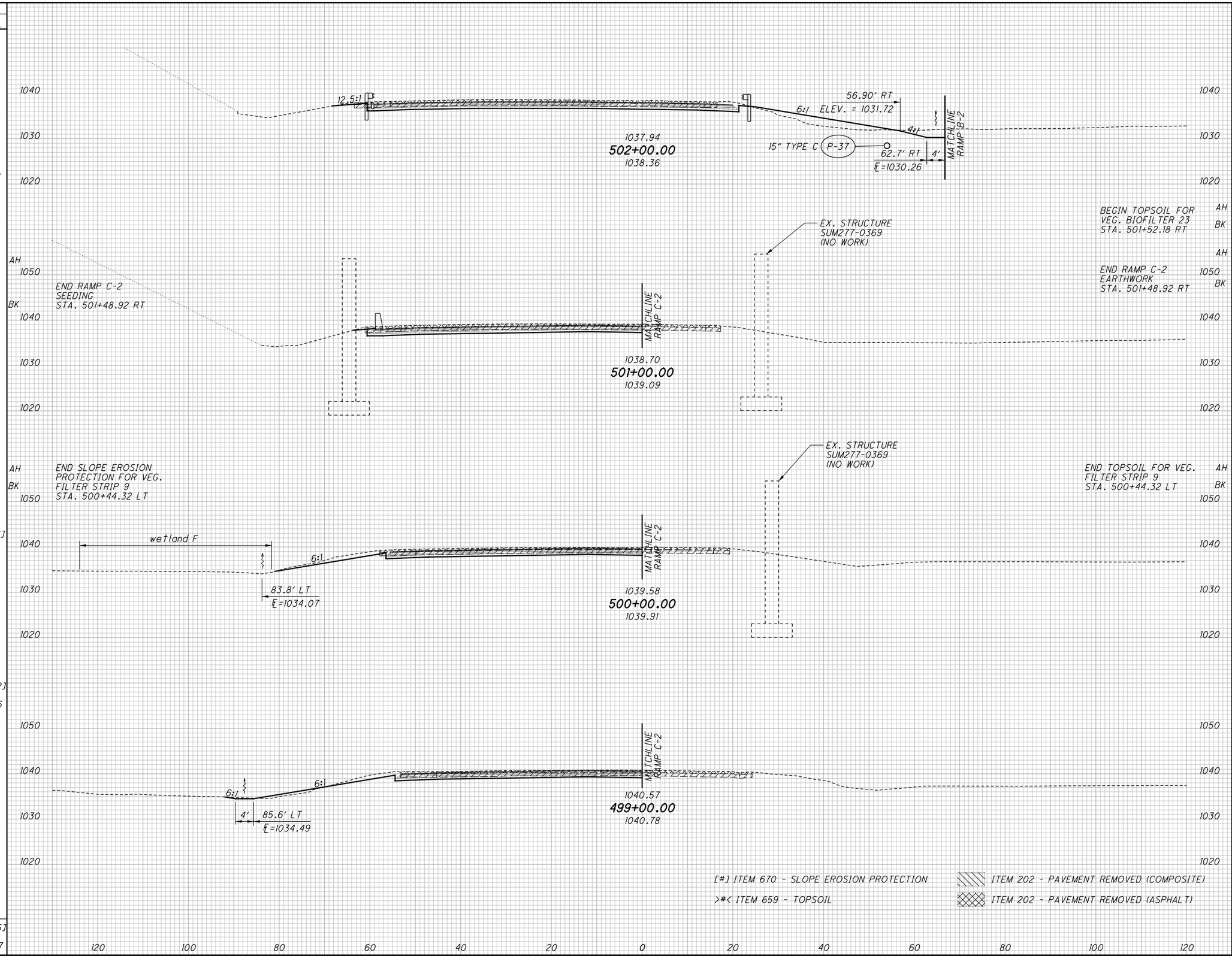


[#] ITEM 670 - SLOPE EROSION PROTECTION

>#< ITEM 659 - TOPSOIL

ITEM 202 - PAVEMENT REMOVED (COMPOSITE)

ITEM 202 - PAVEMENT REMOVED (ASPHALT)

CALCULATED CJC
CHECKED PJF

# CROSS SECTIONS - SB I.R. 77
# STA. 499+00.00 TO STA. 502+00.00

SUM-77 / 277 / 224
VARIOUS

607
1288

0:\2017\2017258\ProjectData\SUM\06002\Design\Roadway\Sheets\06002_XS003.dgn Sheet 1/15/2021 9:21:50 AM pfry

| SEEDING END WIDTH | SEEDING SQ. YDS. |
|---|---|
| 40 | 211 |
| 40 | 222 |
| 40 | 225 |
| 41 | 28 |
| 41 AH / 58 BK | 265 |
| 59 | |
| | 951 |

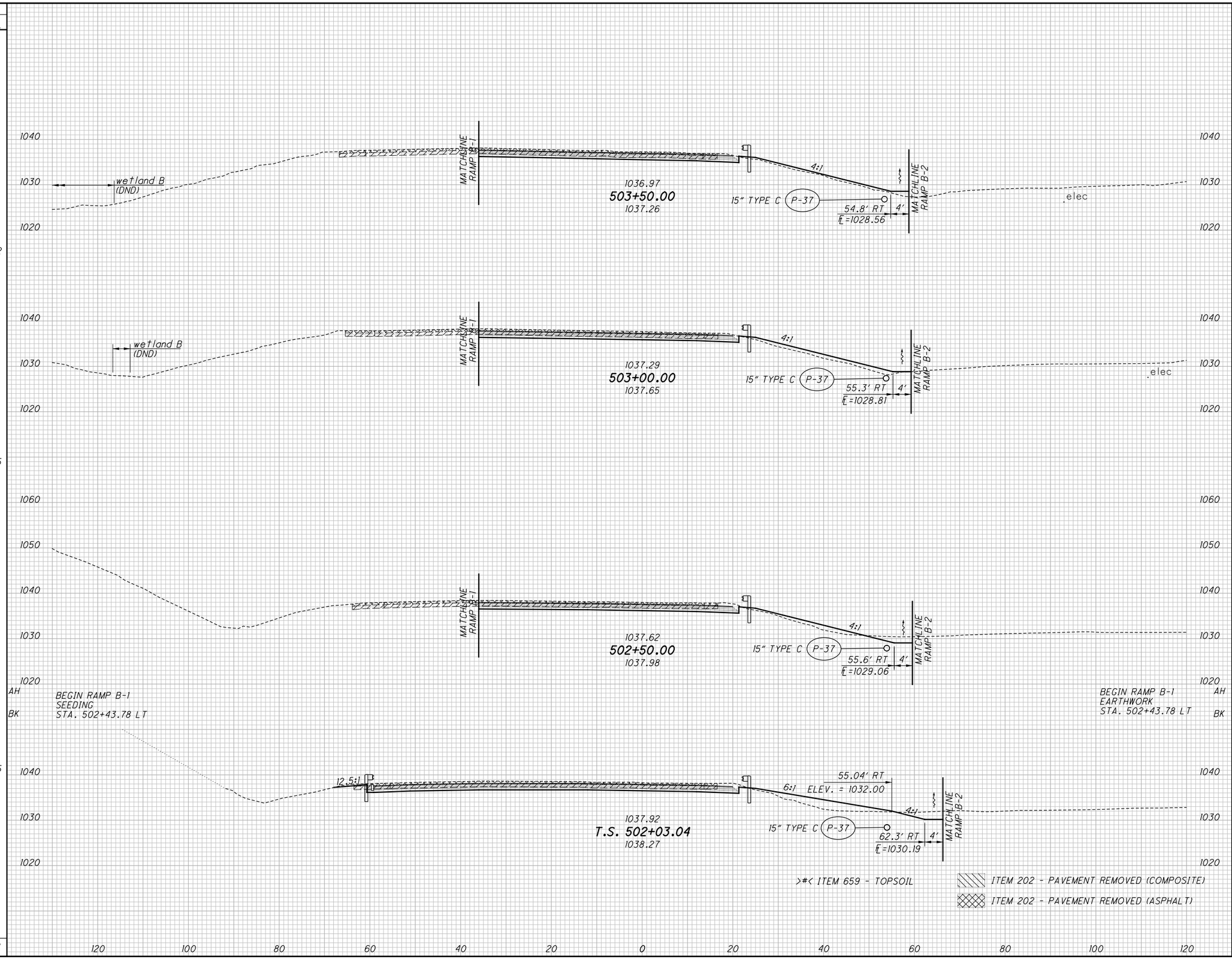


| END AREA CUT | END AREA FILL | VOLUME CUT | VOLUME FILL |
|---|---|---|---|
| | | | >17< |
| | | 69 | 11 |
| | >10< | | |
| 35 | 7 | | |
| | | | >19< |
| | | 67 | 20 |
| | >10< | | |
| 37 | 15 | | |
| | | | >19< |
| | | 83 | 22 |
| | >10< | | |
| 53 | 9 | | |
| | | | >2< |
| | | 12 | 3 |
| | >10< | | |
| 50 | 15 | | |
| | >10< | | |
| 72 | 16 | | |
| | | | >17< |
| | | 109 | 35 |
| | >12< | | |
| 73 | 30 | | |
| | | | >74< |
| | | 340 | 91 |

CALCULATED CJC
CHECKED PJF

CROSS SECTIONS - SB I.R. 77
STA. 502+03.04 TO STA. 503+50.00

SUM-77 / 277 / 224
VARIOUS

608
1288

0:\2017\20171258\ProjectData\SUM\106002\Design\Roadway\Sheets\106002_XS003.dgn Sheet 1/15/2021 9:21:53 AM pfry

| SEEDING END WIDTH | SEEDING SQ. YDS. |
|---|---|
| | 139 |
| 27 | |
| | 164 |
| 32 | |
| | 189 |
| 36 | |
| | 200 |
| 36 | |
| | 692 |

>#< ITEM 659 - TOPSOIL

ITEM 202 - PAVEMENT REMOVED (COMPOSITE)

ITEM 202 - PAVEMENT REMOVED (ASPHALT)

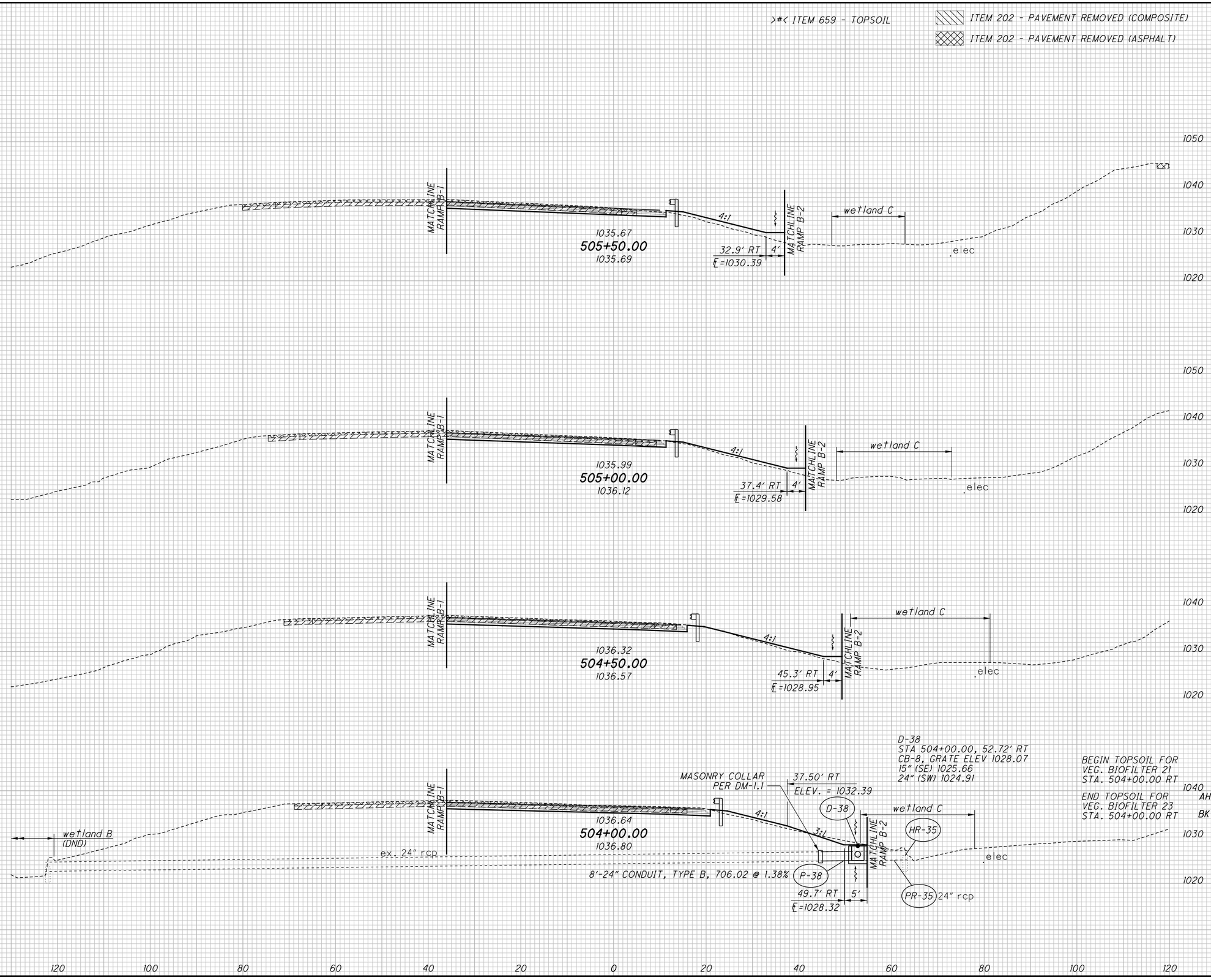


D-38
STA 504+00.00, 52.72' RT
CB-8, GRATE ELEV 1028.07
15" (SE) 1025.66
24" (SW) 1024.91

BEGIN TOPSOIL FOR VEG. BIOFILTER 21 STA. 504+00.00 RT

END TOPSOIL FOR VEG. BIOFILTER 23 STA. 504+00.00 RT

| END AREA CUT | END AREA FILL | VOLUME CUT | VOLUME FILL |
|---|---|---|---|
| | | | >9< |
| | | 41 | 33 |
| | >6< | | |
| 24 | 18 | | |
| | | | >12< |
| | | 44 | 24 |
| | >7< | | |
| 23 | 8 | | |
| | | | >15< |
| | | 49 | 12 |
| 30 | >9< 5 | | |
| | | | >16< |
| | | 64 | 9 |
| 39 | >8< AH >8< BK 5 | | |
| | | | >52< |
| | | 198 | 78 |

CALCULATED CJC
CHECKED PJF

CROSS SECTIONS - SB I.R. 77
STA. 504+00.00 TO STA. 505+50.00

SUM-77 / 277 / 224
VARIOUS

609
1288

0:\2017\2017258\ProjectData\SUM\06002\Design\Roadway\Sheets\06002_XS003.dgn Sheet 1/15/2021 9:21:55 AM pfry

| SEEDING END WIDTH | SEEDING SQ. YDS. |
|---|---|
| | 169 |
| 24 | |
| | 120 |
| 22 | |
| | 8 |
| 23 | |
| | 297 |

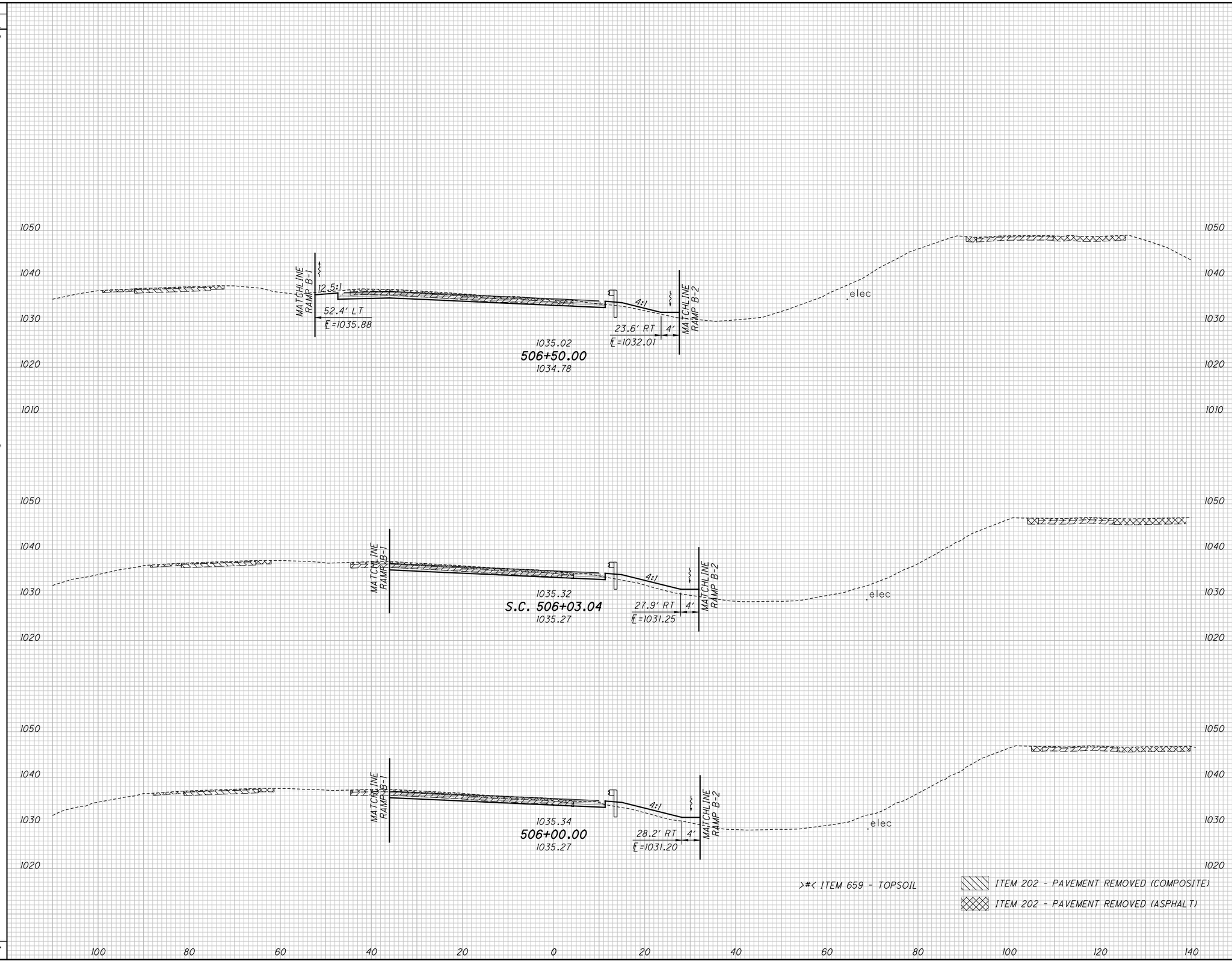


| END AREA CUT | END AREA FILL | VOLUME CUT | VOLUME FILL |
|---|---|---|---|
| | | | >5< |
| | | 70 | 10 |
| | >3< | | |
| 33 | 8 | | |
| | | | >6< |
| | | 46 | 23 |
| 20 | >4< | | |
| | 19 | | |
| | | 2 | >0< |
| | | | 2 |
| 20 | >4< | | |
| | 18 | | |
| | | 118 | >11< |
| | | | 35 |

>#< ITEM 659 - TOPSOIL

ITEM 202 - PAVEMENT REMOVED (COMPOSITE)

ITEM 202 - PAVEMENT REMOVED (ASPHALT)

CALCULATED CJC

CHECKED PJF

# CROSS SECTIONS - SB I.R. 77
## STA. 506+00.00 TO STA. 506+50.00

SUM-77 / 277 / 224
VARIOUS

610
1288

0:\2017\20171258\ProjectData\SUM\106002\Design\Roadway\Sheets\106002_XS003.dgn Sheet 1/15/2021 9:21:59 AM pfry

| SEEDING END WIDTH | SEEDING SQ. YDS. |
|---|---|
| | 164 |
| 23 | |
| | 133 |
| 25 | |
| | 172 |
| 37 | |
| | 469 |

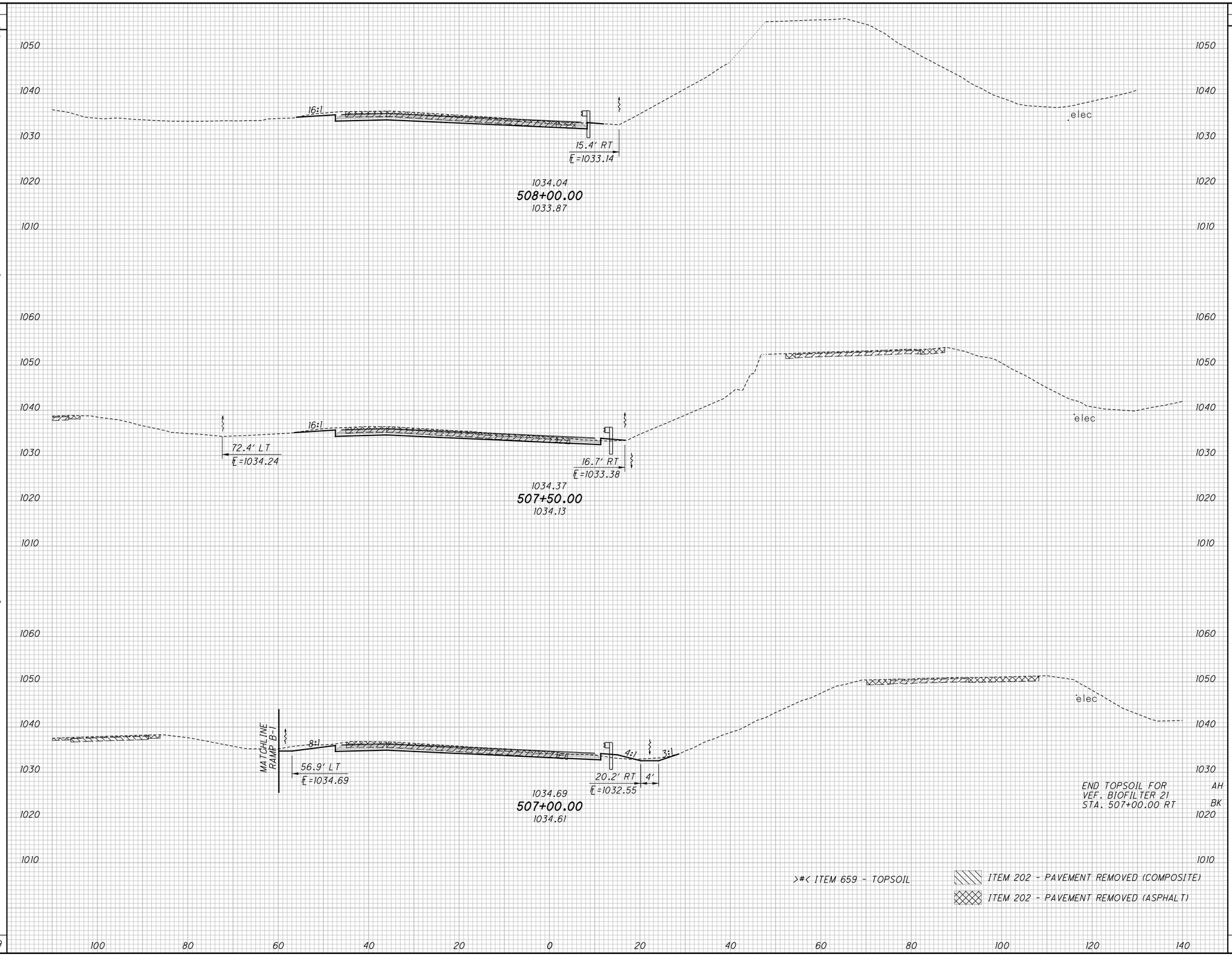


| END AREA CUT | END AREA FILL | VOLUME CUT | VOLUME FILL |
|---|---|---|---|
| | | 77 | 3 |
| 33 | 0 | | |
| | | 59 | 2 |
| 31 | 2 | | |
| | | 69 | 5 |
| 43 | >0< | | |
| | >2< | | |
| | 3 | | |
| | | 205 | 10 |

CALCULATED CJC
CHECKED PJF

# CROSS SECTIONS - SB I.R. 77
## STA. 507+00.00 TO STA. 508+00.00

SUM-77 / 277 / 224
VARIOUS

611
1288

0:\2017\2017258\ProjectData\SUM\06002\Design\Roadway\Sheets\06002_XS003.dgn Sheet 1/15/2021 9:22:01 AM pfry

| SEEDING END WIDTH | SEEDING SQ. YDS. | END AREA CUT | END AREA FILL | VOLUME CUT | VOLUME FILL |
|---|---|---|---|---|---|
| 60 | 406 | 81 | 17 | 175 | 38 |
| | 333 | | | 150 | 19 |
| 60 | 267 | 81 | 3 | 121 | 6 |
| 36 | | 50 | 3 | | |
| | 1006 | | | 446 | 63 |

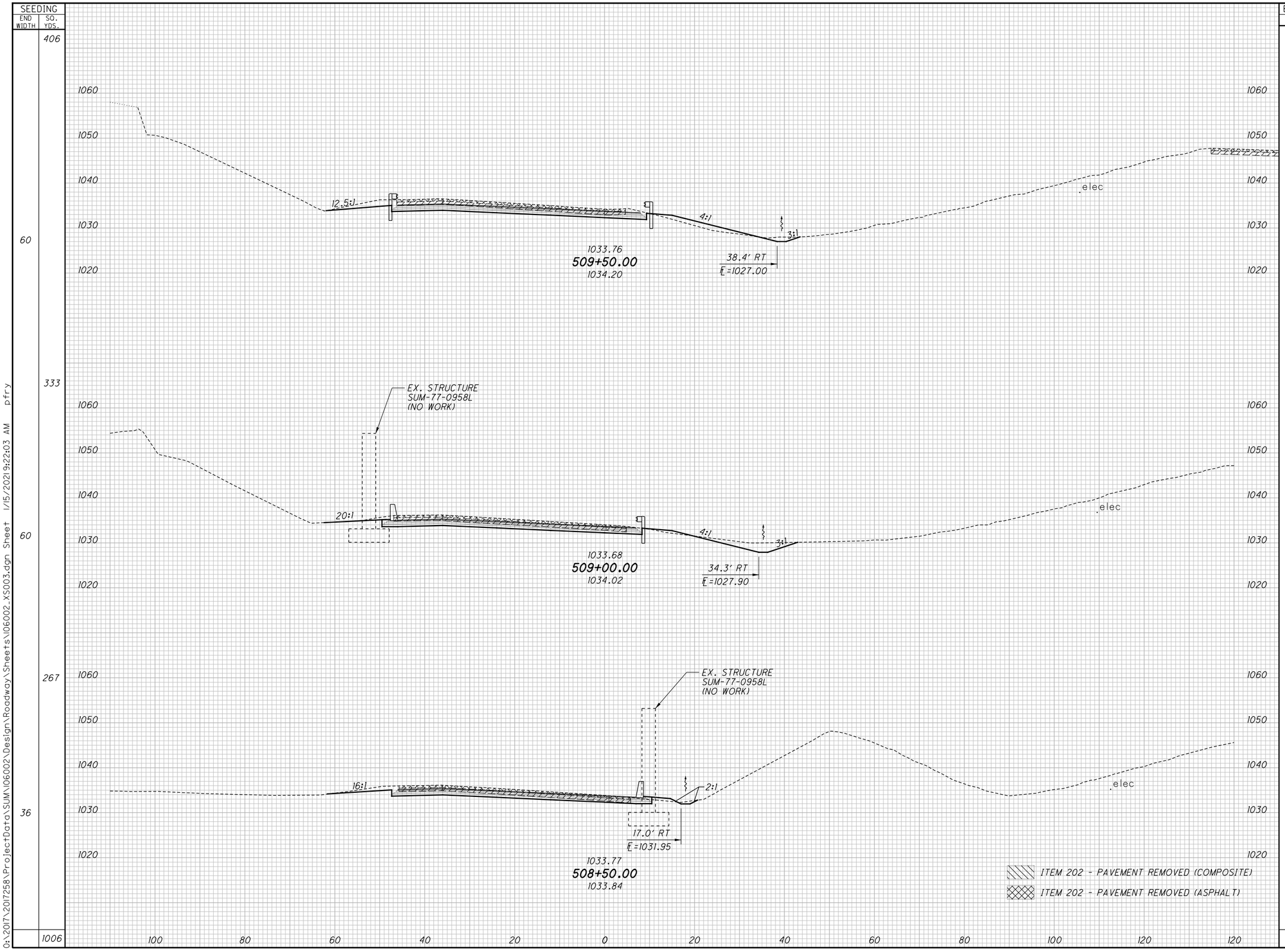


CALCULATED CJC
CHECKED PJF

# CROSS SECTIONS - SB I.R. 77
# STA. 508+50.00 TO STA. 509+50.00

SUM-77 / 277 / 224
VARIOUS

612
1288

0:\2017\20171258\ProjectData\SUM\106002\Design\Roadway\Sheets\106002_XS003.dgn Sheet 1/15/2021 9:22:03 AM pfry

| SEEDING END WIDTH | SEEDING SQ. YDS. |
|---|---|
| | 350 |
| 56 | |
| | 319 |
| 59 | |
| | 339 |
| 63 | |
| | 414 |
| 86 | |
| | 1422 |

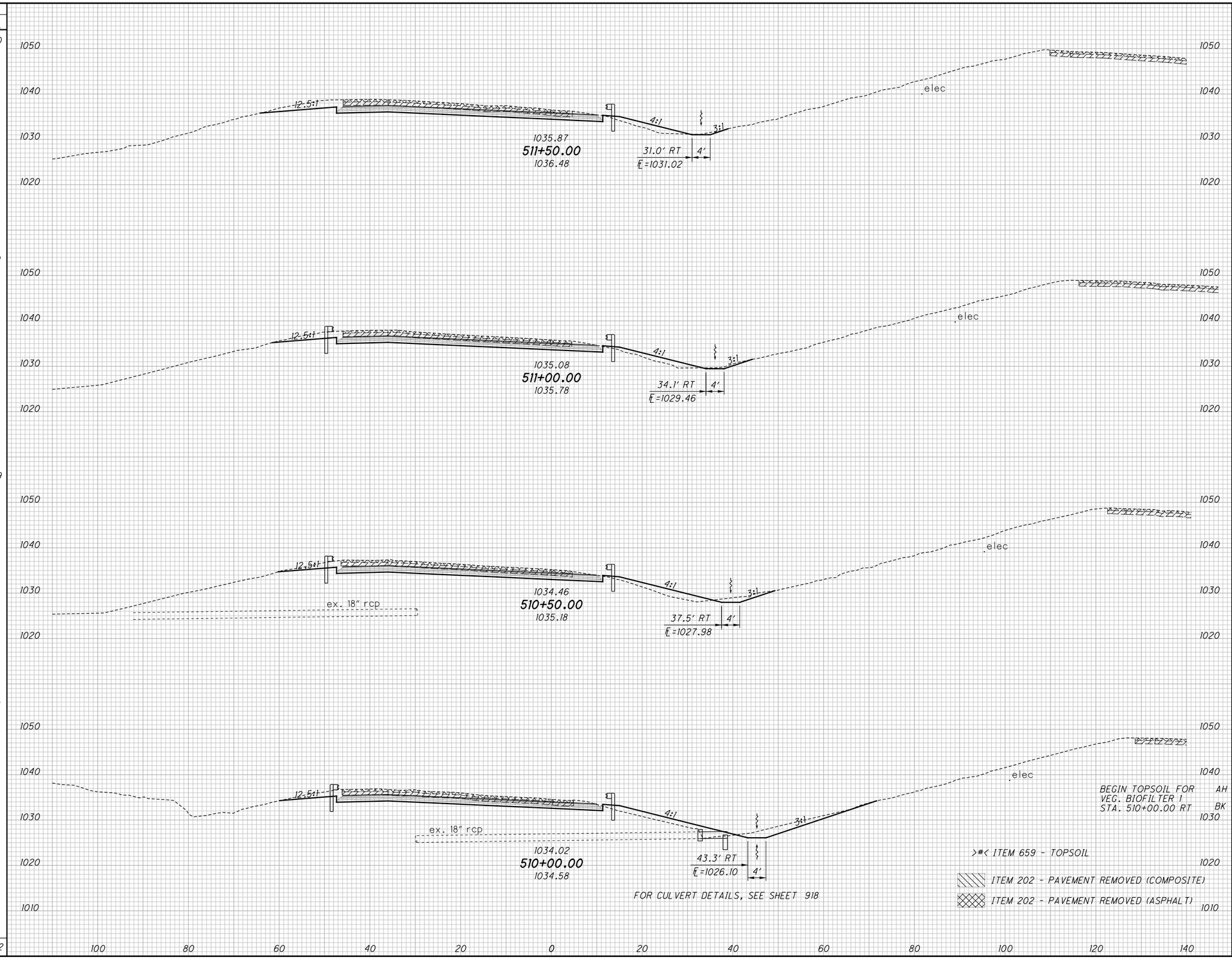


BEGIN TOPSOIL FOR VEG. BIOFILTER 1 STA. 510+00.00 RT — AH BK

>#< ITEM 659 - TOPSOIL

ITEM 202 - PAVEMENT REMOVED (COMPOSITE)

ITEM 202 - PAVEMENT REMOVED (ASPHALT)

FOR CULVERT DETAILS, SEE SHEET 918

| END AREA CUT | END AREA FILL | VOLUME CUT | VOLUME FILL |
|---|---|---|---|
| | | | >9< |
| | | 192 | 21 |
| | >5< | | |
| 100 | 11 | | |
| | | | >10< |
| | | 178 | 21 |
| | >6< | | |
| 92 | 12 | | |
| | | | >13< |
| | | 172 | 27 |
| | >8< | | |
| 94 | 17 | | |
| | | | >16< |
| | | 187 | 38 |
| | >9< | | |
| | >0< | | |
| 108 | 24 | | |
| | | | >48< |
| | | 729 | 107 |

CALCULATED CJC
CHECKED PJF

# CROSS SECTIONS - SB I.R. 77
## STA. 510+00.00 TO STA. 511+50.00

SUM-77 / 277 / 224
VARIOUS

613
1288

0:\2017\2017258\ProjectData\SUM\06002\Design\Roadway\Sheets\06002_XS003.dgn Sheet 1/15/2021 9:22:05 AM pfry

| SEEDING END WIDTH | SEEDING SQ. YDS. | END AREA CUT | END AREA FILL | VOLUME CUT | VOLUME FILL |
|---|---|---|---|---|---|
| | 406 | | | | >6< |
| | | | | 195 | 19 |
| 74 | | 109 | >4< | | |
| | 450 | | 12 | | |
| | | | | 249 | >8< |
| | | | | | 26 |
| 88 | | 160 | >5< | | |
| | | | 16 | | |
| | 439 | | | 247 | >9< |
| | | | | | 26 |
| 70 | | 107 | >5< | | |
| | | | 12 | | |
| | 1295 | | | 691 | >23< |
| | | | | | 71 |

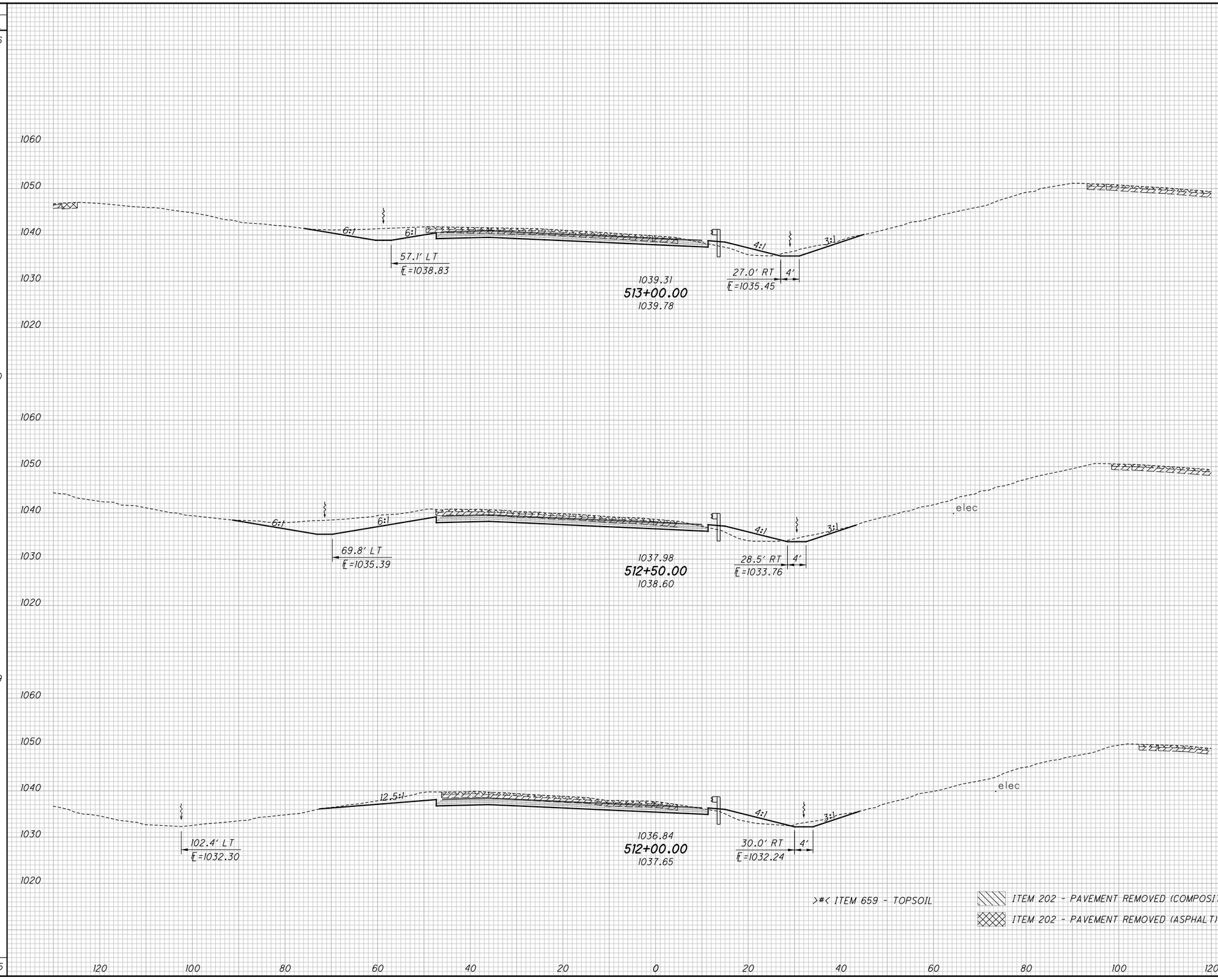


>#< ITEM 659 - TOPSOIL

ITEM 202 - PAVEMENT REMOVED (COMPOUND)

ITEM 202 - PAVEMENT REMOVED (ASPHALT)

CALCULATED CJC

CHECKED PJF

# CROSS SECTIONS - SB I.R. 77
## STA. 512+00.00 TO STA. 513+00.00

SUM-77 / 277 / 224
VARIOUS

614
1288

0:\2017\2017258\ProjectData\SUM\06002\Design\Roadway\Sheets\I06002_XS003.dgn Sheet1 1/15/2021 9:22:08 AM pfry

| SEEDING END WIDTH | SEEDING SQ. YDS. |
|---|---|
| 32 | |
| | 168 |
| 35 | |
| | 236 |
| 50 | |
| | 339 |
| 72 | |
| | 743 |

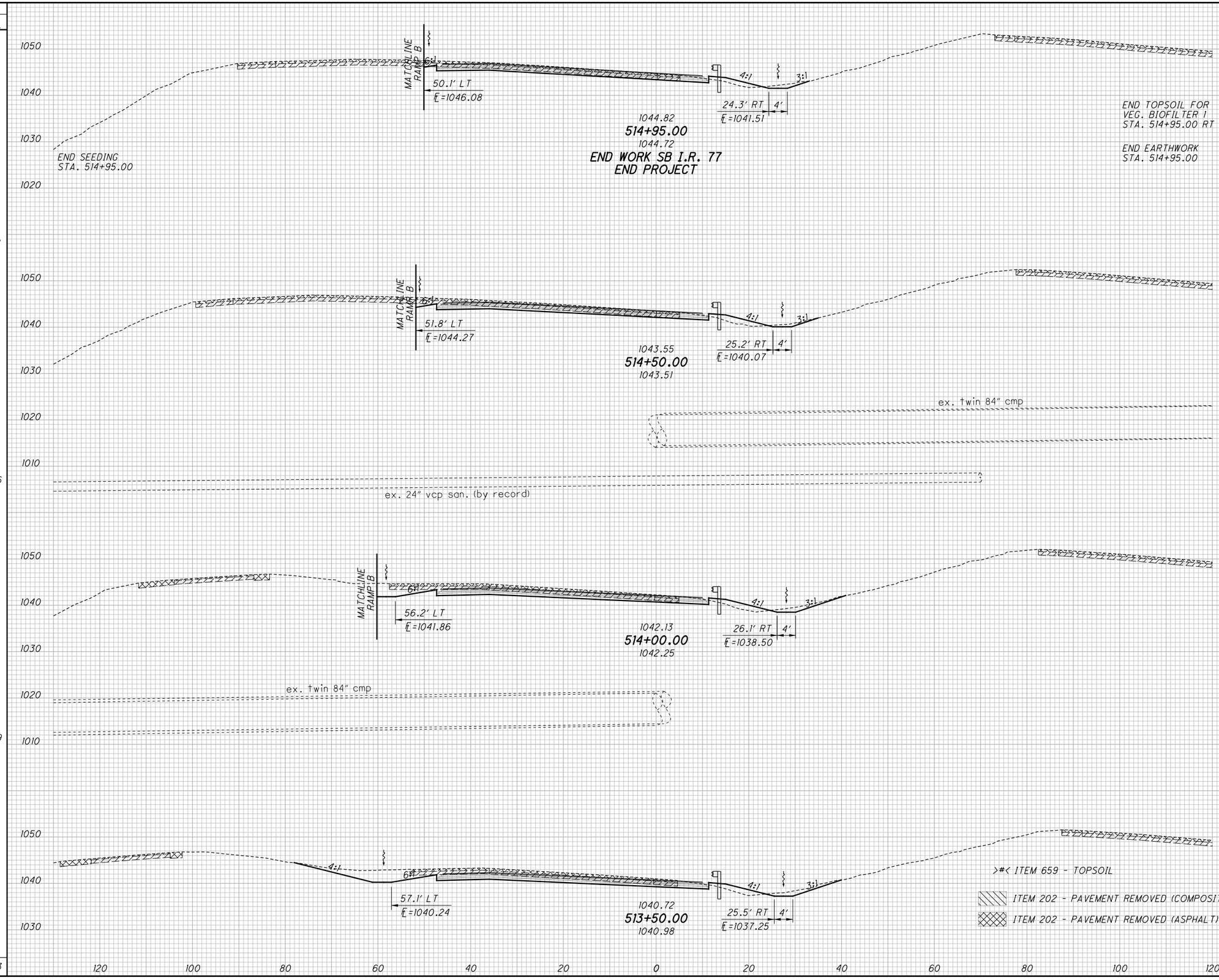


| END AREA CUT | END AREA FILL | VOLUME CUT | VOLUME FILL |
|---|---|---|---|
| | >0< | | |
| | >3< | | >5< |
| 29 | 6 | 56 | 13 |
| | >3< | | |
| 38 | 9 | | |
| | | | >6< |
| | | 103 | 17 |
| | >4< | | |
| 73 | 9 | | |
| | | | >6< |
| | | 162 | 16 |
| | >3< | | |
| 102 | 8 | | |
| | | | >17< |
| | | 321 | 46 |

>#< ITEM 659 - TOPSOIL

ITEM 202 - PAVEMENT REMOVED (COMPOSITE)

ITEM 202 - PAVEMENT REMOVED (ASPHALT)

CALCULATED CJC
CHECKED PJF

# CROSS SECTIONS - SB I.R. 77
## STA. 513+50.00 TO STA. 514+95.00

SUM-77/277/224
VARIOUS

615
1288

0:\2017\2017258\Project Data\SUM\06002\Design\Roadway\Sheets\06002_XS003.dgn Sheet 1/15/2021 9:22:10 AM pfry

| SEEDING | |
|---|---|
| END WIDTH | SQ. YDS. |

| END AREA | |
|---|---|
| CUT | FILL |

| VOLUME | |
|---|---|
| CUT | FILL |

CALCULATED CJC
CHECKED PJF

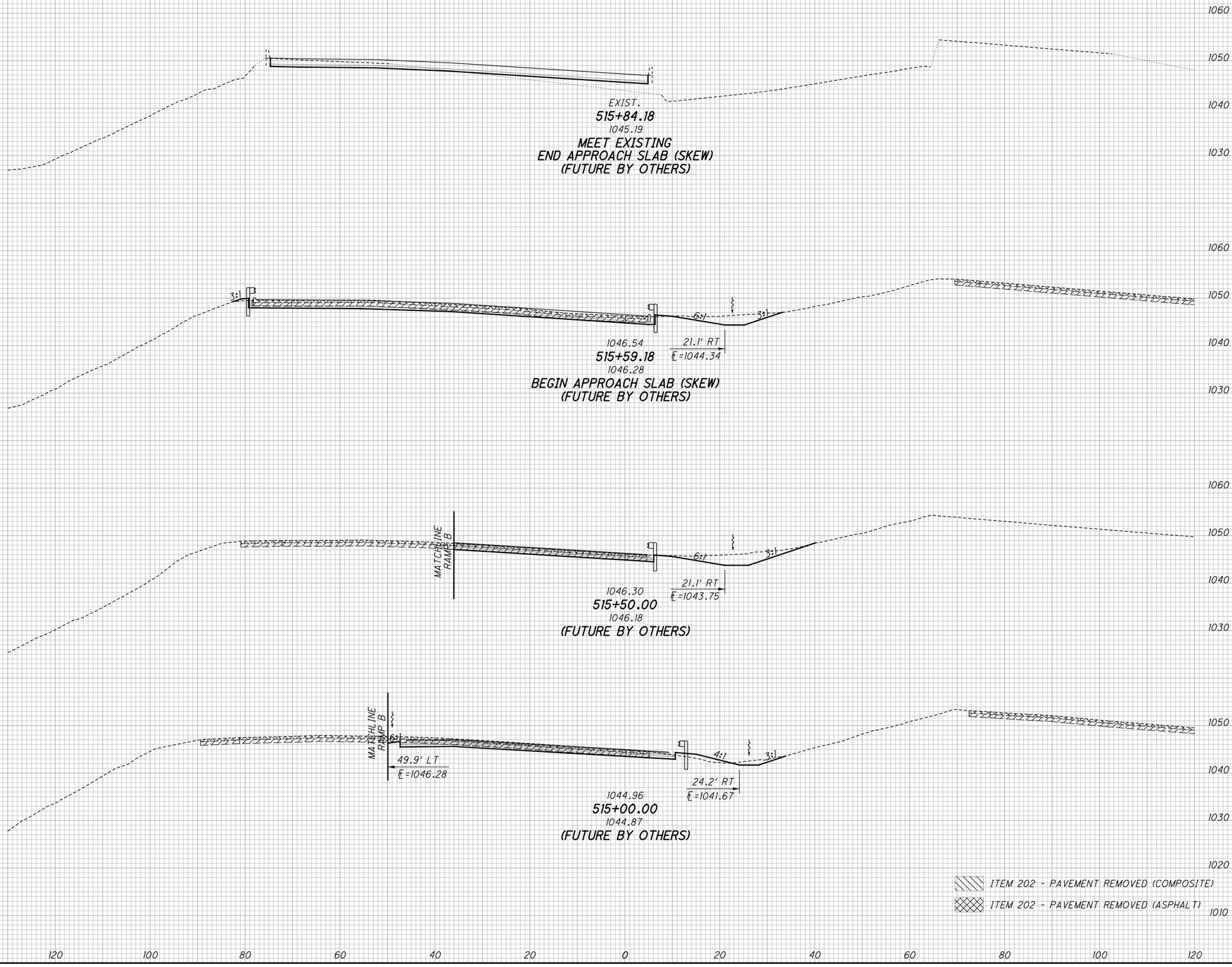


# CROSS SECTIONS - SB I.R. 77
# STA. 515+00.00 TO STA. 515+84.18

SUM-77 / 277 / 224
VARIOUS

616
1288

D:\2017\2017258\ProjectData\SUM\06002\Design\Roadway\Sheets\06002_XS003.dgn Sheet 1/15/2021 9:22:12 AM pfry

| SEEDING | |
|---|---|
| END WIDTH | SQ. YDS. |

| END AREA | |
|---|---|
| CUT | FILL |

| VOLUME | |
|---|---|
| CUT | FILL |

CALCULATED CJC
CHECKED PJF

BEGIN RAMP B-2
SEEDING
STA. 225+00.00 LT

BEGIN RAMP B-2
EARTHWORK
STA. 225+00.00 LT

MATCHLINE RAMP B-2 SAWCUT

℄ NOISE WALL H11
STA. 11+35.31

EX LA-R/W

℄ stream 4

1 1/4" gas (abandoned)

225+00.00
1021.71
BEGIN WORK
MEET EXISTING

℄ NOISE WALL H11
STA. 10+35.31

224+00.00
1020.67

223+00.00
1019.85

ex. 36" san. (by record)

ITEM 202 - PAVEMENT REMOVED (COMPOSITE)

ITEM 202 - PAVEMENT REMOVED (ASPHALT)

1040 1030 1020 1010 1000 990

120 100 80 60 40 20 0 20 40 60 80 100 120

# CROSS SECTIONS - I.R. 277/U.S. 224
# STA. 223+00.00 TO STA. 225+00.00

SUM-77/277/224
VARIOUS

617
1288

O:\2017\2017258\ProjectData\SUM\06002\Design\Roadway\Sheets\06002_XS004.dgn Sheet 1/15/2021 9:32:45 AM pfry

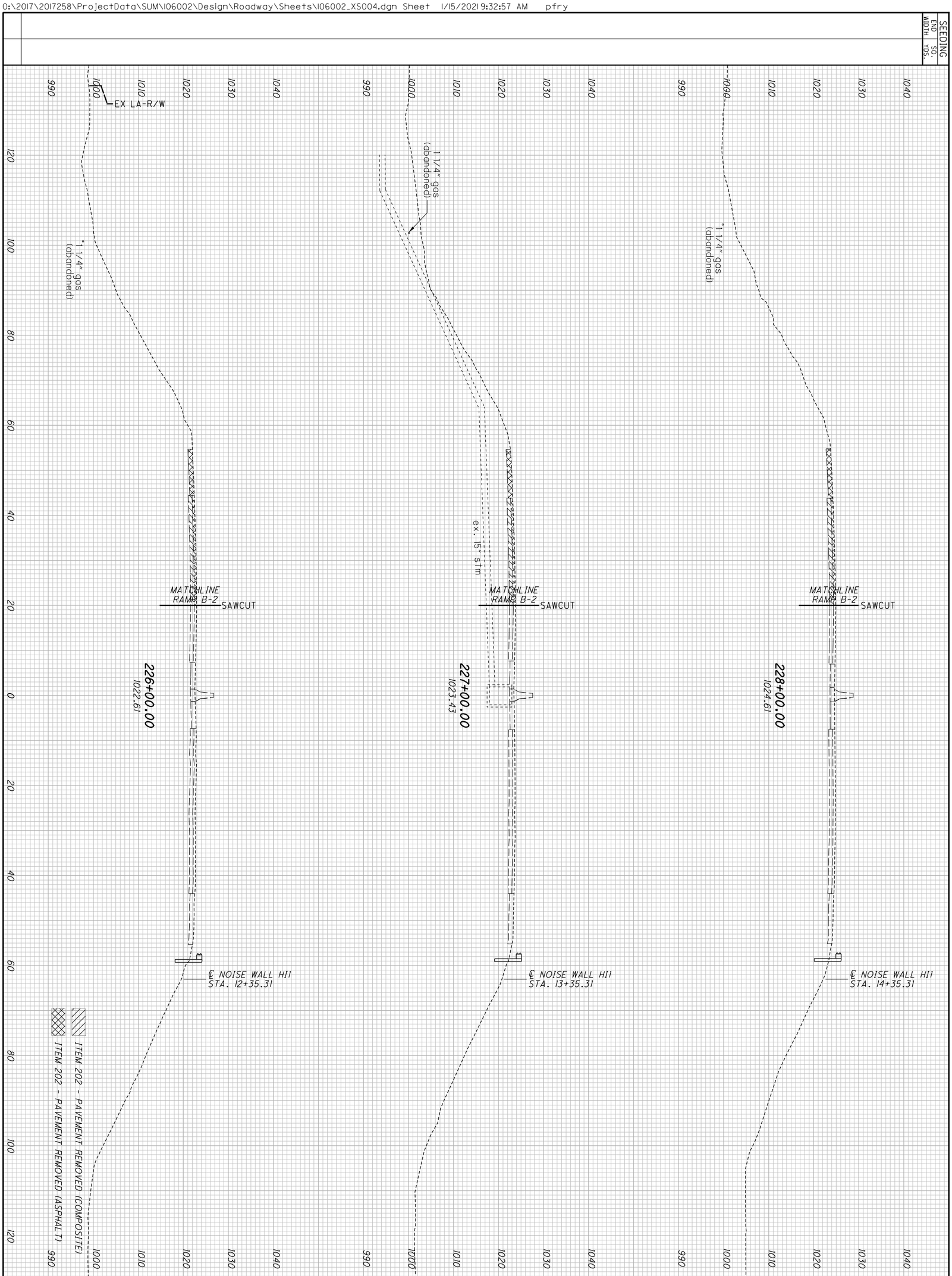


| | | |
|---|---|---|
| 618 / 1288 | **SUM-77/277/224**<br>**VARIOUS** | **CROSS SECTIONS - I.R. 277/U.S. 224**<br>**STA. 226+00.00 TO STA. 228+00.00** |

CALCULATED CJC
CHECKED PJF

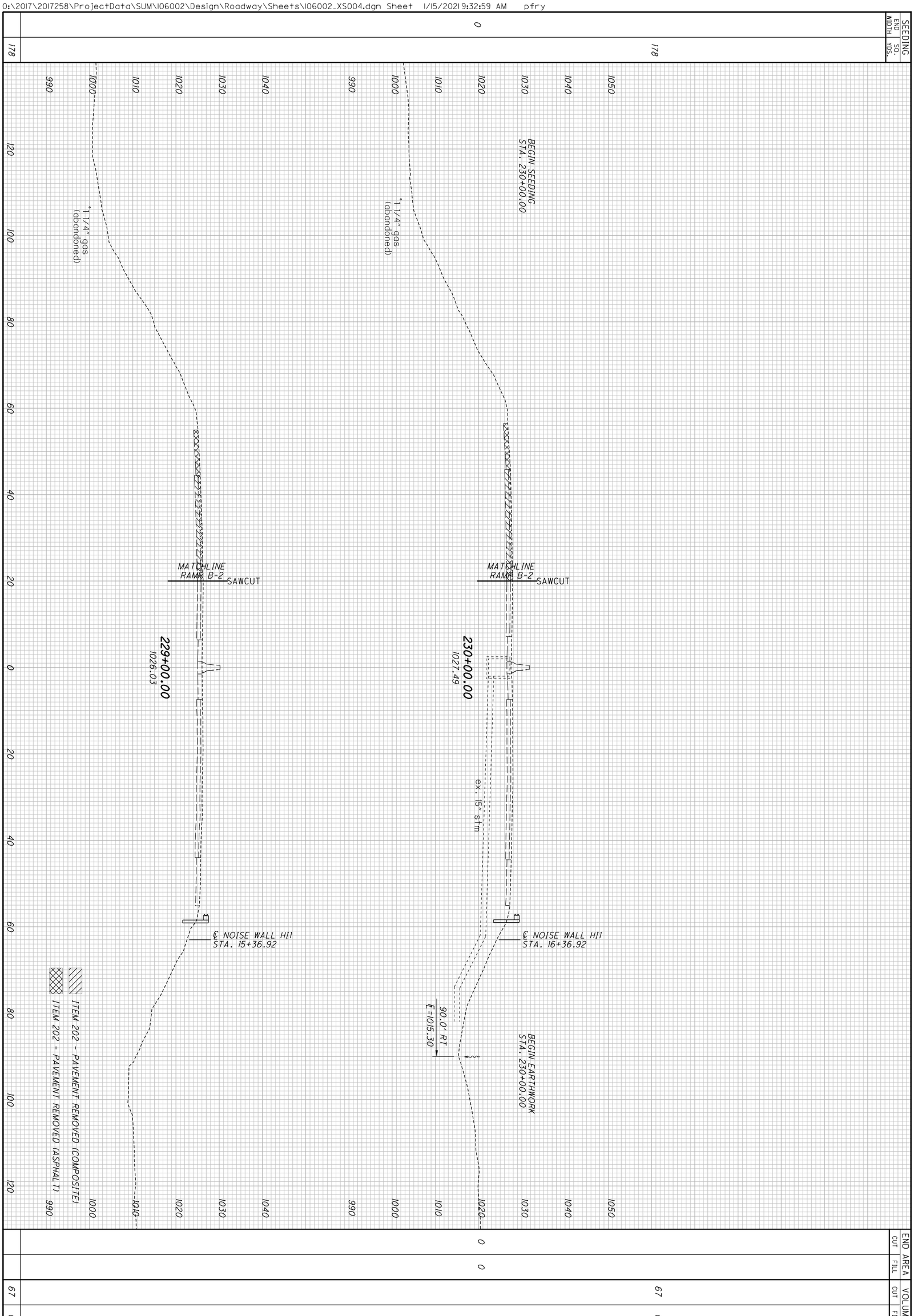


| | | | |
|---|---|---|---|
| 619 1288 | SUM-77/277/224<br>VARIOUS | CROSS SECTIONS - I.R. 277/U.S. 224<br>STA. 229+00.00 TO STA. 230+00.00 | CALCULATED CJC<br>CHECKED PJF |

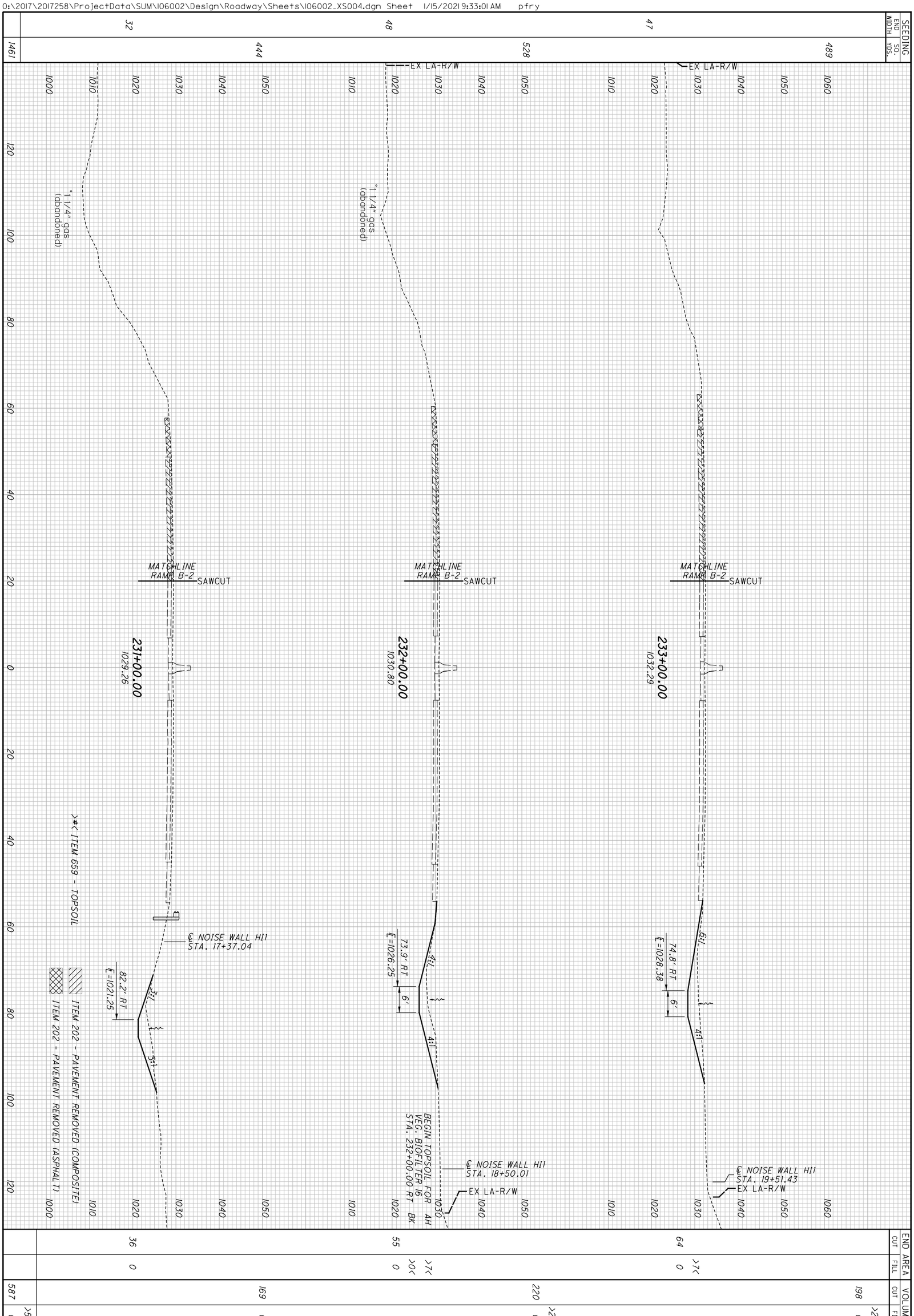


| SUM-77/277/224 VARIOUS | CROSS SECTIONS - I.R. 277/U.S. 224 STA. 231+00.00 TO STA. 233+00.00 | CALCULATED CJC CHECKED PJF |
|---|---|---|

620
1288

| SEEDING END WIDTH | SEEDING SQ. YDS. |
|---|---|
| | 644 |
| 53 | |
| | 210 |
| 50 | |
| 45 | |
| | 309 |
| | |
| 43 | |
| | 467 |
| 41 | |
| | 1630 |

AH BK — END RAMP B-2 SEEDING STA. 235+63.23 LT

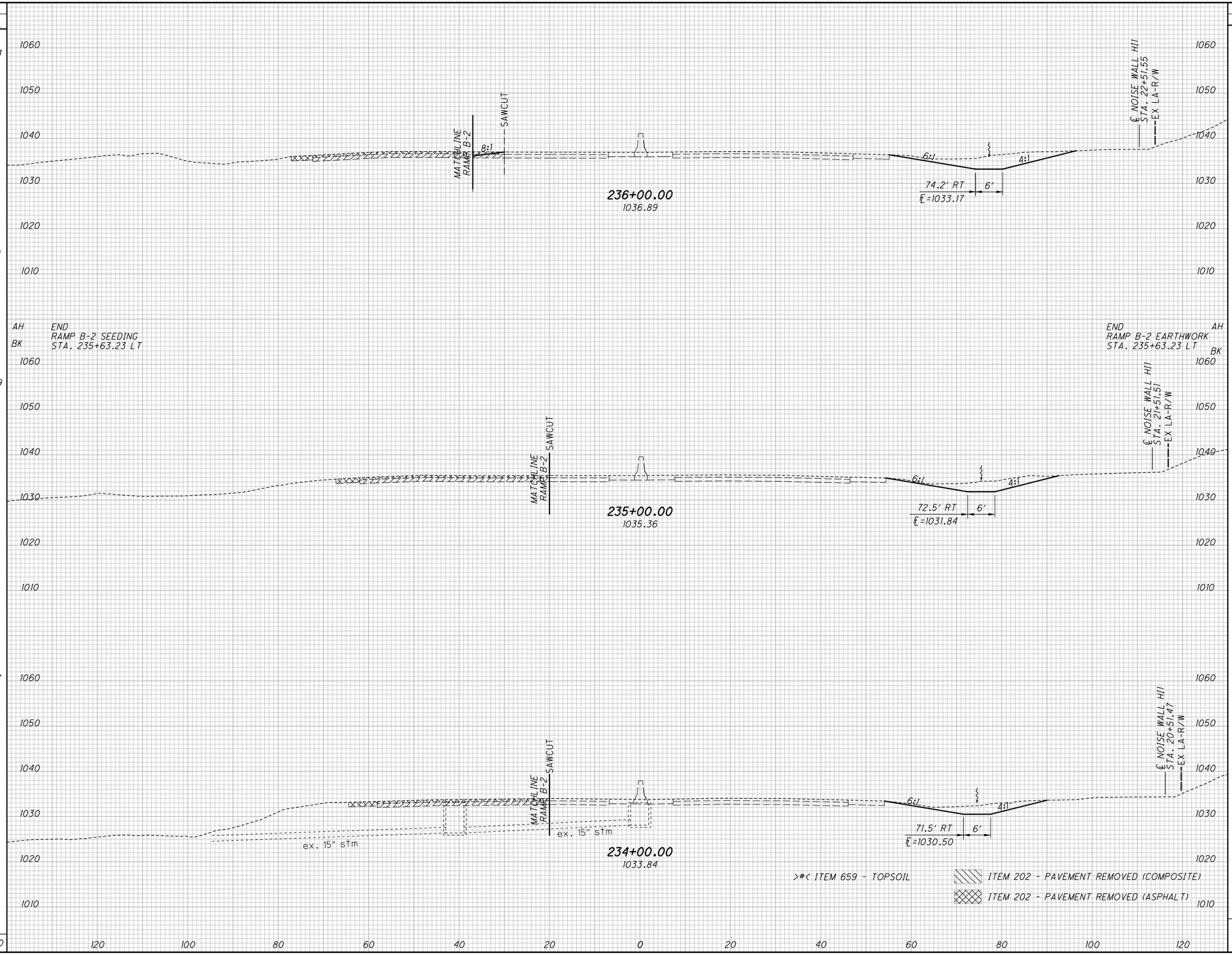


END RAMP B-2 EARTHWORK STA. 235+63.23 LT — AH BK

| END AREA CUT | END AREA FILL | VOLUME CUT | VOLUME FILL |
|---|---|---|---|
| | | | >24< |
| | | 285 | 19 |
| | >6< | | |
| 70 | 6 | | |
| | | | |
| | | | |
| | | | >8< |
| | | 88 | 7 |
| | >6< | | |
| 59 | 5 | | |
| | >6< | | |
| 59 | 0 | | |
| | | | >14< |
| | | 129 | 0 |
| | | | |
| | >6< | | |
| 51 | 0 | | |
| | | | |
| | | | >22< |
| | | 174 | 0 |
| | | | |
| | >6< | | |
| 43 | 0 | | |
| | | | >68< |
| | | 676 | 26 |

>#< ITEM 659 - TOPSOIL

ITEM 202 - PAVEMENT REMOVED (COMPOSITE)

ITEM 202 - PAVEMENT REMOVED (ASPHALT)

CALCULATED CJC
CHECKED PJF

# CROSS SECTIONS - I.R. 277/U.S. 224
## STA. 234+00.00 TO STA. 236+00.00

SUM-77/277/224
VARIOUS

621
1288

0:\2017\2017258\ProjectData\SUM\106002\Design\Roadway\Sheets\106002_XS004.dgn Sheet 1/15/2021 9:33:03 AM pfry

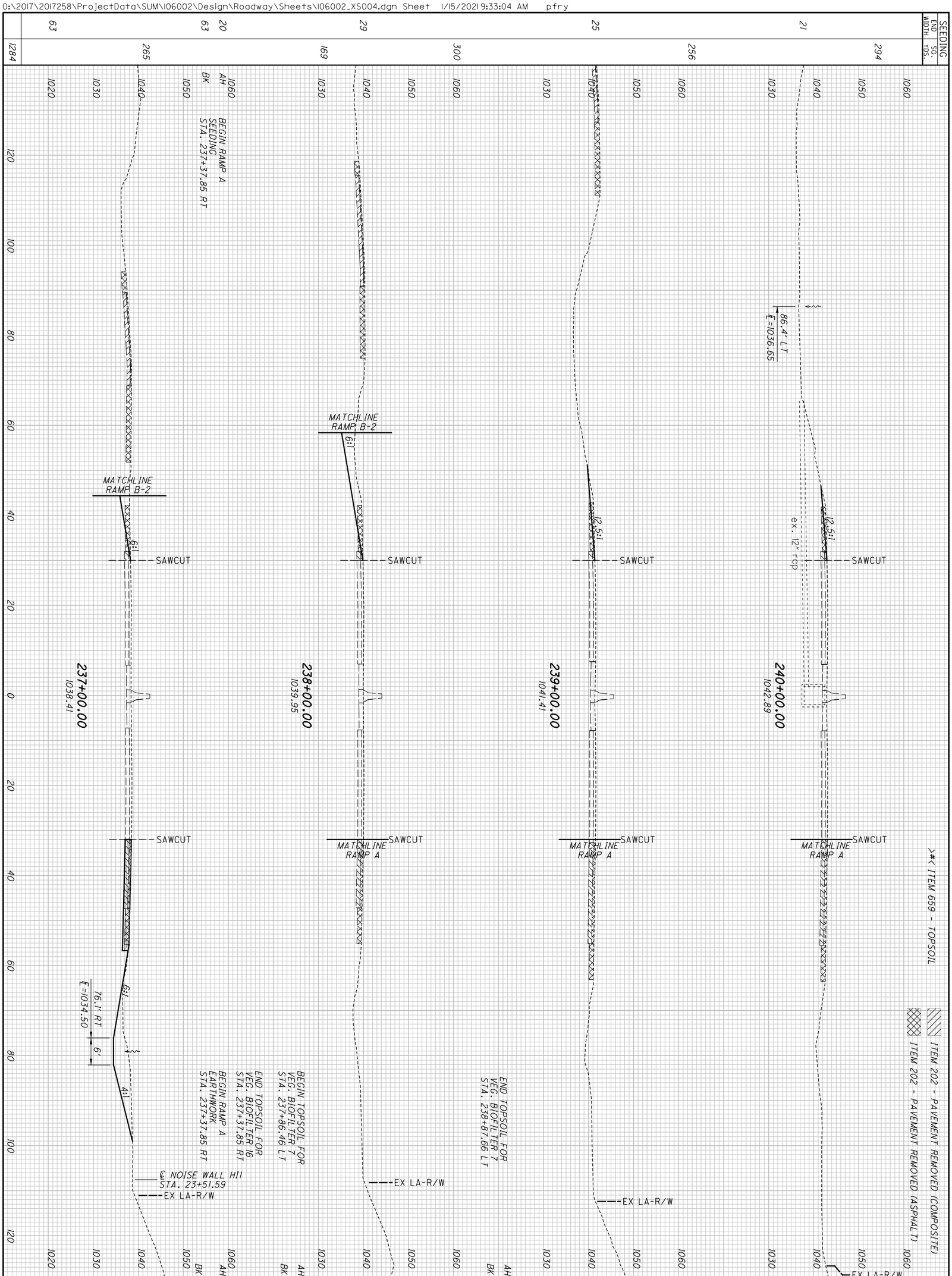


| | |
|---|---|
| 622 / 1288 | SUM-77/277/224 VARIOUS |
| CROSS SECTIONS - I.R. 277/U.S. 224 STA. 237+00.00 TO STA. 240+00.00 | CALCULATED CJC / CHECKED PJF |

| SEEDING END WIDTH | SEEDING SQ. YDS. | END AREA CUT | END AREA FILL | VOLUME CUT | VOLUME FILL |
|---|---|---|---|---|---|
| | 372 | | | 69 | 24 |
| 38 | | 33 | 4 | | |
| | 406 | | | 119 | 15 |
| 35 | | 31 | 4 | | |
| | 372 | | | 94 | 15 |
| 32 | | 20 | 4 | | |
| | 1150 | | | 282 | 54 |

CALCULATED CJC
CHECKED PJF




# CROSS SECTIONS - I.R. 277/U.S. 224
# STA. 241+00.00 TO STA. 243+00.00

SUM-77/277/224
VARIOUS

623
1288

O:\2017\20171258\ProjectData\SUM\106002\Design\Roadway\Sheets\106002_XS004.dgn Sheet 1/15/2021 9:33:06 AM pfry

| SEEDING | |
|---|---|
| END WIDTH | SQ. YDS. |
| | 244 |
| | 22 |
| | 48 |
| 20 | |
| 15 | |
| | 208 |
| | 32 |
| | 339 |
| 29 | |
| | 839 |

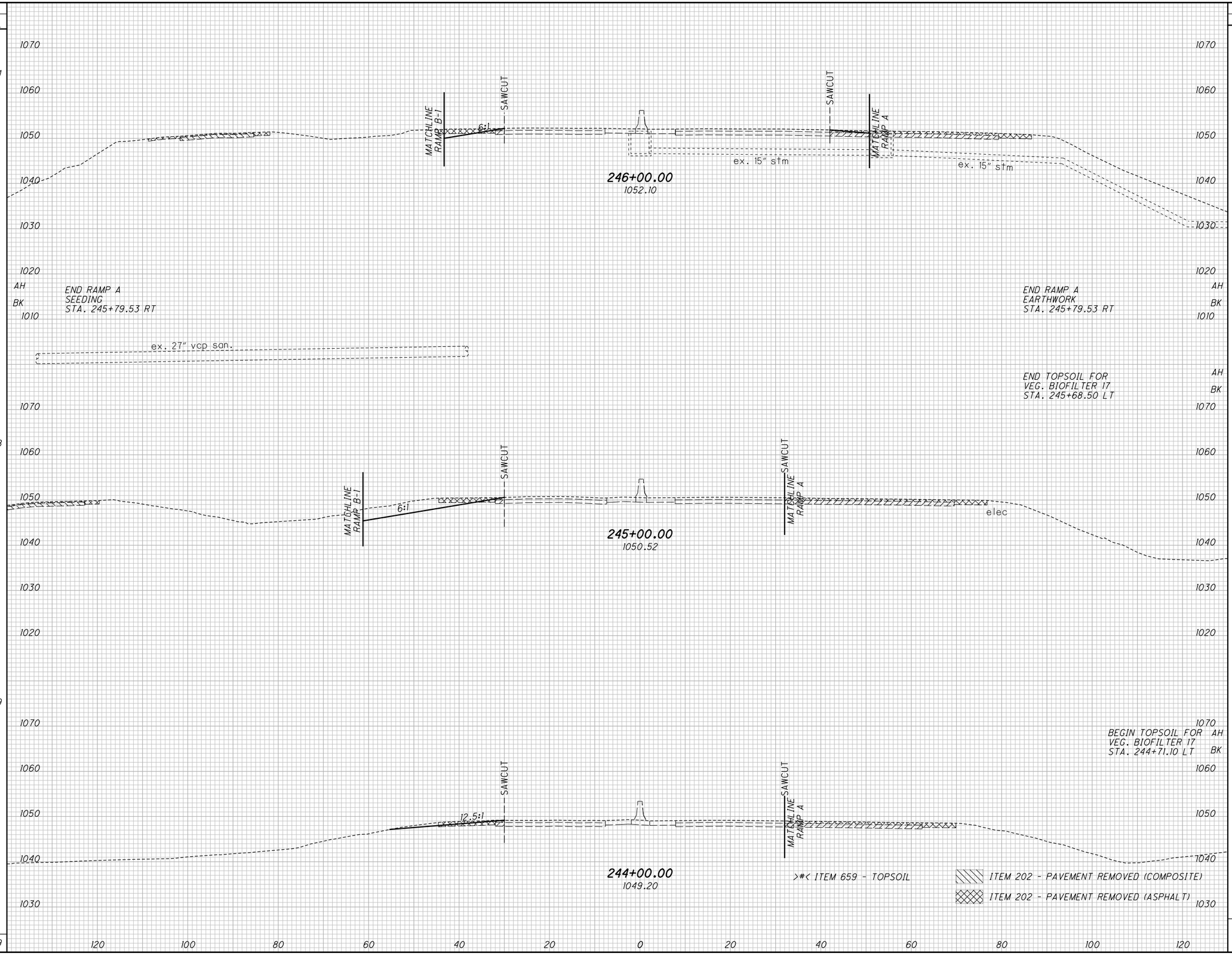


| END AREA | | VOLUME | |
|---|---|---|---|
| CUT | FILL | CUT | FILL |
| | | | |
| | | 17 | 41 |
| | | | |
| 3 | 14 | | |
| | | | |
| | | 3 | 9 |
| | | | |
| 4 | 11 | | |
| 4 | 4 | | |
| | | | |
| | >0< | | |
| | >5< | | |
| | | | |
| | | | >19< |
| | | 87 | 9 |
| | | | |
| | >10< | | |
| 55 | 2 | | |
| | | | |
| | | | >13< |
| | | 109 | 20 |
| | | | |
| | >15< | | |
| | >0< | | |
| 4 | 9 | | |
| | | | |
| | | | >32< |
| | | 216 | 79 |

>#< ITEM 659 - TOPSOIL

ITEM 202 - PAVEMENT REMOVED (COMPOSITE)

ITEM 202 - PAVEMENT REMOVED (ASPHALT)

CALCULATED CJC
CHECKED PJF

# CROSS SECTIONS - I.R. 277/U.S. 224
# STA. 244+00.00 TO STA. 246+00.00

SUM-77/277/224
VARIOUS

624
1288

D:\2017\2017258\ProjectData\SUM\106002\Design\Roadway\Sheets\106002_XS004.dgn Sheet 1/15/2021 9:33:08 AM pfry

| SEEDING END WIDTH | SEEDING SQ. YDS. |
|---|---|
| | 344 |
| 23 | |
| | 47 |
| 21 | |
| 23 | |
| | 202 |
| 22 | |
| | 593 |

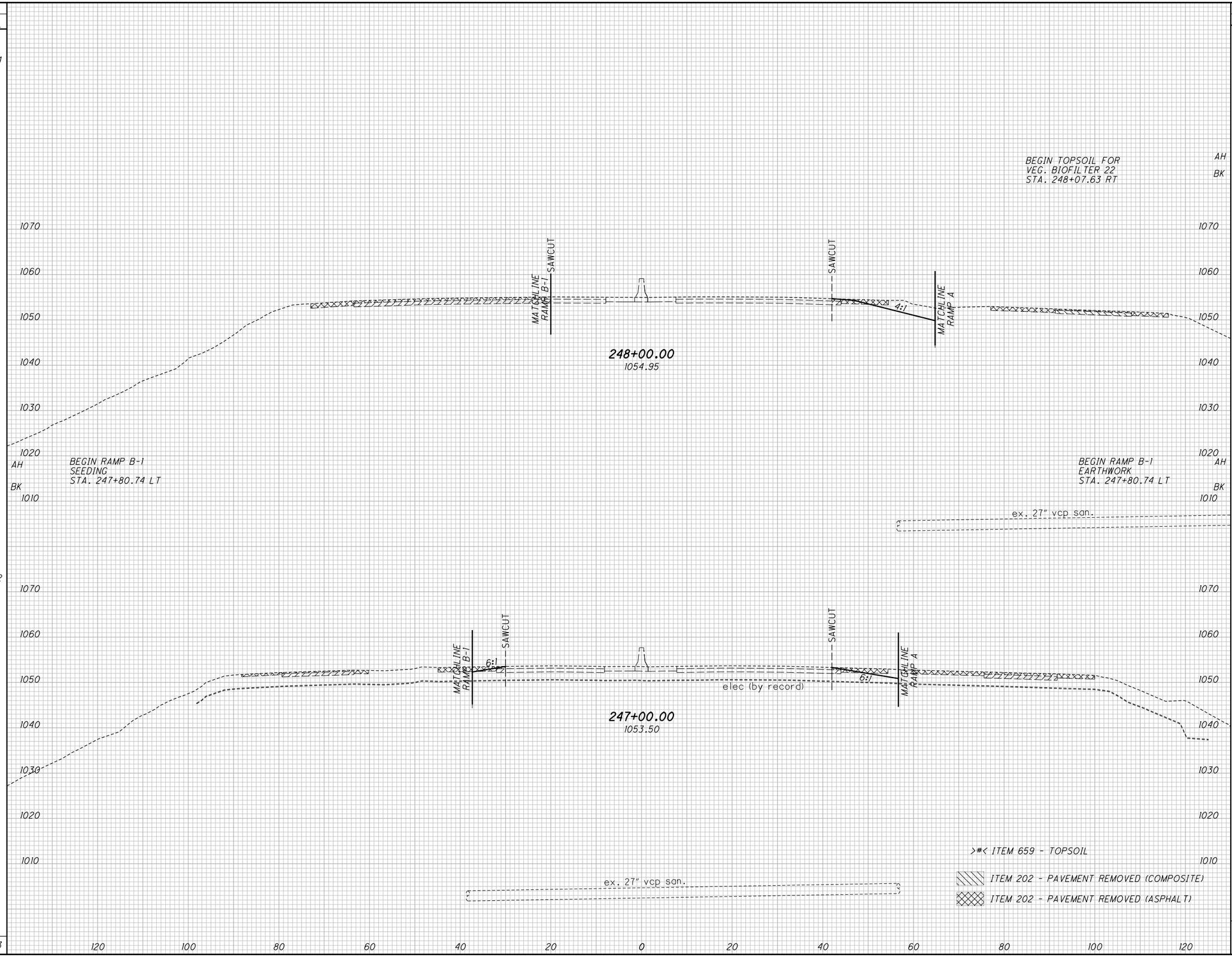


| END AREA CUT | END AREA FILL | VOLUME CUT | VOLUME FILL |
|---|---|---|---|
| | | | >29< |
| | | 106 | 28 |
| | >6< | | |
| | >0< | | |
| 27 | 6 | | |
| | | 17 | 4 |
| 21 | 6 | | |
| 21 | 9 | | |
| | | 40 | 25 |
| 6 | 8 | | |
| | | 163 | >29< 57 |

CALCULATED CJC
CHECKED PJF

CROSS SECTIONS - I.R. 277/U.S. 224
STA. 247+00.00 TO STA. 248+00.00

SUM-77/277/224
VARIOUS

625
1288

O:\2017\2017258\ProjectData\SUM\106002\Design\Roadway\Sheets\106002_XS004.dgn Sheet 1/15/2021 9:33:10 AM pfry

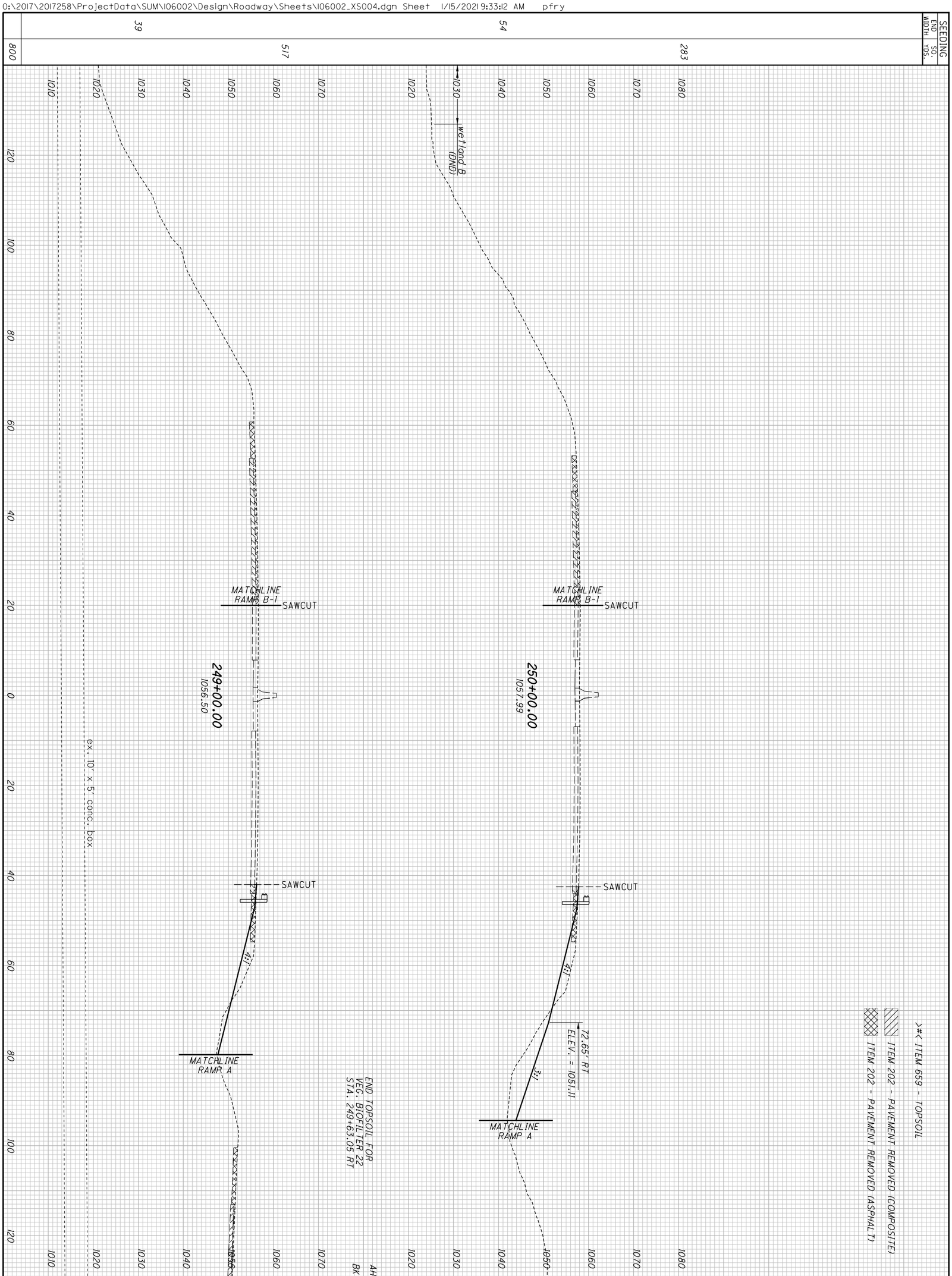


| | | |
|---|---|---|
| 626 / 1288 | **SUM-77 / 277 / 224**<br>**VARIOUS** | **CROSS SECTIONS - I.R. 277 / U.S. 224**<br>**STA. 249+00.00 TO STA. 250+00.00** |

CALCULATED CJC
CHECKED PJF

| SEEDING | |
|---|---|
| END WIDTH | SQ. YDS. |
| | 109 |
| 0 | |
| | |
| | |
|

0:\2017\2017258\ProjectData\SUM\106002\Design\Roadway\Sheets\106002_XS004.dgn Sheet 1/15/2021 9:33:14 AM pfry

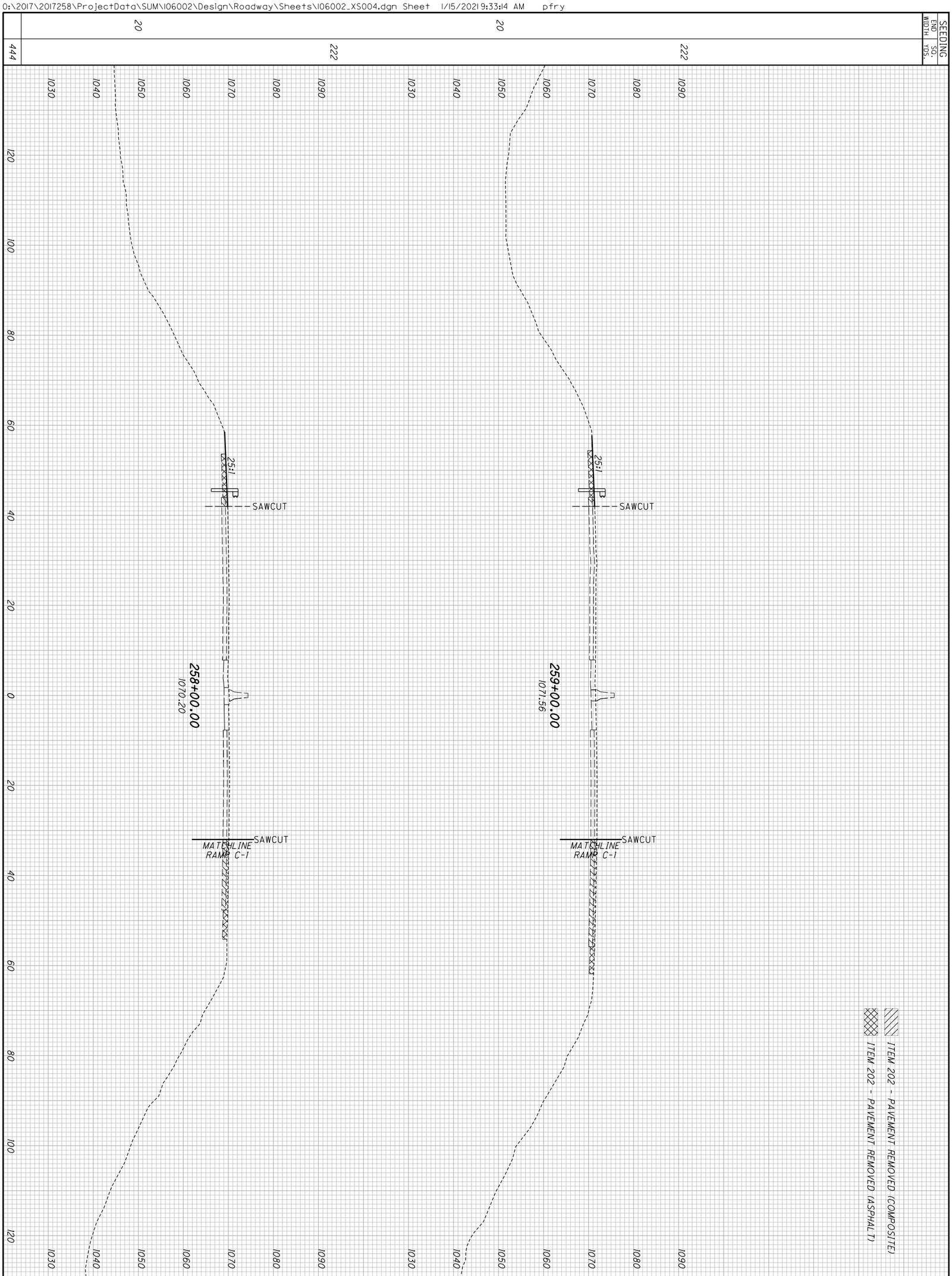


| | |
|---|---|
| 628 / 1288 | SUM-77/277/224 VARIOUS |
| | CROSS SECTIONS - I.R. 277/U.S. 224 STA. 258+00.00 TO STA. 259+00.00 |
| | CALCULATED CJC |
| | CHECKED PJF |

| SEEDING END WIDTH | SEEDING SQ. YDS. |
|---|---|
| | 328 |
| | |
| 45 | |
| | 500 |
| | |
| 45 | |
| | 117 |
| 46 | |
| 39 | |
| | 252 |
| 20 | |
| | 1197 |

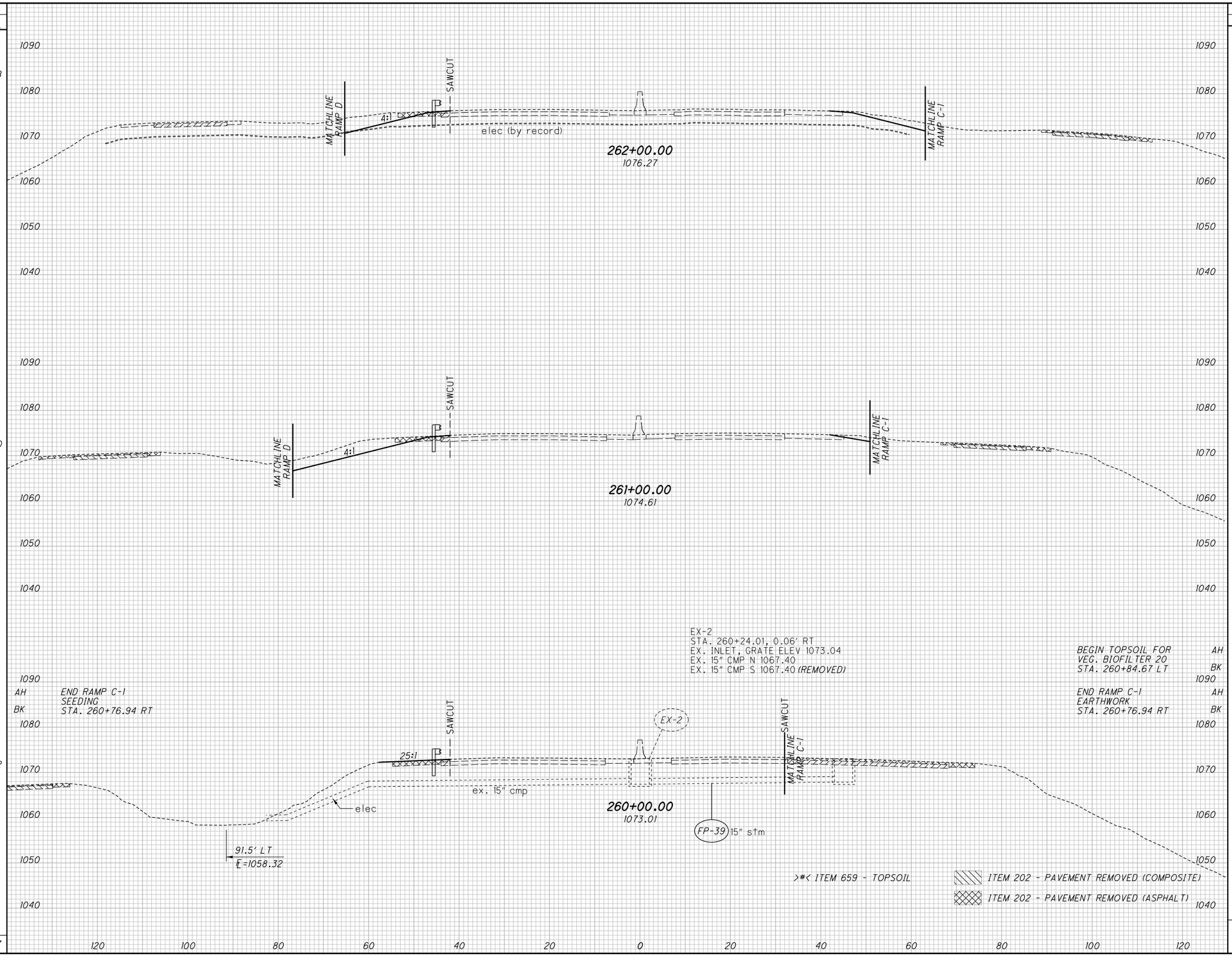


| END AREA CUT | END AREA FILL | VOLUME CUT | VOLUME FILL |
|---|---|---|---|
| | | | >17< |
| | | 113 | 20 |
| | | | |
| | >6< | | |
| 54 | 6 | | |
| | | | >30< |
| | | 226 | 22 |
| | | | |
| | >10< | | |
| 68 | 6 | | |
| | | | >6< |
| | | 51 | 6 |
| AH | >10< | | |
| BK | >0< | | |
| AH 52 | 7 | | |
| BK 53 | 7 | | |
| | | 76 | 30 |
| 0 | 14 | | |
| | | | >53< |
| | | 466 | 78 |

CALCULATED CJC
CHECKED PJF

CROSS SECTIONS - I.R. 277/U.S. 224
STA. 260+00.00 TO STA. 262+00.00

SUM-77/277/224
VARIOUS

629
1288

0:\2017\2017258\ProjectData\SUM\06002\Design\Roadway\Sheets\06002_XS004.dgn Sheet 1/15/2021 9:33:16 AM pfry

| SEEDING END WIDTH | SEEDING SQ. YDS. |
|---|---|
| 0 | |
| 5 | |
| | 51 |
| 8 | |
| | 122 |
| 14 | |
| | 173 |

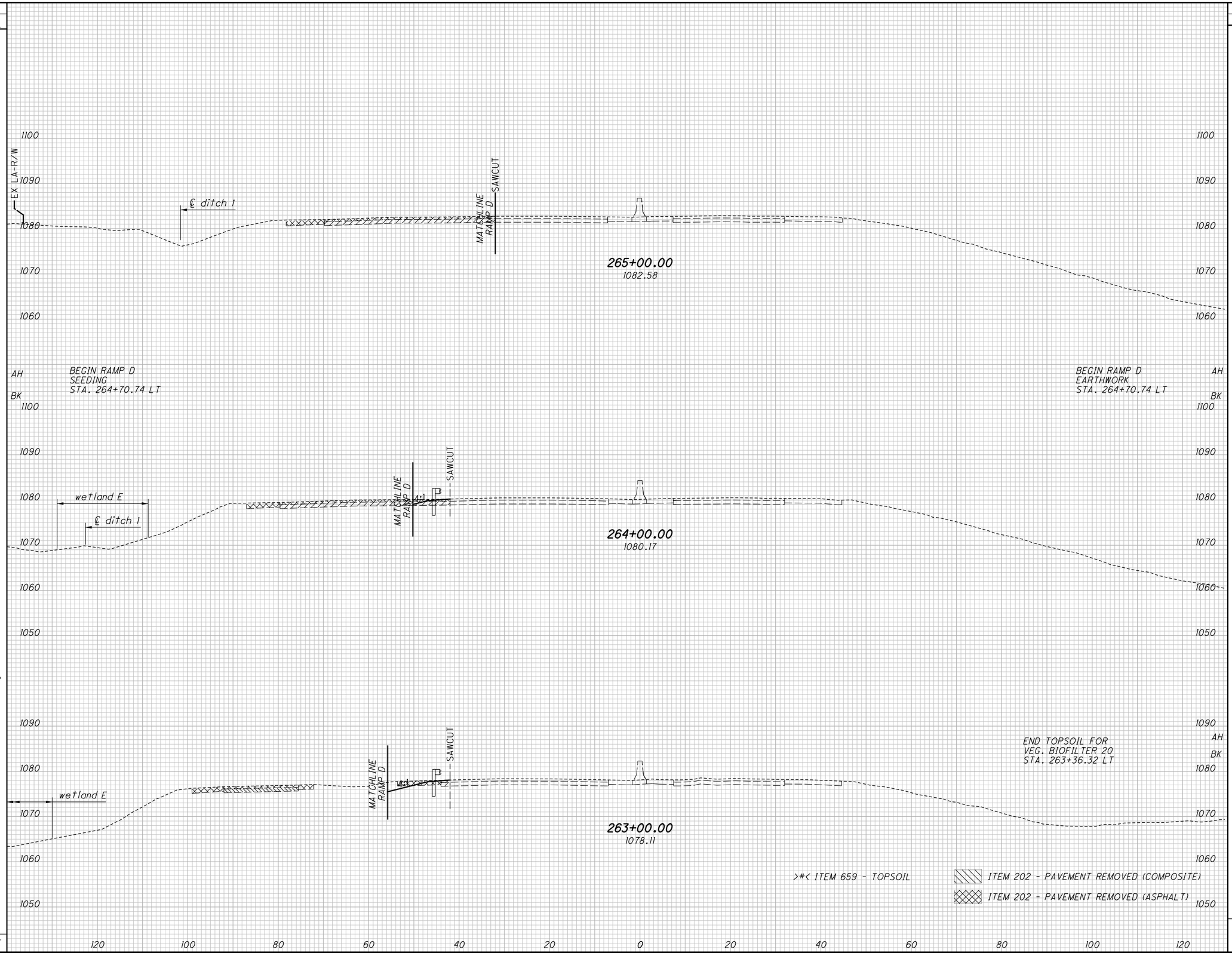


| END AREA CUT | END AREA FILL | VOLUME CUT | VOLUME FILL |
|---|---|---|---|
| 0 | 0 | | |
| 6 | 0 | | |
| | | 8 | 10 |
| 0 | 8 | | |
| | | 13 | 24 |
| AH | >0< | | |
| BK | >2< | | >3< |
| 7 | >3< 5 | | |
| | | 21 | >3< 34 |

CALCULATED CJC
CHECKED PJF

# CROSS SECTIONS - I.R. 277/ U.S. 224
# STA. 263+00.00 TO STA. 265+00.00

SUM-77/277/224
VARIOUS

630
1288

D:\2017\201258\ProjectData\SUM\06002\Design\Roadway\Sheets\06002_XS004.dgn Sheet 1/15/2021 9:33:18 AM pfry

O:\2017\2017258\ProjectData\SUM\106002\Design\Roadway\Sheets\106002_XS004.dgn Sheet 1/15/2021 9:33:20 AM pfry

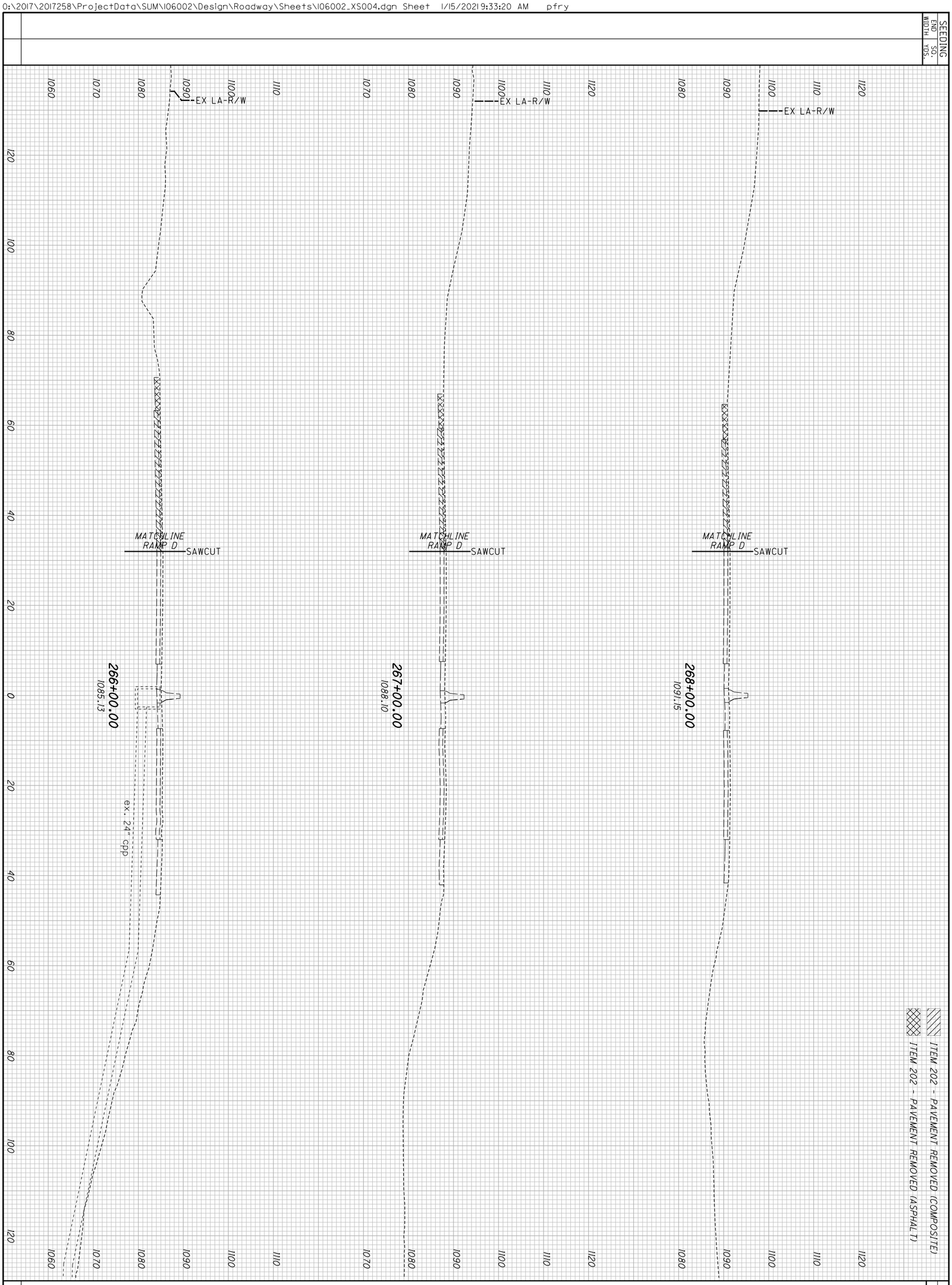


| | | |
|---|---|---|
| 631 / 1288 | **SUM-77 / 277 / 224**<br>**VARIOUS** | **CROSS SECTIONS - I.R. 277 / U.S. 224**<br>**STA. 266+00.00 TO STA. 268+00.00** |

CALCULATED CJC
CHECKED PJF

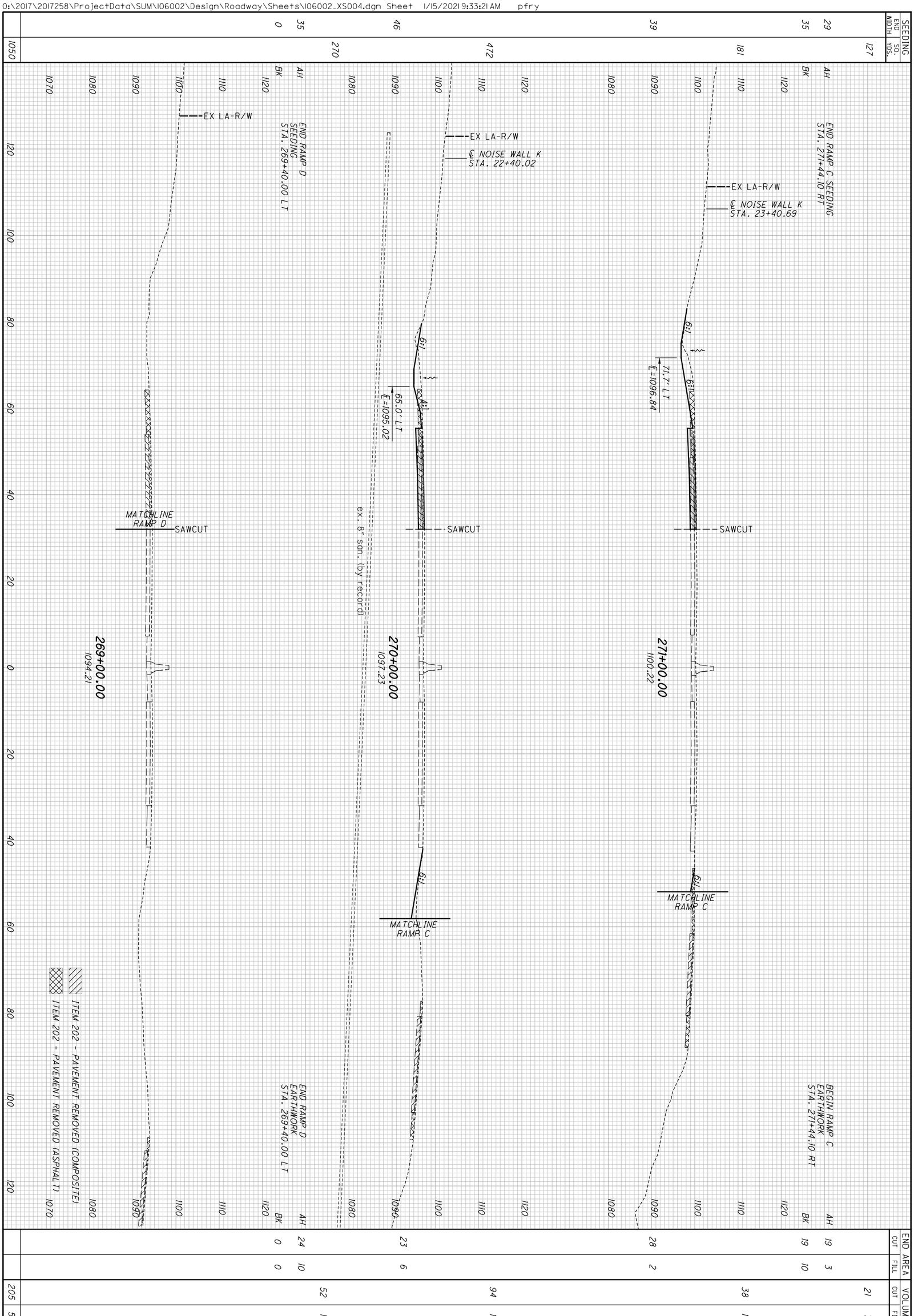


| | | |
|---|---|---|
| 632 / 1288 | **SUM-77 / 277 / 224**<br>**VARIOUS** | **CROSS SECTIONS - I.R. 277 / U.S. 224**<br>**STA. 269+00.00 TO STA. 271+00.00** |
| | | CALCULATED CJC<br>CHECKED PJF |

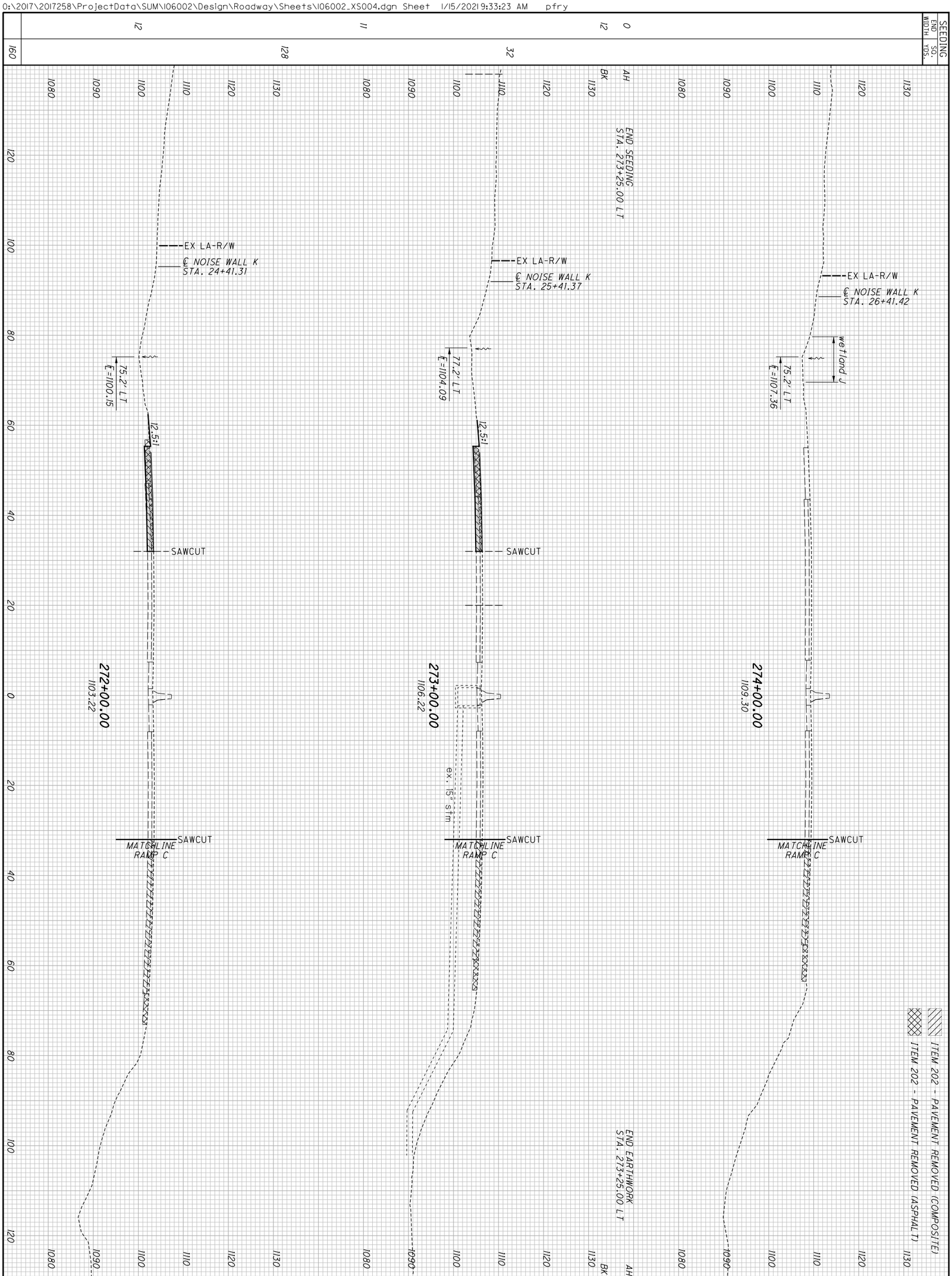


633
1288

**SUM-77/277/224**
**VARIOUS**

# CROSS SECTIONS - I.R. 277/U.S. 224
## STA. 272+00.00 TO STA. 274+00.00

CALCULATED CJC
CHECKED PJF

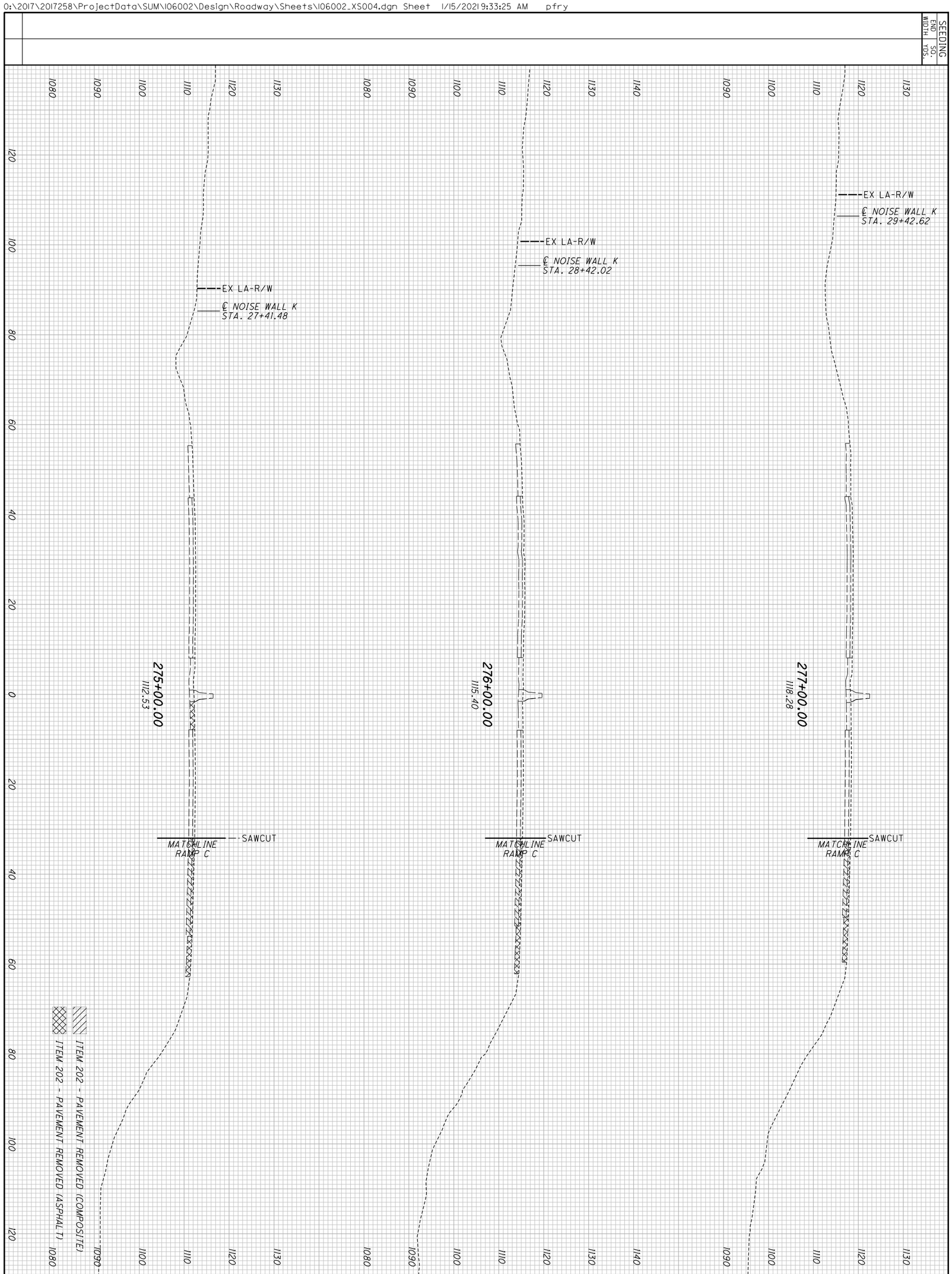


| | | |
|---|---|---|
| 634 / 1288 | **SUM-77/277/224**<br>**VARIOUS** | **CROSS SECTIONS - I.R. 277/U.S. 224**<br>**STA. 275+00.00 TO STA. 277+00.00** |

CALCULATED CJC
CHECKED PJF

| SEEDING END WIDTH | SEEDING SQ. YDS. |
|---|---|
| | 75 |
| | |
| | |
| 15 | |
| | 69 |
| | |
| | |
| 10 | |
| | 33 |
| | |
| 12 | |
| | 28 |
| 10 | |
| 0 | |
| | 205 |

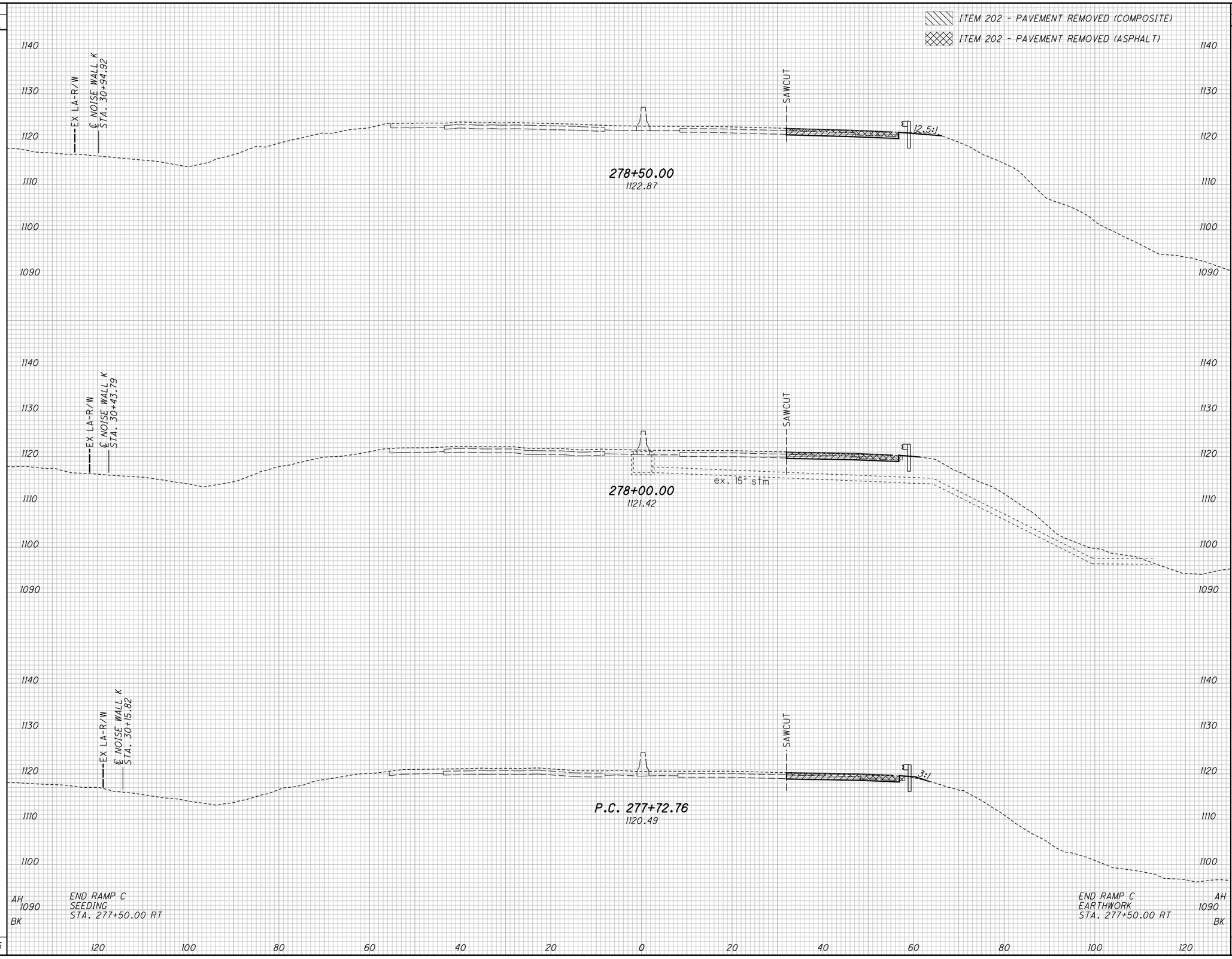


| END AREA CUT | END AREA FILL | VOLUME CUT | VOLUME FILL |
|---|---|---|---|
| | | 13 | 0 |
| 7 | 0 | | |
| | | 9 | 1 |
| 3 | 1 | | |
| 3 | 2 | 3 | 2 |
| 3 | 2 | 3 | 2 |
| 3 | 2 | | |
| 0 | 0 | | |
| | | 28 | 5 |

CALCULATED CJC
CHECKED PJF

# CROSS SECTIONS - I.R. 277/U.S. 224
## STA. 277+72.76 TO STA. 278+50.00

SUM-77/277/224
VARIOUS

635
1288

D:\2017\2017258\ProjectData\SUM\06002\Design\Roadway\Sheets\06002_XS004.dgn Sheet 1/15/2021 9:33:27 AM pfry

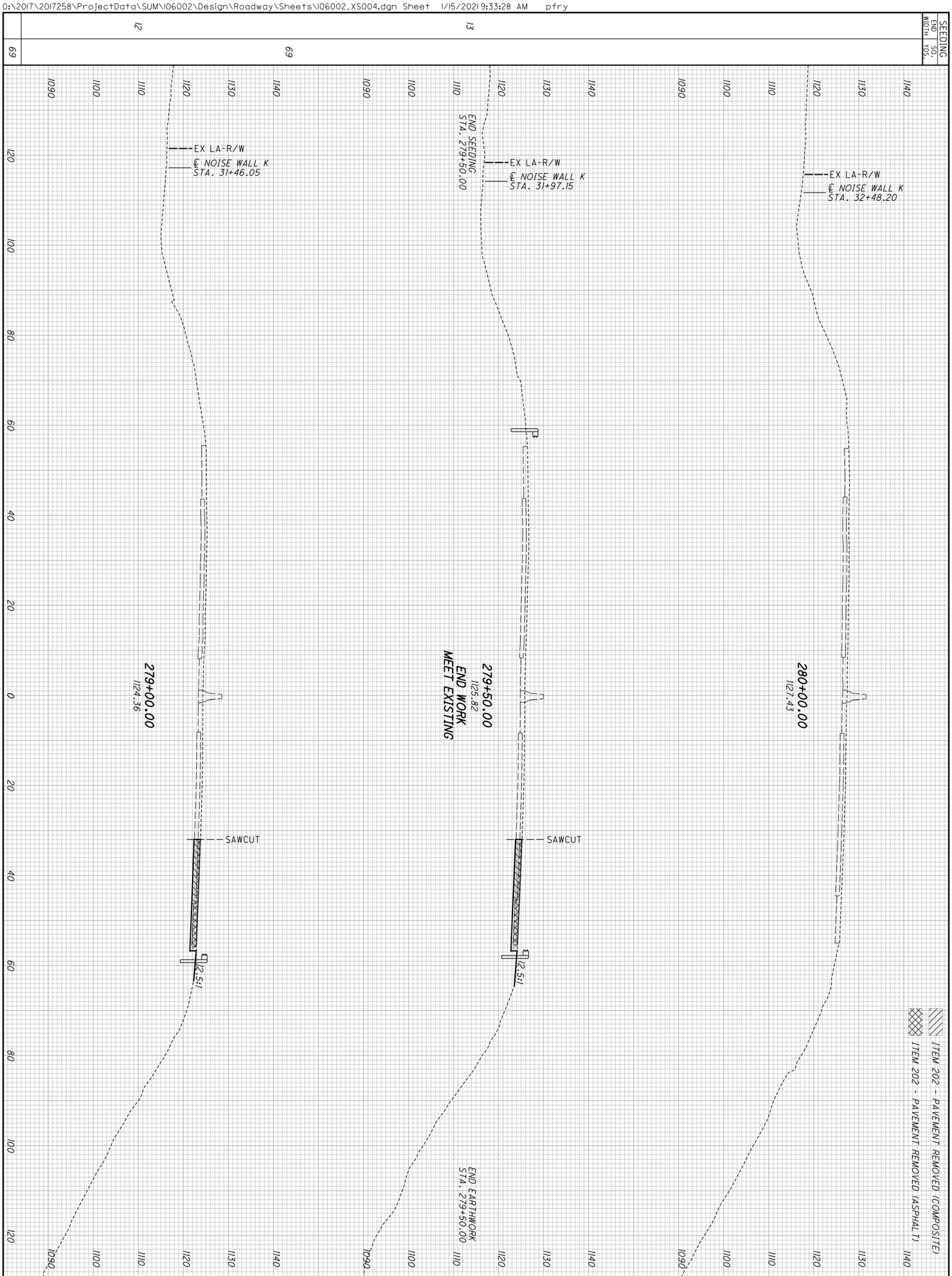


| | |
|---|---|
| 636 / 1288 | SUM-77/277/224<br>VARIOUS |
| CROSS SECTIONS - I.R. 277/U.S. 224<br>STA. 279+00.00 TO STA. 280+00.00 | CALCULATED CJC<br>CHECKED PJF |

| SEEDING | |
|---|---|
| END WIDTH | SQ. YDS. |

| END AREA | |
|---|---|
| CUT | FILL |

| VOLUME | |
|---|---|
| CUT | FILL |

CALCULATED CJC
CHECKED PJF

1140
1130
1120
1110
1100
1090

ITEM 202 - PAVEMENT REMOVED (COMPOSITE)
ITEM 202 - PAVEMENT REMOVED (ASPHALT)

EX LA-R/W

280+31.79
1128.29
BEGIN APPROACH SLAB (SKEW)

120 100 80 60 40 20 0 20 40 60 80 100 120

# CROSS SECTIONS - I.R. 277 / U.S. 224
## STA. 280+31.79

SUM-77 / 277 / 224
VARIOUS

637
1288

D:\2017\2017258\ProjectData\SUM\06002\Design\Roadway\Sheets\06002_XS004.dgn Sheet 1/15/2021 9:33:30 AM pfry

| SEEDING END WIDTH | SEEDING SQ. YDS. |
|---|---|
| | 422 |
| 76 | |
| | 411 |
| 72 | |
| | 290 |
| 72 | |
| | 1123 |

(#) SPECIAL BENCHING

'#' STREAM UNDERCUT

ITEM 202 - PAVEMENT REMOVED (COMPOSITE)

ITEM 202 - PAVEMENT REMOVED (ASPHALT)

ITEM 203 - EXCAVATION (STREAM UNDERCUT) & EMBANKMENT (STREAM UNDERCUT)

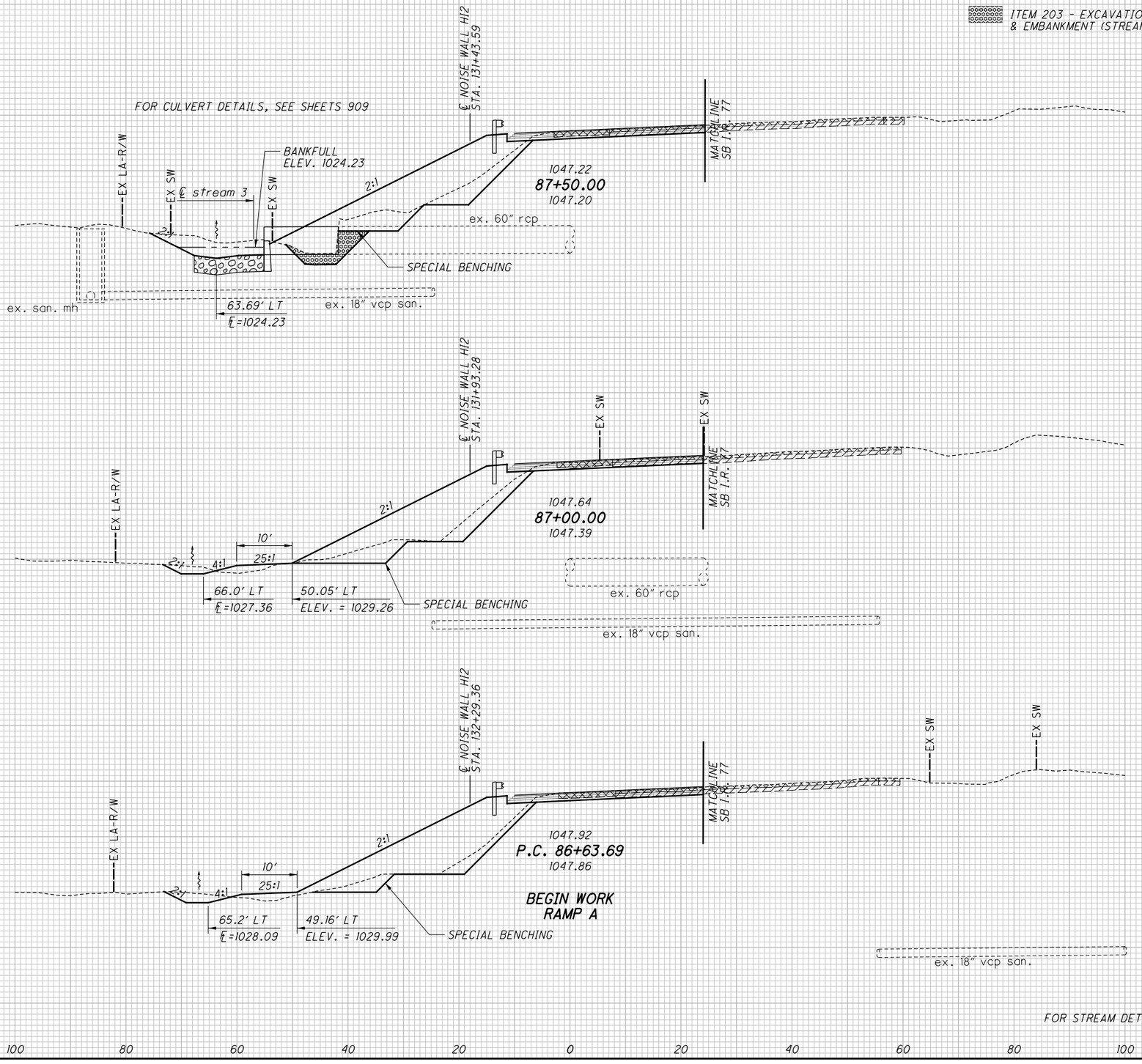


| END AREA CUT | END AREA FILL | VOLUME CUT | VOLUME FILL |
|---|---|---|---|
| | | '58' | '58' |
| | | (142) | (142) |
| | | 106 | 416 |
| | | | |
| '32' | '32' | | |
| (78) | (78) | | |
| 61 | 222 | | |
| | | | |
| | | '30' | '30' |
| | | (140) | (140) |
| | | 73 | 399 |
| | | | |
| '0' | '0' | | |
| (73) | (73) | | |
| 18 | 209 | | |
| | | | |
| | | (79) | (79) |
| | | 29 | 299 |
| | | | |
| (44) | (44) | | |
| 25 | 235 | | |
| | | | |
| | | '88' | '88' |
| | | (361) | (361) |
| | | 208 | 1114 |

CALCULATED CJC
CHECKED PJF

CROSS SECTIONS - RAMP A
STA. 86+63.69 TO STA. 87+50.00

SUM-77 / 277 / 224
VARIOUS

638
1288

0:\2017\2017258\ProjectData\SUM\106002\Design\Roadway\Sheets\106002_XS101.dgn Sheet 1/15/2021 9:36:30 AM pfry

| SEEDING END WIDTH | SEEDING SQ. YDS. |
|---|---|
| | 400 |
| 73 | |
| | 408 |
| 74 | |
| | 417 |
| 76 | |
| | 1225 |

(#) SPECIAL BENCHING

'#' STREAM UNDERCUT

ITEM 202 - PAVEMENT REMOVED (COMPOSITE)

ITEM 202 - PAVEMENT REMOVED (ASPHALT)

ITEM 203 - EXCAVATION (STREAM UNDERCUT) & EMBANKMENT (STREAM UNDERCUT)

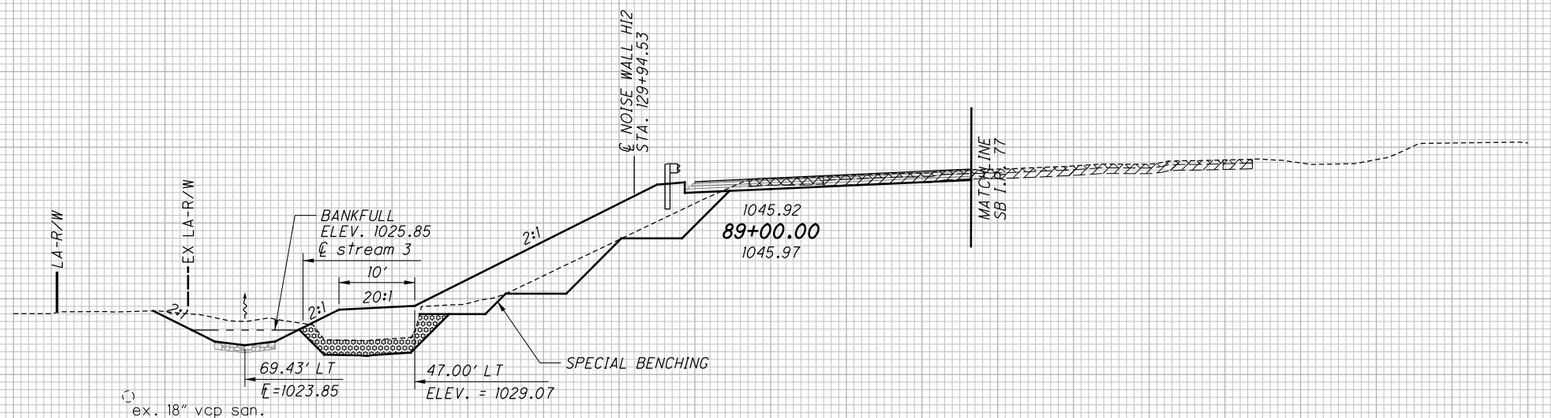


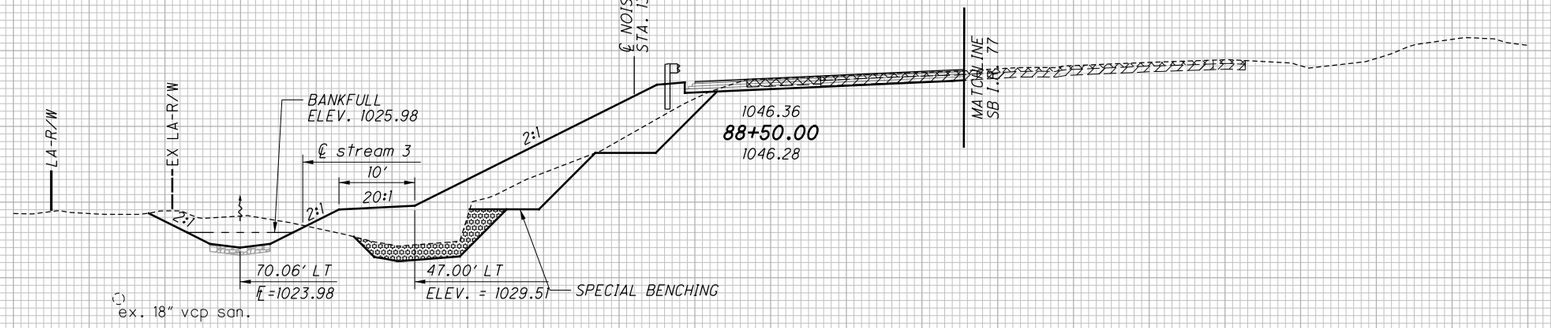


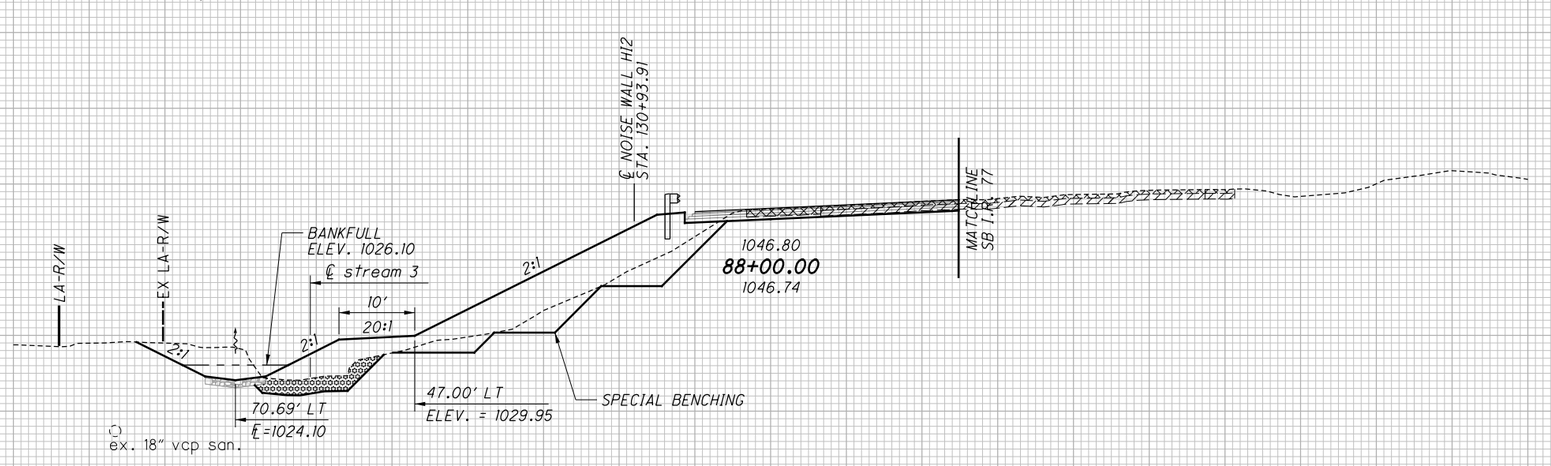


FOR STREAM DETAILS, SEE SHEET 58

| END AREA CUT | END AREA FILL | VOLUME CUT | VOLUME FILL |
|---|---|---|---|
| | | '70' | '70' |
| | | (131) | (131) |
| | | 99 | 361 |
| | | | |
| | | '39' | '39' |
| | | (71) | (71) |
| | | 53 | 196 |
| | | | |
| | | '75' | '75' |
| | | (138) | (138) |
| | | 107 | 385 |
| | | | |
| | | '42' | '42' |
| | | (78) | (78) |
| | | 63 | 220 |
| | | | |
| | | '68' | '68' |
| | | (142) | (142) |
| | | 107 | 414 |
| | | | |
| | | '31' | '31' |
| | | (75) | (75) |
| | | 53 | 227 |
| | | | |
| | | '213' | '213' |
| | | (411) | (411) |
| | | 313 | 1160 |

CALCULATED CJC

CHECKED PJF

# CROSS SECTIONS - RAMP A STA. 88+00.00 TO STA. 89+00.00

SUM-77 / 277 / 224

VARIOUS

639
1288

0:\2017\20172581\ProjectData\SUM\106002\Design\Roadway\Sheets\106002_XS101.dgn Sheet 1/15/2021 9:36:32 AM pfry

| SEEDING END WIDTH | SEEDING SQ. YDS. |
|---|---|
| | 156 |
| 70 | |
| | 389 |
| | 392 |
| 71 | |
| | 937 |

(#) SPECIAL BENCHING

'#' STREAM UNDERCUT

ITEM 202 - PAVEMENT REMOVED (COMPOSITE)

ITEM 202 - PAVEMENT REMOVED (ASPHALT)

ITEM 203 - EXCAVATION (STREAM UNDERCUT) & EMBANKMENT (STREAM UNDERCUT)

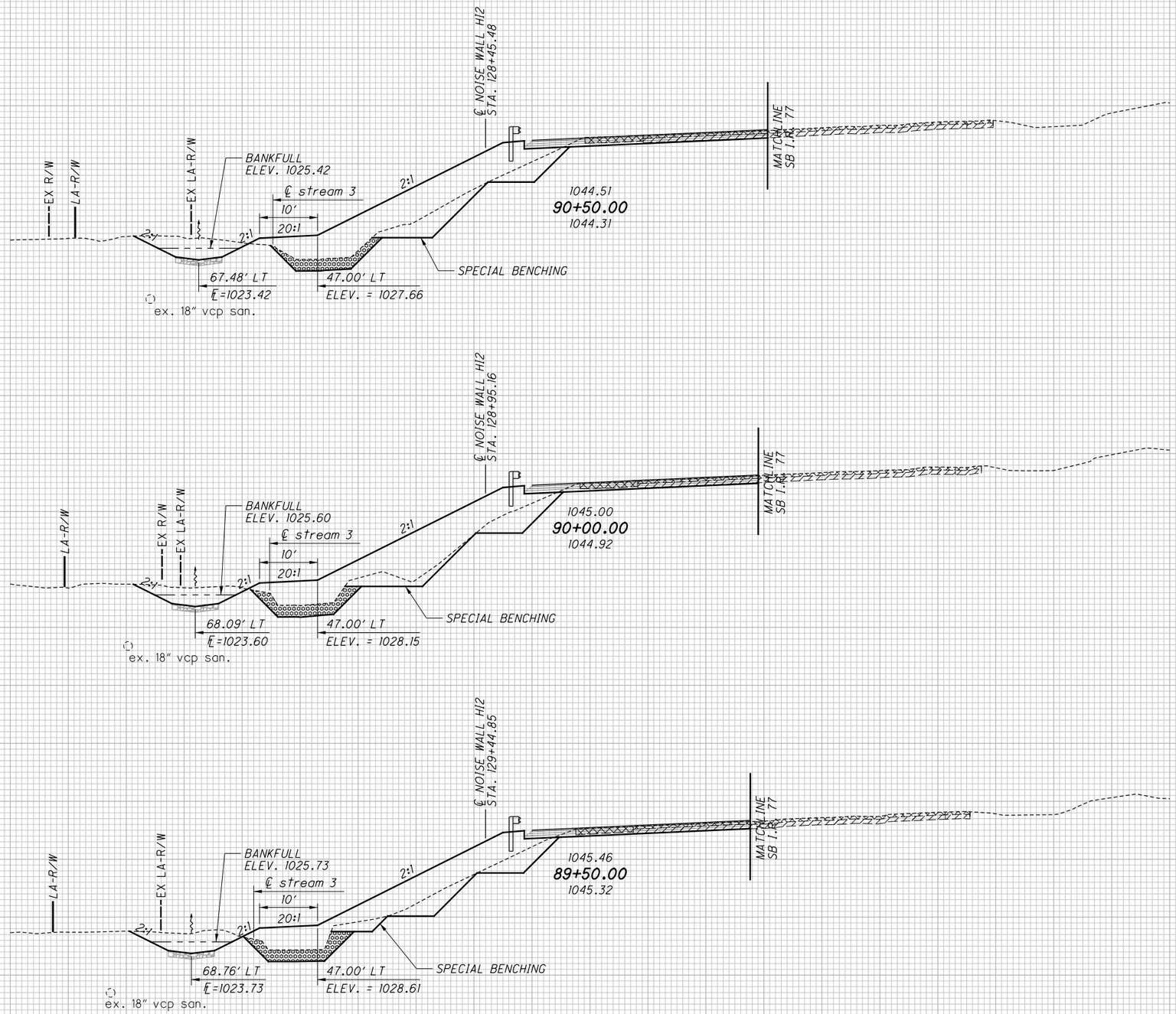


FOR STREAM DETAILS, SEE SHEET 58

| END AREA CUT | END AREA FILL | VOLUME CUT | VOLUME FILL |
|---|---|---|---|
| | | '24' | '24' |
| | | (53) | (53) |
| | | 44 | 175 |
| | | | |
| '32' | '32' | | |
| (72) | (72) | | |
| 57 | 236 | | |
| | | | |
| | | '63' | '63' |
| | | (129) | (129) |
| | | 100 | 438 |
| | | | |
| '36' | '36' | | |
| (67) | (67) | | |
| 51 | 237 | | |
| | | | |
| | | '68' | '68' |
| | | (127) | (127) |
| | | 97 | 399 |
| | | | |
| '37' | '37' | | |
| (70) | (70) | | |
| 54 | 194 | | |
| | | | |
| | | '155' | '155' |
| | | (309) | (309) |
| | | 241 | 1012 |

CALCULATED CJC
CHECKED PJF

# CROSS SECTIONS - RAMP A
## STA. 89+50.00 TO STA. 90+50.00

SUM-77 / 277 / 224
VARIOUS

640
1288

O:\2017\2017258\ProjectData\SUM\106002\Design\Roadway\Sheets\106002_XS101.dgn Sheet 1/15/2021 9:36:34 AM pfry

| SEEDING END WIDTH | SEEDING SQ. YDS. |
|---|---|
| | 244 |
| 60 | |
| | 317 |
| 54 | |
| | 207 |
| 70 | |
| | 768 |

(#) SPECIAL BENCHING

'#' STREAM UNDERCUT

ITEM 202 - PAVEMENT REMOVED (COMPOSITE)

ITEM 202 - PAVEMENT REMOVED (ASPHALT)

ITEM 203 - EXCAVATION (STREAM UNDERCUT) & EMBANKMENT (STREAM UNDERCUT)

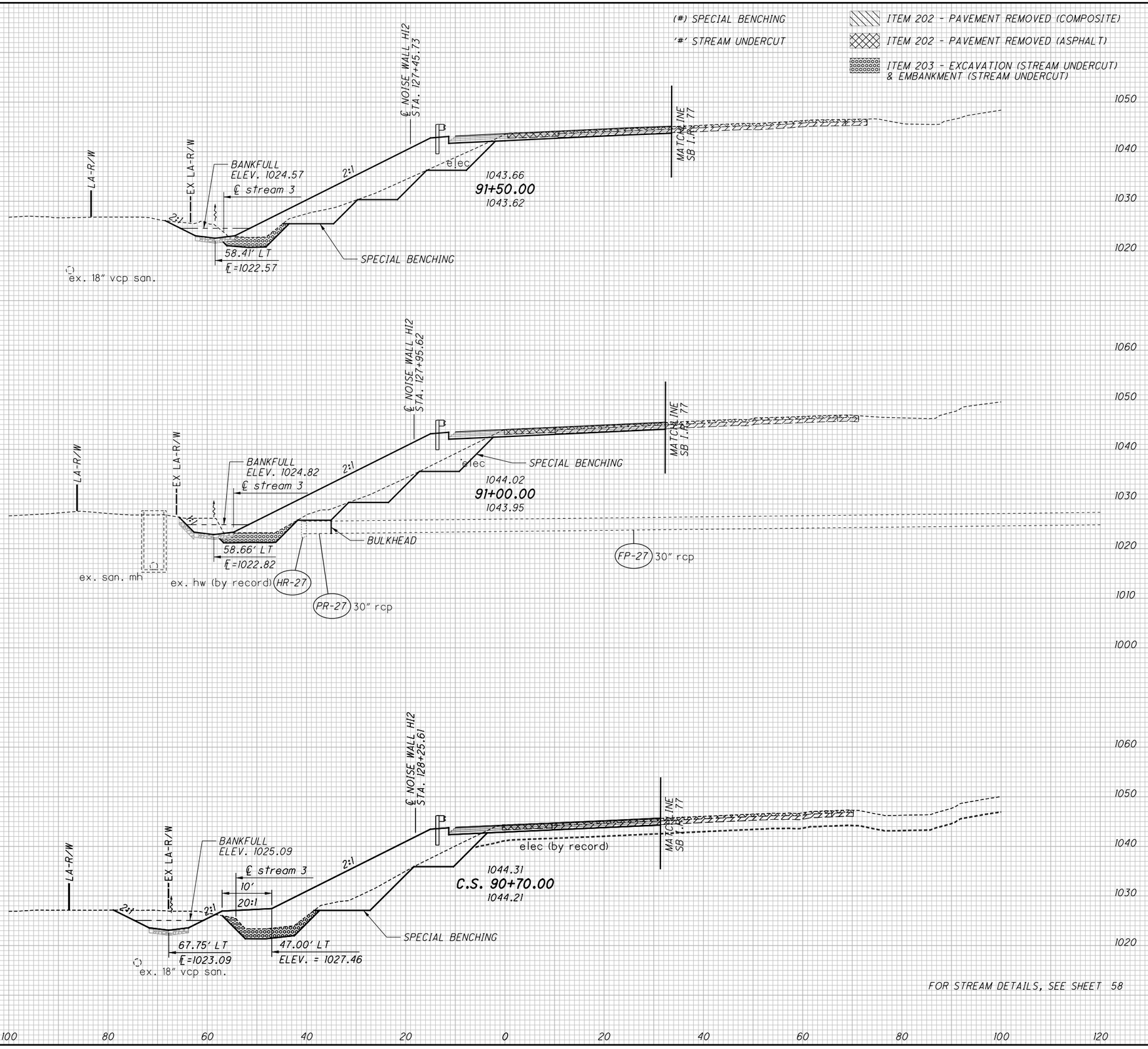


FOR STREAM DETAILS, SEE SHEET 58

| END AREA CUT | END AREA FILL | VOLUME CUT | VOLUME FILL |
|---|---|---|---|
| | | '16' | '16' |
| | | (114) | (114) |
| | | 41 | 273 |
| | | '21' | '21' |
| | | (76) | (76) |
| | | 31 | 194 |
| | | '42' | '42' |
| | | (133) | (133) |
| | | 56 | 386 |
| | | '24' | '24' |
| | | (68) | (68) |
| | | 29 | 223 |
| | | '32' | '32' |
| | | (77) | (77) |
| | | 50 | 256 |
| | | '34' | '34' |
| | | (70) | (70) |
| | | 61 | 237 |
| | | '90' | '90' |
| | | (324) | (324) |
| | | 147 | 915 |

CALCULATED CJC

CHECKED PJF

# CROSS SECTIONS - RAMP A STA. 90+70.00 TO STA. 91+50.00

SUM-77 / 277 / 224

VARIOUS



O:\2017\2017258\ProjectData\SUM\06002\Design\Roadway\Sheets\06002_XS10L.dgn Sheet1 1/15/2021 9:36:36 AM pfry

| SEEDING END WIDTH | SEEDING SQ. YDS. | END AREA CUT | END AREA FILL | VOLUME CUT | VOLUME FILL |
|---|---|---|---|---|---|
| | 289 | | | (147) | (147) |
| | | | | 66 | 268 |
| | 53 | | | | |
| | | (86) | (86) | | |
| | | 31 | 146 | | |
| | 331 | | | (161) | (161) |
| | | | | 94 | 294 |
| | 66 | | | | |
| | | (88) | (88) | | |
| | | 71 | 172 | | |
| | 64 | | | (31) | (31) |
| | | | | 18 | 64 |
| | 50 | '0' | '0' | | |
| | | (78) | (78) | | |
| | | 25 | 175 | | |
| | 684 | | | (339) | (339) |
| | | | | 178 | 626 |

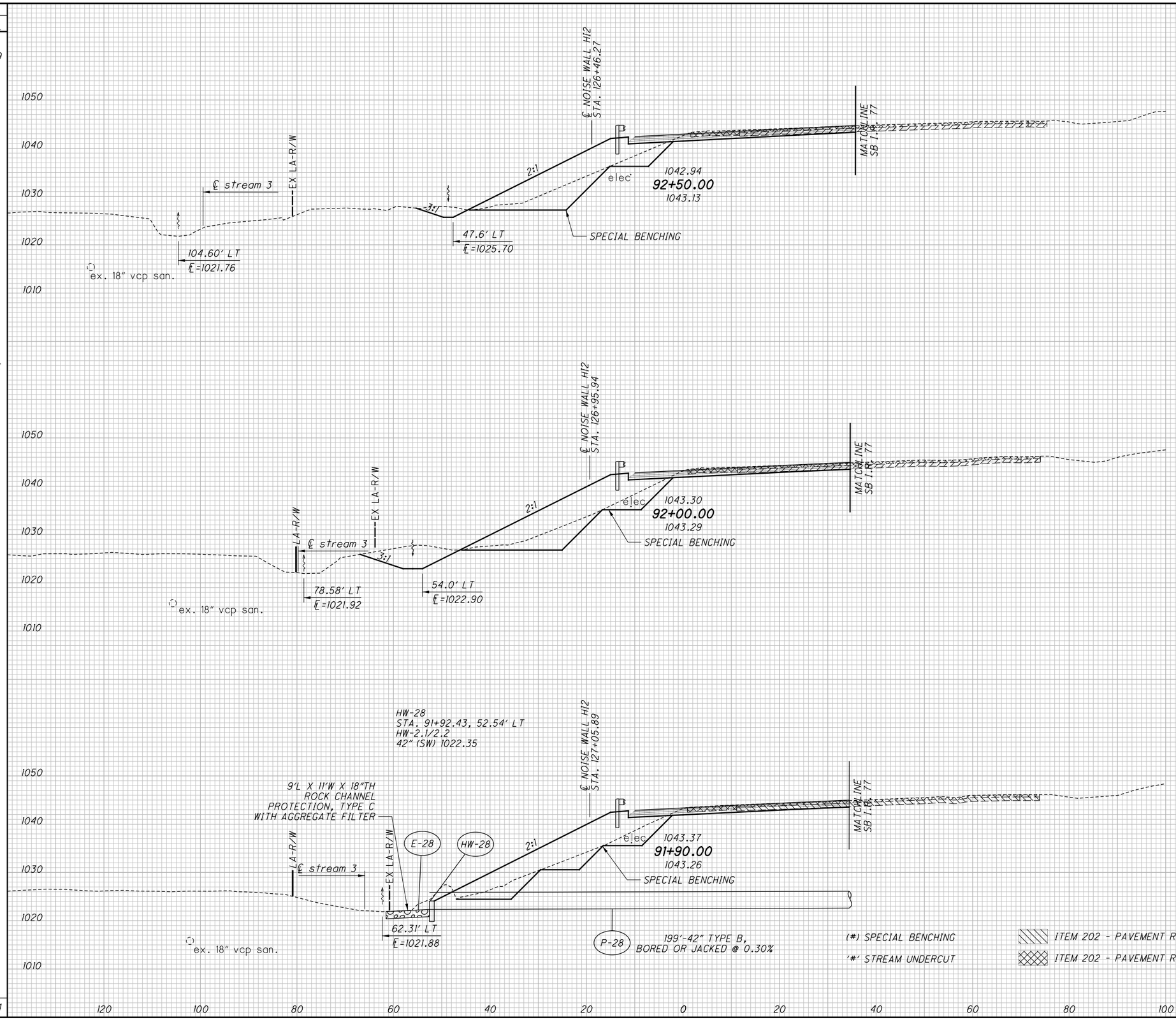


(#) SPECIAL BENCHING
'#' STREAM UNDERCUT

ITEM 202 - PAVEMENT REMOVED (COMPOSITE)
ITEM 202 - PAVEMENT REMOVED (ASPHALT)

CALCULATED CJC
CHECKED PJF

# CROSS SECTIONS - RAMP A
## STA. 91+90.00 TO STA. 92+50.00

SUM-77 / 277 / 224
VARIOUS

642
1288

O:\2017\2017258\ProjectData\SUM\106002\Design\Roadway\Sheets\106002_XS101.dgn Sheet 1/15/2021 9:36:41 AM pfry

| SEEDING END WIDTH | SEEDING SQ. YDS. | END AREA CUT | END AREA FILL | VOLUME CUT | VOLUME FILL |
|---|---|---|---|---|---|
| | 152 | | | (83) | (83) |
| | | | | 29 | 180 |
| | 46 | | | (75) | (75) |
| | | | | 25 | 163 |
| | 106 | | | (56) | (56) |
| | | | | 21 | 116 |
| | 49 | | | (76) | (76) |
| | | | | 32 | 151 |
| | 278 | | | (138) | (138) |
| | | | | 67 | 272 |
| | 51 | | | (73) | (73) |
| | | | | 40 | 143 |
| | 536 | | | (277) | (277) |
| | | | | 117 | 568 |

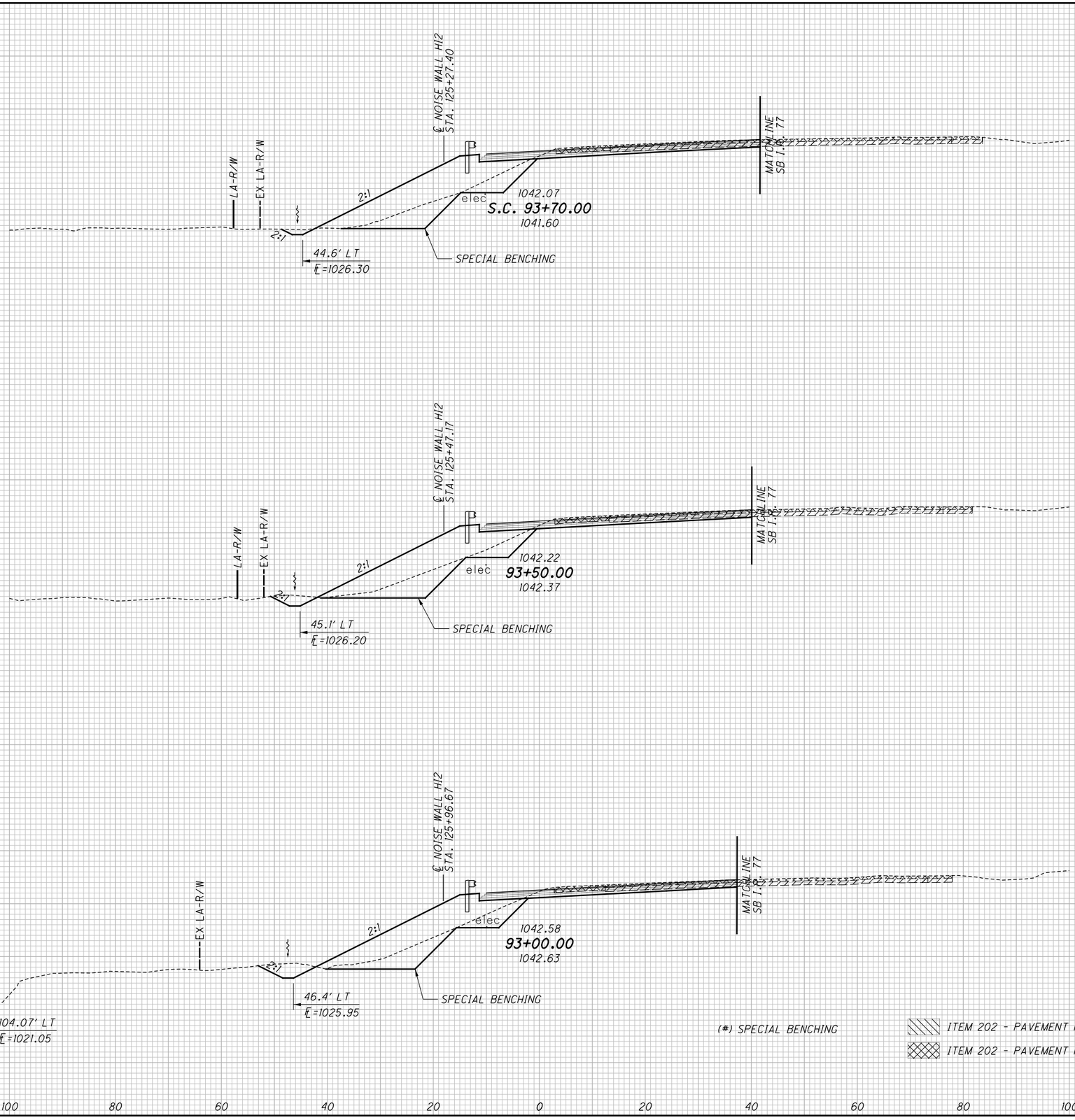


(#) SPECIAL BENCHING

ITEM 202 - PAVEMENT REMOVED (COMPOSITE)

ITEM 202 - PAVEMENT REMOVED (ASPHALT)

CALCULATED CJC
CHECKED PJF

# CROSS SECTIONS - RAMP A
## STA. 93+00.00 TO STA. 93+70.00

SUM-77 / 277 / 224
VARIOUS

643
1288

O:\2017\2017258\ProjectData\SUM\06002\Design\Roadway\Sheets\06002_XS101.dgn Sheet 1/15/2021 9:36:45 AM pfry

| SEEDING END WIDTH | SEEDING SQ. YDS. | END AREA CUT | END AREA FILL | VOLUME CUT | VOLUME FILL |
|---|---|---|---|---|---|
| | | | | (119) | (119) |
| | 300 | | | 36 | 306 |
| | | | | | |
| | | | | | |
| | | | | |

| SEEDING END WIDTH | SEEDING SQ. YDS. |
|---|---|
| | 519 |
| 87 | |
| | 450 |
| 75 | |
| | 386 |
| 64 | |
| | 331 |
| 55 | |
| | 1686 |

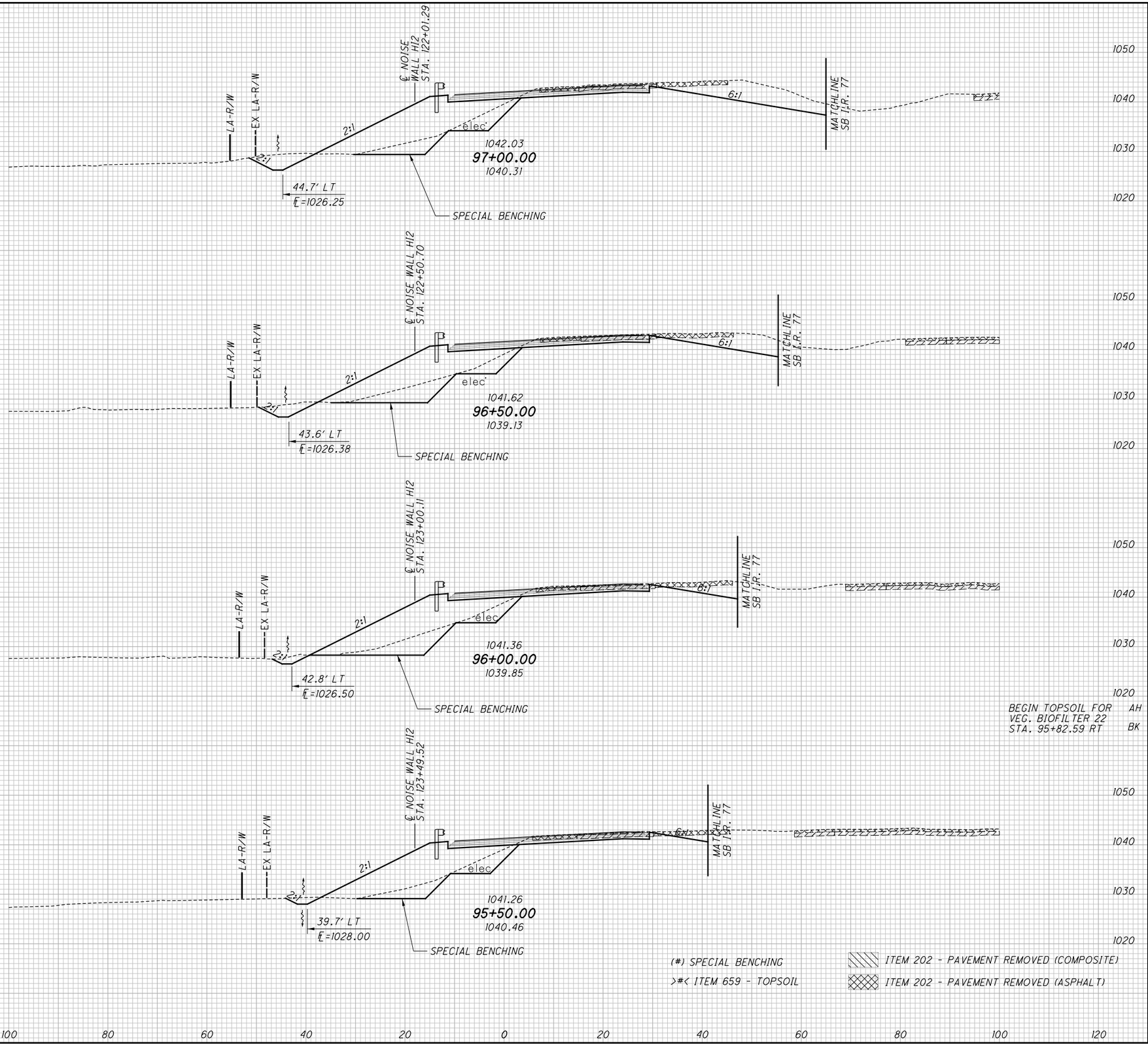


| END AREA CUT | END AREA FILL | VOLUME CUT | VOLUME FILL |
|---|---|---|---|
| | | | >26< |
| | | (119) | (119) |
| | | 280 | 369 |
| | >12< | | |
| (58) | (58) | | |
| 150 | 180 | | |
| | | | >19< |
| | | (116) | (116) |
| | | 226 | 313 |
| | >9< | | |
| (67) | (67) | | |
| 94 | 158 | | |
| | | | >14< |
| | | (126) | (126) |
| | | 132 | 306 |
| | >6< | | |
| (69) | (69) | | |
| 49 | 172 | | |
| | | | >4< |
| | >5< | | |
| | >0< | | |
| | | | |
| | | (114) | (114) |
| | | 69 | 313 |
| | | | |
| (54) | (54) | | |
| 26 | 166 | | |
| | | | >63< |
| | | (475) | (475) |
| | | 707 | 1301 |

BEGIN TOPSOIL FOR VEG. BIOFILTER 22 STA. 95+82.59 RT — AH BK

(#) SPECIAL BENCHING

>#< ITEM 659 - TOPSOIL

ITEM 202 - PAVEMENT REMOVED (COMPOSITE)

ITEM 202 - PAVEMENT REMOVED (ASPHALT)

CALCULATED CJC

CHECKED PJF

# CROSS SECTIONS - RAMP A STA. 95+50.00 TO STA. 97+00.00

SUM-77 / 277 / 224

VARIOUS

645
1288

0:\2017\2017258\ProjectData\SUM\06002\Design\Roadway\Sheets\06002_XS101.dgn Sheet1 1/15/2021 9:36:50 AM pfry

| SEEDING END WIDTH | SEEDING SQ. YDS. |
|---|---|
| | 639 |
| 112 | |
| | 642 |
| 119 | |
| | 608 |
| 100 | |
| | 1889 |







END TOPSOIL FOR VEG. BIOFILTER 24 STA. 97+73.00 RT — AH BK




(#) SPECIAL BENCHING

>#< ITEM 659 - TOPSOIL

ITEM 202 - PAVEMENT REMOVED (COMPOSITE)

ITEM 202 - PAVEMENT REMOVED (ASPHALT)

| END AREA CUT | END AREA FILL | VOLUME CUT | VOLUME FILL |
|---|---|---|---|
| | | (156) | (156) |
| | | 206 | 536 |
| | | | |
| (79) | (79) | | |
| 116 | 274 | | |
| | | | |
| | | | |
| | | (132) | (132) |
| | | 233 | 470 |
| | | | |
| | | | |
| | | | |
| | | | |
| (64) | (64) | | |
| 136 | 234 | | |
| | | | |
| | >0< | | |
| | >17< | | |
| | | | >14< |
| | | (124) | (124) |
| | | 267 | 419 |
| | | | |
| | >16< | | |
| (70) | (70) | | |
| 152 | 219 | | |
| | | | |
| | | | >14< |
| | | (412) | (412) |
| | | 706 | 1425 |

CALCULATED CJC
CHECKED PJF

# CROSS SECTIONS - RAMP A
## STA. 97+50.00 TO STA. 98+50.00

SUM-77 / 277 / 224
VARIOUS

646
1288

0:\2017\2017258\ProjectData\SUM\06002\Design\Roadway\Sheets\06002_XS01.dgn Sheet 1/15/2021 9:36:52 AM pfry

| SEEDING END WIDTH | SEEDING SQ. YDS. |
|---|---|
| | 611 |
| 111 | |
| | 644 |
| 121 | |
| | 664 |
| 118 | |
| | 1919 |

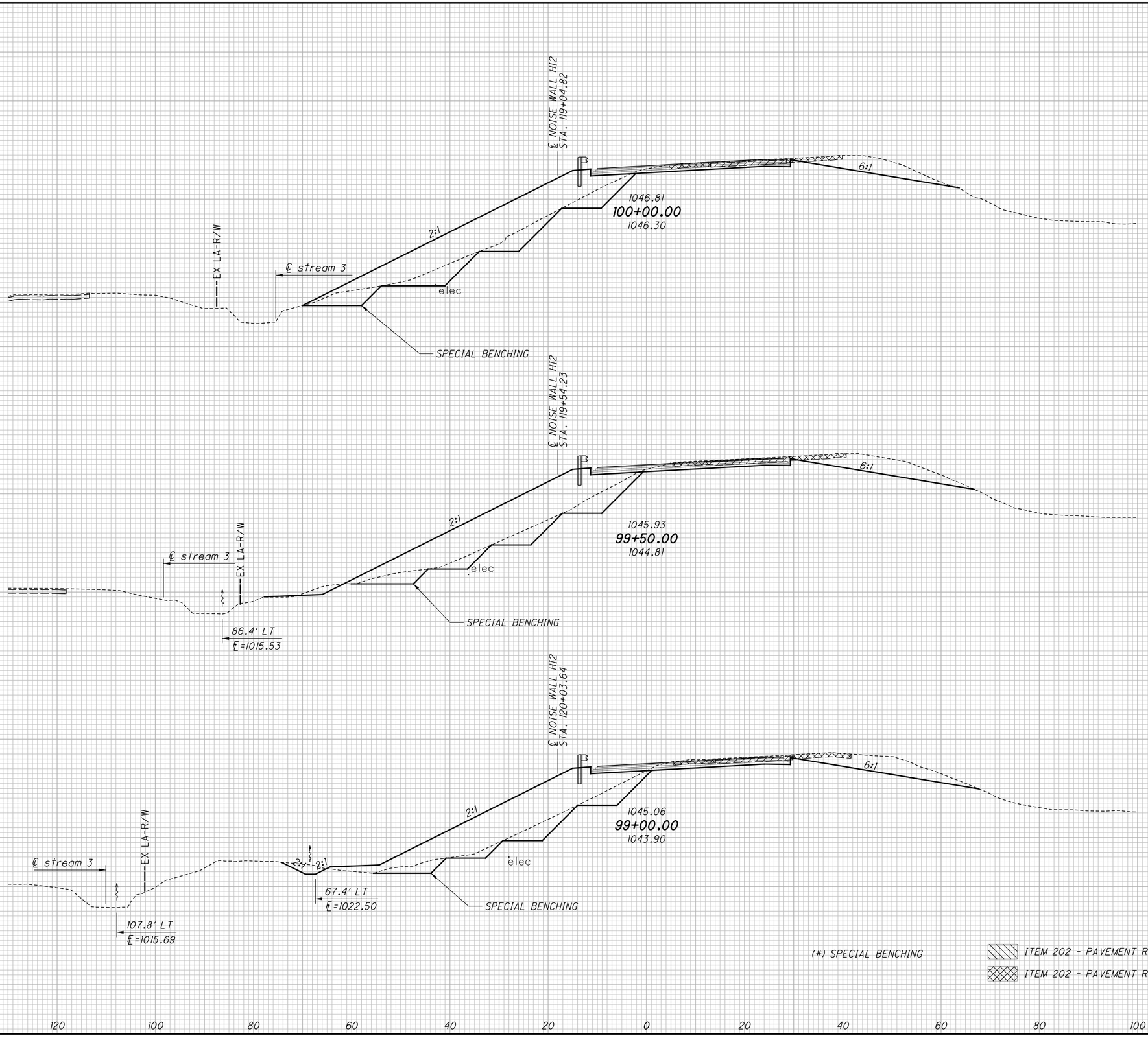


| END AREA CUT | END AREA FILL | VOLUME CUT | VOLUME FILL |
|---|---|---|---|
| | | (249) | (249) |
| | | 122 | 558 |
| (133) | (133) | | |
| 77 | 310 | | |
| | | | |
| | | | |
| | | | |
| | | | |
| | | (217) | (217) |
| | | 167 | 572 |
| | | | |
| | | | |
| (101) | (101) | | |
| 103 | 308 | | |
| | | | |
| | | | |
| | | (176) | (176) |
| | | 194 | 568 |
| | | | |
| | | | |
| (89) | (89) | | |
| 106 | 305 | | |
| | | | |
| | | | |
| | | (642) | (642) |
| | | 483 | 1698 |

CALCULATED CJC
CHECKED PJF

# CROSS SECTIONS - RAMP A
## STA. 99+00.00 TO STA. 100+00.00

SUM-77 / 277 / 224
VARIOUS

647
1288

D:\2017\2017258\ProjectData\SUM\106002\Design\Roadway\Sheets\106002_XS101.dgn Sheet 1/15/2021 9:36:54 AM pfry

| SEEDING END WIDTH | SEEDING SQ. YDS. |
|---|---|
| | 658 |
| 108 | |
| | 606 |
| 110 | |
| | 608 |
| 109 | |
| | 1872 |

SA-1
STA. 101+34.90, 100.27' LT
MH-3, AS PER PLAN
RIM ELEV 1018.05
EX. 27" VCP SE 1007.05
27" (NW) 1007.05

EX-3
STA. 100+94.18, 115.99' LT
EX. SAN MH, GRATE ELEV 1021.34
EX. 12" VCP SW 1009.19
EX. 18" VCP SE 1008.19
EX. 27" VCP NW 1007.54

℄ NOISE WALL H12
STA. 117+56.59

1049.20
**101+50.00**
1048.80

77.7' RT
℄=1040.90

℄ NOISE WALL H12
STA. 118+06.00

1048.50
**101+00.00**
1048.10

℄ NOISE WALL H12
STA. 118+55.41

1047.68
**100+50.00**
1046.91

EX LA-R/W

℄ stream 3

elec

ex. 10' X 5' box culvert

SPECIAL BENCHING

2:1

6:1

SA-1

SR-1

ex. 27" vcp san.
(TO REMAIN)

ex. 27" vcp san.

EX-3

ex. 18" vcp san.

(#) SPECIAL BENCHING

ITEM 202 - PAVEMENT REMOVED (COMPOSITE)

ITEM 202 - PAVEMENT REMOVED (ASPHALT)

FOR CULVERT DETAILS, SEE SHEETS 910 - 915

| END AREA CUT | END AREA FILL | VOLUME CUT | VOLUME FILL |
|---|---|---|---|
| | | (256) | (256) |
| | | 97 | 556 |
| (131) | (131) | | |
| 42 | 295 | | |
| | | (257) | (257) |
| | | 84 | 523 |
| (147) | (147) | | |
| 49 | 270 | | |
| | | (262) | (262) |
| | | 96 | 521 |
| (136) | (136) | | |
| 55 | 293 | | |
| | | (775) | (775) |
| | | 277 | 1600 |

CALCULATED CJC
CHECKED PJF

# CROSS SECTIONS - RAMP A
## STA. 100+50.00 TO STA. 101+50.00

SUM-77 / 277 / 224
VARIOUS

648
1288

0:\2017\2017258\ProjectData\SUM\06002\Design\Roadway\Sheets\06002_XS01.dgn Sheet 1/15/2021 9:36:56 AM pfry

| SEEDING END WIDTH | SEEDING SQ. YDS. |
|---|---|
| | 497 |
| 94 | |
| | 547 |
| 103 | |
| | 644 |
| 129 | |
| | 1688 |

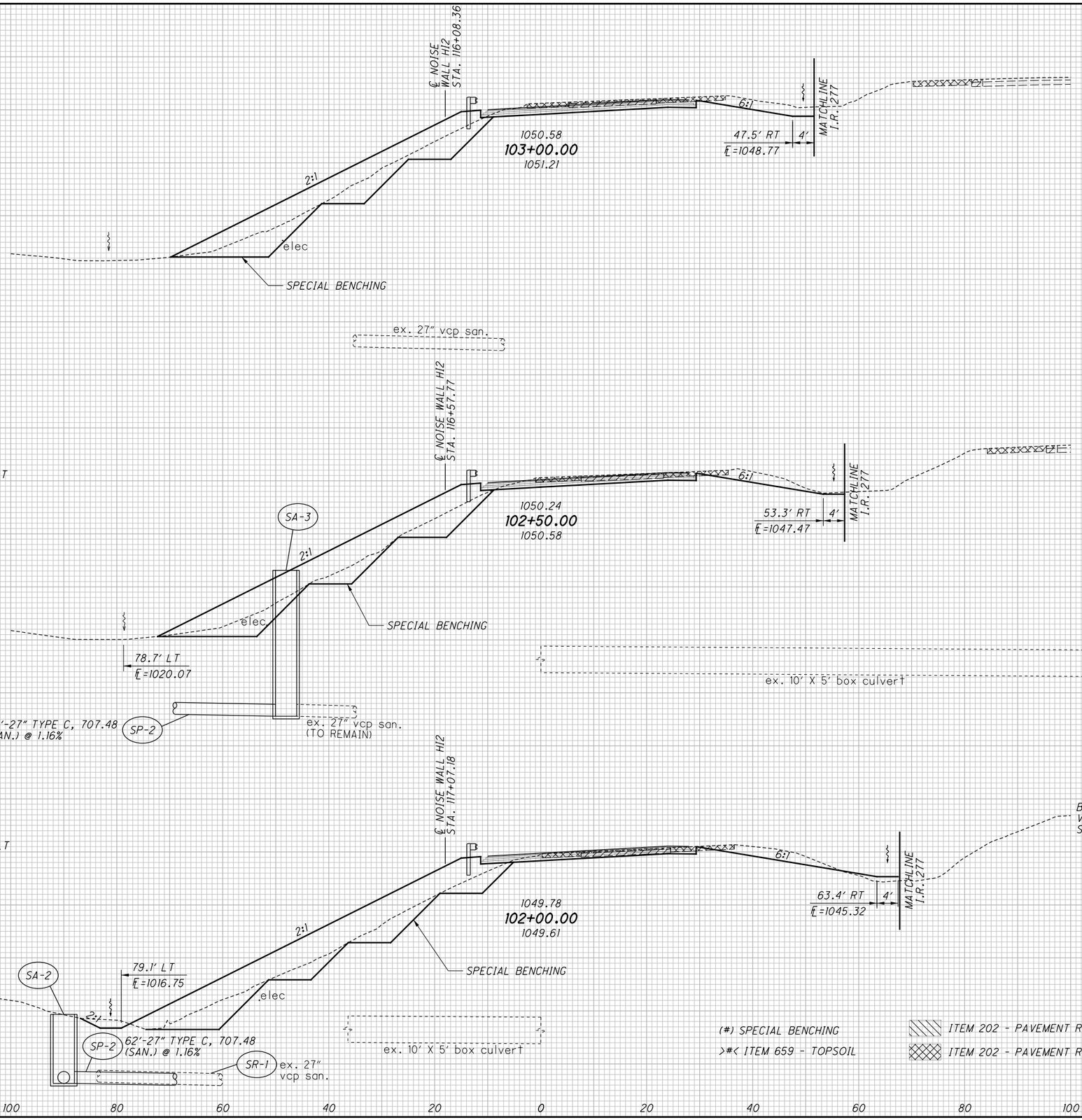


| END AREA CUT | END AREA FILL | VOLUME CUT | VOLUME FILL |
|---|---|---|---|
| | | | >11< |
| | | (289) | (289) |
| | | 156 | 301 |
| | >7< | | |
| (148) | (148) | | |
| 79 | 190 | | |
| | | | >14< |
| | | (249) | (249) |
| | | 132 | 400 |
| | >8< | | |
| (121) | (121) | | |
| 64 | 242 | | |
| | | | >19< |
| | | (246) | (246) |
| | | 118 | 507 |
| | >12< | | |
| | >0< | | |
| (145) | (145) | | |
| 63 | 306 | | |
| | | | >44< |
| | | (784) | (784) |
| | | 406 | 1208 |

CALCULATED CJC
CHECKED PJF

# CROSS SECTIONS - RAMP A
## STA. 102+00.00 TO STA. 103+00.00

SUM-77 / 277 / 224
VARIOUS

649
1288

0:\2017\2017258\ProjectData\SUM\06002\Design\Roadway\Sheets\06002_XS101.dgn Sheet 1/15/2021 9:36:59 AM pfry

| SEEDING END WIDTH | SEEDING SQ. YDS. |
|---|---|
| | 24 |
| 40 | |
| | 314 |
| 73 | |
| | 439 |
| 85 | |
| | 777 |




| END AREA CUT | END AREA FILL | VOLUME CUT | VOLUME FILL |
|---|---|---|---|
| | | (20) | (20) |
| | | 12 | 2 |
| (103) | (103) | | |
| 67 | 10 | | |
| | | (263) | (263) |
| | | 123 | 94 |
| (181) | (181) | | |
| 66 | 91 | | |
| | | (319) | (319) |
| | | 144 | 209 |
| (164) | (164) | | |
| 89 | 135 | | |
| | | (602) | (602) |
| | | 279 | 305 |

CALCULATED CJC
CHECKED PJF

# CROSS SECTIONS - RAMP A
## STA. 103+50.00 TO STA. 104+50.00

SUM-77 / 277 / 224
VARIOUS

650
1288

D:\2017\2017258\ProjectData\SUM\106002\Design\Roadway\Sheets\106002_XS101.dgn Sheet 1/15/2021 9:37:02 AM pfry

| SEEDING END WIDTH | SEEDING SQ. YDS. |
|---|---|
| | 253 |
| | |
| | |
| 47 | |
| | |
| | |
| | 308 |
| | |
| | |
| 64 | |
| | |
| | |
| | 258 |
| | |
| | |
| 40 | |
| | |
| | |
| | 819 |

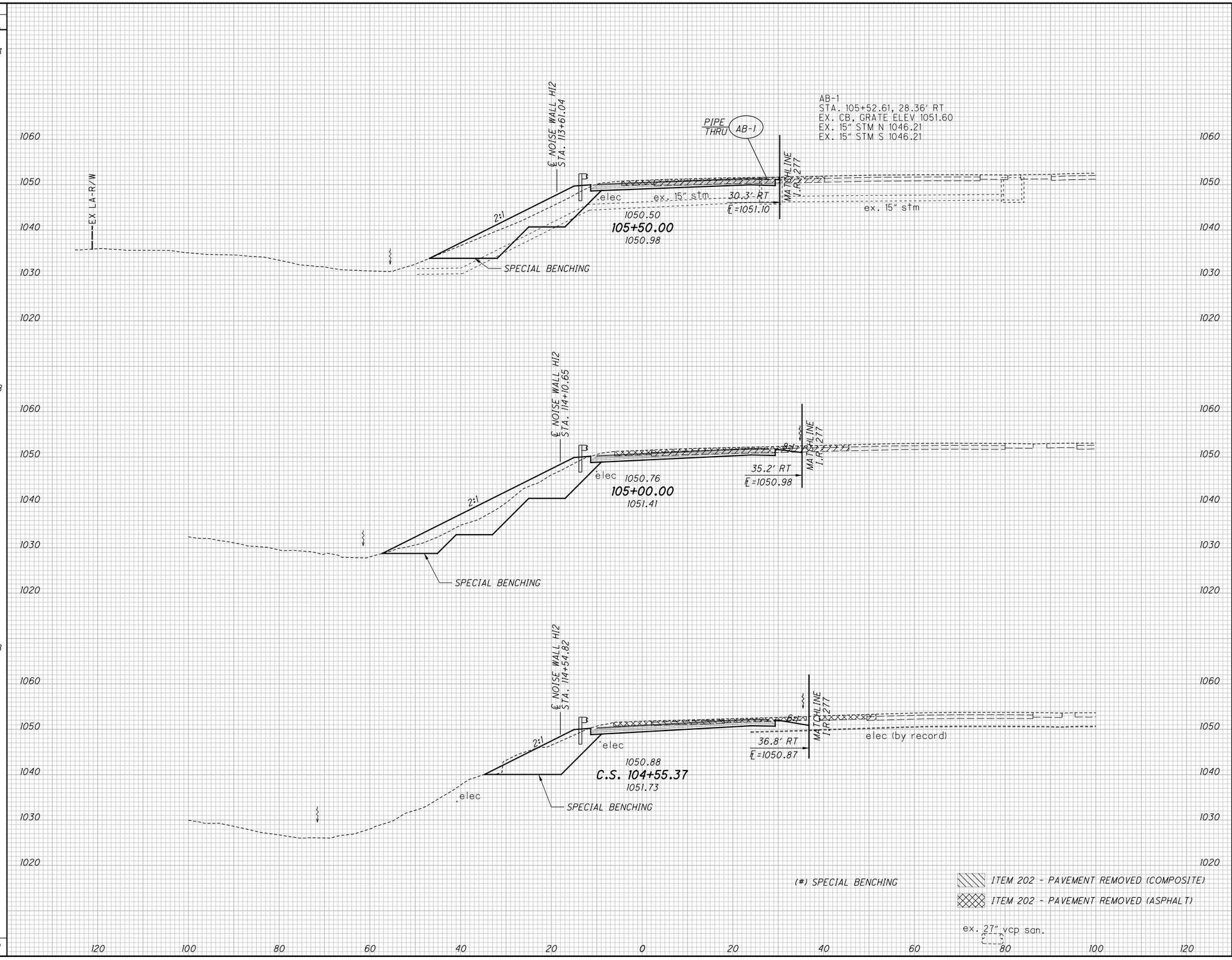


| END AREA CUT | END AREA FILL | VOLUME CUT | VOLUME FILL |
|---|---|---|---|
| | | (244) | (244) |
| | | 53 | 90 |
| | | | |
| | | | |
| (135) | (135) | | |
| 30 | 47 | | |
| | | | |
| | | | |
| | | | |
| | | (269) | (269) |
| | | 61 | 122 |
| | | | |
| | | | |
| | | | |
| | | | |
| (156) | (156) | | |
| 36 | 85 | | |
| | | | |
| | | | |
| | | | |
| | | (214) | (214) |
| | | 78 | 81 |
| | | | |
| | | | |
| | | | |
| (103) | (103) | | |
| 58 | 13 | | |
| | | | |
| | | | |
| | | | |
| | | (727) | (727) |
| | | 192 | 293 |

CALCULATED CJC
CHECKED PJF

# CROSS SECTIONS - RAMP A
## STA. 104+55.37 TO STA. 105+50.00

SUM-77 / 277 / 224
VARIOUS

651
1288

0:\2017\2017258\ProjectData\SUM\06002\Design\Roadway\Sheets\06002_XS101.dgn Sheet 1/15/2021 9:37:04 AM pfry

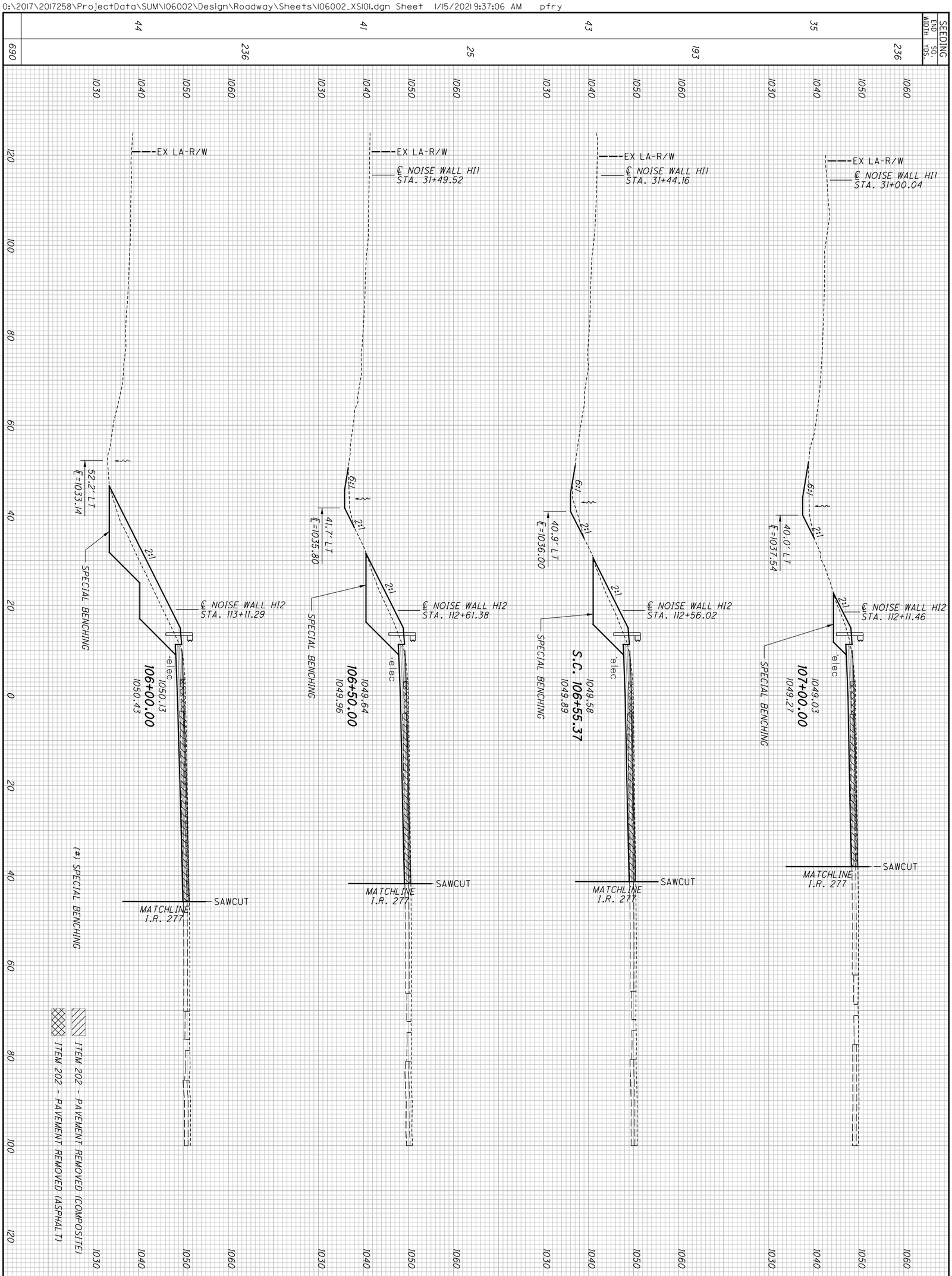
EX LA-R/W
℄ NOISE WALL HI1
STA. 31+00.04
℄ NOISE WALL HI2
STA. 112+11.46
40.0' LT
E=1037.54
SPECIAL BENCHING
1049.03
107+00.00
1049.27
SAWCUT
MATCHLINE
I.R. 277
EX LA-R/W
℄ NOISE WALL HI1
STA. 31+44.16
℄ NOISE WALL HI2
STA. 112+56.02
40.9' LT
E=1036.00
SPECIAL BENCHING
1049.58
S.C. 106+55.37
1049.89
SAWCUT
MATCHLINE
I.R. 277
EX LA-R/W
℄ NOISE WALL HI1
STA. 31+49.52
℄ NOISE WALL HI2
STA. 112+61.38
41.7' LT
E=1035.80
SPECIAL BENCHING
1049.64
106+50.00
1049.96
SAWCUT
MATCHLINE
I.R. 277
EX LA-R/W
℄ NOISE WALL HI2
STA. 113+11.29
52.2' LT
E=1033.14
SPECIAL BENCHING
1050.13
106+00.00
1050.43
SAWCUT
MATCHLINE
I.R. 277
(#) SPECIAL BENCHING
ITEM 202 - PAVEMENT REMOVED (COMPOSITE)
ITEM 202 - PAVEMENT REMOVED (ASPHALT)
SEEDING
END WIDTH
SQ. YDS.
END AREA
CUT
FILL
VOLUME
CUT
FILL

| | | |

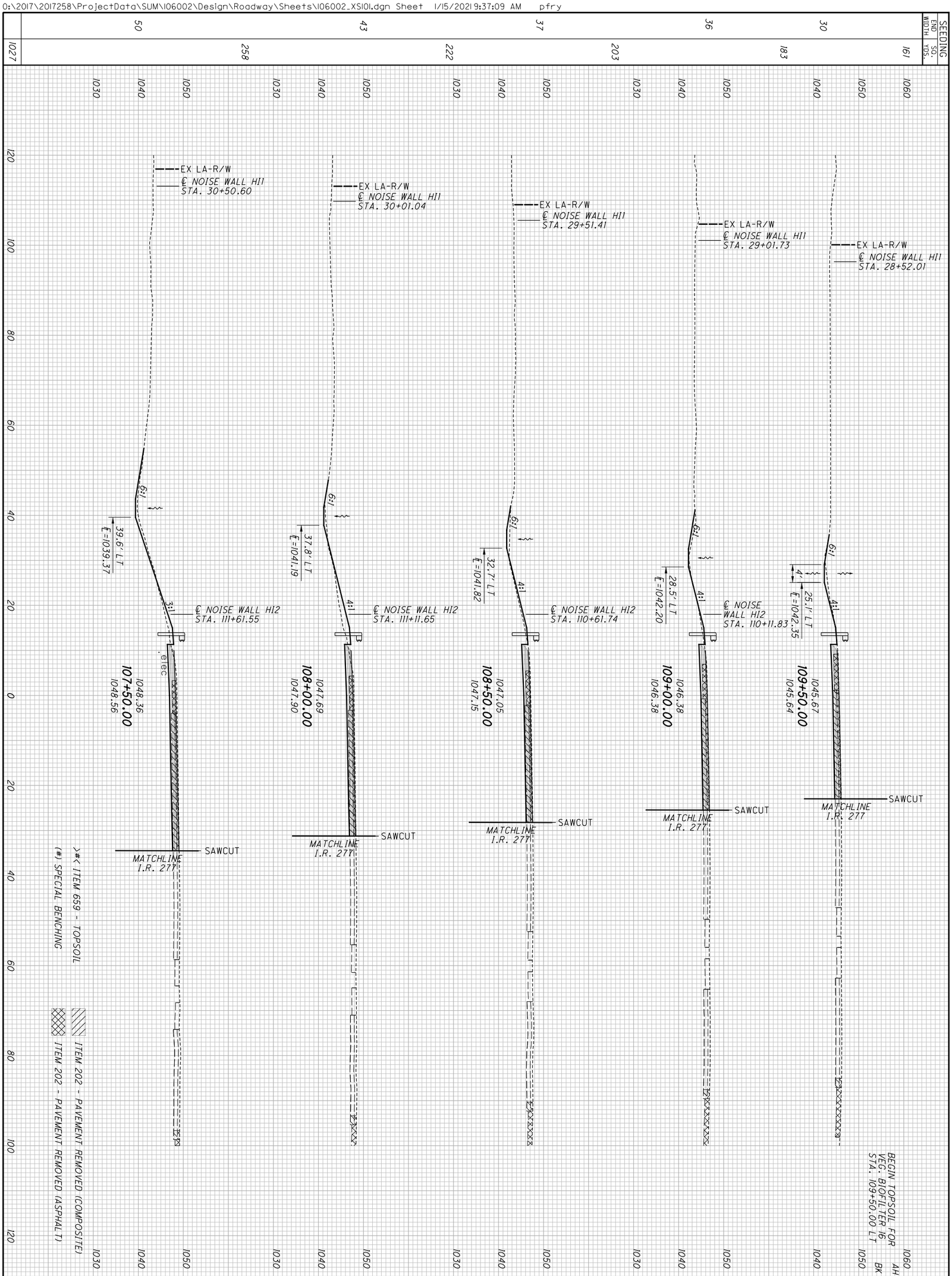


| SEEDING END WIDTH | SEEDING SQ. YDS. | END AREA CUT | END AREA FILL | VOLUME CUT | VOLUME FILL |
|---|---|---|---|---|---|
| 50 | 258 | 33 | 7 | 204 | 49 |
| 43 | 222 | 23 | 15 | 52 | 20 |
| 37 | 203 | 24 | 5 | 44 | 19 |
| 36 | 183 | 18 | 2 | 39 | 6 |
| 30 | 161 | 18 | 1 | 33 | 3 |
| | | >3< | >0< | 36 | 1 |
| | | (0) | (0) | | >6< |

AH
BK

| | | |
|---|---|---|
| 653 1288 | SUM-77/277/224<br>VARIOUS | CROSS SECTIONS - RAMP A<br>STA. 107+50.00 TO STA. 109+50.00 |

CALCULATED CJC
CHECKED PJF

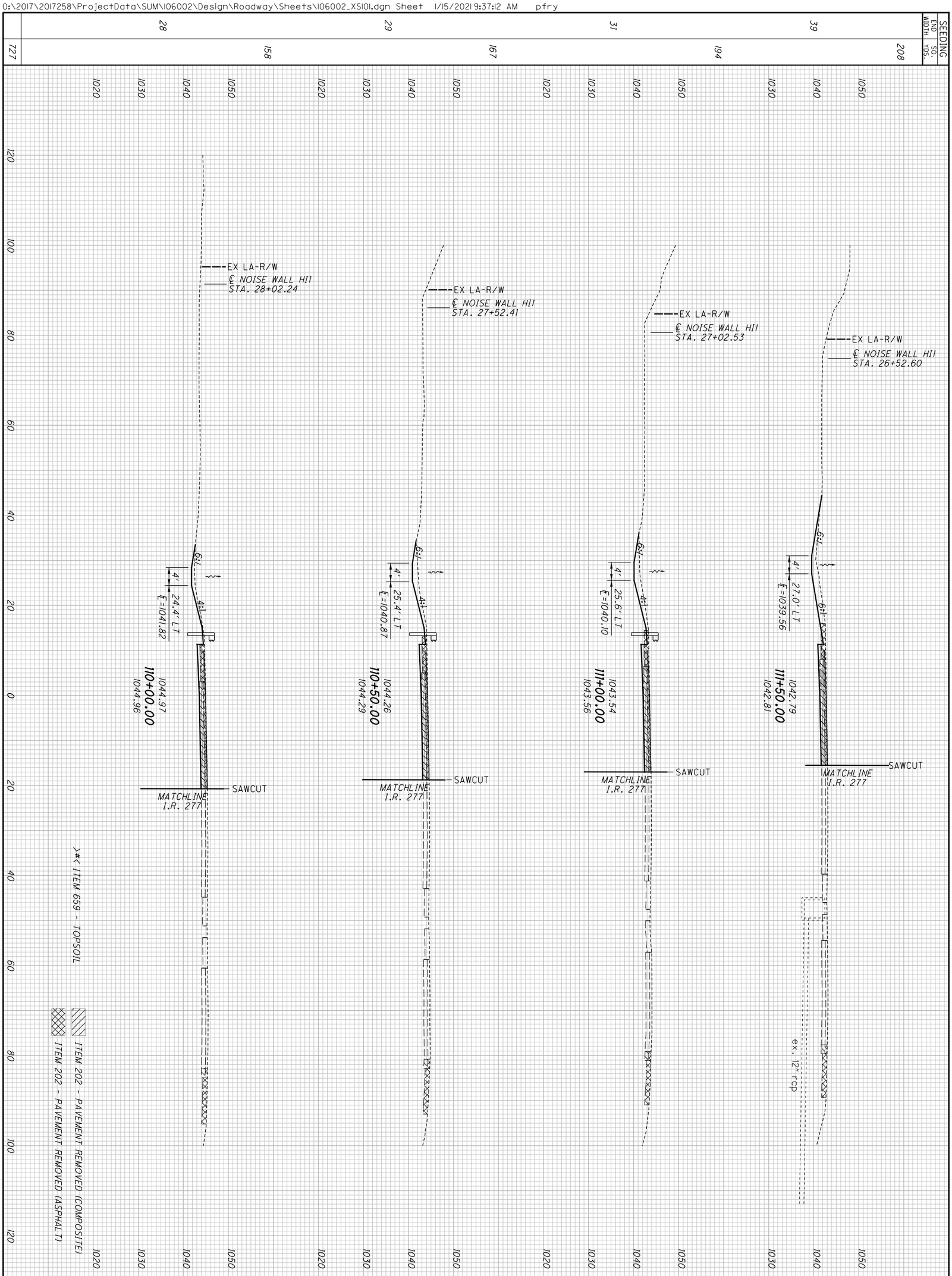


| SUM-77/277/224 VARIOUS | CROSS SECTIONS - RAMP A STA. 110+00.00 TO STA. 111+50.00 | CALCULATED CJC CHECKED PJF |
|---|---|---|
| 654 1288 | | |

O:\2017\2017258\ProjectData\SUM\106002\Design\Roadway\Sheets\106002_XS101.dgn Sheet 1/15/2021 9:37:14 AM pfry

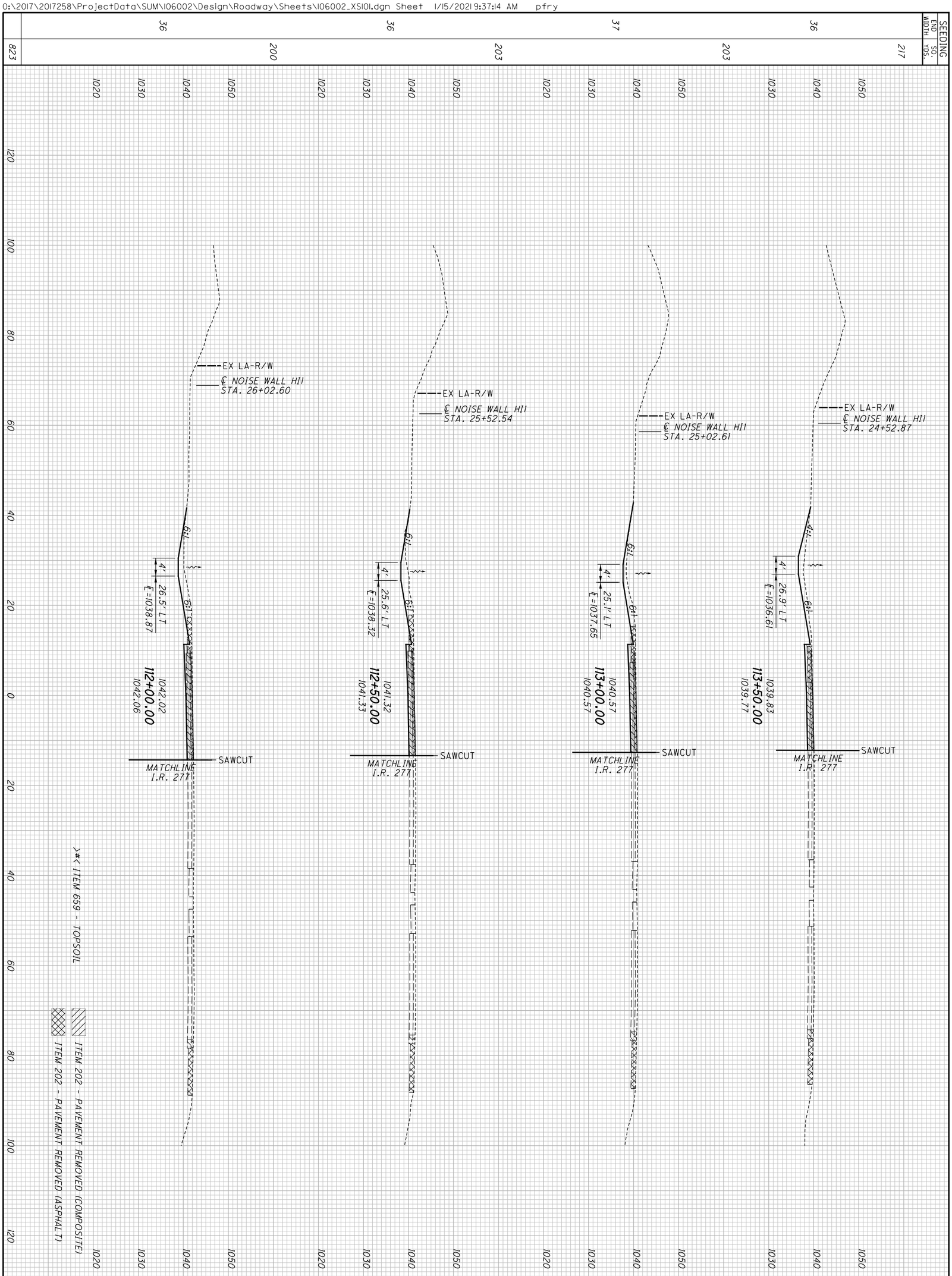


| | | |
|---|---|---|
| 655 / 1288 | **SUM-77 / 277 / 224**<br>**VARIOUS** | **CROSS SECTIONS - RAMP A**<br>**STA. 112+00.00 TO STA. 113+50.00** |

CALCULATED CJC
CHECKED PJF

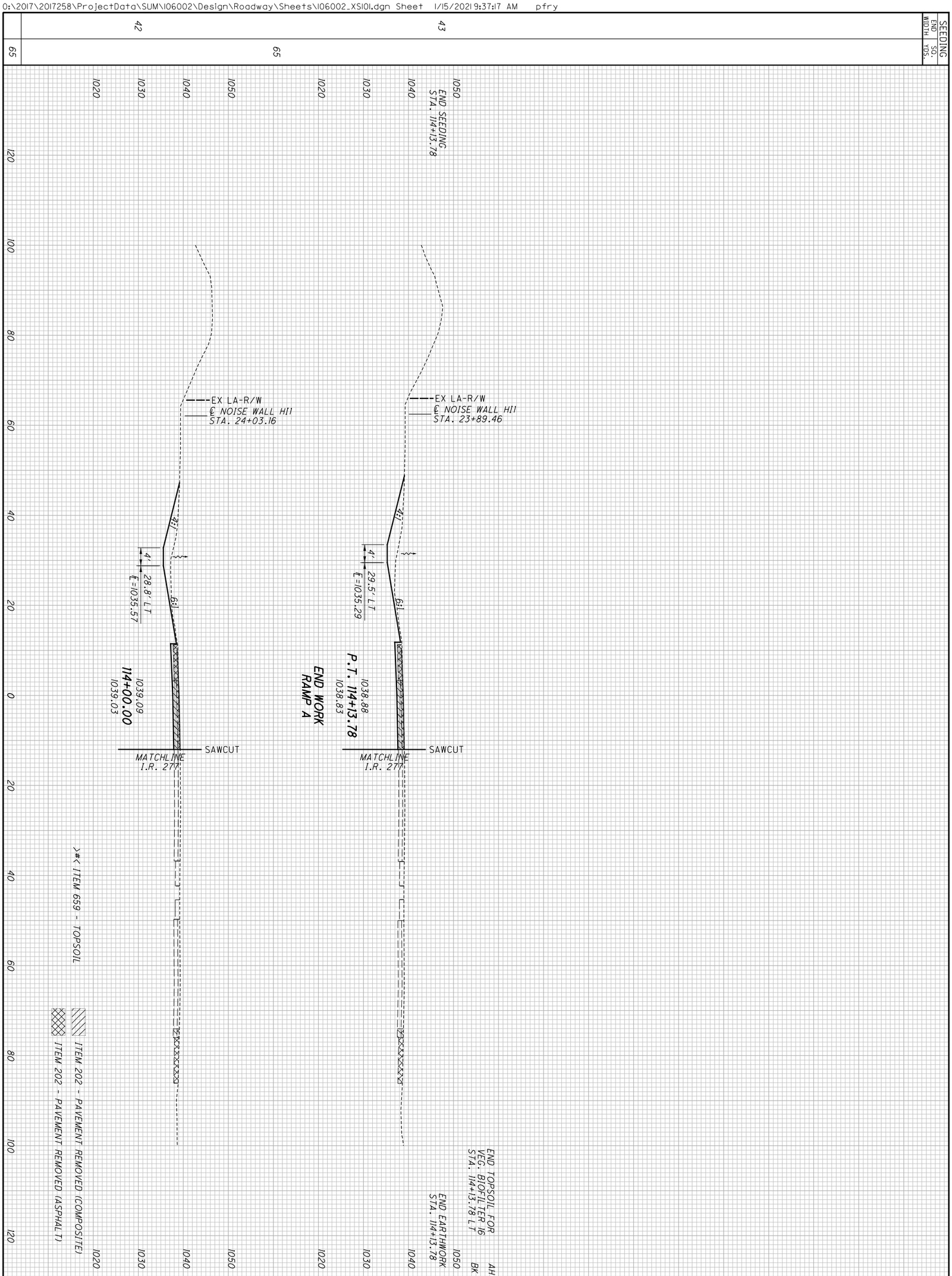


656
1288

**SUM-77/277/224**
**VARIOUS**

# CROSS SECTIONS - RAMP A
## STA. 114+00.00 TO STA. 114+13.78

CALCULATED CJC
CHECKED PJF

| SEEDING END WIDTH | SEEDING SQ. YDS. |
|---|---|
| 33 | 178 |
| | 186 |
| 34 | 214 |
| 43 | 228 |
| 49 | 806 |

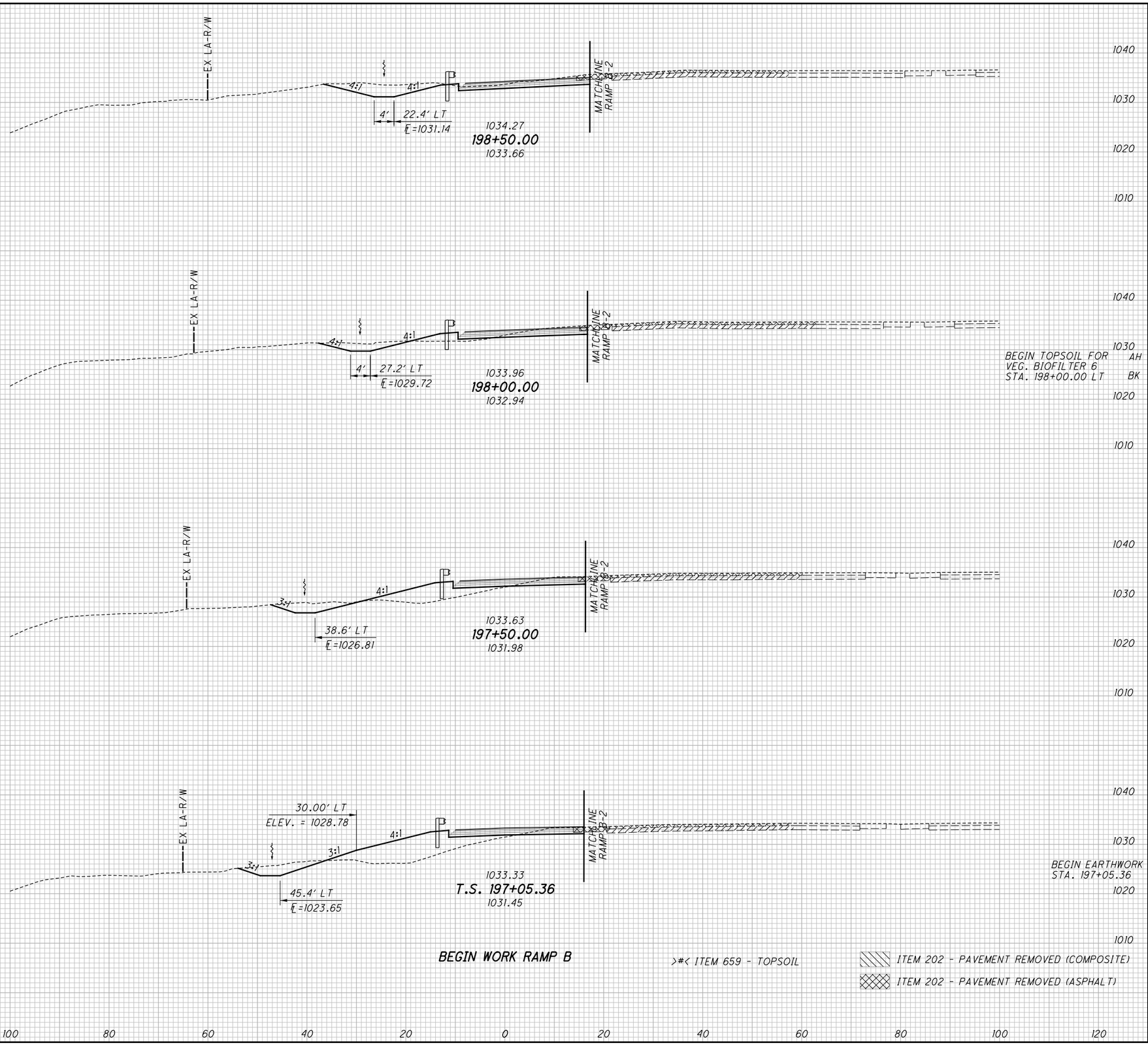


| END AREA CUT | END AREA FILL | VOLUME CUT | VOLUME FILL |
|---|---|---|---|
| | | | >5< |
| | | 180 | 1 |
| | >3< | | |
| 70 | 1 | | |
| | | | >7< |
| | | 105 | 11 |
| | >5< | | |
| | >0< | | |
| 43 | 11 | | |
| | | 74 | 59 |
| 37 | 53 | | |
| | | 59 | 130 |
| 34 | 104 | | |
| | | 418 | >12< |
| | | | 201 |

CALCULATED CJC
CHECKED PJF

# CROSS SECTIONS - RAMP B
## STA. 197+05.36 TO STA. 198+50.00

SUM-77 / 277 / 224
VARIOUS

657
1288

O:\2017\2017258\ProjectData\SUM\06002\Design\Roadway\Sheets\06002_XS02.dgn Sheet 1/14/2021 4:22:40 PM pfry

| SEEDING END WIDTH | SEEDING SQ. YDS. | END AREA CUT | END AREA FILL | VOLUME CUT | VOLUME FILL |
|---|---|---|---|---|---|
| | 194 | | | 430 | >7< 0 |
| 35 | | 212 | >4< 0 | | |
| | 200 | | | 376 | >6< 0 |
| 37 | | 194 | >2< 0 | | |
| | 171 | | | 268 | >3< 0 |
| 32 | | 130 | >2< 0 | | |
| | 19 | | | 25 | >0< 0 |
| 31 | | 124 | >2< 0 | | |
| | 584 | | | 1099 | >16< 0 |

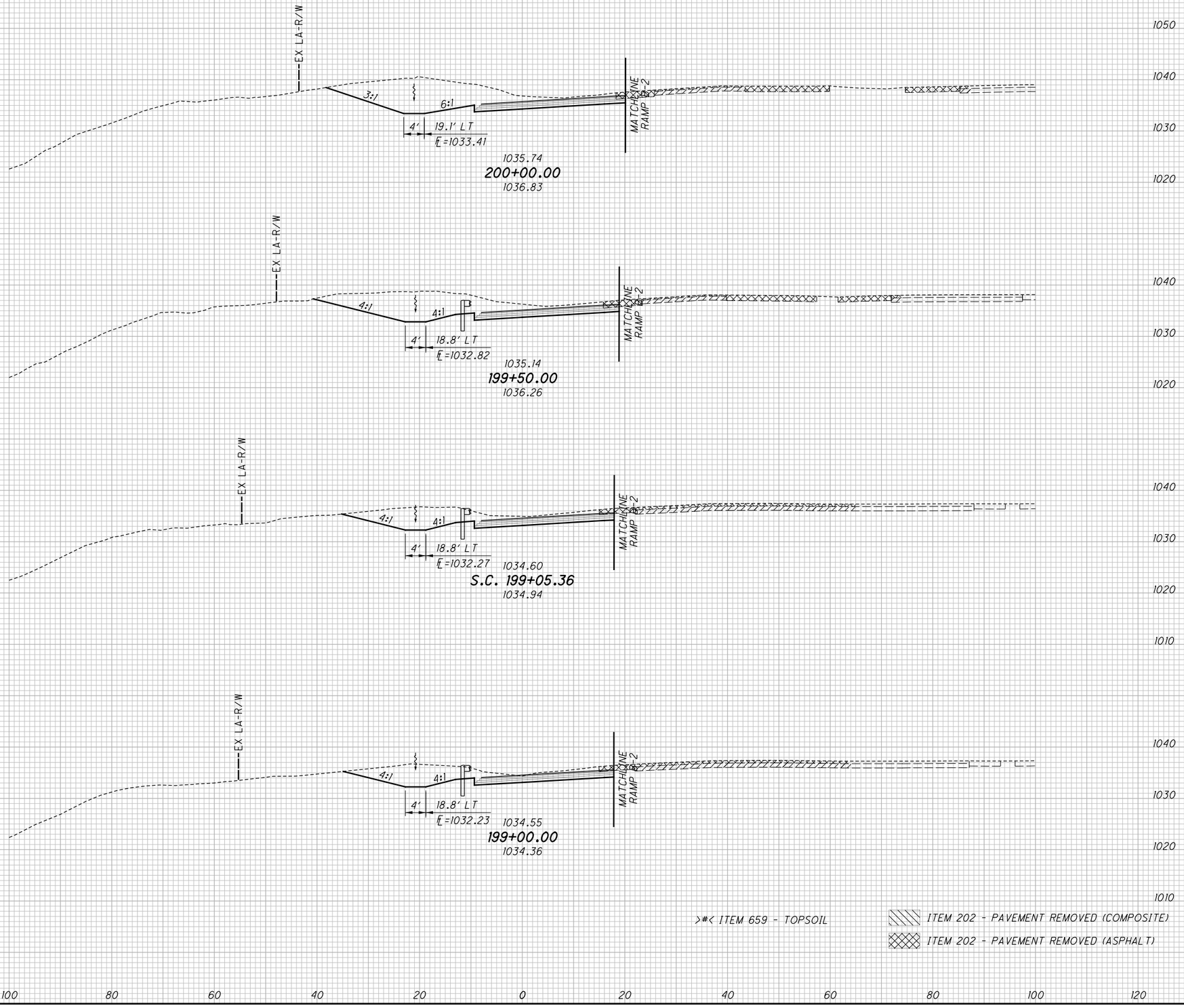


>#< ITEM 659 - TOPSOIL

ITEM 202 - PAVEMENT REMOVED (COMPOSITE)

ITEM 202 - PAVEMENT REMOVED (ASPHALT)

CALCULATED CJC

CHECKED PJF

# CROSS SECTIONS - RAMP B
## STA. 199+00.00 TO STA. 200+00.00

SUM-77 / 277 / 224
VARIOUS

658
1288

0:\2017\2017258\ProjectData\SUM\06002\Design\Roadway\Sheets\06002_XS102.dgn Sheet 1/14/2021 4:22:42 PM pfry

# CROSS SECTIONS - RAMP B
## STA. 200+50.00 TO STA. 202+00.00

CALCULATED CJC
CHECKED PJF

| SEEDING END WIDTH | SEEDING SQ. YDS. | END AREA CUT | END AREA FILL | VOLUME CUT | VOLUME FILL |
|---|---|---|---|---|---|
| | 189 | | | 428 | >7< 0 |
| 37 | | 258 | >4< 0 | | |
| | 231 | | | 495 | >7< 0 |
| 46 | | 277 | >4< 0 | | |
| | 233 | | | 505 | >7< 0 |
| 38 | | 268 | >4< 0 | | |
| | 203 | | | 481 | >7< 0 |
| 35 | | 252 | >4< 0 | | |
| | 856 | | | 1909 | >28< 0 |

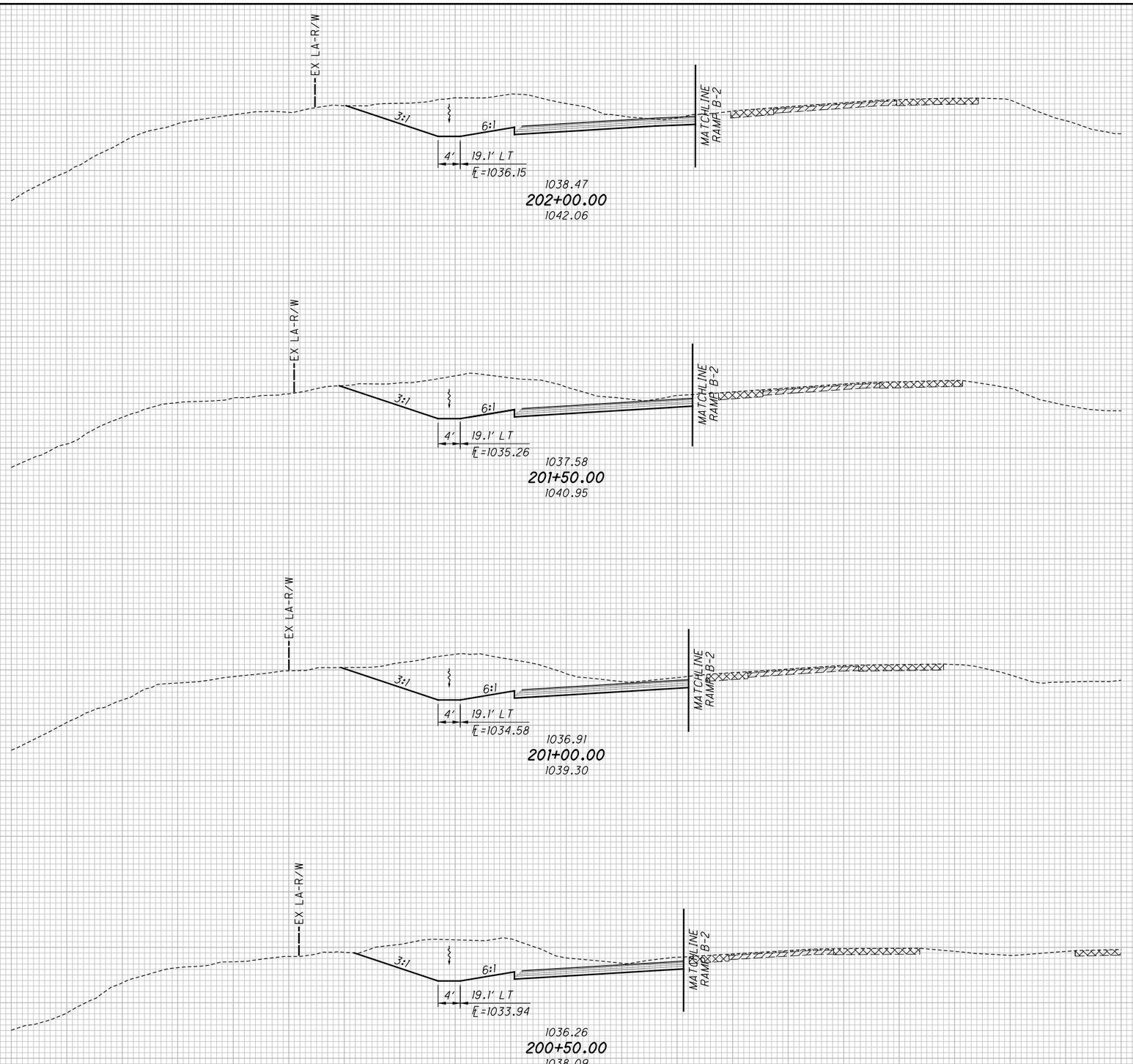


>#< ITEM 659 - TOPSOIL

ITEM 202 - PAVEMENT REMOVED (COMPOSITE)

ITEM 202 - PAVEMENT REMOVED (ASPHALT)

SUM-77 / 277 / 224
VARIOUS

659
1288

O:\2017\2017258\ProjectData\SUM\06002\Design\Roadway\Sheets\06002_XS02.dgn Sheet 1/14/2021 4:22:45 PM pfry

| SEEDING END WIDTH | SEEDING SQ. YDS. |
|---|---|
| | 2 |
| 35 | |
| | 187 |
| 33 | |
| | 164 |
| 26 | |
| | 158 |
| 31 | |
| | 511 |

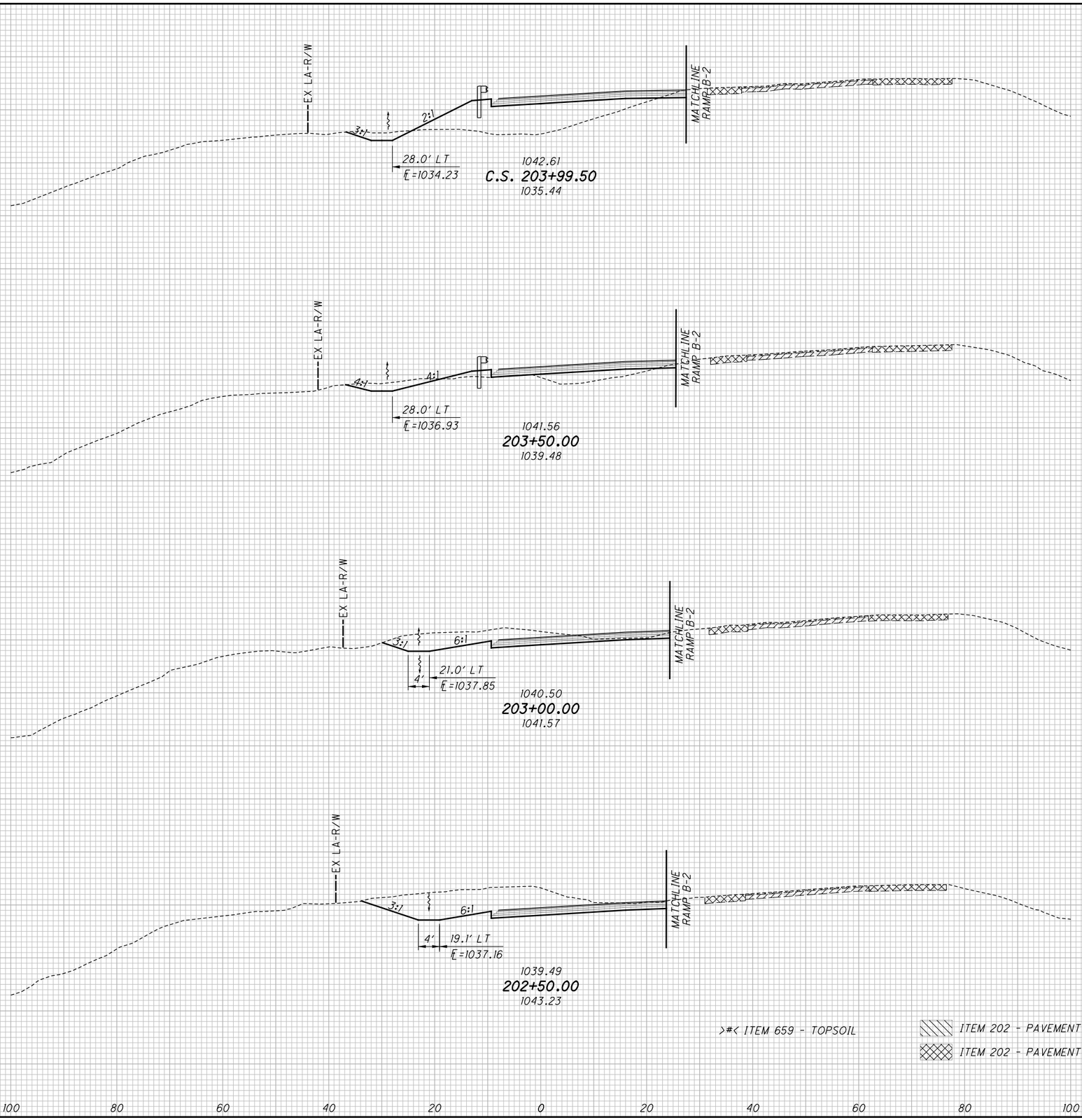


>#< ITEM 659 - TOPSOIL

ITEM 202 - PAVEMENT REMOVED (COMPOSITE)

ITEM 202 - PAVEMENT REMOVED (ASPHALT)

| END AREA CUT | END AREA FILL | VOLUME CUT | VOLUME FILL |
|---|---|---|---|
| | | 0 | 3 |
| 16 | 174 | | |
| | | 33 | 196 |
| 20 | 40 | | |
| | | 119 | 37 |
| 108 | >0< | | |
| | >4< 0 | | |
| | | 289 | >7< 0 |
| 204 | >4< 0 | | |
| | | 441 | >7< 236 |

CALCULATED CJC
CHECKED PJF

# CROSS SECTIONS - RAMP B
## STA. 202+50.00 TO STA. 203+99.50

SUM-77 / 277 / 224
VARIOUS

660
1288

0:\2017\2017258\ProjectData\SUM\06002\Design\Roadway\Sheets\06002_XS02.dgn Sheet 1/14/2021 4:22:47 PM pfry

| SEEDING END WIDTH | SEEDING SQ. YDS. |
|---|---|
| | 383 |
| 65 | |
| | 303 |
| 44 | |
| | 219 |
| 35 | |
| | 905 |

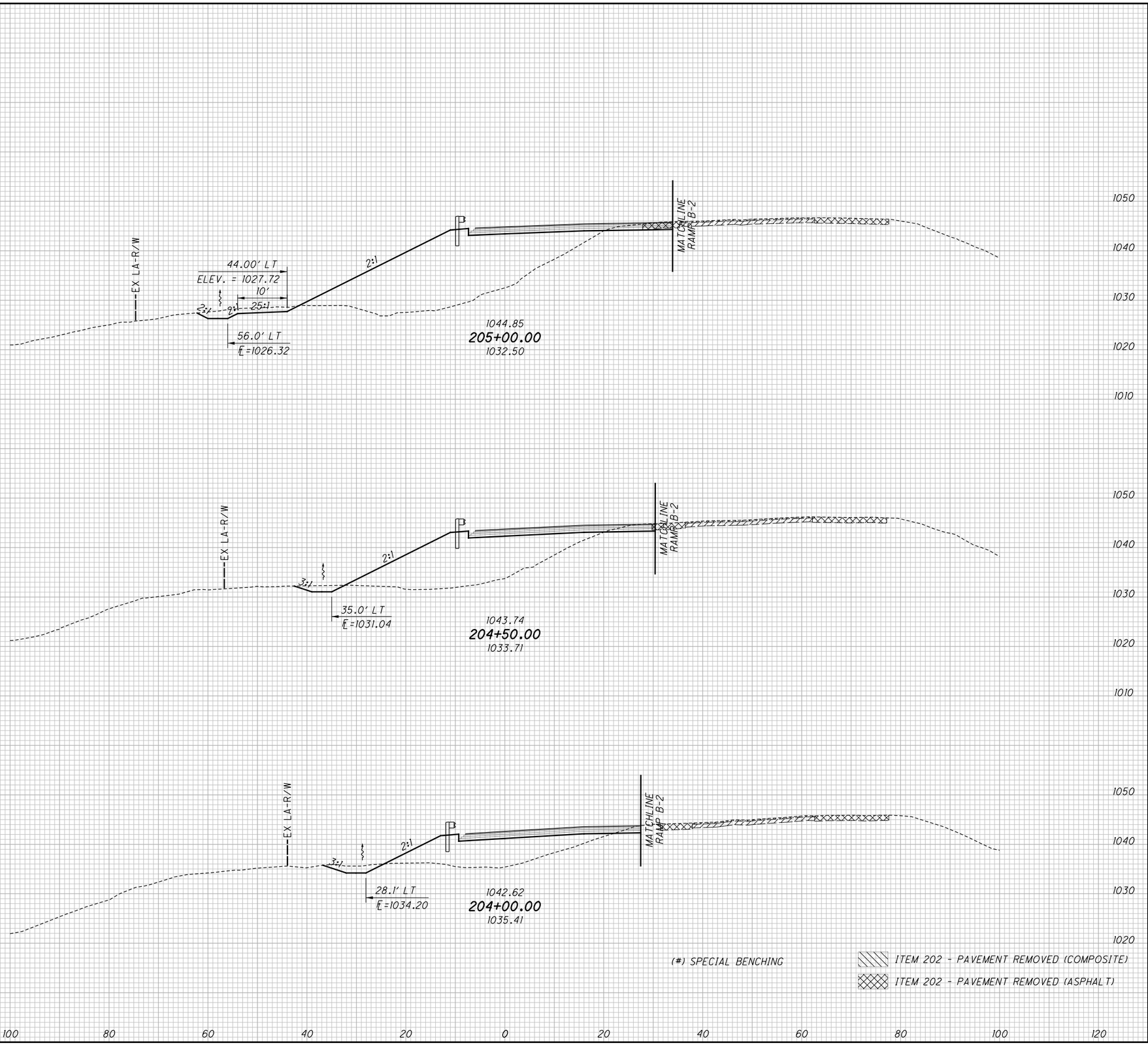


| END AREA CUT | END AREA FILL | VOLUME CUT | VOLUME FILL |
|---|---|---|---|
| | | (101) | (101) |
| | | 44 | 1104 |
| (0) | (0) | | |
| 28 | 513 | | |
| | | 44 | 769 |
| 19 | 317 | | |
| | | 33 | 456 |
| 17 | 175 | | |
| | | (101) | (101) |
| | | 121 | 2329 |

CALCULATED CJC
CHECKED PJF

# CROSS SECTIONS - RAMP B
## STA. 204+00.00 TO STA. 205+00.00

SUM-77 / 277 / 224
VARIOUS

661
1288

O:\2017\2017258\ProjectData\SUM\06002\Design\Roadway\Sheets\06002_XS02.dgn Sheet 1/14/2021 4:22:50 PM pfry

| SEEDING | |
|---|---|
| END WIDTH | SQ. YDS. |
| | 5 |
| | 89 |
| | 446 |
| | 73 |
| | 451 |

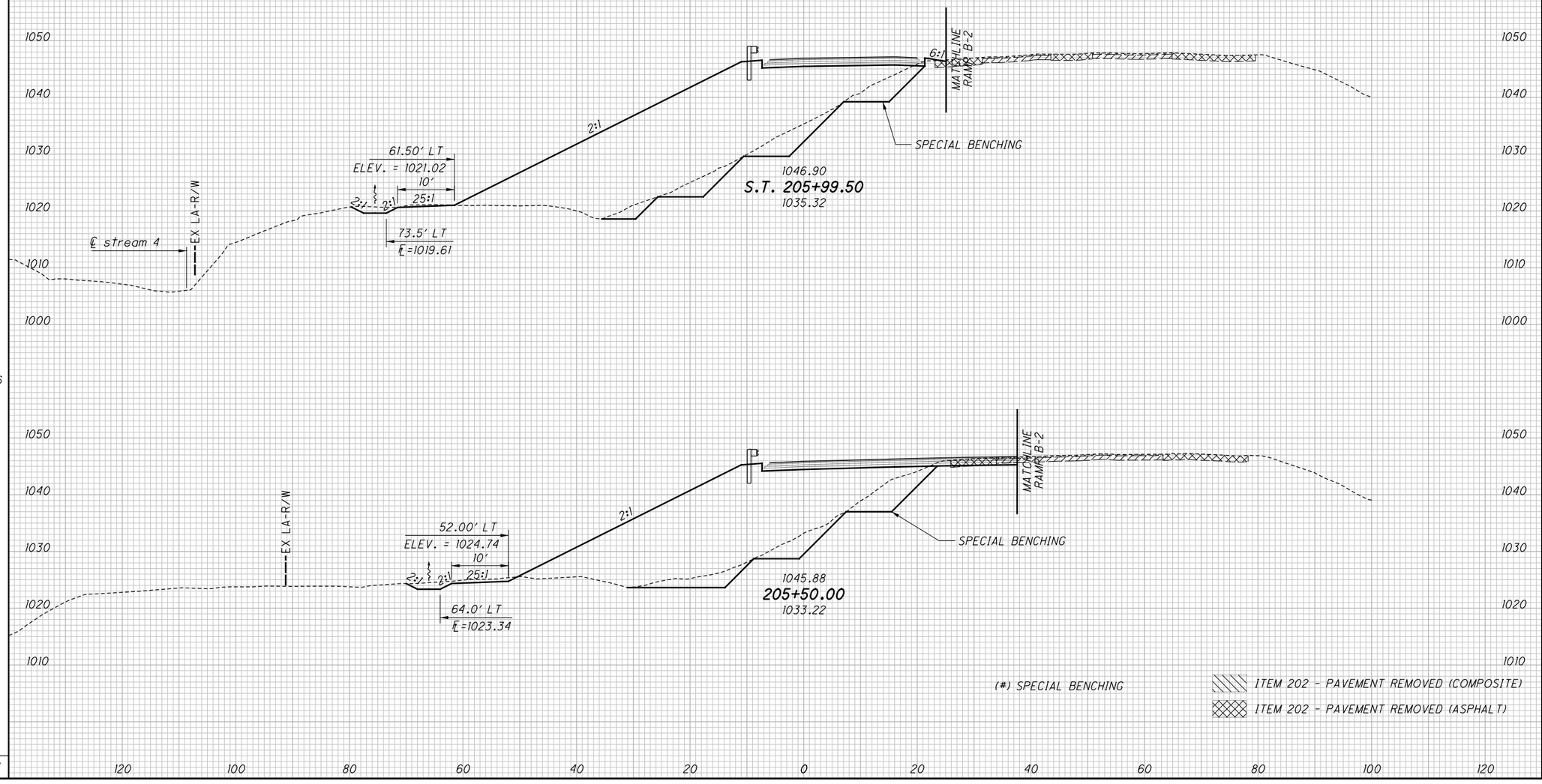


| END AREA | | VOLUME | |
|---|---|---|---|
| CUT | FILL | CUT | FILL |
| | | (2) | (2) |
| | | 0 | 15 |
| (111) | (111) | | |
| 10 | 829 | | |
| | | (202) | (202) |
| | | 28 | 1382 |
| (109) | (109) | | |
| 20 | 679 | | |
| | | (204) | (204) |
| | | 28 | 1397 |

CALCULATED CJC
CHECKED PJF

# CROSS SECTIONS - RAMP B
## STA. 205+50.00 TO STA. 205+99.50

SUM-77 / 277 / 224
VARIOUS

662
1288

O:\2017\2017258\ProjectData\SUM\106002\Design\Roadway\Sheets\106002_XS102.dgn Sheet 1/14/2021 4:22:52 PM pfry

| SEEDING | |
|---|---|
| END WIDTH | SQ. YDS. |
| | 250 |
| 79 | |
| | 233 |
| 89 | |
| | 483 |

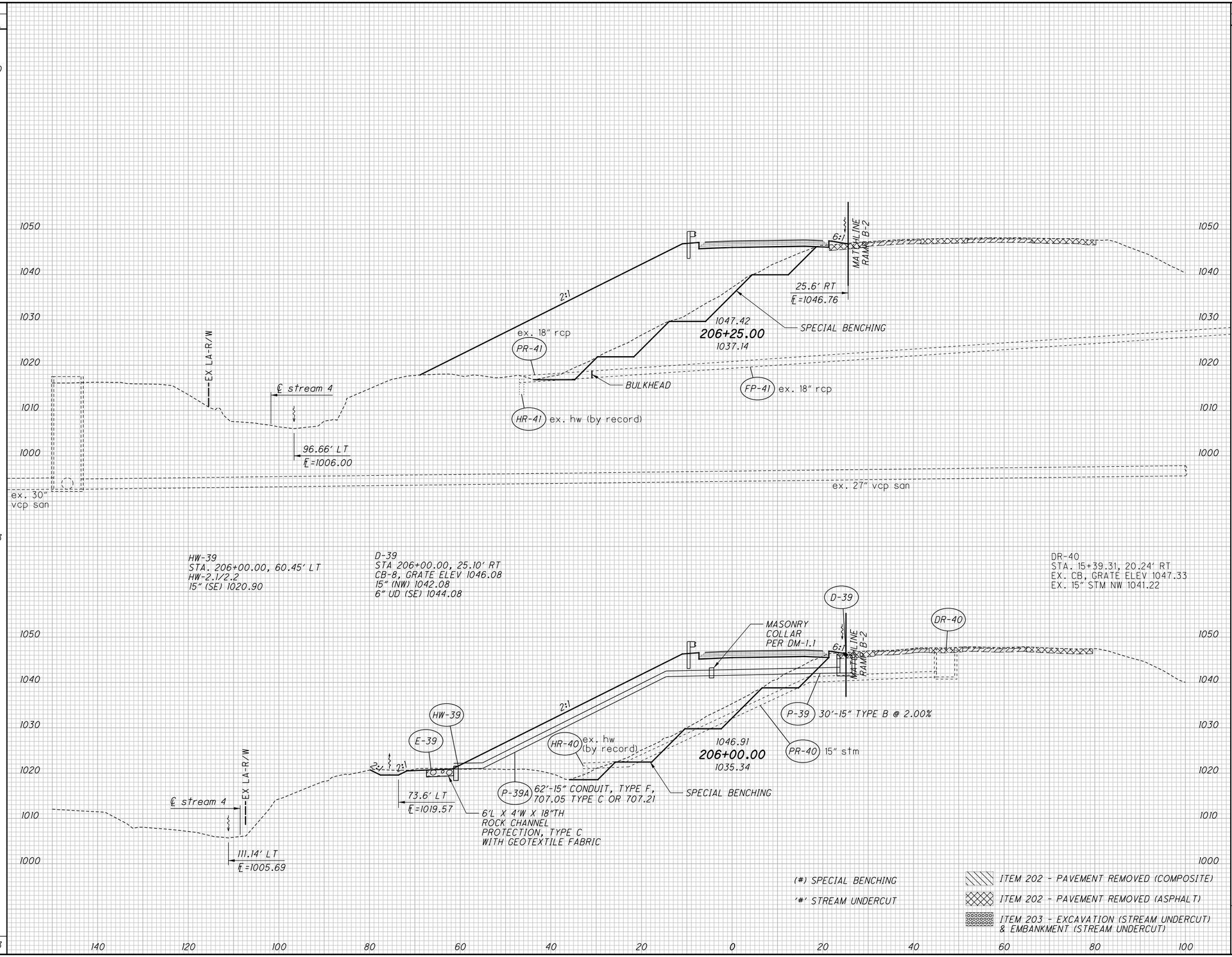


(#) SPECIAL BENCHING

'#' STREAM UNDERCUT

ITEM 202 - PAVEMENT REMOVED (COMPOSITE)

ITEM 202 - PAVEMENT REMOVED (ASPHALT)

ITEM 203 - EXCAVATION (STREAM UNDERCUT) & EMBANKMENT (STREAM UNDERCUT)

| END AREA | | VOLUME | |
|---|---|---|---|
| CUT | FILL | CUT | FILL |
| | | '15' | '15' |
| | | (136) | (136) |
| | | 14 | 860 |
| '0' | '0' | | |
| (107) | (107) | | |
| 1 | 886 | | |
| | | (102) | (102) |
| | | 5 | 795 |
| (114) | (114) | | |
| 10 | 831 | | |
| | | '15' | '15' |
| | | (238) | (238) |
| | | 19 | 1655 |

CALCULATED CJC
CHECKED PJF

# CROSS SECTIONS - RAMP B
## STA. 206+00.00 TO STA. 206+25.00

SUM-77 / 277 / 224
VARIOUS

663
1288

0:\2017\2017258\ProjectData\SUM\06002\Design\Roadway\Sheets\06002_XS02.dgn Sheet 1/14/2021 4:22:53 PM pfry

| SEEDING END WIDTH | SEEDING SQ. YDS. |
|---|---|
| | 714 |
| | |
| 122 | |
| | |
| | 619 |
| | |
| 101 | |
| | |
| | 1333 |

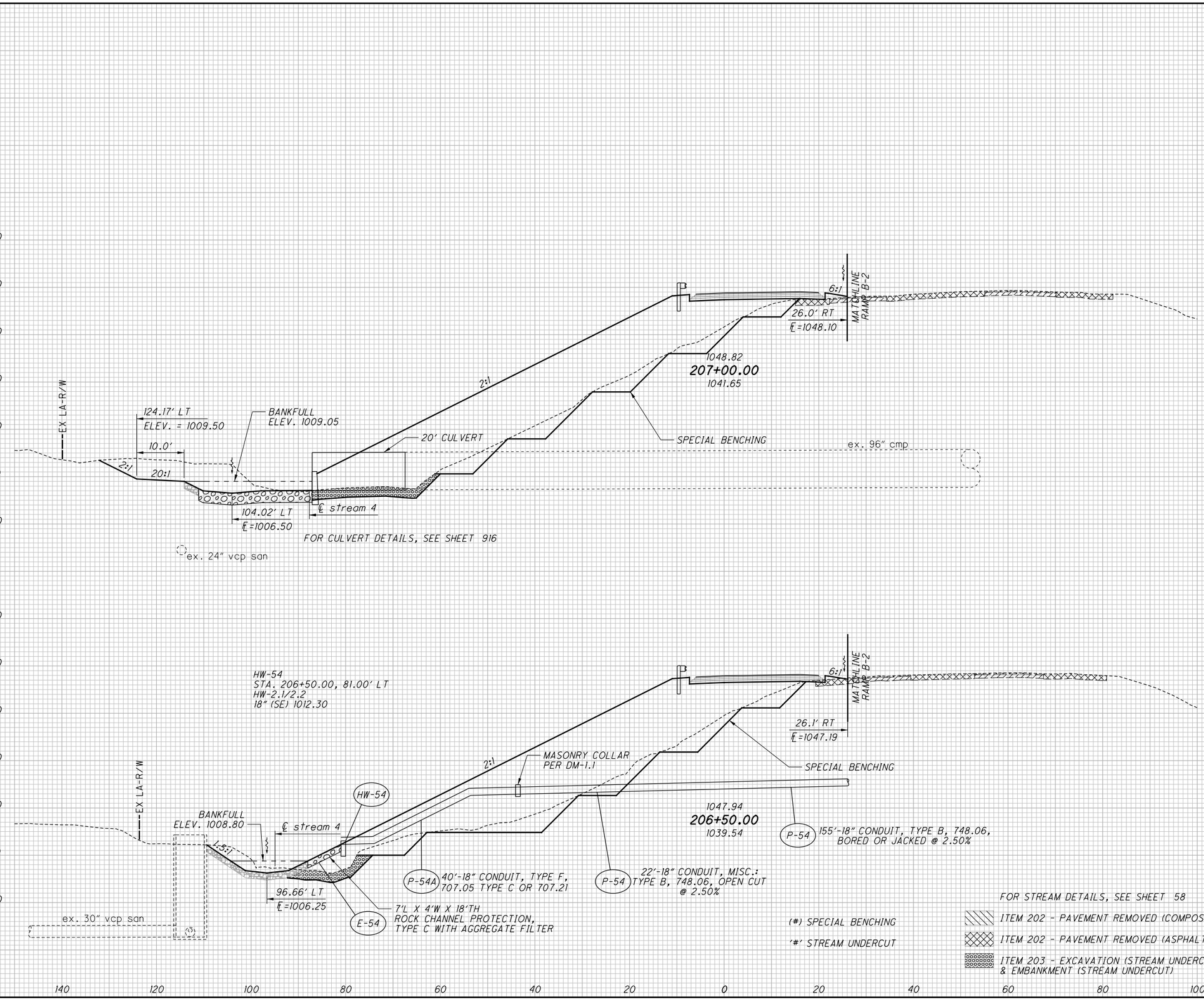


| END AREA CUT | END AREA FILL | VOLUME CUT | VOLUME FILL |
|---|---|---|---|
| | | '71' | '71' |
| | | (254) | (254) |
| | | 204 | 1656 |
| '51' | '51' | | |
| (142) | (142) | | |
| 136 | 998 | | |
| | | '77' | '77' |
| | | (304) | (304) |
| | | 154 | 1823 |
| '32' | '32' | | |
| (186) | (186) | | |
| 30 | 971 | | |
| | | '148' | '148' |
| | | (558) | (558) |
| | | 358 | 3479 |

CALCULATED CJC
CHECKED PJF

# CROSS SECTIONS - RAMP B
## STA. 206+50.00 TO STA. 207+00.00

SUM-77 / 277 / 224
VARIOUS

664
1288

0:\2017\2017258\ProjectData\SUM\06002\Design\Roadway\Sheets\06002_XS02.dgn Sheet 1/14/2021 4:22:56 PM pfry

| SEEDING END WIDTH | SEEDING SQ. YDS. |
|---|---|
| | 438 |
| 148 | |
| | 368 |
| 135 | |
| | 806 |

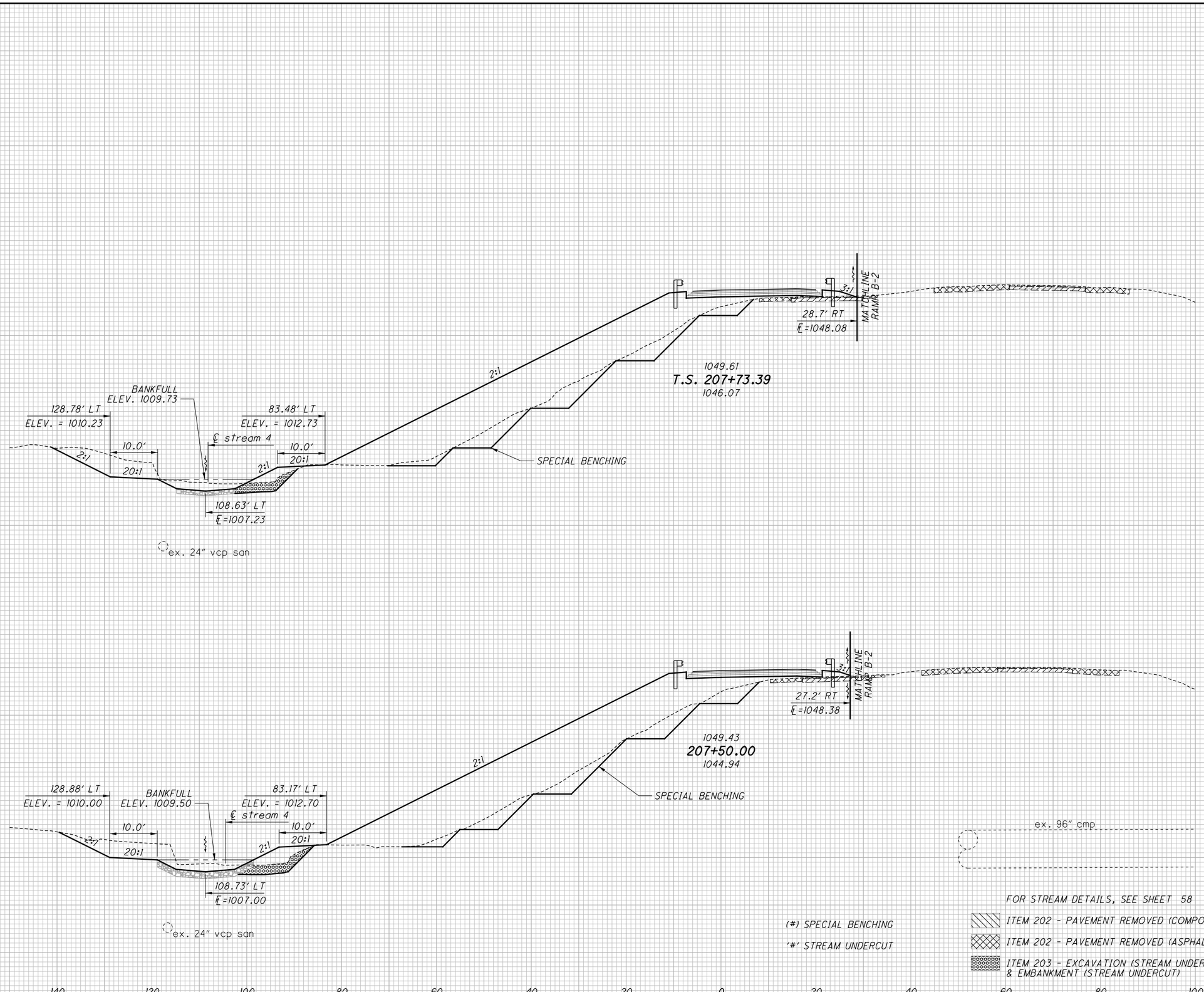


| END AREA CUT | END AREA FILL | VOLUME CUT | VOLUME FILL |
|---|---|---|---|
| | | '16' | '16' |
| | | (137) | (137) |
| | | 94 | 628 |
| '22' | '22' | | |
| (141) | (141) | | |
| 92 | 694 | | |
| '26' | '26' | '21' | '21' |
| (132) | (132) | (118) | (118) |
| 84 | 791 | 76 | 643 |
| | | '37' | '37' |
| | | (255) | (255) |
| | | 170 | 1271 |

CALCULATED CJC
CHECKED PJF

# CROSS SECTIONS - RAMP B
## STA. 207+50.00 TO STA. 207+73.39

SUM-77 / 277 / 224
VARIOUS



O:\2017\2017258\ProjectData\SUM\06002\Design\Roadway\Sheets\06002_XS02.dgn Sheet 1/14/2021 4:22:58 PM pfry

| SEEDING END WIDTH | SEEDING SQ. YDS. |
|---|---|
| | 853 |
| 151 | |
| | 831 |
| 148 | |
| | 1684 |

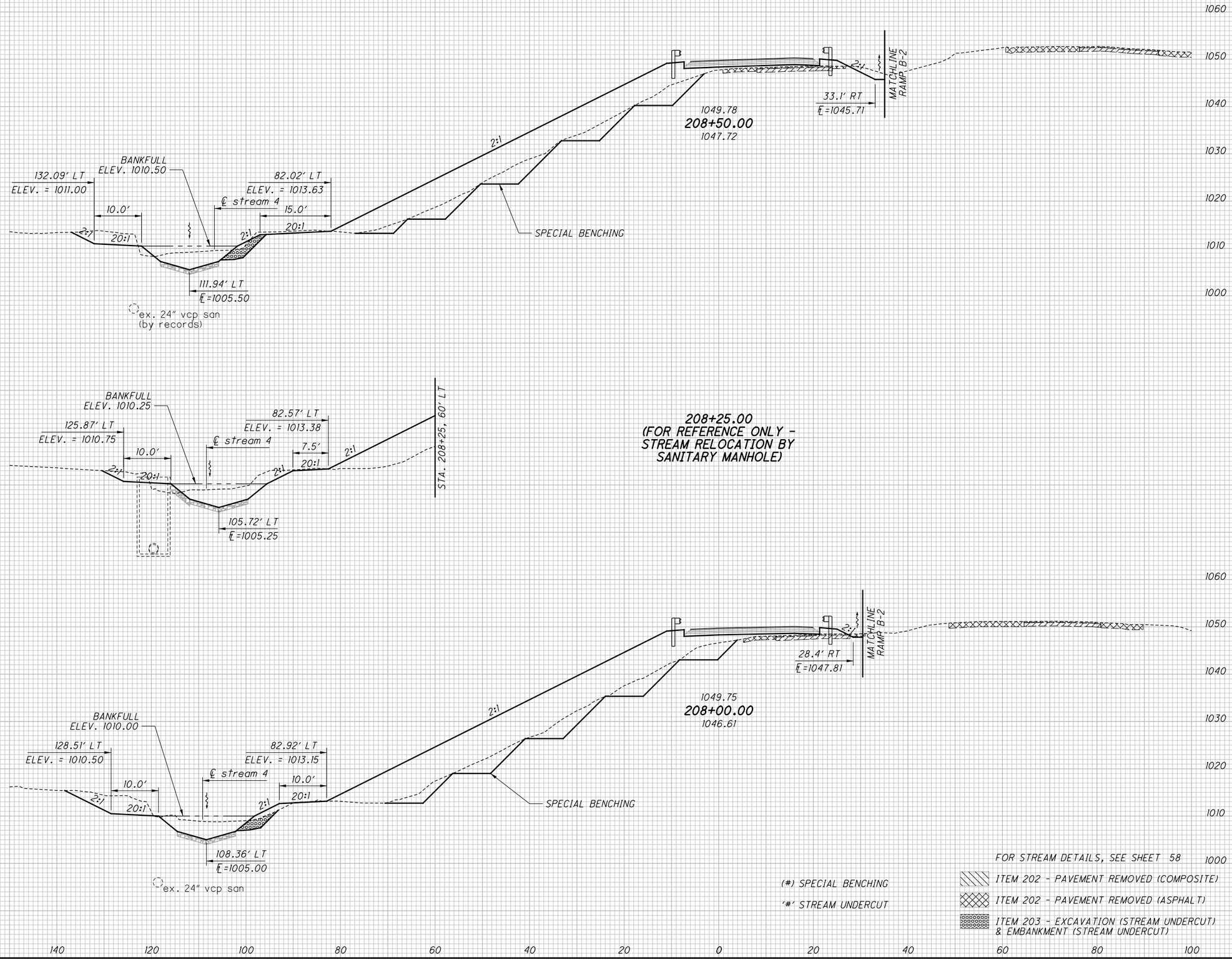


| END AREA CUT | END AREA FILL | VOLUME CUT | VOLUME FILL |
|---|---|---|---|
| | | '40' | '40' |
| | | (272) | (272) |
| | | 151 | 688 |
| '15' | '15' | | |
| (126) | (126) | | |
| 85 | 441 | | |
| | | '24' | '24' |
| | | (244) | (244) |
| | | 169 | 946 |
| '11' | '11' | | |
| (138) | (138) | | |
| 98 | 581 | | |
| | | '64' | '64' |
| | | (516) | (516) |
| | | 320 | 1634 |

CALCULATED CJC
CHECKED PJF

# CROSS SECTIONS - RAMP B
## STA. 208+00.00 TO STA. 208+50.00

SUM-77 / 277 / 224
VARIOUS

666
1288

D:\2017\2017258\ProjectData\SUM\06002\Design\Roadway\Sheets\06002_XS02.dgn Sheet 1/14/2021 2:22:59 PM pfry

| SEEDING | |
|---|---|
| END WIDTH | SQ. YDS. |
| | 351 |
| 136 | |
| | 811 |
| 156 | |
| | 1162 |

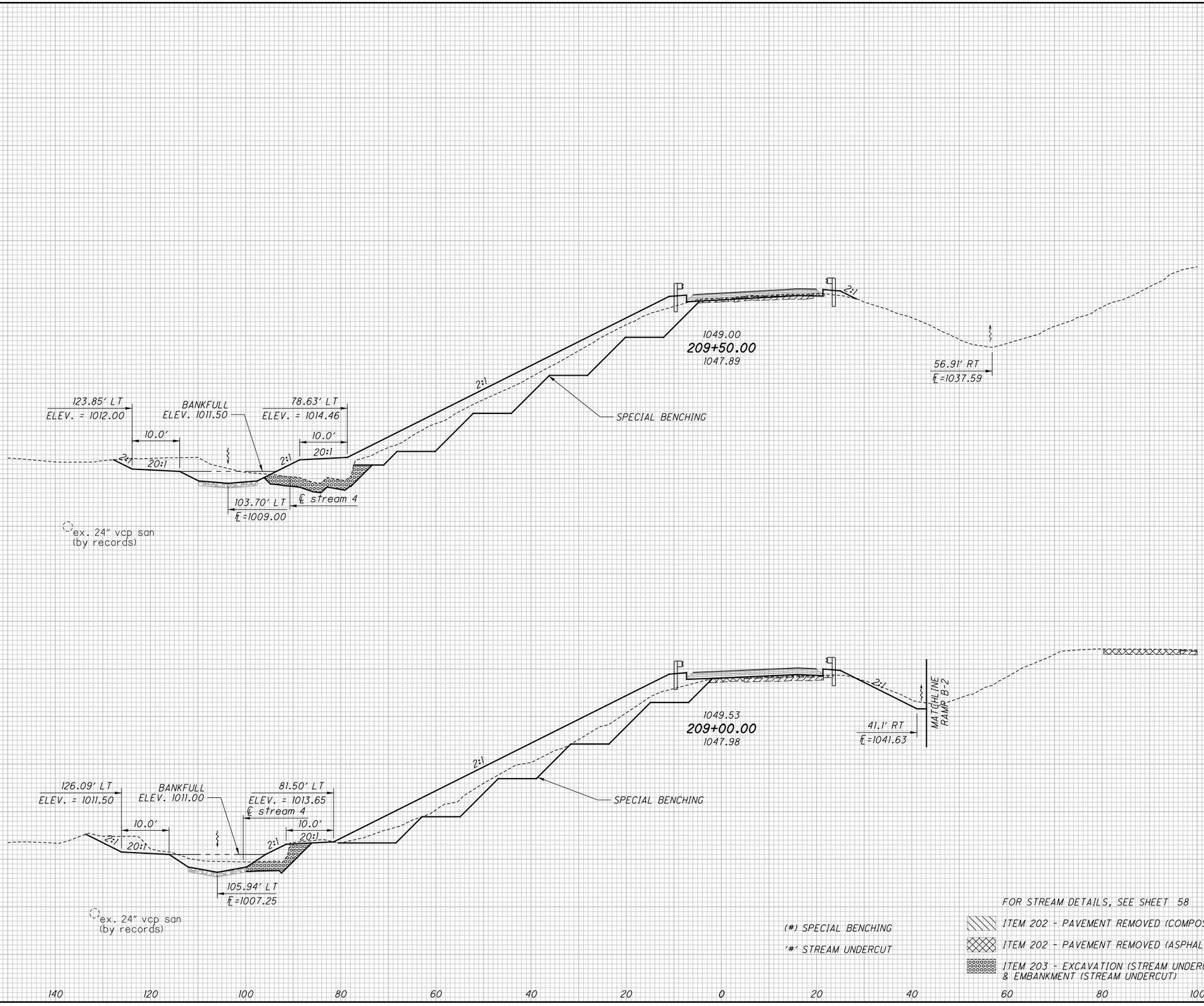


| END AREA | | VOLUME | |
|---|---|---|---|
| CUT | FILL | CUT | FILL |
| | | '42' | '42' |
| | | (242) | (242) |
| | | 80 | 181 |
| | | | |
| '45' | '45' | | |
| (263) | (263) | | |
| 85 | 225 | | |
| | | | |
| | | | |
| | | | |
| | | | |
| | | | |
| | | | |
| | | '68' | '68' |
| | | (399) | (399) |
| | | 151 | 488 |
| | | | |
| '28' | '28' | | |
| (168) | (168) | | |
| 78 | 302 | | |
| | | | |
| | | | |
| | | | |
| | | | |
| | | | |
| | | | |
| | | '110' | '110' |
| | | (641) | (641) |
| | | 231 | 669 |

FOR STREAM DETAILS, SEE SHEET 58

(#) SPECIAL BENCHING

'#' STREAM UNDERCUT

ITEM 202 - PAVEMENT REMOVED (COMPOSITE)

ITEM 202 - PAVEMENT REMOVED (ASPHALT)

ITEM 203 - EXCAVATION (STREAM UNDERCUT) & EMBANKMENT (STREAM UNDERCUT)

CALCULATED CJC
CHECKED PJF

# CROSS SECTIONS - RAMP B
## STA. 209+00.00 TO STA. 209+50.00

SUM-77 / 277 / 224
VARIOUS

667
1288

O:\2017\2017258\ProjectData\SUM\106002\Design\Roadway\Sheets\106002_XS02.dgn Sheet 1/14/2021 4:23:02 PM pfry

| SEEDING END WIDTH | SEEDING SQ. YDS. |
|---|---|
| | 431 |
| 132 | |
| | 393 |
| 134 | |
| | 824 |

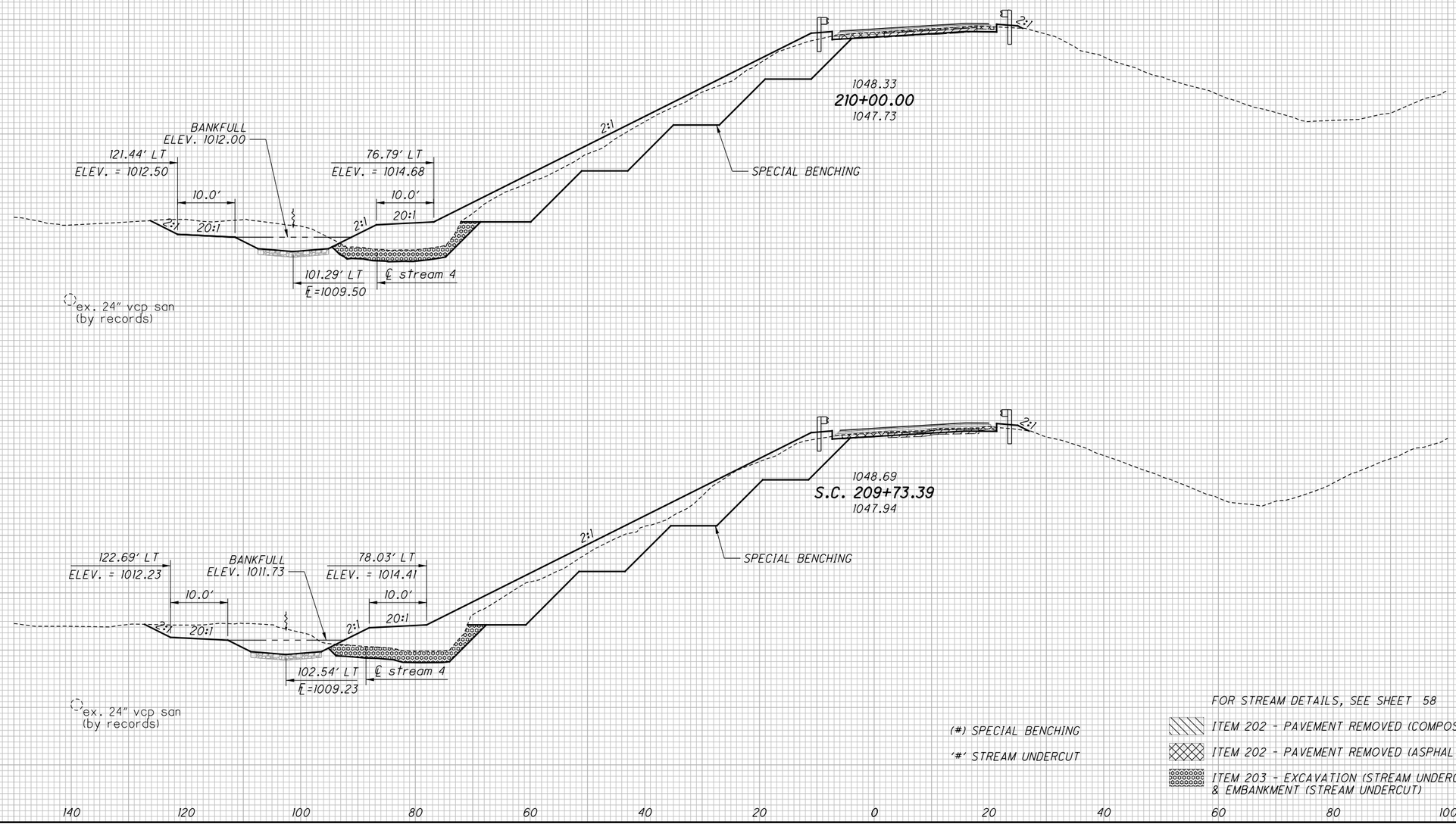


FOR STREAM DETAILS, SEE SHEET 58

(#) SPECIAL BENCHING

'#' STREAM UNDERCUT

ITEM 202 - PAVEMENT REMOVED (COMPOSITE)

ITEM 202 - PAVEMENT REMOVED (ASPHALT)

ITEM 203 - EXCAVATION (STREAM UNDERCUT) & EMBANKMENT (STREAM UNDERCUT)

| END AREA CUT | END AREA FILL | VOLUME CUT | VOLUME FILL |
|---|---|---|---|
| | | '47' | '47' |
| | | (289) | (289) |
| | | 115 | 153 |
| '51' | '51' | | |
| (312) | (312) | | |
| 104 | 163 | | |
| | | '51' | '51' |
| | | (300) | (300) |
| | | 100 | 176 |
| '53' | '53' | | |
| (296) | (296) | | |
| 99 | 194 | | |
| | | '98' | '98' |
| | | (589) | (589) |
| | | 215 | 329 |

CALCULATED CJC
CHECKED PJF

# CROSS SECTIONS - RAMP B
## STA. 209+73.39 TO STA. 210+00.00

SUM-77 / 277 / 224
VARIOUS

668
1288

0:\2017\2017258\Project Data\SUM\06002\Design\Roadway\Sheets\06002_XSI02.dgn Sheet 1/14/2021 4:23:03 PM pfry

| SEEDING | |
|---|---|
| END WIDTH | SQ. YDS. |
| | 139 |
| 24 | |
| | 131 |
| 23 | |
| | 270 |

| END AREA | |
|---|---|
| CUT | FILL |
| | |
| 33 | 0 |
| '0' (0) 20 | '0' (0) 2 |

| VOLUME | |
|---|---|
| CUT | FILL |
| 64 | 0 |
| 49 | 2 |
| 113 | 2 |

CALCULATED CJC
CHECKED PJF




(#) SPECIAL BENCHING

'#' STREAM UNDERCUT

ITEM 202 - PAVEMENT REMOVED (COMPOSITE)

ITEM 202 - PAVEMENT REMOVED (ASPHALT)

# CROSS SECTIONS - RAMP B
## STA. 210+50.00 TO STA. 211+00.00

SUM-77 / 277 / 224
VARIOUS

669
1288

O:\2017\2017258\Project Data\SUM\106002\Design\Roadway\Sheets\106002_XS102.dgn Sheet 1/14/2021 4:23:05 PM pfry

| SEEDING END WIDTH | SEEDING SQ. YDS. |
|---|---|
| 35 | 194 |
| | 175 |
| 28 | |
| 26 | 150 |
| | 519 |

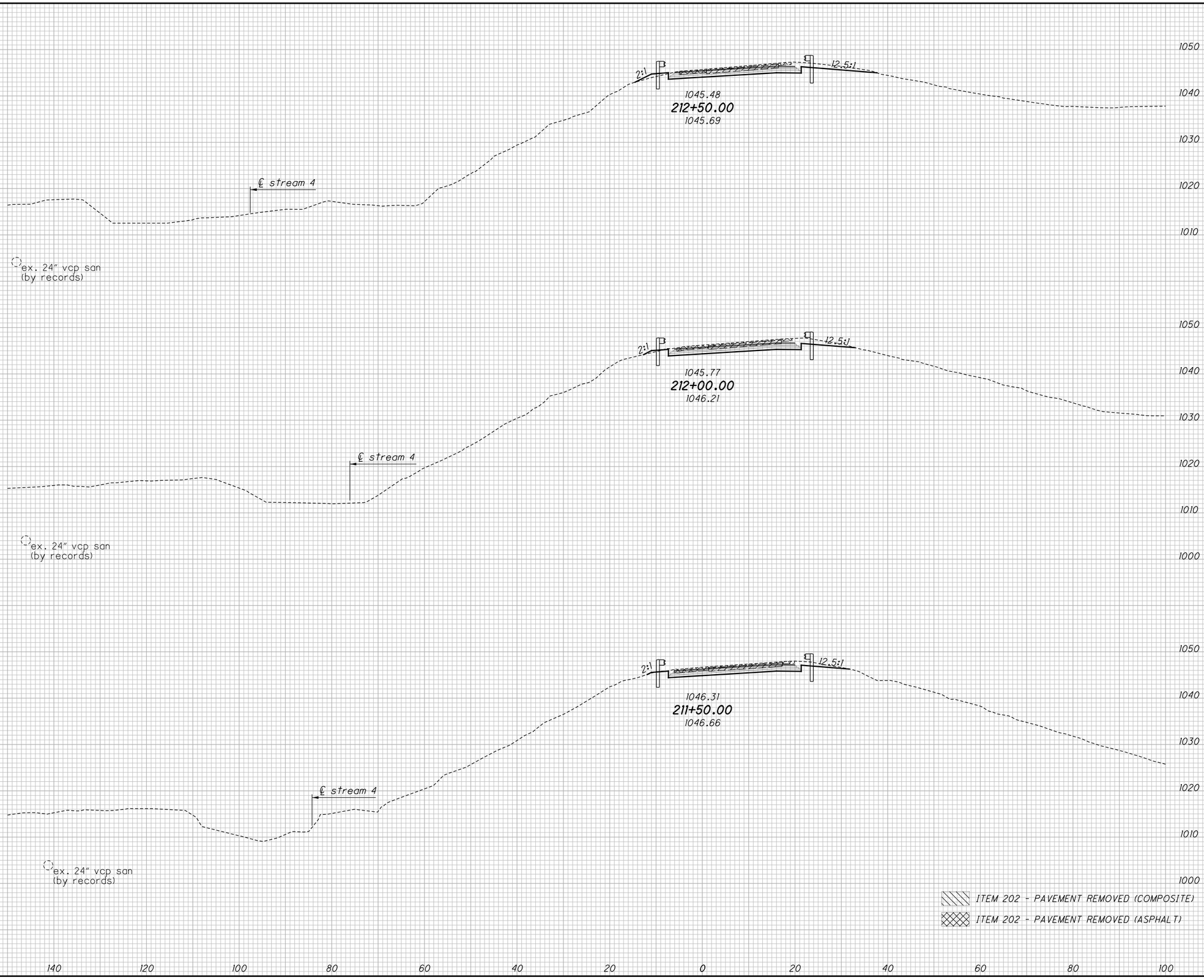


| END AREA CUT | END AREA FILL | VOLUME CUT | VOLUME FILL |
|---|---|---|---|
| | | 69 | 4 |
| 43 | 3 | | |
| | | 81 | 4 |
| 45 | 1 | | |
| 36 | 0 | 75 | 1 |
| | | 225 | 9 |

CALCULATED CJC
CHECKED PJF

# CROSS SECTIONS - RAMP B
## STA. 211+50.00 TO STA. 212+50.00

SUM-77 / 277 / 224
VARIOUS

670
1288

O:\2017\2017258\ProjectData\SUM\06002\Design\Roadway\Sheets\06002_XS02.dgn Sheet 1/14/2021 4:23:06 PM pfry

| SEEDING | |
|---|---|
| END WIDTH | SQ. YDS. |
| | 130 |
| 21 | |
| | 22 |
| 23 | |
| | 161 |
| 35 | |
| | 313 |

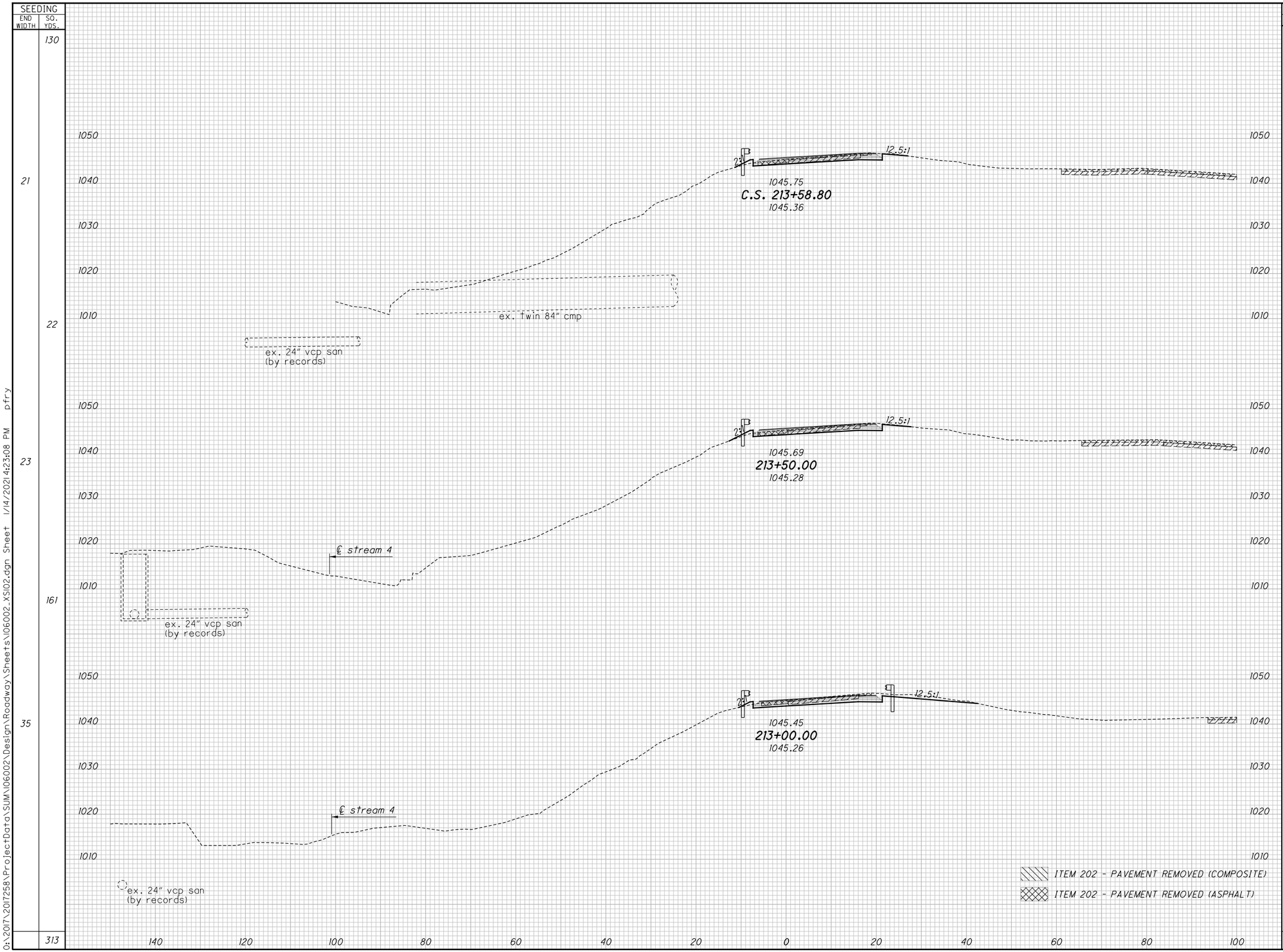


| END AREA | |
|---|---|
| CUT | FILL |
| | |
| 12 | 2 |
| | |
| 13 | 2 |
| | |
| 31 | 1 |
| | |
| | |

| VOLUME | |
|---|---|
| CUT | FILL |
| 27 | 8 |
| | |
| 4 | 1 |
| | |
| 41 | 3 |
| | |
| 72 | 12 |

CALCULATED CJC
CHECKED PJF

# CROSS SECTIONS - RAMP B
## STA. 213+00.00 TO STA. 213+58.80

SUM-77 / 277 / 224
VARIOUS

671
1288

0:\2017\2017258\ProjectData\SUM\06002\Design\Roadway\Sheets\06002_XS02.dgn Sheet 1/14/2021 4:23:08 PM pfry

| SEEDING | |
|---|---|
| END WIDTH | SQ. YDS. |
| 22 | |
| | 116 |
| 30 | |
| | 183 |
| 36 | |
| | 299 |

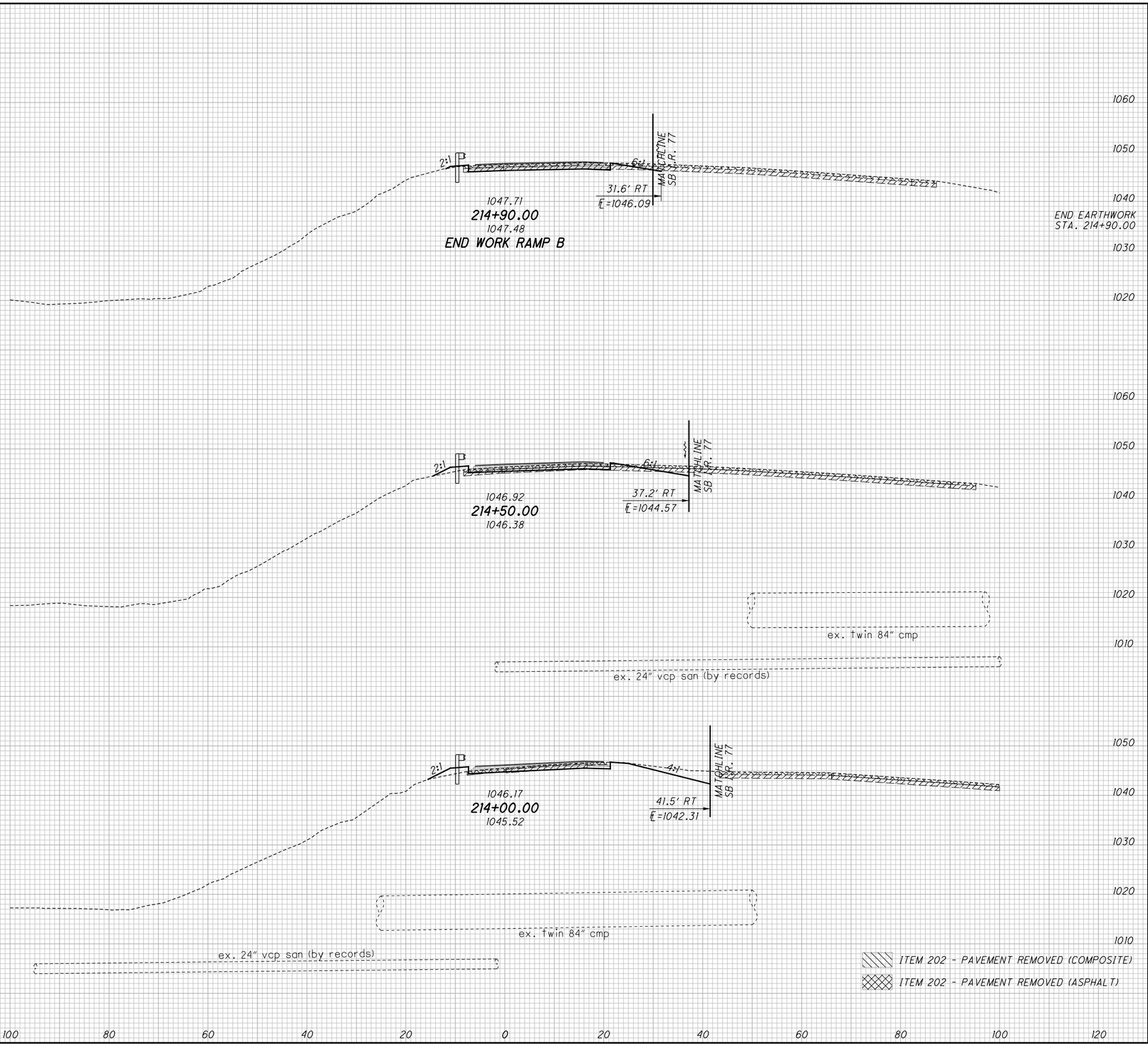


| END AREA | |
|---|---|
| CUT | FILL |
| 1 | 8 |
| | |
| 2 | 23 |
| 2 | 23 |
| 24 | 30 |
| 24 | 9 |
| 26 | 53 |

| VOLUME | |
|---|---|
| CUT | FILL |
| | |
| 2 | 23 |
| | |
| 24 | 30 |
| | |
| | |

CALCULATED CJC
CHECKED PJF

# CROSS SECTIONS - RAMP B
## STA. 214+00.00 TO STA. 214+90.00

SUM-77 / 277 / 224
VARIOUS

672
1288

O:\2017\2017258\ProjectData\SUM\106002\Design\Roadway\Sheets\106002_XS102.dgn Sheet 1/14/2021 4:23:10 PM pfry

| SEEDING | |
|---|---|
| END WIDTH | SQ. YDS. |

| END AREA | | VOLUME | |
|---|---|---|---|
| CUT | FILL | CUT | FILL |

CALCULATED CJC
CHECKED PJF

# CROSS SECTIONS - RAMP B
## STA. 215+00.00 TO STA. 215+58.80




SUM-77 / 277 / 224
VARIOUS

673
1288

O:\2017\2017258\ProjectData\SUM\06002\Design\Roadway\Sheets\06002_XS02.dgn Sheet 1/14/2021 4:23:12 PM pfry

| SEEDING END WIDTH | SEEDING SQ. YDS. |
|---|---|
| | [94] |
| | 156 |
| [17] | |
| 28 | |
| | [94] |
| | 158 |
| [17] | |
| 29 | |
| | [24] |
| [17] | |
| [0] | |
| | 128 |
| 17 | |
| 12 | |
| 17 | |
| | [212] |
| | 454 |

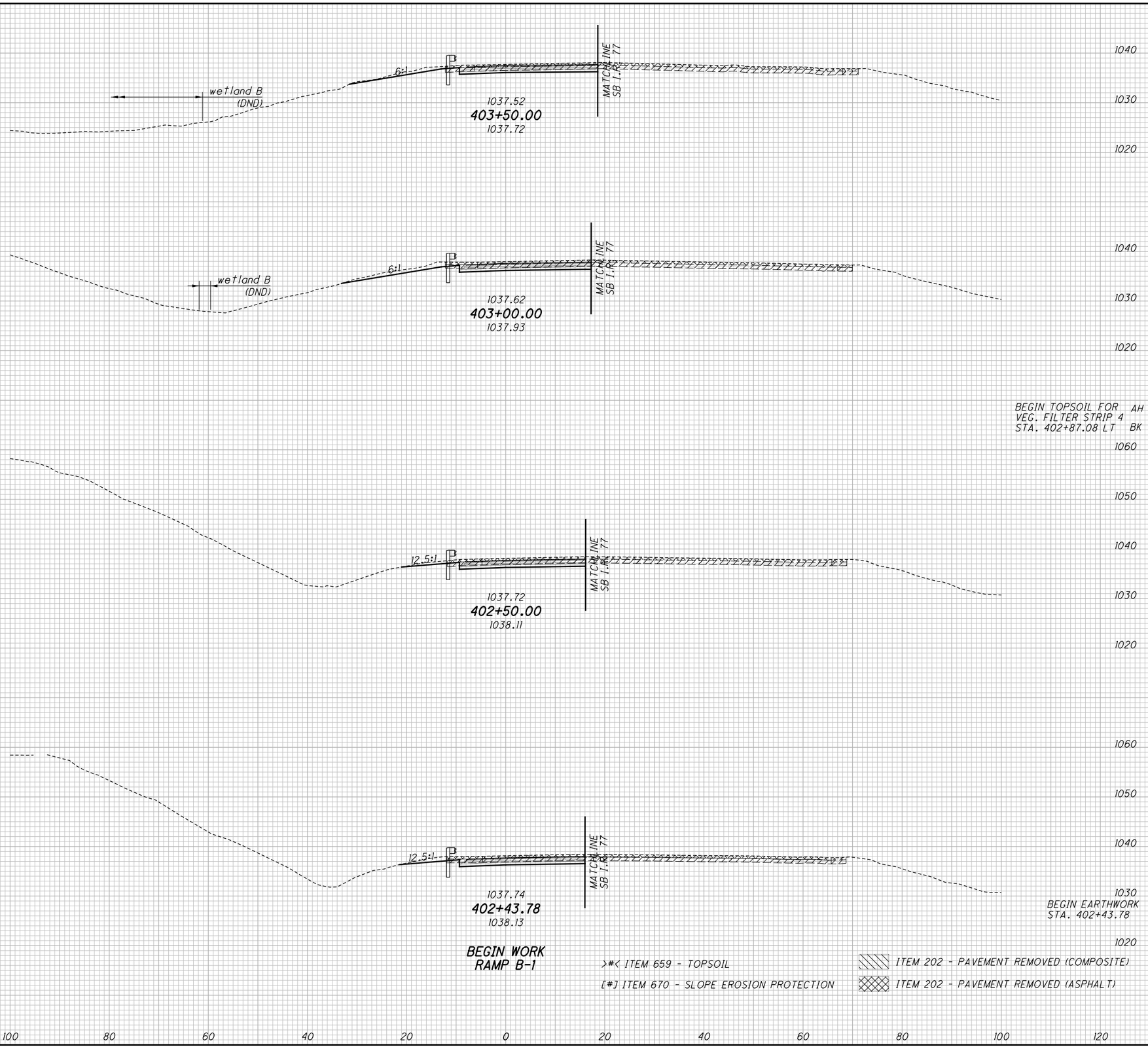


| END AREA CUT | END AREA FILL | VOLUME CUT | VOLUME FILL |
|---|---|---|---|
| | | | >11< |
| | | 48 | 5 |
| | >6< | | |
| 28 | 2 | | |
| | | | >11< |
| | | 57 | 3 |
| | >6< | | |
| 34 | 1 | | |
| | | | >3< |
| | >6< | | |
| | >0< | | |
| | | 50 | 3 |
| 20 | 2 | | |
| | | 5 | 0 |
| 21 | 1 | | |
| | | 160 | >25< |
| | | | 11 |

>#< ITEM 659 - TOPSOIL

[#] ITEM 670 - SLOPE EROSION PROTECTION

ITEM 202 - PAVEMENT REMOVED (COMPOSITE)

ITEM 202 - PAVEMENT REMOVED (ASPHALT)

CALCULATED CJC

CHECKED PJF

# CROSS SECTIONS - RAMP B-1
# STA. 402+43.78 TO STA. 403+50.00

SUM-77 / 277 / 224
VARIOUS

674
1288

0:\2017\2017258\ProjectData\SUM\06002\Design\Roadway\Sheets\06002_XS103.dgn Sheet 1/13/2021 6:08:54 PM pfry

| SEEDING END WIDTH | SEEDING SQ. YDS. | END AREA CUT | END AREA FILL | VOLUME CUT | VOLUME FILL |
|---|---|---|---|---|---|
| | [113] 148 | | | 52 | >13< 3 |
| [17] 24 | | 24 | >6< 2 | | |
| | [3] 4 | | | 2 | >0< 0 |
| [17] 24 | | 25 | >6< 1 | | |
| | [94] 147 | | | 45 | >11< 2 |
| [17] 29 | | 24 | >6< 1 | | |
| | [94] 158 | | | 44 | >11< 4 |
| [17] 28 | | 24 | >6< 3 | | |
| [304] 457 | | | | 143 | >35< 9 |

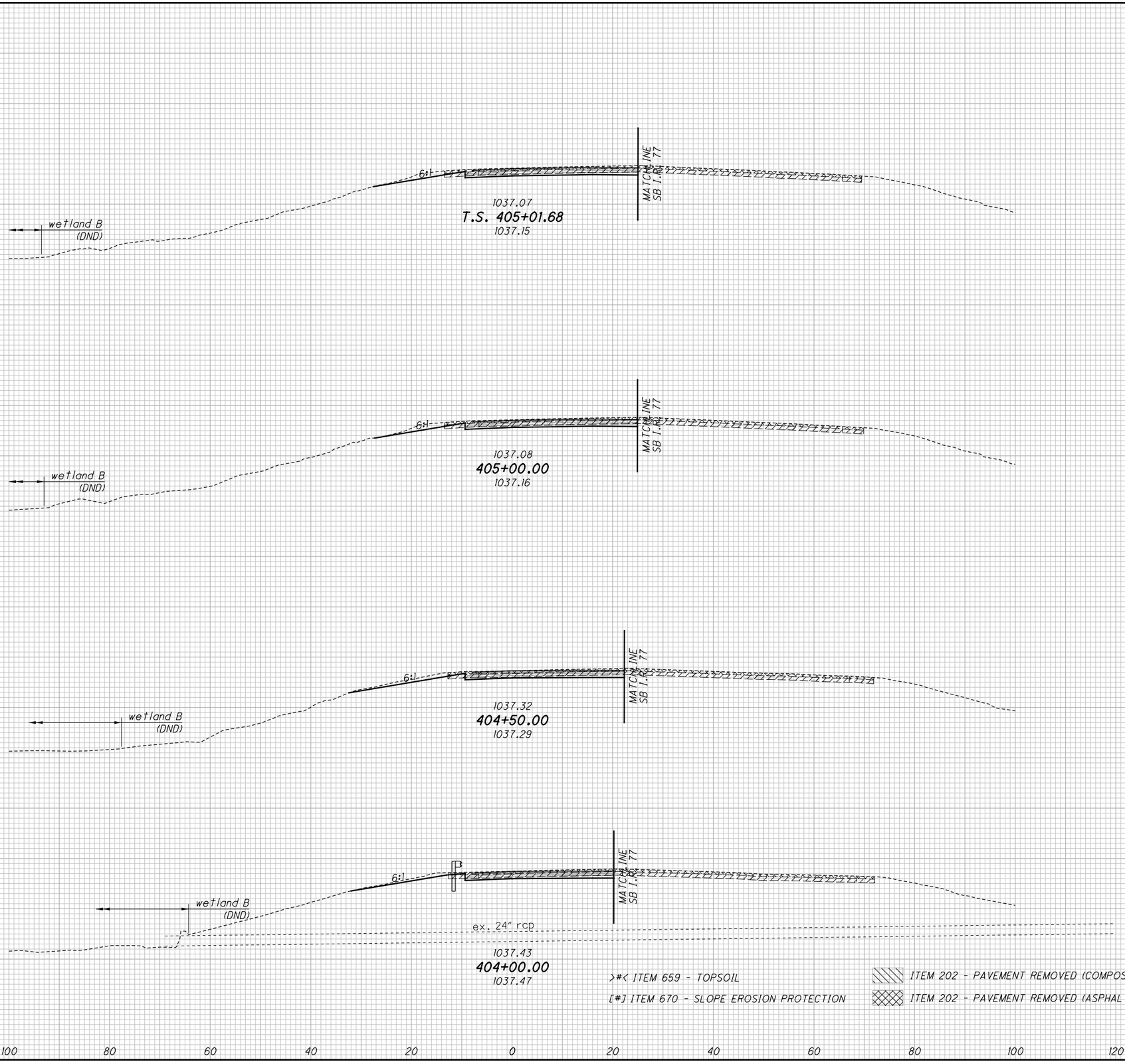


>#< ITEM 659 - TOPSOIL

[#] ITEM 670 - SLOPE EROSION PROTECTION

ITEM 202 - PAVEMENT REMOVED (COMPOSITE)

ITEM 202 - PAVEMENT REMOVED (ASPHALT)

CALCULATED CJC

CHECKED PJF

# CROSS SECTIONS - RAMP B-1
## STA. 404+00.00 TO STA. 405+01.68

SUM-77 / 277 / 224
VARIOUS

675
1288

O:\2017\2017258\ProjectData\SUM\06002\Design\Roadway\Sheets\06002_XS03.dgn Sheet 1/13/2021 6:09:07 PM pfry

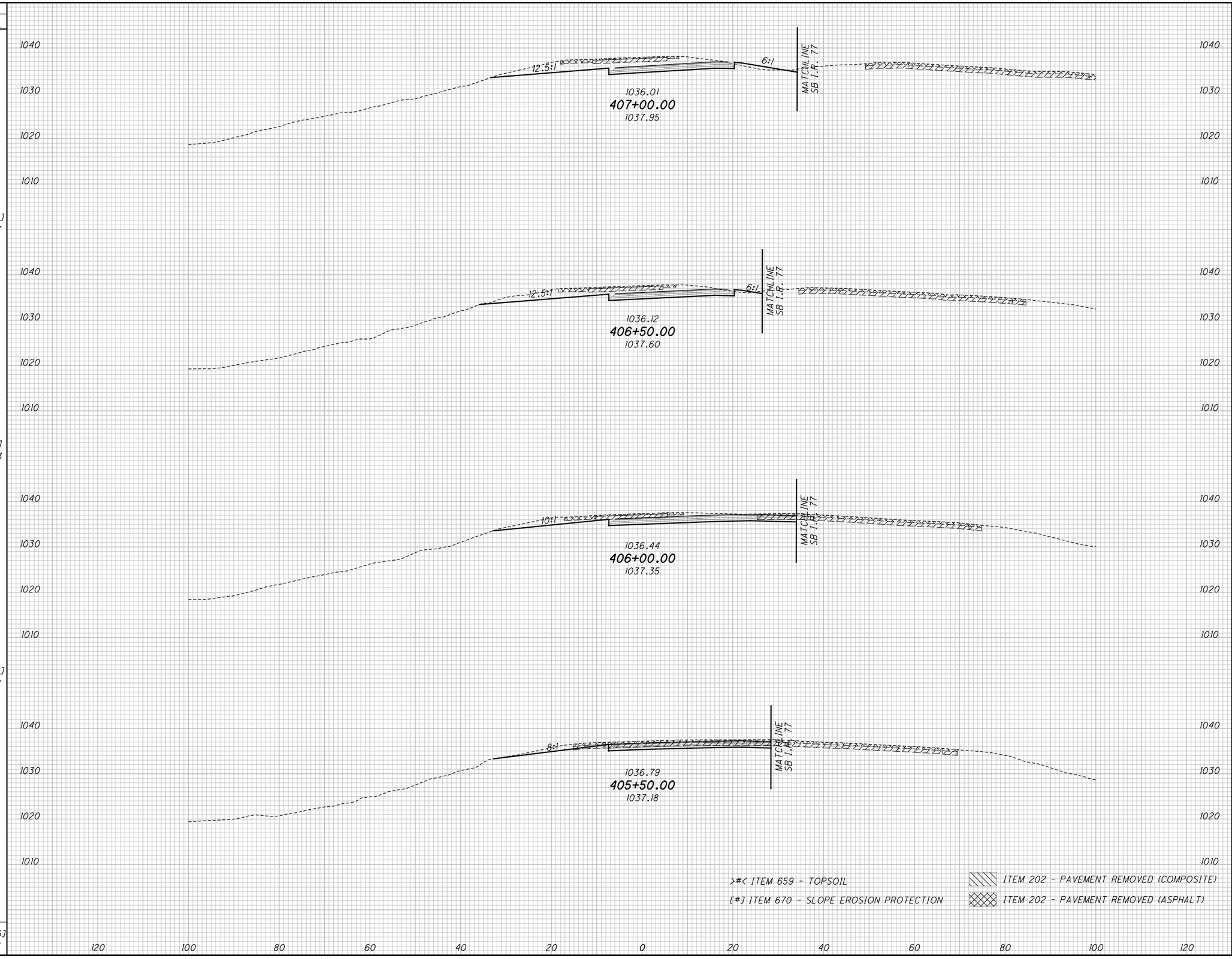


| SEEDING END WIDTH | SEEDING SQ. YDS. | END AREA CUT | END AREA FILL | VOLUME CUT | VOLUME FILL |
|---|---|---|---|---|---|
| | [3] 9 | | | 7 | >0< 0 |
| [15] 47 | | 106 | >5< 5 | | |
| | [83] 247 | | | 182 | >9< 6 |
| [15] 42 | | 91 | >5< 1 | | |
| | [111] 203 | | | 161 | >12< 1 |
| [25] 31 | | 83 | >8< 0 | | |
| | [139] 172 | | | 108 | >15< 1 |
| [25] 31 | | 34 | >8< 1 | | |
| [336] 631 | | | | 458 | >36< 8 |

CALCULATED CJC
CHECKED PJF

# CROSS SECTIONS - RAMP B-1
## STA. 405+50.00 TO STA. 407+00.00

SUM-77 / 277 / 224
VARIOUS

676
1288

0:\2017\20172581\ProjectData\SUM\06002\Design\Roadway\Sheets\06002_XS103.dgn Sheet 1/13/2021 6:09:10 PM pfry

| SEEDING END WIDTH | SEEDING SQ. YDS. | END AREA CUT | END AREA FILL | VOLUME CUT | VOLUME FILL |
|---|---|---|---|---|---|
| | [0] 1 | | | | >0< 0 |
| [15] 45 | | 103 | >5< 0 | 1 | |
| | [83] 258 | | | 206 | >9< 0 |
| [15] 48 | | 120 | >5< 0 | | |
| | [83] 272 | | | 215 | >9< 1 |
| [15] 50 | | 112 | >5< 1 | | |
| | [81] 260 | | | 196 | >9< 6 |
| [15] 47 | | 107 | >5< 6 | | |
| | [247] 791 | | | 618 | >27< 7 |

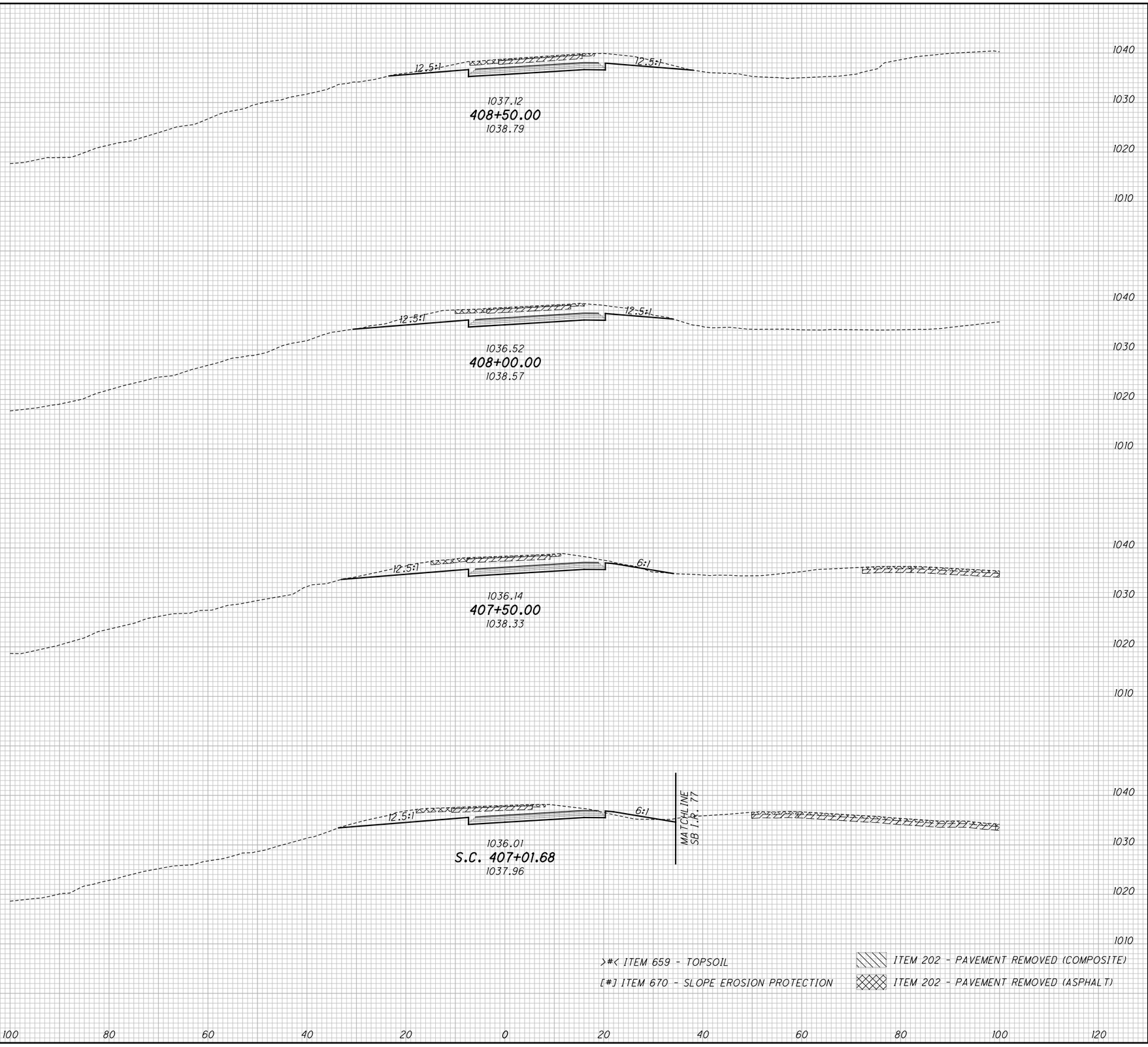


>#< ITEM 659 - TOPSOIL

[#] ITEM 670 - SLOPE EROSION PROTECTION

ITEM 202 - PAVEMENT REMOVED (COMPOSITE)

ITEM 202 - PAVEMENT REMOVED (ASPHALT)

CALCULATED CJC

CHECKED PJF

# CROSS SECTIONS - RAMP B-1
## STA. 407+01.68 TO STA. 408+50.00

SUM-77 / 277 / 224
VARIOUS

677
1288

0:\2017\20172581\ProjectData\SUM\06002\Design\Roadway\Sheets\06002_XS103.dgn Sheet 1/13/2021 6:09:12 PM pfry

| SEEDING END WIDTH | SEEDING SQ. YDS. |
|---|---|
| | 256 |
| 50 | |
| | 267 |
| 46 | |
| | 252 |
| [0] [15] 45 | |
| | 775 |

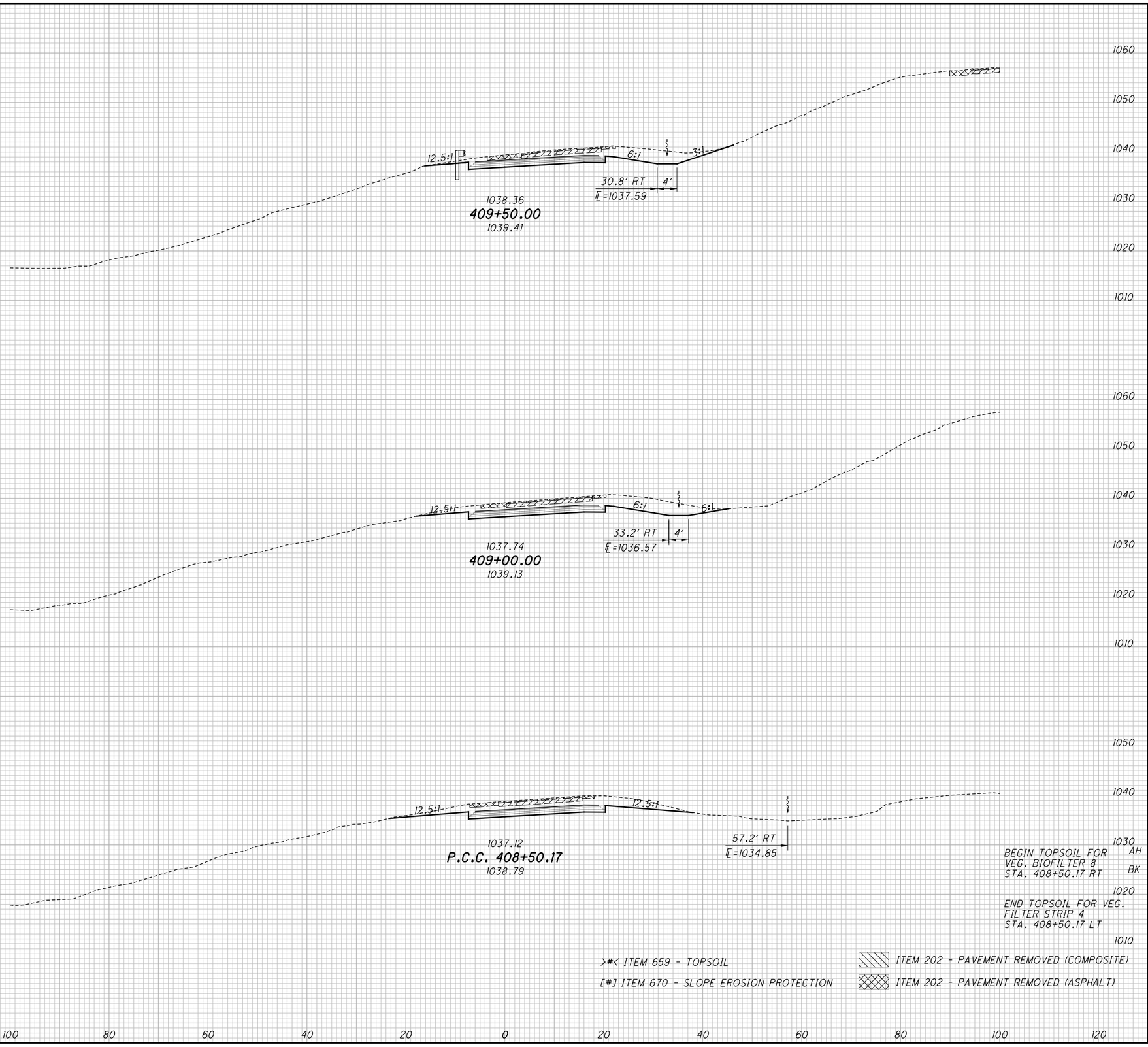


| END AREA CUT | END AREA FILL | VOLUME CUT | VOLUME FILL |
|---|---|---|---|
| | | | >7< |
| | | 182 | 0 |
| | >4< | | |
| 103 | 0 | | |
| | | | >8< |
| | | 207 | 0 |
| | >5< | | |
| 121 | 0 | | |
| | | | >10< |
| | | 212 | 0 |
| | >6< | | |
| | >5< | | |
| 109 | 0 | | |
| | | | >25< |
| | | 601 | 0 |

>#< ITEM 659 - TOPSOIL

[#] ITEM 670 - SLOPE EROSION PROTECTION

ITEM 202 - PAVEMENT REMOVED (COMPOSITE)

ITEM 202 - PAVEMENT REMOVED (ASPHALT)

CALCULATED CJC
CHECKED PJF

# CROSS SECTIONS - RAMP B-1
## STA. 408+50.17 TO STA. 409+50.00

SUM-77 / 277 / 224
VARIOUS

678
1288

0:\2017\2017258\ProjectData\SUM\06002\Design\Roadway\Sheets\06002_XS103.dgn Sheet 1/13/2021 6:09:14 PM pfry

| SEEDING | |
|---|---|
| END WIDTH | SQ. YDS. |
| | 253 |
| 41 | |
| | 233 |
| 43 | |
| | 236 |
| 42 | |
| | 722 |

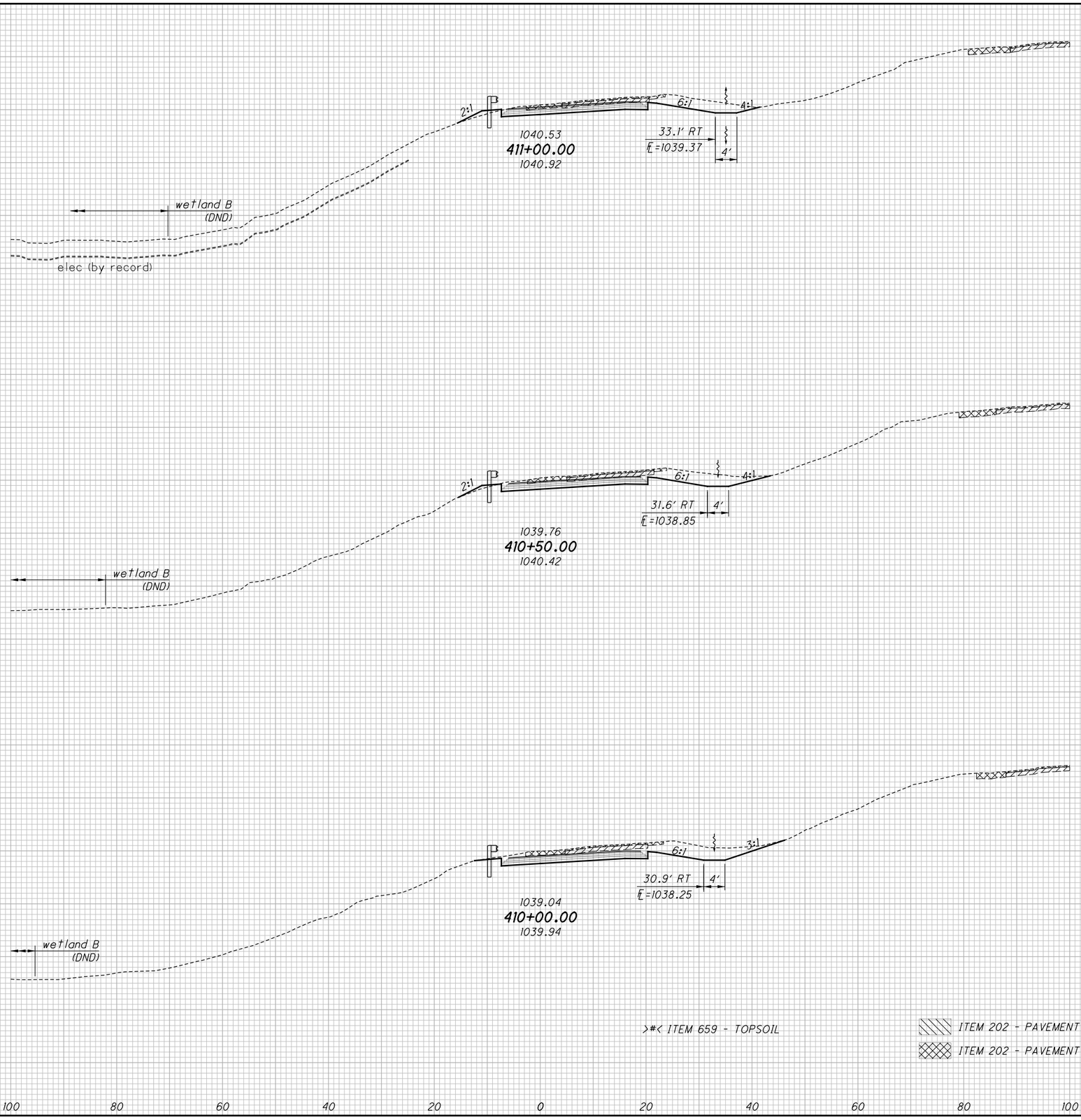


| END AREA | | VOLUME | | |
|---|---|---|---|---|
| CUT | FILL | CUT | FILL | |
| | | 140 | 6 | |
| | >0< | | | |
| | >5< | | | |
| 71 | 4 | | | |
| | | | >8< | |
| | | 140 | 6 | |
| | >4< | | | |
| 80 | 2 | | | |
| | | 161 | >7< 2 | |
| | >4< | | | |
| 94 | 0 | | | |
| | | | >15< | |
| | | 441 | 14 | |

CALCULATED CJC
CHECKED PJF

# CROSS SECTIONS - RAMP B-1
## STA. 410+00.00 TO STA. 411+00.00

SUM-77 / 277 / 224
VARIOUS

679
1288

O:\2017\2017258\ProjectData\SUM\106002\Design\Roadway\Sheets\106002_XS103.dgn Sheet 1/13/2021 6:09:46 PM pfry

| SEEDING END WIDTH | SEEDING SQ. YDS. | END AREA CUT | END AREA FILL | VOLUME CUT | VOLUME FILL |
|---|---|---|---|---|---|
| | 428 | | | 105 | 29 |
| 82 | | 61 | 6 | | |
| | 392 | | | 133 | 6 |
| 59 | | 83 | 0 | | |
| | 303 | | | 151 | 2 |
| 50 | | 80 | 2 | | |
| | 1123 | | | 389 | 37 |

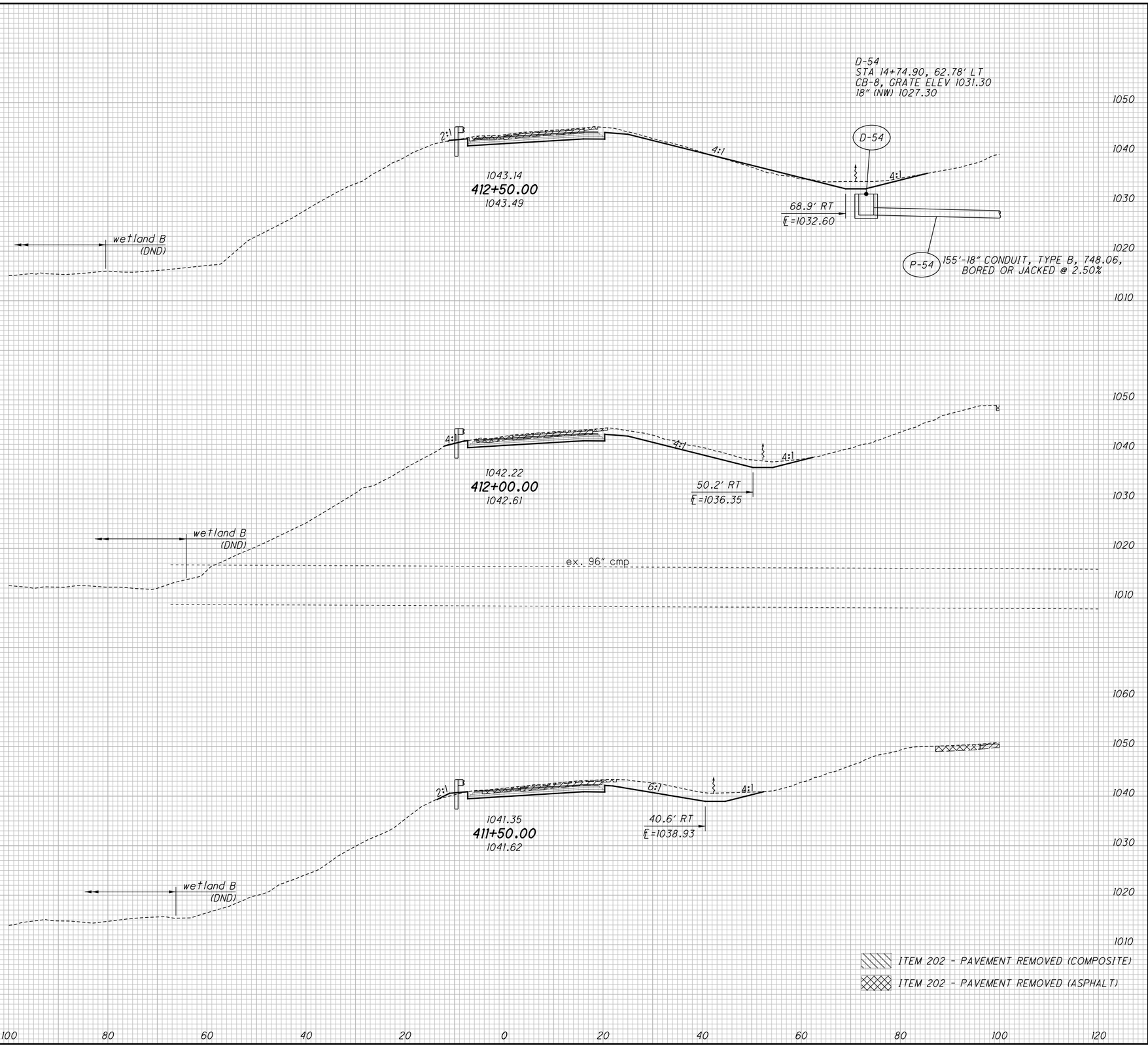


CALCULATED CJC
CHECKED PJF

# CROSS SECTIONS - RAMP B-1
## STA. 411+50.00 TO STA. 412+50.00

SUM-77 / 277 / 224
VARIOUS

680
1288

0:\2017\20172581\Project Data\SUM\06002\Design\Roadway\Sheets\06002_XS103.dgn Sheet 1/13/2021 6:09:18 PM pfry

| SEEDING | |
|---|---|
| END WIDTH | SQ. YDS. |
| | 464 |
| 86 | |
| | 456 |
| 78 | |
| | 417 |
| 72 | |
| | 1337 |

>#< ITEM 659 - TOPSOIL

(#) SPECIAL BENCHING

ITEM 202 - PAVEMENT REMOVED (COMPOSITE)

ITEM 202 - PAVEMENT REMOVED (ASPHALT)

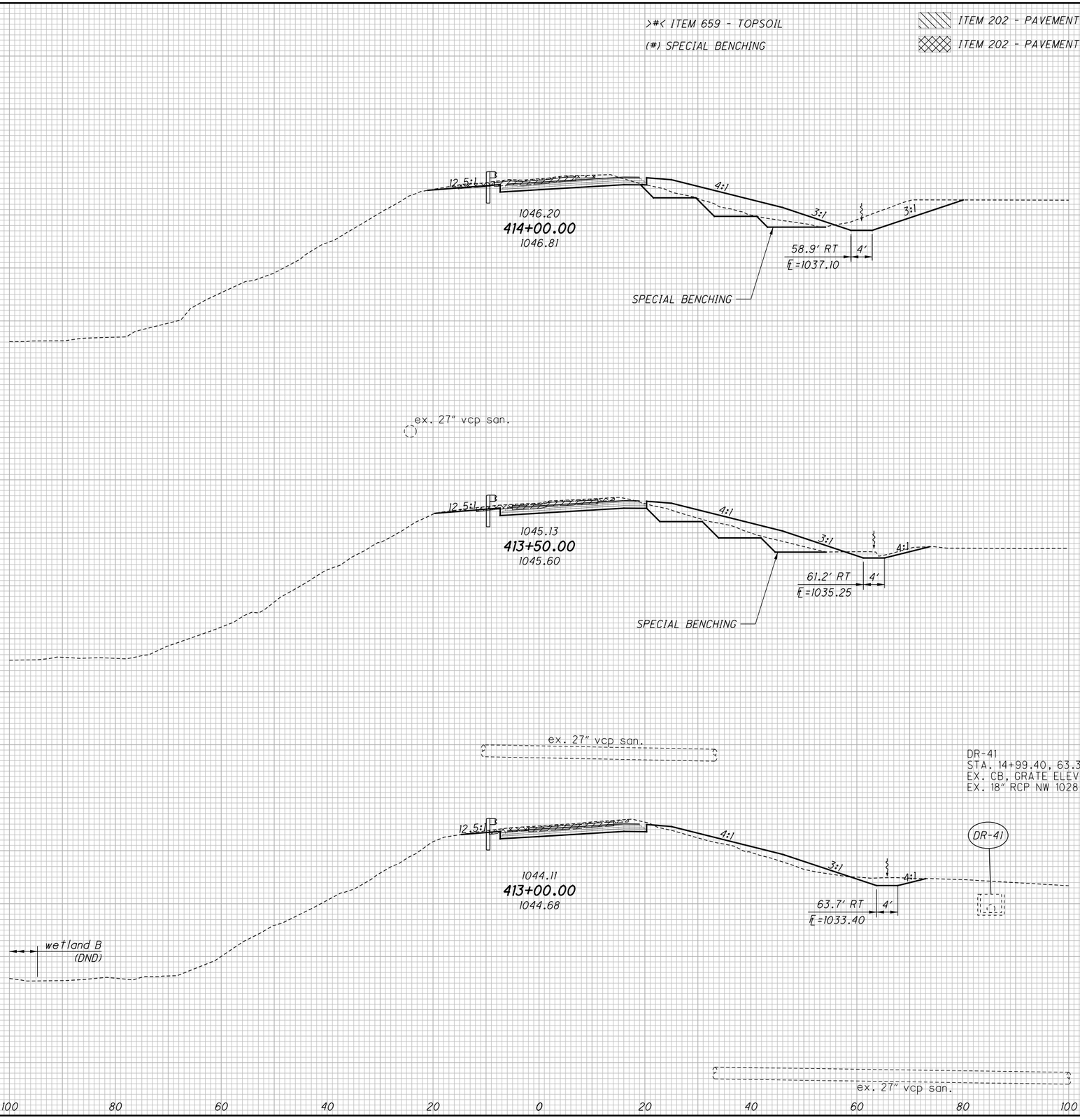


| END AREA | | VOLUME | |
|---|---|---|---|
| CUT | FILL | CUT | FILL |
| | | (68) | (68) |
| | | | >24< |
| | | 128 | 151 |
| (34) | (34) | | |
| | >13< | | |
| 89 | 67 | | |
| | | | |
| | | | |
| | | | |
| | | | |
| | | (78) | (78) |
| | | | >25< |
| | | 127 | 102 |
| | | | |
| | | | |
| | | | |
| (50) | (50) | | |
| | >14< | | |
| 48 | 43 | | |
| | | | |
| | | | |
| | | | |
| | | | |
| | | (46) | (46) |
| | | | >27< |
| | | 93 | 63 |
| | | | |
| | | | |
| | | | |
| | | | |
| (0) | (0) | | |
| | >15< | | |
| | >0< | | |
| 52 | 25 | | |
| | | (192) | (192) |
| | | | >76< |
| | | 348 | 316 |

CALCULATED CJC
CHECKED PJF

# CROSS SECTIONS - RAMP B-1
## STA. 413+00.00 TO STA. 414+00.00

SUM-77 / 277 / 224
VARIOUS

681
1288

O:\2017\2017258\ProjectData\SUM\106002\Design\Roadway\Sheets\106002_XS103.dgn Sheet 1/13/2021 6:09:20 PM pfry

| SEEDING END WIDTH | SEEDING SQ. YDS. |
|---|---|
| | [21] |
| | 100 |
| [15] | |
| 80 | |
| | [83] |
| | 458 |
| [15] | |
| 85 | |
| | [52] |
| [15] | |
| [0] | |
| 81 | |
| | [156] |
| | 1019 |

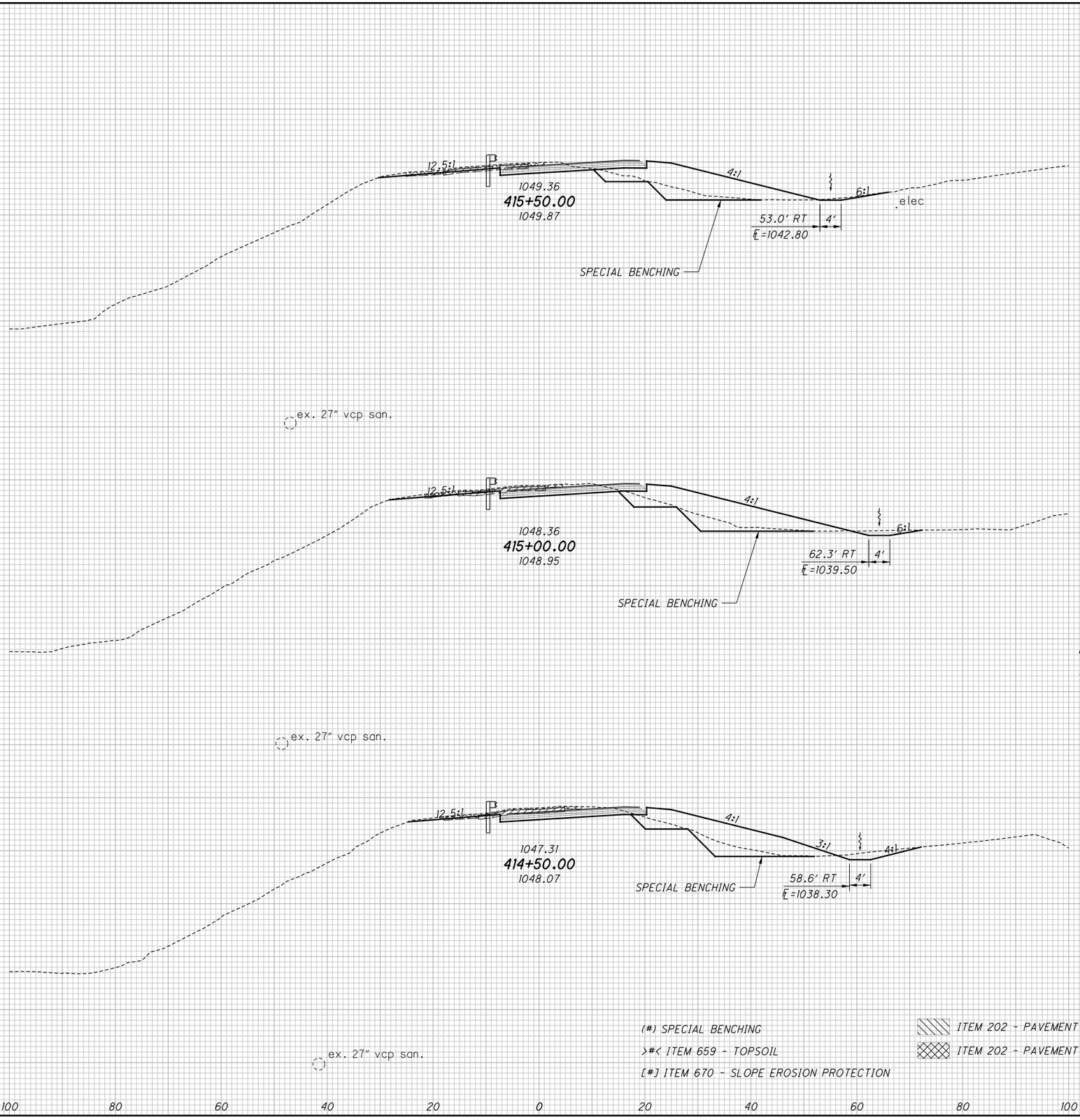


| END AREA CUT | END AREA FILL | VOLUME CUT | VOLUME FILL |
|---|---|---|---|
| | | (15) | (15) |
| | | | >7< |
| | | 11 | 47 |
| (34) | (34) | | |
| | >16< | | |
| 26 | 104 | | |
| | | (69) | (69) |
| | | | >32< |
| | | 65 | 197 |
| (41) | (41) | | |
| | >19< | | |
| 44 | 109 | | |
| | | | >21< |
| | >18< | | |
| | >13< | | |
| | | (74) | (74) |
| | | | >9< |
| | | 86 | 190 |
| (39) | (39) | | |
| | >13< | | |
| 49 | 96 | | |
| | | (158) | (158) |
| | | | >69< |
| | | 162 | 434 |

(#) SPECIAL BENCHING
>#< ITEM 659 - TOPSOIL
[#] ITEM 670 - SLOPE EROSION PROTECTION

ITEM 202 - PAVEMENT REMOVED (COMPOSITE)
ITEM 202 - PAVEMENT REMOVED (ASPHALT)

CALCULATED CJC
CHECKED PJF

# CROSS SECTIONS - RAMP B-1
## STA. 414+50.00 TO STA. 415+50.00

SUM-77 / 277 / 224
VARIOUS

682
1288

0:\2017\2017258\ProjectData\SUM\106002\Design\Roadway\Sheets\106002_XS103.dgn Sheet 1/13/2021 6:09:22 PM pfry

| SEEDING END WIDTH | SEEDING SQ. YDS. |
|---|---|
| | [83] 286 |
| [15] 56 | |
| | [83] 339 |
| [15] 66 | |
| | [63] 271 |
| [15] 64 | |
| | [229] 896 |

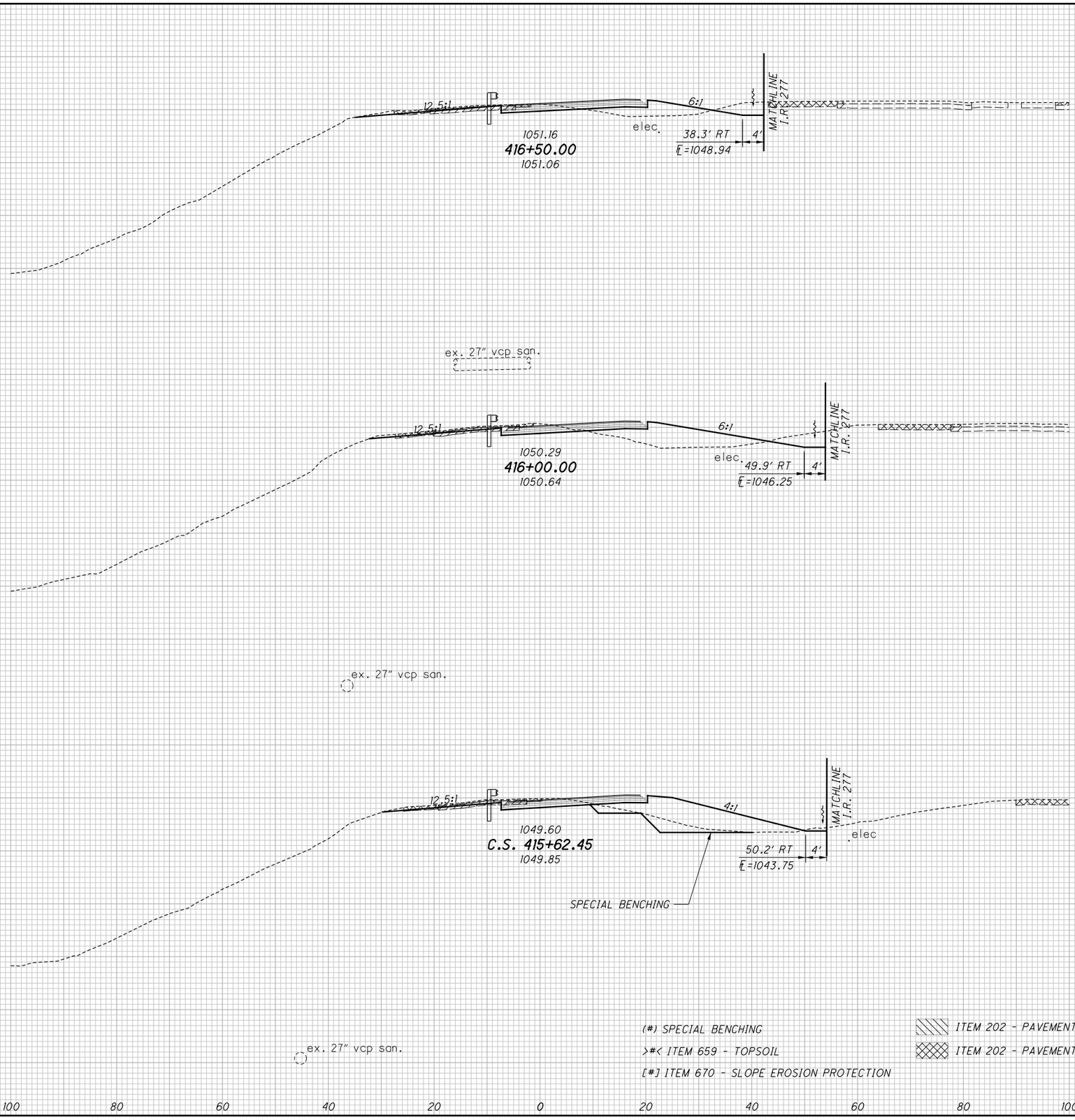


| END AREA CUT | END AREA FILL | VOLUME CUT | VOLUME FILL |
|---|---|---|---|
| | | | >9< |
| | | 50 | 46 |
| | >5< | | |
| | >11< | | |
| 33 | 39 | | |
| | | | >24< |
| | | 69 | 109 |
| (0) | (0) | | |
| | >15< | | |
| 41 | 79 | | |
| | | (20) | (20) |
| | | | >21< |
| | | 45 | 124 |
| (29) | (29) | | |
| | >15< | | |
| 23 | 99 | | |
| | | (20) | (20) |
| | | | >54< |
| | | 164 | 279 |

CALCULATED CJC
CHECKED PJF

CROSS SECTIONS - RAMP B-1
STA. 415+62.45 TO STA. 416+50.00

SUM-77 / 277 / 224
VARIOUS

683
1288

0:\2017\2017258\Project Data\SUM\06002\Design\Roadway\Sheets\06002_XS103.dgn Sheet 1/13/2021 6:09:24 PM pfry

| SEEDING END WIDTH | SEEDING SQ. YDS. |
|---|---|
| | 140 |
| 36 | |
| | |
| [0] | |
| [15] | |
| | [9] |
| | 51 |
| [15] | |
| 38 | |
| | [83] 236 |
| [15] 47 | |
| | [92] 427 |

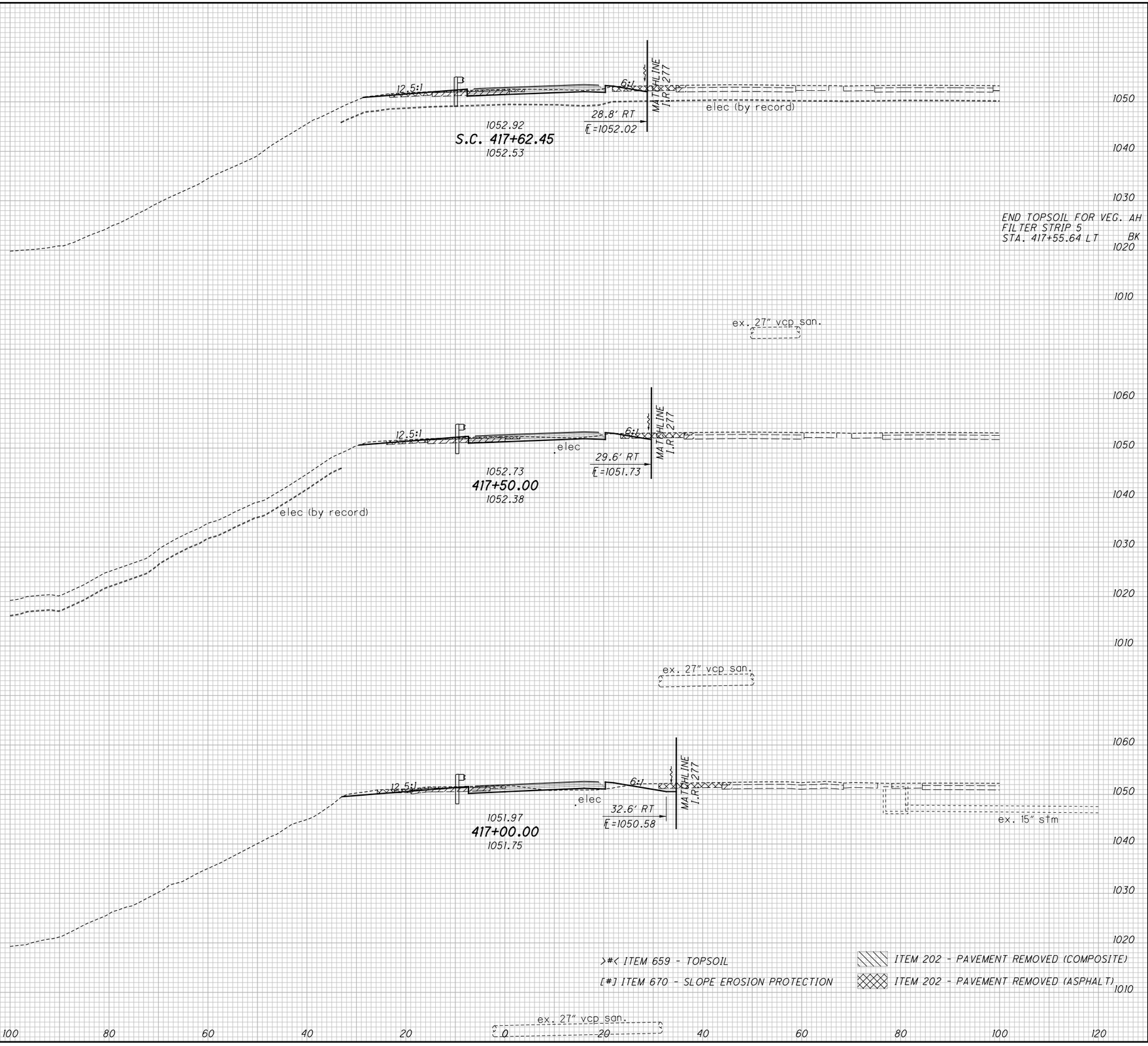


| END AREA CUT | END AREA FILL | VOLUME CUT | VOLUME FILL |
|---|---|---|---|
| | | 8 | 32 |
| 12 | 16 | | |
| | >0< | | |
| | >5< | | >1< |
| | | 6 | 6 |
| | >5< | | |
| 15 | 10 | | |
| | | | |
| | | | |
| | | | >9< |
| 21 | >5< | 33 | 19 |
| | 11 | | |
| | | 47 | >10< |
| | | | 57 |

CALCULATED CJC
CHECKED PJF

# CROSS SECTIONS - RAMP B-1
## STA. 417+00.00 TO STA. 417+62.45

SUM-77 / 277 / 224
VARIOUS



O:\2017\2017258\ProjectData\SUM\106002\Design\Roadway\Sheets\106002_XS103.dgn Sheet 1/13/2021 6:09:26 PM pfry

| SEEDING END WIDTH | SEEDING SQ. YDS. |
|---|---|
| | 89 |
| 17 | |
| | 108 |
| 22 | |
| | 147 |
| 31 | |
| | 344 |

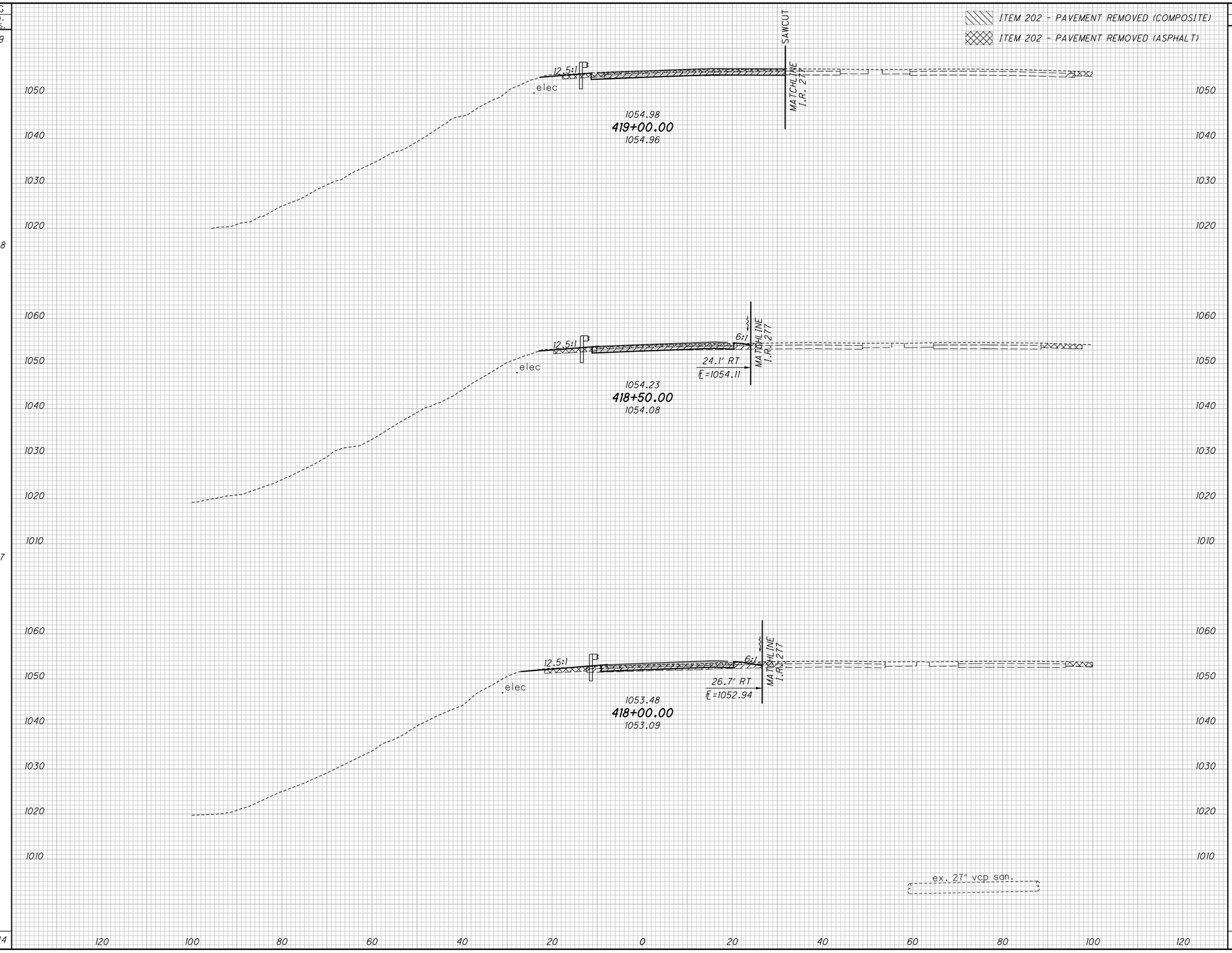


| END AREA CUT | END AREA FILL | VOLUME CUT | VOLUME FILL |
|---|---|---|---|
| | | 12 | 10 |
| 5 | 7 | | |
| | | 6 | 21 |
| 1 | 16 | | |
| 0 | 30 | | |
| | | 1 | 43 |
| | | 19 | 74 |

CALCULATED CJC
CHECKED PJF

# CROSS SECTIONS - RAMP B-1
## STA. 418+00.00 TO STA. 419+00.00

SUM-77 / 277 / 224
VARIOUS

685
1288

O:\2017\2017258\ProjectData\SUM\106002\Design\Roadway\Sheets\106002_XS103.dgn Sheet 1/13/2021 6:09:28 PM pfry

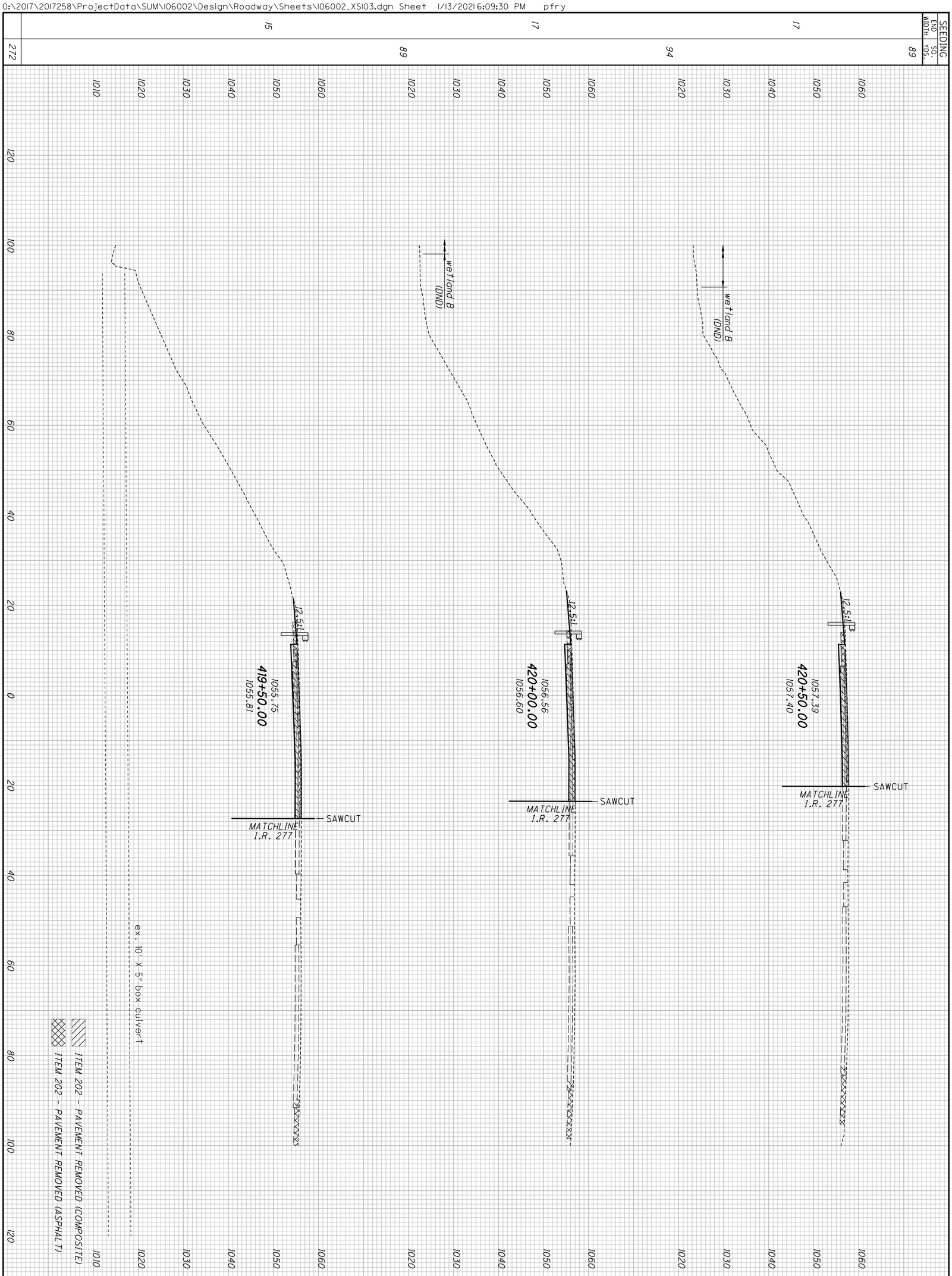


| | | |
|---|---|---|
| 686 / 1288 | **SUM-77/277/224**<br>**VARIOUS** | **CROSS SECTIONS - RAMP B-1**<br>**STA. 419+50.00 TO STA. 420+50.00** |

CALCULATED CJC
CHECKED PJF

| SEEDING | |
|---|---|
| END WIDTH | SQ. YDS. |
| 18 | |
| | 74 |
| 15 | |
| | 74 |

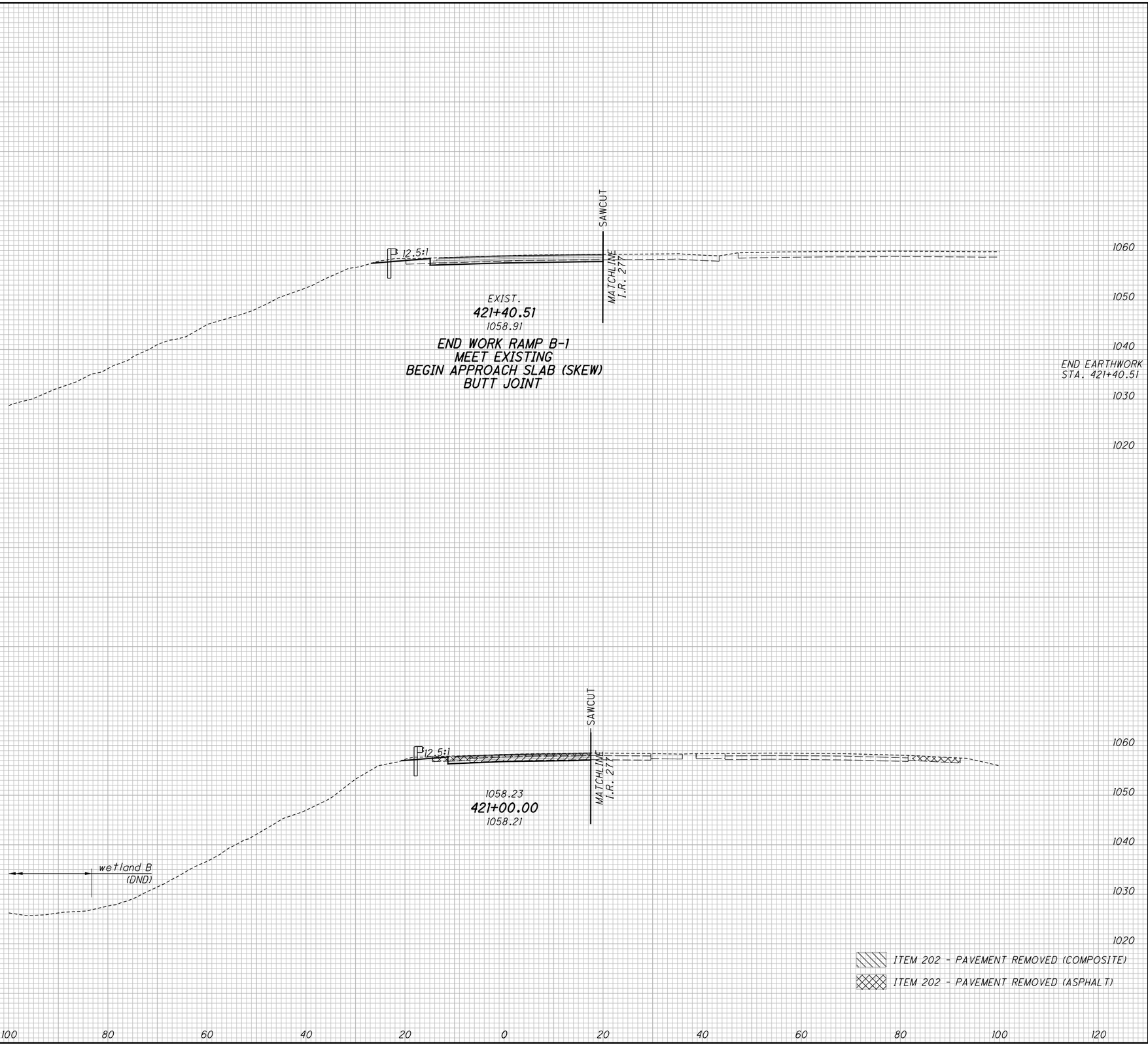


| END AREA | |
|---|---|
| CUT | FILL |
| 16 | 4 |
| 8 | 2 |
| 18 | 5 |

| VOLUME | |
|---|---|
| CUT | FILL |
| | |
| | |
| 18 | 5 |

CALCULATED CJC
CHECKED PJF

# CROSS SECTIONS - RAMP B-1
# STA. 421+00.00 TO STA. 421+40.51

SUM-77 / 277 / 224
VARIOUS

687
1288

D:\2017\2017258\ProjectData\SUM\06002\Design\Roadway\Sheets\06002_XS03.dgn Sheet 1/13/2021 6:09:32 PM pfry

| SEEDING END WIDTH | SEEDING SQ. YDS. |
|---|---|
| | 356 |
| | |
| 62 | |
| | 347 |
| | |
| 63 | |
| | 247 |
| | |
| 64 | |
| | 950 |

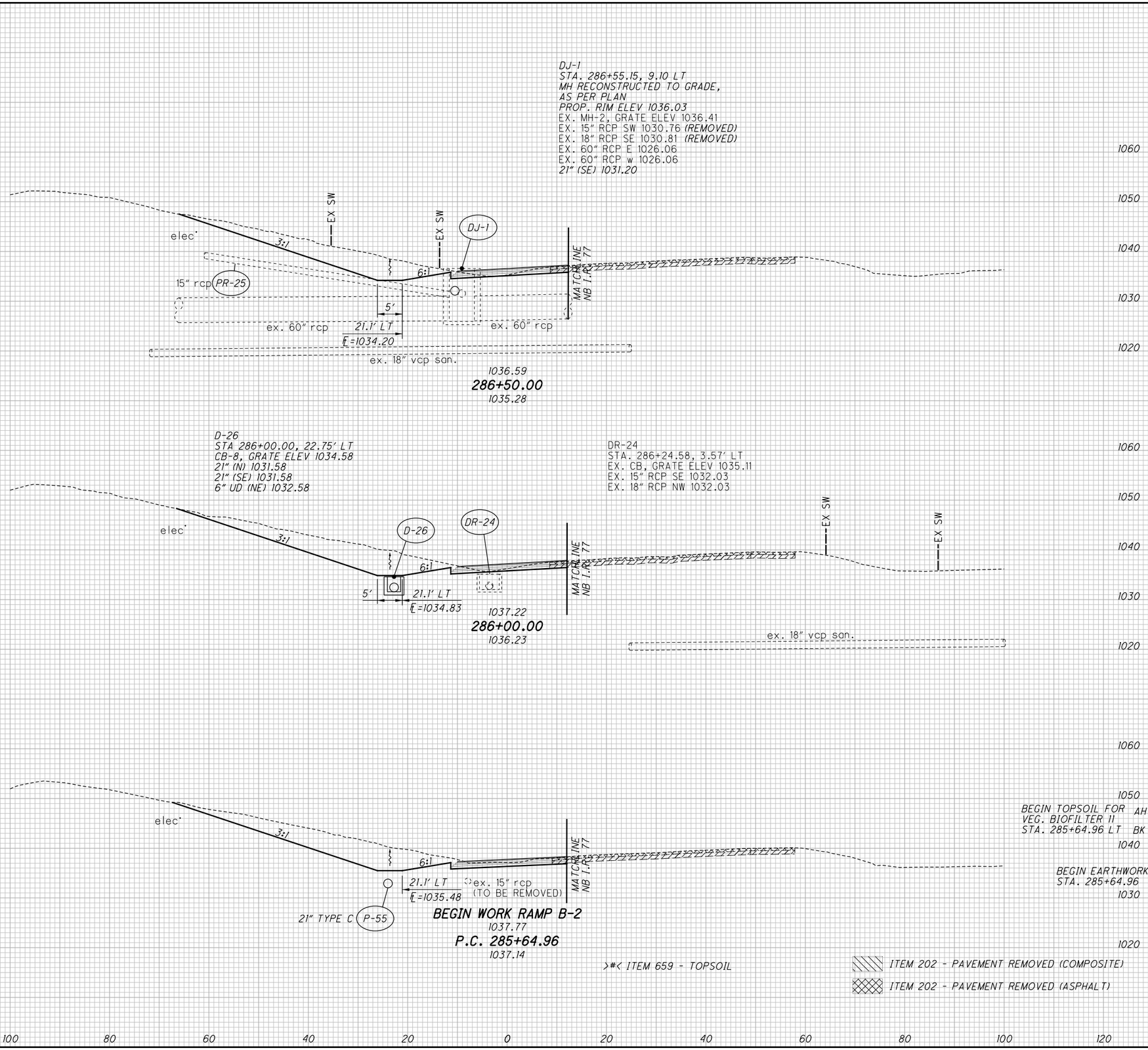


| END AREA CUT | END AREA FILL | VOLUME CUT | VOLUME FILL |
|---|---|---|---|
| | | | >7< |
| | | 315 | 0 |
| | | | |
| | >4< | | |
| 165 | 0 | | |
| | | | |
| | | | >7< |
| | | 319 | 0 |
| | | | |
| | | | |
| 180 | >4< 0 | | |
| | | | |
| | | | >5< |
| | | 245 | 0 |
| | | | |
| | >4< | | |
| | >0< | | |
| 197 | 0 | | |
| | | | |
| | | | >19< |
| | | 879 | 0 |

>#< ITEM 659 - TOPSOIL

ITEM 202 - PAVEMENT REMOVED (COMPOSITE)

ITEM 202 - PAVEMENT REMOVED (ASPHALT)

CALCULATED CJC
CHECKED PJF

# CROSS SECTIONS - RAMP B-2
# STA. 285+64.96 TO STA. 286+50.00

SUM-77 / 277 / 224
VARIOUS

688
1288

O:\2017\2017258\Project Data\SUM\06002\Design\Roadway\Sheets\06002_XS104.dgn Sheet 1/13/2021 6:10:12 PM pfry

| SEEDING END WIDTH | SEEDING SQ. YDS. |
|---|---|
| | 367 |
| 64 | |
| | 353 |
| 63 | |
| | 358 |
| 66 | |
| | 1078 |

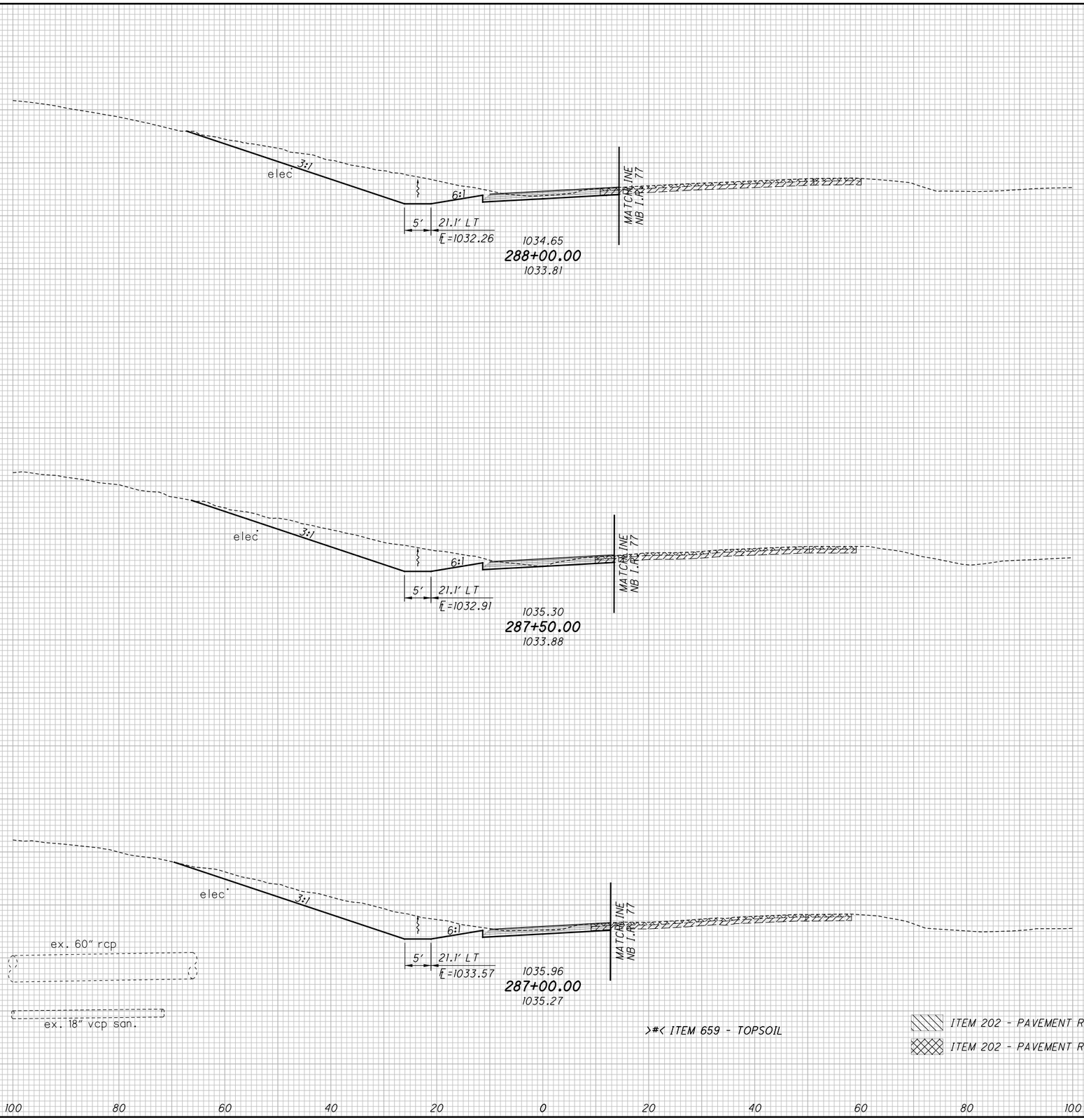


>#< ITEM 659 - TOPSOIL

ITEM 202 - PAVEMENT REMOVED (COMPOSITE)

ITEM 202 - PAVEMENT REMOVED (ASPHALT)

| END AREA CUT | END AREA FILL | VOLUME CUT | VOLUME FILL |
|---|---|---|---|
| | | | >6< |
| | | 387 | 0 |
| | >4< | | |
| 193 | 0 | | |
| | | | >7< |
| | | 332 | 0 |
| | | | |
| 166 | >4< 0 | | |
| | | 316 | >7< 0 |
| 175 | >4< 0 | | |
| | | 1035 | >20< 0 |

CALCULATED CJC
CHECKED PJF

# CROSS SECTIONS - RAMP B-2
## STA. 287+00.00 TO STA. 288+00.00

SUM-77 / 277 / 224
VARIOUS

689
1288

O:\2017\2017258\ProjectData\SUM\106002\Design\Roadway\Sheets\106002_XS104.dgn Sheet 1/13/2021 6:10:16 PM pfry

| SEEDING END WIDTH | SEEDING SQ. YDS. | END AREA CUT | END AREA FILL | VOLUME CUT | VOLUME FILL |
|---|---|---|---|---|---|
| | 372 | | | 448 | >4< 0 |
| 67 | | 234 | >2< 0 | | |
| | 381 | | | 435 | >4< 0 |
| 70 | | 236 | >2< 0 | | |
| | 383 | | | 427 | >4< 0 |
| 68 | | 225 | >2< 0 | | |
| | 1136 | | | 1310 | >12< 0 |

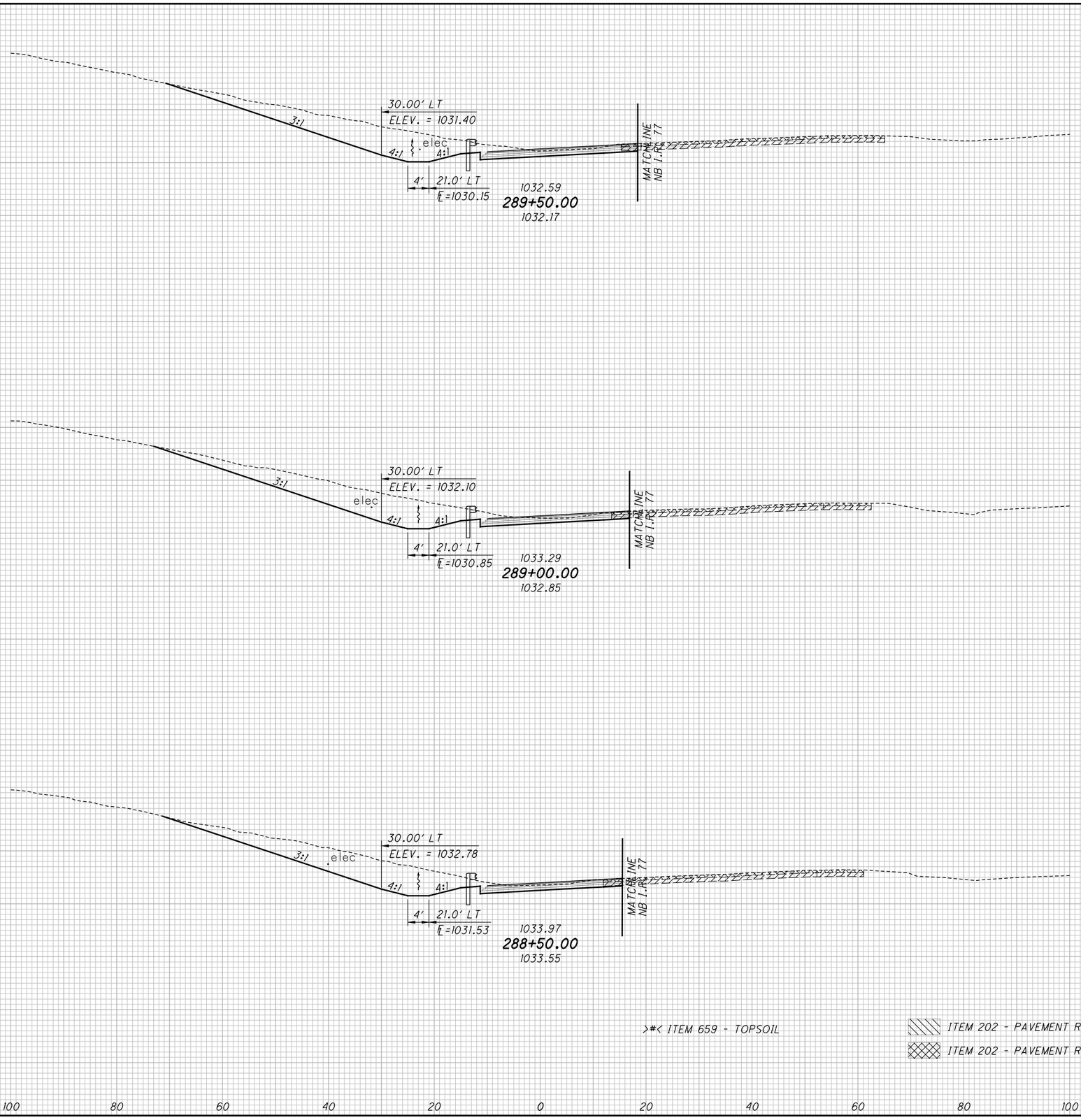


>#< ITEM 659 - TOPSOIL

ITEM 202 - PAVEMENT REMOVED (COMPOSITE)

ITEM 202 - PAVEMENT REMOVED (ASPHALT)

CALCULATED CJC
CHECKED PJF

# CROSS SECTIONS - RAMP B-2
## STA. 288+50.00 TO STA. 289+50.00

SUM-77 / 277 / 224
VARIOUS

690
1288

D:\2017\2017258\ProjectData\SUM\106002\Design\Roadway\Sheets\106002_XS104.dgn Sheet 1/13/2021 6:10:18 PM pfry

| SEEDING END WIDTH | SEEDING SQ. YDS. | END AREA CUT | END AREA FILL | VOLUME CUT | VOLUME FILL |
|---|---|---|---|---|---|
| | 394 | | | 619 | 0 |
| 73 | | 374 | 0 | | |
| | 403 | | | 608 | 0 |
| 72 | | 283 | 0 | | |
| | 386 | | | 494 | >6< 0 |
| 67 | | 250 | >2< 0 | | |
| | 1183 | | | 1721 | >6< 0 |

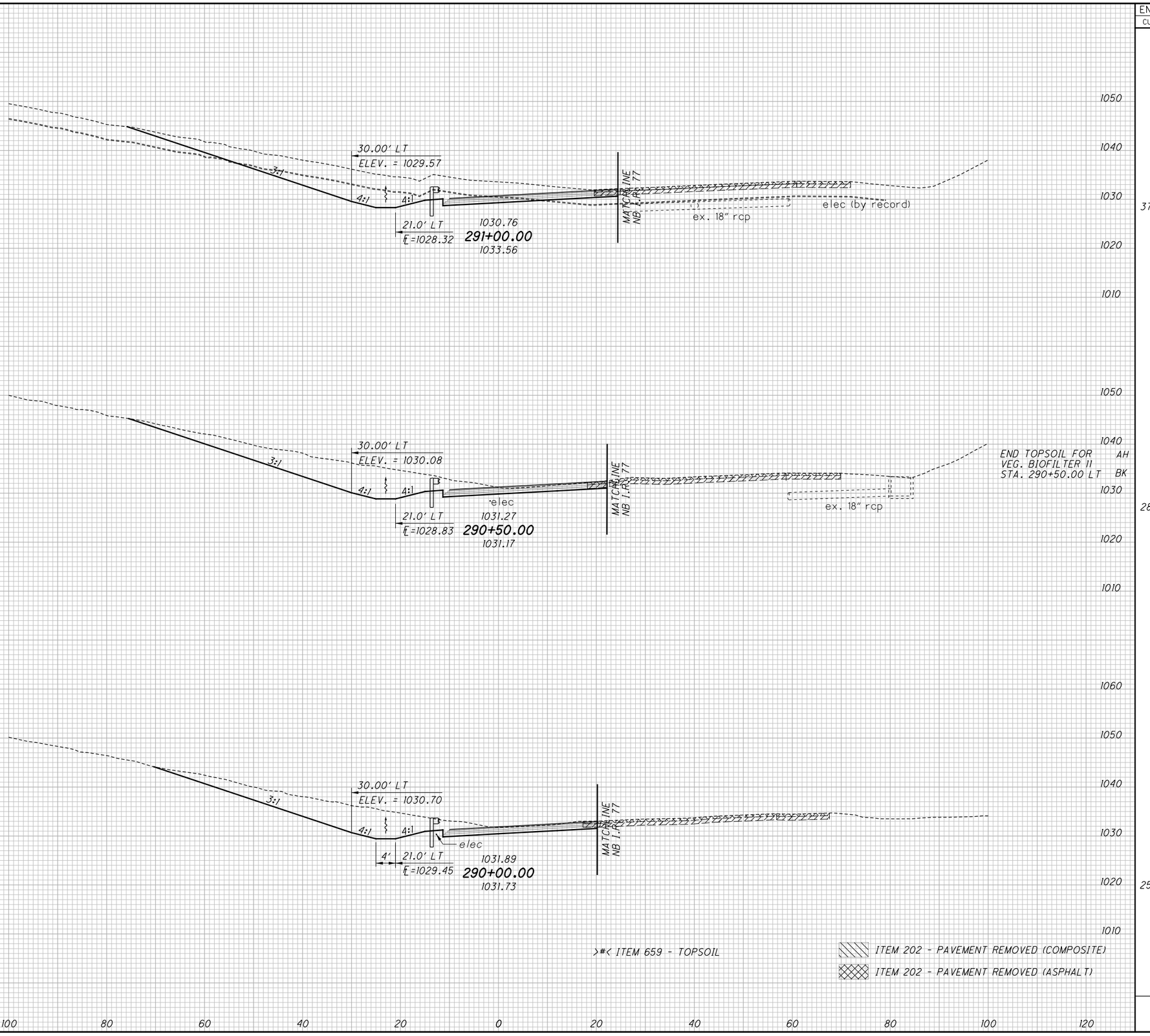


>#< ITEM 659 - TOPSOIL

ITEM 202 - PAVEMENT REMOVED (COMPOSITE)

ITEM 202 - PAVEMENT REMOVED (ASPHALT)

CALCULATED CJC
CHECKED PJF

# CROSS SECTIONS - RAMP B-2
## STA. 290+00.00 TO STA. 291+00.00

SUM-77 / 277 / 224
VARIOUS

691
1288

O:\2017\2017258\ProjectData\SUM\106002\Design\Roadway\Sheets\106002_XS104.dgn Sheet 1/13/2021 6:10:21 PM pfry

| SEEDING END WIDTH | SEEDING SQ. YDS. |
|---|---|
| | 328 |
| 58 | |
| | 342 |
| 65 | |
| | 372 |
| 69 | |
| | 1042 |

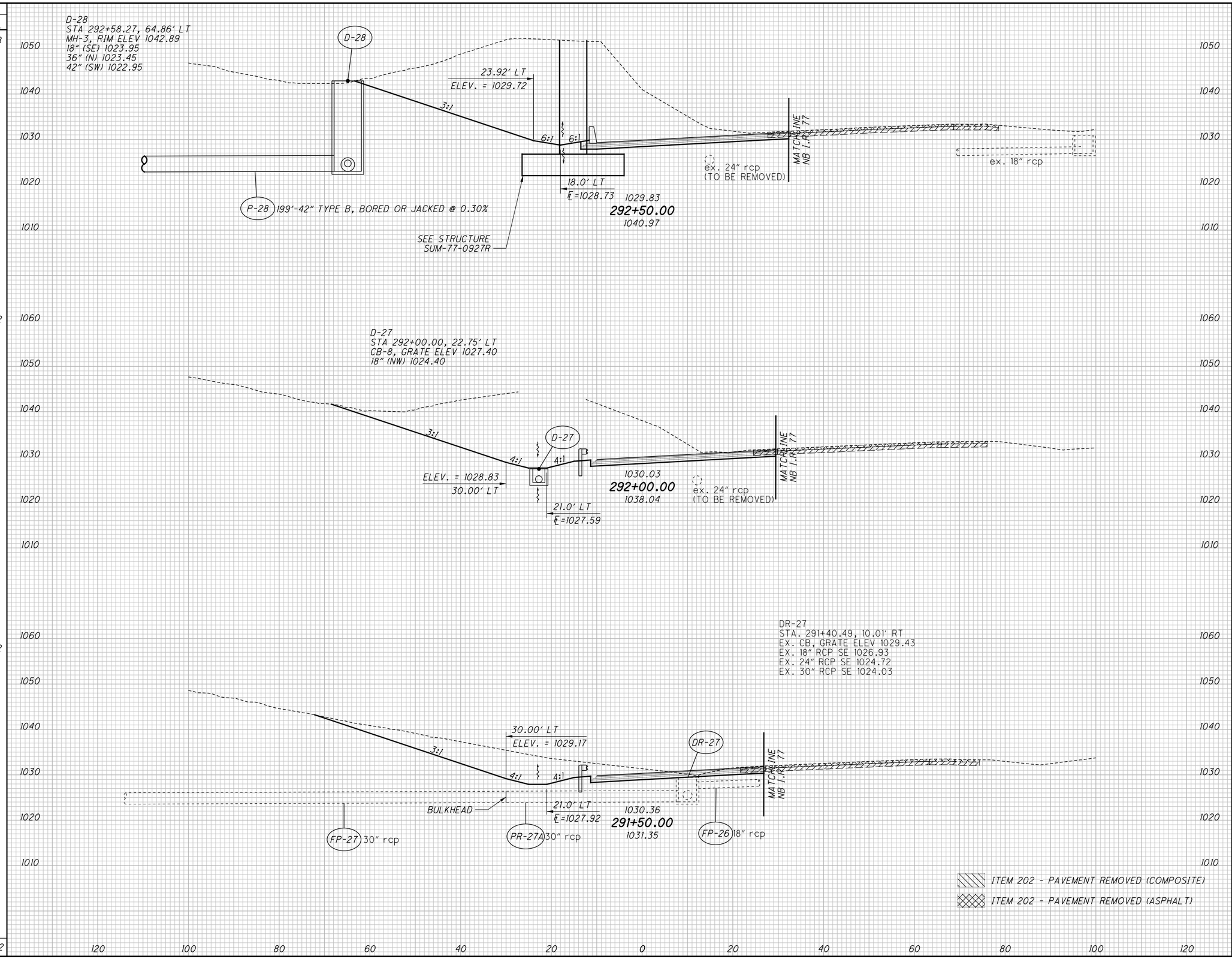


| END AREA CUT | END AREA FILL | VOLUME CUT | VOLUME FILL |
|---|---|---|---|
| | | 1993 | 0 |
| 1104 | 0 | | |
| | | 1723 | 0 |
| 757 | 0 | | |
| | | 973 | 0 |
| 294 | 0 | | |
| | | 4689 | 0 |

CALCULATED CJC
CHECKED PJF

# CROSS SECTIONS - RAMP B-2
## STA. 291+50.00 TO STA. 292+50.00

SUM-77 / 277 / 224
VARIOUS

692
1288

0:\2017\2017258\ProjectData\SUM\06002\Design\Roadway\Sheets\06002_XS104.dgn Sheet 1/13/2021 6:0:23 PM pfry

| SEEDING END WIDTH | SEEDING SQ. YDS. |
|---|---|
| | 136 |
| 19 | |
| | 83 |
| 11 | |
| | 197 |
| 60 | |
| | 416 |

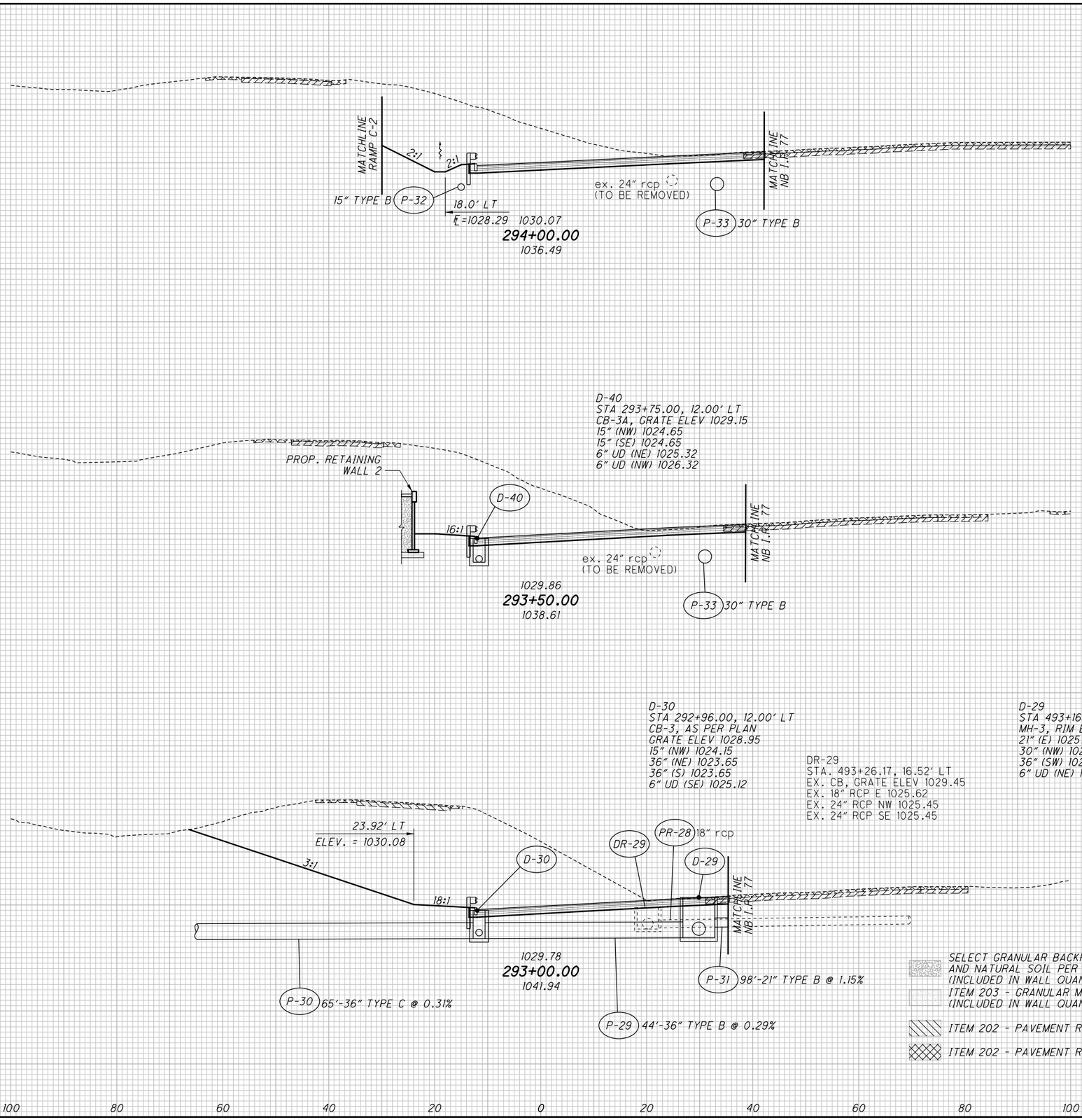


| END AREA CUT | END AREA FILL | VOLUME CUT | VOLUME FILL |
|---|---|---|---|
| | | 941 | 0 |
| 479 | 0 | | |
| | | 859 | 0 |
| 449 | 0 | | |
| | | 1386 | 0 |
| 1048 | 0 | | |
| | | 3186 | 0 |

CALCULATED CJC
CHECKED PJF

# CROSS SECTIONS - RAMP B-2
# STA. 293+00.00 TO STA. 294+00.00

SUM-77 / 277 / 224
VARIOUS

693
1288

D:\2017\2017258\ProjectData\SUM\06002\Design\Roadway\Sheets\06002_XS104.dgn Sheet 1/13/2021 6:10:27 PM pfry

| SEEDING END WIDTH | SEEDING SQ. YDS. | END AREA CUT | END AREA FILL | VOLUME CUT | VOLUME FILL |
|---|---|---|---|---|---|
| | 144 | | | 694 | 0 |
| | | 439 | 0 | | |
| 40 | | | | | |
| | 118 | | | 506 | 0 |
| | | 512 | 0 | | |
| 34 | | | | | |
| | 76 | | | 413 | 0 |
| | | 537 | 0 | | |
| 30 | | | | | |
| | 338 | | | 1613 | 0 |

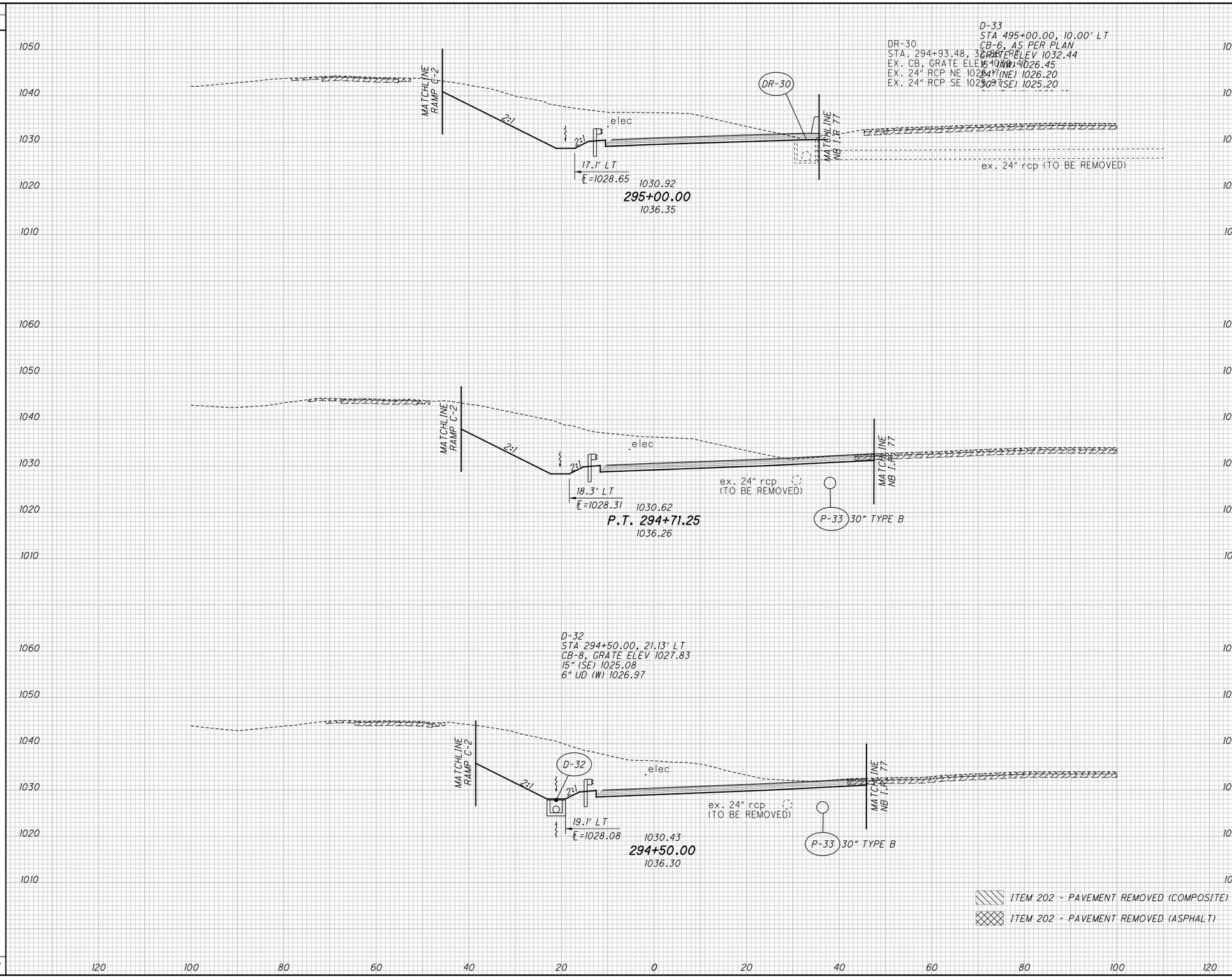


CALCULATED CJC
CHECKED PJF

# CROSS SECTIONS - RAMP B-2
## STA. 294+50.00 TO STA. 295+00.00

SUM-77 / 277 / 224
VARIOUS

694
1288

0:\2017\20172581\Project Data\SUM\06002\Design\Roadway\Sheets\06002_XS104.dgn Sheet 1/13/2021 6:10:31 PM pfry

| SEEDING END WIDTH | SEEDING SQ. YDS. | END AREA CUT | END AREA FILL | VOLUME CUT | VOLUME FILL |
|---|---|---|---|---|---|
| | 89 | | | 569 | 0 |
| | | | | | |
| | | | | | |
| | | | | | |
| | | | | | |
| 17 | | 328 | 0 | | |
| | | | | | |
| | | | | | |
| | 89 | | | 629 | 0 |
| | | | | | |
| | | | | | |
| | | | | | |
| 15 | | 351 | 0 | | |
| | | | | | |
| | | | | | |
| | 75 | | | 612 | 0 |
| | | | | | |
| | | | | | |
| | | | | | |
| 12 | | 310 | 0 | | |
| | | | | | |
| | | | | | |
| 253 | | | | 1810 | 0 |

CALCULATED CJC
CHECKED PJF

# CROSS SECTIONS - RAMP B-2
## STA. 296+50.00 TO STA. 295+50.00

SUM-77 / 277 / 224
VARIOUS

695
1288

1050
1040
1030
1020
1010

elec
MATCHLINE RAMP C-2
4:1
15.0' LT
℄=1030.62
1032.68
296+50.00
1037.93
15" TYPE B
P-35
38.4' RT
℄=1032.29
MATCHLINE NB 1-R 77

elec.
MATCHLINE RAMP C-2
4:1
16.1' LT
℄=1029.98
1032.09
296+00.00
1037.90
15" TYPE B
P-35
MATCHLINE NB 1-R 77

D-41
STA 295+50.00, 32.75' RT
1-3-D, GRATE ELEV 1031.74
15" (NW) 1026.83
15" (SE) 1026.83
6" UD (NW) 1028.91

D-41
elec
MATCHLINE RAMP C-2
2:1
15.1' LT
℄=1029.32
1031.50
295+50.00
1037.03
E-43
MATCHLINE NB 1-R 77

6'L X 4'W X 18" TH
ROCK CHANNEL
PROTECTION, TYPE C
WITH GEOTEXTILE FABRIC

ITEM 202 - PAVEMENT REMOVED (COMPOSITE)
ITEM 202 - PAVEMENT REMOVED (ASPHALT)

120 100 80 60 40 20 0 20 40 60 80 100 120

D:\2017\2017258\ProjectData\SUM\106002\Design\Roadway\Sheets\I06002_XS104.dgn Sheet 1/13/2021 6:10:34 PM pfry

| SEEDING END WIDTH | SEEDING SQ. YDS. |
|---|---|
| | 34 |
| | |
| | |
| 52 | |
| | |
| | |
| | 235 |
| | |
| | |
| | |
| | 164 |
| | |
| | |
| 15 | |
| | |
| | |
| | 433 |

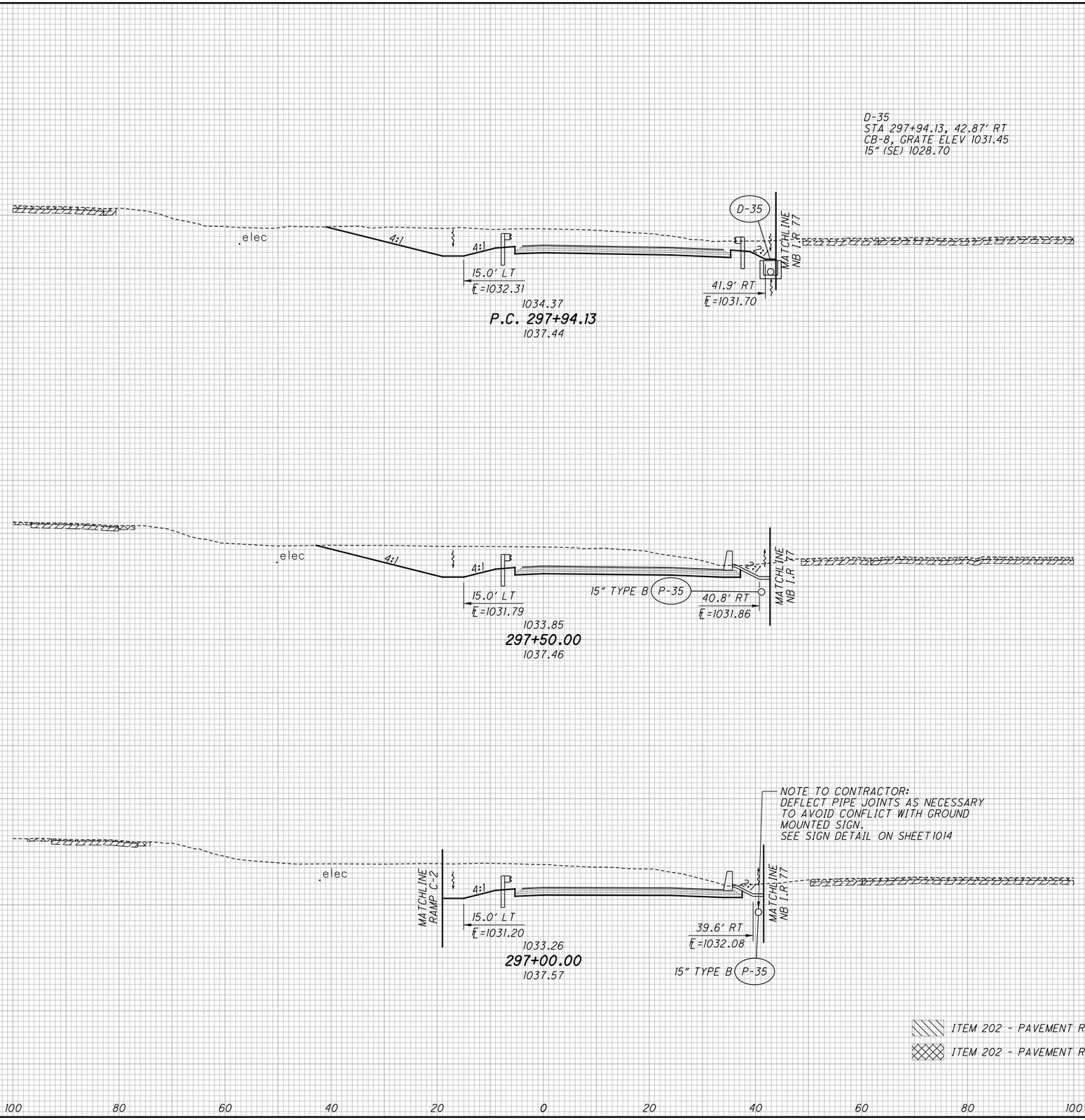


| END AREA CUT | END AREA FILL | VOLUME CUT | VOLUME FILL |
|---|---|---|---|
| | | 65 | 0 |
| | | | |
| | | | |
| 302 | 0 | | |
| | | | |
| | | | |
| | | 515 | 0 |
| | | | |
| | | | |
| | | | |
| 328 | 0 | | |
| | | | |
| | | | |
| | | 569 | 0 |
| | | | |
| | | | |
| | | | |
| 287 | 0 | | |
| | | | |
| | | | |
| | | | |
| | | | |
| | | | |
| | | 1149 | 0 |

CALCULATED CJC
CHECKED PJF

# CROSS SECTIONS - RAMP B-2
## STA. 297+00.00 TO STA. 297+94.13

SUM-77 / 277 / 224
VARIOUS

696
1288

O:\2017\2017258\ProjectData\SUM\06002\Design\Roadway\Sheets\106002_XS104.dgn Sheet 1/13/2021 6:10:37 PM pfry

| SEEDING END WIDTH | SEEDING SQ. YDS. | END AREA CUT | END AREA FILL | VOLUME CUT | VOLUME FILL |
|---|---|---|---|---|---|
| | 250 | | | 379 | 0 |
| 46 | | 225 | 0 | | |
| | 261 | | | 453 | 0 |
| 48 | | 264 | 0 | | |
| | 278 | | | 522 | 0 |
| 52 | | 300 | 0 | | |
| | 789 | | | 1354 | 0 |

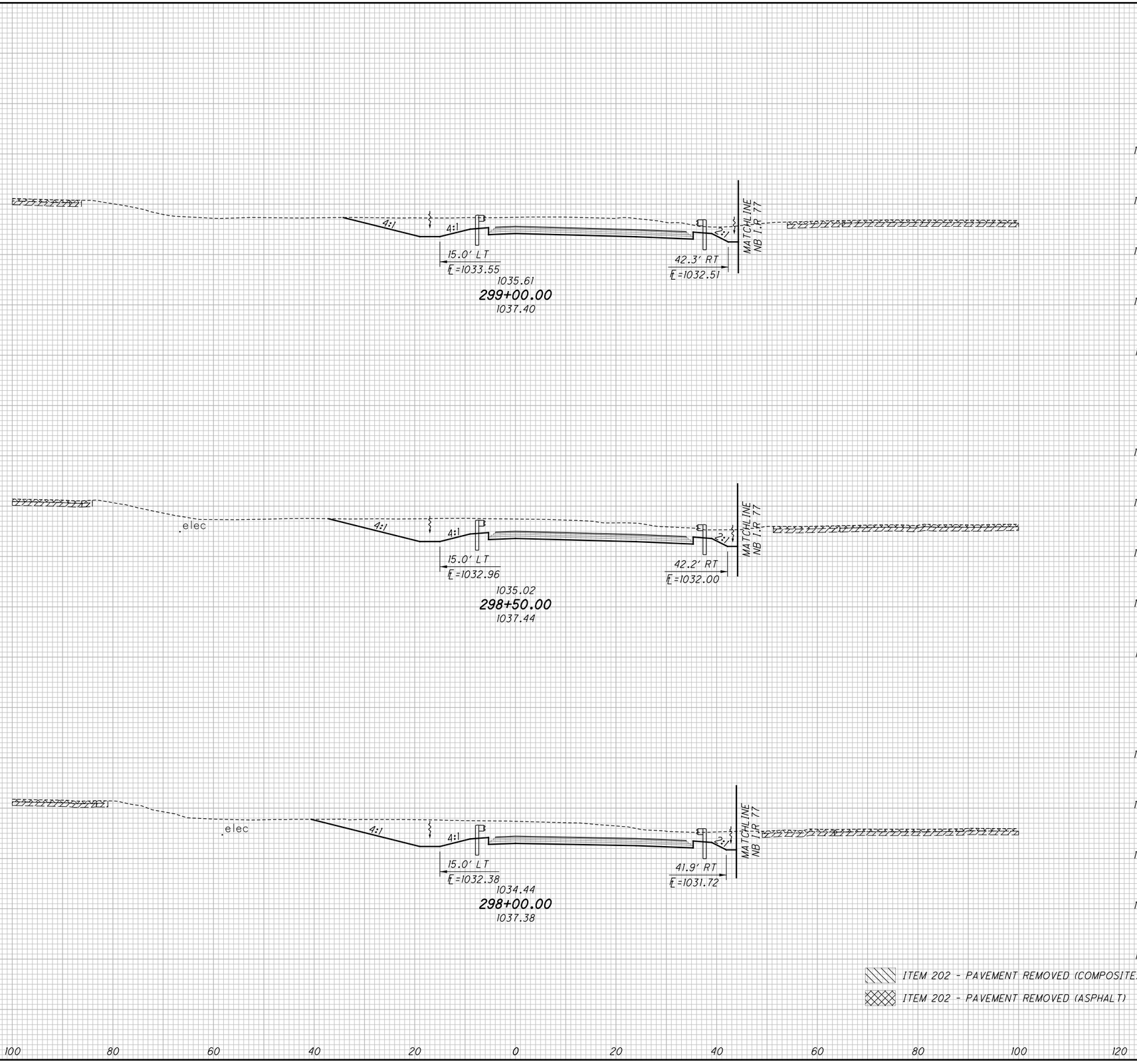


CALCULATED CJC
CHECKED PJF

# CROSS SECTIONS - RAMP B-2
## STA. 298+00.00 TO STA. 299+00.00

SUM-77 / 277 / 224
VARIOUS

697
1288

D:\2017\20171258\ProjectData\SUM\106002\Design\Roadway\Sheets\106002_XSI04.dgn Sheet 1/13/2021 6:10:40 PM pfry

| SEEDING END WIDTH | SEEDING SQ. YDS. |
|---|---|
| | 238 |
| 50 | |
| | 289 |
| 54 | |
| | 272 |
| 44 | |
| | 799 |

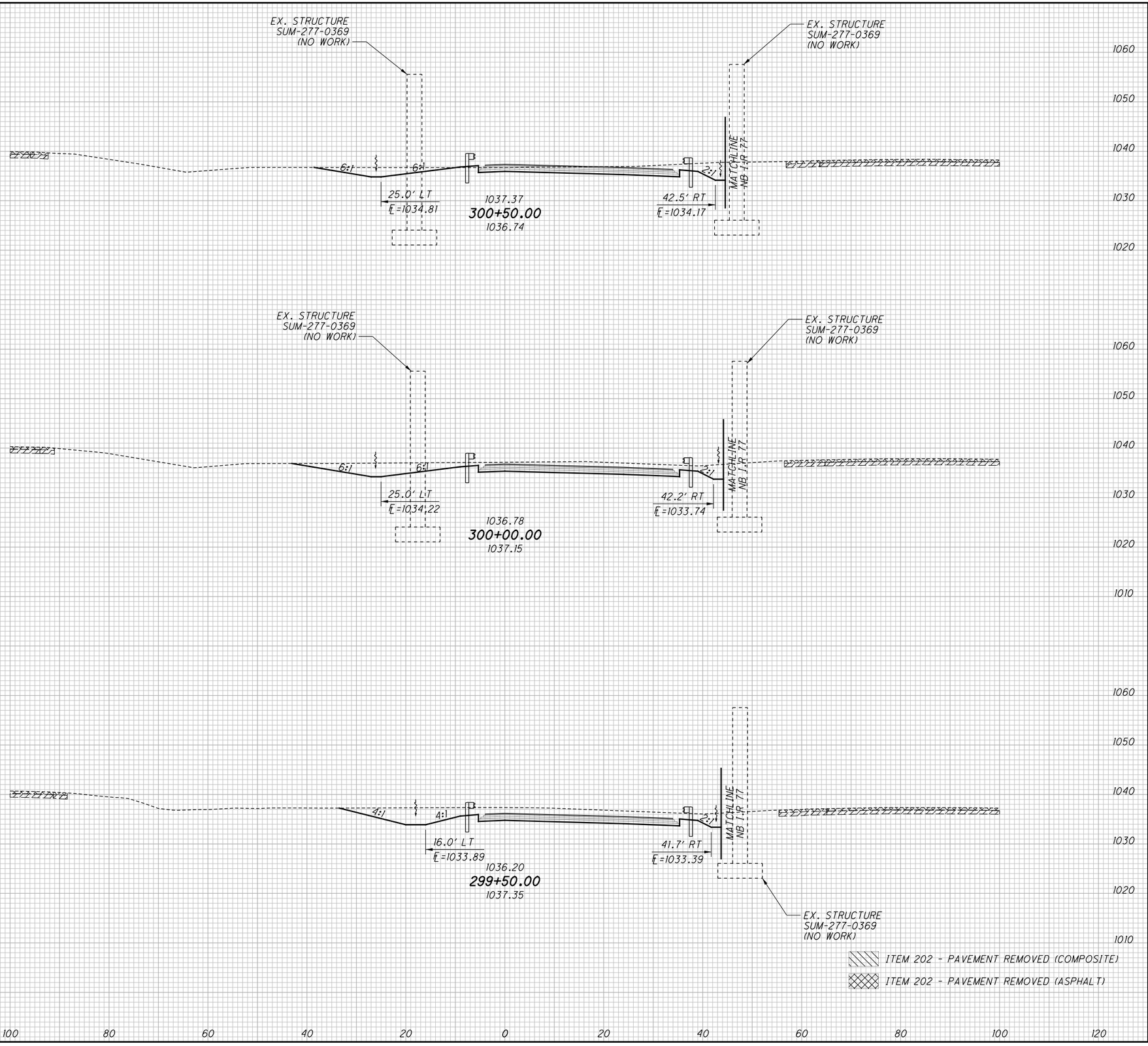


| END AREA CUT | END AREA FILL | VOLUME CUT | VOLUME FILL |
|---|---|---|---|
| | | 127 | 6 |
| 108 | 1 | | |
| | | 250 | 1 |
| 162 | 0 | | |
| | | 320 | 0 |
| 184 | 0 | | |
| | | 697 | 7 |

CALCULATED CJC
CHECKED PJF

# CROSS SECTIONS - RAMP B-2
## STA. 299+50.00 TO STA. 300+50.00

SUM-77 / 277 / 224
VARIOUS



O:\2017\2017258\ProjectData\SUM\106002\Design\Roadway\Sheets\106002_XS104.dgn Sheet 1/13/2021 6:10:42 PM pfry

| SEEDING END WIDTH | SEEDING SQ. YDS. |
|---|---|
| | 322 |
| | |
| | |
| 52 | |
| | |
| | |
| | 272 |
| | |
| | |
| 46 | |
| | |
| | |
| | 30 |
| | |
| | |
| 47 | |
| | |
| | |
| | 624 |

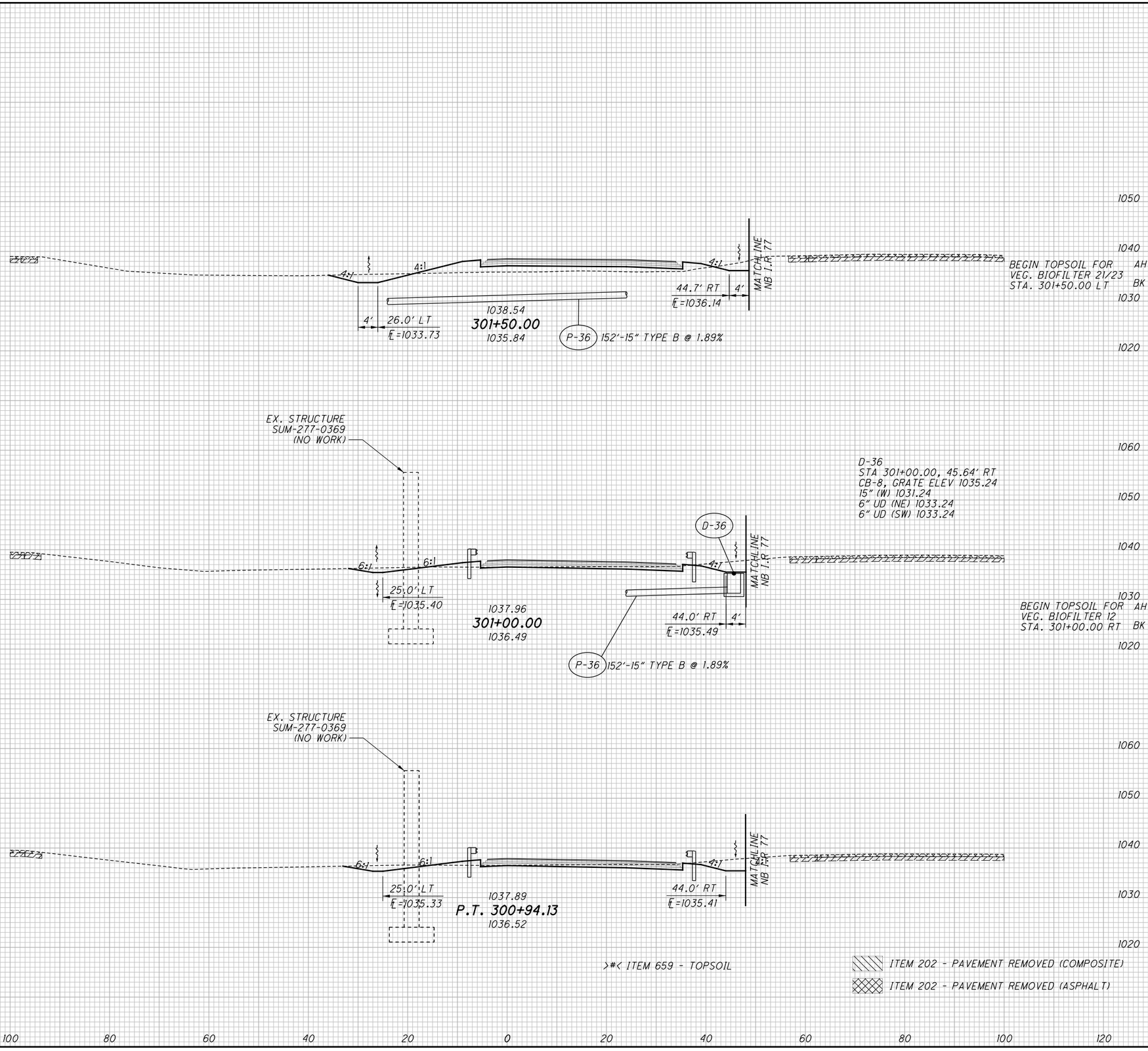


| END AREA CUT | END AREA FILL | VOLUME CUT | VOLUME FILL |
|---|---|---|---|
| | | | >23< |
| | | 65 | 220 |
| | >11< | | |
| | >4< | | |
| 29 | 60 | | |
| | | | >5< |
| | | 63 | 62 |
| | >2< | | |
| | >0< | | |
| 39 | 7 | | |
| | | 9 | 1 |
| 48 | 6 | | |
| | | | >28< |
| | | 137 | 283 |

CALCULATED CJC
CHECKED PJF

# CROSS SECTIONS - RAMP B-2
## STA. 300+94.13 TO STA. 301+50.00

SUM-77/277/224
VARIOUS

699
1288

0:\2017\20172581\ProjectData\SUM\06002\Design\Roadway\Sheets\06002_XS104.dgn Sheet 1/13/2021 6:10:44 PM pfry

| SEEDING END WIDTH | SEEDING SQ. YDS. |
|---|---|
| | 372 |
| 67 | |
| | 344 |
| 57 | |
| | 336 |
| 64 | |
| | 1052 |

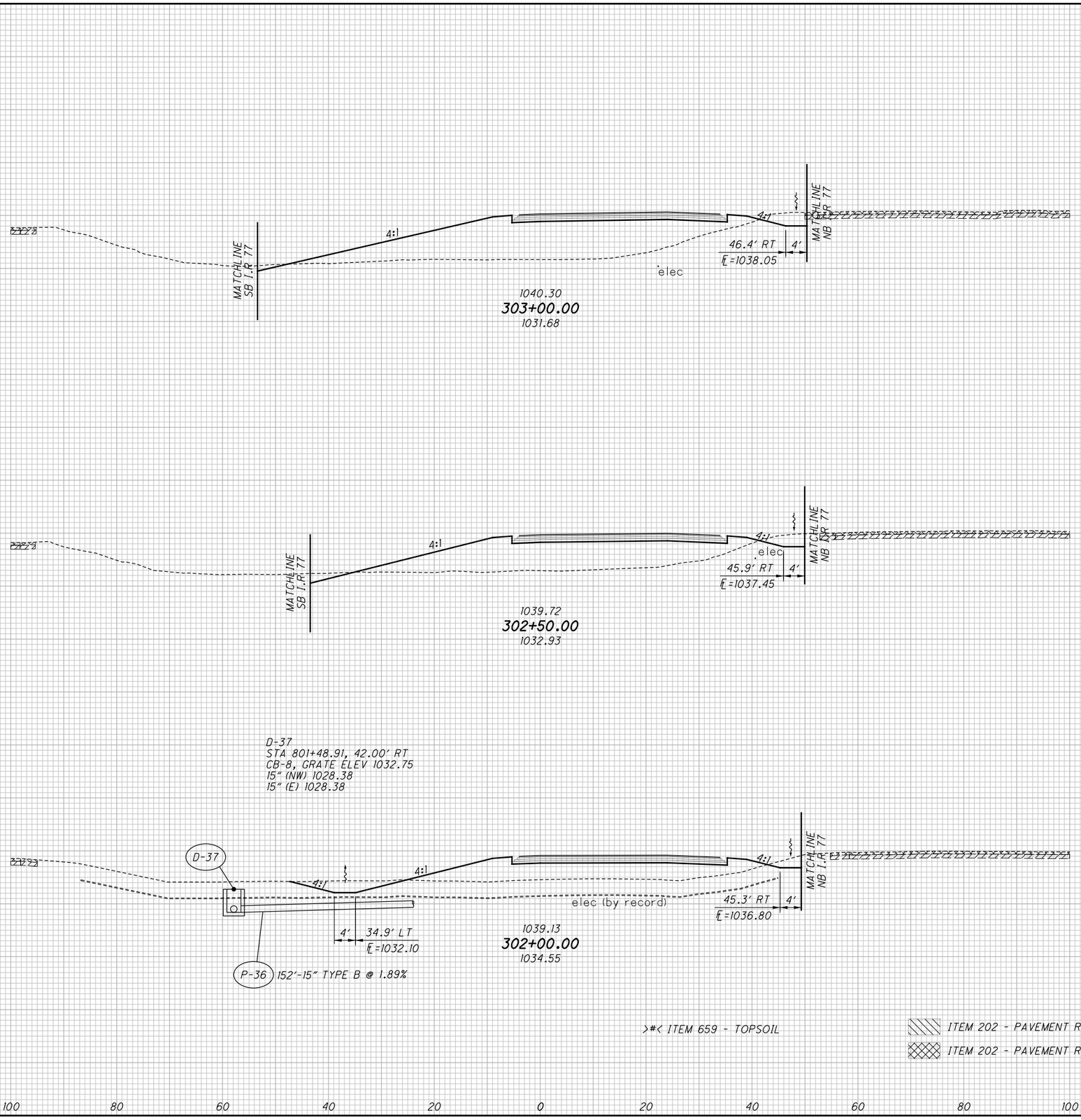


| END AREA CUT | END AREA FILL | VOLUME CUT | VOLUME FILL |
|---|---|---|---|
| | | | >38< |
| | | 37 | 827 |
| | >21< | | |
| 24 | 413 | | |
| | | | >35< |
| | | 47 | 660 |
| | >17< | | |
| 27 | 300 | | |
| | | | >29< |
| | | 63 | 443 |
| | >14< | | |
| 41 | 178 | | |
| | | | >102< |
| | | 147 | 1930 |

>#< ITEM 659 - TOPSOIL

ITEM 202 - PAVEMENT REMOVED (COMPOSITE)

ITEM 202 - PAVEMENT REMOVED (ASPHALT)

CALCULATED CJC
CHECKED PJF

# CROSS SECTIONS - RAMP B-2
## STA. 302+00.00 TO STA. 303+00.00

SUM-77 / 277 / 224
VARIOUS

700
1288

0:\2017\20172581\ProjectData\SUM\106002\Design\Roadway\Sheets\106002_XS104.dgn Sheet 1/13/2021 6:10:47 PM pfry

| SEEDING END WIDTH | SEEDING SQ. YDS. |
|---|---|
| | 403 |
| 70 | |
| | 381 |
| 67 | |
| | 372 |
| 67 | |
| | 1156 |

D-38
STA 504+00.00, 52.72' RT
CB-8, GRATE ELEV 1028.07
15" (SE) 1025.66
24" (SW) 1024.91

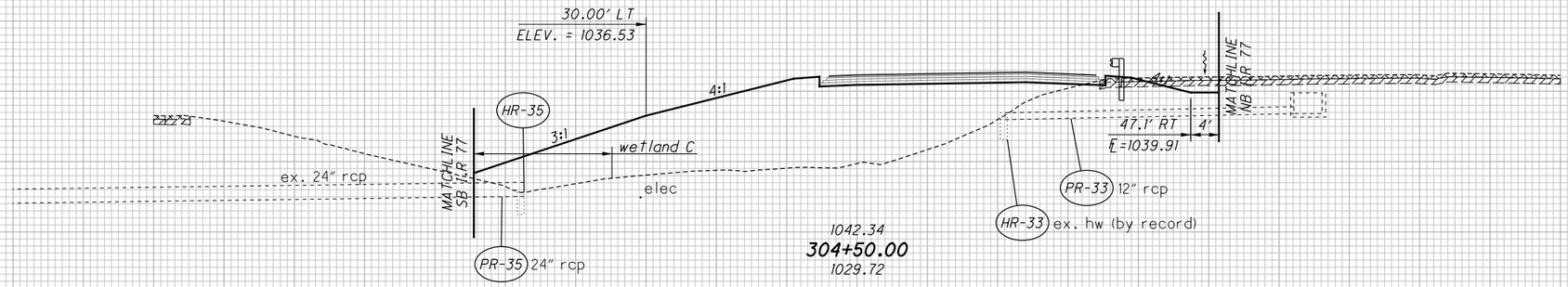


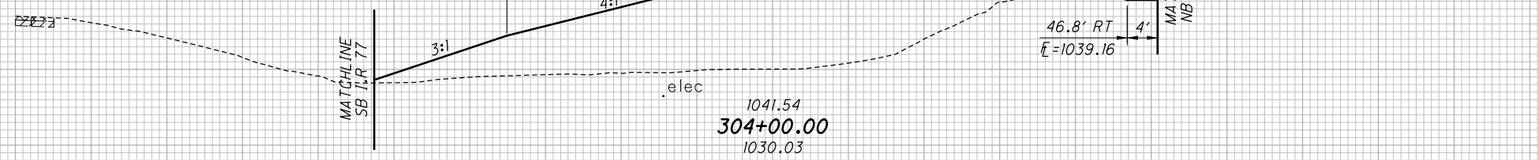


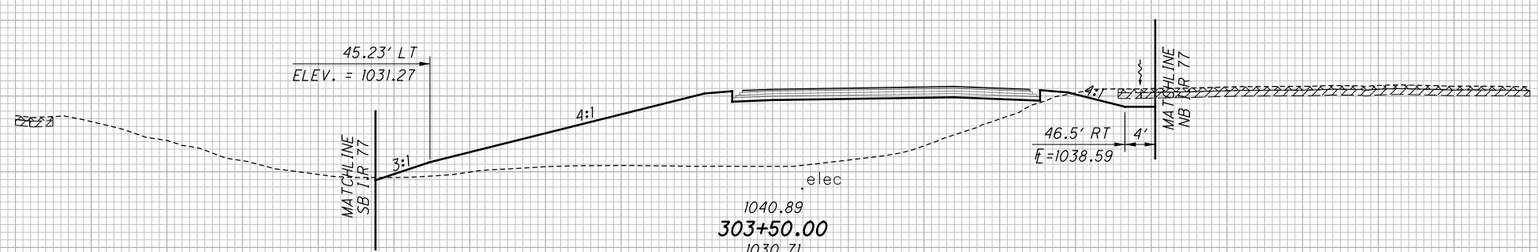


>#< ITEM 659 - TOPSOIL

ITEM 202 - PAVEMENT REMOVED (COMPOSITE)

ITEM 202 - PAVEMENT REMOVED (ASPHALT)

| END AREA CUT | END AREA FILL | VOLUME CUT | VOLUME FILL |
|---|---|---|---|
| | | | >38< |
| | | 18 | 1246 |
| | >20< | | |
| 8 | 664 | | |
| | | | >37< |
| | | 13 | 1147 |
| | >20< | | |
| 6 | 575 | | |
| | | | >37< |
| | | 20 | 977 |
| | >20< | | |
| 16 | 480 | | |
| | | | >112< |
| | | 51 | 3370 |

CALCULATED CJC
CHECKED PJF

# CROSS SECTIONS - RAMP B-2
## STA. 303+50.00 TO STA. 304+50.00

SUM-77 / 277 / 224
VARIOUS

701
1288

O:\2017\2017258\ProjectData\SUM\06002\Design\Roadway\Sheets\106002_XS104.dgn Sheet 1/13/2021 6:10:49 PM pfry

| SEEDING END WIDTH | SEEDING SQ. YDS. | END AREA CUT | END AREA FILL | VOLUME CUT | VOLUME FILL |
|---|---|---|---|---|---|
| | 469 | | | (65) | (65) |
| | | | | | >36< |
| | | | | 25 | 1141 |
| | | (0) | (0) | | |
| | | | >19< | | |
| | | | >22< | | |
| 83 | | 10 | 662 | | |
| | | | | | >16< |
| | 176 | | | 8 | 483 |
| | | | | | >23< |
| 80 | | 12 | 680 | | |
| | 263 | | | | >25< |
| | | | | 13 | 771 |
| | | | >21< | | |
| 75 | | 11 | 682 | | |
| | | | | (65) | (65) |
| | | | | | >77< |
| 908 | | | | 46 | 2395 |

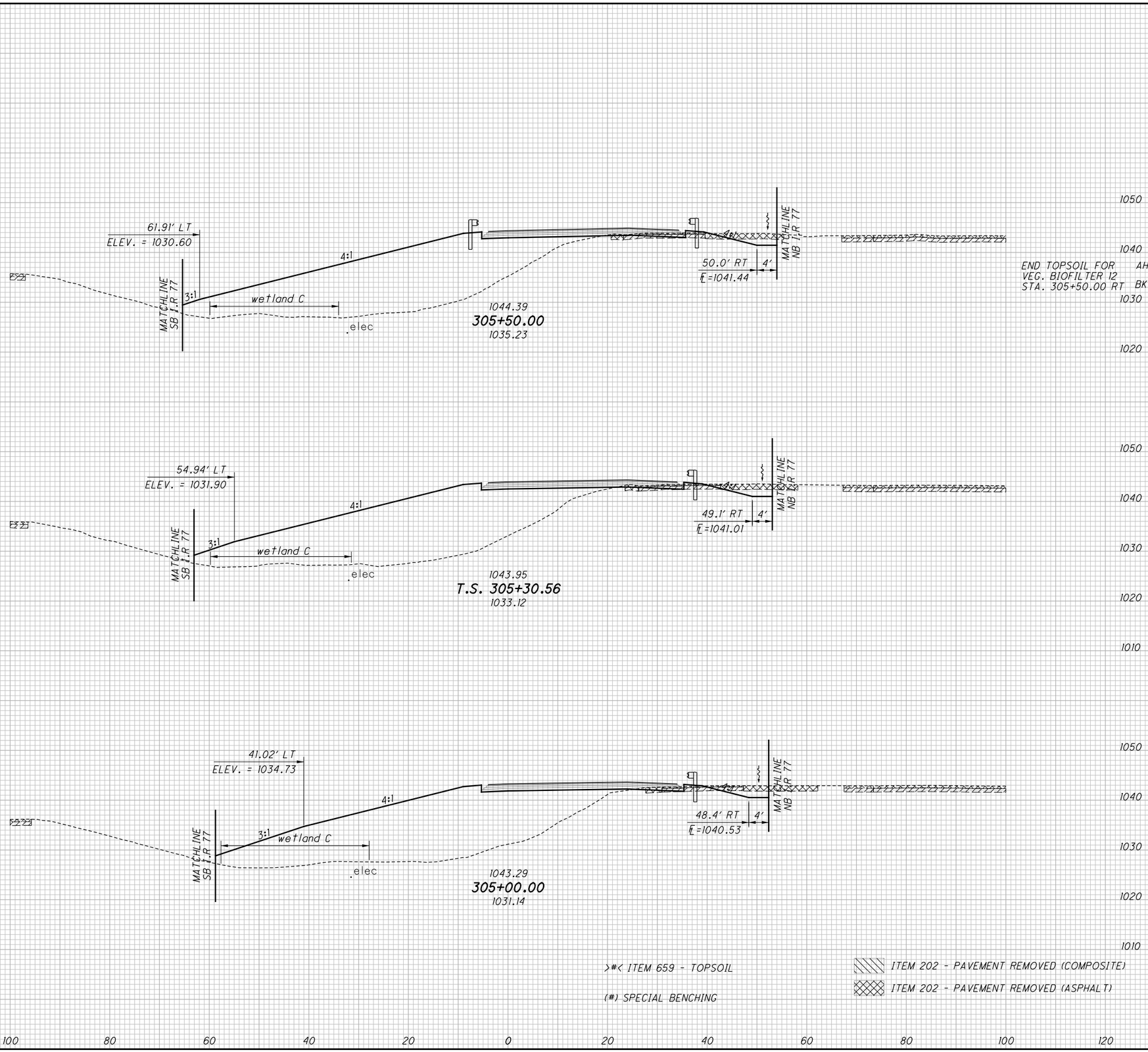


CALCULATED CJC
CHECKED PJF

# CROSS SECTIONS - RAMP B-2
# STA. 305+00.00 TO STA. 305+50.00

SUM-77 / 277 / 224
VARIOUS

702
1288

0:\2017\201758\ProjectData\SUM\06002\Design\Roadway\Sheets\106002_XS104.dgn Sheet 1/13/2021 6:10:52 PM pfry

| SEEDING END WIDTH | SEEDING SQ. YDS. |
|---|---|
| | 136 |
| 86 | |
| | 295 |
| 88 | |
| | 492 |
| 89 | |
| | 486 |
| 86 | |
| | 1409 |

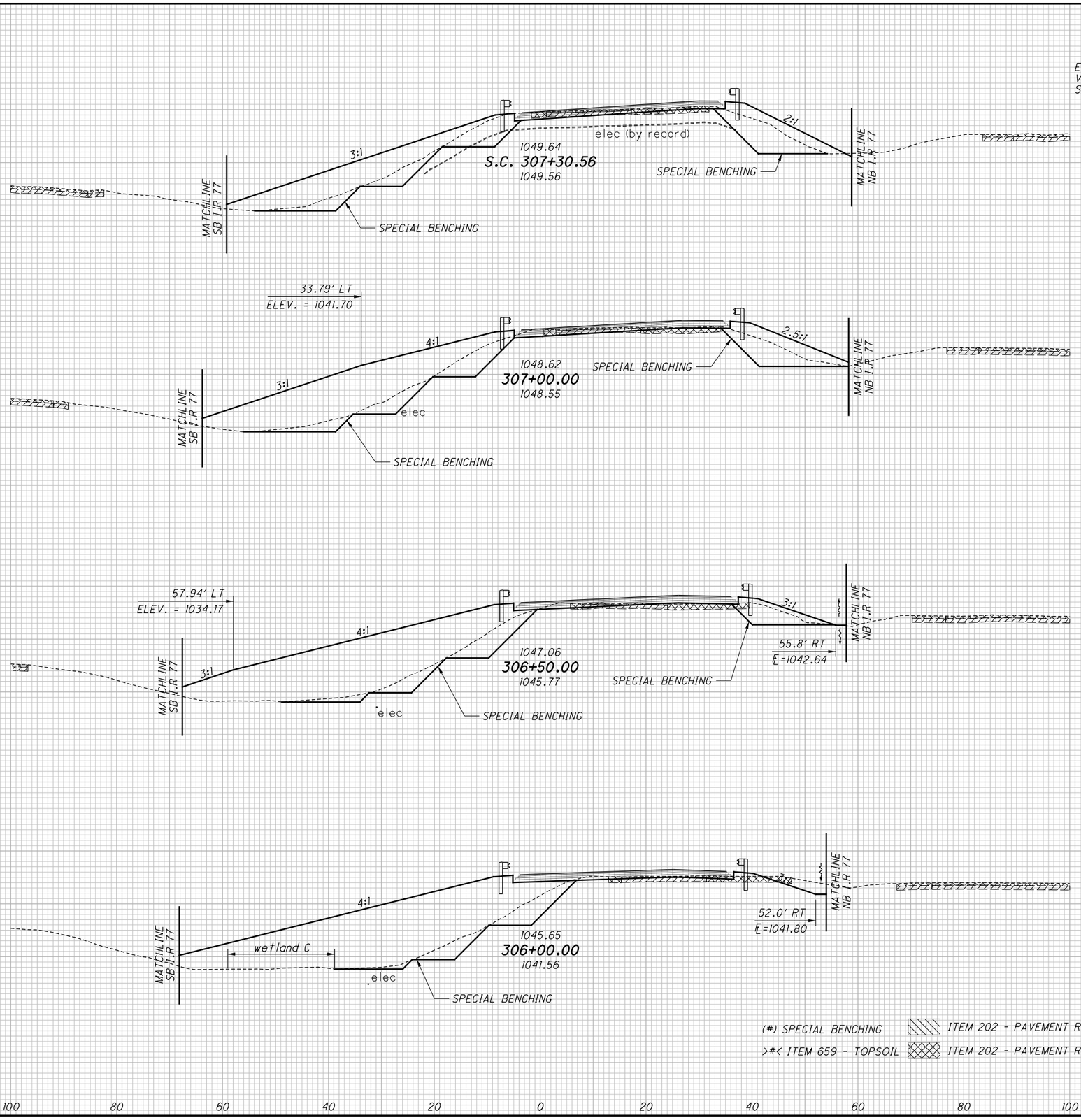


| END AREA CUT | END AREA FILL | VOLUME CUT | VOLUME FILL |
|---|---|---|---|
| | | (89) | (89) |
| | | 6 | 93 |
| | >0< | | |
| | >17< | | >12< |
| (157) | (157) | | |
| | >17< | | |
| 8 | 219 | | |
| | | (169) | (169) |
| | | | >20< |
| | | 8 | 338 |
| | | | |
| (142) | (142) | | |
| | >18< | | |
| 7 | 378 | | |
| | | | |
| | | (236) | (236) |
| | | | >35< |
| | | 10 | 810 |
| | | | |
| (113) | (113) | | |
| | >20< | | |
| 4 | 497 | | |
| | | (169) | (169) |
| | | | >37< |
| | | 19 | 988 |
| | | | |
| (70) | (70) | | |
| | >20< | | |
| 17 | 570 | | |
| | | | |
| (663) | (663) | | |
| | >104< | | |
| 43 | 2229 | | |

CALCULATED CJC
CHECKED PJF

# CROSS SECTIONS - RAMP B-2
## STA. 306+00.00 TO STA. 307+30.56

SUM-77 / 277 / 224
VARIOUS

703
1288

0:\2017\20172581\ProjectData\SUM\06002\Design\Roadway\Sheets\06002_XS104.dgn Sheet 1/13/2021 6:10:54 PM pfry

| SEEDING END WIDTH | SEEDING SQ. YDS. |
|---|---|
| | 36 |
| 19 | |
| 0 | |
| | 136 |
| 40 | |
| | 172 |

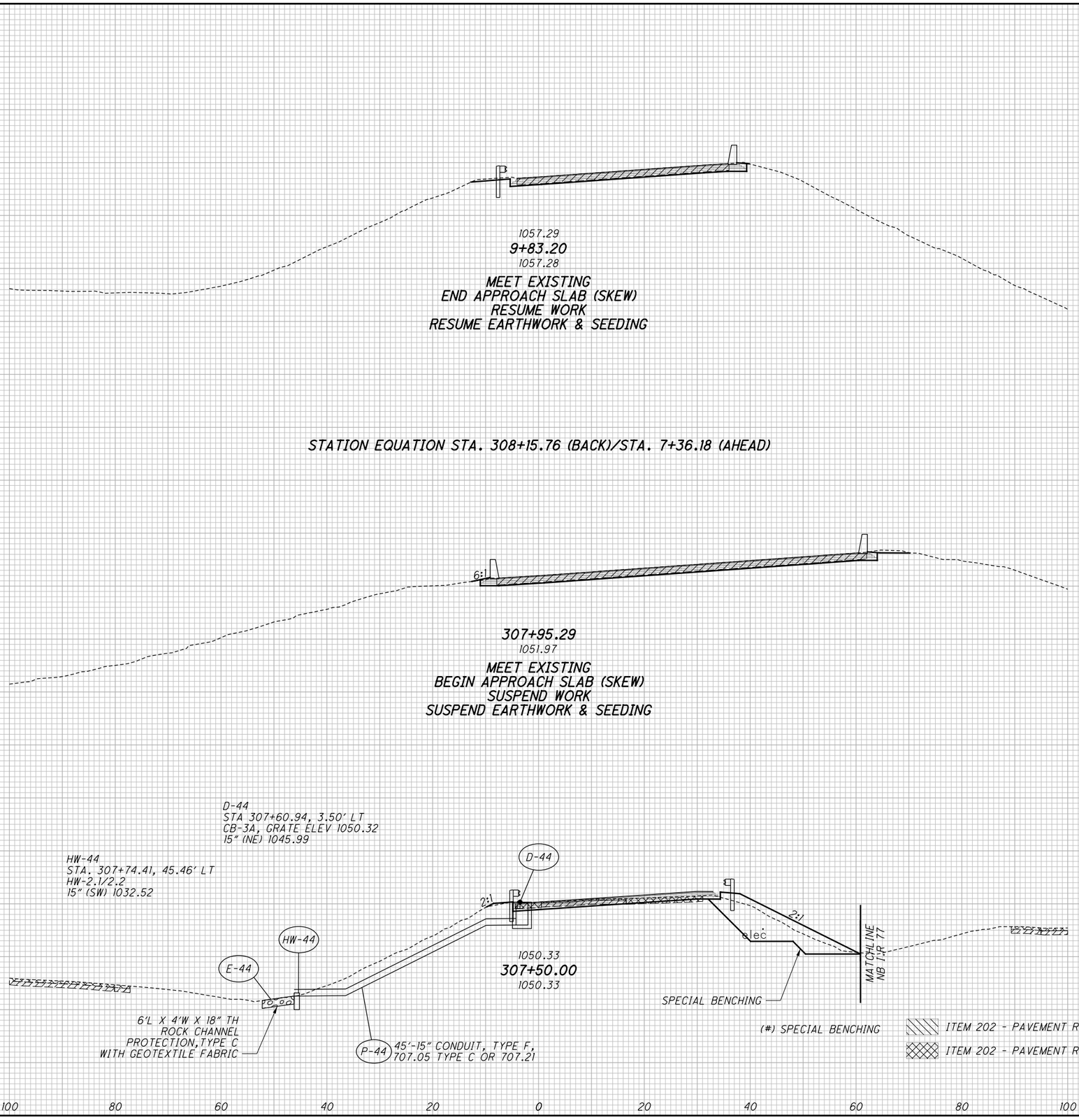


| END AREA CUT | END AREA FILL | VOLUME CUT | VOLUME FILL |
|---|---|---|---|
| | | 13 | 0 |
| AH 17 | 0 | | |
| BK 0 | 0 | | |
| AH 0 | 0 | | |
| (0) | (0) | | |
| BK 24 | 0 | | |
| | | (75) | (75) |
| | | 28 | 34 |
| | | (89) | (89) |
| | | 9 | 40 |
| | | (75) | (75) |
| | | 41 | 34 |

CALCULATED CJC
CHECKED PJF

# CROSS SECTIONS - RAMP B-2
## STA. 307+50.00 TO STA. 9+83.20

SUM-77 / 277 / 224
VARIOUS

704
1288

O:\2017\2017258\ProjectData\SUM\06002\Design\Roadway\Sheets\106002_XS104.dgn Sheet 1/13/2021 6:10:57 PM pfry

| SEEDING END WIDTH | SEEDING SQ. YDS. |
|---|---|
| | 450 |
| 87 | |
| | 503 |
| 94 | |
| | 317 |
| 20 | |
| | 1270 |

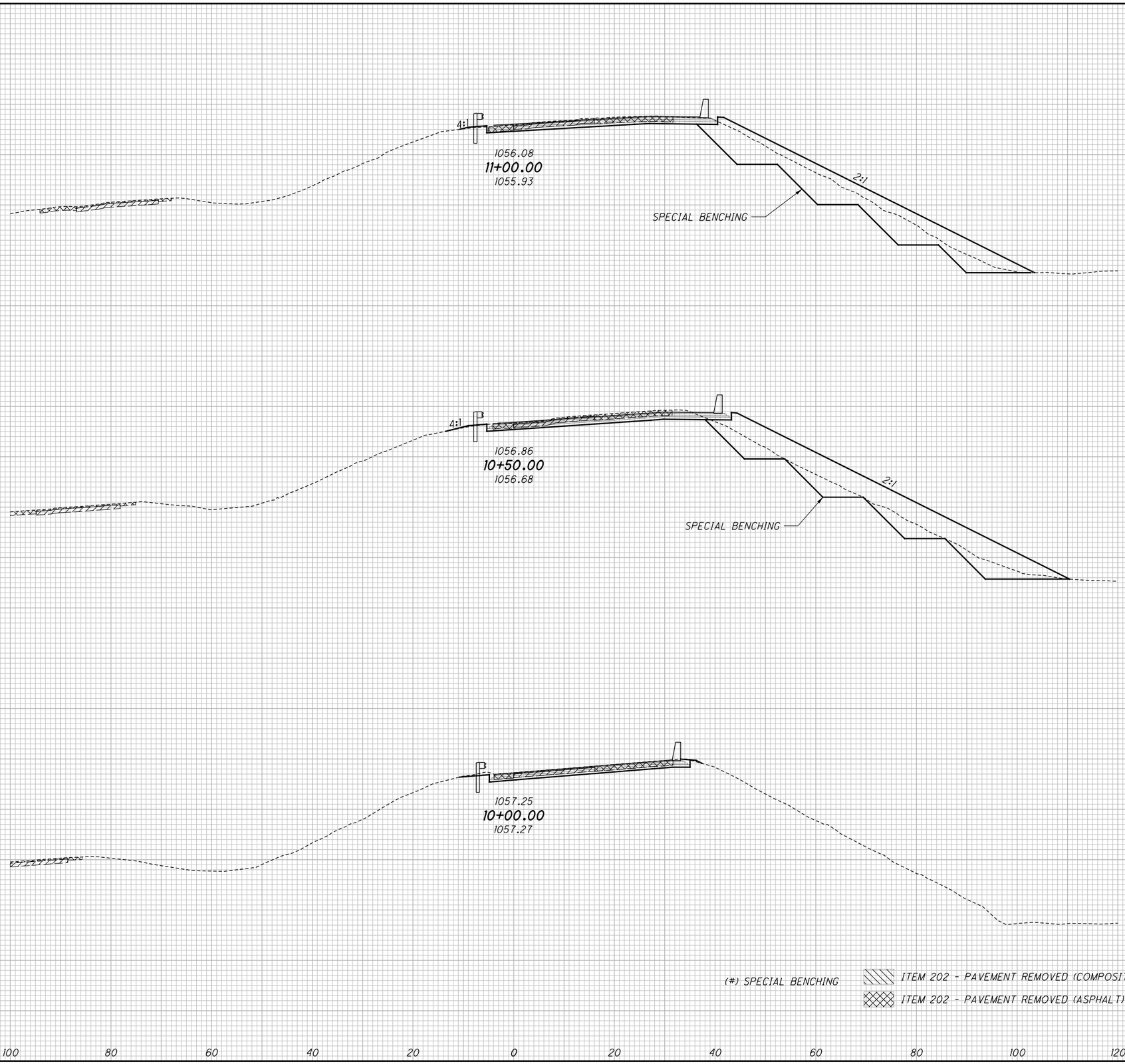


| END AREA CUT | END AREA FILL | VOLUME CUT | VOLUME FILL |
|---|---|---|---|
| | | (363) | (363) |
| | | 46 | 212 |
| (221) | (221) | | |
| 28 | 131 | | |
| | | | |
| | | | |
| | | (332) | (332) |
| | | 56 | 369 |
| | | | |
| | | | |
| (138) | (138) | | |
| 33 | 267 | | |
| | | | |
| | | | |
| | | (128) | (128) |
| | | 53 | 247 |
| | | | |
| | | | |
| (0) | (0) | | |
| 24 | 0 | | |
| | | (823) | (823) |
| | | 155 | 828 |

CALCULATED CJC
CHECKED PJF

# CROSS SECTIONS - RAMP B-2
## STA. 10+00.00 TO STA. 11+00.00

SUM-77 / 277 / 224
VARIOUS

705
1288

O:\2017\2017258\ProjectData\SUM\106002\Design\Roadway\Sheets\106002_XS104.dgn Sheet 1/13/2021 6:11:00 PM pfry

(#) SPECIAL BENCHING

ITEM 202 - PAVEMENT REMOVED (COMPOSITE)

ITEM 202 - PAVEMENT REMOVED (ASPHALT)

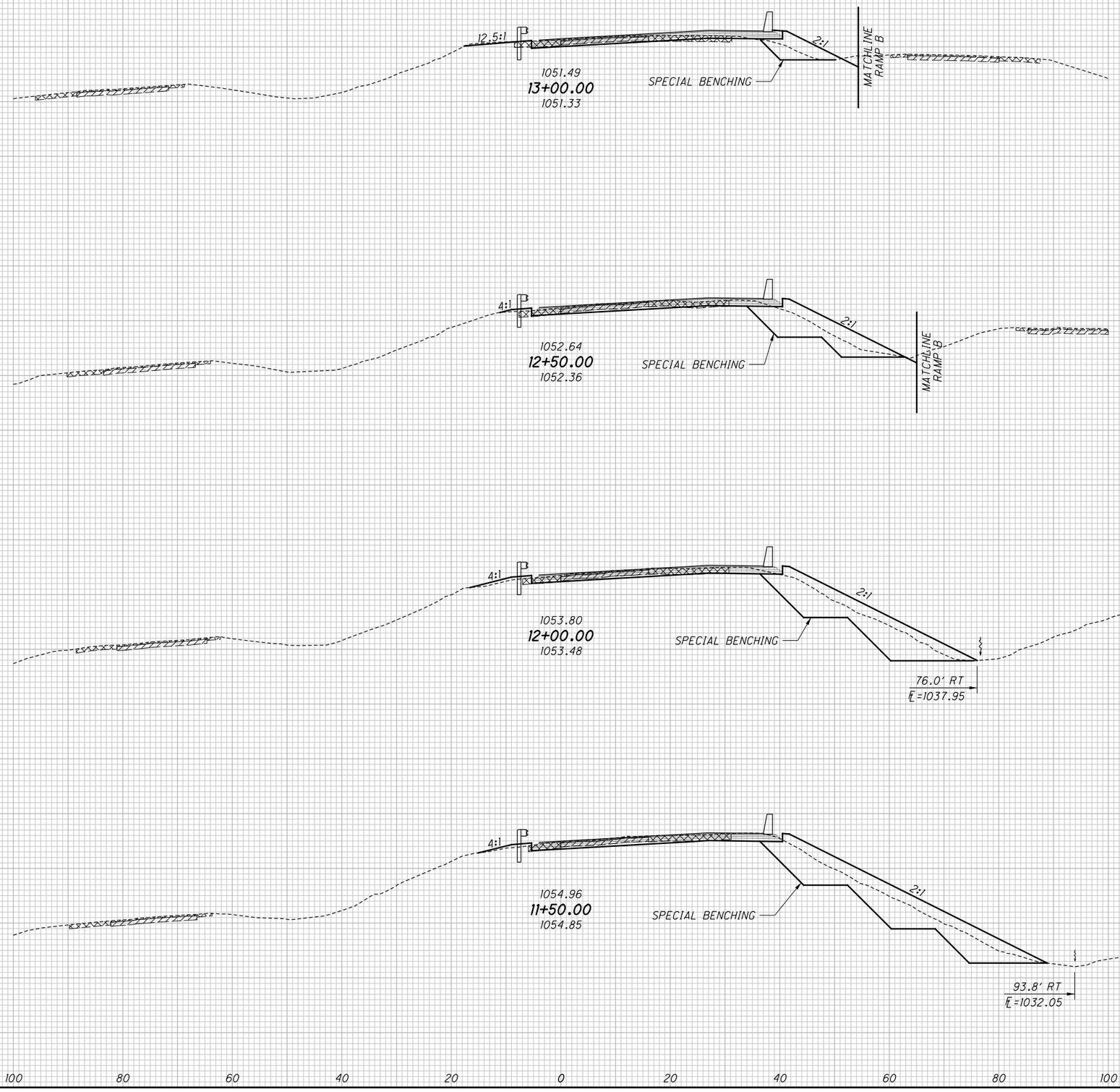


| SEEDING END WIDTH | SEEDING SQ. YDS. | END AREA CUT | END AREA FILL | VOLUME CUT | VOLUME FILL |
|---|---|---|---|---|---|
| | 172 | | | (15) | (15) |
| | | | | 18 | 62 |
| 35 | | (16) | (16) | | |
| | | 11 | 34 | | |
| | 208 | | | (78) | (78) |
| | | | | 24 | 81 |
| | | | | | |
| 40 | | (68) | (68) | | |
| | | 15 | 53 | | |
| | 283 | | | (185) | (185) |
| | | | | 27 | 113 |
| | | | | | |
| 62 | | (132) | (132) | | |
| | | 14 | 69 | | |
| | 381 | | | (281) | (281) |
| | | | | 33 | 155 |
| | | | | | |
| 75 | | (171) | (171) | | |
| | | 22 | 98 | | |
| | 1044 | | | (559) | (559) |
| | | | | 102 | 411 |

CALCULATED CJC

CHECKED PJF

# CROSS SECTIONS - RAMP B-2
## STA. 11+50.00 TO STA. 13+00.00

SUM-77 / 277 / 224
VARIOUS

706
1288

0:\2017\2017258\ProjectData\SUM\06002\Design\Roadway\Sheets\I06002_XSI04.dgn Sheet 1/13/2021 6:11:02 PM pfry

| SEEDING END WIDTH | SEEDING SQ. YDS. | END AREA CUT | END AREA FILL | VOLUME CUT | VOLUME FILL |
|---|---|---|---|---|---|
| | 200 | | | 45 | 36 |
| 25 | | 19 | 21 | | |
| | 139 | | | 30 | 56 |
| 25 | | 13 | 39 | | |
| | 33 | | | 5 | 18 |
| 24 | | 10 | 41 | | |
| | 107 | | | 13 | 52 |
| 27 | | (0) 8 | (0) 33 | | |
| | 479 | | | 93 | 162 |

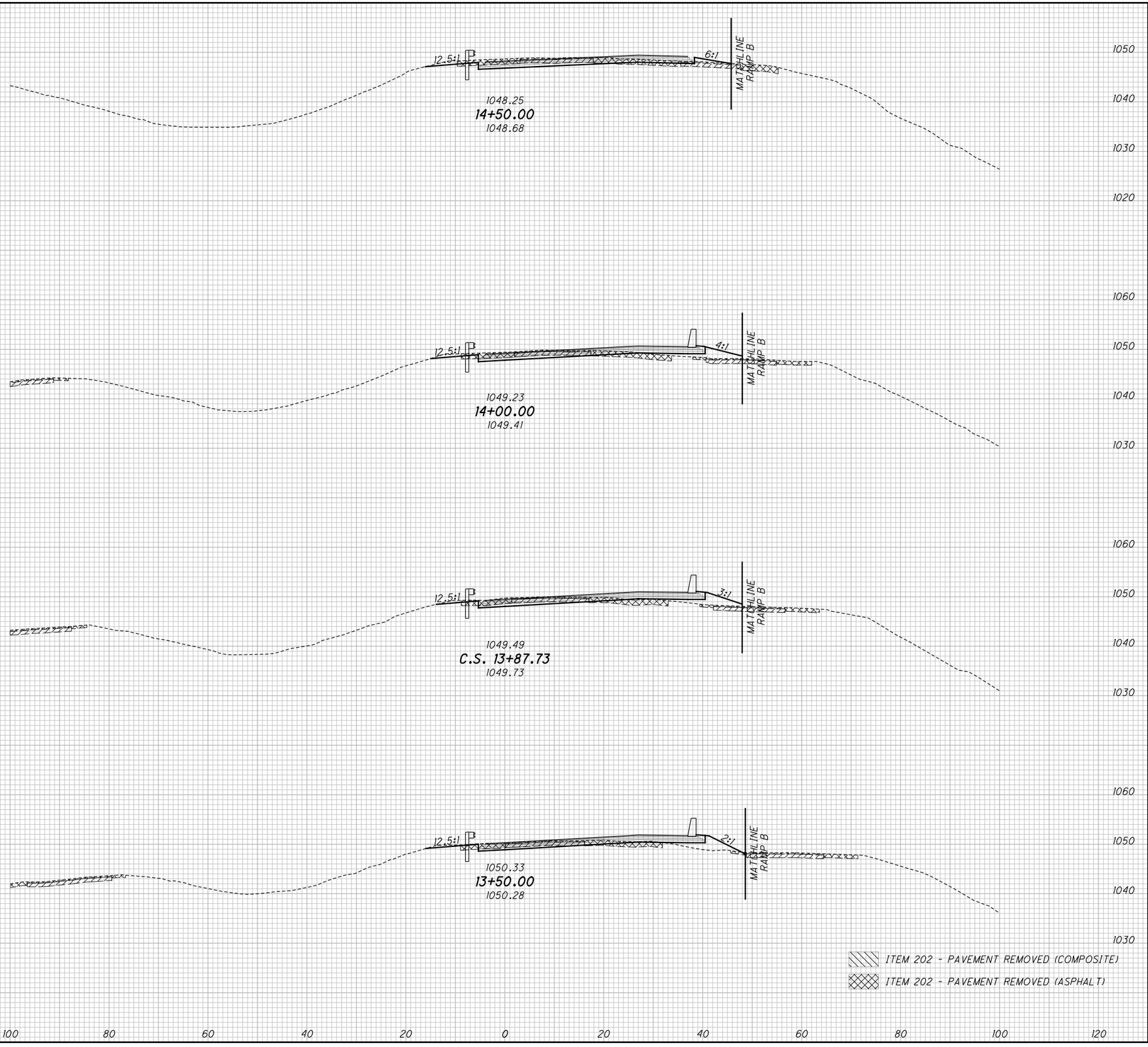


CALCULATED CJC
CHECKED PJF

# CROSS SECTIONS - RAMP B-2
## STA. 13+50.00 TO STA. 14+50.00

SUM-77 / 277 / 224
VARIOUS

707
1288

O:\2017\2017258\ProjectData\SUM\106002\Design\Roadway\Sheets\106002_XS104.dgn Sheet 1/13/2021 6:11:05 PM pfry

| SEEDING END WIDTH | SEEDING SQ. YDS. |
|---|---|
| | 381 |
| [0] | |
| [49] | |
| | [99] |
| [51] | |
| 67 | |
| | [283] |
| | 375 |
| [51] | |
| 68 | |
| | [294] |
| | 386 |
| [55] | |
| 71 | |
| | [203] |
| | 328 |
| [54] | |
| [0] | |
| 47 | |
| | [879] |
| | 1470 |

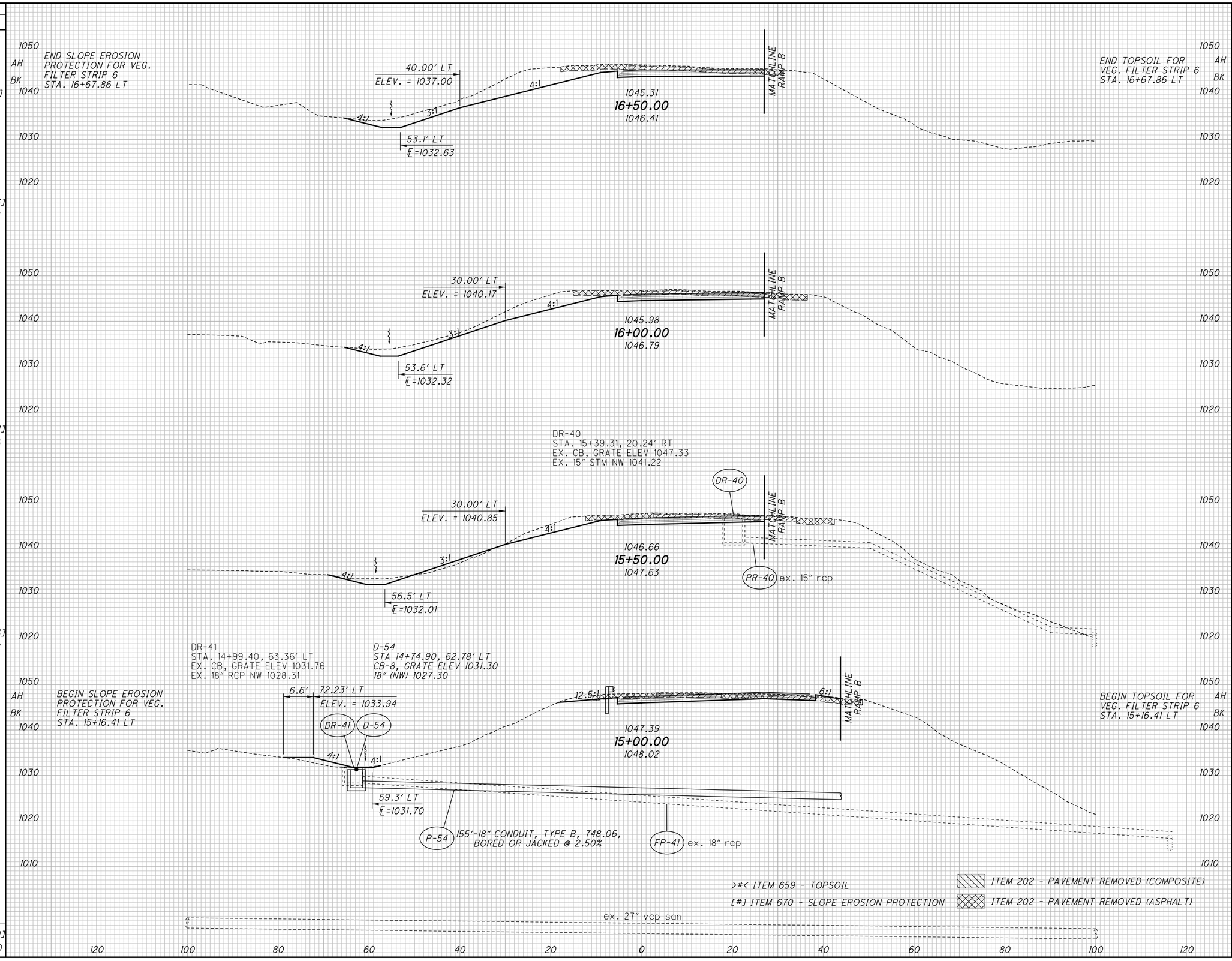


>#< ITEM 659 - TOPSOIL
[#] ITEM 670 - SLOPE EROSION PROTECTION
ITEM 202 - PAVEMENT REMOVED (COMPOSITE)
ITEM 202 - PAVEMENT REMOVED (ASPHALT)

| END AREA CUT | END AREA FILL | VOLUME CUT | VOLUME FILL |
|---|---|---|---|
| | | 366 | 0 |
| | >0< | | |
| | >16< | | |
| | | | >11< |
| | >16< | | |
| 181 | 0 | | |
| | | | >31< |
| | | 294 | 0 |
| | >17< | | |
| 137 | 0 | | |
| | | | >32< |
| | | 210 | 4 |
| 90 | >18< | | |
| | 4 | | |
| | | | >22< |
| | | 111 | 20 |
| | >18< | | |
| | >0< | | |
| 30 | 18 | | |
| | | | >96< |
| | | 981 | 24 |

CALCULATED CJC
CHECKED PJF

# CROSS SECTIONS - RAMP B-2
## STA. 15+00.00 TO STA. 16+50.00

SUM-77/277/224
VARIOUS

708
1288

0:\2017\2017258\ProjectData\SUM\06002\Design\Roadway\Sheets\X06002_XSI04.dgn Sheet 1/13/2016 11:07 PM pfry

O:\2017\2017258\ProjectData\SUM\106002\Design\Roadway\Sheets\106002_XS104.dgn Sheet 1/13/2021 6:11:12 PM pfry

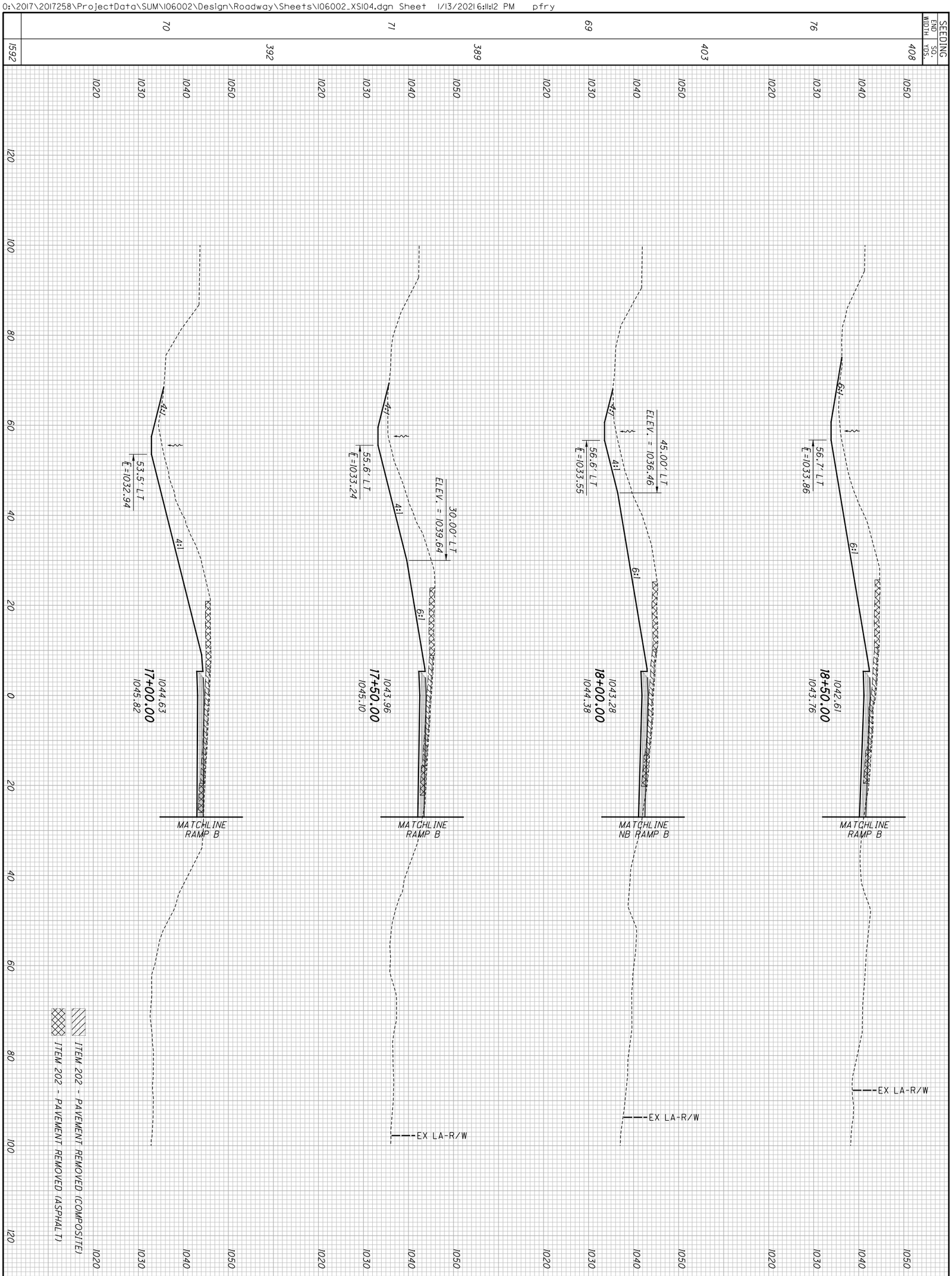


709
1288

**SUM-77/277/224**
**VARIOUS**

# CROSS SECTIONS - RAMP B-2
## STA. 17+00.00 TO STA. 18+50.00

CALCULATED CJC
CHECKED PJF

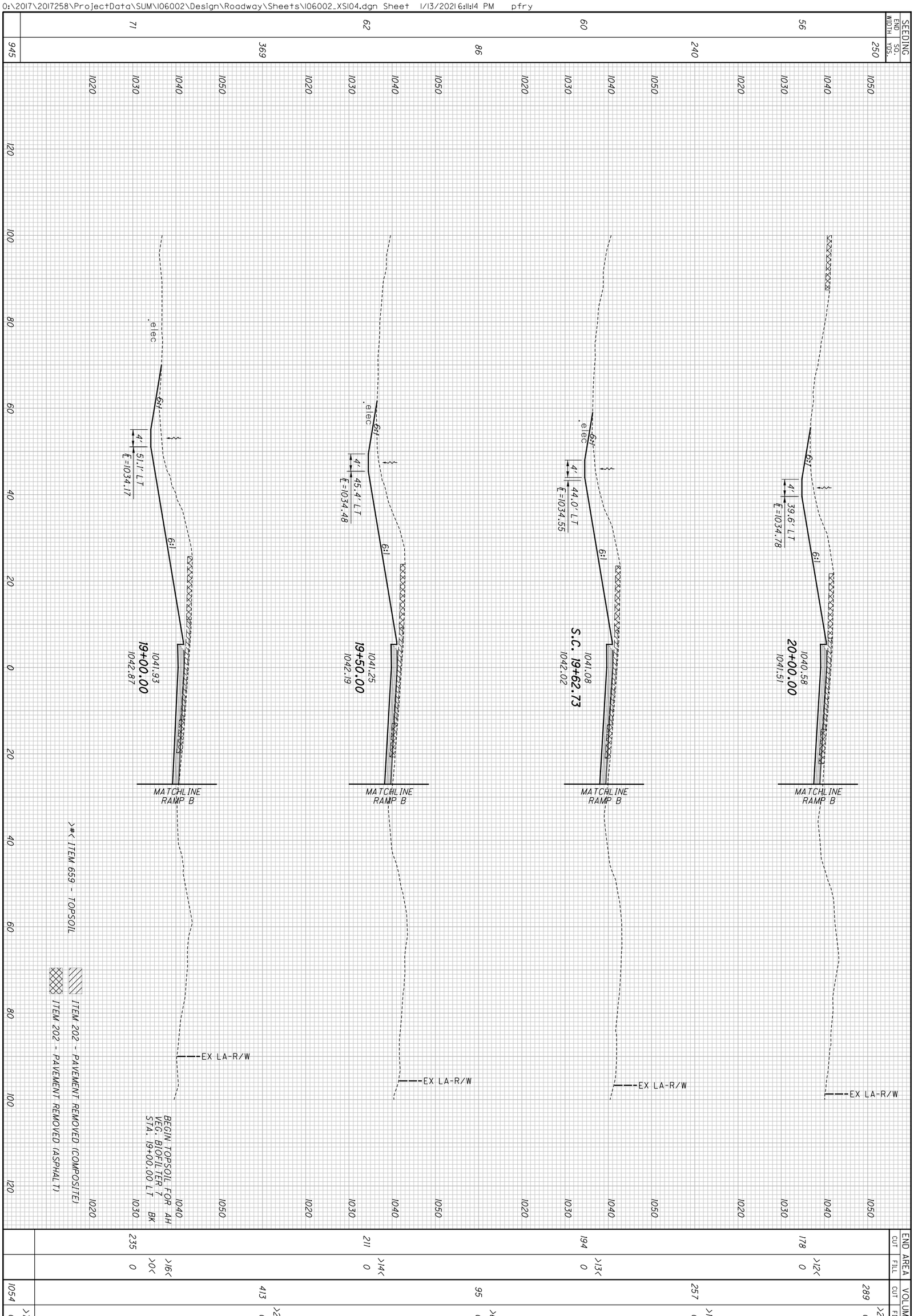


| | | |
|---|---|---|
| 710 / 1288 | **SUM-77/277/224**<br>**VARIOUS** | **CROSS SECTIONS - RAMP B-2**<br>**STA. 19+00.00 TO STA. 20+00.00** |

CALCULATED CJC
CHECKED PJF

| SEEDING END WIDTH | SEEDING SQ. YDS. |
|---|---|
| | 55 |
| 15 | |
| | 94 |
| 19 | |
| | 131 |
| 28 | |
| | 172 |
| 34 | |
| | 452 |

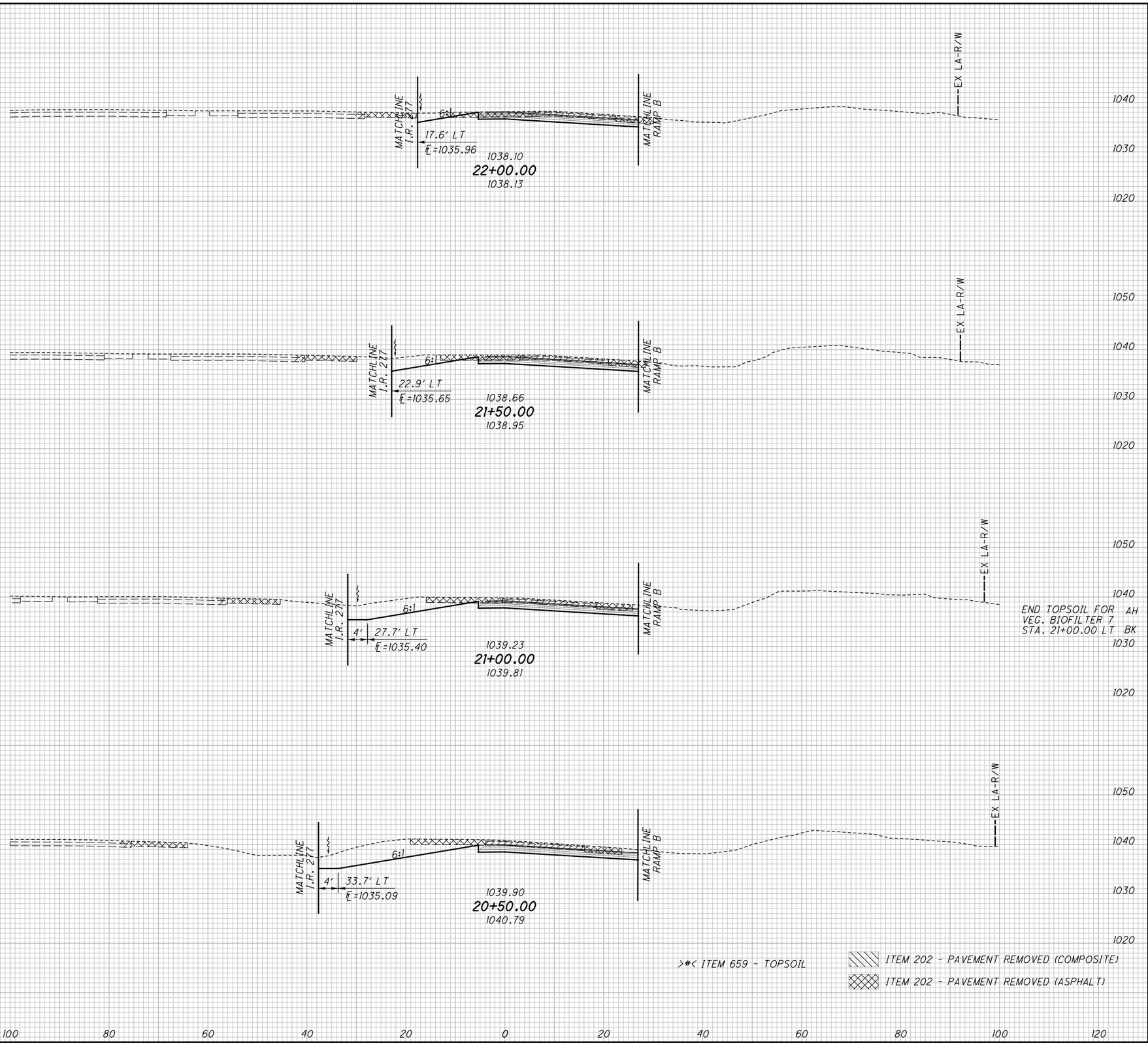


| END AREA CUT | END AREA FILL | VOLUME CUT | VOLUME FILL |
|---|---|---|---|
| | | 45 | 4 |
| 36 | 3 | | |
| | | 83 | 5 |
| 54 | 2 | | |
| | | 140 | 2 |
| 97 | >0< 0 | | >17< |
| | >8< | 214 | 0 |
| 134 | >10< 0 | | |
| | | 482 | >17< 11 |

CALCULATED CJC
CHECKED PJF

# CROSS SECTIONS - RAMP B-2
## STA. 20+50.00 TO STA. 22+00.00

SUM-77 / 277 / 224
VARIOUS

711
1288

O:\2017\2017258\Project Data\SUM\106002\Design\Roadway\Sheets\106002_XS104.dgn Sheet 1/13/2021 6:11:17 PM pfry

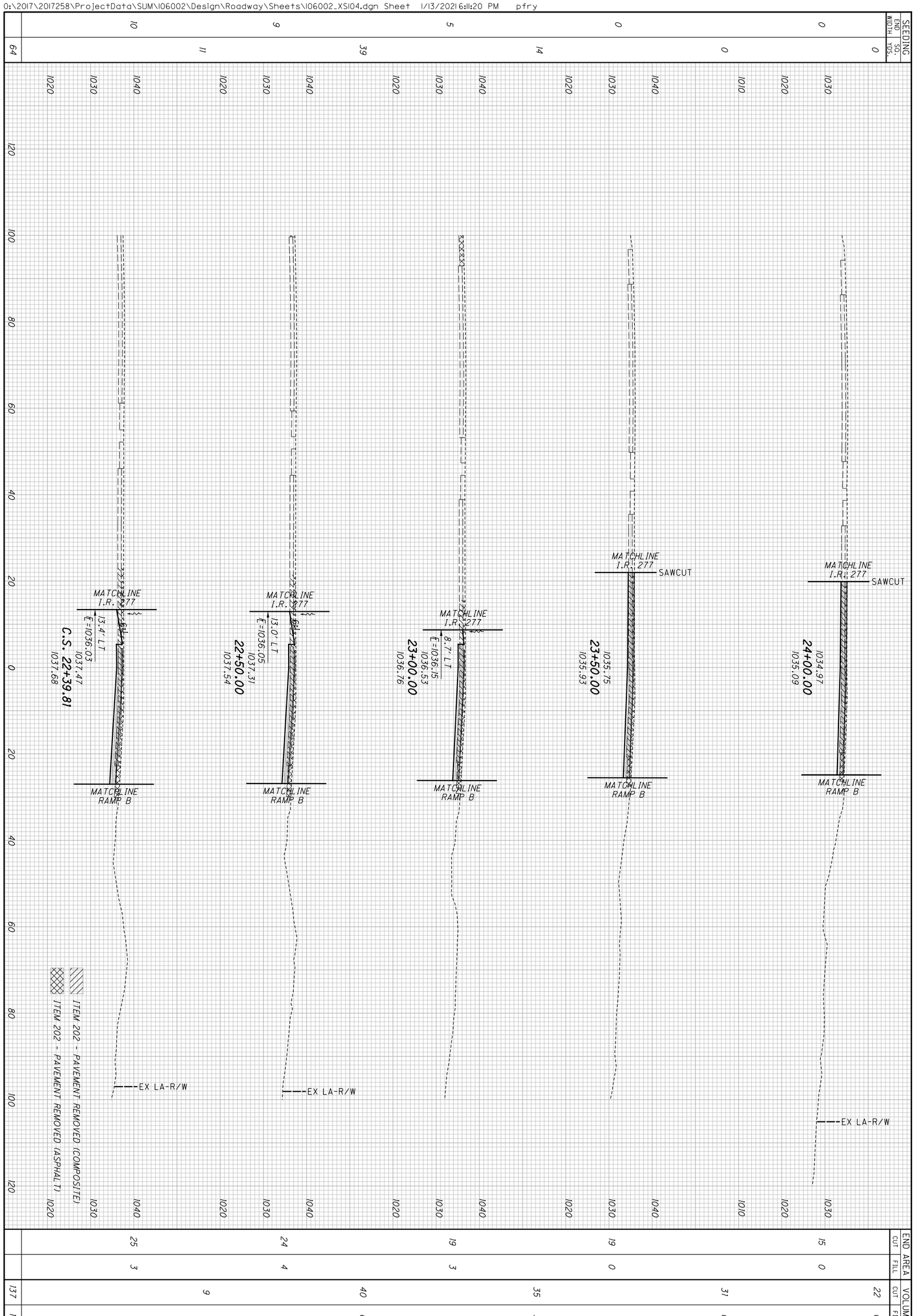


712
1288

**SUM-77/277/224**
**VARIOUS**

# CROSS SECTIONS - RAMP B-2
## STA. 22+39.81 TO STA. 24+00.00

CALCULATED CJC
CHECKED PJF

| SEEDING END WIDTH | SEEDING SQ. YDS. |
|---|---|
| | 319 |
| 56 | |
| | 303 |
| 53 | |
| | 104 |
| 0 | |
| | 0 |
| 0 | |
| | 726 |

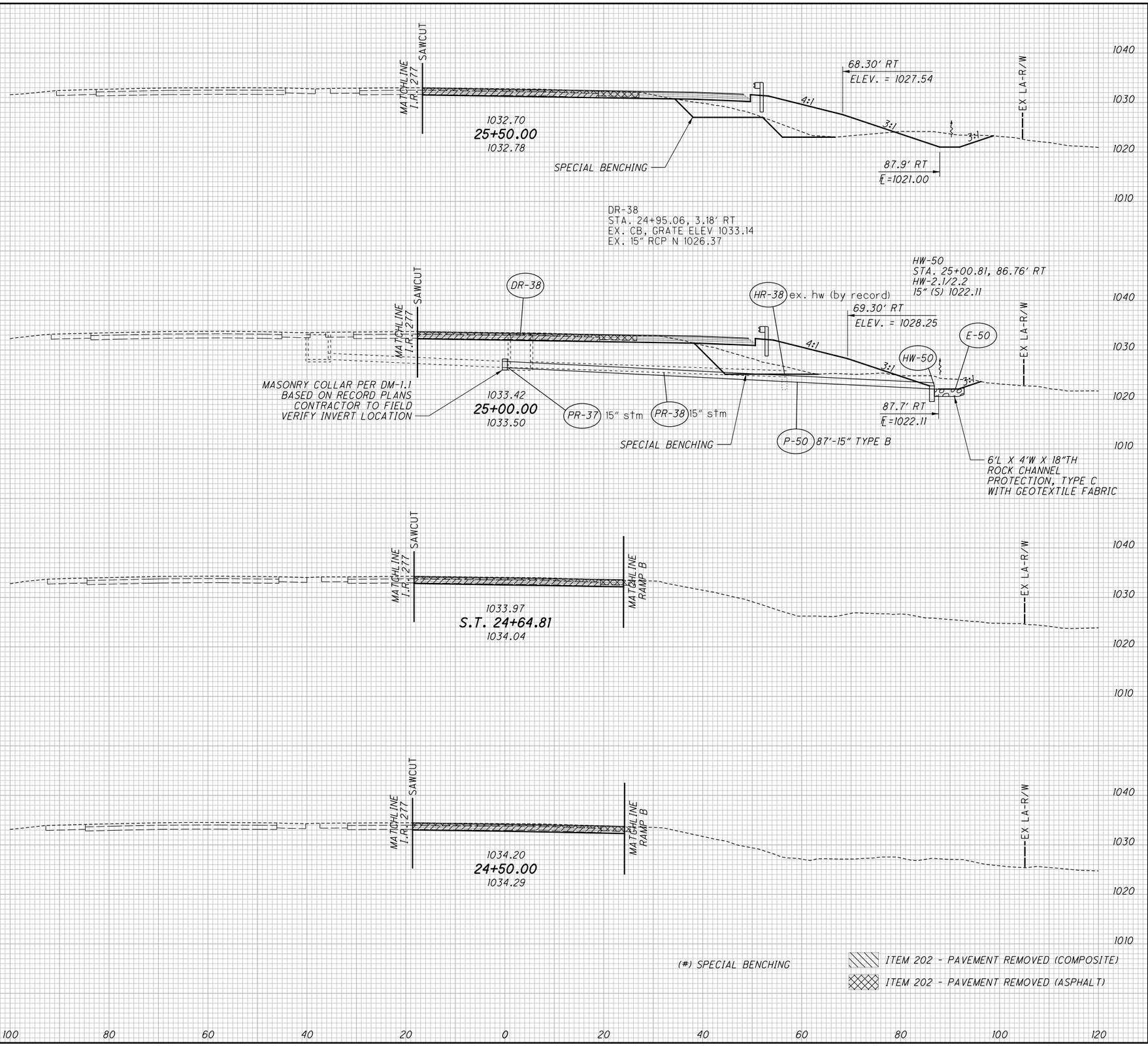


(#) SPECIAL BENCHING

ITEM 202 - PAVEMENT REMOVED (COMPOSITE)

ITEM 202 - PAVEMENT REMOVED (ASPHALT)

| END AREA CUT | END AREA FILL | VOLUME CUT | VOLUME FILL |
|---|---|---|---|
| | | (89) | (89) |
| | | 91 | 244 |
| (46) | (46) | | |
| 45 | 133 | | |
| | | | |
| | | (94) | (94) |
| | | 81 | 229 |
| | | | |
| | | | |
| (56) | (56) | | |
| 43 | 114 | | |
| | | | |
| | | | |
| | | (36) | (36) |
| | | 33 | 74 |
| (0) | (0) | | |
| 7 | 0 | | |
| | | 4 | 0 |
| 9 | 0 | | |
| | | | |
| | | (219) | (219) |
| | | 209 | 547 |

CALCULATED CJC
CHECKED PJF

# CROSS SECTIONS - RAMP B-2
## STA. 24+50.00 TO STA. 25+50.00

SUM-77 / 277 / 224
VARIOUS

713
1288

O:\2017\2017258\ProjectData\SUM\06002\Design\Roadway\Sheets\106002_XSI04.dgn Sheet 1/13/2021 6:11:23 PM pfry

| SEEDING END WIDTH | SEEDING SQ. YDS. |
|---|---|
| | 389 |
| 65 | |
| | 353 |
| 62 | |
| | 328 |
| 56 | |
| | 319 |
| 59 | |
| | 1389 |

(#) SPECIAL BENCHING

ITEM 202 - PAVEMENT REMOVED (COMPOSITE)

ITEM 202 - PAVEMENT REMOVED (ASPHALT)

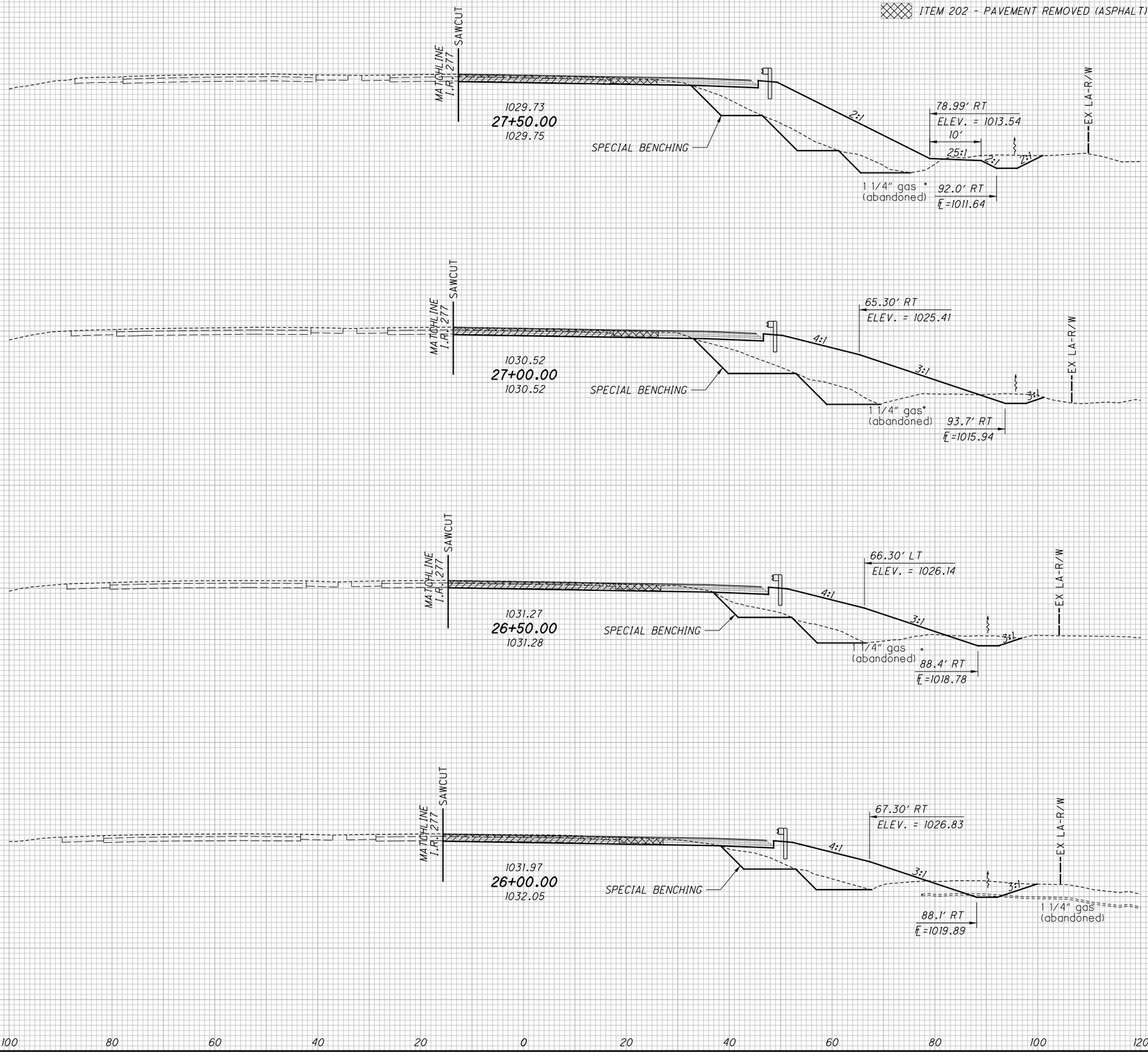


| END AREA CUT | END AREA FILL | VOLUME CUT | VOLUME FILL |
|---|---|---|---|
| | | (147) | (147) |
| | | 62 | 548 |
| (74) | (74) | | |
| 33 | 246 | | |
| | | (147) | (147) |
| | | 55 | 460 |
| (85) | (85) | | |
| 26 | 251 | | |
| | | (123) | (123) |
| | | 53 | 395 |
| (48) | (48) | | |
| 31 | 176 | | |
| | | (91) | (91) |
| | | 78 | 284 |
| (50) | (50) | | |
| 53 | 131 | | |
| | | (508) | (508) |
| | | 248 | 1687 |

CALCULATED CJC
CHECKED PJF

CROSS SECTIONS - RAMP B-2
STA. 26+00.00 TO STA. 27+50.00

SUM-77 / 277 / 224
VARIOUS

714
1288

O:\2017\2017258\ProjectData\SUM\106002\Design\Roadway\Sheets\106002_XS104.dgn Sheet 1/13/2021 6:11:26 PM pfry

| SEEDING END WIDTH | SEEDING SQ. YDS. |
|---|---|
| | 464 |
| 82 | |
| | 450 |
| 80 | |
| | 431 |
| 75 | |
| | 1345 |

(#) SPECIAL BENCHING

ITEM 202 - PAVEMENT REMOVED (COMPOSITE)

ITEM 202 - PAVEMENT REMOVED (ASPHALT)




| END AREA CUT | END AREA FILL | VOLUME CUT | VOLUME FILL |
|---|---|---|---|
| | | (156) | (156) |
| | | 44 | 613 |
| (82) | (82) | | |
| 27 | 327 | | |
| | | (161) | (161) |
| | | 44 | 630 |
| (92) | (92) | | |
| 20 | 353 | | |
| | | (164) | (164) |
| | | 50 | 647 |
| (85) | (85) | | |
| 34 | 346 | | |
| | | (481) | (481) |
| | | 138 | 1890 |

CALCULATED CJC
CHECKED PJF

# CROSS SECTIONS - RAMP B-2
## STA. 28+00.00 TO STA. 29+00.00

SUM-77 / 277 / 224
VARIOUS

715
1288

0:\2017\2017258\ProjectData\SUM\06002\Design\Roadway\Sheets\06002_XS104.dgn Sheet 1/13/2021 6:11:29 PM pfry

| SEEDING END WIDTH | SEEDING SQ. YDS. |
|---|---|
| 90 | 486 |
| | 489 |
| 86 | 475 |
| 85 | 1450 |

(#) SPECIAL BENCHING

ITEM 202 - PAVEMENT REMOVED (COMPOSITE)

ITEM 202 - PAVEMENT REMOVED (ASPHALT)

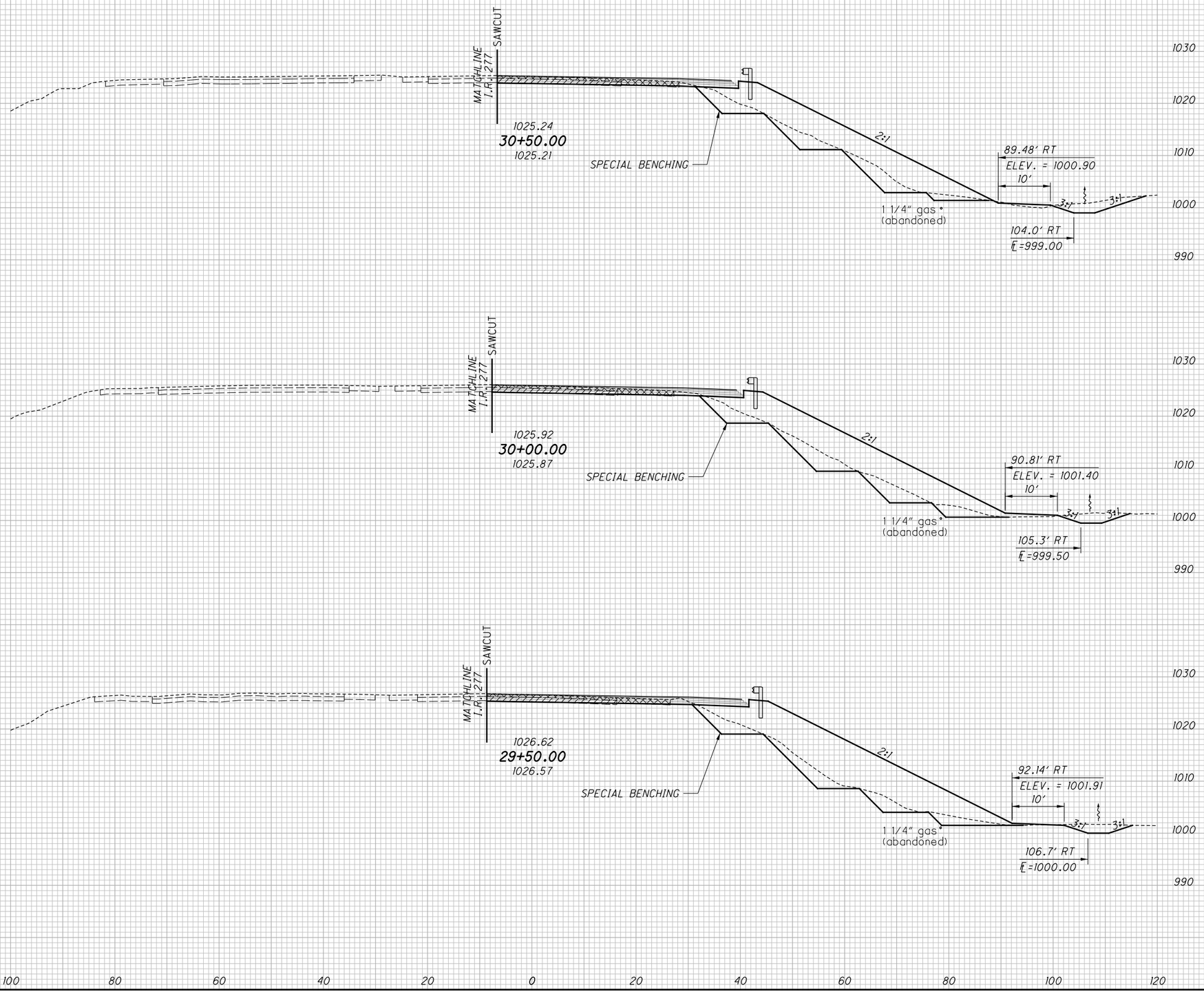


| END AREA CUT | END AREA FILL | VOLUME CUT | VOLUME FILL |
|---|---|---|---|
| | | (171) | (171) |
| | | 43 | 388 |
| | | (88) | (88) |
| | | 26 | 230 |
| | | (177) | (177) |
| | | 44 | 452 |
| | | (103) | (103) |
| | | 21 | 258 |
| | | (176) | (176) |
| | | 38 | 549 |
| | | (87) | (87) |
| | | 20 | 335 |
| | | (524) | (524) |
| | | 125 | 1389 |

CALCULATED CJC
CHECKED PJF

# CROSS SECTIONS - RAMP B-2
## STA. 29+50.00 TO STA. 30+50.00

SUM-77 / 277 / 224
VARIOUS

716
1288

D:\2017\2017258\ProjectData\SUM\106002\Design\Roadway\Sheets\106002_XS104.dgn Sheet 1/13/2021 6:11:31 PM pfry

| SEEDING | |
|---|---|
| END WIDTH | SQ. YDS. |
| | 397 |
| 85 | |
| | 469 |
| 84 | |
| | 469 |
| 85 | |
| | 1335 |

(#) SPECIAL BENCHING

ITEM 202 - PAVEMENT REMOVED (COMPOSITE)

ITEM 202 - PAVEMENT REMOVED (ASPHALT)

HW-51
STA. 31+85.70, 85.00' RT
HW-2.1/2.2
15" (S) 999.95

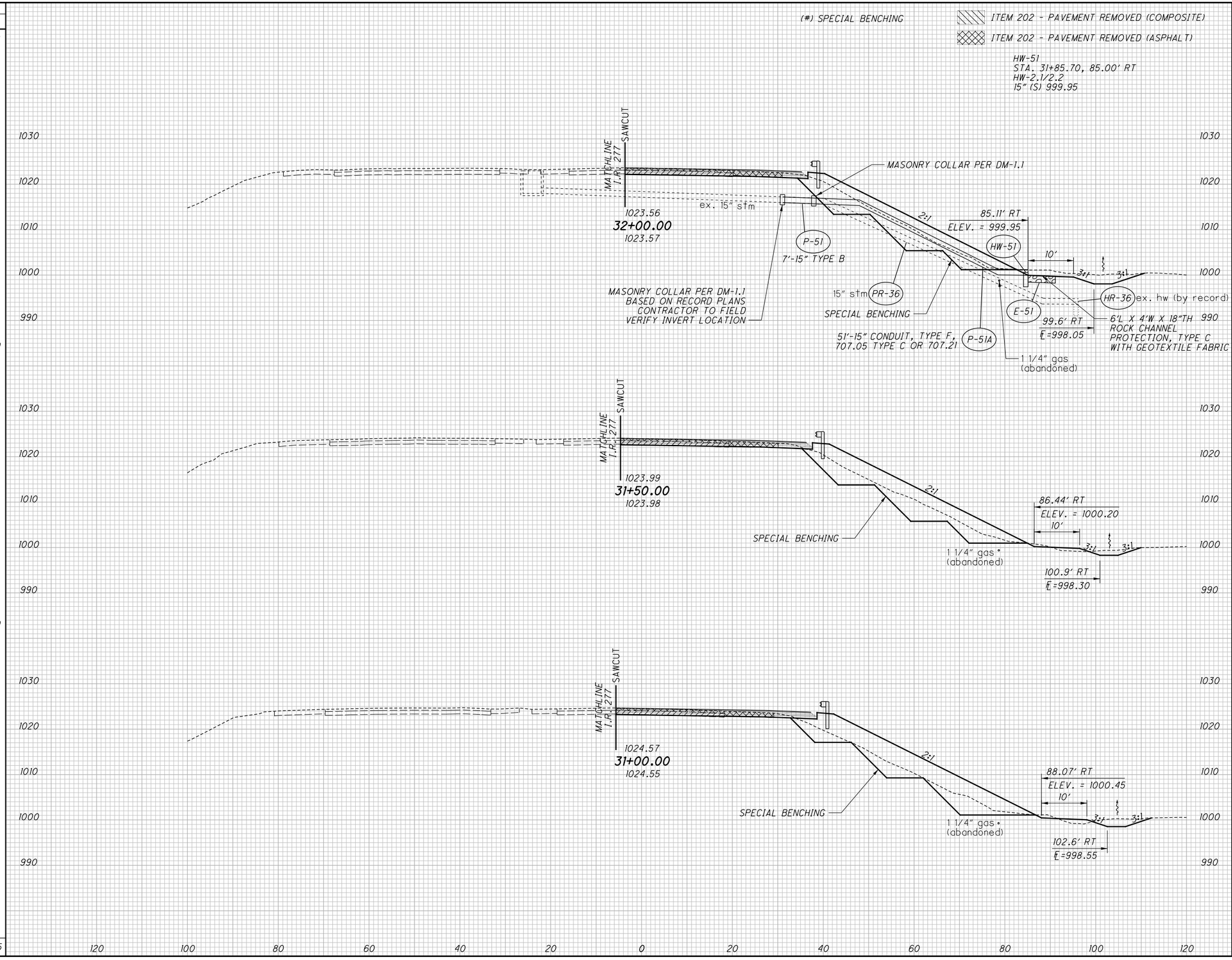


| END AREA | | VOLUME | |
|---|---|---|---|
| CUT | FILL | CUT | FILL |
| | | (272) | (272) |
| | | 47 | 181 |
| | | (135) | (135) |
| | | 42 | 105 |
| | | (234) | (234) |
| | | 54 | 221 |
| (118) | (118) | | |
| 16 | 134 | | |
| | | (199) | (199) |
| | | 33 | 299 |
| (97) | (97) | | |
| 20 | 189 | | |
| | | (705) | (705) |
| | | 134 | 701 |

CALCULATED CJC
CHECKED PJF

# CROSS SECTIONS - RAMP B-2
# STA. 31+00.00 TO STA. 32+00.00

SUM-77 / 277 / 224
VARIOUS

717
1288

D:\2017\2017258\ProjectData\SUM\06002\Design\Roadway\Sheets\06002_XSI04.dgn Sheet 1/13/2021 6:11:33 PM pfry

| SEEDING | |
|---|---|
| END WIDTH | SQ. YDS. |
| | 34 |
| 9 | |
| | 53 |
| 10 | |
| | 189 |
| 58 | |
| | 276 |

(#) SPECIAL BENCHING

ITEM 202 - PAVEMENT REMOVED (COMPOSITE)

ITEM 202 - PAVEMENT REMOVED (ASPHALT)

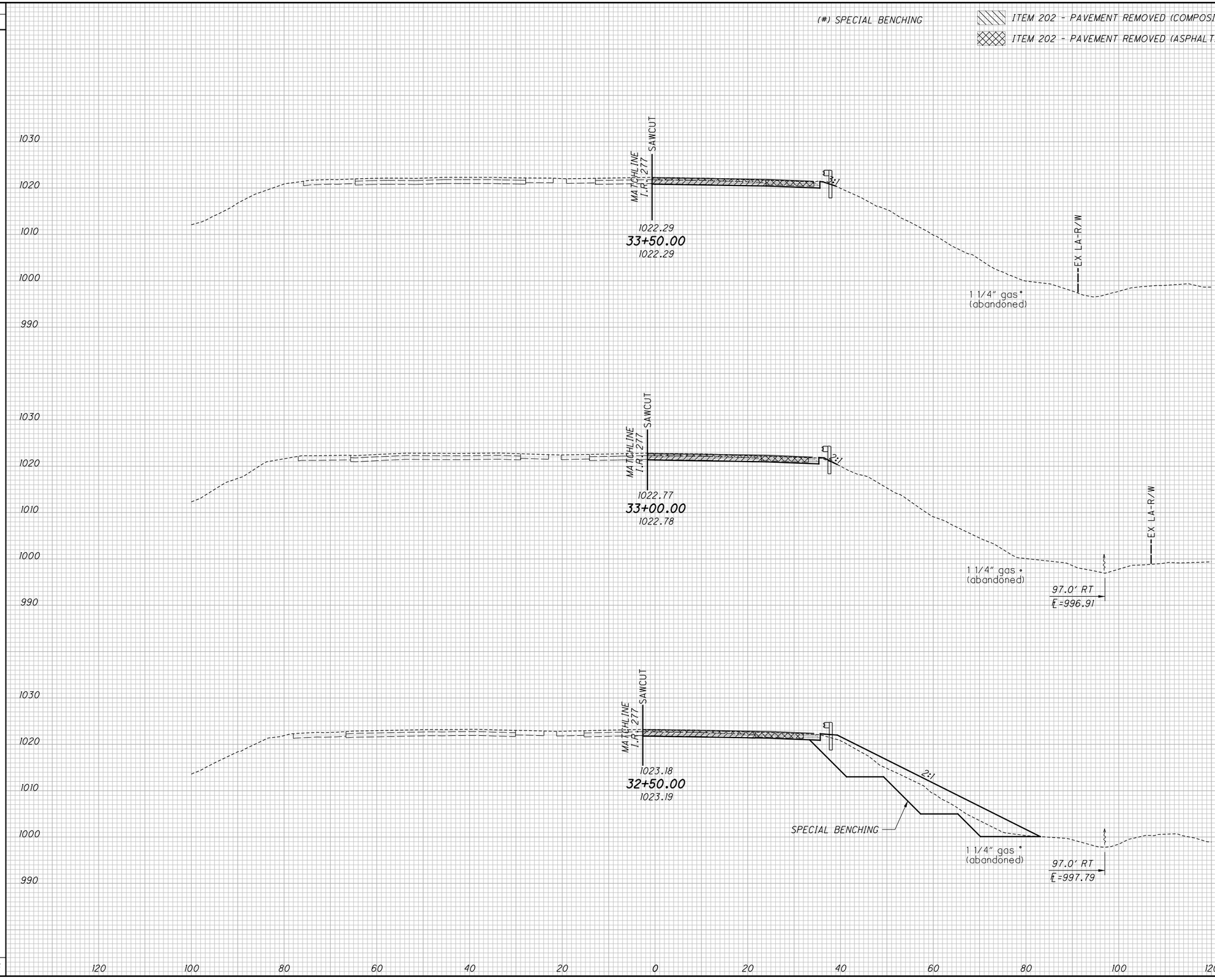


| END AREA | | VOLUME | |
|---|---|---|---|
| CUT | FILL | CUT | FILL |
| | | 10 | 0 |
| 6 | 0 | | |
| | | 13 | 1 |
| (0) 8 | (0) 1 | | |
| (159) 9 | (159) 90 | (147) 16 | (147) 84 |
| | | (147) 39 | (147) 85 |

CALCULATED CJC
CHECKED PJF

# CROSS SECTIONS - RAMP B-2
## STA. 32+50.00 TO STA. 33+50.00

SUM-77 / 277 / 224
VARIOUS

718
1288

O:\2017\2017258\ProjectData\SUM\06002\Design\Roadway\Sheets\I06002_XSI04.dgn Sheet 1/13/2021 6:11:36 PM pfry

| SEEDING | |
|---|---|
| END WIDTH | SQ. YDS. |
| 10 | |

| END AREA | |
|---|---|
| CUT | FILL |
| 11 | 0 |

| VOLUME | |
|---|---|
| CUT | FILL |
| | |

| CALCULATED | CHECKED |
|---|---|
| CJC | PJF |

# CROSS SECTIONS - RAMP B-2
## STA. 33+82.00




SUM-77 / 277 / 224
VARIOUS

719
1288

O:\2017\20171258\Project Data\SUM\106002\Design\Roadway\Sheets\106002_XS04.dgn Sheet† 1/13/2021 6:11:38 PM pfry

| SEEDING END WIDTH | SEEDING SQ. YDS. | END AREA CUT | END AREA FILL | VOLUME CUT | VOLUME FILL |
|---|---|---|---|---|---|
| | 158 | | | "91" | "91" |
| | | | | 63 | 5 |
| | | | | | |
| | | | | | |
| | | | | | |
| 28 | | "48" | "48" | | |
| | | 33 | 3 | | |
| | | | | | |
| | | | | | |
| | 153 | | | "44" | "44" |
| | | | | 65 | 3 |
| | | | | | |
| | | | | | |
| | | | | | |
| 27 | | "0" | "0" | | |
| | | 37 | 0 | | |
| | | | | | |
| | | | | | |
| | 144 | | | 61 | 0 |
| | | | | | |
| | | | | | |
| | | | | | |
| 25 | | 29 | 0 | | |
| | | | | | |
| | | | | | |
| | | | | | |
| | 455 | | | "135" | "135" |
| | | | | 189 | 8 |

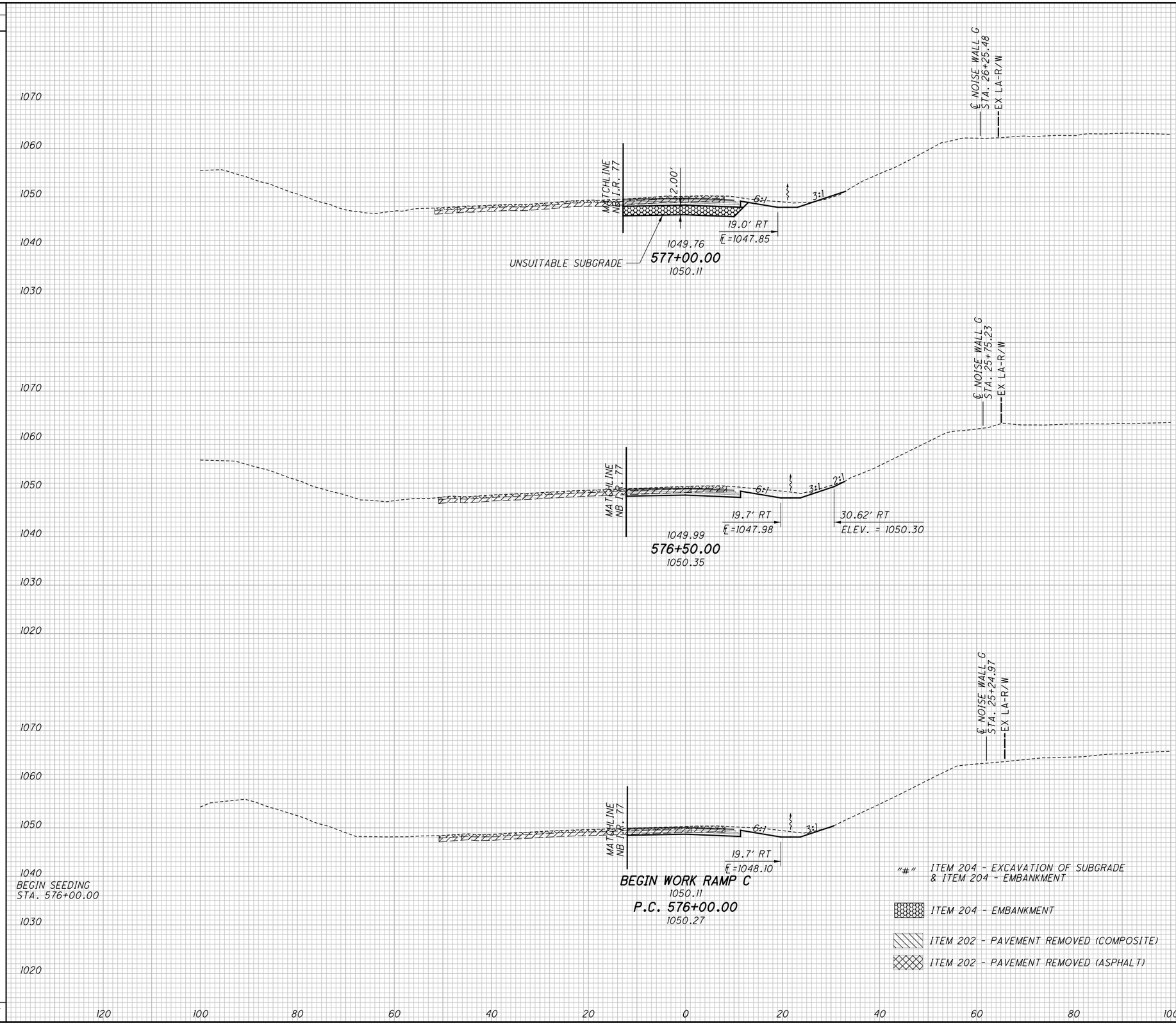


CALCULATED CJC
CHECKED PJF

# CROSS SECTIONS - RAMP C
## STA. 576+00.00 TO STA. 577+00.00

SUM-77 / 277 / 224
VARIOUS

720
1288

O:\2017\2017258\ProjectData\SUM\106002\Design\Roadway\Sheets\106002_XS105.dgn Sheet 1/27/2021 10:50:48 AM pfry

| SEEDING END WIDTH | SEEDING SQ. YDS. |
|---|---|
| | 225 |
| 29 | |
| | 156 |
| 27 | |
| | 156 |
| 29 | |
| | 537 |

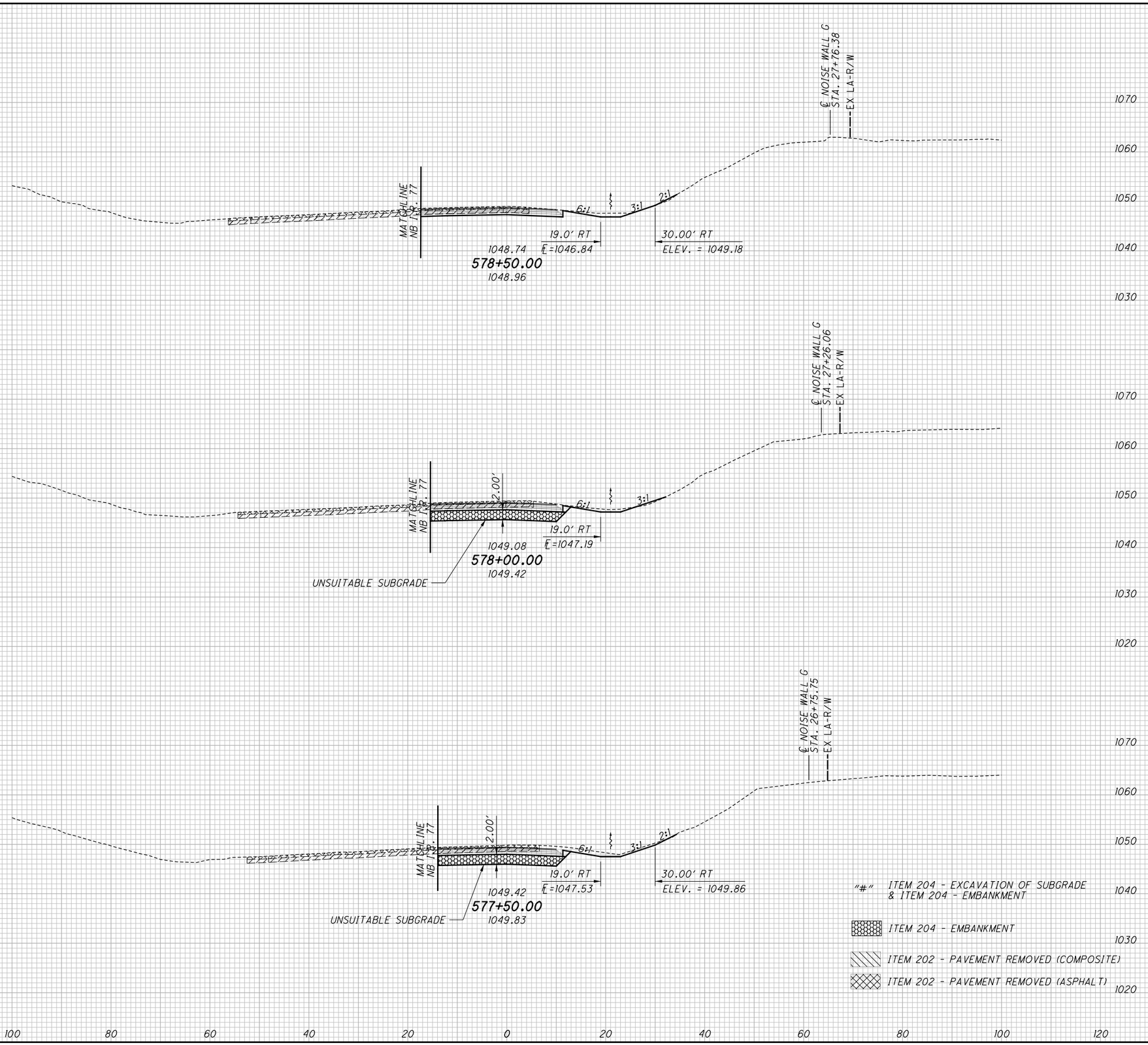


| END AREA CUT | END AREA FILL | VOLUME CUT | VOLUME FILL |
|---|---|---|---|
| | | 78 | 1 |
| "0" | "0" | | |
| 26 | 1 | | |
| | | "49" | "49" |
| | | 50 | 3 |
| "53" | "53" | | |
| 28 | 2 | | |
| | | "95" | "95" |
| | | 58 | 4 |
| "50" | "50" | | |
| 35 | 2 | | |
| | | "144" | "144" |
| | | 186 | 8 |

"#" ITEM 204 - EXCAVATION OF SUBGRADE & ITEM 204 - EMBANKMENT

ITEM 204 - EMBANKMENT

ITEM 202 - PAVEMENT REMOVED (COMPOSITE)

ITEM 202 - PAVEMENT REMOVED (ASPHALT)

CALCULATED CJC
CHECKED PJF

# CROSS SECTIONS - RAMP C
## STA. 577+50.00 TO STA. 578+50.00

SUM-77 / 277 / 224
VARIOUS

721
1288

O:\2017\2017258\ProjectData\SUM\06002\Design\Roadway\Sheets\06002_XS05.dgn Sheet 1/27/2021 10:50:50 AM pfry

| SEEDING END WIDTH | SEEDING SQ. YDS. | END AREA CUT | END AREA FILL | VOLUME CUT | VOLUME FILL |
|---|---|---|---|---|---|
| | 92 | | | 65 | 0 |
| 49 | | 100 | 0 | | |
| | 278 | | | 181 | 0 |
| 51 | | 95 | 0 | | |
| | 286 | | | 142 | 0 |
| 52 | | 58 | 0 | | |
| | 656 | | | 388 | 0 |

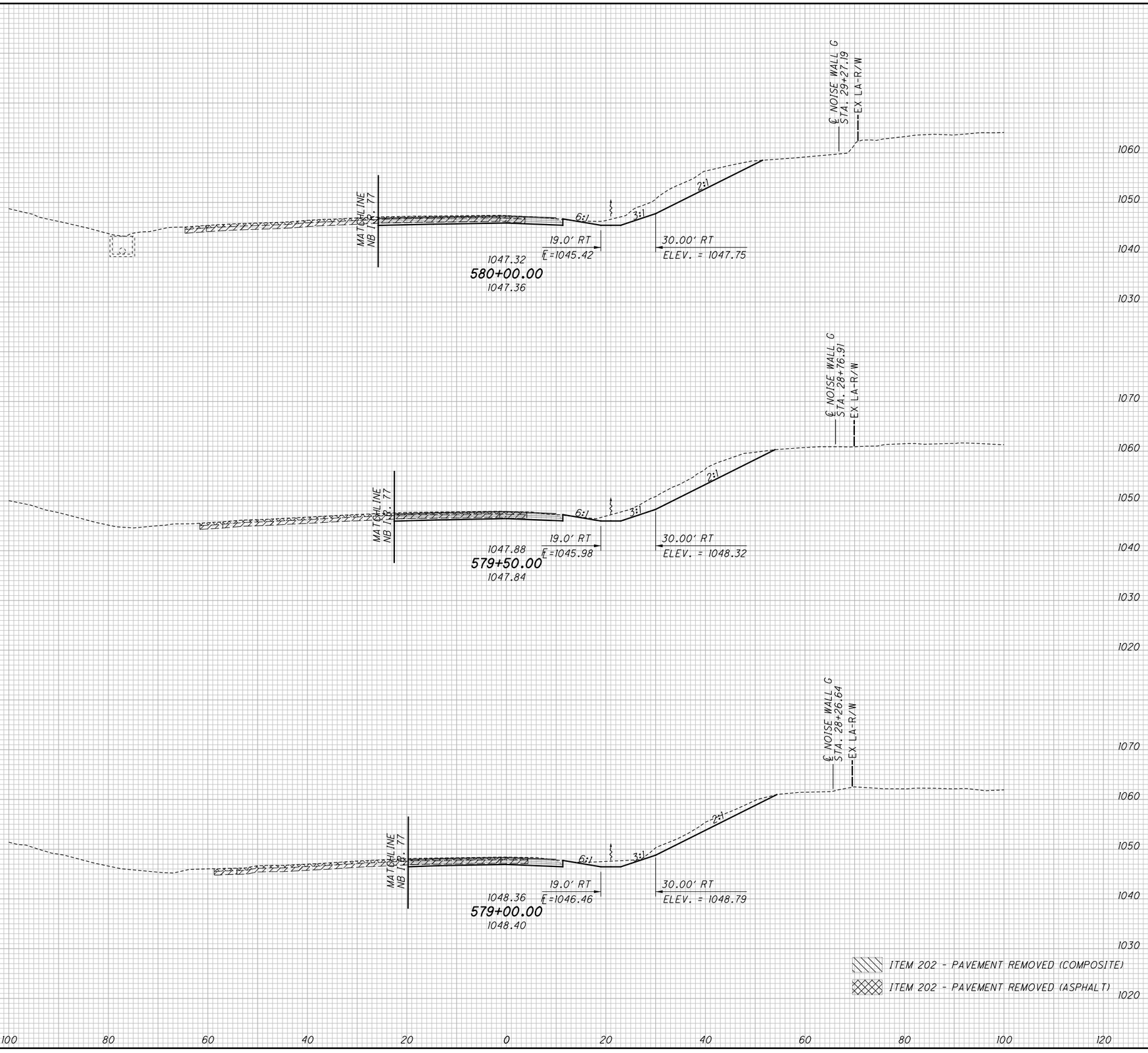


CALCULATED CJC
CHECKED PJF

# CROSS SECTIONS - RAMP C
## STA. 579+00.00 TO STA. 580+00.00

SUM-77 / 277 / 224
VARIOUS

722
1288

0:\2017\2017258\ProjectData\SUM\06002\Design\Roadway\Sheets\06002_XS05.dgn Sheet 1/13/2021 6:15:01 PM pfry

| SEEDING END WIDTH | SEEDING SQ. YDS. | END AREA CUT | END AREA FILL | VOLUME CUT | VOLUME FILL |
|---|---|---|---|---|---|
| | 250 | | | 175 | 0 |
| 39 | | 83 | 0 | | |
| | 225 | | | 166 | 0 |
| 42 | | 96 | 0 | | |
| | 159 | | | 119 | 0 |
| 46 | | 102 | 0 | | |
| | 634 | | | 460 | 0 |

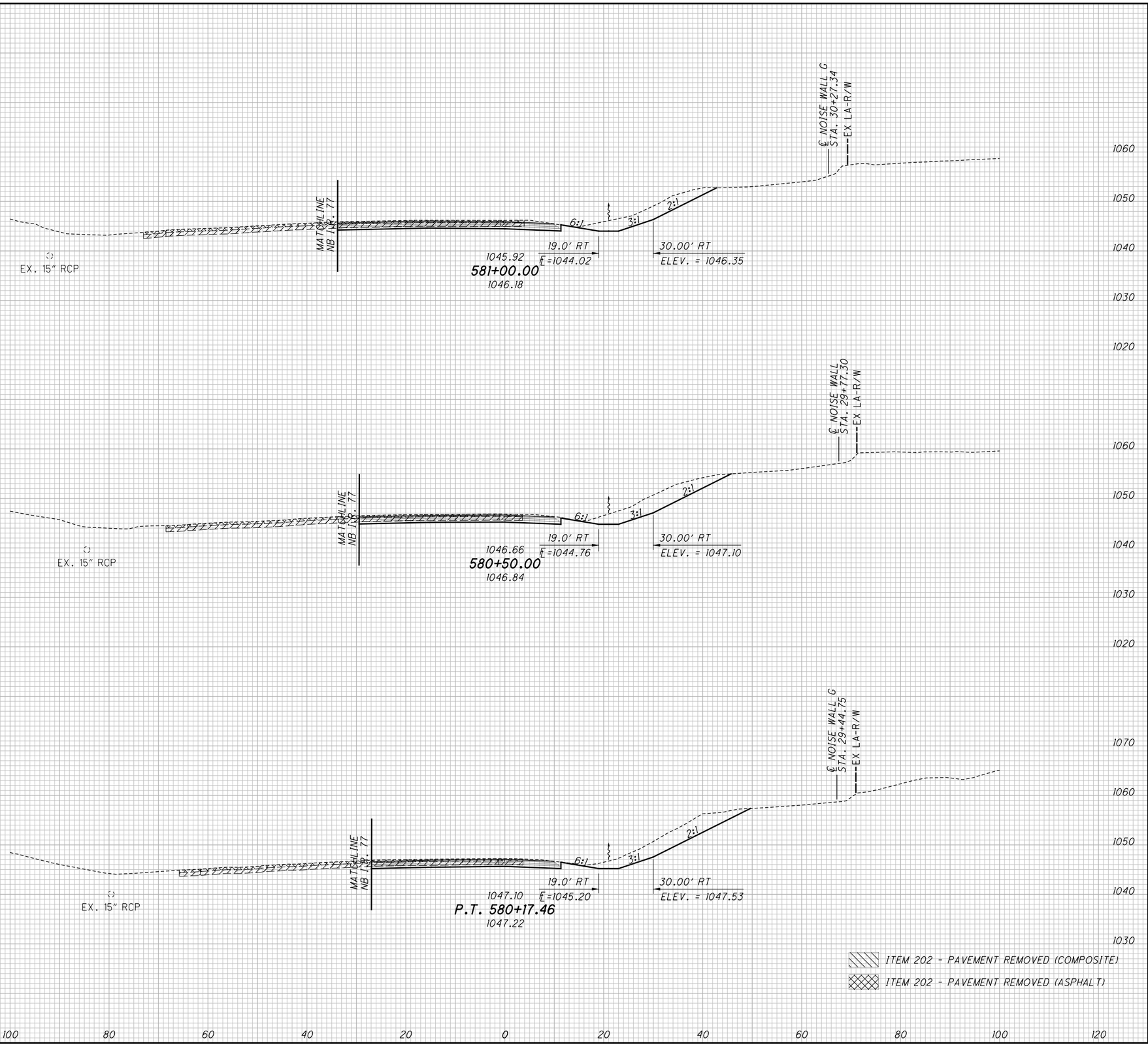


CALCULATED CJC
CHECKED PJF

**CROSS SECTIONS - RAMP C**
**STA. 580+17.46 TO STA. 581+00.00**

**SUM-77 / 277 / 224**
**VARIOUS**

723
1288

O:\2017\2017258\ProjectData\SUM\06002\Design\Roadway\Sheets\06002_XS05.dgn Sheet 1/13/2021 6:15:03 PM pfry

| SEEDING | |
|---|---|
| END WIDTH | SQ. YDS. |
| | 319 |
| 54 | |
| | 333 |
| 66 | |
| | 325 |
| 51 | |
| | 977 |

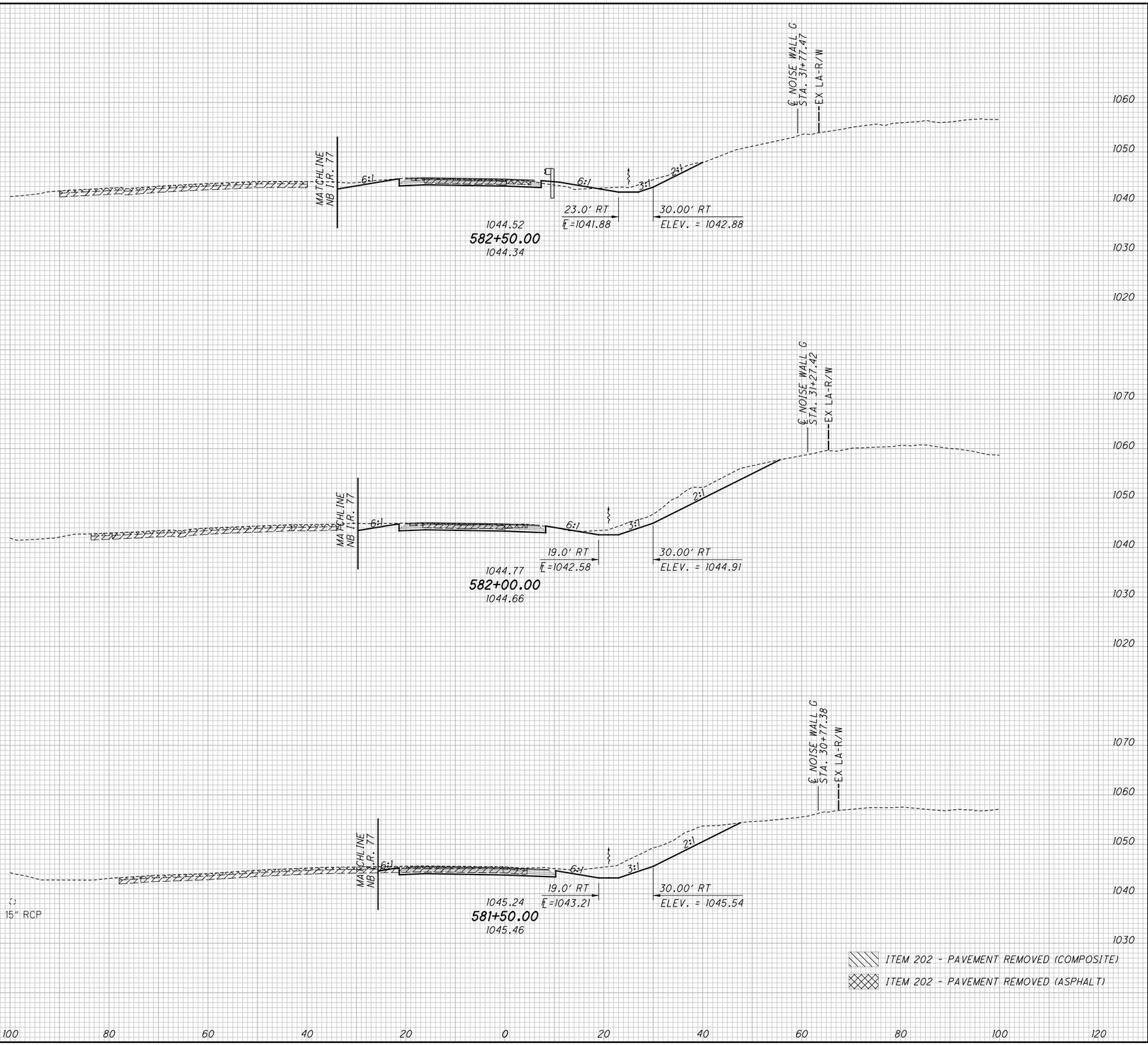


| END AREA | |
|---|---|
| CUT | FILL |
| | |
| 42 | 7 |
| | |
| 98 | 0 |
| | |
| 106 | 0 |
| | |

| VOLUME | |
|---|---|
| CUT | FILL |
| 69 | 16 |
| | |
| 130 | 6 |
| | |
| 189 | 0 |
| | |
| 388 | 22 |

CALCULATED CJC
CHECKED PJF

# CROSS SECTIONS - RAMP C
## STA. 581+50.00 TO STA. 582+50.00

SUM-77 / 277 / 224
VARIOUS

724
1288

D:\2017\201758\ProjectData\SUM\06002\Design\Roadway\Sheets\06002_XS05.dgn Sheet 1/13/2021 6:5:05 PM pfry

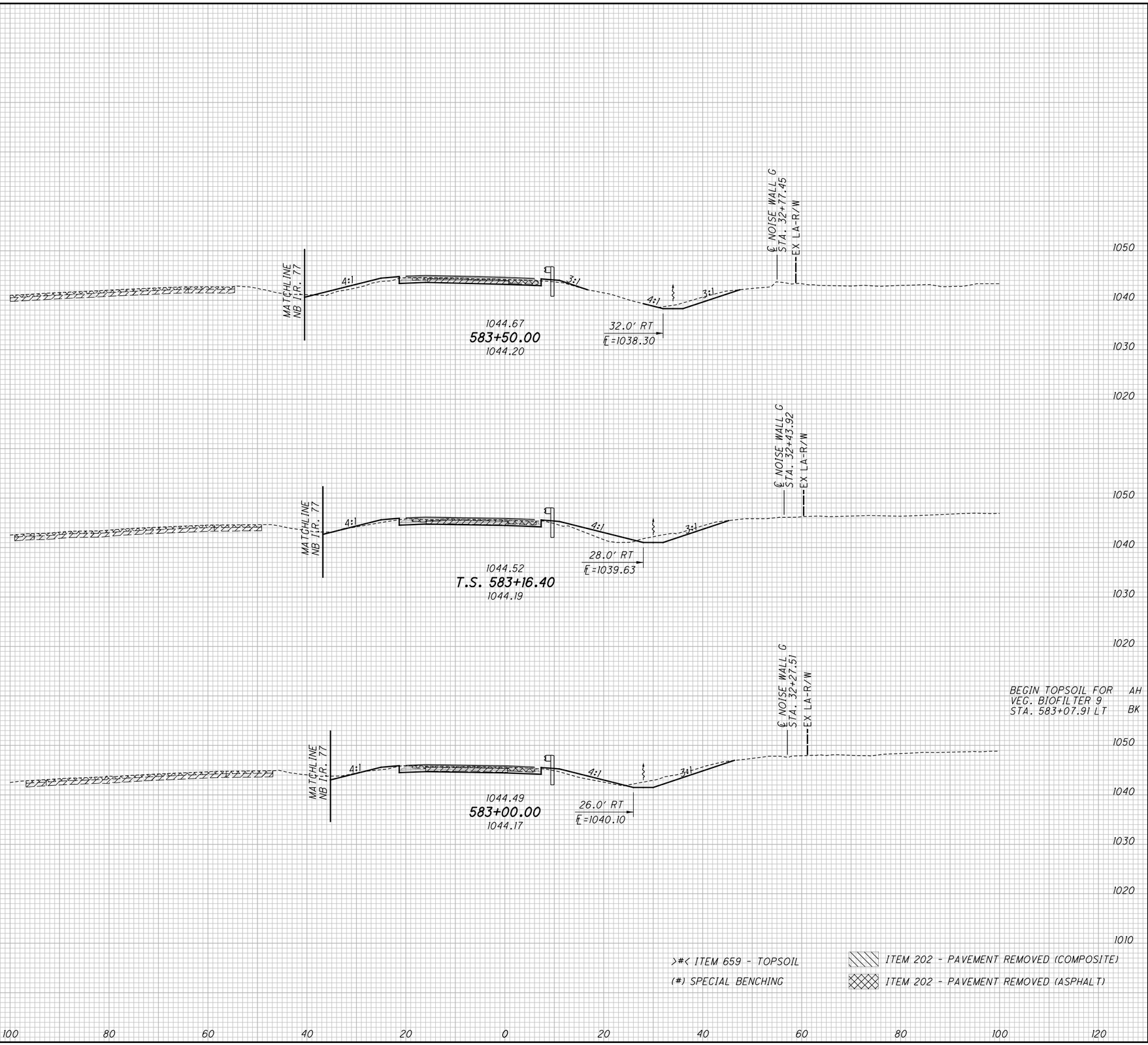


| SEEDING END WIDTH | SEEDING SQ. YDS. | END AREA CUT | END AREA FILL | VOLUME CUT | VOLUME FILL |
|---|---|---|---|---|---|
| | 272 | | | (46) | (46) |
| | | | | | >13< |
| | | | | 23 | 34 |
| 56 | | (0) | (0) | | |
| | | | >7< | | |
| | | 20 | 7 | | |
| | 220 | | | | >8< |
| | | | | 29 | 15 |
| 62 | | 27 | >6< 17 | | |
| | 112 | | >5< >0< | 18 | >2< 8 |
| 61 | | 32 | 10 | | |
| | 604 | | | (46) 70 | (46) >23< 57 |

>#< ITEM 659 - TOPSOIL
(#) SPECIAL BENCHING
ITEM 202 - PAVEMENT REMOVED (COMPOSITE)
ITEM 202 - PAVEMENT REMOVED (ASPHALT)

CALCULATED CJC
CHECKED PJF

# CROSS SECTIONS - RAMP C
## STA. 583+00.00 TO STA. 583+50.00

SUM-77 / 277 / 224
VARIOUS

725
1288

0:\2017\2017258\ProjectData\SUM\06002\Design\Roadway\Sheets\06002_XS105.dgn Sheet 1/13/2021 6:15:07 PM pfry

| SEEDING END WIDTH | SEEDING SQ. YDS. | END AREA CUT | END AREA FILL | VOLUME CUT | VOLUME FILL |
|---|---|---|---|---|---|
| | 99 | | | (42) | (42) |
| | | | | | >8< |
| | | | | 3 | 46 |
| 53 | | (64) | (64) | | |
| | | | | | >13< |
| | | 4 | 69 | | |
| | 286 | | | (106) | (106) |
| | | | | | >21< |
| | | | | 6 | 106 |
| 50 | | (51) | (51) | | |
| | | | | | >10< |
| | | 3 | 46 | | |
| | 256 | | | (94) | (94) |
| | | | | | >16< |
| | | | | 7 | 70 |
| 42 | | (50) | (50) | | |
| | | | | | >7< |
| | | 5 | 30 | | |
| | 641 | | | (242) | (242) |
| | | | | | >45< |
| | | | | 16 | 222 |

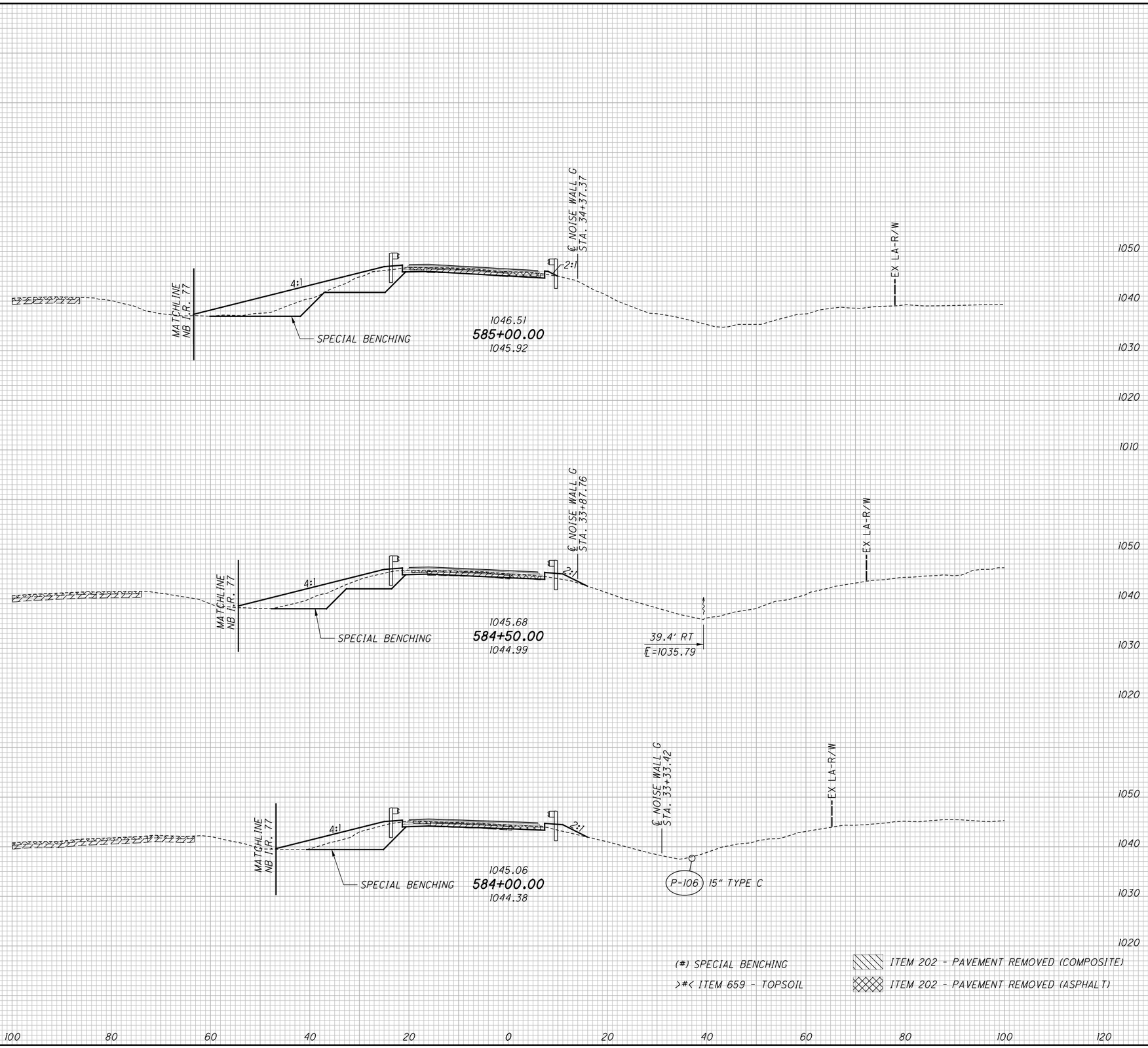


(#) SPECIAL BENCHING

>#< ITEM 659 - TOPSOIL

ITEM 202 - PAVEMENT REMOVED (COMPOSITE)

ITEM 202 - PAVEMENT REMOVED (ASPHALT)

CALCULATED CJC

CHECKED PJF

# CROSS SECTIONS - RAMP C
## STA. 584+00.00 TO STA. 585+00.00

## SUM-77 / 277 / 224
## VARIOUS

726
1288

D:\2017\2017258\ProjectData\SUM\06002\Design\Roadway\Sheets\06002_XS05.dgn Sheet 1/13/2021 6:5:09 PM pfry

| SEEDING END WIDTH | SEEDING SQ. YDS. |
|---|---|
| | 306 |
| 59 | |
| | 342 |
| 64 | |
| | 224 |
| 56 | |
| | 872 |

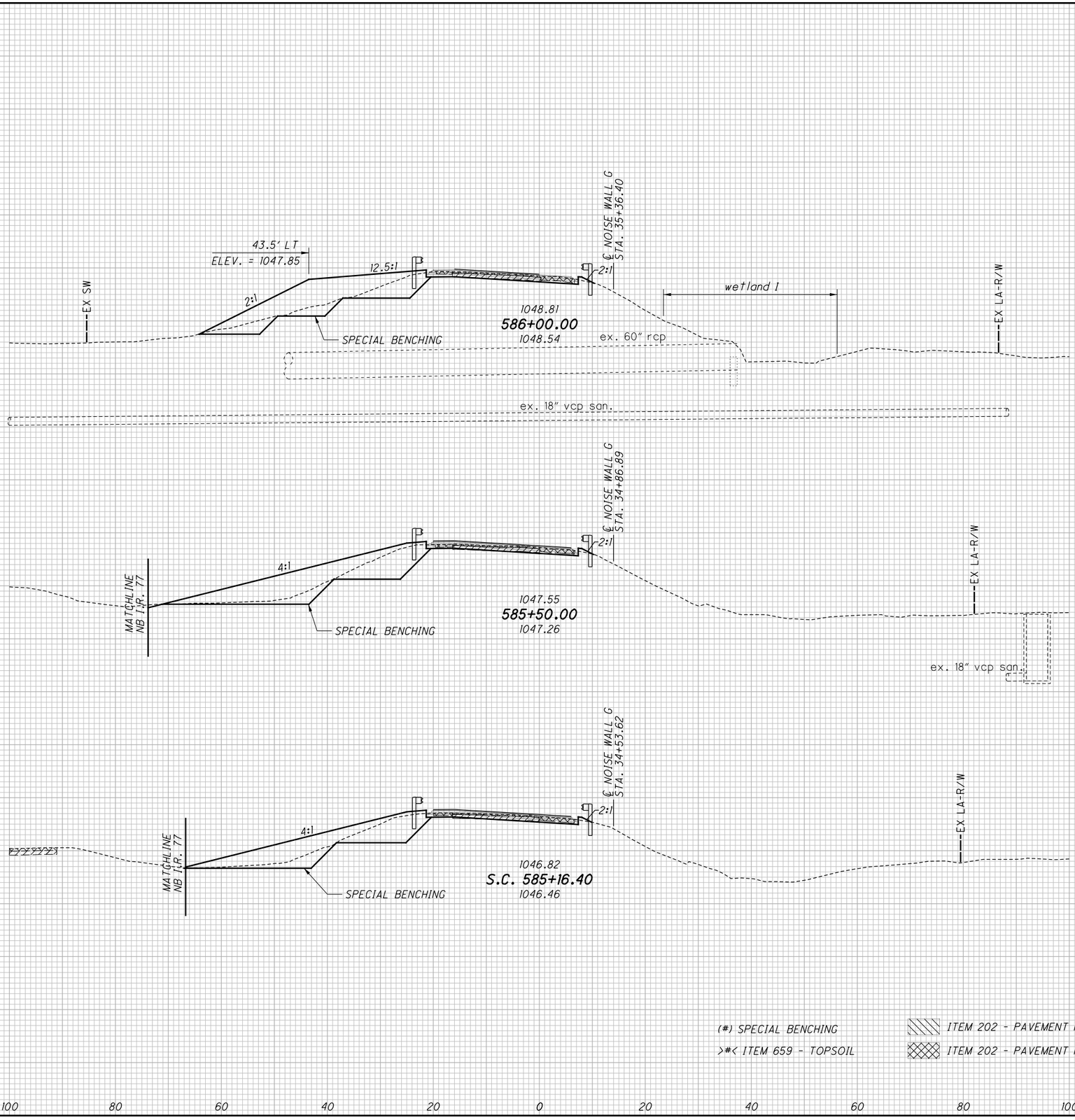


(#) SPECIAL BENCHING

>#< ITEM 659 - TOPSOIL

ITEM 202 - PAVEMENT REMOVED (COMPOSITE)

ITEM 202 - PAVEMENT REMOVED (ASPHALT)

| END AREA CUT | END AREA FILL | VOLUME CUT | VOLUME FILL |
|---|---|---|---|
| | | (120) | (120) |
| | | 18 | 181 |
| (66) | (66) | | |
| 8 | 126 | | |
| | >0< | | |
| | >18< | | |
| | | (133) | (133) |
| | | | >2< |
| | | 14 | 221 |
| (78) | (78) | | |
| | >16< | | |
| 7 | 113 | | |
| | | (95) | (95) |
| | | | >19< |
| | | 7 | 121 |
| (74) | (74) | | |
| | >14< | | |
| 5 | 81 | | |
| | | (348) | (348) |
| | | | >21< |
| | | 39 | 523 |

CALCULATED CJC
CHECKED PJF

# CROSS SECTIONS - RAMP C
## STA. 585+16.40 TO STA. 586+00.00

SUM-77 / 277 / 224
VARIOUS

727
1288

O:\2017\20172581\ProjectData\SUM\106002\Design\Roadway\Sheets\106002_XS105.dgn Sheet 1/13/2021 6:15:11 PM pfry

| SEEDING END WIDTH | SEEDING SQ. YDS. |
|---|---|
| | 256 |
| 46 | |
| | 264 |
| 49 | |
| | 278 |
| 51 | |
| | 798 |

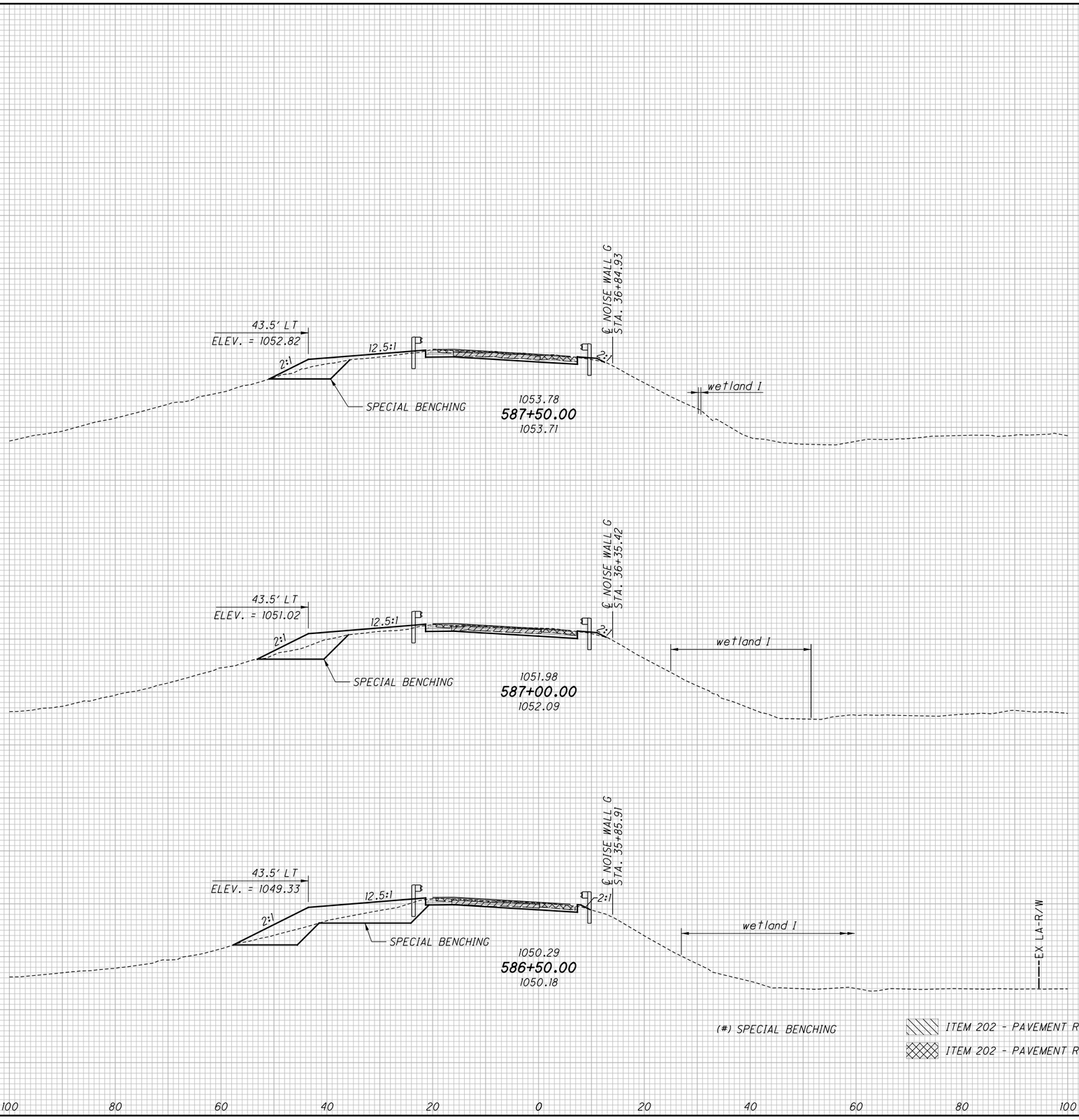


| END AREA CUT | END AREA FILL | VOLUME CUT | VOLUME FILL |
|---|---|---|---|
| | | (36) | (36) |
| | | 28 | 48 |
| | | | |
| (24) | (24) | | |
| 15 | 23 | | |
| | | | |
| | | (49) | (49) |
| | | 29 | 52 |
| | | | |
| (29) | (29) | | |
| 16 | 33 | | |
| | | | |
| | | (86) | (86) |
| | | 25 | 94 |
| | | | |
| (64) | (64) | | |
| 11 | 69 | | |
| | | | |
| | | (171) | (171) |
| | | 82 | 194 |

CALCULATED CJC
CHECKED PJF

# CROSS SECTIONS - RAMP C
# STA. 586+50.00 TO STA. 587+50.00

SUM-77 / 277 / 224
VARIOUS

728
1288

O:\2017\2017258\ProjectData\SUM\106002\Design\Roadway\Sheets\106002_XS105.dgn Sheet 1/13/2021 6:15:13 PM pfry

| SEEDING END WIDTH | SEEDING SQ. YDS. |
|---|---|
| | 233 |
| 40 | |
| | 228 |
| 42 | |
| | 244 |
| 46 | |
| | 705 |

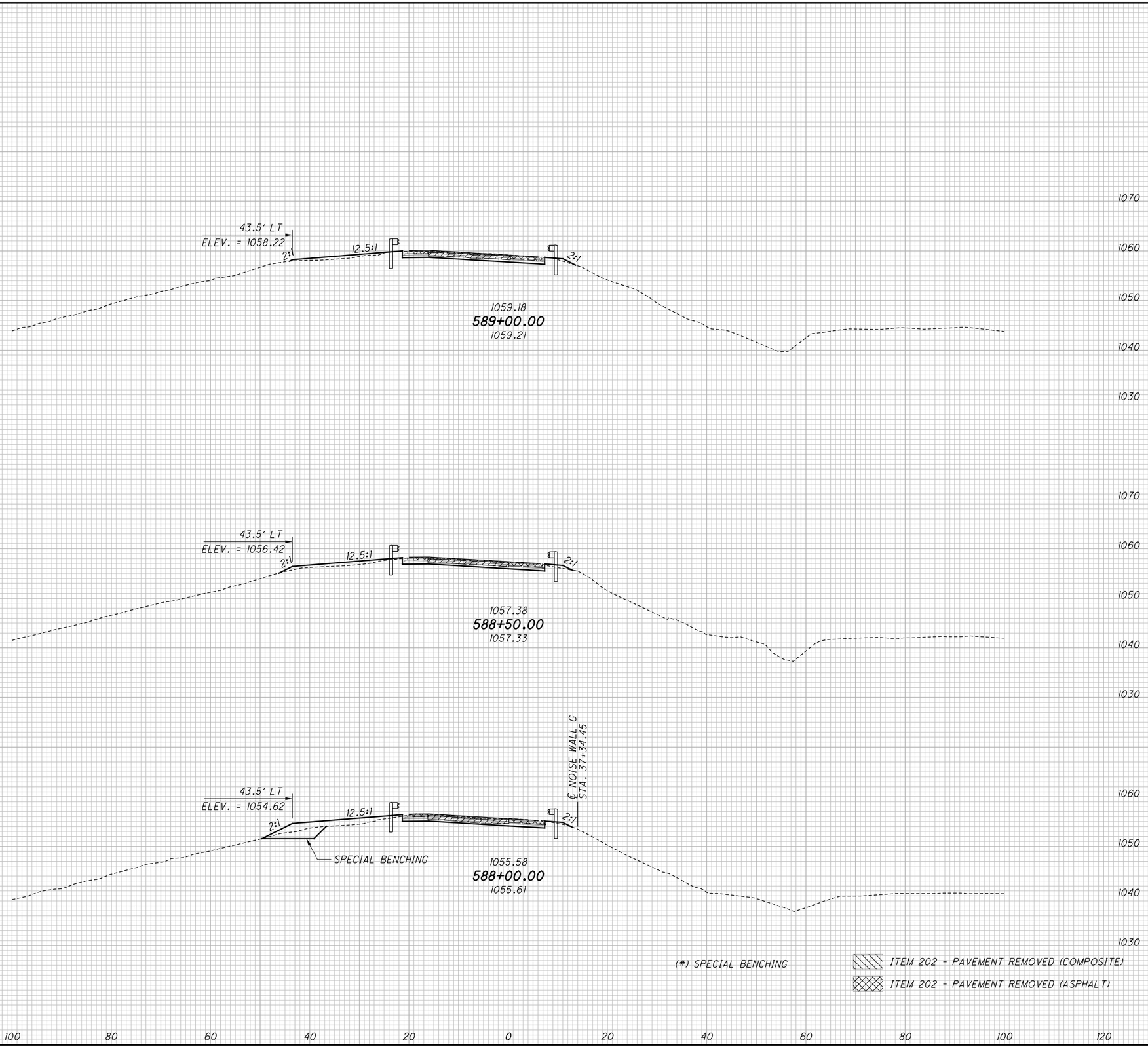


| END AREA CUT | END AREA FILL | VOLUME CUT | VOLUME FILL |
|---|---|---|---|
| | | 31 | 24 |
| 17 | 10 | | |
| | | 31 | 23 |
| (0) | (0) | | |
| 16 | 15 | | |
| | | (14) | (14) |
| | | 29 | 41 |
| (15) | (15) | | |
| 15 | 29 | | |
| | | (14) | (14) |
| | | 91 | 88 |

CALCULATED CJC
CHECKED PJF

# CROSS SECTIONS - RAMP C
## STA. 588+00.00 TO STA. 589+00.00

SUM-77 / 277 / 224
VARIOUS

729
1288

D:\2017\2017258\ProjectData\SUM\106002\Design\Roadway\Sheets\106002_XS105.dgn Sheet 1/13/2021 6:15:15 PM pfry

| SEEDING END WIDTH | SEEDING SQ. YDS. |
|---|---|
| | 361 |
| 72 | |
| | 394 |
| 70 | |
| | 331 |
| 49 | |
| | 258 |
| 44 | |
| | 1344 |

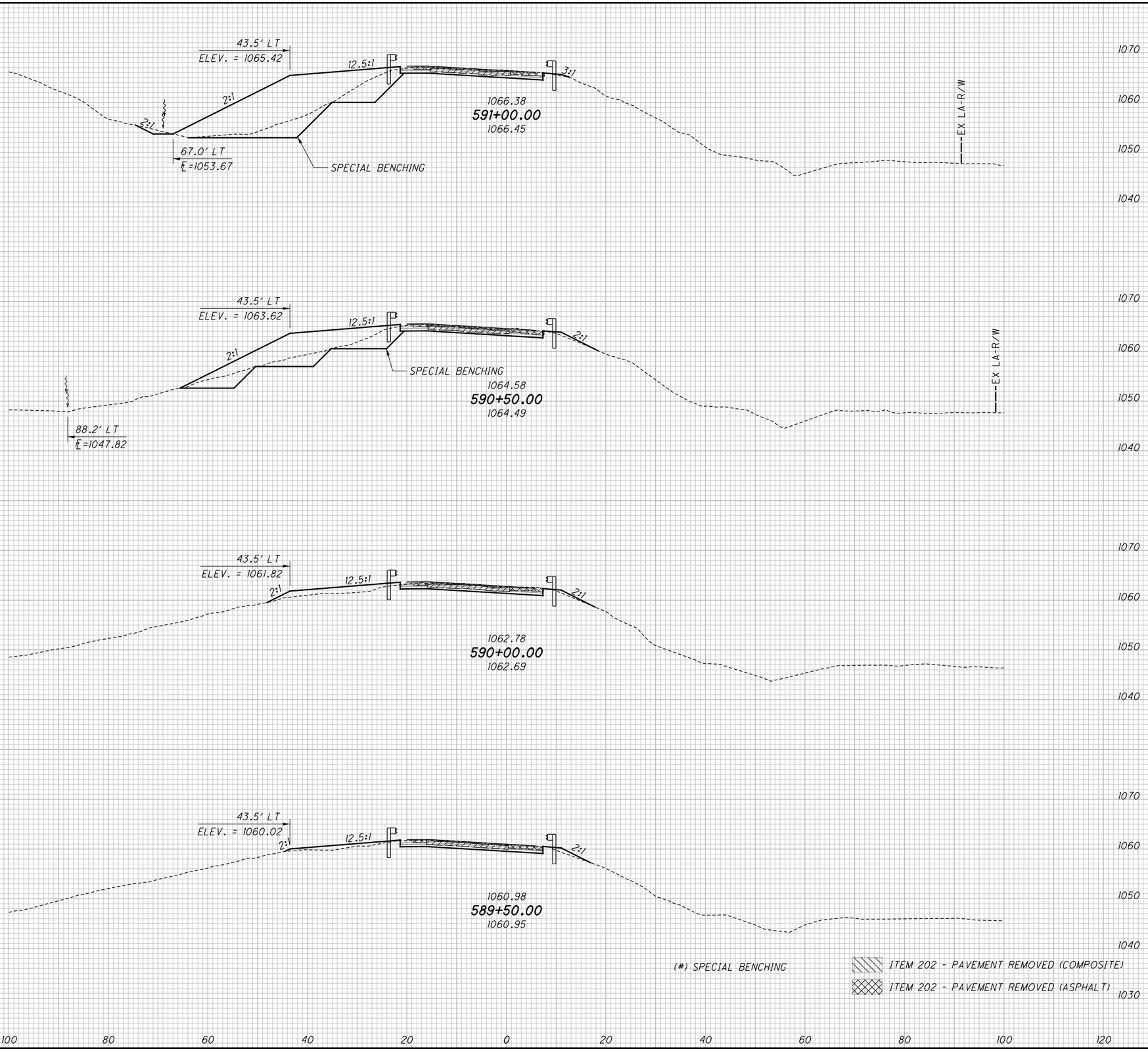


(#) SPECIAL BENCHING

ITEM 202 - PAVEMENT REMOVED (COMPOSITE)

ITEM 202 - PAVEMENT REMOVED (ASPHALT)

| END AREA CUT | END AREA FILL | VOLUME CUT | VOLUME FILL |
|---|---|---|---|
| | | (125) | (125) |
| | | 33 | 314 |
| (81) | (81) | | |
| 19 | 236 | | |
| | | (140) | (140) |
| | | 31 | 332 |
| (70) | (70) | | |
| 15 | 123 | | |
| | | (65) | (65) |
| | | 28 | 141 |
| (0) | (0) | | |
| 15 | 29 | | |
| | | 30 | 42 |
| 17 | 16 | | |
| | | (330) | (330) |
| | | 122 | 829 |

CALCULATED CJC
CHECKED PJF

# CROSS SECTIONS - RAMP C
## STA. 589+50.00 TO STA. 591+00.00

SUM-77 / 277 / 224
VARIOUS

730
1288

O:\2017\2017258\ProjectData\SUM\106002\Design\Roadway\Sheets\106002_XS105.dgn Sheet 1/13/2021 6:15:17 PM pfry

| SEEDING END WIDTH | SEEDING SQ. YDS. | END AREA CUT | END AREA FILL | VOLUME CUT | VOLUME FILL |
|---|---|---|---|---|---|
| | 86 | | | 28 | 2 |
| 21 | | 18 | 1 | | |
| | 139 | | | 32 | 3 |
| 29 | | (0) 17 | (0) 2 | | |
| | 242 | | | (50) 31 | (50) 97 |
| 58 | | (54) 17 | (54) 103 | | |
| | 467 | | | (50) 91 | (50) 102 |

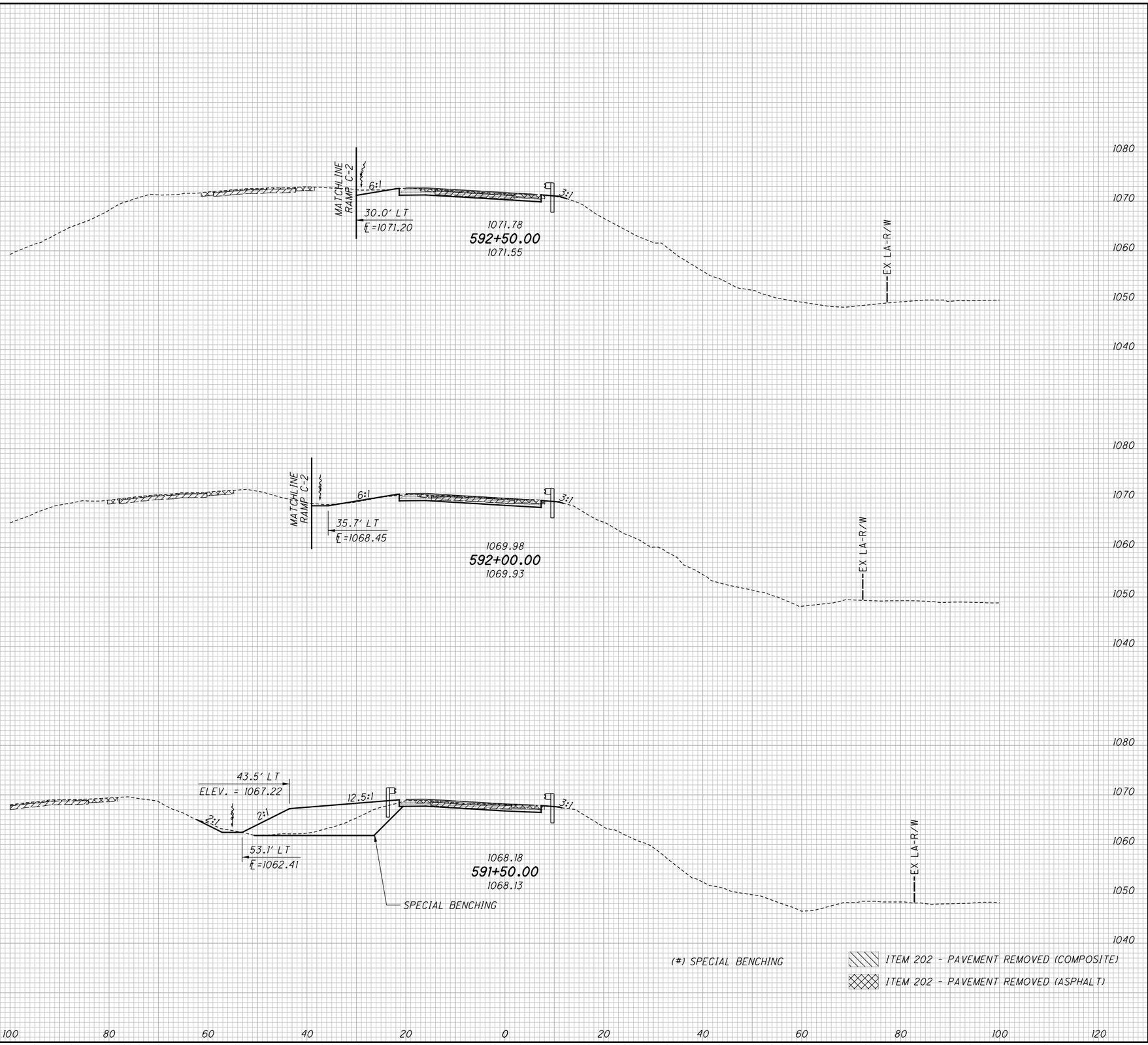


(#) SPECIAL BENCHING

ITEM 202 - PAVEMENT REMOVED (COMPOSITE)

ITEM 202 - PAVEMENT REMOVED (ASPHALT)

CALCULATED CJC
CHECKED PJF

# CROSS SECTIONS - RAMP C
## STA. 591+50.00 TO STA. 592+50.00

SUM-77 / 277 / 224
VARIOUS

731
1288

O:\2017\2017258\ProjectData\SUM\106002\Design\Roadway\Sheets\106002_XS105.dgn Sheet 1/13/2021 6:15:19 PM pfry

| SEEDING END WIDTH | SEEDING SQ. YDS. |
|---|---|
| 10 | 56 |
| 10 | 52 |
| 10 | 4 |
| 10 | |
| | 112 |

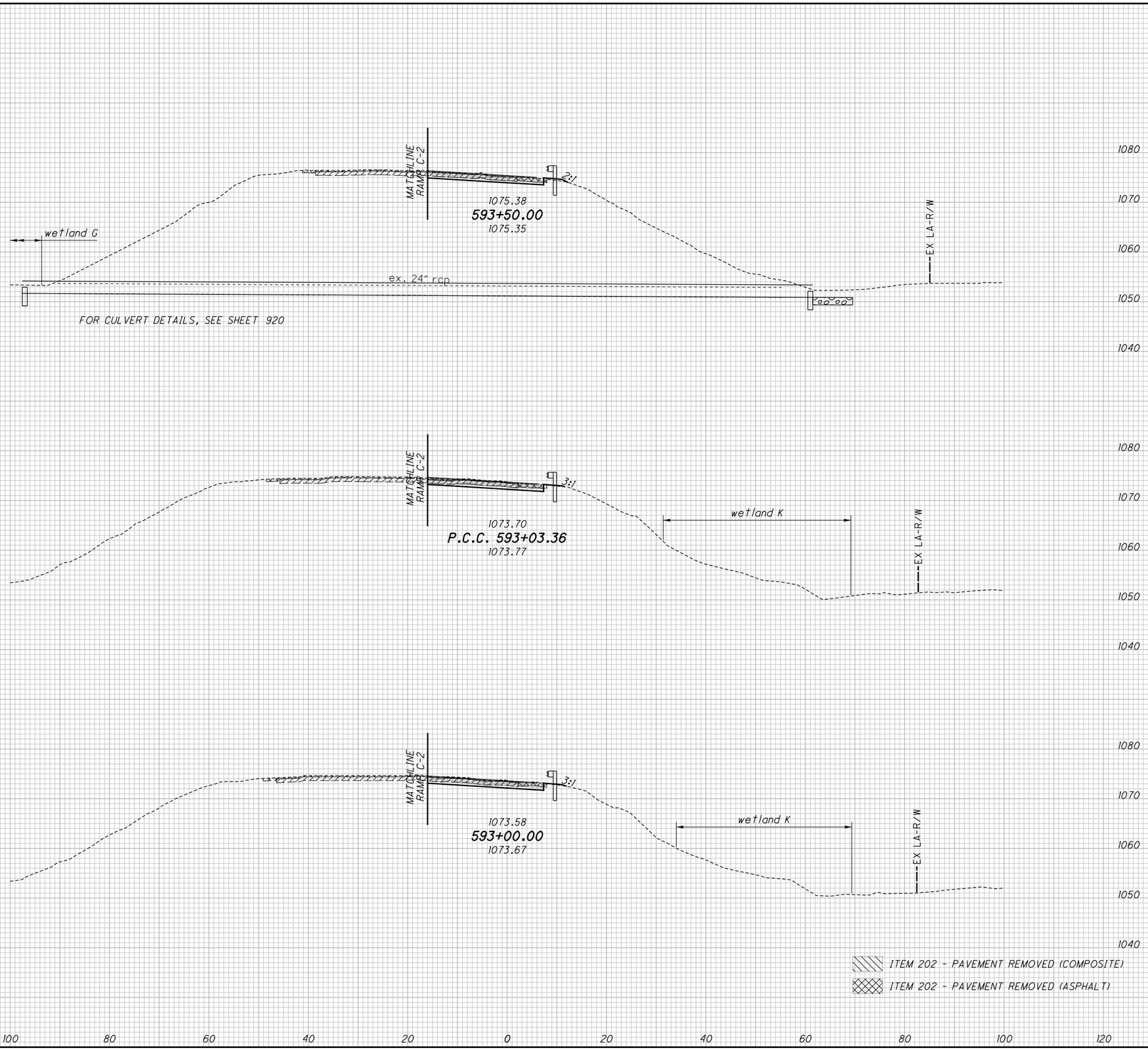


| END AREA CUT | END AREA FILL | VOLUME CUT | VOLUME FILL |
|---|---|---|---|
| | | 21 | 3 |
| 11 | 2 | | |
| | | 19 | 3 |
| 11 | 1 | | |
| | | 1 | 0 |
| 12 | 1 | | |
| | | 41 | 6 |

CALCULATED CJC
CHECKED PJF

# CROSS SECTIONS - RAMP C
## STA. 593+00.00 TO STA. 593+50.00

SUM-77 / 277 / 224
VARIOUS

732
1288

0:\2017\2017258\ProjectData\SUM\06002\Design\Roadway\Sheets\06002_XS105.dgn Sheet 1/13/2021 6:15:21 PM pfry

O:\2017\2017258\ProjectData\SUM\106002\Design\Roadway\Sheets\106002_XS105.dgn Sheet 1/13/2021 6:15:23 PM pfry

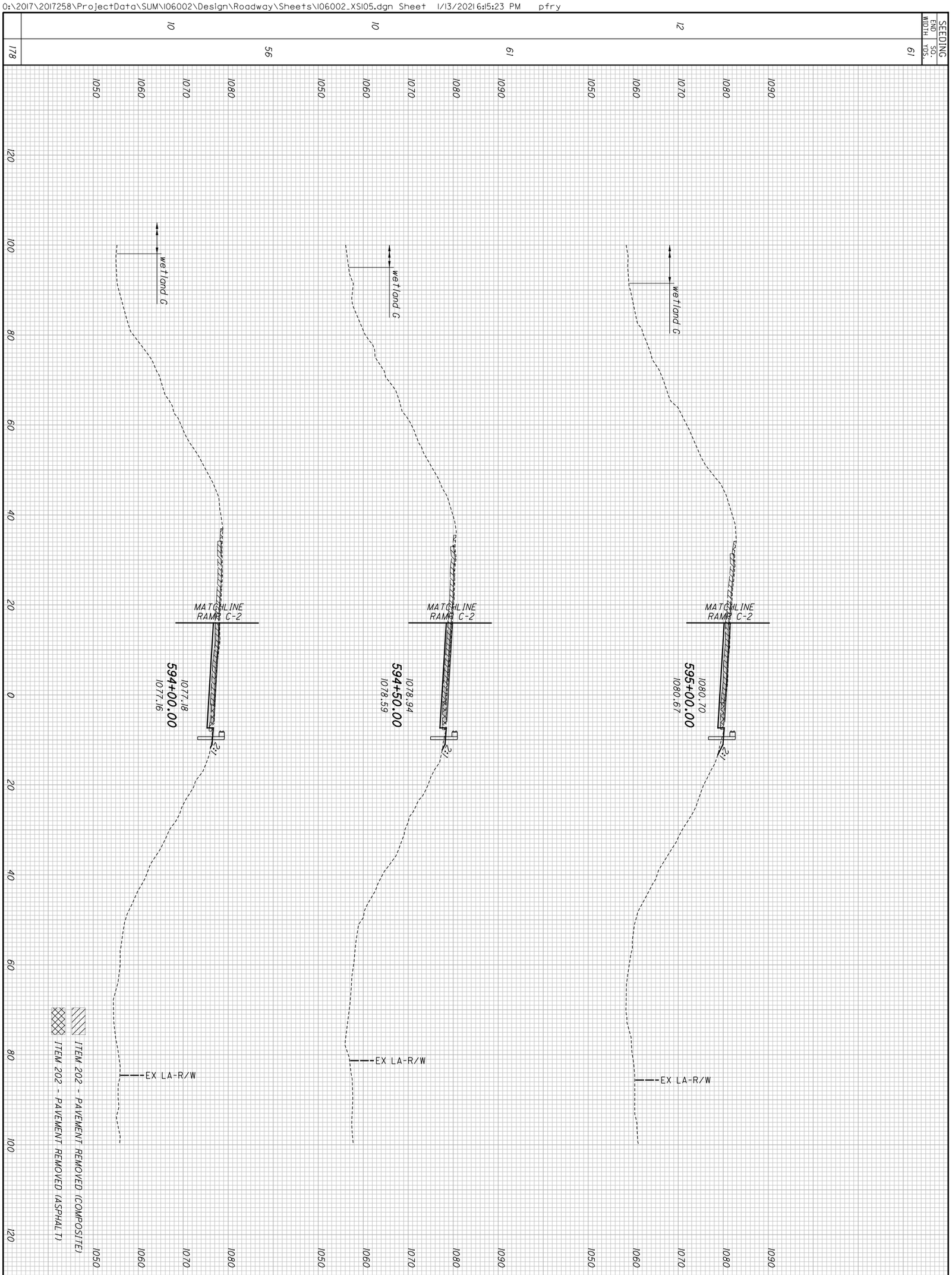


733
1288

**SUM-77/277/224**
**VARIOUS**

# CROSS SECTIONS - RAMP C
## STA. 594+00.00 TO STA. 595+00.00

CALCULATED CJC
CHECKED PJF

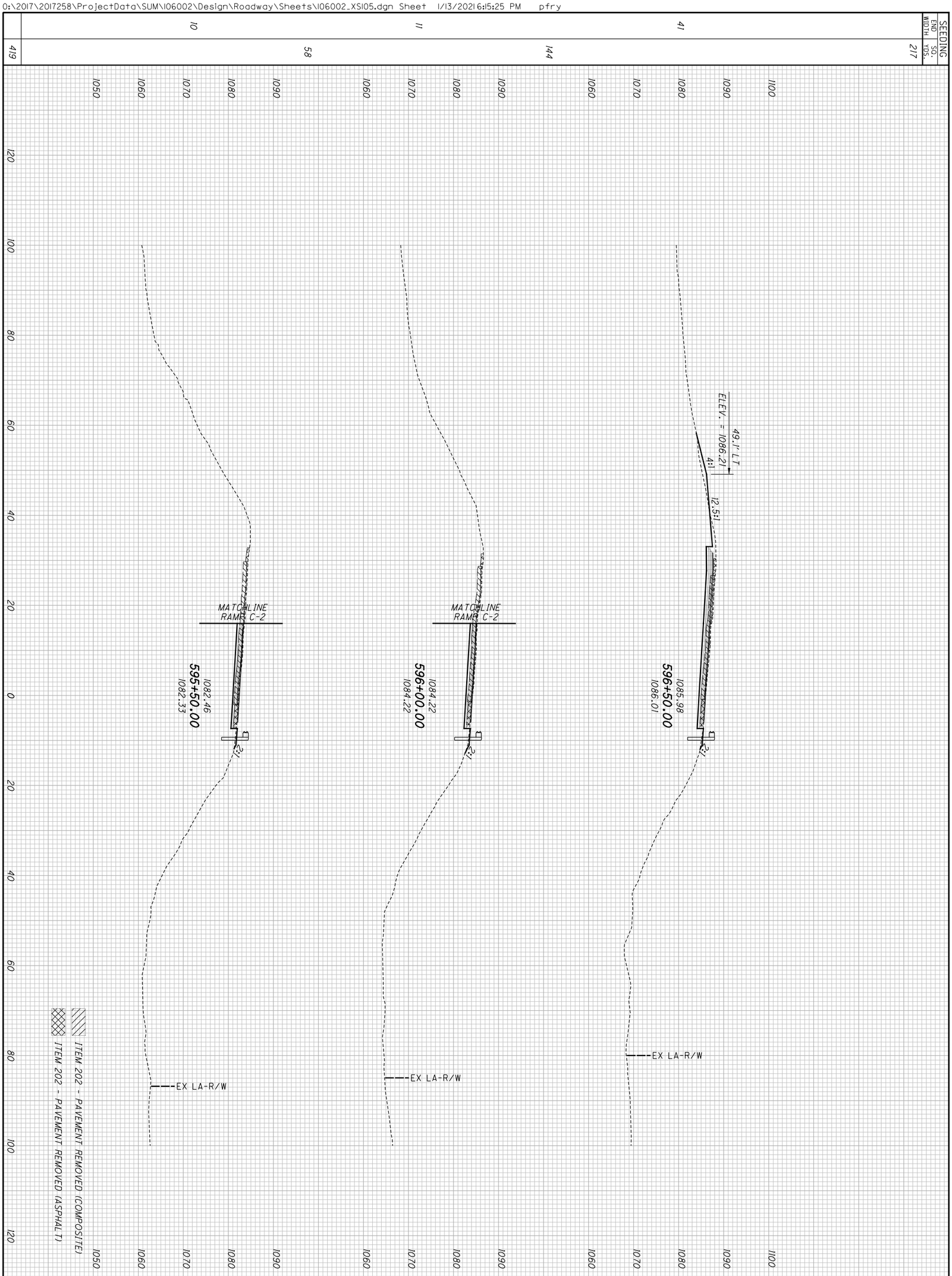


| SEEDING END AREA VOLUME | | | | | | | | | |
|---|---|---|---|---|---|---|---|---|---|
| WIDTH | SQ. YDS. | CUT | FILL | CUT | FILL | | | | |
| 419 | 217 | 10 | 11 | 41 | | | | | |
| | | 58 | 144 | | | | | | |
| | | 1050 | 1060 | 1070 | 1080 | 1090 | 1100 | | |
| | | 120 | 100 | 80 | 60 | 40 | 20 | 0 | 20 | 40 | 60 | 80 | 100 | 120 | |
| | | | | | | | | | |
| | | 11 | 1 | 14 | 1 | 41 | 9 | | |
| | | 152 | 20 | 23 | 2 | 51 | 9 | 78 | 9 |

| | | | |
|---|---|---|---|
| 734 / 1288 | SUM-77 / 277 / 224<br>VARIOUS | CROSS SECTIONS - RAMP C<br>STA. 595+50.00 TO STA. 596+50.00 | CALCULATED CJC<br>CHECKED PJF |

| SEEDING END WIDTH | SEEDING SQ. YDS. | STA. | END AREA CUT | END AREA FILL | VOLUME CUT | VOLUME FILL |
|---|---|---|---|---|---|---|
| 30 | 183 | 598+50.00 | 42 | 1 | 78 | 1 |
| | 164 | | | | 76 | 2 |
| 29 | | 598+00.00 | 40 | 1 | | |
| | 167 | | | | 74 | 2 |
| 31 | | 597+50.00 | 40 | 1 | | |
| | 189 | | | | 77 | 2 |
| 37 | | 597+00.00 | 43 | 1 | | |
| | 703 | | | | 305 | 7 |

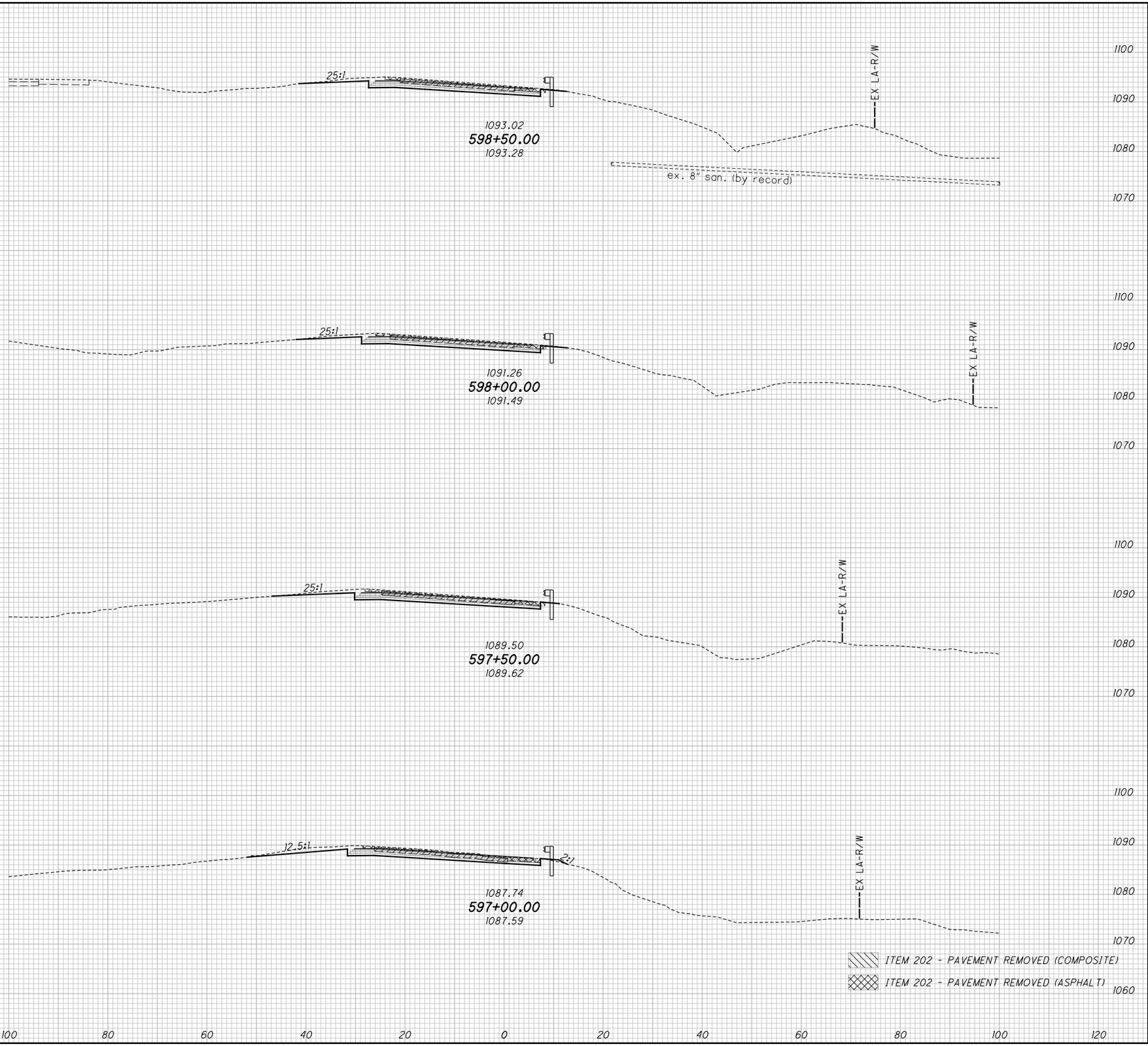


CALCULATED CJC
CHECKED PJF

# CROSS SECTIONS - RAMP C
## STA. 597+00.00 TO STA. 598+50.00

SUM-77 / 277 / 224
VARIOUS

735
1288

O:\2017\2017258\ProjectData\SUM\06002\Design\Roadway\Sheets\06002_XS05.dgn Sheet 1/13/2021 6:15:27 PM pfry

| SEEDING | |
|---|---|
| END WIDTH | SQ. YDS. |
| | 103 |
| 21 | |
| | 133 |
| 27 | |
| | 37 |
| 29 | |
| | 138 |
| 36 | |
| | 411 |

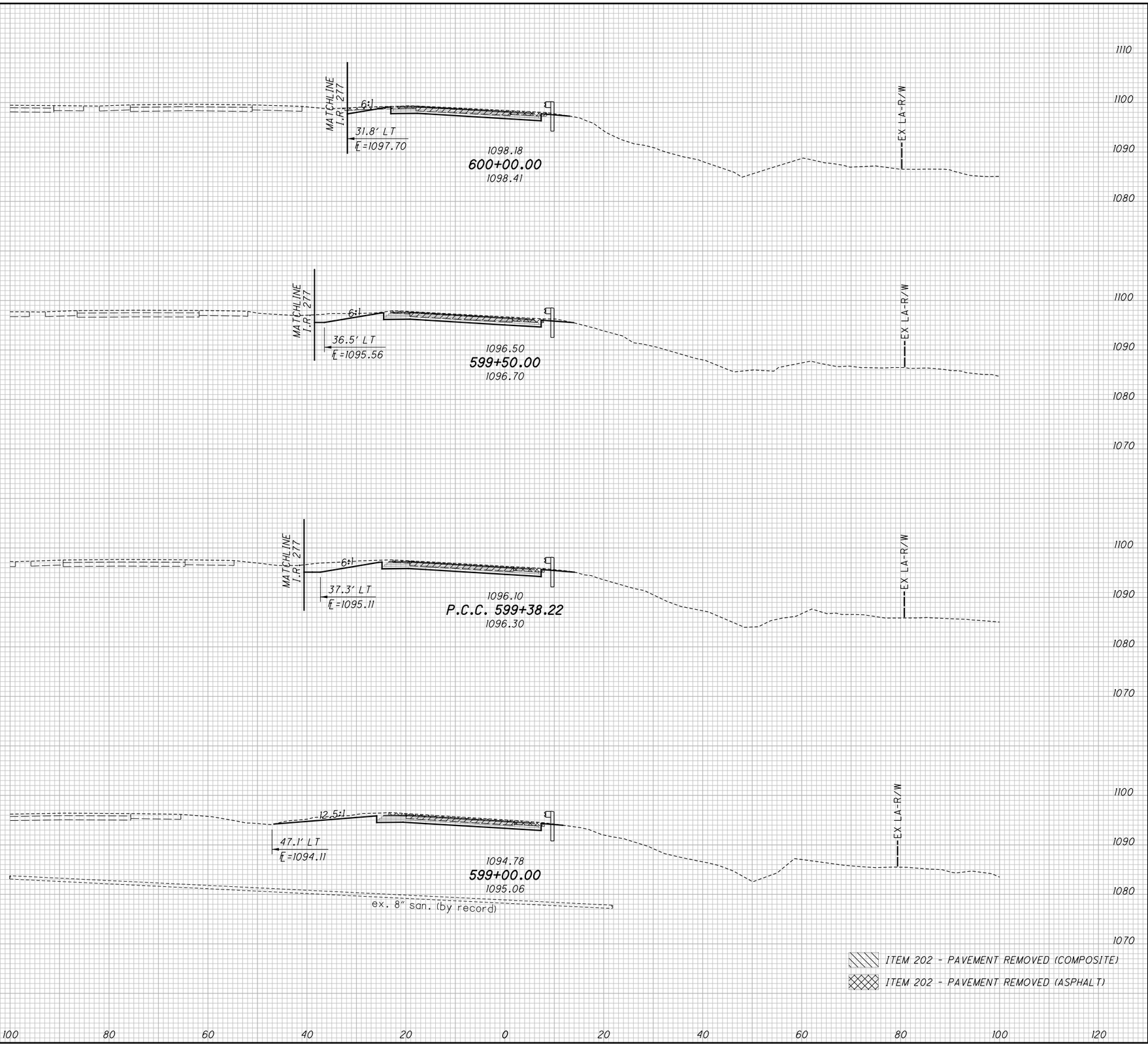


| END AREA | |
|---|---|
| CUT | FILL |
| | |
| 25 | 1 |
| | |
| 40 | 0 |
| | |
| 46 | 0 |
| | |
| 42 | 0 |
| | |
| | |

| VOLUME | |
|---|---|
| CUT | FILL |
| 33 | 2 |
| | |
| 60 | 1 |
| | |
| 19 | 0 |
| | |
| 62 | 0 |
| | |
| 174 | 3 |

CALCULATED CJC
CHECKED PJF

# CROSS SECTIONS - RAMP C
## STA. 599+00.00 TO STA. 600+00.00

SUM-77 / 277 / 224
VARIOUS

736
1288

O:\2017\2017258\ProjectData\SUM\106002\Design\Roadway\Sheets\106002_XS105.dgn Sheet 1/13/2021 6:15:30 PM pfry

0:\2017\2017258\ProjectData\SUM\106002\Design\Roadway\Sheets\106002_XS105.dgn Sheet 1/13/2021 6:15:32 PM pfry

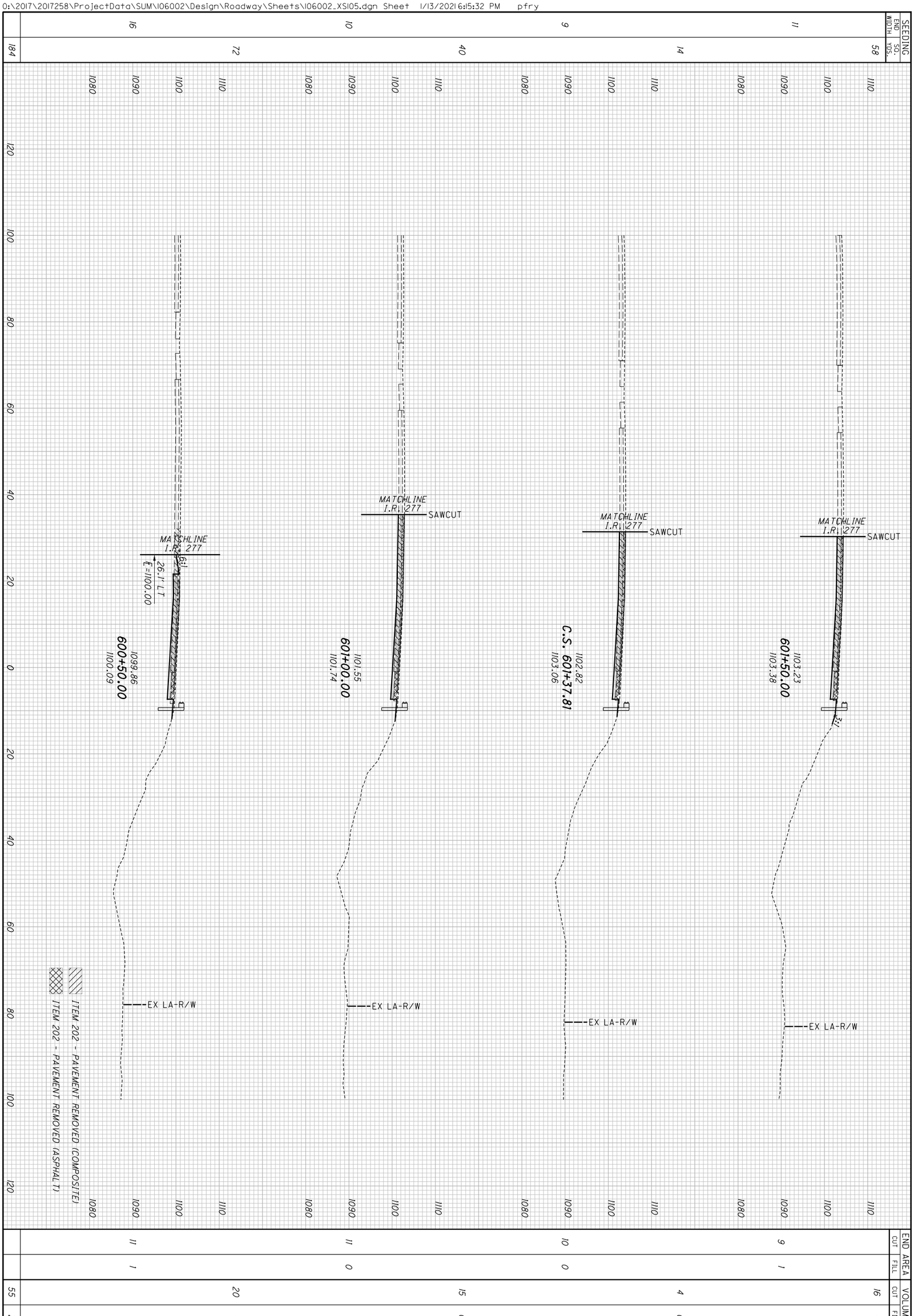


| | | |

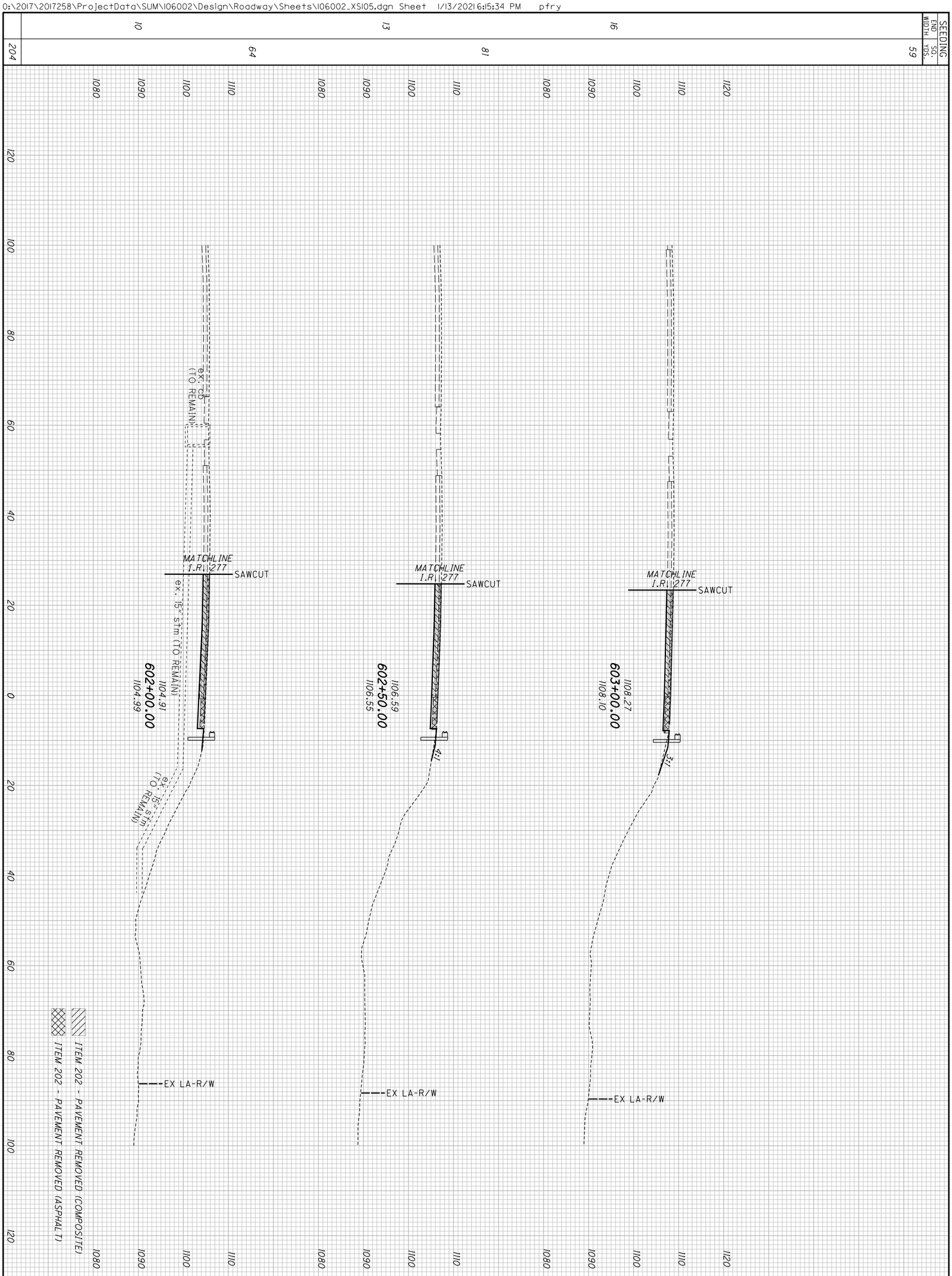


738
1288

**SUM-77/277/224**
**VARIOUS**

# CROSS SECTIONS - RAMP C
## STA. 602+00.00 TO STA. 603+00.00

CALCULATED CJC
CHECKED PJF

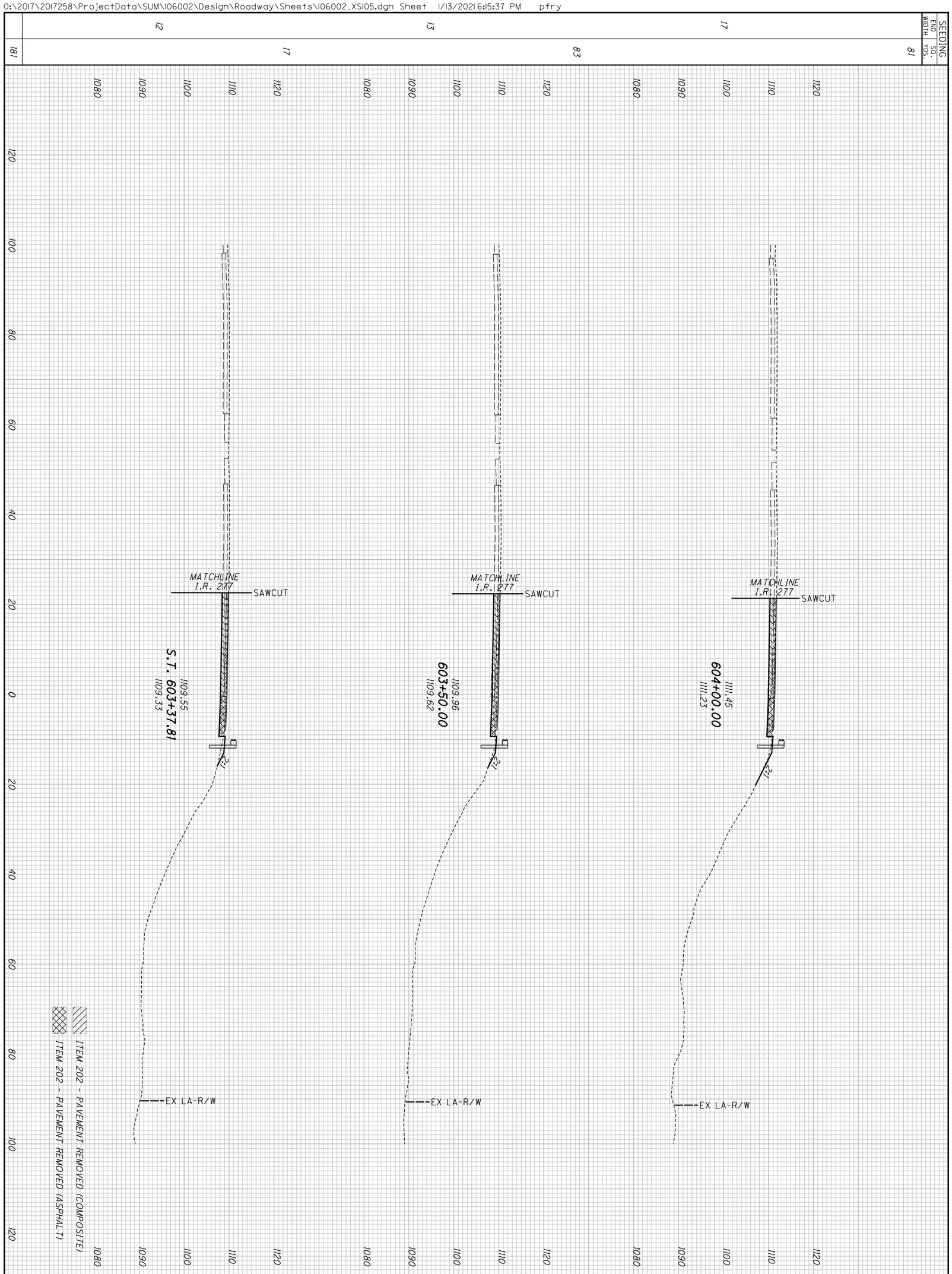


| | |
|---|---|
| 739 / 1288 | SUM-77/277/224 VARIOUS |
| CROSS SECTIONS - RAMP C STA. 603+37.81 TO 604+00.00 | CALCULATED CJC CHECKED PJF |

O:\2017\2017258\ProjectData\SUM\106002\Design\Roadway\Sheets\106002_XS105.dgn Sheet 1/13/2021 6:15:39 PM pfry

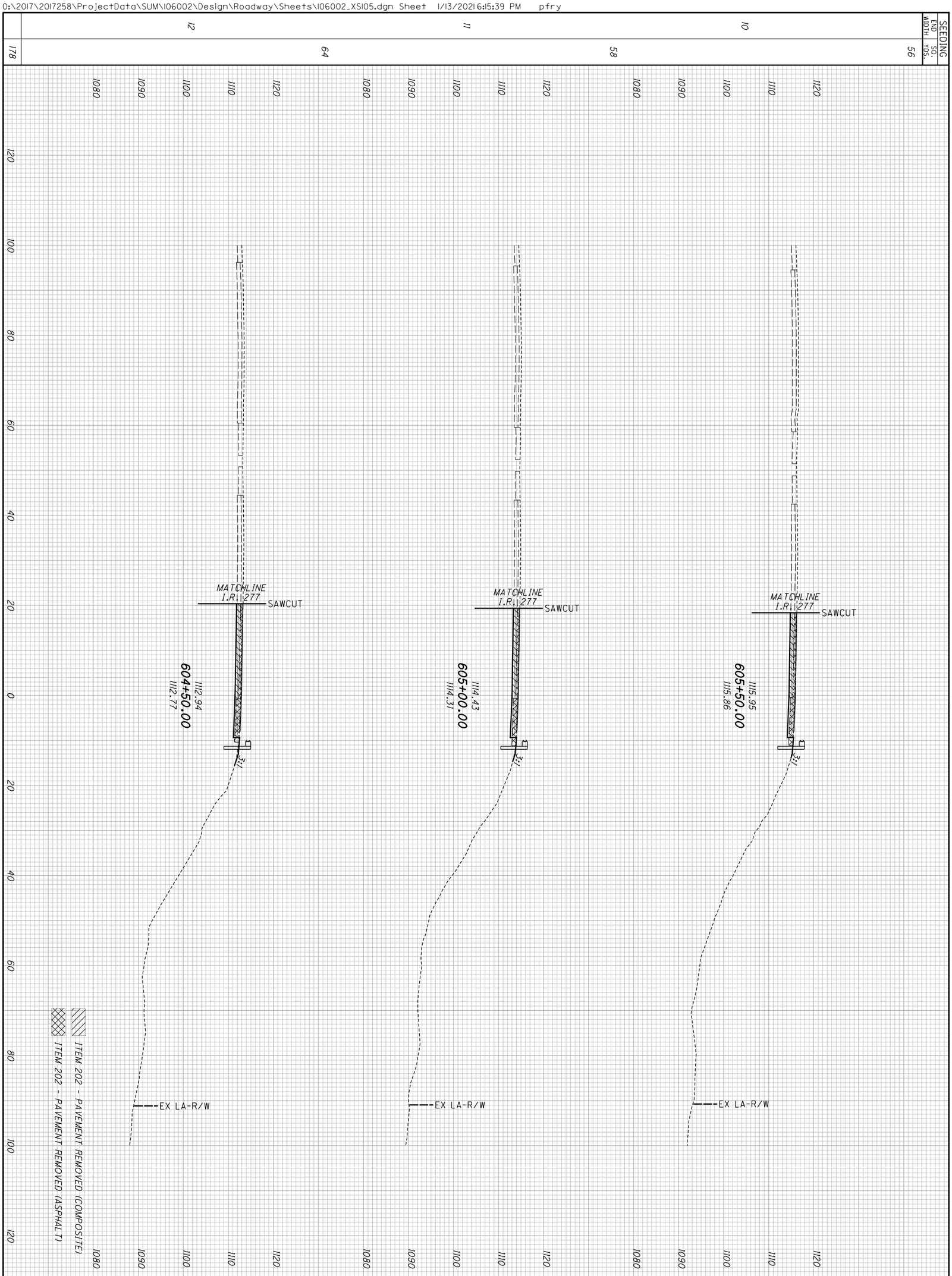


| | |
|---|---|
| 740 / 1288 | SUM-77/277/224 VARIOUS |
| | CROSS SECTIONS - RAMP C STA. 604+50.00 TO STA. 605+50.00 |
| CALCULATED | CJC |
| CHECKED | PJF |

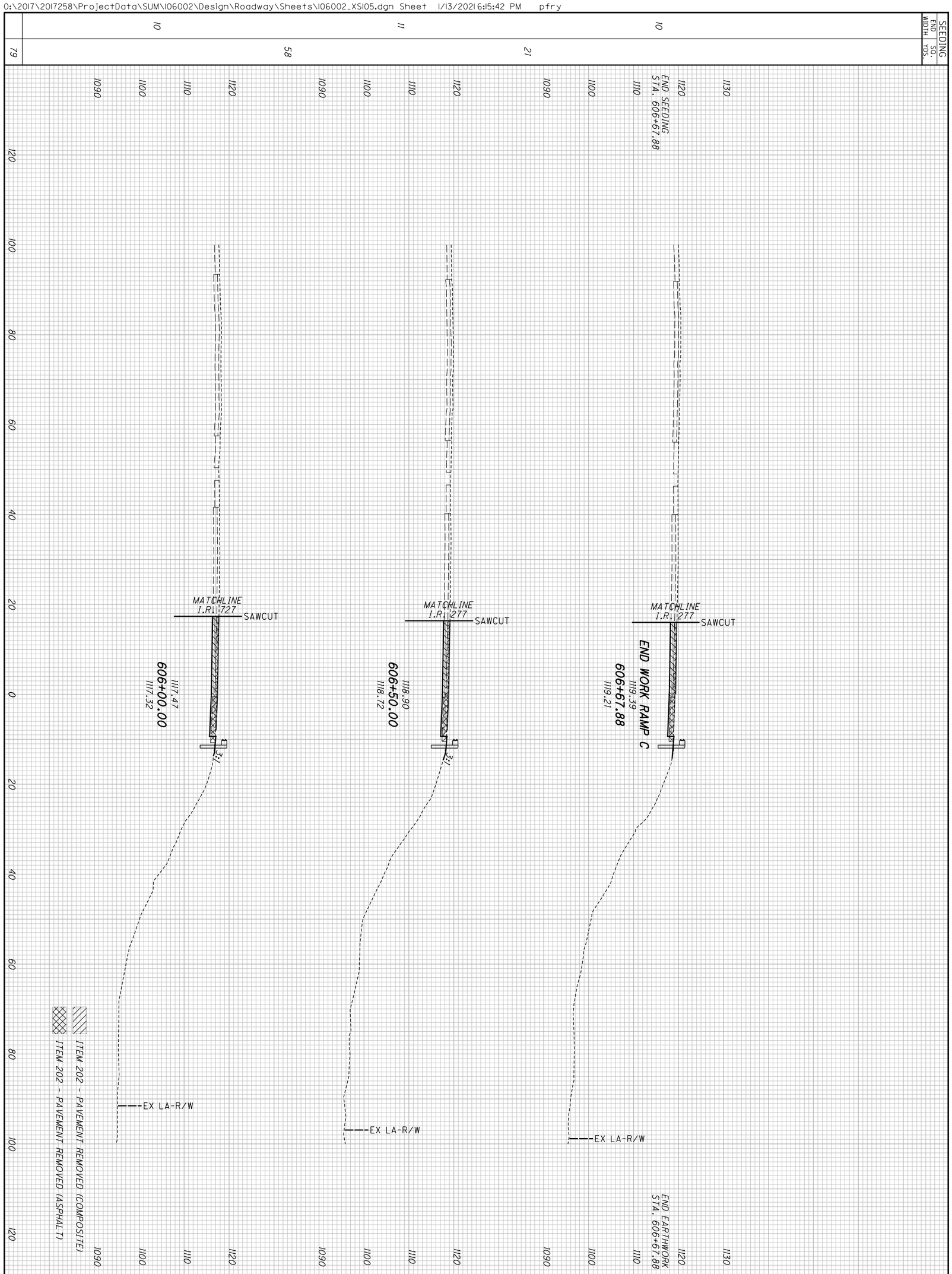


| | |
|---|---|
| 741 / 1288 | **SUM-77/277/224**<br>**VARIOUS** |
| | **CROSS SECTIONS - RAMP C**<br>**STA. 606+00.00 TO STA. 606+67.88** |
| | CALCULATED CJC<br>CHECKED PJF |

O:\2017\2017258\ProjectData\SUM\106002\Design\Roadway\Sheets\106002_XS106.dgn Sheet 1/13/2021 6:16:21 PM pfry

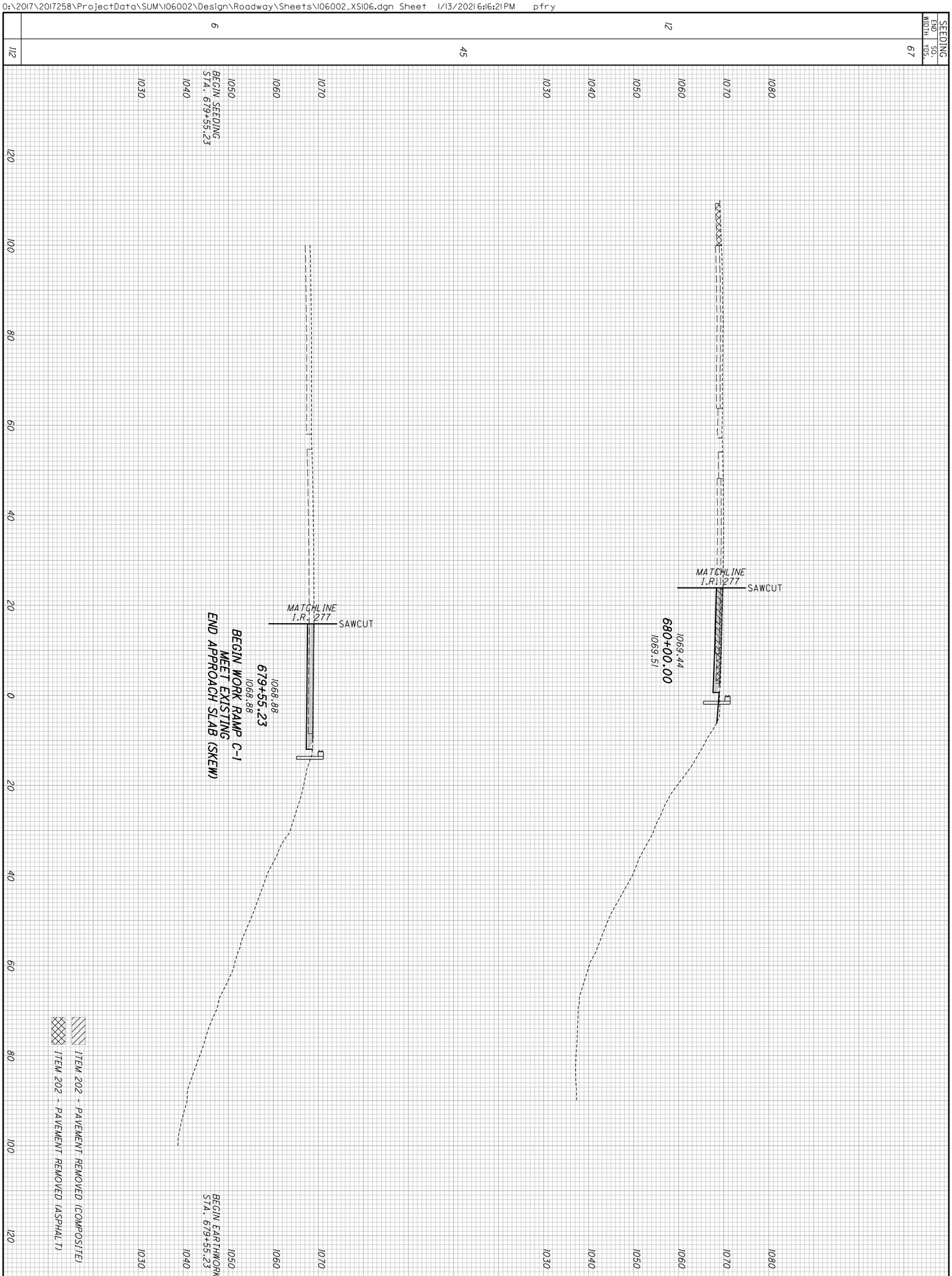


| | | |
|---|---|---|
| 742 / 1288 | **SUM-77 / 277 / 224**<br>**VARIOUS** | **CROSS SECTIONS - RAMP C-1**<br>**STA. 679+55.23 TO STA. 680+00.00** |
| | | CALCULATED CJC<br>CHECKED PJF |

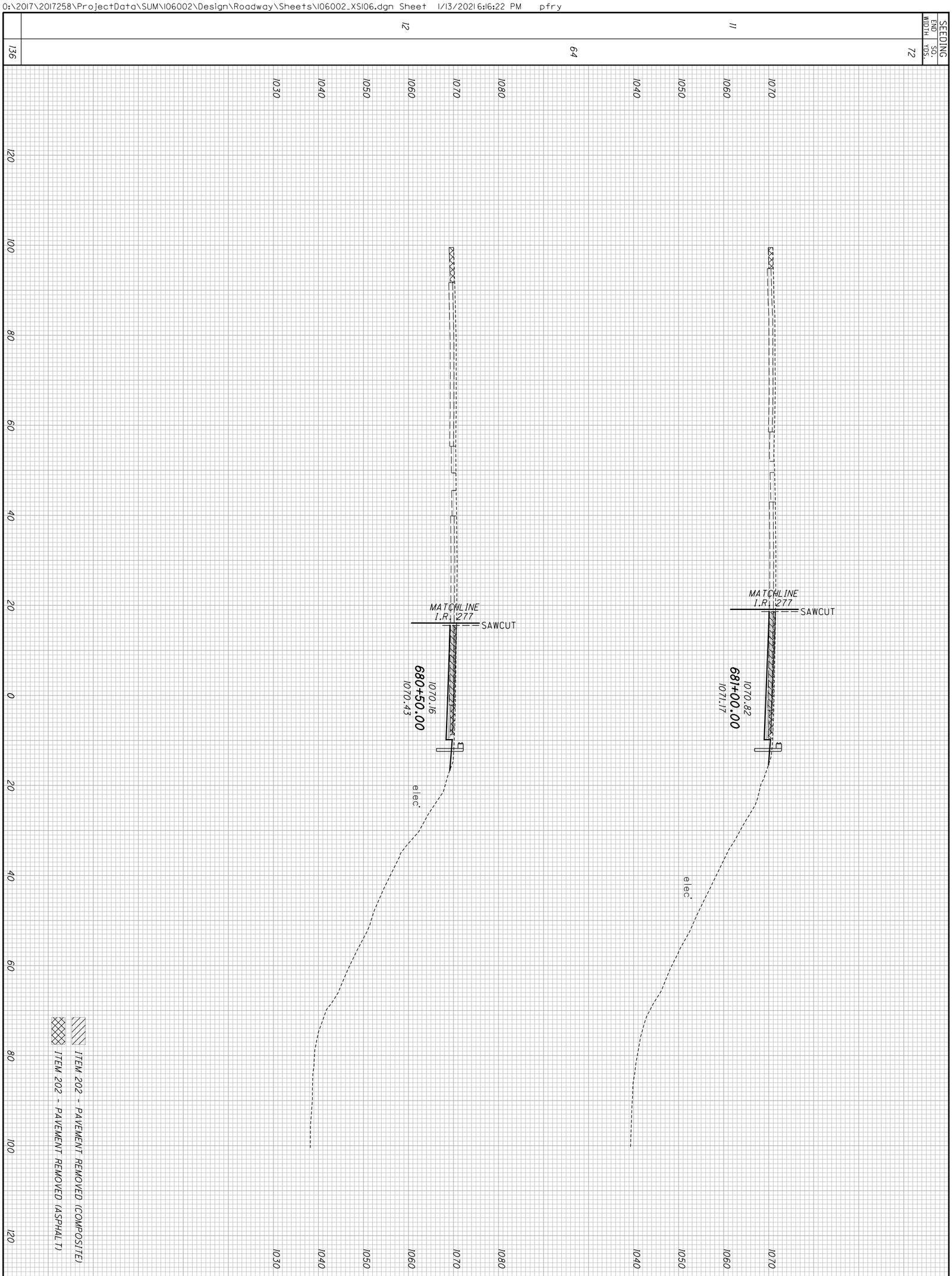


| | | |
|---|---|---|
| 743 / 1288 | **SUM-77/277/224**<br>**VARIOUS** | **CROSS SECTIONS - RAMP C-1**<br>**STA. 680+50.00 TO STA. 681+00.00** |

CALCULATED CJC
CHECKED PJF

| SEEDING END WIDTH | SEEDING SQ. YDS. |
|---|---|
| | 100 |
| 9 | |
| | 64 |
| 14 | |
| | 81 |
| 15 | |
| | 245 |

EX-2
STA. 260+24.01, 0.06' RT
EX. INLET, GRATE ELEV 1073.04
EX. 15" CMP N 1067.40
EX. 15" CMP S 1067.40 *(REMOVED)*

DR-39
STA. 782+42.06, 19.29' LT
EX. CB, GRATE ELEV 1073.05
EX. 15" RCP NE 1067.84

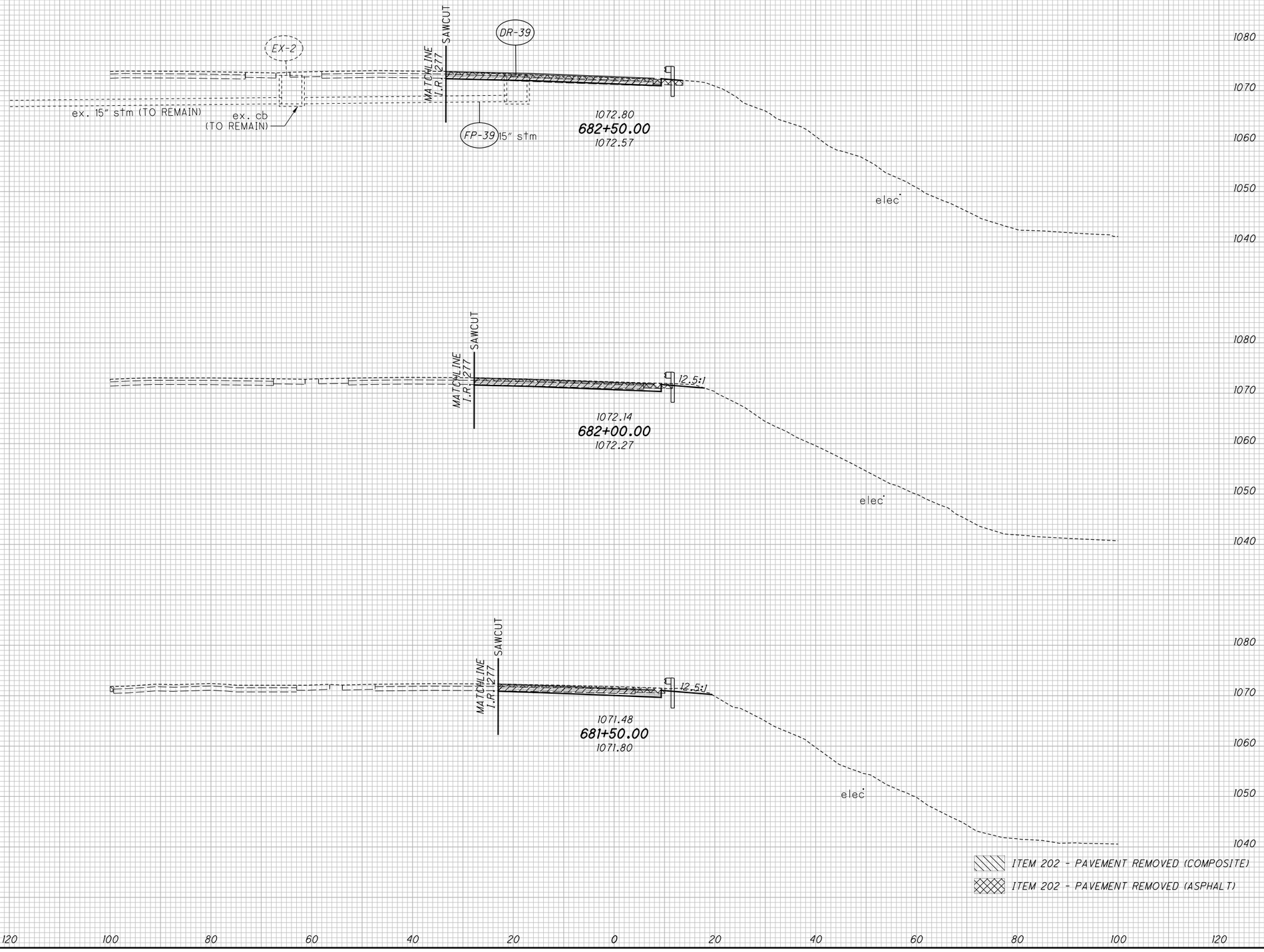


| | 120 | 100 | 80 | 60 | 40 | 20 | 0 | 20 | 40 | 60 | 80 | 100 | 120 | |
|---|---|---|---|---|---|---|---|---|---|---|---|---|---|---|

| END AREA CUT | END AREA FILL | VOLUME CUT | VOLUME FILL |
|---|---|---|---|
| | | 17 | 17 |
| 1 | 9 | | |
| | | 10 | 10 |
| 10 | 2 | | |
| | | 25 | 2 |
| 17 | 0 | | |
| | | 52 | 29 |

CALCULATED CJC
CHECKED PJF

**CROSS SECTIONS - RAMP C-1**
**STA. 681+50.00 TO STA. 682+50.00**

**SUM-77 / 277 / 224**
**VARIOUS**

744
1288

O:\2017\2017258\ProjectData\SUM\06002\Design\Roadway\Sheets\106002_XS106.dgn Sheet 1/13/2021 6:16:23 PM pfry

| SEEDING END WIDTH | SEEDING SQ. YDS. |
|---|---|
| | [83] |
| | 208 |
| [15] | |
| 34 | |
| | [8] |
| | 109 |
| [15] | |
| [0] | |
| 28 | |
| | 56 |
| 27 | |
| | [91] |
| | 373 |

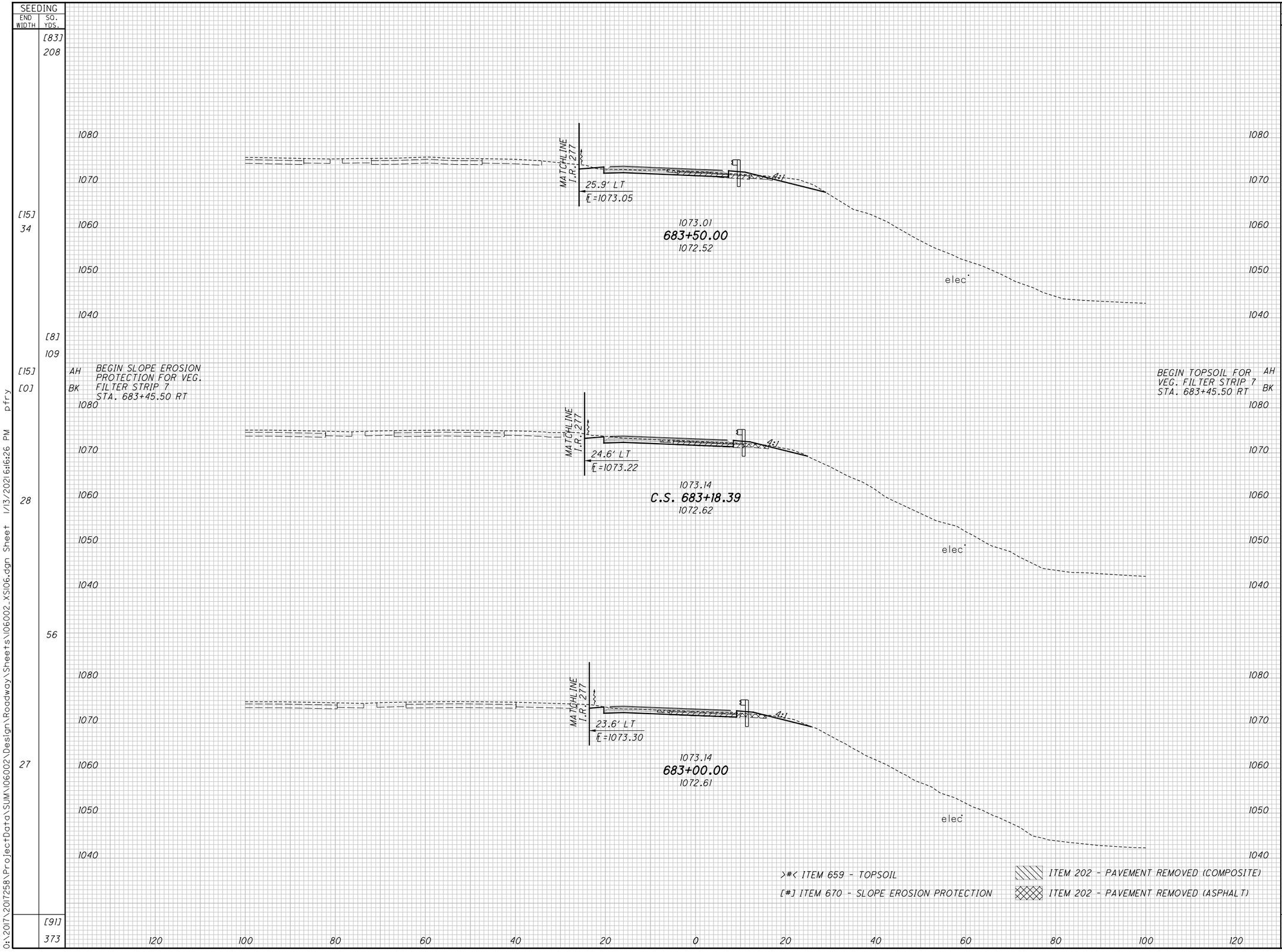


| END AREA CUT | END AREA FILL | VOLUME CUT | VOLUME FILL |
|---|---|---|---|
| | | | >9< |
| | | 57 | 17 |
| | >5< | | |
| 27 | 10 | | |
| | | | >1< |
| | | 27 | 12 |
| | >5< | | |
| | >0< | | |
| 19 | 10 | | |
| | | 12 | 6 |
| 17 | 9 | | |
| | | 96 | >10< 35 |

CALCULATED CJC
CHECKED PJF

# CROSS SECTIONS - RAMP C-1
# STA. 683+00.00 TO STA. 683+50.00

SUM-77 / 277 / 224
VARIOUS

745
1288

D:\2017\20171258\ProjectData\SUM\106002\Design\Roadway\Sheets\106002_XS106.dgn Sheet 1/13/2021 6:16:26 PM pfry

| SEEDING END WIDTH | SEEDING SQ. YDS. | END AREA CUT | END AREA FILL | VOLUME CUT | VOLUME FILL |
|---|---|---|---|---|---|
| | [51] 110 | | | 29 | >5< 7 |
| [25] 52 | | 42 | >8< 11 | | |
| | [139] 283 | | | 77 | >15< 21 |
| [25] 50 | | 41 | >8< 12 | | |
| | [111] 253 | | | 70 | >12< 19 |
| [15] 41 | | 35 | >5< 8 | | |
| | [301] 646 | | | 176 | >32< 47 |

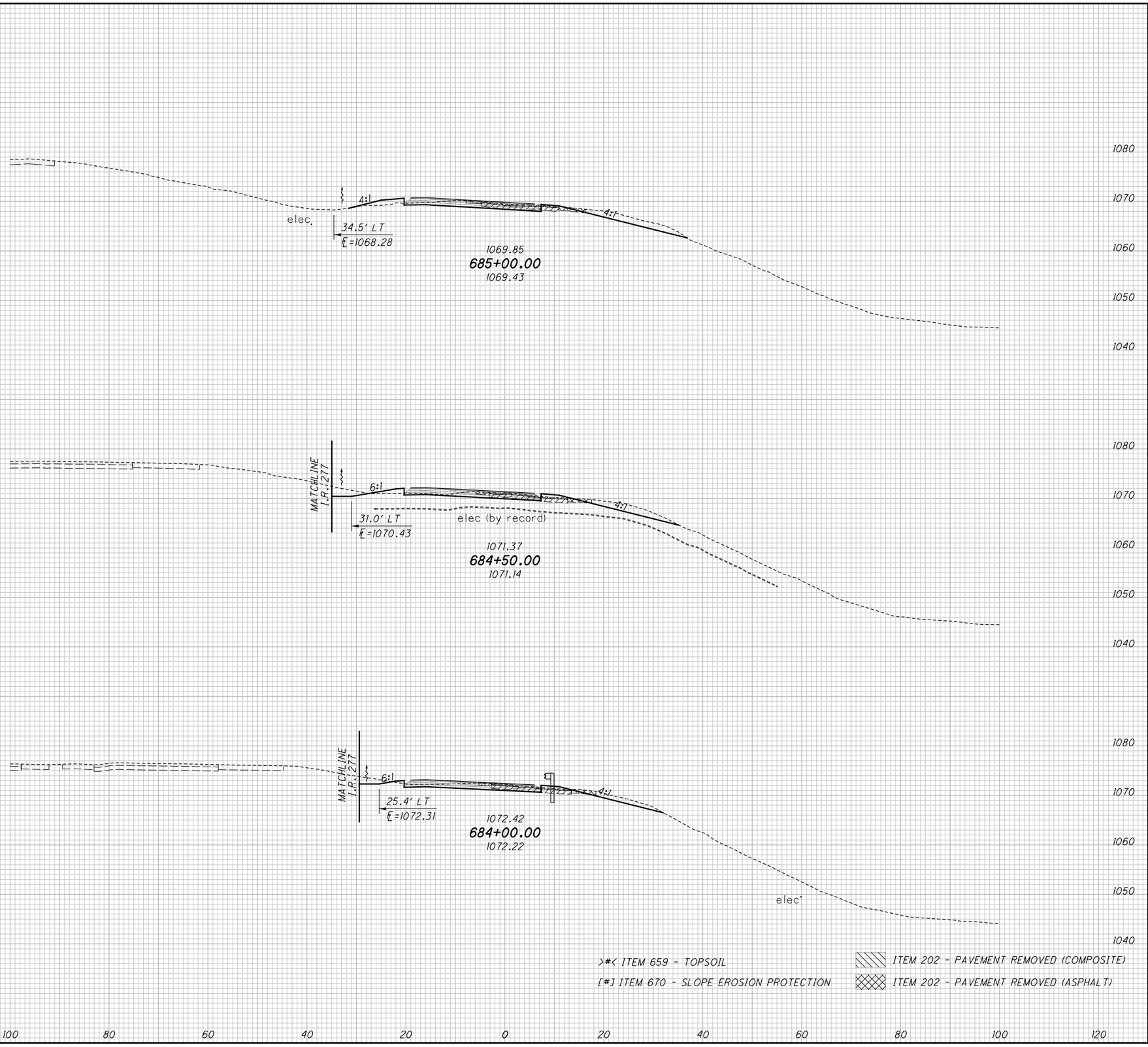


>#< ITEM 659 - TOPSOIL

[#] ITEM 670 - SLOPE EROSION PROTECTION

ITEM 202 - PAVEMENT REMOVED (COMPOSITE)

ITEM 202 - PAVEMENT REMOVED (ASPHALT)

CALCULATED CJC

CHECKED PJF

# CROSS SECTIONS - RAMP C-1
## STA. 684+00.00 TO STA. 685+00.00

SUM-77 / 277 / 224
VARIOUS

746
1288

0:\2017\2017258\ProjectData\SUM\106002\Design\Roadway\Sheets\106002_XS106.dgn Sheet 1/13/2021 6:16:28 PM pfry

| SEEDING END WIDTH | SEEDING SQ. YDS. | END AREA CUT | END AREA FILL | VOLUME CUT | VOLUME FILL |
|---|---|---|---|---|---|
| | [139] 394 | | | 104 | >15< 6 |
| [25] 70 | | 49 | >8< 6 | | |
| | [139] 378 | | | 91 | >15< 18 |
| [25] 66 | | 49 | >8< 13 | | |
| | [88] 214 | | | 54 | >9< 14 |
| [25] 56 | | 44 | >8< 11 | | |
| | [366] 986 | | | 249 | >39< 38 |

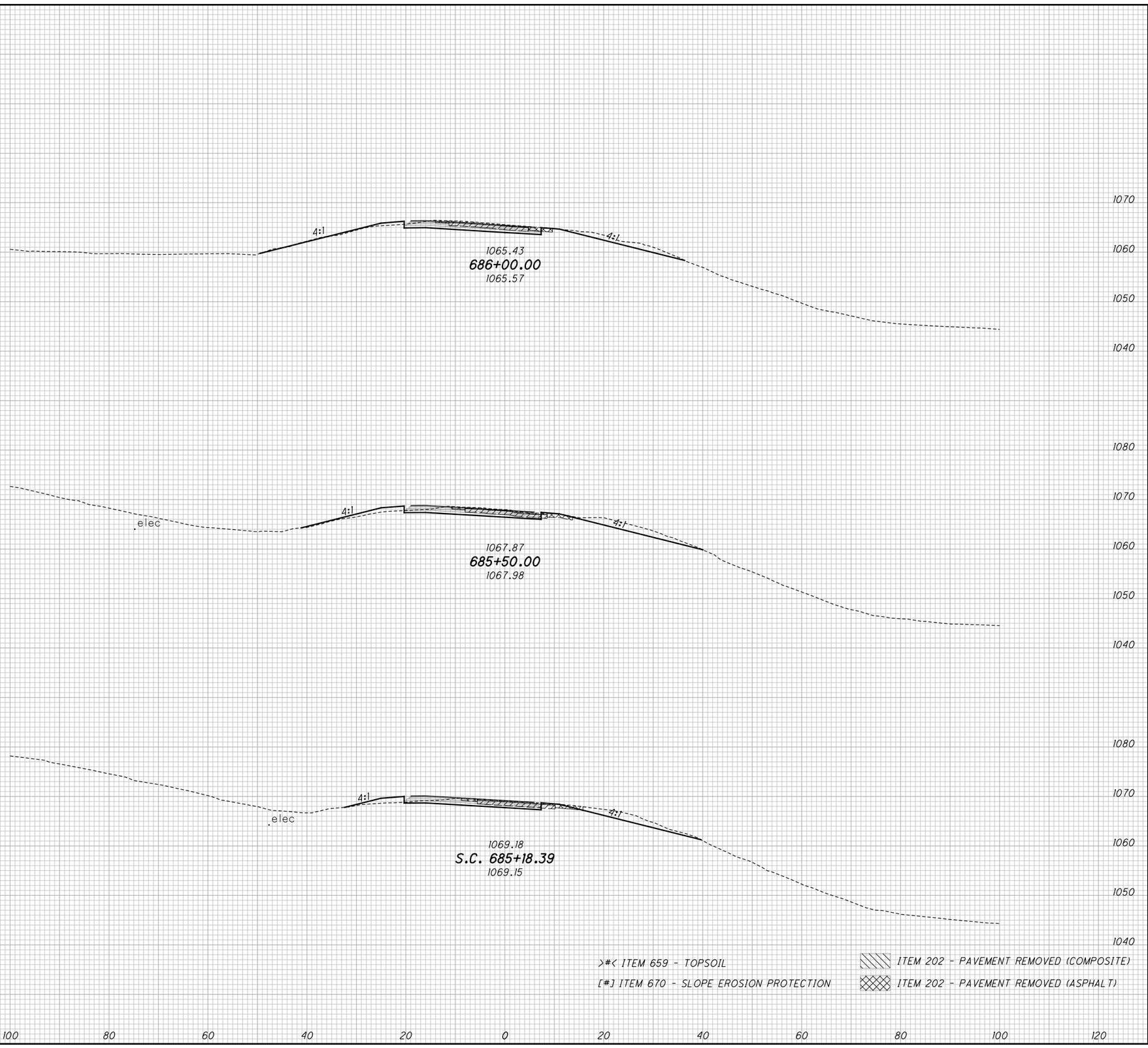


>#< ITEM 659 - TOPSOIL

[#] ITEM 670 - SLOPE EROSION PROTECTION

ITEM 202 - PAVEMENT REMOVED (COMPOSITE)

ITEM 202 - PAVEMENT REMOVED (ASPHALT)

CALCULATED CJC
CHECKED PJF

# CROSS SECTIONS - RAMP C-1
## STA. 685+18.39 TO STA. 686+00.00

SUM-77 / 277 / 224
VARIOUS

747
1288

0:\2017\20172581\Project Data\SUM\106002\Design\Roadway\Sheets\106002_XS106.dgn Sheet 1/13/2021 6:16:30 PM pfry

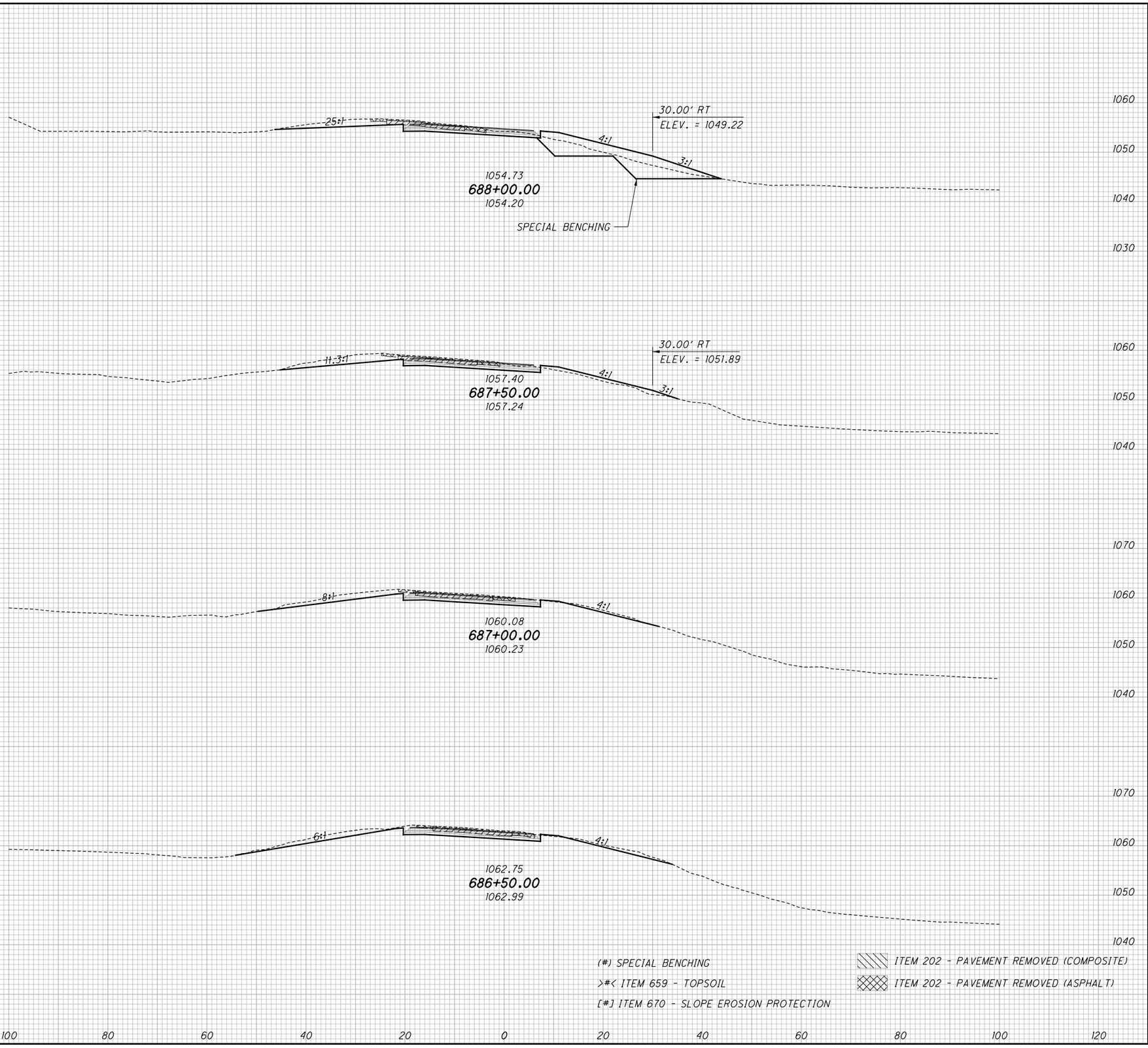


| SEEDING END WIDTH | SEEDING SQ. YDS. |
|---|---|
| [25] | [139] |
| 74 | 403 |
| | [139] |
| | 383 |
| [25] | |
| 64 | |
| | [139] |
| | 358 |
| [25] | |
| 65 | |
| | [139] |
| | 381 |
| [25] | |
| 72 | |
| | [556] |
| | 1525 |

| END AREA CUT | END AREA FILL | VOLUME CUT | VOLUME FILL |
|---|---|---|---|
| | | (101) | (101) |
| | | | >15< |
| | | 78 | 92 |
| (65) | (65) | | |
| | >8< | | |
| 43 | 45 | | |
| | | (60) | (60) |
| | | | >15< |
| | | 88 | 48 |
| (0) | (0) | | |
| | >8< | | |
| 52 | 7 | | |
| | | | >15< |
| | | 106 | 6 |
| | >8< | | |
| 62 | 0 | | |
| | | | >15< |
| | | 116 | 1 |
| | >8< | | |
| 63 | 1 | | |
| | | (161) | (161) |
| | | | >60< |
| | | 388 | 147 |

(#) SPECIAL BENCHING

>#< ITEM 659 - TOPSOIL

[#] ITEM 670 - SLOPE EROSION PROTECTION

ITEM 202 - PAVEMENT REMOVED (COMPOSITE)

ITEM 202 - PAVEMENT REMOVED (ASPHALT)

CALCULATED CJC

CHECKED PJF

# CROSS SECTIONS - RAMP C-1
## STA. 686+50.00 TO STA. 688+00.00

SUM-77 / 277 / 224
VARIOUS

748
1288

0:\2017\2017258\ProjectData\SUM\106002\Design\Roadway\Sheets\106002_XS106.dgn Sheet 1/13/2021 6:6:32 PM pfry

| SEEDING END WIDTH | SEEDING SQ. YDS. |
|---|---|
| | [103] 361 |
| [20] 69 | |
| | [125] 372 |
| [25] 65 | |
| | [139] 378 |
| [25] 71 | |
| | [367] 1111 |

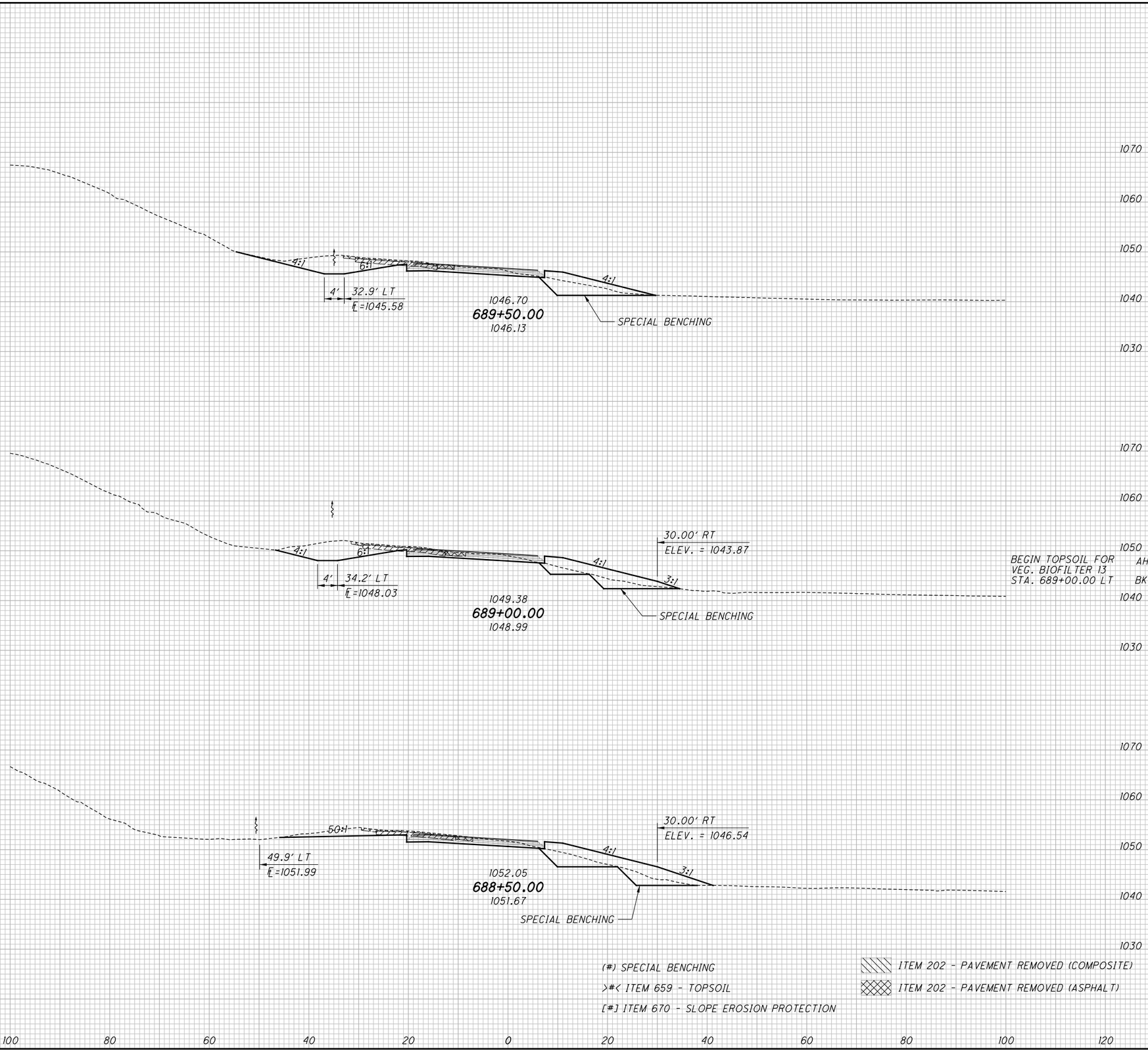


(#) SPECIAL BENCHING
>#< ITEM 659 - TOPSOIL
[#] ITEM 670 - SLOPE EROSION PROTECTION

ITEM 202 - PAVEMENT REMOVED (COMPOSITE)
ITEM 202 - PAVEMENT REMOVED (ASPHALT)

| END AREA CUT | END AREA FILL | VOLUME CUT | VOLUME FILL |
|---|---|---|---|
| | | (38) | (38) |
| | | | >19< |
| | | 134 | 37 |
| | | | |
| | | | |
| | | | |
| | | | |
| (33) | (33) | | |
| | >11< | | |
| 74 | 20 | | |
| | | | |
| | | | |
| | | | |
| | | (56) | (56) |
| | | | >22< |
| | | 139 | 51 |
| | | | |
| | | | |
| | | | |
| | | | |
| (27) | (27) | | |
| | >13< | | |
| AH | >8< | | |
| BK | | | |
| 76 | 35 | | |
| | | | |
| | | | |
| | | | |
| | | (66) | (66) |
| | | | >15< |
| | | 108 | 82 |
| | | | |
| | | | |
| | | | |
| | | | |
| (44) | (44) | | |
| | >8< | | |
| 41 | 54 | | |
| | | | |
| | | | |
| | | | |
| | | (160) | (160) |
| | | | >56< |
| | | 381 | 170 |

CALCULATED CJC
CHECKED PJF

# CROSS SECTIONS - RAMP C-1
## STA. 688+50.00 TO STA. 689+50.00

SUM-77 / 277 / 224
VARIOUS

749
1288

D:\2017\2017258\ProjectData\SUM\106002\Design\Roadway\Sheets\106002_XS106.dgn Sheet 1/13/2021 6:16:34 PM pfry

| SEEDING END WIDTH | SEEDING SQ. YDS. |
|---|---|
| | 417 |
| 75 | |
| | 403 |
| [0] AH<br>[17] BK<br>70 | |
| | [94] 364 |
| [17] 61 | |
| | [94] 1184 |

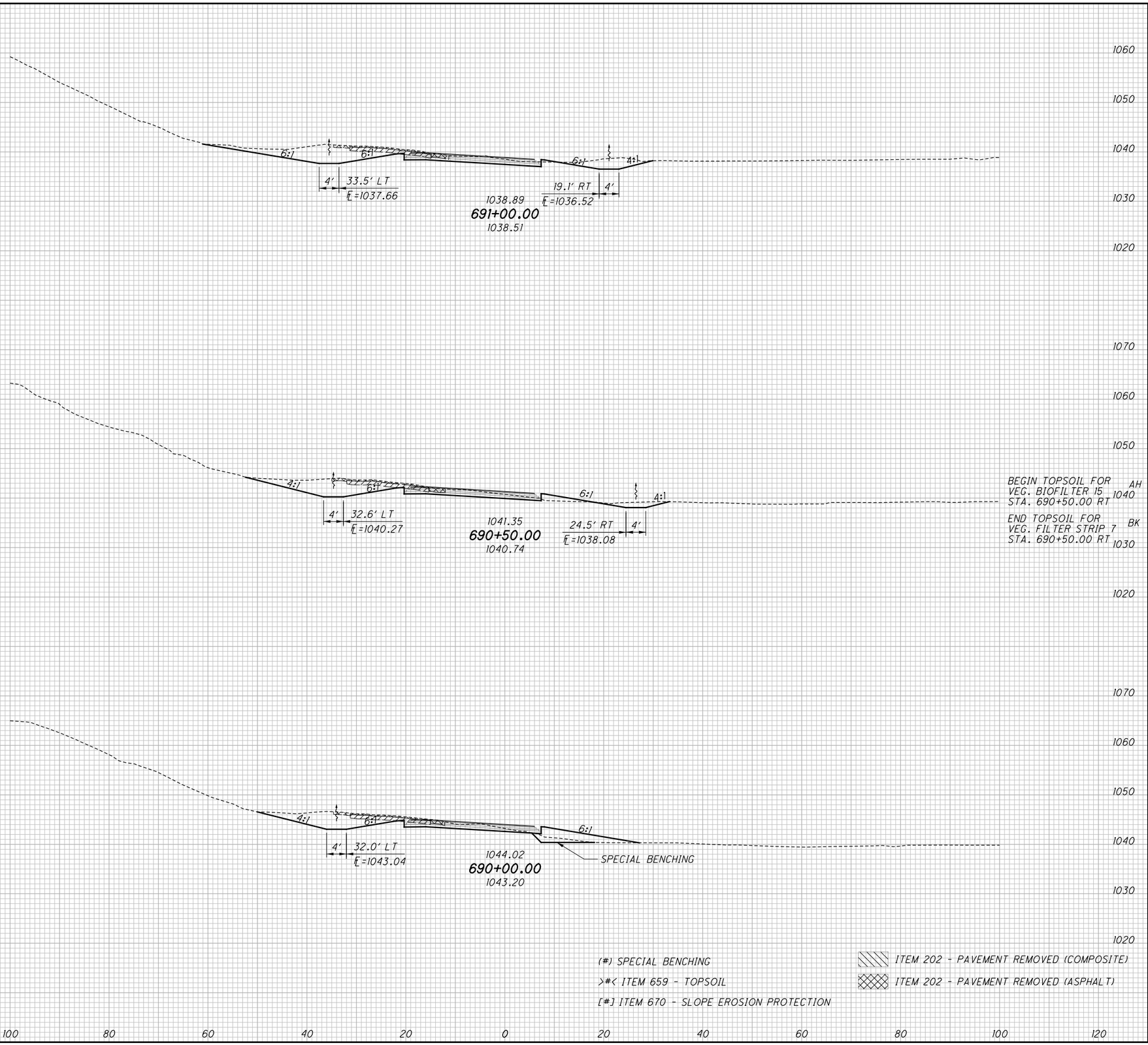


| END AREA CUT | END AREA FILL | VOLUME CUT | VOLUME FILL |
|---|---|---|---|
| | | | >18< |
| | | 237 | 0 |
| | >9< | | |
| 120 | 0 | | |
| | | | >19< |
| | | 198 | 4 |
| | >11< | | |
| (0) | (0) | | |
| | >11< | | |
| 94 | 4 | | |
| | | (7) | (7) |
| | | | >19< |
| | | 153 | 22 |
| (8) | (8) | | |
| | >10< | | |
| 71 | 20 | | |
| | | (7) | (7) |
| | | | >36< |
| | | 588 | 26 |

(#) SPECIAL BENCHING
>#< ITEM 659 - TOPSOIL
[#] ITEM 670 - SLOPE EROSION PROTECTION

ITEM 202 - PAVEMENT REMOVED (COMPOSITE)
ITEM 202 - PAVEMENT REMOVED (ASPHALT)

CALCULATED CJC
CHECKED PJF

# CROSS SECTIONS - RAMP C-1
## STA. 690+00.00 TO STA. 691+00.00

SUM-77 / 277 / 224
VARIOUS

750
1288

D:\2017\2017258\ProjectData\SUM\06002\Design\Roadway\Sheets\06002_XS06.dgn Sheet 1/13/2021 6:6:36 PM pfry

| SEEDING END WIDTH | SEEDING SQ. YDS. |
|---|---|
| | 356 |
| 73 | |
| | 417 |
| 77 | |
| | 43 |
| 77 | |
| | 380 |
| 75 | |
| | 1196 |

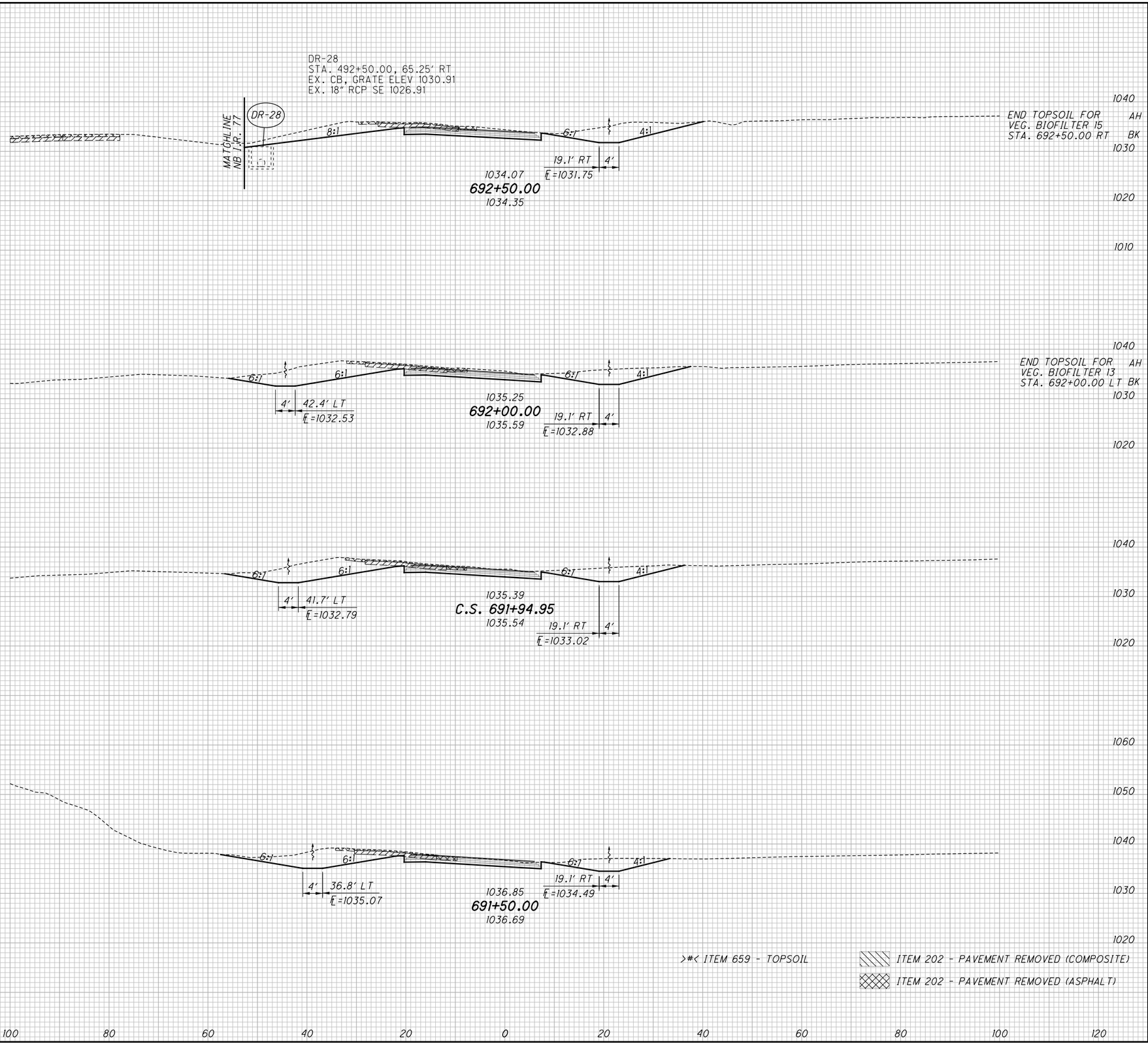


| END AREA CUT | END AREA FILL | VOLUME CUT | VOLUME FILL |
|---|---|---|---|
| | | 260 | 0 |
| | >0< | | |
| | >4< | | |
| 152 | 0 | | |
| | | | >8< |
| | | 306 | 0 |
| | >4< | | |
| | >12< | | |
| 178 | 0 | | |
| | | | >2< |
| | | 32 | 0 |
| | >12< | | |
| 169 | 0 | | |
| | | | >18< |
| | | 254 | 0 |
| | >10< | | |
| 136 | 0 | | |
| | | | >28< |
| | | 852 | 0 |

CALCULATED CJC
CHECKED PJF

# CROSS SECTIONS - RAMP C-1
## STA. 691+50.00 TO STA. 692+50.00

SUM-77 / 277 / 224
VARIOUS

751
1288

D:\2017\20172581\ProjectData\SUM\06002\Design\Roadway\Sheets\06002_XS106.dgn Sheet 1/13/2021 6:16:38 PM pfry

| SEEDING END WIDTH | SEEDING SQ. YDS. | END AREA CUT | END AREA FILL | VOLUME CUT | VOLUME FILL |
|---|---|---|---|---|---|
| | 210 | | | 89 | 2 |
| 42 | | 66 | 1 | | |
| | 225 | | | 131 | 1 |
| 39 | | 76 | 0 | | |
| | 233 | | | 165 | 0 |
| 45 | | 102 | 0 | | |
| | 278 | | | 214 | 0 |
| 55 | | 129 | 0 | | |
| | 946 | | | 599 | 3 |

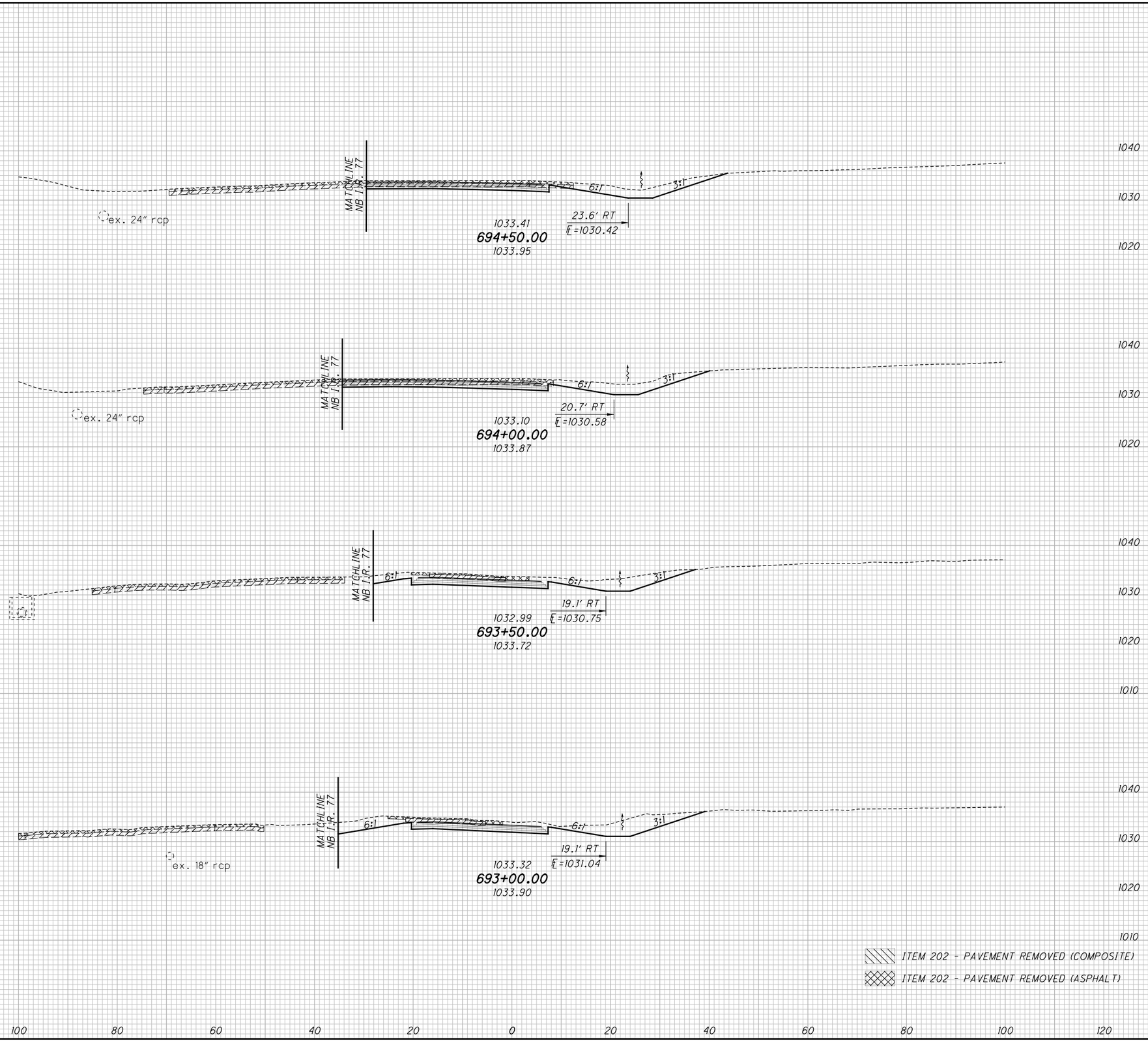


CALCULATED CJC
CHECKED PJF

# CROSS SECTIONS - RAMP C-1
## STA. 693+00.00 TO STA. 694+50.00

SUM-77 / 277 / 224
VARIOUS

752
1288

0:\2017\2017258\ProjectData\SUM\06002\Design\Roadway\Sheets\X06002_XS106.dgn Sheet 1/13/2021 6:16:40 PM pfry

| SEEDING END WIDTH | SEEDING SQ. YDS. | END AREA CUT | END AREA FILL | VOLUME CUT | VOLUME FILL |
|---|---|---|---|---|---|
| | 144 | | | 28 | 5 |
| 26 | | 16 | 2 | | |
| | 153 | | | 35 | 5 |
| 29 | | 22 | 3 | | |
| | 203 | | | 56 | 5 |
| 44 | | 39 | 2 | | |
| | 24 | | | 7 | 0 |
| 42 | | 41 | 2 | | |
| | 524 | | | 126 | 15 |

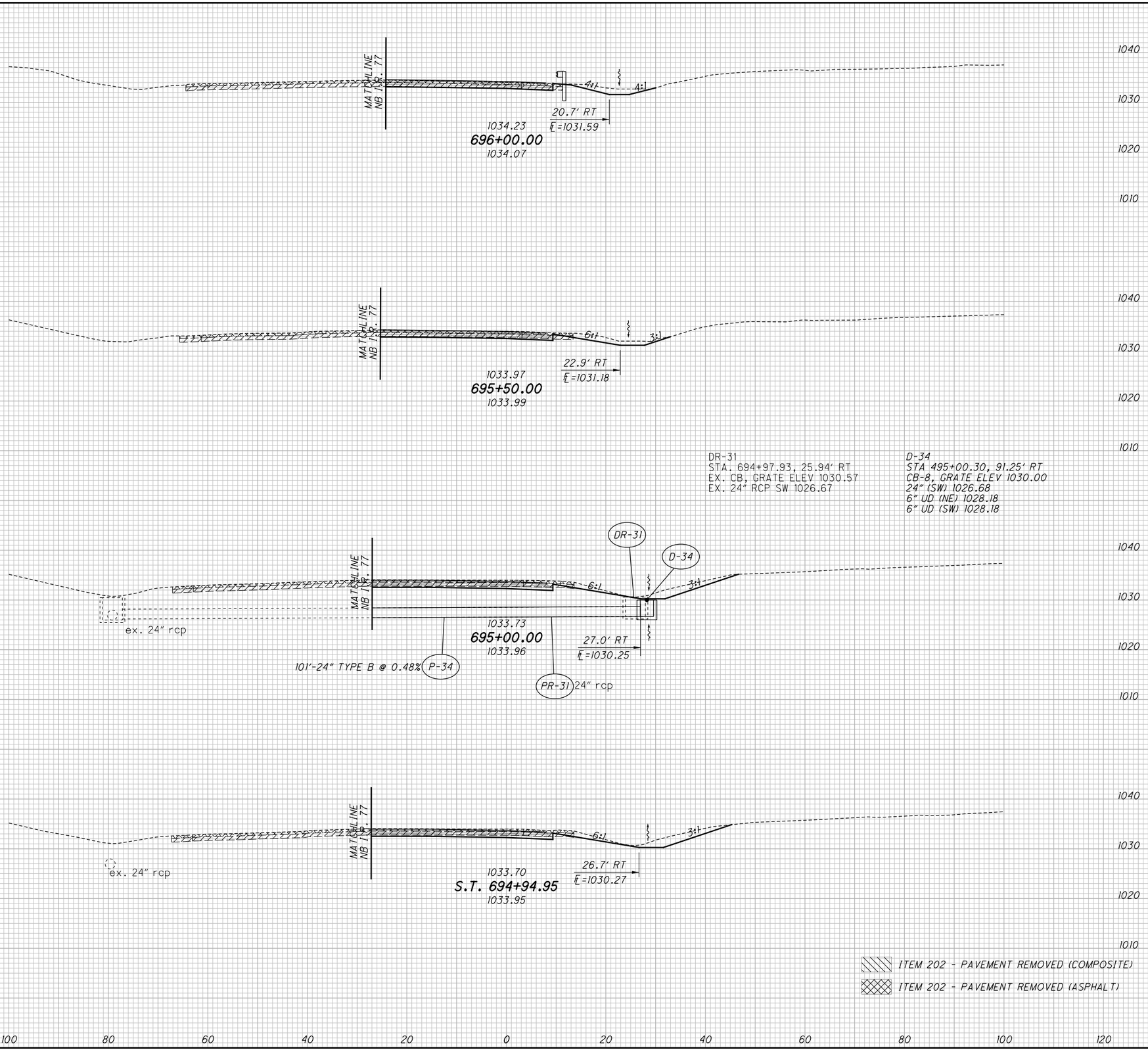


CALCULATED CJC
CHECKED PJF

# CROSS SECTIONS - RAMP C-1
## STA. 694+94.95 TO STA. 696+00.00

SUM-77 / 277 / 224
VARIOUS

753
1288

D:\2017\20171258\Project Data\SUM\106002\Design\Roadway\Sheets\106002_XS06.dgn Sheet 1/13/2021 6:16:43 PM pfry

| SEEDING END WIDTH | SEEDING SQ. YDS. |
|---|---|
| | 142 |
| 30 | |
| | 156 |
| 26 | |
| | 144 |
| 26 | |
| | 442 |

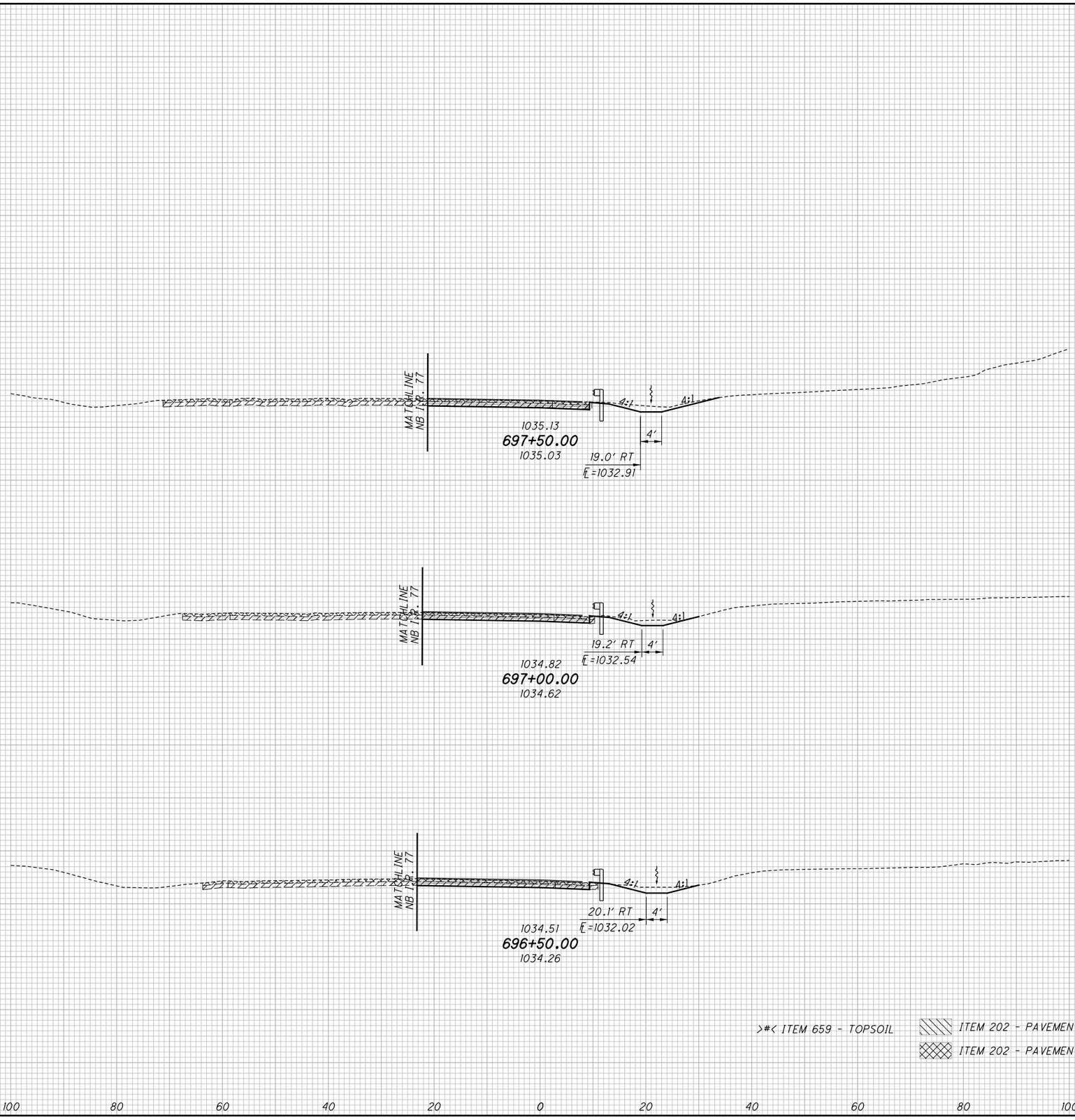


>#< ITEM 659 - TOPSOIL

ITEM 202 - PAVEMENT REMOVED (COMPOSITE)

ITEM 202 - PAVEMENT REMOVED (ASPHALT)

| END AREA CUT | END AREA FILL | VOLUME CUT | VOLUME FILL |
|---|---|---|---|
| | | 33 | 1 |
| | >0< | | |
| | >2< | | |
| 19 | 1 | | |
| | | | >4< |
| | | 30 | 3 |
| 13 | >2< | | |
| | 2 | | |
| | | | >4< |
| | | 25 | 5 |
| 14 | >2< | | |
| | >0< | | |
| | 3 | | |
| | | | >8< |
| | | 88 | 9 |

CALCULATED CJC
CHECKED PJF

# CROSS SECTIONS - RAMP C-1
## STA. 696+50.00 TO STA. 697+50.00

SUM-77/277/224
VARIOUS

754
1288

0:\2017\2017258\ProjectData\SUM\06002\Design\Roadway\Sheets\X06002_XS106.dgn Sheet 1/13/2021 6:16:46 PM pfry

| SEEDING | |
|---|---|
| END WIDTH | SQ. YDS. |
| | 97 |
| 19 | |
| | 108 |
| 20 | |
| | 114 |
| 21 | |
| | 319 |

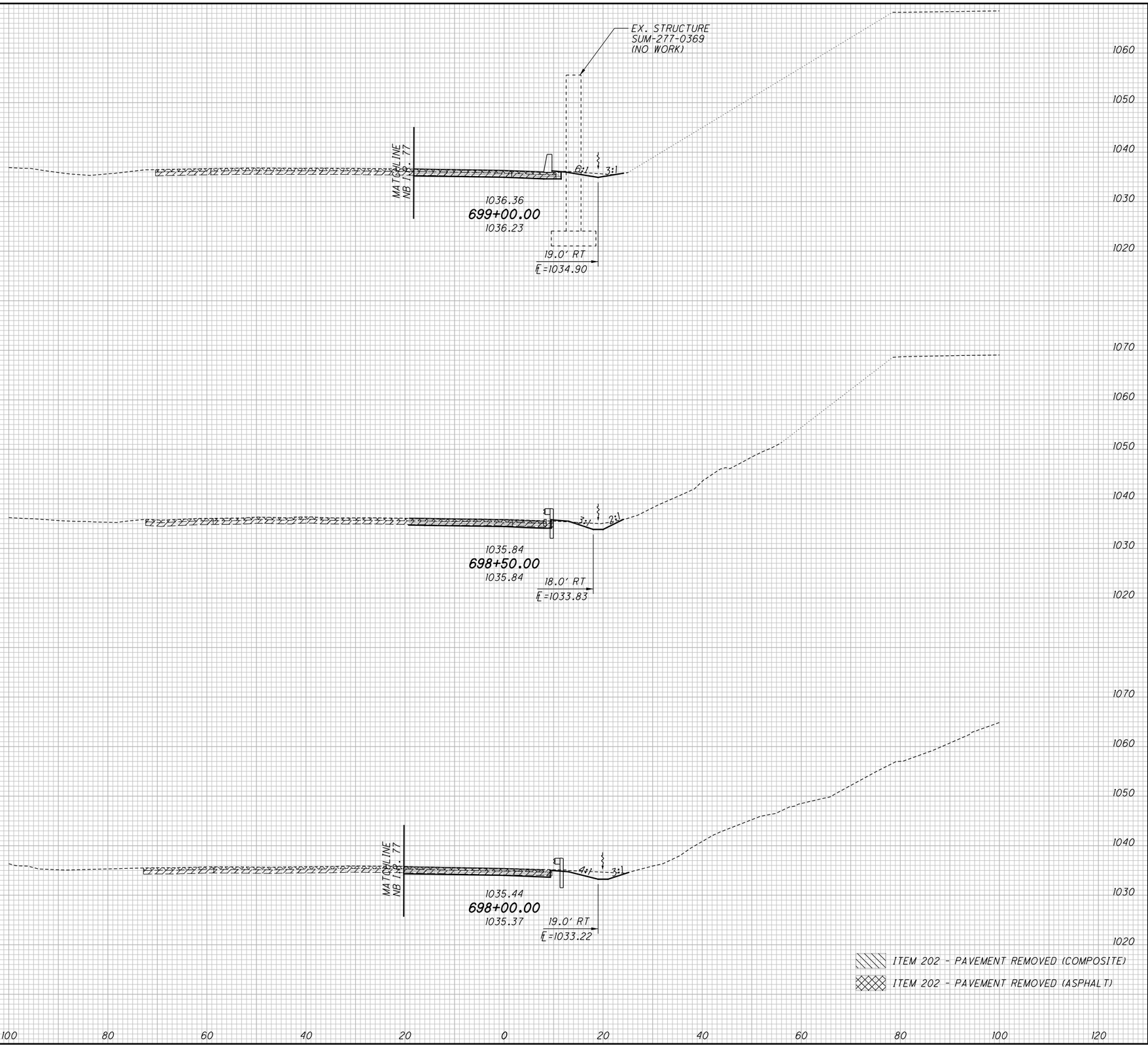


| END AREA | |
|---|---|
| CUT | FILL |
| 9 | 0 |
| 13 | 1 |
| 17 | 0 |

| VOLUME | |
|---|---|
| CUT | FILL |
| 12 | 1 |
| 20 | 1 |
| 28 | 1 |
| 60 | 3 |

CALCULATED CJC
CHECKED PJF

# CROSS SECTIONS - RAMP C-1
# STA. 698+00.00 TO STA. 699+00.00

SUM-77/277/224
VARIOUS

755
1288

0:\2017\2017258\ProjectData\SUM\106002\Design\Roadway\Sheets\106002_XS106.dgn Sheet 1/13/2021 6:16:48 PM pfry

| SEEDING END WIDTH | SEEDING SQ. YDS. | END AREA CUT | END AREA FILL | VOLUME CUT | VOLUME FILL |
|---|---|---|---|---|---|
| | 92 | | | 19 | 0 |
| 12 | | 9 | 0 | | |
| | 83 | | | 13 | 0 |
| 18 | | 5 | 0 | | |
| | 94 | | | 9 | 1 |
| 16 | | 5 | 1 | | |
| | 89 | | | 8 | 2 |
| 16 | | 4 | 1 | | |
| | 358 | | | 49 | 3 |

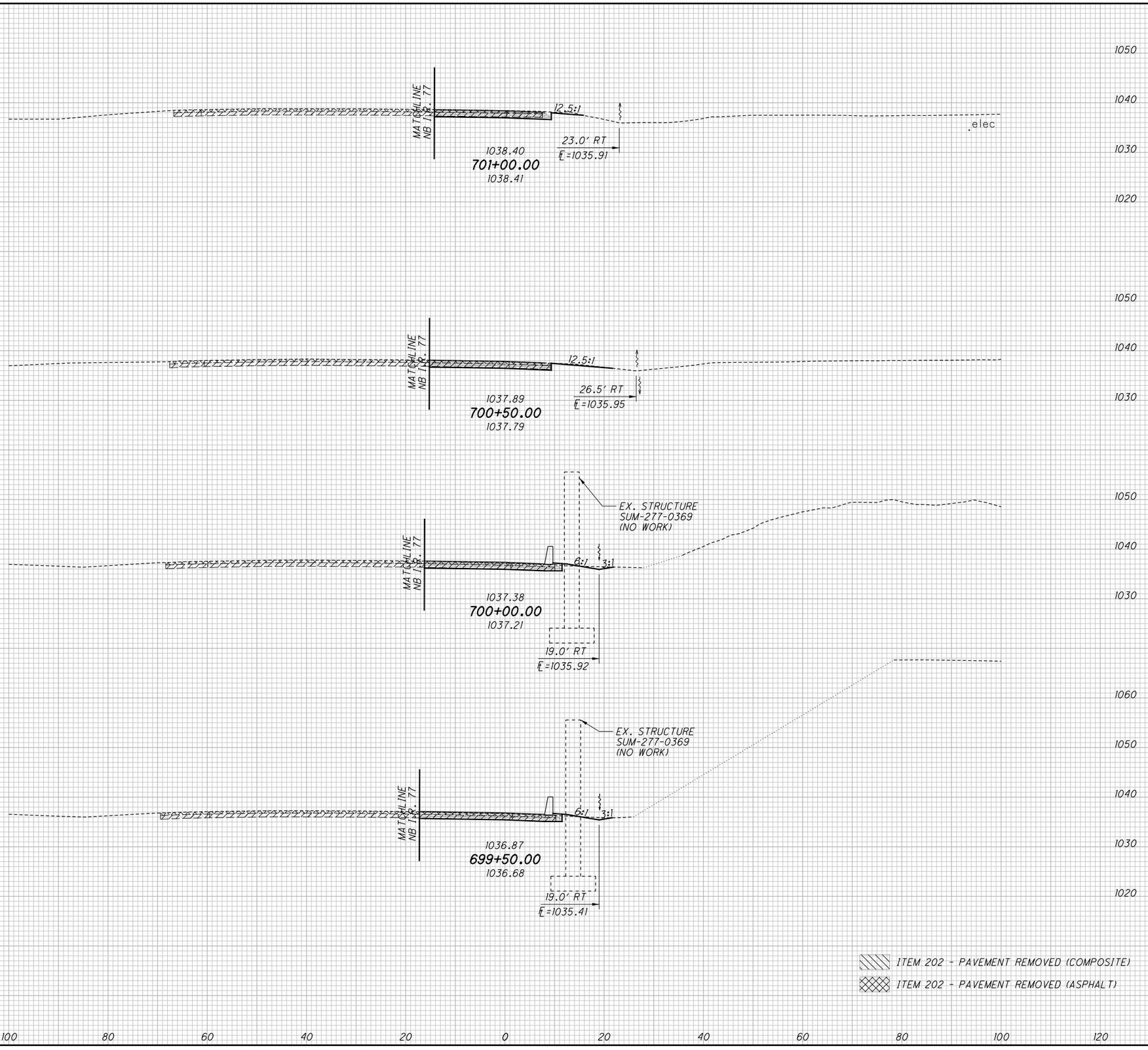


CALCULATED CJC
CHECKED PJF

# CROSS SECTIONS - RAMP C-1
## STA. 699+50.00 TO STA. 701+00.00

SUM-77 / 277 / 224
VARIOUS

| SEEDING END WIDTH | SEEDING SQ. YDS. |
|---|---|
| 20 | |
| 21 | |
| 13 | |
| 94 | |
| 21 | |
| | 115 |




| END AREA CUT | END AREA FILL | VOLUME CUT | VOLUME FILL |
|---|---|---|---|
| 10 | 0 | | |
| 11 | 0 | 4 | 0 |
| 12 | 0 | 21 | 0 |
| | | 25 | 0 |

CALCULATED CJC
CHECKED PJF

# CROSS SECTIONS - RAMP C-1
## STA. 701+50.00 TO END

SUM-77 / 277 / 224
VARIOUS

757
1288

D:\2017\2017258\ProjectData\SUM\106002\Design\Roadway\Sheets\106002_XS06.dgn Sheet 1/13/2021 6:6:52 PM pfry

| SEEDING END WIDTH | SEEDING SQ. YDS. |
|---|---|
| | 319 |
| 65 | |
| | 333 |
| 55 | |
| | 231 |
| 28 | |
| | 15 |
| 28 | |
| | 898 |

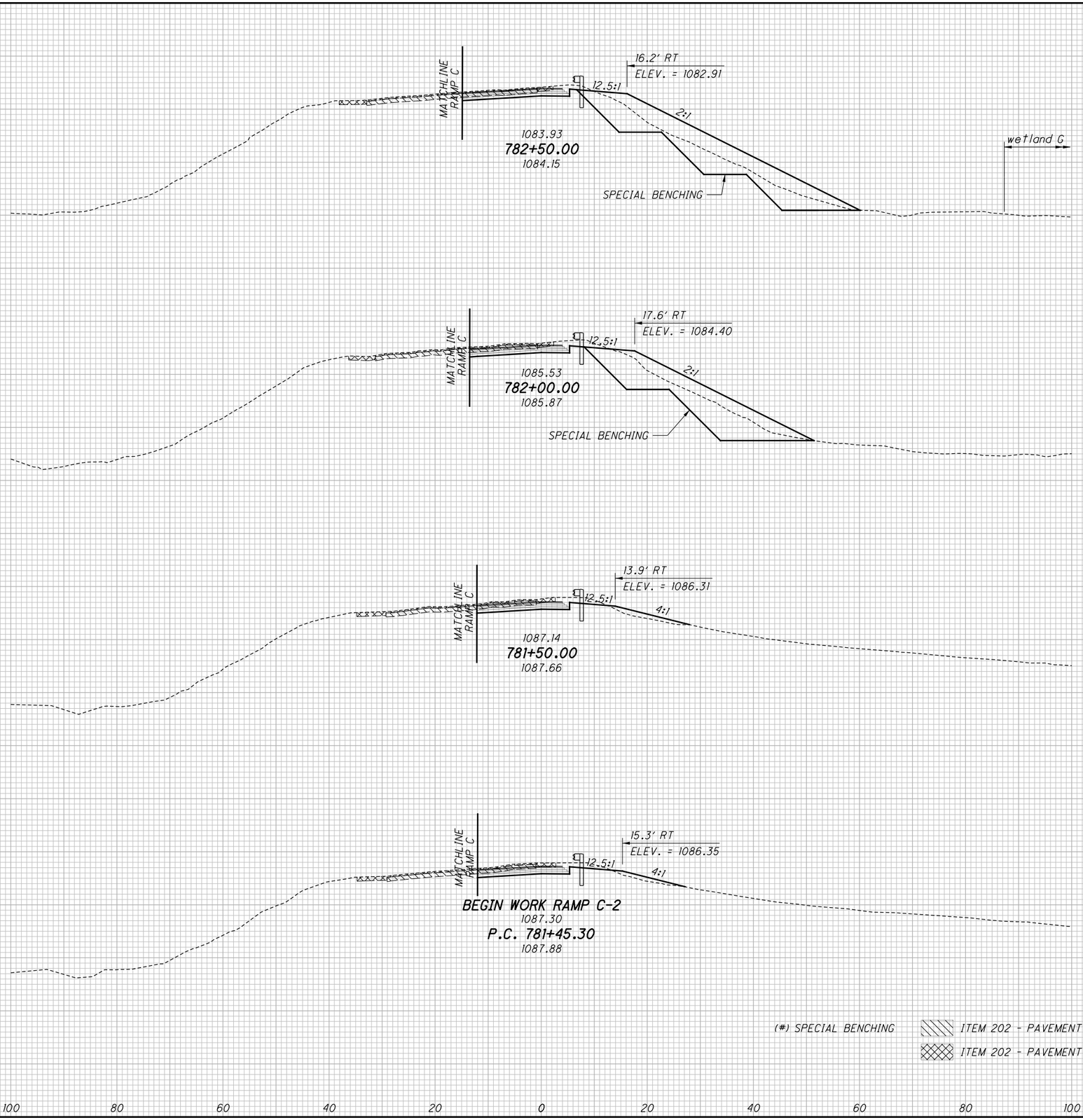


(#) SPECIAL BENCHING

ITEM 202 - PAVEMENT REMOVED (COMPOSITE)

ITEM 202 - PAVEMENT REMOVED (ASPHALT)

| END AREA CUT | END AREA FILL | VOLUME CUT | VOLUME FILL |
|---|---|---|---|
| | | (222) | (222) |
| | | 30 | 219 |
| (137) | (137) | | |
| 21 | 129 | | |
| | | (260) | (260) |
| | | 45 | 187 |
| (144) | (144) | | |
| 28 | 73 | | |
| | | (133) | (133) |
| | | 51 | 77 |
| (0) | (0) | | |
| 27 | 10 | | |
| | | 5 | 1 |
| 26 | 7 | | |
| | | (615) | (615) |
| | | 131 | 484 |

CALCULATED CJC
CHECKED PJF

CROSS SECTIONS - RAMP C-2
STA. 781+45.30 TO STA. 782+50.00

SUM-77 / 277 / 224
VARIOUS

758
1288

O:\2017\2017258\ProjectData\SUM\06002\Design\Roadway\Sheets\06002_XS107.dgn Sheet 1/13/2021 6:17:21 PM pfry

| SEEDING END WIDTH | SEEDING SQ. YDS. | END AREA CUT | END AREA FILL | VOLUME CUT | VOLUME FILL |
|---|---|---|---|---|---|
| | 347 | | | (278) | (278) |
| | | | | 24 | 214 |
| | | | | | |
| | | | | | |
| | | | | | |
| 62 | | (142) | (142) | | |
| | | 13 | 117 | | |
| | | | | | |
| | | | | | |
| | | | | | |
| | 353 | | | (248) | (248) |
| | | | | 25 | 247 |
| | | | | | |
| | | | | | |
| | | | | | |
| 65 | | (126) | (126) | | |
| | | 14 | 150 | | |
| | | | | | |
| | | | | | |
| | | | | | |
| | 45 | | | (30) | (30) |
| | | | | 3 | 33 |
| | | | | | |
| | | | | | |
| | | | | | |
| 66 | | (136) | (136) | | |
| | | 16 | 141 | | |
| | | | | | |
| | | | | | |
| | | | | | |
| | 745 | | | (556) | (556) |
| | | | | 52 | 494 |

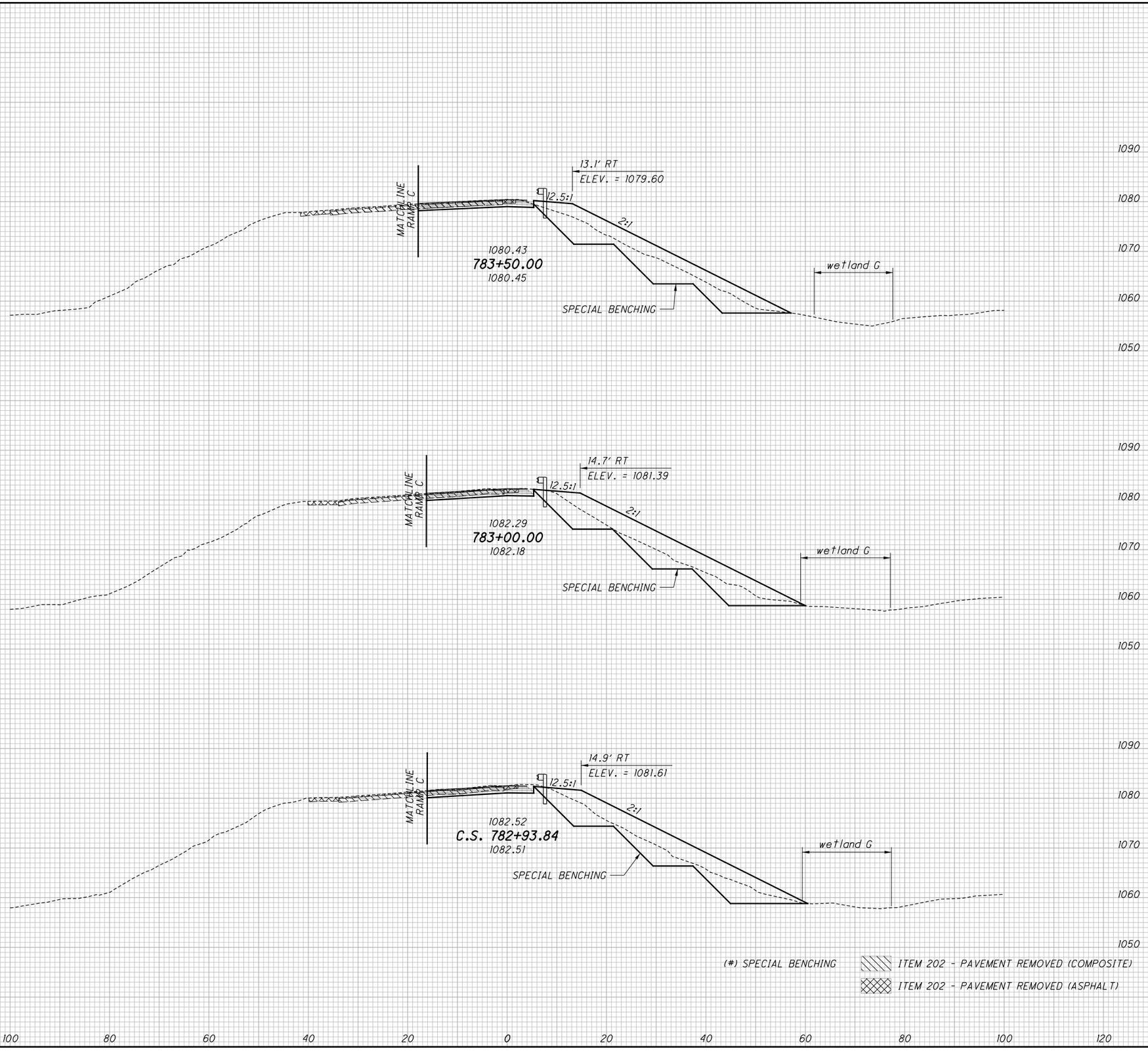


CALCULATED CJC
CHECKED PJF

# CROSS SECTIONS - RAMP C-2
## STA. 782+93.84 TO STA. 783+50.00

SUM-77 / 277 / 224
VARIOUS

759
1288

0:\2017\20172581Project Data\SUM\106002\Design\Roadway\Sheets\106002_XS107.dgn Sheet 1/13/2021 6:17:23 PM pfry

| SEEDING END WIDTH | SEEDING SQ. YDS. |
|---|---|
| | 145 |
| 15 | |
| | 9 |
| 12 | |
| | 183 |
| 63 | |
| | 337 |

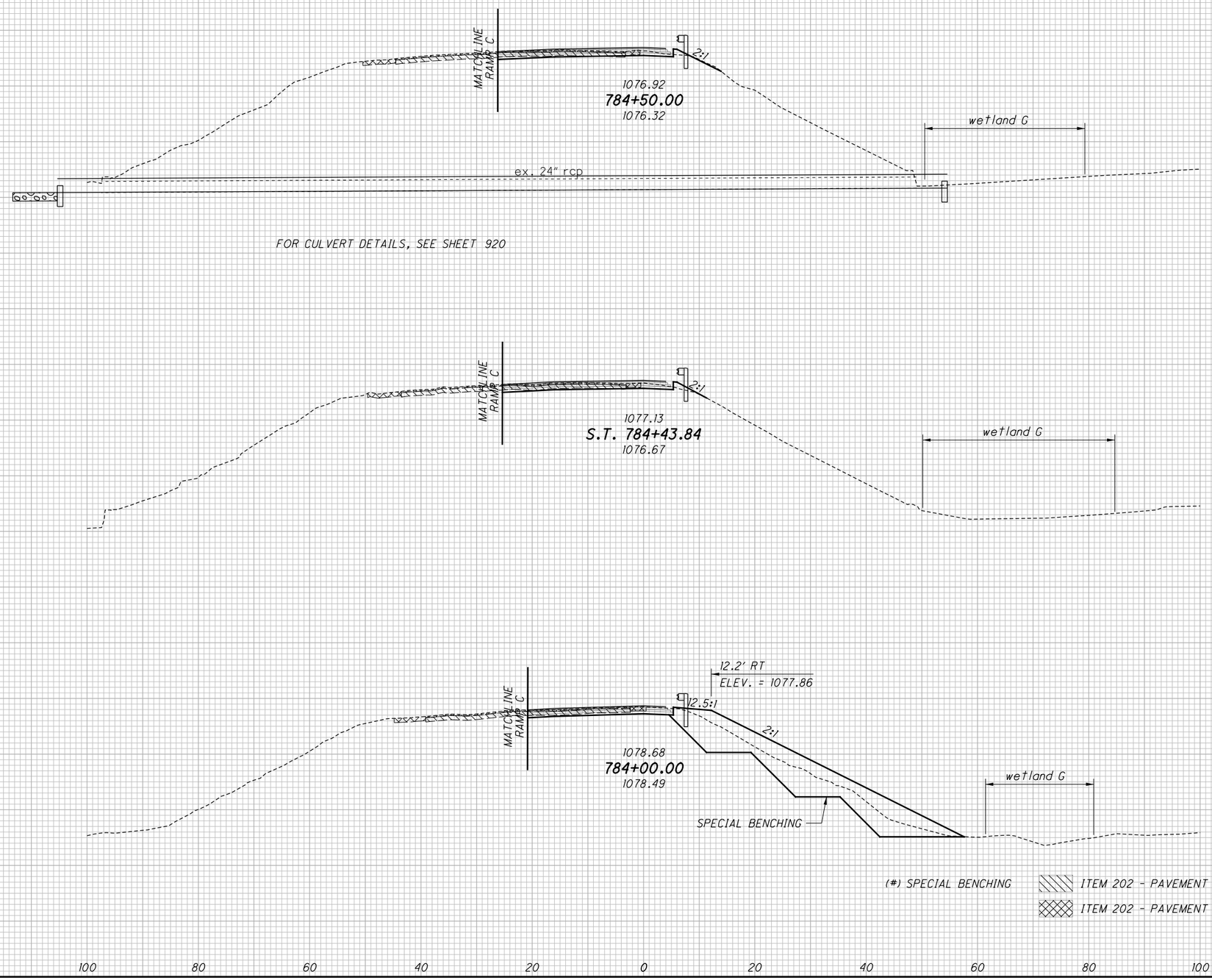


(#) SPECIAL BENCHING

ITEM 202 - PAVEMENT REMOVED (COMPOSITE)

ITEM 202 - PAVEMENT REMOVED (ASPHALT)

| END AREA CUT | END AREA FILL | VOLUME CUT | VOLUME FILL |
|---|---|---|---|
| | | 11 | 48 |
| 9 | 2 | | |
| | | 2 | 1 |
| (0) 9 | (0) 3 | | |
| | | (128) 18 | (128) 95 |
| (158) 13 | (158) 114 | | |
| | | (128) 31 | (128) 144 |

CALCULATED CJC
CHECKED PJF

# CROSS SECTIONS - RAMP C-2
## STA. 784+50.00 TO STA. 784+00.00

SUM-77 / 277 / 224
VARIOUS

760
1288

O:\2017\2017258\ProjectData\SUM\06002\Design\Roadway\Sheets\06002_XS107.dgn Sheet 1/13/2021 6:11:25 PM pfry

| SEEDING END WIDTH | SEEDING SQ. YDS. |
|---|---|
| | 164 |
| 32 | |
| | 153 |
| 23 | |
| | 117 |
| 19 | |
| | 82 |
| 65 | |
| | 516 |

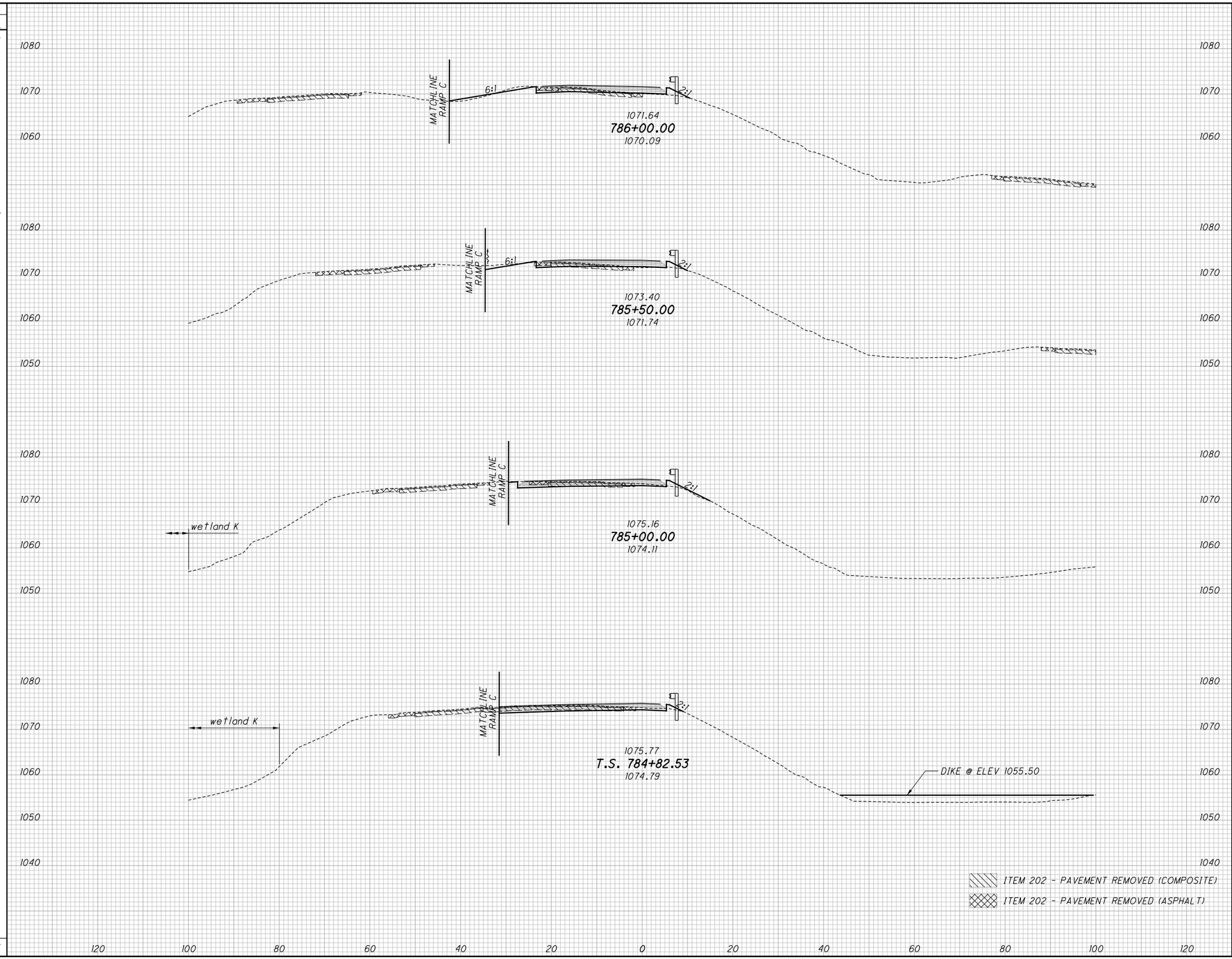


| END AREA CUT | END AREA FILL | VOLUME CUT | VOLUME FILL |
|---|---|---|---|
| | | 6 | 39 |
| 5 | 17 | | |
| | | 9 | 27 |
| 5 | 12 | | |
| | | 13 | 17 |
| 9 | 6 | | |
| | | 6 | 27 |
| 10 | 77 | | |
| | | 34 | 110 |

CALCULATED CJC
CHECKED PJF

# CROSS SECTIONS - RAMP C-2
## STA. 784+82.53 TO STA. 786+00.00

SUM-77 / 277 / 224
VARIOUS

761
1288

O:\2017\2017258\ProjectData\SUM\06002\Design\Roadway\Sheets\106002_XS107.dgn Sheet 1/13/2021 6:17:27 PM pfry

| SEEDING | |
|---|---|
| END WIDTH | SQ. YDS. |
| 40 | 192 |
| | 72 |
| 34 | |
| | 105 |
| 24 | |
| | 142 |
| 27 | |
| | 511 |

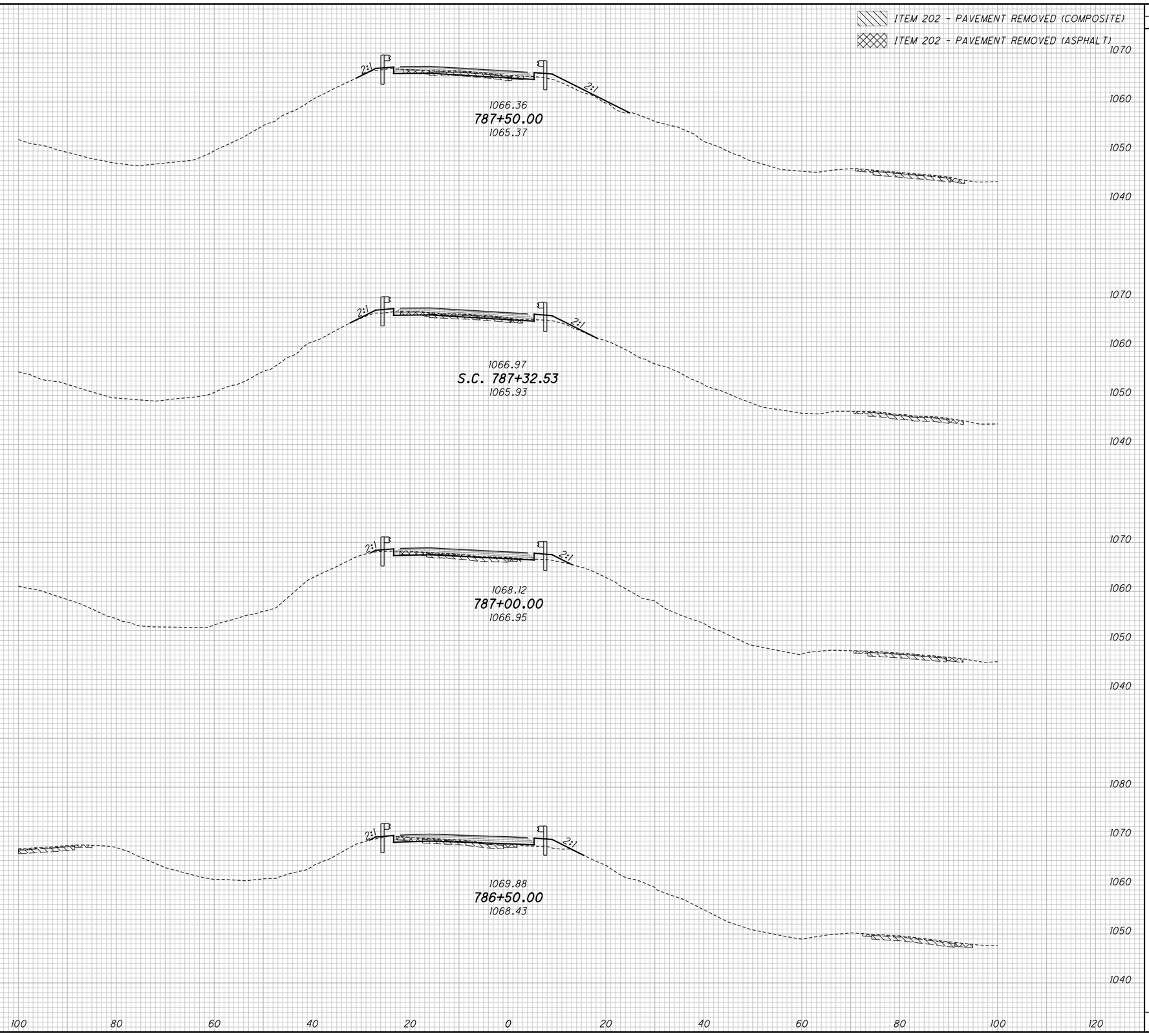


| END AREA | | VOLUME | |
|---|---|---|---|
| CUT | FILL | CUT | FILL |
| | | 10 | 29 |
| 3 | 21 | | |
| | | 2 | 13 |
| 2 | 20 | | |
| | | 2 | 25 |
| 2 | 21 | | |
| | | 4 | 43 |
| 2 | 25 | | |
| | | 18 | 110 |

CALCULATED CJC
CHECKED PJF

# CROSS SECTIONS - RAMP C-2
## STA. 786+50.00 TO STA. 787+50.00

SUM-77 / 277 / 224
VARIOUS

762
1288

D:\2017\20171258\ProjectData\SUM\106002\Design\Roadway\Sheets\106002_XS107.dgn Sheet1 1/13/2021 6:17:29 PM pfry

| SEEDING | |
|---|---|
| END WIDTH | SQ. YDS. |
| | 37 |
| 24 | |
| | 122 |
| 20 | |
| | 136 |
| 29 | |
| | 295 |

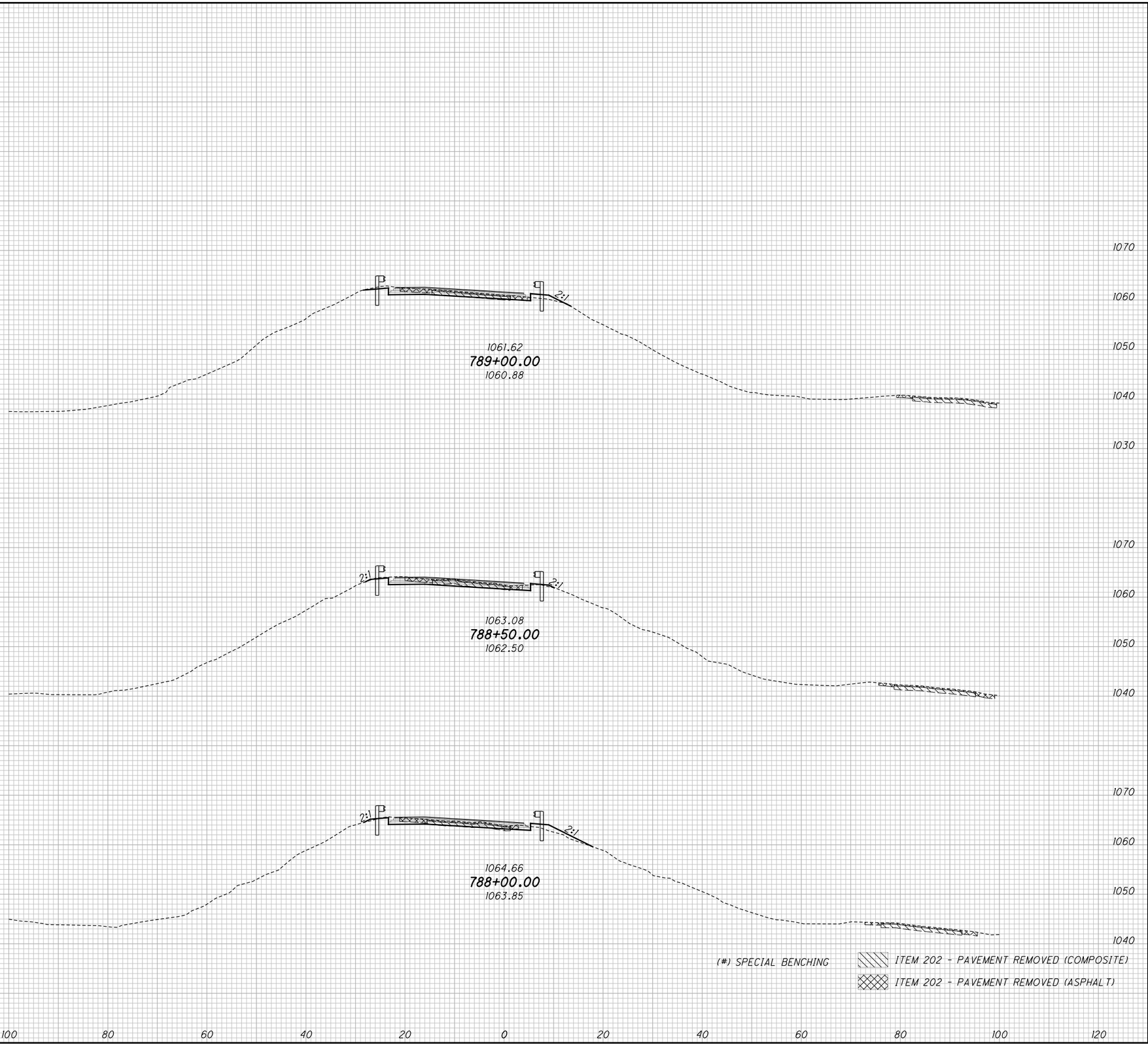


(#) SPECIAL BENCHING

ITEM 202 - PAVEMENT REMOVED (COMPOSITE)

ITEM 202 - PAVEMENT REMOVED (ASPHALT)

| END AREA | | VOLUME | |
|---|---|---|---|
| CUT | FILL | CUT | FILL |
| | | (31) | (31) |
| | | 4 | 5 |
| (0) | (0) | | |
| 9 | 5 | | |
| | | 19 | 6 |
| 12 | 1 | | |
| | | 19 | 10 |
| 8 | 10 | | |
| | | (31) | (31) |
| | | 42 | 21 |

CALCULATED CJC
CHECKED PJF

# CROSS SECTIONS - RAMP C-2
## STA. 788+00.00 TO STA. 789+00.00

SUM-77 / 277 / 224
VARIOUS

763
1288

D:\2017\2017258\Project Data\SUM\106002\Design\Roadway\Sheets\106002_XS107.dgn Sheet1 1/13/2021 6:17:31 PM pfry

| SEEDING END WIDTH | SEEDING SQ. YDS. |
|---|---|
| | 154 |
| 38 | |
| | 103 |
| 24 | |
| 0 | |
| 0 | |
| 62 | |
| | 203 |
| 60 | |
| | 460 |

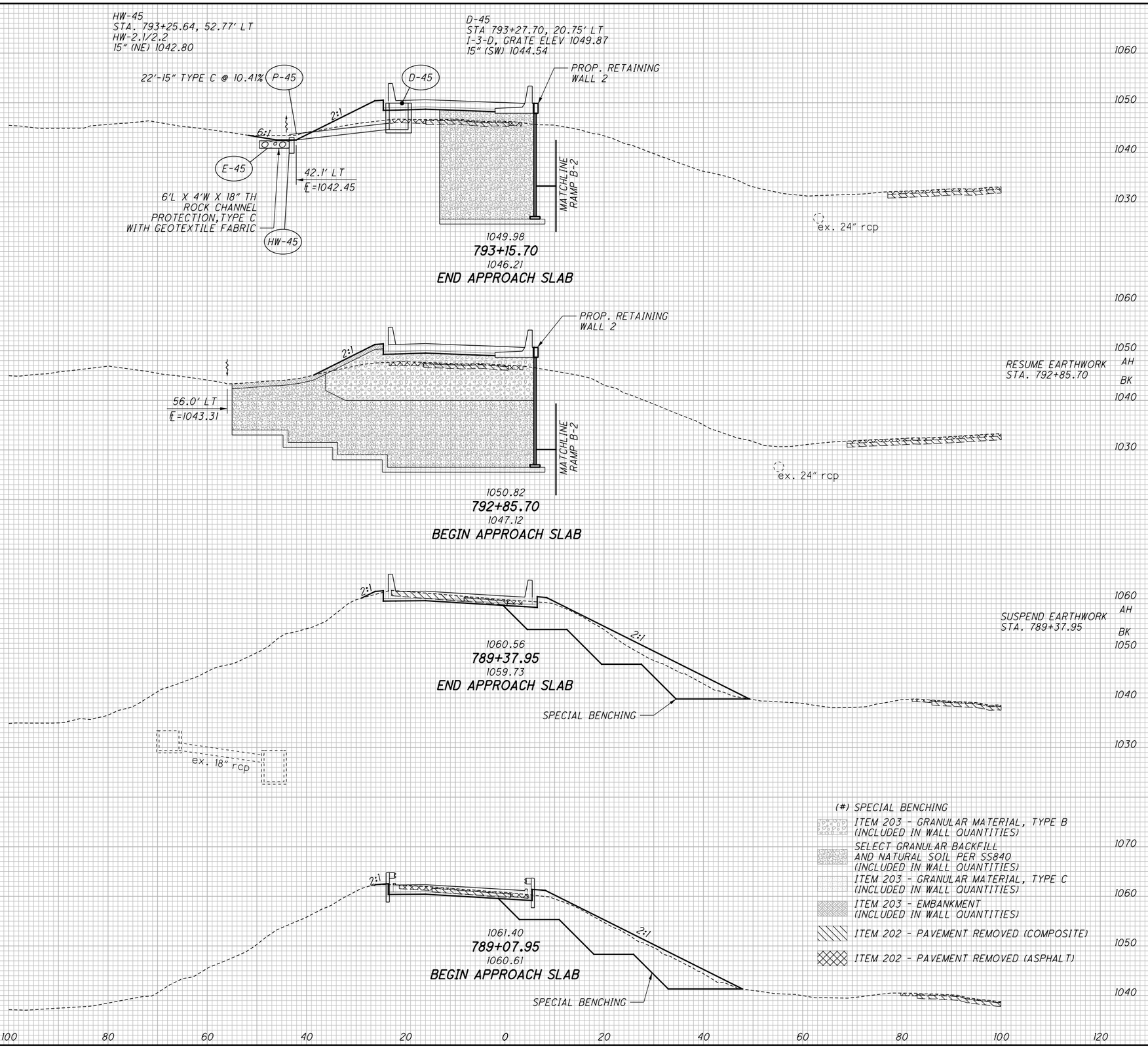


| END AREA CUT | END AREA FILL | VOLUME CUT | VOLUME FILL |
|---|---|---|---|
| | | 54 | 99 |
| 36 | 62 | | |
| | | 39 | 34 |
| 35 | 0 | | |
| 0 | 0 | | |
| 0 (190) 18 | 0 (190) 51 | | |
| (208) 19 | (208) 29 | | |
| | | (221) 21 | (221) 44 |
| | | (221) 114 | (221) 177 |

CALCULATED CJC
CHECKED PJF

# CROSS SECTIONS - RAMP C-2
## STA. 789+07.95 TO STA. 793+15.70

SUM-77 / 277 / 224
VARIOUS

764
1288

O:\2017\2017258\ProjectData\SUM\06002\Design\Roadway\Sheets\06002_XS107.dgn Sheet 1/13/2021 6:17:33 PM pfry

| SEEDING END WIDTH | SEEDING SQ. YDS. | END AREA CUT | END AREA FILL | VOLUME CUT | VOLUME FILL |
|---|---|---|---|---|---|
| | 250 | | | 85 | 156 |
| 28 | | 0 | 89 | | |
| | 181 | | | 19 | 182 |
| 37 | | 21 | 108 | | |
| | 222 | | | 65 | 187 |
| 43 | | 49 | 94 | | |
| | 653 | | | 169 | 525 |

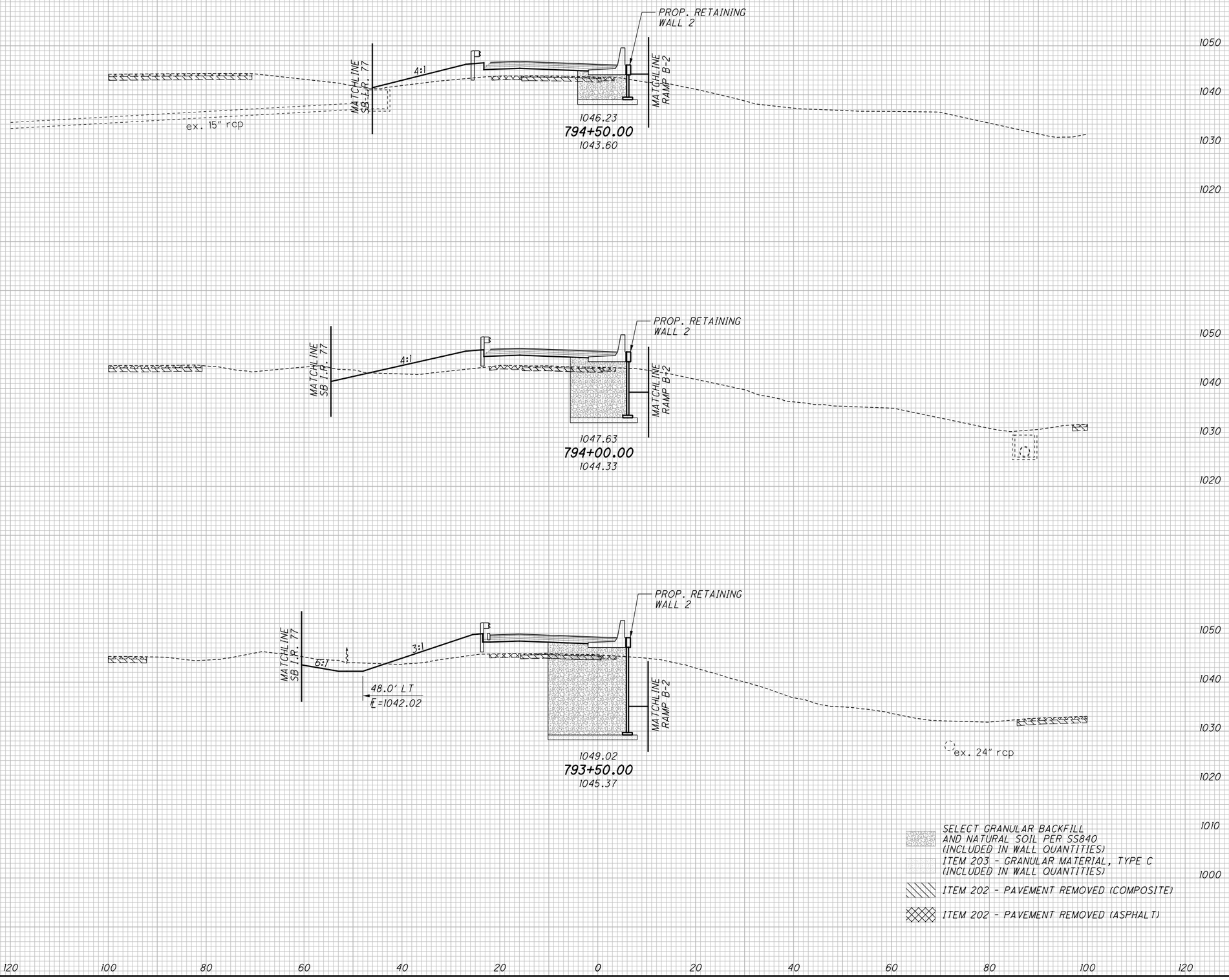


CALCULATED CJC
CHECKED PJF

# CROSS SECTIONS - RAMP C-2
# STA. 793+50.00 TO STA. 794+50.00

SUM-77 / 277 / 224
VARIOUS

765
1288

0:\2017\2017258\ProjectData\SUM\106002\Design\Roadway\Sheets\106002_XS107.dgn Sheet 1/13/2021 6:17:37 PM pfry

| SEEDING END WIDTH | SEEDING SQ. YDS. |
|---|---|
| | [83] |
| | 281 |
| [15] | |
| 64 | |
| | [86] |
| | 353 |
| [16] | |
| 63 | |
| | [9] |
| | 347 |
| [15] | |
| [0] | |
| 62 | |
| | [178] |
| | 981 |

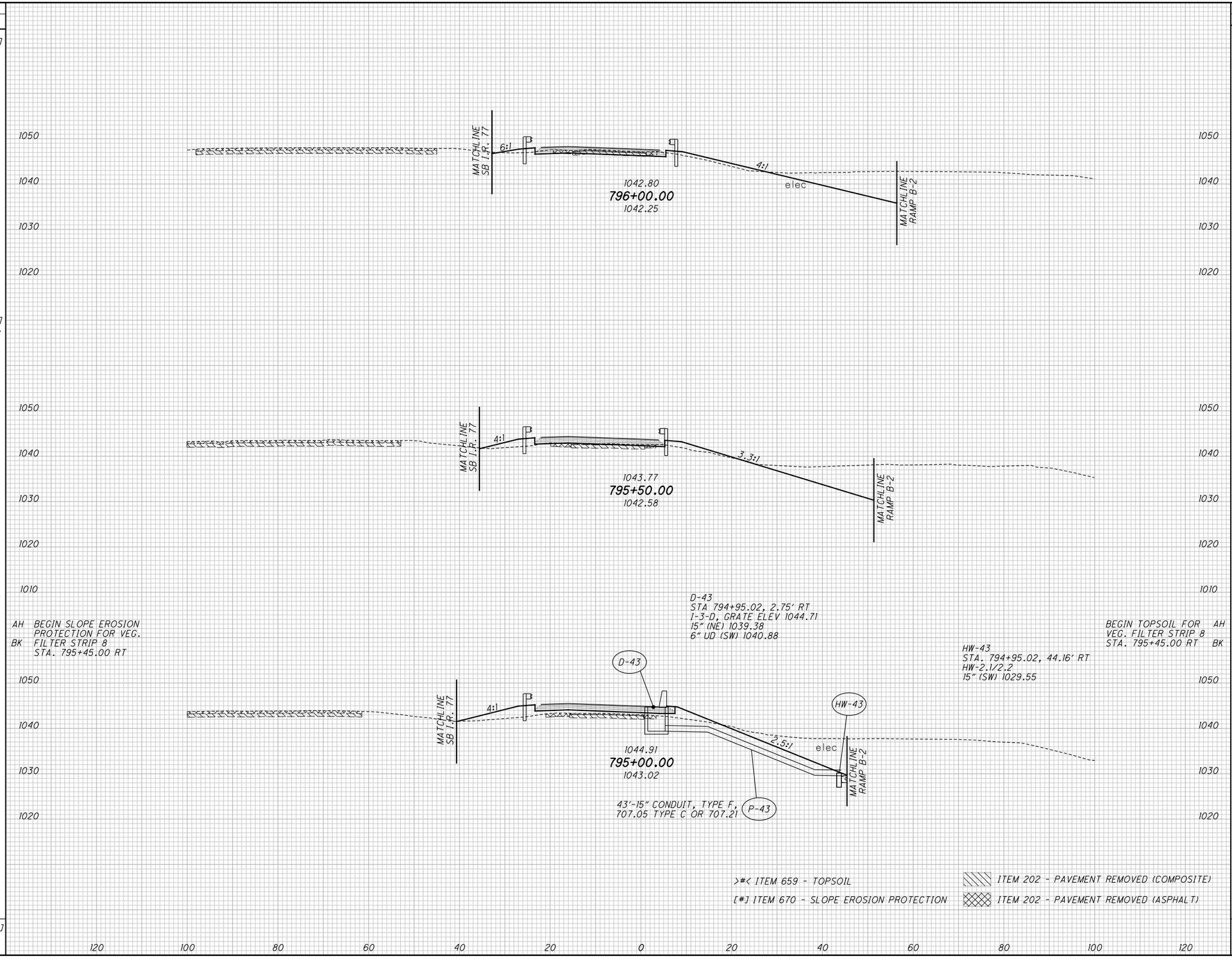


>#< ITEM 659 - TOPSOIL

[#] ITEM 670 - SLOPE EROSION PROTECTION

ITEM 202 - PAVEMENT REMOVED (COMPOSITE)

ITEM 202 - PAVEMENT REMOVED (ASPHALT)

| END AREA CUT | END AREA FILL | VOLUME CUT | VOLUME FILL |
|---|---|---|---|
| | | | >9< |
| | | 119 | 21 |
| | | | |
| | >5< | | |
| 102 | 16 | | |
| | | | |
| | | | >9< |
| | | 183 | 53 |
| | | | |
| | | | |
| | | |

| SEEDING END WIDTH | SEEDING SQ. YDS. |
|---|---|
| | 183 |
| 33 | |
| | 183 |
| 33 | |
| | 186 |
| 34 | |
| [0] [15] | [76] 197 |
| [15] 37 | |
| | [76] 749 |

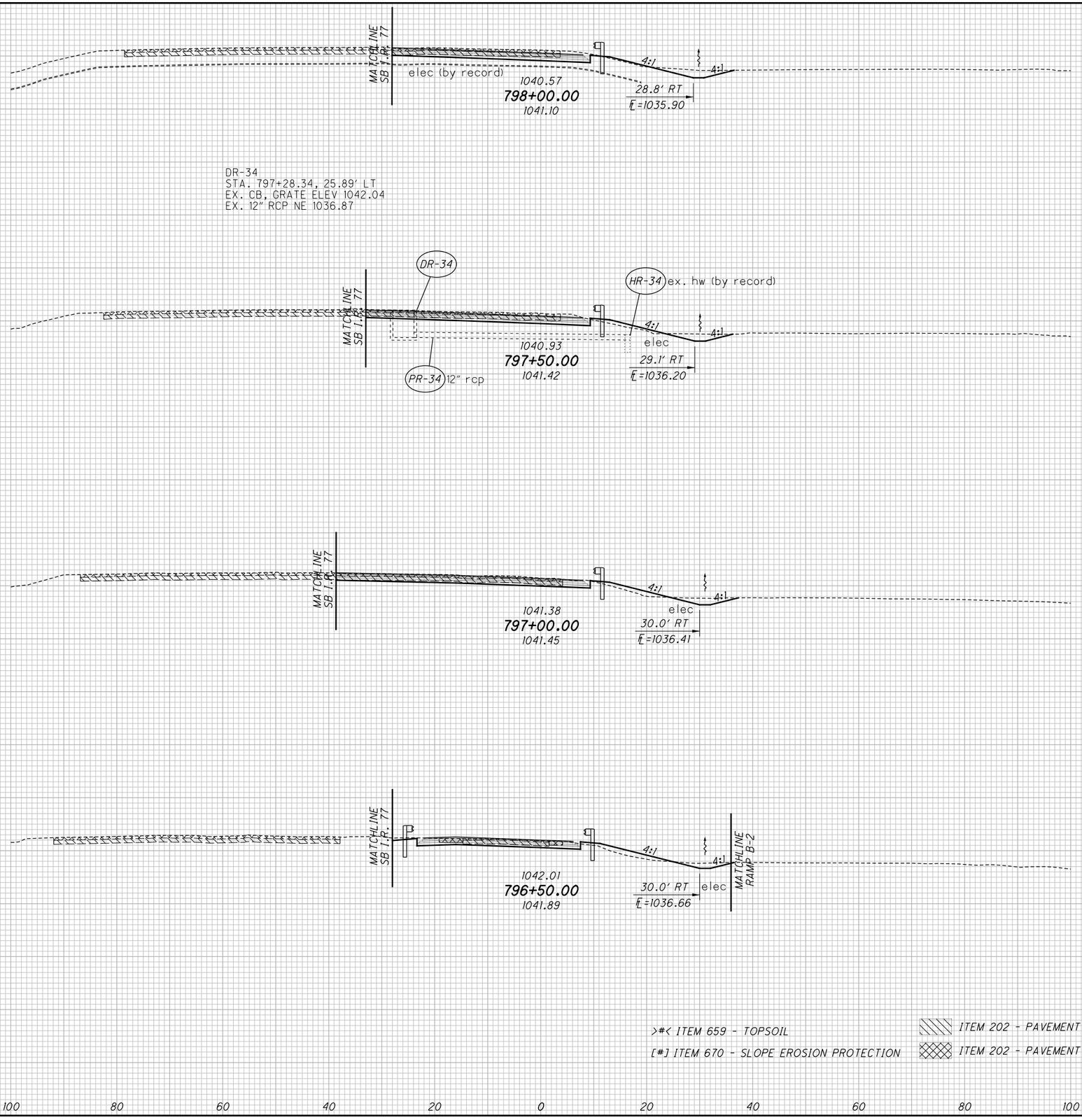


| END AREA CUT | END AREA FILL | VOLUME CUT | VOLUME FILL |
|---|---|---|---|
| | | 72 | 2 |
| 40 | 2 | | |
| | | 70 | 8 |
| 36 | 7 | | |
| | | 58 | 14 |
| 27 | 8 | | |
| | >0< | | |
| | >5< | | |
| | | 50 | >8< 14 |
| | >5< | | |
| 27 | 7 | | |
| | | 250 | >8< 38 |

CALCULATED CJC
CHECKED PJF

# CROSS SECTIONS - RAMP C-2
## STA. 796+50.00 TO STA. 798+00.00

SUM-77 / 277 / 224
VARIOUS

767
1288

D:\2017\2017258\ProjectData\SUM\106002\Design\Roadway\Sheets\106002_XS107.dgn Sheet 1/13/2021 6:17:41 PM pfry

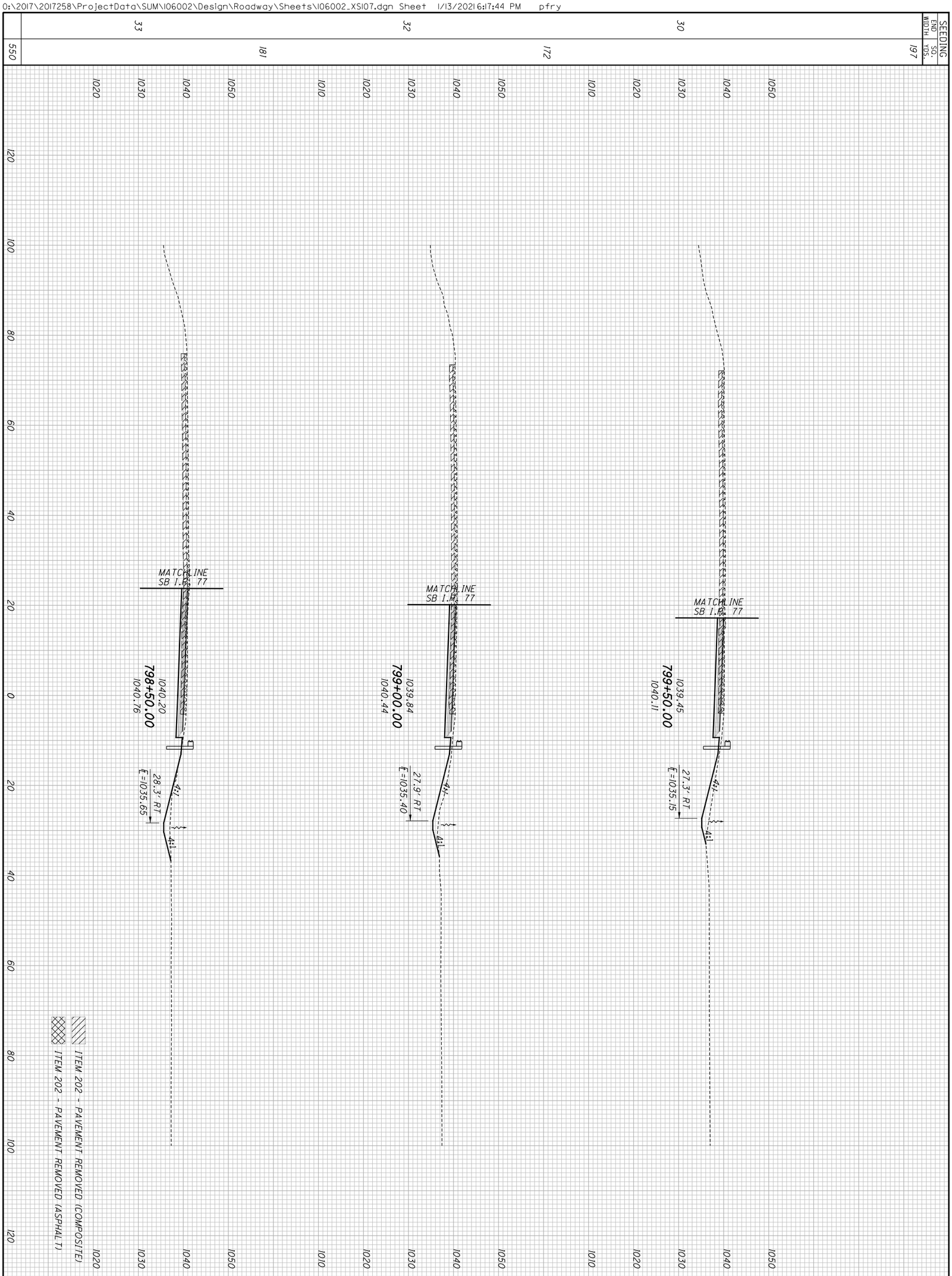


| | | |
|---|---|---|
| 768 / 1288 | **SUM-77 / 277 / 224**<br>**VARIOUS** | **CROSS SECTIONS - RAMP C-2**<br>**STA. 798+50.00 TO STA. 799+50.00** |

CALCULATED CJC
CHECKED PJF

| SEEDING END WIDTH | SEEDING SQ. YDS. |
|---|---|
| | 245 |
| 46 | |
| | 244 |
| 42 | |
| | 231 |
| 41 | |
| | 720 |

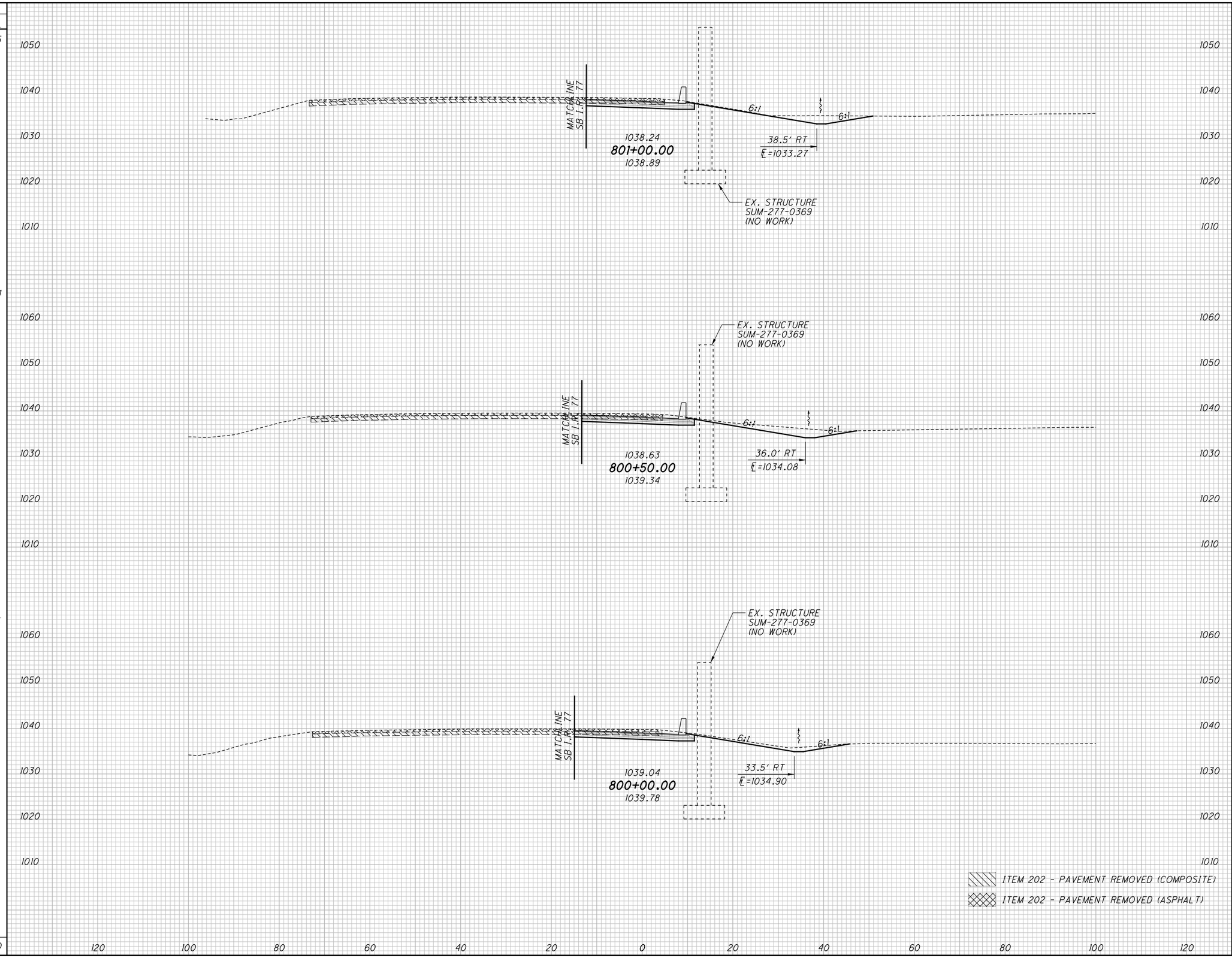


| END AREA CUT | END AREA FILL | VOLUME CUT | VOLUME FILL |
|---|---|---|---|
| | | 70 | 13 |
| 50 | 0 | | |
| | | 105 | 0 |
| 63 | 0 | | |
| 47 | 0 | | |
| | | 102 | 0 |
| | | 277 | 13 |

CALCULATED CJC
CHECKED PJF

# CROSS SECTIONS - RAMP C-2
## STA. 800+00.00 TO STA. 801+00.00

SUM-77 / 277 / 224
VARIOUS

769
1288

0:\2017\2017258\ProjectData\SUM\106002\Design\Roadway\Sheets\106002_XS107.dgn Sheet 1/13/2021 6:17:46 PM pfry

| SEEDING | |
|---|---|
| END WIDTH | SQ. YDS. |
| 44 | |
| | 0 |

| END AREA | |
|---|---|
| CUT | FILL |
| 27 | 14 |
| | |

| VOLUME | |
|---|---|
| CUT | FILL |
| | |
| 0 | 0 |

CALCULATED CJC
CHECKED PJF

# CROSS SECTIONS - RAMP C-2
## STA. 801+48.92

SUM-77 / 277 / 224
VARIOUS

770
1288

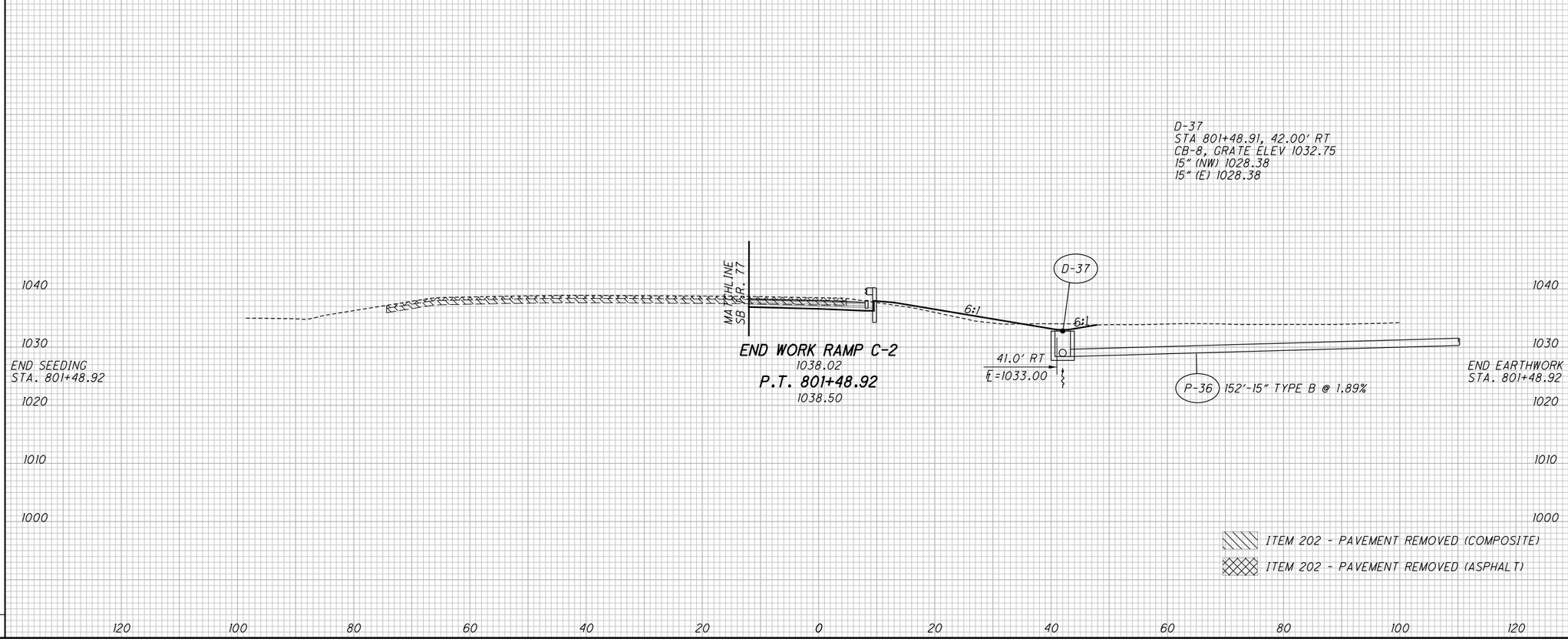


O:\2017\2017258\ProjectData\SUM\106002\Design\Roadway\Sheets\106002_XS07.dgn Sheet 1/13/2021 6:17:47 PM pfry

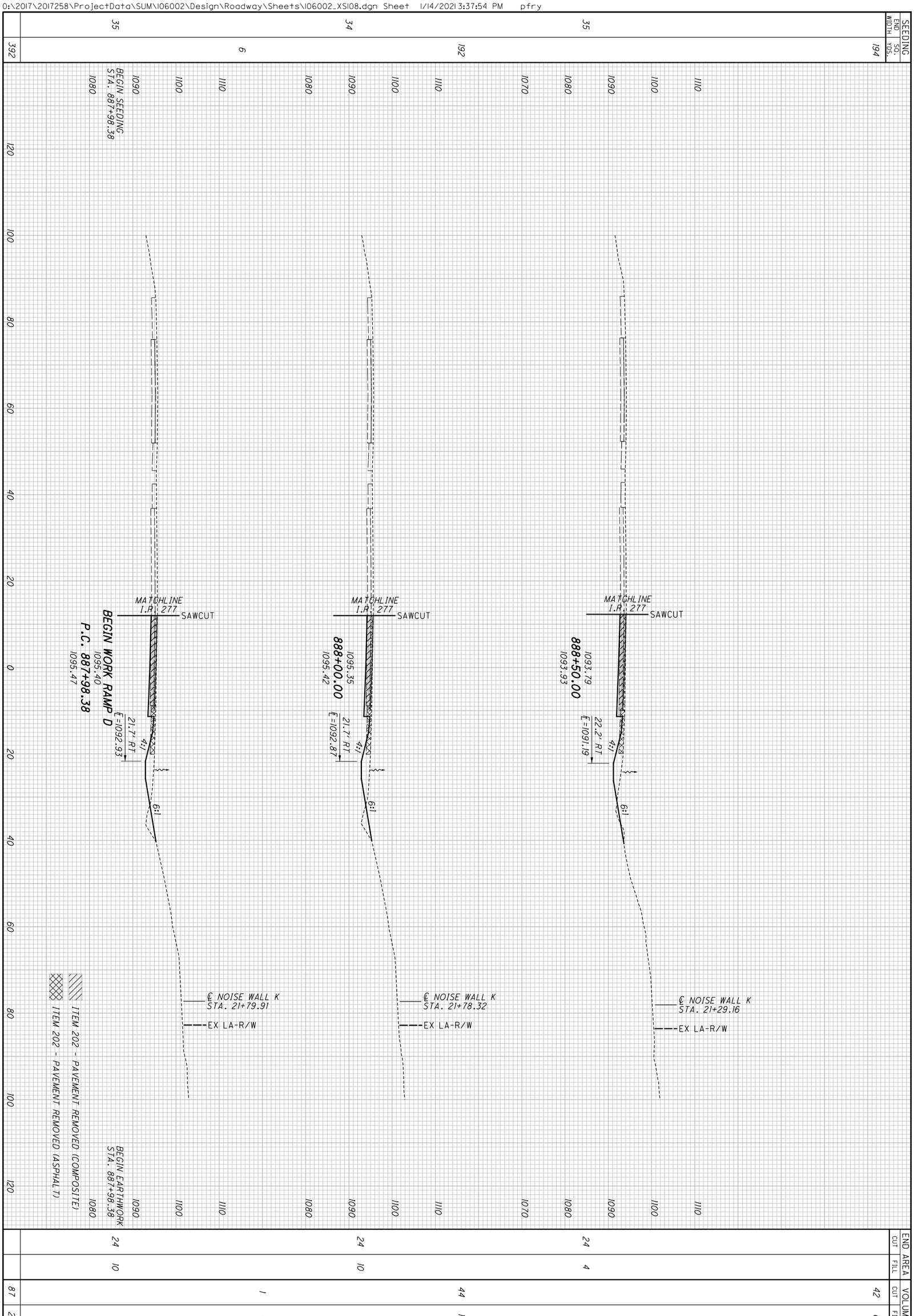
SEEDING
END WIDTH
SQ. YDS.
392
6
35
BEGIN SEEDING STA. 887+98.38
1080
1090
1100
1110
MATCHLINE I.R. 277
SAWCUT
BEGIN WORK RAMP D
P.C. 887+98.38
1095.40
1095.47
21.7' RT
℄=1092.93
4:1
6:1
℄ NOISE WALL K
STA. 21+79.91
EX LA-R/W
192
34
1070
888+00.00
1095.35
1095.42
℄=1092.87
℄ NOISE WALL K
STA. 21+78.32
194
35
888+50.00
1093.79
1093.93
22.2' RT
℄=1091.19
℄ NOISE WALL K
STA. 21+29.16
ITEM 202 - PAVEMENT REMOVED (COMPOSITE)
ITEM 202 - PAVEMENT REMOVED (ASPHALT)
BEGIN EARTHWORK STA. 887+98.38
END AREA
CUT
FILL
24
10
4
87
20
1
44
13
42
6
VOLUME
SUM-77/277/224
VARIOUS
771
1288
CROSS SECTIONS - RAMP D
STA. 887+98.38 TO STA. 888+50.00
CALCULATED
CJC
CHECKED
PJF

| SEEDING END WIDTH | SEEDING SQ. YDS. |
|---|---|
| | 342 |
| 61 | |
| | 264 |
| 34 | |
| | 192 |
| 35 | |
| | 798 |

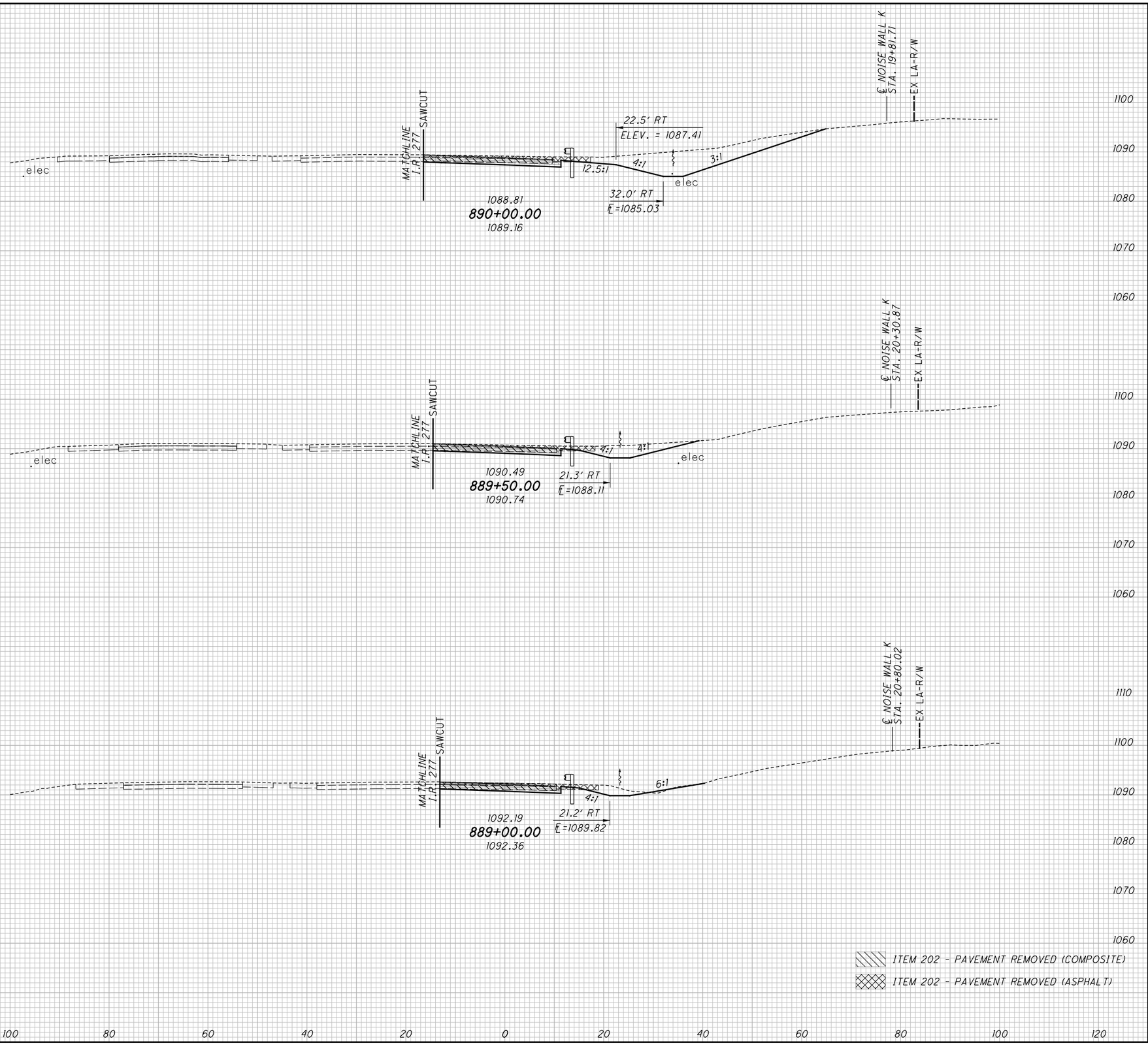


| END AREA CUT | END AREA FILL | VOLUME CUT | VOLUME FILL |
|---|---|---|---|
| | | 301 | 2 |
| 141 | 1 | | |
| | | 171 | 2 |
| 44 | 1 | | |
| | | 60 | 4 |
| 21 | 3 | | |
| | | 532 | 8 |

CALCULATED CJC
CHECKED PJF

# CROSS SECTIONS - RAMP D
## STA. 889+00.00 TO STA. 890+00.00

SUM-77 / 277 / 224
VARIOUS

772
1288

D:\2017\2017258\ProjectData\SUM\06002\Design\Roadway\Sheets\06002_XS08.dgn Sheet 1/14/2021 3:38:08 PM pfry

| SEEDING END WIDTH | SEEDING SQ. YDS. | END AREA CUT | END AREA FILL | VOLUME CUT | VOLUME FILL |
|---|---|---|---|---|---|
| | 353 | | | 270 | 12 |
| 64 | | 164 | 6 | | |
| | 258 | | | 177 | 13 |
| 29 | | 27 | 8 | | |
| | 253 | | | 195 | 8 |
| 62 | | 184 | 1 | | |
| | 864 | | | 642 | 33 |

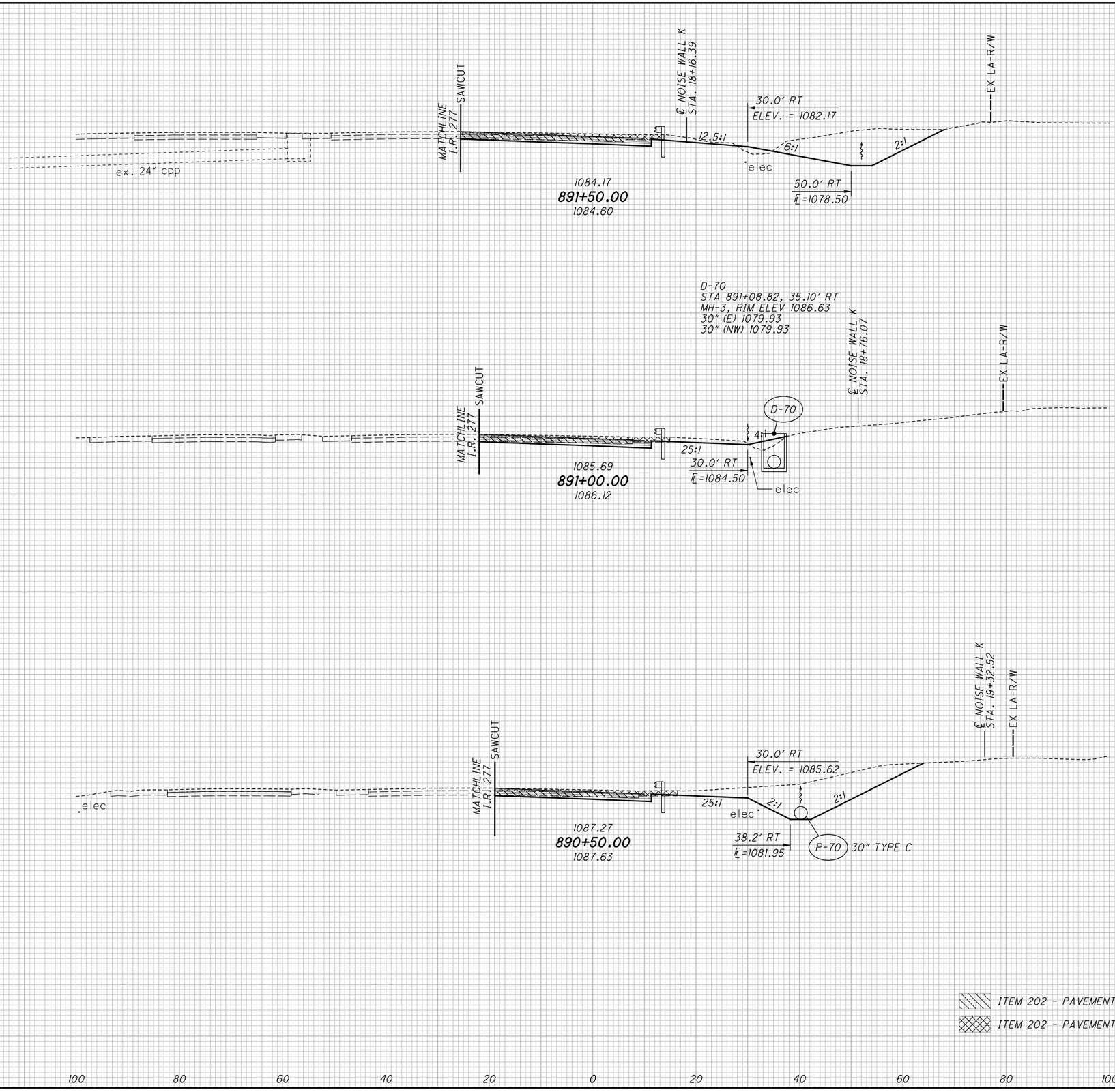


CALCULATED CJC
CHECKED PJF

# CROSS SECTIONS - RAMP D 890+50.00 TO STA. 891+50.00

SUM-77 / 277 / 224
VARIOUS

773
1288

0:\2017\2017258\ProjectData\SUM\106002\Design\Roadway\Sheets\106002_XS108.dgn Sheet 1/14/2021 3:38:10 PM pfry

| SEEDING END WIDTH | SEEDING SQ. YDS. |
|---|---|
| | 131 |
| 22 | |
| | 131 |
| 25 | |
| | 203 |
| 48 | |
| | 308 |
| 63 | |
| | 773 |

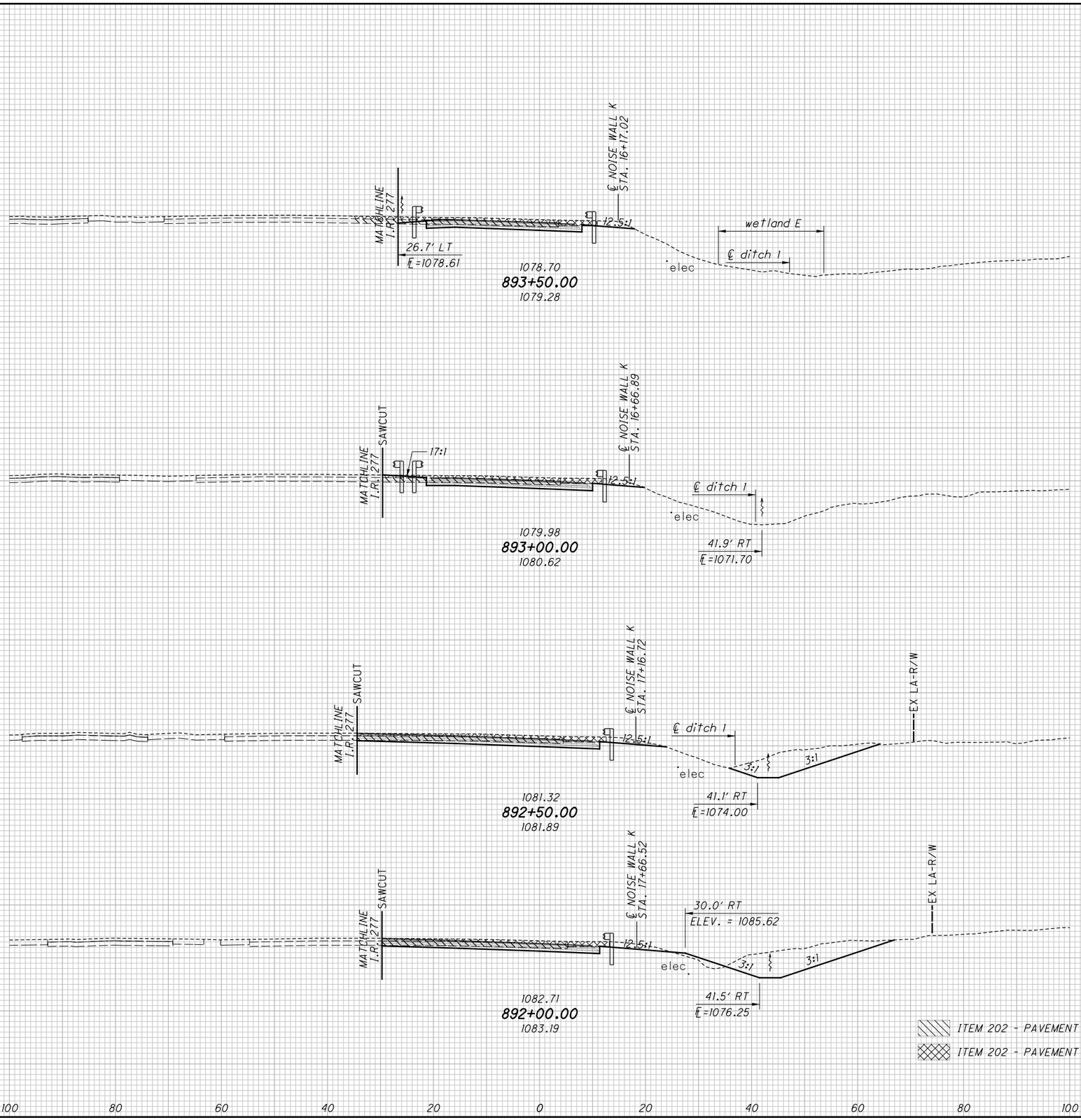


| END AREA CUT | END AREA FILL | VOLUME CUT | VOLUME FILL |
|---|---|---|---|
| | | 64 | 3 |
| 26 | 2 | | |
| | | 52 | 10 |
| 30 | 9 | | |
| 108 | 1 | 128 | 9 |
| 128 | 7 | 219 | 7 |
| | | 463 | 29 |

CALCULATED CJC
CHECKED PJF

# CROSS SECTIONS - RAMP D
## STA. 892+00.00 TO STA. 893+50.00

SUM-77 / 277 / 224
VARIOUS

774
1288

D:\2017\2017258\ProjectData\SUM\06002\Design\Roadway\Sheets\06002_XS08.dgn Sheet 1/14/2021 3:38:12 PM pfry

| SEEDING END WIDTH | SEEDING SQ. YDS. |
|---|---|
| | 110 |
| 29 | |
| | 54 |
| 28 | |
| | 150 |
| 26 | |
| | 142 |
| 25 | |
| | 456 |

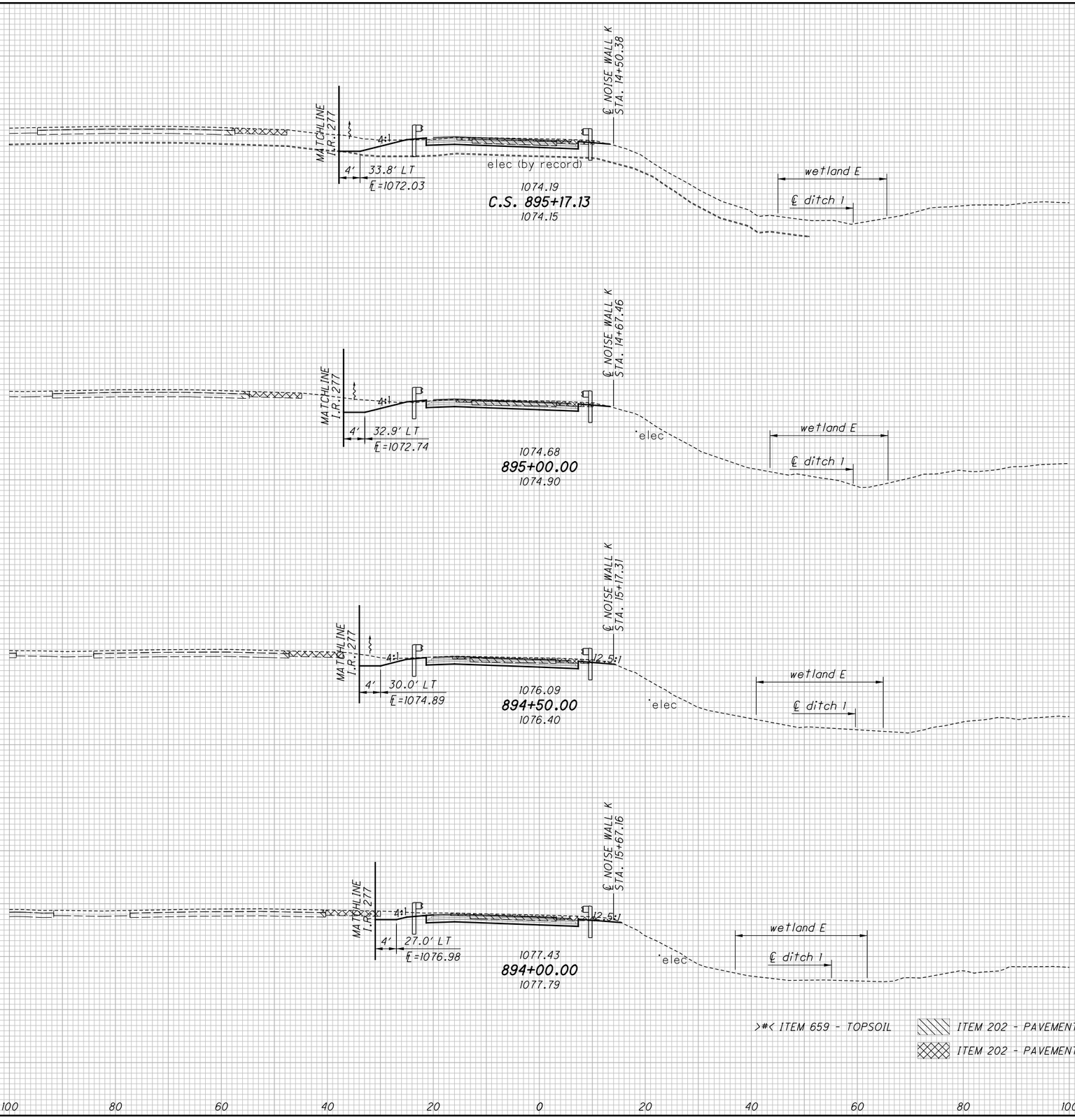


BEGIN TOPSOIL FOR VEG. BIOFILTER 20. STA. 894+00.00 LT — AH BK

>#< ITEM 659 - TOPSOIL

ITEM 202 - PAVEMENT REMOVED (COMPOSITE)

ITEM 202 - PAVEMENT REMOVED (ASPHALT)

| END AREA CUT | END AREA FILL | VOLUME CUT | VOLUME FILL |
|---|---|---|---|
| | | 55 | >4< 2 |
| 43 | >3< 2 | | |
| | | 28 | >2< 1 |
| 45 | >3< 2 | | |
| | | 80 | >5< 3 |
| 41 | >2< 1 | | |
| | | 78 | >3< 2 |
| 43 | >1< >0< 1 | | |
| | | 241 | >14< 8 |

CALCULATED CJC
CHECKED PJF

# CROSS SECTIONS - RAMP D
# STA. 894+00.00 TO STA. 895+17.13

SUM-77 / 277 / 224
VARIOUS

775
1288

0:\2017\20172581Project Data\SUM\106002\Design\Roadway\Sheets\106002_XS108.dgn Sheet 1/14/2021 3:38:15 PM pfry

| SEEDING END WIDTH | SEEDING SQ. YDS. |
|---|---|
| | 37 |
| 19 | |
| | 156 |
| 37 | |
| | 197 |
| 34 | |
| | 181 |
| 31 | |
| | 571 |

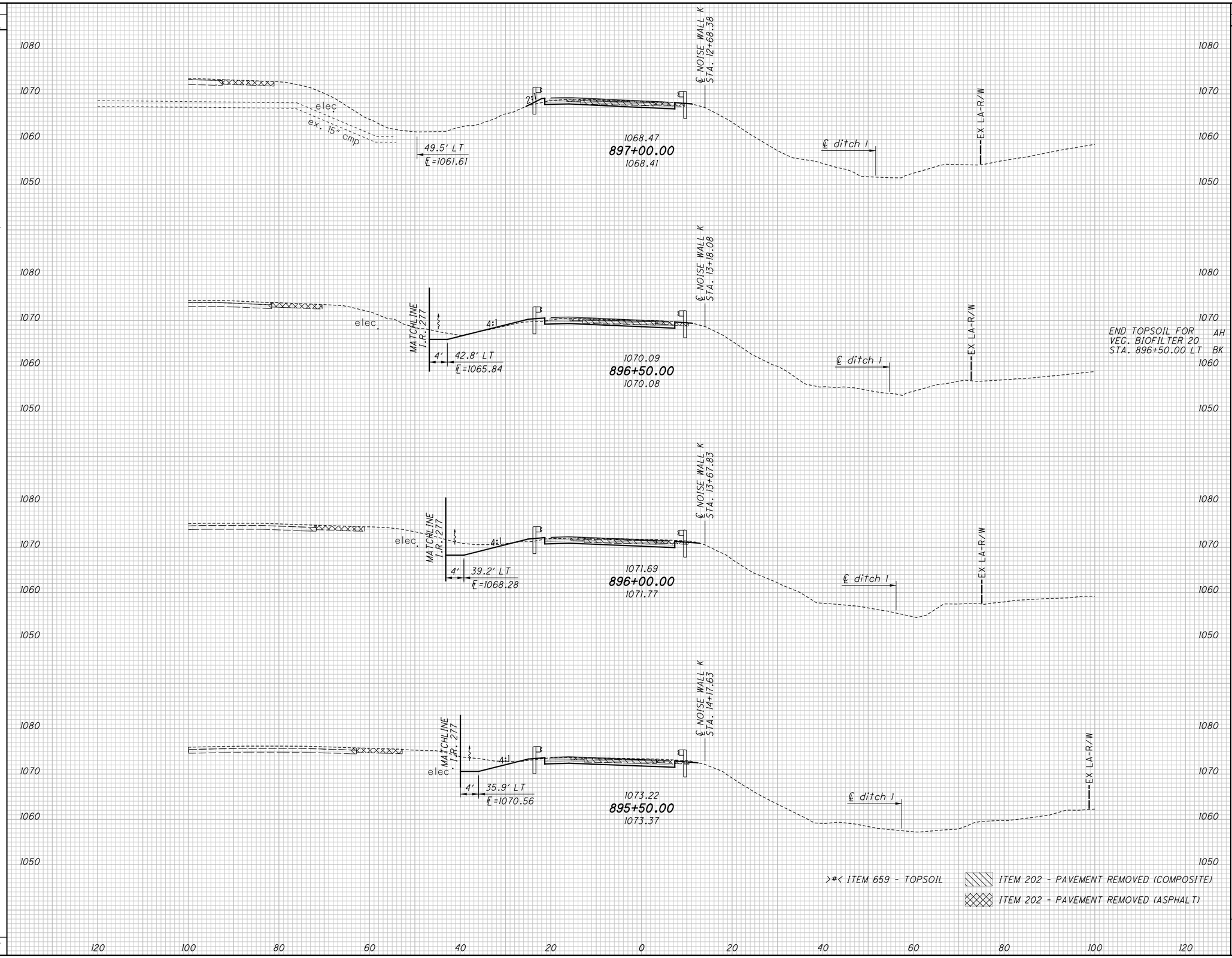


| END AREA CUT | END AREA FILL | VOLUME CUT | VOLUME FILL |
|---|---|---|---|
| | | 8 | 3 |
| 14 | 4 | | |
| | | 40 | 8 |
| | >0< | | |
| | >6< | | |
| 29 | 5 | | |
| | | 70 | >10< 7 |
| 47 | >5< 3 | | |
| | | 88 | >8< 5 |
| 48 | >4< 2 | | |
| | | | >18< |
| | | 206 | 23 |

CALCULATED CJC
CHECKED PJF

# CROSS SECTIONS - RAMP D
# STA. 895+50.00 TO STA. 897+00.00

SUM-77 / 277 / 224
VARIOUS

776
1288

O:\2017\2017258\ProjectData\SUM\06002\Design\Roadway\Sheets\06002_XS08.dgn Sheet 1/14/2021 3:38:17 PM pfry

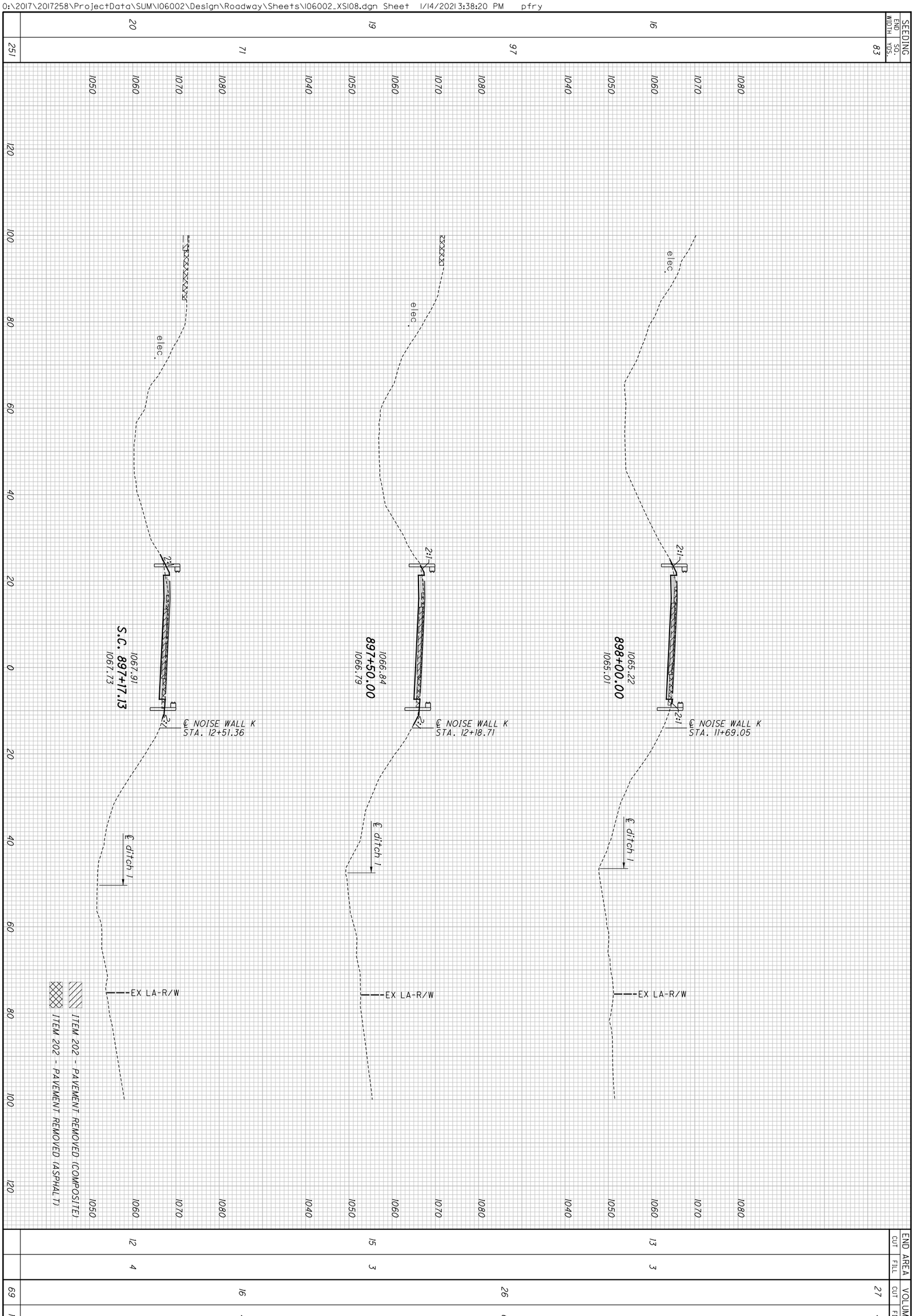


| SEEDING END WIDTH | SEEDING SQ. YDS. |
|---|---|
| 251 | 83 |
| 20 | 16 |
| 71 | 97 |
| 19 | 16 |

| END AREA CUT | END AREA FILL | VOLUME CUT | VOLUME FILL |
|---|---|---|---|
| 12 | 4 | 69 | 14 |
| 15 | 3 | 26 | 6 |
| 13 | 3 | 27 | 4 |

777
1288

**SUM-77/277/224**
**VARIOUS**

# CROSS SECTIONS - RAMP D
## STA. 897+17.13 TO STA. 898+00.00

CALCULATED CJC
CHECKED PJF

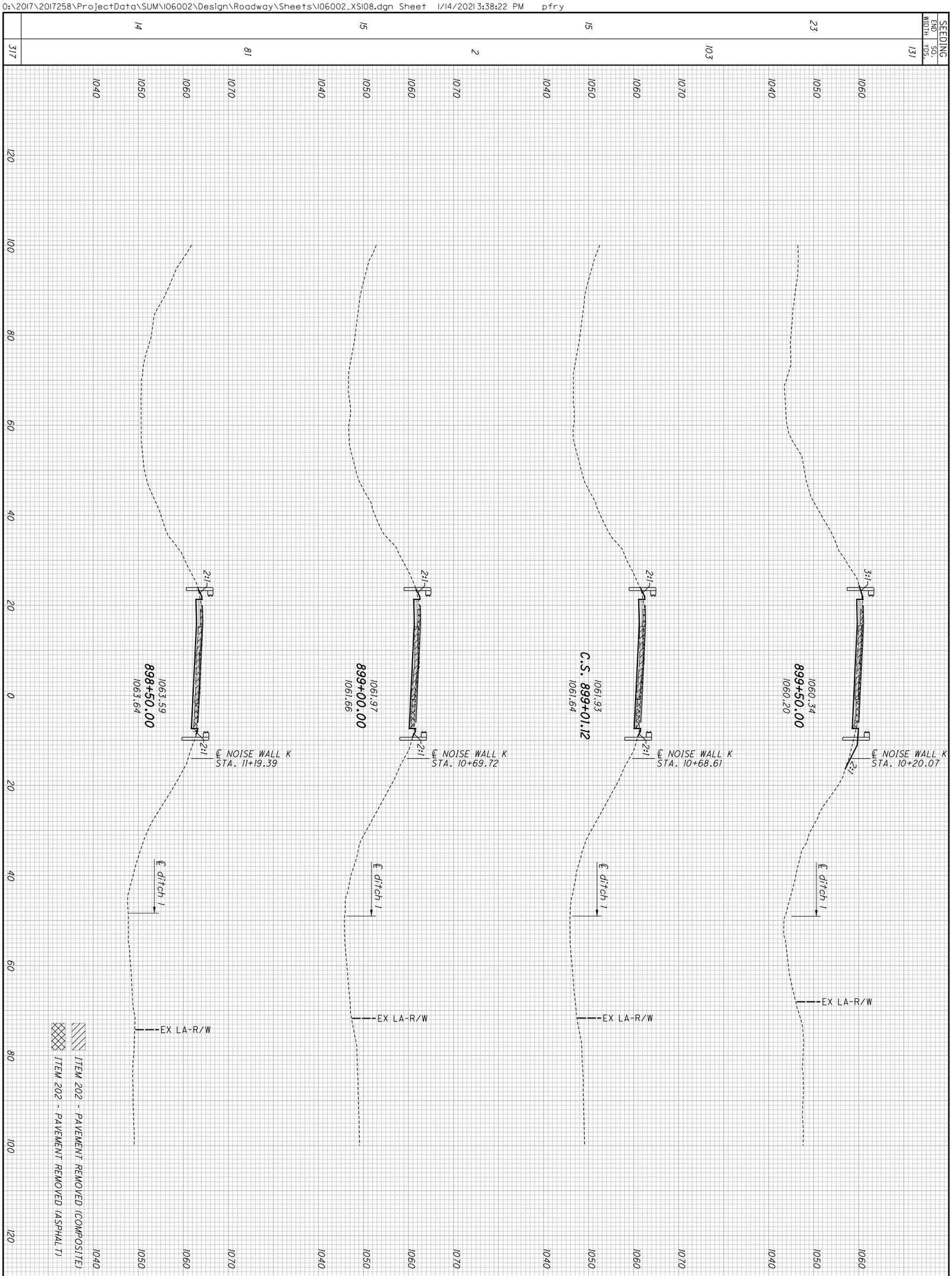


| SEEDING END WIDTH | SEEDING SQ. YDS. | END AREA CUT | END AREA FILL | VOLUME CUT | VOLUME FILL |
|---|---|---|---|---|---|
| 14 | 317 | 16 | 1 | 77 | 17 |
| 15 | 81 | 12 | 1 | 26 | 2 |
| 15 | 2 | 13 | 1 | 1 | 0 |
| 23 | 103 | 14 | 6 | 24 | 6 |
| | 131 | | | 26 | 9 |

| | | | |
|---|---|---|---|
| 778 / 1288 | SUM-77/277/224<br>VARIOUS | CROSS SECTIONS - RAMP D<br>STA. 898+50.00 TO STA. 899+50.00 | CALCULATED CJC<br>CHECKED PJF |

| SEEDING END WIDTH | SEEDING SQ. YDS. | END AREA CUT | END AREA FILL | VOLUME CUT | VOLUME FILL |
|---|---|---|---|---|---|
| | 106 | | | 28 | 5 |
| 20 | | 16 | 2 | | |
| | 2 | | | 1 | 0 |
| 20 | | 15 | 3 | | |
| | 119 | | | 27 | 6 |
| 23 | | 14 | 4 | | |
| | 131 | | | 26 | 7 |
| 24 | | 14 | 4 | | |
| | 358 | | | 82 | 18 |

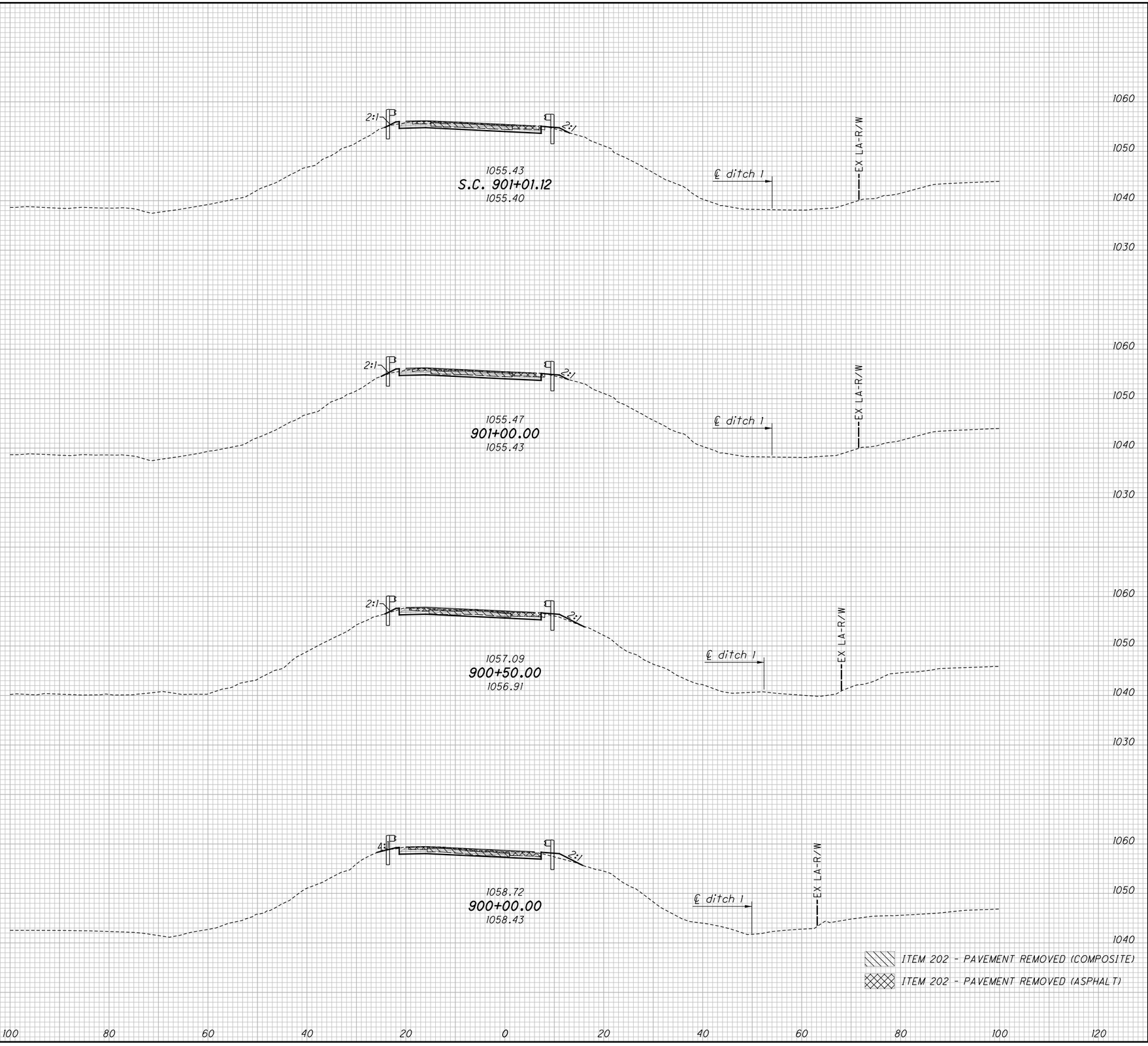


CALCULATED CJC
CHECKED PJF

# CROSS SECTIONS - RAMP D
## STA. 900+00.00 TO STA. 901+01.12

SUM-77 / 277 / 224
VARIOUS

779
1288

0:\2017\20172581Project Data\SUM\106002\Design\Roadway\Sheets\106002_XS108.dgn Sheet 1/14/2021 3:38:25 PM pfry

| SEEDING END WIDTH | SEEDING SQ. YDS. |
|---|---|
| | 217 |
| 54 | |
| | 322 |
| 62 | |
| | 231 |
| 21 | |
| | 111 |
| 19 | |
| | 881 |

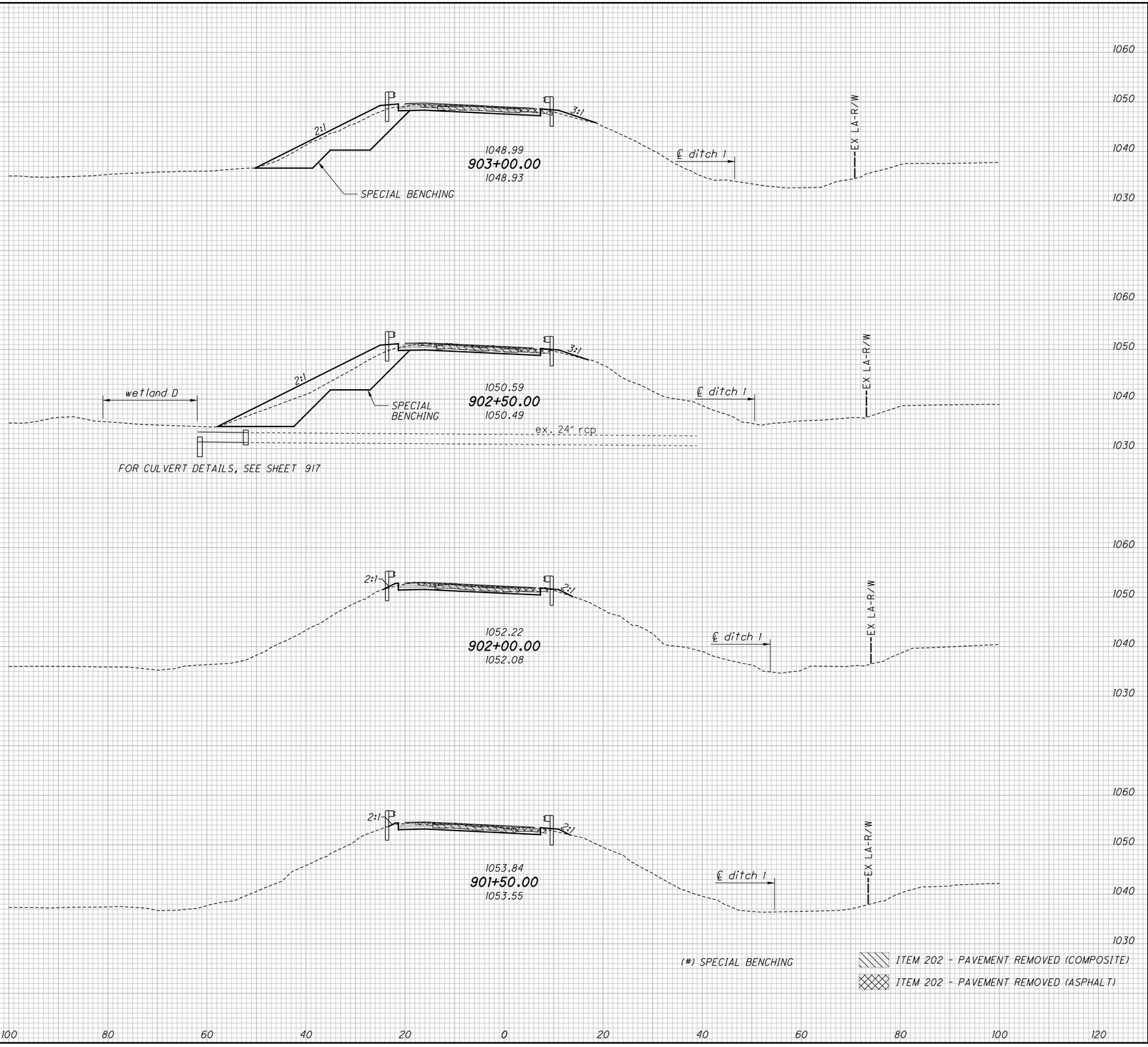


| END AREA CUT | END AREA FILL | VOLUME CUT | VOLUME FILL |
|---|---|---|---|
| | | (106) | (106) |
| | | 29 | 34 |
| (115) | (115) | | |
| 15 | 28 | | |
| | | (225) | (225) |
| | | 28 | 84 |
| (128) | (128) | | |
| 15 | 63 | | |
| | | (119) | (119) |
| | | 29 | 61 |
| (0) | (0) | | |
| 16 | 3 | | |
| | | 29 | 6 |
| 15 | 3 | | |
| | | (450) | (450) |
| | | 115 | 185 |

CALCULATED CJC
CHECKED PJF

CROSS SECTIONS - RAMP D
STA. 901+50.00 TO STA. 903+00.00

SUM-77 / 277 / 224
VARIOUS

780
1288

0:\2017\20172581\ProjectData\SUM\106002\Design\Roadway\Sheets\106002_XS108.dgn Sheet 1/14/2021 3:38:27 PM pfry

| SEEDING | |
|---|---|
| END WIDTH | SQ. YDS. |
| | 211 |
| 42 | |
| | 186 |
| 25 | |
| | 136 |
| 24 | |
| | 133 |
| 24 | |
| | 666 |




| END AREA | | VOLUME | |
|---|---|---|---|
| CUT | FILL | CUT | FILL |
| | | 31 | 44 |
| 17 | 29 | | |
| | | 32 | 32 |
| 18 | 6 | | |
| | | 32 | 12 |
| 17 | 7 | | |
| | | 31 | 15 |
| (0) 16 | (0) 9 | | |
| | | 126 | 103 |

CALCULATED CJC
CHECKED PJF

# CROSS SECTIONS - RAMP D
## STA. 903+50.00 TO STA. 905+00.00

SUM-77 / 277 / 224
VARIOUS

781
1288

D:\2017\2017258\ProjectData\SUM\06002\Design\Roadway\Sheets\06002_XS08.dgn Sheet 1/14/2021 3:38:30 PM pfry

| SEEDING END WIDTH | SEEDING SQ. YDS. |
|---|---|
| | 108 |
| 20 | |
| | 128 |
| 26 | |
| | 147 |
| 27 | |
| | 169 |
| 34 | |
| | 552 |

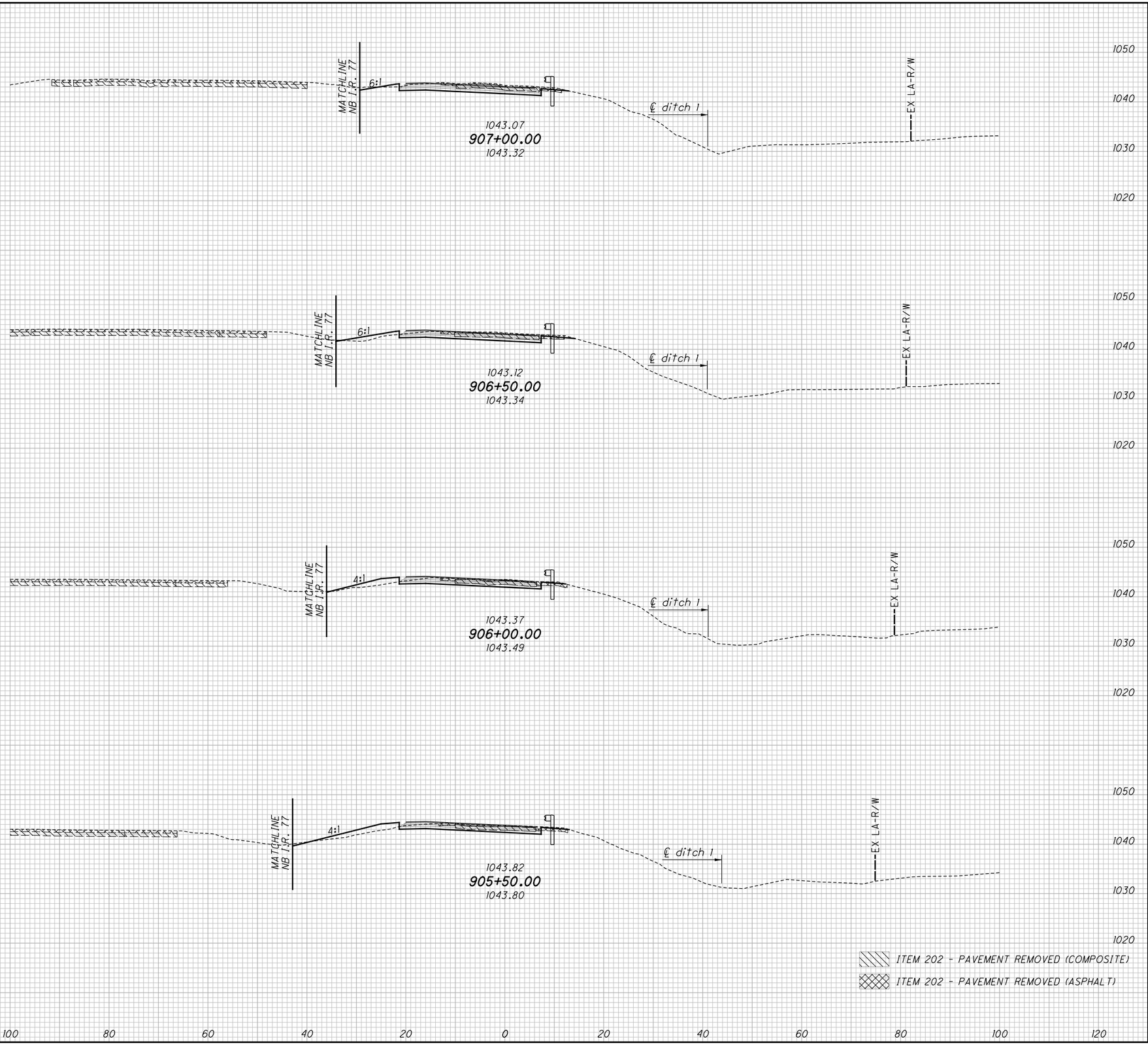


| END AREA CUT | END AREA FILL | VOLUME CUT | VOLUME FILL |
|---|---|---|---|
| | | 56 | 4 |
| 29 | 3 | | |
| | | 46 | 11 |
| 21 | 9 | | |
| | | 35 | 20 |
| 17 | 13 | | |
| | | 31 | 29 |
| 17 | 18 | | |
| | | 168 | 64 |

CALCULATED CJC
CHECKED PJF

# CROSS SECTIONS - RAMP D
## STA. 905+50.00 TO STA. 907+00.00

SUM-77 / 277 / 224
VARIOUS

782
1288

0:\2017\2017258\ProjectData\SUM\106002\Design\Roadway\Sheets\106002_XS108.dgn Sheet 1/14/2021 3:38:32 PM pfry

| SEEDING END WIDTH | SEEDING SQ. YDS. | END AREA CUT | END AREA FILL | VOLUME CUT | VOLUME FILL |
|---|---|---|---|---|---|
| | 57 | | | 44 | 3 |
| 12 | | 38 | 1 | | |
| | 7 | | | 7 | 0 |
| 12 | | 36 | 1 | | |
| | 72 | | | 73 | 2 |
| 14 | | 43 | 1 | | |
| | 92 | | | 69 | 2 |
| 19 | | 32 | 1 | | |
| | 228 | | | 193 | 7 |

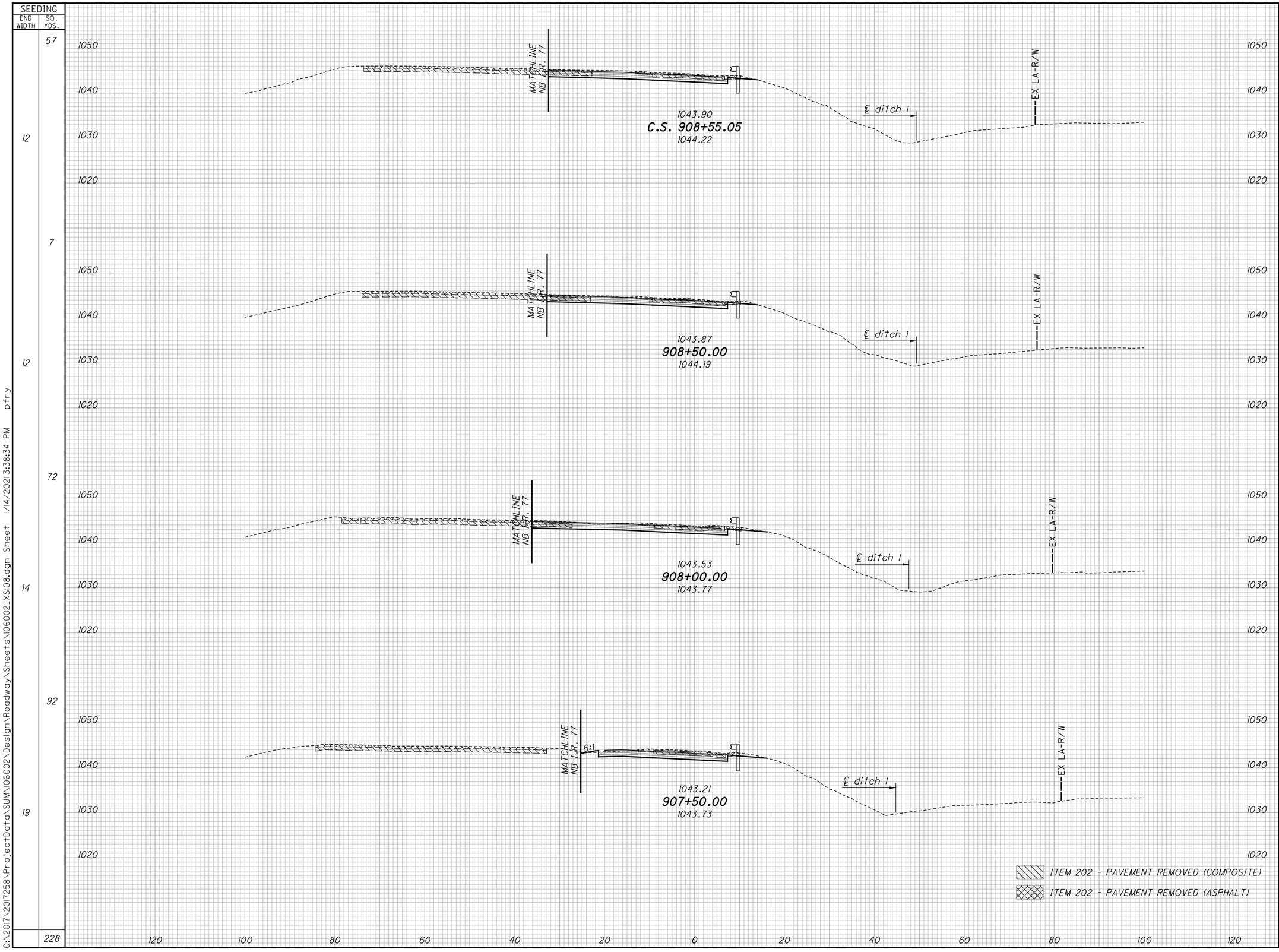


CALCULATED CJC
CHECKED PJF

# CROSS SECTIONS - RAMP D
## STA. 907+50.00 TO STA. 908+55.05

SUM-77 / 277 / 224
VARIOUS

783
1288

O:\2017\2017258\ProjectData\SUM\06002\Design\Roadway\Sheets\06002_XS08.dgn Sheet 1/14/2021 3:38:34 PM pfry

| SEEDING END WIDTH | SEEDING SQ. YDS. | END AREA CUT | END AREA FILL | VOLUME CUT | VOLUME FILL |
|---|---|---|---|---|---|
| | 7 | | | 0 | 1 |
| 10 | | 0 | 6 | | |
| | 58 | | | 5 | 8 |
| 11 | | 5 | 3 | | |
| | 58 | | | 14 | 6 |
| 10 | | 10 | 3 | | |
| | 58 | | | 23 | 6 |
| 11 | | 15 | 3 | | |
| | 181 | | | 42 | 21 |

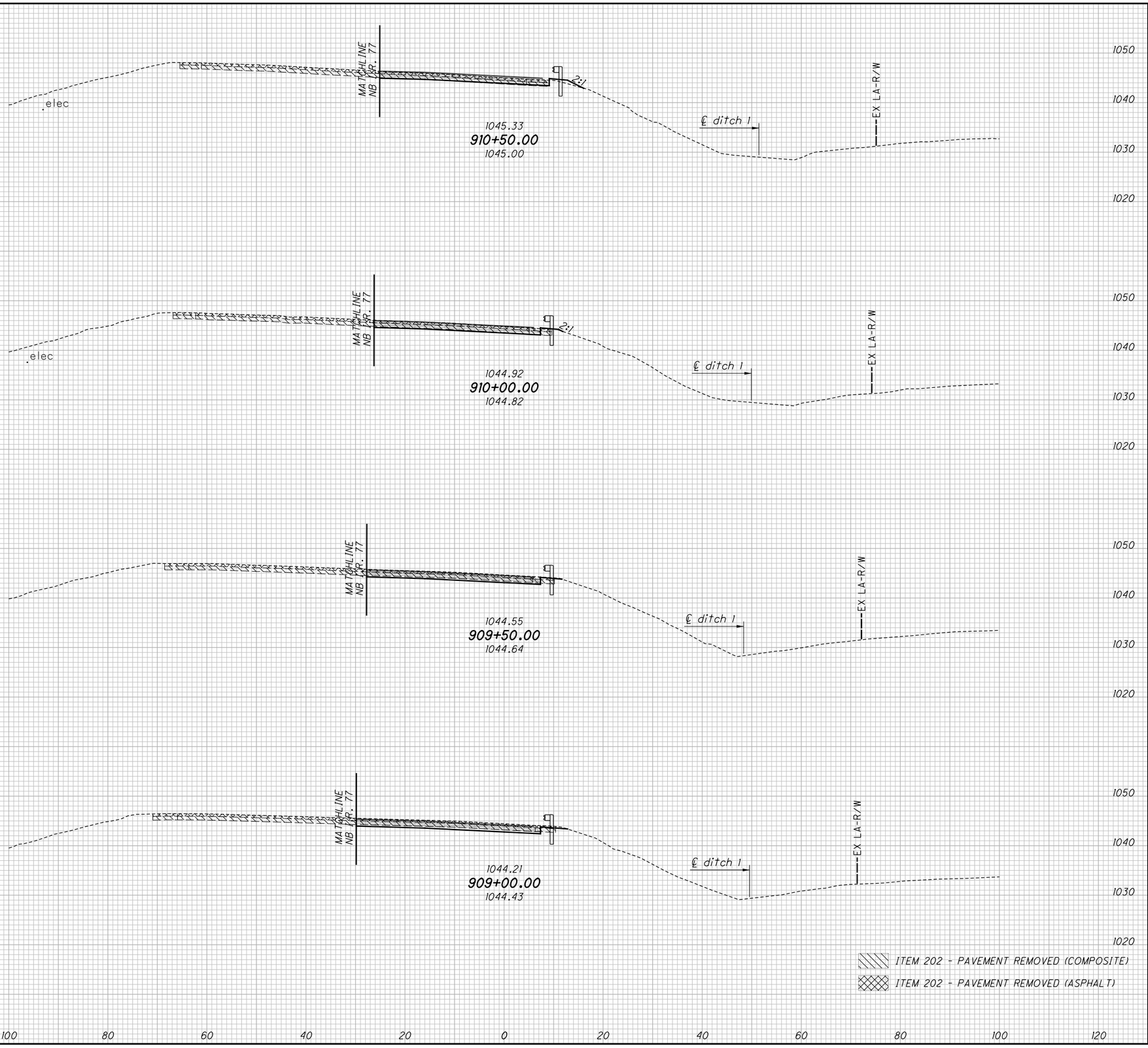


CALCULATED CJC
CHECKED PJF

# CROSS SECTIONS - RAMP D
## STA. 909+00.00 TO STA. 910+50.00

SUM-77 / 277 / 224
VARIOUS

784
1288

0:\2017\2017258\ProjectData\SUM\06002\Design\Roadway\Sheets\106002_XS108.dgn Sheet 1/14/2021 3:38:38 PM pfry

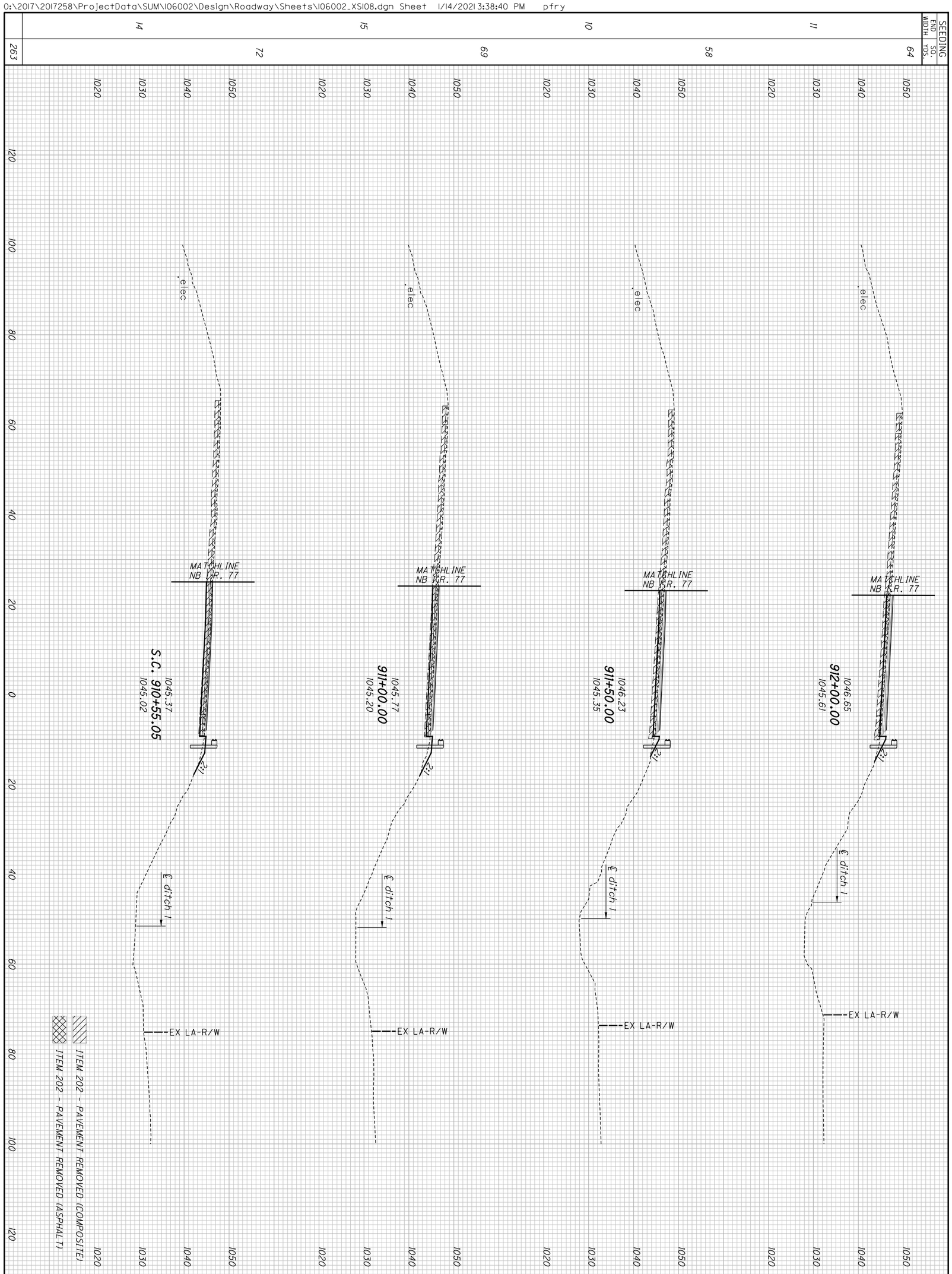


| SUM-77/277/224 VARIOUS | CROSS SECTIONS - RAMP D STA. 910+55.05 TO STA. 912+00.00 | CALCULATED CJC CHECKED PJF |
|---|---|---|
| 785 1288 | | |

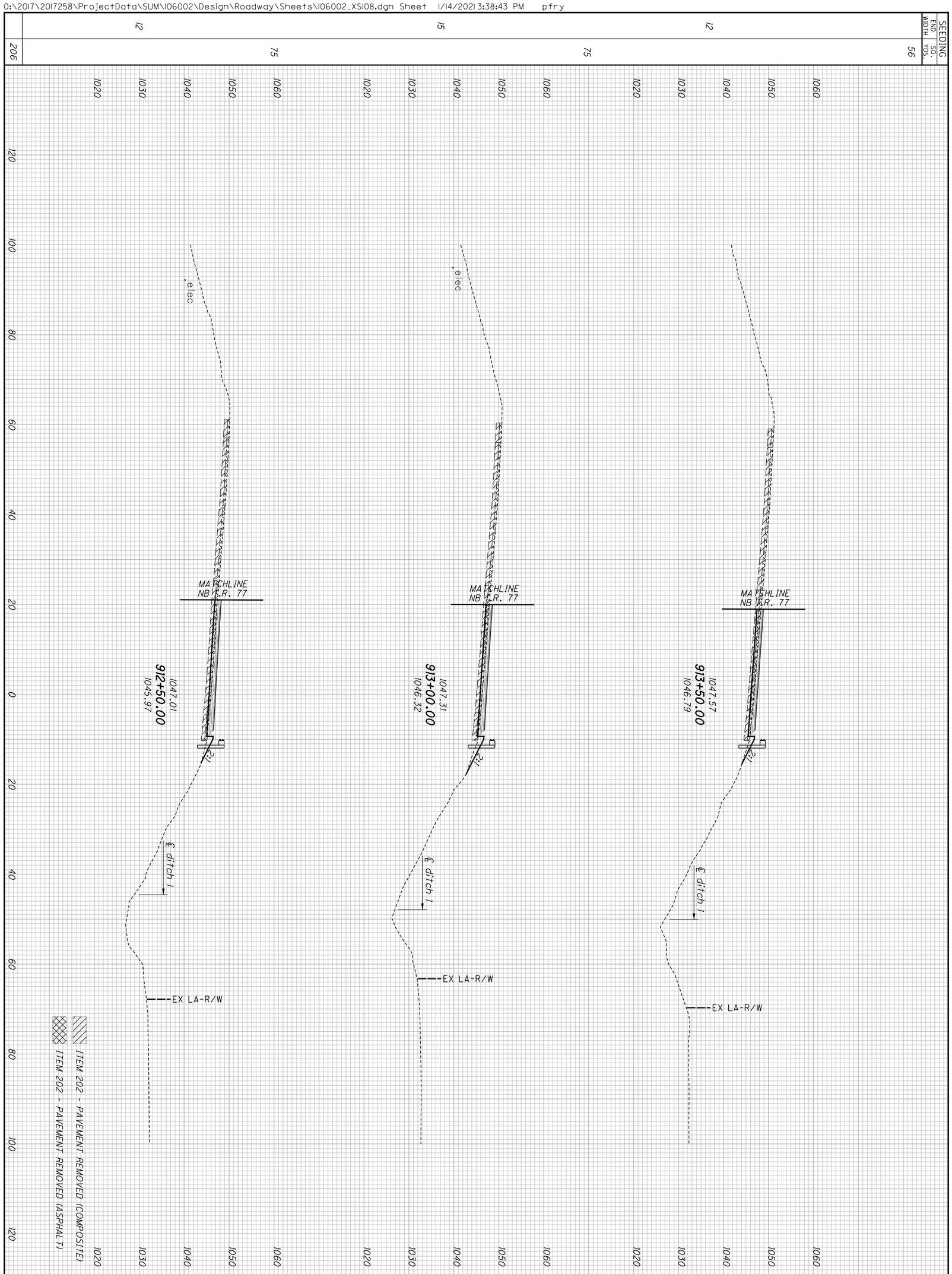


| | | |
|---|---|---|
| 786 / 1288 | **SUM-77 / 277 / 224**<br>**VARIOUS** | **CROSS SECTIONS - RAMP D**<br>**STA. 912+50.00 TO STA. 913+50.00** |
| | | CALCULATED CJC<br>CHECKED PJF |

| SEEDING | |
|---|---|
| END WIDTH | SQ. YDS. |
| 7 | |
| | 31 |
| 7 | |
| | 42 |
| 8 | |
| | 73 |

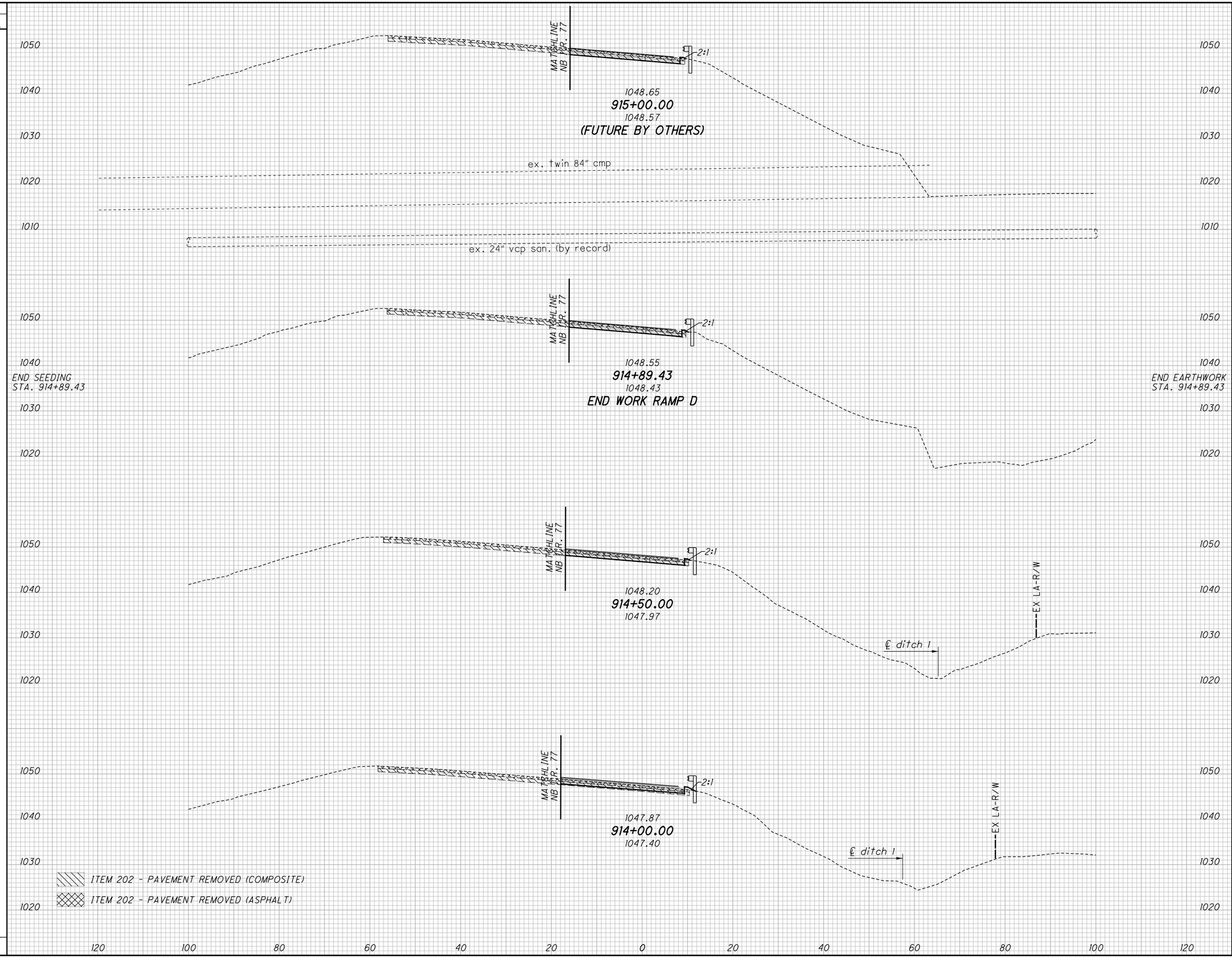


| END AREA | |
|---|---|
| CUT | FILL |
| 1 | 2 |
| 0 | 3 |
| 0 | 10 |
| | |

| VOLUME | |
|---|---|
| CUT | FILL |
| 1 | 4 |
| 0 | 12 |
| | |
| 1 | 16 |

CALCULATED CJC
CHECKED PJF

# CROSS SECTIONS - RAMP D
# STA. 914+00.00 TO STA. 915+00.00

SUM-77 / 277 / 224
VARIOUS

787
1288

0:\2017\2017258\ProjectData\SUM\106002\Design\Roadway\Sheets\106002_XS108.dgn Sheet 1/14/2021 3:38:45 PM pfry

| SEEDING END WIDTH | SEEDING SQ. YDS. |
|---|---|
| | 189 |
| 34 | |
| | 183 |
| 32 | |
| | 107 |
| 30 | |
| | 479 |

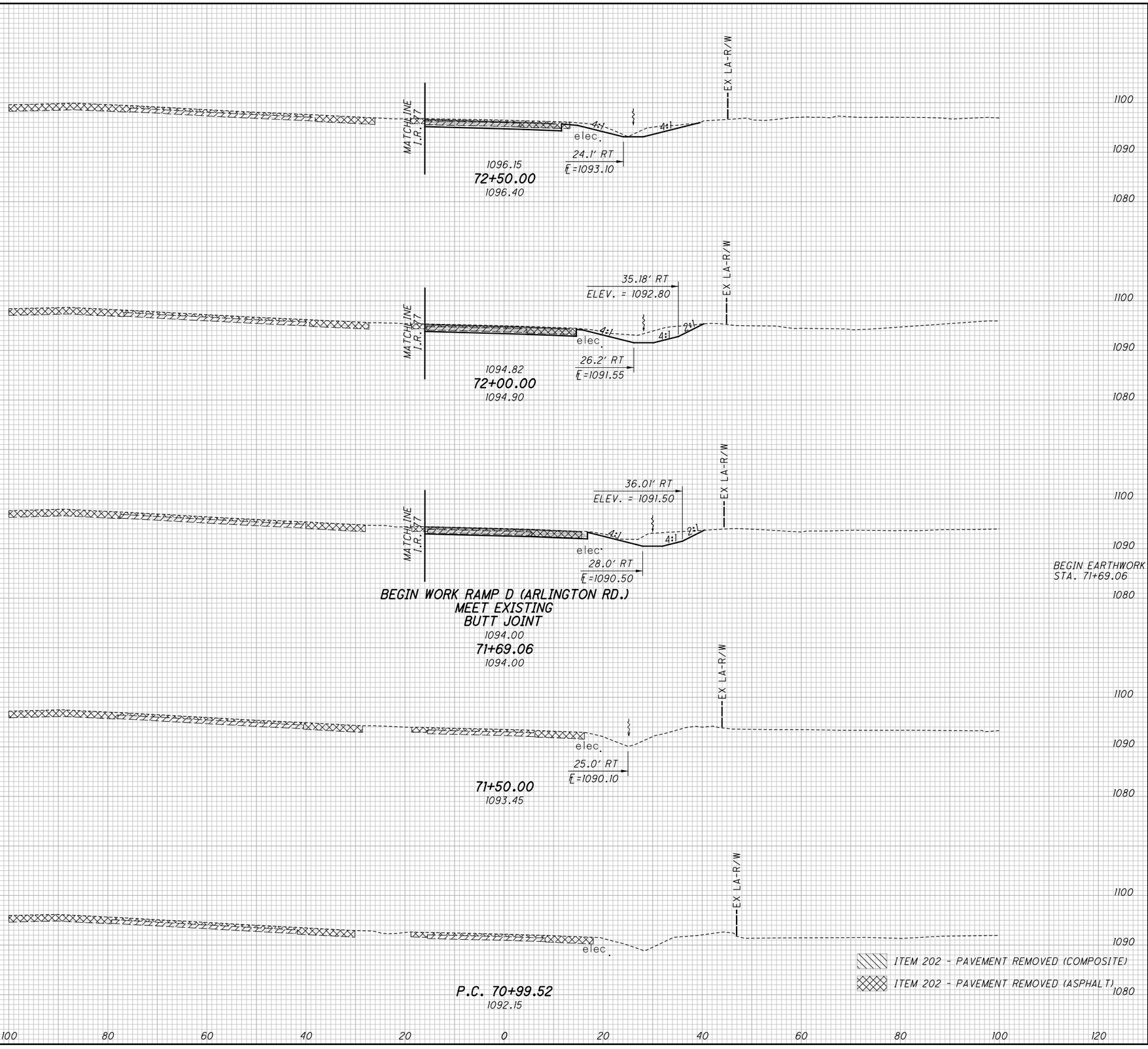


| END AREA CUT | END AREA FILL | VOLUME CUT | VOLUME FILL |
|---|---|---|---|
| | | 67 | 2 |
| 33 | 1 | | |
| | | 69 | 1 |
| 42 | 0 | | |
| | | 46 | 0 |
| 39 | 0 | | |
| | | 182 | 3 |

CALCULATED CJC
CHECKED PJF

# CROSS SECTIONS - ARLINGTON ROAD RAMP D
## STA. 70+99.52 TO STA. 72+50.00

SUM-77 / 277 / 224
VARIOUS

788
1288

O:\2017\2017258\ProjectData\SUM\06002\Design\Roadway\Sheets\06002_XS09.dgn Sheet 1/13/2021 6:20:57 PM pfry

| SEEDING END WIDTH | SEEDING SQ. YDS. | END AREA CUT | END AREA FILL | VOLUME CUT | VOLUME FILL |
|---|---|---|---|---|---|
| | 175 | | | 72 | 4 |
| 32 | | 42 | 2 | | |
| | 169 | | | 73 | 4 |
| 29 | | 37 | 2 | | |
| | 175 | | | 68 | 3 |
| 34 | | 36 | 1 | | |
| | 189 | | | 69 | 2 |
| 34 | | 39 | 1 | | |
| | 708 | | | 282 | 13 |

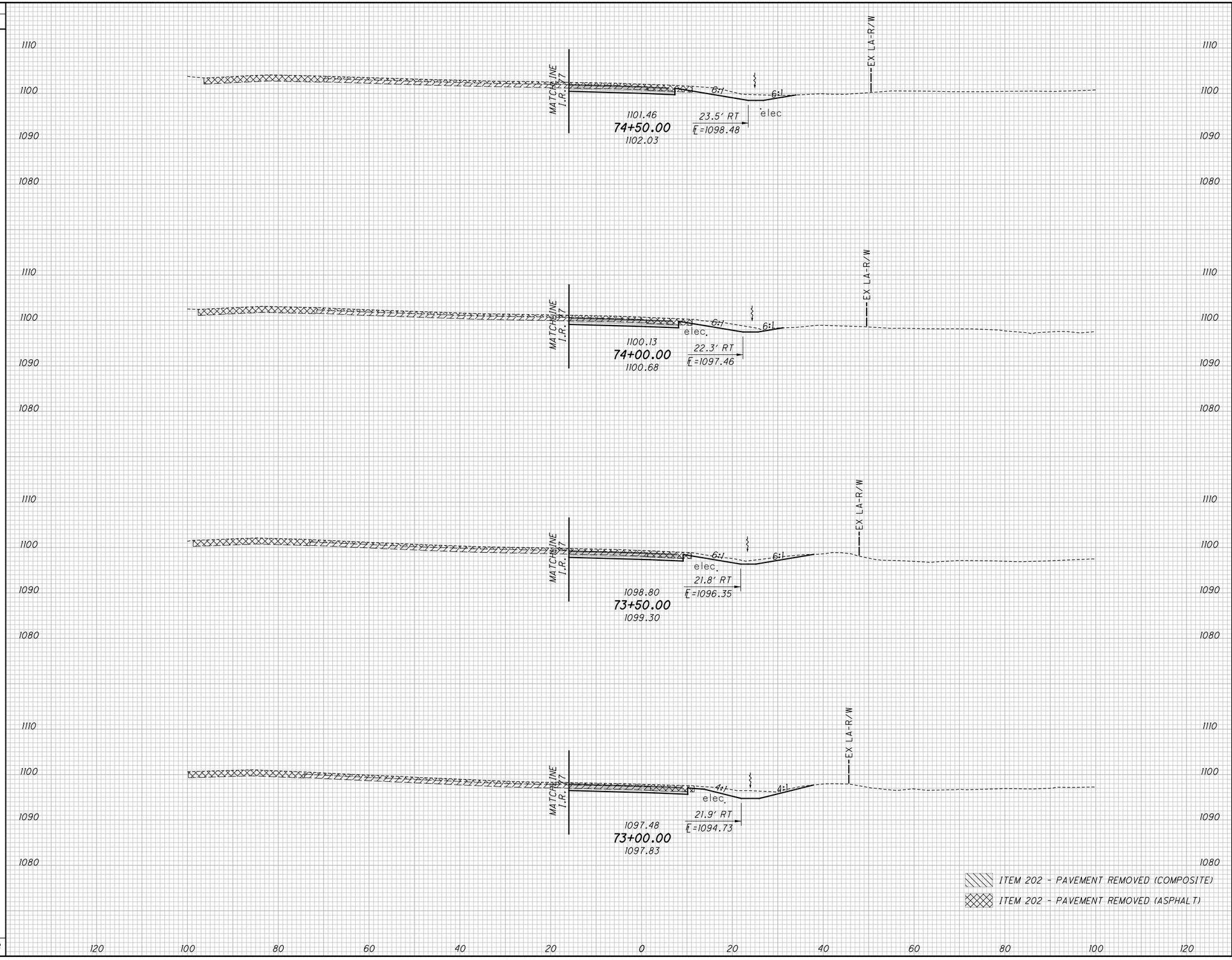


CALCULATED CJC
CHECKED PJF

# CROSS SECTIONS - ARLINGTON ROAD RAMP D STA. 73+00.00 TO STA. 74+50.00

SUM-77/277/224
VARIOUS

789
1288

G:\2017\20172581\Project Data\SUM\06002\Design\Roadway\Sheets\06002_XS109.dgn Sheet 1/13/2021 6:21:00 PM pfry

| SEEDING END WIDTH | SEEDING SQ. YDS. |
|---|---|
| | 158 |
| 29 | |
| | 169 |
| 32 | |
| | 115 |
| 30 | |
| | 57 |
| 31 | |
| | 499 |

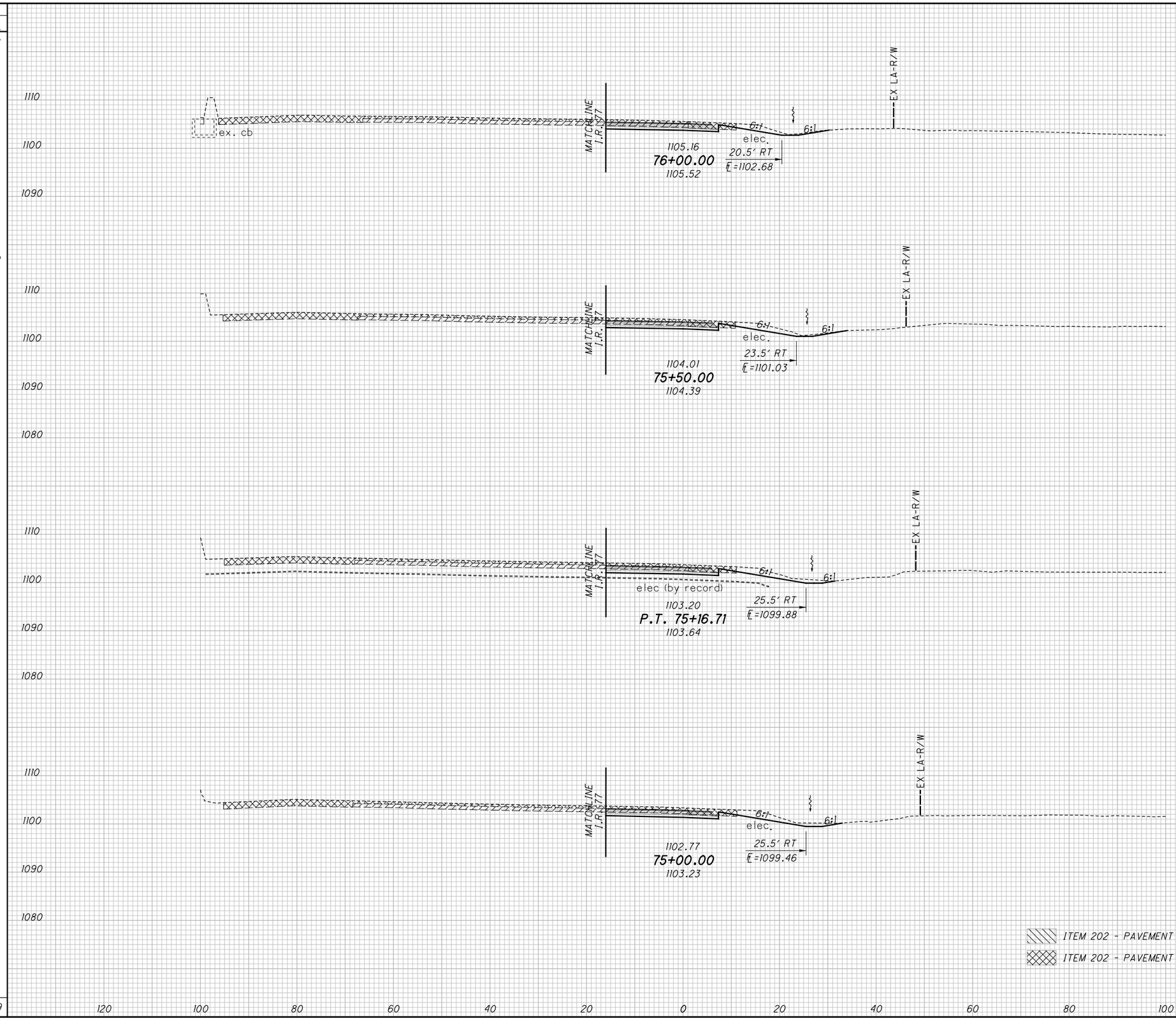


| END AREA CUT | END AREA FILL | VOLUME CUT | VOLUME FILL |
|---|---|---|---|
| | | 45 | 6 |
| 26 | 3 | | |
| | | 53 | 5 |
| 31 | 2 | | |
| | | 40 | 2 |
| 34 | 2 | | |
| | | 22 | 1 |
| 36 | 2 | | |
| | | 160 | 14 |

CALCULATED CJC
CHECKED PJF

# CROSS SECTIONS - ARLINGTON ROAD RAMP D STA. 75+00.00 TO STA. 76+00.00

SUM-77/277/224
VARIOUS

790
1288

D:\2017\2017258\ProjectData\SUM\06002\Design\Roadway\Sheets\106002_XSI09.dgn Sheet 1/13/2021 6:21:02 PM pfry

| SEEDING END WIDTH | SEEDING SQ. YDS. | END AREA CUT | END AREA FILL | VOLUME CUT | VOLUME FILL |
|---|---|---|---|---|---|
| | 228 | | | 69 | 6 |
| 39 | | 42 | 3 | | |
| | 214 | | | 78 | 6 |
| 38 | | 42 | 3 | | |
| | 217 | | | 78 | 6 |
| 40 | | 42 | 3 | | |
| | 189 | | | 60 | 6 |
| 28 | | 23 | 3 | | |
| | 848 | | | 285 | 24 |

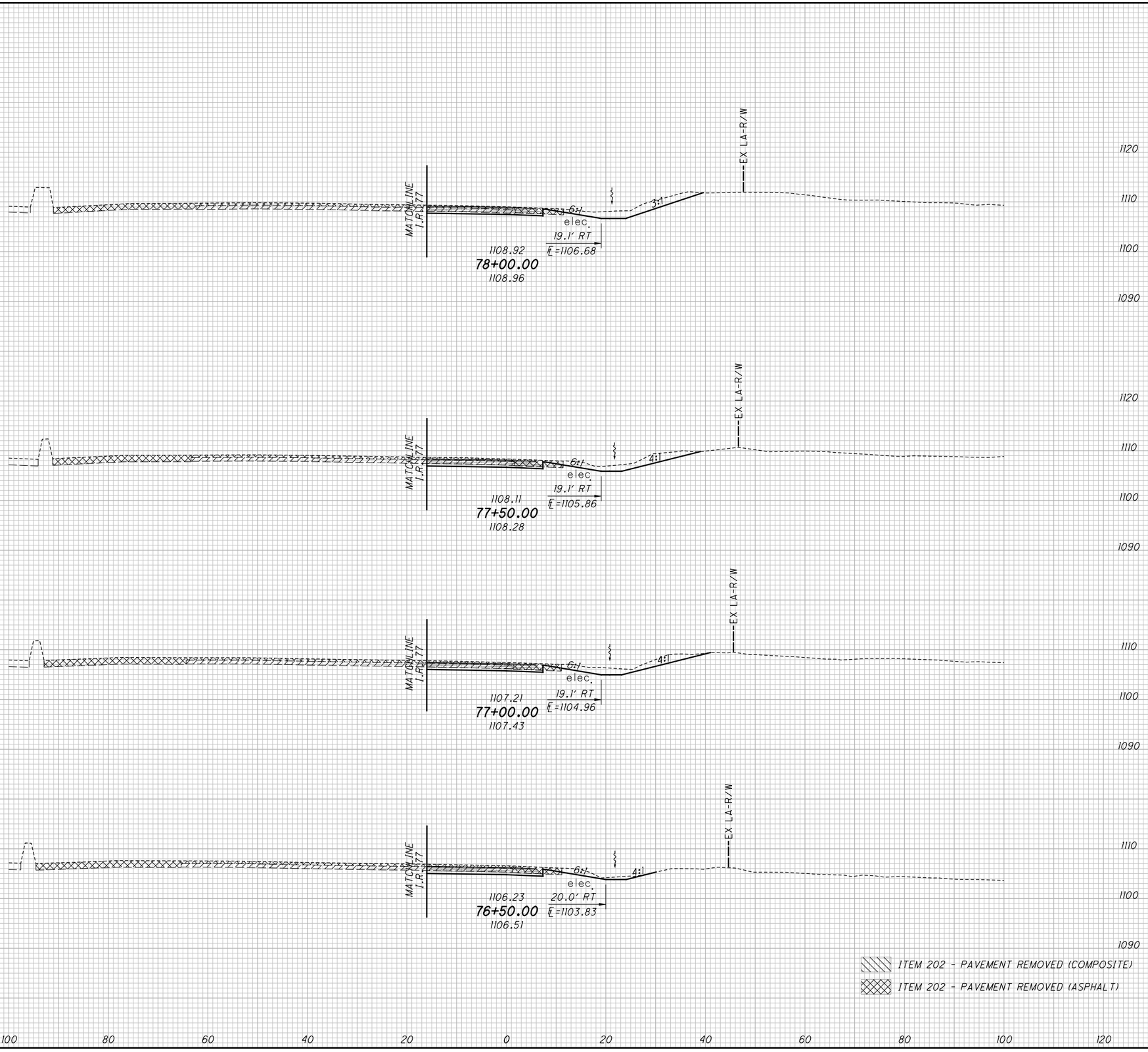


CALCULATED CJC
CHECKED PJF

# CROSS SECTIONS - ARLINGTON ROAD RAMP D
## STA. 76+50.00 TO STA. 78+00.00

SUM-77/277/224
VARIOUS

791
1288

0:\2017\2017258\ProjectData\SUM\06002\Design\Roadway\Sheets\06002_XS109.dgn Sheet 1/13/2021 6:21:04 PM pfry

| SEEDING END WIDTH | SEEDING SQ. YDS. |
|---|---|
| | 161 |
| | |
| 29 | |
| | |
| | 161 |
| | |
| | |
| 29 | |
| | |
| | 161 |
| | |
| | |
| 29 | |
| | |
| | 200 |
| | |
| | |
| 43 | |
| | |
| | 683 |

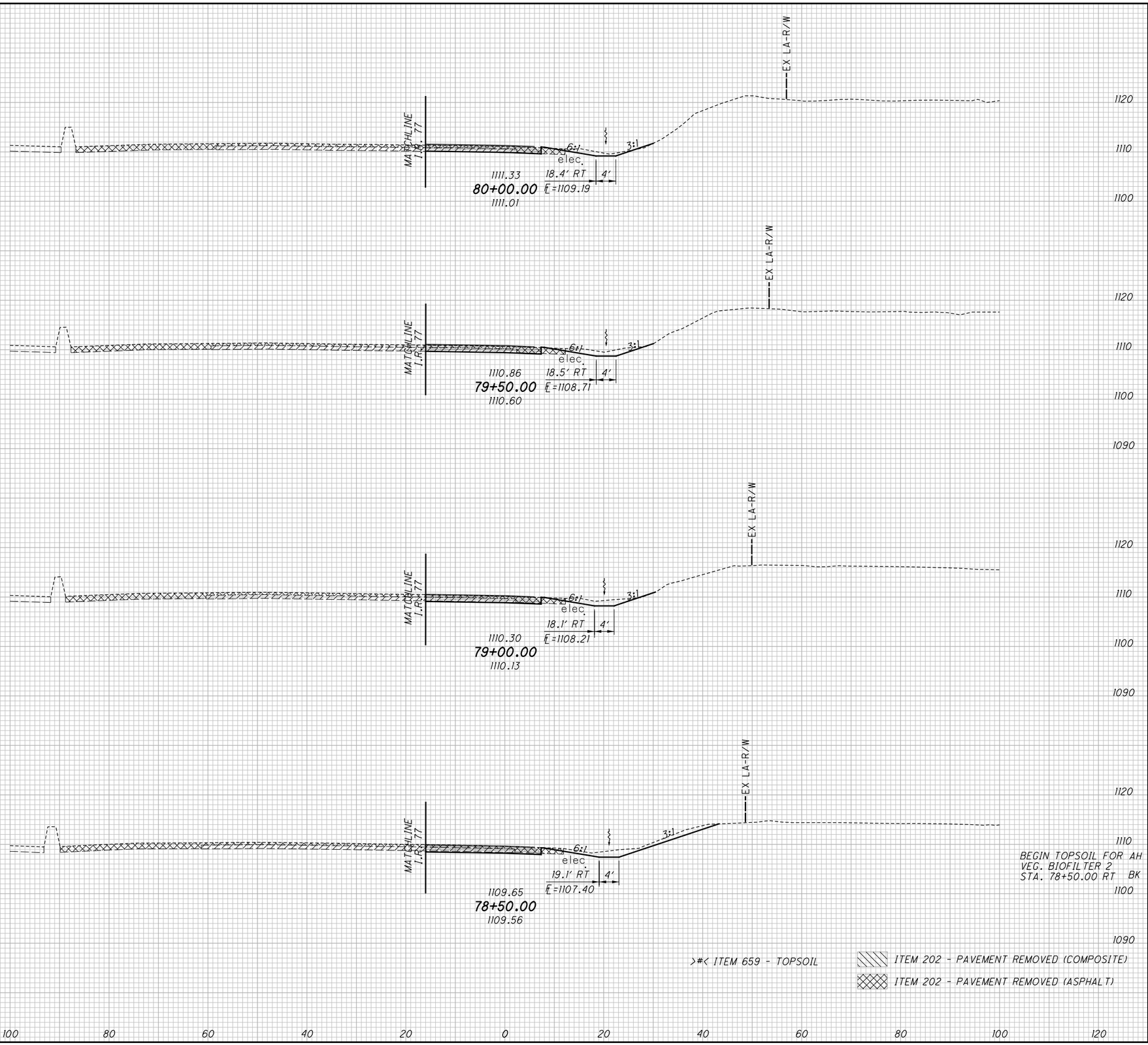


| END AREA CUT | END AREA FILL | VOLUME CUT | VOLUME FILL |
|---|---|---|---|
| | | | >7< |
| | | 24 | 8 |
| | >4< | | |
| 10 | 5 | | |
| | | | >7< |
| | | 25 | 7 |
| | | | |
| | >4< | | |
| 17 | 3 | | |
| | | | >7< |
| | | 31 | 6 |
| | >4< | | |
| 17 | 3 | | |
| | | | >7< |
| | | 45 | 6 |
| | >4< | | |
| | >0< | | |
| 32 | 3 | | |
| | | | >28< |
| | | 125 | 27 |

CALCULATED

CHECKED

**CROSS SECTIONS - ARLINGTON ROAD RAMP D**
**STA. 78+50.00 TO STA. 80+00.00**

**SUM-77 / 277 / 224**
**VARIOUS**

792
1288

0:\2017\2017258\ProjectData\SUM\106002\Design\Roadway\Sheets\106002_XS109.dgn Sheet 1/13/2021 6:21:07 PM pfry

| SEEDING END WIDTH | SEEDING SQ. YDS. | END AREA CUT | END AREA FILL | VOLUME CUT | VOLUME FILL |
|---|---|---|---|---|---|
| | 156 | | | | >7< |
| | | | | 23 | 6 |
| | | | | | |
| | | | | | |
| 27 | | | >4< | | |
| | | 12 | 4 | | |
| | | | | | |
| | | | | | |
| | 156 | | | | >7< |
| | | | | 22 | 7 |
| | | | | | |
| | | | | | |
| 29 | | | >4< | | |
| | | 12 | 4 | | |
| | | | | | |
| | | | | | |
| | 161 | | | | >7< |
| | | | | 26 | 7 |
| | | | | | |
| | | | | | |
| 29 | | | >4< | | |
| | | 16 | 4 | | |
| | | | | | |
| | | | | | |
| | 473 | | | 71 | >21< 20 |

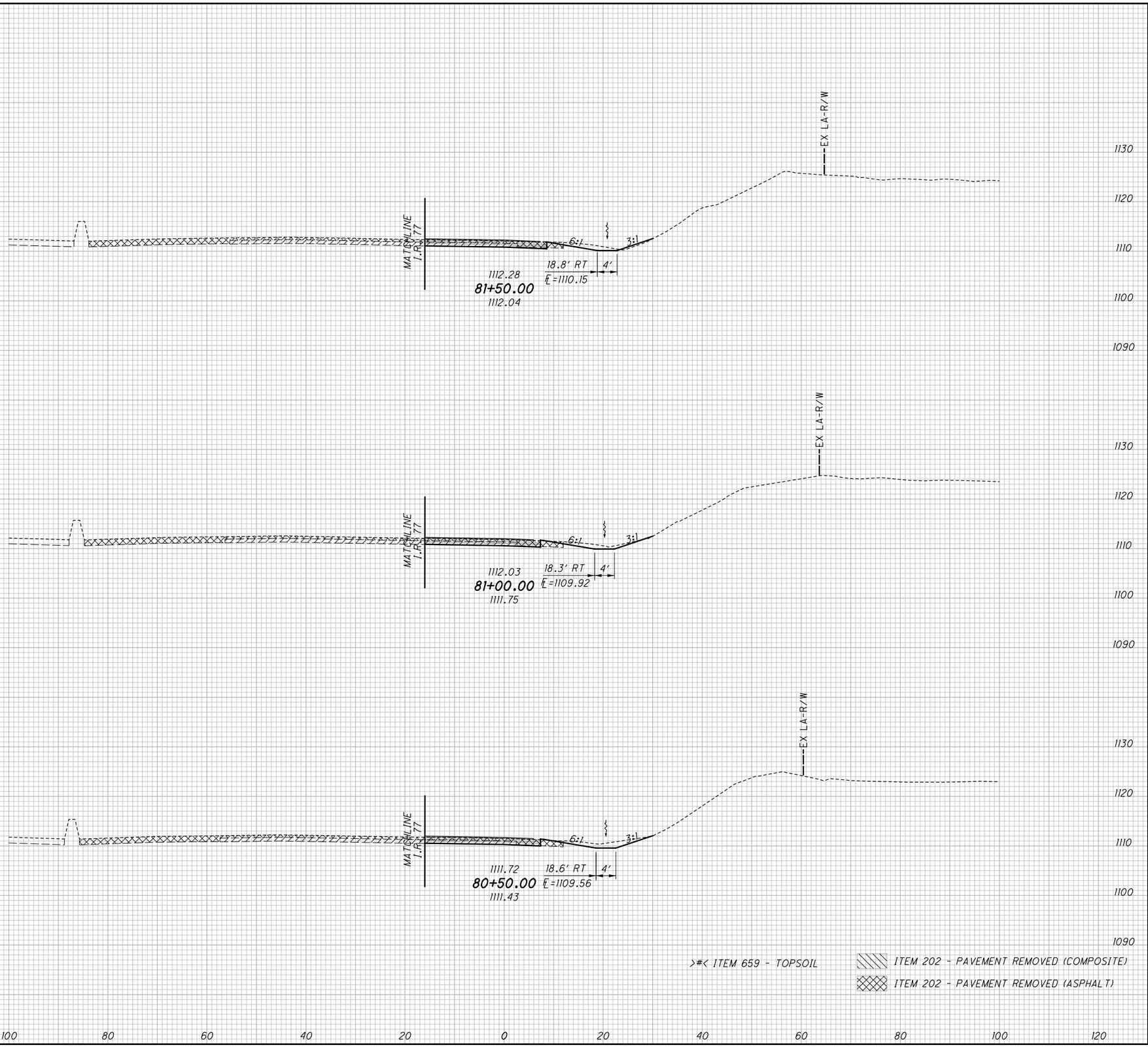


CALCULATED

CHECKED

# CROSS SECTIONS - ARLINGTON ROAD RAMP D
## STA. 80+50.00 TO STA. 81+50.00

SUM-77 / 277 / 224
VARIOUS

793
1288

O:\2017\2017258\ProjectData\SUM\106002\Design\Roadway\Sheets\106002_XS109.dgn Sheet 1/13/2021 6:11:09 PM pfry

| SEEDING END WIDTH | SEEDING SQ. YDS. | END AREA CUT | END AREA FILL | VOLUME CUT | VOLUME FILL |
|---|---|---|---|---|---|
| | 186 | | | 31 | >7< 8 |
| 32 | | 18 | >4< 4 | | |
| | 167 | | | 33 | >7< 5 |
| 28 | | 18 | >4< 1 | | |
| | 158 | | | 29 | >7< 3 |
| 29 | | 13 | >4< 2 | | |
| | 511 | | | 93 | >21< 16 |

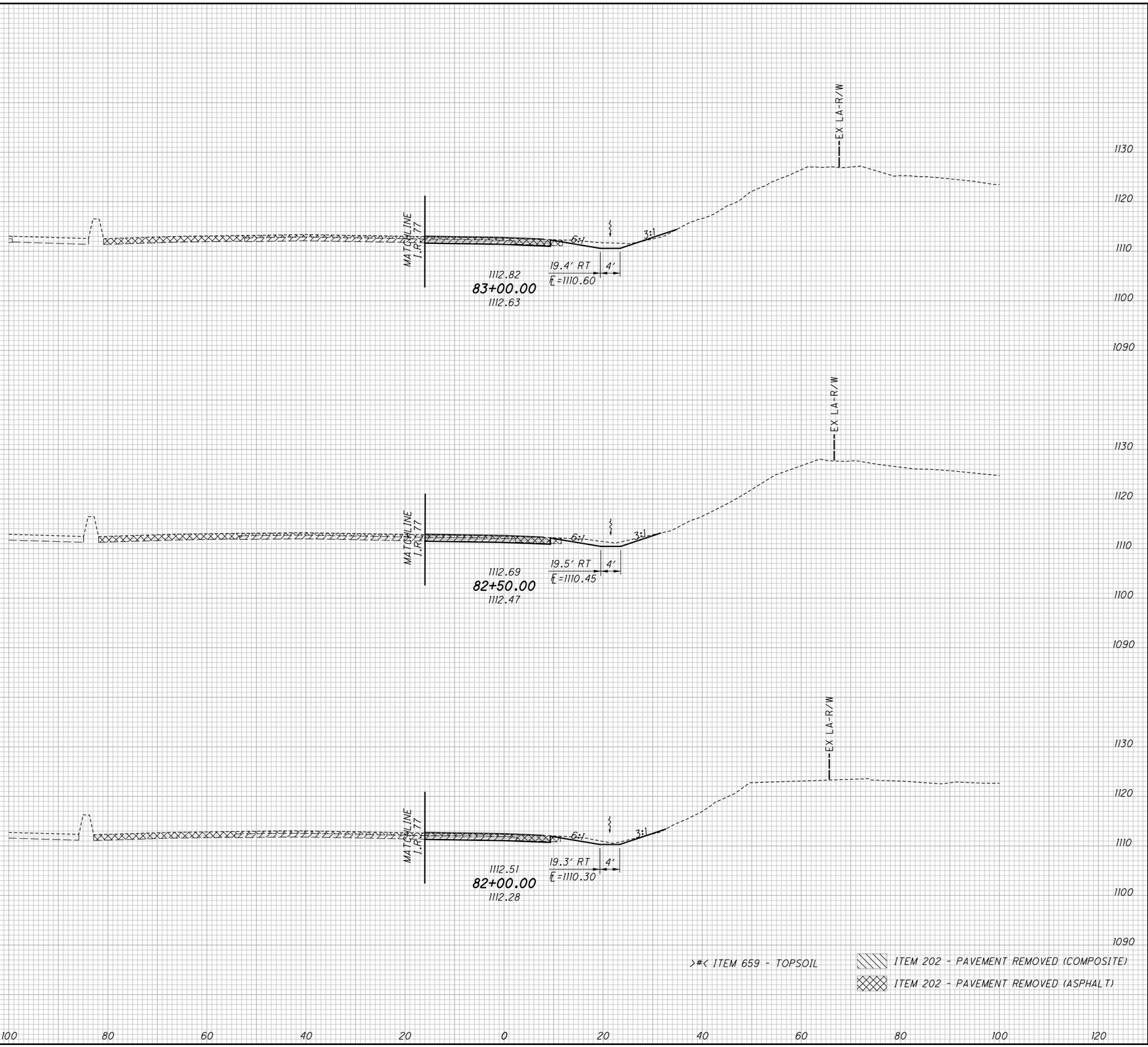


>#< ITEM 659 - TOPSOIL

ITEM 202 - PAVEMENT REMOVED (COMPOSITE)

ITEM 202 - PAVEMENT REMOVED (ASPHALT)

CALCULATED

CHECKED

CROSS SECTIONS - ARLINGTON ROAD RAMP D
STA. 82+00.00 TO STA. 83+00.00

SUM-77 / 277 / 224
VARIOUS

794
1288

O:\2017\2017258\ProjectData\SUM\106002\Design\Roadway\Sheets\106002_XS109.dgn Sheet 1/13/2021 6:21:41 PM pfry

| SEEDING END WIDTH | SEEDING SQ. YDS. |
|---|---|
| | 158 |
| 30 | |
| | 161 |
| | |
| 28 | |
| | 175 |
| 35 | |
| | 494 |

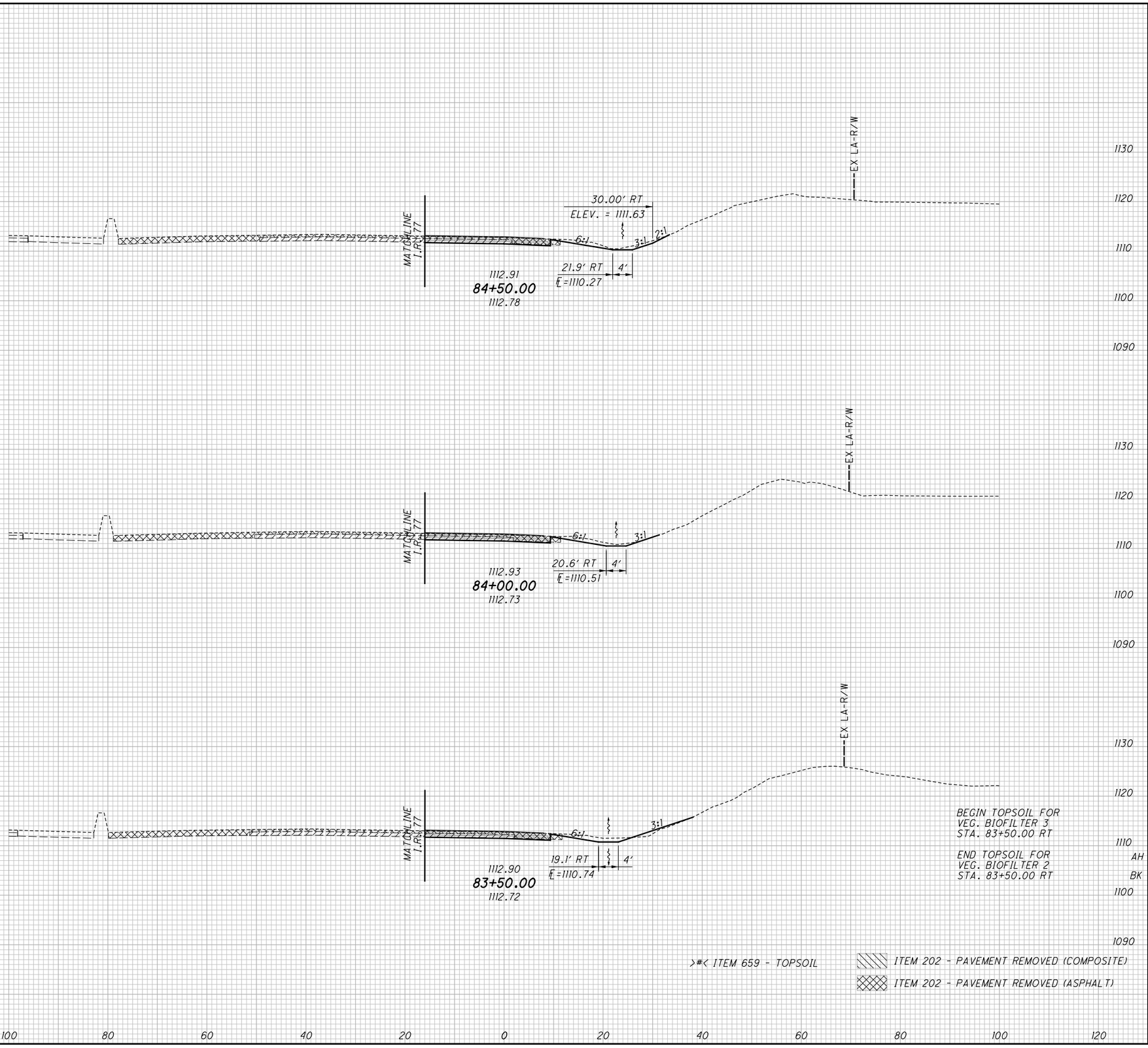


| END AREA CUT | END AREA FILL | VOLUME CUT | VOLUME FILL |
|---|---|---|---|
| | | | >9< |
| | | 36 | 2 |
| | >5< | | |
| 18 | 1 | | |
| | | | >8< |
| | | 30 | 2 |
| | >4< | | |
| 14 | 1 | | |
| | | 27 | >7< |
| | | | 6 |
| AH | >4< | | |
| BK | >4< | | |
| 15 | 5 | | |
| | | | >24< |
| | | 93 | 10 |

CALCULATED

CHECKED

# CROSS SECTIONS - ARLINGTON ROAD RAMP D
## STA. 83+50.00 TO STA. 84+50.00

SUM-77/277/224
VARIOUS

795
1288

D:\2017\2017258\ProjectData\SUM\06002\Design\Roadway\Sheets\U06002_XS109.dgn Sheet 1/13/2021 6:21:13 PM pfry

| SEEDING END WIDTH | SEEDING SQ. YDS. | END AREA CUT | END AREA FILL | VOLUME CUT | VOLUME FILL |
|---|---|---|---|---|---|
| | 161 | | | 35 | >9< 6 |
| 26 | | 19 | >5< 1 | | |
| | 156 | | | 37 | >9< 2 |
| 30 | | 21 | >5< 1 | | |
| | 158 | | | 39 | >9< 2 |
| 27 | | 21 | >5< 1 | | |
| | 475 | | | 111 | >27< 10 |

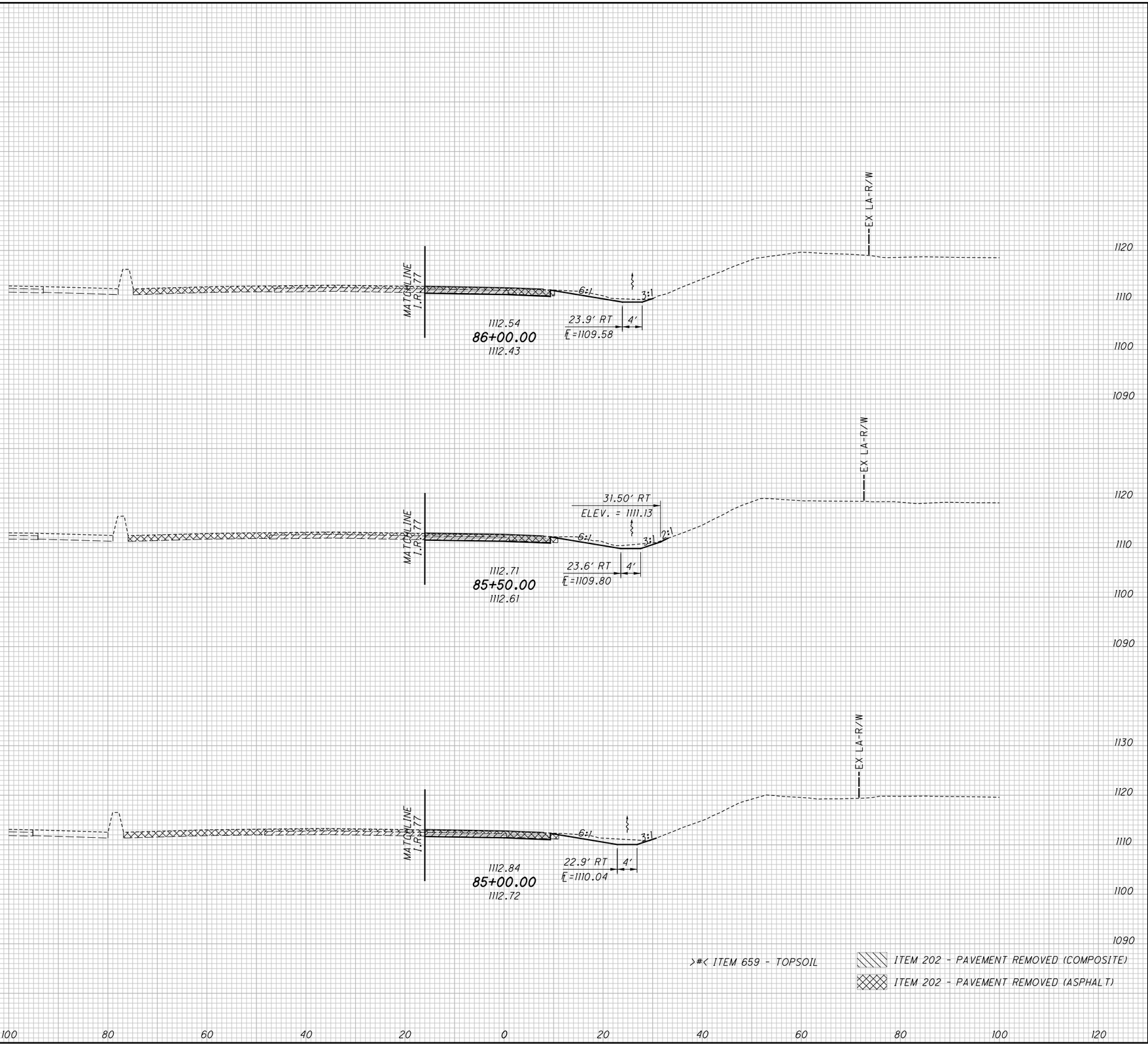


>#< ITEM 659 - TOPSOIL

ITEM 202 - PAVEMENT REMOVED (COMPOSITE)

ITEM 202 - PAVEMENT REMOVED (ASPHALT)

CALCULATED

CHECKED

# CROSS SECTIONS - ARLINGTON ROAD RAMP D
## STA. 85+00.00 TO STA. 86+00.00

SUM-77/277/224
VARIOUS

796
1288

D:\2017\2017258\ProjectData\SUM\06002\Design\Roadway\Sheets\I06002_XSI09.dgn Sheet1 1/13/2021 6:21:14 PM pfry

| SEEDING END WIDTH | SEEDING SQ. YDS. |
|---|---|
| | 158 |
| 31 | |
| | 175 |
| | 178 |
| 32 | |
| | 511 |

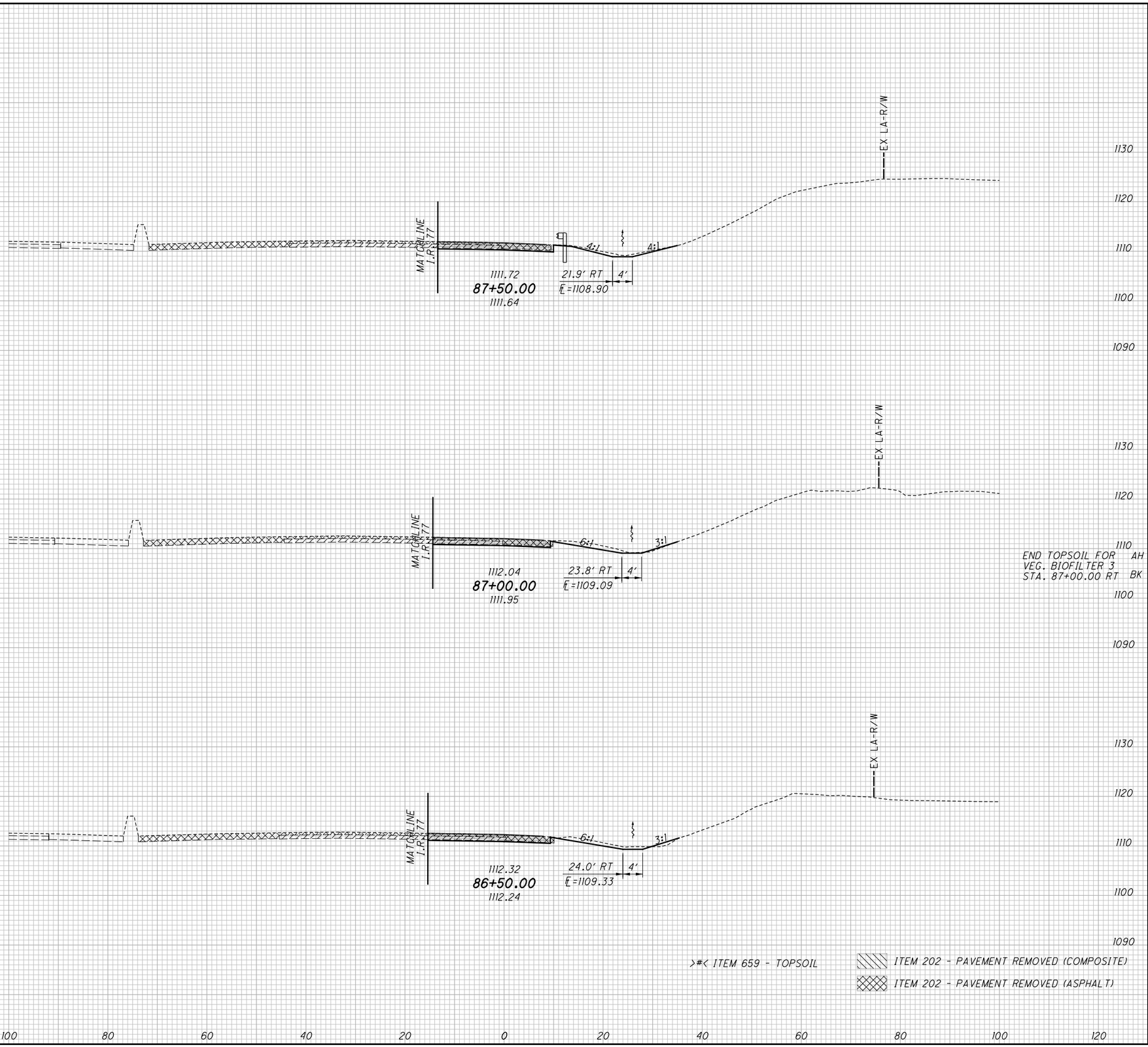


| END AREA CUT | END AREA FILL | VOLUME CUT | VOLUME FILL |
|---|---|---|---|
| | | 21 | 0 |
| 13 | 0 | | |
| | | 31 | 1 |
| 20 | >0< | | |
| | >5< | | |
| | 1 | | |
| | | 36 | >9< |
| | | | 6 |
| 19 | >5< | | |
| | 5 | | |
| | | 88 | >9< |
| | | | 7 |

CALCULATED

CHECKED

# CROSS SECTIONS - ARLINGTON ROAD RAMP D
## STA. 86+50.00 TO STA. 87+50.00

SUM-77 / 277 / 224
VARIOUS

797
1288

O:\2017\2017258\ProjectData\SUM\06002\Design\Roadway\Sheets\06002_XS09.dgn Sheet 1/13/2021 6:21:16 PM pfry

| SEEDING | |
|---|---|
| END WIDTH | SQ. YDS. |
| END SEEDING STA. 88+18.25 | 26 |
| | 53 |
| | 26 |
| | 53 |

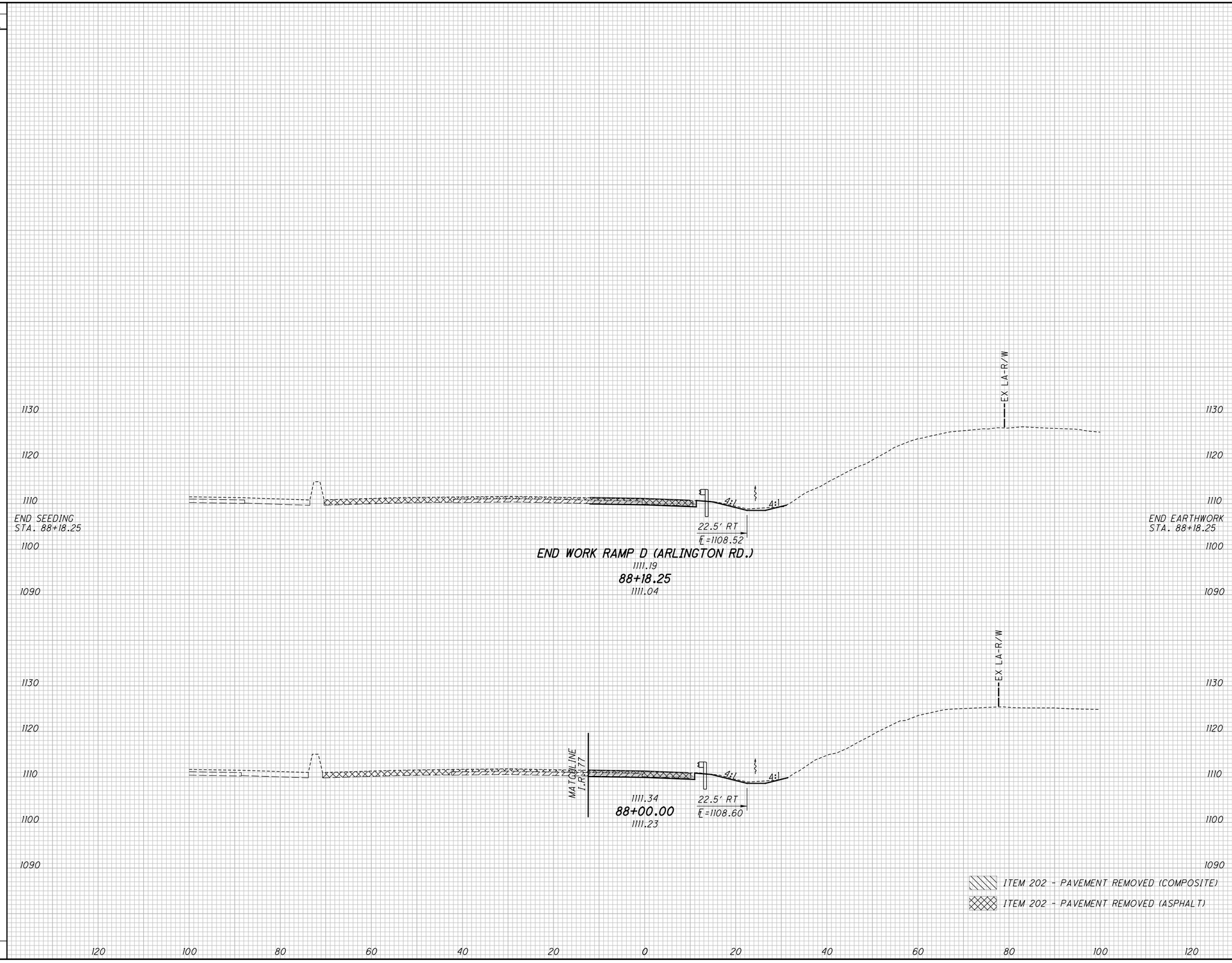


| END AREA | | VOLUME | |
|---|---|---|---|
| CUT | FILL | CUT | FILL |
| | | | |
| 8 | 0 | | |
| | | 6 | 0 |
| 10 | 0 | | |
| | | 6 | 0 |

CALCULATED CJC
CHECKED PJF

# CROSS SECTIONS - ARLINGTON ROAD RAMP D STA. 88+00.00 TO STA. 88+18.25

SUM-77 / 277 / 224
VARIOUS

798
1288

O:\2017\2017258\ProjectData\SUM\106002\Design\Roadway\Sheets\106002_XS109.dgn Sheet 1/13/2021 6:21:18 PM pfry

| SEEDING END WIDTH | SEEDING SQ. YDS. | END AREA CUT | END AREA FILL | VOLUME CUT | VOLUME FILL |
|---|---|---|---|---|---|
| | 103 | | | 60 | 1 |
| 24 | | 29 | 1 | | |
| | 175 | | | 45 | 17 |
| 39 | | 20 | 17 | | |
| | 108 | | | 19 | 16 |
| 0 | | 0 | 0 | | |
| | 386 | | | 124 | 34 |

SJ-1
STA. 24+75.22, 6.19 LT
SAN. MH ADJUSTED TO GRADE, AS PROP. RIM ELEV 1005.09
EX. SAN MH, GRATE ELEV 1005.12
EX. 24" RCP W 991.41
EX. 24" RCP E 991.41

EX-1
STA. 24+64.02, 22.75' RT
EX. CB, GRATE ELEV 1003.59
EX. 12" CMP W 1000.59
EX. 12" CMP N 1000.44
6" UD (W) 1001.59

BEGIN FULL DEPTH PAVEMENT
MEET EXISTING
BUTT JOINT

BEGIN SEEDING
STA. 24+00.00

BEGIN EARTHWORK
STA. 24+00.00

EXISTING PAVEMENT REMOVED (COMPOSITE)
EXISTING PAVEMENT REMOVED (ASPHALT)

CALCULATED TMT
CHECKED PJF

# CROSS SECTIONS - WARNER ROAD
## STA. 24+00.00 TO STA. 25+00.00

SUM-77/277/224
VARIOUS

799
1288

0:\2017\2017258\ProjectData\SUM\06002\Design\Roadway\Sheets\06002_XS10.dgn Design 1/13/2021 2:49 PM pfry

| SEEDING END WIDTH | SEEDING SQ. YDS. | END AREA CUT | END AREA FILL | VOLUME CUT | VOLUME FILL |
|---|---|---|---|---|---|
| | 9 | | | 13 | 0 |
| 11 | | 46 | 0 | | |
| | 67 | | | 76 | 0 |
| 13 | | 36 | 0 | | |
| | 76 | | | 89 | 0 |

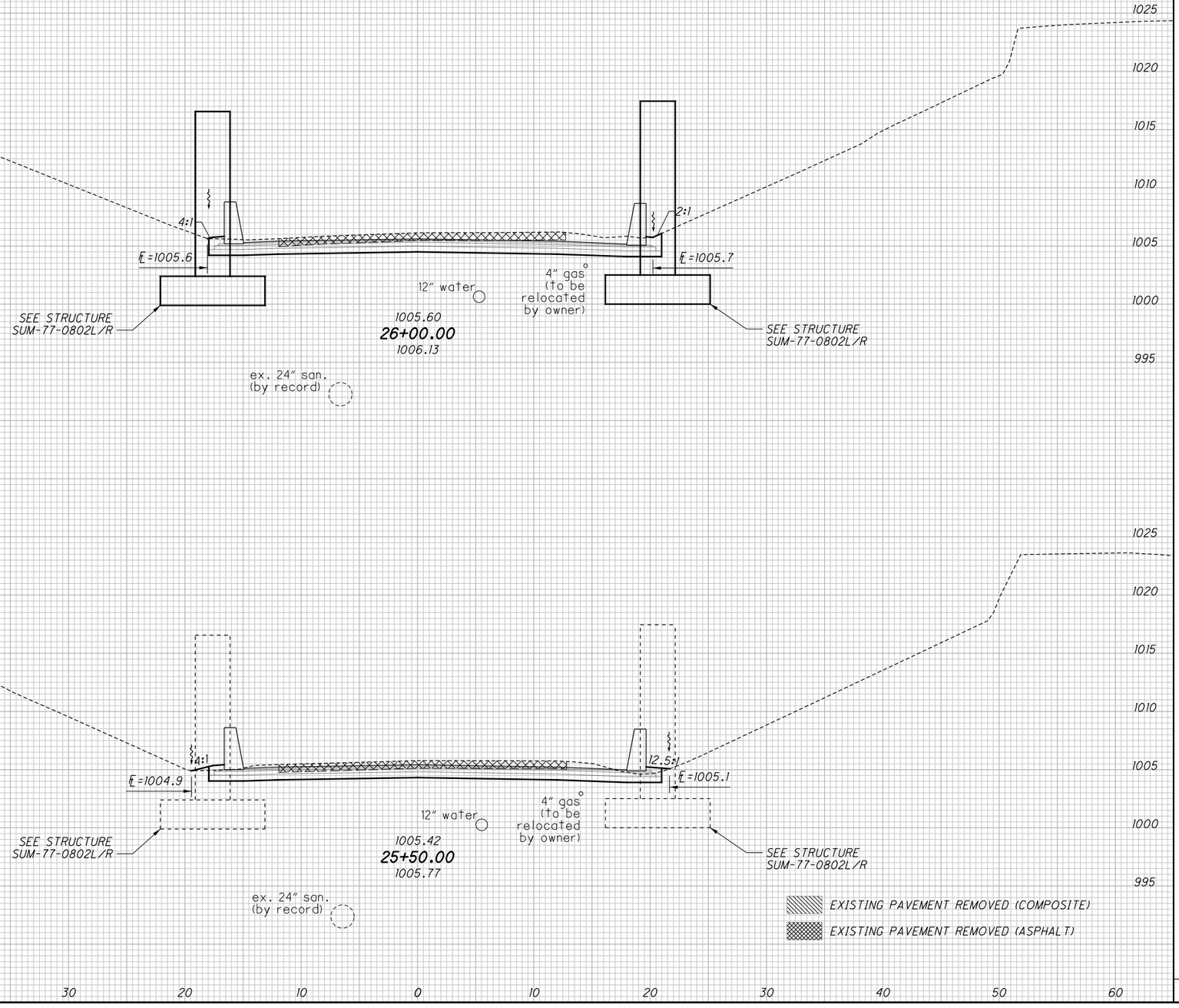


CALCULATED TMT
CHECKED PJF

# CROSS SECTIONS - WARNER ROAD
## STA. 25+50.00 TO STA. 26+00.00

SUM-77/277/224
VARIOUS

800
1288

O:\2017\2017258\ProjectData\SUM\06002\Design\Roadway\Sheets\106002_XS110.dgn Design 1/13/2021 6:22:02 PM pfry

| SEEDING END WIDTH | SEEDING SQ. YDS. | END AREA CUT | END AREA FILL | VOLUME CUT | VOLUME FILL |
|---|---|---|---|---|---|
| | 75 | | | 83 | 1 |
| 12 | | 52 | 0 | | |
| | 54 | | | 79 | 0 |
| 11 | | 49 | 0 | | |
| | 129 | | | 162 | 1 |

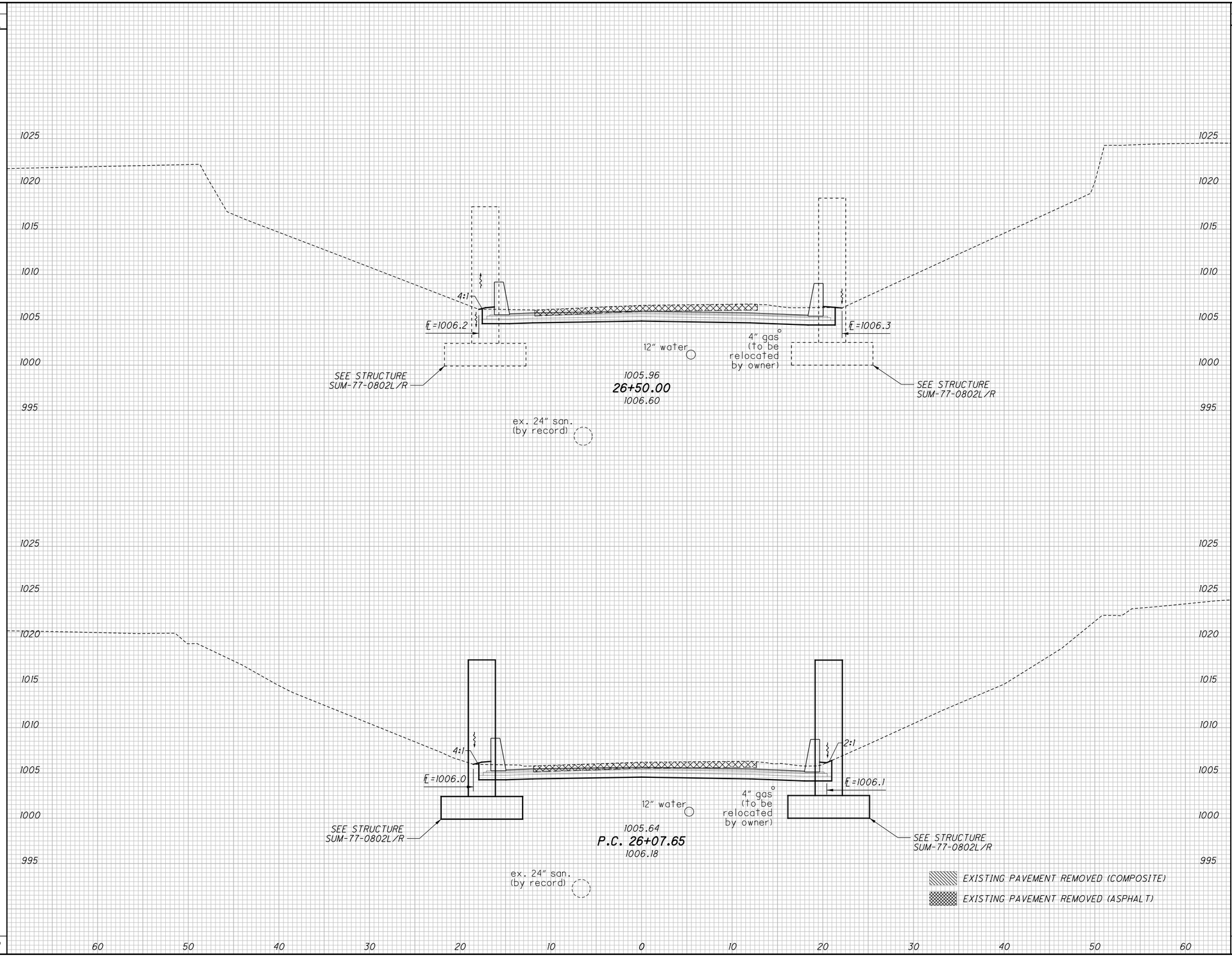


CALCULATED TMT
CHECKED PJF

# CROSS SECTIONS - WARNER ROAD
## STA. 26+50.00 TO STA. 26+07.65

SUM-77/277/224
VARIOUS

801
1288

O:\2017\2017258\ProjectData\SUM\06002\Design\Roadway\Sheets\X06002_XS110.dgn Design 1/13/2021 6:22:03 PM pfry

| SEEDING END WIDTH | SEEDING SQ. YDS. | END AREA CUT | END AREA FILL | VOLUME CUT | VOLUME FILL |
|---|---|---|---|---|---|
| | 80 | | | 17 | 17 |
| | 35 | 26 | 21 | | |
| | 139 | | | 59 | 20 |
| | 15 | 38 | 1 | | |
| | 219 | | | 76 | 37 |

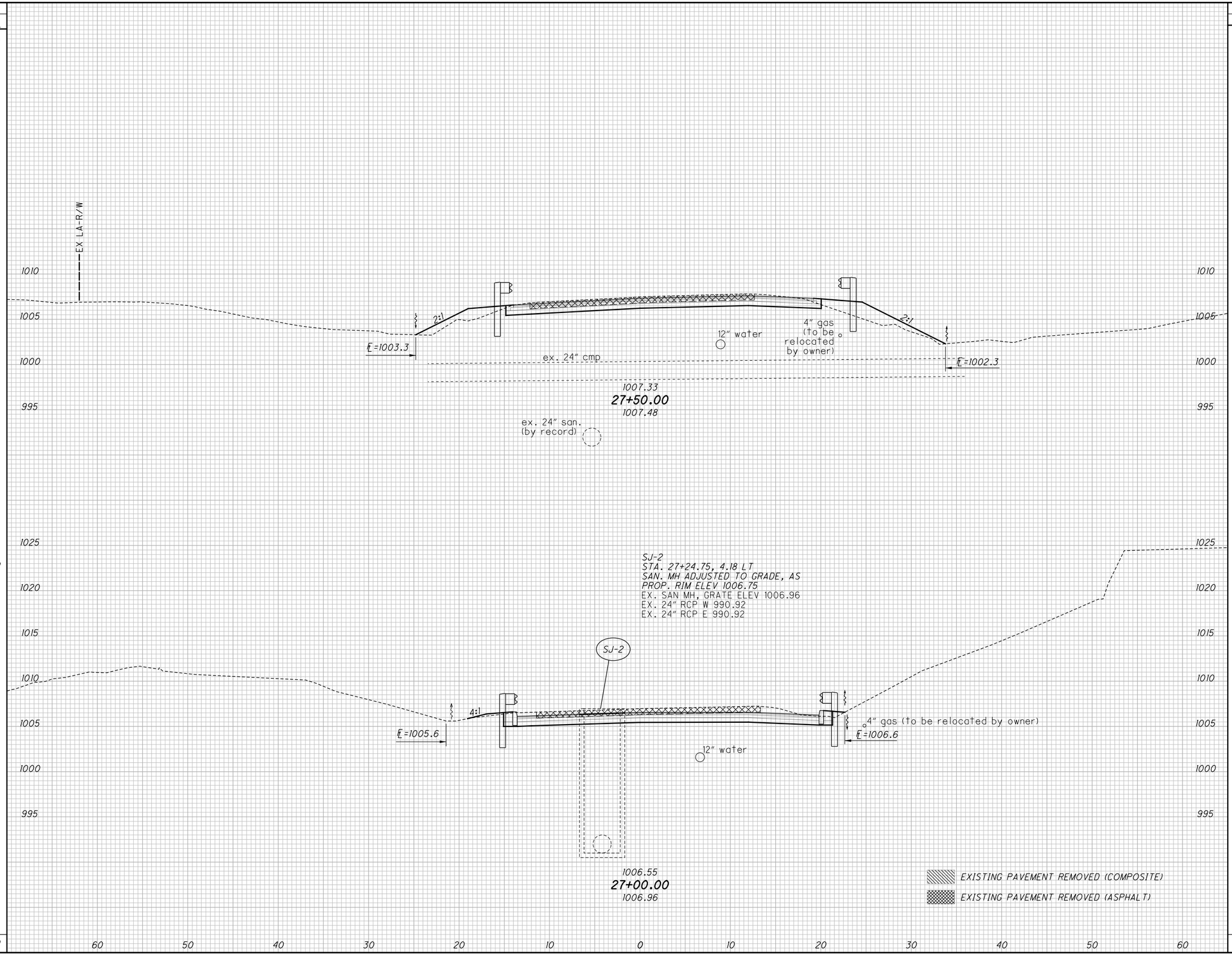


CALCULATED TMT
CHECKED PJF

# CROSS SECTIONS - WARNER ROAD
## STA. 27+00.00 TO STA. 27+50.00

SUM-77 / 277 / 224
VARIOUS

802
1288

O:\2017\2017258\ProjectData\SUM\106002\Design\Roadway\Sheets\106002_XS110.dgn Design 1/13/2021 6:22:04 PM pfry

| SEEDING END WIDTH | SEEDING SQ. YDS. | END AREA CUT | END AREA FILL | VOLUME CUT | VOLUME FILL |
|---|---|---|---|---|---|
| 0 | | 0 | 0 | | |
| | 97 | | | 1 | 8 |
| 35 | | 1 | 9 | | |
| | 120 | | | 12 | 19 |
| 37 | | 20 | 25 | | |
| | 217 | | | 13 | 27 |

CALCULATED TMT
CHECKED PJF

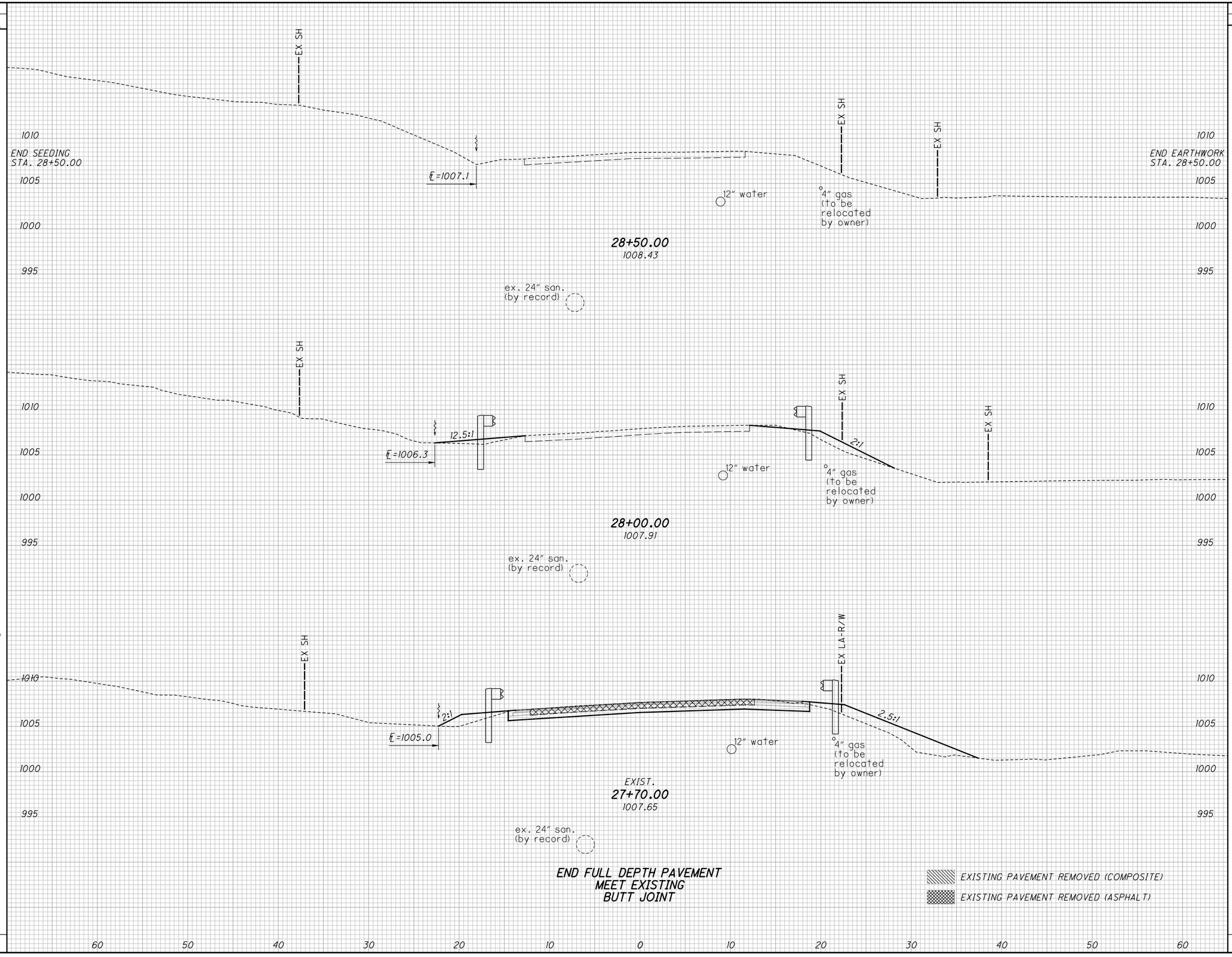


# CROSS SECTIONS - WARNER ROAD
## STA. 27+70.00 TO STA. 28+50.00

SUM-77 / 277 / 224
VARIOUS

803
1288

O:\2017\2017258\ProjectData\SUM\106002\Design\Roadway\Sheets\106002_XS110.dgn Design 1/13/2021 6:22:06 PM pfry

# CURVE 1 SUPERELEVATION TABLE

P.I. STA. 360+81.72  Dc = 1° 28′ 08″

| MEDIAN - CENTERLINE R/W & CONST. I.R. 77 | BASELINE CONTROL | | N.B. INSIDE LANES | | | | | N.B. OUTSIDE LANES | | | | | REMARKS |
|---|---|---|---|---|---|---|---|---|---|---|---|---|---|
| | STATION | *PROFILE GRADE - VARIES | WIDTH | CROSS SLOPE | ELEVATION CORRECTION | TRANSITION RATE | LANE ELEVATION | WIDTH | CROSS SLOPE | ELEVATION CORRECTION | TRANSITION RATE | EDGE ELEVATION | |
| | 371+50.00 | 1097.55 | 24.00 | -0.0535 | -1.28 | 499 | 1096.27 | 24.68 | -0.0535 | -1.32 | 250 | 1094.95 | EXIST. |
| | 371+68.00 | 1098.00 | 24.00 | -0.0520 | -1.25 | | 1096.75 | 24.65 | -0.0520 | -1.28 | | 1095.47 | PROP. F.S. |
| | 371+75.00 | 1098.17 | 24.00 | -0.0520 | -1.25 | | 1096.92 | 24.63 | -0.0520 | -1.28 | | 1095.64 | |
| | 372+00.00 | 1098.78 | 24.00 | -0.0520 | -1.25 | | 1097.53 | 24.58 | -0.0520 | -1.28 | | 1096.25 | |
| | 372+25.00 | 1099.38 | 24.00 | -0.0520 | -1.25 | | 1098.13 | 24.53 | -0.0520 | -1.28 | | 1096.86 | |
| | 372+50.00 | 1099.97 | 24.00 | -0.0520 | -1.25 | | 1098.72 | 24.47 | -0.0520 | -1.27 | | 1097.45 | |
| | 372+70.12 | 1100.43 | 24.00 | -0.0520 | -1.25 | | 1099.18 | 24.43 | -0.0520 | -1.27 | | 1097.91 | F.S. |
| | 372+75.00 | 1100.55 | 24.00 | -0.0516 | -1.24 | | 1099.31 | 24.42 | -0.0516 | -1.26 | | 1098.05 | |
| | 373+00.00 | 1101.11 | 24.00 | -0.0495 | -1.19 | | 1099.92 | 24.37 | -0.0495 | -1.21 | | 1098.72 | |
| | 373+25.00 | 1101.66 | 24.00 | -0.0474 | -1.14 | | 1100.52 | 24.32 | -0.0474 | -1.15 | | 1099.37 | |
| | 373+50.00 | 1102.19 | 24.00 | -0.0453 | -1.09 | | 1101.10 | 24.27 | -0.0453 | -1.10 | | 1100.00 | |
| | 373+75.00 | 1102.72 | 24.00 | -0.0433 | -1.04 | | 1101.68 | 24.21 | -0.0433 | -1.05 | | 1100.63 | |
| | 374+00.00 | 1103.23 | 24.00 | -0.0412 | -0.99 | | 1102.24 | 24.16 | -0.0412 | -1.00 | | 1101.25 | |
| | 374+25.00 | 1103.72 | 24.00 | -0.0391 | -0.94 | | 1102.78 | 24.11 | -0.0391 | -0.94 | | 1101.84 | |
| | 374+50.00 | 1104.21 | 24.00 | -0.0370 | -0.89 | | 1103.32 | 24.06 | -0.0370 | -0.89 | | 1102.43 | |
| | 374+75.00 | 1104.68 | 24.00 | -0.0349 | -0.84 | | 1103.84 | 24.01 | -0.0349 | -0.84 | | 1103.00 | |
| | 374+77.72 | 1104.73 | 24.00 | -0.0347 | -0.83 | 500 | 1103.90 | 24.00 | -0.0347 | -0.83 | 250 | 1103.06 | P.T. |
| | 375+00.00 | 1105.14 | 24.00 | -0.0328 | -0.79 | | 1104.35 | 24.00 | -0.0328 | -0.79 | | 1103.57 | |
| | 375+25.00 | 1105.59 | 24.00 | -0.0308 | -0.74 | | 1104.85 | 24.00 | -0.0308 | -0.74 | | 1104.11 | |
| | 375+50.00 | 1106.02 | 24.00 | -0.0287 | -0.69 | | 1105.33 | 24.00 | -0.0287 | -0.69 | | 1104.64 | |
| | 375+75.00 | 1106.45 | 24.00 | -0.0266 | -0.64 | | 1105.81 | 24.00 | -0.0266 | -0.64 | | 1105.17 | |
| | 376+00.00 | 1106.86 | 24.00 | -0.0245 | -0.59 | | 1106.27 | 24.00 | -0.0245 | -0.59 | | 1105.68 | |
| | 376+25.00 | 1107.25 | 24.00 | -0.0224 | -0.54 | | 1106.71 | 24.00 | -0.0224 | -0.54 | | 1106.17 | |
| | 376+50.00 | 1107.64 | 24.00 | -0.0203 | -0.49 | | 1107.15 | 24.00 | -0.0203 | -0.49 | | 1106.67 | |
| | 376+75.00 | 1108.01 | 24.00 | -0.0183 | -0.44 | | 1107.57 | 24.00 | -0.0183 | -0.44 | | 1107.13 | |
| | 377+00.00 | 1108.37 | 24.00 | -0.0162 | -0.39 | | 1107.98 | 24.00 | -0.0162 | -0.39 | | 1107.59 | |
| | 377+02.12 | 1108.40 | 24.00 | -0.0160 | -0.38 | | 1108.02 | 24.00 | -0.0160 | -0.38 | | 1107.63 | R.C. |
| | 377+25.00 | 1108.71 | 24.00 | -0.0122 | -0.29 | | 1108.42 | 24.00 | -0.0160 | -0.38 | | 1108.03 | |
| | 377+50.00 | 1109.05 | 24.00 | -0.0080 | -0.19 | | 1108.86 | 24.00 | -0.0160 | -0.38 | | 1108.47 | |
| | 377+75.00 | 1109.37 | 24.00 | -0.0039 | -0.09 | | 1109.28 | 24.00 | -0.0160 | -0.38 | | 1108.89 | |
| | 377+98.12 | 1109.65 | 24.00 | 0.0000 | 0.00 | | 1109.65 | 24.00 | -0.0160 | -0.38 | | 1109.27 | H.F. |
| | 378+00.00 | 1109.67 | 24.00 | 0.0003 | 0.01 | 250 | 1109.68 | 24.00 | -0.0160 | -0.38 | | 1109.29 | |
| | 378+25.00 | 1109.97 | 24.00 | 0.0045 | 0.11 | | 1110.08 | 24.00 | -0.0160 | -0.38 | | 1109.69 | |
| | 378+50.00 | 1110.25 | 24.00 | 0.0086 | 0.21 | | 1110.46 | 24.00 | -0.0160 | -0.38 | | 1110.07 | |
| | 378+75.00 | 1110.52 | 24.00 | 0.0128 | 0.31 | | 1110.83 | 24.00 | -0.0160 | -0.38 | | 1110.44 | |
| | 378+94.12 | 1110.72 | 24.00 | 0.0160 | 0.38 | | 1111.10 | 24.00 | -0.0160 | -0.38 | | 1110.72 | N.C. |

*NOTE: PROFILE GRADE VARIES FROM 23.31′ RT. AT STA. 371+50.00 TO 12′ RT. AT STA. 380+50.00

CALCULATED LRK
CHECKED PJF

SUPERELEVATION TABLE
C/L I.R. 77

SUM-77/277/244
VARIOUS

804
1288

O:\2017\2017258\ProjectData\SUM\106002\Design\Roadway\Sheets\106002_GE001.dgn Sheet 1/11/2021 1:10:42 PM pfry

# CURVE 3 SUPERELEVATION TABLE

P.I. STA. 438+34.18  Dc = 0° 24′ 10″

CALCULATED LRK  CHECKED PJF

| | | | MEDIAN - CENTERLINE R/W & CONST. I.R. 77 | N.B. INSIDE SHOULDERS | | | | | BASELINE CONTROL | | N.B. INSIDE LANES | | | | | N.B. OUTSIDE LANES | | | | | N.B. OUTSIDE SHOULDERS | | | | | REMARKS |
|---|---|---|---|---|---|---|---|---|---|---|---|---|---|---|---|---|---|---|---|---|---|---|---|---|---|
| | | | | EDGE ELEVATION | TRANSITION RATE | ELEVATION CORRECTION | CROSS SLOPE | WIDTH | STATION | PROFILE GRADE | WIDTH | CROSS SLOPE | ELEVATION CORRECTION | TRANSITION RATE | LANE ELEVATION | WIDTH | CROSS SLOPE | ELEVATION CORRECTION | TRANSITION RATE | EDGE ELEVATION | WIDTH | CROSS SLOPE | ELEVATION CORRECTION | TRANSITION RATE | EDGE ELEVATION | |
| | | | | 1025.93 | | -0.40 | -0.0400 | 10.00 | 424+46.00 | 1026.33 | 24.00 | 0.0160 | 0.38 | | 1026.71 | 24.00 | -0.0160 | -0.38 | | 1026.33 | 14.20 | -0.0400 | -0.57 | | 1025.76 | |
| | | | | 1025.82 | | -0.40 | -0.0400 | 10.00 | 424+50.00 | 1026.22 | 24.00 | 0.0160 | 0.38 | | 1026.60 | 24.00 | -0.0160 | -0.38 | | 1026.22 | 15.00 | -0.0384 | -0.58 | | 1025.64 | |
| | | | | 1025.54 | | -0.40 | -0.0400 | 10.00 | 424+61.65 | 1025.94 | 24.00 | 0.0160 | 0.38 | | 1026.32 | 24.00 | -0.0160 | -0.38 | | 1025.94 | 17.33 | -0.0337 | -0.58 | | 1025.36 | |
| | | | | 1025.44 | | -0.40 | -0.0400 | 10.00 | 424+66.00 | 1025.84 | 24.00 | 0.0160 | 0.38 | | 1026.22 | 24.00 | -0.0160 | -0.38 | | 1025.84 | 17.33 | -0.0320 | -0.55 | 250 | 1025.29 | |
| | | | | 1025.26 | | -0.36 | -0.0364 | 10.00 | 424+75.00 | 1025.62 | 24.00 | 0.0160 | 0.38 | | 1026.00 | 24.00 | -0.0160 | -0.38 | | 1025.62 | 17.33 | -0.0284 | -0.49 | | 1025.13 | |
| | | | | 1024.75 | | -0.26 | -0.0264 | 10.00 | 425+00.00 | 1025.01 | 24.00 | 0.0160 | 0.38 | | 1025.39 | 24.00 | -0.0160 | -0.38 | | 1025.01 | 17.33 | -0.0184 | -0.32 | | 1024.69 | |
| | | | | 1024.63 | 250 | -0.24 | -0.0240 | 10.00 | 425+06.00 | 1024.87 | 24.00 | 0.0160 | 0.38 | | 1025.25 | 24.00 | -0.0160 | -0.38 | | 1024.87 | 17.33 | -0.0160 | -0.28 | | 1024.59 | |
| | | | | 1024.25 | | -0.16 | -0.0164 | 10.00 | 425+25.00 | 1024.41 | 24.00 | 0.0160 | 0.38 | | 1024.79 | 24.00 | -0.0160 | -0.38 | | 1024.41 | 17.33 | -0.0160 | -0.28 | | 1024.13 | |
| | | | | 1024.22 | | -0.16 | -0.0160 | 10.00 | 425+26.00 | 1024.38 | 24.00 | 0.0160 | 0.38 | | 1024.76 | 24.00 | -0.0160 | -0.38 | | 1024.38 | 17.33 | -0.0160 | -0.28 | | 1024.10 | |
| | | | | 1023.64 | | -0.16 | -0.0160 | 10.00 | 425+50.00 | 1023.80 | 24.00 | 0.0160 | 0.38 | | 1024.18 | 24.00 | -0.0160 | -0.38 | | 1023.80 | 17.33 | -0.0160 | -0.28 | | 1023.52 | |
| | | | | 1023.51 | | -0.16 | -0.0160 | 10.00 | 425+55.16 | 1023.67 | 24.00 | 0.0160 | 0.38 | | 1024.05 | 24.00 | -0.0160 | -0.38 | | 1023.67 | 17.33 | -0.0160 | -0.28 | | 1023.39 | END APPROACH SLAB |
| | | | | | | | | | | | | | | | | | | | | | | | | | | |
| | | | | BRIDGE SUM-77-0802R | | | | | | | | | | | | | | | | | | | | | | |
| | | | | 1021.16 | | -0.16 | -0.0160 | 10.00 | 426+60.73 | 1021.32 | 24.00 | 0.0160 | 0.38 | | 1021.70 | 24.00 | -0.0160 | -0.38 | | 1021.32 | 17.33 | -0.0160 | -0.28 | | 1021.04 | BEGIN APPROACH SLAB |
| | | | | 1021.08 | | -0.16 | -0.0160 | 10.00 | 426+65.00 | 1021.24 | 24.00 | 0.0160 | 0.38 | | 1021.62 | 24.00 | -0.0160 | -0.38 | | 1021.24 | 17.33 | -0.0160 | -0.28 | | 1020.96 | |
| | | | | 1021.01 | | -0.16 | -0.0160 | 10.00 | 426+68.00 | 1021.17 | 24.00 | 0.0160 | 0.38 | | 1021.55 | 24.00 | -0.0160 | -0.38 | | 1021.17 | 17.45 | -0.0160 | -0.28 | | 1020.89 | |
| | | | | 1020.99 | | -0.16 | -0.0160 | 10.00 | 426+69.25 | 1021.15 | 24.00 | 0.0160 | 0.38 | | 1021.53 | 24.00 | -0.0160 | -0.38 | | 1021.15 | 17.50 | -0.0165 | -0.29 | | 1020.86 | |
| | | | | 1020.87 | | -0.16 | -0.0160 | 10.00 | 426+75.00 | 1021.03 | 24.00 | 0.0160 | 0.38 | | 1021.41 | 24.00 | -0.0160 | -0.38 | | 1021.03 | 17.50 | -0.0188 | -0.33 | | 1020.70 | |
| | | | | 1020.66 | | -0.16 | -0.0160 | 10.00 | 426+86.00 | 1020.82 | 24.00 | 0.0160 | 0.38 | | 1021.20 | 24.00 | -0.0160 | -0.38 | | 1020.82 | 17.50 | -0.0232 | -0.41 | 250 | 1020.41 | |
| | | | | 1020.32 | | -0.22 | -0.0216 | 10.00 | 427+00.00 | 1020.54 | 24.00 | 0.0160 | 0.38 | | 1020.92 | 24.00 | -0.0160 | -0.38 | | 1020.54 | 17.50 | -0.0288 | -0.50 | | 1020.04 | |
| | | | | 1019.76 | 250 | -0.32 | -0.0316 | 10.00 | 427+25.00 | 1020.08 | 24.00 | 0.0160 | 0.38 | | 1020.46 | 24.00 | -0.0160 | -0.38 | | 1020.08 | 17.50 | -0.0388 | -0.68 | | 1019.40 | |
| | | | | 1019.69 | | -0.33 | -0.0328 | 10.00 | 427+28.00 | 1020.02 | 24.00 | 0.0160 | 0.38 | | 1020.40 | 24.00 | -0.0160 | -0.38 | | 1020.02 | 17.50 | -0.0400 | -0.70 | | 1019.32 | |
| | | | | 1019.30 | | -0.40 | -0.0400 | 10.00 | 427+46.00 | 1019.70 | 24.00 | 0.0160 | 0.38 | | 1020.08 | 24.00 | -0.0160 | -0.38 | | 1019.70 | 17.50 | -0.0400 | -0.70 | | 1019.00 | |
| | | | | 1019.23 | | -0.40 | -0.0400 | 10.00 | 427+50.00 | 1019.63 | 24.00 | 0.0160 | 0.38 | | 1020.01 | 24.00 | -0.0160 | -0.38 | | 1019.63 | 17.50 | -0.0400 | -0.70 | | 1018.93 | |
| | | | | 1018.81 | | -0.40 | -0.0400 | 10.00 | 427+75.00 | 1019.21 | 24.00 | 0.0160 | 0.38 | | 1019.59 | 24.00 | -0.0160 | -0.38 | | 1019.21 | 17.50 | -0.0400 | -0.70 | | 1018.51 | |
| | | | | 1018.40 | | -0.40 | -0.0400 | 10.00 | 428+00.00 | 1018.80 | 24.00 | 0.0160 | 0.38 | | 1019.18 | 24.00 | -0.0160 | -0.38 | | 1018.80 | 17.50 | -0.0400 | -0.70 | | 1018.10 | |
| | | | | 1018.04 | | -0.40 | -0.0400 | 10.00 | 428+24.00 | 1018.44 | 24.00 | 0.0160 | 0.38 | | 1018.82 | 24.00 | -0.0160 | -0.38 | | 1018.44 | 17.50 | -0.0400 | -0.70 | | 1017.74 | |
| | | | | 1018.02 | | -0.40 | -0.0400 | 10.00 | 428+25.00 | 1018.42 | 24.00 | 0.0160 | 0.38 | | 1018.80 | 24.00 | -0.0160 | -0.38 | | 1018.42 | 17.50 | -0.0396 | -0.69 | | 1017.73 | |
| | | | | 1017.83 | | -0.40 | -0.0400 | 10.00 | 428+38.00 | 1018.23 | 24.00 | 0.0160 | 0.38 | | 1018.61 | 24.00 | -0.0160 | -0.38 | | 1018.23 | 17.50 | -0.0344 | -0.60 | | 1017.63 | |
| | | | | 1017.80 | | -0.39 | -0.0387 | 10.00 | 428+41.24 | 1018.19 | 24.00 | 0.0160 | 0.38 | | 1018.57 | 24.00 | -0.0160 | -0.38 | | 1018.19 | 17.50 | -0.0331 | -0.58 | 250 | 1017.61 | P.C. |
| | | | | 1017.71 | 250 | -0.35 | -0.0352 | 10.00 | 428+50.00 | 1018.06 | 24.00 | 0.0160 | 0.38 | | 1018.44 | 24.00 | -0.0160 | -0.38 | | 1018.06 | 17.50 | -0.0296 | -0.52 | | 1017.54 | |
| | | | | 1017.47 | | -0.25 | -0.0252 | 10.00 | 428+75.00 | 1017.72 | 24.00 | 0.0160 | 0.38 | | 1018.10 | 24.00 | -0.0160 | -0.38 | | 1017.72 | 17.50 | -0.0196 | -0.34 | | 1017.38 | |
| | | | | 1017.39 | | -0.22 | -0.0216 | 10.00 | 428+84.00 | 1017.61 | 24.00 | 0.0160 | 0.38 | | 1017.99 | 24.00 | -0.0160 | -0.38 | | 1017.61 | 17.50 | -0.0160 | -0.28 | | 1017.33 | |
| | | | | 1017.27 | | -0.16 | -0.0160 | 10.00 | 428+98.00 | 1017.43 | 24.00 | 0.0160 | 0.38 | | 1017.81 | 24.00 | -0.0160 | -0.38 | | 1017.43 | 17.50 | -0.0160 | -0.28 | | 1017.15 | |
| | | | | 1017.25 | | -0.16 | -0.0160 | 10.00 | 429+00.00 | 1017.41 | 24.00 | 0.0160 | 0.38 | | 1017.79 | 24.00 | -0.0160 | -0.38 | | 1017.41 | 17.50 | -0.0160 | -0.28 | | 1017.13 | |
| | | | | 1016.95 | | -0.16 | -0.0160 | 10.00 | 429+25.00 | 1017.11 | 24.00 | 0.0160 | 0.38 | | 1017.49 | 24.00 | -0.0160 | -0.38 | | 1017.11 | 17.50 | -0.0160 | -0.28 | | 1016.83 | |
| | | | | 1016.91 | | -0.16 | -0.0160 | 10.00 | 429+28.48 | 1017.07 | 24.00 | 0.0160 | 0.38 | | 1017.45 | 24.00 | -0.0160 | -0.38 | | 1017.07 | 17.50 | -0.0160 | -0.28 | | 1016.79 | END APPROACH SLAB |
| | | | | | | | | | | | | | | | | | | | | | | | | | | |
| | | | | BRIDGE SUM-77-0810R | | | | | | | | | | | | | | | | | | | | | | |
| | | | | 1015.54 | | -0.16 | -0.0160 | 10.00 | 430+89.09 | 1015.70 | 24.00 | 0.0160 | 0.38 | | 1016.08 | 24.00 | -0.0160 | -0.38 | | 1015.70 | 17.50 | -0.0160 | -0.28 | | 1015.42 | BEGIN APPROACH SLAB |
| | | | | 1015.48 | | -0.16 | -0.0160 | 10.00 | 431+00.00 | 1015.64 | 24.00 | 0.0160 | 0.38 | | 1016.02 | 24.00 | -0.0160 | -0.38 | | 1015.64 | 17.50 | -0.0160 | -0.28 | | 1015.36 | |
| | | | | 1015.46 | | -0.16 | -0.0160 | 10.00 | 431+03.00 | 1015.62 | 24.00 | 0.0160 | 0.38 | | 1016.00 | 24.00 | -0.0160 | -0.38 | | 1015.62 | 17.50 | -0.0160 | -0.28 | | 1015.34 | |
| | | | | 1015.39 | | -0.16 | -0.0160 | 10.00 | 431+17.00 | 1015.55 | 24.00 | 0.0160 | 0.38 | | 1015.93 | 24.00 | -0.0160 | -0.38 | | 1015.55 | 17.50 | -0.0216 | -0.38 | | 1015.17 | |
| | | | | 1015.35 | | -0.18 | -0.0182 | 10.00 | 431+22.50 | 1015.53 | 24.00 | 0.0160 | 0.38 | | 1015.91 | 24.00 | -0.0160 | -0.38 | | 1015.53 | 17.50 | -0.0238 | -0.42 | | 1015.11 | |
| | | | | 1015.32 | | -0.19 | -0.0192 | 10.00 | 431+25.00 | 1015.51 | 24.00 | 0.0160 | 0.38 | | 1015.89 | 24.00 | -0.0160 | -0.38 | | 1015.51 | 17.40 | -0.0248 | -0.43 | 250 | 1015.08 | |
| | | | | 1015.12 | 250 | -0.29 | -0.0292 | 10.00 | 431+50.00 | 1015.41 | 24.00 | 0.0160 | 0.38 | | 1015.79 | 24.00 | -0.0160 | -0.38 | | 1015.41 | 16.40 | -0.0348 | -0.57 | | 1014.84 | |
| | | | | 1015.03 | | -0.34 | -0.0344 | 10.00 | 431+63.00 | 1015.37 | 24.00 | 0.0160 | 0.38 | | 1015.75 | 24.00 | -0.0160 | -0.38 | | 1015.37 | 15.88 | -0.0400 | -0.64 | | 1014.73 | |
| | | | | 1014.94 | | -0.39 | -0.0392 | 10.00 | 431+75.00 | 1015.33 | 24.00 | 0.0160 | 0.38 | | 1015.71 | 24.00 | -0.0160 | -0.38 | | 1015.33 | 15.40 | -0.0400 | -0.62 | | 1014.71 | |
| | | | | 1014.92 | | -0.40 | -0.0400 | 10.00 | 431+77.00 | 1015.32 | 24.00 | 0.0160 | 0.38 | | 1015.70 | 24.00 | -0.0160 | -0.38 | | 1015.32 | 15.32 | -0.0400 | -0.61 | | 1014.71 | |

*NOTE: EXTEND CROSS SLOPE TO THE FACE OF THE BARRIER

SUPERELEVATION TABLE
C/L I.R. 77

SUM-77/277/244
VARIOUS

805
1288

O:\2017\2017258\ProjectData\SUM\106002\Design\Roadway\Sheets\106002_GE040.dgn Sheet 1/11/2021 1:10:43 PM pfry

# CURVE 3 SUPERELEVATION TABLE

P.I. STA. 438+34.18  Dc = 0° 24' 10"

| REMARKS | S.B. OUTSIDE SHOULDERS | | | | | S.B. OUTSIDE LANES | | | | | S.B. INSIDE LANES | | | | | BASELINE CONTROL | | S.B. INSIDE SHOULDERS | | | | | MEDIAN - CENTERLINE R/W & CONST. I.R. 77 | | | |
|---|---|---|---|---|---|---|---|---|---|---|---|---|---|---|---|---|---|---|---|---|---|---|---|---|---|---|
| | EDGE ELEVATION | TRANSITION RATE | ELEVATION CORRECTION | CROSS SLOPE | WIDTH | EDGE ELEVATION | TRANSITION RATE | ELEVATION CORRECTION | CROSS SLOPE | WIDTH | EDGE ELEVATION | TRANSITION RATE | ELEVATION CORRECTION | CROSS SLOPE | WIDTH | PROFILE GRADE | STATION | WIDTH | CROSS SLOPE | ELEVATION CORRECTION | TRANSITION RATE | EDGE ELEVATION | | | | |
| | 1025.24 | | -0.58 | -0.0400 | 14.60 | 1025.82 | | -0.38 | -0.0160 | 24.00 | 1026.20 | | 0.38 | 0.0160 | 24.00 | 1025.82 | 424+70.00 | 10.00 | -0.0400 | -0.40 | | 1025.42 | | | | |
| | 1025.11 | | -0.59 | -0.0400 | 14.80 | 1025.70 | | -0.38 | -0.0160 | 24.00 | 1026.08 | | 0.38 | 0.0160 | 24.00 | 1025.70 | 424+75.00 | 10.00 | -0.0380 | -0.38 | | 1025.32 | | | | |
| | 1024.77 | | -0.61 | -0.0400 | 15.32 | 1025.38 | | -0.38 | -0.0160 | 24.00 | 1025.76 | | 0.38 | 0.0160 | 24.00 | 1025.38 | 424+88.00 | 10.00 | -0.0328 | -0.33 | 250 | 1025.05 | | | | |
| | 1024.53 | | -0.56 | -0.0352 | 15.80 | 1025.09 | | -0.38 | -0.0160 | 24.00 | 1025.47 | | 0.38 | 0.0160 | 24.00 | 1025.09 | 425+00.00 | 10.00 | -0.0280 | -0.28 | | 1024.81 | | | | |
| | 1024.06 | 250 | -0.42 | -0.0252 | 16.80 | 1024.48 | | -0.38 | -0.0160 | 24.00 | 1024.86 | | 0.38 | 0.0160 | 24.00 | 1024.48 | 425+25.00 | 10.00 | -0.0180 | -0.18 | | 1024.30 | | | | |
| | 1023.97 | | -0.39 | -0.0232 | 17.00 | 1024.36 | | -0.38 | -0.0160 | 24.00 | 1024.74 | | 0.38 | 0.0160 | 24.00 | 1024.36 | 425+30.00 | 10.00 | -0.0160 | -0.16 | | 1024.20 | | | | |
| | 1023.64 | | -0.28 | -0.0160 | 17.72 | 1023.92 | | -0.38 | -0.0160 | 24.00 | 1024.30 | | 0.38 | 0.0160 | 24.00 | 1023.92 | 425+48.00 | 10.00 | -0.0160 | -0.16 | | 1023.76 | | | | |
| | 1023.60 | | -0.28 | -0.0160 | 17.78 | 1023.88 | | -0.38 | -0.0160 | 24.00 | 1024.26 | | 0.38 | 0.0160 | 24.00 | 1023.88 | 425+49.49 | 10.00 | -0.0160 | -0.16 | | 1023.72 | | | | |
| | 1023.59 | | -0.28 | -0.0160 | 17.78 | 1023.87 | | -0.38 | -0.0160 | 24.00 | 1024.25 | | 0.38 | 0.0160 | 24.00 | 1023.87 | 425+50.00 | 10.00 | -0.0160 | -0.16 | | 1023.71 | | | | |
| END APPROACH SLAB | 1023.46 | | -0.28 | -0.0160 | 17.78 | 1023.74 | | -0.38 | -0.0160 | 24.00 | 1024.12 | | 0.38 | 0.0160 | 24.00 | 1023.74 | 425+55.16 | 10.00 | -0.0160 | -0.16 | | 1023.58 | | | | |
| | BRIDGE SUM-77-0802L | | | | | | | | | | | | | | | | | | | | | | | | | |
| BEGIN APPROACH SLAB | 1021.10 | | -0.28 | -0.0160 | 17.78 | 1021.38 | | -0.38 | -0.0160 | 24.00 | 1021.76 | | 0.38 | 0.0160 | 24.00 | 1021.38 | 426+60.73 | 10.00 | -0.0160 | -0.16 | | 1021.22 | | | | |
| | 1020.81 | | -0.28 | -0.0160 | 17.78 | 1021.09 | | -0.38 | -0.0160 | 24.00 | 1021.47 | | 0.38 | 0.0160 | 24.00 | 1021.09 | 426+75.00 | 10.00 | -0.0160 | -0.16 | | 1020.93 | | | | |
| | 1020.52 | | -0.28 | -0.0160 | 17.78 | 1020.80 | | -0.38 | -0.0160 | 24.00 | 1021.18 | | 0.38 | 0.0160 | 24.00 | 1020.80 | 426+90.00 | 10.00 | -0.0160 | -0.16 | | 1020.64 | | | | |
| | 1020.32 | | -0.28 | -0.0160 | 17.78 | 1020.60 | | -0.38 | -0.0160 | 24.00 | 1020.98 | | 0.38 | 0.0160 | 24.00 | 1020.60 | 427+00.00 | 10.00 | -0.0200 | -0.20 | | 1020.40 | | | | |
| | 1020.13 | | -0.28 | -0.0160 | 17.78 | 1020.41 | | -0.38 | -0.0160 | 24.00 | 1020.79 | | 0.38 | 0.0160 | 24.00 | 1020.41 | 427+10.00 | 10.00 | -0.0240 | -0.24 | 250 | 1020.17 | | | | |
| | 1019.75 | | -0.39 | -0.0220 | 17.78 | 1020.14 | | -0.38 | -0.0160 | 24.00 | 1020.52 | | 0.38 | 0.0160 | 24.00 | 1020.14 | 427+25.00 | 10.00 | -0.0300 | -0.30 | | 1019.84 | | | | |
| | 1019.12 | 250 | -0.57 | -0.0320 | 17.78 | 1019.69 | | -0.38 | -0.0160 | 24.00 | 1020.07 | | 0.38 | 0.0160 | 24.00 | 1019.69 | 427+50.00 | 10.00 | -0.0400 | -0.40 | | 1019.29 | | | | |
| | 1018.88 | | -0.64 | -0.0360 | 17.78 | 1019.52 | | -0.38 | -0.0160 | 24.00 | 1019.90 | | 0.38 | 0.0160 | 24.00 | 1019.52 | 427+60.00 | 10.00 | -0.0400 | -0.40 | | 1019.12 | | | | |
| | 1018.72 | | -0.68 | -0.0388 | 17.50 | 1019.40 | | -0.38 | -0.0160 | 24.00 | 1019.78 | | 0.38 | 0.0160 | 24.00 | 1019.40 | 427+67.00 | 10.00 | -0.0400 | -0.40 | | 1019.00 | | | | |
| | 1018.65 | | -0.70 | -0.0400 | 17.50 | 1019.35 | | -0.38 | -0.0160 | 24.00 | 1019.73 | | 0.38 | 0.0160 | 24.00 | 1019.35 | 427+70.00 | 10.00 | -0.0400 | -0.40 | | 1018.95 | | | | |
| | 1018.57 | | -0.70 | -0.0400 | 17.50 | 1019.27 | | -0.38 | -0.0160 | 24.00 | 1019.65 | | 0.38 | 0.0160 | 24.00 | 1019.27 | 427+75.00 | 10.00 | -0.0400 | -0.40 | | 1018.87 | | | | |
| | 1018.16 | | -0.70 | -0.0400 | 17.50 | 1018.86 | | -0.38 | -0.0160 | 24.00 | 1019.24 | | 0.38 | 0.0160 | 24.00 | 1018.86 | 428+00.00 | 10.00 | -0.0400 | -0.40 | | 1018.46 | | | | |
| | 1017.78 | | -0.70 | -0.0400 | 17.50 | 1018.48 | | -0.38 | -0.0160 | 24.00 | 1018.86 | | 0.38 | 0.0160 | 24.00 | 1018.48 | 428+25.00 | 10.00 | -0.0400 | -0.40 | | 1018.08 | | | | |
| | 1017.55 | | -0.70 | -0.0400 | 17.50 | 1018.25 | | -0.38 | -0.0160 | 24.00 | 1018.63 | | 0.38 | 0.0160 | 24.00 | 1018.25 | 428+41.00 | 10.00 | -0.0400 | -0.40 | | 1017.85 | | | | |
| P.C. | 1017.55 | | -0.70 | -0.0400 | 17.50 | 1018.25 | | -0.38 | -0.0160 | 24.00 | 1018.63 | | 0.38 | 0.0160 | 24.00 | 1018.25 | 428+41.24 | 10.00 | -0.0399 | -0.40 | | 1017.85 | | | | |
| | 1017.43 | | -0.70 | -0.0400 | 17.50 | 1018.13 | | -0.38 | -0.0160 | 24.00 | 1018.51 | | 0.38 | 0.0160 | 24.00 | 1018.13 | 428+50.00 | 10.00 | -0.0364 | -0.36 | | 1017.77 | | | | |
| | 1017.37 | | -0.70 | -0.0400 | 17.50 | 1018.07 | | -0.38 | -0.0160 | 24.00 | 1018.45 | | 0.38 | 0.0160 | 24.00 | 1018.07 | 428+54.00 | 10.00 | -0.0348 | -0.35 | 250 | 1017.72 | | | | |
| | 1017.24 | | -0.55 | -0.0316 | 17.50 | 1017.79 | | -0.38 | -0.0160 | 24.00 | 1018.17 | | 0.38 | 0.0160 | 24.00 | 1017.79 | 428+75.00 | 10.00 | -0.0264 | -0.26 | | 1017.53 | | | | |
| | 1017.09 | 250 | -0.38 | -0.0216 | 17.50 | 1017.47 | | -0.38 | -0.0160 | 24.00 | 1017.85 | | 0.38 | 0.0160 | 24.00 | 1017.47 | 429+00.00 | 10.00 | -0.0164 | -0.16 | | 1017.31 | | | | |
| | 1017.09 | | -0.37 | -0.0212 | 17.50 | 1017.46 | | -0.38 | -0.0160 | 24.00 | 1017.84 | | 0.38 | 0.0160 | 24.00 | 1017.46 | 429+01.00 | 10.00 | -0.0160 | -0.16 | | 1017.30 | | | | |
| | 1017.03 | | -0.28 | -0.0160 | 17.50 | 1017.31 | | -0.38 | -0.0160 | 24.00 | 1017.69 | | 0.38 | 0.0160 | 24.00 | 1017.31 | 429+14.00 | 10.00 | -0.0160 | -0.16 | | 1017.15 | | | | |
| | 1016.90 | | -0.28 | -0.0160 | 17.50 | 1017.18 | | -0.38 | -0.0160 | 24.00 | 1017.56 | | 0.38 | 0.0160 | 24.00 | 1017.18 | 429+25.00 | 10.00 | -0.0160 | -0.16 | | 1017.02 | | | | |
| END APPROACH SLAB | 1016.86 | | -0.28 | -0.0160 | 17.50 | 1017.14 | | -0.38 | -0.0160 | 24.00 | 1017.52 | | 0.38 | 0.0160 | 24.00 | 1017.14 | 429+28.48 | 10.00 | -0.0160 | -0.16 | | 1016.98 | | | | |
| | BRIDGE SUM-77-0810L | | | | | | | | | | | | | | | | | | | | | | | | | |
| BEGIN APPROACH SLAB | 1015.52 | | -0.28 | -0.0160 | 17.50 | 1015.80 | | -0.38 | -0.0160 | 24.00 | 1016.18 | | 0.38 | 0.0160 | 24.00 | 1015.80 | 430+89.09 | 10.00 | -0.0160 | -0.16 | | 1015.64 | | | | |
| | 1015.46 | | -0.28 | -0.0160 | 17.50 | 1015.74 | | -0.38 | -0.0160 | 24.00 | 1016.12 | | 0.38 | 0.0160 | 24.00 | 1015.74 | 431+00.00 | 10.00 | -0.0160 | -0.16 | | 1015.58 | | | | |
| | 1015.37 | | -0.28 | -0.0160 | 17.50 | 1015.65 | | -0.38 | -0.0160 | 24.00 | 1016.03 | | 0.38 | 0.0160 | 24.00 | 1015.65 | 431+20.00 | 10.00 | -0.0160 | -0.16 | | 1015.49 | | | | |
| | 1015.35 | | -0.28 | -0.0160 | 17.50 | 1015.63 | | -0.38 | -0.0160 | 24.00 | 1016.01 | | 0.38 | 0.0160 | 24.00 | 1015.63 | 431+25.00 | 10.00 | -0.0180 | -0.18 | | 1015.45 | | | | |
| | 1015.30 | | -0.28 | -0.0160 | 17.50 | 1015.58 | | -0.38 | -0.0160 | 24.00 | 1015.96 | | 0.38 | 0.0160 | 24.00 | 1015.58 | 431+35.00 | 10.00 | -0.0220 | -0.22 | 250 | 1015.36 | | | | |
| | 1015.15 | | -0.39 | -0.0220 | 17.50 | 1015.53 | | -0.38 | -0.0160 | 24.00 | 1015.91 | | 0.38 | 0.0160 | 24.00 | 1015.53 | 431+50.00 | 10.00 | -0.0280 | -0.28 | | 1015.25 | | | | |
| | 1014.91 | 250 | -0.55 | -0.0320 | 17.14 | 1015.45 | | -0.39 | -0.0160 | 24.36 | 1015.84 | | 0.38 | 0.0160 | 24.00 | 1015.46 | 431+75.00 | 10.00 | -0.0380 | -0.38 | | 1015.08 | | | | |
| | 1014.85 | | -0.58 | -0.0340 | 17.07 | 1015.43 | | -0.39 | -0.0160 | 24.43 | 1015.82 | | 0.38 | 0.0160 | 24.00 | 1015.44 | 431+80.00 | 10.00 | -0.0400 | -0.40 | | 1015.04 | | | | |
| | 1014.85 | | -0.55 | -0.0400 | 13.86 | 1015.40 | | -0.39 | -0.0160 | 24.64 | 1015.79 | | 0.38 | 0.0160 | 24.00 | 1015.41 | 431+95.00 | 10.00 | -0.0400 | -0.40 | | 1015.01 | | | | |
| | | | | | | | | | | | | | | | | | | | | | | | | | | |
| | | | | | | | | | | | | | | | | | | | | | | | | | | |
| | | | | | | | | | | | | | | | | | | | | | |

# CURVE 4 - SUPERELEVATION TABLE

| P.I. Sta. 485+59.78 | Dc = 1° 28' 03" |
|---|---|

| LEFT SIDE | | | | | BASELINE CONTROL | | RIGHT INSIDE | | | | | RIGHT OUTSIDE | | | | | RAMP C AUXILIARY LANE | | | | | REMARKS |
|---|---|---|---|---|---|---|---|---|---|---|---|---|---|---|---|---|---|---|---|---|---|---|
| EDGE ELEVATION | TRANSITION RATE | ELEVATION CORRECTION | CROSS SLOPE | WIDTH | STATION | PROFILE GRADE | WIDTH | CROSS SLOPE | ELEVATION CORRECTION | TRANSITION RATE | EDGE ELEVATION | WIDTH | CROSS SLOPE | ELEVATION CORRECTION | TRANSITION RATE | EDGE ELEVATION | WIDTH | CROSS SLOPE | ELEVATION CORRECTION | TRANSITION RATE | EDGE ELEVATION | |
| 1048.96 | | -0.24 | -0.0200 | 12.00 | 471+31.58 | 1049.20 | 24.00 | 0.0160 | 0.38 | | 1049.58 | 24.00 | -0.0160 | -0.38 | | 1049.20 | | | | | | N.C. |
| 1049.00 | | -0.24 | -0.0200 | 12.00 | 471+50.00 | 1049.24 | 24.00 | 0.0160 | 0.38 | | 1049.62 | 24.00 | -0.0129 | -0.31 | | 1049.31 | | | | | | |
| 1049.04 | | -0.24 | -0.0200 | 12.00 | 471+75.00 | 1049.28 | 24.00 | 0.0160 | 0.38 | | 1049.66 | 24.00 | -0.0088 | -0.21 | | 1049.45 | | | | | | |
| 1049.07 | | -0.24 | -0.0200 | 12.00 | 472+00.00 | 1049.31 | 24.00 | 0.0160 | 0.38 | | 1049.69 | 24.00 | -0.0046 | -0.11 | | 1049.58 | | | | | | |
| 1049.09 | | -0.24 | -0.0200 | 12.00 | 472+25.00 | 1049.33 | 24.00 | 0.0160 | 0.38 | | 1049.71 | 24.00 | -0.0004 | -0.01 | | 1049.70 | | | | | | |
| 1049.10 | | -0.24 | -0.0200 | 12.00 | 472+26.99 | 1049.34 | 24.00 | 0.0160 | 0.38 | | 1049.72 | 24.00 | -0.0001 | 0.00 | 250 | 1049.72 | | | | | | P.I. |
| 1049.10 | | -0.24 | -0.0200 | 12.00 | 472+27.58 | 1049.34 | 24.00 | 0.0160 | 0.38 | | 1049.72 | 24.00 | 0.0000 | 0.00 | | 1049.72 | | | | | | H.F. |
| 1049.11 | | -0.24 | -0.0200 | 12.00 | 472+50.00 | 1049.35 | 24.00 | 0.0160 | 0.38 | | 1049.73 | 24.00 | 0.0037 | 0.09 | | 1049.82 | | | | | | |
| 1049.11 | | -0.24 | -0.0200 | 12.00 | 472+75.00 | 1049.35 | 24.00 | 0.0160 | 0.38 | | 1049.73 | 24.00 | 0.0079 | 0.19 | | 1049.92 | | | | | | |
| 1049.10 | | -0.24 | -0.0200 | 12.00 | 473+00.00 | 1049.34 | 24.00 | 0.0160 | 0.38 | | 1049.72 | 24.00 | 0.0121 | 0.29 | | 1050.01 | | | | | | |
| 1049.08 | | -0.24 | -0.0200 | 12.00 | 473+23.58 | 1049.32 | 24.00 | 0.0160 | 0.38 | | 1049.70 | 24.00 | 0.0160 | 0.38 | | 1050.09 | | | | | | R.C. |
| 1049.08 | | -0.24 | -0.0200 | 12.00 | 473+25.00 | 1049.32 | 24.00 | 0.0161 | 0.39 | | 1049.71 | 24.00 | 0.0161 | 0.39 | | 1050.09 | | | | | | |
| 1049.06 | | -0.24 | -0.0200 | 12.00 | 473+43.98 | 1049.30 | 24.00 | 0.0177 | 0.42 | | 1049.72 | 12.00 | 0.0177 | 0.21 | | 1049.94 | 12.00 | 0.0177 | 0.21 | | 1050.15 | |
| 1049.06 | | -0.24 | -0.0200 | 12.00 | 473+50.00 | 1049.30 | 24.00 | 0.0182 | 0.44 | | 1049.74 | 12.00 | 0.0182 | 0.22 | | 1049.96 | 12.00 | 0.0177 | 0.21 | | 1050.17 | |
| 1049.03 | | -0.24 | -0.0200 | 12.00 | 473+71.58 | 1049.27 | 24.00 | 0.0200 | 0.48 | | 1049.75 | 12.00 | 0.0200 | 0.24 | | 1049.99 | 12.00 | 0.0177 | 0.21 | | 1050.20 | |
| 1048.98 | | -0.28 | -0.0237 | 12.00 | 473+75.00 | 1049.26 | 24.00 | 0.0203 | 0.49 | | 1049.75 | 12.00 | 0.0203 | 0.24 | | 1049.99 | 12.00 | 0.0177 | 0.21 | | 1050.20 | |
| 1048.90 | | -0.31 | -0.0255 | 12.00 | 474+00.00 | 1049.21 | 24.00 | 0.0224 | 0.54 | | 1049.75 | 12.00 | 0.0224 | 0.27 | | 1050.02 | 12.00 | 0.0177 | 0.21 | | 1050.23 | |
| 1048.83 | | -0.33 | -0.0273 | 12.00 | 474+25.00 | 1049.16 | 24.00 | 0.0245 | 0.59 | | 1049.75 | 12.00 | 0.0245 | 0.29 | | 1050.04 | 12.00 | 0.0177 | 0.21 | | 1050.25 | |
| 1048.74 | | -0.35 | -0.0291 | 12.00 | 474+50.00 | 1049.09 | 24.00 | 0.0265 | 0.64 | | 1049.73 | 12.00 | 0.0265 | 0.32 | | 1050.04 | 12.00 | 0.0177 | 0.21 | | 1050.26 | |
| 1048.65 | | -0.37 | -0.0309 | 12.00 | 474+75.00 | 1049.02 | 24.00 | 0.0286 | 0.69 | 500 | 1049.71 | 12.00 | 0.0286 | 0.34 | 250 | 1050.05 | 12.00 | 0.0177 | 0.21 | | 1050.26 | |
| 1048.56 | | -0.39 | -0.0322 | 12.00 | 474+93.14 | 1048.95 | 24.00 | 0.0301 | 0.72 | | 1049.67 | 12.00 | 0.0301 | 0.36 | | 1050.03 | 12.00 | 0.0177 | 0.21 | | 1050.25 | P.C. |
| 1048.54 | 1000 | -0.39 | -0.0327 | 12.00 | 475+00.00 | 1048.93 | 24.00 | 0.0307 | 0.74 | | 1049.67 | 12.00 | 0.0307 | 0.37 | | 1050.04 | 12.00 | 0.0177 | 0.21 | | 1050.25 | |
| 1048.42 | | -0.41 | -0.0345 | 12.00 | 475+25.00 | 1048.83 | 24.00 | 0.0328 | 0.79 | | 1049.62 | 12.00 | 0.0328 | 0.39 | | 1050.01 | 12.00 | 0.0177 | 0.21 | | 1050.22 | |
| 1048.29 | | -0.44 | -0.0363 | 12.00 | 475+50.00 | 1048.73 | 24.00 | 0.0349 | 0.84 | | 1049.57 | 12.00 | 0.0349 | 0.42 | | 1049.99 | 12.00 | 0.0177 | 0.21 | | 1050.20 | |
| 1048.15 | | -0.46 | -0.0381 | 12.00 | 475+75.00 | 1048.61 | 24.00 | 0.0370 | 0.89 | | 1049.50 | 12.00 | 0.0370 | 0.44 | | 1049.94 | 12.00 | 0.0177 | 0.21 | | 1050.15 | |
| 1048.01 | | -0.48 | -0.0399 | 12.00 | 476+00.00 | 1048.49 | 24.00 | 0.0390 | 0.94 | | 1049.43 | 12.00 | 0.0390 | 0.47 | | 1049.89 | 12.00 | 0.0177 | 0.21 | | 1050.11 | |
| 1047.86 | | -0.50 | -0.0417 | 12.00 | 476+25.00 | 1048.36 | 24.00 | 0.0411 | 0.99 | | 1049.35 | 12.00 | 0.0411 | 0.49 | | 1049.84 | | | | | | |
| 1047.69 | | -0.52 | -0.0435 | 12.00 | 476+50.00 | 1048.21 | 24.00 | 0.0432 | 1.04 | | 1049.25 | 12.00 | 0.0432 | 0.52 | | 1049.77 | | | | | | |
| 1047.53 | | -0.54 | -0.0452 | 12.00 | 476+73.98 | 1048.07 | 24.00 | 0.0452 | 1.08 | | 1049.15 | 12.00 | 0.0452 | 0.54 | | 1049.70 | | | | | | F.S. |
| 1047.52 | | -0.54 | -0.0452 | 12.00 | 476+75.00 | 1048.06 | 24.00 | 0.0452 | 1.08 | | 1049.14 | 12.00 | 0.0452 | 0.54 | | 1049.69 | | | | | | |
| 1047.36 | | -0.54 | -0.0452 | 12.00 | 477+00.00 | 1047.90 | 24.00 | 0.0452 | 1.08 | | 1048.98 | 12.00 | 0.0452 | 0.54 | | 1049.53 | | | | | | |
| 1047.18 | | -0.54 | -0.0452 | 12.00 | 477+25.00 | 1047.72 | 24.00 | 0.0452 | 1.08 | | 1048.80 | 12.00 | 0.0452 | 0.54 | | 1049.35 | | | | | | |
| 1047.00 | | -0.54 | -0.0452 | 12.00 | 477+50.00 | 1047.54 | 24.00 | 0.0452 | 1.08 | | 1048.62 | 12.00 | 0.0452 | 0.54 | | 1049.17 | | | | | | |
| 1046.81 | | -0.54 | -0.0452 | 12.00 | 477+75.00 | 1047.35 | 24.00 | 0.0452 | 1.08 | | 1048.43 | 12.00 | 0.0452 | 0.54 | | 1048.98 | | | | | | |
| 1046.60 | | -0.54 | -0.0452 | 12.00 | 478+00.00 | 1047.14 | 24.00 | 0.0452 | 1.08 | | 1048.22 | 12.00 | 0.0452 | 0.54 | | 1048.77 | | | | | | |
| 1046.39 | | -0.54 | -0.0452 | 12.00 | 478+25.00 | 1046.93 | 24.00 | 0.0452 | 1.08 | | 1048.01 | 12.00 | 0.0452 | 0.54 | | 1048.56 | | | | | | |
| 1046.17 | | -0.54 | -0.0452 | 12.00 | 478+50.00 | 1046.71 | 24.00 | 0.0452 | 1.08 | | 1047.79 | 12.00 | 0.0452 | 0.54 | | 1048.34 | | | | | | |
| 1045.94 | | -0.54 | -0.0452 | 12.00 | 478+75.00 | 1046.48 | 24.00 | 0.0452 | 1.08 | | 1047.56 | 12.00 | 0.0452 | 0.54 | | 1048.11 | | | | | | |
| 1045.70 | | -0.54 | -0.0452 | 12.00 | 479+00.00 | 1046.24 | 24.00 | 0.0452 | 1.08 | | 1047.32 | 12.00 | 0.0452 | 0.54 | | 1047.87 | | | | | | |
| 1045.45 | | -0.54 | -0.0452 | 12.00 | 479+25.00 | 1045.99 | 24.00 | 0.0452 | 1.08 | | 1047.07 | 12.00 | 0.0452 | 0.54 | | 1047.62 | | | | | | |
| 1045.19 | | -0.54 | -0.0452 | 12.00 | 479+50.00 | 1045.73 | 24.00 | 0.0452 | 1.08 | | 1046.81 | 12.00 | 0.0452 | 0.54 | | 1047.36 | | | | | | |
| 1044.91 | | -0.54 | -0.0452 | 12.00 | 479+75.00 | 1045.45 | 24.00 | 0.0452 | 1.08 | | 1046.53 | 12.00 | 0.0452 | 0.54 | | 1047.08 | | | | | | |
| 1044.63 | | -0.54 | -0.0452 | 12.00 | 480+00.00 | 1045.17 | 24.00 | 0.0452 | 1.08 | | 1046.25 | 12.00 | 0.0452 | 0.54 | | 1046.80 | | | | | | |
| 1044.34 | | -0.54 | -0.0452 | 12.00 | 480+25.00 | 1044.88 | 24.00 | 0.0452 | 1.08 | | 1045.96 | 12.00 | 0.0452 | 0.54 | | 1046.51 | | | | | | |
| 1044.04 | | -0.54 | -0.0452 | 12.00 | 480+50.00 | 1044.58 | 24.00 | 0.0452 | 1.08 | | 1045.66 | 12.00 | 0.0452 | 0.54 | | 1046.21 | | | | | | |
| 1043.74 | | -0.54 | -0.0452 | 12.00 | 480+75.00 | 1044.28 | 24.00 | 0.0452 | 1.08 | | 1045.36 | 12.00 | 0.0452 | 0.54 | | 1045.91 | | | | | | |
| 1043.44 | | -0.54 | -0.0452 | 12.00 | 481+00.00 | 1043.98 | 24.00 | 0.0452 | 1.08 | | 1045.06 | 12.00 | 0.0452 | 0.54 | | 1045.61 | | | | | | |
| 1043.13 | | -0.54 | -0.0452 | 12.00 | 481+25.00 | 1043.67 | 24.00 | 0.0452 | 1.08 | | 1044.75 | 12.00 | 0.0452 | 0.54 | | 1045.30 | | | | | | |
| 1042.83 | | -0.54 | -0.0452 | 12.00 | 481+50.00 | 1043.37 | 24.00 | 0.0452 | 1.08 | | 1044.45 | 12.00 | 0.0452 | 0.54 | | 1045.00 | | | | | | |
| 1042.52 | | -0.54 | -0.0452 | 12.00 | 481+75.00 | 1043.06 | 24.00 | 0.0452 | 1.08 | | 1044.14 | 12.00 | 0.0452 | 0.54 | | 1044.69 | | | | | | |
| 1042.22 | | -0.54 | -0.0452 | 12.00 | 482+00.00 | 1042.76 | 24.00 | 0.0452 | 1.08 | | 1043.84 | 12.00 | 0.0452 | 0.54 | | 1044.39 | | | | | | |
| 1041.91 | | -0.54 | -0.0452 | 12.00 | 482+25.00 | 1042.45 | 24.00 | 0.0452 | 1.08 | | 1043.53 | 12.00 | 0.0452 | 0.54 | | 1044.08 | | | | | | |
| 1041.61 | | -0.54 | -0.0452 | 12.00 | 482+50.00 | 1042.15 | 24.00 | 0.0452 | 1.08 | | 1043.23 | 12.00 | 0.0452 | 0.54 | | 1043.78 | | | | | | |
| 1041.30 | | -0.54 | -0.0452 | 12.00 | 482+75.00 | 1041.84 | 24.00 | 0.0452 | 1.08 | | 1042.92 | 12.00 | 0.0452 | 0.54 | | 1043.47 | | | | | | |
| 1041.00 | | -0.54 | -0.0452 | 12.00 | 483+00.00 | 1041.54 | 24.00 | 0.0452 | 1.08 | | 1042.62 | 12.00 | 0.0452 | 0.54 | | 1043.17 | | | | | | |

CALCULATED LRK
CHECKED PJF

SUPERELEVATION TABLE
NORTHBOUND I.R. 77

SUM-77/277/244
VARIOUS

807
1288

O:\2017\2017258\ProjectData\SUM\106002\Design\Roadway\Sheets\106002_GE002.dgn Sheet 1/11/2021 1:10:45 PM pfry

# CURVE 4 - SUPERELEVATION TABLE

| P.I. Sta. 485+59.78 | Dc = 1° 28' 03" |
|---|---|

| LEFT SIDE | | | | | BASELINE CONTROL | | RIGHT INSIDE | | | | RIGHT OUTSIDE | | | | | | | | | | REMARKS |
|---|---|---|---|---|---|---|---|---|---|---|---|---|---|---|---|---|---|---|---|---|---|
| EDGE ELEVATION | TRANSITION RATE | ELEVATION CORRECTION | CROSS SLOPE | WIDTH | STATION | PROFILE GRADE | WIDTH | CROSS SLOPE | ELEVATION CORRECTION | TRANSITION RATE | EDGE ELEVATION | WIDTH | CROSS SLOPE | ELEVATION CORRECTION | TRANSITION RATE | EDGE ELEVATION | | | | | | |
| 1040.69 | | -0.54 | -0.0452 | 12.00 | 483+25.00 | 1041.23 | 24.00 | 0.0452 | 1.08 | | 1042.31 | 12.00 | 0.0452 | 0.54 | | 1042.86 | | | | | | |
| 1040.39 | | -0.54 | -0.0452 | 12.00 | 483+75.00 | 1040.93 | 24.00 | 0.0452 | 1.08 | | 1042.01 | 12.00 | 0.0452 | 0.54 | | 1042.56 | | | | | | |
| 1040.08 | | -0.54 | -0.0452 | 12.00 | 483+75.00 | 1040.62 | 24.00 | 0.0452 | 1.08 | | 1041.70 | 12.00 | 0.0452 | 0.54 | | 1042.25 | | | | | | |
| 1039.78 | | -0.54 | -0.0452 | 12.00 | 484+00.00 | 1040.32 | 24.00 | 0.0452 | 1.08 | | 1041.40 | 12.00 | 0.0452 | 0.54 | | 1041.95 | | | | | | |
| 1039.47 | | -0.54 | -0.0452 | 12.00 | 484+25.00 | 1040.01 | 24.00 | 0.0452 | 1.08 | | 1041.09 | 12.00 | 0.0452 | 0.54 | | 1041.64 | | | | | | |
| 1039.17 | | -0.54 | -0.0452 | 12.00 | 484+50.00 | 1039.71 | 24.00 | 0.0452 | 1.08 | | 1040.79 | 12.00 | 0.0452 | 0.54 | | 1041.34 | | | | | | |
| 1038.87 | | -0.54 | -0.0452 | 12.00 | 484+75.00 | 1039.41 | 24.00 | 0.0452 | 1.08 | | 1040.49 | 12.00 | 0.0452 | 0.54 | | 1041.04 | | | | | | |
| 1038.56 | | -0.54 | -0.0452 | 12.00 | 485+00.00 | 1039.10 | 24.00 | 0.0452 | 1.08 | | 1040.18 | 12.00 | 0.0452 | 0.54 | | 1040.73 | | | | | | |
| 1038.26 | | -0.54 | -0.0452 | 12.00 | 485+25.00 | 1038.80 | 24.00 | 0.0452 | 1.08 | | 1039.88 | 12.00 | 0.0452 | 0.54 | | 1040.43 | | | | | | |
| 1037.95 | | -0.54 | -0.0452 | 12.00 | 485+50.00 | 1038.49 | 24.00 | 0.0452 | 1.08 | | 1039.57 | 12.00 | 0.0452 | 0.54 | | 1040.12 | | | | | | |
| 1037.77 | | -0.54 | -0.0452 | 12.00 | 485+64.96 | 1038.31 | 24.00 | 0.0452 | 1.08 | | 1039.39 | 12.00 | 0.0452 | 0.54 | | 1039.94 | | | | | | |
| | | | | | 485+75.00 | 1038.19 | 12.00 | 0.0452 | 0.54 | | 1038.73 | 24.00 | 0.0452 | 1.08 | | 1039.82 | | | | | | |
| | | | | | 486+00.00 | 1037.88 | 12.00 | 0.0452 | 0.54 | | 1038.42 | 24.00 | 0.0452 | 1.08 | | 1039.51 | | | | | | |
| | | | | | 486+25.00 | 1037.58 | 12.00 | 0.0452 | 0.54 | | 1038.12 | 24.00 | 0.0452 | 1.08 | | 1039.21 | | | | | | |
| | | | | | 486+50.00 | 1037.27 | 12.00 | 0.0452 | 0.54 | | 1037.81 | 24.00 | 0.0452 | 1.08 | | 1038.90 | | | | | | |
| | | | | | 486+75.00 | 1036.97 | 12.00 | 0.0452 | 0.54 | | 1037.51 | 24.00 | 0.0452 | 1.08 | | 1038.60 | | | | | | |
| | | | | | 487+00.00 | 1036.66 | 12.00 | 0.0452 | 0.54 | | 1037.20 | 24.00 | 0.0452 | 1.08 | | 1038.29 | | | | | | |
| | | | | | 487+25.00 | 1036.36 | 12.00 | 0.0452 | 0.54 | | 1036.90 | 24.00 | 0.0452 | 1.08 | | 1037.99 | | | | | | |
| | | | | | 487+50.00 | 1036.05 | 12.00 | 0.0452 | 0.54 | | 1036.59 | 24.00 | 0.0452 | 1.08 | | 1037.68 | | | | | | |
| | | | | | 487+75.00 | 1035.75 | 12.00 | 0.0452 | 0.54 | | 1036.29 | 24.00 | 0.0452 | 1.08 | | 1037.38 | | | | | | |
| | | | | | 488+00.00 | 1035.44 | 12.00 | 0.0452 | 0.54 | | 1035.98 | 24.00 | 0.0452 | 1.08 | | 1037.07 | | | | | | |
| | | | | | 488+25.00 | 1035.14 | 12.00 | 0.0452 | 0.54 | | 1035.68 | 24.00 | 0.0452 | 1.08 | | 1036.77 | | | | | | |
| | | | | | 488+50.00 | 1034.84 | 12.00 | 0.0452 | 0.54 | | 1035.38 | 24.00 | 0.0452 | 1.08 | | 1036.47 | | | | | | |
| | | | | | 488+75.00 | 1034.53 | 12.00 | 0.0452 | 0.54 | | 1035.07 | 24.00 | 0.0452 | 1.08 | | 1036.16 | | | | | | |
| | | | | | 489+00.00 | 1034.23 | 12.00 | 0.0452 | 0.54 | | 1034.77 | 24.00 | 0.0452 | 1.08 | | 1035.86 | | | | | | |
| | | | | | 489+25.00 | 1033.92 | 12.00 | 0.0452 | 0.54 | | 1034.46 | 24.00 | 0.0452 | 1.08 | | 1035.55 | | | | | | |
| | | | | | 489+50.00 | 1033.62 | 12.00 | 0.0452 | 0.54 | | 1034.16 | 24.00 | 0.0452 | 1.08 | | 1035.25 | | | | | | |
| | | | | | 489+75.00 | 1033.31 | 12.00 | 0.0452 | 0.54 | | 1033.85 | 24.00 | 0.0452 | 1.08 | | 1034.94 | | | | | | |
| | | | | | 490+00.00 | 1033.02 | 12.00 | 0.0452 | 0.54 | | 1033.56 | 24.00 | 0.0452 | 1.08 | | 1034.65 | | | | | | |
| | | | | | 490+25.00 | 1032.75 | 12.00 | 0.0452 | 0.54 | | 1033.29 | 24.00 | 0.0452 | 1.08 | | 1034.38 | | | | | | |
| | | | | | 490+50.00 | 1032.51 | 12.00 | 0.0452 | 0.54 | | 1033.05 | 24.00 | 0.0452 | 1.08 | | 1034.14 | | | | | | |
| | | | | | 490+75.00 | 1032.29 | 12.00 | 0.0452 | 0.54 | | 1032.83 | 24.00 | 0.0452 | 1.08 | | 1033.92 | | | | | | |
| | | | | | 491+00.00 | 1032.11 | 12.00 | 0.0452 | 0.54 | | 1032.65 | 24.00 | 0.0452 | 1.08 | | 1033.74 | | | | | | |
| | | | | | 491+25.00 | 1031.95 | 12.00 | 0.0452 | 0.54 | | 1032.49 | 24.00 | 0.0452 | 1.08 | | 1033.58 | | | | | | |
| | | | | | 491+50.00 | 1031.82 | 12.00 | 0.0452 | 0.54 | | 1032.36 | 24.00 | 0.0452 | 1.08 | | 1033.45 | | | | | | |
| | | | | | 491+75.00 | 1031.71 | 12.00 | 0.0452 | 0.54 | | 1032.25 | 24.00 | 0.0452 | 1.08 | | 1033.34 | | | | | | |
| | | | | | 492+00.00 | 1031.64 | 12.00 | 0.0452 | 0.54 | | 1032.18 | 24.00 | 0.0452 | 1.08 | | 1033.27 | | | | | | |
| | | | | | 492+25.00 | 1031.59 | 12.00 | 0.0452 | 0.54 | | 1032.13 | 24.00 | 0.0452 | 1.08 | | 1033.22 | | | | | | |
| | | | | | 492+50.00 | 1031.57 | 12.00 | 0.0452 | 0.54 | | 1032.11 | 24.00 | 0.0452 | 1.08 | | 1033.20 | | | | | | |
| | | | | | 492+75.00 | 1031.58 | 12.00 | 0.0452 | 0.54 | | 1032.12 | 24.00 | 0.0452 | 1.08 | | 1033.21 | | | | | | |
| | | | | | 493+00.00 | 1031.61 | 12.00 | 0.0452 | 0.54 | | 1032.15 | 24.00 | 0.0452 | 1.08 | | 1033.24 | | | | | | |
| | | | | | 493+25.00 | 1031.68 | 12.00 | 0.0452 | 0.54 | | 1032.22 | 24.00 | 0.0452 | 1.08 | | 1033.31 | | | | | | |
| | | | | | 493+50.00 | 1031.77 | 12.00 | 0.0452 | 0.54 | | 1032.31 | 24.00 | 0.0452 | 1.08 | | 1033.40 | | | | | | |

CALCULATED LRK
CHECKED PJF

SUPERELEVATION TABLE
NORTHBOUND I.R. 77

SUM-77/277/244
VARIOUS

808
1288

O:\2017\2017258\ProjectData\SUM\106002\Design\Roadway\Sheets\106002_GE003.dgn Sheet 1/11/2021 1:10:46 PM pfry

# CURVE 4 - SUPERELEVATION TABLE

| P.I. Sta. 485+59.78 | Dc = 1° 28' 03" |
|---|---|

| | | | | | BASELINE CONTROL | | RIGHT INSIDE | | | | | RIGHT OUTSIDE | | | | | | | | | | REMARKS |
|---|---|---|---|---|---|---|---|---|---|---|---|---|---|---|---|---|---|---|---|---|---|---|
| | | | | | STATION | PROFILE GRADE | WIDTH | CROSS SLOPE | ELEVATION CORRECTION | TRANSITION RATE | EDGE ELEVATION | WIDTH | CROSS SLOPE | ELEVATION CORRECTION | TRANSITION RATE | EDGE ELEVATION | | | | | | |
| | | | | | 493+72.19 | 1031.87 | 12.00 | 0.0452 | 0.54 | | 1032.41 | 24.00 | 0.0452 | 1.08 | | 1033.50 | | | | | | F.S. |
| | | | | | 493+75.00 | 1031.88 | 12.00 | 0.0449 | 0.54 | | 1032.42 | 24.00 | 0.0449 | 1.08 | | 1033.50 | | | | | | |
| | | | | | 494+00.00 | 1032.03 | 12.00 | 0.0421 | 0.51 | | 1032.54 | 24.00 | 0.0421 | 1.01 | | 1033.55 | | | | | | |
| | | | | | 494+25.00 | 1032.20 | 12.00 | 0.0393 | 0.47 | | 1032.67 | 24.00 | 0.0393 | 0.94 | | 1033.61 | | | | | | |
| | | | | | 494+50.00 | 1032.40 | 12.00 | 0.0366 | 0.44 | | 1032.84 | 24.00 | 0.0366 | 0.88 | | 1033.72 | | | | | | |
| | | | | | 494+75.00 | 1032.63 | 12.00 | 0.0338 | 0.41 | | 1033.04 | 24.00 | 0.0338 | 0.81 | | 1033.85 | | | | | | |
| | | | | | 495+00.00 | 1032.88 | 12.00 | 0.0310 | 0.37 | | 1033.25 | 24.00 | 0.0310 | 0.74 | | 1034.00 | | | | | | |
| | | | | | 495+25.00 | 1033.13 | 12.00 | 0.0282 | 0.34 | 750 | 1033.47 | 24.00 | 0.0282 | 0.68 | 250 | 1034.15 | | | | | | |
| | | | | | 495+50.00 | 1033.37 | 12.00 | 0.0254 | 0.30 | | 1033.67 | 24.00 | 0.0254 | 0.61 | | 1034.28 | | | | | | |
| | | | | | 495+75.00 | 1033.62 | 12.00 | 0.0227 | 0.27 | | 1033.89 | 24.00 | 0.0227 | 0.54 | | 1034.44 | | | | | | |
| | | | | | 495+75.59 | 1033.63 | 12.00 | 0.0226 | 0.27 | | 1033.90 | 24.00 | 0.0226 | 0.54 | | 1034.44 | | | | | | P.T. |
| | | | | | 496+00.00 | 1033.87 | 12.00 | 0.0199 | 0.24 | | 1034.11 | 24.00 | 0.0199 | 0.48 | | 1034.59 | | | | | | |
| | | | | | 496+25.00 | 1034.12 | 12.00 | 0.0171 | 0.21 | | 1034.33 | 24.00 | 0.0171 | 0.41 | | 1034.74 | | | | | | |
| | | | | | 496+34.99 | 1034.22 | 12.00 | 0.0160 | 0.19 | | 1034.41 | 24.00 | 0.0160 | 0.38 | | 1034.80 | | | | | | R.C. |
| | | | | | 496+50.00 | 1034.37 | 12.00 | 0.0160 | 0.19 | | 1034.56 | 24.00 | 0.0135 | 0.32 | | 1034.89 | | | | | | |
| | | | | | 496+75.00 | 1034.61 | 12.00 | 0.0160 | 0.19 | | 1034.80 | 24.00 | 0.0093 | 0.22 | | 1035.03 | | | | | | |
| | | | | | 497+00.00 | 1034.86 | 12.00 | 0.0160 | 0.19 | | 1035.05 | 24.00 | 0.0052 | 0.12 | | 1035.18 | | | | | | |
| | | | | | 497+25.00 | 1035.11 | 12.00 | 0.0160 | 0.19 | | 1035.30 | 24.00 | 0.0010 | 0.02 | | 1035.33 | | | | | | |
| | | | | | 497+30.99 | 1035.17 | 12.00 | 0.0160 | 0.19 | | 1035.36 | 24.00 | 0.0000 | 0.00 | | 1035.36 | | | | | | H.F. |
| | | | | | 497+50.00 | 1035.36 | 12.00 | 0.0160 | 0.19 | | 1035.55 | 24.00 | -0.0032 | -0.08 | 250 | 1035.48 | | | | | | |
| | | | | | 497+75.00 | 1035.60 | 12.00 | 0.0160 | 0.19 | | 1035.79 | 24.00 | -0.0073 | -0.18 | | 1035.62 | | | | | | |
| | | | | | 498+00.00 | 1035.85 | 12.00 | 0.0160 | 0.19 | | 1036.04 | 24.00 | -0.0115 | -0.28 | | 1035.77 | | | | | | |
| | | | | | 498+25.00 | 1036.10 | 12.00 | 0.0160 | 0.19 | | 1036.29 | 24.00 | -0.0157 | -0.38 | | 1035.92 | | | | | | |
| | | | | | 498+26.99 | 1036.12 | 12.00 | 0.0160 | 0.19 | | 1036.31 | 24.00 | -0.0160 | -0.38 | | 1035.93 | | | | | | N.C. |

CALCULATED LRK
CHECKED PJF

SUPERELEVATION TABLE
NORTHBOUND I.R. 77

SUM-77/277/244
VARIOUS

809
1288

O:\2017\2017258\ProjectData\SUM\106002\Design\Roadway\Sheets\106002_GE004.dgn Sheet 1/11/2021 1:10:46 PM pfry

# CURVE 5 - SUPERELEVATION TABLE

| P.I. Sta. 517+45.80 | Dc = 2° 30′ 00″ |
|---|---|

| BASELINE CONTROL | | RIGHT INSIDE | | | | | RIGHT OUTSIDE | | | | | | | | | | | REMARKS |
|---|---|---|---|---|---|---|---|---|---|---|---|---|---|---|---|---|---|---|
| STATION | PROFILE GRADE | WIDTH | CROSS SLOPE | ELEVATION CORRECTION | TRANSITION RATE | EDGE ELEVATION | WIDTH | CROSS SLOPE | ELEVATION CORRECTION | TRANSITION RATE | EDGE ELEVATION | | | | | | | |
| 506+12.86 | 1043.91 | 12.00 | 0.0160 | 0.19 | | 1044.10 | 24.00 | -0.0160 | -0.38 | | 1043.72 | | | | | | | N.C. |
| 506+25.00 | 1044.03 | 12.00 | 0.0123 | 0.15 | | 1044.18 | 24.00 | -0.0160 | -0.38 | | 1043.79 | | | | | | | |
| 506+50.00 | 1044.27 | 12.00 | 0.0048 | 0.06 | 275 | 1044.33 | 24.00 | -0.0160 | -0.38 | | 1043.94 | | | | | | | |
| 506+65.75 | 1044.43 | 12.00 | 0.0000 | 0.00 | | 1044.43 | 24.00 | -0.0160 | -0.38 | | 1044.05 | | | | | | | T.S./H.F. |
| 506+75.00 | 1044.52 | 12.00 | -0.0028 | -0.03 | | 1044.49 | 24.00 | -0.0160 | -0.38 | | 1044.10 | | | | | | | |
| 507+00.00 | 1044.77 | 12.00 | -0.0104 | -0.12 | | 1044.65 | 24.00 | -0.0160 | -0.38 | | 1044.26 | | | | | | | |
| 507+18.64 | 1044.95 | 12.00 | -0.0160 | -0.19 | | 1044.76 | 24.00 | -0.0160 | -0.38 | | 1044.37 | | | | | | | R.C. |
| 507+25.00 | 1045.02 | 12.00 | -0.0166 | -0.20 | | 1044.82 | 24.00 | -0.0166 | -0.40 | | 1044.42 | | | | | | | |
| 507+50.00 | 1045.26 | 12.00 | -0.0192 | -0.23 | | 1045.03 | 24.00 | -0.0192 | -0.46 | | 1044.57 | | | | | | | |
| 507+75.00 | 1045.51 | 12.00 | -0.0217 | -0.26 | | 1045.25 | 24.00 | -0.0217 | -0.52 | | 1044.73 | | | | | | | |
| 508+00.00 | 1045.76 | 12.00 | -0.0242 | -0.29 | | 1045.47 | 24.00 | -0.0242 | -0.58 | | 1044.89 | | | | | | | |
| 508+25.00 | 1046.01 | 12.00 | -0.0267 | -0.32 | | 1045.69 | 24.00 | -0.0267 | -0.64 | | 1045.05 | | | | | | | |
| 508+50.00 | 1046.26 | 12.00 | -0.0292 | -0.35 | | 1045.91 | 24.00 | -0.0292 | -0.70 | | 1045.21 | | | | | | | |
| 508+75.00 | 1046.50 | 12.00 | -0.0318 | -0.38 | | 1046.12 | 24.00 | -0.0318 | -0.76 | | 1045.36 | | | | | | | |
| 509+00.00 | 1046.75 | 12.00 | -0.0343 | -0.41 | 826 | 1046.34 | 24.00 | -0.0343 | -0.82 | 275 | 1045.52 | | | | | | | |
| 509+25.00 | 1047.00 | 12.00 | -0.0368 | -0.44 | | 1046.56 | 24.00 | -0.0368 | -0.88 | | 1045.68 | | | | | | | |
| 509+50.00 | 1047.25 | 12.00 | -0.0393 | -0.47 | | 1046.78 | 24.00 | -0.0393 | -0.94 | | 1045.84 | | | | | | | |
| 509+75.00 | 1047.49 | 12.00 | -0.0418 | -0.50 | | 1046.99 | 24.00 | -0.0418 | -1.00 | | 1045.99 | | | | | | | |
| 510+00.00 | 1047.74 | 12.00 | -0.0444 | -0.53 | | 1047.21 | 24.00 | -0.0444 | -1.07 | | 1046.14 | | | | | | | |
| 510+25.00 | 1047.99 | 12.00 | -0.0469 | -0.56 | | 1047.43 | 24.00 | -0.0469 | -1.13 | | 1046.30 | | | | | | | |
| 510+50.00 | 1048.24 | 12.00 | -0.0494 | -0.59 | | 1047.65 | 24.00 | -0.0494 | -1.19 | | 1046.46 | | | | | | | |
| 510+65.75 | 1048.39 | 12.00 | -0.0510 | -0.61 | | 1047.78 | 24.00 | -0.0510 | -1.22 | | 1046.55 | | | | | | | S.C./F.S. |
| 510+75.00 | 1048.49 | 12.00 | -0.0510 | -0.61 | | 1047.88 | 24.00 | -0.0510 | -1.22 | | 1046.65 | | | | | | | |
| 511+00.00 | 1048.73 | 12.00 | -0.0510 | -0.61 | | 1048.12 | 24.00 | -0.0510 | -1.22 | | 1046.89 | | | | | | | |
| 511+25.00 | 1048.98 | 12.00 | -0.0510 | -0.61 | | 1048.37 | 24.00 | -0.0510 | -1.22 | | 1047.14 | | | | | | | |
| 511+50.00 | 1049.23 | 12.00 | -0.0510 | -0.61 | | 1048.62 | 24.00 | -0.0510 | -1.22 | | 1047.39 | | | | | | | |
| 511+75.00 | 1049.48 | 12.00 | -0.0510 | -0.61 | | 1048.87 | 24.00 | -0.0510 | -1.22 | | 1047.64 | | | | | | | |
| 512+00.00 | 1049.72 | 12.00 | -0.0510 | -0.61 | | 1049.11 | 24.00 | -0.0510 | -1.22 | | 1047.88 | | | | | | | |
| 512+25.00 | 1049.97 | 12.00 | -0.0510 | -0.61 | | 1049.36 | 24.00 | -0.0510 | -1.22 | | 1048.13 | | | | | | | |
| 512+50.00 | 1050.22 | 12.00 | -0.0510 | -0.61 | | 1049.61 | 24.00 | -0.0510 | -1.22 | | 1048.38 | | | | | | | F.S. |
| 512+75.00 | 1050.47 | 12.00 | -0.0540 | -0.65 | | 1049.82 | 24.00 | -0.0540 | -1.30 | | 1048.53 | | | | | | | |
| 513+00.00 | 1050.71 | 12.00 | -0.0569 | -0.68 | | 1050.03 | 24.00 | -0.0569 | -1.37 | | 1048.66 | | | | | | | |
| 513+25.00 | 1050.96 | 12.00 | -0.0599 | -0.72 | | 1050.24 | 24.00 | -0.0599 | -1.44 | | 1048.80 | | | | | | | |
| 513+50.00 | 1051.21 | 12.00 | -0.0628 | -0.75 | | 1050.46 | 24.00 | -0.0628 | -1.51 | | 1048.95 | | | | | | | |
| 513+75.00 | 1051.49 | 12.00 | -0.0658 | -0.79 | | 1050.70 | 24.00 | -0.0658 | -1.58 | | 1049.12 | | | | | | | |
| 514+00.00 | 1051.78 | 12.00 | -0.0687 | -0.82 | 705 | 1050.96 | 24.00 | -0.0687 | -1.65 | 235 | 1049.31 | | | | | | | |
| 514+25.00 | 1052.06 | 12.00 | -0.0717 | -0.86 | | 1051.20 | 24.00 | -0.0717 | -1.72 | | 1049.48 | | | | | | | |
| 514+50.00 | 1052.34 | 12.00 | -0.0746 | -0.90 | | 1051.44 | 24.00 | -0.0746 | -1.79 | | 1049.65 | | | | | | | |
| 514+75.00 | 1052.62 | 12.00 | -0.0776 | -0.93 | | 1051.69 | 24.00 | -0.0776 | -1.86 | | 1049.83 | | | | | | | |
| 515+00.00 | 1052.91 | 12.00 | -0.0805 | -0.97 | | 1051.94 | 24.00 | -0.0805 | -1.93 | | 1050.01 | | | | | | | |
| 515+25.00 | 1053.19 | 12.00 | -0.0835 | -1.00 | | 1052.19 | 24.00 | -0.0835 | -2.00 | | 1050.18 | | | | | | | EX. F.S. |
| 515+50.00 | 1053.47 | 12.00 | -0.0835 | -1.00 | | 1052.47 | 24.00 | -0.0835 | -2.00 | | 1050.46 | | | | | | | |
| 515+75.00 | 1053.75 | 12.00 | -0.0835 | -1.00 | | 1052.75 | 24.00 | -0.0835 | -2.00 | | 1050.74 | | | | | | | |
| 515+87.72 | 1053.90 | 12.00 | -0.0835 | -1.00 | | 1052.90 | 24.00 | -0.0835 | -2.00 | | 1050.89 | | | | | | | EXIST. |

*NOTE: END WORK AT STA. 514+85.00, LIMITS SHOWN PAST THAT STATION ARE TO BE CONSTRUCTED BY OTHERS AS PART OF THE SUM-76/77/8-8.42/9.77/0.00 DB (PID 102329) PROJECT

CALCULATED LRK
CHECKED PJF

SUPERELEVATION TABLE
NORTHBOUND I.R. 77

SUM-77/277/244
VARIOUS

810
1288

O:\2017\2017258\ProjectData\SUM\106002\Design\Roadway\Sheets\106002_GE005.dgn Sheet 1/11/2021 1:10:47 PM pfry

# CURVE 8 - SUPERELEVATION TABLE

| P.I. Sta. 482+91.41 | Dc = 1° 28' 03" |
|---|---|

| RAMP A AUXILIARY LANE | | | | | LEFT OUTSIDE | | | | | LEFT INSIDE | | | | | BASELINE CONTROL | | RIGHT SIDE | | | | | REMARKS |
|---|---|---|---|---|---|---|---|---|---|---|---|---|---|---|---|---|---|---|---|---|---|---|
| EDGE ELEVATION | TRANSITION RATE | ELEVATION CORRECTION | CROSS SLOPE | WIDTH | EDGE ELEVATION | TRANSITION RATE | ELEVATION CORRECTION | CROSS SLOPE | WIDTH | EDGE ELEVATION | TRANSITION RATE | ELEVATION CORRECTION | CROSS SLOPE | WIDTH | STATION | PROFILE GRADE | | | | | | |
| 1049.83 | | -0.38 | -0.0160 | 24.00 | 1050.21 | | -0.19 | -0.0160 | 12.00 | 1050.40 | | 0.38 | 0.0160 | 24.00 | *468+54.57 | 1050.02 | | | | | | N.C. |
| 1049.85 | | -0.38 | -0.0160 | 24.00 | 1050.23 | | -0.19 | -0.0160 | 12.00 | 1050.42 | | 0.30 | 0.0126 | 24.00 | *468+75.00 | 1050.12 | | | | | | |
| 1049.86 | | -0.38 | -0.0160 | 24.00 | 1050.24 | | -0.19 | -0.0160 | 12.00 | 1050.43 | | 0.20 | 0.0084 | 24.00 | *469+00.00 | 1050.23 | | | | | | |
| 1049.88 | | -0.38 | -0.0160 | 24.00 | 1050.26 | | -0.19 | -0.0160 | 12.00 | 1050.45 | | 0.10 | 0.0043 | 24.00 | *469+25.00 | 1050.35 | | | | | | |
| 1049.88 | | -0.38 | -0.0160 | 24.00 | 1050.26 | | -0.19 | -0.0160 | 12.00 | 1050.46 | 250 | 0.02 | 0.0007 | 24.00 | *469+46.33<br>469+42.49 | 1050.44 | | | | | | |
| 1049.88 | | -0.38 | -0.0160 | 24.00 | 1050.27 | | -0.19 | -0.0160 | 12.00 | 1050.46 | | 0.00 | 0.0000 | 24.00 | 469+46.73 | 1050.46 | | | | | | H.F. |
| 1049.89 | | -0.38 | -0.0160 | 24.00 | 1050.28 | | -0.19 | -0.0160 | 12.00 | 1050.47 | | -0.01 | -0.0005 | 24.00 | 469+50.00 | 1050.48 | | | | | | |
| 1049.90 | | -0.38 | -0.0160 | 24.00 | 1050.29 | | -0.19 | -0.0160 | 12.00 | 1050.48 | | -0.11 | -0.0047 | 24.00 | 469+75.00 | 1050.59 | | | | | | |
| 1049.92 | | -0.38 | -0.0160 | 24.00 | 1050.30 | | -0.19 | -0.0160 | 12.00 | 1050.50 | | -0.21 | -0.0089 | 24.00 | 470+00.00 | 1050.71 | | | | | | |
| 1049.99 | | -0.38 | -0.0160 | 24.00 | 1050.38 | | -0.19 | -0.0160 | 12.00 | 1050.57 | | -0.31 | -0.0130 | 24.00 | 470+25.00 | 1050.88 | | | | | | |
| 1050.05 | | -0.38 | -0.0160 | 24.00 | 1050.43 | | -0.19 | -0.0160 | 12.00 | 1050.63 | | -0.38 | -0.0160 | 24.00 | 470+42.73 | 1051.01 | | | | | | R.C. |
| 1050.07 | | -0.40 | -0.0165 | 24.00 | 1050.47 | | -0.20 | -0.0165 | 12.00 | 1050.66 | | -0.40 | -0.0165 | 24.00 | 470+50.00 | 1051.06 | | | | | | |
| 1050.15 | | -0.44 | -0.0182 | 24.00 | 1050.58 | | -0.22 | -0.0182 | 12.00 | 1050.80 | | -0.44 | -0.0182 | 24.00 | 470+75.00 | 1051.24 | | | | | | |
| 1050.22 | | -0.48 | -0.0198 | 24.00 | 1050.70 | | -0.24 | -0.0198 | 12.00 | 1050.93 | | -0.48 | -0.0198 | 24.00 | 471+00.00 | 1051.41 | | | | | | |
| 1050.30 | | -0.52 | -0.0215 | 24.00 | 1050.82 | | -0.26 | -0.0215 | 12.00 | 1051.07 | | -0.52 | -0.0215 | 24.00 | 471+25.00 | 1051.59 | | | | | | |
| 1050.37 | | -0.56 | -0.0232 | 24.00 | 1050.92 | | -0.28 | -0.0232 | 12.00 | 1051.20 | | -0.56 | -0.0232 | 24.00 | 471+50.00 | 1051.76 | | | | | | |
| 1050.45 | | -0.60 | -0.0248 | 24.00 | 1051.05 | | -0.30 | -0.0248 | 12.00 | 1051.34 | | -0.60 | -0.0248 | 24.00 | 471+75.00 | 1051.94 | | | | | | |
| 1050.53 | | -0.64 | -0.0265 | 24.00 | 1051.17 | | -0.32 | -0.0265 | 12.00 | 1051.48 | | -0.64 | -0.0265 | 24.00 | 472+00.00 | 1052.12 | | | | | | |
| 1050.60 | | -0.68 | -0.0282 | 24.00 | 1051.27 | | -0.34 | -0.0282 | 12.00 | 1051.61 | | -0.68 | -0.0282 | 24.00 | 472+25.00 | 1052.29 | | | | | | |
| 1050.68 | | -0.72 | -0.0298 | 24.00 | 1051.40 | | -0.36 | -0.0298 | 12.00 | 1051.75 | | -0.72 | -0.0298 | 24.00 | 472+50.00 | 1052.47 | | | | | | |
| 1050.69 | 250 | -0.72 | -0.0301 | 24.00 | 1051.42 | 417 | -0.36 | -0.0301 | 12.00 | 1051.78 | 625 | -0.72 | -0.0301 | 24.00 | 472+54.68 | 1052.50 | | | | | | P.C. |
| 1050.75 | | -0.76 | -0.0315 | 24.00 | 1051.51 | | -0.38 | -0.0315 | 12.00 | 1051.88 | | -0.76 | -0.0315 | 24.00 | 472+75.00 | 1052.64 | | | | | | |
| 1050.83 | | -0.80 | -0.0332 | 24.00 | 1051.62 | | -0.40 | -0.0332 | 12.00 | 1052.02 | | -0.80 | -0.0332 | 24.00 | 473+00.00 | 1052.82 | | | | | | |
| 1050.90 | | -0.84 | -0.0348 | 24.00 | 1051.74 | | -0.42 | -0.0348 | 12.00 | 1052.15 | | -0.84 | -0.0348 | 24.00 | 473+25.00 | 1052.99 | | | | | | |
| 1050.97 | | -0.88 | -0.0365 | 24.00 | 1051.85 | | -0.44 | -0.0365 | 12.00 | 1052.28 | | -0.88 | -0.0365 | 24.00 | 473+50.00 | 1053.16 | | | | | | |
| 1051.02 | | -0.92 | -0.0382 | 24.00 | 1051.93 | | -0.46 | -0.0382 | 12.00 | 1052.39 | | -0.92 | -0.0382 | 24.00 | 473+75.00 | 1053.31 | | | | | | |
| 1051.07 | | -0.96 | -0.0398 | 24.00 | 1052.03 | | -0.48 | -0.0398 | 12.00 | 1052.50 | | -0.96 | -0.0398 | 24.00 | 474+00.00 | 1053.46 | | | | | | |
| 1051.11 | | -1.00 | -0.0415 | 24.00 | 1052.11 | | -0.50 | -0.0415 | 12.00 | 1052.60 | | -1.00 | -0.0415 | 24.00 | 474+25.00 | 1053.60 | | | | | | |
| 1051.14 | | -1.04 | -0.0432 | 24.00 | 1052.17 | | -0.52 | -0.0432 | 12.00 | 1052.69 | | -1.04 | -0.0432 | 24.00 | 474+50.00 | 1053.73 | | | | | | |
| 1051.16 | | -1.08 | -0.0448 | 24.00 | 1052.24 | | -0.54 | -0.0448 | 12.00 | 1052.77 | | -1.08 | -0.0448 | 24.00 | 474+75.00 | 1053.85 | | | | | | |
| 1051.17 | | -1.08 | -0.0452 | 24.00 | 1052.25 | | -0.54 | -0.0452 | 12.00 | 1052.80 | | -1.08 | -0.0452 | 24.00 | 474+80.73 | 1053.88 | | | | | | F.S. |
| 1051.26 | | -1.08 | -0.0452 | 24.00 | 1052.34 | | -0.54 | -0.0452 | 12.00 | 1052.89 | | -1.08 | -0.0452 | 24.00 | 475+00.00 | 1053.97 | | | | | | |
| 1051.36 | | -1.08 | -0.0452 | 24.00 | 1052.44 | | -0.54 | -0.0452 | 12.00 | 1052.99 | | -1.08 | -0.0452 | 24.00 | 475+25.00 | 1054.07 | | | | | | |
| 1051.46 | | -1.08 | -0.0452 | 24.00 | 1052.54 | | -0.54 | -0.0452 | 12.00 | 1053.09 | | -1.08 | -0.0452 | 24.00 | 475+50.00 | 1054.17 | | | | | | |
| 1051.55 | | -1.08 | -0.0452 | 24.00 | 1052.63 | | -0.54 | -0.0452 | 12.00 | 1053.18 | | -1.08 | -0.0452 | 24.00 | 475+75.00 | 1054.26 | | | | | | |
| 1051.64 | | -1.08 | -0.0452 | 24.00 | 1052.72 | | -0.54 | -0.0452 | 12.00 | 1053.27 | | -1.08 | -0.0452 | 24.00 | 476+00.00 | 1054.35 | | | | | | |
| 1051.71 | | -1.08 | -0.0452 | 24.00 | 1052.79 | | -0.54 | -0.0452 | 12.00 | 1053.34 | | -1.08 | -0.0452 | 24.00 | 476+25.00 | 1054.42 | | | | | | |
| 1051.78 | | -1.08 | -0.0452 | 24.00 | 1052.86 | | -0.54 | -0.0452 | 12.00 | 1053.41 | | -1.08 | -0.0452 | 24.00 | 476+50.00 | 1054.49 | | | | | | |
| 1051.84 | | -1.08 | -0.0452 | 24.00 | 1052.92 | | -0.54 | -0.0452 | 12.00 | 1053.47 | | -1.08 | -0.0452 | 24.00 | 476+75.00 | 1054.55 | | | | | | |
| 1051.89 | | -1.08 | -0.0452 | 24.00 | 1052.97 | | -0.54 | -0.0452 | 12.00 | 1053.52 | | -1.08 | -0.0452 | 24.00 | 477+00.00 | 1054.60 | | | | | | |
| 1051.93 | | -1.08 | -0.0452 | 24.00 | 1053.01 | | -0.54 | -0.0452 | 12.00 | 1053.56 | | -1.08 | -0.0452 | 24.00 | 477+25.00 | 1054.64 | | | | | | |
| 1051.96 | | -1.08 | -0.0452 | 24.00 | 1053.04 | | -0.54 | -0.0452 | 12.00 | 1053.59 | | -1.08 | -0.0452 | 24.00 | 477+50.00 | 1054.67 | | | | | | |
| 1051.99 | | -1.08 | -0.0452 | 24.00 | 1053.07 | | -0.54 | -0.0452 | 12.00 | 1053.62 | | -1.08 | -0.0452 | 24.00 | 477+75.00 | 1054.70 | | | | | | |
| 1052.01 | | -1.08 | -0.0452 | 24.00 | 1053.09 | | -0.54 | -0.0452 | 12.00 | 1053.64 | | -1.08 | -0.0452 | 24.00 | 478+00.00 | 1054.72 | | | | | | |
| 1052.02 | | -1.08 | -0.0452 | 24.00 | 1053.10 | | -0.54 | -0.0452 | 12.00 | 1053.65 | | -1.08 | -0.0452 | 24.00 | 478+25.00 | 1054.73 | | | | | | |
| 1052.02 | | -1.08 | -0.0452 | 24.00 | 1053.10 | | -0.54 | -0.0452 | 12.00 | 1053.65 | | -1.08 | -0.0452 | 24.00 | 478+50.00 | 1054.73 | | | | | | |
| 1052.01 | | -1.08 | -0.0452 | 24.00 | 1053.09 | | -0.54 | -0.0452 | 12.00 | 1053.64 | | -1.08 | -0.0452 | 24.00 | 478+75.00 | 1054.72 | | | | | | |
| 1052.00 | | -1.08 | -0.0452 | 24.00 | 1053.08 | | -0.54 | -0.0452 | 12.00 | 1053.63 | | -1.08 | -0.0452 | 24.00 | 479+00.00 | 1054.71 | | | | | | |
| 1051.97 | | -1.08 | -0.0452 | 24.00 | 1053.05 | | -0.54 | -0.0452 | 12.00 | 1053.60 | | -1.08 | -0.0452 | 24.00 | 479+25.00 | 1054.68 | | | | | | |
| 1051.94 | | -1.08 | -0.0452 | 24.00 | 1053.02 | | -0.54 | -0.0452 | 12.00 | 1053.57 | | -1.08 | -0.0452 | 24.00 | 479+50.00 | 1054.65 | | | | | | |

*NOTE: STATIONS ARE BASED ON THE CENTERLINE R/W & CONST. I.R. 77

CALCULATED LRK
CHECKED PJF

SUPERELEVATION TABLE
SOUTHBOUND I.R. 77

SUM-77/277/244
VARIOUS

811
1288

O:\2017\2017258\ProjectData\SUM\106002\Design\Roadway\Sheets\106002_GE006.dgn Sheet 1/11/2021 1:10:48 PM pfry

# CURVE 8 - SUPERELEVATION TABLE

| P.I. Sta. 482+91.41 | Dc = 1° 28' 03" |
|---|---|

| RAMP A AUXILIARY LANE | | | | | LEFT OUTSIDE | | | | | LEFT INSIDE | | | | | BASELINE CONTROL | | RIGHT SIDE | | | | | REMARKS |
|---|---|---|---|---|---|---|---|---|---|---|---|---|---|---|---|---|---|---|---|---|---|---|
| EDGE ELEVATION | TRANSITION RATE | ELEVATION CORRECTION | CROSS SLOPE | WIDTH | EDGE ELEVATION | TRANSITION RATE | ELEVATION CORRECTION | CROSS SLOPE | WIDTH | EDGE ELEVATION | TRANSITION RATE | ELEVATION CORRECTION | CROSS SLOPE | WIDTH | STATION | PROFILE GRADE | | | | | | |
| 1051.90 | | -1.08 | -0.0452 | 24.00 | 1052.98 | | -0.54 | -0.0452 | 12.00 | 1053.53 | | -1.08 | -0.0452 | 24.00 | 479+75.00 | 1054.61 | | | | | | |
| 1051.85 | | -1.08 | -0.0452 | 24.00 | 1052.93 | | -0.54 | -0.0452 | 12.00 | 1053.48 | | -1.08 | -0.0452 | 24.00 | 480+00.00 | 1054.56 | | | | | | |
| 1051.80 | | -1.08 | -0.0452 | 24.00 | 1052.88 | | -0.54 | -0.0452 | 12.00 | 1053.43 | | -1.08 | -0.0452 | 24.00 | 480+25.00 | 1054.51 | | | | | | |
| 1051.74 | | -1.08 | -0.0452 | 24.00 | 1052.82 | | -0.54 | -0.0452 | 12.00 | 1053.37 | | -1.08 | -0.0452 | 24.00 | 480+50.00 | 1054.45 | | | | | | |
| 1051.66 | | -1.08 | -0.0452 | 24.00 | 1052.74 | | -0.54 | -0.0452 | 12.00 | 1053.29 | | -1.08 | -0.0452 | 24.00 | 480+75.00 | 1054.37 | | | | | | |
| 1051.58 | | -1.08 | -0.0452 | 24.00 | 1052.66 | | -0.54 | -0.0452 | 12.00 | 1053.21 | | -1.08 | -0.0452 | 24.00 | 481+00.00 | 1054.29 | | | | | | |
| 1051.50 | | -1.08 | -0.0452 | 24.00 | 1052.58 | | -0.54 | -0.0452 | 12.00 | 1053.13 | | -1.08 | -0.0452 | 24.00 | 481+25.00 | 1054.21 | | | | | | |
| 1051.40 | | -1.08 | -0.0452 | 24.00 | 1052.48 | | -0.54 | -0.0452 | 12.00 | 1053.03 | | -1.08 | -0.0452 | 24.00 | 481+50.00 | 1054.11 | | | | | | |
| 1051.30 | | -1.08 | -0.0452 | 24.00 | 1052.38 | | -0.54 | -0.0452 | 12.00 | 1052.93 | | -1.08 | -0.0452 | 24.00 | 481+75.00 | 1054.01 | | | | | | |
| 1051.18 | | -1.08 | -0.0452 | 24.00 | 1052.26 | | -0.54 | -0.0452 | 12.00 | 1052.81 | | -1.08 | -0.0452 | 24.00 | 482+00.00 | 1053.89 | | | | | | |
| 1051.06 | | -1.08 | -0.0452 | 24.00 | 1052.14 | | -0.54 | -0.0452 | 12.00 | 1052.69 | | -1.08 | -0.0452 | 24.00 | 482+25.00 | 1053.77 | | | | | | |
| 1050.94 | | -1.08 | -0.0452 | 24.00 | 1052.02 | | -0.54 | -0.0452 | 12.00 | 1052.57 | | -1.08 | -0.0452 | 24.00 | 482+50.00 | 1053.65 | | | | | | |
| 1050.80 | | -1.08 | -0.0452 | 24.00 | 1051.88 | | -0.54 | -0.0452 | 12.00 | 1052.43 | | -1.08 | -0.0452 | 24.00 | 482+75.00 | 1053.51 | | | | | | |
| 1050.65 | | -1.08 | -0.0452 | 24.00 | 1051.73 | | -0.54 | -0.0452 | 12.00 | 1052.28 | | -1.08 | -0.0452 | 24.00 | 483+00.00 | 1053.36 | | | | | | |
| 1050.50 | | -1.08 | -0.0452 | 24.00 | 1051.58 | | -0.54 | -0.0452 | 12.00 | 1052.13 | | -1.08 | -0.0452 | 24.00 | 483+25.00 | 1053.21 | | | | | | |
| 1050.34 | | -1.08 | -0.0452 | 24.00 | 1051.42 | | -0.54 | -0.0452 | 12.00 | 1051.97 | | -1.08 | -0.0452 | 24.00 | 483+50.00 | 1053.05 | | | | | | |
| 1050.17 | | -1.08 | -0.0452 | 24.00 | 1051.25 | | -0.54 | -0.0452 | 12.00 | 1051.80 | | -1.08 | -0.0452 | 24.00 | 483+75.00 | 1052.88 | | | | | | |
| 1049.99 | | -1.08 | -0.0452 | 24.00 | 1051.07 | | -0.54 | -0.0452 | 12.00 | 1051.62 | | -1.08 | -0.0452 | 24.00 | 484+00.00 | 1052.70 | | | | | | |
| 1049.81 | | -1.08 | -0.0452 | 24.00 | 1050.89 | | -0.54 | -0.0452 | 12.00 | 1051.44 | | -1.08 | -0.0452 | 24.00 | 484+25.00 | 1052.52 | | | | | | |
| 1049.62 | | -1.08 | -0.0452 | 24.00 | 1050.70 | | -0.54 | -0.0452 | 12.00 | 1051.25 | | -1.08 | -0.0452 | 24.00 | 484+50.00 | 1052.33 | | | | | | |
| 1049.42 | | -1.08 | -0.0452 | 24.00 | 1050.50 | | -0.54 | -0.0452 | 12.00 | 1051.05 | | -1.08 | -0.0452 | 24.00 | 484+75.00 | 1052.13 | | | | | | |
| 1049.22 | | -1.08 | -0.0452 | 24.00 | 1050.30 | | -0.54 | -0.0452 | 12.00 | 1050.85 | | -1.08 | -0.0452 | 24.00 | 485+00.00 | 1051.93 | | | | | | |
| 1049.02 | | -1.08 | -0.0452 | 24.00 | 1050.10 | | -0.54 | -0.0452 | 12.00 | 1050.65 | | -1.08 | -0.0452 | 24.00 | 485+25.00 | 1051.73 | | | | | | |
| 1048.83 | | -1.08 | -0.0452 | 24.00 | 1049.91 | | -0.54 | -0.0452 | 12.00 | 1050.46 | | -1.08 | -0.0452 | 24.00 | 485+50.00 | 1051.54 | | | | | | |
| 1048.63 | | -1.08 | -0.0452 | 24.00 | 1049.71 | | -0.54 | -0.0452 | 12.00 | 1050.26 | | -1.08 | -0.0452 | 24.00 | 485+75.00 | 1051.34 | | | | | | |
| 1048.43 | | -1.08 | -0.0452 | 24.00 | 1049.51 | | -0.54 | -0.0452 | 12.00 | 1050.06 | | -1.08 | -0.0452 | 24.00 | 486+00.00 | 1051.14 | | | | | | |
| 1048.23 | | -1.08 | -0.0452 | 24.00 | 1049.31 | | -0.54 | -0.0452 | 12.00 | 1049.86 | | -1.08 | -0.0452 | 24.00 | 486+25.00 | 1050.94 | | | | | | |
| 1048.04 | | -1.08 | -0.0452 | 24.00 | 1049.12 | | -0.54 | -0.0452 | 12.00 | 1049.67 | | -1.08 | -0.0452 | 24.00 | 486+50.00 | 1050.75 | | | | | | |
| 1047.93 | | -1.08 | -0.0452 | 24.00 | 1049.01 | | -0.54 | -0.0452 | 12.00 | 1049.56 | | -1.08 | -0.0452 | 24.00 | 486+63.69 | 1050.64 | | | | | | |
| | | | | | 1048.92 | | -1.08 | -0.0452 | 24.00 | 1050.01 | | -0.54 | -0.0452 | 12.00 | 486+75.00 | 1050.55 | | | | | | |
| | | | | | 1048.72 | | -1.08 | -0.0452 | 24.00 | 1049.81 | | -0.54 | -0.0452 | 12.00 | 487+00.00 | 1050.35 | | | | | | |
| | | | | | 1048.52 | | -1.08 | -0.0452 | 24.00 | 1049.61 | | -0.54 | -0.0452 | 12.00 | 487+25.00 | 1050.15 | | | | | | |
| | | | | | 1048.33 | | -1.08 | -0.0452 | 24.00 | 1049.42 | | -0.54 | -0.0452 | 12.00 | 487+50.00 | 1049.96 | | | | | | |
| | | | | | 1048.13 | | -1.08 | -0.0452 | 24.00 | 1049.22 | | -0.54 | -0.0452 | 12.00 | 487+75.00 | 1049.76 | | | | | | |
| | | | | | 1047.93 | | -1.08 | -0.0452 | 24.00 | 1049.02 | | -0.54 | -0.0452 | 12.00 | 488+00.00 | 1049.56 | | | | | | |
| | | | | | 1047.73 | | -1.08 | -0.0452 | 24.00 | 1048.82 | | -0.54 | -0.0452 | 12.00 | 488+25.00 | 1049.36 | | | | | | |
| | | | | | 1047.54 | | -1.08 | -0.0452 | 24.00 | 1048.63 | | -0.54 | -0.0452 | 12.00 | 488+50.00 | 1049.17 | | | | | | |
| | | | | | 1047.34 | | -1.08 | -0.0452 | 24.00 | 1048.43 | | -0.54 | -0.0452 | 12.00 | 488+75.00 | 1048.97 | | | | | | |
| | | | | | 1047.14 | | -1.08 | -0.0452 | 24.00 | 1048.23 | | -0.54 | -0.0452 | 12.00 | 489+00.00 | 1048.77 | | | | | | |
| | | | | | 1046.94 | | -1.08 | -0.0452 | 24.00 | 1048.03 | | -0.54 | -0.0452 | 12.00 | 489+25.00 | 1048.57 | | | | | | |
| | | | | | 1046.75 | | -1.08 | -0.0452 | 24.00 | 1047.84 | | -0.54 | -0.0452 | 12.00 | 489+50.00 | 1048.38 | | | | | | |
| | | | | | 1046.55 | | -1.08 | -0.0452 | 24.00 | 1047.64 | | -0.54 | -0.0452 | 12.00 | 489+75.00 | 1048.18 | | | | | | |
| | | | | | 1046.35 | | -1.08 | -0.0452 | 24.00 | 1047.44 | | -0.54 | -0.0452 | 12.00 | 490+00.00 | 1047.98 | | | | | | |
| | | | | | 1046.15 | | -1.08 | -0.0452 | 24.00 | 1047.24 | | -0.54 | -0.0452 | 12.00 | 490+25.00 | 1047.78 | | | | | | |
| | | | | | 1045.96 | | -1.08 | -0.0452 | 24.00 | 1047.05 | | -0.54 | -0.0452 | 12.00 | 490+50.00 | 1047.59 | | | | | | |
| | | | | | 1045.76 | | -1.08 | -0.0452 | 24.00 | 1046.85 | | -0.54 | -0.0452 | 12.00 | 490+75.00 | 1047.39 | | | | | | |
| | | | | | 1045.56 | | -1.08 | -0.0452 | 24.00 | 1046.65 | | -0.54 | -0.0452 | 12.00 | 491+00.00 | 1047.19 | | | | | | |
| | | | | | 1045.36 | | -1.08 | -0.0452 | 24.00 | 1046.45 | | -0.54 | -0.0452 | 12.00 | 491+25.00 | 1046.99 | | | | | | |

CALCULATED LRK
CHECKED PJF

SUPERELEVATION TABLE
SOUTHBOUND I.R. 77

SUM-77/277/244
VARIOUS

812
1288

O:\2017\2017258\ProjectData\SUM\106002\Design\Roadway\Sheets\106002_GE007.dgn Sheet 1/11/2021 1:10:49 PM pfry

# CURVE 8 - SUPERELEVATION TABLE

| P.I. Sta. 482+91.41 | Dc = 1° 28' 03" |
|---|---|

| | | | | | LEFT OUTSIDE | | | | | LEFT INSIDE | | | | | BASELINE CONTROL | | RIGHT SIDE | | | | | REMARKS |
|---|---|---|---|---|---|---|---|---|---|---|---|---|---|---|---|---|---|---|---|---|---|---|
| | | | | | EDGE ELEVATION | TRANSITION RATE | ELEVATION CORRECTION | CROSS SLOPE | WIDTH | EDGE ELEVATION | TRANSITION RATE | ELEVATION CORRECTION | CROSS SLOPE | WIDTH | STATION | PROFILE GRADE | | | | | | |
| | | | | | 1045.20 | | -1.08 | -0.0452 | 24.00 | 1046.29 | | -0.54 | -0.0452 | 12.00 | 491+45.74 | 1046.83 | | | | | | F.S. |
| | | | | | 1045.19 | | -1.07 | -0.0447 | 24.00 | 1046.26 | | -0.54 | -0.0447 | 12.00 | 491+50.00 | 1046.80 | | | | | | |
| | | | | | 1045.09 | | -1.01 | -0.0419 | 24.00 | 1046.10 | | -0.50 | -0.0419 | 12.00 | 491+75.00 | 1046.60 | | | | | | |
| | | | | | 1044.99 | | -0.94 | -0.0392 | 24.00 | 1045.93 | | -0.47 | -0.0392 | 12.00 | 492+00.00 | 1046.40 | | | | | | |
| | | | | | 1044.89 | | -0.87 | -0.0364 | 24.00 | 1045.76 | | -0.44 | -0.0364 | 12.00 | 492+25.00 | 1046.20 | | | | | | |
| | | | | | 1044.80 | | -0.81 | -0.0336 | 24.00 | 1045.61 | | -0.40 | -0.0336 | 12.00 | 492+50.00 | 1046.01 | | | | | | |
| | | | | | 1044.70 | | -0.74 | -0.0308 | 24.00 | 1045.44 | | -0.37 | -0.0308 | 12.00 | 492+75.00 | 1045.81 | | | | | | |
| | | | | | 1044.68 | 250 | -0.72 | -0.0301 | 24.00 | 1045.40 | 750 | -0.36 | -0.0301 | 12.00 | 492+81.37 | 1045.76 | | | | | | P.T. |
| | | | | | 1044.60 | | -0.67 | -0.0281 | 24.00 | 1045.27 | | -0.34 | -0.0281 | 12.00 | 493+00.00 | 1045.61 | | | | | | |
| | | | | | 1044.50 | | -0.61 | -0.0253 | 24.00 | 1045.11 | | -0.30 | -0.0253 | 12.00 | 493+25.00 | 1045.41 | | | | | | |
| | | | | | 1044.41 | | -0.54 | -0.0225 | 24.00 | 1044.95 | | -0.27 | -0.0225 | 12.00 | 493+50.00 | 1045.22 | | | | | | |
| | | | | | 1044.31 | | -0.47 | -0.0197 | 24.00 | 1044.78 | | -0.24 | -0.0197 | 12.00 | 493+75.00 | 1045.02 | | | | | | |
| | | | | | 1044.21 | | -0.41 | -0.0169 | 24.00 | 1044.62 | | -0.20 | -0.0169 | 12.00 | 494+00.00 | 1044.82 | | | | | | |
| | | | | | 1044.17 | | -0.38 | -0.0160 | 24.00 | 1044.56 | | -0.19 | -0.0160 | 12.00 | 494+08.54 | 1044.75 | | | | | | R.C. |
| | | | | | 1044.11 | | -0.38 | -0.0160 | 24.00 | 1044.49 | | -0.13 | -0.0105 | 12.00 | 494+25.00 | 1044.62 | | | | | | |
| | | | | | 1044.02 | | -0.38 | -0.0160 | 24.00 | 1044.40 | | -0.03 | -0.0022 | 12.00 | 494+50.00 | 1044.43 | | | | | | |
| | | | | | 1043.99 | | -0.38 | -0.0160 | 24.00 | 1044.37 | | 0.00 | 0.0000 | 12.00 | 494+56.54 | 1044.37 | | | | | | H.F. |
| | | | | | 1043.92 | | -0.38 | -0.0160 | 24.00 | 1044.30 | 250 | 0.07 | 0.0062 | 12.00 | 494+75.00 | 1044.23 | | | | | | |
| | | | | | 1043.82 | | -0.38 | -0.0160 | 24.00 | 1044.20 | | 0.17 | 0.0145 | 12.00 | 495+00.00 | 1044.03 | | | | | | |
| | | | | | 1043.80 | | -0.38 | -0.0160 | 24.00 | 1044.18 | | 0.19 | 0.0160 | 12.00 | 495+04.54 | 1043.99 | | | | | | N.C. |

CALCULATED LRK
CHECKED PJF

SUPERELEVATION TABLE
SOUTHBOUND I.R. 77

SUM-77/277/244
VARIOUS

813
1288

O:\2017\2017258\ProjectData\SUM\106002\Design\Roadway\Sheets\106002_GE008.dgn Sheet 1/11/2021 1:10:49 PM pfry

# CURVE 9 - SUPERELEVATION TABLE

| P.I. Sta. 515+02.63 | Dc = 2° 00' 00" |
|---|---|

| RAMP B-1 ACCEL LANE | | | | | LEFT OUTSIDE | | | | | LEFT INSIDE | | | | | BASELINE CONTROL | | RAMP C-2 DECEL LANE | | | | | |
|---|---|---|---|---|---|---|---|---|---|---|---|---|---|---|---|---|---|---|---|---|---|---|
| EDGE ELEVATION | TRANSITION RATE | ELEVATION CORRECTION | CROSS SLOPE | WIDTH | EDGE ELEVATION | TRANSITION RATE | ELEVATION CORRECTION | CROSS SLOPE | WIDTH | EDGE ELEVATION | TRANSITION RATE | ELEVATION CORRECTION | CROSS SLOPE | WIDTH | STATION | PROFILE GRADE | WIDTH | CROSS SLOPE | ELEVATION CORRECTION | TRANSITION RATE | EDGE ELEVATION | REMARKS |
| 1038.33 | | -0.21 | -0.0160 | 13.02 | 1038.54 | | -0.38 | -0.0160 | 24.00 | 1038.92 | | 0.19 | 0.0160 | 12.00 | 500+95.48 | 1038.73 | | | | | | N.C. |
| 1038.32 | | -0.21 | -0.0160 | 13.11 | 1038.52 | | -0.37 | -0.0153 | 24.00 | 1038.89 | | 0.19 | 0.0160 | 12.00 | 501+00.00 | 1038.70 | | | | | | |
| 1038.20 | | -0.22 | -0.0160 | 13.61 | 1038.41 | | -0.28 | -0.0116 | 24.00 | 1038.69 | | 0.19 | 0.0160 | 12.00 | 501+25.00 | 1038.50 | | | | | | |
| 1038.08 | | -0.23 | -0.0160 | 14.09 | 1038.31 | | -0.19 | -0.0081 | 24.00 | 1038.50 | | 0.19 | 0.0160 | 12.00 | 501+48.92 | 1038.31 | 12.00 | -0.0247 | -0.30 | | 1038.01 | |
| 1038.08 | | -0.23 | -0.0160 | 14.12 | 1038.30 | | -0.19 | -0.0079 | 24.00 | 1038.49 | | 0.19 | 0.0160 | 12.00 | 501+50.00 | 1038.30 | 12.00 | -0.0243 | -0.29 | 221 | 1038.01 | |
| 1037.99 | | -0.23 | -0.0160 | 14.56 | 1038.22 | | -0.11 | -0.0046 | 24.00 | 1038.33 | | 0.19 | 0.0160 | 12.00 | 501+72.02 | 1038.14 | 12.00 | -0.0160 | -0.19 | | 1037.95 | |
| 1037.98 | | -0.23 | -0.0160 | 14.62 | 1038.21 | | -0.10 | -0.0042 | 24.00 | 1038.31 | | 0.19 | 0.0160 | 12.00 | 501+75.00 | 1038.12 | 12.00 | -0.0160 | -0.19 | | 1037.93 | |
| 1037.88 | | -0.24 | -0.0160 | 15.12 | 1038.12 | 280 | -0.01 | -0.0005 | 24.00 | 1038.13 | | 0.19 | 0.0160 | 12.00 | 502+00.00 | 1037.94 | 12.00 | -0.0160 | -0.19 | | 1037.75 | |
| 1037.87 | | -0.24 | -0.0160 | 15.18 | 1038.11 | | 0.00 | 0.0000 | 24.00 | 1038.11 | | 0.19 | 0.0160 | 12.00 | 502+03.04 | 1037.92 | 12.00 | -0.0160 | -0.19 | | 1037.73 | T.S./H.F. |
| 1037.80 | | -0.25 | -0.0160 | 15.62 | 1038.05 | | 0.08 | 0.0033 | 24.00 | 1037.97 | | 0.19 | 0.0160 | 12.00 | 502+25.00 | 1037.78 | 12.00 | -0.0160 | -0.19 | | 1037.59 | |
| 1037.74 | | -0.26 | -0.0160 | 16.00 | 1038.00 | | 0.15 | 0.0061 | 24.00 | 1037.85 | | 0.19 | 0.0160 | 12.00 | 502+43.78 | 1037.66 | 12.00 | -0.0160 | -0.19 | | 1037.47 | |
| | | | | | 1037.98 | | 0.17 | 0.0070 | 24.00 | 1037.81 | | 0.19 | 0.0160 | 12.00 | 502+50.00 | 1037.62 | 12.00 | -0.0160 | -0.19 | | 1037.43 | |
| | | | | | 1037.90 | | 0.26 | 0.0107 | 24.00 | 1037.64 | | 0.19 | 0.0160 | 12.00 | 502+75.00 | 1037.45 | 12.00 | -0.0160 | -0.19 | | 1037.26 | |
| | | | | | 1037.83 | | 0.35 | 0.0144 | 24.00 | 1037.48 | | 0.19 | 0.0160 | 12.00 | 503+00.00 | 1037.29 | 12.00 | -0.0160 | -0.19 | | 1037.10 | |
| | | | | | 1037.80 | | 0.38 | 0.0160 | 24.00 | 1037.41 | | 0.19 | 0.0160 | 12.00 | 503+10.60 | 1037.22 | 12.00 | -0.0160 | -0.19 | | 1037.03 | R.C. |
| | | | | | 1037.76 | | 0.42 | 0.0174 | 24.00 | 1037.34 | | 0.21 | 0.0174 | 12.00 | 503+25.00 | 1037.13 | 12.00 | -0.0160 | -0.19 | | 1036.94 | |
| | | | | | 1037.69 | | 0.48 | 0.0199 | 24.00 | 1037.21 | | 0.24 | 0.0199 | 12.00 | 503+50.00 | 1036.97 | 12.00 | -0.0160 | -0.19 | | 1036.78 | |
| | | | | | 1037.61 | | 0.54 | 0.0224 | 24.00 | 1037.07 | | 0.27 | 0.0224 | 12.00 | 503+75.00 | 1036.80 | 12.00 | -0.0160 | -0.19 | | 1036.61 | |
| | | | | | 1037.55 | | 0.59 | 0.0244 | 24.00 | 1036.96 | | 0.29 | 0.0244 | 12.00 | 503+95.44 | 1036.67 | 12.00 | -0.0160 | -0.19 | | 1036.48 | |
| | | | | | 1037.54 | | 0.60 | 0.0249 | 24.00 | 1036.94 | | 0.30 | 0.0249 | 12.00 | 504+00.00 | 1036.64 | | | | | | |
| | | | | | 1037.46 | | 0.66 | 0.0273 | 24.00 | 1036.81 | | 0.33 | 0.0273 | 12.00 | 504+25.00 | 1036.48 | | | | | | |
| | | | | | 1037.39 | 280 | 0.72 | 0.0298 | 24.00 | 1036.68 | 840 | 0.36 | 0.0298 | 12.00 | 504+50.00 | 1036.32 | | | | | | |
| | | | | | 1037.31 | | 0.78 | 0.0323 | 24.00 | 1036.54 | | 0.39 | 0.0323 | 12.00 | 504+75.00 | 1036.15 | | | | | | |
| | | | | | 1037.24 | | 0.84 | 0.0348 | 24.00 | 1036.41 | | 0.42 | 0.0348 | 12.00 | 505+00.00 | 1035.99 | | | | | | |
| | | | | | 1037.17 | | 0.90 | 0.0373 | 24.00 | 1036.28 | | 0.45 | 0.0373 | 12.00 | 505+25.00 | 1035.83 | | | | | | |
| | | | | | 1037.10 | | 0.95 | 0.0397 | 24.00 | 1036.15 | | 0.48 | 0.0397 | 12.00 | 505+50.00 | 1035.67 | | | | | | |
| | | | | | 1037.02 | | 1.01 | 0.0422 | 24.00 | 1036.01 | | 0.51 | 0.0422 | 12.00 | 505+75.00 | 1035.50 | | | | | | |
| | | | | | 1036.95 | | 1.07 | 0.0447 | 24.00 | 1035.88 | | 0.54 | 0.0447 | 12.00 | 506+00.00 | 1035.34 | | | | | | |
| | | | | | 1036.94 | | 1.08 | 0.0450 | 24.00 | 1035.86 | | 0.54 | 0.0450 | 12.00 | 506+03.04 | 1035.32 | | | | | | S.C./F.S. |
| | | | | | 1036.80 | | 1.08 | 0.0450 | 24.00 | 1035.72 | | 0.54 | 0.0450 | 12.00 | 506+25.00 | 1035.18 | | | | | | |
| | | | | | 1036.64 | | 1.08 | 0.0450 | 24.00 | 1035.56 | | 0.54 | 0.0450 | 12.00 | 506+50.00 | 1035.02 | | | | | | |
| | | | | | 1036.47 | | 1.08 | 0.0450 | 24.00 | 1035.39 | | 0.54 | 0.0450 | 12.00 | 506+75.00 | 1034.85 | | | | | | |
| | | | | | 1036.31 | | 1.08 | 0.0450 | 24.00 | 1035.23 | | 0.54 | 0.0450 | 12.00 | 507+00.00 | 1034.69 | | | | | | |
| | | | | | 1036.15 | | 1.08 | 0.0450 | 24.00 | 1035.07 | | 0.54 | 0.0450 | 12.00 | 507+25.00 | 1034.53 | | | | | | |
| | | | | | 1035.99 | | 1.08 | 0.0450 | 24.00 | 1034.91 | | 0.54 | 0.0450 | 12.00 | 507+50.00 | 1034.37 | | | | | | |
| | | | | | 1035.82 | | 1.08 | 0.0450 | 24.00 | 1034.74 | | 0.54 | 0.0450 | 12.00 | 507+75.00 | 1034.20 | | | | | | |
| | | | | | 1035.66 | | 1.08 | 0.0450 | 24.00 | 1034.58 | | 0.54 | 0.0450 | 12.00 | 508+00.00 | 1034.04 | | | | | | |
| | | | | | 1035.51 | | 1.08 | 0.0450 | 24.00 | 1034.43 | | 0.54 | 0.0450 | 12.00 | 508+25.00 | 1033.89 | | | | | | |
| | | | | | 1035.39 | | 1.08 | 0.0450 | 24.00 | 1034.31 | | 0.54 | 0.0450 | 12.00 | 508+50.00 | 1033.77 | | | | | | |
| | | | | | 1035.32 | | 1.08 | 0.0450 | 24.00 | 1034.24 | | 0.54 | 0.0450 | 12.00 | 508+75.00 | 1033.70 | | | | | | |
| | | | | | 1035.30 | | 1.08 | 0.0450 | 24.00 | 1034.22 | | 0.54 | 0.0450 | 12.00 | 509+00.00 | 1033.68 | | | | | | |
| | | | | | 1035.32 | | 1.08 | 0.0450 | 24.00 | 1034.24 | | 0.54 | 0.0450 | 12.00 | 509+25.00 | 1033.70 | | | | | | |
| | | | | | 1035.38 | | 1.08 | 0.0450 | 24.00 | 1034.30 | | 0.54 | 0.0450 | 12.00 | 509+50.00 | 1033.76 | | | | | | |
| | | | | | 1035.49 | | 1.08 | 0.0450 | 24.00 | 1034.41 | | 0.54 | 0.0450 | 12.00 | 509+75.00 | 1033.87 | | | | | | |
| | | | | | 1035.64 | | 1.08 | 0.0450 | 24.00 | 1034.56 | | 0.54 | 0.0450 | 12.00 | 510+00.00 | 1034.02 | | | | | | |
| | | | | | 1035.84 | | 1.08 | 0.0450 | 24.00 | 1034.76 | | 0.54 | 0.0450 | 12.00 | 510+25.00 | 1034.22 | | | | | | |
| | | | | | 1036.08 | | 1.08 | 0.0450 | 24.00 | 1035.00 | | 0.54 | 0.0450 | 12.00 | 510+50.00 | 1034.46 | | | | | | |
| | | | | | 1036.37 | | 1.08 | 0.0450 | 24.00 | 1035.29 | | 0.54 | 0.0450 | 12.00 | 510+75.00 | 1034.75 | | | | | | |
| | | | | | 1036.70 | | 1.08 | 0.0450 | 24.00 | 1035.62 | | 0.54 | 0.0450 | 12.00 | 511+00.00 | 1035.08 | | | | | | |
| | | | | | 1037.07 | | 1.08 | 0.0450 | 24.00 | 1035.99 | | 0.54 | 0.0450 | 12.00 | 511+25.00 | 1035.45 | | | | | | |
| | | | | | 1037.49 | | 1.08 | 0.0450 | 24.00 | 1036.41 | | 0.54 | 0.0450 | 12.00 | 511+50.00 | 1035.87 | | | | | | |
| | | | | | 1037.95 | | 1.08 | 0.0450 | 24.00 | 1036.87 | | 0.54 | 0.0450 | 12.00 | 511+75.00 | 1036.33 | | | | | | |
| | | | | | 1038.46 | | 1.08 | 0.0450 | 24.00 | 1037.38 | | 0.54 | 0.0450 | 12.00 | 512+00.00 | 1036.84 | | | | | | |
| | | | | | 1039.01 | | 1.08 | 0.0450 | 24.00 | 1037.93 | | 0.54 | 0.0450 | 12.00 | 512+25.00 | 1037.39 | | | | | | |

CALCULATED LRK
CHECKED PJF

SUPERELEVATION TABLE
SOUTHBOUND I.R. 77

SUM-77/277/244
VARIOUS

814
1288

O:\2017\2017258\ProjectData\SUM\106002\Design\Roadway\Sheets\106002_GE009.dgn Sheet 1/11/2021 1:10:50 PM pfry

# CURVE 9 - SUPERELEVATION TABLE

| P.I. Sta. 515+02.63 | Dc = 2° 00' 00" |
|---|---|

| | | | | | LEFT OUTSIDE | | | | | LEFT INSIDE | | | | | BASELINE CONTROL | | | | | | | REMARKS |
|---|---|---|---|---|---|---|---|---|---|---|---|---|---|---|---|---|---|---|---|---|---|---|
| | | | | | EDGE ELEVATION | TRANSITION RATE | ELEVATION CORRECTION | CROSS SLOPE | WIDTH | EDGE ELEVATION | TRANSITION RATE | ELEVATION CORRECTION | CROSS SLOPE | WIDTH | STATION | PROFILE GRADE | | | | | | |
| | | | | | 1039.60 | | 1.08 | 0.0450 | 24.00 | 1038.52 | | 0.54 | 0.0450 | 12.00 | 512+50.00 | 1037.98 | | | | | | |
| | | | | | 1040.24 | | 1.08 | 0.0450 | 24.00 | 1039.16 | | 0.54 | 0.0450 | 12.00 | 512+75.00 | 1038.62 | | | | | | |
| | | | | | 1040.93 | | 1.08 | 0.0450 | 24.00 | 1039.85 | | 0.54 | 0.0450 | 12.00 | 513+00.00 | 1039.31 | | | | | | |
| | | | | | 1041.63 | | 1.08 | 0.0450 | 24.00 | 1040.55 | | 0.54 | 0.0450 | 12.00 | 513+25.00 | 1040.01 | | | | | | |
| | | | | | 1042.34 | | 1.08 | 0.0450 | 24.00 | 1041.26 | | 0.54 | 0.0450 | 12.00 | 513+50.00 | 1040.72 | | | | | | |
| | | | | | 1043.05 | | 1.08 | 0.0450 | 24.00 | 1041.97 | | 0.54 | 0.0450 | 12.00 | 513+75.00 | 1041.43 | | | | | | |
| | | | | | 1043.59 | | 1.08 | 0.0450 | 24.00 | 1042.51 | | 0.54 | 0.0450 | 12.00 | 513+94.27 | 1041.97 | | | | | | F.S. |
| | | | | | 1043.85 | | 1.14 | 0.0477 | 24.00 | 1042.70 | | 0.57 | 0.0477 | 12.00 | 514+00.00 | 1042.13 | | | | | | |
| | | | | | 1044.65 | | 1.21 | 0.0504 | 24.00 | 1043.44 | | 0.60 | 0.0504 | 12.00 | 514+25.00 | 1042.84 | | | | | | |
| | | | | | 1045.47 | 222 | 1.28 | 0.0532 | 24.00 | 1044.19 | 668 | 0.64 | 0.0532 | 12.00 | 514+50.00 | 1043.55 | | | | | | |
| | | | | | 1046.26 | | 1.34 | 0.0559 | 24.00 | 1044.92 | | 0.67 | 0.0559 | 12.00 | 514+75.00 | 1044.25 | | | | | | |
| | | | | | 1047.07 | | 1.41 | 0.0586 | 24.00 | 1045.66 | | 0.70 | 0.0586 | 12.00 | 515+00.00 | 1044.96 | | | | | | |
| | | | | | 1047.88 | | 1.47 | 0.0613 | 24.00 | 1046.41 | | 0.74 | 0.0613 | 12.00 | 515+25.00 | 1045.67 | | | | | | EX. F.S. |
| | | | | | 1048.51 | | 1.47 | 0.0613 | 24.00 | 1047.04 | | 0.74 | 0.0613 | 12.00 | 515+50.00 | 1046.30 | | | | | | |
| | | | | | 1049.15 | | 1.47 | 0.0613 | 24.00 | 1047.68 | | 0.74 | 0.0613 | 12.00 | 515+75.00 | 1046.94 | | | | | | |
| | | | | | 1049.39 | | 1.47 | 0.0613 | 24.00 | 1047.92 | | 0.74 | 0.0613 | 12.00 | 515+84.18 | 1047.18 | | | | | | EXIST. |

*NOTE: END WORK AT STA. 514+95.00, LIMITS SHOWN PAST THAT STATION ARE TO BE CONSTRUCTED BY OTHERS AS PART OF THE SUM-76/77/8-8.42/9.77/0.00 DB (PID 102329) PROJECT

CALCULATED LRK
CHECKED PJF

SUPERELEVATION TABLE
SOUTHBOUND I.R. 77

SUM-77/277/244
VARIOUS

815
1288

O:\2017\2017258\ProjectData\SUM\106002\Design\Roadway\Sheets\106002_GE010.dgn Sheet 1/11/2021 1:10:51 PM pfry

## CURVE 12 - SUPERELEVATION TABLE

P.I. Sta. 88+67.18 | Dc = 2° 00' 00"

| LEFT SIDE | | | | | BASELINE CONTROL | | RIGHT SIDE | | | | | | REMARKS |
|---|---|---|---|---|---|---|---|---|---|---|---|---|---|
| EDGE ELEVATION | TRANSITION RATE | ELEVATION CORRECTION | CROSS SLOPE | WIDTH | STATION | PROFILE GRADE | WIDTH | CROSS SLOPE | ELEVATION CORRECTION | TRANSITION RATE | EDGE ELEVATION | |
| | | | | | 86+63.69 | 1047.92 | 24.00 | 0.0452 | 1.08 | 222 | 1049.00 | P.C./77 F.S. |
| | | | | | 86+64.76 | 1047.92 | 24.00 | 0.0450 | 1.08 | | 1049.00 | F.S. |
| | | | | | 86+75.00 | 1047.83 | 24.00 | 0.0450 | 1.08 | | 1048.91 | |
| | | | | | 87+00.00 | 1047.64 | 24.00 | 0.0450 | 1.08 | | 1048.71 | |
| | | | | | 87+25.00 | 1047.43 | 24.00 | 0.0450 | 1.08 | | 1048.51 | |
| | | | | | 87+50.00 | 1047.22 | 24.00 | 0.0450 | 1.08 | | 1048.30 | |
| | | | | | 87+75.00 | 1047.01 | 24.00 | 0.0450 | 1.08 | | 1048.09 | |
| | | | | | 88+00.00 | 1046.80 | 24.00 | 0.0450 | 1.08 | | 1047.88 | |
| | | | | | 88+25.00 | 1046.58 | 24.00 | 0.0450 | 1.08 | | 1047.66 | |
| | | | | | 88+50.00 | 1046.36 | 24.00 | 0.0450 | 1.08 | | 1047.44 | |
| | | | | | 88+75.00 | 1046.14 | 24.00 | 0.0450 | 1.08 | | 1047.22 | |
| | | | | | 89+00.00 | 1045.92 | 24.00 | 0.0450 | 1.08 | | 1047.00 | |
| | | | | | 89+25.00 | 1045.69 | 24.00 | 0.0450 | 1.08 | | 1046.77 | |
| | | | | | 89+50.00 | 1045.46 | 24.00 | 0.0450 | 1.08 | | 1046.54 | |
| | | | | | 89+75.00 | 1045.23 | 24.00 | 0.0450 | 1.08 | | 1046.31 | |
| | | | | | 90+00.00 | 1045.00 | 24.00 | 0.0450 | 1.08 | | 1046.08 | |
| | | | | | 90+25.00 | 1044.75 | 24.00 | 0.0450 | 1.08 | | 1045.83 | |
| | | | | | 90+50.00 | 1044.51 | 24.00 | 0.0450 | 1.08 | | 1045.59 | |
| | | | | | 90+70.00 | 1044.31 | 24.00 | 0.0450 | 1.08 | | 1045.39 | C.S./F.S. |

## SPIRAL 13 - SUPERELEVATION TABLE

P.I. Sta. 92+70.10 |

| LEFT SIDE | | | | | BASELINE CONTROL | | RIGHT SIDE | | | | | | REMARKS |
|---|---|---|---|---|---|---|---|---|---|---|---|---|---|
| EDGE ELEVATION | TRANSITION RATE | ELEVATION CORRECTION | CROSS SLOPE | WIDTH | STATION | PROFILE GRADE | WIDTH | CROSS SLOPE | ELEVATION CORRECTION | TRANSITION RATE | EDGE ELEVATION | |
| | | | | | 90+70.00 | 1044.31 | 24.00 | 0.0450 | 1.08 | 1190 | 1045.39 | C.S./F.S. |
| | | | | | 90+75.00 | 1044.26 | 24.00 | 0.0452 | 1.08 | | 1045.34 | |
| | | | | | 91+00.00 | 1044.02 | 24.00 | 0.0461 | 1.11 | | 1045.13 | |
| | | | | | 91+25.00 | 1043.84 | 24.00 | 0.0469 | 1.13 | | 1044.97 | |
| | | | | | 91+50.00 | 1043.66 | 24.00 | 0.0478 | 1.15 | | 1044.81 | |
| | | | | | 91+75.00 | 1043.48 | 24.00 | 0.0487 | 1.17 | | 1044.65 | |
| | | | | | 92+00.00 | 1043.30 | 24.00 | 0.0496 | 1.19 | | 1044.49 | |
| | | | | | 92+25.00 | 1043.12 | 24.00 | 0.0504 | 1.21 | | 1044.33 | |
| | | | | | 92+50.00 | 1042.94 | 24.00 | 0.0513 | 1.23 | | 1044.17 | |
| | | | | | 92+75.00 | 1042.76 | 24.00 | 0.0522 | 1.25 | | 1044.01 | |
| | | | | | 93+00.00 | 1042.58 | 24.00 | 0.0531 | 1.27 | | 1043.85 | |
| | | | | | 93+25.00 | 1042.40 | 24.00 | 0.0539 | 1.29 | | 1043.69 | |
| | | | | | 93+50.00 | 1042.22 | 24.00 | 0.0548 | 1.32 | | 1043.54 | |
| | | | | | 93+70.00 | 1042.07 | 24.00 | 0.0555 | 1.33 | | 1043.40 | S.C./F.S. |

CALCULATED LRK | CHECKED PJF

SUPERELEVATION TABLE
RAMP A

SUM-77/277/244
VARIOUS

816
1288

O:\2017\2017258\ProjectData\SUM\106002\Design\Roadway\Sheets\106002_GE011.dgn Sheet 1/11/2021 1:10:51 PM pfry

## CURVE 14 - SUPERELEVATION TABLE

P.I. Sta. 99+36.72 | Dc = 3° 45′ 00″

| LEFT SIDE | | | | | BASELINE CONTROL | | RIGHT SIDE | | | | | | REMARKS |
|---|---|---|---|---|---|---|---|---|---|---|---|---|---|
| EDGE ELEVATION | TRANSITION RATE | ELEVATION CORRECTION | CROSS SLOPE | WIDTH | STATION | PROFILE GRADE | WIDTH | CROSS SLOPE | ELEVATION CORRECTION | TRANSITION RATE | EDGE ELEVATION | |
| | | | | | 93+70.00 | 1042.07 | 24.00 | 0.0555 | 1.33 | | 1043.40 | S.C./F.S. |
| | | | | | 93+75.00 | 1042.04 | 24.00 | 0.0555 | 1.33 | | 1043.37 | |
| | | | | | 94+00.00 | 1041.86 | 24.00 | 0.0555 | 1.33 | | 1043.19 | |
| | | | | | 94+25.00 | 1041.68 | 24.00 | 0.0555 | 1.33 | | 1043.01 | |
| | | | | | 94+50.00 | 1041.52 | 24.00 | 0.0555 | 1.33 | | 1042.85 | |
| | | | | | 94+75.00 | 1041.39 | 24.00 | 0.0555 | 1.33 | | 1042.72 | |
| | | | | | 95+00.00 | 1041.31 | 24.00 | 0.0555 | 1.33 | | 1042.64 | |
| | | | | | 95+25.00 | 1041.27 | 24.00 | 0.0555 | 1.33 | | 1042.60 | |
| | | | | | 95+50.00 | 1041.26 | 24.00 | 0.0555 | 1.33 | | 1042.59 | |
| | | | | | 95+75.00 | 1041.29 | 24.00 | 0.0555 | 1.33 | | 1042.62 | |
| | | | | | 96+00.00 | 1041.36 | 24.00 | 0.0555 | 1.33 | | 1042.69 | |
| | | | | | 96+25.00 | 1041.47 | 24.00 | 0.0555 | 1.33 | | 1042.80 | |
| | | | | | 96+50.00 | 1041.62 | 24.00 | 0.0555 | 1.33 | | 1042.95 | |
| | | | | | 96+75.00 | 1041.81 | 24.00 | 0.0555 | 1.33 | | 1043.14 | |
| | | | | | 97+00.00 | 1042.03 | 24.00 | 0.0555 | 1.33 | | 1043.36 | |
| | | | | | 97+25.00 | 1042.30 | 24.00 | 0.0555 | 1.33 | | 1043.63 | |
| | | | | | 97+50.00 | 1042.60 | 24.00 | 0.0555 | 1.33 | | 1043.93 | |
| | | | | | 97+75.00 | 1042.94 | 24.00 | 0.0555 | 1.33 | | 1044.27 | |
| | | | | | 98+00.00 | 1043.32 | 24.00 | 0.0555 | 1.33 | | 1044.65 | |
| | | | | | 98+25.00 | 1043.74 | 24.00 | 0.0555 | 1.33 | | 1045.07 | |
| | | | | | 98+50.00 | 1044.18 | 24.00 | 0.0555 | 1.33 | | 1045.51 | |
| | | | | | 98+75.00 | 1044.62 | 24.00 | 0.0555 | 1.33 | | 1045.95 | |
| | | | | | 99+00.00 | 1045.06 | 24.00 | 0.0555 | 1.33 | | 1046.39 | |
| | | | | | 99+25.00 | 1045.49 | 24.00 | 0.0555 | 1.33 | | 1046.82 | |
| | | | | | 99+50.00 | 1045.93 | 24.00 | 0.0555 | 1.33 | | 1047.26 | |
| | | | | | 99+75.00 | 1046.37 | 24.00 | 0.0555 | 1.33 | | 1047.70 | |
| | | | | | 100+00.00 | 1046.81 | 24.00 | 0.0555 | 1.33 | | 1048.14 | |
| | | | | | 100+25.00 | 1047.25 | 24.00 | 0.0555 | 1.33 | | 1048.58 | |
| | | | | | 100+50.00 | 1047.68 | 24.00 | 0.0555 | 1.33 | | 1049.01 | |
| | | | | | 100+75.00 | 1048.11 | 24.00 | 0.0555 | 1.33 | | 1049.44 | |
| | | | | | 101+00.00 | 1048.50 | 24.00 | 0.0555 | 1.33 | | 1049.83 | |
| | | | | | 101+25.00 | 1048.86 | 24.00 | 0.0555 | 1.33 | | 1050.19 | |
| | | | | | 101+50.00 | 1049.20 | 24.00 | 0.0555 | 1.33 | | 1050.53 | |
| | | | | | 101+75.00 | 1049.50 | 24.00 | 0.0555 | 1.33 | | 1050.83 | |
| | | | | | 102+00.00 | 1049.78 | 24.00 | 0.0555 | 1.33 | | 1051.11 | |
| | | | | | 102+25.00 | 1050.02 | 24.00 | 0.0555 | 1.33 | | 1051.35 | |
| | | | | | 102+50.00 | 1050.24 | 24.00 | 0.0555 | 1.33 | | 1051.57 | |
| | | | | | 102+75.00 | 1050.42 | 24.00 | 0.0555 | 1.33 | | 1051.75 | |
| | | | | | 103+00.00 | 1050.58 | 24.00 | 0.0555 | 1.33 | | 1051.91 | |
| | | | | | 103+25.00 | 1050.71 | 24.00 | 0.0555 | 1.33 | | 1052.04 | |
| | | | | | 103+50.00 | 1050.80 | 24.00 | 0.0555 | 1.33 | | 1052.13 | |
| | | | | | 103+75.00 | 1050.87 | 24.00 | 0.0555 | 1.33 | | 1052.20 | |
| | | | | | 104+00.00 | 1050.91 | 24.00 | 0.0555 | 1.33 | | 1052.24 | |
| | | | | | 104+25.00 | 1050.91 | 24.00 | 0.0555 | 1.33 | | 1052.24 | |
| | | | | | 104+50.00 | 1050.89 | 24.00 | 0.0555 | 1.33 | | 1052.22 | |
| | | | | | 104+55.37 | 1050.88 | 24.00 | 0.0555 | 1.33 | | 1052.21 | C.S./F.S. |

## SPIRAL 15 - SUPERELEVATION TABLE

P.I. Sta. 105+22.06

| LEFT SIDE | | | | | BASELINE CONTROL | | RIGHT SIDE | | | | | | REMARKS |
|---|---|---|---|---|---|---|---|---|---|---|---|---|---|
| EDGE ELEVATION | TRANSITION RATE | ELEVATION CORRECTION | CROSS SLOPE | WIDTH | STATION | PROFILE GRADE | WIDTH | CROSS SLOPE | ELEVATION CORRECTION | TRANSITION RATE | EDGE ELEVATION | |
| | | | | | 104+55.37 | 1050.88 | 24.00 | 0.0555 | 1.33 | | 1052.21 | C.S./F.S. |
| | | | | | 104+75.00 | 1050.84 | 24.00 | 0.0519 | 1.25 | | 1052.09 | |
| | | | | | 105+00.00 | 1050.76 | 24.00 | 0.0473 | 1.14 | | 1051.90 | |
| | | | | | 105+25.00 | 1050.64 | 24.00 | 0.0427 | 1.02 | | 1051.66 | |
| | | | | | 105+50.00 | 1050.50 | 24.00 | 0.0381 | 0.91 | | 1051.41 | |
| | | | | | 105+75.00 | 1050.33 | 24.00 | 0.0335 | 0.80 | 226 | 1051.13 | |
| | | | | | 106+00.00 | 1050.13 | 24.00 | 0.0289 | 0.69 | | 1050.82 | |
| | | | | | 106+25.00 | 1049.90 | 24.00 | 0.0243 | 0.58 | | 1050.48 | |
| | | | | | 106+50.00 | 1049.64 | 24.00 | 0.0197 | 0.47 | | 1050.11 | |
| | | | | | 106+55.37 | 1049.58 | 24.00 | 0.0187 | 0.45 | | 1050.03 | S.C./F.S. |

CALCULATED LRK | CHECKED PJF

**SUPERELEVATION TABLE RAMP A**

**SUM-77/277/244 VARIOUS**

817
1288

O:\2017\2017258\ProjectData\SUM\106002\Design\Roadway\Sheets\106002_GE012.dgn Sheet 1/11/2021 1:10:52 PM pfry

# CURVE 16 - SUPERELEVATION TABLE

| P.I. Sta. 110+34.76 | Dc = 0° 35' 00" |
|---|---|

| LEFT SIDE | | | | | BASELINE CONTROL | | RIGHT SIDE | | | | | | REMARKS |
|---|---|---|---|---|---|---|---|---|---|---|---|---|---|
| EDGE ELEVATION | TRANSITION RATE | ELEVATION CORRECTION | CROSS SLOPE | WIDTH | STATION | PROFILE GRADE | WIDTH | CROSS SLOPE | ELEVATION CORRECTION | TRANSITION RATE | EDGE ELEVATION | |
| | | | | | 106+55.37 | 1049.58 | 24.00 | 0.0187 | 0.45 | | 1050.03 | S.C./F.S. |
| | | | | | 106+75.00 | 1049.35 | 24.00 | 0.0187 | 0.45 | | 1049.80 | |
| | | | | | 107+00.00 | 1049.03 | 24.00 | 0.0187 | 0.45 | | 1049.48 | |
| | | | | | 107+25.00 | 1048.70 | 24.00 | 0.0187 | 0.45 | | 1049.15 | |
| | | | | | 107+50.00 | 1048.36 | 24.00 | 0.0187 | 0.45 | | 1048.81 | |
| | | | | | 107+75.00 | 1048.03 | 24.00 | 0.0187 | 0.45 | | 1048.48 | |
| | | | | | 108+00.00 | 1047.69 | 24.00 | 0.0187 | 0.45 | | 1048.14 | |
| | | | | | 108+25.00 | 1047.37 | 24.00 | 0.0187 | 0.45 | | 1047.82 | |
| | | | | | 108+50.00 | 1047.05 | 24.00 | 0.0187 | 0.45 | | 1047.50 | |
| | | | | | 108+75.00 | 1046.72 | 24.00 | 0.0187 | 0.45 | | 1047.17 | |
| | | | | | 108+89.94 | 1046.53 | 26.00 | 0.0187 | 0.49 | | 1047.02 | |
| | | | | | 109+00.00 | 1046.38 | 25.47 | 0.0187 | 0.48 | | 1046.86 | |
| | | | | | 109+25.00 | 1046.03 | 24.19 | 0.0187 | 0.45 | | 1046.48 | |
| | | | | | 109+50.00 | 1045.67 | 22.97 | 0.0187 | 0.43 | | 1046.10 | |
| | | | | | 109+75.00 | 1045.32 | 21.82 | 0.0187 | 0.41 | | 1045.73 | |
| | | | | | 110+00.00 | 1044.97 | 20.73 | 0.0187 | 0.39 | | 1045.36 | |
| | | | | | 110+25.00 | 1044.62 | 19.71 | 0.0187 | 0.37 | | 1044.99 | |
| | | | | | 110+50.00 | 1044.26 | 18.75 | 0.0187 | 0.35 | | 1044.61 | |
| | | | | | 110+75.00 | 1043.91 | 17.85 | 0.0187 | 0.33 | | 1044.24 | |
| | | | | | 111+00.00 | 1043.54 | 17.02 | 0.0187 | 0.32 | | 1043.86 | |
| | | | | | 111+25.00 | 1043.17 | 16.25 | 0.0187 | 0.30 | | 1043.47 | |
| | | | | | 111+50.00 | 1042.79 | 15.55 | 0.0187 | 0.29 | | 1043.08 | |
| | | | | | 111+75.00 | 1042.41 | 14.91 | 0.0187 | 0.28 | | 1042.69 | |
| | | | | | 112+00.00 | 1042.02 | 14.33 | 0.0187 | 0.27 | | 1042.29 | |
| | | | | | 112+25.00 | 1041.66 | 13.82 | 0.0187 | 0.26 | | 1041.92 | |
| | | | | | 112+50.00 | 1041.32 | 13.37 | 0.0187 | 0.25 | | 1041.57 | |
| | | | | | 112+75.00 | 1040.94 | 12.98 | 0.0187 | 0.24 | | 1041.18 | |
| | | | | | 113+00.00 | 1040.57 | 12.66 | 0.0187 | 0.24 | | 1040.81 | |
| | | | | | 113+25.00 | 1040.20 | 12.40 | 0.0187 | 0.23 | | 1040.43 | |
| | | | | | 113+50.00 | 1039.83 | 12.21 | 0.0187 | 0.23 | | 1040.06 | |
| | | | | | 113+75.00 | 1039.47 | 12.08 | 0.0187 | 0.23 | | 1039.70 | |
| | | | | | 114+00.00 | 1039.09 | 12.01 | 0.0187 | 0.22 | | 1039.31 | |
| | | | | | 114+13.78 = 237+37.85 | 1038.88 | 12.00 | 0.0187 | 0.22 | | 1039.10 | P.T./F.S. |

| | |
|---|---|
| | |

| LEFT SIDE | | | | | *SAWCUT 32' RT. (C/L I.R. 277) | | RIGHT SIDE | | | | | | REMARKS |
|---|---|---|---|---|---|---|---|---|---|---|---|---|---|
| EDGE ELEVATION | TRANSITION RATE | ELEVATION CORRECTION | CROSS SLOPE | WIDTH | STATION | PROFILE GRADE | WIDTH | CROSS SLOPE | ELEVATION CORRECTION | TRANSITION RATE | EDGE ELEVATION | |
| | | | | | 237+00.00 | 1038.52 | 11.42 | -0.0244 | -0.28 | | 1038.24 | EXIST. |
| | | | | | 237+25.00 | 1038.91 | 11.80 | -0.0206 | -0.24 | 553 | 1038.67 | |
| | | | | | 237+37.85 = 114+13.78 | 1039.10 | 12.00 | -0.0187 | -0.22 | | 1038.88 | P.T./F.S. |

*NOTE: ELEVATION IS EXISTING ELEVATION AT SAWCUT 32' RIGHT OF EXISTING C/L I.R. 277 (EXISTING ELEVATIONS TO BE VERIFIED IN FIELD)

CALCULATED LRK
CHECKED PJF

**SUPERELEVATION TABLE RAMP A**

**SUM-77/277/244 VARIOUS**

818
1288

O:\2017\2017258\ProjectData\SUM\106002\Design\Roadway\Sheets\106002_GE013.dgn Sheet 1/11/2021 1:10:53 PM pfry

# CURVE 21 - SUPERELEVATION TABLE

P.I. Sta. 201+73.97 | Dc = 6° 45′ 00″

| LEFT SIDE | | | | | BASELINE CONTROL | | RIGHT SIDE | | | | | | REMARKS |
|---|---|---|---|---|---|---|---|---|---|---|---|---|---|
| EDGE ELEVATION | TRANSITION RATE | ELEVATION CORRECTION | CROSS SLOPE | WIDTH | STATION | PROFILE GRADE | WIDTH | CROSS SLOPE | ELEVATION CORRECTION | TRANSITION RATE | EDGE ELEVATION | |
| | | | | | 197+05.36 | 1033.33 | 16.00 | 0.0160 | 0.26 | | 1033.59 | S.T./N.C. |
| | | | | | 197+25.00 | 1033.46 | 16.00 | 0.0203 | 0.32 | | 1033.78 | |
| | | | | | 197+50.00 | 1033.63 | 16.00 | 0.0258 | 0.41 | | 1034.04 | |
| | | | | | 197+75.00 | 1033.80 | 16.00 | 0.0313 | 0.50 | | 1034.30 | |
| | | | | | 198+00.00 | 1033.96 | 16.00 | 0.0368 | 0.59 | 284 | 1034.55 | |
| | | | | | 198+25.00 | 1034.11 | 16.00 | 0.0423 | 0.68 | | 1034.79 | |
| | | | | | 198+50.00 | 1034.27 | 16.00 | 0.0478 | 0.76 | | 1035.03 | |
| | | | | | 198+75.00 | 1034.41 | 16.00 | 0.0533 | 0.85 | | 1035.26 | |
| | | | | | 199+00.00 | 1034.55 | 16.00 | 0.0588 | 0.94 | | 1035.49 | |
| | | | | | 199+05.36 | 1034.60 | 16.00 | 0.0600 | 0.96 | | 1035.56 | S.C./F.S. |
| | | | | | 199+25.00 | 1035.79 | 16.00 | 0.0600 | 0.96 | | 1036.75 | |
| | | | | | 199+50.00 | 1036.14 | 16.00 | 0.0600 | 0.96 | | 1037.10 | |
| | | | | | 199+75.00 | 1036.50 | 16.00 | 0.0600 | 0.96 | | 1037.46 | |
| | | | | | 200+00.00 | 1036.74 | 16.00 | 0.0600 | 0.96 | | 1037.70 | |
| | | | | | 200+25.00 | 1036.00 | 16.00 | 0.0600 | 0.96 | | 1036.96 | |
| | | | | | 200+50.00 | 1036.26 | 16.00 | 0.0600 | 0.96 | | 1037.22 | |
| | | | | | 200+75.00 | 1036.59 | 16.00 | 0.0600 | 0.96 | | 1037.55 | |
| | | | | | 201+00.00 | 1036.91 | 16.00 | 0.0600 | 0.96 | | 1037.87 | |
| | | | | | 201+25.00 | 1037.25 | 16.00 | 0.0600 | 0.96 | | 1038.21 | |
| | | | | | 201+50.00 | 1037.58 | 16.00 | 0.0600 | 0.96 | | 1038.54 | |
| | | | | | 201+75.00 | 1038.03 | 16.00 | 0.0600 | 0.96 | | 1038.99 | |
| | | | | | 202+00.00 | 1038.47 | 16.00 | 0.0600 | 0.96 | | 1039.43 | |
| | | | | | 202+25.00 | 1038.98 | 16.00 | 0.0600 | 0.96 | | 1039.94 | |
| | | | | | 202+50.00 | 1039.49 | 16.00 | 0.0600 | 0.96 | | 1040.45 | |
| | | | | | 202+75.00 | 1039.99 | 16.00 | 0.0600 | 0.96 | | 1040.95 | |
| | | | | | 203+00.00 | 1040.50 | 16.00 | 0.0600 | 0.96 | | 1041.46 | |
| | | | | | 203+25.00 | 1041.03 | 16.00 | 0.0600 | 0.96 | | 1041.99 | |
| | | | | | 203+50.00 | 1041.56 | 16.00 | 0.0600 | 0.96 | | 1042.52 | |
| | | | | | 203+75.00 | 1042.09 | 16.00 | 0.0600 | 0.96 | | 1043.05 | |
| | | | | | 203+99.50 | 1042.61 | 16.00 | 0.0600 | 0.96 | | 1043.57 | C.S./F.S. |
| | | | | | 204+00.00 | 1042.62 | 16.00 | 0.0599 | 0.96 | | 1043.58 | |
| | | | | | 204+25.00 | 1043.18 | 16.00 | 0.0544 | 0.87 | | 1044.05 | |
| | | | | | 204+50.00 | 1043.74 | 16.00 | 0.0489 | 0.78 | | 1044.52 | |
| | | | | | 204+75.00 | 1044.30 | 16.00 | 0.0434 | 0.69 | | 1044.99 | |
| | | | | | 205+00.00 | 1044.85 | 16.00 | 0.0379 | 0.61 | 284 | 1045.46 | |
| | | | | | 205+25.00 | 1045.37 | 16.00 | 0.0324 | 0.52 | | 1045.89 | |
| | | | | | 205+50.00 | 1045.88 | 16.00 | 0.0269 | 0.43 | | 1046.31 | |
| | | | | | 205+75.00 | 1046.40 | 16.00 | 0.0214 | 0.34 | | 1046.74 | |
| | | | | | 205+99.50 | 1046.90 | 16.00 | 0.0160 | 0.26 | | 1047.16 | S.T./N.C. |

# CURVE 22 - SUPERELEVATION TABLE

P.I. Sta. 211+84.50 | Dc = 8° 00′ 00″

| LEFT SIDE | | | | | BASELINE CONTROL | | RIGHT SIDE | | | | | | REMARKS |
|---|---|---|---|---|---|---|---|---|---|---|---|---|---|
| EDGE ELEVATION | TRANSITION RATE | ELEVATION CORRECTION | CROSS SLOPE | WIDTH | STATION | PROFILE GRADE | WIDTH | CROSS SLOPE | ELEVATION CORRECTION | TRANSITION RATE | EDGE ELEVATION | |
| | | | | | 207+73.39 | 1049.61 | 16.00 | 0.0160 | 0.26 | | 1049.87 | T.S./N.C. |
| | | | | | 207+75.00 | 1049.62 | 16.00 | 0.0164 | 0.26 | | 1049.88 | |
| | | | | | 208+00.00 | 1049.75 | 16.00 | 0.0219 | 0.35 | | 1050.10 | |
| | | | | | 208+25.00 | 1049.80 | 16.00 | 0.0274 | 0.44 | | 1050.24 | |
| | | | | | 208+50.00 | 1049.78 | 16.00 | 0.0329 | 0.53 | | 1050.31 | |
| | | | | | 208+75.00 | 1049.69 | 16.00 | 0.0384 | 0.61 | 284 | 1050.30 | |
| | | | | | 209+00.00 | 1049.53 | 16.00 | 0.0439 | 0.70 | | 1050.23 | |
| | | | | | 209+25.00 | 1049.30 | 16.00 | 0.0494 | 0.79 | | 1050.09 | |
| | | | | | 209+50.00 | 1049.00 | 16.00 | 0.0549 | 0.88 | | 1049.88 | |
| | | | | | 209+73.39 | 1048.69 | 16.00 | 0.0600 | 0.96 | | 1049.65 | S.C./F.S. |
| | | | | | 209+75.00 | 1048.67 | 16.00 | 0.0600 | 0.96 | | 1049.63 | |
| | | | | | 210+00.00 | 1048.33 | 16.00 | 0.0600 | 0.96 | | 1049.29 | |
| | | | | | 210+25.00 | 1047.99 | 16.00 | 0.0600 | 0.96 | | 1048.95 | |
| | | | | | 210+50.00 | 1047.66 | 16.00 | 0.0600 | 0.96 | | 1048.62 | |
| | | | | | 210+75.00 | 1047.32 | 16.00 | 0.0600 | 0.96 | | 1048.28 | |
| | | | | | 211+00.00 | 1046.98 | 16.00 | 0.0600 | 0.96 | | 1047.94 | |
| | | | | | 211+25.00 | 1046.65 | 16.00 | 0.0600 | 0.96 | | 1047.61 | |
| | | | | | 211+50.00 | 1046.31 | 16.00 | 0.0600 | 0.96 | | 1047.27 | |
| | | | | | 211+75.00 | 1046.01 | 16.00 | 0.0600 | 0.96 | | 1046.97 | |
| | | | | | 212+00.00 | 1045.77 | 16.00 | 0.0600 | 0.96 | | 1046.73 | |
| | | | | | 212+25.00 | 1045.59 | 16.00 | 0.0600 | 0.96 | | 1046.55 | |
| | | | | | 212+50.00 | 1045.48 | 16.00 | 0.0600 | 0.96 | | 1046.44 | |
| | | | | | 212+75.00 | 1045.44 | 16.00 | 0.0600 | 0.96 | | 1046.40 | |
| | | | | | 213+00.00 | 1045.45 | 16.00 | 0.0600 | 0.96 | | 1046.41 | |
| | | | | | 213+25.00 | 1045.54 | 16.00 | 0.0600 | 0.96 | | 1046.50 | |
| | | | | | 213+50.00 | 1045.69 | 16.00 | 0.0600 | 0.96 | | 1046.65 | |
| | | | | | 213+58.80 | 1045.75 | 16.00 | 0.0600 | 0.96 | | 1046.71 | C.S./F.S. |
| | | | | | 213+75.00 | 1045.90 | 16.00 | 0.0549 | 0.88 | | 1046.78 | |
| | | | | | 214+00.00 | 1046.17 | 16.00 | 0.0470 | 0.75 | | 1046.92 | |
| | | | | | 214+25.00 | 1046.52 | 16.00 | 0.0392 | 0.63 | | 1047.15 | |
| | | | | | 214+50.00 | 1046.92 | 16.00 | 0.0313 | 0.50 | | 1047.42 | |
| | | | | | 214+75.00 | 1047.39 | 16.00 | 0.0235 | 0.38 | | 1047.77 | |
| | | | | | 215+00.00 | 1047.93 | 16.00 | 0.0156 | 0.25 | 199 | 1048.18 | |
| | | | | | 215+25.00 | 1048.53 | 16.00 | 0.0077 | 0.12 | | 1048.65 | |
| | | | | | 215+49.63 | 1049.18 | 16.00 | 0.0000 | 0.00 | | 1049.18 | H.F. |
| | | | | | 215+50.00 | 1049.19 | 16.00 | -0.0001 | 0.00 | | 1049.19 | |
| | | | | | 215+58.80 | 1049.44 | 16.00 | -0.0029 | -0.05 | | 1049.39 | S.T. |
| | | | | | 215+75.00 | 1049.92 | 16.00 | -0.0080 | -0.13 | | 1049.79 | |
| | | | | | 215+90.98 | 1050.42 | 16.00 | -0.0130 | -0.21 | | 1050.21 | EXIST. |

*NOTE: END WORK AT STA. 214+90.00, LIMITS SHOWN PAST THAT STATION ARE TO BE CONSTRUCTED BY OTHERS AS PART OF THE SUM-76/77/8-8.42/9.77/0.00 DB (PID 102329) PROJECT

CALCULATED LRK | CHECKED PJF

SUPERELEVATION TABLE
RAMP B

SUM-77/277/244
VARIOUS

819
1288

O:\2017\2017258\ProjectData\SUM\106002\Design\Roadway\Sheets\106002_GE014.dgn Sheet 1/11/2021 1:10:54 PM pfry

## SPIRAL 27 - SUPERELEVATION TABLE

P.I. Sta. 406+35.31

| LEFT SIDE | | | | | | BASELINE CONTROL | | RIGHT SIDE | | | | | | REMARKS |
|---|---|---|---|---|---|---|---|---|---|---|---|---|---|---|
| EDGE ELEVATION | TRANSITION RATE | ELEVATION CORRECTION | CROSS SLOPE | WIDTH | | STATION | PROFILE GRADE | WIDTH | CROSS SLOPE | ELEVATION CORRECTION | TRANSITION RATE | EDGE ELEVATION | | |
| | | | | | | 402+43.78 | 1037.74 | 16.00 | 0.0160 | 0.26 | | 1038.00 | | N.C. |
| | | | | | | 402+50.00 | 1037.72 | 16.00 | 0.0156 | 0.25 | | 1037.97 | | |
| | | | | | | 402+75.00 | 1037.67 | 16.00 | 0.0140 | 0.22 | | 1037.89 | | |
| | | | | | | 403+00.00 | 1037.62 | 16.00 | 0.0123 | 0.20 | | 1037.82 | | |
| | | | | | | 403+25.00 | 1037.57 | 16.00 | 0.0107 | 0.17 | 953 | 1037.74 | | |
| | | | | | | 403+50.00 | 1037.52 | 16.00 | 0.0090 | 0.14 | | 1037.66 | | |
| | | | | | | 403+75.00 | 1037.48 | 16.00 | 0.0074 | 0.12 | | 1037.60 | | |
| | | | | | | 404+00.00 | 1037.43 | 16.00 | 0.0058 | 0.09 | | 1037.52 | | |
| | | | | | | 404+25.00 | 1037.38 | 16.00 | 0.0041 | 0.07 | | 1037.45 | | |
| | | | | | | 404+43.48 | 1037.35 | 16.00 | 0.0029 | 0.05 | | 1037.40 | | |
| | | | | | | 404+50.00 | 1037.32 | 16.00 | 0.0044 | 0.07 | 278 | 1037.39 | | |
| | | | | | | 404+75.00 | 1037.20 | 16.00 | 0.0100 | 0.16 | | 1037.36 | | |
| | | | | | | 405+00.00 | 1037.08 | 16.00 | 0.0156 | 0.25 | | 1037.33 | | |
| | | | | | | 405+01.68 | 1037.07 | 16.00 | 0.0160 | 0.26 | | 1037.33 | | T.S./N.C. |
| | | | | | | 405+25.00 | 1036.96 | 16.00 | 0.0211 | 0.34 | | 1037.30 | | |
| | | | | | | 405+50.00 | 1036.79 | 16.00 | 0.0266 | 0.43 | | 1037.22 | | |
| | | | | | | 405+75.00 | 1036.61 | 16.00 | 0.0321 | 0.51 | | 1037.12 | | |
| | | | | | | 406+00.00 | 1036.44 | 16.00 | 0.0376 | 0.60 | | 1037.04 | | |
| | | | | | | 406+25.00 | 1036.26 | 16.00 | 0.0431 | 0.69 | 284 | 1036.95 | | |
| | | | | | | 406+50.00 | 1036.12 | 16.00 | 0.0486 | 0.78 | | 1036.90 | | |
| | | | | | | 406+75.00 | 1036.03 | 16.00 | 0.0541 | 0.87 | | 1036.90 | | |
| | | | | | | 407+00.00 | 1036.01 | 16.00 | 0.0596 | 0.95 | | 1036.96 | | |
| | | | | | | 407+01.68 | 1036.01 | 16.00 | 0.0600 | 0.96 | | 1036.97 | | S.C./F.S. |

## CURVE 28 - SUPERELEVATION TABLE

P.I. Sta. 407+76.50 | Dc = 11° 45′ 00″

| LEFT SIDE | | | | | | BASELINE CONTROL | | RIGHT SIDE | | | | | | REMARKS |
|---|---|---|---|---|---|---|---|---|---|---|---|---|---|---|
| EDGE ELEVATION | TRANSITION RATE | ELEVATION CORRECTION | CROSS SLOPE | WIDTH | | STATION | PROFILE GRADE | WIDTH | CROSS SLOPE | ELEVATION CORRECTION | TRANSITION RATE | EDGE ELEVATION | | |
| | | | | | | 407+01.68 | 1036.01 | 16.00 | 0.0600 | 0.96 | | 1036.97 | | S.C./F.S. |
| | | | | | | 407+25.00 | 1036.05 | 16.00 | 0.0600 | 0.96 | | 1037.01 | | |
| | | | | | | 407+50.00 | 1036.14 | 16.00 | 0.0600 | 0.96 | | 1037.10 | | |
| | | | | | | 407+75.00 | 1036.30 | 16.00 | 0.0600 | 0.96 | | 1037.26 | | |
| | | | | | | 408+00.00 | 1036.52 | 16.00 | 0.0600 | 0.96 | | 1037.48 | | |
| | | | | | | 408+25.00 | 1036.80 | 16.00 | 0.0600 | 0.96 | | 1037.76 | | |
| | | | | | | 408+50.00 | 1037.12 | 16.00 | 0.0600 | 0.96 | | 1038.08 | | |
| | | | | | | 408+50.17 | 1037.12 | 16.00 | 0.0600 | 0.96 | | 1038.08 | | P.C.C./F.S. |

CALCULATED LRK | CHECKED PJF

SUPERELEVATION TABLE
RAMP B-1

SUM-77/277/244
VARIOUS

820
1288

O:\2017\2017258\ProjectData\SUM\106002\Design\Roadway\Sheets\106002_GE015.dgn Sheet 1/11/2021 1:10:55 PM pfry

## CURVE 29 - SUPERELEVATION TABLE

P.I. Sta. 438+65.75 | Dc = 24° 00′ 00″

| LEFT SIDE | | | | | BASELINE CONTROL | | RIGHT SIDE | | | | | | REMARKS |
|---|---|---|---|---|---|---|---|---|---|---|---|---|---|
| EDGE ELEVATION | TRANSITION RATE | ELEVATION CORRECTION | CROSS SLOPE | WIDTH | STATION | PROFILE GRADE | WIDTH | CROSS SLOPE | ELEVATION CORRECTION | TRANSITION RATE | EDGE ELEVATION | |
| | | | | | 408+50.17 | 1037.12 | 16.00 | 0.0600 | 0.96 | | 1038.08 | P.C.C./F.S. |
| | | | | | 408+75.00 | 1037.43 | 16.00 | 0.0600 | 0.96 | | 1038.39 | |
| | | | | | 409+00.00 | 1037.74 | 16.00 | 0.0600 | 0.96 | | 1038.70 | |
| | | | | | 409+25.00 | 1038.05 | 16.00 | 0.0600 | 0.96 | | 1039.01 | |
| | | | | | 409+50.00 | 1038.36 | 16.00 | 0.0600 | 0.96 | | 1039.32 | |
| | | | | | 409+75.00 | 1038.69 | 16.00 | 0.0600 | 0.96 | | 1039.65 | |
| | | | | | 410+00.00 | 1039.04 | 16.00 | 0.0600 | 0.96 | | 1040.00 | |
| | | | | | 410+25.00 | 1039.39 | 16.00 | 0.0600 | 0.96 | | 1040.35 | |
| | | | | | 410+50.00 | 1039.76 | 16.00 | 0.0600 | 0.96 | | 1040.72 | |
| | | | | | 410+75.00 | 1040.14 | 16.00 | 0.0600 | 0.96 | | 1041.10 | |
| | | | | | 411+00.00 | 1040.53 | 16.00 | 0.0600 | 0.96 | | 1041.49 | |
| | | | | | 411+25.00 | 1040.93 | 16.00 | 0.0600 | 0.96 | | 1041.89 | |
| | | | | | 411+50.00 | 1041.35 | 16.00 | 0.0600 | 0.96 | | 1042.31 | |
| | | | | | 411+75.00 | 1041.78 | 16.00 | 0.0600 | 0.96 | | 1042.74 | |
| | | | | | 412+00.00 | 1042.22 | 16.00 | 0.0600 | 0.96 | | 1043.18 | |
| | | | | | 412+25.00 | 1042.67 | 16.00 | 0.0600 | 0.96 | | 1043.63 | |
| | | | | | 412+50.00 | 1043.14 | 16.00 | 0.0600 | 0.96 | | 1044.10 | |
| | | | | | 412+75.00 | 1043.62 | 16.00 | 0.0600 | 0.96 | | 1044.58 | |
| | | | | | 413+00.00 | 1044.11 | 16.00 | 0.0600 | 0.96 | | 1045.07 | |
| | | | | | 413+25.00 | 1044.61 | 16.00 | 0.0600 | 0.96 | | 1045.57 | |
| | | | | | 413+50.00 | 1045.13 | 16.00 | 0.0600 | 0.96 | | 1046.09 | |
| | | | | | 413+75.00 | 1045.66 | 16.00 | 0.0600 | 0.96 | | 1046.62 | |
| | | | | | 414+00.00 | 1046.20 | 16.00 | 0.0600 | 0.96 | | 1047.16 | |
| | | | | | 414+25.00 | 1046.75 | 16.00 | 0.0600 | 0.96 | | 1047.71 | |
| | | | | | 414+50.00 | 1047.31 | 16.00 | 0.0600 | 0.96 | | 1048.27 | |
| | | | | | 414+75.00 | 1047.84 | 16.00 | 0.0600 | 0.96 | | 1048.80 | |
| | | | | | 415+00.00 | 1048.36 | 16.00 | 0.0600 | 0.96 | | 1049.32 | |
| | | | | | 415+25.00 | 1048.87 | 16.00 | 0.0600 | 0.96 | | 1049.83 | |
| | | | | | 415+50.00 | 1049.36 | 16.00 | 0.0600 | 0.96 | | 1050.32 | |
| | | | | | 415+62.45 | 1049.60 | 16.00 | 0.0600 | 0.96 | | 1050.56 | C.S./F.S. |

## SPIRAL 30 - SUPERELEVATION TABLE

P.I. Sta. 416+33.74 |

| LEFT SIDE | | | | | BASELINE CONTROL | | RIGHT SIDE | | | | | | REMARKS |
|---|---|---|---|---|---|---|---|---|---|---|---|---|---|
| EDGE ELEVATION | TRANSITION RATE | ELEVATION CORRECTION | CROSS SLOPE | WIDTH | STATION | PROFILE GRADE | WIDTH | CROSS SLOPE | ELEVATION CORRECTION | TRANSITION RATE | EDGE ELEVATION | |
| | | | | | 415+62.45 | 1049.60 | 16.00 | 0.0600 | 0.96 | | 1050.56 | C.S./F.S. |
| | | | | | 415+75.00 | 1049.83 | 16.00 | 0.0585 | 0.94 | | 1050.77 | |
| | | | | | 416+00.00 | 1050.29 | 16.00 | 0.0555 | 0.89 | | 1051.18 | |
| | | | | | 416+25.00 | 1050.74 | 16.00 | 0.0525 | 0.84 | | 1051.58 | |
| | | | | | 416+50.00 | 1051.16 | 16.00 | 0.0495 | 0.79 | | 1051.95 | |
| | | | | | 416+75.00 | 1051.58 | 16.00 | 0.0465 | 0.74 | 521 | 1052.32 | |
| | | | | | 417+00.00 | 1051.97 | 16.00 | 0.0435 | 0.70 | | 1052.67 | |
| | | | | | 417+25.00 | 1052.36 | 16.00 | 0.0405 | 0.65 | | 1053.01 | |
| | | | | | 417+50.00 | 1052.73 | 16.00 | 0.0375 | 0.60 | | 1053.33 | |
| | | | | | 417+62.45 | 1052.92 | 16.00 | 0.0360 | 0.58 | | 1053.50 | S.C./F.S. |

CALCULATED LRK | CHECKED PJF

# SUPERELEVATION TABLE
# RAMP B-1

SUM-77/277/244
VARIOUS

821
1288

O:\2017\2017258\ProjectData\SUM\106002\Design\Roadway\Sheets\106002_GE016.dgn Sheet 1/11/2021 1:10:55 PM pfry

# CURVE 31 - SUPERELEVATION TABLE

| P.I. Sta. 420+43.64 | Dc = 1° 15' 00" |
|---|---|

| LEFT SIDE | | | | | BASELINE CONTROL | | RIGHT SIDE | | | | | |
|---|---|---|---|---|---|---|---|---|---|---|---|---|
| EDGE ELEVATION | TRANSITION RATE | ELEVATION CORRECTION | CROSS SLOPE | WIDTH | STATION | PROFILE GRADE | WIDTH | CROSS SLOPE | ELEVATION CORRECTION | TRANSITION RATE | EDGE ELEVATION | REMARKS |
| | | | | | 417+62.45 | 1052.92 | 16.00 | 0.0360 | 0.58 | | 1053.50 | S.C./F.S. |
| | | | | | 417+75.00 | 1053.10 | 16.00 | 0.0360 | 0.58 | | 1053.68 | |
| | | | | | 418+00.00 | 1053.48 | 16.00 | 0.0360 | 0.58 | | 1054.06 | |
| | | | | | 418+25.00 | 1053.85 | 16.00 | 0.0360 | 0.58 | | 1054.43 | |
| | | | | | 418+50.00 | 1054.23 | 16.00 | 0.0360 | 0.58 | | 1054.81 | |
| | | | | | 418+55.68 | 1054.31 | 16.00 | 0.0360 | 0.58 | | 1054.89 | |
| | | | | | 418+75.00 | 1054.60 | 15.77 | 0.0360 | 0.57 | | 1055.17 | |
| | | | | | 419+00.00 | 1054.98 | 15.47 | 0.0360 | 0.56 | | 1055.54 | |
| | | | | | 419+25.00 | 1055.35 | 15.17 | 0.0360 | 0.55 | | 1055.90 | |
| | | | | | 419+50.00 | 1055.75 | 14.87 | 0.0360 | 0.54 | | 1056.29 | |
| | | | | | 419+75.00 | 1056.16 | 14.57 | 0.0360 | 0.52 | | 1056.68 | |
| | | | | | 420+00.00 | 1056.56 | 14.27 | 0.0360 | 0.51 | | 1057.07 | F.S. |
| | | | | | 420+25.00 | 1056.97 | 13.97 | 0.0305 | 0.43 | | 1057.40 | |
| | | | | | 420+50.00 | 1057.39 | 13.67 | 0.0251 | 0.34 | | 1057.73 | |
| | | | | | 420+75.00 | 1057.81 | 13.37 | 0.0196 | 0.26 | 381 | 1058.07 | |
| | | | | | 421+00.00 | 1058.23 | 13.07 | 0.0142 | 0.19 | | 1058.42 | |
| | | | | | 421+25.00 | 1058.65 | 12.77 | 0.0087 | 0.11 | | 1058.76 | |
| | | | | | 421+40.51 | 1058.91 | 12.58 | 0.0053 | 0.07 | | 1058.98 | EXIST. |

CALCULATED LRK
CHECKED PJF

SUPERELEVATION TABLE
RAMP B-1

SUM-77/277/244
VARIOUS

822
1288

O:\2017\2017258\ProjectData\SUM\106002\Design\Roadway\Sheets\106002_GE017.dgn Sheet 1/11/2021 1:10:56 PM pfry

## CURVE 37 - SUPERELEVATION TABLE

P.I. Sta. 290+21.80 | Dc = 1° 58′ 03″

| LEFT SIDE | | | | | BASELINE CONTROL | | RIGHT SIDE | | | | | | REMARKS |
|---|---|---|---|---|---|---|---|---|---|---|---|---|---|
| EDGE ELEVATION | TRANSITION RATE | ELEVATION CORRECTION | CROSS SLOPE | WIDTH | STATION | PROFILE GRADE | WIDTH | CROSS SLOPE | ELEVATION CORRECTION | TRANSITION RATE | EDGE ELEVATION | |
| | | | | | 285+64.96 | 1037.77 | 12.00 | 0.0452 | 0.54 | | 1038.31 | P.C./77 F.S. |
| | | | | | 285+75.00 | 1037.62 | 12.00 | 0.0485 | 0.58 | 250 | 1038.20 | |
| | | | | | 285+92.86 | 1037.33 | 12.03 | 0.0545 | 0.66 | | 1037.99 | F.S. |
| | | | | | 286+00.00 | 1037.22 | 12.05 | 0.0545 | 0.66 | | 1037.88 | |
| | | | | | 286+25.00 | 1036.90 | 12.16 | 0.0545 | 0.66 | | 1037.56 | |
| | | | | | 286+50.00 | 1036.59 | 12.31 | 0.0545 | 0.67 | | 1037.26 | |
| | | | | | 286+75.00 | 1036.27 | 12.52 | 0.0545 | 0.68 | | 1036.95 | |
| | | | | | 287+00.00 | 1035.96 | 12.79 | 0.0545 | 0.70 | | 1036.66 | |
| | | | | | 287+25.00 | 1035.63 | 13.11 | 0.0545 | 0.71 | | 1036.34 | |
| | | | | | 287+50.00 | 1035.30 | 13.48 | 0.0545 | 0.73 | | 1036.03 | |
| | | | | | 287+75.00 | 1034.98 | 13.91 | 0.0545 | 0.76 | | 1035.74 | |
| | | | | | 288+00.00 | 1034.65 | 14.39 | 0.0545 | 0.78 | | 1035.43 | |
| | | | | | 288+25.00 | 1034.31 | 14.93 | 0.0545 | 0.81 | | 1035.12 | |
| | | | | | 288+50.00 | 1033.97 | 15.52 | 0.0545 | 0.85 | | 1034.82 | |
| | | | | | 288+75.00 | 1033.63 | 16.16 | 0.0545 | 0.88 | | 1034.51 | |
| | | | | | 289+00.00 | 1033.29 | 16.86 | 0.0545 | 0.92 | | 1034.21 | |
| | | | | | 289+25.00 | 1032.94 | 17.61 | 0.0545 | 0.96 | | 1033.90 | |
| | | | | | 289+50.00 | 1032.59 | 18.42 | 0.0545 | 1.00 | | 1033.59 | |
| | | | | | 289+75.00 | 1032.24 | 19.28 | 0.0545 | 1.05 | | 1033.29 | |
| | | | | | 290+00.00 | 1031.89 | 20.19 | 0.0545 | 1.10 | | 1032.99 | |
| | | | | | 290+25.00 | 1031.58 | 21.16 | 0.0545 | 1.15 | | 1032.73 | |
| | | | | | 290+50.00 | 1031.27 | 22.18 | 0.0545 | 1.21 | | 1032.48 | |
| | | | | | 290+75.00 | 1031.01 | 23.26 | 0.0545 | 1.27 | | 1032.28 | |
| | | | | | 290+91.54 | 1030.85 | 24.00 | 0.0545 | 1.31 | | 1032.16 | |
| | | | | | 291+00.00 | 1030.76 | 24.00 | 0.0545 | 1.31 | | 1032.07 | |
| | | | | | 291+25.00 | 1030.56 | 24.00 | 0.0545 | 1.31 | | 1031.87 | |
| | | | | | 291+50.00 | 1030.36 | 24.00 | 0.0545 | 1.31 | | 1031.67 | |
| | | | | | 291+75.00 | 1030.18 | 24.00 | 0.0545 | 1.31 | | 1031.49 | |
| | | | | | 292+00.00 | 1030.03 | 24.00 | 0.0545 | 1.31 | | 1031.34 | |
| | | | | | 292+25.00 | 1029.91 | 24.00 | 0.0545 | 1.31 | | 1031.22 | |
| | | | | | 292+50.00 | 1029.83 | 24.00 | 0.0545 | 1.31 | | 1031.14 | |
| | | | | | 292+75.00 | 1029.79 | 24.00 | 0.0545 | 1.31 | | 1031.10 | |
| | | | | | 293+00.00 | 1029.78 | 24.00 | 0.0545 | 1.31 | | 1031.09 | |
| | | | | | 293+25.00 | 1029.80 | 24.00 | 0.0545 | 1.31 | | 1031.11 | |
| | | | | | 293+50.00 | 1029.86 | 24.00 | 0.0545 | 1.31 | | 1031.17 | |
| | | | | | 293+63.03 | 1029.90 | 24.00 | 0.0545 | 1.31 | | 1031.21 | F.S. |
| | | | | | 293+75.00 | 1029.95 | 24.00 | 0.0525 | 1.26 | | 1031.21 | |
| | | | | | 294+00.00 | 1030.07 | 24.00 | 0.0483 | 1.16 | 248 | 1031.23 | |
| | | | | | 294+25.00 | 1030.23 | 24.00 | 0.0441 | 1.06 | | 1031.29 | |
| | | | | | 294+50.00 | 1030.43 | 24.00 | 0.0399 | 0.96 | | 1031.39 | |
| | | | | | 294+71.25 | 1030.62 | 24.00 | 0.0363 | 0.87 | | 1031.49 | P.T. |

## CURVE 38 - SUPERELEVATION TABLE

P.I. Sta. 299+44.16 | Dc = 1° 00′ 00″

| BASELINE CONTROL | | RIGHT SIDE | | | | | RIGHT SHOULDER | | | | | REMARKS |
|---|---|---|---|---|---|---|---|---|---|---|---|---|
| STATION | PROFILE GRADE | WIDTH | CROSS SLOPE | ELEVATION CORRECTION | TRANSITION RATE | EDGE ELEVATION | WIDTH | CROSS SLOPE | ELEVATION CORRECTION | TRANSITION RATE | EDGE ELEVATION | |
| 294+71.25 | 1030.62 | 24.00 | 0.0363 | 0.87 | | 1031.49 | | | | | | P.T. |
| 294+75.00 | 1030.66 | 24.00 | 0.0357 | 0.86 | | 1031.52 | | | | | | |
| 294+78.29 | 1030.69 | 24.00 | 0.0351 | 0.84 | | 1031.53 | 10.00 | 0.0499 | 0.50 | | 1032.03 | |
| 295+00.00 | 1030.92 | 24.00 | 0.0315 | 0.76 | | 1031.68 | 10.00 | 0.0304 | 0.30 | | 1031.98 | |
| 295+25.00 | 1031.21 | 24.00 | 0.0273 | 0.66 | | 1031.87 | 10.00 | 0.0079 | 0.08 | | 1031.94 | |
| 295+50.00 | 1031.50 | 24.00 | 0.0231 | 0.55 | | 1032.05 | 10.00 | -0.0146 | -0.15 | | 1031.91 | |
| 295+75.00 | 1031.80 | 24.00 | 0.0189 | 0.45 | | 1032.25 | 10.00 | -0.0370 | -0.37 | | 1031.88 | |
| 295+78.29 | 1031.83 | 24.00 | 0.0183 | 0.44 | | 1032.27 | 10.00 | -0.0400 | -0.40 | | 1031.87 | |
| 295+91.96 | 1031.99 | 24.00 | 0.0160 | 0.38 | | 1032.37 | | | | | | N.C. |
| 296+00.00 | 1032.09 | 24.00 | 0.0146 | 0.35 | | 1032.44 | | | | | | |
| 296+25.00 | 1032.38 | 24.00 | 0.0104 | 0.25 | | 1032.63 | | | | | | |
| 296+50.00 | 1032.68 | 24.00 | 0.0062 | 0.15 | 248 | 1032.83 | | | | | | |
| 296+75.00 | 1032.97 | 24.00 | 0.0020 | 0.05 | | 1033.02 | | | | | | |
| 296+87.10 | 1033.11 | 24.00 | 0.0000 | 0.00 | | 1033.11 | | | | | | FLAT |
| 297+00.00 | 1033.26 | 24.00 | -0.0022 | -0.05 | | 1033.21 | | | | | | |
| 297+25.00 | 1033.56 | 24.00 | -0.0064 | -0.15 | | 1033.41 | | | | | | |
| 297+50.00 | 1033.85 | 24.00 | -0.0106 | -0.25 | | 1033.60 | | | | | | |
| 297+75.00 | 1034.14 | 24.00 | -0.0148 | -0.36 | | 1033.78 | | | | | | |
| 297+82.24 | 1034.23 | 24.00 | -0.0160 | -0.38 | | 1033.85 | | | | | | N.C. |
| 297+94.13 | 1034.37 | 24.00 | -0.0180 | -0.43 | | 1033.94 | | | | | | P.C. |
| 298+00.00 | 1034.44 | 24.00 | -0.0190 | -0.46 | | 1033.98 | | | | | | |
| 298+25.00 | 1034.73 | 24.00 | -0.0232 | -0.56 | | 1034.17 | | | | | | |
| 298+47.65 | 1035.00 | 24.00 | -0.0270 | -0.65 | | 1034.35 | | | | | | F.S. |
| 298+50.00 | 1035.02 | 24.00 | -0.0270 | -0.65 | | 1034.37 | | | | | | |
| 298+75.00 | 1035.32 | 24.00 | -0.0270 | -0.65 | | 1034.67 | | | | | | |
| 299+00.00 | 1035.61 | 24.00 | -0.0270 | -0.65 | | 1034.96 | | | | | | |
| 299+25.00 | 1035.90 | 24.00 | -0.0270 | -0.65 | | 1035.25 | | | | | | |
| 299+50.00 | 1036.20 | 24.00 | -0.0270 | -0.65 | | 1035.55 | | | | | | |
| 299+75.00 | 1036.49 | 24.00 | -0.0270 | -0.65 | | 1035.84 | | | | | | |
| 300+00.00 | 1036.78 | 24.00 | -0.0270 | -0.65 | | 1036.13 | | | | | | |
| 300+25.00 | 1037.08 | 24.00 | -0.0270 | -0.65 | | 1036.43 | | | | | | |
| 300+46.18 | 1037.33 | 24.00 | -0.0270 | -0.65 | | 1036.68 | | | | | | F.S. |
| 300+50.00 | 1037.37 | 24.00 | -0.0263 | -0.63 | | 1036.74 | | | | | | |
| 300+75.00 | 1037.66 | 24.00 | -0.0216 | -0.52 | | 1037.14 | | | | | | |
| 300+94.13 | 1037.89 | 24.00 | -0.0180 | -0.43 | | 1037.46 | | | | | | P.T. |
| 301+00.00 | 1037.96 | 24.00 | -0.0169 | -0.41 | | 1037.55 | | | | | | |
| 301+04.79 | 1038.01 | 24.00 | -0.0160 | -0.38 | | 1037.63 | | | | | | N.C. |
| 301+25.00 | 1038.25 | 24.00 | -0.0122 | -0.29 | | 1037.96 | | | | | | |
| 301+50.00 | 1038.54 | 24.00 | -0.0075 | -0.18 | 222 | 1038.36 | | | | | | |
| 301+75.00 | 1038.84 | 24.00 | -0.0028 | -0.07 | | 1038.77 | | | | | | |
| 301+90.04 | 1039.01 | 24.00 | 0.0000 | 0.00 | | 1039.01 | | | | | | FLAT |
| 302+00.00 | 1039.13 | 24.00 | 0.0019 | 0.05 | | 1039.18 | | | | | | |
| 302+25.00 | 1039.42 | 24.00 | 0.0066 | 0.16 | | 1039.58 | | | | | | |
| 302+50.00 | 1039.72 | 24.00 | 0.0113 | 0.27 | | 1039.99 | | | | | | |
| 302+75.00 | 1040.01 | 24.00 | 0.0159 | 0.38 | | 1040.39 | | | | | | |
| 302+75.29 | 1040.01 | 24.00 | 0.0160 | 0.38 | | 1040.39 | | | | | | N.C. |

CALCULATED LRK | CHECKED PJF

SUPERELEVATION TABLE
RAMP B-2

SUM-77/277/244
VARIOUS

823
1288

O:\2017\2017258\ProjectData\SUM\106002\Design\Roadway\Sheets\106002_GE018.dgn Sheet 1/11/2021 1:10:57 PM pfry

## SPIRAL 39 - SUPERELEVATION TABLE

P.I. Sta. 306+64.20

| LEFT SIDE | | | | | BASELINE CONTROL | | RIGHT SIDE | | | | | REMARKS |
|---|---|---|---|---|---|---|---|---|---|---|---|---|
| EDGE ELEVATION | TRANSITION RATE | ELEVATION CORRECTION | CROSS SLOPE | WIDTH | STATION | *PROFILE GRADE | WIDTH | CROSS SLOPE | ELEVATION CORRECTION | TRANSITION RATE | EDGE ELEVATION | |
| | | | | | 305+30.56 | 1043.95 | 24.00 | 0.0160 | 0.38 | | 1044.33 | T.S./N.C. |
| | | | | | 305+50.00 | 1044.39 | 24.34 | 0.0210 | 0.51 | | 1044.90 | |
| | | | | | 305+75.00 | 1045.00 | 24.78 | 0.0274 | 0.68 | | 1045.68 | |
| | | | | | 306+00.00 | 1045.65 | 25.22 | 0.0338 | 0.85 | | 1046.50 | |
| | | | | | 306+25.00 | 1046.33 | 25.65 | 0.0403 | 1.03 | 162 | 1047.36 | |
| | | | | | 306+50.00 | 1047.06 | 26.09 | 0.0467 | 1.22 | | 1048.28 | |
| | | | | | 306+75.00 | 1047.82 | 26.53 | 0.0531 | 1.41 | | 1049.23 | |
| | | | | | 307+00.00 | 1048.62 | 26.97 | 0.0595 | 1.60 | | 1050.22 | |
| | | | | | 307+25.00 | 1049.45 | 27.40 | 0.0660 | 1.81 | | 1051.26 | |
| | | | | | 307+30.56 | 1049.64 | 27.50 | 0.0674 | 1.85 | | 1051.49 | S.C./EX. F.S. |

*NOTE: EDGE OF PAVEMENT VARIES FROM 0.00' RT. AT STA. 305+30.56 TO 0.50' RT. AT STA. 307+30.56 IN RELATION TO THE PROFILE GRADE

## CURVE 40- SUPERELEVATION TABLE

P.I. Sta. 307+73.27 | Dc = 12° 00' 01"

| LEFT SIDE | | | | | BASELINE CONTROL | | RIGHT SIDE | | | | | REMARKS |
|---|---|---|---|---|---|---|---|---|---|---|---|---|
| EDGE ELEVATION | TRANSITION RATE | ELEVATION CORRECTION | CROSS SLOPE | WIDTH | STATION | PROFILE GRADE | WIDTH | CROSS SLOPE | ELEVATION CORRECTION | TRANSITION RATE | EDGE ELEVATION | |
| | | | | | 307+30.56 | 1049.64 | 27.50 | 0.0674 | 1.85 | | 1051.49 | S.C./EX. F.S. |
| | | | | | 307+50.00 | 1050.33 | 27.50 | 0.0674 | 1.85 | | 1052.18 | |
| | | | | | 307+75.00 | 1051.23 | 27.50 | 0.0674 | 1.85 | | 1053.08 | |
| | | | | | 307+95.29 | 1051.97 | 27.50 | 0.0674 | 1.85 | | 1053.82 | EXIST. |

*NOTE: EDGE OF PAVEMENT IS 0.50' RT. OF THE PROFILE GRADE

CALCULATED LRK | CHECKED PJF

# SUPERELEVATION TABLE RAMP B-2

SUM-77/277/244 VARIOUS

824
1288

O:\2017\2017258\ProjectData\SUM\106002\Design\Roadway\Sheets\106002_GE019.dgn Sheet 1/11/2021 1:10:58 PM pfry

## CURVE 41 - SUPERELEVATION TABLE

P.I. Sta. 11+24.11 | Dc = 12° 00' 01"

| LEFT SIDE | | | | | | BASELINE CONTROL | | RIGHT SIDE | | | | | | REMARKS |
|---|---|---|---|---|---|---|---|---|---|---|---|---|---|---|
| EDGE ELEVATION | TRANSITION RATE | ELEVATION CORRECTION | CROSS SLOPE | WIDTH | | STATION | PROFILE GRADE | WIDTH | CROSS SLOPE | ELEVATION CORRECTION | TRANSITION RATE | EDGE ELEVATION | | |
| | | | | | | 9+90.79 | 1057.27 | 27.50 | 0.0833 | 2.29 | | 1059.56 | | EXIST. |
| | | | | | | 10+00.00 | 1057.25 | 27.50 | 0.0809 | 2.22 | | 1059.47 | | |
| | | | | | | 10+25.00 | 1057.10 | 27.38 | 0.0744 | 2.04 | 161 | 1059.14 | | |
| | | | | | | 10+50.00 | 1056.86 | 27.25 | 0.0680 | 1.85 | | 1058.71 | | |
| | | | | | | 10+75.00 | 1056.52 | 27.13 | 0.0615 | 1.67 | | 1058.19 | | |
| | | | | | | 10+92.41 | 1056.22 | 27.04 | 0.0570 | 1.54 | | 1057.76 | | F.S. |
| | | | | | | 11+00.00 | 1056.08 | 27.00 | 0.0570 | 1.54 | | 1057.62 | | |
| | | | | | | 11+25.00 | 1055.54 | 27.00 | 0.0570 | 1.54 | | 1057.08 | | |
| | | | | | | 11+50.00 | 1054.96 | 27.00 | 0.0570 | 1.54 | | 1056.50 | | |
| | | | | | | 11+75.00 | 1054.38 | 27.00 | 0.0570 | 1.54 | | 1055.92 | | |
| | | | | | | 12+00.00 | 1053.80 | 27.00 | 0.0570 | 1.54 | | 1055.34 | | |
| | | | | | | 12+25.00 | 1053.22 | 27.00 | 0.0570 | 1.54 | | 1054.76 | | |
| | | | | | | 12+50.00 | 1052.64 | 27.00 | 0.0570 | 1.54 | | 1054.18 | | |
| | | | | | | 12+75.00 | 1052.06 | 27.00 | 0.0570 | 1.54 | | 1053.60 | | |
| | | | | | | 13+00.00 | 1051.49 | 27.00 | 0.0570 | 1.54 | | 1053.03 | | |
| | | | | | | 13+25.00 | 1050.91 | 27.00 | 0.0570 | 1.54 | | 1052.45 | | |
| | | | | | | 13+50.00 | 1050.33 | 27.00 | 0.0570 | 1.54 | | 1051.87 | | |
| | | | | | | 13+75.00 | 1049.76 | 27.00 | 0.0570 | 1.54 | | 1051.30 | | |
| | | | | | | 13+87.73 | 1049.49 | 27.00 | 0.0570 | 1.54 | | 1051.03 | | C.S./F.S. |

*NOTE: EDGE OF PAVEMENT VARIES FROM 0.50' RT. AT STA. 10+00.00 TO 0.00' RT. AT STA. 11+00.00 IN RELATION TO THE PROFILE GRADE

## SPIRAL 42- SUPERELEVATION TABLE

P.I. Sta. 17+73.39 |

| LEFT SIDE | | | | | | BASELINE CONTROL | | RIGHT SIDE | | | | | | REMARKS |
|---|---|---|---|---|---|---|---|---|---|---|---|---|---|---|
| EDGE ELEVATION | TRANSITION RATE | ELEVATION CORRECTION | CROSS SLOPE | WIDTH | | STATION | PROFILE GRADE | WIDTH | CROSS SLOPE | ELEVATION CORRECTION | TRANSITION RATE | EDGE ELEVATION | | |
| | | | | | | 13+87.73 | 1049.49 | 27.00 | 0.0570 | 1.54 | | 1051.03 | | C.S./F.S. |
| | | | | | | 14+00.00 | 1049.23 | 27.00 | 0.0545 | 1.47 | | 1050.70 | | |
| | | | | | | 14+25.00 | 1048.73 | 27.00 | 0.0494 | 1.33 | | 1050.06 | | |
| | | | | | | 14+50.00 | 1048.25 | 27.00 | 0.0443 | 1.20 | | 1049.45 | | |
| | | | | | | 14+75.00 | 1047.81 | 27.00 | 0.0392 | 1.06 | | 1048.87 | | |
| | | | | | | 15+00.00 | 1047.39 | 27.00 | 0.0342 | 0.92 | | 1048.31 | | |
| | | | | | | 15+25.00 | 1047.01 | 27.00 | 0.0291 | 0.79 | | 1047.80 | | |
| | | | | | | 15+50.00 | 1046.66 | 27.00 | 0.0240 | 0.65 | | 1047.31 | | |
| | | | | | | 15+75.00 | 1046.32 | 27.00 | 0.0189 | 0.51 | | 1046.83 | | |
| | | | | | | 15+89.23 | 1046.13 | 27.00 | 0.0160 | 0.43 | | 1046.56 | | N.C. |
| | | | | | | 16+00.00 | 1045.98 | 27.00 | 0.0138 | 0.37 | | 1046.35 | | |
| | | | | | | 16+25.00 | 1045.65 | 27.00 | 0.0087 | 0.23 | | 1045.88 | | |
| | | | | | | 16+50.00 | 1045.31 | 27.00 | 0.0036 | 0.10 | | 1045.41 | | |
| | | | | | | 16+67.86 | 1045.07 | 27.00 | 0.0000 | 0.00 | | 1045.07 | | FLAT |
| | | | | | | 16+75.00 | 1044.97 | 27.00 | -0.0015 | -0.04 | 205 | 1044.93 | | |
| | | | | | | 17+00.00 | 1044.63 | 27.00 | -0.0065 | -0.18 | | 1044.45 | | |
| | | | | | | 17+25.00 | 1044.29 | 27.00 | -0.0116 | -0.31 | | 1043.98 | | |
| | | | | | | 17+46.49 | 1044.00 | 27.00 | -0.0160 | -0.43 | | 1043.57 | | N.C. |
| | | | | | | 17+50.00 | 1043.96 | 27.00 | -0.0167 | -0.45 | | 1043.51 | | |
| | | | | | | 17+75.00 | 1043.62 | 27.00 | -0.0218 | -0.59 | | 1043.03 | | |
| | | | | | | 18+00.00 | 1043.28 | 27.00 | -0.0269 | -0.73 | | 1042.55 | | |
| | | | | | | 18+25.00 | 1042.94 | 27.00 | -0.0320 | -0.86 | | 1042.08 | | |
| | | | | | | 18+50.00 | 1042.61 | 27.00 | -0.0371 | -1.00 | | 1041.61 | | |
| | | | | | | 18+75.00 | 1042.27 | 27.00 | -0.0421 | -1.14 | | 1041.13 | | |
| | | | | | | 19+00.00 | 1041.93 | 27.00 | -0.0472 | -1.27 | | 1040.66 | | |
| | | | | | | 19+25.00 | 1041.59 | 27.00 | -0.0523 | -1.41 | | 1040.18 | | |
| | | | | | | 19+50.00 | 1041.25 | 27.00 | -0.0574 | -1.55 | | 1039.70 | | |
| | | | | | | 19+62.73 | 1041.08 | 27.00 | -0.0600 | -1.62 | | 1039.46 | | S.C./F.S. |

CALCULATED LRK | CHECKED PJF

# SUPERELEVATION TABLE RAMP B-2

SUM-77/277/244 VARIOUS

825 / 1288

O:\2017\2017258\ProjectData\SUM\106002\Design\Roadway\Sheets\106002_GE020.dgn Sheet 1/11/2021 1:10:58 PM pfry

## CURVE 43 - SUPERELEVATION TABLE

P.I. Sta. 21+02.51 | Dc = 6° 45' 00"

| LEFT SIDE | | | | | BASELINE CONTROL | | RIGHT SIDE | | | | | | REMARKS |
|---|---|---|---|---|---|---|---|---|---|---|---|---|---|
| EDGE ELEVATION | TRANSITION RATE | ELEVATION CORRECTION | CROSS SLOPE | WIDTH | STATION | PROFILE GRADE | WIDTH | CROSS SLOPE | ELEVATION CORRECTION | TRANSITION RATE | EDGE ELEVATION | |
| | | | | | 19+62.73 | 1041.08 | 27.00 | -0.0600 | -1.62 | | 1039.46 | S.C./F.S. |
| | | | | | 19+75.00 | 1040.92 | 27.00 | -0.0600 | -1.62 | | 1039.30 | |
| | | | | | 20+00.00 | 1040.58 | 27.00 | -0.0600 | -1.62 | | 1038.96 | |
| | | | | | 20+25.00 | 1040.24 | 27.00 | -0.0600 | -1.62 | | 1038.62 | |
| | | | | | 20+50.00 | 1039.90 | 27.00 | -0.0600 | -1.62 | | 1038.28 | |
| | | | | | 20+75.00 | 1039.57 | 27.00 | -0.0600 | -1.62 | | 1037.95 | |
| | | | | | 21+00.00 | 1039.23 | 27.00 | -0.0600 | -1.62 | | 1037.61 | |
| | | | | | 21+25.00 | 1038.95 | 27.00 | -0.0600 | -1.62 | | 1037.33 | |
| | | | | | 21+50.00 | 1038.66 | 27.00 | -0.0600 | -1.62 | | 1037.04 | |
| | | | | | 21+75.00 | 1038.38 | 27.00 | -0.0600 | -1.62 | | 1036.76 | |
| | | | | | 22+00.00 | 1038.10 | 27.00 | -0.0600 | -1.62 | | 1036.48 | |
| | | | | | 22+25.00 | 1037.71 | 27.00 | -0.0600 | -1.62 | | 1036.09 | |
| | | | | | 22+39.81 | 1037.47 | 27.00 | -0.0600 | -1.62 | | 1035.85 | C.S./F.S. |

## SPIRAL 44- SUPERELEVATION TABLE

P.I. Sta. 23+14.93

| LEFT SHOULDER | | | | | BASELINE CONTROL | | RIGHT SIDE | | | | | | REMARKS |
|---|---|---|---|---|---|---|---|---|---|---|---|---|---|
| EDGE ELEVATION | TRANSITION RATE | ELEVATION CORRECTION | CROSS SLOPE | WIDTH | STATION | PROFILE GRADE | WIDTH | CROSS SLOPE | ELEVATION CORRECTION | TRANSITION RATE | EDGE ELEVATION | |
| 1037.43 | | -0.04 | -0.0100 | 4.00 | 22+39.81 | 1037.47 | 27.00 | -0.0600 | -1.62 | | 1035.85 | C.S./F.S. |
| 1037.28 | | -0.03 | -0.0082 | 4.00 | 22+50.00 | 1037.31 | 26.86 | -0.0580 | -1.56 | | 1035.75 | |
| 1036.90 | | -0.02 | -0.0038 | 4.00 | 22+75.00 | 1036.92 | 26.53 | -0.0531 | -1.41 | | 1035.51 | |
| 1036.53 | | 0.00 | 0.0006 | 4.00 | 23+00.00 | 1036.53 | 26.20 | -0.0482 | -1.26 | | 1035.27 | |
| 1036.26 | | 0.02 | 0.0038 | 4.00 | 23+18.46 | 1036.24 | 25.95 | -0.0446 | -1.16 | | 1035.08 | |
| | | | | | 23+25.00 | 1036.14 | 25.86 | -0.0433 | -1.12 | | 1035.02 | |
| | | | | | 23+50.00 | 1035.75 | 25.53 | -0.0385 | -0.98 | 213 | 1034.77 | |
| | | | | | 23+75.00 | 1035.36 | 25.20 | -0.0336 | -0.85 | | 1034.51 | |
| | | | | | 24+00.00 | 1034.97 | 24.86 | -0.0287 | -0.71 | | 1034.26 | |
| | | | | | 24+25.00 | 1034.58 | 24.53 | -0.0238 | -0.58 | | 1034.00 | |
| | | | | | 24+50.00 | 1034.20 | 24.20 | -0.0189 | -0.46 | | 1033.74 | |
| | | | | | 24+64.81 | 1033.97 | 24.00 | -0.0160 | -0.38 | | 1033.59 | N.C. |

CALCULATED LRK | CHECKED PJF

# SUPERELEVATION TABLE RAMP B-2

SUM-77/277/244 VARIOUS

826 1288

O:\2017\2017258\ProjectData\SUM\106002\Design\Roadway\Sheets\106002_GE021.dgn Sheet 1/11/2021 1:10:59 PM pfry

## CURVE 49 - SUPERELEVATION TABLE

P.I. Sta. 578+08.75 | Dc = 0° 28' 03"

| LEFT SIDE | | | | | BASELINE CONTROL | | RIGHT SIDE | | | | | | REMARKS |
|---|---|---|---|---|---|---|---|---|---|---|---|---|---|
| EDGE ELEVATION | TRANSITION RATE | ELEVATION CORRECTION | CROSS SLOPE | WIDTH | STATION | PROFILE GRADE | WIDTH | CROSS SLOPE | ELEVATION CORRECTION | TRANSITION RATE | EDGE ELEVATION | |
| 1049.90 | | -0.21 | -0.0177 | 12.00 | 576+00.00 | 1050.11 | | | | | | P.C. |
| 1049.84 | | -0.21 | -0.0177 | 12.05 | 576+25.00 | 1050.05 | | | | | | |
| 1049.77 | | -0.22 | -0.0177 | 12.22 | 576+50.00 | 1049.99 | | | | | | |
| 1049.69 | | -0.22 | -0.0177 | 12.48 | 576+75.00 | 1049.91 | | | | | | |
| 1049.53 | | -0.23 | -0.0177 | 12.86 | 577+00.00 | 1049.76 | | | | | | |
| 1049.35 | | -0.24 | -0.0177 | 13.34 | 577+25.00 | 1049.59 | | | | | | |
| 1049.17 | | -0.25 | -0.0177 | 13.93 | 577+50.00 | 1049.42 | | | | | | |
| 1049.16 | | -0.25 | -0.0177 | 14.00 | 577+52.62 | 1049.41 | | | | | | |
| 1049.03 | | -0.22 | -0.0177 | 12.24 | 577+75.00 | 1049.25 | | | | | | |
| 1048.86 | | -0.22 | -0.0177 | 12.51 | 578+00.00 | 1049.08 | | | | | | |
| 1048.68 | | -0.23 | -0.0177 | 12.78 | 578+25.00 | 1048.91 | | | | | | |
| 1048.51 | | -0.23 | -0.0177 | 13.05 | 578+50.00 | 1048.74 | | | | | | |
| 1048.32 | | -0.24 | -0.0177 | 13.32 | 578+75.00 | 1048.56 | | | | | | |
| 1048.12 | | -0.24 | -0.0177 | 13.59 | 579+00.00 | 1048.36 | | | | | | |
| 1047.88 | | -0.25 | -0.0177 | 13.86 | 579+25.00 | 1048.13 | | | | | | |
| 1047.63 | | -0.25 | -0.0177 | 14.13 | 579+50.00 | 1047.88 | | | | | | |
| 1047.36 | | -0.25 | -0.0177 | 14.40 | 579+75.00 | 1047.61 | | | | | | |
| 1047.13 | | -0.26 | -0.0177 | 14.60 | 579+93.86 | 1047.39 | | | | | | F.S. |
| 1047.08 | 250 | -0.24 | -0.0162 | 14.66 | 580+00.00 | 1047.32 | | | | | | |
| 1047.08 | | -0.23 | -0.0160 | 14.67 | 580+00.66 | 1047.31 | | | | | | N.C. |
| 1046.92 | | -0.18 | -0.0118 | 14.85 | 580+17.46 | 1047.10 | | | | | | P.T. |
| 1046.85 | | -0.15 | -0.0099 | 14.93 | 580+25.00 | 1047.00 | | | | | | |
| 1046.60 | | -0.06 | -0.0037 | 15.20 | 580+50.00 | 1046.66 | | | | | | |
| 1046.46 | | 0.00 | 0.0000 | 15.36 | 580+64.66 | 1046.46 | | | | | | FLAT |
| 1046.34 | 250 | 0.04 | 0.0026 | 15.47 | 580+75.00 | 1046.30 | | | | | | |
| 1046.06 | | 0.14 | 0.0088 | 15.74 | 581+00.00 | 1045.92 | | | | | | |
| 1045.80 | | 0.24 | 0.0148 | 16.00 | 581+24.01 | 1045.56 | | | | | | |
| 1045.79 | | 0.24 | 0.0151 | 16.00 | 581+25.00 | 1045.55 | | | | | | |
| 1045.76 | | 0.26 | 0.0160 | 16.00 | 581+28.66 | 1045.50 | | | | | | N.C. |
| 1045.50 | | 0.26 | 0.0160 | 16.00 | 581+50.00 | 1045.24 | | | | | | |
| 1045.24 | | 0.26 | 0.0160 | 16.00 | 581+75.00 | 1044.98 | | | | | | |
| 1045.03 | | 0.26 | 0.0160 | 16.00 | 582+00.00 | 1044.77 | | | | | | |
| 1044.88 | | 0.26 | 0.0160 | 16.00 | 582+25.00 | 1044.62 | | | | | | |
| 1044.78 | | 0.26 | 0.0160 | 16.00 | 582+50.00 | 1044.52 | | | | | | |
| 1044.74 | | 0.26 | 0.0160 | 16.00 | 582+75.00 | 1044.48 | | | | | | |
| 1044.75 | | 0.26 | 0.0160 | 16.00 | 583+00.00 | 1044.49 | | | | | | |
| 1044.78 | | 0.26 | 0.0160 | 16.00 | 583+16.40 | 1044.52 | | | | | | T.S./N.C. |

## SPIRAL 50 - SUPERELEVATION TABLE

P.I. Sta. 584+49.77 |

| LEFT SIDE | | | | | BASELINE CONTROL | | RIGHT SIDE | | | | | | REMARKS |
|---|---|---|---|---|---|---|---|---|---|---|---|---|---|
| EDGE ELEVATION | TRANSITION RATE | ELEVATION CORRECTION | CROSS SLOPE | WIDTH | STATION | PROFILE GRADE | WIDTH | CROSS SLOPE | ELEVATION CORRECTION | TRANSITION RATE | EDGE ELEVATION | |
| 1044.78 | | 0.26 | 0.0160 | 16.00 | 583+16.40 | 1044.52 | | | | | | T.S./N.C. |
| 1044.84 | | 0.29 | 0.0179 | 16.00 | 583+25.00 | 1044.55 | | | | | | |
| 1045.04 | | 0.37 | 0.0234 | 16.00 | 583+50.00 | 1044.67 | | | | | | |
| 1045.30 | | 0.46 | 0.0289 | 16.00 | 583+75.00 | 1044.84 | | | | | | |
| 1045.61 | 284 | 0.55 | 0.0344 | 16.00 | 584+00.00 | 1045.06 | | | | | | |
| 1045.98 | | 0.64 | 0.0399 | 16.00 | 584+25.00 | 1045.34 | | | | | | |
| 1046.41 | | 0.73 | 0.0454 | 16.00 | 584+50.00 | 1045.68 | | | | | | |
| 1046.87 | | 0.81 | 0.0509 | 16.00 | 584+75.00 | 1046.06 | | | | | | |
| 1047.41 | | 0.90 | 0.0564 | 16.00 | 585+00.00 | 1046.51 | | | | | | |
| 1047.78 | | 0.96 | 0.0600 | 16.00 | 585+16.40 | 1046.82 | | | | | | S.C./F.S. |

CALCULATED LRK | CHECKED PJF

SUPERELEVATION TABLE
RAMP C

SUM-77/277/244
VARIOUS

827
1288

O:\2017\2017258\ProjectData\SUM\106002\Design\Roadway\Sheets\106002_GE022.dgn Sheet 1/11/2021 1:11:00 PM pfry

## CURVE 51 - SUPERELEVATION TABLE

P.I. Sta. 589+20.09 | Dc = 4° 00′ 00″

| LEFT SIDE | | | | | BASELINE CONTROL | | RIGHT SIDE | | | | | | REMARKS |
|---|---|---|---|---|---|---|---|---|---|---|---|---|---|
| EDGE ELEVATION | TRANSITION RATE | ELEVATION CORRECTION | CROSS SLOPE | WIDTH | STATION | PROFILE GRADE | WIDTH | CROSS SLOPE | ELEVATION CORRECTION | TRANSITION RATE | EDGE ELEVATION | | |
| 1047.78 | | 0.96 | 0.0600 | 16.00 | 585+16.40 | 1046.82 | | | | | | | S.C./F.S. |
| 1047.96 | | 0.96 | 0.0600 | 16.00 | 585+25.00 | 1047.00 | | | | | | | |
| 1048.51 | | 0.96 | 0.0600 | 16.00 | 585+50.00 | 1047.55 | | | | | | | |
| 1049.11 | | 0.96 | 0.0600 | 16.00 | 585+75.00 | 1048.15 | | | | | | | |
| 1049.77 | | 0.96 | 0.0600 | 16.00 | 586+00.00 | 1048.81 | | | | | | | |
| 1050.48 | | 0.96 | 0.0600 | 16.00 | 586+25.00 | 1049.52 | | | | | | | |
| 1051.25 | | 0.96 | 0.0600 | 16.00 | 586+50.00 | 1050.29 | | | | | | | |
| 1052.07 | | 0.96 | 0.0600 | 16.00 | 586+75.00 | 1051.11 | | | | | | | |
| 1052.94 | | 0.96 | 0.0600 | 16.00 | 587+00.00 | 1051.98 | | | | | | | |
| 1053.84 | | 0.96 | 0.0600 | 16.00 | 587+25.00 | 1052.88 | | | | | | | |
| 1054.74 | | 0.96 | 0.0600 | 16.00 | 587+50.00 | 1053.78 | | | | | | | |
| 1055.64 | | 0.96 | 0.0600 | 16.00 | 587+75.00 | 1054.68 | | | | | | | |
| 1056.54 | | 0.96 | 0.0600 | 16.00 | 588+00.00 | 1055.58 | | | | | | | |
| 1057.44 | | 0.96 | 0.0600 | 16.00 | 588+25.00 | 1056.48 | | | | | | | |
| 1058.34 | | 0.96 | 0.0600 | 16.00 | 588+50.00 | 1057.38 | | | | | | | |
| 1059.24 | | 0.96 | 0.0600 | 16.00 | 588+75.00 | 1058.28 | | | | | | | |
| 1060.14 | | 0.96 | 0.0600 | 16.00 | 589+00.00 | 1059.18 | | | | | | | |
| 1061.04 | | 0.96 | 0.0600 | 16.00 | 589+25.00 | 1060.08 | | | | | | | |
| 1061.94 | | 0.96 | 0.0600 | 16.00 | 589+50.00 | 1060.98 | | | | | | | |
| 1062.84 | | 0.96 | 0.0600 | 16.00 | 589+75.00 | 1061.88 | | | | | | | |
| 1063.74 | | 0.96 | 0.0600 | 16.00 | 590+00.00 | 1062.78 | | | | | | | |
| 1064.64 | | 0.96 | 0.0600 | 16.00 | 590+25.00 | 1063.68 | | | | | | | |
| 1065.54 | | 0.96 | 0.0600 | 16.00 | 590+50.00 | 1064.58 | | | | | | | |
| 1066.44 | | 0.96 | 0.0600 | 16.00 | 590+75.00 | 1065.48 | | | | | | | |
| 1067.34 | | 0.96 | 0.0600 | 16.00 | 591+00.00 | 1066.38 | | | | | | | |
| 1068.24 | | 0.96 | 0.0600 | 16.00 | 591+25.00 | 1067.28 | | | | | | | |
| 1069.14 | | 0.96 | 0.0600 | 16.00 | 591+50.00 | 1068.18 | | | | | | | |
| 1070.04 | | 0.96 | 0.0600 | 16.00 | 591+75.00 | 1069.08 | | | | | | | |
| 1070.94 | | 0.96 | 0.0600 | 16.00 | 592+00.00 | 1069.98 | | | | | | | |
| 1071.84 | | 0.96 | 0.0600 | 16.00 | 592+25.00 | 1070.88 | | | | | | | |
| 1072.74 | | 0.96 | 0.0600 | 16.00 | 592+50.00 | 1071.78 | | | | | | | |
| 1073.64 | | 0.96 | 0.0600 | 16.00 | 592+75.00 | 1072.68 | | | | | | | |
| 1074.54 | | 0.96 | 0.0600 | 16.00 | 593+00.00 | 1073.58 | | | | | | | |
| 1074.66 | | 0.96 | 0.0600 | 16.00 | 593+03.36 | 1073.70 | | | | | | | P.C.C./F.S. |

## CURVE 52 - SUPERELEVATION TABLE

P.I. Sta. 596+43.35 | Dc = 8° 00′ 00″

| LEFT SIDE | | | | | BASELINE CONTROL | | RIGHT SIDE | | | | | | REMARKS |
|---|---|---|---|---|---|---|---|---|---|---|---|---|---|
| EDGE ELEVATION | TRANSITION RATE | ELEVATION CORRECTION | CROSS SLOPE | WIDTH | STATION | PROFILE GRADE | WIDTH | CROSS SLOPE | ELEVATION CORRECTION | TRANSITION RATE | EDGE ELEVATION | | |
| 1074.66 | | 0.96 | 0.0600 | 16.00 | 593+03.36 | 1073.70 | | | | | | | P.C.C./F.S. |
| 1075.44 | | 0.96 | 0.0600 | 16.00 | 593+25.00 | 1074.48 | | | | | | | |
| 1076.34 | | 0.96 | 0.0600 | 16.00 | 593+50.00 | 1075.38 | | | | | | | |
| 1077.24 | | 0.96 | 0.0600 | 16.00 | 593+75.00 | 1076.28 | | | | | | | |
| 1078.14 | | 0.96 | 0.0600 | 16.00 | 594+00.00 | 1077.18 | | | | | | | |
| 1079.02 | | 0.96 | 0.0600 | 16.00 | 594+25.00 | 1078.06 | | | | | | | |
| 1079.90 | | 0.96 | 0.0600 | 16.00 | 594+50.00 | 1078.94 | | | | | | | |
| 1080.78 | | 0.96 | 0.0600 | 16.00 | 594+75.00 | 1079.82 | | | | | | | |
| 1081.66 | | 0.96 | 0.0600 | 16.00 | 595+00.00 | 1080.70 | | | | | | | |
| 1082.54 | | 0.96 | 0.0600 | 16.00 | 595+25.00 | 1081.58 | | | | | | | |
| 1083.42 | | 0.96 | 0.0600 | 16.00 | 595+50.00 | 1082.46 | | | | | | | |
| 1084.30 | | 0.96 | 0.0600 | 16.00 | 595+75.00 | 1083.34 | | | | | | | |
| 1085.18 | | 0.96 | 0.0600 | 16.00 | 596+00.00 | 1084.22 | | | | | | | |
| 1086.06 | | 0.96 | 0.0600 | 16.00 | 596+25.00 | 1085.10 | | | | | | | |
| 1086.59 | | 0.96 | 0.0600 | 16.00 | 596+40.00 | 1085.63 | | | | | | | |
| 1087.64 | | 1.66 | 0.0600 | 27.71 | 596+50.00 | 1085.98 | | | | | | | |
| 1088.48 | | 1.62 | 0.0600 | 27.00 | 596+75.00 | 1086.86 | | | | | | | |
| 1089.32 | | 1.58 | 0.0600 | 26.29 | 597+00.00 | 1087.74 | | | | | | | |
| 1090.15 | | 1.53 | 0.0600 | 25.57 | 597+25.00 | 1088.62 | | | | | | | |
| 1090.99 | | 1.49 | 0.0600 | 24.86 | 597+50.00 | 1089.50 | | | | | | | |
| 1091.83 | | 1.45 | 0.0600 | 24.14 | 597+75.00 | 1090.38 | | | | | | | |
| 1092.67 | | 1.41 | 0.0600 | 23.43 | 598+00.00 | 1091.26 | | | | | | | |
| 1093.50 | | 1.36 | 0.0600 | 22.71 | 598+25.00 | 1092.14 | | | | | | | |
| 1094.34 | | 1.32 | 0.0600 | 22.00 | 598+50.00 | 1093.02 | | | | | | | |
| 1095.18 | | 1.28 | 0.0600 | 21.29 | 598+75.00 | 1093.90 | | | | | | | |
| 1096.01 | | 1.23 | 0.0600 | 20.57 | 599+00.00 | 1094.78 | | | | | | | |
| 1096.85 | | 1.19 | 0.0600 | 19.86 | 599+25.00 | 1095.66 | | | | | | | |
| 1097.27 | | 1.17 | 0.0600 | 19.48 | 599+38.22 | 1096.10 | | | | | | | P.C.C./F.S. |

CALCULATED LRK
CHECKED PJF

# SUPERELEVATION TABLE RAMP C

SUM-77/277/244
VARIOUS

828
1288

O:\2017\2017258\ProjectData\SUM\106002\Design\Roadway\Sheets\106002_GE023.dgn Sheet 1/11/2021 1:11:00 PM pfry

## CURVE 53 - SUPERELEVATION TABLE

| P.I. Sta. 600+38.18 | Dc = 4° 00′ 00″ |
|---|---|

| LEFT SIDE | | | | | BASELINE CONTROL | | RIGHT SIDE | | | | | | REMARKS |
|---|---|---|---|---|---|---|---|---|---|---|---|---|---|
| EDGE ELEVATION | TRANSITION RATE | ELEVATION CORRECTION | CROSS SLOPE | WIDTH | STATION | PROFILE GRADE | WIDTH | CROSS SLOPE | ELEVATION CORRECTION | TRANSITION RATE | EDGE ELEVATION | | |
| 1097.27 | | 1.17 | 0.0600 | 19.48 | 599+38.22 | 1096.10 | | | | | | | P.C.C./F.S. |
| 1097.65 | | 1.15 | 0.0600 | 19.14 | 599+50.00 | 1096.50 | | | | | | | |
| 1098.45 | | 1.11 | 0.0600 | 18.43 | 599+75.00 | 1097.34 | | | | | | | |
| 1099.24 | | 1.06 | 0.0600 | 17.71 | 600+00.00 | 1098.18 | | | | | | | |
| 1100.04 | | 1.02 | 0.0600 | 17.00 | 600+25.00 | 1099.02 | | | | | | | |
| 1100.84 | | 0.98 | 0.0600 | 16.29 | 600+50.00 | 1099.86 | | | | | | | |
| 1101.16 | | 0.96 | 0.0600 | 16.00 | 600+60.00 | 1100.20 | | | | | | | |
| 1101.67 | | 0.96 | 0.0600 | 16.00 | 600+75.00 | 1100.71 | | | | | | | |
| 1102.51 | | 0.96 | 0.0600 | 16.00 | 601+00.00 | 1101.55 | | | | | | | |
| 1103.35 | | 0.96 | 0.0600 | 16.00 | 601+25.00 | 1102.39 | | | | | | | |
| 1103.78 | | 0.96 | 0.0600 | 16.00 | 601+37.81 | 1102.82 | | | | | | | C.S./F.S. |

## SPIRAL 54 - SUPERELEVATION TABLE

| P.I. Sta. 602+04.51 | |
|---|---|

| LEFT SIDE | | | | | BASELINE CONTROL | | RIGHT SIDE | | | | | | REMARKS |
|---|---|---|---|---|---|---|---|---|---|---|---|---|---|
| EDGE ELEVATION | TRANSITION RATE | ELEVATION CORRECTION | CROSS SLOPE | WIDTH | STATION | PROFILE GRADE | WIDTH | CROSS SLOPE | ELEVATION CORRECTION | TRANSITION RATE | EDGE ELEVATION | | |
| 1103.78 | | 0.96 | 0.0600 | 16.00 | 601+37.81 | 1102.82 | | | | | | | C.S./F.S. |
| 1104.15 | | 0.92 | 0.0573 | 16.00 | 601+50.00 | 1103.23 | | | | | | | |
| 1104.90 | | 0.83 | 0.0518 | 16.00 | 601+75.00 | 1104.07 | | | | | | | |
| 1105.65 | | 0.74 | 0.0463 | 16.00 | 602+00.00 | 1104.91 | | | | | | | |
| 1106.40 | | 0.65 | 0.0408 | 16.00 | 602+25.00 | 1105.75 | | | | | | | |
| 1107.15 | 284 | 0.56 | 0.0353 | 16.00 | 602+50.00 | 1106.59 | | | | | | | |
| 1107.91 | | 0.48 | 0.0298 | 16.00 | 602+75.00 | 1107.43 | | | | | | | |
| 1108.66 | | 0.39 | 0.0243 | 16.00 | 603+00.00 | 1108.27 | | | | | | | |
| 1109.49 | | 0.30 | 0.0188 | 16.00 | 603+25.00 | 1109.19 | | | | | | | |
| 1109.81 | | 0.26 | 0.0160 | 16.00 | 603+37.81 | 1109.55 | | | | | | | N.C. |

## CURVE 96 - SUPERELEVATION TABLE

| P.I. Sta. 280+91.67 | Dc = 1° 00′ 00″ |
|---|---|

| LEFT SIDE | | | | | *SAWCUT 32' RT. (C/L I.R. 277) | | RIGHT SIDE | | | | | | REMARKS |
|---|---|---|---|---|---|---|---|---|---|---|---|---|---|
| EDGE ELEVATION | TRANSITION RATE | ELEVATION CORRECTION | CROSS SLOPE | WIDTH | STATION | PROFILE GRADE | WIDTH | CROSS SLOPE | ELEVATION CORRECTION | TRANSITION RATE | EDGE ELEVATION | | |
| | | | | | 277+72.76 | 1120.28 | 15.55 | -0.0160 | -0.25 | | 1120.03 | | P.C./N.C. |
| | | | | | 277+75.00 | 1120.34 | 15.50 | -0.0163 | -0.25 | | 1120.09 | | |
| | | | | | 278+00.00 | 1121.01 | 15.00 | -0.0199 | -0.30 | | 1120.71 | | |
| | | | | | 278+25.00 | 1121.69 | 14.50 | -0.0235 | -0.34 | | 1121.35 | | |
| | | | | | 278+50.00 | 1122.39 | 14.00 | -0.0271 | -0.38 | 579 | 1122.01 | | |
| | | | | | 278+75.00 | 1123.10 | 13.50 | -0.0307 | -0.41 | | 1122.69 | | |
| | | | | | 279+00.00 | 1123.81 | 13.00 | -0.0343 | -0.45 | | 1123.36 | | |
| | | | | | 279+25.00 | 1124.52 | 12.50 | -0.0379 | -0.47 | | 1124.05 | | |
| | | | | | 279+50.00 | 1125.23 | 12.00 | -0.0415 | -0.50 | | 1124.73 | | EXIST. |

*NOTE: ELEVATION IS EXISTING ELEVATION AT SAWCUT 32' RIGHT OF EXISTING C/L I.R. 277 (EXISTING ELEVATIONS ARE TO BE VERIFIED IN FIELD)

CALCULATED LRK | CHECKED PJF

# SUPERELEVATION TABLE RAMP C

SUM-77/277/244
VARIOUS

829
1288

O:\2017\2017258\ProjectData\SUM\106002\Design\Roadway\Sheets\106002_GE024.dgn Sheet 1/11/2021 1:11:01 PM pfry

## CURVE 58 - SUPERELEVATION TABLE

P.I. Sta. 681+06.79 | Dc = 1° 55' 00"

| LEFT SIDE | | | | | BASELINE CONTROL | | RIGHT SIDE | | | | | | REMARKS |
|---|---|---|---|---|---|---|---|---|---|---|---|---|---|
| EDGE ELEVATION | TRANSITION RATE | ELEVATION CORRECTION | CROSS SLOPE | WIDTH | STATION | PROFILE GRADE | WIDTH | CROSS SLOPE | ELEVATION CORRECTION | TRANSITION RATE | EDGE ELEVATION | | |
| 1069.16 | | 0.28 | 0.0223 | 12.62 | 679+55.23 | 1068.88 | | | | | | | EXIST. |
| 1069.43 | | 0.32 | 0.0245 | 13.09 | 679+75.00 | 1069.11 | | | | | | | |
| 1069.82 | | 0.38 | 0.0274 | 13.87 | 680+00.00 | 1069.44 | | | | | | | |
| 1070.25 | 552 | 0.45 | 0.0302 | 14.86 | 680+25.00 | 1069.80 | | | | | | | |
| 1070.67 | | 0.53 | 0.0329 | 16.00 | 680+48.74 | 1070.14 | | | | | | | |
| 1070.69 | | 0.53 | 0.0330 | 16.00 | 680+50.00 | 1070.16 | | | | | | | |
| 1071.06 | | 0.57 | 0.0359 | 16.00 | 680+75.00 | 1070.49 | | | | | | | |
| 1071.44 | | 0.62 | 0.0387 | 16.00 | 681+00.00 | 1070.82 | | | | | | | F.S. |
| 1071.77 | | 0.62 | 0.0387 | 16.00 | 681+25.00 | 1071.15 | | | | | | | |
| 1072.10 | | 0.62 | 0.0387 | 16.00 | 681+50.00 | 1071.48 | | | | | | | |
| 1072.43 | | 0.62 | 0.0387 | 16.00 | 681+75.00 | 1071.81 | | | | | | | |
| 1072.76 | | 0.62 | 0.0387 | 16.00 | 682+00.00 | 1072.14 | | | | | | | |
| 1073.10 | | 0.62 | 0.0387 | 16.00 | 682+25.00 | 1072.48 | | | | | | | |
| 1073.42 | | 0.62 | 0.0387 | 16.00 | 682+50.00 | 1072.80 | | | | | | | |
| 1073.64 | | 0.62 | 0.0387 | 16.00 | 682+75.00 | 1073.02 | | | | | | | |
| 1073.76 | | 0.62 | 0.0387 | 16.00 | 683+00.00 | 1073.14 | | | | | | | |
| 1073.76 | | 0.62 | 0.0387 | 16.00 | 683+18.39 | 1073.14 | | | | | | | C.S./F.S. |

## SPIRAL 59 - SUPERELEVATION TABLE

P.I. Sta. 684+48.34 |

| LEFT SIDE | | | | | BASELINE CONTROL | | RIGHT SIDE | | | | | | REMARKS |
|---|---|---|---|---|---|---|---|---|---|---|---|---|---|
| EDGE ELEVATION | TRANSITION RATE | ELEVATION CORRECTION | CROSS SLOPE | WIDTH | STATION | PROFILE GRADE | WIDTH | CROSS SLOPE | ELEVATION CORRECTION | TRANSITION RATE | EDGE ELEVATION | | |
| 1073.76 | | 0.62 | 0.0387 | 16.00 | 683+18.39 | 1073.14 | | | | | | | C.S./F.S. |
| 1073.76 | | 0.63 | 0.0394 | 16.00 | 683+25.00 | 1073.13 | | | | | | | |
| 1073.68 | | 0.67 | 0.0421 | 16.00 | 683+50.00 | 1073.01 | | | | | | | |
| 1073.49 | | 0.72 | 0.0447 | 16.00 | 683+75.00 | 1072.77 | | | | | | | |
| 1073.18 | 587 | 0.76 | 0.0474 | 16.00 | 684+00.00 | 1072.42 | | | | | | | |
| 1072.75 | | 0.80 | 0.0501 | 16.00 | 684+25.00 | 1071.95 | | | | | | | |
| 1072.21 | | 0.84 | 0.0527 | 16.00 | 684+50.00 | 1071.37 | | | | | | | |
| 1071.56 | | 0.89 | 0.0554 | 16.00 | 684+75.00 | 1070.67 | | | | | | | |
| 1070.78 | | 0.93 | 0.0580 | 16.00 | 685+00.00 | 1069.85 | | | | | | | |
| 1070.14 | | 0.96 | 0.0600 | 16.00 | 685+18.39 | 1069.18 | | | | | | | S.C./F.S. |

CALCULATED LRK | CHECKED PJF

**SUPERELEVATION TABLE**
**RAMP C-1**

**SUM-77/277/244**
**VARIOUS**

830
1288

O:\2017\2017258\ProjectData\SUM\106002\Design\Roadway\Sheets\106002_GE025.dgn Sheet 1/11/2021 1:11:02 PM pfry

## CURVE 60 - SUPERELEVATION TABLE

P.I. Sta. 700+58.25 | Dc = 24° 00′ 00″

| LEFT SIDE | | | | | BASELINE CONTROL | | RIGHT SIDE | | | | | | REMARKS |
|---|---|---|---|---|---|---|---|---|---|---|---|---|---|
| EDGE ELEVATION | TRANSITION RATE | ELEVATION CORRECTION | CROSS SLOPE | WIDTH | STATION | PROFILE GRADE | WIDTH | CROSS SLOPE | ELEVATION CORRECTION | TRANSITION RATE | EDGE ELEVATION | |
| 1070.14 | | 0.96 | 0.0600 | 16.00 | 685+18.39 | 1069.18 | | | | | | S.C./F.S. |
| 1069.88 | | 0.96 | 0.0600 | 16.00 | 685+25.00 | 1068.92 | | | | | | |
| 1068.83 | | 0.96 | 0.0600 | 16.00 | 685+50.00 | 1067.87 | | | | | | |
| 1067.67 | | 0.96 | 0.0600 | 16.00 | 685+75.00 | 1066.71 | | | | | | |
| 1066.39 | | 0.96 | 0.0600 | 16.00 | 686+00.00 | 1065.43 | | | | | | |
| 1065.05 | | 0.96 | 0.0600 | 16.00 | 686+25.00 | 1064.09 | | | | | | |
| 1063.71 | | 0.96 | 0.0600 | 16.00 | 686+50.00 | 1062.75 | | | | | | |
| 1062.38 | | 0.96 | 0.0600 | 16.00 | 686+75.00 | 1061.42 | | | | | | |
| 1061.04 | | 0.96 | 0.0600 | 16.00 | 687+00.00 | 1060.08 | | | | | | |
| 1059.70 | | 0.96 | 0.0600 | 16.00 | 687+25.00 | 1058.74 | | | | | | |
| 1058.36 | | 0.96 | 0.0600 | 16.00 | 687+50.00 | 1057.40 | | | | | | |
| 1057.02 | | 0.96 | 0.0600 | 16.00 | 687+75.00 | 1056.06 | | | | | | |
| 1055.69 | | 0.96 | 0.0600 | 16.00 | 688+00.00 | 1054.73 | | | | | | |
| 1054.35 | | 0.96 | 0.0600 | 16.00 | 688+25.00 | 1053.39 | | | | | | |
| 1053.01 | | 0.96 | 0.0600 | 16.00 | 688+50.00 | 1052.05 | | | | | | |
| 1051.67 | | 0.96 | 0.0600 | 16.00 | 688+75.00 | 1050.71 | | | | | | |
| 1050.34 | | 0.96 | 0.0600 | 16.00 | 689+00.00 | 1049.38 | | | | | | |
| 1049.00 | | 0.96 | 0.0600 | 16.00 | 689+25.00 | 1048.04 | | | | | | |
| 1047.66 | | 0.96 | 0.0600 | 16.00 | 689+50.00 | 1046.70 | | | | | | |
| 1046.32 | | 0.96 | 0.0600 | 16.00 | 689+75.00 | 1045.36 | | | | | | |
| 1044.98 | | 0.96 | 0.0600 | 16.00 | 690+00.00 | 1044.02 | | | | | | |
| 1043.65 | | 0.96 | 0.0600 | 16.00 | 690+25.00 | 1042.69 | | | | | | |
| 1042.31 | | 0.96 | 0.0600 | 16.00 | 690+50.00 | 1041.35 | | | | | | |
| 1041.02 | | 0.96 | 0.0600 | 16.00 | 690+75.00 | 1040.06 | | | | | | |
| 1039.85 | | 0.96 | 0.0600 | 16.00 | 691+00.00 | 1038.89 | | | | | | |
| 1038.78 | | 0.96 | 0.0600 | 16.00 | 691+25.00 | 1037.82 | | | | | | |
| 1037.81 | | 0.96 | 0.0600 | 16.00 | 691+50.00 | 1036.85 | | | | | | |
| 1036.96 | | 0.96 | 0.0600 | 16.00 | 691+75.00 | 1036.00 | | | | | | |
| 1036.35 | | 0.96 | 0.0600 | 16.00 | 691+94.95 | 1035.39 | | | | | | C.S./F.S. |

## SPIRAL 61 - SUPERELEVATION TABLE

P.I. Sta. 692+98.87 |

| LEFT SIDE | | | | | BASELINE CONTROL | | RIGHT SIDE | | | | | | REMARKS |
|---|---|---|---|---|---|---|---|---|---|---|---|---|---|
| EDGE ELEVATION | TRANSITION RATE | ELEVATION CORRECTION | CROSS SLOPE | WIDTH | STATION | PROFILE GRADE | WIDTH | CROSS SLOPE | ELEVATION CORRECTION | TRANSITION RATE | EDGE ELEVATION | |
| 1036.35 | | 0.96 | 0.0600 | 16.00 | 691+94.95 | 1035.39 | | | | | | C.S./F.S. |
| 1036.20 | | 0.95 | 0.0593 | 16.00 | 692+00.00 | 1035.25 | | | | | | |
| 1035.49 | | 0.89 | 0.0556 | 16.00 | 692+25.00 | 1034.60 | | | | | | |
| 1034.90 | | 0.83 | 0.0519 | 16.00 | 692+50.00 | 1034.07 | | | | | | |
| 1034.41 | | 0.77 | 0.0483 | 16.00 | 692+75.00 | 1033.64 | | | | | | |
| 1034.03 | | 0.71 | 0.0446 | 16.00 | 693+00.00 | 1033.32 | | | | | | |
| 1033.75 | | 0.65 | 0.0409 | 16.00 | 693+25.00 | 1033.10 | | | | | | |
| 1033.59 | 426 | 0.60 | 0.0373 | 16.00 | 693+50.00 | 1032.99 | | | | | | |
| 1033.53 | | 0.54 | 0.0336 | 16.00 | 693+75.00 | 1032.99 | | | | | | |
| 1033.58 | | 0.48 | 0.0299 | 16.00 | 694+00.00 | 1033.10 | | | | | | |
| 1033.67 | | 0.42 | 0.0263 | 16.00 | 694+25.00 | 1033.25 | | | | | | |
| 1033.77 | | 0.36 | 0.0226 | 16.00 | 694+50.00 | 1033.41 | | | | | | |
| 1033.87 | | 0.30 | 0.0189 | 16.00 | 694+75.00 | 1033.57 | | | | | | |
| 1033.96 | | 0.26 | 0.0160 | 16.00 | 694+94.95 | 1033.70 | | | | | | S.C./N.C. |

CALCULATED LRK | CHECKED PJF

SUPERELEVATION TABLE
RAMP C-1

SUM-77/277/244
VARIOUS

831
1288

O:\2017\2017258\ProjectData\SUM\106002\Design\Roadway\Sheets\106002_GE026.dgn Sheet 1/11/2021 1:11:03 PM pfry

## CURVE 66 - SUPERELEVATION TABLE

P.I. Sta. 782+19.82 | Dc = 7° 39' 38"

| LEFT SIDE | | | | | BASELINE CONTROL | | RIGHT SIDE | | | | | | REMARKS |
|---|---|---|---|---|---|---|---|---|---|---|---|---|---|
| EDGE ELEVATION | TRANSITION RATE | ELEVATION CORRECTION | CROSS SLOPE | WIDTH | STATION | PROFILE GRADE | WIDTH | CROSS SLOPE | ELEVATION CORRECTION | TRANSITION RATE | EDGE ELEVATION | |
| 1086.58 | | -0.72 | -0.0600 | 12.00 | 781+45.30 | 1087.30 | | | | | | P.C./F.S. |
| 1086.41 | | -0.73 | -0.0600 | 12.13 | 781+50.00 | 1087.14 | | | | | | |
| 1085.57 | | -0.77 | -0.0600 | 12.81 | 781+75.00 | 1086.34 | | | | | | |
| 1084.72 | | -0.81 | -0.0600 | 13.50 | 782+00.00 | 1085.53 | | | | | | |
| 1083.88 | | -0.85 | -0.0600 | 14.18 | 782+25.00 | 1084.73 | | | | | | |
| 1083.04 | | -0.89 | -0.0600 | 14.87 | 782+50.00 | 1083.93 | | | | | | |
| 1082.19 | | -0.93 | -0.0600 | 15.56 | 782+75.00 | 1083.12 | | | | | | |
| 1081.65 | | -0.96 | -0.0600 | 16.00 | 782+90.99 | 1082.61 | | | | | | |
| 1081.56 | | -0.96 | -0.0600 | 16.00 | 782+93.84 | 1082.52 | | | | | | C.S./F.S. |

## SPIRAL 67 - SUPERELEVATION TABLE

P.I. Sta. 783+43.89 |

| LEFT SIDE | | | | | BASELINE CONTROL | | RIGHT SIDE | | | | | | REMARKS |
|---|---|---|---|---|---|---|---|---|---|---|---|---|---|
| EDGE ELEVATION | TRANSITION RATE | ELEVATION CORRECTION | CROSS SLOPE | WIDTH | STATION | PROFILE GRADE | WIDTH | CROSS SLOPE | ELEVATION CORRECTION | TRANSITION RATE | EDGE ELEVATION | |
| 1081.56 | | -0.96 | -0.0600 | 16.00 | 782+93.84 | 1082.52 | | | | | | C.S./F.S. |
| 1081.36 | | -0.93 | -0.0582 | 16.00 | 783+00.00 | 1082.29 | | | | | | |
| 1080.55 | | -0.81 | -0.0509 | 16.00 | 783+25.00 | 1081.36 | | | | | | |
| 1079.73 | | -0.70 | -0.0435 | 16.00 | 783+50.00 | 1080.43 | | | | | | |
| 1078.98 | 213 | -0.58 | -0.0362 | 16.00 | 783+75.00 | 1079.56 | | | | | | |
| 1078.55 | | -0.51 | -0.0321 | 16.00 | 783+89.12 | 1079.06 | | | | | | |
| 1078.22 | | -0.46 | -0.0289 | 16.00 | 784+00.00 | 1078.68 | | | | | | |
| 1077.46 | | -0.34 | -0.0215 | 16.00 | 784+25.00 | 1077.80 | | | | | | |
| 1076.87 | | -0.26 | -0.0160 | 16.00 | 784+43.84 | 1077.13 | | | | | | S.T./N.C. |

CALCULATED LRK | CHECKED PJF

SUPERELEVATION TABLE
RAMP C-2

SUM-77/277/244
VARIOUS

832
1288

O:\2017\2017258\ProjectData\SUM\106002\Design\Roadway\Sheets\106002_GE027.dgn Sheet 1/11/2021 1:11:03 PM pfry

## SPIRAL 68 - SUPERELEVATION TABLE

P.I. Sta. 786+50.14

| LEFT SIDE | | | | | BASELINE CONTROL | | RIGHT SIDE | | | | | | REMARKS |
|---|---|---|---|---|---|---|---|---|---|---|---|---|---|
| EDGE ELEVATION | TRANSITION RATE | ELEVATION CORRECTION | CROSS SLOPE | WIDTH | STATION | PROFILE GRADE | WIDTH | CROSS SLOPE | ELEVATION CORRECTION | TRANSITION RATE | EDGE ELEVATION | |
| 1075.51 | | -0.26 | -0.0160 | 16.00 | 784+82.53 | 1075.77 | | | | | | T.S./N.C. |
| 1074.99 | | -0.17 | -0.0107 | 16.00 | 785+00.00 | 1075.16 | | | | | | |
| 1074.23 | | -0.05 | -0.0031 | 16.00 | 785+25.00 | 1074.28 | | | | | | |
| 1073.92 | | 0.00 | 0.0000 | 16.00 | 785+35.16 | 1073.92 | | | | | | FLAT |
| 1073.47 | | 0.07 | 0.0045 | 16.00 | 785+50.00 | 1073.40 | | | | | | |
| 1073.71 | | 0.19 | 0.0121 | 16.00 | 785+75.00 | 1073.52 | | | | | | |
| 1072.33 | | 0.26 | 0.0160 | 16.00 | 785+87.79 | 1072.07 | | | | | | N.C. |
| 1071.96 | 206 | 0.32 | 0.0197 | 16.00 | 786+00.00 | 1071.64 | | | | | | |
| 1071.20 | | 0.44 | 0.0273 | 16.00 | 786+25.00 | 1070.76 | | | | | | |
| 1070.44 | | 0.56 | 0.0349 | 16.00 | 786+50.00 | 1069.88 | | | | | | |
| 1069.68 | | 0.68 | 0.0425 | 16.00 | 786+75.00 | 1069.00 | | | | | | |
| 1068.92 | | 0.80 | 0.0501 | 16.00 | 787+00.00 | 1068.12 | | | | | | |
| 1068.16 | | 0.92 | 0.0577 | 16.00 | 787+25.00 | 1067.24 | | | | | | |
| 1067.93 | | 0.96 | 0.0600 | 16.00 | 787+32.53 | 1066.97 | | | | | | S.C./F.S. |

## CURVE 69 - SUPERELEVATION TABLE

P.I. Sta. 789+63.04 | Dc = 15° 00′ 00″

| LEFT SIDE | | | | | BASELINE CONTROL | | RIGHT SIDE | | | | | | REMARKS |
|---|---|---|---|---|---|---|---|---|---|---|---|---|---|
| EDGE ELEVATION | TRANSITION RATE | ELEVATION CORRECTION | CROSS SLOPE | WIDTH | STATION | PROFILE GRADE | WIDTH | CROSS SLOPE | ELEVATION CORRECTION | TRANSITION RATE | EDGE ELEVATION | |
| 1067.93 | | 0.96 | 0.0600 | 16.00 | 787+32.53 | 1066.97 | | | | | | S.C./F.S. |
| 1067.32 | | 0.96 | 0.0600 | 16.00 | 787+50.00 | 1066.36 | | | | | | |
| 1066.45 | | 0.96 | 0.0600 | 16.00 | 787+75.00 | 1065.49 | | | | | | |
| 1065.62 | | 0.96 | 0.0600 | 16.00 | 788+00.00 | 1064.66 | | | | | | |
| 1064.81 | | 0.96 | 0.0600 | 16.00 | 788+25.00 | 1063.85 | | | | | | |
| 1064.04 | | 0.96 | 0.0600 | 16.00 | 788+50.00 | 1063.08 | | | | | | |
| 1063.29 | | 0.96 | 0.0600 | 16.00 | 788+75.00 | 1062.33 | | | | | | |
| 1062.58 | | 0.96 | 0.0600 | 16.00 | 789+00.00 | 1061.62 | | | | | | |
| 1061.88 | | 0.96 | 0.0600 | 16.00 | 789+25.00 | 1060.92 | | | | | | |
| 1061.18 | | 0.96 | 0.0600 | 16.00 | 789+50.00 | 1060.22 | | | | | | |
| 1060.48 | | 0.96 | 0.0600 | 16.00 | 789+75.00 | 1059.52 | | | | | | |
| 1059.78 | | 0.96 | 0.0600 | 16.00 | 790+00.00 | 1058.82 | | | | | | |
| 1059.08 | | 0.96 | 0.0600 | 16.00 | 790+25.00 | 1058.12 | | | | | | |
| 1058.38 | | 0.96 | 0.0600 | 16.00 | 790+50.00 | 1057.42 | | | | | | |
| 1057.68 | | 0.96 | 0.0600 | 16.00 | 790+75.00 | 1056.72 | | | | | | |
| 1056.98 | | 0.96 | 0.0600 | 16.00 | 791+00.00 | 1056.02 | | | | | | |
| 1056.28 | | 0.96 | 0.0600 | 16.00 | 791+25.00 | 1055.32 | | | | | | |
| 1055.66 | | 0.96 | 0.0600 | 16.00 | 791+47.33 | 1054.70 | | | | | | C.S./F.S. |

CALCULATED LRK | CHECKED PJF

SUPERELEVATION TABLE
RAMP C-2

SUM-77/277/244
VARIOUS

833
1288

O:\2017\2017258\ProjectData\SUM\106002\Design\Roadway\Sheets\106002_GE028.dgn Sheet 1/11/2021 1:11:04 PM pfry

## SPIRAL 70 - SUPERELEVATION TABLE

P.I. Sta. 792+02.11

| LEFT SIDE | | | | | BASELINE CONTROL | | RIGHT SIDE | | | | | | REMARKS |
|---|---|---|---|---|---|---|---|---|---|---|---|---|---|
| EDGE ELEVATION | TRANSITION RATE | ELEVATION CORRECTION | CROSS SLOPE | WIDTH | STATION | PROFILE GRADE | WIDTH | CROSS SLOPE | ELEVATION CORRECTION | TRANSITION RATE | EDGE ELEVATION | |
| 1055.66 | | 0.96 | 0.0600 | 16.00 | 791+47.33 | 1054.70 | | | | | | C.S./F.S. |
| 1055.57 | | 0.95 | 0.0596 | 16.00 | 791+50.00 | 1054.62 | | | | | | |
| 1054.81 | | 0.89 | 0.0558 | 16.00 | 791+75.00 | 1053.92 | | | | | | |
| 1054.05 | 408 | 0.83 | 0.0519 | 16.00 | 792+00.00 | 1053.22 | | | | | | |
| 1053.29 | | 0.77 | 0.0481 | 16.00 | 792+25.00 | 1052.52 | | | | | | |
| 1052.53 | | 0.71 | 0.0443 | 16.00 | 792+50.00 | 1051.82 | | | | | | |
| 1051.77 | | 0.65 | 0.0404 | 16.00 | 792+75.00 | 1051.12 | | | | | | |
| 1051.09 | | 0.59 | 0.0370 | 16.00 | 792+97.33 | 1050.50 | | | | | | S.C./F.S. |

## CURVE 71 - SUPERELEVATION TABLE

P.I. Sta. 797+24.90 | Dc = 1° 30' 00"

| LEFT SIDE | | | | | BASELINE CONTROL | | RIGHT SIDE | | | | | | REMARKS |
|---|---|---|---|---|---|---|---|---|---|---|---|---|---|
| EDGE ELEVATION | TRANSITION RATE | ELEVATION CORRECTION | CROSS SLOPE | WIDTH | STATION | PROFILE GRADE | WIDTH | CROSS SLOPE | ELEVATION CORRECTION | TRANSITION RATE | EDGE ELEVATION | |
| 1051.09 | | 0.59 | 0.0370 | 16.00 | 792+97.33 | 1050.50 | | | | | | S.C./F.S. |
| 1051.01 | | 0.59 | 0.0370 | 16.00 | 793+00.00 | 1050.42 | | | | | | |
| 1050.31 | | 0.59 | 0.0370 | 16.00 | 793+25.00 | 1049.72 | | | | | | |
| 1049.61 | | 0.59 | 0.0370 | 16.00 | 793+50.00 | 1049.02 | | | | | | |
| 1048.92 | | 0.59 | 0.0370 | 16.00 | 793+75.00 | 1048.33 | | | | | | |
| 1048.22 | | 0.59 | 0.0370 | 16.00 | 794+00.00 | 1047.63 | | | | | | |
| 1047.52 | | 0.59 | 0.0370 | 16.00 | 794+25.00 | 1046.93 | | | | | | |
| 1046.82 | | 0.59 | 0.0370 | 16.00 | 794+50.00 | 1046.23 | | | | | | |
| 1046.14 | | 0.59 | 0.0370 | 16.00 | 794+75.00 | 1045.55 | | | | | | |
| 1045.50 | | 0.59 | 0.0370 | 16.00 | 795+00.00 | 1044.91 | | | | | | |
| 1044.91 | | 0.59 | 0.0370 | 16.00 | 795+25.00 | 1044.32 | | | | | | |
| 1044.36 | | 0.59 | 0.0370 | 16.00 | 795+50.00 | 1043.77 | | | | | | |
| 1043.86 | | 0.59 | 0.0370 | 16.00 | 795+75.00 | 1043.27 | | | | | | |
| 1043.39 | | 0.59 | 0.0370 | 16.00 | 796+00.00 | 1042.80 | | | | | | |
| 1042.97 | | 0.59 | 0.0370 | 16.00 | 796+25.00 | 1042.38 | | | | | | |
| 1042.60 | | 0.59 | 0.0370 | 16.00 | 796+50.00 | 1042.01 | | | | | | |
| 1042.26 | | 0.59 | 0.0370 | 16.00 | 796+75.00 | 1041.67 | | | | | | |
| 1041.97 | | 0.59 | 0.0370 | 16.00 | 797+00.00 | 1041.38 | | | | | | |
| 1041.73 | | 0.59 | 0.0370 | 16.00 | 797+25.00 | 1041.14 | | | | | | |
| 1041.52 | | 0.59 | 0.0370 | 16.00 | 797+50.00 | 1040.93 | | | | | | |
| 1041.34 | | 0.59 | 0.0370 | 16.00 | 797+75.00 | 1040.75 | | | | | | |
| 1041.16 | | 0.59 | 0.0370 | 16.00 | 798+00.00 | 1040.57 | | | | | | |
| 1040.97 | | 0.59 | 0.0370 | 16.00 | 798+25.00 | 1040.38 | | | | | | |
| 1040.79 | | 0.59 | 0.0370 | 16.00 | 798+50.00 | 1040.20 | | | | | | |
| 1040.61 | | 0.59 | 0.0370 | 16.00 | 798+75.00 | 1040.02 | | | | | | |
| 1040.43 | | 0.59 | 0.0370 | 16.00 | 799+00.00 | 1039.84 | | | | | | |
| 1040.23 | | 0.59 | 0.0370 | 16.00 | 799+25.00 | 1039.64 | | | | | | |
| 1040.04 | | 0.59 | 0.0370 | 16.00 | 799+50.00 | 1039.45 | | | | | | |
| 1039.84 | | 0.59 | 0.0370 | 16.00 | 799+74.46 | 1039.25 | | | | | | |
| 1039.83 | | 0.59 | 0.0370 | 15.98 | 799+75.00 | 1039.24 | | | | | | |
| 1039.59 | | 0.55 | 0.0370 | 14.91 | 800+00.00 | 1039.04 | | | | | | |
| 1039.36 | | 0.52 | 0.0370 | 14.02 | 800+25.00 | 1038.84 | | | | | | |
| 1039.12 | | 0.49 | 0.0370 | 13.29 | 800+50.00 | 1038.63 | | | | | | |
| 1038.91 | | 0.47 | 0.0370 | 12.72 | 800+75.00 | 1038.44 | | | | | | |
| 1038.70 | | 0.46 | 0.0370 | 12.31 | 801+00.00 | 1038.24 | | | | | | |
| 1038.57 | | 0.45 | 0.0370 | 12.14 | 801+16.07 | 1038.12 | | | | | | F.S. |
| 1038.50 | 222 | 0.41 | 0.0337 | 12.08 | 801+25.00 | 1038.09 | | | | | | |
| 1038.32 | | 0.30 | 0.0247 | 12.00 | 801+48.92 | 1038.02 | | | | | | 2/3 F.S. |

CALCULATED LRK
CHECKED PJF

SUPERELEVATION TABLE
RAMP C-2

SUM-77/277/244
VARIOUS

834
1288

O:\2017\2017258\ProjectData\SUM\106002\Design\Roadway\Sheets\106002_GE029.dgn Sheet 1/11/2021 1:11:05 PM pfry

# CURVE 76 - SUPERELEVATION TABLE

P.I. Sta. 891+58.50 | Dc = 1° 15' 00"

| LEFT SIDE | | | | | *SAWCUT 32' LT. (C/L I.R. 277) | | RIGHT SIDE | | | | | | REMARKS |
|---|---|---|---|---|---|---|---|---|---|---|---|---|---|
| EDGE ELEVATION | TRANSITION RATE | ELEVATION CORRECTION | CROSS SLOPE | WIDTH | STATION | PROFILE GRADE | WIDTH | CROSS SLOPE | ELEVATION CORRECTION | TRANSITION RATE | EDGE ELEVATION | |
| 1095.40 | | -0.29 | -0.0240 | 12.00 | 269+40.00 = 887+98.38 | 1095.69 | | | | | | | P.C. |
| 1095.71 | | -0.28 | -0.0231 | 12.00 | 269+50.00 | 1095.99 | | | | | | | |
| 1096.50 | 939 | -0.25 | -0.0209 | 12.00 | 269+75.00 | 1096.75 | | | | | | | |
| 1097.29 | | -0.22 | -0.0187 | 12.00 | 270+00.00 | 1097.51 | | | | | | | |
| 1098.05 | | -0.20 | -0.0165 | 12.00 | 270+25.00 | 1098.25 | | | | | | | |
| 1098.22 | | -0.19 | -0.0160 | 12.00 | 270+30.15 | 1098.41 | | | | | | | N.C. |
| 1098.81 | | -0.19 | -0.0160 | 12.00 | 270+50.00 | 1099.00 | | | | | | | |
| 1099.50 | | -0.19 | -0.0160 | 12.00 | 270+75.00 | 1099.69 | | | | | | | |
| 1100.18 | | -0.19 | -0.0160 | 12.00 | 271+00.00 | 1100.37 | | | | | | | |
| 1101.00 | | -0.19 | -0.0160 | 12.00 | 271+25.00 | 1101.19 | | | | | | | |
| 1101.81 | | -0.19 | -0.0160 | 12.00 | 271+50.00 | 1102.00 | | | | | | | |
| 1102.53 | | -0.19 | -0.0160 | 12.00 | 271+75.00 | 1102.72 | | | | | | | |
| 1103.25 | | -0.19 | -0.0160 | 12.00 | 272+00.00 | 1103.44 | | | | | | | |
| 1104.01 | | -0.19 | -0.0160 | 12.00 | 272+25.00 | 1104.20 | | | | | | | |
| 1104.76 | | -0.19 | -0.0160 | 12.00 | 272+50.00 | 1104.95 | | | | | | | |
| 1105.50 | | -0.19 | -0.0160 | 12.00 | 272+75.00 | 1105.69 | | | | | | | |
| 1106.23 | | -0.19 | -0.0160 | 12.00 | 273+00.00 | 1106.42 | | | | | | | |
| 1106.54 | 946 | -0.19 | -0.0160 | 11.94 | 273+10.24 | 1106.73 | | | | | | | N.C. |
| 1107.02 | | -0.17 | -0.0147 | 11.88 | 273+25.00 | 1107.19 | | | | | | | EXIST. |

*NOTE: ELEVATION IS EXISTING ELEVATION AT SAWCUT 32' LEFT OF EXISTING C/L I.R. 277 (EXISTING ELEVATIONS TO BE VERIFIED IN FIELD)

| LEFT SHOULDER | | | | | LEFT SIDE | | | | | BASELINE CONTROL | | REMARKS |
|---|---|---|---|---|---|---|---|---|---|---|---|---|
| EDGE ELEVATION | TRANSITION RATE | ELEVATION CORRECTION | CROSS SLOPE | WIDTH | EDGE ELEVATION | TRANSITION RATE | ELEVATION CORRECTION | CROSS SLOPE | WIDTH | STATION | PROFILE GRADE | |
| | | | | | 1095.69 | | 0.29 | 0.0240 | 12.00 | 887+98.38 = 269+40.00 | 1095.40 | P.C. |
| | | | | | 1095.64 | | 0.29 | 0.0241 | 12.00 | 888+00.00 | 1095.35 | |
| | | | | | 1094.90 | | 0.32 | 0.0264 | 12.08 | 888+25.00 | 1094.58 | |
| | | | | | 1094.14 | 939 | 0.35 | 0.0286 | 12.29 | 888+50.00 | 1093.79 | |
| | | | | | 1093.39 | | 0.39 | 0.0308 | 12.64 | 888+75.00 | 1093.00 | |
| | | | | | 1092.62 | | 0.43 | 0.0330 | 13.13 | 889+00.00 | 1092.19 | |
| | | | | | 1091.82 | | 0.48 | 0.0352 | 13.75 | 889+25.00 | 1091.34 | |
| | | | | | 1091.55 | | 0.50 | 0.0360 | 14.00 | 889+33.61 | 1091.05 | F.S. |
| | | | | | 1090.93 | | 0.44 | 0.0360 | 12.20 | 889+50.00 | 1090.49 | |
| | | | | | 1090.06 | | 0.45 | 0.0360 | 12.50 | 889+75.00 | 1089.61 | |
| | | | | | 1089.27 | | 0.46 | 0.0360 | 12.80 | 890+00.00 | 1088.81 | |
| | | | | | 1088.55 | | 0.47 | 0.0360 | 13.10 | 890+25.00 | 1088.08 | |
| | | | | | 1087.75 | | 0.48 | 0.0360 | 13.40 | 890+50.00 | 1087.27 | |
| | | | | | 1086.96 | | 0.49 | 0.0360 | 13.70 | 890+75.00 | 1086.47 | |
| | | | | | 1086.19 | | 0.50 | 0.0360 | 14.00 | 891+00.00 | 1085.69 | |
| | | | | | 1085.43 | | 0.51 | 0.0360 | 14.30 | 891+25.00 | 1084.92 | |
| | | | | | 1084.70 | | 0.53 | 0.0360 | 14.60 | 891+50.00 | 1084.17 | |
| | | | | | 1083.97 | | 0.54 | 0.0360 | 14.90 | 891+75.00 | 1083.43 | |
| | | | | | 1083.26 | | 0.55 | 0.0360 | 15.20 | 892+00.00 | 1082.71 | |
| | | | | | 1082.57 | | 0.56 | 0.0360 | 15.50 | 892+25.00 | 1082.01 | |
| | | | | | 1081.89 | | 0.57 | 0.0360 | 15.80 | 892+50.00 | 1081.32 | |
| 1081.56 | | 0.12 | 0.0305 | 4.00 | 1081.44 | | 0.58 | 0.0360 | 16.00 | 892+66.83 | 1080.86 | |
| 1081.31 | | 0.09 | 0.0224 | 4.00 | 1081.22 | | 0.58 | 0.0360 | 16.00 | 892+75.00 | 1080.64 | |
| 1080.55 | 252 | -0.01 | -0.0024 | 4.00 | 1080.56 | | 0.58 | 0.0360 | 16.00 | 893+00.00 | 1079.98 | |
| 1079.80 | | -0.11 | -0.0272 | 4.00 | 1079.91 | | 0.58 | 0.0360 | 16.00 | 893+25.00 | 1079.33 | |
| 1079.60 | | -0.14 | -0.0340 | 4.00 | 1079.74 | | 0.58 | 0.0360 | 16.00 | 893+31.83 | 1079.16 | |
| | | | | | 1079.28 | | 0.58 | 0.0360 | 16.00 | 893+50.00 | 1078.70 | |
| | | | | | 1078.65 | | 0.58 | 0.0360 | 16.00 | 893+75.00 | 1078.07 | |
| | | | | | 1078.01 | | 0.58 | 0.0360 | 16.00 | 894+00.00 | 1077.43 | |
| | | | | | 1077.34 | | 0.58 | 0.0360 | 16.00 | 894+25.00 | 1076.76 | |
| | | | | | 1076.67 | | 0.58 | 0.0360 | 16.00 | 894+50.00 | 1076.09 | |
| | | | | | 1075.97 | | 0.58 | 0.0360 | 16.00 | 894+75.00 | 1075.39 | |
| | | | | | 1075.26 | | 0.58 | 0.0360 | 16.00 | 895+00.00 | 1074.68 | |
| | | | | | 1074.77 | | 0.58 | 0.0360 | 16.00 | 895+17.13 | 1074.19 | C.S./F.S. |

CALCULATED LRK | CHECKED PJF

SUPERELEVATION TABLE
RAMP D

SUM-77/277/244
VARIOUS

835
1288

1/11/2021 1:11:05 PM pfry
O:\2017\2017258\ProjectData\SUM\106002\Design\Roadway\Sheets\106002_GE030.dgn Sheet

## SPIRAL 77 - SUPERELEVATION TABLE

P.I. Sta. 896+29.68

| LEFT SIDE | | | | | BASELINE CONTROL | | RIGHT SIDE | | | | | | REMARKS |
|---|---|---|---|---|---|---|---|---|---|---|---|---|---|
| EDGE ELEVATION | TRANSITION RATE | ELEVATION CORRECTION | CROSS SLOPE | WIDTH | STATION | PROFILE GRADE | WIDTH | CROSS SLOPE | ELEVATION CORRECTION | TRANSITION RATE | EDGE ELEVATION | |
| 1074.77 | | 0.58 | 0.0360 | 16.00 | 895+17.13 | 1074.19 | | | | | | C.S./F.S. |
| 1074.54 | | 0.58 | 0.0365 | 16.00 | 895+25.00 | 1073.96 | | | | | | |
| 1073.83 | | 0.61 | 0.0380 | 16.00 | 895+50.00 | 1073.22 | | | | | | |
| 1073.09 | | 0.63 | 0.0395 | 16.00 | 895+75.00 | 1072.46 | | | | | | |
| 1072.35 | | 0.66 | 0.0410 | 16.00 | 896+00.00 | 1071.69 | | | | | | |
| 1071.58 | 1042 | 0.68 | 0.0425 | 16.00 | 896+25.00 | 1070.90 | | | | | | |
| 1070.79 | | 0.70 | 0.0440 | 16.00 | 896+50.00 | 1070.09 | | | | | | |
| 1070.01 | | 0.73 | 0.0455 | 16.00 | 896+75.00 | 1069.28 | | | | | | |
| 1069.22 | | 0.75 | 0.0470 | 16.00 | 897+00.00 | 1068.47 | | | | | | |
| 1068.68 | | 0.77 | 0.0480 | 16.00 | 897+17.13 | 1067.91 | | | | | | S.C./F.S. |

## CURVE 78 - SUPERELEVATION TABLE

P.I. Sta. 898+09.19 | Dc = 2° 45' 00"

| LEFT SIDE | | | | | BASELINE CONTROL | | RIGHT SIDE | | | | | | REMARKS |
|---|---|---|---|---|---|---|---|---|---|---|---|---|---|
| EDGE ELEVATION | TRANSITION RATE | ELEVATION CORRECTION | CROSS SLOPE | WIDTH | STATION | PROFILE GRADE | WIDTH | CROSS SLOPE | ELEVATION CORRECTION | TRANSITION RATE | EDGE ELEVATION | |
| 1068.68 | | 0.77 | 0.0480 | 16.00 | 897+17.13 | 1067.91 | | | | | | S.C./F.S. |
| 1068.43 | | 0.77 | 0.0480 | 16.00 | 897+25.00 | 1067.66 | | | | | | |
| 1067.61 | | 0.77 | 0.0480 | 16.00 | 897+50.00 | 1066.84 | | | | | | |
| 1066.80 | | 0.77 | 0.0480 | 16.00 | 897+75.00 | 1066.03 | | | | | | |
| 1065.99 | | 0.77 | 0.0480 | 16.00 | 898+00.00 | 1065.22 | | | | | | |
| 1065.18 | | 0.77 | 0.0480 | 16.00 | 898+25.00 | 1064.41 | | | | | | |
| 1064.36 | | 0.77 | 0.0480 | 16.00 | 898+50.00 | 1063.59 | | | | | | |
| 1063.55 | | 0.77 | 0.0480 | 16.00 | 898+75.00 | 1062.78 | | | | | | |
| 1062.74 | | 0.77 | 0.0480 | 16.00 | 899+00.00 | 1061.97 | | | | | | |
| 1062.70 | | 0.77 | 0.0480 | 16.00 | 899+01.12 | 1061.93 | | | | | | C.S./F.S. |

CALCULATED LRK
CHECKED PJF

**SUPERELEVATION TABLE RAMP D**

**SUM-77/277/244 VARIOUS**

836
1288

O:\2017\2017258\ProjectData\SUM\106002\Design\Roadway\Sheets\106002_GE031.dgn Sheet 1/11/2021 1:11:06 PM pry

## SPIRAL 79 - SUPERELEVATION TABLE

P.I. Sta. 900+05.22

| LEFT SIDE | | | | | BASELINE CONTROL | | RIGHT SIDE | | | | | | REMARKS |
|---|---|---|---|---|---|---|---|---|---|---|---|---|---|
| EDGE ELEVATION | TRANSITION RATE | ELEVATION CORRECTION | CROSS SLOPE | WIDTH | STATION | PROFILE GRADE | WIDTH | CROSS SLOPE | ELEVATION CORRECTION | TRANSITION RATE | EDGE ELEVATION | |
| 1062.70 | | 0.77 | 0.0480 | 16.00 | 899+01.12 | 1061.93 | | | | | | C.S./F.S. |
| 1061.93 | | 0.77 | 0.0480 | 16.00 | 899+25.00 | 1061.16 | | | | | | |
| 1061.11 | | 0.77 | 0.0480 | 16.00 | 899+50.00 | 1060.34 | | | | | | |
| 1060.30 | | 0.77 | 0.0480 | 16.00 | 899+75.00 | 1059.53 | | | | | | |
| 1059.49 | | 0.77 | 0.0480 | 16.00 | 900+00.00 | 1058.72 | | | | | | |
| 1058.68 | | 0.77 | 0.0480 | 16.00 | 900+25.00 | 1057.91 | | | | | | |
| 1057.86 | | 0.77 | 0.0480 | 16.00 | 900+50.00 | 1057.09 | | | | | | |
| 1057.05 | | 0.77 | 0.0480 | 16.00 | 900+75.00 | 1056.28 | | | | | | |
| 1056.24 | | 0.77 | 0.0480 | 16.00 | 901+00.00 | 1055.47 | | | | | | |
| 1056.20 | | 0.77 | 0.0480 | 16.00 | 901+01.12 | 1055.43 | | | | | | S.C./F.S. |

## CURVE 80 - SUPERELEVATION TABLE

P.I. Sta. 904+84.89 | Dc = 3° 30′ 00″

| LEFT SIDE | | | | | BASELINE CONTROL | | RIGHT SIDE | | | | | | REMARKS |
|---|---|---|---|---|---|---|---|---|---|---|---|---|---|
| EDGE ELEVATION | TRANSITION RATE | ELEVATION CORRECTION | CROSS SLOPE | WIDTH | STATION | PROFILE GRADE | WIDTH | CROSS SLOPE | ELEVATION CORRECTION | TRANSITION RATE | EDGE ELEVATION | |
| 1056.20 | | 0.77 | 0.0480 | 16.00 | 901+01.12 | 1055.43 | | | | | | S.C./F.S. |
| 1055.43 | | 0.77 | 0.0480 | 16.00 | 901+25.00 | 1054.66 | | | | | | |
| 1054.61 | | 0.77 | 0.0480 | 16.00 | 901+50.00 | 1053.84 | | | | | | |
| 1053.80 | | 0.77 | 0.0480 | 16.00 | 901+75.00 | 1053.03 | | | | | | |
| 1052.99 | | 0.77 | 0.0480 | 16.00 | 902+00.00 | 1052.22 | | | | | | |
| 1052.18 | | 0.77 | 0.0480 | 16.00 | 902+25.00 | 1051.41 | | | | | | |
| 1051.36 | | 0.77 | 0.0480 | 16.00 | 902+50.00 | 1050.59 | | | | | | |
| 1050.55 | | 0.77 | 0.0480 | 16.00 | 902+75.00 | 1049.78 | | | | | | |
| 1049.76 | | 0.77 | 0.0480 | 16.00 | 903+00.00 | 1048.99 | | | | | | |
| 1049.02 | | 0.77 | 0.0480 | 16.00 | 903+25.00 | 1048.25 | | | | | | |
| 1048.33 | | 0.77 | 0.0480 | 16.00 | 903+50.00 | 1047.56 | | | | | | |
| 1047.69 | | 0.77 | 0.0480 | 16.00 | 903+75.00 | 1046.92 | | | | | | |
| 1047.10 | | 0.77 | 0.0480 | 16.00 | 904+00.00 | 1046.33 | | | | | | |
| 1046.56 | | 0.77 | 0.0480 | 16.00 | 904+25.00 | 1045.79 | | | | | | |
| 1046.07 | | 0.77 | 0.0480 | 16.00 | 904+50.00 | 1045.30 | | | | | | |
| 1045.62 | | 0.77 | 0.0480 | 16.00 | 904+75.00 | 1044.85 | | | | | | |
| 1045.23 | | 0.77 | 0.0480 | 16.00 | 905+00.00 | 1044.46 | | | | | | |
| 1044.88 | | 0.77 | 0.0480 | 16.00 | 905+25.00 | 1044.11 | | | | | | |
| 1044.59 | | 0.77 | 0.0480 | 16.00 | 905+50.00 | 1043.82 | | | | | | |
| 1044.34 | | 0.77 | 0.0480 | 16.00 | 905+75.00 | 1043.57 | | | | | | |
| 1044.14 | | 0.77 | 0.0480 | 16.00 | 906+00.00 | 1043.37 | | | | | | |
| 1043.99 | | 0.77 | 0.0480 | 16.00 | 906+25.00 | 1043.22 | | | | | | |
| 1043.89 | | 0.77 | 0.0480 | 16.00 | 906+50.00 | 1043.12 | | | | | | |
| 1043.84 | | 0.77 | 0.0480 | 16.00 | 906+75.00 | 1043.07 | | | | | | |
| 1043.84 | | 0.77 | 0.0480 | 16.00 | 907+00.00 | 1043.07 | | | | | | |
| 1043.88 | | 0.77 | 0.0480 | 16.00 | 907+25.00 | 1043.11 | | | | | | |
| 1043.98 | | 0.77 | 0.0480 | 16.00 | 907+50.00 | 1043.21 | | | | | | |
| 1044.13 | | 0.77 | 0.0480 | 16.00 | 907+75.00 | 1043.36 | | | | | | |
| 1044.30 | | 0.77 | 0.0480 | 16.00 | 908+00.00 | 1043.53 | | | | | | |
| 1044.47 | | 0.77 | 0.0480 | 16.00 | 908+25.00 | 1043.70 | | | | | | |
| 1044.64 | | 0.77 | 0.0480 | 16.00 | 908+50.00 | 1043.87 | | | | | | |
| 1044.67 | | 0.77 | 0.0480 | 16.00 | 908+55.05 | 1043.90 | | | | | | C.S./F.S. |

CALCULATED LRK
CHECKED PJF

SUPERELEVATION TABLE
RAMP D

SUM-77/277/244
VARIOUS

837
1288

O:\2017\2017258\ProjectData\SUM\106002\Design\Roadway\Sheets\106002_GE032.dgn Sheet 1/11/2021 1:11:07 PM pfry

## SPIRAL 81 - SUPERELEVATION TABLE

P.I. Sta. 909+49.98

| LEFT SIDE | | | | | BASELINE CONTROL | | RIGHT SIDE | | | | | | REMARKS |
|---|---|---|---|---|---|---|---|---|---|---|---|---|---|
| EDGE ELEVATION | TRANSITION RATE | ELEVATION CORRECTION | CROSS SLOPE | WIDTH | STATION | PROFILE GRADE | WIDTH | CROSS SLOPE | ELEVATION CORRECTION | TRANSITION RATE | EDGE ELEVATION | |
| 1044.67 | | 0.77 | 0.0480 | 16.00 | 908+55.05 | 1043.90 | | | | | | C.S./F.S. |
| 1044.81 | | 0.77 | 0.0483 | 16.00 | 908+75.00 | 1044.04 | | | | | | |
| 1044.99 | | 0.78 | 0.0487 | 16.00 | 909+00.00 | 1044.21 | | | | | | |
| 1045.16 | | 0.78 | 0.0490 | 16.00 | 909+25.00 | 1044.38 | | | | | | |
| 1045.34 | | 0.79 | 0.0494 | 16.00 | 909+50.00 | 1044.55 | | | | | | |
| 1045.53 | 4167 | 0.80 | 0.0498 | 16.00 | 909+75.00 | 1044.73 | | | | | | |
| 1045.72 | | 0.80 | 0.0502 | 16.00 | 910+00.00 | 1044.92 | | | | | | |
| 1045.93 | | 0.81 | 0.0505 | 16.00 | 910+25.00 | 1045.12 | | | | | | |
| 1046.14 | | 0.81 | 0.0509 | 16.00 | 910+50.00 | 1045.33 | | | | | | |
| 1046.19 | | 0.82 | 0.0510 | 16.00 | 910+55.05 | 1045.37 | | | | | | S.C./F.S. |

## CURVE 82 - SUPERELEVATION TABLE

P.I. Sta. 913+74.55 | Dc = 2° 33′ 40″

| LEFT SIDE | | | | | BASELINE CONTROL | | RIGHT SIDE | | | | | | REMARKS |
|---|---|---|---|---|---|---|---|---|---|---|---|---|---|
| EDGE ELEVATION | TRANSITION RATE | ELEVATION CORRECTION | CROSS SLOPE | WIDTH | STATION | PROFILE GRADE | WIDTH | CROSS SLOPE | ELEVATION CORRECTION | TRANSITION RATE | EDGE ELEVATION | |
| 1046.19 | | 0.82 | 0.0510 | 16.00 | 910+55.05 | 1045.37 | | | | | | S.C./F.S. |
| 1046.36 | | 0.82 | 0.0510 | 16.00 | 910+75.00 | 1045.54 | | | | | | |
| 1046.59 | | 0.82 | 0.0510 | 16.00 | 911+00.00 | 1045.77 | | | | | | |
| 1046.82 | | 0.82 | 0.0510 | 16.00 | 911+25.00 | 1046.00 | | | | | | |
| 1047.05 | | 0.82 | 0.0510 | 16.00 | 911+50.00 | 1046.23 | | | | | | |
| 1047.26 | | 0.82 | 0.0510 | 16.00 | 911+75.00 | 1046.44 | | | | | | |
| 1047.47 | | 0.82 | 0.0510 | 16.00 | 912+00.00 | 1046.65 | | | | | | F.S. |
| 1047.70 | | 0.87 | 0.0543 | 16.00 | 912+25.00 | 1046.83 | | | | | | |
| 1047.93 | | 0.92 | 0.0575 | 16.00 | 912+50.00 | 1047.01 | | | | | | |
| 1048.14 | | 0.97 | 0.0608 | 16.00 | 912+75.00 | 1047.17 | | | | | | |
| 1048.33 | | 1.02 | 0.0640 | 16.00 | 913+00.00 | 1047.31 | | | | | | |
| 1048.52 | 481 | 1.08 | 0.0673 | 16.00 | 913+25.00 | 1047.44 | | | | | | |
| 1048.70 | | 1.13 | 0.0705 | 16.00 | 913+50.00 | 1047.57 | | | | | | |
| 1048.89 | | 1.18 | 0.0738 | 16.00 | 913+75.00 | 1047.71 | | | | | | |
| 1049.10 | | 1.23 | 0.0770 | 16.00 | 914+00.00 | 1047.87 | | | | | | |
| 1049.31 | | 1.28 | 0.0803 | 16.00 | 914+25.00 | 1048.03 | | | | | | |
| 1049.54 | | 1.34 | 0.0835 | 16.00 | 914+50.00 | 1048.20 | | | | | | EX. F.S. |
| 1049.76 | | 1.34 | 0.0835 | 16.00 | 914+75.00 | 1048.43 | | | | | | |
| 1049.93 | | 1.34 | 0.0835 | 16.00 | 914+93.91 | 1048.59 | | | | | | |
| 1049.98 | | 1.33 | 0.0835 | 15.88 | 915+00.00 | 1048.65 | | | | | | |
| 1050.15 | | 1.28 | 0.0835 | 15.36 | 915+25.00 | 1048.87 | | | | | | |
| 1050.43 | | 1.24 | 0.0835 | 14.85 | 915+50.00 | 1049.19 | | | | | | |
| 1050.81 | | 1.20 | 0.0835 | 14.35 | 915+74.42 | 1049.61 | | | | | | EXIST. |

*NOTE: END WORK AT STA. 914+89.43, LIMITS SHOWN PAST THAT STATION ARE TO BE CONSTRUCTED BY OTHERS AS PART OF THE SUM-76/77/8-8.42/9.77/0.00 DB (PID 102329) PROJECT

CALCULATED LRK | CHECKED PJF

# SUPERELEVATION TABLE RAMP D

SUM-77/277/244
VARIOUS

838
1288

O:\2017\2017258\ProjectData\SUM\106002\Design\Roadway\Sheets\106002_GE033.dgn Sheet 1/11/2021 1:11:08 PM pfry

# CURVE 88 - SUPERELEVATION TABLE

| P.I. Sta. 73+08.33 | Dc = 1° 30' 00" |
|---|---|

| LEFT SIDE | | | | | BASELINE CONTROL | | RIGHT SIDE | | | | | |
|---|---|---|---|---|---|---|---|---|---|---|---|---|
| EDGE ELEVATION | TRANSITION RATE | ELEVATION CORRECTION | CROSS SLOPE | WIDTH | STATION | PROFILE GRADE | WIDTH | CROSS SLOPE | ELEVATION CORRECTION | TRANSITION RATE | EDGE ELEVATION | REMARKS |
| 1094.42 | 200 | 0.42 | 0.0262 | 16.00 | 71+69.06 | 1094.00 | 5.56 | -0.0262 | -0.15 | 200 | 1093.85 | EXIST. |
| 1094.60 | | 0.45 | 0.0280 | 16.00 | 71+74.82 | 1094.15 | 5.44 | -0.0280 | -0.15 | | 1094.00 | F.S. |
| 1094.60 | | 0.45 | 0.0280 | 16.00 | 71+75.00 | 1094.15 | 5.44 | -0.0280 | -0.15 | | 1094.00 | |
| 1095.27 | | 0.45 | 0.0280 | 16.00 | 72+00.00 | 1094.82 | 4.94 | -0.0280 | -0.14 | | 1094.68 | |
| 1095.93 | | 0.45 | 0.0280 | 16.00 | 72+25.00 | 1095.48 | 4.44 | -0.0280 | -0.12 | | 1095.36 | |
| 1096.60 | | 0.45 | 0.0280 | 16.00 | 72+50.00 | 1096.15 | 3.94 | -0.0280 | -0.11 | | 1096.04 | |
| 1097.26 | | 0.45 | 0.0280 | 16.00 | 72+75.00 | 1096.81 | 3.44 | -0.0280 | -0.10 | | 1096.71 | |
| 1097.93 | | 0.45 | 0.0280 | 16.00 | 73+00.00 | 1097.48 | 2.94 | -0.0280 | -0.08 | | 1097.40 | |
| 1098.59 | | 0.45 | 0.0280 | 16.00 | 73+25.00 | 1098.14 | 2.44 | -0.0280 | -0.07 | | 1098.07 | |
| 1099.25 | | 0.45 | 0.0280 | 16.00 | 73+50.00 | 1098.80 | 1.94 | -0.0280 | -0.05 | | 1098.75 | |
| 1099.92 | | 0.45 | 0.0280 | 16.00 | 73+75.00 | 1099.47 | 1.44 | -0.0280 | -0.04 | | 1099.43 | |
| 1100.58 | | 0.45 | 0.0280 | 16.00 | 74+00.00 | 1100.13 | 0.94 | -0.0280 | -0.03 | | 1100.10 | |
| 1101.25 | | 0.45 | 0.0280 | 16.00 | 74+25.00 | 1100.80 | 0.44 | -0.0280 | -0.01 | | 1100.79 | |
| 1101.83 | | 0.45 | 0.0280 | 16.00 | 74+47.06 | 1101.38 | 0.00 | -0.0280 | 0.00 | | 1101.38 | |
| 1101.91 | | 0.45 | 0.0280 | 16.00 | 74+50.00 | 1101.46 | | | | | | |
| 1102.58 | | 0.45 | 0.0280 | 16.00 | 74+75.00 | 1102.13 | | | | | | |
| 1102.89 | | 0.45 | 0.0280 | 16.00 | 74+86.84 | 1102.44 | | | | | | F.S. |
| 1103.15 | | 0.38 | 0.0239 | 16.00 | 75+00.00 | 1102.77 | | | | | | |
| 1103.50 | 200 | 0.30 | 0.0187 | 16.00 | 75+16.71 | 1103.20 | | | | | | P.T. |
| 1103.66 | | 0.26 | 0.0161 | 16.00 | 75+25.00 | 1103.40 | | | | | | |
| 1103.67 | | 0.26 | 0.0160 | 16.00 | 75+25.24 | 1103.41 | | | | | | N.C. |

CALCULATED LRK
CHECKED PJF

**SUPERELEVATION TABLE**
**ARLINGTON ROAD RAMP D**

**SUM-77/277/244**
**VARIOUS**

839
1288

O:\2017\2017258\ProjectData\SUM\106002\Design\Roadway\Sheets\106002_GE034.dgn Sheet 1/11/2021 1:11:09 PM pfry

# CURVE 95 - SUPERELEVATION TABLE

| P.I. Sta. 27+69.62 | Dc = 2° 25' 32" |
|---|---|

| LEFT SIDE | | | | | BASELINE CONTROL | | RIGHT SIDE | | | | | REMARKS |
|---|---|---|---|---|---|---|---|---|---|---|---|---|
| EDGE ELEVATION | TRANSITION RATE | ELEVATION CORRECTION | CROSS SLOPE | WIDTH | STATION | PROFILE GRADE | WIDTH | CROSS SLOPE | ELEVATION CORRECTION | TRANSITION RATE | EDGE ELEVATION | |
| 1005.87 | | -0.19 | -0.0160 | 12.00 | 26+60.00 | 1006.06 | 12.00 | -0.0160 | -0.19 | | 1005.87 | N.C. |
| 1005.98 | | -0.19 | -0.0160 | 12.00 | 26+70.00 | 1006.17 | 12.00 | -0.0116 | -0.14 | | 1006.03 | |
| 1006.00 | | -0.22 | -0.0182 | 12.00 | 26+75.00 | 1006.22 | 12.00 | -0.0095 | -0.11 | | 1006.11 | |
| 1006.17 | 193 | -0.33 | -0.0275 | 12.00 | 26+96.67 | 1006.50 | 12.00 | 0.0000 | 0.00 | 191 | 1006.50 | H.F. |
| 1006.20 | | -0.35 | -0.0289 | 12.00 | 27+00.00 | 1006.55 | 12.00 | 0.0015 | 0.02 | | 1006.57 | |
| 1006.45 | | -0.48 | -0.0397 | 12.00 | 27+25.00 | 1006.93 | 12.00 | 0.0124 | 0.15 | | 1007.08 | |
| 1006.72 | | -0.61 | -0.0505 | 12.00 | 27+50.00 | 1007.33 | 12.00 | 0.0233 | 0.28 | | 1007.61 | EXIST. |
| 1006.94 | | -0.71 | -0.0591 | 12.00 | 27+70.00 | 1007.65 | 12.00 | 0.0320 | 0.38 | | 1008.03 | EXIST. |

CALCULATED LRK
CHECKED PJF

SUPERELEVATION TABLE
WARNER ROAD

SUM-77/277/244
VARIOUS

840
1288

O:\2017\2017258\ProjectData\SUM\106002\Design\Roadway\Sheets\106002_GE035.dgn Sheet 1/11/2021 1:11:09 PM pfry

(8) ℄ CONST. SB I.R. 77
P.I. Sta. 482+91.41
Δ = 29° 44′ 36″ (LT)
Dc = 1° 28′ 03″
R = 3,904.07′
T = 1,036.73′
L = 2,026.68′
E = 135.31′
C = 2,004.00′
C.B. = N 26° 52′ 45″ W
D.S. = 70 MPH
$e_{max}$ = 0.0452
P.C. STA. 472+54.68
P.T. STA. 492+81.37

(12) ℄ CONST. RAMP A
P.I. Sta. 88+67.18
Δ = 8° 07′ 34″ (LT)
Dc = 2° 00′ 00″
R = 2,864.79′
T = 203.49′
L = 406.31′
E = 7.22′
C = 405.96′
C.B. = N 36° 44′ 56″ W
D.S. = 60 MPH
$e_{max}$ = 0.045
P.C. STA. 86+63.69
C.S. STA. 90+70.00

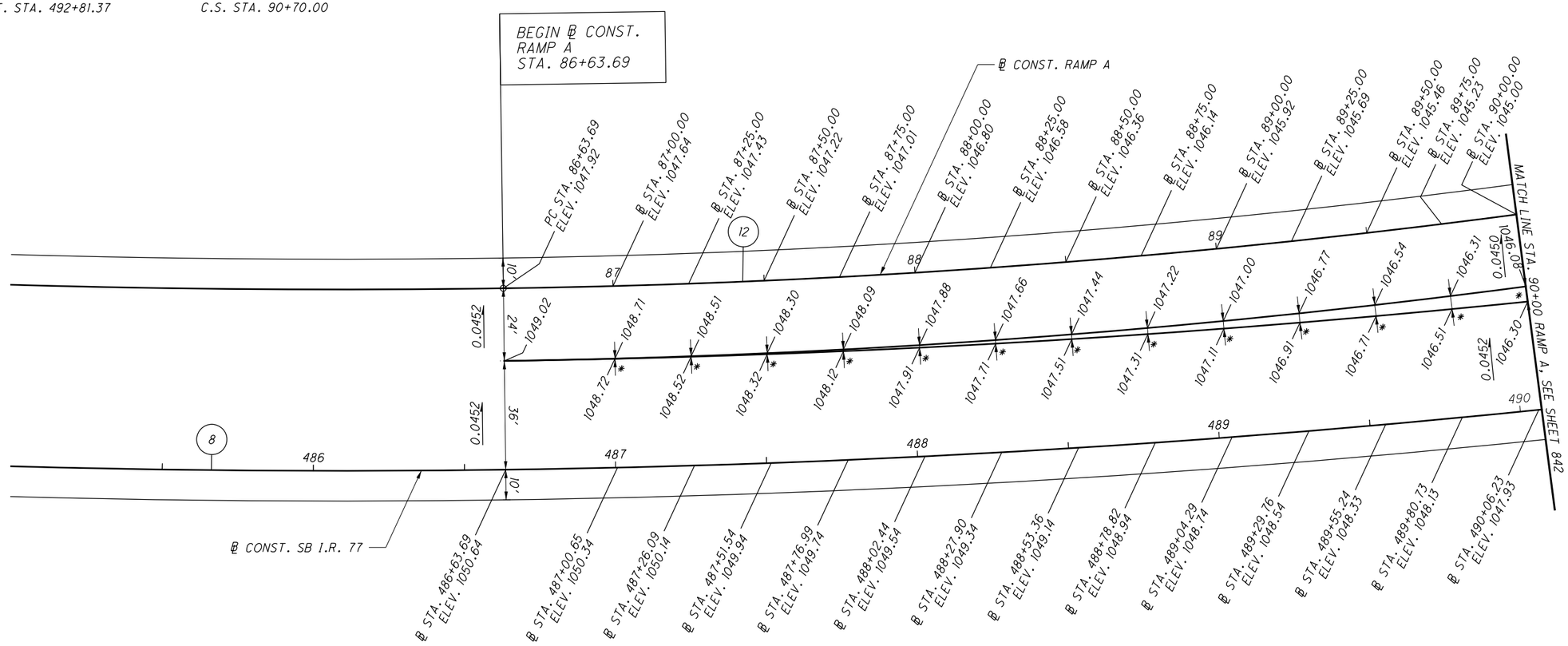


## * GORE SLOPE INFORMATION

(READ FROM SB I.R. 77 E/P TO RAMP A E/P)

STA. 487+00.65, 0.06′ @ -0.0500
STA. 487+26.09, 0.18′ @ -0.0555
STA. 487+51.54, 0.33′ @ -0.0606
STA. 487+76.99, 0.55′ @ -0.0545
STA. 488+02.44, 0.83′ @ -0.0361
STA. 488+27.90, 1.16′ @ -0.0431
STA. 488+53.36, 1.55′ @ -0.0452
STA. 488+78.82, 1.99′ @ -0.0452
STA. 489+04.29, 2.49′ @ -0.0442
STA. 489+29.76, 3.04′ @ -0.0461
STA. 489+55.24, 3.65′ @ -0.0466
STA. 489+80.73, 4.32′ @ -0.0463
STA. 490+06.28, 5.04′ @ -0.0437

FOR SUPERELEVATION TABLES, SEE SHEETS 816 - 818
FOR SB I.R. 77 PROFILE, SEE SHEETS 476 - 479
FOR RAMP A PROFILE, SEE SHEETS 485 - 487

HORIZONTAL SCALE IN FEET
0 10 20 40
CALCULATED KRM
CHECKED LRK

# RAMP GORE DETAILS
## RAMP A AT SB I.R. 77 - BEGIN TO STA. 90+00

SUM-77 / 277 / 224
VARIOUS

841
1288

O:\2017\2017258\ProjectData\SUM\06002\Design\Roadway\Sheets\106002_GM001.dgn Sheet 1/11/2021 11:57 PM pfry

(8) ℄ CONST. SB I.R. 77
P.I. Sta. 482+91.41
Δ = 29° 44′ 36″ (LT)
Dc = 1° 28′ 03″
R = 3,904.07′
T = 1,036.73′
L = 2,026.68′
E = 135.31′
C = 2,004.00′
C.B. = N 26° 52′ 45″ W
D.S. = 70 MPH
$e_{max}$ = 0.0452
P.C. STA. 472+54.68
P.T. STA. 492+81.37

(12) ℄ CONST. RAMP A
P.I. Sta. 88+67.18
Δ = 8° 07′ 34″ (LT)
Dc = 2° 00′ 00″
R = 2,864.79′
T = 203.49′
L = 406.31′
E = 7.22′
C = 405.96′
C.B. = N 36° 44′ 56″ W
D.S. = 60 MPH
$e_{max}$ = 0.045
P.C. STA. 86+63.69
C.S. STA. 90+70.00

(13) ℄ CONST. RAMP A
P.I. STA. 92+70.10
Ls = 300.00′
θs = 5° 37′ 30″
LT = 200.10′
ST = 100.09′
x = 299.71′
y = 9.81′
k = 149.95′
p = 2.45′
C.S. STA. 90+70.00
S.C. STA. 93+70.00

(14) ℄ CONST. RAMP A
P.I. Sta. 99+36.72
Δ = 40° 42′ 05″ (LT)
Dc = 3° 45′ 00″
R = 1,527.89′
T = 566.72′
L = 1,085.37′
E = 101.72′
C = 1,062.69′
C.B. = N 66° 47′ 16″ W
D.S = 55 MPH (SSD = 50 MPH)
$e_{max}$ = 0.0555
S.C. STA. 93+70.00
C.S. STA. 104+55.37

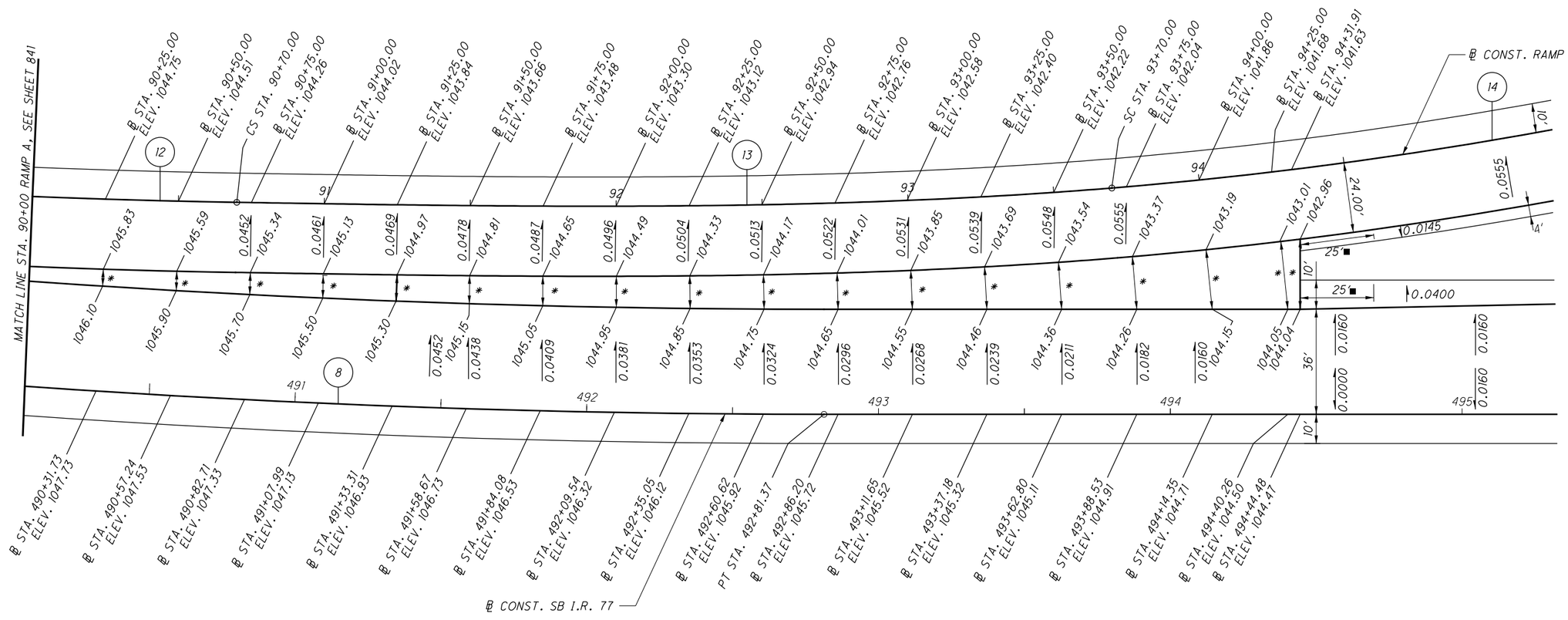


## * GORE SLOPE INFORMATION

(READ FROM SB I.R. 77 E/P TO RAMP A E/P)

STA. 490+31.73, 5.82′ @ -0.0464
STA. 490+57.24, 6.65′ @ -0.0466
STA. 490+82.71, 7.53′ @ -0.0478
STA. 491+07.99, 8.32 @ -0.0445
STA. 491+33.31, 9.00′ @ -0.0367
STA. 491+58.67, 9.58′ @ -0.0355
STA. 491+84.08, 10.12′ @ -0.0395
STA. 492+09.54, 10.63′ @ -0.0433
STA. 492+35.05, 11.16′ @ -0.0466
STA. 492+60.62, 11.74′ @ -0.0494
STA. 492+86.20, 12.41′ @ -0.0516
STA. 493+11.65, 13.30′ @ -0.0526
STA. 493+37.18, 14.52′ @ -0.0530
STA. 493+62.80, 16.10 @ -0.0509
STA. 493+88.53, 18.08′ @ -0.0492
STA. 494+14.35, 20.49′ @ -0.0469
STA. 494+40.26, 23.32′ @ -0.0446
STA. 494+44.48, 24.00′ @ -0.0450

■ TRANSITION SHOULDER CROSS-SLOPE

FOR SUPERELEVATION TABLES, SEE SHEETS 816 - 818
FOR SB I.R. 77 PROFILE, SEE SHEETS 476 - 479
FOR RAMP A PROFILE, SEE SHEETS 485 - 487

HORIZONTAL SCALE IN FEET
0 10 20 40

CALCULATED KRM
CHECKED LRK

# RAMP GORE DETAILS
## RAMP A AT SB I.R. 77 - STA. 90+00 TO STA. 95+00

SUM-77 / 277 / 224
VARIOUS

842
1288

O:\2017\2017258\ProjectData\SUM\106002\Design\Roadway\Sheets\106002_GM002.dgn Sheet 1/11/2021 11:59 PM pfry

(14) ℄ CONST. RAMP A
P.I. Sta. 99+36.72
Δ = 40° 42′ 05″ (LT)
Dc = 3° 45′ 00″
R = 1,527.89′
T = 566.72′
L = 1,085.37′
E = 101.72′
C = 1,062.69′
C.B. = N 66° 47′ 16″ W
D.S = 55 MPH (SSD = 50 MPH)
$e_{max}$ = 0.0555
S.C. STA. 93+70.00
C.S. STA. 104+55.37

(15) ℄ CONST. RAMP A
P.I. STA. 105+22.06
Ls = 200.00′
fs = 3° 45′ 00″
LT = 133.36′
ST = 66.69′
x = 199.91′
y = 4.36′
k = 99.99′
p = 1.09′
C.S. STA. 104+55.37
S.C. STA. 106+55.37

(16) ℄ CONST. RAMP A
P.I. Sta. 110+34.76
Δ = 4° 25′ 27″ (LT)
Dc = 0° 35′ 00″
R = 9,822.13′
T = 379.40′
L = 758.42′
E = 7.32′
C = 758.23′
C.B. = S 86° 53′ 59″ W
D.S. = 65 MPH
$e_{max}$ = 0.0187
S.C. STA. 106+55.37
P.T. STA. 114+13.78

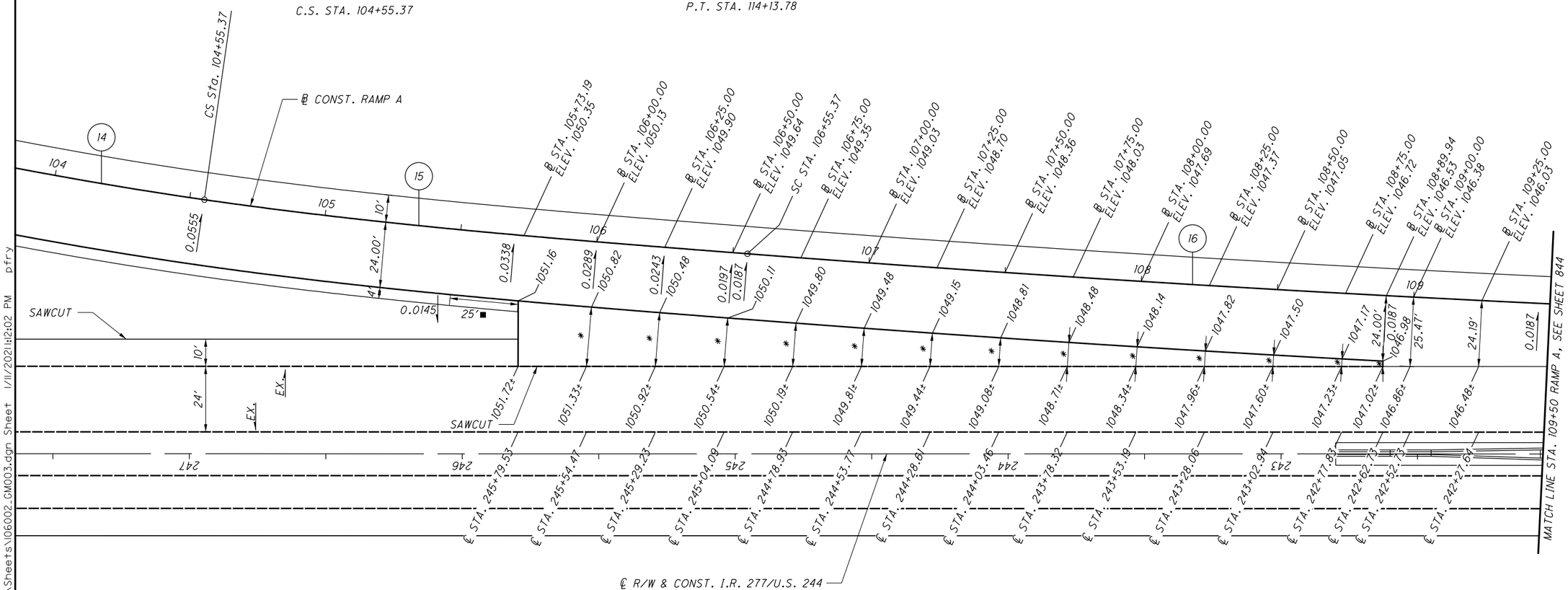


## * GORE SLOPE INFORMATION

(READ FROM I.R. 277 E/P TO RAMP A E/P)

STA. 245+79.53, 24.00′ @ -0.0233
STA. 245+54.47, 21.78′ @ -0.0234
STA. 245+29.23, 19.76′ @ -0.0223
STA. 245+04.09, 17.81′ @ -0.0241
STA. 244+78.93, 15.88′ @ -0.0246
STA. 244+53.77, 14.03′ @ -0.0235
STA. 244+28.61, 12.23′ @ -0.0237
STA. 244+03.46, 10.50′ @ -0.0257
STA. 243+78.32, 8.83′ @ -0.0260
STA. 243+53.19, 7.23′ @ -0.0277
STA. 243+28.06, 5.70′ @-0.0246
STA. 243+02.94, 4.22′ @ -0.0237
STA. 242+77.83, 2.81′ @ -0.0214
STA. 242+62.73, 2.00′ @ -0.0200

■ TRANSITION SHOULDER CROSS-SLOPE

± CONSTRUCTED ELEVATIONS ARE TO MEET EXISTING ELEVATIONS AND ARE TO BE VERIFIED IN FIELD.

FOR SUPERELEVATION TABLES, SEE SHEETS 816 - 818
FOR RAMP A PROFILE, SEE SHEETS 485 - 487

HORIZONTAL SCALE IN FEET
0 10 20 40

CALCULATED KRM
CHECKED LRK

# RAMP GORE DETAILS
## RAMP A AT I.R 277
## STA. 104+00 TO STA. 109+50

SUM-77/277/224
VARIOUS



0:\2017\2017258\ProjectData\SUM\06002\Design\Roadway\Sheets\06002_GM003.dgn Sheet 1/11/2021 2:02 PM pfry

| TAPER TABLE | | | | | | | | |
|---|---|---|---|---|---|---|---|---|
| TAPER CODE | BEGINNING STATION | | ENDING STATION | | SIDE | DESCRIPTION | BEGIN WIDTH | END WIDTH | TAPER RATE |
| AM | 237+00.00 | IR-277/US-224 | 237+37.85 | IR-277/US-224 | RT | PAVEMENT | 11.42′ | 12.00′ | 65:1 |
| AN | 237+00.00 | IR-277/US-224 | 237+47.95 | IR-277/US-224 | RT | SHOULDER | 11.92′ | 10.00′ | 25:1 |

16 — ℄ CONST. RAMP A
P.I. Sta. 110+34.76
Δ = 4° 25′ 27″ (LT)
Dc = 0° 35′ 00″
R = 9,822.13′
T = 379.40′
L = 758.42′
E = 7.32′
C = 758.23′
C.B. = S 86° 53′ 59″ W
D.S. = 65 MPH
$e_{max}$ = 0.0187
S.C. STA. 106+55.37
P.T. STA. 114+13.78

END ℄ CONST. RAMP A
STA. 114+13.78

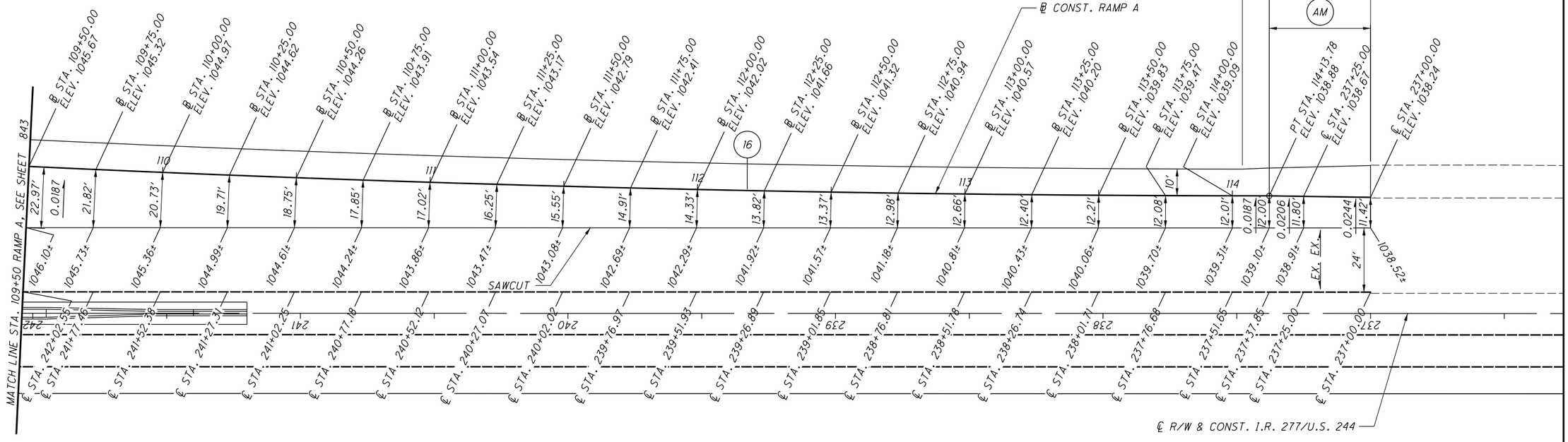


± CONSTRUCTED ELEVATIONS ARE TO MEET EXISTING ELEVATIONS AND ARE TO BE VERIFIED IN FIELD.

FOR SUPERELEVATION TABLES, SEE SHEETS 816 - 818
FOR RAMP A PROFILE, SEE SHEETS 485 - 487

HORIZONTAL SCALE IN FEET
0 10 20 40

CALCULATED KRM
CHECKED LRK

RAMP GORE DETAILS
RAMP A AT I.R. 277 - STA. 109+50 TO END

SUM-77/277/224
VARIOUS

844
1288

0:\2017\20172581\Project Data\SUM\106002\Design\Roadway\Sheets\106002_GM004.dgn Sheet I/11/2021 12:04 PM pfry

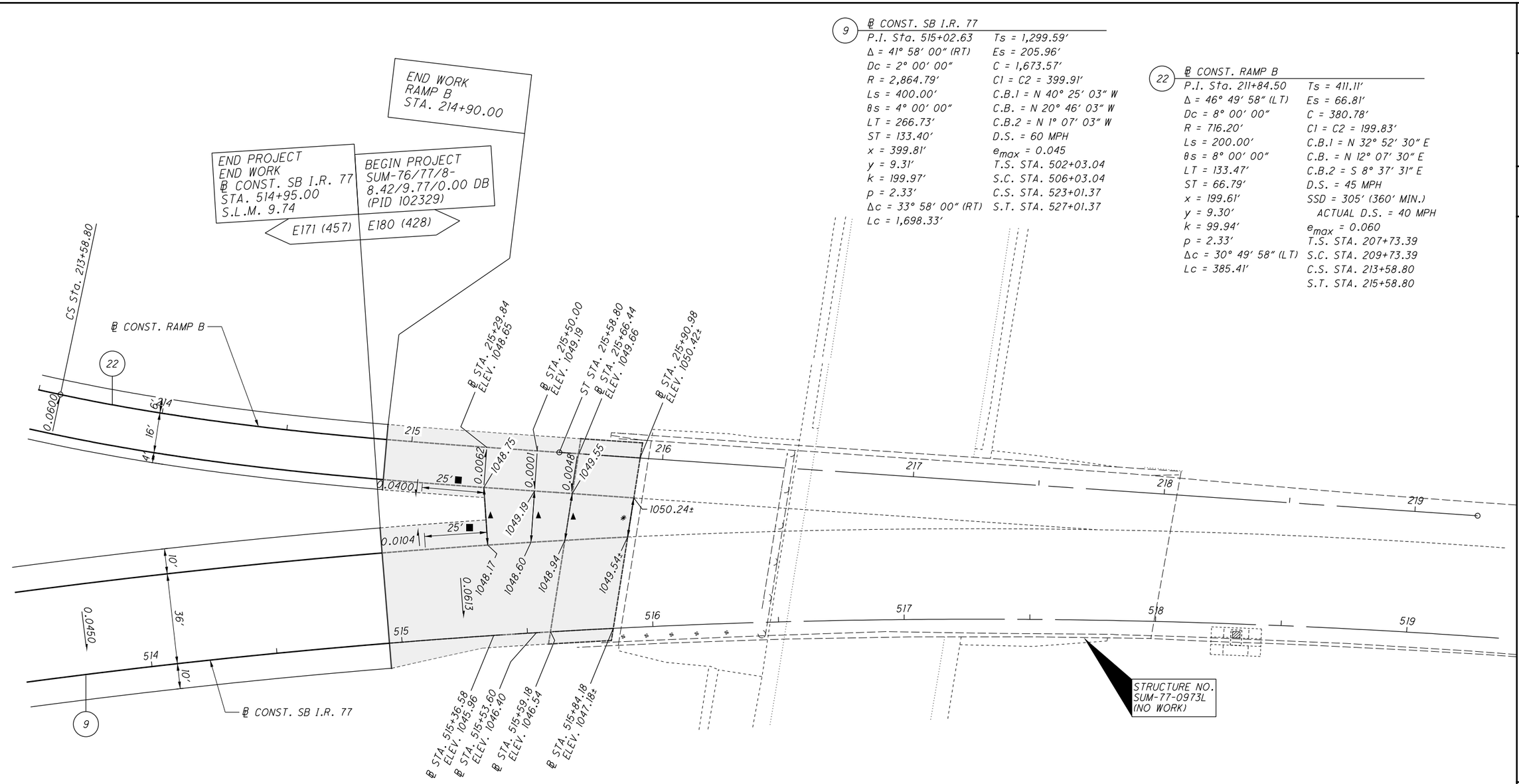


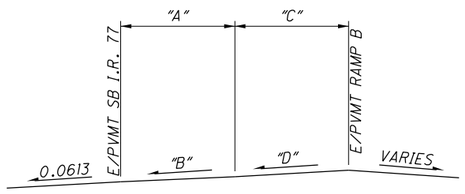


SECTION A-A

| GORE SLOPE INFORMATION | | | | |
|---|---|---|---|---|
| STATION | "A" | "B" | "C" | "D" |
| 516+36.58 | 10.00′ | 0.0293 | 13.00′ | 0.0221 |
| 515+53.60 | 10.09′ | 0.0293 | 10.39′ | 0.0283 |
| 515+59.18 | 10.23′ | 0.0293 | 8.60′ | 0.0361 |

9 ℄ CONST. SB I.R. 77

| | |
|---|---|
| P.I. Sta. 515+02.63 | Ts = 1,299.59′ |
| Δ = 41° 58′ 00″ (RT) | Es = 205.96′ |
| Dc = 2° 00′ 00″ | C = 1,673.57′ |
| R = 2,864.79′ | C1 = C2 = 399.91′ |
| Ls = 400.00′ | C.B.1 = N 40° 25′ 03″ W |
| θs = 4° 00′ 00″ | C.B. = N 20° 46′ 03″ W |
| LT = 266.73′ | C.B.2 = N 1° 07′ 03″ W |
| ST = 133.40′ | D.S. = 60 MPH |
| x = 399.81′ | $e_{max}$ = 0.045 |
| y = 9.31′ | T.S. STA. 502+03.04 |
| k = 199.97′ | S.C. STA. 506+03.04 |
| p = 2.33′ | C.S. STA. 523+01.37 |
| Δc = 33° 58′ 00″ (RT) | S.T. STA. 527+01.37 |
| Lc = 1,698.33′ | |

22 ℄ CONST. RAMP B

| | |
|---|---|
| P.I. Sta. 211+84.50 | Ts = 411.11′ |
| Δ = 46° 49′ 58″ (LT) | Es = 66.81′ |
| Dc = 8° 00′ 00″ | C = 380.78′ |
| R = 716.20′ | C1 = C2 = 199.83′ |
| Ls = 200.00′ | C.B.1 = N 32° 52′ 30″ E |
| θs = 8° 00′ 00″ | C.B. = N 12° 07′ 30″ E |
| LT = 133.47′ | C.B.2 = S 8° 37′ 31″ E |
| ST = 66.79′ | D.S. = 45 MPH |
| x = 199.61′ | SSD = 305′ (360′ MIN.) |
| y = 9.30′ | ACTUAL D.S. = 40 MPH |
| k = 99.94′ | $e_{max}$ = 0.060 |
| p = 2.33′ | T.S. STA. 207+73.39 |
| Δc = 30° 49′ 58″ (LT) | S.C. STA. 209+73.39 |
| Lc = 385.41′ | C.S. STA. 213+58.80 |
| | S.T. STA. 215+58.80 |

PAVEMENT AND APPROACH SLAB BY OTHERS (SUM-76/77/8-8.42/9.77/0.00 DB, PID 102329)

▲ SEE SECTION A-A FOR DETAILS

■ TRANSITION SHOULDER CROSS-SLOPE

± CONSTRUCTED ELEVATIONS ARE TO MEET EXISTING ELEVATIONS AND ARE VERIFIED IN FIELD.

FOR SUPERELEVATION TABLES, SEE SHEETS 819
FOR SB I.R. 77 PROFILE, SEE SHEETS 476 - 479
FOR RAMP B PROFILE, SEE SHEETS 488 - 489

* GORE SLOPE INFORMATION

(READ FROM SB I.R. 77 E/P TO RAMP B E/P)

STA. 515+84.18, 15.80′ @ 0.0443

N

0 10 20 40 HORIZONTAL SCALE IN FEET

CALCULATED KRM CHECKED LRK

RAMP GORE DETAILS
RAMP B AT SB I.R. 77 - STA. 213+50 TO END

SUM-77/277/224
VARIOUS

845
1288

0:\2017\2017258\Project Data\SUM\06002\Design\Roadway\Sheets\106002_GM005.dgn Sheet 1/11/2021 11:21:12 PM pfry

| TAPER TABLE | | | | | | | | | |
|---|---|---|---|---|---|---|---|---|---|
| TAPER CODE | BEGINNING STATION | | ENDING STATION | | SIDE | DESCRIPTION | BEGIN WIDTH | END WIDTH | TAPER RATE |
| AV | 405+01.68 | RAMP B-1 | 405+51.68 | RAMP B-1 | LT | SHOULDER | 8.00′ | 6.00′ | 25:1 |

**(9) ℄ CONST. SB I.R. 77**

P.I. Sta. 515+02.63
Δ = 41° 58′ 00″ (RT)
Dc = 2° 00′ 00″
R = 2,864.79′
Ls = 400.00′
θs = 4° 00′ 00″
LT = 266.73′
ST = 133.40′
x = 399.81′
y = 9.31′
k = 199.97′
p = 2.33′
Δc = 33° 58′ 00″ (RT)
Lc = 1,698.33′

Ts = 1,299.59′
Es = 205.96′
C = 1,673.57′
C1 = C2 = 399.91′
C.B.1 = N 40° 25′ 03″ W
C.B. = N 20° 46′ 03″ W
C.B.2 = N 1° 07′ 03″ W
D.S. = 60 MPH
$e_{max}$ = 0.045
T.S. STA. 502+03.04
S.C. STA. 506+03.04
C.S. STA. 523+01.37
S.T. STA. 527+01.37

**(27) ℄ CONST. RAMP B-1**

P.I. STA. 406+35.31
Ls = 200.00′
f s = 11° 45′ 00″
LT = 133.63′
ST = 66.93′
x = 199.16′
y = 13.63′
k = 99.86′
p = 3.41′
T.S. STA. 405+01.68
S.C. STA. 407+01.68

**(28) ℄ CONST. RAMP B-1**

P.I. Sta. 407+76.50
Δ = 17° 26′ 53″ (LT)
Dc = 11° 45′ 00″
R = 487.62′
T = 74.83′
L = 148.49′
E = 5.71′
C = 147.92′
C.B. = N 63° 22′ 14″ W
D.S. = 40 MPH (SSD = 35 MPH)
$e_{max}$ = 0.060
S.C. STA. 407+01.68
P.C.C. STA. 408+50.17

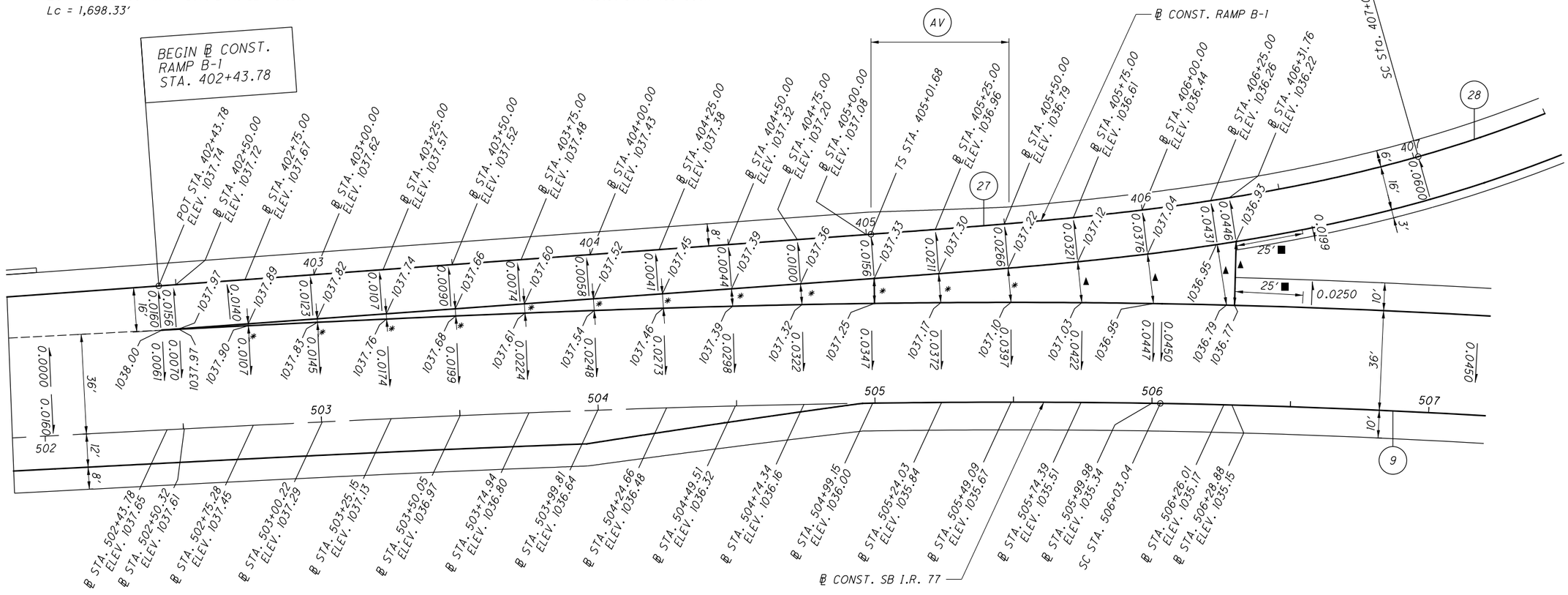


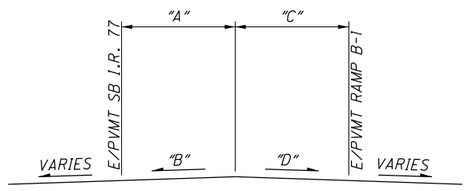


SECTION A-A

| GORE SLOPE INFORMATION | | | | |
|---|---|---|---|---|
| STATION | "A" | "B" | "C" | "D" |
| 505+74.39 | 10.06′ | 0.0110 | 4.78′ | 0.0043 |
| 505+99.98 | 10.10′ | 0.0130 | 7.90′ | 0.0052 |
| 506+26.01 | 10.16′ | 0.0200 | 11.95′ | 0.0036 |
| 506+28.88 | 10.00′ | 0.0200 | 13.00′ | 0.0031 |

*** GORE SLOPE INFORMATION**

(READ FROM SB I.R. 77 E/P TO RAMP B-1 E/P)

STA. 502+50.32, 0.13′ @ 0.0000
STA. 502+75.28, 0.67′ @ -0.0149
STA. 503+00.22, 1.25′ @ -0.0080
STA. 503+25.15, 1.88′ @ -0.0106
STA. 503+50.05, 2.58′ @ -0.0078
STA. 503+74.94, 3.36′ @ -0.0030
STA. 503+99.81, 4.23′ @ -0.0047
STA. 504+24.66, 5.21′ @ -0.0019
STA. 504+49.51, 6.31′ @ 0.0000
STA. 504+74.34, 7.54′ @ 0.0053
STA. 504+99.15, 8.92 @ 0.0090
STA. 505+24.03, 10.49′ @ 0.0124
STA. 505+49.09, 12.39′ @ 0.0097

▲ SEE SECTION A-A FOR DETAILS

■ TRANSITION SHOULDER CROSS-SLOPE

FOR SUPERELEVATION TABLES, SEE SHEETS 820 - 822
FOR SB I.R. 77 PROFILE, SEE SHEETS 476 - 479
FOR RAMP B-1 PROFILE, SEE SHEETS 491

HORIZONTAL SCALE IN FEET
0 10 20 40

CALCULATED KRM
CHECKED LRK

RAMP GORE DETAILS
RAMP B-1 AT SB I.R. 77 - BEGIN TO STA. 407+50

SUM-77 / 277 / 224
VARIOUS

846
1288

0:\2017\2017258\Project Data\SUM\06002\Design\Roadway\Sheets\106002_GM006.dgn Sheet 1/11/2021 12:14 PM pfry

| TAPER TABLE | | | | | | | | | |
|---|---|---|---|---|---|---|---|---|---|
| TAPER CODE | BEGINNING STATION | | ENDING STATION | | SIDE | DESCRIPTION | BEGIN WIDTH | END WIDTH | TAPER RATE |
| AW | 417+55.68 | RAMP B-1 | 418+55.68 | RAMP B-1 | LT | SHOULDER | 6.00′ | 10.00′ | 25:1 |
| AX | 418+55.68 | RAMP B-1 | 421+51.12 | RAMP B-1 | RT | PAVEMENT | 16.00′ | 12.45′ | 83:1 |

(31) ℄ CONST. RAMP B-1
P.I. Sta. 420+43.64
Δ = 7° 01′ 15″ (LT)
Dc = 1° 15′ 00″
R = 4,583.66′
T = 281.19′
L = 561.67′
E = 8.62′
C = 561.32′
C.B. = N 88° 11′ 53″ E
D.S. = 65 MPH
$e_{max}$ = 0.036
S.C. STA. 417+62.45
P.T. STA. 423+24.13

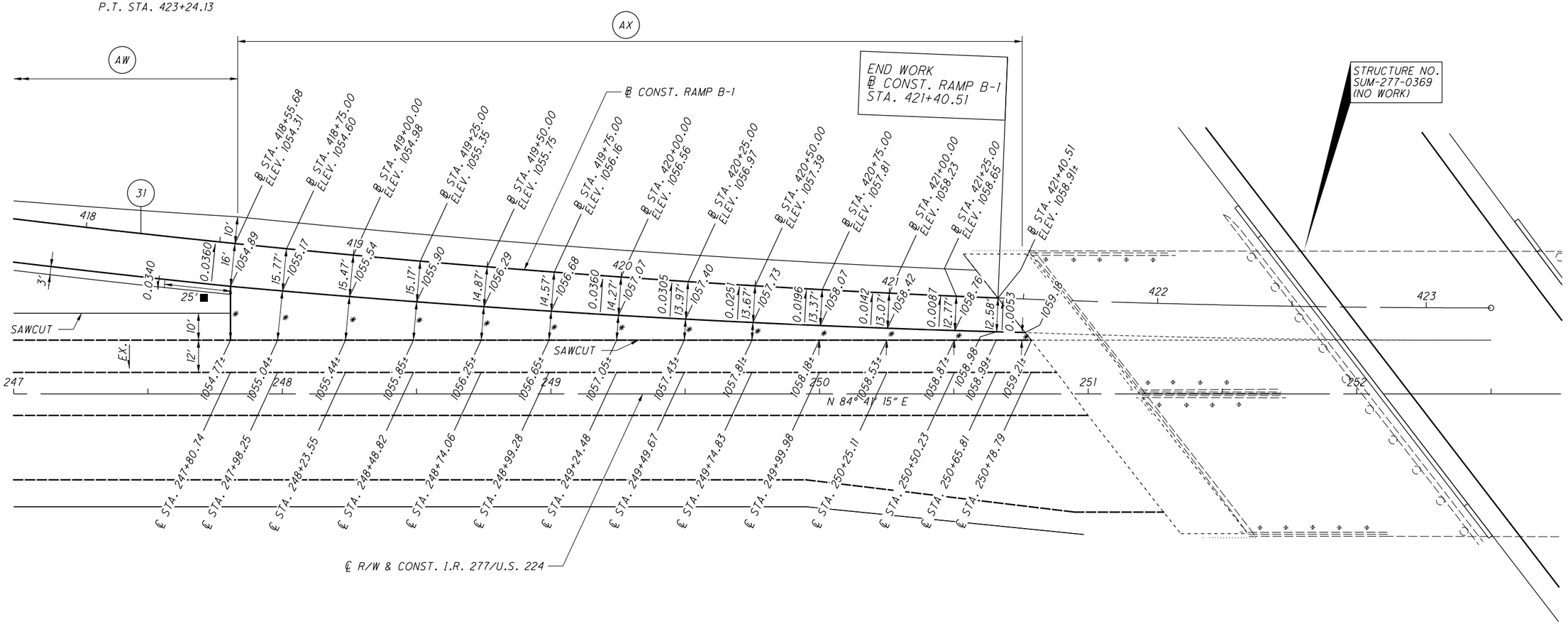


* GORE SLOPE INFORMATION
(READ FROM I.R. 277 E/P TO RAMP B-1 E/P)

STA. 247+80.74, 20.00′ @ 0.0060
STA. 247+98.25, 18.38′ @ 0.0071
STA. 248+23.55, 16.28′ @ 0.0061
STA. 248+48.82, 14.31′ @ 0.0035
STA. 248+74.06, 12.48′ @ 0.0032
STA. 248+99.28, 10.80′ @ 0.0028
STA. 249+24.48, 9.25′ @ 0.0022
STA. 249+49.67, 7.84′ @ -0.0038
STA. 249+74.83, 6.56′ @ -0.0122
STA. 249+99.98, 5.43′ @ -0.0203
STA. 250+25.11, 4.43′ @ -0.0248
STA. 250+50.23, 3.57′ @ -0.0308
STA. 250+65.81, 3.11′ @ -0.0032

■ TRANSITION SHOULDER CROSS-SLOPE

± CONSTRUCTED ELEVATIONS ARE TO MEET EXISTING ELEVATIONS AND ARE TO BE VERIFIED IN FIELD.

FOR SUPERELEVATION TABLES, SEE SHEETS 820 - 822
FOR RAMP B-1 PROFILE, SEE SHEETS 491

HORIZONTAL SCALE IN FEET
0 10 20 40

CALCULATED KRM
CHECKED LRK

RAMP GORE DETAILS
RAMP B-1 AT I.R. 277 - STA. 418+00 TO END

SUM-77/277/224
VARIOUS



O:\2017\2017258\ProjectData\SUM\106002\Design\Roadway\Sheets\106002_GM007.dgn Sheet 1/11/2021 12:16 PM pfry

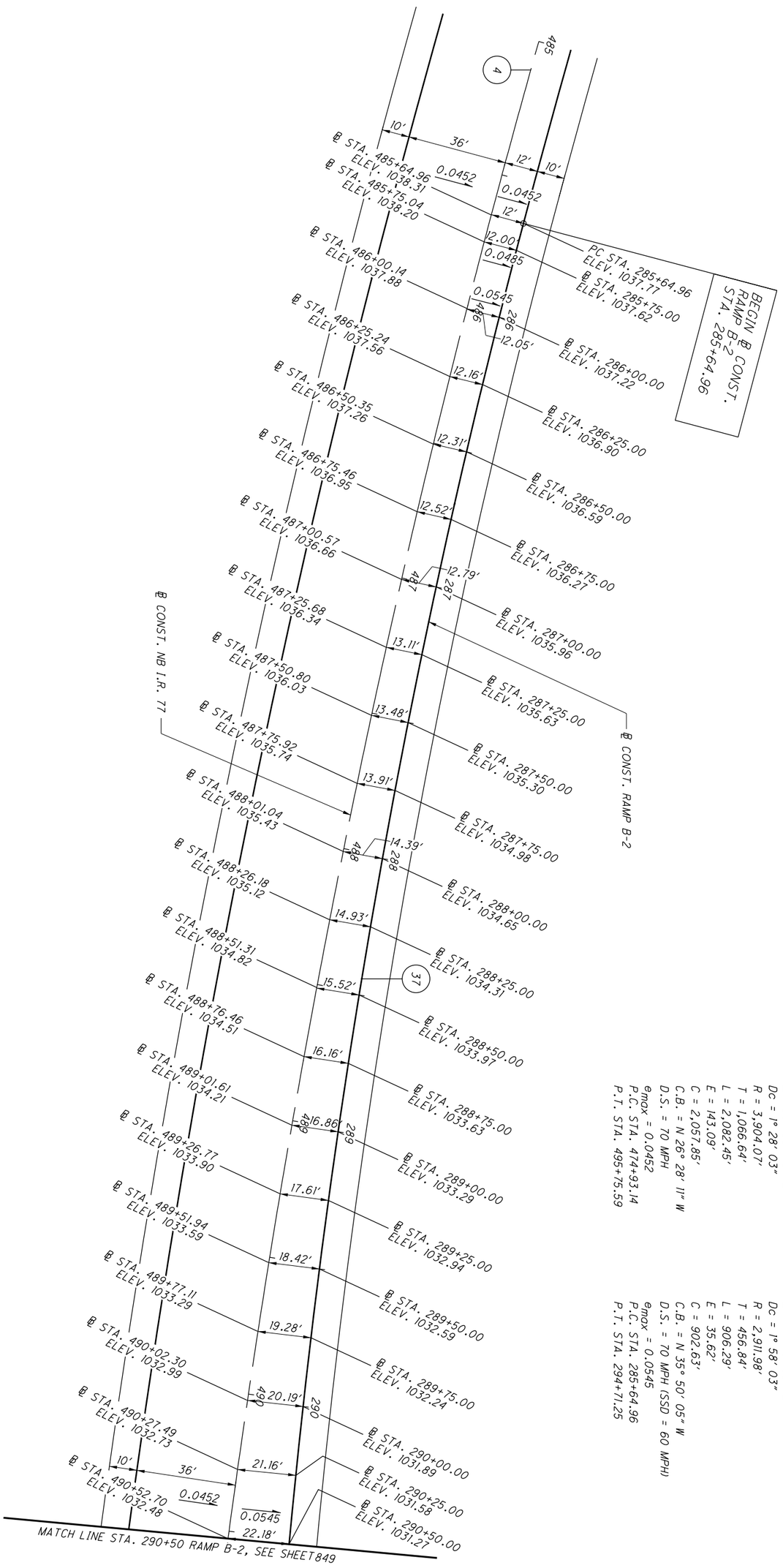


4 ℄ CONST. NB I.R. 77
P.I. Sta. 485+59.78
Δ = 30° 33' 43" (LT)
Dc = 1° 28' 03"
R = 3,904.07'
T = 1,066.64'
L = 2,082.45'
E = 143.09'
C = 2,057.85'
C.B. = N 26° 28' 11" W
D.S. = 70 MPH
emax = 0.0452
P.C. STA. 474+93.14
P.T. STA. 495+75.59

37 ℄ CONST. RAMP B-2
P.I. Sta. 290+21.80
Δ = 17° 49' 55" (LT)
Dc = 1° 58' 03"
R = 2,911.98'
T = 456.84'
L = 906.29'
E = 35.62'
C = 902.63'
C.B. = N 35° 50' 05" W
D.S. = 70 MPH (SSD = 60 MPH)
emax = 0.0545
P.C. STA. 285+64.96
P.T. STA. 294+71.25

FOR SUPERELEVATION TABLES, SEE SHEETS 823 - 826
FOR NB I.R. 77 PROFILE, SEE SHEETS 472 - 475
FOR RAMP B-2 PROFILE, SEE SHEETS 492 - 496

| | | | | |
|---|---|---|---|---|
| 848 / 1288 | SUM-77/277/224<br>VARIOUS | RAMP GORE DETAILS<br>RAMP B-2 AT NB I.R. 77 - BEGIN TO STA. 290+50 | CALCULATED KRM<br>CHECKED LRK | 0 20<br>10 40<br>HORIZONTAL SCALE IN FEET |

| TAPER TABLE | | | | | | | | |
|---|---|---|---|---|---|---|---|---|
| TAPER CODE | BEGINNING STATION | | ENDING STATION | | SIDE | DESCRIPTION | BEGIN WIDTH | END WIDTH | TAPER RATE |
| AY | 292+80.00 | RAMP B-2 | 292+90.00 | RAMP B-2 | LT | SHOULDER | 10.00′ | 12.00′ | 5:1 |
| AZ | 294+28.29 | RAMP B-2 | 296+28.29 | RAMP B-2 | LT | SHOULDER | 12.00′ | 4.00′ | 25:1 |

**(4) ℄ CONST. NB I.R. 77**
P.I. Sta. 485+59.78
Δ = 30° 33′ 43″ (LT)
Dc = 1° 28′ 03″
R = 3,904.07′
T = 1,066.64′
L = 2,082.45′
E = 143.09′
C = 2,057.85′
C.B. = N 26° 28′ 11″ W
D.S. = 70 MPH
$e_{max}$ = 0.0452
P.C. STA. 474+93.14
P.T. STA. 495+75.59

**(37) ℄ CONST. RAMP B-2**
P.I. Sta. 290+21.80
Δ = 17° 49′ 55″ (LT)
Dc = 1° 58′ 03″
R = 2,911.98′
T = 456.84′
L = 906.29′
E = 35.62′
C = 902.63′
C.B. = N 35° 50′ 05″ W
D.S. = 70 MPH (SSD = 60 MPH)
$e_{max}$ = 0.0545
P.C. STA. 285+64.96
P.T. STA. 294+71.25

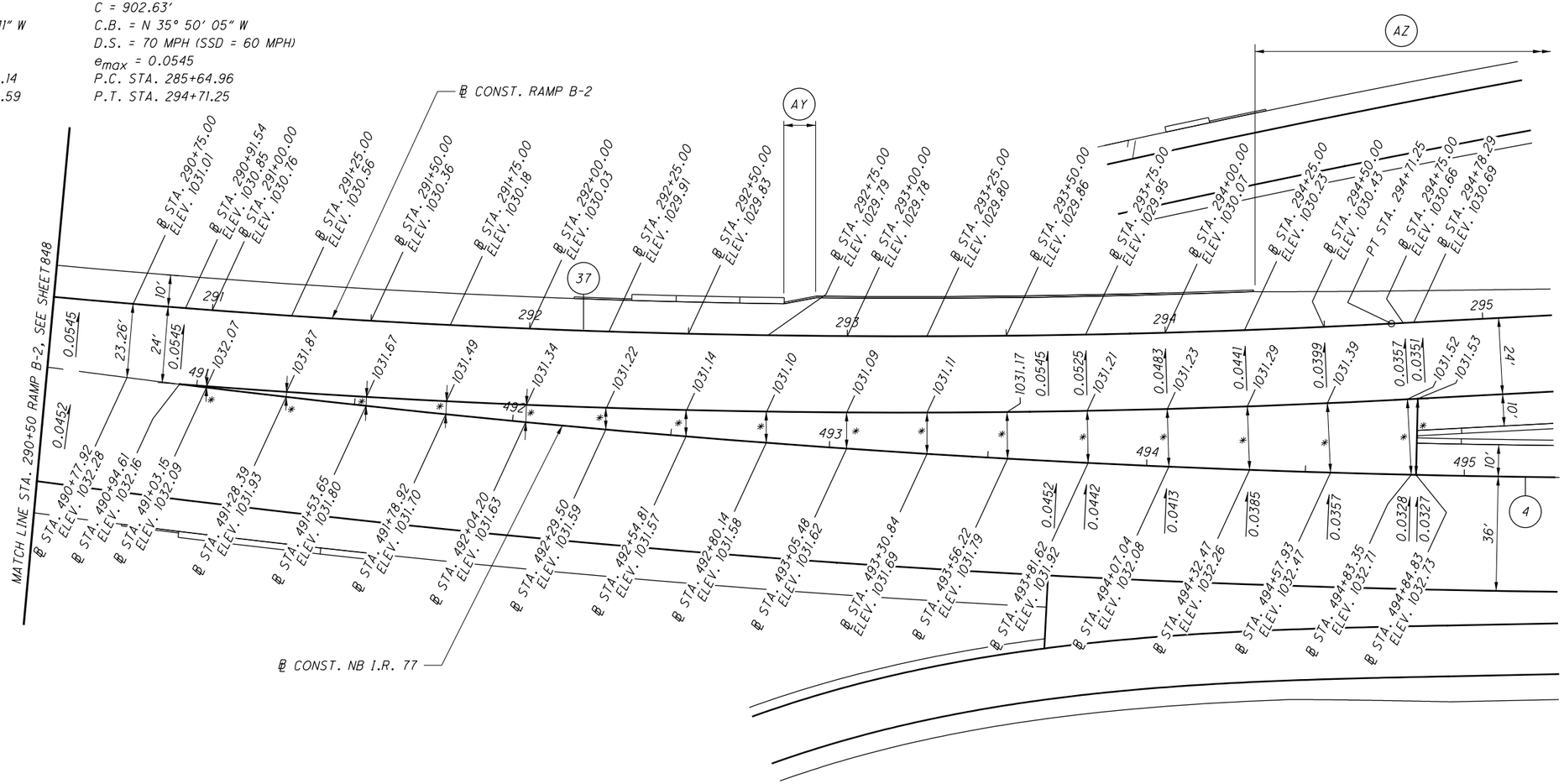


## * GORE SLOPE INFORMATION

(READ FROM NB I.R. 77 E/P TO RAMP B-2)

STA. 491+03.15, 0.39′ @ -0.0513
STA. 491+28.39, 1.57′ @ -0.0382
STA. 491+53.65, 2.81′ @ -0.0463
STA. 491+78.92, 4.10′ @ -0.0512
STA. 492+04.20, 5.45′ @ -0.0532
STA. 492+29.50, 6.85′ @ -0.0540
STA. 492+54.81, 8.31′ @ -0.0517
STA. 492+80.14, 9.82′ @ -0.0489
STA. 493+05.48, 11.38′ @ -0.0466
STA. 493+30.84, 12.99′ @ -0.0446
STA. 493+56.22, 14.66′ @ -0.0423
STA. 493+81.62, 16.39′ @ -0.0433
STA. 494+07.04, 18.17′ @ -0.0468
STA. 494+32.47, 20.00′ @ -0.0485
STA. 494+57.93, 21.89′ @ -0.0493
STA. 494+83.35, 23.82′ @ -0.0500
STA. 494+84.83, 24.00′ @ -0.0500

FOR SUPERELEVATION TABLES, SEE SHEETS 823 - 826
FOR NB I.R. 77 PROFILE, SEE SHEETS 472 - 475
FOR RAMP B-2 PROFILE, SEE SHEETS 492 - 496

HORIZONTAL SCALE IN FEET
0 10 20 40
CALCULATED KRM
CHECKED LRK

# RAMP GORE DETAILS
## RAMP B-2 AT NB I.R. 77 - STA. 290+50 TO STA. 295+00

SUM-77/277/224
VARIOUS



D:\2017\2017258\ProjectData\SUM\06002\Design\Roadway\Sheets\06002_GM009.dgn Sheet 1/11/2021 11:22:20 PM pfry

| 21 | ℄ CONST. RAMP B | |
|---|---|---|
| | P.I. Sta. 201+73.97 | Ts = 468.61′ |
| | Δ = 46° 51′ 17″ (LT) | Es = 78.40′ |
| | Dc = 6° 45′ 00″ | C = 487.20′ |
| | R = 848.83′ | C1 = C2 = 199.88′ |
| | Ls = 200.00′ | C.B.1 = N 80° 08′ 47″ E |
| | θs = 6° 45′ 00″ | C.B. = N 58° 58′ 07″ E |
| | LT = 133.43′ | C.B.2 = S 37° 47′ 28″ W |
| | ST = 66.75′ | D.S. = 50 MPH (SSD = 45 MPH) |
| | x = 199.72′ | $e_{max}$ = 0.060 |
| | y = 7.85′ | T.S. STA. 197+05.36 |
| | k = 99.95′ | S.C. STA. 199+05.36 |
| | p = 1.96′ | C.S. STA. 203+99.50 |
| | Δc = 33° 21′ 17″ (LT) | S.T. STA. 205+99.50 |
| | Lc = 494.14′ | |

| 42 | ℄ CONST. RAMP B-2 |
|---|---|
| | P.I. STA. 17+73.39 |
| | Ls = 575.00′ |
| | θs = 19° 24′ 22″ |
| | LT = 385.66′ |
| | ST = 193.79′ |
| | x = 568.44′ |
| | y = 64.39′ |
| | k = 286.40′ |
| | p = 16.16′ |
| | C.S. STA. 13+87.73 |
| | S.C. STA. 19+62.73 |

| 43 | ℄ CONST. RAMP B-2 |
|---|---|
| | P.I. Sta. 21+02.51 |
| | Δ = 18° 42′ 10″ (RT) |
| | Dc = 6° 45′ 00″ |
| | R = 848.83′ |
| | T = 139.78′ |
| | L = 277.08′ |
| | E = 11.43′ |
| | C = 275.85′ |
| | C.B. = S 66° 35′ 48″ W |
| | D.S. = 50 MPH |
| | $e_{max}$ = 0.060 |
| | S.C. STA. 19+62.73 |
| | C.S. STA. 22+39.81 |

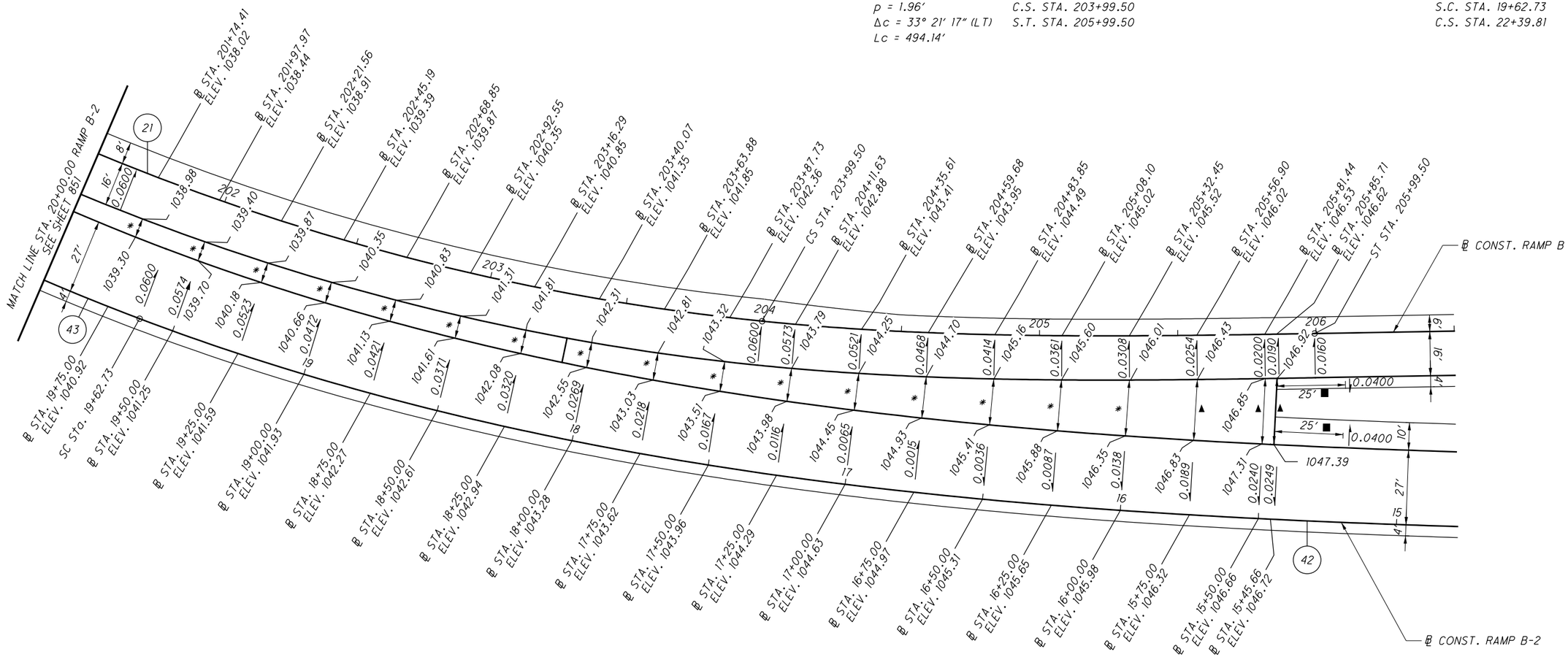


## * GORE SLOPE INFORMATION

(READ FROM RAMP B-2 E/P TO RAMP B E/P)

STA. 19+75.00, 7.03′ @ -0.0455
STA. 19+50.00, 7.26′ @ -0.0413
STA. 19+25.00, 7.46′ @ -0.0416
STA. 19+00.00, 7.67′ @ -0.0404
STA. 18+75.00, 7.92′ @ -0.0379
STA. 18+50.00, 8.24′ @ -0.0364
STA. 18+25.00, 8.67′ @ -0.0311
STA. 18+00.00, 9.23′ @ -0.0260
STA. 17+75.00, 9.96′ @ -0.0221
STA. 17+50.00, 10.89′ @ -0.0174
STA. 17+25.00, 12.05′ @ -0.0158
STA. 17+00.00, 13.44′ @ -0.0149
STA. 16+75.00, 15.00′ @ -0.0153
STA. 16+50.00, 16.70′ @ -0.0150
STA. 16+25.00, 18.47′ @ -0.0152
STA. 16+00.00, 20.27′ @ -0.0168

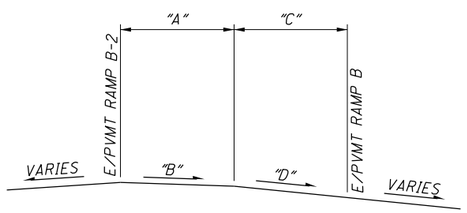


SECTION A-A

| GORE SLOPE INFORMATION | | | | |
|---|---|---|---|---|
| STATION | "A" | "B" | "C" | "D" |
| 15+75.00 | 10.00′ | 0.0131 | 12.03′ | 0.0224 |
| 15+50.00 | 10.00′ | 0.0080 | 13.72′ | 0.0277 |
| 15+45.66 | 10.00′ | 0.0071 | 14.00′ | 0.0285 |

▲ SEE SECTION A-A FOR DETAILS

■ TRANSITION SHOULDER CROSS-SLOPE

FOR SUPERELEVATION TABLES, SEE SHEETS 823 - 826
FOR RAMP B-2 PROFILE, SEE SHEETS 492 - 496
FOR RAMP B PROFILE, SEE SHEETS 488 - 489

HORIZONTAL SCALE IN FEET
0 10 20 40

CALCULATED KRM CHECKED LRK

RAMP GORE DETAILS
RAMP B-2 AT RAMP B - STA. 15+00 - STA. 20+00

SUM-77/277/224
VARIOUS

850
1288

0:\2017\2017258\Project Data\SUM\06002\Design\Roadway\Sheets\06002_GM010.dgn Sheet 1/11/2021 12:24 PM pfry

**(21) ℄ CONST. RAMP B**

P.I. Sta. 201+73.97
Δ = 46° 51′ 17″ (LT)
Dc = 6° 45′ 00″
R = 848.83′
Ls = 200.00′
θs = 6° 45′ 00″
LT = 133.43′
ST = 66.75′
x = 199.72′
y = 7.85′
k = 99.95′
p = 1.96′
Δc = 33° 21′ 17″ (LT)
Lc = 494.14′

Ts = 468.61′
Es = 78.40′
C = 487.20′
C1 = C2 = 199.88′
C.B.1 = N 80° 08′ 47″ E
C.B. = N 58° 58′ 07″ E
C.B.2 = S 37° 47′ 28″ W
D.S. = 50 MPH (SSD = 45 MPH)
$e_{max}$ = 0.060
T.S. STA. 197+05.36
S.C. STA. 199+05.36
C.S. STA. 203+99.50
S.T. STA. 205+99.50

**(43) ℄ CONST. RAMP B-2**

P.I. Sta. 21+02.51
Δ = 18° 42′ 10″ (RT)
Dc = 6° 45′ 00″
R = 848.83′
T = 139.78′
L = 277.08′
E = 11.43′
C = 275.85′
C.B. = S 66° 35′ 48″ W
D.S. = 50 MPH
$e_{max}$ = 0.060
S.C. STA. 19+62.73
C.S. STA. 22+39.81

**(44) ℄ CONST. RAMP B-2**

P.I. STA. 23+14.93
Ls = 225.00′
fs = 7° 35′ 37″
LT = 150.14′
ST = 75.13′
x = 224.61′
y = 9.93′
k = 112.43′
p = 2.48′
C.S. STA. 22+39.81
S.T. STA. 24+64.81

**TAPER TABLE**

| TAPER CODE | BEGINNING STATION | | ENDING STATION | | SIDE | DESCRIPTION | BEGIN WIDTH | END WIDTH | TAPER RATE |
|---|---|---|---|---|---|---|---|---|---|
| BD | 22+39.81 | RAMP B-2 | 24+64.81 | RAMP B-2 | RT | PAVEMENT | 27.00′ | 24.00′ | 75:1 |
| BE | 24+64.81 | RAMP B-2 | 32+64.81 | RAMP B-2 | RT | PAVEMENT | 40.00′ | 24.00′ | 50:1 |

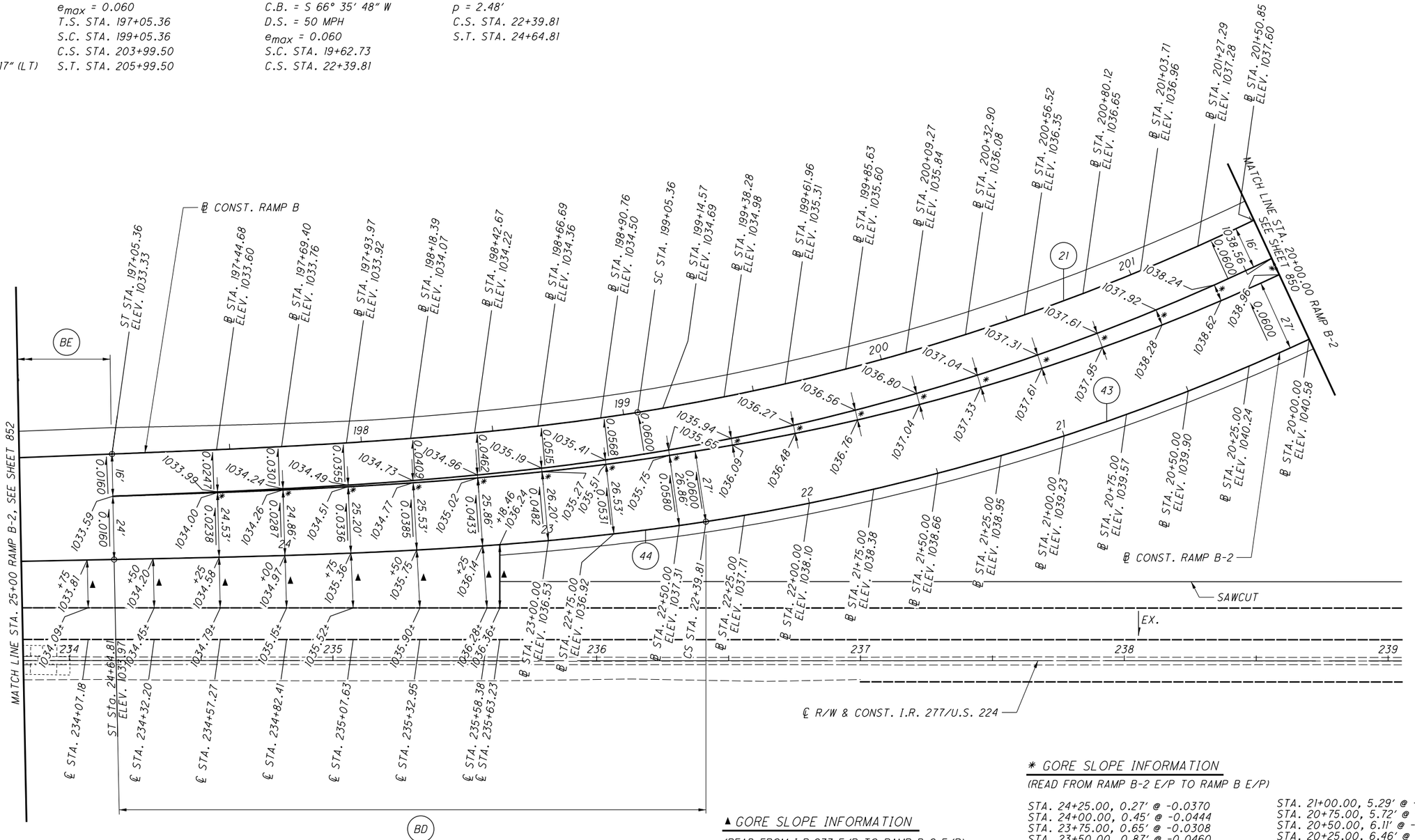


± CONSTRUCTED ELEVATIONS ARE TO MEET EXISTING ELEVATIONS AND ARE TO BE VERIFIED IN FIELD.

FOR SUPERELEVATION TABLES, SEE SHEETS 823 - 826
FOR RAMP B-2 PROFILE, SEE SHEETS 492 - 496
FOR RAMP B PROFILE, SEE SHEETS 488 - 489

**▲ GORE SLOPE INFORMATION**

(READ FROM I.R.277 E/P TO RAMP B-2 E/P)

STA. 234+07.18, 18.14′ @ -0.0154
STA. 234+32.20, 18.64′ @ -0.0134
STA. 234+57.27, 19.20′ @ -0.0109
STA. 234+82.41, 19.88′ @ -0.0091
STA. 235+07.63, 20.79′ @ -0.0077
STA. 235+32.95, 21.99′ @ -0.0068
STA. 235+58.38, 23.58′ @ -0.0059
STA. 235+63.23, 24.00′ @ -0.0050

*** GORE SLOPE INFORMATION**

(READ FROM RAMP B-2 E/P TO RAMP B E/P)

STA. 24+25.00, 0.27′ @ -0.0370
STA. 24+00.00, 0.45′ @ -0.0444
STA. 23+75.00, 0.65′ @ -0.0308
STA. 23+50.00, 0.87′ @ -0.0460
STA. 23+25.00, 1.12′ @ -0.0536
STA. 23+00.00, 1.40′ @ -0.0571
STA. 22+75.00, 1.70′ @ -0.0588
STA. 22+50.00, 2.04′ @ -0.0490
STA. 22+25.00, 2.56′ @ -0.0586
STA. 22+00.00, 3.18′ @ -0.0660
STA. 21+75.00, 3.77′ @ -0.0531
STA. 21+50.00, 4.32′ @ -0.0556
STA. 21+25.00, 4.82′ @ -0.0602
STA. 21+00.00, 5.29′ @ -0.0567
STA. 20+75.00, 5.72′ @ -0.0594
STA. 20+50.00, 6.11′ @ -0.0589
STA. 20+25.00, 6.46′ @ -0.0588
STA. 20+00.00, 6.76′ @ -0.0592

HORIZONTAL SCALE IN FEET
0 10 20 40

CALCULATED KRM
CHECKED LRK

**RAMP GORE DETAILS**
**RAMP B-2 AT I.R. 277 - STA. 20+00 TO STA. 25+00**

**SUM-77 / 277 / 224**
**VARIOUS**

851
1288

0:\2017\2017258\ProjectData\SUM\06002\Design\Roadway\Sheets\106002_GMOII.dgn Sheet 1/11/2021 12:26 PM pfry

| TAPER TABLE | | | | | | | | | |
|---|---|---|---|---|---|---|---|---|---|
| TAPER CODE | BEGINNING STATION | | ENDING STATION | | SIDE | DESCRIPTION | BEGIN WIDTH | END WIDTH | TAPER RATE |
| BE | 24+64.81 | RAMP B-2 | 32+64.81 | RAMP B-2 | RT | PAVEMENT | 40.00′ | 24.00′ | 50:1 |

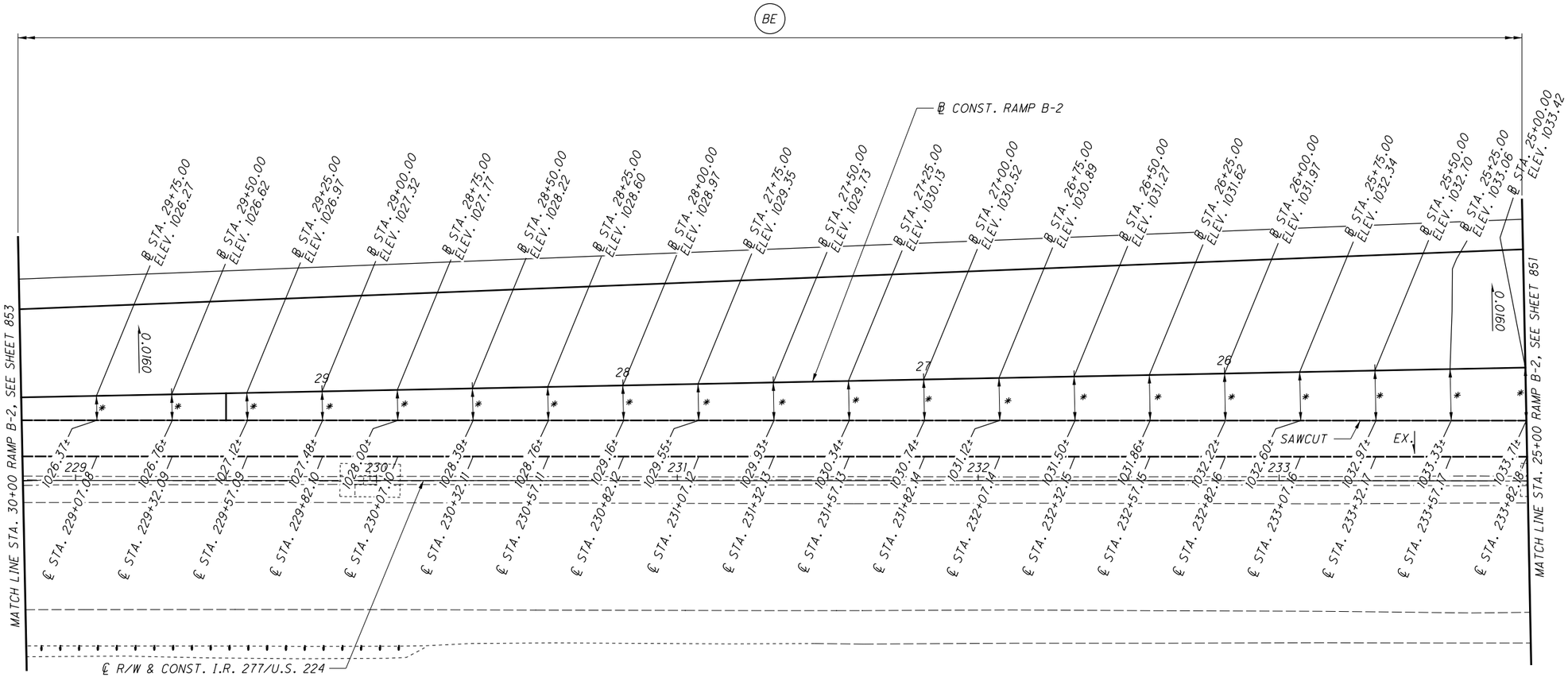


## * GORE SLOPE INFORMATION

(READ FROM I.R. 277 E/P TO RAMP B-2 E/P)

STA. 229+07.08, 8.14′ @ -0.0123
STA. 229+32.09, 8.64′ @ -0.0162
STA. 229+57.09, 9.14′ @ -0.0164
STA. 229+82.10, 9.64′ @ -0.0166
STA. 230+07.10, 10.14′ @ -0.0227
STA. 230+32.11, 10.64′ @ -0.0160
STA. 230+57.11, 11.14′ @ -0.0144
STA. 230+82.12, 11.64′ @ -0.0163
STA. 231+07.12, 12.14′ @ -0.0165
STA. 231+32.13, 12.64′ @ -0.0158
STA. 231+57.13, 13.14′ @ -0.0160
STA. 231+82.14, 13.64′ @ -0.0161
STA. 232+07.14, 14.14′ @ -0.0163
STA. 232+32.15, 14.64′ @ -0.0157
STA. 232+57.15, 15.14′ @ -0.0159
STA. 232+82.16, 15.64′ @ -0.0160
STA. 233+07.16, 16.14′ @ -0.0161
STA. 233+32.17, 16.64′ @ -0.0162
STA. 233+57.17, 17.14′ @ -0.0158
STA. 233+82.18, 17.64′ @ -0.0164

± CONSTRUCTED ELEVATIONS ARE TO MEET EXISTING ELEVATIONS AND ARE TO BE VERIFIED IN FIELD

FOR SUPERELEVATION TABLES, SEE SHEETS 823 - 826
FOR RAMP B-2 PROFILE, SEE SHEETS 492 - 496

N

0 10 20 40 HORIZONTAL SCALE IN FEET

CALCULATED KRM
CHECKED LRK

# RAMP GORE DETAILS
## RAMP B-2 AT I.R. 277 - STA. 25+00 TO STA. 30+00

SUM-77/277/224
VARIOUS

852
1288

D:\2017\2017258\ProjectData\SUM\106002\Design\Roadway\Sheets\106002_GM012.dgn Sheet 1/11/2021 12:29 PM pfry

| TAPER TABLE | | | | | | | | | |
|---|---|---|---|---|---|---|---|---|---|
| TAPER CODE | BEGINNING STATION | | ENDING STATION | | SIDE | DESCRIPTION | BEGIN WIDTH | END WIDTH | TAPER RATE |
| BE | 24+64.81 | RAMP B-2 | 32+64.81 | RAMP B-2 | RT | PAVEMENT | 40.00′ | 24.00′ | 50:1 |
| BF | 33+39.75 | RAMP B-2 | 33+82.00 | RAMP B-2 | RT | SHOULDER | 10.00′ | 10.92′ | 46:1 |

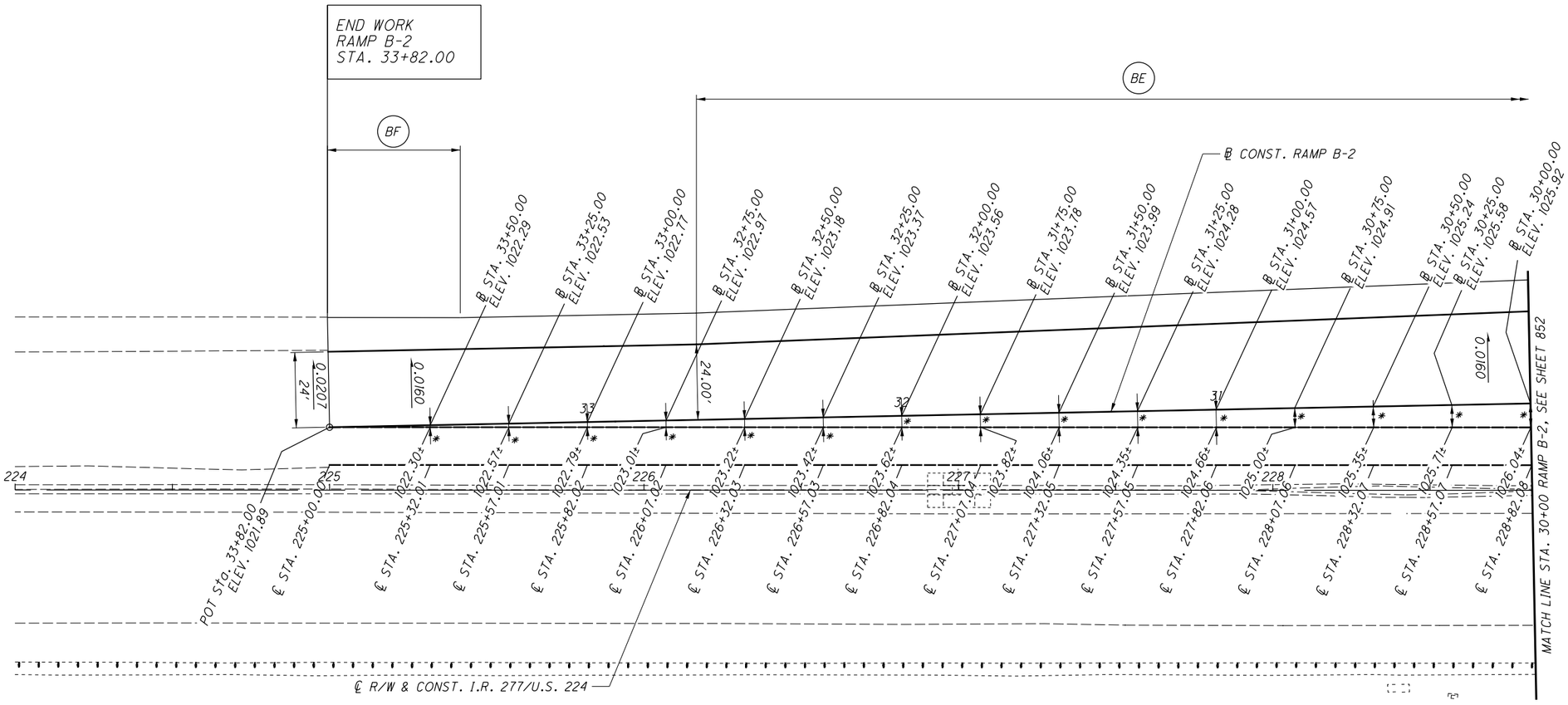


## * GORE SLOPE INFORMATION

(READ FROM I.R. 277 E/P TO RAMP B-2 E/P)

STA. 225+32.01, 0.64′ @ -0.0156
STA. 225+57.01, 1.14′ @ -0.0351
STA. 225+82.02, 1.64′ @ -0.0122
STA. 226+07.02, 2.14′ @ -0.0187
STA. 226+32.03, 2.64′ @ -0.0152
STA. 226+57.03, 3.14′ @ -0.0159
STA. 226+82.04, 3.64′ @ -0.0165
STA. 227+07.04, 4.14′ @ -0.0097
STA. 227+32.05, 4.64′ @ -0.0151
STA. 227+57.05, 5.14′ @ -0.0136
STA. 227+82.06, 5.64′ @ -0.0160
STA. 228+07.06, 6.14′ @ -0.0147
STA. 228+32.07, 6.64′ @ -0.0166
STA. 228+57.07, 7.14′ @ -0.0182
STA. 228+82.08, 7.64′ @ -0.0157

± CONSTRUCTED ELEVATIONS ARE TO MEET EXISTING ELEVATIONS AND ARE TO BE VERIFIED IN FIELD

FOR SUPERELEVATION TABLES, SEE SHEETS 823 - 826
FOR RAMP B-2 PROFILE, SEE SHEETS 492 - 496

HORIZONTAL SCALE IN FEET
0 10 20 40

CALCULATED KRM
CHECKED LRK

# RAMP GORE DETAILS
## RAMP B-2 AT I.R. 277 - STA. 30+00 TO END

SUM-77 / 277 / 224
VARIOUS



O:\2017\20171258\ProjectData\SUM\106002\Design\Roadway\Sheets\106002_GM013.dgn Sheet 1/11/2021 1:23:31 PM pfry

(4) ℄ CONST. NB I.R. 77
P.I. Sta. 485+59.78
Δ = 30° 33′ 43″ (LT)
Dc = 1° 28′ 03″
R = 3,904.07′
T = 1,066.64′
L = 2,082.45′
E = 143.09′
C = 2,057.85′
C.B. = N 26° 28′ 11″ W
D.S. = 70 MPH
$e_{max}$ = 0.0452
P.C. STA. 474+93.14
P.T. STA. 495+75.59

(49) ℄ CONST. RAMP C
P.I. Sta. 578+08.75
Δ = 1° 57′ 07″ (LT)
Dc = 0° 28′ 03″
R = 12,253.42′
T = 208.75′
L = 417.46′
E = 1.78′
C = 417.44′
C.B. = N 13° 43′ 59″ W
D.S. = 70 MPH
$e_{max}$ = 0.0177
P.C. STA. 576+00.00
P.T. STA. 580+17.46

TAPER TABLE

| TAPER CODE | BEGINNING STATION | | ENDING STATION | | SIDE | DESCRIPTION | BEGIN WIDTH | END WIDTH | TAPER RATE |
|---|---|---|---|---|---|---|---|---|---|
| BG | 577+52.62 | RAMP C | 581+24.01 | RAMP C | LT | PAVEMENT | 12.00′ | 16.00′ | 93:1 |
| BH | 581+24.01 | RAMP C | 582+24.01 | RAMP C | RT | SHOULDER | 10.00′ | 6.00′ | 25:1 |

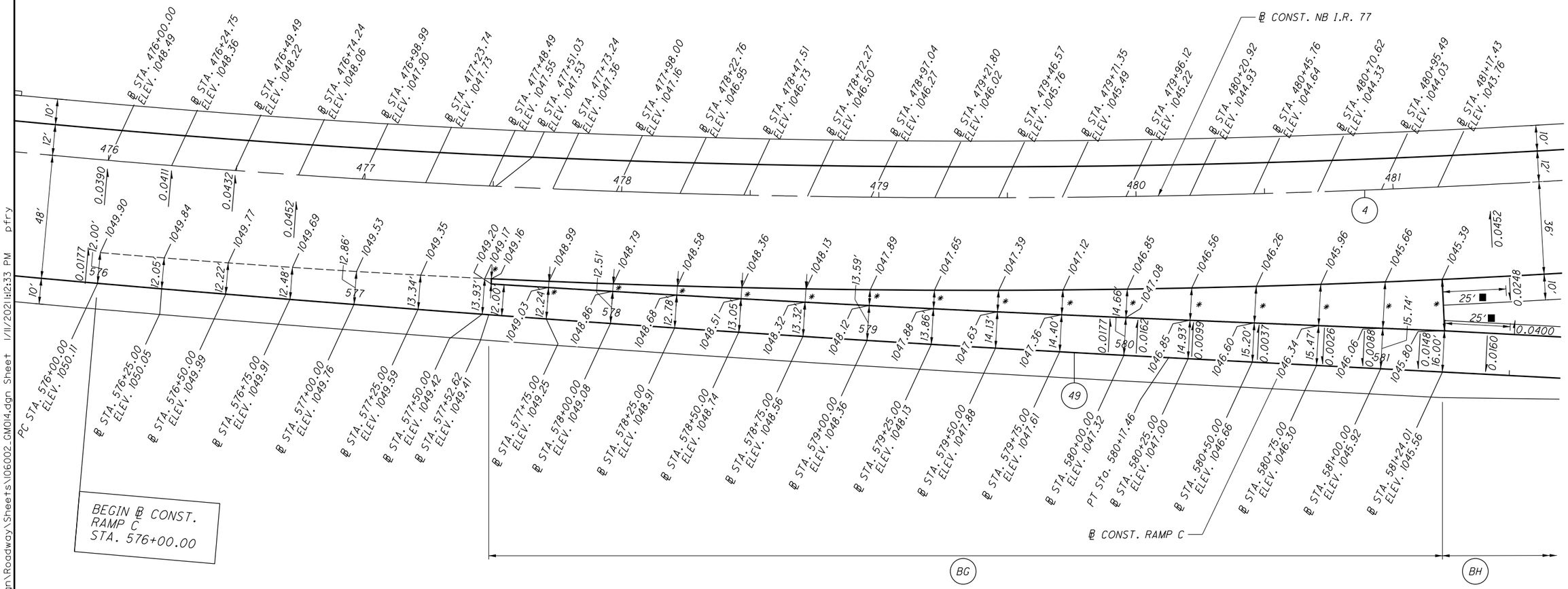


* GORE SLOPE INFORMATION
(READ FROM RAMP C E/P TO NB I.R. 77 E/P)

STA. 577+52.62, 2.00′ @ -0.0200
STA. 577+75.00, 2.39′ @ -0.0167
STA. 578+00.00, 2.93′ @ -0.0239
STA. 578+25.00, 3.57′ @ -0.0280
STA. 578+50.00, 4.32′ @ -0.0347
STA. 578+75.00, 5.18′ @ -0.0367
STA. 579+00.00, 6.15′ @ -0.0374
STA. 579+25.00, 7.22′ @ -0.0319
STA. 579+50.00, 8.40′ @ -0.0286
STA. 579+75.00, 9.69′ @ -0.0248
STA. 580+00.00, 11.09′ @ -0.0207
STA. 580+25.00, 12.59′ @ -0.0230
STA. 580+50.00, 14.25′ @ -0.0239
STA. 580+75.00, 16.07′ @ -0.0236
STA. 581+00.00, 18.05′ @ -0.0222
STA. 581+24.01, 20.00′ @ -0.0205

■ TRANSITION SHOULDER CROSS-SLOPE

FOR SUPERELEVATION TABLES, SEE SHEETS 827 - 829
FOR NB I.R. 77 PROFILE, SEE SHEETS 472 - 475
FOR RAMP C PROFILE, SEE SHEETS 497 - 499

HORIZONTAL SCALE IN FEET
0 10 20 40
CALCULATED KRM
CHECKED LRK

# RAMP GORE DETAILS
## RAMP C AT NB I.R. 77 - BEGIN TO STA. 581+50

SUM-77/277/224
VARIOUS



0:\2017\2017258\ProjectData\SUM\06002\Design\Roadway\Sheets\06002_GM014.dgn Sheet 1/11/2021 12:33 PM pfry

(52) ℄ CONST. RAMP C
P.I. Sta. 596+43.35
Δ = 50° 47′ 20″ (RT)
Dc = 8° 00′ 00″
R = 716.20′
T = 339.99′
L = 634.86′
E = 76.60′
C = 614.28′
C.B. = N 46° 09′ 50″ E
D.S. = 45 MPH
SSD = 305′ (360′ MIN.)
ACTUAL D.S. = 40 MPH
$e_{max}$ = 0.060
P.C.C. STA. 593+03.36
P.C.C. STA. 599+38.22

(53) ℄ CONST. RAMP C
P.I. Sta. 600+38.18
Δ = 7° 59′ 01″ (RT)
Dc = 4° 00′ 00″
R = 1,432.39′
T = 99.96′
L = 199.59′
E = 3.48′
C = 199.43′
C.B. = N 75° 33′ 00″ E
D.S. = 60 MPH (SSD = 50 MPH)
$e_{max}$ = 0.060
P.C.C. STA. 599+38.22
C.S. STA. 601+37.81

(54) ℄ CONST. RAMP C
P.I. STA. 602+04.51
Ls = 200.00′
f s = 4° 00′ 00″
LT = 133.37′
ST = 66.70′
x = 199.90′
y = 4.65′
k = 99.98′
p = 1.16′
C.S. STA. 601+37.81
S.T. STA. 603+37.81

TAPER TABLE

| TAPER CODE | BEGINNING STATION | | ENDING STATION | | SIDE | DESCRIPTION | BEGIN WIDTH | END WIDTH | TAPER RATE |
|---|---|---|---|---|---|---|---|---|---|
| BI | 596+40.00 | RAMP C | 600+60.00 | RAMP C | LT | PAVEMENT | 28.00′ | 16.00′ | 35:1 |
| BJ | 602+87.81 | RAMP C | 603+37.81 | RAMP C | RT | SHOULDER | 6.00′ | 8.00′ | 25:1 |

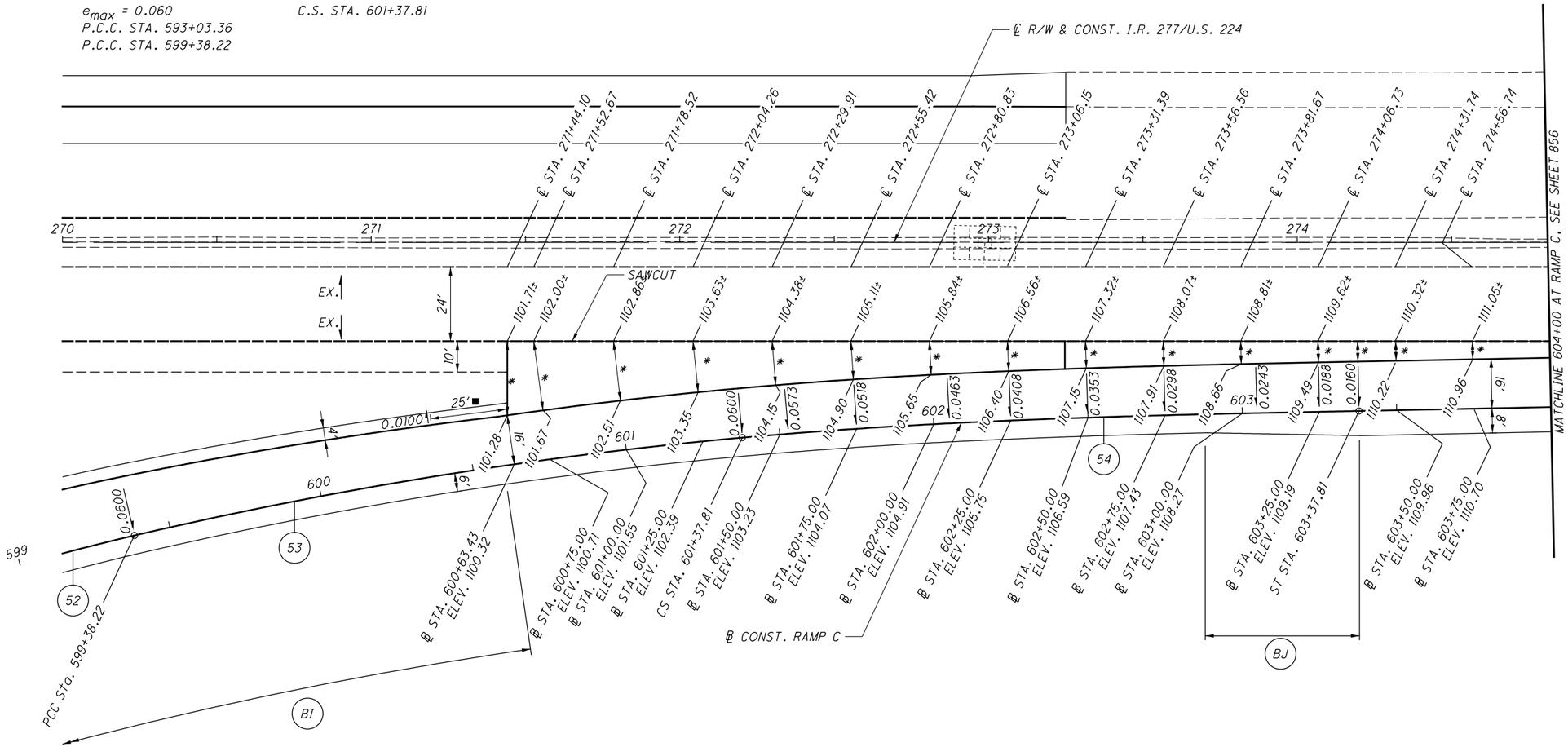


* GORE SLOPE INFORMATION
(READ FROM RAMP C E/P TO I.R. 277 E/P)

STA. 600+63.43, 24.00′ @ 0.0179
STA. 600+75.00, 22.60′ @ 0.0146
STA. 600+00.00, 19.38′ @ 0.0181
STA. 601+25.00, 16.61′ @ 0.0169
STA. 601+50.00, 14.31′ @ 0.0161
STA. 601+75.00, 12.43′ @ 0.0169
STA. 602+00.00, 10.92′ @ 0.0174
STA. 602+25.00, 9.71′ @ 0.0165
STA. 602+50.00, 8.76′ @ 0.0194
STA. 602+75.00, 8.01′ @ 0.0200
STA. 603+00.00, 7.39′ @ 0.0203
STA. 603+25.00, 6.86′ @ 0.0190
STA. 603+50.00, 6.36′ @ 0.0157
STA. 603+75.00, 5.86′ @ 0.0154

■ TRANSITION SHOULDER CROSS-SLOPE

± CONSTRUCTED ELEVATIONS ARE TO MEET EXISTING ELEVATIONS AND ARE TO BE VERIFIED IN FIELD

FOR SUPERELEVATION TABLES, SEE SHEETS 827 - 829
FOR RAMP C PROFILE, SEE SHEETS 497 - 499

N

HORIZONTAL SCALE IN FEET
0 10 20 40

CALCULATED KRM
CHECKED LRK

# RAMP GORE DETAILS
## RAMP C AT I.R. 277 - STA. 599+00 TO STA. 604+00

SUM-77/277/224
VARIOUS

855
1288

0:\2017\2017258\Project Data\SUM\06002\Design\Roadway\Sheets\06002_GM015.dgn Sheet 1/11/2021 12:36 PM pfry

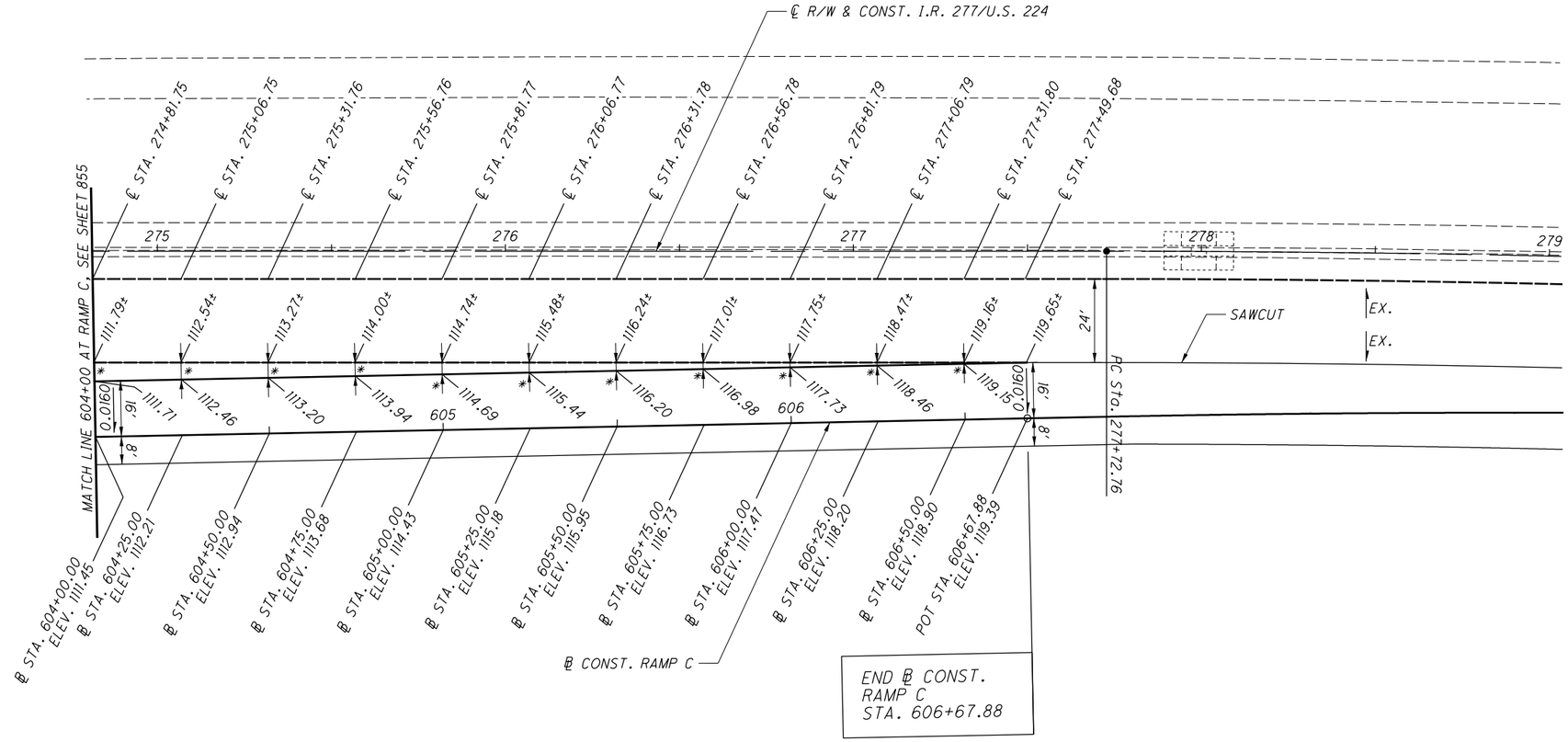


## * GORE SLOPE INFORMATION

(READ FROM RAMP C E/P TO I.R. 277 E/P)

STA. 604+00.00, 5.36' @ 0.0149
STA. 604+25.00, 4.86' @ 0.0165
STA. 604+50.00, 4.36' @ 0.0161
STA. 604+75.00, 3.86' @ 0.0155
STA. 605+00.00, 3.36' @ 0.0149
STA. 605+25.00, 2.86' @ 0.0140
STA. 605+50.00, 2.36' @ 0.0169
STA. 605+75.00, 1.86' @ 0.0161
STA. 606+00.00, 1.36' @ 0.0147
STA. 606+25.00, 0.86' @ 0.0116
STA. 606+50.00, 0.36' @ 0.0278

± CONSTRUCTED ELEVATIONS ARE TO MEET EXISTING ELEVATIONS AND ARE TO BE VERIFIED IN FIELD.

FOR SUPERELEVATION TABLES, SEE SHEETS 827 - 829
FOR RAMP C PROFILE, SEE SHEETS 497 - 499

HORIZONTAL SCALE IN FEET
0 10 20 40

CALCULATED KRM
CHECKED LRK

# RAMP GORE DETAILS
## RAMP C AT I.R. 277 - STA. 604+00 TO END

SUM-77/277/224
VARIOUS

856
1288

O:\2017\2017258\ProjectData\SUM\06002\Design\Roadway\Sheets\06002_GM016.dgn Sheet 1/11/2021 12:38 PM pfry

| TAPER TABLE | | | | | | | | | |
|---|---|---|---|---|---|---|---|---|---|
| TAPER CODE | BEGINNING STATION | | ENDING STATION | | SIDE | DESCRIPTION | BEGIN WIDTH | END WIDTH | TAPER RATE |
| BK | 682+95.50 | RAMP C-1 | 683+45.50 | RAMP C-1 | RT | SHOULDER | 8.00′ | 6.00′ | 25:1 |

(58) ℄ CONST. RAMP C-1
P.I. Sta. 681+06.79
Δ = 8° 07′ 29″ (RT)
Dc = 1° 55′ 00″
R = 2,989.35′
T = 212.30′
L = 423.90′
E = 7.53′
C = 423.54′
C.B. = N 88° 45′ 00″ E
D.S. = 55 MPH
$e_{max}$ = 0.0387
P.C. STA. 678+94.49
C.S. STA. 683+18.39

(59) ℄ CONST. RAMP C-1
P.I. STA. 684+48.34
Ls = 200.00′
f s = 25° 55′ 00″
LT = 129.96′
ST = 73.02′
x = 195.63′
y = 31.91′
k = 99.32′
p = 6.39′
C.S. STA. 683+18.39
S.C. STA. 685+18.39

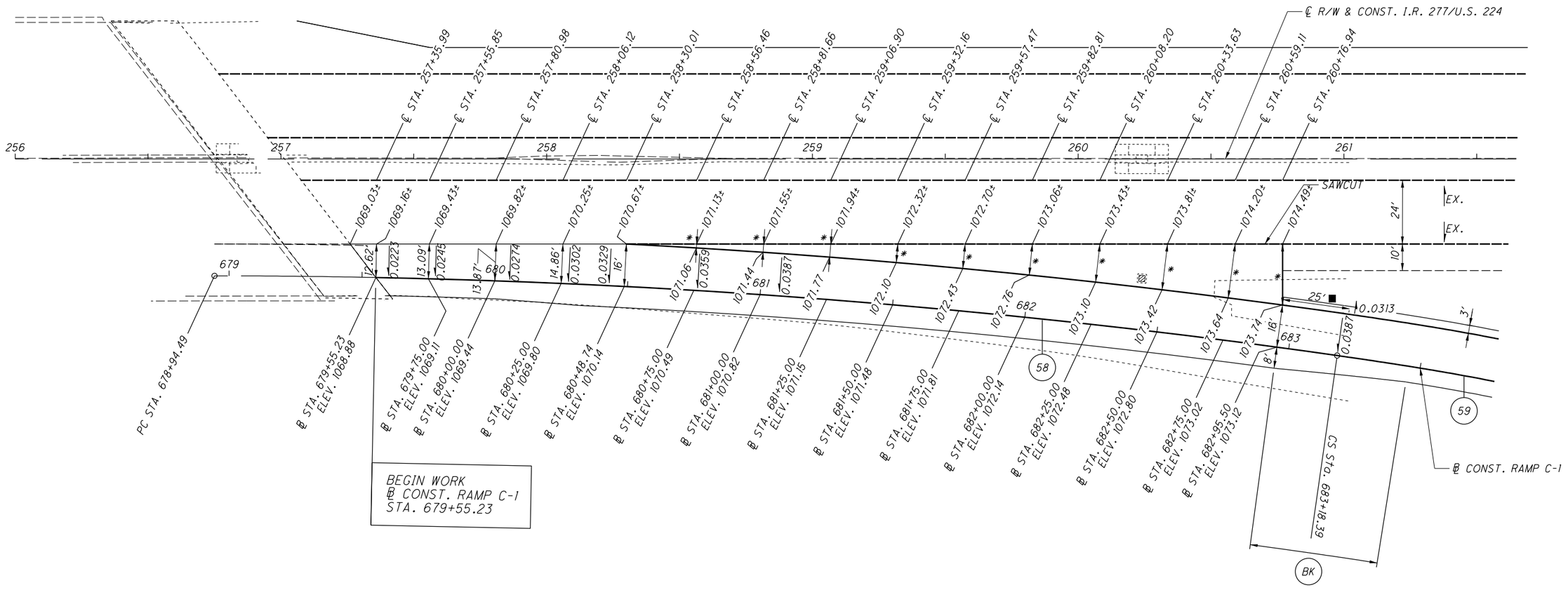


* GORE SLOPE INFORMATION
(READ FROM RAMP C-1 E/P TO I.R. 277 E/P)

STA. 680+75.00, 1.48′ @ 0.0473
STA. 681+00.00, 3.11′ @ 0.0354
STA. 681+25.00, 4.95′ @ 0.0343
STA. 681+50.00, 7.00′ @ 0.0314
STA. 681+75.00, 9.26′ @ 0.0292
STA. 682+00.00, 11.74′ @ 0.0256
STA. 682+25.00, 14.44′ @ 0.0229
STA. 682+50.00, 17.35′ @ 0.0225
STA. 682+75.00, 20.48′ @ 0.0273
STA. 682+95.50, 23.00′ @ 0.0326

■ TRANSITION SHOULDER CROSS-SLOPE

± CONSTRUCTED ELEVATIONS ARE TO MEET EXISTING ELEVATIONS AND ARE TO BE VERIFIED IN FIELD.

FOR SUPERELEVATION TABLES, SEE SHEETS 830 - 831
FOR RAMP C-1 PROFILE, SEE SHEETS 501

N

HORIZONTAL SCALE IN FEET
0 10 20 40

CALCULATED KRM
CHECKED LRK

RAMP GORE DETAILS
RAMP C-1 AT I.R. 277 - BEGIN TO STA. 683+50

SUM-77/277/224
VARIOUS



D:\2017\2017258\ProjectData\SUM\06002\Design\Roadway\Sheets\06002_GM017.dgn Sheet 1/11/2021 1:2:41 PM pfry

4 — ℄ CONST. NB I.R. 77
P.I. Sta. 485+59.78
Δ = 30° 33′ 43″ (LT)
Dc = 1° 28′ 03″
R = 3,904.07′
T = 1,066.64′
L = 2,082.45′
E = 143.09′
C = 2,057.85′
C.B. = N 26° 28′ 11″ W
D.S. = 70 MPH
$e_{max}$ = 0.0452
P.C. STA. 474+93.14
P.T. STA. 495+75.59

61 — ℄ CONST. RAMP C-1
P.I. STA. 692+98.87
Ls = 300.00′
θs = 36° 00′ 00″
LT = 204.30′
ST = 103.92′
x = 288.37′
y = 61.08′
k = 148.05′
p = 15.49′
C.S. STA. 691+94.95
S.T. STA. 694+94.95

TAPER TABLE

| TAPER CODE | BEGINNING STATION | | ENDING STATION | | SIDE | DESCRIPTION | BEGIN WIDTH | END WIDTH | TAPER RATE |
|---|---|---|---|---|---|---|---|---|---|
| BL | 694+44.95 | RAMP C-1 | 694+94.95 | RAMP C-1 | RT | SHOULDER | 6.00′ | 8.00′ | 25:1 |

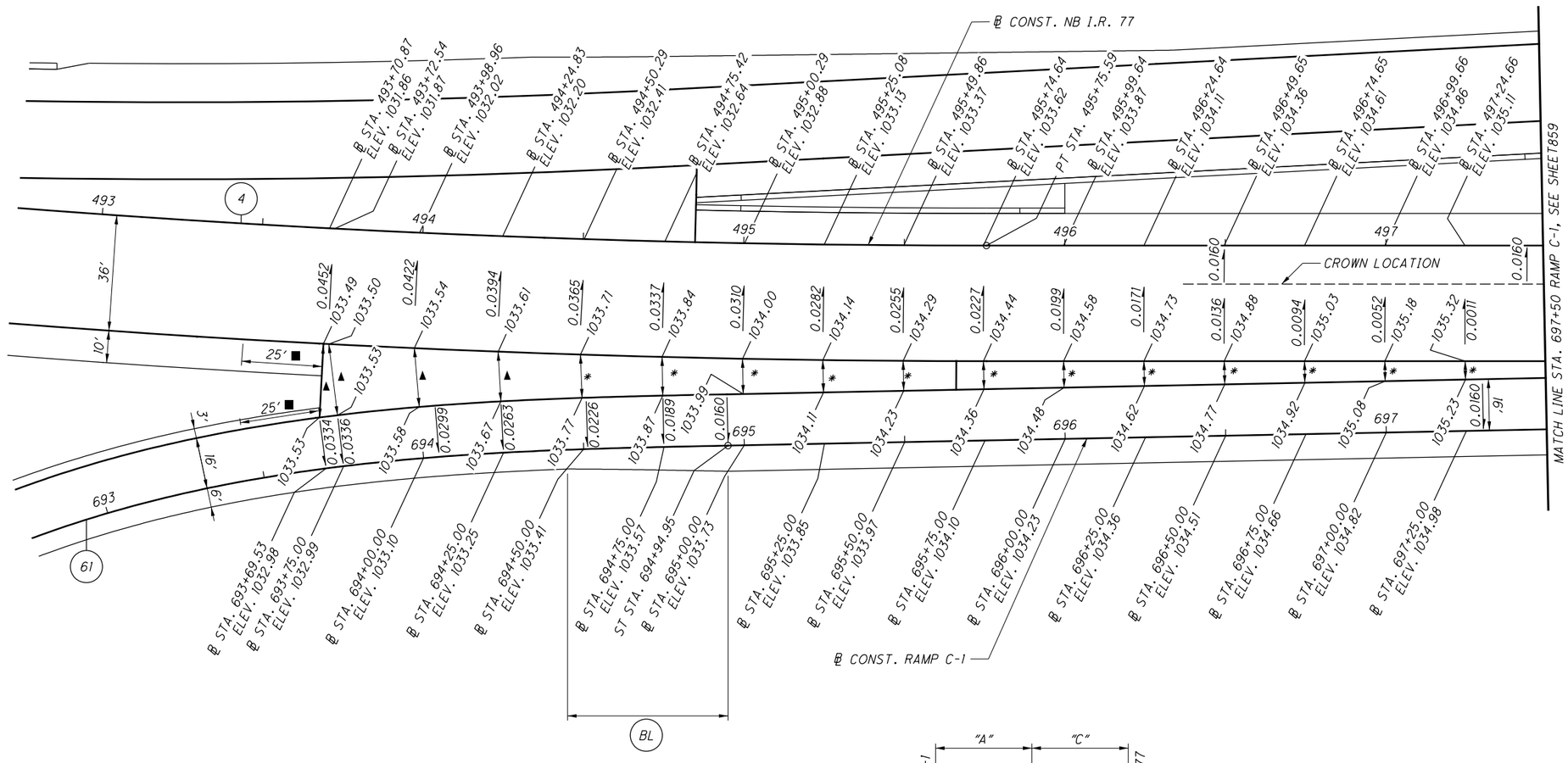


* GORE SLOPE INFORMATION
(READ FROM RAMP C-1 E/P TO NB I.R. 77 E/P)

STA. 694+50.00, 13.48′ @ -0.0045
STA. 694+75.00, 12.05′ @ -0.0025
STA. 695+00.00, 10.96′ @ 0.0009
STA. 695+25.00, 10.06′ @ 0.0030
STA. 695+50.00, 9.32′ @ 0.0064
STA. 695+75.00, 8.73′ @ 0.0092
STA. 696+00.00, 8.23′ @ 0.0121
STA. 696+25.00, 7.73′ @ 0.0142
STA. 696+50.00, 7.23′ @ 0.0152
STA. 696+75.00, 6.73′ @ 0.0163
STA. 697+00.00, 6.23′ @ 0.0161
STA. 697+25.00, 5.73′ @ 0.0157

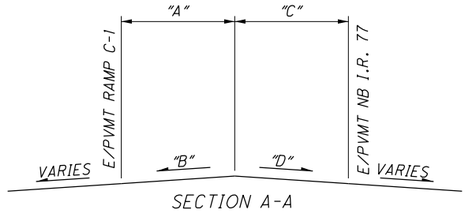


SECTION A-A

GORE SLOPE INFORMATION

| STATION | "A" | "B" | "C" | "D" |
|---|---|---|---|---|
| 693+69.53 | 13.00′ | 0.0071 | 10.00′ | 0.0132 |
| 693+75.00 | 12.19′ | 0.0085 | 10.15′ | 0.0132 |
| 694+00.00 | 8.28′ | 0.0076 | 10.08′ | 0.0102 |
| 694+25.00 | 5.46′ | 0.0026 | 10.04′ | 0.0074 |

▲ SEE SECTION A-A FOR DETAILS
■ TRANSITION SHOULDER CROSS-SLOPE

FOR SUPERELEVATION TABLES, SEE SHEETS 830 - 831
FOR NB I.R. 77 PROFILE, SEE SHEETS 472 - 475
FOR RAMP C-1 PROFILE, SEE SHEETS 501

HORIZONTAL SCALE IN FEET
0 10 20 40
CALCULATED KRM
CHECKED LRK

RAMP GORE DETAILS
RAMP C-1 AT NB I.R. 77 - STA. 693+00 TO STA. 697+50

SUM-77/277/224
VARIOUS

858
1288

0:\2017\2017258\ProjectData\SUM\106002\Design\Roadway\Sheets\106002_GM018.dgn Sheet1 1/11/2021 12:43 PM pfry

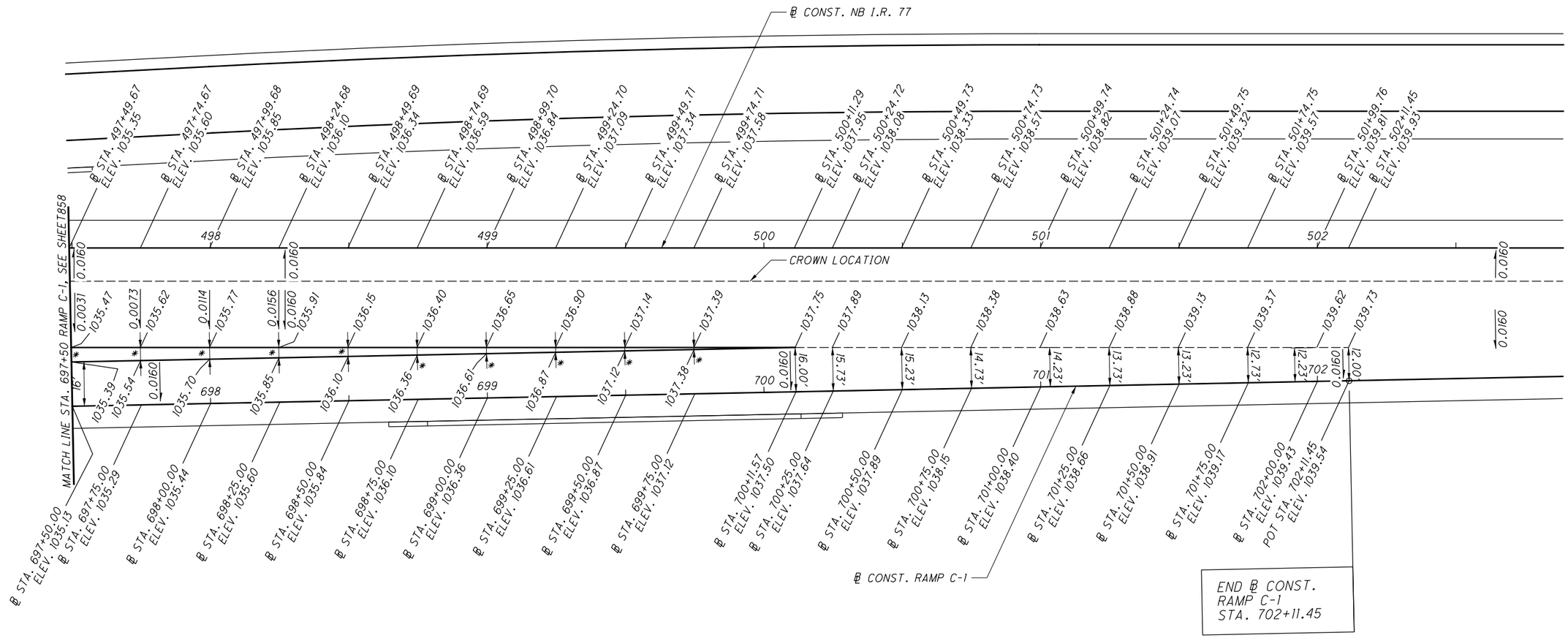


0:\2017\2017258\Project Data\SUM\I06002\Design\Roadway\Sheets\I06002_GM019.dgn Sheet 1/11/2021 11:2:45 PM pfry

HORIZONTAL SCALE IN FEET
0 10 20 40

CALCULATED KRM
CHECKED LRK

# RAMP GORE DETAILS
## RAMP C-1 AT NB I.R. 77 - STA. 697+50 TO END

SUM-77 / 277 / 224
VARIOUS

859
1288

| TAPER TABLE | | | | | | | | |
|---|---|---|---|---|---|---|---|---|
| TAPER CODE | BEGINNING STATION | | ENDING STATION | | SIDE | DESCRIPTION | BEGIN WIDTH | END WIDTH | TAPER RATE |
| B1 | 596+40.00 | RAMP C | 600+60.00 | RAMP C | LT | PAVEMENT | 28.00' | 16.00' | 35:1 |

**(51) ℄ CONST. RAMP C**
P.I. Sta. 589+20.09
Δ = 31° 28' 43" (RT)
Dc = 4° 00' 00"
R = 1,432.39'
T = 403.69'
L = 786.96'
E = 55.80'
C = 777.10'
C.B. = N 5° 01' 48" E
D.S. = 60 MPH (SSD = 50 MPH)
$e_{max}$ = 0.060
S.C. STA. 585+16.40
P.C.C. STA. 593+03.36

**(52) ℄ CONST. RAMP C**
P.I. Sta. 596+43.35
Δ = 50° 47' 20" (RT)
Dc = 8° 00' 00"
R = 716.20'
T = 339.99'
L = 634.86'
E = 76.60'
C = 614.28'
C.B. = N 46° 09' 50" E
D.S. = 45 MPH
SSD = 305' (360' MIN.)
ACTUAL D.S. = 40 MPH
$e_{max}$ = 0.060
P.C.C. STA. 593+03.36
P.C.C. STA. 599+38.22

**(66) ℄ CONST. RAMP C-2**
P.I. Sta. 782+19.82
Δ = 11° 22' 45" (LT)
Dc = 7° 39' 38"
R = 747.92'
T = 74.52'
L = 148.54'
E = 3.70'
C = 148.30'
C.B. = S 43° 33' 57" W
D.S. = 45 MPH
$e_{max}$ = 0.060
P.C. STA. 781+45.30
C.S. STA. 782+93.84

**(67) ℄ CONST. RAMP C-2**
P.I. STA. 783+43.89
Ls = 150.00'
f s = 5° 44' 44"
LT = 100.05'
ST = 50.05'
x = 149.85'
y = 5.01'
k = 74.97'
p = 1.25'
C.S. STA. 782+93.84
S.T. STA. 784+43.84

**(68) ℄ CONST. RAMP C-2**
P.I. STA. 786+50.14
Ls = 250.00'
f s = 18° 45' 00"
LT = 167.61'
ST = 84.19'
x = 247.34'
y = 27.06'
k = 124.56'
p = 6.79'
T.S. STA. 784+82.53
S.C. STA. 787+32.53

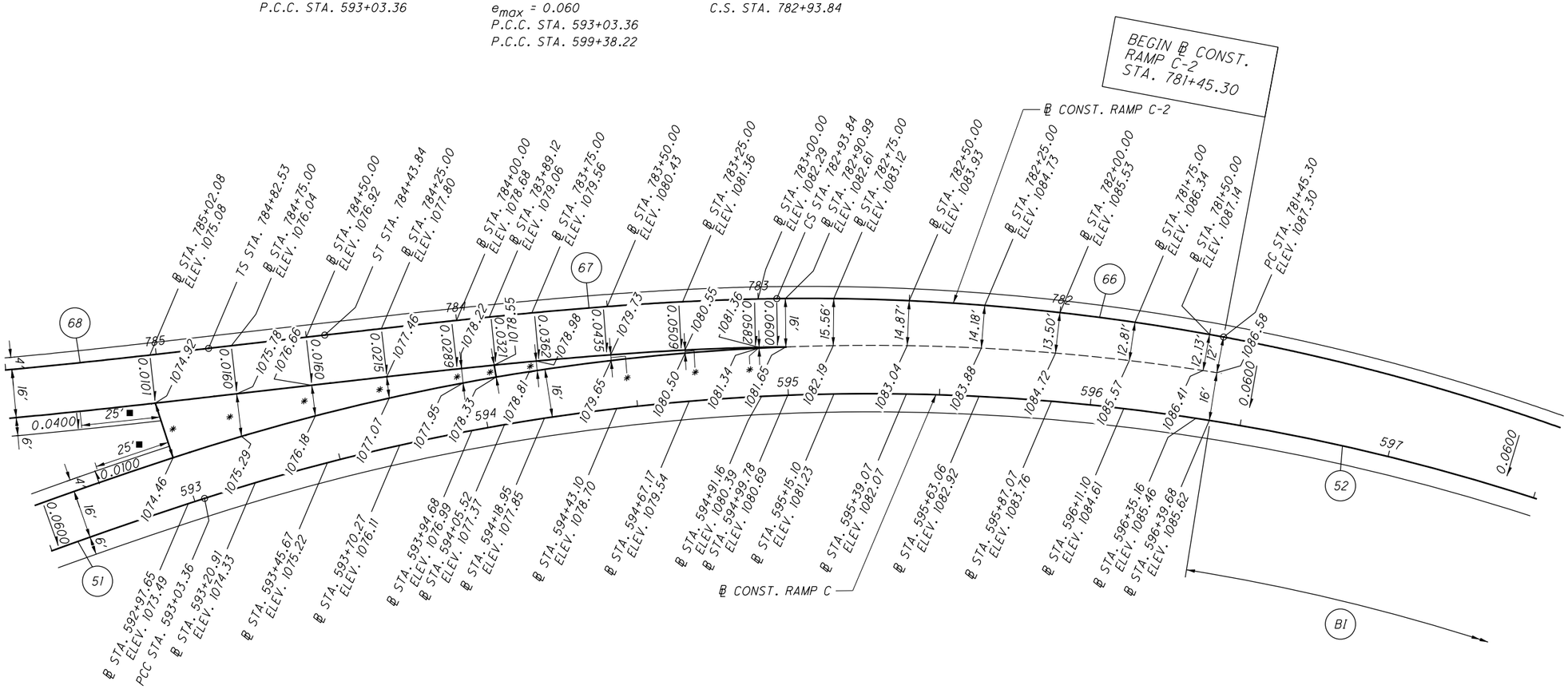


* GORE SLOPE INFORMATION
(READ FROM RAMP C E/P TO RAMP C-2 E/P)

STA. 592+97.65, 19.00' @ 0.0242
STA. 593+20.91, 14.13' @ 0.0347
STA. 593+45.67, 10.19' @ 0.0471
STA. 593+70.27, 7.12' @ 0.0548
STA. 593+94.68, 4.81' @ 0.0561
STA. 594+05.52, 4.00' @ 0.0550
STA. 594+18.95, 3.12' @ 0.0545
STA. 594+43.10, 1.89' @ 0.0423
STA. 594+67.17, 0.98' @ 0.0510
STA. 594+91.16, 0.25' @ 0.0800

■ TRANSITION SHOULDER CROSS-SLOPE

FOR SUPERELEVATION TABLES, SEE SHEETS 827 - 834
FOR RAMP C PROFILE, SEE SHEETS 497 - 499
FOR RAMP C-2 PROFILE, SEE SHEETS 502 - 503

HORIZONTAL SCALE IN FEET
0 10 20 40
CALCULATED KRM
CHECKED LRK

# RAMP GORE DETAILS
## RAMP C-2 AT RAMP C - BEGIN TO STA. 785+50

SUM-77/277/224
VARIOUS



D:\2017\2017258\ProjectData\SUM\06002\Design\Roadway\Sheets\06002_GM020.dgn Sheet 1/11/2021 1:48 PM pfry

(9) ℄ CONST. SB I.R. 77

| | |
|---|---|
| P.I. Sta. 515+02.63 | Ts = 1,299.59′ |
| Δ = 41° 58′ 00″ (RT) | Es = 205.96′ |
| Dc = 2° 00′ 00″ | C = 1,673.57′ |
| R = 2,864.79′ | C1 = C2 = 399.91′ |
| Ls = 400.00′ | C.B.1 = N 40° 25′ 03″ W |
| θs = 4° 00′ 00″ | C.B. = N 20° 46′ 03″ W |
| LT = 266.73′ | C.B.2 = N 1° 07′ 03″ W |
| ST = 133.40′ | D.S. = 60 MPH |
| x = 399.81′ | $e_{max}$ = 0.045 |
| y = 9.31′ | T.S. STA. 502+03.04 |
| k = 199.97′ | S.C. STA. 506+03.04 |
| p = 2.33′ | C.S. STA. 523+01.37 |
| Δc = 33° 58′ 00″ (RT) | S.T. STA. 527+01.37 |
| Lc = 1,698.33′ | |

(71) ℄ CONST. RAMP C-2

| | |
|---|---|
| P.I. Sta. 797+24.90 | |
| Δ = 12° 46′ 26″ (RT) | |
| Dc = 1° 30′ 00″ | |
| R = 3,819.72′ | |
| T = 427.57′ | |
| L = 851.59′ | |
| E = 23.86′ | |
| C = 849.83′ | |
| C.B. = N 48° 08′ 16″ W | |
| D.S. = 60 MPH (SSD = 55 MPH) | |
| $e_{max}$ = 0.037 | |
| S.C. STA. 792+97.33 | |
| P.T. STA. 801+48.92 | |

TAPER TABLE

| TAPER CODE | BEGINNING STATION | | ENDING STATION | | SIDE | DESCRIPTION | BEGIN WIDTH | END WIDTH | TAPER RATE |
|---|---|---|---|---|---|---|---|---|---|
| AG | 494+44.48 | SB IR-77 | 502+43.78 | SB IR-77 | LT | PAVEMENT | 36.00′ | 52.00′ | 50:1 |
| BX | 795+95.44 | RAMP C-2 | 796+95.44 | RAMP C-2 | RT | SHOULDER | 4.00′ | 8.00′ | 25:1 |

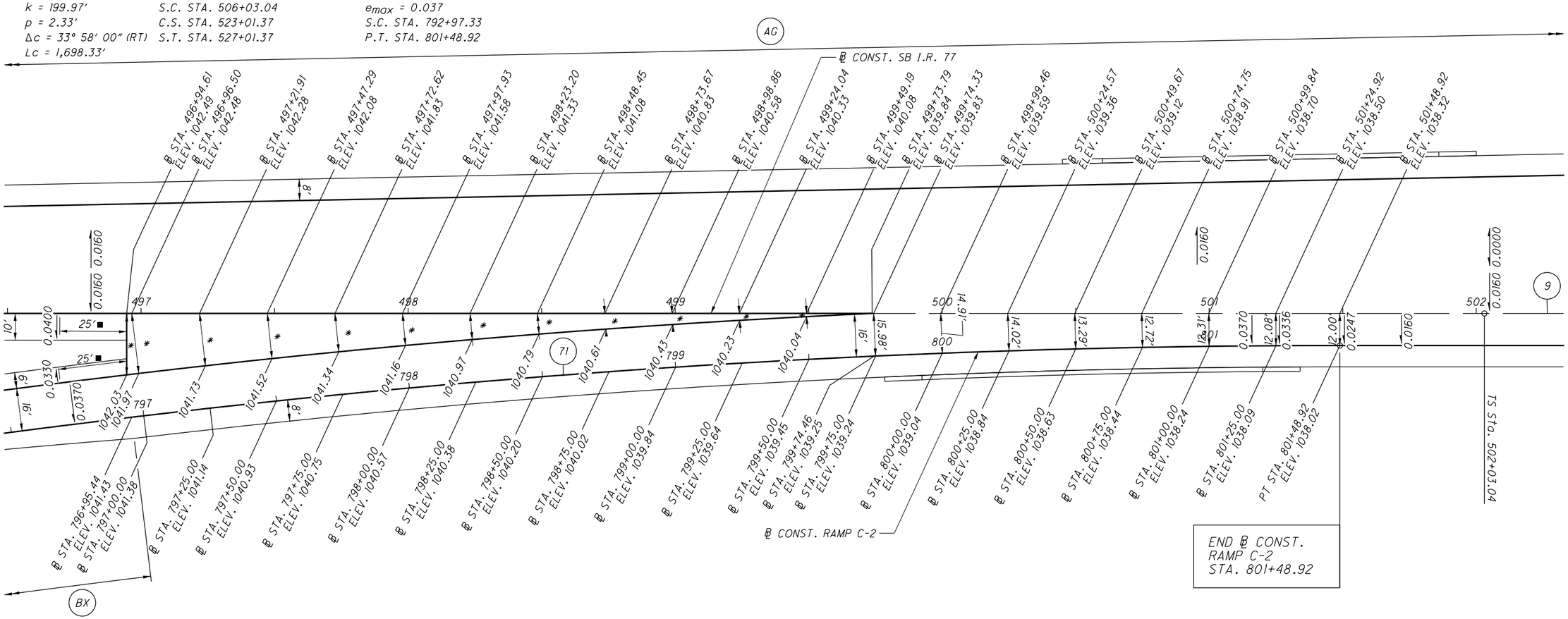


* GORE SLOPE INFORMATION

(READ FROM RAMP C-2 E/P TO SB I.R. 77 E/P)

STA. 796+95.44, 23.00′ @ 0.0200
STA. 797+00.00, 22.62′ @ 0.0225
STA. 797+25.00, 19.72′ @ 0.0279
STA. 797+50.00, 16.99′ @ 0.0330
STA. 797+75.00, 14.43′ @ 0.0340
STA. 798+00.00, 12.04′ @ 0.0349
STA. 798+25.00, 9.82′ @ 0.0367
STA. 798+50.00, 7.76′ @ 0.0374
STA. 798+75.00, 5.87′ @ 0.0375
STA. 799+00.00, 4.15′ @ 0.0361
STA. 799+25.00, 2.59′ @ 0.0386
STA. 799+50.00, 1.20′ @ 0.0333

■ TRANSITION SHOULDER CROSS-SLOPE

FOR SUPERELEVATION TABLES, SEE SHEETS 832 - 834
FOR SB I.R. 77 PROFILE, SEE SHEETS 476 - 479
FOR RAMP C-2 PROFILE, SEE SHEETS 502 - 503

HORIZONTAL SCALE IN FEET
0 10 20 40

CALCULATED KRM
CHECKED LRK

RAMP GORE DETAILS
RAMP C-2 AT SB I.R. 77 - STA. 796+50 TO END

SUM-77 / 277 / 224
VARIOUS

861
1288

0:\2017\2017258\Project Data\SUM\06002\Design\Roadway\Sheets\06002_GM02i.dgn Sheet 1/11/2021 2:50 PM pfry

## * GORE SLOPE INFORMATION

(READ FROM RAMP D E/P TO I.R. 277 E/P)

STA. 889+33.61, 2.00' @ 0.0350
STA. 889+50.00, 2.32' @ 0.0345
STA. 889+75.00, 2.92' @ 0.0342
STA. 890+00.00, 3.65' @ 0.0356
STA. 890+25.00, 4.53' @ 0.0353
STA. 890+50.00, 5.54' @ 0.0415
STA. 890+75.00, 6.68' @ 0.0344
STA. 891+00.00, 7.97' @ 0.0376
STA. 891+25.00, 9.40' @ 0.0383
STA. 891+50.00, 10.96' @ 0.0356
STA. 891+75.00, 12.66' @ 0.0332
STA. 892+00.00, 14.50' @ 0.0310
STA. 892+25.00, 16.48' @ 0.0279
STA. 892+50.00, 18.60' @ 0.0274
STA. 892+66.83, 20.00' @ 0.0305

TAPER TABLE

| TAPER CODE | BEGINNING STATION | | ENDING STATION | | SIDE | DESCRIPTION | BEGIN WIDTH | END WIDTH | TAPER RATE |
|---|---|---|---|---|---|---|---|---|---|
| BM | 889+33.61 | RAMP D | 892+66.83 | RAMP D | LT | PAVEMENT | 12.00' | 16.00' | 83:1 |
| BN | 892+66.83 | RAMP D | 893+66.83 | RAMP D | RT | SHOULDER | 10.00' | 6.00' | 25:1 |

76 — ℄ CONST. RAMP D
P.I. Sta. 891+58.50
Δ = 8° 59' 04" (RT)
Dc = 1° 15' 00"
R = 4,583.66'
T = 360.12'
L = 718.75'
E = 14.12'
C = 718.02'
C.B. = S 89° 10' 47" W
D.S. = 65 MPH
$e_{max}$ = 0.036
P.C. STA. 887+98.38
C.S. STA. 895+17.13

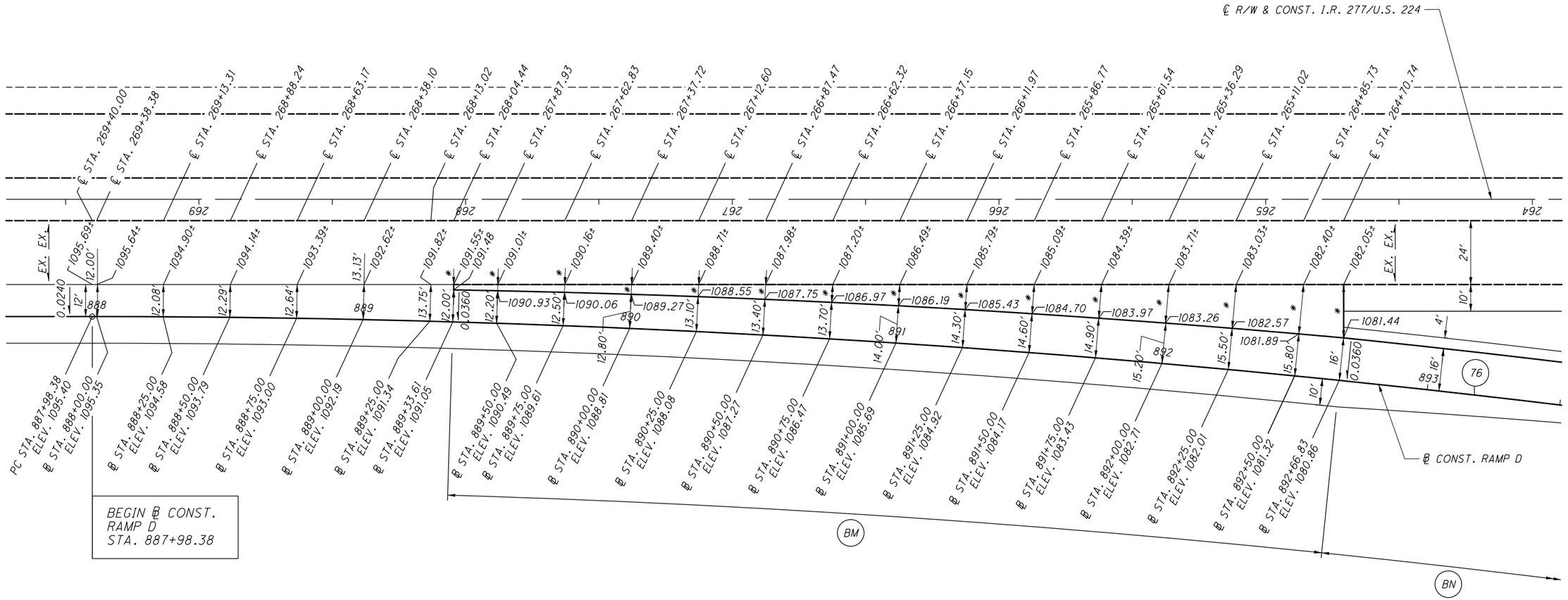


± CONSTRUCTED ELEVATIONS ARE TO MEET EXISTING ELEVATIONS AND ARE TO BE VERIFIED IN FIELD.

FOR SUPERELEVATION TABLES, SEE SHEETS 835 - 838
FOR RAMP D PLAN AND PROFILE, SEE SHEETS 504 - 506

HORIZONTAL SCALE IN FEET
0 10 20 40

CALCULATED KRM
CHECKED LRK

RAMP GORE DETAILS
RAMP D AT I.R. 277 - BEGIN TO STA. 893+50

SUM-77/277/224
VARIOUS

862
1288

0:\2017\2017258\ProjectData\SUM\06002\Design\Roadway\Sheets\06002_GM022.dgn Sheet 1/11/2021 12:52 PM pfry

| TAPER TABLE | | | | | | | | |
|---|---|---|---|---|---|---|---|---|
| TAPER CODE | BEGINNING STATION | | ENDING STATION | | SIDE | DESCRIPTION | BEGIN WIDTH | END WIDTH | TAPER RATE |
| AA | 500+11.45 | NB IR-77 | 508+11.45 | NB IR-77 | RT | PAVEMENT | 52.00′ | 36.00′ | 50:1 |
| AB | 507+11.53 | NB IR-77 | 507+42.24 | NB IR-77 | RT | SHOULDER | 8.00′ | 8.61′ | 50:1 |
| BO | 910+05.05 | RAMP D | 910+55.05 | RAMP D | RT | SHOULDER | 6.00′ | 8.00′ | 25:1 |

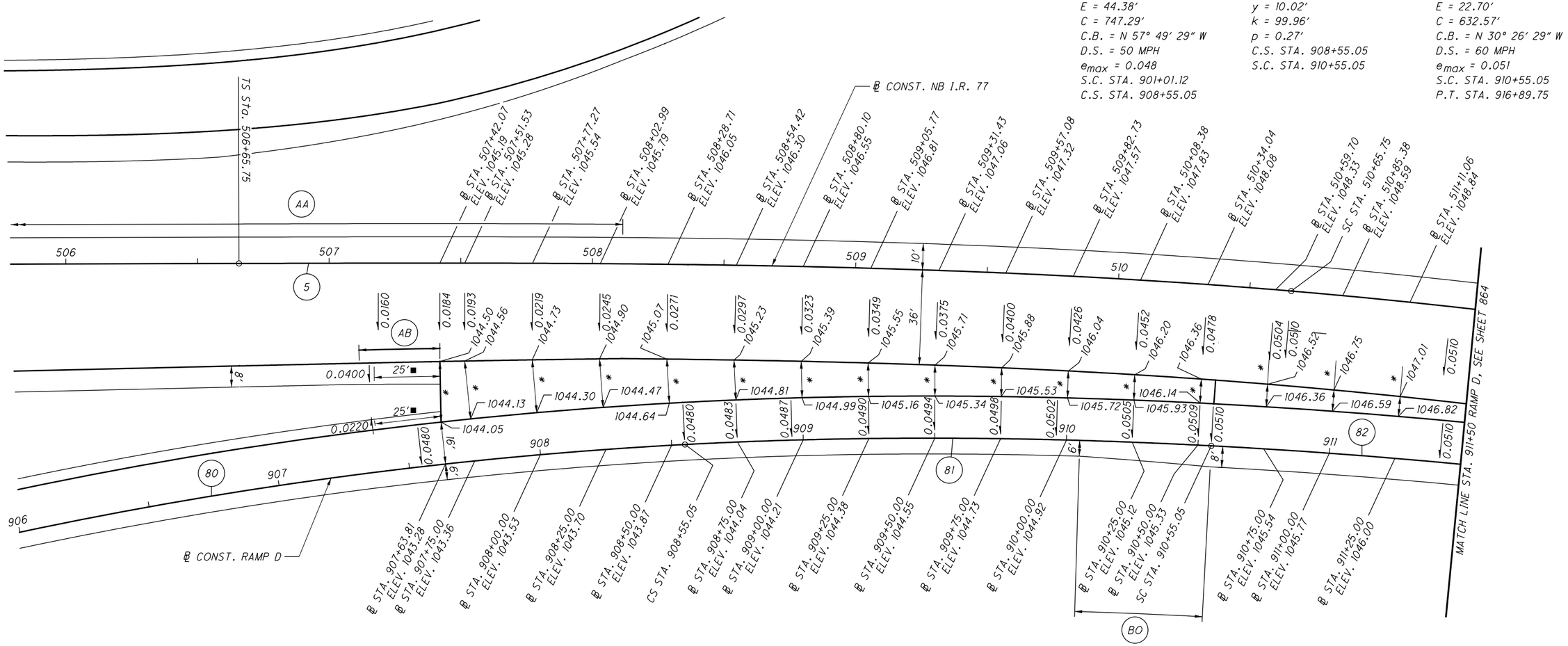


| 5 ℄ CONST. NB I.R. 77 | |
|---|---|
| P.I. Sta. 517+45.80 | Ts = 1,080.05′ |
| Δ = 41° 58′ 00″ (RT) | Es = 165.89′ |
| Dc = 2° 30′ 00″ | C = 1,262.15′ |
| R = 2,291.83′ | C1 = C2 = 399.86′ |
| Ls = 400.00′ | C.B.1 = N 40° 05′ 03″ W |
| θs = 5° 00′ 00″ | C.B. = N 20° 46′ 03″ W |
| LT = 266.77′ | C.B.2 = S 1° 27′ 02″ E |
| ST = 133.43′ | D.S. = 60 MPH |
| x = 399.70′ | $e_{max}$ = 0.051 |
| y = 11.63′ | T.S. STA. 506+65.75 |
| k = 199.95′ | S.C. STA. 510+65.75 |
| p = 2.91′ | C.S. STA. 523+44.42 |
| Δc = 31° 58′ 00″ (RT) | S.T. STA. 527+44.42 |
| Lc = 1,278.67′ | |

| 80 ℄ CONST. RAMP D |
|---|
| P.I. Sta. 904+84.89 |
| Δ = 26° 23′ 16″ (RT) |
| Dc = 3° 30′ 00″ |
| R = 1,637.02′ |
| T = 383.77′ |
| L = 753.93′ |
| E = 44.38′ |
| C = 747.29′ |
| C.B. = N 57° 49′ 29″ W |
| D.S. = 50 MPH |
| $e_{max}$ = 0.048 |
| S.C. STA. 901+01.12 |
| C.S. STA. 908+55.05 |

| 81 ℄ CONST. RAMP D |
|---|
| P.I. STA. 909+49.98 |
| Ls = 200.00′ |
| f s = 6° 03′ 40″ |
| LT = 105.26′ |
| ST = 94.93′ |
| x = 199.66′ |
| y = 10.02′ |
| k = 99.96′ |
| p = 0.27′ |
| C.S. STA. 908+55.05 |
| S.C. STA. 910+55.05 |

| 82 ℄ CONST. RAMP D |
|---|
| P.I. Sta. 913+74.55 |
| Δ = 16° 15′ 22″ (RT) |
| Dc = 2° 33′ 40″ |
| R = 2,237.04′ |
| T = 319.50′ |
| L = 634.70′ |
| E = 22.70′ |
| C = 632.57′ |
| C.B. = N 30° 26′ 29″ W |
| D.S. = 60 MPH |
| $e_{max}$ = 0.051 |
| S.C. STA. 910+55.05 |
| P.T. STA. 916+89.75 |

## * GORE SLOPE INFORMATION

(READ FROM RAMP D E/P TO NB I.R. 77 E/P)

STA. 907+63.81, 23.00′ @ 0.0196
STA. 907+75.00, 22.11′ @ 0.0194
STA. 908+00.00, 20.14′ @ 0.0214
STA. 908+25.00, 18.49′ @ 0.0233
STA. 908+50.00, 16.78′ @ 0.0256
STA. 908+75.00, 15.19′ @ 0.0276
STA. 909+00.00, 13.83′ @ 0.0289
STA. 909+25.00, 12.70′ @ 0.0307
STA. 909+50.00, 11.74′ @ 0.0315
STA. 909+75.00, 10.94′ @ 0.0320
STA. 910+00.00, 10.25′ @ 0.0312
STA. 910+25.00, 9.65′ @ 0.0280
STA. 910+50.00, 9.11′ @ 0.0241
STA. 910+75.00, 8.60′ @ 0.0186
STA. 911+00.00, 8.08′ @ 0.0198
STA. 911+25.00, 7.57′ @ 0.0251

■ TRANSITION SHOULDER CROSS-SLOPE

FOR SUPERELEVATION TABLES, SEE SHEETS 835 - 838
FOR NB I.R. 77 PLAN AND PROFILE, SEE SHEET 474 - 475
FOR RAMP D PLAN AND PROFILE, SEE SHEETS 504 - 506

HORIZONTAL SCALE IN FEET
0 10 20 40
CALCULATED KRM
CHECKED LRK

# RAMP GORE DETAILS
## RAMP D AT NB I.R. 77 - STA. 906+00 TO STA. 911+50

SUM-77/277/224
VARIOUS

863
1288

0:\2017\2017258\ProjectData\SUM\06002\Design\Roadway\Sheets\106002_GM023.dgn Sheet 1/11/2021 12:55 PM pfry

| TAPER TABLE | | | | | | | | | |
|---|---|---|---|---|---|---|---|---|---|
| TAPER CODE | BEGINNING STATION | | ENDING STATION | | SIDE | DESCRIPTION | BEGIN WIDTH | END WIDTH | TAPER RATE |
| AC | 514+12.50 | NB IR-77 | 515+25.00 | NB IR-77 | LT | SHOULDER | 10.00′ | 5.50′ | 25:1 |
| AD | 914+75.00 | RAMP D | 915+06.25 | RAMP D | RT | SHOULDER | 8.00′ | 6.75′ | 25:1 |
| AE | 514+89.25 | NB IR-77 | 515+71.91 | NB IR-77 | RT | PAVEMENT | 52.00′ | 50.35′ | 50:1 |

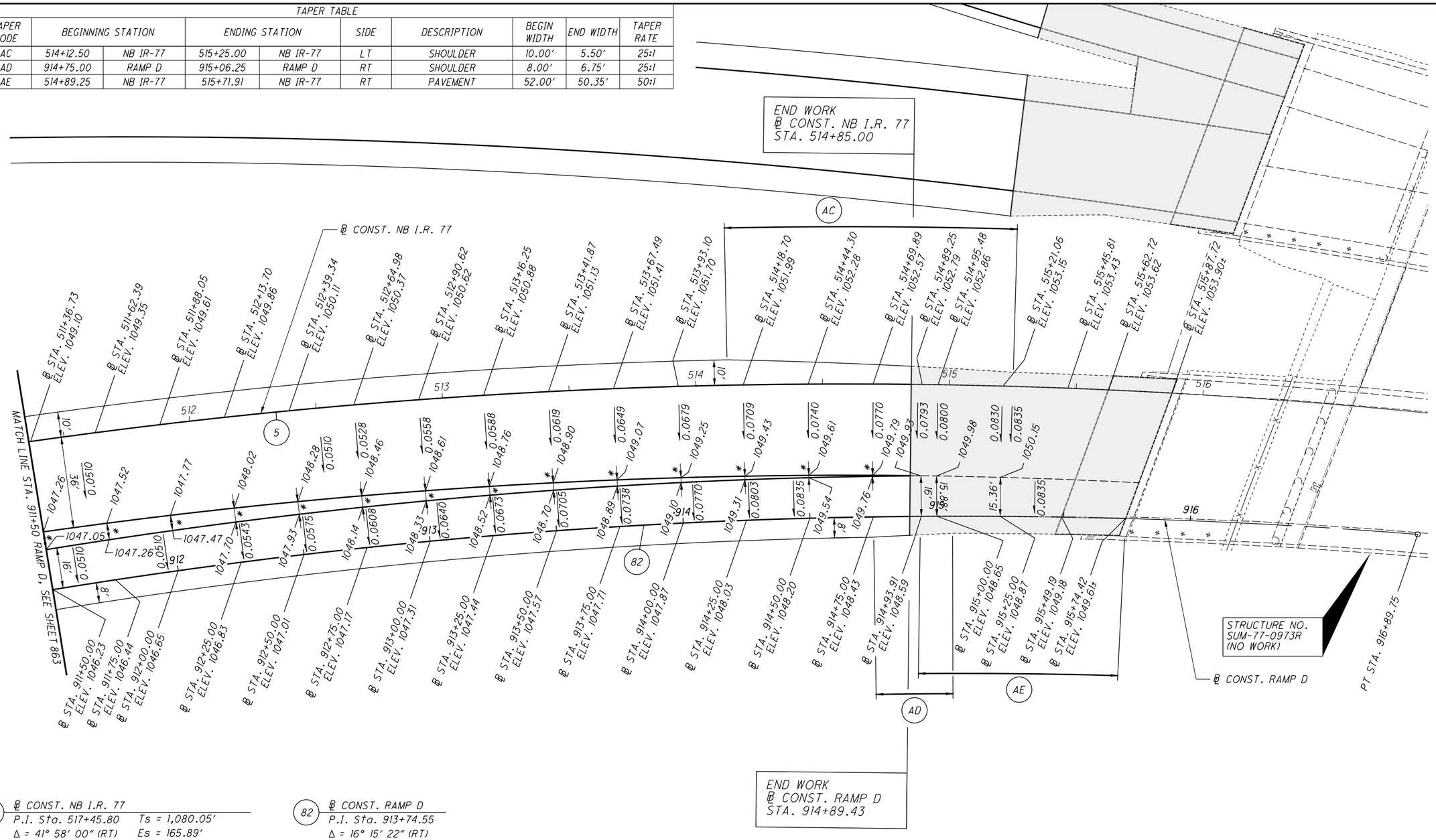


**5** ℄ CONST. NB I.R. 77

| | |
|---|---|
| P.I. Sta. 517+45.80 | Ts = 1,080.05′ |
| Δ = 41° 58′ 00″ (RT) | Es = 165.89′ |
| Dc = 2° 30′ 00″ | C = 1,262.15′ |
| R = 2,291.83′ | C1 = C2 = 399.86′ |
| Ls = 400.00′ | C.B.1 = N 40° 05′ 03″ W |
| θs = 5° 00′ 00″ | C.B. = N 20° 46′ 03″ W |
| LT = 266.77′ | C.B.2 = S 1° 27′ 02″ E |
| ST = 133.43′ | D.S. = 60 MPH |
| x = 399.70′ | $e_{max}$ = 0.051 |
| y = 11.63′ | T.S. STA. 506+65.75 |
| k = 199.95′ | S.C. STA. 510+65.75 |
| p = 2.91′ | C.S. STA. 523+44.42 |
| Δc = 31° 58′ 00″ (RT) | S.T. STA. 527+44.42 |
| Lc = 1,278.67′ | |

**82** ℄ CONST. RAMP D

| | |
|---|---|
| P.I. Sta. 913+74.55 | |
| Δ = 16° 15′ 22″ (RT) | |
| Dc = 2° 33′ 40″ | |
| R = 2,237.04′ | |
| T = 319.50′ | |
| L = 634.70′ | |
| E = 22.70′ | |
| C = 632.57′ | |
| C.B. = N 30° 26′ 29″ W | |
| D.S. = 60 MPH | |
| $e_{max}$ = 0.051 | |
| S.C. STA. 910+55.05 | |
| P.T. STA. 916+89.75 | |

## * GORE SLOPE INFORMATION

(READ FROM RAMP D E/P TO NB I.R. 77 E/P)

STA. 911+50.00, 7.06′ @ 0.0297
STA. 911+75.00, 6.55′ @ 0.0397
STA. 912+00.00, 6.04′ @ 0.0497
STA. 912+25.00, 5.52′ @ 0.0580
STA. 912+50.00, 5.01′ @ 0.0699
STA. 912+75.00, 4.50′ @ 0.0711
STA. 913+00.00, 3.98′ @ 0.0704
STA. 913+25.00, 3.47′ @ 0.0692
STA. 913+50.00, 2.96′ @ 0.0676
STA. 913+75.00, 2.44′ @ 0.0738
STA. 914+00.00, 1.93′ @ 0.0777
STA. 914+25.00, 1.41′ @ 0.0851
STA. 914+50.00, 0.90′ @ 0.0778
STA. 914+75.00, 0.39′ @ 0.0769

PAVEMENT AND APPROACH SLAB BY OTHERS (SUM-76/77/8-8.42/9.77/0.00 DB, PID 102329)

± CONSTRUCTED ELEVATIONS ARE TO MEET EXISTING ELEVATIONS AND ARE TO BE VERIFIED IN FIELD.

FOR SUPERELEVATION TABLES, SEE SHEETS 835 - 838
FOR NB I.R. 77 PLAN AND PROFILE, SEE SHEET 474 - 475
FOR RAMP D PLAN AND PROFILE, SEE SHEETS 504 - 506

HORIZONTAL SCALE IN FEET
0 10 20 40

CALCULATED KRM
CHECKED LRK

# RAMP D AT NB I.R. 77 - STA. 911+50 TO END
# RAMP GORE DETAILS

SUM-77 / 277 / 224
VARIOUS



O:\2017\2017258\Project Data\SUM\06002\Design\Roadway\Sheets\06002_GM024.dgn Sheet 1/11/2021 1:43:02 PM pfry

88 — ℄ CONST. ARLINGTON RAMP D
P.I. Sta. 73+08.33
Δ = 6° 15′ 29″ (RT)
Dc = 1° 30′ 00″
R = 3,819.72′
T = 208.81′
L = 417.19′
E = 5.70′
C = 416.99′
C.B. = N 3° 58′ 43″ W
D.S. = 50 MPH
$e_{max}$ = 0.028
P.C. STA. 70+99.52
P.T. STA. 75+16.71

TAPER TABLE

| TAPER CODE | BEGINNING STATION | | ENDING STATION | | SIDE | DESCRIPTION | BEGIN WIDTH | END WIDTH | TAPER RATE |
|---|---|---|---|---|---|---|---|---|---|
| A | 371+50.00 | IR-77 | 371+67.11 | IR-77 | RT | SHOULDER | 11.85′ | 12.00′ | 114:1 |
| B | 371+50.00 | IR-77 | 374+77.72 | IR-77 | RT | PAVEMENT | 48.68′ | 48.00′ | 482:1 |
| C | 371+50.00 | IR-77 | 380+50.00 | IR-77 | RT | MEDIAN | 20.31′ | 12.00′ | 108:1 |
| BP | 71+69.06 | ARL. RAMP D | 72+67.31 | ARL. RAMP D | RT | SHOULDER | 9.93′ | 6.00′ | 25:1 |
| BQ | 71+69.06 | ARL. RAMP D | 74+47.06 | ARL. RAMP D | LT/RT | PAVEMENT | 21.56′ | 16.00′ | 50:1 |
| BY | 371+50.00 | IR-77 | 377+02.12 | IR-77 | LT | MEDIAN BARRIER | 4.94′ | 0.00′ | 112:1 |

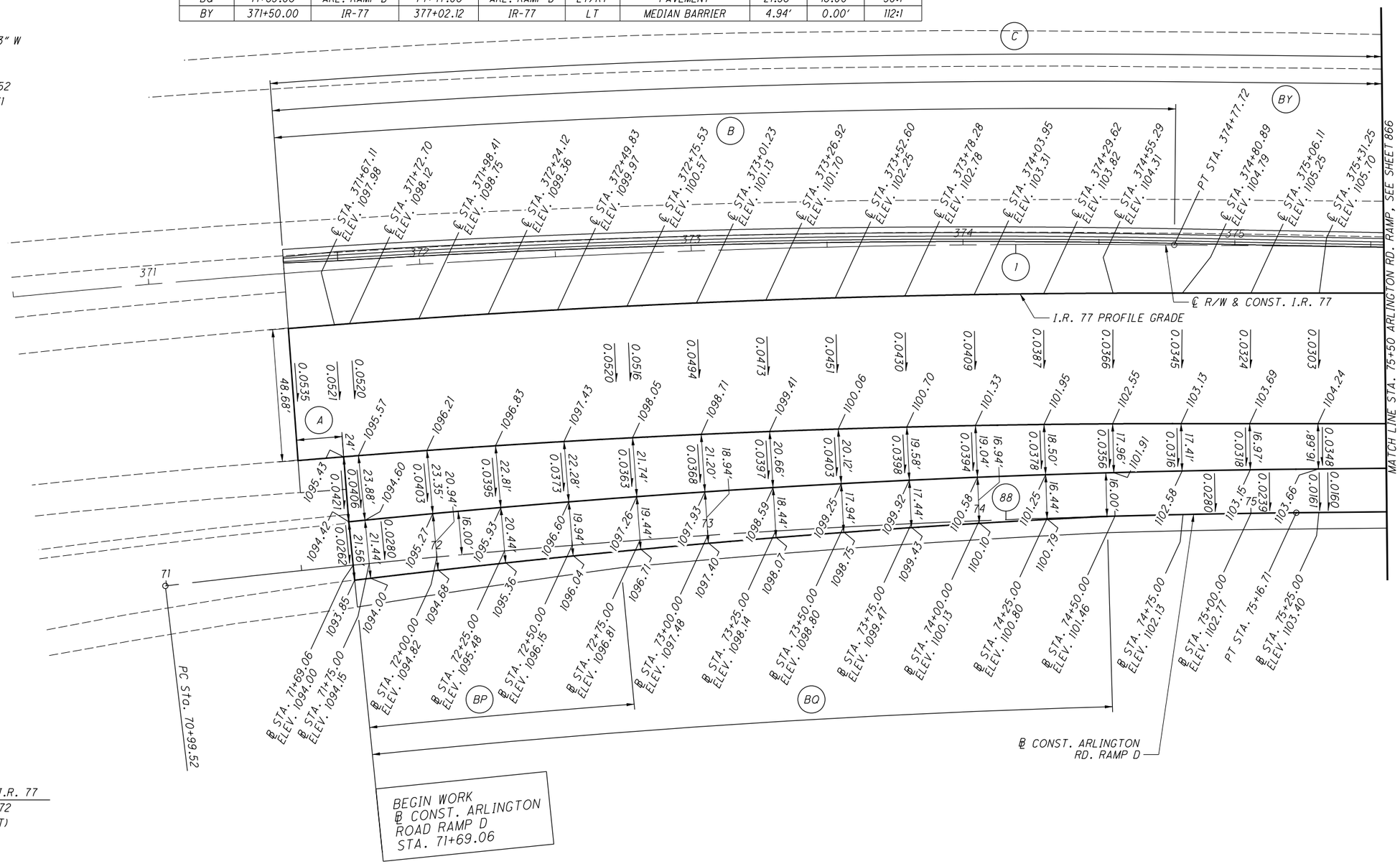


1 — ℄ R/W & CONST. I.R. 77
P.I. Sta. 360+81.72
Δ = 43° 10′ 45″ (RT)
Dc = 1° 28′ 08″
R = 3,900.50′
T = 1,543.50′
L = 2,939.50′
E = 294.29′
C = 2,870.43′
C.B. = N 21° 17′ 37″ W
D.S. = 70 MPH
$e_{max}$ = 0.052
P.C. STA. 345+38.22
P.T. STA. 374+77.72

FOR SUPERELEVATION TABLES, SEE SHEET 839.
FOR I-77 PLAN AND PROFILE, SEE SHEETS 453 - 456 .
FOR ARLINGTON RD. RAMP D PLAN AND PROFILE, SEE SHEETS 507 - 508 .

HORIZONTAL SCALE IN FEET
0 10 20 40

CALCULATED KRM
CHECKED LRK

RAMP GORE DETAILS - ARLINGTON RD.
RAMP D AT I.R. 77 - BEGIN TO STA . 75+50

SUM-77/277/224
VARIOUS

865
1288

0:\2017\2017258\ProjectData\SUM\106002\Design\Roadway\Sheets\106002_GM025.dgn Sheet 1/11/2021 1:3:05 PM pfry

| TAPER TABLE | | | | | | | | | |
|---|---|---|---|---|---|---|---|---|---|
| TAPER CODE | BEGINNING STATION | | ENDING STATION | | SIDE | DESCRIPTION | BEGIN WIDTH | END WIDTH | TAPER RATE |
| C | 371+50.00 | I-R-77 | 380+50.00 | I-R-77 | RT | MEDIAN | 20.31′ | 12.00′ | 108:1 |
| BY | 371+50.00 | I-R-77 | 377+02.12 | I-R-77 | LT | MEDIAN BARRIER | 4.94′ | 0.00′ | 112:1 |

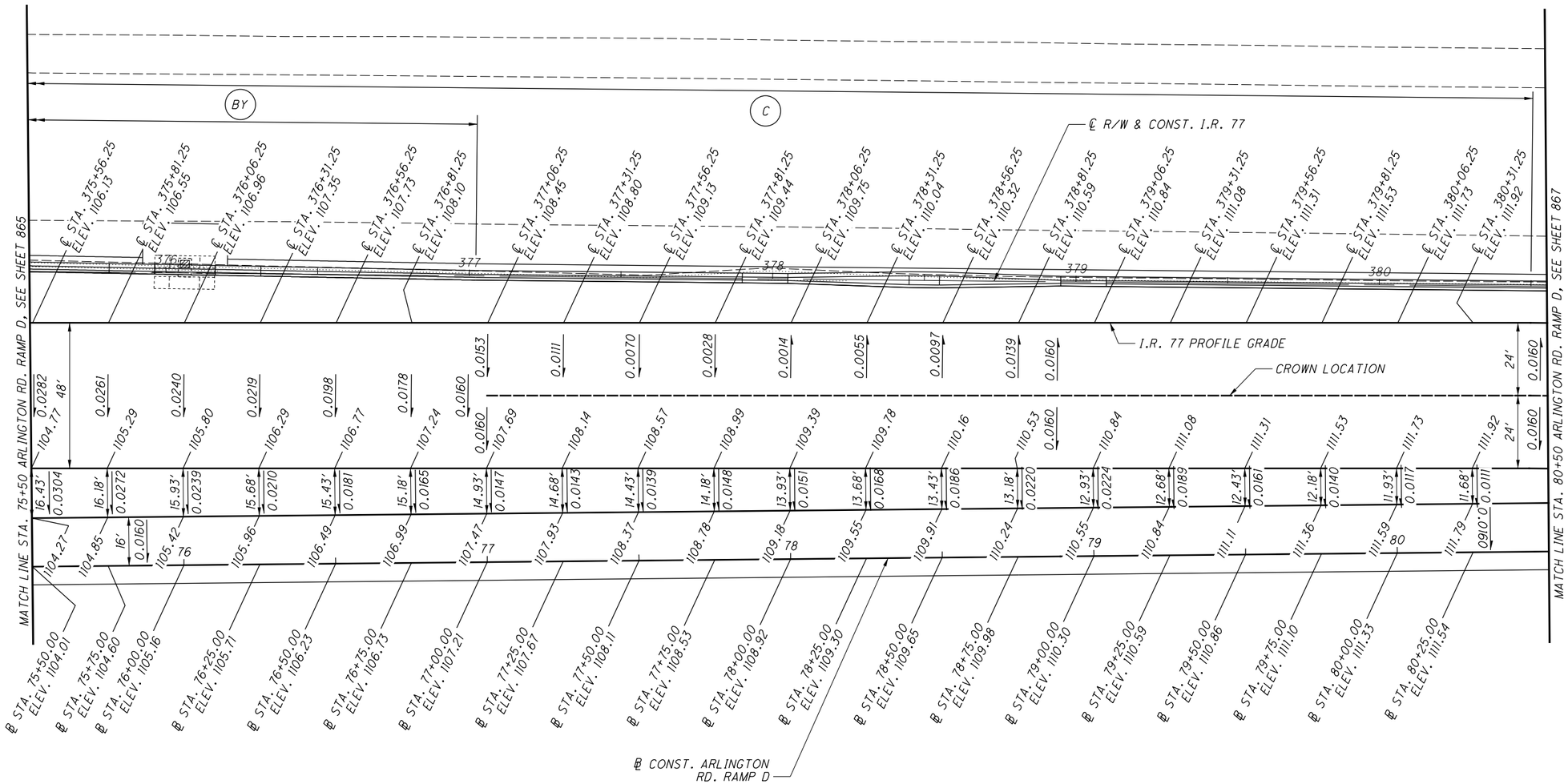


FOR SUPERELEVATION TABLES, SEE SHEET 839.
FOR I-77 PLAN AND PROFILE, SEE SHEETS 453 - 456 .
FOR ARLINGTON RD. RAMP D PLAN AND PROFILE, SEE SHEETS 507 - 508 .

N

HORIZONTAL SCALE IN FEET
0 10 20 40

CALCULATED KRM
CHECKED LRK

# RAMP GORE DETAILS - ARLINGTON RD.
## RAMP D AT I.R. 77 - STA. 75+50 TO STA. 80+50

SUM-77/277/224
VARIOUS

866
1288

0:\2017\2017258\Project Data\SUM\106002\Design\Roadway\Sheets\106002_GM026.dgn Sheet 1/11/2021 3:08 PM pfry

| TAPER TABLE | | | | | | | | | |
|---|---|---|---|---|---|---|---|---|---|
| TAPER CODE | BEGINNING STATION | | ENDING STATION | | SIDE | DESCRIPTION | BEGIN WIDTH | END WIDTH | TAPER RATE |
| BR | 81+17.83 | ARL. RAMP D | 81+67.80 | ARL. RAMP D | RT | SHOULDER | 6.00′ | 8.00′ | 25:1 |

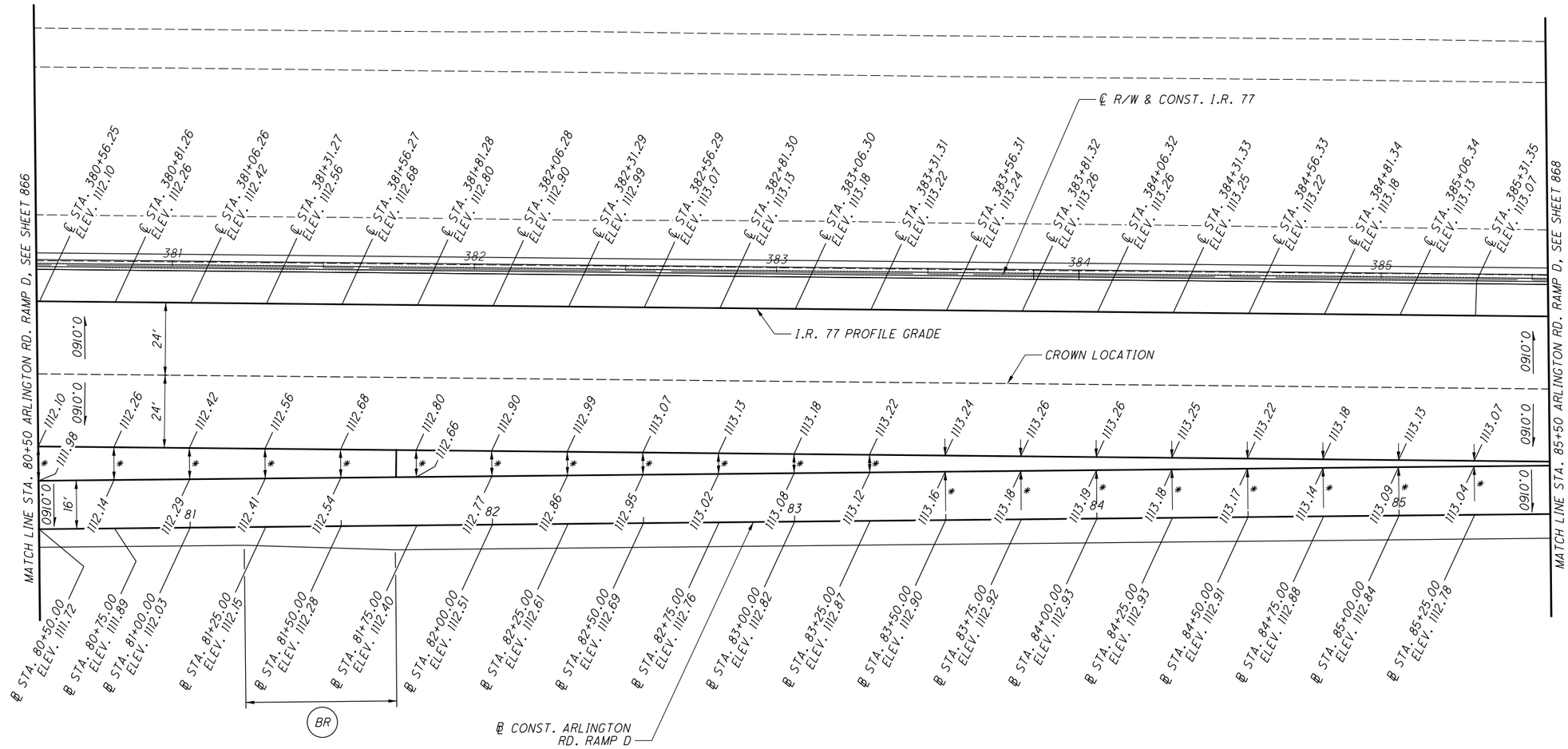


* GORE SLOPE INFORMATION

(READ FROM RAMP D E/P TO I.R. 77 E/P)

STA. 80+50.00, 11.37′ @ 0.0106
STA. 80+75.00, 10.87′ @ 0.0110
STA. 81+00.00, 10.37′ @ 0.0125
STA. 81+25.00, 9.87′ @ 0.0152
STA. 81+50.00, 9.37′ @ 0.0149
STA. 81+75.00, 8.87′ @ 0.0158
STA. 82+00.00, 8.37′ @ 0.0155
STA. 82+25.00, 7.87′ @ 0.0165
STA. 82+50.00, 7.37′ @ 0.0163
STA. 82+75.00, 6.87′ @ 0.0160
STA. 83+00.00, 6.37′ @ 0.0157
STA. 83+25.00, 5.87′ @ 0.0170
STA. 83+50.00, 5.37′ @ 0.0149
STA. 83+75.00, 4.87′ @ 0.0164
STA. 84+00.00, 4.37′ @ 0.0160
STA. 84+25.00, 3.87′ @ 0.0181
STA. 84+50.00, 3.37′ @ 0.0148
STA. 84+75.00, 2.87′ @ 0.0139
STA. 85+00.00, 2.37′ @ 0.0169
STA. 85+25.00, 1.87′ @ 0.0160

FOR SUPERELEVATION TABLES, SEE SHEET 839.
FOR I-77 PLAN AND PROFILE, SEE SHEETS 453 - 456 .
FOR ARLINGTON RD. RAMP D PLAN AND PROFILE, SEE SHEETS 507 - 508 .

HORIZONTAL SCALE IN FEET
0 10 20 40

CALCULATED KRM
CHECKED LRK

# RAMP GORE DETAILS - ARLINGTON RD.
## RAMP D AT I.R. 77 - STA. 80+50 TO STA. 85+50

SUM-77 / 277 / 224
VARIOUS



O:\2017\2017258\ProjectData\SUM\106002\Design\Roadway\Sheets\106002_GM027.dgn Sheet 1/11/2021 1:13:10 PM pfry

| TAPER TABLE | | | | | | | | | |
|---|---|---|---|---|---|---|---|---|---|
| TAPER CODE | BEGINNING STATION | | ENDING STATION | | SIDE | DESCRIPTION | BEGIN WIDTH | END WIDTH | TAPER RATE |
| D | 86+18.37 | ARL. RAMP D | 88+18.25 | ARL. RAMP D | RT | PAVEMENT | 16.00′ | 12.00′ | 50:1 |
| E | 87+18.15 | ARL. RAMP D | 88+18.25 | ARL. RAMP D | RT | SHOULDER | 8.00′ | 10.00′ | 50:1 |

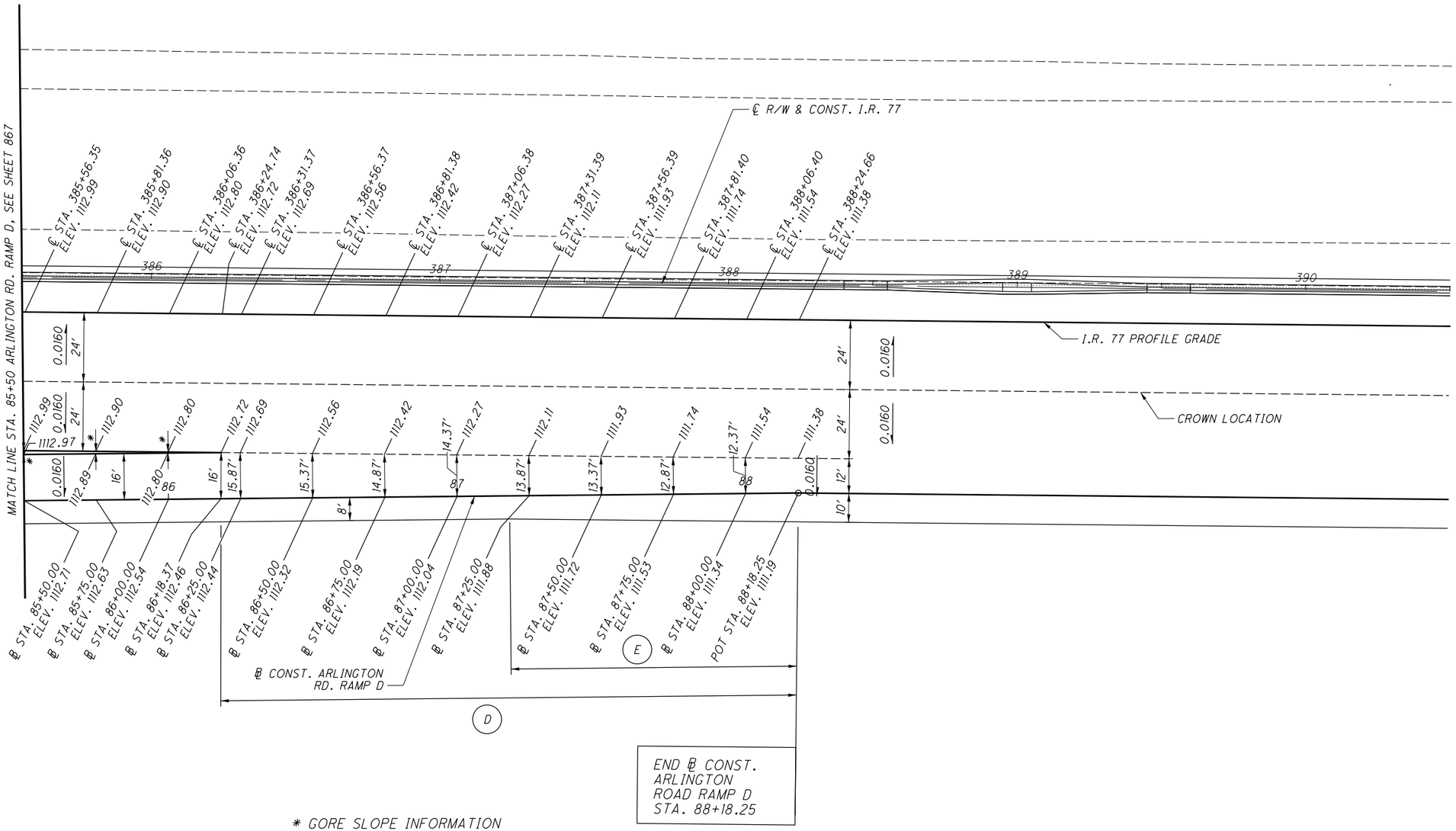


* GORE SLOPE INFORMATION

(READ FROM RAMP D E/P TO I.R. 77 E/P)

STA. 85+50.00, 1.37′ @ 0.0146
STA. 85+75.00, 0.87′ @ 0.0115
STA. 86+00.00, 0.37′ @ 0.0000

FOR SUPERELEVATION TABLES, SEE SHEET 839.
FOR I-77 PLAN AND PROFILE, SEE SHEETS 453 - 456 .
FOR ARLINGTON RD. RAMP D PLAN AND PROFILE, SEE SHEETS 507 - 508 .

N

0 10 20 40 HORIZONTAL SCALE IN FEET

CALCULATED KRM CHECKED LRK

# DETAILS - ARLINGTON RD.

## GORE RAMP D AT I.R. 77 - STA. 85+50 TO END

SUM-77 / 277 / 224
VARIOUS



0:\2017\2017258\ProjectData\SUM\06002\Design\Roadway\Sheets\06002_GM028.dgn Sheet 1/11/2021 11:32 PM pfry

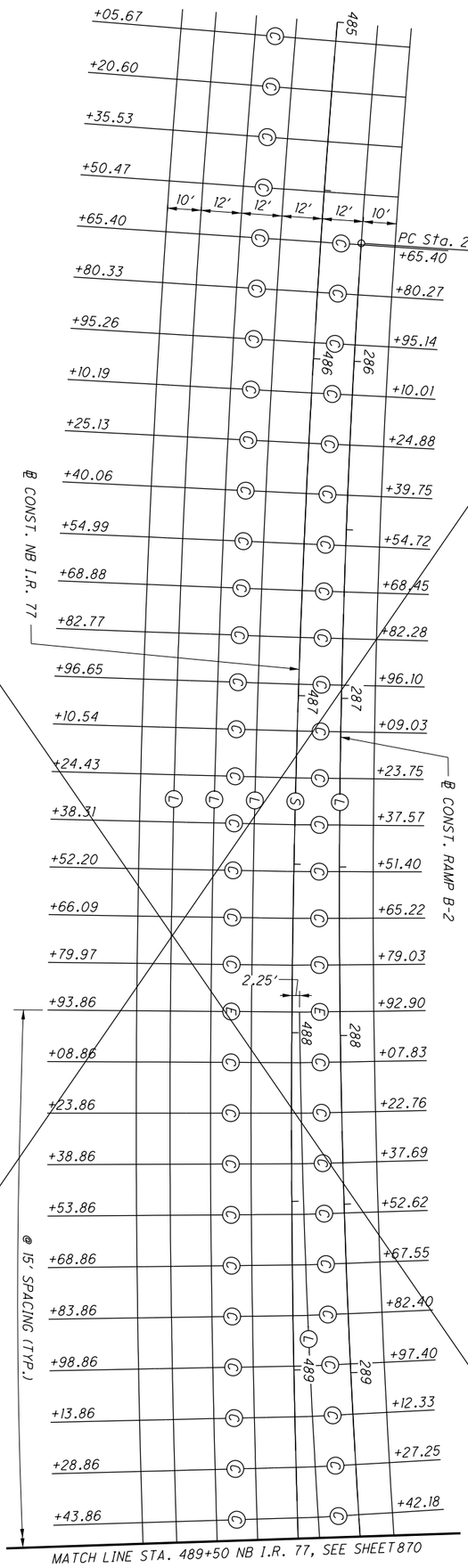


JOINT LEGEND

- Ⓒ CONTRACTION JOINT (SEE STD. DWG. BP-2.2)
- Ⓔ EXPANSION JOINT (SEE STD. DWG. BP-2.2)
- Ⓛ LONGITUDINAL JOINT (SEE STD. DWG. BP-2.1)
- Ⓢ LONGITUDINAL JOINT WITHOUT TIE-BARS (SEE STD. DWG. BP-2.1)
- Ⓨ BUTT JOINT (TYPE Y JOINT AS PER BP-2.5)

NOTE:
EVEN THOUGH SPECIFIC JOINTS MAY HAVE BEEN DESIGNATED BY PAVEMENT DETAILS, NO WAIVER OF STD. DWG. BP-2.2 CONTRACTION JOINT SPACING MAXIMUM OF 15 FEET IS INTENDED.

FOR GORE DETAILS, SEE SHEET 848

| | | | |
|---|---|---|---|
| 869 / 1288 | SUM-77 / 277 / 224<br>VARIOUS | PAVEMENT JOINT DETAILS<br>NB I.R. 77 - STA. 485+00 TO STA. 489+50 | CALCULATED KRM<br>CHECKED PJF<br>0 10 20 40<br>HORIZONTAL SCALE IN FEET |

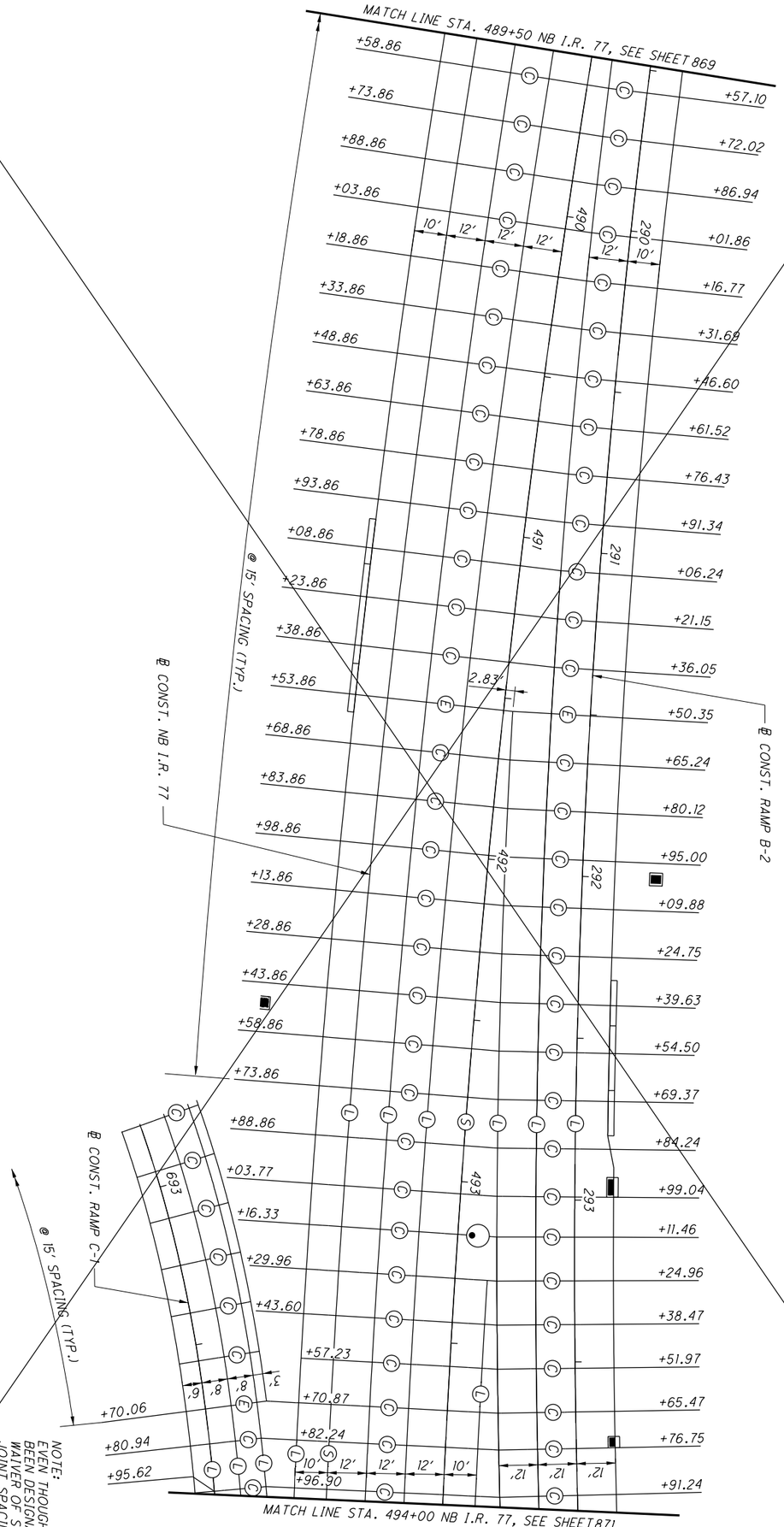


JOINT LEGEND

- (C) CONTRACTION JOINT (SEE STD. DWG. BP-2.2)
- (E) EXPANSION JOINT (SEE STD. DWG. BP-2.2)
- (L) LONGITUDINAL JOINT (SEE STD. DWG. BP-2.1)
- (S) LONGITUDINAL JOINT WITHOUT TIE-BARS (SEE STD. DWG. BP-2.1)
- (Y) BUTT JOINT (TYPE Y JOINT AS PER BP-2.5)

NOTE:
EVEN THOUGH SPECIFIC JOINTS MAY HAVE BEEN DESIGNATED BY PAVEMENT DETAILS, NO WAIVER OF STD. DWG. BP-2.2 CONTRACTION JOINT SPACING MAXIMUM OF 15 FEET IS INTENDED.

FOR GORE DETAILS, SEE SHEET 849

| | | | |
|---|---|---|---|
| 870 / 1288 | SUM-77 / 277 / 224<br>VARIOUS | PAVEMENT JOINT DETAILS<br>NB I.R. 77 - STA. 489+50 TO STA. 494+00 | CALCULATED KRM<br>CHECKED PJF<br>0 20<br>10 40<br>HORIZONTAL SCALE IN FEET |

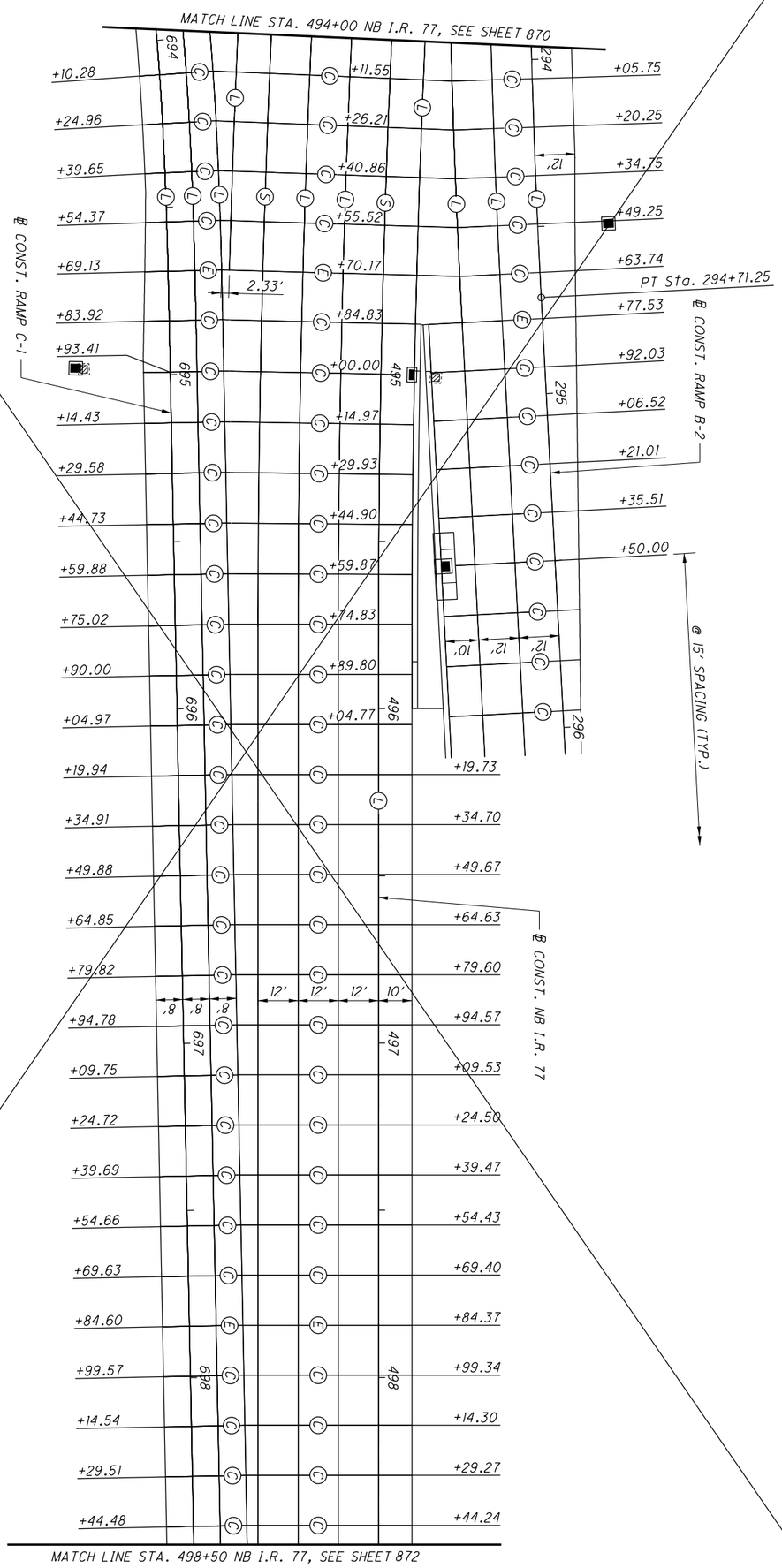


NOTE:
EVEN THOUGH SPECIFIC JOINTS MAY HAVE BEEN DESIGNATED BY PAVEMENT DETAILS, NO WAIVER OF STD. DWG. BP-2.2 CONTRACTION JOINT SPACING MAXIMUM OF 15 FEET IS INTENDED.

JOINT LEGEND

- (C) CONTRACTION JOINT (SEE STD. DWG. BP-2.2)
- (E) EXPANSION JOINT (SEE STD. DWG. BP-2.2)
- (L) LONGITUDINAL JOINT (SEE STD. DWG. BP-2.1)
- (S) LONGITUDINAL JOINT WITHOUT TIE-BARS (SEE STD. DWG. BP-2.1)
- (Y) BUTT JOINT (TYPE Y JOINT AS PER BP-2.5)

FOR GORE DETAILS, SEE SHEET 858

871
1288

**SUM-77/277/224**
**VARIOUS**

# PAVEMENT JOINT DETAILS
## NB I.R. 77 - STA. 494+00 TO STA. 498+50

CALCULATED KRM
CHECKED PJF

0 10 20 40
HORIZONTAL SCALE IN FEET

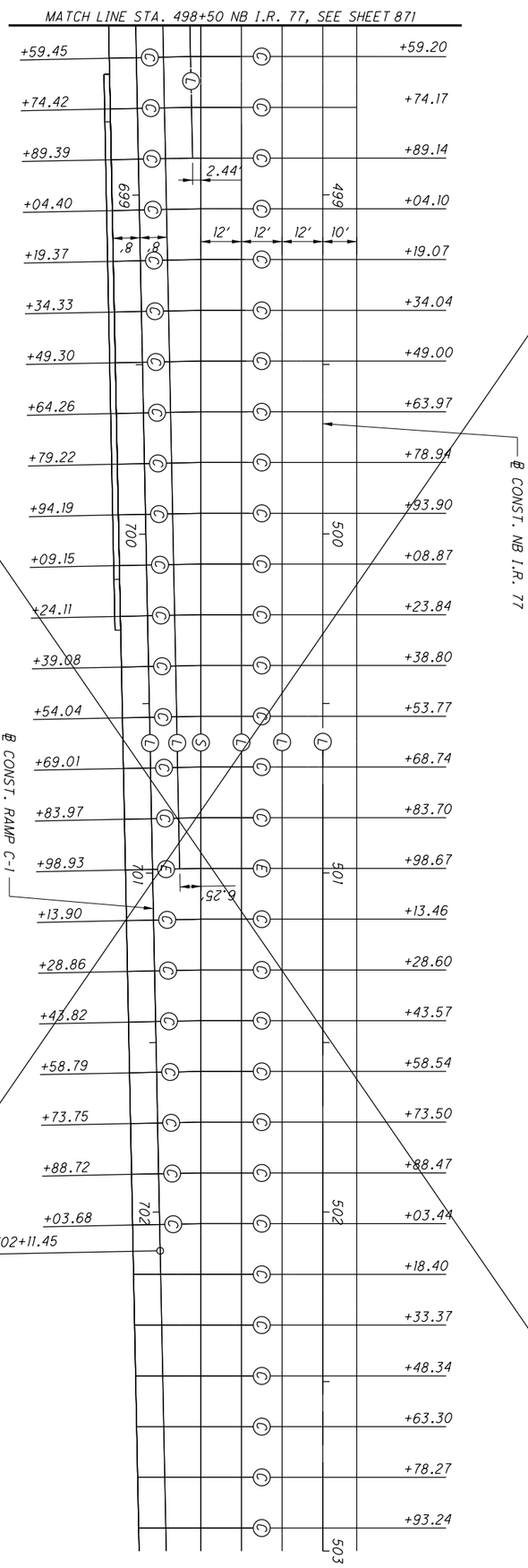


JOINT LEGEND

- (C) CONTRACTION JOINT (SEE STD. DWG. BP-2.2)
- (E) EXPANSION JOINT (SEE STD. DWG. BP-2.2)
- (L) LONGITUDINAL JOINT (SEE STD. DWG. BP-2.1)
- (S) LONGITUDINAL JOINT WITHOUT TIE-BARS (SEE STD. DWG. BP-2.1)
- (Y) BUTT JOINT (TYPE Y JOINT AS PER BP-2.5)

NOTE:
EVEN THOUGH SPECIFIC JOINTS MAY HAVE BEEN DESIGNATED BY PAVEMENT DETAILS, NO WAIVER OF STD. DWG. BP-2.2 CONTRACTION JOINT SPACING MAXIMUM OF 15 FEET IS INTENDED.

FOR GORE DETAILS, SEE SHEET 859

| | | | |
|---|---|---|---|
| 872 / 1288 | SUM-77 / 277 / 224<br>VARIOUS | PAVEMENT JOINT DETAILS<br>NB I.R. 77 - STA. 498+50 TO STA. 503+00 | CALCULATED KRM<br>CHECKED PJF<br>0 10 20 40<br>HORIZONTAL SCALE IN FEET |

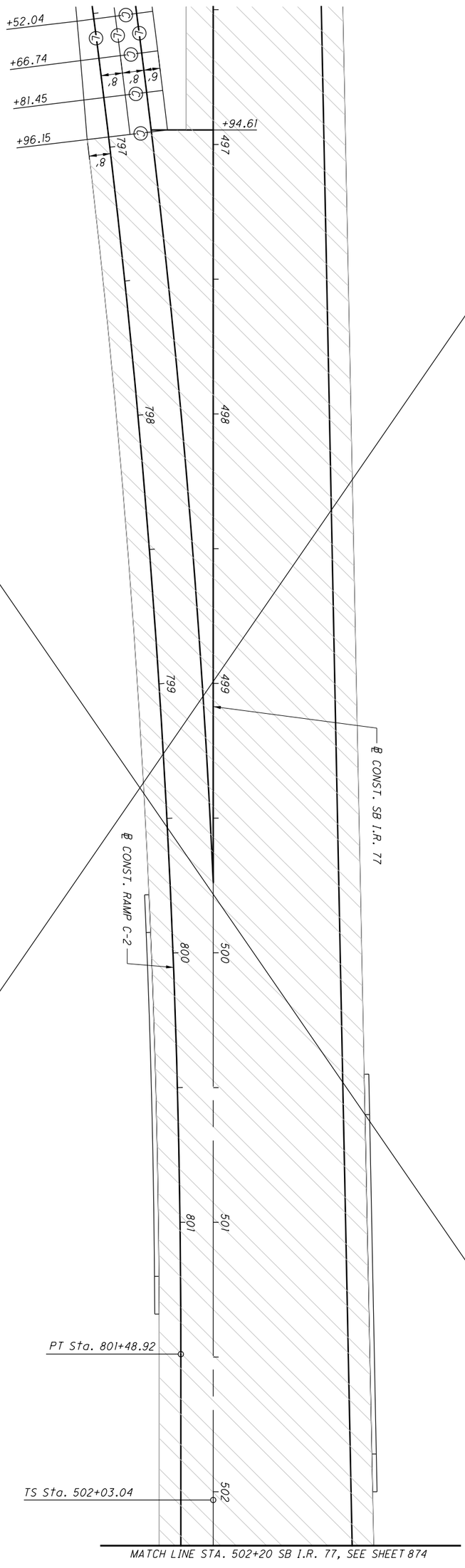


NOTE:
EVEN THOUGH SPECIFIC JOINTS MAY HAVE BEEN DESIGNATED BY PAVEMENT DETAILS, NO WAIVER OF STD. DWG. BP-2.2 CONTRACTION JOINT SPACING MAXIMUM OF 15 FEET IS INTENDED.

JOINT LEGEND

- Ⓒ CONTRACTION JOINT (SEE STD. DWG. BP-2.2)
- Ⓔ EXPANSION JOINT (SEE STD. DWG. BP-2.2)
- Ⓛ LONGITUDINAL JOINT (SEE STD. DWG. BP-2.1)
- Ⓢ LONGITUDINAL JOINT WITHOUT TIE-BARS (SEE STD. DWG. BP-2.1)
- Ⓨ BUTT JOINT (TYPE Y JOINT AS PER BP-2.5)

FOR GORE DETAILS, SEE SHEET 861

873
1288

**SUM-77/277/224**
**VARIOUS**

# PAVEMENT JOINT DETAILS
## SB I.R. 77 - STA. 496+50 TO STA. 502+20

CALCULATED KRM
CHECKED PJF

0 10 20 40
HORIZONTAL SCALE IN FEET

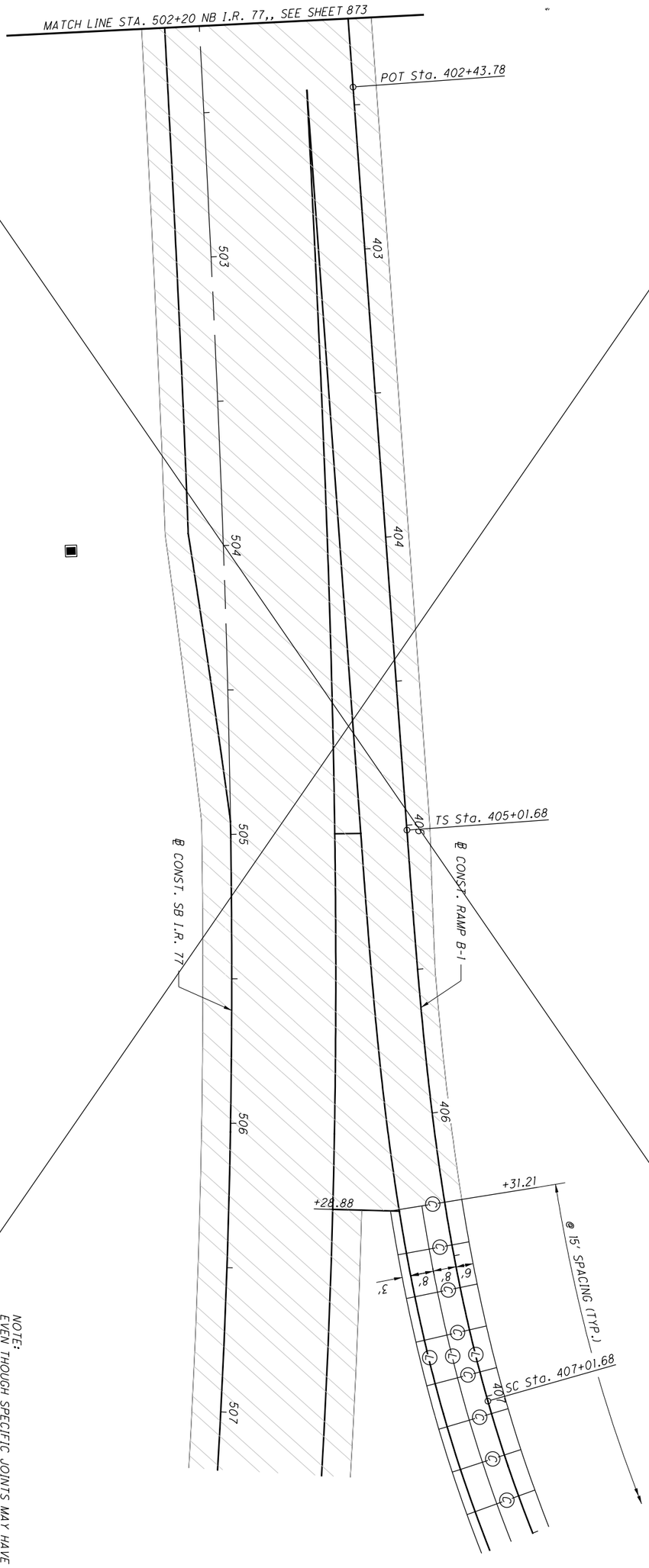


NOTE:
EVEN THOUGH SPECIFIC JOINTS MAY HAVE BEEN DESIGNATED BY PAVEMENT DETAILS, NO WAIVER OF STD. DWG. BP-2.2 CONTRACTION JOINT SPACING MAXIMUM OF 15 FEET IS INTENDED.

JOINT LEGEND

Ⓒ CONTRACTION JOINT (SEE STD. DWG. BP-2.2)
Ⓔ EXPANSION JOINT (SEE STD. DWG. BP-2.2)
Ⓛ LONGITUDINAL JOINT (SEE STD. DWG. BP-2.1)
Ⓢ LONGITUDINAL JOINT WITHOUT TIE-BARS (SEE STD. DWG. BP-2.1)
Ⓨ BUTT JOINT (TYPE Y JOINT AS PER BP-2.5)

FOR GORE DETAILS, SEE SHEET 846

ASPHALT PAVEMENT LIMITS

| | | | | |
|---|---|---|---|---|
| 874 / 1288 | SUM-77 / 277 / 224<br>VARIOUS | PAVEMENT JOINT DETAILS<br>SB I.R. 77 - STA. 502+20 TO STA. 507+50 | CALCULATED KRM<br>CHECKED PJF | 0 10 20 40<br>HORIZONTAL SCALE IN FEET |

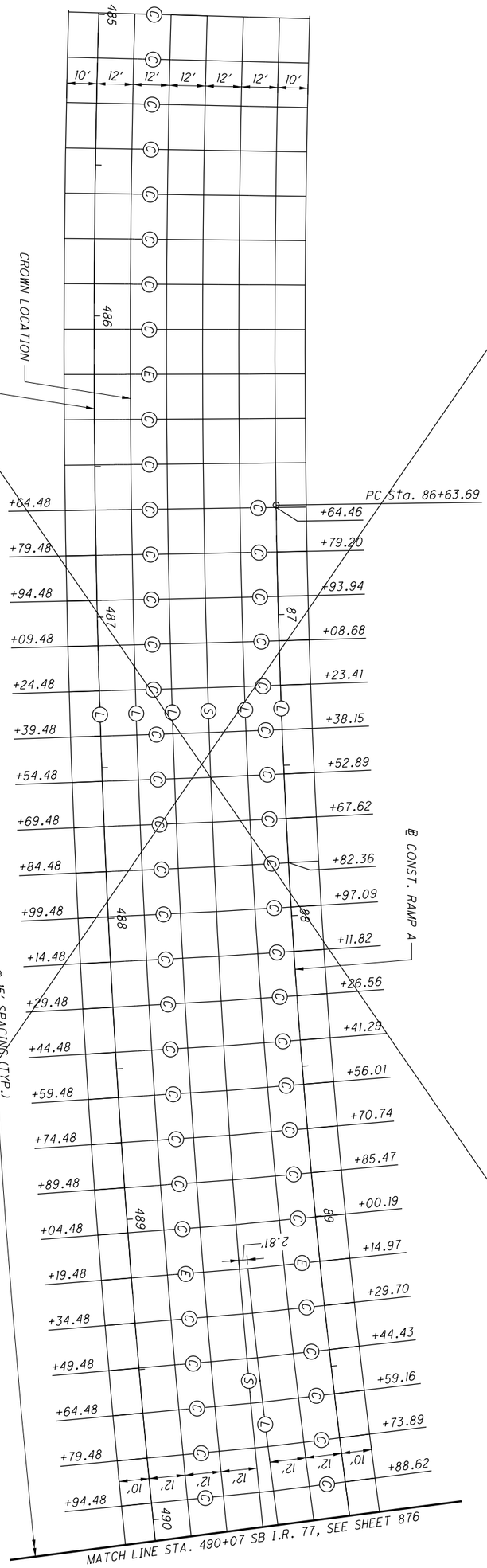


JOINT LEGEND

Ⓒ CONTRACTION JOINT (SEE STD. DWG. BP-2.2)
Ⓔ EXPANSION JOINT (SEE STD. DWG. BP-2.2)
Ⓛ LONGITUDINAL JOINT (SEE STD. DWG. BP-2.1)
Ⓢ LONGITUDINAL JOINT WITHOUT TIE-BARS (SEE STD. DWG. BP-2.1)
Ⓨ BUTT JOINT (TYPE Y JOINT AS PER BP-2.5)

NOTE:
EVEN THOUGH SPECIFIC JOINTS MAY HAVE BEEN DESIGNATED BY PAVEMENT DETAILS, NO WAIVER OF STD. DWG. BP-2.2 CONTRACTION JOINT SPACING MAXIMUM OF 15 FEET IS INTENDED.

FOR GORE DETAILS, SEE SHEET 841

875
1288

**SUM-77/277/224**
**VARIOUS**

# PAVEMENT JOINT DETAILS

**RAMP A AT SB I.R. 77 - STA. 485+00 TO STA. 490+07**

CALCULATED KRM
CHECKED PJF

0 10 20 40
HORIZONTAL SCALE IN FEET

N

0:\2017\2017258\ProjectData\SUM\106002\Design\Roadway\Sheets\106002_GA002.dgn Sheet 1/11/2021 4:25 PM pfry

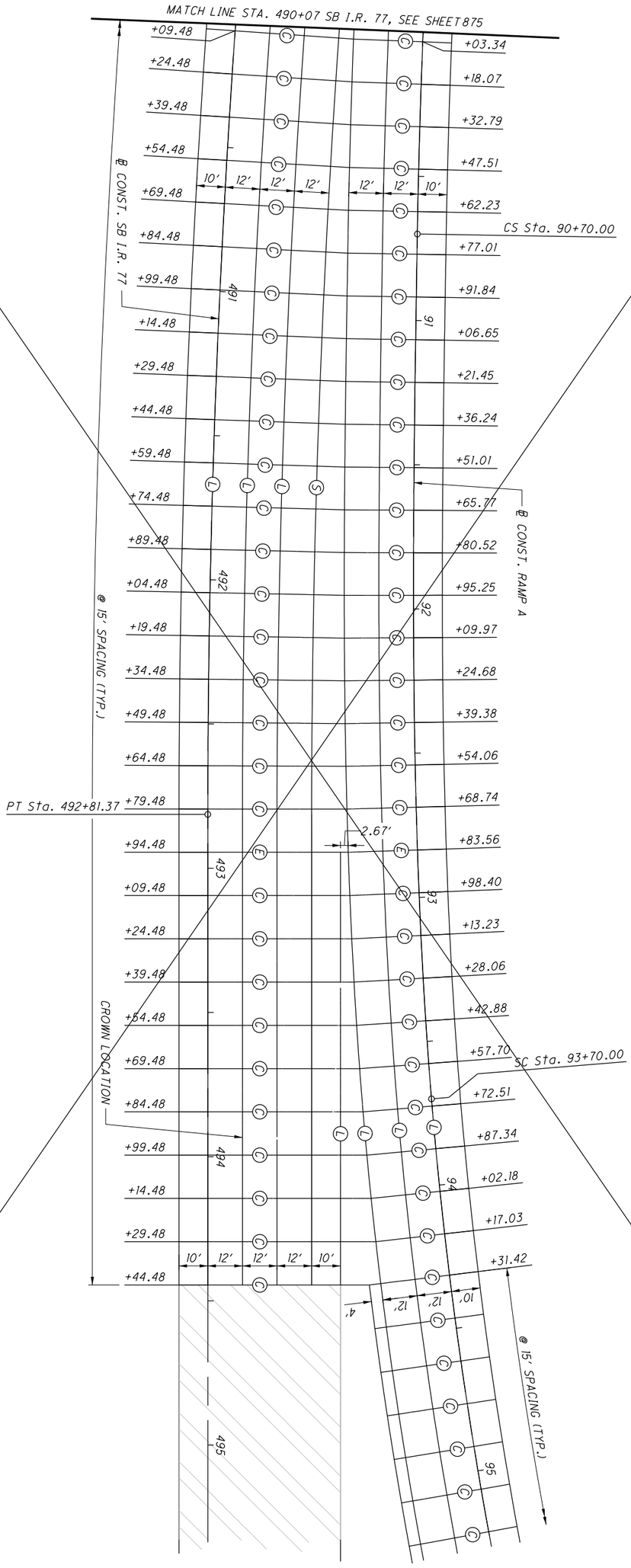


JOINT LEGEND

Ⓒ CONTRACTION JOINT (SEE STD. DWG. BP-2.2)

Ⓔ EXPANSION JOINT (SEE STD. DWG. BP-2.2)

Ⓛ LONGITUDINAL JOINT (SEE STD. DWG. BP-2.1)

Ⓢ LONGITUDINAL JOINT WITHOUT TIE-BARS (SEE STD. DWG. BP-2.1)

Ⓨ BUTT JOINT (TYPE Y JOINT AS PER BP-2.5)

NOTE:
EVEN THOUGH SPECIFIC JOINTS MAY HAVE BEEN DESIGNATED BY PAVEMENT DETAILS, NO WAIVER OF STD. DWG. BP-2.2 CONTRACTION JOINT SPACING MAXIMUM OF 15 FEET IS INTENDED.

FOR GORE DETAILS, SEE SHEET 842

ASPHALT PAVEMENT LIMITS

| | | | | |
|---|---|---|---|---|
| 876 / 1288 | SUM-77 / 277 / 224<br>VARIOUS | PAVEMENT JOINT DETAILS<br>RAMP A AT SB I.R. 77 - STA. 490+07 TO END | CALCULATED KRM<br>CHECKED PJF | 0 10 20 40<br>HORIZONTAL SCALE IN FEET |

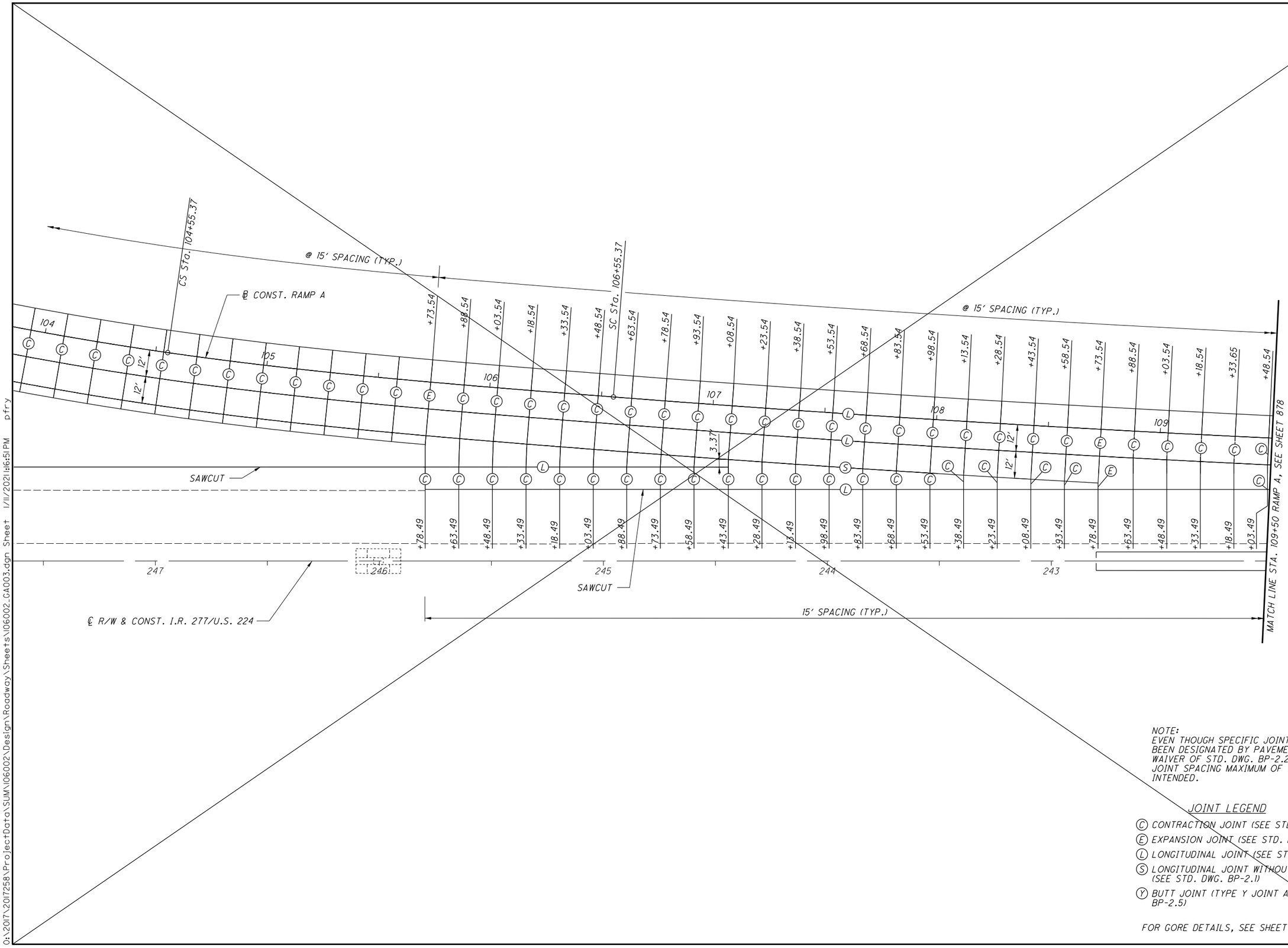


NOTE:
EVEN THOUGH SPECIFIC JOINTS MAY HAVE BEEN DESIGNATED BY PAVEMENT DETAILS, NO WAIVER OF STD. DWG. BP-2.2 CONTRACTION JOINT SPACING MAXIMUM OF 15 FEET IS INTENDED.

JOINT LEGEND

- (C) CONTRACTION JOINT (SEE STD. DWG. BP-2.2)
- (E) EXPANSION JOINT (SEE STD. DWG. BP-2.2)
- (L) LONGITUDINAL JOINT (SEE STD. DWG. BP-2.1)
- (S) LONGITUDINAL JOINT WITHOUT TIE-BARS (SEE STD. DWG. BP-2.1)
- (Y) BUTT JOINT (TYPE Y JOINT AS PER BP-2.5)

FOR GORE DETAILS, SEE SHEET 843

HORIZONTAL SCALE IN FEET
0 10 20 40

CALCULATED KRM
CHECKED PJF

# PAVEMENT JOINT DETAILS
## RAMP A AT I.R 277/ 224 - STA. 104+00 TO 109+50

SUM-77/277/224
VARIOUS

877
1288

O:\2017\2017258\ProjectData\SUM\06002\Design\Roadway\Sheets\06002_GA003.dgn Sheet 1/11/2021 4:51 PM pfry

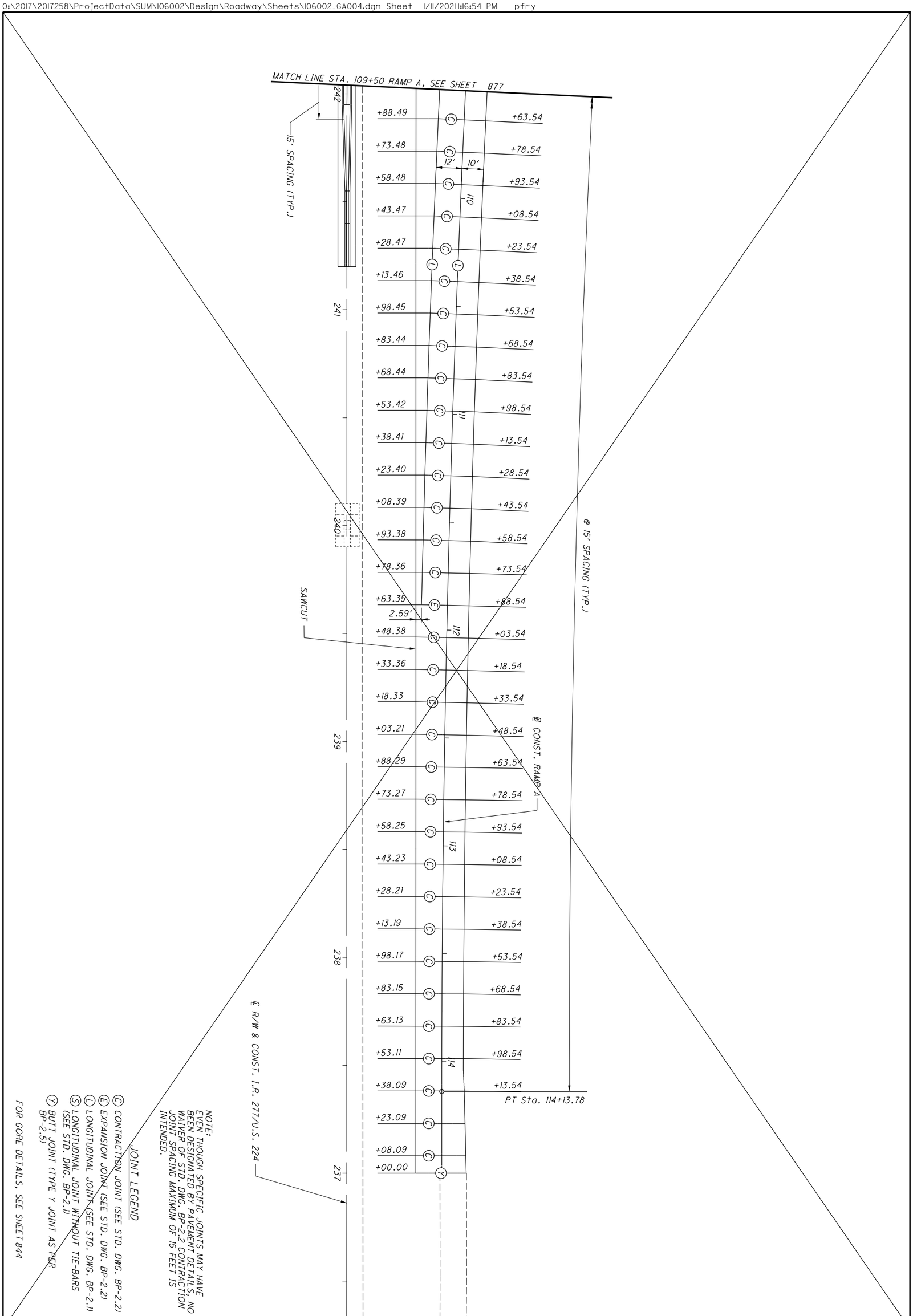


NOTE:
EVEN THOUGH SPECIFIC JOINTS MAY HAVE BEEN DESIGNATED BY PAVEMENT DETAILS, NO WAIVER OF STD. DWG. BP-2.2 CONTRACTION JOINT SPACING MAXIMUM OF 15 FEET IS INTENDED.

JOINT LEGEND

- (C) CONTRACTION JOINT (SEE STD. DWG. BP-2.2)
- (E) EXPANSION JOINT (SEE STD. DWG. BP-2.2)
- (L) LONGITUDINAL JOINT (SEE STD. DWG. BP-2.1)
- (S) LONGITUDINAL JOINT WITHOUT TIE-BARS (SEE STD. DWG. BP-2.1)
- (Y) BUTT JOINT (TYPE Y JOINT AS PER BP-2.5)

FOR GORE DETAILS, SEE SHEET 844

878
1288

**SUM-77/277/224**
**VARIOUS**

# PAVEMENT JOINT DETAILS
## RAMP A AT I.R. 277/224 - STA. 109+50 TO END

CALCULATED KRM
CHECKED PJF

0 10 20 40
HORIZONTAL SCALE IN FEET

N

PAVEMENT AND APPROACH SLAB BY OTHERS
(SUM-76/77/8-8.42/9.77/0.00 DB, PID 102329)

ASPHALT PAVEMENT LIMITS

END WORK
RAMP B
STA. 214+90.00

CS Sta. 213+58.80

@ 15' SPACING (TYP.)

℄ CONST. RAMP B

+90.00 +05.00 +17.70 +30.39

ST Sta. 215+58.80

WATERLOO ROAD

POT Sta. 219+25.00

214 215 216 217 218 219

4' 8' 6'

514 515 516 517 518 519

℄ CONST. SB I.R. 77

END PROJECT
END WORK
℄ CONST. SB I.R. 77
STA. 514+95.00
S.L.M. 9.74

E171 (457)

BEGIN PROJECT
SUM-76/77/8-
8.42/9.77/0.00 DB
(PID 102329)

E180 (428)

NOTE:
EVEN THOUGH SPECIFIC JOINTS MAY HAVE BEEN DESIGNATED BY PAVEMENT DETAILS, NO WAIVER OF STD. DWG. BP-2.2 CONTRACTION JOINT SPACING MAXIMUM OF 15 FEET IS INTENDED.

JOINT LEGEND

- (C) CONTRACTION JOINT (SEE STD. DWG. BP-2.2)
- (E) EXPANSION JOINT (SEE STD. DWG. BP-2.2)
- (L) LONGITUDINAL JOINT (SEE STD. DWG. BP-2.1)
- (S) LONGITUDINAL JOINT WITHOUT TIE-BARS (SEE STD. DWG. BP-2.1)
- (Y) BUTT JOINT (TYPE Y JOINT AS PER BP-2.5)

FOR GORE DETAILS, SEE SHEET 845

HORIZONTAL SCALE IN FEET
0 10 20 40

CALCULATED KRM
CHECKED PJF

# PAVEMENT JOINT DETAILS
## RAMP B AT SB I.R. 77 - STA. 213+50 TO END

SUM-77/277/224
VARIOUS

879
1288

O:\2017\2017258\ProjectData\SUM\106002\Design\Roadway\Sheets\106002_GA005.dgn Sheet 1/11/2021 4:16:56 PM pfry

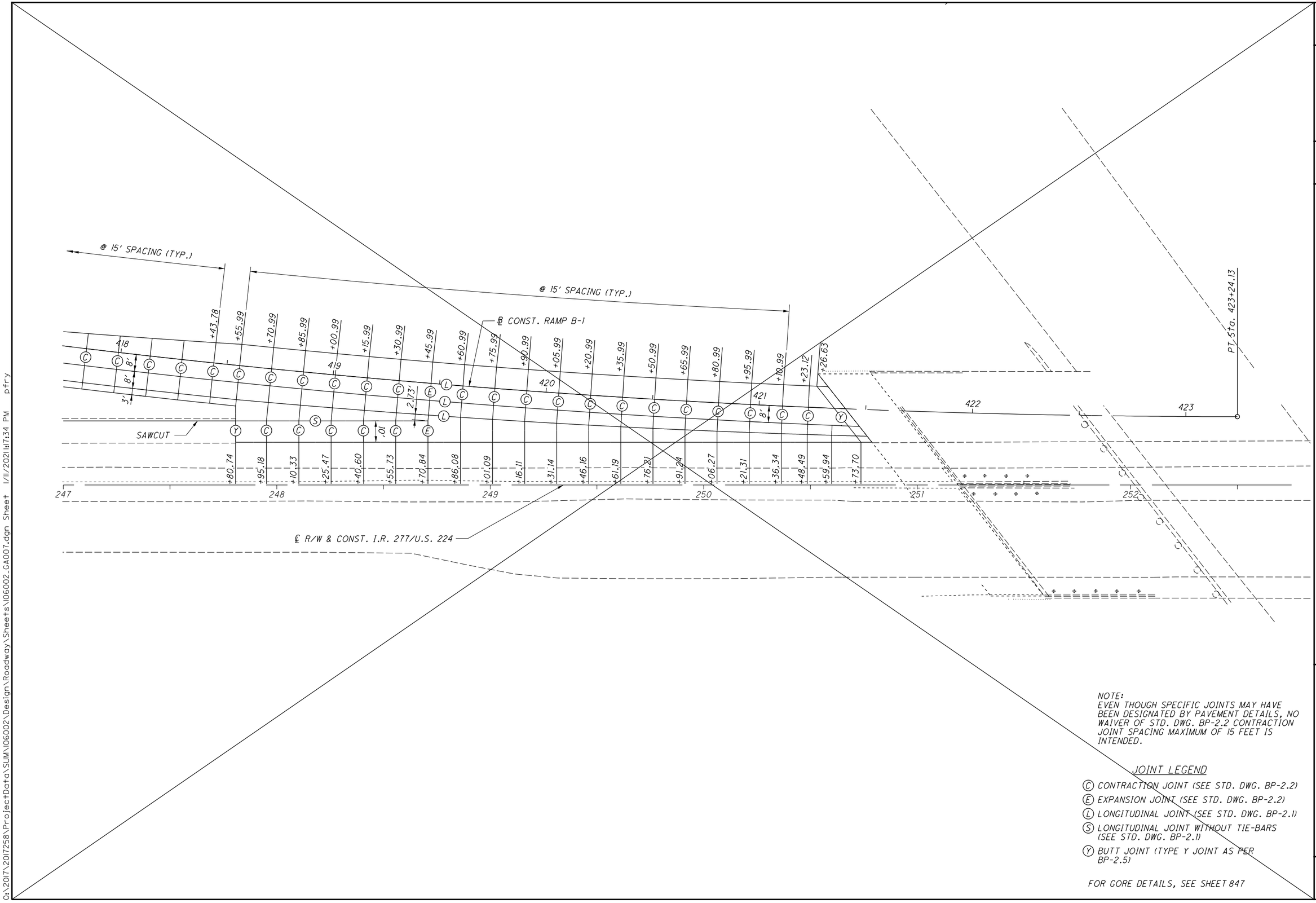


NOTE:
EVEN THOUGH SPECIFIC JOINTS MAY HAVE BEEN DESIGNATED BY PAVEMENT DETAILS, NO WAIVER OF STD. DWG. BP-2.2 CONTRACTION JOINT SPACING MAXIMUM OF 15 FEET IS INTENDED.

JOINT LEGEND

- (C) CONTRACTION JOINT (SEE STD. DWG. BP-2.2)
- (E) EXPANSION JOINT (SEE STD. DWG. BP-2.2)
- (L) LONGITUDINAL JOINT (SEE STD. DWG. BP-2.1)
- (S) LONGITUDINAL JOINT WITHOUT TIE-BARS (SEE STD. DWG. BP-2.1)
- (Y) BUTT JOINT (TYPE Y JOINT AS PER BP-2.5)

FOR GORE DETAILS, SEE SHEET 847

HORIZONTAL SCALE IN FEET
0 10 20 40

CALCULATED KRM
CHECKED PJF

# PAVEMENT JOINT DETAILS
## RAMP B-1 AT I.R. 277/U.S. 224 - STA. 418+00 TO END

SUM-77/277/224
VARIOUS

880
1288

O:\2017\2017258\ProjectData\SUM\06002\Design\Roadway\Sheets\06002_GA007.dgn Sheet 1/11/2021 8:34 PM pfry

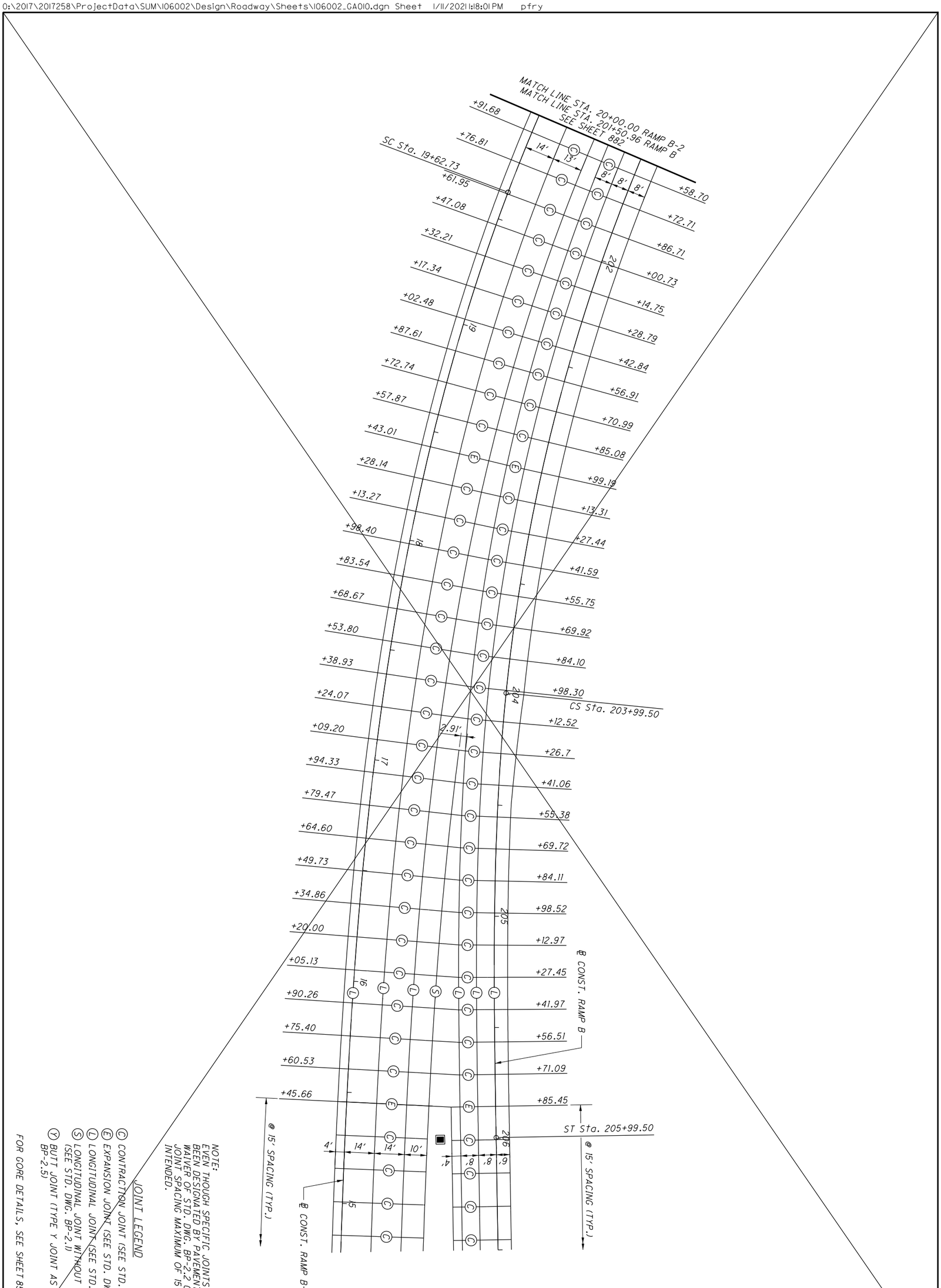


JOINT LEGEND

- (C) CONTRACTION JOINT (SEE STD. DWG. BP-2.2)
- (E) EXPANSION JOINT (SEE STD. DWG. BP-2.2)
- (L) LONGITUDINAL JOINT (SEE STD. DWG. BP-2.1)
- (S) LONGITUDINAL JOINT WITHOUT TIE-BARS (SEE STD. DWG. BP-2.1)
- (Y) BUTT JOINT (TYPE Y JOINT AS PER BP-2.5)

NOTE:
EVEN THOUGH SPECIFIC JOINTS MAY HAVE BEEN DESIGNATED BY PAVEMENT DETAILS, NO WAIVER OF STD. DWG. BP-2.2 CONTRACTION JOINT SPACING MAXIMUM OF 15 FEET IS INTENDED.

FOR GORE DETAILS, SEE SHEET 850

| | | | | |
|---|---|---|---|---|
| 881 / 1288 | SUM-77/277/224<br>VARIOUS | PAVEMENT JOINT DETAILS<br>RAMP B-2 AT RAMP B - STA. 15+00 - STA. 20+00 | CALCULATED KRM<br>CHECKED PJF | 0 20<br>10 40<br>HORIZONTAL SCALE IN FEET |

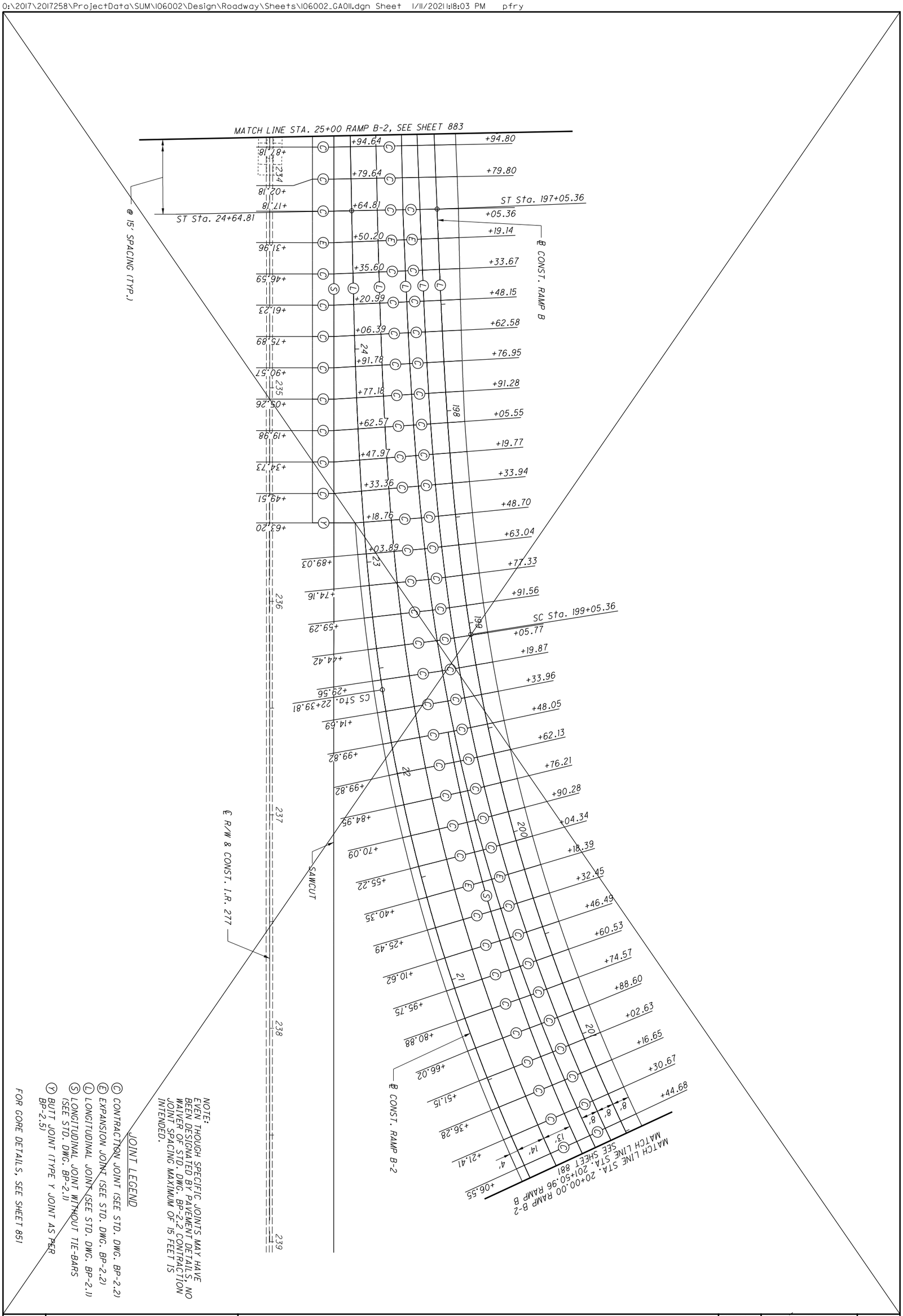


| | | | | |
|---|---|---|---|---|
| 882 / 1288 | SUM-77 / 277 / 224<br>VARIOUS | PAVEMENT JOINT DETAILS<br>RAMP B-2 AT I.R. 277 / 224 - STA. 20+00 TO 25+00 | CALCULATED KRM<br>CHECKED PJF | 0 20<br>10 40<br>HORIZONTAL SCALE IN FEET |

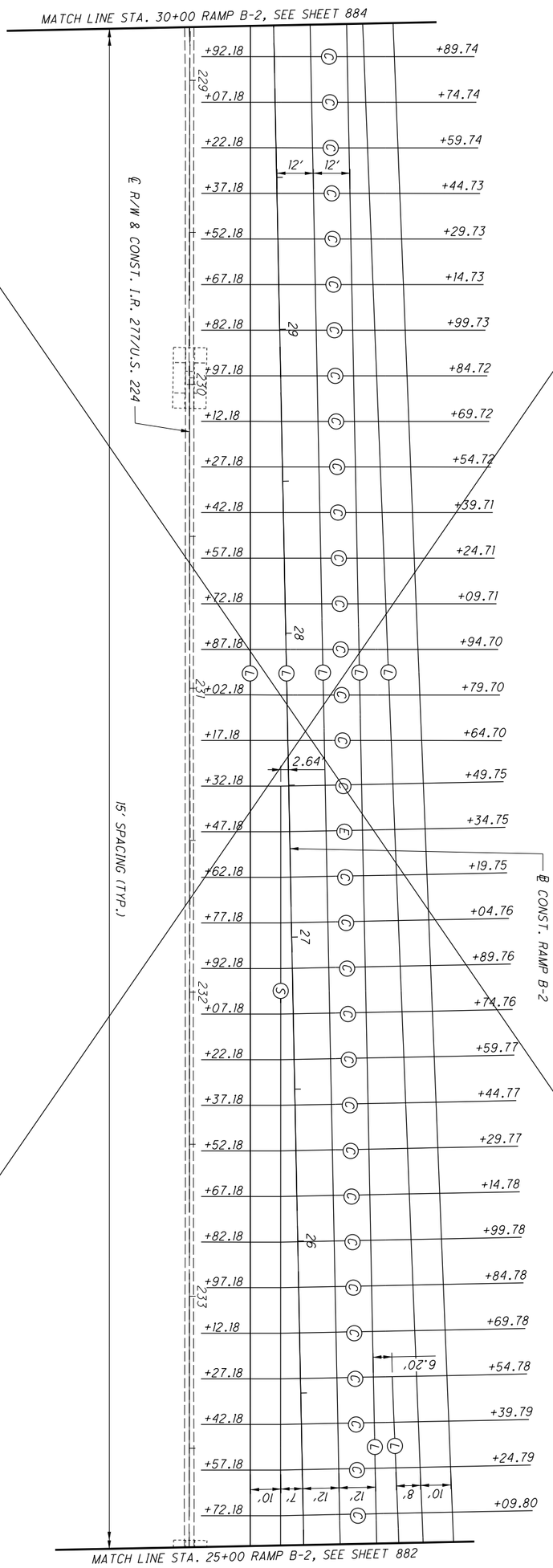


NOTE:
EVEN THOUGH SPECIFIC JOINTS MAY HAVE BEEN DESIGNATED BY PAVEMENT DETAILS, NO WAIVER OF STD. DWG. BP-2.2 CONTRACTION JOINT SPACING MAXIMUM OF 15 FEET IS INTENDED.

JOINT LEGEND

- (C) CONTRACTION JOINT (SEE STD. DWG. BP-2.2)
- (E) EXPANSION JOINT (SEE STD. DWG. BP-2.2)
- (L) LONGITUDINAL JOINT (SEE STD. DWG. BP-2.1)
- (S) LONGITUDINAL JOINT WITHOUT TIE-BARS (SEE STD. DWG. BP-2.1)
- (Y) BUTT JOINT (TYPE Y JOINT AS PER BP-2.5)

FOR GORE DETAILS, SEE SHEET 852

| | | | | |
|---|---|---|---|---|
| 883 / 1288 | SUM-77 / 277 / 224<br>VARIOUS | PAVEMENT JOINT DETAILS<br>RAMP B-2 AT 277 / 224 - STA. 25+00 TO STA. 30+00 | CALCULATED KRM<br>CHECKED PJF | 0 10 20 40<br>HORIZONTAL SCALE IN FEET |

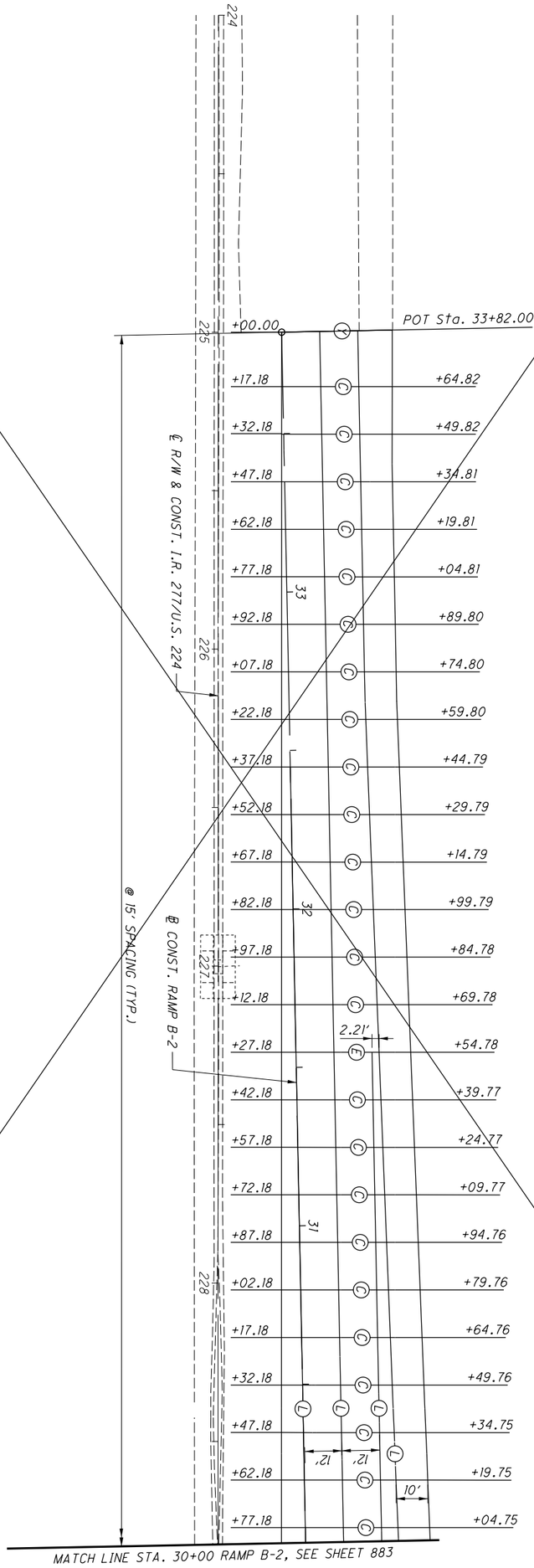


NOTE:
EVEN THOUGH SPECIFIC JOINTS MAY HAVE BEEN DESIGNATED BY PAVEMENT DETAILS, NO WAIVER OF STD. DWG. BP-2.2 CONTRACTION JOINT SPACING MAXIMUM OF 15 FEET IS INTENDED.

JOINT LEGEND

- (C) CONTRACTION JOINT (SEE STD. DWG. BP-2.2)
- (E) EXPANSION JOINT (SEE STD. DWG. BP-2.2)
- (L) LONGITUDINAL JOINT (SEE STD. DWG. BP-2.1)
- (S) LONGITUDINAL JOINT WITHOUT TIE-BARS (SEE STD. DWG. BP-2.1)
- (Y) BUTT JOINT (TYPE Y JOINT AS PER BP-2.5)

FOR GORE DETAILS, SEE SHEET 853

884
1288

**SUM-77/277/224**
**VARIOUS**

# PAVEMENT JOINT DETAILS
## RAMP B-2 AT I.R. 277/224 - STA. 30+00 TO END

CALCULATED KRM
CHECKED PJF

0 10 20 40
HORIZONTAL SCALE IN FEET

N

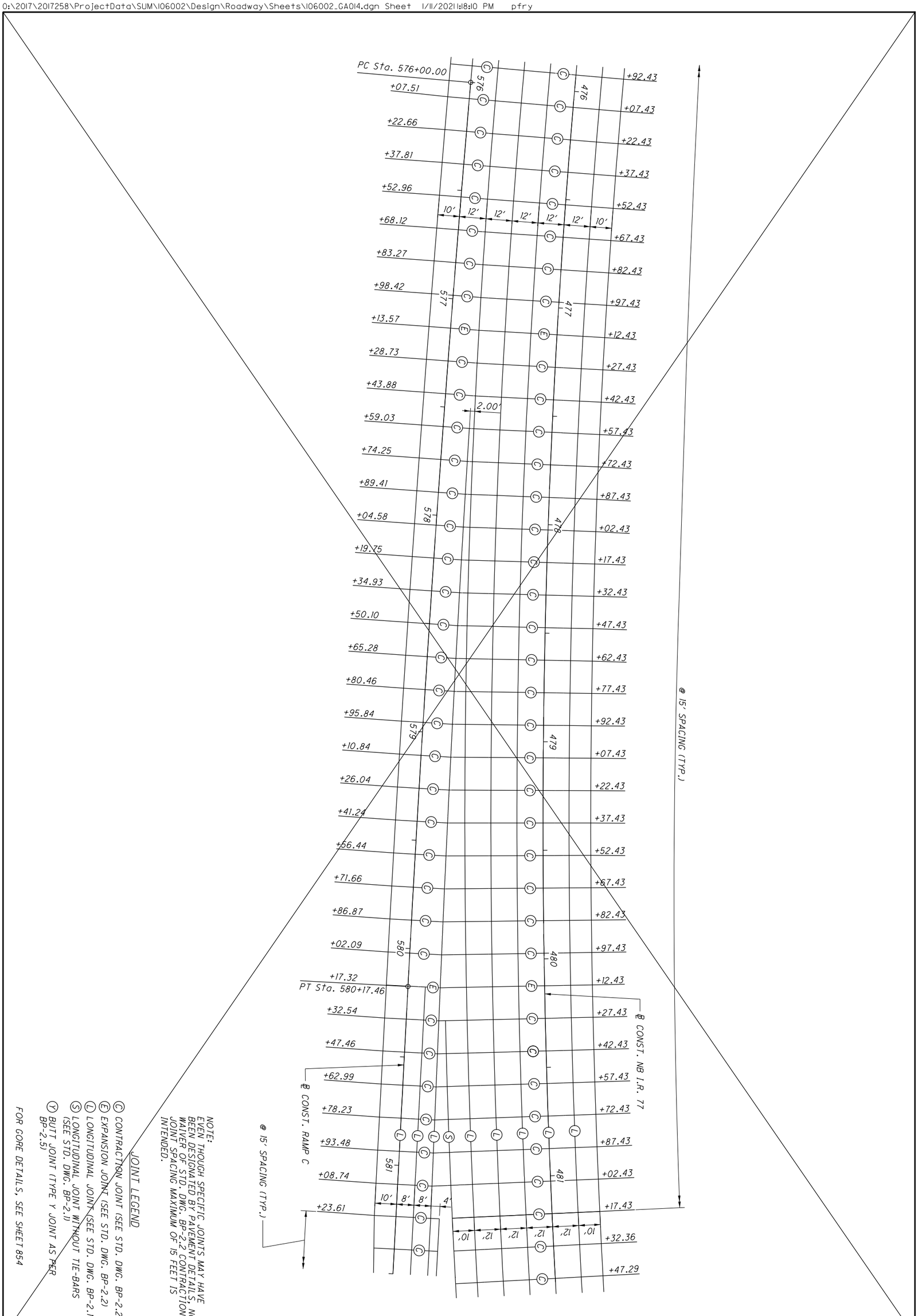


NOTE:
EVEN THOUGH SPECIFIC JOINTS MAY HAVE BEEN DESIGNATED BY PAVEMENT DETAILS, NO WAIVER OF STD. DWG. BP-2.2 CONTRACTION JOINT SPACING MAXIMUM OF 15 FEET IS INTENDED.

JOINT LEGEND

- (C) CONTRACTION JOINT (SEE STD. DWG. BP-2.2)
- (E) EXPANSION JOINT (SEE STD. DWG. BP-2.2)
- (L) LONGITUDINAL JOINT (SEE STD. DWG. BP-2.1)
- (S) LONGITUDINAL JOINT WITHOUT TIE-BARS (SEE STD. DWG. BP-2.1)
- (Y) BUTT JOINT (TYPE Y JOINT AS PER BP-2.5)

FOR GORE DETAILS, SEE SHEET 854

885
1288

**SUM-77/277/224**
**VARIOUS**

# PAVEMENT JOINT DETAILS
## RAMP C AT NB I.R. 77 - BEGIN TO 581+50

CALCULATED KRM
CHECKED PJF

0 20
10 40
HORIZONTAL SCALE IN FEET

N

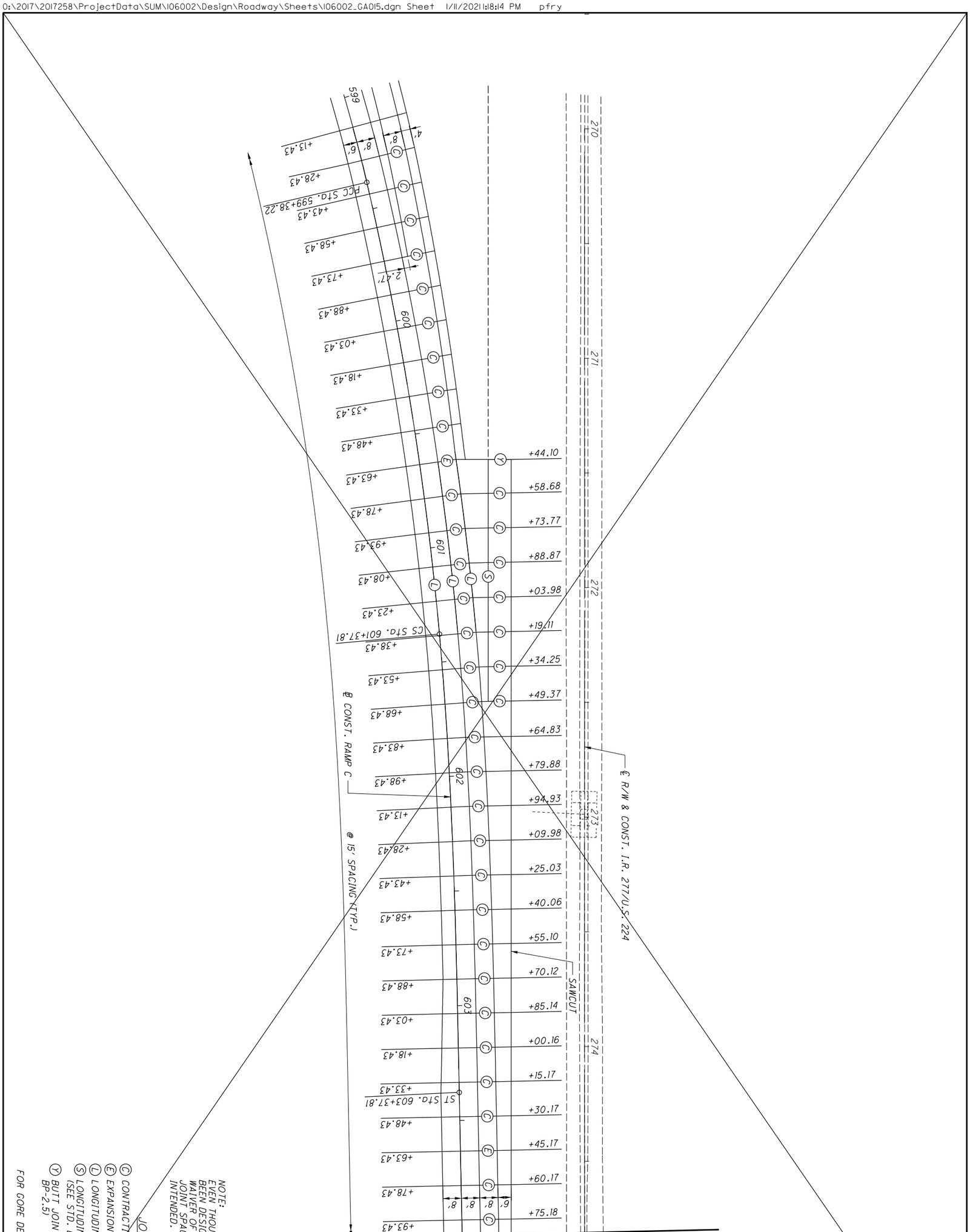


NOTE:
EVEN THOUGH SPECIFIC JOINTS MAY HAVE BEEN DESIGNATED BY PAVEMENT DETAILS, NO WAIVER OF STD. DWG. BP-2.2 CONTRACTION JOINT SPACING MAXIMUM OF 15 FEET IS INTENDED.

JOINT LEGEND

- (C) CONTRACTION JOINT (SEE STD. DWG. BP-2.2)
- (E) EXPANSION JOINT (SEE STD. DWG. BP-2.2)
- (L) LONGITUDINAL JOINT (SEE STD. DWG. BP-2.1)
- (S) LONGITUDINAL JOINT WITHOUT TIE-BARS (SEE STD. DWG. BP-2.1)
- (Y) BUTT JOINT (TYPE Y JOINT AS PER BP-2.5)

FOR GORE DETAILS, SEE SHEET 855

| | | | | |
|---|---|---|---|---|
| 886 / 1288 | SUM-77/277/224<br>VARIOUS | PAVEMENT JOINT DETAILS<br>RAMP C AT I.R. 277/224 - STA. 599+00 TO 604+00 | CALCULATED KRM<br>CHECKED PJF | 0 20<br>10 40<br>HORIZONTAL SCALE IN FEET |

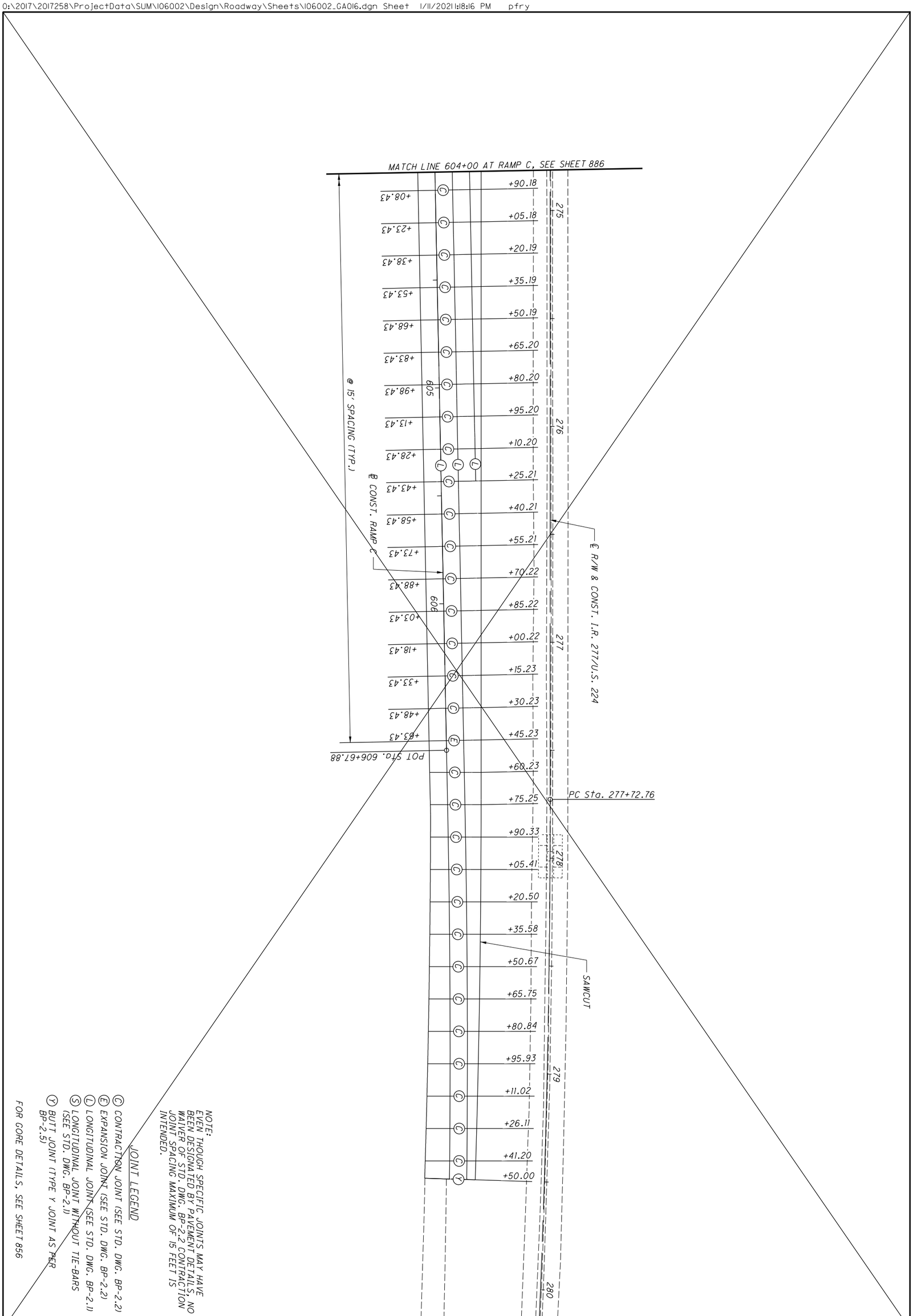


NOTE:
EVEN THOUGH SPECIFIC JOINTS MAY HAVE BEEN DESIGNATED BY PAVEMENT DETAILS, NO WAIVER OF STD. DWG. BP-2.2 CONTRACTION JOINT SPACING MAXIMUM OF 15 FEET IS INTENDED.

JOINT LEGEND

- (C) CONTRACTION JOINT (SEE STD. DWG. BP-2.2)
- (E) EXPANSION JOINT (SEE STD. DWG. BP-2.2)
- (L) LONGITUDINAL JOINT (SEE STD. DWG. BP-2.1)
- (S) LONGITUDINAL JOINT WITHOUT TIE-BARS (SEE STD. DWG. BP-2.1)
- (Y) BUTT JOINT (TYPE Y JOINT AS PER BP-2.5)

FOR GORE DETAILS, SEE SHEET 856

887
1288

**SUM-77/277/224**
**VARIOUS**

# PAVEMENT JOINT DETAILS
## RAMP C AT I.R. 277/224 - STA. 604+00 TO END

CALCULATED KRM
CHECKED PJF

0 10 20 40
HORIZONTAL SCALE IN FEET

N

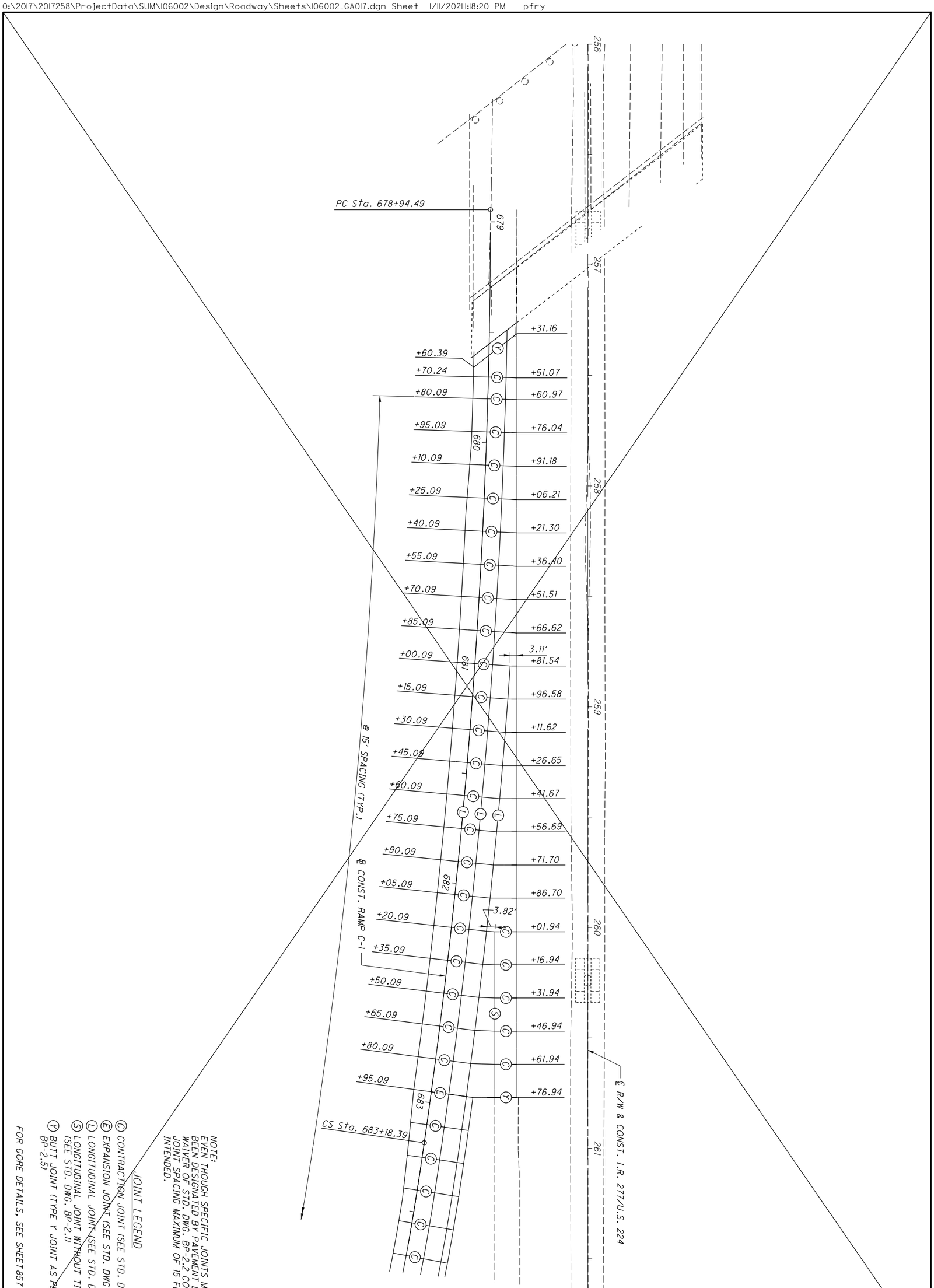


NOTE:
EVEN THOUGH SPECIFIC JOINTS MAY HAVE BEEN DESIGNATED BY PAVEMENT DETAILS, NO WAIVER OF STD. DWG. BP-2.2 CONTRACTION JOINT SPACING MAXIMUM OF 15 FEET IS INTENDED.

JOINT LEGEND

- (C) CONTRACTION JOINT (SEE STD. DWG. BP-2.2)
- (E) EXPANSION JOINT (SEE STD. DWG. BP-2.2)
- (L) LONGITUDINAL JOINT (SEE STD. DWG. BP-2.1)
- (S) LONGITUDINAL JOINT WITHOUT TIE-BARS (SEE STD. DWG. BP-2.1)
- (Y) BUTT JOINT (TYPE Y JOINT AS PER BP-2.5)

FOR GORE DETAILS, SEE SHEET 857

| | | | | |
|---|---|---|---|---|
| 888 / 1288 | SUM-77/277/224<br>VARIOUS | PAVEMENT JOINT DETAILS<br>RAMP C-1 AT I.R. 277/224 - BEGIN TO 683+50 | CALCULATED KRM<br>CHECKED PJF | 0 20<br>10 40<br>HORIZONTAL SCALE IN FEET |

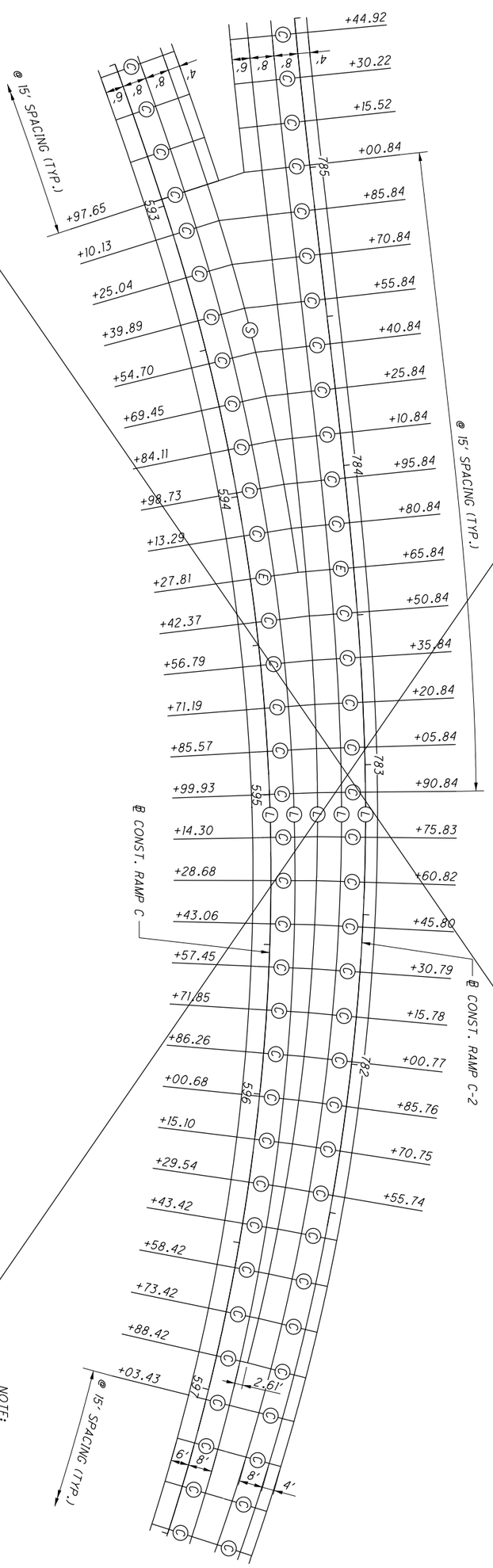


JOINT LEGEND

- (C) CONTRACTION JOINT (SEE STD. DWG. BP-2.2)
- (E) EXPANSION JOINT (SEE STD. DWG. BP-2.2)
- (L) LONGITUDINAL JOINT (SEE STD. DWG. BP-2.1)
- (S) LONGITUDINAL JOINT WITHOUT TIE-BARS (SEE STD. DWG. BP-2.1)
- (Y) BUTT JOINT (TYPE Y JOINT AS PER BP-2.5)

NOTE:
EVEN THOUGH SPECIFIC JOINTS MAY HAVE BEEN DESIGNATED BY PAVEMENT DETAILS, NO WAIVER OF STD. DWG. BP-2.2 CONTRACTION JOINT SPACING MAXIMUM OF 15 FEET IS INTENDED.

FOR GORE DETAILS, SEE SHEET 860

| | | | |
|---|---|---|---|
| 889 / 1288 | SUM-77 / 277 / 224<br>VARIOUS | PAVEMENT JOINT DETAILS<br>RAMP C-2 AT RAMP C - BEGIN TO STS. 785+50 | CALCULATED KRM<br>CHECKED PJF<br>0 10 20 40<br>HORIZONTAL SCALE IN FEET |

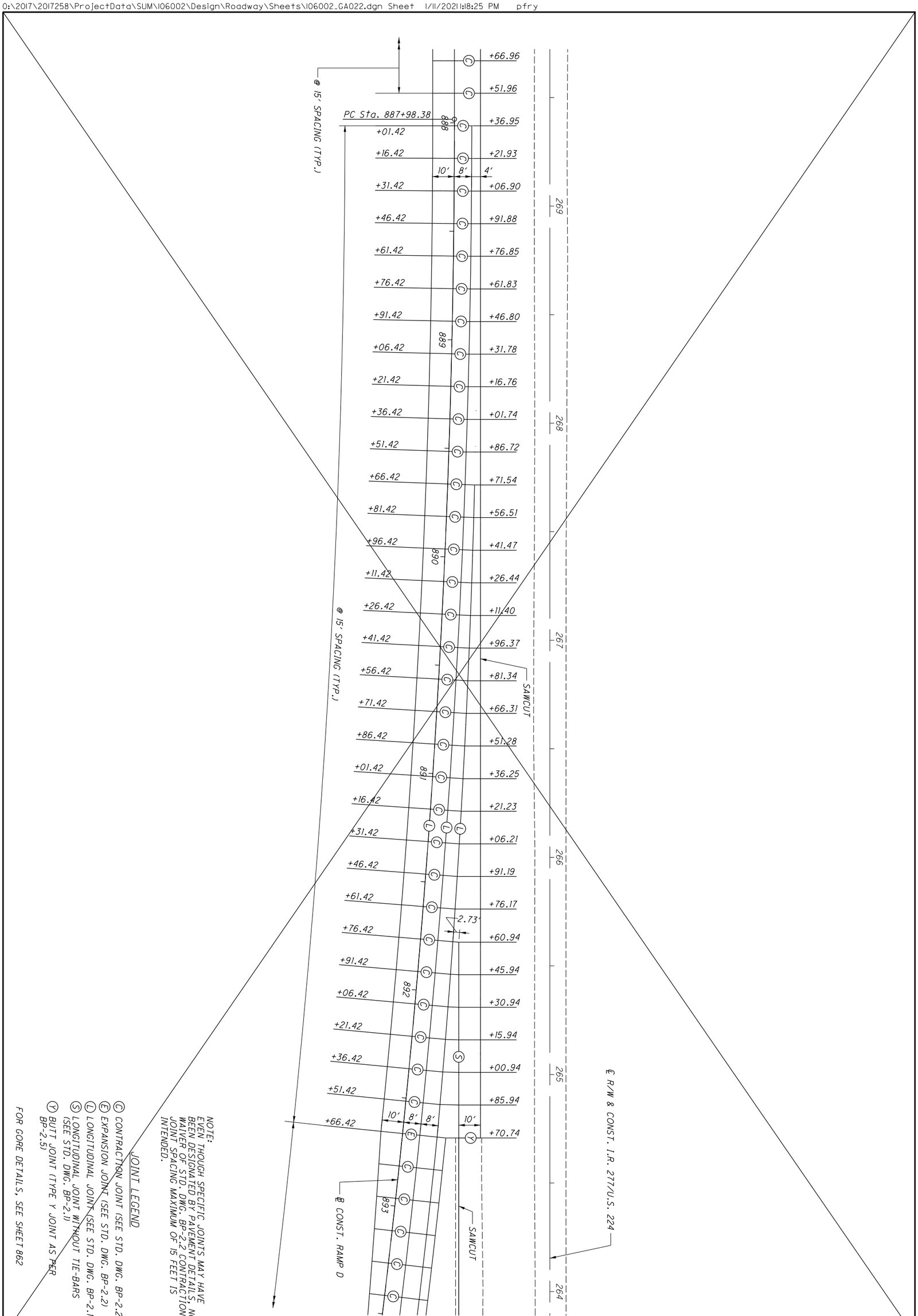


NOTE:
EVEN THOUGH SPECIFIC JOINTS MAY HAVE BEEN DESIGNATED BY PAVEMENT DETAILS, NO WAIVER OF STD. DWG. BP-2.2 CONTRACTION JOINT SPACING MAXIMUM OF 15 FEET IS INTENDED.

JOINT LEGEND

- (C) CONTRACTION JOINT (SEE STD. DWG. BP-2.2)
- (E) EXPANSION JOINT (SEE STD. DWG. BP-2.2)
- (L) LONGITUDINAL JOINT (SEE STD. DWG. BP-2.1)
- (S) LONGITUDINAL JOINT WITHOUT TIE-BARS (SEE STD. DWG. BP-2.1)
- (Y) BUTT JOINT (TYPE Y JOINT AS PER BP-2.5)

FOR GORE DETAILS, SEE SHEET 862

| | | | |
|---|---|---|---|
| 890 / 1288 | SUM-77/277/224<br>VARIOUS | PAVEMENT JOINT DETAILS<br>RAMP D AT I.R. 277/224 - BEGIN TO 893+50 | CALCULATED KRM<br>CHECKED PJF<br>0 10 20 40<br>HORIZONTAL SCALE IN FEET |

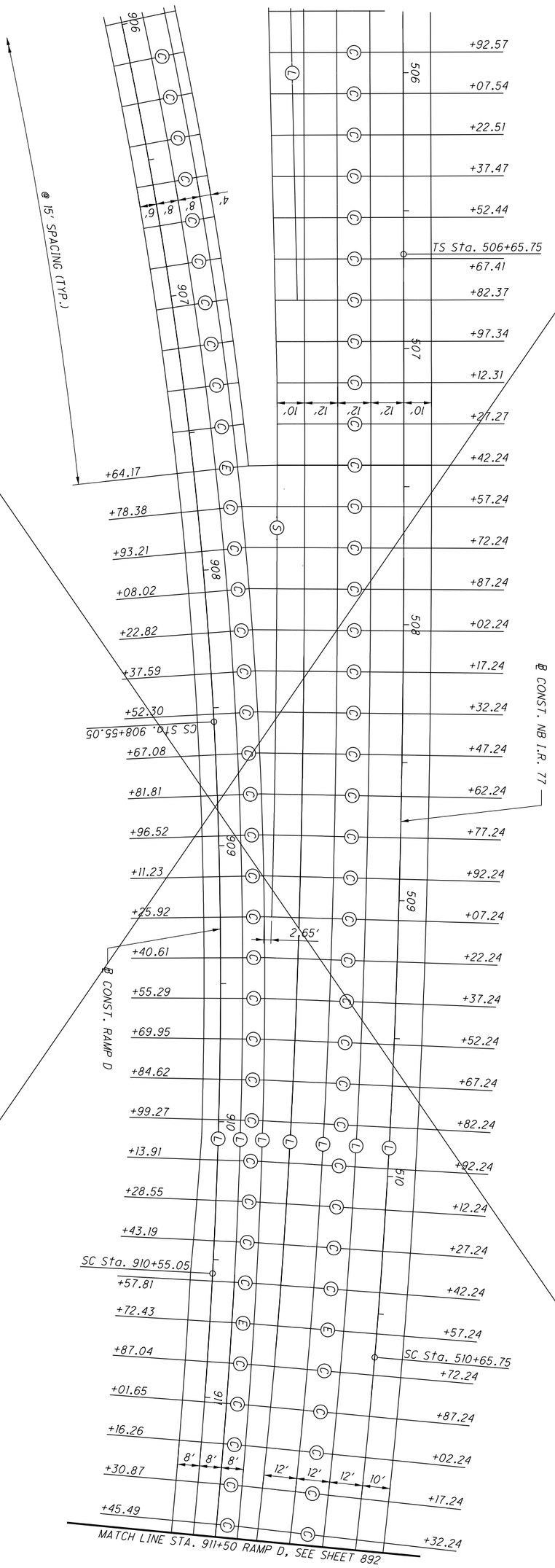


JOINT LEGEND

- (C) CONTRACTION JOINT (SEE STD. DWG. BP-2.2)
- (E) EXPANSION JOINT (SEE STD. DWG. BP-2.2)
- (L) LONGITUDINAL JOINT (SEE STD. DWG. BP-2.1)
- (S) LONGITUDINAL JOINT WITHOUT TIE-BARS (SEE STD. DWG. BP-2.1)
- (Y) BUTT JOINT (TYPE Y JOINT AS PER BP-2.5)

NOTE:
EVEN THOUGH SPECIFIC JOINTS MAY HAVE BEEN DESIGNATED BY PAVEMENT DETAILS, NO WAIVER OF STD. DWG. BP-2.2 CONTRACTION JOINT SPACING MAXIMUM OF 15 FEET IS INTENDED.

FOR GORE DETAILS, SEE SHEET 863

PAVEMENT AND APPROACH SLAB BY OTHERS
(SUM-76/77/8-8.42/9.77/0.00 DB, PID 102329)

℄ CONST. NB I.R. 77

END WORK
℄ CONST. NB I.R. 77
STA. 514+85.00

WATERLOO ROAD

℄ CONST. RAMP D

END WORK
℄ CONST. RAMP D
STA. 914+89.43

MATCH LINE STA. 911+50 RAMP D, SEE SHEET 891

+47.24 +62.24 +77.24 +92.24 +07.24 +22.24 +37.24 +52.24 +67.24 +82.24 +97.24 +12.24 +27.24 +42.24 +57.24 +72.24 +87.24 +02.24 +17.24 +32.24 +47.24 +62.24 +73.62 +85.00 +98.18 +11.36 +24.54 +37.42

+60.10 +74.72 +89.34 +03.97 +18.59 +33.22 +47.85 +62.48 +77.11 +91.74 +06.38 +21.02 +35.66 +50.30 +64.95 +79.59 +94.24 +08.89 +23.54 +38.20 +52.85 +67.51 +78.63 +89.43 +02.31 +15.20 +23.96

912 913 914 915 916 512 513 514 515 516

10' 12' 12' 12' 8' 8' 8' 12' 12' 12' 8' 6' 21.65'

NOTE:
EVEN THOUGH SPECIFIC JOINTS MAY HAVE BEEN DESIGNATED BY PAVEMENT DETAILS, NO WAIVER OF STD. DWG. BP-2.2 CONTRACTION JOINT SPACING MAXIMUM OF 15 FEET IS INTENDED.

JOINT LEGEND

- (C) CONTRACTION JOINT (SEE STD. DWG. BP-2.2)
- (E) EXPANSION JOINT (SEE STD. DWG. BP-2.2)
- (L) LONGITUDINAL JOINT (SEE STD. DWG. BP-2.1)
- (S) LONGITUDINAL JOINT WITHOUT TIE-BARS (SEE STD. DWG. BP-2.1)
- (Y) BUTT JOINT (TYPE Y JOINT AS PER BP-2.5)

FOR GORE DETAILS, SEE SHEET 864

HORIZONTAL SCALE IN FEET
0 10 20 40

CALCULATED KRM
CHECKED PJF

# PAVEMENT JOINT DETAILS
## RAMP D AT I.R. 77 - STA. 911+50 TO END

SUM-77/277/224
VARIOUS

892
1288

O:\2017\2017258\ProjectData\SUM\06002\Design\Roadway\Sheets\06002_GA024.dgn Sheet 1/11/2021 8:30 PM pfry

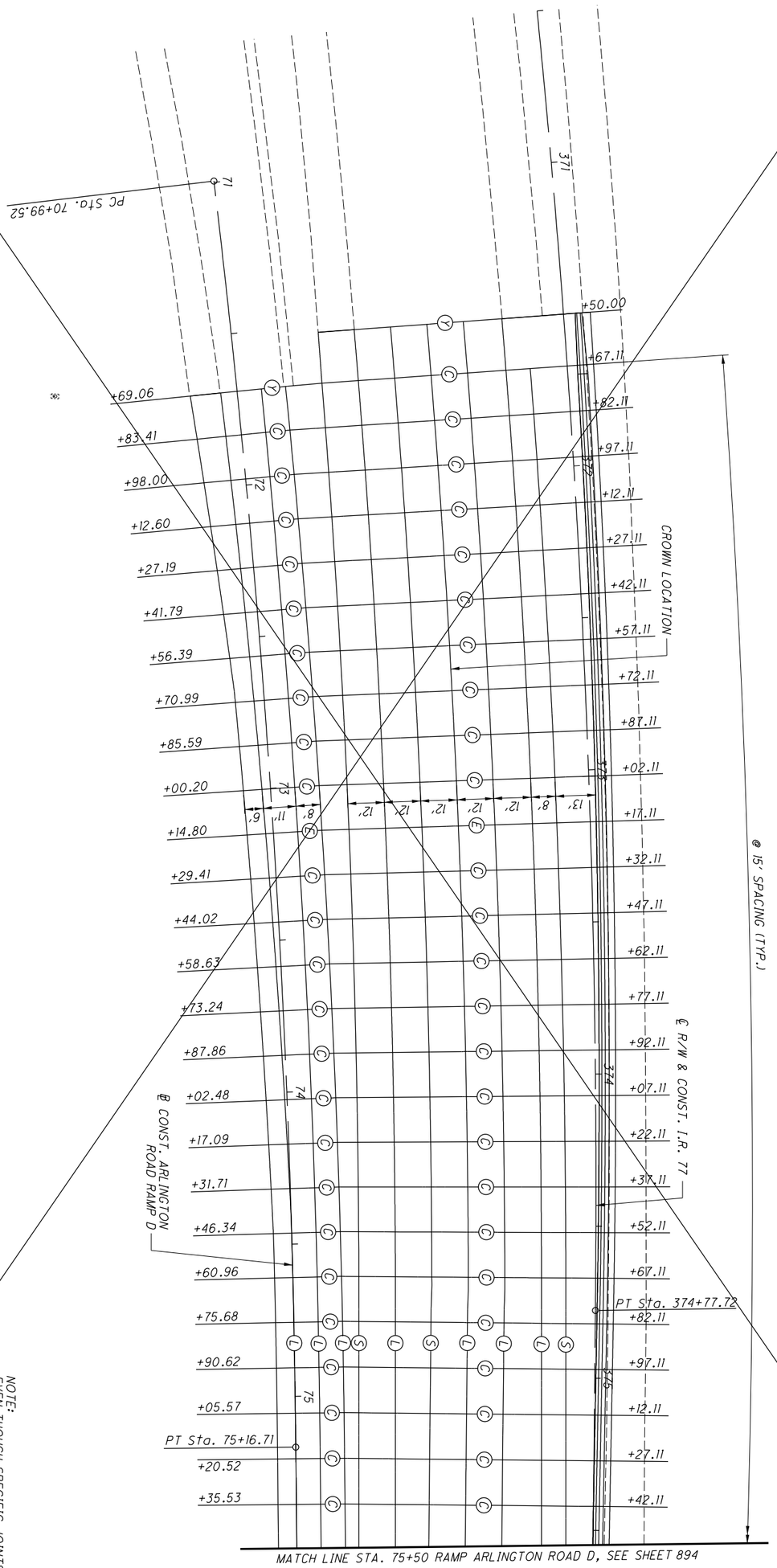


NOTE:
EVEN THOUGH SPECIFIC JOINTS MAY HAVE BEEN DESIGNATED BY PAVEMENT DETAILS, NO WAIVER OF STD. DWG. BP-2.2 CONTRACTION JOINT SPACING MAXIMUM OF 15 FEET IS INTENDED.

JOINT LEGEND

- (C) CONTRACTION JOINT (SEE STD. DWG. BP-2.2)
- (E) EXPANSION JOINT (SEE STD. DWG. BP-2.2)
- (L) LONGITUDINAL JOINT (SEE STD. DWG. BP-2.1)
- (S) LONGITUDINAL JOINT WITHOUT TIE-BARS (SEE STD. DWG. BP-2.1)
- (Y) BUTT JOINT (TYPE Y JOINT AS PER BP-2.5)

FOR GORE DETAILS, SEE SHEET 865

| | | | | |
|---|---|---|---|---|
| 893 / 1288 | SUM-77 / 277 / 224<br>VARIOUS | PAVEMENT JOINT DETAILS<br>RAMP D (ARLINGTON) AT I.R. 77 - BEGIN TO 75+50 | CALCULATED KRM<br>CHECKED PJF | 0 20<br>10 40<br>HORIZONTAL SCALE IN FEET |

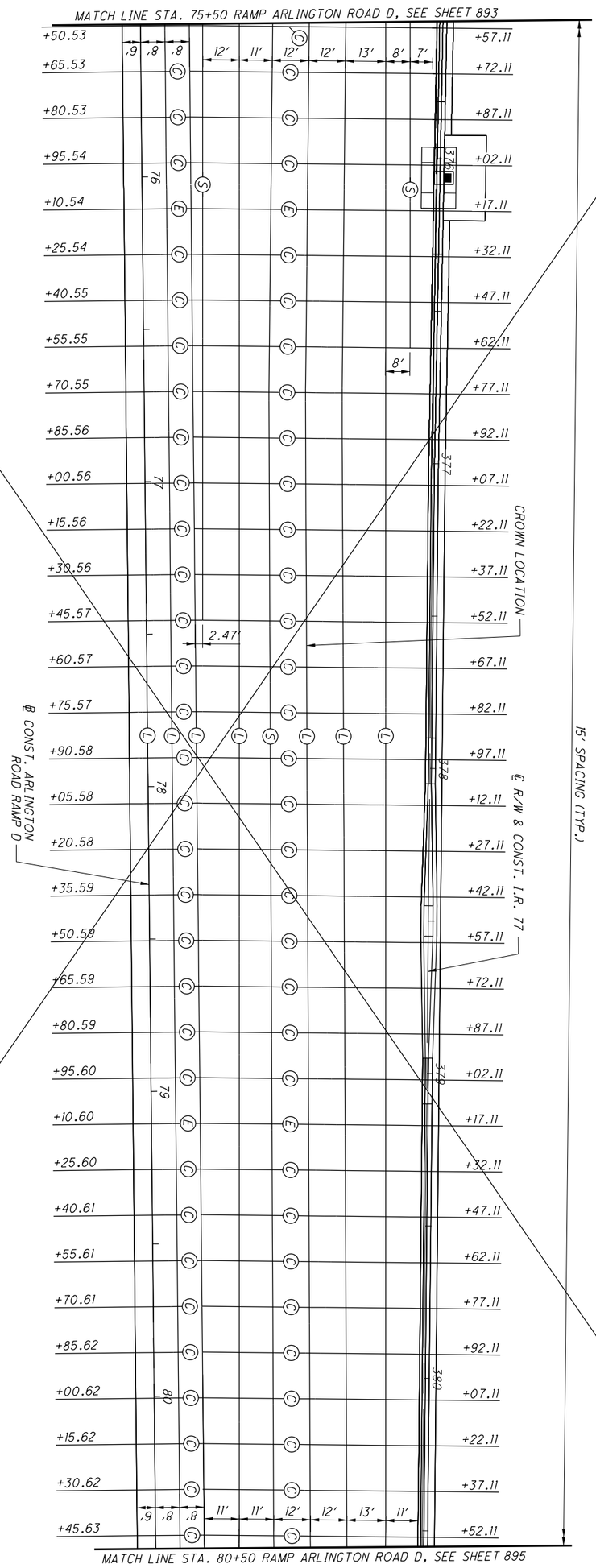


JOINT LEGEND

- (C) CONTRACTION JOINT (SEE STD. DWG. BP-2.2)
- (E) EXPANSION JOINT (SEE STD. DWG. BP-2.2)
- (L) LONGITUDINAL JOINT (SEE STD. DWG. BP-2.1)
- (S) LONGITUDINAL JOINT WITHOUT TIE-BARS (SEE STD. DWG. BP-2.1)
- (Y) BUTT JOINT (TYPE Y JOINT AS PER BP-2.5)

NOTE:
EVEN THOUGH SPECIFIC JOINTS MAY HAVE BEEN DESIGNATED BY PAVEMENT DETAILS, NO WAIVER OF STD. DWG. BP-2.2 CONTRACTION JOINT SPACING MAXIMUM OF 15 FEET IS INTENDED.

FOR GORE DETAILS, SEE SHEET 866

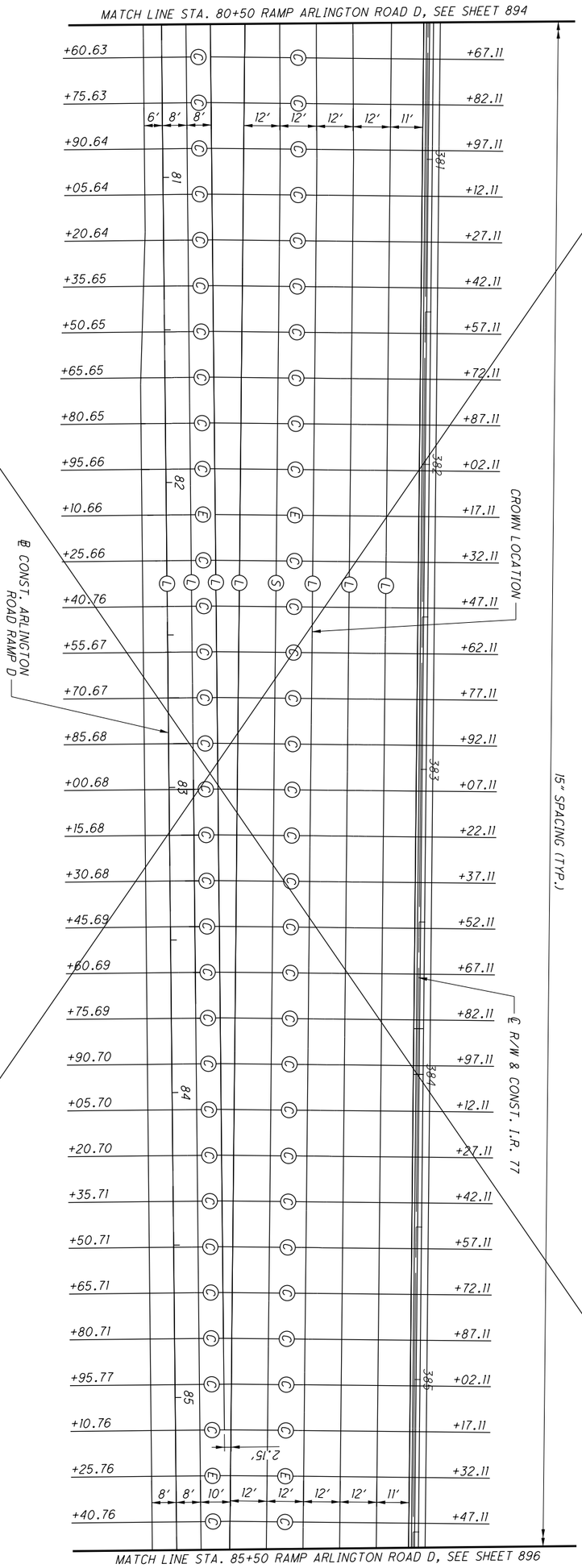


NOTE:
EVEN THOUGH SPECIFIC JOINTS MAY HAVE BEEN DESIGNATED BY PAVEMENT DETAILS, NO WAIVER OF STD. DWG. BP-2.2 CONTRACTION JOINT SPACING MAXIMUM OF 15 FEET IS INTENDED.

JOINT LEGEND

- (C) CONTRACTION JOINT (SEE STD. DWG. BP-2.2)
- (E) EXPANSION JOINT (SEE STD. DWG. BP-2.2)
- (L) LONGITUDINAL JOINT (SEE STD. DWG. BP-2.1)
- (S) LONGITUDINAL JOINT WITHOUT TIE-BARS (SEE STD. DWG. BP-2.1)
- (Y) BUTT JOINT (TYPE Y JOINT AS PER BP-2.5)

FOR GORE DETAILS, SEE SHEET 867

| | | | | |
|---|---|---|---|---|
| 895 / 1288 | SUM-77 / 277 / 224<br>VARIOUS | PAVEMENT JOINT DETAILS<br>RAMP D (ARLINGTON) AT I.R. 77 - STA. 80+50 TO STA. 85+50 | CALCULATED KRM<br>CHECKED PJF | 0 20<br>10 40<br>HORIZONTAL SCALE IN FEET |

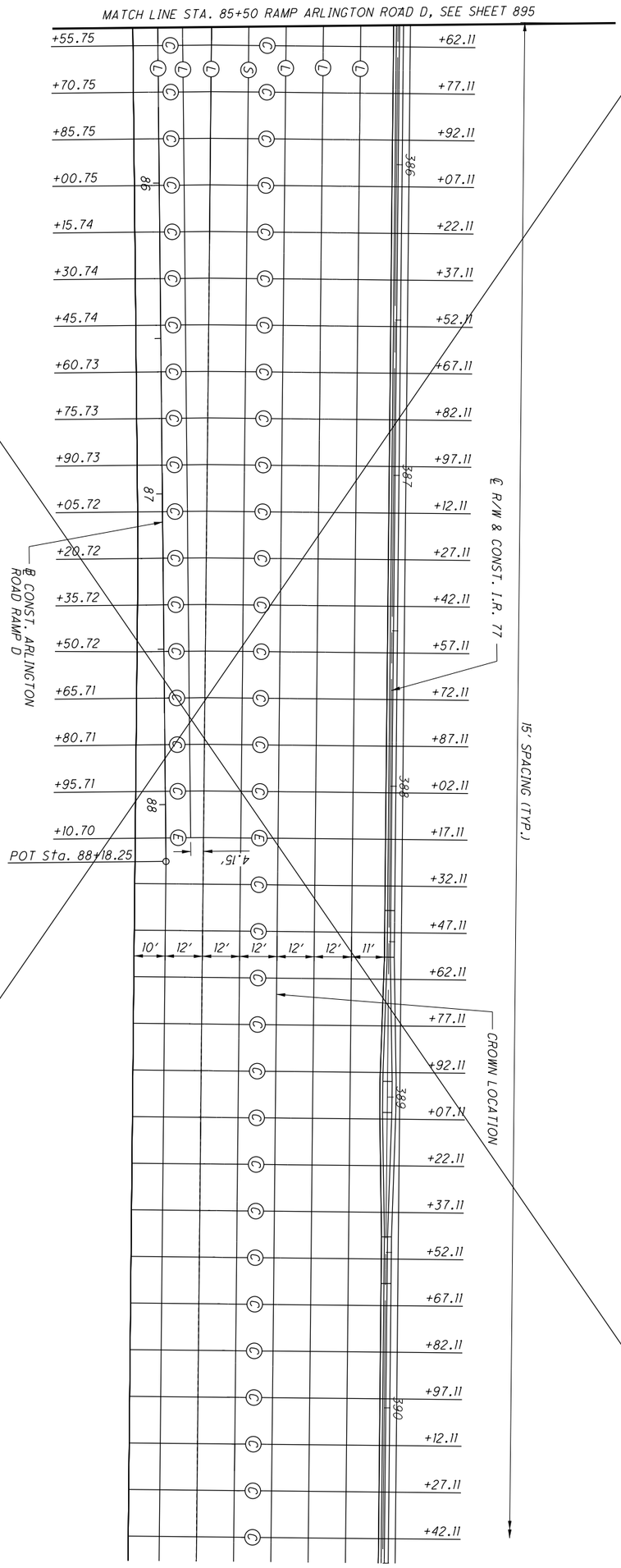


JOINT LEGEND

- (C) CONTRACTION JOINT (SEE STD. DWG. BP-2.2)
- (E) EXPANSION JOINT (SEE STD. DWG. BP-2.2)
- (L) LONGITUDINAL JOINT (SEE STD. DWG. BP-2.1)
- (S) LONGITUDINAL JOINT WITHOUT TIE-BARS (SEE STD. DWG. BP-2.1)
- (Y) BUTT JOINT (TYPE Y JOINT AS PER BP-2.5)

NOTE:
EVEN THOUGH SPECIFIC JOINTS MAY HAVE BEEN DESIGNATED BY PAVEMENT DETAILS, NO WAIVER OF STD. DWG. BP-2.2 CONTRACTION JOINT SPACING MAXIMUM OF 15 FEET IS INTENDED.

FOR GORE DETAILS, SEE SHEET 868

0:\2017\2017258\ProjectData\SUM\06002\Design\Roadway\Sheets\06002_GM050.dgn Sheet 1/17/2021 5:05:25 PM pfry

BEGIN PROJECT
BEGIN WORK (SB)
℄ R/W & CONST. I.R. 77
STA. 391+37.36
S.L.M. 7.39

E171 (457)

MEET EXISTING (SOUTHBOUND)

PROP. NOISE WALL C1

O.H. ELEC. LINES AND TELCOM LINES (TO REMAIN)

KILLIAN ROAD

MATCHLINE - STA. 396+00 ℄ I.R. 77, SEE SHEET 898

BEGIN WORK (NB)
℄ R/W & CONST. I.R. 77
STA. 371+50.00

MEET EXISTING (NORTHBOUND)

℄ R/W & CONST. I.R. 77

370 375 380 385 390 395

70 75 80 85

BEGIN WORK
℄ CONST. ARLINGTON ROAD RAMP D
STA. 71+69.06

℄ CONST. ARLINGTON ROAD RAMP D

END ℄ CONST. ARLINGTON ROAD RAMP D STA. 88+18.25

STRUCTURE NO. SUM-77-0744 (NO WORK)

ARLINGTON ROAD

℄ EX. ARLINGTON ROAD RAMP D

ITEM 202 - PAVEMENT REMOVED (COMPOSITE)

ITEM 202 - PAVEMENT REMOVED (ASPHALT)

FOR ESTIMATED QUANTITIES, SEE SHEETS 417 - 439
FOR REMOVAL QUANTITIES, SEE SHEETS 440 - 443

N

0 50 100 200
HORIZONTAL SCALE IN FEET

CALCULATED ZJP
CHECKED PJF

# REMOVAL PLAN

## PAVEMENT REMOVAL PLAN

SUM-77 / 277 / 224
VARIOUS

897
1288

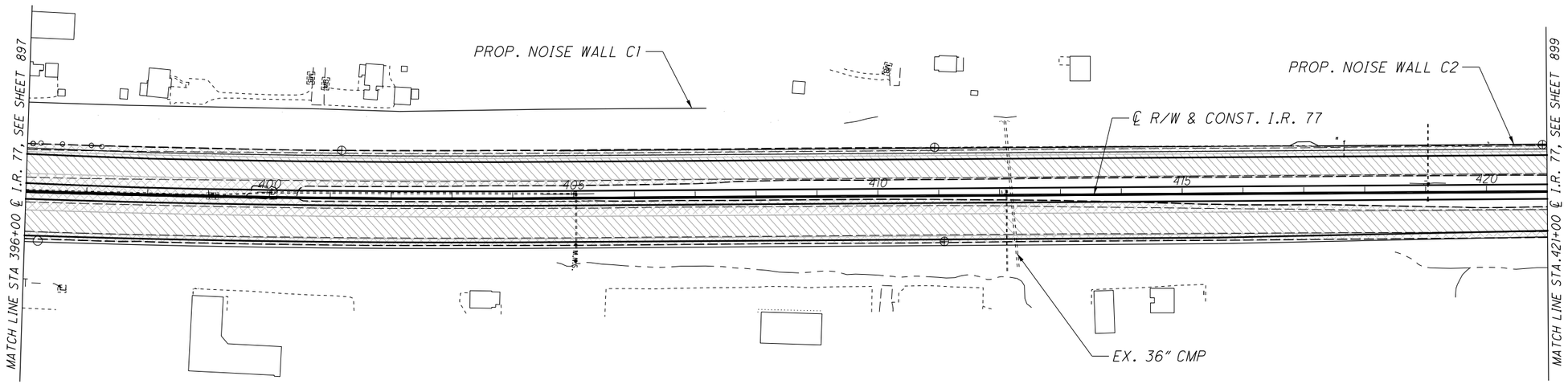


ITEM 202 - PAVEMENT REMOVED (COMPOSITE)

ITEM 202 - PAVEMENT REMOVED (ASPHALT)

FOR ESTIMATED QUANTITIES, SEE SHEETS 417 - 439
FOR REMOVAL QUANTITIES, SEE SHEETS 440 - 443

HORIZONTAL SCALE IN FEET
0 50 100 200

CALCULATED ZJP
CHECKED PJF

# PAVEMENT REMOVAL PLAN

SUM-77 / 277 / 224
VARIOUS

898
1288

O:\2017\2017258\Project Data\SUM\06002\Design\Roadway\Sheets\06002_GM05i.dgn Design 1/17/2021 5:06:33 PM pfry

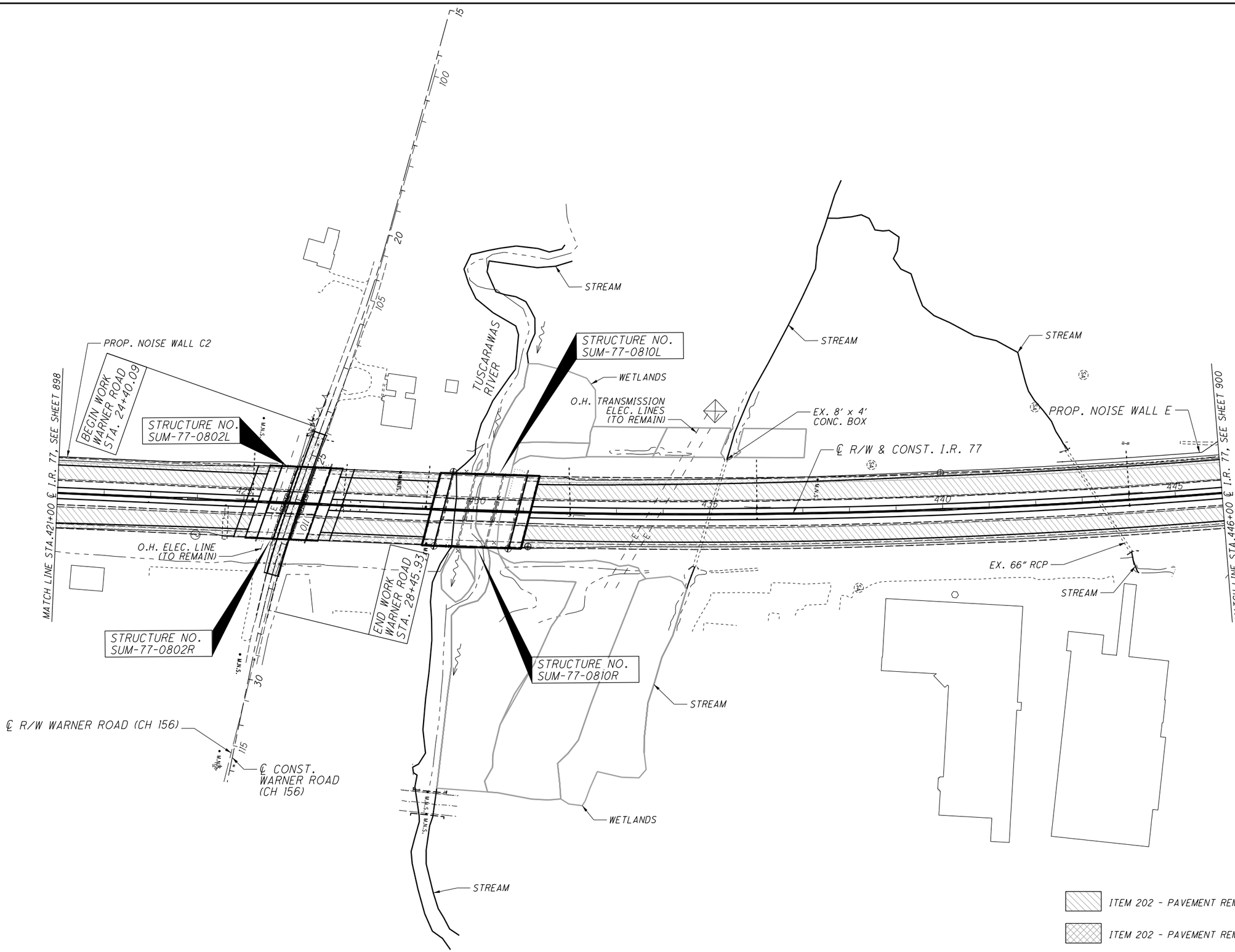


FOR ESTIMATED QUANTITIES, SEE SHEETS 417 - 439
FOR REMOVAL QUANTITIES, SEE SHEETS 440 - 443

HORIZONTAL SCALE IN FEET
0 50 100 200

CALCULATED ZJP
CHECKED PJF

# PAVEMENT REMOVAL PLAN

SUM-77/277/224
VARIOUS

899
1288

0:\2017\2017258\ProjectData\SUM\106002\Design\Roadway\Sheets\106002_GM052.dgn Design 1/17/2021 5:07:23 PM pfry

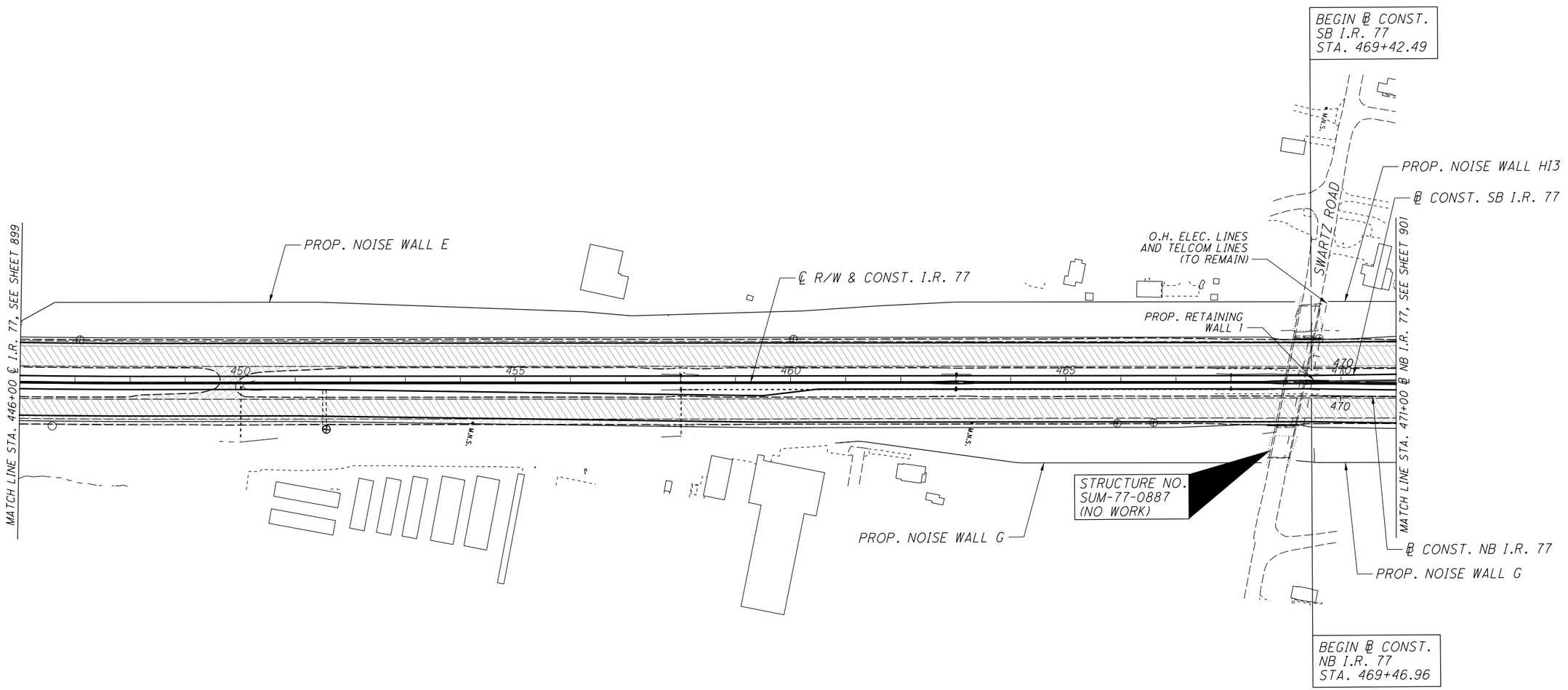


ITEM 202 - PAVEMENT REMOVED (COMPOSITE)

ITEM 202 - PAVEMENT REMOVED (ASPHALT)

FOR ESTIMATED QUANTITIES, SEE SHEETS 417 - 439
FOR REMOVAL QUANTITIES, SEE SHEETS 440 - 443

HORIZONTAL SCALE IN FEET
0 50 100 200

CALCULATED ZJP
CHECKED PJF

# PAVEMENT REMOVAL PLAN

SUM-77 / 277 / 224
VARIOUS

900
1288

D:\2017\2017258\ProjectData\SUM\06002\Design\Roadway\Sheets\06002_GM053.dgn Design 1/17/2021 5:08:17 PM pfry

ITEM 202 - PAVEMENT REMOVED (COMPOSITE)

ITEM 202 - PAVEMENT REMOVED (ASPHALT)

FOR ESTIMATED QUANTITIES, SEE SHEETS 417 - 439
FOR REMOVAL QUANTITIES, SEE SHEETS 440 - 443

END
℄ R/W & CONST.
I.R. 77
STA. 472+26.33

BEGIN
℄ EX. SB I.R. 77
STA. 472+26.33

℄ R/W & CONST. I.R. 77

PROP. NOISE WALL HI3

PROP. NOISE WALL HI2

℄ EX. SB I.R. 77

℄ CONST. SB I.R. 77

MATCH LINE STA. 471+00 ℄ NB I.R. 77, SEE SHEET900

475

475

475

475

480

480

480

480

580

PROP. RETAINING WALL 1

℄ EX. NB I.R. 77

℄ CONST. NB I.R. 77

MATCH LINE STA. 483+50 ℄ NB I.R. 77, SEE SHEET902

℄ EX. RAMP C

℄ CONST. RAMP C

PROP. NOISE WALL G

BEGIN
℄ EX. RAMP C
STA. 0+00.00

BEGIN
℄ CONST. RAMP C
STA. 576+00.00

BEGIN
℄ EX. NB I.R. 77
STA. 474+89.21

HORIZONTAL SCALE IN FEET
0 25 50 100

CALCULATED ZJP
CHECKED PJF

# PAVEMENT REMOVAL PLAN

SUM-77 / 277 / 224
VARIOUS

901
1288

G:\2017\2017258\ProjectData\SUM\06002\Design\Roadway\Sheets\06002_GM054.dgn Design 1/17/2021 5:09:12 PM pfry

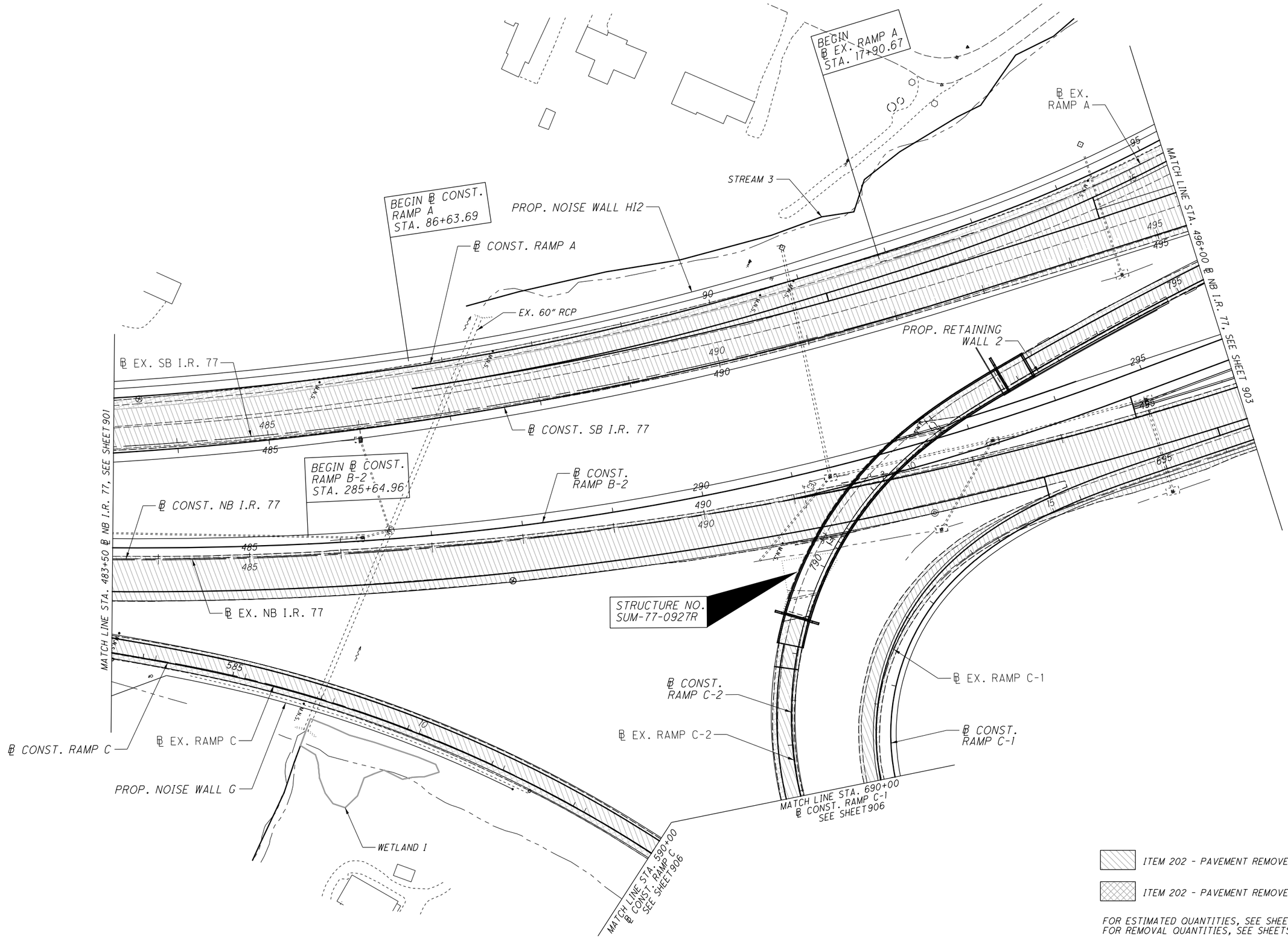


FOR ESTIMATED QUANTITIES, SEE SHEETS 417 - 439
FOR REMOVAL QUANTITIES, SEE SHEETS 440 - 443

HORIZONTAL SCALE IN FEET
0 25 50 100

CALCULATED ZJP
CHECKED PJF

# PAVEMENT REMOVAL PLAN

SUM-77 / 277 / 224
VARIOUS

902
1288

O:\2017\2017258\ProjectData\SUM\06002\Design\Roadway\Sheets\06002_GM055.dgn Design 1/17/2021 5:10:05 PM pfry

STREAM 3

PROP. NOISE WALL HI2

℄ EX. RAMP A

℄ CONST. RAMP A

MATCH LINE
℄ CONST. RAMP A
STA. 101+50
SEE SHEET 905

MATCH LINE STA. 250+00
℄ I.R. 277/U.S. 224
SEE SHEET 905

END WORK
℄ CONST.
RAMP B-1
STA. 421+40.51

END ℄ CONST.
RAMP B-1
STA. 423+24.13

BEGIN
℄ EX. RAMP B-1
STA. 0+00.00

WETLAND F

BEGIN ℄ CONST.
RAMP B-1
STA. 402+43.78

END
℄ EX. RAMP B-1
STA. 17+90.88

WETLAND B
(DO NOT DISTURB)

℄ CONST. RAMP B-1

℄ EX. RAMP B-1

℄ EX. SB
I.R. 77

℄ CONST. SB I.R. 77

MATCH LINE STA. 496+00, ℄ NB I.R. 77, SEE SHEET 902

℄ CONST.
RAMP C-2

℄ CONST.
RAMP B-2

℄ EX. RAMP C-2

BEGIN ℄ EX. RAMP C-2
STA. 0+00.00

END ℄ CONST. RAMP C-2
STA. 801+48.92

WETLAND C

℄ EX. RAMP B-2

MATCH LINE STA. 508+50 ℄ NB I.R. 77, SEE SHEET 904

℄ CONST. NB I.R. 77

END ℄ EX. RAMP C-1
STA. 18+62.36

BEGIN ℄ EX. RAMP B-2
STA. 0+00.00

℄ EX. NB I.R. 77

℄ EX. RAMP C-1

℄ EX.
RAMP C-1

℄ CONST.
RAMP C-1

WETLAND D

END ℄ CONST. RAMP C-1
STA. 702+11.45

BEGIN WORK
℄ CONST. RAMP C-1
STA. 679+55.23

℄ R/W & CONST.
I.R. 277/U.S. 224

DITCH I

℄ EX. RAMP D

℄ CONST. RAMP D

BEGIN ℄ CONST.
RAMP C-1
STA. 678+94.49

BEGIN
℄ EX. RAMP C-1
STA. 0+00.00

MATCH LINE STA. 258+00
℄ I.R. 277/U.S. 224
SEE SHEET 906

MATCH LINE STA. 899+50
℄ CONST. RAMP D
SEE SHEET 906

STRUCTURE NO.
SUM-277-0369
(NO WORK)

PROP. NOISE WALL K

ITEM 202 - PAVEMENT REMOVED (COMPOSITE)

ITEM 202 - PAVEMENT REMOVED (ASPHALT)

FOR ESTIMATED QUANTITIES, SEE SHEETS 417 - 439
FOR REMOVAL QUANTITIES, SEE SHEETS 440 - 443

HORIZONTAL SCALE IN FEET
0 25 50 100

CALCULATED ZJP
CHECKED PJF

# REMOVAL PLAN

# PAVEMENT REMOVAL

SUM-77 / 277 / 224
VARIOUS

903
1288

D:\2017\2017258\Project Data\SUM\106002\Design\Roadway\Sheets\106002_GM056.dgn Design 1/17/2021 5:10:57 PM pfry

END WORK
RAMP B
STA. 214+90.00

END PROJECT
END WORK
℄ CONST. SB I.R. 77
STA. 514+95.00
S.L.M. 9.74

BEGIN PROJECT
SUM-76/77/8-
8.42/9.77/0.00 DB
(PID 102329)

E171 (457) E180 (428)

STRUCTURE NO.
SUM-77-0973L
(NO WORK)

BEGIN
℄ EX. RAMP B
STA. 0+00.00

END ℄ CONST.
RAMP B
STA. 219+25.00

END
℄ EX. SB I.R. 77
STA. 527+07.37

END
℄ CONST. SB I.R. 77
STA. 527+07.37

℄ CONST. SB I.R. 77

MATCH LINE STA. 210+00
℄ CONST. RAMP B
SEE SHEET 905

℄ CONST.
RAMP B

STREAM 4

EX. 84"
TWIN CMP

℄ EX.
RAMP B

℄ EX. SB I.R. 77

MATCH LINE STA. 11+50
℄ CONST. RAMP B-2
SEE SHEET 905

℄ CONST.
RAMP B-2

℄ EX. RAMP B-2

℄ CONST.
RAMP B-1

℄ EX. RAMP B-1

STRUCTURE NO.
SUM-77-0958L
(NO WORK)

E. WATERLOO RD.

DITCH I

STREAM

℄ CONST. NB I.R. 77

℄ EX. NB I.R. 77

STRUCTURE NO.
SUM-77-0973R
(NO WORK)

END ℄ CONST.
NB I.R. 77
STA. 527+44.42

END
℄ EX. NB I.R. 77
STA. 527+44.42

MATCH LINE STA. 508+50
℄ NB I.R. 77, SEE SHEET 903

℄ CONST.
RAMP D

℄ EX. RAMP D

END WORK
℄ CONST. NB I.R. 77
STA. 514+85.00

END WORK
RAMP D
STA. 914+89.43

END ℄ CONST.
RAMP D
STA. 916+89.75

END
℄ EX. RAMP D
STA. 21+60.12

PAVEMENT REMOVED BY OTHERS
(SUM-76/77/8-8.42/9.77/0.00 DB,
PID 102329)

APPROACH SLABS REMOVED BY OTHERS
(SUM-76/77/8-8.42/9.77/0.00 DB,
PID 102329)

ITEM 202 - PAVEMENT REMOVED (COMPOSITE)

ITEM 202 - PAVEMENT REMOVED (ASPHALT)

FOR ESTIMATED QUANTITIES, SEE SHEETS 417 - 439
FOR REMOVAL QUANTITIES, SEE SHEETS 440 - 443

N

0 50 100 200
HORIZONTAL
SCALE IN FEET

CALCULATED ZJP
CHECKED PJF

# PAVEMENT REMOVAL PLAN

SUM-77 / 277 / 224
VARIOUS

904
1288

O:\2017\2017258\ProjectData\SUM\106002\Design\Roadway\Sheets\106002_GM057.dgn Design 1/17/2021 5:11:41 PM pfry

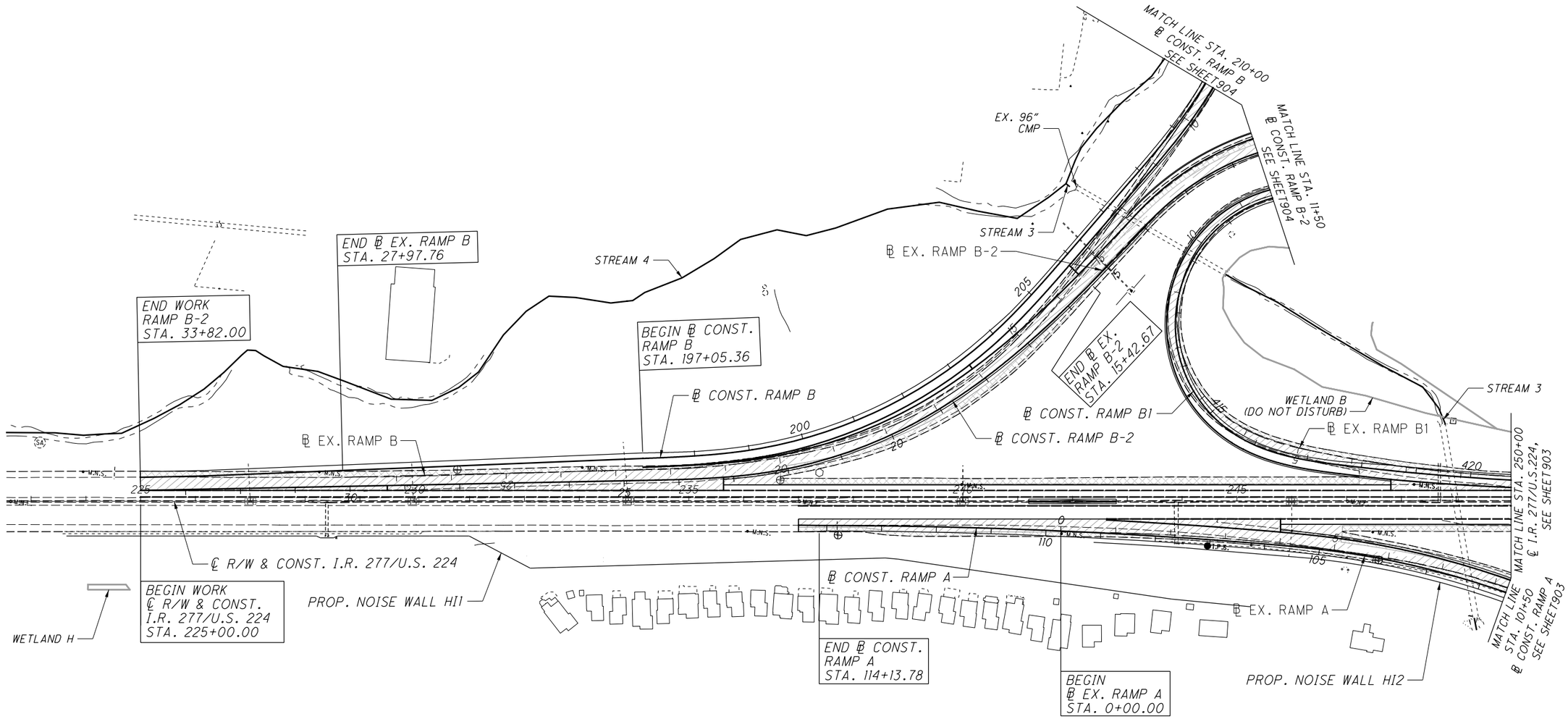


ITEM 202 - PAVEMENT REMOVED (COMPOSITE)

ITEM 202 - PAVEMENT REMOVED (ASPHALT)

FOR ESTIMATED QUANTITIES, SEE SHEETS 417 - 439
FOR REMOVAL QUANTITIES, SEE SHEETS 440 - 443

HORIZONTAL SCALE IN FEET
0 50 100 200

CALCULATED ZJP
CHECKED PJF

# PAVEMENT REMOVAL PLAN

# PAVEMENT

SUM-77 / 277 / 224
VARIOUS

905
1288

0:\2017\2017258\ProjectData\SUM\06002\Design\Roadway\Sheets\06002_GM058.dgn Design 1/17/2021 5:12:34 PM pfry

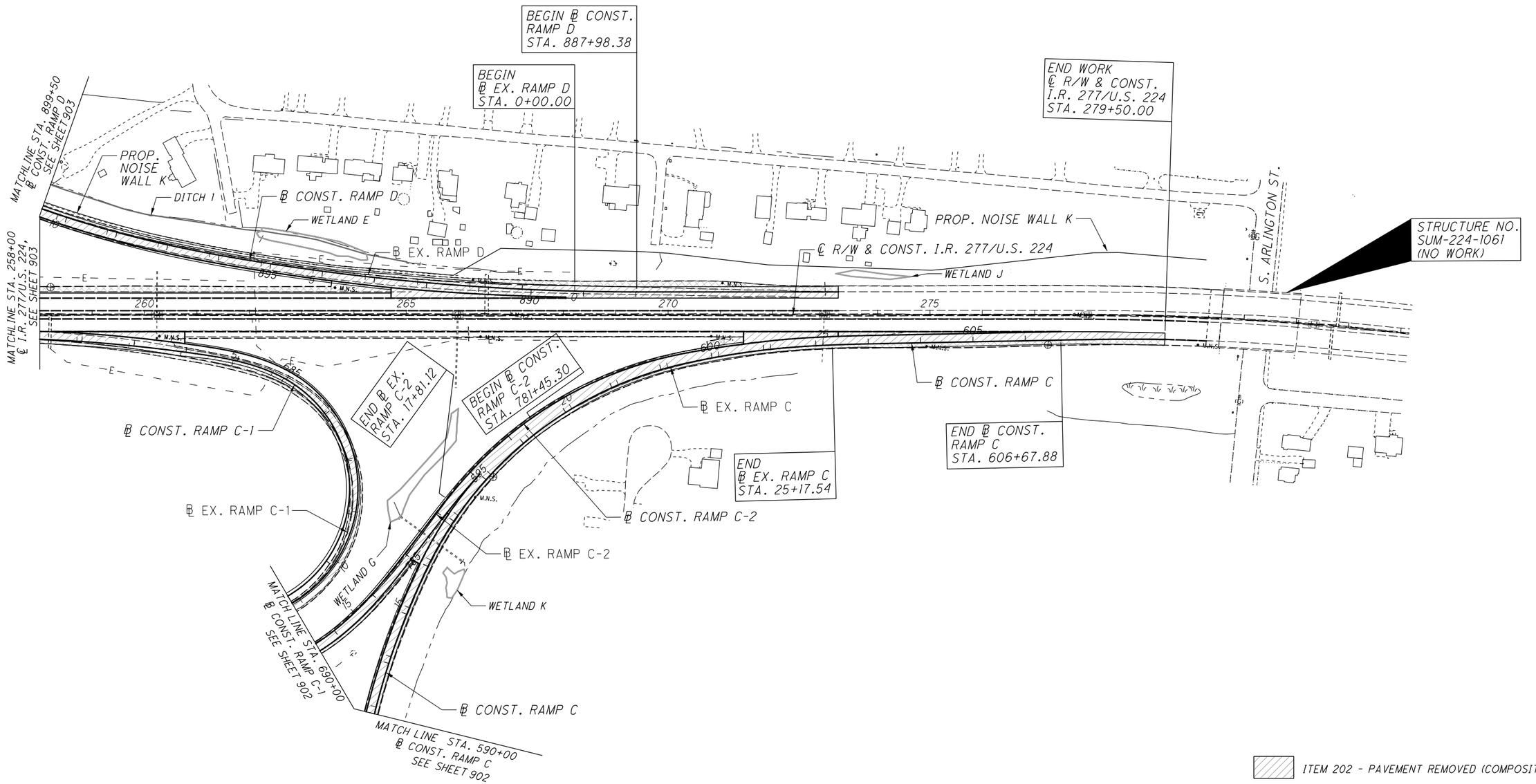


ITEM 202 - PAVEMENT REMOVED (COMPOSITE)

ITEM 202 - PAVEMENT REMOVED (ASPHALT)

FOR ESTIMATED QUANTITIES, SEE SHEETS 417 - 439
FOR REMOVAL QUANTITIES, SEE SHEETS 440 - 443

HORIZONTAL SCALE IN FEET
0 50 100 200

CALCULATED ZJP
CHECKED PJF

# PAVEMENT REMOVAL PLAN

SUM-77 / 277 / 224
VARIOUS

906
1288

D:\2017\2017258\ProjectData\SUM\06002\Design\Roadway\Sheets\06002_GM059.dgn Design 1/17/2021 5:13:27 PM pfry

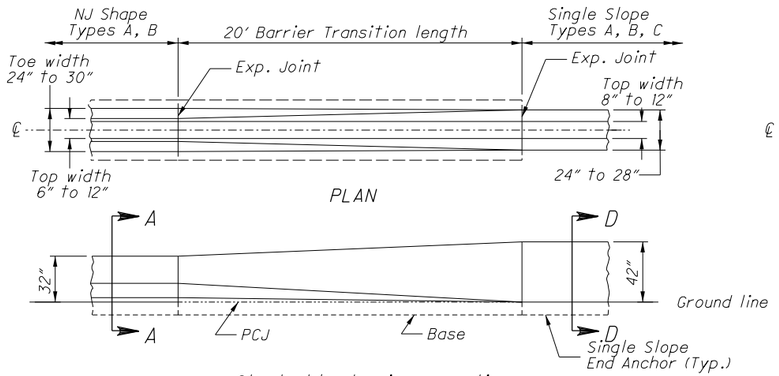


Standard low barrier connection

ELEVATION

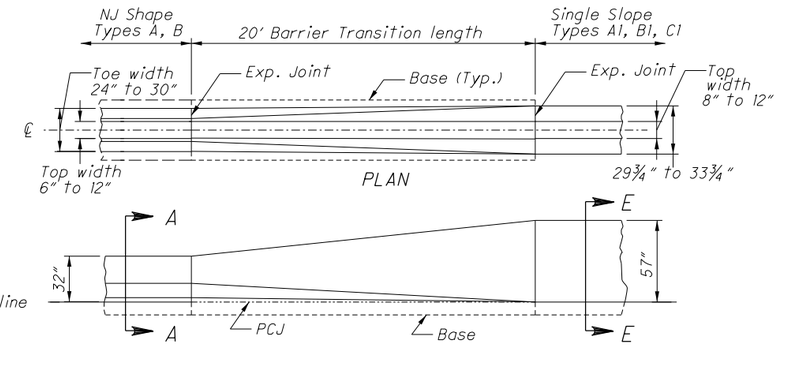


Atypical use

ELEVATION

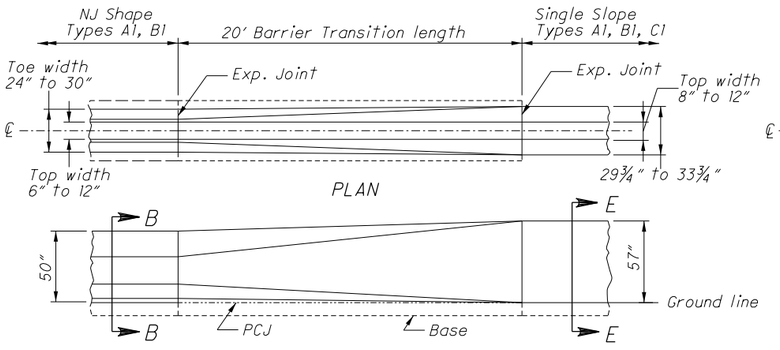


Standard tall barrier connection

ELEVATION

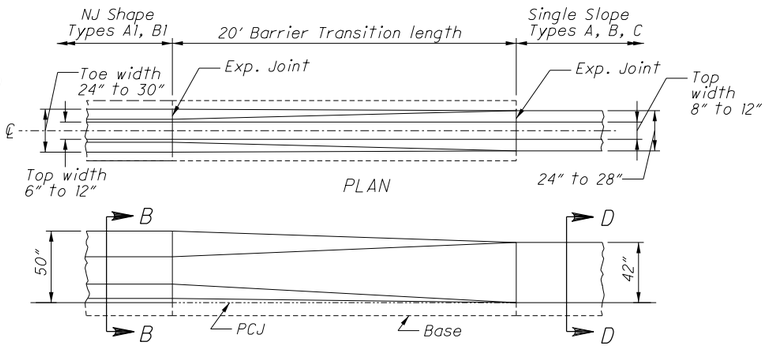


Atypical use

ELEVATION

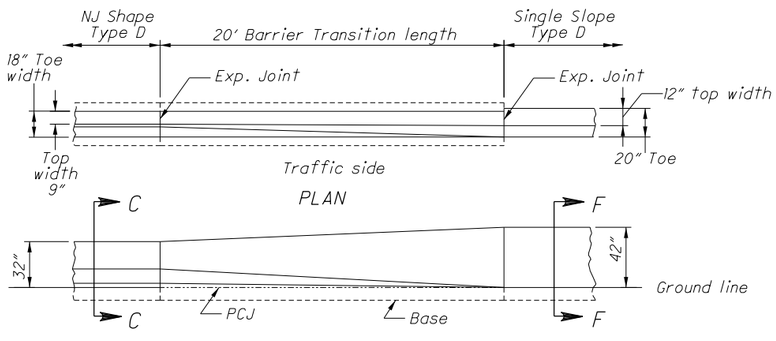


Standard Roadside barrier connection

ELEVATION

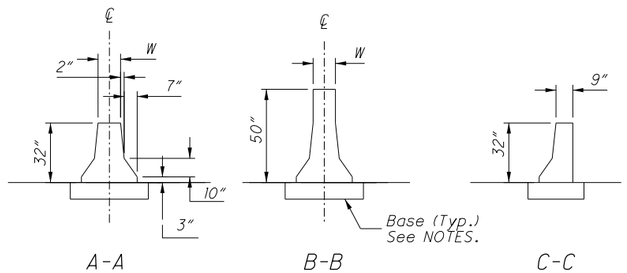


NJ SHAPE SECTIONS

See Plan Insert sheets for specific NJ Shape Concrete barrier details.

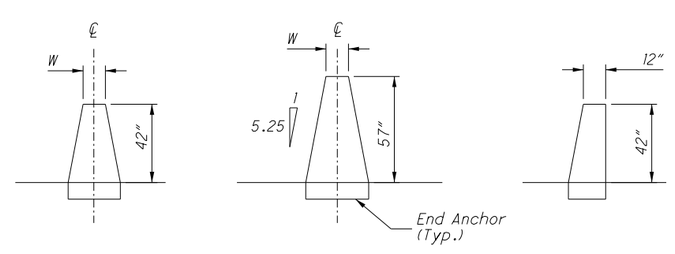


SINGLE SLOPE SECTIONS

See SCD RM-4.3 and RM-4.5 for specific Single Slope concrete barrier details.

## NOTES

GENERAL: This insert details the Barrier Transition, to connect existing NJ Concrete Barrier (safety shape) to a new run of Single Slope Concrete Barrier at locations shown on the plans. For NJ barrier shape and other details see the respective plan insert sheets. For Single Slope barrier details, see SCD RM-4.3 (RM-4.5 for Type D).

ADJACENT CONCRETE BARRIER RUNS: Remove any tapered end sections, Impact attenuators, or other guardrail hardware from existing barrier end. If proposed adjacent single slope barrier is Type A or A1, the Barrier Transiton should contain horizontal reinforcing steel similiar to that required in the respective single slope barrier. Reinforcement is not shown and should be detailed separately. The adjacent single slope end should be terminated with a reinforced End Anchor as detailed on the SCDs.

BARRIER FACE TRANSITION: To prevent vehicle snagging, a smooth transition from the safety shape face to the single slope face is made over a 20' length. The actual shape of the Transition is dependent on both the adjacent NJ barrier and the single slope barrier Types, as detailed on the plans. The contractor and Engineer will agree on a construction method to ensure a smooth barrier face.

MATERIALS: Materials are same for those shown on RM-4.3 and RM-4.5, except that cast-in-place is the only acceptable method. Edges may be chamfered or radiused as shown on those drawings.

CONCRETE BASE: Construct base as shown on the NJ shape insert sheets, including the methods detailing the footing joint, Permissible Construction Joint (PCJ), and Dowelling requirements. The width of the base matches the existing NJ barrier.

JOINTS: Construct joints as shown on respective barrier drawings.

RACEWAYS: When specified, place raceway(s) to match raceway elevation in adjoining segments. Place to obtain maximum concrete cover.

METRIC UNITS: Refer to respective barrier drawings or inserts for metric dimensions.

PAYMENT: This Barrier Transiton shall include all material and labor needed to construct this 20' section, including any raceways, reinforcing steel, dowels and other necessary incidentals. Payment shall be made at the unit price for Item 622 - Barrier Transition, Each.

OFFICE OF ROADWAY ENGINEERING

DESIGNED . REVIEWED .

REVISION DATE 10/20/2006 CHECKED CHECKED

PLAN INSERT SHEET

# NJ SHAPE TO SINGLE SLOPE BARRIER TRANSITION

SUM-77/277/224
VARIOUS

1 / 1

907
1288

O:\2017\2017258\ProjectData\SUM\106002\Design\Roadway\Sheets\106002_GM040.dgn Sheet 1/11/2021 1:22:03 PM pfry

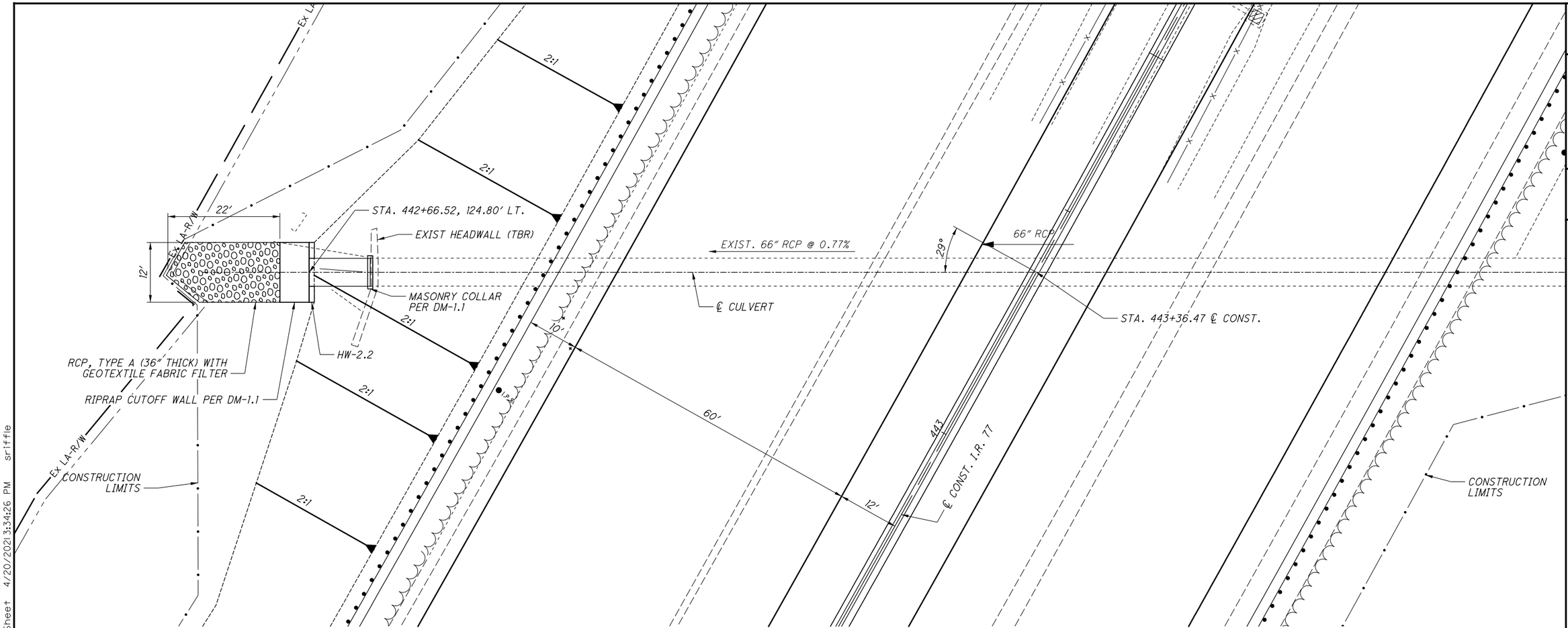


NOTES:
1. NO WORK IS PROPOSED FOR THE INLET SIDE OF THE EXISTING CULVERT.

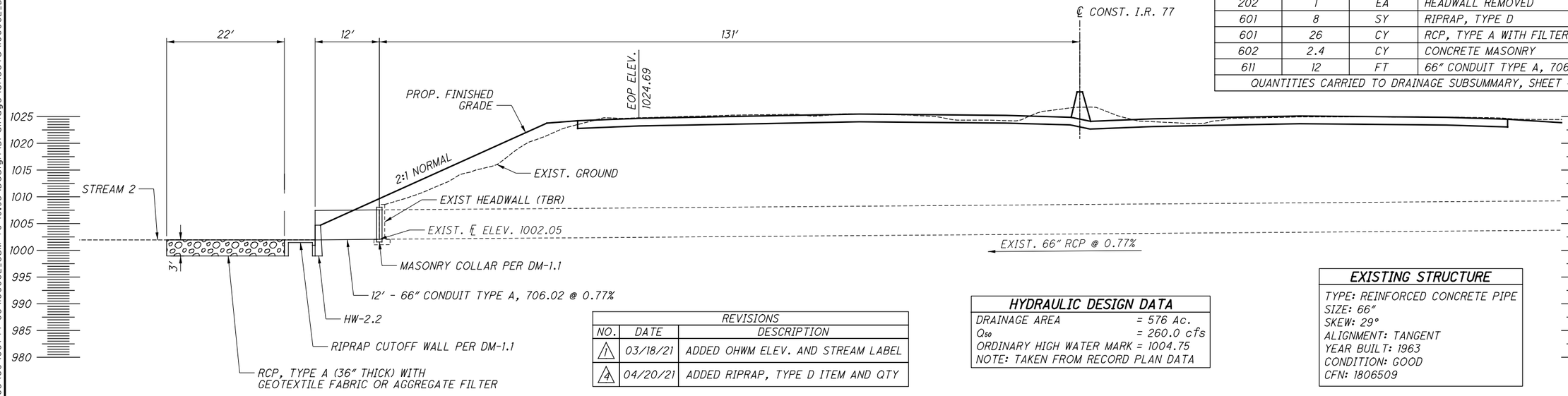


| ESTIMATED QUANTITIES | | | |
|---|---|---|---|
| ITEM | QUAN | UNIT | DESCRIPTION |
| 202 | 1 | EA | HEADWALL REMOVED |
| 601 | 8 | SY | RIPRAP, TYPE D |
| 601 | 26 | CY | RCP, TYPE A WITH FILTER |
| 602 | 2.4 | CY | CONCRETE MASONRY |
| 611 | 12 | FT | 66" CONDUIT TYPE A, 706.02 |
| QUANTITIES CARRIED TO DRAINAGE SUBSUMMARY, SHEET 410 | | | |

| REVISIONS | | |
|---|---|---|
| NO. | DATE | DESCRIPTION |
| 1 | 03/18/21 | ADDED OHWM ELEV. AND STREAM LABEL |
| 4 | 04/20/21 | ADDED RIPRAP, TYPE D ITEM AND QTY |

| HYDRAULIC DESIGN DATA | |
|---|---|
| DRAINAGE AREA | = 576 Ac. |
| $Q_{50}$ | = 260.0 cfs |
| ORDINARY HIGH WATER MARK | = 1004.75 |
| NOTE: TAKEN FROM RECORD PLAN DATA | |

| EXISTING STRUCTURE |
|---|
| TYPE: REINFORCED CONCRETE PIPE |
| SIZE: 66" |
| SKEW: 29° |
| ALIGNMENT: TANGENT |
| YEAR BUILT: 1963 |
| CONDITION: GOOD |
| CFN: 1806509 |

HORIZONTAL SCALE IN FEET
0 5 10 20

CALCULATED SSR
CHECKED DLT

# CULVERT DETAIL
## I-77 STA. 443+36

SUM-77 / 277 / 224
VARIOUS

908
1288

N:\03\60\06744-08\06002_SUM-76-10.95\Design\Drainage\Sheets\06002_DC001.dgn Sheet 4/20/2021 3:34:26 PM srieffle

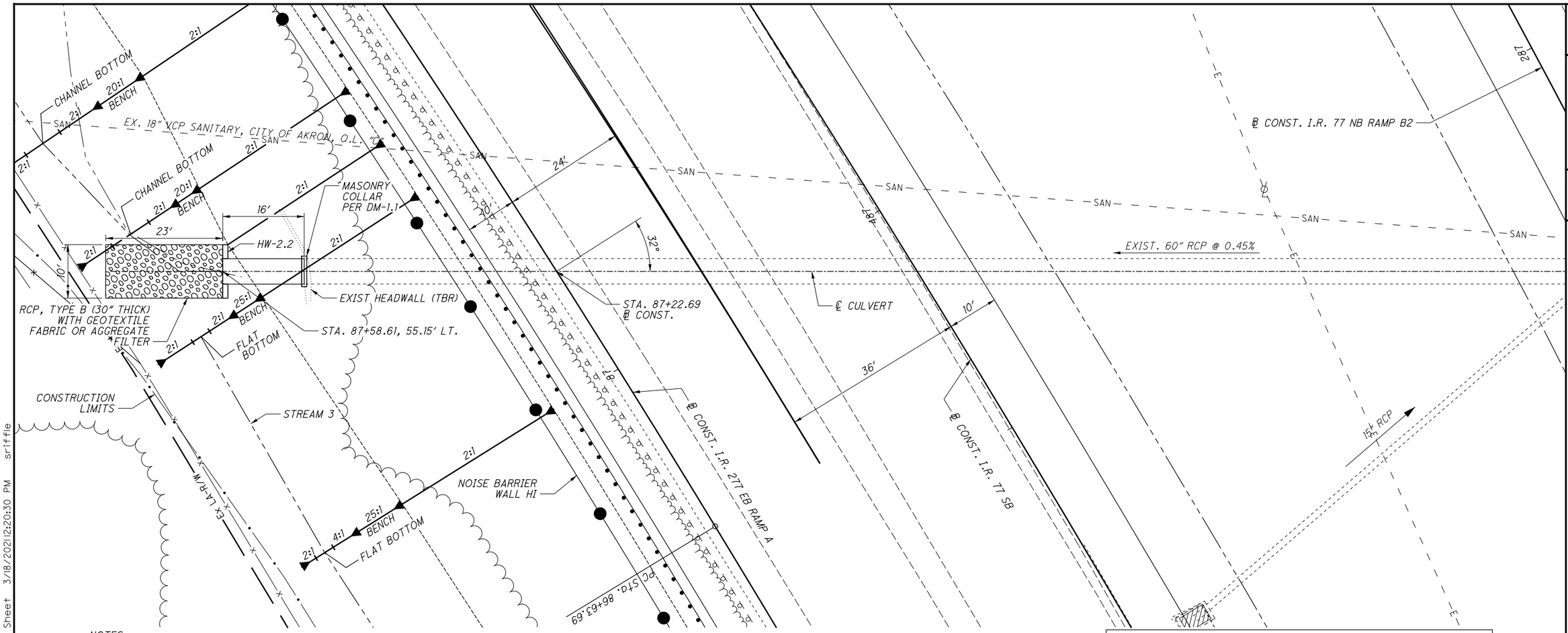


NOTES:
1. NO WORK IS PROPOSED FOR THE INLET SIDE OF THE EXISTING CULVERT.

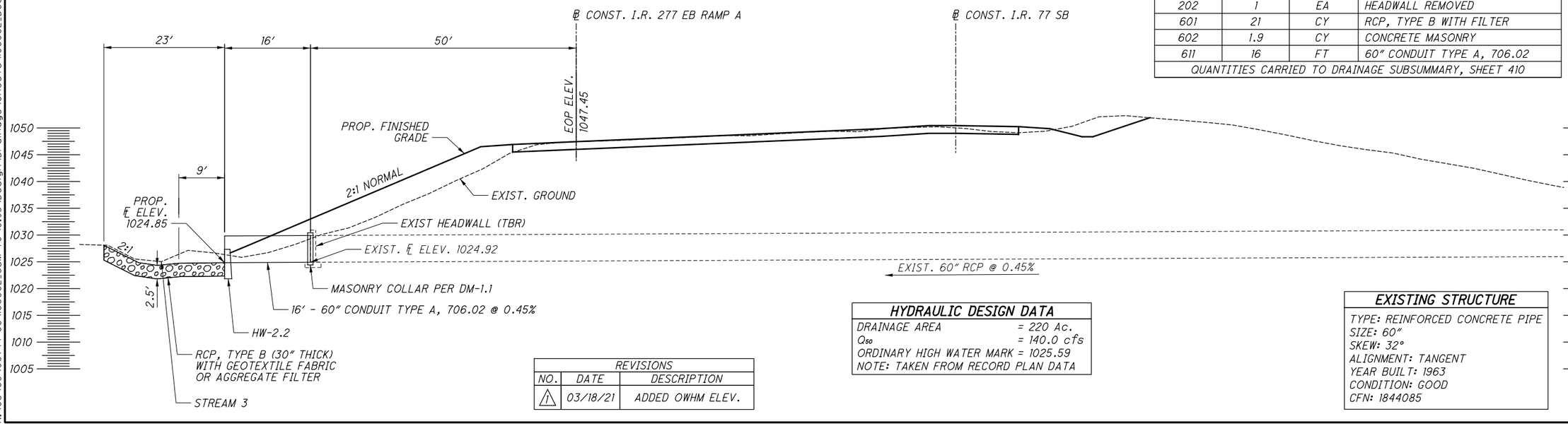


| ESTIMATED QUANTITIES | | | |
|---|---|---|---|
| ITEM | QUAN | UNIT | DESCRIPTION |
| 202 | 1 | EA | HEADWALL REMOVED |
| 601 | 21 | CY | RCP, TYPE B WITH FILTER |
| 602 | 1.9 | CY | CONCRETE MASONRY |
| 611 | 16 | FT | 60" CONDUIT TYPE A, 706.02 |
| QUANTITIES CARRIED TO DRAINAGE SUBSUMMARY, SHEET 410 | | | |

| REVISIONS | | |
|---|---|---|
| NO. | DATE | DESCRIPTION |
| 1 | 03/18/21 | ADDED OWHM ELEV. |

| HYDRAULIC DESIGN DATA | |
|---|---|
| DRAINAGE AREA | = 220 Ac. |
| $Q_{50}$ | = 140.0 cfs |
| ORDINARY HIGH WATER MARK | = 1025.59 |
| NOTE: TAKEN FROM RECORD PLAN DATA | |

| EXISTING STRUCTURE |
|---|
| TYPE: REINFORCED CONCRETE PIPE |
| SIZE: 60" |
| SKEW: 32° |
| ALIGNMENT: TANGENT |
| YEAR BUILT: 1963 |
| CONDITION: GOOD |
| CFN: 1844085 |

HORIZONTAL SCALE IN FEET
0 5 10 20

CALCULATED SSR
CHECKED DLT

# CULVERT DETAIL
# RAMP A STA. 87+23

SUM-77 / 277 / 224
VARIOUS

909
1288

N:\03\60\06744-08\106002_SUM-76-10.95\Design\Drainage\Sheets\106002_DC002.dgn Sheet 3/18/2021 2:20:30 PM srifflie

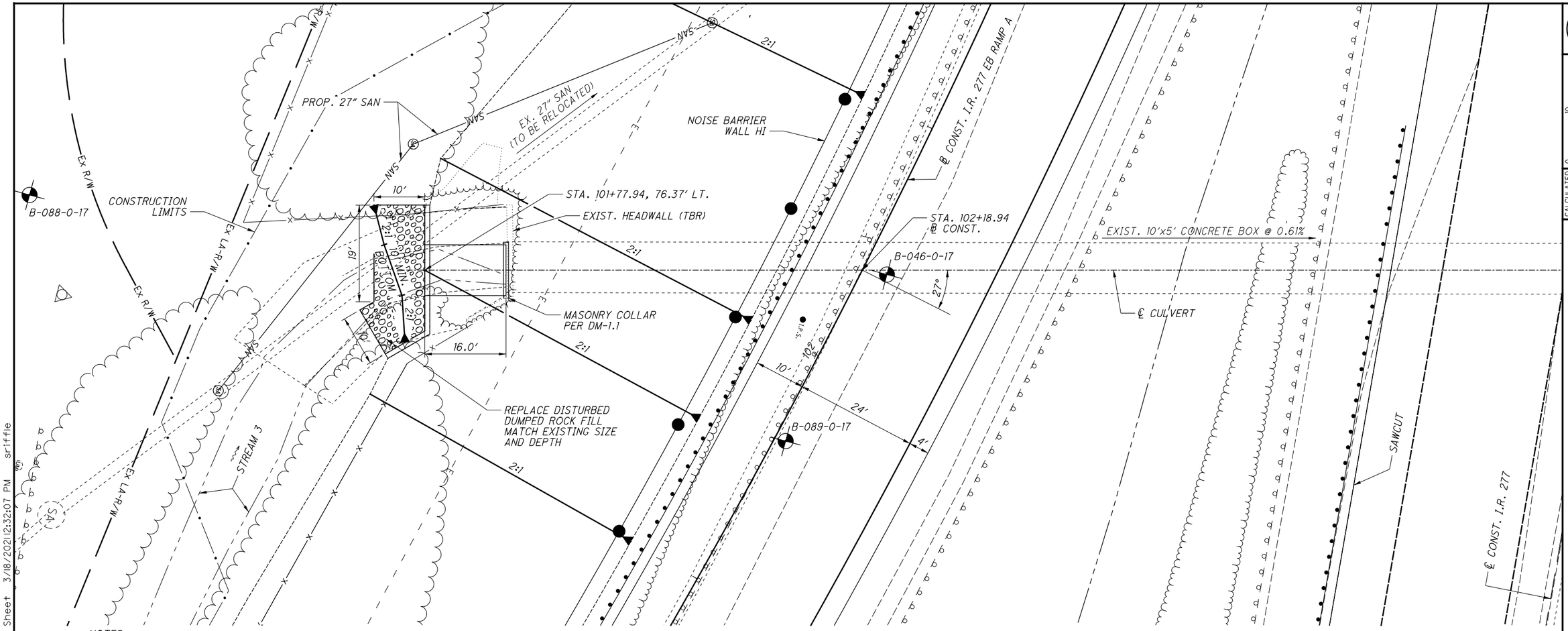


NOTES:
1. NO WORK IS PROPOSED FOR THE OUTLET SIDE OF THE EXISTING CULVERT.

2. THIS WORK SHALL BE CONSTRUCTED IN CONFORMANCE WITH ITEM 611 EXCEPT THAT THE NEW CULVERT SHALL BE CAST-IN-PLACE. PAYMENT WILL BE MADE AT THE UNIT BID PRICE FOR ITEM 611 - 10'x5' CONDUIT TYPE A, 706.05, AS PER PLAN.

SEE SHEET 911 FOR ESTIMATED QUANTITIES
SEE SHEETS 911 - 915 FOR HEADWALL DETAILS

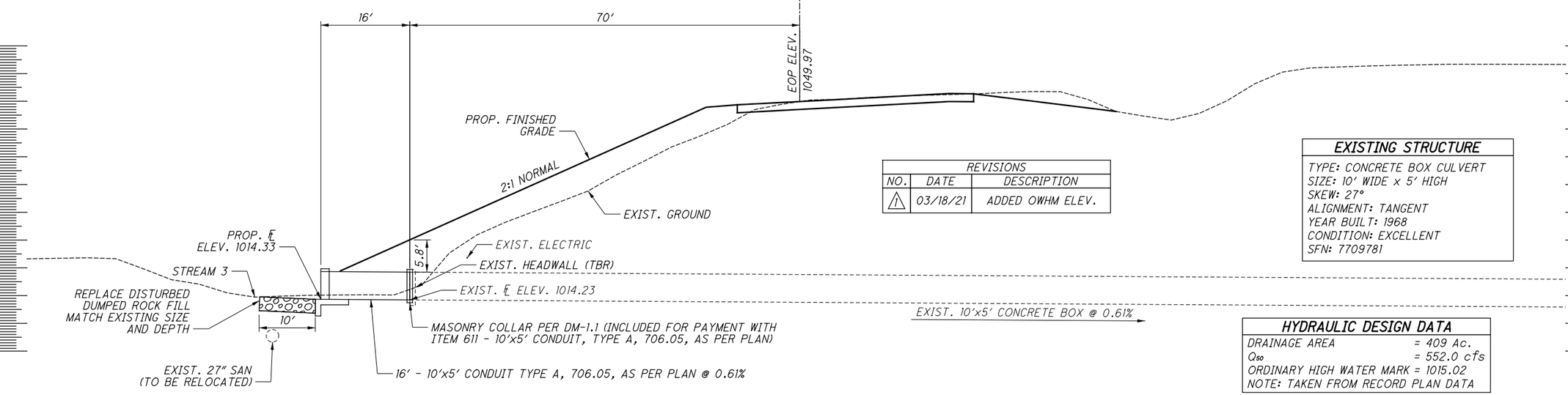


| REVISIONS | | |
|---|---|---|
| NO. | DATE | DESCRIPTION |
| 1 | 03/18/21 | ADDED OWHM ELEV. |

**EXISTING STRUCTURE**

TYPE: CONCRETE BOX CULVERT
SIZE: 10' WIDE x 5' HIGH
SKEW: 27°
ALIGNMENT: TANGENT
YEAR BUILT: 1968
CONDITION: EXCELLENT
SFN: 7709781

**HYDRAULIC DESIGN DATA**

| | |
|---|---|
| DRAINAGE AREA | = 409 Ac. |
| $Q_{50}$ | = 552.0 cfs |
| ORDINARY HIGH WATER MARK | = 1015.02 |
| NOTE: TAKEN FROM RECORD PLAN DATA | |

HORIZONTAL SCALE IN FEET
0 5 10 20

CALCULATED SSR
CHECKED DLT

# CULVERT DETAIL
# RAMP A STA. 102+19

SUM-77 / 277 / 224
VARIOUS

910
1288

N:\03\60\06744-08\106002_SUM-76-10.95\Design\Drainage\Sheets\106002_DC003.dgn Sheet 3/18/2021 12:32:07 PM srifle

## DESIGN SPECIFICATIONS

THIS STRUCTURE CONFORMS TO THE "LRFD BRIDGE DESIGN SPECIFICATIONS" ADOPTED BY THE AMERICAN ASSOCIATION OF STATE HIGHWAY AND TRANSPORTATION OFFICIALS, 2017, 8TH EDITION AND THE ODOT BRIDGE DESIGN MANUAL, 2020.

DESIGN DATA: THE FOLLOWING DESIGN DATA IS USED,

INTERNAL ANGLE OF FRICTION $\phi$= 30 DEGREES
COEFFICIENT OF FRICTION $\delta$= 0.30
UNIT WEIGHT OF SOIL = 120 PCF
UNIT WEIGHT OF CONCRETE = 150 PCF
SLOPE OF BACKFILL = 2:1

CONCRETE CLASS C:
COMPRESSIVE STRENGTH 4000 PSI (FOOTING, WINGWALL, AND FORESLOPE WALL)

REINFORCING STEEL:
ASTM A615, A616, OR A617 GRADE 60 MINIMUM YIELD STRENGTH 60,000 PSI (ALL REINFORCING SHALL BE EPOXY COATED)

## FOUNDATION BEARING RESISTANCE

CULVERT EXTENSION FOOTINGS, AS DESIGNED, PRODUCE A MAX. SERVICE LOAD PRESSURE OF 1.3 KIPS/SQ. FT. AND A MAX. STRENGTH LOAD PRESSURE OF 1.9 KIPS/SQ. FT. THE FACTORED BEARING RESISTANCE IS 7.1 KIPS/SQ. FT.

## PRECAST CONCRETE

AT THE OPTION OF THE CONTRACTOR, PRECAST HEADWALLS MAY BE FURNISHED PER ITEM 602.03 PRECAST STRUCTURES, PROVIDED THEY ARE SIZED TO MEET OR EXCEED THE MATERAL STRENGTHS AND WALL LIMITS AS SHOWN AND SPECIFIED. FULL COMPENSATION FOR THE PRECAST SUBSTITUTION IS THE VOLUME OF CONCRETE AND THE WEIGHT OF THE REINFORCING STEEL FOR THE CORRESPONDING CAST-IN-PLACE STRUCTURE.

## FORESLOPE WALL ANCHOR DOWELS

ANCHOR PER CMS 510 WITH NONSHRINK, NONMETALLIC GROUT CONFORMING TO CMS 705.20 AND TO A DEPTH OF 5". PAYMENT FOR DOWEL HOLES, GROUT AND INSTALLATION SHALL BE INCLUDED WITH ITEM 511.

AS AN ALTERNATIVE TO RESIN BONDING, THREADED INSERTS OR NOPROTRUDING MECHANICAL CONNECTORS CAST INTO THE CULVERT BY THE MANUFACTURER MAY BE USED PROVIDED THEY CAN RESIST AN ULTIMATE PULL-OUT STRENGTH OF 12 KIPS AND MAINTAIN A MIN. COVER OF 3" AT THE BOTTOM OF THE CULVERT SLAB. MECHANICAL CONNECTORS MUST PROVIDE AN "L-SHAPED" BAR INSIDE THE CULVERT WITH A MIN. HORIZONTAL LENGTH OF 1'-0". PAYMENT FOR INSERTS OR MECHANICAL CONNECTORS SHALL BE INCLUDED WITH ITEM 611.

## ITEM 202 - STRUCTURE REMOVED, AS PER PLAN

THIS WORK SHALL CONSIST OF REMOVING INLET STRUCTURE. END OF EXISTING BOX CULVERT SHALL BE THOROUGHLY CLEANED TO INSURE PROPER BOND WITH CONCRETE COLLAR. ALL WORK SHALL CONFORM TO CMS ITEM 202.

## ITEM 512 - TYPE 2 WATERPROOFING

TYPE 2 WATERPROOFING PER CMS 512.09 AND 711.25, SHALL EXTEND VERTICALLY DOWN THE ENTIRE SIDES OF THE PRECAST CULVERT SECTIONS FOR ALL PORTIONS OF THE CULVERT WHICH SHALL BE IN CONTACT WITH THE BACKFILL.

TYPE 2 WATERPROOFING, PER CMS 512.09 AND 711.25 SHALL BE APPLIED TO THE ENTIRE TOP SURFACE OF THE PRECAST CULVERT SECTIONS AND SHALL EXTEND 1'-0" VERTICALLY DOWN THE SIDES FOR ALL PORTIONS OF THE CULVERT WHICH SHALL BE IN CONTACT WITH THE BACKFILL.

TYPE 2 WATERPROOFING SHALL EXTEND 1'-0" ONTO ADJACENT EXISTING CULVERT AND NEW WINGWALLS. EXISTING CULVERT SURFACE SHALL BE CLEANED AS PER 512.08 FOR MEMBRANES.

## ITEM 516 - PREFORMED EXPANSION JOINT FILLER

PREFORMED EXPANSION JOINT FILLER (PEJF) CONFORMING TO CMS 705.03, 1" THICK, SHALL BE PLACED ABOVE THE FOOTING BETWEEN THE SIDES OF THE BOX CULVERT AND THE ENDS OF THE WINGWALLS.

## ITEM 518 - POROUS BACKFILL WITH GEOTEXTILE FABRIC

2'-0" THICK POROUS BACKFILL WITH FILTER FABRIC SHALL BE PLACED BEHIND THE WINGWALLS ONLY AND SHALL EXTEND TO 1'-0" BELOW THE EMBANKMENT SURFACE. GEOTEXTILE FABRIC SHALL BE PLACED BETWEEN THE POROUS BACKFILL AND REPLACED EXCAVATION ADJACENT TO THE STRUCTURE. IT SHALL TURN UNDER THE BOTTOM OF THE POROUS BACKFILL AND RETURN 6" ABOVE THE TOP ELEVATION OF THE WEEPHOLE.

WEEPHOLES SHALL BE PLACED 6" TO 1'-0" ABOVE THE NORMAL WATER ELEVATION OR GROUND LINE AND SHALL HAVE A MAX. SPACING OF 10'-0". A MIN. OF ONE WEEPHOLE SHALL BE PROVIDED PER WINGWALL.

## ITEM 611 - 10'x5' CONDUIT, TYPE A, 706.05, AS PER PLAN

THIS ITEM SHALL BE CONSTRUCTED IN CONFORMANCE WITH ITEM 611, EXCEPT THAT THE CONDUIT SHALL BE CAST-IN-PLACE.

ALL LABOR AND MATERIALS REQUIRED TO INSTALL MASONRY COLLAR SHALL BE INCLUDED FOR PAYMENT WITH ITEM 611 - 10'x5' CONDUIT, TYPE A, 706.05, AS PER PLAN.

## ITEM 503 - COFFERDAMS AND EXCAVATION BRACING, AS PER PLAN

FOR THIS CULVERT, THE CONTRACTOR SHALL PREPARE AND PROVIDE PLANS IN ACCORDANCE WITH CMS 501.05. THE DESIGN SHOWN ON THE PLANS FOR TEMPORARY SUPPORT OF EXCAVATION IS ONE REPRESENTATIVE DESIGN THAT MAY BE USED TO CONSTRUCT THE CULVERT. THE CONTRACTOR MAY CONSTRUCT THE DESIGN SHOWN ON THE PLANS OR PREPARE AN ALTERNATE DESIGN TO SUPPORT THE SIDES OF EXCAVATION. IF CONSTRUCTING AN ALTERNATE DESIGN FOR TEMPORARY SUPPORT OF EXCAVATION, PREPARE AND PROVIDE PLANS IN ACCORDANCE WITH CMS 501.05. NO ADDITIONAL PAYMENT WILL BE MADE FOR PROVIDING AN ALTERNATE DESIGN.

ALL STEEL SHEETING, STEEL PILES, AND STEEL PLATES SHALL BE ASTM A572, GRADE 50.

ALL WORK SHALL BE PERFORMED IN ACCORDANCE WITH OOOT CMS 503. THE DEPARTMENT WILL PAY FOR THE TEMPORARY SUPPORT OF EXCAVATION AT THE CONTRACT LUMP SUM PRICE FOR ITEM 503 - COFFERDAMS AND EXCAVATION BRACING, AS PER PLAN.

ESTIMATED QUANTITIES

| ITEM | ITEM EXT. | TOTAL | UNIT | DESCRIPTION | SHEET REF. |
|---|---|---|---|---|---|
| 202 | 11001 | LUMP | | STRUCTURE REMOVED, AS PER PLAN | 911 |
| 503 | 11101 | LUMP | | COFFERDAMS AND EXCAVATION BRACING, AS PER PLAN | 911 |
| 503 | 21100 | 82 | CY | UNCLASSIFIED EXCAVATION | |
| 509 | 10000 | 2360 | POUND | EPOXY COATED REINFORCING STEEL | |
| 510 | 10000 | 24 | EACH | DOWEL HOLES WITH NONSHRINK, NONMETALLIC GROUT | |
| 511 | 46010 | 7 | CY | CLASS QC1 CONCRETE, RETAINING/WINGWALL NOT INCLUDING FOOTING | |
| 511 | 46510 | 18 | CY | CLASS QC1 CONCRETE, FOOTING | |
| 512 | 10100 | 23 | SY | SEALING OF CONCRETE SURFACES (EPOXY-URETHANE) | |
| 512 | 33000 | 48 | SY | TYPE 2 WATERPROOFING | |
| 516 | 13600 | 17 | SF | 1" PREFORMED EXPANSION JOINT FILLER | |
| 518 | 21200 | 8 | CY | POROUS BACKFILL WITH GEOTEXTILE FABRIC | |
| 601* | 28101 | 21 | CY | DUMPED ROCK FILL, AS PER PLAN | 910 |
| 611** | 95001 | 16 | FT | 10' x 5' CONDUIT, TYPE A, 706.05, AS PER PLAN | 911 |

* INCLUDED FOR PAYMENT WITH THE EROSION CONTROL QUANTITIES - SEE THE GENERAL SUMMARY

** INCLUDED FOR PAYMENT WITH THE DRAINAGE QUANTITIES - SEE THE GENERAL SUMMARY.

DESIGN AGENCY
ms consultants, inc.
2221 Schrock Road
Columbus, Ohio 43229

DESIGNED TVB | DRAWN TVB | REVIEWED SR 05/07/20 | DATE
CHECKED WER | REVISED | STRUCTURE FILE NUMBER 7709781

STRUCTURE NOTES & QUANTITIES
I.R. 277 EB RAMP A CULVERT
STA. 102+19

SUM-77/277/224-VAR
PID No. 106002

1 / 5

911
1288

N:\03\60\06744-08\106002_SUM-76-10.95\Design\Drainage\Sheets\106002_DN001.dgn Sheet 1/14/2021 8:36:51 AM sriffle

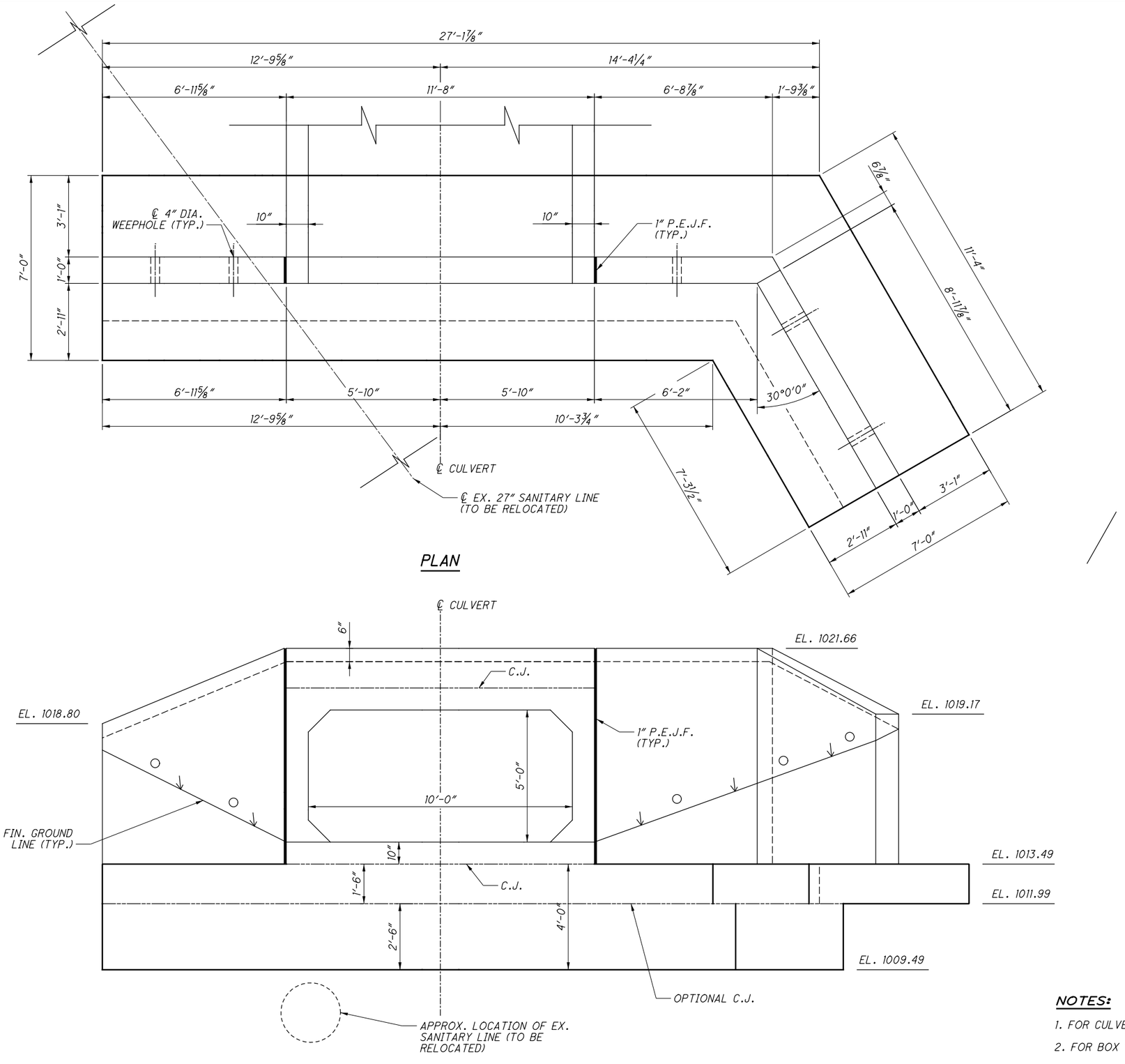


## PLAN




## ELEVATION

**NOTES:**

1. FOR CULVERT LOCATION PLAN, SEE SHEET 910/1288.
2. FOR BOX CULVERT DETAILS, SEE SHEET 914/1288.

DESIGN AGENCY
ms consultants, inc.
2221 Schrock Road
Columbus, Ohio 43229

| DESIGNED | DRAWN | REVIEWED | DATE |
|---|---|---|---|
| TYB | TYB | SR | 05/07/20 |
| CHECKED | REVISED | STRUCTURE FILE NUMBER | |
| WER | . | 77099781 | |

# CULVERT HEADWALL PLAN & ELEVATION

I.R. 277 EB RAMP A CULVERT
STA. 102+19

SUM-77/277/224-VAR
PID No. 106002

2 / 5

912
1288

N:\03\60\06744-08\106002_SUM-76-10.95\Design\Drainage\Sheets\106002_DD001.dgn Sheet 1/14/2021 8:36:53 AM srifflle

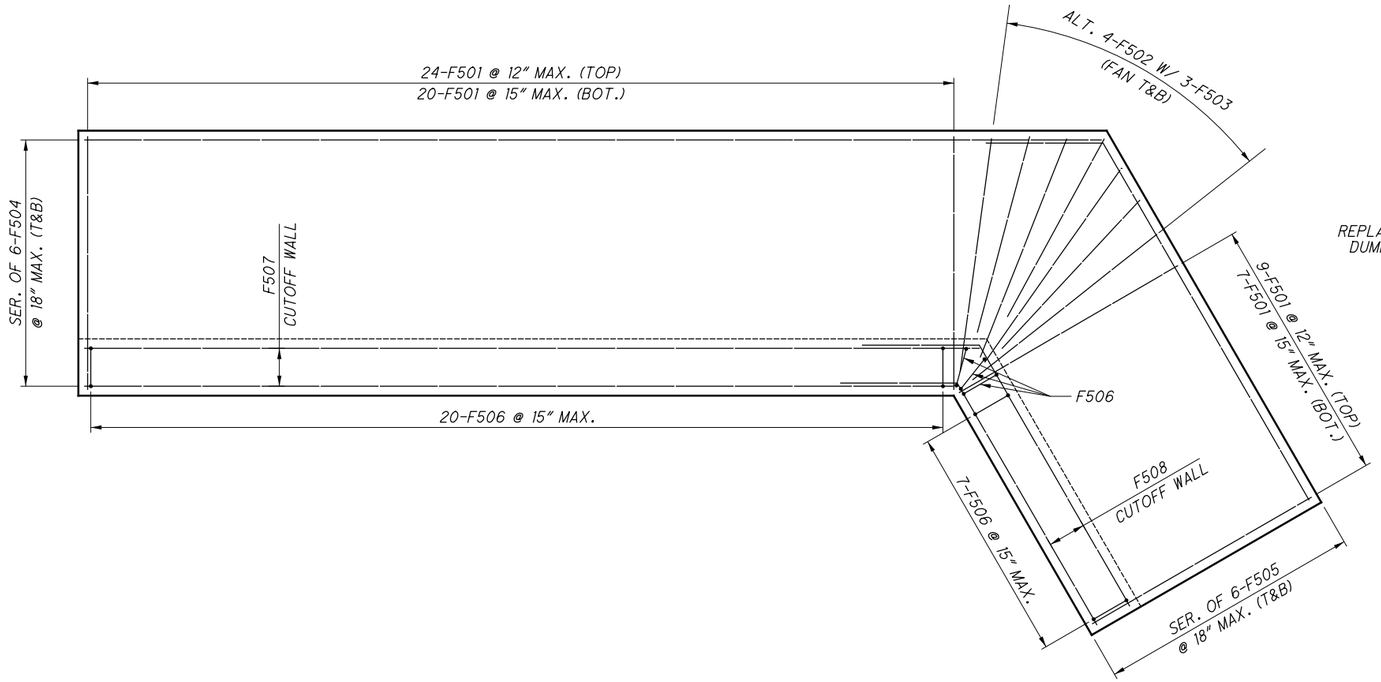


## FOOTING PLAN

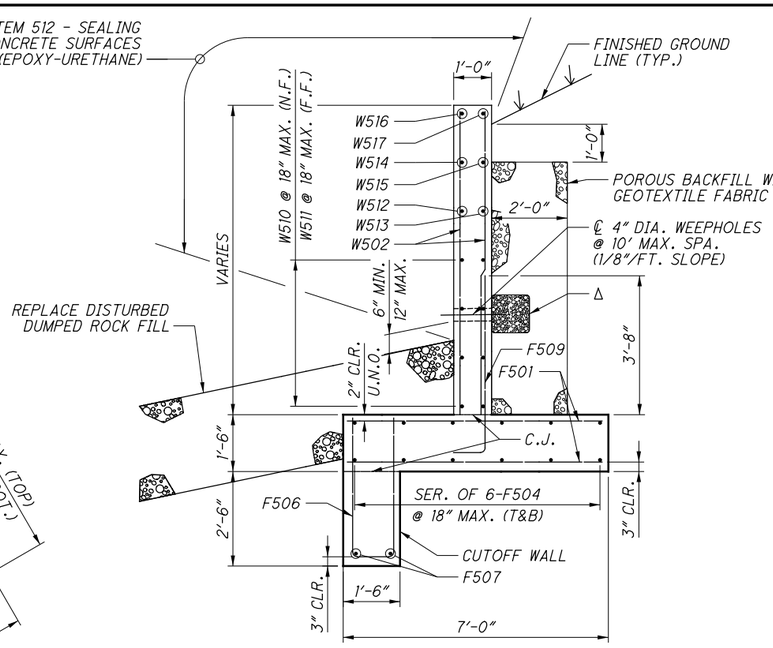


## SECTION A-A

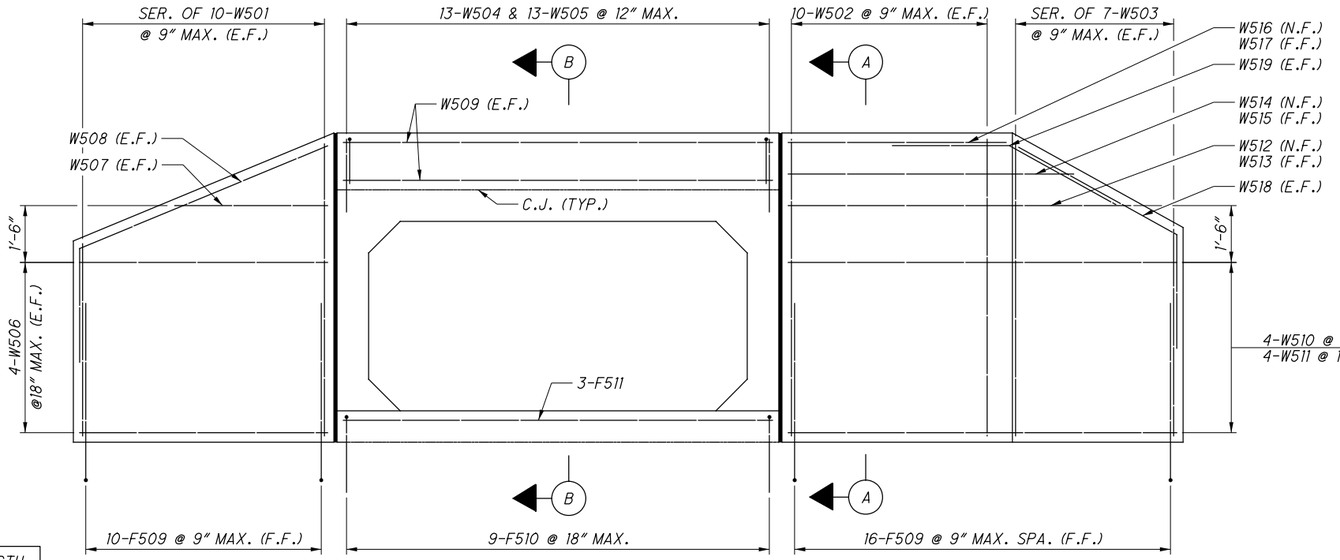


## WINGWALL ELEVATION

| MIN. LAP LENGTH | |
|---|---|
| #5 BAR | 3'-1" |

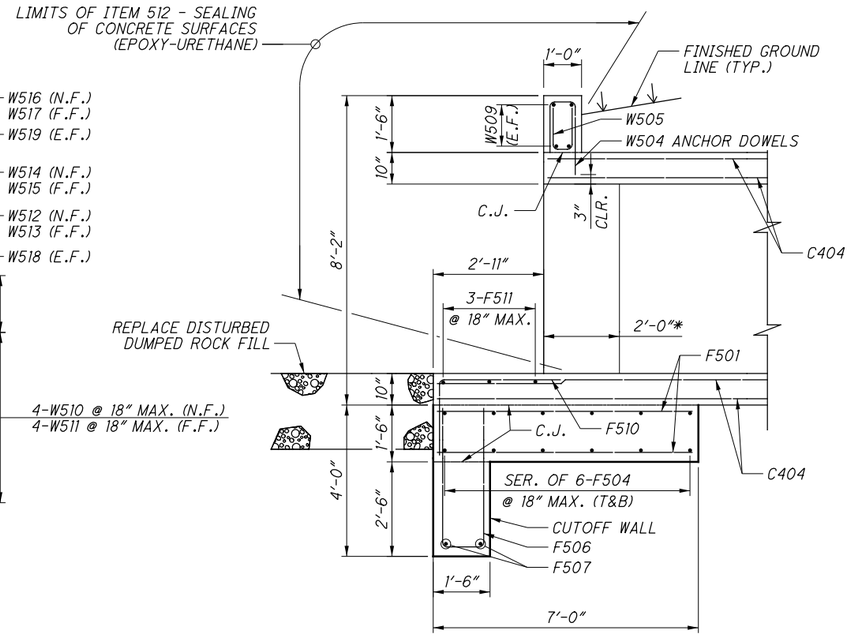


## SECTION B-B

(CULVERT INLET BEVEL SHOWN)

## NOTES:

1. FOR CULVERT LOCATION PLAN, SEE SHEET 910/1288 .
2. FOR BOX CULVERT DETAILS, SEE SHEET 914/1288 .

## LEGEND:

* LIMITS OF ITEM 512 - SEALING OF CONCRETE SURFACES (EPOXY-URETHANE) INSIDE BOX (WALLS AND TOP SLAB)

Δ 2 CU. FT. FILTER FABRIC BAGGED NO. 3 AGGREGATE TO BE PLACED BEHIND WEEPHOLES. INCLUDE WITH ITEM 518 POROUS BACKFILL FOR PAYMENT.

DESIGN AGENCY
ms consultants, inc.
2221 Schrock Road
Columbus, Ohio 43229

| DESIGNED | DRAWN | REVIEWED | DATE |
|---|---|---|---|
| TVB | TVB | SR | 05/07/20 |
| CHECKED | REVISED | STRUCTURE FILE NUMBER | |
| WER | | 7709781 | |

WINGWALL, HEADWALL, & FOOTING DETAILS
I.R. 277 EB RAMP A CULVERT
STA. 102+19

SUM-77/277/224-VAR
PID No. 106002



N:\03\60\06744-08\106002_SUM-76-10.95\Design\Drainage\Sheets\106002_DD002.dgn Sheet 1/14/2021 8:36:54 AM sriffle

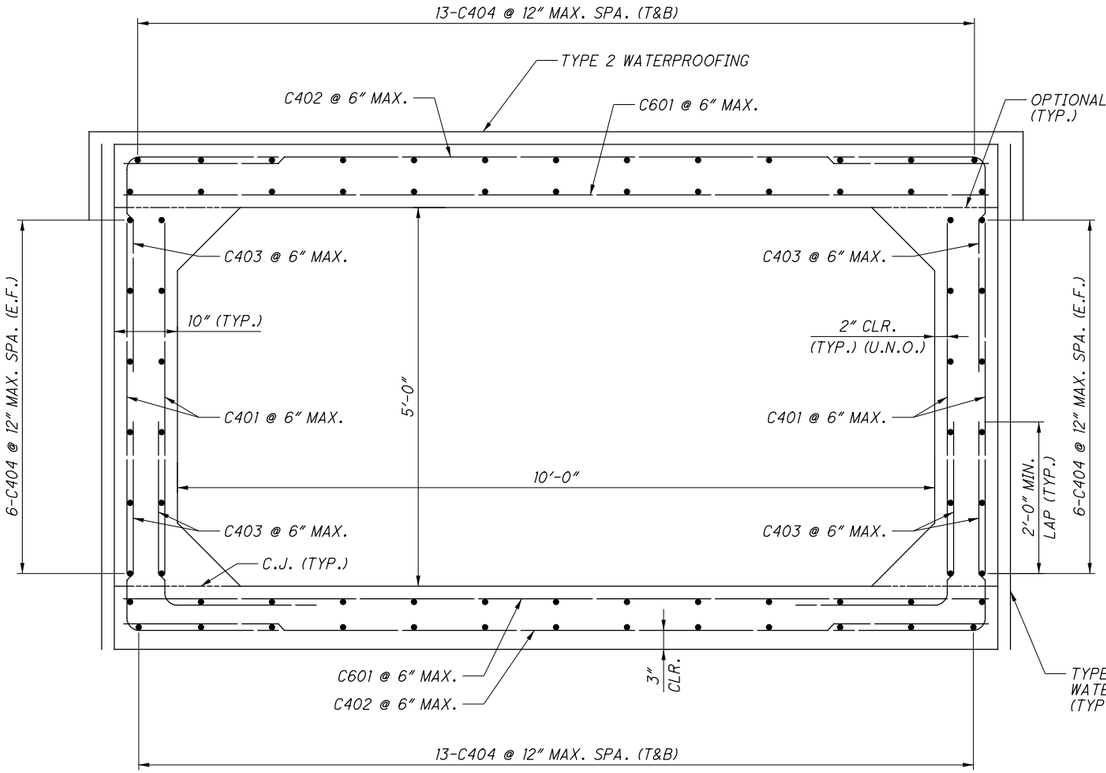


TYPICAL BOX SECTION

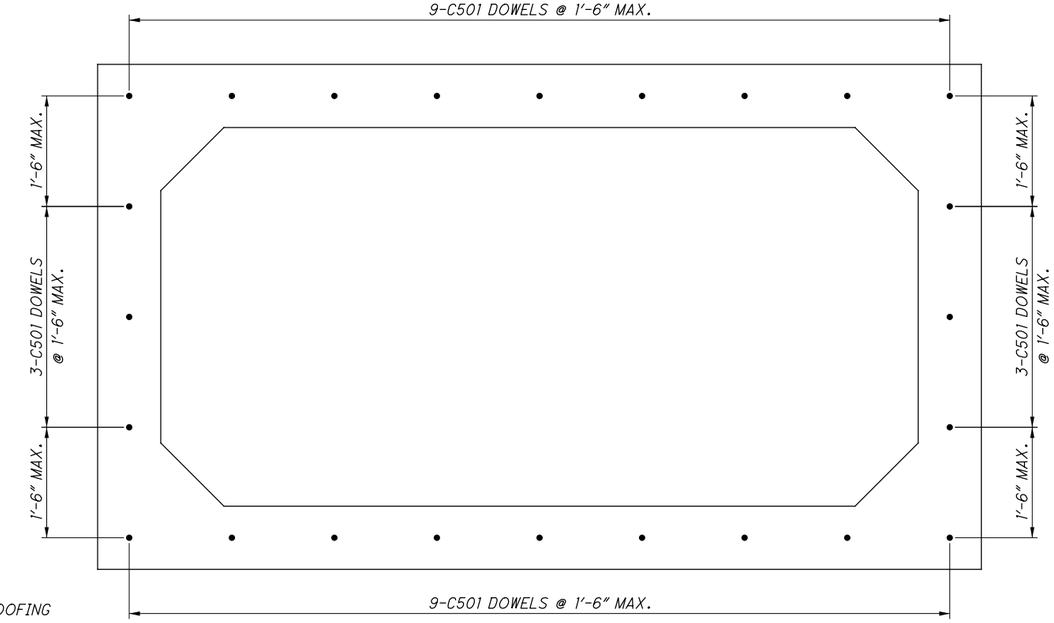


PROP. CULVERT AT FACE OF EX. CULVERT

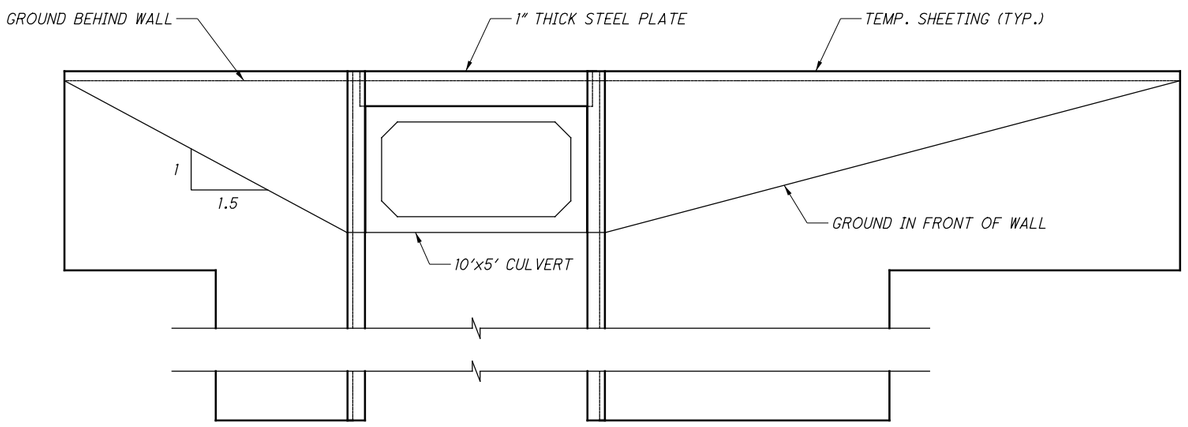


EXCAVATION BRACING DETAIL

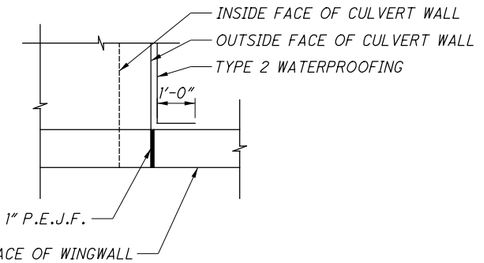


WATERPROOFING DETAIL

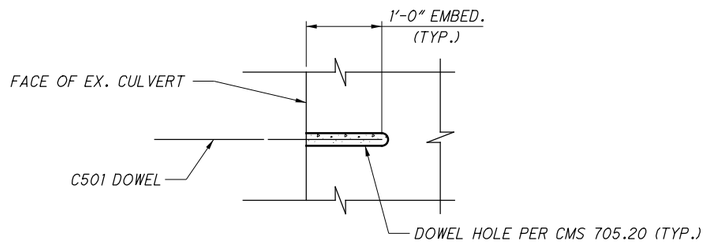


DOWEL DETAIL

DESIGN AGENCY
ms consultants, inc.
2221 Schrock Road
Columbus, Ohio 43229
DESIGNED TVB
DRAWN TVB
CHECKED WER
REVIEWED SR
DATE 05/07/20
REVISED
STRUCTURE FILE NUMBER 7709781

CULVERT DETAILS
I.R. 277 EB RAMP A CULVERT
STA. 102+19

SUM-77/277/224-VAR
PID No. 106002



914
1288

N:\03\60\06744-08\106002_SUM-76-10.95\Design\Drainage\Sheets\106002_DD003.dgn Sheet 1/14/2021 8:36:54 AM sriffle

| MARK | TOTAL | LENGTH | WEIGHT | TYPE | DIMENSIONS | | | | | |
|---|---|---|---|---|---|---|---|---|---|---|
| | | | | | A | B | C | D | E | INC. |
| CULVERT HEADWALL REINFORCING SCHEDULE | | | | | | | | | | |
| F501 | 60 | 6′-8″ | 417 | ST | | | | | | |
| F502 | 8 | 6′-2″ | 51 | ST | | | | | | |
| F503 | 6 | 5′-4″ | 33 | ST | | | | | | |
| | 2 | 23′-2″ | | | | | | | | |
| F504 | SER. OF | TO | 312 | ST | | | | | | |
| | 6 | 26′-9″ | | | | | | | | 0′-8 5/8″ |
| | 2 | 10′-4″ | | | 7′-4″ | 1′-6″ | 2′-8″ | | | |
| F505 | SER. OF | TO | 152 | 19 | TO | TO | TO | | | 0′-8 5/8″ |
| | 6 | 13′-11″ | | | 10′-11″ | 1′-6″ | 2′-8″ | | | |
| F506 | 30 | 8′-1″ | 253 | 2 | 3′-7″ | 1′-2″ | 3′-7″ | | | |
| F507 | 2 | 23′-6″ | 49 | ST | | | | | | |
| F508 | 2 | 10′-7″ | 22 | 19 | 7′-8″ | 1′-2″ | 2′-8″ | | | |
| F509 | 26 | 5′-8″ | 154 | 1 | 10″ | 4′-11″ | | | | |
| F510 | 9 | 5′-0″ | 47 | 1 | 2′-0″ | 3′-1″ | | | | |
| F511 | 3 | 11′-4″ | 35 | ST | | | | | | |
| | | | | | | | | | | |
| | 2 | 5′-0″ | | | | | | | | |
| W501 | SER. OF | TO | 134 | ST | | | | | | 0′-3 3/4″ |
| | 10 | 7′-10″ | | | | | | | | |
| W502 | 20 | 7′-10″ | 163 | ST | | | | | | |
| | 2 | 7′-9″ | | | | | | | | |
| W503 | SER. OF | TO | 96 | ST | | | | | | 0′-7 1/8″ |
| | 7 | 5′-4″ | | | | | | | | |
| W504 | 13 | 3′-6″ | 47 | 2 | 1′-2″ | 8″ | 1′-11″ | | | |
| W505 | 13 | 2′-9″ | 37 | 2 | 1′-2″ | 8″ | 1′-2″ | | | |
| W506 | 8 | 6′-6″ | 54 | ST | | | | | | |
| W507 | 2 | 4′-0″ | 8 | ST | | | | | | |
| W508 | 2 | 10′-0″ | 21 | 19 | 7′-1″ | 1′-1″ | 2′-9″ | | | |
| W509 | 4 | 11′-4″ | 47 | ST | | | | | | |
| W510 | 4 | 14′-10″ | 62 | 19 | 8′-11″ | 3′-0″ | 5′-2″ | | | |
| W511 | 4 | 15′-7″ | 65 | 19 | 9′-3″ | 3′-3″ | 5′-6″ | | | |
| W512 | 1 | 11′-11″ | 12 | 19 | 6′-0″ | 3′-0″ | 5′-2″ | | | |
| W513 | 1 | 12′-8″ | 13 | 19 | 6′-4″ | 3′-3″ | 5′-6″ | | | |
| W514 | 1 | 9′-9″ | 10 | 19 | 3′-10″ | 3′-0″ | 5′-2″ | | | |
| W515 | 1 | 10′-6″ | 11 | 19 | 4′-2″ | 3′-3″ | 5′-6″ | | | |
| W516 | 1 | 5′-10″ | 6 | ST | | | | | | |
| W517 | 1 | 6′-5″ | 7 | ST | | | | | | |
| W518 | 2 | 12′-8″ | 26 | 19 | 7′-10″ | 2′-8″ | 4′-1″ | | | |
| W519 | 2 | 7′-8″ | 16 | 19 | 3′-3″ | 4′-3″ | 1′-3″ | | | |
| | | | | | | | | | | |
| C401 | 132 | 4′-10″ | * | ST | | | | | | |
| C402 | 66 | 11′-4″ | * | ST | | | | | | |
| C403 | 198 | 4′-8″ | * | 1 | 2′-9″ | 2′-0″ | | | | |
| C404 | 76 | 15′-8″ | * | ST | | | | | | |
| C501 | 24 | 3′-2″ | * | ST | | | | | | |
| C601 | 66 | 11′-4″ | * | ST | | | | | | |
| | | | | | | | | | | |
| | | TOTAL = | 2,360 | | | | | | | |

* CULVERT REINFORCING TO BE INCLUDED FOR PAYMENT WITH ITEM 611 - 10′ x 5′ CONDUIT, TYPE A, 706.05, AS PER PLAN

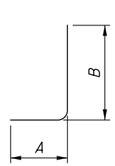


TYPE-1

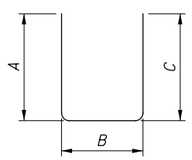


TYPE-2

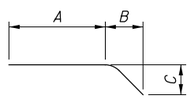


TYPE-19

NOTES:

1. BAR SIZE: THE BAR SIZE NUMBER IS SPECIFIED ON THE PLANS IN THE BAR MARK COLUMN. THE FIRST DIGIT WHERE THREE DIGITS ARE USED AND THE FIRST TWO DIGITS WHERE FOUR DIGITS ARE USED INDICATES THE BAR SIZE NUMBER. FOR EXAMPLE, AN F501 IS A #5 BAR. BAR DIMENSIONS SHOWN ARE OUT TO OUT UNLESS OTHERWISE INDICATED. R INDICATES INSIDE RADIUS, UNLESS OTHERWISE NOTED. "STD." WRITTEN IN PLACE OF A DIMENSION INDICATES A STANDARD BEND AT THE END OF THE BAR.

2. ALL REINFORCING STEEL SHALL BE EPOXY-COATED.

DESIGN AGENCY
ms consultants, inc.
2221 Schrock Road
Columbus, Ohio 43229

DESIGNED TVB | DRAWN TVB | REVIEWED SR | DATE 05/07/20

CHECKED WER | REVISED | STRUCTURE FILE NUMBER 7709781

REINFORCING STEEL LIST
I.R. 277 EB RAMP A CULVERT
STA. 102+19

SUM-77/277/224-VAR
PID No. 106002

5 / 5

915
1288

N:\03\60\06744-08\106002_SUM-76-10.95\Design\Drainage\Sheets\106002_DD005.dgn Sheet 1/14/2021 8:36:55 AM sriffle

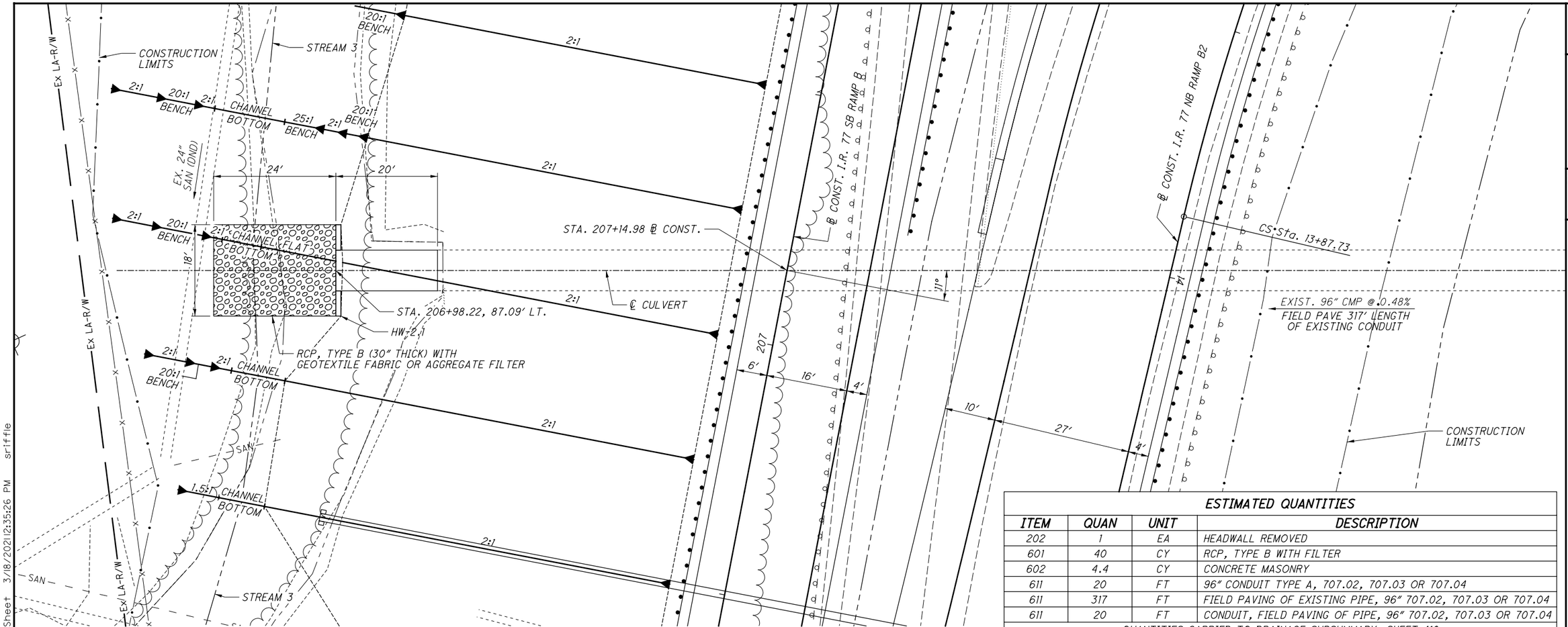


## ESTIMATED QUANTITIES

| ITEM | QUAN | UNIT | DESCRIPTION |
|---|---|---|---|
| 202 | 1 | EA | HEADWALL REMOVED |
| 601 | 40 | CY | RCP, TYPE B WITH FILTER |
| 602 | 4.4 | CY | CONCRETE MASONRY |
| 611 | 20 | FT | 96" CONDUIT TYPE A, 707.02, 707.03 OR 707.04 |
| 611 | 317 | FT | FIELD PAVING OF EXISTING PIPE, 96" 707.02, 707.03 OR 707.04 |
| 611 | 20 | FT | CONDUIT, FIELD PAVING OF PIPE, 96" 707.02, 707.03 OR 707.04 |
| QUANTITIES CARRIED TO DRAINAGE SUBSUMMARY, SHEET 410 | | | |

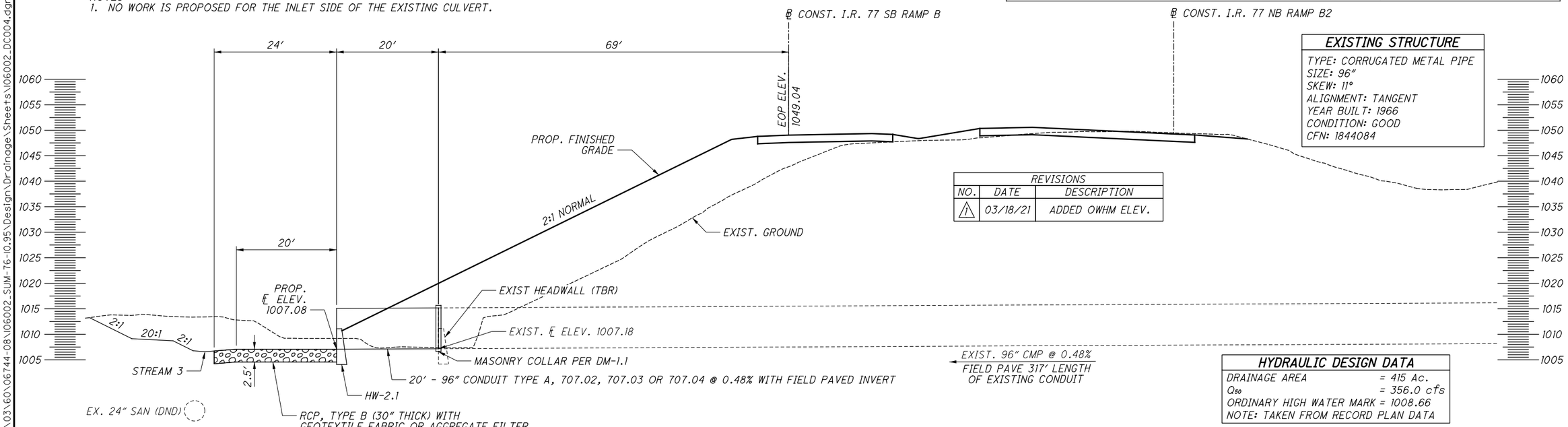


## EXISTING STRUCTURE

TYPE: CORRUGATED METAL PIPE
SIZE: 96"
SKEW: 11°
ALIGNMENT: TANGENT
YEAR BUILT: 1966
CONDITION: GOOD
CFN: 1844084

| REVISIONS | | |
|---|---|---|
| NO. | DATE | DESCRIPTION |
| 1 | 03/18/21 | ADDED OWHM ELEV. |

## HYDRAULIC DESIGN DATA

| | |
|---|---|
| DRAINAGE AREA | = 415 Ac. |
| $Q_{50}$ | = 356.0 cfs |
| ORDINARY HIGH WATER MARK | = 1008.66 |
| NOTE: TAKEN FROM RECORD PLAN DATA | |

HORIZONTAL SCALE IN FEET
0 5 10 20

CALCULATED SSR
CHECKED DLT

# CULVERT DETAIL
# RAMP B STA. 207+15

SUM-77/277/224
VARIOUS

916
1288

N:\03\60\06744-08\06002_SUM-76-10.95\Design\Drainage\Sheets\06002_DC004.dgn Sheet 3/18/2021 2:35:26 PM srieffle

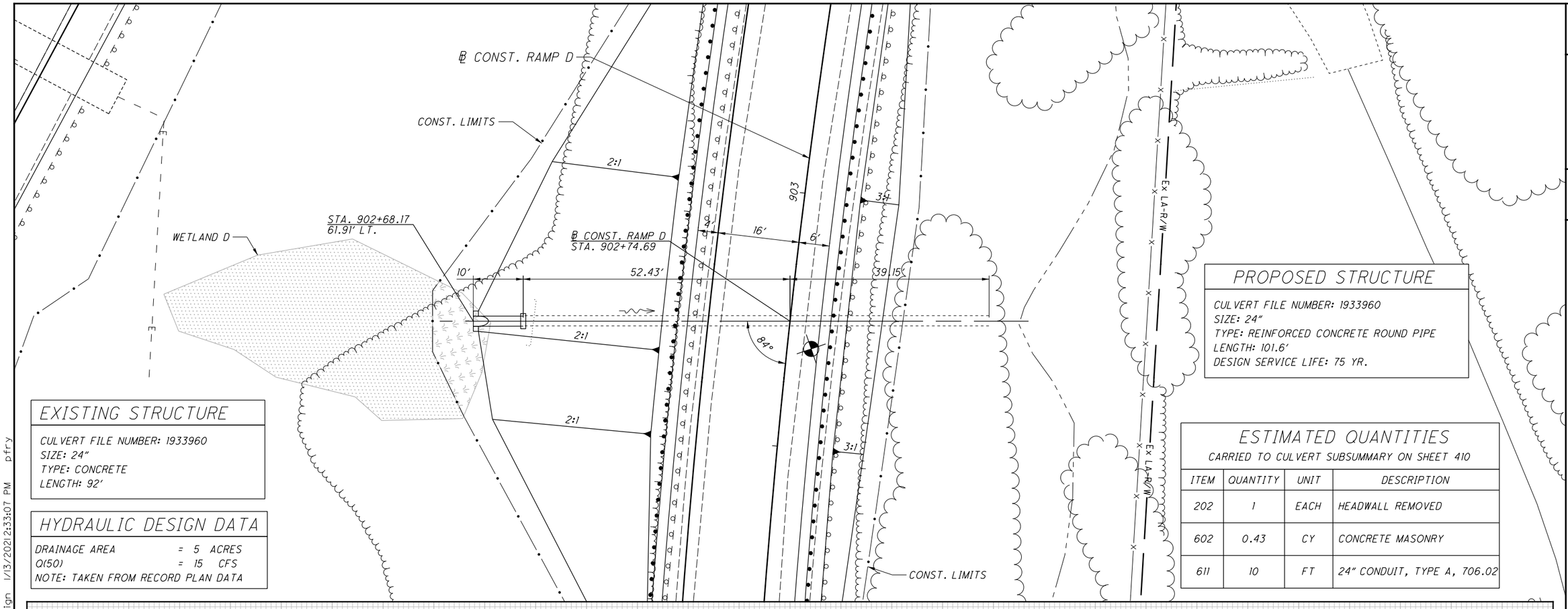


## EXISTING STRUCTURE

CULVERT FILE NUMBER: 1933960
SIZE: 24"
TYPE: CONCRETE
LENGTH: 92'

## HYDRAULIC DESIGN DATA

| | |
|---|---|
| DRAINAGE AREA | = 5 ACRES |
| Q(50) | = 15 CFS |

NOTE: TAKEN FROM RECORD PLAN DATA

## PROPOSED STRUCTURE

CULVERT FILE NUMBER: 1933960
SIZE: 24"
TYPE: REINFORCED CONCRETE ROUND PIPE
LENGTH: 101.6'
DESIGN SERVICE LIFE: 75 YR.

## ESTIMATED QUANTITIES

CARRIED TO CULVERT SUBSUMMARY ON SHEET 410

| ITEM | QUANTITY | UNIT | DESCRIPTION |
|---|---|---|---|
| 202 | 1 | EACH | HEADWALL REMOVED |
| 602 | 0.43 | CY | CONCRETE MASONRY |
| 611 | 10 | FT | 24" CONDUIT, TYPE A, 706.02 |

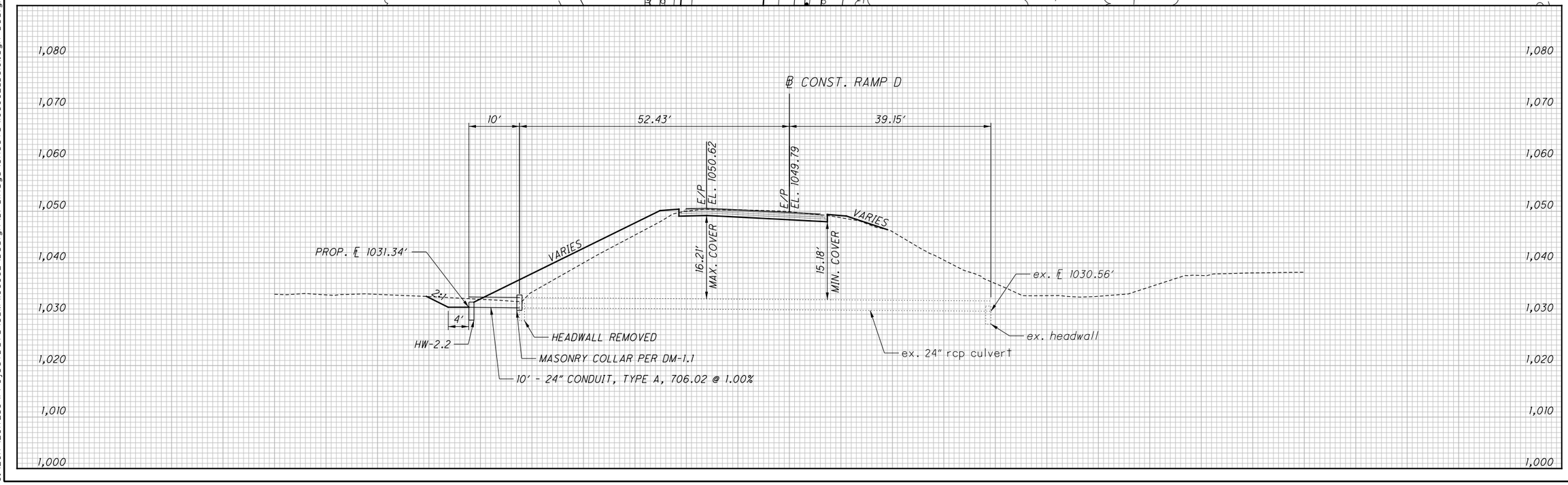


HORIZONTAL SCALE IN FEET
0 5 10 20

CALCULATED ATR
CHECKED PJF

# CULVERT DETAIL
# RAMP D STA. 902+74.69

SUM-77 / 277 / 224
VARIOUS

917
1288

D:\2017\2017258\ProjectData\SUM\106002\Design\Drainage\Sheets\106002_DC101.dgn Design 1/13/2021 2:33:07 PM pfry

## PROPOSED STRUCTURE

CULVERT FILE NUMBER: 1809348
SIZE: 18"
TYPE: REINFORCED CONCRETE ROUND PIPE
LENGTH: 151.6'
DESIGN SERVICE LIFE: 75 YR.

## EXISTING STRUCTURE

CULVERT FILE NUMBER: 1809348
SIZE: 18"
TYPE: CONCRETE
LENGTH: 144'

## HYDRAULIC DESIGN DATA

| | |
|---|---|
| DRAINAGE AREA | = 3 ACRES |
| Q(50) | = 8 CFS |

NOTE: TAKEN FROM RECORD PLAN DATA

## ESTIMATED QUANTITIES

CARRIED TO CULVERT SUBSUMMARY ON SHEET 410

| ITEM | QUANTITY | UNIT | DESCRIPTION |
|---|---|---|---|
| 202 | 1 | EACH | HEADWALL REMOVED |
| 602 | 0.31 | CY | CONCRETE MASONRY |
| 611 | 7 | FT | 18" CONDUIT, TYPE A, 706.02 |

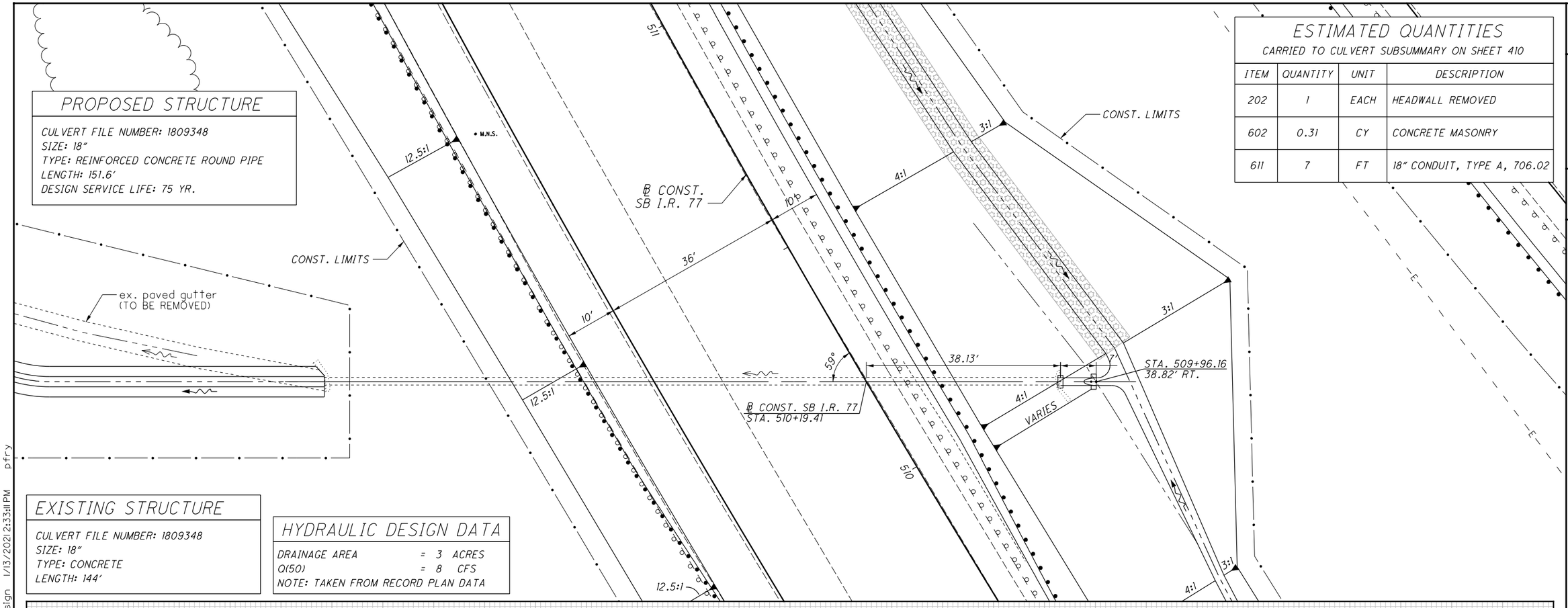


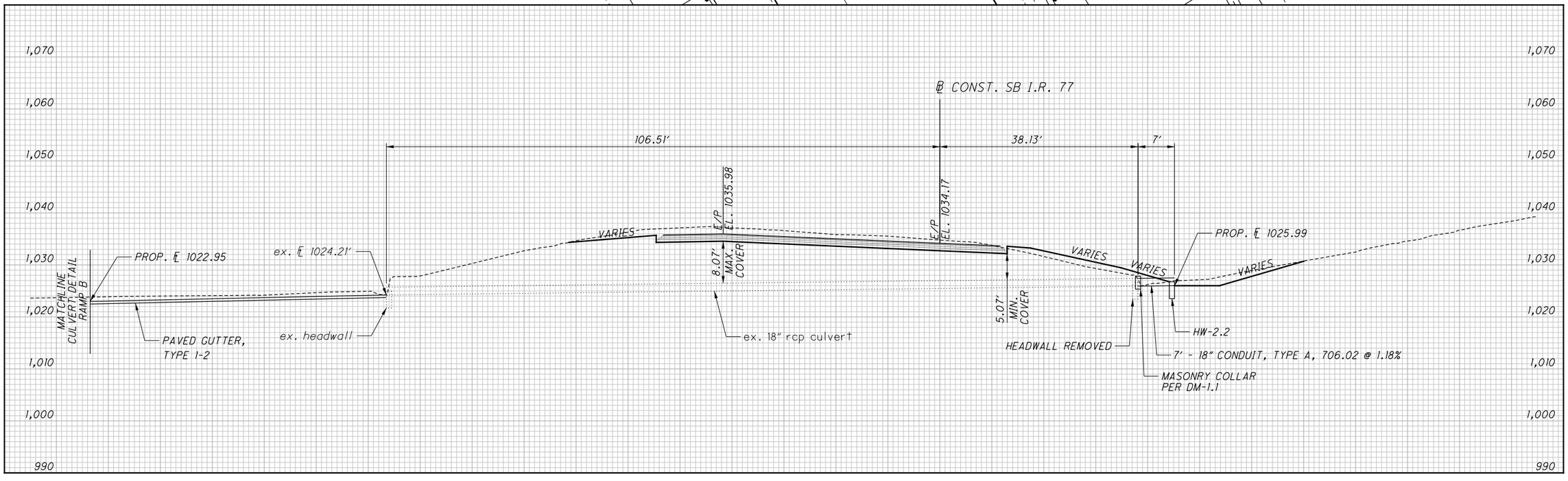


HORIZONTAL SCALE IN FEET
0 5 10 20

CALCULATED ATR
CHECKED PJF

# CULVERT DETAIL
# SB I.R. 77 STA. 510+19.41

SUM-77 / 277 / 224
VARIOUS

918
1288

D:\2017\2017258\ProjectData\SUM\106002\Design\Drainage\Sheets\106002_DC102.dgn Design 1/13/2021 2:33:11 PM pfry

## HYDRAULIC DESIGN DATA

| | | |
|---|---|---|
| DRAINAGE AREA | = | 6.25 ACRES |
| Q(25) | = | 28.6 CFS |
| Q(100) | = | 33.3 CFS |

## EXISTING STRUCTURE

CULVERT FILE NUMBER: 1933857
SIZE: 24"
TYPE: PLASTIC
LENGTH: 177'

## PROPOSED STRUCTURE

CULVERT FILE NUMBER: 1985989
SIZE: 30"
TYPE: STEEL ROUND PIPE
LENGTH: 180.0'
DESIGN SERVICE LIFE: 75 YR.

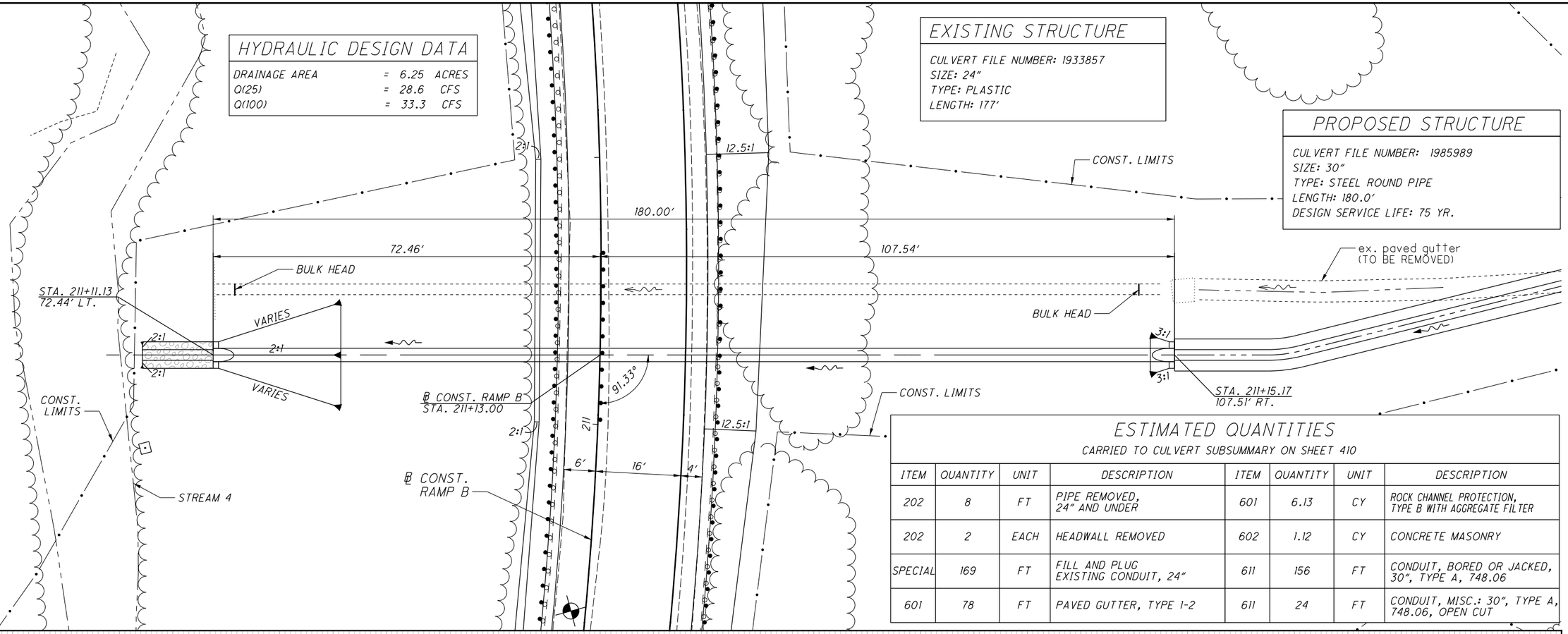


## ESTIMATED QUANTITIES

CARRIED TO CULVERT SUBSUMMARY ON SHEET 410

| ITEM | QUANTITY | UNIT | DESCRIPTION | ITEM | QUANTITY | UNIT | DESCRIPTION |
|---|---|---|---|---|---|---|---|
| 202 | 8 | FT | PIPE REMOVED, 24" AND UNDER | 601 | 6.13 | CY | ROCK CHANNEL PROTECTION, TYPE B WITH AGGREGATE FILTER |
| 202 | 2 | EACH | HEADWALL REMOVED | 602 | 1.12 | CY | CONCRETE MASONRY |
| SPECIAL | 169 | FT | FILL AND PLUG EXISTING CONDUIT, 24" | 611 | 156 | FT | CONDUIT, BORED OR JACKED, 30", TYPE A, 748.06 |
| 601 | 78 | FT | PAVED GUTTER, TYPE 1-2 | 611 | 24 | FT | CONDUIT, MISC.: 30", TYPE A, 748.06, OPEN CUT |

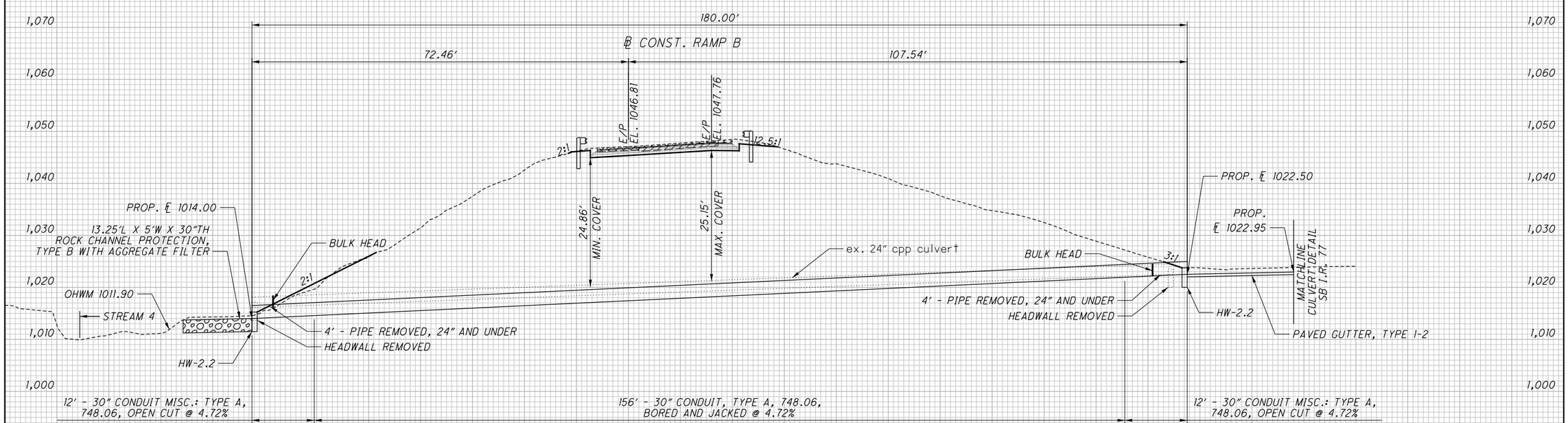


HORIZONTAL SCALE IN FEET
0 5 10 20

CALCULATED ATR
CHECKED PJF

# CULVERT DETAIL
# RAMP B STA. 211+13.00

SUM-77/277/224
VARIOUS

919
1288

0:\2017\2017258\ProjectData\SUM\06002\Design\Drainage\Sheets\06002_DC03.dgn Design 1/13/2021 2:33:5 PM pfry

## ESTIMATED QUANTITIES

CARRIED TO CULVERT SUBSUMMARY ON SHEET 410

| ITEM | QUANTITY | UNIT | DESCRIPTION | ITEM | QUANTITY | UNIT | DESCRIPTION |
|---|---|---|---|---|---|---|---|
| 202 | 8 | FT | PIPE REMOVED, 24" AND UNDER | 602 | 1.12 | CY | CONCRETE MASONRY |
| 202 | 2 | EACH | HEADWALL REMOVED | 611 | 138 | FT | CONDUIT, BORED OR JACKED, 30", TYPE A, 748.06 |
| SPECIAL | 139 | FT | FILL AND PLUG EXISTING CONDUIT, 24" | 611 | 22 | FT | CONDUIT, MISC.: 30", TYPE A, 748.06, OPEN CUT |
| 601 | 2.22 | CY | ROCK CHANNEL PROTECTION, TYPE C, WITH AGGREGATE FILTER | | | | |

## EXISTING STRUCTURE

CULVERT FILE NUMBER: 1933853
SIZE: 24"
TYPE: CONCRETE
LENGTH: 147'

## HYDRAULIC DESIGN DATA

| | | |
|---|---|---|
| DRAINAGE AREA | = 4.64 | ACRES |
| Q(25) | = 16.6 | CFS |
| Q(100) | = 19.7 | CFS |

## PROPOSED STRUCTURE

CULVERT FILE NUMBER: 1985990
SIZE: 30"
TYPE: STEEL ROUND PIPE
LENGTH: 160.0'
DESIGN SERVICE LIFE: 75 YR.

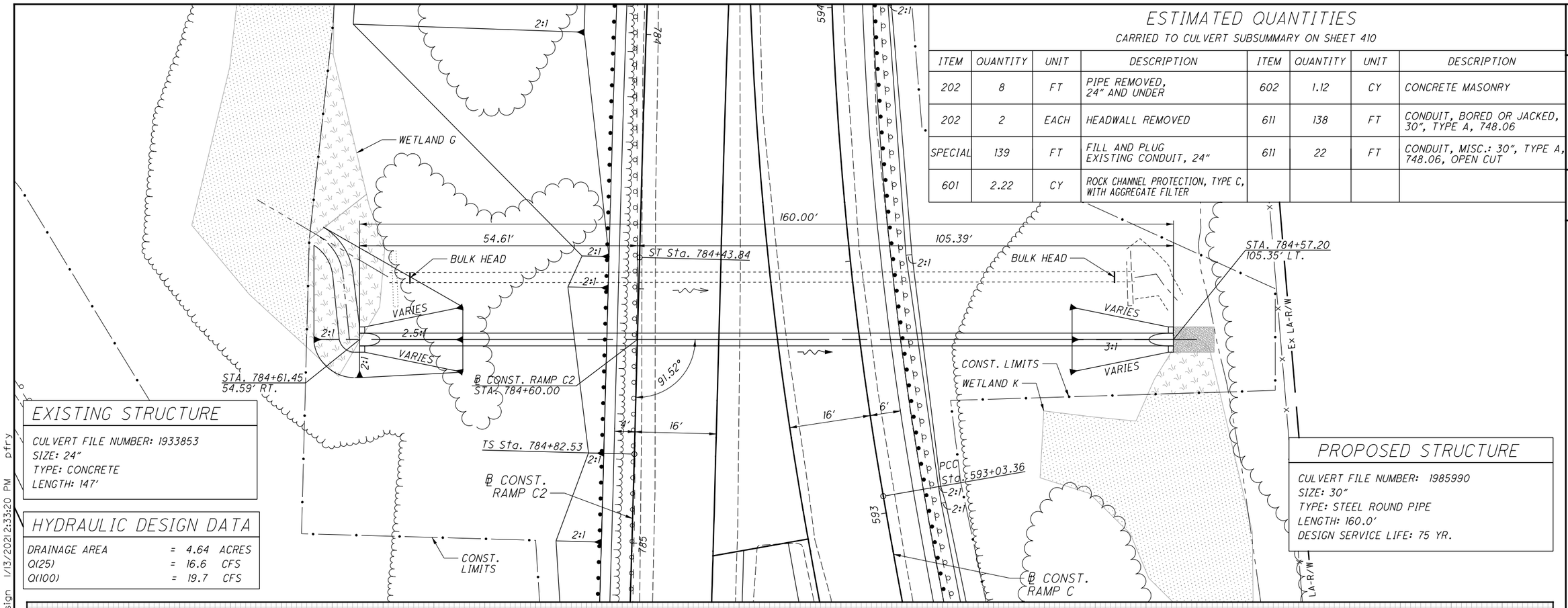


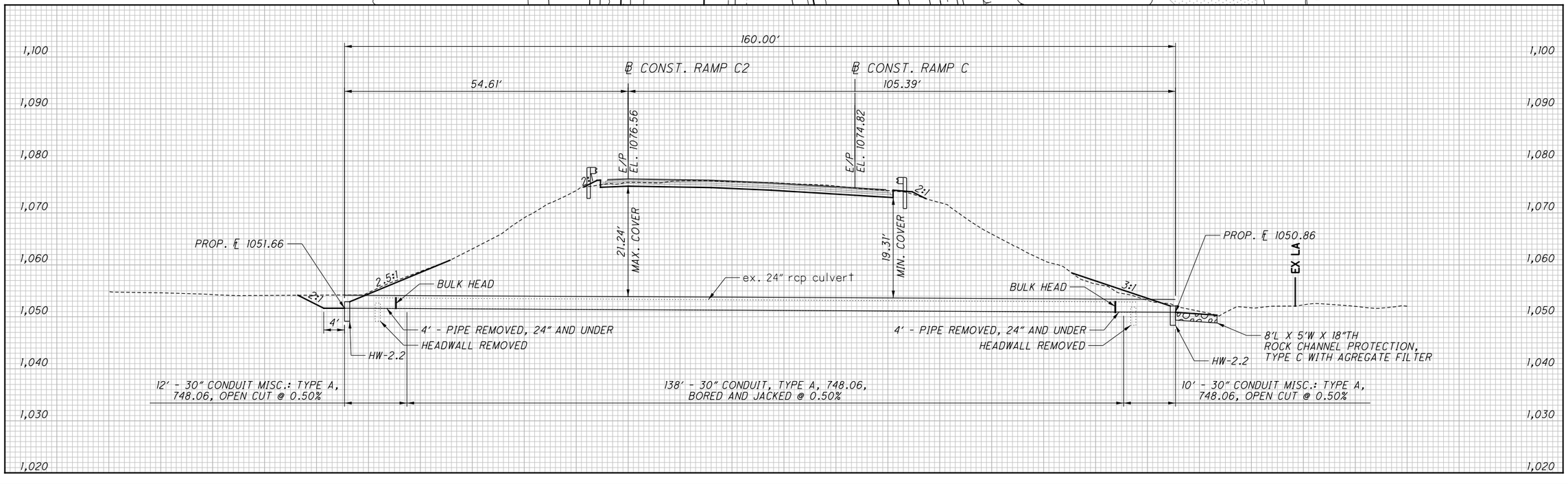


HORIZONTAL SCALE IN FEET
0 5 10 20

CALCULATED ATR
CHECKED PJF

# CULVERT DETAIL
# RAMP C-2 STA. 784+60.00

SUM-77 / 277 / 224
VARIOUS

920
1288

O:\2017\2017258\ProjectData\SUM\106002\Design\Drainage\Sheets\106002_DC104.dgn Design 1/13/2021 2:33:20 PM pfry

NOTE: PROFILE SHOWN ALONG ℄ OF PIPE

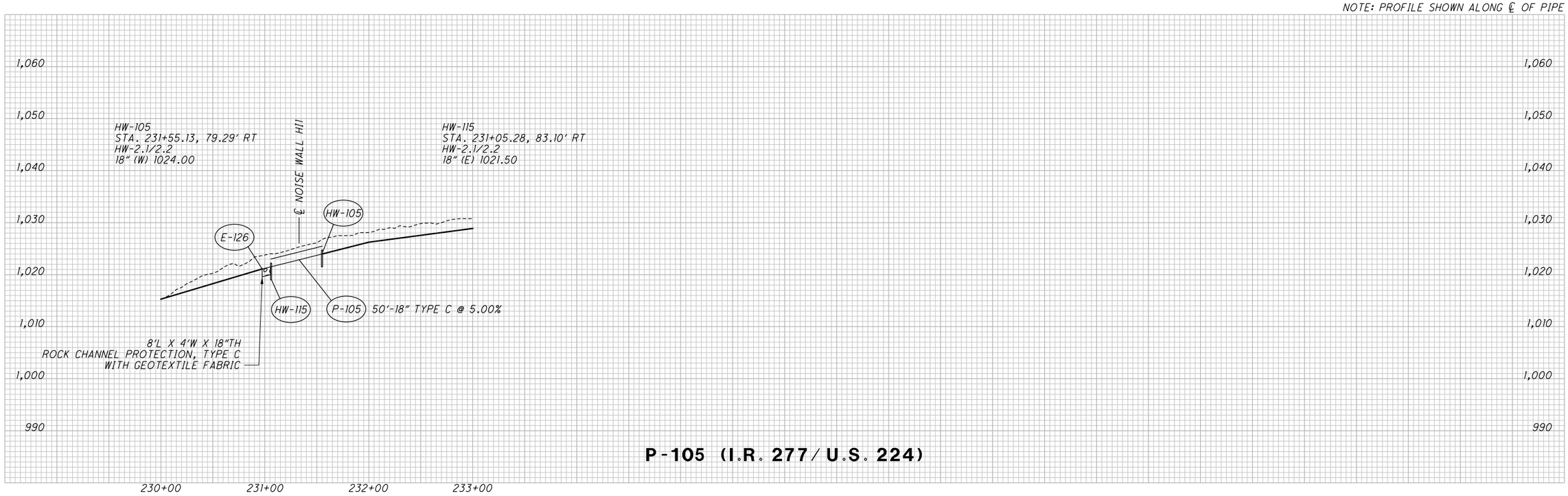


## P-105 (I.R. 277/U.S. 224)

NOTE: PROFILE SHOWN ALONG ℄ OF PIPE

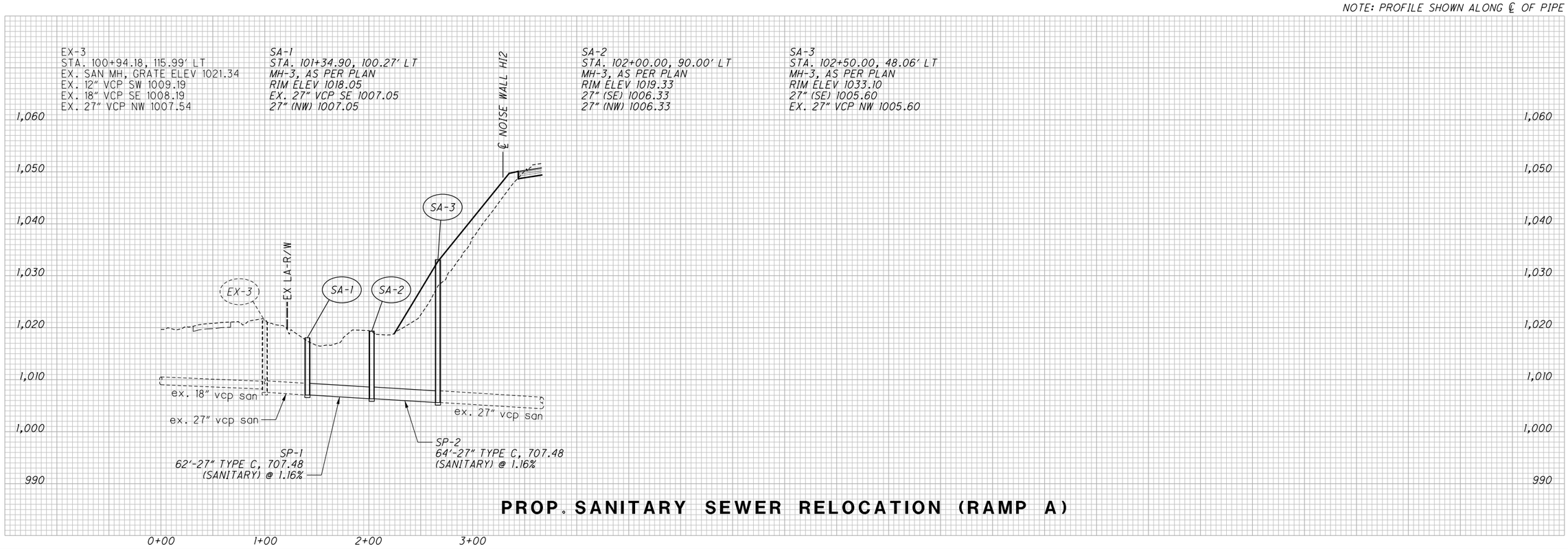


## PROP. SANITARY SEWER RELOCATION (RAMP A)

CALCULATED CJC
CHECKED PJF

# STORM AND SANITARY SEWER PROFILES

SUM-77/277/224
VARIOUS

921
1288

O:\2017\2017258\ProjectData\SUM\106002\Design\Drainage\Sheets\106002_DF001.dgn Design 1/13/2021 6:22:43 PM pfry

D-1
STA. 395+00.00, 3.17' LT
I-3-C1
GRATE LT
WINDOW ELEV LT 1100.12
WINDOW ELEV RT 1100.26
15" (N) 1094.79
6" UD (W) 1096.29
6" UD (E) 1096.29

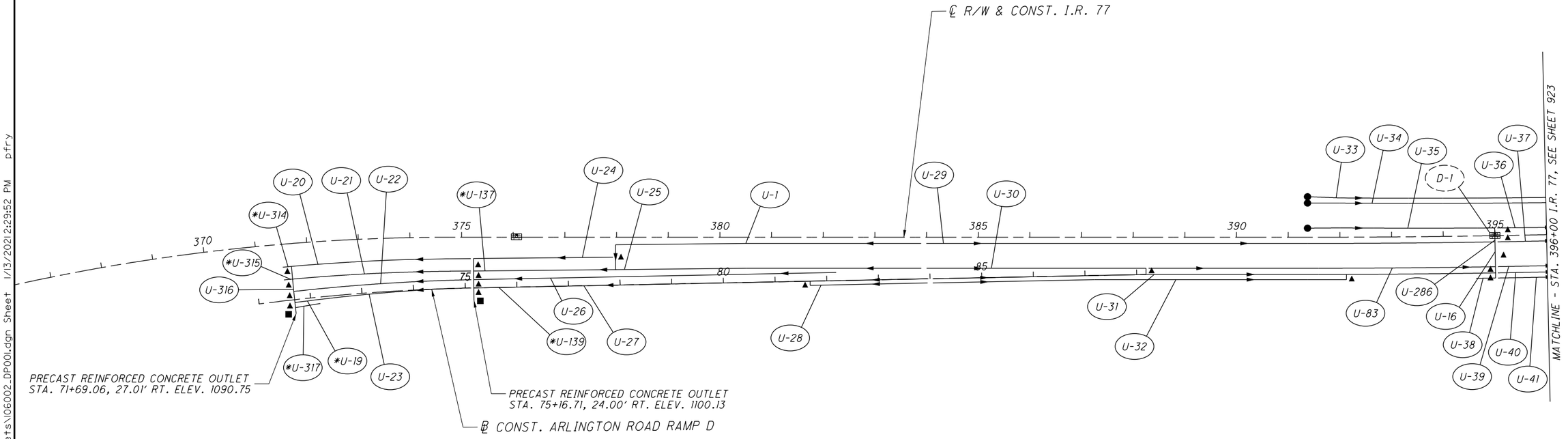


(*U-#) SEE UNCLASSIFIED UNDERDRAIN TABLE FOR DATA ON THIS SHEET.

UNCLASSIFIED UNDERDRAIN TABLE

| UD CODE | BEGIN | | | LENGTH | OUTLET | | | SLOPE |
|---|---|---|---|---|---|---|---|---|
| | STA. | OFFSET | ELEV. | | STRUCT. NO. | STA. | ELEV. | |
| U-19 | 72+25.00 | 4.44 | 1091.36 | 55.87' | U-22 | 71+69.06 | 1090.85 | 0.91% |
| U-137 | 376+06.25 | 64.44 | 1101.80 | 83.12' | U-24 | 375+23.14 | 1101.06 | 0.88% |
| U-139 | 76+00.00 | 0.00 | 1101.16 | 83.29' | U-26 | 75+17.71 | 1100.20 | 1.16% |
| U-314 | 371+50.00 | 44.31 | 1094.01 | 16.72' | U-20 | 371+66.91 | 1093.72 | 1.73% |
| U-315 | 371+50.00 | 69.00 | 1091.69 | 16.80' | U-20 | 371+67.11 | 1091.43 | 1.55% |
| U-317 | 72+17.82 | 12.57 | 1091.97 | 48.67' | U-22 | 71+69.06 | 1090.80 | 2.40% |

● CONNECT TO EXISTING UNDERDRAIN
▲ 6" TYPE B
■ 6" TYPE F

N

0 50 100 200
HORIZONTAL SCALE IN FEET

CALCULATED DRJ
CHECKED PJF

# UNDERDRAIN PLAN
## BEGIN TO STA. 396+00 I.R. 77

SUM-77 / 277 / 224
VARIOUS

922
1288

D:\2017\2017258\ProjectData\SUM\106002\Design\Drainage\Sheets\106002_DP001.dgn Sheet 1/3/2021 2:29:52 PM pfry

D-2
STA. 397+50.00, 3.17' LT
I-3-C1
GRATE LT
WINDOW ELEV LT 1094.13
WINDOW ELEV RT 1094.15
15" (S) 1089.05
18" (N) 1088.80
6" UD (W) 1090.30
6" UD (E) 1090.30

D-3
STA. 400+00.00, 2.75' LT
I-3-B1
GRATE LT
WINDOW ELEV LT/RT 1087.86
18" (S) 1082.53
18" (N) 1082.53
6" UD (W) 1084.03
6" UD (E) 1084.03

D-4
STA. 402+50.00, 2.75' LT
I-3-B1
GRATE LT
WINDOW ELEV LT/RT 1081.57
18" (S) 1076.24
18" (N) 1076.24
6" UD (E) 1077.74
6" UD (W) 1077.74

D-5
STA. 405+04.00, 2.75' LT
I-3-B1
GRATE LT
WINDOW ELEV LT/RT 1075.17
18" (S) 1070.09
21" (E) 1069.23
6" UD (W) 1071.34
6" UD (S) 1071.34

D-6
STA. 409+00.00, 2.75' LT
I-3-B1
GRATE ELEV LT/RT 1065.20
15" (N) 1059.87
6" UD (W) 1061.37
6" UD (E) 1061.37

D-7
STA. 412+11.50, 2.75' LT
I-3-B1
GRATE ELEV LT/RT 1057.36
15" (S) 1052.02
15" (E) 1049.00
6" UD (W) 1053.53
6" UD (S) 1053.53

D-8
STA. 416+00.00, 2.75' LT
I-3-B1
GRATE ELEV LT/RT 1047.58
15" (N) 1042.25
6" UD (W) 1043.75
6" UD (E) 1043.75

D-9
STA. 419+04.50, 2.75' LT
I-3-B1
GRATE ELEV LT/RT 1039.92
15" (S) 1035.09
15" (W) 1035.09
6" UD (S) 1036.09
6" UD (E) 1036.09

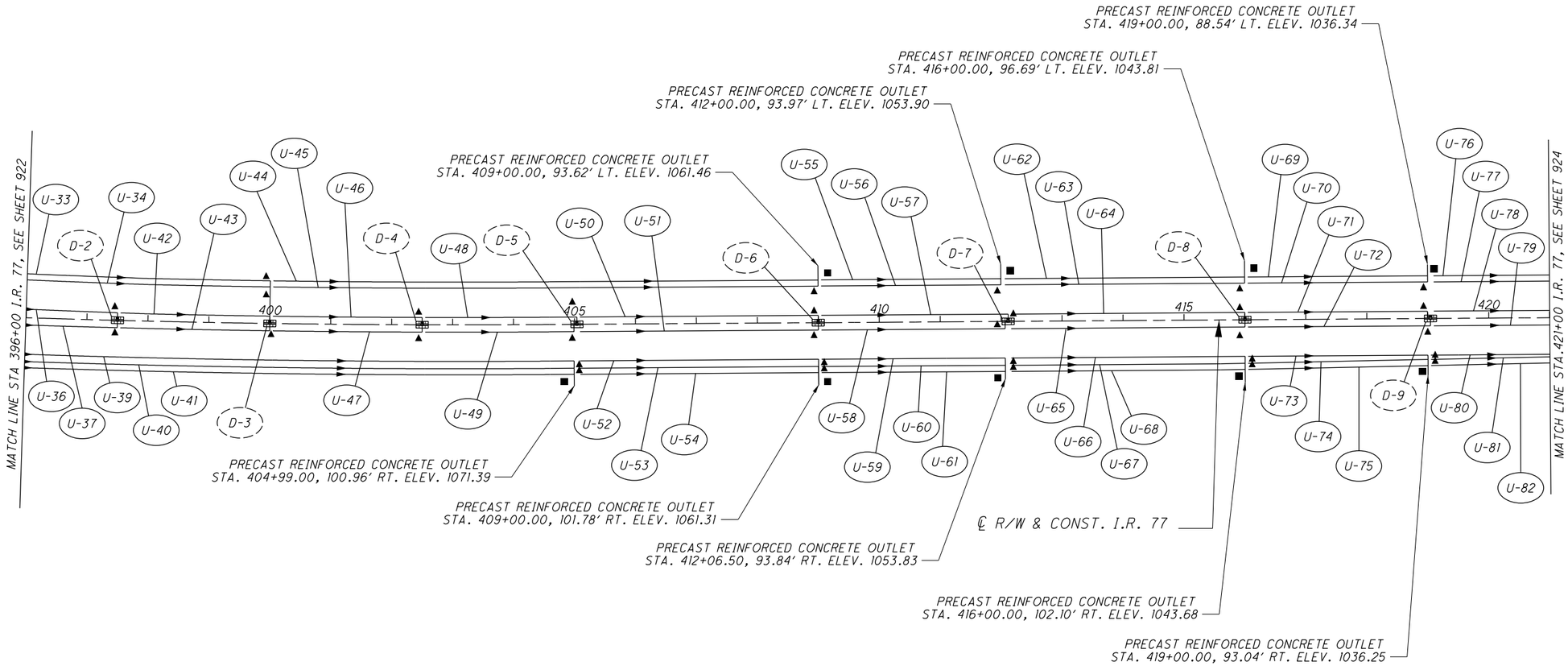


● CONNECT TO EXISTING UNDERDRAIN
▲ 6" TYPE B
■ 6" TYPE F

N

0 50 100 200 HORIZONTAL SCALE IN FEET

CALCULATED DRJ
CHECKED PJF

# UNDERDRAIN PLAN
## STA. 396+00 TO STA. 421+00

SUM-77 / 277 / 224
VARIOUS

923
1288

O:\2017\20I7258\ProjectData\SUM\I06002\Design\Drainage\Sheets\I06002_DP002.dgn Design 1/13/2021 2:29:56 PM pfry

D-10
STA. 422+00.00, 3.17' LT
I-3-C1
GRATE LT
WINDOW ELEV LT 1032.40
WINDOW ELEV RT 1032.32
15" (N) 1026.99
6" UD (W) 1028.57
6" UD (E) 1028.49

D-11
STA. 425+00.00, 3.17' LT
I-3-C1
GRATE LT
WINDOW ELEV LT 1024.66
WINDOW ELEV RT 1024.59
15" (S) 1019.09 "OFFSET"
15" (W) 1019.09
6" UD (N) 1020.67
6" UD (S) 1020.67
6" UD (E) 1020.59

D-12
STA. 428+50.00, 3.17' LT
I-3-C1
GRATE LT
WINDOW ELEV LT 1017.55
WINDOW ELEV RT 1017.52
15" (W) 1012.14
15" (S) 1012.14
6" UD (N) 1013.71
6" UD (S) 1013.71
6" UD (E) 1013.64

D-13
STA. 431+50.00, 3.17' RT
I-3-C1
GRATE RT
WINDOW ELEV LT 1015.06
WINDOW ELEV RT 1014.93
15" (N) 1009.49
6" UD (W) 1011.11
6" UD (E) 1010.99

D-14
STA. 432+50.00, 3.17' RT
I-3-C1
GRATE RT
WINDOW ELEV LT 1014.77
WINDOW ELEV RT 1014.62
15" (N) 1008.93
15" (S) 1008.93
15" (W) 1008.93
6" UD (N) 1010.94
6" UD (S) 1010.94
6" UD (E) 1010.79

D-15
STA. 433+50.00, 3.17' RT
I-3-C1
GRATE RT
WINDOW ELEV LT 1014.96
WINDOW ELEV RT 1014.76
15" (S) 1009.43
6" UD (W) 1011.13
6" UD (E) 1010.93

D-16
STA. 436+02.00, 3.17' RT
I-3-C1
GRATE RT
WINDOW ELEV LT 1016.93
WINDOW ELEV RT 1016.60
15" (N) 1011.52
15" (W) 1011.52
6" UD (N) 1013.10
6" UD (E) 1012.77

D-17
STA. 439+00.00, 3.17' RT
I-3-C1
GRATE RT
WINDOW ELEV LT 1020.09
WINDOW ELEV RT 1019.58
15" (S) 1014.25
6" UD (W) 1016.26
6" UD (E) 1015.75

D-18
STA. 444+10.00, 3.17' RT
I-3-C1
GRATE RT
WINDOW ELEV LT 1025.49
WINDOW ELEV RT 1024.68
15" (N) 1019.35
15" (W) 1019.35
6" UD (N) 1021.66
6" UD (E) 1020.85

D-46
STA 427+40.06, 77.78' LT
CB-3A, GRATE ELEV 1019.20
15" (W) 1014.87
6" UD (S) 1016.37

D-47
STA 431+63.18, 77.50' RT
CB-3A, GRATE ELEV 1014.84
15" (W) 1010.29
6" UD (S) 1012.01

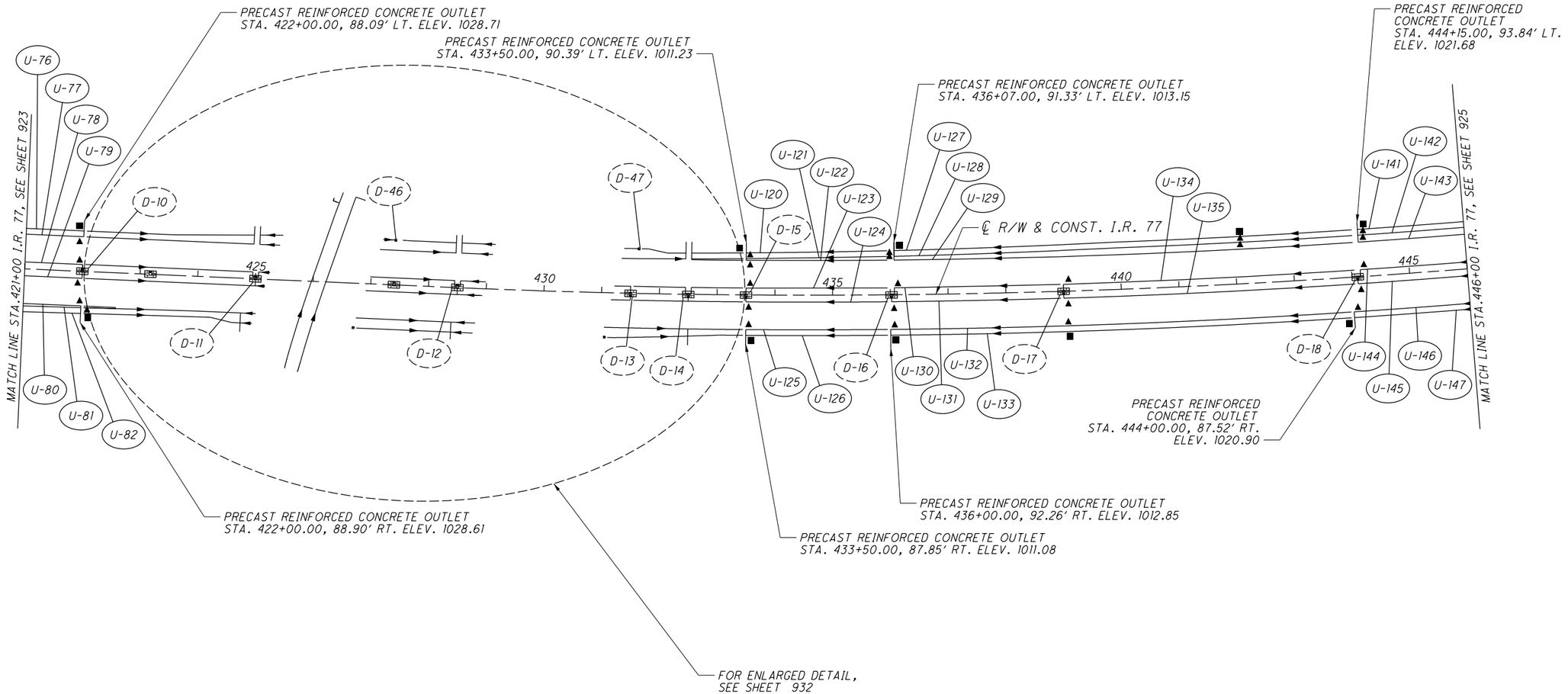


● CONNECT TO EXISTING UNDERDRAIN
▲ 6" TYPE B
■ 6" TYPE F

HORIZONTAL SCALE IN FEET
0 50 100 200

CALCULATED DRJ
CHECKED PJF

# UNDERDRAIN PLAN
## STA. 421+00 TO STA. 446+00

SUM-77 / 277 / 224
VARIOUS

924
1288

O:\2017\2017258\ProjectData\SUM\106002\Design\Drainage\Sheets\106002_DP003.dgn Design 1/13/2021 2:30:00 PM pfry

D-19
STA. 447+00.00, 3.17' RT
I-3-C1
GRATE RT
WINDOW ELEV LT 1028.57
WINDOW ELEV RT 1027.58
15" (S) 1022.25
6" UD (W) 1024.74
6" UD (E) 1023.75

D-20
STA. 450+02.00, 3.17' RT
I-3-C1
GRATE RT
WINDOW ELEV LT 1031.77
WINDOW ELEV RT 1030.61
15" (N) 1025.78
15" (E) 1025.78
6" UD (W) 1027.94
6" UD (N) 1026.77

D-21
STA. 453+00.00, 3.17' RT
I-3-C1
GRATE RT
WINDOW ELEV LT 1034.93
WINDOW ELEV RT 1033.48
15" (N) 1028.15
15" (S) 1028.15
6" UD (W) 1031.10
6" UD (E) 1029.65

D-22
STA. 458+10.00, 3.17' RT
I-3-C1
GRATE RT
WINDOW ELEV LT 1040.33
WINDOW ELEV RT 1038.47
21" (N) 1033.89
24" (E) 1033.64
6" UD (W) 1036.50
6" UD (N) 1034.64

D-23
STA. 461+00.00, 3.17' RT
I-3-C1
GRATE LT
WINDOW ELEV LT 1043.41
WINDOW ELEV RT 1041.52
18" (N) 1036.44 "OFFSET"
21" (S) 1036.19
6" UD (W) 1039.58
6" UD (E) 1037.69

D-24
STA. 464+00.00, 3.17' RT
I-3-C1
GRATE RT
WINDOW LT ELEV 1046.33
WINDOW RT ELEV 1044.40
15" (N) 1039.32
18" (S) 1039.07 "OFFSET"
6" UD (W) 1042.50
6" UD (E) 1040.57

D-25
STA. 467+75.00, 3.17' RT
I-3-C1
GRATE RT
WINDOW LT ELEV 1048.94
WINDOW RT ELEV 1047.23
15" (N) 1042.40
15" (S) 1041.90
6" UD (W) 1045.11
6" UD (E) 1043.40

D-59
STA 469+90.00, 21.33' LT
CB-6, GRATE ELEV 1048.09
15" (E) 1044.44
6" UD (N) 1045.13

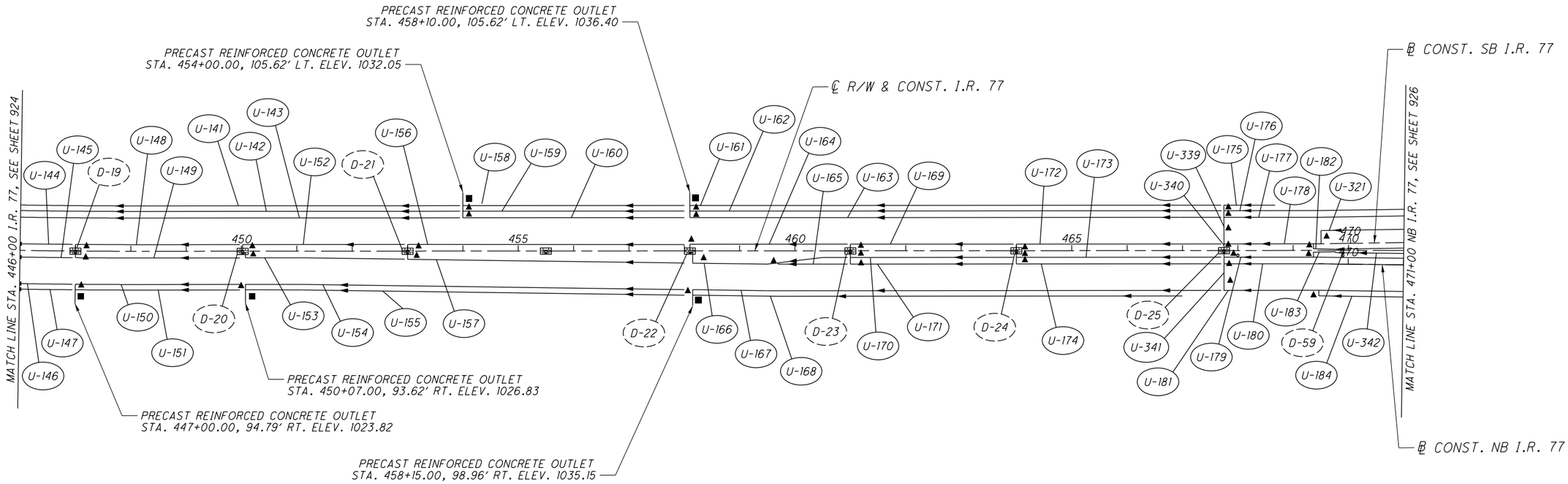


● CONNECT TO EXISTING UNDERDRAIN
▲ 6" TYPE B
■ 6" TYPE F

HORIZONTAL SCALE IN FEET
0 50 100 200

CALCULATED DRJ
CHECKED PJF

# UNDERDRAIN PLAN
## STA. 446+00 I.R. 77 TO STA. 471+00 NB I.R. 77

SUM-77 / 277 / 224
VARIOUS

925
1288

O:\2017\2017258\ProjectData\SUM\06002\Design\Drainage\Sheets\06002_DP004.dgn Design 1/13/2021 2:30:03 PM pfry

D-55
STA 483+00.00, 34.75' LT
CB-8, GRATE ELEV 1038.45
21" (N) 1035.45
6" UD (NE) 1036.67

D-57
STA 471+30.00, 21.33' LT
CB-6, GRATE ELEV 1048.52
15" (E) 1044.87
6" UD (N) 1045.56

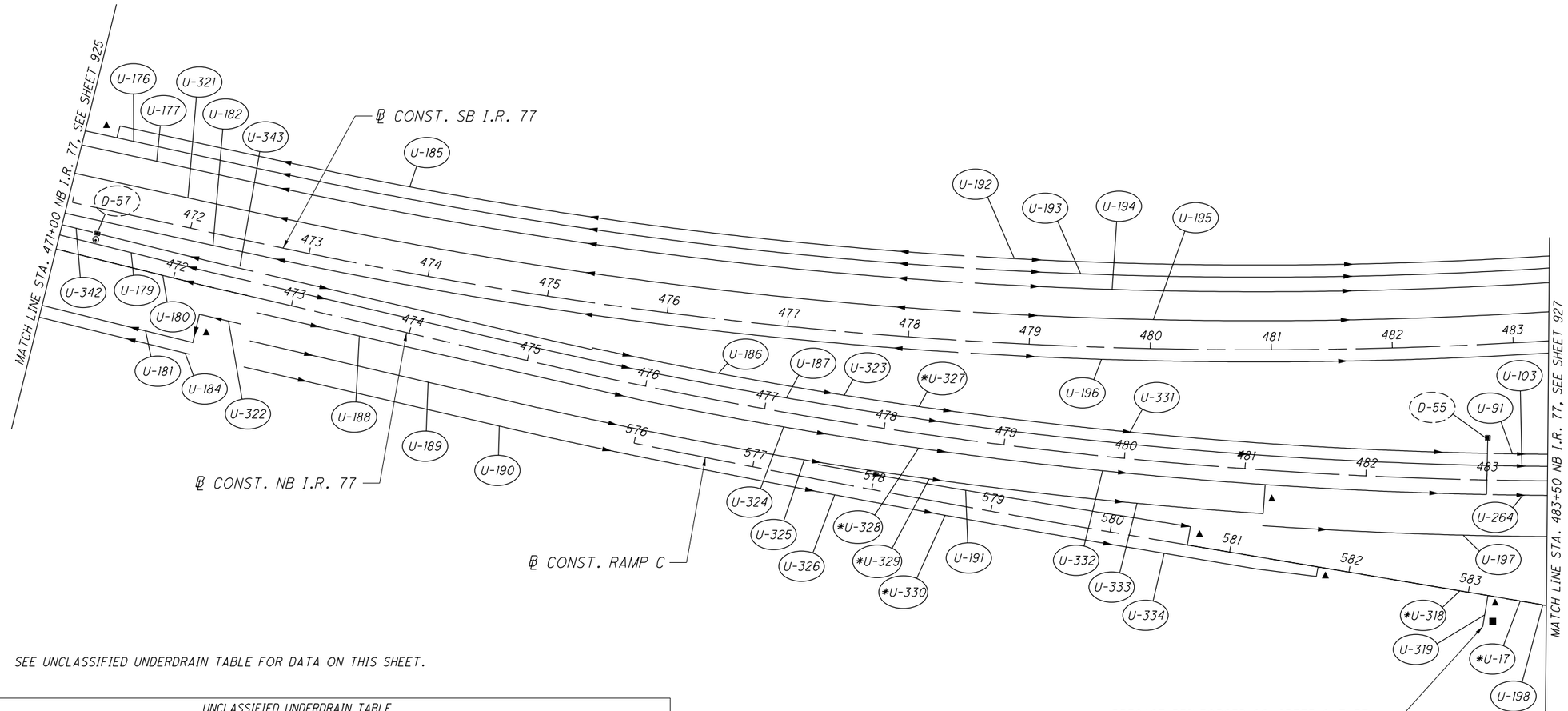


*U-# SEE UNCLASSIFIED UNDERDRAIN TABLE FOR DATA ON THIS SHEET.

UNCLASSIFIED UNDERDRAIN TABLE

| UD CODE | BEGIN | | | LENGTH | OUTLET | | | SLOPE |
|---|---|---|---|---|---|---|---|---|
| | STA. | OFFSET | ELEV. | | STRUCT. NO. | STA. | ELEV. | |
| U-17 | 583+50.00 | 0.00 | 1040.67 | 33.60' | U-319 | 583+16.40 | 1040.27 | 1.19% |
| U-318 | 582+83.01 | 0.00 | 1040.47 | 33.39' | U-319 | 583+16.40 | 1040.27 | 0.60% |
| U-327 | 478+00.00 | 22.00 | 1042.15 | 149.15' | U-331 | 479+50.00 | 1041.73 | 0.28% |
| U-328 | 478+00.00 | 12.00 | 1043.69 | 150.46' | U-332 | 479+50.00 | 1043.27 | 0.28% |
| U-329 | 478+00.00 | 24.00 | 1044.77 | 151.38' | U-333 | 479+50.00 | 1044.35 | 0.28% |
| U-330 | 578+00.00 | 10.00 | 1044.68 | 150.12' | U-334 | 579+50.00 | 1044.48 | 0.13% |

● CONNECT TO EXISTING UNDERDRAIN
▲ 6" TYPE B
■ 6" TYPE F

HORIZONTAL SCALE IN FEET
0 25 50 100

CALCULATED DRJ
CHECKED PJF

# UNDERDRAIN PLAN
## STA. 471+00 TO STA. 483+50

SUM-77/277/224
VARIOUS

926
1288

0:\2017\2017258\ProjectData\SUM\06002\Design\Drainage\Sheets\06002_DP005.dgn Design 1/13/2021 2:30:05 PM pfry

D-26
STA 286+00.00, 22.75' LT
CB-8, GRATE ELEV 1034.58
21" (N) 1031.58
21" (SE) 1031.58
6" UD (NE) 1032.58

D-40
STA 293+75.00, 12.00' LT
CB-3A, GRATE ELEV 1029.15
15" (NW) 1024.65
15" (SE) 1024.65
6" UD (NE) 1025.32
6" UD (NW) 1026.32
6" UD (SE) 1025.32

D-34
STA 495+00.30, 91.25' RT
CB-8, GRATE ELEV 1030.00
24" (SW) 1026.68
6" UD (NE) 1028.18
6" UD (SW) 1028.18

D-42
STA 494+00.00, 30.75' RT
CB-8, GRATE ELEV 1041.00
15" (SW) 1037.50
6" UD (SW) 1039.50

D-29
STA 493+16.33, 6.24' LT
MH-3, RIM ELEV 1031.40
21" (E) 1025.78
30" (NW) 1024.28
36" (SW) 1023.78
6" UD (NE) 1027.40

D-30
STA 292+96.00, 12.00' LT
CB-3, AS PER PLAN
GRATE ELEV 1028.95
15" (NW) 1024.15
36" (NE) 1023.65
36" (S) 1023.65
6" UD (SE) 1025.12

D-33
STA 495+00.00, 10.00' LT
CB-6, AS PER PLAN
GRATE ELEV 1032.44
15" (NW) 1026.45
24" (NE) 1026.20
30" (SE) 1025.20
6" UD (NW) 1028.48

D-41
STA 295+50.00, 32.75' RT
I-3-D, GRATE ELEV 1031.74
15" (NW) 1026.83
15" (SE) 1026.83
6" UD (NW) 1028.91

D-43
STA 794+95.02, 2.75' RT
I-3-D, GRATE ELEV 1044.71
15" (NE) 1039.38
6" UD (SW) 1040.88

D-31
STA 492+50.00, 65.25' RT
CB-8, GRATE ELEV 1030.45
21" (W) 1026.91
6" UD (SE) 1028.45

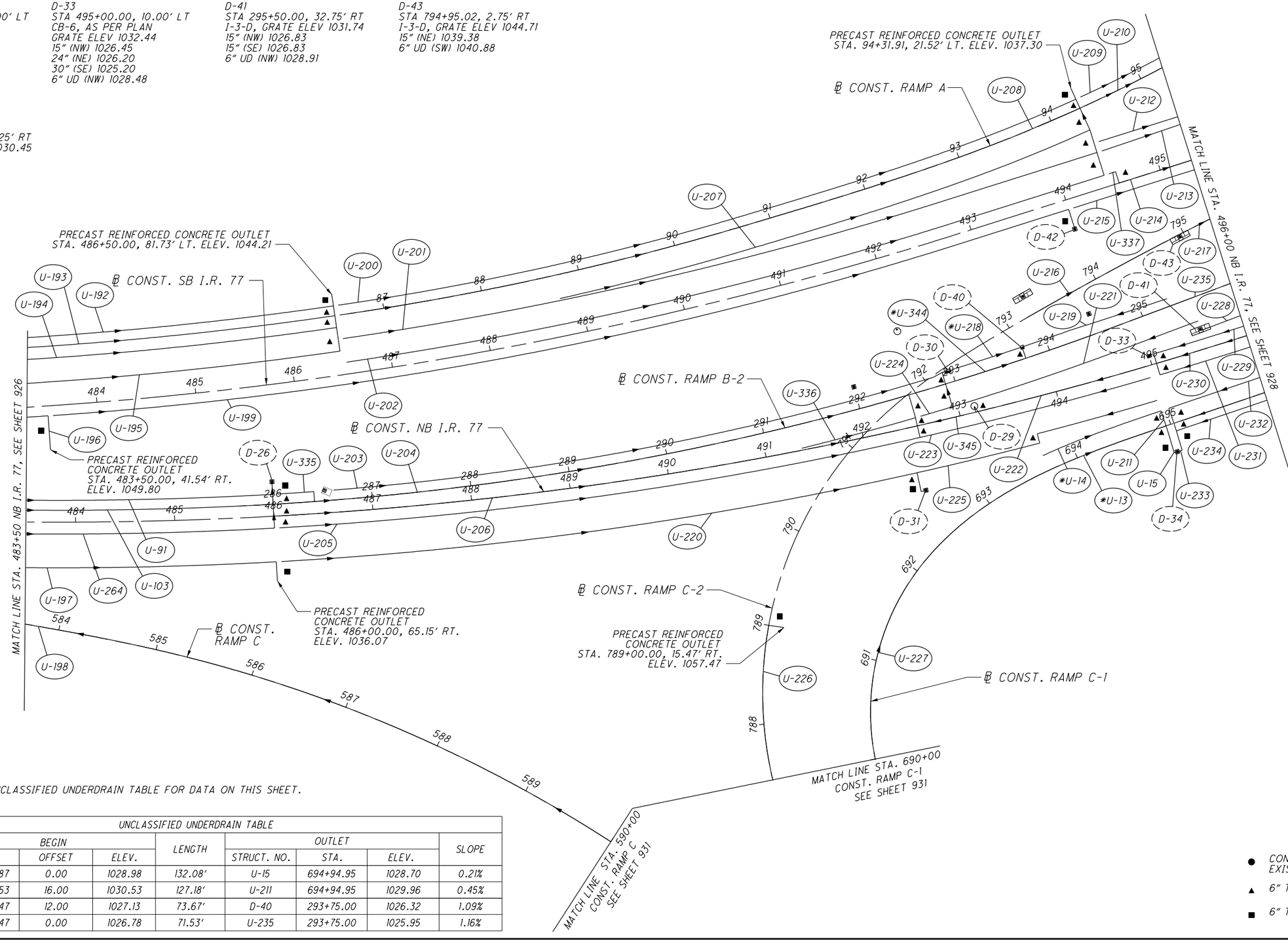


*U-# SEE UNCLASSIFIED UNDERDRAIN TABLE FOR DATA ON THIS SHEET.

UNCLASSIFIED UNDERDRAIN TABLE

| UD CODE | BEGIN | | | LENGTH | OUTLET | | | SLOPE |
|---|---|---|---|---|---|---|---|---|
| | STA. | OFFSET | ELEV. | | STRUCT. NO. | STA. | ELEV. | |
| U-13 | 693+62.87 | 0.00 | 1028.98 | 132.08' | U-15 | 694+94.95 | 1028.70 | 0.21% |
| U-14 | 693+69.53 | 16.00 | 1030.53 | 127.18' | U-211 | 694+94.95 | 1029.96 | 0.45% |
| U-218 | 293+03.47 | 12.00 | 1027.13 | 73.67' | D-40 | 293+75.00 | 1026.32 | 1.09% |
| U-344 | 293+03.47 | 0.00 | 1026.78 | 71.53' | U-235 | 293+75.00 | 1025.95 | 1.16% |

● CONNECT TO EXISTING UNDERDRAIN
▲ 6" TYPE B
■ 6" TYPE F

HORIZONTAL SCALE IN FEET
0 25 50 100

CALCULATED DRJ
CHECKED PJF

# UNDERDRAIN PLAN
## STA. 483+50 TO STA. 496+00

SUM-77 / 277 / 224
VARIOUS

927
1288

O:\2017\2017258\ProjectData\SUM\106002\Design\Drainage\Sheets\106002_DP006.dgn Design 1/13/2021 2:30:07 PM pfry

D-36
STA 301+00.00, 45.64' RT
CB-8, GRATE ELEV 1035.24
15" (W) 1031.24
6" UD (NE) 1033.24
6" UD (SW) 1033.24

MATCH LINE STA. 101+50
CONST. RAMP A
SEE SHEET 930

℄ CONST. RAMP A

PRECAST REINFORCED
CONCRETE OUTLET
STA. 95+41.49, 21.52' LT.
ELEV. 1037.10

MATCH LINE STA. 250+00
CONST. I.R. 277
SEE SHEET 930

℄ CONST. RAMP B-1

PRECAST REINFORCED
CONCRETE OUTLET
STA. 406+97.01, 38.73' LT.
ELEV. 1031.62

PRECAST REINFORCED
CONCRETE OUTLET
STA. 498+00.00, 75.11' LT.
ELEV. 1036.93

℄ CONST. SB I.R 77

℄ CONST. RAMP C-2

PRECAST REINFORCED
CONCRETE OUTLET
STA. 503+00.00, 39.21' RT.
ELEV. 1032.83

℄ CONST. RAMP B-2

℄ CONST. NB I.R 77

℄ CONST. RAMP C-1

PRECAST REINFORCED
CONCRETE OUTLET
STA. 702+00.00, 26.45' RT.
ELEV. 1035.16

℄ CONST.
RAMP C-1

PRECAST REINFORCED
CONCRETE OUTLET
STA. 679+63.98, 21.66' LT.
ELEV. 1065.22

℄ R/W & CONST. I.R. 277/U.S. 224

PRECAST REINFORCED
CONCRETE OUTLET
STA. 257+05.96, 66.05' RT.
ELEV. 1064.00

PRECAST REINFORCED
CONCRETE OUTLET
STA. 906+88.49, 23.93' RT.
ELEV. 1038.83

℄ CONST. RAMP D

MATCH LINE STA. 496+00 NB I.R. 77, SEE SHEET 927

MATCH LINE STA. 508+50 NB I.R. 77, SEE SHEET 929

MATCH LINE STA. 258+00
CONST. I.R. 277
SEE SHEET 931

MATCH LINE STA. 899+50
CONST. RAMP D
SEE SHEET 931

U-209, U-210, U-212, U-213, U-214, U-215, U-217, U-231, U-232, U-233, U-234, U-235, U-236, U-237, U-238, U-239, U-240, U-241, U-242, U-243, U-244, U-245, U-246, U-247, U-248, U-249, U-250, U-251, U-252, U-252A, U-253, U-254, U-255, U-256, U-257, U-258, U-259, U-260, U-261, U-262, U-265, U-266, U-267, U-268, U-269, U-270, U-303

96, 97, 98, 99, 100, 104, 251, 252, 253, 254, 255, 256, 257, 679, 680, 296, 297, 298, 299, 300, 301, 302, 303, 304, 305, 306, 307, 308, 422, 423, 427, 496, 497, 498, 499, 500, 501, 502, 503, 504, 505, 506, 507, 508, 796, 797, 798, 799, 800, 801, 697, 698, 699, 700, 701, 702, 903, 904, 905, 906, 907, 908, 900, 901, 902

- ● CONNECT TO EXISTING UNDERDRAIN
- ▲ 6" TYPE B
- ■ 6" TYPE F

HORIZONTAL SCALE IN FEET
0 25 50 100

CALCULATED DRJ
CHECKED PJF

# UNDERDRAIN PLAN
## STA. 496+00 TO STA. 508+50

SUM-77/277/224
VARIOUS

928
1288

0:\2017\2017258\ProjectData\SUM\06002\Design\Drainage\Sheets\06002_DP007.dgn Design 1/13/2021 2:30:09 PM pfry

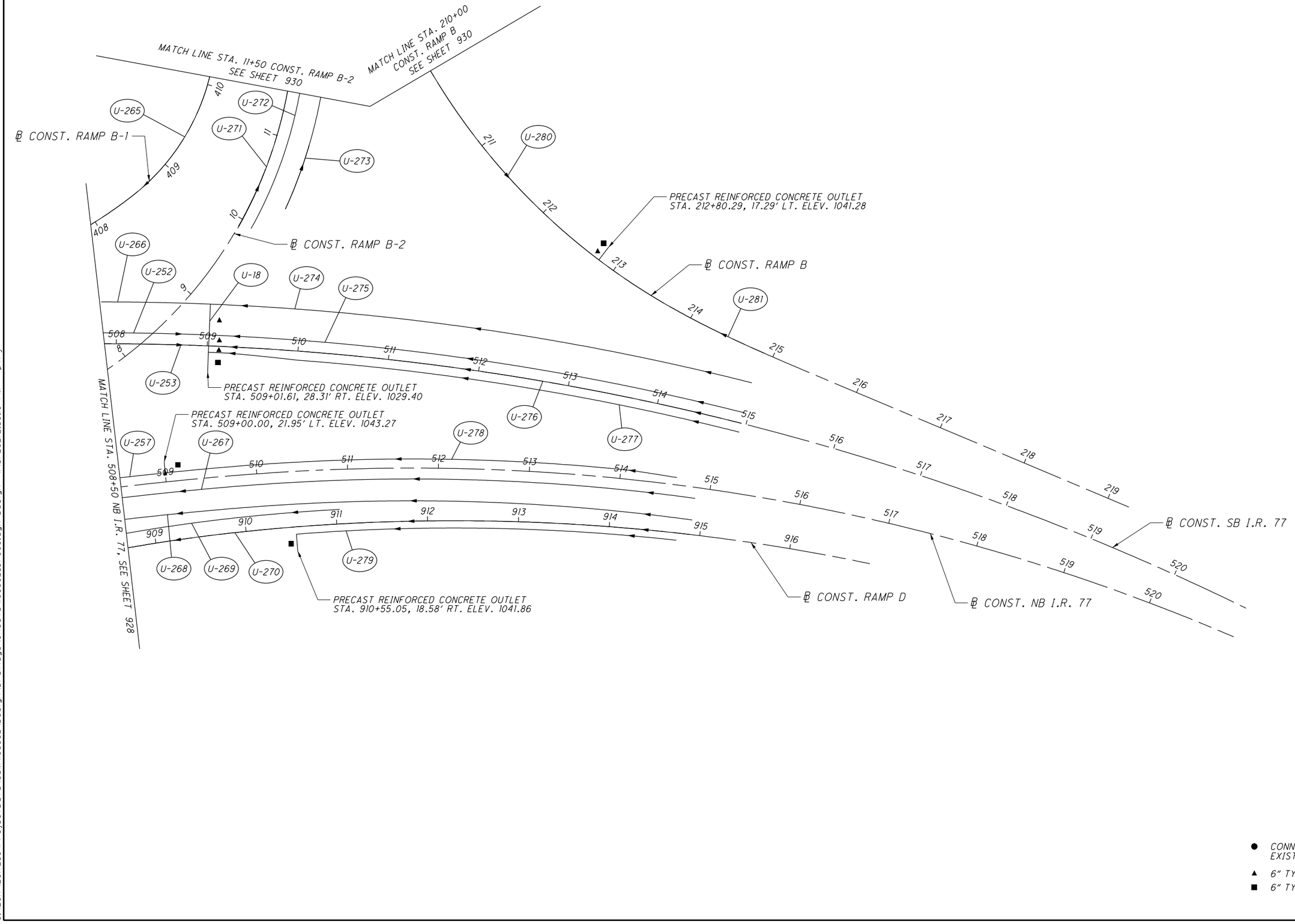


- ● CONNECT TO EXISTING UNDERDRAIN
- ▲ 6" TYPE B
- ■ 6" TYPE F

HORIZONTAL SCALE IN FEET
0 25 50 100

CALCULATED DRJ
CHECKED PJF

# UNDERDRAIN PLAN
## STA. 508+50 TO END

SUM-77 / 277 / 224
VARIOUS

929
1288

O:\2017\2017258\ProjectData\SUM\106002\Design\Drainage\Sheets\106002_DP008.dgn Design 1/13/2021 2:30:10 PM pfry

D-39
STA 206+00.00, 25.10' RT
CB-8, GRATE ELEV 1046.08
15" (NW) 1042.08
6" UD (SE) 1044.08

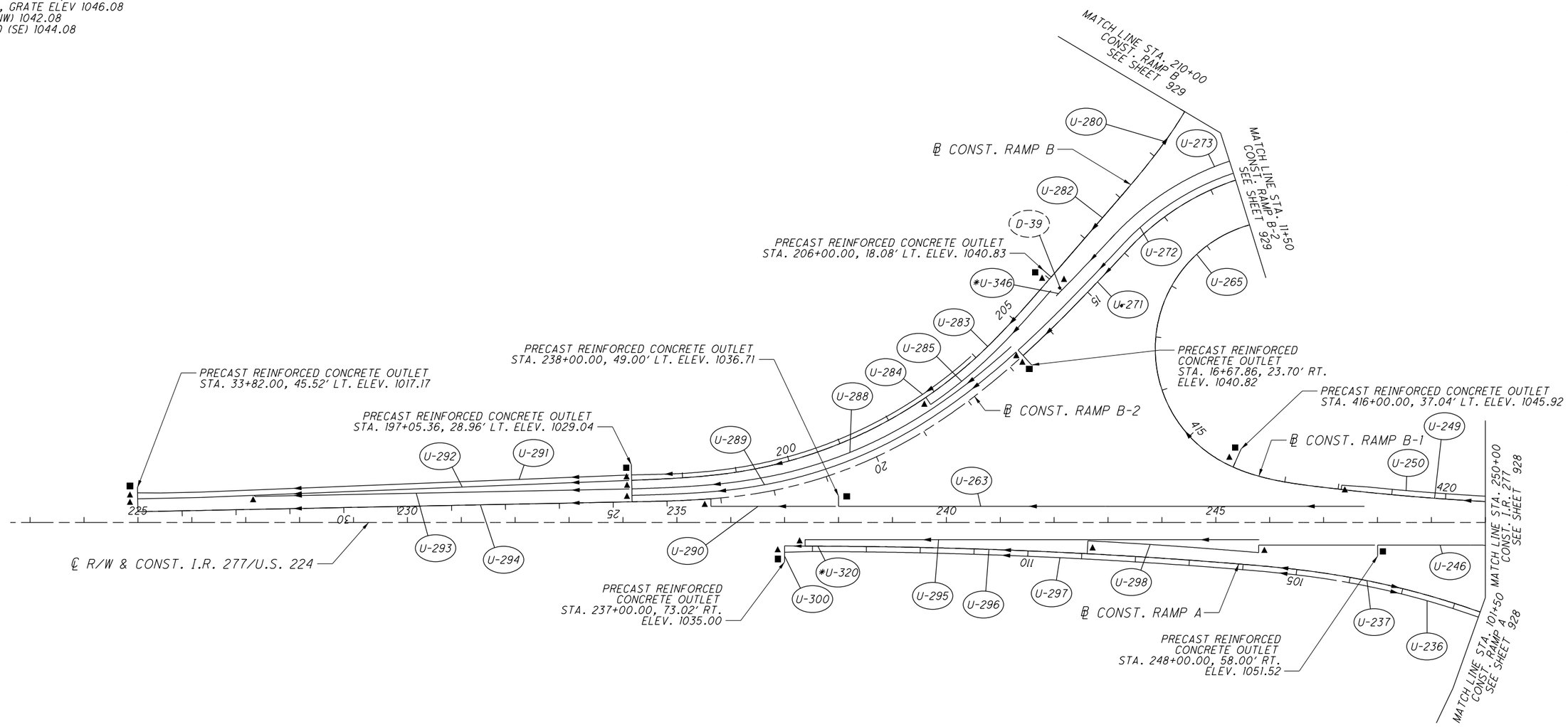


(*U-#) SEE UNCLASSIFIED UNDERDRAIN TABLE FOR DATA ON THIS SHEET.

UNCLASSIFIED UNDERDRAIN TABLE

| UD CODE | BEGIN | | | LENGTH | OUTLET | | | SLOPE |
|---|---|---|---|---|---|---|---|---|
| | STA. | OFFSET | ELEV. | | STRUCT. NO. | STA. | ELEV. | |
| U-320 | 113+50.00 | 0.00 | 1035.83 | 101.65' | U-300 | 237+00.00 | 1035.25 | 0.57% |
| U-346 | 15+45.66 | 37.00 | 1044.49 | 15.09' | U-273 | 15+30.60 | 1044.30 | 1.26% |

● CONNECT TO EXISTING UNDERDRAIN
▲ 6" TYPE B
■ 6" TYPE F

N

HORIZONTAL SCALE IN FEET
0 25 100 100

CALCULATED DRJ
CHECKED PJF

# UNDERDRAIN PLAN
## BEGIN TO STA. 250+00 I.R. 277/U.S. 224

SUM-77/277/224
VARIOUS

930
1288

0:\2017\2017258\ProjectData\SUM\06002\Design\Drainage\Sheets\06002_DP009.dgn Design 1/13/2021 2:30:11 PM pfry

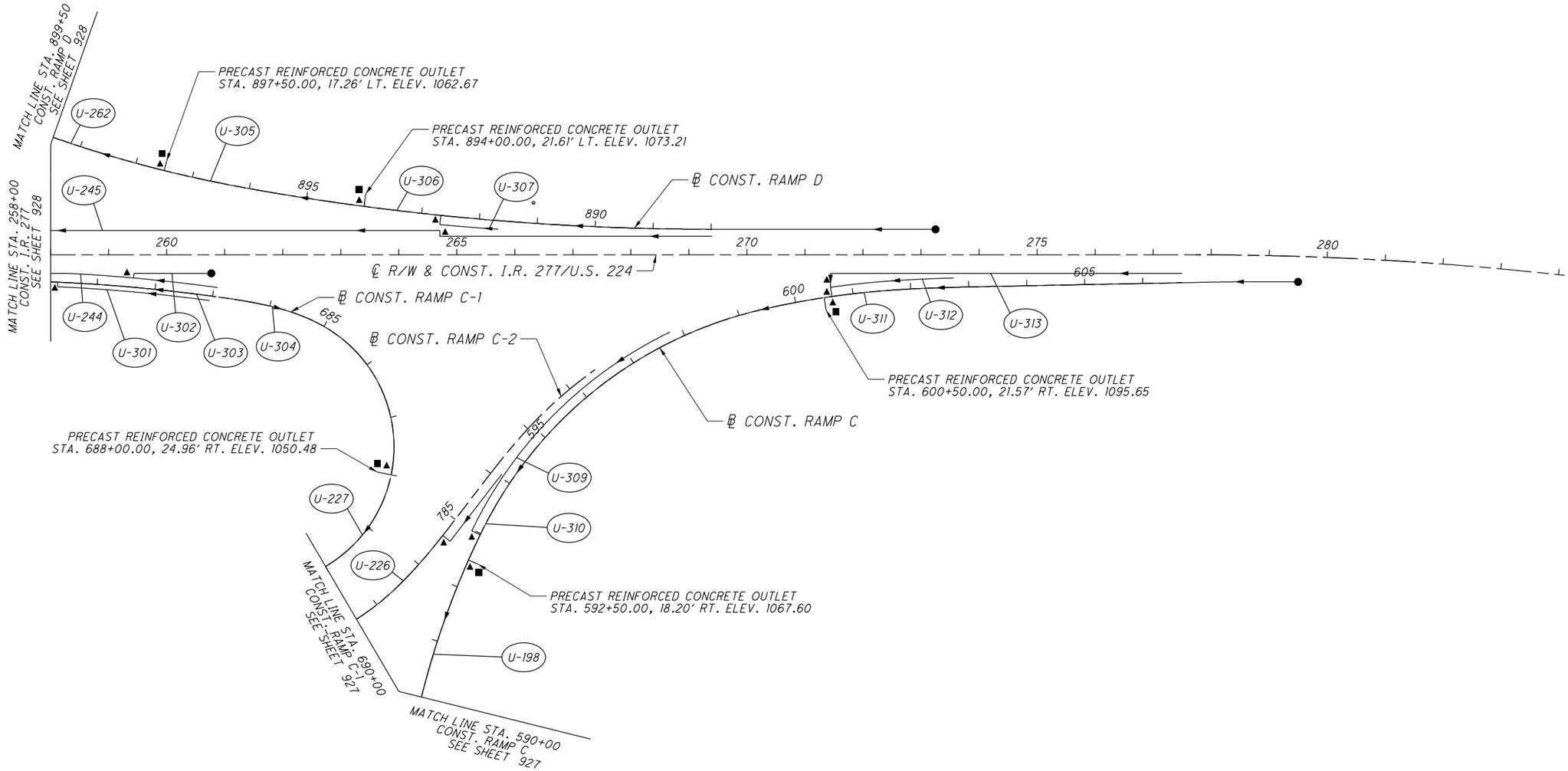


N

0 50 100 200
HORIZONTAL SCALE IN FEET

CALCULATED DRJ
CHECKED PJF

# UNDERDRAIN PLAN
## STA. 258+000 TO END

SUM-77 / 277 / 224
VARIOUS

931
1288

G:\2017\2017258\ProjectData\SUM\06002\Design\Drainage\Sheets\U06002_DP010.dgn Design 1/13/2021 2:30:12 PM pfry

D-10
STA. 422+00.00, 3.17' LT
I-3-C1
GRATE LT
WINDOW ELEV LT 1032.40
WINDOW ELEV RT 1032.32
15" (N) 1026.99
6" UD (W) 1028.57
6" UD (E) 1028.49

D-12
STA. 428+50.00, 3.17' LT
I-3-C1
GRATE LT
WINDOW ELEV LT 1017.55
WINDOW ELEV RT 1017.52
15" (W) 1012.14
15" (S) 1012.14
6" UD (N) 1013.71
6" UD (S) 1013.71
6" UD (E) 1013.64

D-14
STA. 432+50.00, 3.17' RT
I-3-C1
GRATE RT
WINDOW ELEV LT 1014.77
WINDOW ELEV RT 1014.62
15" (N) 1008.93
15" (S) 1008.93
15" (W) 1008.93
6" UD (N) 1010.94
6" UD (S) 1010.94
6" UD (E) 1010.79

D-15
STA. 433+50.00, 3.17' RT
I-3-C1
GRATE RT
WINDOW ELEV LT 1014.96
WINDOW ELEV RT 1014.76
15" (S) 1009.43
6" UD (W) 1011.13
6" UD (E) 1010.93

D-46
STA 427+40.06, 77.78' LT
CB-3A, GRATE ELEV 1019.20
15" (W) 1014.87
6" UD (S) 1016.37

D-47
STA 431+63.18, 77.50' RT
CB-3A, GRATE ELEV 1014.84
15" (W) 1010.29
6" UD (S) 1012.01

D-11
STA. 425+00.00, 3.17' LT
I-3-C1
GRATE LT
WINDOW ELEV LT 1024.66
WINDOW ELEV RT 1024.59
15" (S) 1019.09 "OFFSET"
15" (W) 1019.09
6" UD (N) 1020.67
6" UD (S) 1020.67
6" UD (E) 1020.59

D-13
STA. 431+50.00, 3.17' RT
I-3-C1
GRATE RT
WINDOW ELEV LT 1015.06
WINDOW ELEV RT 1014.93
15" (N) 1009.49
6" UD (W) 1011.11
6" UD (E) 1010.99

EX-1
STA. 24+64.02, 22.75' RT
EX. CB, GRATE ELEV 1003.59
EX. 12" CMP W 1000.59
EX. 12" CMP N 1000.44
6" UD (W) 1001.59

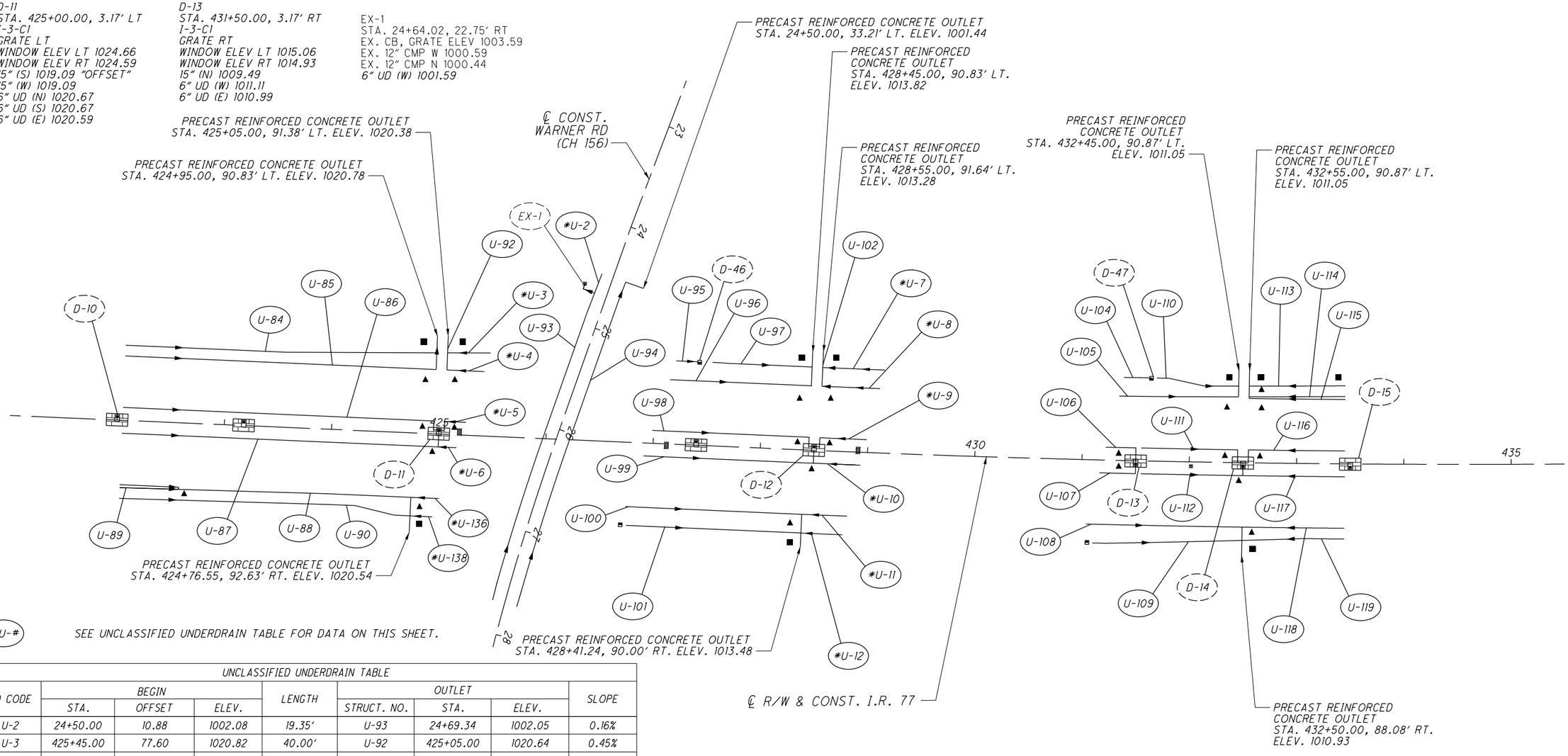


*U-# SEE UNCLASSIFIED UNDERDRAIN TABLE FOR DATA ON THIS SHEET.

UNCLASSIFIED UNDERDRAIN TABLE

| UD CODE | BEGIN | | | LENGTH | OUTLET | | | SLOPE |
|---|---|---|---|---|---|---|---|---|
| | STA. | OFFSET | ELEV. | | STRUCT. NO. | STA. | ELEV. | |
| U-2 | 24+50.00 | 10.88 | 1002.08 | 19.35' | U-93 | 24+69.34 | 1002.05 | 0.16% |
| U-3 | 425+45.00 | 77.60 | 1020.82 | 40.00' | U-92 | 425+05.00 | 1020.64 | 0.45% |
| U-4 | 425+40.00 | 60.00 | 1021.11 | 35.00' | U-92 | 425+05.00 | 1020.97 | 0.40% |
| U-5 | 425+25.00 | 12.00 | 1021.48 | 20.00' | D-11 | 425+05.00 | 1020.97 | 2.55% |
| U-6 | 425+17.00 | 12.00 | 1021.60 | 17.00' | U-87 | 425+00.00 | 1021.01 | 3.47% |
| U-7 | 429+13.26 | 77.50 | 1014.15 | 57.94' | U-102 | 428+55.00 | 1013.66 | 0.85% |
| U-8 | 42+09.41 | 60.00 | 1014.36 | 54.18' | U-102 | 428+55.00 | 1014.06 | 0.55% |
| U-9 | 428+98.93 | 12.00 | 1014.49 | 43.89' | D-12 | 428+55.00 | 1014.06 | 0.98% |
| U-10 | 428+95.87 | 12.00 | 1014.48 | 43.75' | U-99 | 428+50.00 | 1014.06 | 0.96% |
| U-11 | 428+83.33 | 60.00 | 1014.62 | 42.27' | U-100 | 428+41.24 | 1014.19 | 1.02% |
| U-12 | 428+79.56 | 77.50 | 1014.49 | 38.53' | U-100 | 428+41.24 | 1013.86 | 1.64% |
| U-136 | 425+02.71 | 60.00 | 1021.95 | 26.16' | U-88 | 424+76.55 | 1021.58 | 1.41% |
| U-138 | 424+97.21 | 77.33 | 1021.88 | 20.65' | U-88 | 424+76.55 | 1021.30 | 2.81% |

● CONNECT TO EXISTING UNDERDRAIN
▲ 6" TYPE B
■ 6" TYPE F

HORIZONTAL SCALE IN FEET
0 25 50 100

CALCULATED DRJ
CHECKED PJF

# UNDERDRAIN PLAN AND ENLARGED DETAIL

SUM-77 / 277 / 224
VARIOUS

932
1288

O:\2017\2017258\ProjectData\SUM\106002\Design\Drainage\Sheets\106002_DP01.dgn Design 1/13/2021 2:30:18 PM pfry

O:\2017\2017258\ProjectData\SUM\106002\Design\Utilities\Sheets\106002_UM001.dgn Design 1/11/2021 1:28:11 PM pfry

National Engineering & Architectural Services Inc.

National Engineering &
Architectural Services, INC. (NEAS)
2800 Corporate Exchange Dr.
Suite 240
Columbus, Ohio 43231
Office: (614) 714-0299
Fax: (614) 714-0251

# LEVEL A TEST HOLE CERTIFICATION FORM

PROJECT NAME: SUM-76-10.95 , PID#: 106302
NEAS PROJECT #: 17-0129
PROJECT LOCATION (CITY, CITY, ST.): SUM.,AKRON, I-77,
FOREMAN/TRUCK: N. MILLER, B. JOHNSON, B. MOULTON
DATE OF EXCAVATION: 02/25/20
WEATHER CONDITIONS: 36° CLOUDY

TEST HOLE #: 01
UTILITY TO BE LOCATED: WATERLINE (NOT FOUND)

CONTROL POINT: T320 (GRND.)
NORTHING: 496472.826
EASTING: 2243318.319
ELEVATION: 1048.48

SIZE OF UTILITY: N/A
MATERIAL OF FOUND UTILITY: N/A
THE UTILITY N/A IN GOOD CONDITION
THERE N/A ADDITIONAL UTILITIES IN THE TEST HOLE
SURVEYED ELEVATION BOTTOM OF HOLE: 1039.52
SURVEYED ELEVATION BOTTOM OF UTIL (IF REQ.): N/A
SURVEYED NORTHING BOTTOM OF HOLE: 494006.754 (GRND.)
SURVEYED EASTING BOTTOM OF HOLE: 2245656.849 (GRND.)
DEPTH OF BOTTOM OF HOLE FROM SURFACE: 8.82' DEPTH
DIRECTION OF UTILITY LINE: N/A
PHOTO IMAGE NUMBERS: 478 - 480

TEST HOLE LOCATION (PAV., BERM, ETC): MEDIAN
EXISTING SURFACE GRADE ELEVATION: 1048.34
PAVING CONDITION PRIOR TO WORK: N/A
PAVING THICKNESS AND TYPE: N/A
SOIL TYPE: ROCK AND SAND FIELD CONDITIONS: WET
COLOR OF RIBBON INSTALLED IN TEST HOLE: N/A

FIELD REMARKS: DUG TO 9', DID NOT FIND UTILITY. HAD A DECENT SIGNAL FROM LOCATOR BUT COULD NOT GET AN ACCURATE DEPTH.

UTILITY REMARKS:




UTILITY LEGEND

| | | | |
|---|---|---|---|
| GAS | TEST HOLE | ELEC. P.B. |
| WATER | FIRE HYDRANT | POWER POLE |
| TELEPHONE | WATER VALVE | POWER/LIGHT |
| ELECTRIC | GAS MARKER | LIGHT POLE |
| SANITARY SEWER | GAS VALVE | SAN M.H. |
| STORM SEWER | F.O. MARKER | TRAFFIC P.B. |
| FIBER OPTIC | UNKNOWN P.B. | GROUND SHOT |
| CABLE TV | | |
| TRAFFIC | | |

I, Charles W. Price, JR. do hereby certify that the positioning of the utility facilities shown was provided utilizing the Quality Levels was performed in accordance with ODOT's MAPPING specifications.

Charles W. Price, JR., P.S.

DATE 2/5/2020

CHARLES W. PRICE, JR S-7825 REGISTERED PROFESSIONAL SURVEYOR

CALCULATED ATR
CHECKED PJF

HOLE CERTIFICATION *

TEST HO

SUM-77/277/224
VARIOUS

933
1288

| TRAFFIC CONTROL LEGEND | |
|---|---|
| → | TRAFFIC FLOW |
| ◇ | PROPOSED SIGN |
| ◇ | EXISTING SIGN TO BE REMOVED AND REERECTED |
| ◇ | EXISTING SIGN TO REMAIN |
| ◇ | EXISTING SIGN TO BE REMOVED |
| ⊤ | SIGN SUPPORT |
| ▭▭ | PROPOSED TRUSS SIGN SUPPORT |
| ▭— | PROPOSED CANTILEVER SIGN SUPPORT |
| ▭----▭ | EXISTING TRUSS SIGN SUPPORT TO REMAIN |
| ▭------ | EXISTING CANTILEVER SIGN SUPPORT TO REMAIN |
| ■ | RPM (RAISED PAVEMENT MARKER) |
| R-# | EXISTING SIGN TO BE REMOVED |
| S-# | PROPOSED SIGN |
| OSS-# | OVERHEAD SIGN SUPPORT |
| CDS | CENTER LINE, DOUBLE SOLID |
| EW | EDGE LINE, WHITE |
| EY | EDGE LINE, YELLOW |
| LL | LANE LINE |
| CH | CHANNELIZING LINE |
| CV | CHEVRON MARKING, WHITE |
| LR | LANE REDUCTION ARROW |

**ITEM 630 - SIGN, FLAT SHEET, AS PER PLAN**

THE "BRIDGE ICES BEFORE ROAD" SIGN (W8-13-48) SIGN SHALL BE HINGED.

PAYMENT FOR ITEM 630 - SIGN, FLAT SHEET, AS PER PLAN SHALL BE MADE AT THE CONTRACT UNIT PRICE BID PER SQUARE FOOT. PAYMENT SHALL BE FULL COMPENSATION FOR ALL LABOR, MATERIALS, TOOLS, EQUIPMENT, AND ALL PARTS NECESSARY FOR ONE SIGN.

**ITEM 630 - REMOVAL OF MISCELLANEOUS TRAFFIC CONTROL ITEM, BARRIER MOUNTED SIGN SUPPORT BRACKET**

THE CONTRACTOR SHALL REMOVE THE EXISTING BRACKET CONNECTING THE POST TO THE MEDIAN BARRIER.

PAYMENT FOR ITEM 630 - REMOVAL OF MISCELLANEOUS TRAFFIC CONTROL ITEM, BARRIER MOUNTED SIGN SUPPORT BRACKET SHALL BE MADE AT THE CONTRACT UNIT PRICE BID PER EACH. PAYMENT SHALL BE FULL COMPENSATION FOR ALL LABOR, MATERIALS, TOOLS, EQUIPMENT, AND ALL PARTS NECESSARY FOR ONE BRACKET.

**ITEM 630 - SIGN SUPPORT ASSEMBLY, BARRIER MOUNTED, AS PER PLAN**

THE CONTRACTOR SHALL USE CONCRETE BARRIER MOUNTED SIGN SUPPORTS, AS PER THE DETAIL BELOW.

THE ABOVE WORK SHALL BE PAID FOR UNDER ITEM 630 - SIGN SUPPORT ASSEMBLY, BARRIER MOUNTED, AS PER PLAN AND SHALL INCLUDE ALL LABOR, BRACKETS AND MATERIALS REQUIRED TO COMPLETE THIS WORK.

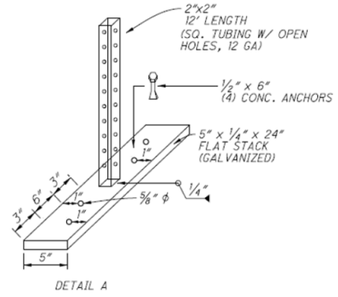

DETAIL A

**ITEM 630 - SIGN, PERMANENT OVERLAY, AS PER PLAN**

THE CONTRACTOR SHALL VERIFY THE OVERLAY SIGN SIZE PRIOR TO ORDERING THE SIGN TO ENSURE PROPER SIZE.

IN ADDITION TO THE OVERLAY SIGN, PAYMENT SHALL BE FULL COMPENSATION FOR ALL LABOR, MATERIALS, TOOLS, EQUIPMENT, AND ALL PARTS NECESSARY TO INSTALL THE SIGN OVERLAY ONTO THE EXISTING OVERHEAD SIGN.

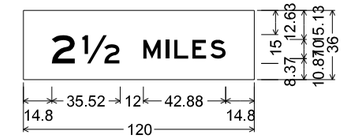


No border, White on Green;
"2½", E; "MILES", E;
Table of letter and object lefts

| | |
|---|---|
| 2 | ½ |
| 14.80 | 30.62 |

| | | | | |
|---|---|---|---|---|
| M | I | L | E | S |
| 62.32 | 74.12 | 78.42 | 87.82 | 97.23 |

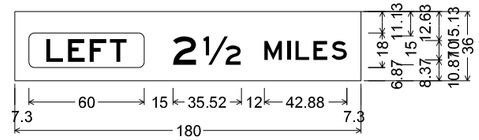


No border, White on Green;
Rounded Rectangle 3.00" Radius Yellow;
"2½", E; "MILES", E;
Table of letter and object lefts

| | | |
|---|---|---|
| ▭ | 2 | ½ |
| 7.30 | 82.30 | 98.12 |

| | | | | |
|---|---|---|---|---|
| M | I | L | E | S |
| 129.82 | 141.62 | 145.92 | 155.32 | 164.73 |

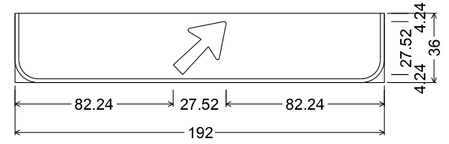


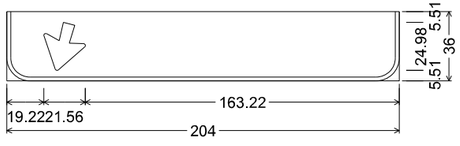


**OVERLAY SIGN CAD DETAILS**
NTS

**REFERENCE LOCATION SIGNS**

THE LOCATION OF REFERENCE LOCATION SIGNS ON THE PLANS ARE APPROXIMATE AND A MORE PRECISE LOCATION WILL BE PROVIDED BY THE DEPARTMENT. THE CONTRACTOR SHALL NOTIFY THE ENGINEER AT LEAST 30 DAYS IN ADVANCE OF THE PLANNED DATE OF REFERENCE LOCATION SIGN INSTALLATION. THE ENGINEER WILL CONTACT THE OFFICE OF TECHNICAL SERVICES WHICH WILL LOCATE THE LONGITUDINAL POSITION OF REFERENCE LOCATION SIGNS BY MEANS OF A PAINT MARK ON THE PAVEMENT EDGE. ALTERNATE MARKS WILL NOT BE PROVIDED ON DIVIDED HIGHWAYS AND THE CONTRACTOR SHALL SET REFERENCE LOCATION SIGNS FOR THE OPPOSITE ROADWAY ACROSS FROM THE PROVIDED MARK. DELINEATORS WHOSE NORMAL POSITION FALLS WITHIN 50 FEET OF A REFERENCE LOCATION SIGN SHALL BE OMITTED.

**ITEM 630 - REMOVAL OF MISCELLANEOUS TRAFFIC CONTROL ITEM, BEAM SUPPORT FOUNDATION**

A CONTINGENCY QUANTITY HAS BEEN PROVIDED FOR THIS WORK TO BE USED FOR REMOVAL OF BEAM SUPPORT FOUNDATIONS, AS DIRECTED BY THE ENGINEER, WHEREVER NEEDED THROUGHOUT THE PROJECT.

THE FOLLOWING QUANTITY HAS BEEN CARRIED TO THE GENERAL SUMMARY:

ITEM 630 - REMOVAL OF MISCELLANEOUS TRAFFIC CONTROL ITEM, BEAM SUPPORT FOUNDATION, 16 EACH

CALCULATED DLS CHECKED AKF

TRAFFIC CONTROL NOTES

SUM-77 / 277 / 224
VARIOUS

934
1288

O:\2017\2017258\ProjectData\SUM\106002\Design\Traffic\Sheets\106002_TN001.dgn 106002GN001 2/1/2021 3:18:07 PM aford

***ITEM SPECIAL, CLEARING AND GRUBBING***

*THIS ITEM IS INTENDED TO BE USED TO CLEAR ALL GROWTH IN FRONT OF HIGHWAY SIGNS THAT MAY IMPEDE ITS VIEWING BY MOTORISTS. IN ADDITION TO THE REQUIREMENTS OF 201. THE CONTRACTOR WILL REMOVE STUMPS AT LEAST 6 INCHES BELOW GROUND SURFACE AND THE WORK NOT INCLUDE SCALPING. THE AREA TO BE CLEARED AND GRUBBED WILL BE DELINEATED IN THE WORK ORDER. PAYMENT WILL BE AT THE UNIT BID PRICE PER ACRE CLEARED AND GRUBBED AND WILL INCLUDE BACKFILLING HOLES AND REMOVING ALL TREES AND STUMPS.*

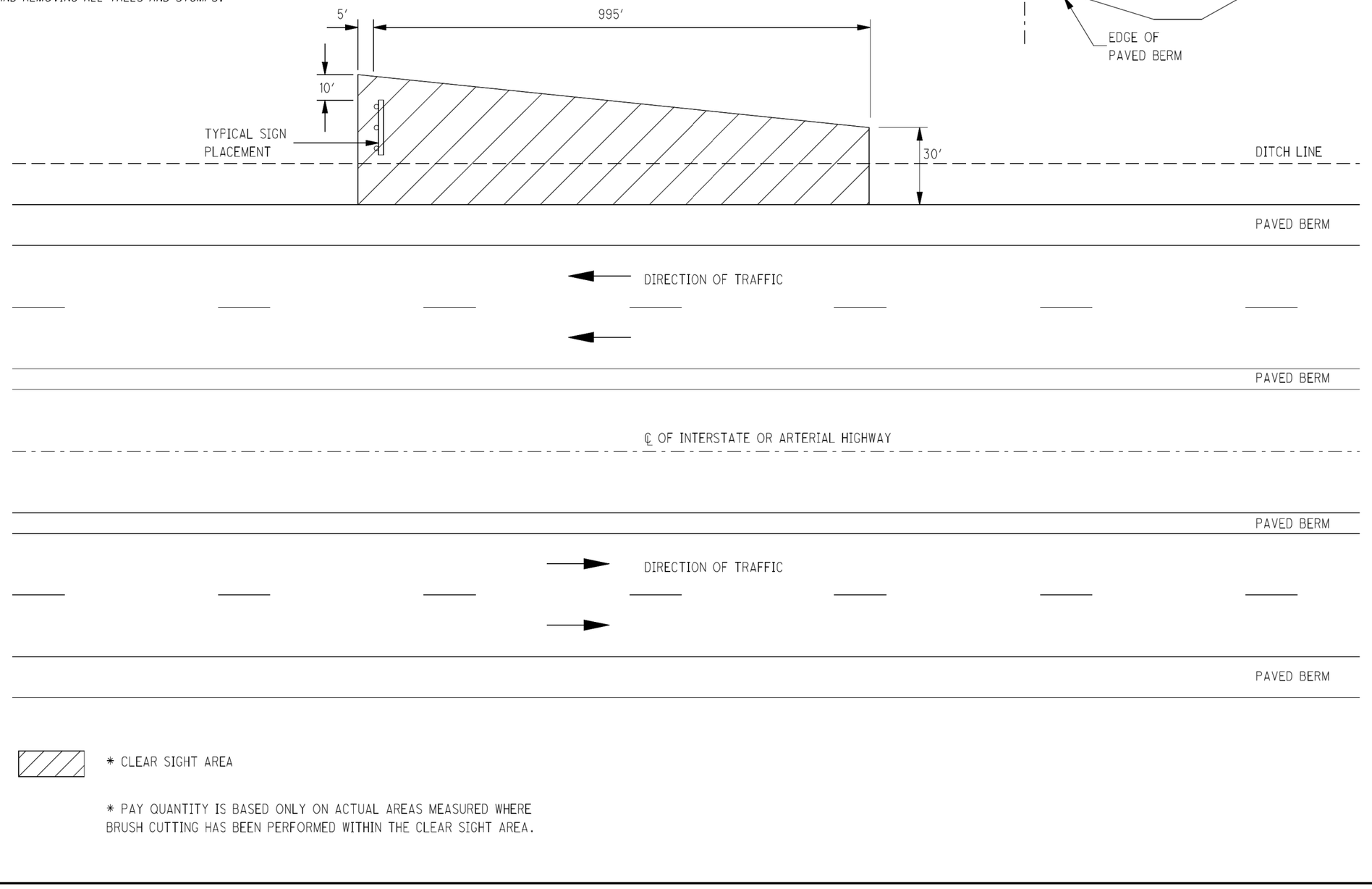


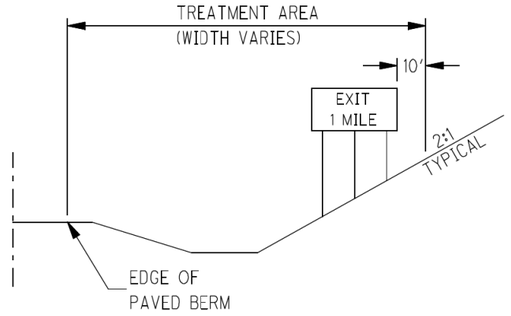


* CLEAR SIGHT AREA

* PAY QUANTITY IS BASED ONLY ON ACTUAL AREAS MEASURED WHERE BRUSH CUTTING HAS BEEN PERFORMED WITHIN THE CLEAR SIGHT AREA.

**BRUSH CUT AND TREATED DETAIL**

CALCULATED
CHECKED

CALCULATED DLS
CHECKED AKF

**TRAFFIC CONTROL NOTES**

**SUM-77 / 277 / 224**
**VARIOUS**

935
1288

W:\I-Drive_Stds\d04_Pref\clear_grub_app.dgn 07-NOV-2006 11:04AM tpowell2
O:\2017\2017258\ProjectData\SUM\106002\Design\Traffic\Sheets\106002_TN002.dgn 106002GN001 1/17/2021 7:13:35 AM aford

| SHEETS | | | | | | | | | | | PART. | | ITEM | ITEM EXT. | GRAND TOTAL | UNIT | DESCRIPTION | SEE SHEET NO. |
|---|---|---|---|---|---|---|---|---|---|---|---|---|---|---|---|---|---|---|
| 407 | 934 | 935 | 938 | 939 | 947 | 953 | 957 | 959 | | | 01/IMS/PV | 02/IMS/PV | | | | | | |
| | | LS | | | | | | | | | LS | LS | SPECIAL | 201E99000 | LS | | CLEARING AND GRUBBING | 935 |
| | | | 904 | 382 | | | | | | | 1157 | 129 | 621 | 00100 | 1286 | EACH | RPM | |
| | | | 904 | 382 | | | | | | | 1157 | 129 | 621 | 54000 | 1286 | EACH | RAISED PAVEMENT MARKER REMOVED | |
| | | | | | | | | 19 | | | 17 | 2 | 625 | 32000 | 19 | EACH | GROUND ROD | |
| 266 | | | | | | | | | | | 239 | 27 | 626 | 00102 | 266 | EACH | BARRIER REFLECTOR, TYPE 1, ONE-WAY | |
| 4 | | | | | | | | | | | 4 | 0 | 626 | 00102 | 4 | EACH | BARRIER REFLECTOR, TYPE 1, BI-DIRECTIONAL | |
| 450 | | | | | | | | | | | 405 | 45 | 626 | 00112 | 450 | EACH | BARRIER REFLECTOR, TYPE 3, ONE-WAY | |
| 6 | | | | | | | | | | | 5 | 1 | 626 | 00112 | 6 | EACH | BARRIER REFLECTOR, TYPE 3, BI-DIRECTIONAL | |
| | | | | | | | 266.3 | | | | 239.7 | 26.6 | 630 | 02100 | 266.3 | FT | GROUND MOUNTED SUPPORT, NO. 2 POST | |
| | | | | | | | 1923.1 | | | | 1730.8 | 192.3 | 630 | 03100 | 1923.1 | FT | GROUND MOUNTED SUPPORT, NO. 3 POST | |
| | | | | | | | 219.0 | | | | 197.1 | 21.9 | 630 | 04100 | 219.0 | FT | GROUND MOUNTED SUPPORT, NO. 4 POST | |
| | | | | | | | | 144.6 | | | 130.1 | 14.5 | 630 | 06400 | 144.6 | FT | GROUND MOUNTED STRUCTURAL BEAM SUPPORT, S4X7.7 | |
| | | | | | | | | 364.9 | | | 328.4 | 36.5 | 630 | 06500 | 364.9 | FT | GROUND MOUNTED STRUCTURAL BEAM SUPPORT, W6X9 | |
| | | | | | | | | 96.2 | | | 86.6 | 9.6 | 630 | 07500 | 96.2 | FT | GROUND MOUNTED STRUCTURAL BEAM SUPPORT, W10X22 | |
| | | | | | | | | 126.7 | | | 114.0 | 12.7 | 630 | 07600 | 126.7 | FT | GROUND MOUNTED STRUCTURAL BEAM SUPPORT, W10X12 | |
| | | | | | | | 54 | | | | 49 | 5 | 630 | 08600 | 54 | EACH | SIGN POST REFLECTOR | |
| | | | | | | | | 38 | | | 34 | 4 | 630 | 09000 | 38 | EACH | BREAKAWAY STRUCTURAL BEAM CONNECTION | |
| | | | | | | | | 2 | | | 2 | 0 | 630 | 72320 | 2 | EACH | OVERHEAD SIGN SUPPORT, TYPE TC-12.31, DESIGN 6 | |
| | | | | | | | | 1 | | | 1 | 0 | 630 | 72330 | 1 | EACH | OVERHEAD SIGN SUPPORT, TYPE TC-12.31, DESIGN 10 | |
| | | | | | | | | 2 | | | 2 | 0 | 630 | 72340 | 2 | EACH | OVERHEAD SIGN SUPPORT, TYPE TC-12.31, DESIGN 12 | |
| | | | | | | | | 1 | | | 1 | 0 | 630 | 72410 | 1 | EACH | OVERHEAD SIGN SUPPORT, TYPE TC-15.116, DESIGN 1 | |
| | | | | | | | | 3 | | | 3 | 0 | 630 | 72420 | 3 | EACH | OVERHEAD SIGN SUPPORT, TYPE TC-15.116, DESIGN 2 | |
| | | | | | | | | 3 | | | 3 | 0 | 630 | 72430 | 3 | EACH | OVERHEAD SIGN SUPPORT, TYPE TC-15.116, DESIGN 3 | |
| | | | | | | | | 62 | | | 56 | 6 | 630 | 75000 | 62 | EACH | SIGN ATTACHMENT ASSEMBLY | |
| | | | | | | | 3 | 8 | | | 10 | 1 | 630 | 79500 | 11 | EACH | SIGN SUPPORT ASSEMBLY, POLE MOUNTED | |
| | | | | | | | 12 | | | | 11 | 1 | 630 | 79611 | 12 | EACH | SIGN SUPPORT ASSEMBLY, BARRIER MOUNTED, AS PER PLAN | 934 |
| | | | | | | | 1173.9 | 139.9 | | | 1182.4 | 131.4 | 630 | 80100 | 1313.8 | SF | SIGN, FLAT SHEET | |
| | | | | | | | 48.0 | | | | 43.2 | 4.8 | 630 | 80101 | 48.0 | SF | SIGN, FLAT SHEET, AS PER PLAN | 934 |
| | | | | | | | 109.0 | 815.5 | | | 832.1 | 92.4 | 630 | 80200 | 924.5 | SF | SIGN, GROUND MOUNTED EXTRUSHEET | |
| | | | | | | | | 8681.0 | | | 7812.9 | 868.1 | 630 | 80224 | 8681.0 | SF | SIGN, OVERHEAD EXTRUSHEET | |
| | | | | | | | | 222.0 | | | 199.8 | 22.2 | 630 | 80401 | 222.0 | SF | SIGN, PERMANENT OVERLAY, AS PER PLAN | 934 |
| | | | | | | | | 5 | | | 4 | 1 | 630 | 84010 | 5 | EACH | CONCRETE BARRIER MEDIAN OVERHEAD SIGN SUPPORT FOUNDATION, TYPE TC-21.50 | |
| | | | | | | | | 38 | | | 34 | 4 | 630 | 84500 | 38 | EACH | GROUND MOUNTED STRUCTURAL BEAM SUPPORT FOUNDATION | |
| | | | | | | | | 14 | | | 13 | 1 | 630 | 84510 | 14 | EACH | RIGID OVERHEAD SIGN SUPPORT FOUNDATION | |
| | | | | | | 139 | | | | | 125 | 14 | 630 | 84900 | 139 | EACH | REMOVAL OF GROUND MOUNTED SIGN AND DISPOSAL | |
| | | | | | | 10 | | | | | 9 | 1 | 630 | 85100 | 10 | EACH | REMOVAL OF GROUND MOUNTED SIGN AND REERECTION | |
| | | | | | | 19 | | | | | 17 | 2 | 630 | 85400 | 19 | EACH | REMOVAL OF GROUND MOUNTED MAJOR SIGN AND DISPOSAL | |
| | | | | | | 2 | | | | | 2 | 0 | 630 | 85600 | 2 | EACH | REMOVAL OF GROUND MOUNTED MAJOR SIGN AND REERECTION | |
| | | | | | | 166 | | | | | 149 | 17 | 630 | 86002 | 166 | EACH | REMOVAL OF GROUND MOUNTED POST SUPPORT AND DISPOSAL | |
| | | | | | | 30 | | | | | 27 | 3 | 630 | 86102 | 30 | EACH | REMOVAL OF GROUND MOUNTED STRUCTURAL BEAM SUPPORT AND DISPOSAL | |
| | | | | | | 8 | | | | | 7 | 1 | 630 | 86292 | 8 | EACH | REMOVAL OF GROUND MOUNTED WOODEN BOX BEAM SUPPORT AND DISPOSAL | |
| | | | | | | 3 | | | | | 3 | 0 | 630 | 87100 | 3 | EACH | REMOVAL OF OVERHEAD MOUNTED SIGN AND REERECTION | |
| | | | | | | 58 | | | | | 52 | 6 | 630 | 87400 | 58 | EACH | REMOVAL OF OVERHEAD MOUNTED SIGN AND DISPOSAL | |
| | | | | | | 6 | | | | | 5 | 1 | 630 | 87500 | 6 | EACH | REMOVAL OF POLE MOUNTED SIGN AND DISPOSAL | |
| | | | | | | 6 | | | | | 5 | 1 | 630 | 89706 | 6 | EACH | REMOVAL OF OVERHEAD SIGN SUPPORT AND DISPOSAL, TYPE TC-12.30 | |
| | | | | | | 5 | | | | | 4 | 1 | 630 | 89802 | 5 | EACH | REMOVAL OF OVERHEAD SIGN SUPPORT AND DISPOSAL, TYPE TC-7.65 | |
| | 16 | | | | | | | | | | 14 | 2 | 630 | 89902 | 16 | EACH | REMOVAL OF MISCELLANEOUS TRAFFIC CONTROL ITEM, BEAM SUPPORT FOUNDATION | 934 |
| | | | | | | 5 | | | | | 4 | 1 | 630 | 89902 | 5 | EACH | REMOVAL OF MISCELLANEOUS TRAFFIC CONTROL ITEM, BARRIER MOUNTED SIGN SUPPORT BRACKET | 934 |
| | | | | | 0.13 | | | | | | 0.12 | 0.01 | 644 | 00100 | 0.13 | MILE | EDGE LINE, 4" | |
| | | | | | 0.07 | | | | | | 0.06 | 0.01 | 644 | 00300 | 0.07 | MILE | CENTER LINE | |
| | | | | | 765 | | | | | | 689 | 76 | 646 | 10620 | 765 | FT | CHEVRON MARKING | |
| | | | | | 4 | | | | | | 4 | 0 | 646 | 20350 | 4 | EACH | LANE REDUCTION ARROW | |

CALCULATED DLS CHECKED AKF

TRAFFIC CONTROL GENERAL SUMMARY 1 OF 2

SUM-77 / 277 / 224
VARIOUS

936
1288

D:\2017\2017258\ProjectData\SUM\106002\Design\Traffic\Sheets\106002_TG001.dgn 106002GN001 2/3/2021 11:52:30 AM aford

| SHEETS | | | | | | | | | | | | PART. | | | ITEM | ITEM EXT. | GRAND TOTAL | UNIT | DESCRIPTION | SEE SHEET NO. |
|---|---|---|---|---|---|---|---|---|---|---|---|---|---|---|---|---|---|---|---|---|
| | | | | | 947 | | | | | | | 01/IMS/PV | 02/IMS/PV | | | | | | | |
| | | | | | 24.28 | | | | | | | 21.85 | 2.43 | | 807 | 12010 | 24.28 | MILE | WET REFLECTIVE EPOXY PAVEMENT MARKING, EDGE LINE, 6" | |
| | | | | | 24.70 | | | | | | | 22.23 | 2.47 | | 807 | 12110 | 24.70 | MILE | WET REFLECTIVE EPOXY PAVEMENT MARKING, LANE LINE, 6" | |
| | | | | | 22788 | | | | | | | 20509 | 2279 | | 807 | 12310 | 22788 | FT | WET REFLECTIVE EPOXY PAVEMENT MARKING, CHANNELIZING LINE, 12" | |
| | | | | | 11942 | | | | | | | 10748 | 1194 | | 807 | 12410 | 11942 | FT | WET REFLECTIVE EPOXY PAVEMENT MARKING, DOTTED LINE, 6" | |
| | | | | | 48.97 | | | | | | | 44.07 | 4.90 | | 850 | 10010 | 48.97 | MILE | GROOVING FOR 6" RECESSED PAVEMENT MARKING, (ASPHALT) | |
| | | | | | 22788 | | | | | | | 20509 | 2279 | | 850 | 10110 | 22788 | FT | GROOVING FOR 6" RECESSED PAVEMENT MARKING, (ASPHALT) | |
| | | | | | 11942 | | | | | | | 10748 | 1194 | | 850 | 10130 | 11942 | FT | GROOVING FOR 12" RECESSED PAVEMENT MARKING, (ASPHALT) | |

CALCULATED DLS
CHECKED AKF

# TRAFFIC CONTROL GENERAL SUMMARY 2 OF 2

SUM-77/277/224
VARIOUS

937
1288

0:\2017\2017258\ProjectData\SUM\106002\Design\Traffic\Sheets\106002_TG002.dgn 106002GN001 1/18/2021 7:38:44 AM aford

## ITEM 621 - RAISED PAVEMENT MARKER SUBSUMMARY

| ROADWAY | SHEET NO. | STATION TO STATION | | SIDE | INTERVAL | 1-WAY WHITE | 2-WAY WH/RED | 2-WAY YEL/RED | RAISED PAVEMENT MARKER REMOVED |
|---|---|---|---|---|---|---|---|---|---|
| I-77 | 962 | 371+50 | 379+50 | RT | 120 | 7 | | | 7 |
| I-77 | 962 | 371+50 | 379+50 | RT | 120 | 7 | | | 7 |
| I-77 | 962 | 371+50 | 379+50 | RT | 120 | 7 | | | 7 |
| RAMP D | 962 | 71+67 | 79+43 | LT | 40 | | 20 | | 20 |
| I-77 | 963 | 379+50 | 390+50 | RT | 120 | 9 | | | 9 |
| I-77 | 963 | 379+50 | 390+50 | RT | 120 | 9 | | | 9 |
| I-77 | 963 | 379+50 | 390+50 | RT | 120 | 9 | | | 9 |
| RAMP D | 963 | 79+43 | 86+22 | LT | 40 | | 17 | | 17 |
| I-77 | 963 | 386+22 | 390+50 | RT | 120 | 3 | | | 3 |
| I-77 | 964 | 390+50 | 403+50 | RT | 120 | 11 | | | 11 |
| I-77 | 964 | 390+50 | 403+50 | RT | 120 | 11 | | | 11 |
| I-77 | 964 | 390+50 | 403+50 | RT | 120 | 11 | | | 11 |
| I-77 | 964 | 390+50 | 403+50 | RT | 120 | 11 | | | 11 |
| I-77 | 964 | 391+37 | 403+50 | LT | 120 | 11 | | | 11 |
| I-77 | 964 | 391+37 | 403+50 | LT | 120 | 11 | | | 11 |
| I-77 | 964 | 391+37 | 403+50 | LT | 120 | 11 | | | 11 |
| I-77 | 965 | 403+50 | 415+50 | RT | 120 | 10 | | | 10 |
| I-77 | 965 | 403+50 | 415+50 | RT | 120 | 10 | | | 10 |
| I-77 | 965 | 403+50 | 415+50 | RT | 120 | 10 | | | 10 |
| I-77 | 965 | 403+50 | 407+20 | RT | 120 | 3 | | | 3 |
| I-77 | 965 | 403+50 | 415+50 | LT | 120 | 10 | | | 10 |
| I-77 | 965 | 403+50 | 415+50 | LT | 120 | 10 | | | 10 |
| I-77 | 965 | 403+50 | 415+50 | LT | 120 | 10 | | | 10 |
| I-77 | 966 | 415+50 | 427+50 | RT | 120 | 10 | | | 10 |
| I-77 | 966 | 415+50 | 427+50 | RT | 120 | 10 | | | 10 |
| I-77 | 966 | 415+50 | 427+50 | RT | 120 | 10 | | | 10 |
| I-77 | 966 | 415+50 | 427+50 | LT | 120 | 10 | | | 10 |
| I-77 | 966 | 415+50 | 427+50 | LT | 120 | 10 | | | 10 |
| I-77 | 966 | 415+50 | 427+50 | LT | 120 | 10 | | | 10 |
| I-77 | 967 | 427+50 | 439+50 | RT | 120 | 10 | | | 10 |
| I-77 | 967 | 427+50 | 439+50 | RT | 120 | 10 | | | 10 |
| I-77 | 967 | 427+50 | 439+50 | RT | 120 | 10 | | | 10 |
| I-77 | 967 | 427+50 | 439+50 | LT | 120 | 10 | | | 10 |
| I-77 | 967 | 427+50 | 439+50 | LT | 120 | 10 | | | 10 |
| I-77 | 967 | 427+50 | 439+50 | LT | 120 | 10 | | | 10 |
| I-77 | 968 | 439+50 | 451+50 | RT | 120 | 10 | | | 10 |
| I-77 | 968 | 439+50 | 451+50 | RT | 120 | 10 | | | 10 |
| I-77 | 968 | 439+50 | 449+93 | RT | 120 | 9 | | | 9 |
| I-77 | 968 | 439+50 | 451+50 | LT | 120 | 10 | | | 10 |
| I-77 | 968 | 439+50 | 451+50 | LT | 120 | 10 | | | 10 |
| I-77 | 968 | 439+50 | 451+50 | LT | 120 | 10 | | | 10 |
| I-77 | 968 | 448+90 | 451+50 | LT | 120 | 3 | | | 3 |
| I-77 | 969 | 451+50 | 463+50 | RT | 120 | 10 | | | 10 |
| I-77 | 969 | 451+50 | 463+50 | RT | 120 | 10 | | | 10 |
| I-77 | 969 | 460+50 | 463+50 | RT | 120 | 3 | | | 3 |
| I-77 | 969 | 451+50 | 463+50 | LT | 120 | 10 | | | 10 |
| I-77 | 969 | 451+50 | 463+50 | LT | 120 | 10 | | | 10 |
| I-77 | 969 | 451+50 | 463+50 | LT | 120 | 10 | | | 10 |
| I-77 | 969 | 451+50 | 463+50 | LT | 120 | 10 | | | 10 |
| TOTALS | | | | | | 436 | 37 | | 473 |
| TOTALS CARRIED TO TRAFFIC CONTROL GENERAL SUMMARY | | | | | | | 473 | | 473 |

## ITEM 621 - RAISED PAVEMENT MARKER SUBSUMMARY

| ROADWAY | SHEET NO. | STATION TO STATION | | SIDE | INTERVAL | 1-WAY WHITE | 2-WAY WH/RED | 2-WAY YEL/RED | RAISED PAVEMENT MARKER REMOVED |
|---|---|---|---|---|---|---|---|---|---|
| I-77 | 970 | 463+50 | 475+00 | RT | 120 | 10 | | | 10 |
| I-77 | 970 | 463+50 | 475+00 | RT | 120 | 10 | | | 10 |
| I-77 | 970 | 463+50 | 475+00 | RT | 120 | 9 | | | 9 |
| I-77 | 970 | 466+48 | 475+00 | RT | 40 | | 22 | | 22 |
| I-77 | 970 | 463+50 | 475+00 | LT | 120 | 9 | | | 9 |
| I-77 | 970 | 463+50 | 475+00 | LT | 120 | 9 | | | 9 |
| I-77 | 970 | 463+50 | 475+00 | LT | 120 | 9 | | | 9 |
| I-77 | 970 | 463+50 | 475+00 | LT | 120 | 9 | | | 9 |
| I-77 | 971 | 475+00 | 487+00 | RT | 120 | 10 | | | 10 |
| I-77 | 971 | 475+00 | 487+00 | RT | 120 | 10 | | | 10 |
| I-77 | 971 | 475+00 | 487+00 | RT | 120 | 10 | | | 10 |
| I-77 | 971 | 475+00 | 481+17 | RT | 40 | | 16 | | 16 |
| RAMP C | 971 | 576+42 | 581+24 | LT | 40 | | 12 | | 12 |
| RAMP C | 971 | 581+24 | 587+00 | LT | 80 | | | 7 | 7 |
| I-77 | 971 | 475+00 | 487+00 | LT | 120 | 10 | | | 10 |
| I-77 | 971 | 475+00 | 486+64 | LT | 120 | 10 | | | 10 |
| I-77 | 971 | 486+64 | 487+00 | LT | 40 | | 1 | | 1 |
| I-77 | 971 | 475+00 | 487+00 | LT | 120 | 10 | | | 10 |
| I-77 | 971 | 475+00 | 487+00 | LT | 120 | 10 | | | 10 |
| I-77 | 972 | 487+00 | 499+00 | RT | 120 | 10 | | | 10 |
| I-77 | 972 | 487+00 | 499+00 | RT | 120 | 10 | | | 10 |
| I-77 | 972 | 490+95 | 494+85 | CEN | 40 | | 10 | | 10 |
| RAMP C-1 | 972 | 693+00 | 693+72 | LT | 80 | | | 1 | 1 |
| RAMP C-1 | 972 | 693+72 | 699+00 | LT | 40 | | 14 | | 14 |
| RAMP B-2 | 972 | 287+00 | 298+95 | RT | 120 | 10 | | | 10 |
| I-77 | 972 | 490+95 | 494+85 | LT | 40 | | 9 | | 9 |
| RAMP C-2 | 972 | 789+00 | 798+32 | LT | 80 | | | 12 | 12 |
| I-77 | 972 | 496+95 | 499+00 | LT | 40 | | 4 | | 4 |
| I-77 | 972 | 487+00 | 499+00 | LT | 120 | 10 | | | 10 |
| I-77 | 972 | 487+00 | 499+00 | LT | 120 | 10 | | | 10 |
| I-77 | 972 | 496+95 | 499+00 | LT | 40 | | 4 | | 4 |
| RAMP A | 972 | 86+73 | 95+00 | RT | 120 | 7 | | | 7 |
| RAMP A | 972 | 86+73 | 94+44 | RT | 40 | | 19 | | 19 |
| RAMP A | 972 | 94+44 | 95+00 | RT | 80 | | | 1 | 1 |
| I-77 | 973 | 499+00 | 511+00 | RT | 120 | 10 | | | 10 |
| I-77 | 973 | 499+00 | 511+00 | RT | 120 | 10 | | | 10 |
| I-77 | 973 | 499+00 | 500+11 | RT | 40 | | 3 | | 3 |
| RAMP D | 973 | 904+00 | 907+55 | LT | 80 | | | 5 | 5 |
| RAMP D | 973 | 907+55 | 911+14 | LT | 40 | | 7 | | 7 |
| RAMP B-2 | 973 | 298+95 | 10+00 | RT | 120 | 10 | | | 10 |
| RAMP B-2 | 973 | 298+95 | 10+00 | RT | 80 | | | 12 | 12 |
| I-77 | 973 | 499+00 | 511+00 | LT | 120 | 10 | | | 10 |
| I-77 | 973 | 499+00 | 511+00 | LT | 120 | 10 | | | 10 |
| I-77 | 973 | 499+00 | 499+75 | LT | 40 | | 4 | | 4 |
| I-77 | 973 | 499+00 | 503+95 | LT | 80 | | | 9 | 9 |
| RAMP C-2 | 973 | 798+33 | 799+74 | LT | 40 | | 3 | | 3 |
| RAMP B-1 | 973 | 406+44 | 409+00 | RT | 80 | | | 3 | 3 |
| RAMP B-1 | 973 | 402+03 | 406+44 | RT | 40 | | 11 | | 11 |
| TOTALS | | | | | | 242 | 139 | 50 | 431 |
| TOTALS CARRIED TO TRAFFIC CONTROL GENERAL SUMMARY | | | | | | 431 | | | 431 |

CALCULATED DLS
CHECKED AKF

# RAISED PAVEMENT MARKING SUBSUMMARY 1 OF 2

SUM-77 / 277 / 224
VARIOUS

938
1288

O:\2017\2017258\ProjectData\SUM\106002\Design\Traffic\Sheets\106002_TS001.dgn 106002GN001 1/17/2021 7:13:41 AM aford

## ITEM 621 - RAISED PAVEMENT MARKER SUBSUMMARY

| ROADWAY | SHEET NO. | STATION TO STATION | | SIDE | INTERVAL | 1-WAY WHITE | 2-WAY WH/RED | 2-WAY YEL/RED | RAISED PAVEMENT MARKER REMOVED |
|---|---|---|---|---|---|---|---|---|---|
| I-77 | 974 | 511+00 | 515+87 | RT | 120 | 4 | | | 4 |
| I-77 | 974 | 511+00 | 515+87 | RT | 120 | 4 | | | 4 |
| RAMP D | 974 | 73+15 | 76+99 | LT | 40 | | 10 | | 10 |
| I-77 | 974 | 510+51 | 515+94 | LT | 120 | 4 | | | 4 |
| I-77 | 974 | 510+51 | 515+94 | LT | 120 | 4 | | | 4 |
| I-77 | 974 | 515+36 | 515+94 | LT | 40 | | 2 | | 2 |
| RAMP B | 974 | 215+28 | 215+50 | RT | 40 | | 1 | | 1 |
| RAMP B | 974 | 212+00 | 215+28 | RT | 80 | | | 5 | 5 |
| I-277 | 980 | 225+00 | 234+50 | RT | 40 | | 24 | | 24 |
| I-277 | 980 | 225+00 | 234+50 | RT | 120 | 8 | | | 8 |
| RAMP B-2 | 980 | 24+32 | 24+65 | RT | 40 | 1 | | | 1 |
| I-277 | 981 | 237+66 | 246+50 | RT | 120 | 8 | | | 8 |
| I-277 | 981 | 237+66 | 246+50 | RT | 120 | 8 | | | 8 |
| I-277 | 981 | 242+24 | 245+80 | RT | 40 | | 9 | | 9 |
| I-277 | 981 | 242+24 | 245+80 | RT | 40 | | 8 | | 8 |
| I-277 | 981 | 245+80 | 246+50 | RT | 80 | | | 1 | 1 |
| RAMP B-2 | 981 | 18+50 | 23+18 | RT | 80 | | | 6 | 6 |
| RAMP B-2 | 981 | 23+18 | 24+65 | RT | 40 | | 3 | | 3 |
| RAMP B-2 | 981 | 18+50 | 24+65 | RT | 120 | 5 | | | 5 |
| RAMP B-2 | 981 | 18+50 | 24+65 | RT | 40 | | 14 | | 14 |
| RAMP B-1 | 981 | 409+00 | 417+22 | RT | 80 | | | 11 | 11 |
| I-277 | 982 | 246+50 | 258+50 | RT | 120 | 10 | | | 10 |
| I-277 | 982 | 258+30 | 258+50 | RT | 40 | | 1 | | 1 |
| I-277 | 982 | 252+14 | 258+50 | LT | 120 | 5 | | | 5 |
| I-277 | 982 | 247+81 | 252+14 | LT | 40 | | 11 | | 11 |
| I-277 | 982 | 247+81 | 252+14 | LT | 40 | | 10 | | 10 |
| I-277 | 982 | 246+50 | 247+81 | LT | 80 | | | 2 | 2 |
| I-277 | 983 | 258+50 | 270+50 | RT | 120 | 10 | | | 10 |
| I-277 | 983 | 258+50 | 260+77 | RT | 40 | | 6 | | 6 |
| I-277 | 983 | 258+50 | 260+77 | RT | 40 | | 6 | | 6 |
| RAMP C-1 | 983 | 682+95 | 685+00 | LT | 80 | | | 2 | 2 |
| I-277 | 983 | 258+50 | 270+50 | LT | 120 | 10 | | | 10 |
| I-277 | 983 | 264+68 | 268+84 | LT | 40 | | 10 | | 10 |
| I-277 | 983 | 264+68 | 270+50 | LT | 40 | | 15 | | 15 |
| RAMP D | 983 | 892+67 | 898+00 | LT | 80 | | | 7 | 7 |
| RAMP C | 983 | 598+00 | 599+66 | RT | 80 | | | 2 | 2 |
| I-277 | 984 | 270+50 | 279+50 | RT | 120 | 7 | | | 7 |
| I-277 | 984 | 277+50 | 279+50 | RT | 120 | 1 | | | 1 |
| I-277 | 984 | 271+44 | 277+50 | RT | 40 | | 16 | | 16 |
| I-277 | 984 | 270+50 | 271+44 | RT | 80 | | | 1 | 1 |
| I-277 | 984 | 270+50 | 273+10 | LT | 120 | 2 | | | 2 |
| I-277 | 984 | 270+50 | 275+34 | LT | 40 | | 12 | | 12 |
| RAMP A | 986 | 95+00 | 105+00 | RT | 120 | 8 | | | 8 |
| RAMP A | 986 | 95+00 | 105+00 | RT | 80 | | | 12 | 12 |
| RAMP B | 987 | 202+92 | 205+86 | RT | 40 | | 8 | | 8 |
| RAMP B | 987 | 205+86 | 212+00 | RT | 80 | | | 7 | 7 |
| RAMP B-2 | 987 | 10+00 | 18+50 | RT | 120 | 7 | | | 7 |
| RAMP B-2 | 987 | 10+00 | 18+50 | RT | 80 | | | 11 | 11 |
| RAMP C | 988 | 587+00 | 593+00 | RT | 80 | | | 7 | 7 |
| RAMP C | 988 | 593+00 | 594+94 | RT | 40 | | 6 | | 6 |
| RAMP C-2 | 988 | 779+80 | 789+00 | CEN | 80 | | | 11 | 11 |
| RAMP C-1 | 989 | 685+00 | 693+00 | LT | 80 | | | 11 | 11 |
| RAMP D | 990 | 898+00 | 904+00 | LT | 80 | | | 8 | 8 |
| TOTALS | | | | | | 106 | 172 | 104 | 382 |
| TOTALS CARRIED TO TRAFFIC CONTROL GENERAL SUMMARY | | | | | | | 382 | | 382 |

CALCULATED DLS
CHECKED AKF

# RAISED PAVEMENT MARKING SUBSUMMARY 2 OF 2

SUM-77/277/224
VARIOUS

939
1288

O:\2017\2017258\ProjectData\SUM\106002\Design\Traffic\Sheets\106002_TS002.dgn 106002GN001 1/17/2021 7:13:42 AM aford

| SHEET NO. | REF. NO. | LOCATION | STATION | | SIDE | 644 EDGE LINE, 4", WHITE | 644 CENTER LINE, DOUBLE SOLID | 646 CHEVRON MARKING, WHITE | 646 LANE REDUCTION ARROW | 807 WET REFLECTIVE EPOXY PAVEMENT MARKING, EDGE LINE, 6", WHITE | 807 WET REFLECTIVE EPOXY PAVEMENT MARKING, EDGE LINE, 6", YELLOW | 807 WET REFLECTIVE EPOXY PAVEMENT MARKING, LANE LINE, 6" | 807 WET REFLECTIVE EPOXY PAVEMENT MARKING, CHANNELIZING LINE, 12" | 807 WET REFLECTIVE EPOXY PAVEMENT MARKING, DOTTED LINE, 6", WHITE | 850 GROOVING FOR 6" RECESSED PAVEMENT MARKING, (ASPHALT) | 850 GROOVING FOR 6" RECESSED PAVEMENT MARKING, (ASPHALT) | 850 GROOVING FOR 12" RECESSED PAVEMENT MARKING, (ASPHALT) |
|---|---|---|---|---|---|---|---|---|---|---|---|---|---|---|---|---|---|
| | | | FROM | TO | | FT | FT | FT | EACH | FT | FT | FT | FT | FT | FT | FT | FT |
| 960 | EY | I-77 | 342+46 | 356+00 | RT | | | | | | 1354 | | | | 1354 | | |
| 960 | LL | I-77 | 342+46 | 356+00 | RT | | | | | | | 1354 | | | 1354 | | |
| 960 | LL | I-77 | 342+46 | 356+00 | RT | | | | | | | 1354 | | | 1354 | | |
| 960 | DW | I-77 | 342+46 | 344+31 | RT | | | | | | | | | 185 | | | 185 |
| 960 | CH | I-77 | 344+31 | 348+12 | RT | | | | | | | | 381 | | | 381 | |
| 960 | CH | I-77 | 344+31 | 348+12 | RT | | | | | | | | 381 | | | 381 | |
| 960 | EW | I-77 | 348+12 | 354+61 | RT | | | | | 649 | | | | | 649 | | |
| 960 | CH | I-77 | 354+81 | 356+00 | RT | | | | | | | | 119 | | | 119 | |
| 960 | CH | I-77 | 354+81 | 356+00 | RT | | | | | | | | 119 | | | 119 | |
| 960 | EW | I-77 | 354+81 | 356+00 | RT | | | | | 119 | | | | | 119 | | |
| 960 | EW | I-77 | 342+46 | 348+12 | RT | | | | | 566 | | | | | 566 | | |
| | | | | | | | | | | | | | | | | | |
| 961 | EY | I-77 | 356+00 | 368+00 | RT | | | | | | 1200 | | | | 1200 | | |
| 961 | LL | I-77 | 356+00 | 368+00 | RT | | | | | | | 1200 | | | 1200 | | |
| 961 | LL | I-77 | 356+00 | 368+00 | RT | | | | | | | 1200 | | | 1200 | | |
| 961 | LL | I-77 | 356+46 | 368+00 | RT | | | | | | | 1154 | | | 1154 | | |
| 961 | CH | I-77 | 356+00 | 356+46 | RT | | | | | | | | 46 | | | 46 | |
| 961 | CH | I-77 | 356+00 | 356+46 | RT | | | | | | | | 46 | | | 46 | |
| 961 | EW | I-77 | 356+00 | 368+00 | RT | | | | | 1200 | | | | | 1200 | | |
| 961 | EY | I-77 | 356+83 | 368+00 | LT | | | | | | 1117 | | | | 1117 | | |
| 961 | LL | I-77 | 356+83 | 368+00 | LT | | | | | | | 1117 | | | 1117 | | |
| 961 | LL | I-77 | 356+83 | 368+00 | LT | | | | | | | 1117 | | | 1117 | | |
| 961 | EW | I-77 | 356+83 | 363+54 | LT | | | | | 671 | | | | | 671 | | |
| 961 | CH | I-77 | 363+54 | 366+82 | LT | | | | | | | | 328 | | | 328 | |
| 961 | CH | I-77 | 363+54 | 366+82 | LT | | | | | | | | 328 | | | 328 | |
| 961 | LL | I-77 | 363+54 | 368+00 | LT | | | | | | | 446 | | | 446 | | |
| 961 | EW | I-77 | 363+54 | 368+00 | LT | | | | | 446 | | | | | 446 | | |
| | | | | | | | | | | | | | | | | | |
| 962 | EY | I-77 | 368+00 | 379+50 | RT | | | | | | 1150 | | | | 1150 | | |
| 962 | LL | I-77 | 368+00 | 379+50 | RT | | | | | | | 1150 | | | 1150 | | |
| 962 | LL | I-77 | 368+00 | 379+50 | RT | | | | | | | 1150 | | | 1150 | | |
| 962 | LL | I-77 | 368+00 | 379+50 | RT | | | | | | | 1150 | | | 1150 | | |
| 962 | EW | I-77 | 368+00 | 371+67 | RT | | | | | 367 | | | | | 367 | | |
| 962 | CH | I-77 | 371+67 | 379+50 | RT | | | | | | | | 783 | | | 783 | |
| 962 | CH | I-77 | 371+67 | 379+50 | RT | | | | | | | | 783 | | | 783 | |
| 962 | EW | I-77 | 371+67 | 379+50 | RT | | | | | 783 | | | | | 783 | | |
| 962 | EY | I-77 | 368+00 | 379+50 | LT | | | | | | 1150 | | | | 1150 | | |
| 962 | LL | I-77 | 368+00 | 379+50 | LT | | | | | | | 1150 | | | 1150 | | |
| 962 | LL | I-77 | 368+00 | 379+50 | LT | | | | | | | 1150 | | | 1150 | | |
| 962 | LL | I-77 | 368+00 | 379+50 | LT | | | | | | | 1150 | | | 1150 | | |
| 962 | EW | I-77 | 368+00 | 379+50 | LT | | | | | 1150 | | | | | 1150 | | |
| | | | | | | | | | | | | | | | | | |
| 963 | EY | I-77 | 379+50 | 390+50 | RT | | | | | | 1100 | | | | 1100 | | |
| 963 | LL | I-77 | 379+50 | 390+50 | RT | | | | | | | 1100 | | | 1100 | | |
| 963 | LL | I-77 | 379+50 | 390+50 | RT | | | | | | | 1100 | | | 1100 | | |
| 963 | LL | I-77 | 379+50 | 390+50 | RT | | | | | | | 1100 | | | 1100 | | |
| 963 | CH | I-77 | 379+50 | 386+22 | RT | | | | | | | | 672 | | | 672 | |
| 963 | LL | I-77 | 386+22 | 390+50 | RT | | | | | | | 428 | | | 428 | | |
| 963 | CH | I-77 | 379+50 | 386+22 | RT | | | | | | | | 672 | | | 672 | |
| 963 | EW | I-77 | 379+50 | 390+50 | RT | | | | | 1100 | | | | | 1100 | | |
| 963 | EY | I-77 | 379+50 | 390+50 | LT | | | | | | 1100 | | | | 1100 | | |
| 963 | LL | I-77 | 379+50 | 390+50 | LT | | | | | | | 1100 | | | 1100 | | |
| 963 | LL | I-77 | 379+50 | 390+50 | LT | | | | | | | 1100 | | | 1100 | | |
| 963 | LL | I-77 | 379+50 | 390+50 | LT | | | | | | | 1100 | | | 1100 | | |
| 963 | EW | I-77 | 379+50 | 390+50 | LT | | | | | 1100 | | | | | 1100 | | |
| | | | | | | | | | | | | | | | | | |
| TOTALS CARRIED TO PAVEMENT MARKING SHEET 8 OF 8 | | | | | | | | | | 16322 | | 22870 | 4658 | 185 | 39192 | 4658 | 185 |

CALCULATED DLS
CHECKED AKF

# PAVEMENT MARKING SUBSUMMARY SHEET 1 OF 8

SUM-77/277/224
VARIOUS

940
1288

0:\2017\2017258\ProjectData\SUM\106002\Design\Traffic\Sheets\106002_TS010.dgn 106002GN001 1/17/2021 7:13:42 AM aford

| SHEET NO. | REF. NO. | LOCATION | STATION FROM | STATION TO | SIDE | 644 EDGE LINE, 4", WHITE FT | 644 CENTER LINE, DOUBLE SOLID FT | 646 CHEVRON MARKING, WHITE FT | 646 LANE REDUCTION ARROW EACH | 807 WET REFLECTIVE EPOXY PAVEMENT MARKING, EDGE LINE, 6", WHITE FT | 807 WET REFLECTIVE EPOXY PAVEMENT MARKING, EDGE LINE, 6", YELLOW FT | 807 WET REFLECTIVE EPOXY PAVEMENT MARKING, LANE LINE, 6" FT | 807 WET REFLECTIVE EPOXY PAVEMENT MARKING, CHANNELIZING LINE, 12" FT | 807 WET REFLECTIVE EPOXY PAVEMENT MARKING, DOTTED LINE, 6", WHITE FT | 850 GROOVING FOR 6" RECESSED PAVEMENT MARKING, (ASPHALT) FT | 850 GROOVING FOR 6" RECESSED PAVEMENT MARKING, (ASPHALT) FT | 850 GROOVING FOR 12" RECESSED PAVEMENT MARKING, (ASPHALT) FT |
|---|---|---|---|---|---|---|---|---|---|---|---|---|---|---|---|---|---|
| 964 | EY | I-77 | 390+50 | 403+50 | RT | | | | | | 1300 | | | | 1300 | | |
| 964 | LL | I-77 | 390+50 | 403+50 | RT | | | | | | | 1300 | | | 1300 | | |
| 964 | LL | I-77 | 390+50 | 403+50 | RT | | | | | | | 1300 | | | 1300 | | |
| 964 | LL | I-77 | 390+50 | 403+50 | RT | | | | | | | 1300 | | | 1300 | | |
| 964 | LL | I-77 | 390+50 | 403+50 | RT | | | | | | | 1300 | | | 1300 | | |
| 964 | EW | I-77 | 390+50 | 403+50 | RT | | | | | 1300 | | | | | 1300 | | |
| 964 | EY | I-77 | 390+50 | 403+50 | LT | | | | | | 1300 | | | | 1300 | | |
| 964 | LL | I-77 | 390+50 | 403+50 | LT | | | | | | | 1300 | | | 1300 | | |
| 964 | LL | I-77 | 390+50 | 403+50 | LT | | | | | | | 1300 | | | 1300 | | |
| 964 | LL | I-77 | 390+50 | 403+50 | LT | | | | | | | 1300 | | | 1300 | | |
| 964 | EW | I-77 | 390+50 | 403+50 | LT | | | | | 1300 | | | | | 1300 | | |
| | | | | | | | | | | | | | | | | | |
| 965 | EY | I-77 | 403+50 | 415+50 | RT | | | | | | 1200 | | | | 1200 | | |
| 965 | LL | I-77 | 403+50 | 415+50 | RT | | | | | | | 1200 | | | 1200 | | |
| 965 | LL | I-77 | 403+50 | 415+50 | RT | | | | | | | 1200 | | | 1200 | | |
| 965 | LL | I-77 | 403+50 | 415+50 | RT | | | | | | | 1200 | | | 1200 | | |
| 965 | LL | I-77 | 403+50 | 407+20 | RT | | | | | | | 370 | | | 370 | | |
| 965 | DW | I-77 | 407+20 | 415+50 | RT | | | | | | | | | 830 | | | 830 |
| 965 | EW | I-77 | 403+50 | 415+50 | RT | | | | | 1200 | | | | | 1200 | | |
| 965 | LR | I-77 | 407+20 | | RT | | | | 1 | | | | | | | | |
| 965 | LR | I-77 | 415+20 | | RT | | | | 1 | | | | | | | | |
| 965 | EY | I-77 | 403+50 | 415+50 | LT | | | | | | 1200 | | | | 1200 | | |
| 965 | LL | I-77 | 403+50 | 415+50 | LT | | | | | | | 1200 | | | 1200 | | |
| 965 | LL | I-77 | 403+50 | 415+50 | LT | | | | | | | 1200 | | | 1200 | | |
| 965 | LL | I-77 | 403+50 | 415+50 | LT | | | | | | | 1200 | | | 1200 | | |
| 965 | EW | I-77 | 403+50 | 415+50 | LT | | | | | 1200 | | | | | 1200 | | |
| | | | | | | | | | | | | | | | | | |
| 966 | EY | I-77 | 415+50 | 427+50 | RT | | | | | | 1200 | | | | 1200 | | |
| 966 | LL | I-77 | 415+50 | 427+50 | RT | | | | | | | 1200 | | | 1200 | | |
| 966 | LL | I-77 | 415+50 | 427+50 | RT | | | | | | | 1200 | | | 1200 | | |
| 966 | LL | I-77 | 415+50 | 427+50 | RT | | | | | | | 1200 | | | 1200 | | |
| 966 | DW | I-77 | 415+50 | 424+00 | RT | | | | | | | | | 850 | | | 850 |
| 966 | EW | I-77 | 415+50 | 427+50 | RT | | | | | 1200 | | | | | 1200 | | |
| 966 | EY | I-77 | 415+50 | 427+50 | LT | | | | | | 1200 | | | | 1200 | | |
| 966 | LL | I-77 | 415+50 | 427+50 | LT | | | | | | | 1200 | | | 1200 | | |
| 966 | LL | I-77 | 415+50 | 427+50 | LT | | | | | | | 1200 | | | 1200 | | |
| 966 | LL | I-77 | 415+50 | 427+50 | LT | | | | | | | 1200 | | | 1200 | | |
| 966 | EW | I-77 | 415+50 | 427+50 | LT | | | | | 1200 | | | | | 1200 | | |
| 966 | EW | WARNER ROAD | 24+50 | 27+69 | RT | 319 | | | | | | | | | | | |
| 966 | EW | WARNER ROAD | 24+50 | 27+69 | LT | 319 | | | | | | | | | | | |
| 966 | CDS | WARNER ROAD | 24+50 | 27+69 | LT | | 319 | | | | | | | | | | |
| | | | | | | | | | | | | | | | | | |
| 967 | EY | I-77 | 427+50 | 439+50 | RT | | | | | | 1200 | | | | 1200 | | |
| 967 | LL | I-77 | 427+50 | 439+50 | RT | | | | | | | 1200 | | | 1200 | | |
| 967 | LL | I-77 | 427+50 | 439+50 | RT | | | | | | | 1200 | | | 1200 | | |
| 967 | LL | I-77 | 427+50 | 439+50 | RT | | | | | | | 1200 | | | 1200 | | |
| 967 | EW | I-77 | 427+50 | 439+50 | RT | | | | | 1200 | | | | | 1200 | | |
| 967 | EY | I-77 | 427+50 | 439+50 | LT | | | | | | 1200 | | | | 1200 | | |
| 967 | LL | I-77 | 427+50 | 439+50 | LT | | | | | | | 1200 | | | 1200 | | |
| 967 | LL | I-77 | 427+50 | 439+50 | LT | | | | | | | 1200 | | | 1200 | | |
| 967 | LL | I-77 | 427+50 | 439+50 | LT | | | | | | | 1200 | | | 1200 | | |
| 967 | EW | I-77 | 427+50 | 439+50 | LT | | | | | 1200 | | | | | 1200 | | |
| 967 | DW | I-77 | 431+50 | 439+50 | LT | | | | | | | | | 800 | | | 800 |
| TOTALS CARRIED TO PAVEMENT MARKING SHEET 8 OF 8 | | | | | | 638 | 319 | | 2 | 19600 | | 31070 | | 2480 | 50670 | | 2480 |

CALCULATED DLS
CHECKED AKF

# PAVEMENT MARKING SUBSUMMARY SHEET 2 OF 8

SUM-77 / 277 / 224
VARIOUS

941
1288

0:\2017\2017258\ProjectData\SUM\106002\Design\Traffic\Sheets\106002_TS011.dgn 106002GN001 1/17/2021 7:13:43 AM aford

| SHEET NO. | REF. NO. | LOCATION | STATION FROM | STATION TO | SIDE | 644 EDGE LINE, 4", WHITE FT | 644 CENTER LINE, DOUBLE SOLID FT | 646 CHEVRON MARKING, WHITE FT | 646 LANE REDUCTION ARROW EACH | 807 WET REFLECTIVE EPOXY PAVEMENT MARKING, EDGE LINE, 6", WHITE FT | 807 WET REFLECTIVE EPOXY PAVEMENT MARKING, EDGE LINE, 6", YELLOW FT | 807 WET REFLECTIVE EPOXY PAVEMENT MARKING, LANE LINE, 6" FT | 807 WET REFLECTIVE EPOXY PAVEMENT MARKING, CHANNELIZING LINE, 12" FT | 807 WET REFLECTIVE EPOXY PAVEMENT MARKING, DOTTED LINE, 6", WHITE FT | 850 GROOVING FOR 6" RECESSED PAVEMENT MARKING, (ASPHALT) FT | 850 GROOVING FOR 6" RECESSED PAVEMENT MARKING, (ASPHALT) FT | 850 GROOVING FOR 12" RECESSED PAVEMENT MARKING, (ASPHALT) FT |
|---|---|---|---|---|---|---|---|---|---|---|---|---|---|---|---|---|---|
| 968 | EY | I-77 | 439+50 | 451+50 | RT | | | | | | 1200 | | | | 1200 | | |
| 968 | LL | I-77 | 439+50 | 451+50 | RT | | | | | | | 1200 | | | 1200 | | |
| 968 | LL | I-77 | 439+50 | 451+50 | RT | | | | | | | 1200 | | | 1200 | | |
| 968 | LL | I-77 | 439+50 | 449+93 | RT | | | | | | | 1043 | | | 1043 | | |
| 968 | DW | I-77 | 449+93 | 451+50 | RT | | | | | | | | | 157 | | | 157 |
| 968 | EW | I-77 | 439+50 | 451+50 | RT | | | | | 1200 | | | | | 1200 | | |
| 968 | EY | I-77 | 439+50 | 451+50 | LT | | | | | | 1200 | | | | 1200 | | |
| 968 | LL | I-77 | 439+50 | 451+50 | LT | | | | | | | 1200 | | | 1200 | | |
| 968 | LL | I-77 | 439+50 | 451+50 | LT | | | | | | | 1200 | | | 1200 | | |
| 968 | LL | I-77 | 439+50 | 451+50 | LT | | | | | | | 1200 | | | 1200 | | |
| 968 | LL | I-77 | 448+90 | 451+50 | LT | | | | | | | 260 | | | 260 | | |
| 968 | EW | I-77 | 439+50 | 451+50 | LT | | | | | 1200 | | | | | 1200 | | |
| 968 | DW | I-77 | 439+50 | 448+90 | LT | | | | | | | | | 940 | | | 940 |
| 968 | LR | I-77 | 440+90 | | LT | | | | 1 | | | | | | | | |
| 968 | LR | I-77 | 448+90 | | LT | | | | 1 | | | | | | | | |
| 969 | EY | I-77 | 451+50 | 463+50 | RT | | | | | | 1200 | | | | 1200 | | |
| 969 | LL | I-77 | 451+50 | 463+50 | RT | | | | | | | 1200 | | | 1200 | | |
| 969 | LL | I-77 | 451+50 | 463+50 | RT | | | | | | | 1200 | | | 1200 | | |
| 969 | LL | I-77 | 460+50 | 463+50 | RT | | | | | | | 300 | | | 300 | | |
| 969 | EW | I-77 | 451+50 | 463+50 | RT | | | | | 1200 | | | | | 1200 | | |
| 969 | DW | I-77 | 459+50 | 460+50 | RT | | | | | | | | | 100 | | | 100 |
| 969 | DW | I-77 | 451+50 | 463+50 | RT | | | | | | | | | 1200 | | | 1200 |
| 969 | EY | I-77 | 451+50 | 463+50 | LT | | | | | | 1200 | | | | 1200 | | |
| 969 | LL | I-77 | 451+50 | 463+50 | LT | | | | | | | 1200 | | | 1200 | | |
| 969 | LL | I-77 | 451+50 | 463+50 | LT | | | | | | | 1200 | | | 1200 | | |
| 969 | LL | I-77 | 451+50 | 463+50 | LT | | | | | | | 1200 | | | 1200 | | |
| 969 | LL | I-77 | 451+50 | 463+50 | LT | | | | | | | 1200 | | | 1200 | | |
| 969 | EW | I-77 | 451+50 | 463+50 | LT | | | | | 1200 | | | | | 1200 | | |
| 970 | EY | I-77 | 463+50 | 475+00 | RT | | | | | | 1150 | | | | 1150 | | |
| 970 | LL | I-77 | 463+50 | 475+00 | RT | | | | | | | 1150 | | | 1150 | | |
| 970 | LL | I-77 | 463+50 | 475+00 | RT | | | | | | | 1150 | | | 1150 | | |
| 970 | LL | I-77 | 463+50 | 475+00 | RT | | | | | | | 1150 | | | 1150 | | |
| 970 | EW | I-77 | 463+50 | 475+00 | RT | | | | | 1150 | | | | | 1150 | | |
| 970 | DW | I-77 | 463+50 | 466+48 | RT | | | | | | | | | 298 | | | 298 |
| 970 | CH | I-77 | 466+48 | 475+00 | RT | | | | | | | | 852 | | | 852 | |
| 970 | EY | I-77 | 463+50 | 475+00 | LT | | | | | | 1150 | | | | 1150 | | |
| 970 | LL | I-77 | 463+50 | 475+00 | LT | | | | | | | 1150 | | | 1150 | | |
| 970 | LL | I-77 | 463+50 | 475+00 | LT | | | | | | | 1150 | | | 1150 | | |
| 970 | LL | I-77 | 463+50 | 475+00 | LT | | | | | | | 1150 | | | 1150 | | |
| 970 | LL | I-77 | 463+50 | 475+00 | LT | | | | | | | 1150 | | | 1150 | | |
| 970 | EW | I-77 | 463+50 | 475+00 | LT | | | | | 1150 | | | | | 1150 | | |
| TOTALS CARRIED TO PAVEMENT MARKING SHEET 8 OF 8 | | | | | | | | | 2 | 14200 | | 22853 | 852 | 2695 | 37053 | 852 | 2695 |

CALCULATED DLS
CHECKED AKF

# PAVEMENT MARKING SUBSUMMARY SHEET 3 OF 8

SUM-77/277/224
VARIOUS

942
1288

0:\2017\2017258\ProjectData\SUM\106002\Design\Traffic\Sheets\106002_TS012.dgn 1060020N001 1/17/2021 7:13:44 AM aford

| SHEET NO. | REF. NO. | LOCATION | STATION FROM | STATION TO | SIDE | 644 EDGE LINE, 4", WHITE FT | 644 CENTER LINE, DOUBLE SOLID FT | 646 CHEVRON MARKING, WHITE FT | 646 LANE REDUCTION ARROW EACH | 807 WET REFLECTIVE EPOXY PAVEMENT MARKING, EDGE LINE, 6", WHITE FT | 807 WET REFLECTIVE EPOXY PAVEMENT MARKING, EDGE LINE, 6", YELLOW FT | 807 WET REFLECTIVE EPOXY PAVEMENT MARKING, LANE LINE, 6" FT | 807 WET REFLECTIVE EPOXY PAVEMENT MARKING, CHANNELIZING LINE, 12" FT | 807 WET REFLECTIVE EPOXY PAVEMENT MARKING, DOTTED LINE, 6", WHITE FT | 850 GROOVING FOR 6" RECESSED PAVEMENT MARKING, (ASPHALT) FT | 850 GROOVING FOR 6" RECESSED PAVEMENT MARKING, (ASPHALT) FT | 850 GROOVING FOR 12" RECESSED PAVEMENT MARKING, (ASPHALT) FT |
|---|---|---|---|---|---|---|---|---|---|---|---|---|---|---|---|---|---|
| 971 | EY | I-77 | 475+00 | 487+00 | RT | | | | | | 1200 | | | | 1200 | | |
| 971 | LL | I-77 | 475+00 | 487+00 | RT | | | | | | | 1200 | | | 1200 | | |
| 971 | LL | I-77 | 475+00 | 487+00 | RT | | | | | | | 1200 | | | 1200 | | |
| 971 | LL | I-77 | 475+00 | 487+00 | RT | | | | | | | 1200 | | | 1200 | | |
| 971 | EW | I-77 | 481+17 | 487+00 | RT | | | | | 583 | | | | | 583 | | |
| 971 | CH | I-77 | 475+00 | 481+17 | RT | | | | | 617 | | | | | 617 | | |
| 971 | EY | RAMP C | 581+24 | 587+00 | LT | | | | | | 576 | | | | 576 | | |
| 971 | CH | I-77 | 476+42 | 481+17 | RT | | | | | | | | 475 | | | 475 | |
| 971 | EW | RAMP C | 575+00 | 587+00 | CEN | | | | | 1200 | | | | | 1200 | | |
| 971 | CV | I-77 | 476+42 | 481+17 | RT | | | 101 | | | | | | | | | |
| 971 | EY | I-77 | 475+00 | 486+68 | LT | | | | | | 1168 | | | | 1168 | | |
| 971 | LL | I-77 | 475+00 | 486+68 | LT | | | | | | | 1168 | | | 1168 | | |
| 971 | LL | I-77 | 475+00 | 486+68 | LT | | | | | | | 1168 | | | 1168 | | |
| 971 | LL | I-77 | 475+00 | 486+68 | LT | | | | | | | 1168 | | | 1168 | | |
| 971 | LL | I-77 | 475+00 | 486+64 | LT | | | | | | | 1164 | | | 1164 | | |
| 971 | EW | I-77 | 475+00 | 486+68 | LT | | | | | 1168 | | | | | 1168 | | |
| 971 | CH | I-77 | 486+64 | 486+68 | LT | | | | | | | | 4 | | | 4 | |
| 972 | EW | I-77 | 487+00 | 493+72 | RT | | | | | 672 | | | | | 672 | | |
| 972 | CH | I-77 | 493+72 | 499+00 | RT | | | | | | | | 528 | | | 528 | |
| 972 | LL | I-77 | 487+00 | 499+00 | RT | | | | | | | 1200 | | | 1200 | | |
| 972 | LL | I-77 | 487+00 | 499+00 | RT | | | | | | | 1200 | | | 1200 | | |
| 972 | LL | RAMP B-2 | 287+00 | 298+95 | RT | | | | | | | 1195 | | | 1195 | | |
| 972 | EY | I-77 | 494+85 | 499+00 | RT | | | | | | 415 | | | | 415 | | |
| 972 | EY | RAMP B-2 | 287+00 | 298+95 | LT | | | | | | 1195 | | | | 1195 | | |
| 972 | EW | RAMP B-2 | 294+85 | 298+95 | RT | | | | | 410 | | | | | 410 | | |
| 972 | CH | I-77 | 490+95 | 494+85 | RT | | | | | | | | 390 | | | 390 | |
| 972 | CH | I-77 | 490+95 | 494+85 | RT | | | | | | | | 390 | | | 390 | |
| 972 | CV | I-77 | 490+95 | 494+85 | RT | | | 128 | | | | | | | | | |
| 972 | EY | RAMP C-1 | 693+00 | 693+72 | RT | | | | | | 72 | | | | 72 | | |
| 972 | CH | I-77 | 493+72 | 499+00 | RT | | | | | | | | 528 | | | 528 | |
| 972 | EW | RAMP C-1 | 693+00 | 699+00 | CEN | | | | | 600 | | | | | 600 | | |
| 972 | EY | RAMP C-2 | 789+00 | 798+33 | CEN | | | | | | 933 | | | | 933 | | |
| 972 | EW | RAMP C-2 | 789+00 | 796+95 | LT | | | | | 795 | | | | | 795 | | |
| 972 | CH | I-77 | 496+95 | 498+33 | LT | | | | | | | | 138 | | | 138 | |
| 972 | CV | I-77 | 496+95 | 498+33 | LT | | | 63 | | | | | | | | | |
| 972 | EW | I-77 | 494+44 | 498+33 | LT | | | | | 389 | | | | | 389 | | |
| 972 | DW | I-77 | 494+44 | 498+33 | LT | | | | | | | | | 389 | | | 389 |
| 972 | CH | I-77 | 496+95 | 498+33 | LT | | | | | | | | 138 | | | 138 | |
| 972 | CH | I-77 | 486+68 | 494+44 | LT | | | | | | | | 776 | | | 776 | |
| 972 | EY | I-77 | 486+68 | 496+95 | LT | | | | | | 1027 | | | | 1027 | | |
| 972 | LL | I-77 | 486+68 | 498+33 | LT | | | | | | | 1165 | | | 1165 | | |
| 972 | LL | I-77 | 486+68 | 498+33 | LT | | | | | | | 1165 | | | 1165 | | |
| 972 | EW | RAMP A | 86+73 | 95+00 | CEN | | | | | 827 | | | | | 827 | | |
| 972 | LL | RAMP A | 86+73 | 95+00 | RT | | | | | | | 827 | | | 827 | | |
| 972 | CH | RAMP A | 86+73 | 94+44 | RT | | | | | | | | 771 | | | 771 | |
| 972 | EY | RAMP A | 94+44 | 95+00 | RT | | | | | | 56 | | | | 56 | | |
| TOTALS CARRIED TO PAVEMENT MARKING SHEET 8 OF 8 | | | | | | | | 292 | | 13903 | | 15020 | 4138 | 389 | 28923 | 4138 | 389 |

CALCULATED DLS
CHECKED AKF

# PAVEMENT MARKING SUBSUMMARY SHEET 4 OF 8

SUM-77/277/224
VARIOUS

943
1288

0:\2017\2017258\ProjectData\SUM\106002\Design\Traffic\Sheets\106002_TS013.dgn 106002GN001 1/17/2021 7:13:44 AM aford

| SHEET NO. | REF. NO. | LOCATION | STATION FROM | STATION TO | SIDE | 644 EDGE LINE, 4", WHITE FT | 644 CENTER LINE, DOUBLE SOLID FT | 646 CHEVRON MARKING, WHITE FT | 646 LANE REDUCTION ARROW EACH | 807 WET REFLECTIVE EPOXY PAVEMENT MARKING, EDGE LINE, 6", WHITE FT | 807 WET REFLECTIVE EPOXY PAVEMENT MARKING, EDGE LINE, 6", YELLOW FT | 807 WET REFLECTIVE EPOXY PAVEMENT MARKING, LANE LINE, 6" FT | 807 WET REFLECTIVE EPOXY PAVEMENT MARKING, CHANNELIZING LINE, 12" FT | 807 WET REFLECTIVE EPOXY PAVEMENT MARKING, DOTTED LINE, 6", WHITE FT | 850 GROOVING FOR 6" RECESSED PAVEMENT MARKING, (ASPHALT) FT | 850 GROOVING FOR 6" RECESSED PAVEMENT MARKING, (ASPHALT) FT | 850 GROOVING FOR 12" RECESSED PAVEMENT MARKING, (ASPHALT) FT |
|---|---|---|---|---|---|---|---|---|---|---|---|---|---|---|---|---|---|
| 973 | EY | I-77 | 499+00 | 511+00 | RT | | | | | | 1200 | | | | 1200 | | |
| 973 | LL | I-77 | 499+00 | 511+00 | RT | | | | | | | 1200 | | | 1200 | | |
| 973 | LL | I-77 | 499+00 | 511+00 | RT | | | | | | | 1200 | | | 1200 | | |
| 973 | EW | I-77 | 499+00 | 508+11 | RT | | | | | 911 | | | | | 911 | | |
| 973 | CH | I-77 | 508+11 | 511+00 | RT | | | | | | | | 289 | | | 289 | |
| 973 | CH | I-77 | 499+00 | 500+11 | RT | | | | | | | | 111 | | | 111 | |
| 973 | CH | I-77 | 499+00 | 500+11 | RT | | | | | | | | 111 | | | 111 | |
| 973 | DW | I-77 | 500+11 | 508+11 | RT | | | | | | | | | 800 | | | 800 |
| 973 | EW | RAMP D | 904+00 | 911+14 | LT | | | | | 714 | | | | | 714 | | |
| 973 | EY | RAMP D | 904+00 | 907+55 | LT | | | | | | 355 | | | | 355 | | |
| 973 | CH | RAMP D | 907+55 | 911+14 | CEN | | | | | | | | 359 | | | 359 | |
| 973 | EY | RAMP B-2 | 298+95 | 10+00 | CEN | | | | | | 1185 | | | | 1185 | | |
| 973 | LL | RAMP B-2 | 298+95 | 10+00 | RT | | | | | | | 1185 | | | 1185 | | |
| 973 | EW | RAMP B-2 | 298+95 | 10+00 | RT | | | | | 1185 | | | | | 1185 | | |
| 973 | EY | I-77 | 498+33 | 510+51 | LT | | | | | | 1218 | | | | 1218 | | |
| 973 | LL | I-77 | 498+33 | 510+51 | LT | | | | | | | 1218 | | | 1218 | | |
| 973 | LL | I-77 | 498+33 | 510+51 | LT | | | | | | | 1218 | | | 1218 | | |
| 973 | DW | I-77 | 503+85 | 504+95 | LT | | | | | | | | | 110 | | | 110 |
| 973 | CH | I-77 | 502+03 | 506+44 | LT | | | | | | | | 441 | | | 441 | |
| 973 | CV | I-77 | 498+33 | 499+74 | LT | | | 28 | | | | | | | | | |
| 973 | CH | I-77 | 498+33 | 499+74 | LT | | | | | | | | 141 | | | 141 | |
| 973 | DW | I-77 | 498+33 | 502+03 | LT | | | | | | | | | 370 | | | 370 |
| 973 | EW | I-77 | 506+44 | 510+51 | LT | | | | | 407 | | | | | 407 | | |
| 973 | CH | I-77 | 498+33 | 499+74 | LT | | | | | | | | 141 | | | 141 | |
| 973 | CH | RAMP B-1 | 402+03 | 406+44 | LT | | | | | | | | 441 | | | 441 | |
| 973 | DW | I-77 | 499+74 | 503+85 | LT | | | | | | | | | 411 | | | 411 |
| 973 | EY | RAMP B-1 | 406+44 | 409+00 | LT | | | | | | 256 | | | | 256 | | |
| 973 | CV | RAMP B-1 | 398+33 | 409+00 | CEN | | | | | 1067 | | | | | 1067 | | |
| 974 | EY | I-77 | 511+00 | 523+00 | RT | | | | | | 1200 | | | | 1200 | | |
| 974 | LL | I-77 | 511+00 | 523+00 | RT | | | | | | | 1200 | | | 1200 | | |
| 974 | LL | I-77 | 511+00 | 523+00 | RT | | | | | | | 1200 | | | 1200 | | |
| 974 | CH | I-77 | 511+00 | 514+89 | RT | | | | | | | | 389 | | | 389 | |
| 974 | CH | I-77 | 511+00 | 514+89 | RT | | | | | | | | 389 | | | 389 | |
| 974 | EW | I-77 | 511+00 | 523+00 | RT | | | | | 1200 | | | | | 1200 | | |
| 974 | EY | I-77 | 510+51 | 522+89 | LT | | | | | | 1238 | | | | 1238 | | |
| 974 | LL | I-77 | 510+51 | 522+89 | LT | | | | | | | 1238 | | | 1238 | | |
| 974 | LL | I-77 | 510+51 | 522+89 | LT | | | | | | | 1238 | | | 1238 | | |
| 974 | CH | I-77 | 515+36 | 518+30 | LT | | | | | | | | 294 | | | 294 | |
| 974 | EW | I-77 | 510+51 | 515+36 | LT | | | | | 485 | | | | | 485 | | |
| 974 | EW | RAMP B | 212+00 | 222+93 | LT | | | | | 1093 | | | | | 1093 | | |
| 974 | EY | RAMP B | 212+00 | 215+28 | LT | | | | | | 328 | | | | 328 | | |
| 974 | CH | I-77 | 515+36 | 518+30 | LT | | | | | | | | 294 | | | 294 | |
| 974 | TW | I-77 | 514+99 | 518+30 | LT | | | 64 | | | | | | | | | |
| 974 | DW | I-77 | 514+89 | 522+58 | RT | | | | | | | | | 769 | | | 769 |
| 974 | DW | I-77 | 518+30 | 522+64 | LT | | | | | | | | | 434 | | | 434 |
| 975 | EY | I-77 | 523+00 | 525+59 | RT | | | | | | 259 | | | | 259 | | |
| 975 | LL | I-77 | 523+00 | 525+59 | RT | | | | | | | 259 | | | 259 | | |
| 975 | LL | I-77 | 523+00 | 525+59 | RT | | | | | | | 259 | | | 259 | | |
| 975 | EW | I-77 | 523+00 | 525+59 | RT | | | | | 259 | | | | | 259 | | |
| 975 | EY | I-77 | 522+89 | 537+00 | LT | | | | | | 1411 | | | | 1411 | | |
| 975 | LL | I-77 | 522+89 | 537+00 | LT | | | | | | | 1411 | | | 1411 | | |
| 975 | LL | I-77 | 522+89 | 537+00 | LT | | | | | | | 1411 | | | 1411 | | |
| 975 | LL | I-77 | 528+50 | 537+00 | LT | | | | | | | 850 | | | 850 | | |
| 975 | CH | I-77 | 525+46 | 528+50 | LT | | | | | | | | 304 | | | 304 | |
| 975 | EW | I-77 | 522+89 | 525+46 | LT | | | | | 257 | | | | | 257 | | |
| 975 | EW | I-77 | 529+70 | 537+00 | LT | | | | | 730 | | | | | 730 | | |
| TOTALS CARRIED TO PAVEMENT MARKING SHEET 8 OF 8 | | | | | | | | 92 | | 16958 | | 15087 | 3704 | 2894 | 32045 | 3704 | 2894 |

# PAVEMENT MARKING SUBSUMMARY SHEET 5 OF 8

CALCULATED DLS
CHECKED AKF

SUM-77 / 277 / 224
VARIOUS

944
1288

O:\2017\2017258\ProjectData\SUM\106002\Design\Traffic\Sheets\106002_TS014.dgn 106002GN001 1/17/2021 7:13:45 AM aford

| SHEET NO. | REF. NO. | LOCATION | STATION FROM | STATION TO | SIDE | 644 EDGE LINE, 4", WHITE FT | 644 CENTER LINE, DOUBLE SOLID FT | 646 CHEVRON MARKING, WHITE FT | 646 LANE REDUCTION ARROW EACH | 807 WET REFLECTIVE EPOXY PAVEMENT MARKING, EDGE LINE, 6", WHITE FT | 807 WET REFLECTIVE EPOXY PAVEMENT MARKING, EDGE LINE, 6", YELLOW FT | 807 WET REFLECTIVE EPOXY PAVEMENT MARKING, LANE LINE, 6" FT | 807 WET REFLECTIVE EPOXY PAVEMENT MARKING, CHANNELIZING LINE, 12" FT | 807 WET REFLECTIVE EPOXY PAVEMENT MARKING, DOTTED LINE, 6", WHITE FT | 850 GROOVING FOR 6" RECESSED PAVEMENT MARKING, (ASPHALT) FT | 850 GROOVING FOR 6" RECESSED PAVEMENT MARKING, (ASPHALT) FT | 850 GROOVING FOR 12" RECESSED PAVEMENT MARKING, (ASPHALT) FT |
|---|---|---|---|---|---|---|---|---|---|---|---|---|---|---|---|---|---|
| 976 | EY | I-77 | 537+00 | 544+62 | LT | | | | | | 762 | | | | 762 | | |
| 976 | LL | I-77 | 537+00 | 544+62 | LT | | | | | | | 762 | | | 762 | | |
| 976 | LL | I-77 | 537+00 | 544+62 | LT | | | | | | | 762 | | | 762 | | |
| 976 | LL | I-77 | 537+00 | 544+62 | LT | | | | | | | 762 | | | 762 | | |
| 976 | EW | I-77 | 537+00 | 544+62 | LT | | | | | 762 | | | | | 762 | | |
| 979 | EW | I-277 | 207+41 | 222+00 | RT | | | | | 1459 | | | | | 1459 | | |
| 979 | LL | I-277 | 207+41 | 222+00 | RT | | | | | | | 1459 | | | 1459 | | |
| 979 | LL | I-277 | 207+41 | 222+00 | RT | | | | | | | 1459 | | | 1459 | | |
| 979 | EY | I-277 | 207+41 | 222+00 | RT | | | | | | 1459 | | | | 1459 | | |
| 979 | EY | I-277 | 220+80 | 222+00 | LT | | | | | | 120 | | | | 120 | | |
| 979 | LL | I-277 | 220+80 | 222+00 | LT | | | | | | | 120 | | | 120 | | |
| 979 | LL | I-277 | 220+80 | 222+00 | LT | | | | | | | 120 | | | 120 | | |
| 979 | EW | I-277 | 220+80 | 222+00 | LT | | | | | 120 | | | | | 120 | | |
| 980 | EY | I-277 | 222+00 | 234+50 | RT | | | | | | 1250 | | | | 1250 | | |
| 980 | LL | I-277 | 222+00 | 234+50 | RT | | | | | | | 1250 | | | 1250 | | |
| 980 | LL | I-277 | 222+00 | 234+50 | RT | | | | | | | 1250 | | | 1250 | | |
| 980 | EW | I-277 | 222+00 | 234+50 | RT | | | | | 1250 | | | | | 1250 | | |
| 980 | EY | I-277 | 222+00 | 234+50 | LT | | | | | | 1250 | | | | 1250 | | |
| 980 | LL | I-277 | 222+00 | 225+00 | LT | | | | | | | 300 | | | 300 | | |
| 980 | CH | I-277 | 225+00 | 234+50 | LT | | | | | | | | 950 | | | 950 | |
| 980 | LL | I-277 | 222+00 | 234+50 | LT | | | | | | | 1250 | | | 1250 | | |
| 980 | EW | I-277 | 222+00 | 234+50 | LT | | | | | 1250 | | | | | 1250 | | |
| 980 | DW | I-277 | 226+17 | 234+50 | LT | | | | | | | | | 833 | | | 833 |
| 980 | CH | I-277 | 225+00 | 234+50 | LT | | | | | | | | 950 | | | 950 | |
| 981 | EY | I-277 | 234+50 | 246+50 | RT | | | | | | 1200 | | | | 1200 | | |
| 981 | LL | I-277 | 234+50 | 246+50 | RT | | | | | | | 1200 | | | 1200 | | |
| 981 | CH | I-277 | 242+24 | 245+80 | RT | | | | | | | | 356 | | | 356 | |
| 981 | EW | I-277 | 234+50 | 246+50 | RT | | | | | 1200 | | | | | 1200 | | |
| 981 | LL | I-277 | 234+50 | 246+50 | RT | | | | | | | 1200 | | | 1200 | | |
| 981 | CH | I-277 | 242+24 | 245+80 | RT | | | | | | | | 356 | | | 356 | |
| 981 | CV | I-277 | 242+24 | 245+80 | RT | | | 132 | | | | | | | | | |
| 981 | EY | I-277 | 245+80 | 246+50 | RT | | | | | | 70 | | | | 70 | | |
| 981 | EW | I-277 | 245+80 | 246+50 | RT | | | | | 70 | | | | | 70 | | |
| 981 | EY | I-277 | 234+50 | 246+50 | LT | | | | | | 1200 | | | | 1200 | | |
| 981 | EW | I-277 | 235+63 | 246+50 | LT | | | | | 1087 | | | | | 1087 | | |
| 981 | CH | I-277 | 234+50 | 235+63 | LT | | | | | | | | 113 | | | 113 | |
| 981 | CH | RAMP B-2 | 23+18 | 24+32 | CEN | | | | | | | | 114 | | | 114 | |
| 981 | EY | RAMP B-2 | 18+50 | 23+18 | CEN | | | | | | 468 | | | | 468 | | |
| 981 | LL | RAMP B-2 | 18+50 | 24+32 | LT | | | | | | | 582 | | | 582 | | |
| 981 | CH | RAMP B-2 | 18+50 | 24+32 | LT | | | | | | | | 582 | | | 582 | |
| 981 | EW | RAMP B-2 | 18+50 | 24+32 | LT | | | | | 582 | | | | | 582 | | |
| 981 | CH | RAMP B-2 | 18+50 | 24+32 | LT | | | | | | | | 582 | | | 582 | |
| 981 | EW | RAMP B-1 | 409+00 | 417+22 | CEN | | | | | 822 | | | | | 822 | | |
| 981 | EY | RAMP B-1 | 409+00 | 417+22 | LT | | | | | | 822 | | | | 822 | | |
| TOTALS CARRIED TO PAVEMENT MARKING SHEET 8 OF 8 | | | | | | | | 132 | | 17203 | | 12476 | 4003 | 833 | 29679 | 4003 | 833 |

CALCULATED DLS
CHECKED AKF

# PAVEMENT MARKING SUBSUMMARY SHEET 6 OF 8

SUM-77/277/224
VARIOUS

945
1288

O:\2017\2017258\ProjectData\SUM\106002\Design\Traffic\Sheets\106002_TS015.dgn 106002GN001 1/17/2021 7:13:46 AM aford

| SHEET NO. | REF. NO. | LOCATION | STATION FROM | STATION TO | SIDE | 644 EDGE LINE, 4", WHITE FT | 644 CENTER LINE, DOUBLE SOLID FT | 646 CHEVRON MARKING, WHITE FT | 646 LANE REDUCTION ARROW EACH | 807 WET REFLECTIVE EPOXY PAVEMENT MARKING, EDGE LINE, 6", WHITE FT | 807 WET REFLECTIVE EPOXY PAVEMENT MARKING, EDGE LINE, 6", YELLOW FT | 807 WET REFLECTIVE EPOXY PAVEMENT MARKING, LANE LINE, 6" FT | 807 WET REFLECTIVE EPOXY PAVEMENT MARKING, CHANNELIZING LINE, 12" FT | 807 WET REFLECTIVE EPOXY PAVEMENT MARKING, DOTTED LINE, 6", WHITE FT | 850 GROOVING FOR 6" RECESSED PAVEMENT MARKING, (ASPHALT) FT | 850 GROOVING FOR 6" RECESSED PAVEMENT MARKING, (ASPHALT) FT | 850 GROOVING FOR 12" RECESSED PAVEMENT MARKING, (ASPHALT) FT |
|---|---|---|---|---|---|---|---|---|---|---|---|---|---|---|---|---|---|
| 982 | EY | I-277 | 246+50 | 258+50 | RT | | | | | | 1200 | | | | 1200 | | |
| 982 | LL | I-277 | 246+50 | 258+50 | RT | | | | | | | 1200 | | | 1200 | | |
| 982 | EW | I-277 | 246+50 | 258+50 | RT | | | | | 1200 | | | | | 1200 | | |
| 982 | DW | I-277 | 249+94 | 258+30 | RT | | | | | | | | | 836 | | | 836 |
| 982 | CH | I-277 | 258+30 | 258+50 | RT | | | | | | | | 20 | | | 20 | |
| 982 | CH | I-277 | 258+30 | 258+50 | RT | | | | | | | | 20 | | | 20 | |
| 982 | EY | I-277 | 246+50 | 258+50 | LT | | | | | | 1200 | | | | 1200 | | |
| 982 | EW | I-277 | 246+50 | 247+81 | LT | | | | | 131 | | | | | 131 | | |
| 982 | CH | I-277 | 247+81 | 252+14 | LT | | | | | | | | 433 | | | 433 | |
| 982 | LL | I-277 | 252+14 | 258+50 | LT | | | | | | | 636 | | | 636 | | |
| 982 | CV | I-277 | 247+81 | 252+14 | LT | | | 84 | | | | | | | | | |
| 982 | EY | I-277 | 246+50 | 247+81 | LT | | | | | | 131 | | | | 131 | | |
| 982 | EW | I-277 | 246+50 | 258+50 | LT | | | | | 1200 | | | | | 1200 | | |
| 982 | CH | I-277 | 247+81 | 252+14 | LT | | | | | | | | 433 | | | 433 | |
| 983 | EY | I-277 | 258+50 | 270+50 | RT | | | | | | 1200 | | | | 1200 | | |
| 983 | LL | I-277 | 258+50 | 270+50 | RT | | | | | | | 1200 | | | 1200 | | |
| 983 | CH | I-277 | 258+50 | 260+77 | RT | | | | | | | | 227 | | | 227 | |
| 983 | CV | I-277 | 258+50 | 260+77 | RT | | | 78 | | | | | | | | | |
| 983 | EW | I-277 | 260+77 | 270+50 | RT | | | | | 973 | | | | | 973 | | |
| 983 | CH | I-277 | 258+50 | 260+77 | RT | | | | | | | | 227 | | | 227 | |
| 983 | EY | RAMP C-1 | 682+98 | 685+00 | LT | | | | | | 202 | | | | 202 | | |
| 983 | EW | RAMP C-1 | 680+70 | 685+00 | CEN | | | | | 430 | | | | | 430 | | |
| 983 | EY | RAMP C | 598+00 | 599+66 | LT | | | | | | 166 | | | | 166 | | |
| 983 | DW | RAMP C | 598+00 | 599+66 | LT | | | | | | | | | 166 | | | 166 |
| 983 | EW | RAMP C | 598+00 | 599+66 | CEN | | | | | 166 | | | | | 166 | | |
| 983 | EY | I-277 | 258+50 | 270+50 | LT | | | | | | 1200 | | | | 1200 | | |
| 983 | LL | I-277 | 258+50 | 270+50 | LT | | | | | | | 1200 | | | 1200 | | |
| 983 | EW | I-277 | 258+50 | 264+68 | LT | | | | | 618 | | | | | 618 | | |
| 983 | CH | I-277 | 264+68 | 270+50 | LT | | | | | | | | 582 | | | 582 | |
| 983 | CV | I-277 | 264+68 | 268+84 | LT | | | 87 | | | | | | | | | |
| 983 | EW | RAMP D | 886+89 | 898+00 | CEN | | | | | 1111 | | | | | 1111 | | |
| 983 | CH | I-277 | 264+68 | 268+84 | LT | | | | | | | | 416 | | | 416 | |
| 983 | EY | RAMP D | 892+68 | 898+00 | LT | | | | | | 532 | | | | 532 | | |
| 984 | EY | US 224 | 270+50 | 284+00 | RT | | | | | | 1350 | | | | 1350 | | |
| 984 | LL | US 224 | 270+50 | 284+00 | RT | | | | | | | 1350 | | | 1350 | | |
| 984 | EW | US 224 | 270+50 | 271+44 | RT | | | | | 94 | | | | | 94 | | |
| 984 | CH | US 224 | 271+44 | 277+50 | RT | | | | | | | | 606 | | | 606 | |
| 984 | LL | US 224 | 277+50 | 284+00 | RT | | | | | | | 650 | | | 650 | | |
| 984 | DW | RAMP C | 599+65 | 600+60 | LT | | | | | | | | | 95 | | | 95 |
| 984 | EW | US 224 | 270+50 | 284+00 | RT | | | | | 1350 | | | | | 1350 | | |
| 984 | EY | RAMP C | 599+65 | 600+60 | LT | | | | | | 95 | | | | 95 | | |
| 984 | CH | US 224 | 271+44 | 277+50 | RT | | | | | | | | 606 | | | 606 | |
| 984 | EY | US 224 | 270+50 | 284+00 | LT | | | | | | 1350 | | | | 1350 | | |
| 984 | LL | US 224 | 270+50 | 284+00 | LT | | | | | | | 1350 | | | 1350 | | |
| 984 | CH | US 224 | 270+50 | 275+34 | LT | | | | | | | | 484 | | | 484 | |
| 984 | DW | US 224 | 275+34 | 284+00 | LT | | | | | | | | | 866 | | | 866 |
| 984 | EW | US 224 | 270+50 | 284+00 | LT | | | | | 1350 | | | | | 1350 | | |
| TOTALS CARRIED TO PAVEMENT MARKING SHEET 8 OF 8 | | | | | | | | 249 | | 17249 | | 7586 | 4054 | 1963 | 24835 | 4054 | 1963 |

CALCULATED DLS
CHECKED AKF

# PAVEMENT MARKING SUBSUMMARY SHEET 7 OF 8

SUM-77/277/224
VARIOUS

946
1288

0:\2017\2017258\ProjectData\SUM\106002\Design\Traffic\Sheets\106002_TS016.dgn 106002GN001 1/17/2021 7:13:46 AM aford

| SHEET NO. | REF. NO. | LOCATION | STATION FROM | STATION TO | SIDE | 644 EDGE LINE, 4", WHITE FT | 644 CENTER LINE, DOUBLE SOLID FT | 646 CHEVRON MARKING, WHITE FT | 646 LANE REDUCTION ARROW EACH | 807 WET REFLECTIVE EPOXY PAVEMENT MARKING, EDGE LINE, 6", WHITE FT | 807 WET REFLECTIVE EPOXY PAVEMENT MARKING, EDGE LINE, 6", YELLOW FT | 807 WET REFLECTIVE EPOXY PAVEMENT MARKING, LANE LINE, 6" FT | 807 WET REFLECTIVE EPOXY PAVEMENT MARKING, CHANNELIZING LINE, 12" FT | 807 WET REFLECTIVE EPOXY PAVEMENT MARKING, DOTTED LINE, 6", WHITE FT | 850 GROOVING FOR 6" RECESSED PAVEMENT MARKING, (ASPHALT) FT | 850 GROOVING FOR 6" RECESSED PAVEMENT MARKING, (ASPHALT) FT | 850 GROOVING FOR 12" RECESSED PAVEMENT MARKING, (ASPHALT) FT |
|---|---|---|---|---|---|---|---|---|---|---|---|---|---|---|---|---|---|
| 985 | EY | US 224 | 284+00 | 290+00 | RT | | | | | | 600 | | | | 600 | | |
| 985 | LL | US 224 | 284+00 | 290+00 | RT | | | | | | | 600 | | | 600 | | |
| 985 | LL | US 224 | 284+00 | 290+00 | RT | | | | | | | 600 | | | 600 | | |
| 985 | EW | US 224 | 284+00 | 290+00 | RT | | | | | 600 | | | | | 600 | | |
| 985 | EY | US 224 | 284+00 | 287+90 | LT | | | | | | 390 | | | | 390 | | |
| 985 | LL | US 224 | 284+00 | 287+90 | LT | | | | | | | 390 | | | 390 | | |
| 985 | DW | US 224 | 284+00 | 285+97 | LT | | | | | | | | | 197 | | | 197 |
| 985 | CH | US 224 | 285+97 | 287+90 | LT | | | | | | | | 193 | | | 193 | |
| 985 | CH | US 224 | 285+97 | 287+90 | LT | | | | | | | | 193 | | | 193 | |
| 985 | EW | US 224 | 284+00 | 287+90 | LT | | | | | 390 | | | | | 390 | | |
| 986 | EY | RAMP A | 95+00 | 105+00 | RT | | | | | | 1000 | | | | 1000 | | |
| 986 | LL | RAMP A | 95+00 | 105+00 | RT | | | | | | | 1000 | | | 1000 | | |
| 986 | EW | RAMP A | 95+00 | 105+00 | CEN | | | | | 1000 | | | | | 1000 | | |
| 987 | EY | RAMP B | 205+86 | 212+00 | RT | | | | | | 614 | | | | 614 | | |
| 987 | CH | RAMP B | 202+92 | 205+86 | RT | | | | | | | | 294 | | | 294 | |
| 987 | EW | RAMP B | 202+92 | 212+00 | CEN | | | | | 908 | | | | | 908 | | |
| 987 | EY | RAMP B-2 | 10+00 | 18+50 | CEN | | | | | | 850 | | | | 850 | | |
| 987 | LL | RAMP B-2 | 10+00 | 18+50 | RT | | | | | | | 850 | | | 850 | | |
| 987 | EW | RAMP B-2 | 10+00 | 15+46 | RT | | | | | 546 | | | | | 546 | | |
| 987 | CH | RAMP B | 202+92 | 205+86 | RT | | | | | | | | 294 | | | 294 | |
| 988 | EY | RAMP C | 587+00 | 593+00 | LT | | | | | | 600 | | | | 600 | | |
| 988 | CH | RAMP C | 593+00 | 594+94 | LT | | | | | | | | 194 | | | 194 | |
| 988 | DW | RAMP C | 594+94 | 598+00 | LT | | | | | | | | | 306 | | | 306 |
| 988 | EW | RAMP C | 587+00 | 598+00 | CEN | | | | | 1100 | | | | | 1100 | | |
| 988 | EW | RAMP C-2 | 785+05 | 789+00 | LT | | | | | 395 | | | | | 395 | | |
| 988 | CH | RAMP C-2 | 782+94 | 785+05 | LT | | | | | | | | 211 | | | 211 | |
| 988 | EY | RAMP C-2 | 779+80 | 789+00 | CEN | | | | | | 920 | | | | 920 | | |
| 989 | EY | RAMP C-1 | 685+00 | 693+00 | LT | | | | | | 800 | | | | 800 | | |
| 989 | EW | RAMP C-1 | 685+00 | 693+00 | CEN | | | | | 800 | | | | | 800 | | |
| 990 | EY | RAMP D | 898+00 | 904+00 | LT | | | | | | 600 | | | | 600 | | |
| 990 | EW | RAMP D | 898+00 | 904+00 | CEN | | | | | 600 | | | | | 600 | | |
| TOTALS FROM PAVEMENT MARKING SUBSUMMARY SHEET 1 OF 8 | | | | | | | | | | 16322 | | 22870 | 4658 | 185 | 39192 | 4658 | 185 |
| TOTALS FROM PAVEMENT MARKING SUBSUMMARY SHEET 2 OF 8 | | | | | | 638 | 319 | | 2 | 19600 | 31070 | | | 2480 | 50670 | | 2480 |
| TOTALS FROM PAVEMENT MARKING SUBSUMMARY SHEET 3 OF 8 | | | | | | | | | 2 | 14200 | 22853 | 852 | 2695 | | 37053 | 852 | 2695 |
| TOTALS FROM PAVEMENT MARKING SUBSUMMARY SHEET 4 OF 8 | | | | | | | | 292 | | 13903 | 15020 | 4138 | 389 | | 28923 | 4138 | 389 |
| TOTALS FROM PAVEMENT MARKING SUBSUMMARY SHEET 5 OF 8 | | | | | | | | 92 | | 16958 | 15087 | 3704 | 2894 | | 32045 | 3704 | 2894 |
| TOTALS FROM PAVEMENT MARKING SUBSUMMARY SHEET 6 OF 8 | | | | | | | | 132 | | 17203 | 12476 | 4003 | 833 | | 29679 | 4003 | 833 |
| TOTALS FROM PAVEMENT MARKING SUBSUMMARY SHEET 7 OF 8 | | | | | | | | 249 | | 17249 | 7586 | 4054 | 1963 | | 24835 | 4054 | 1963 |
| TOTALS THIS SHEET | | | | | | | | | | 12713 | 3440 | 1379 | 503 | | 16153 | 1379 | 503 |
| TOTAL MILES | | | | | | 0.13 | 0.07 | | | 24.28 | 24.70 | | | | 48.97 | | |
| TOTALS CARRIED TO TRAFFIC CONTROL GENERAL SUMMARY | | | | | | 0.13 | 0.07 | 765 | 4 | 24.28 | 24.70 | 22788 | 11942 | | 48.97 | 22788 | 11942 |

CALCULATED DLS
CHECKED AKF

# PAVEMENT MARKING SUBSUMMARY SHEET 8 OF 8

SUM-77 / 277 / 224
VARIOUS

947
1288

0:\2017\2017258\ProjectData\SUM\106002\Design\Traffic\Sheets\106002_TS017.dgn 106002GN001 1/17/2021 7:13:47 AM aford

| SHEET NO. | REFERENCE NO. | LOCATION | STATION | SIDE | CODE | SIZE (INCHES) | 630 REMOVAL OF GROUND MOUNTED SIGN AND DISPOSAL EACH | 630 REMOVAL OF GROUND MOUNTED SIGN AND REERECTION EACH | 630 REMOVAL OF GROUND MOUNTED MAJOR SIGN AND DISPOSAL EACH | 630 REMOVAL OF GROUND MOUNTED MAJOR SIGN AND REERECTION EACH | 630 REMOVAL OF GROUND MOUNTED POST SUPPORT AND DISPOSAL EACH | 630 REMOVAL OF GROUND MOUNTED STRUCTURAL BEAM SUPPORT AND DISPOSAL EACH | 630 REMOVAL OF GROUND MOUNTED WOODEN BOX BEAM SUPPORT AND DISPOSAL EACH | 630 REMOVAL OF OVERHEAD MOUNTED SIGN AND REERECTION EACH | 630 REMOVAL OF OVERHEAD MOUNTED SIGN AND DISPOSAL EACH | 630 REMOVAL OF POLE MOUNTED SIGN AND DISPOSAL EACH | 630 REMOVAL OF OVERHEAD SIGN SUPPORT AND DISPOSAL, TYPE TC-12.30 EACH | 630 REMOVAL OF OVERHEAD SIGN SUPPORT AND DISPOSAL, TYPE TC-7.65 EACH | 630 REMOVAL OF MISCELLANEOUS TRAFFIC CONTROL ITEM, BARRIER MOUNTED SIGN SUPPORT BRACKET EACH | |
|---|---|---|---|---|---|---|---|---|---|---|---|---|---|---|---|---|---|---|---|---|
| 962 | R-1 | I-77 | | LT | SPECIAL | | | | | | | | | | 1 | | | 1 | | |
| | | | | | E1-1H5P | | | | | | | | | | 1 | | | | | |
| | | | | | SPECIAL | | | | | | | | | | 1 | | | | | |
| 962 | R-2 | I-77 | | RT | W4-1R | | 1 | | | | 2 | | | | | | | | | |
| 963 | R-3 | I-77 | | CEN | D10-5 | | 1 | | | | 1 | | | | | | | | 1 | |
| | | | | | D10-5 | | 1 | | | | | | | | | | | | | |
| 963 | R-4 | I-77 | | RT | D14-H4 | | 1 | | | | 2 | | | | | | | | | |
| 963 | R-5 | I-77 | | RT | M3-1 | | | 1 | | | 1 | | | | | | | | | |
| | | | | | M1-1-2 | | | 1 | | | | | | | | | | | | |
| 964 | R-6 | I-77 | | LT | D3-1 | | | | | | | | | 1 | | | | | | |
| 964 | R-7 | I-77 | | LT | I-H25a | | 1 | | | | 1 | | | | | | | | | |
| 964 | R-8 | I-77 | | CEN | D10-5 | | 1 | | | | 1 | | | | | | | | | |
| | | | | | D10-5 | | 1 | | | | | | | | | | | | | |
| 964 | R-10 | I-77 | | LT | R3-4 | | 1 | | | | 1 | | | | | | | | | |
| | | | | | R5-H11 | | 1 | | | | | | | | | | | | | |
| 964 | R-11 | I-77 | | CEN | D10-5 | | 1 | | | | 1 | | | | | | | | 1 | |
| | | | | | D10-5 | | 1 | | | | | | | | | | | | | |
| 964 | R-12 | I-77 | | RT | I-H25a | | 1 | | | | 1 | | | | | | | | | |
| 964 | R-13 | I-77 | | RT | R2-1 | | | 1 | | | 2 | | | | | | | | | |
| 964 | R-14 | I-77 | | RT | D10-3 | | | 1 | | | 1 | | | | | | | | | |
| 964 | R-15 | I-77 | | RT | R3-4 | | 1 | | | | 1 | | | | | | | | | |
| | | | | | R5-H11 | | 1 | | | | | | | | | | | | | |
| 964 | R-16 | I-77 | | RT | W9-H4R | | | | 1 | | | 2 | | | | | | | | |
| 965 | R-17 | I-77 | | CEN | D10-5 | | 1 | | | | 1 | | | | | | | | | |
| | | | | | D10-5 | | 1 | | | | | | | | | | | | | |
| 965 | R-18 | I-77 | | RT | W4-2R | | | 1 | | | 2 | | | | | | | | | |
| 966 | R-19 | I-77 | | LT | E1-H5P | | | | | | | | | 1 | | | 1 | | | |
| | | | | | SPECIAL | | | | | | | | | 1 | | | | | | |
| 966 | R-20 | I-77 | | CEN | D10-5 | | 1 | | | | 1 | | | | | | | | | |
| 966 | R-21 | I-77 | | CEN | OM-3L | | 1 | | | | 1 | | | | | | | | | |
| 966 | R-22 | I-77 | | CEN | D3-1 | | 1 | | | | 2 | | | | | | | | | |
| 966 | R-23 | WARNER RD | | RT | W3-3 | | 1 | | | | 1 | | | | | | | | | |
| 966 | R-24 | I-77 | | LT | OM-3R | | 1 | | | | 1 | | | | | | | | | |
| | | | | | I-H25a | | 1 | | | | | | | | | | | | | |
| 966 | R-25 | I-77 | | RT | E1-H5bP | | | | | | | | | | 1 | | | | | |
| | | | | | SPECIAL | | | | | | | | | | 1 | | | | | |
| 966 | R-26 | I-77 | | RT | OM-3R | | 1 | | | | 1 | | | | | | | | | |
| | | | | | I-H25a | | 1 | | | | | | | | | | | | | |
| 966 | R-27 | WARNER RD | | RT | D3-H6 | | 1 | | | | 2 | | | | | | | | | |
| 966 | R-28 | WARNER RD | | LT | W12-2 | | 1 | | | | 1 | | | | | | | | | |
| 966 | R-29 | WARNER RD | | LT | W11-3 | | 1 | | | | 1 | | | | | | | | | |
| 967 | R-32 | I-77 | | LT | OM-3L | | 1 | | | | 1 | | | | | | | | | |
| 967 | R-33 | I-77 | | LT | OM-3R | | 1 | | | | 1 | | | | | | | | | |
| | | | | | I-H25a | | 1 | | | | | | | | | | | | | |
| 967 | R-35 | I-77 | | RT | OM-3R | | 1 | | | | 1 | | | | | | | | | |
| | | | | | I-H25a | | 1 | | | | | | | | | | | | | |
| 967 | R-36 | I-77 | | RT | OM-3L | | 1 | | | | 1 | | | | | | | | | |
| TOTALS CARRIED TO SIGNING REMOVAL SUBSUMMARY 6 OF 6 | | | | | | | 33 | 5 | 1 | | 33 | 2 | | 3 | 5 | | 1 | 1 | 2 | |

CALCULATED DLS
CHECKED AKF

# SIGNING REMOVAL SUBSUMMARY SHEET 1 OF 6

SUM-77 / 277 / 224
VARIOUS

948
1288

0:\2017\2017258\ProjectData\SUM\106002\Design\Traffic\Sheets\106002_TS030.dgn 106002GN001 2/1/2021 3:22:56 PM aford

| SHEET NO. | REFERENCE NO. | LOCATION | STATION | SIDE | CODE | SIZE (INCHES) | 630 REMOVAL OF GROUND MOUNTED SIGN AND DISPOSAL EACH | 630 REMOVAL OF GROUND MOUNTED SIGN AND REERECTION EACH | 630 REMOVAL OF GROUND MOUNTED MAJOR SIGN AND DISPOSAL EACH | 630 REMOVAL OF GROUND MOUNTED MAJOR SIGN AND REERECTION EACH | 630 REMOVAL OF GROUND MOUNTED POST SUPPORT AND DISPOSAL EACH | 630 REMOVAL OF GROUND MOUNTED STRUCTURAL BEAM SUPPORT AND DISPOSAL EACH | 630 REMOVAL OF GROUND MOUNTED WOODEN BOX BEAM SUPPORT AND DISPOSAL EACH | 630 REMOVAL OF OVERHEAD MOUNTED SIGN AND REERECTION EACH | 630 REMOVAL OF OVERHEAD MOUNTED SIGN AND DISPOSAL EACH | 630 REMOVAL OF POLE MOUNTED SIGN AND DISPOSAL EACH | 630 REMOVAL OF OVERHEAD SIGN SUPPORT AND DISPOSAL, TYPE TC-12.30 EACH | 630 REMOVAL OF OVERHEAD SIGN SUPPORT AND DISPOSAL, TYPE TC-7.65 EACH | 630 REMOVAL OF MISCELLANEOUS TRAFFIC CONTROL ITEM, BARRIER MOUNTED SIGN SUPPORT BRACKET EACH | |
|---|---|---|---|---|---|---|---|---|---|---|---|---|---|---|---|---|---|---|---|---|
| 968 | R-37 | I-77 | | CEN | D10-5 | | 1 | | | | 1 | | | | | | | | | |
| | | | | | D10-5 | | 1 | | | | 1 | | | | | | | | | |
| 968 | R-38 | I-77 | | LT | E9-H1 | | | | 1 | | | 2 | | | | | | | | |
| 968 | R-39 | I-77 | | LT | R3-4 | | 1 | | | | 1 | | | | | | | | | |
| | | | | | R5-H11 | | 1 | | | | | | | | | | | | | |
| 968 | R-40 | I-77 | | RT | D12-H5b | | | | 1 | | | | 2 | | | | | | | |
| | | | | | D12-H5bP | | | | | 1 | | | | | | | | | | |
| 968 | R-41 | I-77 | | RT | R3-4 | | 1 | | | | 1 | | | | | | | | | |
| | | | | | R5-H11 | | 1 | | | | | | | | | | | | | |
| 969 | R-42 | I-77 | | CEN | D10-5 | | 1 | | | | 1 | | | | | | | | | |
| | | | | | D10-5 | | 1 | | | | | | | | | | | | | |
| 969 | R-43 | I-77 | | LT | D10-3 | | 1 | | | | 1 | | | | | | | | | |
| 969 | R-44 | I-77 | | LT | R25-H1 | | | | 1 | | | | 2 | | | | | | | |
| 969 | R-45 | I-77 | | RT | D12-H5b | | | | 1 | | | | 2 | | | | | | | |
| | | | | | D12-H5bP | | | | | 1 | | | | | | | | | | |
| 969 | R-46 | I-77 | | RT | E1-H5bP | | | | | | | | | | 1 | | | 1 | | |
| | | | | | SPECIAL | | | | | | | | | | 1 | | | | | |
| | | | | | E1-H5P | | | | | | | | | | 1 | | | | | |
| | | | | | SPECIAL | | | | | | | | | | 1 | | | | | |
| | | | | | D10-3 | | | | | | | | | | | 1 | | | | |
| 969 | R-47 | I-77 | | RT | E1-H5bP | | | | 1 | | | 2 | | | | | | | | |
| | | | | | SPECIAL | | | | 1 | | | | | | | | | | | |
| 970 | R-48 | I-77 | | CEN | R4-16 | | 1 | | | | 2 | | | | | | | | | |
| 970 | R-49 | I-77 | | LT | R2-1 | | 1 | | | | 2 | | | | | | | | | |
| 970 | R-50 | I-77 | | CEN | D3-1 | | 1 | | | | 2 | | | | | | | | | |
| 970 | R-51 | I-77 | | LT | D10-5 | | 1 | | | | 1 | | | | | | | | | |
| | | | | | D10-5 | | 1 | | | | | | | | | | | | | |
| 970 | R-52 | I-77 | | RT | D12-H22 | | | | 1 | | | | 2 | | | | | | | |
| 970 | R-53 | I-77 | | RT | I-H25a | | 1 | | | | 1 | | | | | | | | | |
| 971 | R-54 | I-77 | | LT | M3-3 | | 1 | | | | 2 | | | | | | | | | |
| | | | | | M1-1-2 | | 1 | | | | | | | | | | | | | |
| 971 | R-55 | I-77 | | LT | D14-H4 | | 1 | | | | 2 | | | | | | | | | |
| 971 | R-56 | I-77 | | LT | D10-5 | | 1 | | | | 1 | | | | | | | | | |
| 971 | R-57 | I-77 | | RT | E1-H5bP | | | | | | | | | | 1 | | | 1 | | |
| | | | | | SPECIAL | | | | | | | | | | 1 | | | | | |
| | | | | | SPECIAL | | | | | | | | | | 1 | | | | | |
| 971 | R-58 | I-77 | | RT | E1-H1a | | | 1 | | | | 2 | | | | | | | | |
| 971 | R-59 | I-77 | | RT | D10-5 | | 1 | | | | 1 | | | | | | | | | |
| 971 | R-61 | I-77 | | RT | D10-H5a | | 1 | | | | 1 | | | | | | | | | |
| TOTALS CARRIED TO SIGNING REMOVAL SUBSUMMARY 6 OF 6 | | | | | | | 21 | 1 | 7 | 2 | 21 | 6 | 8 | | 7 | 1 | | 2 | | |

CALCULATED DLS
CHECKED AKF

# SIGNING REMOVAL SUBSUMMARY SHEET 2 OF 6

SUM-77/277/224
VARIOUS

949
1288

0:\2017\2017258\ProjectData\SUM\106002\Design\Traffic\Sheets\106002_TS031.dgn 106002GN001 1/17/2021 7:13:48 AM aford

| SHEET NO. | REFERENCE NO. | LOCATION | STATION | SIDE | CODE | SIZE (INCHES) | 630 REMOVAL OF GROUND MOUNTED SIGN AND DISPOSAL EACH | 630 REMOVAL OF GROUND MOUNTED SIGN AND REERECTION EACH | 630 REMOVAL OF GROUND MOUNTED MAJOR SIGN AND DISPOSAL EACH | 630 REMOVAL OF GROUND MOUNTED MAJOR SIGN AND REERECTION EACH | 630 REMOVAL OF GROUND MOUNTED POST SUPPORT AND DISPOSAL EACH | 630 REMOVAL OF GROUND MOUNTED STRUCTURAL BEAM SUPPORT AND DISPOSAL EACH | 630 REMOVAL OF GROUND MOUNTED WOODEN BOX BEAM SUPPORT AND DISPOSAL EACH | 630 REMOVAL OF OVERHEAD MOUNTED SIGN AND REERECTION EACH | 630 REMOVAL OF OVERHEAD MOUNTED SIGN AND DISPOSAL EACH | 630 REMOVAL OF POLE MOUNTED SIGN AND DISPOSAL EACH | 630 REMOVAL OF OVERHEAD SIGN SUPPORT AND DISPOSAL, TYPE TC-12.30 EACH | 630 REMOVAL OF OVERHEAD SIGN SUPPORT AND DISPOSAL, TYPE TC-7.65 EACH | 630 REMOVAL OF MISCELLANEOUS TRAFFIC CONTROL ITEM, BARRIER MOUNTED SIGN SUPPORT BRACKET EACH | |
|---|---|---|---|---|---|---|---|---|---|---|---|---|---|---|---|---|---|---|---|---|
| 972 | R-62 | RAMP C-2 | | LT | OM-3R | | 1 | | | | 1 | | | | | | | | | |
| | | | | | I-H25a | | 1 | | | | | | | | | | | | | |
| 972 | R-63 | RAMP C-2 | | LT | D10-H5a | | 1 | | | | 1 | | | | | | | | | |
| 972 | R-64 | RAMP C-2 | | LT | OM-3L | | 1 | | | | 1 | | | | | | | | | |
| | | | | | I-H25a | | 1 | | | | | | | | | | | | | |
| 972 | R-65 | RAMP C-2 | | LT | W1-6L | | | | 1 | | 2 | | | | | | | | | |
| 972 | R-66 | I-77 | | LT | D10-5 | | 1 | | | | 1 | | | | | | | | | |
| 972 | R-67 | I-77 | | LT | E1-H1a | | | | 1 | | | 2 | | | | | | | | |
| 972 | R-68 | I-77 | | LT | R2-1 | | 1 | | | | 2 | | | | | | | | | |
| 972 | R-69 | I-77 | | LT | W3-5 | | 1 | | | | 2 | | | | | | | | | |
| 972 | R-70 | I-77 | | RT | W3-5 | | 1 | | | | 2 | | | | | | | | | |
| 972 | R-71 | I-77 | | RT | I-H25a | | 1 | | | | 1 | | | | | | | | | |
| 972 | R-72 | I-77 | | RT | E1-H5bP | | | | | | | | | | 1 | | 1 | | | |
| | | | | | SPECIAL | | | | | | | | | | 1 | | | | | |
| 972 | R-73 | I-77 | | RT | W4-3R | | 1 | | | | 2 | | | | | | | | | |
| 972 | R-74 | I-77 | | LT | D10-5 | | 1 | | | | 1 | | | | | | | | | |
| 972 | R-75 | I-77 | | LT | W13-7 | | 1 | | | | 2 | | | | | | | | | |
| 972 | R-76 | I-77 | | LT | R2-1 | | 1 | | | | 2 | | | | | | | | | |
| 973 | R-77 | I-77 | | LT | E1-H5bP | | | | | | | | | | 1 | | 1 | | | |
| | | | | | SPECIAL | | | | | | | | | | 1 | | | | | |
| | | | | | W13-3 | | | | | | | | | | | 1 | | | | |
| 973 | R-78 | I-77 | | LT | D10-5 | | 1 | | | | 1 | | | | | | | | | |
| 973 | R-79 | I-77 | | LT | D10-3 | | 1 | | | | 1 | | | | | | | | | |
| 973 | R-80 | I-77 | | LT | W4-1R | | 1 | | | | 2 | | | | | | | | | |
| 973 | R-81 | RAMP B-1 | | LT | D10-H5a | | 1 | | | | 1 | | | | | | | | | |
| 973 | R-82 | I-77 | | LT | I-H25a | | 1 | | | | 1 | | | | | | | | | |
| 973 | R-83 | I-77 | | LT | E1-H5bP | | | | | | | | | | 1 | | 1 | | | |
| | | | | | SPECIAL | | | | | | | | | | 1 | | | | | |
| 973 | R-85 | I-77 | | RT | SPECIAL | | | | | | | | | | 1 | | | 1 | | |
| | | | | | E1-H5bP | | | | | | | | | | 1 | | | | | |
| | | | | | SPECIAL | | | | | | | | | | 1 | | | | | |
| 973 | R-86 | I-77 | | RT | D10-3 | | 1 | | | | 1 | | | | | | | | | |
| 973 | R-87 | I-77 | | LT | E5-H1a | | | | 1 | | | 2 | | | | | | | | |
| 973 | R-88 | I-77 | | RT | W4-1R | | 1 | | | | 2 | | | | | | | | | |
| 973 | R-89 | RAMP B-2 | | LT | OM-3L | | 1 | | | | 1 | | | | | | | | | |
| 973 | R-90 | RAMP B-2 | | RT | OM-3R | | 1 | | | | 1 | | | | | | | | | |
| | | | | | I-H25a | | 1 | | | | 1 | | | | | | | | | |
| 973 | R-90A | RAMP B-2 | | RT | W1-6 | | 1 | | | | 2 | | | | | | | | | |
| | | | | | W1-H6P | | | | | | | | | | | | | | | |
| 974 | R-91 | RAMP B | | RT | D10-H5a | | 1 | | | | 1 | | | | | | | | | |
| 974 | R-92 | I-77 | | LT | E5-H1a | | | | 1 | | | 2 | | | | | | | | |
| 974 | R-93 | I-77 | | LT | SPECIAL | | 1 | | | | 2 | | | | | | | | | |
| 974 | R-94 | I-77 | | LT | I-H2e | | 1 | | | | | 2 | | | | | | | | |
| 974 | R-95 | I-77 | | LT | D10-5 | | 1 | | | | 1 | | | | | | | | | |
| 974 | R-96 | I-77 | | RT | R1-2 | | 1 | | | | 2 | | | | | | | | | |
| 974 | R-97 | I-77 | | RT | W8-13 | | 1 | | | | 2 | | | | | | | | | |
| 974 | R-98 | I-77 | | RT | I-H2a | | | | 1 | | | 2 | | | | | | | | |
| 974 | R-99 | I-77 | | RT | I-H25a | | 1 | | | | 1 | | | | | | | | | |
| 974 | R-100 | I-77 | | RT | OM-3R | | 1 | | | | 1 | | | | | | | | | |
| 974 | R-101 | I-77 | | LT | D10-5 | | 1 | | | | 1 | | | | | | | | | |
| 974 | R-95A | I-77 | | LT | M3-2 | | 1 | | | | 1 | | | | | | | | | |
| | | | | | M1-4-3 | | 1 | | | | | | | | | | | | | |
| 974 | R-101A | I-77 | | RT | R2-4a | | 1 | | | | 2 | | | | | | | | | |
| 974 | R-101B | I-77 | | LT | R2-4a | | 1 | | | | 2 | | | | | | | | | |
| TOTALS CARRIED TO SIGNING REMOVAL SUBSUMMARY 6 OF 6 | | | | | | | 38 | | 5 | | 50 | 10 | | | 9 | 1 | 3 | 1 | | |

CALCULATED DLS
CHECKED AKF

SIGNING REMOVAL SUBSUMMARY SHEET 3 OF 6

SUM-77 / 277 / 224
VARIOUS

950
1288

0:\2017\2017258\ProjectData\SUM\106002\Design\Traffic\Sheets\106002_TS032.dgn 106002GN001 1/17/2021 7:13:49 AM aford

| SHEET NO. | REFERENCE NO. | LOCATION | STATION | SIDE | CODE | SIZE (INCHES) | 630 REMOVAL OF GROUND MOUNTED SIGN AND DISPOSAL EACH | 630 REMOVAL OF GROUND MOUNTED SIGN AND REERECTION EACH | 630 REMOVAL OF GROUND MOUNTED MAJOR SIGN AND DISPOSAL EACH | 630 REMOVAL OF GROUND MOUNTED MAJOR SIGN AND REERECTION EACH | 630 REMOVAL OF GROUND MOUNTED POST SUPPORT AND DISPOSAL EACH | 630 REMOVAL OF GROUND MOUNTED STRUCTURAL BEAM SUPPORT AND DISPOSAL EACH | 630 REMOVAL OF GROUND MOUNTED WOODEN BOX BEAM SUPPORT AND DISPOSAL EACH | 630 REMOVAL OF OVERHEAD MOUNTED SIGN AND REERECTION EACH | 630 REMOVAL OF OVERHEAD MOUNTED SIGN AND DISPOSAL EACH | 630 REMOVAL OF POLE MOUNTED SIGN AND DISPOSAL EACH | 630 REMOVAL OF OVERHEAD SIGN SUPPORT AND DISPOSAL, TYPE TC-12.30 EACH | 630 REMOVAL OF OVERHEAD SIGN SUPPORT AND DISPOSAL, TYPE TC-7.65 EACH | 630 REMOVAL OF MISCELLANEOUS TRAFFIC CONTROL ITEM, BARRIER MOUNTED SIGN SUPPORT BRACKET EACH | |
|---|---|---|---|---|---|---|---|---|---|---|---|---|---|---|---|---|---|---|---|---|
| 975 | R-102 | I-77 | | LT | E1-H5P | | | | | | | | | | 1 | | | | | |
| | | | | | SPECIAL | | | | | | | | | | 1 | | | | | |
| 976 | R-103 | I-77 | | LT | E1-H5P | | | | | | | | | | 1 | | | | | |
| | | | | | SPECIAL | | | | | | | | | | 1 | | | | | |
| 977 | R-104 | I-277 | | RT | SPECIAL | | | | | | | | | | 1 | | | | | |
| | | | | | SPECIAL | | | | | | | | | | 1 | | | | | |
| 978 | R-105 | I-277 | | RT | SPECIAL | | | | | | | | | | 1 | | | | | |
| | | | | | SPECIAL | | | | | | | | | | 1 | | | | | |
| | | | | | E1-H5P | | | | | | | | | | 1 | | | | | |
| | | | | | SPECIAL | | | | | | | | | | 1 | | | | | |
| 980 | R-106 | I-277 | | LT | M3-4 | | 1 | | | | 2 | | | | | | | | | |
| | | | | | M1-1-3 | | 1 | | | | | | | | | | | | | |
| | | | | | M3-4 | | 1 | | | | 2 | | | | | | | | | |
| | | | | | M1-4-3 | | 1 | | | | | | | | | | | | | |
| 980 | R-107 | I-277 | | RT | R4-16 | | | | | | | | | | | 1 | | | | |
| | | | | | SPECIAL | | | | | | | | | | 1 | | | | | |
| | | | | | E1-H5P | | | | | | | | | | 1 | | | | | |
| | | | | | SPECIAL | | | | | | | | | | 1 | | | | | |
| 981 | R-108 | I-277 | | LT | W4-3R | | 1 | | | | 2 | | | | | | | | | |
| 981 | R-109 | RAMP B | | LT | I-H2a | | | | 1 | | | 2 | | | | | | | | |
| 981 | R-110 | I-277 | | LT | SPECIAL | | 1 | | | | 2 | | | | | | | | | |
| 981 | R-111 | RAMP B-1 | | RT | W1-8R | | 1 | | | | 1 | | | | | | | | | |
| 981 | R-112 | RAMP B-1 | | RT | W1-8R | | 1 | | | | 1 | | | | | | | | | |
| 981 | R-113 | RAMP B-1 | | RT | W1-8R | | 1 | | | | 1 | | | | | | | | | |
| 981 | R-114 | RAMP B-1 | | RT | W1-8R | | 1 | | | | 1 | | | | | | | | | |
| 981 | R-115 | RAMP B-1 | | RT | W1-8R | | 1 | | | | 1 | | | | | | | | | |
| 981 | R-116 | RAMP B-1 | | RT | W1-8R | | 1 | | | | 1 | | | | | | | | | |
| 981 | R-117 | RAMP B-1 | | LT | D10-H5a | | 1 | | | | 1 | | | | | | | | | |
| 981 | R-118 | RAMP B-1 | | RT | W1-8R | | 1 | | | | 1 | | | | | | | | | |
| 981 | R-119 | I-277 | | RT | W1-6R | | 1 | | | | 2 | | | | | | | | | |
| 981 | R-120 | I-277 | | RT | M4-6 | | | | | | | | | | | 1 | | | | |
| | | | | | M1-1-3 | | | | | | | | | | | 1 | | | | |
| | | | | | SPECIAL | | | | | | | | | | 1 | | 1 | | | |
| 981 | R-122 | I-277 | | RT | SPECIAL | | | | | | | | | | 1 | | | 1 | | |
| | | | | | SPECIAL | | | | | | | | | | 1 | | | | | |
| | | | | | SPECIAL | | | | | | | | | | 1 | | | | | |
| | | | | | E1-H5P | | | | | | | | | | 1 | | | | | |
| | | | | | E1-H5P | | | | | | | | | | 1 | | | | | |
| 981 | R-123 | I-277 | | CEN | D10-5 | | 1 | | | | 1 | | | | | | | | 1 | |
| | | | | | D10-5 | | 1 | | | | | | | | | | | | | |
| TOTALS CARRIED TO SIGNING REMOVAL SUBSUMMARY 6 OF 6 | | | | | | | 17 | | 1 | | 19 | 2 | | | 19 | 3 | 1 | 1 | 1 | |

CALCULATED DLS CHECKED AKF

# SIGNING REMOVAL SUBSUMMARY SHEET 4 OF 6

SUM-77/277/224
VARIOUS

951
1288

0:\2017\2017258\ProjectData\SUM\106002\Design\Traffic\Sheets\106002_TS033.dgn 106002GN001 1/17/2021 7:13:50 AM aford

| SHEET NO. | REFERENCE NO. | LOCATION | STATION | SIDE | CODE | SIZE (INCHES) | 630 REMOVAL OF GROUND MOUNTED SIGN AND DISPOSAL EACH | 630 REMOVAL OF GROUND MOUNTED SIGN AND REERECTION EACH | 630 REMOVAL OF GROUND MOUNTED MAJOR SIGN AND DISPOSAL EACH | 630 REMOVAL OF GROUND MOUNTED MAJOR SIGN AND REERECTION EACH | 630 REMOVAL OF GROUND MOUNTED POST SUPPORT AND DISPOSAL EACH | 630 REMOVAL OF GROUND MOUNTED STRUCTURAL BEAM SUPPORT AND DISPOSAL EACH | 630 REMOVAL OF GROUND MOUNTED WOODEN BOX BEAM SUPPORT AND DISPOSAL EACH | 630 REMOVAL OF OVERHEAD MOUNTED SIGN AND REERECTION EACH | 630 REMOVAL OF OVERHEAD MOUNTED SIGN AND DISPOSAL EACH | 630 REMOVAL OF POLE MOUNTED SIGN AND DISPOSAL EACH | 630 REMOVAL OF OVERHEAD SIGN SUPPORT AND DISPOSAL, TYPE TC-12.30 EACH | 630 REMOVAL OF OVERHEAD SIGN SUPPORT AND DISPOSAL, TYPE TC-7.65 EACH | 630 REMOVAL OF MISCELLANEOUS TRAFFIC CONTROL ITEM, BARRIER MOUNTED SIGN SUPPORT BRACKET EACH | |
|---|---|---|---|---|---|---|---|---|---|---|---|---|---|---|---|---|---|---|---|---|
| 982 | R-124 | I-277 | | LT | E5-H1a | | | | 1 | | | 2 | | | | | | | | |
| 982 | R-125 | I-277 | | LT | SPECIAL | | | | | | | | | | 1 | | | | | |
| | | | | | SPECIAL | | | | | | | | | | 1 | | | | | |
| | | | | | E1-H5P | | | | | | | | | | 1 | | | | | |
| 982 | R-126 | I-277 | | LT | OM-3R | | 1 | | | | 1 | | | | | | | | | |
| | | | | | I-H25a | | 1 | | | | | | | | | | | | | |
| 982 | R-127 | I-277 | | RT | E5-H1a | | | | 1 | | | 2 | | | | | | | | |
| 982 | R-128 | I-277 | | RT | W8-13 | | 1 | | | | 2 | | | | | | | | | |
| 982 | R-129 | I-277 | | RT | SPECIAL | | | | 1 | | | 2 | | | | | | | | |
| 982 | R-130 | I-277 | | RT | OM-3R | | 1 | | | | 1 | | | | | | | | | |
| | | | | | I-H25a | | 1 | | | | | | | | | | | | | |
| 982 | R-131 | I-277 | | CEN | D10-5 | | 1 | | | | 1 | | | | | | | | 1 | |
| | | | | | D10-5 | | 1 | | | | | | | | | | | | | |
| 982 | R-132 | I-277 | | RT | SPECIAL | | | | | | | | | | 1 | | | | | |
| | | | | | SPECIAL | | | | | | | | | | 1 | | | | | |
| | | | | | E1-H5P | | | | | | | | | | 1 | | | | | |
| | | | | | W13-7 | | | | | | | | | | | 1 | | | | |
| 983 | R-133 | I-277 | | LT | W8-13 | | 1 | | | | 2 | | | | | | | | | |
| 983 | R-134 | I-277 | | LT | E5-H1a | | | | 1 | | | 2 | | | | | | | | |
| 983 | R-135 | I-277 | | CEN | D10-5 | | 1 | | | | 1 | | | | | | | | 1 | |
| | | | | | D10-5 | | 1 | | | | | | | | | | | | | |
| 983 | R-136 | I-277 | | LT | SPECIAL | | | | | | | | | | 1 | | | | | |
| | | | | | SPECIAL | | | | | | | | | | 1 | | | | | |
| | | | | | SPECIAL | | | | | | | | | | 1 | | | | | |
| | | | | | E1-H5P | | | | | | | | | | 1 | | | | | |
| | | | | | E1-H5P | | | | | | | | | | 1 | | | | | |
| 983 | R-137 | I-277 | | RT | E5-H1a | | | | 1 | | | 2 | | | | | | | | |
| 983 | R-138 | I-277 | | RT | W1-6R | | 1 | | | | 2 | | | | | | | | | |
| 983 | R-139 | I-277 | | RT | SPECIAL | | | | | | | | | | 1 | | 1 | | | |
| 983 | R-140 | I-277 | | RT | W4-3R | | 1 | | | | 2 | | | | | | | | | |
| 984 | R-141 | US 224 | | LT | SPECIAL | | | | | | | | | | 1 | | | | | |
| | | | | | E1-H5P | | | | | | | | | | 1 | | | | | |
| 984 | R-142 | US 224 | | LT | SPECIAL | | | | | | | | | | 1 | | | | | |
| | | | | | SPECIAL | | | | | | | | | | 1 | | | | | |
| | | | | | E1-H5P | | | | | | | | | | 1 | | | | | |
| 985 | R-143 | US 224 | | LT | SPECIAL | | | | | | | | | | 1 | | | | | |
| 986 | R-144 | RAMP A | | LT | D10-H5a | | 1 | | | | 1 | | | | | | | | | |
| 986 | R-145 | RAMP A | | RT | W4-1R | | 1 | | | | 2 | | | | | | | | | |
| 987 | R-146 | RAMP B | | LT | W3-2 | | 1 | | | | 2 | | | | | | | | | |
| 987 | R-147 | RAMP B | | RT | R1-2 | | 1 | | | | 2 | | | | | | | | | |
| 987 | R-147A | RAMP B-2 | | RT | W1-8L | | | 1 | | | 2 | | | | | | | | | |
| 987 | R-147B | RAMP B-2 | | RT | W1-8L | | | 1 | | | 2 | | | | | | | | | |
| 987 | R-147C | RAMP B-2 | | RT | W1-8L | | | 1 | | | 2 | | | | | | | | | |
| 987 | R-147D | RAMP B-2 | | RT | W1-8L | | | 1 | | | 2 | | | | | | | | | |
| 988 | R-148 | RAMP C-2 | | LT | D10-H5a | | 1 | | | | 1 | | | | | | | | | |
| 988 | R-149 | RAMP C-2 | | LT | W4-1R | | 1 | | | | 2 | | | | | | | | | |
| 988 | R-150 | RAMP C | | RT | D10-H5a | | 1 | | | | 1 | | | | | | | | | |
| 988 | R-151 | RAMP B | | RT | R1-2 | | 1 | | | | 2 | | | | | | | | | |
| TOTALS CARRIED TO SIGNING REMOVAL SUBSUMMARY 6 OF 6 | | | | | | | 20 | 4 | 5 | | 33 | 10 | | | 18 | 1 | 1 | | 2 | |

CALCULATED DLS
CHECKED AKF

# SIGNING REMOVAL SUBSUMMARY SHEET 5 OF 6

SUM-77 / 277 / 224
VARIOUS

952
1288

O:\2017\2017258\ProjectData\SUM\106002\Design\Traffic\Sheets\106002_TS034.dgn 106002GN001 1/28/2021 4:48:56 PM afford

| SHEET NO. | REFERENCE NO. | LOCATION | STATION | SIDE | CODE | SIZE (INCHES) | 630 REMOVAL OF GROUND MOUNTED SIGN AND DISPOSAL EACH | 630 REMOVAL OF GROUND MOUNTED SIGN AND REERECTION EACH | 630 REMOVAL OF GROUND MOUNTED MAJOR SIGN AND DISPOSAL EACH | 630 REMOVAL OF GROUND MOUNTED MAJOR SIGN AND REERECTION EACH | 630 REMOVAL OF GROUND MOUNTED POST SUPPORT AND DISPOSAL EACH | 630 REMOVAL OF GROUND MOUNTED STRUCTURAL BEAM SUPPORT AND DISPOSAL EACH | 630 REMOVAL OF GROUND MOUNTED WOODEN BOX BEAM SUPPORT AND DISPOSAL EACH | 630 REMOVAL OF OVERHEAD MOUNTED SIGN AND REERECTION EACH | 630 REMOVAL OF OVERHEAD MOUNTED SIGN AND DISPOSAL EACH | 630 REMOVAL OF POLE MOUNTED SIGN AND DISPOSAL EACH | 630 REMOVAL OF OVERHEAD SIGN SUPPORT AND DISPOSAL, TYPE TC-12.30 EACH | 630 REMOVAL OF OVERHEAD SIGN SUPPORT AND DISPOSAL, TYPE TC-7.65 EACH | 630 REMOVAL OF MISCELLANEOUS TRAFFIC CONTROL ITEM, BARRIER MOUNTED SIGN SUPPORT BRACKET EACH | |
|---|---|---|---|---|---|---|---|---|---|---|---|---|---|---|---|---|---|---|---|---|
| 989 | R-152 | RAMP C-1 | | LT | W1-8R | | 1 | | | | 1 | | | | | | | | | |
| 989 | R-153 | RAMP C-1 | | LT | W1-8R | | 1 | | | | 1 | | | | | | | | | |
| 989 | R-154 | RAMP C-1 | | LT | W1-8R | | 1 | | | | 1 | | | | | | | | | |
| 989 | R-155 | RAMP C-1 | | LT | W1-8R | | 1 | | | | 1 | | | | | | | | | |
| 989 | R-156 | RAMP C-1 | | LT | W1-8R | | 1 | | | | 1 | | | | | | | | | |
| 989 | R-157 | RAMP C-1 | | LT | W1-8R | | 1 | | | | 1 | | | | | | | | | |
| 989 | R-158 | RAMP C-1 | | LT | W1-8R | | 1 | | | | 1 | | | | | | | | | |
| 989 | R-159 | RAMP C-1 | | LT | W1-8R | | 1 | | | | 1 | | | | | | | | | |
| 989 | R-161 | RAMP C-1 | | RT | D10-H5a | | 1 | | | | 1 | | | | | | | | | |
| 990 | R-160 | RAMP D | | RT | D10-H5a | | 1 | | | | 1 | | | | | | | | | |
| SIGNING REMOVAL SUBSUMMARY 1 OF 6 | | | | | | | 33 | 5 | 1 | | 33 | 2 | | 3 | 5 | | 1 | 1 | 2 | |
| SIGNING REMOVAL SUBSUMMARY 2 OF 6 | | | | | | | 21 | 1 | 7 | 2 | 21 | 6 | 8 | | 7 | 1 | | 2 | | |
| SIGNING REMOVAL SUBSUMMARY 3 OF 6 | | | | | | | 38 | | 5 | | 50 | 10 | | | 9 | 1 | 3 | 1 | | |
| SIGNING REMOVAL SUBSUMMARY 4 OF 6 | | | | | | | 17 | | 1 | | 19 | 2 | | | 19 | 3 | 1 | 1 | 1 | |
| SIGNING REMOVAL SUBSUMMARY 5 OF 6 | | | | | | | 20 | 4 | 5 | | 33 | 10 | | | 18 | 1 | 1 | | 2 | |
| THIS SHEET | | | | | | | 10 | | | | 10 | | | | | | | | | |
| TOTALS CARRIED TO TRAFFIC CONTROL GENERAL SUMMARY | | | | | | | 139 | 10 | 19 | 2 | 166 | 30 | 8 | 3 | 58 | 6 | 6 | 5 | 5 | |

CALCULATED DLS
CHECKED AKF

# SIGNING REMOVAL SUBSUMMARY SHEET 6 OF 6

SUM-77 / 277 / 224
VARIOUS

953
1288

O:\2017\2017258\ProjectData\SUM\106002\Design\Traffic\Sheets\106002_TS035.dgn 106002GN001 2/2/2021 11:26:54 AM aford

| SHEET NO. | REFERENCE NO. | LOCATION | STATION | SIDE | CODE | SIZE (INCHES) | 630 GROUND MOUNTED SUPPORT, NO. 2 POST FT | 630 GROUND MOUNTED SUPPORT, NO. 3 POST FT | 630 GROUND MOUNTED SUPPORT, NO. 4 POST FT | 630 SIGN POST REFLECTOR (YELLOW) EACH | 630 SIGN POST REFLECTOR (RED) EACH | 630 SIGN SUPPORT ASSEMBLY, POLE MOUNTED EACH | 630 SIGN SUPPORT ASSEMBLY, BARRIER MOUNTED, AS PER PLAN EACH | 630 SIGN, FLAT SHEET SF | 630 SIGN, FLAT SHEET, AS PER PLAN SF | 630 SIGN, GROUND MOUNTED EXTRUSHEET SF |
|---|---|---|---|---|---|---|---|---|---|---|---|---|---|---|---|---|
| 961 | S-1 | I-77 | 366+53 | LT | M3-3-36 | 36 X 18 | | | | | | 1 | | 4.5 | | |
| | | | | | M1-1-36-2 | 36 X 36 | | | | | | 1 | | 9.0 | | |
| 962 | S-2 | RAMP D | 71+60 | LT | W4-3R-48 | 48 X 48 | | 16.2/16.2 | | | | | | 16.0 | | |
| 963 | S-3 | I-77 | 380+38 | CEN | D10-5-18 | 18 X 60 | | | | | | | 1 | 7.5 | | |
| | | | | | D10-5-18 | 18 X 60 | | | | | | | | 7.5 | | |
| 964 | S-6 | I-77 | 394+80 | LT | D3-1-66 | 66 X 18 | | 12.0/12.0 | | | | | | 8.3 | | |
| | | | | | I-H25a-12 | 12 X 12 | | | | | | | | 1.0 | | |
| 964 | S-7 | I-77 | | CEN | D10-5-18 | 18 X 60 | | | | | | | 1 | 7.5 | | |
| | | | | D10-5-18 | D10-5-18 | 18 X 60 | | | | | | | | 7.5 | | |
| 964 | S-9 | I-77 | 390+76 | CEN | D10-5-18 | 18 X 60 | | | | | | | 1 | 7.5 | | |
| | | | | | D10-5-18 | 18 X 60 | | | | | | | | 7.5 | | |
| 964 | S-10 | I-77 | 393+60 | RT | D3-1-66 | 66 X 18 | | 12.0/12.0 | | | | | | 8.3 | | |
| | | | | | I-H25a-12 | 12 X 12 | | | | | | | | 1.0 | | |
| 964 | S-12 | I-77 | 399+60 | RT | D10-3 | 12 X 48 | 11.5 | | | | | | | | | |
| 965 | S-13 | I-77 | 410+26 | CEN | D10-5-18 | 18 X 60 | | | | | | | 1 | 7.5 | | |
| | | | | | D10-5-18 | 18 X 60 | | | | | | | | 7.5 | | |
| 965 | S-14 | I-77 | 404+20 | RT | W4-2R | | | 16.2/16.2 | | | | | | | | |
| 966 | S-16 | I-77 | 420+74 | CEN | D10-5-18 | 18 X 60 | | | | | | | 1 | 7.5 | | |
| | | | | | D10-5-18 | 18 X 60 | | | | | | | | 7.5 | | |
| 966 | S-17 | I-77 | 425+00 | RT | OM-3L-12 | 12 X 36 | 10.5 | | | | | | | 3.0 | | |
| 966 | S-18 | WARNER RD | 25+09 | RT | W3-3-30 | 30 X 30 | | 14.1 | | | | | | 6.3 | | |
| 966 | S-19 | I-77 | 427+00 | LT | D3-1-72 | 72 X 18 | | 12.0/12.0 | | | | | | 9.0 | | |
| 966 | S-20 | I-77 | 427+00 | LT | OM-3R-12 | 12 X 36 | 11.5 | | | | | | | 3.0 | | |
| | | | | | I-H25a-12 | 12 X 12 | | | | | | | | 1.0 | | |
| 966 | S-21 | I-77 | 424+78 | RT | OM-3L-12 | 12 X 36 | 11.5 | | | | | | | 3.0 | | |
| | | | | | I-H25a-12 | 12 X 12 | | | | | | | | 1.0 | | |
| 966 | S-22 | I-77 | 425+00 | RT | D3-1-72 | 72 X 18 | | 12.0/12.0 | | | | | | 9.0 | | |
| 966 | S-23 | WARNER RD | 72+06 | LT | D3-H6-72 | 72 X 12 | | 11.5/11.5 | | | | | | 6.0 | | |
| 966 | S-24 | WARNER RD | 27+00 | LT | W11-3-30 | 30 X 30 | | 14.1 | | | | | | 6.3 | | |
| 966 | S-25 | I-77 | 427+15 | CEN | OM-3L-12 | 12 X 36 | | | | | | | 1 | 3.0 | | |
| TOTALS CARRIED TO GROUND MOUNTED SIGNING SUBSUMMARY SHEET 4 OF 4 | | | | | | | 45.0 | 212.0 | | | | 2 | 6 | 173.7 | | |

CALCULATED DLS CHECKED AKF

GROUND MOUNTED SIGNING SUBSUMMARY SHEET 1 OF 4

SUM-77/277/224
VARIOUS

954
1288

O:\2017\2017258\ProjectData\SUM\106002\Design\Traffic\Sheets\106002_TS040.dgn 106002GN001 1/17/2021 7:13:52 AM afford

| SHEET NO. | REFERENCE NO. | LOCATION | STATION | SIDE | CODE | SIZE (INCHES) | 630 GROUND MOUNTED SUPPORT, NO. 2 POST FT | 630 GROUND MOUNTED SUPPORT, NO. 3 POST FT | 630 GROUND MOUNTED SUPPORT, NO. 4 POST FT | 630 SIGN POST REFLECTOR (YELLOW) EACH | 630 SIGN POST REFLECTOR (RED) EACH | 630 SIGN SUPPORT ASSEMBLY, POLE MOUNTED EACH | 630 SIGN SUPPORT ASSEMBLY, BARRIER MOUNTED, AS PER PLAN EACH | 630 SIGN, FLAT SHEET SF | 630 SIGN, FLAT SHEET, AS PER PLAN SF | 630 SIGN, GROUND MOUNTED EXTRUSHEET SF |
|---|---|---|---|---|---|---|---|---|---|---|---|---|---|---|---|---|
| 967 | S-26 | I-77 | 431+38 | CEN | OM-3L-12 | 12 X 36 | | | | | | | 1 | 3.0 | | |
| 967 | S-27 | I-77 | 431+38 | LT | OM-3L-12 | 12 X 36 | 10.5 | | | | | | | 3.0 | | |
| | | | | | I-H25a-12 | 12 X 12 | | | | | | | | 1.0 | | |
| 967 | S-28 | I-77 | 428+84 | RT | OM-3R-12 | 12 X 36 | 11.5 | | | | | | | 3.0 | | |
| | | | | | I-H25a-12 | 12 X 12 | | | | | | | | 1.0 | | |
| 967 | S-29 | I-77 | 428+94 | RT | OM-3L-12 | 12 X 36 | 10.5 | | | | | | | 3.0 | | |
| 968 | S-30 | I-77 | 441+84 | CEN | D10-5-18 | 18 X 60 | | | | | | | 1 | 7.5 | | |
| | | | | | D10-5-18 | 18 X 60 | | | | | | | | 7.5 | | |
| 969 | S-32 | I-77 | 451+90 | LT | W4-2R-48 | 48 X 48 | | 16.2/16.2 | | | | | | 16.0 | | |
| 969 | S-33 | I-77 | 452+73 | CEN | D10-5-18 | 18 X 60 | | | | | | | 1 | 7.5 | | |
| | | | | | D10-5-18 | 18 X 60 | | | | | | | | 7.5 | | |
| 969 | S-34 | I-77 | 452+73 | LT | D10-3-12 | 12 X 48 | 11.5 | | | | | | | 4.0 | | |
| 969 | S-37 | I-77 | 452+73 | RT | D10-3-12 | 12 X 48 | 11.5 | | | | | | | 4.0 | | |
| 970 | S-39 | I-77 | 469+68 | LT | R2-1-48 | 48 X 60 | | | 15.5/15.5 | | | | | | | 20.0 |
| 970 | S-40 | I-77 | 469+78 | LT | D3-1-72 | 72 X 18 | | 12.0/12.0 | | | | | | 9.0 | | |
| 970 | S-41 | I-77 | 473+96 | LT | D10-5-18 | 18 X 60 | | 15.5 | | | | | | 7.5 | | |
| | | | | | D10-5-18 | 18 X 60 | | | | | | | | 7.5 | | |
| 970 | S-43 | I-77 | 468+49 | RT | D3-1-72 | 72 X 18 | | 12.0/12.0 | | | | | | 9.0 | | |
| | | | | | I-H25a-12 | 12 X 12 | | | | | | | | 1.0 | | |
| 971 | S-44 | I-77 | 475+61 | LT | M3-3-36 | 36 X 18 | | 15.1/15.1 | | | | | | 4.5 | | |
| | | | | | M1-1-36-2 | 36 X 36 | | | | | | | | 9.0 | | |
| 971 | S-46 | I-77 | 484+17 | RT | D10-5-18 | 18 X 60 | | 15.5 | | | | | | 7.5 | | |
| 971 | S-48 | I-77 | 484+17 | LT | D10-5-18 | 18 X 60 | | 15.5 | | | | | | 7.5 | | |
| 971 | S-50 | RAMP C | 585+68 | RT | D10-H5a-30 | 30 X 30 | | 13.0 | | | | | | 6.3 | | |
| 972 | S-51 | RAMP C-2 | 792+28 | LT | D10-H5a-30 | 30 X 30 | | 13.0 | | | | | | 6.3 | | |
| 972 | S-52 | RAMP C-2 | 793+18 | LT | OM-3R-12 | 12 X 36 | 11.5 | | | | | | | 3.0 | | |
| | | | | | I-H25a-12 | 12 X 12 | | | | | | | | 1.0 | | |
| 972 | S-53 | RAMP C-2 | 793+18 | RT | OM-3L-12 | 12 X 36 | 10.5 | | | | | | | 3.0 | | |
| 972 | S-55 | RAMP C-2 | 793+85 | LT | W1-6L-72 | 72 x 36 | | | 15.5/15.5 | 2 | | | | 18.0 | | |
| | | | | | W1-H6P-72 | 72 x 24 | | | | | | | | 12.0 | | |
| 972 | S-56 | I-77 | 494+44 | LT | D10-5-18 | 18 X 60 | | 15.5 | | | | | | 7.5 | | |
| 972 | S-59 | I-77 | 490+90 | RT | I-H25a-12 | 12 X 12 | 8.5 | | | | | | | 1.0 | | |
| 972 | S-60 | I-77 | 492+36 | RT | W4-3R-48 | 48 X 48 | | 16.2/16.2 | | | | | | 16.0 | | |
| 972 | S-61 | I-77 | 496+00 | RT | D10-5-18 | 18 X 60 | | 15.5 | | | | | | 7.5 | | |
| 972 | S-63 | I-77 | 498+43 | LT | R2-1-48 | 48 X 60 | | | 15.5/15.5 | | | | | | | 20.0 |
| 972 | S-64 | I-77 | 498+48 | RT | R2-1-48 | 48 X 60 | | | 15.5/15.5 | | | | | | | 20.0 |
| 972 | S-116 | RAMP A | 94+50 | RT | W4-3R-48 | 48 X 48 | | 16.2/16.2 | | | | | | 16.0 | | |
| TOTALS CARRIED TO GROUND MOUNTED SIGNING SUBSUMMARY SHEET 4 OF 4 | | | | | | | 86.0 | 278.9 | 124.0 | 2 | | 3 | | 228.1 | | 60.0 |

CALCULATED DLS CHECKED AKF

GROUND MOUNTED SIGNING SUBSUMMARY SHEET 2 OF 4

SUM-77/277/224
VARIOUS

955
1288

O:\2017\2017258\ProjectData\SUM\106002\Design\Traffic\Sheets\106002_TS041.dgn 106002GN001 1/17/2021 7:13:52 AM aford

| SHEET NO. | REFERENCE NO. | LOCATION | STATION | SIDE | CODE | SIZE (INCHES) | 630 GROUND MOUNTED SUPPORT, NO. 2 POST FT | 630 GROUND MOUNTED SUPPORT, NO. 3 POST FT | 630 GROUND MOUNTED SUPPORT, NO. 4 POST FT | 630 SIGN POST REFLECTOR (YELLOW) EACH | 630 SIGN POST REFLECTOR (RED) EACH | 630 SIGN SUPPORT ASSEMBLY, POLE MOUNTED EACH | 630 SIGN SUPPORT ASSEMBLY, BARRIER MOUNTED, AS PER PLAN EACH | 630 SIGN, FLAT SHEET SF | 630 SIGN, FLAT SHEET, AS PER PLAN SF | 630 SIGN, GROUND MOUNTED EXTRUSHEET SF | | | | |
|---|---|---|---|---|---|---|---|---|---|---|---|---|---|---|---|---|---|---|---|---|
| 973 | S-65 | I-77 | 504+91 | LT | D10-5-18 | 18 X 60 | | 15.5 | | | | | | 7.5 | | | | | | |
| 973 | S-66 | RAMP B-1 | 404+92 | LT | D10-3-12 | 12 X 48 | 11.5 | | | | | | | 4.0 | | | | | | |
| 973 | S-67 | I-77 | 506+96 | LT | W4-1R-48 | 48 X 48 | | 16.2/16.2 | | | | | | 16.0 | | | | | | |
| 973 | S-68 | RAMP B-1 | 585+68 | LT | D10-H5a-30 | 30 X 30 | | 13.0 | | | | | | 6.3 | | | | | | |
| 973 | S-69 | I-77 | 509+16 | LT | I-H25a-12 | 12 X 12 | 8.5 | | | | | | | 1.0 | | | | | | |
| 973 | S-70 | I-77 | 504+73 | RT | D10-3-12 | 12 X 48 | 11.5 | | | | | | | 4.0 | | | | | | |
| 973 | S-72 | I-77 | 506+52 | RT | W4-1R-48 | 48 X 48 | | 16.2/16.2 | | | | | | 16.0 | | | | | | |
| 973 | S-73 | RAMP B-2 | 307+78 | LT | OM-3L-12 | 12 X 36 | 10.5 | | | | | | | 3.0 | | | | | | |
| 973 | S-74 | RAMP B-2 | 308+13 | RT | OM-3R-12 | 12 X 36 | 11.5 | | | | | | | 3.0 | | | | | | |
| | | | | | I-H25a-12 | 12 X 12 | | | | | | | | 1.0 | | | | | | |
| 973 | S-66A | I-77 | 502+03 | LT | R1-2-60 | 60 X 60 X 60 | | 16.1/16.1 | | | 2 | | | 10.9 | | | | | | |
| 973 | S-71B | RAMP B-2 | 306+75 | RT | W1-6L-72 | 72 x 36 | | | 15.5/15.5 | 2 | | | | 18.0 | | | | | | |
| | | | | | W1-H6P-72 | 72 x 24 | | | | | | | | 12.0 | | | | | | |
| 974 | S-75 | RAMP B | 213+15 | LT | D10-H5a-30 | 30 X 30 | | 13.0 | | | | | | 6.3 | | | | | | |
| 974 | S-77 | RAMP B | 214+81 | LT | I-H2c-36 | 36 X 24 | | 13.5 | | | | | | 6.0 | | | | | | |
| 974 | S-78 | I-77 | 515+08 | LT | I-H2e-84 | 84 X 36 | | 13.5/13.5 | | | | | | | | 21.0 | | | | |
| 974 | S-79 | I-77 | 515+37 | LT | D10-5-18 | 18 X 60 | | 15.5 | | | | | | 7.5 | | | | | | |
| 974 | S-80 | RAMP B | 216+00 | LT | W13-7-48 | 48 X 84 | | | 16.5/16.5 | | | | | 7.5 | | 28.0 | | | | |
| 974 | S-81 | I-77 | 511+25 | RT | R1-2-60 | 60 X 60 X 60 | | 16.1/16.1 | | | 2 | | | 10.9 | | | | | | |
| 974 | S-82 | I-77 | 515+10 | RT | W1-2R-48 | 48 X 48 | | 16.2/16.2 | | | | | | | 16.0 | | | | | |
| 974 | S-83 | I-77 | 515+30 | RT | I-H2a-72 | 72 X 36 | | 13.5/13.5 | | | | | | 18.0 | | | | | | |
| 974 | S-84 | I-77 | 515+48 | RT | OM-3R-12 | 12 X 36 | 11.5 | | | | | | | 3.0 | | | | | | |
| | | | | | I-H25a-12 | 12 X 12 | | | | | | | | 1.0 | | | | | | |
| 974 | S-85 | I-77 | 515+55 | LT | D10-5-18 | 18 X 60 | | 15.5 | | | | | | 7.5 | | | | | | |
| 974 | S-85A | I-77 | 521+00 | RT | M3-1-36 | 36 X 18 | | 15.1/15.1 | | | | | | 4.5 | | | | | | |
| | | | | | M1-1-36-2 | 36 X 36 | | | | | | | | 9.0 | | | | | | |
| 975 | S-85B | I-77 | 535+00 | RT | R2-1-48 | 48 X 60 | | | 15.5/15.5 | | | | | 20.0 | | | | | | |
| 979 | S-86 | I-277 | 219+00 | LT | M3-4-36 | 36 X 18 | | 15.1/15.1 | | | | | | 4.5 | | | | | | |
| | | | | | M1-1-3 | 45 X 36 | | | | | | | | 11.3 | | | | | | |
| | | | | | M3-4-36 | 36 X 18 | | 15.1/15.1 | | | | | | 4.5 | | | | | | |
| | | | | | M1-4-3 | 45 X 36 | | | | | | | | 11.3 | | | | | | |
| 980 | S-87 | I-277 | 234+17 | LT | R1-2-60 | 60 X 60 X 60 | | 16.1/16.1 | | | 2 | | | 10.9 | | | | | | |
| 980 | S-87A | I-277 | 228+40 | LT | W4-3R-48 | 48 X 48 | | 16.2/16.2 | | | | | | 16.0 | | | | | | |
| 981 | S-88 | RAMP B | 202+50 | RT | W3-2-48 | 48 X 48 | | 16.2/16.2 | | | | | | 16.0 | | | | | | |
| 981 | S-89 | I-277 | 238+00 | LT | W4-3R-48 | 48 X 48 | | 16.2/16.2 | | | | | | 16.0 | | | | | | |
| 981 | S-90 | RAMP B | 201+18 | LT | I-H2a-72 | 72 X 36 | | 13.5/13.5 | | | | | | 18.0 | | | | | | |
| 981 | S-91 | I-277 | 241+88 | LT | D6-H5-72 | 72 X 30 | | 13.0/13.0 | | | | | | 15.0 | | | | | | |
| 981 | S-92 | RAMP B-1 | 409+23 | RT | W1-8R-36 | 36 X 48 | | 11.5/11.5 | | 2 | | | | 12.0 | | | | | | |
| 981 | S-93 | RAMP B-1 | 410+02 | RT | W1-8R-36 | 36 X 48 | | 11.5/11.5 | | 2 | | | | 12.0 | | | | | | |
| 981 | S-94 | RAMP B-1 | 410+82 | RT | W1-8R-36 | 36 X 48 | | 11.5/11.5 | | 2 | | | | 12.0 | | | | | | |
| 981 | S-95 | RAMP B-1 | 411+62 | RT | W1-8R-36 | 36 X 48 | | 11.5/11.5 | | 2 | | | | 12.0 | | | | | | |
| 981 | S-96 | RAMP B-1 | 412+42 | RT | W1-8R-36 | 36 X 48 | | 11.5/11.5 | | 2 | | | | 12.0 | | | | | | |
| 981 | S-97 | RAMP B-1 | 413+22 | RT | W1-8R-36 | 36 X 48 | | 11.5/11.5 | | 2 | | | | 12.0 | | | | | | |
| 981 | S-98 | RAMP B-1 | 414+02 | RT | W1-8R-36 | 36 X 48 | | 11.5/11.5 | | 2 | | | | 12.0 | | | | | | |
| 981 | S-99 | RAMP B-1 | 414+05 | LT | D10-H5a-30 | 30 X 30 | | 13.0 | | | | | | 6.3 | | | | | | |
| 981 | S-100 | RAMP B-1 | 414+82 | RT | W1-8R-36 | 36 X 48 | | 11.5/11.5 | | 2 | | | | 12.0 | | | | | | |
| 981 | S-101 | RAMP B-1 | 415+51 | RT | W1-6R-60 | 60 X 30 | 10.0/10.0 | | | 2 | | | | 12.5 | | | | | | |
| 981 | S-103 | I-277/US 224 | 245+12 | CEN | D10-5-18 | 18 X 60 | 7.3 | | | | | | 1 | 7.5 | | | | | | |
| | | | | | D10-5-18 | 18 X 60 | | | | | | | | 7.5 | | | | | | |
| TOTALS CARRIED TO GROUND MOUNTED SIGNING SUBSUMMARY SHEET 4 OF 4 | | | | | | | 92.3 | 771.6 | 95.0 | 26 | | | 1 | 457.2 | 16.0 | 49.0 | | | | |

CALCULATED DLS
CHECKED AKF

GROUND MOUNTED SIGNING SUBSUMMARY SHEET 3 OF 4

SUM-77 / 277 / 224
VARIOUS

956
1288

O:\2017\2017258\ProjectData\SUM\106002\Design\Traffic\Sheets\106002_TS042.dgn 106002GN001 1/17/2021 7:13:53 AM aford

| SHEET NO. | REFERENCE NO. | LOCATION | STATION | SIDE | CODE | SIZE (INCHES) | 630 GROUND MOUNTED SUPPORT, NO. 2 POST FT | 630 GROUND MOUNTED SUPPORT, NO. 3 POST FT | 630 GROUND MOUNTED SUPPORT, NO. 4 POST FT | 630 SIGN POST REFLECTOR (YELLOW) EACH | 630 SIGN POST REFLECTOR (RED) EACH | 630 SIGN SUPPORT ASSEMBLY, POLE MOUNTED EACH | 630 SIGN SUPPORT ASSEMBLY, BARRIER MOUNTED, AS PER PLAN EACH | 630 SIGN, FLAT SHEET SF | 630 SIGN, FLAT SHEET, AS PER PLAN SF | 630 SIGN, GROUND MOUNTED EXTRUSHEET SF | | | | |
|---|---|---|---|---|---|---|---|---|---|---|---|---|---|---|---|---|---|---|---|---|
| 982 | S-105 | I-277 | 256+59 | LT | OM-3R-12 | 12 X 36 | 11.5 | | | | | | | 3.0 | | | | | | |
| | | | | | I-H25a-12 | 12 X 12 | | | | | | | | 1.0 | | | | | | |
| 982 | S-106 | I-277 | 249+06 | RT | W8-13-48 | 48 X 48 | | 16.2/16.2 | | | | | | | 16.0 | | | | | |
| 982 | S-107 | I-277 | 251+44 | RT | OM-3R-12 | 12 X 36 | 11.5 | | | | | | | 3.0 | | | | | | |
| | | | | | I-H25a-12 | 12 X 12 | | | | | | | | 1.0 | | | | | | |
| 982 | S-108 | I-277 | 254+13 | CEN | D10-5-18 | 18 X 60 | | | | | | | 1 | 7.5 | | | | | | |
| | | | | | D10-5-18 | 18 X 60 | | | | | | | | 7.5 | | | | | | |
| 983 | S-109 | I-277 | 259+50 | LT | W8-13-48 | 48 X 48 | | 16.2/16.2 | | | | | | | 16.0 | | | | | |
| 983 | S-111 | I-277 | 265+13 | CEN | D10-5-18 | 18 X 60 | | | | | | | 1 | 7.5 | | | | | | |
| | | | | | D10-5-18 | 18 X 60 | | | | | | | | 7.5 | | | | | | |
| 983 | S-113 | RAMP C-1 | 684+05 | LT | W1-6R-60 | 60 X 30 | 10.0/10.0 | | | 2 | | | | 12.5 | | | | | | |
| 983 | S-114 | I-277 | 270+37 | RT | W4-3R-48 | 48 X 48 | | 16.2/16.2 | | | | | | 16.0 | | | | | | |
| 985 | S-114A | US 224 | 291+00 | RT | R2-1-48 | 48 X 60 | | | | | | 1 | | 20.0 | | | | | | |
| 986 | S-115 | RAMP A | 99+29 | LT | D10-H5a-30 | 30 X 30 | | 13.0 | | | | | | 6.3 | | | | | | |
| 987 | S-117 | RAMP B | 208+00 | RT | W4-5R-48 | 48 X 48 | | 16.2/16.2 | | | | | | 16.0 | | | | | | |
| 987 | S-117A | RAMP B-2 | 10+05 | RT | W1-8L | | | 14.5/14.5 | | | | | | | | | | | | |
| 987 | S-117B | RAMP B-2 | 10+91 | RT | W1-8L | | | 14.5/14.5 | | | | | | | | | | | | |
| 987 | S-117C | RAMP B-2 | 11+85 | RT | W1-8L | | | 14.5/14.5 | | | | | | | | | | | | |
| 987 | S-117D | RAMP B-2 | 12+78 | RT | W1-8L | | | 14.5/14.5 | | | | | | | | | | | | |
| 988 | S-118 | RAMP C-2 | 785+92 | LT | D10-H5a-30 | 30 X 30 | | 13.0 | | | | | | 6.3 | | | | | | |
| 988 | S-119 | RAMP C-2 | 785+54 | LT | W4-1R-48 | 48 X 48 | | 16.2/16.2 | | | | | | 16.0 | | | | | | |
| 988 | S-120 | RAMP C | 589+86 | RT | D10-H5a-30 | 30 X 30 | | 13.0 | | | | | | 6.3 | | | | | | |
| 988 | S-121 | RAMP C | 593+03 | RT | W1-2R-48 | 48 X 48 | | 16.2/16.2 | | | | | | 16.0 | | | | | | |
| | | | | | W13-1P-30 | 30 X 30 | | | | | | | | 6.3 | | | | | | |
| 988 | S-122 | RAMP C | 594+96 | RT | R1-2-60 | 60 X 60 X 60 | | 16.1/16.1 | | | 2 | | | 10.9 | | | | | | |
| 988 | S-122A | RAMP C-2 | 788+10 | LT | W1-8L-36 | 36 X 48 | | 11.5/11.5 | | 2 | | | | 12.0 | | | | | | |
| 988 | S-122B | RAMP C-2 | 788+90 | LT | W1-8L-36 | 36 X 48 | | 11.5/11.5 | | 2 | | | | 12.0 | | | | | | |
| 989 | S-123 | RAMP C-1 | 685+18 | LT | W1-8R-36 | 36 X 48 | | 11.5/11.5 | | 2 | | | | 12.0 | | | | | | |
| 989 | S-124 | RAMP C-1 | 685+98 | LT | W1-8R-36 | 36 X 48 | | 11.5/11.5 | | 2 | | | | 12.0 | | | | | | |
| 989 | S-125 | RAMP C-1 | 686+78 | LT | W1-8R-36 | 36 X 48 | | 11.5/11.5 | | 2 | | | | 12.0 | | | | | | |
| 989 | S-126 | RAMP C-1 | 687+58 | LT | W1-8R-36 | 36 X 48 | | 11.5/11.5 | | 2 | | | | 12.0 | | | | | | |
| 989 | S-127 | RAMP C-1 | 688+38 | LT | W1-8R-36 | 36 X 48 | | 11.5/11.5 | | 2 | | | | 12.0 | | | | | | |
| 989 | S-128 | RAMP C-1 | 689+18 | LT | W1-8R-36 | 36 X 48 | | 11.5/11.5 | | 2 | | | | 12.0 | | | | | | |
| 989 | S-129 | RAMP C-1 | 689+98 | LT | W1-8R-36 | 36 X 48 | | 11.5/11.5 | | 2 | | | | 12.0 | | | | | | |
| 989 | S-130 | RAMP C-1 | 690+78 | LT | W1-8R-36 | 36 X 48 | | 11.5/11.5 | | 2 | | | | 12.0 | | | | | | |
| 989 | S-131 | RAMP C-1 | 691+58 | LT | W1-8R-36 | 36 X 48 | | 11.5/11.5 | | 2 | | | | 12.0 | | | | | | |
| 989 | S-133 | RAMP C-1 | 686+17 | RT | D10-H5a-30 | 30 X 30 | | 13.0 | | | | | | 6.3 | | | | | | |
| 990 | S-132 | RAMP D | 900+76 | RT | D10-H5a-30 | 30 X 30 | | 13.0 | | | | | | 6.3 | | | | | | |
| GROUND MOUNTED SIGNING SUBSUMMARY 1 OF 4 | | | | | | | 45.0 | 212.0 | | | | 2 | 6 | 173.7 | | | | | | |
| GROUND MOUNTED SIGNING SUBSUMMARY 2 OF 4 | | | | | | | 86.0 | 278.9 | 124.0 | 2 | | | 3 | 228.1 | | 60.0 | | | | |
| GROUND MOUNTED SIGNING SUBSUMMARY 3 OF 4 | | | | | | | 92.3 | 771.6 | 95.0 | 26 | | | 1 | 457.2 | 16.0 | 49.0 | | | | |
| THIS SHEET | | | | | | | 43.0 | 660.6 | | 26 | | 1 | 2 | 314.9 | 32.0 | | | | | |
| TOTALS CARRIED TO TRAFFIC CONTROL GENERAL SUMMARY | | | | | | | 266.3 | 1923.1 | 219.0 | 54 | | 3 | 12 | 1173.9 | 48.0 | 109.0 | | | | |

CALCULATED DLS
CHECKED AKF

GROUND MOUNTED SIGNING SUBSUMMARY SHEET 4 OF 4

SUM-77/277/224
VARIOUS

957
1288

O:\2017\2017258\ProjectData\SUM\106002\Design\Traffic\Sheets\106002_TS043.dgn 106002GN001 1/28/2021 10:55:05 AM aford

| SHEET NO. | REFERENCE NO. | LOCATION | SIDE | DETAIL PAGE | STATION | 625 GROUND ROD EACH | 630 GROUND MOUNTED STRUCTURAL BEAM SUPPORT, S4X7.7 FT | 630 GROUND MOUNTED STRUCTURAL BEAM SUPPORT, W6X9 FT | 630 GROUND MOUNTED STRUCTURAL BEAM SUPPORT, W10X22 FT | 630 GROUND MOUNTED STRUCTURAL BEAM SUPPORT, W10X12 FT | 630 BREAKAWAY STRUCTURAL BEAM CONNECTION EACH | 630 OVERHEAD SIGN SUPPORT, TYPE TC-12.31, DESIGN 6 EACH | 630 OVERHEAD SIGN SUPPORT, TYPE TC-12.31, DESIGN 10 EACH | 630 OVERHEAD SIGN SUPPORT, TYPE TC-12.31, DESIGN 12 EACH | 630 OVERHEAD SIGN SUPPORT, TYPE TC-15.116, DESIGN 1 EACH | 630 OVERHEAD SIGN SUPPORT, TYPE TC-15.116, DESIGN 2 EACH | 630 OVERHEAD SIGN SUPPORT, TYPE TC-15.116, DESIGN 3 EACH | 630 SIGN ATTACHMENT ASSEMBLY EACH | 630 SIGN SUPPORT ASSEMBLY, POLE MOUNTED EACH | 630 SIGN, FLAT SHEET SF | 630 SIGN, GROUND MOUNTED EXTRUSHEET SF | 630 SIGN, OVERHEAD EXTRUSHEET SF | 630 SIGN, PERMANENT OVERLAY, AS PER PLAN SF | 630 CONCRETE BARRIER MEDIAN OVERHEAD SIGN SUPPORT FOUNDATION, TYPE TC-21.50 EACH | 630 GROUND MOUNTED STRUCTURAL BEAM SUPPORT FOUNDATION EACH | 630 RIGID OVERHEAD SIGN SUPPORT FOUNDATION EACH | |
|---|---|---|---|---|---|---|---|---|---|---|---|---|---|---|---|---|---|---|---|---|---|---|---|---|---|---|---|
| 960 | OSS-1B | I-77 | RT | 934 | 344+15 | | | | | | | | | | | | | | | | | | 75.0 | | | | |
| 962 | OSS-1A | I-77 | LT | 991 | 378+50 | 2 | | | | | | | | | | 1 | | | | | | 652.5 | | 1 | | 1 | |
| 963 | OSS-1 | I-77 | RT | 992 | 389+00 | 2 | | | | | | | | | | 1 | | | | 2 | | 463.5 | | 1 | | 1 | |
| 963 | OSS-1C | I-77 | LT | 934 | 390+00 | | | | | | | | | | | | | | | | | | 51.0 | | | | |
| 964 | S-11 | I-77 | RT | 1014 | 401+00 | | 17.3/17.7 | | | | 2 | | | | | | | | | | 20.0 | | | | | 2 | |
| 965 | S-15 | I-77 | RT | 1011 | 415+20 | | | 17.8/19.9 | | | 2 | | | | | | | | | | | 48.0 | | | | 2 | |
| 966 | OSS-2 | I-77 | LT | 1008 | 417+00 | 1 | | | | | | | | 1 | | | | | | | | | | | | 1 | |
| 968 | OSS-3 | I-77 | RT | 993 | 440+00 | 2 | | | | | | | | | | 1 | | | | | | 446.5 | | 1 | | 1 | |
| 968 | S-31 | I-77 | RT | 1011 | 445+50 | | | | | 20.9/22.6 | 2 | | | | | | | | | | | 60.0 | | | | 2 | |
| 969 | S-35 | I-77 | LT | 1012 | 455+89 | | | | | 22.4/22.2 | 2 | | | | | | | | | | | 50.0 | | | | 2 | |
| 969 | S-36 | I-77 | LT | 1012 | 462+50 | | | | | 21.3/17.3 | 2 | | | | | | | | | | | 60.0 | | | | 2 | |
| 969 | S-38 | I-77 | RT | 1013 | 459+50 | | | | 23.6/22.6 | | 2 | | | | | | | | | | | 161.5 | | | | 2 | |
| 969 | OSS-4 | I-77 | RT | 994 | 463+00 | 2 | | | | | | | | | | | 1 | | | 1 | 20.0 | | 943.5 | | | 1 | |
| 970 | S-42 | I-77 | RT | 1013 | 468+00 | | | 18.0/18.1 | | | 2 | | | | | | | | | | | 40.0 | | | | 2 | |
| 971 | OSS-5 | I-77 | RT | 995 | 476+00 | 2 | | | | | | | | | | | 1 | | | | | | 943.5 | | | 2 | |
| 971 | S-47 | I-77 | RT | 1014 | 481+75 | | | 18.4/17.5 | | | 2 | | | | | | | | | | | 45.0 | | | | 2 | |
| 972 | S-57 | I-77 | LT | 1015 | 496+25 | | | 17.6/17.9 | | | 2 | | | | | | | | | | | 45.0 | | | | 2 | |
| 972 | S-58 | I-77 | LT | 1019 | 498+25 | | 16.1/16.2 | | | | 2 | | | | | | | | | | 20.0 | | | | | 2 | |
| 972 | OSS-6 | I-77 | RT | 996 | 490+00 | 2 | | | | | | | | | | | 1 | | | 1 | 16.0 | | 753.5 | | | | 2 |
| 972 | S-62 | I-77 | LT | 1015 | 496+60 | | | 18.8/17.7 | | | 2 | | | | | | | | | | | 45.0 | | | | 2 | |
| 973 | OSS-7 | I-77 | LT | 1008 | 503+50 | 1 | | | | | | | 1 | | | | | | | 1 | 20.0 | | 177.5 | | | | 1 |
| 973 | OSS-8 | I-77 | LT | 1009 | 509+50 | 1 | | | | | | | | 1 | | | | | | | | | 192.5 | | | | 1 |
| 973 | S-30A | I-77 | LT | STE055 | 447+00 | | | | 27.0/23.0 | | 2 | | | | | | | | | | | | | | | 2 | |
| 973 | S-71 | RAMP B-2 | LT | 1019 | 304+00 | | 19.2/19.9 | | | | 2 | | | | | | | | | | | 28.0 | | | | 2 | |
| 973 | S-71A | RAMP B-2 | RT | 1019 | 304+00 | | 19.0/19.2 | | | | 2 | | | | | | | | | | | 28.0 | | | | 2 | |
| 974 | S-76 | I-77 | LT | 1016 | 514+66 | | | 18.5/17.5 | | | 2 | | | | | | | | | | | 45.0 | | | | 2 | |
| 974 | OSS-8A | I-77 | LT | 934 | 518+00 | | | | | | | | | | | | | | | | | | | 48.0 | | | |
| 975 | OSS-10 | I-77 | LT | 997 | 528+45 | | | | | | | | | | | | | 3 | | | | | 137.0 | 48.0 | | | |
| 976 | OSS-11 | I-77 | LT | 998 | 541+95 | | | | | | | | | | | | | 3 | | | | | 169.0 | | | | |
| 977 | OSS-12 | I-277 | RT | 999 | | | | | | | | | | | | | | 3 | | | | | 174.0 | | | | |
| 978 | OSS-13 | I-277 | RT | 1000 | | | | | | | | | | | | | | 10 | | | | | 495.0 | | | | |
| 980 | OSS-14 | I-277 | RT | 1001 | 228+40 | | | | | | | | | | | | | 7 | | | | | 390.0 | | | | |
| TOTALS CARRIED TO OVERHEAD AND BEAM MOUNTED SUBSUMMARY 2 OF 2 | | | | | | 15 | 144.6 | 217.7 | 96.2 | 126.7 | 30 | | 1 | 2 | | 3 | 3 | 26 | 5 | 96.0 | 655.5 | 5938.0 | 222.0 | 4 | 30 | 11 | |

CALCULATED DLS CHECKED AKF

# OVERHEAD AND BEAM MOUNTED SUBSUMMARY SHEET 1 OF 2

SUM-77/277/224
VARIOUS

958
1288

O:\2017\2017258\ProjectData\SUM\106002\Design\Traffic\Sheets\106002_TS050.dgn 106002GN001 2/2/2021 11:20:47 AM aford

| SHEET NO. | REFERENCE NO. | LOCATION | SIDE | DETAIL PAGE | STATION | 625 GROUND ROD EACH | 630 GROUND MOUNTED STRUCTURAL BEAM SUPPORT, S4X7.7 FT | 630 GROUND MOUNTED STRUCTURAL BEAM SUPPORT, W6X9 FT | 630 GROUND MOUNTED STRUCTURAL BEAM SUPPORT, W10X22 FT | 630 GROUND MOUNTED STRUCTURAL BEAM SUPPORT, W10X12 FT | 630 BREAKAWAY STRUCTURAL BEAM CONNECTION EACH | 630 OVERHEAD SIGN SUPPORT, TYPE TC-12.31, DESIGN 6 EACH | 630 OVERHEAD SIGN SUPPORT, TYPE TC-12.31, DESIGN 10 EACH | 630 OVERHEAD SIGN SUPPORT, TYPE TC-12.31, DESIGN 12 EACH | 630 OVERHEAD SIGN SUPPORT, TYPE TC-15.116, DESIGN 1 EACH | 630 OVERHEAD SIGN SUPPORT, TYPE TC-15.116, DESIGN 2 EACH | 630 OVERHEAD SIGN SUPPORT, TYPE TC-15.116, DESIGN 3 EACH | 630 SIGN ATTACHMENT ASSEMBLY EACH | 630 SIGN SUPPORT ASSEMBLY, POLE MOUNTED EACH | 630 SIGN, FLAT SHEET SF | 630 SIGN, GROUND MOUNTED EXTRUSHEET SF | 630 SIGN, OVERHEAD EXTRUSHEET SF | 630 SIGN, PERMANENT OVERLAY, AS PER PLAN SF | 630 CONCRETE BARRIER MEDIAN OVERHEAD SIGN SUPPORT FOUNDATION, TYPE TC-21.50 EACH | 630 GROUND MOUNTED STRUCTURAL BEAM SUPPORT FOUNDATION EACH | 630 RIGID OVERHEAD SIGN SUPPORT FOUNDATION EACH | |
|---|---|---|---|---|---|---|---|---|---|---|---|---|---|---|---|---|---|---|---|---|---|---|---|---|---|---|---|---|
| 981 | S-102 | US 224 | LT | 1017 | 246+21 | | | 18.7/18.7 | | | 2 | | | | | | | | | | 40.0 | | | | | 2 | | |
| 981 | OSS-15 | I-277 | RT | 1002 | 242+00 | 2 | | | | | | | | | 1 | | | | 2 | 15.9 | | 470.0 | | | 1 | | 1 | |
| 981 | S-104 | US 224 | RT | 1017 | 246+40 | | | 18.3/19.3 | | | 2 | | | | | | | | | | 40.0 | | | | | 2 | | |
| 982 | OSS-16 | US 224 | LT | 1003 | 248+70 | | | | | | | | | | | | | 6 | | | | 341.00 | | | | | | |
| 982 | OSS-17 | US 224 | RT | 1009 | 251+00 | 1 | | | | | | 1 | | | | | | | | | | 132.0 | | | | | 1 | |
| 982 | OSS-18 | US 224 | RT | 1004 | 258+21 | | | | | | | | | | | | | 6 | 1 | 28.0 | | 310.00 | | | | | | |
| 983 | S-110 | US 224 | LT | 1018 | 264+00 | | | 17.6/18.3 | | | 2 | | | | | | | | | | 40.0 | | | | | 2 | | |
| 983 | OSS-19 | US 224 | LT | 1005 | 266+54 | | | | | | | | | | | | | 9 | | | | 526.00 | | | | | | |
| 983 | S-112 | US 224 | RT | 1018 | 261+37 | | | 18.1/18.2 | | | 2 | | | | | | | | | | 40.0 | | | | | 2 | | |
| 983 | OSS-22 | US 224 | RT | 1010 | 266+50 | 1 | | | | | | 1 | | | | | | | | | | 128.0 | | | | | 1 | |
| 984 | OSS-20 | US 224 | LT | 1006 | 282+78 | | | | | | | | | | | | | 9 | | | | 506.00 | | | | | | |
| 985 | OSS-21 | US 224 | LT | 1007 | | | | | | | | | | | | | | 6 | | | | 330.00 | | | | | | |
| OVERHEAD AND BEAM MOUNTED SUBSUMMARY 1 OF 2 | | | | | | 15 | 144.6 | 217.7 | 96.2 | 126.7 | 30 | | 1 | 2 | | 3 | 3 | 26 | 5 | 96.0 | 655.5 | 5938.0 | 222.0 | 4 | 30 | 11 | |
| THIS SHEET | | | | | | 4 | | 147.2 | | | 8 | 2 | | | 1 | | | 36 | 3 | 43.9 | 160.0 | 2743.0 | | 1 | 8 | 3 | |
| TOTALS CARRIED TO TRAFFIC CONTROL GENERAL SUMMARY | | | | | | 19 | 144.6 | 364.9 | 96.2 | 126.7 | 38 | 2 | 1 | 2 | 1 | 3 | 3 | 62 | 8 | 139.9 | 815.5 | 8681.0 | 222.0 | 5 | 38 | 14 | |

CALCULATED DLS CHECKED AKF

# OVERHEAD AND BEAM MOUNTED SUBSUMMARY SHEET 2 OF 2

SUM-77/277/224
VARIOUS

959
1288

0:\2017\2017258\ProjectData\SUM\106002\Design\Traffic\Sheets\106002_TS051.dgn 106002GN001 2/2/2021 11:21:50 AM aford

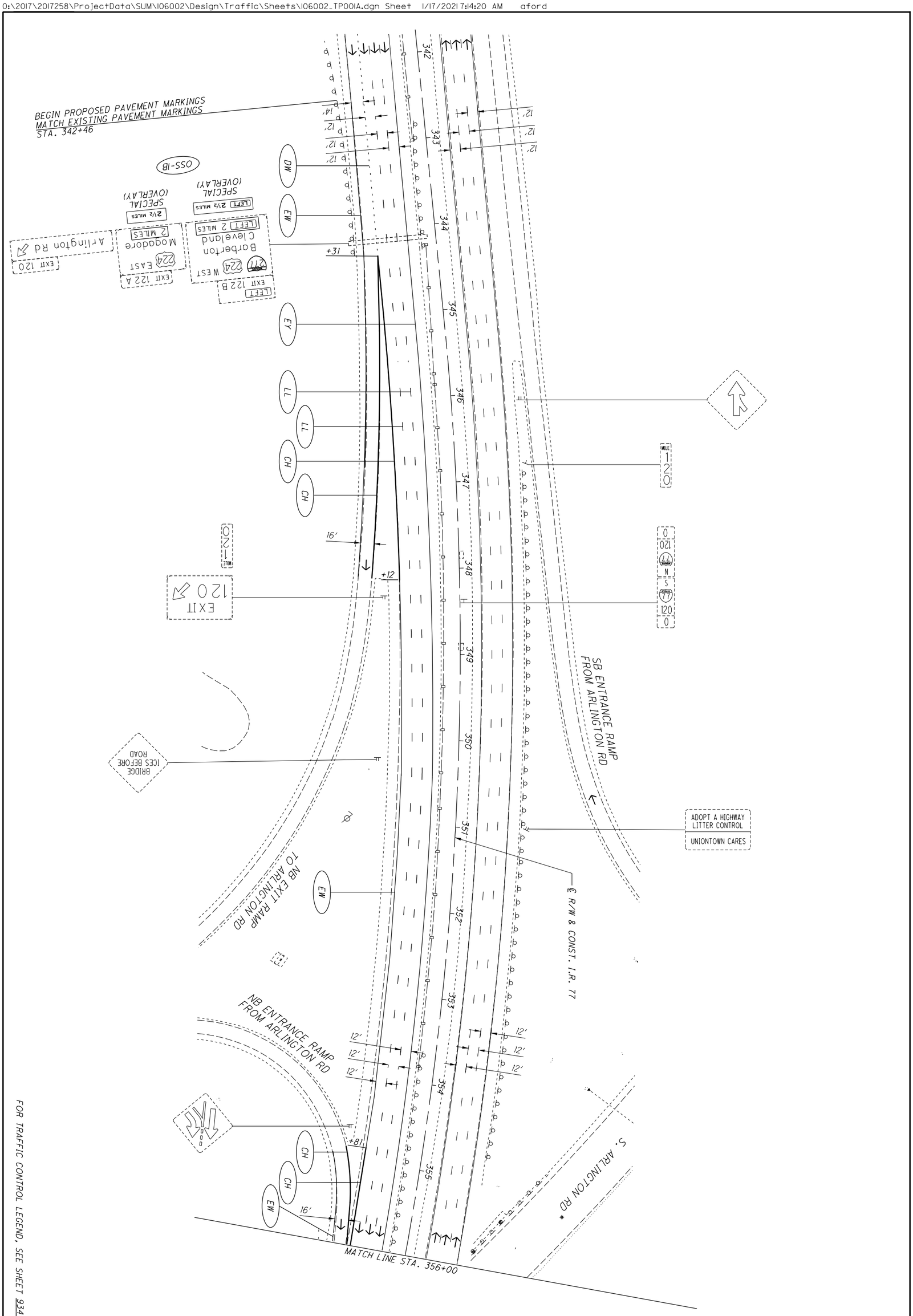


FOR TRAFFIC CONTROL LEGEND, SEE SHEET 934.

| | | | | |
|---|---|---|---|---|
| 960 / 1288 | SUM-77/277/224<br>VARIOUS | TRAFFIC CONTROL PLAN - I.R. 77<br>BEGIN TO STA. 356+00 | CALCULATED MBK<br>CHECKED AKF | 0 50<br>25 100<br>HORIZONTAL SCALE IN FEET |

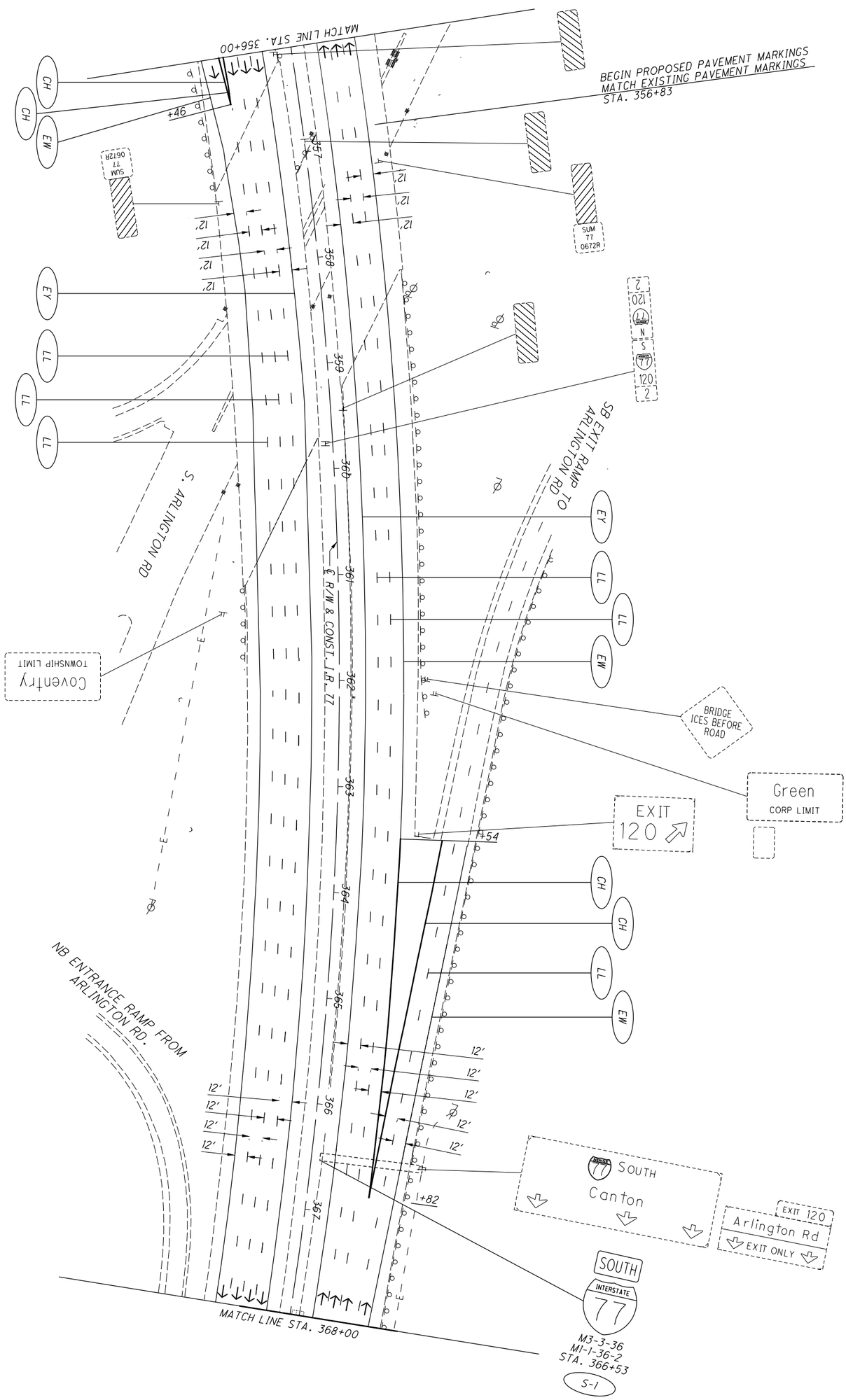


FOR TRAFFIC CONTROL LEGEND, SEE SHEET 934.

| | | | | |
|---|---|---|---|---|
| 196 / 1288 | SUM-77/277/224<br>VARIOUS | TRAFFIC CONTROL PLAN - I.R. 77<br>STA. 356+00 TO STA. 368+00 | CALCULATED MBK<br>CHECKED AKF | 0 50<br>25 100<br>HORIZONTAL SCALE IN FEET |

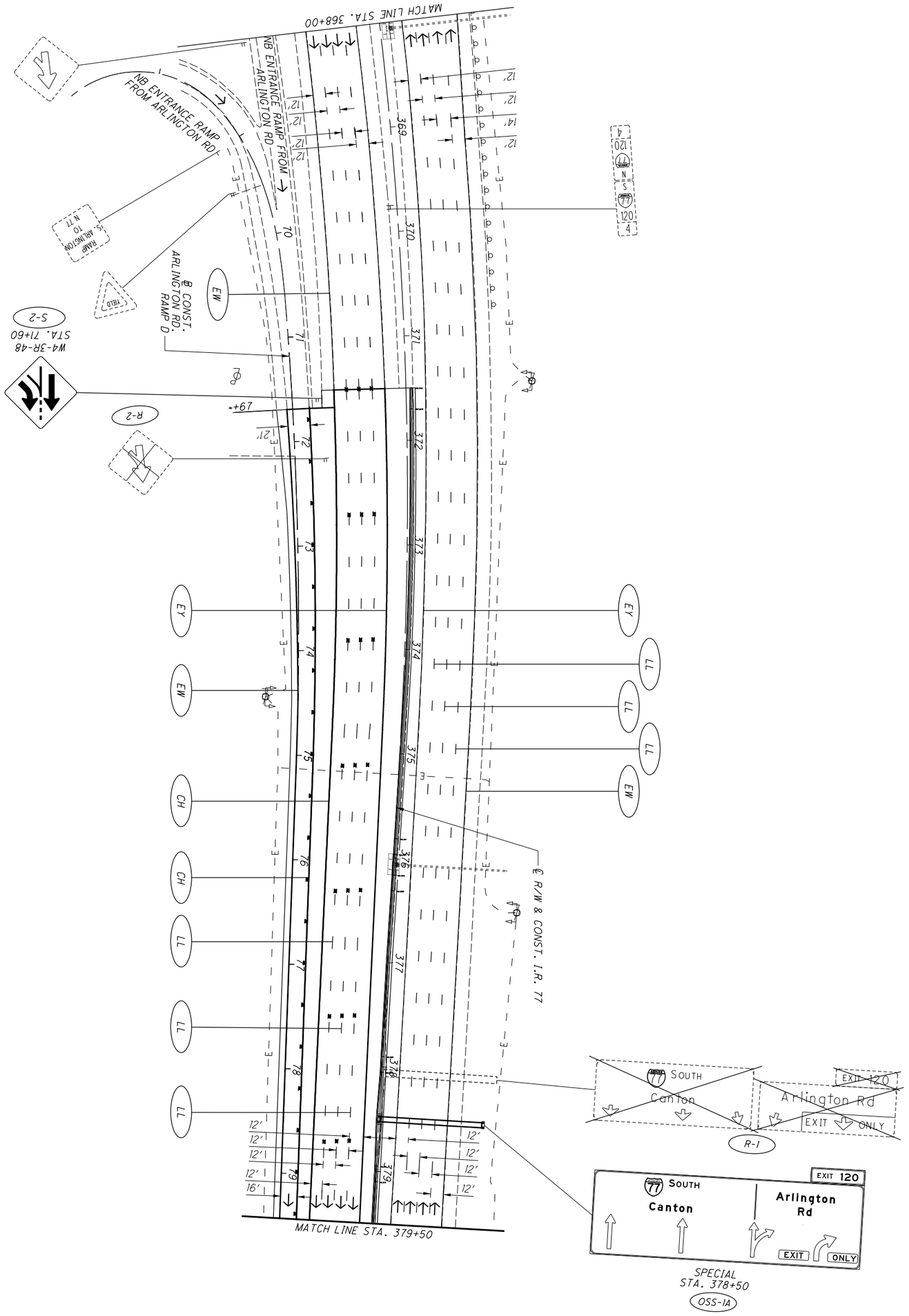


FOR TRAFFIC CONTROL LEGEND, SEE SHEET 934.

| | | | | |
|---|---|---|---|---|
| 962 / 1288 | SUM-77/277/224<br>VARIOUS | TRAFFIC CONTROL PLAN - I.R. 77<br>STA. 368+00 TO STA. 379+50 | CALCULATED MBK<br>CHECKED AKF | 0 50<br>25 100<br>HORIZONTAL SCALE IN FEET |

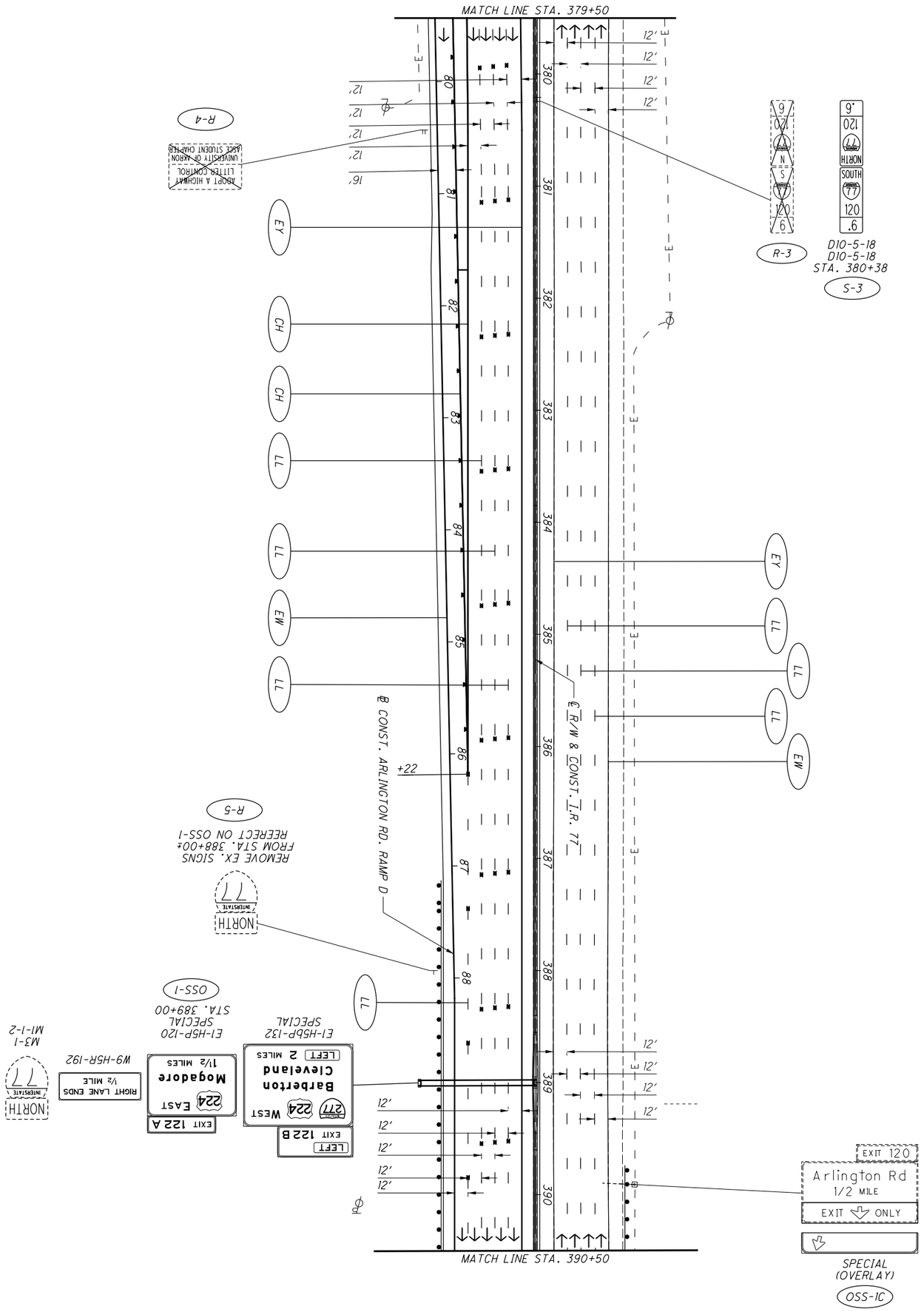


FOR TRAFFIC CONTROL LEGEND, SEE SHEET 934.

| | | | |
|---|---|---|---|
| 963 / 1288 | **SUM-77/277/224**<br>**VARIOUS** | **TRAFFIC CONTROL PLAN - I.R. 77**<br>**STA. 379+50 TO STA. 390+50** | CALCULATED MBK<br>CHECKED AKF<br>0 50 25 100<br>HORIZONTAL SCALE IN FEET |

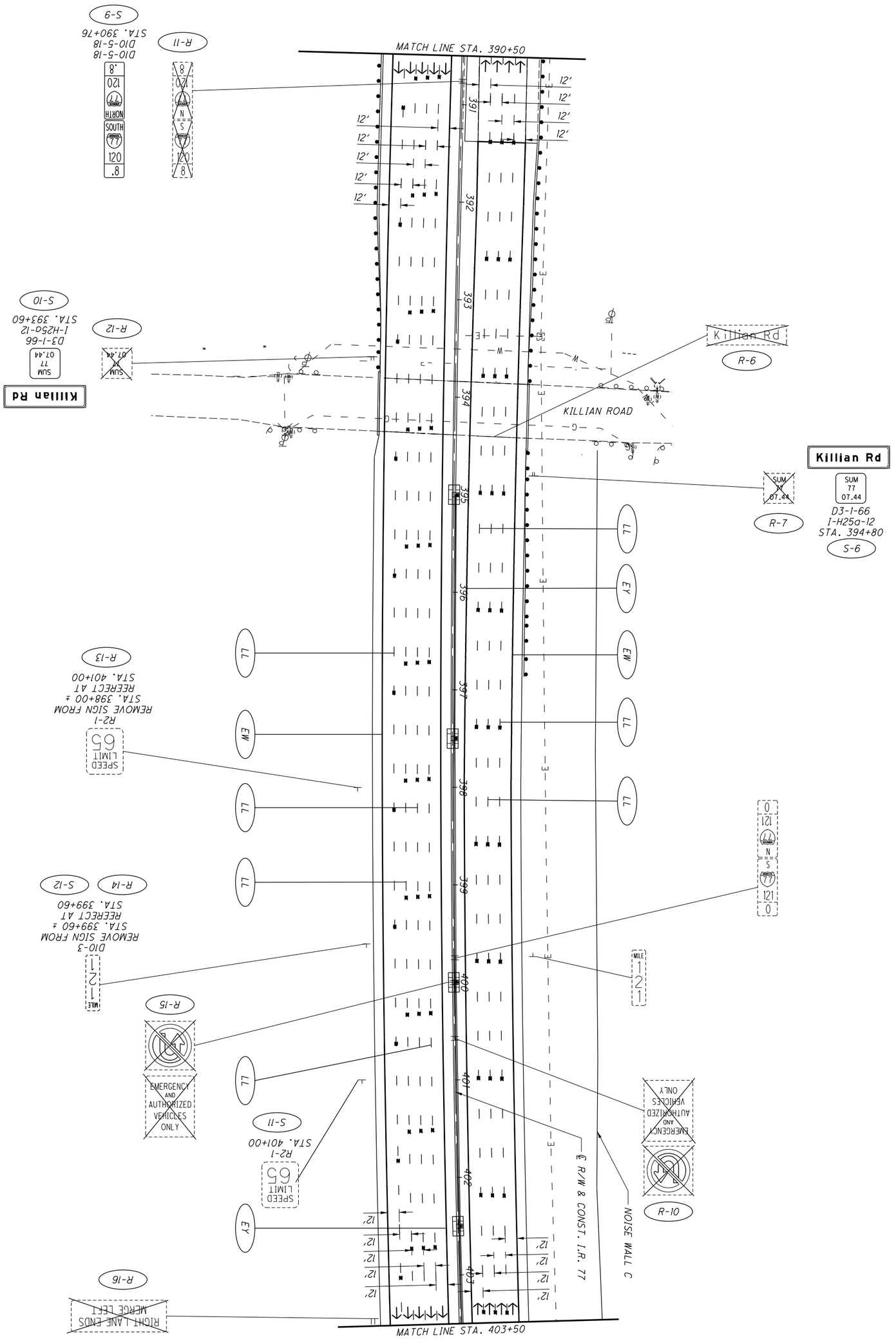


FOR TRAFFIC CONTROL LEGEND, SEE SHEET 934

| | | | | |
|---|---|---|---|---|
| 964 / 1288 | SUM-77/277/224<br>VARIOUS | TRAFFIC CONTROL PLAN - I.R. 77<br>STA. 390+50 TO STA. 403+50 | CALCULATED MBK<br>CHECKED AKF | 0 50<br>25 100<br>HORIZONTAL SCALE IN FEET |

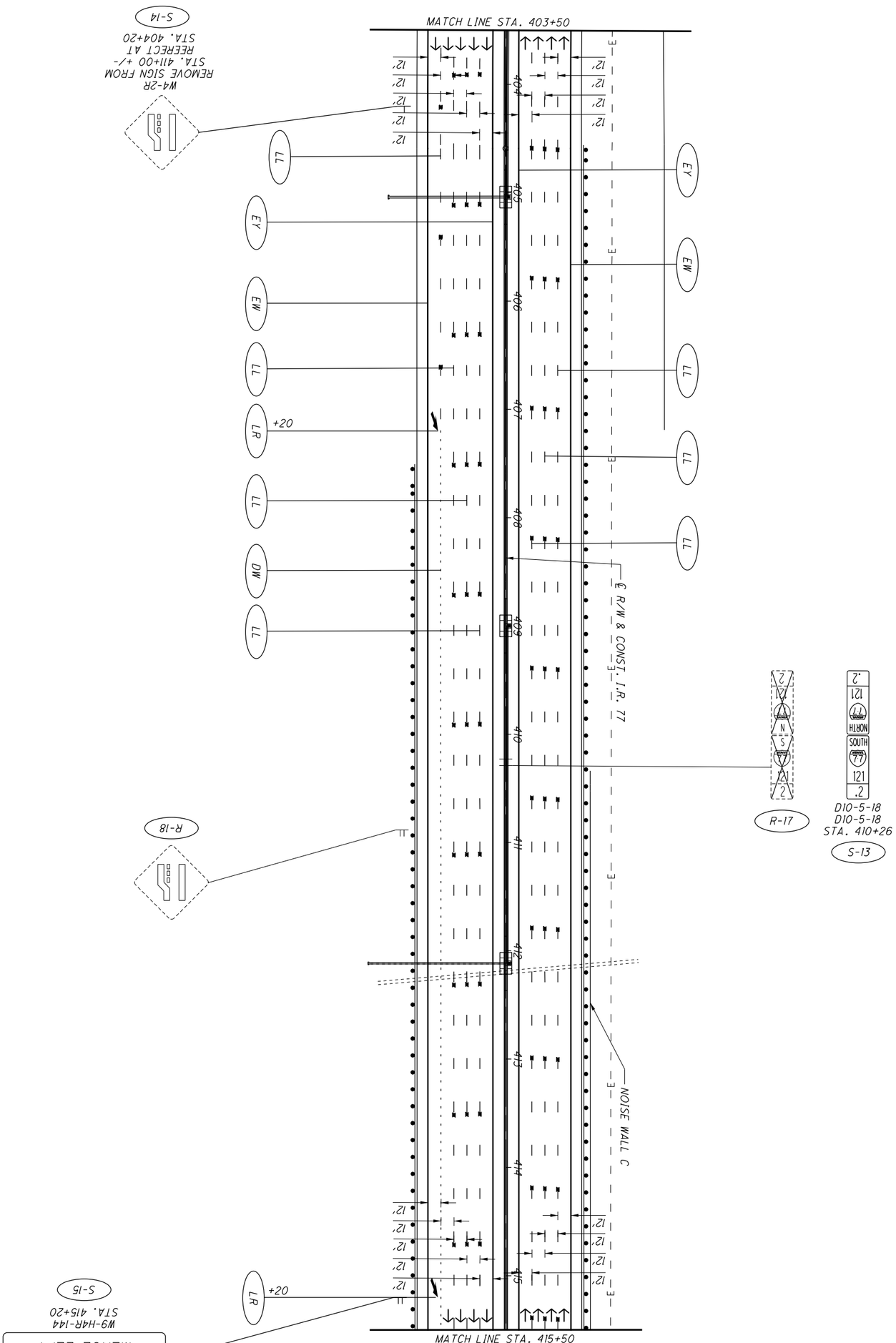


FOR TRAFFIC CONTROL LEGEND, SEE SHEET 934.

| | | | |
|---|---|---|---|
| 965 / 1288 | SUM-77 / 277 / 224<br>VARIOUS | TRAFFIC CONTROL PLAN - I.R. 77<br>STA. 403+50 TO STA. 415+50 | CALCULATED MBK<br>CHECKED AKF<br>0 50 100<br>25<br>HORIZONTAL SCALE IN FEET |

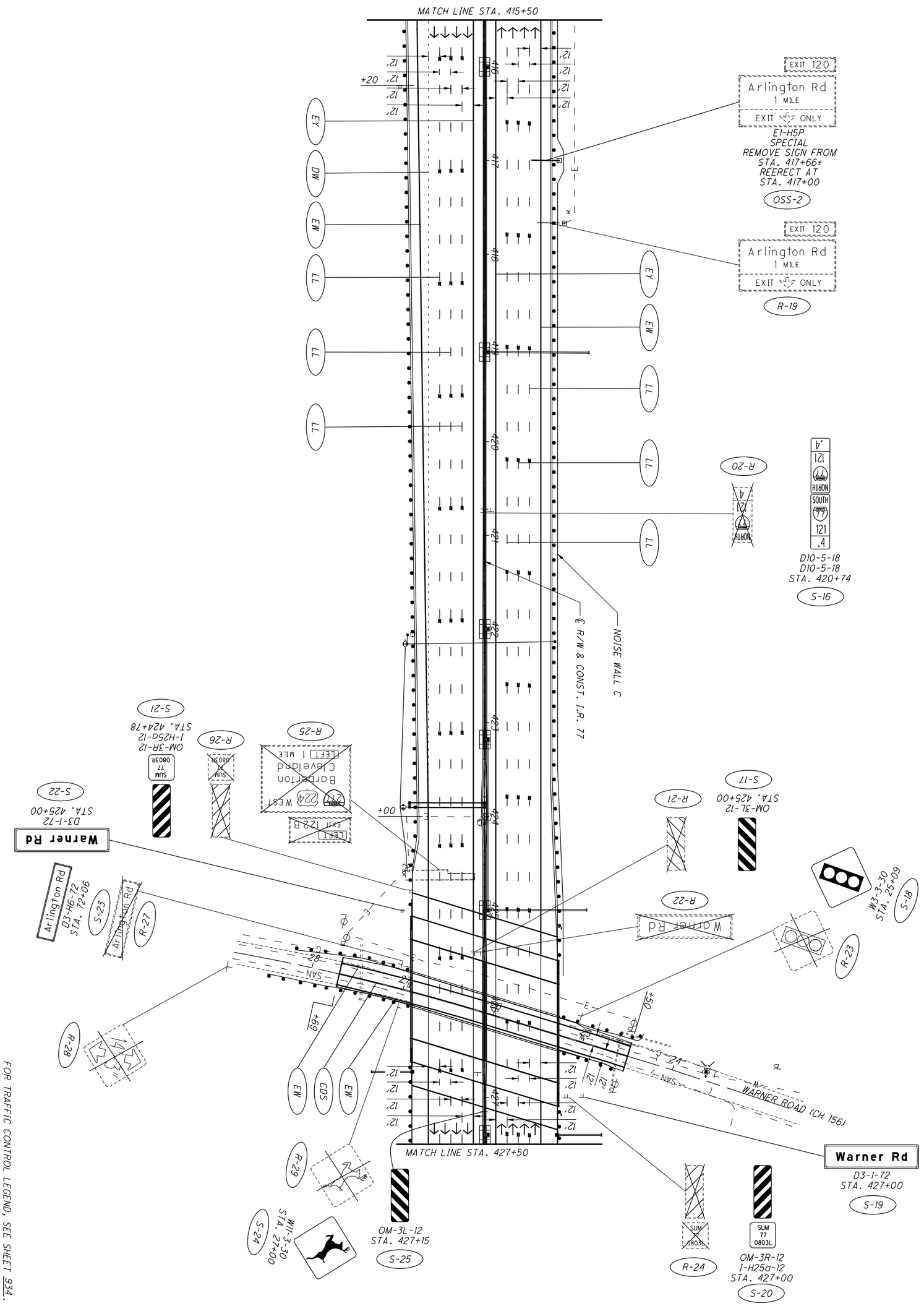


FOR TRAFFIC CONTROL LEGEND, SEE SHEET 934.

| | | | |
|---|---|---|---|
| 966 / 1288 | SUM-77 / 277 / 224<br>VARIOUS | TRAFFIC CONTROL PLAN - I.R. 77<br>STA. 415+50 TO STA. 427+50 | CALCULATED MBK<br>CHECKED AKF<br>0 50<br>25 100<br>HORIZONTAL SCALE IN FEET |

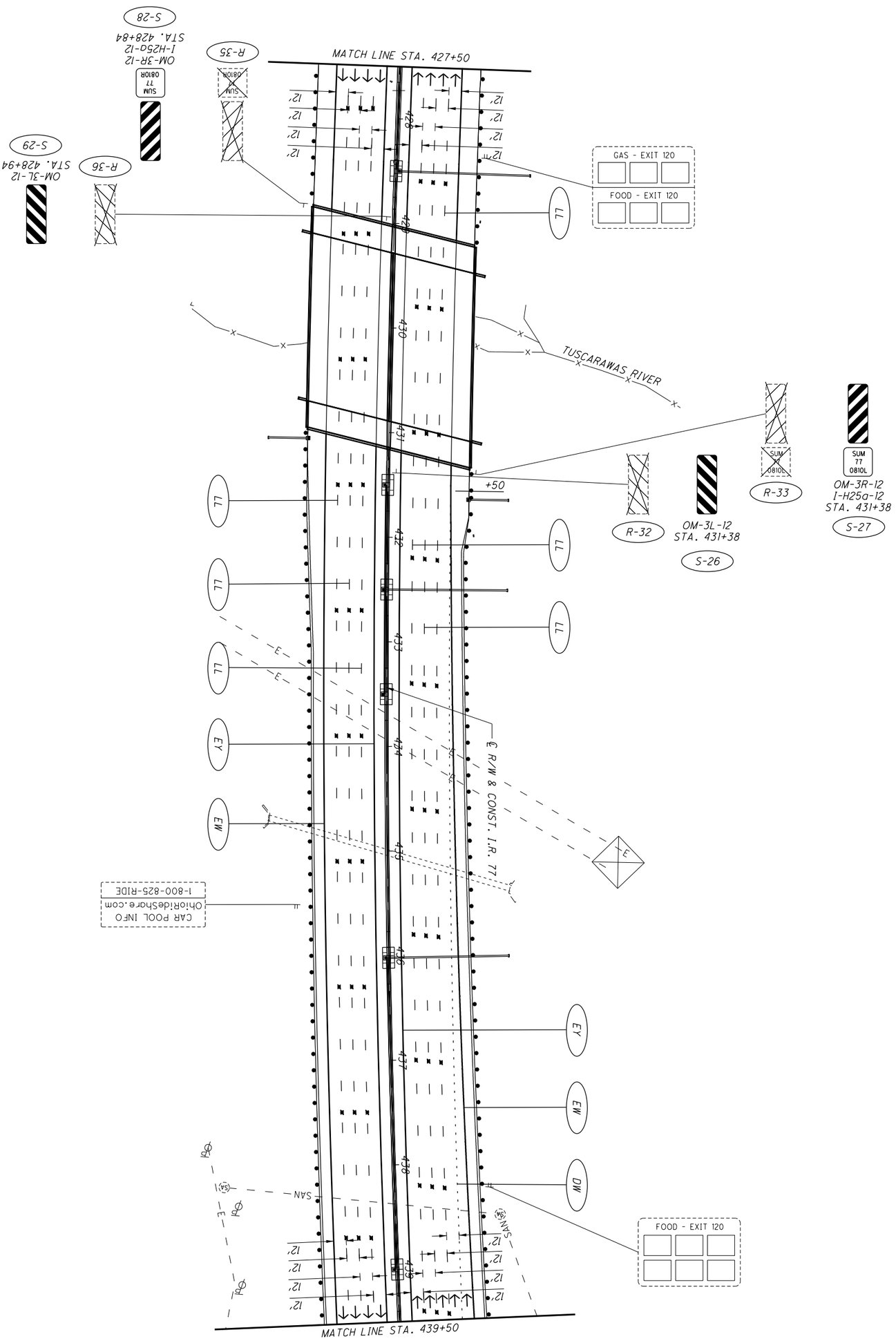


FOR TRAFFIC CONTROL LEGEND, SEE SHEET 934.

| | | | | |
|---|---|---|---|---|
| 967 / 1288 | SUM-77/277/224<br>VARIOUS | TRAFFIC CONTROL PLAN - I.R. 77<br>STA. 427+50 TO STA. 439+50 | CALCULATED MBK<br>CHECKED AKF | 0 50<br>25 100<br>HORIZONTAL SCALE IN FEET |

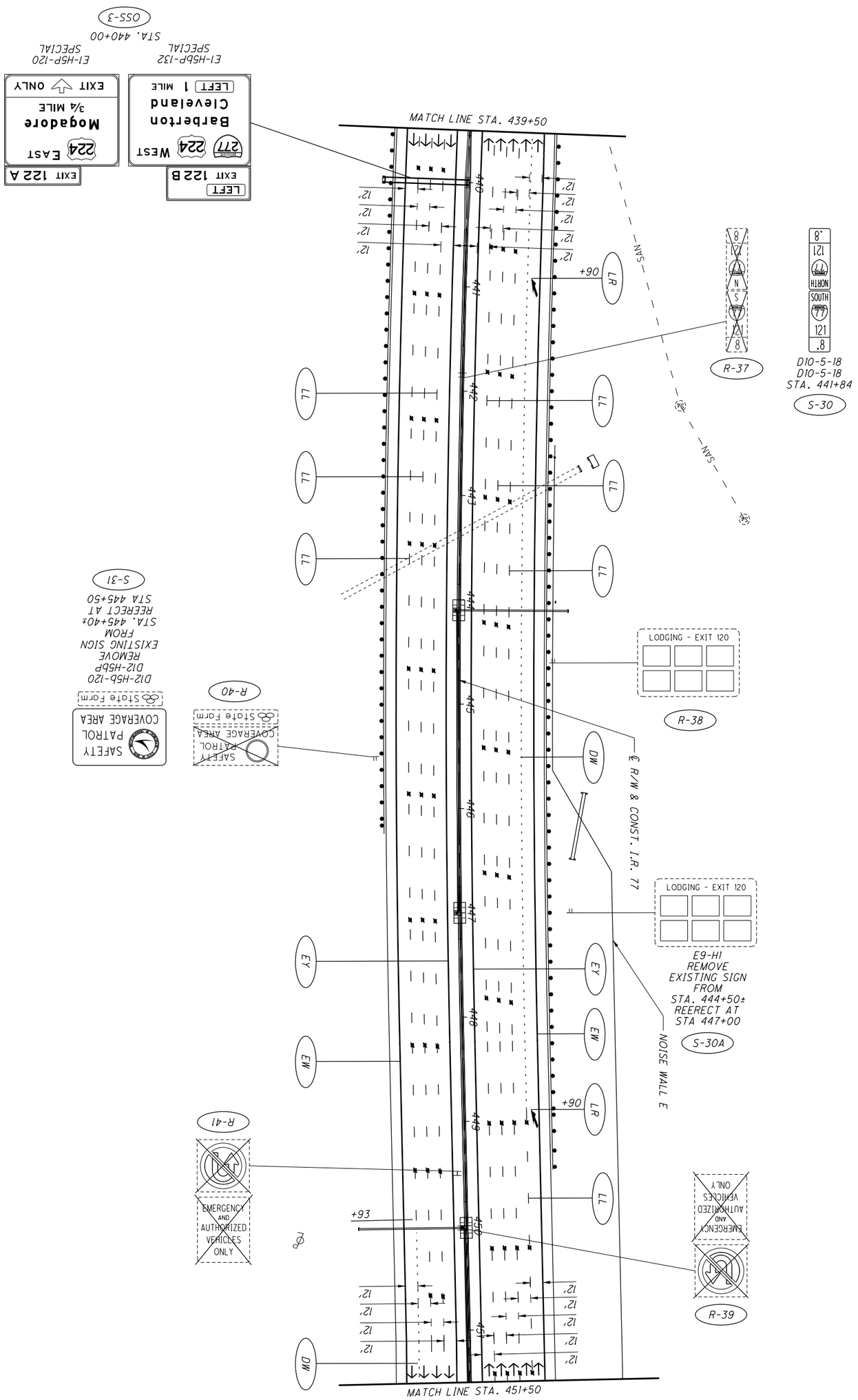


FOR TRAFFIC CONTROL LEGEND, SEE SHEET 934.

| | | | | |
|---|---|---|---|---|
| 968 / 1288 | SUM-77/277/224<br>VARIOUS | TRAFFIC CONTROL PLAN - I.R. 77<br>STA. 439+50 TO STA. 451+50 | CALCULATED MBK<br>CHECKED AKF | 0 50<br>25 100<br>HORIZONTAL SCALE IN FEET |

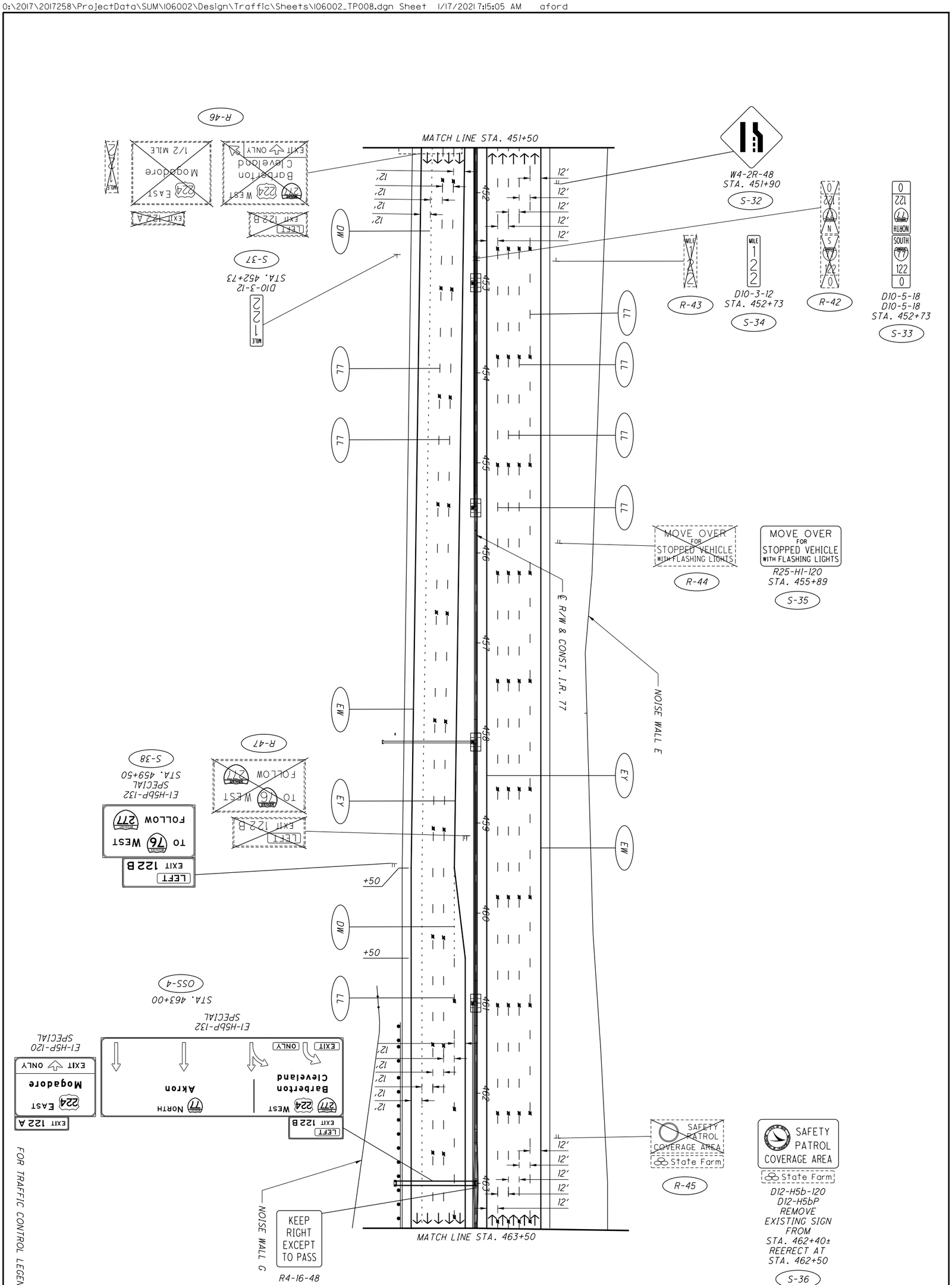


FOR TRAFFIC CONTROL LEGEND, SEE SHEET 934.

| 969 / 1288 | SUM-77/277/224 VARIOUS | TRAFFIC CONTROL PLAN - I.R. 77 STA. 451+50 TO STA. 463+50 | CALCULATED MBK / CHECKED AKF | 0 50 25 100 HORIZONTAL SCALE IN FEET | N |
|---|---|---|---|---|---|

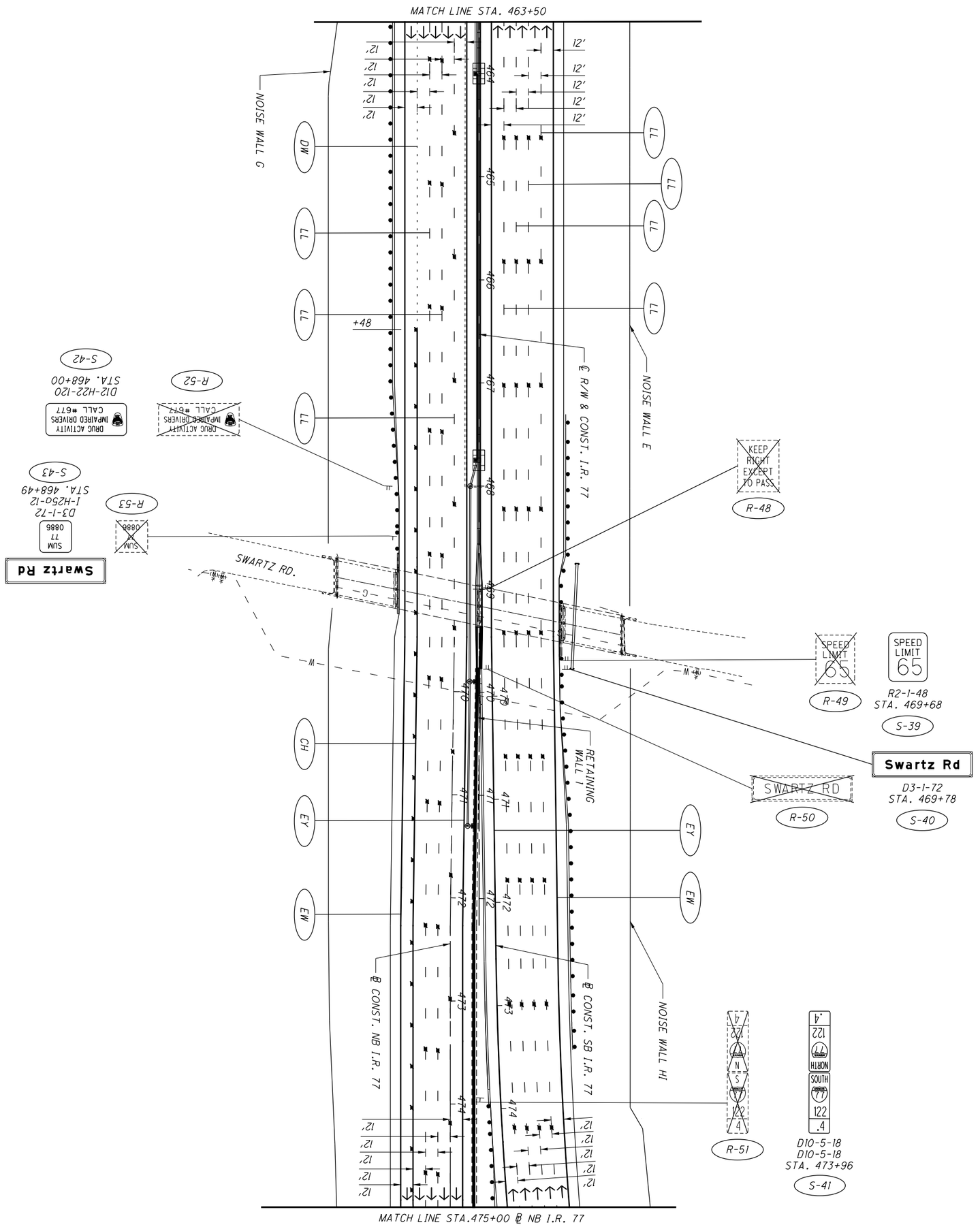


FOR TRAFFIC CONTROL LEGEND, SEE SHEET 934.

| | | | |
|---|---|---|---|
| 970 / 1288 | SUM-77/277/224<br>VARIOUS | TRAFFIC CONTROL PLAN - I.R. 77<br>STA. 463+50 TO STA. 475+00 | CALCULATED MBK<br>CHECKED AKF<br>0 50<br>25 100<br>HORIZONTAL SCALE IN FEET |

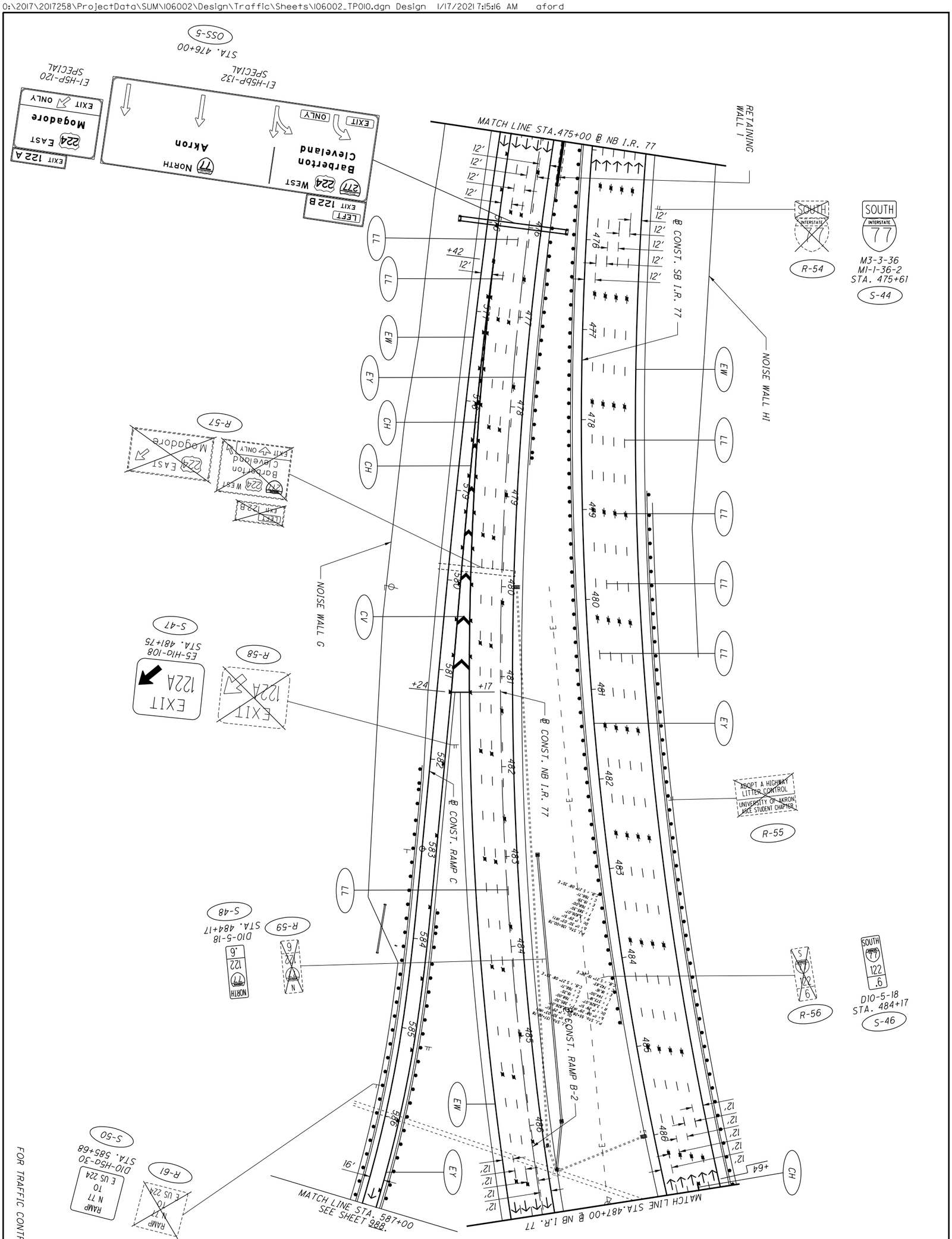


FOR TRAFFIC CONTROL LEGEND, SEE SHEET 934.

| | | | |
|---|---|---|---|
| 971 / 1288 | **SUM-77/277/224**<br>**VARIOUS** | **TRAFFIC CONTROL PLAN - I.R. 77**<br>**STA. 475+00 TO STA. 487+00** | CALCULATED MBK<br>CHECKED AKF<br>0 50<br>25 100<br>HORIZONTAL SCALE IN FEET |

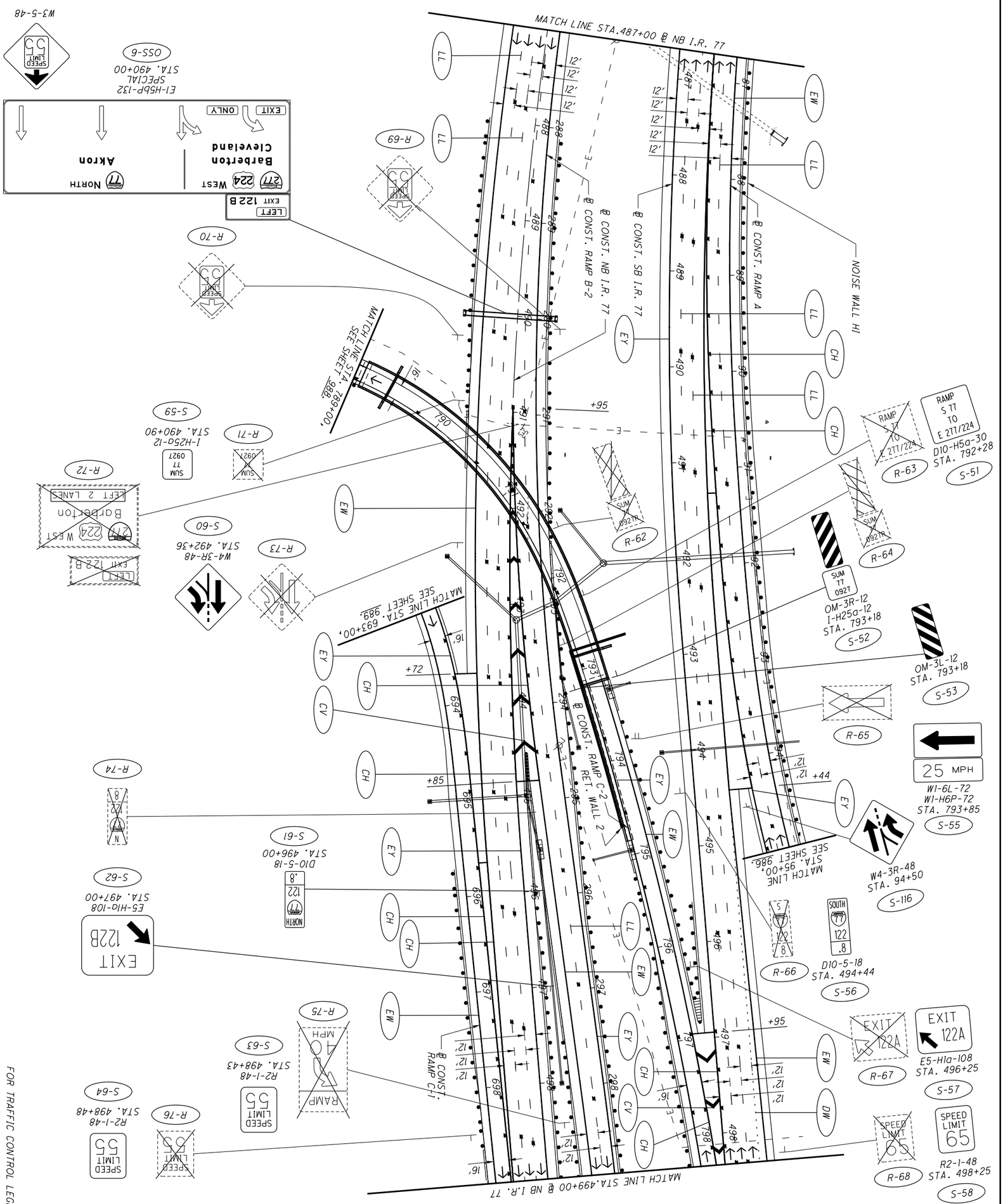


FOR TRAFFIC CONTROL LEGEND, SEE SHEET 934.

| | | | |
|---|---|---|---|
| 1288 / 972 | SUM-77/277/224<br>VARIOUS | TRAFFIC CONTROL PLAN - I.R. 77<br>STA. 487+00 TO STA. 499+00 | CALCULATED MBK<br>CHECKED AKF<br>0 50<br>25 100<br>HORIZONTAL SCALE IN FEET |

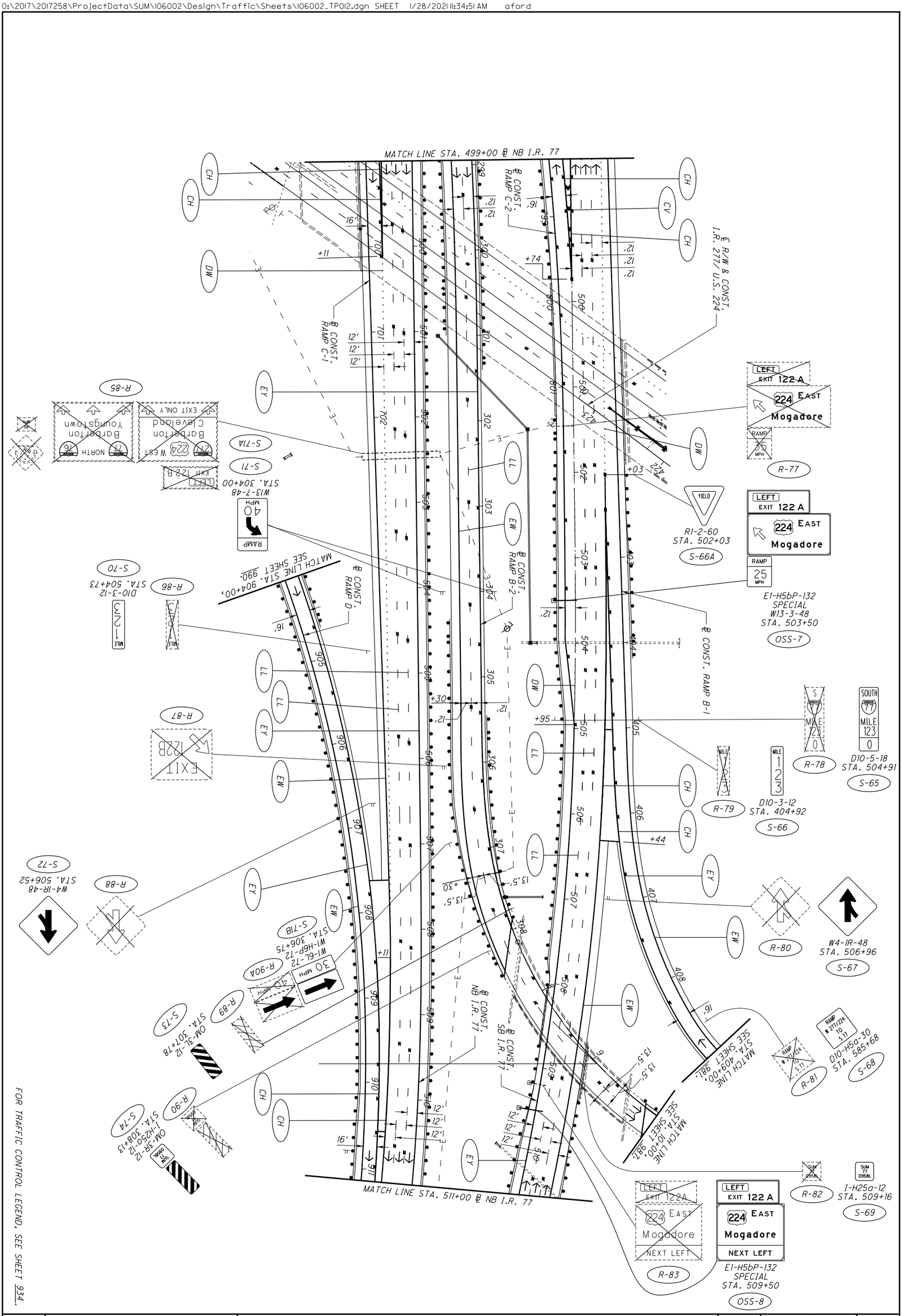


FOR TRAFFIC CONTROL LEGEND, SEE SHEET 934.

| | | | |
|---|---|---|---|
| 973 / 1288 | SUM-77/277/224<br>VARIOUS | TRAFFIC CONTROL PLAN - I.R. 77<br>STA. 499+00 TO STA. 511+00 | CALCULATED MBK<br>CHECKED AKF<br>0 50<br>25 100<br>HORIZONTAL SCALE IN FEET |

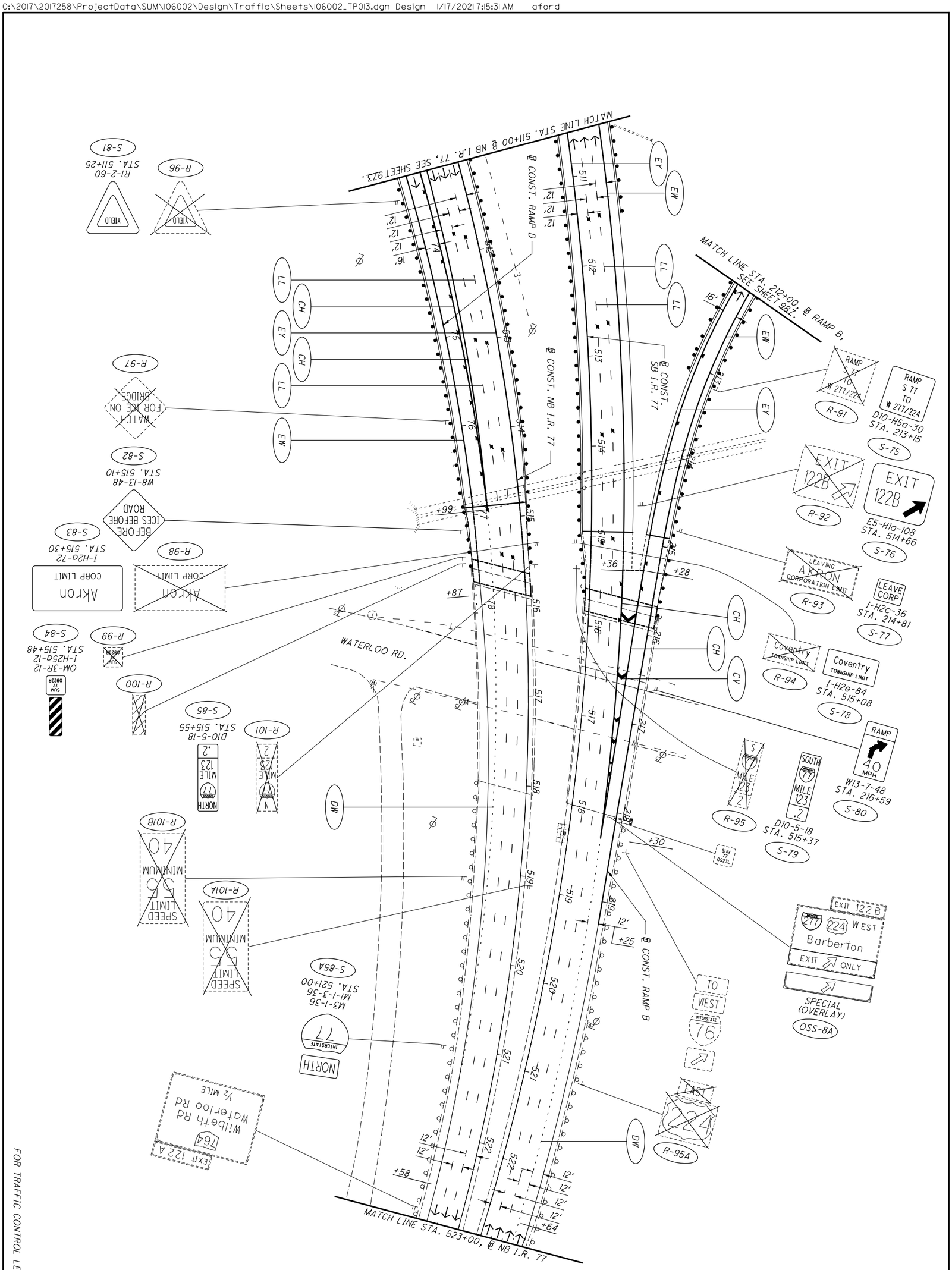


FOR TRAFFIC CONTROL LEGEND, SEE SHEET 934.

| | | | | |
|---|---|---|---|---|
| 974 / 1288 | SUM-77/277/224<br>VARIOUS | TRAFFIC CONTROL PLAN - I.R. 77<br>STA. 511+00 TO 523+00 | CALCULATED MBK<br>CHECKED AKF | 0 50<br>25 100<br>HORIZONTAL SCALE IN FEET |

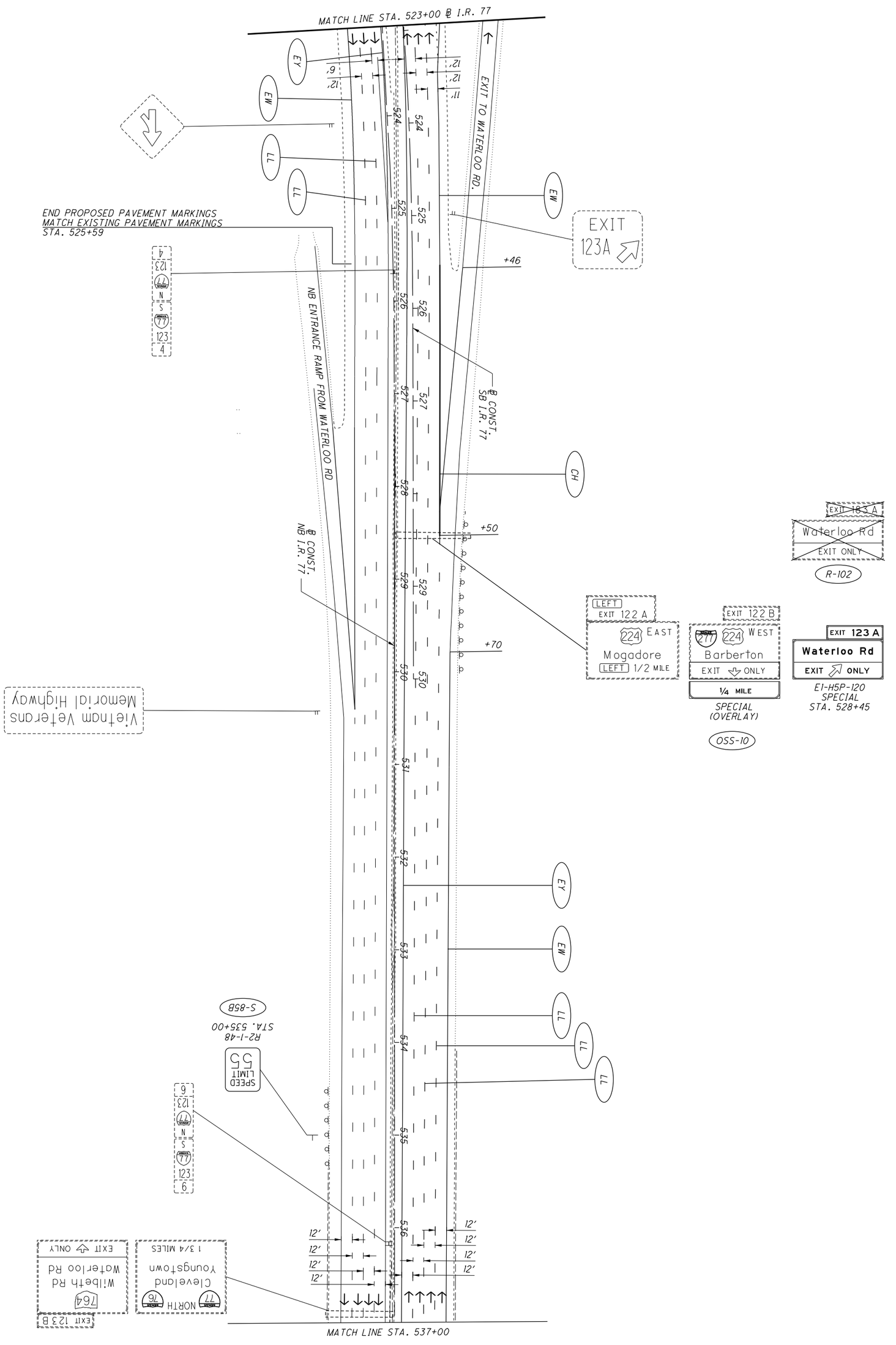


FOR TRAFFIC CONTROL LEGEND, SEE SHEET 934.

| | | | | |
|---|---|---|---|---|
| 975 / 1288 | SUM-77/277/224<br>VARIOUS | TRAFFIC CONTROL PLAN - I.R. 77<br>STA. 523+00 TO STA. 537+00 | CALCULATED MBK<br>CHECKED AKF | 0 50<br>25 100<br>HORIZONTAL SCALE IN FEET |

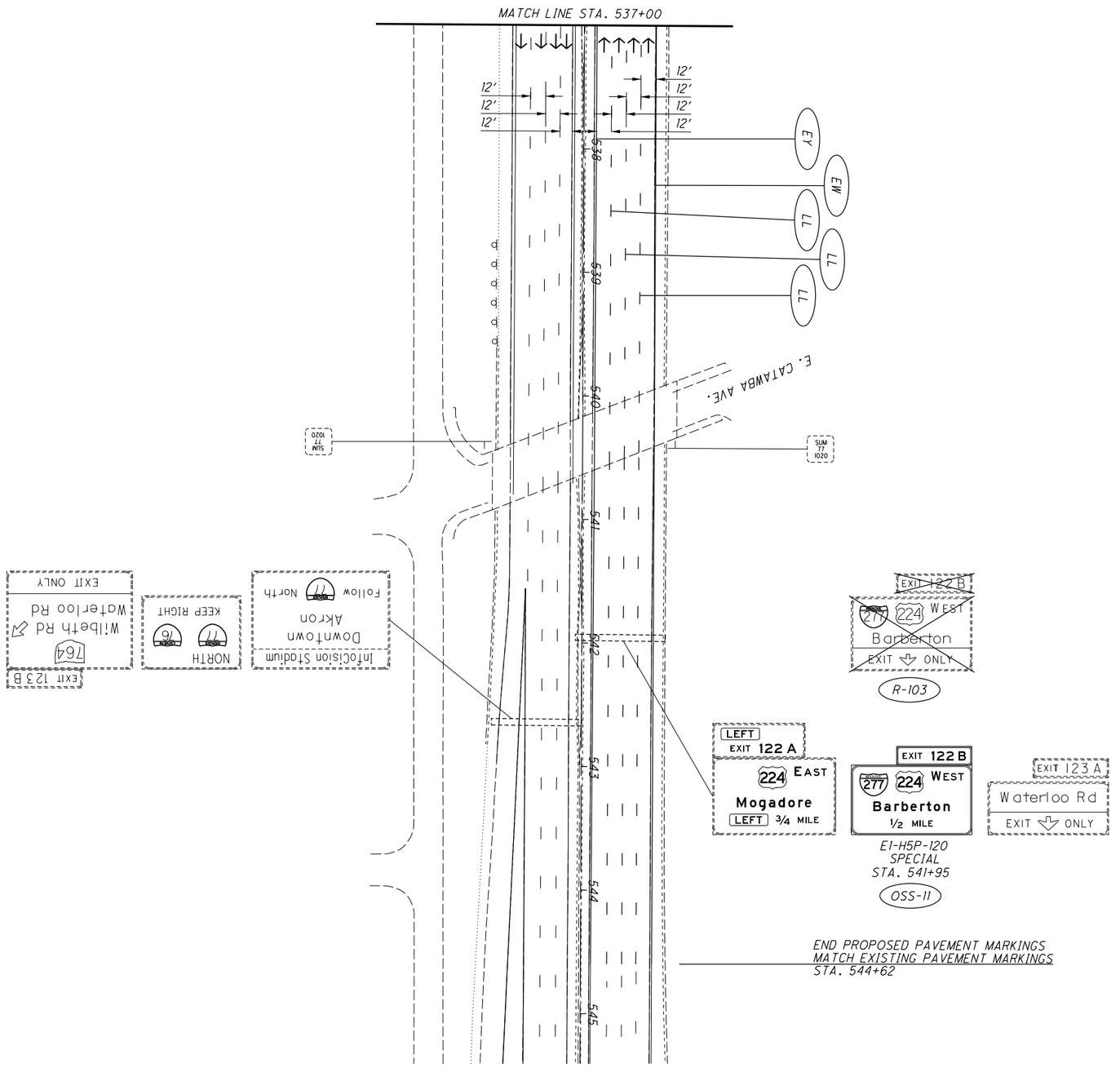


FOR TRAFFIC CONTROL LEGEND, SEE SHEET 934.

| | | | | |
|---|---|---|---|---|
| 976 / 1288 | SUM-77/277/224<br>VARIOUS | TRAFFIC CONTROL PLAN - I.R. 77<br>STA. 537+00 TO END | CALCULATED MBK<br>CHECKED AKF | 0 50<br>25 100<br>HORIZONTAL SCALE IN FEET |

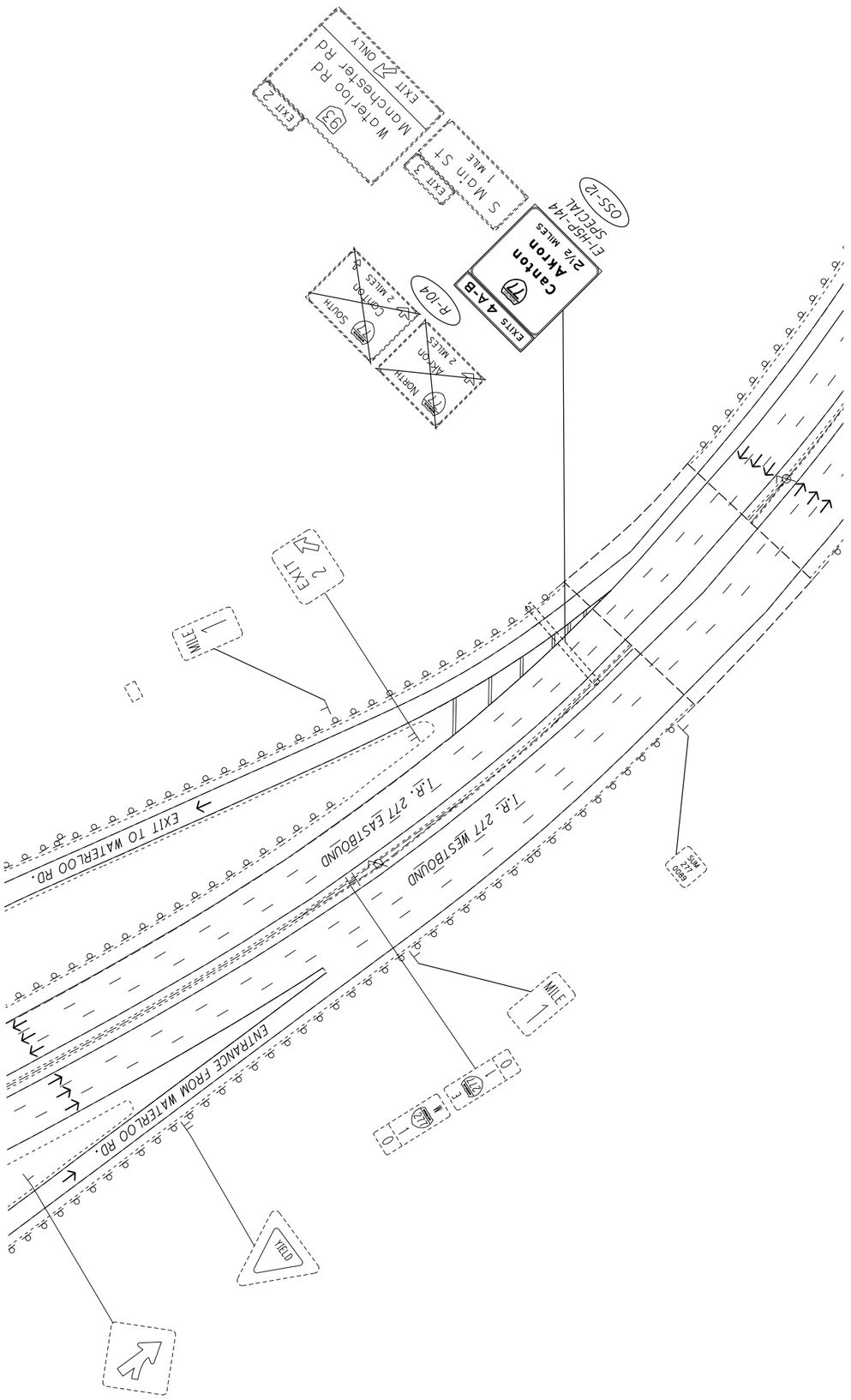


FOR TRAFFIC CONTROL LEGEND, SEE SHEET 934.

| | | | | |
|---|---|---|---|---|
| 977 / 1288 | SUM-77/277/224<br>VARIOUS | TRAFFIC CONTROL PLAN<br>I.R. 277 | CALCULATED MBK<br>CHECKED AKF | 0 50<br>25 100<br>HORIZONTAL SCALE IN FEET |

FOR TRAFFIC CONTROL LEGEND, SEE SHEET 934.

HORIZONTAL SCALE IN FEET
0 25 50 100

CALCULATED MBK
CHECKED AKF

# TRAFFIC CONTROL PLAN
## I.R. 277

SUM-77 / 277 / 224
VARIOUS

978
1288

O:\2017\2017258\ProjectData\SUM\106002\Design\Traffic\Sheets\106002_TP203.dgn Sheet 1/28/2021 11:45:56 AM afford

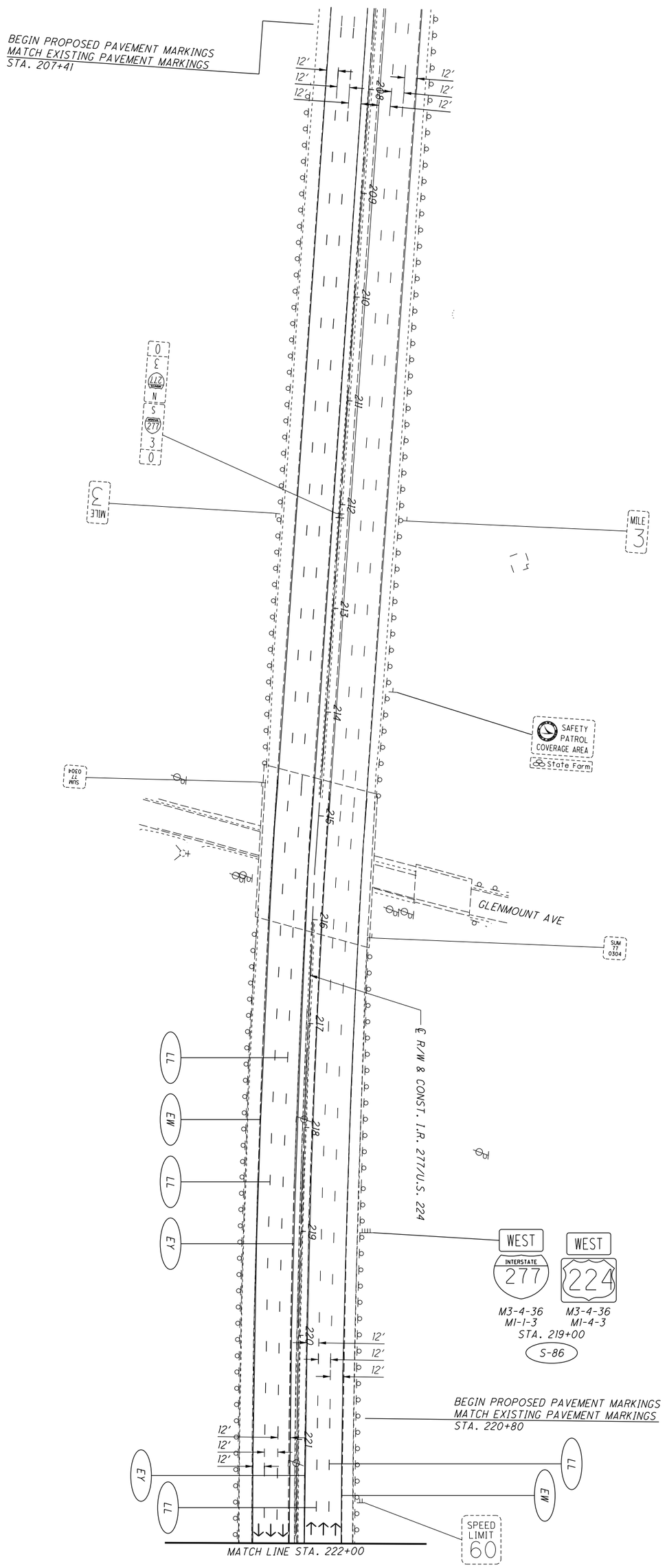


FOR TRAFFIC CONTROL LEGEND, SEE SHEET 934.

| | | | | |
|---|---|---|---|---|
| 979 / 1288 | **SUM-77/277/224**<br>**VARIOUS** | **TRAFFIC CONTROL PLAN - I.R. 277/U.S. 224**<br>**BEGIN TO STA. 222+00** | CALCULATED MBK<br>CHECKED AKF | 0 50<br>25 100<br>HORIZONTAL SCALE IN FEET |

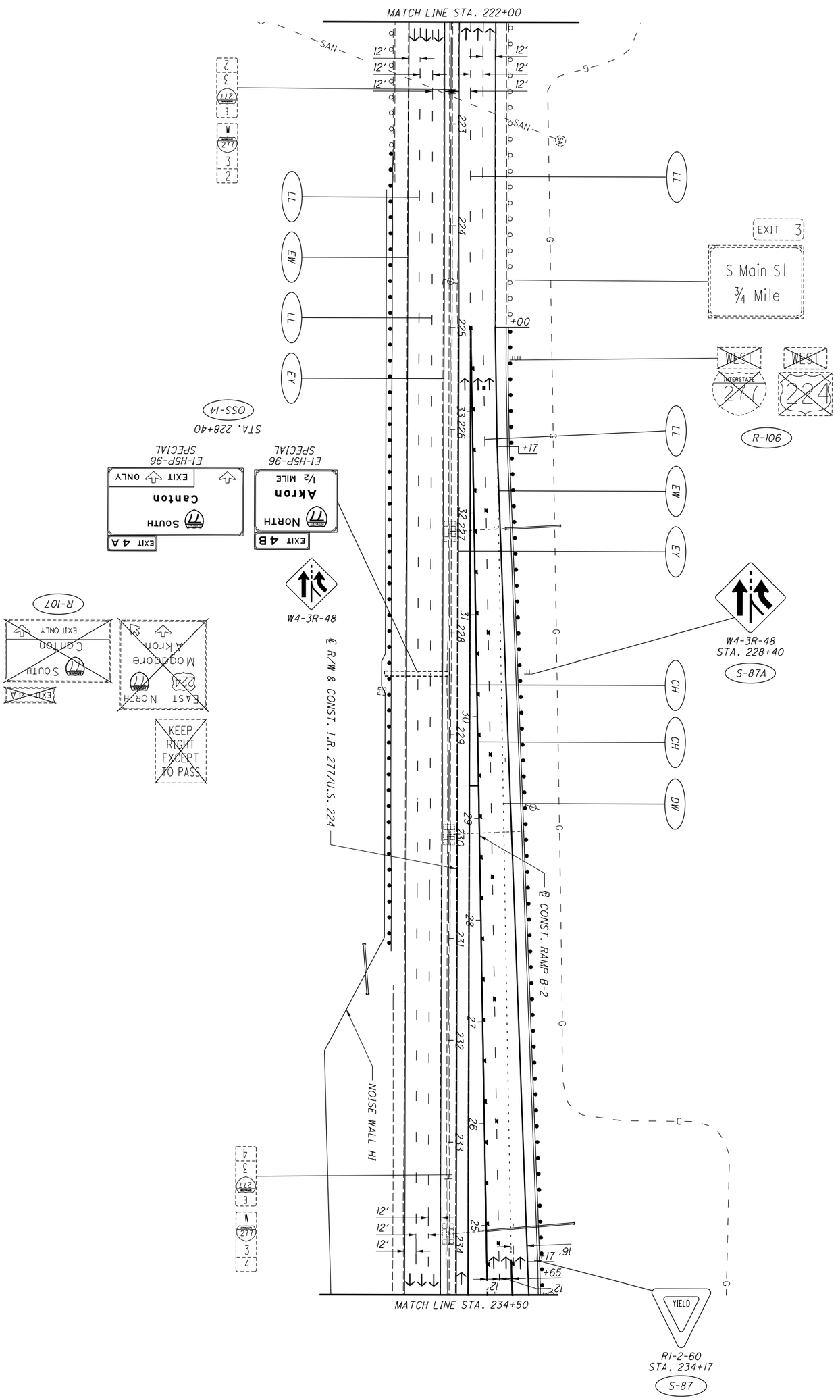


FOR TRAFFIC CONTROL LEGEND, SEE SHEET 934.

| | | | |
|---|---|---|---|
| 980 / 1288 | **SUM-77/277/224**<br>**VARIOUS** | **TRAFFIC CONTROL PLAN - I.R. 277/U.S. 224**<br>**STA. 222+00 TO STA. 234+50** | CALCULATED MBK<br>CHECKED AKF<br>0 50<br>25 100<br>HORIZONTAL SCALE IN FEET |

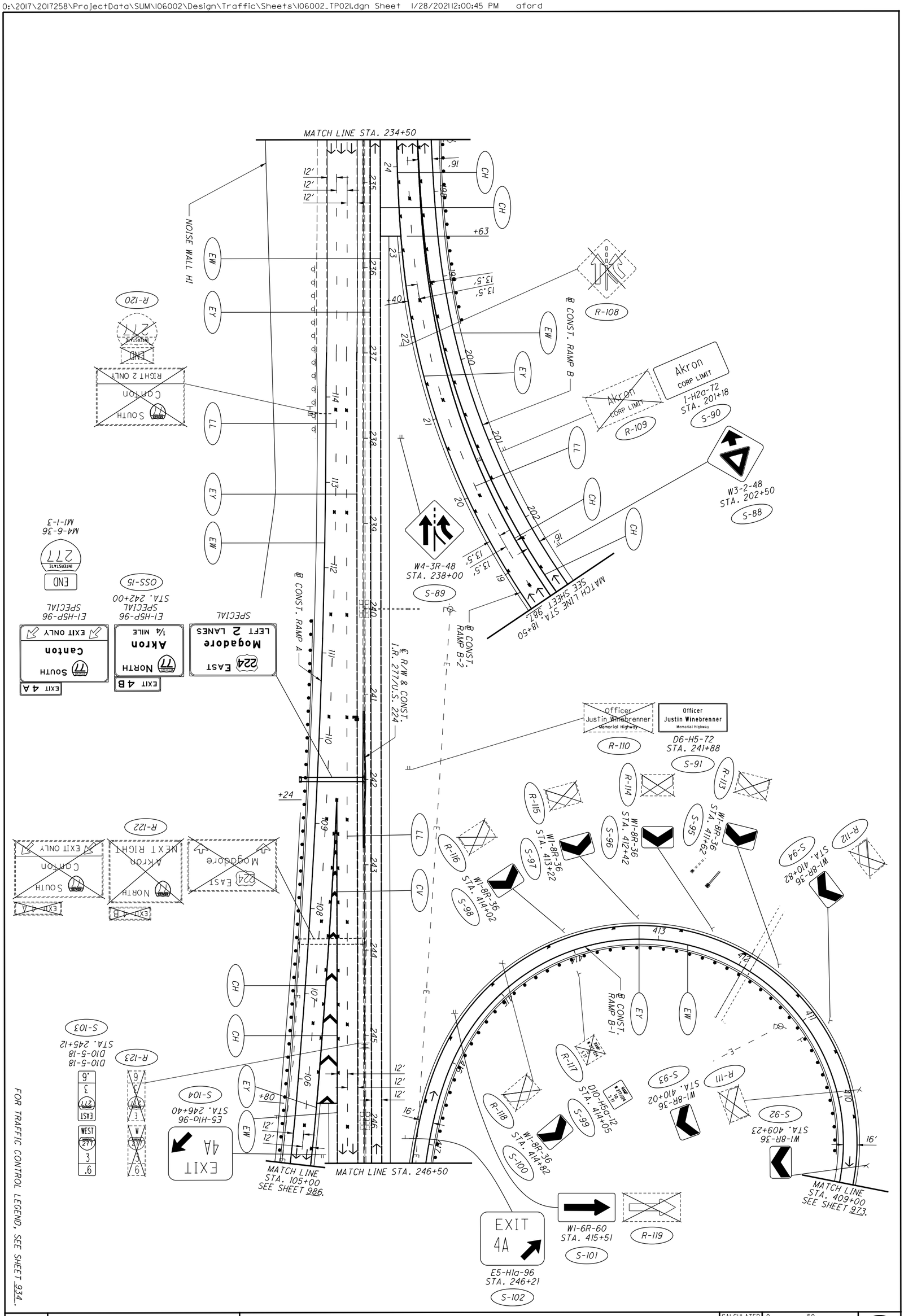


FOR TRAFFIC CONTROL LEGEND, SEE SHEET 934.

| | | | |
|---|---|---|---|
| 981 / 1288 | **SUM-77/277/224 VARIOUS** | **TRAFFIC CONTROL PLAN - I.R. 277/U.S. 224 STA. 234+50 TO STA. 246+50** | CALCULATED MBK / CHECKED AKF; 0 50 25 100 HORIZONTAL SCALE IN FEET; N |

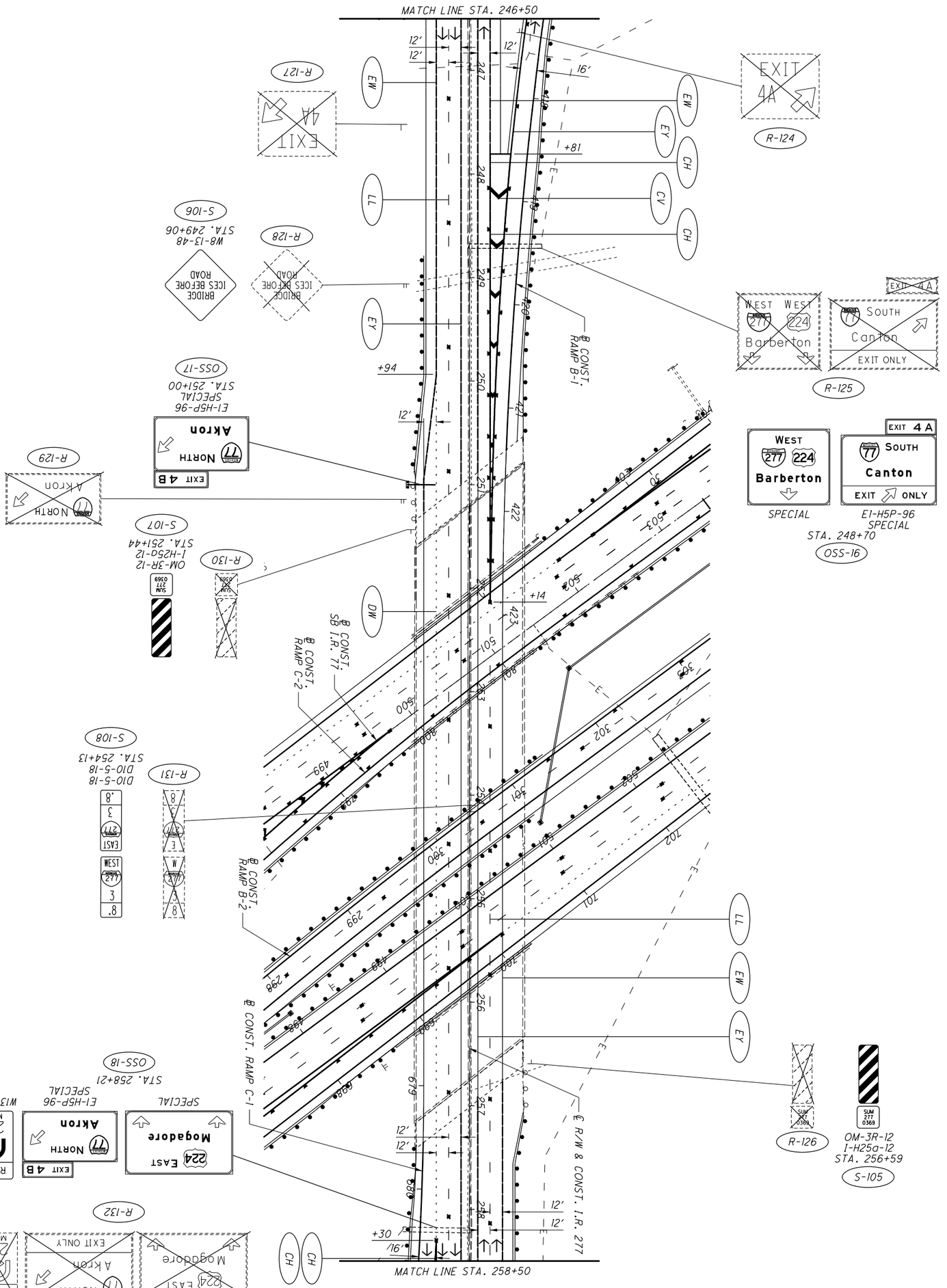


FOR TRAFFIC CONTROL LEGEND, SEE SHEET 934.

| | | | | |
|---|---|---|---|---|
| 982 / 1288 | SUM-77/277/224<br>VARIOUS | TRAFFIC CONTROL PLAN - I.R. 277/U.S. 224<br>STA. 246+50 TO STA. 258+50 | CALCULATED MBK<br>CHECKED AKF | 0 50<br>25 100<br>HORIZONTAL SCALE IN FEET |

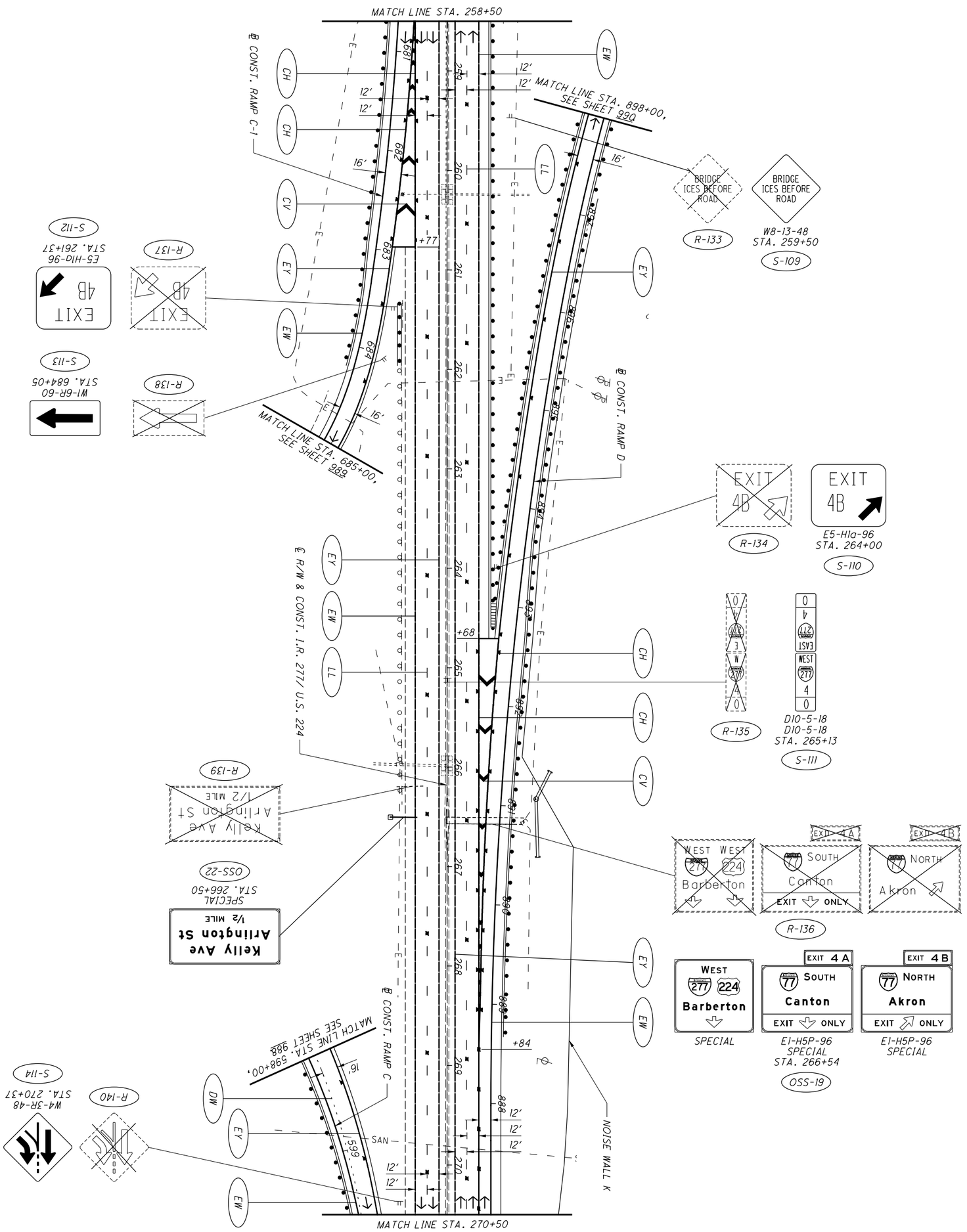


FOR TRAFFIC CONTROL LEGEND, SEE SHEET 934.

| | | | | |
|---|---|---|---|---|
| 983 / 1288 | SUM-77/277/224<br>VARIOUS | TRAFFIC CONTROL PLAN - I.R. 277/U.S. 224<br>STA. 258+50 TO STA. 270+50 | CALCULATED MBK<br>CHECKED AKF | 0 50<br>25 100<br>HORIZONTAL SCALE IN FEET |

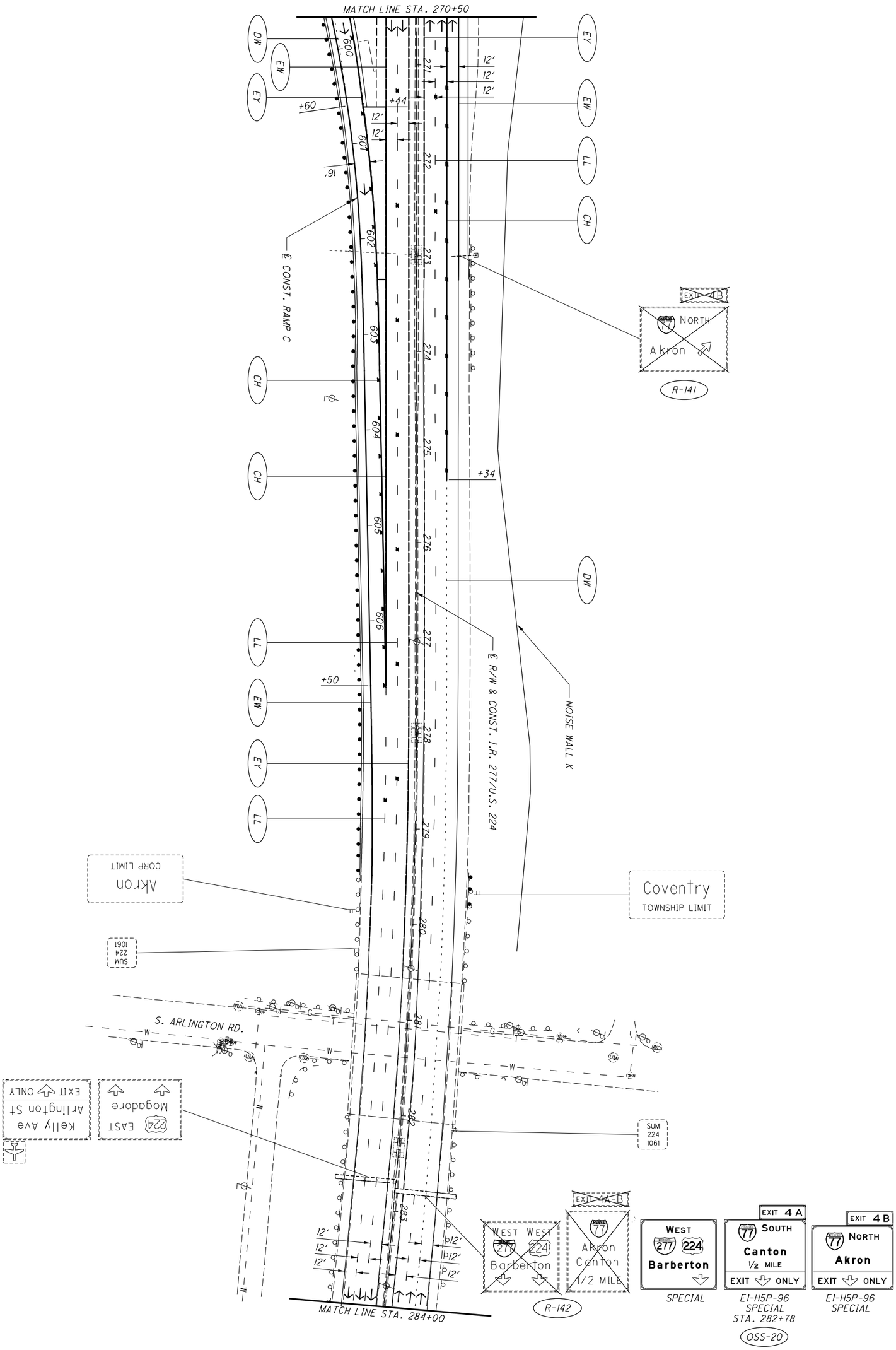


FOR TRAFFIC CONTROL LEGEND, SEE SHEET 934.

| | | | |
|---|---|---|---|
| 984 / 1288 | SUM-77/277/224<br>VARIOUS | TRAFFIC CONTROL PLAN - U.S. 224<br>STA. 270+50 TO STA. 284+00 | CALCULATED MBK<br>CHECKED AKF<br>0 50 25 100<br>HORIZONTAL SCALE IN FEET |

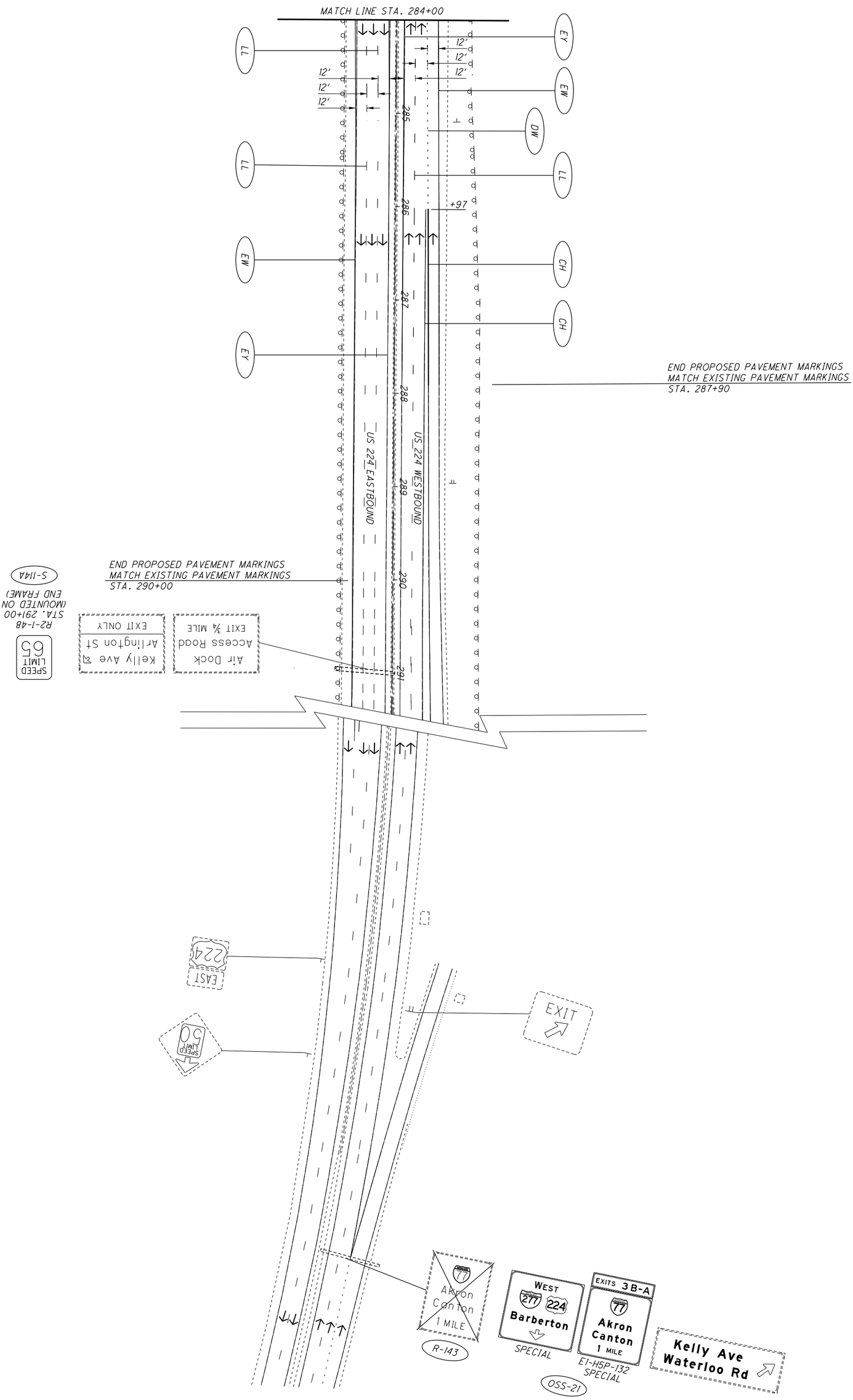


FOR TRAFFIC CONTROL LEGEND, SEE SHEET 934.

| | | | |
|---|---|---|---|
| 985 / 1288 | SUM-77/277/224<br>VARIOUS | TRAFFIC CONTROL PLAN - U.S. 224<br>STA. 284+00 TO END | CALCULATED MBK<br>CHECKED AKF<br>0 50 25 100<br>HORIZONTAL SCALE IN FEET |

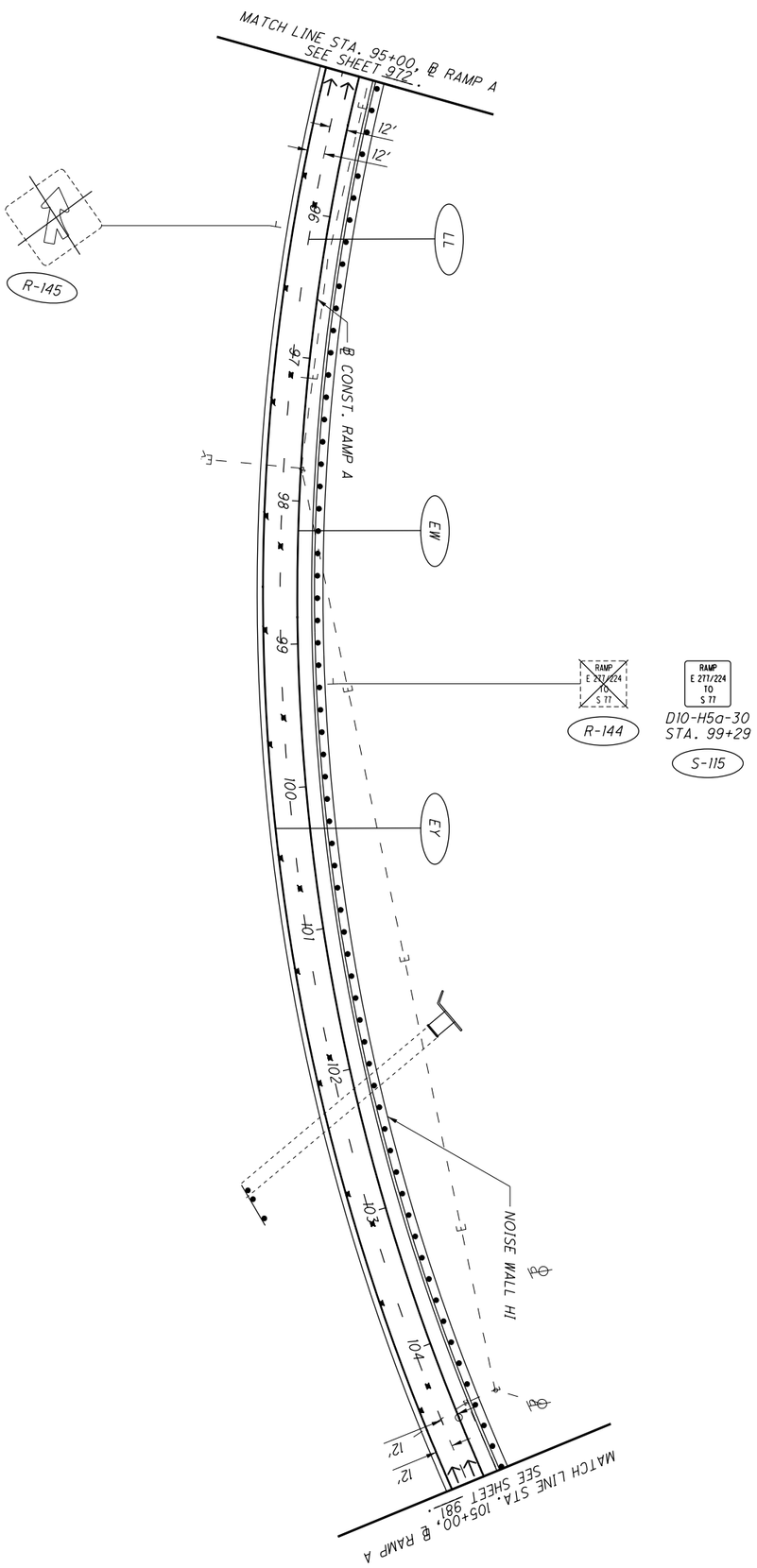


FOR TRAFFIC CONTROL LEGEND, SEE SHEET 934.

| | | | | |
|---|---|---|---|---|
| 986 / 1288 | SUM-77/277/224<br>VARIOUS | TRAFFIC CONTROL PLAN - RAMP A<br>STA. 95+00 TO STA. 105+00 | CALCULATED MBK<br>CHECKED AKF | 0 50<br>25 100<br>HORIZONTAL SCALE IN FEET |

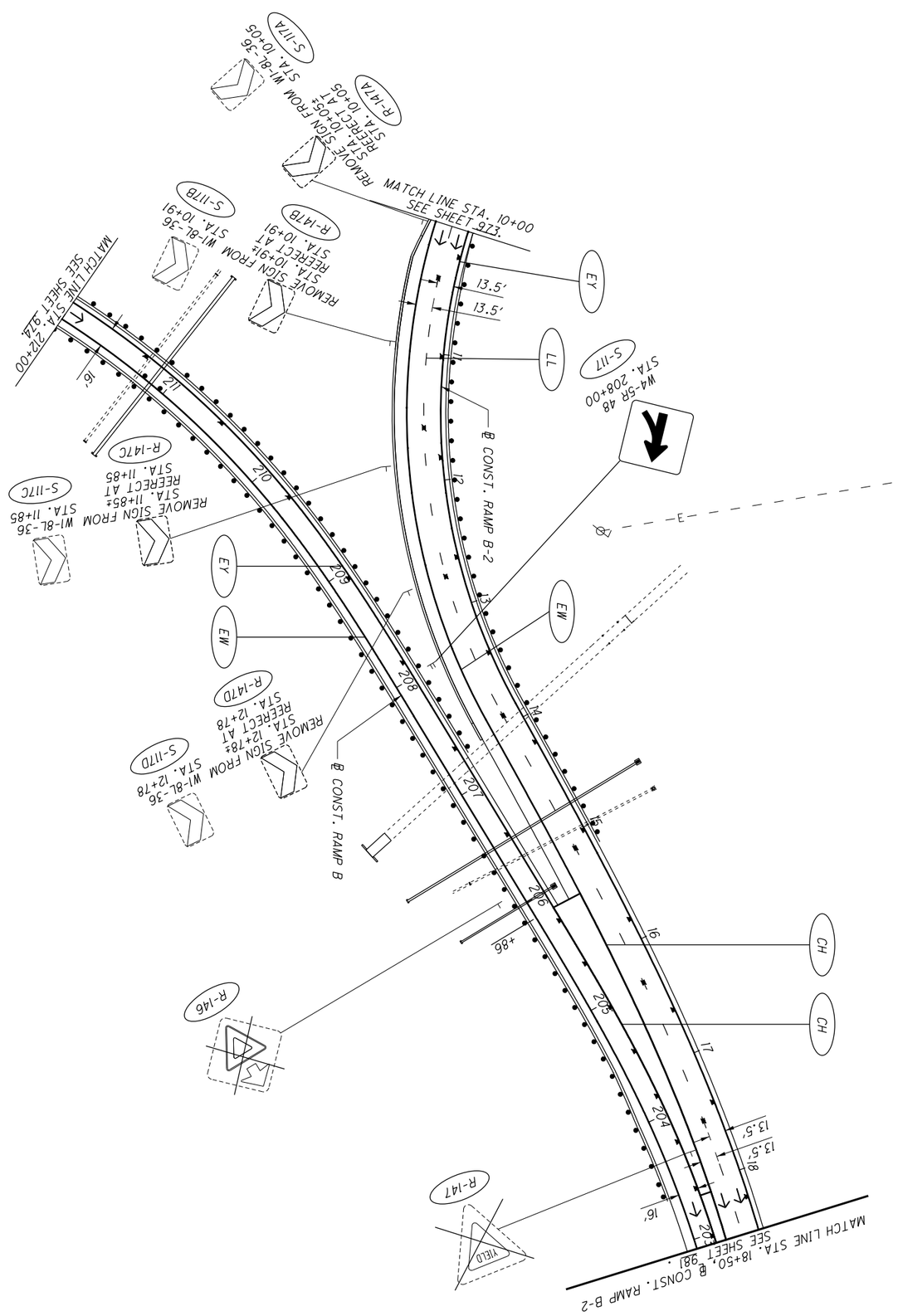


FOR TRAFFIC CONTROL LEGEND, SEE SHEET 934.

| | | | | |
|---|---|---|---|---|
| 987 / 1288 | SUM-77 / 277 / 224<br>VARIOUS | TRAFFIC CONTROL PLAN - RAMP B-2<br>STA. 10+00 TO STA. 18+50 | CALCULATED MBK<br>CHECKED AKF | 0 50<br>25 100<br>HORIZONTAL SCALE IN FEET |

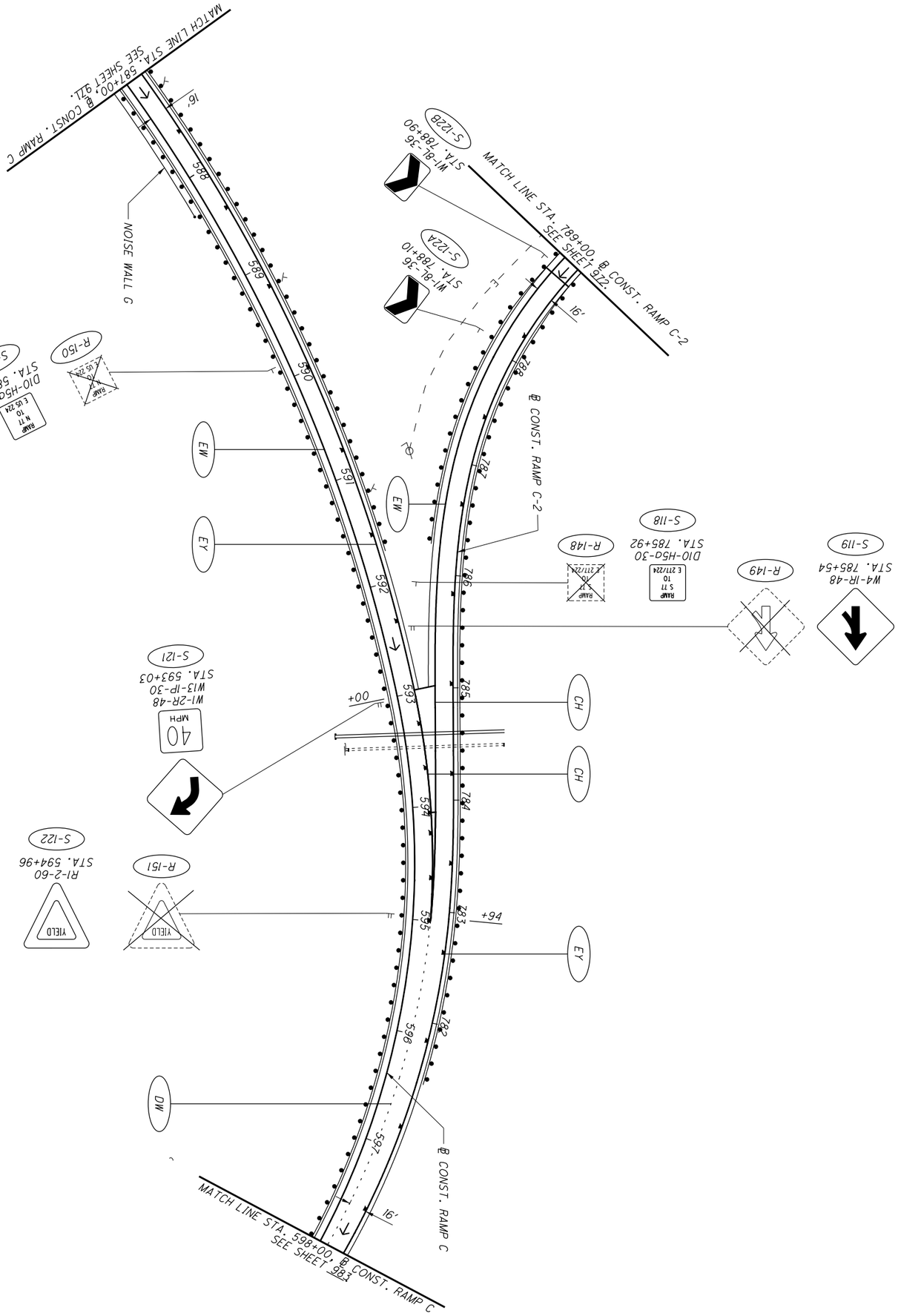


FOR TRAFFIC CONTROL LEGEND, SEE SHEET 934.

| | | | | |
|---|---|---|---|---|
| 988 / 1288 | SUM-77/277/224<br>VARIOUS | TRAFFIC CONTROL PLAN - RAMP C<br>STA. 587+00 TO STA. 598+00 | CALCULATED MBK<br>CHECKED AKF | 0 50<br>25 100<br>HORIZONTAL SCALE IN FEET |

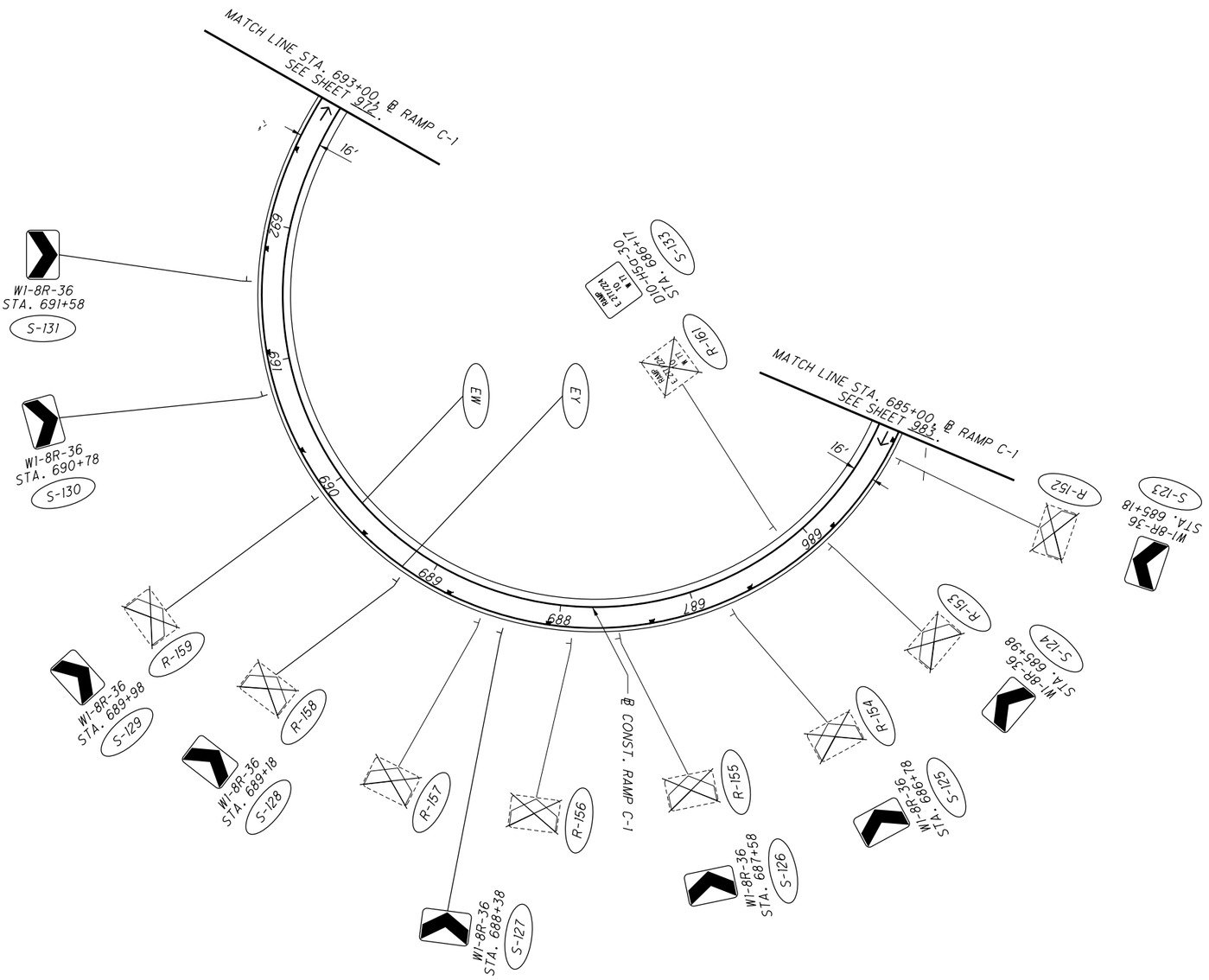


FOR TRAFFIC CONTROL LEGEND, SEE SHEET 934.

| | | | | |
|---|---|---|---|---|
| 989 / 1288 | SUM-77 / 277 / 224<br>VARIOUS | TRAFFIC CONTROL PLAN - RAMP C-1<br>STA. 685+00 TO STA. 693+00 | CALCULATED MBK<br>CHECKED AKF | 0 50<br>25 100<br>HORIZONTAL SCALE IN FEET |

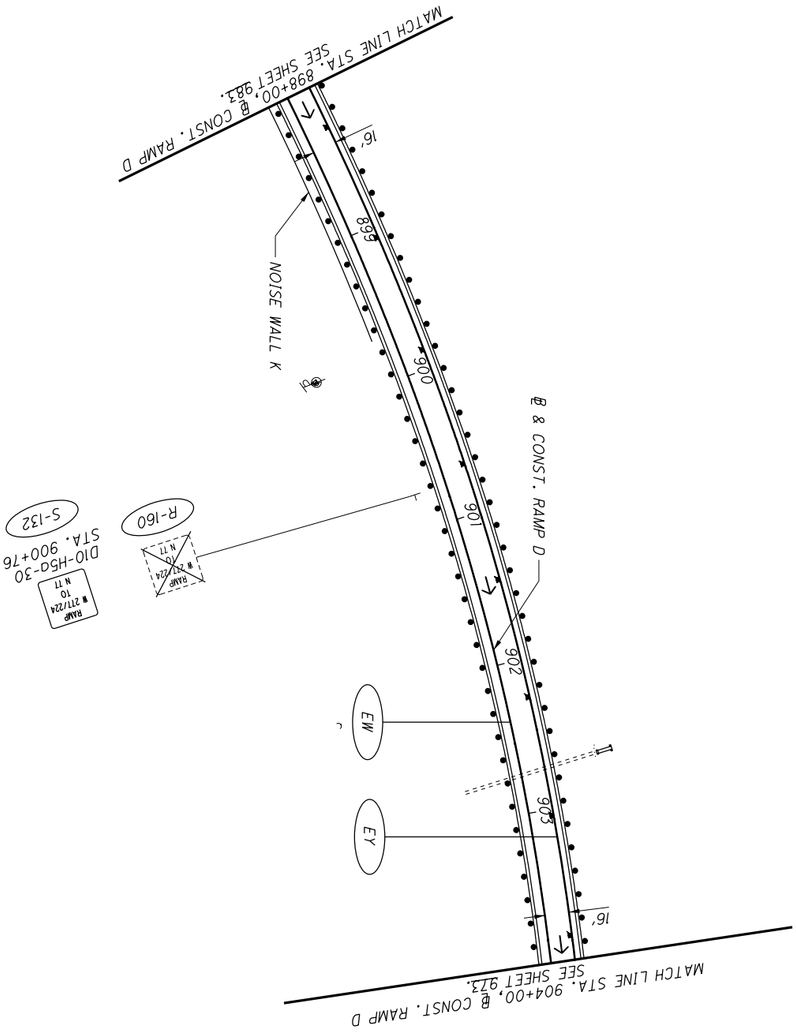


FOR TRAFFIC CONTROL LEGEND, SEE SHEET 934.

| | | | | |
|---|---|---|---|---|
| 990 / 1288 | SUM-77/277/224<br>VARIOUS | TRAFFIC CONTROL PLAN - RAMP D<br>STA. 898+00 TO STA. 904+00 | CALCULATED MBK<br>CHECKED AKF | 0 50<br>25 100<br>HORIZONTAL SCALE IN FEET |

| PANEL A | |
|---|---|
| DESIGN LEVEL: | 1 |
| TEXT FONT: | E MOD / E |
| PANEL SIZE: | 45′ X 14′ |
| BACKGROUND: | GREEN |
| FILL COLOR: | WHITE |
| EXIT PANEL SIZE: | 9′ X 2.5′ |
| EXIT PANEL BACKGROUND: | GREEN |
| EXIT PANEL FILL COLOR: | WHITE |
| NUMBER OF BRACKETS: | 7 |
| SIGN SUPPORT INFORMATION | |
| TOTAL SIGN AREA: | 652.5 SQ. FT. |
| TOTAL SPAN LENGTH: | 95.0 FT. |
| DESIGN TYPE: | TC-15.116, DESIGN 2 |
| SUPPORT FOUNDATION INFORMATION | |

| SUPPORT TYPE | DISTANCE BETWEEN FOUNDATIONS | FOUNDATION DEPTH |
|---|---|---|
| TYPE TC-15.116, DES. 2 | 7′-0″ | 14.0′ |

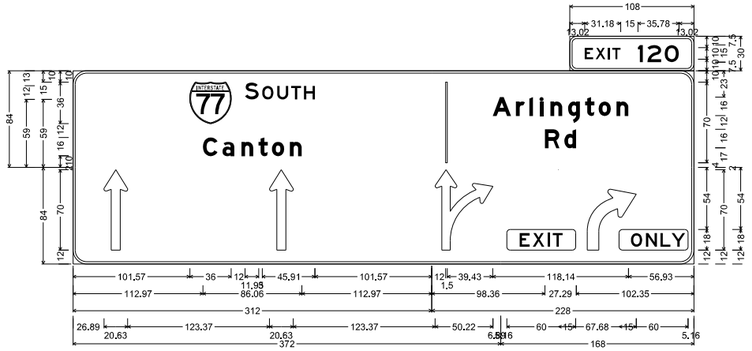


PANEL A
N.T.S.

**NOTES:**

1. CONTRACTOR SHALL FIELD VERIFY EXISTING ELEVATIONS PRIOR TO THE ORDERING OF ANY MATERIALS.
2. ALL SIGNS ARE VIEWED IN THE DIRECTION OF TRAVEL.
3. CONTRACTOR SHALL LOCATE ALL UNDERGROUND UTILITIES IN FIELD PRIOR TO ANY EXCAVATION.

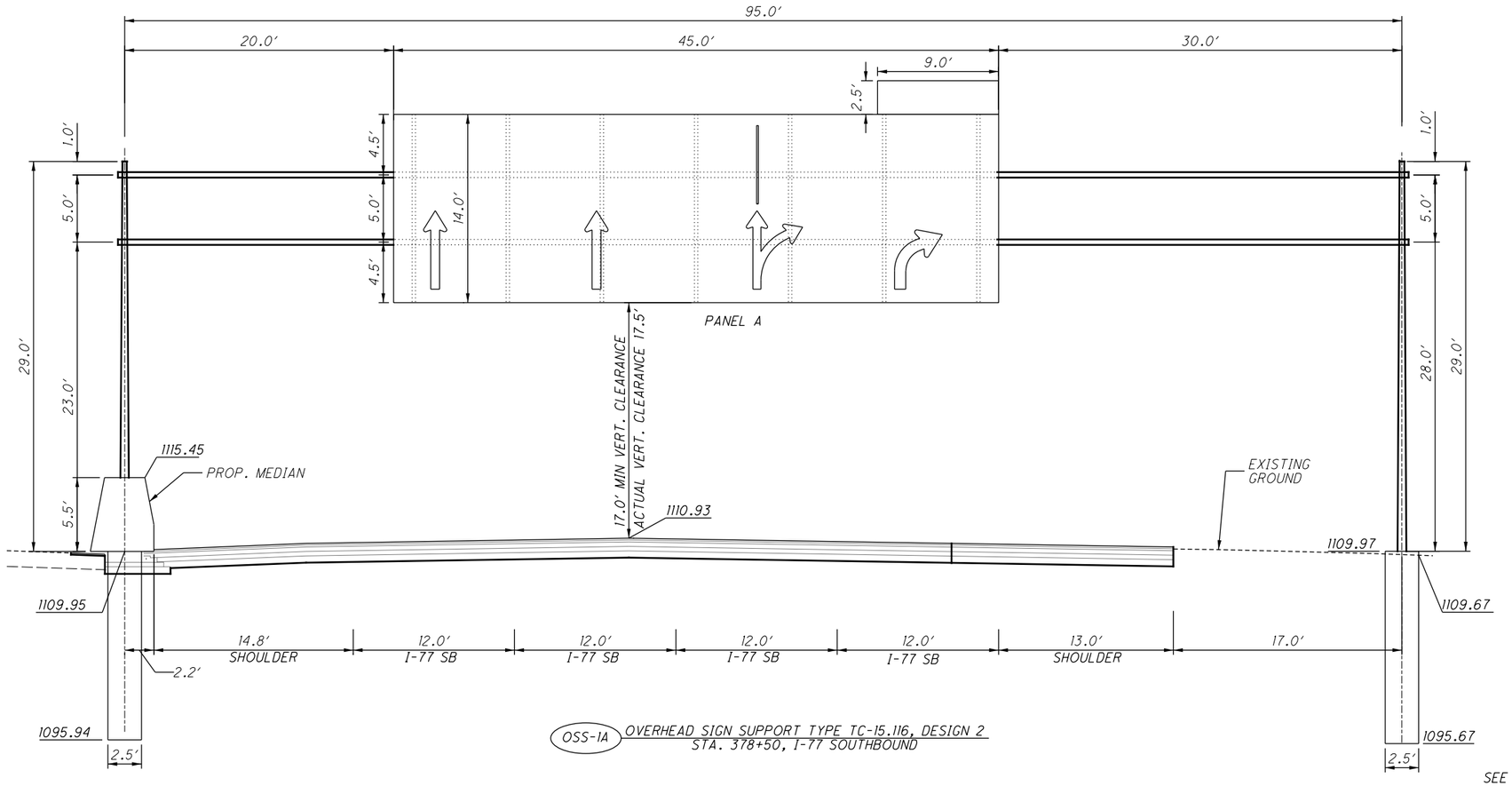


OSS-1A OVERHEAD SIGN SUPPORT TYPE TC-15.116, DESIGN 2
STA. 378+50, I-77 SOUTHBOUND

SEE SHEET 962 FOR PLAN VIEW.

0 2.5 5 10 HORIZONTAL SCALE IN FEET

CALCULATED DLS | CHECKED AKF

# SIGN SUPPORT DETAILS
# OSS-1A

## OVERHEAD SIGN SUPPORT

SUM-77 / 277 / 224
VARIOUS



O:\2017\2017258\ProjectData\SUM\106002\Design\Traffic\Sheets\106002_TE001.dgn Default 2/2/2021 11:12:54 AM aford

| PANEL A | |
|---|---|
| DESIGN LEVEL: | 1 |
| TEXT FONT: | E MOD / E |
| PANEL SIZE: | 16′ X 12′ |
| BACKGROUND: | GREEN |
| FILL COLOR: | WHITE |
| EXIT PANEL SIZE: | 11′ X 4.5′ |
| EXIST PANEL BACKGROUND: | GREEN |
| EXIT PANEL FILL COLOR: | WHITE |
| NUMBER OF BRACKETS: | 3 |
| PANEL B | |
| DESIGN LEVEL: | 1 |
| TEXT FONT: | E MOD / E |
| PANEL SIZE: | 13′ X 9′ |
| BACKGROUND: | GREEN |
| FILL COLOR: | WHITE |
| EXIT PANEL SIZE: | 10′ X 2.5′ |
| EXIT PANEL BACKGROUND: | GREEN |
| EXIT PANEL FILL COLOR: | WHITE |
| NUMBER OF BRACKETS: | 3 |
| PANEL C | |
| SIGN DESIGNATION | W9-H5R-192 |
| PANEL SIZE: | 16′ X 5′ |
| BACKGROUND: | YELLOW |
| FILL COLOR: | BLACK |
| NUMBER OF BRACKETS: | 3 |
| SIGN SUPPORT INFORMATION | |
| TOTAL SIGN AREA: | 463.5 SQ. FT. |
| TOTAL SPAN LENGTH: | 91.0 FT. |
| DESIGN TYPE: | TC-15.116, DESIGN 2 |

| SUPPORT FOUNDATION INFORMATION | | |
|---|---|---|
| SUPPORT TYPE | DISTANCE BETWEEN FOUNDATIONS | FOUNDATION DEPTH |
| TYPE TC-15.116, DES. 2 | 7′-0″ | 14.0′ |

**NOTES:**

1. CONTRACTOR SHALL FIELD VERIFY EXISTING ELEVATIONS PRIOR TO THE ORDERING OF ANY MATERIALS.
2. ALL SIGNS ARE VIEWED IN THE DIRECTION OF TRAVEL.
3. CONTRACTOR SHALL LOCATE ALL UNDERGROUND UTILITIES IN FIELD PRIOR TO ANY EXCAVATION.

PANEL A
N.T.S.

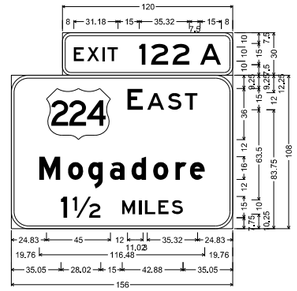


PANEL B
N.T.S.

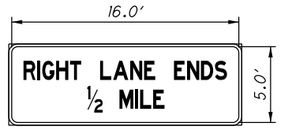


W9-H5R-192

PANEL C
N.T.S.

M3-1
M1-1-2

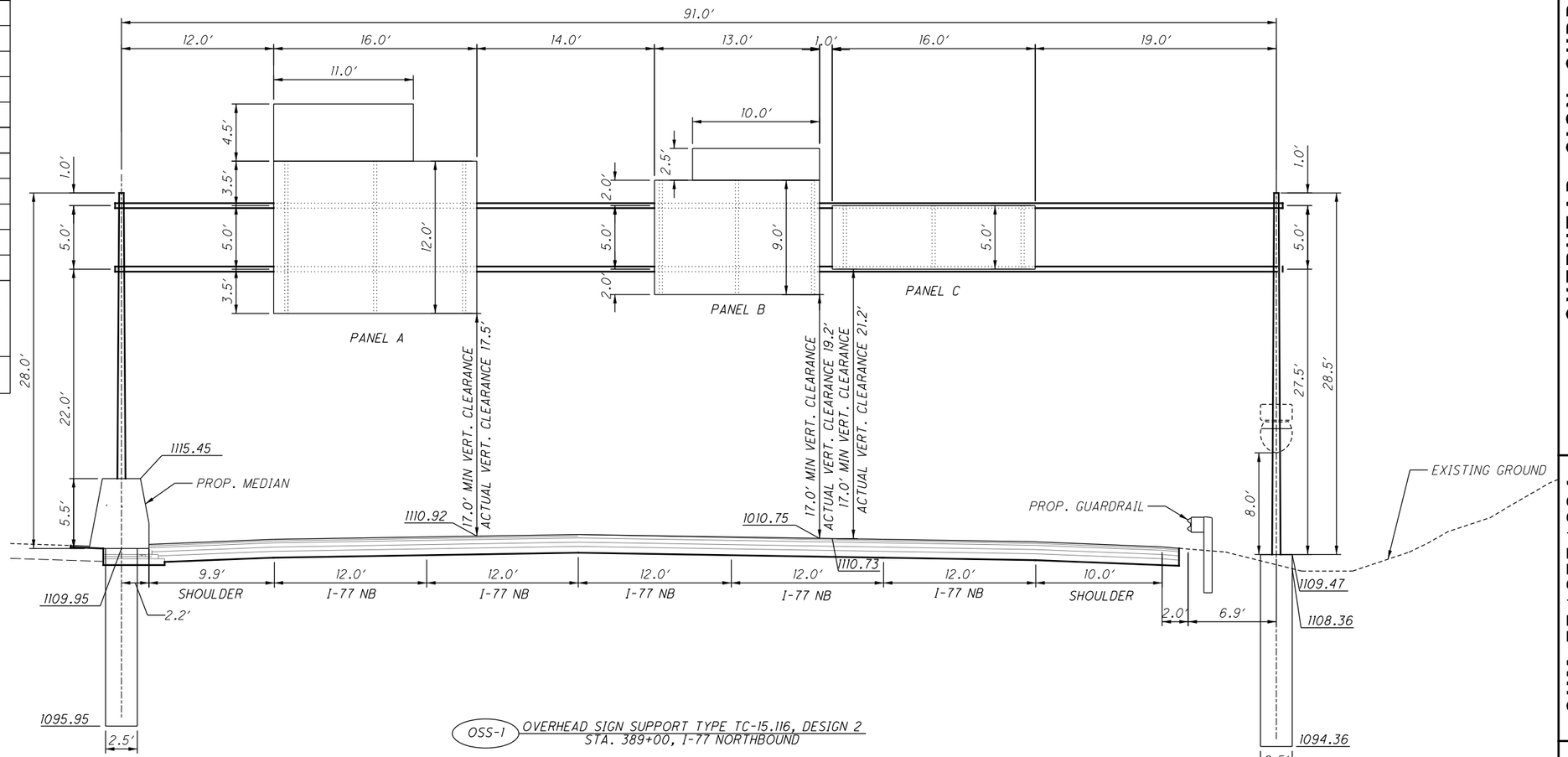


OSS-1 OVERHEAD SIGN SUPPORT TYPE TC-15.116, DESIGN 2
STA. 389+00, I-77 NORTHBOUND

SEE SHEET 963 FOR PLAN VIEW.

HORIZONTAL SCALE IN FEET
0 2.5 5 10

CALCULATED DLS
CHECKED AKF

OVERHEAD SIGN SUPPORT DETAILS
OSS-1

SUM-77/277/224
VARIOUS

992
1288

0:\2017\2017258\ProjectData\SUM\106002\Design\Traffic\Sheets\106002_TE002.dgn Default 1/17/2021 7:17:33 AM aford

| PANEL A | |
|---|---|
| DESIGN LEVEL: | 1 |
| TEXT FONT: | E MOD / E |
| PANEL SIZE: | 16' X 12' |
| BACKGROUND: | GREEN |
| FILL COLOR: | WHITE |
| EXIT PANEL SIZE: | 11' X 4.5' |
| EXIT PANEL BACKGROUND: | GREEN |
| EXIT PANEL FILL COLOR: | WHITE |
| NUMBER OF BRACKETS: | 3 |
| PANEL B | |
| DESIGN LEVEL: | 1 |
| TEXT FONT: | E MOD / E |
| PANEL SIZE: | 15' X 9' |
| BACKGROUND: | GREEN |
| FILL COLOR: | WHITE |
| EXIT ONLY PANEL TEXT FONT: | E |
| EXIT ONLY PANEL SIZE: | 15' X 3' |
| EXIT ONLY PANEL BACKGROUND: | YELLOW |
| EXIT ONLY PANEL FILL COLOR: | BLACK |
| EXIT PANEL SIZE: | 10' X 2.5' |
| EXIT PANEL BACKGROUND: | GREEN |
| EXIT PANEL FILL COLOR: | WHITE |
| NUMBER OF BRACKETS: | 3 |
| SIGN SUPPORT INFORMATION | |
| TOTAL SIGN AREA: | 446.5 SQ. FT. |
| TOTAL SPAN LENGTH: | 78.5 FT. |
| DESIGN TYPE: | TC-15.116, DESIGN 2 |

| SUPPORT FOUNDATION INFORMATION | | |
|---|---|---|
| SUPPORT TYPE | DISTANCE BETWEEN FOUNDATIONS | FOUNDATION DEPTH |
| TYPE TC-15.116, DES. 2 | 7'-0" | 14.0' |

PANEL A
N.T.S.

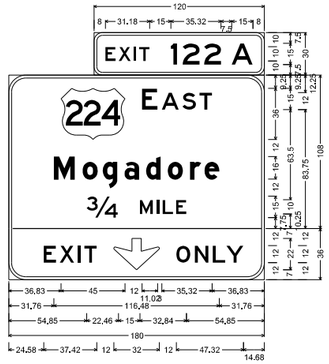


PANEL B
N.T.S.

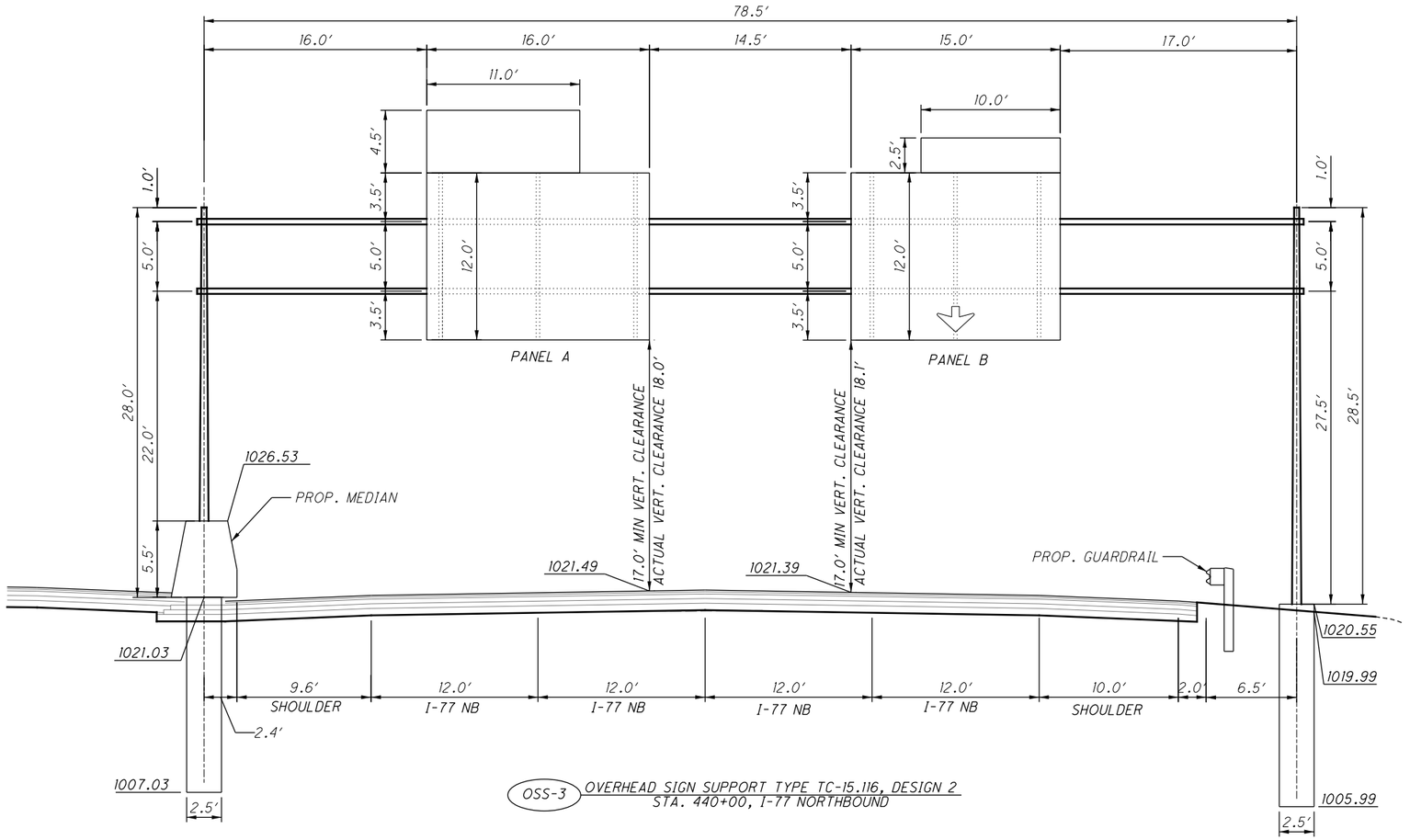


OSS-3 OVERHEAD SIGN SUPPORT TYPE TC-15.116, DESIGN 2
STA. 440+00, I-77 NORTHBOUND

SEE SHEET 968 FOR PLAN VIEW.

NOTES:
1. CONTRACTOR SHALL FIELD VERIFY EXISTING ELEVATIONS PRIOR TO THE ORDERING OF ANY MATERIALS.
2. ALL SIGNS ARE VIEWED IN THE DIRECTION OF TRAVEL.
3. CONTRACTOR SHALL LOCATE ALL UNDERGROUND UTILITIES IN FIELD PRIOR TO ANY EXCAVATION.

0 2.5 5 10 HORIZONTAL SCALE IN FEET

CALCULATED DLS
CHECKED AKF

# SIGN SUPPORT DETAILS
# OSS-3

SUM-77/277/224
VARIOUS



O:\2017\2017258\ProjectData\SUM\106002\Design\Traffic\Sheets\106002_TE003.dgn Default 1/17/2021 7:17:34 AM aford

| PANEL A | |
|---|---|
| DESIGN LEVEL: | |
| TEXT FONT: | E MOD / E |
| PANEL SIZE: | 44′ X 16′ |
| BACKGROUND: | GREEN |
| FILL COLOR: | WHITE |
| EXIT PANEL SIZE: | 11′ X 4.5′ |
| EXIT PANEL BACKGROUND: | GREEN |
| EXIT PANEL FILL COLOR: | WHITE |
| NUMBER OF BRACKETS: | |
| **PANEL B** | |
| DESIGN LEVEL: | |
| TEXT FONT: | E MOD / E |
| PANEL SIZE: | 15′ X 8′ |
| BACKGROUND: | GREEN |
| FILL COLOR: | WHITE |
| EXIT PANEL SIZE: | 10′ X 2.5′ |
| EXIT PANEL BACKGROUND: | GREEN |
| EXIT PANEL FILL COLOR: | WHITE |
| EXIT ONLY PANEL TEXT FONT: | E |
| EXIT ONLY PANEL SIZE: | 15′ X 3′ |
| EXIT ONLY PANEL BACKGROUND: | YELLOW |
| EXIT ONLY PANEL FILL COLOR: | BLACK |
| NUMBER OF BRACKETS: | 3 |

| SIGN SUPPORT INFORMATION | | |
|---|---|---|
| TOTAL SIGN AREA: | 943.5 SQ. FT. | |
| TOTAL SPAN LENGTH: | 90.5 FT. | |
| DESIGN TYPE: | TC-15.116, DESIGN 3 | |
| SUPPORT FOUNDATION INFORMATION | | |
| SUPPORT TYPE | DISTANCE BETWEEN FOUNDATIONS | FOUNDATION DEPTH |
| TYPE TC-15.116, DES. 3 | 7′-0″ | 18.0′ |

NOTES:
1. CONTRACTOR SHALL FIELD VERIFY EXISTING ELEVATIONS PRIOR TO THE ORDERING OF ANY MATERIALS.
2. ALL SIGNS ARE VIEWED IN THE DIRECTION OF TRAVEL.
3. CONTRACTOR SHALL LOCATE ALL UNDERGROUND UTILITIES IN FIELD PRIOR TO ANY EXCAVATION.

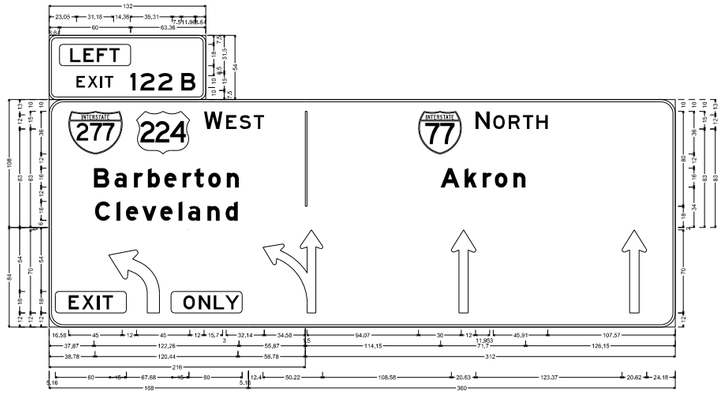


PANEL A
N.T.S.

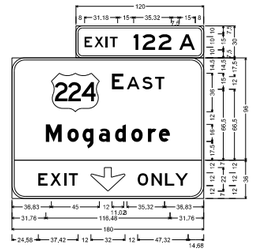


PANEL B
N.T.S.

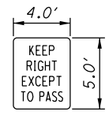


R4-16-48

PANEL C
N.T.S.

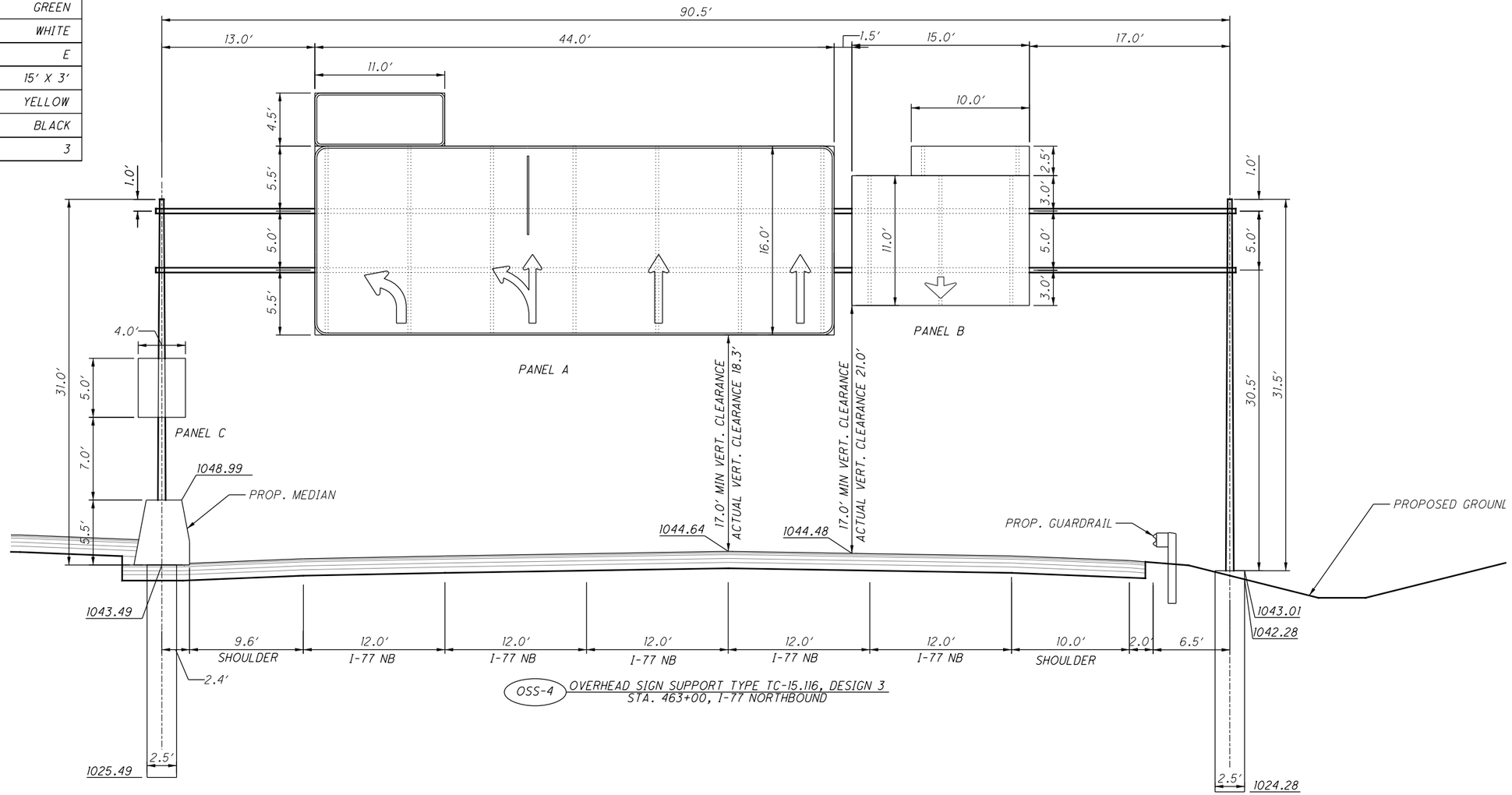


OSS-4 OVERHEAD SIGN SUPPORT TYPE TC-15.116, DESIGN 3
STA. 463+00, I-77 NORTHBOUND

SEE SHEET 969 FOR PLAN VIEW.

0 2.5 5 10 HORIZONTAL SCALE IN FEET

CALCULATED DLS | CHECKED AKF

# OVERHEAD SIGN SUPPORT DETAILS
# OSS-4

SUM-77/277/224
VARIOUS



O:\2017\2017258\ProjectData\SUM\106002\Design\Traffic\Sheets\106002_TE004.dgn Default 1/28/2021 1:03:57 PM aford

| PANEL A | |
|---|---|
| DESIGN LEVEL: | 1 |
| TEXT FONT: | E MOD / E |
| PANEL SIZE: | 44′ X 16′ |
| BACKGROUND: | GREEN |
| FILL COLOR: | WHITE |
| EXIT PANEL SIZE: | 11′ X 4.5′ |
| EXIT PANEL BACKGROUND: | GREEN |
| EXIT PANEL FILL COLOR: | WHITE |
| NUMBER OF BRACKETS: | 7 |

| PANEL B | |
|---|---|
| DESIGN LEVEL: | 1 |
| TEXT FONT: | E MOD / E |
| PANEL SIZE: | 15′ X 8′ |
| BACKGROUND: | GREEN |
| FILL COLOR: | WHITE |
| EXIT PANEL SIZE: | 10′ X 2.5′ |
| EXIT PANEL BACKGROUND: | GREEN |
| EXIT PANEL FILL COLOR: | WHITE |

| PANEL B (CONTINUED) | |
|---|---|
| EXIT ONLY PANEL TEXT FONT: | E |
| EXIT ONLY PANEL SIZE: | 15′ X 3′ |
| EXIT ONLY PANEL BACKGROUND: | YELLOW |
| EXIT ONLY PANEL FILL COLOR: | BLACK |
| NUMBER OF BRACKETS: | 3 |

| SIGN SUPPORT INFORMATION | |
|---|---|
| TOTAL SIGN AREA: | 943.5 SQ. FT. |
| TOTAL SPAN LENGTH: | 129.0 FT. |
| DESIGN TYPE: | TC-15.116, DESIGN 3 |

SUPPORT FOUNDATION INFORMATION

| SUPPORT TYPE | DISTANCE BETWEEN FOUNDATIONS | FOUNDATION DEPTH |
|---|---|---|
| TYPE TC-15.116, DES. 3 | 7′-0″ | 18.0′ |

NOTES:
1. CONTRACTOR SHALL FIELD VERIFY EXISTING ELEVATIONS PRIOR TO THE ORDERING OF ANY MATERIALS.
2. ALL SIGNS ARE VIEWED IN THE DIRECTION OF TRAVEL.
3. CONTRACTOR SHALL LOCATE ALL UNDERGROUND UTILITIES IN FIELD PRIOR TO ANY EXCAVATION.

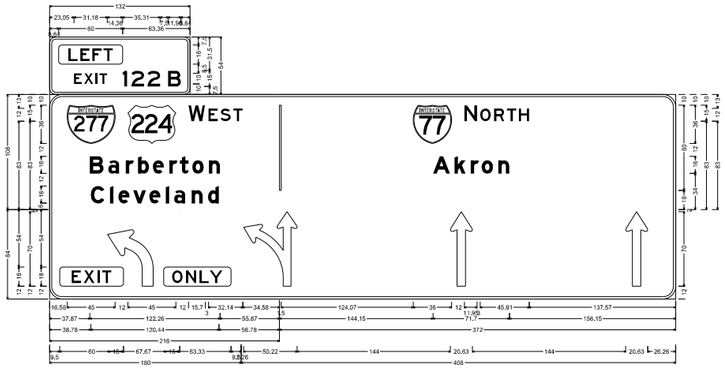


PANEL A
N.T.S.

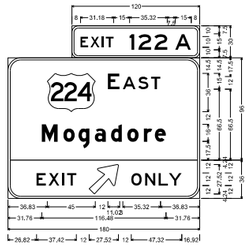


PANEL B
N.T.S.

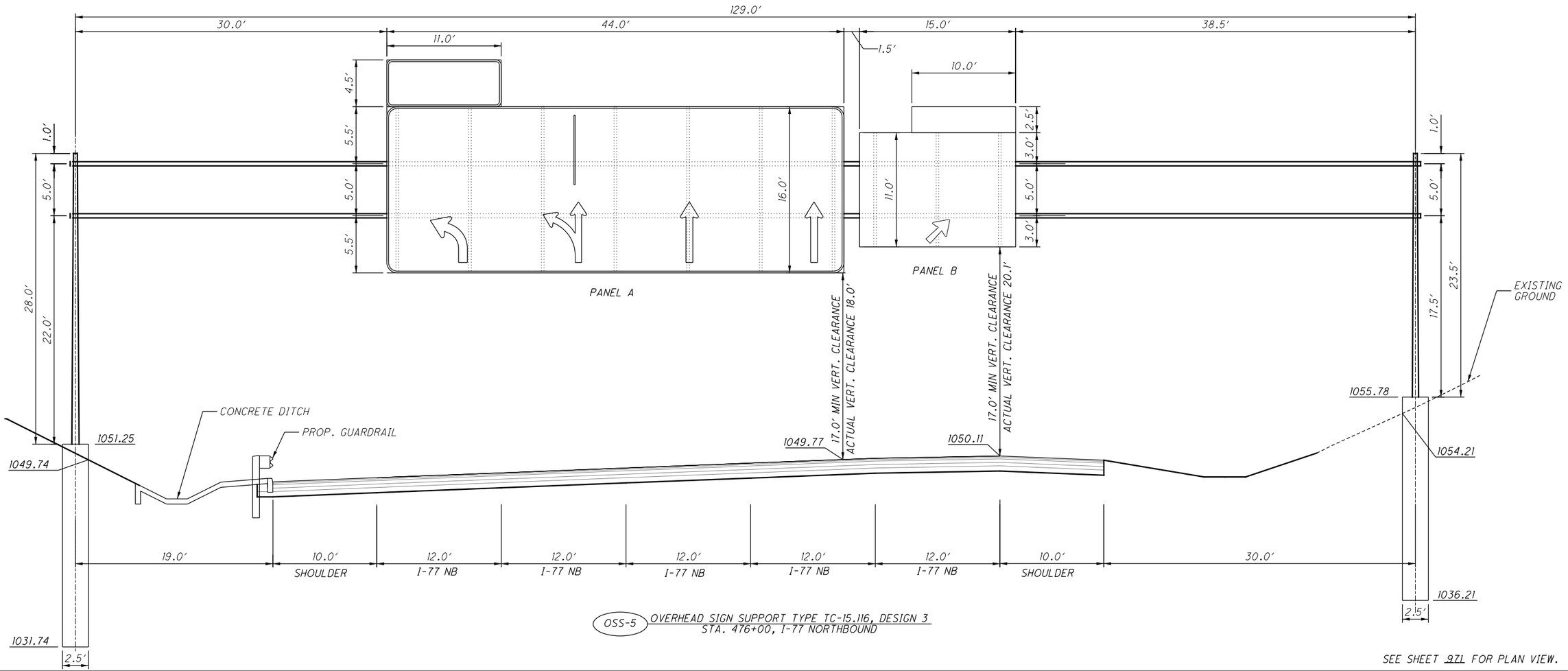


OSS-5 OVERHEAD SIGN SUPPORT TYPE TC-15.116, DESIGN 3
STA. 476+00, I-77 NORTHBOUND

SEE SHEET 9ZL FOR PLAN VIEW.

0 2.5 5 10 HORIZONTAL SCALE IN FEET

CALCULATED DLS | CHECKED AKF

# OVERHEAD SIGN SUPPORT DETAILS OSS-5

SUM-77/277/224 VARIOUS

995
1288

O:\2017\2017258\ProjectData\SUM\106002\Design\Traffic\Sheets\106002_TE005.dgn Default 1/17/2021 7:17:37 AM aford

| PANEL A | |
|---|---|
| DESIGN LEVEL: | 1 |
| TEXT FONT: | E MOD / E |
| PANEL SIZE: | 44' X 16' |
| BACKGROUND: | GREEN |
| FILL COLOR: | WHITE |
| EXIT PANEL SIZE: | 11' X 4.5' |
| EXIT PANEL BACKGROUND: | GREEN |
| EXIT PANEL FILL COLOR: | WHITE |
| NUMBER OF BRACKETS: | 7 |
| SIGN SUPPORT INFORMATION | |
| TOTAL SIGN AREA: | 753.5 SQ. FT. |
| TOTAL SPAN LENGTH: | 93.2 FT. |
| DESIGN TYPE: | TC-15.116, DESIGN 3 |

| SUPPORT FOUNDATION INFORMATION | | |
|---|---|---|
| SUPPORT TYPE | DISTANCE BETWEEN FOUNDATIONS | FOUNDATION DEPTH |
| TYPE TC-15.116, DES. 3 | 7'-0" | 18.0' |

**NOTES:**

1. CONTRACTOR SHALL FIELD VERIFY EXISTING ELEVATIONS PRIOR TO THE ORDERING OF ANY MATERIALS.
2. ALL SIGNS ARE VIEWED IN THE DIRECTION OF TRAVEL.
3. CONTRACTOR SHALL LOCATE ALL UNDERGROUND UTILITIES IN FIELD PRIOR TO ANY EXCAVATION.

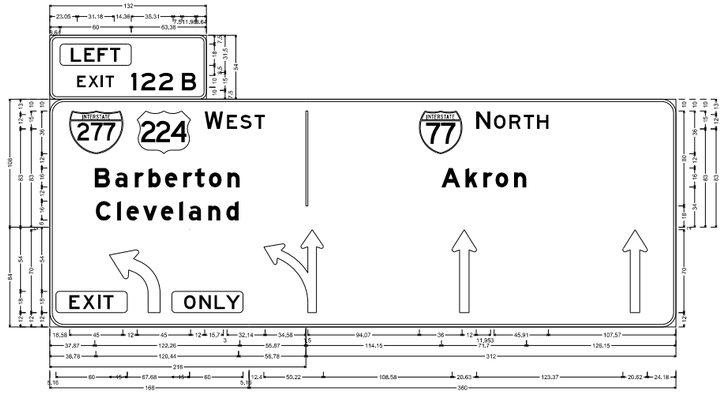


PANEL A
N.T.S.

W3-5-48

PANEL B
N.T.S.

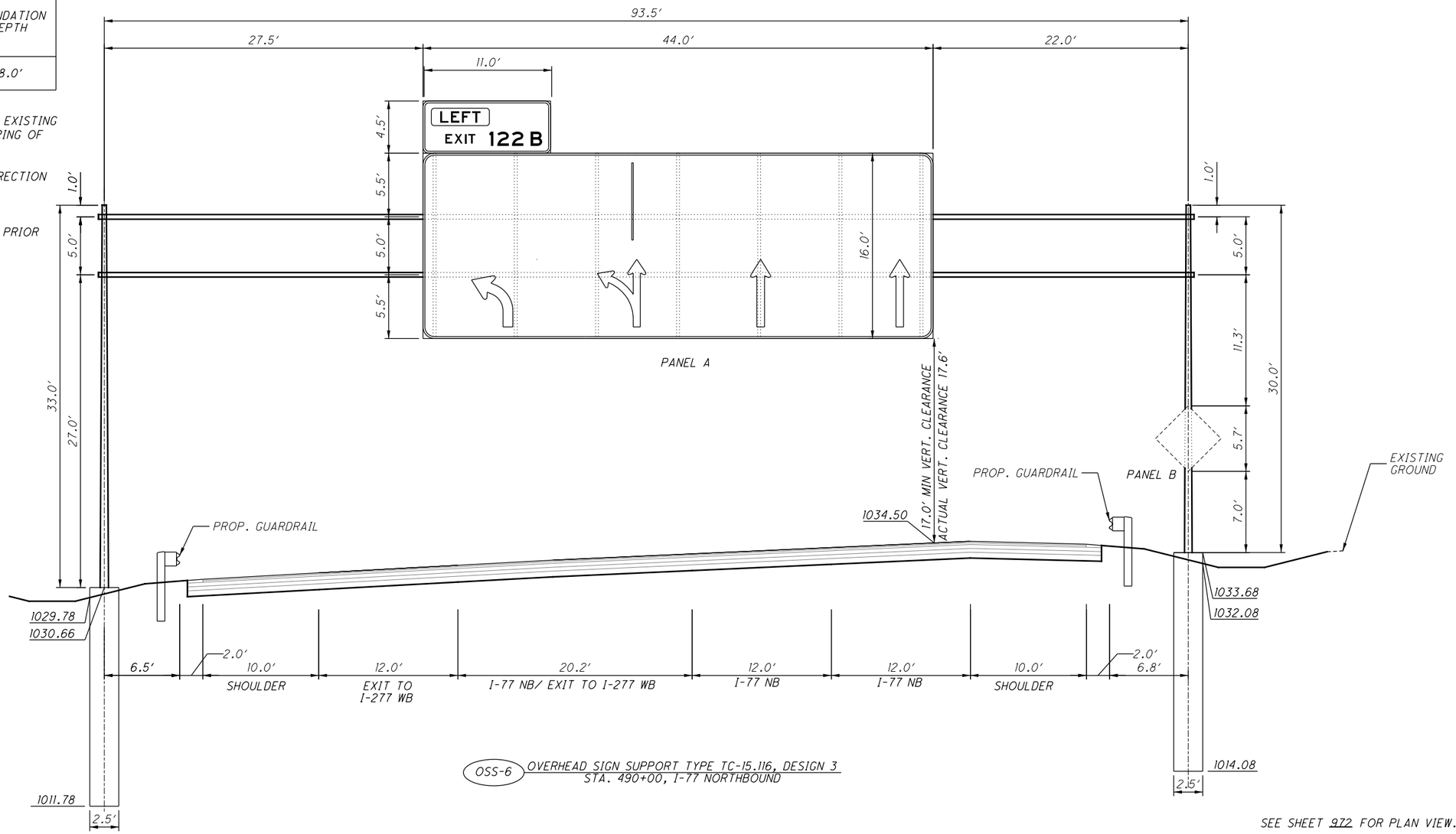


OSS-6 OVERHEAD SIGN SUPPORT TYPE TC-15.116, DESIGN 3
STA. 490+00, I-77 NORTHBOUND

SEE SHEET 972 FOR PLAN VIEW.

HORIZONTAL SCALE IN FEET
0 2.5 5 10

CALCULATED DLS
CHECKED AKF

# OVERHEAD SIGN SUPPORT DETAILS OSS-6

SUM-77/277/224
VARIOUS



O:\2017\2017258\ProjectData\SUM\106002\Design\Traffic\Sheets\106002_TE006.dgn Default 1/17/2021 7:17:38 AM aford

| PANEL B | |
|---|---|
| DESIGN LEVEL: | 1 |
| TEXT FONT: | E MOD / E |
| PANEL SIZE: | 16' X 3' |
| BACKGROUND: | GREEN |
| FILL COLOR: | WHITE |
| **PANEL C** | |
| DESIGN LEVEL: | 1 |
| TEXT FONT: | E MOD / E |
| PANEL SIZE: | 16' X 4' |
| BACKGROUND: | GREEN |
| FILL COLOR: | WHITE |
| EXIT PANEL SIZE: | 10' X 2.5' |
| EXIT PANEL BACKGROUND: | GREEN |
| EXIT PANEL FILL COLOR: | WHITE |
| EXIT ONLY PANEL TEXT FONT: | E |
| EXIT ONLY PANEL SIZE: | 16' X 3' |
| EXIT ONLY PANEL BACKGROUND: | YELLOW |
| EXIT ONLY PANEL FILL COLOR: | BLACK |
| NUMBER OF BRACKETS: | 3 |
| **SIGN SUPPORT INFORMATION** | |
| TOTAL SIGN AREA: | 531.5 SQ. FT. |
| TOTAL SPAN LENGTH: | 80.0 FT. |
| DESIGN TYPE: | TC-7.65, DESIGN 8 |

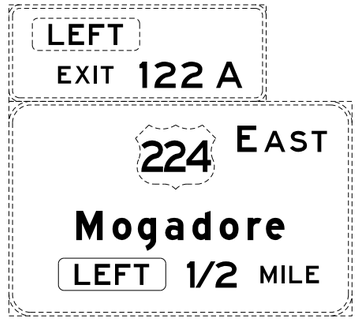


PANEL A
N.T.S.

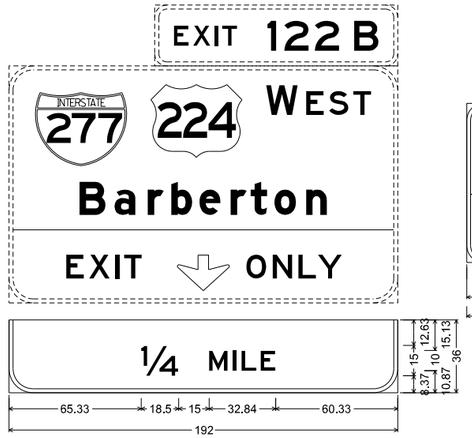


PANEL B
N.T.S.

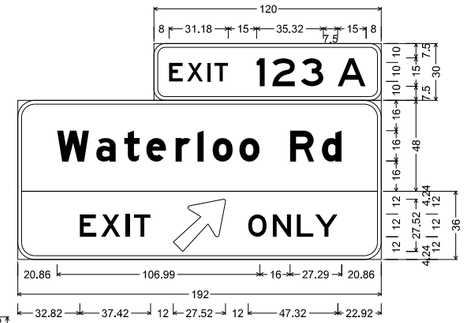


PANEL C
N.T.S.

NOTES:
1. CONTRACTOR SHALL FIELD VERIFY EXISTING ELEVATIONS PRIOR TO THE ORDERING OF ANY MATERIALS.
2. ALL SIGNS ARE VIEWED IN THE DIRECTION OF TRAVEL.
3. CONTRACTOR SHALL LOCATE ALL UNDERGROUND UTILITIES IN FIELD PRIOR TO ANY EXCAVATION.

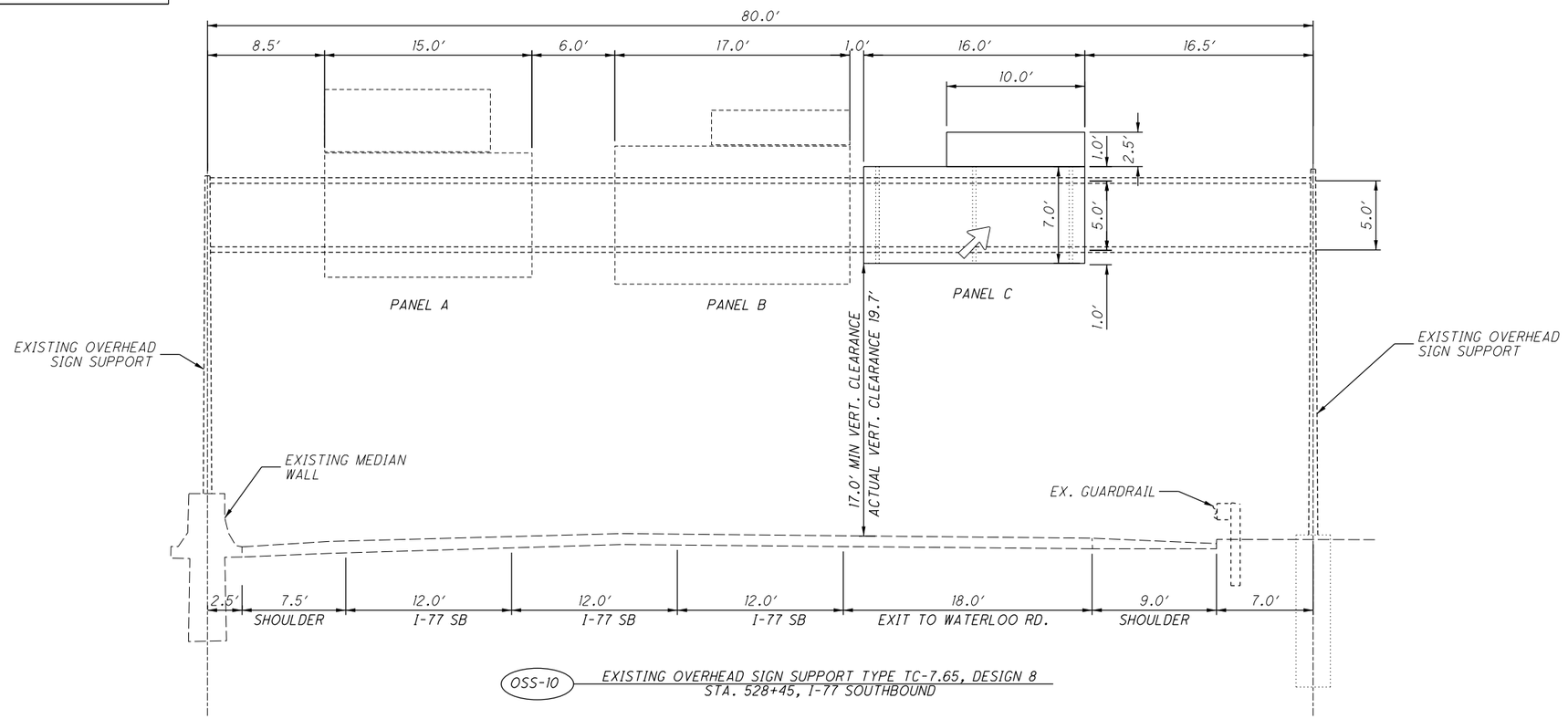


OSS-10 EXISTING OVERHEAD SIGN SUPPORT TYPE TC-7.65, DESIGN 8
STA. 528+45, I-77 SOUTHBOUND

SEE SHEET 975 FOR PLAN VIEW.

HORIZONTAL SCALE IN FEET
0 2.5 5 10

CALCULATED DLS
CHECKED AKF

# OVERHEAD SIGN SUPPORT DETAILS OSS-10

SUM-77/277/224
VARIOUS



O:\2017\2017258\ProjectData\SUM\106002\Design\Traffic\Sheets\106002_TE007.dgn Default 1/17/2021 7:17:41 AM aford

| PANEL B | |
|---|---|
| DESIGN LEVEL: | 1 |
| TEXT FONT: | E MOD / E |
| PANEL SIZE: | 16' X 9' |
| BACKGROUND: | GREEN |
| FILL COLOR: | WHITE |
| EXIT PANEL SIZE: | 10' X 2.5' |
| EXIT PANEL BACKGROUND: | GREEN |
| EXIT PANEL FILL COLOR: | WHITE |
| NUMBER OF BRACKETS: | 3 |
| SIGN SUPPORT INFORMATION | |
| TOTAL SIGN AREA: | 497.5 SQ. FT. |
| TOTAL SPAN LENGTH: | 72.0 FT. |
| DESIGN TYPE: | TC-7.65, DESIGN 8 |

NOTES:
1. CONTRACTOR SHALL FIELD VERIFY EXISTING ELEVATIONS PRIOR TO THE ORDERING OF ANY MATERIALS.
2. ALL SIGNS ARE VIEWED IN THE DIRECTION OF TRAVEL.
3. CONTRACTOR SHALL LOCATE ALL UNDERGROUND UTILITIES IN FIELD PRIOR TO ANY EXCAVATION.

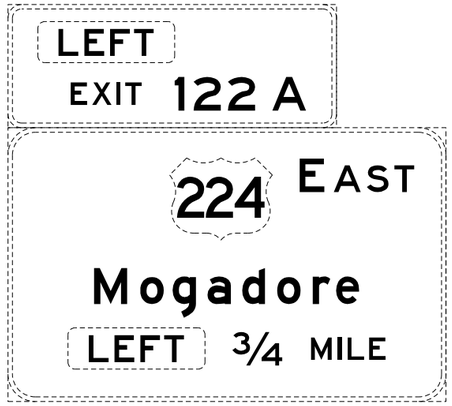


PANEL A
N.T.S.

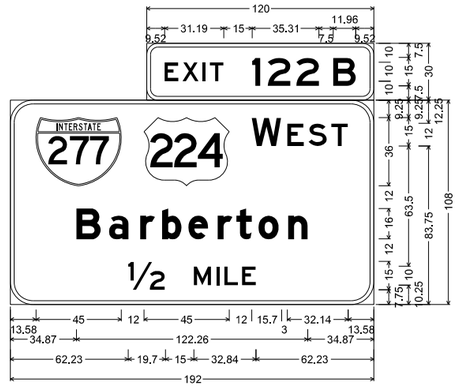


PANEL B
N.T.S.

PANEL C
N.T.S.

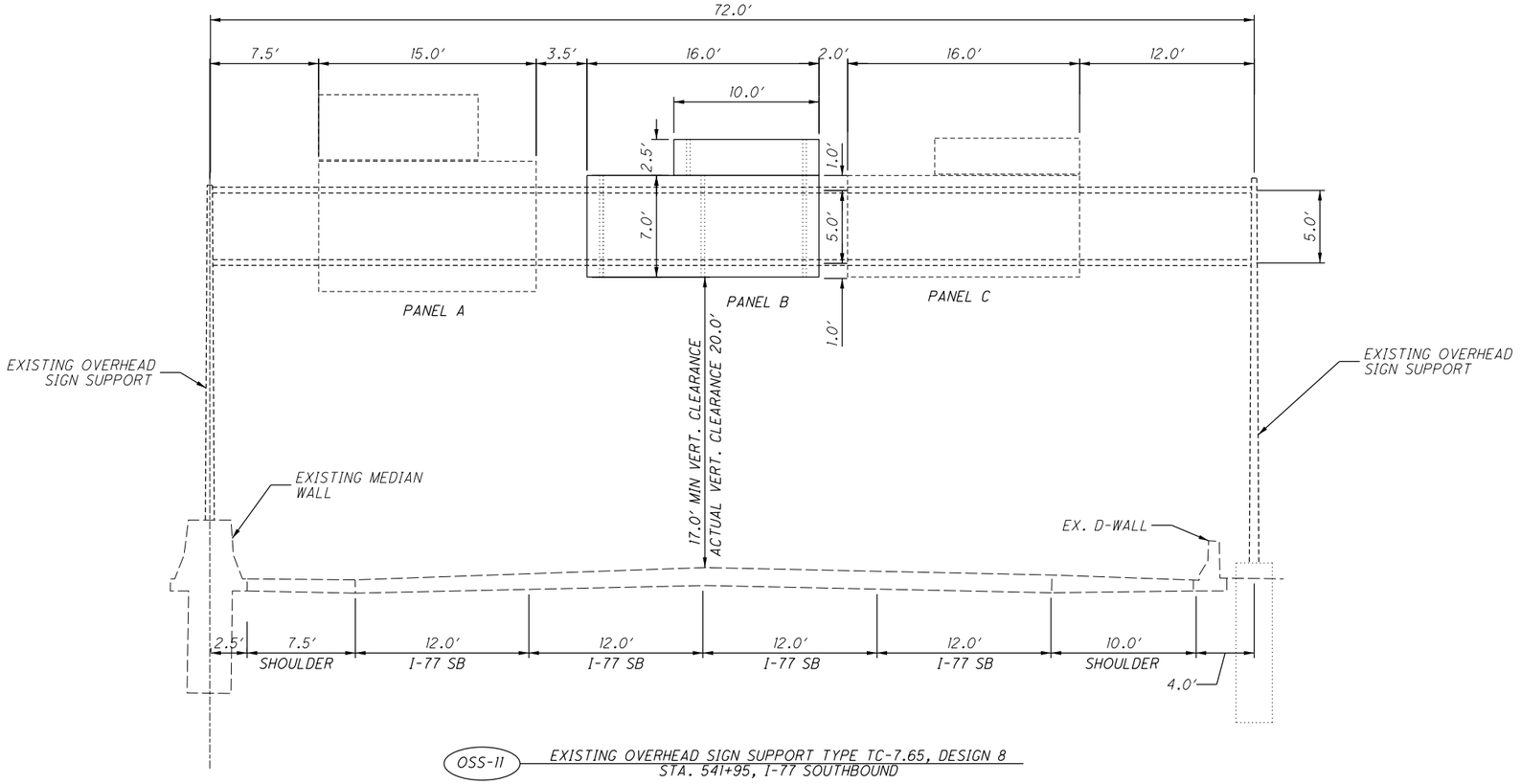


OSS-11 EXISTING OVERHEAD SIGN SUPPORT TYPE TC-7.65, DESIGN 8
STA. 541+95, I-77 SOUTHBOUND

SEE SHEET 976 FOR PLAN VIEW.

HORIZONTAL SCALE IN FEET
0 2.5 5 10

CALCULATED DLS
CHECKED AKF

OVERHEAD SIGN SUPPORT DETAILS
OSS-11

SUM-77/277/224
VARIOUS

998
1288

O:\2017\2017258\ProjectData\SUM\106002\Design\Traffic\Sheets\106002_TE008.dgn Default 1/17/2021 7:17:42 AM aford

| PANEL A | |
|---|---|
| DESIGN LEVEL: | 1 |
| TEXT FONT: | E MOD / E |
| PANEL SIZE: | 12' X 12' |
| BACKGROUND: | GREEN |
| FILL COLOR: | WHITE |
| EXIT PANEL SIZE: | 12' X 2.5' |
| EXIT PANEL BACKGROUND: | GREEN |
| EXIT PANEL FILL COLOR: | WHITE |
| NUMBER OF BRACKETS: | 3 |
| SIGN SUPPORT INFORMATION | |
| TOTAL SIGN AREA: | 505.0 SQ. FT. |
| TOTAL SPAN LENGTH: | 77.0 FT. |
| DESIGN TYPE: | TC-7.65, DESIGN 8 |

PANEL A
N.T.S.

PANEL B
N.T.S.

PANEL C
N.T.S.

NOTES:
1. CONTRACTOR SHALL FIELD VERIFY EXISTING ELEVATIONS PRIOR TO THE ORDERING OF ANY MATERIALS.
2. ALL SIGNS ARE VIEWED IN THE DIRECTION OF TRAVEL.
3. CONTRACTOR SHALL LOCATE ALL UNDERGROUND UTILITIES IN FIELD PRIOR TO ANY EXCAVATION.

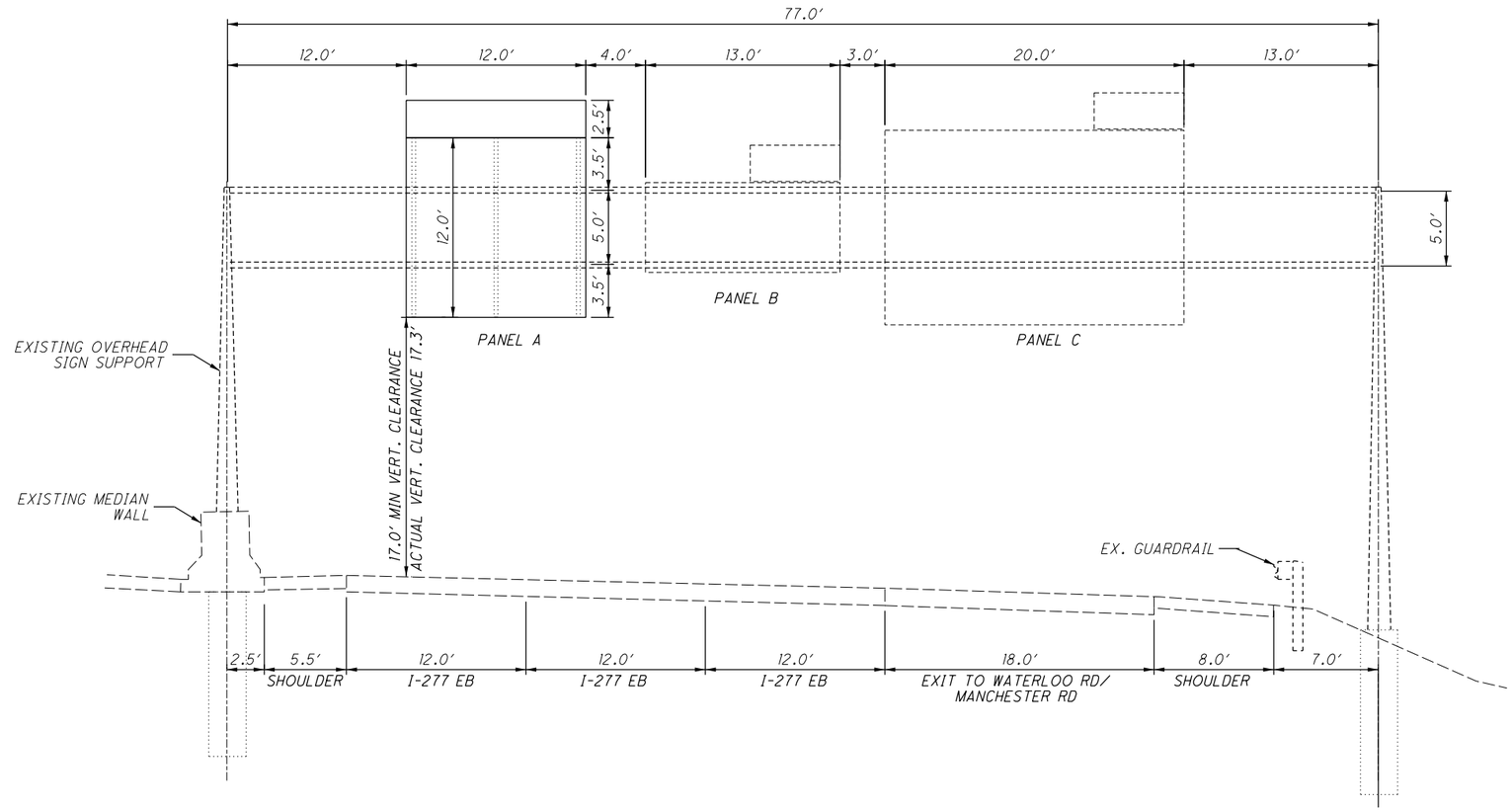


OSS-12 EXISTING OVERHEAD SIGN SUPPORT TYPE TC-7.65, DESIGN 8
I-277 EASTBOUND

SEE SHEET 977 FOR PLAN VIEW.

HORIZONTAL SCALE IN FEET
0 2.5 5 10
CALCULATED DLS
CHECKED AKF

# SIGN SUPPORT DETAILS
# OSS-12

SUM-77/277/224
VARIOUS



O:\2017\2017258\ProjectData\SUM\106002\Design\Traffic\Sheets\106002_TE009.dgn Default 1/28/2021 2:22:32 PM afford

| PANEL A | |
|---|---|
| DESIGN LEVEL: | 1 |
| TEXT FONT: | E MOD / E |
| PANEL SIZE: | 12′ X 9′ |
| BACKGROUND: | GREEN |
| FILL COLOR: | WHITE |
| EXIT PANEL SIZE: | 8′ X 2.5′ |
| EXIT PANEL BACKGROUND: | GREEN |
| EXIT PANEL FILL COLOR: | WHITE |
| NUMBER OF BRACKETS: | 3 |
| PANEL B | |
| DESIGN LEVEL: | 1 |
| TEXT FONT: | E MOD / E |
| PANEL SIZE: | 22′ X 12′ |
| BACKGROUND: | GREEN |
| FILL COLOR: | WHITE |
| EXIT PANEL SIZE: | 8′ X 2.5′ |
| EXIT PANEL BACKGROUND: | GREEN |
| EXIT PANEL FILL COLOR: | WHITE |
| EXIT ONLY PANEL TEXT FONT: | E |
| EXIT ONLY PANEL SIZE: | 14′ X 3′ |
| EXIT ONLY PANEL BACKGROUND: | YELLOW |
| EXIT ONLY PANEL FILL COLOR: | BLACK |
| NUMBER OF BRACKETS: | 4 |
| PANEL C | |
| DESIGN LEVEL: | 1 |
| TEXT FONT: | E MOD / E |
| PANEL SIZE: | 17′ X 4′ |
| BACKGROUND: | GREEN |
| FILL COLOR: | WHITE |
| EXIT PANEL SIZE: | 6′ X 2.5′ |
| EXIT PANEL BACKGROUND: | GREEN |
| EXIT PANEL FILL COLOR: | WHITE |
| NUMBER OF BRACKETS: | 3 |
| SIGN SUPPORT INFORMATION | |
| TOTAL SIGN AREA: | 495.0 SQ. FT. |
| TOTAL SPAN LENGTH: | 77.0 FT. |
| DESIGN TYPE: | TC-7.65, DESIGN 8 |

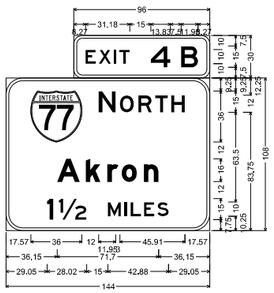


PANEL A
N.T.S.

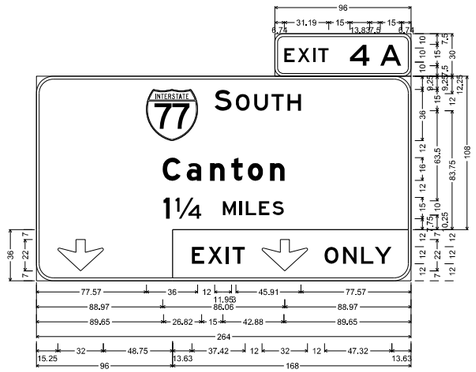


PANEL C
N.T.S.

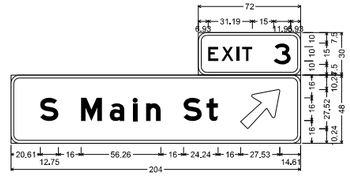


PANEL C
N.T.S.

**NOTES:**

1. CONTRACTOR SHALL FIELD VERIFY EXISTING ELEVATIONS PRIOR TO THE ORDERING OF ANY MATERIALS.
2. ALL SIGNS ARE VIEWED IN THE DIRECTION OF TRAVEL.
3. CONTRACTOR SHALL LOCATE ALL UNDERGROUND UTILITIES IN FIELD PRIOR TO ANY EXCAVATION.

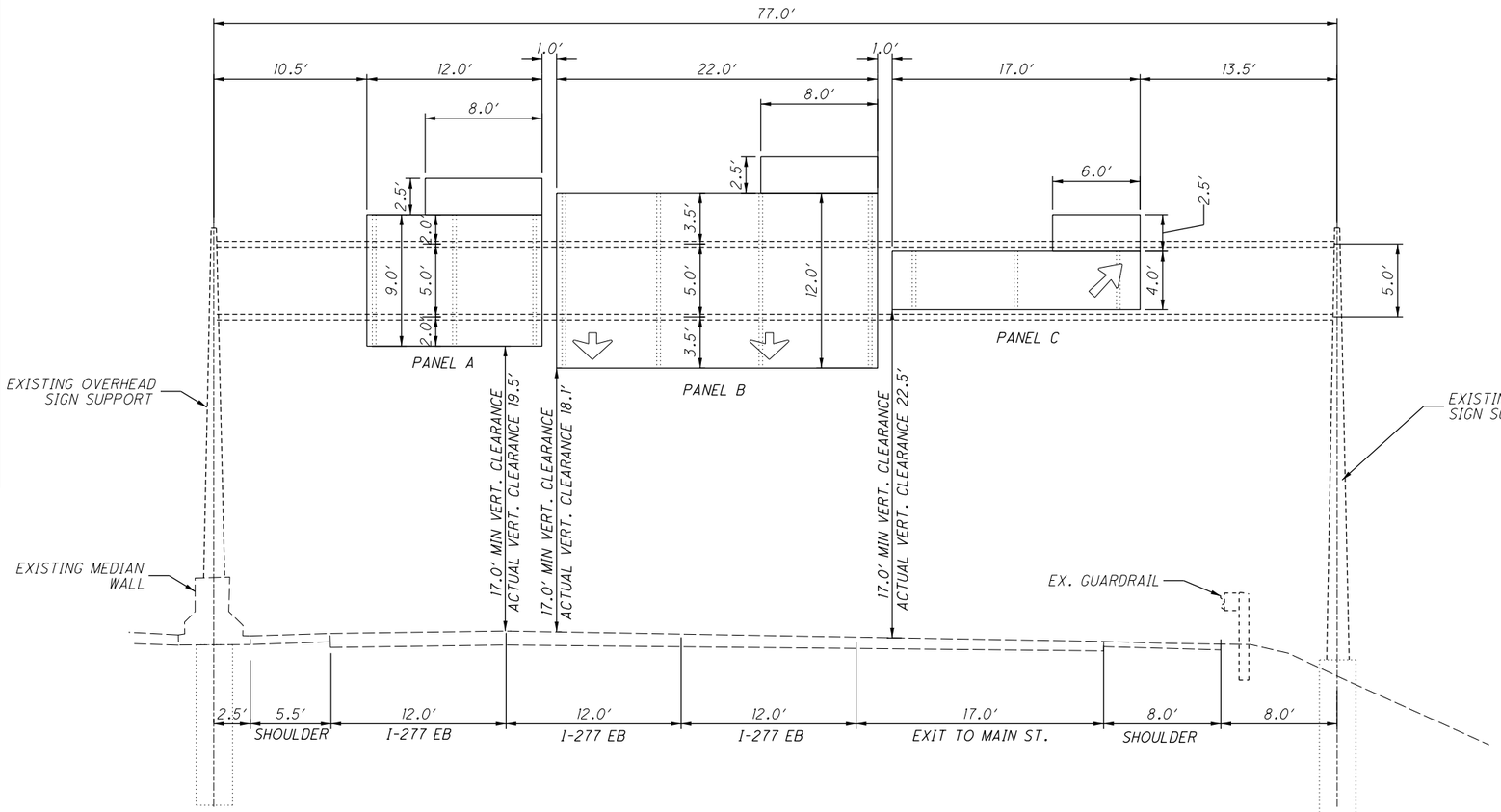


OSS-13 EXISTING OVERHEAD SIGN SUPPORT TYPE TC-7.65, DESIGN 8
I-277 EASTBOUND

SEE SHEET 978 FOR PLAN VIEW.

0 2.5 5 10 HORIZONTAL SCALE IN FEET

CALCULATED DLS | CHECKED AKF

# SIGN SUPPORT DETAILS OSS-13

SUM-77/277/224 VARIOUS

1000 / 1288

O:\2017\2017258\ProjectData\SUM\106002\Design\Traffic\Sheets\106002_TE010.dgn Default 1/28/2021 1:10:47 PM aford

| PANEL A | |
|---|---|
| DESIGN LEVEL: | 1 |
| TEXT FONT: | E MOD / E |
| PANEL SIZE: | 12′ X 9′ |
| BACKGROUND: | GREEN |
| FILL COLOR: | WHITE |
| EXIT PANEL SIZE: | 8′ X 2.5′ |
| EXIT PANEL BACKGROUND: | GREEN |
| EXIT PANEL FILL COLOR: | WHITE |
| NUMBER OF BRACKETS: | 3 |
| PANEL B | |
| DESIGN LEVEL: | 1 |
| TEXT FONT: | E MOD / E |
| PANEL SIZE: | 22′ X 11′ |
| BACKGROUND: | GREEN |
| FILL COLOR: | WHITE |
| EXIT PANEL SIZE: | 8′ X 2.5′ |
| EXIT PANEL BACKGROUND: | GREEN |
| EXIT PANEL FILL COLOR: | WHITE |
| EXIT ONLY PANEL TEXT FONT: | E |
| EXIT ONLY PANEL SIZE: | 14′ X 3′ |
| EXIT ONLY PANEL BACKGROUND: | YELLOW |
| EXIT ONLY PANEL FILL COLOR: | BLACK |
| NUMBER OF BRACKETS: | 4 |
| SIGN SUPPORT INFORMATION | |
| TOTAL SIGN AREA: | 390.0 SQ. FT. |
| TOTAL SPAN LENGTH: | 63.0 FT. |
| DESIGN TYPE: | TC-7.65, DESIGN 6 |

**NOTES:**

1. CONTRACTOR SHALL FIELD VERIFY EXISTING ELEVATIONS PRIOR TO THE ORDERING OF ANY MATERIALS.
2. ALL SIGNS ARE VIEWED IN THE DIRECTION OF TRAVEL.
3. CONTRACTOR SHALL LOCATE ALL UNDERGROUND UTILITIES IN FIELD PRIOR TO ANY EXCAVATION.

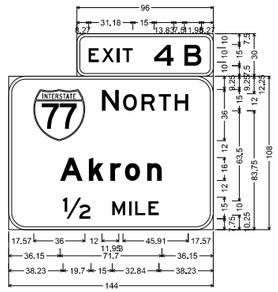


PANEL A
N.T.S.

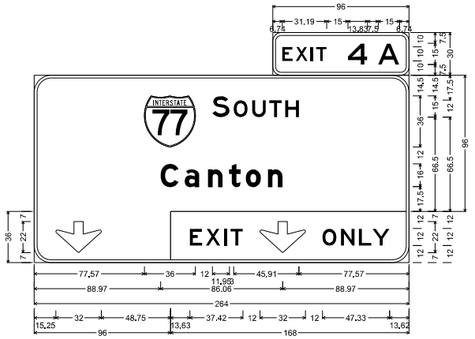


PANEL B
N.T.S.

W4-3R-48

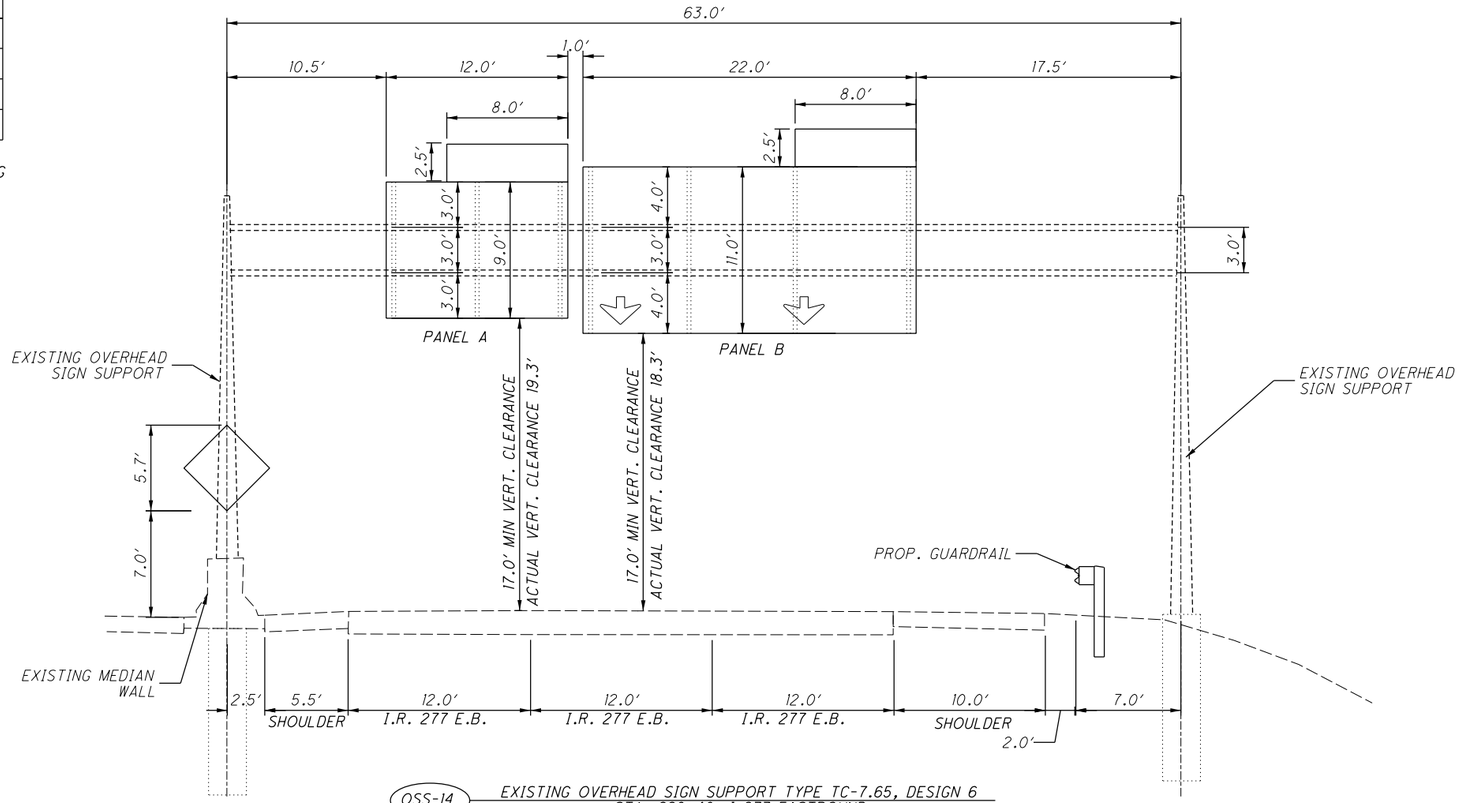


OSS-14 EXISTING OVERHEAD SIGN SUPPORT TYPE TC-7.65, DESIGN 6
STA. 228+40, I-277 EASTBOUND

SEE SHEET 980 FOR PLAN VIEW.

HORIZONTAL SCALE IN FEET
0 2.5 5 10

CALCULATED DLS
CHECKED AKF

# OVERHEAD SIGN SUPPORT DETAILS OSS-14

SUM-77/277/224
VARIOUS

1001
1288

O:\2017\2017258\ProjectData\SUM\106002\Design\Traffic\Sheets\106002_TE011.dgn Default 1/28/2021 1:15:10 PM aford

| PANEL A | |
|---|---|
| DESIGN LEVEL: | 1 |
| TEXT FONT: | E MOD / E |
| PANEL SIZE: | 15′ X 9′ |
| BACKGROUND: | GREEN |
| FILL COLOR: | WHITE |
| NUMBER OF BRACKETS: | 3 |
| PANEL B | |
| DESIGN LEVEL: | 1 |
| TEXT FONT: | E MOD / E |
| PANEL SIZE: | 12′ X 9′ |
| BACKGROUND: | GREEN |
| FILL COLOR: | WHITE |
| EXIT PANEL SIZE: | 8′ X 2.5′ |
| EXIT PANEL BACKGROUND: | GREEN |
| EXIT PANEL FILL COLOR: | WHITE |
| NUMBER OF BRACKETS: | 3 |
| PANEL C | |
| DESIGN LEVEL: | 1 |
| TEXT FONT: | E MOD / E |
| PANEL SIZE: | 17′ X 8′ |
| BACKGROUND: | GREEN |
| FILL COLOR: | WHITE |
| EXIT PANEL SIZE: | 8′ X 2.5′ |
| EXIT PANEL BACKGROUND: | GREEN |
| EXIT PANEL FILL COLOR: | WHITE |
| EXIT ONLY PANEL TEXT FONT: | E |
| EXIT ONLY PANEL SIZE: | 17′ X 3′ |
| EXIT ONLY PANEL BACKGROUND: | YELLOW |
| EXIT ONLY PANEL FILL COLOR: | BLACK |
| NUMBER OF BRACKETS: | 3 |
| SIGN SUPPORT INFORMATION | |
| TOTAL SIGN AREA: | 470.0 SQ. FT. |
| TOTAL SPAN LENGTH: | 73.5 FT. |
| DESIGN TYPE: | TC-15.116, DESIGN 1 |

| SUPPORT FOUNDATION INFORMATION | | |
|---|---|---|
| SUPPORT TYPE | DISTANCE BETWEEN FOUNDATIONS | FOUNDATION DEPTH |
| TYPE TC-15.116, DES. 1 | 5′-0″ | 12.0′ |

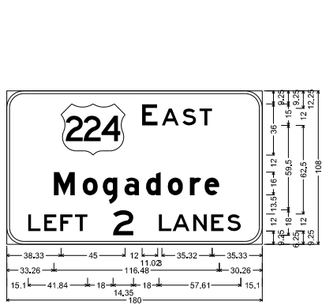


PANEL A
N.T.S.

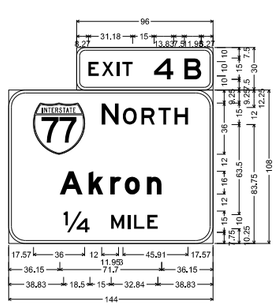


PANEL B
N.T.S.

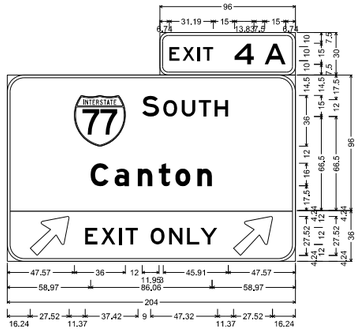


PANEL C
N.T.S.

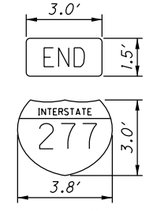


M4-6-36
M1-1-3

PANEL D
N.T.S.

NOTES:
1. CONTRACTOR SHALL FIELD VERIFY EXISTING ELEVATIONS PRIOR TO THE ORDERING OF ANY MATERIALS.
2. ALL SIGNS ARE VIEWED IN THE DIRECTION OF TRAVEL.
3. CONTRACTOR SHALL LOCATE ALL UNDERGROUND UTILITIES IN FIELD PRIOR TO ANY EXCAVATION.

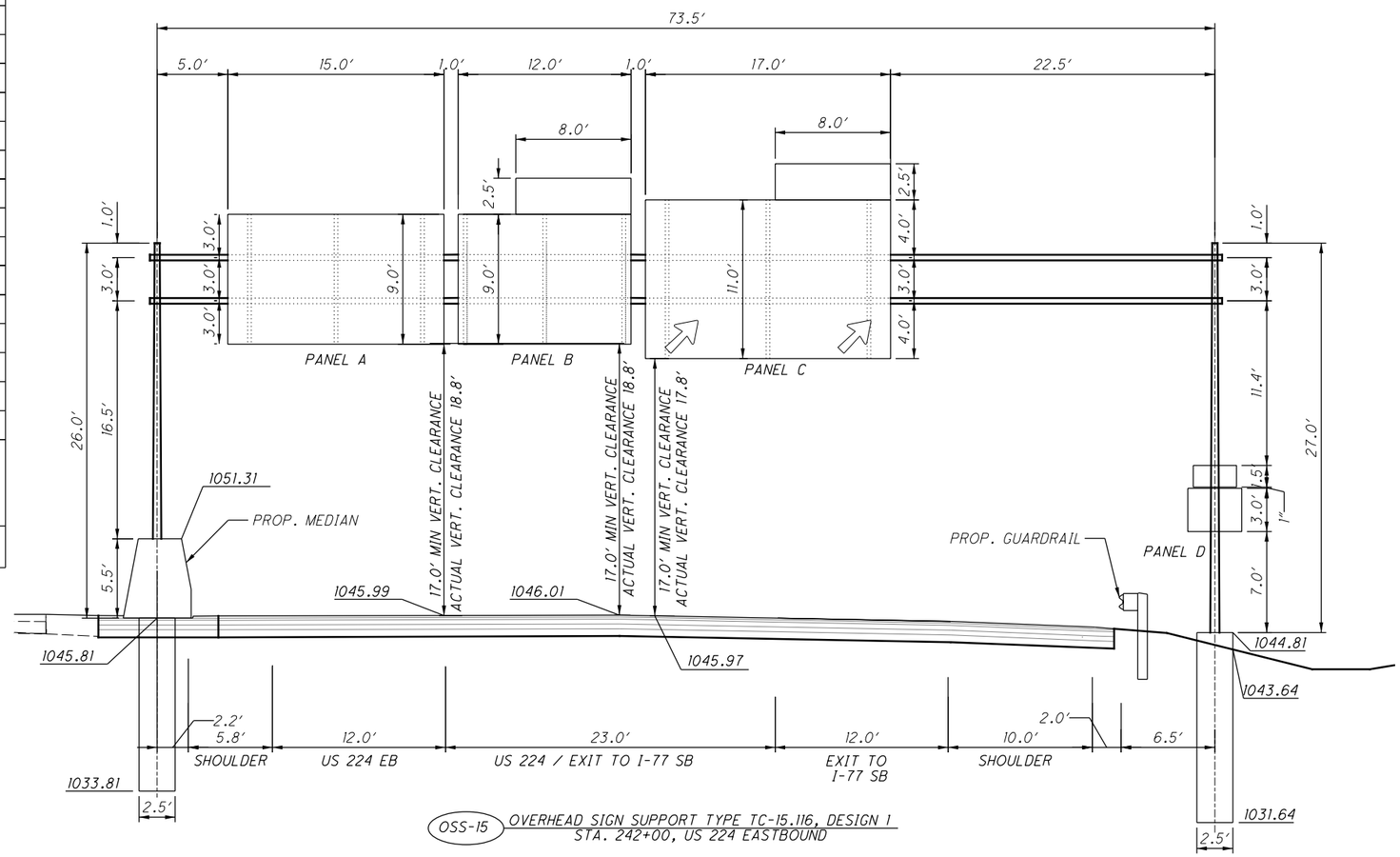


OSS-15 OVERHEAD SIGN SUPPORT TYPE TC-15.116, DESIGN 1
STA. 242+00, US 224 EASTBOUND

SEE SHEET 981 FOR PLAN VIEW.

0 2.5 5 10
HORIZONTAL SCALE IN FEET

CALCULATED DLS
CHECKED AKF

OVERHEAD SIGN SUPPORT DETAILS
OSS-15

SUM-77/277/224
VARIOUS

1002
1288

0:\2017\2017258\ProjectData\SUM\106002\Design\Traffic\Sheets\106002_TE012.dgn Default 1/28/2021 1:19:29 PM aford

| PANEL A | |
|---|---|
| DESIGN LEVEL: | 1 |
| TEXT FONT: | E MOD / E |
| PANEL SIZE: | 13′ X 12′ |
| BACKGROUND: | GREEN |
| FILL COLOR: | WHITE |
| NUMBER OF BRACKETS: | 3 |
| PANEL B | |
| DESIGN LEVEL: | 1 |
| TEXT FONT: | E MOD / E |
| PANEL SIZE: | 15′ X 8′ |
| BACKGROUND: | GREEN |
| FILL COLOR: | WHITE |
| EXIT PANEL SIZE: | 8′ X 2.5′ |
| EXIT PANEL BACKGROUND: | GREEN |
| EXIT PANEL FILL COLOR: | WHITE |
| EXIT ONLY PANEL TEXT FONT: | E |
| EXIT ONLY PANEL SIZE: | 15′ X 3′ |
| EXIT ONLY PANEL BACKGROUND: | YELLOW |
| EXIT ONLY PANEL FILL COLOR: | BLACK |
| NUMBER OF BRACKETS: | 3 |
| SIGN SUPPORT INFORMATION | |
| TOTAL SIGN AREA: | 341.0 SQ. FT. |
| TOTAL SPAN LENGTH: | 64.0 FT. |
| DESIGN TYPE: | TC-7.65, DESIGN 6 |

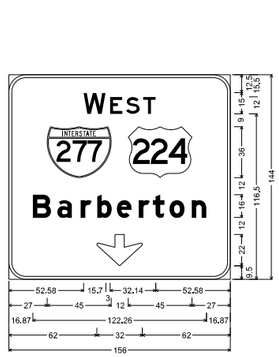


PANEL A
N.T.S.

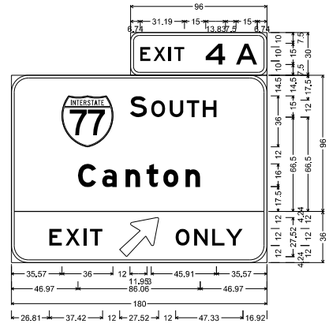


PANEL B
N.T.S.

NOTES:
1. CONTRACTOR SHALL FIELD VERIFY EXISTING ELEVATIONS PRIOR TO THE ORDERING OF ANY MATERIALS.
2. ALL SIGNS ARE VIEWED IN THE DIRECTION OF TRAVEL.
3. CONTRACTOR SHALL LOCATE ALL UNDERGROUND UTILITIES IN FIELD PRIOR TO ANY EXCAVATION.

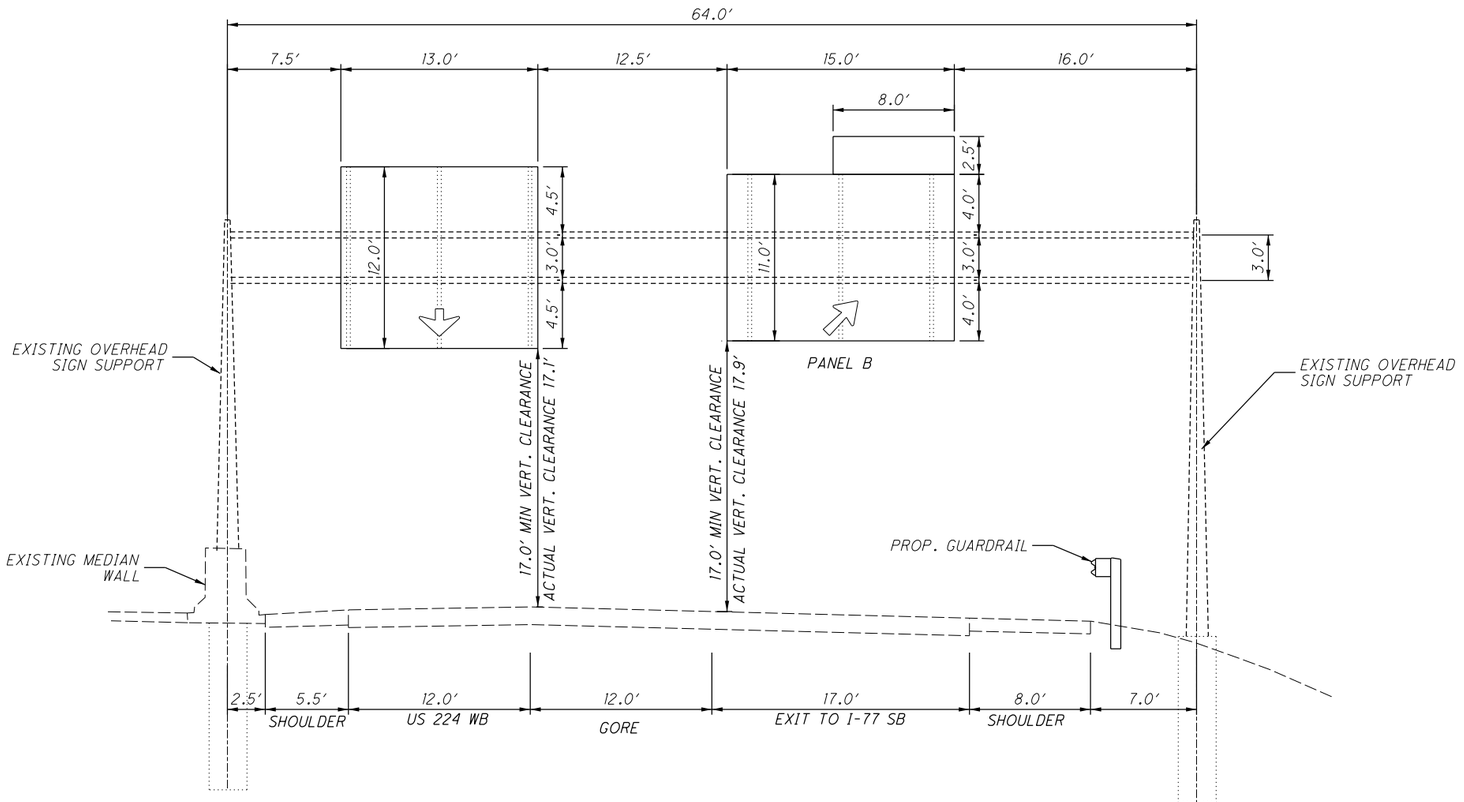


OSS-16 EXISTING OVERHEAD SIGN SUPPORT TYPE TC-7.65, DESIGN 6
STA. 248+70, US 224 WESTBOUND

SEE SHEET 982 FOR PLAN VIEW.

0 2.5 5 10 HORIZONTAL SCALE IN FEET

CALCULATED DLS
CHECKED AKF

# SIGN SUPPORT DETAILS
# OSS-16

## OVERHEAD SIGN

SUM-77/277/224
VARIOUS

1003
1288

0:\2017\2017258\ProjectData\SUM\106002\Design\Traffic\Sheets\106002_TE013.dgn Default 1/28/2021 1:22:33 PM aford

| PANEL A | |
|---|---|
| DESIGN LEVEL: | 1 |
| TEXT FONT: | E MOD / E |
| PANEL SIZE: | 17′ X 10′ |
| BACKGROUND: | GREEN |
| FILL COLOR: | WHITE |
| NUMBER OF BRACKETS: | 3 |
| PANEL B | |
| DESIGN LEVEL: | 1 |
| TEXT FONT: | E MOD / E |
| PANEL SIZE: | 15′ X 8′ |
| BACKGROUND: | GREEN |
| FILL COLOR: | WHITE |
| EXIT PANEL SIZE: | 8′ X 2.5′ |
| EXIT PANEL BACKGROUND: | GREEN |
| EXIT PANEL FILL COLOR: | WHITE |
| NUMBER OF BRACKETS: | 3 |
| SIGN SUPPORT INFORMATION | |
| TOTAL SIGN AREA: | 310.0 SQ. FT. |
| TOTAL SPAN LENGTH: | 64.0 FT. |
| DESIGN TYPE: | TC-7.65, DESIGN 6 |

NOTES:
1. CONTRACTOR SHALL FIELD VERIFY EXISTING ELEVATIONS PRIOR TO THE ORDERING OF ANY MATERIALS.
2. ALL SIGNS ARE VIEWED IN THE DIRECTION OF TRAVEL.
3. CONTRACTOR SHALL LOCATE ALL UNDERGROUND UTILITIES IN FIELD PRIOR TO ANY EXCAVATION.

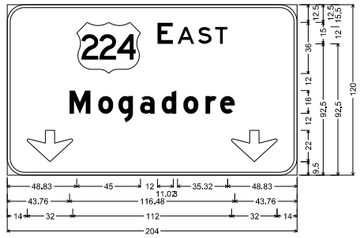


PANEL A
N.T.S.

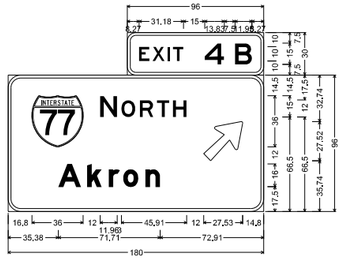


PANEL B
N.T.S.

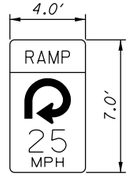


W13-7-48

PANEL C
N.T.S.

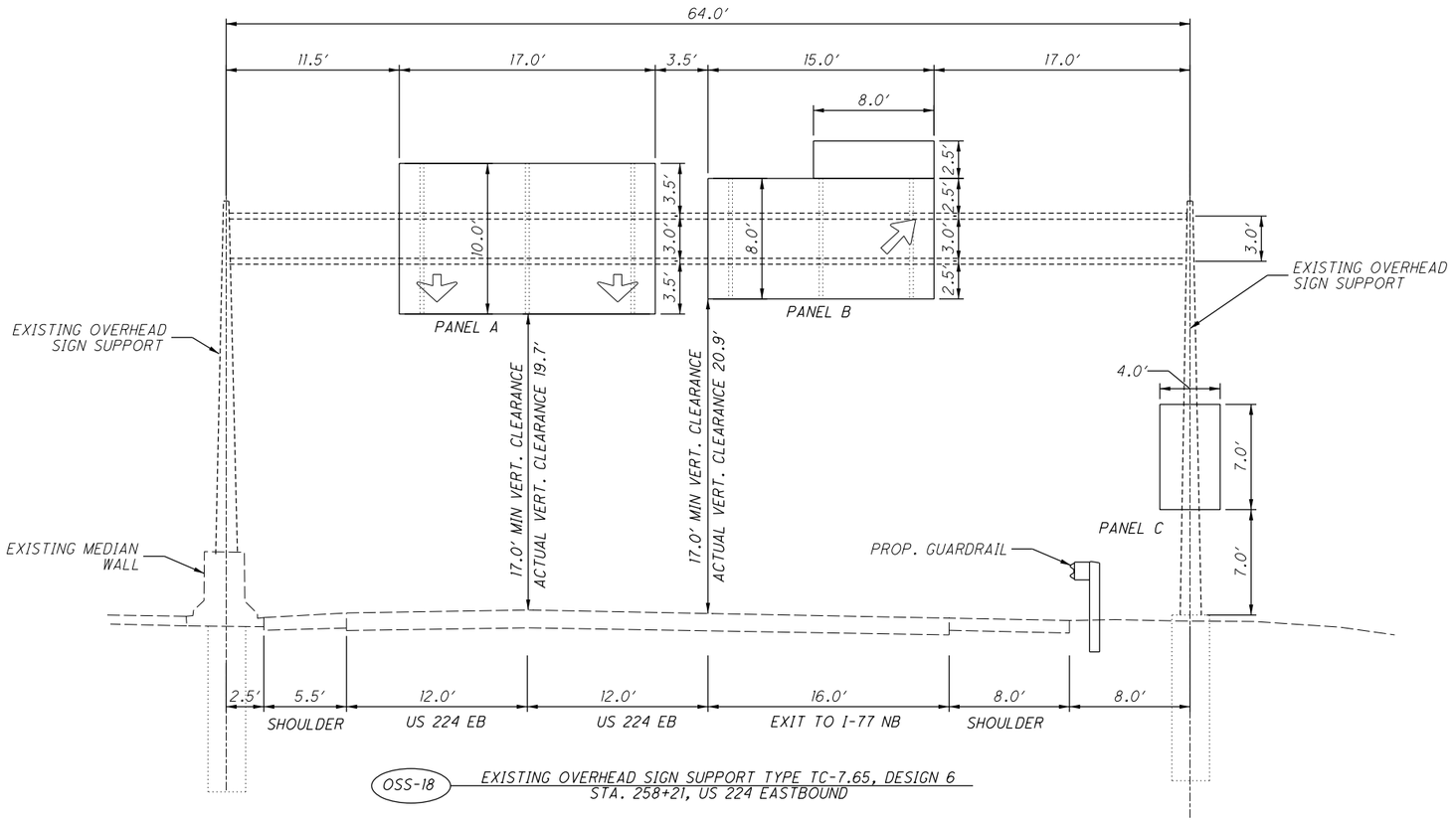


OSS-18 EXISTING OVERHEAD SIGN SUPPORT TYPE TC-7.65, DESIGN 6
STA. 258+21, US 224 EASTBOUND

SEE SHEET 982 FOR PLAN VIEW.

0 2.5 5 10 HORIZONTAL SCALE IN FEET

CALCULATED DLS
CHECKED AKF

# OVERHEAD SIGN SUPPORT DETAILS
# OSS-18

SUM-77/277/224
VARIOUS

1004
1288

O:\2017\2017258\ProjectData\SUM\106002\Design\Traffic\Sheets\106002_TE014.dgn Default 1/28/2021 1:23:53 PM aford

| PANEL A | |
|---|---|
| DESIGN LEVEL: | 1 |
| TEXT FONT: | E MOD / E |
| PANEL SIZE: | 13′ X 12′ |
| BACKGROUND: | GREEN |
| FILL COLOR: | WHITE |
| NUMBER OF BRACKETS: | 3 |
| PANEL B | |
| DESIGN LEVEL: | 1 |
| TEXT FONT: | E MOD / E |
| PANEL SIZE: | 15′ X 8′ |
| BACKGROUND: | GREEN |
| FILL COLOR: | WHITE |
| EXIT PANEL SIZE: | 8′ X 2.5′ |
| EXIT PANEL BACKGROUND: | GREEN |
| EXIT PANEL FILL COLOR: | WHITE |
| EXIT ONLY PANEL TEXT FONT: | E |
| EXIT ONLY PANEL SIZE: | 15′ X 3′ |
| EXIT ONLY PANEL BACKGROUND: | YELLOW |
| EXIT ONLY PANEL FILL COLOR: | BLACK |
| NUMBER OF BRACKETS: | 3 |
| PANEL C | |
| DESIGN LEVEL: | 1 |
| TEXT FONT: | E MOD / E |
| PANEL SIZE: | 15′ X 8′ |
| BACKGROUND: | GREEN |
| FILL COLOR: | WHITE |
| EXIT PANEL SIZE: | 8′ X 2.5′ |
| EXIT PANEL BACKGROUND: | GREEN |
| EXIT PANEL FILL COLOR: | WHITE |
| EXIT ONLY PANEL TEXT FONT: | E |
| EXIT ONLY PANEL SIZE: | 15′ X 3′ |
| EXIT ONLY PANEL BACKGROUND: | YELLOW |
| EXIT ONLY PANEL FILL COLOR: | BLACK |
| NUMBER OF BRACKETS: | 3 |
| SIGN SUPPORT INFORMATION | |
| TOTAL SIGN AREA: | 526.0 SQ. FT. |
| TOTAL SPAN LENGTH: | 77.0 FT. |
| DESIGN TYPE: | TC-7.65, DESIGN 8 |

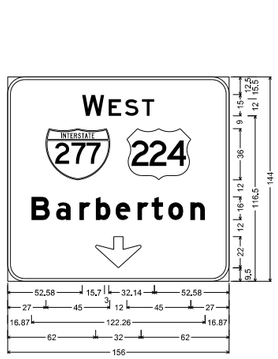


PANEL A
N.T.S.

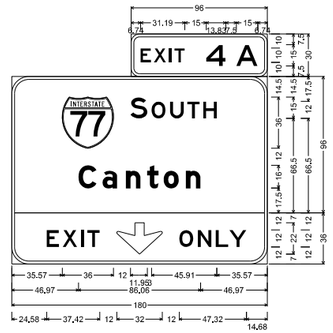


PANEL B
N.T.S.

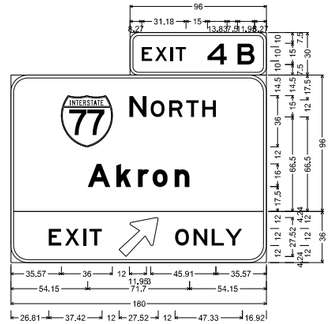


PANEL C
N.T.S.

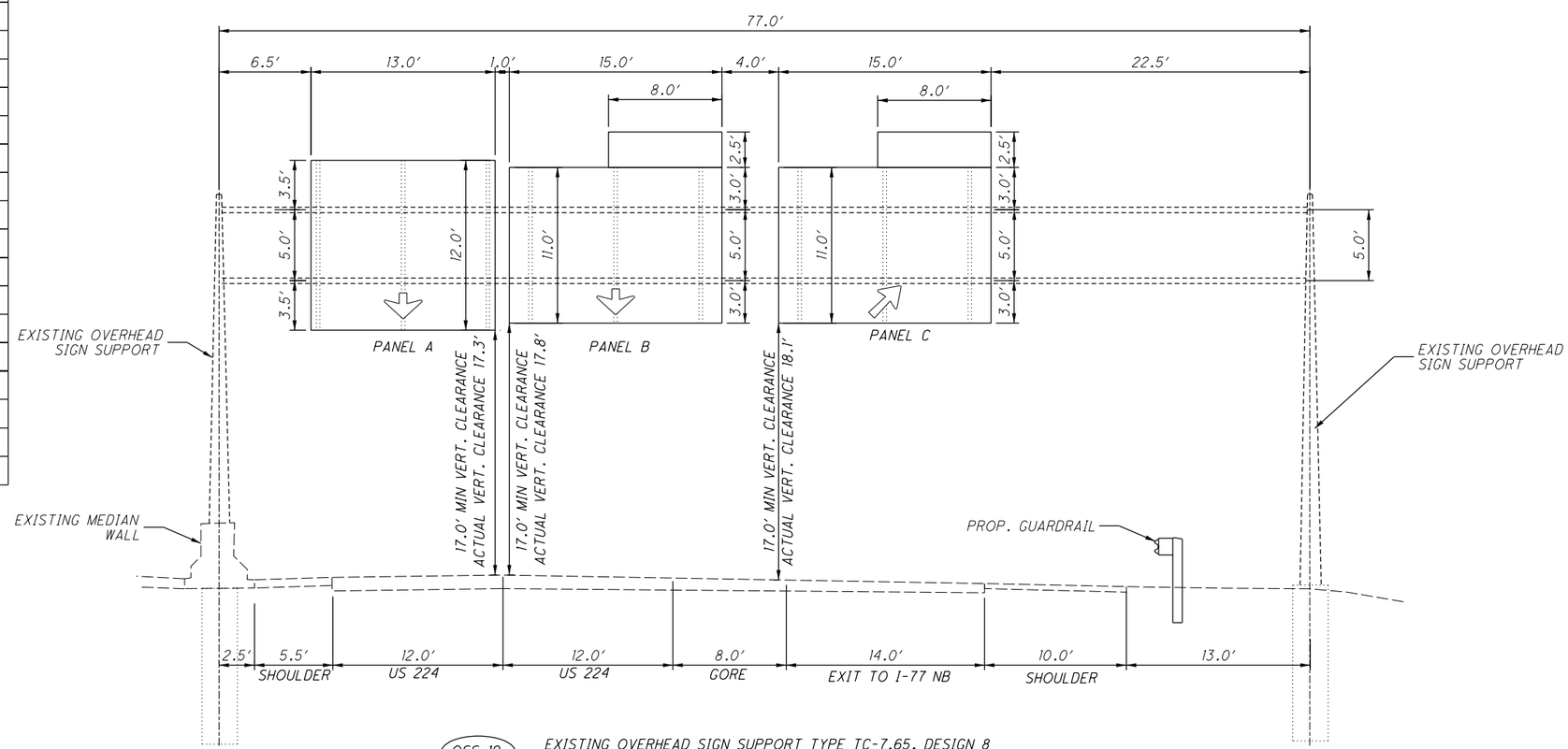


OSS-19 EXISTING OVERHEAD SIGN SUPPORT TYPE TC-7.65, DESIGN 8
STA. 266+54, US 224 WESTBOUND

SEE SHEET 983 FOR PLAN VIEW.

NOTES:
1. CONTRACTOR SHALL FIELD VERIFY EXISTING ELEVATIONS PRIOR TO THE ORDERING OF ANY MATERIALS.
2. ALL SIGNS ARE VIEWED IN THE DIRECTION OF TRAVEL.
3. CONTRACTOR SHALL LOCATE ALL UNDERGROUND UTILITIES IN FIELD PRIOR TO ANY EXCAVATION.

0 2.5 5 10 HORIZONTAL SCALE IN FEET

CALCULATED DLS | CHECKED AKF

# OVERHEAD SIGN SUPPORT DETAILS OSS-19

SUM-77/277/224
VARIOUS

1005
1288

O:\2017\2017258\ProjectData\SUM\106002\Design\Traffic\Sheets\106002_TE015.dgn Default 1/28/2021 1:26:05 PM aford

| PANEL A | |
|---|---|
| DESIGN LEVEL: | 1 |
| TEXT FONT: | E MOD / E |
| PANEL SIZE: | 12' X 12' |
| BACKGROUND: | GREEN |
| FILL COLOR: | WHITE |
| NUMBER OF BRACKETS: | 3 |
| PANEL B | |
| DESIGN LEVEL: | 1 |
| TEXT FONT: | E MOD / E |
| PANEL SIZE: | 14' X 9' |
| BACKGROUND: | GREEN |
| FILL COLOR: | WHITE |
| EXIT PANEL SIZE: | 8' X 2.5' |
| EXIT PANEL BACKGROUND: | GREEN |
| EXIT PANEL FILL COLOR: | WHITE |
| EXIT ONLY PANEL TEXT FONT: | E |
| EXIT ONLY PANEL SIZE: | 14' X 3' |
| EXIT ONLY PANEL BACKGROUND: | YELLOW |
| EXIT ONLY PANEL FILL COLOR: | BLACK |
| NUMBER OF BRACKETS: | 3 |
| PANEL C | |
| DESIGN LEVEL: | 1 |
| TEXT FONT: | E MOD / E |
| PANEL SIZE: | 14' X 8' |
| BACKGROUND: | GREEN |
| FILL COLOR: | WHITE |
| EXIT PANEL SIZE: | 8' X 2.5' |
| EXIT PANEL BACKGROUND: | GREEN |
| EXIT PANEL FILL COLOR: | WHITE |
| EXIT ONLY PANEL TEXT FONT: | E |
| EXIT ONLY PANEL SIZE: | 14' X 3' |
| EXIT ONLY PANEL BACKGROUND: | YELLOW |
| EXIT ONLY PANEL FILL COLOR: | BLACK |
| NUMBER OF BRACKETS: | 3 |
| SIGN SUPPORT INFORMATION | |
| TOTAL SIGN AREA: | 506.0 SQ. FT. |
| TOTAL SPAN LENGTH: | 63.0 FT. |
| DESIGN TYPE: | TC-7.65, DESIGN 6 |

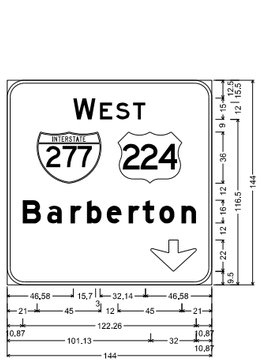


PANEL A
N.T.S.

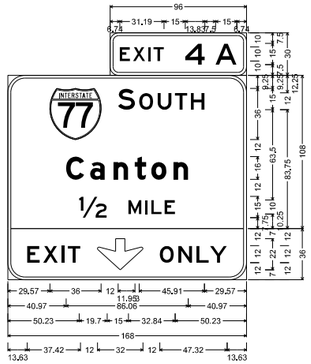


PANEL B
N.T.S.

PANEL C
N.T.S.

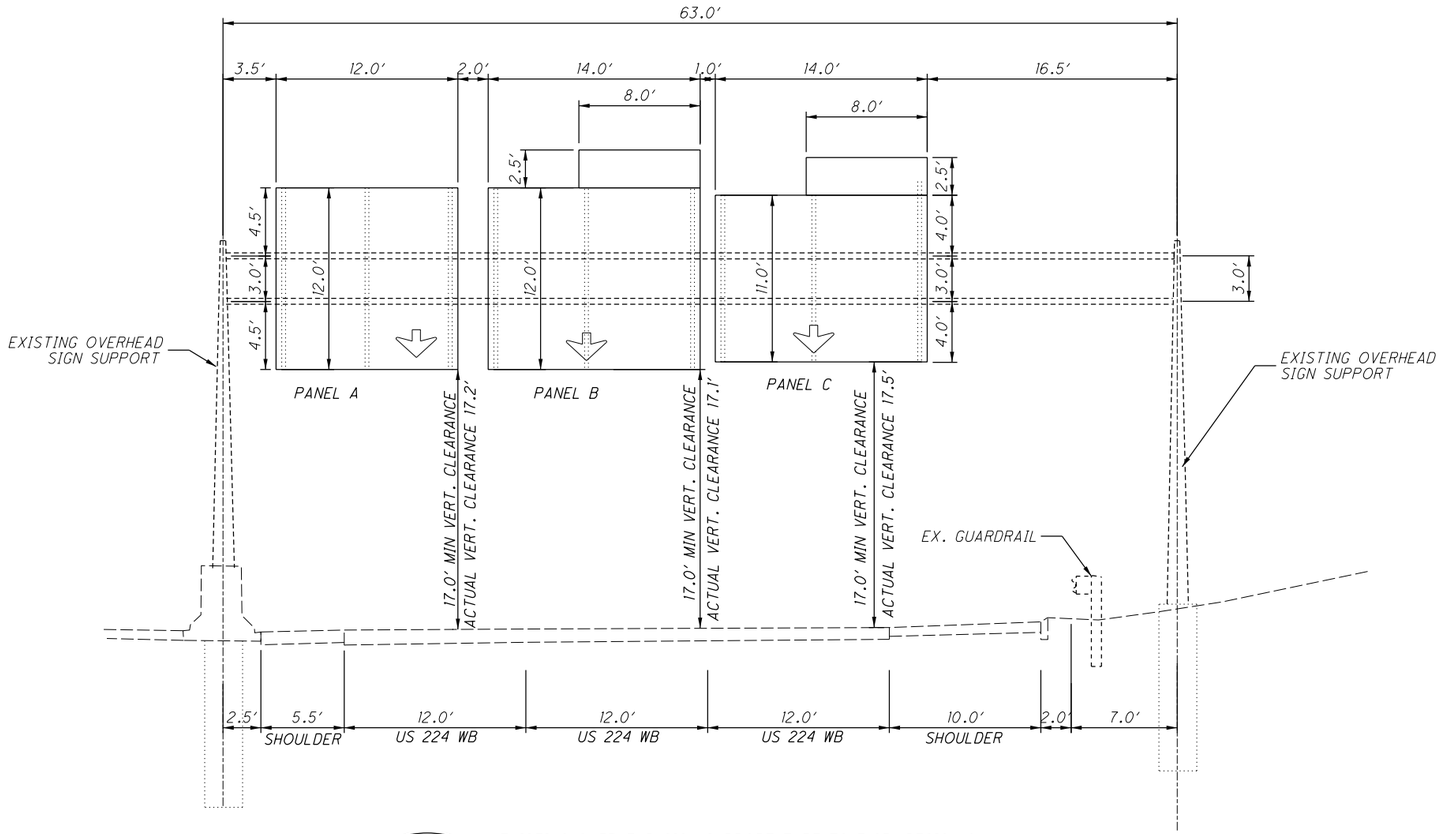


OSS-20 EXISTING OVERHEAD SIGN SUPPORT TYPE TC-7.65, DESIGN 6
STA. 282+78, US 224 WESTBOUND

SEE SHEET 984 FOR PLAN VIEW.

NOTES:
1. CONTRACTOR SHALL FIELD VERIFY EXISTING ELEVATIONS PRIOR TO THE ORDERING OF ANY MATERIALS.
2. ALL SIGNS ARE VIEWED IN THE DIRECTION OF TRAVEL.
3. CONTRACTOR SHALL LOCATE ALL UNDERGROUND UTILITIES IN FIELD PRIOR TO ANY EXCAVATION.

0 2.5 5 10 HORIZONTAL SCALE IN FEET

CALCULATED DLS | CHECKED AKF

# OVERHEAD SIGN SUPPORT DETAILS OSS-20

SUM-77/277/224
VARIOUS

1006
1288

0:\2017\2017258\ProjectData\SUM\106002\Design\Traffic\Sheets\106002_TE016.dgn Default 1/28/2021 1:28:56 PM aford

| PANEL A | |
|---|---|
| DESIGN LEVEL: | 1 |
| TEXT FONT: | E MOD / E |
| PANEL SIZE: | 13′ X 12′ |
| BACKGROUND: | GREEN |
| FILL COLOR: | WHITE |
| NUMBER OF BRACKETS: | 3 |
| PANEL B | |
| DESIGN LEVEL: | 1 |
| TEXT FONT: | E MOD / E |
| PANEL SIZE: | 12′ X 12′ |
| BACKGROUND: | GREEN |
| FILL COLOR: | WHITE |
| EXIT PANEL SIZE: | 12′ X 2.5′ |
| EXIT PANEL BACKGROUND: | GREEN |
| EXIT PANEL FILL COLOR: | WHITE |
| NUMBER OF BRACKETS: | 3 |
| SIGN SUPPORT INFORMATION | |
| TOTAL SIGN AREA: | 463.0 SQ. FT. |
| TOTAL SPAN LENGTH: | 66.0 FT. |
| DESIGN TYPE: | TC-7.65, DESIGN 6 |

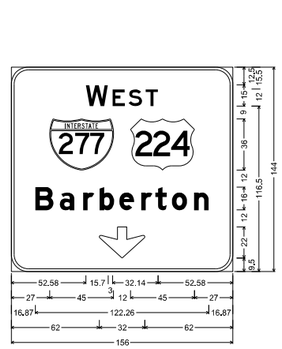


PANEL A
N.T.S.

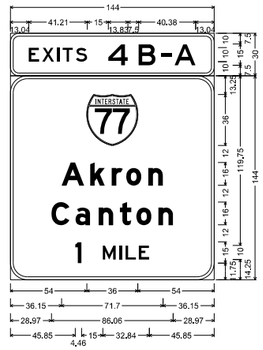


PANEL B
N.T.S.

PANEL C
N.T.S.

NOTES:
1. CONTRACTOR SHALL FIELD VERIFY EXISTING ELEVATIONS PRIOR TO THE ORDERING OF ANY MATERIALS.
2. ALL SIGNS ARE VIEWED IN THE DIRECTION OF TRAVEL.
3. CONTRACTOR SHALL LOCATE ALL UNDERGROUND UTILITIES IN FIELD PRIOR TO ANY EXCAVATION.

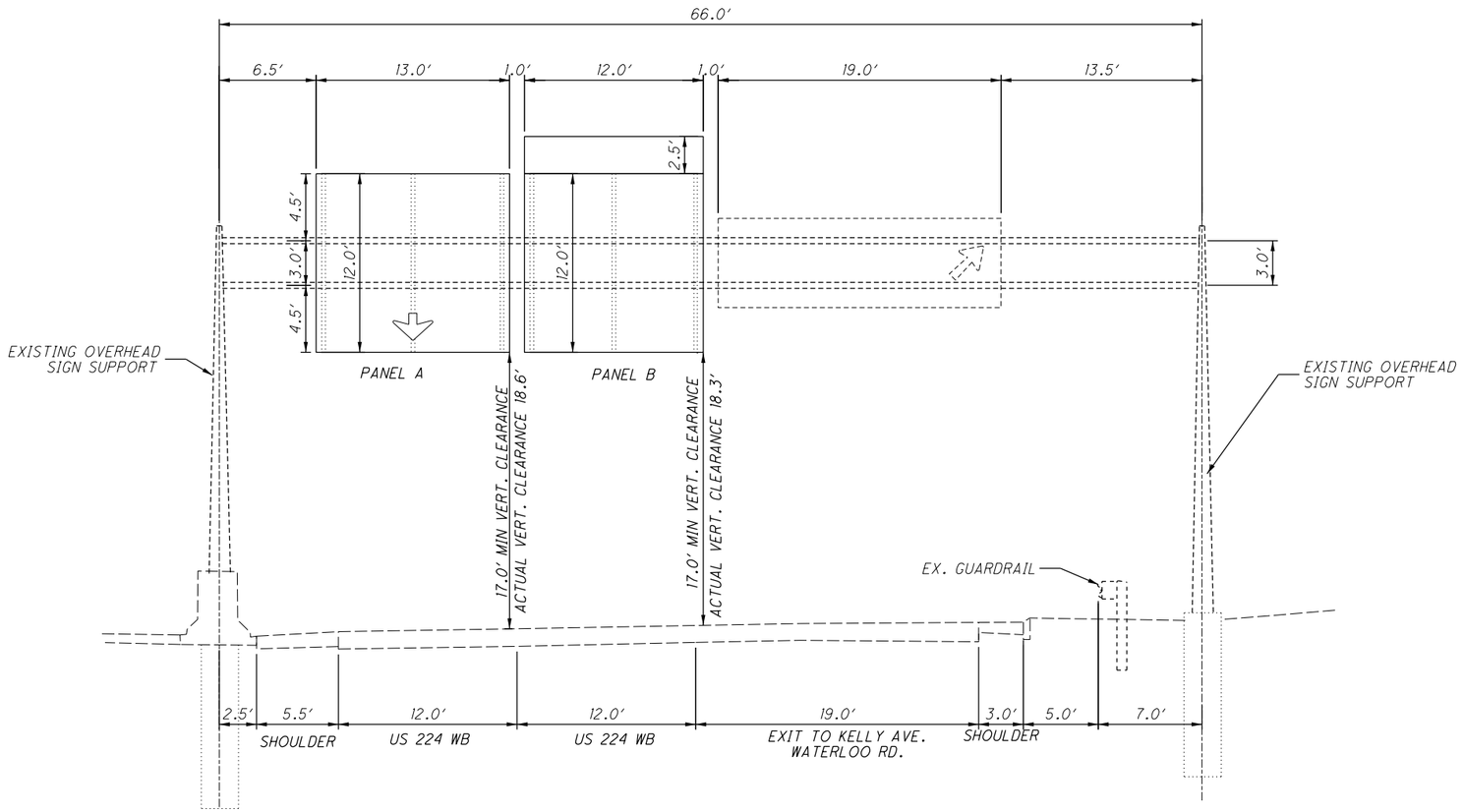


OSS-21 EXISTING OVERHEAD SIGN SUPPORT TYPE TC-7.65, DESIGN 6
US 224 WESTBOUND

SEE SHEET 985 FOR PLAN VIEW.

HORIZONTAL SCALE IN FEET
0 2.5 5 10

CALCULATED DLS
CHECKED AKF

# SIGN SUPPORT DETAILS
# OSS-21

SUM-77/277/224
VARIOUS

1007
1288

0:\2017\2017258\ProjectData\SUM\106002\Design\Traffic\Sheets\106002_TE017.dgn Default 1/28/2021 2:25:27 PM aford

| PANEL A | | | |
|---|---|---|---|
| SIGN SUPPORT INFORMATION | | | |
| TOTAL SIGN AREA: | 166.5 SQ. FT. | | |
| TOTAL ℄ TO ℄ LENGTH: | 22.0 FT. | | |
| DESIGN TYPE: | TC-12.31, DESIGN 12 | | |
| SUPPORT FOUNDATION INFORMATION | | | |
| SUPPORT TYPE | DES NO. | FOUNDATION DEPTH | FOUNDATION DIAMETER |
| 12.31 | 12 | 18.0′ | 42″ |

NOTES:
1. CONTRACTOR SHALL FIELD VERIFY EXISTING ELEVATIONS PRIOR TO THE ORDERING OF ANY MATERIALS.
2. ALL SIGNS ARE VIEWED IN THE DIRECTION OF TRAVEL.
3. CONTRACTOR SHALL LOCATE ALL UNDERGROUND UTILITIES IN FIELD PRIOR TO ANY EXCAVATION.

PANEL A
N.T.S.

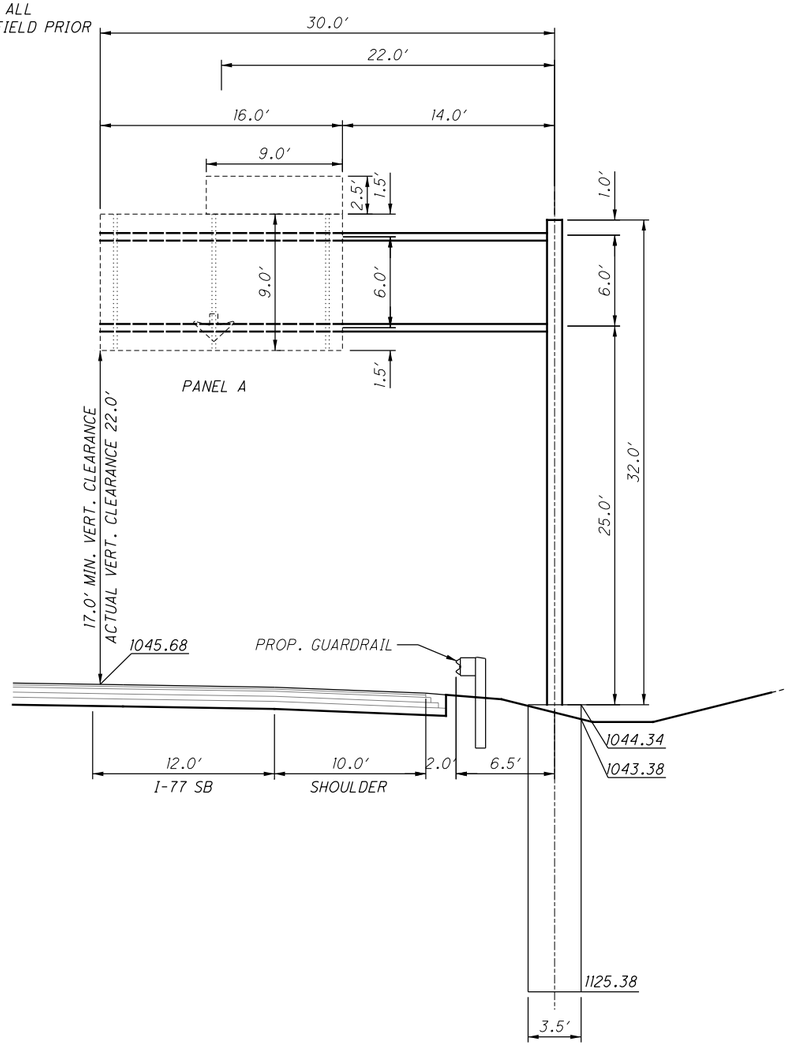


OSS-2 — OVERHEAD SIGN SUPPORT TYPE TC-12.31, DESIGN 12
STA. 417+00, I-77 SOUTHBOUND

SEE SHEET 966 FOR PLAN VIEW.

| PANEL A | |
|---|---|
| DESIGN LEVEL: | 1 |
| TEXT FONT: | E MOD / E |
| PANEL SIZE: | 16′ X 8′ |
| BACKGROUND: | GREEN |
| FILL COLOR: | WHITE |
| EXIT PANEL SIZE: | 11′ X 4.5′ |
| EXIT PANEL BACKGROUND: | GREEN |
| EXIT PANEL FILL COLOR: | WHITE |
| NUMBER OF BRACKETS: | 3 |
| SIGN SUPPORT INFORMATION | |
| TOTAL SIGN AREA: | 177.5 SQ. FT. |
| TOTAL ℄ TO ℄ LENGTH: | 18.5 FT. |
| DESIGN TYPE: | TC-12.31, DESIGN 10 |
| SUPPORT FOUNDATION INFORMATION | |

| SUPPORT TYPE | DES NO. | FOUNDATION DEPTH | FOUNDATION DIAMETER |
|---|---|---|---|
| 12.31 | 10 | 17.0′ | 42″ |

NOTES:
1. CONTRACTOR SHALL FIELD VERIFY EXISTING ELEVATIONS PRIOR TO THE ORDERING OF ANY MATERIALS.
2. ALL SIGNS ARE VIEWED IN THE DIRECTION OF TRAVEL.
3. CONTRACTOR SHALL LOCATE ALL UNDERGROUND UTILITIES IN FIELD PRIOR TO ANY EXCAVATION.

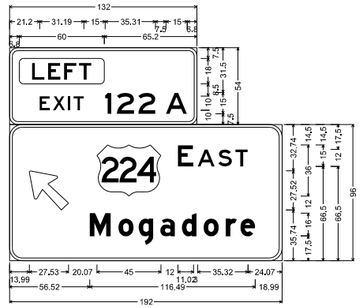


PANEL A
N.T.S.

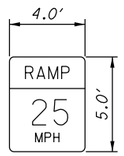


W13-3-48

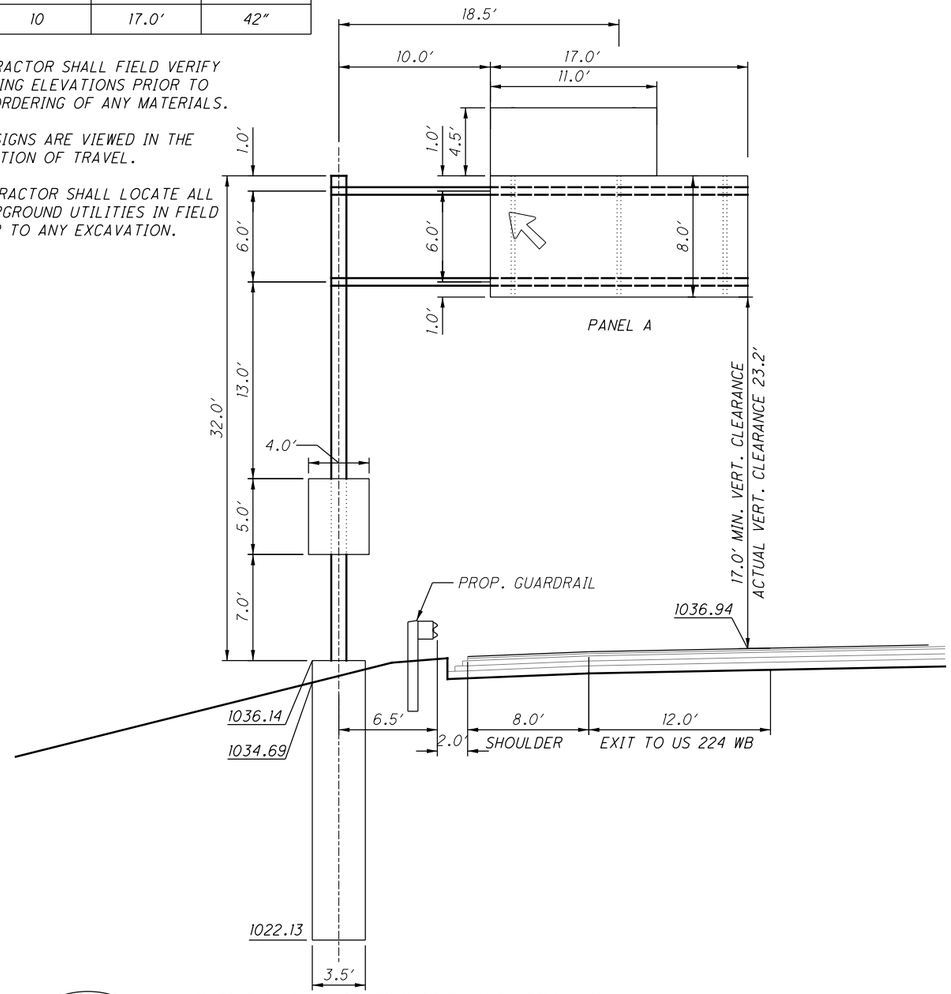


OSS-7 — OVERHEAD SIGN SUPPORT TYPE TC-12.31, DESIGN 10
STA. 503+50, I-77 SOUTHBOUND

SEE SHEET 973 FOR PLAN VIEW.

HORIZONTAL SCALE IN FEET
0 2.5 5 10

CALCULATED DLS
CHECKED AKF

# OVERHEAD SIGN SUPPORT DETAILS OSS-2 & OSS-7

SUM-77/277/224
VARIOUS

1008
1288

0:\2017\2017258\ProjectData\SUM\106002\Design\Traffic\Sheets\106002_TE030.dgn Default 1/17/2021 7:17:56 AM aford

| PANEL A | |
|---|---|
| DESIGN LEVEL: | 1 |
| TEXT FONT: | E MOD / E |
| PANEL SIZE: | 13′ X 8′ |
| BACKGROUND: | GREEN |
| FILL COLOR: | WHITE |
| EXIT PANEL SIZE: | 11′ X 4.5′ |
| EXIT PANEL BACKGROUND: | YELLOW |
| EXIT PANEL FILL COLOR: | BLACK |
| EXIT PANEL SIZE: | 13′ X 3′ |
| EXIT PANEL BACKGROUND: | GREEN |
| EXIT PANEL FILL COLOR: | WHITE |
| NUMBER OF BRACKETS: | 3 |
| SIGN SUPPORT INFORMATION | |
| TOTAL SIGN AREA: | 192.5 SQ. FT. |
| TOTAL ℄ TO ℄ LENGTH: | 22.0 FT. |
| DESIGN TYPE: | TC-12.31, DESIGN 12 |

SUPPORT FOUNDATION INFORMATION

| SUPPORT TYPE | DES NO. | FOUNDATION DEPTH | FOUNDATION DIAMETER |
|---|---|---|---|
| 12.31 | 12 | 18.0′ | 42″ |

NOTES:
1. CONTRACTOR SHALL FIELD VERIFY EXISTING ELEVATIONS PRIOR TO THE ORDERING OF ANY MATERIALS.
2. ALL SIGNS ARE VIEWED IN THE DIRECTION OF TRAVEL.
3. CONTRACTOR SHALL LOCATE ALL UNDERGROUND UTILITIES IN FIELD PRIOR TO ANY EXCAVATION.

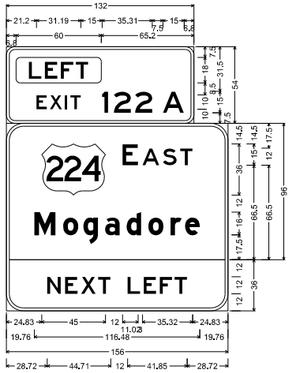


PANEL A
N.T.S.

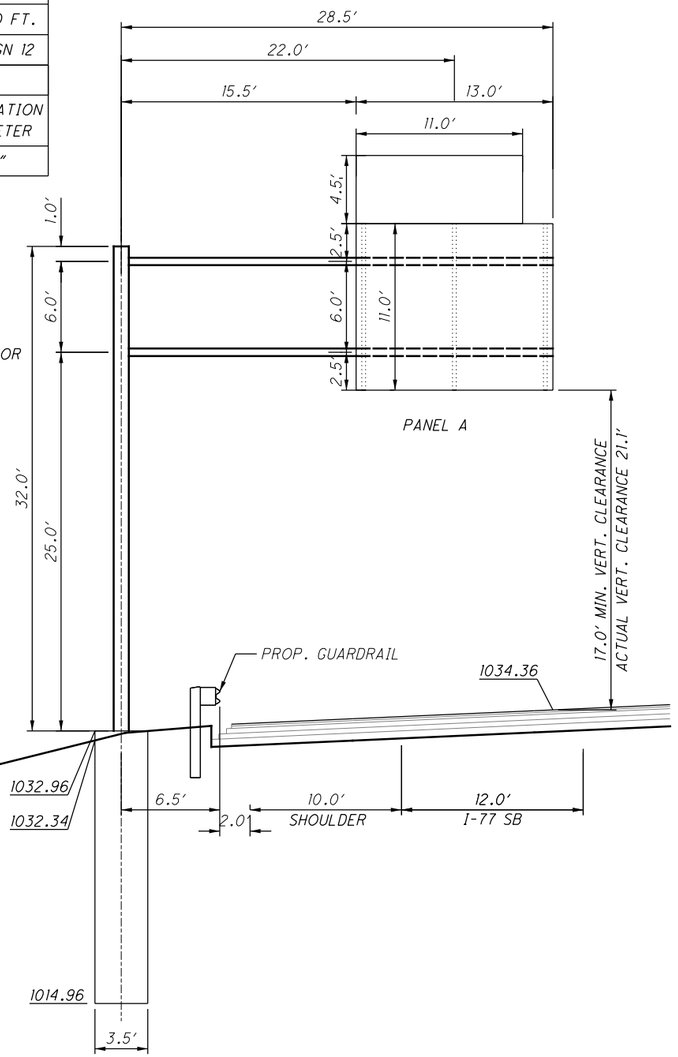


OSS-8 — OVERHEAD SIGN SUPPORT TYPE TC-12.31, DESIGN 12
STA. 509+50 W.B.

SEE SHEET 973 FOR PLAN VIEW.

| PANEL A | |
|---|---|
| DESIGN LEVEL: | 1 |
| TEXT FONT: | E MOD |
| PANEL SIZE: | 14′ X 8′ |
| BACKGROUND: | GREEN |
| FILL COLOR: | WHITE |
| EXIT PANEL SIZE: | 8′ X 2.5′ |
| EXIT PANEL BACKGROUND: | GREEN |
| EXIT PANEL FILL COLOR: | WHITE |
| NUMBER OF BRACKETS: | 3 |
| SIGN SUPPORT INFORMATION | |
| TOTAL SIGN AREA: | 132.0 SQ. FT. |
| TOTAL ℄ TO ℄ LENGTH: | 16.5 FT. |
| DESIGN TYPE: | TC-12.31, DESIGN 6 |

SUPPORT FOUNDATION INFORMATION

| SUPPORT TYPE | DES NO. | FOUNDATION DEPTH | FOUNDATION DIAMETER |
|---|---|---|---|
| 12.31 | 6 | 12.0′ | 36″ |

NOTES:
1. CONTRACTOR SHALL FIELD VERIFY EXISTING ELEVATIONS PRIOR TO THE ORDERING OF ANY MATERIALS.
2. ALL SIGNS ARE VIEWED IN THE DIRECTION OF TRAVEL.
3. CONTRACTOR SHALL LOCATE ALL UNDERGROUND UTILITIES IN FIELD PRIOR TO ANY EXCAVATION.

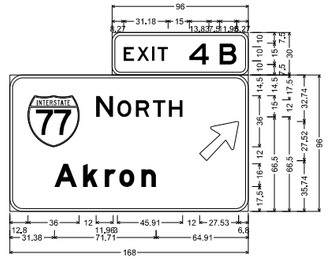


PANEL A
N.T.S.

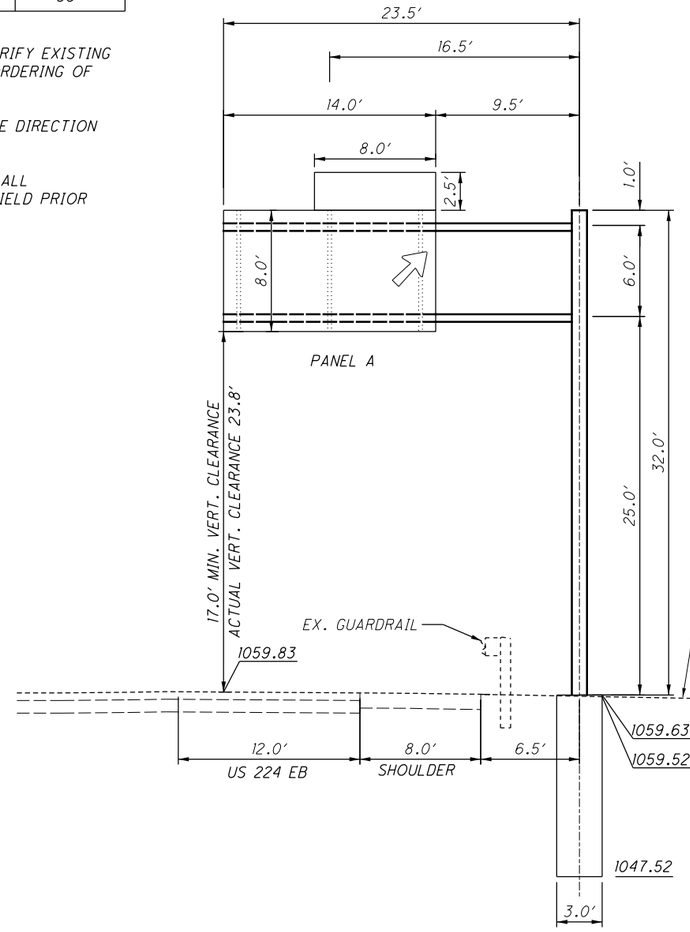


OSS-17 — OVERHEAD SIGN SUPPORT TYPE TC-12.31, DESIGN 6
STA. 251+00, US 224 EASTBOUND

SEE SHEET 982 FOR PLAN VIEW.

HORIZONTAL SCALE IN FEET
0 2.5 5 10

CALCULATED DLS
CHECKED AKF

# OVERHEAD SIGN SUPPORT DETAILS
## OSS-8 & OSS-17

SUM-77/277/224
VARIOUS

1009
1288

O:\2017\2017258\ProjectData\SUM\106002\Design\Traffic\Sheets\106002_TE031.dgn Default 1/28/2021 1:31:02 PM aford

| PANEL A | |
|---|---|
| DESIGN LEVEL: | 1 |
| TEXT FONT: | E MOD / E |
| PANEL SIZE: | 16′ X 8′ |
| BACKGROUND: | GREEN |
| FILL COLOR: | WHITE |
| NUMBER OF BRACKETS: | 3 |
| SIGN SUPPORT INFORMATION | |
| TOTAL SIGN AREA: | 128.0 SQ. FT. |
| TOTAL ℄ TO ℄ LENGTH: | 14.5 FT. |
| DESIGN TYPE: | TC-12.31, DESIGN 6 |
| SUPPORT FOUNDATION INFORMATION | |

| SUPPORT TYPE | DES NO. | FOUNDATION DEPTH | FOUNDATION DIAMETER |
|---|---|---|---|
| 12.31 | 6 | 12.0′ | 36″ |

NOTES:
1. CONTRACTOR SHALL FIELD VERIFY EXISTING ELEVATIONS PRIOR TO THE ORDERING OF ANY MATERIALS.
2. ALL SIGNS ARE VIEWED IN THE DIRECTION OF TRAVEL.
3. CONTRACTOR SHALL LOCATE ALL UNDERGROUND UTILITIES IN FIELD PRIOR TO ANY EXCAVATION.

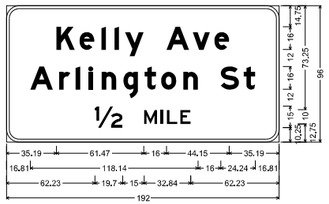


PANEL A
N.T.S.

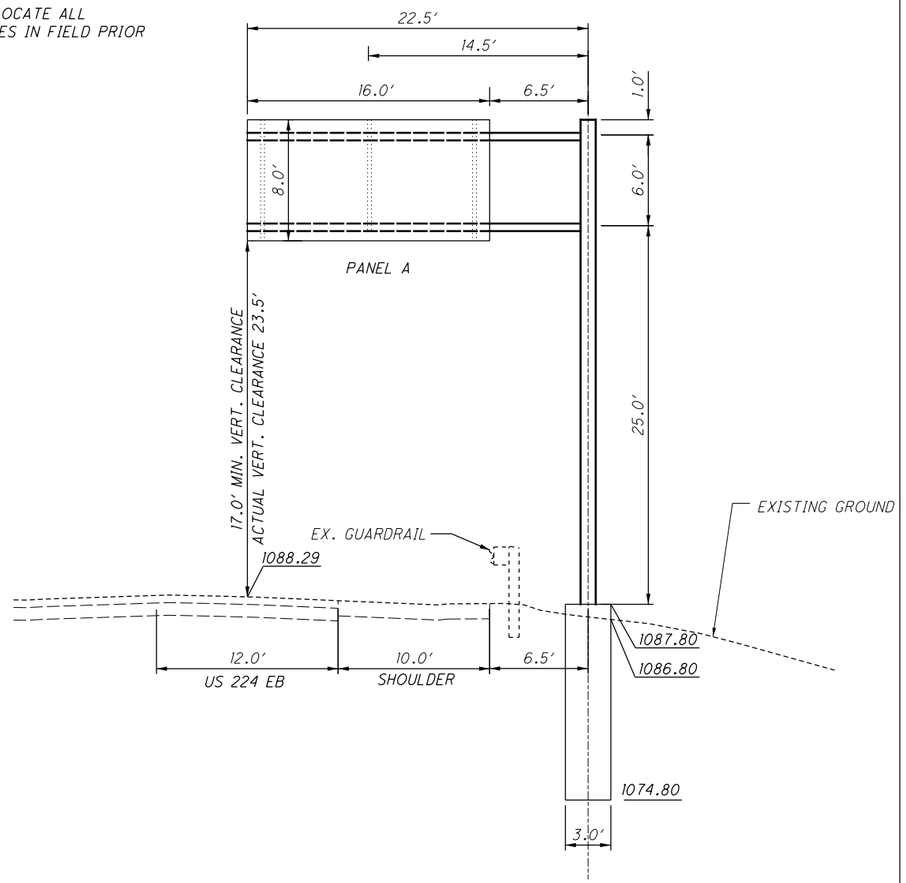


OSS-22 OVERHEAD SIGN SUPPORT TYPE TC-12.31, DESIGN 6
STA. 266+50, US 224 EASTBOUND

SEE SHEET 983 FOR PLAN VIEW.

0 2.5 5 10 HORIZONTAL SCALE IN FEET

CALCULATED DLS
CHECKED AKF

# OVERHEAD MOUNTED SIGN SUPPORT DETAILS
# OSS-22

SUM-77/277/224
VARIOUS

1010
1288

O:\2017\2017258\ProjectData\SUM\106002\Design\Traffic\Sheets\106002_TE032.dgn Default 1/17/2021 7:18:00 AM aford

| SIGN INFORMATION | |
|---|---|
| PANEL A | |
| SIGN DESIGNATION: | W9-H4R-144 |
| PANEL SIZE: | 12′ X 4′ |
| BACKGROUND: | YELLOW |
| FILL COLOR: | BLACK |
| SIGN SUPPORT INFORMATION | |
| TOTAL SIGN AREA: | 48.0 SQ. FT. |
| DESIGN TYPE: | W6X9 |
| SIZE: | 5-7/8″ X 4″ |
| BEAM FOUNDATION INFORMATION | |
| DIAMETER: | 18″ |
| DEPTH: | 5.0′ |

NOTES:
1. CONTRACTOR SHALL FIELD VERIFY EXISTING ELEVATIONS PRIOR TO THE ORDERING OF ANY MATERIALS.
2. ALL SIGNS ARE VIEWED IN THE DIRECTION OF TRAVEL.
3. CONTRACTOR SHALL LOCATE ALL UNDERGROUND UTILITIES IN FIELD PRIOR TO ANY EXCAVATION.

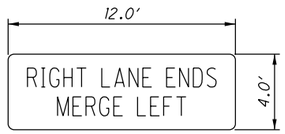


W9-H4R-144
PANEL A
N.T.S.

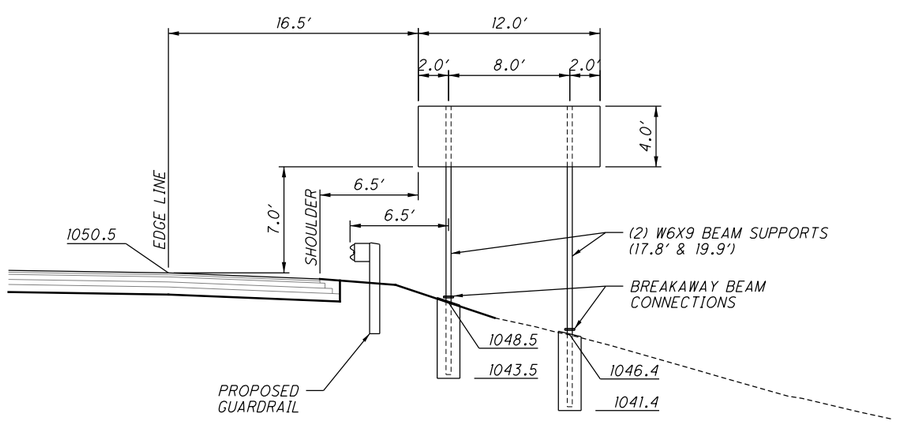


S-15 BEAM SUPPORT TYPE W6X9
STA. 415+20, I-77 NORTHBOUND

SEE SHEET 965 FOR PLAN VIEW.

| SIGN INFORMATION | |
|---|---|
| PANEL A | |
| SIGN DESIGNATION: | D12-H5b-120 |
| PANEL SIZE: | 10′ X 6′ |
| BACKGROUND: | YELLOW |
| FILL COLOR: | BLACK |
| SIGN SUPPORT INFORMATION | |
| TOTAL SIGN AREA: | 80.0 SQ. FT. |
| DESIGN TYPE: | W10X12 |
| SIZE: | 9-7/8″ X 4″ |
| BEAM FOUNDATION INFORMATION | |
| DIAMETER: | 30″ |
| DEPTH: | 6.0′ |

NOTES:
1. CONTRACTOR SHALL FIELD VERIFY EXISTING ELEVATIONS PRIOR TO THE ORDERING OF ANY MATERIALS.
2. ALL SIGNS ARE VIEWED IN THE DIRECTION OF TRAVEL.
3. CONTRACTOR SHALL LOCATE ALL UNDERGROUND UTILITIES IN FIELD PRIOR TO ANY EXCAVATION.

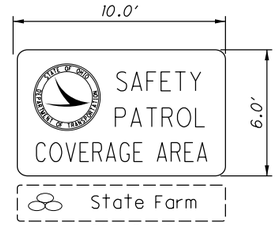


D12-H5b-120
D12-H5bP

PANEL A
N.T.S.

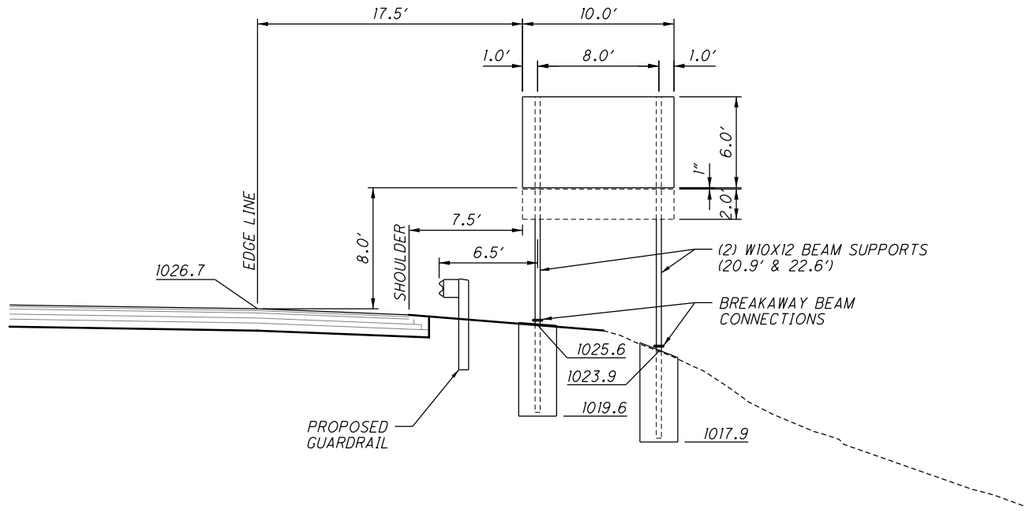


S-31 BEAM SUPPORT TYPE W6X9
STA. 445+50, I-77 NORTHBOUND

SEE SHEET 968 FOR PLAN VIEW.

HORIZONTAL SCALE IN FEET
0 2.5 5 10

CALCULATED DLS
CHECKED AKF

# BEAM MOUNTED SIGN SUPPORT DETAILS S-15 & S-31

SUM-77/277/224
VARIOUS

1011
1288

O:\2017\2017258\ProjectData\SUM\106002\Design\Traffic\Sheets\106002_TE050.dgn Default 1/17/2021 7:18:03 AM aford

| PANEL A | |
|---|---|
| SIGN DESIGNATION | R25-H1-120 |
| PANEL SIZE: | 10′ X 5′ |
| BACKGROUND: | WHITE |
| FILL COLOR: | BLACK |
| PROPOSED BEAM INFORMATION | |
| TOTAL SIGN AREA: | 50.0 SQ. FT. |
| DESIGN TYPE: | W10X12 |
| SIZE: | 9-7/8″ X 4″ |
| BEAM FOUNDATION INFORMATION | |
| DIAMETER: | 30″ |
| DEPTH: | 6.0′ |

NOTES:
1. CONTRACTOR SHALL FIELD VERIFY EXISTING ELEVATIONS PRIOR TO THE ORDERING OF ANY MATERIALS.
2. ALL SIGNS ARE VIEWED IN THE DIRECTION OF TRAVEL.
3. CONTRACTOR SHALL LOCATE ALL UNDERGROUND UTILITIES IN FIELD PRIOR TO ANY EXCAVATION.

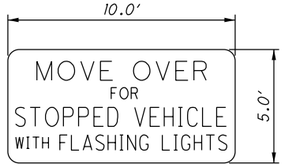


R25-H1-120

PANEL A
N.T.S.

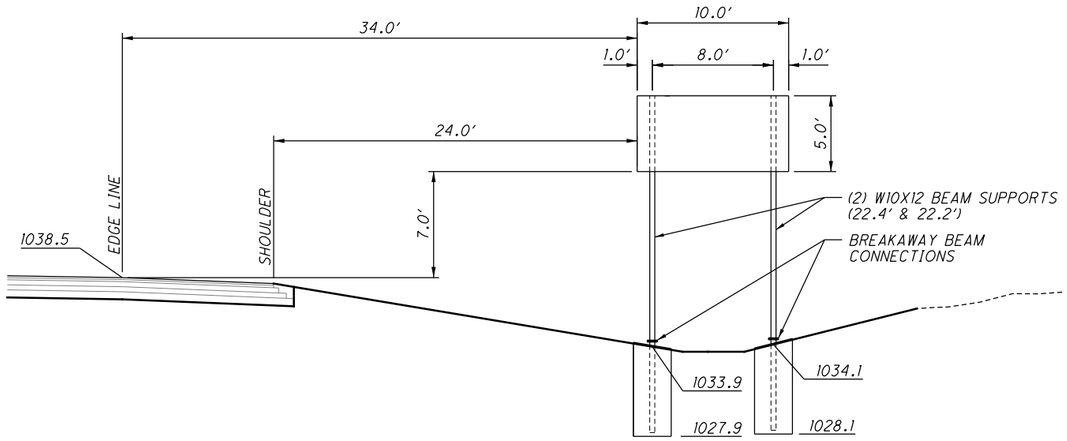


S-35 BEAM SUPPORT TYPE W10X12
STA. 455+89, I-77 SOUTHBOUND

SEE SHEET 969 FOR PLAN VIEW.

| SIGN INFORMATION | |
|---|---|
| PANEL A | |
| SIGN DESIGNATION | D12-H5b-120 |
| PANEL SIZE: | 10′ X 6′ |
| BACKGROUND: | BLUE |
| FILL COLOR: | WHITE |
| SIGN SUPPORT INFORMATION | |
| TOTAL SIGN AREA: | 80.0 SQ. FT. |
| DESIGN TYPE: | W10X12 |
| SIZE: | 9-7/8″ X 4″ |
| BEAM FOUNDATION INFORMATION | |
| DIAMETER: | 30″ |
| DEPTH: | 6.0′ |

NOTES:
1. CONTRACTOR SHALL FIELD VERIFY EXISTING ELEVATIONS PRIOR TO THE ORDERING OF ANY MATERIALS.
2. ALL SIGNS ARE VIEWED IN THE DIRECTION OF TRAVEL.
3. CONTRACTOR SHALL LOCATE ALL UNDERGROUND UTILITIES IN FIELD PRIOR TO ANY EXCAVATION.

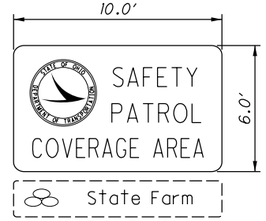


D12-H5b-120
D12-H5bP

PANEL A
N.T.S.

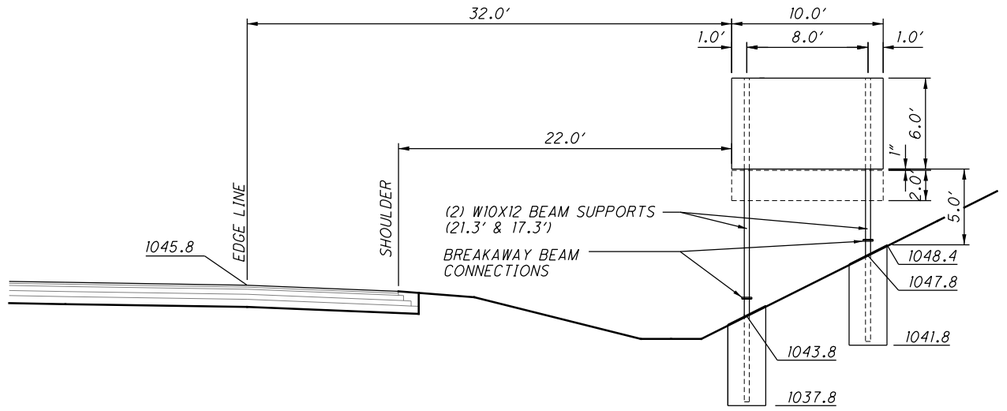


S-36 BEAM SUPPORT TYPE W10X12
STA. 462+50, I-77 SOUTHBOUND

SEE SHEET 969 FOR PLAN VIEW.

HORIZONTAL SCALE IN FEET
0 2.5 5 10

CALCULATED DLS
CHECKED AKF

# BEAM MOUNTED SIGN SUPPORT DETAILS S-35 & S-36

SUM-77/277/224
VARIOUS

1012
1288

O:\2017\2017258\ProjectData\SUM\106002\Design\Traffic\Sheets\106002_TE051.dgn Default 1/17/2021 7:18:05 AM aford

| PANEL A | |
|---|---|
| DESIGN LEVEL: | 2 |
| TEXT FONT: | E MOD / E |
| PANEL SIZE: | 14′ X 8′ |
| BACKGROUND: | GREEN |
| FILL COLOR: | WHITE |
| EXIT PANEL SIZE: | 11′ X 4.5′ |
| EXIT PANEL BACKGROUND: | GREEN |
| EXIT PANEL FILL COLOR: | WHITE |
| PROPOSED BEAM INFORMATION | |
| TOTAL SIGN AREA: | 161.5 SQ. FT. |
| DESIGN TYPE: | W10X22 |
| SIZE: | 10-1/8″ X 5-3/4″ |
| BEAM FOUNDATION INFORMATION | |
| DIAMETER: | 30″ |
| DEPTH: | 6.75′ |

NOTES:
1. CONTRACTOR SHALL FIELD VERIFY EXISTING ELEVATIONS PRIOR TO THE ORDERING OF ANY MATERIALS.
2. ALL SIGNS ARE VIEWED IN THE DIRECTION OF TRAVEL.
3. CONTRACTOR SHALL LOCATE ALL UNDERGROUND UTILITIES IN FIELD PRIOR TO ANY EXCAVATION.

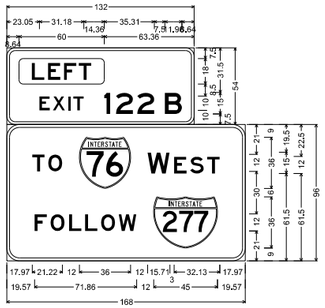


PANEL A
N.T.S.

| PANEL A | |
|---|---|
| SIGN DESIGNATION | D12-H22-120 |
| PANEL SIZE: | 10′ X 4′ |
| BACKGROUND: | BLUE |
| FILL COLOR: | WHITE |
| PROPOSED BEAM INFORMATION | |
| TOTAL SIGN AREA: | 40.0 SQ. FT. |
| DESIGN TYPE: | W6X9 |
| SIZE: | 5-7/8″ X 4″ |
| BEAM FOUNDATION INFORMATION | |
| DIAMETER: | 18″ |
| DEPTH: | 5.0′ |

NOTES:
1. CONTRACTOR SHALL FIELD VERIFY EXISTING ELEVATIONS PRIOR TO THE ORDERING OF ANY MATERIALS.
2. ALL SIGNS ARE VIEWED IN THE DIRECTION OF TRAVEL.
3. CONTRACTOR SHALL LOCATE ALL UNDERGROUND UTILITIES IN FIELD PRIOR TO ANY EXCAVATION.

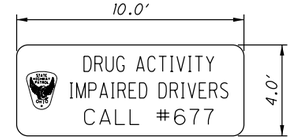


D12-H22-120

PANEL A
N.T.S.

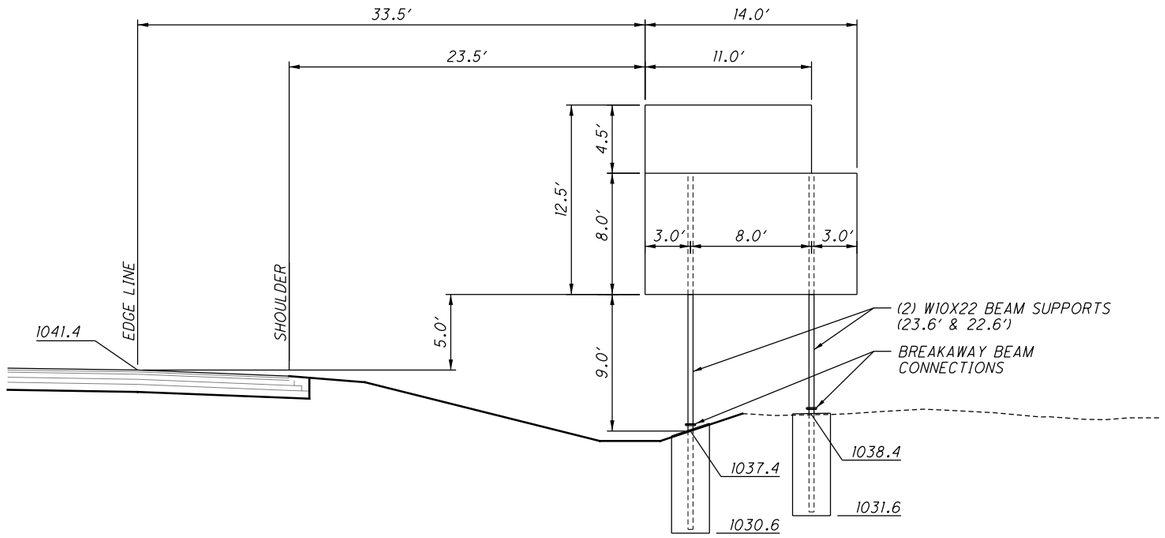


S-38 BEAM SUPPORT TYPE W10X22
STA. 459+50, I-77 NORTHBOUND

SEE SHEET 969 FOR PLAN VIEW.

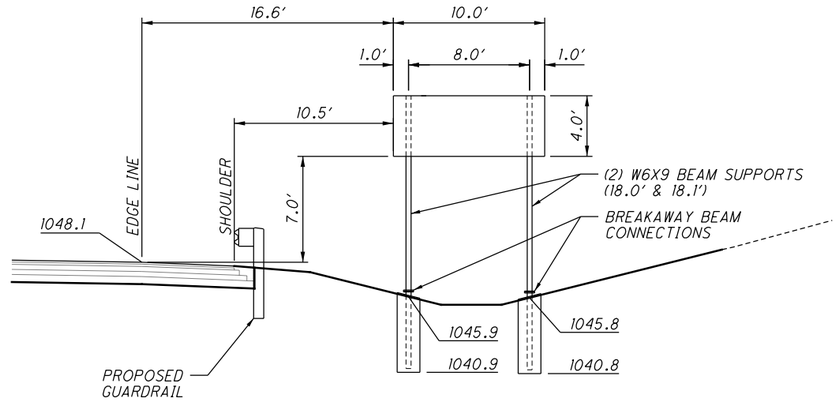


S-42 BEAM SUPPORT TYPE W6X9
STA. 468+00, I-77 NORTHBOUND

SEE SHEET 970 FOR PLAN VIEW.

HORIZONTAL SCALE IN FEET
0 2.5 5 10

CALCULATED DLS
CHECKED AKF

# BEAM MOUNTED SIGN SUPPORT DETAILS S-38 & S-42

SUM-77/277/224
VARIOUS

1013
1288

0:\2017\2017258\ProjectData\SUM\106002\Design\Traffic\Sheets\106002_TE052.dgn Default 1/17/2021 7:18:06 AM aford

| PANEL A | |
|---|---|
| SIGN DESIGNATION | E5-H1a-108 |
| PANEL SIZE: | 9′ X 5′ |
| BACKGROUND: | GREEN |
| FILL COLOR: | WHITE |
| PROPOSED BEAM INFORMATION | |
| TOTAL SIGN AREA: | 45.0 SQ. FT. |
| DESIGN TYPE: | W6X9 |
| SIZE: | 5-7/8″ X 4″ |
| BEAM FOUNDATION INFORMATION | |
| DIAMETER: | 18″ |
| DEPTH: | 5.0′ |

NOTES:
1. CONTRACTOR SHALL FIELD VERIFY EXISTING ELEVATIONS PRIOR TO THE ORDERING OF ANY MATERIALS.
2. ALL SIGNS ARE VIEWED IN THE DIRECTION OF TRAVEL.
3. CONTRACTOR SHALL LOCATE ALL UNDERGROUND UTILITIES IN FIELD PRIOR TO ANY EXCAVATION.

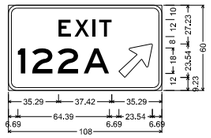


PANEL A
N.T.S.

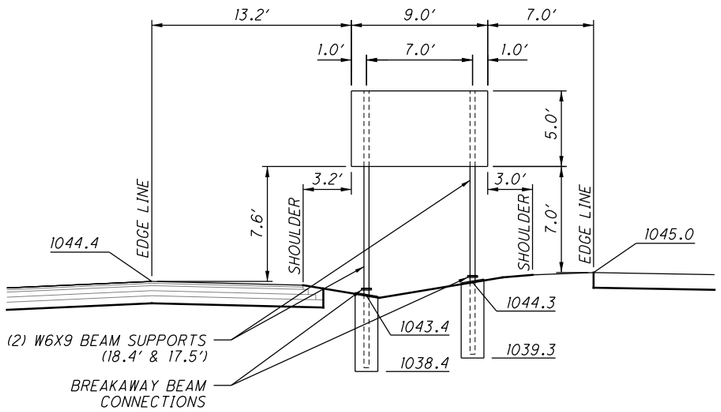


S-47 BEAM SUPPORT TYPE W6X9
STA. 481+75, I-77 NORTHBOUND

SEE SHEET 971 FOR PLAN VIEW.

| PANEL A | |
|---|---|
| SIGN DESIGNATION: | R2-1-48 |
| PANEL SIZE: | 4′ X 5′ |
| BACKGROUND: | WHITE |
| FILL COLOR: | BLACK |
| PROPOSED BEAM INFORMATION | |
| TOTAL SIGN AREA: | 20.0 SQ. FT. |
| DESIGN TYPE: | S4X7.7 |
| SIZE: | 4″ X 2-5/8″ |
| BEAM FOUNDATION INFORMATION | |
| DIAMETER: | 18″ |
| DEPTH: | 4.0′ |

NOTES:
1. CONTRACTOR SHALL FIELD VERIFY EXISTING ELEVATIONS PRIOR TO THE ORDERING OF ANY MATERIALS.
2. ALL SIGNS ARE VIEWED IN THE DIRECTION OF TRAVEL.
3. CONTRACTOR SHALL LOCATE ALL UNDERGROUND UTILITIES IN FIELD PRIOR TO ANY EXCAVATION.

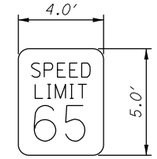


PANEL A
N.T.S

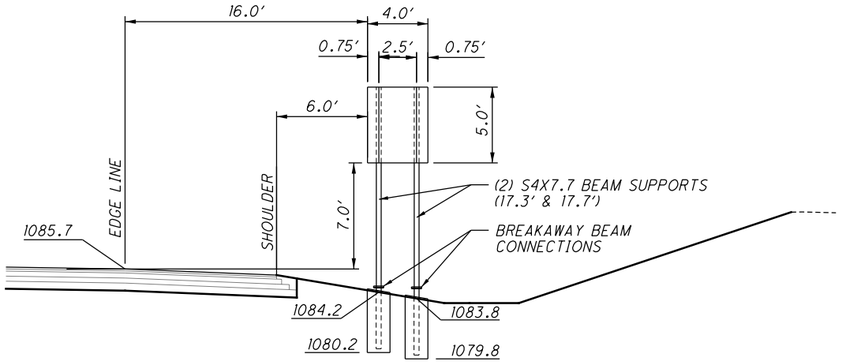


S-11 BEAM SUPPORT TYPE S4X7.7
STA. 401+00, I-77 NORTHBOUND

SEE SHEET 964 FOR PLAN VIEW.

HORIZONTAL SCALE IN FEET
0 2.5 5 10

CALCULATED DLS
CHECKED AKF

# BEAM MOUNTED SIGN SUPPORT DETAILS S-47 & S-11

SUM-77/277/224
VARIOUS

1014
1288

O:\2017\2017258\ProjectData\SUM\106002\Design\Traffic\Sheets\106002_TE053.dgn Default 1/17/2021 7:18:08 AM aford

| PANEL A | |
|---|---|
| SIGN DESIGNATION | E5-H1-108 |
| PANEL SIZE: | 9′ X 5′ |
| BACKGROUND: | GREEN |
| FILL COLOR: | WHITE |
| PROPOSED BEAM INFORMATION | |
| TOTAL SIGN AREA: | 45.0 SQ. FT. |
| DESIGN TYPE: | W6X9 |
| SIZE: | 5-7/8″ X 4″ |
| BEAM FOUNDATION INFORMATION | |
| DIAMETER: | 18″ |
| DEPTH: | 5.0′ |

NOTES:
1. CONTRACTOR SHALL FIELD VERIFY EXISTING ELEVATIONS PRIOR TO THE ORDERING OF ANY MATERIALS.
2. ALL SIGNS ARE VIEWED IN THE DIRECTION OF TRAVEL.
3. CONTRACTOR SHALL LOCATE ALL UNDERGROUND UTILITIES IN FIELD PRIOR TO ANY EXCAVATION.

PANEL A
N.T.S.

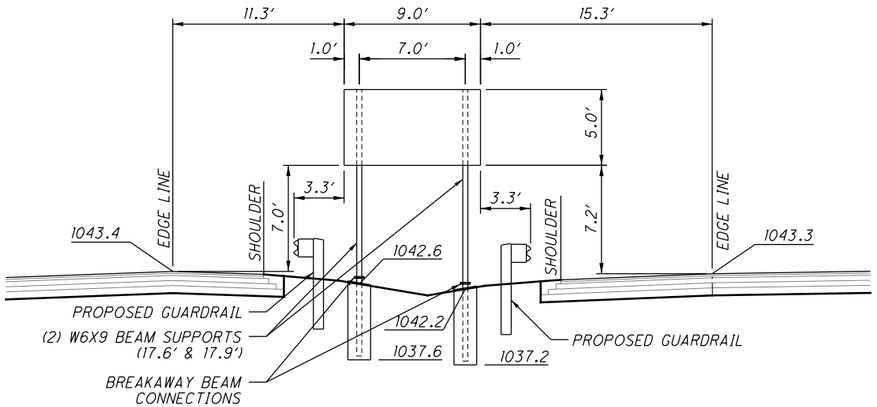


S-57 BEAM SUPPORT TYPE W6X9
STA. 496+25, I-77 SOUTHBOUND

SEE SHEET 972 FOR PLAN VIEW.

| PANEL A | |
|---|---|
| SIGN DESIGNATION | E5-H1-108 |
| PANEL SIZE: | 9′ X 5′ |
| BACKGROUND: | GREEN |
| FILL COLOR: | WHITE |
| PROPOSED BEAM INFORMATION | |
| TOTAL SIGN AREA: | 45.0 SQ. FT. |
| DESIGN TYPE: | W6X9 |
| SIZE: | 5-7/8″ X 4″ |
| BEAM FOUNDATION INFORMATION | |
| DIAMETER: | 18″ |
| DEPTH: | 5.0′ |

NOTES:
1. CONTRACTOR SHALL FIELD VERIFY EXISTING ELEVATIONS PRIOR TO THE ORDERING OF ANY MATERIALS.
2. ALL SIGNS ARE VIEWED IN THE DIRECTION OF TRAVEL.
3. CONTRACTOR SHALL LOCATE ALL UNDERGROUND UTILITIES IN FIELD PRIOR TO ANY EXCAVATION.

PANEL A
N.T.S.

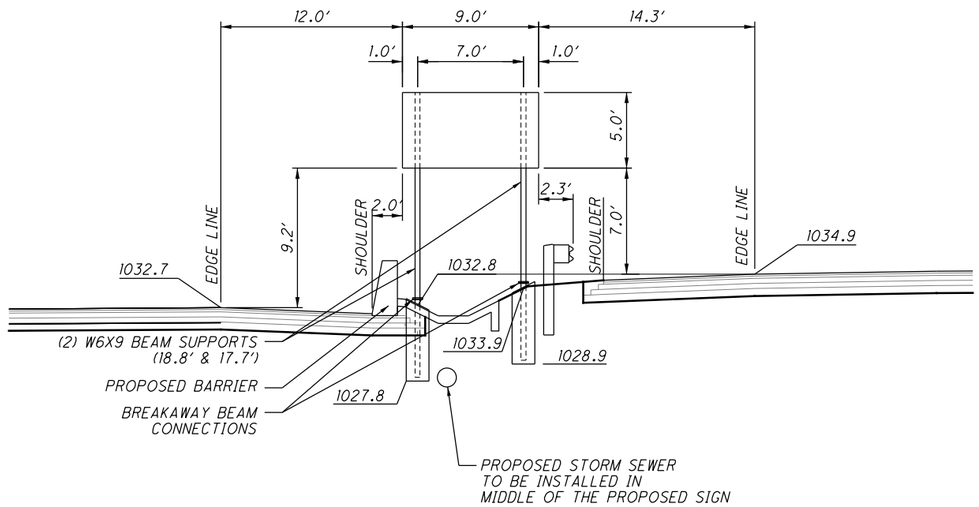


S-62 BEAM SUPPORT TYPE W6X9
STA. 497+00, I-77 NORTHBOUND

SEE SHEET 972 FOR PLAN VIEW.

HORIZONTAL SCALE IN FEET
0 2.5 5 10

CALCULATED DLS
CHECKED AKF

# BEAM MOUNTED SIGN SUPPORT DETAILS
## S-57 & S-62

SUM-77/277/224
VARIOUS

1015
1288

O:\2017\2017258\ProjectData\SUM\106002\Design\Traffic\Sheets\106002_TE054.dgn Default 1/17/2021 7:18:10 AM aford

| PANEL A | |
|---|---|
| SIGN DESIGNATION | E5-H1-108 |
| PANEL SIZE: | 9' X 5' |
| BACKGROUND: | GREEN |
| FILL COLOR: | WHITE |
| PROPOSED BEAM INFORMATION | |
| TOTAL SIGN AREA: | 45.0 SQ. FT. |
| DESIGN TYPE: | W6X9 |
| SIZE: | 5-7/8" X 4" |
| BEAM FOUNDATION INFORMATION | |
| DIAMETER: | 18" |
| DEPTH: | 5.0' |

NOTES:
1. CONTRACTOR SHALL FIELD VERIFY EXISTING ELEVATIONS PRIOR TO THE ORDERING OF ANY MATERIALS.
2. ALL SIGNS ARE VIEWED IN THE DIRECTION OF TRAVEL.
3. CONTRACTOR SHALL LOCATE ALL UNDERGROUND UTILITIES IN FIELD PRIOR TO ANY EXCAVATION.

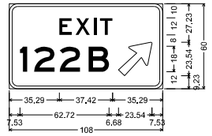


PANEL A
N.T.S.

| PROPOSED BEAM INFORMATION | |
|---|---|
| TOTAL SIGN AREA: | 150.0 SQ. FT. |
| DESIGN TYPE: | W10X22 |
| SIZE: | 10-1/8" X 5-3/4" |
| BEAM FOUNDATION INFORMATION | |
| DIAMETER: | 30" |
| DEPTH: | 6.75' |

NOTES:
1. CONTRACTOR SHALL FIELD VERIFY EXISTING ELEVATIONS PRIOR TO THE ORDERING OF ANY MATERIALS.
2. ALL SIGNS ARE VIEWED IN THE DIRECTION OF TRAVEL.
3. CONTRACTOR SHALL LOCATE ALL UNDERGROUND UTILITIES IN FIELD PRIOR TO ANY EXCAVATION.

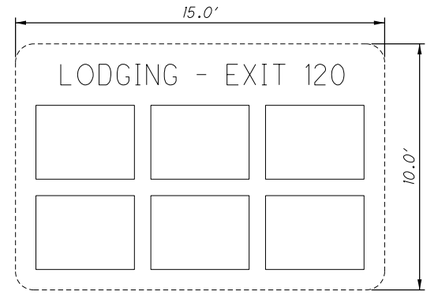


PANEL A
N.T.S.

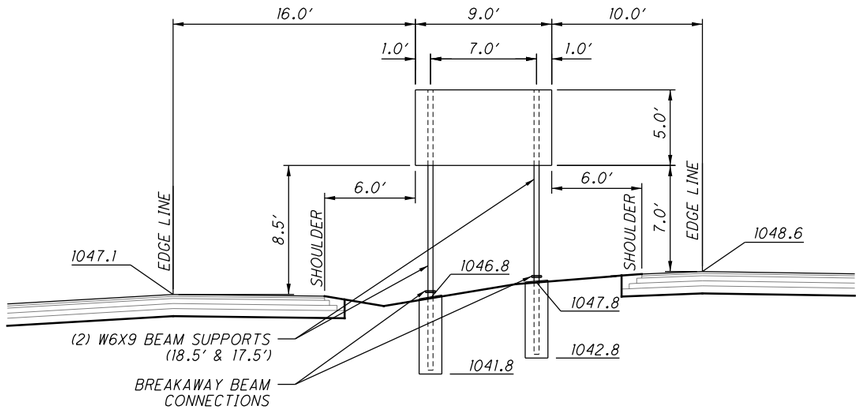


S-76 BEAM SUPPORT TYPE W6X9
STA. 514+66, I-77 SOUTHBOUND

SEE SHEET 974 FOR PLAN VIEW.

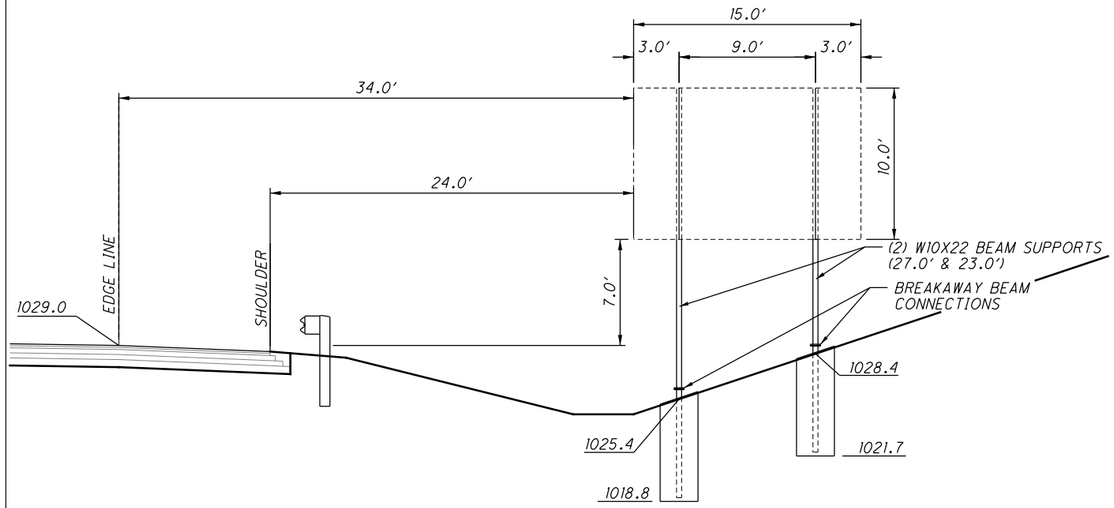


S-30A BEAM SUPPORT TYPE W10X22
STA. 447+00, I-77 SOUTHBOUND

SEE SHEET 968 FOR PLAN VIEW.

HORIZONTAL SCALE IN FEET
0 2.5 5 10

CALCULATED DLS
CHECKED AKF

# BEAM MOUNTED SIGN SUPPORT DETAILS S-76

SUM-77/277/224
VARIOUS

1016
1288

O:\2017\2017258\ProjectData\SUM\106002\Design\Traffic\Sheets\106002_TE055.dgn Default 1/17/2021 7:18:12 AM aford

| PANEL A | |
|---|---|
| SIGN DESIGNATION | E5-H1-96 |
| PANEL SIZE: | 8′ X 5′ |
| BACKGROUND: | GREEN |
| FILL COLOR: | WHITE |
| PROPOSED BEAM INFORMATION | |
| TOTAL SIGN AREA: | 40.0 SQ. FT. |
| DESIGN TYPE: | W6X9 |
| SIZE: | 5-7/8″ X 4″ |
| BEAM FOUNDATION INFORMATION | |
| DIAMETER: | 18″ |
| DEPTH: | 5.0′ |

NOTES:
1. CONTRACTOR SHALL FIELD VERIFY EXISTING ELEVATIONS PRIOR TO THE ORDERING OF ANY MATERIALS.
2. ALL SIGNS ARE VIEWED IN THE DIRECTION OF TRAVEL.
3. CONTRACTOR SHALL LOCATE ALL UNDERGROUND UTILITIES IN FIELD PRIOR TO ANY EXCAVATION.

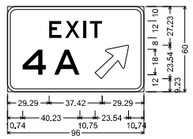


PANEL A
N.T.S.

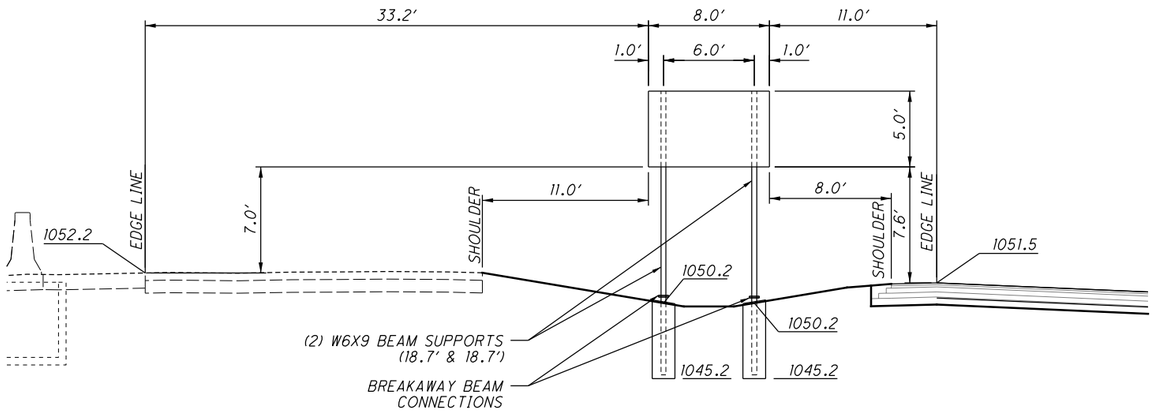


S-102 — BEAM SUPPORT TYPE W6X9
STA. 246+21, US 224 WESTBOUND

SEE SHEET 981 FOR PLAN VIEW.

| PANEL A | |
|---|---|
| SIGN DESIGNATION | E5-H1-96 |
| PANEL SIZE: | 8′ X 5′ |
| BACKGROUND: | GREEN |
| FILL COLOR: | WHITE |
| PROPOSED BEAM INFORMATION | |
| TOTAL SIGN AREA: | 40.0 SQ. FT. |
| DESIGN TYPE: | W6X9 |
| SIZE: | 5-7/8″ X 4″ |
| BEAM FOUNDATION INFORMATION | |
| DIAMETER: | 18″ |
| DEPTH: | 5.0′ |

NOTES:
1. CONTRACTOR SHALL FIELD VERIFY EXISTING ELEVATIONS PRIOR TO THE ORDERING OF ANY MATERIALS.
2. ALL SIGNS ARE VIEWED IN THE DIRECTION OF TRAVEL.
3. CONTRACTOR SHALL LOCATE ALL UNDERGROUND UTILITIES IN FIELD PRIOR TO ANY EXCAVATION.

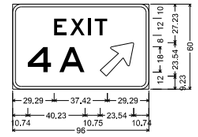


PANEL A
N.T.S.

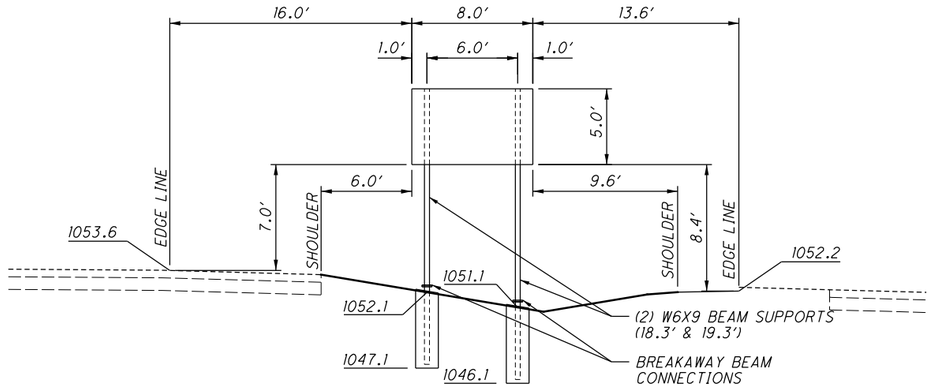


S-104 — BEAM SUPPORT TYPE W6X9
STA. 246+40, US 224 EASTBOUND

SEE SHEET 981 FOR PLAN VIEW.

0 2.5 5 10 HORIZONTAL SCALE IN FEET

CALCULATED DLS | CHECKED AKF

# BEAM MOUNTED SIGN SUPPORT DETAILS S-102 & S-104

SUM-77/277/224
VARIOUS

1017
1288

O:\2017\2017258\Project Data\SUM\106002\Design\Traffic\Sheets\106002_TE056.dgn Default 1/28/2021 1:37:12 PM aford

| PANEL A | |
|---|---|
| SIGN DESIGNATION | E5-H1-96 |
| PANEL SIZE: | 8' X 5' |
| BACKGROUND: | GREEN |
| FILL COLOR: | WHITE |
| PROPOSED BEAM INFORMATION | |
| TOTAL SIGN AREA: | 40.0 SQ. FT. |
| DESIGN TYPE: | W6X9 |
| SIZE: | 5-7/8" X 4" |
| BEAM FOUNDATION INFORMATION | |
| DIAMETER: | 18" |
| DEPTH: | 5.0' |

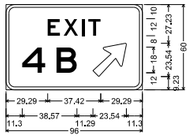


PANEL A
N.T.S.

NOTES:
1. CONTRACTOR SHALL FIELD VERIFY EXISTING ELEVATIONS PRIOR TO THE ORDERING OF ANY MATERIALS.
2. ALL SIGNS ARE VIEWED IN THE DIRECTION OF TRAVEL.
3. CONTRACTOR SHALL LOCATE ALL UNDERGROUND UTILITIES IN FIELD PRIOR TO ANY EXCAVATION.

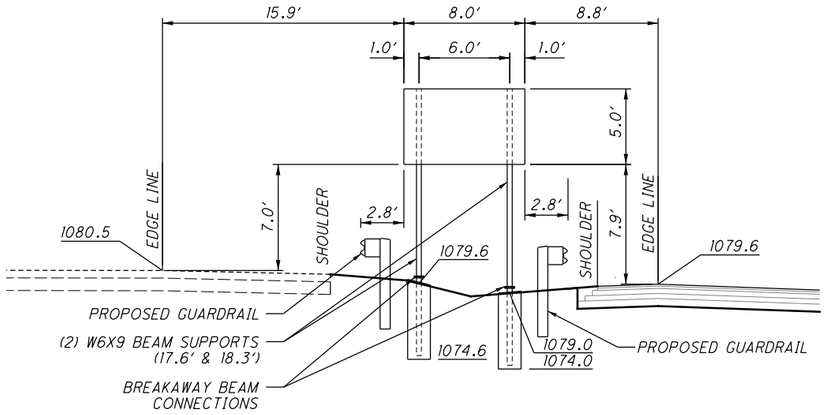


S-110 BEAM SUPPORT TYPE W6X9
STA. 264+00, US 224 WESTBOUND

SEE SHEET 983 FOR PLAN VIEW.

| PANEL A | |
|---|---|
| SIGN DESIGNATION | E5-H1-96 |
| PANEL SIZE: | 8' X 5' |
| BACKGROUND: | GREEN |
| FILL COLOR: | WHITE |
| PROPOSED BEAM INFORMATION | |
| TOTAL SIGN AREA: | 40.0 SQ. FT. |
| DESIGN TYPE: | W6X9 |
| SIZE: | 5-7/8" X 4" |
| BEAM FOUNDATION INFORMATION | |
| DIAMETER: | 18" |
| DEPTH: | 5.0' |

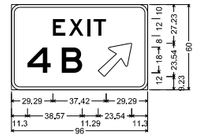


PANEL A
N.T.S.

NOTES:
1. CONTRACTOR SHALL FIELD VERIFY EXISTING ELEVATIONS PRIOR TO THE ORDERING OF ANY MATERIALS.
2. ALL SIGNS ARE VIEWED IN THE DIRECTION OF TRAVEL.
3. CONTRACTOR SHALL LOCATE ALL UNDERGROUND UTILITIES IN FIELD PRIOR TO ANY EXCAVATION.

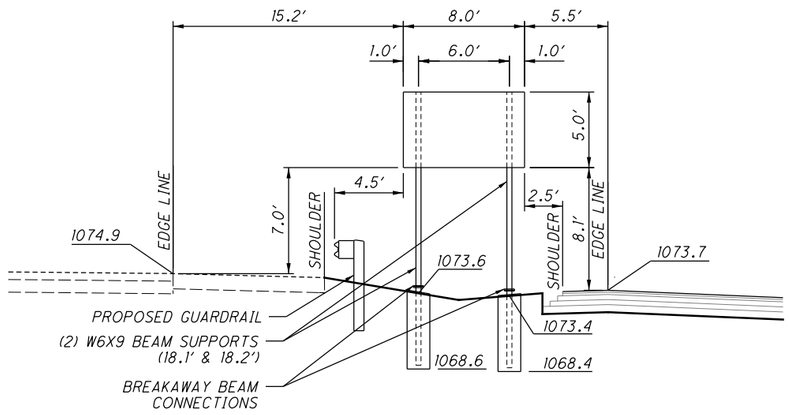


S-112 BEAM SUPPORT TYPE W6X9
STA. 261+37, US 224 EASTBOUND

SEE SHEET 983 FOR PLAN VIEW.

0 2.5 5 10
HORIZONTAL SCALE IN FEET

CALCULATED DLS
CHECKED AKF

# BEAM MOUNTED SIGN SUPPORT DETAILS S-110 & S-112

SUM-77/277/224
VARIOUS

1018
1288

O:\2017\2017258\ProjectData\SUM\106002\Design\Traffic\Sheets\106002_TE057.dgn Default 1/28/2021 1:39:05 PM aford

| PANEL A | |
|---|---|
| SIGN DESIGNATION: | R2-1-48 |
| PANEL SIZE: | 4' X 5' |
| BACKGROUND: | WHITE |
| FILL COLOR: | BLACK |
| PROPOSED BEAM INFORMATION | |
| TOTAL SIGN AREA: | 20.0 SQ. FT. |
| DESIGN TYPE: | S4X7.7 |
| SIZE: | 4" X 2-5/8" |
| BEAM FOUNDATION INFORMATION | |
| DIAMETER: | 18" |
| DEPTH: | 4.0' |

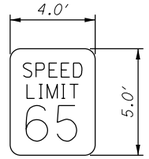


PANEL A
N.T.S

NOTES:
1. CONTRACTOR SHALL FIELD VERIFY EXISTING ELEVATIONS PRIOR TO THE ORDERING OF ANY MATERIALS.
2. ALL SIGNS ARE VIEWED IN THE DIRECTION OF TRAVEL.
3. CONTRACTOR SHALL LOCATE ALL UNDERGROUND UTILITIES IN FIELD PRIOR TO ANY EXCAVATION.

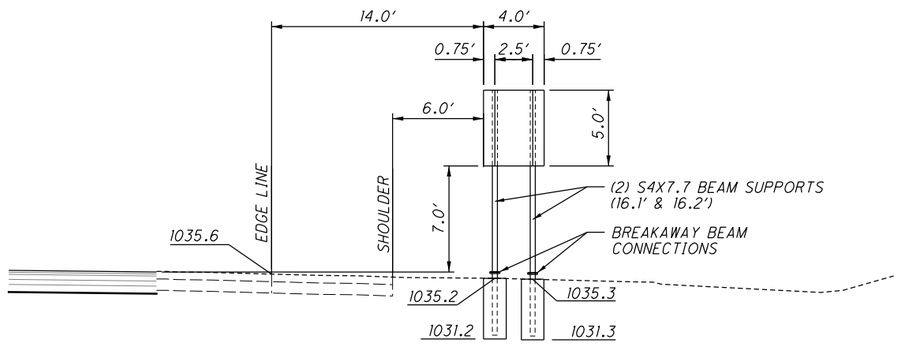


S-58 BEAM SUPPORT TYPE S4X7.7
STA. 498+25, I-77 SOUTHBOUND

SEE SHEET 972 FOR PLAN VIEW.

0 2.5 5 10 HORIZONTAL SCALE IN FEET

CALCULATED DLS
CHECKED AKF

BEAM MOUNTED SIGN SUPPORT DETAILS
S-58

SUM-77/277/224
VARIOUS

1019
1288

O:\2017\2017258\ProjectData\SUM\106002\Design\Traffic\Sheets\106002_TE058.dgn Default 1/17/2021 7:18:18 AM aford

| PANEL A | |
|---|---|
| SIGN DESIGNATION: | W13-7-48 |
| PANEL SIZE: | 4' X 8' |
| BACKGROUND: | YELLOW |
| FILL COLOR: | BLACK |
| PROPOSED BEAM INFORMATION | |
| TOTAL SIGN AREA: | 28.0 SQ. FT. |
| DESIGN TYPE: | S4X7.7 |
| SIZE: | 4" X 2-5/8" |
| BEAM FOUNDATION INFORMATION | |
| DIAMETER: | 18" |
| DEPTH: | 4.0' |
| PANEL B | |
| SIGN DESIGNATION: | W13-7-48 |
| PANEL SIZE: | 4' X 8' |
| BACKGROUND: | YELLOW |
| FILL COLOR: | BLACK |
| PROPOSED BEAM INFORMATION | |
| TOTAL SIGN AREA: | 28.0 SQ. FT. |
| DESIGN TYPE: | S4X7.7 |
| SIZE: | 4" X 2-5/8" |
| BEAM FOUNDATION INFORMATION | |
| DIAMETER: | 18" |
| DEPTH: | 4.0' |

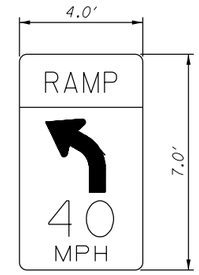


PANEL A & PANEL B
N.T.S

NOTES:
1. CONTRACTOR SHALL FIELD VERIFY EXISTING ELEVATIONS PRIOR TO THE ORDERING OF ANY MATERIALS.
2. ALL SIGNS ARE VIEWED IN THE DIRECTION OF TRAVEL.
3. CONTRACTOR SHALL LOCATE ALL UNDERGROUND UTILITIES IN FIELD PRIOR TO ANY EXCAVATION.

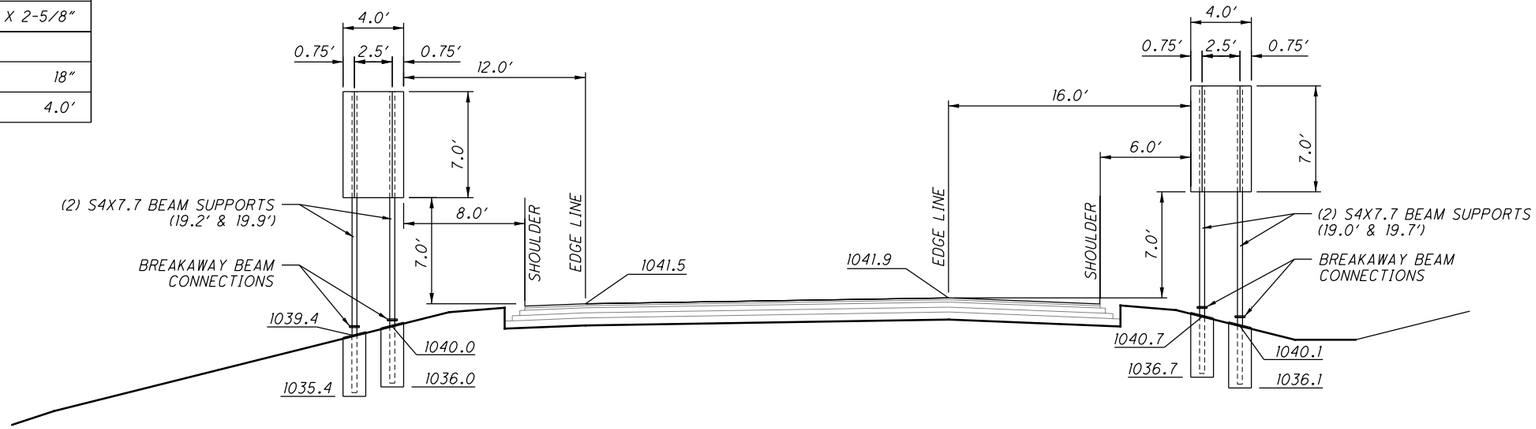


S-71 — BEAM SUPPORT TYPE S4X7.7
STA. 304+00, RAMP B-2 WESTBOUND

S-71A — BEAM SUPPORT TYPE S4X7.7
STA. 304+00, RAMP B-2 WESTBOUND

SEE SHEET 973 FOR PLAN VIEW.

HORIZONTAL SCALE IN FEET
0 2.5 5 10

CALCULATED DLS
CHECKED AKF

# BEAM MOUNTED SIGN SUPPORT DETAILS S-71 & S-71A

SUM-77/277/224
VARIOUS

1019A
1288

O:\2017\2017258\ProjectData\SUM\106002\Design\Traffic\Sheets\106002_TE059.dgn Default 1/17/2021 7:11:03 AM aford

**ITEM 625 - POWER SERVICE, AS PER PLAN**

THE CONTRACTOR SHALL DETERMINE THE EXISTING POWER SOURCE LOCATION. BEFORE REMOVING ANY OF THE EXISTING EQUIPMENT, THE CONTRACTOR SHALL DISCONNECT ALL POWER CABLES. UPON INSTALLING THE NEW AND/OR RELOCATED ITS EQUIPMENT AND CONDUIT WHERE NEEDED, THE POWER CABLE SHALL BE ROUTED TO THE NEW ITS INSTALLATION LOCATION.

THE CONTRACTOR WILL BE RESPONSIBLE FOR REQUESTING AND SCHEDULING ANY INSPECTIONS OHIO EDISON MAY REQUIRE FOR THE POWER SERVICE HOOK UP. THE CONTRACTOR SHALL BE RESPONSIBLE TO CONTACT OHIO EDISON FOR THE ELECTRICAL SERVICE CONNECTION. UNDER NO CIRCUMSTANCES SHALL THE CONTRACTOR SPLICE THE POWER CABLE INTO OHIO EDISIONS CIRCUITS. THE VOLTAGE SUPPLIED SHALL BE NOMINALLY 120 VOLTS. THE CONTRACTOR IS RESPONSIBLE FOR OBTAINING ANY NECESSARY PERMITS AND THE PAYING OF ALL FEES. THE CONTRACTOR SHALL PAY ALL POWER CHARGES UNIL THE ITS EQUIPMENT IS APPROVED BY ODOT.

PAYMENT FOR ITEM 625 - POWER SERVICE, AS PER PLAN SHALL BE MADE AT THE CONTRACT UNIT PRICE PER EACH AND SHALL INCLUDE ALL LABOR, EQUIPMENT AND MATERIALS NECESSARY TO PROVIDE POWER TO THE PROPOSED ITS CABINET.

**TRACER WIRE**

TRACER WIRE SHALL BE INSTALLED IN ONE OF THE MULTICELL INNERDUCTS IN ALL CONDUIT RUNS. TRACER WIRE SHALL BE NO SMALLER THAN #12 AWG WIRE. THE WIRE SHALL BE HDPE INSULATED, ORANGE IN COLOR, AND CONSTRUCTED OF COPPER CLAD STEEL. APPROXIMATELY 20 FEET OF SLACK OF THE TRACER WIRE SHALL BE LEFT INSIDE THE ADJACENT PULL BOXES CONNECTING THE CONDUIT RUNS.

PAYMENT FOR ALL TRACER WIRE SHALL BE INCLUDED IN THE BID ITEM FOR ITEM 625 - CONDUIT, MULTICELL, 4", 725.20 (BY SCHEDULE).

**ITEM 625 - MEDIAN JUNCTION BOX, AS PER PLAN**

THE CONTRACTOR SHALL SUPPLY THE MEDIAN PULL BOX THAT MEETS THE FOLLOWING SPECIFICATIONS:

SHALL BE OF TYPE POLYMER-CONCRETE
SIZE: 17 INCHES (HEIGHT) X 30 INCHES (LENGTH)
MINIMUM WALL THICKNESS: 0.5 INCH
MINIMUM LID THICKNESS: 2 INCHES
ANSI TIER 22 RATING WITH A MINIMUM DESIGN LOAD OF 22,000 POUNDS
LID SHALL BE MARKED "TRAFFIC."

THE MEDIAN JUNCTION BOX SHALL BE SECURED IN THE MEDIAN BARRIER WALL WITH THE COVER ON THE WEST SIDE OF I.R. 77 USING DOWELS. (NON-SHRINK GROUT MAY BE USED WHEN NECESSARY). SEE DETAIL ON SHEET 1035.

**ITEM 625 - CONDUIT, JACKED OR DRILLED, AS PER PLAN**

THE CONTRACTOR SHALL JACK OR DRILL THE 4", MULTICELL, 725.20 CONDUIT AT THE PROPOSED LOCATIONS SPECIFIED IN THE DETAILED ITS PLANS IN ACCORDANCE WITH C&MS 625.14.

THE CONTRACTOR SHALL NOT FURNISH THE CONDUIT ASSOCIATED WITH ITEM 625 - CONDUIT, JACKED OR DRILLED, AS PER PLAN, AS THE CONDUIT WILL BE PAID FOR AS PART OF THE ITEM 625 - CONDUIT, MULTICELL, 4", 725.20, HDPE PAY ITEM.

PAYMENT SHALL INCLUDE ALL LABOR, MATERIALS, EQUIPMENT AND INCIDENTALS NECESSARY TO INSTALL THE 4" MULTICELL CONDUIT UNDER THE ROADWAY.

**ITEM 809 - ITS DEVICE, MISC.: REMOVAL OF EXISTING ITS INSTALLATION**

THE EXISTING CCTV CAMERA INSTALLATION, INCLUDING POLE, CAMERA, LOWERING UNIT, CABINET, ETC. SHALL BE REMOVED IN ITS ENTIRETY AS INDICATED ON THE PLANS. REMOVED ITEMS SHALL BE REUSED AS PART OF A NEW INSTALLATION ON THE PROJECT OR STORED ON THE PROJECT FOR SALVAGE BY ODOT. THE CONTRACTOR SHALL CONTACT THE CENTRAL OFFICE ITS DIVISION AT (614) 387-4113 TO ARRANGE A MUTUALLY AGREEABLE TIME TO DELIVER THE EQUIPMENT TO A LOCATION AS DIRECTED BY THE ITS DIVISION.

ITEMS TO BE REUSED:

CCTV IP-CAMERA, DOME TYPE
CCTV LOWERING UNIT
DIGITAL MESSAGE SIGN

ITEMS TO BE STORED:

ITS CABINET

ALL OTHER ITEMS SHALL BE DISPOSED OF BY THE CONTRACTOR.

IN THE EVENT THE ITEMS STORED ON THE PROJECT FOR DELIVERY TO ODOT ARE NOT ACCEPTED, THE CONTRACTOR SHALL, WHEN DIRECTED BY THE ENGINEER IN WRITING, REMOVE AND DISPOSE OF THE ITEMS AT NO ADDITIONAL COST TO THE PROJECT.

**ITEM 809 - ITS DEVICE, MISC.: REUSE OF EXISTING ITS EQUIPMENT**

WHILE REMOVING THE EXISTING ITS EQUIPMENT INSTALLATION, THE CONTRACTOR SHALL TAKE GREAT CARE AS TO NOT DAMAGE THE EXISTING ITS EQUIPMENT AS IT IS THE INTENT OF THE PROJECT TO REUSE THE ITS EQUIPEMENT. THE CONTRACTOR SHALL DOCUMENT, IN WRITING, ANY MALFUNCTIONING EQUIPMENT, PRIOR TO EQUIPMENT REMOVAL.

IF THE ENGINEER HAS DETERMINED THE ITS EQUIPMENT HAS BEEN DAMAGED, THE CONTRACTOR SHALL REPLACE THE EQUIPMENT IN LIKE KIND AS APPROVED BY THE ENGINEER, AT THE CONTRACTOR'S COST.

PAYMENT FOR ITEM 809 - ITS DEVICE, MISC.: REUSE OF EXISTING ITS EQUIPMENT SHALL BE MADE AT THE CONTRACT UNIT PRICE PER EACH AND SHALL INCLUDE ALL LABOR, EQUIPMENT AND MATERIALS NECESSARY TO RELOCATE THE ITS EQUIPMENT AND MAKE THE SYSTEM FULLY FUNCTIONAL.

**COORDINATION BETWEEN CONTRACTORS**

THE CONTRACTOR SHALL BE ADVISED THAT PROJECT D04 ITS MAINT FY2021 (PID 113833) MAY BE ONGOING DURING THE CONSTRUCTION OF THIS PROJECT. PID 113833 PROPOSES NEW CAMERAS AND LOWERING UNITS TO BE INSTALLED WITHIN THE PROJECT AREA. THE CONTRACTOR SHALL COORDINATE WITH THE PID 113833 CONTRACTOR TO EITHER OBTAIN THE NEW CAMERA AND LOWERING DEVICES TO BE INSTALLED WITH THIS PROJECT OR SCHEDULE A TIME FOR THE CONTRACTOR OF PID 113833 TO INSTALL THE NEW CAMERA AND LOWERING DEVICE ON THE RELOCATED CCTV POLE.

COMPENSATION FOR THE ABOVE COORDINATION SHALL BE INCIDENTAL TO THE VARIOUS PAY ITEMS INCLUDED WITHIN THIS PROJECT.

**CCTV INSTALLATIONS**

THE CONTRACTOR SHALL INSTALL THIS ITEM ACCORDING TO ODOT SUPPLEMENTAL SPECIFICATION 809, AS WELL AS ANY STANDARD CONSTRUCTION DRAWINGS NOTED IN THE PLANS.

**ITEM 625 - CONDUIT, MULTICELL, 4", 725.20, HDPE**

**DESCRIPTION**
THIS CONDUIT IS INTENDED FOR THE USE IN UNDERGROUND OR ENCASED INSIDE CONCRETE BARRIER WALL SITUATIONS REQUIRING MORE THAN ONE SINGLE CONDUIT. THIS INCLUDES THE MAIN CONDUIT RACEWAY ALONG THE FREEWAY, CONNECTION FROM PULL BOXES TO THE ROAD SIDE CABINETS AND FOR RUNS OF CONDUIT FOR MULTIPLE PURPOSES, E.G., AT RAMP METER INSTALLATIONS, FOR LOOP LEAD-IN CABLE, SIGNALS CABLE FOR RAMP METER DISPLAYS, SIGNAL CABLE FOR RAMP METER SIGNING FLASHERS & ILLUMINATION AND POWER. THE CONTRACTOR SHALL PLUG ALL UNUSED CELLS WITH CONDUIT CAPS TO ASSURE AIR AND WATER INTEGRITY OF EACH INDIVIDUAL INNERDUCT.

**MATERIALS**
THE TRAFFIC SURVEILLANCE RACEWAY SHALL CONSIST OF A FACTORY-ASSEMBLED SYSTEM OF (4) INNERDUCTS ASSEMBLED WITHIN A PROTECTIVE OUTER DUCT, HIGH DENSITY POLYETHYLENE OR APPROVED EQUIVALENT. THE INNERDUCTS SHALL BE A MINIMUM OF 1.10 INCH INSIDE DIAMETER. THE OUTER DUCT SHALL BE NOMINAL 4 INCH INSIDE DIAMETER AND MAXIMUM OUTSIDE DIAMETER OF 4.8 INCHES.

THE HDPE CONDUIT SHALL BE COILABLE ON REELS.

WHERE INNERDUCT(S) WITHIN A MULTI-CELL DUCT ARE TO REMAIN EMPTY, ONE 1/4" NYLON ROPE SHALL BE INSTALLED IN EACH OF THE OPEN INNERDUCTS, THE ROPE WILL REMAIN TO BE USED FOR A FUTURE CABLE INSTALLATION. ALSO EACH INNERDUCT SHALL BE PLUGGED TO MAINTAIN THE AIR AND WATER INTEGRITY. IN ADDITION THE OUTER DUCT SHALL BE CAPPED TO MAINTAIN THE AIR AND WATER INTEGRITY OF THE ENTIRE SYSTEM.

**INSTALLATION**
INSTALLATION WILL BE IN 30" DEEP TRENCH, DRILLED OR PLOWED TO A MINIMUM OF 30" DEEP, BORED UNDER ROADWAYS, ENCASED INSIDE CONCRETE BARRIER WALL, OR AS NOTED ON THE PLANS.

THE HDPE CONDUIT SHALL BE INSTALLED IN CONTINOUS LENGTHS WITHOUT JOINTS/COUPLINGS BETWEEN PULL BOXES OR JUNCTION BOXES.

**METHOD OF MEASUREMENT**
THE CONDUIT WILL BE MEASURED BY THE AMOUNT OF CONDUIT IN FEET FURNISHED AND INSTALLED FROM CENTER TO CENTER OF PULL BOXES, FOUNDATION, ETC., AND WILL INCLUDE ALL FITTING AND APPURTENANCES, JOINTS, BENDS, GROUNDS, AND CONCRETE ENCASEMENT WHERE SPECIFIED.

**BASIS OF PAYMENT**
THE PAYMENT FOR THESE ITEMS WILL BE MADE FOR THE ACCEPTED LINER FOOT QUANTITIES AT THE CONTRACT BID PRICE.

**ITEM 625 - PULL BOX, 725.08, 32" AS PER PLAN**

PULL BOXES SHALL BE FURNISHED AND INSTALLED AS PER STANDARD CONSTRUCTION DRAWING ITS-14.11

**ITEM 633 - CONTROLLER WORK PAD, AS PER PLAN**

IN ADDITION TO C&MS 633.11, THE CONTRACTOR SHALL CONSTRUCT THE CONCRETE WORK PAD SUCH THAT THE SURFACE OF THE WORK PAD IS LARGE ENOUGH TO PLACE A LADDER SO THAT ACCESS TO THE CATWALK CAN BE ACHIEVED.

PAYMENT SHALL BE AT THE CONTRACT BID PRICE AND SHALL INCLUDE ALL LABOR, MATERIALS AND EQUIPMENT TO INSTALL THE PROPOSED CONCRETE WORK PAD.

**AT&T COORDINATION**

THE CONTRACTOR SHALL COORDINATE WITH AT&T AND ODOT ITS TO REMOVE THE EXISTING AT&T EQUIPMENT. THE CONTRACTOR SHALL CONTACT BRYAN COMER AT (614) 387-1253 A MINIMUM OF 60 DAYS IN ADVANCE OF THE START OF WORK. ODOT WILL BE RESPONSIBLE FOR PLACING THE NECESSARY DISCONNECT ORDER TO AT&T.

**ITEM 630 - OVERHEAD SIGN SUPPORT, DMS TRUSS, 80', AS PER PLAN**

THE CONTRACTOR SHALL INSTALL THIS ITEM ACCORDING TO ODOT SUPPLEMENTAL SPECIFICATION 809, AS WELL AS ANY STANDARD CONSTRUCTION DRAWINGS NOTED ON THE PLANS.

THE DMS TRUSS TO BE ERECTED FOR THIS PROJECT SHALL BE OBTAINED FROM ODOT DISTRICT 4. THE CONTRACTOR SHALL CONTACT MICHELLE CHANEY AT (330) 786-2267 TO COORDINATE A TIME AND PLACE TO PICK-UP THE REQUIRED MATERIALS FROM ODOT DISTRICT 4 MAIN GARAGE, 2088 S. ARLINGTON ST. AKRON, OHIO 33406.

PAYMENT FOR ITEM 630 - OVERHEAD SIGN SUPPORT, DMS TRUSS, 80', AS PER PLAN SHALL BE MADE AT THE CONTRACT BID PRICE. PAYMENT SHALL INCLUDE ALL COORDINATION, MOVEMENT, LABOR, MATERIALS AND THE INSTALLATION OF THE PROPOSED DMS TRUSS COMPLETE AND IN PLACE.

**ITS DOWN TIME**

THE CONTRACTOR SHALL CONSTRUCT THE DMS TRUSS SUPPORT AND RELOCATE THE EXISTING ITS DEVICES AT THE BEGINNING OF THE PHASE 2 CONSTRUCTION PHASE TO LIMIT THE AMOUNT OF ITS DOWN TIME.

WHILE THE ITS EQUIPMENT IS OUT OF SERVICE, THE CONTRACTOR SHALL UTILIZE A PORTABLE CHANGEABLE MESSAGE SIGN TO DISPLAY THE INFORMATION RELAYED ON THE EXISTING DMS SIGN. THE CONTRACTOR SHALL COORDINATE WITH CENTRAL OFFICE (BRYAN COMER AT (614) 378-1253) TO OBTAIN A MODEM TO USE WITH THE PORTABLE CHANGEABLE MESSAGE SIGN. THE WORK ASSOCIATED WITH INSTALLING AND FURNISHING THE PORTABLE CHANGEABLE MESSAGE SIGN SHALL BE PAID FOR UNDER ITEM 614 - PORTABLE CHANGEABLE MESSAGE SIGN, AS PER PLAN.

THE DISINCENTIVES ASSOCIATED WITH SUPPLEMENTAL SPECIFICATION 809.14 SHALL NOT BE ENFORCED DUE TO THE LENGTH OF TIME THE DMS WILL BE OUT OF SERVICE.

CALCULATED BEB
CHECKED KMG

# ITS NOTES

SUM-77 / 277 / 224
VARIOUS

1020
1288

D:\2017\20I7258\ProjectData\SUM\I06002\Design\Signals\Sheets\I06002_CN00I.dgn Sheet 2/4/2021 9:00:52 AM bbinsley

| SHEET NUMBER | | | | | | PARTICIPATION | | ITEM | ITEM EXT. | GRAND TOTAL | UNIT | DESCRIPTION | SEE SHEET NO. |
|---|---|---|---|---|---|---|---|---|---|---|---|---|---|
| 1022 | | 1026 | | | | 01/IMS/PV | 02/IMS/PV | | | | | | |
| 260 | | | | | | 234 | 26 | 625 | 25600 | 260 | FT | CONDUIT, 4", 725.04 | |
| 14,339 | | | | | | 12,905 | 1,434 | 625 | 25740 | 14,339 | FT | CONDUIT, MULTICELL, 4", 725.20, HDPE | 1020 |
| 886 | | | | | | 797 | 89 | 625 | 25901 | 886 | FT | CONDUIT, JACKED OR DRILLED, AS PER PLAN, 4" | 1020 |
| 3,128 | | | | | | 2,815 | 313 | 625 | 29000 | 3,128 | FT | TRENCH | |
| 16 | | | | | | 14 | 2 | 625 | 29931 | 16 | EACH | MEDIAN JUNCTION BOX, AS PER PLAN | 1020 |
| 2 | | | | | | 2 | | 625 | 30700 | 2 | EACH | PULL BOX, 725.08, 18" | |
| 18 | | | | | | 16 | 2 | 625 | 30711 | 18 | EACH | PULL BOX, 725.08, 32", AS PER PLAN | 1020 |
| 8 | | | | | | 7 | 1 | 625 | 32000 | 8 | EACH | GROUND ROD | |
| 1 | | | | | | 1 | | 625 | 34001 | 1 | EACH | POWER SERVICE, AS PER PLAN | 1020 |
| 3,128 | | | | | | 2,815 | 313 | 625 | 36010 | 3,128 | FT | UNDERGROUND WARNING/MARKING TAPE | |
| 1 | | | | | | 1 | | 630 | 70001 | 1 | EACH | OVERHEAD SIGN SUPPORT, DMS TRUSS, 80', AS PER PLAN | 1020 |
| 1 | | | | | | 1 | | 630 | 70070 | 1 | EACH | CONCRETE BARRIER MEDIAN OVERHEAD SIGN SUPPORT FOUNDATION, DMS TRUSS | |
| 1 | | | | | | 1 | | 630 | 70080 | 1 | EACH | OVERHEAD SIGN SUPPORT FOUNDATION, DMS TRUSS | |
| 4 | | | | | | 3 | 1 | 630 | 75000 | 4 | EACH | SIGN ATTACHMENT ASSEMBLY | |
| 1 | | | | | | 1 | | 630 | 89702 | 1 | EACH | REMOVAL OF OVERHEAD SIGN SUPPORT AND DISPOSAL | |
| 596 | | 100 | | | | 626 | 70 | 632 | 67400 | 696 | FT | POWER CABLE, 4 CONDUCTOR, NO. 8 AWG | |
| 1 | | | | | | 1 | | 633 | 67100 | 1 | EACH | CABINET FOUNDATION | |
| 1 | | | | | | 1 | | 633 | 67200 | 1 | EACH | CONTROLLER WORK PAD | |
| 1 | | | | | | 1 | | 633 | 67201 | 1 | EACH | CONTROLLER WORK PAD, AS PER PLAN | 1020 |
| 1 | | | | | | 1 | | 809 | 61002 | 1 | EACH | CCTV CONCRETE POLE, 70 FEET | |
| 438 | | | | | | 394 | 44 | 809 | 64550 | 438 | FT | ETHERNET CABLE, OUTDOOR-RATED | |
| 1 | | | | | | 1 | | 809 | 65040 | 1 | EACH | ITS CABINET - DMS | |
| 1 | | | | | | 1 | | 809 | 65990 | 1 | EACH | ITS DEVICE, MISC.: REMOVAL OF EXISTING ITS INSTALLATION | 1020 |
| 1 | | | | | | 1 | | 809 | 65990 | 1 | EACH | ITS DEVICE, MISC.: REUSE OF EXISTING ITS EQUIPMENT | 1020 |

CALCULATED BEB
CHECKED KMG

# ITS GENERAL SUMMARY

SUM-77 / 277 / 224
VARIOUS

1021
1288

0:\2017\2017258\ProjectData\SUM\106002\Design\Signals\Sheets\106002_GG001.dgn Sheet bbinsley 2/12/2021 9:08:47 AM

| SHEET | LOCATION | 625 CONDUIT, 4", 725.04 FT | 625 CONDUIT, MULTICELL, 4", 725.20, HDPE FT | 625 CONDUIT, JACKED OR DRILLED, AS PER PLAN, 4" FT | 625 TRENCH FT | 625 MEDIAN JUNCTION BOX, AS PER PLAN EACH | 625 PULL BOX, 725.08, 18" EACH | 625 PULL BOX, 725.08, 32", AS PER PLAN EACH | 625 GROUND ROD EACH | 625 POWER SERVICE, AS PER PLAN EACH | 625 UNDERGROUND WARNING/MARKING TAPE FT | 630 OVERHEAD SIGN SUPPORT, DMS TRUSS, 80', AS PER PLAN EACH | 630 CONCRETE BARRIER MEDIAN OVERHEAD SIGN SUPPORT FOUNDATION, DMS TRUSS EACH | 630 OVERHEAD SIGN SUPPORT FOUNDATION, DMS TRUSS EACH | 630 SIGN ATTACHMENT ASSEMBLY EACH | 630 REMOVAL OF OVERHEAD SIGN SUPPORT AND DISPOSAL EACH | 632 POWER CABLE, 4 CONDUCTOR, NO. 8 AWG FT | 633 CABINET FOUNDATION EACH | 633 CONTROLLER WORK PAD EACH | 633 CONTROLLER WORK PAD, AS PER PLAN EACH | 809 CCTV CONCRETE POLE, 70 FEET EACH | 809 ETHERNET CABLE, OUTDOOR-RATED FT | 809 ITS CABINET - DMS EACH | 809 ITS DEVICE, MISC.: REMOVAL OF EXISTING ITS INSTALLATION EACH |
|---|---|---|---|---|---|---|---|---|---|---|---|---|---|---|---|---|---|---|---|---|---|---|---|---|---|
| 1023 | BEGIN TO STA. 384+00 | | 1331 | 80 | | 3 | | 1 | | | | | | | | | | | | | | | | | |
| 1024 | STA. 384+00 TO STA. 398+00 | | 1564 | 163 | | 1 | | 2 | | | | | | | | | | | | | | | | | |
| 1025 | STA. 398+00 TO STA. 412+00 | | 1401 | | | 1 | | | | | | | | | | | | | | | | | | | |
| 1026 | STA. 412+00 TO STA. 426+00 | | 1561 | 159 | | 3 | | 1 | | | | | | | | | 112 | | | | | | | | |
| 1027 | DETAIL 'A' | 260 | 199 | | 283 | | 2 | 2 | 8 | 1 | 283 | 1 | 1 | 1 | 4 | 1 | 484 | 1 | 1 | 1 | 1 | 438 | 1 | 1 | |
| 1028 | STA. 426+00 TO STA. 438+00 | | 1202 | | | 3 | | | | | | | | | | | | | | | | | | | |
| 1029 | STA. 438+00 TO STA. 452+00 | | 1401 | | | 2 | | | | | | | | | | | | | | | | | | | |
| 1030 | STA. 452+00 TO STA. 462+00 | | 1167 | 168 | | 1 | | 2 | | | | | | | | | | | | | | | | | |
| 1031 | STA. 462+00 TO STA. 472+00 | | 1169 | 168 | | 1 | | 2 | | | | | | | | | | | | | | | | | |
| 1032 | STA. 472+00 TO STA. 482+00 | | 1009 | | 658 | 1 | | 2 | | | 658 | | | | | | | | | | | | | | |
| 1033 | STA. 482+00 TO STA. 492+00 | | 991 | | 991 | | | 2 | | | 991 | | | | | | | | | | | | | | |
| 1034 | STA. 492+00 TO END | | 1344 | 148 | 1196 | | | 4 | | | 1196 | | | | | | | | | | | | | | |
| | TOTALS CARRIED TO ITS GENERAL SUMMARY | 260 | 14339 | 886 | 3128 | 16 | 2 | 18 | 8 | 1 | 3128 | 1 | 1 | 1 | 4 | 1 | 596 | 1 | 1 | 1 | 1 | 438 | 1 | 1 |

| SHEET | LOCATION | 809 ITS DEVICE, MISC.: REUSE OF EXISTING ITS EQUIPMENT EACH |
|---|---|---|
| 1023 | BEGIN TO STA. 384+00 | |
| 1024 | STA. 384+00 TO STA. 398+00 | |
| 1025 | STA. 398+00 TO STA. 412+00 | |
| 1026 | STA. 412+00 TO STA. 426+00 | |
| 1027 | DETAIL 'A' | 1 |
| 1028 | STA. 426+00 TO STA. 438+00 | |
| 1029 | STA. 438+00 TO STA. 452+00 | |
| 1030 | STA. 452+00 TO STA. 462+00 | |
| 1031 | STA. 462+00 TO STA. 472+00 | |
| 1032 | STA. 472+00 TO STA. 482+00 | |
| 1033 | STA. 482+00 TO STA. 492+00 | |
| 1034 | STA. 492+00 TO END | |
| | TOTALS CARRIED TO ITS GENERAL SUMMARY | 1 |

CALCULATED BEB
CHECKED KMG

# ITS SUBSUMMARY

SUM-77 / 277 / 224
VARIOUS

1022
1288

D:\2017\2017258\ProjectData\SUM\106002\Design\Signals\Sheets\106002_CS001.dgn Sheet 1/19/2021 9:59:13 AM bbinsley

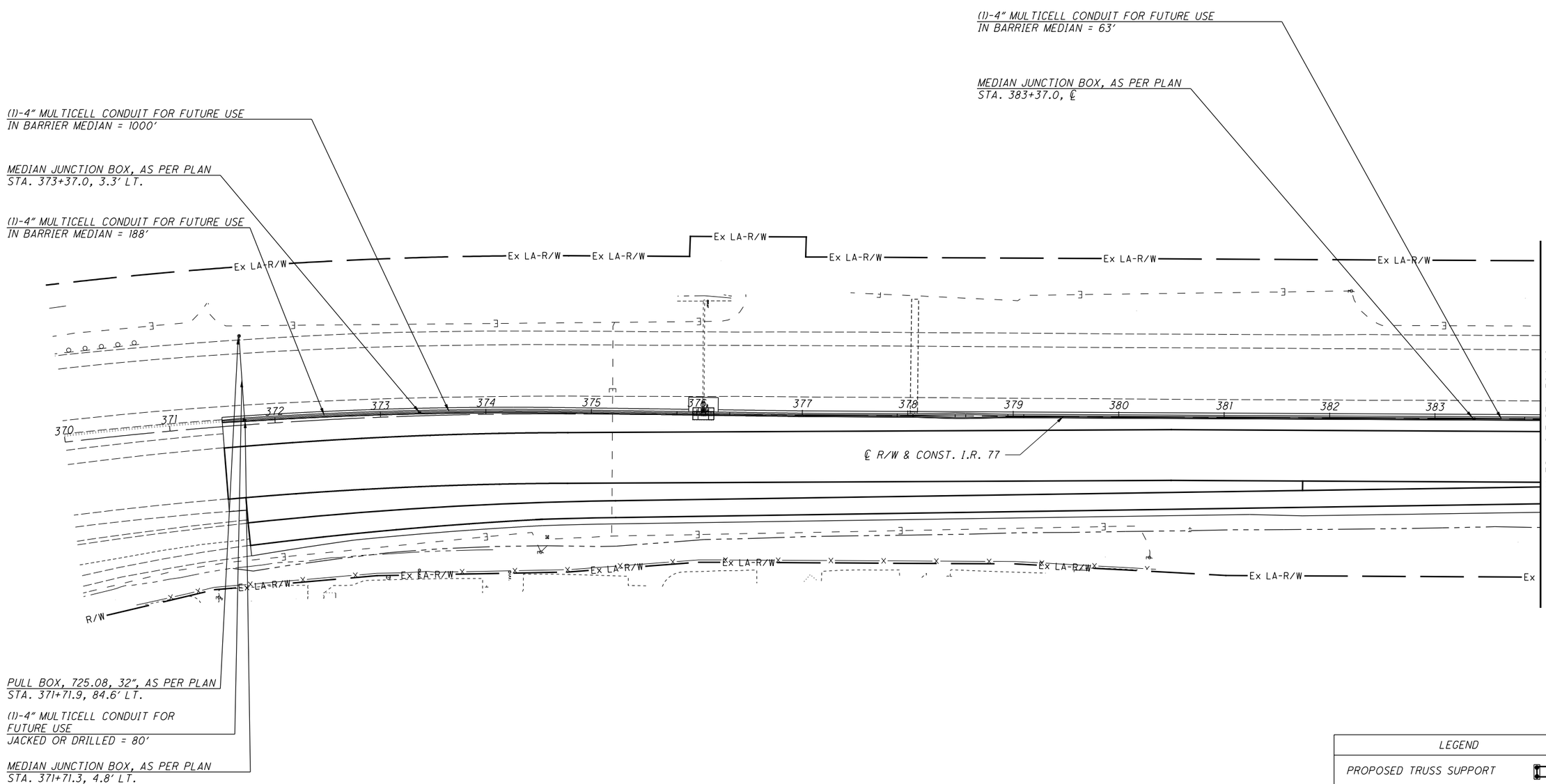


NOTE:

1. ALL ITS MEDIAN JUNCTION BOX COVERS SHALL BE LOCATED ON THE WEST SIDE OF THE I.R. 77 MAINLINE MEDIAN BARRIER UNLESS OTHERWISE NOTED.

| LEGEND | |
|---|---|
| PROPOSED TRUSS SUPPORT | |
| EXISTING CCTV POLE | |
| PROPOSED CCTV POLE | |
| EXISTING CCTV CAMERA | |
| PROPOSED MEDIAN JUNCTION BOX | TR |
| EXISTING 32" PULL BOX | TR |
| PROPOSED 32" PULL BOX | TR |
| EXISTING ELECTRICAL PULL BOX | E |
| PROPOSED ELECTRICAL PULL BOX | E |
| PROPOSED ITS CONDUIT | |

N

0 25 50 100
HORIZONTAL SCALE IN FEET

CALCULATED BEB
CHECKED KMG

# ITS PLAN
## BEGIN TO STA. 384+00

SUM-77 / 277 / 224
VARIOUS

1023
1288

0:\2017\2017258\ProjectData\SUM\106002\Design\Signals\Sheets\106002_CP001.dgn Design 1/17/2021 2:03:51 PM kgoetz

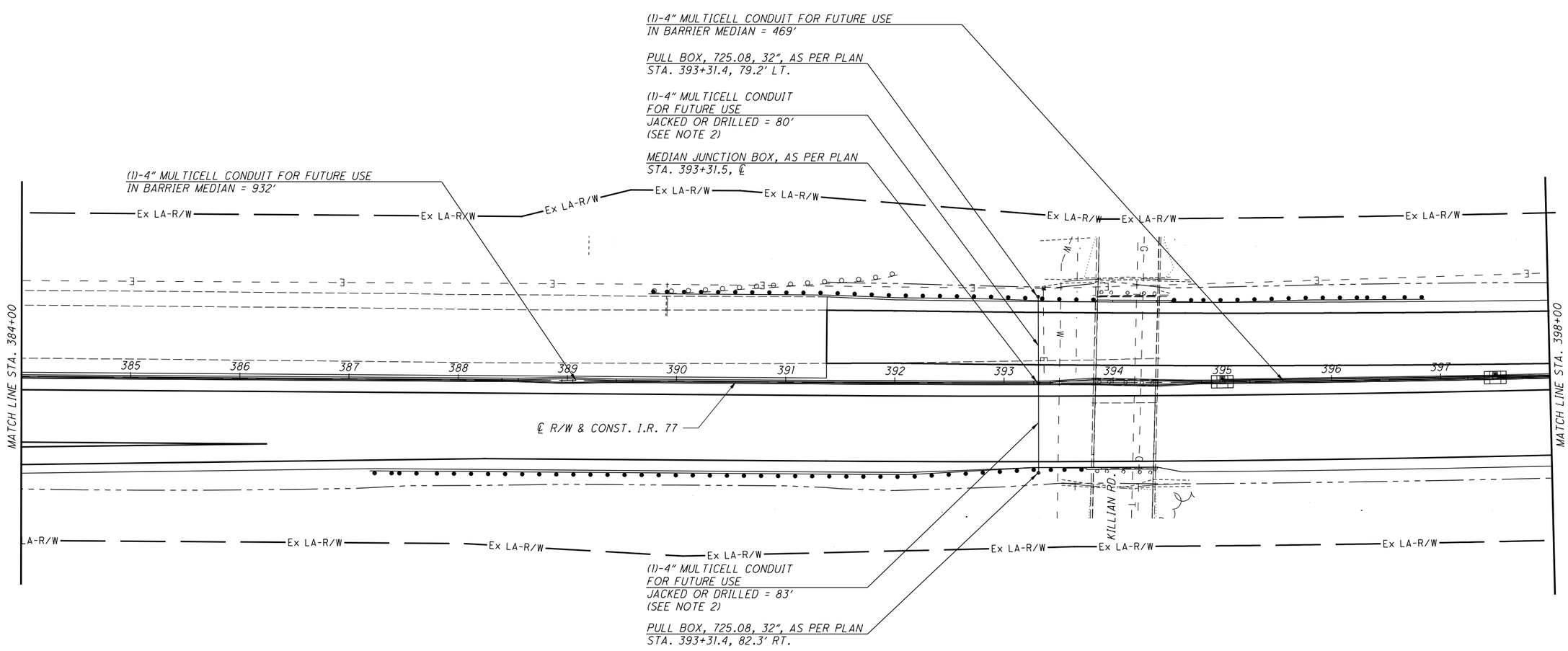


NOTE:

1. ALL ITS MEDIAN JUNCTION BOX COVERS SHALL BE LOCATED ON THE WEST SIDE OF THE I.R. 77 MAINLINE MEDIAN BARRIER UNLESS OTHERWISE NOTED.

2. CONDUIT WITHIN 6' OF THE PROPOSED GUARDRAIL SHALL BE ENCASED IN CONCRETE. PAYMENT FOR THE CONCRETE ENCASEMENT SHALL BE CONSIDERED INCIDENTAL TO ITEM 625 - CONDUIT, JACKED OR DRILLED, AS PER PLAN.

FOR ITS LEGEND, SEE SHEET 1023.

HORIZONTAL SCALE IN FEET
0 25 50 100

CALCULATED BEB
CHECKED KMG

# ITS PLAN
## STA. 384+00 TO STA. 398+00

SUM-77 / 277 / 224
VARIOUS



D:\2017\2017258\ProjectData\SUM\106002\Design\Signals\Sheets\106002_CP002.dgn Design 1/17/2021 2:05:46 PM kgoetz

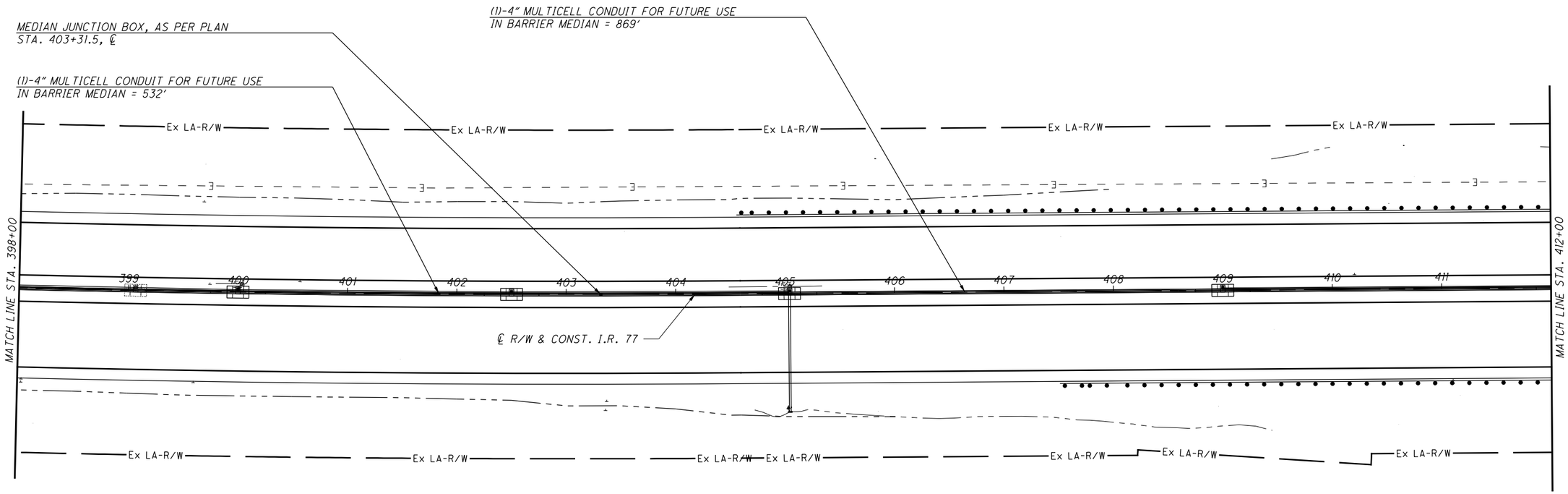


NOTE:

1. ALL ITS MEDIAN JUNCTION BOX COVERS SHALL BE LOCATED ON THE WEST SIDE OF THE I.R. 77 MAINLINE MEDIAN BARRIER UNLESS OTHERWISE NOTED.

FOR ITS LEGEND, SEE SHEET 1023.

HORIZONTAL SCALE IN FEET
0 25 50 100

CALCULATED BEB
CHECKED KMG

# ITS PLAN
## STA. 398+00 TO STA. 412+00

SUM-77 / 277 / 224
VARIOUS

1025
1288

O:\2017\2017258\ProjectData\SUM\106002\Design\Signals\Sheets\106002_CP003.dgn Design 1/17/2021 2:08:43 PM kgoetz

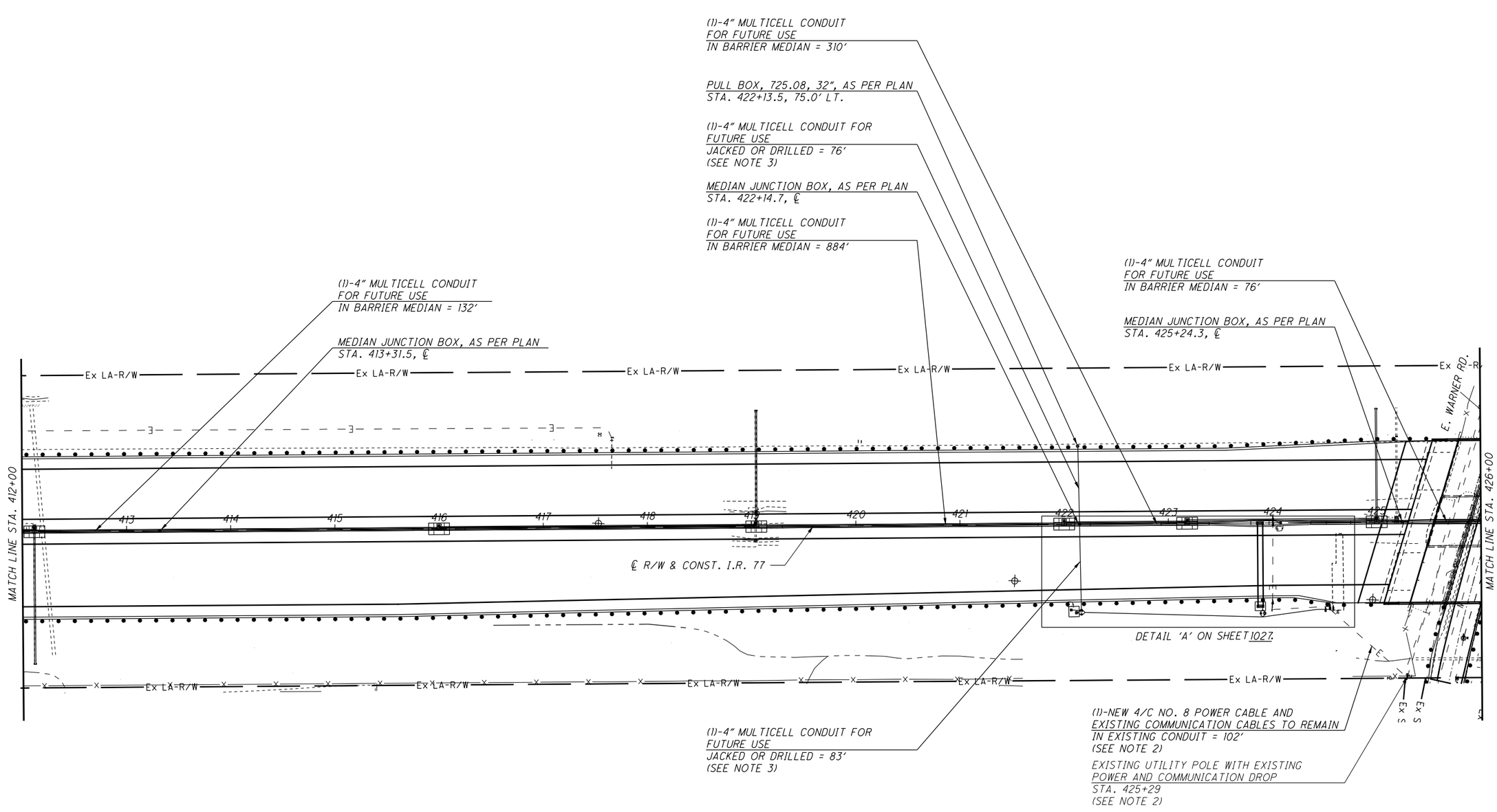


NOTE:

1. ALL ITS MEDIAN JUNCTION BOX COVERS SHALL BE LOCATED ON THE WEST SIDE OF THE I.R. 77 MAINLINE MEDIAN BARRIER UNLESS OTHERWISE NOTED.
2. THE CONTRACTOR SHALL VERIFY THE EXISTING POWER SOURCE LOCATION. THE FOLLOWING CONTINGENCY QUANTITY HAS BEEN CARRIED TO THE GENERAL SUMMARY TO RUN POWER CABLE TO THE EXISTING POWER SOURCE LOCATION TO BE USED AS DIRECTED BY THE ENGINEER:

   ITEM 632 - POWER CABLE, 4 CONDUCTOR, NO. 8 AWG  100 FT

3. CONDUIT WITHIN 6' OF THE PROPOSED GUARDRAIL SHALL BE ENCASED IN CONCRETE. PAYMENT FOR THE CONCRETE ENCASEMENT SHALL BE CONSIDERED INCIDENTAL TO ITEM 625 - CONDUIT, JACKED OR DRILLED, AS PER PLAN.

FOR ITS LEGEND, SEE SHEET 1023.

HORIZONTAL SCALE IN FEET
0 25 50 100

CALCULATED BEB
CHECKED KMG

# ITS PLAN
# STA. 412+00 TO STA. 426+00

SUM-77 / 277 / 224
VARIOUS

1026
1288

O:\2017\2017258\ProjectData\SUM\06002\Design\Signals\Sheets\06002_CP004.dgn Design 1/17/2021 2:08 PM kgoetz

NOTES:

1. FOR ITS LEGEND, SEE SHEET 1023.
2. FOR DMS TRUSS DETAIL, SEE SHEET 1036.
3. PROPOSED POLE SHALL HAVE A 12-FOOT EMBEDMENT DEPTH.

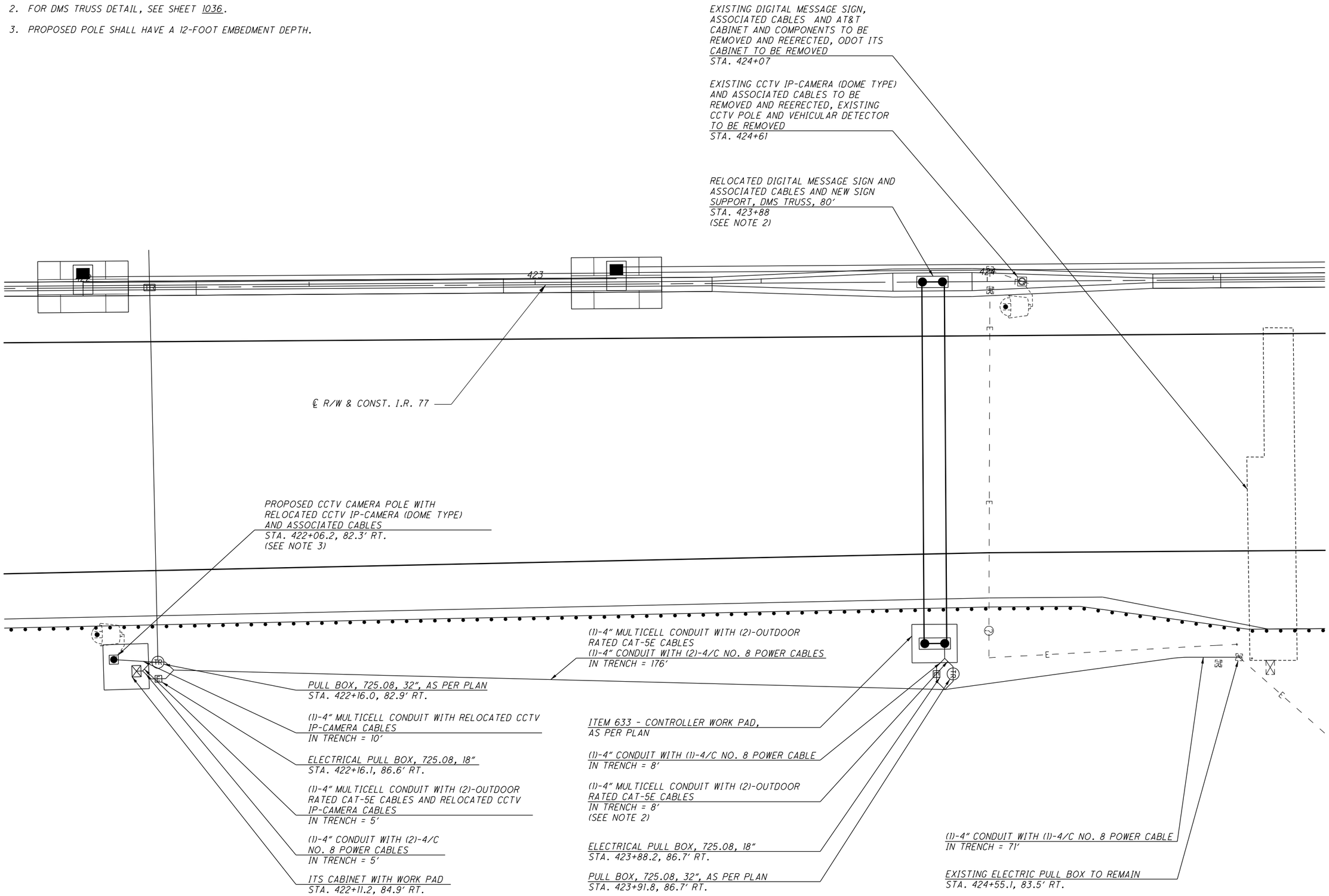


0 5 10 20
HORIZONTAL SCALE IN FEET

CALCULATED BEB
CHECKED KMG

# ITS PLAN DETAIL A

SUM-77 / 277 / 224
VARIOUS

1027
1288

0:\2017\2017258\Project Data\SUM\06002\Design\Signals\Sheets\106002_CP004A.dgn Design 1/17/2021 2:15:57 PM kgoetz

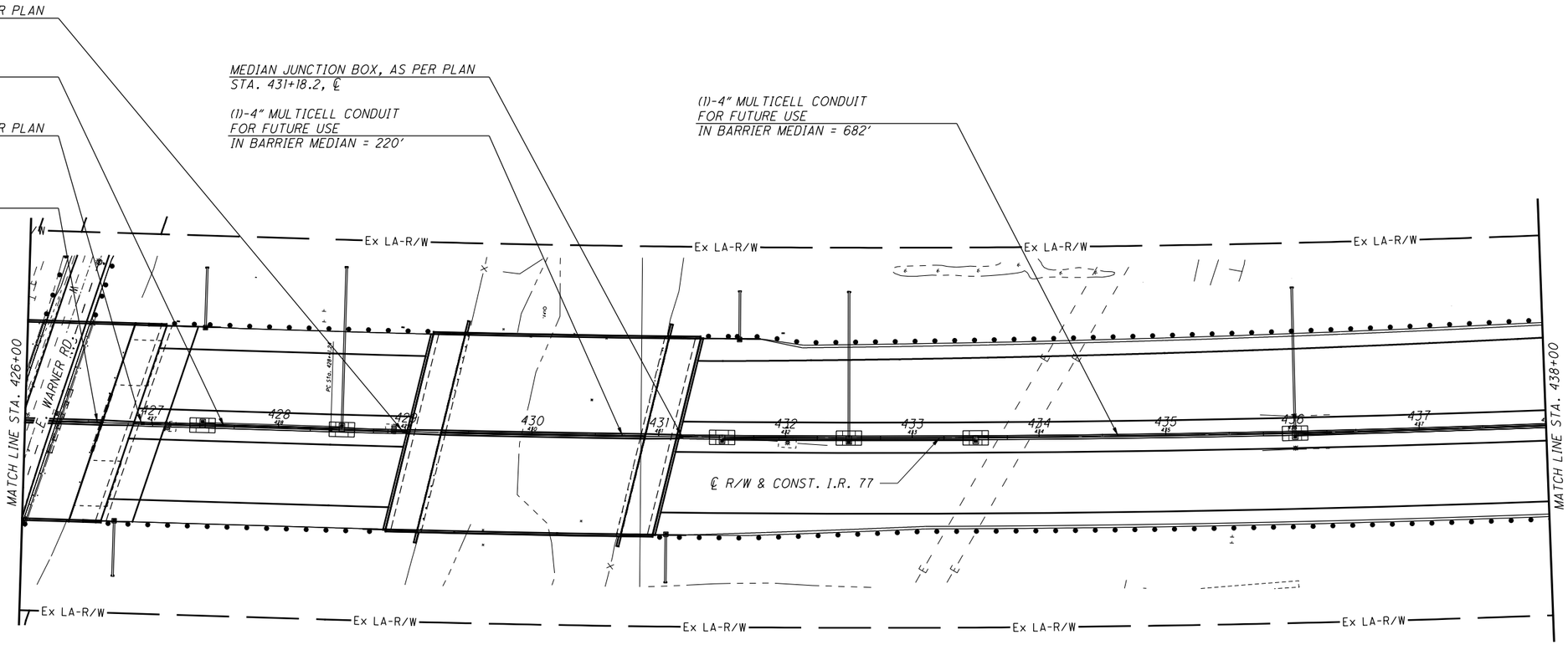


NOTE:

1. ALL ITS MEDIAN JUNCTION BOX COVERS SHALL BE LOCATED ON THE WEST SIDE OF THE I.R. 77 MAINLINE MEDIAN BARRIER UNLESS OTHERWISE NOTED.

FOR ITS LEGEND, SEE SHEET 1023.

HORIZONTAL SCALE IN FEET
0 25 50 100

CALCULATED BEB
CHECKED KMG

# ITS PLAN
## STA. 426+00 TO STA. 438+00

SUM-77 / 277 / 224
VARIOUS

1028
1288

D:\2017\2017258\ProjectData\SUM\06002\Design\Signals\Sheets\106002_CP005.dgn Design 1/17/2021 2:19:0 PM kgoetz

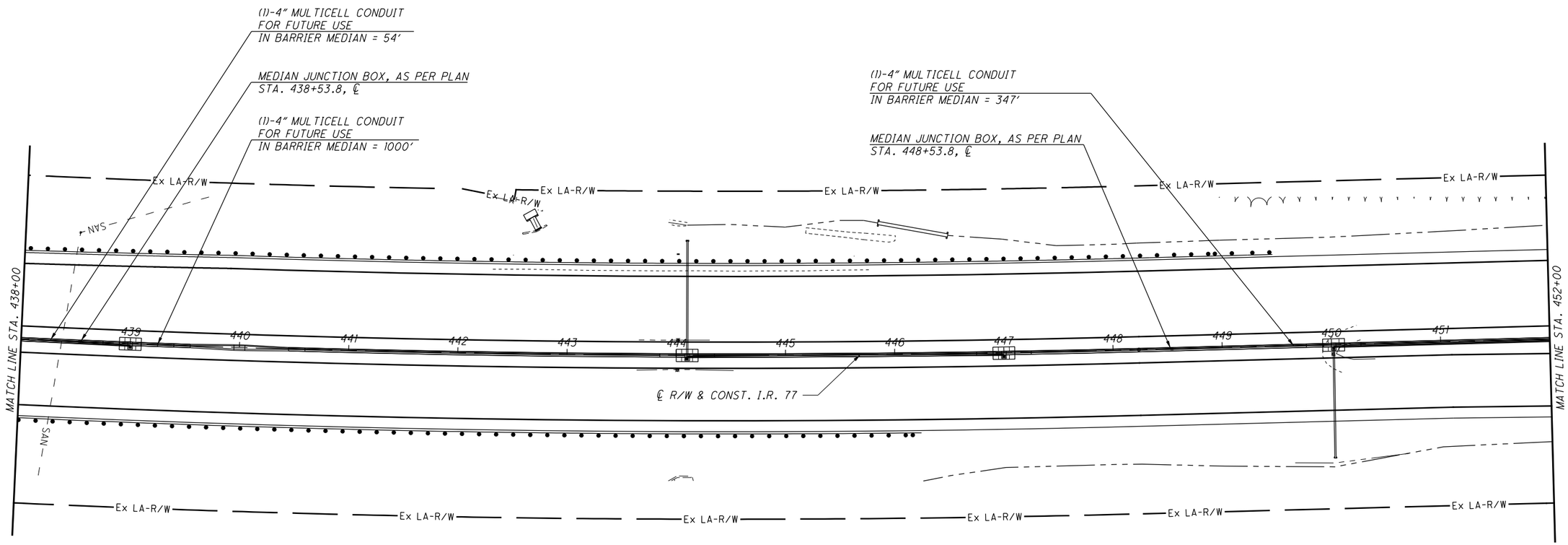


NOTE:

1. ALL ITS MEDIAN JUNCTION BOX COVERS SHALL BE LOCATED ON THE WEST SIDE OF THE I.R. 77 MAINLINE MEDIAN BARRIER UNLESS OTHERWISE NOTED.

FOR ITS LEGEND, SEE SHEET 1023.

HORIZONTAL SCALE IN FEET
0 25 50 100

CALCULATED BEB
CHECKED KMG

# ITS PLAN
## STA. 438+00 TO STA. 452+00

SUM-77 / 277 / 224
VARIOUS

1029
1288

O:\2017\2017258\ProjectData\SUM\106002\Design\Signals\Sheets\106002_CP006.dgn Design 1/17/2021 2:58 PM kgoetz

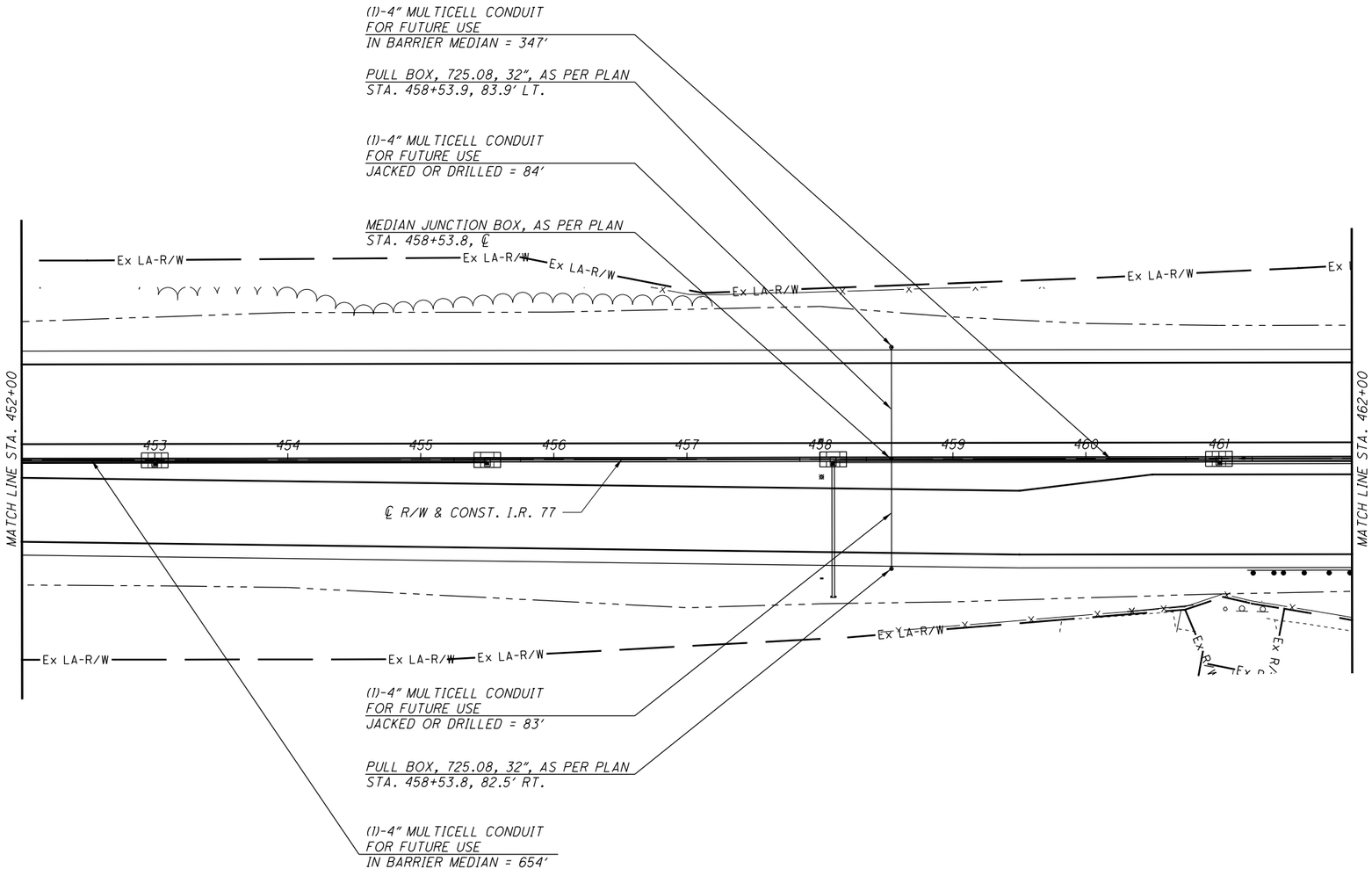


NOTE:

1. ALL ITS MEDIAN JUNCTION BOX COVERS SHALL BE LOCATED ON THE WEST SIDE OF THE I.R. 77 MAINLINE MEDIAN BARRIER UNLESS OTHERWISE NOTED.

FOR ITS LEGEND, SEE SHEET 1023.

HORIZONTAL SCALE IN FEET
0 25 50 100

CALCULATED BEB
CHECKED KMG

# ITS PLANS
## STA. 452+00 TO STA. 462+00

SUM-77/277/224
VARIOUS

1030
1288

O:\2017\2017258\ProjectData\SUM\106002\Design\Signals\Sheets\106002_CP007.dgn Design 1/17/2021 2:24:42 PM kgoetz

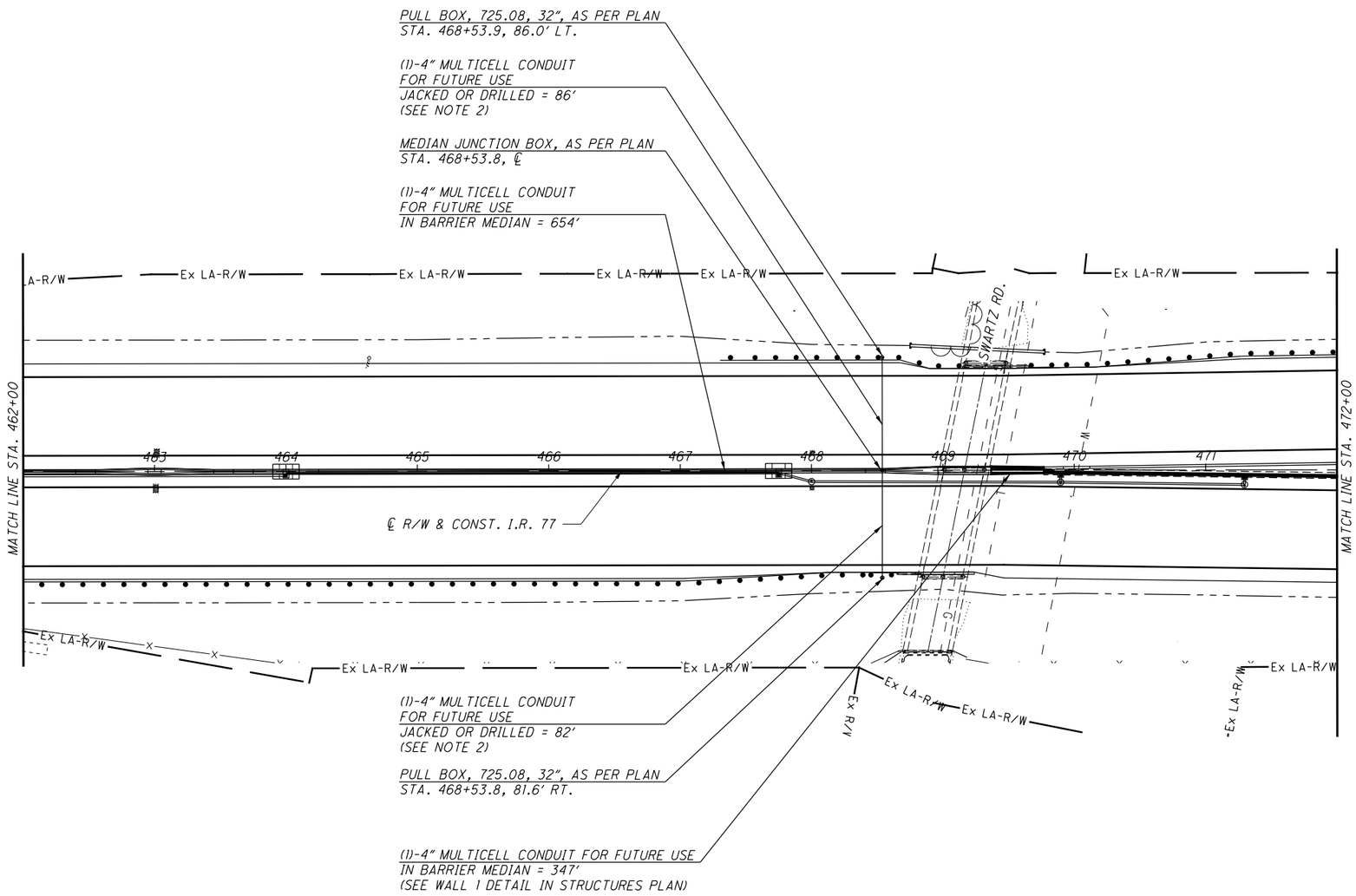


NOTE:

1. ALL ITS MEDIAN JUNCTION BOX COVERS SHALL BE LOCATED ON THE WEST SIDE OF THE I.R. 77 MAINLINE MEDIAN BARRIER UNLESS OTHERWISE NOTED.
2. CONDUIT WITHIN 6' OF THE PROPOSED GUARDRAIL SHALL BE ENCASED IN CONCRETE. PAYMENT FOR THE CONCRETE ENCASEMENT SHALL BE CONSIDERED INCIDENTAL TO ITEM 625 - CONDUIT, JACKED OR DRILLED, AS PER PLAN.

FOR ITS LEGEND, SEE SHEET 1023.

HORIZONTAL SCALE IN FEET
0 25 50 100

CALCULATED BEB
CHECKED KMG

ITS PLANS
STA. 462+00 TO STA. 472+00

SUM-77 / 277 / 224
VARIOUS

1031
1288

D:\2017\20172581\ProjectData\SUM\06002\Design\Signals\Sheets\106002_CP008.dgn Design 1/17/2021 2:27:16 PM kgoetz

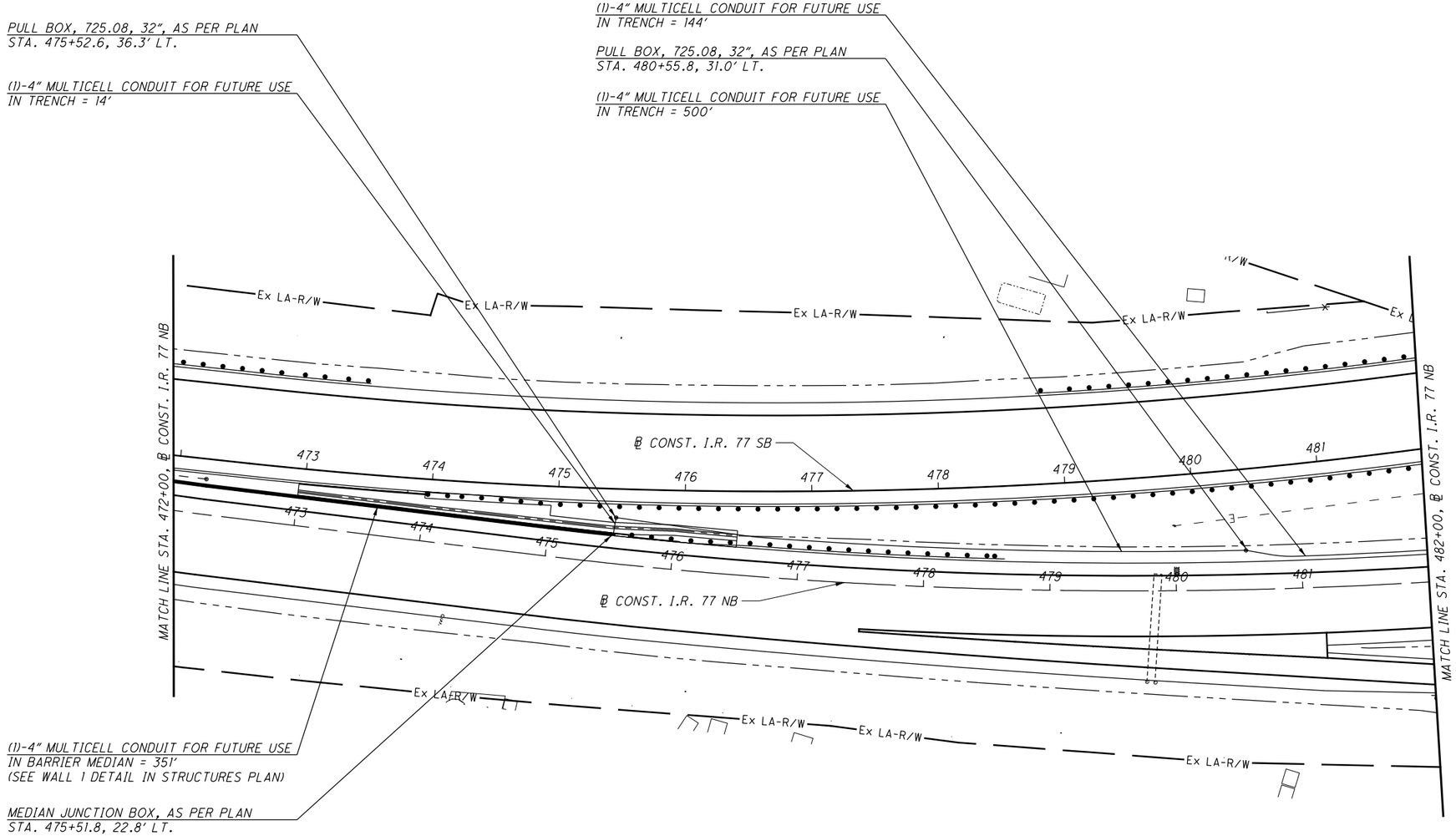


NOTE:

1. ALL ITS MEDIAN JUNCTION BOX COVERS SHALL BE LOCATED ON THE WEST SIDE OF THE I.R. 77 MAINLINE MEDIAN BARRIER UNLESS OTHERWISE NOTED.
2. ALL STATIONING IS BASED OFF OF ℄ CONST. I.R. 77 NB.

FOR ITS LEGEND, SEE SHEET 1023.

HORIZONTAL SCALE IN FEET
0 25 50 100

CALCULATED BEB
CHECKED KMG

# ITS PLANS
## STA. 472+00 TO STA. 482+00

SUM-77/277/224
VARIOUS

1032
1288

D:\2017\2017258\ProjectData\SUM\06002\Design\Signals\Sheets\06002_CP009.dgn Design 1/17/2021 2:29:24 PM kgoetz

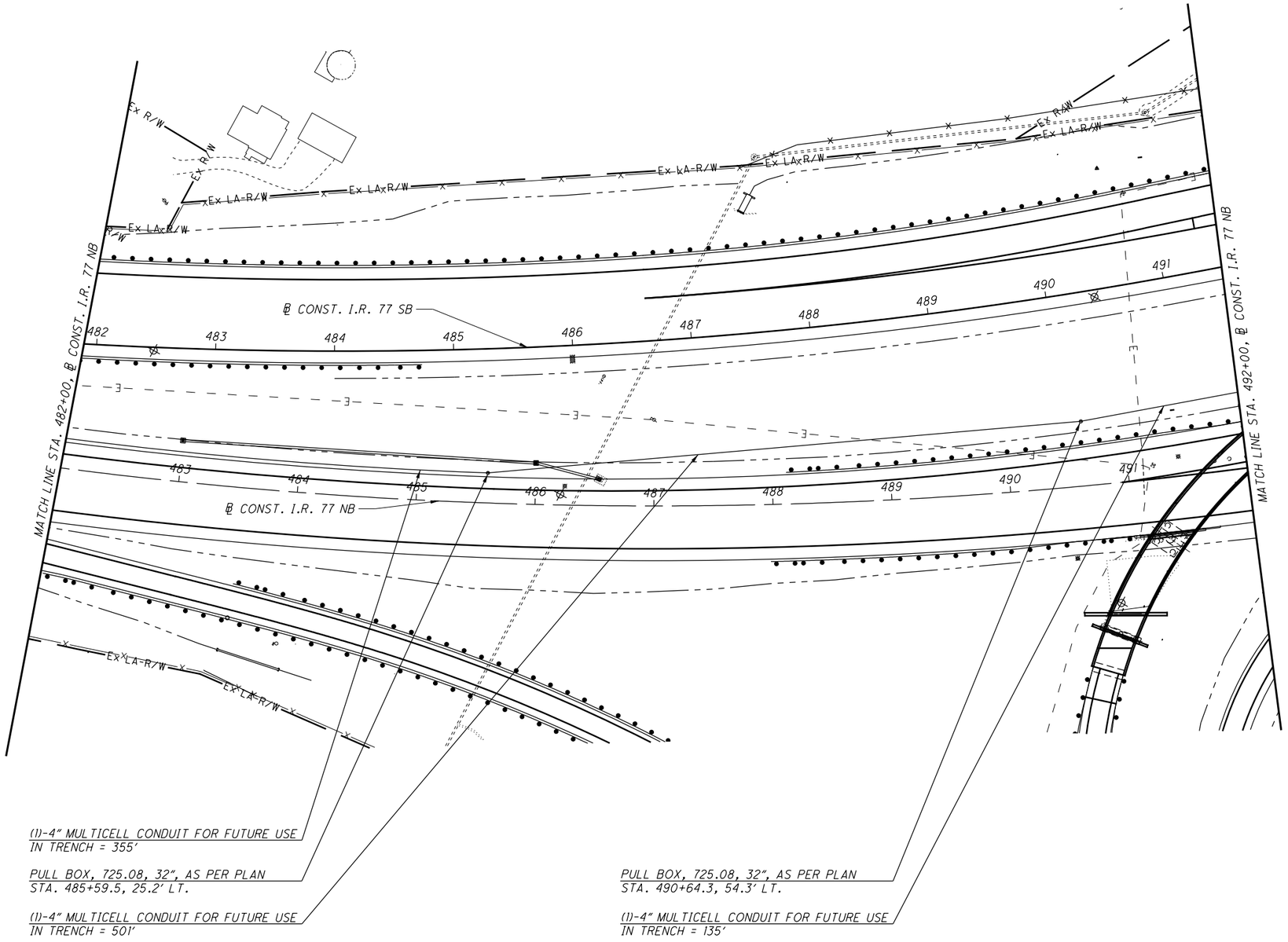


NOTE:

1. ALL STATIONING IS BASED OFF OF ℄ CONST. I.R. 77 NB.

FOR ITS LEGEND, SEE SHEET 1023.

HORIZONTAL SCALE IN FEET
0 25 50 100

CALCULATED BEB
CHECKED KMG

# ITS PLANS
## STA. 482+00 TO STA. 492+00

SUM-77 / 277 / 224
VARIOUS

1033
1288

D:\2017\20171258\ProjectData\SUM\106002\Design\Signals\Sheets\106002_CP010.dgn Design 1/17/2021 3:51 PM kgoetz

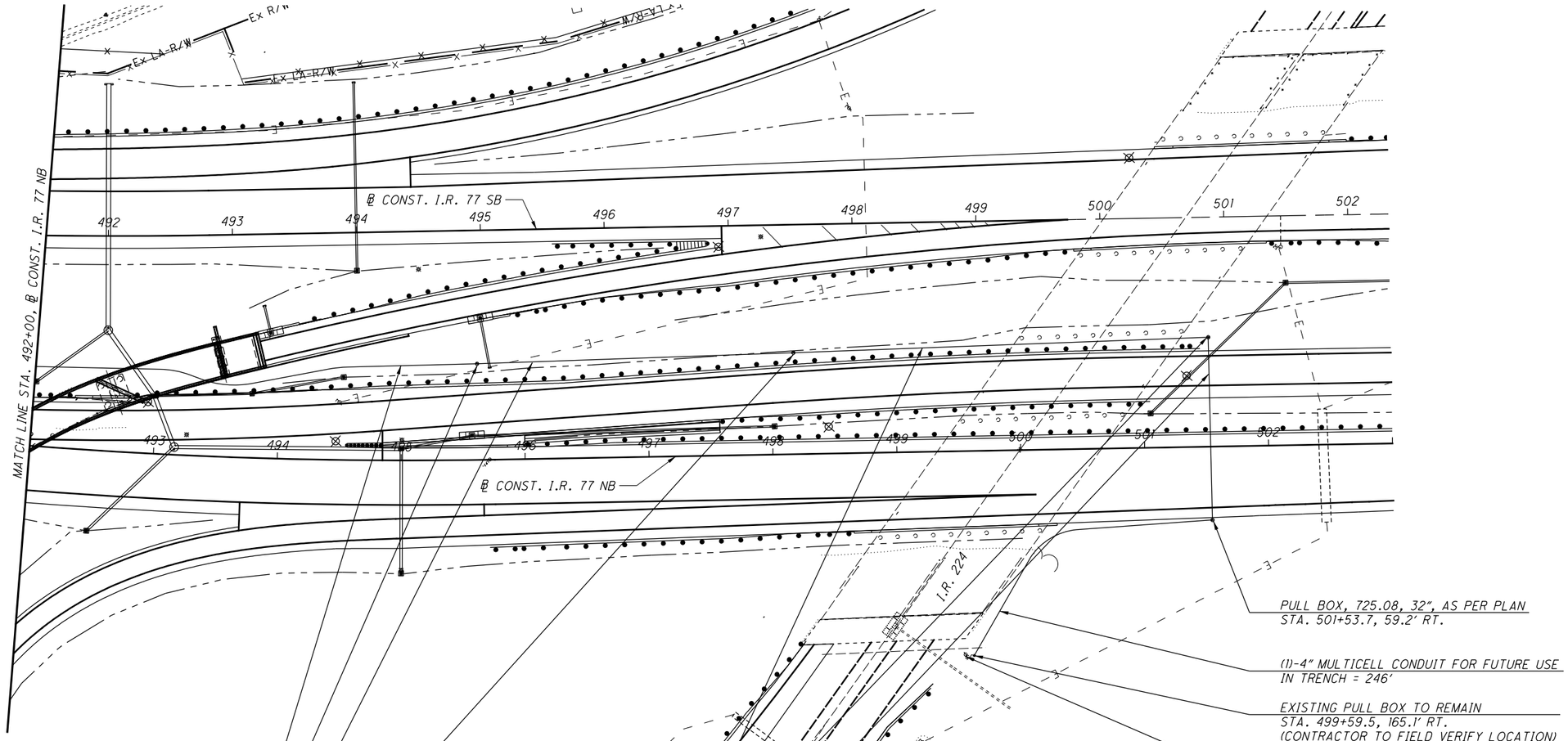


NOTE:

1. ALL STATIONING IS BASED OFF OF ℄ CONST. I.R. 77 NB.
2. CONDUIT WITHIN 6' OF THE PROPOSED GUARDRAIL SHALL BE ENCASED IN CONCRETE. PAYMENT FOR THE CONCRETE ENCASEMENT SHALL BE CONSIDERED INCIDENTAL TO ITEM 625 - CONDUIT, JACKED OR DRILLED, AS PER PLAN.

FOR ITS LEGEND, SEE SHEET 1023.

HORIZONTAL SCALE IN FEET
0 25 50 100

CALCULATED BEB
CHECKED KMG

# ITS PLANS
## STA. 492+00 TO END

SUM-77 / 277 / 224
VARIOUS



O:\2017\2017258\ProjectData\SUM\106002\Design\Signals\Sheets\106002_CP01.dgn Design 1/17/2021 2:33:53 PM kgoetz

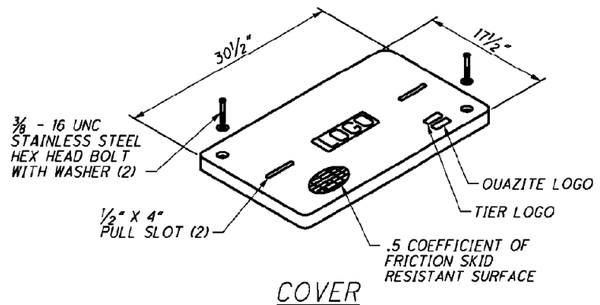


COVER

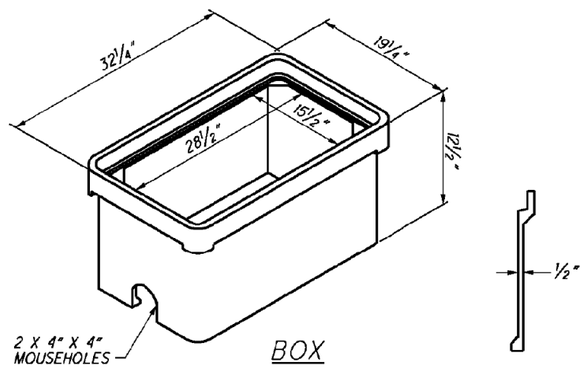


BOX

## POLYMER CONCRETE ASSEMBLY

**625-MEDIAN JUNCTION BOX, AS PER PLAN**

NOTES:

1. ALL ITS CONDUIT SHALL BE ACCESSIBLE INSIDE THE PULL BOX.
2. EACH INNERDUCT OF MULTICELL CONDUITS SHALL HAVE PUSH-IN CAPS.
3. THE LID LOGO SHALL BE "TRAFFIC".
4. USE QUAZITE 17" X 30" STYLE POLYMERCONCRETE (STACKABLE) ASSEMBLY, PART NO. PG1730DA12 AND PG1730HH00.
5. SEE ITEM 625 - MEDIAN JUNCTION BOX, AS PER PLAN NOTE ON SHEET 1020 FOR ADDITIONAL DETAILS.

CALCULATED BEB
CHECKED KMG

ITS DETAILS

SUM-77 / 277 / 224
VARIOUS

1035
1288

0:\2017\2017258\ProjectData\SUM\06002\Design\Signals\Sheets\106002_C0001.dgn Sheet 1/17/2021 11:56:02 PM kgoetz

| SIGN INFORMATION | |
|---|---|
| PANEL A | |
| PANEL SIZE: | 25' X 8' |
| NUMBER OF BRACKETS: | 5 |
| SIGN SUPPORT INFORMATION | |
| TOTAL SIGN AREA: | 200.0 SQ. FT. |
| TOTAL SPAN LENGTH: | 80.0' |
| DESIGN TYPE | ITS-35.13 |

| SUPPORT FOUNDATION INFORMATION | | |
|---|---|---|
| SUPPORT TYPE | DISTANCE BETWEEN FOUNDATIONS | FOUNDATION DEPTH |
| ITS-35.13 | 7'-6" | 21.5' |

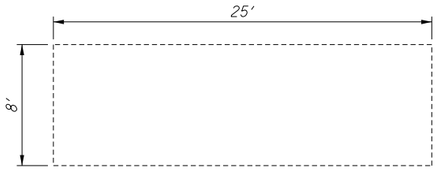


PANEL A
EXISTING DMS SIGN

NOTES:

1. CONTRACTOR SHALL FIELD VERIFY EXISTING ELEVATION PRIOR TO THE ORDERING OF MATERIALS
2. ALL SIGNS ARE VIEWED IN THE DIRECTION OF TRAVEL.
3. CONTRACTOR SHALL LOCATE ALL UNDERGROUND UTILITIES IN FIELD PRIOR TO ANY EXCAVATION.

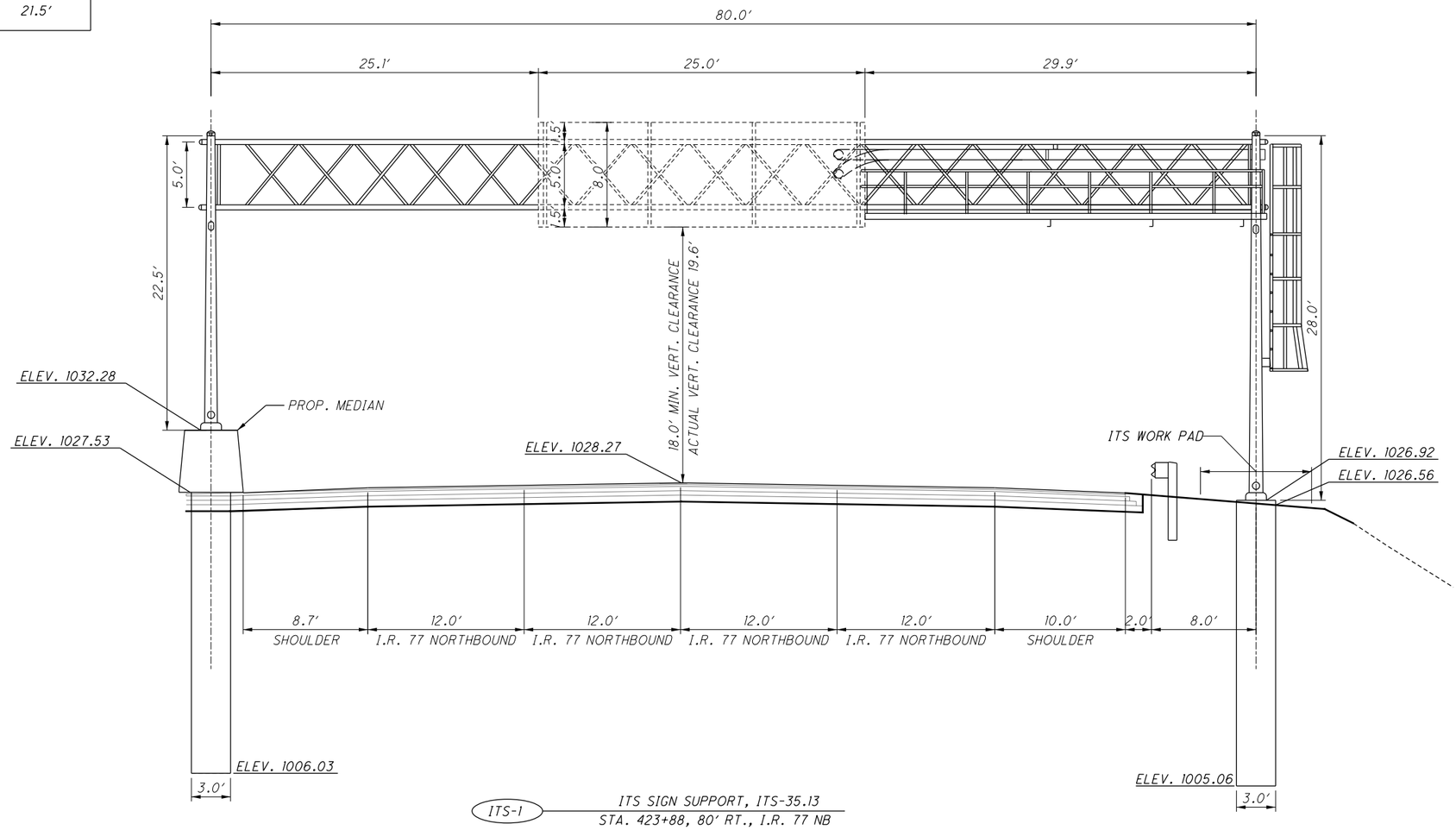


ITS-1 — ITS SIGN SUPPORT, ITS-35.13
STA. 423+88, 80' RT., I.R. 77 NB

CALCULATED BEB
CHECKED AKF

ITS SIGN SUPPORT DETAILS
ITS-1 - STA. 423+88, 80' RT., I.R. 77 NB

SUM-77/277/224
VARIOUS

1036
1288

0:\2017\20172581\ProjectData\SUM\106002\Design\Signals\Sheets\106002_CD100.dgn Sheet 2/4/2021 9:00:53 AM bbinsley

**UNDERGROUND UTILITIES**

THE LOCATIONS OF THE UNDERGROUND UTILITIES SHOWN ON THE PLANS ARE AS OBTAINED FROM THE OWNERS OF THE UTILITY AS REQUIRED BY SECTION 153.64 ORC. AT LEAST 48 HOURS BEFORE DIGGING, THE CONTRACTOR SHALL CALL THE OHIO UTILITIES PROTECTION SERVICE, TOLL-FREE, 800-362-2764. NON-MEMBER UTILITY COMPANIES MUST BE CALLED DIRECTLY. SEE SHEET 66 FOR ADDITIONAL UTILITY INFORMATION.

**CONTINGENCY QUANTITIES**

THE CONTRACTOR SHALL NOT ORDER MATERIAL OR PERFORM WORK FOR PLAN ITEMS SET UP TO BE USED "AS DIRECTED BY THE ENGINEER" UNLESS AUTHORIZED BY THE ENGINEER.

**EXISTING LIGHTING ITEMS, DUCT CABLE AND CONDUIT**

THE LOCATION OF EXISTING LIGHTING ITEMS, CONDUIT AND DUCT CABLE SHOWN ON THE PLANS HAVE BEEN OBTAINED BY SEARCHES OF AVAILABLE RECORDS AND FIELD CHECKS. IT IS BELIEVED THAT THEY ARE ESSENTIALLY CORRECT, HOWEVER, THE STATE OF OHIO DOES NOT GUARANTEE THEIR ACCURACY OR COMPLETENESS. FIELD VERIFY ALL CIRCUITS.

**EXISTING PLANS AND CONSTRUCTION PROJECT NO.**

SUM-277/224-0.00/6.31-10.22

**EXISTING ODOT CONTROL CENTERS**

THE CONTRACTOR SHALL CONTACT ODOT DISTRICT 4 TO OBTAIN KEYS TO THE EXTERNAL DISCONNECT HANDLES OF EXISTING CONTROL CENTER ENCLOSURES. THE AFFECTED EXISTING CONTROL CENTERS AND THEIR LOCATIONS ARE AS FOLLOWS:

- CONTROL CENTER 'CH' (CKTS '1' & '2') STA. 895+35± RAMP D, RT.
- CONTROL CENTER 'WO' (CKTS '1', '2' & '3') STA. 104+70± RAMP A, LT.

CIRCUITS SHALL BE TURNED "OFF" AS NECESSARY TO SAFELY WORK ON THE AFFECTED CIRCUITS. THE ENCLOSURES SHALL REMAIN LOCKED. ALL REMAINING CIRCUITS SHALL REMAIN "ON" UNLESS OTHERWISE APPROVED BY THE ENGINEER. UPON COMPLETION OF A PARTICULAR CIRCUIT'S WORK, THE CONTRACTOR SHALL RESTORE POWER TO THAT CIRCUIT, UNLESS THE CIRCUIT HAS BEEN DEACTIVATED.

**EXISTING CABLE AND CONDUIT**

EXISTING CIRCUIT CABLES IN TRENCH WHICH HAVE BEEN REPLACED AS INDICATED IN THE PLANS (INCLUDING CONDUIT, DISTRIBUTION CABLE, AND DUCT CABLE) MAY BE ABANDONED IN PLACE OR REMOVED. THE REMOVAL OR ABANDONMENT OF THESE ITEMS WHICH ARE NOT ITEMIZED SEPARATELY SHALL BE CONSIDERED INCIDENTAL TO THE VARIOUS LIGHTING ITEMS IN THE PROJECT.

EXISTING CIRCUIT CABLE IN BARRIER WHICH HAVE BEEN REPLACED AS INDICATED IN THE PLANS SHALL BE REMOVED AND PROPERLY DISPOSED OF BY THE CONTRACTOR. THE REMOVAL OF THESE ITEMS WHICH ARE NOT ITEMIZED SEPARATELY SHALL BE CONSIDERED INCIDENTAL TO THE VARIOUS LIGHTING ITEMS IN THE PROJECT.

REMOVAL OF CIRCUITS IN EXISTING UNDERGROUND OR BARRIER CONDUITS TO BE REUSED: WORK IS INCLUDED UNDER C&MS ITEM 625, "CONDUIT CLEANED AND CABLES REMOVED".

**ITEM 625 TRENCH**

TRENCH SHALL BE AS PER 625.13. IN ADDITION, ALL TRENCHING IN PAVED AREAS AND AREAS TO BE PAVED SHALL BE PERFORMED PRIOR TO THE PLACEMENT OF PAVEMENT.

**ITEM 625, POWER SERVICE, AS PER PLAN**

IN ADDITION TO THE REQUIREMENTS OF THE SPECIFICATIONS, THE FOLLOWING SHALL APPLY.

THE POWER SUPPLYING AGENCY FOR THIS PROJECT IS:

POWER COMPANY: FIRST ENERGY CORP. (OHIO EDISON CO.)
ADDRESS: 1910 W. MARKET ST. BLDG 3, AKRON, OH 44313
PHONE #: (330) 436-4055
CONTACT NAME: MR. DAVID MILLER

POWER SERVICE: 480 VOLT, 3-WIRE, SINGLE PHASE, GROUNDED NEUTRAL. THIS PROJECT HAS BEEN DESIGNED ON THE BASIS OF 5% VOLTAGE DROP WITH A MAXIMUM UNIFORMITY RATIO OF 4.0 TO 1.0 FOR CONVENTIONAL UNITS AND 3.0 TO 1.0 FOR HIGH MAST UNITS.

ALL POWER SERVICES SHALL BE METERED. THE METER BASE MOUNTING HEIGHT SHALL BE NO MORE THAN FIVE (5) FEET HIGH TO THE CENTER OF THE METER BASE FROM THE GROUND. A NON-FUSED DISCONNECT SHALL BE INSTALLED ON THE POWER SIDE OF THE METER BASE. THE CONTRACTOR SHALL SUPPLY THE NECESSARY METER BASES AND DISCONNECTS.

THE CONTRACTOR SHALL PAY ALL ELECTRICAL ENERGY CHARGES FOR NEW POWER SERVICES ESTABLISHED BY THIS PROJECT. UPON COMPLETION OF THIS PROJECT AND AFTER WRITTEN AUTHORIZATION FROM THE DISTRICT CONSTRUCTION ENGINEER, POWER SERVICE ELECTRICAL ENERGY ACCOUNTS SHALL BE TRANSFERRED TO THE MAINTAINING AGENCY. THIS SHALL INCLUDE NEW POWER SERVICE ESTABLISHED BY THIS PROJECT AS WELL AS REASSIGNMENT OF EXISTING SERVICE DUE TO WORK PERFORMED BY THIS PROJECT. IF POWER SERVICE IS TRANSFERRED PRIOR TO RECEIVING THE WRITTEN AUTHORIZATION, A DISINCENTIVE OF $100 PER DAY SHALL BE ASSESSED FOR EACH CALENDAR DAY OF NON-COMPLIANCE.

PAYMENT WILL BE MADE AT THE UNIT BID PRICE FOR EACH C&MS ITEM 625, "POWER SERVICE, AS PER PLAN" WHICH SHALL BE FULL COMPENSATION FOR ALL LABOR, MATERIALS AND INCIDENTALS REQUIRED TO COMPLETE THIS ITEM IN A SATISFACTORY AND WORKMANLIKE MANNER.

**PADLOCKS AND KEYS**

PADLOCKS FURNISHED SHALL BE EITHER BRASS OR BRONZE, EQUAL TO MASTER NO. 4BKA OR WILSON BOHANNAN 660A, AND SHALL BE KEYED IN ACCORDANCE WITH C&MS 631.06. PAYMENT SHALL BE INCLUDED IN THE BID FOR THE ITEM(S) BEING LOCKED.

**ITEM 625 SERVICE TO UNDERPASS LIGHTING**

THIS ITEM SHALL CONSIST OF PROVIDING COMPLETE ELECTRICAL SERVICE, EXCEPT FOR LUMINAIRES AND STRUCTURE GROUNDING FOR AN UNDERPASS LIGHTING SYSTEM ON THE VARIOUS UNDERPASSES SHOWN IN THE PLANS.

THE INSTALLATION WORK SHALL INCLUDE DISCONNECT SWITCH WITH ENCLOSURE, CONDUITS, CONDUIT GROUNDING, MOUNTINGS, FITTINGS, JUNCTION BOXES, CABLES, AND ALL INCIDENTALS NECESSARY TO COMPLETE READY FOR USE, THE SERVICE AS SHOWN IN THE LIGHTING PLANS. ALL CONDUITS AND FITTINGS SHALL BE SCH-80 PVC. CABLE FOR UNDERPASS LIGHTING SHALL BE #10 AWG (MINIMUM).

PAYMENT WILL BE MADE AT THE UNIT PRICE BID FOR ITEM 625, "SERVICE TO UNDERPASS LIGHTING" AND SHALL INCLUDE PAYMENT FOR ALL EQUIPMENT, LABOR, AND MATERIALS NECESSARY TO COMPLETE THE WORK AS SPECIFIED. COMPONENT PARTS NOT SPECIFICALLY MENTIONED BUT REQUIRED FOR SATISFACTORY OPERATION OF THIS ITEM SHALL BE FURNISHED AND CONSIDERED PAID FOR AS PART OF THE ITEM.

**ITEM 625 - CONDUIT CLEANED AND CABLES REMOVED**

THIS ITEM SHALL CONSIST OF CLEANING AN EXISTING CONDUIT BY REMOVING EXISTING CABLES, MUD AND DEBRIS SO THAT NEW CABLE CAN BE INSTALLED. INCIDENTAL TO THE CLEANING IS THE INSTALLATION OF BUSHINGS AND/OR COUPLINGS ON THE ENDS OF EXISTING CONDUIT AS REQUIRED. MATERIALS REMOVED SHALL BECOME THE PROPERTY OF THE CONTRACTOR FOR PROPER DISPOSAL OFF OF THE PROJECT SITE. DISTURBED AREAS SHALL BE PROPERLY RESTORED.

PAYMENT WILL BE MADE AT THE UNIT PRICE BID UNDER C&MS ITEM 625, "CONDUIT CLEANED AND CABLES REMOVED" PER FOOT OF CONDUIT CLEANED WHICH SHALL BE FULL COMPENSATION FOR ALL LABOR, MATERIALS AND INCIDENTALS REQUIRED TO COMPLETE THIS ITEM IN A SATISFACTORY AND WORKMANLIKE MANNER.

**ITEM 625 - PULL BOX CLEANED**

THIS ITEM OF WORK SHALL CONSIST OF CLEANING AN EXISTING PULL BOX BY REMOVING ANY EXISTING CABLES NOT BEING RECONNECTED, AND DEBRIS SO THAT NEW CABLES CAN BE INSTALLED. ANY UNUSED OPENINGS SHALL BE CLOSED. DISTURBED AREAS NEAR THE PULL BOX SHALL BE CLEARED OF WEEDS OR DEBRIS AND SHALL BE FULLY RESTORED. MATERIAL REMOVED SHALL BECOME THE PROPERTY OF THE CONTRACTOR AND SHALL BE PROPERLY DISPOSED OF OFF OF THE PROJECT SITE.

PAYMENT WILL BE MADE AT THE UNIT PRICE BID UNDER C&MS ITEM 625, "PULL BOX CLEANED" FOR EACH PULL BOX CLEANED WHICH SHALL BE FULL COMPENSATION FOR ALL LABOR, MATERIALS AND INCIDENTALS REQUIRED TO COMPLETE THIS ITEM IN A SATISFACTORY AND WORKMANLIKE MANNER.

**ITEM 625 - LUMINAIRE, INSTALLATION ONLY, AS PER PLAN**

THIS ITEM OF WORK SHALL CONSIST OF INSTALLING AN EXISTING LUMINAIRE REMOVED FROM A PREVIOUS LOCATION ON THE PROJECT.

THE CONTRACTOR SHALL EXERCISE CARE WHEN INSTALLING THE LUMINAIRE TO ENSURE THAT THE PROPER LUMINAIRE (SYMMETRIC OR ASYMMETRIC) IS INSTALLED AS INDICATED IN THE PLANS.

THE LUMINAIRE SHALL BE CLEANED, REPAIRS TO ENSURE THAT IT IS IN GOOD SERVICEABLE CONDITION MADE, ADJUSTMENTS TO THE OPTICAL COMPONENTS TO ENSURE THAT THE SPECIFIED DISTRIBUTION IS BEING PRODUCED MADE, AND A NEW LAMP INSTALLED IF THE LIGHT SOURCE IS A LAMP.

PAYMENT WILL BE MADE AT THE UNIT PRICE BID UNDER ITEM 625, "LUMINAIRE, INSTALLATION ONLY, AS PER PLAN" FOR EACH LUMINAIRE INSTALLED AND SHALL BE FULL COMPENSATION FOR ALL MATERIAL, LABOR, EQUIPMENT AND INCIDENTALS NECESSARY TO COMPLETE THIS ITEM IN A WORKMANLIKE MANNER.

**ITEM - 625 ARC FLASH CALCULATIONS AND LABEL, (BY LOCATION)**

THE CONTRACTOR SHALL SATISFY THE REQUIREMENTS OF ODOT SUPPLEMENTAL SPECIFICATION 825 FOR EACH OF THE NEW LIGHTING CONTROL CENTERS INDICATED IN THE PLANS.

THE CONTRACTOR MAY BE ABLE TO OBTAIN LABELS FOR ODOT MAINTAINED INSTALLATIONS FROM THE ODOT SIGN SHOP, 1606 WEST BROAD STREET, COLUMBUS, OH 43223. FOR NON-ODOT MAINTAINED INSTALLATIONS, THE CONTRACTOR IS RESPONSIBLE FOR OBTAINING THE LABEL, MADE FROM "ENGINEER GRADE" SIGN SHEETING OR AN EQUIVALENT COMMERCIAL LABEL MATERIAL.

THE ODOT OFFICE OF ROADWAY ENGINEERING HAS AN EXCEL SPREADSHEET, AVAILABLE UPON REQUEST, TO ASSIST WITH MAKING AND DOCUMENTING THE REQUIRED CALCULATIONS.

METHOD OF MEASUREMENT SHALL BE PER 825.06.

THE FOLLOWING QUANTITIES HAVE BEEN CARRIED TO THE GENERAL SUMMARY:

| | |
|---|---|
| ARC FLASH CALCULATIONS AND LABEL (CC-'WO') | 1 EACH |
| ARC FLASH CALCULATIONS AND LABEL (CC-'CH') | 1 EACH |
| ARC FLASH CALCULATIONS AND LABEL (CC-'FAA') | 1 EACH |

**ITEM 625 - 1-½" DUCT CABLE WITH THREE NO. (BY SIZE) AWG 2400 VOLT CABLES**

PROVIDE (#2 OR #4) AWG 725.02 WIRE, 2400 VOLT, ASSURING THE GROUNDING CABLE INSULATION IS GREEN OR BLACK WITH A GREEN STRIPE.

**ITEM 625 - PORTABLE WINCH DRIVE POWER UNIT**

THE CONTRACTOR SHALL SUPPLY A PORTABLE WINCH DRIVE POWER UNIT AS SPECIFIED IN THE ODOT CONSTRUCTION AND MATERIAL SPECIFICATIONS. A QUANTITY OF "1 EACH" OF ITEM 625, "PORTABLE WINCH DRIVE POWER UNIT", IS INCLUDED IN THE GENERAL SUMMARY FOR THIS PURPOSE.

| REVISIONS | | |
|---|---|---|
| NO. | DATE | DESCRIPTION |
| 1 | 04/28/21 | ADDED FAA FLASHING BEACON |

CALCULATED DRB CHECKED KWR

# LIGHTING GENERAL NOTES

SUM-77 / 277 / 224
VARIOUS

1037
1288

N:\03\60\06744-08\106002_SUM-76-10.95\Design\Lighting\Sheets\106002_LN001.dgn Sheet 4/28/2021 11:27 PM kryan

**ITEM 625 - LUMINAIRE, HIGH MAST, SOLID STATE (LED), IES-V, LED, 45,200-47,100 LUMENS, AS PER PLAN**

IN ADDITON TO THE REQUIREMENTS OF ODOT'S CONSTRUCTION AND MATERIALS SPECIFICATIONS AND SUPPLEMENTAL SPECIFICATION 813 AND 913, LUMINAIRES FOR HIGH MAST LIGHTING SHALL BE AS FOLLOWS:

LUMINAIRES SHALL BE COOPER LIGHTING CELESTEON SERIES, 325W, (CST-8-4-8-T5R-AP-7030-AP), GE EVOLVE, 365W, (ERHM-02-5-50-VW-30), OR EQUAL APPROVED BY THE ENGINEER.

PAYMENT WILL BE MADE AT THE UNIT BID PRICE FOR EACH C&MS ITEM 625 "LUMINAIRE, HIGH MAST, SOLID STATE (LED), IES-V, LED, 45,200-47,100 LUMENS, AS PER PLAN" FOR EACH LUMINAIRE WHICH SHALL BE FULL COMPENSATION FOR ALL LABOR, MATERIALS, AND INCIDENTALS REQUIRED TO COMPLETE THIS ITEM IN A SATISFACTORY AND WORKMANLIKE MANNER.

**ITEM 625 - LUMINAIRE, UNDERPASS, SOLID STATE (LED), IES-III, LED, 3,100-4,100 LUMENS, AS PER PLAN**

IN ADDITON TO THE REQUIREMENTS OF ODOT'S CONSTRUCTION AND MATERIALS SPECIFICATIONS AND SUPPLEMENTAL SPECIFICATION 813 AND 913, LUMINAIRES FOR UNDERPASS LIGHTING SHALL BE AS FOLLOWS:

LUMINAIRES SHALL BE HOLOPHANE WALLPACK, 39W, (W4GLED-10C1000-30K-T3M), COOPER LIGHTING, GALLEON SERIES, 34W, (GWC-AF-01-LED-E1-T4FT-7030-600), OR EQUAL APPROVED BY THE ENGINEER.

PAYMENT WILL BE MADE AT THE UNIT BID PRICE FOR EACH C&MS ITEM 625 "LUMINAIRE, UNDERPASS, SOLID STATE (LED), IES-III, LED, 3,100-4,100 LUMENS, AS PER PLAN" FOR EACH LUMINAIRE WHICH SHALL BE FULL COMPENSATION FOR ALL LABOR, MATERIALS, AND INCIDENTALS REQUIRED TO COMPLETE THIS ITEM IN A SATISFACTORY AND WORKMANLIKE MANNER.

**ITEM 625 - LUMINAIRE REMOVED FOR REUSE**

THE CONTRACTOR WILL BE REMOVING 82 LED HIGH MAST LUMINAIRES (54 SYMMETRIC AND 28 ASYMMETRIC) AS PART OF THIS PROJECT. ALL LUMINAIRES ARE RATED 45,000 - 55,000 LUMENS. ALL 54 SYMMETRIC LUMINAIRES AND 20 OF THE 28 ASYMMETRIC LUMINAIRES WILL BE REUSED WITHIN THIS PROJECT. THE REMAINING EIGHT (8) ASYMMETRIC LUMINAIRES WILL BE REMOVED FOR REUSE BUT NOT WITHIN THIS PROJECT AND THUS SHALL BE CAREFULLY STORED ON THE PROJECT SITE FOR PICK UP BY ODOT DISTRICT 4 PERSONNEL (SEE NOTE ENTITLED 'LUMINAIRE REMOVED FOR STORAGE').

THE CONTRACTOR SHALL CLEARLY NOTE WHICH LUMINAIRES ARE SYMMETRIC AND WHICH ARE ASYMMETRIC SO THAT THEIR SUBSEQUENT INSTALLATION IS AS INDICATED IN THE PLANS.

**ITEM 625 - LUMINAIRE REMOVED FOR STORAGE**

THIS ITEM OF WORK SHALL BE PER C&MS 625.21(A). THE CONTRACTOR SHALL CONTACT ODOT DISTRICT 4 [MICHELLE CHANEY (330)-786-2267] 72 HOURS ADVANCE NOTICE OF WHEN THE LUMINAIRES WILL BE AVAILABLE FOR PICK UP AND THEIR LOCATION ON THE PROJECT SITE.

**ITEM 625 - POWER SERVICE, AS PER PLAN (120V)**

IN ADDITION TO THE REQUIREMENTS OF THE SPECIFICATIONS, THE FOLLOWING SHALL APPLY. THE POWER SUPPLYING AGENCY FOR THIS PROJECT IS:

POWER COMPANY: FIRST ENERGY CORP (OHIO EDISON CO)
ADDRESS: 1910 W. MARKET ST. BLDG 3, AKRON, OH 44313
PHONE #: (330) 436-4055
CONTACT NAME: MR. DAVID MILLER

POWER SERVICE: 120 VOLT, 3-WIRE, SINGLE PHASE, GROUNDED NEUTRAL.

ALL POWER SERVICES SHALL BE METERED. THE METER BASE MOUNTING HEIGHT SHALL BE NO MORE THAN FIVE (5) FEET HIGH TO THE CENTER OF THE METER BASE FROM THE GROUND. A NON-FUSED DISCONNECT SHALL BE INSTALLED ON THE POWER SIDE OF THE METER BASE. THE CONTRACTOR SHALL SUPPLY THE NECESSARY METER BASES AND DISCONNECTS

THE CONTRACTOR SHALL PAY ALL ELECTRICAL ENERGY CHARGES FOR NEW POWER SERVICES ESTABLISHED BY THIS PROJECT. UPON COMPLETION OF THIS PROJECT AND AFTER WRITTEN AUTHORIZATION FROM THE DISTRICT CONSTRUCTION ENGINEER, POWER SERVICE ELECTRICAL ENERGY ACCOUNTS SHALL BE TRANSFERRED TO THE MAINTAINING AGENCY. IF POWER SERVICE IS TRANSFERRED PRIOR TO RECEIVING THE WRITTEN AUTHORIZATION, A DISINCENTIVE OF $100 PER DAY SHALL BE ASSESSED FOR EACH CALENDAR DAY OF NON-COMPLIANCE.

PAYMENT WILL BE MADE AT THE UNIT BID PRICE FOR EACH CMS ITEM 625, "POWER SERVICE, AS PER PLAN [120V]" WHICH SHALL BE FULL COMPENSATION FOR ALL LABOR, MATERIALS AND INCIDENTALS REQUIRED TO COMPLETE THIS ITEM IN A SATISFACTORY AND WORKMANLIKE MANNER.

**ITEM 625 - LIGHT POLE REMOVED, AS PER PLAN**

THIS ITEM OF WORK SHALL BE PER C&MS 625.21(B) AND SHALL INCLUDE CUTTING THE ANCHOR BOLTS AND EXPOSED CONDUIT ELL(S) FLUSH WITH THE TOP OF THE MEDIAN BARRIER. THE CONTRACTOR SHALL ALSO FILL THE TOP 6 INCHES (MIN.) OF THE OPEN ELL(S) WITH CONCRETE MORTAR AND FINISH FLUSH WITH THE TOP OF THE MEDIAN BARRIER.

**ITEM 625 - LIGHT TOWER MAINTENANCE PLATFORM, MISC.: PLATFORM REMOVED**

THIS ITEM OF WORK INCLUDES THE REMOVAL OF AN EXISTING LIGHT TOWER MAINTENANCE PLATFORM AND THE LIGHT TOWER FOUNDATION IT ENCOMPASSES. THE PLATFORM AND FOUNDATION SHALL BE REMOVED PER C&MS 625.21(C). ALL REMOVED MATERIAL SHALL BE PROPERLY DISPOSED OF OFF THE PROJECT SITE.

LOCATIONS OF LIGHT TOWER MAINTENANCE PLATFORMS TO BE REMOVED ARE SHOWN AND QUANTIFIED ON LIGHTING REMOVAL PLAN SHEETS 858 & 859.

PAYMENT WILL BE MADE AT EACH SUCH PLATFORM LOCATION AT THE UNIT PRICE BID FOR EACH C&MS ITEM 625, "LIGHT TOWER MAINTENANCE PLATFORM, MISC.: PLATFORM REMOVED" AND SHALL BE FULL COMPENSATION FOR ALL MATERIAL, LABOR, EQUIPMENT AND INCIDENTALS NECESSARY TO COMPLETE THIS ITEM IN A WORKMANLIKE MANNER.

**ITEM 625 - LIGHT TOWER, BBBB90, AS PER PLAN**

IN ADDITION TO THE REQUIREMENTS OF THE CMS, AND THE STANDARD CONSTRUCTION DRAWINGS, THE FOURTH ARM IS FOR THE INSTALLATION OF THE FAA OBSTRUCTION LIGHT. THE MANUFACTURER SHALL DETERMINE AND SUPPLY ANY COUNTERWEIGHTS.

**ITEM 625 - UNDERGROUND WARNING/MARKING TAPE, AS PER PLAN**

UNDERGROUND WARNING/MARKING TAPE SHALL BE IN ACCORDANCE WITH CMS 725.22 EXCEPT THE TAPE SHALL NOT BE FURNISHED WITH TRACER WIRE.

**ITEM 625 - LIGHTING, MISC.: FAA TYPE L-810 OBSTRUCTION LIGHTING, LED**

THIS ITEM CONSISTS OF INSTALLATION AND TESTING OF FAA L-810 COMPLIANT OBSTRUCTION LIGHTING FOR MARKING OF STRUCTURES UNDER 150 FEET. THE LOCATION SHALL BE AS SHOWN IN THE LIGHTING PLANS. EACH OBSTRUCTION LAMP FIXTURE SHALL UTILIZE LIGHT EMITTING DIODES (LEDS). THE OBSTRUCTION LAMP SHALL HAVE A WRITTEN MINIMUM 5-YEAR MANUFACTURER WARRANTY. THE LAMP SHALL BE ETL VERIFIED TO FAA ADVISORY CIRCULAR AC150/5345-43F, TYPE L-810 AND SHALL BE ONE OF THE FOLLOWING OR APPROVED EQUAL:

1. FLIGHT LIGHT FL-810L
2. POINT LIGHTING MODEL POL-21006 DOUBLE OBSTRUCTION LIGHT

EACH OBSTRUCTION LAMP FIXTURE SHALL HAVE ITS OWN CONTROLLER, HOUSED IN ITS OWN METAL CABINET MOUNTED ON A 3' PEDESTAL, 4' FROM THE TOWER. THE CONTROLLER SHALL OPERATE AT 120VAC, 60HZ AND HAVE ITS OWN DEDICATED CIRCUIT BREAKER. THE OBSTRUCTION LAMP SHALL OPERATE IN A STEADY BURN OPERATION CONTINUOUSLY TWENTY-FOUR (24) HOURS PER DAY, WITH NO INTERVENING PHOTOCELL CONTROL.

THE CONTROLLER SHALL PROVIDE AT LEAST ONE UNUSED ALARM STATUS OUTPUT IN THE FORM OF A DRY-CONTACT OR SOLID-STATE RELAY CLOSURE THAT RESPONDS TO DEFECTIVE OR INOPERATIVE OBSTRUCTION LAMP CONDITIONS. AT LEAST ONE RELAY WITH COMPLETE CONTACTS (NORMALLY OPEN, NORMALLY CLOSED, AND COMMON) SHALL BE PROVIDED. ALARM RELAY CONTACT RATINGS SHALL BE AT LEAST 500 MA RESISTIVE AT 120VAC/30VDC. THE CONTROLLER SHALL PROVIDE AT LEAST ONE VISIBLE ALARM STATUS INDICATOR FOR LAMP FAILURE INDICATION. THIS INDICATOR SHALL BE IN THE FORM OF A PANEL MOUNTED RED DOME-TYPE LED VISIBLE FROM THE OUTSIDE OF THE ENCLOSURE.

THE CONTROLLER ENCLOSURE SHALL UTILIZE A VERTICALLY HINGED, SWING-OPEN DOOR, AND BE RATED NEMA 3R, MINIMUM. ENCLOSURE SHALL INCLUDE AT LEAST ONE COMMERCIAL GRADE NEMA 5-15 RECEPTACLE TO ACCOMMODATE WIRELESS COMMUNICATION EQUIPMENT TO BE INSTALLED LATER BY ODOT FOR ALARM STATUS MONITORING. AN INTEGRAL SHELF SHALL BE PROVIDED FOR THIS EQUIPMENT INSIDE THE ENCLOSURE, AND SHALL PROVIDE AN OPEN, ACCESSIBLE SPACE FOR EQUIPMENT MEASURING AT LEAST TWELVE (12) INCHES WIDE, EIGHT (8) INCHES DEEP, AND SIX (6) INCHES IN HEIGHT.

THE CONTRACTOR SHALL FULLY TEST THE SYSTEM AND ARRANGE FOR ACCEPTANCE INSPECTION OF THE OBSTRUCTION LIGHTING INSTALLATION BY ODOT DISTRICT SIGNAL MAINTENANCE PERSONNEL AFTER THE SYSTEM IS OPERATIONAL. DURING ACCEPTANCE INSPECTION, THE CONTRACTOR SHALL DEMONSTRATE THE PROPER OPERATION OF ALL LAMPS AND ALARMS. CONTRACTOR SHALL PROVIDE WRITTEN MANUFACTURER WARRANTY AND ALL OPERATING MANUALS FOR OBSTRUCTION LIGHTING CONTROLLER AND LAMP TO ODOT DISTRICT SIGNAL MAINTENANCE PERSONNEL AT THE TIME OF INSPECTION.

THE DEPARTMENT SHALL MEASURE FAA TYPE L-810 OBSTRUCTION LIGHTING, LED BY EACH INDIVIDUAL OBSTRUCTION LIGHT FIXTURE, COMPLETE AND INSTALLED INCLUDING ANY CONTROL DEVICES AND ALL WIRING AND CONDUITS FROM THE LIGHT TO THE CONTROLLER AND TO THE POWER SERVICE.

QUANTITIES CARRIED TO THE GENERAL SUMMARY:

| | |
|---|---|
| 625 LIGHTING, MISC.: FAA TYPE L-810 OBSTRUCTION LIGHTING, LED | 1 EACH |
| 625 TRENCH, 24" | 260 FEET |
| 625 UNDERGROUND WARNING/MARKING TAPE, AS PER PLAN | 260 FEET |
| 625 GROUND ROD | 1 EACH |
| 632 PEDESTAL FOUNDATION | 1 EACH |
| 632 PEDESTAL, 3' | 1 EACH |

| REVISIONS | | |
|---|---|---|
| NO. | DATE | DESCRIPTION |
| 1 | 04/28/21 | ADDED FAA FLASHING BEACON |

CALCULATED DRB CHECKED KWR

# LIGHTING GENERAL NOTES

SUM-77/277/224
VARIOUS

1038
1288

N:\03\60\06744-08\106002_SUM-76-10.95\Design\Lighting\Sheets\106002_LN002.dgn Sheet 4/28/2021 6:01:29 PM kryan

ITEM SPECIAL - MAINTAIN EXISTING LIGHTING

EXISTING ROADWAYS WHICH ARE TO REMAIN OPEN TO TRAFFIC DURING CONSTRUCTION OF THIS PROJECT AND ARE LIGHTED SHALL HAVE THE LIGHTING MAINTAINED AS DESCRIBED HEREIN.

BEFORE ANY WORK IS STARTED IN THE IMMEDIATE VICINITY OF ANY EXISTING LIGHTING CIRCUITS, REPRESENTATIVES OF THE STATE, THE MAINTAINING AGENCY, AND THE CONTRACTOR SHALL MAKE A VISUAL INSPECTION OF THE EXISTING ROADWAY LIGHTING CIRCUITS TO BE MAINTAINED. DURING THIS INSPECTION A WRITTEN RECORD OF THE CONDITION OF THE EXISTING LIGHTING SHALL BE MADE BY THE STATE'S REPRESENTATIVE. THIS WRITTEN REPORT SHALL NOTE INDIVIDUAL LUMINAIRES WHICH ARE NOT OPERATIONAL, AND INDIVIDUAL CIRCUITS WHICH ARE NOT IN WORKING ORDER. THE COMPLETED REPORT SHALL BE SIGNED BY THE REPRESENTATIVES OF THE STATE, THE MAINTAINING AGENCY, AND THE CONTRACTOR. IF, AS A RESULT OF THIS INSPECTION, IT IS DETERMINED THAT THE CONDITION OF THE EXISTING SYSTEM IS BELOW THAT REQUIRED FOR THE SAFETY OF THE TRAVELING PUBLIC, THEN THE MAINTAINING AGENCY SHALL MAKE REPAIRS NECESSARY TO RETURN THE SYSTEM TO AN ACCEPTABLE CONDITION. FOLLOWING THESE REPAIRS, THE SYSTEM SHALL AGAIN BE INSPECTED AND A REPORT MADE AND SIGNED AS OUTLINED HEREIN.

WHEN THE EXISTING SYSTEM IS IN AN ACCEPTABLE CONDITION, IT SHALL BE TURNED OVER TO THE CONTRACTOR WHO SHALL THEN BE REQUIRED TO MAINTAIN THE EXISTING LIGHTING TO THE CONDITION OUTLINED IN THIS REPORT WITH THE EXCEPTION OF KNOCKDOWNS DUE TO TRAFFIC ACCIDENTS. REPLACEMENTS OF KNOCKED DOWN UNITS SHALL BE DONE ONLY WHEN THE ENGINEER HAS DETERMINED THAT THE REPLACEMENT OF THE KNOCKED DOWN UNIT IS NECESSARY AND SHALL BE PAID SEPARATELY ON A PER UNIT BASIS. BETTERMENTS SHALL BE COVERED IN ITEMS OF WORK PERTAINING TO THE CONSTRUCTION OF PERMANENT IMPROVEMENTS. THE MAINTAINING AGENCY SHALL GIVE THE CONTRACTOR ONE COPY OF THE EXISTING LIGHTING CIRCUITRY LAYOUT. WHEN THE CONTRACTOR HAS TAKEN OVER THE MAINTENANCE OF THE EXISTING SYSTEM, HE SHALL PROVIDE ALL REQUIRED LAYOUT AND LOCATING OF EXISTING LIGHTING CIRCUITS WITHIN THE PROJECT.

ITEM SPECIAL - MAINTAIN EXISTING LIGHTING (CONT.)

SHOULD THE CONTRACTOR DESIRE THE REMOVAL OF THE EXISTING LIGHTING BEFORE THE NEW LIGHTING IS OPERATIONAL, THE CONTRACTOR SHALL THEN BE RESPONSIBLE FOR ADEQUATE TEMPORARY LIGHTING OF THAT PORTION OF THE EXISTING ROADWAY AFFECTED BY THE REMOVAL OF THE EXISTING LIGHTING. TWO [2] WEEKS PRIOR TO INSTALLING SUCH LIGHTING, THE CONTRACTOR SHALL PREPARE AND SUBMIT FOUR (4) SETS OF THE TEMPORARY LIGHTING PLANS TO THE ENGINEER FOR REVIEW AND APPROVAL. THIS PLAN SHALL SHOW LOCATION OF POLES, LENGTH OF BRACKET ARMS, STYLE OF LUMINAIRES, MOUNTING HEIGHT, WIRING METHODS, AND OTHER PERTINENT INFORMATION. THE TEMPORARY LIGHTING SHALL PROVIDE AN AVERAGE INITIAL INTENSITY OF 1.2 FOOTCANDLES WITH AN AVERAGE TO MINIMUM UNIFORMITY RATIO NOT TO EXCEED 4:1. MOUNTING HEIGHT FOR TEMPORARY LUMINAIRES SHALL NOT BE LESS THAN 27 FEET AND MINIMUM OVERHEAD CONDUCTOR CLEARANCE SHALL BE 20 FEET. TEMPORARY OVERHEAD CONSTRUCTION SHALL NOT BE LESS THAN GRADE "A" FOR STRENGTH REQUIREMENTS AS DEFINED BY THE NATIONAL ELECTRIC SAFETY CODE. WOOD POLES WITH OVERHEAD WIRING MAY BE USED. HOWEVER, TEMPORARY LIGHTING SHALL MEET FEDERAL AND STATE SAFETY CRITERIA. IF BREAKAWAY POLES ARE USED TO MEET THIS CRITERIA, THEN UNDERGROUND WIRING WILL BE USED. RECONDITIONED OR USED MATERIALS MAY BE FURNISHED FOR TEMPORARY LIGHTING. ALL MATERIALS NECESSARY TO COMPLETE THE TEMPORARY LIGHTING SHALL BE FURNISHED AND INSTALLED BY THE CONTRACTOR. A SEPARATE POWER SERVICE WILL BE PROVIDED BY THE CONTRACTOR FOR THE TEMPORARY LIGHTING SYSTEM. THE TEMPORARY LIGHTING SHALL NOT BE SPLICED INTO EXISTING LIGHTING CIRCUITS. THE CONTRACTOR SHALL PAY ALL HOOK-UP FEES AND ELECTRICAL COSTS FOR THE TEMPORARY SYSTEM. THESE COSTS SHALL BE PAID FOR UNDER THE LUMP SUM ITEM SPECIAL MAINTAIN EXISTING LIGHTING. WHEN NO LONGER NEEDED THE TEMPORARY LIGHTING INSTALLATION SHALL BE REMOVED AND PROPERLY DISPOSED OF BY THE CONTRACTOR.

THE LUMP SUM BID FOR ITEM SPECIAL - MAINTAIN EXISTING LIGHTING, SHALL INCLUDE PAYMENT FOR ALL LABOR, EQUIPMENT, MATERIALS, INCIDENTALS, AND TEMPORARY POWER SERVICES NECESSARY TO MAINTAIN THE EXISTING LIGHTING AS SPECIFIED HEREIN. THE FOLLOWING QUANTITIES HAVE BEEN INCLUDED IN THE LIGHTING GENERAL SUMMARY FOR USE AS DIRECTED BY THE ENGINEER.

| | |
|---|---|
| SPECIAL, MAINTAIN EXISTING LIGHTING | LUMP SUM |

CALCULATED DRB
CHECKED KWR

# LIGHTING GENERAL NOTES

SUM-77/277/224
VARIOUS

1039
1288

N:\03\60\06744-08\106002_SUM-76-10.95\Design\Lighting\Sheets\106002_LN003.dgn Sheet 1/14/2021 8:38:53 AM srifle

| SHEET NUM. | | | | | | | | | | | PART. | | | ITEM | ITEM EXT | GRAND TOTAL | UNIT | DESCRIPTION | SEE SHEET NO. |
|---|---|---|---|---|---|---|---|---|---|---|---|---|---|---|---|---|---|---|---|
| 1037 | 1038 | 1039 | 1041 | 1042 | 1043 | 1045 | | | | | 01/IMS/PV | 02/IMS/PV | | | | | | | |
| | | | | | | | | | | | | | | | | | | LIGHTING | |
| | | | 33 | 30 | 21 | | | | | | 76 | 8 | | 625 | 00480 | 84 | EACH | CONNECTION, UNFUSED PERMANENT | |
| | | | | | 1 | | | | | | 1 | | | 625 | 12010 | 1 | EACH | LIGHT TOWER, BBB90 | |
| | | | | | 1 | | | | | | 1 | | | 625 | 13101 | 1 | EACH | LIGHT TOWER, BBBB90, AS PER PLAN | 1038 |
| | | | | 3 | | | | | | | 3 | | | 625 | 13200 | 3 | EACH | LIGHT TOWER, BBBB100 | |
| | | | 3 | 2 | 2 | | | | | | 6 | 1 | | 625 | 13400 | 7 | EACH | LIGHT TOWER, BBBBBB100 | |
| | | | 5 | 1 | 1 | | | | | | 6 | 1 | | 625 | 13404 | 7 | EACH | LIGHT TOWER, BBBBBB110 | |
| | | | | 2 | | | | | | | 2 | | | 625 | 15000 | 2 | EACH | LIGHT TOWER FOUNDATION, 36" X 15' DEEP | |
| | | | 1 | 1 | 1 | | | | | | 3 | | | 625 | 15100 | 3 | EACH | LIGHT TOWER FOUNDATION, 36" X 20' DEEP | |
| | | | 7 | 3 | 4 | | | | | | 13 | 1 | | 625 | 15200 | 14 | EACH | LIGHT TOWER FOUNDATION, 36" X 25' DEEP | |
| 1 | | | | | | | | | | | 1 | | | 625 | 20000 | 1 | EACH | PORTABLE WINCH DRIVE POWER UNIT | |
| | | | | | | 4 | | | | | 4 | | | 625 | 21400 | 4 | EACH | LIGHT TOWER MAINTENANCE PLATFORM, MISC. PLATFORM REMOVED | 1038 |
| | | | 714 | 1,386 | 1,749 | | | | | | 3,464 | 385 | | 625 | 23200 | 3,849 | FT | NO. 4 AWG 2400 VOLT DISTRIBUTION CABLE | |
| | | | 219 | 321 | | | | | | | 486 | 54 | | 625 | 23300 | 540 | FT | NO. 2 AWG 2400 VOLT DISTRIBUTION CABLE | |
| | | | 1,534 | 3,234 | 2,490 | | | | | | 6,532 | 726 | | 625 | 24320 | 7,258 | FT | 1-1/2" DUCT CABLE WITH THREE NO. 4 AWG 2400 VOLT CABLES | |
| | | | 2,938 | 178 | | | | | | | 2,804 | 312 | | 625 | 24330 | 3,116 | FT | 1-1/2" DUCT CABLE WITH THREE NO. 2 AWG 2400 VOLT CABLES | |
| | | | 271 | 387 | 161 | | | | | | 737 | 82 | | 625 | 25500 | 819 | FT | CONDUIT, 3", 725.04 | |
| | | | | | 129 | | | | | | 116 | 13 | | 625 | 25900 | 129 | FT | CONDUIT, JACKED OR DRILLED, 725.04, 3" | |
| | | | | | 123 | | | | | | 111 | 12 | | 625 | 25910 | 123 | FT | CONDUIT CLEANED AND CABLES REMOVED | |
| | | | | 12 | 18 | | | | | | 27 | 3 | | 625 | 26263 | 30 | EACH | LUMINAIRE, HIGH MAST, SOLID STATE (LED), AS PER PLAN (IES-V, LED, 45,200 - 47,100 LUMENS) | 1038 |
| | | | 11 | | | | | | | | 10 | 1 | | 625 | 27503 | 11 | EACH | LUMINAIRE, UNDERPASS, SOLID STATE (LED), AS PER PLAN (IES-III, LED, 3,100 - 4,100 LUMENS) | 1038 |
| | | | 48 | 18 | 6 | | | | | | 65 | 7 | | 625 | 27561 | 72 | EACH | LUMINAIRE, INSTALLATION ONLY, AS PER PLAN | 1037 |
| | 260 | | 4,573 | 3,669 | 2,561 | | | | | | 9,957 | 1,106 | | 625 | 29002 | 11,063 | FT | TRENCH, 24" DEEP | |
| | | | 13 | 11 | 8 | | | | | | 29 | 3 | | 625 | 30700 | 32 | EACH | PULL BOX, 725.08, 18" | |
| | | | | 3 | 1 | | | | | | 4 | | | 625 | 30706 | 4 | EACH | PULL BOX, 725.08, 24" | |
| | | | | 1 | 18 | | | | | | 17 | 2 | | 625 | 31510 | 19 | EACH | PULL BOX REMOVED | |
| | 1 | | 16 | 12 | 10 | | | | | | 35 | 4 | | 625 | 32000 | 39 | EACH | GROUND ROD | |
| | | | 1 | | | | | | | | 1 | | | 625 | 33000 | 1 | EACH | STRUCTURE GROUNDING SYSTEM | |
| | | | | 1 | 1 | | | | | | 2 | | | 625 | 34001 | 2 | EACH | POWER SERVICE, AS PER PLAN | 1037 |
| | 1 | | | | | | | | | | 1 | | | 625 | 34001 | 1 | EACH | POWER SERVICE, AS PER PLAN (120V) | 1038 |
| | 260 | | 4,573 | 3,669 | 2,561 | | | | | | 9,957 | 1,106 | | 625 | 36011 | 11,063 | FT | UNDERGROUND WARNING/MARKING TAPE, AS PER PLAN | 1038 |
| | | | 4 | | | | | | | | 4 | | | 625 | 37100 | 4 | EACH | SERVICE TO UNDERPASS LIGHTING | |
| | | | 1 | | | | | | | | 1 | | | 625 | 39520 | 1 | EACH | PULL BOX CLEANED | |
| | | LS | | | | | | | | | LS | | | SPECIAL | 62540000 | LS | | MAINTAIN EXISTING LIGHTING | 1039 |
| | | | | | | 16 | | | | | 14 | 2 | | 625 | 75350 | 16 | EACH | LIGHT TOWER REMOVED | |
| | | | | | | 2 | | | | | 2 | | | 625 | 75401 | 2 | EACH | LIGHT POLE REMOVED, AS PER PLAN | 1038 |
| | | | | | | 10 | | | | | 9 | 1 | | 625 | 75504 | 10 | EACH | LUMINAIRE REMOVED FOR STORAGE | |
| | | | | | | 4 | | | | | 4 | | | 625 | 75506 | 4 | EACH | LUMINAIRE REMOVED | |
| | | | | | | 72 | | | | | 65 | 7 | | 625 | 75508 | 72 | EACH | LUMINAIRE REMOVED FOR REUSE | |
| | | | | | | 2 | | | | | 2 | | | 625 | 75510 | 2 | EACH | POWER SERVICE REMOVED | |
| | | | | | | 9 | | | | | 8 | 1 | | 625 | 75540 | 9 | EACH | LIGHT TOWER FOUNDATION REMOVED | |
| | | | | | 595 | | | | | | 536 | 59 | | 625 | 75550 | 595 | FT | DISTRIBUTION CABLE REMOVED | |
| 1 | | | | | | | | | | | 1 | | | 625 | 76000 | 1 | EACH | ARC FLASH CALCULATIONS AND LABEL (CC-'CH') | |
| 1 | | | | | | | | | | | 1 | | | 625 | 76000 | 1 | EACH | ARC FLASH CALCULATIONS AND LABEL (CC-'WO') | |
| 1 | | | | | | | | | | | 1 | | | 625 | 76000 | 1 | EACH | ARC FLASH CALCULATIONS AND LABEL (CC-'FAA') | |
| | 1 | | | | | | | | | | 1 | | | 625 | 98000 | 1 | EACH | LIGHTING, MISC.: FAA TYPE L-810 OBSTRUCTION LIGHTING, LED | 1038 |
| | 1 | | | | | | | | | | 1 | | | 632 | 64020 | 1 | EACH | PEDESTAL FOUNDATION | |
| | 1 | | | | | | | | | | 1 | | | 632 | 89500 | 1 | EACH | PEDESTAL, 3' | |

CALCULATED KWR CHECKED DRB

# LIGHTING GENERAL SUMMARY

SUM-77 / 277 / 224
VARIOUS

| REVISIONS | | |
|---|---|---|
| NO. | DATE | DESCRIPTION |
| 1 | 04/28/21 | ADDED FAA FLASHING BEACON |

1040
1288

N:\03\60\06744-08\106002_SUM-76-10.95\Design\Lighting\Sheets\106002_L001.dgn Sheet 4/28/2021 6:06:30 PM kryan

| REVISIONS | | |
|---|---|---|
| NO. | DATE | DESCRIPTION |
| 7 | 04/28/21 | ADDED FAA FLASHING BEACON |

**STATION**

ML = MATCHLINE
'X' = RAMP X
'NB' = I-77 NB
'SB' = I-77 SB
'277' = I-277
'224' = U.S. 224

| SHEET NO. | FROM STATION | TO STATION | SIDE | POLE/PULL BOX NO. | 625 CONNECTION, UNFUSED PERMANENT EACH | 625 LIGHT TOWER, BBB90 EACH | 625 LIGHT TOWER, BBBB90, AS PER PLAN EACH | 625 LIGHT TOWER, BBBB100 EACH | 625 LIGHT TOWER, BBBBBB100 EACH | 625 LIGHT TOWER, BBBBBB110 EACH | 625 LIGHT TOWER FOUNDATION, 36" X 15' DEEP EACH | 625 LIGHT TOWER FOUNDATION, 36" X 20' DEEP EACH | 625 LIGHT TOWER FOUNDATION, 36" X 25' DEEP EACH | 625 LUMINAIRE, INSTALLATION ONLY, AS PER PLAN EACH | 625 LUMINAIRE, HIGH MAST, SOLID STATE (LED), AS PER PLAN (IES-V, LED, 45,200 - 47,100 LUMENS) EACH | 625 LUMINAIRE, UNDERPASS, SOLID STATE (LED), AS PER PLAN (IES-III, LED, 3,100 - 4,100 LUMENS) EACH | 625 NO. 4 AWG 2400 VOLT DISTRIBUTION CABLE FT | 625 NO. 2 AWG 2400 VOLT DISTRIBUTION CABLE FT | 625 1-1/2" DUCT CABLE WITH THREE NO. 4 AWG 2400 VOLT CABLES FT | 625 1-1/2" DUCT CABLE WITH THREE NO. 2 AWG 2400 VOLT CABLES FT | 625 CONDUIT, JACKED OR DRILLED, 725.04, 3" FT | 625 CONDUIT, 3", 725.04 FT | 625 TRENCH, 24" DEEP FT | 625 PULL BOX, 725.08, 18" EACH | 625 PULL BOX, 725.08, 24" EACH | 625 PULL BOX REMOVED EACH | 625 GROUND ROD EACH | 625 STRUCTURE GROUNDING SYSTEM EACH | 625 POWER SERVICE, AS PER PLAN EACH | 625 UNDERGROUND WARNING/MARKING TAPE, AS PER PLAN FT | 625 SERVICE TO UNDERPASS LIGHTING EACH | 625 DISTRIBUTION CABLE REMOVED FT | 625 CONDUIT CLEANED AND CABLES REMOVED FT | 625 PULL BOX CLEANED EACH | | |
|---|---|---|---|---|---|---|---|---|---|---|---|---|---|---|---|---|---|---|---|---|---|---|---|---|---|---|---|---|---|---|---|---|---|---|---|---|---|
| | CKT 'WO-2' | | | | | | | | | | | | | | | | | | | | | | | | | | | | | | | | | | | | |
| 1047 | 477+88 'NB' | | LT | WO-2-5 | | | | | 1 | | | 1 | | 6 | | | | | | | | | | | | 2 | | | | | | | | | | |
| | 477+88 | 480+11 | LT | WO-2-5 - PB-1 | | | | | | | | | | | | | | | | | 240 | | | 230 | | | | | | | 230 | | | | | |
| | 480+11 | | LT | PB-1 | | | | | | | | | | | | | | | | | | | | | | | | | | | | | | | | 1 | |
| | 480+11 | 484+17 | LT | PB-1 - WO-2-4 | | | | | | | | | | | | | | | | | 411 | | | 401 | | | | | | | 401 | | | | | |
| | 484+17 | | LT | WO-2-4 | | | | | | 1 | | | 1 | 6 | | | | | | | | | | | | 2 | | | | | | | | | | |
| | 484+17 | 486+00 | LT | WO-2-4 - ML | | | | | | | | | | | | | | | | | 188 | | | 183 | | | | | | | 183 | | | | | |
| 1048 | 486+00 | 289+15 'B2' | LT | ML - WO-2-3 | | | | | | | | | | | | | | | | | 317 | | | 312 | | | | | | | 312 | | | | | |
| | 289+15 | | LT | WO-2-3 | | | | | | 1 | | | 1 | 6 | | | | | | | | | | | | 2 | | | | | | | | | | |
| | 289+15 | 491+38 'SB' | L/R | WO-2-3 - PB-2 | | | | | | | | | | | | | | | | | 286 | | | 276 | | | | | | | 276 | | | | | |
| | 491+38 | | RT | PB-2 | | | | | | | | | | | | | | | | | | | | | 1 | | | | | | | | | | | |
| | 491+38 | 794+14 'C2' | R/L | PB-2 - WO-2-2 | | | | | | | | | | | | | | | | | 286 | | | 276 | | | | | | | 276 | | | | | |
| | 794+14 | | LT | WO-2-2 | | | | | 1 | | | | 1 | 6 | | | | | | | | | | | | 2 | | | | | | | | | | |
| | 794+14 | 495+00 'SB' | L/R | WO-2-2 - PB-3 | | | | | | | | | | | | | | | | | 113 | | | 103 | | | | | | | 103 | | | | | |
| | 495+00 | | RT | PB-3 | 3 | | | | | | | | | | | | | | | | | | | | 1 | | | | | | | | | | | |
| | 495+00 | 495+00 | R/L | PB-3 - PB-4 | | | | | | | | | | | | | | 219 | | | | | 63 | 63 | | | | | | | 63 | | | | | |
| | 495+00 | | LT | PB-4 | 3 | | | | | | | | | | | | | | | | | | | | 1 | | | | | | | | | | | |
| | 495+00 | 497+00 | LT | PB-4 - ML | | | | | | | | | | | | | | | | | 205 | | | 200 | | | | | | | 200 | | | | | |
| | 790+28 'C2' | | BL | PIER 1 | | | | | | | | | | | | | | | | | | | | | | | | | 1 | | | | | | | |
| 1049 | 497+00 | 500+42 | LT | ML - PB-5 | | | | | | | | | | | | | | | | | 347 | | | 342 | | | | | | | 342 | | | | | |
| | 500+42 | | LT | PB-5 | 3 | | | | | | | | | | | 2 | | | | | | | | | 1 | | | | | | | | 1 | | | |
| | 500+42 | 99+39 'A' | L/R | PB-5 - WO-2-1 | | | | | | | | | | | | | | | | | 133 | | | 123 | | | | | | | 123 | | | | | |
| | 99+39 | | RT | WO-2-1 | | | | | | 1 | | | 1 | 6 | | | | | | | | | | | | 2 | | | | | | | | | | |
| | 99+39 | 103+00 | RT | WO-2-1 - ML | | | | | | | | | | | | | | | | | 412 | | | 407 | | | | | | | 407 | | | | | |
| | CKT 'CH-1' | | | | | | | | | | | | | | | | | | | | | | | | | | | | | | | | | | | | |
| | 259+50 | 257+69 '277' | LT | ML - CH-1-1 | | | | | | | | | | | | | | | | 189 | | | | 184 | | | | | | | 184 | | | | | |
| | 257+69 | | LT | CH-1-1 | | | | | 1 | | | | 1 | 6 | | | | | | | | | | | | 2 | | | | | | | | | | |
| | 257+69 | 700+23 'C1' | RT | CH-1-1 - PB-9 | | | | | | | | | | | | | | | | 246 | | | | 236 | | | | | | | 236 | | | | | |
| | 700+23 | | RT | PB-9 | 3 | | | | | | | | | | | 3 | | | | | | | | | 1 | | | | | | | | 1 | | | |
| | 700+23 | 700+89 | RT | PB-9 - PB-10 | | | | | | | | | | | | | | | | 76 | | | | 66 | | | | | | | 66 | | | | | |
| | 700+89 | | RT | PB-10 | 3 | | | | | | | | | | | | | | | | | | | | 1 | | | | | | | | | | | |
| | 700+89 | 500+90 'NB' | R/L | PB-10 - PB-11 | | | | | | | | | | | | | | 279 | | | | | 83 | 83 | | | | | | | 83 | | | | | |
| | 500+90 | | LT | PB-11 | 3 | | | | | | | | | | | 4 | | | | | | | | | 1 | | | | | | | | 1 | | | |
| | 500+90 | 501+37 | LT | PB-11 - PB-12 | | | | | | | | | | | | | | | | 57 | | | | 47 | | | | | | | 47 | | | | | |
| | 501+37 | | LT | PB-12 | 3 | | | | | | | | | | | | | | | | | | | | 1 | | | | | | | | | | | |
| | 501+37 | 301+32 'B2' | LT | PB-12 - PB-8 | | | | | | | | | | | | | | 216 | | | | | 62 | 62 | | | | | | | 62 | | | | | |
| | 301+32 | | LT | PB-8 | 3 | | | | | | | | | | | | | | | | | | | | 1 | | | | | | | | | | | |
| | 301+32 | 801+21 'C2' | L/R | PB-8 - PB-6 | | | | | | | | | | | | | | | | 100 | | | | 90 | | | | | | | 90 | | | | | |
| | 801+21 | | RT | PB-6 | 3 | | | | | | | | | | | 2 | | | | | | | | | 1 | | | | | | | | 1 | | | |
| | 501+37 'NB' | 504+06 | LT | PB-12 - PB-13 | | | | | | | | | | | | | | | | 279 | | | | 269 | | | | | | | 269 | | | | | |
| | 504+06 | | LT | PB-13 | 3 | | | | | | | | | | | | | | | | | | | | 1 | | | | | | | | | | | |
| | 504+06 | 304+00 'B2' | LT | PB-13 - PB-7 | | | | | | | | | | | | | | 219 | | | | | 63 | 63 | | | | | | | 63 | | | | | |
| | 304+00 | | LT | PB-7 | 3 | | | | | | | | | | | | | | | | | | | | 1 | | | | | | | | | | | |
| | 304+00 | 304+00 | LT | PB-7 - CH-1-2 | | | | | | | | | | | | | | | | 33 | | | | 23 | | | | | | | 23 | | | | | |
| | 304+00 | | LT | CH-1-2 | | | | | | 1 | | | 1 | 6 | | | | | | | | | | | | 2 | | | | | | | | | | |
| | 504+06 'NB' | 506+72 | LT | PB-13 - PB-14 | | | | | | | | | | | | | | | | 277 | | | | 267 | | | | | | | 267 | | | | | |
| | 506+72 | | LT | PB-14 | | | | | | | | | | | | | | | | | | | | | 1 | | | | | | | | | | | |
| | 506+72 | 509+29 | LT | PB-14 - CH-1-3 | | | | | | | | | | | | | | | | 277 | | | | 267 | | | | | | | 267 | | | | | |
| | 509+29 | | LT | CH-1-3 | | | | | | 1 | | | 1 | 6 | | | | | | | | | | | | 2 | | | | | | | | | | |
| TOTALS CARRIED TO LIGHTING GENERAL SUMMARY | | | | | 33 | | | | 3 | 5 | | 1 | 7 | 48 | | 11 | 714 | 219 | 1534 | 2938 | | 271 | 4573 | 13 | | | 16 | 1 | | 4573 | 4 | | | 1 | | |

CALCULATED KWR
CHECKED DRB

# LIGHTING SUBSUMMARY

SUM-77 / 277 / 224
VARIOUS

10.41
12.88

N:\03\60\06744-08\06002_SUM-76-10.95\Design\Lighting\Sheets\06002-LS001.dgn Sheet 4/28/2021 11:58:22 AM kryan

| REVISIONS | | |
|---|---|---|
| NO. | DATE | DESCRIPTION |
| 7 | 04/28/21 | ADDED FAA FLASHING BEACON |

**STATION**

ML = MATCHLINE
'X' = RAMP X
'NB' = I-77 NB
'SB' = I-77 SB
'277' = I-277
'224' = U.S. 224

| SHEET NO. | FROM | TO | SIDE | POLE/PULL BOX NO. | 625 CONNECTION, UNFUSED PERMANENT EACH | 625 LIGHT TOWER, BBB90 EACH | 625 LIGHT TOWER, BBBB90, AS PER PLAN EACH | 625 LIGHT TOWER, BBBB100 EACH | 625 LIGHT TOWER, BBBBBB100 EACH | 625 LIGHT TOWER, BBBBBB110 EACH | 625 LIGHT TOWER FOUNDATION, 36" X 15' DEEP EACH | 625 LIGHT TOWER FOUNDATION, 36" X 20' DEEP EACH | 625 LIGHT TOWER FOUNDATION, 36" X 25' DEEP EACH | 625 LUMINAIRE, INSTALLATION ONLY, AS PER PLAN EACH | 625 LUMINAIRE, HIGH MAST, SOLID STATE (LED), AS PER PLAN (IES-V, LED, 45,200 - 47,100 LUMENS) EACH | 625 LUMINAIRE, UNDERPASS, SOLID STATE (LED), AS PER PLAN (IES-III, LED, 3,100 - 4,100 LUMENS) EACH | 625 NO. 4 AWG 2400 VOLT DISTRIBUTION CABLE FT | 625 NO. 2 AWG 2400 VOLT DISTRIBUTION CABLE FT | 625 1-1/2" DUCT CABLE WITH THREE NO. 4 AWG 2400 VOLT CABLES FT | 625 1-1/2" DUCT CABLE WITH THREE NO. 2 AWG 2400 VOLT CABLES FT | 625 CONDUIT, JACKED OR DRILLED, 725.04, 3" FT | 625 CONDUIT, 3", 725.04 FT | 625 TRENCH, 24" DEEP FT | 625 PULL BOX, 725.08, 18" EACH | 625 PULL BOX, 725.08, 24" EACH | 625 PULL BOX REMOVED EACH | 625 GROUND ROD EACH | 625 STRUCTURE GROUNDING SYSTEM EACH | 625 POWER SERVICE, AS PER PLAN EACH | 625 UNDERGROUND WARNING/MARKING TAPE, AS PER PLAN FT | 625 SERVICE TO UNDERPASS LIGHTING EACH | 625 DISTRIBUTION CABLE REMOVED FT | 625 CONDUIT CLEANED AND CABLES REMOVED FT | 625 PULL BOX CLEANED EACH |
|---|---|---|---|---|---|---|---|---|---|---|---|---|---|---|---|---|---|---|---|---|---|---|---|---|---|---|---|---|---|---|---|---|---|---|---|
| | CKT 'WO-1' | | | | | | | | | | | | | | | | | | | | | | | | | | | | | | | | | | |
| 1050 | 209+00 'B' | 513+12 'SB' | R/L | ML - WO-1-6 | | | | | | | | | | | | | | | | 451 | | | | 446 | | | | | | | 446 | | | | | |
| | 513+12 | | LT | WO-1-6 | | | | | 1 | | | | 1 | 6 | | | | | | | | | | | | | | | | | | | | | | |
| 1051 | 28+90 'B2' | | RT | WO-1-1 | | | | 1 | | | | | 1 | 4 | | | | | | | | | | | | | 2 | | | | | | | | | |
| | 28+90 | 26+34 | RT | WO-1-1 - PB-15 | | | | | | | | | | | | | | | | 267 | | | | 257 | | | | | | | 257 | | | | | |
| | 26+34 | | RT | PB-15 | | | | | | | | | | | | | | | | | | | | | 1 | | | | | | | | | | | |
| | 26+34 | 197+93 'B' | R/L | PB-15 - WO-1-2 | | | | | | | | | | | | | | | | 266 | | | | 256 | | | | | | | 256 | | | | | |
| | 197+93 | | LT | WO-1-2 | | | | 1 | | | | | 1 | 4 | | | | | | | | | | | | | 2 | | | | | | | | | |
| | 197+93 | 198+41 | LT | WO-1-2 - ML | | | | | | | | | | | | | | | | 52 | | | | 47 | | | | | | | 47 | | | | | |
| 1052 | 198+41 'B' | 200+49 | LT | ML - PB-18 | | | | | | | | | | | | | | | | 211 | | | | 206 | | | | | | | 206 | | | | | |
| | 200+49 | | LT | PB-18 | 3 | | | | | | | | | | | | | | | | | | | | 1 | | | | | | | | | | | |
| | 200+49 | 21+07 'B2' | LT | PB-18 - PB-19 | | | | | | | | | | | | | | 231 | | | | | | 67 | 67 | | | | | | 67 | | | | | |
| | 21+07 | | LT | PB-19 | 3 | | | | | | | | | | | | | | | | | | | | 1 | | | | | | | | | | | |
| | 21+07 | 240+27 '277' | LT | PB-19 - WO-1-3 | | | | | | | | | | | | | | | | 265 | | | | 255 | | | | | | | 255 | | | | | |
| | 240+27 | | LT | WO-1-3 | | | | | 1 | | | 1 | | | 6 | | | | | | | | | | | | 2 | | | | | | | | | |
| | 240+27 | 243+56 | LT | WO-1-3 - PB-23 | | | | | | | | | | | | | | | | 341 | | | | 331 | | | | | | | 331 | | | | | |
| | 243+56 | | LT | PB-23 | | | | | | | | | | | | | | | | | | | | | 1 | | | | | | | | | | | |
| | 243+56 | 417+62 'B1' | L/R | PB-23 - PB-28 | | | | | | | | | | | | | | | | 341 | | | | 331 | | | | | | | 331 | | | | | |
| | 417+62 | | RT | PB-28 | 3 | | | | | | | | | | | | | | | | | | | | 1 | | | | | | | | | | | |
| | 417+62 | 417+62 | R/L | PB-28 - PB-27 | | | | | | | | | | | | | | 156 | | | | | | 42 | 42 | | | | | | 42 | | | | | |
| | 417+62 | | LT | PB-27 | 3 | | | | | | | | | | | | | | | | | | | | 1 | | | | | | | | | | | |
| | 417+62 | 417+11 | LT | PB-27 - WO-1-4 | | | | | | | | | | | | | | | | 60 | | | | 50 | | | | | | | 50 | | | | | |
| | 417+11 | | LT | WO-1-4 | | | | 1 | | | 1 | | | 4 | | | | | | | | | | | | | 2 | | | | | | | | | |
| | 417+11 | 414+33 | LT | WO-1-4 - PB-26 | | | | | | | | | | | | | | | | 269 | | | | 259 | | | | | | | 259 | | | | | |
| | 414+33 | | LT | PB-26 | | | | | | | | | | | | | | | | | | | | | 1 | | | | | | | | | | | |
| | 414+33 | 411+50 | LT | PB-26 - WO-1-5 | | | | | | | | | | | | | | | | 269 | | | | 259 | | | | | | | 259 | | | | | |
| | 411+50 | | LT | WO-1-5 | | | | | | 1 | 1 | | | | 6 | | | | | | | | | | | | 2 | | | | | | | | | |
| | 411+50 | 411+31 | LT | WO-1-5 - PB-25 | | | | | | | | | | | | | | | | 28 | | | | 18 | | | | | | | 18 | | | | | |
| | 411+31 | | LT | PB-25 | 3 | | | | | | | | | | | | | | | | | | | | 1 | | | | | | | | | | | |
| | 411+31 | 411+31 | L/R | PB-25 - PB-22 | | | | | | | | | | | | | | 150 | | | | | | 40 | 40 | | | | | | 40 | | | | | |
| | 411+31 | | RT | PB-22 | 3 | | | | | | | | | | | | | | | | | | | | 1 | | | | | | | | | | | |
| | 411+31 | 13+08 'B2' | R/L | PB-22 - PB-21 | | | | | | | | | | | | | | | | 68 | | | | 58 | | | | | | | 58 | | | | | |
| | 13+08 | | LT | PB-21 | 3 | | | | | | | | | | | | | | | | | | | | 1 | | | | | | | | | | | |
| | 13+08 | 13+08 | L/R | PB-21 - PB-20 | | | | | | | | | | | | | | 192 | | | | | | 54 | 54 | | | | | | 54 | | | | | |
| | 13+08 | | RT | PB-20 | 3 | | | | | | | | | | | | | | | | | | | | 1 | | | | | | | | | | | |
| | 13+08 | 209+00 'B' | RT | PB-20 - ML | | | | | | | | | | | | | | | | 79 | | | | 74 | | | | | | | 74 | | | | | |
| | 417+62 'B1' | 104+69 'A' | RT | PB-28 - PB-24 | | | | | | | | | | | | | | 336 | | | | | | 102 | 102 | | | | | | 102 | | | | | |
| | 104+69 | | RT | PB-24 | 3 | | | | | | | | | | | | | | | | | | | | | 1 | | | | | | | | | | |
| | | | | | | | | | | | | | | | | | | | | | | | | | | | | | | | | | | | | |
| | CKTS 'WO-1' & 'WO-2' | | | | | | | | | | | | | | | | | | | | | | | | | | | | | | | | | | | |
| | 104+69 | 104+69 | R/L | PB-24 - PB-16 | | | | | | | | | | | | | | 195 | 195 | | | | | 55 | 55 | | | | | | 55 | | | | | |
| | 104+69 | | LT | PB-16 | | | | | | | | | | | | | | | | | | | | | | 1 | | | | | | | | | | |
| | 104+69 | 104+80 | LT | PB-16 - PB-17 | | | | | | | | | | | | | | 126 | 126 | | | | | 27 | 27 | | | | | | 27 | | | | | |
| | 104+81 | | LT | CC 'WO' | | | | | | | | | | | | | | | | | | | | | | | | | | 1 | | | | | | |
| | | | | | | | | | | | | | | | | | | | | | | | | | | | | | | | | | | | | |
| | CKT 'WO-2' | | | | | | | | | | | | | | | | | | | | | | | | | | | | | | | | | | | |
| | 104+69 | 103+00 | RT | PB-19 - ML | | | | | | | | | | | | | | | | | 178 | | | 173 | | | | | | | 173 | | | | | |
| | | | | | | | | | | | | | | | | | | | | | | | | | | | | | | | | | | | | |
| | CKT 'CH-1' | | | | | | | | | | | | | | | | | | | | | | | | | | | | | | | | | | | |
| 1053 | 259+50 '224' | 262+11 | LT | ML - PB-30 | | | | | | | | | | | | | | | | 267 | | | | 262 | | | | | | | 262 | | | | | |
| | 262+11 | | LT | PB-30 | 3 | | | | | | | | | | | | | | | | | | | | | 1 | 1 | | | | | | | | |
| | | | | | | | | | | | | | | | | | | | | | | | | | | | | | | | | | | | | |
| | TOTALS CARRIED TO LIGHTING GENERAL SUMMARY | | | | 30 | | | 3 | 2 | 1 | 2 | 1 | 3 | 18 | 12 | | | 1386 | 321 | 3234 | 178 | | 387 | 3669 | 11 | 3 | 1 | 12 | | 1 | 3669 | | | | | |

CALCULATED KWR
CHECKED DRB

# LIGHTING SUBSUMMARY

SUM-77 / 277 / 224
VARIOUS

10.42
1288

N:\03\60\06744-08\06002_SUM-76-10.95\Design\Lighting\Sheets\06002_LS002.dgn 4/28/2021 12:07:47 PM kryan

| REVISIONS | | |
|---|---|---|
| NO. | DATE | DESCRIPTION |
| 7 | 04/28/21 | ADDED FAA FLASHING BEACON |

**STATION**

ML = MATCHLINE
'X' = RAMP X
'NB' = I-77 NB
'SB' = I-77 SB
'277' = I-277
'224' = U.S. 224

| SHEET NO. | STATION FROM | STATION TO | SIDE | POLE/PULL BOX NO. | 625 CONNECTION, UNFUSED PERMANENT EACH | 625 LIGHT TOWER, BBB90 EACH | 625 LIGHT TOWER, BBBB90, AS PER PLAN EACH | 625 LIGHT TOWER, BBBB100 EACH | 625 LIGHT TOWER, BBBBBB100 EACH | 625 LIGHT TOWER, BBBBBB110 EACH | 625 LIGHT TOWER FOUNDATION, 36" X 15' DEEP EACH | 625 LIGHT TOWER FOUNDATION, 36" X 20' DEEP EACH | 625 LIGHT TOWER FOUNDATION, 36" X 25' DEEP EACH | 625 LUMINAIRE, INSTALLATION ONLY, AS PER PLAN EACH | 625 LUMINAIRE, HIGH MAST, SOLID STATE (LED), AS PER PLAN (IES-V, LED, 45,200 - 47,100 LUMENS) EACH | 625 LUMINAIRE, UNDERPASS, SOLID STATE (LED), AS PER PLAN (IES-III, LED, 3,100 - 4,100 LUMENS) EACH | 625 NO. 4 AWG 2400 VOLT DISTRIBUTION CABLE FT | 625 NO. 2 AWG 2400 VOLT DISTRIBUTION CABLE FT | 625 1-1/2" DUCT CABLE WITH THREE NO. 4 AWG 2400 VOLT CABLES FT | 625 1-1/2" DUCT CABLE WITH THREE NO. 2 AWG 2400 VOLT CABLES FT | 625 CONDUIT, JACKED OR DRILLED, 725.04, 3" FT | 625 CONDUIT, 3", 725.04 FT | 625 TRENCH, 24" DEEP FT | 625 PULL BOX, 725.08, 18" EACH | 625 PULL BOX, 725.08, 24" EACH | 625 PULL BOX REMOVED EACH | 625 GROUND ROD EACH | 625 STRUCTURE GROUNDING SYSTEM EACH | 625 POWER SERVICE, AS PER PLAN EACH | 625 UNDERGROUND WARNING/MARKING TAPE, AS PER PLAN FT | 625 SERVICE TO UNDERPASS LIGHTING EACH | 625 DISTRIBUTION CABLE REMOVED FT | 625 CONDUIT CLEANED AND CABLES REMOVED FT | 625 PULL BOX CLEANED EACH |
|---|---|---|---|---|---|---|---|---|---|---|---|---|---|---|---|---|---|---|---|---|---|---|---|---|---|---|---|---|---|---|---|---|---|---|
| | CKTS 'CH-1' & 'CH-2' | | | | | | | | | | | | | | | | | | | | | | | | | | | | | | | | | |
| 1053 | 262+11 | 895+25 'D' | L/R | PB-30 - PB-35 | | | | | | | | | | | | | 408 | | | | | 58 | 58 | | | | | | | 58 | | | | |
| | 895+25 | | RT | PB-35 | | | | | | | | | | | | | | | | | | | | | 1 | | | | | | | | | |
| | 895+25 | 895+36 | RT | PB-35 - PB-34 | | | | | | | | | | | | | 222 | | | | | 22 | 22 | | | | | | | 22 | | | | |
| | 895+31 | | RT | CC 'CH' | | | | | | | | | | | | | | | | | | | | | | | | 1 | | | | | | |
| | CKT 'CH-2' | | | | | | | | | | | | | | | | | | | | | | | | | | | | | | | | | |
| | 262+11 '224' | 262+14 | L/R | PB-30 - PB-29 | | | | | | | | | | | | | 399 | | | | | | | | | | | | | | | 123 | | |
| | 262+14 | | RT | PB-29 | 3 | | | | | | | | | | | | | | | | | | | 1 | | 1 | | | | | | | | |
| | 262+14 | 685+28 'C1' | R/L | PB-29 - CH-2-1 | | | | | | | | | | | | | | | 142 | | | | 132 | | | | | | | 132 | | | | |
| | 685+28 | | LT | CH-2-1 | | | | | 1 | | | | 1 | | 6 | | | | | | | | | | | 2 | | | | | | | | |
| | 685+28 | 785+29 'C2' | RT | CH-2-1 - PB-31 | | | | | | | | | | | | | | | 436 | | | | 426 | | | | | | | 426 | | | | |
| | 785+29 | | RT | PB-31 | 3 | | | | | | | | | | | | | | | | | | | 1 | | | | | | | | | | |
| | 785+29 | 785+29 | R/L | PB-31 - PB-32 | | | | | | | | | | | | | 141 | | | | | 37 | 37 | | | | | | | 37 | | | | |
| | 785+29 | | LT | PB-32 | 3 | | | | | | | | | | | | | | | | | | | 1 | | | | | | | | | | |
| | 786+29 | 786+80 | LT | PB-32 - CH-2-2 | | | | | | | | | | | | | | | 190 | | | | 180 | | | | | | | 180 | | | | |
| | 786+80 | | LT | CH-2-2 | | | | | | 1 | | 1 | | | 6 | | | | | | | | | | | 2 | | | | | | | | |
| | 262+14 '224' | 268+74 | RT | PB-29 - PB-33 | | | | | | | | | | | | | | | 344 | | | | 334 | | | | | | | 334 | | | | |
| | 265+47 | | RT | PB-33 | | | | | | | | | | | | | | | | | | | | 1 | | | | | | | | | | |
| | 265+47 | 268+74 | RT | PB-33 - CH-2-3 | | | | | | | | | | | | | | | 345 | | | | 335 | | | | | | | 335 | | | | |
| | 268+74 | | RT | CH-2-3 | | | | | 1 | | | | 1 | | 6 | | | | | | | | | | | 2 | | | | | | | | |
| | 268+74 | 271+00 | RT | CH-2-3 - ML | | | | | | | | | | | | | | | 239 | | | | 234 | | | | | | | 234 | | | | |
| 1054 | 271+00 | 271+20 | RT | ML - PB-29 | | | | | | | | | | | | | | | 25 | | | | 20 | | | | | | | 20 | | | | |
| | 271+20 | | RT | PB-29 | 3 | | | | | | | | | | | | | | | | | | | 1 | | | | | | | | | | |
| | 271+20 | 600+41 'C' | RT | PB-29 - PB-30 | | | | | | | | | | | | | 162 | | | | | 44 | 44 | | | | | | | 44 | | | | |
| | 600+41 | | RT | PB-30 | 3 | | | | | | | | | | | | | | | | | | | 1 | | | | | | | | | | |
| | 600+41 | 603+27 | RT | PB-30 - CH-2-4 | | | | | | | | | | | | | | | 294 | | | | 284 | | | | | | | 284 | | | | |
| | 603+27 | | RT | CH-2-4 | | 1 | | | | | | | 1 | 3 | | | | | | | | | | | | 2 | | | | | | | | |
| | 603+27 | 603+89 | RT | CH-2-4 - PB-32 | | | | | | | | | | | | | | | 72 | | | | 62 | | | | | | | 62 | | | | |
| | 603+89 | | RT | PB-32 | 3 | | | | | | | | | | | | | | | | | | | 1 | | | | | | | | | | |
| | 603+89 | 274+72 '224' | R/L | PB-32 - PB-31 | | | | | | | | | | | | | 417 | | | | 129 | | | | | | | | | | | | | | |
| | 274+72 | | LT | PB-31 | 3 | | | | | | | | | | | | | | | | | | | 1 | | | | | | | | | | |
| | 274+72 | 278+63 | LT | PB-31 - CH-2-5 | | | | | | | | | | | | | | | 403 | | | | 393 | | | | | | | 393 | | | | |
| | 278+63 | | LT | CH-2-5 | | | 1 | | | | | | 1 | 3 | | | | | | | | | | | | 2 | | | | | | | | |
| | 274+50 | 280+45 | CL | MJ-1 - EX CH-1-1 | | | | | | | | | | | | | | | | | | | | | | | | | | | 595 | | | |
| | | | | | | | | | | | | | | | | | | | | | | | | | | | | | | | | | | |
| | REMOVALS | | | | | | | | | | | | | | | | | | | | | | | | | | | | | | | | | |
| 1048 | 491+03 | | RT | PB-R | | | | | | | | | | | | | | | | | | | | | 1 | | | | | | | | | |
| | 491+13 | | LT | PB-R | | | | | | | | | | | | | | | | | | | | | 1 | | | | | | | | | |
| | 90+70 'A' | | LT | PB-R | | | | | | | | | | | | | | | | | | | | | 1 | | | | | | | | | |
| 1049 | 97+77 | | LT | PB-R | | | | | | | | | | | | | | | | | | | | | 1 | | | | | | | | | |
| | 307+29 'B2' | | LT | PB-R | | | | | | | | | | | | | | | | | | | | | 1 | | | | | | | | | |
| | 307+35 | | RT | PB-R | | | | | | | | | | | | | | | | | | | | | 1 | | | | | | | | | |
| | 798+10 'C2' | | RT | PB-R | | | | | | | | | | | | | | | | | | | | | 1 | | | | | | | | | |
| | 801+42 | | RT | PB-R | | | | | | | | | | | | | | | | | | | | | 1 | | | | | | | | | |
| | 502+44 'NB' | | LT | PB-R | | | | | | | | | | | | | | | | | | | | | 1 | | | | | | | | | |
| | 502+47 | | RT | PB-R | | | | | | | | | | | | | | | | | | | | | 1 | | | | | | | | | |
| 1052 | 417+57 'B1' | | RT | PB-R | | | | | | | | | | | | | | | | | | | | | 1 | | | | | | | | | |
| | 417+59 | | LT | PB-R | | | | | | | | | | | | | | | | | | | | | 1 | | | | | | | | | |
| 1053 | 684+73 'C1' | | LT | PB-R | | | | | | | | | | | | | | | | | | | | | 1 | | | | | | | | | |
| | 890+86 'D' | | RT | PB-R | | | | | | | | | | | | | | | | | | | | | 1 | | | | | | | | | |
| | 895+35 | | RT | PB-R | | | | | | | | | | | | | | | | | | | | | 1 | | | | | | | | | |
| | 599+52 'C' | | RT | PB-R | | | | | | | | | | | | | | | | | | | | | 1 | | | | | | | | | |
| | 599+53 | | LT | PB-R | | | | | | | | | | | | | | | | | | | | | 1 | | | | | | | | | |
| | TOTALS CARRIED TO LIGHTING GENERAL SUMMARY | | | | 21 | 1 | 1 | | 2 | 1 | | 1 | 4 | 6 | 18 | | 1749 | | 2490 | | 129 | 161 | 2561 | 8 | 1 | 18 | 10 | | 1 | 2561 | | 595 | 123 | | |

CALCULATED KWR
CHECKED DRB

# LIGHTING SUBSUMMARY

SUM-77 / 277 / 224
VARIOUS

10.43
12.88

N:\03\60\06744-08\106002_SUM-76-10.95\Design\Lighting\Sheets\106002_LS003.dgn Sheet 4/28/2021 12:19:59 PM kryan

| PLAN LEGEND (ODOT - MAINLINE & RAMPS) | | |
|---|---|---|
| EXIST. | PROP. | ITEM |
| | | LIGHT POLE, EXISTING TO REMAIN |
| | | HIGH MAST UNIT, W/ 4-LED ASYMMETRIC LUMINAIRES |
| | | HIGH MAST UNIT W/ 6-LED SYMMETRIC LUMINAIRES |
| | | UNDERPASS LUMINAIRE, LED (3,100-4,100 LUMENS) |
| AB-4 | AB-4 | LIGHT POLE/TOWER, IDENTIFICATION NO. |
| | | 1 ½" DUCT CABLE IN 24" DEEP TRENCH |
| | | POWER SERVICE |
| | | INDICATES CIRCUIT & NO. OF SINGLE CONDUCTORS IN CABLE OR CONDUIT (CABLE SIZE INDICATED) |
| CKT X | | ACTIVE EXIST. CIRCUIT |
| MJ-2 | MJ-2 | MEDIAN JUNCTION BOX |
| PB-2 | PB-2 | PULL BOX, IDENTIFICATION NO. |
| PB-R | | PULL BOX, EXISTING TO BE REMOVED |
| | | 2" CONDUIT, 725.04 |
| | | 3" CONDUIT, 725.04 |
| | | STUB AND CAP CONDUIT ELL |
| | | STRUCTURE GROUND |

LIGHT POLE/TOWER IDENTIFICATION NO.

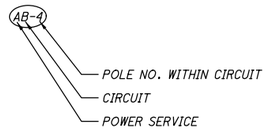


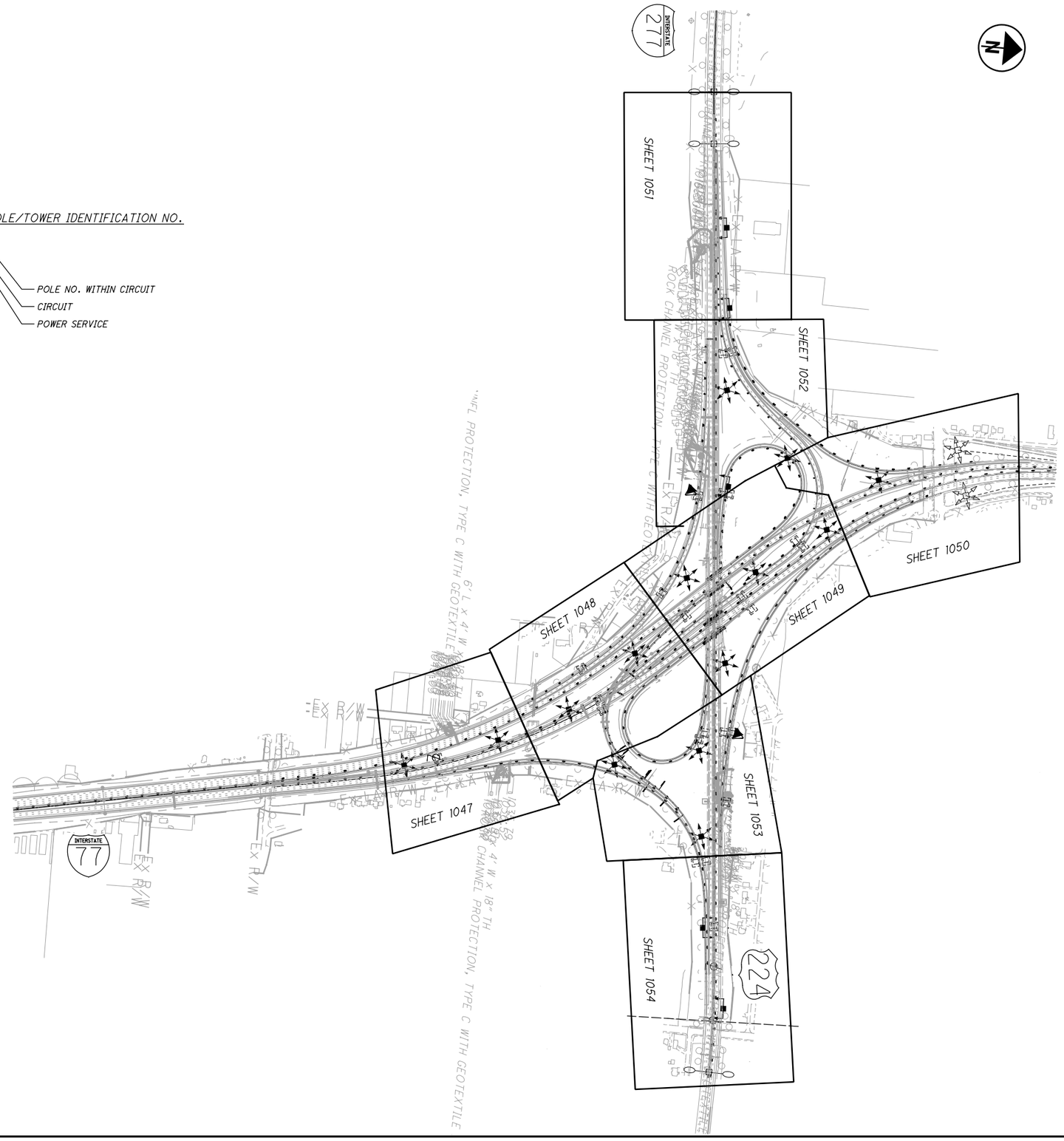


CALCULATED . CHECKED .

# LIGHTING SHEET INDEX

SUM-77 / 277 / 224
VARIOUS

1044
1288

N:\03\60\06744-08\106002_SUM-76-10.95\Design\Lighting\Sheets\106002_LB001.dgn Sheet 1/14/2021 8:39:11 AM sriffle

N:\03\60\06744-08\106002_SUM-76-10.95\Design\Lighting\Sheets\106002_LM001.dgn Sheet 1/14/2021 8:39:13 AM sriffle

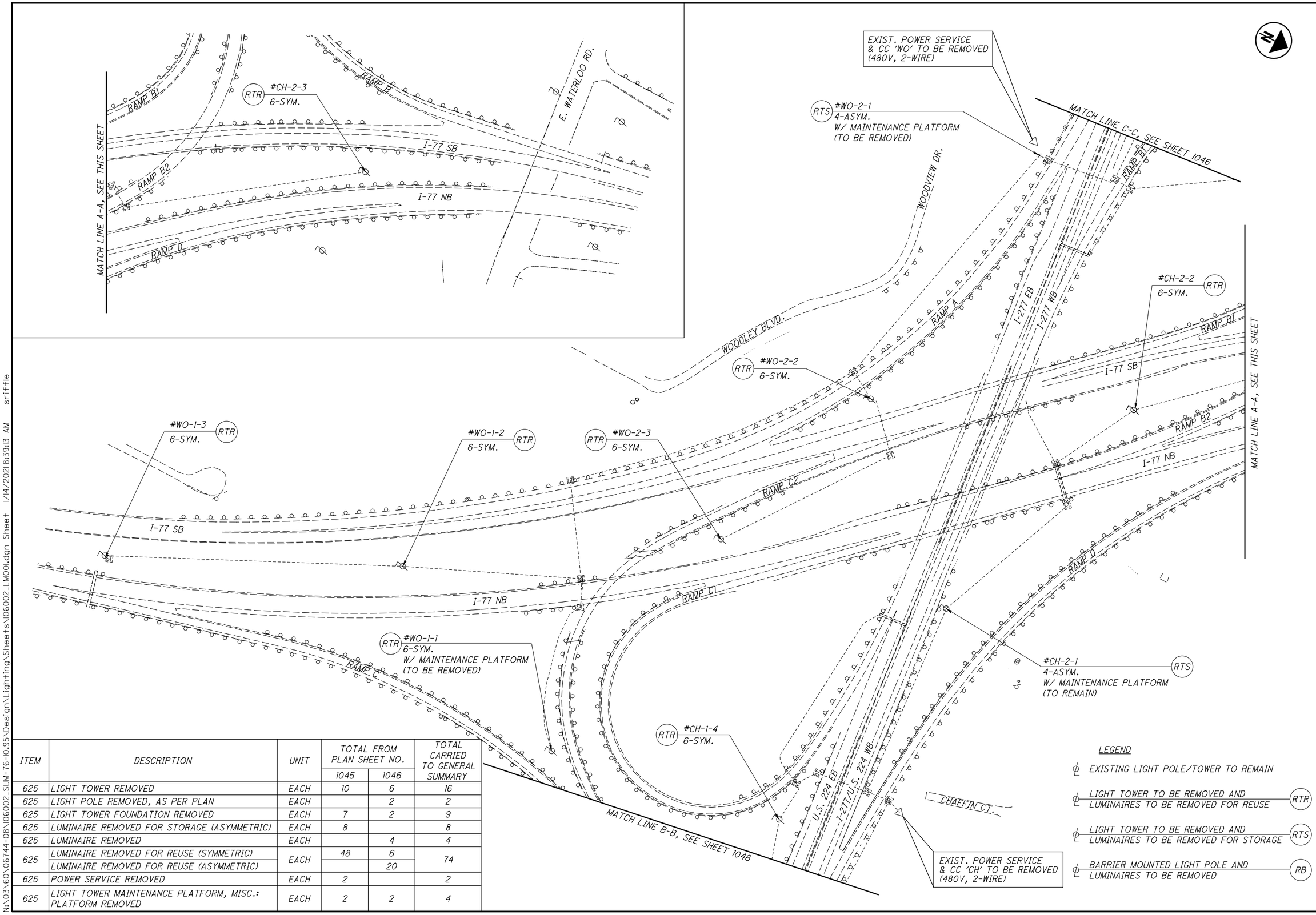


| ITEM | DESCRIPTION | UNIT | TOTAL FROM PLAN SHEET NO. | | TOTAL CARRIED TO GENERAL SUMMARY |
|---|---|---|---|---|---|
| | | | 1045 | 1046 | |
| 625 | LIGHT TOWER REMOVED | EACH | 10 | 6 | 16 |
| 625 | LIGHT POLE REMOVED, AS PER PLAN | EACH | | 2 | 2 |
| 625 | LIGHT TOWER FOUNDATION REMOVED | EACH | 7 | 2 | 9 |
| 625 | LUMINAIRE REMOVED FOR STORAGE (ASYMMETRIC) | EACH | 8 | | 8 |
| 625 | LUMINAIRE REMOVED | EACH | | 4 | 4 |
| 625 | LUMINAIRE REMOVED FOR REUSE (SYMMETRIC) | EACH | 48 | 6 | 74 |
| | LUMINAIRE REMOVED FOR REUSE (ASYMMETRIC) | | | 20 | |
| 625 | POWER SERVICE REMOVED | EACH | 2 | | 2 |
| 625 | LIGHT TOWER MAINTENANCE PLATFORM, MISC.: PLATFORM REMOVED | EACH | 2 | 2 | 4 |

CALCULATED KWR
CHECKED DRB

# I-77 / I-277 / US 224 INTERCHANGE LIGHTING REMOVAL PLAN

SUM-77 / 277 / 224
VARIOUS

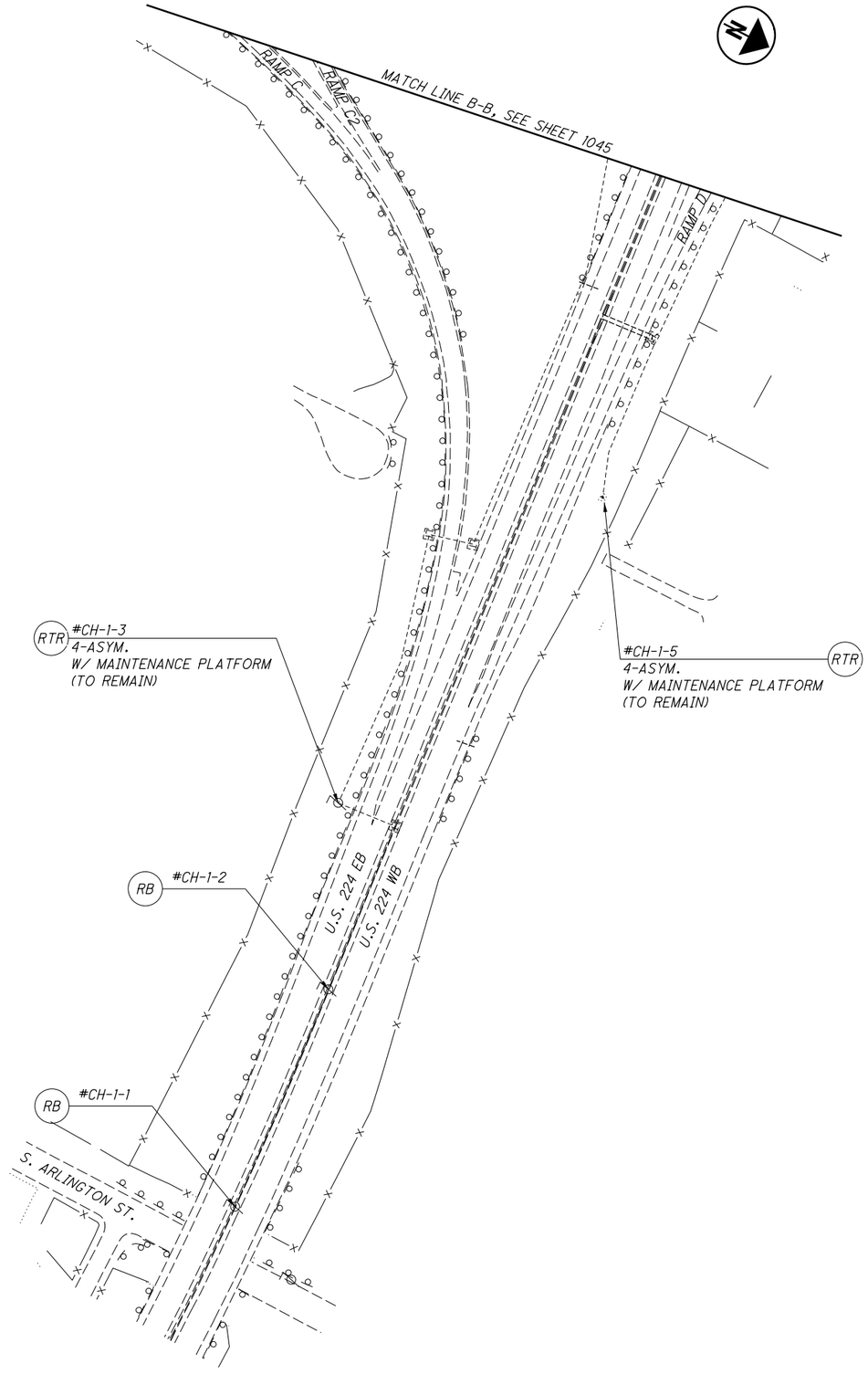


LEGEND

- EXISTING LIGHT POLE/TOWER TO REMAIN
- LIGHT TOWER TO BE REMOVED AND LUMINAIRES TO BE REMOVED FOR REUSE — RTR
- LIGHT TOWER TO BE REMOVED AND LUMINAIRES TO BE REMOVED FOR STORAGE — RTS
- BARRIER MOUNTED LIGHT POLE AND LUMINAIRES TO BE REMOVED — RB

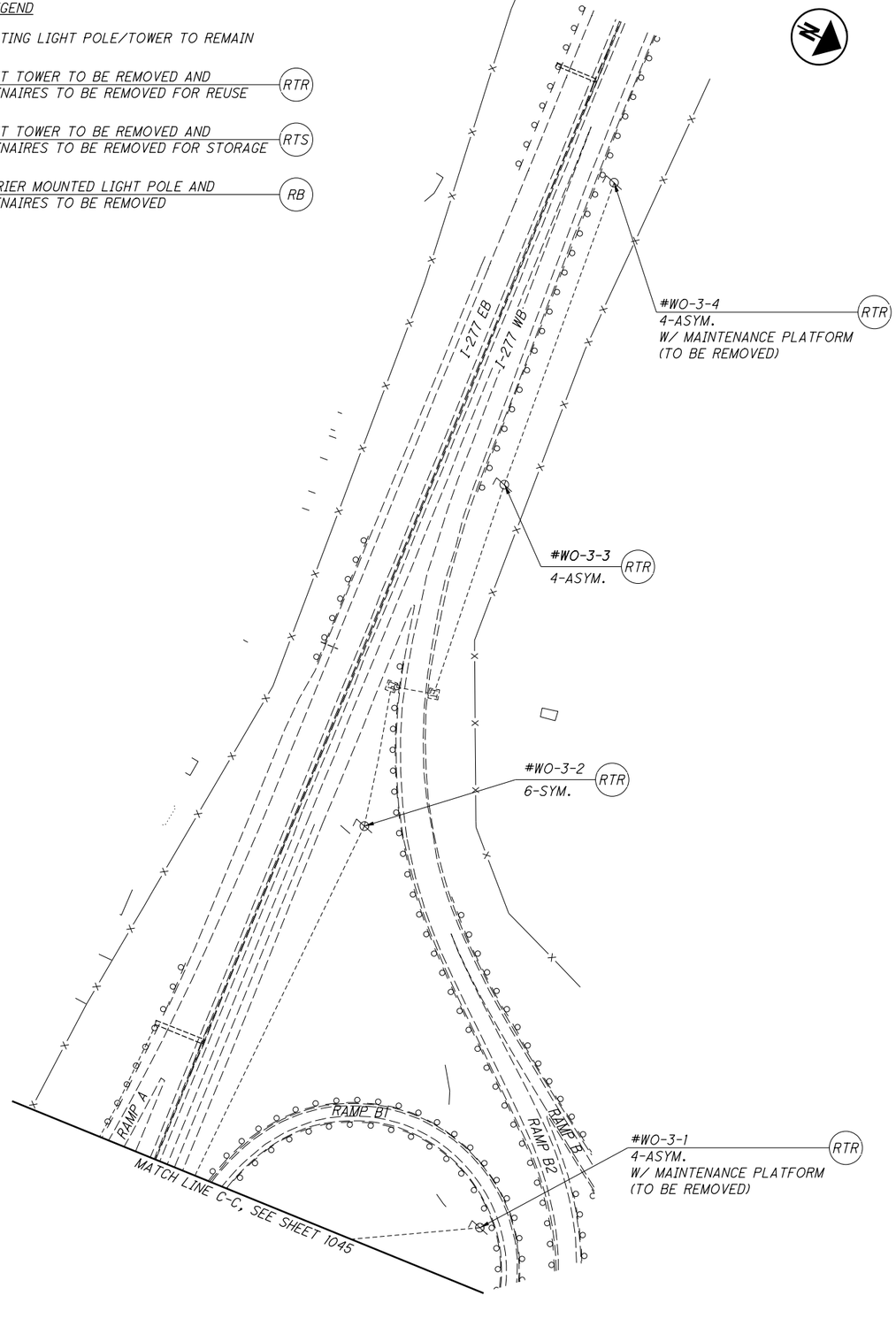


CALCULATED KWR
CHECKED DRB

# I-77 / I-277 / US 224 INTERCHANGE LIGHTING REMOVAL PLAN

SUM-77 / 277 / 224
VARIOUS

1046
1288

N:\03\60\06744-08\106002_SUM-76-10.95\Design\Lighting\Sheets\106002_LM002.dgn Sheet 1/14/2021 8:39:14 AM sriffle

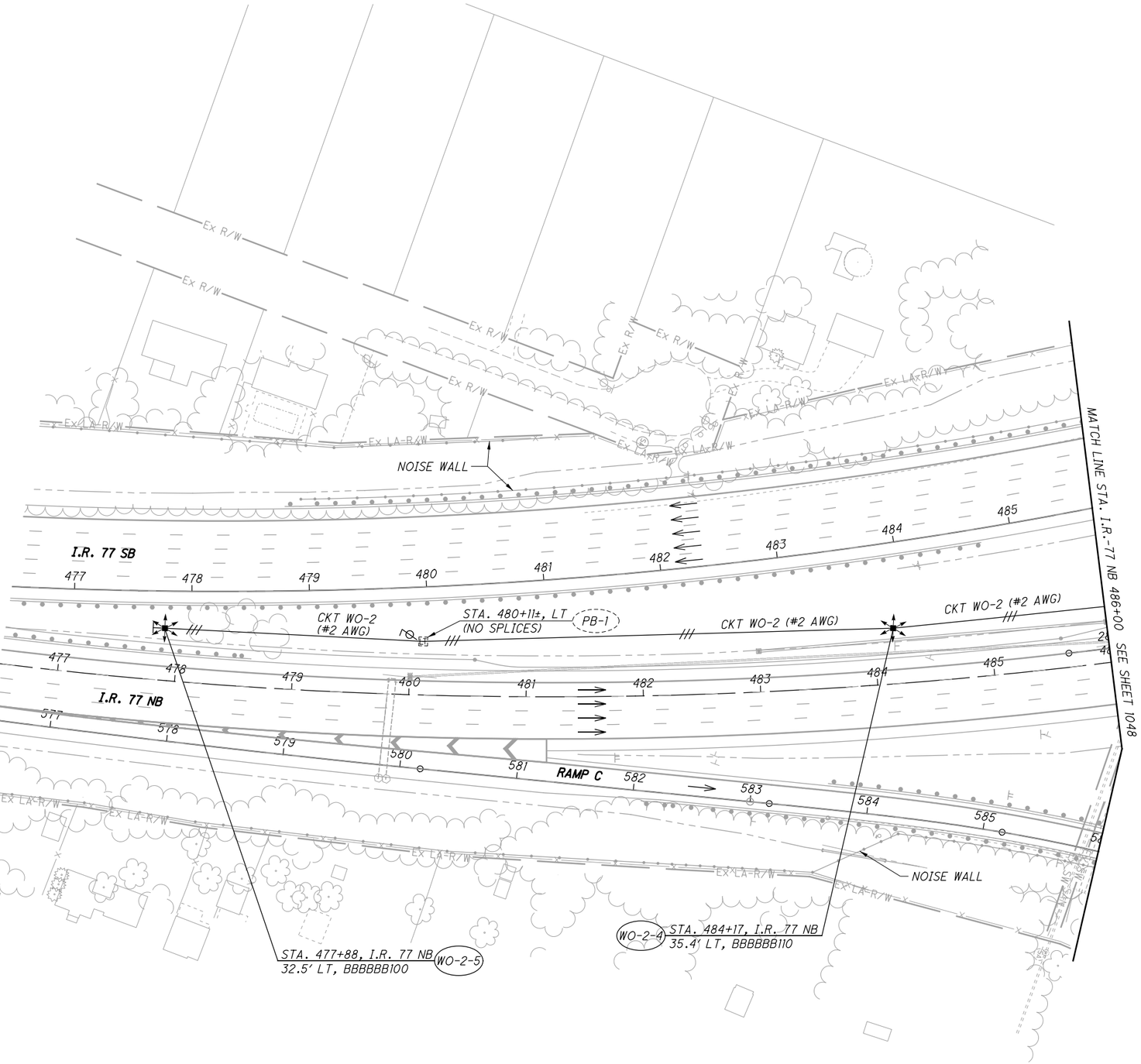


NOTES:

1. OFFSETS TO LIGHT POLES/TOWERS ARE FROM THE NEAREST EOP.
2. OFFSETS TO PULL BOXES ARE FROM ℄/℄.
3. SEE SHEET 1044 FOR LIGHTING LEGEND.

HORIZONTAL SCALE IN FEET
0 25 50 100

CALCULATED . CHECKED .

LIGHTING PLAN
I.R.-77 NB STA. 476+50 TO I.R.-77 NB STA. 486+00

SUM-77/277/224
VARIOUS

1047
1288

N:\03\60\06744-08\106002_SUM-76-10.95\Design\Lighting\Sheets\106002_LP009.dgn Sheet 1/14/2021 3:45:14 PM kryan

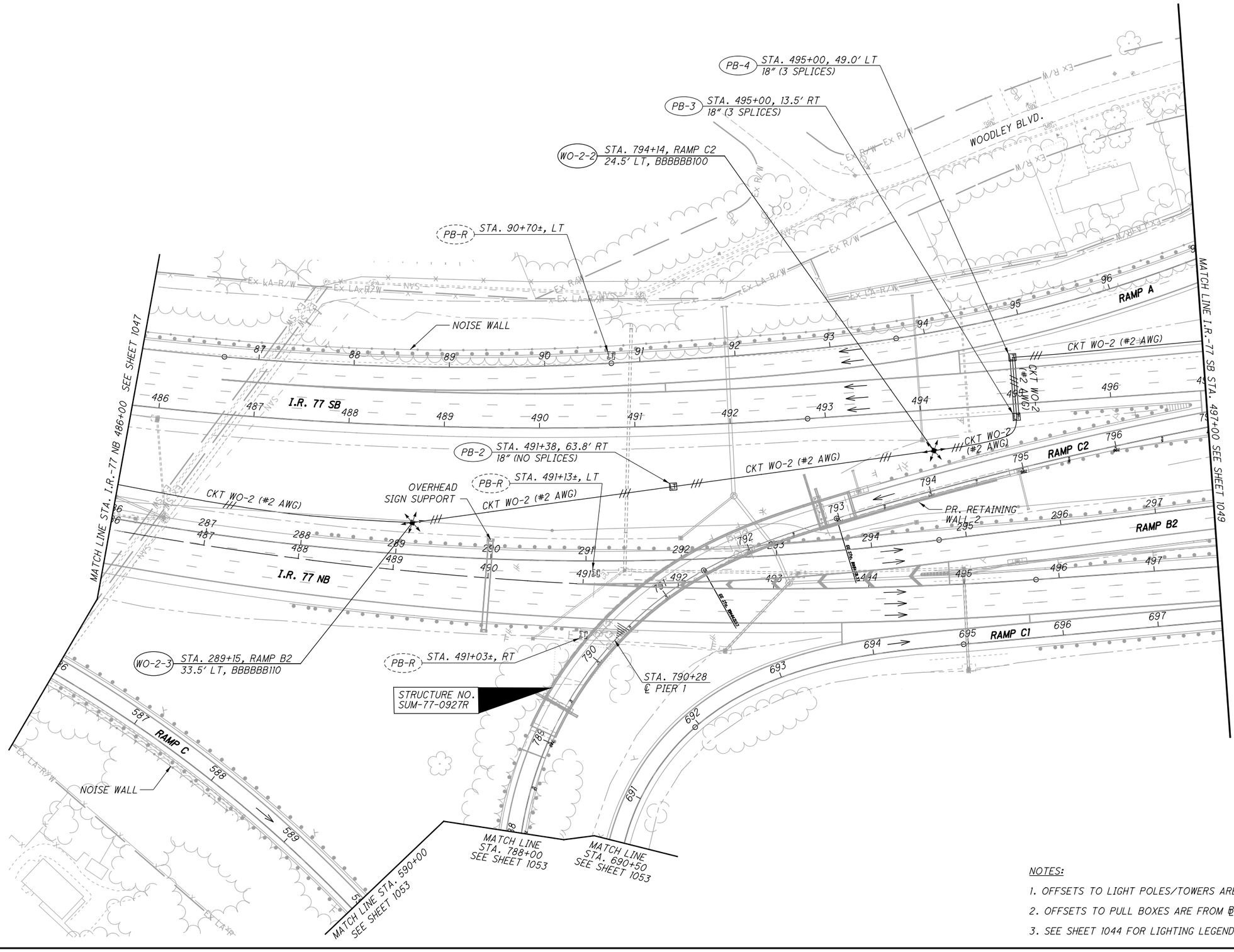


NOTES:

1. OFFSETS TO LIGHT POLES/TOWERS ARE FROM THE NEAREST EOP.
2. OFFSETS TO PULL BOXES ARE FROM ℄/℄.
3. SEE SHEET 1044 FOR LIGHTING LEGEND.

HORIZONTAL SCALE IN FEET
0 25 50 100

CALCULATED . CHECKED .

# LIGHTING PLAN
## I.R.-77 NB STA. 486+00 TO I.R.-77 SB STA. 497+00

SUM-77 / 277 / 224
VARIOUS

1048
1288

N:\03\60\06744-08\106002_SUM-76-10.95\Design\Lighting\Sheets\106002_LP010.dgn Sheet 1/14/2021 3:45:19 PM kryan

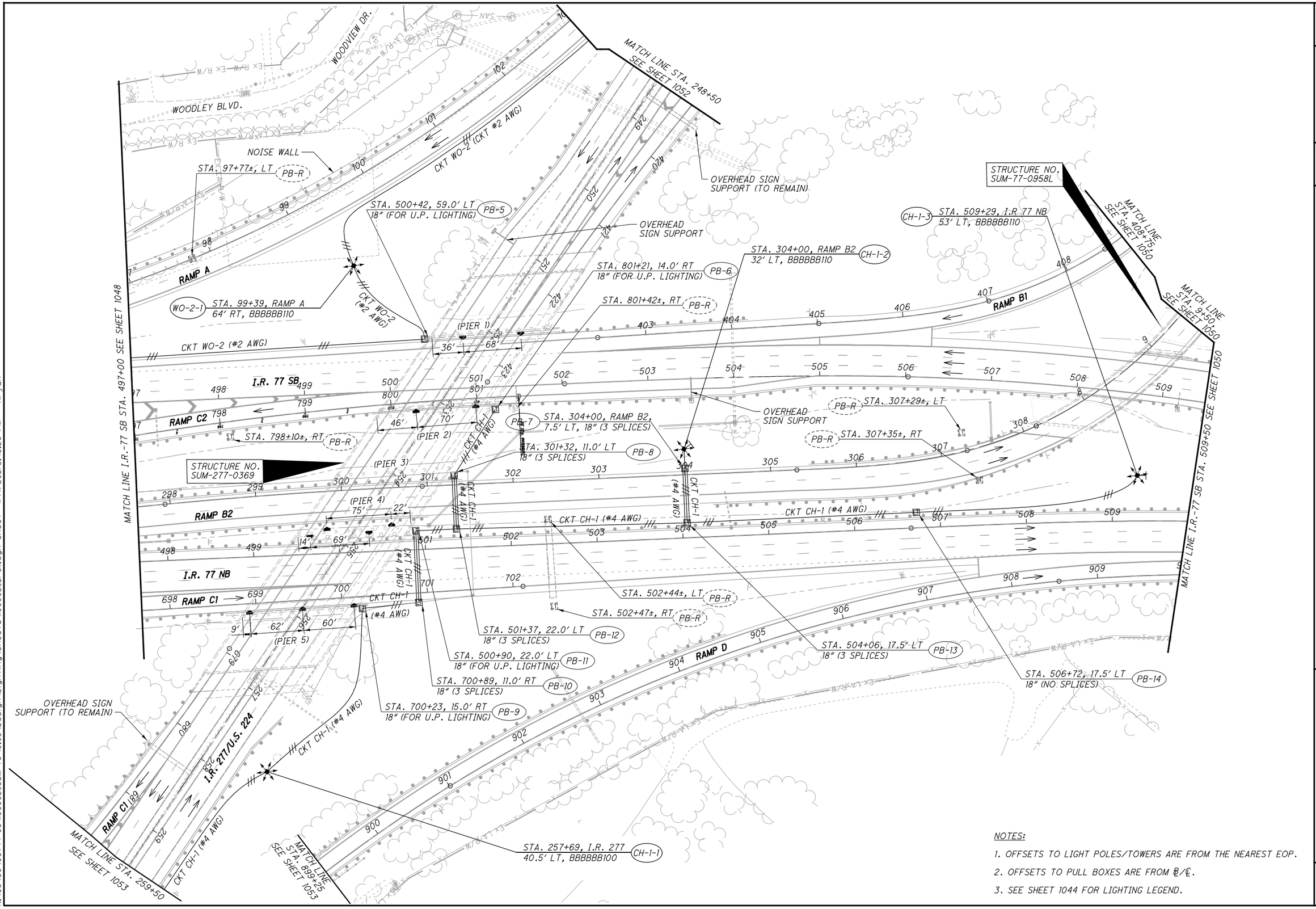


NOTES:

1. OFFSETS TO LIGHT POLES/TOWERS ARE FROM THE NEAREST EOP.
2. OFFSETS TO PULL BOXES ARE FROM ℄/℄.
3. SEE SHEET 1044 FOR LIGHTING LEGEND.

HORIZONTAL SCALE IN FEET
0 25 50 100

CALCULATED . CHECKED .

# LIGHTING PLAN
## I.R.-77 SB STA. 497+00 TO I.R.-77 SB STA. 509+50

SUM-77 / 277 / 224
VARIOUS

1049
1288

N:\03\60\06744-08\I06002_SUM-76-10.95\Design\Lighting\Sheets\I06002_LP01.dgn Sheet 1/14/2021 3:45:26 PM kryan

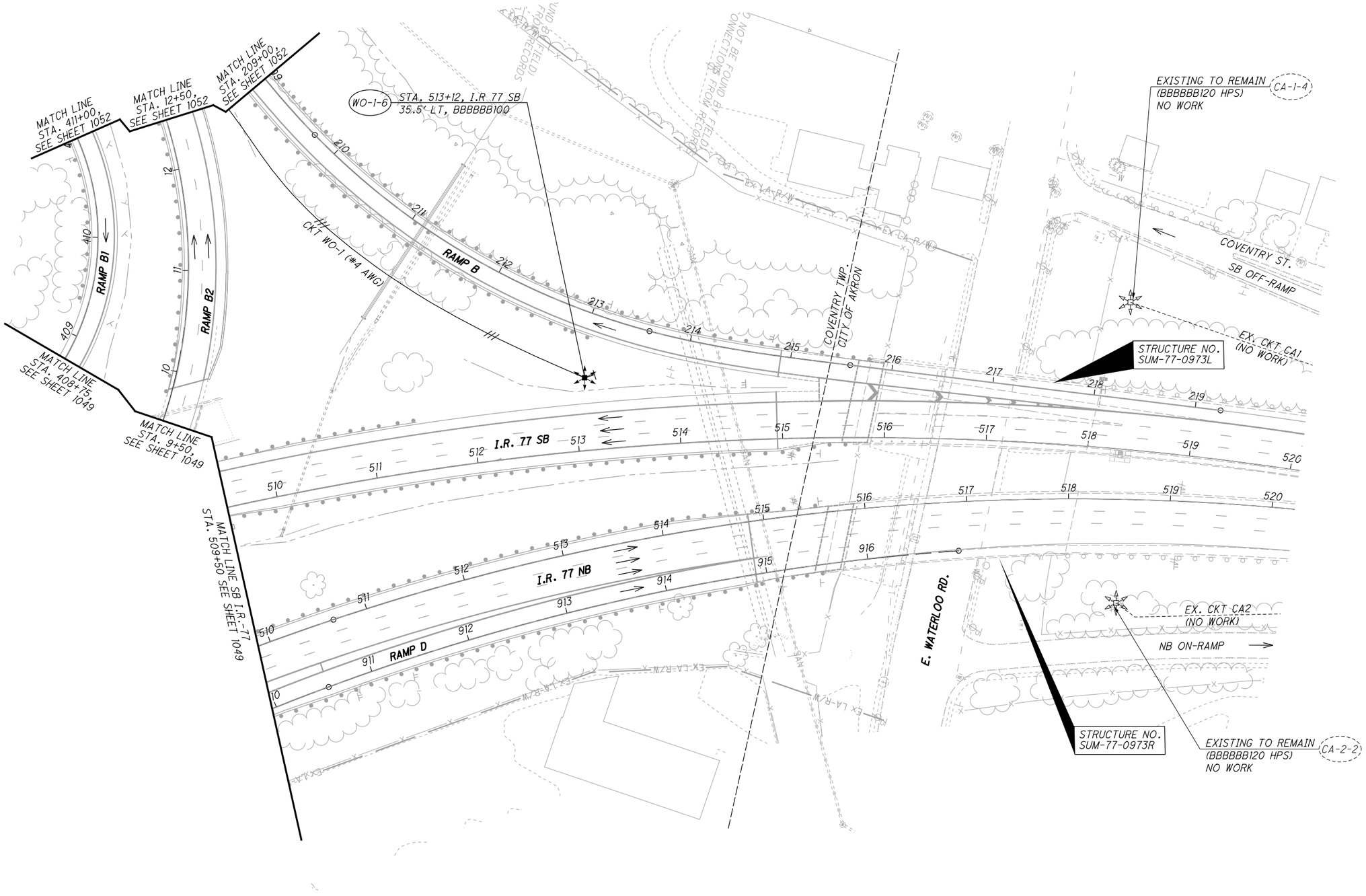


*NOTES:*

1. *OFFSETS TO LIGHT POLES/TOWERS ARE FROM THE NEAREST EOP.*
2. *OFFSETS TO PULL BOXES ARE FROM ℄/℄.*
3. *SEE SHEET 1044 FOR LIGHTING LEGEND.*

HORIZONTAL SCALE IN FEET
0 25 50 100

CALCULATED . CHECKED .

# LIGHTING PLAN
## I.R.-77 SB STA. 509+50 TO I.R.-77 SB STA. 520+00

SUM-77 / 277 / 224
VARIOUS

1050
1288

N:\03\60\06744-08\106002_SUM-76-10.95\Design\Lighting\Sheets\106002_LP012.dgn Sheet 1/14/2021 3:45:33 PM kryan

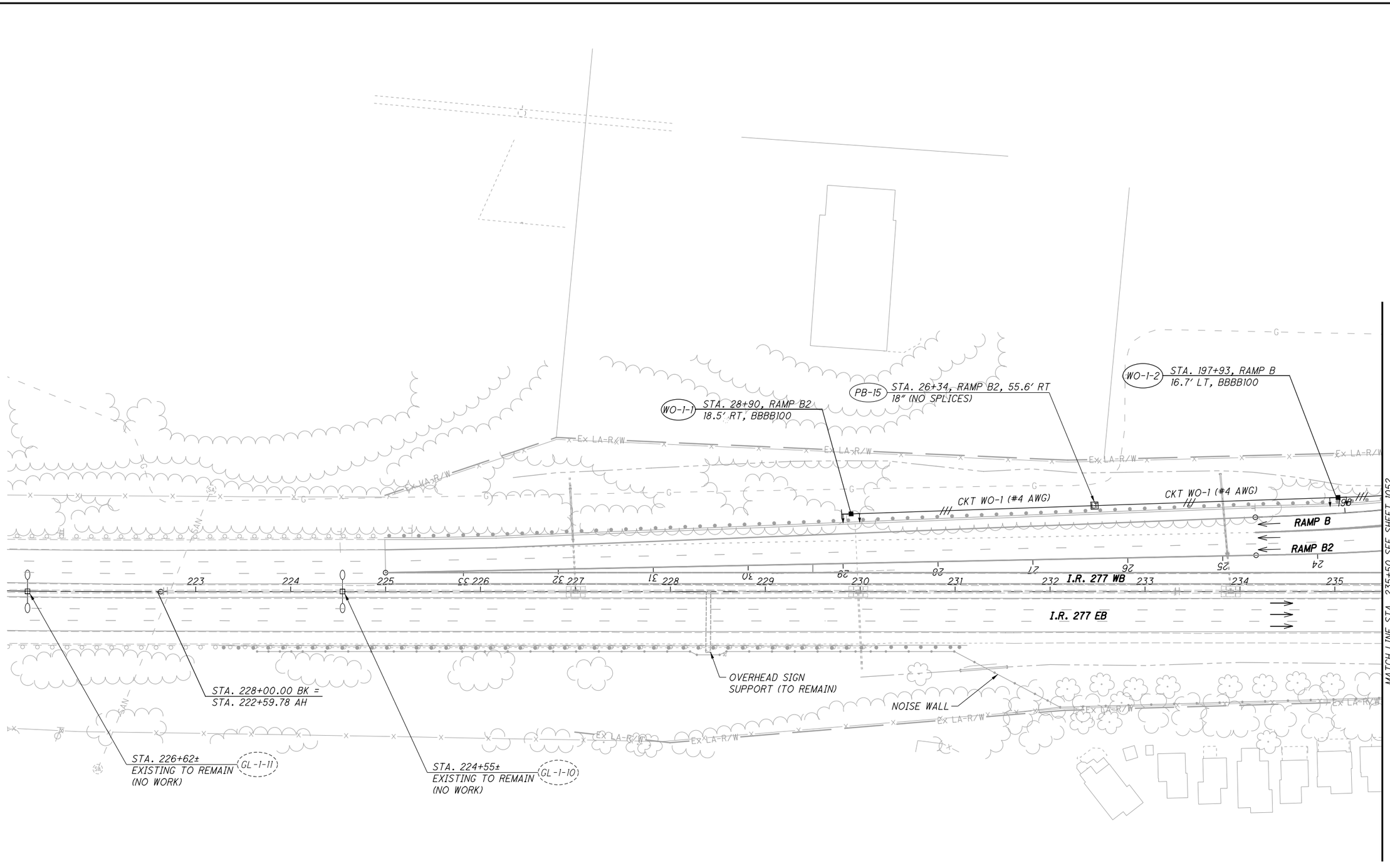


NOTES:

1. OFFSETS TO LIGHT POLES/TOWERS ARE FROM THE NEAREST EOP.
2. OFFSETS TO PULL BOXES ARE FROM ℄/℄.
3. SEE SHEET 1044 FOR LIGHTING LEGEND.

HORIZONTAL SCALE IN FEET
0 25 50 100

CALCULATED .
CHECKED .

# LIGHTING PLAN
## I.R.-277 STA. 223+00 TO STA. 235+50

SUM-77 / 277 / 224
VARIOUS

1051
1288

N:\03\60\06744-08\106002_SUM-76-10.95\Design\Lighting\Sheets\106002_LP013.dgn Sheet 1/14/2021 3:45:39 PM kryan

PB-16 STA. 104+69, RAMP A, 22.5' LT
24" (NO SPLICES)

3" CONDUIT W/ CKTS
WO-1 (#4 AWG)
WO-2 (#2 AWG)

3" CONDUIT W/ CKTS
WO-1 (#4 AWG)
WO-2 (#2 AWG)

PB-17 STA. 104+80, RAMP A, 46.5' LT
24" (INCIDENTAL TO POWER SERVICE)

INSTALL NEW POWER SERVICE 'WO'
ON NEW SERVICE POLE ADJACENT TO EXISTING
240/480V, 1ϕ, 3-WIRE W/ 2 CIRCUITS (1 AND 2)
STA. 104+81±, RAMP A, LT.

REMOVE EXISTING
POWER SERVICE 'WO'

DETAIL 'A'

PB-18 STA. 200+49, RAMP B, 11.5' LT
18" (3 SPLICES)

PB-19 STA. 21+07, RAMP B2, 7.5' LT
18" (3 SPLICES)

WO-1-3 STA. 240+27, I.R. 277
64' LT, BBBBBB100

PB-20 STA. 13+08, RAMP B2, 42.0' RT
18" (3 SPLICES)

PB-21 STA. 13+08, RAMP B2, 11.0' LT
18" (3 SPLICES)

PB-22 STA. 411+31, RAMP B1, 22.0' RT
18" (3 SPLICES)

MATCH LINE
STA. 209+00
SEE SHEET 1050

MATCH LINE
STA. 212+50
SEE SHEET 1050

MATCH LINE
STA. 411+00
SEE SHEET 1050

CKT WO-1
(#4 AWG)

PB-24 STA. 104+69, RAMP A, 31.5' RT
24" (3 SPLICES CKT WO-2)

PB-23 STA. 243+56, I-277, 45.7' LT
18" (NO SPLICES)

PB-25 STA. 411+31, RAMP B1, 17.0' LT
18" (3 SPLICES)

WO-1-5 STA. 411+50, RAMP B1
16.5' LT, BBBBBB110

PB-26 STA. 414+33, RAMP B1, 17.0' LT
18" (NO SPLICES)

WO-1-4 STA. 417+11, RAMP B1
18' LT, BBBB100

PB-R STA. 417+57±, RT

PB-R STA. 417+59±, LT

PB-27 STA. 417+62, RAMP B1, 14.0' LT
18" (3 SPLICES)

PB-28 STA. 417+62, RAMP B1, 22.5' RT
18" (3 SPLICES)

RAMP B
RAMP B1
RAMP B2
RAMP A

I.R. 277

Ex LA R/W

Ex R/W

OVERHEAD
SIGN SUPPORT

NOISE WALL

NOISE WALL

SEE DETAIL 'A'

MATCH LINE STA. 235+50
SEE SHEET 1051

MATCH LINE STA. 248+50
SEE SHEET 1049

NOTES:

1. OFFSETS TO LIGHT POLES/TOWERS ARE FROM THE NEAREST EOP.
2. OFFSETS TO PULL BOXES ARE FROM ℄/℄.
3. SEE SHEET 1044 FOR LIGHTING LEGEND.

HORIZONTAL
SCALE IN FEET
0 25 50 100

CALCULATED .
CHECKED .

LIGHTING PLAN
I.R.-277 / U.S. 224 STA. 235+50 TO STA. 248+50

SUM-77 / 277 / 224
VARIOUS

1052
1288

N:\03\60\06744-08\I06002_SUM-76-10.95\Design\Lighting\Sheets\I06002_LP014.dgn Sheet 1/14/2021 3:45:44 PM kryan

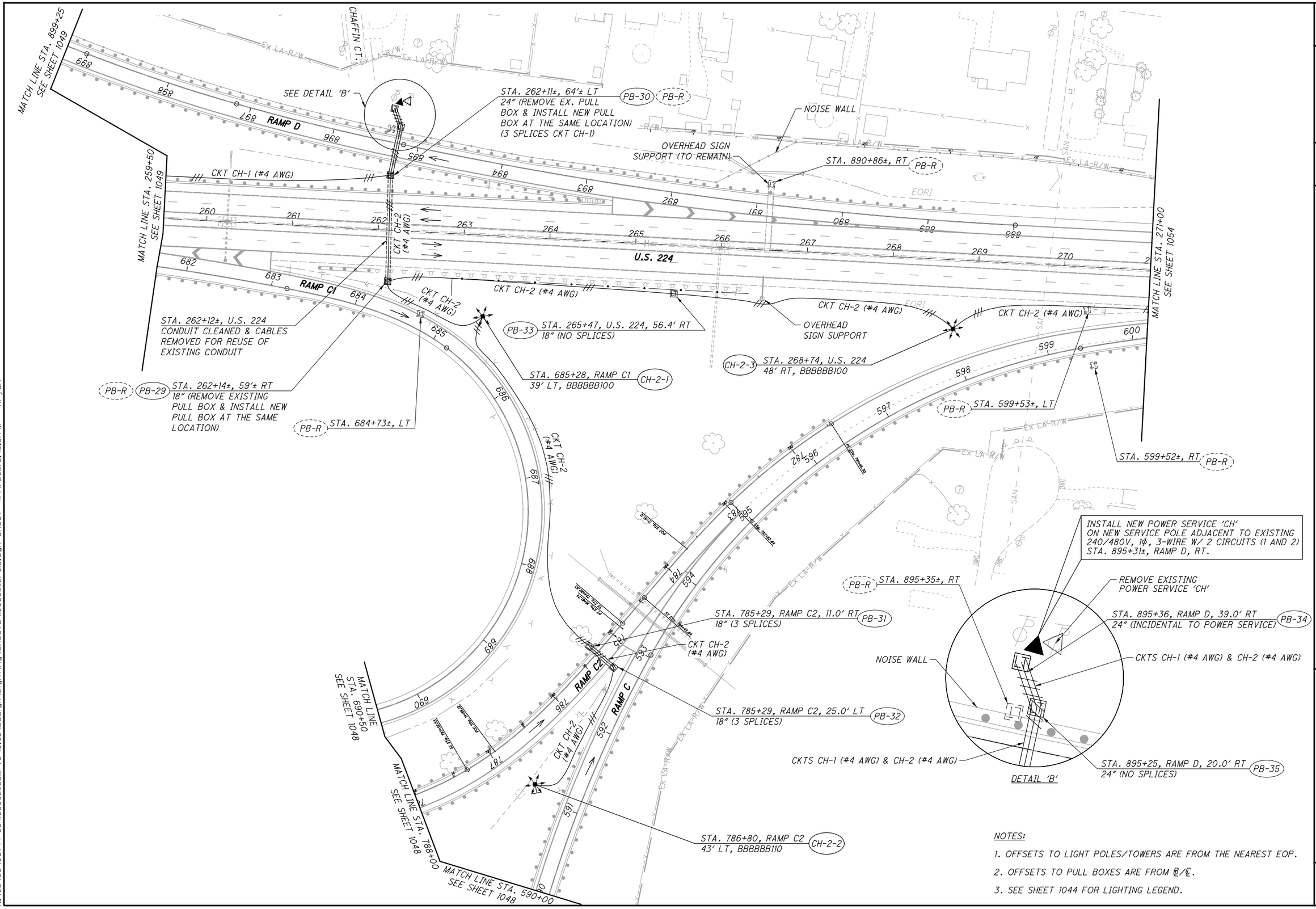


NOTES:

1. OFFSETS TO LIGHT POLES/TOWERS ARE FROM THE NEAREST EOP.
2. OFFSETS TO PULL BOXES ARE FROM ℄/℄.
3. SEE SHEET 1044 FOR LIGHTING LEGEND.

HORIZONTAL SCALE IN FEET
0 25 50 100

CALCULATED . CHECKED .

LIGHTING PLAN
I.R.-277/U.S. 224 STA. 259+50 TO STA. 271+00
SUM-77/277/224
VARIOUS

1053
1288

N:\03\60\06744-08\I06002_SUM-76-10.95\Design\Lighting\Sheets\I06002_LP015.dgn Sheet 1/14/2021 3:45:51 PM kryan

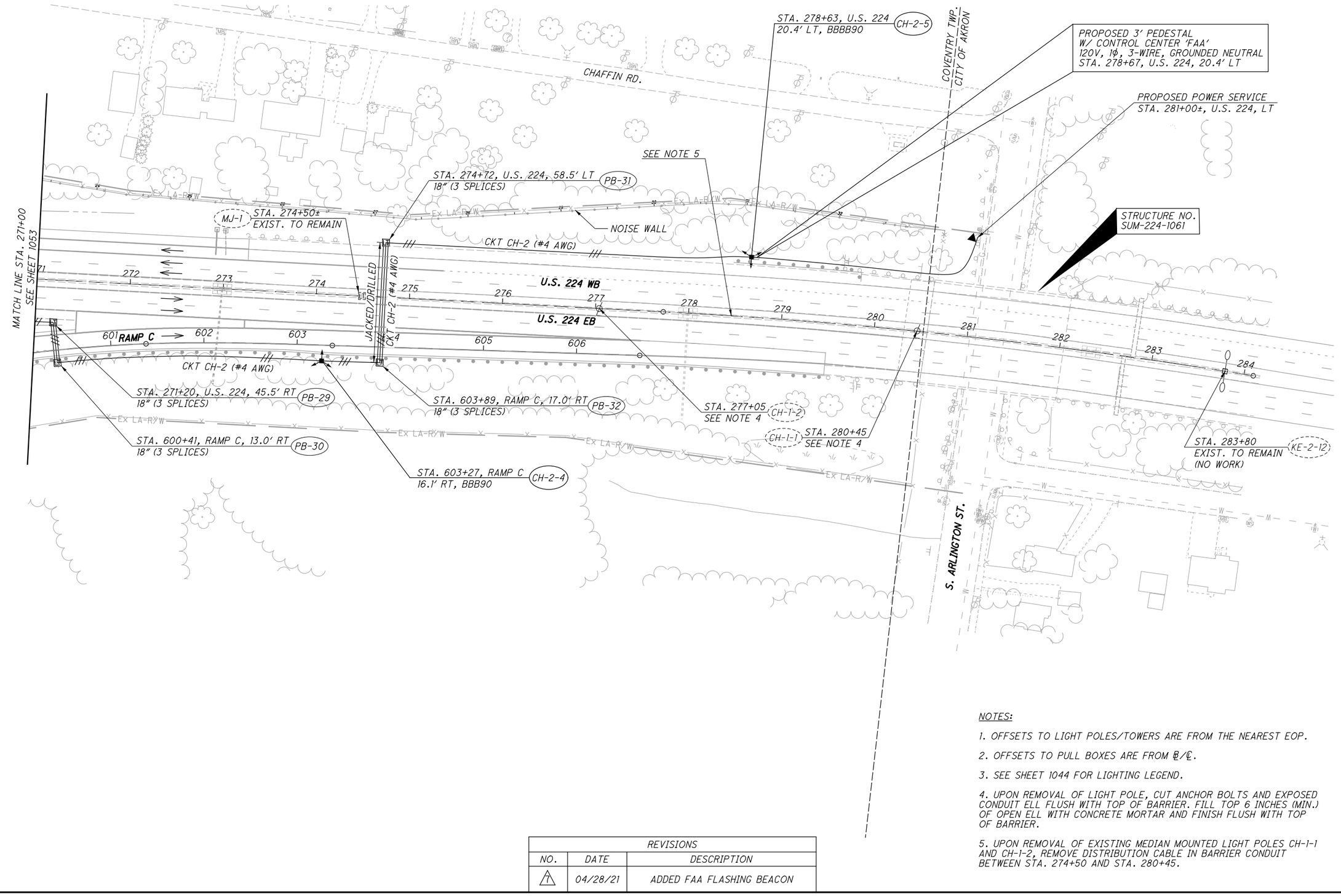


| REVISIONS | | |
|---|---|---|
| NO. | DATE | DESCRIPTION |
| 1 | 04/28/21 | ADDED FAA FLASHING BEACON |

NOTES:

1. OFFSETS TO LIGHT POLES/TOWERS ARE FROM THE NEAREST EOP.
2. OFFSETS TO PULL BOXES ARE FROM ℄/℄.
3. SEE SHEET 1044 FOR LIGHTING LEGEND.
4. UPON REMOVAL OF LIGHT POLE, CUT ANCHOR BOLTS AND EXPOSED CONDUIT ELL FLUSH WITH TOP OF BARRIER. FILL TOP 6 INCHES (MIN.) OF OPEN ELL WITH CONCRETE MORTAR AND FINISH FLUSH WITH TOP OF BARRIER.
5. UPON REMOVAL OF EXISTING MEDIAN MOUNTED LIGHT POLES CH-1-1 AND CH-1-2, REMOVE DISTRIBUTION CABLE IN BARRIER CONDUIT BETWEEN STA. 274+50 AND STA. 280+45.

HORIZONTAL SCALE IN FEET
0 25 50 100

CALCULATED . CHECKED .

# LIGHTING PLAN
## U.S. 224 STA. 271+00 TO STA. 284+00
SUM-77/277/224
VARIOUS

1054
1288

N:\03\60\06744-08\106002_SUM-76-10.95\Design\Lighting\Sheets\106002_LP016.dgn Sheet 4/28/2021 6:09:25 PM kryan

| LIGHT TOWER SCHEDULE | | | | | | | | | | | |
|---|---|---|---|---|---|---|---|---|---|---|---|
| TOWER | | | | LOCATION | | | ELEV. (FT) (NOTE 2) | FOUNDATION | | | |
| NO. | HEIGHT (FT.) | NO. OF LUMINAIRES | | ALIGNMENT | STATION | OFFSET (NOTE 1) | | DIA. (IN.) | DEPTH (FT) (NOTE 3) | REFERENCE BORING(S) (NOTE 4) | COMMENTS |
| | | SYMMETRIC | ASYMMETRIC | | | | | | | | |
| WO-1-1 | 100 | | 4 | RAMP B2 | 28+90 | 18.5' RT | 1024.5 | 36 | 25 | B-097 | |
| WO-1-2 | 100 | | 4 | RAMP B | 197+93 | 16.7' LT | 1032.3 | 36 | 25 | B-011-0.14 | |
| WO-1-3 | 100 | 6 | | I.R. 277 | 240+27 | 64.0' LT | 1037.2 | 36 | 20 | | |
| WO-1-4 | 100 | | 4 | RAMP B1 | 417+11 | 18.0' LT | 1050.9 | 36 | 15 | | |
| WO-1-5 | 110 | 6 | | RAMP B1 | 411+50 | 16.5' LT | 1038.0 | 36 | 15 | | |
| WO-1-6 | 100 | 6 | | I.R. 77 SB | 513+12 | 35.5' LT | 1041.7 | 36 | 25 | B-007-1.14 | |
| WO-2-1 | 110 | 6 | | RAMP A | 99+39 | 64.0' RT | 1035.4 | 36 | 25 | | |
| WO-2-2 | 100 | 6 | | RAMP C2 | 794+14 | 24.5' LT | 1044.2 | 36 | 25 | | |
| WO-2-3 | 110 | 6 | | RAMP B2 | 289+15 | 33.5' LT | 1033.1 | 36 | 25 | | MAY ENCOUNTER ROCK AT 12.5'. SEE C&MS 625.10 FOR ADDITIONAL INFORMATION. |
| WO-2-4 | 110 | 6 | | I.R. 77 NB | 484+17 | 35.4' LT | 1040.4 | 36 | 25 | B-076 | |
| WO-2-5 | 100 | 6 | | I.R. 77 NB | 477+88 | 32.5' LT | 1050.8 | 36 | 20 | | |
| CH-1-1 | 100 | 6 | | I.R. 277 | 257+69 | 40.5' LT | 1061.5 | 36 | 25 | | MAY ENCOUNTER ROCK AT 9'. SEE C&MS 625.10 FOR ADDITIONAL INFORMATION. |
| CH-1-2 | 110 | 6 | | RAMP B2 | 304+00 | 32.0' LT | 1035.2 | 36 | 25 | | |
| CH-1-3 | 110 | 6 | | I.R. 77 NB | 509+29 | 53.0' LT | 1035.4 | 36 | 25 | | |
| CH-2-1 | 100 | 6 | | RAMP C1 | 685+28 | 39.0' LT | 1067.1 | 36 | 25 | | MAY ENCOUNTER ROCK BETWEEN 10' AND 18'. SEE C&MS 625.10 FOR ADDITIONAL INFORMATION. |
| CH-2-2 | 110 | 6 | | RAMP C2 | 786+80 | 43.0' LT | 1056.0 | 36 | 20 | | |
| CH-2-3 | 100 | 6 | | U.S. 224 | 268+74 | 48.0' RT | 1092.1 | 36 | 25 | | |
| CH-2-4 | 90 | | 3 | RAMP C | 603+27 | 16.1' RT | 1107.0 | 36 | 25 | | |
| CH-2-5 | 90 | | 3 | U.S. 224 | 278+63 | 20.4' LT | 1121.0 | 36 | 25 | B-129 | |

NOTES:

1. OFFSETS TO LIGHT TOWERS ARE FROM THE NEAREST EOP.
2. ELEVATION IS FINISHED GRADE (EXISTING OR PROPOSED) AT TOWER FOUNDATION CENTERLINE. (NOTE: TOP OF FOUNDATION IS PER HL-20.21)
3. AT LOCATIONS WHERE THE SLOPE IS 6:1 OR GREATER, THE BURIED DEPTH OF FOUNDATION SHALL APPLY TO THE LOW SIDE OF THE SLOPE.
4. UNLESS INDICATED OTHERWISE, REFERENCE BORINGS ARE FROM 1979 HISTORIC BORINGS FOR HIGH MAST LIGHT TOWERS IDENTIFIED AS PROJECT 15115 IN TIMS.

CALCULATED KWR
CHECKED DRB

LIGHT TOWER SCHEDULE

SUM-77 / 277 / 224
VARIOUS

| REVISIONS | | |
|---|---|---|
| NO. | DATE | DESCRIPTION |
| 1 | 04/28/21 | ADDED FAA FLASHING BEACON |

10155
1288

N:\03\60\06744-08\106002_SUM-76-10.95\Design\Lighting\Sheets\106002_LE001.dgn Sheet 4/28/2021 11:20:55 PM kryan

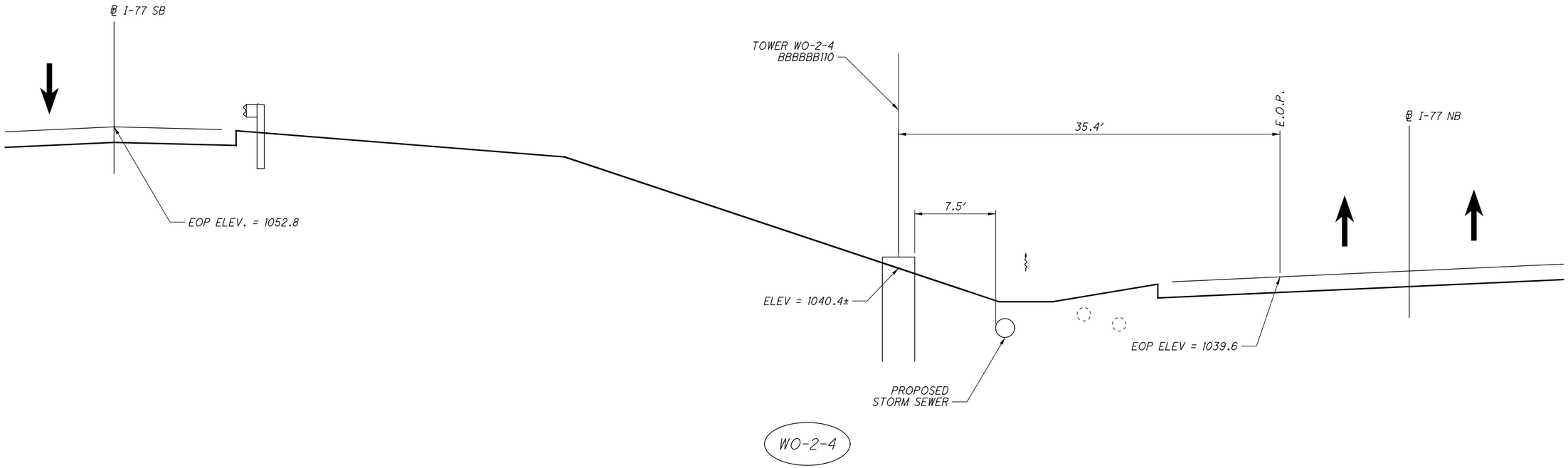


STA. 484+17 I-77 NB, 35.4' LT (OF E.O.P.)

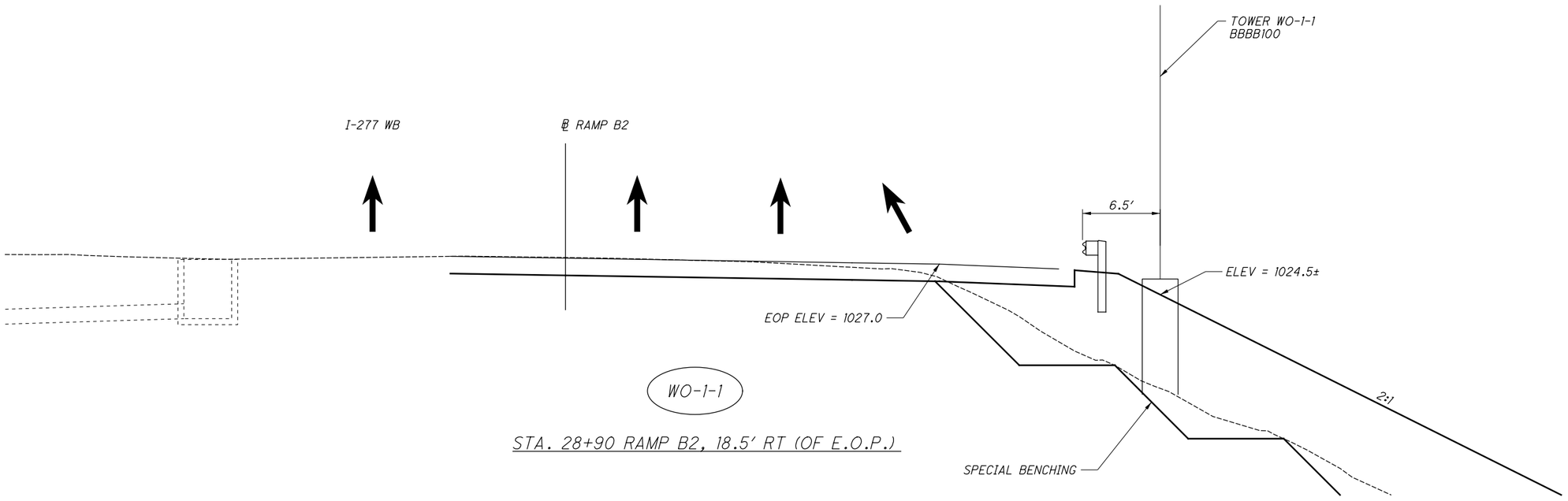


STA. 28+90 RAMP B2, 18.5' RT (OF E.O.P.)

HORIZONTAL SCALE IN FEET
0 2.5 5 10

CALCULATED KWR
CHECKED DRB

LIGHTING DETAILS
TOWER WO-2-4 & WO-1-1 ELEVATIONS

SUM-77/277/224
VARIOUS

1056
1288

N:\03\60\06744-08\106002_SUM-76-10.95\Design\Lighting\Sheets\106002_LE201.dgn Sheet 1/14/2021 8:40:13 AM srifflе

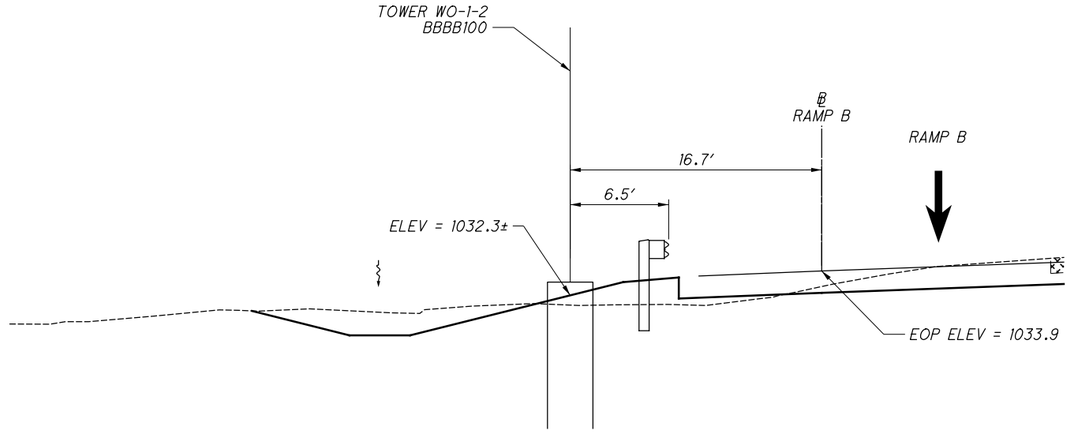


WO-1-2

STA. 197+93 RAMP B, 16.7′ LT (E.O.P.)

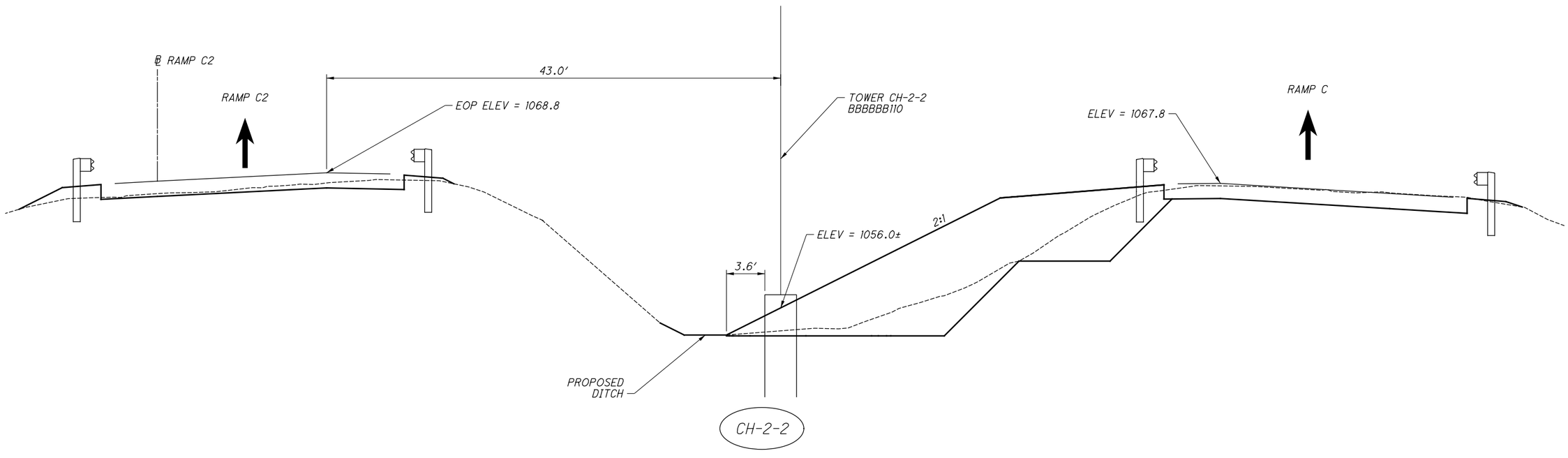


CH-2-2

STA. 786+80 RAMP C2, 43.0′ LT (E.O.P.)

HORIZONTAL SCALE IN FEET
0 2.5 5 10

CALCULATED KWR
CHECKED DRB

LIGHTING DETAILS
TOWER WO-1-2 & CH-2-2 ELEVATIONS

SUM-77-277-224
VARIOUS

1057
1288

N:\03\60\06744-08\106002_SUM-76-10.95\Design\Lighting\Sheets\106002_LE202.dgn Sheet 1/14/2021 8:40:20 AM srifflе

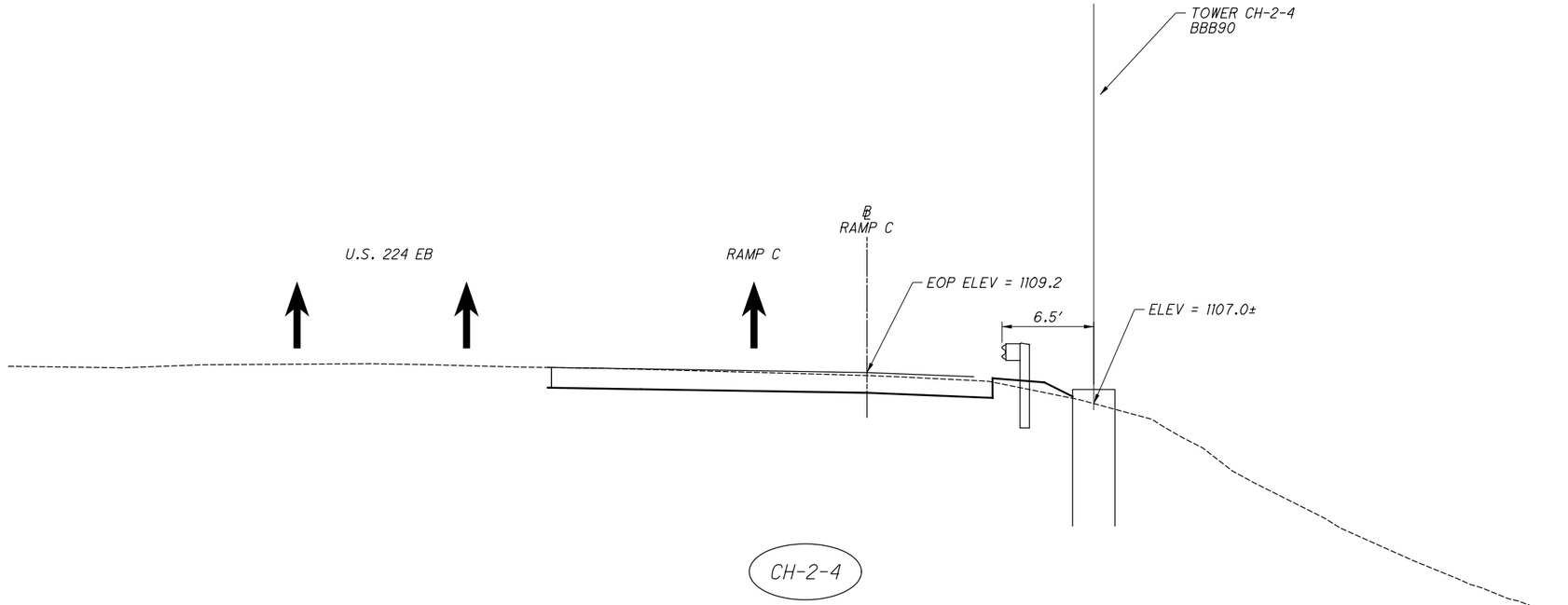


CH-2-4

STA. 603+27 RAMP C, 16.1′ RT (E.O.P.)

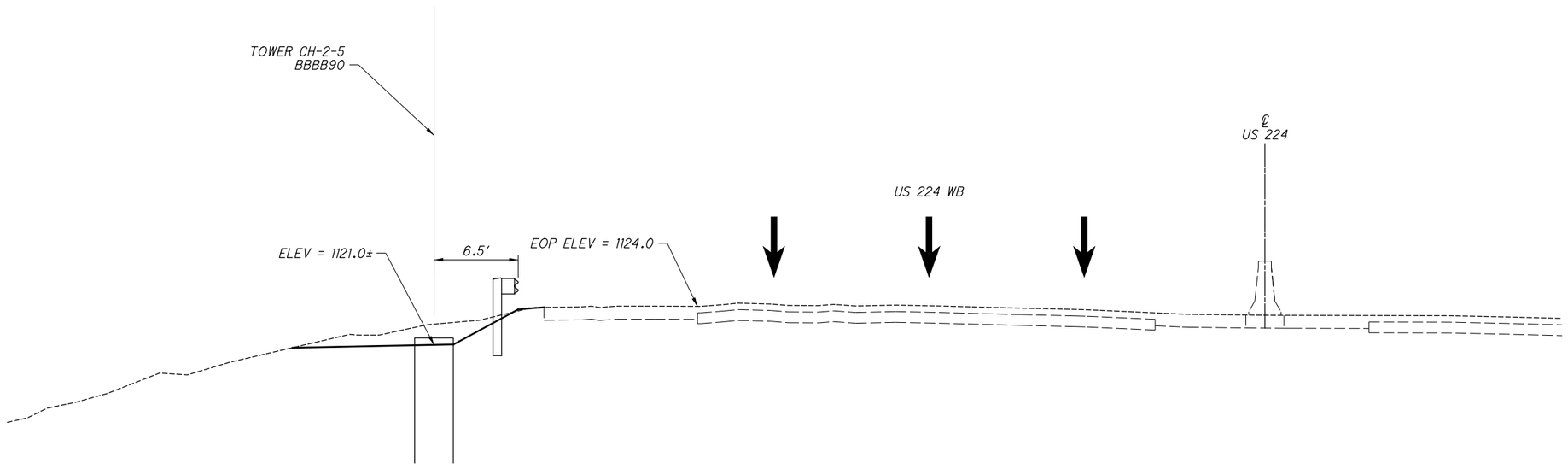


CH-2-5

STA. 278+63 US 224, 20.4′ LT (E.O.P.)

| REVISIONS | | |
|---|---|---|
| NO. | DATE | DESCRIPTION |
| 7 | 04/28/21 | ADDED FAA FLASHING BEACON |

HORIZONTAL SCALE IN FEET
0 2.5 5 10

CALCULATED KWR
CHECKED DRB

LIGHTING DETAILS
TOWER CH-2-4 & CH-2-5 ELEVATION

SUM-77/277/224
VARIOUS

1058
1288

N:\03\60\06744-08\106002_SUM-76-10.95\Design\Lighting\Sheets\106002_LE203.dgn Sheet 4/28/2021 8:25 PM kryan

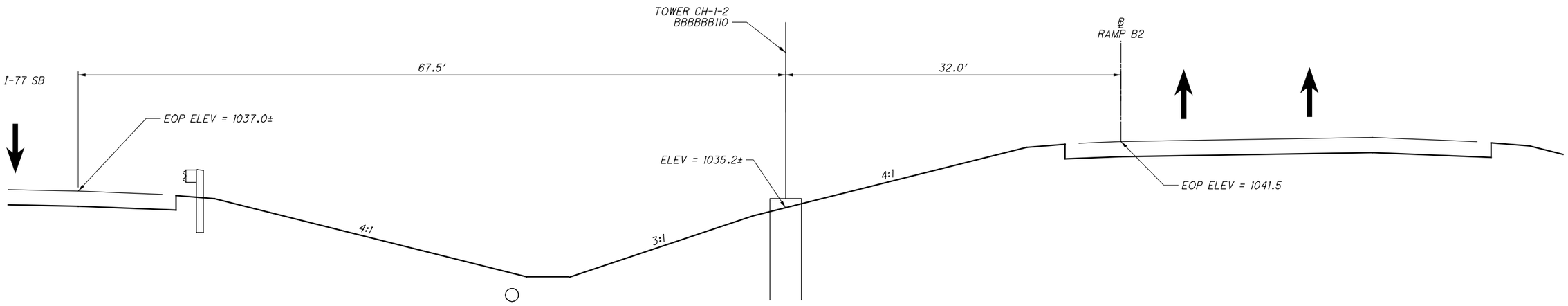


CH-1-2

STA. 304+00 RAMP B2, 32.0' LT (E.O.P.)

HORIZONTAL SCALE IN FEET
0 2.5 5 10

CALCULATED KWR
CHECKED DRB

# LIGHTING DETAILS
# TOWER CH-1-2 ELEVATION

SUM-77/277/224
VARIOUS

1059
1288

N:\03\60\06744-08\106002_SUM-76-10.95\Design\Lighting\Sheets\106002_LE204.dgn Sheet 1/14/2021 8:40:30 AM srifflle

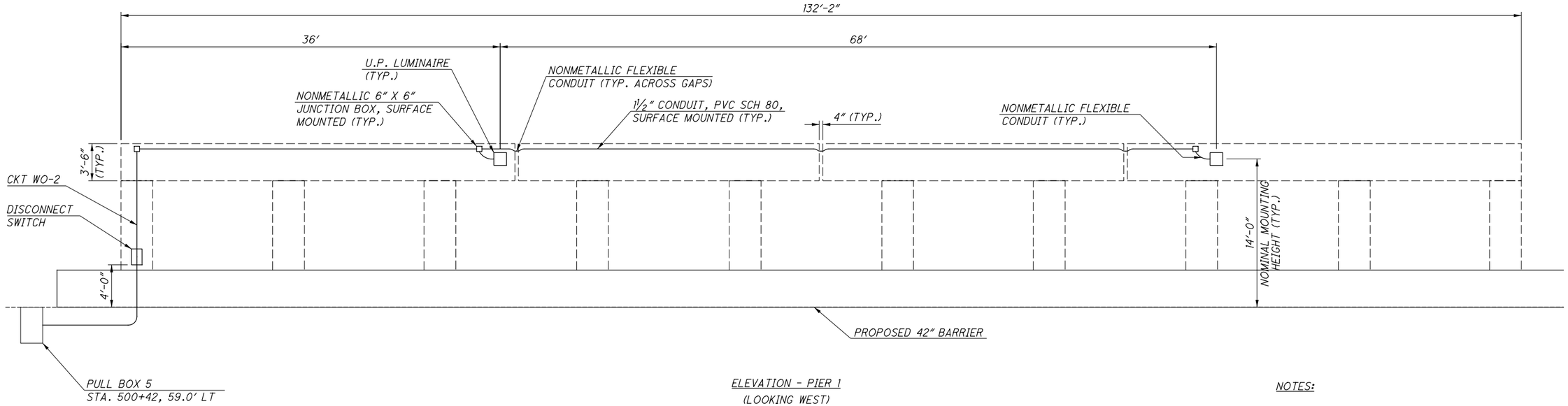


ELEVATION - PIER 1
(LOOKING WEST)
STA. 252+00

NOTES:

1. SECTIONS OF FLEXIBLE CONDUIT SHALL NOT EXCEED 30" IN LENGTH UNLESS OTHERWISE DIRECTED BY THE ENGINEER.

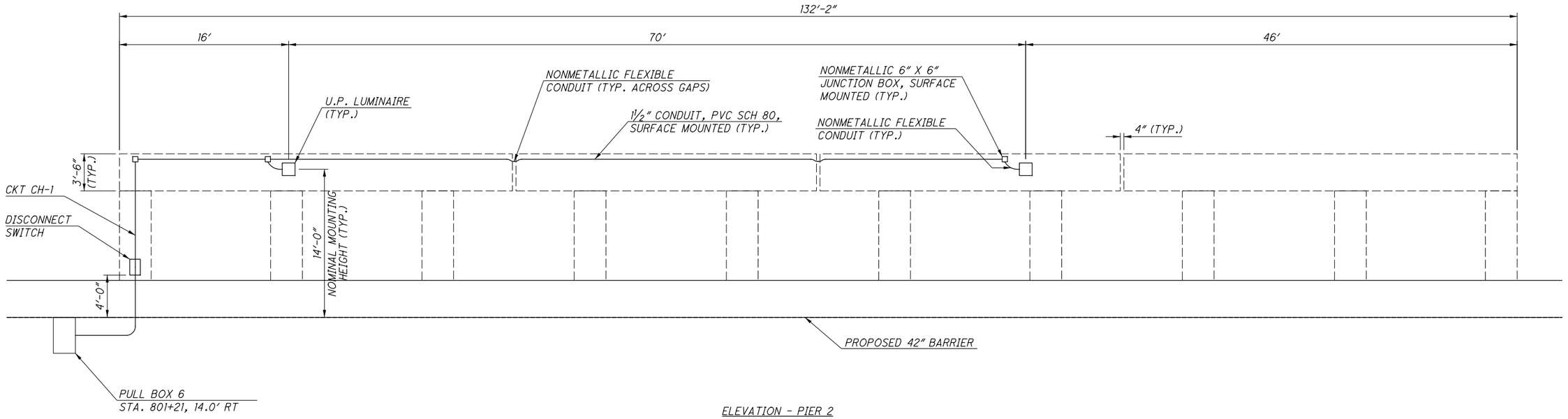


ELEVATION - PIER 2
(LOOKING EAST)
STA. 253+15

HORIZONTAL SCALE IN FEET
0 2.5 5 10

CALCULATED KWR
CHECKED DRB

# LIGHTING DETAILS - UNDERPASS ELEVATIONS

SUM-277-0369 PIERS 1 & 2

SUM-77 / 277 / 224
VARIOUS

1060
1288

N:\03\60\06744-08\106002_SUM-76-10.95\Design\Lighting\Sheets\106002_LE101.dgn Sheet 1/14/2021 8:40:39 AM srifflе

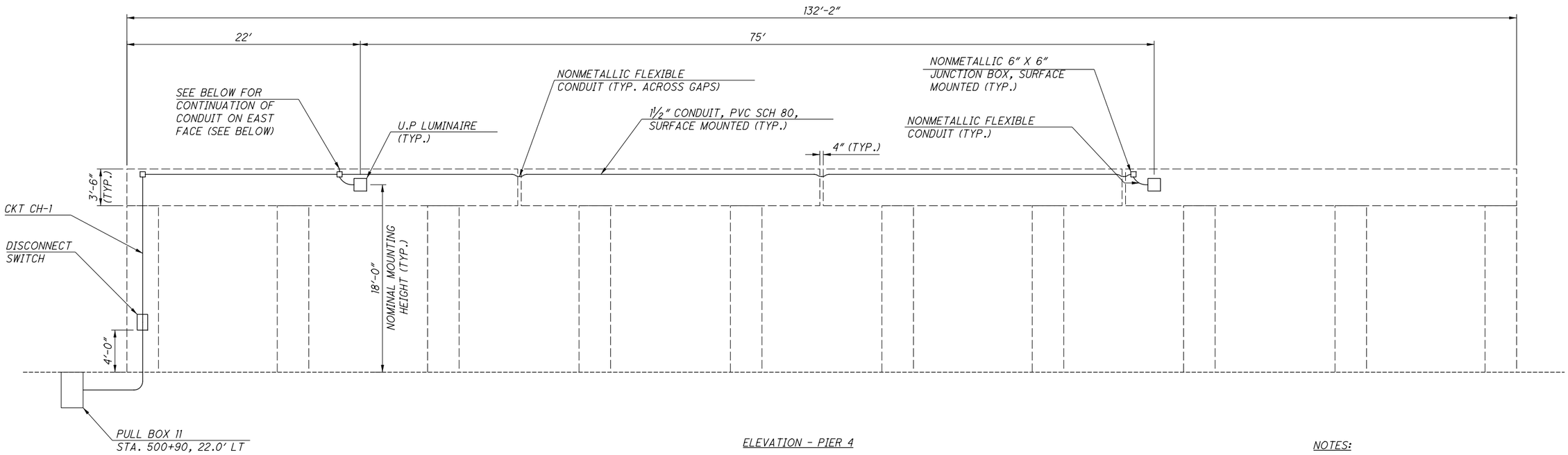


ELEVATION - PIER 4

(LOOKING EAST)
STA. 254+80

NOTES:

1. SECTIONS OF FLEXIBLE CONDUIT SHALL NOT EXCEED 30" IN LENGTH UNLESS OTHERWISE DIRECTED BY THE ENGINEER.

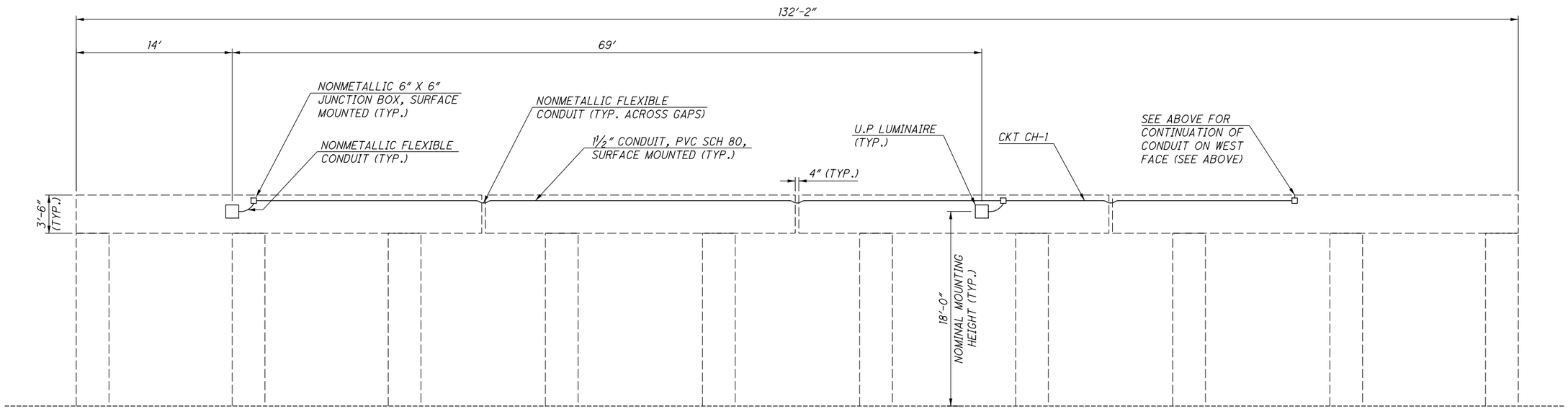


ELEVATION - PIER 4

(LOOKING WEST)
STA. 254+80

HORIZONTAL SCALE IN FEET
0 2.5 5 10

CALCULATED KWR
CHECKED DRB

LIGHTING DETAILS - UNDERPASS ELEVATIONS
SUM-277-0369 PIER 4

SUM-77 / 277 / 224
VARIOUS

1061
1288

N:\03\60\06744-08\106002_SUM-76-10.95\Design\Lighting\Sheets\106002_LEI02.dgn Sheet 1/14/2021 8:40:40 AM sriffle

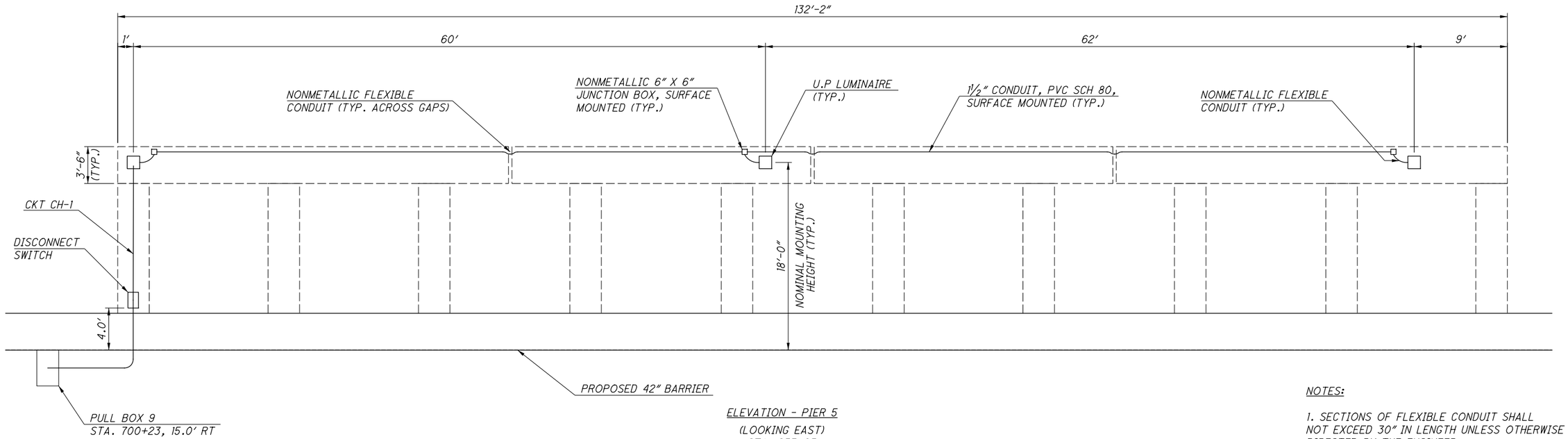


ELEVATION - PIER 5

(LOOKING EAST)
STA. 255+95

NOTES:

1. SECTIONS OF FLEXIBLE CONDUIT SHALL NOT EXCEED 30" IN LENGTH UNLESS OTHERWISE DIRECTED BY THE ENGINEER.

HORIZONTAL SCALE IN FEET
0 2.5 5 10

CALCULATED KWR
CHECKED DRB

LIGHTING DETAILS - UNDERPASS ELEVATIONS
SUM-277-0369 PIER 5

SUM-77/277/224
VARIOUS

1062
1288

N:\03\60\06744-08\I06002_SUM-76-10.95\Design\Lighting\Sheets\I06002_LEI03.dgn Sheet 1/14/2021 8:40:40 AM sriffle

SCHEMATIC LEGEND

- HIGH MAST TOWER W/4 LED ASYMMETRIC LUMINAIRES
- HIGH MAST TOWER W/6 LED SYMMETRIC LUMINAIRES
- UP • UNDERPASS LUMINAIRE, LED W/ QUANTITY (X)
- PULL BOX W/ CIRCUIT SPLICES
- POWER SERVICE

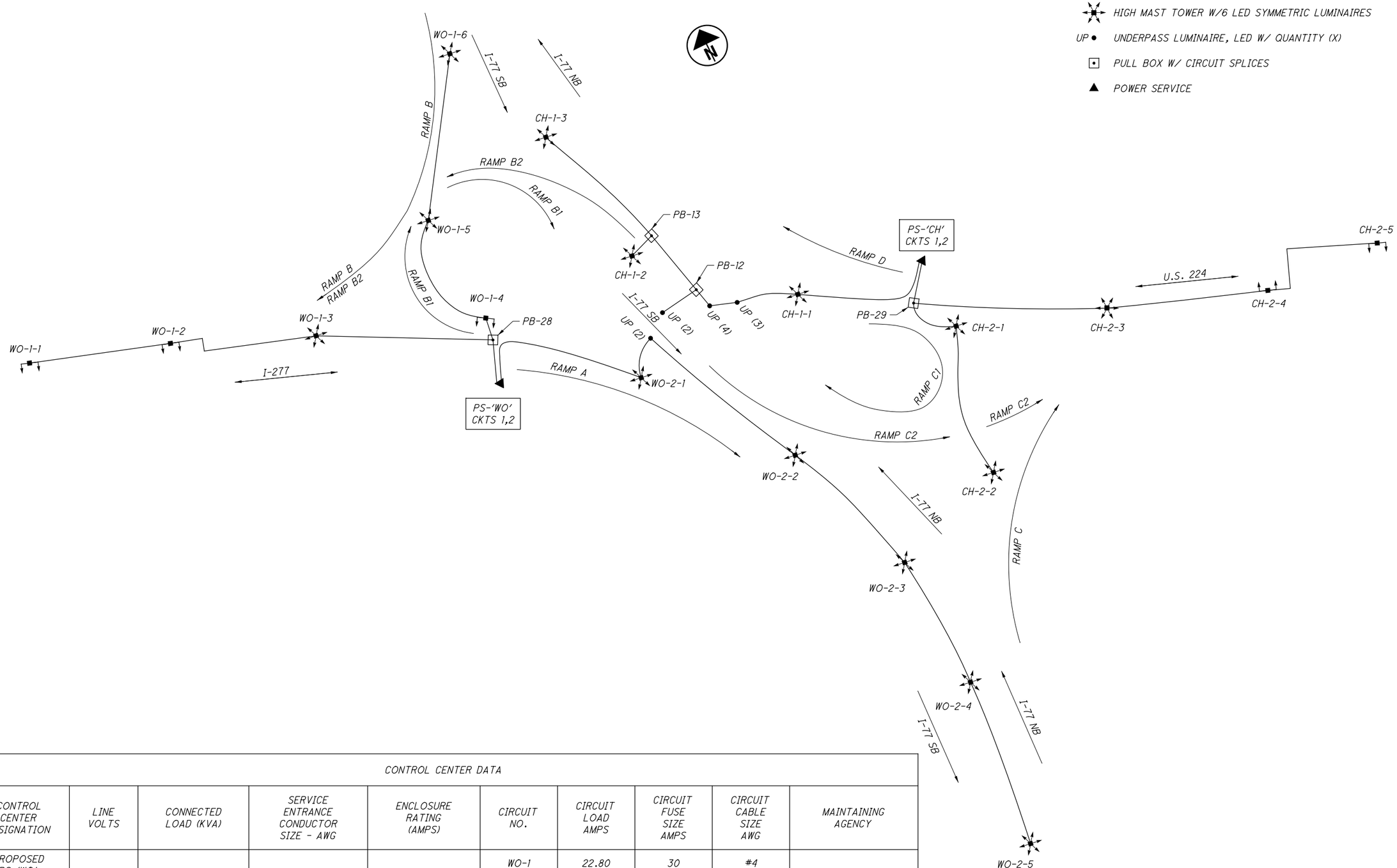


CONTROL CENTER DATA

| CONTROL CENTER DESIGNATION | LINE VOLTS | CONNECTED LOAD (KVA) | SERVICE ENTRANCE CONDUCTOR SIZE - AWG | ENCLOSURE RATING (AMPS) | CIRCUIT NO. | CIRCUIT LOAD AMPS | CIRCUIT FUSE SIZE AMPS | CIRCUIT CABLE SIZE AWG | MAINTAINING AGENCY |
|---|---|---|---|---|---|---|---|---|---|
| PROPOSED PS-'WO' 240/480V 1PH, 3-WIRE | 480 | 22.0 | #1/0 | 60 | WO-1 | 22.80 | 30 | #4 | ODOT |
| | | | | | WO-2 | 22.96 | 30 | #2 | |
| PROPOSED PS-'CH' 240/480V 1PH, 3-WIRE | 480 | 16.4 | #1/0 | 60 | CH-1 | 14.40 | 20 | #4 | ODOT |
| | | | | | CH-2 | 19.76 | 30 | #4 | |

CALCULATED KWR
CHECKED DRB

# CIRCUIT SCHEMATIC - PS 'WO' & PS 'CH'

SUM-77/277/224
VARIOUS

1063
1288

N:\03\60\06744-08\106002_SUM-76-10.95\Design\Lighting\Sheets\106002_LC002.dgn Sheet 1/14/2021 8:40:41 AM sriffle

CALCULATED KWR | CHECKED DRB

# VOLTAGE DROP CALCULATIONS

SUM-77 / 277 / 224
VARIOUS

1064
1288

## CIRCUIT 'WO-1'

VOLTAGE: 480V
WIRE FACTOR USED (TWO - NO. 4 AWG WIRES): 0.62 OHMS/MFT/1000

| Section | | | Amperes | | Ampere-Feet | AWG | Voltage Drop | | % Drop | At Point |
|---|---|---|---|---|---|---|---|---|---|---|
| From | To | Design Feet | At Point | Accum. | | | In Section | Accum. | | |
| WO-1-1 | WO-1-2 | 523 | 3.04 | 3.04 | 1,590 | 4 | 0.99 | 10.56 | 2.20 | WO-1-1 |
| WO-1-2 | WO-1-3 | 585 | 3.04 | 6.08 | 3,557 | 4 | 2.21 | 9.58 | 2.00 | WO-1-2 |
| WO-1-3 | PB-22 | 672 | 4.56 | 10.64 | 7,150 | 4 | 4.43 | 7.37 | 1.54 | WO-1-3 |
| | | | | | | | | | | |
| WO-1-6 | WO-1-5 | 695 | 4.56 | 4.56 | 3,169 | 4 | 1.96 | 8.66 | 1.80 | WO-1-6 |
| WO-1-5 | WO-1-4 | 528 | 4.56 | 9.12 | 4,815 | 4 | 2.99 | 6.69 | 1.39 | WO-1-5 |
| WO-1-4 | PB-22 | 102 | 3.04 | 12.16 | 1,240 | 4 | 0.77 | 3.71 | 0.77 | WO-1-4 |
| | | | | | | | | | | |
| PB-22 | CC-WO | 208 | 0.00 | 22.80 | 4,742 | 4 | 2.94 | 2.94 | 0.61 | PB-22 |

## CIRCUIT 'WO-2'

VOLTAGE: 480V
WIRE FACTOR USED (TWO - NO. 2 AWG WIRES): 0.38 OHMS/MFT/1000

| Section | | | Amperes | | Ampere-Feet | AWG | Voltage Drop | | % Drop | At Point |
|---|---|---|---|---|---|---|---|---|---|---|
| From | To | Design Feet | At Point | Accum. | | | In Section | Accum. | | |
| WO-2-5 | WO-2-4 | 632 | 4.56 | 4.56 | 2,882 | 2 | 1.10 | 17.56 | 3.66 | WO-2-5 |
| WO-2-4 | WO-2-3 | 503 | 4.56 | 9.12 | 4,587 | 2 | 1.74 | 16.46 | 3.43 | WO-2-4 |
| WO-2-3 | WO-2-2 | 562 | 4.56 | 13.68 | 7,688 | 2 | 2.92 | 14.72 | 3.07 | WO-2-3 |
| WO-2-2 | PB-3 (UP) | 718 | 4.56 | 18.24 | 13,096 | 2 | 4.98 | 11.80 | 2.46 | WO-2-2 |
| PB-3 (UP) | WO-2-1 | 133 | 0.16 | 18.40 | 2,447 | 2 | 0.93 | 6.82 | 1.42 | PB-3 (UP) |
| WO-2-1 | CC-WO | 675 | 4.56 | 22.96 | 15,498 | 2 | 5.89 | 5.89 | 1.23 | WO-2-1 |

## CIRCUIT 'CH-1'

VOLTAGE: 480V
WIRE FACTOR USED (TWO - NO. 4 AWG WIRES): 0.62 OHMS/MFT/1000

| Section | | | Amperes | | Ampere-Feet | AWG | Voltage Drop | | % Drop | At Point |
|---|---|---|---|---|---|---|---|---|---|---|
| From | To | Design Feet | At Point | Accum. | | | In Section | Accum. | | |
| CH-1-3 | PB-11 | 544 | 4.56 | 4.56 | 2,481 | 4 | 1.54 | 10.72 | 2.23 | CH-1-3 |
| | | | | | | | | | | |
| CH-1-2 | PB-11 | 96 | 4.56 | 4.56 | 438 | 4 | 0.27 | 9.45 | 1.97 | CH-1-2 |
| | | | | | | | | | | |
| PB-11 | PB-10 | 279 | 0.00 | 9.12 | 2,544 | 4 | 1.58 | 9.18 | 1.91 | PB-11 |
| | | | | | | | | | | |
| PB-4 (UP) | PB-10 | 162 | 0.16 | 0.16 | 26 | 4 | 0.02 | 7.62 | 1.59 | PB-4 (UP) |
| | | | | | | | | | | |
| PB-10 | PB-9 (UP) | 57 | 0.00 | 9.28 | 529 | 4 | 0.33 | 7.61 | 1.58 | PB-10 |
| PB-9 (UP) | PB-7 (UP) | 159 | 0.32 | 9.60 | 1,526 | 4 | 0.95 | 7.28 | 1.52 | PB-9 (UP) |
| PB-7 (UP) | CH-1-1 | 246 | 0.24 | 9.84 | 2,421 | 4 | 1.50 | 6.33 | 1.32 | PB-7 (UP) |
| CH-1-1 | CC-CH | 541 | 4.56 | 14.40 | 7,790 | 4 | 4.83 | 4.83 | 1.01 | CH-1-1 |

## CIRCUIT 'CH-2'

VOLTAGE: 480V
WIRE FACTOR USED (TWO - NO. 4 AWG WIRES): 0.62 OHMS/MFT/1000

| Section | | | Amperes | | Ampere-Feet | AWG | Voltage Drop | | % Drop | At Point |
|---|---|---|---|---|---|---|---|---|---|---|
| From | To | Design Feet | At Point | Accum. | | | In Section | Accum. | | |
| CH-2-5 | CH-2-4 | 655 | 3.04 | 3.04 | 1,991 | 4 | 1.23 | 10.77 | 2.24 | CH-2-5 |
| CH-2-4 | CH-2-3 | 639 | 3.04 | 6.08 | 3,885 | 4 | 2.41 | 9.54 | 1.99 | CH-2-4 |
| CH-2-3 | PB-23 | 676 | 4.56 | 10.64 | 7,193 | 4 | 4.46 | 7.13 | 1.49 | CH-2-3 |
| | | | | | | | | | | |
| CH-2-2 | CH-2-1 | 649 | 4.56 | 4.56 | 2,959 | 4 | 1.83 | 5.31 | 1.11 | CH-2-2 |
| CH-2-1 | PB-23 | 142 | 4.56 | 9.12 | 1,295 | 4 | 0.80 | 3.47 | 0.72 | CH-2-1 |
| | | | | | | | | | | |
| PB-23 | CC-CH | 218 | 0.00 | 19.76 | 4,308 | 4 | 2.67 | 2.67 | 0.56 | PB-23 |

N:\03\60\06744-08\I06002_SUM-76-10.95\Design\Lighting\Sheets\I06002_LMI00.dgn Sheet 1/14/2021 8:40:41 AM sriffle

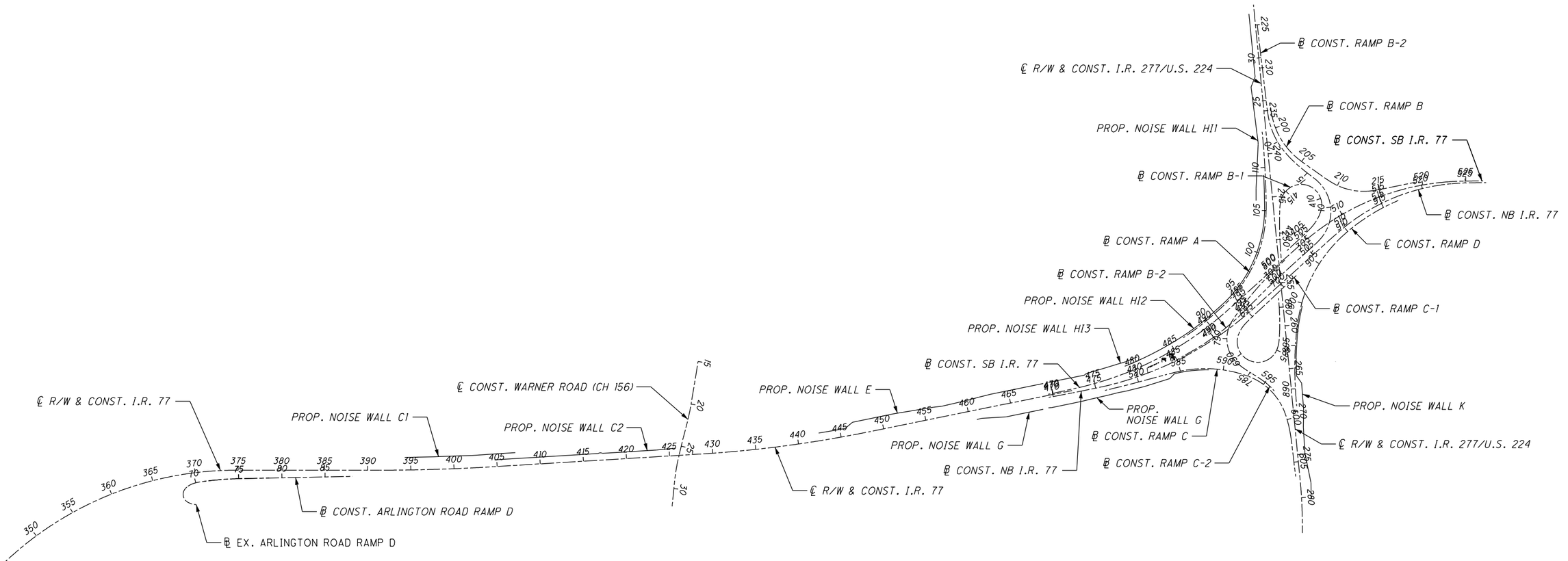


0 600 1200
HORIZONTAL SCALE IN FEET

CALCULATED ATR
CHECKED DGN

# NOISE WALL SCHEMATIC PLAN

SUM-77 / 277 / 224
VARIOUS

1065
1288

O:\2017\2017258\ProjectData\SUM\06002\Design\Structures\Wall_Noise_General_Sheets\06002_Schematic_plan.dgn Sheet 1/17/2021 6:56:54 PM rvitelli

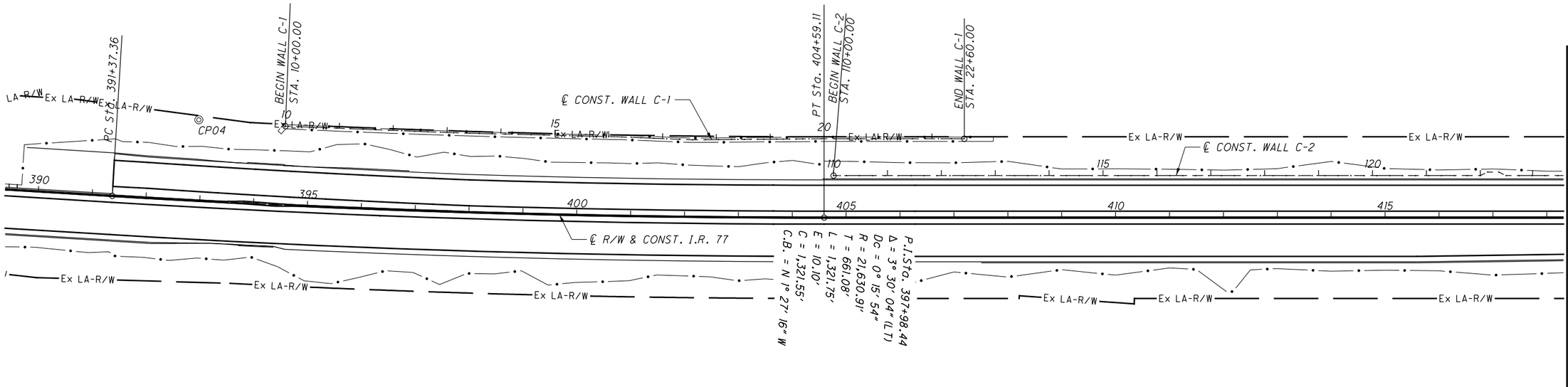


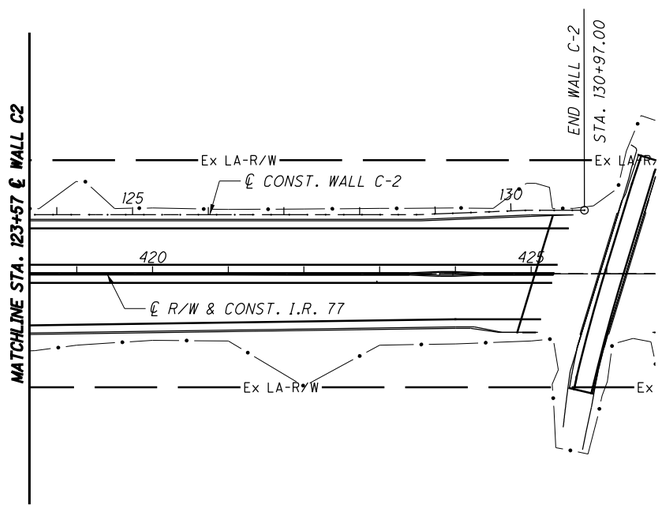


| REFERENCE POINTS | | | | |
|---|---|---|---|---|
| POINT NUMBER | NORTHING | EASTING | ELEVATION | DESCRIPTION |
| CP04 | 486357.9587 | 2246323.9152 | 1121.63 | CONCRETE MONUMENT |
| CP05 | 493895.1420 | 2245390.8980 | 1073.53 | CONCRETE MONUMENT |
| CP06 | 493906.9643 | 2244750.3816 | 1090.46 | CONCRETE MONUMENT |
| CP07 | 498481.9448 | 2243140.4162 | 1064.39 | CONCRETE MONUMENT |
| CP08 | 499070.7218 | 2243262.6440 | 1076.40 | CONCRETE MONUMENT |

**NOTE:** SEE SHEET 1070 / 1288 & 1071 / 1288 FOR NOISE BARRIER C BASELINE GEOMETRY

CALCULATED RFV
CHECKED TJW

0 50 100 200
HORIZONTAL SCALE IN FEET

SCHEMATIC PLAN & SURVERY CONTROL
WALL C

SUM-77 / 277 / 224

1065A / 1288

O:\2017\2017258\ProjectData\SUM\106002\Design\Structures\Wall_Noise_General_Sheets\106002_Schematic_plan_walls.dgn Sheet 1 1/17/2021 6:57:16 PM rvitelli

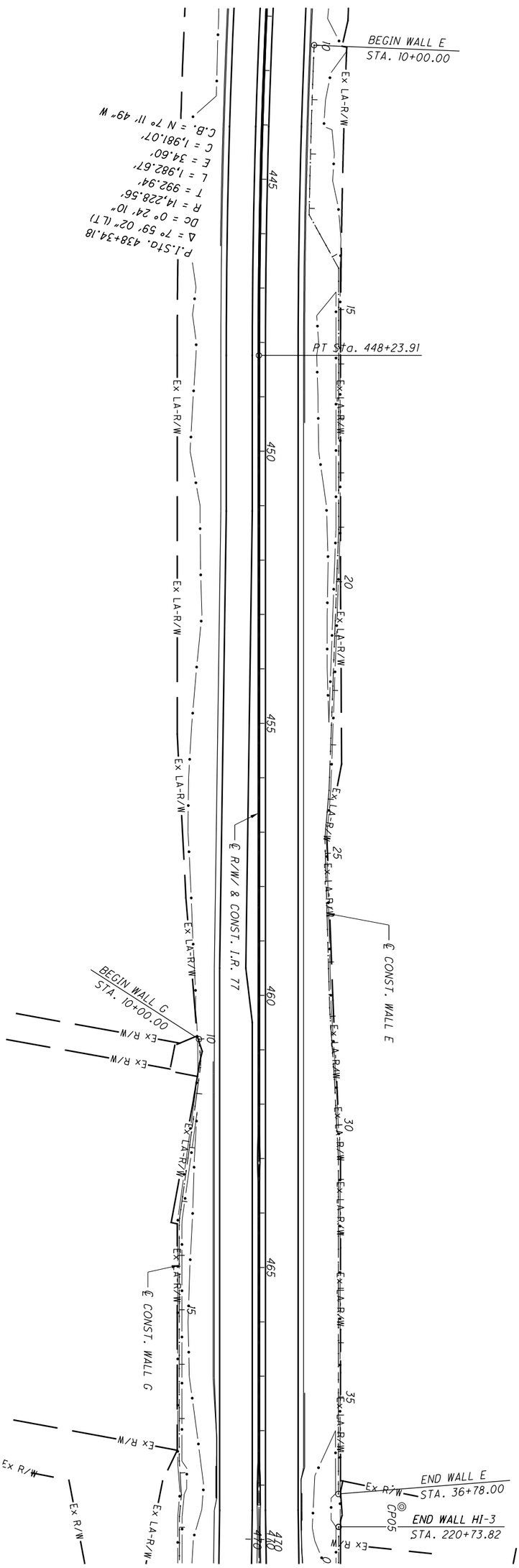


**NOTE:**
SEE SHEET 1072 1288 & 1073 1288 FOR NOISE BARRIER E BASELINE GEOMETRY

| | | | | |
|---|---|---|---|---|
| 1066 1288 | **SUM-77/277/224** | **SCHEMATIC PLAN & SURVEY CONTROL WALL E** | CALCULATED RFV / CHECKED TJW | 0 100 50 200 HORIZONTAL SCALE IN FEET |

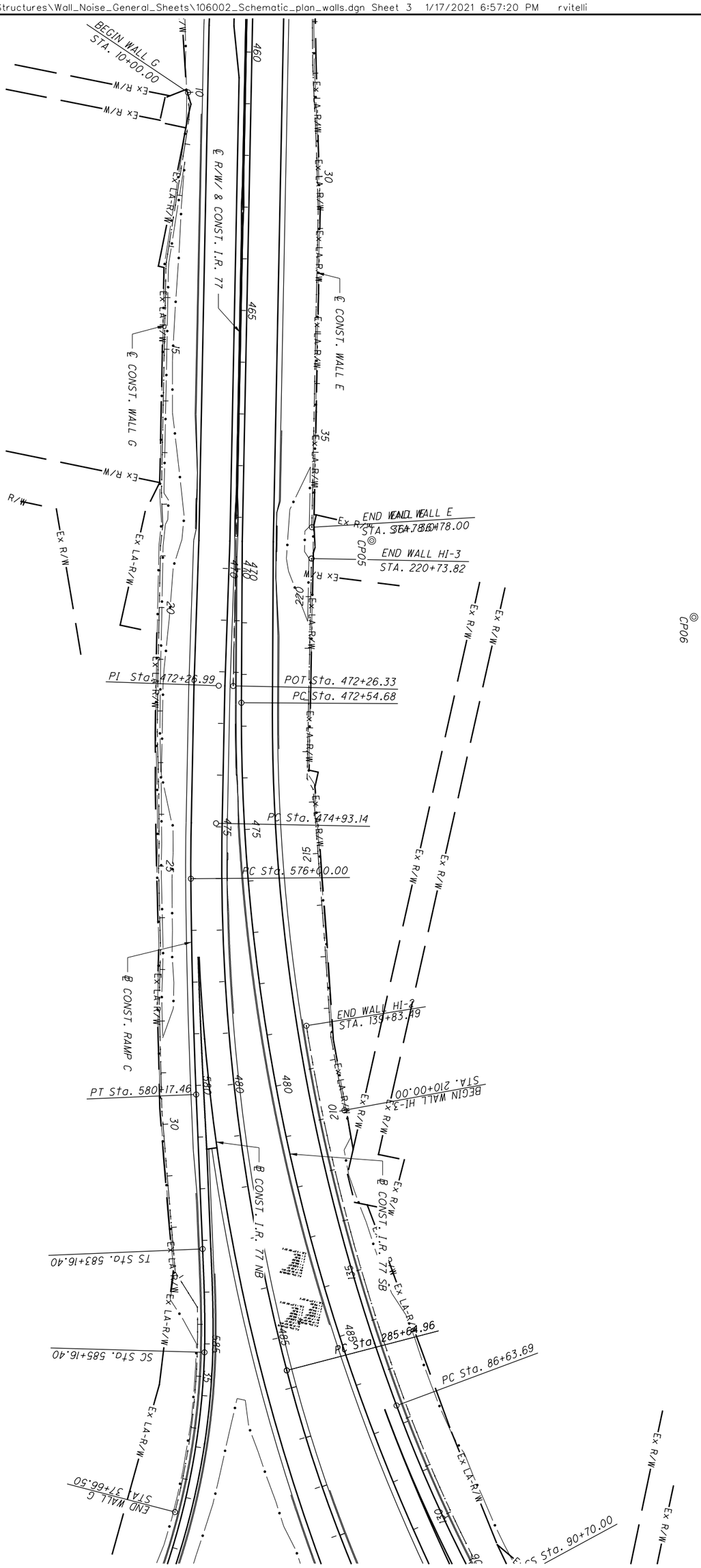


**NOTE:**
SEE SHEET 107A (1288) & 107B (1288) FOR NOISE BARRIER G BASELINE GEOMETRY

| | | | | |
|---|---|---|---|---|
| 1067 (1288) | **SUM-77/277/224** | **SCHEMATIC PLAN & SURVEY CONTROL WALL G** | CALCULATED RFV / CHECKED TJW | 0 100 50 200 HORIZONTAL SCALE IN FEET |

D:\2017\2017258\ProjectData\SUM\106002\Design\Structures\Wall_Noise_General_Sheets\106002_Schematic_plan_walls.dgn Sheet 4 1/17/2021 6:57:21 PM rvitelli

POT Sta. 222+63.19
BEGIN WALL HI-1
STA. 10+00.00
Ex LA-R/W
℄ R/W & CONST. I.R. 277
ST Sta. 197+05.36
SC Sta. 199+05.36
CS Sta. 201+39.81
PCC Sta. 19+13.38
SC Sta. 19+62.73
CS Sta. 203+
℄ CONST. RAMP B
℄ CONST. RAMP B2
℄ CONST. WALL HI-1
ST Sta. 202+60.18
PT Sta. 114+13.78
BEGIN WALL HI-2
STA. 110+00.00
℄ CONST. WALL HI-2
℄ CONST. RAMP A
SC Sta. 104+55.37
END WALL HI-1
STA. 31+82.00
SC Sta. 106+55.37
Ex R/W
MATCHLINE STA. 118+60 ℄ WALL HI-2
POT Sta. 14+62.67
CS Sta. 415+62.17
CS Sta. 405+30.56
SC Sta. 405+01.68
PC Sta. 402+43.78

℄ CONST. RAMP C1
SC Sta. 495+35.90
PT Sta. 492+81.37
PT Sta. 294+71.35
SC Sta. 292+82.49
CS Sta. 290+82.49
℄ CONST. I.R. 77 NB
℄ CONST. RAMP B2
℄ CONST. RAMP C2
℄ CONST. I.R. 77 SB
PC Sta. 285+64.96
PC Sta. 86+63.69
℄ CONST. WALL HI-2
SC Sta. 90+70.00
SC Sta. 93+70.00
℄ CONST. RAMP A
℄ R/W & CONST. I.R. 77 SB
BEGIN WALL HI-3
STA. 210+00.00
END WALL HI-2
STA. 133+81.30
CS Sta. 576+40.00
PC Sta. 574+93.14
℄ CONST. RAMP C
℄ CONST. WALL G
℄ CONST. WALL HI-3
PC Sta. 472+54.68
PI Sta. 472+26.99
END WALL HI-3
STA. 220+73.82
MATCHLINE STA. 118+60 ℄ WALL HI-2

**NOTE:** SEE SHEET 1076/1288 THRU 1078/1288 FOR NOISE BARRIER HI BASELINE GEOMETRY

HORIZONTAL SCALE IN FEET
0 50 100 200
CALCULATED RFV
CHECKED TJW

# SCHEMATIC PLAN & SURVEY CONTROL WALL HI

SUM-77 / 277 / 224

1068
1288

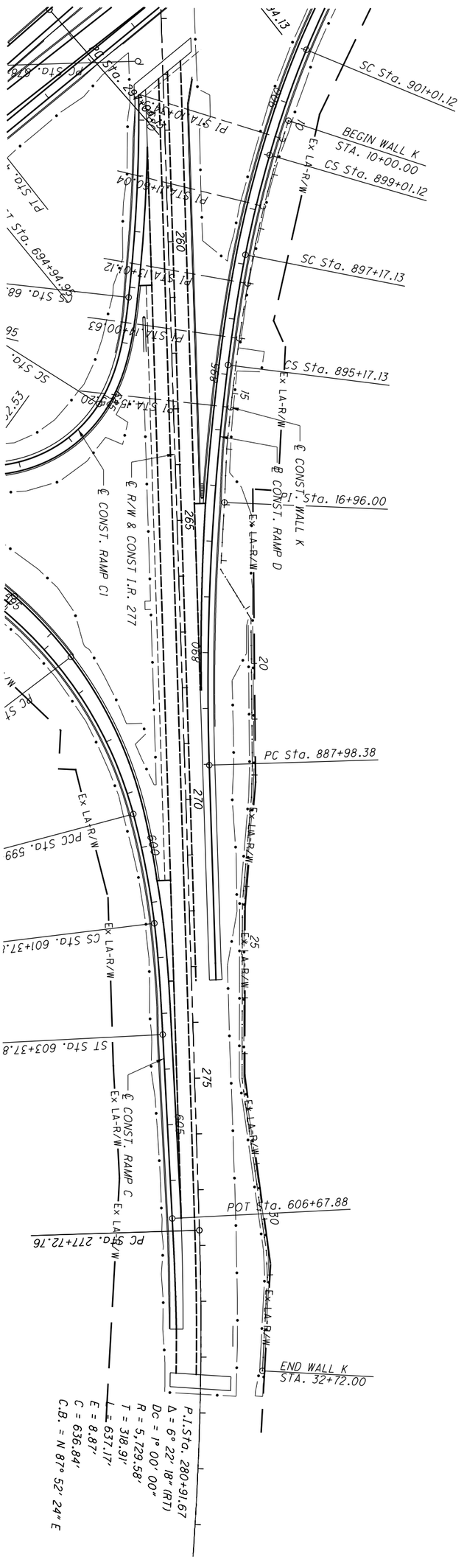


**NOTE:**
SEE SHEET 1078 (1288) FOR NOISE BARRIER K BASELINE GEOMETRY

| | | | | |
|---|---|---|---|---|
| 1069 (1288) | SUM-77/277/224 | SCHEMATIC PLAN & SURVEY CONTROL WALL K | CALCULATED RFV / CHECKED TJW | 0 100 50 200 HORIZONTAL SCALE IN FEET |

## NOISE BARRIER WALL C1 BASELINE GEOMETRY

| POINT | WALL STATION | NORTHING | EASTING | ALIGNMENT | | | BEARING |
|---|---|---|---|---|---|---|---|
| | | | | NAME | STATION | OFFSET | |
| 1 | 10+00.00 | 486518.99 | 2246326.68 | CLXRWI77 | 394+52.39 | -146.50 | |
| 2 | 10+24.00 | 486542.99 | 2246326.28 | CLXRWI77 | 394+76.56 | -146.66 | |
| 3 | 10+48.00 | 486566.99 | 2246325.88 | CLXRWI77 | 395+00.72 | -146.79 | |
| 4 | 10+72.00 | 486590.98 | 2246325.48 | CLXRWI77 | 395+24.89 | -146.90 | |
| 5 | 10+96.00 | 486614.98 | 2246325.08 | CLXRWI77 | 395+49.05 | -146.98 | |
| 6 | 11+20.00 | 486638.98 | 2246324.69 | CLXRWI77 | 395+73.21 | -147.04 | |
| 7 | 11+44.00 | 486662.97 | 2246324.29 | CLXRWI77 | 395+97.38 | -147.06 | |
| 8 | 11+68.00 | 486686.97 | 2246323.89 | CLXRWI77 | 396+21.54 | -147.06 | N0°57'16"W |
| 9 | 11+92.00 | 486710.97 | 2246323.49 | CLXRWI77 | 396+45.71 | -147.04 | |
| 10 | 12+16.00 | 486734.96 | 2246323.09 | CLXRWI77 | 396+69.87 | -146.98 | |
| 11 | 12+40.00 | 486758.96 | 2246322.69 | CLXRWI77 | 396+94.03 | -146.90 | |
| 12 | 12+64.00 | 486782.96 | 2246322.29 | CLXRWI77 | 397+18.20 | -146.79 | |
| 13 | 12+88.00 | 486806.95 | 2246321.89 | CLXRWI77 | 397+42.36 | -146.66 | |
| 14 | 13+12.00 | 486830.95 | 2246321.49 | CLXRWI77 | 397+66.52 | -146.50 | |
| 15 | 13+36.00 | 486854.94 | 2246320.74 | CLXRWI77 | 397+90.69 | -146.66 | |
| 16 | 13+60.00 | 486878.92 | 2246319.99 | CLXRWI77 | 398+14.85 | -146.79 | |
| 17 | 13+84.00 | 486902.91 | 2246319.24 | CLXRWI77 | 398+39.01 | -146.90 | |
| 18 | 14+08.00 | 486926.90 | 2246318.49 | CLXRWI77 | 398+63.18 | -146.98 | |
| 19 | 14+32.00 | 486950.89 | 2246317.75 | CLXRWI77 | 398+87.34 | -147.04 | |
| 20 | 14+56.00 | 486974.88 | 2246317.00 | CLXRWI77 | 399+11.51 | -147.06 | N1°47'12"W |
| 21 | 14+80.00 | 486998.87 | 2246316.25 | CLXRWI77 | 399+35.67 | -147.06 | |
| 22 | 15+04.00 | 487022.85 | 2246315.50 | CLXRWI77 | 399+59.83 | -147.04 | |
| 23 | 15+28.00 | 487046.84 | 2246314.75 | CLXRWI77 | 399+84.00 | -146.98 | |
| 24 | 15+52.00 | 487070.84 | 2246314.41 | CLXRWI77 | 400+08.16 | -146.50 | |
| 25 | 15+76.00 | 487094.82 | 2246313.26 | CLXRWI77 | 400+32.33 | -146.79 | |
| 26 | 16+00.00 | 487118.81 | 2246312.51 | CLXRWI77 | 400+56.49 | -146.66 | |
| 27 | 16+24.00 | 487142.80 | 2246311.76 | CLXRWI77 | 400+80.65 | -146.50 | |
| 28 | 16+42.00 | 487160.79 | 2246311.48 | CLXRWI77 | 400+98.77 | -146.08 | |
| 29 | 16+60.00 | 487178.79 | 2246311.19 | CLXRWI77 | 401+16.89 | -145.65 | |
| 30 | 16+84.00 | 487202.79 | 2246310.82 | CLXRWI77 | 401+41.04 | -145.05 | N0°54'00"W |
| 31 | 17+08.00 | 487226.78 | 2246310.44 | CLXRWI77 | 401+65.20 | -144.43 | |
| 32 | 17+32.00 | 487250.78 | 2246310.06 | CLXRWI77 | 401+89.35 | -143.77 | |
| 33 | 17+56.00 | 487274.78 | 2246309.69 | CLXRWI77 | 402+13.50 | -143.09 | |
| 34 | 17+80.00 | 487298.73 | 2246308.14 | CLXRWI77 | 402+37.65 | -143.56 | |
| 35 | 18+04.00 | 487322.68 | 2246306.60 | CLXRWI77 | 402+61.81 | -143.99 | |
| 36 | 18+28.00 | 487346.63 | 2246305.06 | CLXRWI77 | 402+85.97 | -144.40 | |
| 37 | 18+40.00 | 487358.61 | 2246304.28 | CLXRWI77 | 402+98.05 | -144.59 | |
| 38 | 18+52.00 | 487370.58 | 2246303.51 | CLXRWI77 | 403+10.13 | -144.78 | |
| 39 | 18+64.00 | 487382.56 | 2246302.74 | CLXRWI77 | 403+22.21 | -144.96 | |
| 40 | 18+76.00 | 487394.53 | 2246301.97 | CLXRWI77 | 403+34.29 | -145.13 | |
| 41 | 18+88.00 | 487406.51 | 2246301.20 | CLXRWI77 | 403+46.37 | -145.30 | N3°41'15"W |
| 42 | 19+00.00 | 487418.48 | 2246300.43 | CLXRWI77 | 403+58.44 | -145.46 | |
| 43 | 19+12.00 | 487430.46 | 2246299.65 | CLXRWI77 | 403+70.53 | -145.61 | |
| 44 | 19+24.00 | 487442.43 | 2246298.88 | CLXRWI77 | 403+82.61 | -145.76 | |
| 45 | 19+36.00 | 487454.41 | 2246298.11 | CLXRWI77 | 403+94.69 | -145.90 | |
| 46 | 19+48.00 | 487466.38 | 2246297.34 | CLXRWI77 | 404+06.77 | -146.03 | |
| 47 | 19+60.00 | 487478.36 | 2246296.57 | CLXRWI77 | 404+18.85 | -146.16 | |
| 48 | 19+72.00 | 487490.33 | 2246295.79 | CLXRWI77 | 404+30.93 | -146.28 | |
| 49 | 19+96.00 | 487514.28 | 2246294.25 | CLXRWI77 | 404+55.09 | -146.50 | |
| 50 | 20+20.00 | 487538.24 | 2246292.91 | CLXRWI77 | 404+79.12 | -146.50 | |

## NOISE BARRIER WALL C1 BASELINE GEOMETRY

| POINT | WALL STATION | NORTHING | EASTING | ALIGNMENT | | | BEARING |
|---|---|---|---|---|---|---|---|
| | | | | NAME | STATION | OFFSET | |
| 51 | 20+44.00 | 487562.21 | 2246291.57 | CLXRWI77 | 405+03.12 | -146.50 | |
| 52 | 20+68.00 | 487586.17 | 2246290.23 | CLXRWI77 | 405+27.12 | -146.50 | |
| 53 | 20+92.00 | 487610.13 | 2246288.88 | CLXRWI77 | 405+51.12 | -146.50 | |
| 54 | 21+16.00 | 487634.09 | 2246287.54 | CLXRWI77 | 405+75.12 | -146.50 | |
| 55 | 21+40.00 | 487658.06 | 2246286.20 | CLXRWI77 | 405+99.12 | -146.50 | N3°12'18"W |
| 56 | 21+64.00 | 487682.02 | 2246284.86 | CLXRWI77 | 406+23.12 | -146.50 | |
| 57 | 21+88.00 | 487705.98 | 2246283.52 | CLXRWI77 | 406+47.12 | -146.50 | |
| 58 | 22+12.00 | 487729.94 | 2246282.17 | CLXRWI77 | 406+71.12 | -146.50 | |
| 59 | 22+36.00 | 487753.91 | 2246280.83 | CLXRWI77 | 406+95.12 | -146.50 | |
| 60 | 22+60.00 | 487777.87 | 2246279.49 | CLXRWI77 | 407+19.12 | -146.50 | |

CALCULATED RFV
CHECKED TJW

SURVEY CONTROL

SUM-77 / 277 / 224

1070
1288

O:\2017\2017258\ProjectData\SUM\106002\Design\Structures\Wall_Noise_General_Sheets\106002_Schematic_Table_C.dgn Sheet 1 1/17/2021 6:57:25 PM rvitelli

## NOISE BARRIER WALL C2 BASELINE GEOMETRY

| POINT | WALL STATION | NORTHING | EASTING | ALIGNMENT | | | BEARING |
|---|---|---|---|---|---|---|---|
| | | | | NAME | STATION | OFFSET | |
| 61 | 110+00.00 | 487539.57 | 2246361.44 | CLXRWI77 | 404+76.61 | -78.00 | |
| 62 | 110+12.00 | 487551.55 | 2246360.77 | CLXRWI77 | 404+88.61 | -78.00 | |
| 63 | 110+24.00 | 487563.53 | 2246360.10 | CLXRWI77 | 405+00.61 | -78.00 | |
| 64 | 110+48.00 | 487587.49 | 2246358.76 | CLXRWI77 | 405+24.61 | -78.00 | |
| 65 | 110+72.00 | 487611.45 | 2246357.42 | CLXRWI77 | 405+48.61 | -78.00 | |
| 66 | 110+96.00 | 487635.42 | 2246356.08 | CLXRWI77 | 405+72.61 | -78.00 | |
| 67 | 111+20.00 | 487659.38 | 2246354.73 | CLXRWI77 | 405+96.61 | -78.00 | |
| 68 | 111+44.00 | 487683.34 | 2246353.39 | CLXRWI77 | 406+20.61 | -78.00 | |
| 69 | 111+68.00 | 487707.30 | 2246352.05 | CLXRWI77 | 406+44.61 | -78.00 | |
| 70 | 111+92.00 | 487731.27 | 2246350.71 | CLXRWI77 | 406+68.61 | -78.00 | |
| 71 | 112+16.00 | 487755.23 | 2246349.37 | CLXRWI77 | 406+92.61 | -78.00 | |
| 72 | 112+40.00 | 487779.19 | 2246348.02 | CLXRWI77 | 407+16.61 | -78.00 | |
| 73 | 112+64.00 | 487803.15 | 2246346.68 | CLXRWI77 | 407+40.61 | -78.00 | |
| 74 | 112+88.00 | 487827.12 | 2246345.34 | CLXRWI77 | 407+64.61 | -78.00 | |
| 75 | 113+12.00 | 487851.08 | 2246344.00 | CLXRWI77 | 407+88.61 | -78.00 | |
| 76 | 113+36.00 | 487875.04 | 2246342.66 | CLXRWI77 | 408+12.61 | -78.00 | |
| 77 | 113+60.00 | 487899.00 | 2246341.32 | CLXRWI77 | 408+36.61 | -78.00 | |
| 78 | 113+84.00 | 487922.97 | 2246339.97 | CLXRWI77 | 408+60.61 | -78.00 | |
| 79 | 114+08.00 | 487946.93 | 2246338.63 | CLXRWI77 | 408+84.61 | -78.00 | |
| 80 | 114+32.00 | 487970.89 | 2246337.29 | CLXRWI77 | 409+08.61 | -78.00 | |
| 81 | 114+56.00 | 487994.85 | 2246335.95 | CLXRWI77 | 409+32.61 | -78.00 | |
| 82 | 114+80.00 | 488018.82 | 2246334.61 | CLXRWI77 | 409+56.61 | -78.00 | |
| 83 | 115+04.00 | 488042.78 | 2246333.26 | CLXRWI77 | 409+80.61 | -78.00 | |
| 84 | 115+28.00 | 488066.74 | 2246331.92 | CLXRWI77 | 410+04.61 | -78.00 | |
| 85 | 115+52.00 | 488090.70 | 2246330.58 | CLXRWI77 | 410+28.61 | -78.00 | |
| 86 | 115+76.00 | 488114.67 | 2246329.24 | CLXRWI77 | 410+52.61 | -78.00 | |
| 87 | 116+00.00 | 488138.63 | 2246327.90 | CLXRWI77 | 410+76.61 | -78.00 | N3°12'18''W |
| 88 | 116+24.00 | 488162.59 | 2246326.55 | CLXRWI77 | 411+00.61 | -78.00 | |
| 89 | 116+48.00 | 488186.55 | 2246325.21 | CLXRWI77 | 411+24.61 | -78.00 | |
| 90 | 116+72.00 | 488210.52 | 2246323.87 | CLXRWI77 | 411+48.61 | -78.00 | |
| 91 | 116+96.00 | 488234.48 | 2246322.53 | CLXRWI77 | 411+72.61 | -78.00 | |
| 92 | 117+20.00 | 488258.44 | 2246321.19 | CLXRWI77 | 411+96.61 | -78.00 | |
| 93 | 117+44.00 | 488282.40 | 2246319.85 | CLXRWI77 | 412+20.61 | -78.00 | |
| 94 | 117+68.00 | 488306.37 | 2246318.50 | CLXRWI77 | 412+44.61 | -78.00 | |
| 95 | 117+92.00 | 488330.33 | 2246317.16 | CLXRWI77 | 412+68.61 | -78.00 | |
| 96 | 118+16.00 | 488354.29 | 2246315.82 | CLXRWI77 | 412+92.61 | -78.00 | |
| 97 | 118+40.00 | 488378.25 | 2246314.48 | CLXRWI77 | 413+16.61 | -78.00 | |
| 98 | 118+64.00 | 488402.22 | 2246313.14 | CLXRWI77 | 413+40.61 | -78.00 | |
| 99 | 118+88.00 | 488426.18 | 2246311.79 | CLXRWI77 | 413+64.61 | -78.00 | |
| 100 | 119+12.00 | 488450.14 | 2246310.45 | CLXRWI77 | 413+88.61 | -78.00 | |

## NOISE BARRIER WALL C2 BASELINE GEOMETRY

| POINT | WALL STATION | NORTHING | EASTING | ALIGNMENT | | | BEARING |
|---|---|---|---|---|---|---|---|
| | | | | NAME | STATION | OFFSET | |
| 101 | 119+36.00 | 488474.10 | 2246309.11 | CLXRWI77 | 414+12.61 | -78.00 | |
| 102 | 119+60.00 | 488498.07 | 2246307.77 | CLXRWI77 | 414+36.61 | -78.00 | |
| 103 | 119+84.00 | 488522.03 | 2246306.43 | CLXRWI77 | 414+60.61 | -78.00 | |
| 104 | 120+08.00 | 488545.99 | 2246305.09 | CLXRWI77 | 414+84.61 | -78.00 | |
| 105 | 120+32.00 | 488569.95 | 2246303.74 | CLXRWI77 | 415+08.61 | -78.00 | |
| 106 | 120+56.00 | 488593.92 | 2246302.40 | CLXRWI77 | 415+32.61 | -78.00 | |
| 107 | 120+80.00 | 488617.88 | 2246301.06 | CLXRWI77 | 415+56.61 | -78.00 | |
| 108 | 121+04.00 | 488641.84 | 2246299.72 | CLXRWI77 | 415+80.61 | -78.00 | |
| 109 | 121+28.00 | 488665.80 | 2246298.38 | CLXRWI77 | 416+04.61 | -78.00 | |
| 110 | 121+52.00 | 488689.77 | 2246297.03 | CLXRWI77 | 416+28.61 | -78.00 | |
| 111 | 121+76.00 | 488713.73 | 2246295.69 | CLXRWI77 | 416+52.61 | -78.00 | |
| 112 | 122+00.00 | 488737.69 | 2246294.35 | CLXRWI77 | 416+76.61 | -78.00 | N29°2'47''W |
| 113 | 122+15.00 | 488750.80 | 2246287.07 | CLXRWI77 | 416+90.11 | -84.54 | N3°12'18''W |
| 114 | 122+36.00 | 488771.77 | 2246285.89 | CLXRWI77 | 417+11.11 | -84.54 | N22°38'11''E |
| 115 | 122+51.00 | 488785.62 | 2246291.67 | CLXRWI77 | 417+24.61 | -78.00 | |
| 116 | 122+75.00 | 488809.58 | 2246290.33 | CLXRWI77 | 417+48.61 | -78.00 | |
| 117 | 122+99.00 | 488833.54 | 2246288.98 | CLXRWI77 | 417+72.61 | -78.00 | |
| 118 | 123+23.00 | 488857.50 | 2246287.64 | CLXRWI77 | 417+96.61 | -78.00 | |
| 119 | 123+47.00 | 488881.47 | 2246286.30 | CLXRWI77 | 418+20.61 | -78.00 | |
| 120 | 123+71.00 | 488905.43 | 2246284.96 | CLXRWI77 | 418+44.61 | -78.00 | |
| 121 | 123+95.00 | 488929.39 | 2246283.62 | CLXRWI77 | 418+68.61 | -78.00 | |
| 122 | 124+19.00 | 488953.35 | 2246282.27 | CLXRWI77 | 418+92.61 | -78.00 | |
| 123 | 124+43.00 | 488977.32 | 2246280.93 | CLXRWI77 | 419+16.61 | -78.00 | |
| 124 | 124+67.00 | 489001.28 | 2246279.59 | CLXRWI77 | 419+40.61 | -78.00 | |
| 125 | 124+91.00 | 489025.24 | 2246278.25 | CLXRWI77 | 419+64.61 | -78.00 | |
| 126 | 125+15.00 | 489049.20 | 2246276.91 | CLXRWI77 | 419+88.61 | -78.00 | |
| 127 | 125+39.00 | 489073.17 | 2246275.57 | CLXRWI77 | 420+12.61 | -78.00 | |
| 128 | 125+63.00 | 489097.13 | 2246274.22 | CLXRWI77 | 420+36.61 | -78.00 | N3°12'18''W |
| 129 | 125+87.00 | 489121.09 | 2246272.88 | CLXRWI77 | 420+60.61 | -78.00 | |
| 130 | 126+11.00 | 489145.05 | 2246271.54 | CLXRWI77 | 420+84.61 | -78.00 | |
| 131 | 126+35.00 | 489169.01 | 2246270.20 | CLXRWI77 | 421+08.61 | -78.00 | |
| 132 | 126+59.00 | 489192.98 | 2246268.86 | CLXRWI77 | 421+32.61 | -78.00 | |
| 133 | 126+83.00 | 489216.94 | 2246267.51 | CLXRWI77 | 421+56.61 | -78.00 | |
| 134 | 127+07.00 | 489240.90 | 2246266.17 | CLXRWI77 | 421+80.61 | -78.00 | |
| 135 | 127+31.00 | 489264.86 | 2246264.83 | CLXRWI77 | 422+04.61 | -78.00 | |
| 136 | 127+55.00 | 489288.83 | 2246263.49 | CLXRWI77 | 422+28.61 | -78.00 | |
| 137 | 127+79.00 | 489312.79 | 2246262.15 | CLXRWI77 | 422+52.61 | -78.00 | |
| 138 | 128+03.00 | 489336.75 | 2246260.81 | CLXRWI77 | 422+76.61 | -78.00 | |
| 139 | 128+27.00 | 489360.71 | 2246259.46 | CLXRWI77 | 423+00.61 | -78.00 | |
| 140 | 128+51.00 | 489384.68 | 2246258.12 | CLXRWI77 | 423+24.61 | -78.00 | |
| 141 | 128+75.00 | 489408.64 | 2246256.78 | CLXRWI77 | 423+48.61 | -78.00 | |
| 142 | 128+99.00 | 489432.53 | 2246254.48 | CLXRWI77 | 423+72.59 | -78.96 | |
| 143 | 129+23.00 | 489456.42 | 2246252.18 | CLXRWI77 | 423+96.57 | -79.92 | |
| 144 | 129+47.00 | 489480.31 | 2246249.88 | CLXRWI77 | 424+20.55 | -80.88 | N5°29'44''W |
| 145 | 129+71.00 | 489504.20 | 2246247.59 | CLXRWI77 | 424+44.53 | -81.84 | |
| 146 | 129+95.00 | 489528.09 | 2246245.29 | CLXRWI77 | 424+68.51 | -82.80 | |
| 147 | 130+19.00 | 489551.98 | 2246242.99 | CLXRWI77 | 424+92.49 | -83.76 | |
| 148 | 130+38.00 | 489570.95 | 2246241.88 | CLXRWI77 | 425+11.49 | -83.80 | |
| 149 | 130+57.00 | 489589.91 | 2246240.78 | CLXRWI77 | 425+30.49 | -83.84 | N3°19'54"W |
| 150 | 130+81.00 | 489613.87 | 2246239.39 | CLXRWI77 | 425+54.49 | -83.89 | |
| 151 | 130+97.00 | 489629.85 | 2246238.46 | CLXRWI77 | 425+70.49 | -83.93 | |

CALCULATED RFV
CHECKED TJW

SURVEY CONTROL

SUM-77 / 277 / 224

1071
1288

O:\2017\2017258\ProjectData\SUM\106002\Design\Structures\Wall_Noise_General_Sheets\106002_Schematic_Table_C.dgn Sheet 2 1/17/2021 6:57:26 PM rvitelli

## NOISE BARRIER WALL E BASELINE GEOMETRY

| POINT | WALL STATION | NORTHING | EASTING | ALIGNMENT | | | BEARING |
|---|---|---|---|---|---|---|---|
| | | | | NAME | STATION | OFFSET | |
| 1 | 10+00.00 | 491291.28 | 2246069.99 | CLXRWI77 | 442+49.94 | -90.00 | |
| 2 | 10+12.00 | 491303.13 | 2246068.14 | CLXRWI77 | 442+62.02 | -90.00 | N8°54'6"W |
| 3 | 10+24.00 | 491314.99 | 2246066.27 | CLXRWI77 | 442+74.10 | -90.00 | N8°57'3"W |
| 4 | 10+48.00 | 491338.70 | 2246062.50 | CLXRWI77 | 442+98.25 | -90.00 | N9°1'24"W |
| 5 | 10+72.00 | 491362.39 | 2246058.70 | CLXRWI77 | 443+22.41 | -90.00 | N9°7'15"W |
| 6 | 10+96.00 | 491386.08 | 2246054.86 | CLXRWI77 | 443+46.56 | -90.00 | N9°13'6"W |
| 7 | 11+20.00 | 491409.77 | 2246050.97 | CLXRWI77 | 443+70.71 | -90.00 | N9°18'55"W |
| 8 | 11+44.00 | 491433.44 | 2246047.05 | CLXRWI77 | 443+94.87 | -90.00 | N9°24'45"W |
| 9 | 11+68.00 | 491457.11 | 2246043.08 | CLXRWI77 | 444+19.02 | -90.00 | N9°30'35"W |
| 10 | 11+92.00 | 491480.78 | 2246039.07 | CLXRWI77 | 444+43.17 | -90.00 | N9°36'26"W |
| 11 | 12+16.00 | 491504.43 | 2246035.03 | CLXRWI77 | 444+67.32 | -90.00 | N9°42'16"W |
| 12 | 12+40.00 | 491528.08 | 2246030.94 | CLXRWI77 | 444+91.48 | -90.00 | N9°48'6"W |
| 13 | 12+64.00 | 491551.73 | 2246026.82 | CLXRWI77 | 445+15.63 | -90.00 | N9°53'56"W |
| 14 | 12+88.00 | 491575.36 | 2246022.65 | CLXRWI77 | 445+39.78 | -90.00 | N9°59'47"W |
| 15 | 13+12.00 | 491598.99 | 2246018.45 | CLXRWI77 | 445+63.93 | -90.00 | N10°5'36"W |
| 16 | 13+28.00 | 491611.23 | 2246008.14 | CLXRWI77 | 445+77.89 | -97.98 | |
| 17 | 13+40.00 | 491620.41 | 2246000.41 | CLXRWI77 | 445+88.37 | -103.96 | |
| 18 | 13+52.00 | 491629.59 | 2245992.68 | CLXRWI77 | 445+98.86 | -109.93 | |
| 19 | 13+76.00 | 491647.95 | 2245977.22 | CLXRWI77 | 446+19.86 | -121.85 | N40°5'46"W |
| 20 | 13+88.00 | 491657.13 | 2245969.50 | CLXRWI77 | 446+30.38 | -127.79 | |
| 21 | 14+00.00 | 491666.31 | 2245961.77 | CLXRWI77 | 446+40.90 | -133.73 | |
| 22 | 14+24.00 | 491684.67 | 2245946.31 | CLXRWI77 | 446+61.98 | -145.59 | |
| 23 | 14+48.00 | 491708.21 | 2245941.65 | CLXRWI77 | 446+86.23 | -145.84 | |
| 24 | 14+72.00 | 491731.75 | 2245937.00 | CLXRWI77 | 447+10.47 | -146.05 | |
| 25 | 14+96.00 | 491755.30 | 2245932.34 | CLXRWI77 | 447+34.72 | -146.22 | |
| 26 | 15+20.00 | 491778.84 | 2245927.68 | CLXRWI77 | 447+58.97 | -146.35 | |
| 27 | 15+44.00 | 491802.39 | 2245923.02 | CLXRWI77 | 447+83.22 | -146.44 | |
| 28 | 15+68.00 | 491825.93 | 2245918.37 | CLXRWI77 | 448+07.47 | -146.49 | |
| 29 | 15+92.00 | 491849.47 | 2245913.71 | CLXRWI77 | 448+31.64 | -146.50 | |
| 30 | 16+16.00 | 491873.02 | 2245909.05 | CLXRWI77 | 448+55.64 | -146.50 | |
| 31 | 16+40.00 | 491896.56 | 2245904.40 | CLXRWI77 | 448+79.64 | -146.50 | |
| 32 | 16+64.00 | 491920.10 | 2245899.74 | CLXRWI77 | 449+03.64 | -146.50 | N11°11'20"W |
| 33 | 16+88.00 | 491943.65 | 2245895.08 | CLXRWI77 | 449+27.64 | -146.50 | |
| 34 | 17+12.00 | 491967.19 | 2245890.42 | CLXRWI77 | 449+51.64 | -146.50 | |
| 35 | 17+36.00 | 491990.74 | 2245885.77 | CLXRWI77 | 449+75.64 | -146.50 | |
| 36 | 17+60.00 | 492014.28 | 2245881.11 | CLXRWI77 | 449+99.64 | -146.50 | |
| 37 | 17+84.00 | 492037.82 | 2245876.45 | CLXRWI77 | 450+23.64 | -146.50 | |
| 38 | 18+08.00 | 492061.37 | 2245871.80 | CLXRWI77 | 450+47.64 | -146.50 | |
| 39 | 18+32.00 | 492084.91 | 2245867.14 | CLXRWI77 | 450+71.64 | -146.50 | |
| 40 | 18+56.00 | 492108.45 | 2245862.48 | CLXRWI77 | 450+95.64 | -146.50 | |
| 41 | 18+80.00 | 492132.00 | 2245857.83 | CLXRWI77 | 451+19.64 | -146.50 | |
| 42 | 19+04.00 | 492155.54 | 2245853.17 | CLXRWI77 | 451+43.64 | -146.50 | |
| 43 | 19+28.00 | 492179.24 | 2245849.38 | CLXRWI77 | 451+67.62 | -145.62 | |
| 44 | 19+52.00 | 492202.94 | 2245845.59 | CLXRWI77 | 451+91.61 | -144.74 | |
| 45 | 19+76.00 | 492226.64 | 2245841.80 | CLXRWI77 | 452+15.59 | -143.86 | |
| 46 | 20+00.00 | 492250.34 | 2245838.01 | CLXRWI77 | 452+39.57 | -142.98 | |
| 47 | 20+24.00 | 492274.04 | 2245834.22 | CLXRWI77 | 452+63.56 | -142.09 | |
| 48 | 20+48.00 | 492297.74 | 2245830.43 | CLXRWI77 | 452+87.54 | -141.21 | |
| 49 | 20+72.00 | 492321.44 | 2245826.64 | CLXRWI77 | 453+11.53 | -140.33 | |
| 50 | 20+96.00 | 492345.13 | 2245822.85 | CLXRWI77 | 453+35.51 | -139.45 | |
| 51 | 21+20.00 | 492368.83 | 2245819.06 | CLXRWI77 | 453+59.49 | -138.57 | |
| 52 | 21+44.00 | 492392.53 | 2245815.27 | CLXRWI77 | 453+83.48 | -137.69 | N9°05'05"W |
| 53 | 21+68.00 | 492416.23 | 2245811.48 | CLXRWI77 | 454+07.46 | -136.81 | |
| 54 | 21+92.00 | 492439.93 | 2245807.69 | CLXRWI77 | 454+31.44 | -135.93 | |
| 55 | 22+16.00 | 492463.63 | 2245803.90 | CLXRWI77 | 454+55.43 | -135.05 | |

## NOISE BARRIER WALL E BASELINE GEOMETRY

| POINT | WALL STATION | NORTHING | EASTING | ALIGNMENT | | | BEARING |
|---|---|---|---|---|---|---|---|
| | | | | NAME | STATION | OFFSET | |
| 56 | 22+40.00 | 492487.33 | 2245800.11 | CLXRWI77 | 454+79.41 | -134.16 | |
| 57 | 22+64.00 | 492511.03 | 2245796.33 | CLXRWI77 | 455+03.40 | -133.28 | |
| 58 | 22+88.00 | 492534.73 | 2245792.54 | CLXRWI77 | 455+27.38 | -132.40 | |
| 59 | 23+12.00 | 492558.42 | 2245788.75 | CLXRWI77 | 455+51.36 | -131.52 | |
| 60 | 23+36.00 | 492582.12 | 2245784.96 | CLXRWI77 | 455+75.35 | -130.64 | |
| 61 | 23+60.00 | 492605.82 | 2245781.17 | CLXRWI77 | 455+99.33 | -129.76 | |
| 62 | 23+84.00 | 492629.52 | 2245777.38 | CLXRWI77 | 456+23.32 | -128.88 | |
| 63 | 24+00.00 | 492645.43 | 2245775.64 | CLXRWI77 | 456+39.26 | -127.50 | |
| 64 | 24+24.00 | 492669.28 | 2245773.02 | CLXRWI77 | 456+63.17 | -125.43 | N6°14'59"W |
| 65 | 24+48.00 | 492693.14 | 2245770.41 | CLXRWI77 | 456+87.08 | -123.37 | |
| 66 | 24+72.00 | 492717.00 | 2245767.80 | CLXRWI77 | 457+10.99 | -121.30 | |
| 67 | 24+96.00 | 492740.40 | 2245762.49 | CLXRWI77 | 457+34.98 | -121.96 | |
| 68 | 25+20.00 | 492763.81 | 2245757.19 | CLXRWI77 | 457+58.97 | -122.62 | |
| 69 | 25+44.00 | 492787.22 | 2245751.89 | CLXRWI77 | 457+82.96 | -123.28 | |
| 70 | 25+68.00 | 492810.62 | 2245746.58 | CLXRWI77 | 458+06.95 | -123.95 | |
| 71 | 25+92.00 | 492834.03 | 2245741.28 | CLXRWI77 | 458+30.94 | -124.61 | |
| 72 | 26+16.00 | 492857.44 | 2245735.97 | CLXRWI77 | 458+54.93 | -125.27 | |
| 73 | 26+40.00 | 492880.84 | 2245730.67 | CLXRWI77 | 458+78.92 | -125.93 | |
| 74 | 26+64.00 | 492904.25 | 2245725.37 | CLXRWI77 | 459+02.92 | -126.59 | |
| 75 | 26+88.00 | 492927.66 | 2245720.06 | CLXRWI77 | 459+26.91 | -127.25 | |
| 76 | 27+12.00 | 492951.06 | 2245714.76 | CLXRWI77 | 459+50.90 | -127.91 | |
| 77 | 27+36.00 | 492974.47 | 2245709.45 | CLXRWI77 | 459+74.89 | -128.58 | |
| 78 | 27+60.00 | 492997.88 | 2245704.15 | CLXRWI77 | 459+98.88 | -129.24 | |
| 79 | 27+84.00 | 493021.28 | 2245698.84 | CLXRWI77 | 460+22.87 | -129.90 | |
| 80 | 27+96.00 | 493032.87 | 2245695.74 | CLXRWI77 | 460+34.84 | -130.70 | |
| 81 | 28+08.00 | 493044.46 | 2245692.63 | CLXRWI77 | 460+46.81 | -131.50 | |
| 82 | 28+20.00 | 493056.05 | 2245689.51 | CLXRWI77 | 460+58.79 | -132.30 | |
| 83 | 28+32.00 | 493067.64 | 2245686.41 | CLXRWI77 | 460+70.76 | -133.11 | |
| 84 | 28+44.00 | 493079.23 | 2245683.29 | CLXRWI77 | 460+82.74 | -133.91 | N15°1'14"W |
| 85 | 28+56.00 | 493090.82 | 2245680.19 | CLXRWI77 | 460+94.70 | -134.71 | |
| 86 | 28+68.00 | 493102.41 | 2245677.07 | CLXRWI77 | 461+06.68 | -135.51 | |
| 87 | 28+92.00 | 493125.59 | 2245670.85 | CLXRWI77 | 461+30.63 | -137.12 | |
| 88 | 29+16.00 | 493148.77 | 2245664.63 | CLXRWI77 | 461+54.57 | -138.72 | |
| 89 | 29+40.00 | 493172.05 | 2245658.79 | CLXRWI77 | 461+78.54 | -139.94 | |
| 90 | 29+64.00 | 493195.33 | 2245652.94 | CLXRWI77 | 462+02.51 | -141.16 | |
| 91 | 29+88.00 | 493218.60 | 2245647.09 | CLXRWI77 | 462+26.48 | -142.38 | N14°06'12"W |
| 92 | 30+12.00 | 493241.88 | 2245641.24 | CLXRWI77 | 462+50.45 | -143.60 | |
| 93 | 30+36.00 | 493265.16 | 2245635.39 | CLXRWI77 | 462+74.42 | -144.82 | |
| 94 | 30+60.00 | 493288.43 | 2245629.55 | CLXRWI77 | 462+98.39 | -146.04 | |
| 95 | 30+84.00 | 493311.98 | 2245624.89 | CLXRWI77 | 463+22.39 | -146.04 | |
| 96 | 31+08.00 | 493335.52 | 2245620.23 | CLXRWI77 | 463+46.39 | -146.04 | |
| 97 | 31+32.00 | 493359.06 | 2245615.58 | CLXRWI77 | 463+70.39 | -146.04 | |
| 98 | 31+56.00 | 493382.61 | 2245610.92 | CLXRWI77 | 463+94.39 | -146.04 | |
| 99 | 31+80.00 | 493406.15 | 2245606.26 | CLXRWI77 | 464+18.39 | -146.04 | |
| 100 | 32+04.00 | 493429.70 | 2245601.60 | CLXRWI77 | 464+42.39 | -146.04 | |
| 101 | 32+28.00 | 493453.24 | 2245596.95 | CLXRWI77 | 464+66.39 | -146.04 | |
| 102 | 32+52.00 | 493476.78 | 2245592.29 | CLXRWI77 | 464+90.39 | -146.04 | |
| 103 | 32+76.00 | 493500.33 | 2245587.63 | CLXRWI77 | 465+14.39 | -146.04 | |
| 104 | 33+00.00 | 493523.87 | 2245582.98 | CLXRWI77 | 465+38.38 | -146.04 | |
| 105 | 33+24.00 | 493547.42 | 2245578.32 | CLXRWI77 | 465+62.39 | -146.04 | |
| 106 | 33+48.00 | 493570.96 | 2245573.66 | CLXRWI77 | 465+86.39 | -146.04 | |
| 107 | 33+72.00 | 493594.50 | 2245569.00 | CLXRWI77 | 466+10.39 | -146.04 | |
| 108 | 33+96.00 | 493618.05 | 2245564.35 | CLXRWI77 | 466+34.39 | -146.04 | N11°11'20"W |
| 109 | 34+20.00 | 493641.59 | 2245559.69 | CLXRWI77 | 466+58.39 | -146.04 | |
| 110 | 34+44.00 | 493665.13 | 2245555.03 | CLXRWI77 | 466+82.39 | -146.04 | |
| 111 | 34+68.00 | 493688.68 | 2245550.38 | CLXRWI77 | 467+06.39 | -146.04 | |
| 112 | 34+92.00 | 493712.22 | 2245545.72 | CLXRWI77 | 467+30.39 | -146.04 | |

CALCULATED RFV
CHECKED TJW

SURVEY CONTROL

SUM-77 / 277 / 224

1072
1288

0:\2017\2017258\ProjectData\SUM\106002\Design\Structures\Wall_Noise_General_Sheets\106002_Schematic_Table_E.dgn Sheet 1 1/17/2021 6:57:27 PM rvitelli

| NOISE BARRIER WALL E BASELINE GEOMETRY | | | | | | | |
|---|---|---|---|---|---|---|---|
| POINT | WALL STATION | NORTHING | EASTING | ALIGNMENT | | | BEARING |
| | | | | NAME | STATION | OFFSET | |
| 113 | 35+16.00 | 493735.77 | 2245541.06 | CLXRW177 | 467+54.39 | -146.04 | N11°11'20"E |
| 114 | 35+40.00 | 493759.31 | 2245536.40 | CLXRW177 | 467+78.39 | -146.04 | |
| 115 | 35+64.00 | 493782.85 | 2245531.75 | CLXRW177 | 468+02.39 | -146.04 | |
| 116 | 35+88.00 | 493806.40 | 2245527.09 | CLXRW177 | 468+26.39 | -146.04 | |
| 117 | 36+12.00 | 493829.94 | 2245522.43 | CLXRW177 | 468+50.39 | -146.04 | |
| 118 | 36+36.00 | 493853.48 | 2245517.78 | CLXRW177 | 468+74.39 | -146.04 | |
| 119 | 36+60.00 | 493877.03 | 2245513.12 | CLXRW177 | 468+98.39 | -146.04 | |
| 120 | 36+78.00 | 493894.69 | 2245509.63 | CLXRW177 | 469+16.39 | -146.04 | |

CALCULATED RFV
CHECKED TJW

SURVEY CONTROL

SUM-77 / 277 / 224

1072A
1288

0:\2017\2017258\ProjectData\SUM\106002\Design\Structures\Wall_Noise_General_Sheets\106002_Schematic_Table_E.dgn Sheet 2 1/17/2021 6:57:28 PM rvitelli

## NOISE BARRIER WALL G BASELINE GEOMETRY

| POINT | WALL STATION | NORTHING | EASTING | ALIGNMENT | | | BEARING |
|---|---|---|---|---|---|---|---|
| | | | | NAME | STATION | OFFSET | |
| 1 | 10+00.00 | 493124.48 | 2245923.09 | CLXRWI77 | 460+80.59 | 110.11 | |
| 2 | 10+12.00 | 493136.04 | 2245919.85 | CLXRWI77 | 460+92.56 | 109.18 | N15°39'47"W |
| 3 | 10+24.00 | 493147.59 | 2245916.61 | CLXRWI77 | 461+04.52 | 108.24 | |
| 4 | 10+40.00 | 493163.00 | 2245912.29 | CLXRWI77 | 461+20.47 | 106.99 | N9°29'31"W |
| 5 | 10+52.00 | 493174.83 | 2245910.31 | CLXRWI77 | 461+32.47 | 107.35 | |
| 6 | 10+76.00 | 493198.79 | 2245908.92 | CLXRWI77 | 461+56.24 | 110.63 | |
| 7 | 11+00.00 | 493222.75 | 2245907.53 | CLXRWI77 | 461+80.02 | 113.92 | |
| 8 | 11+24.00 | 493246.71 | 2245906.14 | CLXRWI77 | 462+03.79 | 117.20 | |
| 9 | 11+48.00 | 493270.67 | 2245904.75 | CLXRWI77 | 462+27.56 | 120.49 | |
| 10 | 11+72.00 | 493294.63 | 2245903.36 | CLXRWI77 | 462+51.34 | 123.77 | |
| 11 | 11+96.00 | 493318.59 | 2245901.97 | CLXRWI77 | 462+75.11 | 127.06 | N3°19'15"W |
| 12 | 12+20.00 | 493342.55 | 2245900.58 | CLXRWI77 | 462+98.89 | 130.34 | |
| 13 | 12+44.00 | 493366.51 | 2245899.19 | CLXRWI77 | 463+22.66 | 133.63 | |
| 14 | 12+68.00 | 493390.47 | 2245897.80 | CLXRWI77 | 463+46.43 | 136.92 | |
| 15 | 12+92.00 | 493414.43 | 2245896.41 | CLXRWI77 | 463+70.21 | 140.20 | |
| 16 | 13+16.00 | 493438.39 | 2245895.02 | CLXRWI77 | 463+93.98 | 143.49 | |
| 17 | 13+32.00 | 493454.36 | 2245894.09 | CLXRWI77 | 464+09.83 | 145.68 | N8°27'02"W |
| 18 | 13+44.00 | 493466.23 | 2245892.33 | CLXRWI77 | 464+21.82 | 146.25 | |
| 19 | 13+68.00 | 493489.78 | 2245887.67 | CLXRWI77 | 464+45.82 | 146.25 | |
| 20 | 13+92.00 | 493513.32 | 2245883.02 | CLXRWI77 | 464+69.82 | 146.25 | |
| 21 | 14+16.00 | 493536.86 | 2245878.36 | CLXRWI77 | 464+93.82 | 146.25 | |
| 22 | 14+40.00 | 493560.41 | 2245873.70 | CLXRWI77 | 465+17.82 | 146.25 | |
| 23 | 14+64.00 | 493583.95 | 2245869.04 | CLXRWI77 | 465+41.82 | 146.25 | |
| 24 | 14+88.00 | 493607.50 | 2245864.39 | CLXRWI77 | 465+65.82 | 146.25 | |
| 25 | 15+12.00 | 493631.04 | 2245859.73 | CLXRWI77 | 465+89.82 | 146.25 | |
| 26 | 15+36.00 | 493654.58 | 2245855.07 | CLXRWI77 | 466+13.82 | 146.25 | |
| 27 | 15+60.00 | 493678.13 | 2245850.42 | CLXRWI77 | 466+37.82 | 146.25 | |
| 28 | 15+84.00 | 493701.67 | 2245845.76 | CLXRWI77 | 466+61.82 | 146.25 | |
| 29 | 16+08.00 | 493725.22 | 2245841.10 | CLXRWI77 | 466+85.82 | 146.25 | |
| 30 | 16+32.00 | 493748.76 | 2245836.45 | CLXRWI77 | 467+09.82 | 146.25 | |
| 31 | 16+56.00 | 493772.30 | 2245831.79 | CLXRWI77 | 467+33.82 | 146.25 | |
| 32 | 16+80.00 | 493795.85 | 2245827.13 | CLXRWI77 | 467+57.82 | 146.25 | |
| 33 | 17+04.00 | 493819.39 | 2245822.47 | CLXRWI77 | 467+81.82 | 146.25 | |
| 34 | 17+28.00 | 493842.93 | 2245817.82 | CLXRWI77 | 468+05.82 | 146.25 | |
| 35 | 17+52.00 | 493866.48 | 2245813.16 | CLXRWI77 | 468+29.82 | 146.25 | |
| 36 | 17+65.00 | 493879.23 | 2245810.64 | CLXRWI77 | 468+42.82 | 146.25 | |
| 37 | 17+78.00 | 493891.98 | 2245808.11 | CLXRWI77 | 468+55.82 | 146.25 | N11°11'20"W |
| 38 | 18+40.50 | 493952.44 | 2245792.22 | CLXRWI77 | 469+18.21 | 142.39 | |
| 39 | 18+60.50 | 493972.33 | 2245790.13 | CLXRWI77 | 469+38.13 | 144.20 | N6°00'52"W |
| 40 | 18+80.50 | 493992.22 | 2245788.03 | CLXRWI77 | 469+58.05 | 146.00 | |
| 41 | 19+04.50 | 494015.76 | 2245783.38 | CLXRWI77 | 469+82.05 | 146.00 | |
| 42 | 19+28.50 | 494039.31 | 2245778.72 | CLXRWI77 | 470+06.05 | 146.00 | |
| 43 | 19+52.50 | 494062.85 | 2245774.06 | CLXRWI77 | 470+30.05 | 146.00 | |
| 44 | 19+76.50 | 494086.40 | 2245769.40 | CLXRWI77 | 470+54.05 | 146.00 | |
| 45 | 20+00.50 | 494109.94 | 2245764.75 | CLXRWI77 | 470+78.05 | 146.00 | |
| 46 | 20+24.50 | 494133.48 | 2245760.09 | CLXRWI77 | 471+02.05 | 146.00 | |
| 47 | 20+48.50 | 494157.03 | 2245755.43 | CLXRWI77 | 471+26.05 | 146.00 | |
| 48 | 20+72.50 | 494180.57 | 2245750.78 | CLXRWI77 | 471+50.05 | 146.00 | |
| 49 | 20+96.50 | 494204.12 | 2245746.12 | CLXRWI77 | 471+74.05 | 146.00 | |
| 50 | 21+20.50 | 494227.66 | 2245741.46 | CLXRWI77 | 471+98.05 | 146.00 | N11°11'20"W |

## NOISE BARRIER WALL G BASELINE GEOMETRY

| POINT | WALL STATION | NORTHING | EASTING | ALIGNMENT | | | BEARING |
|---|---|---|---|---|---|---|---|
| | | | | NAME | STATION | OFFSET | |
| 51 | 21+44.50 | 494251.20 | 2245736.80 | CLXRWI77 | 472+22.05 | 146.00 | N11°11'20"W |
| 52 | 21+68.50 | 494274.70 | 2245731.91 | BLPSBI77 | 472+39.92 | 162.0239 | |
| 53 | 21+92.50 | 494298.19 | 2245727.02 | BLPSBI77 | 472+63.55 | 162.1361 | N11°45'53"W |
| 54 | 22+16.50 | 494321.69 | 2245722.12 | BLPSBI77 | 472+86.59 | 162.3631 | |
| 55 | 22+40.50 | 494345.19 | 2245717.23 | BLPSBI77 | 473+09.63 | 162.7317 | |
| 56 | 22+64.50 | 494368.51 | 2245711.55 | BLPSBI77 | 473+32.67 | 162.4388 | |
| 57 | 22+88.50 | 494391.82 | 2245705.88 | BLPSBI77 | 473+55.71 | 162.2875 | N13°40'56"W |
| 58 | 23+12.50 | 494415.14 | 2245700.20 | BLPSBI77 | 473+78.75 | 162.2779 | |
| 59 | 23+36.50 | 494438.46 | 2245694.52 | BLPSBI77 | 474+01.80 | 162.4099 | |
| 60 | 23+60.50 | 494461.78 | 2245688.85 | BLPSBI77 | 474+24.84 | 162.6836 | |
| 61 | 23+84.50 | 494485.19 | 2245683.57 | BLPSBI77 | 474+47.86 | 163.5109 | |
| 62 | 24+08.50 | 494508.61 | 2245678.30 | BLPSBI77 | 474+70.87 | 164.4797 | N12°41'53"W |
| 63 | 24+32.50 | 494532.02 | 2245673.02 | BLPSBI77 | 474+93.88 | 165.5897 | |
| 64 | 24+56.50 | 494555.43 | 2245667.75 | BLPSBI77 | 475+16.86 | 166.8409 | |
| 65 | 24+80.50 | 494578.99 | 2245663.17 | BLPSBI77 | 475+39.79 | 168.9425 | N11°00'00"W |
| 66 | 25+04.50 | 494602.55 | 2245658.59 | BLPSBI77 | 475+62.68 | 171.1843 | |
| 67 | 25+28.50 | 494625.87 | 2245652.90 | BLPR77C | 576+03.52 | 61.9898 | N13°42'43"W |
| 68 | 25+52.50 | 494649.18 | 2245647.21 | BLPR77C | 576+27.39 | 61.6202 | |
| 69 | 25+76.50 | 494672.50 | 2245641.52 | BLPR77C | 576+51.27 | 61.2973 | |
| 70 | 26+00.50 | 494695.81 | 2245635.81 | BLPR77C | 576+75.15 | 60.9994 | |
| 71 | 26+24.50 | 494719.12 | 2245630.10 | BLPR77C | 576+99.03 | 60.7483 | N13°45'50"W |
| 72 | 26+48.50 | 494742.43 | 2245624.39 | BLPR77C | 577+22.91 | 60.5440 | |
| 73 | 26+62.50 | 494756.03 | 2245621.06 | BLPR77C | 577+36.84 | 60.4464 | |
| 74 | 26+86.50 | 494779.61 | 2245616.60 | BLPR77C | 577+60.70 | 61.5979 | |
| 75 | 27+10.50 | 494803.19 | 2245612.14 | BLPR77C | 577+84.55 | 62.7961 | N10°42'10"W |
| 76 | 27+34.50 | 494826.78 | 2245607.69 | BLPR77C | 578+08.39 | 64.0409 | |
| 77 | 27+58.50 | 494850.36 | 2245603.23 | BLPR77C | 578+32.23 | 65.3324 | |
| 78 | 27+82.50 | 494873.67 | 2245597.53 | BLPR77C | 578+56.10 | 65.4043 | |
| 79 | 28+06.50 | 494896.99 | 2245591.84 | BLPR77C | 578+79.97 | 65.5230 | |
| 80 | 28+30.50 | 494920.30 | 2245586.14 | BLPR77C | 579+03.85 | 65.6884 | |
| 81 | 28+54.50 | 494943.62 | 2245580.45 | BLPR77C | 579+27.72 | 65.9006 | N13°43'38"W |
| 82 | 28+78.50 | 494966.93 | 2245574.75 | BLPR77C | 579+51.59 | 66.1596 | |
| 83 | 29+02.50 | 494990.25 | 2245569.06 | BLPR77C | 579+75.46 | 66.4652 | |
| 84 | 29+26.50 | 495013.56 | 2245563.36 | BLPR77C | 579+99.32 | 66.8177 | |
| 85 | 29+50.50 | 495036.88 | 2245557.67 | BLPR77C | 580+23.22 | 67.2155 | |
| 86 | 29+74.50 | 495060.19 | 2245551.97 | BLPR77C | 580+47.22 | 67.6268 | |
| 87 | 29+98.50 | 495083.13 | 2245544.92 | BLPR77C | 580+71.20 | 66.6310 | |
| 88 | 30+22.50 | 495106.07 | 2245537.87 | BLPR77C | 580+95.18 | 65.6353 | |
| 89 | 30+46.50 | 495129.01 | 2245530.82 | BLPR77C | 581+19.16 | 64.6395 | |
| 90 | 30+70.50 | 495151.95 | 2245523.77 | BLPR77C | 581+43.14 | 63.6437 | |
| 91 | 30+94.50 | 495174.89 | 2245516.71 | BLPR77C | 581+67.11 | 62.6479 | |
| 92 | 31+18.50 | 495197.83 | 2245509.66 | BLPR77C | 581+91.09 | 61.6521 | |
| 93 | 31+42.50 | 495220.77 | 2245502.61 | BLPR77C | 582+15.07 | 60.6563 | |
| 94 | 31+54.50 | 495232.24 | 2245499.08 | BLPR77C | 582+27.06 | 60.1585 | |
| 95 | 31+66.50 | 495243.72 | 2245495.56 | BLPR77C | 582+39.05 | 59.6606 | N17°5'14"W |
| 96 | 31+78.50 | 495255.19 | 2245492.03 | BLPR77C | 582+51.04 | 59.1627 | |
| 97 | 31+90.50 | 495266.66 | 2245488.51 | BLPR77C | 582+63.03 | 58.6648 | |
| 98 | 32+02.50 | 495278.13 | 2245484.98 | BLPR77C | 582+75.02 | 58.1669 | |
| 99 | 32+14.50 | 495289.60 | 2245481.46 | BLPR77C | 582+87.01 | 57.6690 | |
| 100 | 32+26.50 | 495301.07 | 2245477.93 | BLPR77C | 582+99.00 | 57.1711 | |

CALCULATED RFV
CHECKED TJW

SURVEY CONTROL

SUM-77 / 277 / 224

1073
1288

O:\2017\2017258\ProjectData\SUM\106002\Design\Structures\Wall_Noise_General_Sheets\106002_Schematic_Table_G.dgn Sheet 1 1/17/2021 6:57:29 PM rvitelli

## NOISE BARRIER WALL G BASELINE GEOMETRY

| POINT | WALL STATION | NORTHING | EASTING | ALIGNMENT | | | BEARING |
|---|---|---|---|---|---|---|---|
| | | | | NAME | STATION | OFFSET | |
| 101 | 32+38.50 | 495312.54 | 2245474.40 | BLPR77C | 583+10.99 | 56.6732 | N17°5'14"W |
| 102 | 32+50.50 | 495324.01 | 2245470.88 | BLPR77C | 583+22.98 | 56.1752 | |
| 103 | 32+62.50 | 495335.48 | 2245467.35 | BLPR77C | 583+35.00 | 55.6737 | |
| 104 | 32+86.50 | 495358.42 | 2245460.30 | BLPR77C | 583+59.12 | 54.6366 | |
| 105 | 33+10.50 | 495375.51 | 2245443.45 | BLPR77C | 583+80.06 | 42.5738 | N44°35'45"W |
| 106 | 33+34.50 | 495392.60 | 2245426.60 | BLPR77C | 584+00.95 | 30.4148 | |
| 107 | 33+50.50 | 495403.99 | 2245415.37 | BLPR77C | 584+14.82 | 22.2400 | |
| 108 | 33+66.50 | 495415.38 | 2245404.13 | BLPR77C | 584+28.62 | 14.0000 | N13°9'33"W |
| 109 | 33+90.50 | 495438.75 | 2245398.67 | BLPR77C | 584+52.77 | 14.0000 | N12°30'1"W |
| 110 | 34+14.50 | 495462.19 | 2245393.47 | BLPR77C | 584+76.95 | 14.0000 | N11°43'25"W |
| 111 | 34+38.50 | 495485.68 | 2245388.60 | BLPR77C | 585+01.15 | 14.0000 | N10°49'47"W |
| 112 | 34+62.50 | 495509.26 | 2245384.09 | BLPR77C | 585+25.38 | 14.0000 | N9°51'54"W |
| 113 | 34+86.50 | 495532.90 | 2245379.98 | BLPR77C | 585+49.62 | 14.0000 | N8°53'44"W |
| 114 | 35+10.50 | 495556.61 | 2245376.26 | BLPR77C | 585+73.86 | 14.0000 | N8°5'16"W |
| 115 | 35+26.50 | 495572.45 | 2245374.01 | BLPR77C | 585+90.01 | 14.0000 | N7°16'47"W |
| 116 | 35+50.50 | 495596.26 | 2245370.97 | BLPR77C | 586+14.25 | 14.0000 | N6°18'38"W |
| 117 | 35+74.50 | 495620.12 | 2245368.33 | BLPR77C | 586+38.49 | 14.0000 | N5°20'27"W |
| 118 | 35+98.50 | 495644.01 | 2245366.10 | BLPR77C | 586+62.73 | 14.0000 | N4°22'17"W |
| 119 | 36+22.50 | 495667.94 | 2245364.27 | BLPR77C | 586+86.96 | 14.0000 | N3°24'6"W |
| 120 | 36+46.50 | 495691.90 | 2245362.85 | BLPR77C | 587+11.20 | 14.0000 | N2°25'57"W |
| 121 | 36+70.50 | 495715.88 | 2245361.83 | BLPR77C | 587+35.44 | 14.0000 | N1°27'46"W |
| 122 | 36+94.50 | 495739.87 | 2245361.22 | BLPR77C | 587+59.67 | 14.0000 | N0°29'36"W |
| 123 | 37+18.50 | 495763.87 | 2245361.01 | BLPR77C | 587+83.91 | 14.0000 | N0°28'34"E |
| 124 | 37+42.50 | 495787.87 | 2245361.21 | BLPR77C | 588+08.15 | 14.0000 | N1°26'44"E |
| 125 | 37+66.50 | 495811.86 | 2245361.81 | BLPR77C | 588+32.39 | 14.0000 | |

CALCULATED RFV
CHECKED TJW

SURVEY CONTROL

SUM-77 / 277 / 224

1074
1288

O:\2017\2017258\ProjectData\SUM\106002\Design\Structures\Wall_Noise_General_Sheets\106002_Schematic_Table_G.dgn Sheet 2 1/17/2021 6:57:30 PM rviteli

## NOISE BARRIER WALL HI BASELINE GEOMETRY

| POINT | WALL STATION | NORTHING | EASTING | ALIGNMENT | | | BEARING |
|---|---|---|---|---|---|---|---|
| | | | | NAME | STATION | OFFSET | |
| 1 | 10+00.00 | 496297.92 | 2241241.60 | CLXRWI277 | 223+64.69 | 63.00 | |
| 2 | 10+12.00 | 496299.03 | 2241253.55 | CLXRWI277 | 223+76.69 | 63.00 | |
| 3 | 10+24.00 | 496300.14 | 2241265.50 | CLXRWI277 | 223+88.69 | 63.00 | |
| 4 | 10+36.00 | 496301.26 | 2241277.45 | CLXRWI277 | 224+00.69 | 63.00 | |
| 5 | 10+48.00 | 496302.37 | 2241289.39 | CLXRWI277 | 224+12.69 | 63.00 | |
| 6 | 10+72.00 | 496304.59 | 2241313.29 | CLXRWI277 | 224+36.69 | 63.00 | |
| 7 | 10+96.00 | 496306.81 | 2241337.19 | CLXRWI277 | 224+60.69 | 63.00 | |
| 8 | 11+20.00 | 496309.03 | 2241361.08 | CLXRWI277 | 224+84.69 | 63.00 | |
| 9 | 11+44.00 | 496311.25 | 2241384.98 | CLXRWI277 | 225+08.69 | 63.00 | |
| 10 | 11+68.00 | 496313.48 | 2241408.88 | CLXRWI277 | 225+32.69 | 63.00 | |
| 11 | 11+92.00 | 496315.70 | 2241432.78 | CLXRWI277 | 225+56.69 | 63.00 | |
| 12 | 12+16.00 | 496317.92 | 2241456.67 | CLXRWI277 | 225+80.69 | 63.00 | |
| 13 | 12+40.00 | 496320.14 | 2241480.57 | CLXRWI277 | 226+04.69 | 63.00 | |
| 14 | 12+64.00 | 496322.36 | 2241504.47 | CLXRWI277 | 226+28.69 | 63.00 | |
| 15 | 12+88.00 | 496324.59 | 2241528.36 | CLXRWI277 | 226+52.69 | 63.00 | |
| 16 | 13+12.00 | 496326.81 | 2241552.26 | CLXRWI277 | 226+76.69 | 63.00 | |
| 17 | 13+36.00 | 496329.03 | 2241576.16 | CLXRWI277 | 227+00.69 | 63.00 | |
| 18 | 13+60.00 | 496331.25 | 2241600.05 | CLXRWI277 | 227+24.69 | 63.00 | |
| 19 | 13+84.00 | 496333.48 | 2241623.95 | CLXRWI277 | 227+48.69 | 63.00 | |
| 20 | 14+08.00 | 496335.70 | 2241647.85 | CLXRWI277 | 227+72.69 | 63.00 | |
| 21 | 14+32.00 | 496337.92 | 2241671.74 | CLXRWI277 | 227+96.69 | 63.00 | |
| 22 | 14+56.00 | 496340.14 | 2241695.64 | CLXRWI277 | 228+20.69 | 63.00 | S69°22'5"E |
| 23 | 14+64.00 | 496337.32 | 2241703.13 | CLXRWI277 | 228+27.89 | 66.50 | N84°41'15"E |
| 24 | 14+88.00 | 496339.54 | 2241727.02 | CLXRWI277 | 228+51.89 | 66.50 | N58°44'35"E |
| 25 | 14+96.00 | 496343.70 | 2241733.86 | CLXRWI277 | 228+59.08 | 63.00 | |
| 26 | 15+20.00 | 496345.92 | 2241757.76 | CLXRWI277 | 228+83.08 | 63.00 | |
| 27 | 15+44.00 | 496348.14 | 2241781.66 | CLXRWI277 | 229+07.08 | 63.00 | |
| 28 | 15+68.00 | 496350.36 | 2241805.55 | CLXRWI277 | 229+31.08 | 63.00 | |
| 29 | 15+92.00 | 496352.58 | 2241829.45 | CLXRWI277 | 229+55.08 | 63.00 | |
| 30 | 16+16.00 | 496354.81 | 2241853.35 | CLXRWI277 | 229+79.08 | 63.00 | |
| 31 | 16+32.00 | 496356.29 | 2241869.28 | CLXRWI277 | 229+95.08 | 63.00 | N84°41'15"E |
| 32 | 16+48.00 | 496357.77 | 2241885.21 | CLXRWI277 | 230+11.08 | 63.00 | |
| 33 | 16+64.00 | 496359.25 | 2241901.14 | CLXRWI277 | 230+27.08 | 63.00 | |
| 34 | 16+88.00 | 496361.47 | 2241925.04 | CLXRWI277 | 230+51.08 | 63.00 | |
| 35 | 17+12.00 | 496363.69 | 2241948.93 | CLXRWI277 | 230+75.08 | 63.00 | |
| 36 | 17+36.00 | 496365.92 | 2241972.83 | CLXRWI277 | 230+99.08 | 63.00 | |
| 37 | 17+60.00 | 496356.76 | 2241995.02 | CLXRWI277 | 231+20.32 | 74.17 | |
| 38 | 17+84.00 | 496347.61 | 2242017.20 | CLXRWI277 | 231+41.57 | 85.33 | S67°35'1"E |
| 39 | 18+08.00 | 496338.46 | 2242039.39 | CLXRWI277 | 231+62.81 | 96.50 | |
| 40 | 18+32.00 | 496329.31 | 2242061.58 | CLXRWI277 | 231+84.05 | 107.67 | |
| 41 | 18+47.00 | 496323.59 | 2242075.44 | CLXRWI277 | 231+97.33 | 114.65 | |
| 42 | 18+62.00 | 496317.87 | 2242089.31 | CLXRWI277 | 232+10.61 | 121.63 | |
| 43 | 18+86.00 | 496320.78 | 2242113.13 | CLXRWI277 | 232+34.60 | 120.94 | |
| 44 | 19+10.00 | 496323.68 | 2242136.96 | CLXRWI277 | 232+58.59 | 120.25 | |
| 45 | 19+34.00 | 496326.59 | 2242160.78 | CLXRWI277 | 232+82.58 | 119.56 | |
| 46 | 19+58.00 | 496329.50 | 2242184.60 | CLXRWI277 | 233+06.57 | 118.87 | |
| 47 | 19+82.00 | 496332.41 | 2242208.43 | CLXRWI277 | 233+30.56 | 118.18 | N83°2'31"E |
| 48 | 20+06.00 | 496335.31 | 2242232.25 | CLXRWI277 | 233+54.55 | 117.49 | |
| 49 | 20+30.00 | 496338.22 | 2242256.07 | CLXRWI277 | 233+78.54 | 116.80 | |
| 50 | 20+54.00 | 496341.13 | 2242279.90 | CLXRWI277 | 234+02.53 | 116.11 | |

HI-1

## NOISE BARRIER WALL HI BASELINE GEOMETRY

| POINT | WALL STATION | NORTHING | EASTING | ALIGNMENT | | | BEARING |
|---|---|---|---|---|---|---|---|
| | | | | NAME | STATION | OFFSET | |
| 51 | 20+78.00 | 496344.03 | 2242303.72 | CLXRWI277 | 234+26.52 | 115.42 | |
| 52 | 21+02.00 | 496346.94 | 2242327.54 | CLXRWI277 | 234+50.51 | 114.73 | |
| 53 | 21+26.00 | 496349.85 | 2242351.37 | CLXRWI277 | 234+74.50 | 114.05 | |
| 54 | 21+50.00 | 496352.76 | 2242375.19 | CLXRWI277 | 234+98.49 | 113.36 | |
| 55 | 21+74.00 | 496355.66 | 2242399.01 | CLXRWI277 | 235+22.48 | 112.67 | |
| 56 | 21+98.00 | 496358.57 | 2242422.84 | CLXRWI277 | 235+46.47 | 111.98 | N83°2'31"E |
| 57 | 22+22.00 | 496361.48 | 2242446.66 | CLXRWI277 | 235+70.46 | 111.29 | |
| 58 | 22+46.00 | 496364.39 | 2242470.48 | CLXRWI277 | 235+94.45 | 110.60 | |
| 59 | 22+70.00 | 496367.29 | 2242494.31 | CLXRWI277 | 236+18.44 | 109.91 | |
| 60 | 22+94.00 | 496370.20 | 2242518.13 | CLXRWI277 | 236+42.43 | 109.22 | |
| 61 | 23+18.00 | 496373.11 | 2242541.95 | CLXRWI277 | 236+66.42 | 108.53 | |
| 62 | 23+42.00 | 496376.02 | 2242565.78 | CLXRWI277 | 236+90.41 | 107.84 | |
| 63 | 23+66.00 | 496378.92 | 2242589.60 | CLXRWI277 | 237+14.40 | 107.15 | |
| 64 | 23+90.00 | 496381.83 | 2242613.42 | BLPR77A | 114+13.24 | -62.4649 | |
| 65 | 24+14.00 | 496384.74 | 2242637.25 | BLPR77A | 113+89.10 | -61.7450 | |
| 66 | 24+38.00 | 496387.64 | 2242661.07 | BLPR77A | 113+64.96 | -60.9660 | |
| 67 | 24+62.00 | 496390.55 | 2242684.89 | BLPR77A | 113+40.82 | -60.1282 | |
| 68 | 24+86.00 | 496393.46 | 2242708.72 | BLPR77A | 113+16.70 | -59.2314 | |
| 69 | 25+10.00 | 496396.37 | 2242732.54 | BLPR77A | 112+92.57 | -58.2756 | |
| 70 | 25+34.00 | 496396.37 | 2242756.54 | BLPR77A | 112+68.50 | -60.1734 | DUE EAST |
| 71 | 25+58.00 | 496395.11 | 2242780.51 | BLPR77A | 112+44.55 | -63.2598 | |
| 72 | 25+82.00 | 496393.86 | 2242804.47 | BLPR77A | 112+20.58 | -66.2882 | |
| 73 | 26+06.00 | 496392.61 | 2242828.44 | BLPR77A | 111+96.60 | -69.2584 | |
| 74 | 26+30.00 | 496391.35 | 2242852.41 | BLPR77A | 111+72.61 | -72.1705 | |
| 75 | 26+54.00 | 496390.10 | 2242876.37 | BLPR77A | 111+48.60 | -75.0244 | |
| 76 | 26+78.00 | 496388.85 | 2242900.34 | BLPR77A | 111+24.57 | -77.8200 | |
| 77 | 27+02.00 | 496387.59 | 2242924.31 | BLPR77A | 111+00.54 | -80.5572 | |
| 78 | 27+26.00 | 496386.34 | 2242948.28 | BLPR77A | 110+76.49 | -83.2361 | |
| 79 | 27+50.00 | 496385.09 | 2242972.24 | BLPR77A | 110+52.42 | -85.8566 | |
| 80 | 27+74.00 | 496383.83 | 2242996.21 | BLPR77A | 110+28.34 | -88.4186 | |
| 81 | 27+98.00 | 496382.58 | 2243020.18 | BLPR77A | 110+04.26 | -90.9221 | S87°0'23"E |
| 82 | 28+22.00 | 496381.33 | 2243044.15 | BLPR77A | 109+80.15 | -93.3670 | |
| 83 | 28+46.00 | 496380.07 | 2243068.11 | BLPR77A | 109+56.04 | -95.7533 | |
| 84 | 28+70.00 | 496378.82 | 2243092.08 | BLPR77A | 109+31.92 | -98.0809 | |
| 85 | 28+94.00 | 496377.57 | 2243116.05 | BLPR77A | 109+07.78 | -100.3499 | |
| 86 | 29+18.00 | 496376.31 | 2243140.01 | BLPR77A | 108+83.63 | -102.5602 | |
| 87 | 29+42.00 | 496375.06 | 2243163.98 | BLPR77A | 108+59.47 | -104.7116 | |
| 88 | 29+66.00 | 496373.81 | 2243187.95 | BLPR77A | 108+35.31 | -106.8043 | |
| 89 | 29+90.00 | 496372.55 | 2243211.92 | BLPR77A | 108+11.13 | -108.8381 | |
| 90 | 30+14.00 | 496371.30 | 2243235.88 | BLPR77A | 107+86.94 | -110.8130 | |
| 91 | 30+38.00 | 496370.05 | 2243259.85 | BLPR77A | 107+62.74 | -112.7290 | |
| 92 | 30+62.00 | 496369.93 | 2243283.85 | BLPR77A | 107+38.47 | -113.4488 | |
| 93 | 30+86.00 | 496369.81 | 2243307.85 | BLPR77A | 107+14.20 | -114.1093 | |
| 94 | 31+10.00 | 496369.70 | 2243331.85 | BLPR77A | 106+89.92 | -114.7106 | |
| 95 | 31+34.00 | 496369.58 | 2243355.85 | BLPR77A | 106+65.64 | -115.2525 | |
| 96 | 31+58.00 | 496369.47 | 2243379.85 | BLPR77A | 106+41.49 | -115.7436 | S89°43'31"E |
| 97 | 31+82.00 | 496369.35 | 2243403.85 | BLPR77A | 106+17.26 | -116.2023 | |
| 98 | 110+00.00 | 496459.68 | 2243108.59 | BLPR77A | 109+11.85 | -18.0000 | |
| 99 | 110+12.00 | 496460.17 | 2243120.58 | BLPR77A | 108+99.83 | -18.0000 | N87°39'2"E |
| 100 | 110+24.00 | 496460.65 | 2243132.58 | BLPR77A | 108+87.81 | -18.0000 | N87°43'14"E |
| 101 | 110+48.00 | 496461.56 | 2243156.56 | BLPR77A | 108+63.76 | -18.0000 | N87°49'33"E |
| 102 | 110+72.00 | 496462.41 | 2243180.54 | BLPR77A | 108+39.72 | -18.0000 | N87°57'59"E |
| 103 | 110+96.00 | 496463.20 | 2243204.53 | BLPR77A | 108+15.67 | -18.0000 | N88°6'23"E |
| 104 | 111+20.00 | 496463.94 | 2243228.52 | BLPR77A | 107+91.63 | -18.0000 | N88°14'48"E |
| 105 | 111+44.00 | 496464.61 | 2243252.51 | BLPR77A | 107+67.59 | -18.0000 | N88°23'13"E |
| | | | | | | | N88°31'38"E |

HI-1

HI-2

CALCULATED RFV
CHECKED TJW

SURVEY CONTROL

SUM-77 / 277 / 224

1075
1288

O:\2017\2017258\ProjectData\SUM\106002\Design\Structures\Wall_Noise_General_Sheets\106002_Schematic_Table_HI.dgn Sheet 1 1/17/2021 6:57:31 PM rvitelli

## NOISE BARRIER WALL HI BASELINE GEOMETRY

| POINT | WALL STATION | NORTHING | EASTING | ALIGNMENT | | | BEARING |
|---|---|---|---|---|---|---|---|
| | | | | NAME | STATION | OFFSET | |
| 106 | 111+68.00 | 496465.23 | 2243276.50 | BLPR77A | 107+43.54 | -18.0000 | |
| 107 | 111+92.00 | 496465.47 | 2243300.50 | BLPR77A | 107+19.50 | -18.3151 | |
| 108 | 112+16.00 | 496465.71 | 2243324.50 | BLPR77A | 106+95.46 | -18.5714 | |
| 109 | 112+40.00 | 496465.96 | 2243348.50 | BLPR77A | 106+71.41 | -18.7689 | |
| 110 | 112+64.00 | 496466.20 | 2243372.50 | BLPR77A | 106+47.38 | -18.9107 | |
| 111 | 112+84.00 | 496466.40 | 2243392.50 | BLPR77A | 106+27.36 | -19.0065 | |
| 112 | 113+04.00 | 496466.61 | 2243412.49 | BLPR77A | 106+07.31 | -19.0655 | |
| 113 | 113+24.00 | 496466.81 | 2243432.49 | BLPR77A | 105+87.24 | -19.0615 | |
| 114 | 113+48.00 | 496467.05 | 2243456.49 | BLPR77A | 105+63.12 | -18.9361 | |
| 115 | 113+72.00 | 496467.30 | 2243480.49 | BLPR77A | 105+38.96 | -18.6358 | |
| 116 | 113+96.00 | 496467.54 | 2243504.48 | BLPR77A | 105+14.79 | -18.1148 | N89°25'10"E |
| 117 | 114+20.00 | 496467.08 | 2243528.48 | BLPR77A | 104+90.57 | -18.0238 | S88°54'55"E |
| 118 | 114+44.00 | 496466.25 | 2243552.46 | BLPR77A | 104+66.32 | -18.0007 | S88°0'16"E |
| 119 | 114+68.00 | 496465.03 | 2243576.43 | BLPR77A | 104+42.04 | -18.0000 | S87°5'38"E |
| 120 | 114+92.00 | 496463.43 | 2243600.38 | BLPR77A | 104+17.75 | -18.0000 | S86°10'59"E |
| 121 | 115+16.00 | 496461.46 | 2243624.30 | BLPR77A | 103+93.46 | -18.0000 | S85°16'21"E |
| 122 | 115+40.00 | 496459.10 | 2243648.18 | BLPR77A | 103+69.18 | -18.0000 | S84°21'42"E |
| 123 | 115+64.00 | 496456.36 | 2243672.02 | BLPR77A | 103+44.89 | -18.0000 | S83°27'3"E |
| 124 | 115+88.00 | 496453.24 | 2243695.82 | BLPR77A | 103+20.60 | -18.0000 | S82°32'24"E |
| 125 | 116+12.00 | 496449.75 | 2243719.56 | BLPR77A | 102+96.32 | -18.0000 | S81°37'47"E |
| 126 | 116+36.00 | 496445.88 | 2243743.25 | BLPR77A | 102+72.03 | -18.0000 | S80°43'7"E |
| 127 | 116+60.00 | 496441.63 | 2243766.87 | BLPR77A | 102+47.75 | -18.0000 | S79°48'28"E |
| 128 | 116+84.00 | 496437.01 | 2243790.42 | BLPR77A | 102+23.46 | -18.0000 | S78°53'51"E |
| 129 | 117+08.00 | 496432.02 | 2243813.90 | BLPR77A | 101+99.17 | -18.0000 | S77°59'11"E |
| 130 | 117+32.00 | 496426.65 | 2243837.29 | BLPR77A | 101+74.89 | -18.0000 | S77°4'33"E |
| 131 | 117+56.00 | 496420.91 | 2243860.59 | BLPR77A | 101+50.60 | -18.0000 | S76°9'54"E |
| 132 | 117+80.00 | 496414.80 | 2243883.80 | BLPR77A | 101+26.31 | -18.0000 | S75°15'16"E |
| 133 | 118+04.00 | 496408.32 | 2243906.91 | BLPR77A | 101+02.03 | -18.0000 | S74°20'36"E |
| 134 | 118+28.00 | 496401.48 | 2243929.92 | BLPR77A | 100+77.74 | -18.0000 | S73°25'58"E |
| 135 | 118+52.00 | 496394.27 | 2243952.81 | BLPR77A | 100+53.45 | -18.0000 | S72°31'19"E |
| 136 | 118+76.00 | 496386.70 | 2243975.58 | BLPR77A | 100+29.17 | -18.0000 | S71°36'42"E |
| 137 | 119+00.00 | 496378.77 | 2243998.23 | BLPR77A | 100+04.88 | -18.0000 | S70°42'1"E |
| 138 | 119+24.00 | 496370.48 | 2244020.76 | BLPR77A | 99+80.60 | -18.0000 | S69°47'24"E |
| 139 | 119+48.00 | 496361.83 | 2244043.14 | BLPR77A | 99+56.31 | -18.0000 | S68°52'45"E |
| 140 | 119+72.00 | 496352.83 | 2244065.39 | BLPR77A | 99+32.02 | -18.0000 | S67°58'6"E |
| 141 | 119+96.00 | 496343.47 | 2244087.49 | BLPR77A | 99+07.74 | -18.0000 | S67°3'28"E |
| 142 | 120+20.00 | 496333.77 | 2244109.44 | BLPR77A | 98+83.45 | -18.0000 | S66°8'49"E |
| 143 | 120+44.00 | 496323.71 | 2244131.24 | BLPR77A | 98+59.16 | -18.0000 | S65°14'10"E |
| 144 | 120+68.00 | 496313.31 | 2244152.87 | BLPR77A | 98+34.88 | -18.0000 | S64°19'31"E |
| 145 | 120+92.00 | 496302.57 | 2244174.33 | BLPR77A | 98+10.59 | -18.0000 | S63°24'53"E |
| 146 | 121+16.00 | 496291.49 | 2244195.62 | BLPR77A | 97+86.30 | -18.0000 | S62°30'14"E |
| 147 | 121+40.00 | 496280.08 | 2244216.73 | BLPR77A | 97+62.02 | -18.0000 | S61°35'35"E |
| 148 | 121+64.00 | 496268.32 | 2244237.65 | BLPR77A | 97+37.73 | -18.0000 | S60°40'57"E |
| 149 | 121+88.00 | 496256.24 | 2244258.39 | BLPR77A | 97+13.45 | -18.0000 | S59°46'18"E |
| 150 | 122+12.00 | 496243.83 | 2244278.93 | BLPR77A | 96+89.16 | -18.0000 | S58°51'40"E |
| 151 | 122+36.00 | 496231.10 | 2244299.27 | BLPR77A | 96+64.87 | -18.0000 | S57°57'1"E |
| 152 | 122+60.00 | 496218.04 | 2244319.41 | BLPR77A | 96+40.59 | -18.0000 | S57°2'22"E |
| 153 | 122+84.00 | 496204.66 | 2244339.34 | BLPR77A | 96+16.30 | -18.0000 | S56°7'43"E |
| 154 | 123+08.00 | 496190.97 | 2244359.05 | BLPR77A | 95+92.01 | -18.0000 | S55°13'5"E |
| 155 | 123+32.00 | 496176.97 | 2244378.54 | BLPR77A | 95+67.73 | -18.0000 | S54°18'26"E |

HI-2

## NOISE BARRIER WALL HI BASELINE GEOMETRY

| POINT | WALL STATION | NORTHING | EASTING | ALIGNMENT | | | BEARING |
|---|---|---|---|---|---|---|---|
| | | | | NAME | STATION | OFFSET | |
| 156 | 123+56.00 | 496162.66 | 2244397.81 | BLPR77A | 95+43.44 | -18.0000 | S53°23'48"E |
| 157 | 123+80.00 | 496148.04 | 2244416.85 | BLPR77A | 95+19.15 | -18.0000 | S52°29'9"E |
| 158 | 124+04.00 | 496133.13 | 2244435.65 | BLPR77A | 94+94.87 | -18.0000 | S51°34'31"E |
| 159 | 124+28.00 | 496117.91 | 2244454.21 | BLPR77A | 94+70.58 | -18.0000 | S50°39'52"E |
| 160 | 124+52.00 | 496102.41 | 2244472.53 | BLPR77A | 94+46.30 | -18.0000 | S49°45'12"E |
| 161 | 124+76.00 | 496086.61 | 2244490.60 | BLPR77A | 94+22.01 | -18.0000 | S48°50'35"E |
| 162 | 125+00.00 | 496070.53 | 2244508.42 | BLPR77A | 93+97.72 | -18.0000 | S47°55'55"E |
| 163 | 125+24.00 | 496054.17 | 2244525.97 | BLPR77A | 93+73.44 | -18.0000 | S47°1'17"E |
| 164 | 125+48.00 | 496037.53 | 2244543.27 | BLPR77A | 93+49.16 | -18.0033 | S46°6'38"E |
| 165 | 125+72.00 | 496020.62 | 2244560.30 | BLPR77A | 93+24.90 | -18.0334 | S45°11'60"E |
| 166 | 125+96.00 | 496003.44 | 2244577.06 | BLPR77A | 93+00.67 | -18.1214 | S44°17'21"E |
| 167 | 126+20.00 | 495986.00 | 2244593.54 | BLPR77A | 92+76.46 | -18.2983 | S43°22'42"E |
| 168 | 126+44.00 | 495968.12 | 2244609.55 | BLPR77A | 92+52.28 | -18.8579 | |
| 169 | 126+68.00 | 495950.24 | 2244625.56 | BLPR77A | 92+28.11 | -19.1867 | |
| 170 | 126+92.00 | 495932.36 | 2244641.57 | BLPR77A | 92+03.96 | -19.3155 | |
| 171 | 127+16.00 | 495914.48 | 2244657.58 | BLPR77A | 91+79.84 | -19.2751 | S41°50'25"E |
| 172 | 127+40.00 | 495896.60 | 2244673.59 | BLPR77A | 91+55.74 | -19.0959 | |
| 173 | 127+64.00 | 495878.72 | 2244689.60 | BLPR77A | 91+31.67 | -18.8086 | |
| 174 | 127+88.00 | 495860.84 | 2244705.61 | BLPR77A | 91+07.62 | -18.4437 | |
| 175 | 128+12.00 | 495842.97 | 2244721.61 | BLPR77A | 90+83.62 | -18.0317 | |
| 176 | 128+36.00 | 495824.81 | 2244737.30 | BLPR77A | 90+59.55 | -18.0000 | S40°50'40"E |
| 177 | 128+60.00 | 495806.53 | 2244752.84 | BLPR77A | 90+35.40 | -18.0000 | S40°21'41"E |
| 178 | 128+84.00 | 495788.11 | 2244768.23 | BLPR77A | 90+11.25 | -18.0000 | S39°52'43"E |
| 179 | 129+08.00 | 495769.56 | 2244783.46 | BLPR77A | 89+87.09 | -18.0000 | S39°23'44"E |
| 180 | 129+32.00 | 495750.89 | 2244798.54 | BLPR77A | 89+62.94 | -18.0000 | S38°54'44"E |
| 181 | 129+56.00 | 495732.09 | 2244813.46 | BLPR77A | 89+38.79 | -18.0000 | S38°25'46"E |
| 182 | 129+80.00 | 495713.16 | 2244828.22 | BLPR77A | 89+14.64 | -18.0000 | S37°56'47"E |
| 183 | 130+04.00 | 495694.11 | 2244842.81 | BLPSBI77 | 488+93.69 | -80.2828 | S37°27'48"E |
| 184 | 130+28.00 | 495674.94 | 2244857.25 | BLPSBI77 | 488+69.19 | -79.8226 | S36°58'49"E |
| 185 | 130+52.00 | 495655.65 | 2244871.52 | BLPSBI77 | 488+44.70 | -79.4141 | S36°29'50"E |
| 186 | 130+76.00 | 495636.23 | 2244885.64 | BLPSBI77 | 488+20.20 | -79.0573 | S36°0'51"E |
| 187 | 131+00.00 | 495616.70 | 2244899.58 | BLPSBI77 | 487+95.71 | -78.7523 | S35°31'51"E |
| 188 | 131+24.00 | 495597.05 | 2244913.37 | BLPSBI77 | 487+71.22 | -78.4991 | S35°2'54"E |
| 189 | 131+48.00 | 495577.29 | 2244926.98 | BLPSBI77 | 487+46.72 | -78.2976 | S34°33'54"E |
| 190 | 131+67.50 | 495561.15 | 2244937.92 | BLPSBI77 | 487+26.83 | -78.1721 | S34°7'38"E |
| 191 | 131+91.50 | 495541.18 | 2244951.24 | BLPSBI77 | 487+02.34 | -78.0645 | S33°41'23"E |
| 192 | 132+15.50 | 495521.10 | 2244964.39 | BLPSBI77 | 486+77.85 | -78.0000 | S33°13'38"E |
| 193 | 132+39.50 | 495500.91 | 2244977.36 | BLPSBI77 | 486+53.36 | -78.0000 | S32°42'50"E |
| 194 | 132+63.50 | 495480.64 | 2244990.20 | BLPSBI77 | 486+28.87 | -78.0000 | S32°21'16"E |
| 195 | 132+87.50 | 495460.28 | 2245002.92 | BLPSBI77 | 486+04.38 | -78.0000 | S31°59'42"E |
| 196 | 133+11.50 | 495439.85 | 2245015.51 | BLPSBI77 | 485+79.89 | -78.0000 | S31°38'9"E |
| 197 | 133+35.50 | 495419.34 | 2245027.97 | BLPSBI77 | 485+55.40 | -78.0000 | S31°16'35"E |
| 198 | 133+59.50 | 495398.75 | 2245040.30 | BLPSBI77 | 485+30.91 | -78.0000 | S30°55'0"E |
| 199 | 133+83.50 | 495378.08 | 2245052.50 | BLPSBI77 | 485+06.42 | -78.0000 | S30°33'27"E |
| 200 | 134+07.50 | 495357.34 | 2245064.57 | BLPSBI77 | 484+81.93 | -78.0000 | S30°11'52"E |
| 201 | 134+31.50 | 495336.52 | 2245076.51 | BLPSBI77 | 484+57.44 | -78.0000 | S29°50'19"E |
| 202 | 134+55.50 | 495315.62 | 2245088.32 | BLPSBI77 | 484+32.95 | -78.0000 | S29°28'45"E |
| 203 | 134+79.50 | 495294.66 | 2245100.00 | BLPSBI77 | 484+08.46 | -78.0000 | S29°7'11"E |
| 204 | 135+03.50 | 495273.62 | 2245111.55 | BLPSBI77 | 483+83.98 | -78.0000 | S28°45'38"E |
| 205 | 135+27.50 | 495252.51 | 2245122.96 | BLPSBI77 | 483+59.49 | -78.0000 | S28°24'4"E |
| 206 | 135+51.50 | 495231.32 | 2245134.25 | BLPSBI77 | 483+35.00 | -78.0000 | S28°2'30"E |

HI-2

CALCULATED RFV
CHECKED TJW

SURVEY CONTROL

SUM-77 / 277 / 224

1076
1288

0:\2017\2017258\ProjectData\SUM106002\Design\Structures\Wall_Noise_General_Sheets\106002_Schematic_Table_HI.dgn Sheet 2 1/17/2021 6:57:32 PM rvitelli

## NOISE BARRIER WALL HI BASELINE GEOMETRY

| POINT | WALL STATION | NORTHING | EASTING | ALIGNMENT | | | BEARING | |
|---|---|---|---|---|---|---|---|---|
| | | | | NAME | STATION | OFFSET | | |
| 207 | 135+75.50 | 495210.07 | 2245145.40 | BLPSBI77 | 483+10.51 | -78.0000 | S27°40'56"E | HI-2 |
| 208 | 135+99.50 | 495188.75 | 2245156.41 | BLPSBI77 | 482+86.02 | -78.0000 | S27°19'22"E | |
| 209 | 136+23.50 | 495167.36 | 2245167.29 | BLPSBI77 | 482+61.53 | -78.0000 | S26°57'48"E | |
| 210 | 136+47.50 | 495145.90 | 2245178.04 | BLPSBI77 | 482+37.04 | -78.0000 | S26°36'14"E | |
| 211 | 136+71.50 | 495124.37 | 2245188.66 | BLPSBI77 | 482+12.55 | -78.0000 | S26°14'41"E | |
| 212 | 136+95.50 | 495102.78 | 2245199.13 | BLPSBI77 | 481+88.06 | -78.0000 | S25°53'7"E | |
| 213 | 137+19.50 | 495081.12 | 2245209.47 | BLPSBI77 | 481+63.57 | -78.0000 | S25°31'33"E | |
| 214 | 137+43.50 | 495059.40 | 2245219.68 | BLPSBI77 | 481+39.08 | -78.0000 | S25°9'59"E | |
| 215 | 137+67.50 | 495037.62 | 2245229.75 | BLPSBI77 | 481+14.59 | -78.0000 | S24°48'25"E | |
| 216 | 137+91.50 | 495015.77 | 2245239.68 | BLPSBI77 | 480+90.10 | -78.0000 | S24°26'52"E | |
| 217 | 138+15.50 | 494993.86 | 2245249.48 | BLPSBI77 | 480+65.61 | -78.0000 | S24°5'18"E | |
| 218 | 138+39.50 | 494971.89 | 2245259.14 | BLPSBI77 | 480+41.13 | -78.0000 | S23°43'44"E | |
| 219 | 138+63.50 | 494949.86 | 2245268.66 | BLPSBI77 | 480+16.64 | -78.0000 | S23°22'9"E | |
| 220 | 138+87.50 | 494927.77 | 2245278.04 | BLPSBI77 | 479+92.15 | -78.0000 | S23°0'36"E | |
| 221 | 139+11.50 | 494905.62 | 2245287.28 | BLPSBI77 | 479+67.66 | -78.0000 | S22°39'3"E | |
| 222 | 139+35.50 | 494883.41 | 2245296.38 | BLPSBI77 | 479+43.17 | -78.0000 | S22°17'28"E | |
| 223 | 139+59.50 | 494861.15 | 2245305.35 | BLPSBI77 | 479+18.68 | -78.0000 | S21°55'55"E | |
| 224 | 139+71.50 | 494849.99 | 2245309.78 | BLPSBI77 | 479+06.43 | -78.0000 | S21°39'44"E | |
| 225 | 139+83.50 | 494838.83 | 2245314.17 | BLPSBI77 | 478+94.19 | -78.0000 | S21°28'57"E | |
| 226 | 210+00.00 | 494982.75 | 2245207.40 | BLPSBI77 | 480+72.73 | -120.9628 | | |
| 227 | 210+24.00 | 494960.62 | 2245216.69 | BLPSBI77 | 480+47.97 | -121.4048 | | |
| 228 | 210+48.00 | 494938.49 | 2245225.98 | BLPSBI77 | 480+23.20 | -121.6946 | | |
| 229 | 210+72.00 | 494916.37 | 2245235.27 | BLPSBI77 | 479+98.43 | -121.8321 | S22°46'34"E | |
| 230 | 210+96.00 | 494894.24 | 2245244.56 | BLPSBI77 | 479+73.65 | -121.8173 | | |
| 231 | 211+20.00 | 494872.11 | 2245253.86 | BLPSBI77 | 479+48.88 | -121.6502 | | |
| 232 | 211+44.00 | 494849.98 | 2245263.15 | BLPSBI77 | 479+24.11 | -121.3309 | | |
| 233 | 211+68.00 | 494826.92 | 2245269.79 | BLPSBI77 | 478+99.45 | -123.6702 | S16°3'26"E | |
| 234 | 211+92.00 | 494803.85 | 2245276.42 | BLPSBI77 | 478+74.77 | -125.8585 | | |
| 235 | 212+16.00 | 494780.79 | 2245283.06 | BLPSBI77 | 478+50.05 | -127.8955 | | |
| 236 | 212+40.00 | 494757.72 | 2245289.70 | BLPSBI77 | 478+25.31 | -129.7811 | | |
| 237 | 212+64.00 | 494734.62 | 2245296.37 | BLPSBI77 | 478+00.49 | -131.4995 | S16°06'34"E | |
| 238 | 212+88.00 | 494711.56 | 2245303.03 | BLPSBI77 | 477+75.70 | -133.0581 | | |
| 239 | 213+12.00 | 494688.50 | 2245309.69 | BLPSBI77 | 477+50.89 | -134.4645 | | |
| 240 | 213+36.00 | 494665.49 | 2245316.34 | BLPSBI77 | 477+26.12 | -135.7166 | | HI-3 |
| 241 | 213+60.00 | 494642.50 | 2245323.22 | BLPSBI77 | 477+01.26 | -136.5890 | | |
| 242 | 213+84.00 | 494619.51 | 2245330.10 | BLPSBI77 | 476+76.40 | -137.3087 | | |
| 243 | 214+08.00 | 494596.52 | 2245336.98 | BLPSBI77 | 476+51.53 | -137.8756 | | |
| 244 | 214+32.00 | 494573.52 | 2245343.86 | BLPSBI77 | 476+26.66 | -138.2896 | | |
| 245 | 214+56.00 | 494550.53 | 2245350.74 | BLPSBI77 | 476+01.78 | -138.5507 | | |
| 246 | 214+80.00 | 494527.54 | 2245357.62 | BLPSBI77 | 475+76.89 | -138.6589 | S16°39'38"E | |
| 247 | 215+04.00 | 494504.55 | 2245364.50 | BLPSBI77 | 475+52.01 | -138.6140 | | |
| 248 | 215+28.00 | 494481.55 | 2245371.38 | BLPSBI77 | 475+27.13 | -138.4162 | | |
| 249 | 215+52.00 | 494458.56 | 2245378.27 | BLPSBI77 | 475+02.25 | -138.0655 | | |
| 250 | 215+76.00 | 494435.57 | 2245385.15 | BLPSBI77 | 474+77.38 | -137.5619 | | |
| 251 | 216+00.00 | 494412.58 | 2245392.03 | BLPSBI77 | 474+52.51 | -136.9054 | | |
| 252 | 216+24.00 | 494389.58 | 2245398.91 | BLPSBI77 | 474+27.66 | -136.0962 | S41°33'38"E | |
| 253 | 216+48.00 | 494371.63 | 2245414.83 | BLPSBI77 | 474+05.57 | -125.1344 | | |
| 254 | 216+72.00 | 494348.08 | 2245419.48 | BLPSBI77 | 473+80.80 | -126.3317 | | |
| 255 | 216+96.00 | 494324.54 | 2245424.14 | BLPSBI77 | 473+56.02 | -127.3767 | S11°10'50"W | |
| 256 | 217+20.00 | 494300.99 | 2245428.79 | BLPSBI77 | 473+31.22 | -128.2696 | | |
| 257 | 217+44.00 | 494277.45 | 2245433.44 | BLPSBI77 | 473+06.41 | -129.0100 | | |

## NOISE BARRIER WALL HI BASELINE GEOMETRY

| POINT | WALL STATION | NORTHING | EASTING | ALIGNMENT | | | BEARING | |
|---|---|---|---|---|---|---|---|---|
| | | | | NAME | STATION | OFFSET | | |
| 258 | 217+68.00 | 494253.90 | 2245438.10 | BLPSBI77 | 472+81.60 | -129.5980 | S11°10'50"E | HI-3 |
| 259 | 217+92.00 | 494230.36 | 2245442.75 | BLPSBI77 | 472+56.78 | -130.0335 | | |
| 260 | 218+16.00 | 494206.81 | 2245447.40 | BLPSBI77 | 472+32.71 | -130.3803 | | |
| 261 | 218+40.00 | 494183.27 | 2245452.06 | BLPSBI77 | 472+08.71 | -130.7266 | | |
| 262 | 218+64.00 | 494159.73 | 2245456.71 | BLPSBI77 | 471+84.72 | -131.0729 | | |
| 263 | 218+88.00 | 494136.18 | 2245461.37 | BLPSBI77 | 471+60.72 | -131.4192 | | |
| 264 | 219+12.00 | 494112.64 | 2245466.02 | BLPSBI77 | 471+36.72 | -131.7655 | | |
| 265 | 219+36.00 | 494089.09 | 2245470.67 | BLPSBI77 | 471+12.72 | -132.1118 | | |
| 266 | 219+60.00 | 494065.55 | 2245475.33 | BLPSBI77 | 470+88.73 | -132.4581 | | |
| 267 | 219+84.00 | 494042.00 | 2245479.98 | BLPSBI77 | 470+64.73 | -132.8044 | | |
| 268 | 220+08.00 | 494018.46 | 2245484.63 | BLPSBI77 | 470+40.73 | -133.1507 | | |
| 269 | 220+32.00 | 493994.91 | 2245489.29 | BLPSBI77 | 470+16.73 | -133.4970 | | |
| 270 | 220+56.00 | 493971.37 | 2245493.94 | BLPSBI77 | 469+92.74 | -133.8433 | | |
| 271 | 220+73.82 | 493953.89 | 2245497.40 | BLPSBI77 | 469+74.92 | -134.1003 | | |

CALCULATED RFV
CHECKED TJW

SURVEY CONTROL

SUM-77/277/224

1077
1288

O:\2017\2017258\ProjectData\SUM\106002\Design\Structures\Wall_Noise_General_Sheets\106002_Schematic_Table_HI.dgn Sheet 3 1/17/2021 6:57:33 PM rvitelli

## NOISE BARRIER WALL K BASELINE GEOMETRY

| POINT | WALL STATION | NORTHING | EASTING | ALIGNMENT | | | BEARING |
|---|---|---|---|---|---|---|---|
| | | | | NAME | STATION | OFFSET | |
| 1 | 10+00.00 | 496899.19 | 2244625.75 | BLPR77D | 899+70.21 | 14.00 | S75°28'5"E |
| 2 | 10+12.00 | 496896.17 | 2244637.37 | BLPR77D | 899+58.13 | 14.00 | S75°48'37"E |
| 3 | 10+24.00 | 496893.23 | 2244649.01 | BLPR77D | 899+46.04 | 14.00 | S76°10'11"E |
| 4 | 10+36.00 | 496890.36 | 2244660.66 | BLPR77D | 899+33.95 | 14.00 | S76°41'9"E |
| 5 | 10+60.00 | 496884.84 | 2244684.01 | BLPR77D | 899+09.79 | 14.00 | S77°21'57"E |
| 6 | 10+84.00 | 496879.59 | 2244707.43 | BLPR77D | 898+85.62 | 14.00 | S78°1'37"E |
| 7 | 11+08.00 | 496874.61 | 2244730.91 | BLPR77D | 898+61.46 | 14.00 | S78°41'28"E |
| 8 | 11+32.00 | 496869.90 | 2244754.44 | BLPR77D | 898+37.30 | 14.00 | S79°21'20"E |
| 9 | 11+56.00 | 496865.47 | 2244778.03 | BLPR77D | 898+13.14 | 14.00 | S80°1'13"E |
| 10 | 11+80.00 | 496861.31 | 2244801.67 | BLPR77D | 897+88.97 | 14.00 | S80°41'5"E |
| 11 | 12+04.00 | 496857.42 | 2244825.35 | BLPR77D | 897+64.81 | 14.00 | S81°20'56"E |
| 12 | 12+28.00 | 496853.81 | 2244849.08 | BLPR77D | 897+40.65 | 14.00 | S82°0'54"E |
| 13 | 12+52.00 | 496850.48 | 2244872.85 | BLPR77D | 897+16.49 | 14.00 | S82°41'17"E |
| 14 | 12+76.00 | 496847.43 | 2244896.65 | BLPR77D | 896+92.33 | 14.01 | S83°15'53"E |
| 15 | 13+00.00 | 496844.61 | 2244920.48 | BLPR77D | 896+68.18 | 14.00 | S83°50'27"E |
| 16 | 13+24.00 | 496842.04 | 2244944.35 | BLPR77D | 896+44.05 | 13.99 | S84°25'3"E |
| 17 | 13+48.00 | 496839.70 | 2244968.23 | BLPR77D | 896+19.92 | 14.00 | S84°55'16"E |
| 18 | 13+72.00 | 496837.58 | 2244992.14 | BLPR77D | 895+95.81 | 14.01 | S85°18'37"E |
| 19 | 13+96.00 | 496835.62 | 2245016.06 | BLPR77D | 895+71.71 | 14.01 | S85°41'54"E |
| 20 | 14+20.00 | 496833.81 | 2245039.99 | BLPR77D | 895+47.61 | 13.99 | S86°5'11"E |
| 21 | 14+44.00 | 496832.18 | 2245063.93 | BLPR77D | 895+23.53 | 14.00 | S86°23'39"E |
| 22 | 14+65.00 | 496830.86 | 2245084.89 | BLPR77D | 895+02.47 | 14.00 | S86°38'32"E |
| 23 | 14+86.00 | 496829.63 | 2245105.86 | BLPR77D | 894+81.40 | 14.00 | S86°54'26"E |
| 24 | 15+07.00 | 496828.49 | 2245126.83 | BLPR77D | 894+60.34 | 14.00 | S87°10'6"E |
| 25 | 15+28.00 | 496827.46 | 2245147.80 | BLPR77D | 894+39.27 | 14.00 | S87°27'6"E |
| 26 | 15+52.00 | 496826.39 | 2245171.78 | BLPR77D | 894+15.20 | 14.00 | S87°45'10"E |
| 27 | 15+76.00 | 496825.45 | 2245195.76 | BLPR77D | 893+91.13 | 14.00 | S88°3'13"E |
| 28 | 16+00.00 | 496824.63 | 2245219.74 | BLPR77D | 893+67.05 | 14.00 | |
| 29 | 16+24.00 | 496825.10 | 2245243.74 | BLPR77D | 893+43.01 | 15.16 | N88°52'37"E |
| 30 | 16+48.00 | 496825.57 | 2245267.73 | BLPR77D | 893+18.95 | 16.19 | |
| 31 | 16+72.00 | 496826.04 | 2245291.73 | BLPR77D | 892+94.88 | 17.10 | |
| 32 | 16+96.00 | 496826.51 | 2245315.73 | BLPR77D | 892+70.80 | 17.88 | |
| 33 | 17+20.00 | 496826.60 | 2245339.73 | BLPR77D | 892+46.70 | 18.16 | N89°47'0"E |
| 34 | 17+44.00 | 496826.70 | 2245363.73 | BLPR77D | 892+22.61 | 18.31 | |
| 35 | 17+68.00 | 496826.79 | 2245387.73 | BLPR77D | 891+98.51 | 18.33 | |
| 36 | 17+92.00 | 496826.88 | 2245411.72 | BLPR77D | 891+74.42 | 18.23 | |
| 37 | 18+16.00 | 496826.97 | 2245435.72 | BLPR77D | 891+50.32 | 18.00 | |
| 38 | 18+32.00 | 496836.14 | 2245448.83 | BLPR77D | 891+36.99 | 26.94 | |
| 39 | 18+48.00 | 496845.31 | 2245461.94 | BLPR77D | 891+23.60 | 35.85 | |
| 40 | 18+60.00 | 496852.19 | 2245471.78 | BLPR77D | 891+13.53 | 42.50 | |
| 41 | 18+72.00 | 496859.07 | 2245481.61 | BLPR77D | 891+03.43 | 49.13 | N55°1'7"E |
| 42 | 18+84.00 | 496865.95 | 2245491.44 | BLPR77D | 890+93.30 | 55.74 | |
| 43 | 18+96.00 | 496872.83 | 2245501.27 | BLPR77D | 890+83.14 | 62.33 | |
| 44 | 19+08.00 | 496879.71 | 2245511.10 | BLPR77D | 890+72.95 | 68.89 | |
| 45 | 19+20.00 | 496886.59 | 2245520.94 | BLPR77D | 890+62.72 | 75.44 | |
| 46 | 19+44.00 | 496888.29 | 2245544.88 | BLPR77D | 890+38.33 | 76.23 | |
| 47 | 19+68.00 | 496889.99 | 2245568.81 | BLPR77D | 890+13.94 | 76.90 | |
| 48 | 19+92.00 | 496891.69 | 2245592.75 | BLPR77D | 889+89.53 | 77.44 | N85°56'19"E |
| 49 | 20+16.00 | 496893.39 | 2245616.69 | BLPR77D | 889+65.12 | 77.85 | |
| 50 | 20+40.00 | 496895.09 | 2245640.63 | BLPR77D | 889+40.71 | 78.14 | |

## NOISE BARRIER WALL K BASELINE GEOMETRY

| POINT | WALL STATION | NORTHING | EASTING | ALIGNMENT | | | BEARING |
|---|---|---|---|---|---|---|---|
| | | | | NAME | STATION | OFFSET | |
| 51 | 20+64.00 | 496896.79 | 2245664.57 | BLPR77D | 889+16.29 | 78.30 | N85°56'19"E |
| 52 | 20+88.00 | 496898.49 | 2245688.51 | BLPR77D | 888+91.87 | 78.33 | |
| 53 | 21+12.00 | 496900.19 | 2245712.45 | BLPR77D | 888+67.46 | 78.23 | |
| 54 | 21+36.00 | 496901.89 | 2245736.39 | CLXRW1277 | 268+96.10 | -122.21 | |
| 55 | 21+60.00 | 496903.59 | 2245760.33 | CLXRW1277 | 269+20.09 | -121.69 | |
| 56 | 21+84.00 | 496905.29 | 2245784.27 | CLXRW1277 | 269+44.09 | -121.17 | N88°9'37"E |
| 57 | 22+00.00 | 496905.80 | 2245800.26 | CLXRW1277 | 269+60.06 | -120.20 | |
| 58 | 22+16.00 | 496906.32 | 2245816.26 | CLXRW1277 | 269+76.03 | -119.23 | |
| 59 | 22+40.00 | 496907.09 | 2245840.24 | CLXRW1277 | 269+99.98 | -117.78 | |
| 60 | 22+64.00 | 496906.53 | 2245864.24 | CLXRW1277 | 270+23.82 | -115.00 | |
| 61 | 22+88.00 | 496905.97 | 2245888.23 | CLXRW1277 | 270+47.66 | -112.22 | |
| 62 | 23+12.00 | 496905.41 | 2245912.22 | CLXRW1277 | 270+71.50 | -109.44 | S88°40'4"E |
| 63 | 23+36.00 | 496904.86 | 2245936.22 | CLXRW1277 | 270+95.34 | -106.67 | |
| 64 | 23+60.00 | 496904.30 | 2245960.21 | CLXRW1277 | 271+19.18 | -103.89 | |
| 65 | 23+84.00 | 496903.74 | 2245984.20 | CLXRW1277 | 271+43.02 | -101.11 | |
| 66 | 24+08.00 | 496903.18 | 2246008.20 | CLXRW1277 | 271+66.86 | -98.34 | |
| 67 | 24+32.00 | 496902.62 | 2246032.19 | CLXRW1277 | 271+90.69 | -95.56 | |
| 68 | 24+56.00 | 496904.05 | 2246056.15 | CLXRW1277 | 272+14.68 | -94.76 | |
| 69 | 24+80.00 | 496905.47 | 2246080.11 | CLXRW1277 | 272+38.67 | -93.96 | |
| 70 | 25+04.00 | 496906.90 | 2246104.06 | CLXRW1277 | 272+62.65 | -93.16 | |
| 71 | 25+28.00 | 496908.33 | 2246128.02 | CLXRW1277 | 272+86.64 | -92.36 | |
| 72 | 25+52.00 | 496909.75 | 2246151.98 | CLXRW1277 | 273+10.63 | -91.56 | |
| 73 | 25+76.00 | 496911.18 | 2246175.94 | CLXRW1277 | 273+34.61 | -90.77 | |
| 74 | 26+00.00 | 496912.60 | 2246199.90 | CLXRW1277 | 273+58.60 | -89.97 | N86°35'41"E |
| 75 | 26+24.00 | 496914.03 | 2246223.85 | CLXRW1277 | 273+82.59 | -89.17 | |
| 76 | 26+48.00 | 496915.45 | 2246247.81 | CLXRW1277 | 274+06.57 | -88.37 | |
| 77 | 26+72.00 | 496916.88 | 2246271.77 | CLXRW1277 | 274+30.56 | -87.57 | |
| 78 | 26+96.00 | 496918.30 | 2246295.73 | CLXRW1277 | 274+54.55 | -86.77 | |
| 79 | 27+20.00 | 496919.73 | 2246319.68 | CLXRW1277 | 274+78.54 | -85.97 | |
| 80 | 27+44.00 | 496921.16 | 2246343.64 | CLXRW1277 | 275+02.52 | -85.17 | |
| 81 | 27+68.00 | 496925.49 | 2246367.25 | CLXRW1277 | 275+26.43 | -87.30 | N79°35'41"E |
| 82 | 27+92.00 | 496930.31 | 2246390.76 | CLXRW1277 | 275+50.28 | -89.93 | |
| 83 | 28+16.00 | 496935.13 | 2246414.27 | CLXRW1277 | 275+74.14 | -92.55 | |
| 84 | 28+40.00 | 496939.95 | 2246437.78 | CLXRW1277 | 275+98.00 | -95.17 | |
| 85 | 28+64.00 | 496944.77 | 2246461.29 | CLXRW1277 | 276+21.85 | -97.80 | |
| 86 | 28+88.00 | 496949.59 | 2246484.80 | CLXRW1277 | 276+45.71 | -100.42 | |
| 87 | 29+12.00 | 496954.41 | 2246508.31 | CLXRW1277 | 276+69.56 | -103.04 | N78°24'47"E |
| 88 | 29+36.00 | 496959.23 | 2246531.82 | CLXRW1277 | 276+93.42 | -105.67 | |
| 89 | 29+60.00 | 496964.05 | 2246555.33 | CLXRW1277 | 277+17.28 | -108.29 | |
| 90 | 29+84.00 | 496968.87 | 2246578.84 | CLXRW1277 | 277+41.13 | -110.91 | |
| 91 | 30+08.00 | 496973.69 | 2246602.36 | CLXRW1277 | 277+64.99 | -113.53 | |
| 92 | 30+32.00 | 496978.52 | 2246625.87 | CLXRW1277 | 277+88.53 | -116.18 | |
| 93 | 30+56.00 | 496983.34 | 2246649.38 | CLXRW1277 | 278+11.89 | -118.92 | |
| 94 | 30+80.00 | 496985.84 | 2246673.25 | CLXRW1277 | 278+35.40 | -119.41 | N84°1'5"E |
| 95 | 31+04.00 | 496988.34 | 2246697.12 | CLXRW1277 | 278+58.90 | -120.00 | |
| 96 | 31+28.00 | 496988.52 | 2246721.11 | CLXRW1277 | 278+82.35 | -118.37 | |
| 97 | 31+52.00 | 496988.70 | 2246745.11 | CLXRW1277 | 279+05.82 | -116.83 | |
| 98 | 31+76.00 | 496988.88 | 2246769.11 | CLXRW1277 | 279+29.30 | -115.40 | |
| 99 | 32+00.00 | 496989.06 | 2246793.11 | CLXRW1277 | 279+52.80 | -114.06 | N89°34'12"E |
| 100 | 32+24.00 | 496989.24 | 2246817.11 | CLXRW1277 | 279+76.30 | -112.81 | |
| 101 | 32+48.00 | 496989.42 | 2246841.11 | CLXRW1277 | 279+99.81 | -111.67 | |
| 102 | 32+72.00 | 496989.60 | 2246865.11 | CLXRW1277 | 280+23.33 | -110.63 | |

CALCULATED RFV
CHECKED TJW

SURVEY CONTROL

SUM-77 / 277 / 224

1078
1288

O:\2017\2017258\ProjectData\SUM\106002\Design\Structures\Wall_Noise_General_Sheets\106002_Schematic_Table_K.dgn Sheet 1 1/17/2021 6:57:35 PM rvitelli

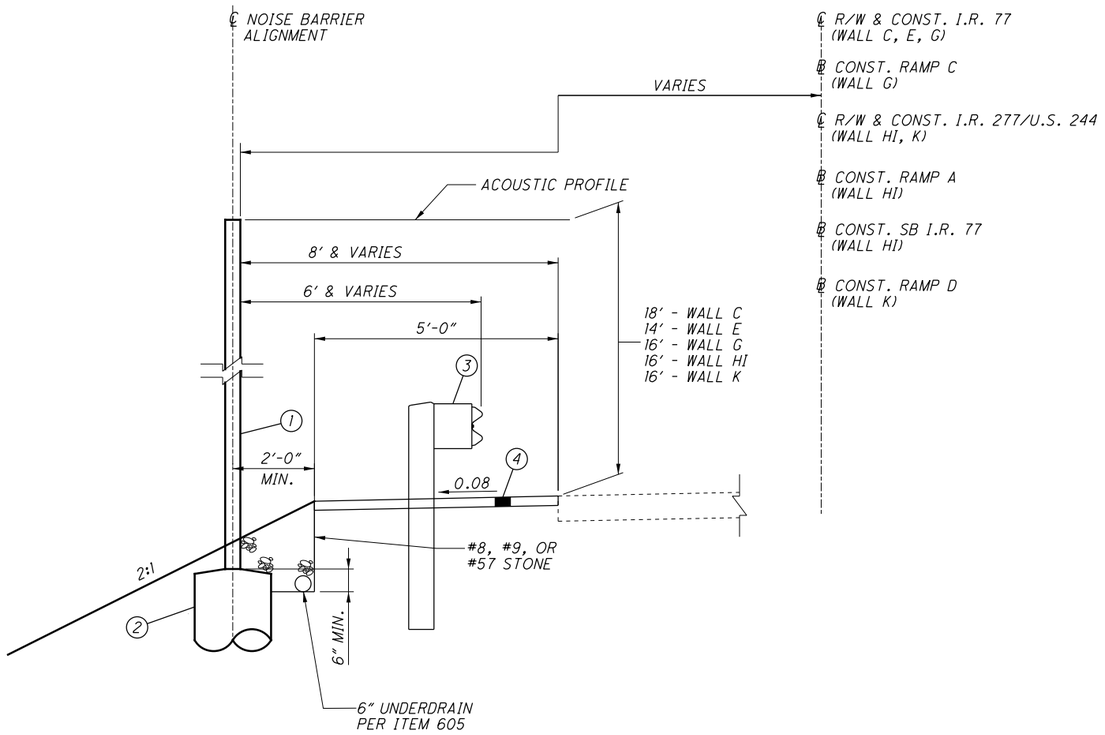


## TYPICAL NOISE WALL

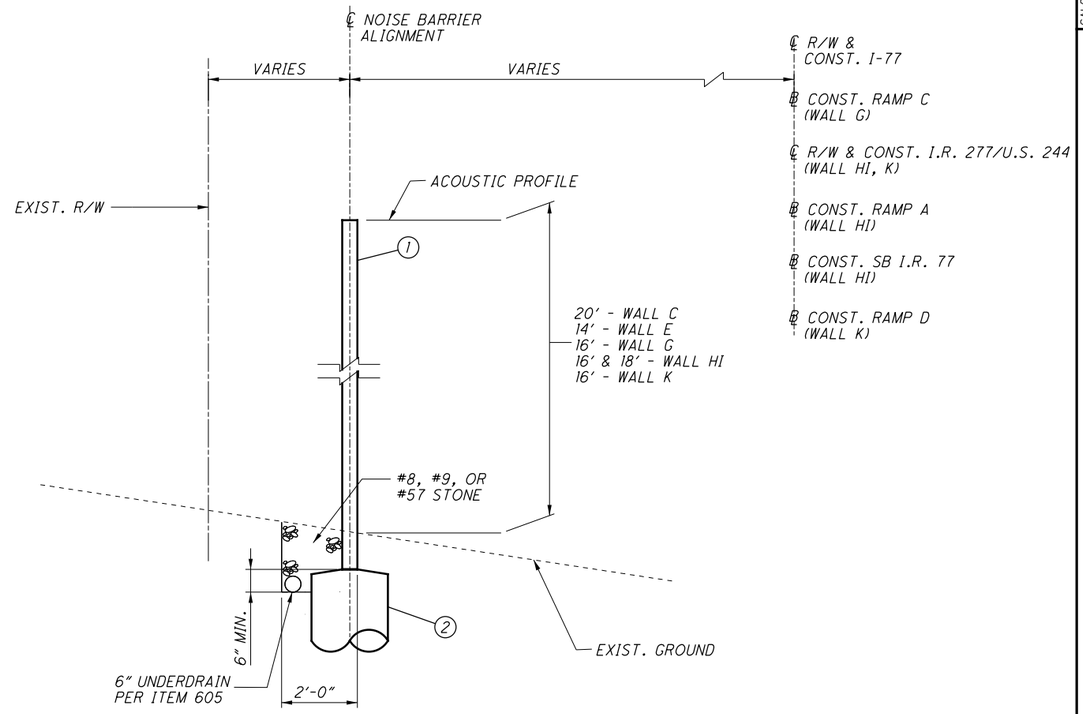


## TYPICAL NOISE WALL

RIGHT-OF-WAY LOCATION

## TYPICAL NOISE WALL

ROADWAY SHOULDER LOCATION

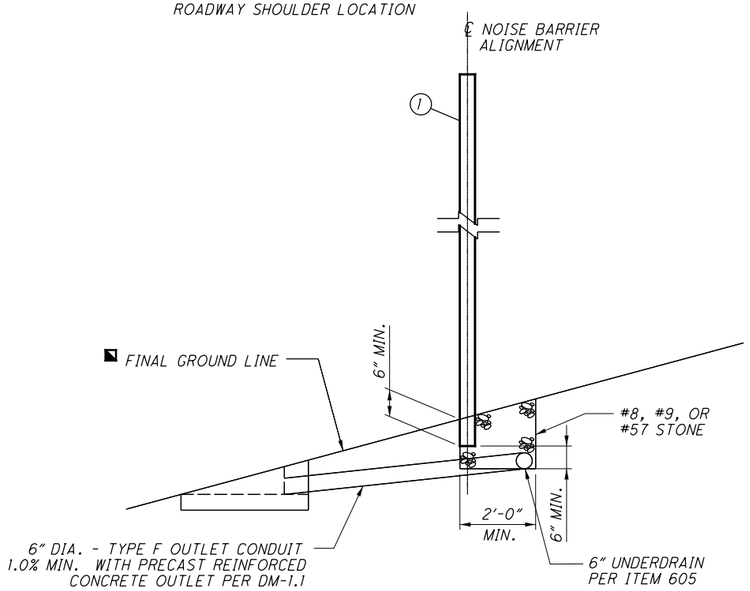


## TYPICAL NOISE BARRIER DRAINAGE OUTLET DETAIL

◪ MINOR GRADING ADJUSTMENT MAY BE NECESSARY TO PROVIDE 6″ MINIMUM BURIED WALL.

## LEGEND:

(1) ITEM SPECIAL - NOISE BARRIER (REFLECTIVE)

(2) ITEM 524 - DRILLED SHAFT

(3) ITEM 606 - GUARDRAIL, TYPE MGS

(4) ITEM 441 - 2″ ASPHALT CONCRETE INTERMEDIATE COURSE, (448), (UNDER GUARDRAIL), AS PER PLAN

## TYPICAL NOISE BARRIER DRAINAGE NOTES:

1. CONSTRUCT A TRENCH WITH A MINIMUM LONGITUDINAL SLOPE OF 1.0% UNDER THE NOISE BARRIER PANELS AS SHOWN IN THE TYPICAL ELEVATION.
2. PROVIDE UNDERDRAIN SLOPE OF 1.0% MINIMUM OR AS SPECIFIED IN PROJECT PLANS. INSTALL IN ACCORDANCE WITH ITEM 605.
3. OUTLET CONDUIT TO BE SPACED AT 500′ MAX.; INSTALL IN ACCORDANCE WITH ITEM 605.

## NOTES:

1. SEE ROADWAY TYPICAL SECTIONS FOR DETAILS AND ITEMS NOT SHOWN.
2. DRILLED SHAFTS AND ALL NOISE WALL DRAINAGE APPURTENANCES INCLUDING 6″ PIPE, STONE AND PRECAST OUTLETS ARE INCLUDED WITH NOISE WALL FOR PAYMENT. SEE STD. DWG. NBS-1-09 FOR MORE INFORMATION.

CALCULATED RFV
CHECKED TJW

# NOISE BARRIER TYPICAL SECTIONS

SUM-77 / 277 / 224

1079
1288

O:\2017\2017258\ProjectData\SUM\106002\Design\Structures\Wall_Noise_General_Sheets\106002_00C_WD001.dgn Sheet 1/17/2021 6:57:37 PM rvitelli

## ITEM 606 - SPECIAL - NOISE WALL BARRIER (REFLECTIVE)

NOISE WALL CONSTRUCTION SHALL ADHERE TO ODOT STANDARD DRAWING NBS-1-09. UNLESS OTHERWISE NOTED HEREIN, ALL GENERAL NOTES LISTED IN THE STANDARD SHALL APPLY FOR THE DESIGN SPECIFICATIONS, DESIGN LOADS, MATERIALS, ETC. FOR THESE WALLS. THOSE ITEMS THAT DEVIATE FROM THE NOTES LISTED IN THE STANDARD ARE DESCRIBED BELOW.

MATERIAL SPECIFICATIONS:

FOAM BACKER ROD:
THE BACKER ROD SHALL BE AN EXPANDED, CLOSED CELL POLYETHYLENE FOAM. THE BACKER ROD DIAMETER SHALL BE 1-¼" ϕ. OTHER BACKUP MATERIALS (PAPER, ROPE AND OPEN CELL FOAM) ARE NOT ACCEPTABLE. FURNISH FOAM BACKER ROD MEETING ASTM D5249 TYPE I OR TYPE 3.

SHOP DRAWINGS:

PROVIDE SHOP DRAWINGS FOR ALL NOISE WALL COMPONENTS THAT REQUIRE SHOP FABRICATION. INCLUDE THE FABRICATION SCHEDULE FOR ALL NOISE BARRIER WALL COMPONENTS IN THE PROJECT PROGRESS SCHEDULE AS REQUIRED BY C&MS 108.02.

THE SHOP DRAWINGS SHALL BE SIGNED, SEALED AND DATED BY AN OHIO REGISTERED ENGINEER. ALL MODIFICATIONS TO THE STRUCTURAL DESIGN OF THE PANELS, POSTS, BASE PLATES OR ANCHORAGES PROVIDED BY THIS STANDARD DRAWING SHALL BE CLEARLY NOTED ON THE SHOP DRAWINGS AND BE ACCOMPANIED WITH SUPPORTING CALCULATIONS STAMPED BY TWO OHIO REGISTERED ENGINEERS. DEPARTMENT ACCEPTANCE OF THE SHOP DRAWINGS AND SUPPORTING CALCULATIONS DOES NOT RELIEVE THE CONTRACTOR FROM RESPONSIBILITY FOR ERRORS AND OMISSIONS FOUND AFTER ACCEPTANCE OF THE SUBMITTAL.

THE CONTRACTOR SHALL PROVIDE AN ELECTRONINC COPY OF A WRITTEN ACCEPTANCE LETTER THAT DOCUMENTS ACCEPTANCE OF THE SHOP DRAWINGS INCLUDING CONFIRMATION OF FIELD VERIFICATION, AS REQUIRED, AND DESCRIPTIONS OF ISSUES RESOLVED BETWEEN THE CONTRACTOR, THE FABRICATOR AND THE DEPARTMENT. BY ACCEPTING THESE DRAWINGS, THE CONTRACTOR REPRESENTS TO THE DEPARTMENT THAT ALL DIMENSIONS AND ELEVATIONS OF CONDITIONS SHOWN ON THE PLANS HAVE BEEN FIELD MEASURED AND VERIFIED, AND THAT THESE SHOP DRAWINGS COMPLY WITH ALL THE MATERIALS REQUIREMENTS, CONSTRUCTION REQUIREMENTS AND CONTRACT REQUIREMENTS. THE CONTRACTOR FURTHER REPRESENTS THAT THESE DRAWINGS HAVE BEEN COORDINATED AND VERIFIED WITH THE DETAILS OF THE WORK TO BE PERFORMED BY OTHER FABRICATORS AND ENTITIES ON THE PROJECT. DELAYS TO THE CONTRACTOR FOR INCORRECT FABRICATION AS A RESULT OF FAILURE TO COORDINATE OR PERFORM THIS ACCEPTANCE ARE NON-EXCUSABLE ACCORDING TO C&MS 108.06.E.

ALL ELECTRONIC DOCUMENTS SHALL BE IN PORTABLE DOCUMENT FORMAT (PDF). SHOP DRAWINGS SHALL BE SUBMITTED IN 11' X 17" SHEET SIZE AND ACCEPTANCE LETTERS SHALL BE SUBMITTED IN 8 ½" X 11" SHEET SIZE.

CONCRETE NOISE BARRIER PANELS AND POSTS:

EVERY PRODUCER OF PRECAST CONCRETE NOISE BARRIER COMPONENTS SUPPLIED TO THE PROJECT SHALL BE CERTIFIED IN ACCORDANCE WITH SUPPLEMENT 1073. THE DEPARTMENT WILL NOT ACCEPT PRECAST COMPONENTS FROM NON-CERTIFIED PLANTS. THE CONCRETE SUPPLIED FOR CONCRETE POSTS AND PANELS SHALL MEET THE REQUIREMENTS SPECIFIED ABOVE UNDER SECTION 6, MATERIAL SPECIFICATIONS.

NOISE BARRIERS REQUIRE A REINFORCED INTEGRAL CAP (COPING) ON THE TOP OF THE TOP PANELS AND INTEGRAL REINFORCED CONCRETE CAP ON TOP OF THE POSTS.

REMOVE LEACHING OR EFFLORESCENCE THAT OCCURS PRIOR TO FINAL ACCEPTANCE OF THE ENTIRE PROJECT AND RESEAL THE AREA AT NO EXPENSE TO THE DEPARTMENT. THIS SHALL ALSO APPLY IN AREAS WHERE A PARTIAL ACCEPTANCE OF THE COMPLETED WALLS MAY HAVE BEEN GRANTED.

THE FOLLOWING REQUIREMENTS FOR THE CONCRETE MIX DESIGN FOR POSTS AND FINIALS IS REQUIRED:

a. IN ADDITION TO THE SECTION 6. MATERIAL SPECIFICATIONS, CONCRETE, OF THE GENERAL NOTES FOR ITEM SPECIAL - NOISE BARRIERS, FROM THE STATE OF OHIO DEPARTMENT OF TRANSPORTATION, OFFICE OF STRUCTURAL ENGINEERING STANDARD DRAWING NBS-1-09 - NOISE BARRIER SPECIFICATIONS FOR GROUND MOUNTED APPLICATIONS, THE CONCRETE MIX DESIGN FOR POSTS, AND FINIALS SHALL CONTAIN A PERMANENT, NON-SOLUBLE CRYSTALLINE CAPILLARY WATERPROOFING ADMIXTURE. PENETRON, BASF MASTERLITE 300D, SIKA WT-240P AND SIKA MIX AE-6 ARE ODOT APPROVED CONCRETE WATERPROOFING ADMIXTURES.

ITEM 606 - SPECIAL - NOISE BARRIER (REFLECTIVE), INFINITY WALL

PANEL IDS 1-14 OF NOISE BARRIER E SHALL BE MANUFACTURED AND DELIVERED TO THE PROJECT SITE BY NOISE WALL BARRIER (NWB) LLC. THE CONTRACTOR IS DIRECTED TO CONTACT JIM THOMPSON OF NWB AT 614-429-7635 TO COORDINATE PROJECT SCHEDULES INCLUDING, BUT NOT LIMITED TO, MANUFACTURE AND DELIVERY OF NOISE BARRIER PANELS. NWB SHALL PROVIDE THE INFINITY NOISE BARRIER PANELS AT THE SAME COST AS ITEM - 606 NOISE BARRIER (REFLECTIVE). THE PROVIDED NOISE BARRIER PANELS SHALL MATCH DETAILS IN NBS-1-09. THE PANELS SHALL MATCH THE PANEL SIZES IN THE NOISE WALL SHOP DRAWINGS AND SHALL MATCH COLOR AND TEXTURE OF CONCRETE PANELS IN THE REMAINDER OF THE WALL SECTION. INSTALLATION OF THESE PANELS WILL BE PERFORMED BY THE PRIME CONTRACTOR. THE POSTS SHALL BE PROVIDED BY THE CONRETE NOISE WALL SUPPLIER, NOT NWB.

PAYMENT FOR THESE SHALL BE INCLUDED IN THE UNIT PRICE BID PER SQUARE FOOT ITEM 606 - SPECIAL - NOISE BARRIER (RELECTIVE), INFINITY WALL, UNLESS OTHERWISE NOTED, AND SHALL INCLUDE ALL LABOR, EQUIPMENT, MATERIALS AND INCIDENTALS NECESSARY TO COMPLETE THE ABOVE WORK.

CALCULATED RFV | CHECKED DGN

# NOISE BARRIER GENERAL NOTES

SUM-77/277/224

1080
1288

| REVISIONS | | |
|---|---|---|
| NO. | DATE | DESCRIPTION |
| 1 | 03/23/21 | PHONE NUMBER REVISED |

O:\2017\2017258\ProjectData\SUM\106002\Design\Structures\Wall_Noise_General_Sheets\106002_00C_WN001.dgn Sheet 3/23/2021 2:44:49 PM pfry

## NOTE:

REFER TO NOISE BARRIER SPECIFICATIONS AND STANDARD DRAWINGS NBS-1-09. INTEGRAL POST CAPS AND INTEGRAL COPING SHALL BE UTILIZED FOR ALL NOISE BARRIERS. INTEGRAL CAP AND PANEL DETAIL TO BE APPROVED BY ENGINEER PRIOR TO USE.

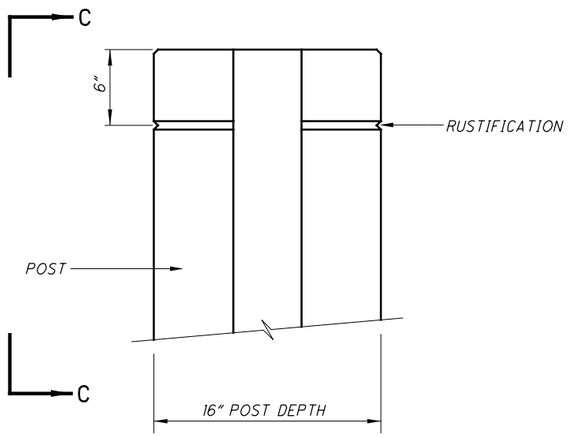


SECTION B-B

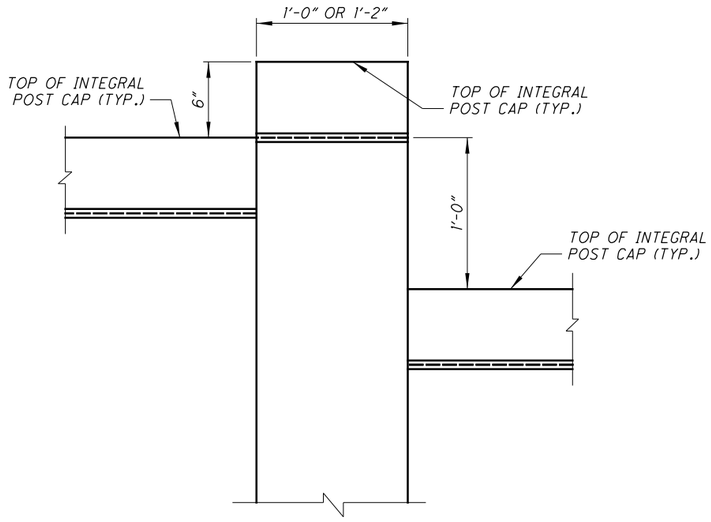


VIEW C-C

## COLOR SCHEDULE

| NON-HIGHWAY SIDE OF NOISE WALL COLOR SCHEDULE | | |
|---|---|---|
| NSA | COLOR | FEDERAL COLOR ID # |
| C | BEIGE | 17778 |
| E | TAN | 23522 |
| G | TAN | 23522 |
| HI | TAN | 23522 |
| K | BEIGE | 17778 |

| HIGHWAY SIDE OF NOISE WALL COLOR SCHEDULE | | |
|---|---|---|
| NSA | COLOR | FEDERAL COLOR ID # |
| C | GENERAL/TAN | 23522 |
| E | GENERAL/TAN | 23522 |
| G | GENERAL/TAN | 23522 |
| HI | GENERAL/TAN | 23522 |
| K | GENERAL/TAN | 23522 |

CONCRETE SEALER TREATMENT SHALL BE LIMITED TO ENTIRE PANEL AND INTEGRAL CAP SURFACES ONLY. NOISE WALL POSTS AND POST CAPS SHALL REMAIN UNTREATED.

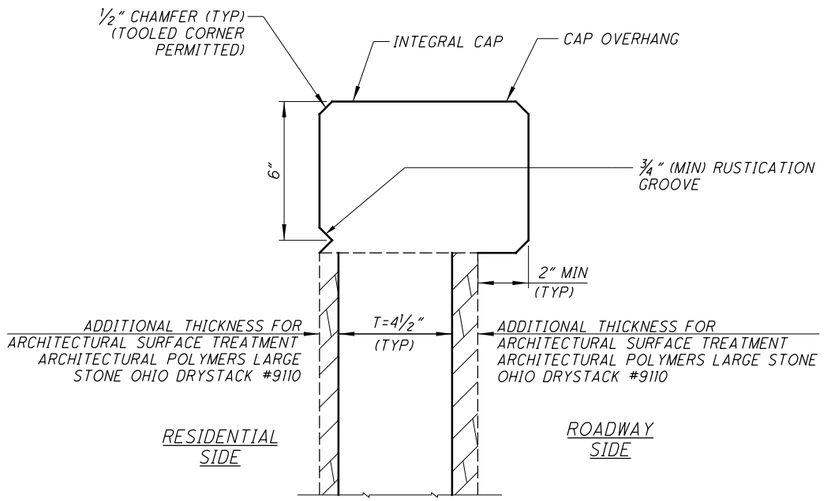


SECTION A-A REFLECTIVE PANEL WITH INTEGRAL CAP

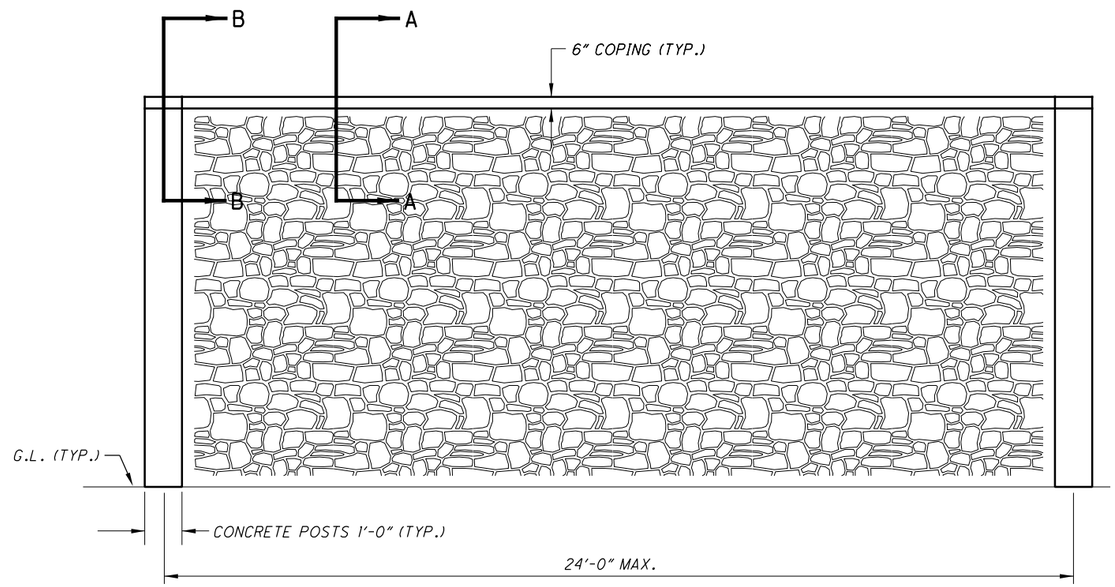


NOISE BARRIER DETAIL - ARCHITECTURAL POLYMERS LARGE STONE OHIO DRYSTACK #9110

BOTH SIDES
(OR ENGINEER APPROVED EQUAL)

CALCULATED RF V
CHECKED DGN

NOISE BARRIER DETAILS

SUM-77/277/224

1081
1288

O:\2017\2017258\ProjectData\SUM\106002\Design\Structures\Wall_Noise_General_Sheets\106002_00C_WD002.dgn Sheet 1/17/2021 6:57:43 PM rvitelli

## NOISE BARRIER C1

| PANEL NO. | DRILLED SHAFT NO. | POST TYPE | WORKPOINT STATION | DRILLED SHAFT NO. | POST TYPE | WORKPOINT STATION | TOP OF WALL | BOTTOM OF WALL | LENGTH OF PANEL (LFT) | HEIGHT OF PANEL (LFT) | 606 SPECIAL - NOISE BARRIER (REFLECTIVE) SF |
|---|---|---|---|---|---|---|---|---|---|---|---|
| 1 | 1 | B-16" | 10+00.00 | 2 | A-20" | 10+24.00 | 1130.0 | 1115.00 | 24.00 | 15.0 | 360 |
| 2 | 2 | A-20" | 10+24.00 | 3 | A-20" | 10+48.00 | 1130.0 | 1109.00 | 24.00 | 21.0 | 504 |
| 3 | 3 | A-20" | 10+48.00 | 4 | A-20" | 10+72.00 | 1130.0 | 1107.00 | 24.00 | 23.0 | 552 |
| 4 | 4 | A-20" | 10+72.00 | 5 | A-20" | 10+96.00 | 1129.0 | 1106.00 | 24.00 | 23.0 | 552 |
| 5 | 5 | A-20" | 10+96.00 | 6 | A-20" | 11+20.00 | 1128.0 | 1106.00 | 24.00 | 22.0 | 528 |
| 6 | 6 | A-20" | 11+20.00 | 7 | A-20" | 11+44.00 | 1128.0 | 1106.00 | 24.00 | 22.0 | 528 |
| 7 | 7 | A-20" | 11+44.00 | 8 | A-20" | 11+68.00 | 1128.0 | 1105.50 | 24.00 | 22.5 | 540 |
| 8 | 8 | A-20" | 11+68.00 | 9 | A-20" | 11+92.00 | 1127.0 | 1105.00 | 24.00 | 22.0 | 528 |
| 9 | 9 | A-20" | 11+92.00 | 10 | A-20" | 12+16.00 | 1126.0 | 1104.50 | 24.00 | 21.5 | 516 |
| 10 | 10 | A-20" | 12+16.00 | 11 | A-20" | 12+40.00 | 1126.0 | 1104.00 | 24.00 | 22.0 | 528 |
| 11 | 11 | A-20" | 12+40.00 | 12 | A-20" | 12+64.00 | 1125.0 | 1103.00 | 24.00 | 22.0 | 528 |
| 12 | 12 | A-20" | 12+64.00 | 13 | A-20" | 12+88.00 | 1124.0 | 1102.50 | 24.00 | 21.5 | 516 |
| 13 | 13 | A-20" | 12+88.00 | 14 | A-20" | 13+12.00 | 1124.0 | 1102.00 | 24.00 | 22.0 | 528 |
| 14 | 14 | A-20" | 13+12.00 | 15 | A-20" | 13+36.00 | 1123.0 | 1101.00 | 24.00 | 22.0 | 528 |
| 15 | 15 | A-20" | 13+36.00 | 16 | A-20" | 13+60.00 | 1122.0 | 1099.50 | 24.00 | 22.5 | 540 |
| 16 | 16 | A-20" | 13+60.00 | 17 | A-20" | 13+84.00 | 1121.0 | 1098.50 | 24.00 | 22.5 | 540 |
| 17 | 17 | A-20" | 13+84.00 | 18 | A-20" | 14+08.00 | 1121.0 | 1098.50 | 24.00 | 22.5 | 540 |
| 18 | 18 | A-20" | 14+08.00 | 19 | A-20" | 14+32.00 | 1122.0 | 1099.00 | 24.00 | 23.0 | 552 |
| 19 | 19 | A-20" | 14+32.00 | 20 | A-20" | 14+56.00 | 1123.0 | 1100.50 | 24.00 | 22.5 | 540 |
| 20 | 20 | A-20" | 14+56.00 | 21 | A-20" | 14+80.00 | 1123.0 | 1102.00 | 24.00 | 21.0 | 504 |
| 21 | 21 | A-20" | 14+80.00 | 22 | A-20" | 15+04.00 | 1123.0 | 1103.00 | 24.00 | 20.0 | 480 |
| 22 | 22 | A-20" | 15+04.00 | 23 | A-20" | 15+28.00 | 1123.0 | 1103.00 | 24.00 | 20.0 | 480 |
| 23 | 23 | A-20" | 15+28.00 | 24 | A-20" | 15+52.00 | 1123.0 | 1103.00 | 24.00 | 20.0 | 480 |
| 24 | 24 | A-20" | 15+52.00 | 25 | A-20" | 15+76.00 | 1123.0 | 1103.00 | 24.00 | 20.0 | 480 |
| 25 | 25 | A-20" | 15+76.00 | 26 | A-20" | 16+00.00 | 1123.0 | 1101.00 | 24.00 | 22.0 | 528 |
| 26 | 26 | A-20" | 16+00.00 | 27 | A-20" | 16+24.00 | 1122.0 | 1100.50 | 24.00 | 21.5 | 516 |
| 27 | 27 | A-20" | 16+24.00 | 28 | A-20" | 16+42.00 | 1122.0 | 1100.50 | 18.00 | 21.5 | 387 |
| 28 | 28 | A-20" | 16+42.00 | 29 | A-20" | 16+60.00 | 1122.0 | 1100.50 | 18.00 | 21.5 | 387 |
| 29 | 29 | A-20" | 16+60.00 | 30 | A-20" | 16+84.00 | 1122.0 | 1100.00 | 24.00 | 22.0 | 528 |
| 30 | 30 | A-20" | 16+84.00 | 31 | A-20" | 17+08.00 | 1122.0 | 1100.50 | 24.00 | 21.5 | 516 |
| 31 | 31 | A-20" | 17+08.00 | 32 | A-20" | 17+32.00 | 1122.0 | 1100.50 | 24.00 | 21.5 | 516 |
| 32 | 32 | A-20" | 17+32.00 | 33 | A-20" | 17+56.00 | 1122.0 | 1100.50 | 24.00 | 21.5 | 516 |
| 33 | 33 | A-20" | 17+56.00 | 34 | A-20" | 17+80.00 | 1122.0 | 1100.50 | 24.00 | 21.5 | 516 |
| 34 | 34 | A-20" | 17+80.00 | 35 | A-20" | 18+04.00 | 1121.0 | 1099.50 | 24.00 | 21.5 | 516 |
| 35 | 35 | A-20" | 18+04.00 | 36 | A-20" | 18+28.00 | 1120.0 | 1098.50 | 24.00 | 21.5 | 516 |
| 36 | 36 | A-20" | 18+28.00 | 37 | A-20" | 18+40.00 | 1119.0 | 1097.00 | 12.00 | 22.0 | 264 |
| 37 | 37 | A-20" | 18+40.00 | 38 | A-20" | 18+52.00 | 1118.0 | 1096.00 | 12.00 | 22.0 | 264 |
| 38 | 38 | A-20" | 18+52.00 | 39 | A-20" | 18+64.00 | 1117.0 | 1095.00 | 12.00 | 22.0 | 264 |
| 39 | 39 | A-20" | 18+64.00 | 40 | A-20" | 18+76.00 | 1116.0 | 1094.00 | 12.00 | 22.0 | 264 |
| 40 | 40 | A-20" | 18+76.00 | 41 | A-20" | 18+88.00 | 1115.0 | 1093.00 | 12.00 | 22.0 | 264 |
| 41 | 41 | A-20" | 18+88.00 | 42 | A-20" | 19+00.00 | 1114.0 | 1091.50 | 12.00 | 22.5 | 270 |
| 42 | 42 | A-20" | 19+00.00 | 43 | A-20" | 19+12.00 | 1113.0 | 1090.50 | 12.00 | 22.5 | 270 |
| 43 | 43 | A-20" | 19+12.00 | 44 | A-20" | 19+24.00 | 1112.0 | 1089.50 | 12.00 | 22.5 | 270 |
| 44 | 44 | A-20" | 19+24.00 | 45 | A-20" | 19+36.00 | 1111.0 | 1088.50 | 12.00 | 22.5 | 270 |
| 45 | 45 | A-20" | 19+36.00 | 46 | A-20" | 19+48.00 | 1110.0 | 1087.50 | 12.00 | 22.5 | 270 |
| 46 | 46 | A-20" | 19+48.00 | 47 | A-20" | 19+60.00 | 1109.0 | 1086.50 | 12.00 | 22.5 | 270 |
| 47 | 47 | A-20" | 19+60.00 | 48 | A-20" | 19+72.00 | 1108.0 | 1085.50 | 12.00 | 22.5 | 270 |
| 48 | 48 | A-20" | 19+72.00 | 49 | A-20" | 19+96.00 | 1107.0 | 1084.00 | 24.00 | 23.0 | 552 |
| 49 | 49 | A-20" | 19+96.00 | 50 | A-20" | 20+20.00 | 1106.0 | 1083.00 | 24.00 | 23.0 | 552 |
| 50 | 50 | A-20" | 20+20.00 | 51 | A-20" | 20+44.00 | 1105.0 | 1082.00 | 24.00 | 23.0 | 552 |

## NOISE BARRIER C1

| PANEL NO. | DRILLED SHAFT NO. | POST TYPE | WORKPOINT STATION | DRILLED SHAFT NO. | POST TYPE | WORKPOINT STATION | TOP OF WALL | BOTTOM OF WALL | LENGTH OF PANEL (LFT) | HEIGHT OF PANEL (LFT) | 606 SPECIAL - NOISE BARRIER (REFLECTIVE) SF |
|---|---|---|---|---|---|---|---|---|---|---|---|
| 51 | 51 | A-20" | 20+44.00 | 52 | A-20" | 20+68.00 | 1105.0 | 1082.50 | 24.00 | 22.5 | 540 |
| 52 | 52 | A-20" | 20+68.00 | 53 | A-20" | 20+92.00 | 1105.0 | 1082.50 | 24.00 | 22.5 | 540 |
| 53 | 53 | A-20" | 20+92.00 | 54 | A-20" | 21+16.00 | 1105.0 | 1084.00 | 24.00 | 21.0 | 504 |
| 54 | 54 | A-20" | 21+16.00 | 55 | A-20" | 21+40.00 | 1105.0 | 1084.50 | 24.00 | 20.5 | 492 |
| 55 | 55 | A-20" | 21+40.00 | 56 | A-20" | 21+64.00 | 1105.0 | 1084.50 | 24.00 | 20.5 | 492 |
| 56 | 56 | A-20" | 21+64.00 | 57 | A-20" | 21+88.00 | 1105.0 | 1084.50 | 24.00 | 20.5 | 492 |
| 57 | 57 | A-20" | 21+88.00 | 58 | A-20" | 22+12.00 | 1105.0 | 1083.50 | 24.00 | 21.5 | 516 |
| 58 | 58 | A-20" | 22+12.00 | 59 | B-20" | 22+36.00 | 1104.0 | 1082.00 | 24.00 | 22.0 | 528 |
| 59 | 59 | B-20" | 22+36.00 | 60 | B-20" | 22+60.00 | 1103.0 | 1080.50 | 24.00 | 22.5 | 540 |

## NOISE BARRIER C2

| PANEL NO. | DRILLED SHAFT NO. | POST TYPE | WORKPOINT STATION | DRILLED SHAFT NO. | POST TYPE | WORKPOINT STATION | TOP OF WALL | BOTTOM OF WALL | LENGTH OF PANEL (LFT) | HEIGHT OF PANEL (LFT) | 606 SPECIAL - NOISE BARRIER (REFLECTIVE) SF |
|---|---|---|---|---|---|---|---|---|---|---|---|
| 60 | 61 | B-16" | 110+00.00 | 62 | A-16" | 110+12.00 | 1084.0 | 1074.50 | 12.00 | 9.5 | 114 |
| 61 | 62 | A-16" | 110+12.00 | 63 | A-20" | 110+24.00 | 1088.0 | 1074.50 | 12.00 | 13.5 | 162 |
| 62 | 63 | A-20" | 110+24.00 | 64 | A-20" | 110+48.00 | 1092.0 | 1073.50 | 24.00 | 18.5 | 444 |
| 63 | 64 | A-20" | 110+48.00 | 65 | A-20" | 110+72.00 | 1092.0 | 1073.00 | 24.00 | 19.0 | 456 |
| 64 | 65 | A-20" | 110+72.00 | 66 | A-20" | 110+96.00 | 1092.0 | 1072.50 | 24.00 | 19.5 | 468 |
| 65 | 66 | A-20" | 110+96.00 | 67 | A-20" | 111+20.00 | 1091.0 | 1072.00 | 24.00 | 19.0 | 456 |
| 66 | 67 | A-20" | 111+20.00 | 68 | A-20" | 111+44.00 | 1091.0 | 1071.00 | 24.00 | 20.0 | 480 |
| 67 | 68 | A-20" | 111+44.00 | 69 | A-20" | 111+68.00 | 1090.0 | 1070.50 | 24.00 | 19.5 | 468 |
| 68 | 69 | A-20" | 111+68.00 | 70 | A-20" | 111+92.00 | 1090.0 | 1070.00 | 24.00 | 20.0 | 480 |
| 69 | 70 | A-20" | 111+92.00 | 71 | A-20" | 112+16.00 | 1089.0 | 1069.50 | 24.00 | 19.5 | 468 |
| 70 | 71 | A-20" | 112+16.00 | 72 | A-20" | 112+40.00 | 1088.0 | 1068.50 | 24.00 | 19.5 | 468 |
| 71 | 72 | A-20" | 112+40.00 | 73 | A-20" | 112+64.00 | 1088.0 | 1068.00 | 24.00 | 20.0 | 480 |
| 72 | 73 | A-20" | 112+64.00 | 74 | A-20" | 112+88.00 | 1087.0 | 1067.50 | 24.00 | 19.5 | 468 |
| 73 | 74 | A-20" | 112+88.00 | 75 | A-20" | 113+12.00 | 1086.0 | 1067.00 | 24.00 | 19.0 | 456 |
| 74 | 75 | A-20" | 113+12.00 | 76 | A-20" | 113+36.00 | 1086.0 | 1066.50 | 24.00 | 19.5 | 468 |
| 75 | 76 | A-20" | 113+36.00 | 77 | A-20" | 113+60.00 | 1085.0 | 1065.50 | 24.00 | 19.5 | 468 |
| 76 | 77 | A-20" | 113+60.00 | 78 | A-20" | 113+84.00 | 1085.0 | 1065.00 | 24.00 | 20.0 | 480 |
| 77 | 78 | A-20" | 113+84.00 | 79 | A-20" | 114+08.00 | 1084.0 | 1064.50 | 24.00 | 19.5 | 468 |
| 78 | 79 | A-20" | 114+08.00 | 80 | A-20" | 114+32.00 | 1084.0 | 1064.00 | 24.00 | 20.0 | 480 |
| 79 | 80 | A-20" | 114+32.00 | 81 | A-20" | 114+56.00 | 1083.0 | 1063.50 | 24.00 | 19.5 | 468 |
| 80 | 81 | A-20" | 114+56.00 | 82 | A-20" | 114+80.00 | 1083.0 | 1063.00 | 24.00 | 20.0 | 480 |

CALCULATED RFV
CHECKED TJW

# CALCULATIONS & SUBSUMMARY - NOISE WALL C

SUM-77/277/224

1082
1288

O:\2017\2017258\ProjectData\SUM\106002\Design\Structures\Wall_Noise_C\Sheets\106002_00C_WS001.dgn Sheet 1 1/17/2021 6:57:45 PM rvitelli

## NOISE BARRIER C2

| PANEL NO. | DRILLED SHAFT NO. | POST TYPE | WORKPOINT STATION | DRILLED SHAFT NO. | POST TYPE | WORKPOINT STATION | TOP OF WALL | BOTTOM OF WALL | LENGTH OF PANEL (LFT) | HEIGHT OF PANEL (LFT) | 606 SPECIAL - NOISE BARRIER (REFLECTIVE) SF |
|---|---|---|---|---|---|---|---|---|---|---|---|
| 81 | 82 | A-20" | 114+80.00 | 83 | A-20" | 115+04.00 | 1082.0 | 1062.50 | 24.00 | 19.5 | 468 |
| 82 | 83 | A-20" | 115+04.00 | 84 | A-20" | 115+28.00 | 1081.0 | 1061.50 | 24.00 | 19.5 | 468 |
| 83 | 84 | A-20" | 115+28.00 | 85 | A-20" | 115+52.00 | 1081.0 | 1061.00 | 24.00 | 20.0 | 480 |
| 84 | 85 | A-20" | 115+52.00 | 86 | A-20" | 115+76.00 | 1081.0 | 1060.50 | 24.00 | 20.5 | 492 |
| 85 | 86 | A-20" | 115+76.00 | 87 | A-20" | 116+00.00 | 1080.0 | 1060.00 | 24.00 | 20.0 | 480 |
| 86 | 87 | A-20" | 116+00.00 | 88 | A-20" | 116+24.00 | 1079.0 | 1059.50 | 24.00 | 19.5 | 468 |
| 87 | 88 | A-20" | 116+24.00 | 89 | A-20" | 116+48.00 | 1079.0 | 1059.00 | 24.00 | 20.0 | 480 |
| 88 | 89 | A-20" | 116+48.00 | 90 | A-20" | 116+72.00 | 1078.0 | 1058.50 | 24.00 | 19.5 | 468 |
| 89 | 90 | A-20" | 116+72.00 | 91 | A-20" | 116+96.00 | 1078.0 | 1058.00 | 24.00 | 20.0 | 480 |
| 90 | 91 | A-20" | 116+96.00 | 92 | A-20" | 117+20.00 | 1077.0 | 1057.00 | 24.00 | 20.0 | 480 |
| 91 | 92 | A-20" | 117+20.00 | 93 | A-20" | 117+44.00 | 1076.0 | 1056.50 | 24.00 | 19.5 | 468 |
| 92 | 93 | A-20" | 117+44.00 | 94 | A-20" | 117+68.00 | 1076.0 | 1056.00 | 24.00 | 20.0 | 480 |
| 93 | 94 | A-20" | 117+68.00 | 95 | A-20" | 117+92.00 | 1075.0 | 1055.50 | 24.00 | 19.5 | 468 |
| 94 | 95 | A-20" | 117+92.00 | 96 | A-20" | 118+16.00 | 1075.0 | 1054.50 | 24.00 | 20.5 | 492 |
| 95 | 96 | A-20" | 118+16.00 | 97 | A-20" | 118+40.00 | 1074.0 | 1054.00 | 24.00 | 20.0 | 480 |
| 96 | 97 | A-20" | 118+40.00 | 98 | A-20" | 118+64.00 | 1073.0 | 1053.50 | 24.00 | 19.5 | 468 |
| 97 | 98 | A-20" | 118+64.00 | 99 | A-20" | 118+88.00 | 1073.0 | 1053.00 | 24.00 | 20.0 | 480 |
| 98 | 99 | A-20" | 118+88.00 | 100 | A-20" | 119+12.00 | 1072.0 | 1052.50 | 24.00 | 19.5 | 468 |
| 99 | 100 | A-20" | 119+12.00 | 101 | A-20" | 119+36.00 | 1071.0 | 1051.50 | 24.00 | 19.5 | 468 |
| 100 | 101 | A-20" | 119+36.00 | 102 | D-20" | 119+60.00 | 1071.0 | 1051.00 | 24.00 | 20.0 | 480 |
| 101 | 102 | D-20" | 119+60.00 | 103 | D-20" | 119+84.00 | 1070.0 | 1050.50 | 24.00 | 19.5 | 468 |
| 102 | 103 | D-20" | 119+84.00 | 104 | D-20" | 120+08.00 | 1070.0 | 1050.00 | 24.00 | 20.0 | 480 |
| 103 | 104 | D-20" | 120+08.00 | 105 | D-20" | 120+32.00 | 1069.0 | 1049.50 | 24.00 | 19.5 | 468 |
| 104 | 105 | D-20" | 120+32.00 | 106 | A-20" | 120+56.00 | 1068.0 | 1048.50 | 24.00 | 19.5 | 468 |
| 105 | 106 | A-20" | 120+56.00 | 107 | A-20" | 120+80.00 | 1068.0 | 1048.00 | 24.00 | 20.0 | 480 |
| 106 | 107 | A-20" | 120+80.00 | 108 | A-20" | 121+04.00 | 1067.0 | 1047.50 | 24.00 | 19.5 | 468 |
| 107 | 108 | A-20" | 121+04.00 | 109 | A-20" | 121+28.00 | 1067.0 | 1047.00 | 24.00 | 20.0 | 480 |
| 108 | 109 | A-20" | 121+28.00 | 110 | A-20" | 121+52.00 | 1066.0 | 1046.00 | 24.00 | 20.0 | 480 |
| 109 | 110 | A-20" | 121+52.00 | 111 | A-20" | 121+76.00 | 1065.0 | 1045.50 | 24.00 | 19.5 | 468 |
| 110 | 111 | A-20" | 121+76.00 | 112 | A-20" | 122+00.00 | 1065.0 | 1045.00 | 24.00 | 20.0 | 480 |
| 111 | 112 | A-20" | 122+00.00 | 113 | A-20" | 122+15.00 | 1064.0 | 1044.00 | 15.00 | 20.0 | 300 |
| 112 | 113 | A-20" | 122+15.00 | 114 | A-20" | 122+36.00 | 1064.0 | 1044.00 | 21.00 | 20.0 | 420 |
| 113 | 114 | A-20" | 122+36.00 | 115 | A-20" | 122+51.00 | 1063.0 | 1043.00 | 15.00 | 20.0 | 300 |
| 114 | 115 | A-20" | 122+51.00 | 116 | A-20" | 122+75.00 | 1063.0 | 1043.00 | 24.00 | 20.0 | 480 |
| 115 | 116 | A-20" | 122+75.00 | 117 | A-20" | 122+99.00 | 1062.0 | 1042.50 | 24.00 | 19.5 | 468 |
| 116 | 117 | A-20" | 122+99.00 | 118 | A-20" | 123+23.00 | 1062.0 | 1042.00 | 24.00 | 20.0 | 480 |
| 117 | 118 | A-20" | 123+23.00 | 119 | A-20" | 123+47.00 | 1061.0 | 1041.50 | 24.00 | 19.5 | 468 |
| 118 | 119 | A-20" | 123+47.00 | 120 | A-20" | 123+71.00 | 1060.0 | 1041.00 | 24.00 | 19.0 | 456 |
| 119 | 120 | A-20" | 123+71.00 | 121 | A-20" | 123+95.00 | 1060.0 | 1040.00 | 24.00 | 20.0 | 480 |
| 120 | 121 | A-20" | 123+95.00 | 122 | A-20" | 124+19.00 | 1060.0 | 1039.50 | 24.00 | 20.5 | 492 |

## NOISE BARRIER C2

| PANEL NO. | DRILLED SHAFT NO. | POST TYPE | WORKPOINT STATION | DRILLED SHAFT NO. | POST TYPE | WORKPOINT STATION | TOP OF WALL | BOTTOM OF WALL | LENGTH OF PANEL (LFT) | HEIGHT OF PANEL (LFT) | 606 SPECIAL - NOISE BARRIER (REFLECTIVE) SF |
|---|---|---|---|---|---|---|---|---|---|---|---|
| 121 | 122 | A-20" | 124+19.00 | 123 | A-20" | 124+43.00 | 1059.0 | 1039.00 | 24.00 | 20.0 | 480 |
| 122 | 123 | A-20" | 124+43.00 | 124 | A-20" | 124+67.00 | 1058.0 | 1038.50 | 24.00 | 19.5 | 468 |
| 123 | 124 | A-20" | 124+67.00 | 125 | A-20" | 124+91.00 | 1057.0 | 1037.50 | 24.00 | 19.5 | 468 |
| 124 | 125 | A-20" | 124+91.00 | 126 | A-20" | 125+15.00 | 1057.0 | 1037.00 | 24.00 | 20.0 | 480 |
| 125 | 126 | A-20" | 125+15.00 | 127 | A-20" | 125+39.00 | 1056.0 | 1036.50 | 24.00 | 19.5 | 468 |
| 126 | 127 | A-20" | 125+39.00 | 128 | A-20" | 125+63.00 | 1056.0 | 1036.00 | 24.00 | 20.0 | 480 |
| 127 | 128 | A-20" | 125+63.00 | 129 | A-20" | 125+87.00 | 1055.0 | 1035.50 | 24.00 | 19.5 | 468 |
| 128 | 129 | A-20" | 125+87.00 | 130 | A-20" | 126+11.00 | 1055.0 | 1035.00 | 24.00 | 20.0 | 480 |
| 129 | 130 | A-20" | 126+11.00 | 131 | A-20" | 126+35.00 | 1054.0 | 1034.00 | 24.00 | 20.0 | 480 |
| 130 | 131 | A-20" | 126+35.00 | 132 | A-20" | 126+59.00 | 1053.0 | 1033.50 | 24.00 | 19.5 | 468 |
| 131 | 132 | A-20" | 126+59.00 | 133 | A-20" | 126+83.00 | 1053.0 | 1033.00 | 24.00 | 20.0 | 480 |
| 132 | 133 | A-20" | 126+83.00 | 134 | A-20" | 127+07.00 | 1052.0 | 1032.00 | 24.00 | 20.0 | 480 |
| 133 | 134 | A-20" | 127+07.00 | 135 | A-20" | 127+31.00 | 1051.0 | 1031.50 | 24.00 | 19.5 | 468 |
| 134 | 135 | A-20" | 127+31.00 | 136 | A-20" | 127+55.00 | 1051.0 | 1031.00 | 24.00 | 20.0 | 480 |
| 135 | 136 | A-20" | 127+55.00 | 137 | A-20" | 127+79.00 | 1050.0 | 1030.50 | 24.00 | 19.5 | 468 |
| 136 | 137 | A-20" | 127+79.00 | 138 | A-20" | 128+03.00 | 1049.0 | 1029.50 | 24.00 | 19.5 | 468 |
| 137 | 138 | A-20" | 128+03.00 | 139 | A-20" | 128+27.00 | 1049.0 | 1029.00 | 24.00 | 20.0 | 480 |
| 138 | 139 | A-20" | 128+27.00 | 140 | A-20" | 128+51.00 | 1048.0 | 1028.50 | 24.00 | 19.5 | 468 |
| 139 | 140 | A-20" | 128+51.00 | 141 | A-20" | 128+75.00 | 1047.0 | 1027.50 | 24.00 | 19.5 | 468 |
| 140 | 141 | A-20" | 128+75.00 | 142 | A-20" | 128+99.00 | 1047.0 | 1027.00 | 24.00 | 20.0 | 480 |
| 141 | 142 | A-20" | 128+99.00 | 143 | A-20" | 129+23.00 | 1046.0 | 1026.00 | 24.00 | 20.0 | 480 |
| 142 | 143 | A-20" | 129+23.00 | 144 | A-20" | 129+47.00 | 1045.0 | 1025.50 | 24.00 | 19.5 | 468 |
| 143 | 144 | A-20" | 129+47.00 | 145 | A-20" | 129+71.00 | 1045.0 | 1025.00 | 24.00 | 20.0 | 480 |
| 144 | 145 | A-20" | 129+71.00 | 146 | A-20" | 129+95.00 | 1044.0 | 1024.50 | 24.00 | 19.5 | 468 |
| 145 | 146 | A-20" | 129+95.00 | 147 | A-20" | 130+19.00 | 1044.0 | 1024.00 | 24.00 | 20.0 | 480 |
| 146 | 147 | A-20" | 130+19.00 | 148 | A-20" | 130+38.00 | 1043.0 | 1023.50 | 19.00 | 19.5 | 370.5 |
| 147 | 148 | A-20" | 130+38.00 | 149 | A-20" | 130+57.00 | 1043.0 | 1023.00 | 19.00 | 20.0 | 380 |
| 148 | 149 | A-20" | 130+57.00 | 150 | A-20" | 130+81.00 | 1042.0 | 1022.00 | 24.00 | 20.0 | 480 |
| 149 | 150 | A-20" | 130+81.00 | 151 | B-20" | 130+97.00 | 1041.0 | 1020.00 | 16.00 | 21.0 | 336 |
| | | | | | | | | | | TOTAL | 64584 |

CALCULATED RF V
CHECKED TJW

# CALCULATIONS & SUBSUMMARY - NOISE WALL C

SUM-77 / 277 / 224

1083
1288

O:\2017\2017258\ProjectData\SUM\106002\Design\Structures\Wall_Noise_C\Sheets\106002_00C_WS001.dgn Sheet 2 1/17/2021 6:57:46 PM rvitelli

| NOISE WALL C1 | | | |
|---|---|---|---|
| DRILLED SHAFT NO. | WORKPOINT STATION | TOP OF DRILLED SHAFT ELEVATION | SHAFT LENGTH (FEET) |
| 1 | 10+00.00 | 1114.77 | 24 |
| 2 | 10+24.00 | 1108.58 | 22 |
| 3 | 10+48.00 | 1106.58 | 22 |
| 4 | 10+72.00 | 1105.58 | 19 |
| 5 | 10+96.00 | 1105.58 | 14 |
| 6 | 11+20.00 | 1105.58 | 14 |
| 7 | 11+44.00 | 1105.08 | 14 |
| 8 | 11+68.00 | 1104.55 | 14 |
| 9 | 11+92.00 | 1104.05 | 14 |
| 10 | 12+16.00 | 1103.55 | 14 |
| 11 | 12+40.00 | 1102.55 | 14 |
| 12 | 12+64.00 | 1102.05 | 14 |
| 13 | 12+88.00 | 1101.55 | 14 |
| 14 | 13+12.00 | 1100.55 | 14 |
| 15 | 13+36.00 | 1099.05 | 14 |
| 16 | 13+60.00 | 1098.05 | 14 |
| 17 | 13+84.00 | 1098.05 | 14 |
| 18 | 14+08.00 | 1098.05 | 14 |
| 19 | 14+32.00 | 1098.55 | 14 |
| 20 | 14+56.00 | 1100.05 | 14 |
| 21 | 14+80.00 | 1101.55 | 12 |
| 22 | 15+04.00 | 1102.55 | 12 |
| 23 | 15+28.00 | 1102.55 | 12 |
| 24 | 15+52.00 | 1102.55 | 12 |
| 25 | 15+76.00 | 1100.55 | 12 |
| 26 | 16+00.00 | 1100.05 | 12 |
| 27 | 16+24.00 | 1100.05 | 12 |
| 28 | 16+42.00 | 1100.05 | 12 |
| 29 | 16+60.00 | 1099.55 | 12 |
| 30 | 16+84.00 | 1099.55 | 12 |
| 31 | 17+08.00 | 1100.05 | 14 |
| 32 | 17+32.00 | 1100.05 | 19 |
| 33 | 17+56.00 | 1100.05 | 19 |
| 34 | 17+80.00 | 1099.05 | 19 |
| 35 | 18+04.00 | 1098.05 | 19 |
| 36 | 18+28.00 | 1096.55 | 19 |
| 37 | 18+40.00 | 1095.55 | 14 |
| 38 | 18+52.00 | 1094.55 | 14 |
| 39 | 18+64.00 | 1093.55 | 14 |
| 40 | 18+76.00 | 1092.55 | 14 |
| 41 | 18+88.00 | 1091.05 | 14 |
| 42 | 19+00.00 | 1090.05 | 14 |
| 43 | 19+12.00 | 1089.05 | 14 |
| 44 | 19+24.00 | 1088.05 | 14 |
| 45 | 19+36.00 | 1087.05 | 14 |
| 46 | 19+48.00 | 1086.05 | 14 |
| 47 | 19+60.00 | 1085.05 | 14 |
| 48 | 19+72.00 | 1083.55 | 14 |
| 49 | 19+96.00 | 1082.55 | 16 |
| 50 | 20+20.00 | 1081.55 | 16 |

| NOISE WALL C1 | | | |
|---|---|---|---|
| DRILLED SHAFT NO. | WORKPOINT STATION | TOP OF DRILLED SHAFT ELEVATION | SHAFT LENGTH (FEET) |
| 51 | 20+44.00 | 1081.55 | 16 |
| 52 | 20+68.00 | 1082.05 | 16 |
| 53 | 20+92.00 | 1082.05 | 14 |
| 54 | 21+16.00 | 1083.55 | 14 |
| 55 | 21+40.00 | 1084.05 | 14 |
| 56 | 21+64.00 | 1084.05 | 14 |
| 57 | 21+88.00 | 1083.05 | 14 |
| 58 | 22+12.00 | 1081.55 | 14 |
| 59 | 22+36.00 | 1080.05 | 14 |
| 60 | 22+60.00 | 1080.05 | 14 |

| NOISE WALL C2 | | | |
|---|---|---|---|
| DRILLED SHAFT NO. | WORKPOINT STATION | TOP OF DRILLED SHAFT ELEVATION | SHAFT LENGTH (FEET) |
| 61 | 110+00.00 | 1074.05 | 8 |
| 62 | 110+12.00 | 1074.05 | 11.5 |
| 63 | 110+24.00 | 1073.05 | 16 |
| 64 | 110+48.00 | 1072.55 | 16 |
| 65 | 110+72.00 | 1072.05 | 13.5 |
| 66 | 110+96.00 | 1071.55 | 13.5 |
| 67 | 111+20.00 | 1070.55 | 13.5 |
| 68 | 111+44.00 | 1070.05 | 13.5 |
| 69 | 111+68.00 | 1069.55 | 13.5 |
| 70 | 111+92.00 | 1069.05 | 13.5 |
| 71 | 112+16.00 | 1068.05 | 13.5 |
| 72 | 112+40.00 | 1067.55 | 13.5 |
| 73 | 112+64.00 | 1067.07 | 13.5 |
| 74 | 112+88.00 | 1066.55 | 13.5 |
| 75 | 113+12.00 | 1066.05 | 13.5 |
| 76 | 113+36.00 | 1065.05 | 13.5 |
| 77 | 113+60.00 | 1064.55 | 13.5 |
| 78 | 113+84.00 | 1064.05 | 13.5 |
| 79 | 114+08.00 | 1063.55 | 10 |
| 80 | 114+32.00 | 1063.10 | 10 |
| 81 | 114+56.00 | 1062.55 | 10 |
| 82 | 114+80.00 | 1062.05 | 10 |
| 83 | 115+04.00 | 1061.05 | 10 |
| 84 | 115+28.00 | 1060.55 | 10 |
| 85 | 115+52.00 | 1060.05 | 10 |
| 86 | 115+76.00 | 1059.55 | 10 |
| 87 | 116+00.00 | 1059.05 | 10 |
| 88 | 116+24.00 | 1058.55 | 10 |
| 89 | 116+48.00 | 1058.05 | 10 |
| 90 | 116+72.00 | 1057.55 | 10 |
| 91 | 116+96.00 | 1056.55 | 10 |
| 92 | 117+20.00 | 1056.05 | 10 |
| 93 | 117+44.00 | 1055.55 | 10 |
| 94 | 117+68.00 | 1055.05 | 10 |
| 95 | 117+92.00 | 1054.05 | 10 |
| 96 | 118+16.00 | 1053.55 | 10 |
| 97 | 118+40.00 | 1053.05 | 10 |
| 98 | 118+64.00 | 1052.55 | 10 |
| 99 | 118+88.00 | 1052.05 | 10 |
| 100 | 119+12.00 | 1051.05 | 10 |

| NOISE WALL C2 | | | |
|---|---|---|---|
| DRILLED SHAFT NO. | WORKPOINT STATION | TOP OF DRILLED SHAFT ELEVATION | SHAFT LENGTH (FEET) |
| 101 | 119+36.00 | 1050.55 | 10 |
| 102 | 119+60.00 | 1050.05 | 10 |
| 103 | 119+84.00 | 1049.55 | 21 |
| 104 | 120+08.00 | 1049.05 | 21 |
| 105 | 120+32.00 | 1048.05 | 21 |
| 106 | 120+56.00 | 1047.57 | 21 |
| 107 | 120+80.00 | 1047.07 | 21 |
| 108 | 121+04.00 | 1046.57 | 21 |
| 109 | 121+28.00 | 1045.57 | 21 |
| 110 | 121+52.00 | 1045.05 | 21 |
| 111 | 121+76.00 | 1044.55 | 21 |
| 112 | 122+00.00 | 1043.55 | 17.5 |
| 113 | 122+15.00 | 1043.55 | 14 |
| 114 | 122+36.00 | 1042.55 | 14 |
| 115 | 122+51.00 | 1042.55 | 19.5 |
| 116 | 122+75.00 | 1042.05 | 16 |
| 117 | 122+99.00 | 1041.55 | 16 |
| 118 | 123+23.00 | 1041.05 | 30 |
| 119 | 123+47.00 | 1040.55 | 30 |
| 120 | 123+71.00 | 1039.55 | 30 |
| 121 | 123+95.00 | 1039.05 | 16 |
| 122 | 124+19.00 | 1038.55 | 16 |
| 123 | 124+43.00 | 1038.05 | 16 |
| 124 | 124+67.00 | 1037.05 | 16 |
| 125 | 124+91.00 | 1036.55 | 16 |
| 126 | 125+15.00 | 1036.05 | 16 |
| 127 | 125+39.00 | 1035.55 | 19 |
| 128 | 125+63.00 | 1035.05 | 19 |
| 129 | 125+87.00 | 1034.55 | 30 |
| 130 | 126+11.00 | 1033.55 | 30 |
| 131 | 126+35.00 | 1033.05 | 30 |
| 132 | 126+59.00 | 1032.55 | 30 |
| 133 | 126+83.00 | 1031.55 | 30 |
| 134 | 127+07.00 | 1031.05 | 30 |
| 135 | 127+31.00 | 1030.55 | 30 |
| 136 | 127+55.00 | 1030.05 | 30 |
| 137 | 127+79.00 | 1029.05 | 30 |
| 138 | 128+03.00 | 1028.55 | 10 |
| 139 | 128+27.00 | 1028.05 | 10 |
| 140 | 128+51.00 | 1027.05 | 10 |
| 141 | 128+75.00 | 1026.55 | 10 |
| 142 | 128+99.00 | 1025.55 | 10 |
| 143 | 129+23.00 | 1025.05 | 10 |
| 144 | 129+47.00 | 1024.55 | 10 |
| 145 | 129+71.00 | 1024.05 | 10 |
| 146 | 129+95.00 | 1023.55 | 24 |
| 147 | 130+19.00 | 1023.05 | 24 |
| 148 | 130+38.00 | 1022.55 | 24 |
| 149 | 130+57.00 | 1021.55 | 24 |
| 150 | 130+81.00 | 1019.55 | 24 |
| 151 | 130+97.00 | 1019.55 | 24 |

CALCULATED RFV
CHECKED TJW

# DATA TABLES - NOISE WALL C

SUM-77 / 277 / 224

1084
1288

O:\2017\2017258\ProjectData\SUM\106002\Design\Structures\Wall_Noise_C\Sheets\106002_00C_WS002.dgn Sheet 1/17/2021 6:57:46 PM rvitelli

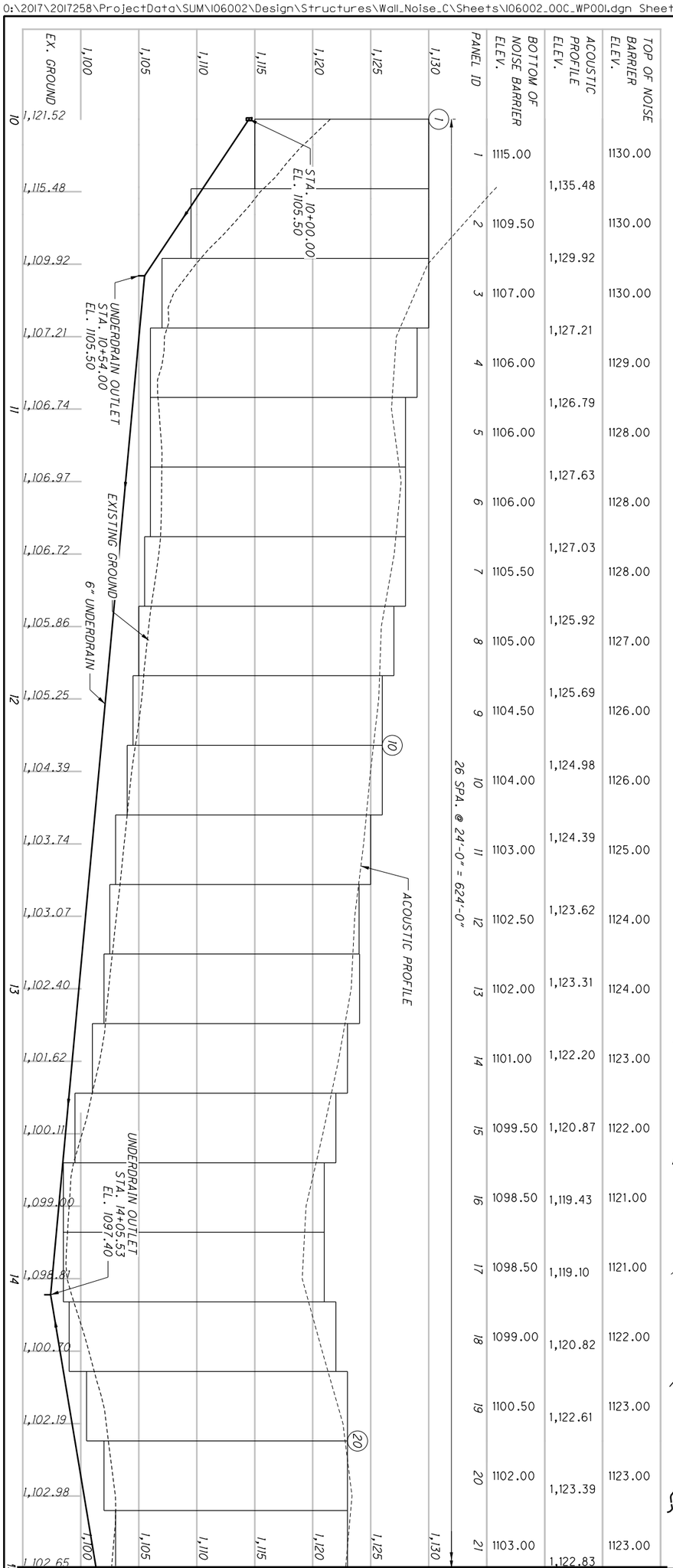


| PANEL ID | BOTTOM OF NOISE BARRIER ELEV. | ACOUSTIC PROFILE ELEV. | TOP OF NOISE BARRIER ELEV. |
|---|---|---|---|
| 1 | 1115.00 | 1,135.48 | 1130.00 |
| 2 | 1109.50 | 1,129.92 | 1130.00 |
| 3 | 1107.00 | 1,127.21 | 1130.00 |
| 4 | 1106.00 | 1,126.79 | 1129.00 |
| 5 | 1106.00 | 1,127.63 | 1128.00 |
| 6 | 1106.00 | 1,127.03 | 1128.00 |
| 7 | 1105.50 | 1,125.92 | 1128.00 |
| 8 | 1105.00 | 1,125.69 | 1127.00 |
| 9 | 1104.50 | 1,124.98 | 1126.00 |
| 10 | 1104.00 | 1,124.39 | 1126.00 |
| 11 | 1103.00 | 1,123.62 | 1125.00 |
| 12 | 1102.50 | 1,123.31 | 1124.00 |
| 13 | 1102.00 | 1,122.20 | 1124.00 |
| 14 | 1101.00 | 1,120.87 | 1123.00 |
| 15 | 1099.50 | 1,119.43 | 1122.00 |
| 16 | 1098.50 | 1,119.10 | 1121.00 |
| 17 | 1098.50 | 1,120.82 | 1121.00 |
| 18 | 1099.00 | 1,122.61 | 1122.00 |
| 19 | 1100.50 | 1,123.39 | 1123.00 |
| 20 | 1102.00 | 1,122.83 | 1123.00 |
| 21 | 1103.00 | | 1123.00 |

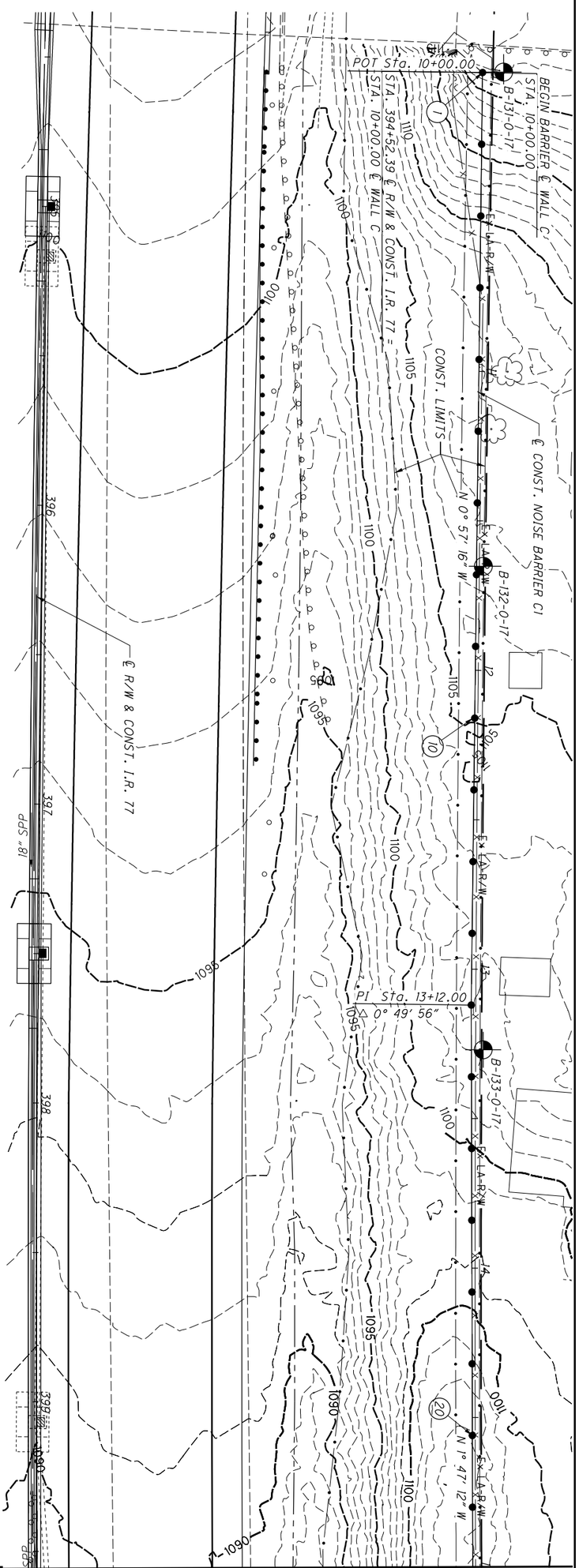


NOTE: BEDROCK WAS NOT DISCOVERED IN ANY BORING FOR THIS WALL.

| | | | | |
|---|---|---|---|---|
| 1085 / 1288 | SUM-77 / 277 / 224 | PLAN AND PROFILE - NOISE BARRIER C1<br>BEGIN TO STA. 15+00.00 | CALCULATED RHC<br>CHECKED DJC | 0 20<br>10 40<br>HORIZONTAL SCALE IN FEET |

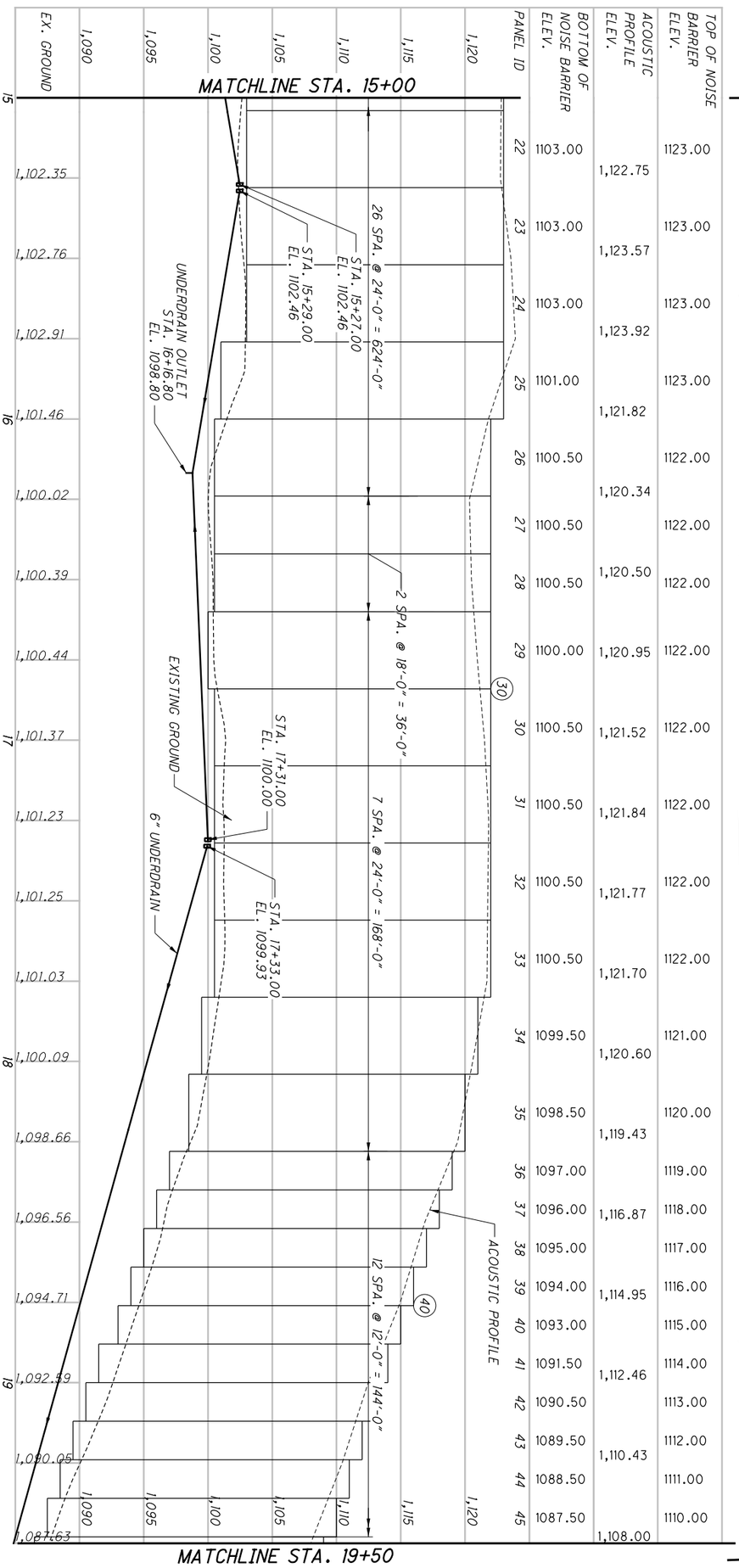


| | | | | |
|---|---|---|---|---|
| 1086 / 1288 | SUM-77 / 277 / 224 | PLAN AND PROFILE - NOISE BARRIER C1<br>STA. 15+00.00 TO STA. 19+50.00 | CALCULATED RHC<br>CHECKED DJC | 0 10 20 40<br>HORIZONTAL SCALE IN FEET |

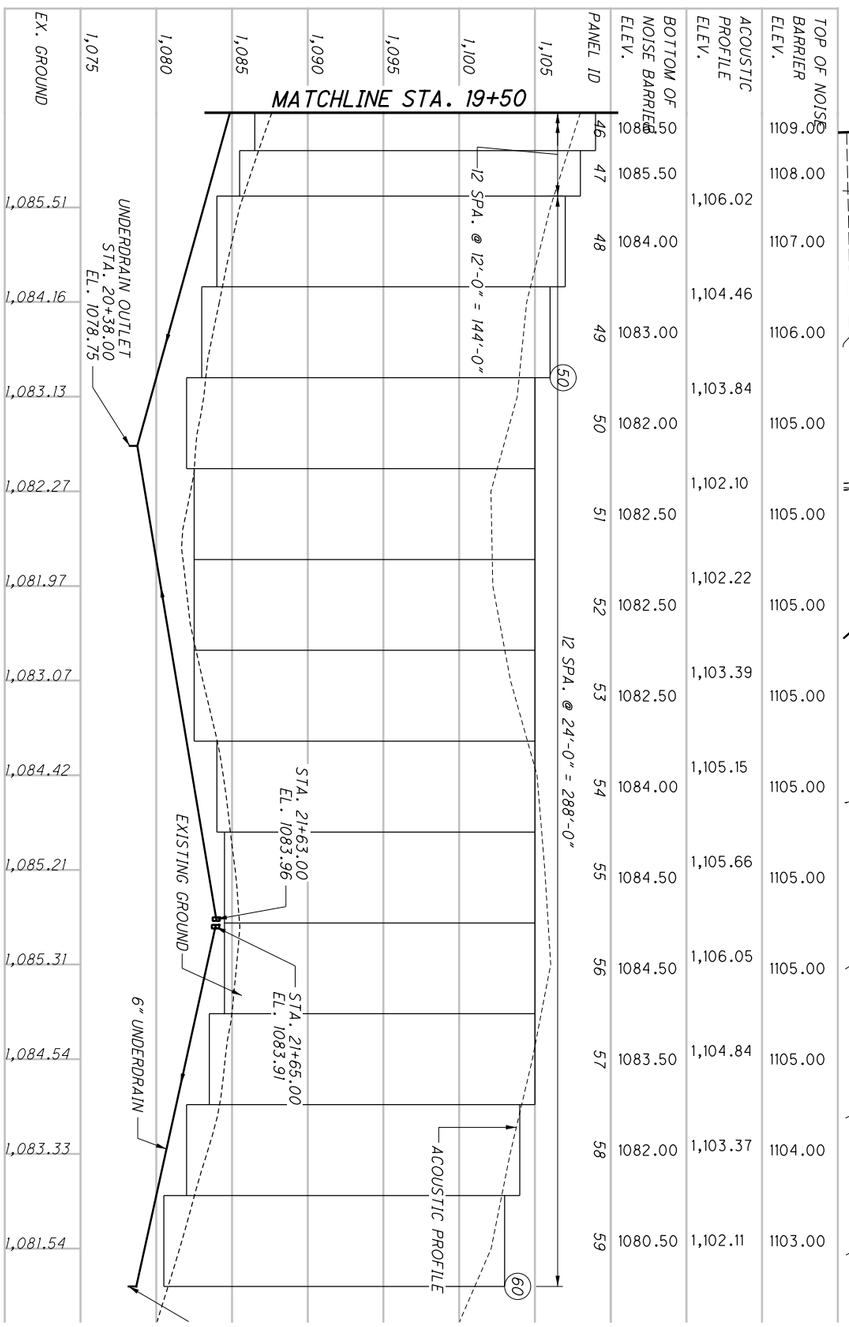


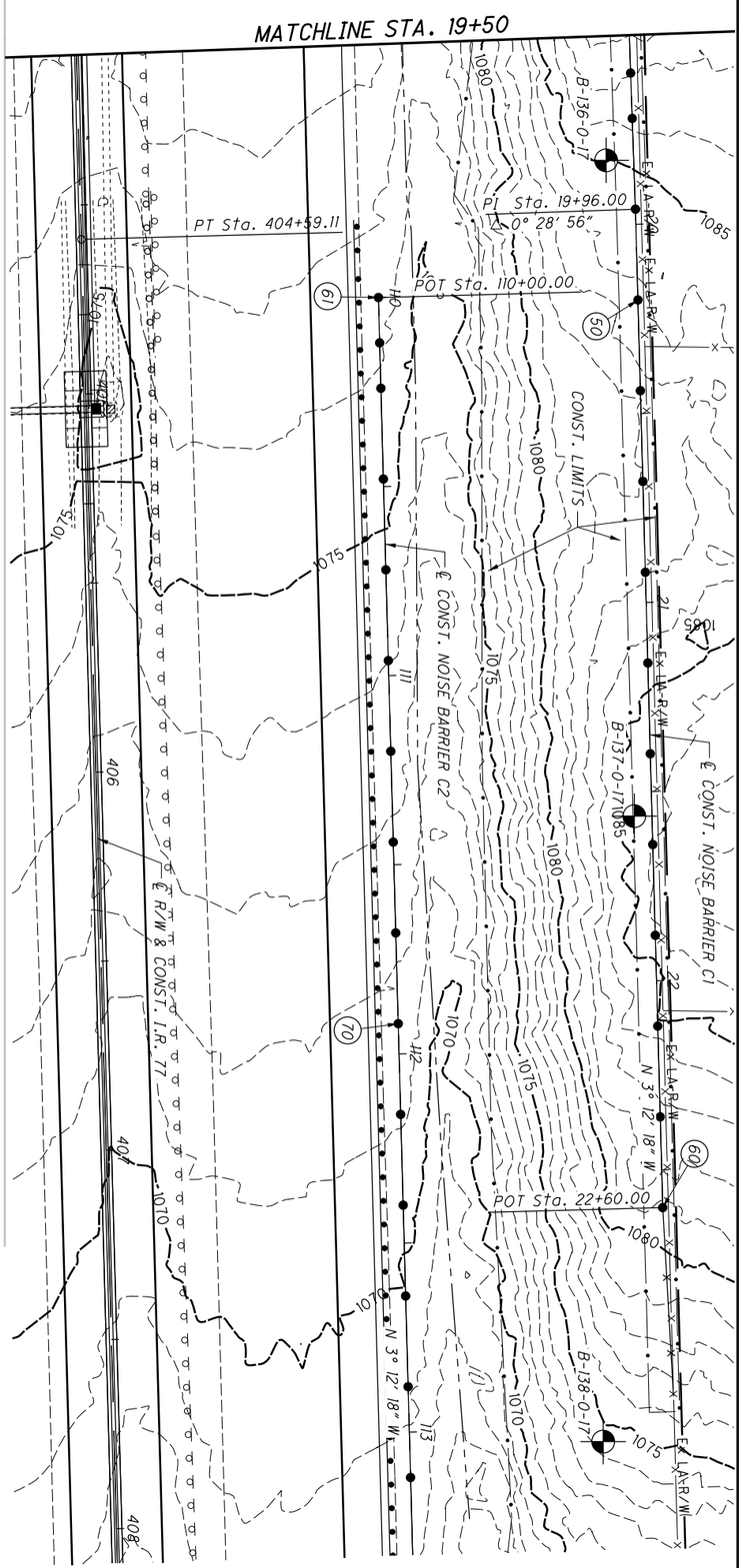


| | | | | |
|---|---|---|---|---|
| 1087 / 1288 | SUM-77 / 277 / 224 | PLAN AND PROFILE - NOISE BARRIER C1<br>STA. 19+50.00 TO END | CALCULATED RHC<br>CHECKED DJC | 0 20<br>10 40<br>HORIZONTAL SCALE IN FEET |

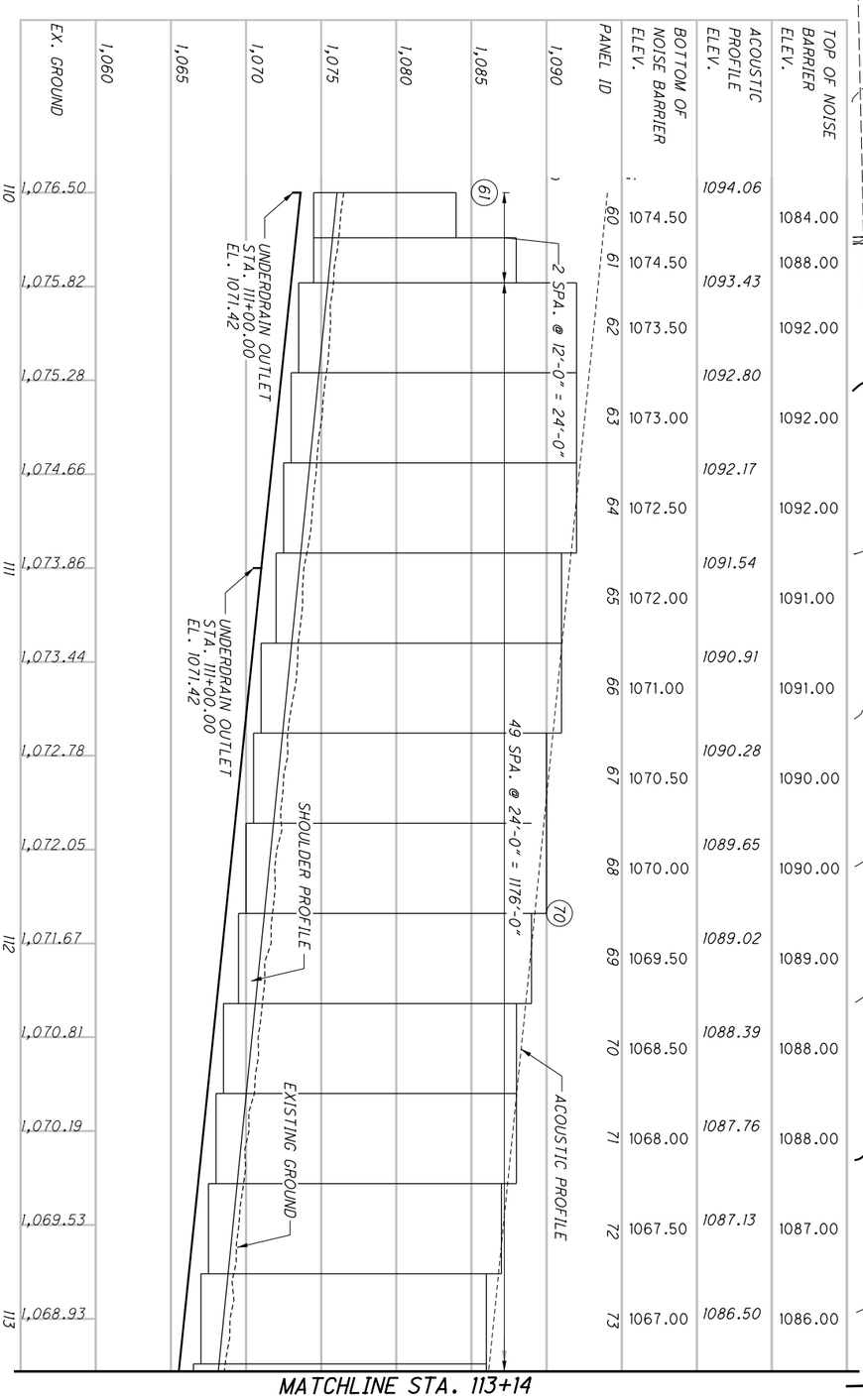


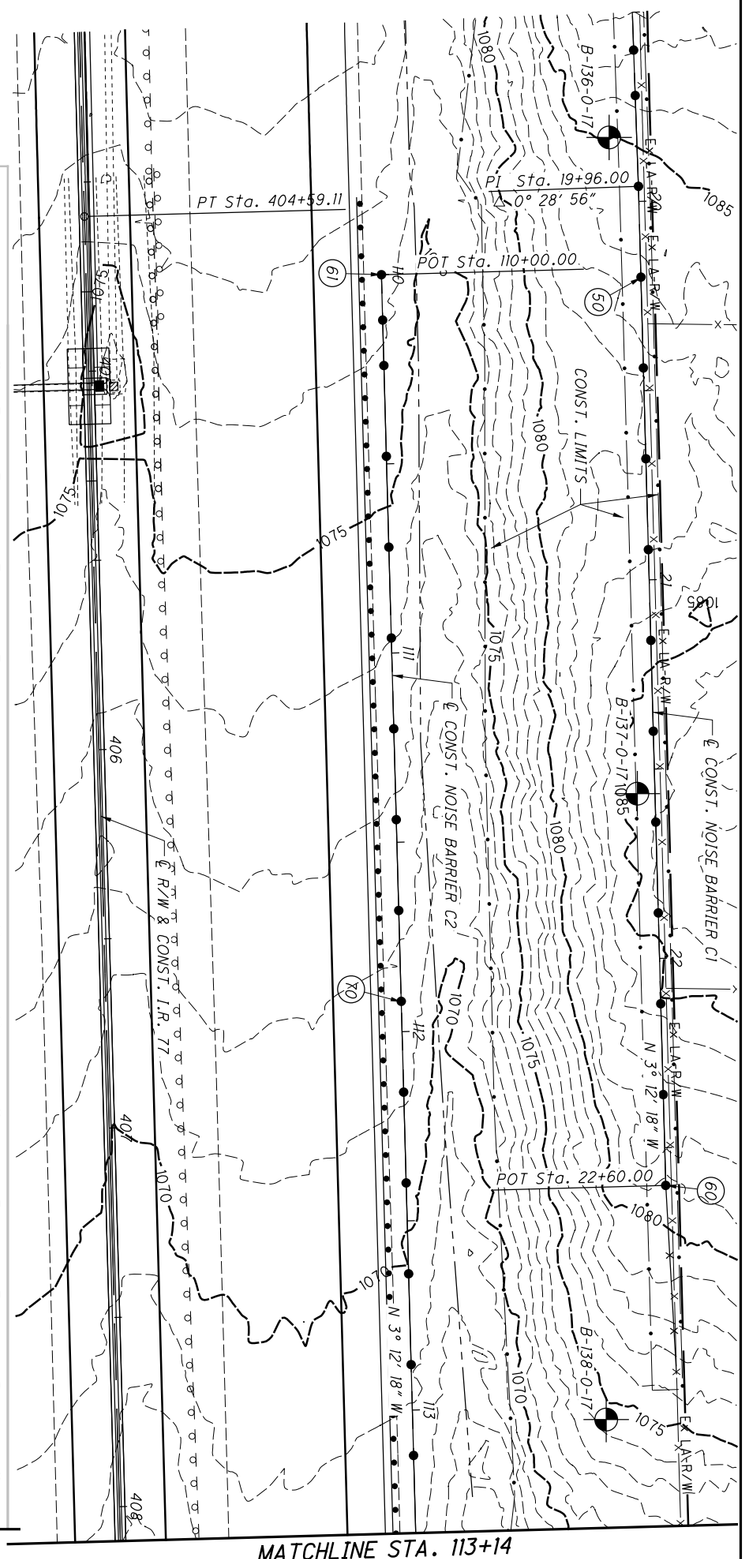


| | | | | |
|---|---|---|---|---|
| 1288 / 087A | SUM-77 / 277 / 224 | PLAN AND PROFILE - NOISE BARRIER C2<br>BEGIN TO STA. 113+14.00 | CALCULATED RHC<br>CHECKED DJC | 0 20<br>10 40<br>HORIZONTAL SCALE IN FEET |

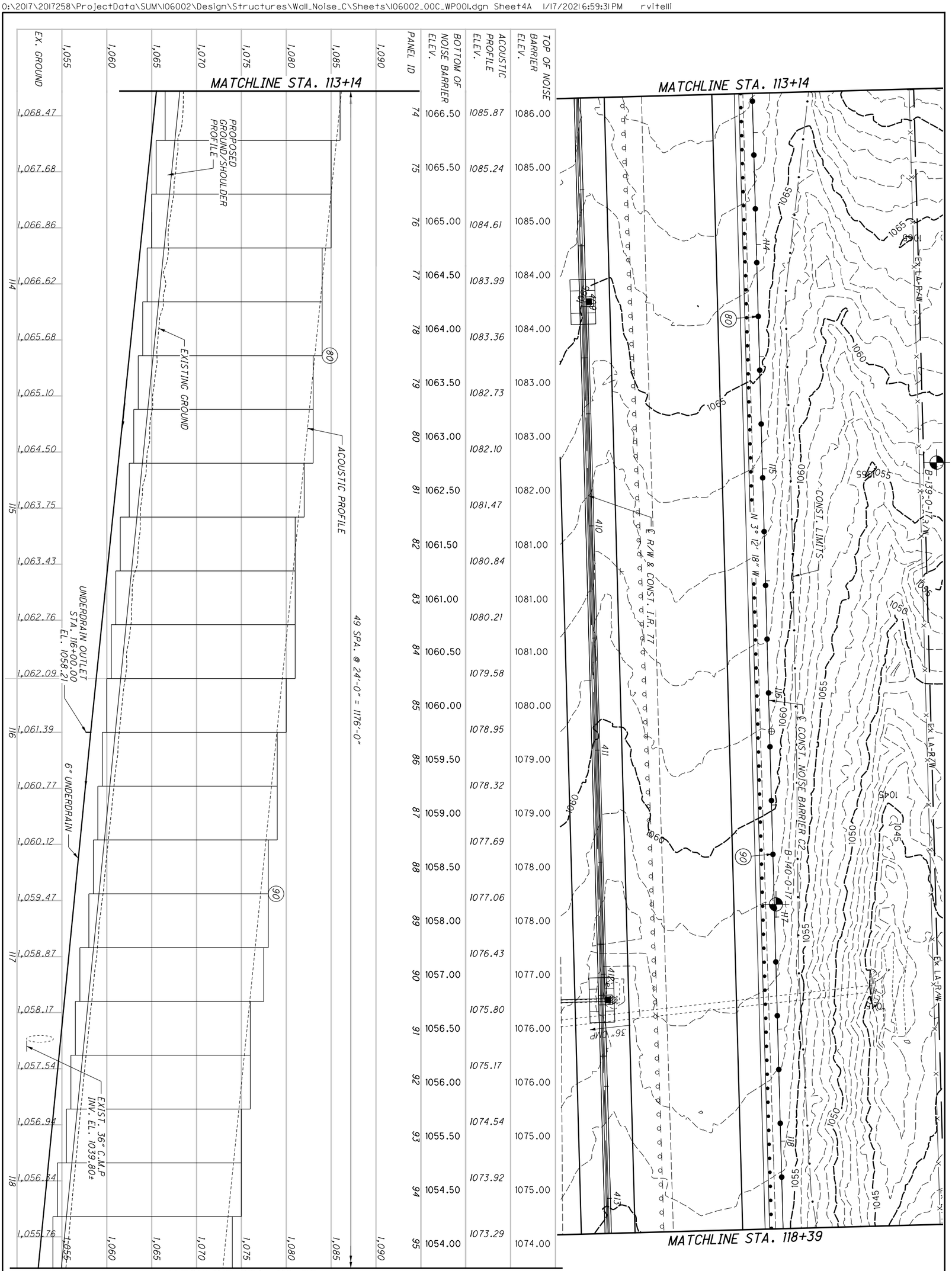


| PANEL ID | BOTTOM OF NOISE BARRIER ELEV. | ACOUSTIC PROFILE ELEV. | TOP OF NOISE BARRIER ELEV. |
|---|---|---|---|
| 74 | 1066.50 | 1085.87 | 1086.00 |
| 75 | 1065.50 | 1085.24 | 1085.00 |
| 76 | 1065.00 | 1084.61 | 1085.00 |
| 77 | 1064.50 | 1083.99 | 1084.00 |
| 78 | 1064.00 | 1083.36 | 1084.00 |
| 79 | 1063.50 | 1082.73 | 1083.00 |
| 80 | 1063.00 | 1082.10 | 1083.00 |
| 81 | 1062.50 | 1081.47 | 1082.00 |
| 82 | 1061.50 | 1080.84 | 1081.00 |
| 83 | 1061.00 | 1080.21 | 1081.00 |
| 84 | 1060.50 | 1079.58 | 1081.00 |
| 85 | 1060.00 | 1078.95 | 1080.00 |
| 86 | 1059.50 | 1078.32 | 1079.00 |
| 87 | 1059.00 | 1077.69 | 1079.00 |
| 88 | 1058.50 | 1077.06 | 1078.00 |
| 89 | 1058.00 | 1076.43 | 1078.00 |
| 90 | 1057.00 | 1075.80 | 1077.00 |
| 91 | 1056.50 | 1075.17 | 1076.00 |
| 92 | 1056.00 | 1074.54 | 1076.00 |
| 93 | 1055.50 | 1073.92 | 1075.00 |
| 94 | 1054.50 | 1073.29 | 1075.00 |
| 95 | 1054.00 | | 1074.00 |

| EX. GROUND |
|---|
| 1,068.47 |
| 1,067.68 |
| 1,066.86 |
| 1,066.62 |
| 1,065.68 |
| 1,065.10 |
| 1,064.50 |
| 1,063.75 |
| 1,063.43 |
| 1,062.76 |
| 1,062.09 |
| 1,061.39 |
| 1,060.77 |
| 1,060.12 |
| 1,059.47 |
| 1,058.87 |
| 1,058.17 |
| 1,057.54 |
| 1,056.94 |
| 1,056.34 |
| 1,055.76 |

| | |
|---|---|
| SUM-77/277/224 | PLAN AND PROFILE - NOISE BARRIER C2<br>STA. 113+14.00 TO STA. 118+39.00 |

CALCULATED RHC
CHECKED DJC
HORIZONTAL SCALE IN FEET

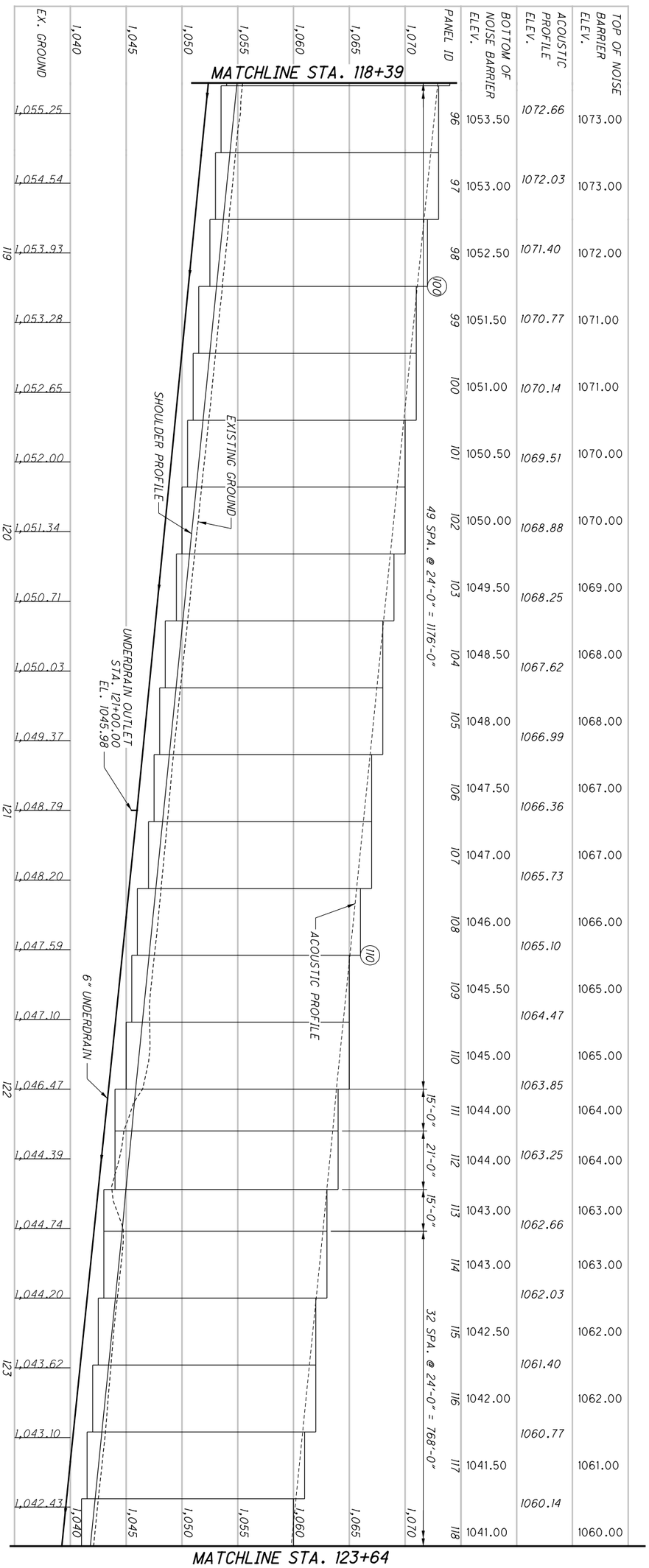


| PANEL ID | BOTTOM OF NOISE BARRIER ELEV. | ACOUSTIC PROFILE ELEV. | TOP OF NOISE BARRIER ELEV. |
|---|---|---|---|
| 96 | 1053.50 | 1072.66 | 1073.00 |
| 97 | 1053.00 | 1072.03 | 1073.00 |
| 98 | 1052.50 | 1071.40 | 1072.00 |
| 99 | 1051.50 | 1070.77 | 1071.00 |
| 100 | 1051.00 | 1070.14 | 1071.00 |
| 101 | 1050.50 | 1069.51 | 1070.00 |
| 102 | 1050.00 | 1068.88 | 1070.00 |
| 103 | 1049.50 | 1068.25 | 1069.00 |
| 104 | 1048.50 | 1067.62 | 1068.00 |
| 105 | 1048.00 | 1066.99 | 1068.00 |
| 106 | 1047.50 | 1066.36 | 1067.00 |
| 107 | 1047.00 | 1065.73 | 1067.00 |
| 108 | 1046.00 | 1065.10 | 1066.00 |
| 109 | 1045.50 | 1064.47 | 1065.00 |
| 110 | 1045.00 | 1063.85 | 1065.00 |
| 111 | 1044.00 | 1063.25 | 1064.00 |
| 112 | 1044.00 | 1062.66 | 1064.00 |
| 113 | 1043.00 | 1062.03 | 1063.00 |
| 114 | 1043.00 | 1061.40 | 1063.00 |
| 115 | 1042.50 | 1060.77 | 1062.00 |
| 116 | 1042.00 | 1060.14 | 1062.00 |
| 117 | 1041.50 | | 1061.00 |
| 118 | 1041.00 | | 1060.00 |

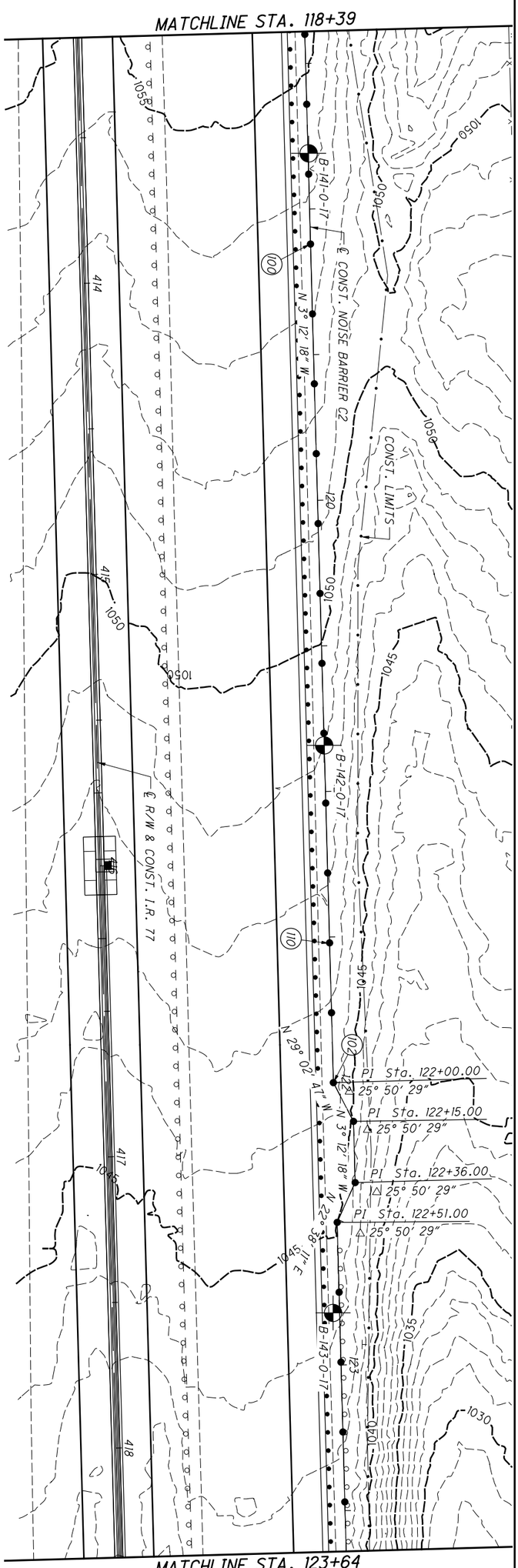


| | | | | | |
|---|---|---|---|---|---|
| 1089 / 1288 | SUM-77 / 277 / 224 | PLAN AND PROFILE - NOISE BARRIER C2<br>STA. 118+39.00 TO STA. 123+64.00 | CALCULATED RHC<br>CHECKED DJC | 0 20<br>10 40<br>HORIZONTAL SCALE IN FEET | N |

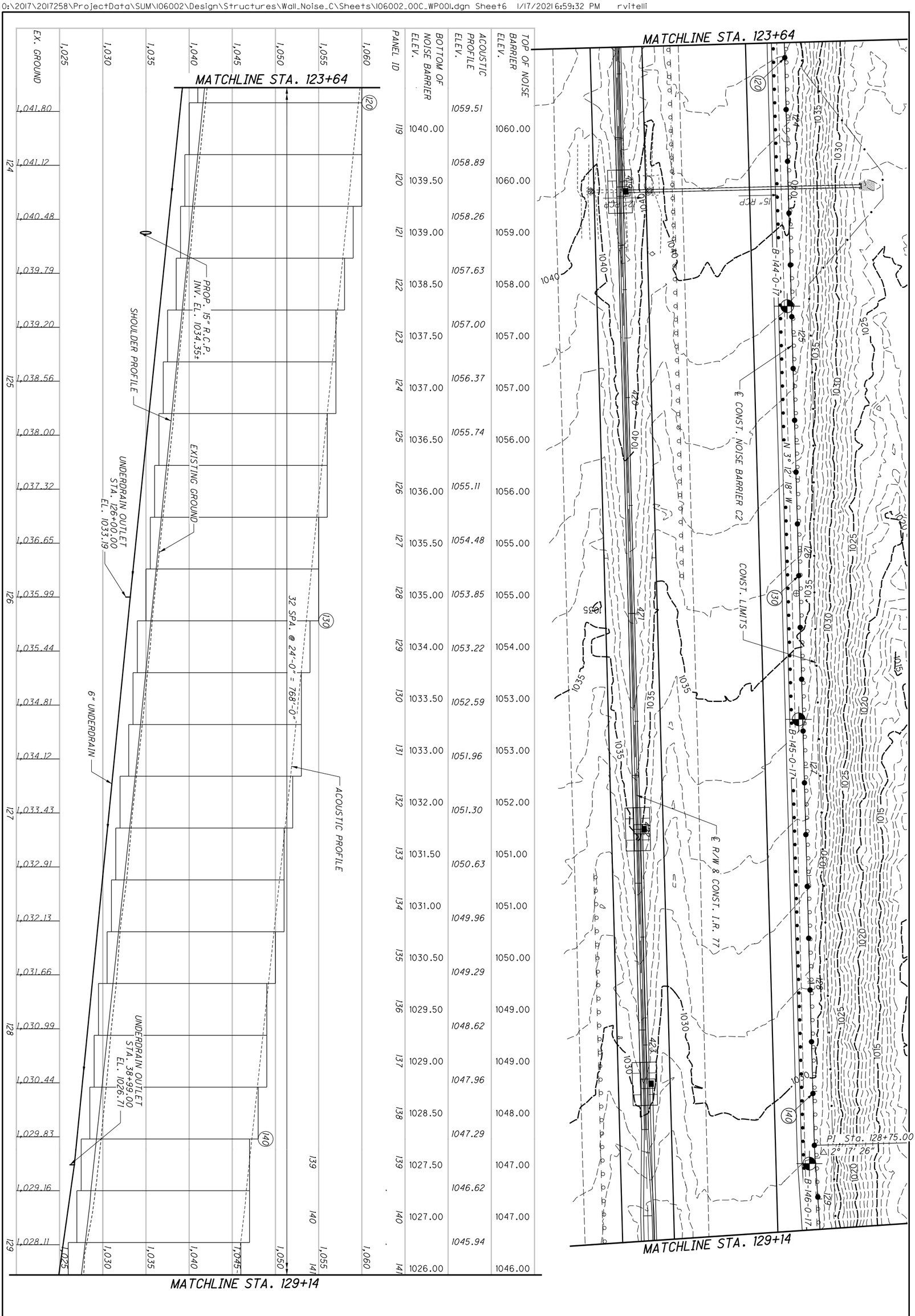


| | | | | |
|---|---|---|---|---|
| 1090 / 1288 | SUM-77 / 277 / 224 | PLAN AND PROFILE - NOISE BARRIER C2<br>STA. 34+00.00 123+64.00 TO STA. 129+14.00 | CALCULATED RHC<br>CHECKED DJC | 0 20<br>10 40<br>HORIZONTAL SCALE IN FEET |

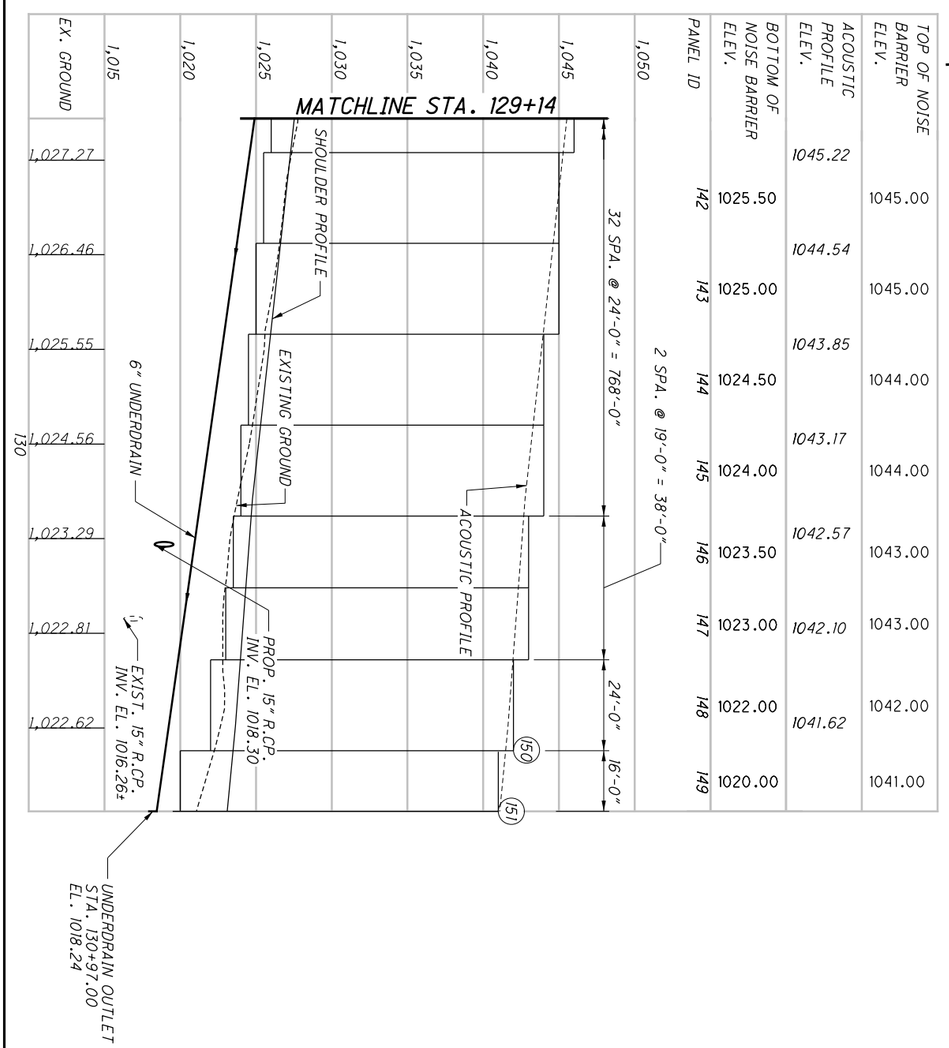


| PANEL ID | BOTTOM OF NOISE BARRIER ELEV. | ACOUSTIC PROFILE ELEV. | TOP OF NOISE BARRIER ELEV. |
|---|---|---|---|
| | | 1045.22 | |
| 142 | 1025.50 | | 1045.00 |
| | | 1044.54 | |
| 143 | 1025.00 | | 1045.00 |
| | | 1043.85 | |
| 144 | 1024.50 | | 1044.00 |
| | | 1043.17 | |
| 145 | 1024.00 | | 1044.00 |
| | | 1042.57 | |
| 146 | 1023.50 | | 1043.00 |
| | | 1042.10 | |
| 147 | 1023.00 | | 1043.00 |
| | | 1041.62 | |
| 148 | 1022.00 | | 1042.00 |
| 149 | 1020.00 | | 1041.00 |

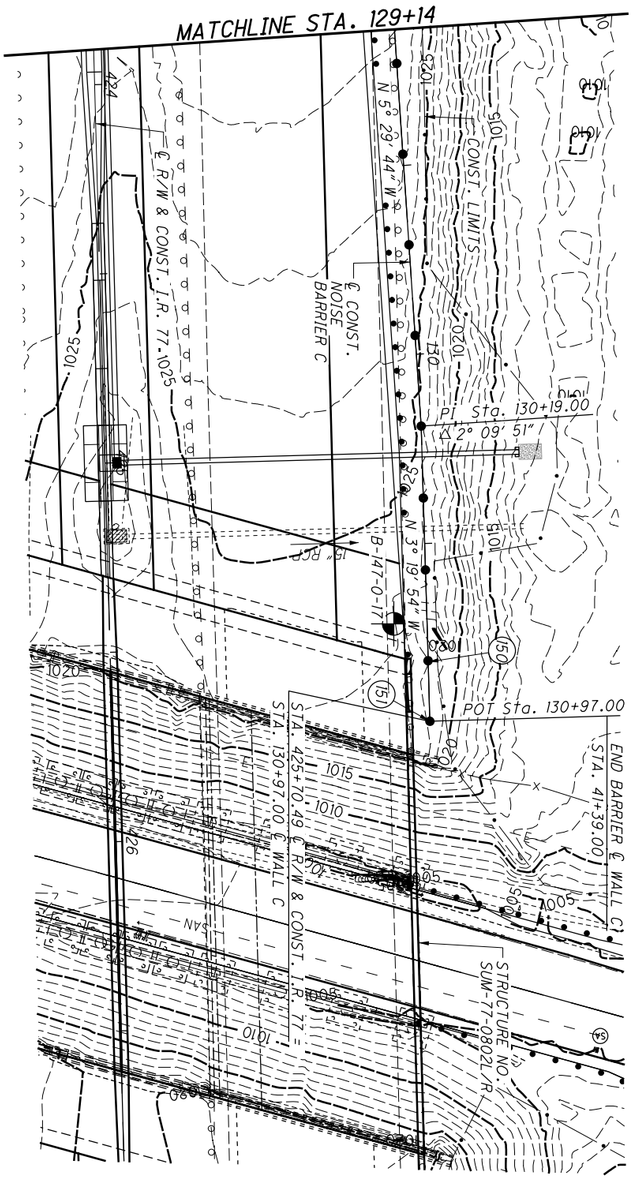


| | | | | | |
|---|---|---|---|---|---|
| 1091 / 1288 | SUM-77 / 277 / 224 | PLAN AND PROFILE - NOISE BARRIER C2<br>STA. 129+14.00 TO END | CALCULATED RHC<br>CHECKED DJC | 0 20<br>10 40<br>HORIZONTAL SCALE IN FEET | N |

| PANEL NO. | DRILLED SHAFT NO. | POST TYPE | WORKPOINT STATION | DRILLED SHAFT NO. | POST TYPE | WORKPOINT STATION | TOP OF WALL | BOTTOM OF WALL | LENGTH OF PANEL (LFT) | HEIGHT OF PANEL (LFT) | 606 SPECIAL - NOISE BARRIER (REFLECTIVE) SF |
|---|---|---|---|---|---|---|---|---|---|---|---|
| 1 | 1 | B-16" | 10+00.00 | 2 | A-16" | 10+12.00 | 1031.0 | 1021.0 | 12.00 | 10.0 | 120 |
| 2 | 2 | A-16" | 10+12.00 | 3 | A-20" | 10+24.00 | 1035.0 | 1021.0 | 12.00 | 14.0 | 168 |
| 3 | 3 | A-20" | 10+24.00 | 4 | A-20" | 10+48.00 | 1039.0 | 1021.5 | 24.00 | 17.5 | 420 |
| 4 | 4 | A-20" | 10+48.00 | 5 | A-20" | 10+72.00 | 1039.0 | 1021.5 | 24.00 | 17.5 | 420 |
| 5 | 5 | A-20" | 10+72.00 | 6 | A-20" | 10+96.00 | 1040.0 | 1022.0 | 24.00 | 18.0 | 432 |
| 6 | 6 | A-20" | 10+96.00 | 7 | A-20" | 11+20.00 | 1040.0 | 1022.0 | 24.00 | 18.0 | 432 |
| 7 | 7 | A-20" | 11+20.00 | 8 | A-20" | 11+44.00 | 1040.0 | 1022.5 | 24.00 | 17.5 | 420 |
| 8 | 8 | A-20" | 11+44.00 | 9 | A-20" | 11+68.00 | 1040.0 | 1022.5 | 24.00 | 17.5 | 420 |
| 9 | 9 | A-20" | 11+68.00 | 10 | A-20" | 11+92.00 | 1041.0 | 1023.0 | 24.00 | 18.0 | 432 |
| 10 | 10 | A-20" | 11+92.00 | 11 | A-20" | 12+16.00 | 1041.0 | 1023.5 | 24.00 | 17.5 | 420 |
| 11 | 11 | A-20" | 12+16.00 | 12 | A-20" | 12+40.00 | 1041.0 | 1024.0 | 24.00 | 17.0 | 408 |
| 12 | 12 | A-20" | 12+40.00 | 13 | A-20" | 12+64.00 | 1042.0 | 1024.0 | 24.00 | 18.0 | 432 |
| 13 | 13 | A-20" | 12+64.00 | 14 | A-20" | 12+88.00 | 1042.0 | 1024.5 | 24.00 | 17.5 | 420 |
| 14 | 14 | A-20" | 12+88.00 | 15 | D-20" | 13+12.00 | 1043.0 | 1025.0 | 24.00 | 18.0 | 432 |
| 15 | 15 | D-20" | 13+12.00 | 16 | A-20" | 13+28.00 | 1043.0 | 1024.5 | 16.00 | 18.5 | 296 |
| 16 | 16 | A-20" | 13+28.00 | 17 | A-16" | 13+40.00 | 1044.0 | 1024.5 | 12.00 | 19.5 | 234 |
| 17 | 17 | A-16" | 13+40.00 | 18 | A-20" | 13+52.00 | 1045.0 | 1024.5 | 12.00 | 20.5 | 246 |
| 18 | 18 | A-20" | 13+52.00 | 19 | A-20" | 13+76.00 | 1046.0 | 1024.5 | 24.00 | 21.5 | 516 |
| 19 | 19 | A-20" | 13+76.00 | 20 | A-16" | 13+88.00 | 1047.0 | 1028.5 | 12.00 | 18.5 | 222 |
| 20 | 20 | A-16" | 13+88.00 | 21 | A-20" | 14+00.00 | 1048.0 | 1028.5 | 12.00 | 19.5 | 234 |
| 21 | 21 | A-20" | 14+00.00 | 22 | D-20" | 14+24.00 | 1049.0 | 1032.5 | 24.00 | 16.5 | 396 |
| 22 | 22 | D-20" | 14+24.00 | 23 | A-20" | 14+48.00 | 1050.0 | 1035.5 | 24.00 | 14.5 | 348 |
| 23 | 23 | A-20" | 14+48.00 | 24 | A-20" | 14+72.00 | 1051.0 | 1036.5 | 24.00 | 14.5 | 348 |
| 24 | 24 | A-20" | 14+72.00 | 25 | A-20" | 14+96.00 | 1052.0 | 1037.0 | 24.00 | 15.0 | 360 |
| 25 | 25 | A-20" | 14+96.00 | 26 | A-20" | 15+20.00 | 1052.0 | 1037.5 | 24.00 | 14.5 | 348 |
| 26 | 26 | A-20" | 15+20.00 | 27 | A-20" | 15+44.00 | 1052.0 | 1037.5 | 24.00 | 14.5 | 348 |
| 27 | 27 | A-20" | 15+44.00 | 28 | A-20" | 15+68.00 | 1052.0 | 1038.0 | 24.00 | 14.0 | 336 |
| 28 | 28 | A-20" | 15+68.00 | 29 | A-20" | 15+92.00 | 1052.0 | 1038.0 | 24.00 | 14.0 | 336 |
| 29 | 29 | A-20" | 15+92.00 | 30 | A-20" | 16+16.00 | 1052.0 | 1037.5 | 24.00 | 14.5 | 348 |
| 30 | 30 | A-20" | 16+16.00 | 31 | A-20" | 16+40.00 | 1051.0 | 1036.5 | 24.00 | 14.5 | 348 |
| 31 | 31 | A-20" | 16+40.00 | 32 | A-20" | 16+64.00 | 1051.0 | 1035.5 | 24.00 | 15.5 | 372 |
| 32 | 32 | A-20" | 16+64.00 | 33 | A-20" | 16+88.00 | 1050.0 | 1035.0 | 24.00 | 15.0 | 360 |
| 33 | 33 | A-20" | 16+88.00 | 34 | A-20" | 17+12.00 | 1050.0 | 1035.0 | 24.00 | 15.0 | 360 |
| 34 | 34 | A-20" | 17+12.00 | 35 | A-20" | 17+36.00 | 1049.0 | 1034.5 | 24.00 | 14.5 | 348 |
| 35 | 35 | A-20" | 17+36.00 | 36 | A-20" | 17+60.00 | 1049.0 | 1034.5 | 24.00 | 14.5 | 348 |
| 36 | 36 | A-20" | 17+60.00 | 37 | A-20" | 17+84.00 | 1049.0 | 1034.5 | 24.00 | 14.5 | 348 |
| 37 | 37 | A-20" | 17+84.00 | 38 | A-20" | 18+08.00 | 1049.0 | 1034.5 | 24.00 | 14.5 | 348 |
| 38 | 38 | A-20" | 18+08.00 | 39 | A-20" | 18+32.00 | 1049.0 | 1034.5 | 24.00 | 14.5 | 348 |
| 39 | 39 | A-20" | 18+32.00 | 40 | A-20" | 18+56.00 | 1049.0 | 1034.5 | 24.00 | 14.5 | 348 |
| 40 | 40 | A-20" | 18+56.00 | 41 | A-20" | 18+80.00 | 1049.0 | 1034.5 | 24.00 | 14.5 | 348 |
| 41 | 41 | A-20" | 18+80.00 | 42 | A-20" | 19+04.00 | 1049.0 | 1034.5 | 24.00 | 14.5 | 348 |
| 42 | 42 | A-20" | 19+04.00 | 43 | A-20" | 19+28.00 | 1049.0 | 1034.5 | 24.00 | 14.5 | 348 |
| 43 | 43 | A-20" | 19+28.00 | 44 | A-20" | 19+52.00 | 1049.0 | 1034.5 | 24.00 | 14.5 | 348 |
| 44 | 44 | A-20" | 19+52.00 | 45 | A-20" | 19+76.00 | 1049.0 | 1034.5 | 24.00 | 14.5 | 348 |
| 45 | 45 | A-20" | 19+76.00 | 46 | A-20" | 20+00.00 | 1049.0 | 1034.5 | 24.00 | 14.5 | 348 |
| 46 | 46 | A-20" | 20+00.00 | 47 | A-20" | 20+24.00 | 1049.0 | 1034.0 | 24.00 | 15.0 | 360 |
| 47 | 47 | A-20" | 20+24.00 | 48 | A-20" | 20+48.00 | 1050.0 | 1034.0 | 24.00 | 16.0 | 384 |
| 48 | 48 | A-20" | 20+48.00 | 49 | A-20" | 20+72.00 | 1050.0 | 1034.0 | 24.00 | 16.0 | 384 |
| 49 | 49 | A-20" | 20+72.00 | 50 | A-20" | 20+96.00 | 1050.0 | 1034.0 | 24.00 | 16.0 | 384 |
| 50 | 50 | A-20" | 20+96.00 | 51 | A-20" | 21+20.00 | 1050.0 | 1034.0 | 24.00 | 16.0 | 384 |

| PANEL NO. | DRILLED SHAFT NO. | POST TYPE | WORKPOINT STATION | DRILLED SHAFT NO. | POST TYPE | WORKPOINT STATION | TOP OF WALL | BOTTOM OF WALL | LENGTH OF PANEL (LFT) | HEIGHT OF PANEL (LFT) | 606 SPECIAL - NOISE BARRIER (REFLECTIVE) SF |
|---|---|---|---|---|---|---|---|---|---|---|---|
| 51 | 51 | A-20" | 21+20.00 | 52 | A-20" | 21+44.00 | 1051.0 | 1033.5 | 24.00 | 17.5 | 420 |
| 52 | 52 | A-20" | 21+44.00 | 53 | A-20" | 21+68.00 | 1051.0 | 1033.5 | 24.00 | 17.5 | 420 |
| 53 | 53 | A-20" | 21+68.00 | 54 | A-20" | 21+92.00 | 1051.0 | 1034.0 | 24.00 | 17.0 | 408 |
| 54 | 54 | A-20" | 21+92.00 | 55 | A-20" | 22+16.00 | 1051.0 | 1034.0 | 24.00 | 17.0 | 408 |
| 55 | 55 | A-20" | 22+16.00 | 56 | A-20" | 22+40.00 | 1052.0 | 1034.5 | 24.00 | 17.5 | 420 |
| 56 | 56 | A-20" | 22+40.00 | 57 | A-20" | 22+64.00 | 1052.0 | 1035.0 | 24.00 | 17.0 | 408 |
| 57 | 57 | A-20" | 22+64.00 | 58 | A-20" | 22+88.00 | 1052.0 | 1035.0 | 24.00 | 17.0 | 408 |
| 58 | 58 | A-20" | 22+88.00 | 59 | A-20" | 23+12.00 | 1052.0 | 1035.5 | 24.00 | 16.5 | 396 |
| 59 | 59 | A-20" | 23+12.00 | 60 | A-20" | 23+36.00 | 1053.0 | 1036.0 | 24.00 | 17.0 | 408 |
| 60 | 60 | A-20" | 23+36.00 | 61 | A-20" | 23+60.00 | 1053.0 | 1036.0 | 24.00 | 17.0 | 408 |
| 61 | 61 | A-20" | 23+60.00 | 62 | A-20" | 23+84.00 | 1053.0 | 1036.0 | 24.00 | 17.0 | 408 |
| 62 | 62 | A-20" | 23+84.00 | 63 | A-20" | 24+00.00 | 1053.0 | 1036.0 | 16.00 | 17.0 | 272 |
| 63 | 63 | A-20" | 24+00.00 | 64 | A-20" | 24+24.00 | 1054.0 | 1036.0 | 24.00 | 18.0 | 432 |
| 64 | 64 | A-20" | 24+24.00 | 65 | A-20" | 24+48.00 | 1054.0 | 1036.0 | 24.00 | 18.0 | 432 |
| 65 | 65 | A-20" | 24+48.00 | 66 | A-20" | 24+72.00 | 1054.0 | 1036.0 | 24.00 | 18.0 | 432 |
| 66 | 66 | A-20" | 24+72.00 | 67 | A-20" | 24+96.00 | 1054.0 | 1036.0 | 24.00 | 18.0 | 432 |
| 67 | 67 | A-20" | 24+96.00 | 68 | A-20" | 25+20.00 | 1055.0 | 1036.0 | 24.00 | 19.0 | 456 |
| 68 | 68 | A-20" | 25+20.00 | 69 | A-20" | 25+44.00 | 1055.0 | 1036.0 | 24.00 | 19.0 | 456 |
| 69 | 69 | A-20" | 25+44.00 | 70 | A-20" | 25+68.00 | 1055.0 | 1036.0 | 24.00 | 19.0 | 456 |
| 70 | 70 | A-20" | 25+68.00 | 71 | A-20" | 25+92.00 | 1055.0 | 1036.0 | 24.00 | 19.0 | 456 |
| 71 | 71 | A-20" | 25+92.00 | 72 | A-20" | 26+16.00 | 1056.0 | 1037.0 | 24.00 | 19.0 | 456 |
| 72 | 72 | A-20" | 26+16.00 | 73 | A-20" | 26+40.00 | 1056.0 | 1037.5 | 24.00 | 18.5 | 444 |
| 73 | 73 | A-20" | 26+40.00 | 74 | A-20" | 26+64.00 | 1056.0 | 1038.0 | 24.00 | 18.0 | 432 |
| 74 | 74 | A-20" | 26+64.00 | 75 | A-20" | 26+88.00 | 1056.0 | 1038.5 | 24.00 | 17.5 | 420 |
| 75 | 75 | A-20" | 26+88.00 | 76 | A-20" | 27+12.00 | 1057.0 | 1040.0 | 24.00 | 17.0 | 408 |
| 76 | 76 | A-20" | 27+12.00 | 77 | A-20" | 27+36.00 | 1058.0 | 1041.0 | 24.00 | 17.0 | 408 |
| 77 | 77 | A-20" | 27+36.00 | 78 | A-20" | 27+60.00 | 1059.0 | 1042.5 | 24.00 | 16.5 | 396 |
| 78 | 78 | A-20" | 27+60.00 | 79 | A-20" | 27+84.00 | 1060.0 | 1043.5 | 24.00 | 16.5 | 396 |
| 79 | 79 | A-20" | 27+84.00 | 80 | A-16" | 27+96.00 | 1061.0 | 1045.0 | 12.00 | 16.0 | 192 |
| 80 | 80 | A-16" | 27+96.00 | 81 | A-16" | 28+08.00 | 1062.0 | 1046.0 | 12.00 | 16.0 | 192 |
| 81 | 81 | A-16" | 28+08.00 | 82 | A-16" | 28+20.00 | 1063.0 | 1046.0 | 12.00 | 17.0 | 204 |
| 82 | 82 | A-16" | 28+20.00 | 83 | A-16" | 28+32.00 | 1064.0 | 1047.5 | 12.00 | 16.5 | 198 |
| 83 | 83 | A-16" | 28+32.00 | 84 | A-16" | 28+44.00 | 1065.0 | 1047.5 | 12.00 | 17.5 | 210 |
| 84 | 84 | A-16" | 28+44.00 | 85 | A-16" | 28+56.00 | 1066.0 | 1049.5 | 12.00 | 16.5 | 198 |
| 85 | 85 | A-16" | 28+56.00 | 86 | A-20" | 28+68.00 | 1067.0 | 1049.5 | 12.00 | 17.5 | 210 |
| 86 | 86 | A-20" | 28+68.00 | 87 | A-20" | 28+92.00 | 1068.0 | 1051.0 | 24.00 | 17.0 | 408 |
| 87 | 87 | A-20" | 28+92.00 | 88 | A-20" | 29+16.00 | 1069.0 | 1052.5 | 24.00 | 16.5 | 396 |
| 88 | 88 | A-20" | 29+16.00 | 89 | A-20" | 29+40.00 | 1070.0 | 1053.5 | 24.00 | 16.5 | 396 |
| 89 | 89 | A-20" | 29+40.00 | 90 | A-20" | 29+64.00 | 1071.0 | 1055.0 | 24.00 | 16.0 | 384 |
| 90 | 90 | A-20" | 29+64.00 | 91 | A-20" | 29+88.00 | 1072.0 | 1056.5 | 24.00 | 15.5 | 372 |
| 91 | 91 | A-20" | 29+88.00 | 92 | A-20" | 30+12.00 | 1073.0 | 1057.5 | 24.00 | 15.5 | 372 |
| 92 | 92 | A-20" | 30+12.00 | 93 | A-20" | 30+36.00 | 1074.0 | 1058.0 | 24.00 | 16.0 | 384 |
| 93 | 93 | A-20" | 30+36.00 | 94 | A-20" | 30+60.00 | 1075.0 | 1059.0 | 24.00 | 16.0 | 384 |
| 94 | 94 | A-20" | 30+60.00 | 95 | A-20" | 30+84.00 | 1075.0 | 1060.0 | 24.00 | 15.0 | 360 |
| 95 | 95 | A-20" | 30+84.00 | 96 | A-20" | 31+08.00 | 1076.0 | 1061.0 | 24.00 | 15.0 | 360 |
| 96 | 96 | A-20" | 31+08.00 | 97 | A-20" | 31+32.00 | 1076.0 | 1061.5 | 24.00 | 14.5 | 348 |
| 97 | 97 | A-20" | 31+32.00 | 98 | A-20" | 31+56.00 | 1077.0 | 1062.0 | 24.00 | 15.0 | 360 |
| 98 | 98 | A-20" | 31+56.00 | 99 | A-20" | 31+80.00 | 1077.0 | 1062.0 | 24.00 | 15.0 | 360 |
| 99 | 99 | A-20" | 31+80.00 | 100 | A-20" | 32+04.00 | 1077.0 | 1062.0 | 24.00 | 15.0 | 360 |
| 100 | 100 | A-20" | 32+04.00 | 101 | A-20" | 32+28.00 | 1077.0 | 1062.0 | 24.00 | 15.0 | 360 |

CALCULATED MOJ
CHECKED DGN

# CALCULATIONS & SUBSUMMARY - NOISE WALL E

SUM-77 / 277 / 224

1092
1288

O:\2017\2017258\ProjectData\SUM\106002\Design\Structures\Wall_Noise_E\Sheets\106002_00E_WS001.dgn Sheet 1 1/17/2021 6:59:35 PM rvitelli

| PANEL NO. | DRILLED SHAFT NO. | POST TYPE | WORKPOINT STATION | DRILLED SHAFT NO. | POST TYPE | WORKPOINT STATION | TOP OF WALL | BOTTOM OF WALL | LENGTH OF PANEL (LFT) | HEIGHT OF PANEL (LFT) | 606<br>SPECIAL - NOISE BARRIER (REFLECTIVE)<br>SF |
|---|---|---|---|---|---|---|---|---|---|---|---|
| 101 | 101 | A-20" | 32+28.00 | 102 | A-20" | 32+52.00 | 1077.0 | 1061.5 | 24.00 | 15.5 | 372 |
| 102 | 102 | A-20" | 32+52.00 | 103 | A-20" | 32+76.00 | 1077.0 | 1061.0 | 24.00 | 16.0 | 384 |
| 103 | 103 | A-20" | 32+76.00 | 104 | A-20" | 33+00.00 | 1077.0 | 1060.5 | 24.00 | 16.5 | 396 |
| 104 | 104 | A-20" | 33+00.00 | 105 | A-20" | 33+24.00 | 1077.0 | 1059.5 | 24.00 | 17.5 | 420 |
| 105 | 105 | A-20" | 33+24.00 | 106 | A-20" | 33+48.00 | 1077.0 | 1059.5 | 24.00 | 17.5 | 420 |
| 106 | 106 | A-20" | 33+48.00 | 107 | A-20" | 33+72.00 | 1077.0 | 1059.5 | 24.00 | 17.5 | 420 |
| 107 | 107 | A-20" | 33+72.00 | 108 | A-20" | 33+96.00 | 1077.0 | 1059.5 | 24.00 | 17.5 | 420 |
| 108 | 108 | A-20" | 33+96.00 | 109 | A-20" | 34+20.00 | 1077.0 | 1060.5 | 24.00 | 16.5 | 396 |
| 109 | 109 | A-20" | 34+20.00 | 110 | A-20" | 34+44.00 | 1077.0 | 1061.0 | 24.00 | 16.0 | 384 |
| 110 | 110 | A-20" | 34+44.00 | 111 | A-20" | 34+68.00 | 1077.0 | 1062.0 | 24.00 | 15.0 | 360 |
| 111 | 111 | A-20" | 34+68.00 | 112 | A-20" | 34+92.00 | 1078.0 | 1062.5 | 24.00 | 15.5 | 372 |
| 112 | 112 | A-20" | 34+92.00 | 113 | A-20" | 35+16.00 | 1078.0 | 1063.0 | 24.00 | 15.0 | 360 |
| 113 | 113 | A-20" | 35+16.00 | 114 | A-20" | 35+40.00 | 1079.0 | 1063.5 | 24.00 | 15.5 | 372 |
| 114 | 114 | A-20" | 35+40.00 | 115 | A-20" | 35+64.00 | 1079.0 | 1064.0 | 24.00 | 15.0 | 360 |
| 115 | 115 | A-20" | 35+64.00 | 116 | A-20" | 35+88.00 | 1079.0 | 1064.5 | 24.00 | 14.5 | 348 |
| 116 | 116 | A-20" | 35+88.00 | 117 | A-20" | 36+12.00 | 1080.0 | 1065.0 | 24.00 | 15.0 | 360 |
| 117 | 117 | A-20" | 36+12.00 | 118 | A-20" | 36+36.00 | 1080.0 | 1065.5 | 24.00 | 14.5 | 348 |
| 118 | 118 | A-20" | 36+36.00 | 119 | A-20" | 36+60.00 | 1080.0 | 1065.5 | 24.00 | 14.5 | 348 |
| 119 | 119 | A-20" | 36+60.00 | 120 | B-16" | 36+78.00 | 1080.0 | 1066.0 | 18.00 | 14.0 | 252 |
| | | | | | | | | | | TOTAL | 43600 |

CALCULATED MOJ
CHECKED DGN

# CALCULATIONS & SUBSUMMARY - NOISE WALL E

SUM-77 / 277 / 224

1093
1288

O:\2017\2017258\ProjectData\SUM\106002\Design\Structures\Wall_Noise_E\Sheets\106002_00E_WS001.dgn Sheet 2 1/17/2021 6:59:35 PM rviteli

| NOISE WALL E | | | |
|---|---|---|---|
| DRILLED SHAFT NO. | WORKPOINT STATION | TOP OF DRILLED SHAFT ELEVATION | SHAFT LENGTH (FEET) |
| 1 | 10+00.00 | 1020.77 | 8 |
| 2 | 10+12.00 | 1020.72 | 10 |
| 3 | 10+24.00 | 1020.55 | 19 |
| 4 | 10+48.00 | 1021.05 | 19 |
| 5 | 10+72.00 | 1021.05 | 19 |
| 6 | 10+96.00 | 1021.55 | 19 |
| 7 | 11+20.00 | 1021.55 | 19 |
| 8 | 11+44.00 | 1022.05 | 19 |
| 9 | 11+68.00 | 1022.05 | 19 |
| 10 | 11+92.00 | 1022.55 | 19 |
| 11 | 12+16.00 | 1023.05 | 19 |
| 12 | 12+40.00 | 1023.55 | 19 |
| 13 | 12+64.00 | 1023.55 | 19 |
| 14 | 12+88.00 | 1024.05 | 19 |
| 15 | 13+12.00 | 1024.05 | 19 |
| 16 | 13+28.00 | 1024.05 | 14 |
| 17 | 13+40.00 | 1024.05 | 14 |
| 18 | 13+52.00 | 1024.05 | 14 |
| 19 | 13+76.00 | 1024.05 | 14 |
| 20 | 13+88.00 | 1028.05 | 10.5 |
| 21 | 14+00.00 | 1028.05 | 14 |
| 22 | 14+24.00 | 1032.05 | 14 |
| 23 | 14+48.00 | 1035.05 | 14 |
| 24 | 14+72.00 | 1036.05 | 14 |
| 25 | 14+96.00 | 1036.55 | 14 |
| 26 | 15+20.00 | 1037.05 | 14 |
| 27 | 15+44.00 | 1037.05 | 16 |
| 28 | 15+68.00 | 1037.55 | 14 |
| 29 | 15+92.00 | 1037.05 | 18 |
| 30 | 16+16.00 | 1036.05 | 18 |
| 31 | 16+40.00 | 1035.05 | 18 |
| 32 | 16+64.00 | 1034.55 | 18 |
| 33 | 16+88.00 | 1034.55 | 18 |
| 34 | 17+12.00 | 1034.05 | 18 |
| 35 | 17+36.00 | 1034.05 | 11 |
| 36 | 17+60.00 | 1034.05 | 11 |
| 37 | 17+84.00 | 1034.05 | 11 |
| 38 | 18+08.00 | 1034.05 | 11 |
| 39 | 18+32.00 | 1034.05 | 11 |
| 40 | 18+56.00 | 1034.05 | 11 |
| 41 | 18+80.00 | 1034.05 | 11 |
| 42 | 19+04.00 | 1034.05 | 12.5 |
| 43 | 19+28.00 | 1034.05 | 12.5 |
| 44 | 19+52.00 | 1034.05 | 12.5 |
| 45 | 19+76.00 | 1034.05 | 12.5 |
| 46 | 20+00.00 | 1033.55 | 12.5 |
| 47 | 20+24.00 | 1033.55 | 12.5 |
| 48 | 20+48.00 | 1033.55 | 12.5 |
| 49 | 20+72.00 | 1033.55 | 12.5 |
| 50 | 20+96.00 | 1033.55 | 12.5 |

| NOISE WALL E | | | |
|---|---|---|---|
| DRILLED SHAFT NO. | WORKPOINT STATION | TOP OF DRILLED SHAFT ELEVATION | SHAFT LENGTH (FEET) |
| 51 | 21+20.00 | 1033.05 | 14.5 |
| 52 | 21+44.00 | 1033.05 | 14.5 |
| 53 | 21+68.00 | 1033.05 | 14.5 |
| 54 | 21+92.00 | 1033.55 | 14.5 |
| 55 | 22+16.00 | 1033.55 | 14.5 |
| 56 | 22+40.00 | 1034.05 | 14.5 |
| 57 | 22+64.00 | 1034.55 | 14.5 |
| 58 | 22+88.00 | 1034.55 | 14.5 |
| 59 | 23+12.00 | 1035.05 | 12 |
| 60 | 23+36.00 | 1035.55 | 12 |
| 61 | 23+60.00 | 1035.55 | 12 |
| 62 | 23+84.00 | 1035.55 | 12 |
| 63 | 24+00.00 | 1035.55 | 12 |
| 64 | 24+24.00 | 1035.55 | 12 |
| 65 | 24+48.00 | 1035.55 | 12 |
| 66 | 24+72.00 | 1035.55 | 12 |
| 67 | 24+96.00 | 1035.55 | 12 |
| 68 | 25+20.00 | 1035.55 | 12 |
| 69 | 25+44.00 | 1035.55 | 12 |
| 70 | 25+68.00 | 1035.55 | 12 |
| 71 | 25+92.00 | 1035.55 | 12 |
| 72 | 26+16.00 | 1036.55 | 12 |
| 73 | 26+40.00 | 1037.05 | 12 |
| 74 | 26+64.00 | 1037.55 | 12 |
| 75 | 26+88.00 | 1038.05 | 14 |
| 76 | 27+12.00 | 1039.55 | 14 |
| 77 | 27+36.00 | 1040.55 | 14 |
| 78 | 27+60.00 | 1042.05 | 14 |
| 79 | 27+84.00 | 1043.05 | 14 |
| 80 | 27+96.00 | 1044.55 | 11 |
| 81 | 28+08.00 | 1045.55 | 11 |
| 82 | 28+20.00 | 1045.55 | 11 |
| 83 | 28+32.00 | 1047.05 | 11 |
| 84 | 28+44.00 | 1047.05 | 11 |
| 85 | 28+56.00 | 1049.05 | 11 |
| 86 | 28+68.00 | 1049.05 | 22* |
| 87 | 28+92.00 | 1050.55 | 22* |
| 88 | 29+16.00 | 1052.05 | 22* |
| 89 | 29+40.00 | 1053.05 | 22* |
| 90 | 29+64.00 | 1054.55 | 22* |
| 91 | 29+88.00 | 1056.05 | 22* |
| 92 | 30+12.00 | 1057.05 | 22* |
| 93 | 30+36.00 | 1057.55 | 22* |
| 94 | 30+60.00 | 1058.55 | 22* |
| 95 | 30+84.00 | 1059.55 | 22* |
| 96 | 31+08.00 | 1060.55 | 10* |
| 97 | 31+32.00 | 1061.05 | 10* |
| 98 | 31+56.00 | 1061.55 | 10* |
| 99 | 31+80.00 | 1061.55 | 10* |
| 100 | 32+04.00 | 1061.55 | 10* |

| NOISE WALL E | | | |
|---|---|---|---|
| DRILLED SHAFT NO. | WORKPOINT STATION | TOP OF DRILLED SHAFT ELEVATION | SHAFT LENGTH (FEET) |
| 101 | 32+28.00 | 1061.05 | 10* |
| 102 | 32+52.00 | 1060.55 | 10* |
| 103 | 32+76.00 | 1060.05 | 17* |
| 104 | 33+00.00 | 1059.05 | 17* |
| 105 | 33+24.00 | 1059.05 | 17* |
| 106 | 33+48.00 | 1059.05 | 17* |
| 107 | 33+72.00 | 1059.05 | 17* |
| 108 | 33+96.00 | 1059.05 | 15.5* |
| 109 | 34+20.00 | 1060.05 | 15.5* |
| 110 | 34+44.00 | 1060.55 | 17.5* |
| 111 | 34+68.00 | 1061.55 | 17.5* |
| 112 | 34+92.00 | 1062.05 | 18* |
| 113 | 35+16.00 | 1062.55 | 18* |
| 114 | 35+40.00 | 1063.05 | 18* |
| 115 | 35+64.00 | 1063.55 | 21* |
| 116 | 35+88.00 | 1064.05 | 21* |
| 117 | 36+12.00 | 1064.55 | 21* |
| 118 | 36+36.00 | 1065.05 | 21* |
| 119 | 36+60.00 | 1065.05 | 21* |
| 120 | 36+78.00 | 1065.72 | 15 |

**LEGEND:**

* INCLUDES 5' ROCK SOCKET

CALCULATED MOJ
CHECKED DGN

# DATA TABLES - NOISE WALL E

SUM-77/277/224

1094
1288

O:\2017\2017258\ProjectData\SUM\106002\Design\Structures\Wall_Noise_E\Sheets\106002_00E_WS002.dgn Sheet 1/17/2021 6:59:36 PM rvitelli

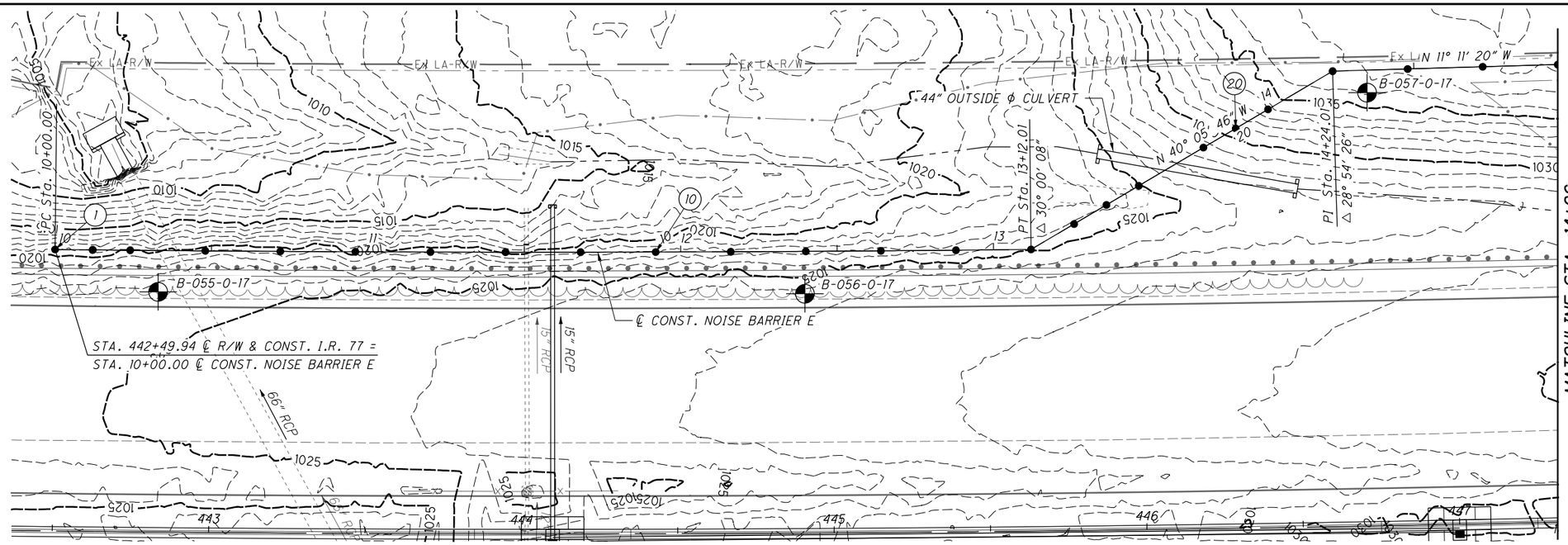


| APPROX. TOP OF ROCK ELEV. | |
|---|---|
| BORING I.D. NO. | T/ROCK ELEV. |
| B-055-0-17 | N/A |
| B-056-0-17 | N/A |
| B-057-0-17 | N/A |
| B-058-0-17 | N/A |
| B-059-0-17 | N/A |
| B-060-0-17 | N/A |
| B-061-0-17 | N/A |
| B-062-0-17 | N/A |
| B-063-0-17 | N/A |
| B-064-0-17 | N/A |
| B-065-0-17 | 1037.3± |
| B-066-0-17 | 1056.7± |
| B-067-0-17 | 1047.1± |
| B-068-0-17 | 1049.6± |
| B-069-0-17 | 1048.5± |

| | | | | | | | | | | | | | | | | | | | | | | | | |
|---|---|---|---|---|---|---|---|---|---|---|---|---|---|---|---|---|---|---|---|---|---|---|---|---|
| TOP OF NOISE BARRIER ELEV. | 1031.00 | 1035.00 | 1039.00 | 1039.00 | 1040.00 | 1040.00 | 1040.00 | 1040.00 | 1041.00 | 1041.00 | 1041.00 | 1042.00 | 1042.00 | 1043.00 | 1043.00 | 1044.00 | 1045.00 | 1046.00 | 1047.00 | 1048.00 | 1049.00 | 1050.00 | 1051.00 | 1052.00 |
| ACOUSTIC PROFILE ELEV. | | 1038.46 | 1038.73 | 1039.00 | 1039.26 | 1039.53 | 1039.53 | 1040.06 | 1040.33 | 1040.60 | 1040.86 | 1041.13 | 1041.40 | 1041.65 | 1041.88 | 1042.26 | 1046.45 | 1048.47 | 1050.27 | 1050.95 | | | | |
| BOTTOM OF NOISE BARRIER ELEV. | 1021.00 | 1021.00 | 1021.50 | 1021.50 | 1022.00 | 1022.00 | 1022.50 | 1022.50 | 1023.00 | 1023.50 | 1024.00 | 1024.00 | 1024.50 | 1025.00 | 1024.50 | 1024.50 | 1024.50 | 1024.50 | 1028.50 | 1028.50 | 1032.50 | 1035.50 | 1036.50 | 1037.00 |
| PANEL ID | 1 | 2 | 3 | 4 | 5 | 6 | 7 | 8 | 9 | 10 | 11 | 12 | 13 | 14 | 15 | 16 | 17 | 18 | 19 | 20 | 21 | 22 | 23 | 24 |

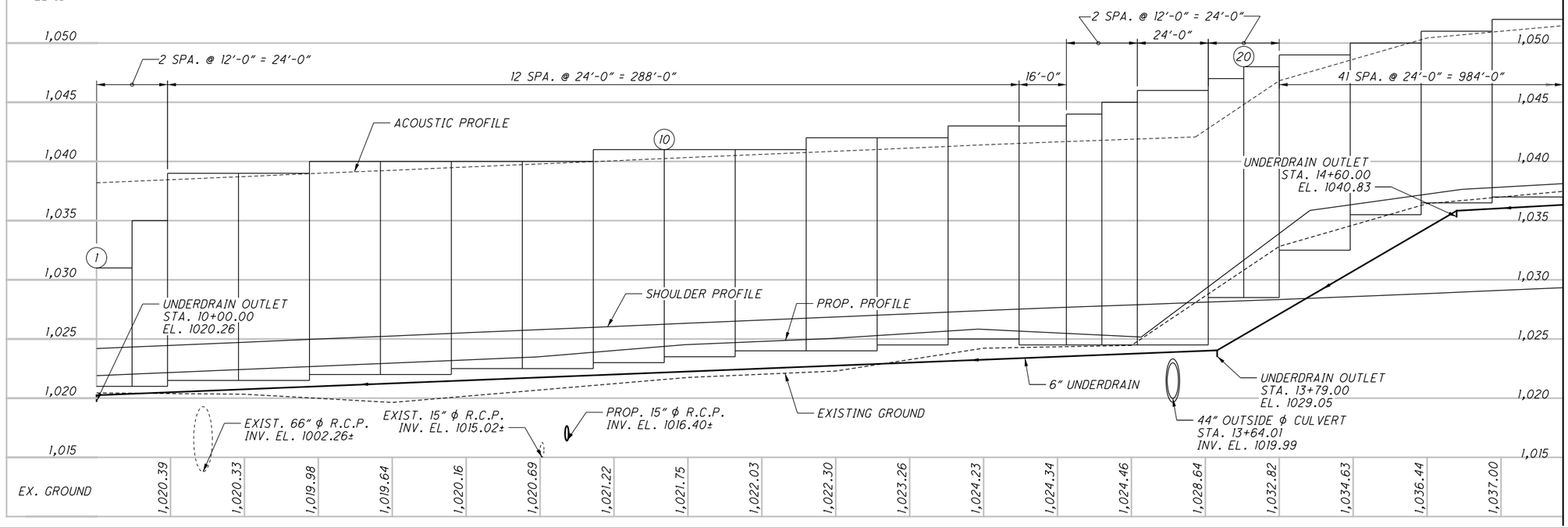


| | | | | | | | | | | | | | | | | | | | | | | | | |
|---|---|---|---|---|---|---|---|---|---|---|---|---|---|---|---|---|---|---|---|---|---|---|---|---|
| EX. GROUND | 1,020.39 | 1,020.33 | 1,019.98 | 1,019.64 | 1,020.16 | 1,020.69 | 1,021.22 | 1,021.75 | 1,022.03 | 1,022.30 | 1,023.26 | 1,024.23 | 1,024.34 | 1,024.46 | 1,028.64 | 1,032.82 | 1,034.63 | 1,036.44 | 1,037.00 | | | | | |

HORIZONTAL SCALE IN FEET
0 10 20 40

CALCULATED MOJ
CHECKED DGN

# PLAN AND PROFILE - NOISE BARRIER E
## BEGIN TO STA. 14+96

SUM-77 / 277 / 224

1095
1288

O:\2017\2017258\ProjectData\SUM\106002\Design\Structures\Wall_Noise_E\Sheets\106002_00E_WP001.dgn Sheet 1 1/17/2021 7:01:18 PM rvitelli

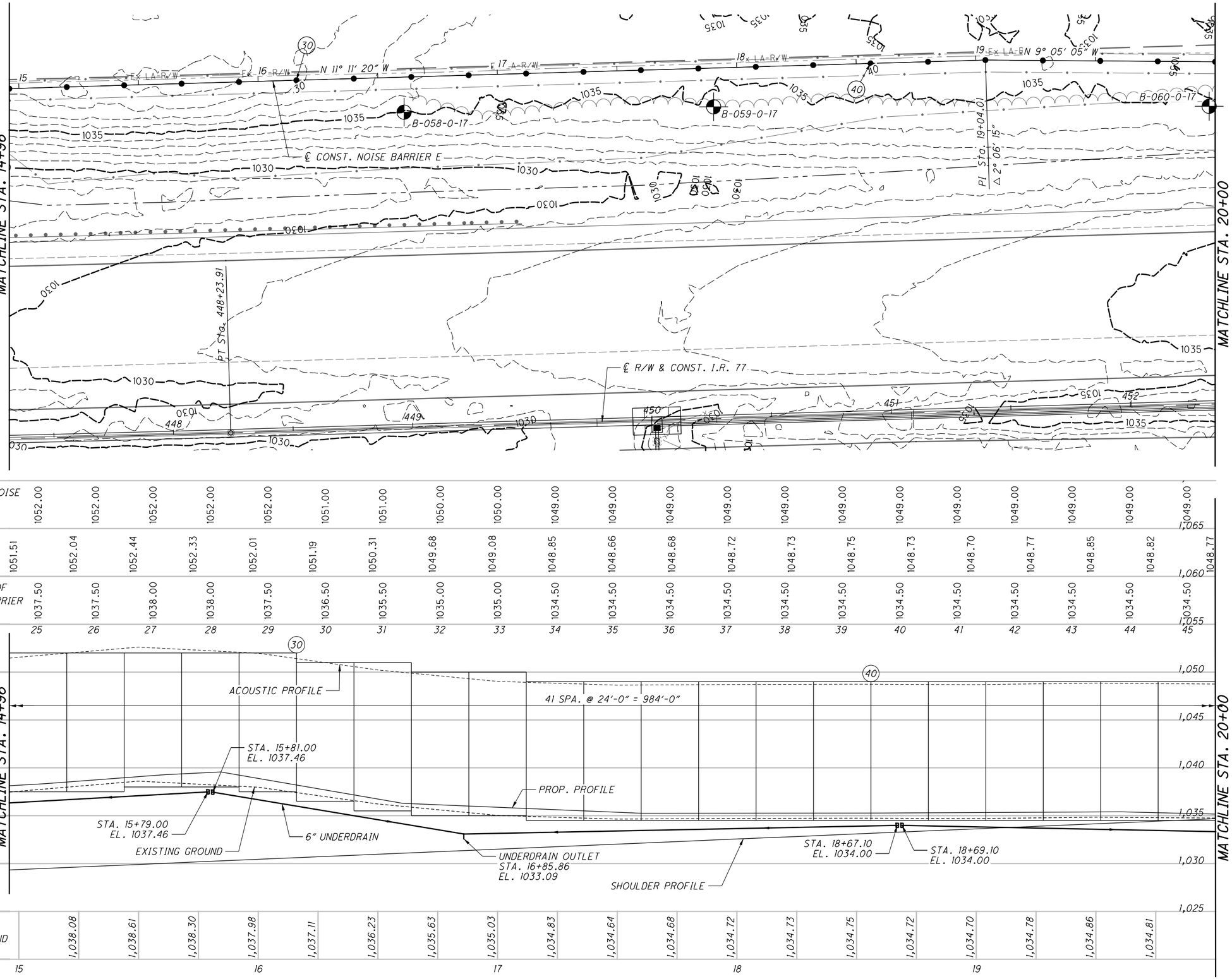


| | | | | | | | | | | | | | | | | | | | | | | |
|---|---|---|---|---|---|---|---|---|---|---|---|---|---|---|---|---|---|---|---|---|---|---|
| TOP OF NOISE BARRIER ELEV. | 1052.00 | 1052.00 | 1052.00 | 1052.00 | 1052.00 | 1051.00 | 1051.00 | 1050.00 | 1050.00 | 1049.00 | 1049.00 | 1049.00 | 1049.00 | 1049.00 | 1049.00 | 1049.00 | 1049.00 | 1049.00 | 1049.00 | 1049.00 | 1049.00 | 1049.00 |
| ACOUSTIC PROFILE ELEV. | 1051.51 | 1052.04 | 1052.44 | 1052.33 | 1052.01 | 1051.19 | 1050.31 | 1049.68 | 1049.08 | 1048.85 | 1048.66 | 1048.68 | 1048.72 | 1048.73 | 1048.75 | 1048.73 | 1048.70 | 1048.77 | 1048.85 | 1048.82 | 1048.77 | |
| BOTTOM OF NOISE BARRIER ELEV. | 1037.50 | 1037.50 | 1038.00 | 1038.00 | 1037.50 | 1036.50 | 1035.50 | 1035.00 | 1035.00 | 1034.50 | 1034.50 | 1034.50 | 1034.50 | 1034.50 | 1034.50 | 1034.50 | 1034.50 | 1034.50 | 1034.50 | 1034.50 | 1034.50 | |
| PANEL ID | 25 | 26 | 27 | 28 | 29 | 30 | 31 | 32 | 33 | 34 | 35 | 36 | 37 | 38 | 39 | 40 | 41 | 42 | 43 | 44 | 45 | |
| EX. GROUND | 1,038.08 | 1,038.61 | 1,038.30 | 1,037.98 | 1,037.11 | 1,036.23 | 1,035.63 | 1,035.03 | 1,034.83 | 1,034.64 | 1,034.68 | 1,034.72 | 1,034.73 | 1,034.75 | 1,034.72 | 1,034.70 | 1,034.78 | 1,034.86 | 1,034.81 | | | |
| | 15 | | | | 16 | | | | 17 | | | | 18 | | | | 19 | | | | | |

# PLAN AND PROFILE - NOISE BARRIER E
## STA. 14+96 TO STA. 20+00

SUM-77 / 277 / 224

1096
1288

O:\2017\2017258\ProjectData\SUM\106002\Design\Structures\Wall_Noise_E\Sheets\106002_00E_WP001.dgn Sheet 2 1/17/2021 7:01:22 PM rvitelli

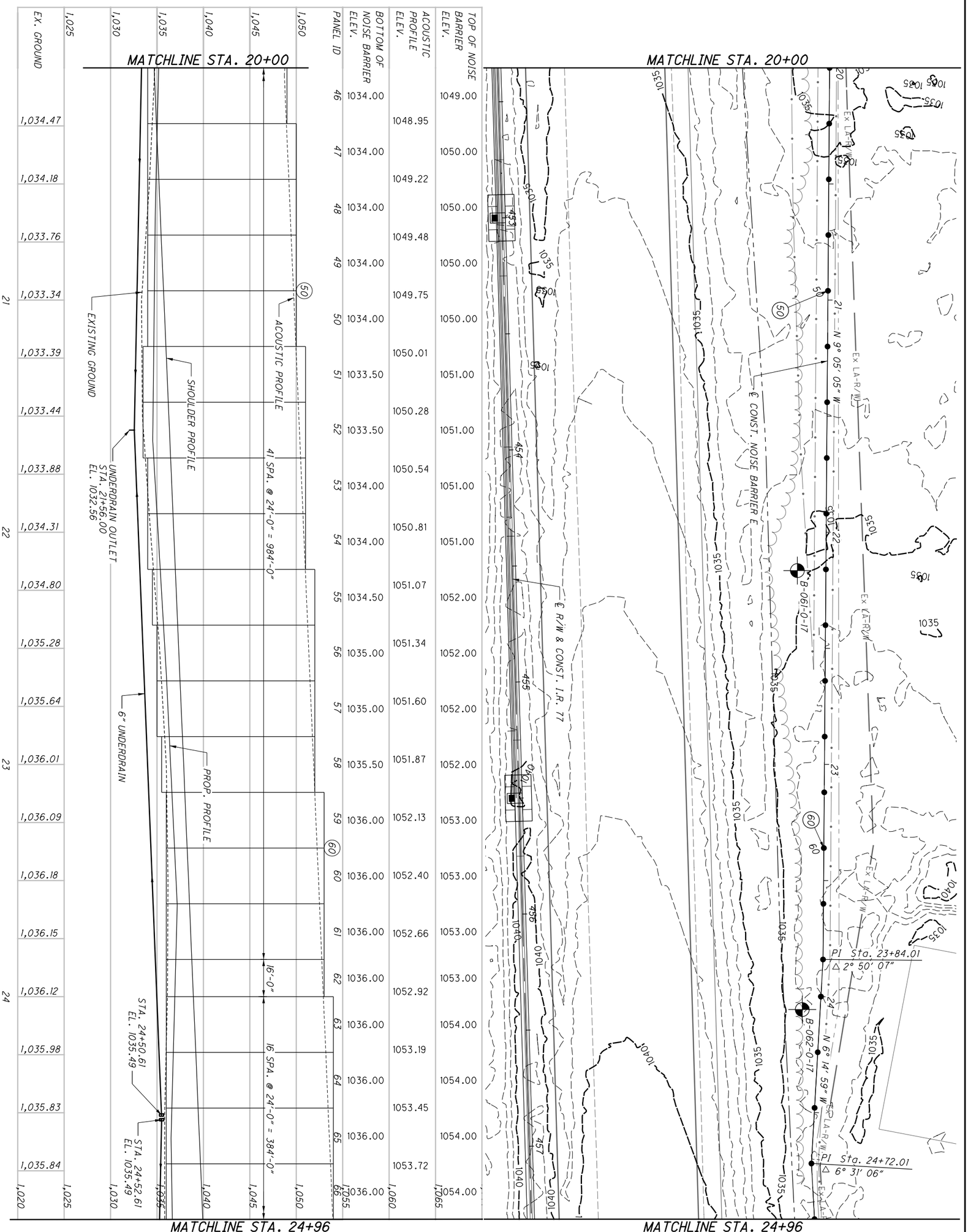


| | | | | |
|---|---|---|---|---|
| 1097 / 1288 | SUM-77 / 277 / 224 | PLAN AND PROFILE - NOISE BARRIER E<br>STA. 20+00 TO STA. 24+96 | CALCULATED MOJ<br>CHECKED DGN | 0 20<br>10 40<br>HORIZONTAL SCALE IN FEET |

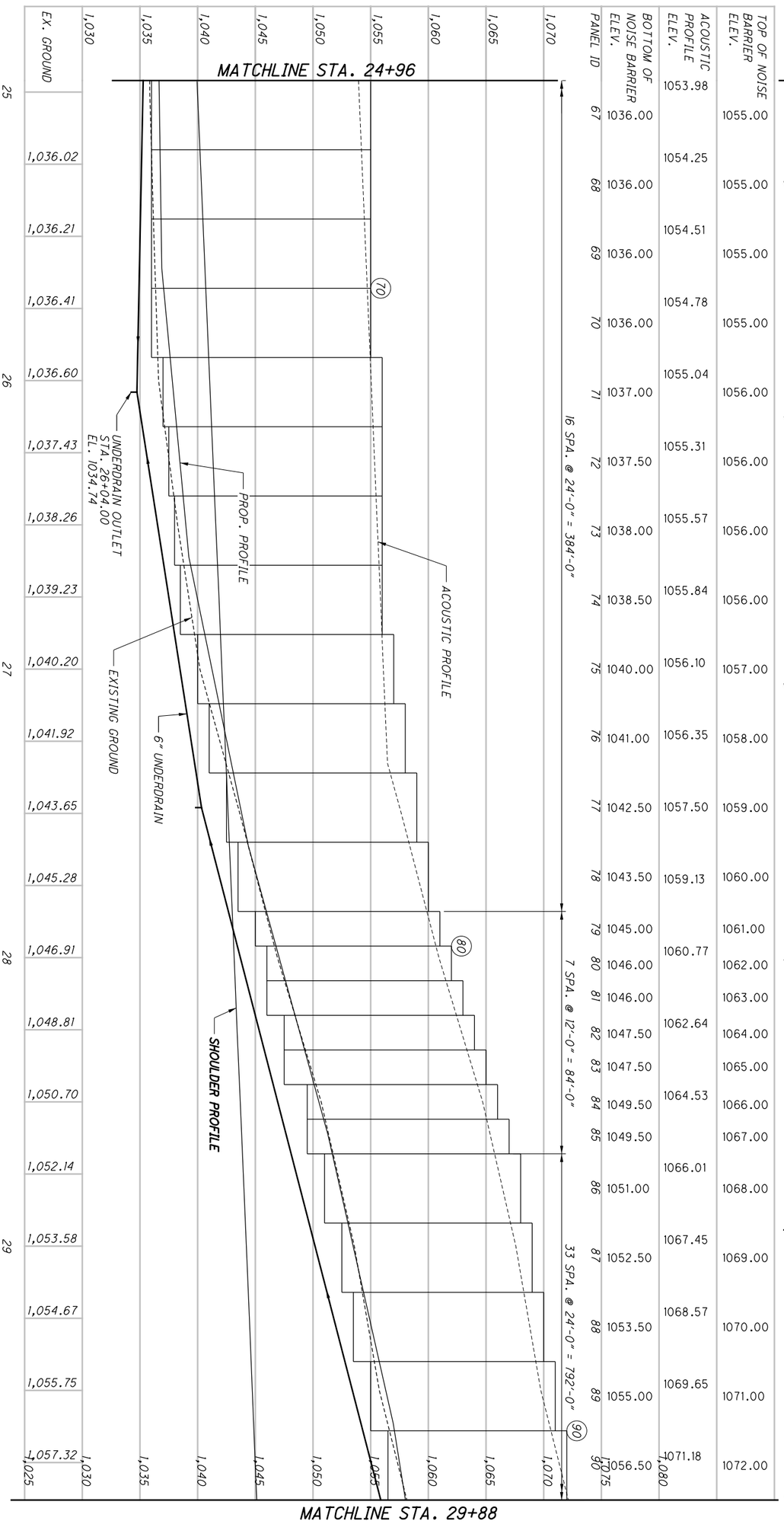


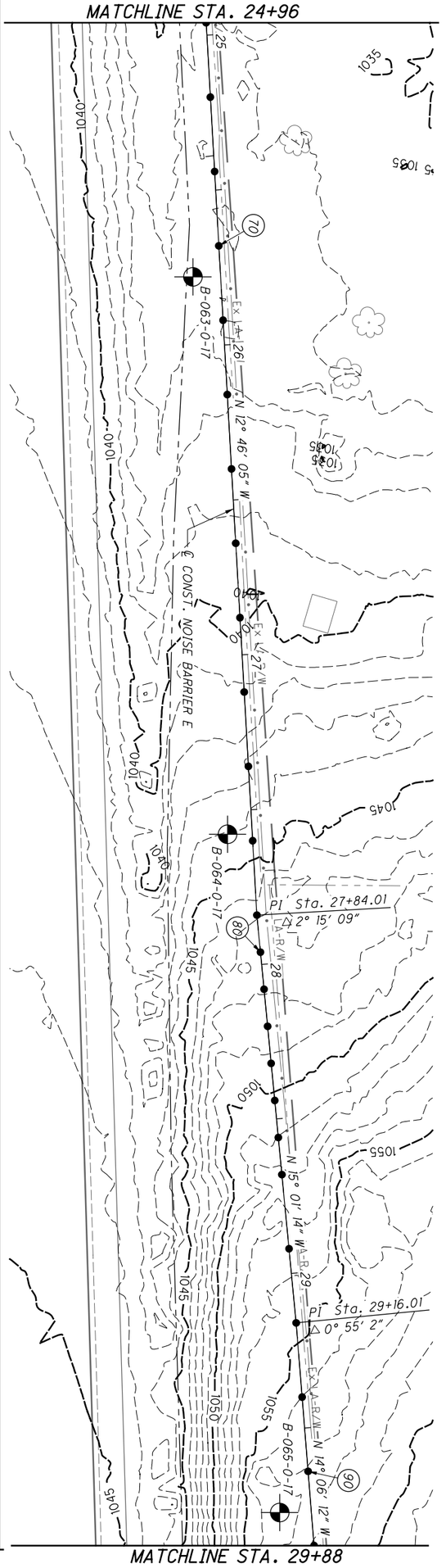


| | | | | |
|---|---|---|---|---|
| 1098 / 1288 | SUM-77/277/224 | PLAN AND PROFILE - NOISE BARRIER E<br>STA. 24+96 TO STA. 29+88 | CALCULATED MOJ<br>CHECKED DGN | 0 20<br>10 40<br>HORIZONTAL SCALE IN FEET |

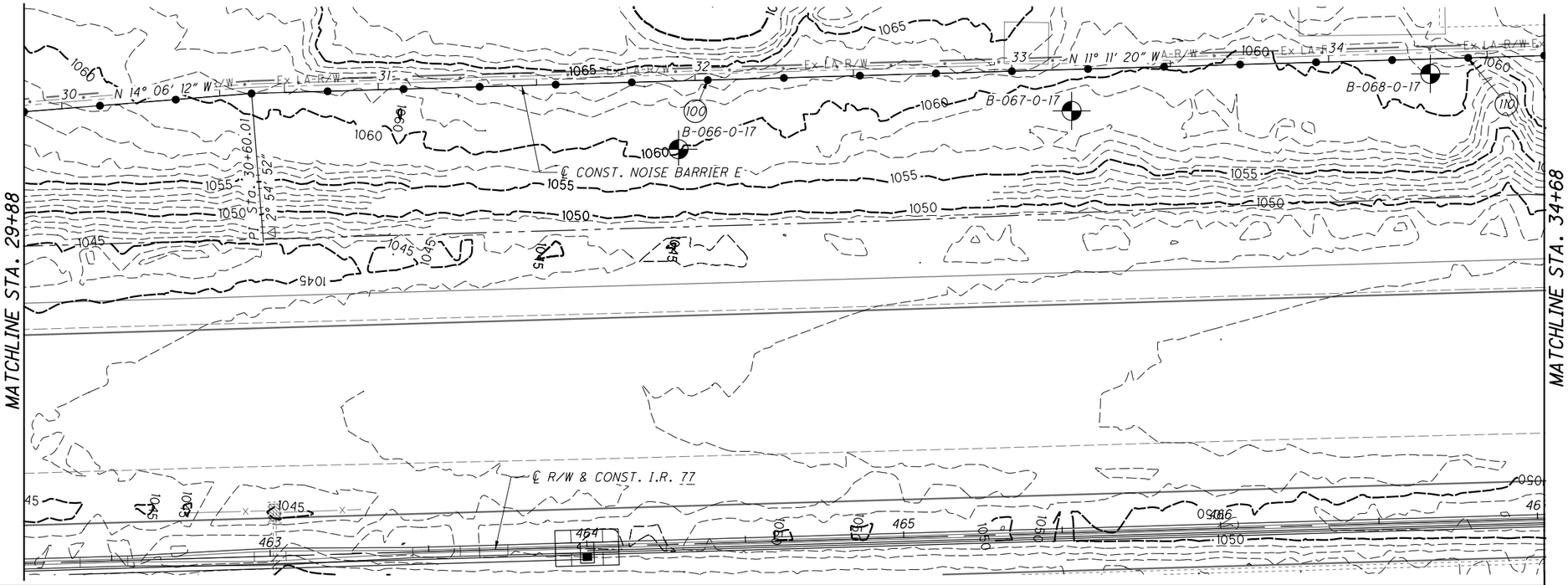


| | | | | | | | | | | | | | | | | | | | | | |
|---|---|---|---|---|---|---|---|---|---|---|---|---|---|---|---|---|---|---|---|---|---|
| TOP OF NOISE BARRIER ELEV. | 1073.00 | 1074.00 | 1075.00 | 1075.00 | 1076.00 | 1076.00 | 1077.00 | 1077.00 | 1077.00 | 1077.00 | 1077.00 | 1077.00 | 1077.00 | 1077.00 | 1077.00 | 1077.00 | 1077.00 | 1077.00 | 1077.00 | 1077.00 | 1077.00 |
| ACOUSTIC PROFILE ELEV. | 1072.75 | 1073.54 | 1074.25 | 1074.75 | 1075.22 | 1075.75 | 1076.29 | 1076.64 | 1076.98 | 1076.63 | 1076.21 | 1076.26 | 1076.35 | 1075.35 | 1074.25 | 1074.17 | 1074.20 | 1074.99 | 1075.85 | | |
| BOTTOM OF NOISE BARRIER ELEV. | 1057.50 | 1058.00 | 1059.00 | 1060.00 | 1061.00 | 1061.50 | 1062.00 | 1062.00 | 1062.00 | 1062.00 | 1061.50 | 1061.00 | 1060.50 | 1059.50 | 1059.50 | 1059.50 | 1059.50 | 1060.50 | 1061.00 | 1062.00 | 1062.00 |
| PANEL ID | 91 | 92 | 93 | 94 | 95 | 96 | 97 | 98 | 99 | 100 | 101 | 102 | 103 | 104 | 105 | 106 | 107 | 108 | 109 | 110 | |

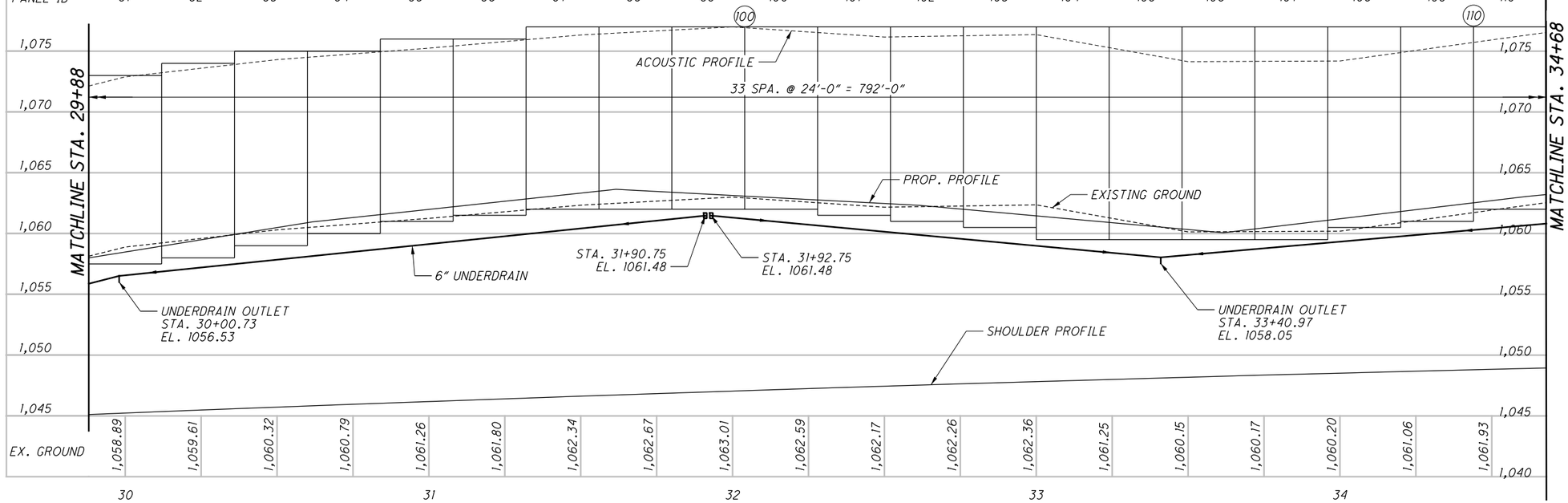


| | | | | | | | | | | | | | | | | | | | | | |
|---|---|---|---|---|---|---|---|---|---|---|---|---|---|---|---|---|---|---|---|---|---|
| EX. GROUND | 1,058.89 | 1,059.61 | 1,060.32 | 1,060.79 | 1,061.26 | 1,061.80 | 1,062.34 | 1,062.67 | 1,063.01 | 1,062.59 | 1,062.17 | 1,062.26 | 1,062.36 | 1,061.25 | 1,060.15 | 1,060.17 | 1,060.20 | 1,061.06 | 1,061.93 | | |
| | 30 | | | | 31 | | | | 32 | | | | 33 | | | | 34 | | | | |

HORIZONTAL SCALE IN FEET
0 10 20 40

CALCULATED MOJ
CHECKED DGN

# PLAN AND PROFILE - NOISE BARRIER E
## STA. 29+88 TO STA. 34+68

SUM-77/277/224

1099
1288

O:\2017\2017258\ProjectData\SUM\106002\Design\Structures\Wall_Noise_E\Sheets\106002_00E_WP001.dgn Sheet 5 1/17/2021 7:01:31 PM rvitelli

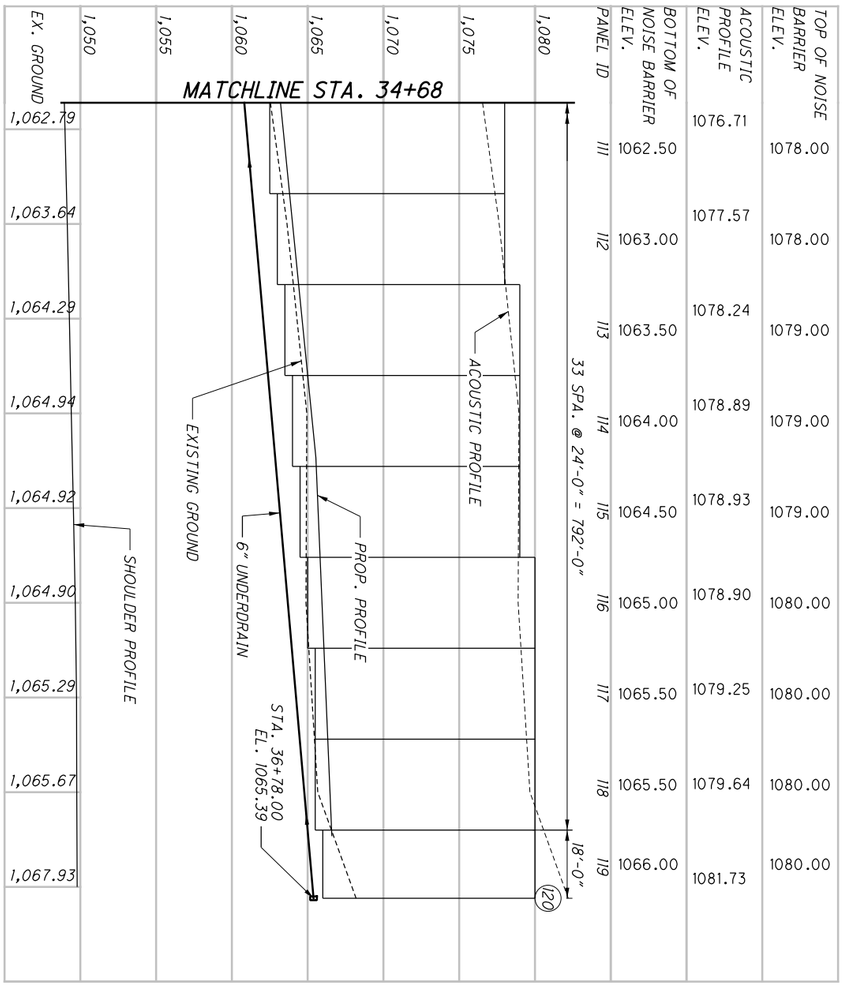


| PANEL ID | BOTTOM OF NOISE BARRIER ELEV. | ACOUSTIC PROFILE ELEV. | TOP OF NOISE BARRIER ELEV. |
|---|---|---|---|
| 111 | 1062.50 | 1076.71 | 1078.00 |
| 112 | 1063.00 | 1077.57 | 1078.00 |
| 113 | 1063.50 | 1078.24 | 1079.00 |
| 114 | 1064.00 | 1078.89 | 1079.00 |
| 115 | 1064.50 | 1078.93 | 1079.00 |
| 116 | 1065.00 | 1078.90 | 1080.00 |
| 117 | 1065.50 | 1079.25 | 1080.00 |
| 118 | 1065.50 | 1079.64 | 1080.00 |
| 119 | 1066.00 | 1081.73 | 1080.00 |

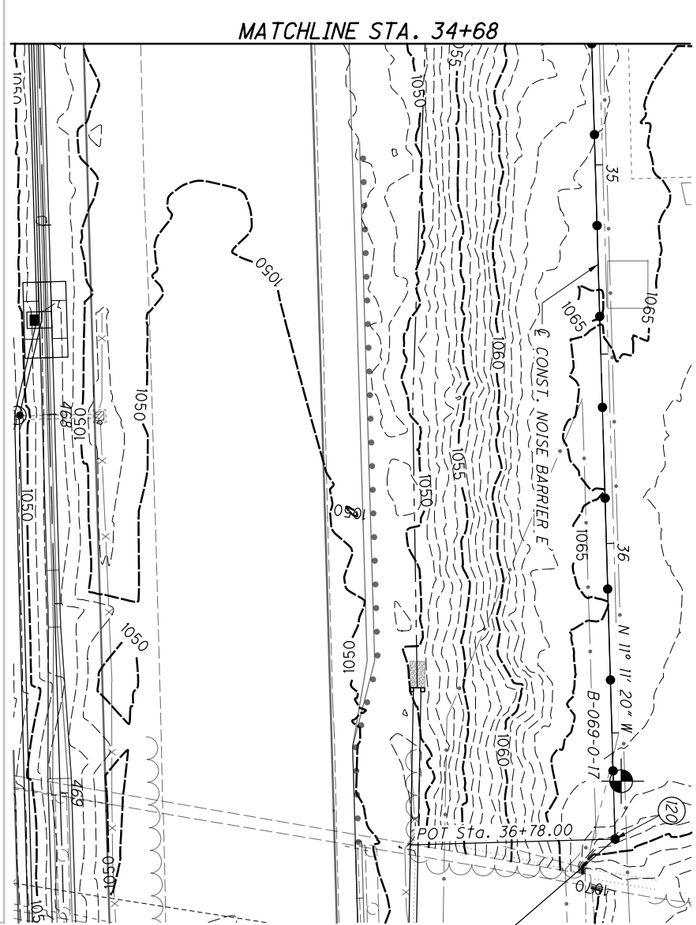

| PANEL NO. | DRILLED SHAFT NO. | POST TYPE | WORKPOINT STATION | DRILLED SHAFT NO. | POST TYPE | WORKPOINT STATION | TOP OF WALL | BOTTOM OF WALL | LENGTH OF PANEL (LFT) | HEIGHT OF PANEL (LFT) | 606 SPECIAL - NOISE BARRIER (REFLECTIVE) SF |
|---|---|---|---|---|---|---|---|---|---|---|---|
| 1 | 1 | B-16" | 10+00.00 | 2 | A-16" | 10+12.00 | 1046.5 | 1038.50 | 12.00 | 8.0 | 96 |
| 2 | 2 | A-16" | 10+12.00 | 3 | A-16" | 10+24.00 | 1050.5 | 1039.00 | 12.00 | 11.5 | 138 |
| 3 | 3 | A-16" | 10+24.00 | 4 | A-16" | 10+40.00 | 1054.5 | 1039.50 | 16.00 | 15.0 | 240 |
| 4 | 4 | A-16" | 10+40.00 | 5 | A-20" | 10+52.00 | 1058.5 | 1040.00 | 12.00 | 18.5 | 222 |
| 5 | 5 | A-20" | 10+52.00 | 6 | A-20" | 10+76.00 | 1058.5 | 1040.50 | 24.00 | 18.0 | 432 |
| 6 | 6 | A-20" | 10+76.00 | 7 | A-20" | 11+00.00 | 1059.5 | 1041.50 | 24.00 | 18.0 | 432 |
| 7 | 7 | A-20" | 11+00.00 | 8 | A-20" | 11+24.00 | 1059.5 | 1042.50 | 24.00 | 17.0 | 408 |
| 8 | 8 | A-20" | 11+24.00 | 9 | A-20" | 11+48.00 | 1060.5 | 1043.00 | 24.00 | 17.5 | 420 |
| 9 | 9 | A-20" | 11+48.00 | 10 | A-20" | 11+72.00 | 1060.5 | 1043.50 | 24.00 | 17.0 | 408 |
| 10 | 10 | A-20" | 11+72.00 | 11 | A-20" | 11+96.00 | 1061.5 | 1044.00 | 24.00 | 17.5 | 420 |
| 11 | 11 | A-20" | 11+96.00 | 12 | A-20" | 12+20.00 | 1061.5 | 1044.50 | 24.00 | 17.0 | 408 |
| 12 | 12 | A-20" | 12+20.00 | 13 | A-20" | 12+44.00 | 1062.5 | 1044.50 | 24.00 | 18.0 | 432 |
| 13 | 13 | A-20" | 12+44.00 | 14 | A-20" | 12+68.00 | 1062.5 | 1045.00 | 24.00 | 17.5 | 420 |
| 14 | 14 | A-20" | 12+68.00 | 15 | A-20" | 12+92.00 | 1062.5 | 1045.00 | 24.00 | 17.5 | 420 |
| 15 | 15 | A-20" | 12+92.00 | 16 | A-20" | 13+16.00 | 1062.5 | 1045.00 | 24.00 | 17.5 | 420 |
| 16 | 16 | A-20" | 13+16.00 | 17 | A-16" | 13+32.00 | 1063.5 | 1045.50 | 16.00 | 18.0 | 288 |
| 17 | 17 | A-16" | 13+32.00 | 18 | A-20" | 13+44.00 | 1063.5 | 1045.50 | 12.00 | 18.0 | 216 |
| 18 | 18 | A-20" | 13+44.00 | 19 | A-20" | 13+68.00 | 1064.5 | 1046.50 | 24.00 | 18.0 | 432 |
| 19 | 19 | A-20" | 13+68.00 | 20 | A-20" | 13+92.00 | 1064.5 | 1047.50 | 24.00 | 17.0 | 408 |
| 20 | 20 | A-20" | 13+92.00 | 21 | A-20" | 14+16.00 | 1065.5 | 1048.00 | 24.00 | 17.5 | 420 |
| 21 | 21 | A-20" | 14+16.00 | 22 | A-20" | 14+40.00 | 1065.5 | 1048.50 | 24.00 | 17.0 | 408 |
| 22 | 22 | A-20" | 14+40.00 | 23 | A-20" | 14+64.00 | 1066.5 | 1048.50 | 24.00 | 18.0 | 432 |
| 23 | 23 | A-20" | 14+64.00 | 24 | A-20" | 14+88.00 | 1066.5 | 1049.00 | 24.00 | 17.5 | 420 |
| 24 | 24 | A-20" | 14+88.00 | 25 | A-20" | 15+12.00 | 1066.5 | 1049.00 | 24.00 | 17.5 | 420 |
| 25 | 25 | A-20" | 15+12.00 | 26 | A-20" | 15+36.00 | 1066.5 | 1049.00 | 24.00 | 17.5 | 420 |
| 26 | 26 | A-20" | 15+36.00 | 27 | A-20" | 15+60.00 | 1066.5 | 1049.50 | 24.00 | 17.0 | 408 |
| 27 | 27 | A-20" | 15+60.00 | 28 | A-20" | 15+84.00 | 1067.5 | 1049.50 | 24.00 | 18.0 | 432 |
| 28 | 28 | A-20" | 15+84.00 | 29 | A-20" | 16+08.00 | 1067.5 | 1050.00 | 24.00 | 17.5 | 420 |
| 29 | 29 | A-20" | 16+08.00 | 30 | A-20" | 16+32.00 | 1067.5 | 1050.00 | 24.00 | 17.5 | 420 |
| 30 | 30 | A-20" | 16+32.00 | 31 | A-20" | 16+56.00 | 1067.5 | 1050.00 | 24.00 | 17.5 | 420 |
| 31 | 31 | A-20" | 16+56.00 | 32 | A-20" | 16+80.00 | 1067.5 | 1050.50 | 24.00 | 17.0 | 408 |
| 32 | 32 | A-20" | 16+80.00 | 33 | A-20" | 17+04.00 | 1068.5 | 1050.50 | 24.00 | 18.0 | 432 |
| 33 | 33 | A-20" | 17+04.00 | 34 | A-20" | 17+28.00 | 1068.5 | 1051.00 | 24.00 | 17.5 | 420 |
| 34 | 34 | A-20" | 17+28.00 | 35 | A-20" | 17+52.00 | 1069.5 | 1051.50 | 24.00 | 18.0 | 432 |
| 35 | 35 | A-20" | 17+52.00 | 36 | A-16" | 17+65.00 | 1069.5 | 1053.00 | 13.00 | 16.5 | 214.5 |
| 36 | 36 | A-16" | 17+65.00 | 37 | B-16" | 17+78.00 | 1069.5 | 1056.50 | 13.00 | 13.0 | 169 |
| 37 | 38 | B-16" | 18+40.50 | 39 | A-20" | 18+60.50 | 1070.5 | 1054.50 | 20.00 | 16.0 | 320 |
| 38 | 39 | A-20" | 18+60.50 | 40 | A-20" | 18+80.50 | 1070.5 | 1053.50 | 20.00 | 17.0 | 340 |
| 39 | 40 | A-20" | 18+80.50 | 41 | A-20" | 19+04.50 | 1070.5 | 1053.50 | 24.00 | 17.0 | 408 |
| 40 | 41 | A-20" | 19+04.50 | 42 | A-20" | 19+28.50 | 1071.5 | 1053.00 | 24.00 | 18.5 | 444 |
| 41 | 42 | A-20" | 19+28.50 | 43 | A-20" | 19+52.50 | 1072.5 | 1053.00 | 24.00 | 19.5 | 468 |
| 42 | 43 | A-20" | 19+52.50 | 44 | A-20" | 19+76.50 | 1073.5 | 1053.50 | 24.00 | 20.0 | 480 |
| 43 | 44 | A-20" | 19+76.50 | 45 | A-20" | 20+00.50 | 1074.5 | 1055.00 | 24.00 | 19.5 | 468 |
| 44 | 45 | A-20" | 20+00.50 | 46 | A-20" | 20+24.50 | 1075.5 | 1057.00 | 24.00 | 18.5 | 444 |
| 45 | 46 | A-20" | 20+24.50 | 47 | A-20" | 20+48.50 | 1076.5 | 1059.00 | 24.00 | 17.5 | 420 |
| 46 | 47 | A-20" | 20+48.50 | 48 | A-20" | 20+72.50 | 1077.5 | 1061.00 | 24.00 | 16.5 | 396 |
| 47 | 48 | A-20" | 20+72.50 | 49 | A-20" | 20+96.50 | 1078.5 | 1061.50 | 24.00 | 17.0 | 408 |
| 48 | 49 | A-20" | 20+96.50 | 50 | A-20" | 21+20.50 | 1079.5 | 1061.50 | 24.00 | 18.0 | 432 |
| 49 | 50 | A-20" | 21+20.50 | 51 | A-20" | 21+44.50 | 1079.5 | 1062.00 | 24.00 | 17.5 | 420 |
| 50 | 51 | A-20" | 21+44.50 | 52 | A-20" | 21+68.50 | 1079.5 | 1062.00 | 24.00 | 17.5 | 420 |

| PANEL NO. | DRILLED SHAFT NO. | POST TYPE | WORKPOINT STATION | DRILLED SHAFT NO. | POST TYPE | WORKPOINT STATION | TOP OF WALL | BOTTOM OF WALL | LENGTH OF PANEL (LFT) | HEIGHT OF PANEL (LFT) | 606 SPECIAL - NOISE BARRIER (REFLECTIVE) SF |
|---|---|---|---|---|---|---|---|---|---|---|---|
| 51 | 52 | A-20" | 21+68.50 | 53 | A-20" | 21+92.50 | 1080.5 | 1063.00 | 24.00 | 17.5 | 420 |
| 52 | 53 | A-20" | 21+92.50 | 54 | A-20" | 22+16.50 | 1080.5 | 1063.00 | 24.00 | 17.5 | 420 |
| 53 | 54 | A-20" | 22+16.50 | 55 | A-20" | 22+40.50 | 1080.5 | 1063.50 | 24.00 | 17.0 | 408 |
| 54 | 55 | A-20" | 22+40.50 | 56 | A-20" | 22+64.50 | 1080.5 | 1063.50 | 24.00 | 17.0 | 408 |
| 55 | 56 | A-20" | 22+64.50 | 57 | A-20" | 22+88.50 | 1080.5 | 1063.00 | 24.00 | 17.5 | 420 |
| 56 | 57 | A-20" | 22+88.50 | 58 | A-20" | 23+12.50 | 1080.5 | 1063.00 | 24.00 | 17.5 | 420 |
| 57 | 58 | A-20" | 23+12.50 | 59 | A-20" | 23+36.50 | 1080.5 | 1063.00 | 24.00 | 17.5 | 420 |
| 58 | 59 | A-20" | 23+36.50 | 60 | A-20" | 23+60.50 | 1080.5 | 1062.50 | 24.00 | 18.0 | 432 |
| 59 | 60 | A-20" | 23+60.50 | 61 | A-20" | 23+84.50 | 1080.5 | 1062.50 | 24.00 | 18.0 | 432 |
| 60 | 61 | A-20" | 23+84.50 | 62 | A-20" | 24+08.50 | 1080.5 | 1062.50 | 24.00 | 18.0 | 432 |
| 61 | 62 | A-20" | 24+08.50 | 63 | A-20" | 24+32.50 | 1080.5 | 1062.50 | 24.00 | 18.0 | 432 |
| 62 | 63 | A-20" | 24+32.50 | 64 | A-20" | 24+56.50 | 1080.5 | 1062.50 | 24.00 | 18.0 | 432 |
| 63 | 64 | A-20" | 24+56.50 | 65 | A-20" | 24+80.50 | 1080.5 | 1063.00 | 24.00 | 17.5 | 420 |
| 64 | 65 | A-20" | 24+80.50 | 66 | A-20" | 25+04.50 | 1080.5 | 1063.00 | 24.00 | 17.5 | 420 |
| 65 | 66 | A-20" | 25+04.50 | 67 | A-20" | 25+28.50 | 1080.5 | 1063.00 | 24.00 | 17.5 | 420 |
| 66 | 67 | A-20" | 25+28.50 | 68 | A-20" | 25+52.50 | 1079.5 | 1062.50 | 24.00 | 17.0 | 408 |
| 67 | 68 | A-20" | 25+52.50 | 69 | A-20" | 25+76.50 | 1079.5 | 1062.00 | 24.00 | 17.5 | 420 |
| 68 | 69 | A-20" | 25+76.50 | 70 | A-20" | 26+00.50 | 1079.5 | 1061.50 | 24.00 | 18.0 | 432 |
| 69 | 70 | A-20" | 26+00.50 | 71 | A-20" | 26+24.50 | 1079.5 | 1061.50 | 24.00 | 18.0 | 432 |
| 70 | 71 | A-20" | 26+24.50 | 72 | A-20" | 26+48.50 | 1079.5 | 1061.50 | 24.00 | 18.0 | 432 |
| 71 | 72 | A-20" | 26+48.50 | 73 | A-20" | 26+62.50 | 1079.5 | 1061.50 | 14.00 | 18.0 | 252 |
| 72 | 73 | A-20" | 26+62.50 | 74 | A-20" | 26+86.50 | 1079.5 | 1062.00 | 24.00 | 17.5 | 420 |
| 73 | 74 | A-20" | 26+86.50 | 75 | A-20" | 27+10.50 | 1079.5 | 1062.00 | 24.00 | 17.5 | 420 |
| 74 | 75 | A-20" | 27+10.50 | 76 | A-20" | 27+34.50 | 1079.5 | 1062.00 | 24.00 | 17.5 | 420 |
| 75 | 76 | A-20" | 27+34.50 | 77 | A-20" | 27+58.50 | 1079.5 | 1062.50 | 24.00 | 17.0 | 408 |
| 76 | 77 | A-20" | 27+58.50 | 78 | A-20" | 27+82.50 | 1079.5 | 1062.00 | 24.00 | 17.5 | 420 |
| 77 | 78 | A-20" | 27+82.50 | 79 | A-20" | 28+06.50 | 1078.5 | 1062.00 | 24.00 | 16.5 | 396 |
| 78 | 79 | A-20" | 28+06.50 | 80 | A-20" | 28+30.50 | 1078.5 | 1061.50 | 24.00 | 17.0 | 408 |
| 79 | 80 | A-20" | 28+30.50 | 81 | A-20" | 28+54.50 | 1078.5 | 1061.00 | 24.00 | 17.5 | 420 |
| 80 | 81 | A-20" | 28+54.50 | 82 | A-20" | 28+78.50 | 1078.5 | 1061.00 | 24.00 | 17.5 | 420 |
| 81 | 82 | A-20" | 28+78.50 | 83 | A-20" | 29+02.50 | 1077.5 | 1060.50 | 24.00 | 17.0 | 408 |
| 82 | 83 | A-20" | 29+02.50 | 84 | A-20" | 29+26.50 | 1077.5 | 1060.00 | 24.00 | 17.5 | 420 |
| 83 | 84 | A-20" | 29+26.50 | 85 | A-20" | 29+50.50 | 1076.5 | 1058.50 | 24.00 | 18.0 | 432 |
| 84 | 85 | A-20" | 29+50.50 | 86 | A-20" | 29+74.50 | 1075.5 | 1057.50 | 24.00 | 18.0 | 432 |
| 85 | 86 | A-20" | 29+74.50 | 87 | A-20" | 29+98.50 | 1074.5 | 1056.00 | 24.00 | 18.5 | 444 |
| 86 | 87 | A-20" | 29+98.50 | 88 | A-20" | 30+22.50 | 1073.5 | 1056.00 | 24.00 | 17.5 | 420 |
| 87 | 88 | A-20" | 30+22.50 | 89 | A-20" | 30+46.50 | 1073.5 | 1056.00 | 24.00 | 17.5 | 420 |
| 88 | 89 | A-20" | 30+46.50 | 90 | A-20" | 30+70.50 | 1073.5 | 1056.00 | 24.00 | 17.5 | 420 |
| 89 | 90 | A-20" | 30+70.50 | 91 | A-20" | 30+94.50 | 1073.5 | 1056.00 | 24.00 | 17.5 | 420 |
| 90 | 91 | A-20" | 30+94.50 | 92 | A-20" | 31+18.50 | 1073.5 | 1056.50 | 24.00 | 17.0 | 408 |
| 91 | 92 | A-20" | 31+18.50 | 93 | A-20" | 31+42.50 | 1072.5 | 1056.00 | 24.00 | 16.5 | 396 |
| 92 | 93 | A-20" | 31+42.50 | 94 | A-20" | 31+54.50 | 1071.5 | 1053.00 | 12.00 | 18.5 | 222 |
| 93 | 94 | A-20" | 31+54.50 | 95 | A-20" | 31+66.50 | 1070.5 | 1053.00 | 12.00 | 17.5 | 210 |
| 94 | 95 | A-20" | 31+66.50 | 96 | A-20" | 31+78.50 | 1069.5 | 1050.50 | 12.00 | 19.0 | 228 |
| 95 | 96 | A-20" | 31+78.50 | 97 | A-20" | 31+90.50 | 1068.5 | 1050.00 | 12.00 | 18.5 | 222 |
| 96 | 97 | A-20" | 31+90.50 | 98 | A-20" | 32+02.50 | 1067.5 | 1048.00 | 12.00 | 19.5 | 234 |
| 97 | 98 | A-20" | 32+02.50 | 99 | A-20" | 32+14.50 | 1066.5 | 1047.00 | 12.00 | 19.5 | 234 |
| 98 | 99 | A-20" | 32+14.50 | 100 | A-20" | 32+26.50 | 1065.5 | 1045.50 | 12.00 | 20.0 | 240 |
| 99 | 100 | A-20" | 32+26.50 | 101 | A-20" | 32+38.50 | 1064.5 | 1045.00 | 12.00 | 19.5 | 234 |
| 100 | 101 | A-20" | 32+38.50 | 102 | A-20" | 32+50.50 | 1063.5 | 1043.50 | 12.00 | 20.0 | 240 |

CALCULATED RFV
CHECKED TJW

# CALCULATIONS & SUBSUMMARY - NOISE WALL G

SUM-77 / 277 / 224

1101
1288

O:\2017\2017258\ProjectData\SUM\106002\Design\Structures\Wall_Noise_G\Sheets\106002_00G_WS001.dgn Sheet 1 1/17/2021 7:01:39 PM rvitelli

| PANEL NO. | DRILLED SHAFT NO. | POST TYPE | WORKPOINT STATION | DRILLED SHAFT NO. | POST TYPE | WORKPOINT STATION | TOP OF WALL | BOTTOM OF WALL | LENGTH OF PANEL (LFT) | HEIGHT OF PANEL (LFT) | 606 SPECIAL - NOISE BARRIER (REFLECTIVE) SF |
|---|---|---|---|---|---|---|---|---|---|---|---|
| 101 | 102 | A-20" | 32+50.50 | 103 | A-20" | 32+62.50 | 1062.5 | 1043.50 | 12.00 | 19.0 | 228 |
| 102 | 103 | A-20" | 32+62.50 | 104 | D-20" | 32+86.50 | 1062.5 | 1043.00 | 24.00 | 19.5 | 468 |
| 103 | 104 | D-20" | 32+86.50 | 105 | A-20" | 33+10.50 | 1062.5 | 1042.50 | 24.00 | 20.0 | 480 |
| 104 | 105 | A-20" | 33+10.50 | 106 | A-20" | 33+34.50 | 1062.5 | 1042.50 | 24.00 | 20.0 | 480 |
| 105 | 106 | A-20" | 33+34.50 | 107 | A-20" | 33+50.50 | 1062.5 | 1042.50 | 16.00 | 20.0 | 320 |
| 106 | 107 | A-20" | 33+50.50 | 108 | D-20" | 33+66.50 | 1062.5 | 1042.50 | 16.00 | 20.0 | 320 |
| 107 | 108 | D-20" | 33+66.50 | 109 | A-20" | 33+90.50 | 1062.5 | 1042.50 | 24.00 | 20.0 | 480 |
| 108 | 109 | A-20" | 33+90.50 | 110 | A-20" | 34+14.50 | 1062.5 | 1043.00 | 24.00 | 19.5 | 468 |
| 109 | 110 | A-20" | 34+14.50 | 111 | A-20" | 34+38.50 | 1062.5 | 1043.00 | 24.00 | 19.5 | 468 |
| 110 | 111 | A-20" | 34+38.50 | 112 | A-20" | 34+62.50 | 1063.5 | 1043.50 | 24.00 | 20.0 | 480 |
| 111 | 112 | A-20" | 34+62.50 | 113 | A-20" | 34+86.50 | 1063.5 | 1044.00 | 24.00 | 19.5 | 468 |
| 112 | 113 | A-20" | 34+86.50 | 114 | A-20" | 35+10.50 | 1063.5 | 1044.00 | 24.00 | 19.5 | 468 |
| 113 | 114 | A-20" | 35+10.50 | 115 | A-20" | 35+26.50 | 1064.5 | 1044.50 | 16.00 | 20.0 | 320 |
| 114 | 115 | A-20" | 35+26.50 | 116 | A-20" | 35+50.50 | 1064.5 | 1044.50 | 24.00 | 20.0 | 480 |
| 115 | 116 | A-20" | 35+50.50 | 117 | A-20" | 35+74.50 | 1065.5 | 1045.50 | 24.00 | 20.0 | 480 |
| 116 | 117 | A-20" | 35+74.50 | 118 | A-20" | 35+98.50 | 1066.5 | 1047.00 | 24.00 | 19.5 | 468 |
| 117 | 118 | A-20" | 35+98.50 | 119 | A-20" | 36+22.50 | 1067.5 | 1048.00 | 24.00 | 19.5 | 468 |
| 118 | 119 | A-20" | 36+22.50 | 120 | A-20" | 36+46.50 | 1068.5 | 1049.00 | 24.00 | 19.5 | 468 |
| 119 | 120 | A-20" | 36+46.50 | 121 | A-20" | 36+70.50 | 1069.5 | 1050.00 | 24.00 | 19.5 | 468 |
| 120 | 121 | A-20" | 36+70.50 | 122 | A-20" | 36+94.50 | 1070.5 | 1050.50 | 24.00 | 20.0 | 480 |
| 121 | 122 | A-20" | 36+94.50 | 123 | A-20" | 37+18.50 | 1070.5 | 1051.50 | 24.00 | 19.0 | 456 |
| 122 | 123 | A-20" | 37+18.50 | 124 | A-20" | 37+42.50 | 1071.5 | 1052.00 | 24.00 | 19.5 | 468 |
| 123 | 124 | A-20" | 37+42.50 | 125 | B-20" | 37+66.50 | 1072.5 | 1053.00 | 24.00 | 19.5 | 468 |
| | | | | | | | | | | TOTAL | 48504 |

CALCULATED RFV
CHECKED TJW

# CALCULATIONS & SUBSUMMARY - NOISE WALL G

SUM-77 / 277 / 224

1102
1288

O:\2017\2017258\ProjectData\SUM\106002\Design\Structures\Wall_Noise_G\Sheets\106002_00G_WS001.dgn Sheet 2 1/17/2021 7:01:39 PM rvitelli

| NOISE WALL G | | | |
|---|---|---|---|
| DRILLED SHAFT NO. | WORKPOINT STATION | TOP OF DRILLED SHAFT ELEVATION | SHAFT LENGTH (FEET) |
| 1 | 10+00.00 | 1038.27 | 6 |
| 2 | 10+12.00 | 1038.08 | 9 |
| 3 | 10+24.00 | 1038.58 | 9 |
| 4 | 10+40.00 | 1039.08 | 12 |
| 5 | 10+52.00 | 1039.55 | 12 |
| 6 | 10+76.00 | 1040.05 | 12 |
| 7 | 11+00.00 | 1041.05 | 12 |
| 8 | 11+24.00 | 1042.05 | 12 |
| 9 | 11+48.00 | 1042.55 | 12 |
| 10 | 11+72.00 | 1043.05 | 16 |
| 11 | 11+96.00 | 1043.55 | 18 |
| 12 | 12+20.00 | 1044.05 | 16 |
| 13 | 12+44.00 | 1044.05 | 16 |
| 14 | 12+68.00 | 1044.55 | 16 |
| 15 | 12+92.00 | 1044.55 | 14 |
| 16 | 13+16.00 | 1044.55 | 14 |
| 17 | 13+32.00 | 1045.08 | 14 |
| 18 | 13+44.00 | 1045.05 | 14 |
| 19 | 13+68.00 | 1046.05 | 14 |
| 20 | 13+92.00 | 1047.05 | 14 |
| 21 | 14+16.00 | 1047.55 | 12 |
| 22 | 14+40.00 | 1048.05 | 12 |
| 23 | 14+64.00 | 1048.05 | 12 |
| 24 | 14+88.00 | 1048.55 | 12 |
| 25 | 15+12.00 | 1048.55 | 12 |
| 26 | 15+36.00 | 1048.55 | 12 |
| 27 | 15+60.00 | 1049.05 | 12 |
| 28 | 15+84.00 | 1049.05 | 12 |
| 29 | 16+08.00 | 1049.55 | 12 |
| 30 | 16+32.00 | 1049.55 | 12 |
| 31 | 16+56.00 | 1049.55 | 12 |
| 32 | 16+80.00 | 1050.05 | 12 |
| 33 | 17+04.00 | 1050.05 | 12 |
| 34 | 17+28.00 | 1050.55 | 14 |
| 35 | 17+52.00 | 1051.05 | 14 |
| 36 | 17+65.00 | 1052.58 | 12 |
| 37 | 17+78.00 | 1054.27 | 12 |
| 38 | 18+40.50 | 1056.27 | 14 |
| 39 | 18+60.50 | 1053.05 | 14 |
| 40 | 18+80.50 | 1053.05 | 14 |
| 41 | 19+04.50 | 1052.55 | 14 |
| 42 | 19+28.50 | 1052.55 | 19.5 |
| 43 | 19+52.50 | 1052.55 | 14 |
| 44 | 19+76.50 | 1053.05 | 14 |
| 45 | 20+00.50 | 1054.55 | 14 |
| 46 | 20+24.50 | 1056.55 | 14 |
| 47 | 20+48.50 | 1058.55 | 14 |
| 48 | 20+72.50 | 1060.55 | 14 |
| 49 | 20+96.50 | 1061.05 | 14 |
| 50 | 21+20.50 | 1061.05 | 14 |

| NOISE WALL G | | | |
|---|---|---|---|
| DRILLED SHAFT NO. | WORKPOINT STATION | TOP OF DRILLED SHAFT ELEVATION | SHAFT LENGTH (FEET) |
| 51 | 21+44.50 | 1061.55 | 14 |
| 52 | 21+68.50 | 1061.55 | 14 |
| 53 | 21+92.50 | 1062.55 | 14 |
| 54 | 22+16.50 | 1062.55 | 16 |
| 55 | 22+40.50 | 1063.05 | 16 |
| 56 | 22+64.50 | 1062.55 | 16 |
| 57 | 22+88.50 | 1062.55 | 19.5* |
| 58 | 23+12.50 | 1062.55 | 19.5* |
| 59 | 23+36.50 | 1062.05 | 19.5* |
| 60 | 23+60.50 | 1062.05 | 19.5* |
| 61 | 23+84.50 | 1062.05 | 19.5* |
| 62 | 24+08.50 | 1062.05 | 19.5* |
| 63 | 24+32.50 | 1062.05 | 19.5* |
| 64 | 24+56.50 | 1062.05 | 19.5* |
| 65 | 24+80.50 | 1062.55 | 19.5* |
| 66 | 25+04.50 | 1062.55 | 19.5* |
| 67 | 25+28.50 | 1062.05 | 19.5* |
| 68 | 25+52.50 | 1061.55 | 17.5* |
| 69 | 25+76.50 | 1061.10 | 17.5* |
| 70 | 26+00.50 | 1061.05 | 17.5* |
| 71 | 26+24.50 | 1061.05 | 17.5* |
| 72 | 26+48.50 | 1061.05 | 17.5* |
| 73 | 26+62.50 | 1061.05 | 17.5* |
| 74 | 26+86.50 | 1061.55 | 17.5* |
| 75 | 27+10.50 | 1061.55 | 17.5* |
| 76 | 27+34.50 | 1061.60 | 17.5* |
| 77 | 27+58.50 | 1061.55 | 11* |
| 78 | 27+82.50 | 1061.55 | 11* |
| 79 | 28+06.50 | 1061.05 | 11* |
| 80 | 28+30.50 | 1060.55 | 11* |
| 81 | 28+54.50 | 1060.55 | 11* |
| 82 | 28+78.50 | 1060.05 | 11* |
| 83 | 29+02.50 | 1059.55 | 11* |
| 84 | 29+26.50 | 1058.05 | 11* |
| 85 | 29+50.50 | 1057.05 | 15 |
| 86 | 29+74.50 | 1055.55 | 19 |
| 87 | 29+98.50 | 1055.55 | 15 |
| 88 | 30+22.50 | 1055.55 | 19 |
| 89 | 30+46.50 | 1055.55 | 16 |
| 90 | 30+70.50 | 1055.55 | 14 |
| 91 | 30+94.50 | 1055.55 | 16 |
| 92 | 31+18.50 | 1055.55 | 14 |
| 93 | 31+42.50 | 1052.55 | 16 |
| 94 | 31+54.50 | 1052.55 | 16 |
| 95 | 31+66.50 | 1050.05 | 16 |
| 96 | 31+78.50 | 1049.55 | 10.5 |
| 97 | 31+90.50 | 1047.55 | 10.5 |
| 98 | 32+02.50 | 1046.55 | 10.5 |
| 99 | 32+14.50 | 1045.05 | 10.5 |
| 100 | 32+26.50 | 1044.55 | 10.5 |

| NOISE WALL G | | | |
|---|---|---|---|
| DRILLED SHAFT NO. | WORKPOINT STATION | TOP OF DRILLED SHAFT ELEVATION | SHAFT LENGTH (FEET) |
| 101 | 32+38.50 | 1043.05 | 10.5 |
| 102 | 32+50.50 | 1043.05 | 8 |
| 103 | 32+62.50 | 1042.55 | 12 |
| 104 | 32+86.50 | 1042.05 | 12 |
| 105 | 33+10.50 | 1042.05 | 14 |
| 106 | 33+34.50 | 1042.05 | 14 |
| 107 | 33+50.50 | 1042.05 | 14 |
| 108 | 33+66.50 | 1042.05 | 14 |
| 109 | 33+90.50 | 1042.05 | 14 |
| 110 | 34+14.50 | 1042.55 | 16 |
| 111 | 34+38.50 | 1042.55 | 16 |
| 112 | 34+62.50 | 1043.05 | 16 |
| 113 | 34+86.50 | 1043.55 | 10 |
| 114 | 35+10.50 | 1043.55 | 10 |
| 115 | 35+26.50 | 1044.05 | 10 |
| 116 | 35+50.50 | 1044.05 | 10 |
| 117 | 35+74.50 | 1045.05 | 10 |
| 118 | 35+98.50 | 1046.55 | 10 |
| 119 | 36+22.50 | 1047.55 | 10 |
| 120 | 36+46.50 | 1048.55 | 15 |
| 121 | 36+70.50 | 1049.55 | 15 |
| 122 | 36+94.50 | 1050.05 | 15 |
| 123 | 37+18.50 | 1051.05 | 15 |
| 124 | 37+42.50 | 1051.55 | 15 |
| 125 | 37+66.50 | 1052.72 | 15 |

**LEGEND:**

* INCLUDES 5' ROCK SOCKET

CALCULATED RFV
CHECKED TJW

# DATA TABLES - NOISE WALL G

SUM-77 / 277 / 224

1103
1288

O:\2017\2017258\ProjectData\SUM\106002\Design\Structures\Wall_Noise_G\Sheets\106002_00G_WS002.dgn Sheet 1/17/2021 7:09:17 PM rvitelli

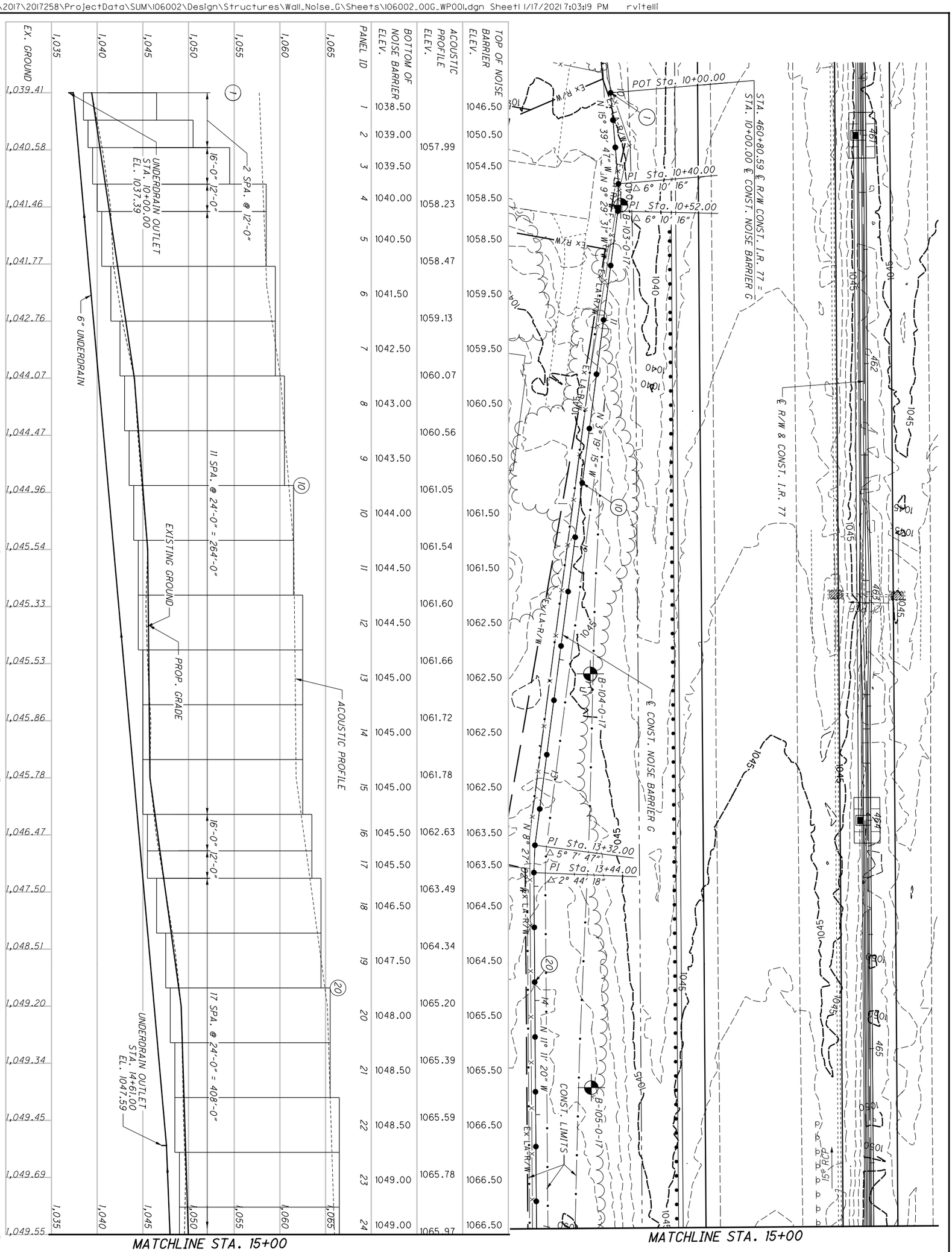


| BORING I.D. NO. | APPROX. TOP OF ROCK ELEV. T/ROCK ELEV. |
|---|---|
| B-103-0-17 | N/A |
| B-104-0-17 | 1023.9± |
| B-105-0-17 | 1026.8± |
| B-106-0-17 | 1034.7± |
| B-107-0-17 | 1030.7± |
| B-108-0-17 | 1030.5± |
| B-109-0-17 | 1037.7 |
| B-110-0-17 | 1048.1± |
| B-111-0-17 | 1048.7± |
| B-112-0-17 | 1055.1± |
| B-113-0-17 | N/A |
| B-114-0-17 | N/A |
| B-115-0-17 | N/A |
| B-116-0-17 | N/A |
| B-117-0-17 | N/A |

1104
1288

**SUM-77/277/224**

# PLAN AND PROFILE - NOISE BARRIER G
## BEGIN TO STA. 15+00.00

CALCULATED RHC
CHECKED DJC

0 10 20 40
HORIZONTAL SCALE IN FEET

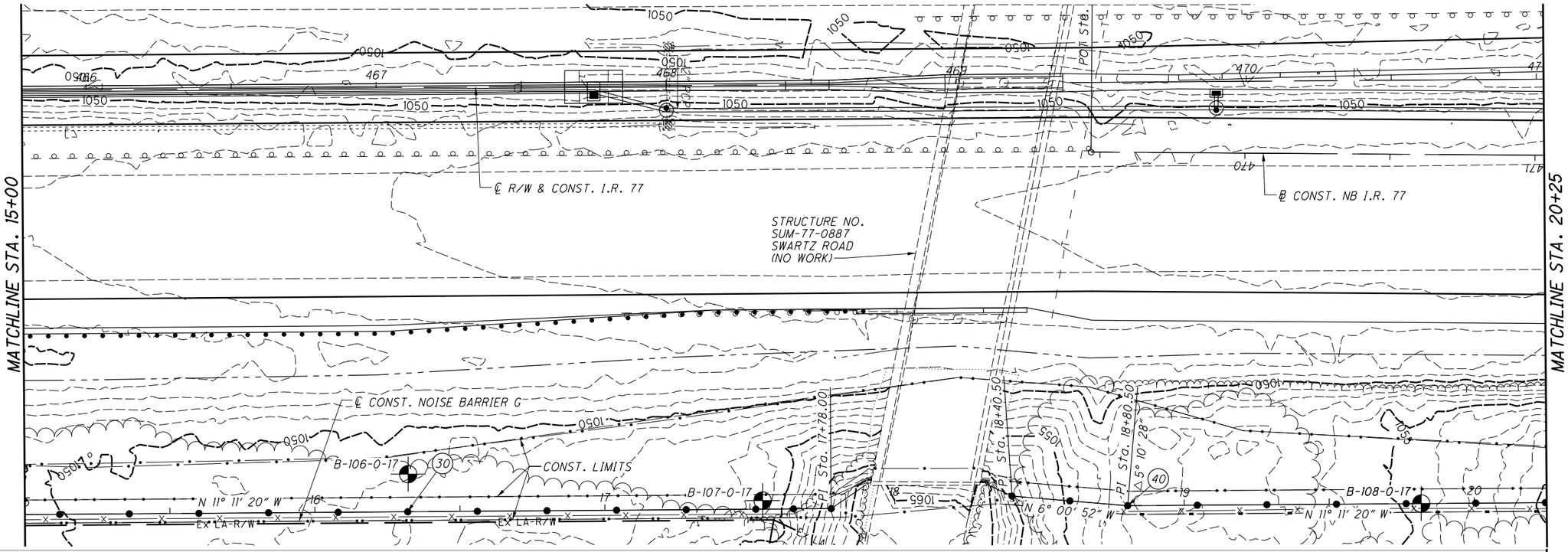
MATCHLINE STA. 15+00
MATCHLINE STA. 20+25
℄ R/W & CONST. I.R. 77
℄ CONST. NB I.R. 77
STRUCTURE NO.
SUM-77-0887
SWARTZ ROAD
(NO WORK)
POI Sta.
℄ CONST. NOISE BARRIER G
B-106-0-17
B-107-0-17
B-108-0-17
CONST. LIMITS
EX. LA-R/W
N 11° 11' 20" W
N 6° 00' 52" W
PI Sta. 17+78.00
PI Sta. 18+40.50
PI Sta. 18+80.50
Δ 5° 10' 28"

| | | |

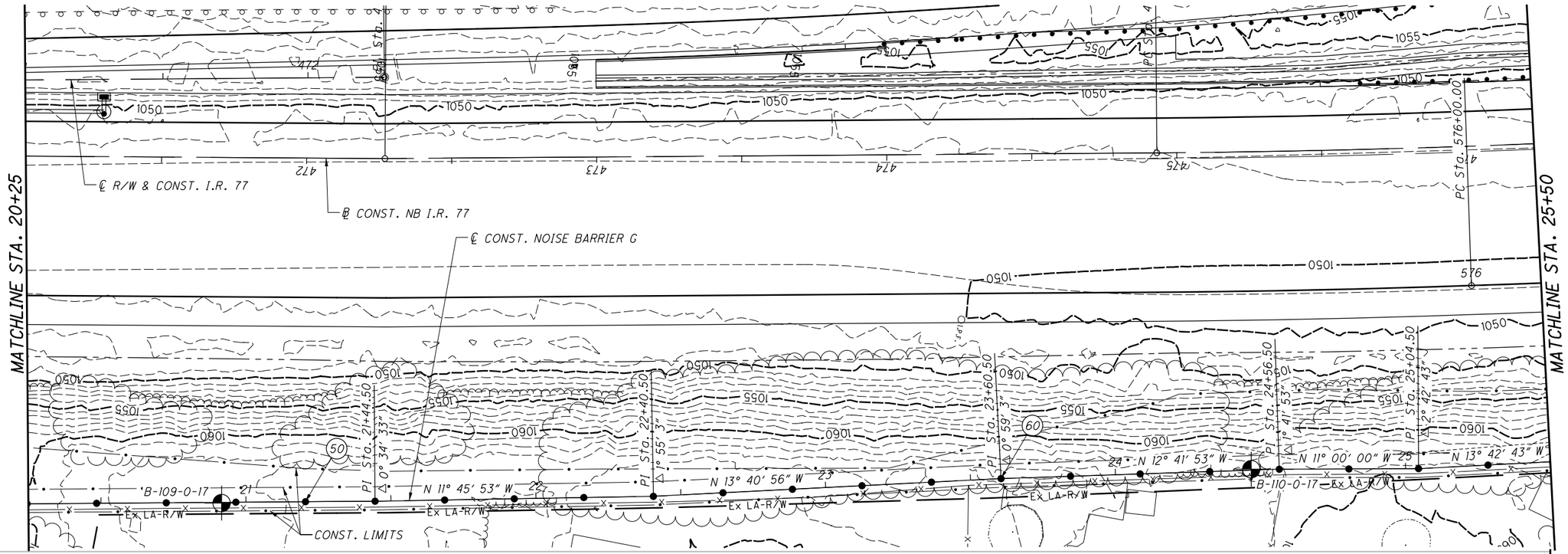


| | | | | | | | | | | | | | | | | | | | | | | | |
|---|---|---|---|---|---|---|---|---|---|---|---|---|---|---|---|---|---|---|---|---|---|---|---|
| TOP OF NOISE BARRIER ELEV. | 1076.50 | 1077.50 | 1078.50 | 1079.50 | 1079.50 | 1079.50 | 1080.50 | 1080.50 | 1080.50 | 1080.50 | 1080.50 | 1080.50 | 1080.50 | 1080.50 | 1080.50 | 1080.50 | 1080.50 | 1080.50 | 1080.50 | 1080.50 | 1080.50 | 1080.50 | 1079.50 |
| ACOUSTIC PROFILE ELEV. | | 1077.84 | | 1078.23 | | 1078.62 | | 1079.01 | | 1079.40 | | 1079.79 | | 1080.18 | | 1080.57 | | 1080.39 | | 1080.21 | | 1080.03 | | 1079.86 | | 1079.68 | | 1079.48 | | 1079.29 | | 1079.09 | | 1079.48 | | 1079.86 | | 1080.25 | | 1079.71 | |
| BOTTOM OF NOISE BARRIER ELEV. | 1059.00 | 1061.00 | 1061.50 | 1061.50 | 1062.00 | 1062.00 | 1063.00 | 1063.00 | 1063.50 | 1063.50 | 1063.00 | 1063.00 | 1063.00 | 1062.50 | 1062.50 | 1062.50 | 1062.50 | 1062.50 | 1063.00 | 1063.00 | 1063.00 | 1062.50 | | | | | | | | | | | | | | | | | | |
| PANEL ID | 45 | 46 | 47 | 48 | 49 | 50 | 51 | 52 | 53 | 54 | 55 | 56 | 57 | 58 | 59 | 60 | 61 | 62 | 63 | 64 | 65 | 66 | | | | | | | | | | | | | | | | | | |

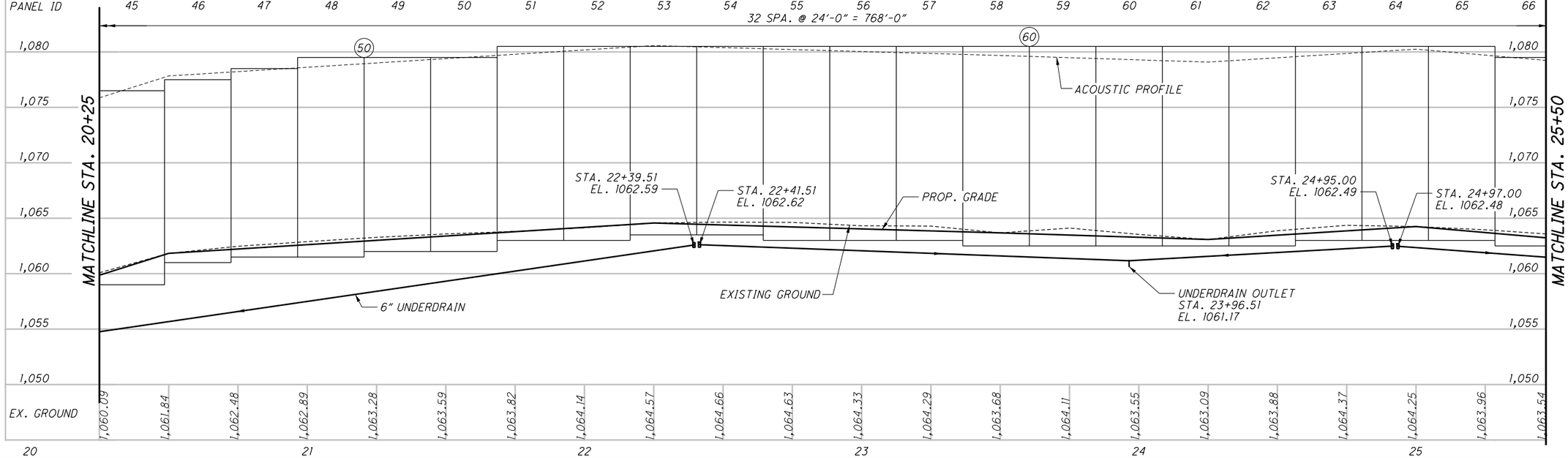


| | | | | | | | | | | | | | | | | | | | | | | | |
|---|---|---|---|---|---|---|---|---|---|---|---|---|---|---|---|---|---|---|---|---|---|---|---|
| EX. GROUND | 1,060.09 | 1,061.84 | 1,062.48 | 1,062.89 | 1,063.28 | 1,063.59 | 1,063.82 | 1,064.14 | 1,064.57 | 1,064.66 | 1,064.63 | 1,064.33 | 1,064.29 | 1,063.68 | 1,064.11 | 1,063.55 | 1,063.09 | 1,063.88 | 1,064.37 | 1,064.25 | 1,063.96 | 1,063.54 | |
| | 20 | | | 21 | | | 22 | | | 23 | | | 24 | | | 25 | | | | | | | |

# PLAN AND PROFILE - NOISE BARRIER G
## STA. 20+25.00 TO STA. 25+50.00

HORIZONTAL SCALE IN FEET: 0, 10, 20, 40

CALCULATED RHC
CHECKED DJC

SUM-77 / 277 / 224

1106
1288

D:\2017\20172581Project Data\SUM\106002\Design\Structures\Wall_Noise_G\Sheets\106002_00G_WP001.dgn Sheet3 1/17/2021 7:03:22 PM rvitelli

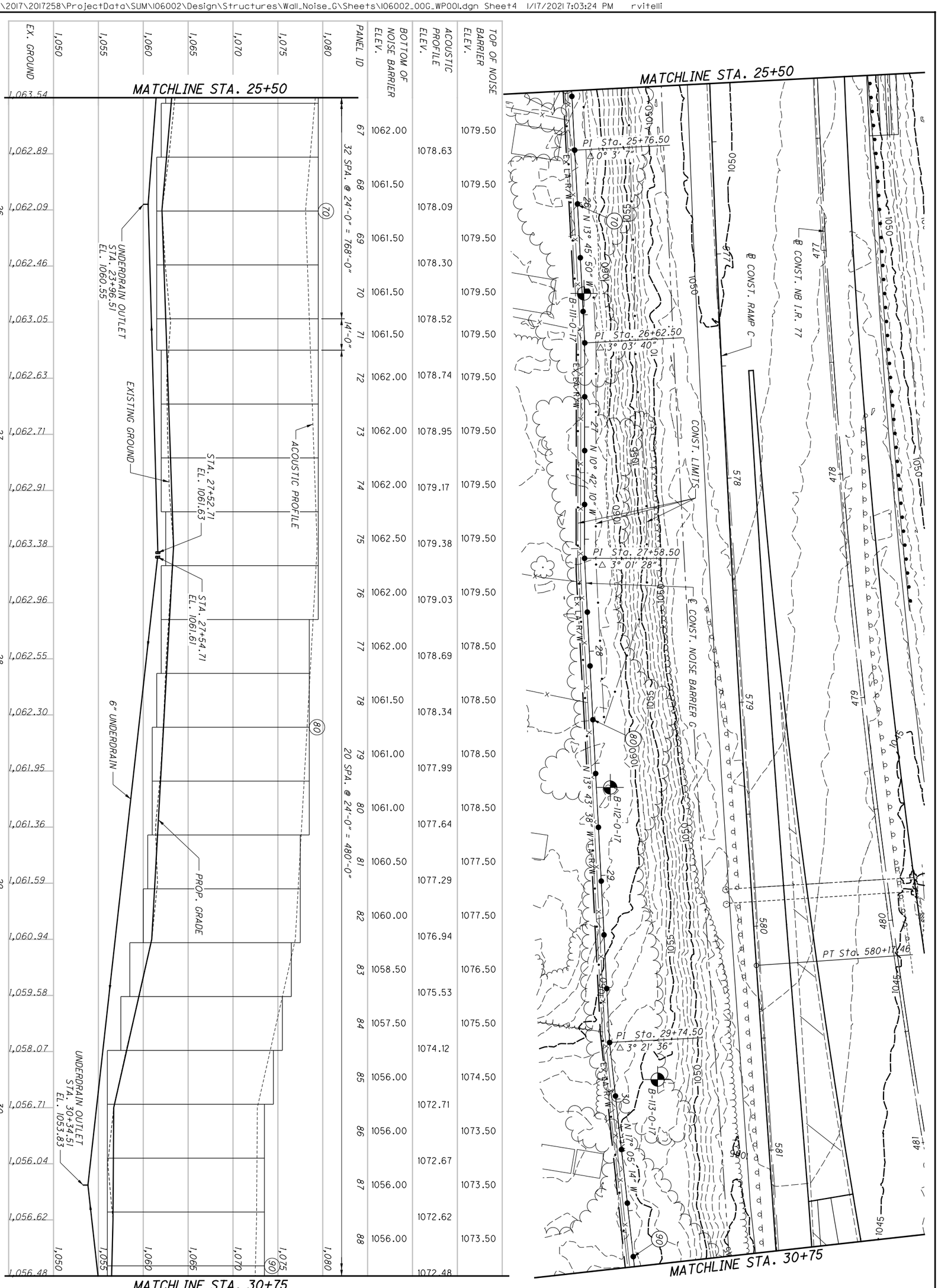


| PANEL ID | BOTTOM OF NOISE BARRIER ELEV. | ACOUSTIC PROFILE ELEV. | TOP OF NOISE BARRIER ELEV. |
|---|---|---|---|
| 67 | 1062.00 | 1078.63 | 1079.50 |
| 68 | 1061.50 | 1078.09 | 1079.50 |
| 69 | 1061.50 | 1078.30 | 1079.50 |
| 70 | 1061.50 | 1078.52 | 1079.50 |
| 71 | 1061.50 | 1078.74 | 1079.50 |
| 72 | 1062.00 | 1078.95 | 1079.50 |
| 73 | 1062.00 | 1079.17 | 1079.50 |
| 74 | 1062.00 | 1079.38 | 1079.50 |
| 75 | 1062.50 | 1079.03 | 1079.50 |
| 76 | 1062.00 | 1078.69 | 1079.50 |
| 77 | 1062.00 | 1078.34 | 1078.50 |
| 78 | 1061.50 | 1077.99 | 1078.50 |
| 79 | 1061.00 | 1077.64 | 1078.50 |
| 80 | 1061.00 | 1077.29 | 1077.50 |
| 81 | 1060.50 | 1076.94 | 1077.50 |
| 82 | 1060.00 | 1075.53 | 1076.50 |
| 83 | 1058.50 | 1074.12 | 1075.50 |
| 84 | 1057.50 | 1072.71 | 1074.50 |
| 85 | 1056.00 | 1072.67 | 1073.50 |
| 86 | 1056.00 | 1072.62 | 1073.50 |
| 87 | 1056.00 | 1072.48 | 1073.50 |
| 88 | 1056.00 | | |

| | | | | | |
|---|---|---|---|---|---|
| 1107 / 1288 | SUM-77 / 277 / 224 | PLAN AND PROFILE - NOISE BARRIER G<br>STA. 25+50.00 TO STA. 30+75.00 | CALCULATED RHC<br>CHECKED DJC | 0 20<br>10 40<br>HORIZONTAL SCALE IN FEET | N |

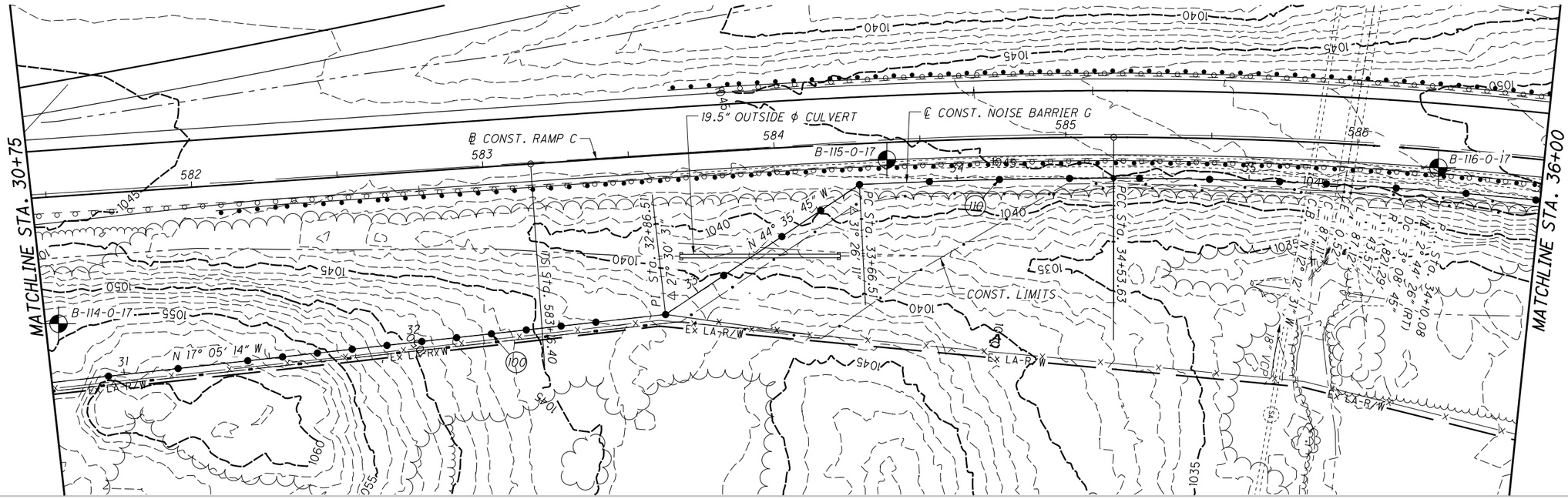
MATCHLINE STA. 30+75
MATCHLINE STA. 36+00
℄ CONST. RAMP C
℄ CONST. NOISE BARRIER G
19.5" OUTSIDE ϕ CULVERT
B-114-0-17
B-115-0-17
B-116-0-17
CONST. LIMITS
Ex LA-R/W
N 17° 05' 14" W
N 44° 35' 45" W
PI Sta. 32+86.51
Δ 27° 30' 31"
PC Sta. 33+66.51
PCC Sta. 34+53.63
PCC Sta. 34+10.08
Δ = 8° 43' 57"
R = 1,310.00'
T = 101.58'
L = 199.62'
Δ = 12° 27' 37"
R = 1,310.00'
T = 142.98'
L = 284.80'
Δ = 18° 27' 45"
R = 1,310.00'
T = 213.26'
L = 422.07'
18" VCP
60" RCP

| | | |

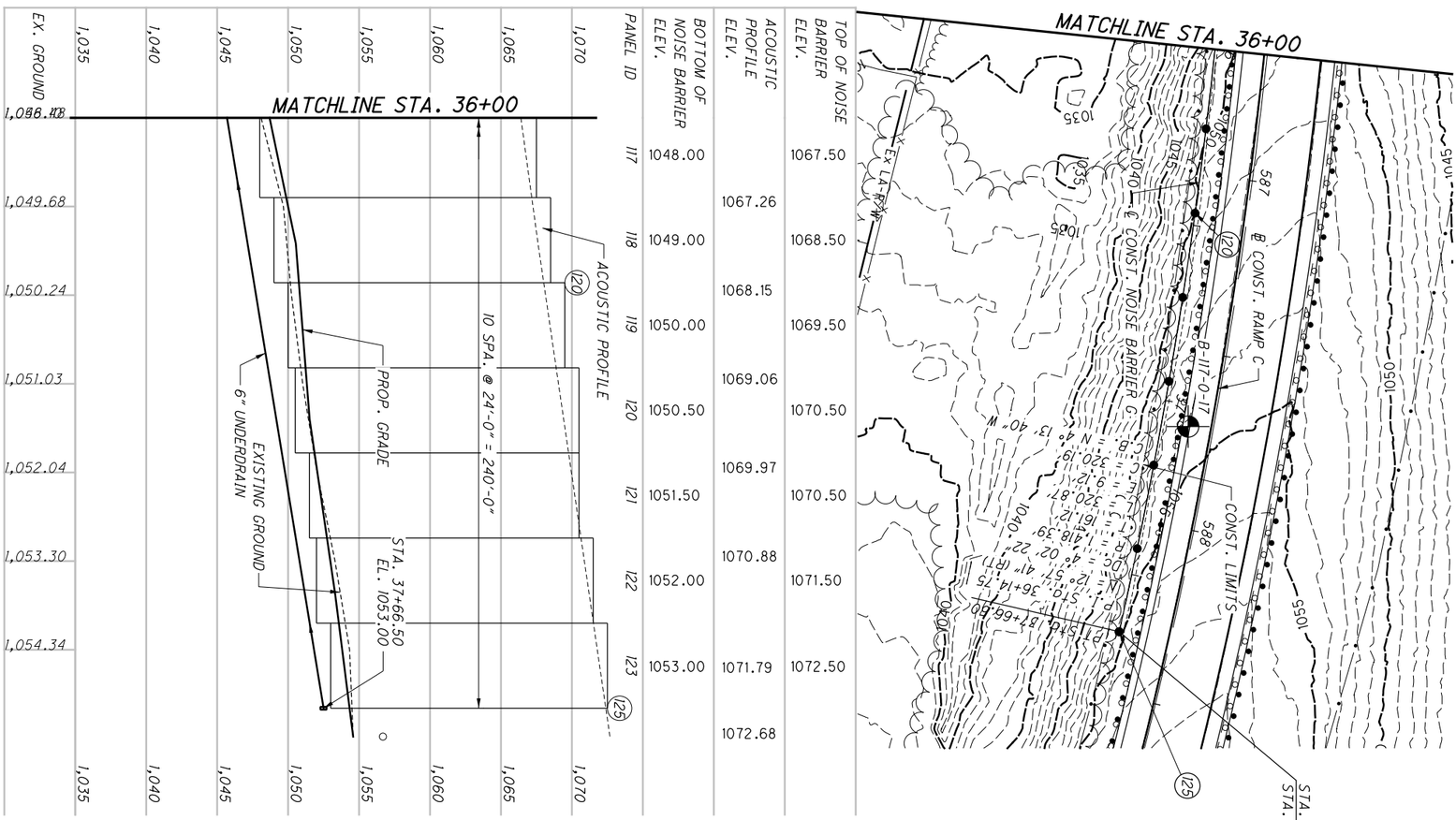


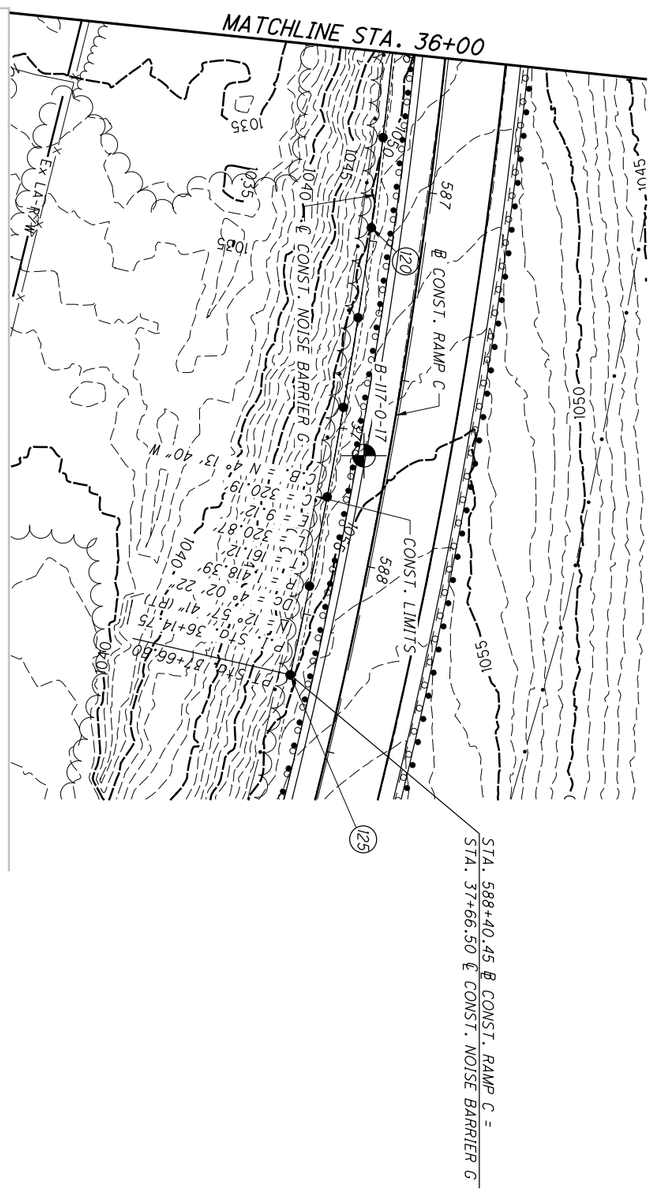


| | | | | |
|---|---|---|---|---|
| 1109 / 12888 | SUM-77 / 277 / 224 | PLAN AND PROFILE - NOISE BARRIER G<br>STA. 36+00.00 TO END | CALCULATED RHC<br>CHECKED DJC | 0 20<br>10 40<br>HORIZONTAL SCALE IN FEET |

| HI-1 | | | | | | | | | | | 606 |
|---|---|---|---|---|---|---|---|---|---|---|---|
| PANEL NO. | DRILLED SHAFT NO. | POST TYPE | WORKPOINT STATION | DRILLED SHAFT NO. | POST TYPE | WORKPOINT STATION | TOP OF WALL | BOTTOM OF WALL | LENGTH OF PANEL (LFT) | HEIGHT OF PANEL (LFT) | SPECIAL - NOISE BARRIER (REFLECTIVE) SF |
| 1 | 1 | B-16" | 10+00.00 | 2 | A-16" | 10+12.00 | 1025.0 | 1016.50 | 12.00 | 8.5 | 102 |
| 2 | 2 | A-16" | 10+12.00 | 3 | A-16" | 10+24.00 | 1029.0 | 1016.50 | 12.00 | 12.5 | 150 |
| 3 | 3 | A-16" | 10+24.00 | 4 | A-20" | 10+36.00 | 1033.0 | 1016.50 | 12.00 | 16.5 | 198 |
| 4 | 4 | A-20" | 10+36.00 | 5 | A-20" | 10+48.00 | 1037.0 | 1016.50 | 12.00 | 20.5 | 246 |
| 5 | 5 | A-20" | 10+48.00 | 6 | A-20" | 10+72.00 | 1037.0 | 1017.00 | 24.00 | 20.0 | 480 |
| 6 | 6 | A-20" | 10+72.00 | 7 | A-20" | 10+96.00 | 1037.0 | 1017.00 | 24.00 | 20.0 | 480 |
| 7 | 7 | A-20" | 10+96.00 | 8 | A-20" | 11+20.00 | 1037.0 | 1017.50 | 24.00 | 19.5 | 468 |
| 8 | 8 | A-20" | 11+20.00 | 9 | A-20" | 11+44.00 | 1038.0 | 1018.00 | 24.00 | 20.0 | 480 |
| 9 | 9 | A-20" | 11+44.00 | 10 | A-20" | 11+68.00 | 1038.0 | 1018.00 | 24.00 | 20.0 | 480 |
| 10 | 10 | A-20" | 11+68.00 | 11 | A-20" | 11+92.00 | 1038.0 | 1018.50 | 24.00 | 19.5 | 468 |
| 11 | 11 | A-20" | 11+92.00 | 12 | A-20" | 12+16.00 | 1038.0 | 1018.50 | 24.00 | 19.5 | 468 |
| 12 | 12 | A-20" | 12+16.00 | 13 | A-20" | 12+40.00 | 1039.0 | 1018.50 | 24.00 | 20.5 | 492 |
| 13 | 13 | A-20" | 12+40.00 | 14 | A-20" | 12+64.00 | 1039.0 | 1019.00 | 24.00 | 20.0 | 480 |
| 14 | 14 | A-20" | 12+64.00 | 15 | A-20" | 12+88.00 | 1039.0 | 1019.00 | 24.00 | 20.0 | 480 |
| 15 | 15 | A-20" | 12+88.00 | 16 | A-20" | 13+12.00 | 1039.0 | 1019.50 | 24.00 | 19.5 | 468 |
| 16 | 16 | A-20" | 13+12.00 | 17 | A-20" | 13+36.00 | 1040.0 | 1020.00 | 24.00 | 20.0 | 480 |
| 17 | 17 | A-20" | 13+36.00 | 18 | A-20" | 13+60.00 | 1040.0 | 1020.50 | 24.00 | 19.5 | 468 |
| 18 | 18 | A-20" | 13+60.00 | 19 | A-20" | 13+84.00 | 1040.0 | 1021.00 | 24.00 | 19.0 | 456 |
| 19 | 19 | A-20" | 13+84.00 | 20 | A-20" | 14+08.00 | 1040.0 | 1021.50 | 24.00 | 18.5 | 444 |
| 20 | 20 | A-20" | 14+08.00 | 21 | A-20" | 14+32.00 | 1041.0 | 1022.00 | 24.00 | 19.0 | 456 |
| 21 | 21 | A-20" | 14+32.00 | 22 | D-20" | 14+56.00 | 1041.0 | 1021.00 | 24.00 | 20.0 | 480 |
| 22 | 22 | D-20" | 14+56.00 | 23 | D-20" | 14+64.00 | 1041.0 | 1020.50 | 8.00 | 20.5 | 164 |
| 23 | 23 | D-20" | 14+64.00 | 24 | D-20" | 14+88.00 | 1041.0 | 1020.50 | 24.00 | 20.5 | 492 |
| 24 | 24 | D-20" | 14+88.00 | 25 | D-20" | 14+96.00 | 1041.0 | 1020.50 | 8.00 | 20.5 | 164 |
| 25 | 25 | D-20" | 14+96.00 | 26 | A-20" | 15+20.00 | 1041.0 | 1021.00 | 24.00 | 20.0 | 480 |
| 26 | 26 | A-20" | 15+20.00 | 27 | A-20" | 15+44.00 | 1042.0 | 1021.50 | 24.00 | 20.5 | 492 |
| 27 | 27 | A-20" | 15+44.00 | 28 | A-20" | 15+68.00 | 1042.0 | 1022.00 | 24.00 | 20.0 | 480 |
| 28 | 28 | A-20" | 15+68.00 | 29 | A-20" | 15+92.00 | 1043.0 | 1022.50 | 24.00 | 20.5 | 492 |
| 29 | 29 | A-20" | 15+92.00 | 30 | A-20" | 16+16.00 | 1043.0 | 1023.00 | 24.00 | 20.0 | 480 |
| 30 | 30 | A-20" | 16+16.00 | 31 | A-20" | 16+32.00 | 1044.0 | 1023.50 | 16.00 | 20.5 | 328 |
| 31 | 31 | A-20" | 16+32.00 | 32 | A-20" | 16+48.00 | 1044.0 | 1024.00 | 16.00 | 20.0 | 320 |
| 32 | 32 | A-20" | 16+48.00 | 33 | A-20" | 16+64.00 | 1044.0 | 1024.50 | 16.00 | 19.5 | 312 |
| 33 | 33 | A-20" | 16+64.00 | 34 | A-20" | 16+88.00 | 1044.0 | 1025.00 | 24.00 | 19.0 | 456 |
| 34 | 34 | A-20" | 16+88.00 | 35 | A-20" | 17+12.00 | 1045.0 | 1025.50 | 24.00 | 19.5 | 468 |
| 35 | 35 | A-20" | 17+12.00 | 36 | D-20" | 17+36.00 | 1045.0 | 1026.00 | 24.00 | 19.0 | 456 |
| 36 | 36 | D-20" | 17+36.00 | 37 | A-20" | 17+60.00 | 1046.0 | 1026.50 | 24.00 | 19.5 | 468 |
| 37 | 37 | A-20" | 17+60.00 | 38 | A-20" | 17+84.00 | 1047.0 | 1027.00 | 24.00 | 20.0 | 480 |
| 38 | 38 | A-20" | 17+84.00 | 39 | A-20" | 18+08.00 | 1048.0 | 1027.50 | 24.00 | 20.5 | 492 |
| 39 | 39 | A-20" | 18+08.00 | 40 | A-20" | 18+32.00 | 1049.0 | 1028.50 | 24.00 | 20.5 | 492 |
| 40 | 40 | A-20" | 18+32.00 | 41 | A-20" | 18+47.00 | 1050.0 | 1029.50 | 15.00 | 20.5 | 307.5 |
| 41 | 41 | A-20" | 18+47.00 | 42 | D-20" | 18+62.00 | 1050.0 | 1029.50 | 15.00 | 20.5 | 307.5 |
| 42 | 42 | D-20" | 18+62.00 | 43 | A-20" | 18+86.00 | 1051.0 | 1031.00 | 24.00 | 20.0 | 480 |
| 43 | 43 | A-20" | 18+86.00 | 44 | A-20" | 19+10.00 | 1052.0 | 1032.00 | 24.00 | 20.0 | 480 |
| 44 | 44 | A-20" | 19+10.00 | 45 | A-20" | 19+34.00 | 1052.0 | 1032.00 | 24.00 | 20.0 | 480 |
| 45 | 45 | A-20" | 19+34.00 | 46 | A-20" | 19+58.00 | 1052.0 | 1033.00 | 24.00 | 19.0 | 456 |
| 46 | 46 | A-20" | 19+58.00 | 47 | A-20" | 19+82.00 | 1053.0 | 1033.00 | 24.00 | 20.0 | 480 |
| 47 | 47 | A-20" | 19+82.00 | 48 | A-20" | 20+06.00 | 1053.0 | 1033.50 | 24.00 | 19.5 | 468 |
| 48 | 48 | A-20" | 20+06.00 | 49 | A-20" | 20+30.00 | 1053.0 | 1034.00 | 24.00 | 19.0 | 456 |
| 49 | 49 | A-20" | 20+30.00 | 50 | A-20" | 20+54.00 | 1054.0 | 1034.00 | 24.00 | 20.0 | 480 |
| 50 | 50 | A-20" | 20+54.00 | 51 | A-20" | 20+78.00 | 1054.0 | 1034.50 | 24.00 | 19.5 | 468 |
| 51 | 51 | A-20" | 20+78.00 | 52 | A-20" | 21+02.00 | 1054.0 | 1034.50 | 24.00 | 19.5 | 468 |
| 52 | 52 | A-20" | 21+02.00 | 53 | A-20" | 21+26.00 | 1055.0 | 1035.00 | 24.00 | 20.0 | 480 |

| HI-1 | | | | | | | | | | | 606 |
|---|---|---|---|---|---|---|---|---|---|---|---|
| PANEL NO. | DRILLED SHAFT NO. | POST TYPE | WORKPOINT STATION | DRILLED SHAFT NO. | POST TYPE | WORKPOINT STATION | TOP OF WALL | BOTTOM OF WALL | LENGTH OF PANEL (LFT) | HEIGHT OF PANEL (LFT) | SPECIAL - NOISE BARRIER (REFLECTIVE) SF |
| 53 | 53 | A-20" | 21+26.00 | 54 | A-20" | 21+50.00 | 1055.0 | 1035.50 | 24.00 | 19.5 | 468 |
| 54 | 54 | A-20" | 21+50.00 | 55 | A-20" | 21+74.00 | 1055.0 | 1035.50 | 24.00 | 19.5 | 468 |
| 55 | 55 | A-20" | 21+74.00 | 56 | A-20" | 21+98.00 | 1056.0 | 1036.00 | 24.00 | 20.0 | 480 |
| 56 | 56 | A-20" | 21+98.00 | 57 | A-20" | 22+22.00 | 1056.0 | 1036.50 | 24.00 | 19.5 | 468 |
| 57 | 57 | A-20" | 22+22.00 | 58 | A-20" | 22+46.00 | 1056.0 | 1036.50 | 24.00 | 19.5 | 468 |
| 58 | 58 | A-20" | 22+46.00 | 59 | A-20" | 22+70.00 | 1057.0 | 1037.00 | 24.00 | 20.0 | 480 |
| 59 | 59 | A-20" | 22+70.00 | 60 | A-20" | 22+94.00 | 1057.0 | 1037.50 | 24.00 | 19.5 | 468 |
| 60 | 60 | A-20" | 22+94.00 | 61 | A-20" | 23+18.00 | 1057.0 | 1037.50 | 24.00 | 19.5 | 468 |
| 61 | 61 | A-20" | 23+18.00 | 62 | A-20" | 23+42.00 | 1058.0 | 1038.00 | 24.00 | 20.0 | 480 |
| 62 | 62 | A-20" | 23+42.00 | 63 | A-20" | 23+66.00 | 1058.0 | 1038.00 | 24.00 | 20.0 | 480 |
| 63 | 63 | A-20" | 23+66.00 | 64 | A-20" | 23+90.00 | 1058.0 | 1038.50 | 24.00 | 19.5 | 468 |
| 64 | 64 | A-20" | 23+90.00 | 65 | A-20" | 24+14.00 | 1059.0 | 1039.00 | 24.00 | 20.0 | 480 |
| 65 | 65 | A-20" | 24+14.00 | 66 | A-20" | 24+38.00 | 1059.0 | 1039.00 | 24.00 | 20.0 | 480 |
| 66 | 66 | A-20" | 24+38.00 | 67 | A-20" | 24+62.00 | 1059.0 | 1039.50 | 24.00 | 19.5 | 468 |
| 67 | 67 | A-20" | 24+62.00 | 68 | A-20" | 24+86.00 | 1059.0 | 1040.00 | 24.00 | 19.0 | 456 |
| 68 | 68 | A-20" | 24+86.00 | 69 | A-20" | 25+10.00 | 1060.0 | 1040.00 | 24.00 | 20.0 | 480 |
| 69 | 69 | A-20" | 25+10.00 | 70 | A-20" | 25+34.00 | 1060.0 | 1040.50 | 24.00 | 19.5 | 468 |
| 70 | 70 | A-20" | 25+34.00 | 71 | A-20" | 25+58.00 | 1060.0 | 1040.50 | 24.00 | 19.5 | 468 |
| 71 | 71 | A-20" | 25+58.00 | 72 | A-20" | 25+82.00 | 1060.0 | 1041.00 | 24.00 | 19.0 | 456 |
| 72 | 72 | A-20" | 25+82.00 | 73 | A-20" | 26+06.00 | 1061.0 | 1041.00 | 24.00 | 20.0 | 480 |
| 73 | 73 | A-20" | 26+06.00 | 74 | A-20" | 26+30.00 | 1061.0 | 1041.00 | 24.00 | 20.0 | 480 |
| 74 | 74 | A-20" | 26+30.00 | 75 | A-20" | 26+54.00 | 1061.0 | 1041.50 | 24.00 | 19.5 | 468 |
| 75 | 75 | A-20" | 26+54.00 | 76 | A-20" | 26+78.00 | 1061.0 | 1041.50 | 24.00 | 19.5 | 468 |
| 76 | 76 | A-20" | 26+78.00 | 77 | A-20" | 27+02.00 | 1061.0 | 1042.00 | 24.00 | 19.0 | 456 |
| 77 | 77 | A-20" | 27+02.00 | 78 | A-20" | 27+26.00 | 1062.0 | 1042.00 | 24.00 | 20.0 | 480 |
| 78 | 78 | A-20" | 27+26.00 | 79 | A-20" | 27+50.00 | 1062.0 | 1042.50 | 24.00 | 19.5 | 468 |
| 79 | 79 | A-20" | 27+50.00 | 80 | A-20" | 27+74.00 | 1062.0 | 1042.50 | 24.00 | 19.5 | 468 |
| 80 | 80 | A-20" | 27+74.00 | 81 | A-20" | 27+98.00 | 1062.0 | 1043.00 | 24.00 | 19.0 | 456 |
| 81 | 81 | A-20" | 27+98.00 | 82 | A-20" | 28+22.00 | 1062.0 | 1043.00 | 24.00 | 19.0 | 456 |
| 82 | 82 | A-20" | 28+22.00 | 83 | A-20" | 28+46.00 | 1062.0 | 1043.00 | 24.00 | 19.0 | 456 |
| 83 | 83 | A-20" | 28+46.00 | 84 | A-20" | 28+70.00 | 1062.0 | 1043.00 | 24.00 | 19.0 | 456 |
| 84 | 84 | A-20" | 28+70.00 | 85 | A-20" | 28+94.00 | 1062.0 | 1042.50 | 24.00 | 19.5 | 468 |
| 85 | 85 | A-20" | 28+94.00 | 86 | A-20" | 29+18.00 | 1062.0 | 1042.50 | 24.00 | 19.5 | 468 |
| 86 | 86 | A-20" | 29+18.00 | 87 | A-20" | 29+42.00 | 1062.0 | 1042.50 | 24.00 | 19.5 | 468 |
| 87 | 87 | A-20" | 29+42.00 | 88 | A-20" | 29+66.00 | 1062.0 | 1042.50 | 24.00 | 19.5 | 468 |
| 88 | 88 | A-20" | 29+66.00 | 89 | A-20" | 29+90.00 | 1062.0 | 1042.50 | 24.00 | 19.5 | 468 |
| 89 | 89 | A-20" | 29+90.00 | 90 | A-20" | 30+14.00 | 1062.0 | 1042.50 | 24.00 | 19.5 | 468 |
| 90 | 90 | A-20" | 30+14.00 | 91 | A-20" | 30+38.00 | 1062.0 | 1042.50 | 24.00 | 19.5 | 468 |
| 91 | 91 | A-20" | 30+38.00 | 92 | A-20" | 30+62.00 | 1062.0 | 1042.00 | 24.00 | 20.0 | 480 |
| 92 | 92 | A-20" | 30+62.00 | 93 | A-20" | 30+86.00 | 1062.0 | 1042.00 | 24.00 | 20.0 | 480 |
| 93 | 93 | A-20" | 30+86.00 | 94 | A-20" | 31+10.00 | 1062.0 | 1042.00 | 24.00 | 20.0 | 480 |
| 94 | 94 | A-20" | 31+10.00 | 95 | A-20" | 31+34.00 | 1061.0 | 1042.00 | 24.00 | 19.0 | 456 |
| 95 | 95 | A-20" | 31+34.00 | 96 | A-20" | 31+58.00 | 1060.0 | 1040.50 | 24.00 | 19.5 | 468 |
| 96 | 96 | A-20" | 31+58.00 | 97 | B-20" | 31+82.00 | 1059.0 | 1039.00 | 24.00 | 20.0 | 480 |
| | | | | | | | | | | TOTAL | 42715 |

CALCULATED RFV
CHECKED TJW

# CALCULATIONS & SUBSUMMARY - NOISE WALL HI

SUM-77 / 277 / 224

1110
1288

O:\2017\2017258\ProjectData\SUM\106002\Design\Structures\Wall_Noise_HI\Sheets\106002_00HI_WS001.dgn Sheet 1 1/17/2021 7:03:33 PM rviteli

| HI-2 | | | | | | | | | | | |
|---|---|---|---|---|---|---|---|---|---|---|---|
| PANEL NO. | DRILLED SHAFT NO. | POST TYPE | WORKPOINT STATION | DRILLED SHAFT NO. | POST TYPE | WORKPOINT STATION | TOP OF WALL | BOTTOM OF WALL | LENGTH OF PANEL (LFT) | HEIGHT OF PANEL (LFT) | 606 SPECIAL - NOISE BARRIER (REFLECTIVE) SF |
| 97 | 98 | B-16" | 110+00.00 | 99 | A-20" | 110+12.00 | 1055.0 | 1043.50 | 12.00 | 11.5 | 138 |
| 98 | 99 | A-20" | 110+12.00 | 100 | A-20" | 110+24.00 | 1059.0 | 1044.00 | 12.00 | 15.0 | 180 |
| 99 | 100 | A-20" | 110+24.00 | 101 | A-20" | 110+48.00 | 1063.0 | 1044.00 | 24.00 | 19.0 | 456 |
| 100 | 101 | A-20" | 110+48.00 | 102 | A-20" | 110+72.00 | 1064.0 | 1044.50 | 24.00 | 19.5 | 468 |
| 101 | 102 | A-20" | 110+72.00 | 103 | A-20" | 110+96.00 | 1064.0 | 1044.50 | 24.00 | 19.5 | 468 |
| 102 | 103 | A-20" | 110+96.00 | 104 | A-20" | 111+20.00 | 1064.0 | 1044.50 | 24.00 | 19.5 | 468 |
| 103 | 104 | A-20" | 111+20.00 | 105 | A-20" | 111+44.00 | 1064.0 | 1045.00 | 24.00 | 19.0 | 456 |
| 104 | 105 | A-20" | 111+44.00 | 106 | A-20" | 111+68.00 | 1065.0 | 1045.00 | 24.00 | 20.0 | 480 |
| 105 | 106 | A-20" | 111+68.00 | 107 | A-20" | 111+92.00 | 1065.0 | 1045.00 | 24.00 | 20.0 | 480 |
| 106 | 107 | A-20" | 111+92.00 | 108 | A-20" | 112+16.00 | 1065.0 | 1045.50 | 24.00 | 19.5 | 468 |
| 107 | 108 | A-20" | 112+16.00 | 109 | A-20" | 112+40.00 | 1065.0 | 1046.00 | 24.00 | 19.0 | 456 |
| 108 | 109 | A-20" | 112+40.00 | 110 | A-20" | 112+64.00 | 1065.5 | 1046.00 | 24.00 | 19.5 | 468 |
| 109 | 110 | A-20" | 112+64.00 | 111 | A-20" | 112+84.00 | 1066.0 | 1046.50 | 20.00 | 19.5 | 390 |
| 110 | 111 | A-20" | 112+84.00 | 112 | A-20" | 113+04.00 | 1066.0 | 1046.50 | 20.00 | 19.5 | 390 |
| 111 | 112 | A-20" | 113+04.00 | 113 | A-20" | 113+24.00 | 1066.0 | 1047.00 | 20.00 | 19.0 | 380 |
| 112 | 113 | A-20" | 113+24.00 | 114 | A-20" | 113+48.00 | 1066.0 | 1047.00 | 24.00 | 19.0 | 456 |
| 113 | 114 | A-20" | 113+48.00 | 115 | A-20" | 113+72.00 | 1067.0 | 1047.00 | 24.00 | 20.0 | 480 |
| 114 | 115 | A-20" | 113+72.00 | 116 | A-20" | 113+96.00 | 1067.0 | 1047.00 | 24.00 | 20.0 | 480 |
| 115 | 116 | A-20" | 113+96.00 | 117 | A-20" | 114+20.00 | 1067.0 | 1047.50 | 24.00 | 19.5 | 468 |
| 116 | 117 | A-20" | 114+20.00 | 118 | A-20" | 114+44.00 | 1067.0 | 1047.50 | 24.00 | 19.5 | 468 |
| 117 | 118 | A-20" | 114+44.00 | 119 | A-20" | 114+68.00 | 1067.0 | 1047.50 | 24.00 | 19.5 | 468 |
| 118 | 119 | A-20" | 114+68.00 | 120 | A-20" | 114+92.00 | 1067.0 | 1047.50 | 24.00 | 19.5 | 468 |
| 119 | 120 | A-20" | 114+92.00 | 121 | A-20" | 115+16.00 | 1067.0 | 1047.50 | 24.00 | 19.5 | 468 |
| 120 | 121 | A-20" | 115+16.00 | 122 | A-20" | 115+40.00 | 1067.0 | 1047.50 | 24.00 | 19.5 | 468 |
| 121 | 122 | A-20" | 115+40.00 | 123 | A-20" | 115+64.00 | 1067.0 | 1047.50 | 24.00 | 19.5 | 468 |
| 122 | 123 | A-20" | 115+64.00 | 124 | A-20" | 115+88.00 | 1067.0 | 1047.50 | 24.00 | 19.5 | 468 |
| 123 | 124 | A-20" | 115+88.00 | 125 | A-20" | 116+12.00 | 1067.0 | 1047.00 | 24.00 | 20.0 | 480 |
| 124 | 125 | A-20" | 116+12.00 | 126 | A-20" | 116+36.00 | 1066.0 | 1047.00 | 24.00 | 19.0 | 456 |
| 125 | 126 | A-20" | 116+36.00 | 127 | A-20" | 116+60.00 | 1066.0 | 1047.00 | 24.00 | 19.0 | 456 |
| 126 | 127 | A-20" | 116+60.00 | 128 | A-20" | 116+84.00 | 1066.0 | 1046.50 | 24.00 | 19.5 | 468 |
| 127 | 128 | A-20" | 116+84.00 | 129 | A-20" | 117+08.00 | 1066.0 | 1046.50 | 24.00 | 19.5 | 468 |
| 128 | 129 | A-20" | 117+08.00 | 130 | A-20" | 117+32.00 | 1065.0 | 1046.00 | 24.00 | 19.0 | 456 |
| 129 | 130 | A-20" | 117+32.00 | 131 | A-20" | 117+56.00 | 1065.0 | 1046.00 | 24.00 | 19.0 | 456 |
| 130 | 131 | A-20" | 117+56.00 | 132 | A-20" | 117+80.00 | 1065.0 | 1045.50 | 24.00 | 19.5 | 468 |
| 131 | 132 | A-20" | 117+80.00 | 133 | A-20" | 118+04.00 | 1065.0 | 1045.00 | 24.00 | 20.0 | 480 |
| 132 | 133 | A-20" | 118+04.00 | 134 | A-20" | 118+28.00 | 1064.0 | 1045.00 | 24.00 | 19.0 | 456 |
| 133 | 134 | A-20" | 118+28.00 | 135 | A-20" | 118+52.00 | 1064.0 | 1044.50 | 24.00 | 19.5 | 468 |
| 134 | 135 | A-20" | 118+52.00 | 136 | A-20" | 118+76.00 | 1063.0 | 1044.00 | 24.00 | 19.0 | 456 |
| 135 | 136 | A-20" | 118+76.00 | 137 | A-20" | 119+00.00 | 1063.0 | 1043.50 | 24.00 | 19.5 | 468 |
| 136 | 137 | A-20" | 119+00.00 | 138 | A-20" | 119+24.00 | 1062.0 | 1043.00 | 24.00 | 19.0 | 456 |
| 137 | 138 | A-20" | 119+24.00 | 139 | A-20" | 119+48.00 | 1062.0 | 1042.50 | 24.00 | 19.5 | 468 |
| 138 | 139 | A-20" | 119+48.00 | 140 | A-20" | 119+72.00 | 1062.0 | 1042.50 | 24.00 | 19.5 | 468 |
| 139 | 140 | A-20" | 119+72.00 | 141 | A-20" | 119+96.00 | 1061.0 | 1042.00 | 24.00 | 19.0 | 456 |
| 140 | 141 | A-20" | 119+96.00 | 142 | A-20" | 120+20.00 | 1061.0 | 1041.50 | 24.00 | 19.5 | 468 |
| 141 | 142 | A-20" | 120+20.00 | 143 | A-20" | 120+44.00 | 1060.0 | 1041.00 | 24.00 | 19.0 | 456 |
| 142 | 143 | A-20" | 120+44.00 | 144 | A-20" | 120+68.00 | 1060.0 | 1040.50 | 24.00 | 19.5 | 468 |
| 143 | 144 | A-20" | 120+68.00 | 145 | A-20" | 120+92.00 | 1059.0 | 1040.00 | 24.00 | 19.0 | 456 |
| 144 | 145 | A-20" | 120+92.00 | 146 | A-20" | 121+16.00 | 1059.0 | 1040.00 | 24.00 | 19.0 | 456 |
| 145 | 146 | A-20" | 121+16.00 | 147 | A-20" | 121+40.00 | 1059.0 | 1039.50 | 24.00 | 19.5 | 468 |
| 146 | 147 | A-20" | 121+40.00 | 148 | A-20" | 121+64.00 | 1058.0 | 1039.00 | 24.00 | 19.0 | 456 |
| 147 | 148 | A-20" | 121+64.00 | 149 | A-20" | 121+88.00 | 1058.0 | 1039.00 | 24.00 | 19.0 | 456 |
| 148 | 149 | A-20" | 121+88.00 | 150 | A-20" | 122+12.00 | 1058.0 | 1038.50 | 24.00 | 19.5 | 468 |
| 149 | 150 | A-20" | 122+12.00 | 151 | A-20" | 122+36.00 | 1058.0 | 1038.50 | 24.00 | 19.5 | 468 |
| 150 | 151 | A-20" | 122+36.00 | 152 | A-20" | 122+60.00 | 1058.0 | 1038.50 | 24.00 | 19.5 | 468 |

| HI-2 | | | | | | | | | | | |
|---|---|---|---|---|---|---|---|---|---|---|---|
| PANEL NO. | DRILLED SHAFT NO. | POST TYPE | WORKPOINT STATION | DRILLED SHAFT NO. | POST TYPE | WORKPOINT STATION | TOP OF WALL | BOTTOM OF WALL | LENGTH OF PANEL (LFT) | HEIGHT OF PANEL (LFT) | 606 SPECIAL - NOISE BARRIER (REFLECTIVE) SF |
| 151 | 152 | A-20" | 122+60.00 | 153 | A-20" | 122+84.00 | 1058.0 | 1038.00 | 24.00 | 20.0 | 480 |
| 152 | 153 | A-20" | 122+84.00 | 154 | A-20" | 123+08.00 | 1058.0 | 1038.00 | 24.00 | 20.0 | 480 |
| 153 | 154 | A-20" | 123+08.00 | 155 | A-20" | 123+32.00 | 1058.0 | 1038.00 | 24.00 | 20.0 | 480 |
| 154 | 155 | A-20" | 123+32.00 | 156 | A-20" | 123+56.00 | 1058.0 | 1038.00 | 24.00 | 20.0 | 480 |
| 155 | 156 | A-20" | 123+56.00 | 157 | A-20" | 123+80.00 | 1058.0 | 1038.00 | 24.00 | 20.0 | 480 |
| 156 | 157 | A-20" | 123+80.00 | 158 | A-20" | 124+04.00 | 1058.0 | 1038.00 | 24.00 | 20.0 | 480 |
| 157 | 158 | A-20" | 124+04.00 | 159 | A-20" | 124+28.00 | 1058.0 | 1038.00 | 24.00 | 20.0 | 480 |
| 158 | 159 | A-20" | 124+28.00 | 160 | A-20" | 124+52.00 | 1058.0 | 1038.00 | 24.00 | 20.0 | 480 |
| 159 | 160 | A-20" | 124+52.00 | 161 | A-20" | 124+76.00 | 1058.0 | 1038.50 | 24.00 | 19.5 | 468 |
| 160 | 161 | A-20" | 124+76.00 | 162 | A-20" | 125+00.00 | 1058.0 | 1038.50 | 24.00 | 19.5 | 468 |
| 161 | 162 | A-20" | 125+00.00 | 163 | A-20" | 125+24.00 | 1058.0 | 1038.50 | 24.00 | 19.5 | 468 |
| 162 | 163 | A-20" | 125+24.00 | 164 | A-20" | 125+48.00 | 1058.0 | 1039.00 | 24.00 | 19.0 | 456 |
| 163 | 164 | A-20" | 125+48.00 | 165 | A-20" | 125+72.00 | 1058.0 | 1039.00 | 24.00 | 19.0 | 456 |
| 164 | 165 | A-20" | 125+72.00 | 166 | A-20" | 125+96.00 | 1059.0 | 1039.00 | 24.00 | 20.0 | 480 |
| 165 | 166 | A-20" | 125+96.00 | 167 | A-20" | 126+20.00 | 1059.0 | 1039.50 | 24.00 | 19.5 | 468 |
| 166 | 167 | A-20" | 126+20.00 | 168 | A-20" | 126+44.00 | 1059.0 | 1039.50 | 24.00 | 19.5 | 468 |
| 167 | 168 | A-20" | 126+44.00 | 169 | A-20" | 126+68.00 | 1059.0 | 1039.50 | 24.00 | 19.5 | 468 |
| 168 | 169 | A-20" | 126+68.00 | 170 | A-20" | 126+92.00 | 1059.0 | 1040.00 | 24.00 | 19.0 | 456 |
| 169 | 170 | A-20" | 126+92.00 | 171 | A-20" | 127+16.00 | 1059.0 | 1040.00 | 24.00 | 19.0 | 456 |
| 170 | 171 | A-20" | 127+16.00 | 172 | A-20" | 127+40.00 | 1060.0 | 1040.00 | 24.00 | 20.0 | 480 |
| 171 | 172 | A-20" | 127+40.00 | 173 | A-20" | 127+64.00 | 1060.0 | 1040.50 | 24.00 | 19.5 | 468 |
| 172 | 173 | A-20" | 127+64.00 | 174 | A-20" | 127+88.00 | 1060.0 | 1040.50 | 24.00 | 19.5 | 468 |
| 173 | 174 | A-20" | 127+88.00 | 175 | A-20" | 128+12.00 | 1060.0 | 1041.00 | 24.00 | 19.0 | 456 |
| 174 | 175 | A-20" | 128+12.00 | 176 | A-20" | 128+36.00 | 1060.0 | 1041.00 | 24.00 | 19.0 | 456 |
| 175 | 176 | A-20" | 128+36.00 | 177 | A-20" | 128+60.00 | 1061.0 | 1041.50 | 24.00 | 19.5 | 468 |
| 176 | 177 | A-20" | 128+60.00 | 178 | A-20" | 128+84.00 | 1061.0 | 1041.50 | 24.00 | 19.5 | 468 |
| 177 | 178 | A-20" | 128+84.00 | 179 | A-20" | 129+08.00 | 1061.0 | 1042.00 | 24.00 | 19.0 | 456 |
| 178 | 179 | A-20" | 129+08.00 | 180 | A-20" | 129+32.00 | 1061.0 | 1042.00 | 24.00 | 19.0 | 456 |
| 179 | 180 | A-20" | 129+32.00 | 181 | A-20" | 129+56.00 | 1062.0 | 1042.00 | 24.00 | 20.0 | 480 |
| 180 | 181 | A-20" | 129+56.00 | 182 | A-20" | 129+80.00 | 1062.0 | 1042.50 | 24.00 | 19.5 | 468 |
| 181 | 182 | A-20" | 129+80.00 | 183 | A-20" | 130+04.00 | 1062.0 | 1042.50 | 24.00 | 19.5 | 468 |
| 182 | 183 | A-20" | 130+04.00 | 184 | A-20" | 130+28.00 | 1062.0 | 1043.00 | 24.00 | 19.0 | 456 |
| 183 | 184 | A-20" | 130+28.00 | 185 | A-20" | 130+52.00 | 1062.0 | 1043.00 | 24.00 | 19.0 | 456 |
| 184 | 185 | A-20" | 130+52.00 | 186 | A-20" | 130+76.00 | 1063.0 | 1043.50 | 24.00 | 19.5 | 468 |
| 185 | 186 | A-20" | 130+76.00 | 187 | A-20" | 131+00.00 | 1063.0 | 1043.50 | 24.00 | 19.5 | 468 |
| 186 | 187 | A-20" | 131+00.00 | 188 | A-20" | 131+24.00 | 1063.0 | 1043.50 | 24.00 | 19.5 | 468 |
| 187 | 188 | A-20" | 131+24.00 | 189 | A-20" | 131+48.00 | 1063.0 | 1044.00 | 24.00 | 19.0 | 456 |
| 188 | 189 | A-20" | 131+48.00 | 190 | A-20" | 131+67.50 | 1063.0 | 1044.00 | 19.50 | 19.0 | 370.5 |
| 189 | 190 | A-20" | 131+67.50 | 191 | A-20" | 131+91.50 | 1064.0 | 1044.50 | 24.00 | 19.5 | 468 |
| 190 | 191 | A-20" | 131+91.50 | 192 | A-20" | 132+15.50 | 1064.0 | 1044.50 | 24.00 | 19.5 | 468 |
| 191 | 192 | A-20" | 132+15.50 | 193 | A-20" | 132+39.50 | 1064.0 | 1044.50 | 24.00 | 19.5 | 468 |
| 192 | 193 | A-20" | 132+39.50 | 194 | A-20" | 132+63.50 | 1064.0 | 1045.00 | 24.00 | 19.0 | 456 |
| 193 | 194 | A-20" | 132+63.50 | 195 | A-20" | 132+87.50 | 1064.0 | 1045.00 | 24.00 | 19.0 | 456 |
| 194 | 195 | A-20" | 132+87.50 | 196 | A-20" | 133+11.50 | 1065.0 | 1045.50 | 24.00 | 19.5 | 468 |
| 195 | 196 | A-20" | 133+11.50 | 197 | A-20" | 133+35.50 | 1065.0 | 1045.50 | 24.00 | 19.5 | 468 |
| 196 | 197 | A-20" | 133+35.50 | 198 | A-20" | 133+59.50 | 1065.0 | 1045.50 | 24.00 | 19.5 | 468 |
| 197 | 198 | A-20" | 133+59.50 | 199 | A-20" | 133+83.50 | 1065.0 | 1046.00 | 24.00 | 19.0 | 456 |
| 198 | 199 | A-20" | 133+83.50 | 200 | A-20" | 134+07.50 | 1065.0 | 1046.00 | 24.00 | 19.0 | 456 |
| 199 | 200 | A-20" | 134+07.50 | 201 | A-20" | 134+31.50 | 1066.0 | 1046.00 | 24.00 | 20.0 | 480 |
| 200 | 201 | A-20" | 134+31.50 | 202 | A-20" | 134+55.50 | 1066.0 | 1046.50 | 24.00 | 19.5 | 468 |
| 201 | 202 | A-20" | 134+55.50 | 203 | A-20" | 134+79.50 | 1066.0 | 1046.50 | 24.00 | 19.5 | 468 |
| 202 | 203 | A-20" | 134+79.50 | 204 | A-20" | 135+03.50 | 1066.0 | 1047.00 | 24.00 | 19.0 | 456 |
| 203 | 204 | A-20" | 135+03.50 | 205 | A-20" | 135+27.50 | 1066.0 | 1047.00 | 24.00 | 19.0 | 456 |
| 204 | 205 | A-20" | 135+27.50 | 206 | A-20" | 135+51.50 | 1066.0 | 1047.00 | 24.00 | 19.0 | 456 |

CALCULATED RFV
CHECKED TJW

# CALCULATIONS & SUBSUMMARY - NOISE WALL HI

SUM-77/277/224

1111
1288

O:\2017\2017258\ProjectData\SUM\106002\Design\Structures\Wall_Noise_HI\Sheets\106002_00HI_WS001.dgn Sheet 2 1/17/2021 7:03:33 PM rvitelli

HI-2

| PANEL NO. | DRILLED SHAFT NO. | POST TYPE | WORKPOINT STATION | DRILLED SHAFT NO. | POST TYPE | WORKPOINT STATION | TOP OF WALL | BOTTOM OF WALL | LENGTH OF PANEL (LFT) | HEIGHT OF PANEL (LFT) | 606 SPECIAL - NOISE BARRIER (REFLECTIVE) SF |
|---|---|---|---|---|---|---|---|---|---|---|---|
| 205 | 206 | A-20" | 135+51.50 | 207 | A-20" | 135+75.50 | 1067.0 | 1047.50 | 24.00 | 19.5 | 468 |
| 206 | 207 | A-20" | 135+75.50 | 208 | A-20" | 135+99.50 | 1067.0 | 1047.50 | 24.00 | 19.5 | 468 |
| 207 | 208 | A-20" | 135+99.50 | 209 | A-20" | 136+23.50 | 1067.0 | 1047.50 | 24.00 | 19.5 | 468 |
| 208 | 209 | A-20" | 136+23.50 | 210 | A-20" | 136+47.50 | 1067.0 | 1047.50 | 24.00 | 19.5 | 468 |
| 209 | 210 | A-20" | 136+47.50 | 211 | A-20" | 136+71.50 | 1067.0 | 1048.00 | 24.00 | 19.0 | 456 |
| 210 | 211 | A-20" | 136+71.50 | 212 | A-20" | 136+95.50 | 1067.0 | 1048.00 | 24.00 | 19.0 | 456 |
| 211 | 212 | A-20" | 136+95.50 | 213 | A-20" | 137+19.50 | 1067.0 | 1048.00 | 24.00 | 19.0 | 456 |
| 212 | 213 | A-20" | 137+19.50 | 214 | A-20" | 137+43.50 | 1067.0 | 1048.00 | 24.00 | 19.0 | 456 |
| 213 | 214 | A-20" | 137+43.50 | 215 | A-20" | 137+67.50 | 1068.0 | 1048.00 | 24.00 | 20.0 | 480 |
| 214 | 215 | A-20" | 137+67.50 | 216 | A-20" | 137+91.50 | 1068.0 | 1048.00 | 24.00 | 20.0 | 480 |
| 215 | 216 | A-20" | 137+91.50 | 217 | A-20" | 138+15.50 | 1068.0 | 1048.00 | 24.00 | 20.0 | 480 |
| 216 | 217 | A-20" | 138+15.50 | 218 | A-20" | 138+39.50 | 1068.0 | 1048.00 | 24.00 | 20.0 | 480 |
| 217 | 218 | A-20" | 138+39.50 | 219 | A-20" | 138+63.50 | 1068.0 | 1048.00 | 24.00 | 20.0 | 480 |
| 218 | 219 | A-20" | 138+63.50 | 220 | A-20" | 138+87.50 | 1068.0 | 1048.00 | 24.00 | 20.0 | 480 |
| 219 | 220 | A-20" | 138+87.50 | 221 | A-20" | 139+11.50 | 1068.0 | 1048.00 | 24.00 | 20.0 | 480 |
| 220 | 221 | A-20" | 139+11.50 | 222 | A-20" | 139+35.50 | 1068.0 | 1048.00 | 24.00 | 20.0 | 480 |
| 221 | 222 | A-20" | 139+35.50 | 223 | A-20" | 139+59.50 | 1068.0 | 1048.00 | 24.00 | 20.0 | 480 |
| 222 | 223 | A-20" | 139+59.50 | 224 | A-20" | 139+71.50 | 1064.0 | 1049.00 | 12.00 | 15.0 | 180 |
| 223 | 224 | A-20" | 139+71.50 | 225 | B-16" | 139+83.50 | 1060.0 | 1049.00 | 12.00 | 11.0 | 132 |
| | | | | | | | | | | TOTAL | 57709 |

HI-3

| PANEL NO. | DRILLED SHAFT NO. | POST TYPE | WORKPOINT STATION | DRILLED SHAFT NO. | POST TYPE | WORKPOINT STATION | TOP OF WALL | BOTTOM OF WALL | LENGTH OF PANEL (LFT) | HEIGHT OF PANEL (LFT) | 606 SPECIAL - NOISE BARRIER (REFLECTIVE) SF |
|---|---|---|---|---|---|---|---|---|---|---|---|
| 224 | 226 | B-20" | 210+00.00 | 227 | A-20" | 210+24.00 | 1069.0 | 1051.50 | 24.00 | 17.5 | 420 |
| 225 | 227 | A-20" | 210+24.00 | 228 | A-20" | 210+48.00 | 1070.0 | 1052.00 | 24.00 | 18.0 | 432 |
| 226 | 228 | A-20" | 210+48.00 | 229 | A-20" | 210+72.00 | 1071.0 | 1052.50 | 24.00 | 18.5 | 444 |
| 227 | 229 | A-20" | 210+72.00 | 230 | A-20" | 210+96.00 | 1072.0 | 1053.50 | 24.00 | 18.5 | 444 |
| 228 | 230 | A-20" | 210+96.00 | 231 | A-20" | 211+20.00 | 1072.0 | 1054.50 | 24.00 | 17.5 | 420 |
| 229 | 231 | A-20" | 211+20.00 | 232 | A-20" | 211+44.00 | 1073.0 | 1055.00 | 24.00 | 18.0 | 432 |
| 230 | 232 | A-20" | 211+44.00 | 233 | A-20" | 211+68.00 | 1073.0 | 1055.50 | 24.00 | 17.5 | 420 |
| 231 | 233 | A-20" | 211+68.00 | 234 | A-20" | 211+92.00 | 1074.0 | 1056.00 | 24.00 | 18.0 | 432 |
| 232 | 234 | A-20" | 211+92.00 | 235 | A-20" | 212+16.00 | 1074.0 | 1056.50 | 24.00 | 17.5 | 420 |
| 233 | 235 | A-20" | 212+16.00 | 236 | A-20" | 212+40.00 | 1075.0 | 1057.00 | 24.00 | 18.0 | 432 |
| 234 | 236 | A-20" | 212+40.00 | 237 | A-20" | 212+64.00 | 1075.0 | 1057.50 | 24.00 | 17.5 | 420 |
| 235 | 237 | A-20" | 212+64.00 | 238 | A-20" | 212+88.00 | 1076.0 | 1058.00 | 24.00 | 18.0 | 432 |
| 236 | 238 | A-20" | 212+88.00 | 239 | A-20" | 213+12.00 | 1076.0 | 1058.50 | 24.00 | 17.5 | 420 |
| 237 | 239 | A-20" | 213+12.00 | 240 | A-20" | 213+36.00 | 1077.0 | 1059.00 | 24.00 | 18.0 | 432 |
| 238 | 240 | A-20" | 213+36.00 | 241 | A-20" | 213+60.00 | 1077.0 | 1060.00 | 24.00 | 17.0 | 408 |
| 239 | 241 | A-20" | 213+60.00 | 242 | A-20" | 213+84.00 | 1078.0 | 1060.50 | 24.00 | 17.5 | 420 |
| 240 | 242 | A-20" | 213+84.00 | 243 | A-20" | 214+08.00 | 1079.0 | 1061.00 | 24.00 | 18.0 | 432 |
| 241 | 243 | A-20" | 214+08.00 | 244 | A-20" | 214+32.00 | 1079.0 | 1061.50 | 24.00 | 17.5 | 420 |
| 242 | 244 | A-20" | 214+32.00 | 245 | A-20" | 214+56.00 | 1079.0 | 1062.00 | 24.00 | 17.0 | 408 |
| 243 | 245 | A-20" | 214+56.00 | 246 | A-20" | 214+80.00 | 1080.0 | 1062.50 | 24.00 | 17.5 | 420 |
| 244 | 246 | A-20" | 214+80.00 | 247 | A-20" | 215+04.00 | 1080.0 | 1063.00 | 24.00 | 17.0 | 408 |
| 245 | 247 | A-20" | 215+04.00 | 248 | A-20" | 215+28.00 | 1081.0 | 1063.00 | 24.00 | 18.0 | 432 |
| 246 | 248 | A-20" | 215+28.00 | 249 | A-20" | 215+52.00 | 1081.0 | 1063.00 | 24.00 | 18.0 | 432 |
| 247 | 249 | A-20" | 215+52.00 | 250 | A-20" | 215+76.00 | 1081.0 | 1063.50 | 24.00 | 17.5 | 420 |
| 248 | 250 | A-20" | 215+76.00 | 251 | A-20" | 216+00.00 | 1081.0 | 1063.50 | 24.00 | 17.5 | 420 |
| 249 | 251 | A-20" | 216+00.00 | 252 | D-20" | 216+24.00 | 1081.0 | 1063.50 | 24.00 | 17.5 | 420 |
| 250 | 252 | D-20" | 216+24.00 | 253 | D-20" | 216+48.00 | 1081.0 | 1063.50 | 24.00 | 17.5 | 420 |
| 251 | 253 | D-20" | 216+48.00 | 254 | A-20" | 216+72.00 | 1081.0 | 1063.50 | 24.00 | 17.5 | 420 |
| 252 | 254 | A-20" | 216+72.00 | 255 | A-20" | 216+96.00 | 1081.0 | 1063.00 | 24.00 | 18.0 | 432 |
| 253 | 255 | A-20" | 216+96.00 | 256 | A-20" | 217+20.00 | 1081.0 | 1063.00 | 24.00 | 18.0 | 432 |
| 254 | 256 | A-20" | 217+20.00 | 257 | A-20" | 217+44.00 | 1081.0 | 1062.50 | 24.00 | 18.5 | 444 |
| 255 | 257 | A-20" | 217+44.00 | 258 | A-20" | 217+68.00 | 1081.0 | 1062.50 | 24.00 | 18.5 | 444 |
| 256 | 258 | A-20" | 217+68.00 | 259 | A-20" | 217+92.00 | 1081.0 | 1062.50 | 24.00 | 18.5 | 444 |
| 257 | 259 | A-20" | 217+92.00 | 260 | A-20" | 218+16.00 | 1081.0 | 1062.50 | 24.00 | 18.5 | 444 |
| 258 | 260 | A-20" | 218+16.00 | 261 | A-20" | 218+40.00 | 1081.0 | 1063.00 | 24.00 | 18.0 | 432 |
| 259 | 261 | A-20" | 218+40.00 | 262 | A-20" | 218+64.00 | 1082.0 | 1064.00 | 24.00 | 18.0 | 432 |
| 260 | 262 | A-20" | 218+64.00 | 263 | A-20" | 218+88.00 | 1082.0 | 1064.50 | 24.00 | 17.5 | 420 |
| 261 | 263 | A-20" | 218+88.00 | 264 | A-20" | 219+12.00 | 1083.0 | 1065.00 | 24.00 | 18.0 | 432 |
| 262 | 264 | A-20" | 219+12.00 | 265 | A-20" | 219+36.00 | 1083.0 | 1066.00 | 24.00 | 17.0 | 408 |
| 263 | 265 | A-20" | 219+36.00 | 266 | A-20" | 219+60.00 | 1084.0 | 1066.50 | 24.00 | 17.5 | 420 |
| 264 | 266 | A-20" | 219+60.00 | 267 | A-20" | 219+84.00 | 1085.0 | 1067.00 | 24.00 | 18.0 | 432 |
| 265 | 267 | A-20" | 219+84.00 | 268 | A-20" | 220+08.00 | 1086.0 | 1067.50 | 24.00 | 18.5 | 444 |
| 266 | 268 | A-20" | 220+08.00 | 269 | A-20" | 220+32.00 | 1086.0 | 1068.00 | 24.00 | 18.0 | 432 |
| 267 | 269 | A-20" | 220+32.00 | 270 | A-20" | 220+56.00 | 1086.0 | 1067.50 | 24.00 | 18.5 | 444 |
| 268 | 270 | A-20" | 220+56.00 | 271 | B-20" | 220+73.82 | 1086.0 | 1067.50 | 17.82 | 18.5 | 329.67 |
| | | | | | | | | | | TOTAL | 19146 |

CALCULATED RFV
CHECKED TJW

# CALCULATIONS & SUBSUMMARY - NOISE WALL HI

SUM-77 / 277 / 224

1112
1288

0:\2017\2017258\ProjectData\SUM\106002\Design\Structures\Wall_Noise_HI\Sheets\106002_00HI_WS001.dgn Sheet 3 1/17/2021 7:03:34 PM rvitelli

| NOISE WALL HI-1 | | | |
|---|---|---|---|
| DRILLED SHAFT NO. | WORKPOINT STATION | TOP OF DRILLED SHAFT ELEVATION | SHAFT LENGTH (FEET) |
| 1 | 10+00.00 | 1016.27 | 8 |
| 2 | 10+12.00 | 1016.23 | 10 |
| 3 | 10+24.00 | 1016.08 | 14.5 |
| 4 | 10+36.00 | 1016.05 | 30 |
| 5 | 10+48.00 | 1016.05 | 30 |
| 6 | 10+72.00 | 1016.55 | 30 |
| 7 | 10+96.00 | 1016.55 | 30 |
| 8 | 11+20.00 | 1017.05 | 30 |
| 9 | 11+44.00 | 1017.55 | 30 |
| 10 | 11+68.00 | 1017.55 | 30 |
| 11 | 11+92.00 | 1018.05 | 30 |
| 12 | 12+16.00 | 1018.05 | 30 |
| 13 | 12+40.00 | 1018.05 | 30 |
| 14 | 12+64.00 | 1018.55 | 30 |
| 15 | 12+88.00 | 1018.55 | 30 |
| 16 | 13+12.00 | 1019.05 | 30 |
| 17 | 13+36.00 | 1019.55 | 30 |
| 18 | 13+60.00 | 1020.05 | 30 |
| 19 | 13+84.00 | 1020.55 | 30 |
| 20 | 14+08.00 | 1021.05 | 30 |
| 21 | 14+32.00 | 1020.55 | 30 |
| 22 | 14+56.00 | 1020.07 | 30 |
| 23 | 14+64.00 | 1020.07 | 30 |
| 24 | 14+88.00 | 1020.07 | 30 |
| 25 | 14+96.00 | 1020.07 | 30 |
| 26 | 15+20.00 | 1020.55 | 30 |
| 27 | 15+44.00 | 1021.05 | 30 |
| 28 | 15+68.00 | 1021.55 | 30 |
| 29 | 15+92.00 | 1022.05 | 30 |
| 30 | 16+16.00 | 1022.55 | 30 |
| 31 | 16+32.00 | 1023.05 | 30 |
| 32 | 16+48.00 | 1023.55 | 30 |
| 33 | 16+64.00 | 1024.05 | 30 |
| 34 | 16+88.00 | 1024.55 | 30 |
| 35 | 17+12.00 | 1025.05 | 30 |
| 36 | 17+36.00 | 1025.57 | 19 |
| 37 | 17+60.00 | 1026.05 | 19 |
| 38 | 17+84.00 | 1026.55 | 19 |
| 39 | 18+08.00 | 1027.05 | 19 |
| 40 | 18+32.00 | 1028.05 | 19 |
| 41 | 18+47.00 | 1029.05 | 19 |
| 42 | 18+62.00 | 1029.07 | 19 |
| 43 | 18+86.00 | 1030.55 | 19 |
| 44 | 19+10.00 | 1031.55 | 19 |
| 45 | 19+34.00 | 1031.55 | 19 |
| 46 | 19+58.00 | 1032.55 | 19 |
| 47 | 19+82.00 | 1032.55 | 19 |
| 48 | 20+06.00 | 1033.05 | 19 |
| 49 | 20+30.00 | 1033.55 | 19 |
| 50 | 20+54.00 | 1033.55 | 19 |
| 51 | 20+78.00 | 1034.05 | 19 |
| 52 | 21+02.00 | 1034.05 | 19 |

| NOISE WALL HI-1 | | | |
|---|---|---|---|
| DRILLED SHAFT NO. | WORKPOINT STATION | TOP OF DRILLED SHAFT ELEVATION | SHAFT LENGTH (FEET) |
| 53 | 21+26.00 | 1034.55 | 19 |
| 54 | 21+50.00 | 1035.05 | 19 |
| 55 | 21+74.00 | 1035.05 | 19 |
| 56 | 21+98.00 | 1035.55 | 19 |
| 57 | 22+22.00 | 1036.05 | 19 |
| 58 | 22+46.00 | 1036.05 | 19 |
| 59 | 22+70.00 | 1036.55 | 19 |
| 60 | 22+94.00 | 1037.05 | 19 |
| 61 | 23+18.00 | 1037.05 | 19 |
| 62 | 23+42.00 | 1037.55 | 17.5* |
| 63 | 23+66.00 | 1037.55 | 17.5* |
| 64 | 23+90.00 | 1038.05 | 17.5* |
| 65 | 24+14.00 | 1038.55 | 17.5* |
| 66 | 24+38.00 | 1038.55 | 17.5* |
| 67 | 24+62.00 | 1039.05 | 17.5* |
| 68 | 24+86.00 | 1039.55 | 17.5* |
| 69 | 25+10.00 | 1039.55 | 17.5* |
| 70 | 25+34.00 | 1040.05 | 19* |
| 71 | 25+58.00 | 1040.05 | 19* |
| 72 | 25+82.00 | 1040.55 | 19* |
| 73 | 26+06.00 | 1040.55 | 19* |
| 74 | 26+30.00 | 1040.55 | 19* |
| 75 | 26+54.00 | 1041.05 | 19* |
| 76 | 26+78.00 | 1041.05 | 19* |
| 77 | 27+02.00 | 1041.55 | 19* |
| 78 | 27+26.00 | 1041.55 | 19* |
| 79 | 27+50.00 | 1042.05 | 19* |
| 80 | 27+74.00 | 1042.05 | 19* |
| 81 | 27+98.00 | 1042.55 | 19* |
| 82 | 28+22.00 | 1042.55 | 19* |
| 83 | 28+46.00 | 1042.55 | 19* |
| 84 | 28+70.00 | 1042.05 | 19* |
| 85 | 28+94.00 | 1042.05 | 19* |
| 86 | 29+18.00 | 1042.05 | 14* |
| 87 | 29+42.00 | 1042.05 | 14* |
| 88 | 29+66.00 | 1042.05 | 14* |
| 89 | 29+90.00 | 1042.05 | 14* |
| 90 | 30+14.00 | 1042.05 | 14* |
| 91 | 30+38.00 | 1041.55 | 14* |
| 92 | 30+62.00 | 1041.55 | 14* |
| 93 | 30+86.00 | 1041.55 | 14* |
| 94 | 31+10.00 | 1041.55 | 14* |
| 95 | 31+34.00 | 1040.05 | 14* |
| 96 | 31+58.00 | 1038.55 | 14* |
| 97 | 31+82.00 | 1038.69 | 14* |

| NOISE WALL HI-2 | | | |
|---|---|---|---|
| DRILLED SHAFT NO. | WORKPOINT STATION | TOP OF DRILLED SHAFT ELEVATION | SHAFT LENGTH (FEET) |
| 98 | 110+00.00 | 1043.19 | 17* |
| 99 | 110+12.00 | 1043.05 | 17* |
| 100 | 110+24.00 | 1043.55 | 17* |
| 101 | 110+48.00 | 1043.55 | 17* |
| 102 | 110+72.00 | 1044.05 | 17* |
| 103 | 110+96.00 | 1044.05 | 17* |
| 104 | 111+20.00 | 1044.05 | 17* |
| 105 | 111+44.00 | 1044.55 | 17* |
| 106 | 111+68.00 | 1044.55 | 17* |
| 107 | 111+92.00 | 1044.55 | 17* |
| 108 | 112+16.00 | 1045.05 | 13 |
| 109 | 112+40.00 | 1045.55 | 13 |
| 110 | 112+64.00 | 1045.55 | 15 |
| 111 | 112+84.00 | 1046.05 | 15 |
| 112 | 113+04.00 | 1046.05 | 15 |
| 113 | 113+24.00 | 1046.55 | 15 |
| 114 | 113+48.00 | 1046.55 | 15 |
| 115 | 113+72.00 | 1046.55 | 15 |
| 116 | 113+96.00 | 1046.55 | 15 |
| 117 | 114+20.00 | 1047.05 | 15 |
| 118 | 114+44.00 | 1047.05 | 30 |
| 119 | 114+68.00 | 1047.05 | 30 |
| 120 | 114+92.00 | 1047.05 | 30 |
| 121 | 115+16.00 | 1047.05 | 30 |
| 122 | 115+40.00 | 1047.05 | 30 |
| 123 | 115+64.00 | 1047.05 | 30 |
| 124 | 115+88.00 | 1046.55 | 30 |
| 125 | 116+12.00 | 1046.55 | 30 |
| 126 | 116+36.00 | 1046.55 | 30 |
| 127 | 116+60.00 | 1046.05 | 19 |
| 128 | 116+84.00 | 1046.05 | 19 |
| 129 | 117+08.00 | 1045.55 | 19 |
| 130 | 117+32.00 | 1045.55 | 19 |
| 131 | 117+56.00 | 1045.05 | 19 |
| 132 | 117+80.00 | 1044.55 | 19 |
| 133 | 118+04.00 | 1044.55 | 19 |
| 134 | 118+28.00 | 1044.05 | 19 |
| 135 | 118+52.00 | 1043.55 | 19 |
| 136 | 118+76.00 | 1043.05 | 30 |
| 137 | 119+00.00 | 1042.55 | 30 |
| 138 | 119+24.00 | 1042.05 | 30 |
| 139 | 119+48.00 | 1042.05 | 30 |
| 140 | 119+72.00 | 1041.55 | 30 |
| 141 | 119+96.00 | 1041.05 | 30 |
| 142 | 120+20.00 | 1040.55 | 30 |
| 143 | 120+44.00 | 1040.05 | 30 |
| 144 | 120+68.00 | 1039.55 | 30 |
| 145 | 120+92.00 | 1039.55 | 30 |
| 146 | 121+16.00 | 1039.05 | 30 |
| 147 | 121+40.00 | 1038.55 | 30 |
| 148 | 121+64.00 | 1038.55 | 30 |
| 149 | 121+88.00 | 1038.05 | 30 |
| 150 | 122+12.00 | 1038.05 | 30 |

| NOISE WALL HI-2 | | | |
|---|---|---|---|
| DRILLED SHAFT NO. | WORKPOINT STATION | TOP OF DRILLED SHAFT ELEVATION | SHAFT LENGTH (FEET) |
| 151 | 122+36.00 | 1038.05 | 30 |
| 152 | 122+60.00 | 1037.55 | 19 |
| 153 | 122+84.00 | 1037.55 | 19 |
| 154 | 123+08.00 | 1037.55 | 19 |
| 155 | 123+32.00 | 1037.55 | 19 |
| 156 | 123+56.00 | 1037.55 | 19 |
| 157 | 123+80.00 | 1037.55 | 19 |
| 158 | 124+04.00 | 1037.55 | 19 |
| 159 | 124+28.00 | 1037.55 | 19 |
| 160 | 124+52.00 | 1037.55 | 30 |
| 161 | 124+76.00 | 1038.05 | 30 |
| 162 | 125+00.00 | 1038.05 | 30 |
| 163 | 125+24.00 | 1038.05 | 30 |
| 164 | 125+48.00 | 1038.55 | 30 |
| 165 | 125+72.00 | 1038.55 | 30 |
| 166 | 125+96.00 | 1038.55 | 30 |
| 167 | 126+20.00 | 1039.05 | 30 |
| 168 | 126+44.00 | 1039.05 | 30 |
| 169 | 126+68.00 | 1039.05 | 30 |
| 170 | 126+92.00 | 1039.55 | 30 |
| 171 | 127+16.00 | 1039.55 | 30 |
| 172 | 127+40.00 | 1039.55 | 30 |
| 173 | 127+64.00 | 1040.05 | 15 |
| 174 | 127+88.00 | 1040.05 | 15 |
| 175 | 128+12.00 | 1040.55 | 15 |
| 176 | 128+36.00 | 1040.55 | 15 |
| 177 | 128+60.00 | 1041.05 | 15 |
| 178 | 128+84.00 | 1041.05 | 15 |
| 179 | 129+08.00 | 1041.55 | 30 |
| 180 | 129+32.00 | 1041.55 | 30 |
| 181 | 129+56.00 | 1041.55 | 30 |
| 182 | 129+80.00 | 1042.05 | 30 |
| 183 | 130+04.00 | 1042.05 | 30 |
| 184 | 130+28.00 | 1042.55 | 30 |
| 185 | 130+52.00 | 1042.55 | 30 |
| 186 | 130+76.00 | 1043.05 | 30 |
| 187 | 131+00.00 | 1043.05 | 30 |
| 188 | 131+24.00 | 1043.05 | 30 |
| 189 | 131+48.00 | 1043.55 | 30 |
| 190 | 131+67.50 | 1043.55 | 30 |
| 191 | 131+91.50 | 1044.05 | 30 |
| 192 | 132+15.50 | 1044.05 | 30 |
| 193 | 132+39.50 | 1044.05 | 30 |
| 194 | 132+63.50 | 1044.55 | 30 |
| 195 | 132+87.50 | 1044.55 | 30 |
| 196 | 133+11.50 | 1045.05 | 30 |
| 197 | 133+35.50 | 1045.05 | 30 |
| 198 | 133+59.50 | 1045.05 | 30 |
| 199 | 133+83.50 | 1045.55 | 30 |
| 200 | 134+07.50 | 1045.55 | 30 |
| 201 | 134+31.50 | 1045.55 | 30 |
| 202 | 134+55.50 | 1046.05 | 30 |
| 203 | 134+79.50 | 1046.05 | 30 |
| 204 | 135+03.50 | 1046.55 | 30 |

| NOISE WALL HI-2 | | | |
|---|---|---|---|
| DRILLED SHAFT NO. | WORKPOINT STATION | TOP OF DRILLED SHAFT ELEVATION | SHAFT LENGTH (FEET) |
| 205 | 135+27.50 | 1046.55 | 30 |
| 206 | 135+51.50 | 1046.55 | 30 |
| 207 | 135+75.50 | 1047.05 | 30 |
| 208 | 135+99.50 | 1047.05 | 30 |
| 209 | 136+23.50 | 1047.05 | 30 |
| 210 | 136+47.50 | 1047.05 | 30 |
| 211 | 136+71.50 | 1047.55 | 20* |
| 212 | 136+95.50 | 1047.55 | 20* |
| 213 | 137+19.50 | 1047.55 | 20* |
| 214 | 137+43.50 | 1047.55 | 20* |
| 215 | 137+67.50 | 1047.55 | 20* |
| 216 | 137+91.50 | 1047.55 | 20* |
| 217 | 138+15.50 | 1047.55 | 20* |
| 218 | 138+39.50 | 1047.55 | 20* |
| 219 | 138+63.50 | 1047.55 | 20* |
| 220 | 138+87.50 | 1047.55 | 11* |
| 221 | 139+11.50 | 1047.55 | 11* |
| 222 | 139+35.50 | 1047.55 | 11* |
| 223 | 139+59.50 | 1047.55 | 11* |
| 224 | 139+71.50 | 1048.55 | 11* |
| 225 | 139+83.50 | 1048.55 | 11* |

| NOISE WALL HI-3 | | | |
|---|---|---|---|
| DRILLED SHAFT NO. | WORKPOINT STATION | TOP OF DRILLED SHAFT ELEVATION | SHAFT LENGTH (FEET) |
| 226 | 210+00.00 | 1051.19 | 16* |
| 227 | 210+24.00 | 1051.05 | 16* |
| 228 | 210+48.00 | 1051.55 | 16* |
| 229 | 210+72.00 | 1052.05 | 16* |
| 230 | 210+96.00 | 1053.05 | 16* |
| 231 | 211+20.00 | 1054.05 | 16* |
| 232 | 211+44.00 | 1054.55 | 16* |
| 233 | 211+68.00 | 1055.05 | 16* |
| 234 | 211+92.00 | 1055.55 | 16* |
| 235 | 212+16.00 | 1056.05 | 16* |
| 236 | 212+40.00 | 1056.55 | 12 |
| 237 | 212+64.00 | 1057.05 | 12 |
| 238 | 212+88.00 | 1057.55 | 12 |
| 239 | 213+12.00 | 1058.05 | 12 |
| 240 | 213+36.00 | 1058.55 | 12 |
| 241 | 213+60.00 | 1059.55 | 12 |
| 242 | 213+84.00 | 1060.05 | 12 |
| 243 | 214+08.00 | 1060.55 | 12 |
| 244 | 214+32.00 | 1061.05 | 12 |
| 245 | 214+56.00 | 1061.55 | 12 |
| 246 | 214+80.00 | 1062.05 | 12 |
| 247 | 215+04.00 | 1062.55 | 12 |
| 248 | 215+28.00 | 1062.55 | 12 |
| 249 | 215+52.00 | 1062.55 | 12 |
| 250 | 215+76.00 | 1063.05 | 12 |
| 251 | 216+00.00 | 1063.05 | 12 |
| 252 | 216+24.00 | 1063.07 | 12 |
| 253 | 216+48.00 | 1063.07 | 12 |
| 254 | 216+72.00 | 1062.55 | 12 |
| 255 | 216+96.00 | 1062.55 | 12 |
| 256 | 217+20.00 | 1062.05 | 12 |
| 257 | 217+44.00 | 1062.05 | 12 |
| 258 | 217+68.00 | 1062.05 | 14 |
| 259 | 217+92.00 | 1062.05 | 14 |
| 260 | 218+16.00 | 1062.05 | 14 |
| 261 | 218+40.00 | 1062.55 | 14 |
| 262 | 218+64.00 | 1063.55 | 14 |
| 263 | 218+88.00 | 1064.05 | 14 |
| 264 | 219+12.00 | 1064.55 | 14 |
| 265 | 219+36.00 | 1065.55 | 14 |
| 266 | 219+60.00 | 1066.05 | 14 |
| 267 | 219+84.00 | 1066.55 | 14 |
| 268 | 220+08.00 | 1067.05 | 14 |
| 269 | 220+32.00 | 1067.05 | 16 |
| 270 | 220+56.00 | 1067.05 | 16 |
| 271 | 220+73.82 | 1067.19 | 16 |

**LEGEND:**

* INCLUDES 5' ROCK SOCKET

CALCULATED RFV
CHECKED TJW

# DATA TABLES - NOISE WALL HI

SUM-77 / 277 / 224

1113
1288

O:\2017\2017258\ProjectData\SUM\106002\Design\Structures\Wall_Noise_HI\Sheets\106002_00HI_WS002.dgn Sheet 1/18/2021 11:10:25 AM rvitelli

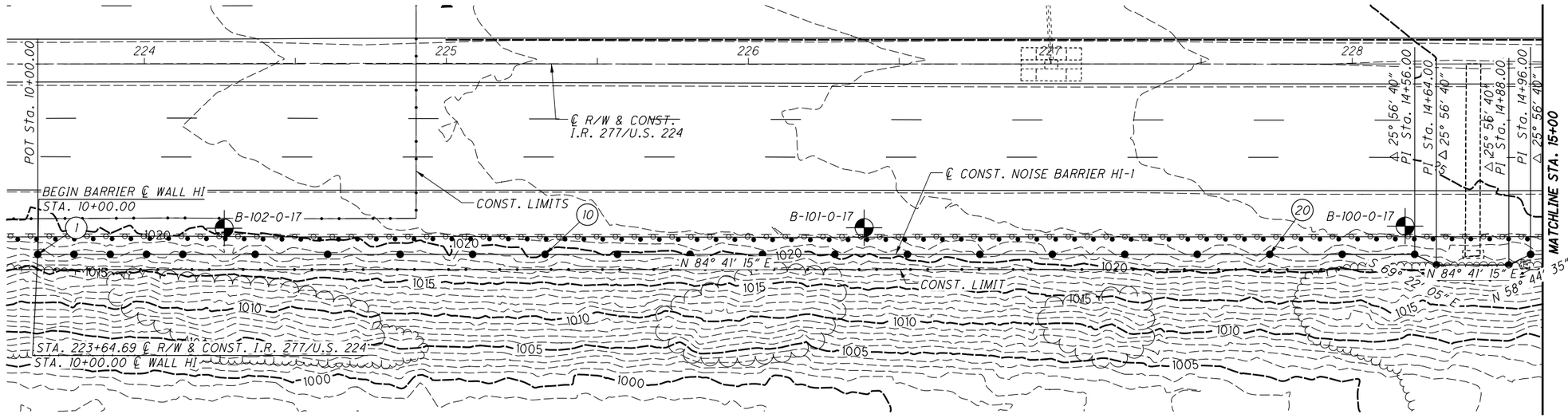


| | | | | | | | | | | | | | | | | | | | | | | | | |
|---|---|---|---|---|---|---|---|---|---|---|---|---|---|---|---|---|---|---|---|---|---|---|---|---|
| TOP OF NOISE BARRIER ELEV. | 1025.00 | 1029.00 | 1033.00 | 1037.00 | 1037.00 | 1037.00 | 1037.00 | 1038.00 | 1038.00 | 1038.00 | 1038.00 | 1039.00 | 1039.00 | 1039.00 | 1040.00 | 1040.00 | 1040.00 | 1040.00 | 1041.00 | 1041.00 | 1041.00 | 1041.00 | 1041.00 | |
| ACOUSTIC PROFILE ELEV. | | 1035.99 | | 1036.27 | | 1036.52 | 1036.76 | 1037.01 | 1037.25 | 1037.49 | 1037.74 | 1037.98 | 1038.22 | 1038.46 | 1038.71 | 1038.95 | 1039.19 | 1039.44 | 1039.68 | 1039.93 | 1040.24 | 1040.60 | 1040.97 | |
| BOTTOM OF NOISE BARRIER ELEV. | 1016.50 | 1016.50 | 1016.50 | 1016.50 | 1017.00 | 1017.00 | 1017.50 | 1018.00 | 1018.00 | 1018.50 | 1018.50 | 1018.50 | 1019.00 | 1019.00 | 1019.50 | 1020.00 | 1020.50 | 1021.00 | 1021.50 | 1022.00 | 1021.00 | 1020.50 | 1020.50 | 1020.50 |
| PANEL ID | 1 | 2 | 3 | 4 | 5 | 6 | 7 | 8 | 9 | 10 | 11 | 12 | 13 | 14 | 15 | 16 | 17 | 18 | 19 | 20 | 21 | 22 | 23 | 24 |

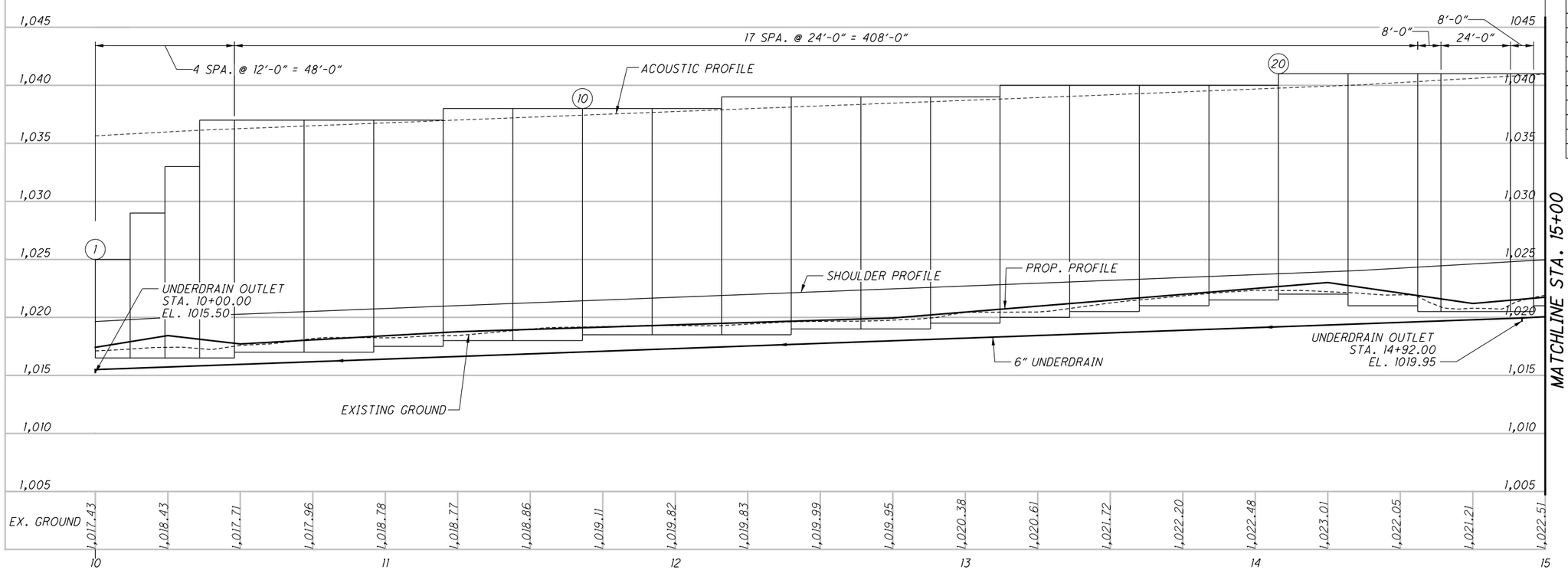


| APPROX. TOP OF ROCK ELEV. | |
|---|---|
| BORING I.D. NO. | T/ROCK ELEV. |
| B-070-0-17 | 1048.9± |
| B-071-0-17 | 1048.4± |
| B-072-0-17 | 1044.1± |
| B-073-0-17 | 1049.7± |
| B-074-0-17 | 1039.8± |
| B-075-0-17 | 1042.8± |
| B-076-0-17 | 1032.7± |
| B-077-0-17 | N/A |
| B-078-0-17 | N/A |
| B-079-0-17 | N/A |
| B-080-0-17 | N/A |
| B-081-0-17 | N/A |
| B-082-0-17 | N/A |
| B-083-0-17 | N/A |
| B-084-0-17 | N/A |
| B-085-0-17 | N/A |
| B-086-0-17 | 1018.1± |
| B-087-0-17 | N/A |
| B-089-0-17 | N/A |
| B-090-0-17 | N/A |
| B-091-0-17 | N/A |
| B-092-0-17 | 1032.1± |
| B-093-0-17 | 1028.0± |
| B-094-0-17 | 1026.4± |
| B-095-0-17 | 1026.4± |
| B-096-0-17 | N/A |
| B-097-0-17 | N/A |
| B-098-0-17 | N/A |
| B-099-0-17 | N/A |
| B-100-0-17 | N/A |
| B-101-0-17 | N/A |
| B-102-0-17 | N/A |

N

0 10 20 40 HORIZONTAL SCALE IN FEET

CALCULATED RHC
CHECKED DJC

# PLAN AND PROFILE - NOISE BARRIER HI-1
## BEGIN TO STA. 15+00.00

SUM-77 / 277 / 224

1114
1288

O:\2017\2017258\ProjectData\SUM\106002\Design\Structures\Wall_Noise_HI\Sheets\106002_00HI_WP001.dgn Sheet1 1/17/2021 7:05:17 PM rvitelli

MATCHLINE STA. 15+00
MATCHLINE STA. 20+50
POT Sta. 2+97.76
PI Sta. 17+36.00
Δ 27° 43' 44"
℄ CONST. NOISE BARRIER HI-1
23" OUTSIDE ϕ CULVERT
PI Sta. 18+62.00
Δ 29° 22' 28"
B-099-0-17
B-098-0-17
N 84° 41' 15" E
S 67° 35' 01" E
N 83° 02' 31" E
CONST. LIMITS
Ex LA-R/W
15' STM.
229
230
231
232
233

| | | |

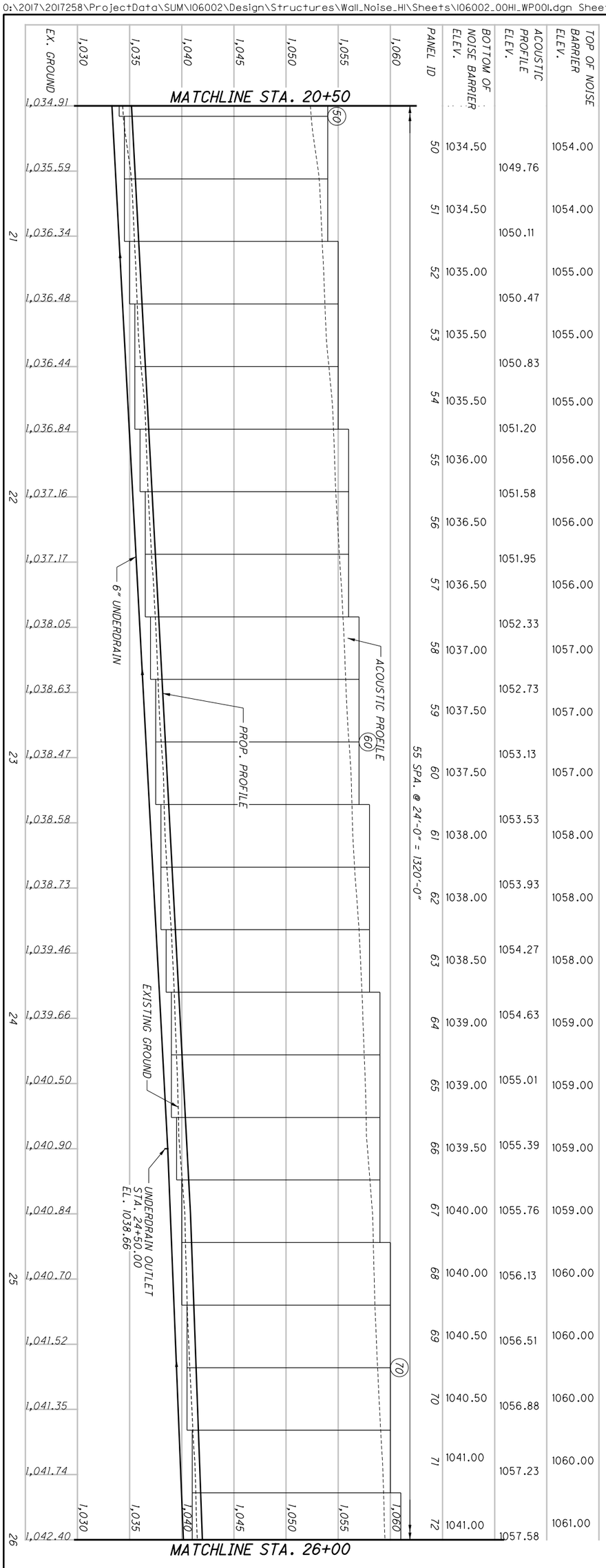


| PANEL ID | BOTTOM OF NOISE BARRIER ELEV. | ACOUSTIC PROFILE ELEV. | TOP OF NOISE BARRIER ELEV. |
|---|---|---|---|
| 50 | 1034.50 | 1049.76 | 1054.00 |
| 51 | 1034.50 | 1050.11 | 1054.00 |
| 52 | 1035.00 | 1050.47 | 1055.00 |
| 53 | 1035.50 | 1050.83 | 1055.00 |
| 54 | 1035.50 | 1051.20 | 1055.00 |
| 55 | 1036.00 | 1051.58 | 1056.00 |
| 56 | 1036.50 | 1051.95 | 1056.00 |
| 57 | 1036.50 | 1052.33 | 1056.00 |
| 58 | 1037.00 | 1052.73 | 1057.00 |
| 59 | 1037.50 | 1053.13 | 1057.00 |
| 60 | 1037.50 | 1053.53 | 1057.00 |
| 61 | 1038.00 | 1053.93 | 1058.00 |
| 62 | 1038.00 | 1054.27 | 1058.00 |
| 63 | 1038.50 | 1054.63 | 1058.00 |
| 64 | 1039.00 | 1055.01 | 1059.00 |
| 65 | 1039.00 | 1055.39 | 1059.00 |
| 66 | 1039.50 | 1055.76 | 1059.00 |
| 67 | 1040.00 | 1056.13 | 1060.00 |
| 68 | 1040.00 | 1056.51 | 1060.00 |
| 69 | 1040.50 | 1056.88 | 1060.00 |
| 70 | 1040.50 | 1057.23 | 1060.00 |
| 71 | 1041.00 | 1057.58 | 1061.00 |
| 72 | 1041.00 | | |

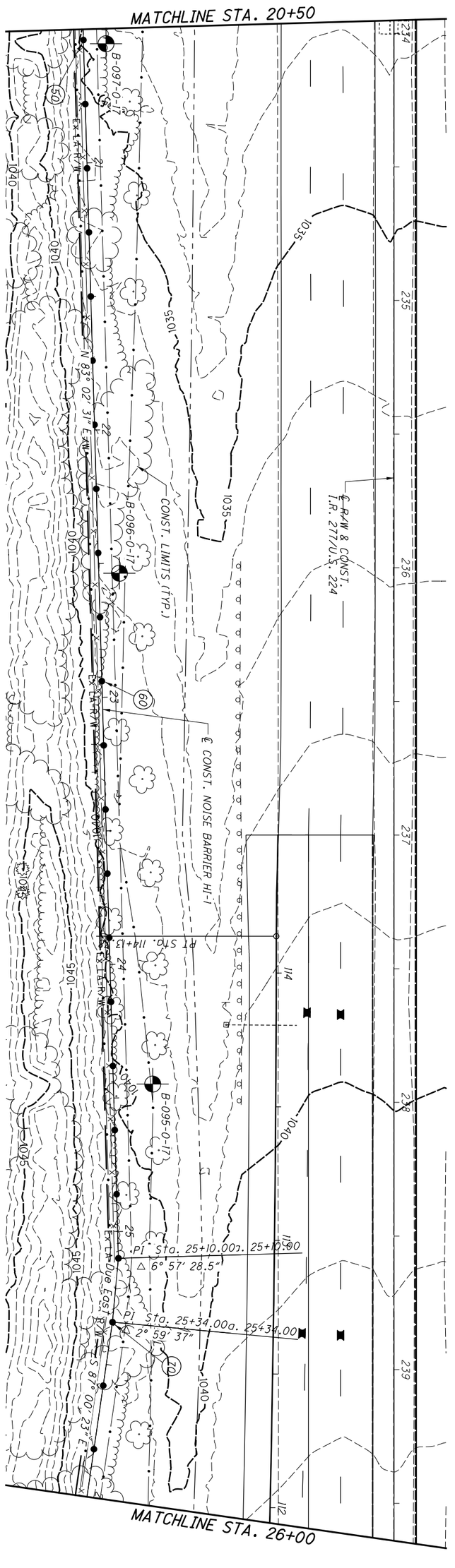


| | | | | |
|---|---|---|---|---|
| 1116 / 1288 | SUM-77/277/224 | PLAN AND PROFILE - NOISE BARRIER HI-1<br>STA. 20+50.00 TO STA. 26+00.00 | CALCULATED RHC<br>CHECKED DJC | 0 20<br>10 40<br>HORIZONTAL SCALE IN FEET |

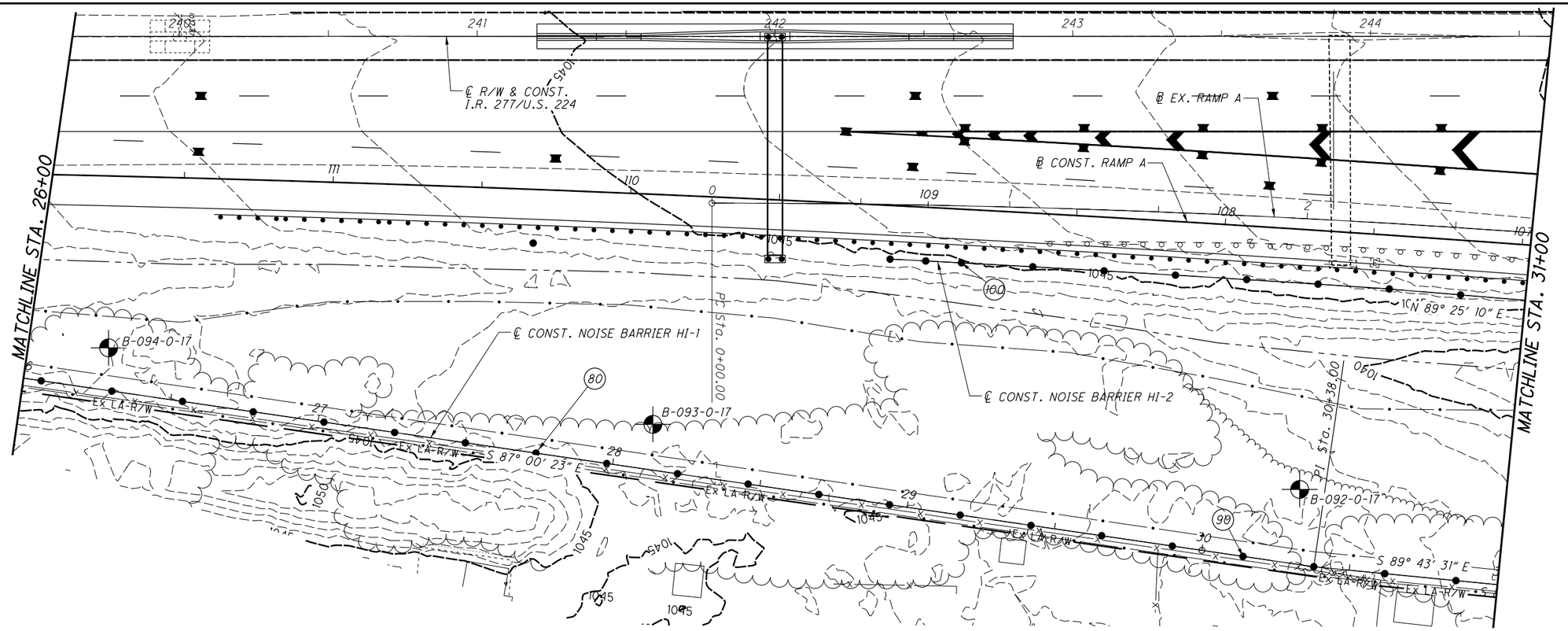


| | | | | | | | | | | | | | | | | | | | | | | | | |
|---|---|---|---|---|---|---|---|---|---|---|---|---|---|---|---|---|---|---|---|---|---|---|---|---|
| TOP OF NOISE BARRIER ELEV. | 1061.00 | 1061.00 | 1061.00 | 1061.00 | 1062.00 | 1062.00 | 1062.00 | 1062.00 | 1062.00 | 1062.00 | 1062.00 | 1062.00 | 1062.00 | 1062.00 | 1062.00 | 1062.00 | 1062.00 | 1062.00 | 1062.00 | 1062.00 | 1062.00 | 1062.00 | 1062.00 | 1062.00 |
| ACOUSTIC PROFILE ELEV. | 1057.96 | 1058.35 | 1058.73 | 1059.10 | 1059.46 | 1059.82 | 1060.18 | 1060.54 | 1060.89 | 1061.24 | 1061.60 | 1061.96 | 1061.49 | 1061.37 | 1060.22 | 1060.84 | 1060.59 | 1061.23 | 1061.46 | 1060.95 | | | | |
| BOTTOM OF NOISE BARRIER ELEV. | 1041.00 | 1041.50 | 1041.50 | 1042.00 | 1042.00 | 1042.50 | 1042.50 | 1043.00 | 1043.00 | 1043.00 | 1043.00 | 1042.50 | 1042.50 | 1042.50 | 1042.50 | 1042.50 | 1042.50 | 1042.00 | 1042.00 | 1042.00 | | | | |
| PANEL ID | 73 | 74 | 75 | 76 | 77 | 78 | 79 | 80 | 81 | 82 | 83 | 84 | 85 | 86 | 87 | 88 | 89 | 90 | 91 | 92 | 93 | | | |

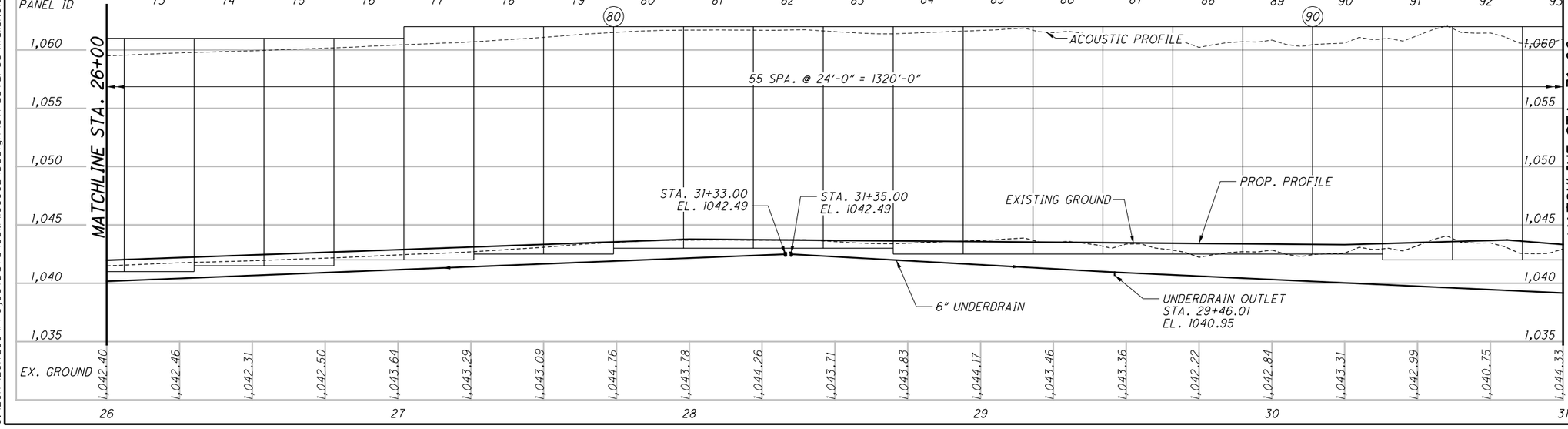


| | | | | | | | | | | | | | | | | | | | | | | | | |
|---|---|---|---|---|---|---|---|---|---|---|---|---|---|---|---|---|---|---|---|---|---|---|---|---|
| EX. GROUND | 1042.40 | 1042.46 | 1042.31 | 1042.50 | 1043.64 | 1043.29 | 1043.09 | 1044.76 | 1043.78 | 1044.26 | 1043.71 | 1043.83 | 1044.17 | 1043.46 | 1043.36 | 1042.22 | 1042.84 | 1043.31 | 1042.99 | 1040.75 | 1044.33 | | | |
| | 26 | | | | 27 | | | | 28 | | | | 29 | | | | 30 | | | | 31 | | | |

HORIZONTAL SCALE IN FEET
0 10 20 40

CALCULATED RHC
CHECKED DJC

# PLAN AND PROFILE - NOISE BARRIER HI-1
## STA. 26+00.00 TO STA. 31+50.00

SUM-77 / 277 / 224

1117
1288

O:\2017\20172581Project Data\SUM\106002\Design\Structures\Wall_Noise_HI\Sheets\106002_00HI_WP001.dgn Sheet4 1/17/2021 7:05:20 PM rvitelli

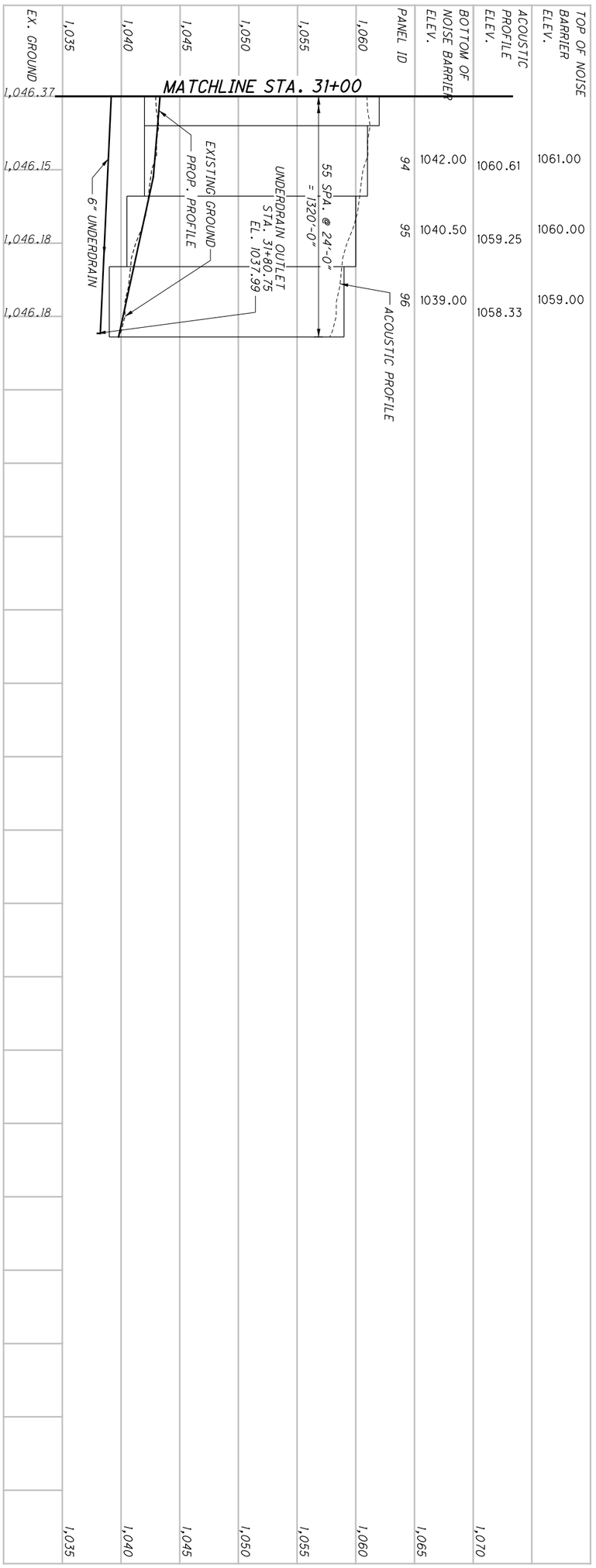


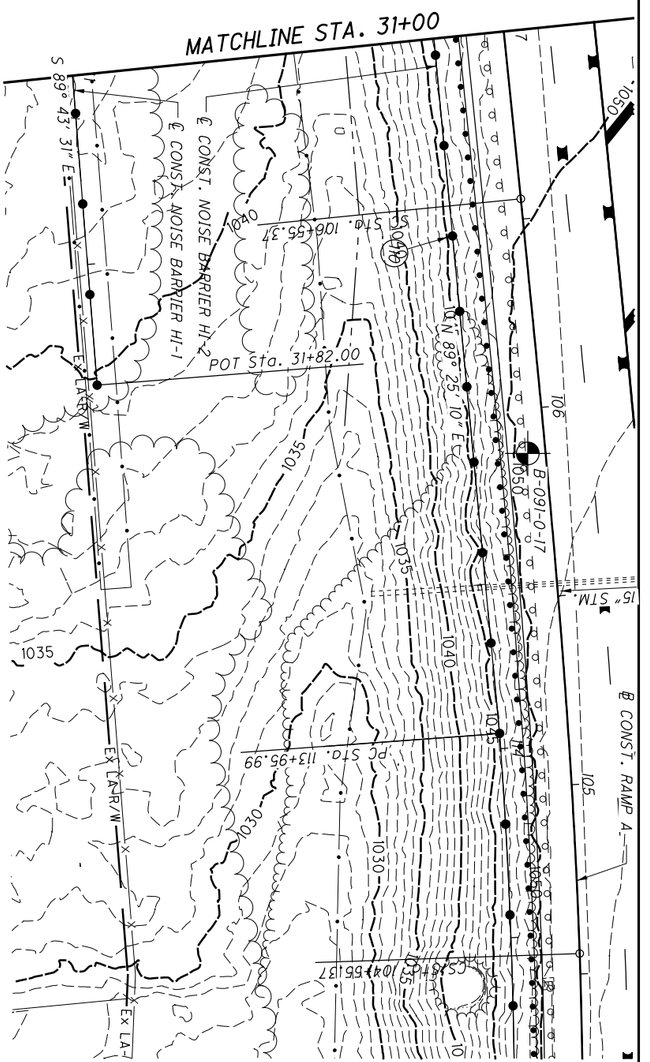


| | | | | |
|---|---|---|---|---|
| 1117A (1288) | SUM-77/277/224 | PLAN AND PROFILE - NOISE BARRIER HI-1<br>STA. 31+00.00 TO END WALL HI-1 | CALCULATED RHC<br>CHECKED DJC | 0 20<br>10 40<br>HORIZONTAL SCALE IN FEET |

| | | | | |
|---|---|---|---|---|
| 1288 / 1117B | SUM-77 / 277 / 224 | PLAN AND PROFILE - NOISE BARRIER HI-2<br>BEGIN WALL TO STA. 112+00.00 | CALCULATED RHC<br>CHECKED DJC | 0 20<br>10 40<br>HORIZONTAL SCALE IN FEET |

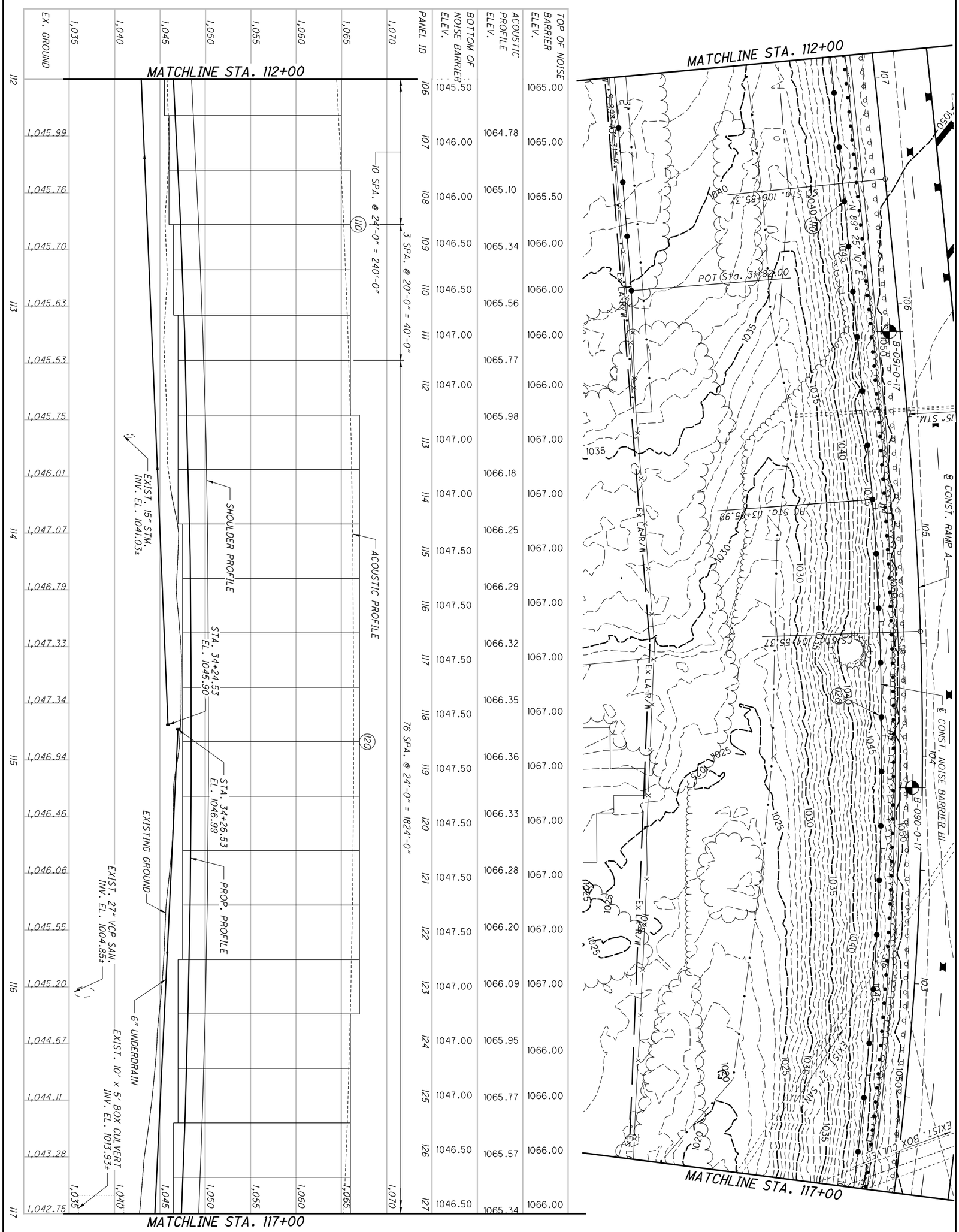


| 1288 | SUM-77/277/224 | PLAN AND PROFILE - NOISE BARRIER HI-2<br>STA. 112+00.00 TO STA. 117+00.00 | CALCULATED RHC<br>CHECKED DJC | 0 20<br>10 40<br>HORIZONTAL SCALE IN FEET |
|---|---|---|---|---|

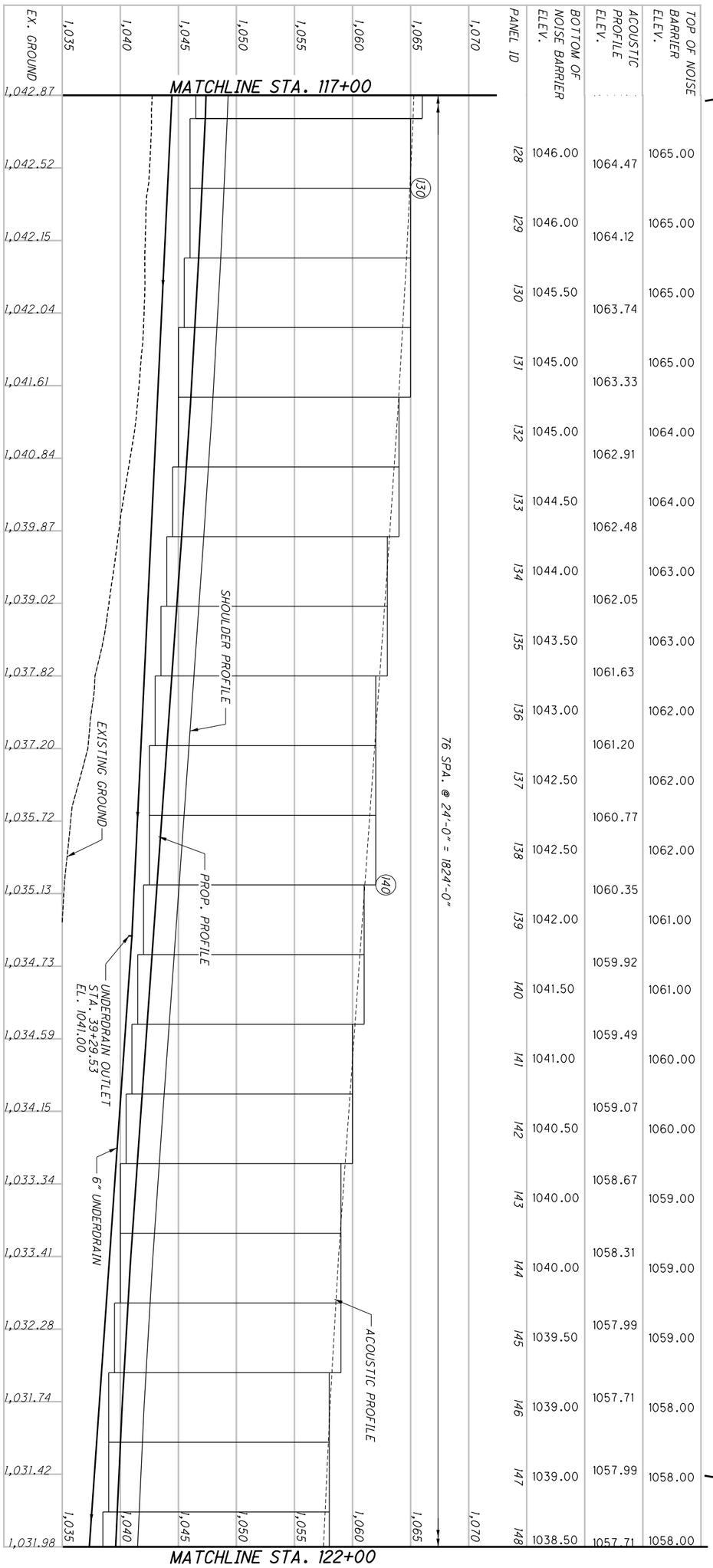


| PANEL ID | BOTTOM OF NOISE BARRIER ELEV. | ACOUSTIC PROFILE ELEV. | TOP OF NOISE BARRIER ELEV. |
|---|---|---|---|
| 128 | 1046.00 | 1064.47 | 1065.00 |
| 129 | 1046.00 | 1064.12 | 1065.00 |
| 130 | 1045.50 | 1063.74 | 1065.00 |
| 131 | 1045.00 | 1063.33 | 1065.00 |
| 132 | 1045.00 | 1062.91 | 1064.00 |
| 133 | 1044.50 | 1062.48 | 1064.00 |
| 134 | 1044.00 | 1062.05 | 1063.00 |
| 135 | 1043.50 | 1061.63 | 1063.00 |
| 136 | 1043.00 | 1061.20 | 1062.00 |
| 137 | 1042.50 | 1060.77 | 1062.00 |
| 138 | 1042.50 | 1060.35 | 1062.00 |
| 139 | 1042.00 | 1059.92 | 1061.00 |
| 140 | 1041.50 | 1059.49 | 1061.00 |
| 141 | 1041.00 | 1059.07 | 1060.00 |
| 142 | 1040.50 | 1058.67 | 1060.00 |
| 143 | 1040.00 | 1058.31 | 1059.00 |
| 144 | 1040.00 | 1057.99 | 1059.00 |
| 145 | 1039.50 | 1057.71 | 1059.00 |
| 146 | 1039.00 | 1057.99 | 1058.00 |
| 147 | 1039.00 | 1057.71 | 1058.00 |
| 148 | 1038.50 | | 1058.00 |

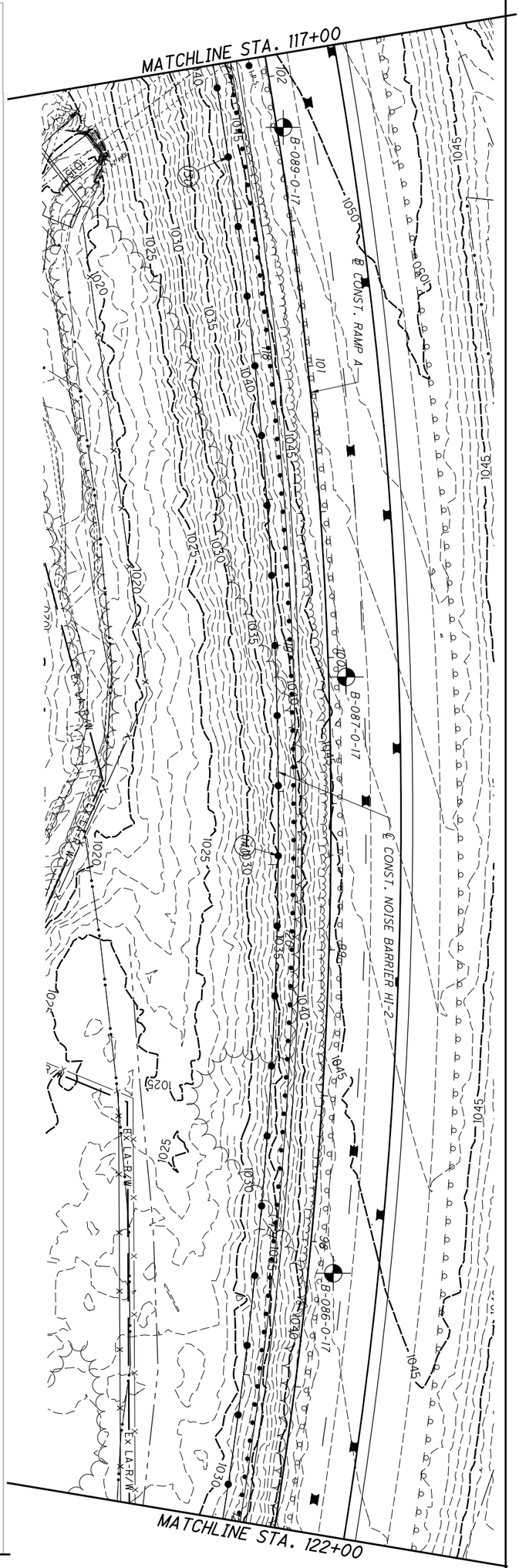


| | | | | | |
|---|---|---|---|---|---|
| 1119 / 1288 | SUM-77 / 277 / 224 | PLAN AND PROFILE - NOISE BARRIER HI-2<br>STA. 117+00.00 TO STA. 122+00.00 | CALCULATED RHC<br>CHECKED DJC | 0 20<br>10 40<br>HORIZONTAL SCALE IN FEET | N |

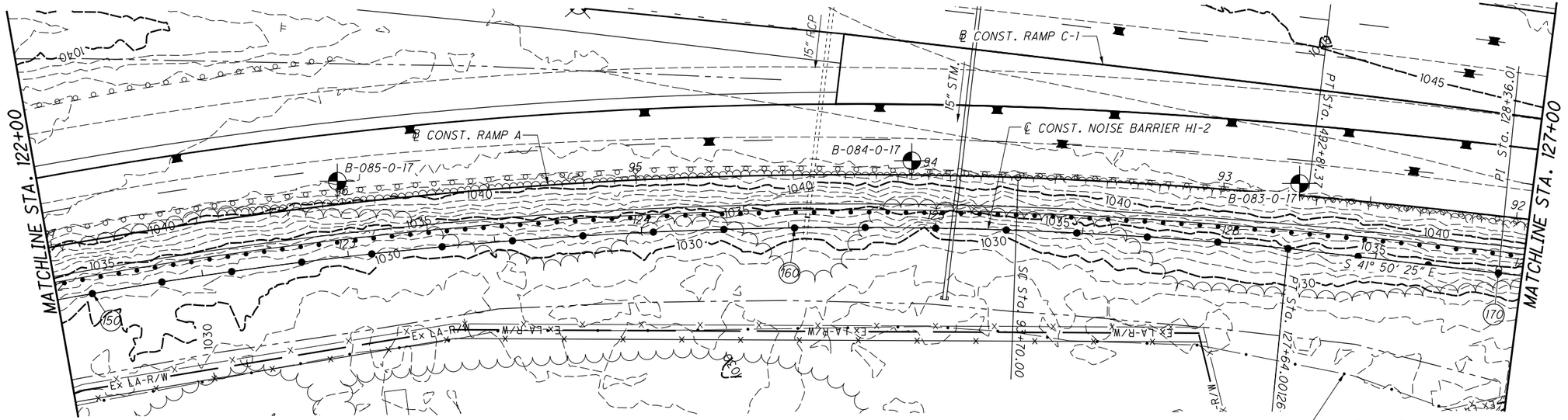


| | | | | | | | | | | | | | | | | | | | | | | |
|---|---|---|---|---|---|---|---|---|---|---|---|---|---|---|---|---|---|---|---|---|---|---|
| TOP OF NOISE BARRIER ELEV. | 1058.00 | 1058.00 | 1058.00 | 1058.00 | 1058.00 | 1058.00 | 1058.00 | 1058.00 | 1058.00 | 1058.00 | 1058.00 | 1058.00 | 1058.00 | 1058.00 | 1058.00 | 1058.00 | 1059.00 | 1059.00 | 1059.00 | 1059.00 | 1059.00 | |
| ACOUSTIC PROFILE ELEV. | 1057.46 | 1057.26 | 1057.09 | 1056.96 | 1056.87 | 1056.82 | 1056.81 | 1056.84 | 1056.90 | 1057.01 | 1057.15 | 1057.32 | 1057.50 | 1057.69 | 1057.88 | 1058.07 | 1058.26 | 1058.46 | 1058.65 | 1058.85 | | |
| BOTTOM OF NOISE BARRIER ELEV. | 1038.50 | 1038.50 | 1038.50 | 1038.00 | 1038.00 | 1038.00 | 1038.00 | 1038.00 | 1038.00 | 1038.00 | 1038.00 | 1038.50 | 1038.50 | 1038.50 | 1039.00 | 1039.00 | 1039.00 | 1039.50 | 1039.50 | 1039.50 | 1040.00 | |
| PANEL ID | 148 | 149 | 150 | 151 | 152 | 153 | 154 | 155 | 156 | 157 | 158 | 159 | 160 | 161 | 162 | 163 | 164 | 165 | 166 | 167 | 168 | |

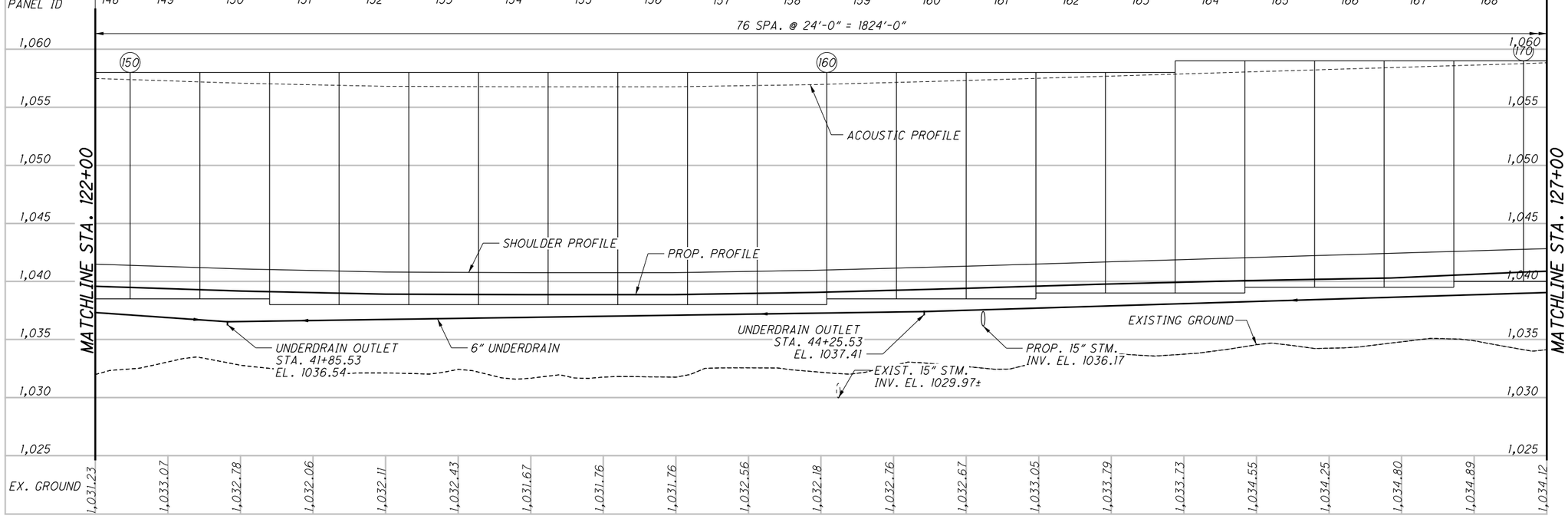


| | | | | | | | | | | | | | | | | | | | | | | |
|---|---|---|---|---|---|---|---|---|---|---|---|---|---|---|---|---|---|---|---|---|---|---|
| EX. GROUND | 1,031.23 | 1,033.07 | 1,032.78 | 1,032.06 | 1,032.11 | 1,032.43 | 1,031.67 | 1,031.76 | 1,031.76 | 1,032.56 | 1,032.18 | 1,032.76 | 1,032.67 | 1,033.05 | 1,033.79 | 1,033.73 | 1,034.55 | 1,034.25 | 1,034.80 | 1,034.89 | 1,034.12 | |
| | 122 | | | | | | | | | | | | | | | | | | | | | 127 |

HORIZONTAL SCALE IN FEET: 0, 10, 20, 40

CALCULATED RHC
CHECKED DJC

# PLAN AND PROFILE - NOISE BARRIER HI-2
## STA. 122+00.00 TO STA. 127+00.00

SUM-77/277/224

1120
1288

D:\2017\20172581\ProjectData\SUM\06002\Design\Structures\Wall_Noise_HI\Sheets\06002_OOHL_WP001.dgn Sheet7 1/17/2021 7:05:27 PM rvitelli

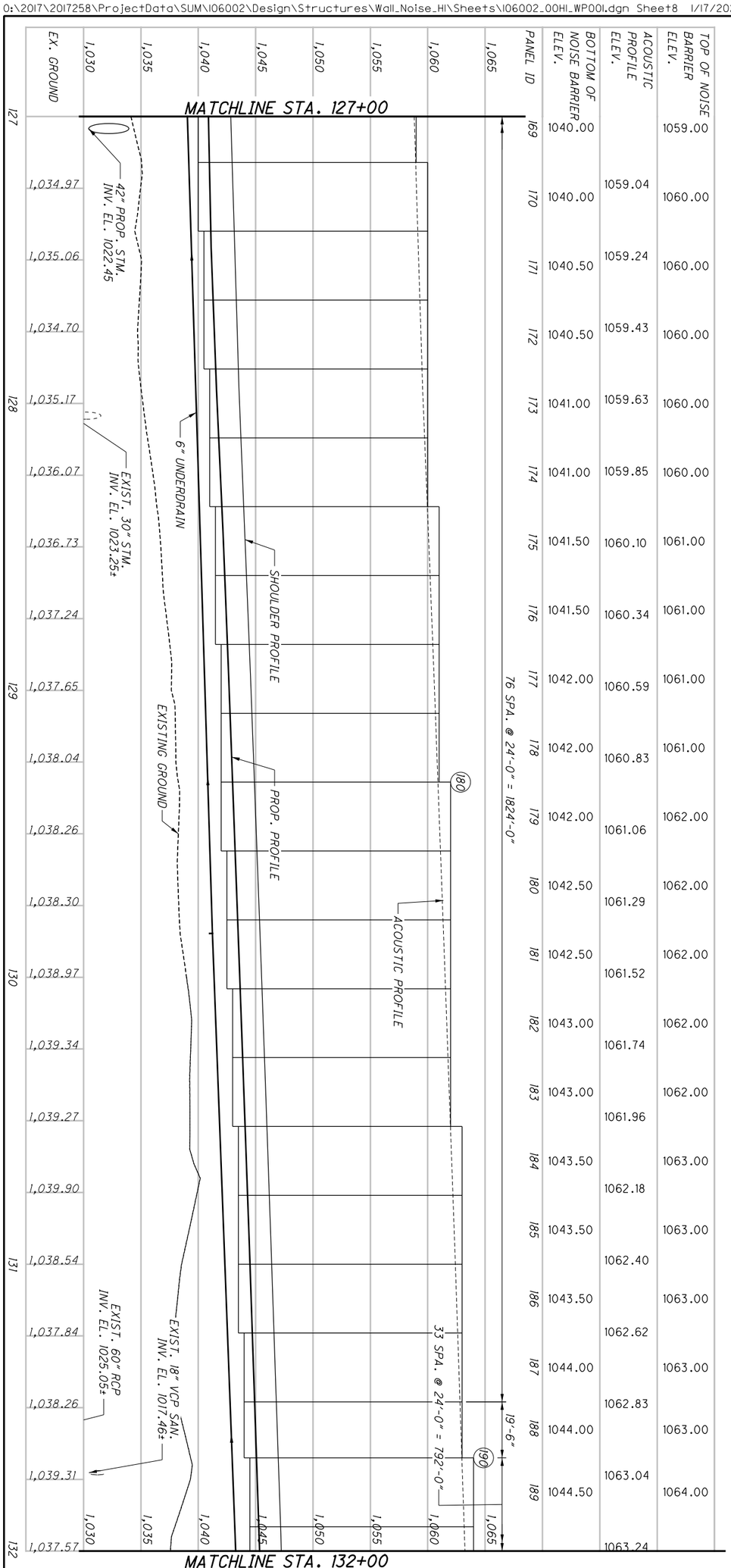


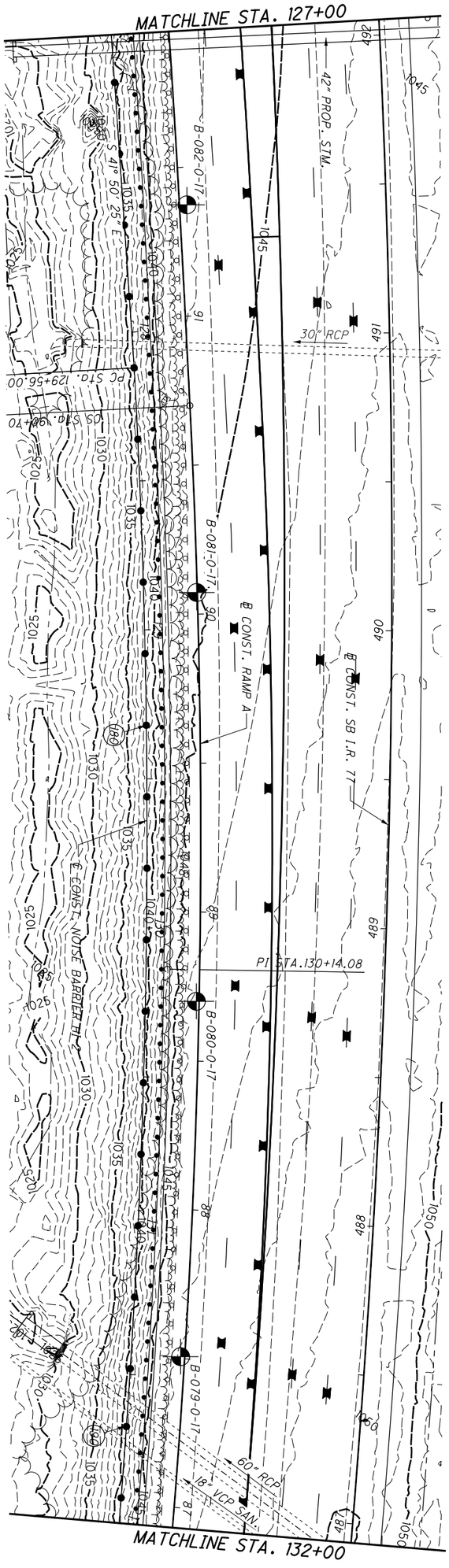


| | | | | |
|---|---|---|---|---|
| 1121 / 1288 | SUM-77 / 277 / 224 | PLAN AND PROFILE - NOISE BARRIER HI-2<br>STA. 127+00.00 TO STA. 132+00.00 | CALCULATED RHC<br>CHECKED DJC | 0 20<br>10 40<br>HORIZONTAL SCALE IN FEET |

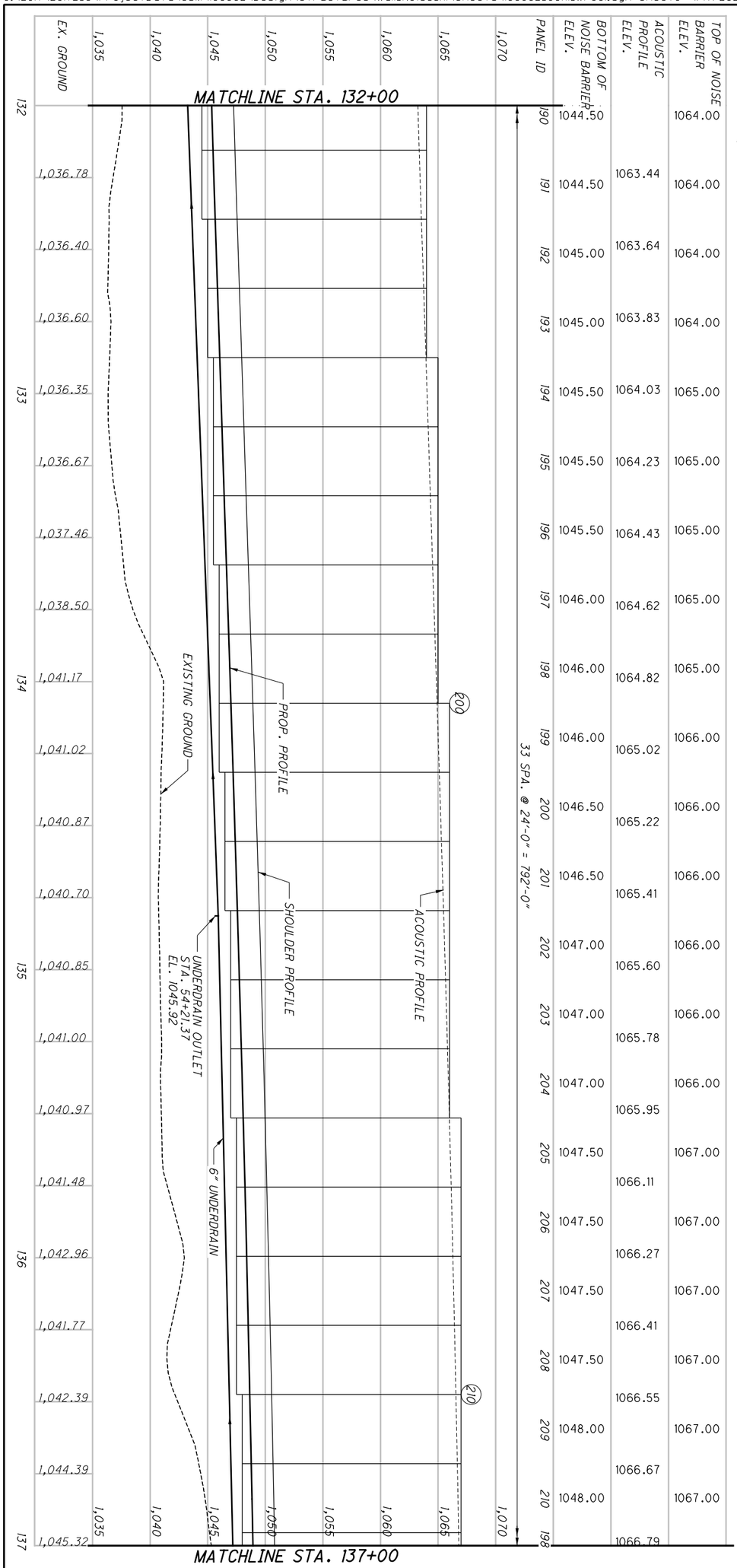


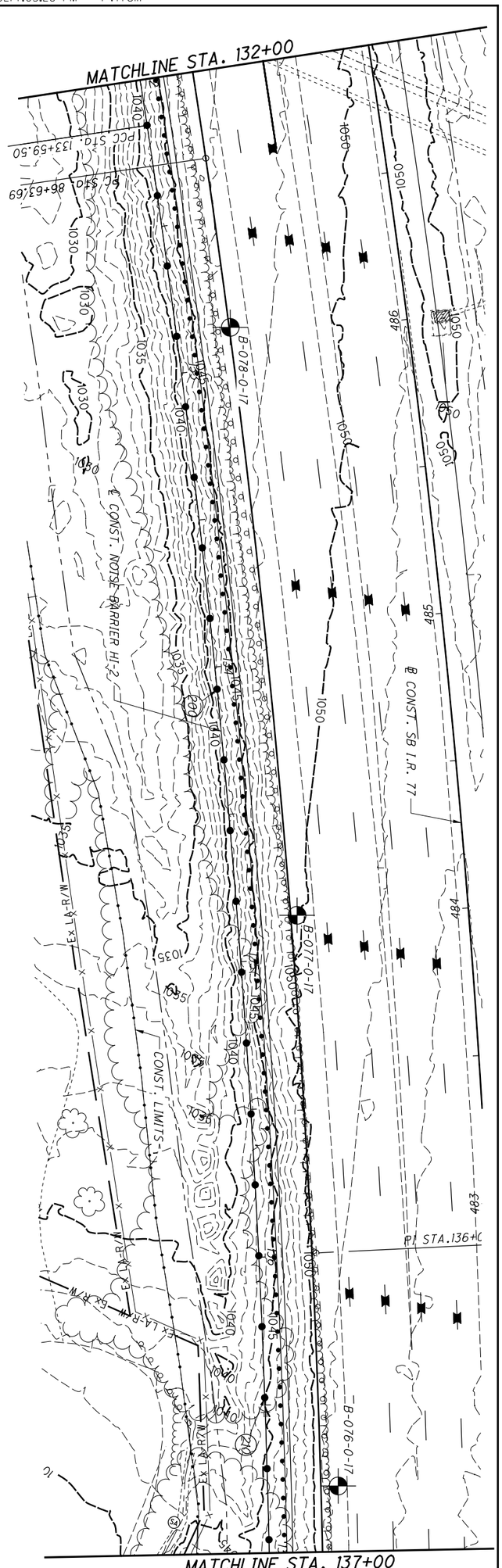


| | | | | |
|---|---|---|---|---|
| 1122 / 1288 | SUM-77 / 277 / 224 | PLAN AND PROFILE - NOISE BARRIER HI-2<br>STA. 132+00.00 TO STA. 137+00.00 | CALCULATED RHC<br>CHECKED DJC | 0 20<br>10 40<br>HORIZONTAL SCALE IN FEET |

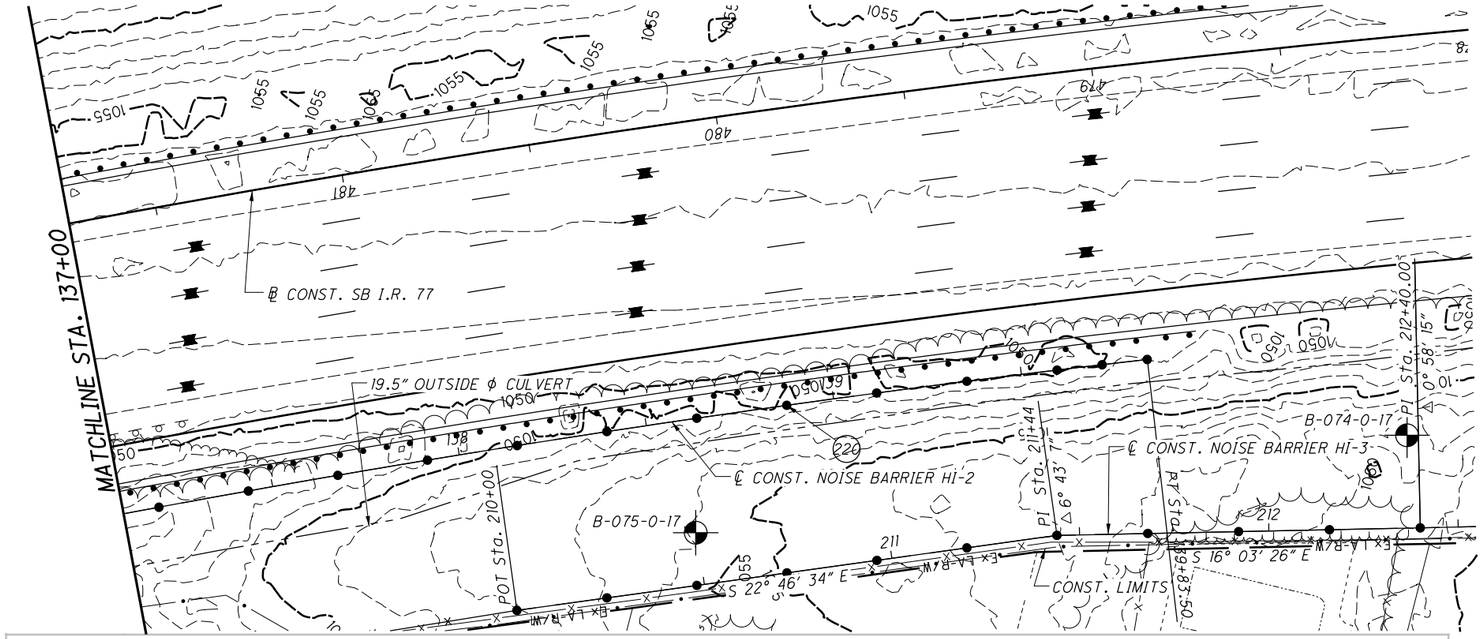


| | | | | | | | | | | | | | |
|---|---|---|---|---|---|---|---|---|---|---|---|---|---|
| TOP OF NOISE BARRIER ELEV. | 1067.00 | 1067.00 | 1068.00 | 1068.00 | 1068.00 | 1068.00 | 1068.00 | 1068.00 | 1068.00 | 1068.00 | 1068.00 | 1064.00 | 1060.00 |
| ACOUSTIC PROFILE ELEV. | | 1066.90 | 1067.01 | 1067.10 | 1067.18 | 1067.26 | 1067.33 | 1067.39 | 1067.44 | 1067.48 | 1067.51 | 1067.54 | |
| BOTTOM OF NOISE BARRIER ELEV. | 1048.00 | 1048.00 | 1048.00 | 1048.00 | 1048.00 | 1048.00 | 1048.00 | 1048.00 | 1048.00 | 1048.00 | 1048.00 | 1049.00 | 1049.00 |
| PANEL ID | 211 | 212 | 213 | 214 | 215 | 216 | 217 | 218 | 219 | 220 | 221 | 222 | 223 |

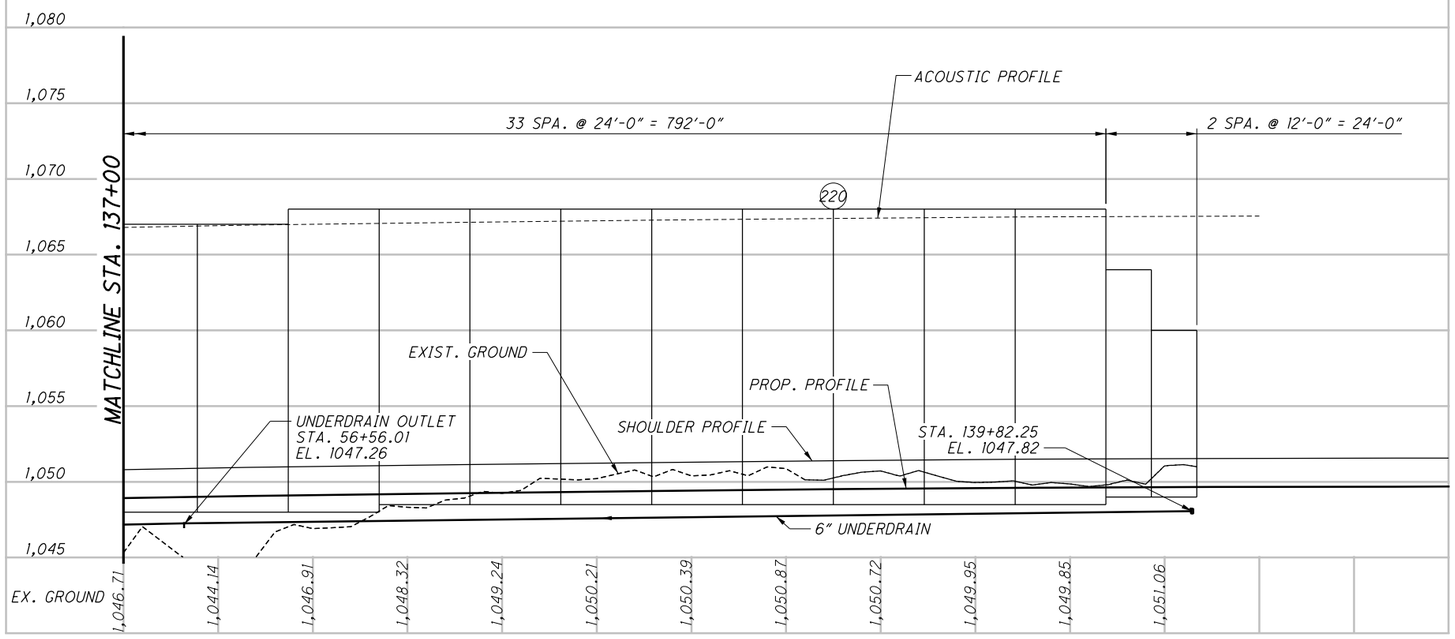


0:\2017\2017258\ProjectData\SUM\06002\Design\Structures\Wall_Noise_HI\Sheets\106002_OOHL_WP001.dgn Sheet10 1/17/2021 7:05:29 PM rvitelli

HORIZONTAL SCALE IN FEET
0 10 20 40

CALCULATED RHC
CHECKED DJC

PLAN AND PROFILE - NOISE BARRIER HI
STA. 137+00.00 TO STA. END WALL HI-2

SUM-77 / 277 / 224

1123
1288

| | | | | | | | | | | | | | | | | | | | | | | |
|---|---|---|---|---|---|---|---|---|---|---|---|---|---|---|---|---|---|---|---|---|---|---|
| TOP OF NOISE BARRIER ELEV. | | | | 1069.00 | 1070.00 | 1071.00 | 1072.00 | 1072.00 | 1073.00 | 1073.00 | 1074.00 | 1074.00 | 1075.00 | 1075.00 | 1076.00 | 1076.00 | 1077.00 | 1077.00 | 1078.00 | 1079.00 | | |
| ACOUSTIC PROFILE ELEV. | | | | 1068.16 | 1068.91 | 1069.66 | 1070.58 | 1071.33 | 1072.07 | 1072.73 | 1073.26 | 1073.79 | 1074.31 | 1074.84 | 1075.22 | 1075.75 | 1076.28 | 1076.81 | 1077.34 | 1077.87 | | |
| BOTTOM OF NOISE BARRIER ELEV. | | | | 1051.50 | 1052.00 | 1052.50 | 1053.50 | 1054.50 | 1055.00 | 1055.50 | 1056.00 | 1056.50 | 1057.00 | 1057.50 | 1058.00 | 1058.50 | 1059.00 | 1060.00 | 1060.50 | 1061.00 | | |
| PANEL ID | | | | 224 | 225 | 226 | 227 | 228 | 229 | 230 | 231 | 232 | 233 | 234 | 235 | 236 | 237 | 238 | 239 | 240 | | |




| | | | | | | | | | | | | | | | | | | | | | | |
|---|---|---|---|---|---|---|---|---|---|---|---|---|---|---|---|---|---|---|---|---|---|---|
| EX. GROUND | | | | 1051.69 | 1052.92 | 1054.00 | 1054.88 | 1055.33 | 1056.03 | 1057.02 | 1057.46 | 1057.97 | 1058.33 | 1058.39 | 1058.64 | 1059.05 | 1059.61 | 1060.30 | 1060.96 | 1061.51 | | |
| | | | | 210 | | | | 211 | | | | 212 | | | | 213 | | | | 214 | | |

HORIZONTAL SCALE IN FEET
0 10 20 40

CALCULATED RHC
CHECKED DJC

# PLAN AND PROFILE - NOISE BARRIER HI-3
## BEGIN WALL TO STA. 214+00.00

SUM-77 / 277 / 224

1123A
1288

O:\2017\2017258\ProjectData\SUM\06002\Design\Structures\Wall_Noise_HI\Sheets\06002_OOHI_WP001.dgn Sheet10A 1/17/2021 7:05:31 PM rvitelli

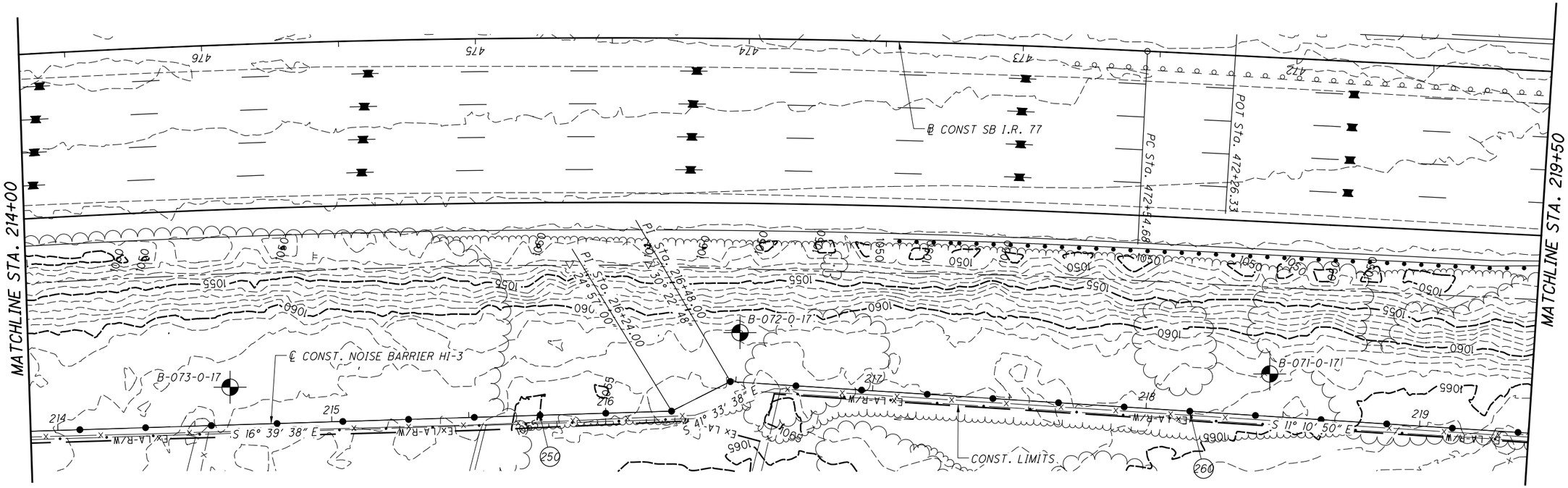


| | | | | | | | | | | | | | | | | | | | | | | | | |
|---|---|---|---|---|---|---|---|---|---|---|---|---|---|---|---|---|---|---|---|---|---|---|---|---|
| TOP OF NOISE BARRIER ELEV. | 1079.00 | 1079.00 | 1080.00 | 1080.00 | 1081.00 | 1081.00 | 1081.00 | 1081.00 | 1081.00 | 1081.00 | 1081.00 | 1081.00 | 1081.00 | 1081.00 | 1081.00 | 1081.00 | 1081.00 | 1081.00 | 1082.00 | 1082.00 | 1083.00 | 1083.00 | 1084.00 | |
| ACOUSTIC PROFILE ELEV. | 1078.40 | 1078.93 | 1079.46 | 1079.82 | 1079.94 | 1080.05 | 1080.17 | 1080.29 | 1080.40 | 1080.38 | 1080.17 | 1079.95 | 1079.74 | 1079.52 | 1079.30 | 1079.44 | 1080.12 | 1080.80 | 1081.48 | 1082.16 | 1082.84 | 1083.52 | | |
| BOTTOM OF NOISE BARRIER ELEV. | 1061.50 | 1062.00 | 1062.50 | 1063.00 | 1063.00 | 1063.00 | 1063.50 | 1063.50 | 1063.50 | 1063.50 | 1063.50 | 1063.00 | 1063.00 | 1062.50 | 1062.50 | 1062.50 | 1062.50 | 1063.00 | 1064.00 | 1064.50 | 1065.00 | 1066.00 | 1066.50 | |
| PANEL ID | 241 | 242 | 243 | 244 | 245 | 246 | 247 | 248 | 249 | 250 | 251 | 252 | 253 | 254 | 255 | 256 | 257 | 258 | 259 | 260 | 261 | 262 | 263 | |

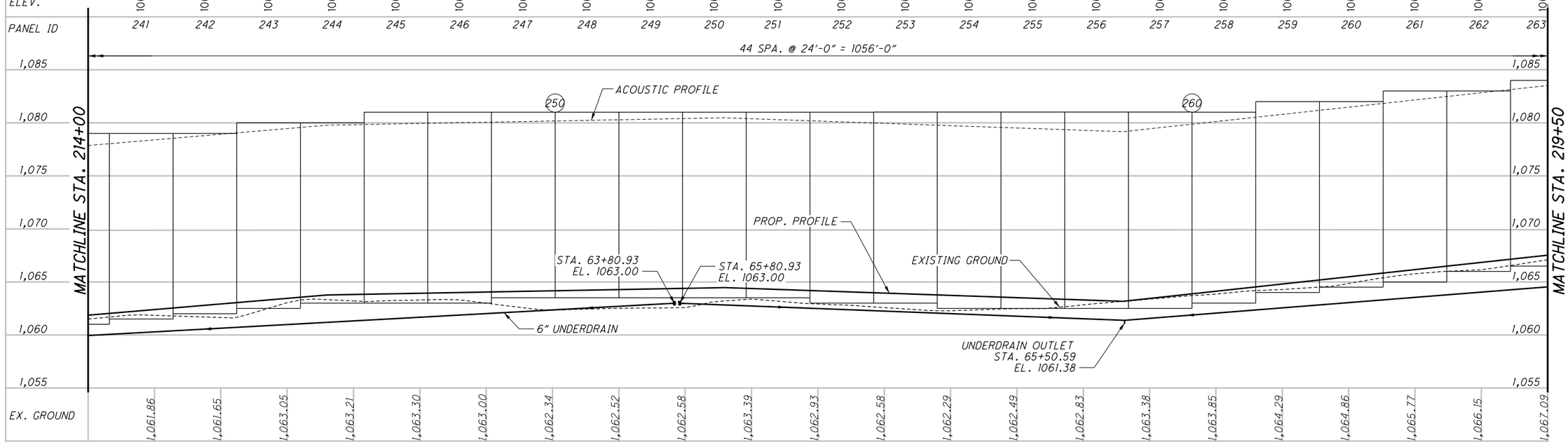


| | | | | | | | | | | | | | | | | | | | | | | | | |
|---|---|---|---|---|---|---|---|---|---|---|---|---|---|---|---|---|---|---|---|---|---|---|---|---|
| EX. GROUND | 1,061.86 | 1,061.65 | 1,063.05 | 1,063.21 | 1,063.30 | 1,063.00 | 1,062.34 | 1,062.52 | 1,062.58 | 1,063.39 | 1,062.93 | 1,062.58 | 1,062.29 | 1,062.49 | 1,062.83 | 1,063.38 | 1,063.85 | 1,064.29 | 1,064.86 | 1,065.77 | 1,066.15 | 1,067.09 | | |
| | 214 | | | 215 | | | 216 | | | 217 | | | 218 | | | 219 | | | | | | | | |

HORIZONTAL SCALE IN FEET
0 10 20 40

CALCULATED RHC
CHECKED DJC

# PLAN AND PROFILE - NOISE BARRIER HI-3
## STA. 214+00.00 TO STA. 219+50.00

SUM-77/277/224

1124
1288

O:\2017\2017258\ProjectData\SUM\06002\Design\Structures\Wall_Noise_HI\Sheets\06002_00HI_WP001.dgn SheetHI 1/17/2021 7:05:32 PM rvitelli

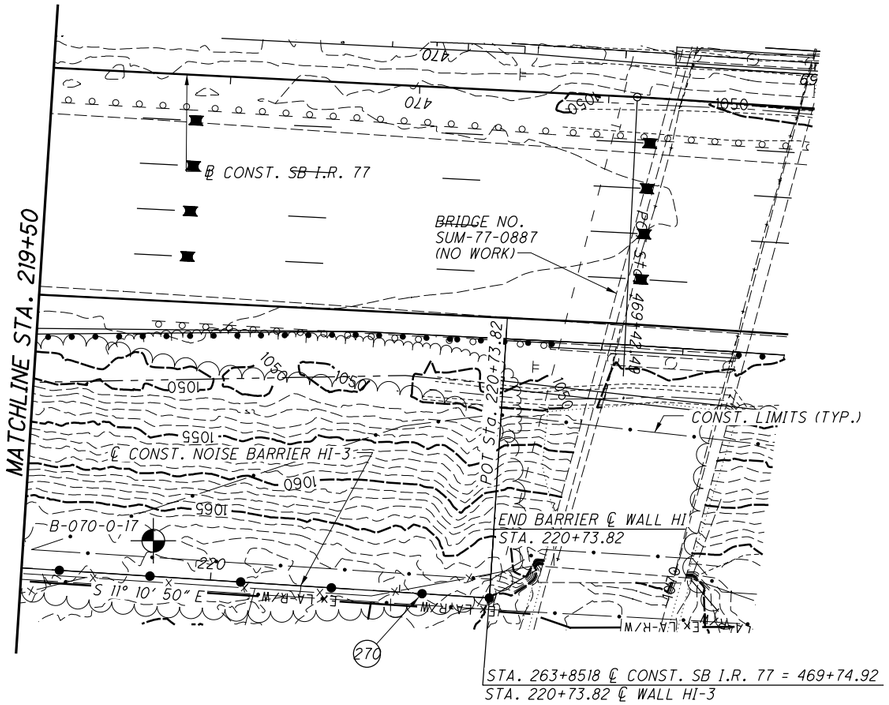


| | | | | | |
|---|---|---|---|---|---|
| TOP OF NOISE BARRIER ELEV. | 1085.00 | 1086.00 | 1086.00 | 1086.00 | 1086.00 |
| ACOUSTIC PROFILE ELEV. | 1084.18 | 1084.82 | 1085.01 | 1084.52 | |
| BOTTOM OF NOISE BARRIER ELEV. | 1067.00 | 1067.50 | 1068.00 | 1067.50 | 1067.50 |
| PANEL ID | 264 | 265 | 266 | 267 | 268 |

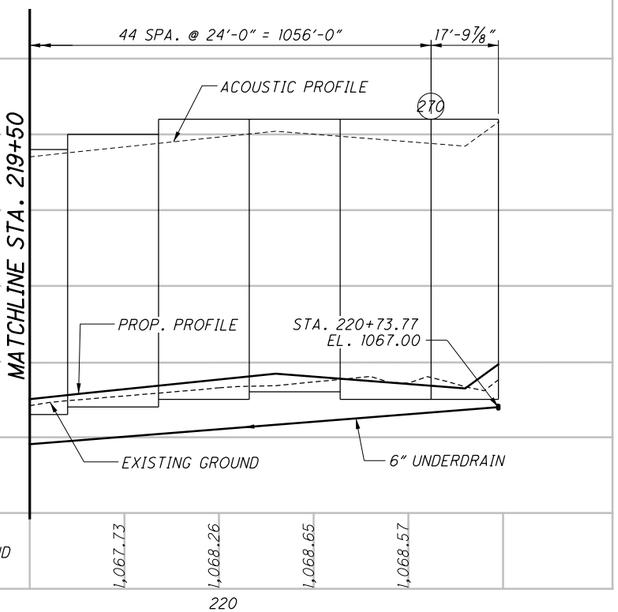


| | | | | | |
|---|---|---|---|---|---|
| EX. GROUND | 1,067.73 | 1,068.26 | 1,068.65 | 1,068.57 | |

220

# PLAN AND PROFILE - NOISE BARRIER HI-3
## STA. 219+50.00 TO END WALL HI-3

CALCULATED RHC
CHECKED DJC

HORIZONTAL SCALE IN FEET
0 10 20 40

SUM-77 / 277 / 224

1125
1288

O:\2017\20172581\ProjectData\SUM\106002\Design\Structures\Wall_Noise_HI\Sheets\106002_00HI_WP001.dgn Sheet12 1/17/2021 7:05:33 PM rvitelli

| PANEL NO. | DRILLED SHAFT NO. | POST TYPE | WORKPOINT STATION | DRILLED SHAFT NO. | POST TYPE | WORKPOINT STATION | TOP OF WALL | BOTTOM OF WALL | LENGTH OF PANEL (LFT) | HEIGHT OF PANEL (LFT) | 606 SPECIAL - NOISE BARRIER (REFLECTIVE) SF |
|---|---|---|---|---|---|---|---|---|---|---|---|
| 1 | 1 | B-16" | 10+00.00 | 2 | A-16" | 10+12.00 | 1065.0 | 1056.50 | 12.00 | 8.5 | 102 |
| 2 | 2 | A-16" | 10+12.00 | 3 | A-16" | 10+24.00 | 1069.0 | 1057.00 | 12.00 | 12.0 | 144 |
| 3 | 3 | A-16" | 10+24.00 | 4 | A-20" | 10+36.00 | 1073.0 | 1057.50 | 12.00 | 15.5 | 186 |
| 4 | 4 | A-20" | 10+36.00 | 5 | A-20" | 10+60.00 | 1077.0 | 1058.00 | 24.00 | 19.0 | 456 |
| 5 | 5 | A-20" | 10+60.00 | 6 | A-20" | 10+84.00 | 1078.0 | 1058.50 | 24.00 | 19.5 | 468 |
| 6 | 6 | A-20" | 10+84.00 | 7 | A-20" | 11+08.00 | 1079.0 | 1059.50 | 24.00 | 19.5 | 468 |
| 7 | 7 | A-20" | 11+08.00 | 8 | A-20" | 11+32.00 | 1080.0 | 1060.00 | 24.00 | 20.0 | 480 |
| 8 | 8 | A-20" | 11+32.00 | 9 | A-20" | 11+56.00 | 1081.0 | 1061.00 | 24.00 | 20.0 | 480 |
| 9 | 9 | A-20" | 11+56.00 | 10 | A-20" | 11+80.00 | 1082.0 | 1062.00 | 24.00 | 20.0 | 480 |
| 10 | 10 | A-20" | 11+80.00 | 11 | A-20" | 12+04.00 | 1082.0 | 1062.50 | 24.00 | 19.5 | 468 |
| 11 | 11 | A-20" | 12+04.00 | 12 | A-20" | 12+28.00 | 1083.0 | 1063.50 | 24.00 | 19.5 | 468 |
| 12 | 12 | A-20" | 12+28.00 | 13 | A-20" | 12+52.00 | 1084.0 | 1064.00 | 24.00 | 20.0 | 480 |
| 13 | 13 | A-20" | 12+52.00 | 14 | A-20" | 12+76.00 | 1085.0 | 1065.00 | 24.00 | 20.0 | 480 |
| 14 | 14 | A-20" | 12+76.00 | 15 | A-20" | 13+00.00 | 1086.0 | 1066.00 | 24.00 | 20.0 | 480 |
| 15 | 15 | A-20" | 13+00.00 | 16 | A-20" | 13+24.00 | 1086.0 | 1067.00 | 24.00 | 19.0 | 456 |
| 16 | 16 | A-20" | 13+24.00 | 17 | A-20" | 13+48.00 | 1087.0 | 1067.50 | 24.00 | 19.5 | 468 |
| 17 | 17 | A-20" | 13+48.00 | 18 | A-20" | 13+72.00 | 1088.0 | 1068.50 | 24.00 | 19.5 | 468 |
| 18 | 18 | A-20" | 13+72.00 | 19 | A-20" | 13+96.00 | 1088.0 | 1069.50 | 24.00 | 18.5 | 444 |
| 19 | 19 | A-20" | 13+96.00 | 20 | A-20" | 14+20.00 | 1089.0 | 1070.50 | 24.00 | 18.5 | 444 |
| 20 | 20 | A-20" | 14+20.00 | 21 | A-20" | 14+44.00 | 1090.0 | 1071.50 | 24.00 | 18.5 | 444 |
| 21 | 21 | A-20" | 14+44.00 | 22 | A-20" | 14+65.00 | 1091.0 | 1072.00 | 21.00 | 19.0 | 399 |
| 22 | 22 | A-20" | 14+65.00 | 23 | A-20" | 14+86.00 | 1091.0 | 1072.50 | 21.00 | 18.5 | 388.5 |
| 23 | 23 | A-20" | 14+86.00 | 24 | A-20" | 15+07.00 | 1092.0 | 1073.00 | 21.00 | 19.0 | 399 |
| 24 | 24 | A-20" | 15+07.00 | 25 | A-20" | 15+28.00 | 1093.0 | 1074.00 | 21.00 | 19.0 | 399 |
| 25 | 25 | A-20" | 15+28.00 | 26 | A-20" | 15+52.00 | 1093.0 | 1074.50 | 24.00 | 18.5 | 444 |
| 26 | 26 | A-20" | 15+52.00 | 27 | A-20" | 15+76.00 | 1094.0 | 1075.50 | 24.00 | 18.5 | 444 |
| 27 | 27 | A-20" | 15+76.00 | 28 | A-20" | 16+00.00 | 1094.0 | 1076.00 | 24.00 | 18.0 | 432 |
| 28 | 28 | A-20" | 16+00.00 | 29 | A-20" | 16+24.00 | 1095.0 | 1076.50 | 24.00 | 18.5 | 444 |
| 29 | 29 | A-20" | 16+24.00 | 30 | A-20" | 16+48.00 | 1096.0 | 1077.00 | 24.00 | 19.0 | 456 |
| 30 | 30 | A-20" | 16+48.00 | 31 | A-20" | 16+72.00 | 1096.0 | 1078.00 | 24.00 | 18.0 | 432 |
| 31 | 31 | A-20" | 16+72.00 | 32 | A-20" | 16+96.00 | 1097.0 | 1078.50 | 24.00 | 18.5 | 444 |
| 32 | 32 | A-20" | 16+96.00 | 33 | A-20" | 17+20.00 | 1097.0 | 1079.00 | 24.00 | 18.0 | 432 |
| 33 | 33 | A-20" | 17+20.00 | 34 | A-20" | 17+44.00 | 1098.0 | 1079.50 | 24.00 | 18.5 | 444 |
| 34 | 34 | A-20" | 17+44.00 | 35 | A-20" | 17+68.00 | 1099.0 | 1080.50 | 24.00 | 18.5 | 444 |
| 35 | 35 | A-20" | 17+68.00 | 36 | A-20" | 17+92.00 | 1100.0 | 1081.00 | 24.00 | 19.0 | 456 |
| 36 | 36 | A-20" | 17+92.00 | 37 | D-20" | 18+16.00 | 1101.0 | 1081.50 | 24.00 | 19.5 | 468 |
| 37 | 37 | D-20" | 18+16.00 | 38 | A-16" | 18+32.00 | 1102.0 | 1082.00 | 16.00 | 20.0 | 320 |
| 38 | 38 | A-16" | 18+32.00 | 39 | A-16" | 18+48.00 | 1103.0 | 1083.50 | 16.00 | 19.5 | 312 |
| 39 | 39 | A-16" | 18+48.00 | 40 | A-16" | 18+60.00 | 1104.0 | 1085.00 | 12.00 | 19.0 | 228 |
| 40 | 40 | A-16" | 18+60.00 | 41 | A-16" | 18+72.00 | 1105.0 | 1086.00 | 12.00 | 19.0 | 228 |
| 41 | 41 | A-16" | 18+72.00 | 42 | A-16" | 18+84.00 | 1106.0 | 1087.00 | 12.00 | 19.0 | 228 |
| 42 | 42 | A-16" | 18+84.00 | 43 | A-16" | 18+96.00 | 1107.0 | 1088.50 | 12.00 | 18.5 | 222 |
| 43 | 43 | A-16" | 18+96.00 | 44 | A-16" | 19+08.00 | 1108.0 | 1089.50 | 12.00 | 18.5 | 222 |
| 44 | 44 | A-16" | 19+08.00 | 45 | D-20" | 19+20.00 | 1109.0 | 1091.00 | 12.00 | 18.0 | 216 |
| 45 | 45 | D-20" | 19+20.00 | 46 | A-20" | 19+44.00 | 1110.0 | 1092.00 | 24.00 | 18.0 | 432 |
| 46 | 46 | A-20" | 19+44.00 | 47 | A-20" | 19+68.00 | 1111.0 | 1093.50 | 24.00 | 17.5 | 420 |
| 47 | 47 | A-20" | 19+68.00 | 48 | A-20" | 19+92.00 | 1112.0 | 1094.00 | 24.00 | 18.0 | 432 |
| 48 | 48 | A-20" | 19+92.00 | 49 | A-20" | 20+16.00 | 1113.0 | 1095.00 | 24.00 | 18.0 | 432 |
| 49 | 49 | A-20" | 20+16.00 | 50 | A-20" | 20+40.00 | 1114.0 | 1096.00 | 24.00 | 18.0 | 432 |
| 50 | 50 | A-20" | 20+40.00 | 51 | A-20" | 20+64.00 | 1115.0 | 1097.00 | 24.00 | 18.0 | 432 |

| PANEL NO. | DRILLED SHAFT NO. | POST TYPE | WORKPOINT STATION | DRILLED SHAFT NO. | POST TYPE | WORKPOINT STATION | TOP OF WALL | BOTTOM OF WALL | LENGTH OF PANEL (LFT) | HEIGHT OF PANEL (LFT) | 606 SPECIAL - NOISE BARRIER (REFLECTIVE) SF |
|---|---|---|---|---|---|---|---|---|---|---|---|
| 51 | 51 | A-20" | 20+64.00 | 52 | A-20" | 20+88.00 | 1116.0 | 1097.50 | 24.00 | 18.5 | 444 |
| 52 | 52 | A-20" | 20+88.00 | 53 | A-20" | 21+12.00 | 1117.0 | 1098.50 | 24.00 | 18.5 | 444 |
| 53 | 53 | A-20" | 21+12.00 | 54 | A-20" | 21+36.00 | 1117.0 | 1099.50 | 24.00 | 17.5 | 420 |
| 54 | 54 | A-20" | 21+36.00 | 55 | A-20" | 21+60.00 | 1118.0 | 1100.00 | 24.00 | 18.0 | 432 |
| 55 | 55 | A-20" | 21+60.00 | 56 | A-20" | 21+84.00 | 1118.0 | 1100.50 | 24.00 | 17.5 | 420 |
| 56 | 56 | A-20" | 21+84.00 | 57 | A-16" | 22+00.00 | 1118.0 | 1100.50 | 16.00 | 17.5 | 280 |
| 57 | 57 | A-16" | 22+00.00 | 58 | A-20" | 22+16.00 | 1119.0 | 1101.00 | 16.00 | 18.0 | 288 |
| 58 | 58 | A-20" | 22+16.00 | 59 | A-20" | 22+40.00 | 1119.0 | 1101.50 | 24.00 | 17.5 | 420 |
| 59 | 59 | A-20" | 22+40.00 | 60 | A-20" | 22+64.00 | 1119.0 | 1101.50 | 24.00 | 17.5 | 420 |
| 60 | 60 | A-20" | 22+64.00 | 61 | A-20" | 22+88.00 | 1119.0 | 1101.50 | 24.00 | 17.5 | 420 |
| 61 | 61 | A-20" | 22+88.00 | 62 | A-20" | 23+12.00 | 1119.0 | 1101.50 | 24.00 | 17.5 | 420 |
| 62 | 62 | A-20" | 23+12.00 | 63 | A-20" | 23+36.00 | 1119.0 | 1101.50 | 24.00 | 17.5 | 420 |
| 63 | 63 | A-20" | 23+36.00 | 64 | A-20" | 23+60.00 | 1119.0 | 1101.50 | 24.00 | 17.5 | 420 |
| 64 | 64 | A-20" | 23+60.00 | 65 | A-20" | 23+84.00 | 1120.0 | 1102.00 | 24.00 | 18.0 | 432 |
| 65 | 65 | A-20" | 23+84.00 | 66 | A-20" | 24+08.00 | 1120.0 | 1102.50 | 24.00 | 17.5 | 420 |
| 66 | 66 | A-20" | 24+08.00 | 67 | A-20" | 24+32.00 | 1120.0 | 1103.00 | 24.00 | 17.0 | 408 |
| 67 | 67 | A-20" | 24+32.00 | 68 | A-20" | 24+56.00 | 1121.0 | 1103.00 | 24.00 | 18.0 | 432 |
| 68 | 68 | A-20" | 24+56.00 | 69 | A-20" | 24+80.00 | 1122.0 | 1103.50 | 24.00 | 18.5 | 444 |
| 69 | 69 | A-20" | 24+80.00 | 70 | A-20" | 25+04.00 | 1123.0 | 1104.00 | 24.00 | 19.0 | 456 |
| 70 | 70 | A-20" | 25+04.00 | 71 | A-20" | 25+28.00 | 1124.0 | 1105.50 | 24.00 | 18.5 | 444 |
| 71 | 71 | A-20" | 25+28.00 | 72 | A-20" | 25+52.00 | 1125.0 | 1106.50 | 24.00 | 18.5 | 444 |
| 72 | 72 | A-20" | 25+52.00 | 73 | A-20" | 25+76.00 | 1126.0 | 1108.00 | 24.00 | 18.0 | 432 |
| 73 | 73 | A-20" | 25+76.00 | 74 | A-20" | 26+00.00 | 1127.0 | 1109.00 | 24.00 | 18.0 | 432 |
| 74 | 74 | A-20" | 26+00.00 | 75 | A-20" | 26+24.00 | 1127.0 | 1109.50 | 24.00 | 17.5 | 420 |
| 75 | 75 | A-20" | 26+24.00 | 76 | A-20" | 26+48.00 | 1128.0 | 1110.00 | 24.00 | 18.0 | 432 |
| 76 | 76 | A-20" | 26+48.00 | 77 | A-20" | 26+72.00 | 1128.0 | 1110.50 | 24.00 | 17.5 | 420 |
| 77 | 77 | A-20" | 26+72.00 | 78 | A-20" | 26+96.00 | 1128.0 | 1110.50 | 24.00 | 17.5 | 420 |
| 78 | 78 | A-20" | 26+96.00 | 79 | A-20" | 27+20.00 | 1129.0 | 1111.00 | 24.00 | 18.0 | 432 |
| 79 | 79 | A-20" | 27+20.00 | 80 | A-20" | 27+44.00 | 1129.0 | 1111.50 | 24.00 | 17.5 | 420 |
| 80 | 80 | A-20" | 27+44.00 | 81 | A-20" | 27+68.00 | 1129.0 | 1111.50 | 24.00 | 17.5 | 420 |
| 81 | 81 | A-20" | 27+68.00 | 82 | A-20" | 27+92.00 | 1129.0 | 1112.00 | 24.00 | 17.0 | 408 |
| 82 | 82 | A-20" | 27+92.00 | 83 | A-20" | 28+16.00 | 1130.0 | 1112.50 | 24.00 | 17.5 | 420 |
| 83 | 83 | A-20" | 28+16.00 | 84 | A-20" | 28+40.00 | 1130.0 | 1112.50 | 24.00 | 17.5 | 420 |
| 84 | 84 | A-20" | 28+40.00 | 85 | A-20" | 28+64.00 | 1130.0 | 1112.50 | 24.00 | 17.5 | 420 |
| 85 | 85 | A-20" | 28+64.00 | 86 | A-20" | 28+88.00 | 1130.0 | 1112.50 | 24.00 | 17.5 | 420 |
| 86 | 86 | A-20" | 28+88.00 | 87 | A-20" | 29+12.00 | 1130.0 | 1112.50 | 24.00 | 17.5 | 420 |
| 87 | 87 | A-20" | 29+12.00 | 88 | A-20" | 29+36.00 | 1131.0 | 1113.00 | 24.00 | 18.0 | 432 |
| 88 | 88 | A-20" | 29+36.00 | 89 | A-20" | 29+60.00 | 1131.0 | 1113.50 | 24.00 | 17.5 | 420 |
| 89 | 89 | A-20" | 29+60.00 | 90 | A-20" | 29+84.00 | 1132.0 | 1114.00 | 24.00 | 18.0 | 432 |
| 90 | 90 | A-20" | 29+84.00 | 91 | A-20" | 30+08.00 | 1132.0 | 1114.50 | 24.00 | 17.5 | 420 |
| 91 | 91 | A-20" | 30+08.00 | 92 | A-20" | 30+32.00 | 1133.0 | 1115.00 | 24.00 | 18.0 | 432 |
| 92 | 92 | A-20" | 30+32.00 | 93 | A-20" | 30+56.00 | 1133.0 | 1115.50 | 24.00 | 17.5 | 420 |
| 93 | 93 | A-20" | 30+56.00 | 94 | A-20" | 30+80.00 | 1133.0 | 1115.50 | 24.00 | 17.5 | 420 |
| 94 | 94 | A-20" | 30+80.00 | 95 | A-20" | 31+04.00 | 1133.0 | 1115.50 | 24.00 | 17.5 | 420 |
| 95 | 95 | A-20" | 31+04.00 | 96 | A-20" | 31+28.00 | 1133.0 | 1115.50 | 24.00 | 17.5 | 420 |
| 96 | 96 | A-20" | 31+28.00 | 97 | A-20" | 31+52.00 | 1133.0 | 1115.50 | 24.00 | 17.5 | 420 |
| 97 | 97 | A-20" | 31+52.00 | 98 | A-20" | 31+76.00 | 1133.0 | 1115.00 | 24.00 | 18.0 | 432 |
| 98 | 98 | A-20" | 31+76.00 | 99 | A-20" | 32+00.00 | 1133.0 | 1115.00 | 24.00 | 18.0 | 432 |
| 99 | 99 | A-20" | 32+00.00 | 100 | A-20" | 32+24.00 | 1134.0 | 1116.00 | 24.00 | 18.0 | 432 |
| 100 | 100 | A-20" | 32+24.00 | 101 | A-20" | 32+48.00 | 1134.0 | 1116.50 | 24.00 | 17.5 | 420 |
| 101 | 101 | A-20" | 32+48.00 | 102 | B-20" | 32+72.00 | 1134.0 | 1116.50 | 24.00 | 17.5 | 420 |
| | | | | | | | | | | | |
| | | | | | | | | | | TOTAL | 41282 |

CALCULATED RFV
CHECKED TJW

# SUMMARY - NOISE WALL K

## CALCULATIONS

SUM-77 / 277 / 224

1126
1288

O:\2017\2017258\ProjectData\SUM\106002\Design\Structures\Wall_Noise_K\Sheets\106002_00K_WS001.dgn Sheet 1/17/2021 7:05:35 PM rvitelli

| NOISE WALL K | | | |
|---|---|---|---|
| DRILLED SHAFT NO. | WORKPOINT STATION | TOP OF DRILLED SHAFT ELEVATION | SHAFT LENGTH (FEET) |
| 1 | 10+00.00 | 1056.27 | 7 |
| 2 | 10+12.00 | 1056.22 | 7 |
| 3 | 10+24.00 | 1056.69 | 7 |
| 4 | 10+36.00 | 1057.07 | 10 |
| 5 | 10+60.00 | 1057.57 | 10 |
| 6 | 10+84.00 | 1058.07 | 10 |
| 7 | 11+08.00 | 1059.07 | 10 |
| 8 | 11+32.00 | 1059.57 | 10 |
| 9 | 11+56.00 | 1060.57 | 10 |
| 10 | 11+80.00 | 1061.57 | 10 |
| 11 | 12+04.00 | 1062.07 | 10 |
| 12 | 12+28.00 | 1063.07 | 10 |
| 13 | 12+52.00 | 1063.57 | 10 |
| 14 | 12+76.00 | 1064.57 | 10 |
| 15 | 13+00.00 | 1065.55 | 10 |
| 16 | 13+24.00 | 1066.57 | 10 |
| 17 | 13+48.00 | 1067.07 | 10 |
| 18 | 13+72.00 | 1068.07 | 15 |
| 19 | 13+96.00 | 1069.07 | 15 |
| 20 | 14+20.00 | 1070.05 | 15 |
| 21 | 14+44.00 | 1071.07 | 15 |
| 22 | 14+65.00 | 1071.57 | 15 |
| 23 | 14+86.00 | 1072.07 | 15 |
| 24 | 15+07.00 | 1072.57 | 15 |
| 25 | 15+28.00 | 1073.57 | 15 |
| 26 | 15+52.00 | 1074.07 | 15 |
| 27 | 15+76.00 | 1075.07 | 15 |
| 28 | 16+00.00 | 1075.57 | 15 |
| 29 | 16+24.00 | 1076.07 | 15 |
| 30 | 16+48.00 | 1076.57 | 15 |
| 31 | 16+72.00 | 1077.57 | 15 |
| 32 | 16+96.00 | 1078.07 | 15 |
| 33 | 17+20.00 | 1078.57 | 15 |
| 34 | 17+44.00 | 1079.07 | 15 |
| 35 | 17+68.00 | 1080.07 | 15 |
| 36 | 17+92.00 | 1080.57 | 15 |
| 37 | 18+16.00 | 1081.07 | 15 |
| 38 | 18+32.00 | 1081.57 | 15 |
| 39 | 18+48.00 | 1083.07 | 15 |
| 40 | 18+60.00 | 1084.57 | 10.5 |
| 41 | 18+72.00 | 1085.57 | 10.5 |
| 42 | 18+84.00 | 1086.57 | 10.5 |
| 43 | 18+96.00 | 1088.07 | 10.5 |
| 44 | 19+08.00 | 1089.07 | 10.5 |
| 45 | 19+20.00 | 1090.57 | 14* |
| 46 | 19+44.00 | 1091.57 | 14* |
| 47 | 19+68.00 | 1093.07 | 14* |
| 48 | 19+92.00 | 1093.57 | 16* |
| 49 | 20+16.00 | 1094.57 | 16* |
| 50 | 20+40.00 | 1095.57 | 16* |

| NOISE WALL K | | | |
|---|---|---|---|
| DRILLED SHAFT NO. | WORKPOINT STATION | TOP OF DRILLED SHAFT ELEVATION | SHAFT LENGTH (FEET) |
| 51 | 20+64.00 | 1096.57 | 18* |
| 52 | 20+88.00 | 1097.07 | 18* |
| 53 | 21+12.00 | 1098.07 | 14* |
| 54 | 21+36.00 | 1099.07 | 14* |
| 55 | 21+60.00 | 1099.57 | 14* |
| 56 | 21+84.00 | 1100.07 | 14* |
| 57 | 22+00.00 | 1100.07 | 14* |
| 58 | 22+16.00 | 1100.57 | 14* |
| 59 | 22+40.00 | 1101.07 | 14* |
| 60 | 22+64.00 | 1101.07 | 14* |
| 61 | 22+88.00 | 1101.07 | 14* |
| 62 | 23+12.00 | 1101.07 | 14* |
| 63 | 23+36.00 | 1101.07 | 14* |
| 64 | 23+60.00 | 1101.07 | 14* |
| 65 | 23+84.00 | 1101.57 | 14* |
| 66 | 24+08.00 | 1102.07 | 14* |
| 67 | 24+32.00 | 1102.57 | 14* |
| 68 | 24+56.00 | 1102.57 | 14* |
| 69 | 24+80.00 | 1103.07 | 14* |
| 70 | 25+04.00 | 1103.57 | 14* |
| 71 | 25+28.00 | 1105.07 | 19.5* |
| 72 | 25+52.00 | 1106.07 | 19.5* |
| 73 | 25+76.00 | 1107.57 | 19.5* |
| 74 | 26+00.00 | 1108.57 | 19.5* |
| 75 | 26+24.00 | 1109.07 | 19.5* |
| 76 | 26+48.00 | 1109.57 | 14.5 |
| 77 | 26+72.00 | 1110.07 | 14.5 |
| 78 | 26+96.00 | 1110.07 | 9.5 |
| 79 | 27+20.00 | 1110.57 | 9.5 |
| 80 | 27+44.00 | 1111.07 | 9.5 |
| 81 | 27+68.00 | 1111.07 | 9.5 |
| 82 | 27+92.00 | 1111.57 | 9.5 |
| 83 | 28+16.00 | 1112.07 | 9.5 |
| 84 | 28+40.00 | 1112.07 | 13 |
| 85 | 28+64.00 | 1112.07 | 13 |
| 86 | 28+88.00 | 1112.07 | 13 |
| 87 | 29+12.00 | 1112.07 | 13 |
| 88 | 29+36.00 | 1112.57 | 13 |
| 89 | 29+60.00 | 1113.07 | 13 |
| 90 | 29+84.00 | 1113.57 | 13 |
| 91 | 30+08.00 | 1114.07 | 9 |
| 92 | 30+32.00 | 1114.57 | 9 |
| 93 | 30+56.00 | 1115.07 | 9 |
| 94 | 30+80.00 | 1115.07 | 9 |
| 95 | 31+04.00 | 1115.07 | 9 |
| 96 | 31+28.00 | 1115.07 | 9 |
| 97 | 31+52.00 | 1114.57 | 9 |
| 98 | 31+76.00 | 1114.57 | 21* |
| 99 | 32+00.00 | 1114.57 | 21* |
| 100 | 32+24.00 | 1115.57 | 21* |
| 101 | 32+48.00 | 1116.19 | 21* |
| 102 | 32+72.00 | 1116.26 | 21* |

**LEGEND:**

* INCLUDES 5' ROCK SOCKET

CALCULATED RFV
CHECKED TJW

# DATA TABLES - NOISE WALL K

SUM-77/277/224

1127
1288

O:\2017\2017258\ProjectData\SUM\106002\Design\Structures\Wall_Noise_K\Sheets\106002_00K_WS002.dgn Sheet 1/18/2021 12:55:02 PM rviteli

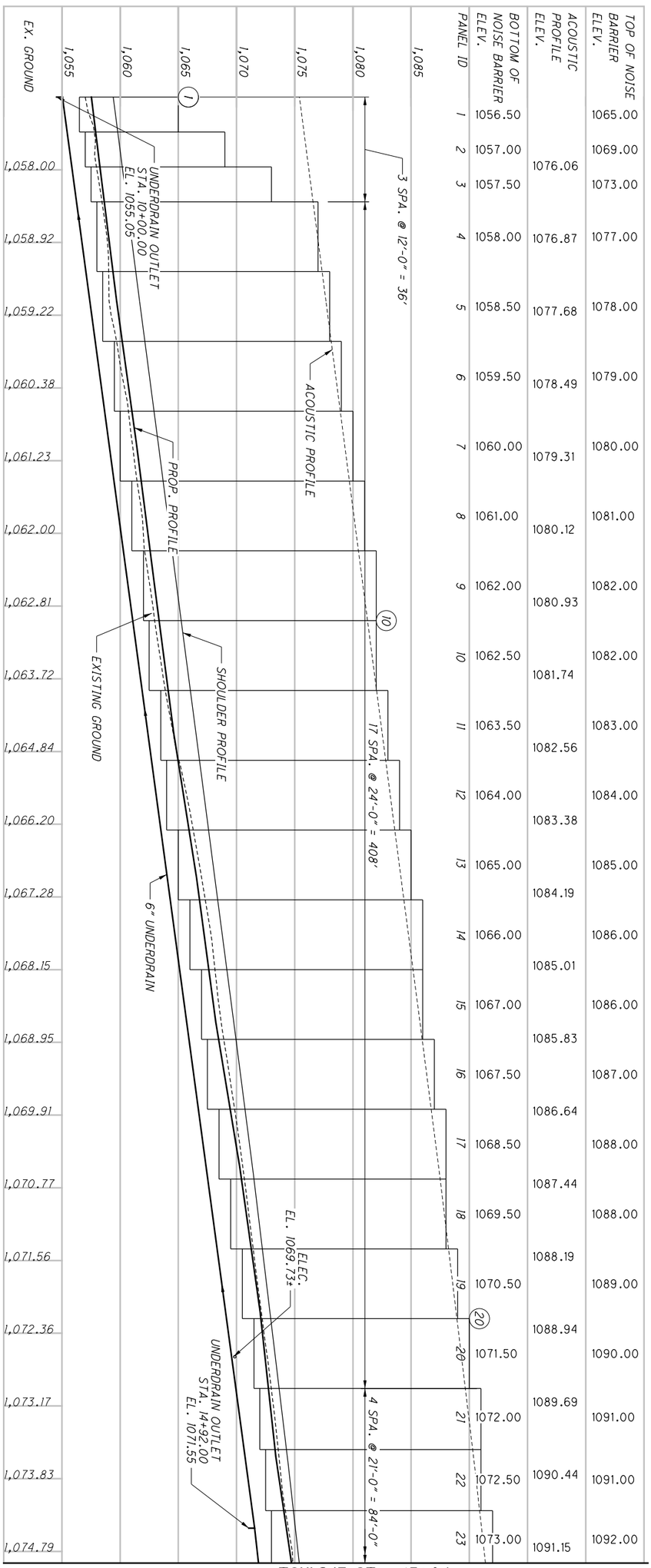


| PANEL ID | BOTTOM OF NOISE BARRIER ELEV. | ACOUSTIC PROFILE ELEV. | TOP OF NOISE BARRIER ELEV. |
|---|---|---|---|
| 1 | 1056.50 | | 1065.00 |
| 2 | 1057.00 | 1076.06 | 1069.00 |
| 3 | 1057.50 | | 1073.00 |
| 4 | 1058.00 | 1076.87 | 1077.00 |
| 5 | 1058.50 | 1077.68 | 1078.00 |
| 6 | 1059.50 | 1078.49 | 1079.00 |
| 7 | 1060.00 | 1079.31 | 1080.00 |
| 8 | 1061.00 | 1080.12 | 1081.00 |
| 9 | 1062.00 | 1080.93 | 1082.00 |
| 10 | 1062.50 | 1081.74 | 1082.00 |
| 11 | 1063.50 | 1082.56 | 1083.00 |
| 12 | 1064.00 | 1083.38 | 1084.00 |
| 13 | 1065.00 | 1084.19 | 1085.00 |
| 14 | 1066.00 | 1085.01 | 1086.00 |
| 15 | 1067.00 | 1085.83 | 1086.00 |
| 16 | 1067.50 | 1086.64 | 1087.00 |
| 17 | 1068.50 | 1087.44 | 1088.00 |
| 18 | 1069.50 | 1088.19 | 1088.00 |
| 19 | 1070.50 | 1088.94 | 1089.00 |
| 20 | 1071.50 | 1089.69 | 1090.00 |
| 21 | 1072.00 | 1090.44 | 1091.00 |
| 22 | 1072.50 | 1091.15 | 1091.00 |
| 23 | 1073.00 | | 1092.00 |

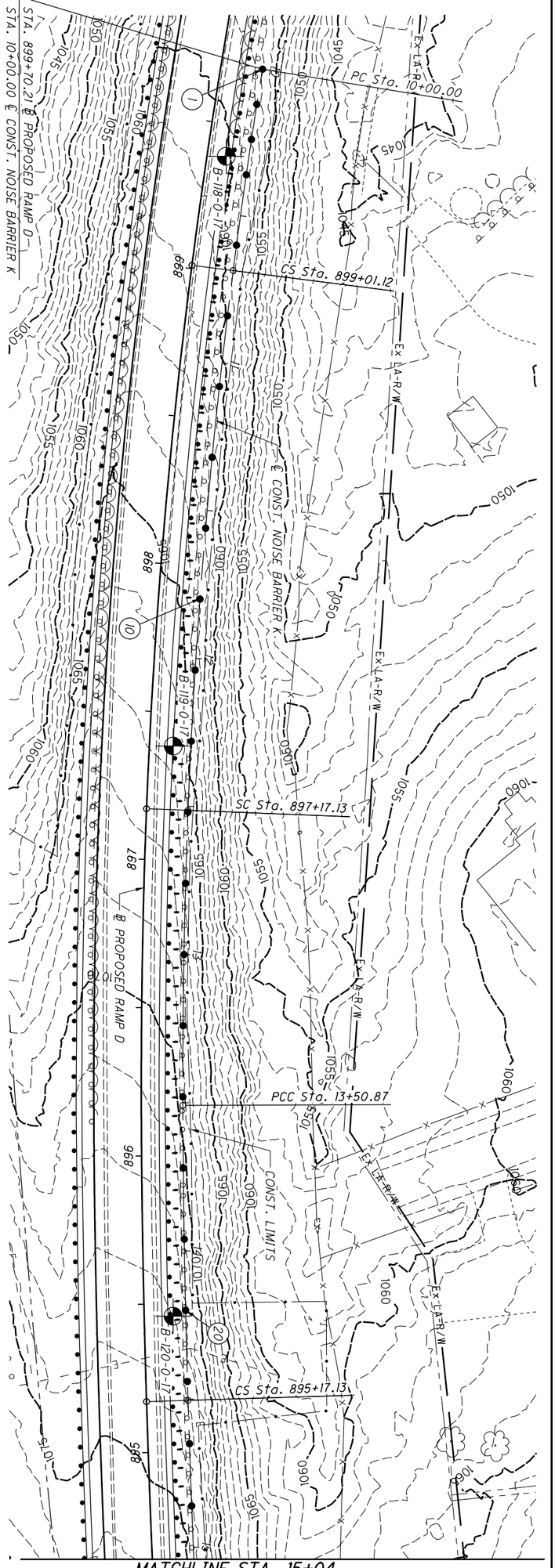


| BORING I.D. NO. | APPROX. TOP OF ROCK ELEV. T/ROCK ELEV. |
|---|---|
| B-118-0-17 | N/A |
| B-119-0-17 | N/A |
| B-120-0-17 | N/A |
| B-121-0-17 | N/A |
| B-122-0-17 | N/A |
| B-123-0-17 | 1084.2± |
| B-124-0-17 | 1092.2± |
| B-125-0-17 | 1095.4± |
| B-126-0-17 | 1094.3± |
| B-127-0-17 | 1096.9± |
| B-128-0-17 | 1110.2± |
| B-129-0-17 | N/A |
| B-130-0-17 | 1099.9± |

1128
1288

**SUM-77/277/224**

# PLAN AND PROFILE - NOISE BARRIER K
## BEGIN TO STA. 15+04

CALCULATED RHC
CHECKED DGN

0 20
10 40
HORIZONTAL SCALE IN FEET

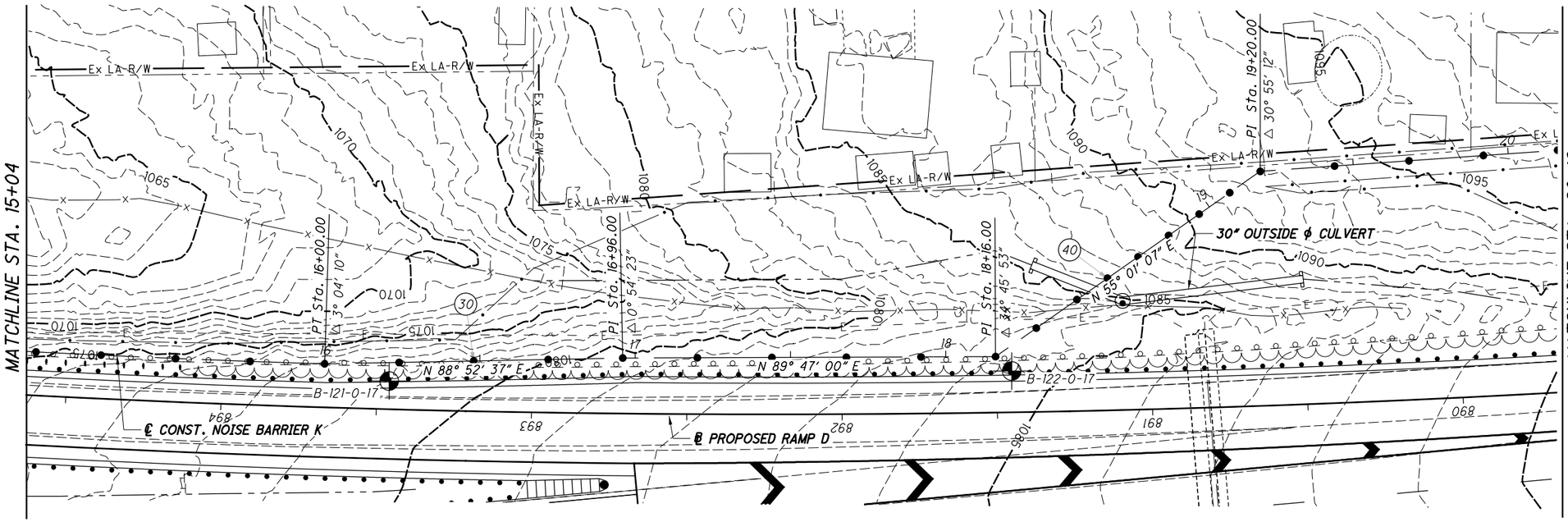
MATCHLINE STA. 15+04
MATCHLINE STA. 20+16
Ex LA-R/W
PT Sta. 16+00.00
Δ 3° 04' 10"
PI Sta. 16+96.00
Δ 10° 54' 23"
PI Sta. 18+16.00
Δ 34° 45' 53"
PI Sta. 19+20.00
Δ 30° 55' 12"
N 88° 52' 37" E
N 89° 47' 00" E
N 55° 01' 07" E
30" OUTSIDE ϕ CULVERT
℄ CONST. NOISE BARRIER K
℄ PROPOSED RAMP D
B-121-0-17
B-122-0-17

| | | |

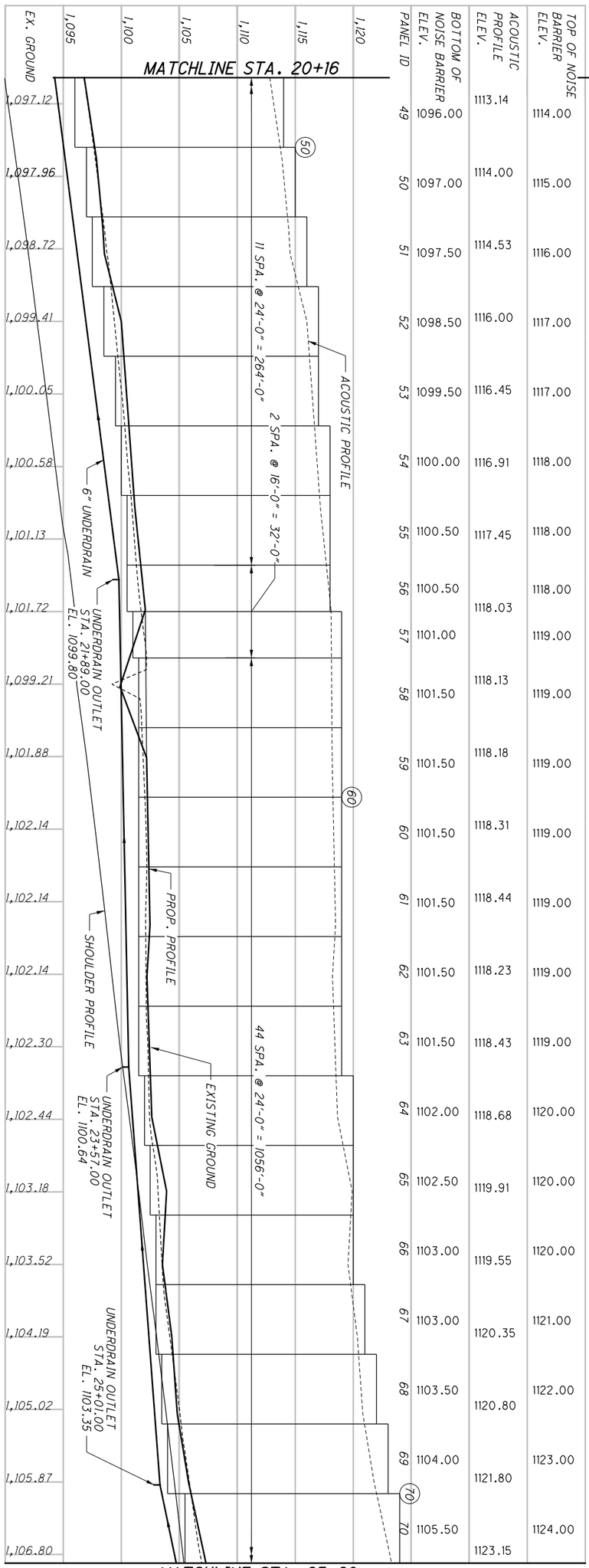


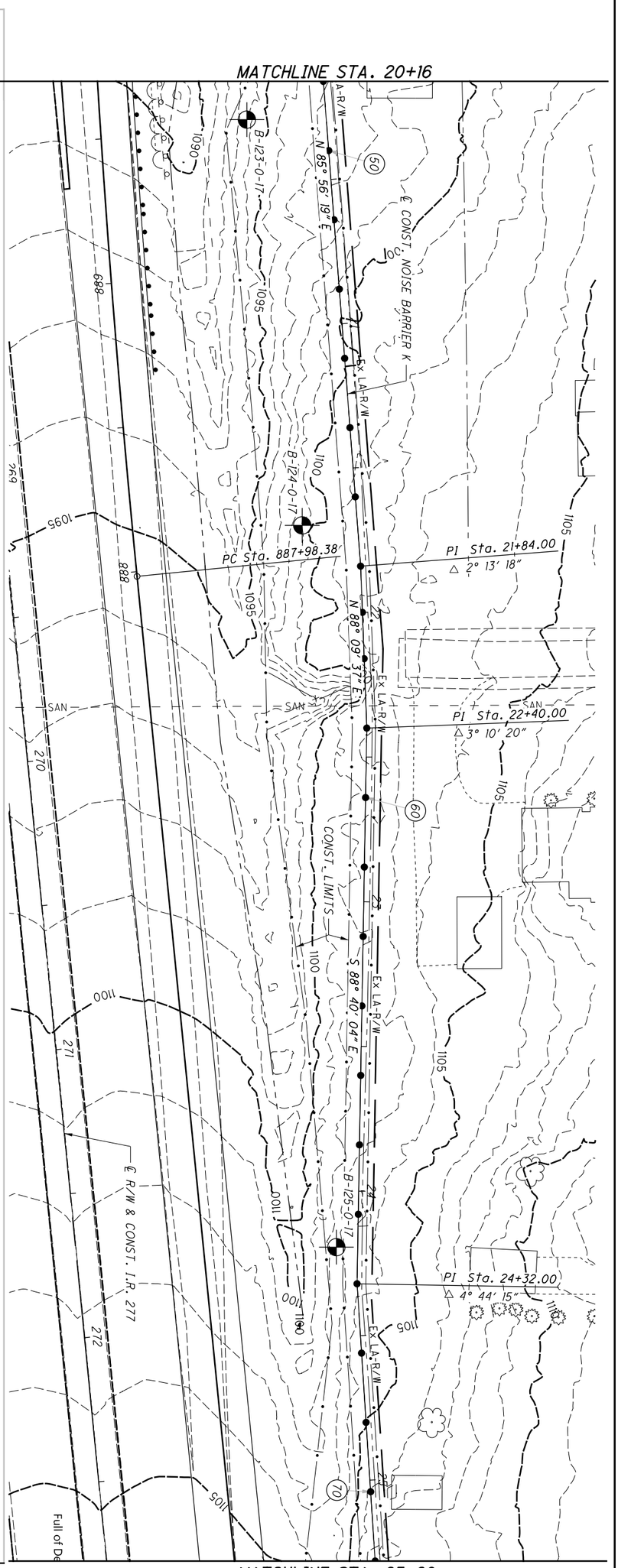


| | | | | |
|---|---|---|---|---|
| 1130 / 1288 | SUM-77/277/224 | PLAN AND PROFILE - NOISE BARRIER K<br>STA. 20+16 TO STA. 25+28 | CALCULATED RHC<br>CHECKED DGN | 0 20<br>10 40<br>HORIZONTAL SCALE IN FEET |

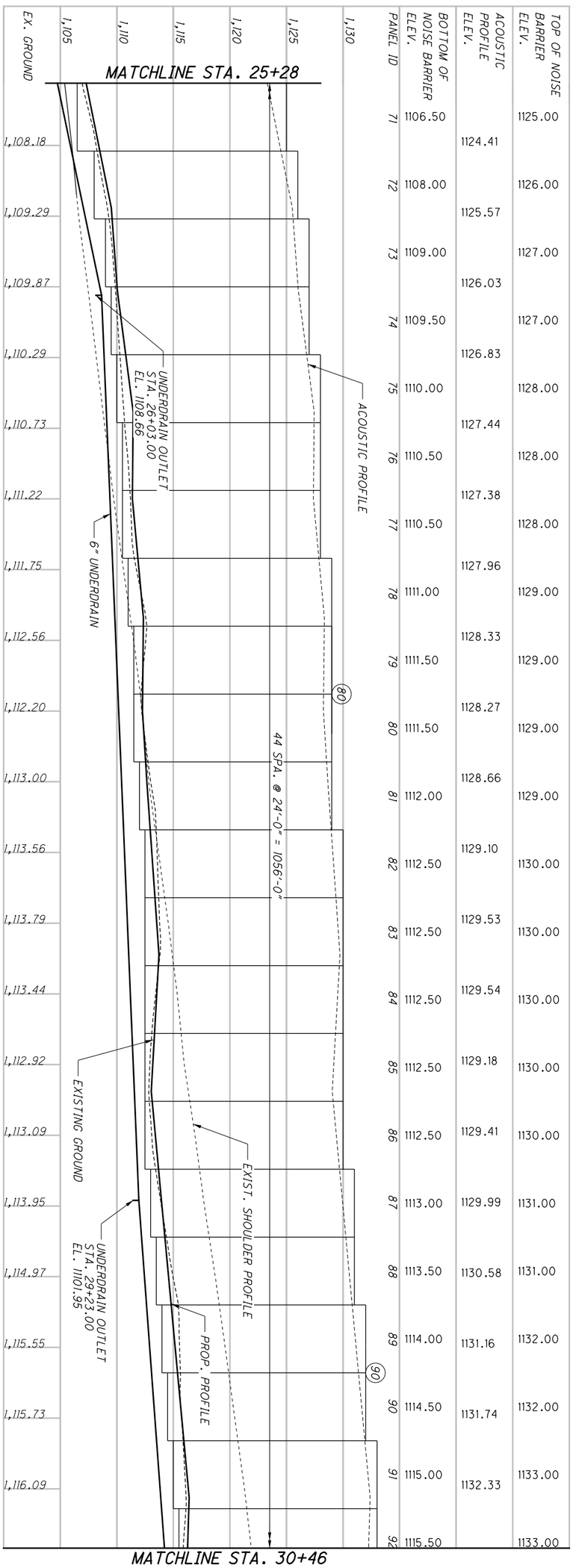


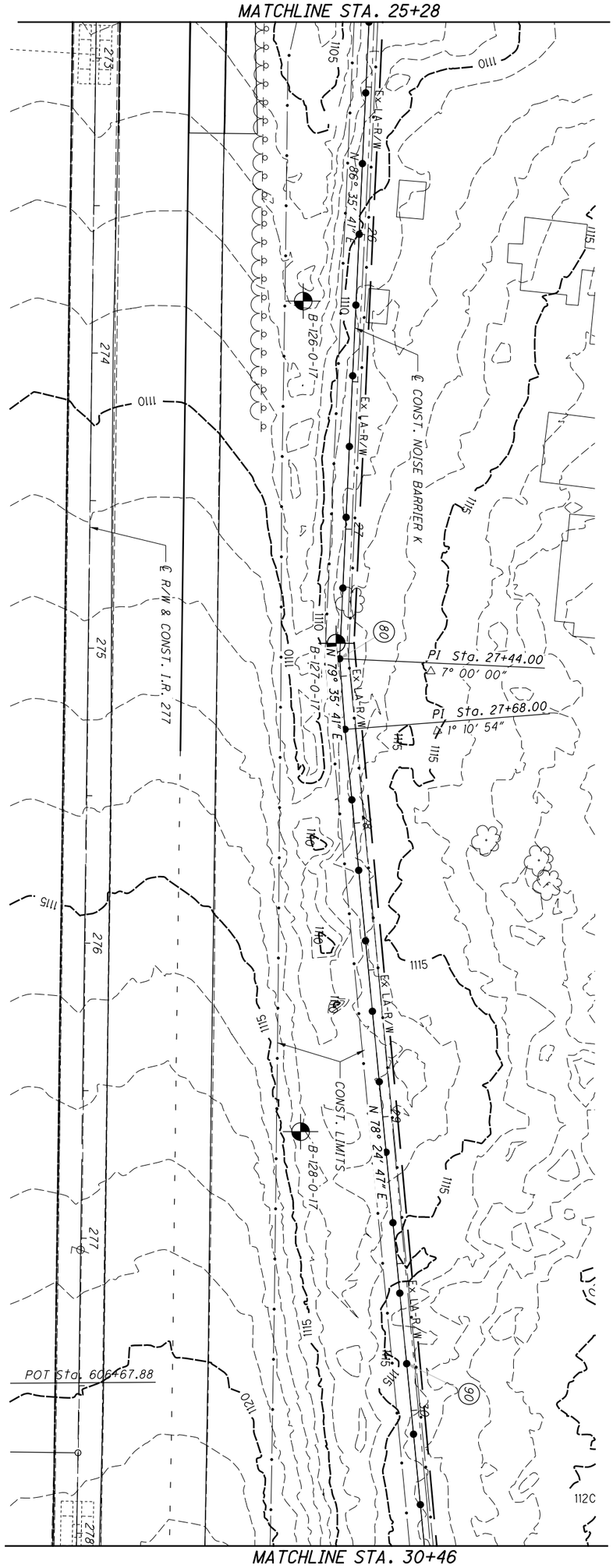


| | | | | |
|---|---|---|---|---|
| 1131 / 1288 | SUM-77/277/224 | PLAN AND PROFILE - NOISE BARRIER K<br>STA. 125+28 TO STA. 130+46 | CALCULATED RHC<br>CHECKED DGN | 0 20<br>10 40<br>HORIZONTAL SCALE IN FEET |

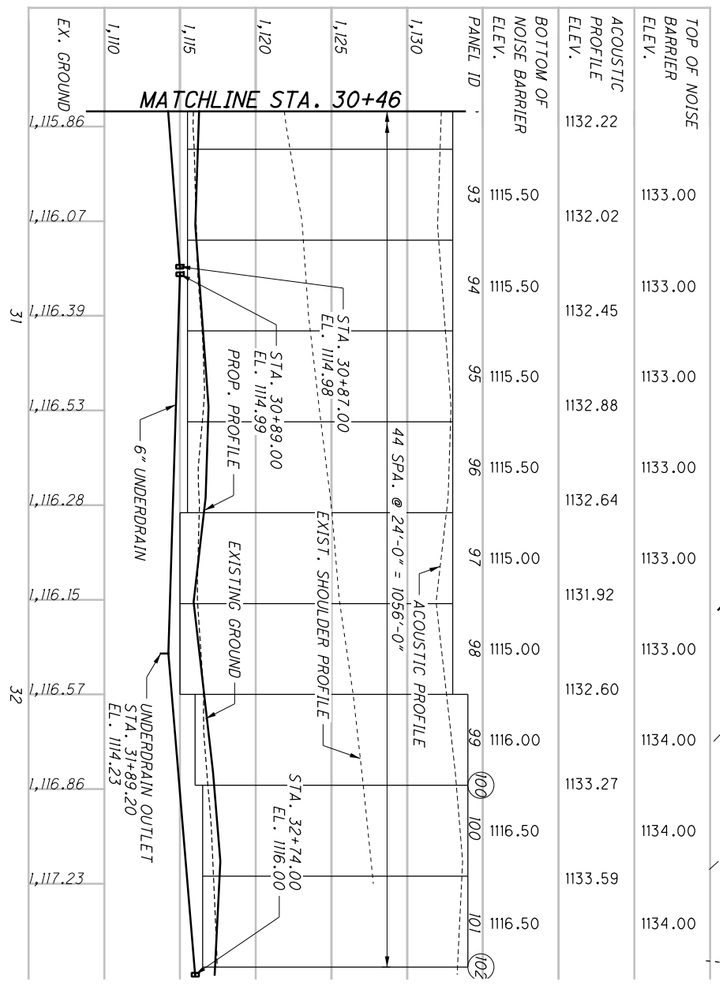
MATCHLINE STA. 30+46
EX. GROUND
1,110
1,115
1,120
1,125
1,130
PANEL ID
BOTTOM OF NOISE BARRIER ELEV.
ACOUSTIC PROFILE ELEV.
TOP OF NOISE BARRIER ELEV.
1,115.86
1,116.07
1,116.39
1,116.53
1,116.28
1,116.15
1,116.57
1,116.86
1,117.23
31
32
93 1115.50 1132.22 1133.00
94 1115.50 1132.02 1133.00
95 1115.50 1132.45 1133.00
96 1115.50 1132.88 1133.00
97 1115.00 1132.64 1133.00
98 1115.00 1131.92 1133.00
99 1116.00 1132.60 1134.00
100 100 1116.50 1133.27 1134.00
101 1116.50 1133.59 1134.00
102
6" UNDERDRAIN
UNDERDRAIN OUTLET STA. 31+89.20 EL. 1114.23
STA. 30+87.00 EL. 1114.98
STA. 30+89.00 EL. 1114.99
PROP. PROFILE
EXISTING GROUND
EXIST. SHOULDER PROFILE
STA. 32+74.00 EL. 1116.00
44 SPA. @ 24'-0" = 1056'-0"
ACOUSTIC PROFILE

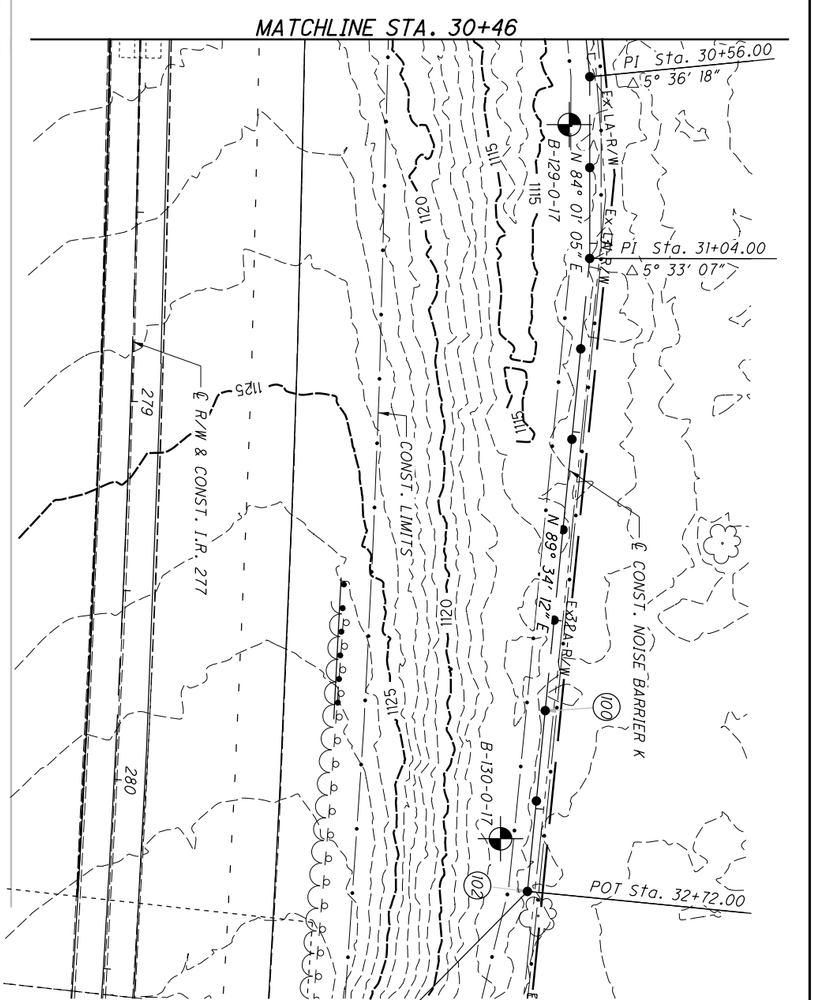
MATCHLINE STA. 30+46
PI Sta. 30+56.00
5° 36' 18"
PI Sta. 31+04.00
5° 33' 07"
Ex LA R/W
Ex ORR R/W
N 84° 01' 05" E
N 89° 34' 12" E
B-129-0-17
B-130-0-17
1115
1120
1125
279
280
℄ R/W & CONST. I.R. 277
CONST. LIMITS
℄ CONST. NOISE BARRIER K
100
102
POT Sta. 32+72.00
STA. 280+25.13 ℄ R/W & CONST. I.R. 277 =
STA. 32+72.00 ℄ CONST. NOISE BARRIER K

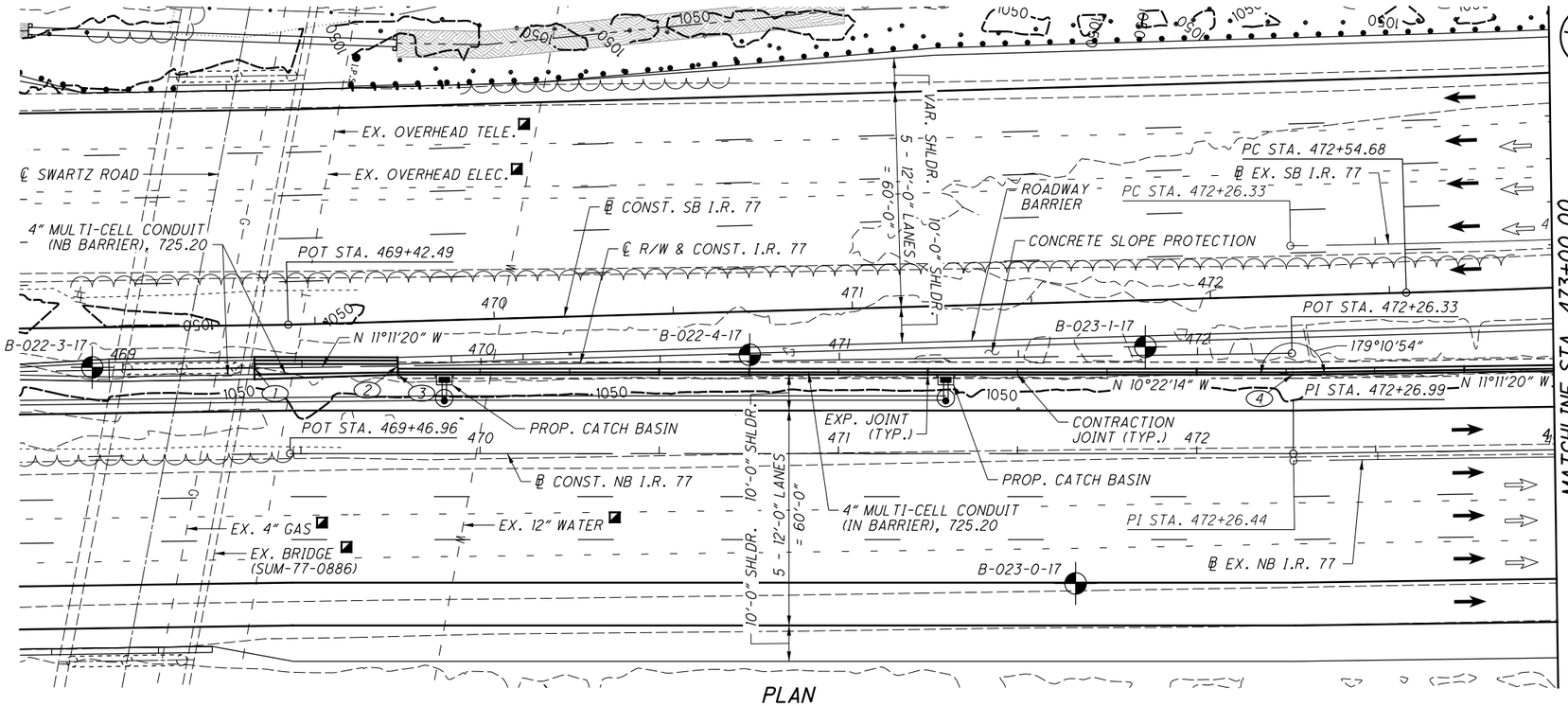


PLAN

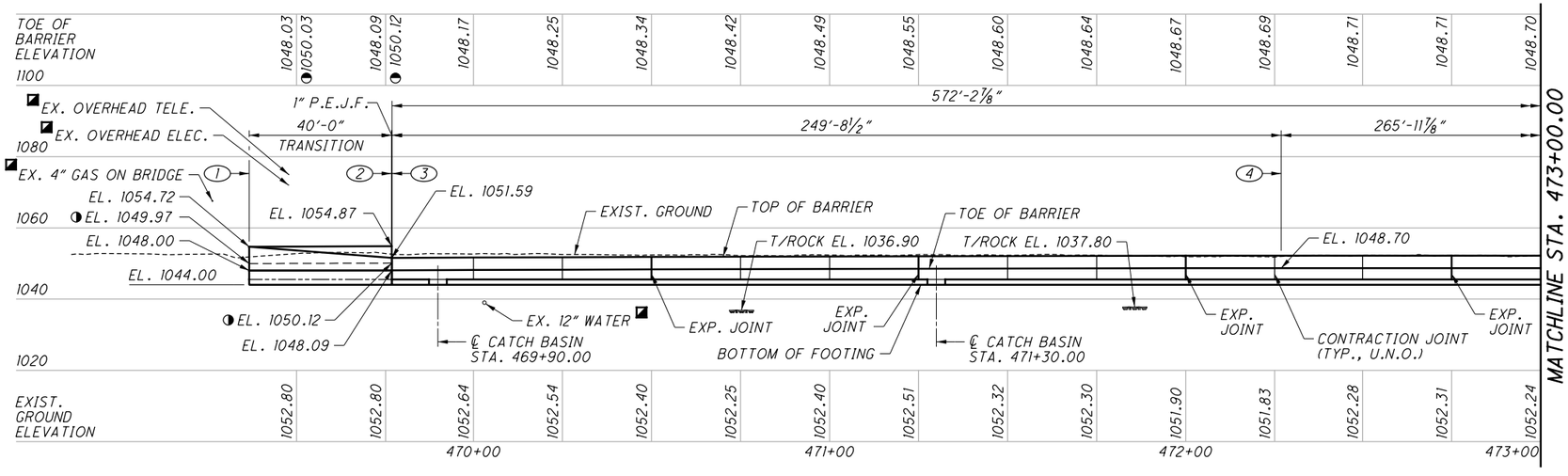


ELEVATION ALONG WALL REFERENCE LINE

BRIDGE AND ADJACENT BARRIERS NOT SHOWN FOR CLARITY

## BENCHMARK DATA

| POINT | NORTHING | EASTING | ELEV. | DESCRIPTION |
|---|---|---|---|---|
| CP05 | 493895.1420 | 2245390.8980 | 1073.53 | CONC. MONUMENT |
| CP06 | 493906.9643 | 2244750.3816 | 1090.46 | CONC. MONUMENT |
| CP07 | 498481.9448 | 2243140.4162 | 1064.39 | CONC. MONUMENT |
| CP08 | 499070.7218 | 2243262.6440 | 1076.40 | CONC. MONUMENT |

FOR ADDITIONAL BENCHMARK INFORMATION, SEE ROADWAY SHEETS.

| WALL REFERENCE POINT | STATION | OFFSET | NOTES |
|---|---|---|---|
| (1) | STA. 469+36.72 ▲ | 0.00' ▲ | BEGIN TRANSITION |
| (2) | STA. 469+76.72 ▲ | 0.00' ▲ | END TRANSITION |
| (3) | STA. 469+77.12 | 22.00' LT. | BEGIN WALL SECTION |
| (4) | STA. 472+26.83 | 22.00' LT. | ANGLE POINT |

## LEGEND:

(#) WALL REFERENCE POINT

▲ STATION & OFFSET GIVEN TO ℄ R/W & CONST. I.R. 77

◑ SB I.R. 77 TOE OF BARRIER ELEVATION

◪ TO REMAIN

PROJECT BORING LOCATION

## NOTES:

1. STATIONS AND OFFSETS ARE GIVEN TO ℄ CONST. NB I.R. 77 UNLESS NOTED OTHERWISE.
2. ALL TOE OF BARRIER ELEVATIONS ARE FOR NB I.R. 77 UNLESS NOTED OTHERWISE.
3. TRANSITION DIMENSIONS ARE GIVEN ALONG ℄ R/W & CONST. I.R. 77. WALL DIMENSIONS ARE GIVEN ALONG TOE OF BARRIER.
4. FOR MATCHLINE, SEE SHEET 2/12.
5. EARTHWORK LIMITS SHOWN ARE APPROXIMATE. ACTUAL SLOPES SHALL CONFORM TO PLAN CROSS SECTIONS.

DESIGN AGENCY
GPD GROUP
Glaus, Pyle, Schomer, Burns & DeHaven, Inc.
520 South Main Street, Akron, OH 44311 330.572.2100
Copyright Glaus, Pyle, Schomer, Burns & DeHaven, Inc. 2020

| DESIGNED | DRAWN | REVIEWED | DATE |
|---|---|---|---|
| MOJ | MOJ | DGN | 1-19-21 |
| CHECKED | REVISED | STRUCTURE FILE NUMBER | |
| RHC | | | |

SITE PLAN - 1

CAST-IN-PLACE REINFORCED CONCRETE RETAINING WALL 1
I-77 MEDIAN BARRIER BETWEEN SWARTZ ROAD AND I-77/I-277/US-224 INTERCHANGE

SUM-77/277/224
VARIOUS
PID No. 106002

1 / 12

1133
1288

O:\2017\2017258\ProjectData\SUM\106002\Design\Structures\Wall_001\Sheets\106002_001_WP001.dgn Sheet 1/17/2021 8:51:09 PM mjurcak

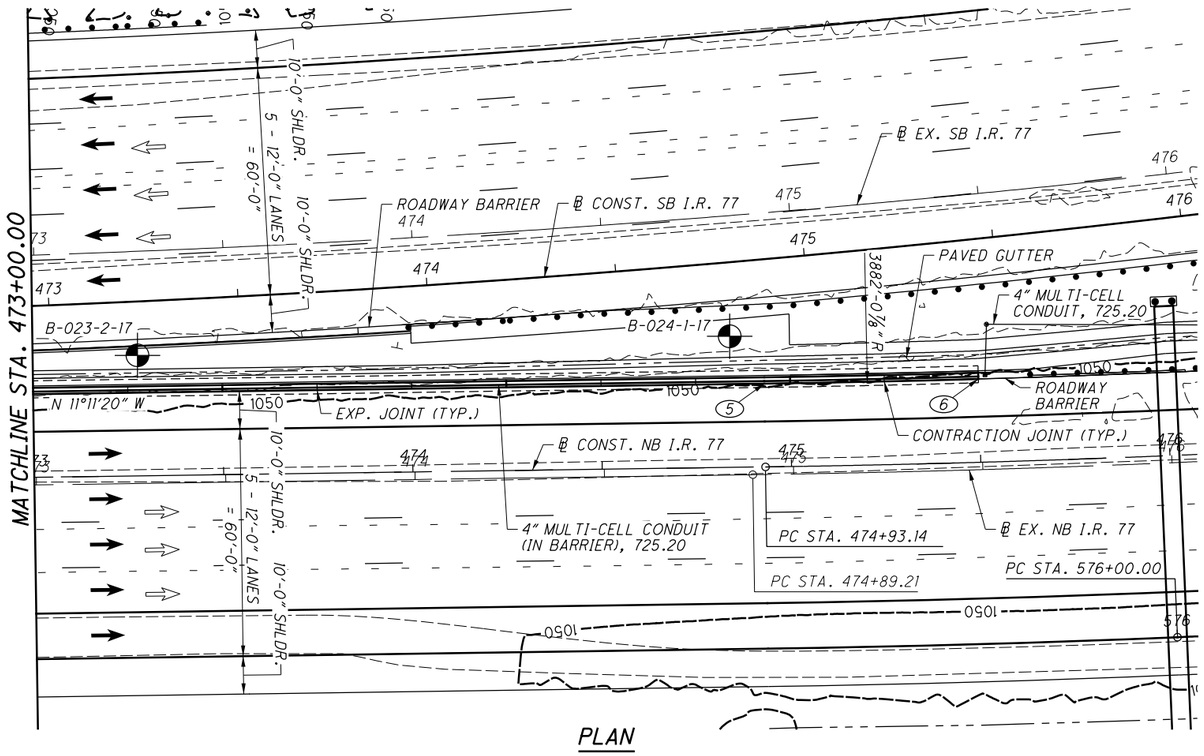


PLAN

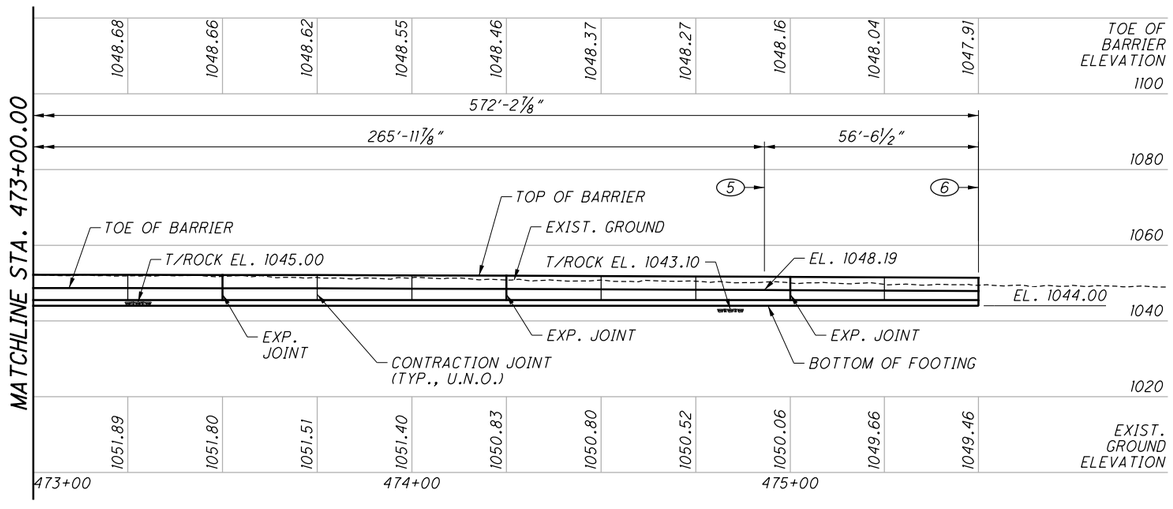


ELEVATION ALONG WALL REFERENCE LINE

ADJACENT BARRIER NOT SHOWN FOR CLARITY

| WALL REFERENCE POINT | STATION | OFFSET | NOTES |
|---|---|---|---|
| (5) | STA. 474+93.14 | 22.00' LT. | BEGIN CURVE |
| (6) | STA. 475+50.00 | 22.00' LT. | END CURVE & END WALL |

## LEGEND:

(#) WALL REFERENCE POINT

PROJECT BORING LOCATION

## NOTES:

1. STATIONS AND OFFSETS ARE GIVEN TO ℄ CONST. NB I.R. 77.
2. WALL DIMENSIONS ARE GIVEN ALONG TOE OF BARRIER.
4. FOR MATCHLINE, SEE SHEET 1/12.
5. EARTHWORK LIMITS SHOWN ARE APPROXIMATE. ACTUAL SLOPES SHALL CONFORM TO PLAN CROSS SECTIONS.

DESIGN AGENCY
GPD GROUP
520 South Main Street, Akron, OH 44311 330.572.2100
Copyright GPD Group, Akron, Ohio, Schneider, Burns & Deshaven, Inc. 2020

| DESIGNED | DRAWN | REVIEWED | DATE |
|---|---|---|---|
| MOJ | MOJ | DGN | 1-19-21 |
| CHECKED | REVISED | STRUCTURE FILE NUMBER | |
| RHC | | | |

SITE PLAN - 2
CAST-IN-PLACE REINFORCED CONCRETE RETAINING WALL 1
I-77 MEDIAN BARRIER BETWEEN SWARTZ ROAD AND I-77/I-277/US-224 INTERCHANGE

SUM-77/277/224
VARIOUS
PID No. 106002

2 / 12

1134
1288

D:\2017\2017258\ProjectData\SUM\106002\Design\Structures\Wall_001\Sheets\106002_001_WP001.dgn Sheet2 1/17/2021 8:51:26 PM mjurcak

**DESIGN SPECIFICATIONS:**

THIS STRUCTURE CONFORMS TO THE 8TH EDITION OF THE "LRFD BRIDGE DESIGN SPECIFICATIONS" ADOPTED BY THE AMERICAN ASSOCIATION OF STATE HIGHWAY AND TRANSPORTATION OFFICIALS, AND THE ODOT BRIDGE DESIGN MANUAL, 2020.

**STANDARD DRAWINGS AND STANDARD SPECIFICATIONS:**

REFER TO THE FOLLOWING STANDARD DRAWING:

SBR-1-20 REVISED 7-17-20

AND TO THE FOLLOWING SUPPLEMENTAL SPECIFICATION:

SS800 DATED 1-15-21

**OPERATIONAL IMPORTANCE:**

A LOAD MODIFIER OF 1.00 HAS BEEN ASSUMED FOR THE DESIGN OF THIS STRUCTURE IN ACCORDANCE WITH THE AASHTO LRFD BRIDGE DESIGN SPECIFICATIONS, ARTICLE 1.3.5 AND THE ODOT BRIDGE DESIGN MANUAL.

**DESIGN DATA:**

CONCRETE CLASS QC1 - COMPRESSIVE STRENGTH 4.0 KSI (WALL)
CONCRETE CLASS QC4 - COMPRESSIVE STRENGTH 4.0 KSI (WALL)
REINFORCING STEEL - MINIMUM YIELD STRENGTH 60 KSI

**FOUNDATION BEARING RESISTANCE:**

WALL FOOTINGS, AS DESIGNED, PRODUCE A MAXIMUM SERVICE LIMIT STATE BEARING PRESSURE OF 1.0 KIPS PER SQUARE FOOT AND A MAXIMUM STRENGTH LIMIT STATE BEARING PRESSURE OF 1.3 KIPS PER SQUARE FOOT. THE MINIMUM FACTORED BEARING RESISTANCE IS 10.2 KIPS PER SQUARE FOOT.

**ITEM 511 - CLASS QC1 CONCRETE WITH QC/QA, FOOTING, AS PER PLAN**

IN ADDITION TO THE REQUIREMENTS OF ITEM 511, INSTALL REFERENCE MONUMENTS IN THE RETAINING WALL FOOTING AT THE LOCATIONS SHOWN IN THE TABLE ON THIS SHEET. THE REFERENCE MONUMENT SHALL CONSIST OF A #8, OR LARGER, EPOXY COATED REBAR EMBEDDED AT LEAST 6" INTO THE FOOTING AND EXTENDED VERTICALLY 4 TO 6 INCHES ABOVE THE TOP OF THE FOOTING. INSTALL A SIX-INCH DIAMETER, SCHEDULE 40, PLASTIC PIPE AROUND THE REFERENCE MONUMENT. CENTER THE PIPE ON THE REFERENCE MONUMENT AND PLACE THE PIPE VERTICAL WITH ITS TOP AT THE FINISHED GRADE. THE PIPE SHALL HAVE A REMOVABLE, SCHEDULE 40, PLASTIC CAP. PERMANENTLY ATTACH THE BOTTOM OF THE PIPE TO THE TOP OF THE FOOTING.

ESTABLISH A BENCHMARK TO DETERMINE THE ELEVATIONS OF THE REFERENCE MONUMENTS AT VARIOUS MONITORING PERIODS THROUGHOUT THE LENGTH OF THE CONSTRUCTION PROJECT. THE BENCHMARK SHALL BE THE SAME THROUGHOUT THE PROJECT AND SHALL BE INDEPENDENT OF ALL STRUCTURES.

RECORD THE ELEVATION OF EACH REFERENCE MONUMENT AT EACH MONITORING PERIOD SHOWN IN THE TABLE.

THE ORIGINAL COMPLETED TABLES WILL BECOME PART OF THE DISTRICT'S PROJECT PLAN RECORDS.

**ITEM 512 - SEALING OF CONCRETE SURFACES (EPOXY-URETHANE)**

THE URETHANE TOP COAT SHALL BE TINTED TO MEET AMS-STD-595A COLOR No. 17778 - LIGHT NEUTRAL.

**ABBREVIATIONS:**

| | |
|---|---|
| BOT. | BOTTOM |
| B.S. | BOTH SIDES |
| BTWN. | BETWEEN |
| C.J. | CONSTRUCTION JOINT |
| CLR. | CLEAR |
| CONST. | CONSTRUCTION |
| DIA. | DIAMETER |
| EL. | ELEVATION |
| EQ. | EQUAL |
| EX. OR EXIST. | EXISTING |
| F.S. | FAR SIDE |
| GFRP | GLASS FIBER REINFORCED POLYMER |
| MAX. | MAXIMUM |
| MIN. | MINIMUM |
| NB | NORTHBOUND |
| NO. | NUMBER |
| N.S. | NEAR SIDE |
| P.E.J.F. | PREFORMED EXPANSION JONT FILLER |
| SB | SOUTHBOUND |
| SER. | SERIES |
| SPA. | SPACES OR SPACING |
| STA. | STATION |
| STD. DWG. | STANDARD DRAWING |
| T&B | TOP AND BOTTOM |
| TYP. | TYPICAL |

| PROJECT NUMBER: | | | | | SUM-77/277/224-VARIOUS, PID: 106002 |
|---|---|---|---|---|---|
| BENCHMARK LOCATION: | | | | | |
| C.I.P. RETAINING WALL 1: | 4'-6" WIDE FOOTING | | | | |
| MAX. FACTORED BEARING PRESSURE: | 1.3 KIPS PER SQUARE FOOT | | | | |
| MONITORING PERIOD: | MONUMENT #1 ALIGNMENT: C/L R/W & CONST. I.R. 77 STA. 469+78.12 OFFSET: 24.58' LT. | MONUMENT #2 ALIGNMENT: C/L R/W & CONST. I.R. 77 STA. 470+49.00 OFFSET: 24.58' LT. | MONUMENT #3 ALIGNMENT: C/L R/W & CONST. I.R. 77 STA. 471+24.00 OFFSET: 24.58' LT. | MONUMENT #4 ALIGNMENT: C/L R/W & CONST. I.R. 77 STA. 471+99.00 OFFSET: 24.58' LT. | MONUMENT #5 ALIGNMENT: C/L R/W & CONST. I.R. 77 STA. 472+74.00 OFFSET: 24.58' LT. |
| AFTER FOOTING CONCRETE IS PLACED: | | | | | |
| AFTER STEM CONCRETE IS PLACED: | | | | | |
| AFTER BARRIER CONCRETE IS PLACED: | | | | | |
| PROJECT COMPLETION: | | | | | |

| PROJECT NUMBER: | | | | SUM-77/277/224-VARIOUS, PID: 106002 |
|---|---|---|---|---|
| BENCHMARK LOCATION: | | | | |
| C.I.P. RETAINING WALL 1: | 4'-6" WIDE FOOTING | | | |
| MAX. FACTORED BEARING PRESSURE: | 1.3 KIPS PER SQUARE FOOT | | | |
| MONITORING PERIOD: | MONUMENT #6 ALIGNMENT: C/L R/W & CONST. I.R. 77 STA. 473+49.00 OFFSET: 24.58' LT. | MONUMENT #7 ALIGNMENT: C/L R/W & CONST. I.R. 77 STA. 474+24.00 OFFSET: 24.58' LT. | MONUMENT #8 ALIGNMENT: C/L R/W & CONST. I.R. 77 STA. 474+98.99 OFFSET: 24.58' LT. | MONUMENT #9 ALIGNMENT: C/L R/W & CONST. I.R. 77 STA. 475+48.99 OFFSET: 24.58' LT. |
| AFTER FOOTING CONCRETE IS PLACED: | | | | |
| AFTER STEM CONCRETE IS PLACED: | | | | |
| AFTER BARRIER CONCRETE IS PLACED: | | | | |
| PROJECT COMPLETION: | | | | |

DESIGN AGENCY
GPD GROUP
Glaus, Pyle, Schomer, Burns & DeHaven, Inc.
520 South Main Street, Akron, OH 44311 330.572.2100
Copyright Glaus, Pyle, Schomer, Burns & DeHaven, Inc. 2020

DESIGNED MOJ | DRAWN MOJ | REVIEWED DGN | DATE 1-19-21
CHECKED RHC | REVISED | STRUCTURE FILE NUMBER

**GENERAL NOTES**

CAST-IN-PLACE REINFORCED CONCRETE RETAINING WALL 1
I-77 MEDIAN BARRIER BETWEEN SWARTZ ROAD AND I-77/I-277/US-224 INTERCHANGE

**SUM-77/277/224**
**VARIOUS**
**PID No. 106002**



1135
1288

O:\2017\2017258\ProjectData\SUM\106002\Design\Structures\Wall_001\Sheets\106002_001_WN001.dgn Sheet 1/17/2021 8:51:29 PM mjurcak

# ESTIMATED QUANTITIES

CALCULATED BY: MOJ DATE: 12-28-2020
CHECKED BY: JJB DATE: 1-12-2020

| ITEM | EXT. | TOTAL 02/IMS/PV | UNIT | DESCRIPTION | AS PER PLAN REFERENCE SHEET |
|---|---|---|---|---|---|
| 503 | 21100 | 651 | CY | UNCLASSIFIED EXCAVATION | |
| 503 | 31100 | 13 | CY | ROCK EXCAVATION | |
| | | | | | |
| 509 | 10000 | 43,590 | LB | EPOXY COATED REINFORCING STEEL | |
| 509 | 30020 | 8,703 | FT | NO. 4 GFRP DEFORMED BARS | |
| | | | | | |
| 511 | 45600 | 62 | CY | CLASS QC4 MASS CONCRETE, SUBSTRUCTURE | |
| 511 | 46012 | 205 | CY | CLASS QC1 CONCRETE WITH QC/QA, RETAINING/WINGWALL NOT INCLUDING FOOTING | |
| 511 | 46513 | 155 | CY | CLASS QC1 CONCRETE WITH QC/QA, FOOTING, AS PER PLAN | 3 |
| | | | | | |
| 512 | 10100 | 410 | SY | SEALING OF CONCRETE SURFACES (EPOXY-URETHANE) | |
| 512 | 33000 | 40 | SY | TYPE 2 WATERPROOFING | |
| | | | | | |
| 516 | 13600 | 78 | SF | 1" PREFORMED EXPANSION JOINT FILLER | |

DESIGN AGENCY
GPD GROUP
Gillan, P.M., Schmid, Bunn & DeMarco, Inc.
520 South Main Street, Akron, OH 44311 330.572.2100
Copyright GBm, PM, Schmid, Bunn & DeMarco, Inc. 2020

| REVIEWED | DATE | |
|---|---|---|
| DGN | 1-19-21 | STRUCTURE FILE NUMBER |
| DRAWN | | REVISED |
| MOJ | | |
| DESIGNED | | CHECKED |
| MOJ | | JJB |

ESTIMATED QUANTITIES
CAST-IN-PLACE REINFORCED CONCRETE RETAINING WALL 1
I-77 MEDIAN BARRIER BETWEEN SWARTZ ROAD AND I-77/I-277/US-224 INTERCHANGE

SUM-77/277/224
VARIOUS
PID No. 106002



O:\2017\20172581ProjectData\SUM\106002\Design\Structures\Wall_001\Sheets\106002_001_W0001.dgn Sheet 1/17/2021 8:51:34 PM mjurcak

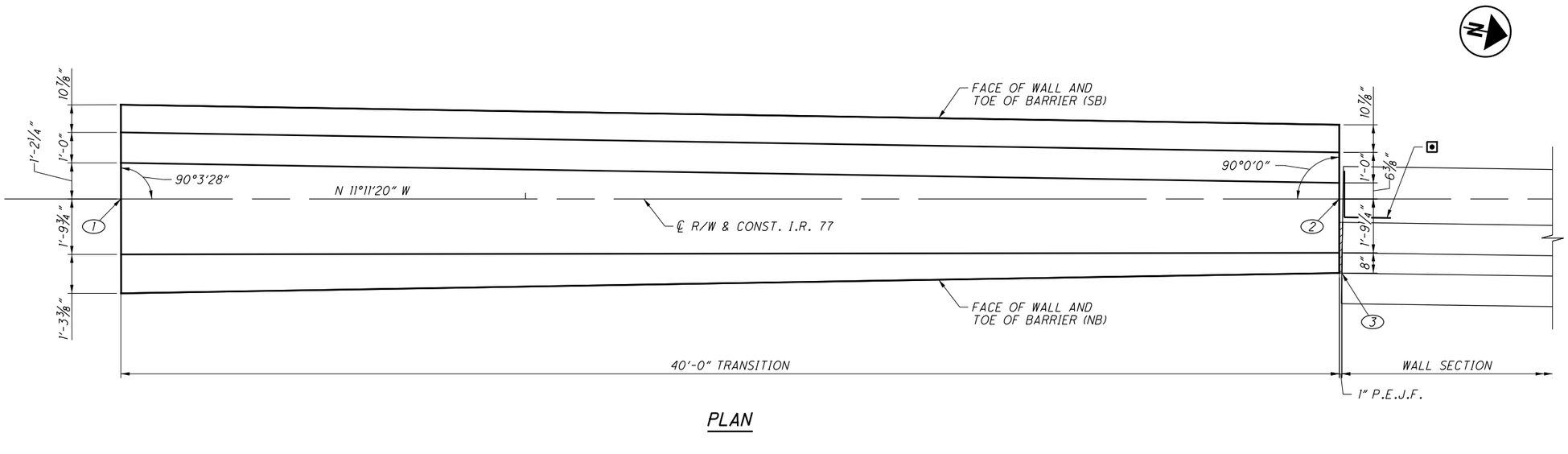


PLAN

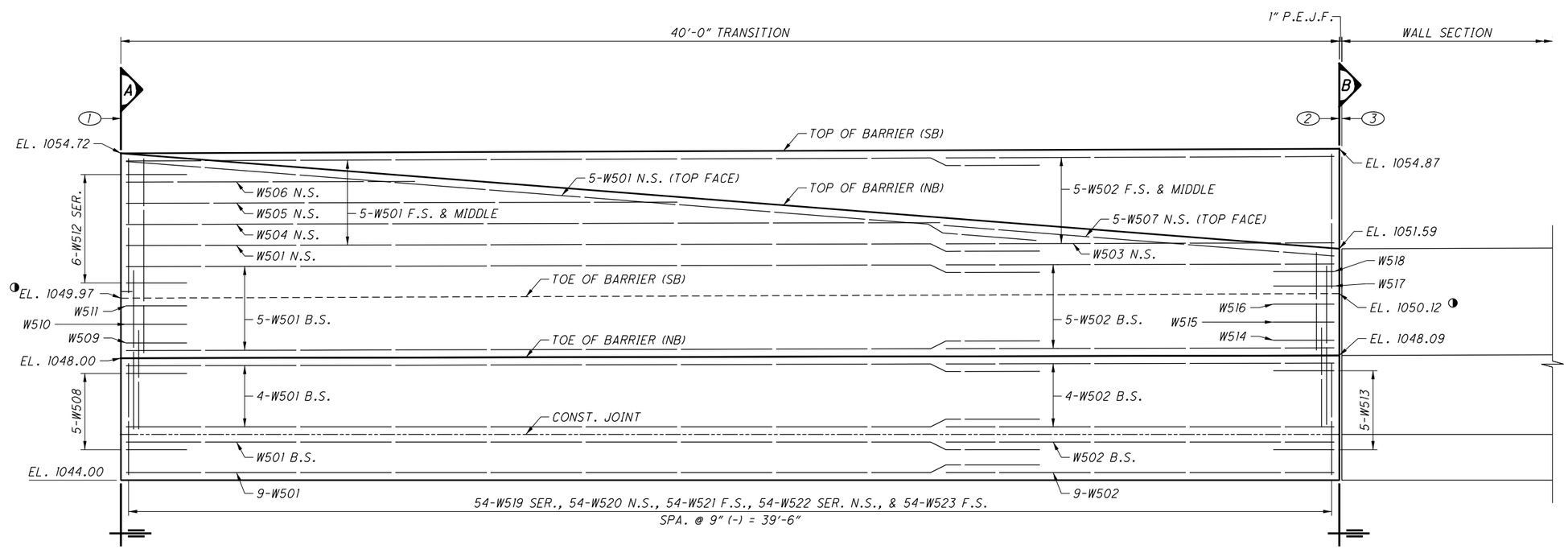


ELEVATION

## LEGEND:

- (#) WALL REFERENCE POINT (SEE SITE PLAN FOR ADDITIONAL DETAILS)
- ⊡ TYPE 2 WATERPROOFING: 3'-0" WIDE STRIP CENTERED ON JOINT AND EXTENDING VERTICALLY FROM THE TOP OF FOOTING TO 6" BELOW GRADE
- ◑ SB I.R.77 TOE OF BARRIER ELEVATION

## NOTES:

1. FOR WALL SECTION DETAILS, SEE SHEET 6/12.
2. FOR SECTIONS A AND B, SEE SHEET 10/12.
3. MINIMUM HORIZONTAL REINFORCING LAP LENGTHS ARE AS FOLLOWS:

| | |
|---|---|
| NO. 5 BARS | 3'-1" |

DESIGN AGENCY
GPD GROUP
320 South Main Street, Akron, OH 44311 330.572.2100
Copyright GPD Group, Akron, Ohio, Glaus, Pyle, Schomer, Burns & DeHaven, Inc. 2020

| DESIGNED | DRAWN | REVIEWED | DATE |
|---|---|---|---|
| MOJ | MOJ | DGN | 1-19-21 |
| CHECKED | REVISED | STRUCTURE FILE NUMBER | |
| RHC | | | |

TRANSITION PLAN & ELEVATION
CAST-IN-PLACE REINFORCED CONCRETE RETAINING WALL 1
I-77 MEDIAN BARRIER BETWEEN SWARTZ ROAD AND I-77/I-277/US-224 INTERCHANGE

SUM-77/277/224
VARIOUS
PID No. 106002

5 / 12

1137
1288

O:\2017\2017258\ProjectData\SUM\106002\Design\Structures\Wall_001\Sheets\106002_001_WE001.dgn Sheet 1/17/2021 8:54:38 PM mjurcak

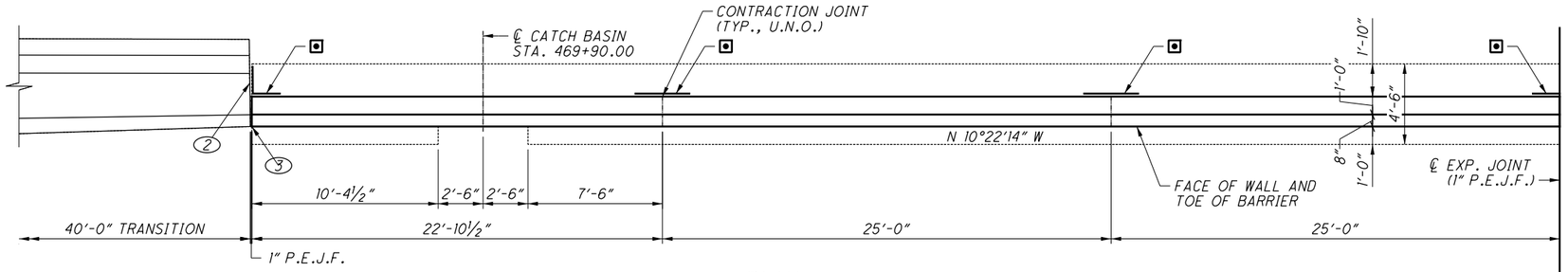


PLAN

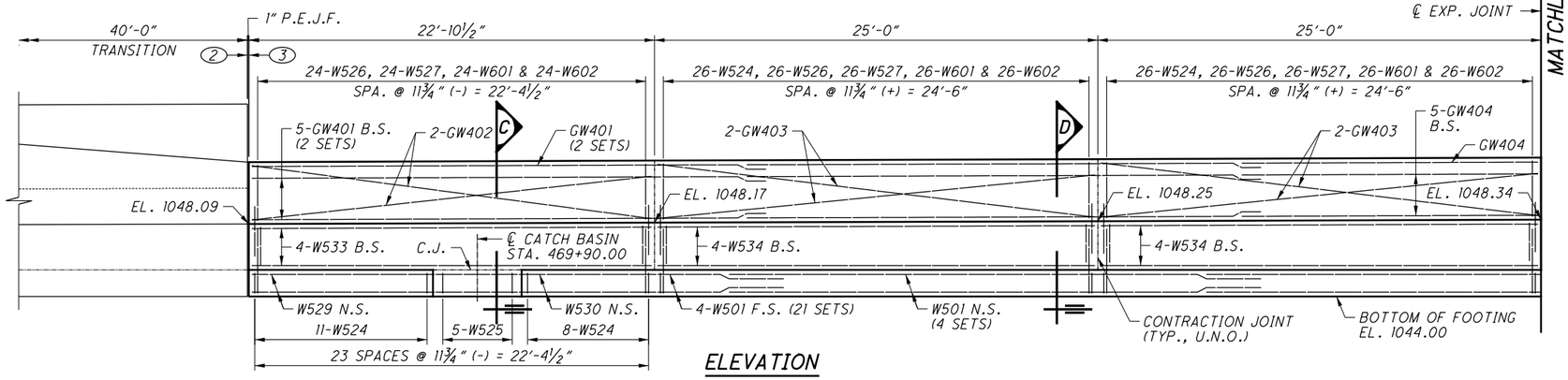


ELEVATION

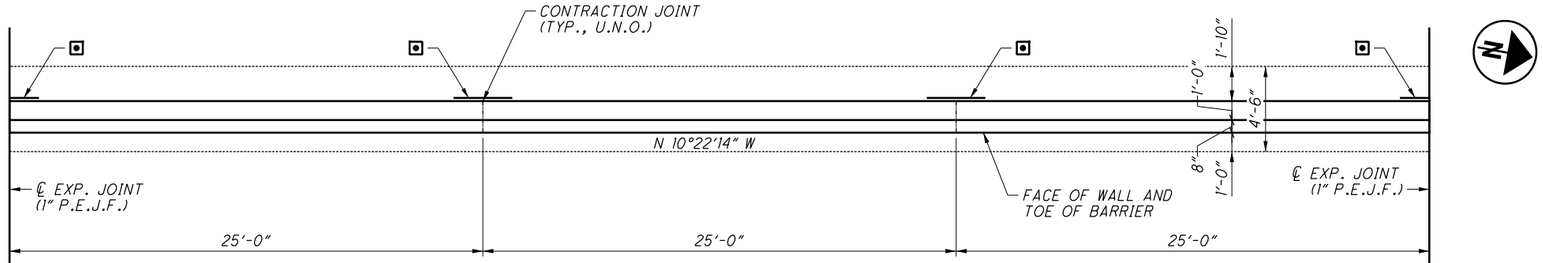


PLAN

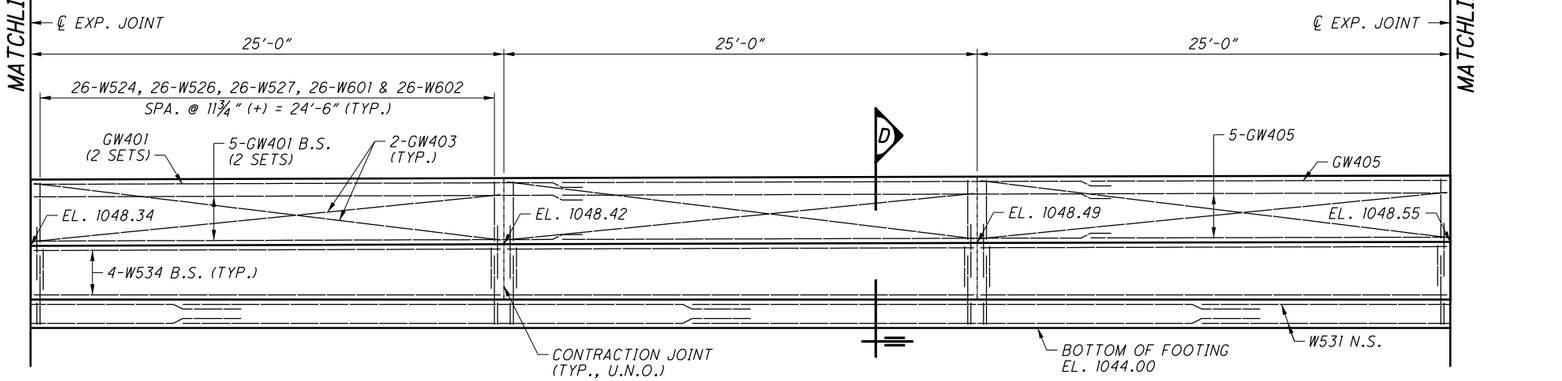


ELEVATION

## LEGEND:

(#) WALL REFERENCE POINT
(SEE SITE PLAN FOR ADDITIONAL DETAILS)

▣ TYPE 2 WATERPROOFING: 3'-0" WIDE STRIP CENTERED ON JOINT AND EXTENDING VERTICALLY FROM THE TOP OF FOOTING TO 6" BELOW GRADE

## NOTES:

1. STATIONS ARE GIVEN TO ℄ CONST. NB I.R. 77.
2. FOR 40'-0" TRANSITION DETAILS, SEE SHEET 5/12.
3. FOR MATCHLINE B, SEE SHEET 7/12.
4. FOR SECTIONS C AND D, SEE SHEET 11/12.
5. MINIMUM HORIZONTAL REINFORCING LAP LENGTHS ARE AS FOLLOWS:

| | |
|---|---|
| NO. 5 BARS | 3'-1" |
| ALL GFRP BARS | 1'-1" |

DESIGN AGENCY
GPD GROUP
520 South Main Street, Akron, OH 44311 330.572.2100
Copyright GPD Group, Akron, Ohio, USA

| DESIGNED | DRAWN | REVIEWED | DATE |
|---|---|---|---|
| MOJ | MOJ | DGN | 1-19-21 |
| CHECKED | REVISED | STRUCTURE FILE NUMBER | |
| RHC | | | |

WALL PLAN & ELEVATION (1 OF 4)
CAST-IN-PLACE REINFORCED CONCRETE RETAINING WALL 1
I-77 MEDIAN BARRIER BETWEEN SWARTZ ROAD AND I-77/I-277/US-224 INTERCHANGE

SUM-77/277/224
VARIOUS
PID No. 106002

6 / 12

1138
1288

0:\2017\2017258\Project Data\SUM\106002\Design\Structures\Wall_001\Sheets\106002_001_WE001.dgn Sheet2 1/17/2021 8:51:40 PM mjurcak

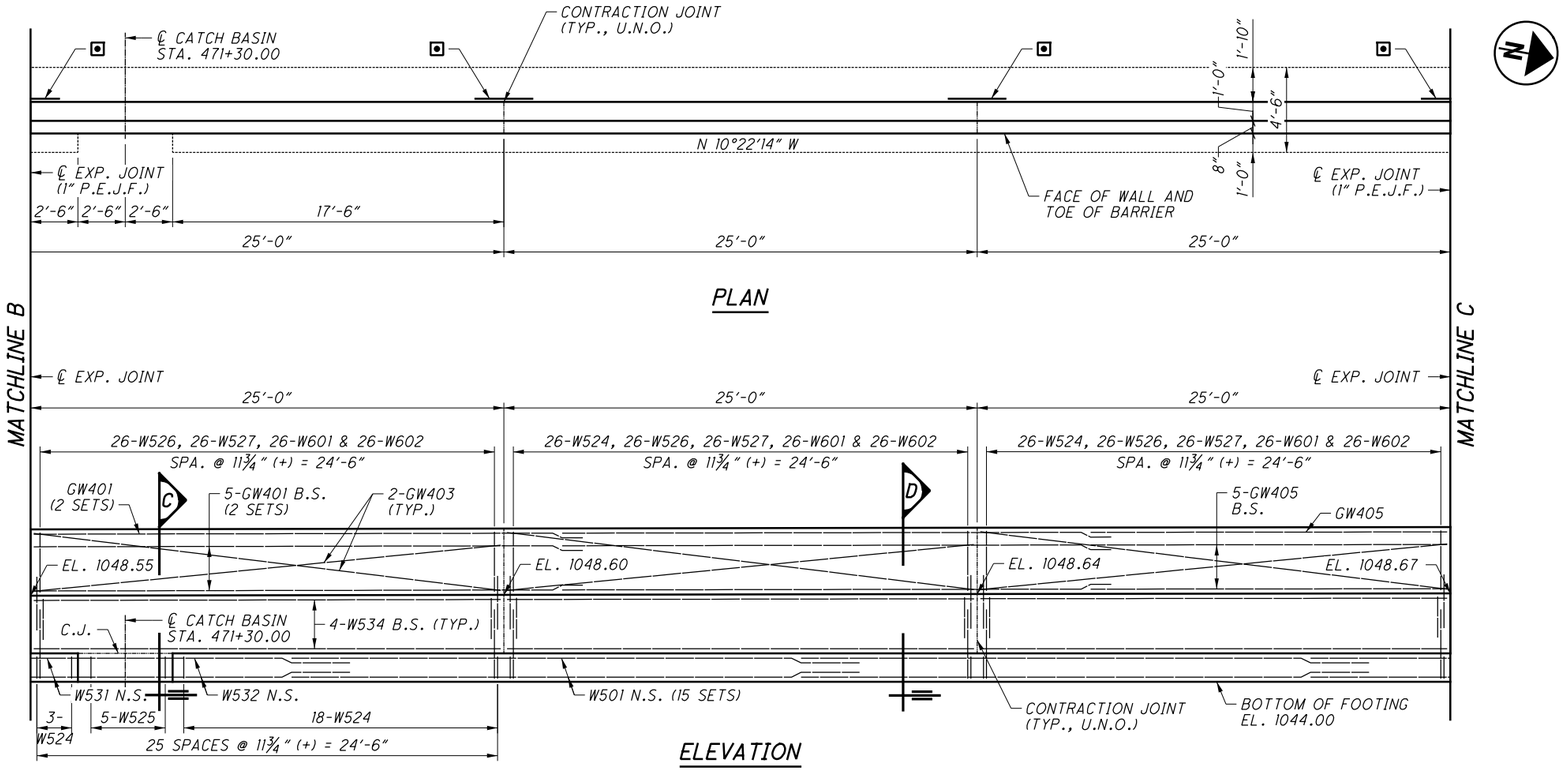


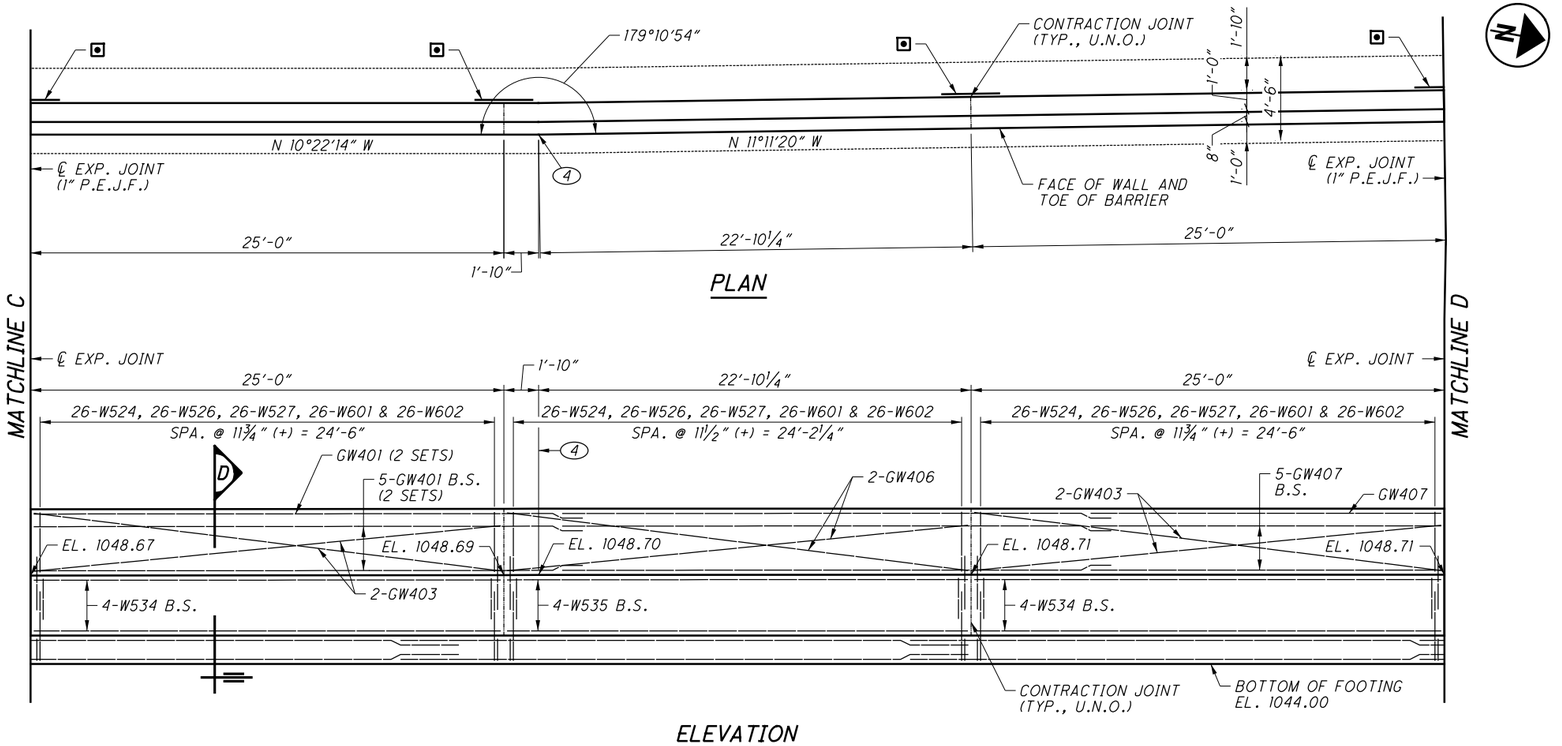


## LEGEND:

(#) WALL REFERENCE POINT
(SEE SITE PLAN FOR ADDITIONAL DETAILS)

▣ TYPE 2 WATERPROOFING: 3'-0" WIDE STRIP CENTERED ON JOINT AND EXTENDING VERTICALLY FROM THE TOP OF FOOTING TO 6" BELOW GRADE

## NOTES:

1. STATIONS ARE GIVEN TO ℄ CONST. NB I.R. 77.
2. FOR MATCHLINE B, SEE SHEET 6/12.
3. FOR MATCHLINE D, SEE SHEET 8/12.
4. FOR SECTIONS C AND D, SEE SHEET 11/12.
5. MINIMUM HORIZONTAL REINFORCING LAP LENGTHS ARE AS FOLLOWS:

| | |
|---|---|
| NO. 5 BARS | 3'-1" |
| ALL GFRP BARS | 1'-1" |


DESIGN AGENCY
GPD GROUP®
Glaus, Pyle, Schomer, Burns & DeHaven, Inc.
520 South Main Street, Akron, OH 44311 330.572.2100

Copyright Glaus, Pyle, Schomer, Burns & DeHaven, Inc. 2020

| DESIGNED | DRAWN | REVIEWED | DATE |
|---|---|---|---|
| MOJ | MOJ | DGN | 1-19-21 |
| CHECKED | REVISED | STRUCTURE FILE NUMBER | |
| RHC | | | |

# WALL PLAN & ELEVATION (2 OF 4)

CAST-IN-PLACE REINFORCED CONCRETE RETAINING WALL 1
I-77 MEDIAN BARRIER BETWEEN SWARTZ ROAD AND I-77/I-277/US-224 INTERCHANGE

SUM-77/277/224
VARIOUS
PID No. 106002

7 / 12

1139
1288

0:\2017\2017258\Project Data\SUM\106002\Design\Structures\Wall_001\Sheets\106002_001_WE001.dgn Sheet13 1/17/2021 8:51:41 PM mjurcak

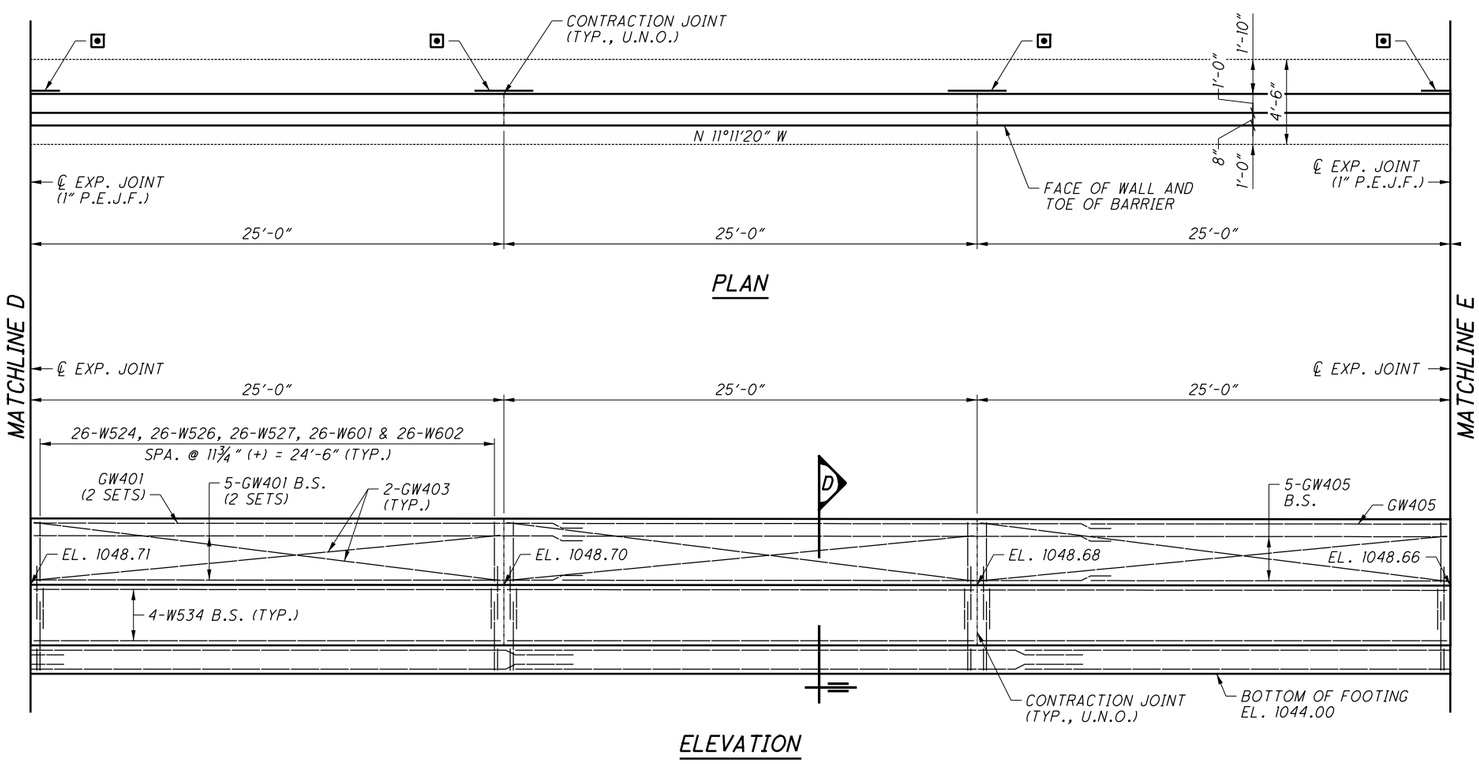


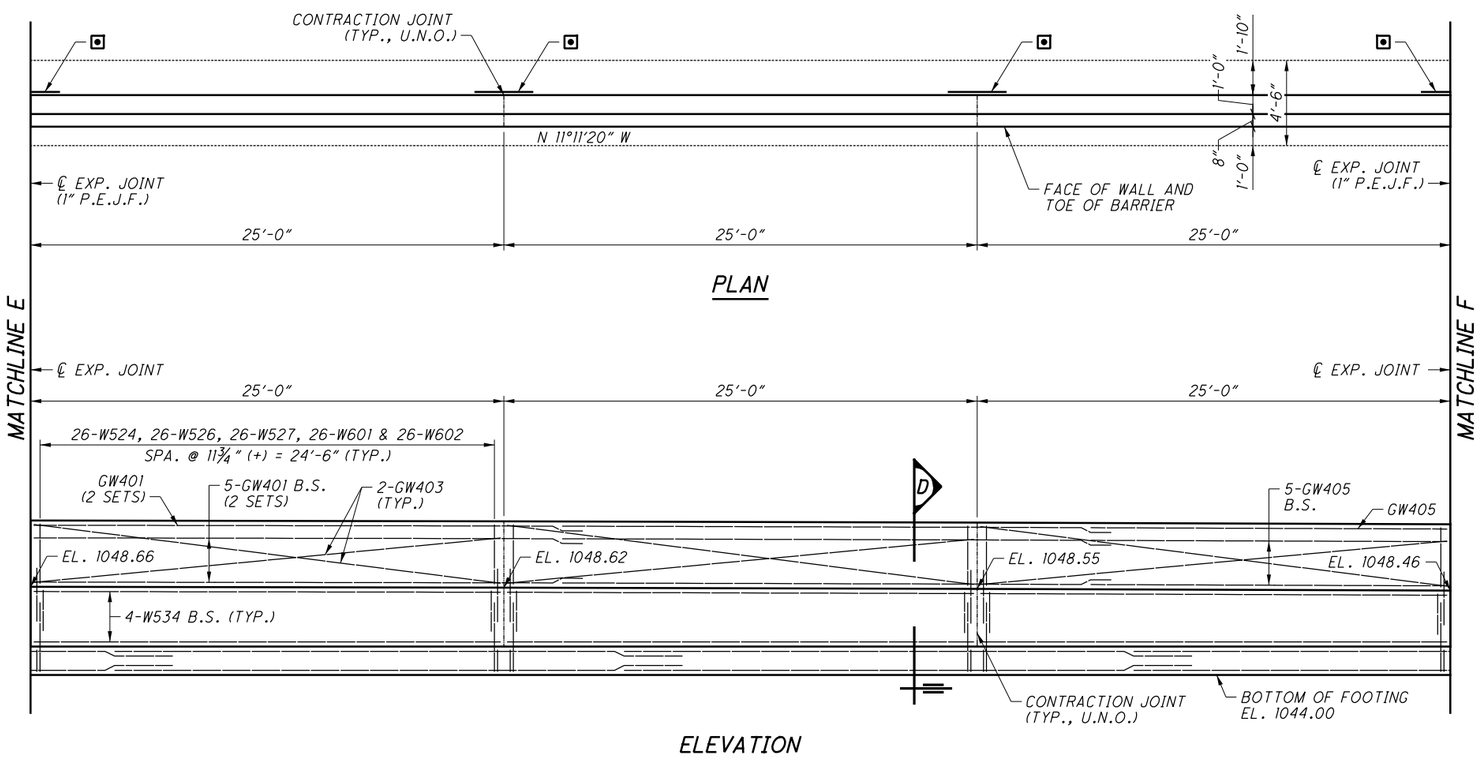


## LEGEND:

▣ TYPE 2 WATERPROOFING: 3'-0" WIDE STRIP CENTERED ON JOINT AND EXTENDING VERTICALLY FROM THE TOP OF FOOTING TO 6" BELOW GRADE

## NOTES:

1. STATIONS ARE GIVEN TO ℄ CONST. NB I.R. 77.
2. FOR MATCHLINE D, SEE SHEET 7/12.
3. FOR MATCHLINE F, SEE SHEET 9/12.
4. FOR SECTIONS C AND D, SEE SHEET 11/12.
5. MINIMUM HORIZONTAL REINFORCING LAP LENGTHS ARE AS FOLLOWS:

| | |
|---|---|
| NO. 5 BARS | 3'-1" |
| ALL GFRP BARS | 1'-1" |

DESIGN AGENCY
GPD GROUP
Glaus, Pyle, Schomer, Burns & DeHaven, Inc.
520 South Main Street, Akron, OH 44311 330.572.2100
Copyright Glaus, Pyle, Schomer, Burns & DeHaven, Inc. 2020

| DESIGNED | DRAWN | REVIEWED | DATE |
|---|---|---|---|
| MOJ | MOJ | DGN | 1-19-21 |
| CHECKED | REVISED | STRUCTURE FILE NUMBER | |
| RHC | | | |

WALL PLAN & ELEVATION (3 OF 4)
CAST-IN-PLACE REINFORCED CONCRETE RETAINING WALL 1
I-77 MEDIAN BARRIER BETWEEN SWARTZ ROAD AND I-77/I-277/US-224 INTERCHANGE

SUM-77/277/224
VARIOUS
PID No. 106002

8 / 12

1140
1288

O:\2017\2017258\ProjectData\SUM\106002\Design\Structures\Wall_001\Sheets\106002_001_WE001.dgn Sheet4 1/17/2021 8:51:42 PM mjurcak

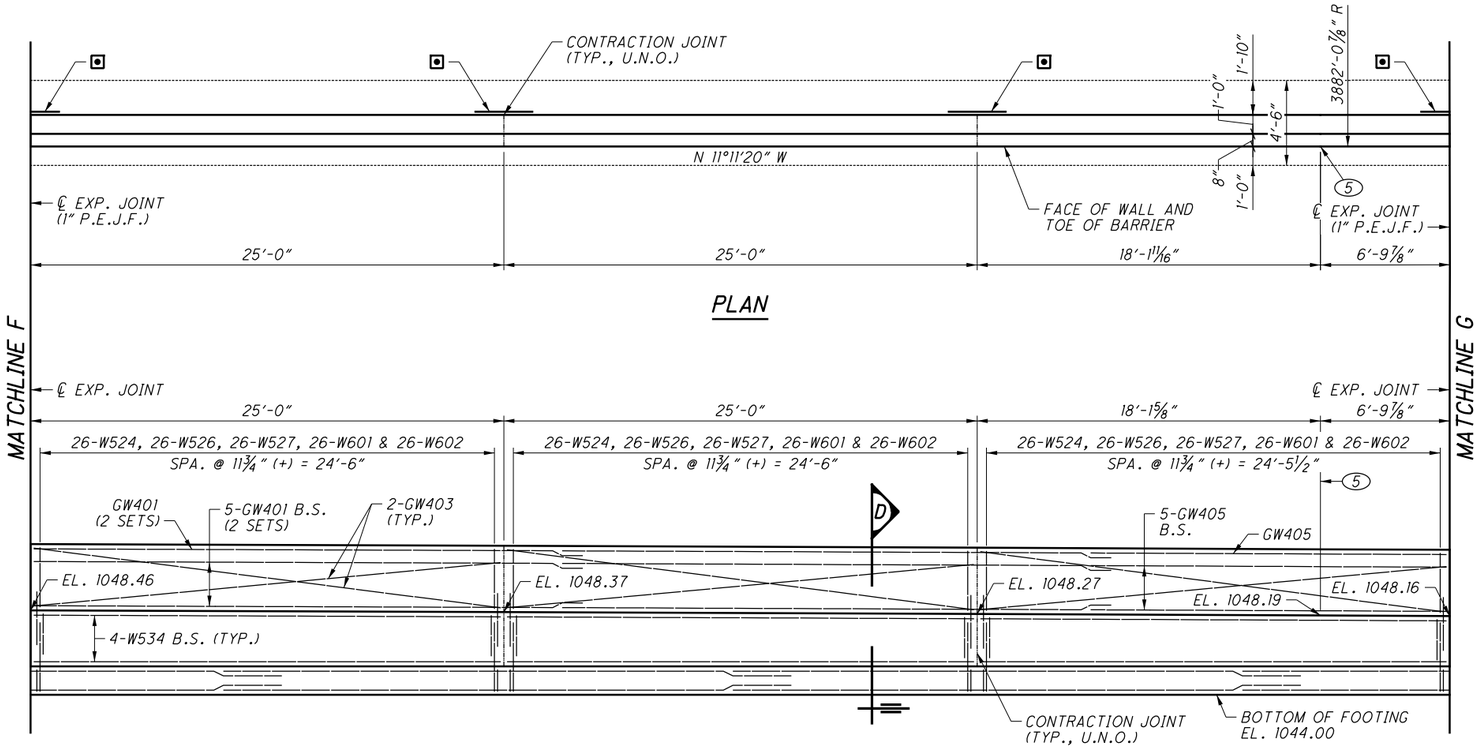


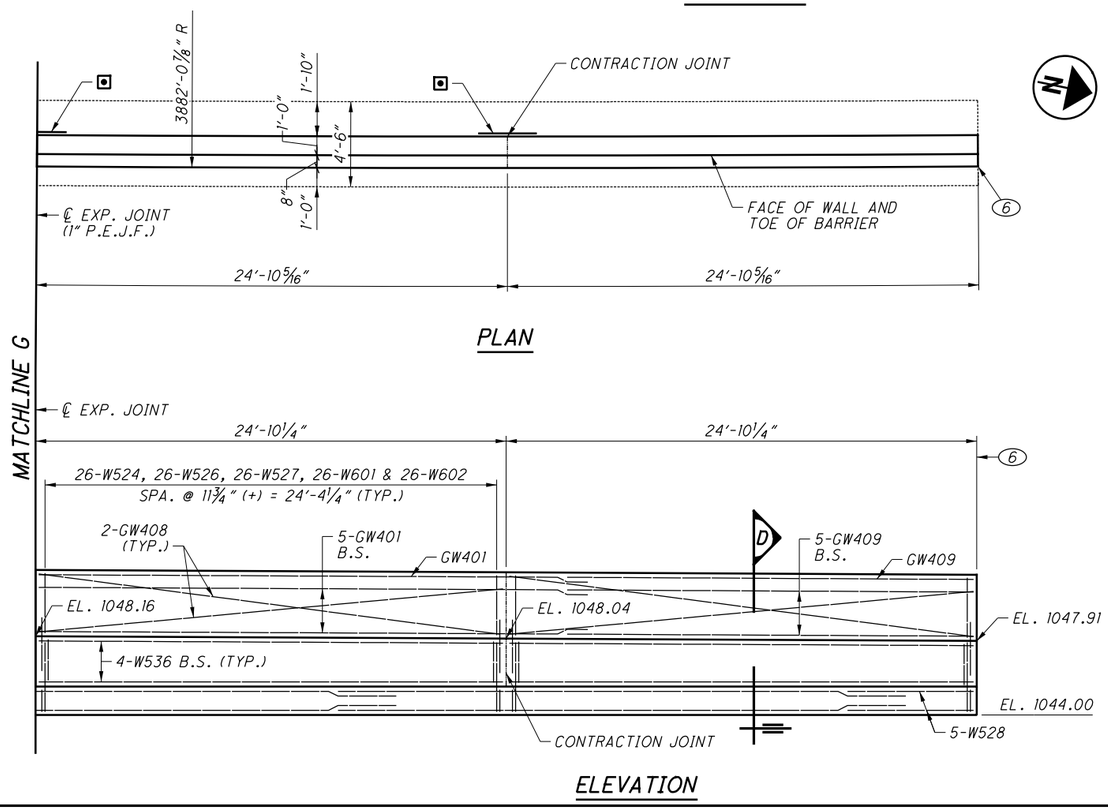


## LEGEND:

(#) WALL REFERENCE POINT
(SEE SITE PLAN FOR ADDITIONAL DETAILS)

TYPE 2 WATERPROOFING: 3'-0" WIDE STRIP CENTERED ON JOINT AND EXTENDING VERTICALLY FROM THE TOP OF FOOTING TO 6" BELOW GRADE

## NOTES:

1. FOR MATCHLINE F, SEE SHEET 8/12.
3. FOR SECTIONS C AND D, SEE SHEET 11/12.
4. MINIMUM HORIZONTAL REINFORCING LAP LENGTHS ARE AS FOLLOWS:

| | |
|---|---|
| NO. 5 BARS | 3'-1" |
| ALL GFRP BARS | 1'-1" |

DESIGN AGENCY
GPD GROUP
Glaus, Pyle, Schomer, Burns & DeHaven, Inc.
520 South Main Street, Akron, OH 44311 330.572.2100
Copyright Glaus, Pyle, Schomer, Burns & DeHaven, Inc. 2020

| DESIGNED | DRAWN | REVIEWED | DATE |
|---|---|---|---|
| MOJ | MOJ | DGN | 1-19-21 |
| CHECKED | REVISED | STRUCTURE FILE NUMBER | |
| RHC | | | |

WALL PLAN & ELEVATION (4 OF 4)
CAST-IN-PLACE REINFORCED CONCRETE RETAINING WALL 1
I-77 MEDIAN BARRIER BETWEEN SWARTZ ROAD AND I-77/I-277/US-224 INTERCHANGE

SUM-77/277/224
VARIOUS
PID No. 106002

9 / 12

1141
1288

O:\2017\2017258\ProjectData\SUM\106002\Design\Structures\Wall_001\Sheets\106002_001_WE001.dgn Sheet5 1/17/2021 8:51:43 PM mjurcak

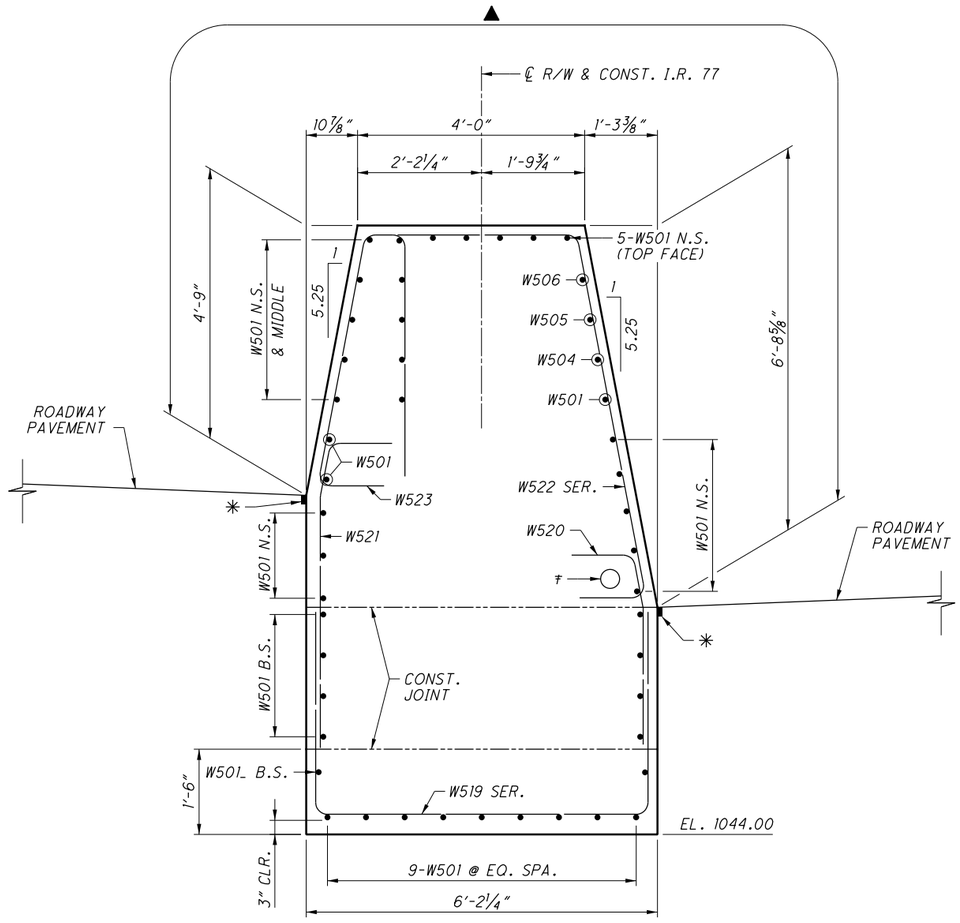


SECTION A

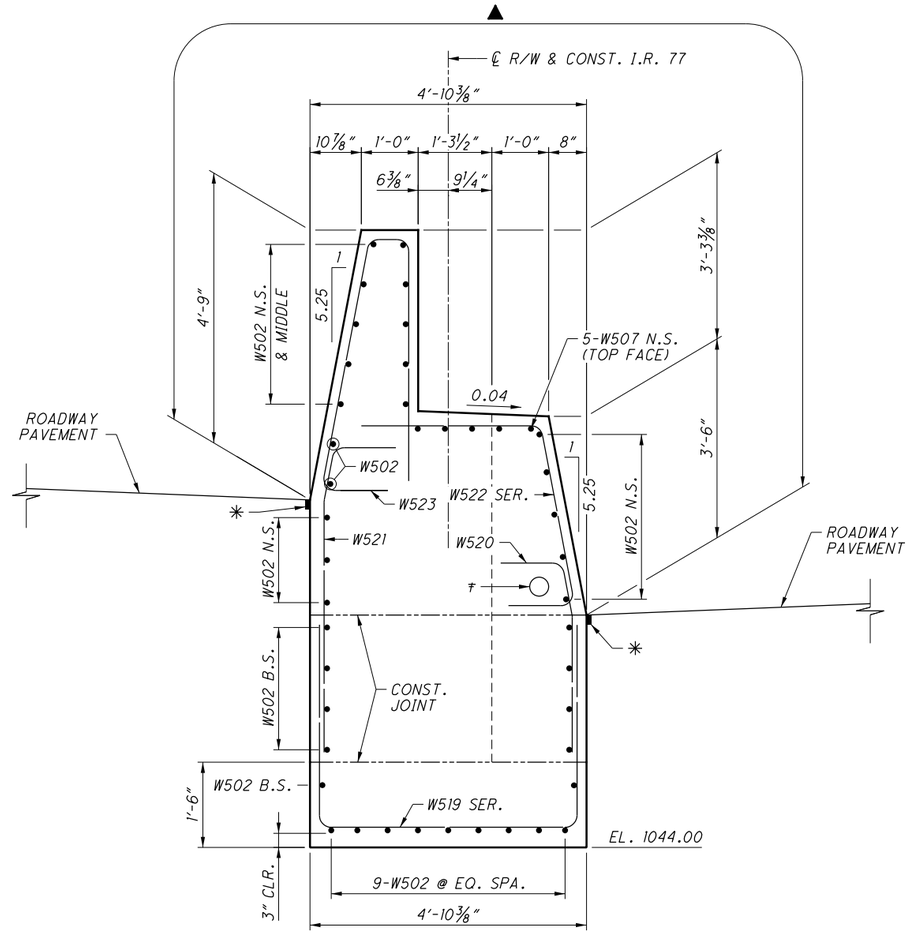


SECTION B

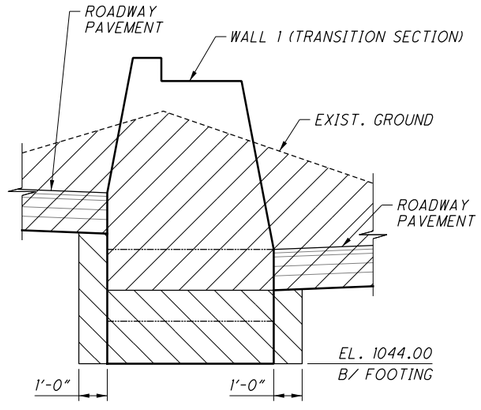


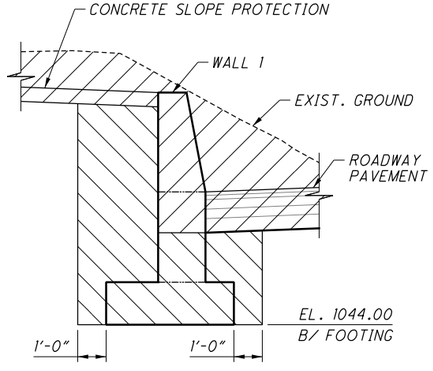


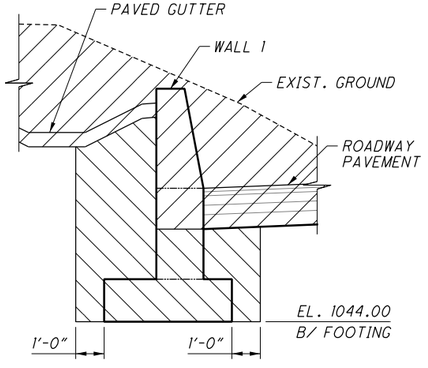


TYPICAL EXCAVATION LIMITS

## LEGEND:

| | |
|---|---|
| ▲ | ITEM 512 - SEALING OF CONCRETE SURFACES (EPOXY-URETHANE) |
| ✳ | HOT APPLIED JOINT SEAL, CMS 705.04 (TO BE INCLUDED WITH WALL CONCRETE) |
| ∓ | 4″ MULTI-CELL CONDUIT, 725.20 (TO BE INCLUDED WITH THE ITS QUANTITIES FOR PAYMENT) |
| | ITEM 203 - EXCAVATION (TO BE INCLUDED WITH ROADWAY QUANTITIES) |
| | ITEM 203 - UNCLASSIFIED EXCAVATION OR ITEM 203 - ROCK EXCAVATION |

## NOTES:

1. FOR THE LOCATION OF SECTIONS A AND B, SEE SHEET 5/12.
2. FOR PAVEMENT BUILDUP, SEE ROADWAY TYPICAL SECTIONS.

DESIGN AGENCY
GPD GROUP
520 South Main Street, Akron, OH 44311 330.572.2100
Copyright GPD Group, Akron, Ohio, USA. All Rights Reserved. Unauthorized use of these plans and specifications is prohibited by law and may result in civil liability and criminal penalties. Any use of these plans and specifications without the written permission of GPD Group, Akron, Ohio, USA will be at the user's sole risk and without liability to GPD Group, Akron, Ohio, USA.

| DESIGNED | DRAWN | REVIEWED | DATE |
|---|---|---|---|
| MOJ | MOJ | DGN | 1-19-21 |
| CHECKED | REVISED | STRUCTURE FILE NUMBER | |
| RHC | | | |

WALL DETAILS
CAST-IN-PLACE REINFORCED CONCRETE RETAINING WALL 1
I-77 MEDIAN BARRIER BETWEEN SWARTZ ROAD AND I-77/I-277/US-224 INTERCHANGE

SUM-77/277/224
VARIOUS
PID No. 106002

10 / 12

1142
1288

D:\2017\2017258\ProjectData\SUM\106002\Design\Structures\Wall_001\Sheets\106002_001_WD001.dgn Sheet 1/17/2021 8:51:46 PM mjurcak

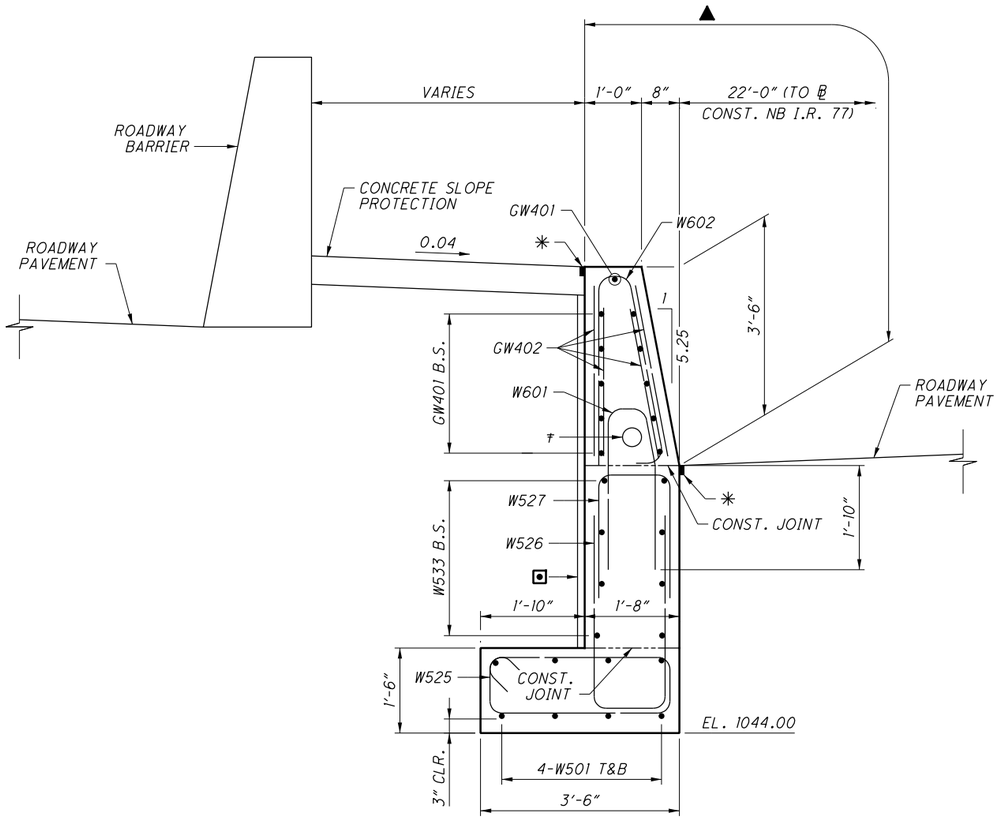


SECTION C

CONCRETE SLOPE PROTECTION IS TYPICAL FROM STA. 469+77.04 TO STA. 473+00.00

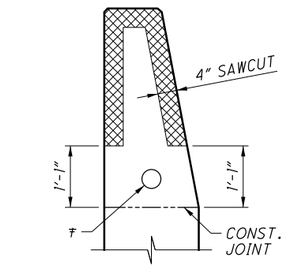


SAWCUT DETAIL

TYPICAL AT ALL CONTRACTION JOINTS

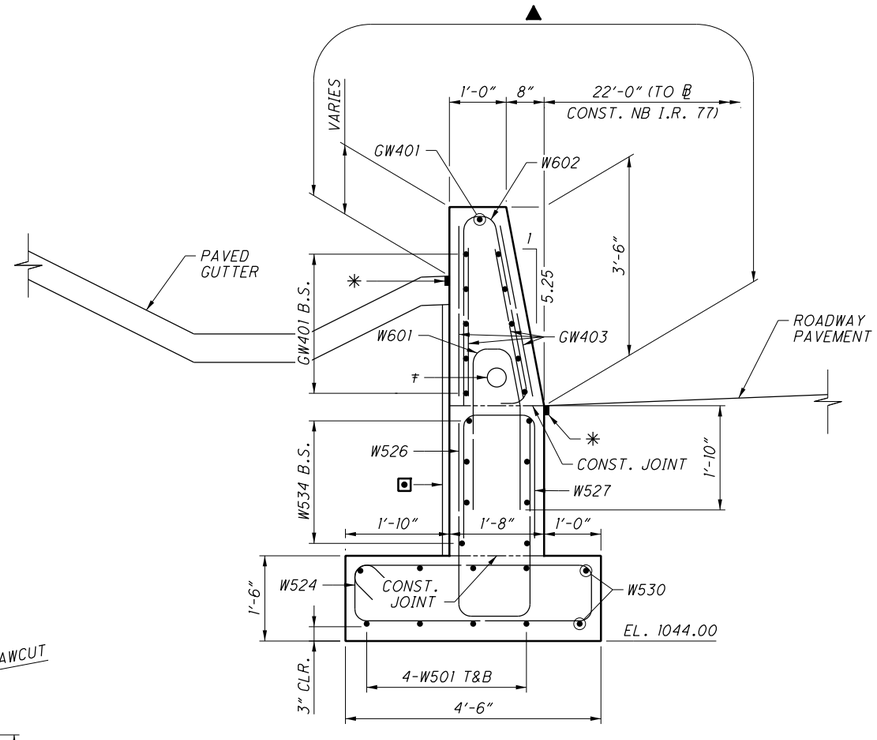


SECTION D

PAVED GUTTER IS TYPICAL FROM STA. 473+00.00 TO STA. 475+50.00

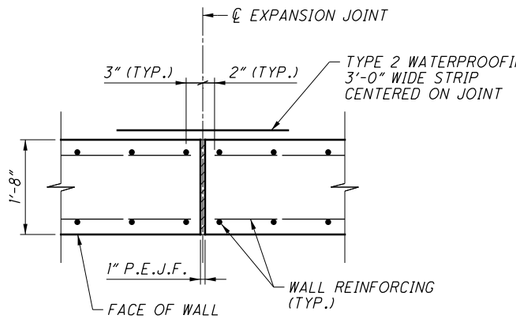


EXPANSION JOINT DETAIL

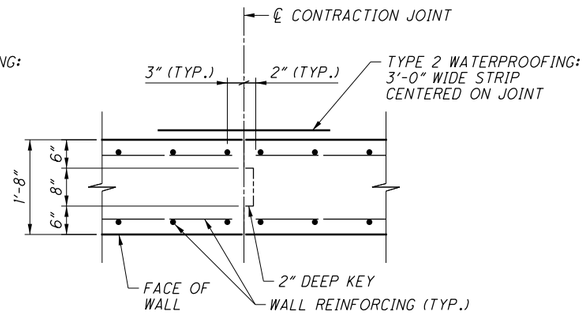


CONTRACTION JOINT DETAIL

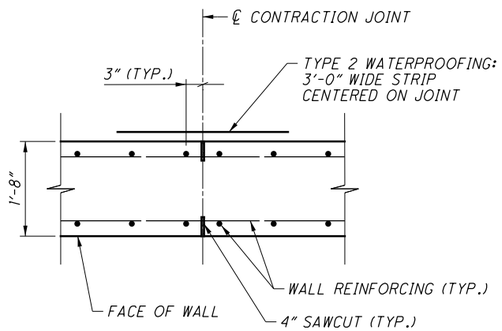


SAWCUT DETAIL

## LEGEND:

▲ ITEM 512 - SEALING OF CONCRETE SURFACES (EPOXY-URETHANE)

⊡ TYPE 2 WATERPROOFING: 3'-0" WIDE STRIP CENTERED ON JOINTS

✳ HOT APPLIED JOINT SEAL, CMS 705.04 (TO BE INCLUDED WITH WALL CONCRETE)

∓ 4" MULTI-CELL CONDUIT, 725.20 (TO BE INCLUDED WITH THE ITS QUANTITIES FOR PAYMENT)

## NOTES:

1. FOR THE LOCATION OF SECTIONS C AND D, SEE SHEETS 6/12 THROUGH 9/12.
2. FOR PAVEMENT BUILDUP, SEE ROADWAY TYPICAL SECTIONS.
3. FOR DETAILS AND PAYMENT FOR CONCRETE SLOPE PROTECTION AND PAVED GUTTER, SEE ROADWAY PLANS.
4. FOR ADDITIONAL SAWCUT DETAILS, SEE STD. DWG. SBR-1-20.

DESIGN AGENCY
GPD GROUP
520 South Main Street, Akron, OH 44311 330.572.2100
Copyright GPD Group, Akron, Ohio, USA

| DESIGNED | DRAWN | REVIEWED | DATE |
|---|---|---|---|
| MOJ | MOJ | DGN | 1-19-21 |
| CHECKED | REVISED | STRUCTURE FILE NUMBER | |
| RHC | | | |

WALL DETAILS

CAST-IN-PLACE REINFORCED CONCRETE RETAINING WALL 1
I-77 MEDIAN BARRIER BETWEEN SWARTZ ROAD AND I-77/I-277/US-224 INTERCHANGE

SUM-77/277/224
VARIOUS
PID No. 106002



1143
1288

O:\2017\2017258\Project Data\SUM\106002\Design\Structures\Wall_001\Sheets\106002_001_WD001.dgn Sheet2 1/17/2021 8:51:47 PM mjurcak

| MARK | TOTAL | LENGTH | WEIGHT (LBS) | TYPE | DIMENSIONS | | | | | |
|---|---|---|---|---|---|---|---|---|---|---|
| | | | | | A | B | C | D | E | INC. |
| RETAINING WALL BARS | | | | | | | | | | |
| W501 | 251 | 30'-0" | 7,854 | ST | | | | | | |
| W502 | 39 | 12'-9" | 519 | ST | | | | | | |
| W503 | 1 | 8'-6" | 9 | ST | | | | | | |
| W504 | 1 | 26'-9" | 28 | ST | | | | | | |
| W505 | 1 | 18'-1" | 19 | ST | | | | | | |
| W506 | 1 | 9'-6" | 10 | ST | | | | | | |
| W507 | 5 | 12'-10" | 67 | ST | | | | | | |
| W508 | 5 | 10'-4" | 54 | 2 | 2'-5" | 5'-9" | 2'-5" | | | |
| W509 | 1 | 10'-3" | 11 | 2 | 2'-5" | 5'-8" | 2'-5" | | | |
| W510 | 1 | 10'-2" | 11 | 2 | 2'-5" | 5'-7" | 2'-5" | | | |
| W511 | 1 | 10'-0" | 10 | 2 | 2'-5" | 5'-5" | 2'-5" | | | |
| W512 | 1 SER. OF 6 | 8'-6" TO 9'-10" | 57 | 2 | 2'-5" | 3'-11" TO 5'-3" | 2'-5" | | | 3 3/16" |
| W513 | 5 | 9'-0" | 47 | 2 | 2'-5" | 4'-5" | 2'-5" | | | |
| W514 | 1 | 8'-11" | 9 | 2 | 2'-5" | 4'-4" | 2'-5" | | | |
| W515 | 1 | 8'-10" | 9 | 2 | 2'-5" | 4'-3" | 2'-5" | | | |
| W516 | 1 | 8'-8" | 9 | 2 | 2'-5" | 4'-1" | 2'-5" | | | |
| W517 | 1 | 8'-5" | 9 | 2 | 2'-5" | 3'-10" | 2'-5" | | | |
| W518 | 1 | 8'-2" | 9 | 2 | 2'-5" | 3'-7" | 2'-5" | | | |
| W519 | 1 SER. OF 54 | 11'-0" TO 12'-4" | 657 | 2 | 3'-5" | 4'-5" TO 5'-9" | 3'-5" | | | 5/16" |
| W520 | 54 | 4'-1" | 230 | 13 | 2'-4" | 11" | 2" | 11" | | |
| W521 | 54 | 6'-1" | 343 | 13 | 4'-4" | 11" | 2" | 11" | | |
| W522 | 1 SER. OF 54 | 7'-7" TO 10'-9" | 516 | 42 | 3'-2" TO 6'-4" | 3'-7" | 1'-0" | | | 11/16" |
| W523 | 54 | 10'-1" | 568 | 60 | 11" | 4'-6" | 8" | 4'-3" | | |
| W524 | 586 | 10'-11" | 6,672 | 3 | 4'-2" | 1'-0" | | | | |
| W525 | 10 | 8'-11" | 93 | 3 | 3'-2" | 1'-0" | | | | |
| W526 | 596 | 8'-1" | 5,025 | 2 | 3'-6" | 1'-4" | 3'-6" | | | |
| W527 | 596 | 5'-3" | 3,264 | 2 | 2'-1" | 1'-4" | 2'-1" | | | |
| W528 | 10 | 6'-8" | 70 | ST | | | | | | |
| W529 | 2 | 10'-0" | 21 | ST | | | | | | |
| W530 | 2 | 14'-8" | 31 | ST | | | | | | |
| W531 | 2 | 15'-8" | 33 | ST | | | | | | |
| W532 | 2 | 9'-3" | 19 | ST | | | | | | |
| W533 | 8 | 22'-6" | 188 | ST | | | | | | |
| W534 | 152 | 24'-7" | 3,897 | ST | | | | | | |
| W535 | 8 | 24'-8" | 206 | ST | | | | | | |
| W536 | 16 | 24'-6" | 409 | ST | | | | | | |
| | | | | | | | | | | |
| W601 | 596 | 6'-5" | 5,744 | 14 | 2'-9" | 1'-2" | 2" | 11" | 1'-10" | |
| W602 | 596 | 7'-8" | 6,863 | 60 | 11" | 3'-3" | 8" | 3'-3" | | |
| | | | | | | | | | | |
| TOTAL | | | 43,590 | | | | | | | |

| MARK | TOTAL | LENGTH (EACH) | LENGTH (TOTAL) | TYPE | DIMENSIONS | | | |
|---|---|---|---|---|---|---|---|---|
| | | | | | A | B | C | INC. |
| RETAINING WALL BARS - GFRP REINFORCING | | | | | | | | |
| GW401 | 165 | 30'-0" | 4,950 | ST | | | | |
| GW402 | 4 | 22'-8" | 91 | ST | | | | |
| GW403 | 76 | 24'-9" | 1,881 | ST | | | | |
| GW404 | 11 | 14'-9" | 162 | ST | | | | |
| GW405 | 55 | 16'-8" | 917 | ST | | | | |
| GW406 | 4 | 24'-5" | 98 | ST | | | | |
| GW407 | 11 | 16'-7" | 182 | ST | | | | |
| GW408 | 8 | 24'-7" | 197 | ST | | | | |
| GW409 | 11 | 20'-6" | 226 | ST | | | | |
| | | | | | | | | |
| TOTAL | | | 8,703 | | | | | |

## BAR BENDING DIAGRAMS

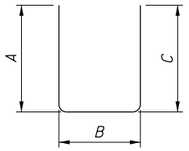


TYPE-2

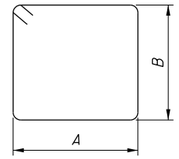


TYPE-3

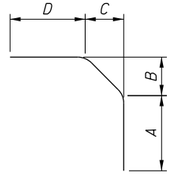


TYPE-13

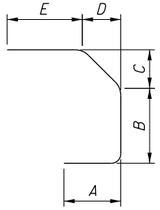


TYPE-14

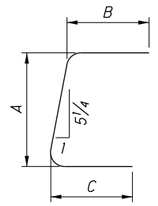


TYPE-42

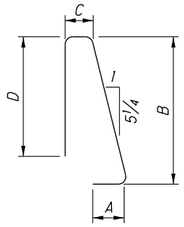


TYPE-60

## NOTES:

1. BAR DIMENSIONS ARE OUT-TO-OUT UNLESS NOTED OTHERWISE.
2. ALL BARS ARE EPOXY COATED.
3. WHEN NO BAR LEG DIMENSIONS ARE SHOWN, IT INDICATES A STANDARD BEND.
4. BAR SIZE AND LOCATION ARE INDICATED IN THE BAR MARK. THE FIRST ALPHABETICAL LETTER(S) INDICATES LOCATION. THE NEXT DIGIT OF THE THREE DIGIT SERIES AND THE NEXT TWO DIGITS OF THE FOUR DIGIT SERIES INDICATE BAR SIZE NUMBER.

EXAMPLES: W501
- NO. 5 SIZE BAR
- WALL BAR

GW401
- NO. 4 SIZE BAR
- GFRP WALL BAR


DESIGN AGENCY
GPD GROUP®
Glaus, Pyle, Schomer, Burns & DeHaven, Inc.
520 South Main Street, Akron, OH 44311 330.572.2100

Copyright Glaus, Pyle, Schomer, Burns & DeHaven, Inc. 2020

| REVIEWED | DATE |
|---|---|
| DGN | 1-19-21 |
| STRUCTURE FILE NUMBER | |

| DRAWN | REVISED |
|---|---|
| MOJ | |

| DESIGNED | CHECKED |
|---|---|
| MOJ | JJB |

# REINFORCING BAR LISTS

CAST-IN-PLACE REINFORCED CONCRETE RETAINING WALL 1
I-77 MEDIAN BARRIER BETWEEN SWARTZ ROAD AND I-77/I-277/US-224 INTERCHANGE

SUM-77/277/224
VARIOUS
PID No. 106002



O:\2017\2017258\ProjectData\SUM\06002\Design\Structures\Wall_001\Sheets\06002_001_WL001.dgn Sheet 1/17/2021 8:51:48 PM mjurcak

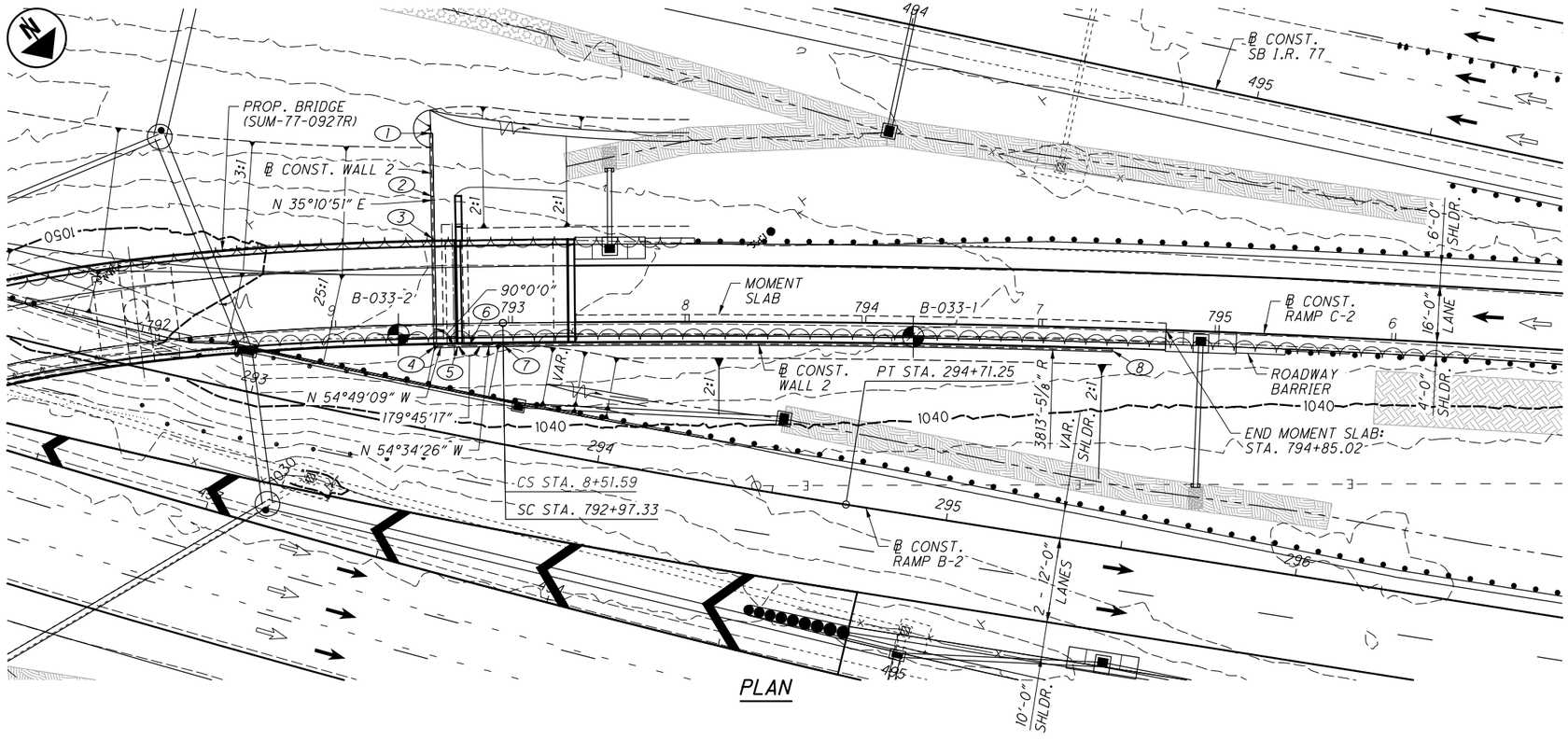


PLAN

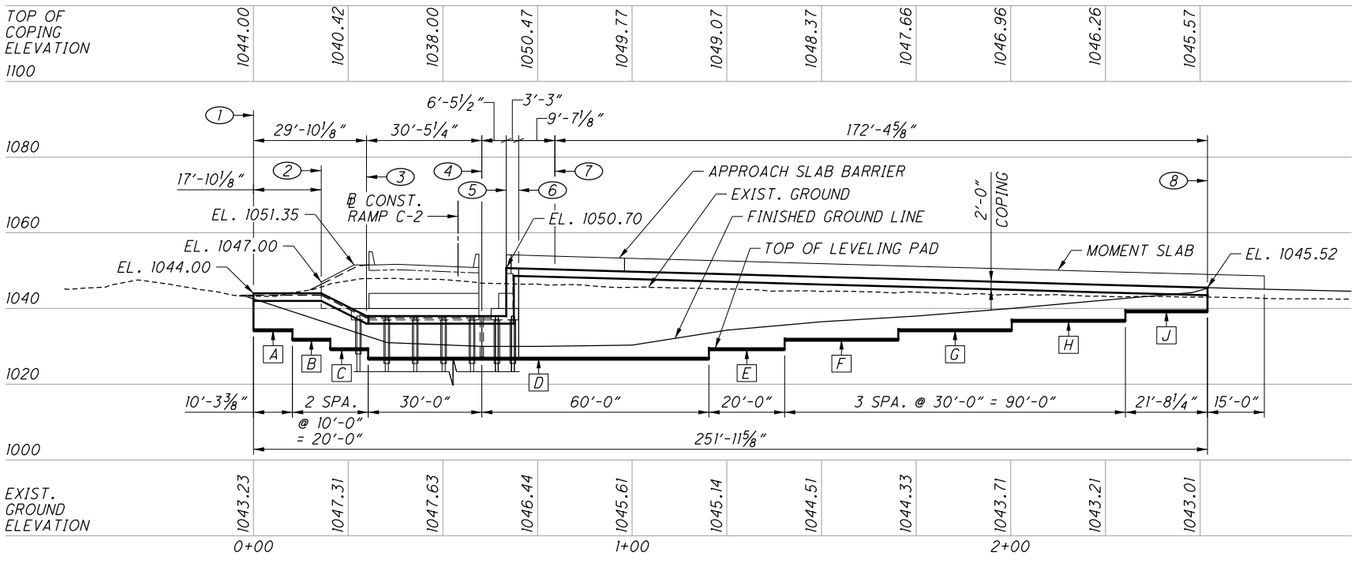


ELEVATION ALONG ℄ CONST. WALL 2

| BENCHMARK DATA | | | | |
|---|---|---|---|---|
| POINT | NORTHING | EASTING | ELEV. | DESCRIPTION |
| CP05 | 493895.1420 | 2245390.8980 | 1073.53 | CONC. MONUMENT |
| CP06 | 493906.9643 | 2244750.3816 | 1090.46 | CONC. MONUMENT |
| CP07 | 498481.9448 | 2243140.4162 | 1064.39 | CONC. MONUMENT |
| CP08 | 499070.7218 | 2243262.6440 | 1076.40 | CONC. MONUMENT |

FOR ADDITIONAL BENCHMARK INFORMATION, SEE ROADWAY SHEETS.

| REVISIONS | | |
|---|---|---|
| NO. | DATE | DESCRIPTION |
| 2 | 04/2/21 | UPDATED WINGWALL CORNER |

| RETAINING WALL 2 DATA | | | |
|---|---|---|---|
| LOCATION | STATION | OFFSET | NOTES |
| 1 | STA. 792+78.14 | 54.00' LT. | BEGIN WALL |
| | STA. 0+00.00 ◑ | 0.00' ◑ | |
| 2 | STA. 792+78.10 | 36.16' LT. | COPING ELEV. CHANGE |
| | STA. 0+17.84 ◑ | 0.00' ◑ | |
| 3 | STA. 792+78.06 | 24.16' LT. | COPING ELEV. CHANGE |
| | STA. 0+29.84 ◑ | 0.00' ◑ | |
| 4 | STA. 792+77.98 | 6.28' RT. | ANGLE POINT |
| | STA. 0+60.28 ◑ | 0.00' ◑ | |
| 5 | STA. 792+84.45 | 6.29' RT. | COPING ELEV. CHANGE |
| | STA. 0+66.74 ◑ | 0.00' ◑ | |
| 6 | STA. 792+87.71 | 6.29' RT. | ANGLE POINT |
| | STA. 0+69.99 ◑ | 0.00' ◑ | |
| 7 | STA. 792+97.33 | 6.29' RT. | BEGIN CURVE |
| | STA. 0+79.58 ◑ | 0.00' ◑ | |
| 8 | STA. 794+70.00 | 6.29' RT. | END CURVE & END WALL |
| | STA. 2+51.97 ◑ | 0.00' ◑ | |

| LEVELING PAD DATA | |
|---|---|
| LOCATION | ELEVATION |
| A | 1034.50 |
| B | 1032.00 |
| C | 1029.50 |
| D | 1027.00 |
| E | 1029.50 |
| F | 1032.00 |
| G | 1034.50 |
| H | 1037.00 |
| J | 1039.50 |

## LEGEND:

(#) ℄ CONST. WALL 2 POINT

X TOP OF LEVELING PAD ELEVATION LOCATION

◑ STATION & OFFSET GIVEN TO ℄ CONST. WALL 2

PROJECT BORING LOCATION

## NOTES:

1. ALL WALL STATIONS AND OFFSETS ARE MEASURED FROM THE FRONT FACE OF THE WALL AND GIVEN TO ℄ CONST. RAMP C-2 UNLESS NOTED OTHERWISE.
2. ALL DIMENSIONS ARE GIVEN ALONG ℄ CONST. WALL 2.
3. EARTHWORK LIMITS SHOWN ARE APPROXIMATE. ACTUAL SLOPES SHALL CONFORM TO PLAN CROSS SECTIONS.

DESIGN AGENCY
GPD GROUP
Gital Patel, Scott Burdt & Dohanyan, Inc.
520 South Main Street, Akron, OH 44311 330.572.2100
Copyright GPD Group, Akron, Ohio, Scheme: Aurora Sewers, Inc., 2020

| DESIGNED | DRAWN | REVIEWED | DATE |
|---|---|---|---|
| MOJ | MOJ | DGN | 1-18-21 |
| CHECKED | REVISED | STRUCTURE FILE NUMBER | |
| RHC | | | |

SITE PLAN
RETAINING WALL 2
MSE WALL BELOW SUM-77-0927R FORWARD ABUTMENT

SUM-77/277/224
VARIOUS
PID No. 106002

1 / 10

1145
1288

0:\2017\20171258\ProjectData\SUM\106002\Design\Structures\Wall_002\Sheets\106002_002_WP001.dgn Sheet 4/2/2021 4:51:11 PM mjurcak

**DESIGN SPECIFICATIONS:**

THIS STRUCTURE CONFORMS TO THE 8TH EDITION OF THE "LRFD BRIDGE DESIGN SPECIFICATIONS" ADOPTED BY THE AMERICAN ASSOCIATION OF STATE HIGHWAY AND TRANSPORTATION OFFICIALS, AND THE ODOT BRIDGE DESIGN MANUAL, 2020.

**REFER TO THE FOLLOWING STANDARD DRAWINGS:**

SBR-1-20 DATED 7-17-20

**AND TO THE FOLLOWING SUPPLEMENTAL SPECIFICATIONS:**

800 DATED 1-15-21
840 DATED 1-15-21
878 DATED 1-17-20

**OPERATIONAL IMPORTANCE:**

A LOAD MODIFIER OF 1.00 HAS BEEN ASSUMED FOR THE DESIGN OF THIS STRUCTURE IN ACCORDANCE WITH THE AASHTO LRFD BRIDGE DESIGN SPECIFICATIONS, ARTICLE 1.3.5 AND THE ODOT BRIDGE DESIGN MANUAL.

**DESIGN DATA:**

CONCRETE CLASS QC2 - COMPRESSIVE STRENGTH 4.5 KSI (SUBSTRUCTURE)
REINFORCING STEEL - MINIMUM YIELD STRENGTH 60 KSI

**DESIGN LOADING**

LIVE LOAD SURCHARGE OF 0.240 KSF
FUTURE WEARING SURFACE (FWS) OF 0.060 KSF

**PROPRIETARY RETAINING WALL DATA:**

THE PROPRIETARY WALL SUPPLIER SHALL DESIGN THE INTERNAL STABILITY OF A MECHANICALLY STABILIZED EARTH (MSE) WALL IN ACCORDANCE WITH SS840 TO SUPPORT THE ABUTMENT. THE DESIGN FOR INTERNAL STABILITY SHALL INCLUDE A NOMINAL (I.E. UNFACTORED) HORIZONTAL STRIP LOAD DUE TO FRICTION (FR) FROM THE SUPERSTRUCTURE OF 2.65 K/FT APPLIED PERPENDICULAR TO THE FACE OF WALL AT THE BASE OF THE CONCRETE FOOTING. THIS STRIP LOAD DOES NOT INCLUDE EARTH PRESSURE LOADS FROM THE ABUTMENT BACKFILL. HOWEVER, THE PROPRIETARY WALL SUPPLIER SHALL INCLUDE EARTH PRESSURE LOADS FROM THE ABUTMENT BACKFILL IN THE DESIGN CALCULATIONS.

**FOUNDATION BEARING RESISTANCE**

THE WALL 2 REINFORCED SOIL MASS, AS DESIGNED, PRODUCES A MAXIMUM SERVICE LIMIT STATE BEARING PRESSURE OF 4.05 KIPS PER SQUARE FOOT AND A MAXIMUM STRENGTH LIMIT STATE BEARING PRESSURE OF 6.06 KIPS PER SQUARE FOOT. THE FACTORED BEARING RESISTANCE IS 14.8 KIPS PER SQUARE FOOT.

**MINIMUM SOIL REINFORCEMENT LENGTH**

PROVIDE MINIMUM SOIL REINFORCEMENT LENGTHS EQUAL TO THE GREATER OF 8 FEET OR A LENGTH EQUAL TO 70% OF THE WALL HEIGHT ACCORDING TO SUPPLEMENTAL SPECIFICATION 840.04.

**ITEM 512 - SEALING OF CONCRETE SURFACES (EPOXY-URETHANE)**

THE URETHANE TOP COAT SHALL BE TINTED TO MEET AMS-STD-595A COLOR No. 17778 - LIGHT NEUTRAL.

**ABBREVIATIONS:**

| | |
|---|---|
| BOT. | BOTTOM |
| B.S. | BOTH SIDES |
| BTWN. | BETWEEN |
| C.J. | CONSTRUCTION JOINT |
| CLR. | CLEAR |
| CONST. | CONSTRUCTION |
| DIA. | DIAMETER |
| EL. | ELEVATION |
| EQ. | EQUAL |
| EX. OR EXIST. | EXISTING |
| F.S. | FAR SIDE |
| GFRP | GLASS FIBER REINFORCED POLYMER |
| MAX. | MAXIMUM |
| MIN. | MINIMUM |
| NB | NORTHBOUND |
| NO. | NUMBER |
| N.S. | NEAR SIDE |
| P.E.J.F. | PREFORMED EXPANSION JONT FILLER |
| SB | SOUTHBOUND |
| SER. | SERIES |
| SPA. | SPACES OR SPACING |
| STA. | STATION |
| STD. DWG. | STANDARD DRAWING |
| T&B | TOP AND BOTTOM |
| TYP. | TYPICAL |

O:\2017\20172581\ProjectData\SUM\106002\Design\Structures\Wall_002\Sheets\106002_002_WN001.dgn Sheet 1/29/2021 2:06:39 PM rcummins

DESIGN AGENCY
GPD GROUP
Glaus, Pyle, Schomer, Burns & DeHaven, Inc.
520 South Main Street, Akron, OH 44311 330.572.2100
Copyright Glaus, Pyle, Schomer, Burns & DeHaven, Inc. 2020

| DESIGNED | DRAWN | REVIEWED | DATE |
|---|---|---|---|
| DJC | DJC | DGN | 1-18-21 |
| CHECKED | REVISED | | STRUCTURE FILE NUMBER |
| RHC | | | |

# GENERAL NOTES

RETAINING WALL 2
MSE WALL BELOW SUM-77-0927R FORWARD ABUTMENT

SUM-77/277/224
VARIOUS
PID No. 106002



1146
1288

## ESTIMATED QUANTITIES

CALCULATED BY: DJC DATE: 1-14-2021
CHECKED BY: DGN DATE: 1-15-2021

| ITEM | EXT. | TOTAL 05/IMS/BR | UNIT | DESCRIPTION | AS PER PLAN REF. SHEET |
|---|---|---|---|---|---|
| 203 | 35110 | 167 | CY | GRANULAR MATERIAL, TYPE B | |
| | | | | | |
| 509 | 10000 | 13,478 | LB | EPOXY COATED REINFORCING STEEL | |
| 509 | 30030 | 669 | FT | NO. 5 GFRP DEFORMED BARS | |
| 509 | 30040 | 1,925 | FT | NO. 6 GFRP DEFORMED BARS | |
| | | | | | |
| 511 | 53012 | 90 | CY | CLASS QC2 CONCRETE, MISC.: PARAPET INCLUDING MOMENT SLAB | |
| | | | | | |
| 512 | 10100 | 412 | SY | SEALING OF CONCRETE SURFACES (EPOXY-URETHANE) | |
| | | | | | |
| 516 | 13900 | 322 | SF | 2" PREFORMED EXPANSION JOINT FILLER | |
| | | | | | |
| 601 | 21000 | 14 | SY | CONCRETE SLOPE PROTECTION | |
| | | | | | |
| 840 | 20000 | 3,640 | SF | MECHANICALLY STABILIZED EARTH WALL | |
| 840 | 21000 | 2,321 | CY | WALL EXCAVATION | |
| 840 | 22000 | 442 | SY | FOUNDATION PREPARATION | |
| 840 | 23000 | 1,896 | CY | SELECT GRANULAR BACKFILL | |
| 840 | 23050 | 37 | CY | NATURAL SOIL | |
| 840 | 25010 | 500 | FT | 6" DRAINAGE PIPE, PERFORATED | |
| 840 | 25020 | 20 | FT | 6" DRAINAGE PIPE, NON-PERFORATED | |
| 840 | 26000 | 263 | FT | CONCRETE COPING | |
| 840 | 27000 | 5 | DAY | ON-SITE ASSISTANCE | |
| 840 | 28000 | | LS | SGB INSPECTION AND COMPACTION TESTING | |

| REVISIONS | | |
|---|---|---|
| NO. | DATE | DESCRIPTION |
| 2 | 04/2/21 | ITEM ADDED/QUANTITY UPDATED |

DESIGN AGENCY
GPD GROUP
Gillan, Post, Schmid, Burrell & DeMarco, Inc.
520 South Main Street, Akron, OH 44311 330.572.2100
Copyright Gillan, Post, Schmid, Burrell & DeMarco, Inc. 2020

| DESIGNED | DRAWN | REVIEWED | DATE |
|---|---|---|---|
| DJC | DJC | DGN | 1-18-21 |
| CHECKED | REVISED | STRUCTURE FILE NUMBER | |
| RHC | | | |

**SUM-77/277/224**
**VARIOUS**
**PID No. 106002**

**ESTIMATED QUANTITIES**
RETAINING WALL 2
MSE WALL BELOW SUM-77-0927R FORWARD ABUTMENT



O:\2017\2017258\ProjectData\SUM\106002\Design\Structures\Wall_002\Sheets\106002_002_W000i.dgn Sheet 4/2/2021 4:51:26 PM mjurcak

| POINT | ℄ CONST. WALL 2 | | ℄ CONST. RAMP C-2 | |
|---|---|---|---|---|
| | STATION | OFFSET | STATION | OFFSET |
| 1 | 0+00.00 | 00.00' | 792+78.14 | 54.00' LT. |
| 2 | 0+17.84 | 00.00' | 792+78.10 | 36.16' LT. |
| 3 | 0+29.84 | 00.00' | 792+78.06 | 24.16' LT. |
| 4 | 0+60.28 | 00.00' | 792+77.98 | 6.28' RT. |
| 5 | 0+66.74 | 00.00' | 792+84.45 | 6.29' RT. |
| 6 | 0+69.99 | 00.00' | 792+87.71 | 6.29' RT. |
| 7 | 0+79.58 | 00.00' | 792+97.33 | 6.29' RT. |
| 9 | | | 792+76.19 | 8.05' RT. |
| 10 | 0+69.99 | 1.77' RT. | 792+87.71 | 8.06' RT. |
| 11 | 0+79.58 | 1.77' RT. | 792+97.33 | 8.06' RT. |
| 12 | | | 792+76.43 | 55.01' LT. |
| 13 | | | 792+87.36 | 55.00' LT. |
| 14 | 0+10.28 | 9.46' LT. | 792+87.38 | 43.71' LT. |
| 15 | 0+17.84 | 19.96' LT. | 792+97.76 | 36.19' LT. |
| 16 | 0+40.87 | 19.96' LT. | 792+97.88 | 13.17' LT. |

## LEGEND

◪ PIPE DROP FROM ABUTMENT BACKWALL DRAINAGE TO BE CONNECTED TO THE WALL DRAINAGE COLLECTION SYSTEM SEE BRIDGE NO. SUM-77-0927R FORWARD ABUTMENT PLANS

▲ ITEM 840 - 6" DRAINAGE PIPE, NON-PERFORATED, 19'-0" LONG, OUTLET TO CATCH BASIN D-40 AT INVERT EL. 1025.50

** MEASURED ALONG ℄ CONST. WALL 2 (FRONT FACE OF THE WALL)

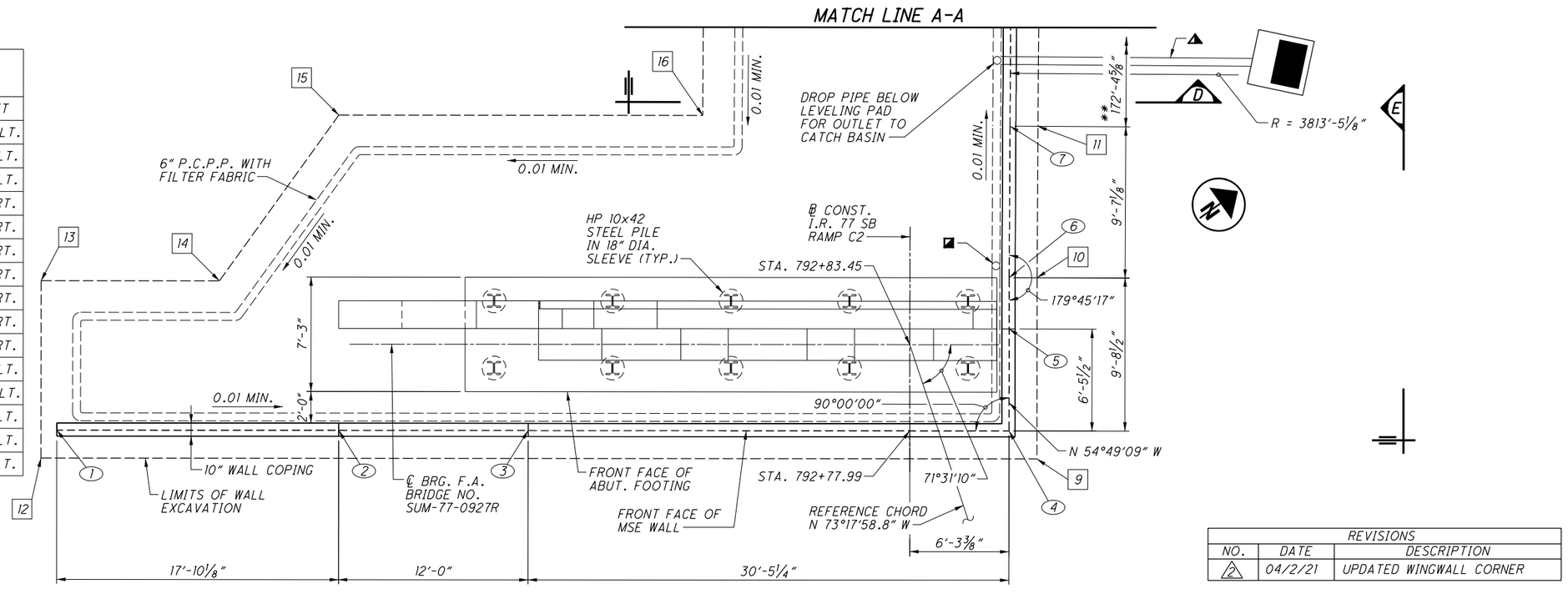


PLAN

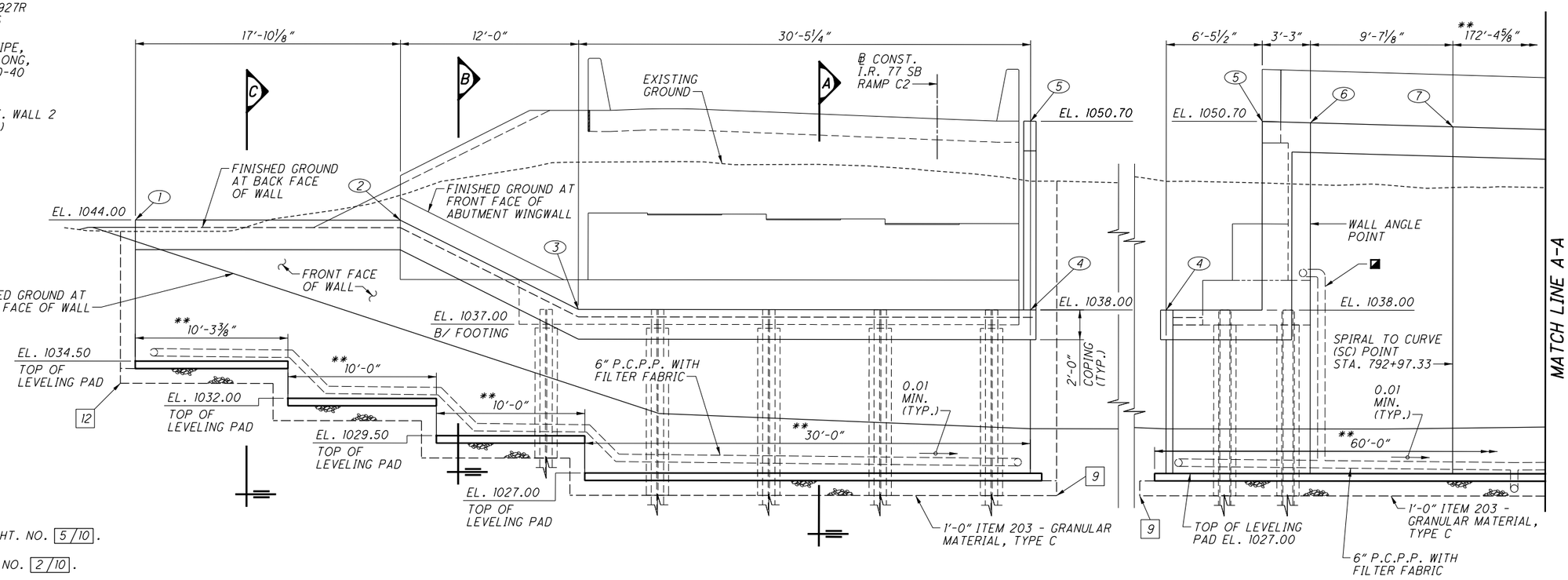


ELEVATION ALONG ℄ CONST. WALL 2

VIEW E

ELEVATION ALONG ℄ CONST. WALL 2

## NOTES:

1. FOR MATCH LINE A-A, SEE SHT. NO. 5/10.
2. FOR WALL NOTES, SEE SHT. NO. 2/10.
3. FOR SECTIONS A & D, SEE SHT. NO. 7/10.
4. FOR SECTIONS B & C, SEE SHT. NO. 8/10.

| REVISIONS | | |
|---|---|---|
| NO. | DATE | DESCRIPTION |
| 2 | 04/2/21 | UPDATED WINGWALL CORNER |


DESIGN AGENCY
GPD GROUP
520 South Main Street, Akron, OH 44311 330.572.2100


| DESIGNED | DRAWN | REVIEWED | DATE |
|---|---|---|---|
| DJC | DJC | DGN | 1-18-21 |

STRUCTURE FILE NUMBER

REVISED

CHECKED RHC

WALL PLAN & ELEVATION (1 OF 3)
RETAINING WALL 2
MSE WALL BELOW SUM-77-0927R FORWARD ABUTMENT

SUM-77/277/224
VARIOUS
PID No. 106002

4 / 10

1148
1288


O:\2017\2017258\ProjectData\SUM\106002\Design\Structures\Wall_002\Sheets\106002_002_WE001.dgn Sheet 1 4/2/2021 4:51:28 PM mjurcak

| POINT | ℄ CONST. WALL 2 | | ℄ CONST. RAMP C-2 | |
|---|---|---|---|---|
| | STATION | OFFSET | STATION | OFFSET |
| 17 | 1+20.28 | 19.46' LT. | 793+38.10 | 13.17' LT. |
| 18 | 1+20.28 | 16.46' LT. | 793+38.10 | 10.17' LT. |
| 19 | 1+40.28 | 16.46' LT. | 793+58.13 | 10.17' LT. |
| 20 | 1+40.28 | 14.46' LT. | 793+58.13 | 8.17' LT. |

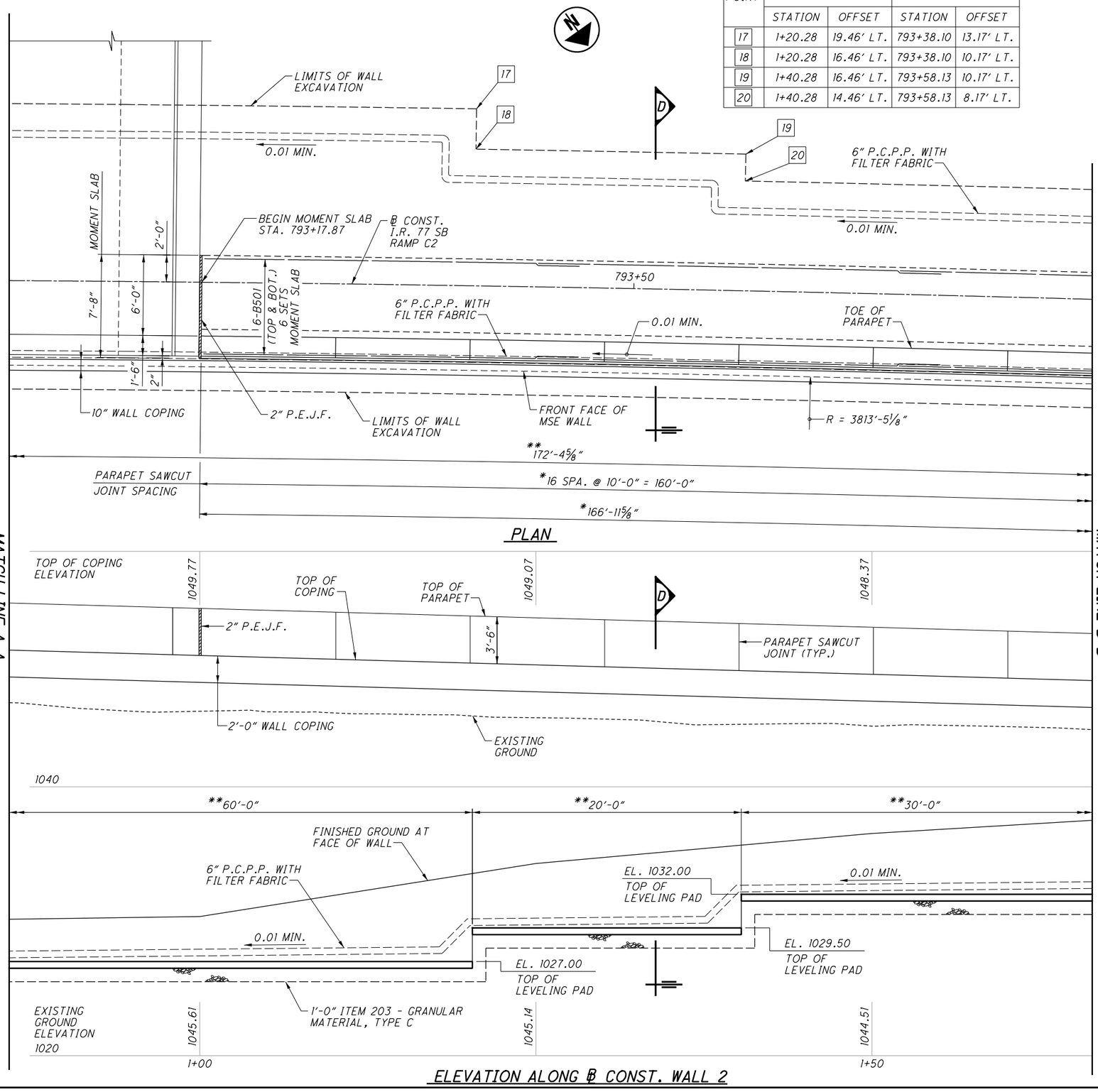


ELEVATION ALONG ℄ CONST. WALL 2

| REVISIONS | | |
|---|---|---|
| NO. | DATE | DESCRIPTION |
| 2 | 04/2/21 | UPDATED LEVELING PAD ELEV. |

## LEGEND

* MEASURED ALONG THE TOE OF PARAPET

** MEASURED ALONG ℄ WALL 2 (FRONT FACE OF WALL)

## NOTES:

1. FOR MATCH LINE A-A, SEE SHT. NO. 4/10.
2. FOR MATCH LINE B-B, SEE SHT. NO. 6/10.
3. FOR WALL NOTES, SEE SHT. NO. 2/10.
4. FOR SECTION D, SEE SHT. NO. 7/10.
5. MINIMUM LAP SPLICE LENGTH FOR #5 LONGITUDINAL BARS IN MOMENT SLAB = 3'-1"
6. FOR ADDITIONAL MOMENT SLAB AND PARAPET DETAILS AND REINFORCING, SEE SHT. NO. 9/10.

DESIGN AGENCY
GPD GROUP
Glaus, Pyle, Schomer, Burns & DeHaven, Inc.
520 South Main Street, Akron, OH 44311 330.572.2100
Copyright Glaus, Pyle, Schomer, Burns & DeHaven, Inc. 2020

| DESIGNED | DRAWN | REVIEWED | DATE |
|---|---|---|---|
| DJC | DJC | DGN | 1-18-21 |
| CHECKED | REVISED | STRUCTURE FILE NUMBER | |
| RHC | | | |

WALL PLAN & ELEVATION (2 OF 3)
RETAINING WALL 2
MSE WALL BELOW SUM-77-0927R FORWARD ABUTMENT

SUM-77/277/224
VARIOUS
PID No. 106002

5 / 10

1149
1288

0:\2017\2017258\ProjectData\SUM\106002\Design\Structures\Wall_002\Sheets\106002_002_WE001.dgn Sheet 2 4/2/2021 45:30 PM mjurcak

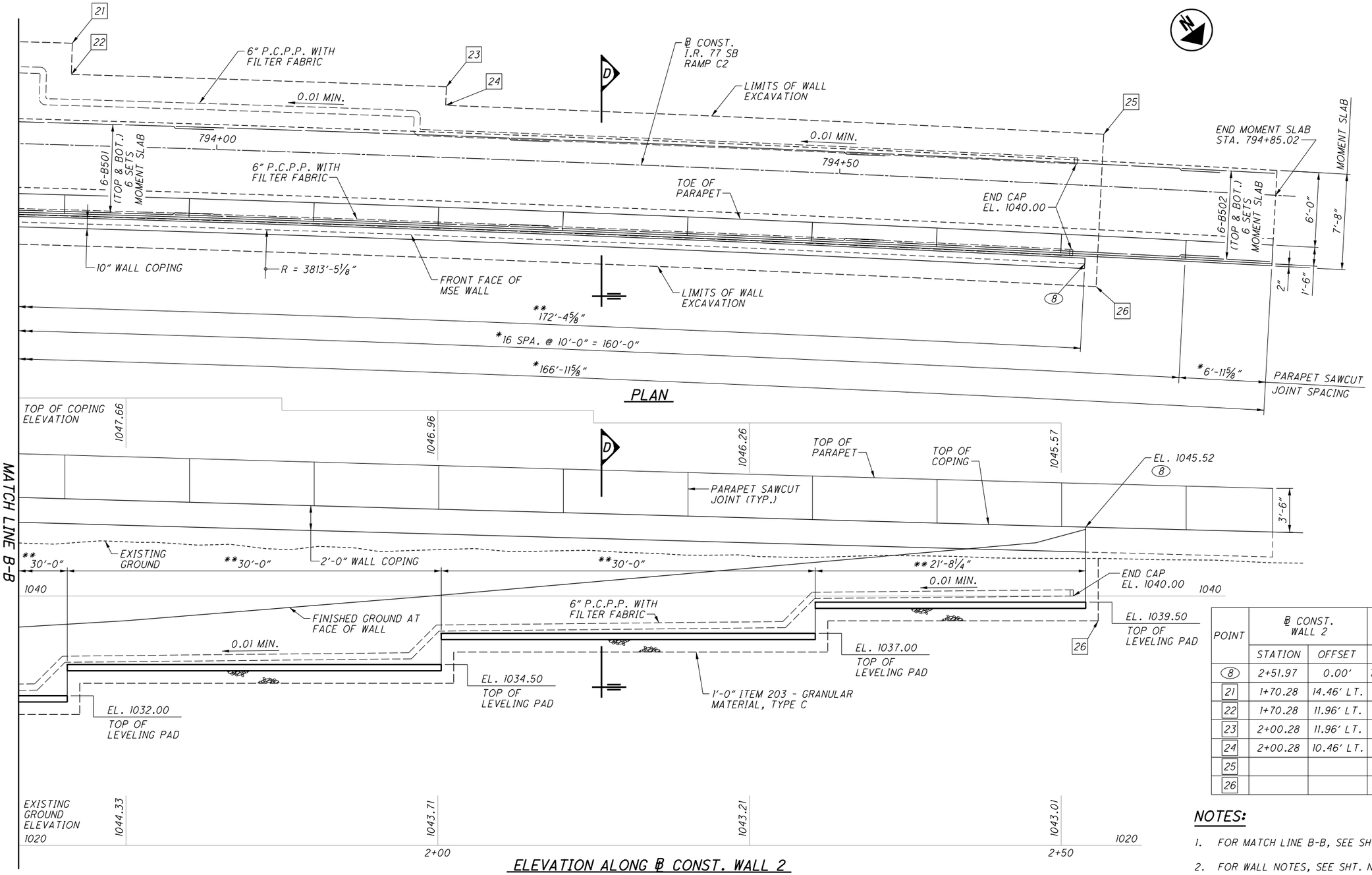


| POINT | ℄ CONST. WALL 2 | | ℄ CONST. RAMP C-2 | |
|---|---|---|---|---|
| | STATION | OFFSET | STATION | OFFSET |
| (8) | 2+51.97 | 0.00' | 794+70.00 | 6.29' RT. |
| 21 | 1+70.28 | 14.46' LT. | 793+88.18 | 8.17' LT. |
| 22 | 1+70.28 | 11.96' LT. | 793+88.18 | 5.67' LT. |
| 23 | 2+00.28 | 11.96' LT. | 794+18.23 | 5.67' LT. |
| 24 | 2+00.28 | 10.46' LT. | 794+18.23 | 4.17' LT. |
| 25 | | | 794+71.00 | 4.17' LT. |
| 26 | | | 794+71.00 | 8.06' RT. |

## LEGEND

* MEASURED ALONG THE TOE OF PARAPET

** MEASURED ALONG ℄ WALL 2 (FRONT FACE OF WALL)

## NOTES:

1. FOR MATCH LINE B-B, SEE SHT. NO. 5/10.
2. FOR WALL NOTES, SEE SHT. NO. 2/10.
3. FOR SECTION D, SEE SHT. NO. 7/10.
4. MINIMUM LAP SPLICE LENGTH FOR #5 LONGITUDINAL BARS = 3'-1".
5. FOR ADDITIONAL MOMENT SLAB AND PARAPET DETAILS AND REINFORCING, SEE SHT. NO. 9/10.

DESIGN AGENCY
GPD GROUP
320 South Main Street, Akron, OH 44311 330.572.2100
(Graphic Glitch: Ink, Schmee, Kuna & Brewers, Inc. 2020)

| DESIGNED | DRAWN | REVIEWED | DATE |
|---|---|---|---|
| DJC | DJC | DGN | 1-18-21 |
| CHECKED | REVISED | STRUCTURE FILE NUMBER | |
| RHC | | | |

WALL PLAN & ELEVATION (3 OF 3)
RETAINING WALL 2
MSE WALL BELOW SUM-77-0927R FORWARD ABUTMENT

SUM-77/277/224
VARIOUS
PID No. 106002

6 / 10

1150
1288

0:\2017\2017258\ProjectData\SUM\106002\Design\Structures\Wall_002\Sheets\106002_002_WE001.dgn Sheet 3 1/17/2021 9:26:28 PM rvitelli

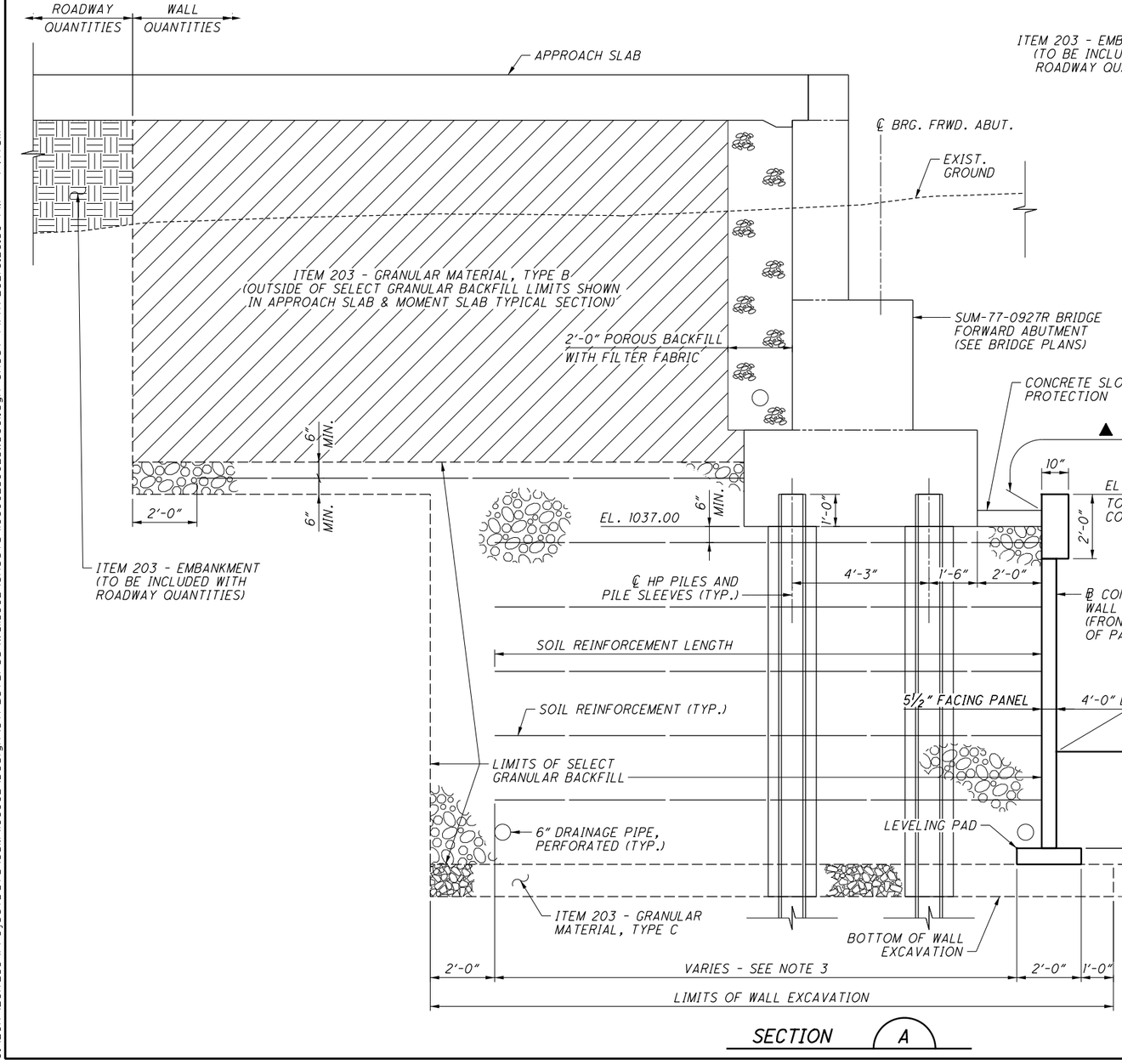


SECTION A

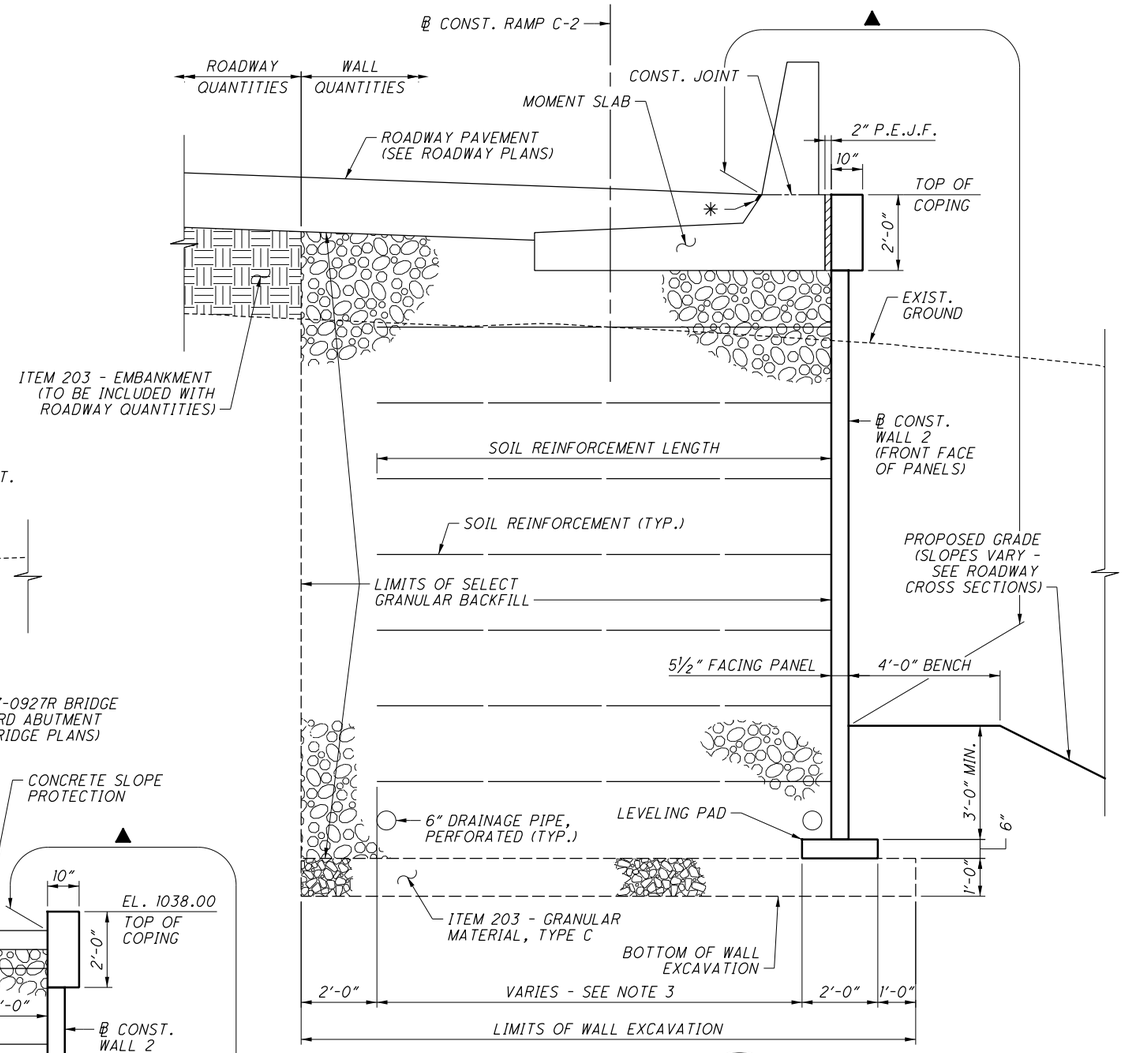


SECTION D

STA. 793+15.79 TO STA. 794+70.00
(STA. 0+98.01 TO STA. 2+51.97 ◑)
SECTION SHOWN AT MOMENT SLAB
SECTION AT APPROACH SLAB SIMILAR

## LEGEND:

◑ STATION GIVEN TO ℄ CONST. WALL 2

▲ ITEM 512 - SEALING OF CONCRETE SURFACES (EPOXY-URETHANE)

✳ HOT APPLIED JOINT SEAL, CMS 705.04 (TO BE INCLUDED WITH MOMENT SLAB CONCRETE)

## NOTES:

1. STATIONS ARE GIVEN TO ℄ CONST. RAMP C-2 UNLESS NOTED OTHERWISE.
2. FOR WALL NOTES, SEE SHT. NO. 2/10.
3. ACTUAL DIMENSIONS DEPEND ON THE DESIGN BY THE MSE WALL MANUFACTURER. FOR ESTIMATING PURPOSES, SEE THE TABLES ON SHT. NOS. 4/10 THRU 6/10.

DESIGN AGENCY
GPD GROUP
Glaus, Pyle, Schomer, Burns & DeHaven, Inc.
520 South Main Street, Akron, OH 44311 330.572.2100
(Copyright Glaus, Pyle, Schomer, Burns & DeHaven, Inc. 2020)

| DESIGNED | DRAWN | REVIEWED | DATE |
|---|---|---|---|
| MOJ | MOJ | DGN | 1-18-21 |
| CHECKED | REVISED | STRUCTURE FILE NUMBER | |
| RHC | | | |

WALL SECTIONS
RETAINING WALL 2
MSE WALL BELOW SUM-77-0927R FORWARD ABUTMENT

SUM-77/277/224
VARIOUS
PID No. 106002

7 / 10

1151
1288

D:\2017\2017258\ProjectData\SUM\106002\Design\Structures\Wall_002\Sheets\106002_002_WD001.dgn Sheet 1 1/17/2021 9:26:30 PM rvitelli

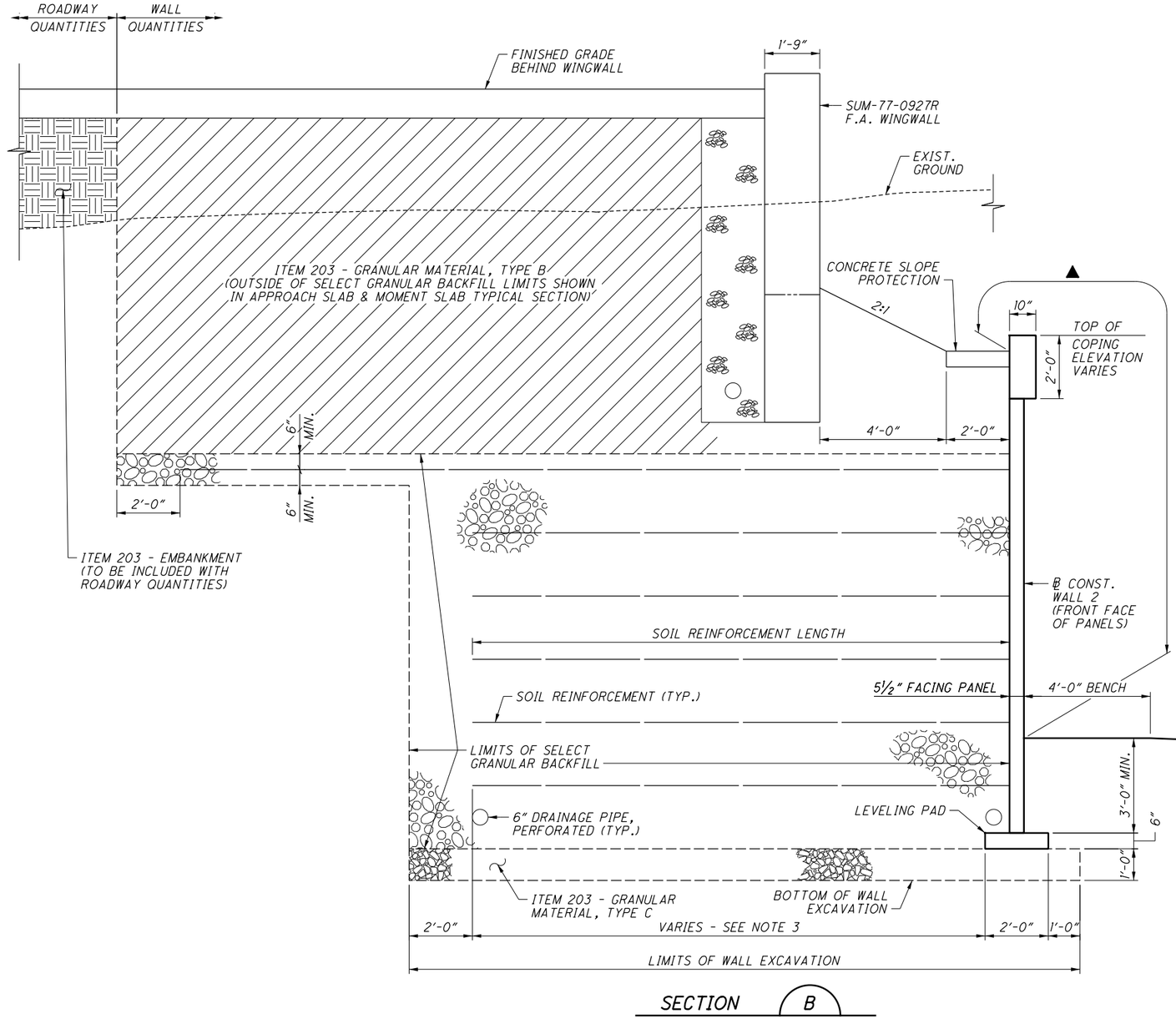


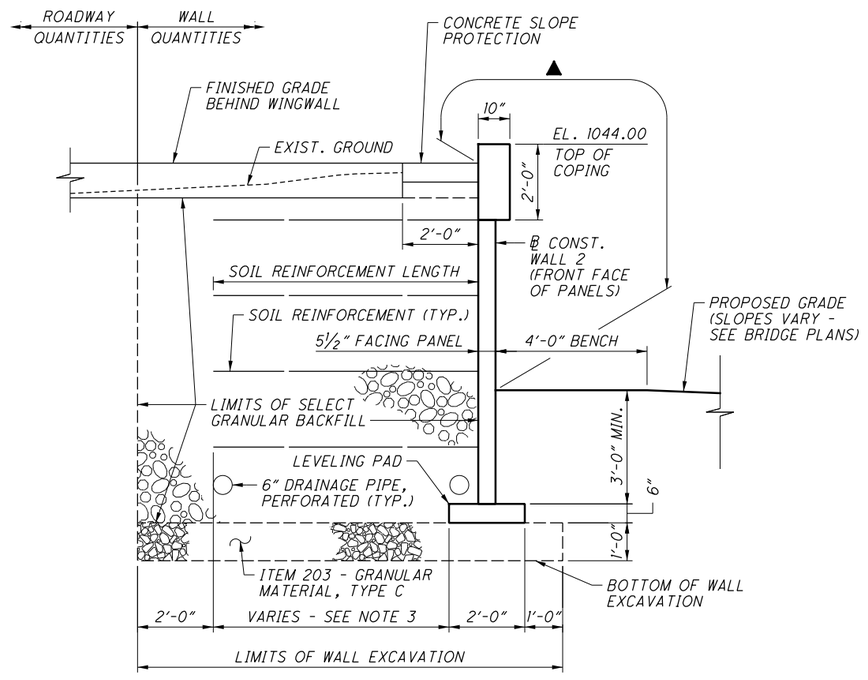


## LEGEND:

▲ ITEM 512 - SEALING OF CONCRETE SURFACES (EPOXY-URETHANE)

## NOTES:

1. STATIONS ARE GIVEN TO ℄ CONST. RAMP C-2 UNLESS NOTED OTHERWISE.
2. FOR WALL NOTES, SEE SHT. NO. 2/10.
3. ACTUAL DIMENSIONS DEPEND ON THE DESIGN BY THE MSE WALL MANUFACTURER. FOR ESTIMATING PURPOSES, SEE THE TABLES ON SHT. NOS. 4/10 THRU 6/10.

DESIGN AGENCY
GPD GROUP
Glaus, Pyle, Schomer, Burns & DeHaven, Inc.
520 South Main Street, Akron, OH 44311 330.572.2100
Copyright Glaus, Pyle, Schomer, Burns & DeHaven, Inc. 2020

DESIGNED MOJ | DRAWN MOJ | REVIEWED DGN | DATE 1-18-21
CHECKED RHC | REVISED | STRUCTURE FILE NUMBER

**WALL SECTIONS**
RETAINING WALL 2
MSE WALL BELOW SUM-77-0927R FORWARD ABUTMENT

**SUM-77/277/224**
**VARIOUS**
**PID No. 106002**

8 / 10

1152
1288

D:\2017\2017258\ProjectData\SUM\106002\Design\Structures\Wall_002\Sheets\106002_002_W000i.dgn Sheet 2 1/17/2021 9:26:31 PM rvitelli

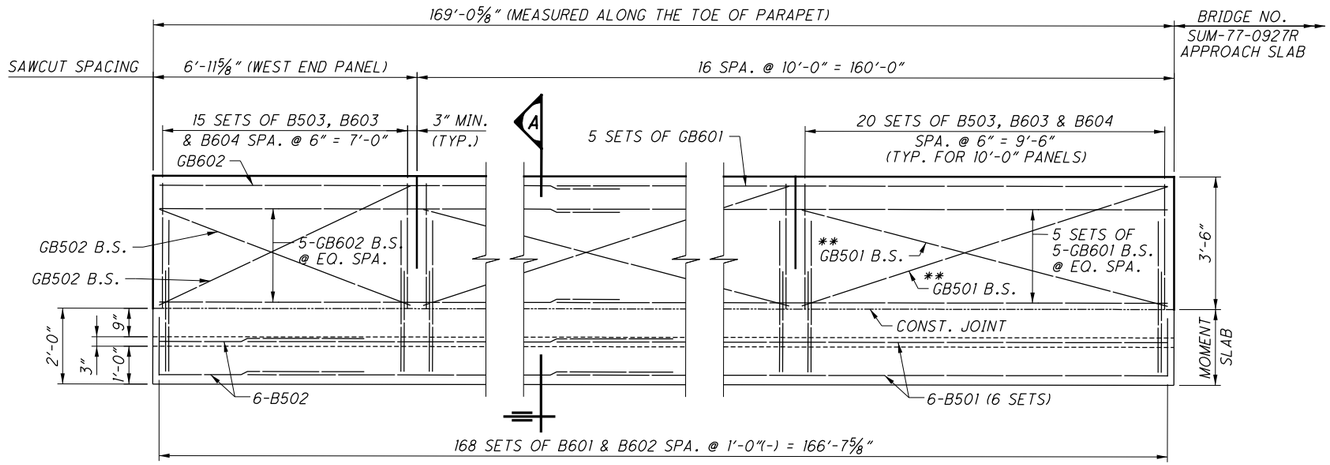


## SBR-1-20 PARAPET ELEVATION ON MOMENT SLAB

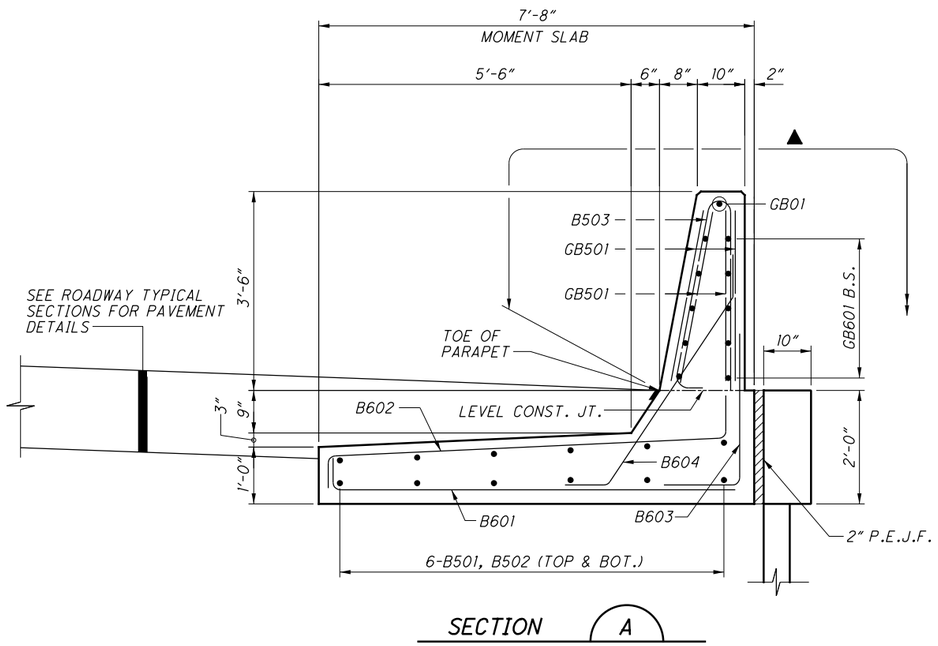


## SECTION A

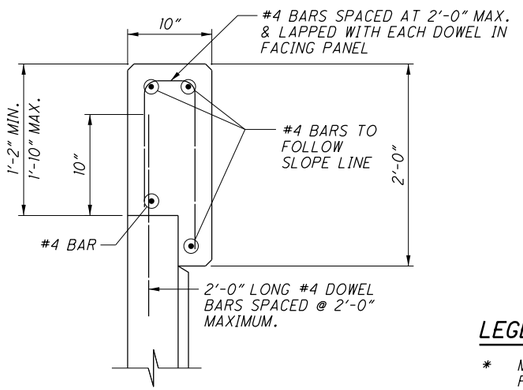


## MSE WALL COPING DETAIL

### LEGEND:

* MEASURED ALONG THE TOE OF THE PARAPET

** TYPICAL FOR 10'-0 PANELS

▲ ITEM 512 - SEALING OF CONCRETE SURFACES (EPOXY-URETHANE)

### NOTES:

1. FOR ADDITIONAL INFORMATION, SEE STANDARD DRAWINGS SBR-1-20.
2. REINFORCEMENT DESIGNATED WITH A "GB" PREFIX ARE GFRP BARS.
3. LAP B601 & B602 BARS WITH B603 & B604 BARS IN THE MOMENT SLAB. ADJUST SPACING AS NEEDED TO MAINTAIN 3" MIN. CLEAR TO SAWCUT JOINTS.
4. MINIMUM HORIZONTAL REINFORCING LAP LENGTHS ARE AS FOLLOWS:

| | |
|---|---|
| NO. 5 BARS | 3'-1" |
| ALL GFRP BARS | 1'-8" |

DESIGN AGENCY
GPD GROUP
Gray, Pape & Dohnavin, Inc.
520 South Main Street, Akron, OH 44311 330.572.2100
Copyright GPD Group, Gray, Pape & Dohnavin, Inc. 2020

| DESIGNED | DRAWN | REVIEWED | DATE |
|---|---|---|---|
| DJC | DJC | DGN | 1-18-21 |
| CHECKED | REVISED | STRUCTURE FILE NUMBER | |
| RHC | | | |

MOMENT SLAB & PARAPET DETAILS
RETAINING WALL 2
MSE WALL BELOW SUM-77-0927R FORWARD ABUTMENT

SUM-77/277/224
VARIOUS
PID No. 106002

9 / 10

1153
1288

O:\2017\2017258\ProjectData\SUM\106002\Design\Structures\Wall_002\Sheets\106002_002_WM001.dgn Sheet 1/17/2021 9:26:34 PM rvitelli

| MARK | NUMBER | LENGTH | WEIGHT | TYPE | DIMENSIONS | | | | | | INC. |
|---|---|---|---|---|---|---|---|---|---|---|---|
| | | | | | A | B | C | D | E | R | |
| STEEL REINFORCEMENT | | | | | | | | | | | |
| B501 | 72 | 30'-0" | 2253 | STR | | | | | | | |
| B502 | 12 | 5'-2' | 65 | STR | | | | | | | |
| B503 | 335 | 7'-0" | 2446 | 23 | 0'-6" | 3'-3" | 3'-3" | | | 0'-2" | |
| | | | | | | | | | | | |
| B601 | 168 | 7'-8" | 1935 | 1 | 0'-7" | 7'-3" | | | | | |
| B602 | 168 | 8'-3" | 2082 | 41 | 0'-9" | 0'-4" | 7'-0" | 0'-7" | | | |
| B603 | 335 | 3'-11" | 1971 | 1 | 1'-4" | 2'-9" | | | | | |
| B604 | 335 | 5'-5" | 2726 | 13 | 0'-9" | 2'-3" | 3'-3" | 0'-9" | | | |
| | | | | | | | | | | | |
| TOTAL STEEL REINFORCEMENT | | | 13,478 | LBS | | | | | | | |

| MARK | NUMBER | LENGTH | TOTAL FEET | TYPE | DIMENSIONS | | | | | | INC. |
|---|---|---|---|---|---|---|---|---|---|---|---|
| | | | | | A | B | C | D | E | R | |
| GFRP REINFORCEMENT | | | | | | | | | | | |
| GB501 | 64 | 10'-0" | 640 | STR | | | | | | | |
| GB502 | 4 | 7'-4" | 29 | STR | | | | | | | |
| TOTAL NO. 5 GFRP | | | 669 | FT | | | | | | | |
| | | | | | | | | | | | |
| GB601 | 55 | 30'-0" | 1650 | STR | | | | | | | |
| GB602 | 11 | 25'-0" | 275 | STR | | | | | | | |
| TOTAL NO. 6 GFRP | | | 1925 | FT | | | | | | | |

## BAR BENDING DIAGRAMS

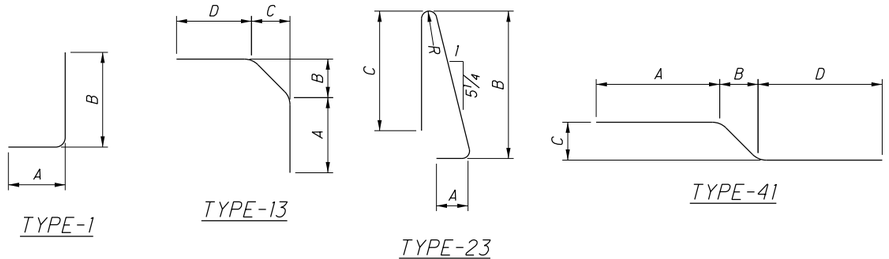


## NOTES:

1. BAR DIMENSIONS ARE OUT-TO-OUT UNLESS NOTED OTHERWISE.
2. ALL BARS ARE EPOXY COATED.
3. WHEN NO BAR LEG DIMENSIONS ARE SHOWN, IT INDICATES A STANDARD BEND.
4. BAR SIZE AND LOCATION ARE INDICATED IN THE BAR MARK. THE FIRST ALPHABETICAL LETTER(S) INDICATES LOCATION. THE NEXT DIGIT OF THE THREE DIGIT SERIES AND THE NEXT TWO DIGITS OF THE FOUR DIGIT SERIES INDICATE BAR SIZE NUMBER.

EXAMPLES: B501 — NO. 5 SIZE BAR, WALL BAR

GB601 — NO. 6 SIZE BAR, GFRP WALL BAR

DESIGN AGENCY
GPD GROUP
520 South Main Street, Akron, OH 44311 330.572.2100
Copyright GPD Group, Akron, Ohio, Schimmer, Burns & Dohlemann, Inc. 2020

| DESIGNED | DRAWN | REVIEWED | DATE |
|---|---|---|---|
| DJC | DJC | DGN | 1-18-21 |

STRUCTURE FILE NUMBER

REVISED

CHECKED RHC

REINFORCING BAR LISTS
RETAINING WALL 2
MSE WALL BELOW SUM-77-0927R FORWARD ABUTMENT

SUM-77/277/224
VARIOUS
PID No. 106002

10 / 10

1154
1288

O:\2017\20172581ProjectData\SUM\106002\Design\Structures\Wall_002\Sheets\106002_002_WL001.dgn Sheet 1/17/2021 9:26:35 PM rvitelli

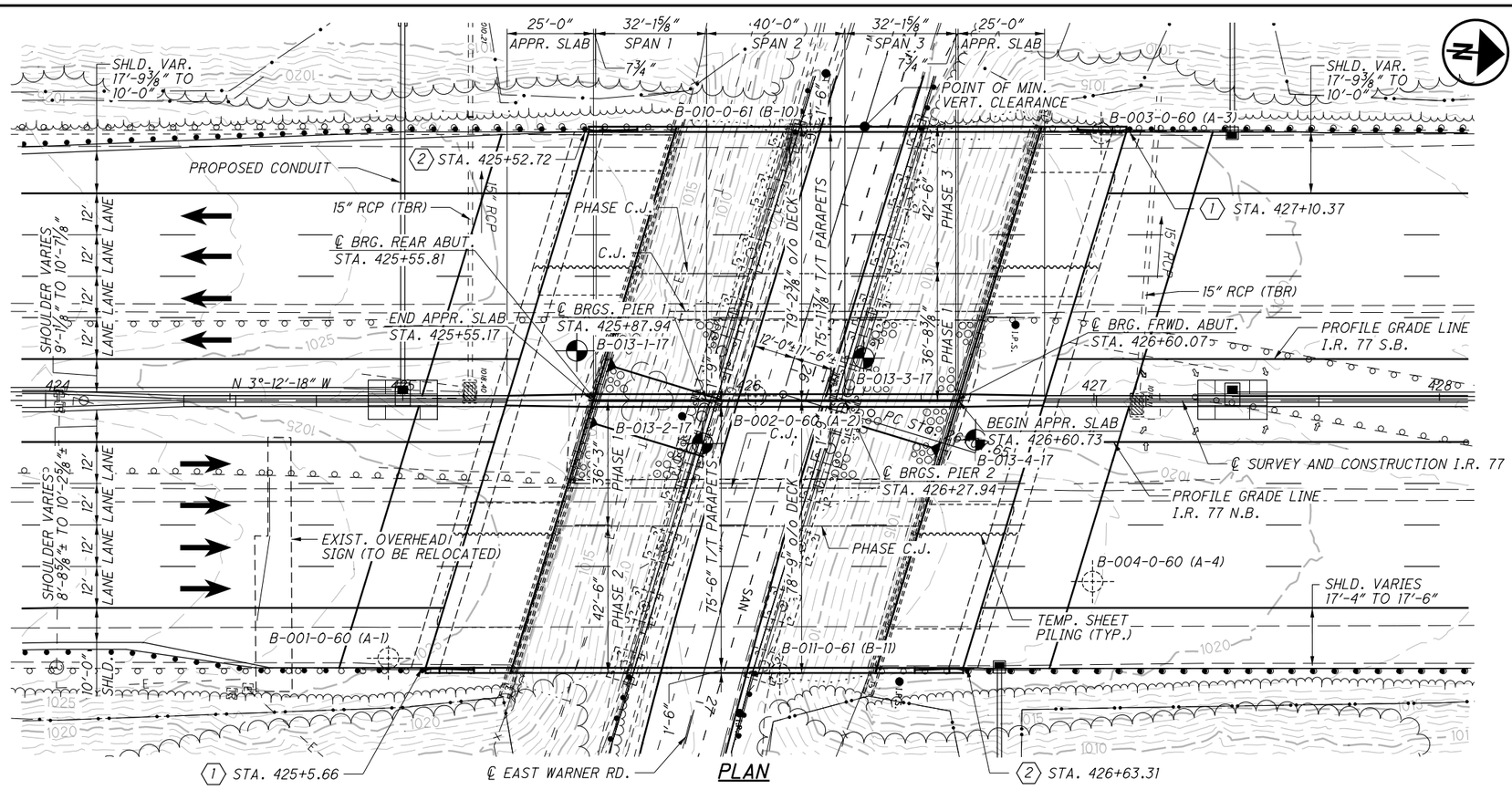


## PLAN

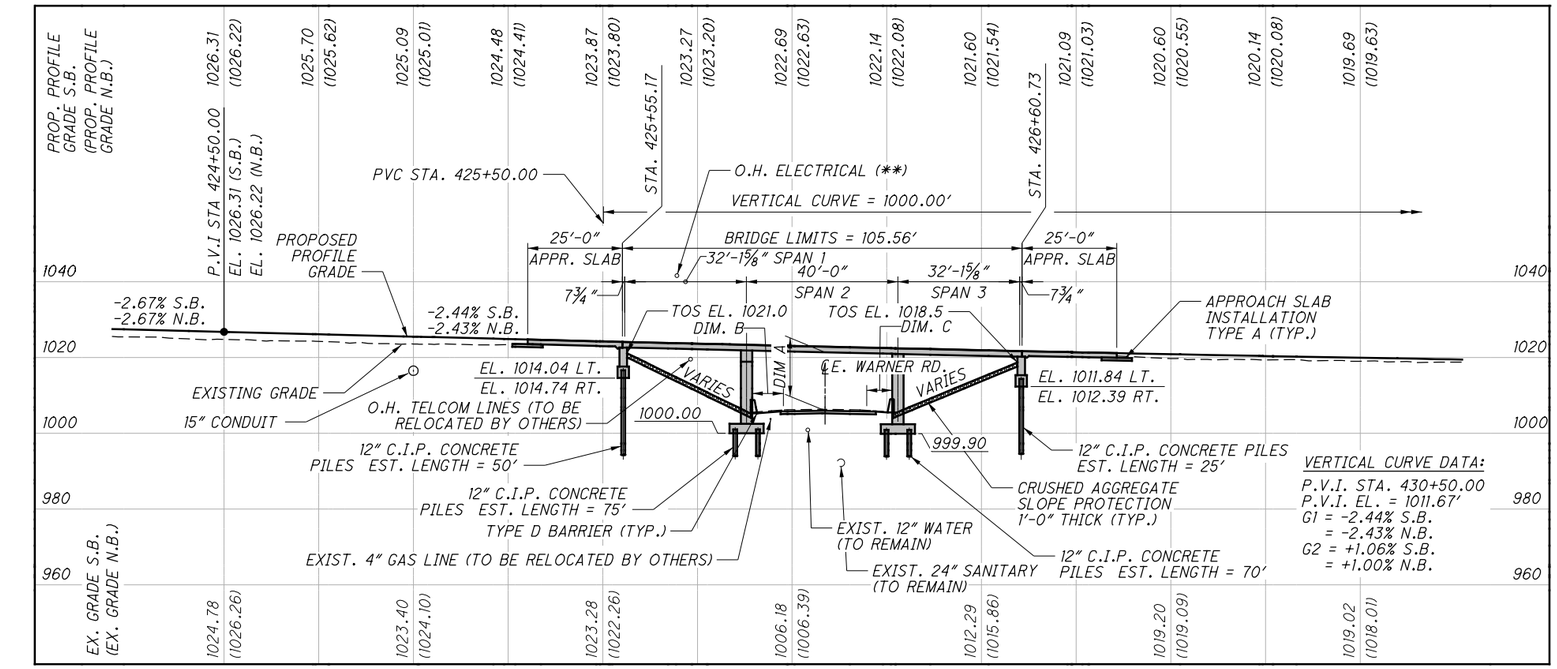


## PROFILE ALONG ℄ SURVEY & CONSTRUCTION I.R. 77

EXISTING GRADE ELEVATIONS ARE GIVEN ALONG THE NEW PROPOSED PROFILE GRADE LINES

## BENCHMARK DATA

| POINT | NORTHING | EASTING | ELEV. | DESCRIPTION |
|---|---|---|---|---|
| CP03 | 485566.6495 | 2246336.2535 | 1117.76 | CONC. MONUMENT |
| CP04 | 486357.9587 | 2246323.9152 | 1121.63 | CONC. MONUMENT |
| CP05 | 493895.1420 | 2245390.8980 | 1073.53 | CONC. MONUMENT |
| CP06 | 493906.9643 | 2244750.3816 | 1090.46 | CONC. MONUMENT |

FOR ADDITIONAL BENCHMARK INFORMATION, SEE ROADWAY PLANS.

## NOTES

EARTHWORK LIMITS SHOWN ARE APPROXIMATE. ACTUAL SLOPES SHALL CONFORM TO PLAN CROSS SECTIONS.

DESIGN TRAFFIC:
2020 ADT = 118,630 2020 ADTT = 10,680
2040 ADT = 141,010 2040 ADTT = 12,690
DIRECTIONAL DISTRIBUTION = 57%

## MINIMUM VERTICAL CLEARANCE (DIM. A)

| | |
|---|---|
| EXIST. | 14.20' ± |
| ACTUAL | 14.55' |
| REQUIRED | 14.50' |

## MINIMUM HORIZONTAL CLEARANCE

| | DIM. B | DIM. C |
|---|---|---|
| ACTUAL | 8.15' | 3.86' |
| REQUIRED | 5.67' | 5.67' |

* THIS BRIDGE RECEIVED AN APPROVED DESIGN EXCEPTION FOR SHOULDER WIDTH

## LEGEND

- PROJECT BORING LOCATION
- HISTORIC BORING LOCATION
- (1) MGS BTA, TYPE 1 FIRST POST LOCATION (SEE STD. DWG. MGS-3.1)
- (2) MGS BTA, TYPE 2 FIRST POST LOCATION (SEE STD. DWG. MGS-3.2)
- ** UTILITY DISPOSITION PENDING

## EXISTING STRUCTURE

TYPE: CONTINUOUS REINFORCED CONCRETE SLAB WITH CAPPED PILE ABUTMENTS AND REINFORCED CONCRETE PIERS ON C.I.P. PILES
SPANS: 32'-1⅝"±, 40'-0"±, 32'-1⅝"±
ROADWAY: 53'-0"± T/T PARAPETS
LOADING: CF = 2000 (57)
SKEW: 16°-56'-07" L.F.
WEARING SURFACE: 4"± ASPHALT
APPROACH SLABS: AS-1-54 (25'-0" LONG)
ALIGNMENT: TANGENT
CROWN: 0.0156 FT/FT
STRUCTURAL FILE NUMBER: 7702493 (LT) & 7702523 (RT)
DATE BUILT: 1965
DISPOSITION: TO BE REHABILITATED

## PROPOSED STRUCTURE

PROPOSED WORK: WIDEN CONTINUOUS REINFORCED CONCRETE SLAB ON EXTENDED CAPPED PILE ABUTMENTS AND REINFORCED CONCRETE PIERS ON C.I.P. PILES AND TREAT EXISTING DECK SURFACE WITH MICRO-SILICA OVERLAY
SPANS: 32'-1⅝", 40'-0", 32'-1⅝"
ROADWAY: 75'-11⅜" TOE/TOE PARAPETS (SB)
75'-6" TOE/TOE PARAPETS (NB)
VEHICULAR LIVE LOAD: (SEE GENERAL NOTES)
FUTURE WEARING SURFACE: (SEE GENERAL NOTES)
SKEW: 16°-56'-07" L.F.
WEARING SURFACE: 1" MONOLITHIC CONCRETE AND 1½" MICRO-SILICA OVERLAY
DECK AREA: 8,361 SQ. FT. (NB), 8,318 SQ. FT. (SB)
APPROACH SLABS: 25'-0" LONG (AS-1-15) TYPE A INSTALL. (AS-2-15)
ALIGNMENT: TANGENT
CROWN: 0.0156 FT/FT
COORDINATES: LATITUDE 41°-00'-21.87" (SB) 41°-00'-21.69" (NB)
LONGITUDE 81°-29'-39.84" (SB) 81°-29'-38.19" (NB)

DESIGN AGENCY
CPD GROUP®
Civil, Traffic & Structural Engineers, DeHaven, Inc.
320 South Main Street, Akron, OH 44311 330.572.2100
Copyright Dec. '20, Schmidt, Kuhn & Associates, Inc. 2020

REVIEWED TJW DATE 1-18-21
STRUCTURE FILE NUMBER 7702493/7702523
DRAWN RFV REVISED
DESIGNED RFV CHECKED RHC
COUNTY
STA. 425+55.17
STA. 426+60.73

SITE PLAN
BRIDGE NO. SUM-77-0802 L/R
OVER EAST WARNER ROAD

SUM-77/277/224
VARIOUS
PID No. 106002

1 / 26

1155
1288

O:\2017\2017258\ProjectData\SUM\06002\Design\Structures\SUM077_0802\Sheets\077_0802C_SP001.dgn Sheet 1/17/2021 8:04:55 PM rvitelli

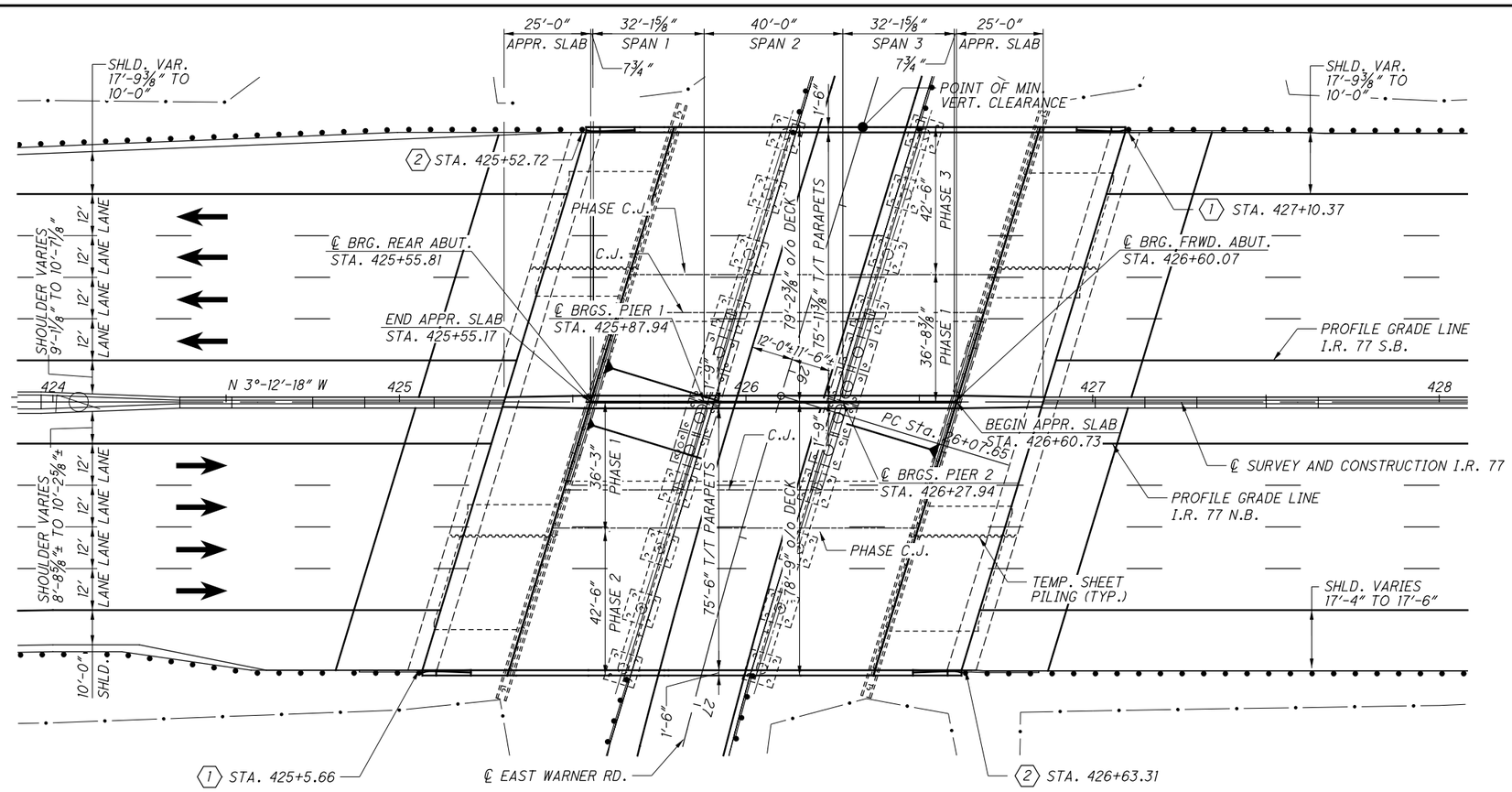


PLAN

## LEGEND:

1 MGS BRIDGE TERMINAL ASSEMBLY, TYPE 1
FIRST POST LOCATION (SEE STD. DWG. MGS-3.1)

2 MGS BRIDGE TERMINAL ASSEMBLY, TYPE 2
FIRST POST LOCATION (SEE STD. DWG. MGS-3.2)

## NOTES:

THE BRIDGE DECKS, CONSTRUCT JOINTS, CROWNS, AND PROFILE GRADES ARE OFFSETS FROM THE ℄ SURVEY & CONSTRUCTION I.R. 77

DESIGN AGENCY
GPD GROUP
320 South Main Street, Akron, OH 44311 330.572.2100
Copyright GPD Group, Schimmer, Burns & DeHaven, Inc. 2020

| DESIGNED | DRAWN | REVIEWED | DATE |
|---|---|---|---|
| RFV | RFV | TJW | 1-18-21 |
| CHECKED | REVISED | STRUCTURE FILE NUMBER | |
| RHC | | 77002493/77002523 | |

COUNTY
STA. 425+55.17
STA. 426+60.73

**GENERAL PLAN**
BRIDGE NO. SUM-77-0802 L/R
OVER EAST WARNER ROAD

**SUM-77/277/224**
**VARIOUS**
**PID No. 106002**

2 / 26

1156
1288

O:\2017\201758\ProjectData\SUM\06002\Design\Structures\SUM077_0802\Sheets\077_0802C_SG001.dgn Sheet 1/17/2021 8:05:01 PM rvitelli

DESIGN SPECIFICATIONS:

THIS STRUCTURE CONFORMS TO THE 8TH EDITION OF THE "LRFD BRIDGE DESIGN SPECIFICATIONS" ADOPTED BY THE AMERICAN ASSOCIATION OF STATE HIGHWAY AND TRANSPORTATION OFFICIALS, AND THE ODOT BRIDGE DESIGN MANUAL, 2020.

STANDARD DRAWINGS AND SUPPLEMENTAL SPECIFICATIONS:

REFER TO THE FOLLOWING STANDARD BRIDGE DRAWINGS:

| | | |
|---|---|---|
| AS-1-15 | REVISED | 7-17-15 |
| AS-2-15 | REVISED | 1-18-19 |
| CPP-1-08 | REVISED | 7-21-17 |
| CS-1-08 | DATED | 1-15-21 |
| PCB-91 | REVISED | 7-17-20 |
| SBR-1-20 | REVISED | 7-17-20 |
| SBR-2-20 | DATED | 1-15-21 |

AND TO THE FOLLOWING SUPPLEMENTAL SPECIFICATION:

| | | |
|---|---|---|
| SS800 | DATED | 01-15-21 |

OPERATIONAL IMPORTANCE:

A LOAD MODIFIER OF 1.05 HAS BEEN ASSUMED FOR THE DESIGN OF THIS STRUCTURE IN ACCORDANCE WITH THE AASHTO LRFD BRIDGE DESIGN SPECIFICATIONS, ARTICLE 1.3.5 AND THE ODOT BRIDGE DESIGN MANUAL.

DESIGN LOADING:

VEHICULAR LIVE LOAD/FUTURE WEARING SURFACE:
WIDENED SLAB: HL-93 / FWS = 0.060 KSF
EX. SLAB & OVERLAY: 70% HL-93 / FWS = 0.000 SF*
WIDENED SUBSTRUCTURE & FOUNDATION: HL-93 / FWS = 0.060 KSF
EX. SUBSTRUCTURE & FOUNDATION: CF-2000 (57)
* - THIS BRIDGE RECEIVED AN APPROVED DESIGN EXCEPTION FOR DESIGN LOADING STRUCTURAL CAPACITY.

DESIGN DATA:

CONCRETE CLASS QC2 - COMPRESSIVE STRENGTH 4.5 KSI (SUPERSTRUCTURE)
CONCRETE CLASS QC1 - COMPRESSIVE STRENGTH 4.0 KSI (SUBSTRUCTURE)
REINFORCING STEEL - MINIMUM YIELD STRENGTH 60 KSI
CIP REINF. CONC. PILE STEEL - ASTM A252 GRADE 3 - YIELD STRENGTH 35 KSI (MIN.)

MONOLITHIC WEARING SURFACE:

MONOLITHIC WEARING SURFACE IS ASSUMED, FOR DESIGN PURPOSES, TO BE 1 INCH THICK.

PILE DESIGN LOADS (ULTIMATE BEARING VALUE):

THE ULTIMATE BEARING VALUE IS 167 KIPS PER PILE FOR THE ABUTMENT PILES. THE ULTIMATE BEARING VALUE IS 272 KIPS PER PILE FOR THE PIER PILES.

ABUTMENT PILES:
12" DIA. PILES 55 FEET LONG, ORDER LENGTH (REAR)
12" DIA. PILES 30 FEET LONG, ORDER LENGTH (FORWARD)
1 DYNAMIC LOAD TESTING ITEM

PIER PILES:
12" DIA. PILES 80 FEET LONG, ORDER LENGTH (PIER 1)
12" DIA. PILES 75 FEET LONG, ORDER LENGTH (PIER 2)
1 DYNAMIC LOAD TESTING ITEM

PILE DRIVING:

THE MINIMUM RATED ENERGY OF THE HAMMER USED TO INSTALL THE PILES SHALL BE 43,000 FOOT-POUNDS. ENSURE THAT STRESSES IN THE PILES DURING DRIVING DO NOT EXCEED 31,500 POUNDS PER SQUARE INCH. THE MINIMUM PILE WALL THICKNESS SHALL BE 0.25 INCHES FOR THE ABUTMENT PILES AND 0.30 INCHES FOR THE PIER PILES.

EXISTING STRUCTURE VERIFICATION

DETAILS AND DIMENSIONS SHOWN ON THESE PLANS PERTAINING TO THE EXISTING STRUCTURE HAVE BEEN OBTAINED FROM PLANS OF THE EXISTING STRUCTURE AND FROM FIELD OBSERVATIONS AND MEASUREMENTS. CONSEQUENTLY, THEY ARE INDICATIVE OF THE EXISTING STRUCTURE AND THE PROPOSED WORK BUT THEY SHALL BE CONSIDERED TENTATIVE AND APPROXIMATE. THE CONTRACTOR IS REFERRED TO C&MS SECTIONS 102.05 AND 105.02 BASE CONTRACT BID PRICES UPON A RECOGNITION OF THE UNCERTAINTIES DESCRIBED ABOVE AND UPON A PREBID EXAMINATION OF THE EXISTING STRUCTURE. HOWEVER, THE DEPARTMENT WILL PAY FOR ALL PROJECT WORK BASED UPON ACTUAL DETAILS AND DIMENSIONS THAT HAVE BEEN VERIFIED IN THE FIELD.

ITEM 202 - PORTIONS OF STRUCTURE REMOVED, OVER 20' SPAN, AS PER PLAN

ITEM 202 - PORTIONS OF STRUCTURE REMOVED, OVER 20' SPAN, AS PER PLAN

DESCRIPTION: THIS ITEM SHALL INCLUDE THE ELEMENTS INDICATED IN THE PLANS AND GENERAL NOTES AND THAT ARE NOT SEPARATELY LISTED FOR PAYMENT, EXCEPT FOR WEARING COURSE REMOVAL. ITEMS TO BE REMOVED INCLUDE ALL EXISTING MATERIALS BEING REPLACED BY NEW CONSTRUCTION AND MISCELLANEOUS ITEMS THAT ARE NOT SHOWN TO BE INCORPORATED INTO THE FINAL CONSTRUCTION AND ARE DIRECTED TO BE REMOVED BY THE ENGINEER. THE USE OF EXPLOSIVES, HEADACHE BALLS AND/OR HOE-RAMS WILL NOT BE PERMITTED. THE METHOD OF REMOVAL AND THE WEIGHT OF HAMMER SHALL BE APPROVED BY THE ENGINEER. PERFORM ALL WORK IN A MANNER THAT WILL NOT CUT, ELONGATE OR DAMAGE THE EXISTING REINFORCING STEEL TO BE PRESERVED. CHIPPING HAMMERS SHALL NOT BE HEAVIER THAN THE NOMINAL 90-POUND CLASS. PNEUMATIC HAMMERS SHALL NOT BE PLACED IN DIRECT CONTACT WITH REINFORCING STEEL THAT IS TO BE RETAINED IN THE REBUILT STRUCTURE. SUBMIT CONSTRUCTION PLANS ACCORDING TO C&MS 501.05.

CUT LINE CONSTRUCTION JOINT PREPARATION: SAW CUT BOUNDARIES OF PROPOSED CONCRETE REMOVALS 1 INCH DEEP. REMOVE CONCRETE TO A ROUGH SURFACE. LEAVE THE EXISTING REINFORCING STEEL, IF REQUIRED IN THE PLANS, IN PLACE. INSTALL DOWEL BARS IF SPECIFIED. PRIOR TO CONCRETE PLACEMENT ABRASIVELY CLEAN JOINT SURFACES AND EXISTING EXPOSED REINFORCEMENT TO REMOVE LOOSE AND DISINTEGRATED CONCRETE AND LOOSE RUST. THOROUGHLY CLEAN THE JOINT SURFACE AND EXPOSED REINFORCEMENT OF ALL DIRT, DUST, RUST OR OTHER FOREIGN MATERIAL BY THE USE OF WATER, AIR UNDER PRESSURE, OR OTHER METHODS THAT PRODUCE SATISFACTORY RESULTS. EXISTING REINFORCING STEEL DOES NOT HAVE TO HAVE A BRIGHT STEEL FINISH BUT REMOVE ALL PACK AND LOOSE RUST. THOROUGHLY DRENCH EXISTING CONCRETE SURFACES WITH CLEAN WATER AND ALLOW TO DRY TO A DAMP CONDITION BEFORE PLACING CONCRETE.

SUBSTRUCTURE CONCRETE REMOVAL: REMOVE CONCRETE BY MEANS OF APPROVED PNEUMATIC HAMMERS EMPLOYING POINTED AND BLUNT CHISEL TOOLS. HYDRAULIC HOE-RAM TYPE HAMMERS WILL NOT BE PERMITTED. THE WEIGHT OF THE HAMMER SHALL NOT BE MORE THAN 35 POUNDS FOR REMOVAL WITHIN 18 INCHES OF PORTIONS TO BE PRESERVED. OUTSIDE THE 18 INCH LIMIT, THE CONTRACTOR MAY USE HAMMERS NOT EXCEEDING 90 POUNDS UPON THE APPROVAL OF THE ENGINEER. DO NOT PLACE PNEUMATIC HAMMERS IN DIRECT CONTACT WITH REINFORCING STEEL THAT IS TO BE RETAINED IN THE REBUILT STRUCTURE.

MEASUREMENT & PAYMENT: THE DEPARTMENT WILL MEASURE THE QUANTITY OF REMOVALS ON A LUMP SUM BASIS. THE DEPARTMENT WILL PAY FOR THE ACCEPTED QUANTITIES OF REMOVALS AT THE CONTRACT PRICE FOR ITEM 202 - PORTIONS OF STRUCTURE REMOVED, OVER 20' SPAN, AS PER PLAN.

ITEM 509 - REINFORCING STEEL, REPLACEMENT OF EXISTING REINFORCING STEEL, AS PER PLAN:

REPLACE ALL EXISTING REINFORCING BARS DEEMED BY THE ENGINEER TO BE UNUSABLE BECAUSE OF CORROSION. THE DEPARTMENT WILL MEASURE THE REPLACEMENT REINFORCING STEEL BY THE NUMBER OF POUNDS ACCEPTED IN PLACE. REPLACE ALL EXISTING REINFORCING STEEL BARS WHICH ARE TO BE INCORPORATED INTO THE NEW WORK AND ARE DEEMED BY THE ENGINEER TO BE MADE UNUSABLE BY CONCRETE REMOVAL OPERATIONS WITH NEW EPOXY COATED REINFORCING STEEL OF THE SAME SIZE AT NO COST TO THE DEPARTMENT.

ITEM 519 - PATCHING CONCRETE STRUCTURES, AS PER PLAN

PRIOR TO THE SURFACE CLEANING SPECIFIED IN CMS 519.04 AND WITHIN 24 HOURS OF PLACING PATCHING MATERIAL, BLAST CLEAN ALL SURFACES TO BE PATCHED INCLUDING THE EXPOSED REINFORCING STEEL. ACCEPTALE METHODS INCLUDE HIGH-PRESSURE WATER BLASTING WITH OR WITHOUT ABRASIVES IN THE WATER, ABRASSIVE BLASTING WITH CONTAINMENT, OR VACUUM ABRASIVE BLASTING.

ALL UNSOUND AREAS OF CONCRETE TO REMAIN SHALL BE PATCHED UNDER THIS ITEM. ESTIMATED AREAS SHOWN IN THE TABLE BELOW HAVE BEEN INCLUDED IN THE ESTIMATED QUANTITIES ALONG WITH A CONTINGENCY QUANTITY OF 20 SQUARE FEET.

| REPAIR ITEMS | ITEM 519 - PATCHING CONCRETE STRUCTURE (SF) |
|---|---|
| **NORTHBOUND** | |
| REAR ABUTMENT | 0 |
| PIER 1 | 0 |
| PIER 2 | 5 |
| FORWARD ABUTMENT | 25 |
| **SOUTHBOUND** | |
| REAR ABUTMENT | 5 |
| PIER 1 | 0 |
| PIER 2 | 0 |
| FORWARD ABUTMENT | 35 |

ITEM SPECIAL - COMPOSITE FIBER WRAP SYSTEM

THE EXISTING COLUMNS OF ALL PIERS SHALL BE WRAPPED WITH A COMPOSITE FIBER WRAP SYSTEM CAPABLE OF PROVIDING A CONFINING STRESS OF 0.150 KSI FOR THE ENTIRE LENGTH OF THE COLUMN FROM TOP OF FOOTING TO BOTTOM OF PIER CAP. ALL DESIGN AND INSTALLATION WORK SHALL BE IN ACCORDANCE WITH PROPOSAL NOTE 519.

EXISTING COATING ON THE PIER COLUMNS SHALL BE COMPLETELY REMOVED PRIOR TO THE INSTALLATION OF A COMPOSITE FIBER WRAP SYSTEM.

PAYMENT SHALL BE MADE AT THE UNIT PRICE BID PER SQUARE FOOT OF COLUMN SURFACE TREATED FOR ITEM SPECIAL COMPOSITE FIBER WRAP SYSTEM AND SHALL INCLUDE ALL DESIGN, LABOR, EQUIPMENT, MATERIALS AND INCIDENTALS TO COMPLETE THE WORK.

ABBREVIATIONS:

| | |
|---|---|
| ABUT. | ABUTMENT |
| BOT. | BOTTOM |
| BRG. | BEARING |
| B.S. | BOTH SIDES |
| BTWN. | BETWEEN |
| C.I.P. | CAST-IN-PLACE |
| C.J. | CONSTRUCTION JOINT |
| CLR. | CLEAR |
| CONST. | CONSTRUCTION |
| DIA. | DIAMETER |
| DIM. | DIMENSION |
| EL. | ELEVATION |
| EQ. | EQUAL |
| EX. OR EXIST. | EXISTING |
| F.A. | FORWARD ABUTMENT |
| FRWD. | FORWARD |
| F.S. | FAR SIDE |
| GFRP | GLASS FIBER REINFORCED POLYMER |
| LT. | LEFT |
| MAX. | MAXIMUM |
| MIN. | MINIMUM |
| NB | NORTHBOUND |
| N.P.C.P.P. | NON-PERFORATED CORRUGATED PLASTIC PIPE |
| NO. | NUMBER |
| N.S. | NEAR SIDE |
| P.C.P.P. | PERFORATED CORRUGATED PLASTIC PIPE |
| P.E.J.F. | PREFORMED EXPANSION JONT FILLER |
| R.A. | REAR ABUTMENT |
| RT. | RIGHT |
| SB | SOUTHBOUND |
| SER. | SERIES |
| SPA. | SPACES OR SPACING |
| STA. | STATION |
| STD. DWG. | STANDARD DRAWING |
| T&B | TOP AND BOTTOM |
| TBR | TO BE REMOVED |
| TYP. | TYPICAL |

0:\2017\2017258\ProjectData\SUM\106002\Design\Structures\SUM077_0802\Sheets\077_0802C_SN001.dgn Sheet 1/29/2021 11:38:30 PM rcummins

DESIGN AGENCY
CPD GROUP
Civil, Traffic & Structural Engineers, Inc.
320 South Main Street, Akron, OH 44311 330.572.2100
Copyright 2021, CPD Group, Inc.

| DESIGNED | DRAWN | REVIEWED | DATE |
|---|---|---|---|
| RFV | RFV | TJW | 1-18-21 |
| CHECKED | REVISED | STRUCTURE FILE NUMBER | |
| RHC | | 77102493/77102523 | |

GENERAL NOTES
BRIDGE NO. SUM-77-0802 L/R
OVER EAST WARNER ROAD

SUM-77/277/224
VARIOUS
PID No. 106002



1157
1288

# ESTIMATED QUANTITIES

CALCULATED BY: RFV DATE: 1-14-21
CHECKED BY: DJC DATE: 1-15-21

ESTIMATED QUANTITIES

| ITEM | EXT. | TOTAL | PARTICIPATION 03/IMS/BR | PARTICIPATION 04/IMS/BR | UNIT | DESCRIPTION | ABUTMENTS | PIERS | SUPER-STRUCTURE | GENERAL | AS PER PLAN REFERENCE SHEET |
|---|---|---|---|---|---|---|---|---|---|---|---|
| 202 | 11203 | LS | LS | LS | LS | PORTIONS OF STRUCTURE REMOVED, OVER 20 FOOT SPAN, AS PER PLAN | | | | | 3 |
| 202 | 22900 | 400 | 260 | 140 | SY | APPROACH SLAB REMOVED | | | | 400 | |
| 202 | 23500 | 400 | 260 | 140 | SY | WEARING COURSE REMOVED | | | | 400 | |
| 503 | 11100 | LS | LS | LS | LS | COFFERDAMS AND EXCAVATION BRACING | | | | | |
| 503 | 21100 | 278 | 181 | 97 | CY | UNCLASSIFIED EXCAVATION | 88 | 190 | | | |
| 505 | 11100 | LS | LS | LS | LS | PILE DRIVING EQUIPMENT MOBILIZATION | | | | | |
| 507 | 00500 | 2770 | 1800 | 970 | FT | 12" CAST-IN-PLACE REINFORCED CONCRETE PILES, DRIVEN | 450 | 2320 | | | |
| 507 | 00550 | 2990 | 1944 | 1046 | FT | 12" CAST-IN-PLACE REINFORCED CONCRETE PILES, FURNISHED | 510 | 2480 | | | |
| 509 | 10000 | 130236 | 84653 | 45583 | LB | EPOXY COATED REINFORCING STEEL | 9997 | 28796 | 91443 | | |
| 509 | 20001 | 100 | 65 | 35 | LB | REINFORCING STEEL, REPLACEMENT OF EXISTING REINFORCING STEEL, AS PER PLAN | | | | 100 | 3 |
| 509 | 30020 | 4171 | 2711 | 1460 | FT | NO. 4 GFRP DEFORMED BARS | | | 4171 | | |
| 509 | 30040 | 3310 | 2152 | 1158 | FT | NO. 6 GFRP DEFORMED BARS | | | 3310 | | |
| 510 | 10000 | 282 | 183 | 99 | EACH | DOWEL HOLES WITH NONSHRINK, NONMETALLIC GROUT | 282 | | | | |
| 511 | 34446 | 368 | 239 | 129 | CY | CLASS QC2 CONCRETE WITH QC/QA, BRIDGE DECK | | | 368 | | |
| 511 | 34450 | 115 | 75 | 40 | CY | CLASS QC2 CONCRETE WITH QC/QA, BRIDGE DECK (PARAPET) | | | 115 | | |
| 511 | 41010 | 70 | 45 | 25 | CY | CLASS QC1 CONCRETE, PIER ABOVE FOOTINGS | | 70 | | | |
| 511 | 44112 | 32 | 21 | 11 | CY | CLASS QC1 CONCRETE WITH QC/QA, ABUTMENT NOT INCLUDING FOOTING | 32 | | | | |
| 511 | 46512 | 81 | 53 | 28 | CY | CLASS QC1 CONCRETE WITH QC/QA, FOOTING | 21 | 60 | | | |
| 512 | 10100 | 1217 | 791 | 426 | SY | SEALING OF CONCRETE SURFACES (EPOXY-URETHANE) | 61 | 636 | 520 | | |
| 512 | 33000 | 10 | 7 | 3 | SY | TYPE 2 WATERPROOFING | 10 | | | | |
| 512 | 74000 | 473 | 307 | 166 | SY | REMOVAL OF EXISTING COATINGS FROM CONCRETE SURFACES | 40 | 433 | | | |
| 516 | 13600 | 50 | 33 | 17 | SF | 1" PREFORMED EXPANSION JOINT FILLER | 8 | | 42 | | |
| 516 | 13900 | 37 | 24 | 13 | SF | 2" PREFORMED EXPANSION JOINT FILLER | 37 | | | | |
| 518 | 21200 | 125 | 81 | 44 | CY | POROUS BACKFILL WITH GEOTEXTILE FABRIC | 125 | | | | |
| 518 | 40000 | 360 | 234 | 126 | FT | 6" PERFORATED CORRUGATED PLASTIC PIPE | 360 | | | | |
| 518 | 40010 | 60 | 39 | 21 | FT | 6" NON-PERFORATED CORRUGATED PLASTIC PIPE, INCLUDING SPECIALS | 60 | | | | |
| 519 | 00100 | 2199 | 1429 | 770 | SF | SPECIAL - COMPOSITE FIBER WRAP SYSTEM | | 2199 | | | 3 |
| 519 | 11101 | 90 | 59 | 31 | SF | PATCHING CONCRETE STRUCTURE, AS PER PLAN | 65 | 5 | | 20 | 3 |
| 523 | 20000 | 2 | 1 | 1 | EACH | DYNAMIC LOAD TESTING | 1 | 1 | | | |
| 526 | 25011 | 879 | 571 | 308 | SY | REINFORCED CONCRETE APPROACH SLABS WITH QC/QA (T=15"), AS PER PLAN | | | | 879 | 22-24 |
| 526 | 90011 | 325 | 211 | 114 | FT | TYPE A INSTALLATION, AS PER PLAN | | | | 325 | 22-23 |
| ✳ 601 | 20000 | 310 | 202 | 108 | SY | CRUSHED AGGREGATE SLOPE PROTECTION | 310 | | | | |
| 846 | 00110 | 136 | 88 | 48 | CF | POLYMER MODIFIED ASPHALT EXPANSION JOINT SYSTEM | | | | 136 | |
| 848 | 10000 | 1220 | 793 | 427 | SY | MICRO SILICA MODIFIED CONCRETE OVERLAY USING HYDRODEMOLITION, 1 1/2 " THICK. AND VARIES | | | 1220 | | |
| 848 | 20000 | 1197 | 778 | 419 | SY | SURFACE PREPARATION USING HYDRODEMOLITION | | | 1197 | | |
| 848 | 30000 | 60 | 39 | 21 | CY | MICRO SILICA MODIFIED CONCRETE OVERLAY (VARIABLE THICKNESS), MATERIAL ONLY | | | 60 | | |
| 848 | 50000 | 12 | 8 | 4 | SY | HAND CHIPPING | | | 12 | | |
| 848 | 50100 | LS | LS | LS | LS | TEST SLAB | | | | | |
| 848 | 50200 | 2 | 1 | 1 | CY | FULL-DEPTH REPAIR | | | 2 | | |
| 848 | 50300 | 1220 | 793 | 427 | SY | WEARING COURSE REMOVED, ASPHALT | | | 1,220 | | |

✳ INCLUDED FOR PAYMENT WITH THE EROSION CONTROL QUANTITIES - SEE THE GENERAL SUMMARY.

| REVISIONS | | |
|---|---|---|
| NO. | DATE | DESCRIPTION |
| 6 | 04/30/21 | ADDED ITEM 512 - REMOVAL OF EXISTING COATINGS |

DESIGN AGENCY
GPD GROUP
Glaus, Pyle, Schomer, Burns & DeHaven, Inc.
520 South Main Street, Akron, OH 44311 330.572.2100
Copyright GPD, Inc.

DESIGNED RFV | DRAWN RFV | CHECKED RHC | REVIEWED TJW | DATE 1-18-21

STRUCTURE FILE NUMBER 7702493/7702523

REVISED

ESTIMATED QUANTITIES
BRIDGE NO. SUM-77-0802 L/R
OVER EAST WARNER ROAD

SUM-77/277/224
VARIOUS
PID No. 106002

4 / 26

1158
1288

O:\2017\2017258\ProjectData\SUM\06002\Design\Structures\SUM077_0802\Sheets\077_0802C_S000I.dgn Sheet 4/30/2021 2:23:49 PM mjurcak

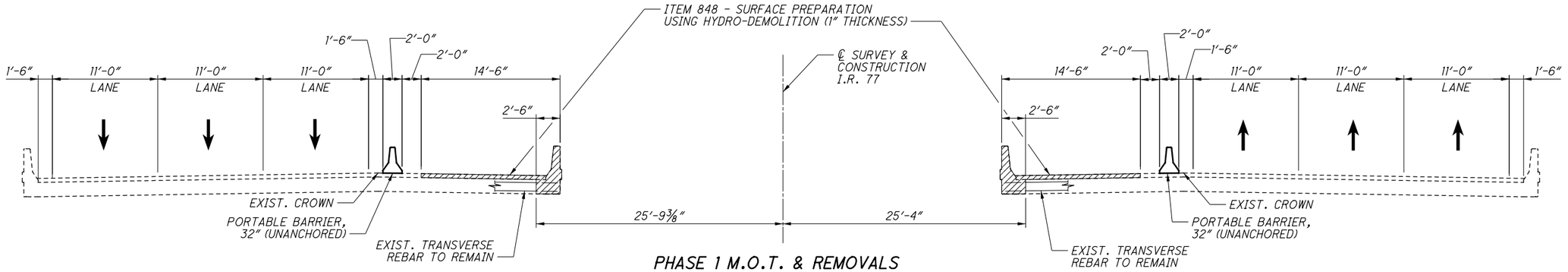


## PHASE 1 M.O.T. & REMOVALS

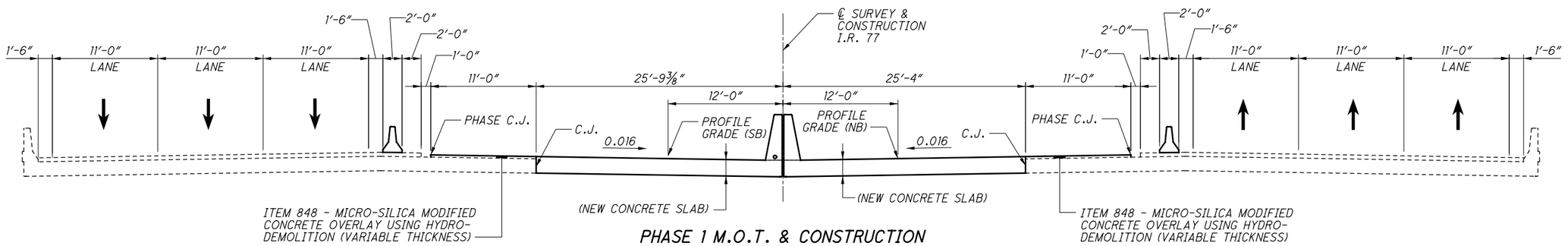


## PHASE 1 M.O.T. & CONSTRUCTION

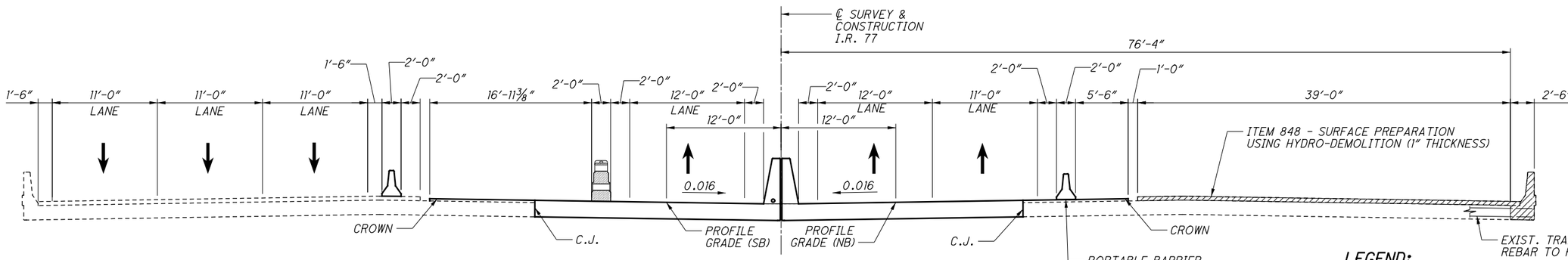


## PHASE 2 M.O.T. & REMOVALS

**LEGEND:**

▨ - INDICATES PORTIONS OF STRUCTURE REMOVED, OVER 20 FOOT SPAN, AS PER PLAN (OR AS NOTED)

**NOTES:**

FOR PROPOSED WORK, SEE SHEET 6/26.

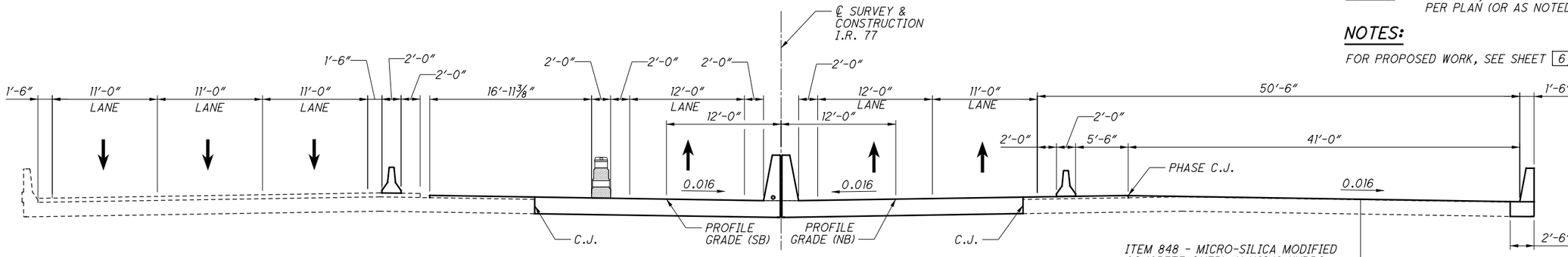


## PHASE 2 M.O.T. & CONSTRUCTION

DESIGN AGENCY
GPD GROUP
Glenn, Pate, Schiener & DeHaven, Inc.
520 South Main Street, Akron, OH 44311 330.572.2100
Copyright GPD Group, Pate, Schiener, Burns & DeHaven, Inc. 2020

| DESIGNED | DRAWN | REVIEWED | DATE |
|---|---|---|---|
| RFV | RFV | TJW | 1-18-21 |
| CHECKED | REVISED | STRUCTURE FILE NUMBER | |
| RHC | | 77002493/77002523 | |

**STAGE CONSTRUCTION DETAILS**
BRIDGE NO. SUM-77-0802 L/R
OVER EAST WARNER ROAD

**SUM-77/277/224**
**VARIOUS**
**PID No. 106002**



1159
1288

D:\2017\2017258\ProjectData\SUM\106002\Design\Structures\SUM077_0802\Sheets\077_0802C_SC001.dgn Sheet 1/17/2021 8:05:06 PM rvitelli

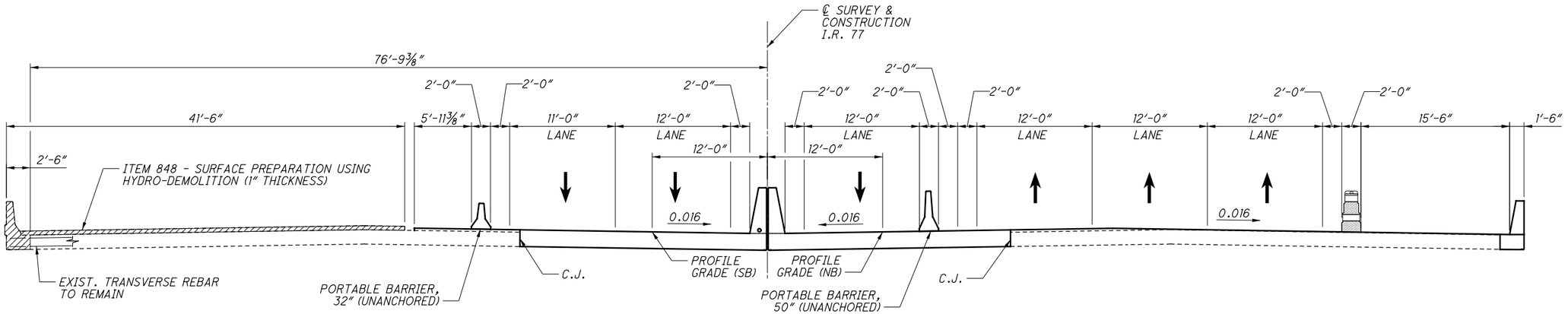


## PHASE 3 M.O.T. & REMOVALS

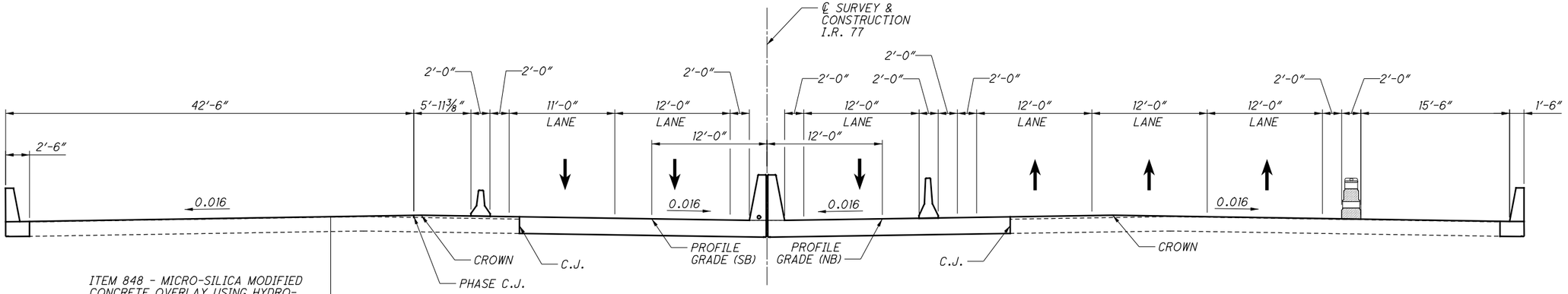


## PHASE 3 M.O.T. & CONSTRUCTION

**LEGEND:**

▨ - INDICATES PORTIONS OF STRUCTURE REMOVED, OVER 20 FOOT SPAN, AS PER PLAN (OR AS NOTED)

## PROPOSED WORK:

*PHASE 1 REMOVALS AND CONTRUCTION (NORTHBOUND & SOUTHBOUND)*

1. PLACE PORTABLE BARRIER AND TEMPORARY STRIPING.
2. DIVERT AND MAINTAIN THREE LANES OF TRAFFIC IN EACH DIRECTION.
3. REMOVE PORTION OF ASPHALT.
4. PERFORM ITEM 848, SURFACE PREPARATION USING HYDRODEMOLITION.
5. REMOVE PORTION OF DECK SLAB, PARAPET AND APPROACH SLABS.
6. INSTALL TEMPORARY SHEETING AT ABUTMENTS.
7. CONSTRUCT NEW WIDENED ABUTMENT AND PIER CONCRETE.
8. PLACE CONCRETE DECK SLAB, PARAPETS AND APPROACH SLABS.
9. PLACE ITEM 848, MICROSILICA CONCRETE OVERLAY.
10. PATCH AND SEAL CONCRETE SURFACES.
11. PLACE CRUSHED AGGREGATE SLOPE PROTECTION.

*PHASE 2 REMOVALS AND CONTRUCTION (NORTHBOUND)*

1. PLACE PORTABLE BARRIER AND TEMPORARY STRIPING.
2. DIVERT AND MAINTAIN THREE LANES OF TRAFFIC IN EACH DIRECTION.
3. REMOVE PORTION OF ASPHALT.
4. PERFORM ITEM 848, SURFACE PREPARATION USING HYDRODEMOLITION.
5. REMOVE PORTION OF DECK SLAB, PARAPET AND APPROACH SLABS.
6. CONSTRUCT NEW ABUTMENT WINGWALL CONCRETE.
7. PLACE CONCRETE DECK SLAB, PARAPETS AND APPROACH SLABS.
8. PLACE ITEM 848, MICROSILICA CONCRETE OVERLAY.
9. PATCH AND SEAL CONCRETE SURFACES.

*PHASE 3 REMOVALS AND CONTRUCTION (SOUTHBOUND)*

1. PLACE PORTABLE BARRIER AND TEMPORARY STRIPING.
2. DIVERT AND MAINTAIN THREE LANES OF TRAFFIC IN EACH DIRECTION.
3. REMOVE PORTION OF ASPHALT.
4. PERFORM ITEM 848, SURFACE PREPARATION USING HYDRODEMOLITION.
5. REMOVE PORTION OF DECK SLAB, PARAPET AND APPROACH SLABS.
6. CONSTRUCT NEW ABUTMENT WINGWALL CONCRETE.
7. PLACE CONCRETE DECK SLAB, PARAPETS AND APPROACH SLABS.
8. PLACE ITEM 848, MICROSILICA CONCRETE OVERLAY.
9. PATCH AND SEAL CONCRETE SURFACES.
10. AFTER ALL CONSTRUCTION IS COMPLETE, REMOVE TRAFFIC CONTROL AND OPEN BRIDGES TO NORMAL TRAFFIC.

O:\2017\20I7258\ProjectData\SUM106002\Design\Structures\SUM077_0802\Sheets\077_0802C_SC001.dgn Sheet 2 1/17/2021 8:05:06 PM rvitelli

DESIGN AGENCY
GPD GROUP
520 South Main Street, Akron, OH 44311 330.572.2100

| DESIGNED | DRAWN | REVIEWED | DATE |
|---|---|---|---|
| RFV | RFV | TJW | 1-18-21 |
| CHECKED | REVISED | STRUCTURE FILE NUMBER | |
| RHC | | 77002493/77002523 | |

STAGE CONSTRUCTION DETAILS
BRIDGE NO. SUM-77-0802 L/R
OVER EAST WARNER ROAD

SUM-77/277/224
VARIOUS
PID No. 106002

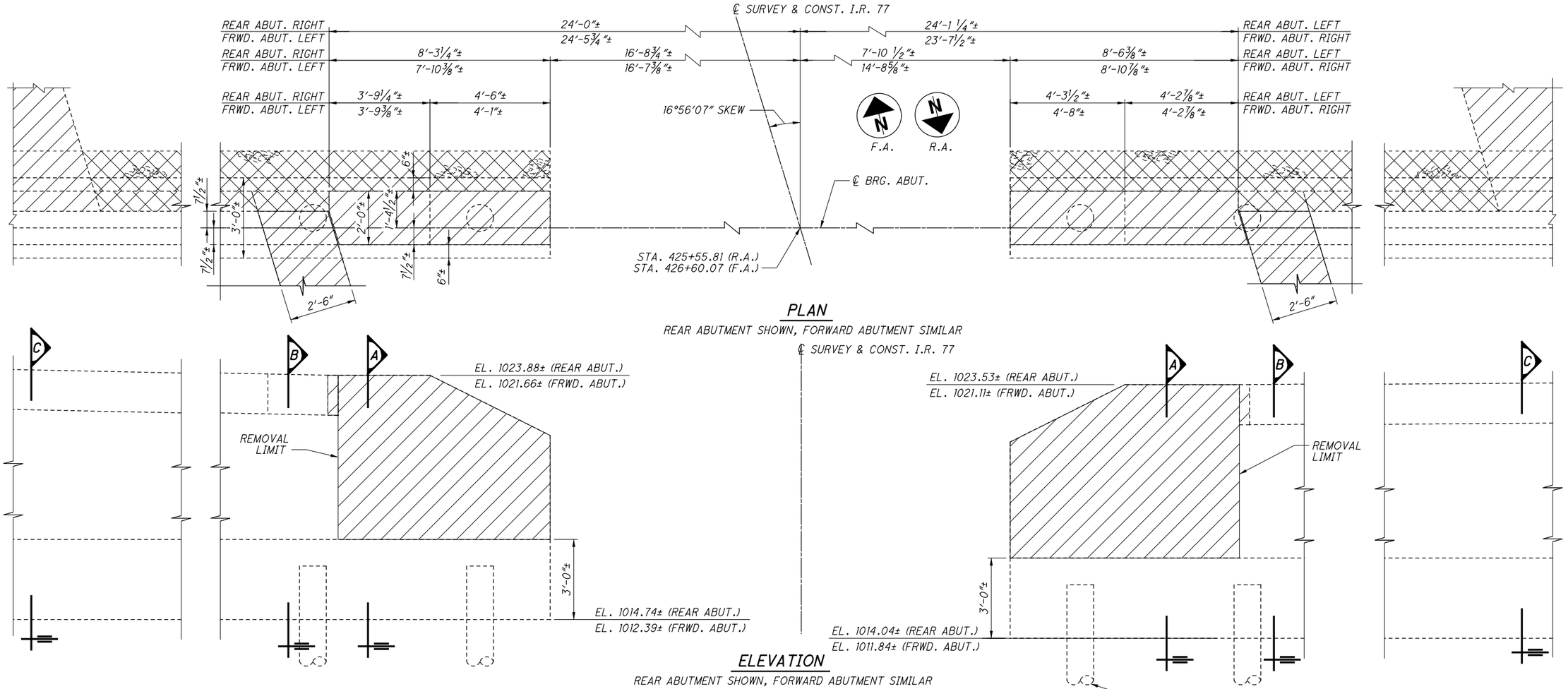


## PLAN

REAR ABUTMENT SHOWN, FORWARD ABUTMENT SIMILAR




## ELEVATION

REAR ABUTMENT SHOWN, FORWARD ABUTMENT SIMILAR

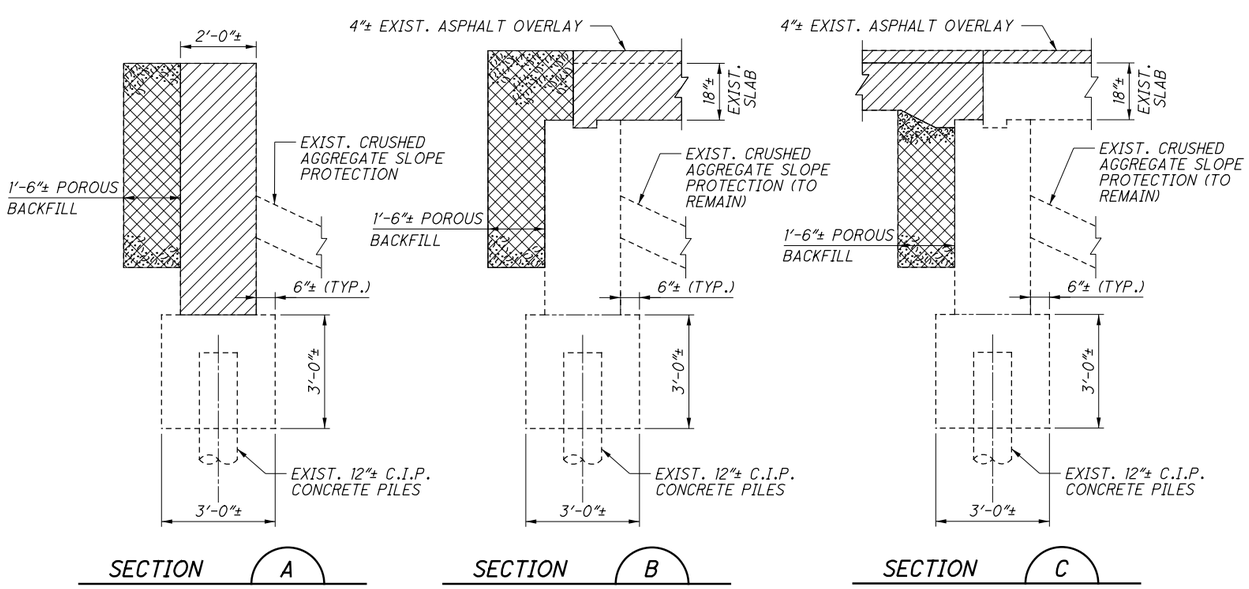


| REVISIONS | | |
|---|---|---|
| NO. | DATE | DESCRIPTION |
| 3 | 04/9/21 | NOTE 3 REMOVED |

## LEGEND:

- – INDICATES PORTIONS OF STRUCTURE REMOVED, OVER 20 FOOT SPAN, AS PER PLAN, PER ITEM 202
- – INDICATES WEARING COURSE REMOVED, PER ITEM 848
- – INDICATES POROUS BACKFILL REMOVED, PER ITEM 518
- – EXIST. 12" DIA. C.I.P. CONCRETE PILE

## NOTES:

1. FOR EXISTING SLAB REMOVAL DETAIL USING HYDRODEMOLITION, SEE SHEET 15/26.
2. ALL UNSOUND AREAS OF CONCRETE TO REMAIN SHALL BE PATCHED UNDER ITEM 519 - PATCHING CONRETE STRUCTURE. ESTIMATED AREAS ARE SHOWN IN THE TABLES IN THE GENERAL NOTES HAVE BEEN INCLUDED IN THE ESTIMATED QUANTITIES.

DESIGN AGENCY
CPD GROUP®
Glaus, Pyle, Schomer, Burns & DeHaven, Inc.
320 South Main Street, Akron, OH 44311 330.572.2100
Copyright Glaus, Pyle, Schomer, Burns & DeHaven, Inc., 2020

DESIGNED RFV | DRAWN RFV | REVIEWED TJW | DATE 1-18-21
CHECKED RHC | REVISED | STRUCTURE FILE NUMBER 77002493/77702523

ABUTMENT REMOVAL DETAILS
BRIDGE NO. SUM-77-0802 L/R
OVER EAST WARNER ROAD

SUM-77/277/224
VARIOUS
PID No. 106002

7 / 26

1161
1288

O:\2017\2017258\ProjectData\SUM\06002\Design\Structures\SUM077_0802\Sheets\077_0802C_SV001.dgn Sheet 4/9/2021 2:07:12 PM rcummins

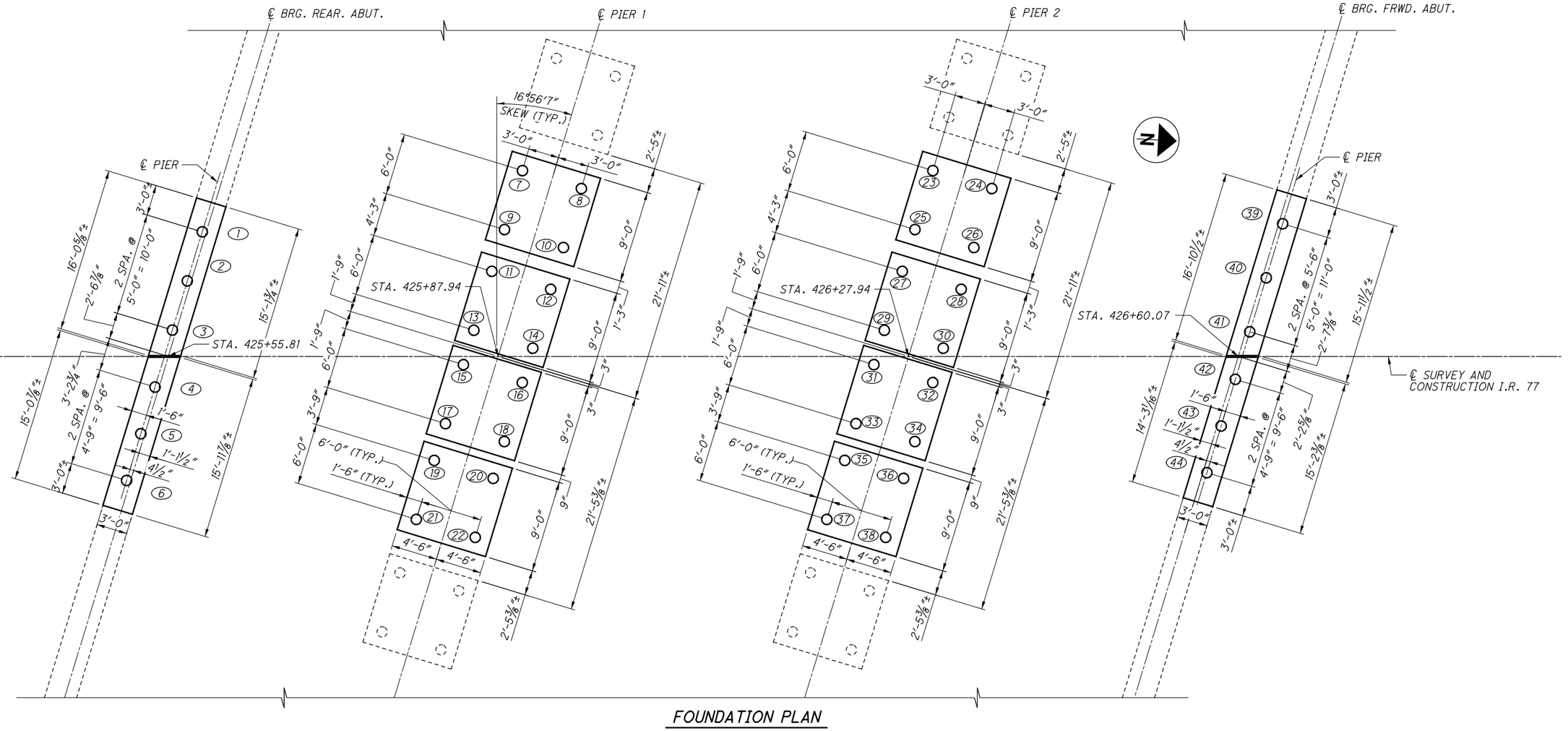


FOUNDATION PLAN

**LEGEND:**

- (#) PILE NUMBER
- O INDICATES PROPOSED 12" C.I.P. PILE
- ◌ INDICATES EXISTING 12" C.I.P. PILE

DESIGN AGENCY
**GPD GROUP**
Glaus, Pyle, Schomer, Burns & DeHaven, Inc.
520 South Main Street, Akron, OH 44311 330.572.2100
Copyright GPD Group, Glaus, Pyle, Schomer, Burns & DeHaven, Inc. 2020

| DESIGNED | DRAWN | REVIEWED | DATE |
|---|---|---|---|
| RFV | RFV | TJW | 1-18-21 |
| CHECKED | REVISED | STRUCTURE FILE NUMBER | |
| RHC | | 77702493/77702523 | |

**FOUNDATION PLAN**
BRIDGE NO. SUM-77-0802 L/R
OVER EAST WARNER ROAD

**SUM-77/277/224**
**VARIOUS**
**PID No. 106002**

8 / 26

1162
1288

0:\2017\2017258\ProjectData\SUM\106002\Design\Structures\SUM077_0802\Sheets\077_0802C_S000I.dgn Sheet 1/17/2021 8:05:10 PM rvitelli

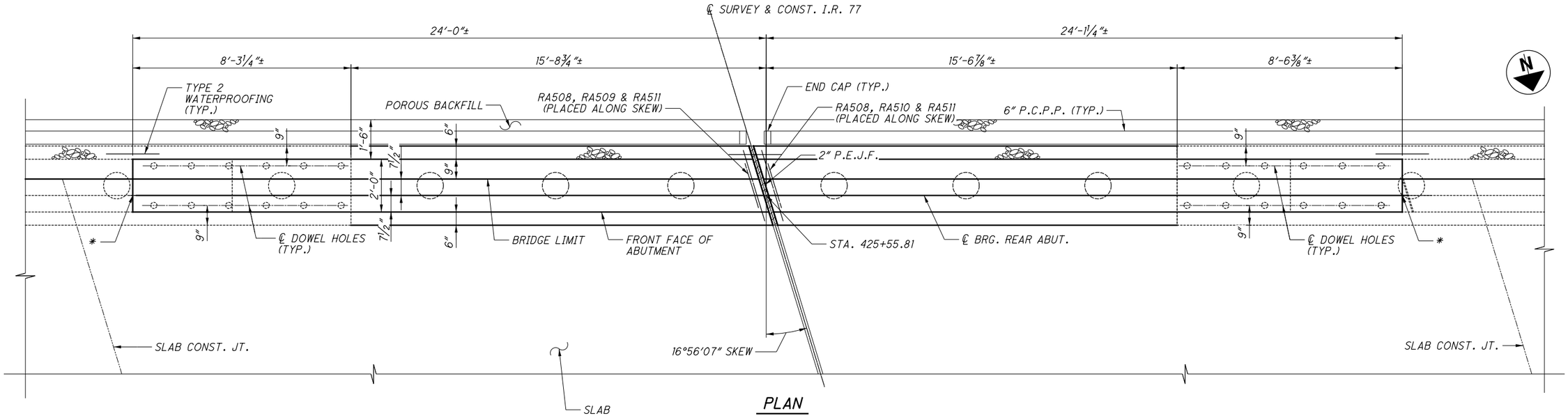


## PLAN

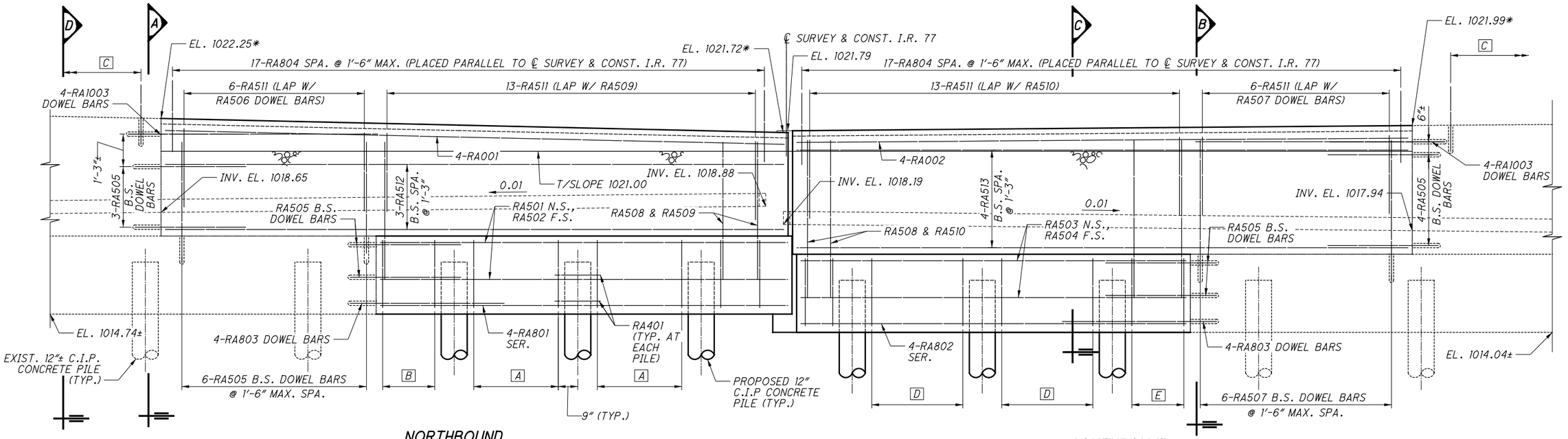


## NORTHBOUND

## ELEVATION

## SOUTHBOUND

### LEGEND:

- [A] 4 SETS OF RA508 & RA509 @ EQ. SPA.
- [B] 3 SETS OF RA508 & RA509 @ EQ. SPA.
- [C] 40-RA805 DOWELS SPA. @ 1'-6" MAX. (PLACED PARALLEL TO ℄ SURVEY & CONST. I.R. 77)
- [D] 4 SETS OF RA508 & RA510 @ EQ. SPA.
- [E] 3 SETS OF RA508 & RA510 @ EQ. SPA.
- * - ELEVATION GIVEN AT TOP FRONT EDGE OF KEY (SEE PLAN AND SECTION VIEW)

### NOTES:

1. FOR SECTIONS A THROUGH D, SEE SHEET [11/26].
2. DOWEL HOLES DEPTHS ARE AS FOLLOWS:
   # 5 BARS = 12"
   # 8 BARS = 12"
   # 10 BARS = 15"
3. MINIMUM LAP LENGTHS:
   # 5 BARS = 3'-1"
   # 8 BARS = 4'-9"
   # 10 BARS = 8'-2"

DESIGN AGENCY
GPD GROUP
Gray, Pape & Detheron, Inc.
520 South Main Street, Akron, OH 44311 330.572.2100
Copyright GPD, Inc. 2020

| DESIGNED | DRAWN | REVIEWED | DATE |
|---|---|---|---|
| RFV | RFV | TJW | 1-18-21 |
| CHECKED | REVISED | STRUCTURE FILE NUMBER | |
| RHC | | 77002493/77002523 | |

REAR ABUTMENT PLAN & ELEVATION
BRIDGE NO. SUM-77-0802 L/R
OVER EAST WARNER ROAD

SUM-77/277/224
VARIOUS
PID No. 106002

9 / 26

1163
1288

0:\2017\2017258\ProjectData\SUM\06002\Design\Structures\SUM077_0802\Sheets\077_0802C_SR001.dgn Sheet 1/17/2021 8:05:12 PM rvitelli

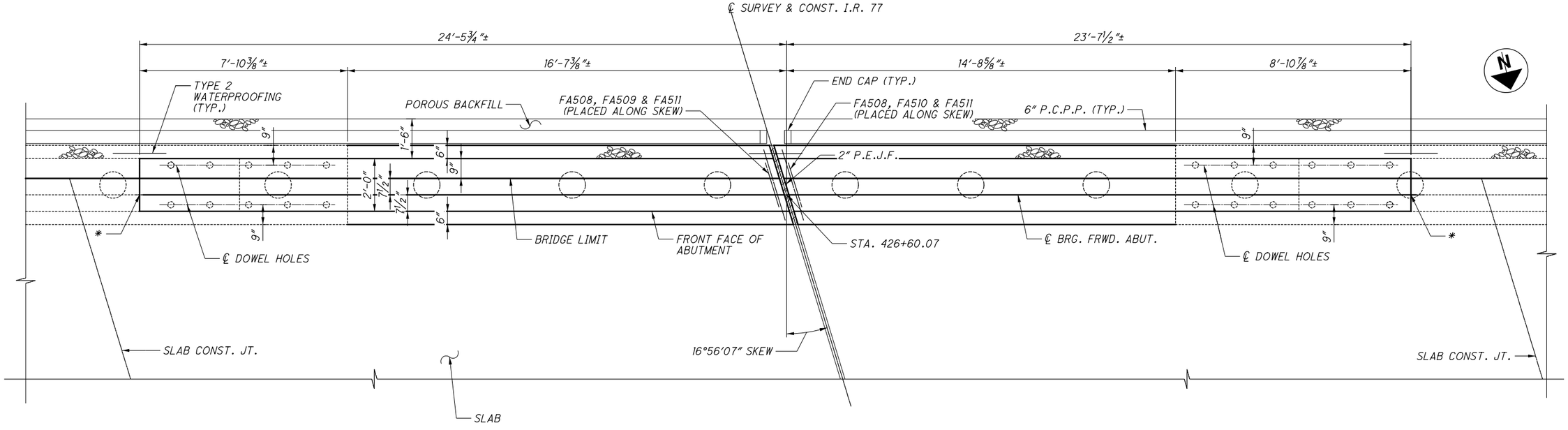


## PLAN

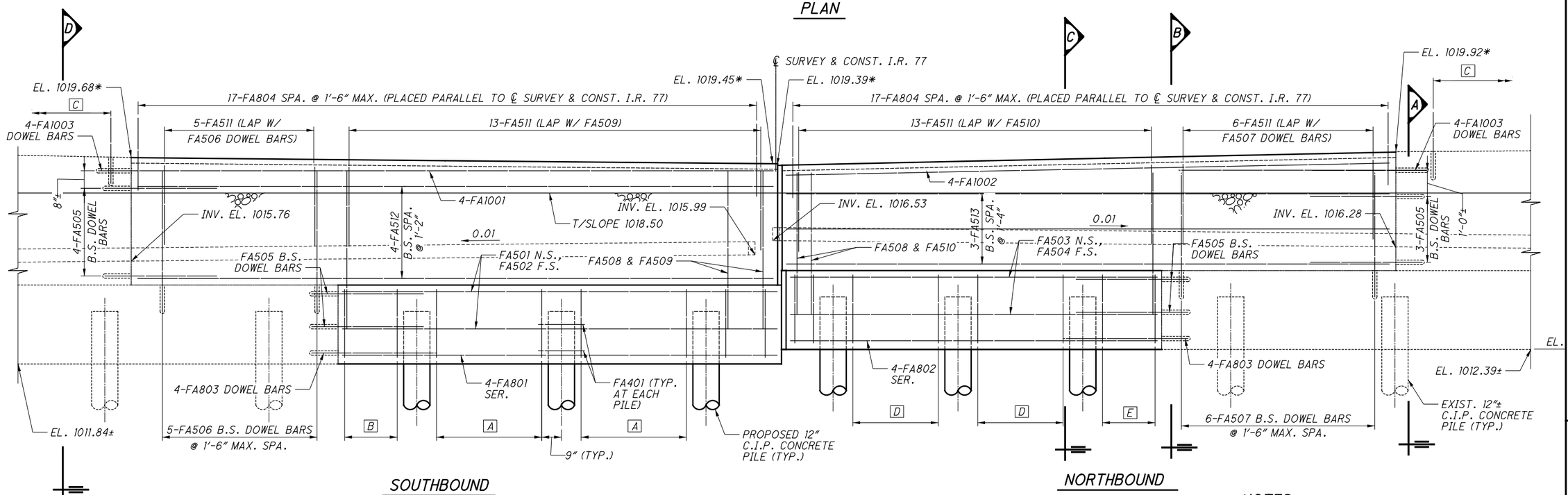


SOUTHBOUND NORTHBOUND

## ELEVATION

### LEGEND:

- A — 4 SETS OF FA508 & FA509 @ EQ. SPA.
- B — 3 SETS OF FA508 & FA509 @ EQ. SPA.
- C — 40-FA805 DOWELS SPA. @ 1′-6″ MAX. (PLACED PARALLEL TO ℄ SURVEY & CONST. I.R. 77)
- D — 4 SETS OF FA508 & FA510 @ EQ. SPA.
- E — 3 SETS OF FA508 & FA510 @ EQ. SPA.
- * — ELEVATION GIVEN AT TOP FRONT EDGE OF KEY (SEE PLAN AND SECTION VIEW)

### NOTES:

1. FOR SECTIONS A THROUGH D, SEE SHEET 11/26.
2. DOWEL HOLES DEPTHS ARE AS FOLLOWS:
   # 5 BARS = 12″
   # 8 BARS = 12″
   # 10 BARS = 15″
3. MINIMUM LAP LENGTHS:
   # 5 BARS = 3′-1″
   # 8 BARS = 4′-9″
   # 10 BARS = 8′-2″

DESIGN AGENCY
GPD GROUP
320 South Main Street, Akron, OH 44311 330.572.2100
Copyright GPD Group, Akron, Ohio, 2020

| DESIGNED | DRAWN | REVIEWED | DATE |
|---|---|---|---|
| RFV | RFV | TJW | 1-18-21 |
| CHECKED | REVISED | STRUCTURE FILE NUMBER | |
| RHC | | 77002493/77002523 | |

# FORWARD ABUTMENT PLAN & ELEVATION

BRIDGE NO. SUM-77-0802 L/R
OVER EAST WARNER ROAD

SUM-77/277/224
VARIOUS
PID No. 106002

10 / 26

1164
1288

O:\2017\2017258\ProjectData\SUM\06002\Design\Structures\SUM077_0802\Sheets\077_0802C_SF001.dgn Sheet 1/17/2021 8:05:13 PM rvitelli

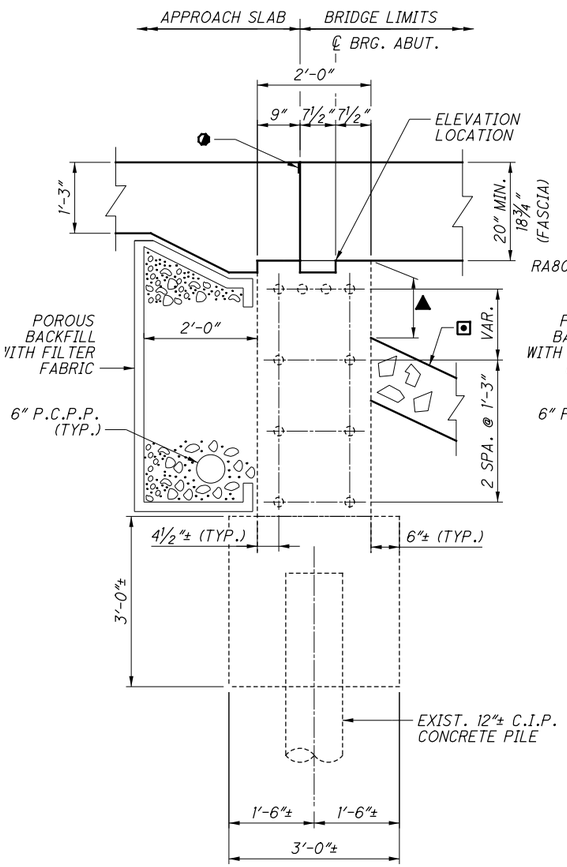


SECTION A

REHABILITATION WITH PROPOSED SLAB (AT WIDENING AND FASCIA)

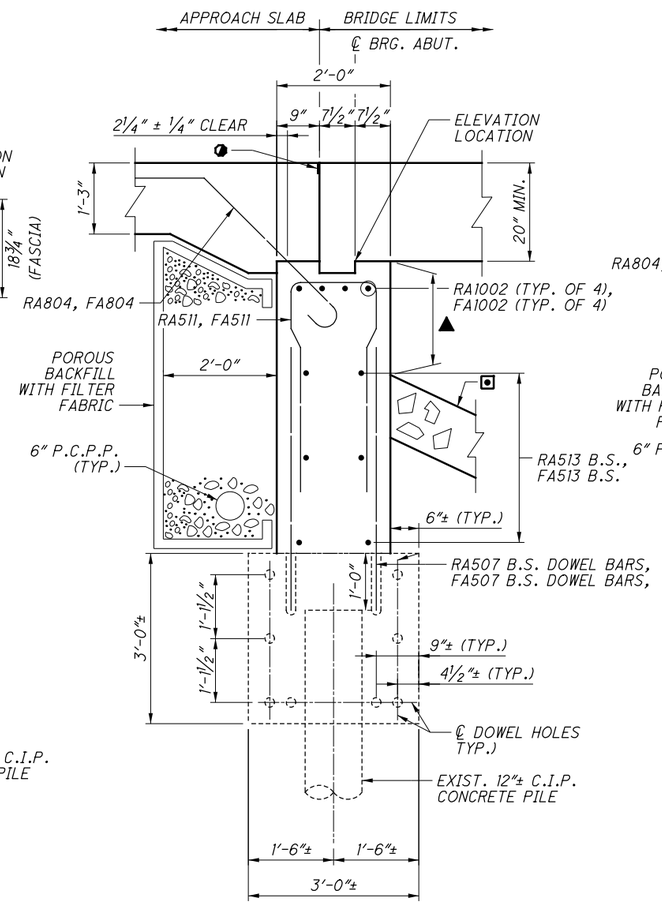


SECTION B

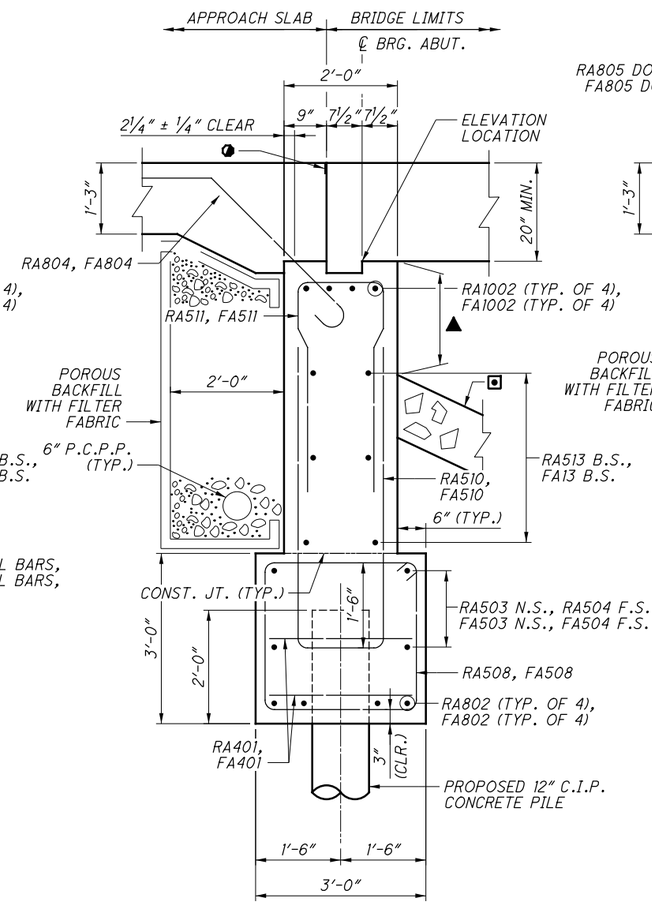


SECTION C

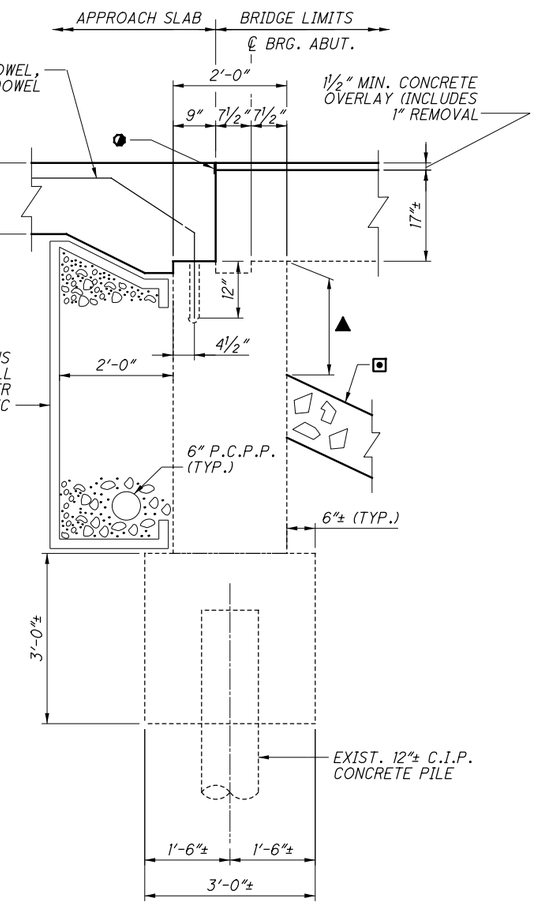


SECTION D

REHABILITATION WITH EXISTING SLAB

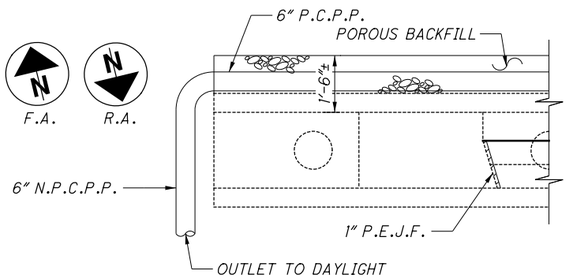


WINGWALL PLAN

REAR ABUTMENT (NORTHBOUND) WINGWALL SHOWN, OTHERS SIMILAR

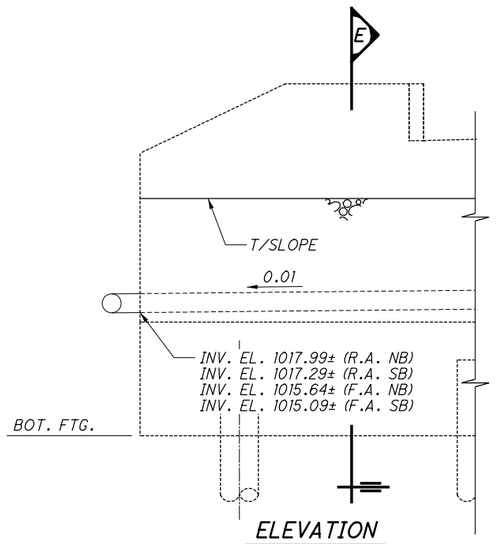


ELEVATION

REAR ABUTMENT (NORTHBOUND) WINGWALL SHOWN, OTHERS SIMILAR

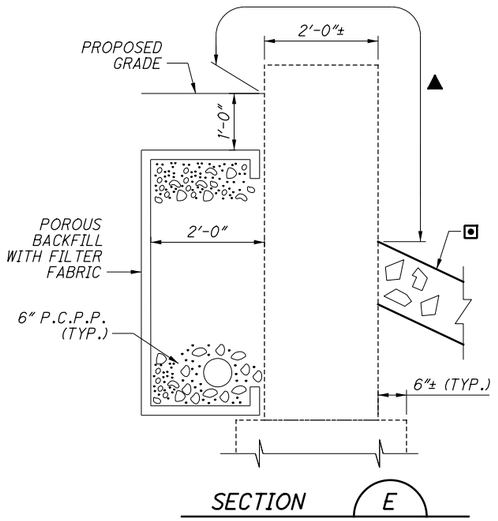


SECTION E

**LEGEND:**

- ▲ INDICATES LIMITS OF "ITEM 512 - SEALING OF CONCRETE SURFACES (EPOXY-URETHANE)"
- ⊡ CRUSHED AGGREGATE SLOPE PROTECTION (1'-0" THICK)
- ◕ SEE DETAIL B FROM STANDARD DRAWING AS-1-15, SHEET 2/2

**NOTE:**

FOR THE LOCATION OF SECTION A THRU D, SEE SHEETS 9/26 & 10/26.

DESIGN AGENCY
CPD GROUP
Civil, Traffic & Structural Engineers
320 South Main Street, Akron, OH 44311 330.572.2100
Copyright Glaus, Pyle, Schomer, Burns & DeHaven, Inc. 2020

| DESIGNED | DRAWN | REVIEWED | DATE |
|---|---|---|---|
| RFV | RFV | TJW | 1-18-21 |
| CHECKED | REVISED | STRUCTURE FILE NUMBER | |
| RHC | | 77102493/77102523 | |

ABUTMENT DETAILS
BRIDGE NO. SUM-77-0802 L/R
OVER EAST WARNER ROAD

SUM-77/277/224
VARIOUS
PID No. 106002

11 / 26

1165
1288

0:\2017\2017258\ProjectData\SUM\06002\Design\Structures\SUM077_0802\Sheets\077_0802C_SR001.dgn Sheet 2 1/17/2021 8:05:14 PM rvitelli

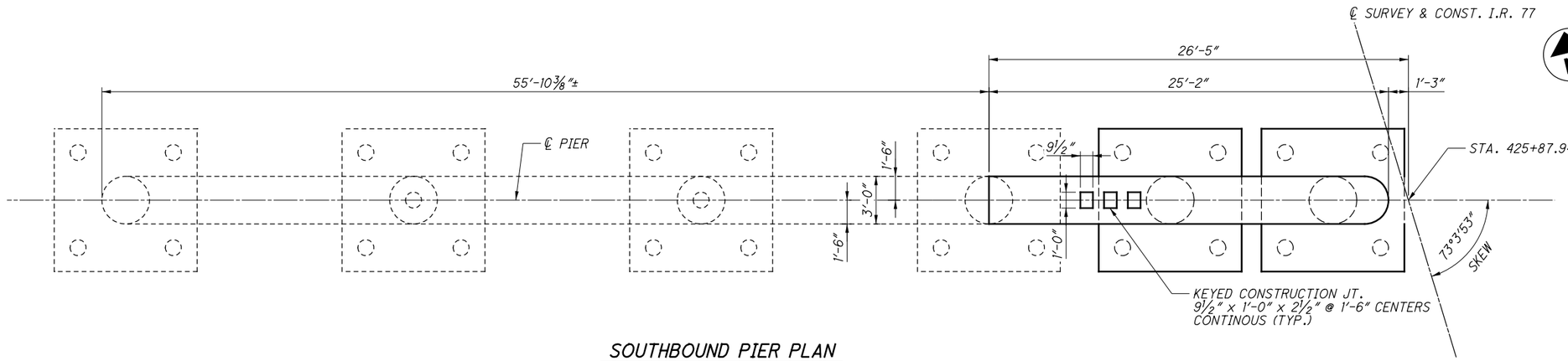


## SOUTHBOUND PIER PLAN

PIER 1 SHOWN, PIER 2 SIMILAR

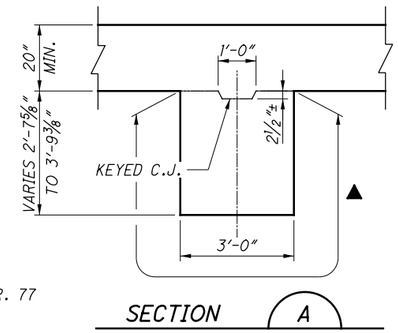


SECTION A

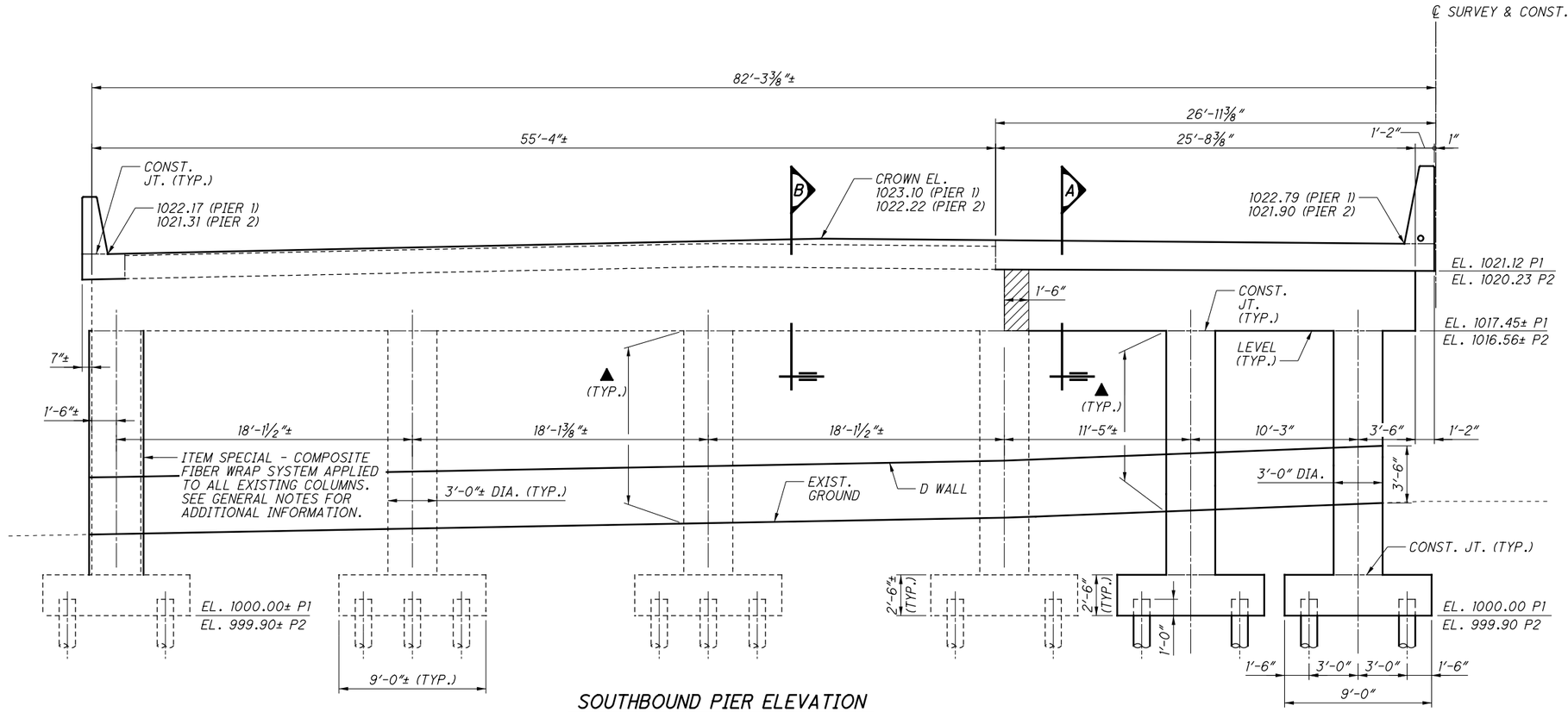


## SOUTHBOUND PIER ELEVATION

PIER 1 SHOWN, PIER 2 SIMILAR
BRIDGE TERMINAL ASSEMBLY NOT SHOWN

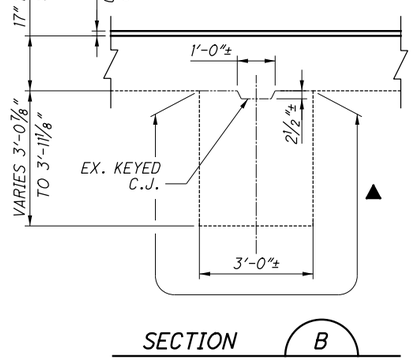


SECTION B

### LEGEND:

▲ LIMITS OF "ITEM 512 - SEALING OF CONCRETE SURFACES (EPOXY-URETHANE)"

▨ INDICATES PORTIONS OF STRUCTURE REMOVED, OVER 20 FOOT SPAN, AS PER PLAN, PER ITEM 202

### NOTES:

1. FOR NORTHBOUND PIER PLAN AND ELEVATIONS, SEE SHEET 13/26 .
2. FOR PIER REINFORCING DETAILS, SEE SHEET 14/26 .
3. SALVAGE ALL VERTICAL COLUMN REINFORCING STEEL AND HORIZONTAL CAP REINFORCING STEEL.

DESIGN AGENCY
GPD GROUP
Gray, Pape & Dehaven, Inc.
320 South Main Street, Akron, OH 44311 330.572.2100
Copyright GPD, Inc.

| DESIGNED | DRAWN | REVIEWED | DATE |
|---|---|---|---|
| RFV | RFV | TJW | 1-18-21 |
| CHECKED | REVISED | STRUCTURE FILE NUMBER | |
| RHC | | 77102493/77102523 | |

SOUTHBOUND PIER PLAN & ELEVATION
BRIDGE NO. SUM-77-0802 L/R
OVER EAST WARNER ROAD

SUM-77/277/224
VARIOUS
PID No. 106002

12/26

1166
1288

0:\2017\2017258\Project Data\SUM\06002\Design\Structures\SUM077_0802\Sheets\077_0802C_SI001.dgn Sheet 1 1/17/2021 8:05:15 PM rvitelli

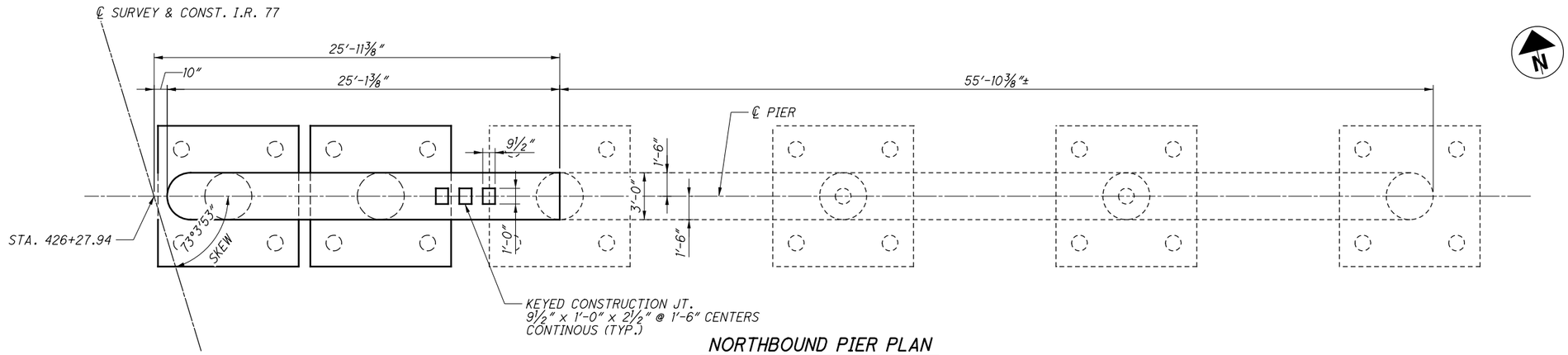


## NORTHBOUND PIER PLAN

PIER 1 SHOWN, PIER 2 SIMILAR

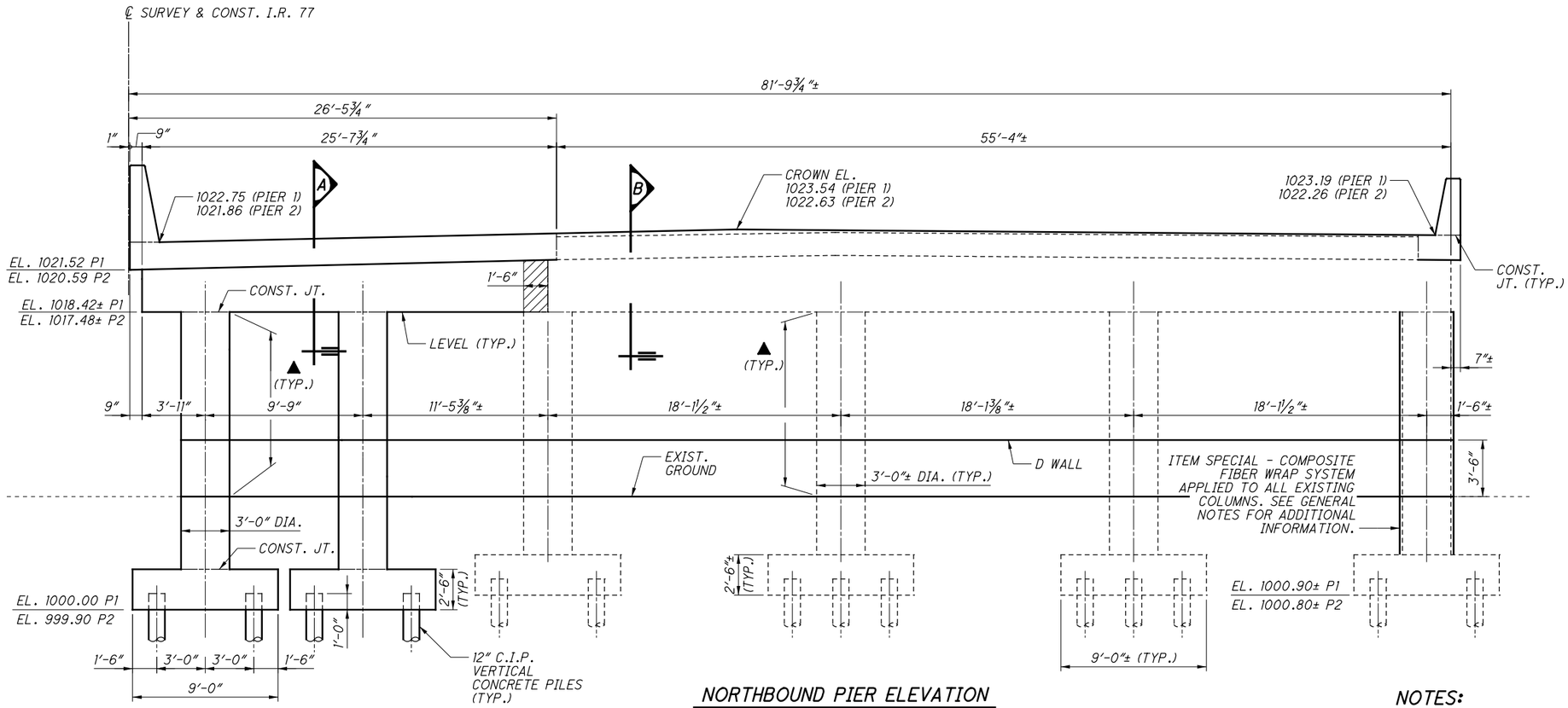


## NORTHBOUND PIER ELEVATION

PIER 1 SHOWN, PIER 2 SIMILAR
BRIDGE TERMINAL ASSEMBLY NOT SHOWN

### LEGEND:

▲ INDICATES LIMITS OF "ITEM 512 - SEALING OF CONCRETE SURFACES (EPOXY-URETHANE)"

▨ INDICATES PORTIONS OF STRUCTURE REMOVED, OVER 20 FOOT SPAN, AS PER PLAN, PER ITEM 202

### NOTES:

1. FOR SOUTHBOUND PIER PLAN AND ELEVATIONS, SEE SHEET 12/26.
2. FOR SECTIONS A & B, SEE SHEET 12/26.
3. FOR PIER REINFORCING DETAILS, SEE SHEET 14/26.
4. SALVAGE ALL VERTICAL COLUMN REINFORCING STEEL AND HORIZONTAL CAP REINFORCING STEEL.

DESIGN AGENCY
CPD GROUP
Chan, Pak, Schmec, Burns & DeHaven, Inc.
320 South Main Street, Akron, OH 44311 330.572.2100
Copyright ©Dec. Pak, Schmec, Burns & DeHaven, Inc. 2020

| DESIGNED | DRAWN | REVIEWED | DATE |
|---|---|---|---|
| RFV | RFV | TJW | 1-18-21 |
| CHECKED | REVISED | STRUCTURE FILE NUMBER | |
| RHC | | 77002493/77002523 | |

NORTHBOUND PIER PLAN & ELEVATION
BRIDGE NO. SUM-77-0802 L/R
OVER EAST WARNER ROAD

SUM-77/277/224
VARIOUS
PID No. 106002

13 / 26

1167
1288

O:\2017\2017258\ProjectData\SUM\06002\Design\Structures\SUM077_0802\Sheets\077_0802C_SI001.dgn Sheet 2 1/17/2021 8:05:16 PM rvitelli

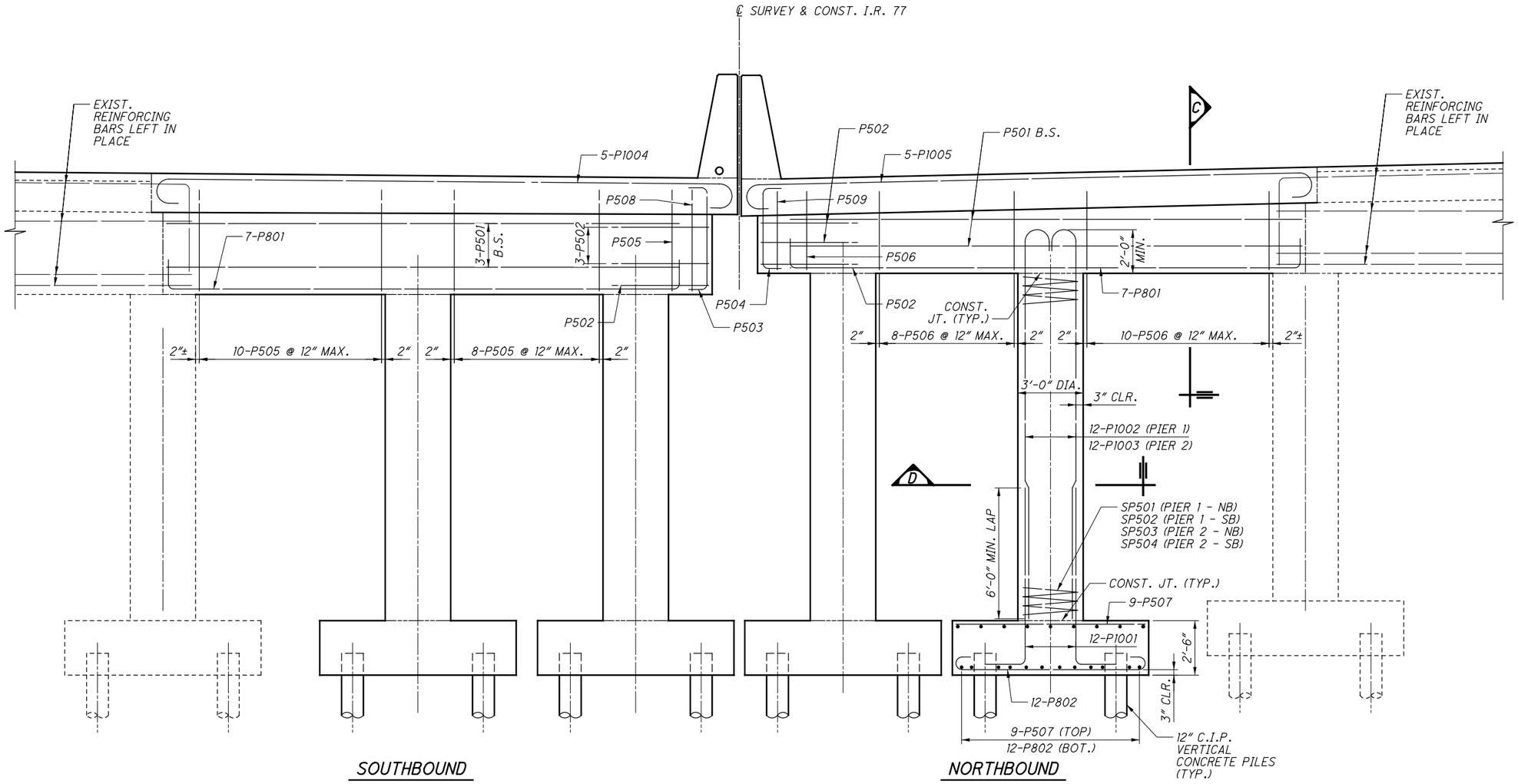


## PIER REINFORCING ELEVATIONS

PIER 1 SHOWN, PIER 2 SIMILAR

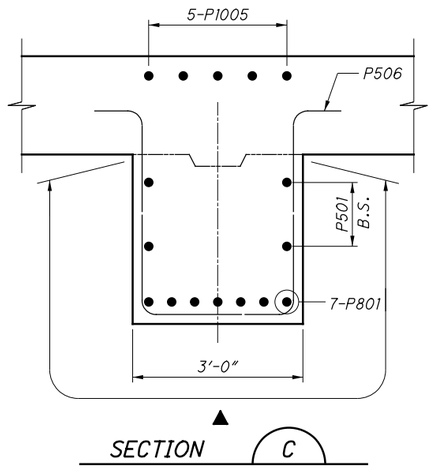


SECTION C

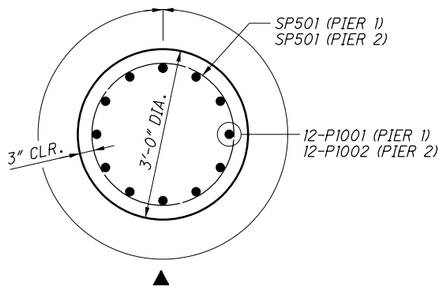


SECTION D

**MIN. LAP LENGTHS:**

#5 BAR = 3'-1"
#8 BAR = 5'-11"
#10 BAR = 7'-2"

**LEGEND:**

▲ INDICATES LIMITS OF "ITEM 512 - SEALING OF CONCRETE SURFACES (EPOXY-URETHANE)"

DESIGN AGENCY
CPD GROUP
Glaus, Pyle, Schomer, Burns & DeHaven, Inc.
320 South Main Street, Akron, OH 44311 330.572.2100
Copyright Glaus, Pyle, Schomer, Burns & DeHaven, Inc. 2020

| DESIGNED | DRAWN | REVIEWED | DATE |
|---|---|---|---|
| RFV | RFV | TJW | 1-18-21 |
| CHECKED | REVISED | STRUCTURE FILE NUMBER | |
| RHC | | 77002493/77002523 | |

PIER REINFORCING DETAILS
BRIDGE NO. SUM-77-0802 L/R
OVER EAST WARNER ROAD

SUM-77/277/224
VARIOUS
PID No. 106002

14 / 26

1168
1288

0:\2017\2017258\ProjectData\SUM\106002\Design\Structures\SUM077_0802\Sheets\077_0802C_SI002.dgn Sheet 1/17/2021 8:05:17 PM rvitelli

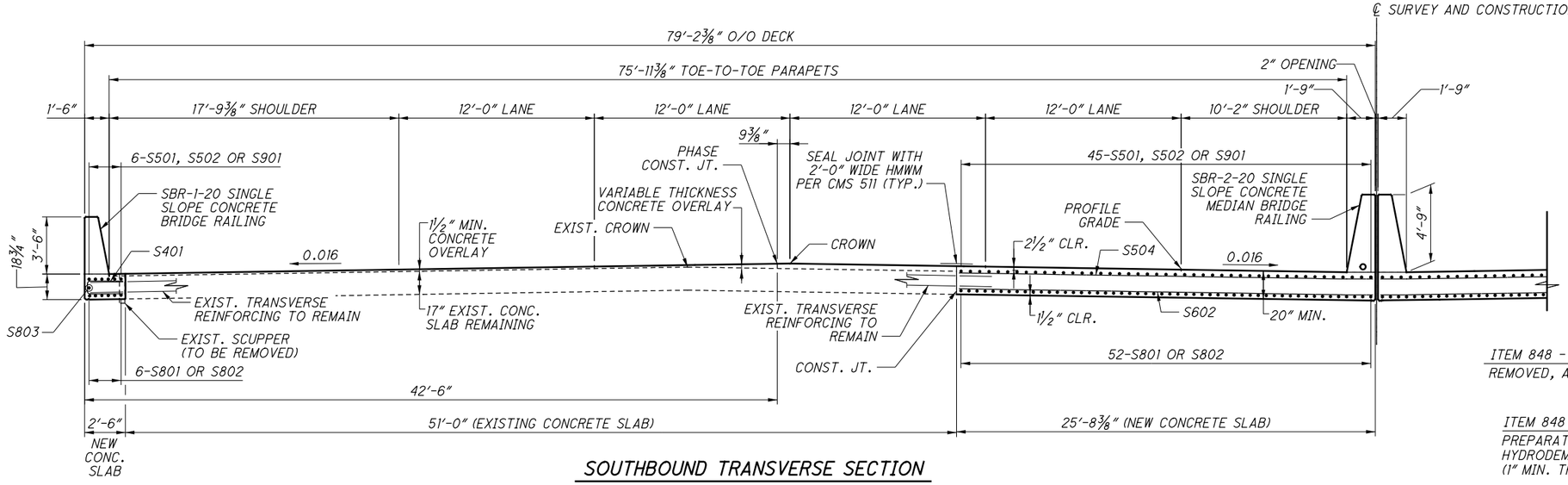


## SOUTHBOUND TRANSVERSE SECTION

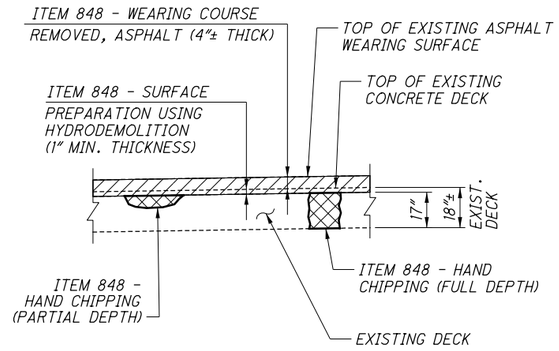


## OVERLAY REMOVAL DETAIL

(AT EXISTING DECK SLAB)

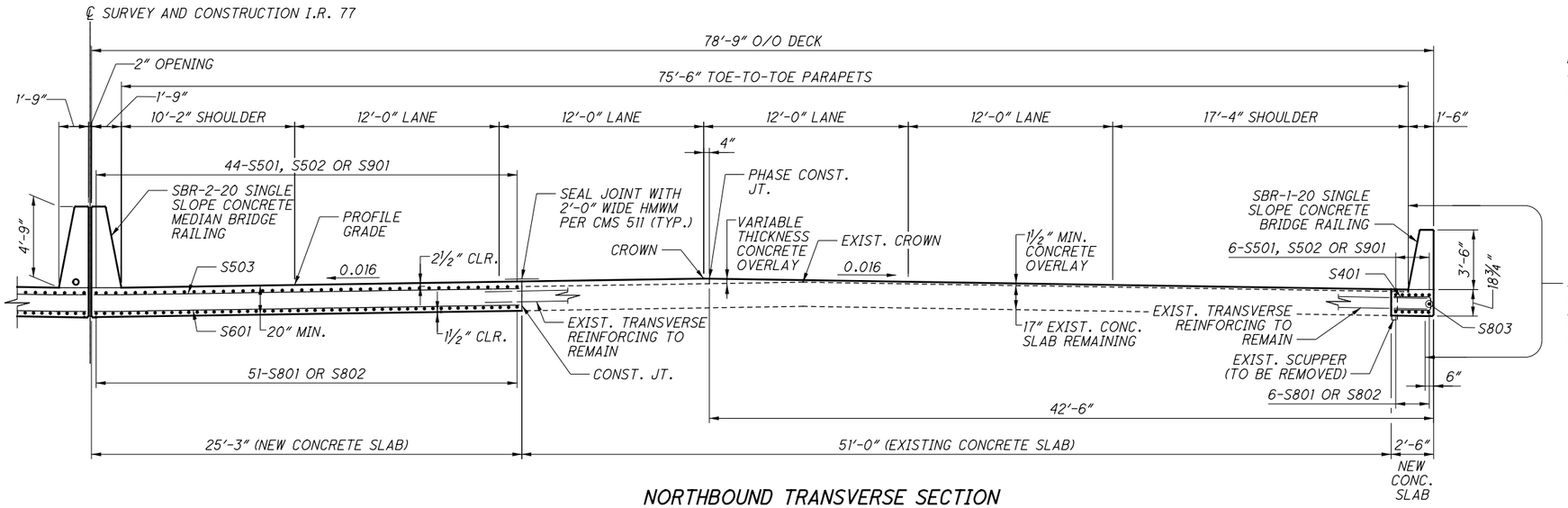


## NORTHBOUND TRANSVERSE SECTION

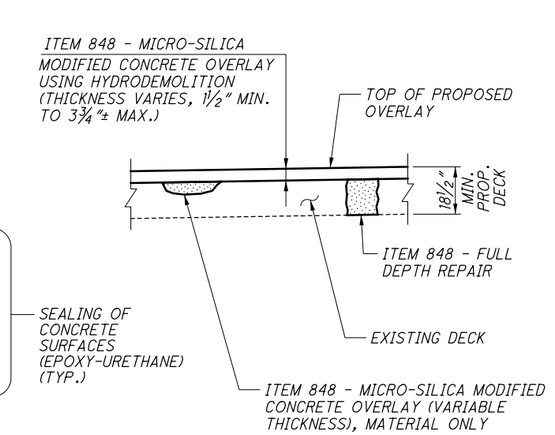


## OVERLAY REPLACEMENT DETAIL

(AT EXISTING DECK SLAB)

## NOTES:

1. FOR PARAPET DETAILS SEE SHEET 18/26 .
2. FOR MEDIAN BARRIER DETAILS SEE SHEET 19/26 .
3. FOR SLAB PLANS SEE SHEETS 16/26 & 17/26 .

DESIGN AGENCY
GPD GROUP
Gary Pak, Schnec Burke & DeHaven, Inc.
520 South Main Street, Akron, OH 44311 330.572.2100
Copyright GPD Group, Pak, Schnec, Burke & DeHaven, Inc. 2020

| DESIGNED | DRAWN | REVIEWED | DATE |
|---|---|---|---|
| RFV | RFV | TJW | 1-18-21 |
| CHECKED | REVISED | STRUCTURE FILE NUMBER | |
| RHC | | 77002493/77002523 | |

TRANSVERSE SECTION
BRIDGE NO. SUM-77-0802 L/R
OVER EAST WARNER ROAD

SUM-77/277/224
VARIOUS
PID No. 106002

15 / 26

1169
1288

0:\2017\20172581\ProjectData\SUM\106002\Design\Structures\SUM077_0802\Sheets\077_0802C_ST001.dgn 1/17/2021 8:05:18 PM rvitelli

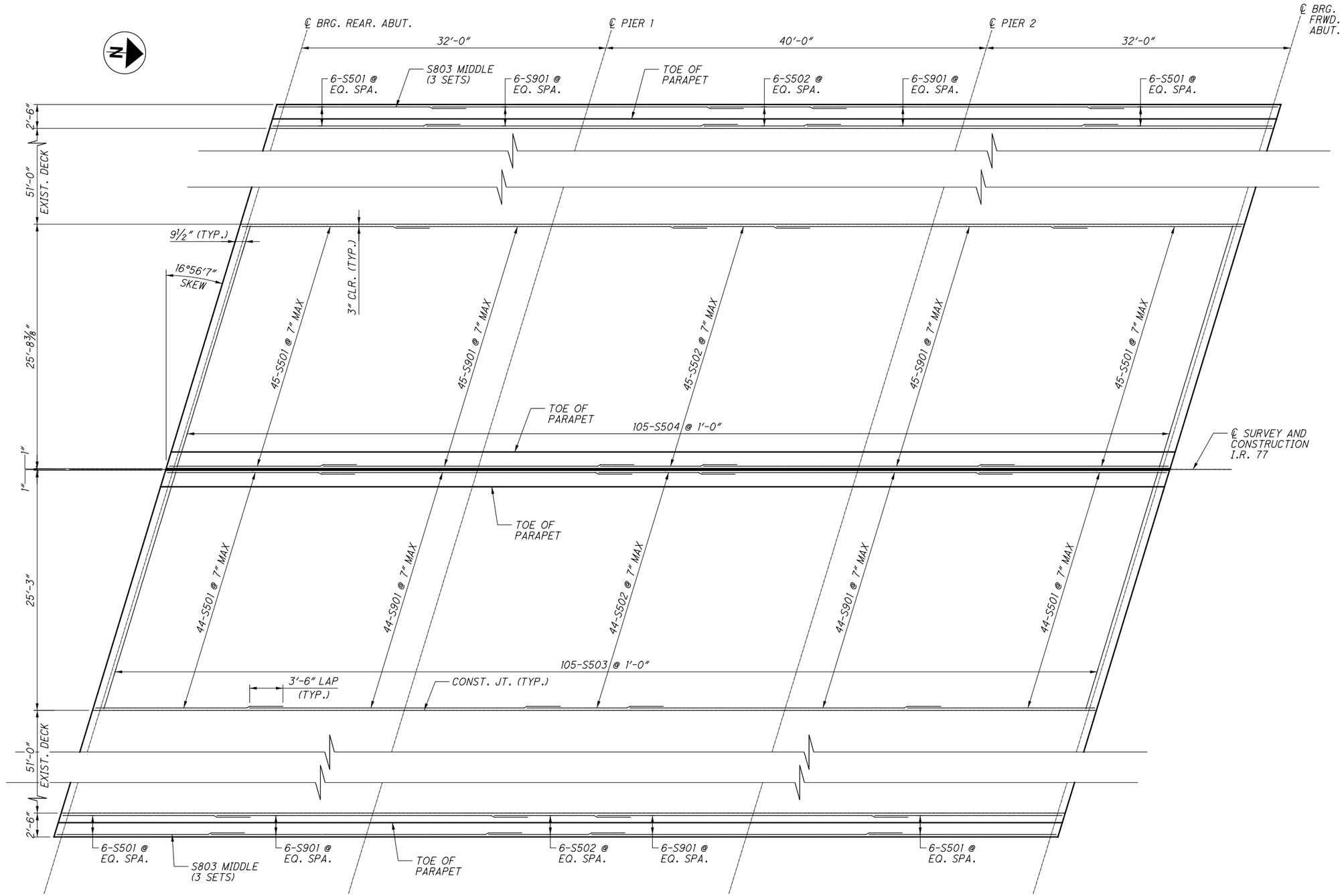


SLAB PLAN - TOP MAT

**NOTES:**

1. FOR TRANSVERSE SECTION, SEE SHEET 15/26 .
2. FOR ELEVATION LINE LOCATIONS AND TABLES SEE SHEETS 20/26 & 21/26 .
3. UNLESS NOTED OTHERWISE, MINIMUM REINFORCING STEEL LAP LENGTHS ARE AS FOLLOWS:

   NO. 8 BARS 6′-9″

DESIGN AGENCY
GPD GROUP
520 South Main Street, Akron, OH 44311 330.572.2100
Copyright GPD Group, Akron, Ohio, USA, Inc. 2020

| DESIGNED | DRAWN | REVIEWED | DATE |
|---|---|---|---|
| RFV | RFV | TJW | 1-18-21 |
| CHECKED | REVISED | STRUCTURE FILE NUMBER | |
| RHC | | 77702493/77702523 | |

SLAB PLAN - TOP
BRIDGE NO. SUM-77-0802 L/R
OVER EAST WARNER ROAD

SUM-77/277/224
VARIOUS
PID No. 106002

16 / 26

1170
1288

0:\2017\20172581\ProjectData\SUM\106002\Design\Structures\SUM077_0802\Sheets\077_0802C_SD001.dgn Sheet 1/17/2021 8:05:19 PM rvitelli

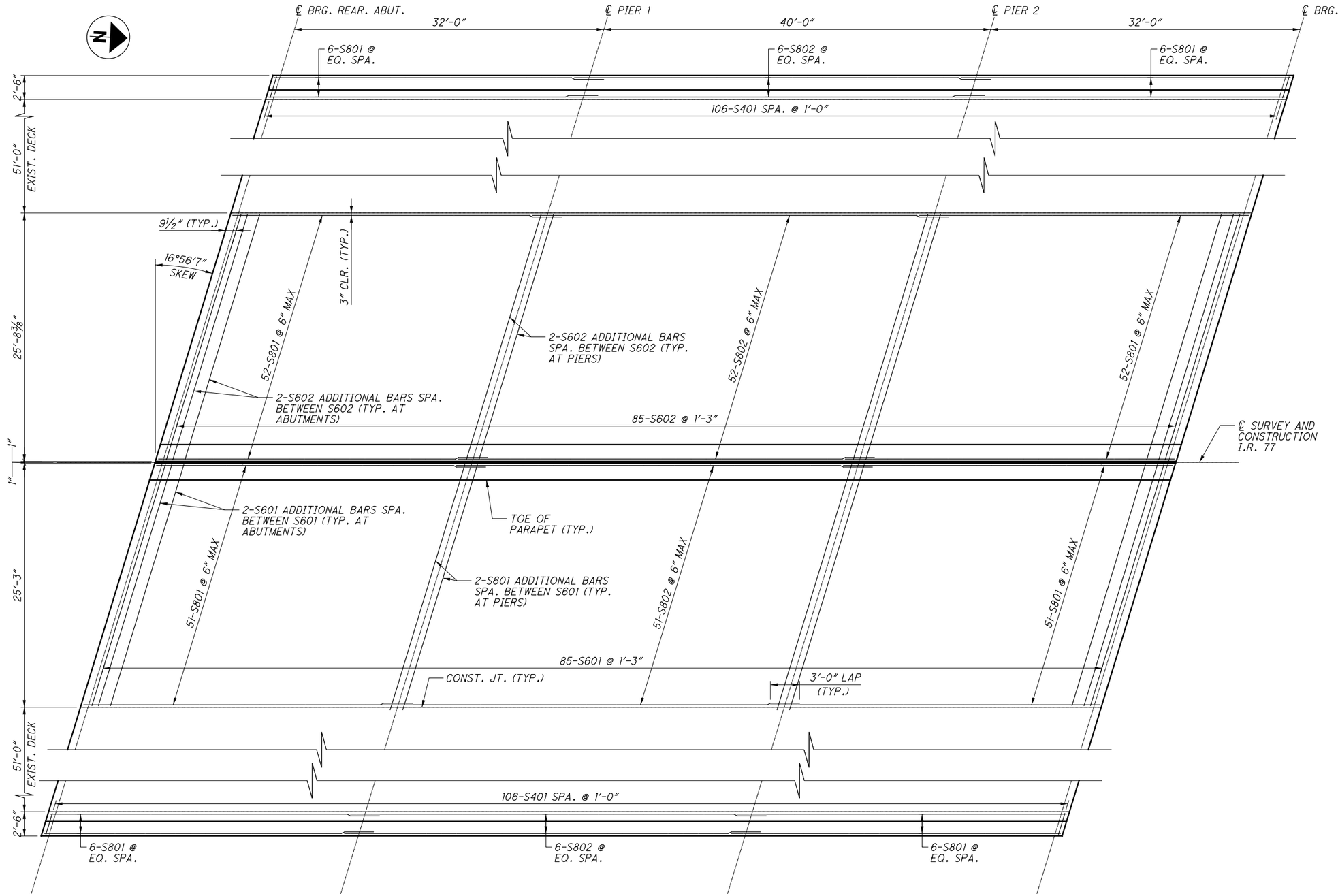


## SLAB PLAN - BOTTOM MAT

**NOTES:**

1. FOR TRANSVERSE SECTION, SEE SHEET 15/26.
2. FOR ELEVATION LINE LOCATIONS AND TABLES SEE SHEETS 20/26 & 21/26.

DESIGN AGENCY
GPD GROUP
520 South Main Street, Akron, OH 44311 330.572.2100
Copyright GPD Group, Akron, Ohio, USA, 2020

| DESIGNED | DRAWN | REVIEWED | DATE |
|---|---|---|---|
| RFV | RFV | TJW | 1-18-21 |
| CHECKED | REVISED | STRUCTURE FILE NUMBER | |
| RHC | | 77002493/77002523 | |

SLAB PLAN - BOTTOM
BRIDGE NO. SUM-77-0802 L/R
OVER EAST WARNER ROAD

SUM-77/277/224
VARIOUS
PID No. 106002



1171
1288

O:\2017\2017258\ProjectData\SUM\06002\Design\Structures\SUM077_0802\Sheets\077_0802C_SD002.dgn Sheet 1/17/2021 8:05:21 PM rvitelli

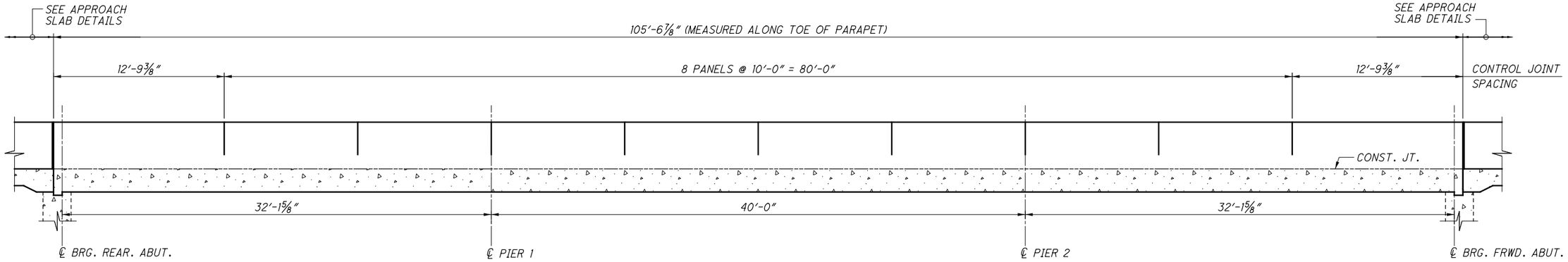


## PARAPET ELEVATION

SOUTHBOUND PARAPET SHOWN, NORTHBOUND SIMILAR

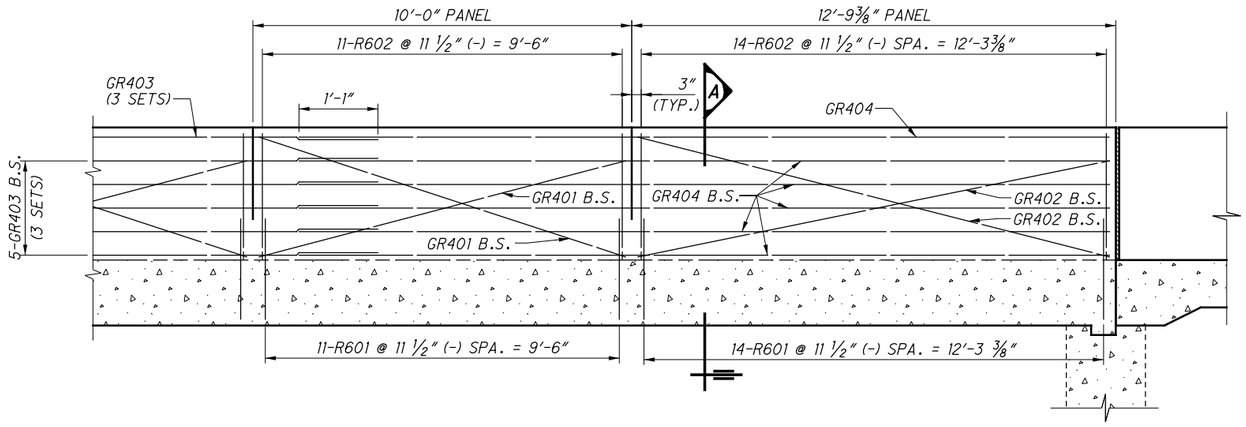


## PARAPET REINFORCING DETAILS

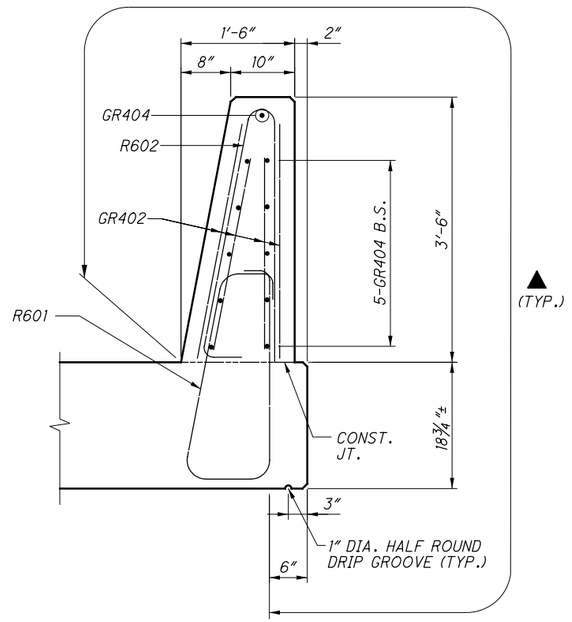


## SECTION A

DECK SLAB REINFORCING NOT SHOWN

### LEGEND:

▲ LIMITS OF ITEM 512 - SEALING OF CONCRETE SURFACES (EPOXY- URETHANE)

### NOTES:

1. FOR ADDITIONAL INFORMATION, SEE STANDARD DRAWINGS SBR-1-20.
2. FOR RAILING TRANSITION DETAILS, SEE SHEET 24 26 .
3. REINFORCEMENT DESIGNATED WITH A "GR" PREFIX ARE GFRP BARS.
5. GR6 BARS MAY BE PROVIDED AS EPOXY COATED STEEL REINFORCEMENT IF A GFRP FABRICATED SHAPE IS NOT AVAILABLE.
6. MINIMUM LAP LENGTHS FOR #4 GFRP BARS TO BE 1'-1"

DESIGN AGENCY
GPD GROUP
Glenn P.M. Schiesz, P.E., Daniel R. DeHaven, Inc.
520 South Main Street, Akron, OH 44311 330.572.2100
Copyright GPD, Inc. Schiesz, Burns & DeHaven, Inc. 2020

| DESIGNED | DRAWN | REVIEWED | DATE |
|---|---|---|---|
| RFV | RFV | TJW | 1-18-21 |
| CHECKED | REVISED | STRUCTURE FILE NUMBER | |
| RHC | | 77002493/77002523 | |

PARAPET ELEVATION & DETAILS
BRIDGE NO. SUM-77-0802 L/R
OVER EAST WARNER ROAD

SUM-77/277/224
VARIOUS
PID No. 106002



O:\2017\2017258\ProjectData\SUM\106002\Design\Structures\SUM077_0802\Sheets\077_0802C_SA001.dgn Sheet 1/17/2021 8:05:23 PM rvitelli

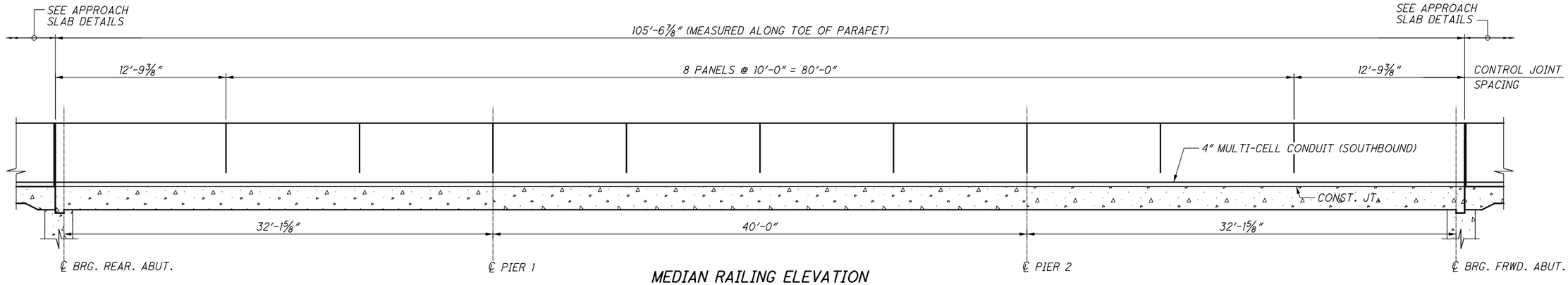


## MEDIAN RAILING ELEVATION

NORTHBOUND MEDIAN RAILING SHOWN, SOUTHBOUND SIMILAR

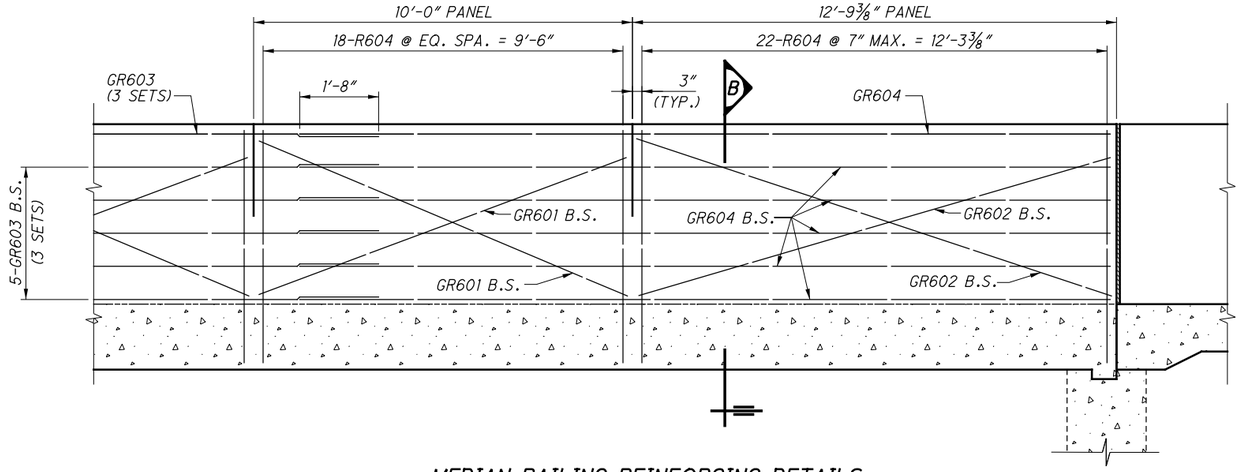


## MEDIAN RAILING REINFORCING DETAILS

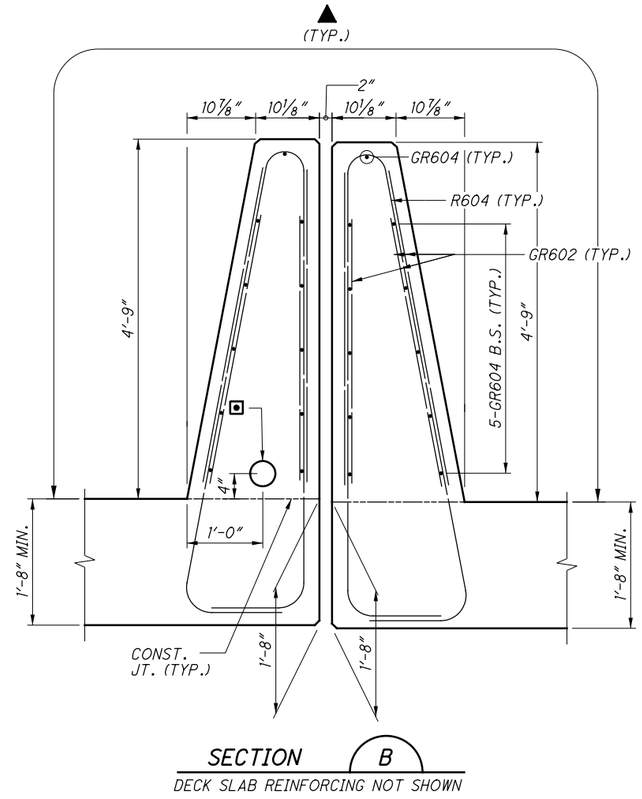


## SECTION B

DECK SLAB REINFORCING NOT SHOWN

### LEGENDS:

- ⊡ 4" MULTI-CELL CONDUIT (SB RAILING) 725.20 (TO BE INCLUDED WITH THE ITS QUANTITIES FOR PAYMENT
- ▲ LIMITS OF ITEM 512 - SEALING OF CONCRETE SURFACES (EPOXY- URETHANE)

### NOTES:

1. FOR ADDITIONAL INFORMATION, SEE STANDARD DRAWINGS SBR-2-20.
2. FOR RAILING TRANSITION DETAILS, SEE SHEET 24,26 .
3. REINFORCEMENT DESIGNATED WITH A "GR" PREFIX ARE GFRP BARS.
4. MINIMUM LAP LENGTHS FOR ALL #6 GFRP BARS TO BE 1'-8".

DESIGN AGENCY
CPD GROUP
Glaus, Pyle, Schomer, Burns & DeHaven, Inc.
520 South Main Street, Akron, OH 44311 330.572.2100
Copyright GPD, Inc. Schomer, Burns & DeHaven, Inc. 2020

| DESIGNED | DRAWN | REVIEWED | DATE |
|---|---|---|---|
| RFV | RFV | TJW | 1-18-21 |
| CHECKED | REVISED | STRUCTURE FILE NUMBER | |
| RHC | | 77002493/77002523 | |

MEDIAN RAILING ELEVATION & DETAILS
BRIDGE NO. SUM-77-0802 L/R
OVER EAST WARNER ROAD

SUM-77/277/224
VARIOUS
PID No. 106002



0:\2017\2017258\ProjectData\SUM\06002\Design\Structures\SUM077_0802\Sheets\077_0802C_SA001.dgn Sheet 2 1/17/2018 8:05:23 PM rvitelli

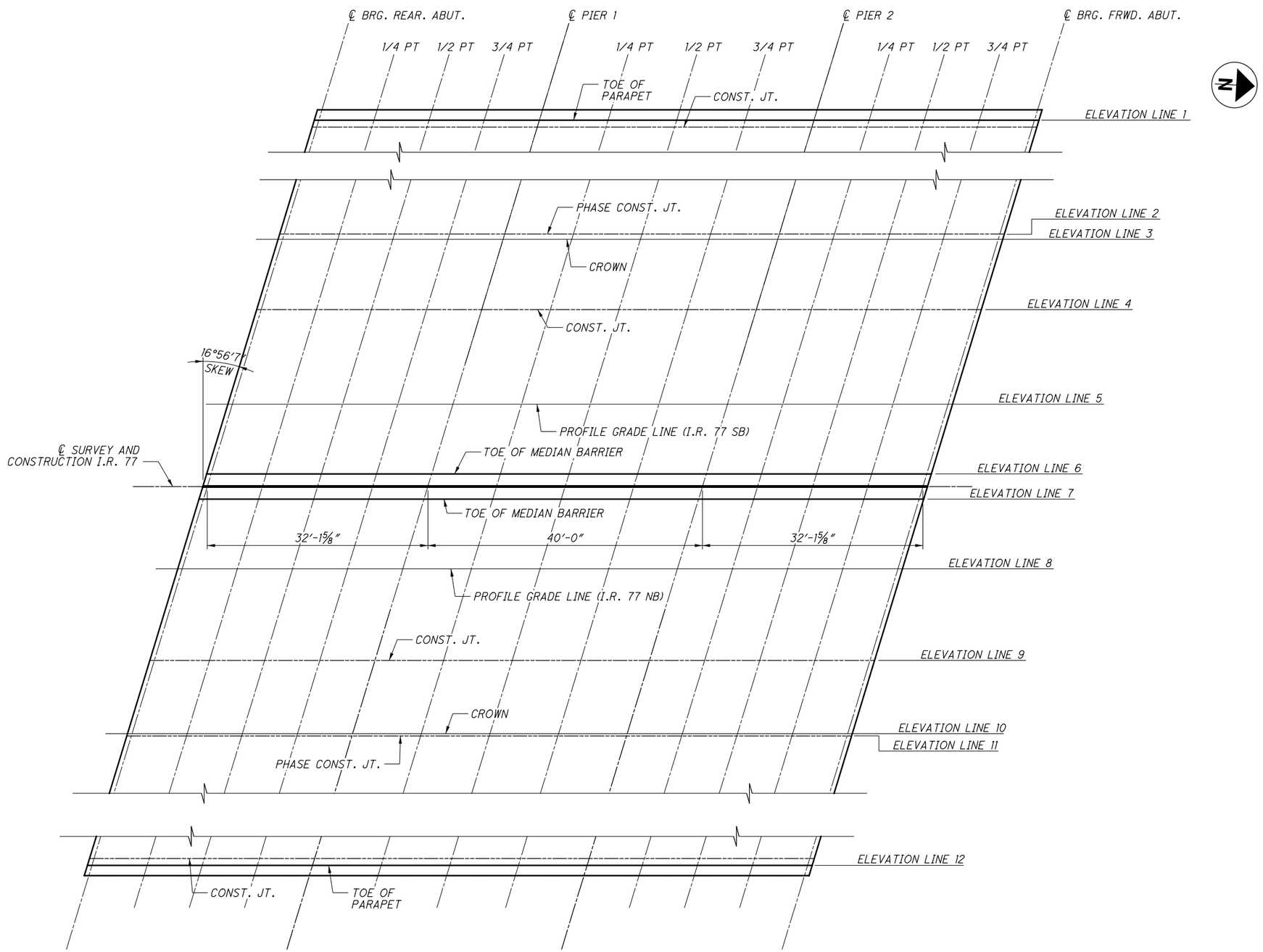


PLAN - ELEVATION LINE LOCATION

**NOTES:**

1. ALL ELEVATION LINES ARE OFFSET FORM THE ℄ SURVEY AND CONST. I.R. 77.
2. FOR ELEVATION LINE LOCATION SECTION AND ELEVATION TABLES, SEE SHEET 21/26.

DESIGN AGENCY
GPD GROUP
520 South Main Street, Akron, OH 44311 330.572.2100
Copyright GPD Group, Akron, Ohio, 2020

| DESIGNED | DRAWN | REVIEWED | DATE |
|---|---|---|---|
| RFV | RFV | TJW | 1-18-21 |
| CHECKED | REVISED | STRUCTURE FILE NUMBER | |
| RHC | | 77002493/77002523 | |

ELEVATION LINE LOCATION - PLAN
BRIDGE NO. SUM-77-0802 L/R
OVER EAST WARNER ROAD

SUM-77/277/224
VARIOUS
PID No. 106002



O:\2017\2017258\ProjectData\SUM\106002\Design\Structures\SUM077_0802\Sheets\077_0802C_SS001.dgn Sheet 1/17/2021 8:05:24 PM rvitelli

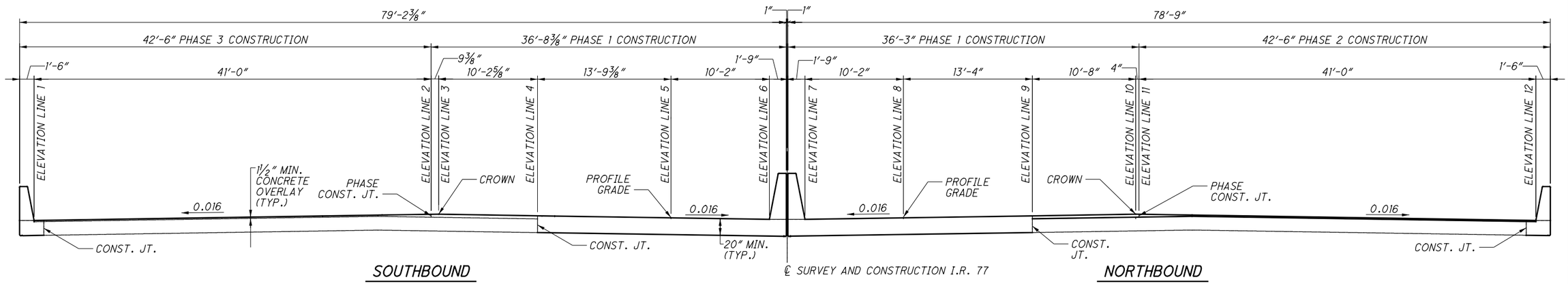


## TRANSVERSE - ELEVATION LINE LOCATION

### SOUTHBOUND FINISHED ELEVATIONS

| | ELEVATION LINE 1 | | ELEVATION LINE 2 | | ELEVATION LINE 3 | | ELEVATION LINE 4 | | ELEVATION LINE 5 | | ELEVATION LINE 6 | |
|---|---|---|---|---|---|---|---|---|---|---|---|---|
| LOCATION | STATION | FINISHED ELEVATIONS | STATION | FINISHED ELEVATIONS | STATION | FINISHED ELEVATIONS | STATION | FINISHED ELEVATIONS | STATION | FINISHED ELEVATIONS | STATION | FINISHED ELEVATIONS |
| CL BRG. REAR ABUT. | 425+79.49 | 1022.88 | 425+67.01 | 1023.83 | 425+66.77 | 1023.85 | 425+63.66 | 1023.76 | 425+59.46 | 1023.64 | 425+56.37 | 1023.55 |
| 1/4 SPAN 1 | 425+87.53 | 1022.69 | 425+75.04 | 1023.64 | 425+74.80 | 1023.66 | 425+71.69 | 1023.57 | 425+67.50 | 1023.45 | 425+64.40 | 1023.36 |
| 1/2 SPAN 1 | 425+95.56 | 1022.51 | 425+83.07 | 1023.45 | 425+82.84 | 1023.47 | 425+79.73 | 1023.38 | 425+75.53 | 1023.26 | 425+72.43 | 1023.17 |
| 3/4 SPAN 1 | 426+03.59 | 1022.33 | 425+91.11 | 1023.27 | 425+90.87 | 1023.29 | 425+87.76 | 1023.19 | 425+83.56 | 1023.07 | 425+80.47 | 1022.98 |
| CL PIER 1 | 426+11.62 | 1022.15 | 425+99.14 | 1023.08 | 425+98.90 | 1023.10 | 425+95.79 | 1023.01 | 425+91.59 | 1022.89 | 425+88.50 | 1022.79 |
| 1/4 SPAN 2 | 426+21.62 | 1021.93 | 426+09.14 | 1022.86 | 426+08.90 | 1022.88 | 426+05.79 | 1022.78 | 426+01.59 | 1022.66 | 425+98.50 | 1022.57 |
| 1/2 SPAN 2 | 426+31.62 | 1021.71 | 426+19.14 | 1022.64 | 426+18.90 | 1022.66 | 426+15.79 | 1022.56 | 426+11.59 | 1022.43 | 426+08.50 | 1022.34 |
| 3/4 SPAN 2 | 426+41.62 | 1021.50 | 426+29.14 | 1022.42 | 426+28.90 | 1022.44 | 426+25.79 | 1022.34 | 426+21.59 | 1022.21 | 426+18.50 | 1022.12 |
| CL PIER 2 | 426+51.62 | 1021.29 | 426+39.14 | 1022.21 | 426+38.90 | 1022.22 | 426+35.79 | 1022.13 | 426+31.59 | 1022.00 | 426+28.50 | 1021.90 |
| 1/4 SPAN 3 | 426+59.66 | 1021.12 | 426+47.17 | 1022.04 | 426+46.93 | 1022.05 | 426+43.82 | 1021.96 | 426+39.63 | 1021.82 | 426+36.53 | 1021.73 |
| 1/2 SPAN 3 | 426+67.69 | 1020.96 | 426+55.20 | 1021.87 | 426+54.97 | 1021.89 | 426+51.86 | 1021.79 | 426+47.66 | 1021.65 | 426+44.56 | 1021.56 |
| 3/4 SPAN 3 | 426+75.72 | 1020.79 | 426+63.24 | 1021.70 | 426+63.00 | 1021.72 | 426+59.89 | 1021.62 | 426+55.69 | 1021.49 | 426+52.60 | 1021.39 |
| CL BRG. FRWD. ABUT. | 426+83.75 | 1020.63 | 426+71.27 | 1021.54 | 426+71.03 | 1021.56 | 426+67.92 | 1021.46 | 426+63.72 | 1021.32 | 426+60.63 | 1021.22 |

### NORTHBOUND FINISHED ELEVATIONS

| | ELEVATION LINE 7 | | ELEVATION LINE 8 | | ELEVATION LINE 9 | | ELEVATION LINE 10 | | ELEVATION LINE 11 | | ELEVATION LINE 12 | |
|---|---|---|---|---|---|---|---|---|---|---|---|---|
| LOCATION | STATION | FINISHED ELEVATIONS | STATION | FINISHED ELEVATIONS | STATION | FINISHED ELEVATIONS | STATION | FINISHED ELEVATIONS | STATION | FINISHED ELEVATIONS | STATION | FINISHED ELEVATIONS |
| CL BRG. REAR ABUT. | 425+55.25 | 1023.51 | 425+52.16 | 1023.75 | 425+48.10 | 1024.06 | 425+44.85 | 1024.31 | 425+44.75 | 1024.30 | 425+32.26 | 1023.96 |
| 1/4 SPAN 1 | 425+63.28 | 1023.32 | 425+60.19 | 1023.55 | 425+56.13 | 1023.86 | 425+52.88 | 1024.11 | 425+52.78 | 1024.11 | 425+40.29 | 1023.77 |
| 1/2 SPAN 1 | 425+71.32 | 1023.13 | 425+68.22 | 1023.36 | 425+64.16 | 1023.67 | 425+60.91 | 1023.92 | 425+60.81 | 1023.92 | 425+48.33 | 1023.57 |
| 3/4 SPAN 1 | 425+79.35 | 1022.94 | 425+76.25 | 1023.17 | 425+72.19 | 1023.48 | 425+68.95 | 1023.73 | 425+68.84 | 1023.73 | 425+56.36 | 1023.38 |
| CL PIER 1 | 425+87.38 | 1022.75 | 425+84.29 | 1022.99 | 425+80.23 | 1023.29 | 425+76.98 | 1023.54 | 425+76.88 | 1023.54 | 425+64.39 | 1023.19 |
| 1/4 SPAN 2 | 425+97.38 | 1022.53 | 425+94.29 | 1022.76 | 425+90.23 | 1023.06 | 425+86.98 | 1023.31 | 425+86.88 | 1023.31 | 425+74.39 | 1022.95 |
| 1/2 SPAN 2 | 426+07.38 | 1022.30 | 426+04.29 | 1022.53 | 426+00.23 | 1022.84 | 425+96.98 | 1023.08 | 425+96.88 | 1023.08 | 425+84.39 | 1022.72 |
| 3/4 SPAN 2 | 426+17.38 | 1022.08 | 426+14.29 | 1022.31 | 426+10.23 | 1022.61 | 426+06.98 | 1022.86 | 426+06.88 | 1022.85 | 425+94.39 | 1022.49 |
| CL PIER 2 | 426+27.38 | 1021.86 | 426+24.29 | 1022.09 | 426+20.23 | 1022.39 | 426+16.98 | 1022.63 | 426+16.88 | 1022.63 | 426+04.39 | 1022.26 |
| 1/4 SPAN 3 | 426+35.41 | 1021.69 | 426+32.32 | 1021.92 | 426+28.26 | 1022.22 | 426+25.01 | 1022.46 | 426+24.91 | 1022.46 | 426+12.42 | 1022.08 |
| 1/2 SPAN 3 | 426+43.45 | 1021.52 | 426+40.35 | 1021.75 | 426+36.29 | 1022.05 | 426+33.04 | 1022.29 | 426+32.94 | 1022.28 | 426+20.46 | 1021.91 |
| 3/4 SPAN 3 | 426+51.48 | 1021.35 | 426+48.38 | 1021.58 | 426+44.32 | 1021.88 | 426+41.08 | 1022.12 | 426+40.97 | 1022.11 | 426+28.49 | 1021.73 |
| CL BRG. FRWD. ABUT. | 426+59.51 | 1021.18 | 426+56.42 | 1021.41 | 426+52.36 | 1021.71 | 426+49.11 | 1021.95 | 426+49.01 | 1021.94 | 426+36.52 | 1021.56 |

**NOTES:**

FOR ELEVATION LINE LOCATION PLAN, SEE SHEET 20/26 .

DESIGN AGENCY
CPD GROUP®
Civil, Traffic, Structural & Delineation, Inc.
320 South Main Street, Akron, OH 44311 330.572.2100
Copyright CPD Group, Inc. 2020

DESIGNED RFV | DRAWN RFV | CHECKED RHC | REVISED | REVIEWED TJW | DATE 1-18-21

STRUCTURE FILE NUMBER 77002493/77002523

TRANSVERSE ELEVATION LINE LOCATION & ELEVATION TABLES
BRIDGE NO. SUM-77-0802 L/R
OVER EAST WARNER ROAD

SUM-77/277/224
VARIOUS
PID No. 106002

21/26

1175
1288

O:\2017\20172581\ProjectData\SUM\106002\Design\Structures\SUM077_0802\Sheets\077_0802C_SS001.dgn Sheet 2 1/17/2021 8:05:25 PM rvitelli

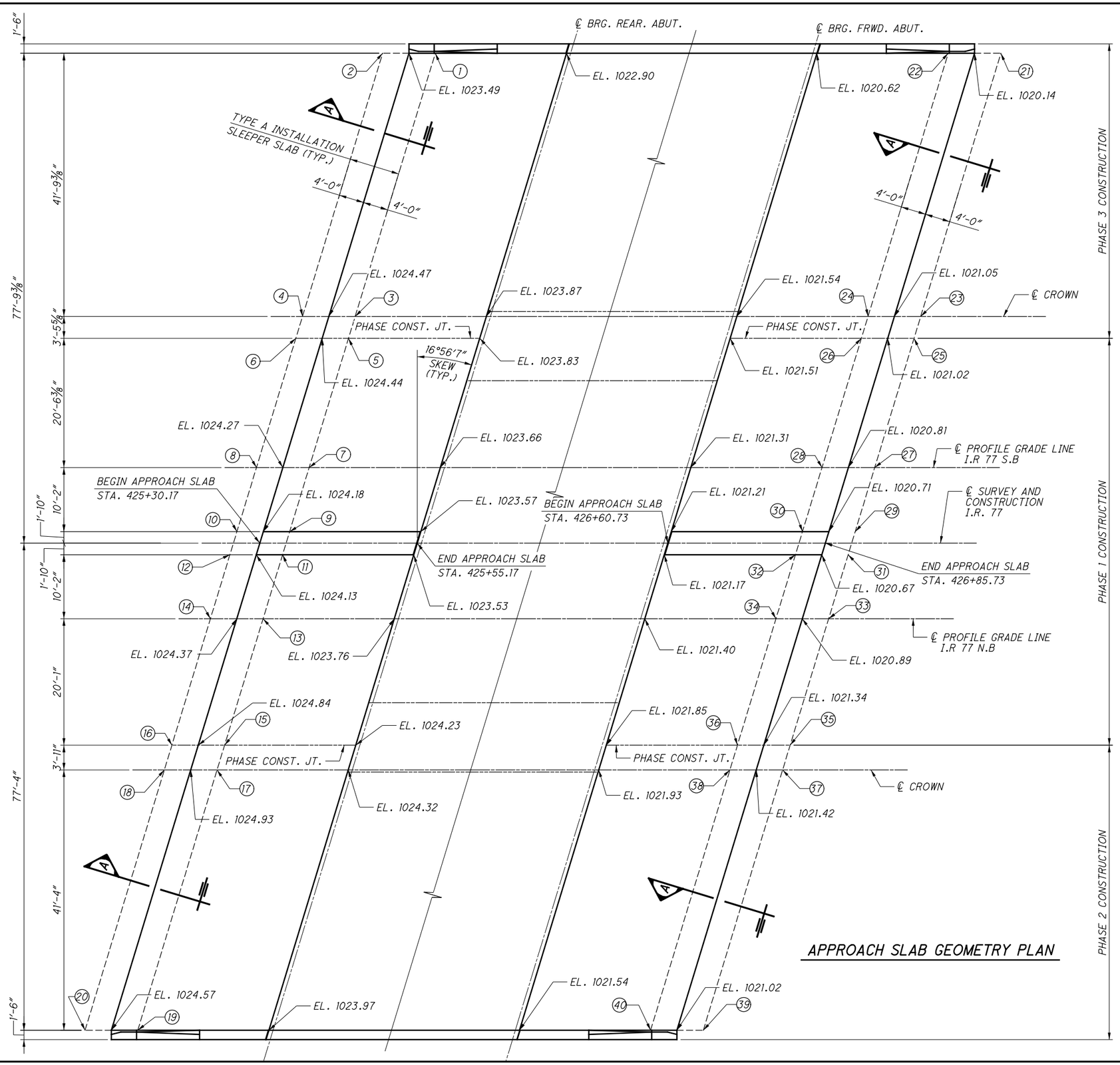


## APPROACH SLAB GEOMETRY PLAN

| SLEEPER SLAB ELEVATION TABLE | | | |
|---|---|---|---|
| REAR APPROACH | | FRWD. APPROACH | |
| (#) | *ELEV. | (#) | *ELEV. |
| 1 | 1022.14 | 21 | 1018.80 |
| 2 | 1022.34 | 22 | 1018.97 |
| 3 | 1023.12 | 23 | 1019.72 |
| 4 | 1023.32 | 24 | 1019.88 |
| 5 | 1023.09 | 25 | 1019.69 |
| 6 | 1023.29 | 26 | 1019.85 |
| 7 | 1022.91 | 27 | 1019.48 |
| 8 | 1023.12 | 28 | 1019.64 |
| 9 | 1022.83 | 29 | 1019.37 |
| 10 | 1023.02 | 30 | 1019.54 |
| 11 | 1022.78 | 31 | 1019.33 |
| 12 | 1022.98 | 32 | 1019.50 |
| 13 | 1023.02 | 33 | 1019.56 |
| 14 | 1023.22 | 34 | 1019.73 |
| 15 | 1023.49 | 35 | 1020.00 |
| 16 | 1023.69 | 36 | 1020.17 |
| 17 | 1023.58 | 37 | 1020.09 |
| 18 | 1023.78 | 38 | 1020.26 |
| 19 | 1023.22 | 39 | 1019.68 |
| 20 | 1023.41 | 40 | 1019.85 |

* GIVEN TO TOP OF SLEEPER SLAB

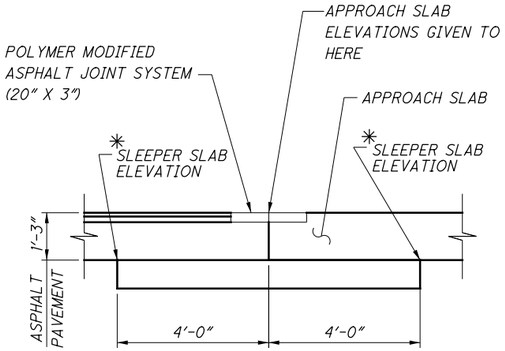


SECTION A

### NOTES:

1. FOR TYPE A INSTALLATION REINFORCING AND ADDITIONAL DETAILS, SEE STD. DWG. AS-1-15 & AS-2-15.
2. FOR APPROACH SLAB REINFORCING DETAILS, SEE SHEET 23/26 .
3. REINFORCING STEEL AND CONCRETE FOR RAILING TRANSITIONS SHALL BE PAID FOR UNDER SEPARATE ITEMS. FOR DETAILS, SEE SHEET 24/26 .

DESIGN AGENCY
GPD GROUP
Glaus, Pyle, Schomer, Burns & DeHaven, Inc.
520 South Main Street, Akron, OH 44311 330.572.2100
Copyright Glaus, Pyle, Schomer, Burns & DeHaven, Inc. 2020

DESIGNED RFV | DRAWN RFV | CHECKED RHC | REVIEWED TJW | DATE 1-18-21 | REVISED

STRUCTURE FILE NUMBER 77102493/77102523

APPROACH SLAB GEOMETRY PLAN
BRIDGE NO. SUM-77-0802 L/R
OVER EAST WARNER ROAD

SUM-77/277/224
VARIOUS
PID No. 106002

22 / 26

1176
1288

0:\2017\20172581Project Data\SUM\106002\Design\Structures\SUM077_0802\Sheets\077_0802C_SM001.dgn 1/17/2021 8:05:26 PM rvitelli

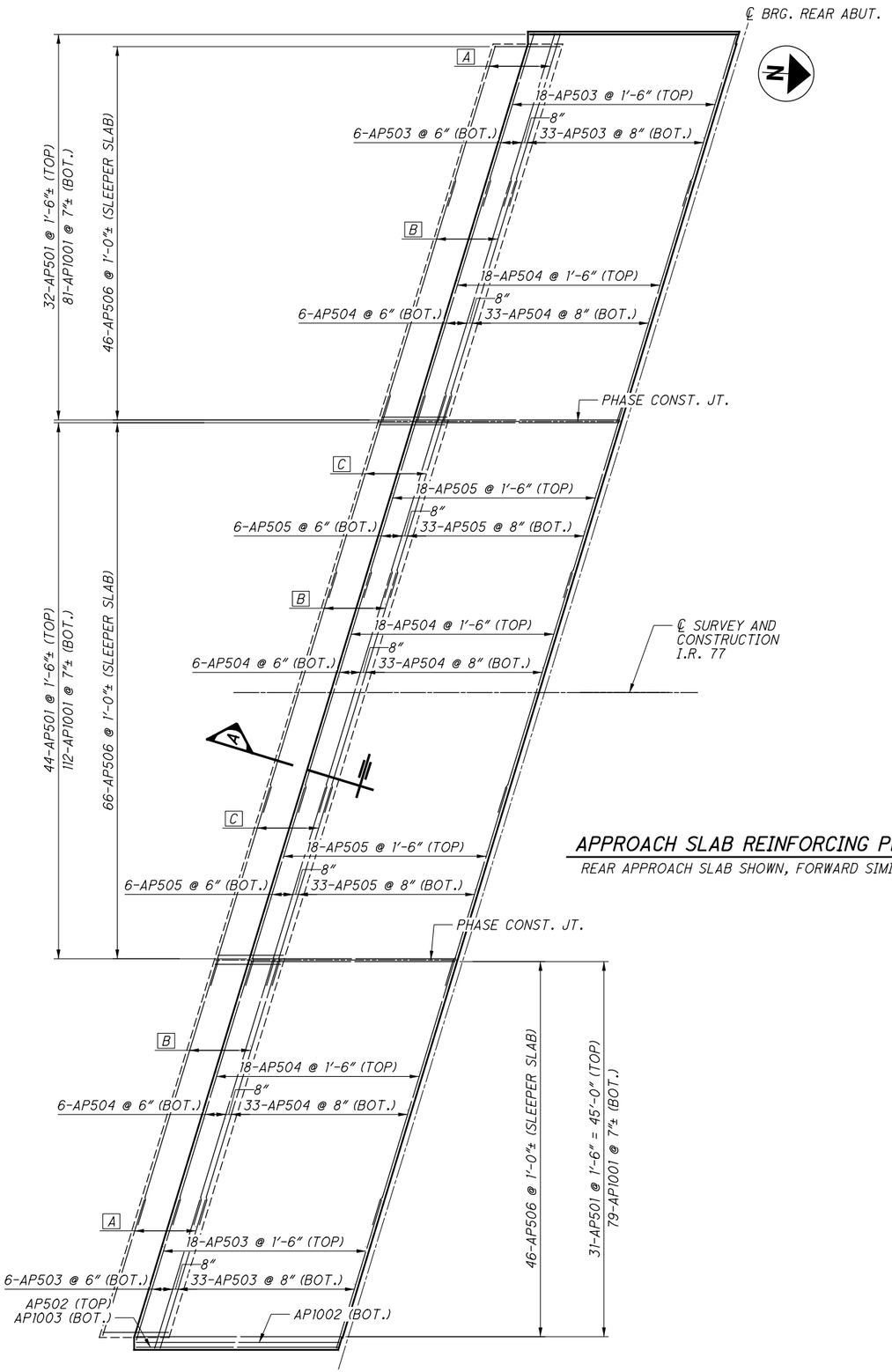


## APPROACH SLAB REINFORCING PLAN

REAR APPROACH SLAB SHOWN, FORWARD SIMILAR

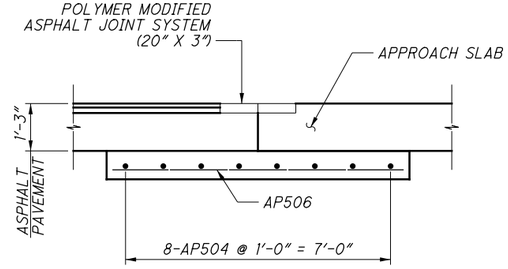


SECTION A

### LEGEND:

- A 8-AP503 @ 1'-0" = 7'-0" (SLEEPER SLAB)
- B 8-AP504 @ 1'-0" = 7'-0" (SLEEPER SLAB)
- C 8-AP505 @ 1'-0" = 7'-0" (SLEEPER SLAB)
- D 8-AP506 @ 1'-0" = 7'-0" (SLEEPER SLAB)

### NOTES:

1. FOR APPROACH SLAB GEOMETRY PLAN AND SLEEPER SLAB DETAILS, SEE SHEET 22/26.
2. FORWARD APPROACH SLAB REINFORCING IS SIMILAR EXCEPT AP5XX AND AP10XX BARS AT THE EXTERIOR EDGE ARE OPPOSITE HAND.
3. REINFORCING STEEL AND CONCRETE FOR RAILING TRANSITIONS SHALL BE PAID FOR UNDER SEPARATE ITEMS. FOR DETAILS, SEE SHEET 24/26.
4. FOR ADDITIONAL DETAILS SEE STD. DWG. AS-1-15 & AS-2-15.
5. MINIMUM REINFORCING STEEL LAP LENGTHS ARE AS FOLLOWS:

   # 5 BARS = 3'-1"

DESIGN AGENCY
GPD GROUP
520 South Main Street, Akron, OH 44311 330.572.2100
Copyright GPD Group, Akron, Ohio, USA, Inc. 2020

| DESIGNED | DRAWN | REVIEWED | DATE |
|---|---|---|---|
| RFV | RFV | TJW | 1-18-21 |
| CHECKED | REVISED | STRUCTURE FILE NUMBER | |
| RHC | | 77102493/77102523 | |

APPROACH SLAB REINFORCING PLAN
BRIDGE NO. SUM-77-0802 L/R
OVER EAST WARNER ROAD

SUM-77/277/224
VARIOUS
PID No. 106002

23/26

1177
1288

0:\2017\20172581\ProjectData\SUM\106002\Design\Structures\SUM077_0802\Sheets\077_0802C_SM002.dgn Sheet 1/17/2021 8:05:27 PM rvitelli

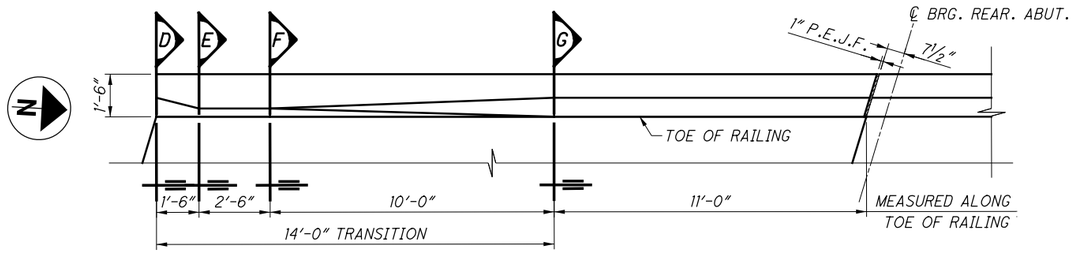


## PARAPET PLAN - REAR APPROACH SLAB (SOUTHBOUND)

REAR APPROACH SLAB PARAPET ON SOUTHBOUND SIDE SHOWN, OTHERS SIMILAR

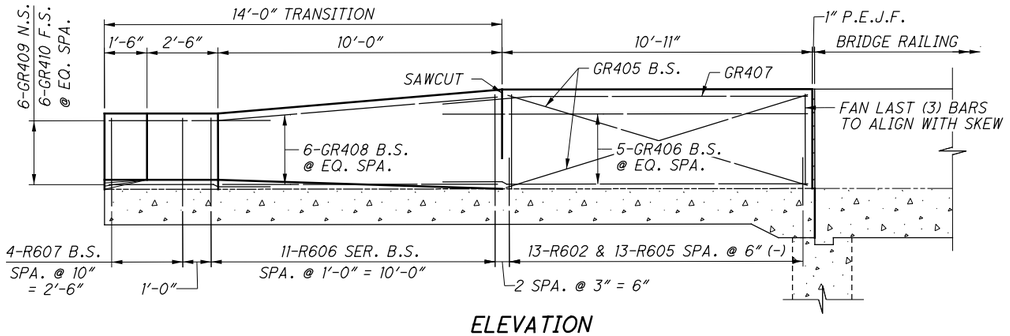


## ELEVATION

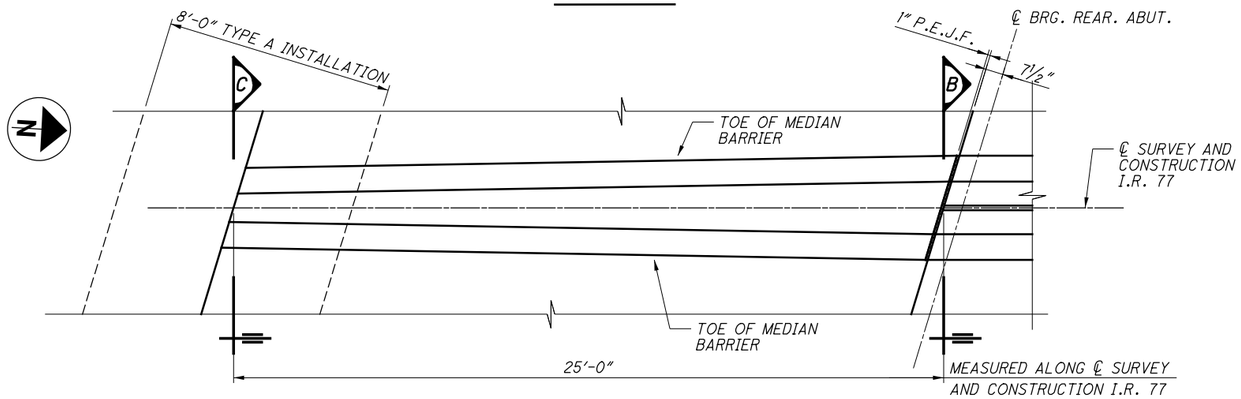


## APPROACH MEDIAN BARRIER PLAN

REAR APPROACH SLAB MEDIAN BARRIER SHOWN, FORWARD SIMILAR

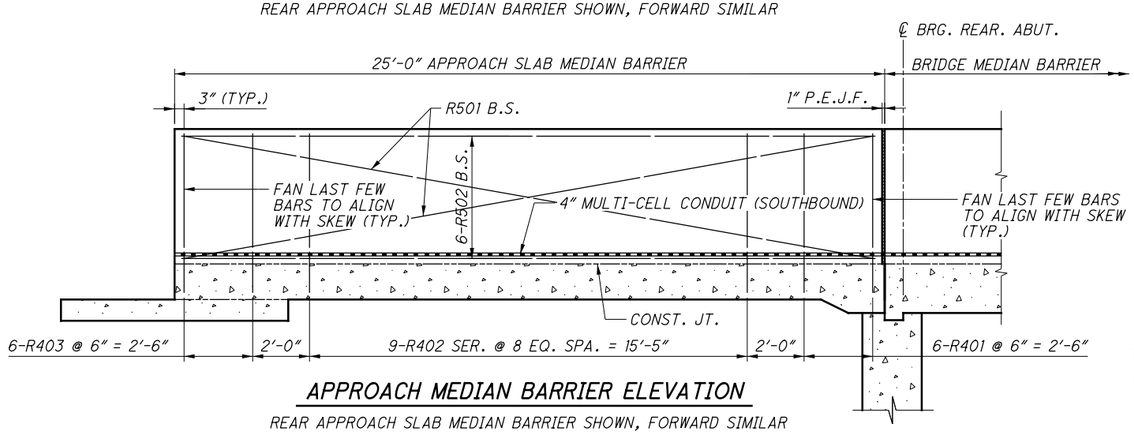


## APPROACH MEDIAN BARRIER ELEVATION

REAR APPROACH SLAB MEDIAN BARRIER SHOWN, FORWARD SIMILAR

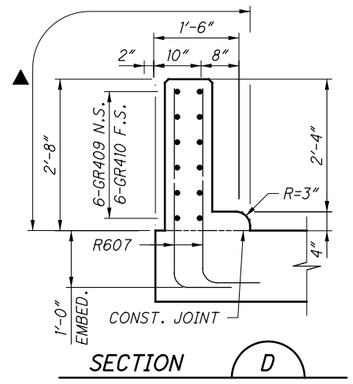


SECTION D

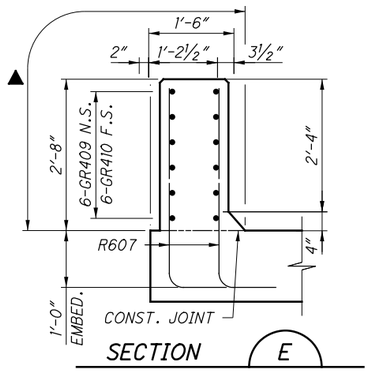


SECTION E

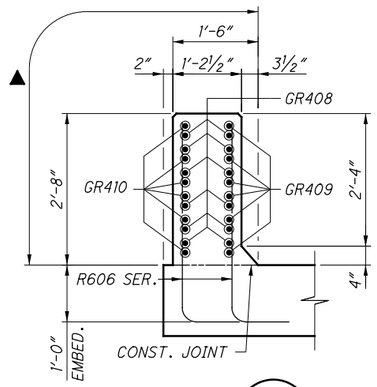


SECTION F

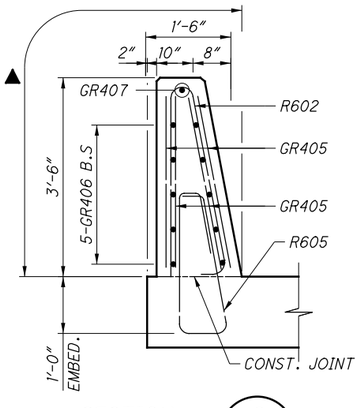


SECTION G

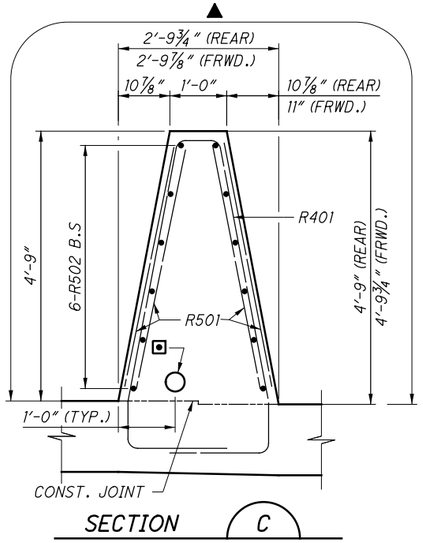


SECTION C

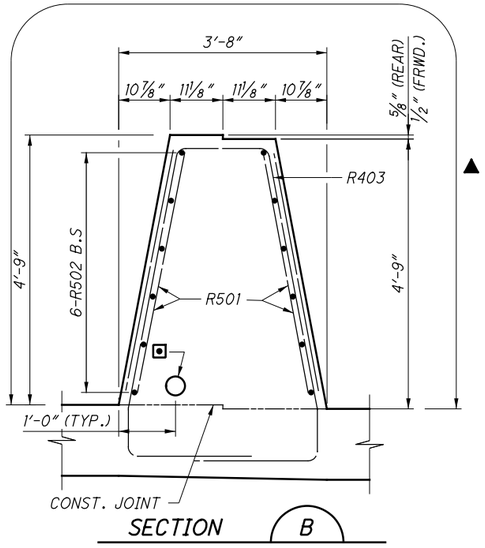


SECTION B

## LEGEND:

▲ ITEM 512 - SEALING OF CONCRETE SURFACES (EPOXY-URETHANE)

⊡ 4" MULTI-CELL CONDUIT (SB RAILING) 725.20 (TO BE INCLUDED WITH THE ITS QUANTITIES FOR PAYMENT

## NOTES:

1. FOR ADDITIONAL INFORMATION, SEE STANDARD DRAWINGS AS-1-15, AS-2-15, SBR-1-20 & SBR-2-20.
2. MINIMUM HORIZONTAL #4 GFRP REINFORCING LAP LENGTHS ARE 1'-1" FOR ALL GFRP BARS.

DESIGN AGENCY
GPD GROUP
520 South Main Street, Akron, OH 44311 330.572.2100
Copyright GPD Group, Akron, Ohio, USA

| DESIGNED | DRAWN | REVIEWED | DATE |
|---|---|---|---|
| RFV | RFV | TJW | 1-18-21 |
| CHECKED | REVISED | STRUCTURE FILE NUMBER | |
| RHC | | 77002493/77002523 | |

APPROACH SLAB REINFORCING DETAILS
BRIDGE NO. SUM-77-0802 L/R
OVER EAST WARNER ROAD

SUM-77/277/224
VARIOUS
PID No. 106002

24/26

1178
1288

O:\2017\2017258\ProjectData\SUM\06002\Design\Structures\SUM077_0802\Sheets\077_0802C_SM002.dgn Sheet 2 1/17/2021 8:05:28 PM rvitelli

| MARK | NUMBER | LENGTH | WEIGHT | TYPE | DIMENSIONS | | | | | | INC. |
|---|---|---|---|---|---|---|---|---|---|---|---|
| | | | | | A | B | C | D | E | R | |
| REAR ABUTMENT | | | | | | | | | | | |
| RA401 | 12 | 8'-11" | 71 | 3 | 1'-9" | 2'-6" | | | | | |
| | | | | | | | | | | | |
| RA501 | 2 | 15'-7" | 33 | STR | | | | | | | |
| RA502 | 2 | 14'-8" | 31 | STR | | | | | | | |
| RA503 | 2 | 14'-10" | 31 | STR | | | | | | | |
| RA504 | 2 | 15'-8" | 33 | STR | | | | | | | |
| RA505 | 22 | 4'-3" | 98 | STR | | | | | | | |
| RA506 | 12 | 4'-4" | 54 | STR | | | | | | | |
| RA507 | 12 | 5'-1" | 64 | STR | | | | | | | |
| RA508 | 28 | 11'-2" | 439 | 3 | 2'-7" | 2'-8" | | | | | |
| RA509 | 14 | 12'-1" | 176 | 2 | 5'-4" | 1'-8" | 5'-4" | | | | |
| RA510 | 14 | 13'-7" | 198 | 2 | 6'-1" | 1'-8" | 6'-1" | | | | |
| RA511 | 40 | 8'-3" | 344 | 2 | 3'-5" | 1'-8" | 3'-5" | | | | |
| RA512 | 6 | 23'-2" | 145 | STR | | | | | | | |
| RA513 | 8 | 23'-6" | 196 | STR | | | | | | | |
| | | | | | | | | | | | |
| RA801 | 1 SR OF 4 | 14'-9" TO 15'-7" | 162 | STR | | | | | | | 0'-3 1/4" |
| RA802 | 1 SR OF 4 | 14'-10" TO 15'-8" | 163 | STR | | | | | | | 0'-3 1/4" |
| RA803 | 8 | 5'-11" | 126 | STR | | | | | | | |
| RA804 | 34 | 5'-7" | 507 | 18 | 3'-5" | 1'-0" | 1'-0" | | | | |
| RA805 | 80 | 4'-7" | 979 | 20 | 1'-3" | 0'-11" | 1'-9" | 1'-2" | 0'-9" | | |
| | | | | | | | | | | | |
| RA1001 | 4 | 23'-2" | 399 | STR | | | | | | | |
| RA1002 | 4 | 23'-6" | 404 | STR | | | | | | | |
| RA1003 | 8 | 9'-7" | 330 | STR | | | | | | | |
| | | | | | | | | | | | |
| | | TOTAL | 4,983 | LBS | | | | | | | |

| MARK | NUMBER | LENGTH | WEIGHT | TYPE | DIMENSIONS | | | | | | INC. |
|---|---|---|---|---|---|---|---|---|---|---|---|
| | | | | | A | B | C | D | E | R | |
| FORWARD ABUTMENT | | | | | | | | | | | |
| FA401 | 12 | 8'-11" | 71 | 3 | 1'-9" | 2'-6" | | | | | |
| | | | | | | | | | | | |
| FA501 | 2 | 16'-5" | 34 | STR | | | | | | | |
| FA502 | 2 | 15'-8" | 32 | STR | | | | | | | |
| FA503 | 2 | 14'-0" | 39 | STR | | | | | | | |
| FA504 | 2 | 14'-9" | 31 | STR | | | | | | | |
| FA505 | 22 | 4'-3" | 98 | STR | | | | | | | |
| FA506 | 10 | 5'-0" | 52 | STR | | | | | | | |
| FA507 | 12 | 4'-5" | 55 | STR | | | | | | | |
| FA508 | 28 | 11'-2" | 439 | 3 | 2'-7" | 2'-8" | | | | | |
| FA509 | 14 | 13'-5" | 196 | 2 | 6'-0" | 1'-8" | 6'-0" | | | | |
| FA510 | 14 | 12'-3" | 179 | 2 | 5'-5" | 1'-8" | 5'-5" | | | | |
| FA511 | 39 | 8'-1" | 329 | 2 | 3'-4" | 1'-8" | 3'-4" | | | | |
| FA512 | 8 | 23'-8" | 197 | STR | | | | | | | |
| FA513 | 8 | 23'-0" | 192 | STR | | | | | | | |
| | | | | | | | | | | | |
| FA801 | 1 SR OF 4 | 15'-8" TO 16'-5" | 171 | STR | | | | | | | 0'-3" |
| FA802 | 1 SR OF 4 | 14'-0" TO 14'-9" | 154 | STR | | | | | | | 0'-3" |
| FA803 | 8 | 5'-11" | 126 | STR | | | | | | | |
| FA804 | 34 | 5'-7" | 507 | 18 | 3'-5" | 1'-0" | 1'-0" | | | | |
| FA805 | 80 | 4'-7" | 979 | 20 | 1'-3" | 0'-11" | 1'-9" | 1'-2" | 0'-9" | | |
| | | | | | | | | | | | |
| FA1001 | 4 | 23'-8" | 407 | STR | | | | | | | |
| FA1002 | 4 | 23'-0" | 396 | STR | | | | | | | |
| FA1003 | 8 | 9'-7" | 330 | STR | | | | | | | |
| | | | | | | | | | | | |
| | | TOTAL | 5,014 | LBS | | | | | | | |

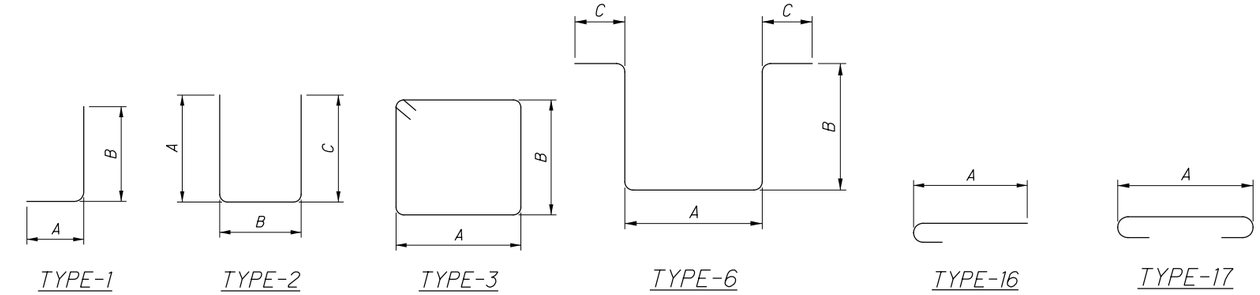


## BAR BENDING DIAGRAMS

## NOTES:

1. BAR DIMENSIONS ARE OUT TO OUT UNLESS NOTED OTHERWISE.
2. ALL BARS ARE EPOXY COATED.
3. I.R. DENOTES INNER RADIUS.
4. WHEN NO BAR LEG DIMENSIONS ARE SHOWN, IT INDICATES STANDARD BEND.
5. BAR SIZE AND LOCATION ARE INDICATED IN THE BAR MARK. THE FIRST ALPHABETICAL LETTER INDICATES LOCATION. THE NEXT DIGIT OF THE THREE DIGIT SERIES AND THE NEXT TWO DIGITS OF THE FOUR DIGIT SERIES INDICATE BAR SIZE NUMBER.

EXAMPLES:

S 501 — NO. 5 SIZE BAR, SLAB

A 801 — NO. 8 SIZE BAR, ABUTMENT

DESIGN AGENCY
GPD GROUP
Gray, Pape & Schmidt, Burns & DeHaven, Inc.
520 South Main Street, Akron, OH 44311 330.572.2100
Copyright GPD Group, Gray, Pape & Schmidt, Burns & DeHaven, Inc. 2020

DESIGNED RFV | DRAWN RFV | REVIEWED TJW | DATE 1-18-21
CHECKED RHC | REVISED | STRUCTURE FILE NUMBER 77002493/77002523

REINFORCING STEEL LIST
BRIDGE NO. SUM-77-0802 L/R
OVER EAST WARNER ROAD

SUM-77/277/224
VARIOUS
PID No. 106002

25/26

1179
1288

0:\2017\2017258\ProjectData\SUM\106002\Design\Structures\SUM077_0802\Sheets\077_0802C_SL001.dgn Sheet 1 1/17/2021 8:05:30 PM rvitelli

| MARK | NUMBER | | | LENGTH | WEIGHT | TYPE | DIMENSIONS | | | | | | INC. |
|---|---|---|---|---|---|---|---|---|---|---|---|---|---|
| | PIER 1 | PIER 2 | TOTAL | | | | A | B | C | D | E | R | |
| PIERS | | | | | | | | | | | | | |
| P501 | 10 | 10 | 20 | 23′-3″ | 485 | STR | | | | | | | |
| P502 | 7 | 7 | 14 | 12′-10″ | 187 | 24 | 2′-8″ | 4′-4″ | | | | 1′-3″ | |
| P503 | 1 | 1 | 2 | 6′-1″ | 13 | 2 | 0′-10″ | 4′-8″ | 0′-10″ | | | | |
| P504 | 1 | 1 | 2 | 5′-1″ | 11 | 2 | 0′-10″ | 3′-8″ | 0′-10″ | | | | |
| P505 | 19 | 19 | 38 | 13′-2″ | 522 | 6 | 2′-8″ | 4′-8″ | 0′-10″ | | | | |
| P506 | 19 | 19 | 38 | 11′-2″ | 443 | 6 | 2′-8″ | 3′-8″ | 0′-10″ | | | | |
| P507 | 72 | 72 | 144 | 8′-8″ | 1302 | STR | | | | | | | |
| P508 | 1 | 1 | 2 | 12′-3″ | 26 | 6 | 1′-9″ | 4′-8″ | 0′-10″ | | | | |
| P509 | 1 | 1 | 2 | 10′-3″ | 21 | 6 | 1′-9″ | 3′-8″ | 0′-10″ | | | | |
| | | | | | | | | | | | | | |
| P801 | 14 | 14 | 28 | 25′-7″ | 1913 | 2 | 1′-4″ | 23′-4″ | 1′-4″ | | | | |
| P802 | 96 | 96 | 192 | 10′-4″ | 5297 | 17 | 8′-8″ | | | | | | |
| | | | | | | | | | | | | | |
| P1001 | 48 | 48 | 96 | 9′-9″ | 4028 | 1 | 1′-10″ | 8′-3″ | | | | | |
| P1002 | 48 | | 48 | 19′-4″ | 3993 | 16 | 17′-11″ | | | | | | |
| P1003 | | 48 | 48 | 18′-6″ | 3821 | 16 | 17′-1″ | | | | | | |
| P1004 | 5 | 5 | 10 | 29′-2″ | 1255 | 17 | 26′-4″ | | | | | | |
| P1005 | 5 | 5 | 10 | 28′-8″ | 1234 | 17 | 25′-10″ | | | | | | |
| | | | | | | | | | | | | | |
| SP501 | 2 | | 2 | 16′-8″ | 1,119 | 27 | 0′-3″ | 2′-6″ | | | | | |
| SP502 | | 2 | 2 | 15′-10″ | 1,065 | 27 | 0′-3″ | 2′-6″ | | | | | |
| SP503 | 2 | | 2 | 15′-8″ | 1,055 | 27 | 0′-3″ | 2′-6″ | | | | | |
| SP504 | | 2 | 2 | 14′-11″ | 1,006 | 27 | 0′-3″ | 2′-6″ | | | | | |
| | | | | | | | | | | | | | |
| | | | | TOTAL | 28,796 | LBS | | | | | | | |

| MARK | NUMBER | | | LENGTH | WEIGHT | TYPE | DIMENSIONS | | | | | | INC. |
|---|---|---|---|---|---|---|---|---|---|---|---|---|---|
| | REAR | FORWARD | TOTAL | | | | A | B | C | D | E | R | |
| APPROACH SLABS | | | | | | | | | | | | | |
| AP501 | 107 | 107 | 214 | 24′-6″ | 5468 | STR | | | | | | | |
| AP502 | 1 | 1 | 2 | 24′-1″ | 50 | STR | | | | | | | |
| AP503 | 130 | 130 | 260 | 21′-8″ | 2938 | STR | | | | | | | |
| AP504 | 195 | 195 | 390 | 30′-0″ | 12203 | STR | | | | | | | |
| AP505 | 130 | 130 | 260 | 25′-3″ | 6847 | STR | | | | | | | |
| AP506 | 158 | 158 | 316 | 7′-8″ | 2527 | STR | | | | | | | |
| | | | | | | | | | | | | | |
| AP1001 | 272 | 272 | 544 | 25′-11″ | 60667 | 16 | 24′-6″ | | | | | | |
| AP1002 | 1 | 1 | 2 | 25′-8″ | 221 | 16 | 24′-3″ | | | | | | |
| AP1003 | 1 | 1 | 2 | 25′-6″ | 219 | 16 | 24′-1″ | | | | | | |
| | | | | | | | | | | | | | |
| | | | | TOTAL | 91,140 | LBS | | | | | | | |

| MARK | NUMBER | LENGTH | TOTAL FEET | TYPE | DIMENSIONS | | | | | | INC. |
|---|---|---|---|---|---|---|---|---|---|---|---|
| | | | | | A | B | C | D | E | R | |
| RAILING (GFRP) | | | | | | | | | | | |
| GR401 | 64 | 10′-0″ | 64′-0″ | STR | | | | | | | |
| GR402 | 16 | 12′-9″ | 204′-0″ | STR | | | | | | | |
| GR403 | 66 | 30′-0″ | 1980′-0″ | STR | | | | | | | |
| GR404 | 22 | 18′-6″ | 407′-0″ | STR | | | | | | | |
| GR405 | 16 | 11′-0″ | 176′-0″ | STR | | | | | | | |
| GR406 | 40 | 12′-10″ | 514′-0″ | STR | | | | | | | |
| GR407 | 4 | 12′-10″ | 52′-0″ | 19 | 10′-9″ | 2′-1″ | 0′-2″ | | | | |
| GR408 | 48 | 10′-0″ | 480′-0″ | STR | | | | | | | |
| GR409 | 24 | 6′-4″ | 152′-0″ | 25 | 2′-6″ | 2′-5″ | 1′-4 1/4″ | 0′-1 1/2″ | 0′-5″ | | |
| GR410 | 24 | 5′-11″ | 142′-0″ | STR | | | | | | | |
| | | | | | | | | | | | |
| TOTAL #4 GFRP | | | 4,171 | FT | | | | | | | |
| GR601 | 64 | 10′-6″ | 672′-0″ | STR | | | | | | | |
| GR602 | 16 | 13′-3″ | 212′-0″ | STR | | | | | | | |
| GR603 | 66 | 30′-0″ | 1980′-0″ | STR | | | | | | | |
| GR604 | 22 | 20′-3″ | 446′-0″ | STR | | | | | | | |
| | | | | | | | | | | | |
| TOTAL #6 GFRP | | | 3,310 | FT | | | | | | | |

| MARK | NUMBER | LENGTH | WEIGHT | TYPE | DIMENSIONS | | | | | | INC. |
|---|---|---|---|---|---|---|---|---|---|---|---|
| | | | | | A | B | C | D | E | R | |
| SLAB | | | | | | | | | | | |
| S401 | 212 | 5′-2″ | 732 | 2 | 2′-2″ | 1′-0″ | 2′-2″ | | | | |
| | | | | | | | | | | | |
| S501 | 202 | 19′-9″ | 4161 | STR | | | | | | | |
| S502 | 101 | 14′-3″ | 1501 | STR | | | | | | | |
| S503 | 105 | 26′-0″ | 2847 | STR | | | | | | | |
| S504 | 105 | 26′-6″ | 2902 | STR | | | | | | | |
| | | | | | | | | | | | |
| S601 | 93 | 26′-0″ | 3632 | STR | | | | | | | |
| S602 | 93 | 26′-6″ | 3702 | STR | | | | | | | |
| | | | | | | | | | | | |
| S801 | 230 | 34′-10″ | 21391 | 16 | 34′-0″ | | | | | | |
| S802 | 115 | 43′-0″ | 13203 | STR | | | | | | | |
| S803 | 6 | 37′-3″ | 597 | STR | | | | | | | |
| | | | | | | | | | | | |
| S901 | 202 | 32′-8″ | 22435 | STR | | | | | | | |
| | | | | | | | | | | | |
| | | TOTAL | 77,103 | LBS | | | | | | | |

| MARK | NUMBER | LENGTH | WEIGHT | TYPE | DIMENSIONS | | | | | | INC. |
|---|---|---|---|---|---|---|---|---|---|---|---|
| | | | | | A | B | C | D | E | R | |
| RAILING | | | | | | | | | | | |
| R401 | 12 | 16′-6″ | 132 | 36 | 1′-0″ | 1′-0″ | 3′-2″ | 1′-4″ | 4′-7″ | | |
| R402 | 2 SR OF 9 | 15′-5″ TO 15′-7″ | 186 | 36 | 1′-0″ | 1′-0″ | 2′-7″ TO 3′-2″ | 0′-9″ TO 1′-4″ | 4′-7″ | | 0′-1″ (-) |
| R403 | 12 | 15′-3″ | 122 | 36 | 1′-0″ | 1′-0″ | 2′-6″ | 0′-8″ | 4′-7″ | | |
| | | | | | | | | | | | |
| R501 | 8 | 24′-7″ | 205 | STR | | | | | | | |
| R502 | 24 | 24′-5″ | 611 | STR | | | | | | | |
| | | | | | | | | | | | |
| R601 | 232 | 8′-5″ | 2933 | 200 | 0′-9 1/2″ | 2′-9″ | 0′-7″ | 1′-0″ | | | |
| R602 | 280 | 7′-0″ | 2940 | 201 | 0′-6″ | 3′-3″ | | | | 0′-2″ | |
| R604 | 376 | 14′-9″ | 5784 | 35 | 1′-6″ | 1′-5″ | 1′-0″ | 4′-7″ | | 0′-3″ | |
| R605 | 48 | 8′-0″ | 576 | 200 | 0′-9 1/2″ | 2′-5″ | 0′-7″ | 1′-0″ | | | |
| R606 | 8 SR OF 11 | 4′-5″ TO 5′-2″ | 639 | 1 | 1′-0″ | 3′-7″ TO 4′-4″ | | | | | 0′-1″ |
| R607 | 32 | 4′-5″ | 212 | 1 | 1′-0″ | 3′-7″ | | | | | |
| | | | | | | | | | | | |
| | | TOTAL | 14,340 | LBS | | | | | | | |

DESIGN AGENCY
CPD GROUP
Clark, Dietz & Partners, Inc.
320 South Main Street, Akron, OH 44311 330.572.2100
Copyright Clark, Dietz & Partners, Inc. 2020

DESIGNED RFV
DRAWN RFV
REVIEWED TJW
DATE 1-18-21
CHECKED RHC
REVISED
STRUCTURE FILE NUMBER 77002493/77002523

# REINFORCING STEEL LIST

BRIDGE NO. SUM-77-0802 L/R
OVER EAST WARNER ROAD

SUM-77/277/224
VARIOUS
PID No. 106002

26/26

1180
1288

0:\2017\2017258\ProjectData\SUM\06002\Design\Structures\SUM077_0802\Sheets\077_0802C_SL001.dgn Sheet 2 1/17/2021 8:05:30 PM rvitelli

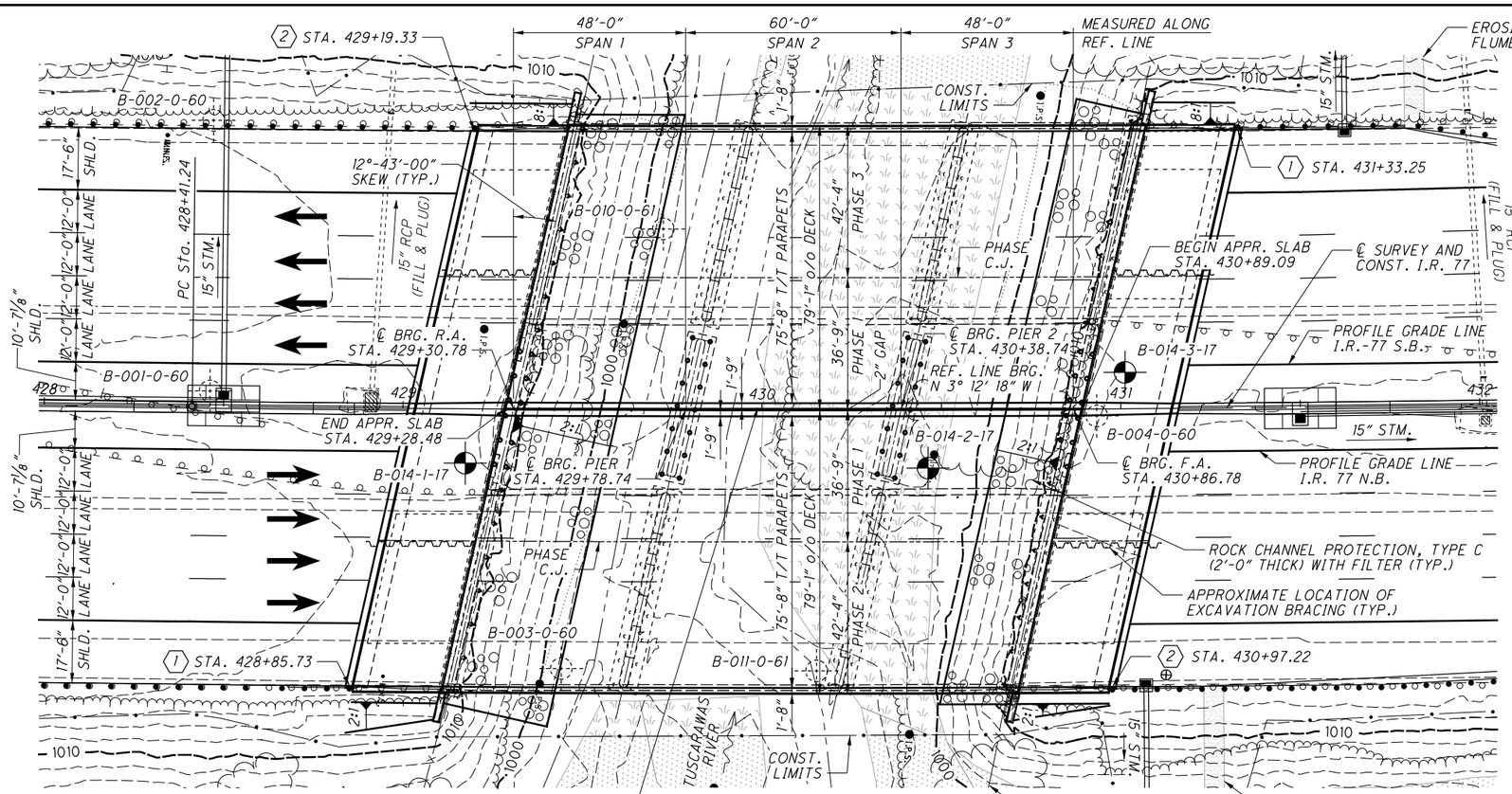


## PLAN

### REFERENCE LINE:

THE REFERENCE LINE IS A LINE CONNECTING ℄ BRGS. R.A. AND ℄ BRGS. F.A. AT THE ℄ SURVEY AND CONST. I.R. 77

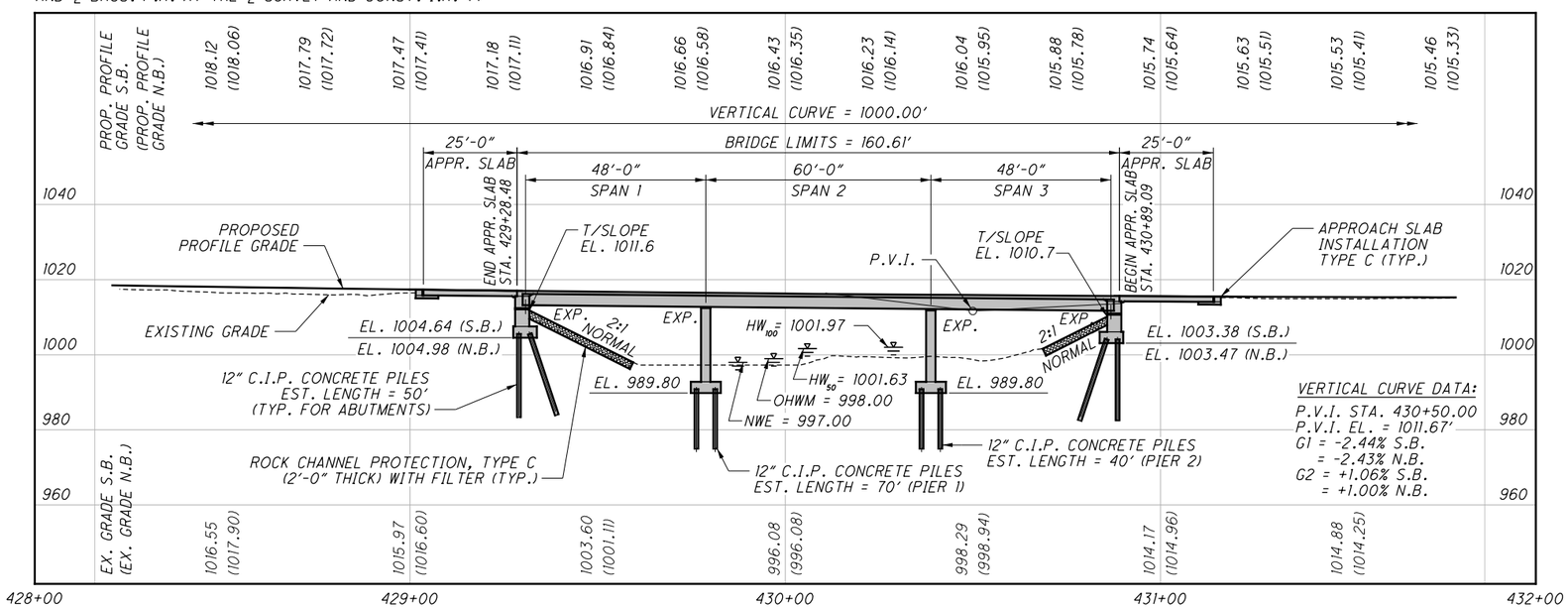


## PROFILE ALONG ℄ SURVEY AND CONSTRUCTION I.R. 77

EXISTING GRADE ELEVATIONS ARE GIVEN ALONG THE NEW, PROPOSED PROFILE GRADE LINES

## BENCHMARK DATA

| POINT | NORTHING | EASTING | ELEV. | DESCRIPTION |
|---|---|---|---|---|
| CP03 | 485566.6495 | 2246336.2535 | 1117.76 | CONC. MONUMENT |
| CP04 | 486357.9587 | 2246323.9152 | 1121.63 | CONC. MONUMENT |
| CP05 | 493895.1420 | 2245390.8980 | 1073.53 | CONC. MONUMENT |
| CP06 | 493906.9643 | 2244750.3816 | 1090.46 | CONC. MONUMENT |

FOR ADDITIONAL BENCHMARK INFORMATION. SEE ROADWAY PLANS.

## NOTES

EARTHWORK LIMITS SHOWN ARE APPROXIMATE. ACTUAL SLOPES SHALL CONFORM TO PLAN CROSS SECTIONS.

DESIGN TRAFFIC:
2020 ADT = 118,630 2020 ADTT = 10,680
2040 ADT = 141,010 2040 ADTT = 12,690
DIRECTIONAL DISTRIBUTION = 57%

## HORIZONTAL CURVE DATA:

P.I. STA. 438+34.18
Δ = 7° 59' 02" (LT)
Dc = 0° 24' 10"
R = 14,228.56'
T = 992.94'
L = 1982.67'
E = 34.60'
C = 1,981.07'

## LEGEND:

- PROJECT BORING LOCATION
- HISTORIC BORING LOCATION
- (1) MGS BTA, TYPE 1 FIRST POST LOCATION (SEE STD. DWG. MGS-3.1)
- (2) MGS BTA, TYPE 2 FIRST POST LOCATION (SEE STD. DWG. MGS-3.2)

## HYDRAULIC DATA

DRAINAGE AREA = 32.90 SQ. MILES
FIS Q (50) = 2,519 CFS V (50) = 7.17 FT/S
FIS Q (100) = 2,914 CFS V (100) = 7.79 FT/S
STRUCTURE CLEARS THE 50 YEAR DESIGN HW BY 10.9 FEET.

## EXISTING STRUCTURE

TYPE: CONTINUOUS STEEL BEAMS WITH REINFORCED CONCRETE DECK, STUB ABUTMENTS AND WALL TYPE PIERS.
SPANS: 48'-0"±, 60'-0"±, 48'-0"± C/C BRGS. ALONG REF. LINE
ROADWAY: 53'-0"± F/F CURBS
LOADING: CF = 2000 (57)
SKEW: 12°-43'-00"± L.F.
WEARING SURFACE: 4"± ASPHALT
APPROACH SLABS: AS-1-54 (25'-0" LONG)
ALIGNMENT: CURVE LEFT
CROWN: 0.016 FT/FT
STRUCTURAL FILE NUMBER: 7702558 (LT) & 7702582 (RT)
DATE BUILT: 1965
DISPOSITION: TO BE REHABILITATED

## PROPOSED STRUCTURE

PROPOSED WORK: 3-SPAN EXIST. CONTINUOUS STEEL BEAM (A7) & NEW CONTINUOUS STEEL BEAM (A709 GRADE 50, PAINTED) BRIDGE W/ NEW COMPOSITE REINF. CONC. DECK ON WIDENED SEMI-INTEGRAL ABUTS. & WALL TYPE PIERS
SPANS: 48'-0", 60'-0", 48'-0" C/C BRGS. ALONG REF. LINE
ROADWAY: 75'-8" TOE/TOE PARAPET (S.B. AND N.B.)
VEHICULAR LIVE LOAD: (SEE GENERAL NOTES)
FUTURE WEARING SURFACE: (SEE GENERAL NOTES)
SKEW: 12°-43'-00" L.F. (TO REFERENCE CHORD)
WEARING SURFACE: 1" MONOLITHIC CONCRETE
DECK AREA: 12,702 SQ. FT. (N.B.), 12,702 SQ. FT. (S.B.)
APPROACH SLABS: 25'-0" LONG (MODIFIED) (AS-1-15)
TYPE C INSTALLATION (AS-2-15)
ALIGNMENT: 0°-24'-10" CURVE LEFT
CROWN: 0.016 FT/FT
COORDINATES: LATITUDE 41°-00'-25.56" (SB) 41°-00'-25.42" (NB)
LONGITUDE 81°-29'-40.05" (SB) 81°-29'-38.40" (NB)

DESIGN AGENCY
GPD GROUP
Glaus, Pyle, Schomer, Burns & DeHaven, Inc.
320 South Main Street, Akron, OH 44311 330.572.2100
Copyright GPD Group, Akron, Ohio, Schomer, Burns & DeHaven, Inc. 2020

DESIGNED MOJ | DRAWN MOJ | REVIEWED DGN | DATE 1-19-21
CHECKED RHC | REVISED | STRUCTURE FILE NUMBER 7702558/7702582

SUMMIT COUNTY
STA. 429+28.48
STA. 430+89.09

SITE PLAN
BRIDGE NO. SUM-77-0810 L/R
I.R. 77 OVER THE TUSCARAWAS RIVER

SUM-77/277/224
VARIOUS
PID No. 106002

1 / 44

1181
1288

D:\2017\2017258\ProjectData\SUM\06002\Design\Structures\SUM077_0810\Sheets\077_0810C_SP001.dgn 1/17/2021 9:21:0 PM mjurcak

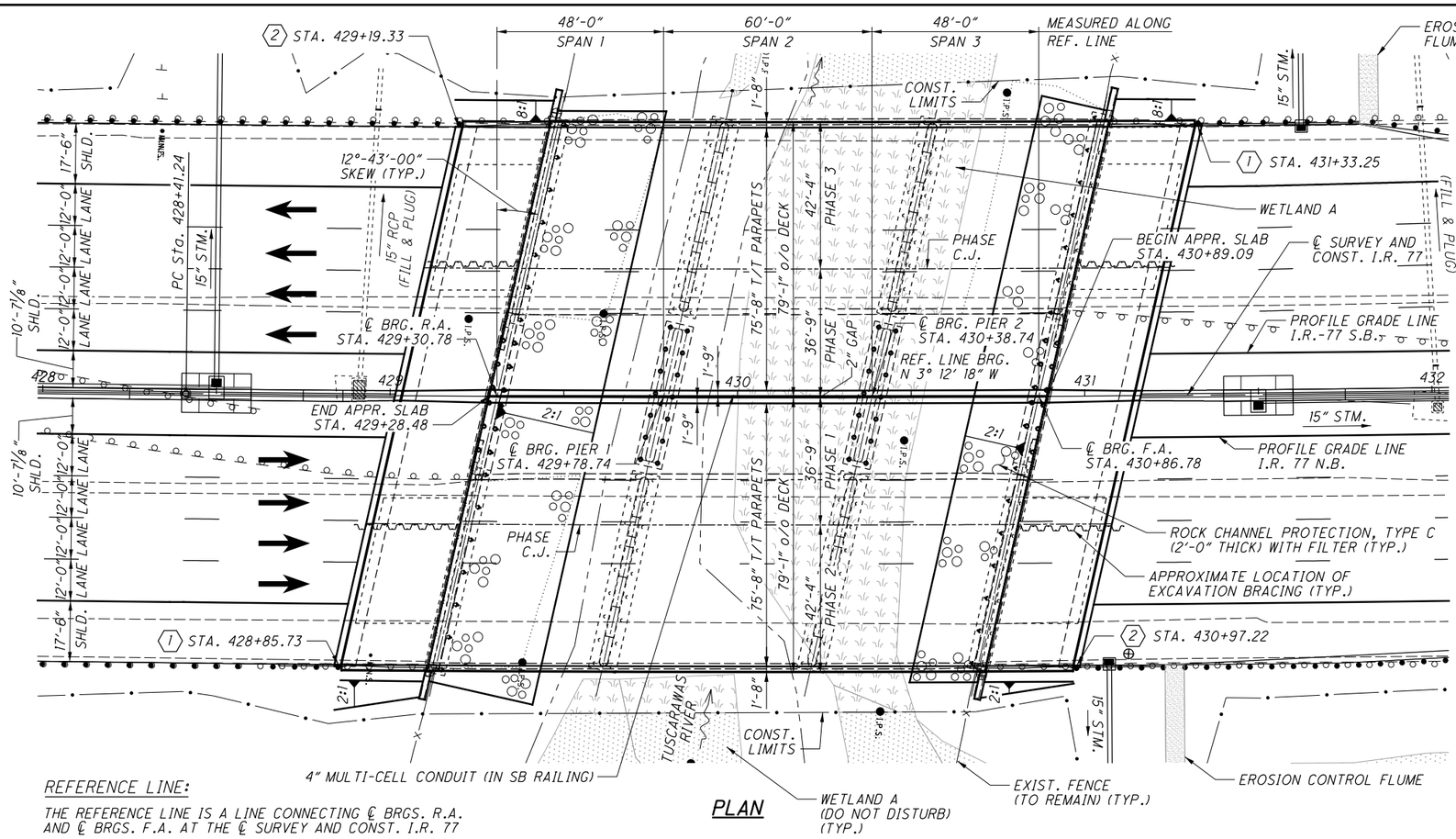


PLAN

## REFERENCE LINE:

THE REFERENCE LINE IS A LINE CONNECTING ℄ BRGS. R.A. AND ℄ BRGS. F.A. AT THE ℄ SURVEY AND CONST. I.R. 77

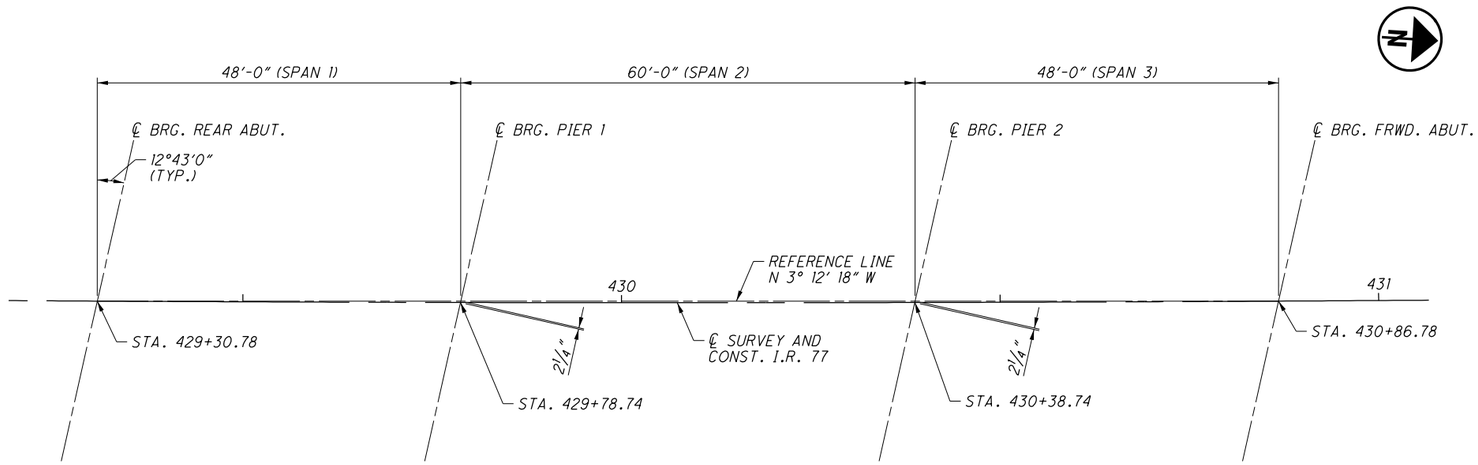


GEOMETRY PLAN

## HORIZONTAL CURVE DATA:

P.I. STA. 438+34.18
Δ = 7° 59' 02" (LT)
Dc = 0° 24' 10"
R = 14,228.56'
T = 992.94'
L = 1982.67'
E = 34.60'
C = 1,981.07'

## LEGEND:

- WETLAND
- WETLAND AREA NOT TO BE DISTURBED
- (1) MGS BRIDGE TERMINAL ASSEMBLY, TYPE 1 FIRST POST LOCATION (SEE STD. DWG. MGS-3.1)
- (2) MGS BRIDGE TERMINAL ASSEMBLY, TYPE 2 FIRST POST LOCATION (SEE STD. DWG. MGS-3.2)

## NOTES:

1. EARTHWORK LIMITS SHOWN ARE APPROXIMATE. ACTUAL SLOPES SHALL CONFORM TO PLAN CROSS SECTIONS.
2. THE EXISTING AND PROPOSED BEAMS ARE PARALLEL TO THE REFERENCE LINE. SPAN LENGTHS AND SUBSTRUCTURE SKEWS ARE MEASURED TO THE REFERENCE LINE.
3. THE BRIDGE DECKS, CONSTRUCTION JOINTS, CROWNS, AND PROFILE GRADES ARE OFFSETS FROM THE ℄ SURVEY AND CONST. I.R. 77.

DESIGN AGENCY
GPD GROUP®
Glaus, Pyle, Schomer, Burns & DeHaven, Inc.
320 South Main Street, Akron, OH 44311 330.572.2100
Copyright Glaus, Pyle, Schomer, Burns & DeHaven, Inc. 2020

| DESIGNED | DRAWN | REVIEWED | DATE |
|---|---|---|---|
| MOJ | MOJ | DGN | 1-19-21 |
| CHECKED | REVISED | STRUCTURE FILE NUMBER | |
| RHC | | 7702558/7702582 | |

GENERAL PLAN
BRIDGE NO. SUM-77-0810 L/R
I.R. 77 OVER THE TUSCARAWAS RIVER

SUM-77/277/224
VARIOUS
PID No. 106002

2 / 44

1182
1288

O:\2017\2017258\ProjectData\SUM\06002\Design\Structures\SUM077_0810\Sheets\077_0810_SG001.dgn Sheet 1/17/2021 9:21:17 PM mjurcak

**DESIGN SPECIFICATIONS:**

THIS STRUCTURE CONFORMS TO THE 8TH EDITION OF THE "LRFD BRIDGE DESIGN SPECIFICATIONS" ADOPTED BY THE AMERICAN ASSOCIATION OF STATE HIGHWAY AND TRANSPORTATION OFFICIALS, AND THE ODOT BRIDGE DESIGN MANUAL, 2020.

**STANDARD DRAWINGS AND SUPPLEMENTAL SPECIFICATIONS:**

REFER TO THE FOLLOWING STANDARD BRIDGE DRAWINGS:

| | | |
|---|---|---|
| AS-1-15 | REVISED | 7-17-15 |
| AS-2-15 | REVISED | 1-18-19 |
| GSD-1-19 | DATED | 1-15-21 |
| PCB-91 | REVISED | 7-17-20 |
| SBR-1-20 | REVISED | 7-17-20 |
| SBR-2-20 | DATED | 1-15-21 |
| SCID-1-21 | DATED | 1-15-21 |
| SCID-2-14 | DATED | 1-15-21 |

AND TO THE FOLLOWING SUPPLEMENTAL SPECIFICATION:

| | | |
|---|---|---|
| SS800 | DATED | 1-15-21 |

**OPERATIONAL IMPORTANCE:**

A LOAD MODIFIER OF 1.05 HAS BEEN ASSUMED FOR THE DESIGN OF THIS STRUCTURE IN ACCORDANCE WITH THE AASHTO LRFD BRIDGE DESIGN SPECIFICATIONS, ARTICLE 1.3.5 AND THE ODOT BRIDGE DESIGN MANUAL.

**DESIGN LOADING:**

EXISTING BEAMS, SUBSTRUCTURE, & FOUNDATION:
CF-2000 (57)

DECK, PROPOSED BEAMS, AND WIDENED SUBSTRUCTURE & FOUNDATION:
HL-93
FUTURE WEARING SURFACE (FWS) OF 0.060 KSF

**DESIGN DATA:**

CONCRETE CLASS QC2 - COMPRESSIVE STRENGTH 4.5 KSI (SUPERSTRUCTURE)
CONCRETE CLASS QC1 - COMPRESSIVE STRENGTH 4.0 KSI (SUBSTRUCTURE)
REINFORCING STEEL - MINIMUM YIELD STRENGTH 60 KSI
STRUCTURAL STEEL - ASTM A709 GRADE 50 - YIELD STRENGTH 50 KSI
CIP REINF. CONC. PILE STEEL - ASTM A252 GRADE 3 - YIELD STRENGTH 45 KSI (MIN.)

**MONOLITHIC WEARING SURFACE:**

MONOLITHIC WEARING SURFACE IS ASSUMED, FOR DESIGN PURPOSES, TO BE 1 INCH THICK.

**EXISTING STRUCTURE VERIFICATION:**

DETAILS AND DIMENSIONS SHOWN ON THESE PLANS PERTAINING TO THE EXISTING STRUCTURE HAVE BEEN OBTAINED FROM PLANS OF THE EXISTING STRUCTURE AND FROM FIELD OBSERVATIONS AND MEASUREMENTS. CONSEQUENTLY, THEY ARE INDICATIVE OF THE EXISTING STRUCTURE AND THE PROPOSED WORK BUT THEY SHALL BE CONSIDERED TENTATIVE AND APPROXIMATE. THE CONTRACTOR IS REFERRED TO C&MS SECTIONS 102.05, 105.02 AND 513.04. BASE CONTRACT BID PRICES UPON A RECOGNITION OF THE UNCERTAINTIES DESCRIBED ABOVE AND UPON A PREBID EXAMINATION OF THE EXISTING STRUCTURE. HOWEVER, THE DEPARTMENT WILL PAY FOR ALL PROJECT WORK BASED UPON ACTUAL DETAILS AND DIMENSIONS THAT HAVE BEEN VERIFIED IN THE FIELD.

**INSPECTION OF EXISTING STRUCTURAL STEEL:**

THE ENGINEER WILL VISUALLY INSPECT ALL EXISTING BUTT-WELDED SPLICES AND TOP FLANGE COVERPLATE FILLET WELDS TO ENSURE THE WELDS, PLATES, AND BEAMS OR GIRDERS ARE FREE OF DEFECTS AND CRACKS. IF NECESSARY, REMOVE ALL DECK SLAB HAUNCH FORMS IMMEDIATELY ADJACENT TO SUCH WELDS THAT MAY INTERFERE WITH THE ENGINEER'S INSPECTION. THE INSPECTION WILL NOT TAKE PLACE UNTIL THE TOP FLANGES ARE CLEANED ACCORDING TO C&MS 511.10, BUT IT WILL BE DONE BEFORE THE DECK SLAB REINFORCEMENT IS INSTALLED. THE DEPARTMENT WILL PAY FOR THE COST ASSOCIATED WITH THIS INSPECTION WITH ITEM 511 - CLASS QC2 CONCRETE WITH QC/QA, BRIDGE DECK. THE ENGINEER WILL REPORT ALL CRACKS FOUND TO THE OFFICE OF CONSTRUCTION ADMINISTRATION, BRIDGE CONSTRUCTION SPECIALIST, ALONG WITH SPECIFIC INFORMATION ON LOCATION OF THE CRACKS, LENGTH, AND DEPTH SO AN EVALUATION AND REPAIR OR REPLACEMENT RECOMMENDATION CAN BE MADE.

**PAINTING OF STRUCTURAL STEEL:**

EXISTING STEEL: AREAS AT ENDS OF BEAMS DISTURBED BY PROPOSED WORK, TOP FLANGE VERTICAL EDGES, AND AREAS DISTURBED BY PROPOSED CROSS FRAME WORK SHALL BE PAINTED WITH A FIELD APPLIED THREE-COAT OZEU PAINT SYSTEM. ADDITIONAL NOTES AND DETAILS CAN BE FOUND ON THE BEAM DETAIL SHEETS. QUANTITIES OF 753 SF FOR THE PRIME, THE EPOXY INTERMEDIATE, AND THE URETHANE FINISH COATS HAVE BEEN INCLUDED IN THE ESTIMATED QUANTITIES TABLE FOR THIS WORK.

PROPOSED STEEL: ALL EXPOSED PROPOSED STEEL SURFACES SHALL BE PAINTED WITH A THREE-COAT IZEU PAINT SYSTEM. THE INORGANIC ZINC PRIME COAT SHALL BE SHOP APPLIED AND INCLUDED WITH ITEM 513 FOR PAYMENT. EPOXY INTERMEDIATE AND URETHANE FINISH COATS SHALL BE APPLIED IN THE FIELD. QUANTITIES OF 13,004 SF FOR THE EPOXY INTERMEDIATE AND URETHANE FINISH COATS HAVE BEEN INCLUDED IN THE ESTIMATED QUANTITIES TABLE FOR THIS WORK.

**DECK PLACEMENT DESIGN ASSUMPTIONS:**

THE FOLLOWING ASSUMPTIONS OF CONSTRUCTION MEANS AND METHODS WERE MADE FOR THE ANALYSIS AND DESIGN OF THE SUPERSTRUCTURE. THE CONTRACTOR IS RESPONSIBLE FOR THE DESIGN OF THE FALSEWORK SUPPORT SYSTEM WITHIN THESE PARAMETERS AND WILL ASSUME RESPONSIBILITY FOR SUPERSTRUCTURE ANALYSIS FOR DEVIATION FROM THESE DESIGN ASSUMPTIONS.

- AN EIGHT WHEEL FINISHING MACHINE WITH A MAXIMUM WHEEL LOAD OF 2.30 KIPS (PHASE 1) AND 2.37 KIPS (PHASE 2 & 3).
- A MINIMUM OUT-TO-OUT WHEEL SPACING AT EACH END OF THE MACHINE OF 103".
- A MAXIMUM SPACING OF OVERHANG FALSEWORK BRACKETS OF 48".
- A MAXIMUM DISTANCE FROM THE CENTERLINE OF THE FASCIA BEAM TO THE FACE OF THE SAFETY HANDRAIL OF 65".

**PILE DESIGN LOADS (ULTIMATE BEARING VALUE):**

THE ULTIMATE BEARING VALUE IS 270.0 KIPS PER PILE FOR THE ABUTMENT PILES. THE ULTIMATE BEARING VALUE IS 242.9 KIPS PER PILE FOR THE PIER PILES.

ABUTMENT PILES:
12" DIA. C.I.P. REINFORCED CONCRETE PILES: 55 FEET LONG, ORDER LENGTH
1 DYNAMIC LOAD TESTING ITEM

PIER PILES:
12" DIA. C.I.P. REINFORCED CONCRETE PILES: 75 FEET LONG, PIER 1 ORDER LENGTH
12" DIA. C.I.P. REINFORCED CONCRETE PILES: 45 FEET LONG, PIER 2 ORDER LENGTH
1 DYNAMIC LOAD TESTING ITEM

**PILE DRIVING:**

THE MINIMUM RATED ENERGY OF THE HAMMER USED TO INSTALL THE PILES SHALL BE 43,000 FOOT-POUNDS. ENSURE THAT STRESSES IN THE PILES DURING DRIVING DO NOT EXCEED 40,500 POUNDS PER SQUARE INCH. THE MINIMUM PILE WALL THICKNESS SHALL BE 0.30 INCHES FOR THE ABUTMENT PILES AND 0.27 INCHES FOR THE PIER PILES.

**ITEM 202 - PORTIONS OF STRUCTURE REMOVED, OVER 20 FOOT SPAN, AS PER PLAN**

DESCRIPTION: THIS WORK CONSISTS OF THE REMOVAL OF CONCRETE DECKS INCLUDING CONCRETE BRIDGE RAILINGS, DECK JOINTS AND OTHER APPURTENANCES FROM STEEL SUPPORTING SYSTEMS (BEAMS, CROSSFRAMES, ETC.). THE PROVISIONS OF ITEM 202 APPLY EXCEPT AS SPECIFIED BY THE FOLLOWING NOTES. PERFORM WORK CAREFULLY DURING DECK REMOVALS TO PROTECT PORTIONS OF SUCH SYSTEMS THAT ARE TO BE SALVAGED AND INCORPORATED INTO THE PROPOSED STRUCTURE. THE USE OF EXPLOSIVES, HEADACHE BALLS AND/OR HOE RAM TYPE OF EQUIPMENT IS PROHIBITED. SUBMIT CONSTRUCTION PLANS ACCORDING TO CMS 501.05.

REMOVAL METHODS: THE CONTRACTOR MAY REMOVE CONCRETE BY CUTTING AND BY MEANS OF HAND OPERATED PNEUMATIC HAMMERS EMPLOYING POINTED OR BLUNTED CHISEL TYPE TOOLS. FOR REMOVALS OVER STRUCTURAL MEMBERS (STEEL BEAMS), THE CONTRACTOR MAY USE A HAMMER HEAVIER THAN 35 POUNDS BUT NOT TO EXCEED 90 POUNDS UNLESS APPROVED BY THE ENGINEER. REMOVAL METHODS OVER STRUCTURAL MEMBERS SHALL ENSURE ADEQUATE DEPTH CONTROL AND PREVENT NICKING OR GOUGING THE PRIMARY STRUCTURAL MEMBERS. DUE TO THE POSSIBLE PRESENCE OF ATTACHMENTS (E.G., FINISHING MACHINE, SCUPPER AND FORM SUPPORTS, ETC.) TO EXISTING STRUCTURAL MEMBERS, PERFORM WORK CAREFULLY DURING DECK REMOVAL TO AVOID DAMAGING STRUCTURAL MEMBERS THAT ARE TO REMAIN. REPLACE OR REPAIR STRUCTURAL MEMBERS DAMAGED BY THE REMOVAL OPERATIONS AT NO COST TO THE PROJECT. AT LEAST 7 DAYS BEFORE PERFORMING REPAIR WORK, SUBMIT A PROPOSED REPAIR PLAN, DEVELOPED BY AN OHIO REGISTERED PROFESSIONAL ENGINEER TO THE ENGINEER. OBTAIN THE ENGINEER'S APPROVAL BEFORE PERFORMING REPAIR.

CUT LINE CONSTRUCTION JOINT PREPARATION: SAW CUT BOUNDARIES OF PROPOSED CONCRETE REMOVALS 1 INCH DEEP. REMOVE CONCRETE TO A ROUGH SURFACE. LEAVE THE EXISTING REINFORCING STEEL, IF REQUIRED IN THE PLANS, IN PLACE. INSTALL DOWEL BARS IF SPECIFIED. PRIOR TO CONCRETE PLACEMENT ABRASIVELY CLEAN JOINT SURFACES AND EXISTING EXPOSED REINFORCEMENT TO REMOVE LOOSE AND DISINTEGRATED CONCRETE AND LOOSE RUST. THOROUGHLY CLEAN THE JOINT SURFACE AND EXPOSED REINFORCEMENT OF ALL DIRT, DUST, RUST OR OTHER FOREIGN MATERIAL BY THE USE OF WATER, AIR UNDER PRESSURE, OR OTHER METHODS THAT PRODUCE SATISFACTORY RESULTS. EXISTING REINFORCING STEEL DOES NOT HAVE TO HAVE A BRIGHT STEEL FINISH BUT REMOVE ALL PACK AND LOOSE RUST. THOROUGHLY DRENCH EXISTING CONCRETE SURFACES WITH CLEAN WATER AND ALLOW TO DRY TO A DAMP CONDITION BEFORE PLACING CONCRETE.

SUBSTRUCTURE CONCRETE REMOVAL: REMOVE CONCRETE BY MEANS OF APPROVED PNEUMATIC HAMMERS EMPLOYING POINTED AND BLUNT CHISEL TOOLS. HYDRAULIC HOE-RAM TYPE HAMMERS WILL NOT BE PERMITTED. THE WEIGHT OF THE HAMMER SHALL NOT BE MORE THAN 35 POUNDS FOR REMOVAL WITHIN 18 INCHES OF PORTIONS TO BE PRESERVED. OUTSIDE THE 18-INCH LIMIT, THE CONTRACTOR MAY USE HAMMERS NOT EXCEEDING 90 POUNDS UPON THE APPROVAL OF THE ENGINEER. DO NOT PLACE PNEUMATIC HAMMERS IN DIRECT CONTACT WITH REINFORCING STEEL THAT IS TO BE RETAINED IN THE REBUILT STRUCTURE.

MEASUREMENT & PAYMENT: THE DEPARTMENT WILL MEASURE THE QUANTITY OF REMOVALS ON A LUMP SUM BASIS. THE DEPARTMENT WILL PAY FOR THE ACCEPTED QUANTITIES OF REMOVALS AT THE CONTRACT PRICE FOR ITEM 202 - PORTIONS OF STRUCTURE REMOVED, OVER 20 FOOT SPAN, AS PER PLAN.

**ITEM 503 - COFFERDAMS AND EXCAVATION BRACING, AS PER PLAN**

THE DESIGN SHOWN ON THE PLANS FOR TEMPORARY SUPPORT OF EXCAVATION IS ONE REPRESENTATIVE DESIGN THAT MAY BE USED TO CONSTRUCT THE PROJECT. THE CONTRACTOR MAY CONSTRUCT THE DESIGN SHOWN ON THE PLANS OR PREPARE AN ALTERNATE DESIGN TO SUPPORT THE SIDES OF EXCAVATIONS. IF CONSTRUCTING AN ALTERNATE DESIGN FOR TEMPORARY SUPPORT OF EXCAVATION, PREPARE AND PROVIDE PLANS IN ACCORDANCE WITH CMS 501.05. THE DEPARTMENT WILL PAY FOR THE TEMPORARY SUPPORT OF EXCAVATION AT THE CONTRACT LUMP SUM PRICE FOR ITEM 503 - COFFERDAMS AND EXCAVATION BRACING, AS PER PLAN. THE DEPARTMENT WILL NOT MAKE ADDITIONAL PAYMENT FOR PROVIDING AN ALTERNATE DESIGN.

**ITEM 511 - CLASS QC2 CONCRETE WITH QC/QA, BRIDGE DECK, AS PER PLAN**

IN ADDITION TO THE REQUIREMENTS OF CMS 511, ALL EXPOSED HANGERS FOR DECK FORMING AT HAUNCHES SHALL BE GALVANIZED.

**ITEM 513 - STRUCTURAL STEEL MEMBERS, LEVEL 3, AS PER PLAN**

IN ADDITION TO THE REQUIREMENTS OF CMS 513, THIS ITEM SHALL INCLUDE THE COPING OF THE EXISTING BEAMS AT THE ABUTMENTS AS SHOWN IN THE PLANS. ALL REMOVAL SHALL BE IN ACCORDANCE WITH CMS 202.

**ITEM 514 - FIELD PAINTING STRUCTURAL STEEL, FINISH COAT**

ALL EXISTING STRUCTURAL STEEL MEMBERS DESIGNATED IN THE PLANS AND ALL NEW STRUCTURAL STEEL MEMBERS SHALL BE PAINTED USING A THREE-COAT PAINT SYSTEM. THE URETHANE TOP COAT SHALL BE TINTED TO MEET AMS-STD-595A COLOR No. 15526 - BLUE.

**ITEM 516 - JACKING AND TEMPORARY SUPPORT OF SUPERSTRUCTURE, AS PER PLAN**

THIS WORK CONSISTS OF RAISING OR RE-POSITIONING EXISTING STRUCTURES TO THE DIMENSIONS AND REQUIREMENTS DEFINED IN THE PROJECT PLANS. SUBMIT CONSTRUCTION PLANS IN ACCORDANCE WITH C&MS 501.05. IF, DURING THE JACKING OPERATIONS, DAMAGE TO THE STRUCTURE IS VISUALLY OBSERVED, IMMEDIATELY CEASE THE JACKING OPERATION AND INSTALL SUPPORTS TO THE SATISFACTION OF THE ENGINEER. ANALYZE THE DAMAGE AND SUBMIT A METHOD OF CORRECTION TO THE ENGINEER FOR APPROVAL. THE DEPARTMENT WILL NOT PAY FOR THE COST OF REQUIRED REPAIRS. THE BRIDGE BEARINGS SHALL BE FULLY SEATED AT ALL CONTACT AREAS. IF FULL SEATING IS NOT ATTAINED, SUBMIT A REPAIR PLAN TO THE ENGINEER. THE DEPARTMENT WILL NOT PAY FOR THE REPAIR COSTS TO ENSURE FULL SEATING ON BEARINGS. THE DEPARTMENT WILL MEASURE THIS WORK ON A LUMP SUM BASIS. THE DEPARTMENT WILL PAY FOR THE ACCEPTED QUANTITIES AT THE CONTRACT PRICE FOR ITEM 516 - JACKING AND TEMPORARY SUPPORT OF SUPERSTRUCTURE, AS PER PLAN.

**PERMITS FOR SECTION 401 AND 404 (TEMPORARY ACCESS FILLS):**

THE TEMPORARY ACCESS FILL (TAF) INFORMATION USED FOR THE PERMIT APPLICATION IS AVAILABLE FOR INFORMATIONAL PURPOSES ONLY AND IS PROVIDED AS PART OF THE DESIGNER CALCULATIONS. THE CONTRACTOR IS RESPONSIBLE FOR DESIGNING THEIR OWN TAF AND THE DESIGN SHOULD CORRESPOND WITH REQUIREMENTS OF SS 832 AND THOSE FOUND IN THE SPECIAL PROVISIONS.

FOR THIS PROJECT, PERMITS FOR SECTION 401 AD 404 OF THE CLEAN WATER ACT ARE BASED ON THE LIMITS OF TEMPORARY CONSTRUCTION FILL PLACED IN THE "WATERS OF THE UNITED STATES" AS SHOWN BELOW. SHOULD THE CONTRACTOR CHOOSE TO DEVIATE FROM THE PROPOSED TAF, THE CONTRACTOR IS REQUIRED TO COORDINATE THE REQUEST FOR THE CAUSEWAY AND ACCESS FILL(S) WITH THE PROJECT ENGINEER AND OES. IF A PERMIT MODIFICATION IS REQUIRED, REFER TO SUPPLEMENTAL SPECIFICATION 832.06 FOR THE APPLICATION REQUIREMENTS AND TIME FRAMES.

TOTAL AREA OF TAF MATERIAL = 0.10 ACRES
TOTAL VOLUME OF TAF MATERIAL = 323 C.Y.
CHANNEL DISTURBED DUE TO TEMPORARY CROSSING = 92 FT.
TOTAL VOLUME OF TAF BELOW ORDINARY HIGH WATER MARK (OHWM) = 204 C.Y.

THE TEMPORARY ACCESS FILL SHALL ACCOMMODATE A FLOW RATE (Q) EQUAL TO TWICE THE HIGHEST MEAN MONTHLY FLOW SUCH THAT THE BACKWATER ELEVATION DOES NOT EXCEED THE OHWM. Q FOR THIS LOCATION IS 70.0 CFS.

TAF SHALL CONSIST OF CLEAN ROCK (FREE OF ANY TOXIC OR FINE MATERIAL) THAT IS A MINIMUM OF THREE INCHES IN DIAMETER. ALL TEMPORARY INSTREAM FILL MUST BE REMOVED TO THE EXISTING CONDITION PRIOR TO PROJECT COMPLETION.

**ABBREVIATIONS:**

| | |
|---|---|
| ABUT. | ABUTMENT |
| BOT. | BOTTOM |
| BRG. | BEARING |
| B.S. | BOTH SIDES |
| BTA | BRIDGE TERMINAL ASSEMBLY |
| BTWN. | BETWEEN |
| C.I.P. | CAST-IN-PLACE |
| C.J. | CONSTRUCTION JOINT |
| CLR. | CLEAR |
| CONST. | CONSTRUCTION |
| DIA. | DIAMETER |
| DIM. | DIMENSION |
| EL. | ELEVATION |
| EQ. | EQUAL |
| EX./EXIST. | EXISTING |
| FRWD. | FORWARD |
| F.S. | FAR SIDE |
| GFRP | GLASS FIBER REINFORCED POLYMER |
| LT. | LEFT |
| MAX. | MAXIMUM |
| MGS | MIDWEST GUARDRAIL SYSTEM |
| MIN. | MINIMUM |
| NB | NORTHBOUND |
| NO. | NUMBER |
| N.S. | NEAR SIDE |
| P.E.J.F. | PREFORMED EXPANSION JONT FILLER |
| REF. | REFERENCE |
| RT. | RIGHT |
| SB | SOUTHBOUND |
| SER. | SERIES |
| SPA. | SPACES OR SPACING |
| STA. | STATION |
| STD. DWG. | STANDARD DRAWING |
| T&B | TOP AND BOTTOM |
| TYP. | TYPICAL |

DESIGN AGENCY
GPD GROUP
Glaus, Pyle, Schomer, Burns & DeHaven, Inc.
520 South Main Street, Akron, OH 44311 330.572.2100
Copyright GPD, Pyle, Schomer, Burns & DeHaven, Inc. 2020

| DESIGNED | DRAWN | REVIEWED | DATE |
|---|---|---|---|
| MOJ | MOJ | DGN | 1-19-21 |

CHECKED: RHC
REVISED:
STRUCTURE FILE NUMBER 7702558/7702582

GENERAL NOTES
BRIDGE NO. SUM-77-0810 L/R
I.R. 77 OVER THE TUSCARAWAS RIVER

SUM-77/277/224
VARIOUS
PID No. 106002



O:\2017\2017258\ProjectData\SUM\06002\Design\Structures\SUM077_0810\Sheets\077_0810C_SN001.dgn Sheet 1/29/2021 4:43:39 PM rcummins

# ESTIMATED QUANTITIES

CALCULATED BY: MOJ DATE: 1-11-2021
CHECKED BY: RHC DATE: 1-12-2021

| | ITEM | EXT. | TOTAL | PARTICIPATION 03/IMS/BR | PARTICIPATION 04/IMS/BR | UNIT | DESCRIPTION | ABUTMENTS | PIERS | SUPER-STRUCTURE | GENERAL | AS PER PLAN REFERENCE SHEET |
|---|---|---|---|---|---|---|---|---|---|---|---|---|
| | 202 | 11203 | LS | LS | LS | | PORTIONS OF STRUCTURE REMOVED, OVER 20 FOOT SPAN, AS PER PLAN | | | | LS | 3 |
| | 202 | 22900 | 400 | 260 | 140 | SY | APPROACH SLAB REMOVED | | | | 400 | |
| | 202 | 23500 | 2,450 | 1,593 | 857 | SY | WEARING COURSE REMOVED | | | | 2,450 | |
| | | | | | | | | | | | | |
| | 503 | 11101 | LS | LS | LS | | COFFERDAMS AND EXCAVATION BRACING, AS PER PLAN | | | | LS | 3 |
| | 503 | 21100 | 421 | 274 | 147 | CY | UNCLASSIFIED EXCAVATION | 192 | 229 | | | |
| | | | | | | | | | | | | |
| | 505 | 11100 | LS | LS | LS | | PILE DRIVING EQUIPMENT MOBILIZATION | | | | LS | |
| | | | | | | | | | | | | |
| | 507 | 00500 | 2,740 | 1,781 | 959 | FT | 12" CAST-IN-PLACE REINFORCED CONCRETE PILES, DRIVEN | 1,200 | 1,540 | | | |
| | 507 | 00550 | 3,000 | 1,950 | 1,050 | FT | 12" CAST-IN-PLACE REINFORCED CONCRETE PILES, FURNISHED | 1,320 | 1,680 | | | |
| | | | | | | | | | | | | |
| | 509 | 10000 | 293,392 | 190,705 | 102,687 | LB | EPOXY COATED REINFORCING STEEL | 7,408 | 40,021 | 245,963 | | |
| | 509 | 30020 | 6,400 | 4,160 | 2,240 | FT | NO. 4 GFRP DEFORMED BARS | | | 6,400 | | |
| | 509 | 30040 | 5,020 | 3,263 | 1,757 | FT | NO. 6 GFRP DEFORMED BARS | | | 5,020 | | |
| | | | | | | | | | | | | |
| | 510 | 10000 | 170 | 111 | 59 | EACH | DOWEL HOLES WITH NONSHRINK, NONMETALLIC GROUT | 170 | | | | |
| | | | | | | | | | | | | |
| | 511 | 33500 | 4 | 3 | 1 | EACH | SEMI-INTEGRAL DIAPHRAGM GUIDE | 4 | | | | |
| | 511 | 34447 | 847 | 551 | 296 | CY | CLASS QC2 CONCRETE WITH QC/QA, BRIDGE DECK, AS PER PLAN | | | 847 | | 3 |
| | 511 | 34450 | 151 | 98 | 53 | CY | CLASS QC2 CONCRETE WITH QC/QA, BRIDGE DECK (PARAPET) | | | 151 | | 39 |
| | 511 | 40512 | 141 | 92 | 49 | CY | CLASS QC1 CONCRETE WITH QC/QA, PIER ABOVE FOOTINGS | | 141 | | | |
| | 511 | 44112 | 67 | 44 | 23 | CY | CLASS QC1 CONCRETE WITH QC/QA, ABUTMENT NOT INCLUDING FOOTING | 67 | | | | |
| | 511 | 46512 | 135 | 88 | 47 | CY | CLASS QC1 CONCRETE WITH QC/QA, FOOTING | 60 | 75 | | | |
| | | | | | | | | | | | | |
| | 512 | 10100 | 1,998 | 1,299 | 699 | SY | SEALING OF CONCRETE SURFACES (EPOXY-URETHANE) | 59 | 1,132 | 807 | | |
| | 512 | 10600 | 10 | 7 | 3 | FT | CONCRETE REPAIR BY EPOXY INJECTION | 6 | 4 | | | |
| | 512 | 33000 | 19 | 12 | 7 | SY | TYPE 2 WATERPROOFING | 19 | | | | |
| | 512 | 74000 | 867 | 564 | 303 | SY | REMOVAL OF EXISTING COATINGS FROM CONCRETE SURFACES | 34 | 833 | | | |
| | | | | | | | | | | | | |
| | 513 | 10261 | 194,393 | 126,355 | 68,038 | LB | STRUCTURAL STEEL MEMBERS, LEVEL 3, AS PER PLAN | | | 194,393 | | 3 |
| | 513 | 20000 | 13,050 | 8,483 | 4,567 | EACH | WELDED STUD SHEAR CONNECTORS | | | 13,050 | | |
| | | | | | | | | | | | | |
| | 514 | 00050 | 753 | 489 | 264 | SF | SURFACE PREPARATION OF EXISTING STRUCTURAL STEEL | | | 753 | | |
| | 514 | 00056 | 753 | 489 | 264 | SF | FIELD PAINTING OF EXISTING STRUCTURAL STEEL, PRIME COAT | | | 753 | | |
| | 514 | 00060 | 13,757 | 8,942 | 4,815 | SF | FIELD PAINTING STRUCTURAL STEEL, INTERMEDIATE COAT | | | 13,757 | | |
| | 514 | 00066 | 13,757 | 8,942 | 4,815 | SF | FIELD PAINTING STRUCTURAL STEEL, FINISH COAT | | | 13,757 | | |
| | 514 | 00504 | 3 | 2 | 1 | MNHR | GRINDING FINS, TEARS, SLIVERS ON EXISTING STRUCTURAL STEEL | | | 3 | | |
| | 514 | 10000 | 13 | 8 | 5 | EACH | FINAL INSPECTION REPAIR | | | 13 | | |
| | | | | | | | | | | | | |
| | 516 | 10010 | 318 | 207 | 111 | FT | ARMORLESS PREFORMED JOINT SEAL | | | | 318 | |
| | 516 | 13600 | 41 | 27 | 14 | SF | 1" PREFORMED EXPANSION JOINT FILLER | | | 41 | | |
| | 516 | 13900 | 64 | 42 | 22 | SF | 2" PREFORMED EXPANSION JOINT FILLER | 64 | | | | |
| | 516 | 14020 | 354 | 230 | 124 | FT | SEMI-INTEGRAL ABUTMENT EXPANSION JOINT SEAL | 354 | | | | |
| | 516 | 44001 | 40 | 26 | 14 | EACH | ELASTOMERIC BEARING WITH INTERNAL LAMINATES AND LOAD PLATE (NEOPRENE) (9" X 1'-1" X 1.85" THICK), AS PER PLAN | 40 | | | | 17 |
| | 516 | 44101 | 40 | 26 | 14 | EACH | ELASTOMERIC BEARING WITH INTERNAL LAMINATES AND LOAD PLATE (NEOPRENE) (11" X 1'-5" X 2.25" THICK), AS PER PLAN | | 40 | | | 17 |
| | 516 | 47001 | LS | LS | LS | | JACKING AND TEMPORARY SUPPORT OF SUPERSTRUCTURE, AS PER PLAN | | | LS | | 3 |
| | | | | | | | | | | | | |
| | 518 | 21200 | 192 | 125 | 67 | CY | POROUS BACKFILL WITH GEOTEXTILE FABRIC | 192 | | | | |
| | 518 | 40000 | 360 | 234 | 126 | FT | 6" PERFORATED CORRUGATED PLASTIC PIPE | 360 | | | | |
| | 518 | 40010 | 32 | 21 | 11 | FT | 6" NON-PERFORATED CORRUGATED PLASTIC PIPE, INCLUDING SPECIALS | 32 | | | | |
| | | | | | | | | | | | | |
| | 519 | 11100 | 125 | 81 | 44 | SF | PATCHING CONCRETE STRUCTURE | 97 | 28 | | | |
| | | | | | | | | | | | | |
| | 523 | 20000 | 2 | 1 | 1 | EACH | DYNAMIC LOAD TESTING | | | | 2 | |
| | | | | | | | | | | | | |
| | 526 | 25011 | 880 | 572 | 308 | SY | REINFORCED CONCRETE APPROACH SLABS WITH QC/QA (T=15"), AS PER PLAN | | | | 880 | 38 |
| | 526 | 90031 | 318 | 207 | 111 | FT | TYPE C INSTALLATION, AS PER PLAN | | | | 318 | 39 |
| | | | | | | | | | | | | |
| ✳ | 601 | 32200 | 637 | 414 | 223 | CY | ROCK CHANNEL PROTECTION, TYPE C WITH FILTER | | | | 637 | |

✳ INCLUDED FOR PAYMENT WITH THE EROSION CONTROL QUANTITIES - SEE THE GENERAL SUMMARY.

| REVISIONS | | |
|---|---|---|
| NO. | DATE | DESCRIPTION |
| 8 | 04/27/21 | REVISED ITEM 511 - BRIDGE DECK CONCRETE QUANTITY |
| 8 | 04/30/21 | ADDED ITEM 512 - REMOVAL OF EXISTING COATINGS |

DESIGN AGENCY
GPD GROUP
Gillan, Polk, Schorr, Bland & DeNavorn, Inc.
520 South Main Street, Akron, OH 44311 330.572.2100
Copyright GPD Group, Inc. Schorr, Aurora & Brewers, Inc. 2020

DESIGNED MOJ | DRAWN MOJ | REVIEWED DGN | DATE 1-19-21
CHECKED RHC | REVISED | STRUCTURE FILE NUMBER 7702558/7702582

ESTIMATED QUANTITIES
BRIDGE NO. SUM-77-0810 L/R
I.R. 77 OVER THE TUSCARAWAS RIVER

SUM-77/277/224
VARIOUS
PID No. 106002



1184
1288

O:\2017\2017258\ProjectData\SUM\106002\Design\Structures\SUM077_0810\Sheets\077_0810C_S000i.dgn Sheet 4/30/2021 1:24:28 PM mjurcak

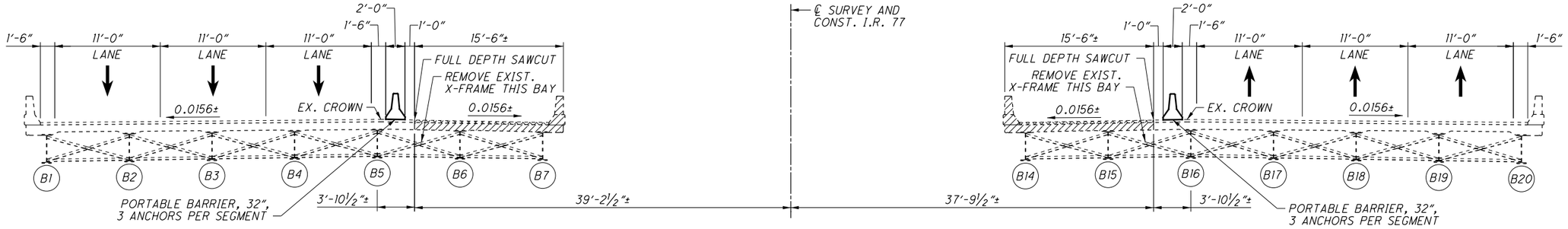


## PHASE 1 M.O.T. & REMOVALS

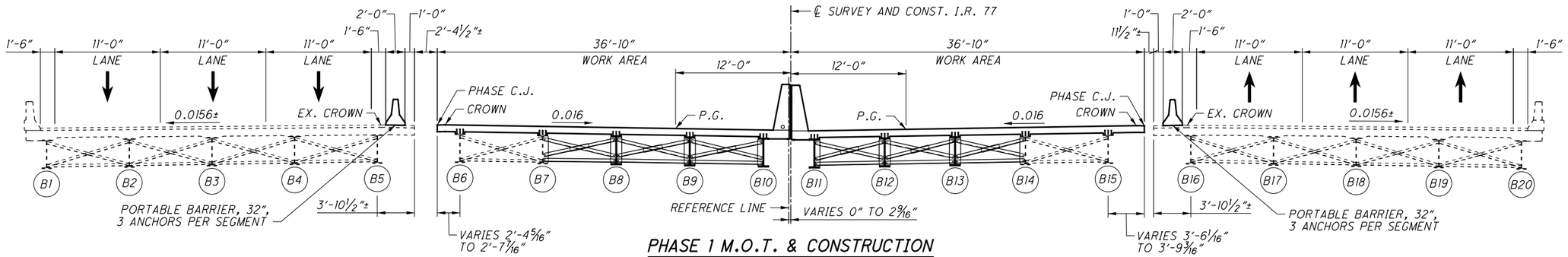


## PHASE 1 M.O.T. & CONSTRUCTION

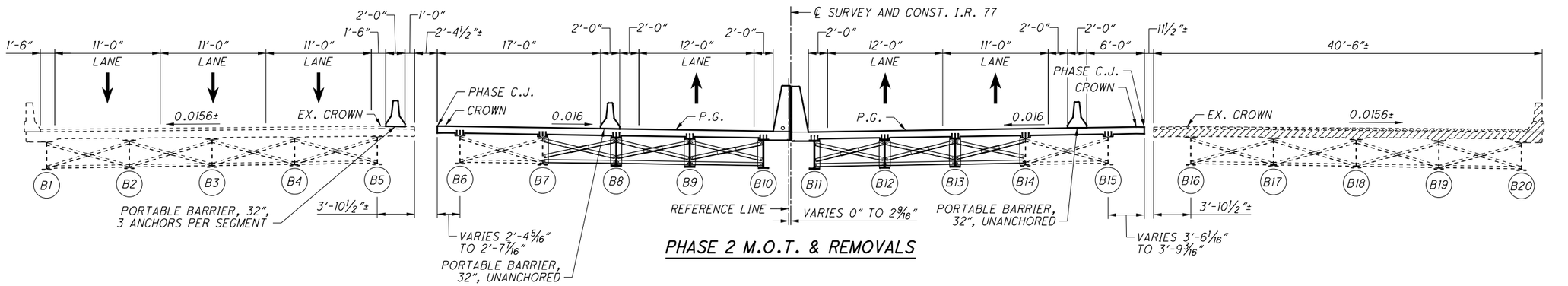


## PHASE 2 M.O.T. & REMOVALS

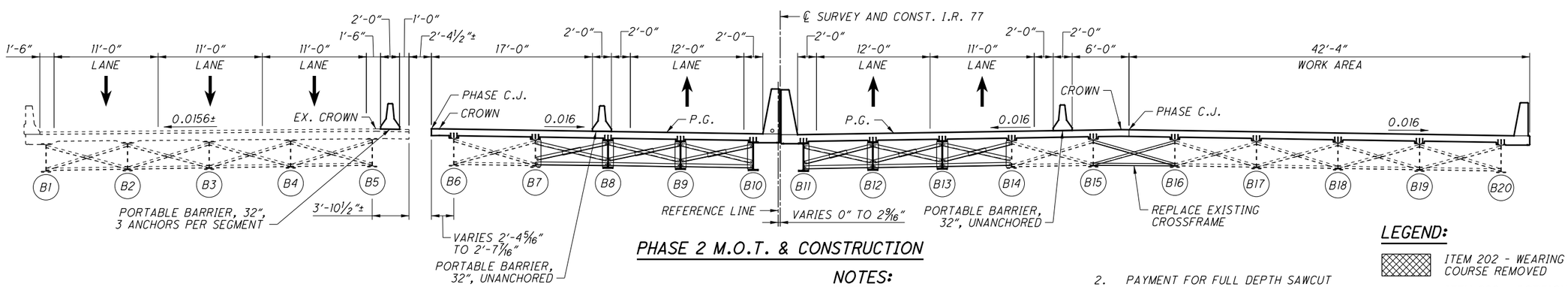


## PHASE 2 M.O.T. & CONSTRUCTION

### NOTES:

1. FOR PORTABLE BARRIER DETAILS, SEE STD. DWG. PCB-91.
2. PAYMENT FOR FULL DEPTH SAWCUT IS INCLUDED WITH ITEM 202 - PORTIONS OF STRUCTURE REMOVED, OVER 20 FOOT SPAN, AS PER PLAN.

### LEGEND:

- ITEM 202 - WEARING COURSE REMOVED
- ITEM 202 - PORTIONS OF STRUCTURE REMOVED, OVER 20 FOOT SPAN, AS PER PLAN

DESIGN AGENCY
GPD GROUP
Glaus, Pyle, Schomer, Burns & DeHaven, Inc.
520 South Main Street, Akron, OH 44311 330.572.2100
(Copyright claim: Mr. Schomer, Aura & Reviewers, Inc. 2020

| DESIGNED | DRAWN | REVIEWED | DATE |
|---|---|---|---|
| MOJ | MOJ | DGN | 1-19-21 |
| CHECKED | REVISED | STRUCTURE FILE NUMBER | |
| RHC | | 7702558/7702582 | |

PHASE 1 AND 2 CONSTRUCTION DETAILS
BRIDGE NO. SUM-77-0810 L/R
I.R. 77 OVER THE TUSCARAWAS RIVER

SUM-77/277/224
VARIOUS
PID No. 106002

5 / 44

1185
1288

O:\2017\2017258\ProjectData\SUM\06002\Design\Structures\SUM077_0810\Sheets\077_0810C_SC001.dgn Sheet 1/17/2021 9:21:36 PM mjurcak

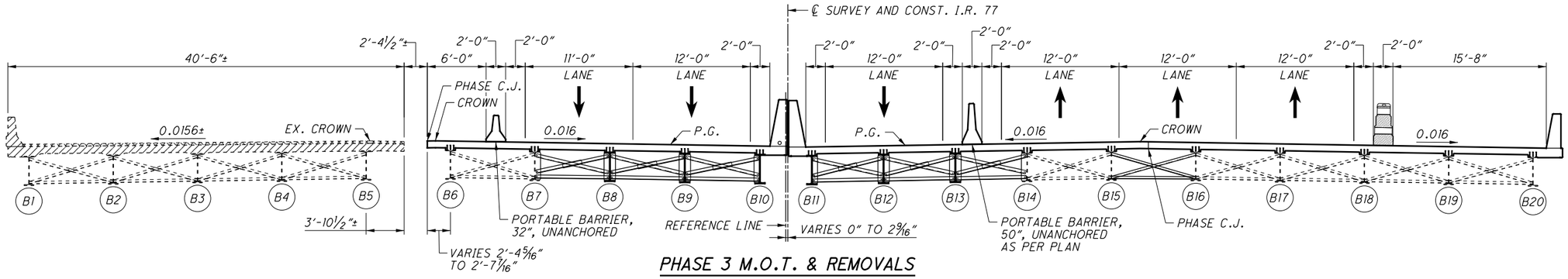


## PHASE 3 M.O.T. & REMOVALS

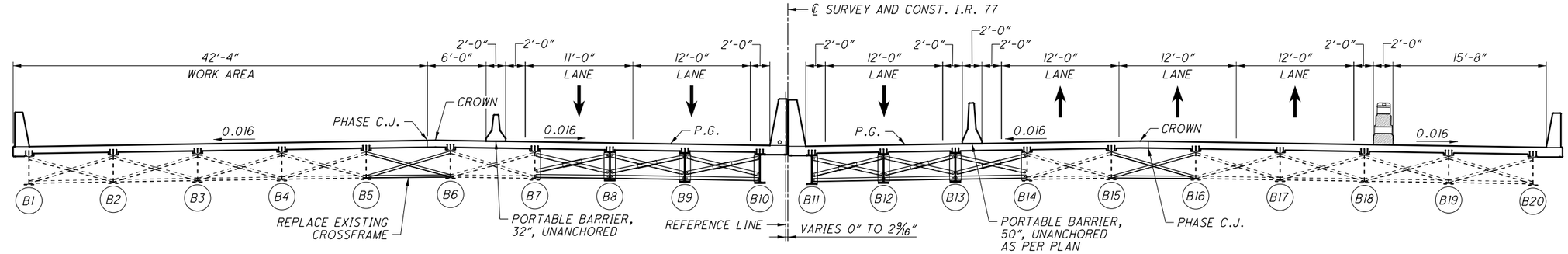


## PHASE 3 M.O.T. & CONSTRUCTION

### LEGEND:

- ITEM 202 - WEARING COURSE REMOVED
- ITEM 202 - PORTIONS OF STRUCTURE REMOVED, OVER 20 FOOT SPAN, AS PER PLAN

### NOTES:

1. FOR PORTABLE BARRIER DETAILS, SEE STD. DWG. PCB-91.

## PROPOSED WORK:

### PHASE 1 REMOVALS AND CONSTRUCTION (NORTHBOUND & SOUTHBOUND)

1. PLACE PORTABLE BARRIER AND TEMPORARY STRIPING.
2. DIVERT AND MAINTAIN THREE LANES OF TRAFFIC IN EACH DIRECTION.
3. REMOVE PORTION OF WEARING SURFACE, DECK, PARAPET, AND APPROACH SLABS.
4. INSTALL TEMPORARY SHEETING AT ABUTMENTS.
5. REMOVE EXISTING CROSSFRAMES AS NOTED.
6. REMOVE PORTIONS OF EXISTING BACKWALL.
7. JACK AND SUPPORT EXISTING BEAMS 6-7 & 14-15 AND REMOVE EXISTING BEARINGS AT ABUTMENTS AND PIERS.
8. REMOVE EXISTING END CROSSFRAMES AND COPE BEAM ENDS.
9. CONSTRUCT NEW WIDENED ABUTMENT AND PIER CONCRETE.
10. INSTALL NEW ELASTOMERIC BEARINGS, STEEL BEAMS, STUD SHEAR CONNECTORS, AND INTERMEDIATE CROSSFRAMES. PAINT EXISTING BEAM ENDS WITH PRIME COAT.
11. PLACE NEW CONCRETE DIAPHRAGMS, DECKS, PARAPETS, AND APPROACH SLABS. DIAPHRAGM CONCRETE AT ABUTMENTS SHALL BE PLACED DURING DECK PLACEMENT.
12. PATCH AND SEAL CONCRETE SURFACES.
13. PLACE ROCK CHANNEL PROTECTION.

### PHASE 2 REMOVALS AND CONSTRUCTION (NORTHBOUND)

1. PLACE PORTABLE BARRIER AND TEMPORARY STRIPING.
2. DIVERT AND MAINTAIN THREE LANES OF TRAFFIC IN EACH DIRECTION.
3. REMOVE REMAINING PORTION OF WEARING SURFACE, DECK, PARAPET, AND APPROACH SLABS.
4. REMOVE REMAINING PORTION OF EXISTING BACKWALLS AND WINGWALLS AS NOTED.
5. JACK AND SUPPORT EXISTING BEAMS 16-20 AND REMOVE EXISTING BEARINGS AT ABUTMENTS AND PIERS.
6. REMOVE EXISTING END CROSSFRAMES AND COPE BEAM ENDS.
7. INSTALL NEW ELASTOMERIC BEARINGS AND STUD SHEAR CONNECTORS. PAINT EXISTING BEAM ENDS WITH PRIME COAT.
8. PLACE NEW CONCRETE DIAPHRAGMS, DECK, PARAPET, AND APPROACH SLABS. DIAPHRAGM CONCRETE AT ABUTMENTS SHALL BE PLACED DURING DECK PLACEMENT.
9. REPLACE EXISTING CROSSFRAMES AS NOTED.
10. CONSTRUCT NEW WINGWALL CONCRETE.
11. SEAL CONCRETE SURFACES.

### PHASE 3 REMOVALS AND CONSTRUCTION (SOUTHBOUND)

1. PLACE PORTABLE BARRIER AND TEMPORARY STRIPING.
2. DIVERT AND MAINTAIN THREE LANES OF TRAFFIC IN EACH DIRECTION.
3. REMOVE REMAINING PORTION OF WEARING SURFACE, DECK, PARAPET, AND APPROACH SLABS.
4. REMOVE REMAINING PORTION OF EXISTING BACKWALLS AND WINGWALLS AS NOTED.
5. JACK AND SUPPORT EXISTING BEAMS 1-5 AND REMOVE EXISTING BEARINGS AT ABUTMENTS AND PIERS.
6. REMOVE EXISTING END CROSSFRAMES AND COPE BEAM ENDS.
7. INSTALL NEW ELASTOMERIC BEARINGS AND STUD SHEAR CONNECTORS. PAINT EXISTING BEAM ENDS WITH PRIME COAT.
8. PLACE NEW CONCRETE DIAPHRAGMS, DECK, PARAPET, AND APPROACH SLABS. DIAPHRAGM CONCRETE AT ABUTMENTS SHALL BE PLACED DURING DECK PLACEMENT.
9. REPLACE EXISTING CROSSFRAMES AS NOTED.
10. CONSTRUCT NEW WINGWALL CONCRETE.
11. PAINT PROPOSED STEEL AND DESIGNATED EXISTING STEEL AREAS WITH INTERMEDIATE AND FINISH COATS. SEAL CONCRETE SURFACES.
12. AFTER ALL CONSTRUCTION IS COMPLETE, REMOVE TRAFFIC CONTROL AND OPEN BRIDGES TO NORMAL TRAFFIC.

DESIGN AGENCY
GPD GROUP
Glaus, Pyle, Schomer, Burns & DeHaven, Inc.
320 South Main Street, Akron, OH 44311 330.572.2100
Copyright Glaus, Pyle, Schomer, Burns & DeHaven, Inc. 2020

| DESIGNED | DRAWN | REVIEWED | DATE |
|---|---|---|---|
| MOJ | MOJ | DGN | 1-19-21 |
| CHECKED | REVISED | STRUCTURE FILE NUMBER | |
| RHC | | 7702558/7702582 | |

PHASE 3 CONSTRUCTION DETAILS AND NOTES
BRIDGE NO. SUM-77-0810 L/R
I.R. 77 OVER THE TUSCARAWAS RIVER

SUM-77/277/224
VARIOUS
PID No. 106002

6 / 44

1186
1288

O:\2017\2017258\ProjectData\SUM\106002\Design\Structures\SUM077_0810\Sheets\077_0810C_SC002.dgn Sheet 1/17/2021 9:21:38 PM mjurcak

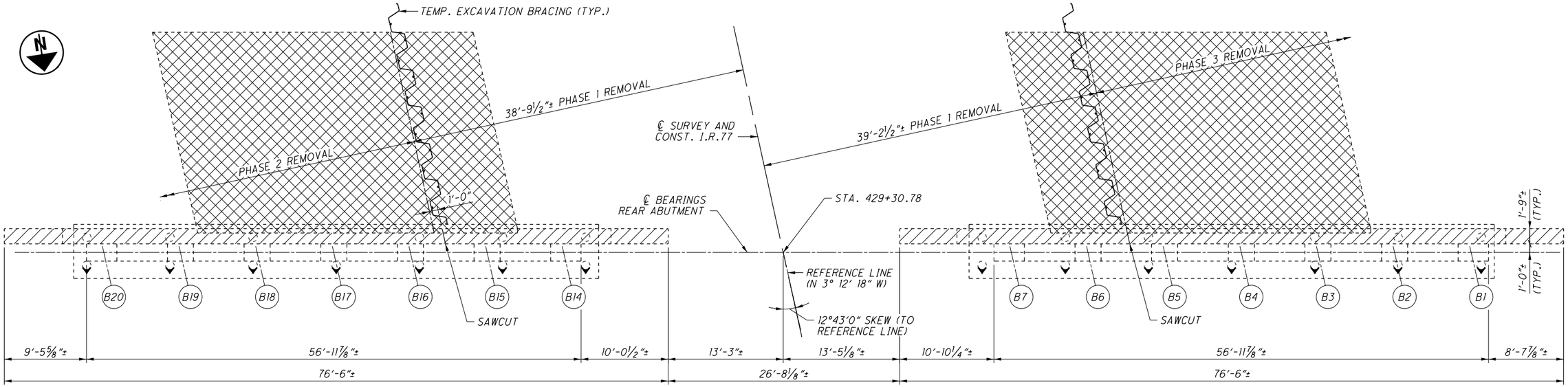


PLAN

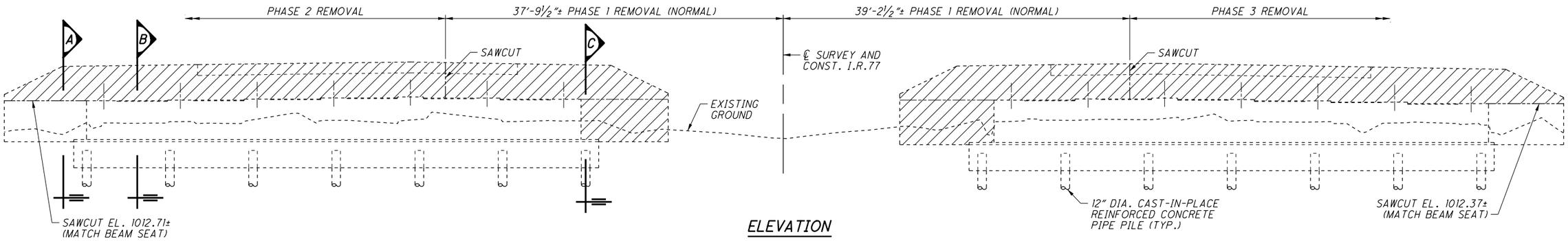


ELEVATION

| REAR ABUTMENT REPAIRS | | |
|---|---|---|
| REPAIR ITEM | SOUTHBOUND | NORTHBOUND |
| ITEM 512 - CONCRETE REPAIR BY EPOXY INJECTION (FT) | 0 | 0 |
| ITEM 519 - PATCHING CONCRETE STRUCTURE (SF) | 20 | 15 |

| PIER 1 REPAIRS | | |
|---|---|---|
| REPAIR ITEM | SOUTHBOUND | NORTHBOUND |
| ITEM 512 - CONCRETE REPAIR BY EPOXY INJECTION (FT) | 0 | 0 |
| ITEM 519 - PATCHING CONCRETE STRUCTURE (SF) | 15 | 0 |

| PIER 2 REPAIRS | | |
|---|---|---|
| REPAIR ITEM | SOUTHBOUND | NORTHBOUND |
| ITEM 512 - CONCRETE REPAIR BY EPOXY INJECTION (FT) | 0 | 0 |
| ITEM 519 - PATCHING CONCRETE STRUCTURE (SF) | 2 | 0 |

| FORWARD ABUTMENT REPAIRS | | |
|---|---|---|
| REPAIR ITEM | SOUTHBOUND | NORTHBOUND |
| ITEM 512 - CONCRETE REPAIR BY EPOXY INJECTION (FT) | 0 | 2 |
| ITEM 519 - PATCHING CONCRETE STRUCTURE (SF) | 30 | 20 |

## LEGEND:

- (B#) BEAM NUMBER
- ITEM 202 - PORTIONS OF STRUCTURE REMOVED, OVER 20 FOOT SPAN, AS PER PLAN
- ITEM 202 - APPROACH SLAB REMOVED
- ITEM 202 - WEARING COURSE REMOVED
- EXISTING VERTICAL 12" DIA. CAST-IN-PLACE REINFORCED CONCRETE PIPE PILE
- EXISTING BATTERED 12" DIA. CAST-IN-PLACE REINFORCED CONCRETE PIPE PILE WITH DIRECTION OF BATTER (1:4)

## NOTES:

1. STATIONS AND DIMENSIONS ARE GIVEN TO ℄ SURVEY AND CONST. I.R.77.
2. FOR SECTIONS A THROUGH C, SEE SHEET 8/44.
3. ALL PORTIONS OF THE EXISTING PIERS SHALL REMAIN.
4. ALL UNSOUND AREAS OF CONCRETE TO REMAIN SHALL BE PATCHED UNDER ITEM 519 - PATCHING CONCRETE STRUCTURE, AND ALL STRUCTURAL CRACKS WIDER THAN ⅛" SHALL BE REPAIRED UNDER ITEM 512 - CONCRETE REPAIR BY EPOXY INJECTION. ESTIMATED AREAS AND LENGTHS SHOWN IN THE TABLES ON THIS SHEET HAVE BEEN INCLUDED IN THE ESTIMATED QUANTITIES ALONG WITH CONTINGENCY QUANTITIES OF 23 SQUARE FEET FOR ITEM 519 AND 8 FEET FOR ITEM 512.
5. STEEL SHEET PILING SHALL HAVE A MINIMUM SECTION MODULUS OF 18.1 CUBIC INCHES PER FOOT OF WALL AND BE DRIVEN TO EL. 991.00 AT THE REAR ABUTMENT AND EL. 990.00 AT THE FORWARD ABUTMENT OR DEEPER. THE TOP OF SHEET PILING SHALL BE ABOVE THE FINISHED PAVEMENT ELEVATIONS. LATERALLY, IT SHALL START AT THE BACK OF ABUTMENTS AND EXTEND ALONG THE APPROACH SLAB PHASE CONSTRUCTION JOINTS FOR APPROXIMATELY 18 FEET OR AS NECESSARY TO CONSTRUCT THE APPROACH SLABS IN PHASES.

DESIGN AGENCY
GPD GROUP
Glaus, Pyle, Schomer, Burns & DeHaven, Inc.
520 South Main Street, Akron, OH 44311 330.572.2100
(Copyright Glaus, Pyle, Schomer, Burns & DeHaven, Inc. 2020)

| DESIGNED | DRAWN | REVIEWED | DATE |
|---|---|---|---|
| MOJ | MOJ | DGN | 1-19-21 |
| CHECKED | REVISED | STRUCTURE FILE NUMBER | |
| RHC | | 7702558/7702582 | |

REAR ABUTMENT AND PIER REMOVAL AND REPAIR DETAILS
BRIDGE NO. SUM-77-0810 L/R
I.R. 77 OVER THE TUSCARAWAS RIVER

SUM-77/277/224
VARIOUS
PID No. 106002

7 / 44

1187
1288

D:\2017\20172581\Project Data\SUM\106002\Design\Structures\SUM077_0810\Sheets\077_0810C_SV001.dgn Sheet 1/17/2021 9:21:40 PM mjurcak

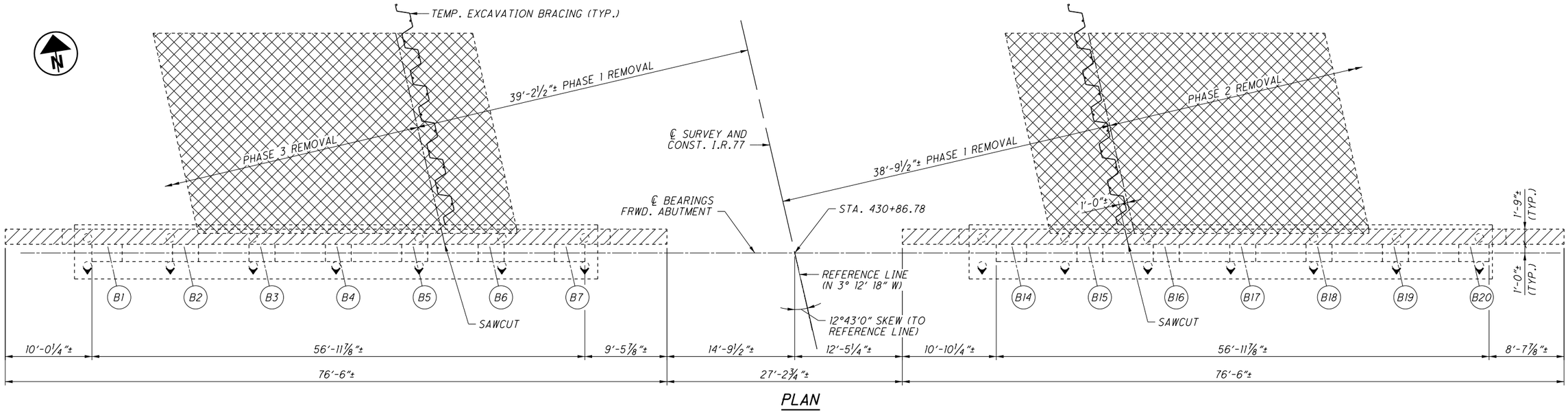


## PLAN

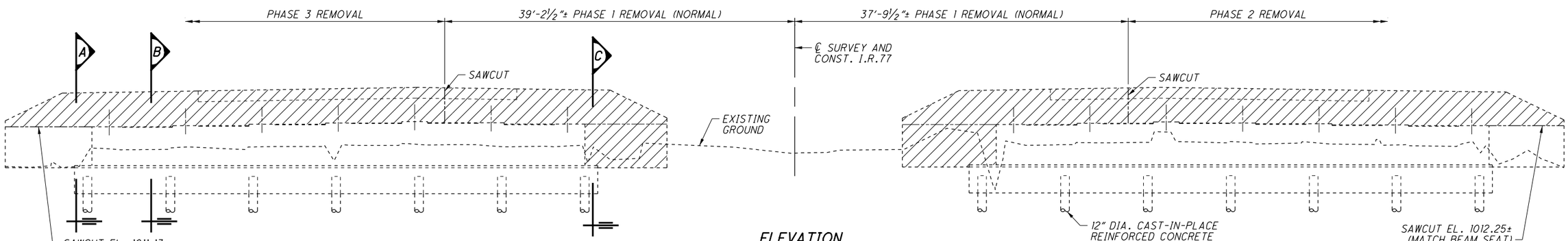


## ELEVATION

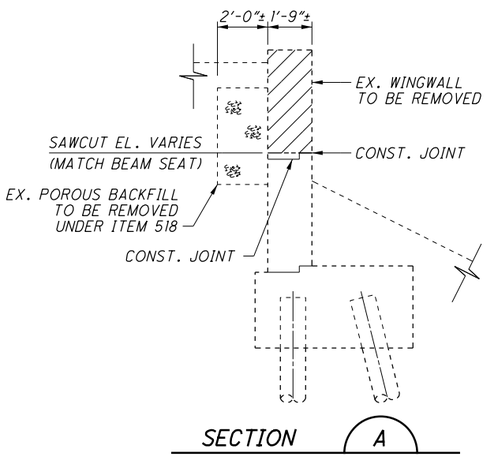


## SECTION A

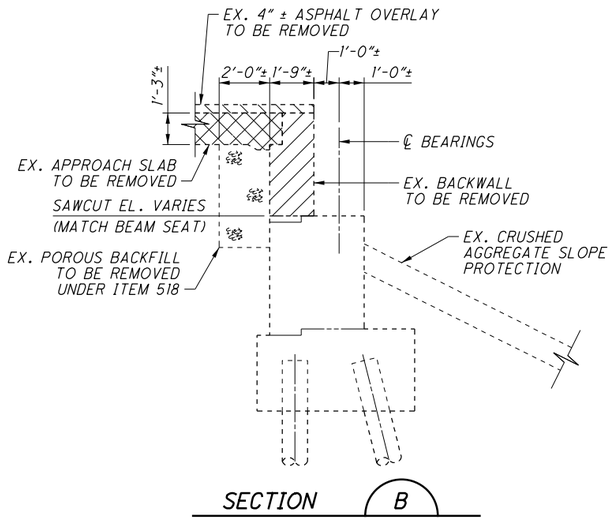


## SECTION B

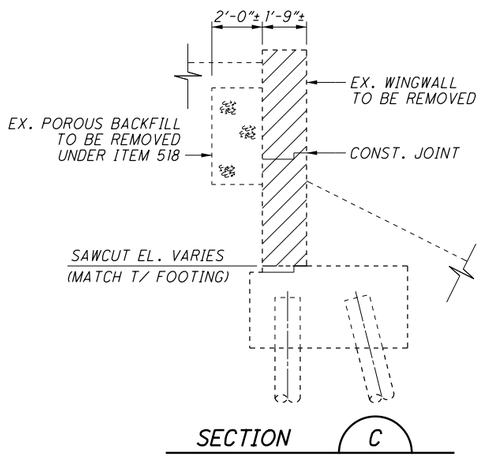


## SECTION C

### NOTES:

1. FOR ADDITIONAL NOTES & DETAILS AND LOCATIONS OF SECTIONS A THROUGH C, SEE SHEET 7/44.

DESIGN AGENCY
GPD GROUP
520 South Main Street, Akron, OH 44311 330.572.2100

DESIGNED MOJ | DRAWN MOJ | CHECKED RHC | REVIEWED DGN | DATE 1-19-21
STRUCTURE FILE NUMBER 7702558/7702582
REVISED

FORWARD ABUTMENT REMOVAL AND REPAIR DETAILS
BRIDGE NO. SUM-77-0810 L/R
I.R. 77 OVER THE TUSCARAWAS RIVER

SUM-77/277/224
VARIOUS
PID No. 106002

8 / 44

1188
1288

0:\2017\20172581ProjectData\SUM\106002\Design\Structures\SUM077_0810\Sheets\077_0810C_SV001.dgn Sheet2 1/17/2021 9:21:41 PM mjurcak

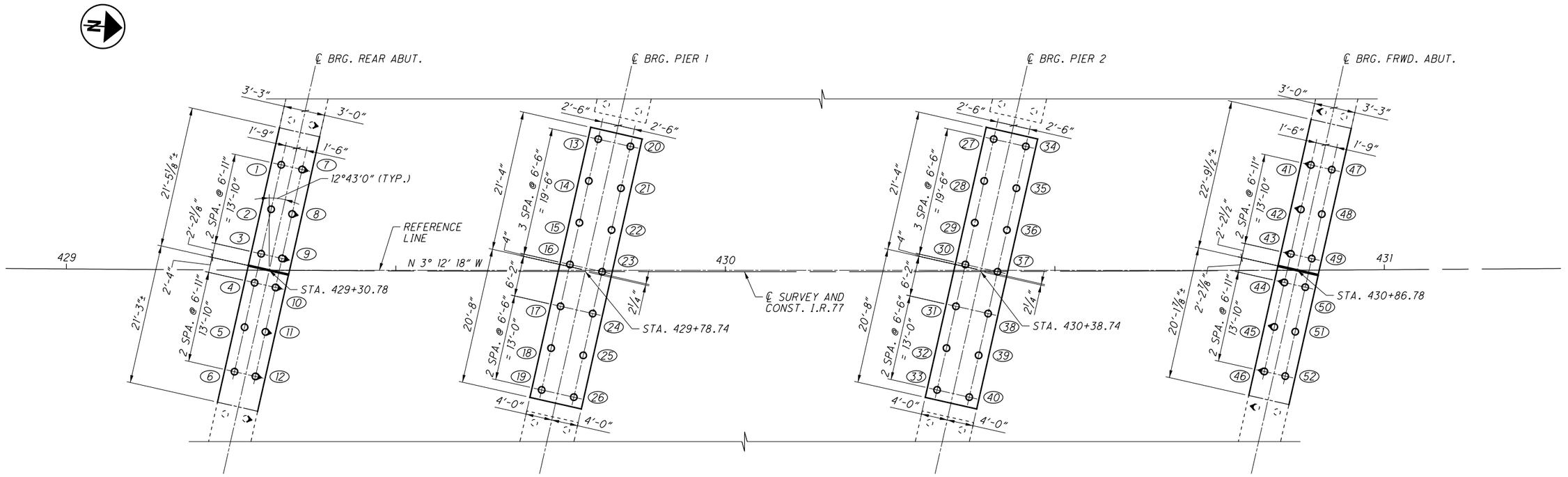


## PLAN

### LEGEND:

(##) PILE NUMBER

○ PROPOSED VERTICAL 12" DIA. CAST-IN-PLACE REINFORCED CONCRETE PIPE PILE

PROPOSED BATTERED 12" DIA. CAST-IN-PLACE REINFORCED CONCRETE PIPE PILE WITH DIRECTION OF BATTER (1:3)

EXISTING VERTICAL 12" DIA. CAST-IN-PLACE REINFORCED CONCRETE PIPE PILE

EXISTING BATTERED 12" DIA. CAST-IN-PLACE REINFORCED CONCRETE PIPE PILE WITH DIRECTION OF BATTER (1:4)

### NOTES:

1. STATIONS ARE GIVEN TO ℄ SURVEY AND CONST. I.R.77.
2. ALL DIMENSIONS ARE GIVEN TO THE REFERENCE LINE.

DESIGN AGENCY
GPD GROUP
Glaus, Pyle, Schomer, Burns & DeHaven, Inc.
520 South Main Street, Akron, OH 44311 330.572.2100
Copyright Glaus, Pyle, Schomer, Burns & DeHaven, Inc. 2020

| DESIGNED | DRAWN | REVIEWED | DATE |
|---|---|---|---|
| MOJ | MOJ | DGN | 1-19-21 |
| CHECKED | REVISED | STRUCTURE FILE NUMBER | |
| RHC | | 7702558/7702582 | |

SUM-77/277/224
VARIOUS
PID No. 106002

FOUNDATION PLAN
BRIDGE NO. SUM-77-0810 L/R
I.R. 77 OVER THE TUSCARAWAS RIVER

9 / 44

1189
1288

O:\2017\2017258\ProjectData\SUM\06002\Design\Structures\SUM077_0810\Sheets\077_0810C_S0001.dgn Sheet 1/17/2021 9:21:42 PM mjurcak

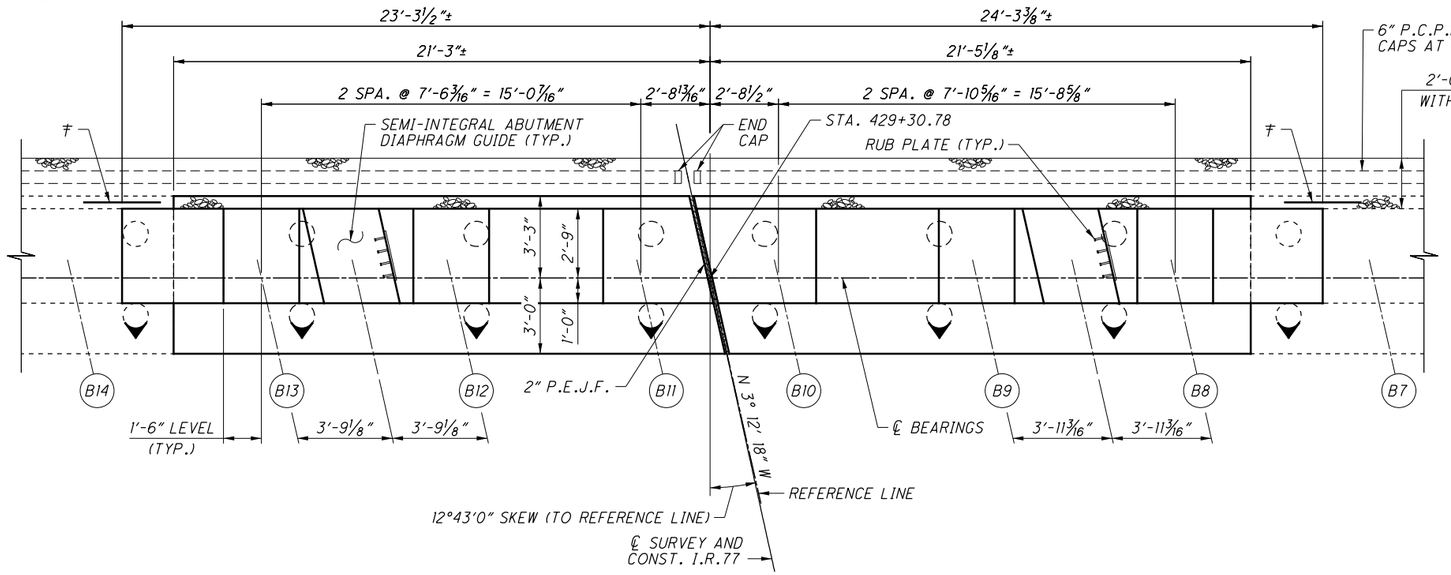


## PLAN

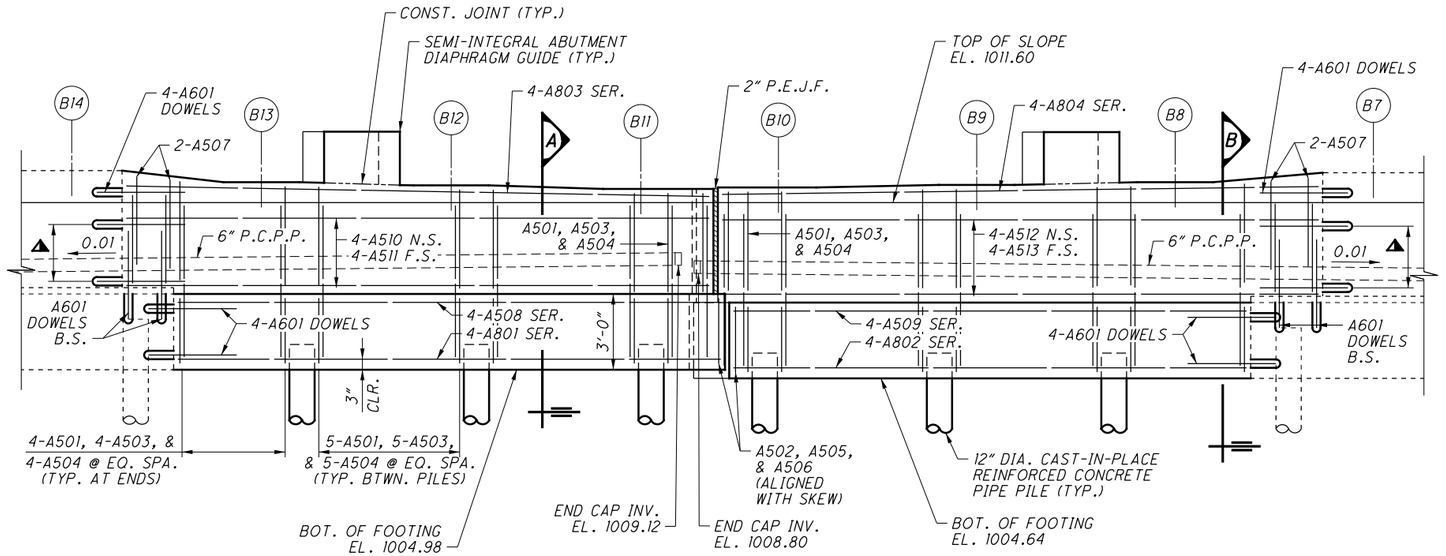


## ELEVATION

| BEAM SEAT ELEVATIONS | |
|---|---|
| BEAM | REAR ABUTMENT |
| B8 | 1012.41 |
| B9 | 1012.30 |
| B10 | 1012.20 |
| B11 | 1012.14 |
| B12 | 1012.28 |
| B13 | 1012.41 |

## LEGEND:

- (B#) BEAM NUMBER
- PROPOSED VERTICAL 12" DIA. CAST-IN-PLACE REINFORCED CONCRETE PIPE PILE
- PROPOSED BATTERED 12" DIA. CAST-IN-PLACE REINFORCED CONCRETE PIPE PILE WITH DIRECTION OF BATTER (1:3)
- EXISTING VERTICAL 12" DIA. CAST-IN-PLACE REINFORCED CONCRETE PIPE PILE
- EXISTING BATTERED 12" DIA. CAST-IN-PLACE REINFORCED CONCRETE PIPE PILE WITH DIRECTION OF BATTER (1:4)
- ▲ 4-A601 DOWELS B.S.
- ∓ TYPE 2 WATERPROOFING: 3'-0" WIDE STRIP CENTERED ON JOINT AND EXTENDING VERTICALLY FROM THE TOP OF FOOTING TO THE TOP OF BEAM SEAT

## NOTES:

1. STATIONS ARE GIVEN TO ℄ SURVEY AND CONST. I.R.77.
2. ALL DIMENSIONS ARE GIVEN TO THE REFERENCE LINE.
3. FOR SECTION A, VIEW B, AND SEMI-INTEGRAL ABUTMENT DIAPHRAGM GUIDE DETAILS, SEE SHEET 14/44.
4. FOR ABUTMENT DIAPHRAGM DETAILS, SEE SHEETS 24/44, 25/44, AND 28/44.
5. ALL DOWEL BARS SHALL BE EMBEDDED 1'-0" MINIMUM INTO EXISTING CONCRETE.

DESIGN AGENCY
GPD GROUP
Glaus, Pyle, Schomer, Burns & DeHaven, Inc.
520 South Main Street, Akron, OH 44311 330.572.2100
Copyright Glaus, Pyle, Schomer, Burns & DeHaven, Inc. 2020

DESIGNED MOJ | DRAWN MOJ | REVIEWED DGN | DATE 1-19-21
CHECKED RHC | REVISED | STRUCTURE FILE NUMBER 7702558/7702582

# REAR ABUTMENT PLAN AND ELEVATION

BRIDGE NO. SUM-77-0810 L/R
I.R. 77 OVER THE TUSCARAWAS RIVER

SUM-77/277/224
VARIOUS
PID No. 106002

10 / 44

1190
1288

0:\2017\2017258\ProjectData\SUM\06002\Design\Structures\SUM077_0810\Sheets\077_0810C_SR001.dgn Sheet 11/17/2021 9:21:45 PM mjurcak

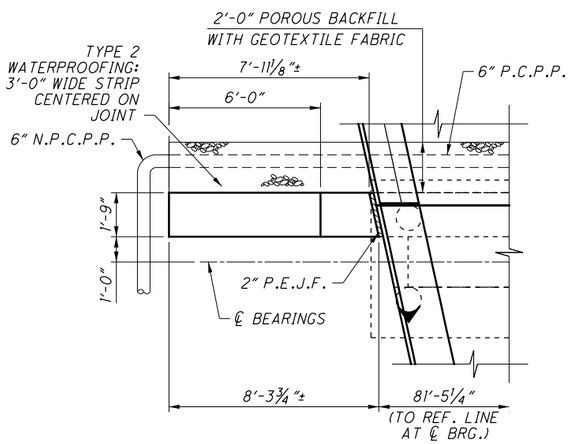


PLAN

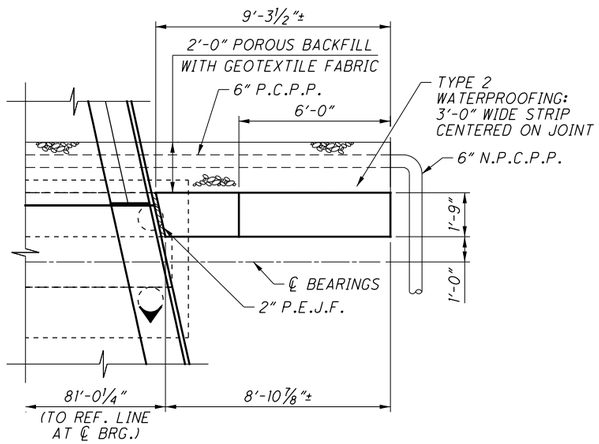


PLAN

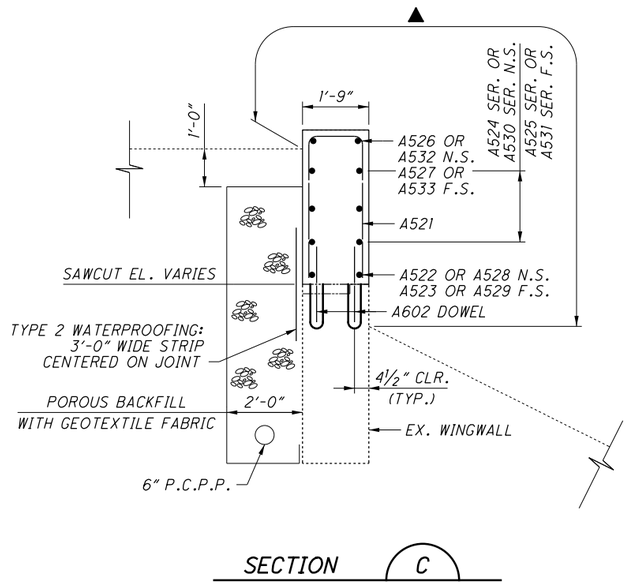


SECTION C

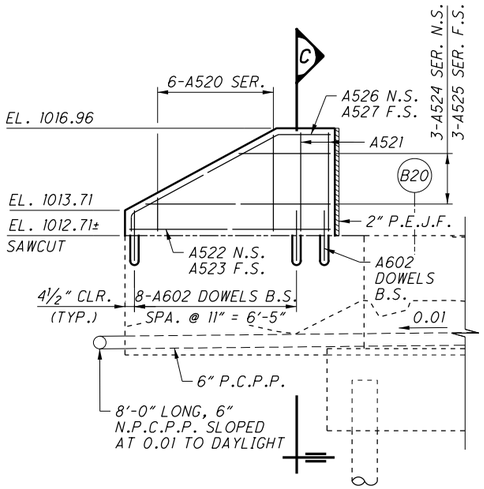


ELEVATION

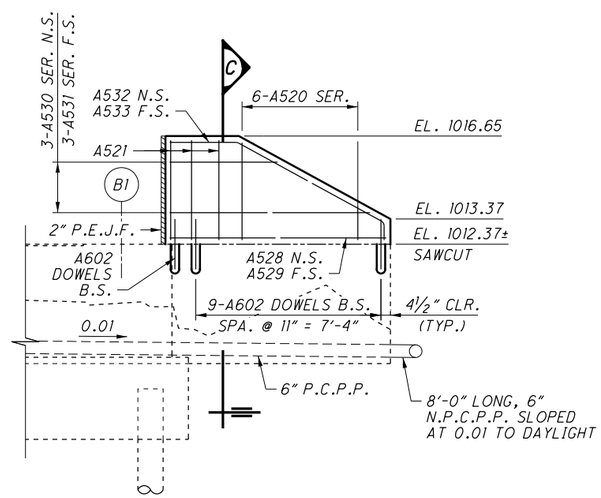


ELEVATION

## LEGEND:

▲ ITEM 512 - SEALING OF CONCRETE SURFACES (EPOXY-URETHANE)

## NOTES:

1. ALL DOWEL BARS SHALL BE EMBEDDED 1'-0" MINIMUM INTO EXISTING CONCRETE.

DESIGN AGENCY
GPD GROUP
Glaus, Pyle, Schomer, Burns & DeHaven, Inc.
320 South Main Street, Akron, OH 44311 330.572.2100
Copyright Glaus, Pyle, Schomer, Burns & DeHaven, Inc. 2020

| DESIGNED | DRAWN | REVIEWED | DATE |
|---|---|---|---|
| MOJ | MOJ | DGN | 1-19-21 |
| CHECKED | REVISED | STRUCTURE FILE NUMBER | |
| RHC | | 7702558/7702582 | |

REAR ABUTMENT WINGWALL DETAILS
BRIDGE NO. SUM-77-0810 L/R
I.R. 77 OVER THE TUSCARAWAS RIVER

SUM-77/277/224
VARIOUS
PID No. 106002



O:\2017\2017258\ProjectData\SUM\106002\Design\Structures\SUM077_0810\Sheets\077_0810C_SR001.dgn Sheet3 1/17/2021 9:21:46 PM mjurcak

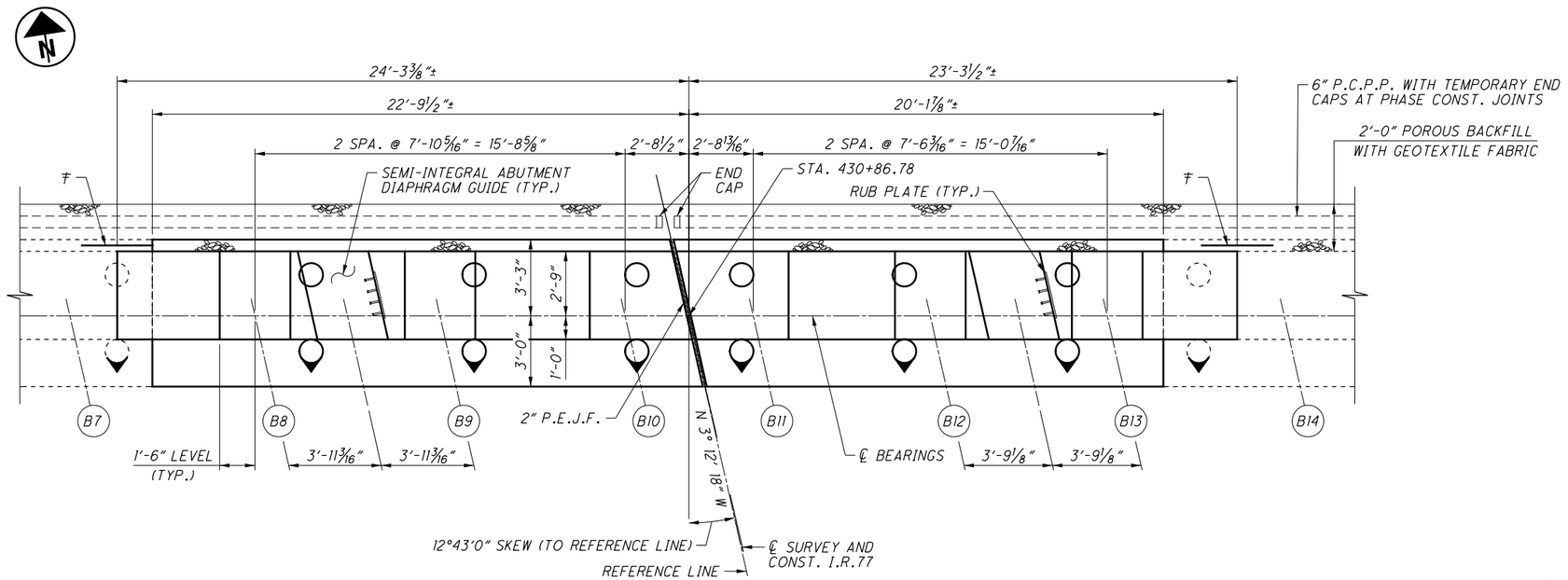


## PLAN

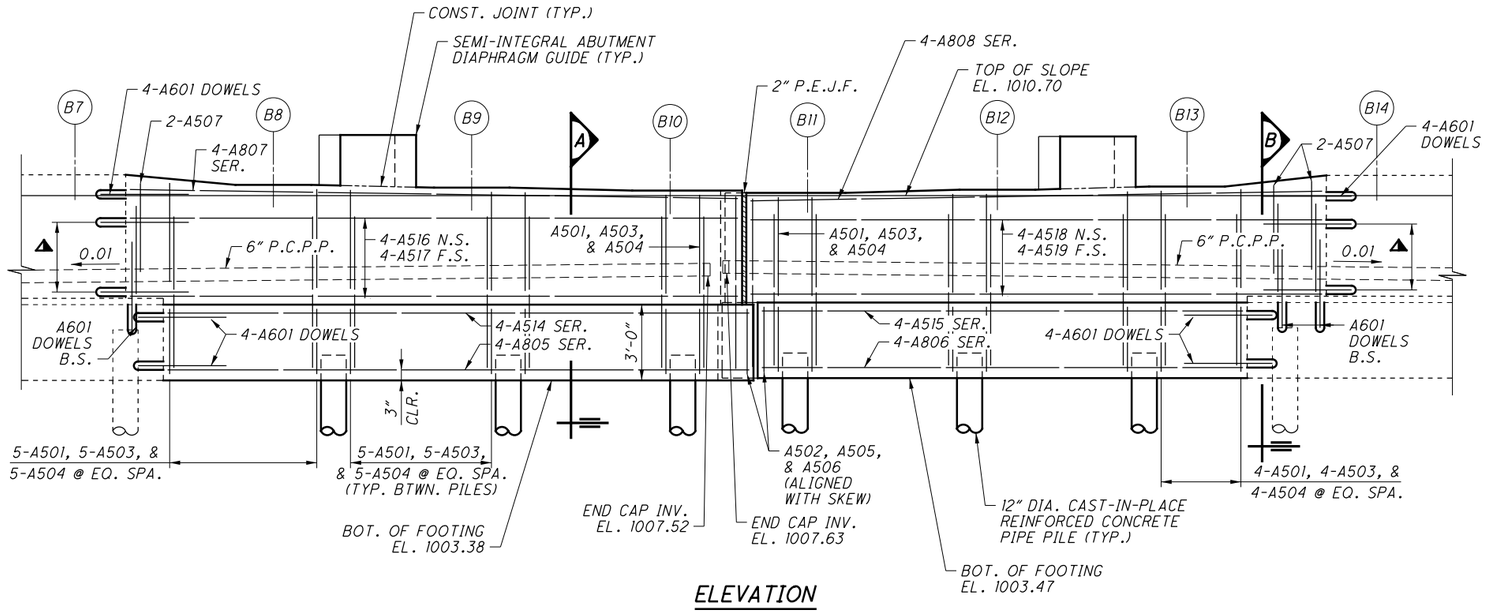


## ELEVATION

| BEAM SEAT ELEVATIONS | |
|---|---|
| BEAM | FRWD. ABUTMENT |
| B8 | 1011.13 |
| B9 | 1011.02 |
| B10 | 1010.90 |
| B11 | 1010.81 |
| B12 | 1010.94 |
| B13 | 1011.06 |

## LEGEND:

- (B#) BEAM NUMBER
- PROPOSED VERTICAL 12" DIA. CAST-IN-PLACE REINFORCED CONCRETE PIPE PILE
- PROPOSED BATTERED 12" DIA. CAST-IN-PLACE REINFORCED CONCRETE PIPE PILE WITH DIRECTION OF BATTER (1:3)
- EXISTING VERTICAL 12" DIA. CAST-IN-PLACE REINFORCED CONCRETE PIPE PILE
- EXISTING BATTERED 12" DIA. CAST-IN-PLACE REINFORCED CONCRETE PIPE PILE WITH DIRECTION OF BATTER (1:4)
- ▲ 4-A601 DOWELS B.S.
- ∓ TYPE 2 WATERPROOFING: 3'-0" WIDE STRIP CENTERED ON JOINT AND EXTENDING VERTICALLY FROM THE TOP OF FOOTING TO THE TOP OF BEAM SEAT

## NOTES:

1. STATIONS ARE GIVEN TO ℄ SURVEY AND CONST. I.R.77.
2. ALL DIMENSIONS ARE GIVEN TO THE REFERENCE LINE.
3. FOR SECTION A, VIEW B, AND SEMI-INTEGRAL ABUTMENT DIAPHRAGM GUIDE DETAILS, SEE SHEET 14/44.
4. FOR ABUTMENT DIAPHRAGM DETAILS, SEE SHEETS 26/44 THROUGH 28/44.
5. ALL DOWEL BARS SHALL BE EMBEDDED 1'-0" MINIMUM INTO EXISTING CONCRETE.

DESIGN AGENCY
GPD GROUP
Gray, Pape & Associates, Inc.
320 South Main Street, Akron, OH 44311 330.572.2100
Copyright Gray, Pape & Associates, Inc. 2020

DESIGNED MOJ | DRAWN MOJ | REVIEWED DGN | DATE 1-19-21
CHECKED RHC | REVISED | STRUCTURE FILE NUMBER 7702558/7702582

FORWARD ABUTMENT PLAN AND ELEVATION
BRIDGE NO. SUM-77-0810 L/R
I.R. 77 OVER THE TUSCARAWAS RIVER

SUM-77/277/224
VARIOUS
PID No. 106002

12 / 44

1192
1288

D:\2017\2017258\ProjectData\SUM\06002\Design\Structures\SUM077_0810\Sheets\077_0810C_SR001.dgn Sheet IA 1/17/2021 9:21:47 PM mjurcak

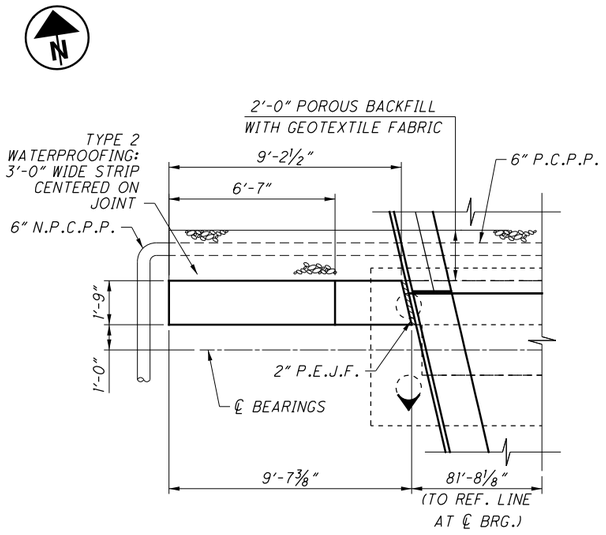


PLAN

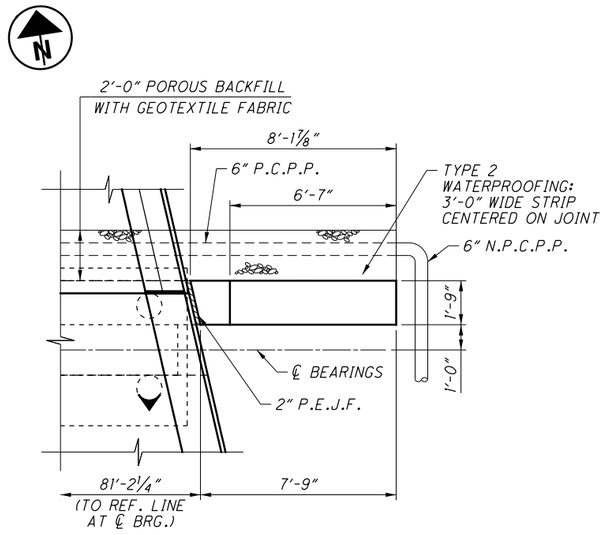


PLAN

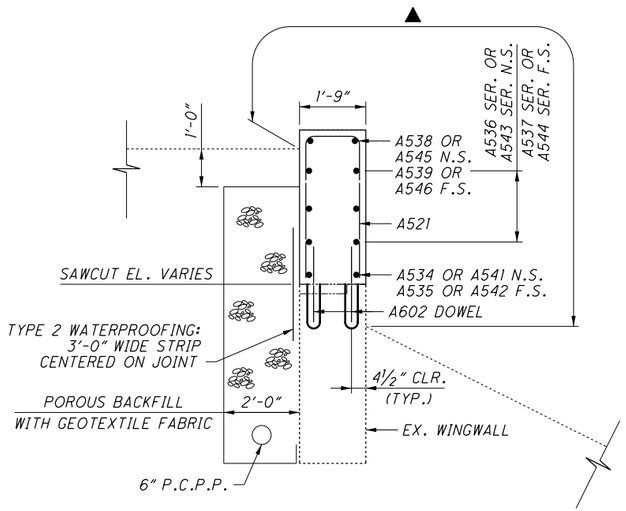


SECTION D

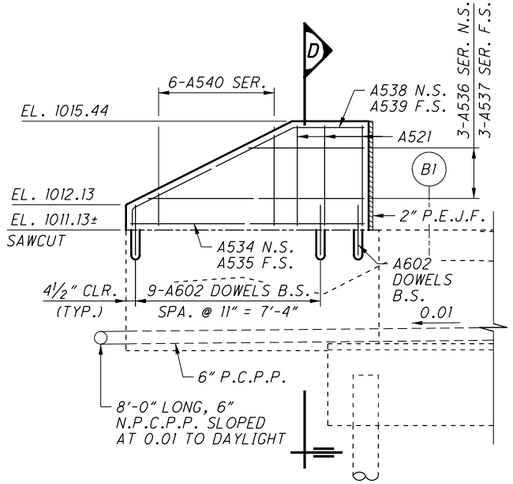


ELEVATION

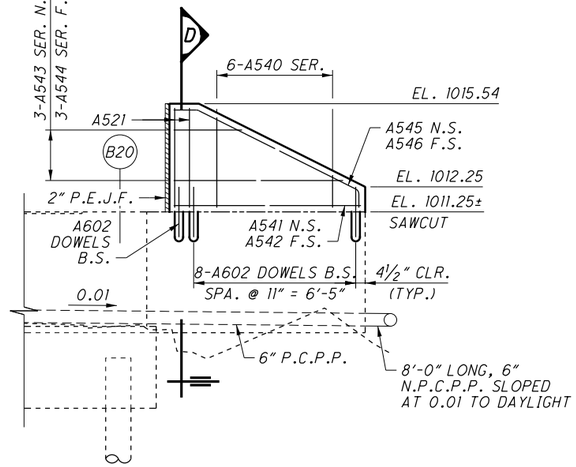


ELEVATION

**LEGEND:**

▲ ITEM 512 - SEALING OF CONCRETE SURFACES (EPOXY-URETHANE)

**NOTES:**

1. ALL DOWEL BARS SHALL BE EMBEDDED 1'-0" MINIMUM INTO EXISTING CONCRETE.

DESIGN AGENCY
GPD GROUP
Glaus, Pyle, Schomer, Burns & DeHaven, Inc.
320 South Main Street, Akron, OH 44311 330.572.2100
(Copyright claim, Mr. Schomer, Burns & deHaven, Inc. 2020

| DESIGNED | DRAWN | REVIEWED | DATE |
|---|---|---|---|
| MOJ | MOJ | DGN | 1-19-21 |
| CHECKED | REVISED | STRUCTURE FILE NUMBER | |
| RHC | | 7702558/7702582 | |

FORWARD ABUTMENT WINGWALL DETAILS
BRIDGE NO. SUM-77-0810 L/R
I.R. 77 OVER THE TUSCARAWAS RIVER

SUM-77/277/224
VARIOUS
PID No. 106002

13 / 44

1193
1288

0:\2017\2017258\ProjectData\SUM\06002\Design\Structures\SUM077_0810\Sheets\077_0810C_SR001.dgn Sheet+3A 1/17/2021 9:21:48 PM mjurcak

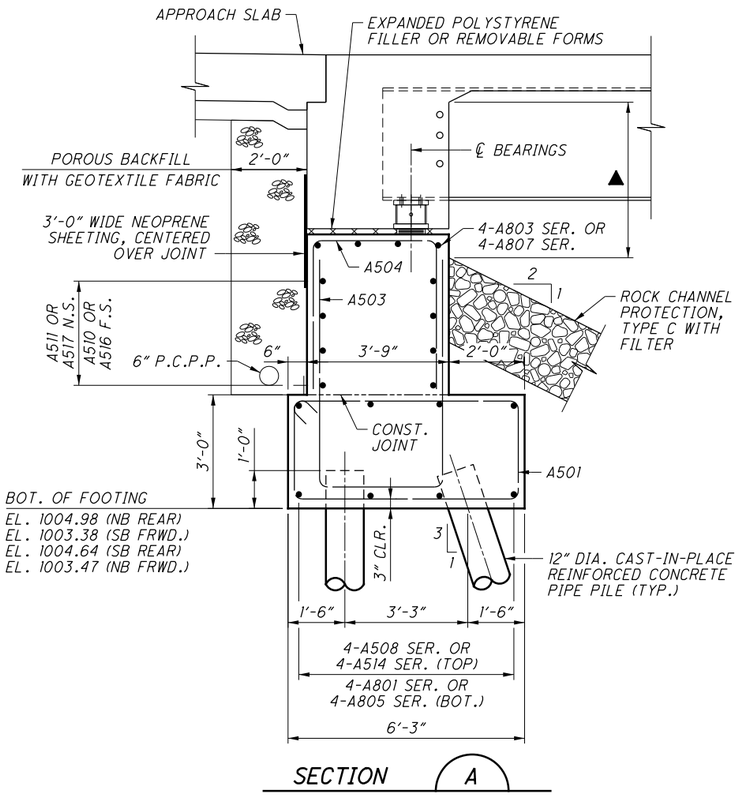


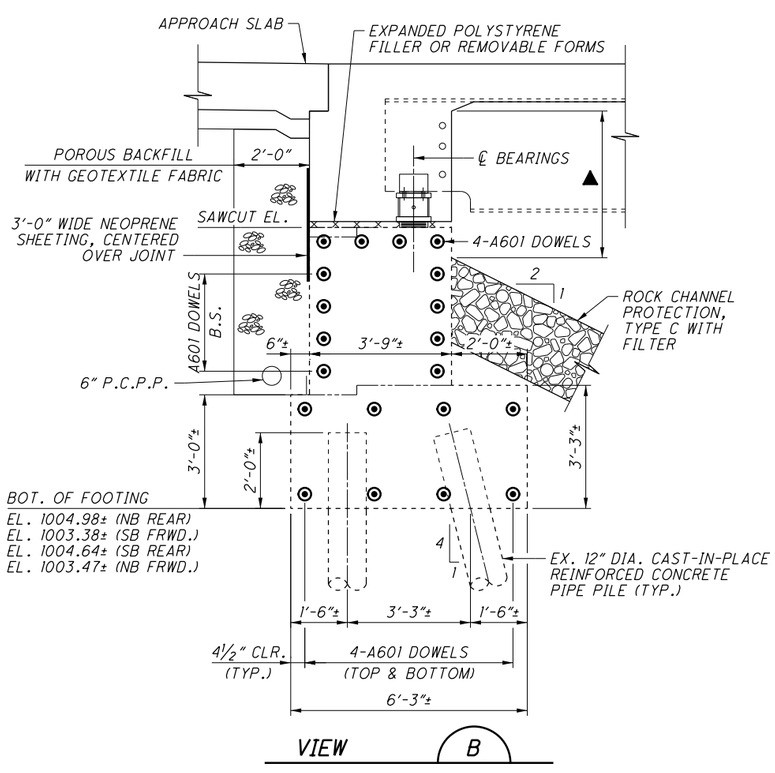


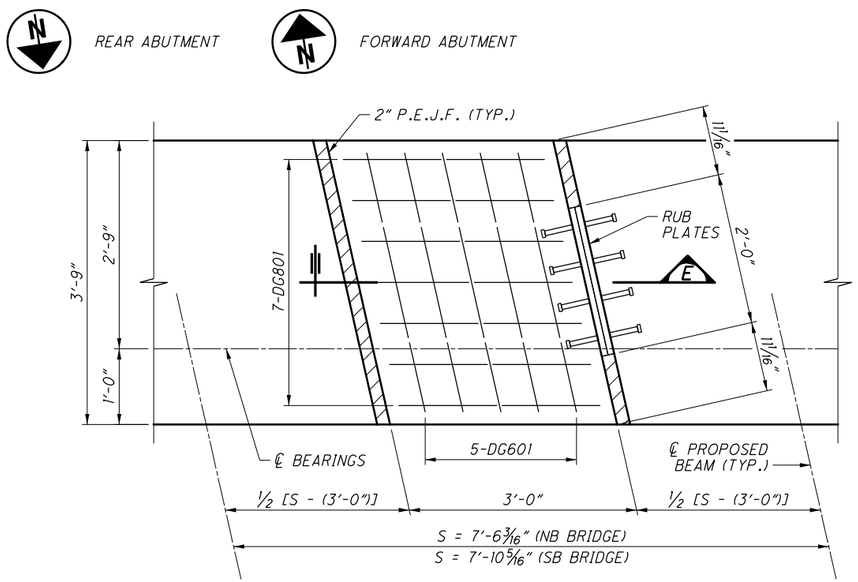


TYPICAL SEMI-INTEGRAL ABUTMENT DIAPHRAGM GUIDE PLAN

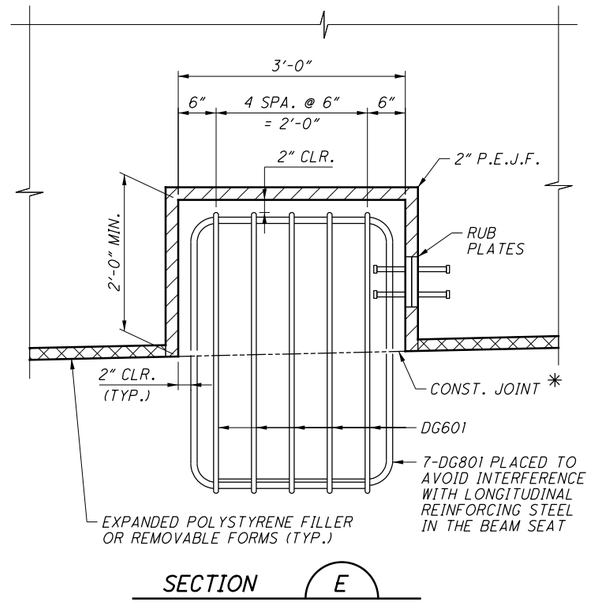


## LEGEND:

▲ ITEM 512 - SEALING OF CONCRETE SURFACES (EPOXY-URETHANE)

✱ THE SURFACE OF THE BEAM SEAT IN THIS AREA SHALL BE FINISHED WITH A SERRATED TROWEL. THE SERRATIONS SHALL BE ¼" DEEP MINIMUM.

## NOTES:

1. FOR THE LOCATION OF SECTION A AND VIEW B, SEE SHEET 10/44 AND 12/44.
2. FOR ADDITIONAL SEMI-INTEGRAL ABUTMENT DIAPHRAGM GUIDE DETAILS, SEE STANDARD DRAWING SCID-2-14.
3. ALL DOWEL BARS SHALL BE EMBEDDED 1'-0" MINIMUM INTO EXISTING CONCRETE.
4. THE EXISTING BEAMS SHALL BE RAISED TO ACCOMODATE THE PROPOSED BEARINGS.

DESIGN AGENCY
GPD GROUP
Glaus, Pyle, Schomer, Burns & DeHaven, Inc.
520 South Main Street, Akron, OH 44311 330.572.2100

| DESIGNED | DRAWN | REVIEWED | DATE |
|---|---|---|---|
| MOJ | MOJ | DGN | 1-19-21 |
| CHECKED | REVISED | STRUCTURE FILE NUMBER | |
| RHC | | 7702558/7702582 | |

ABUTMENT DETAILS
BRIDGE NO. SUM-77-0810 L/R
I.R. 77 OVER THE TUSCARAWAS RIVER

SUM-77/277/224
VARIOUS
PID No. 106002

14 / 44

1194
1288

O:\2017\2017258\ProjectData\SUM\06002\Design\Structures\SUM077_0810\Sheets\077_0810C_SR001.dgn Sheet2 1/17/2021 9:21:49 PM mjurcak

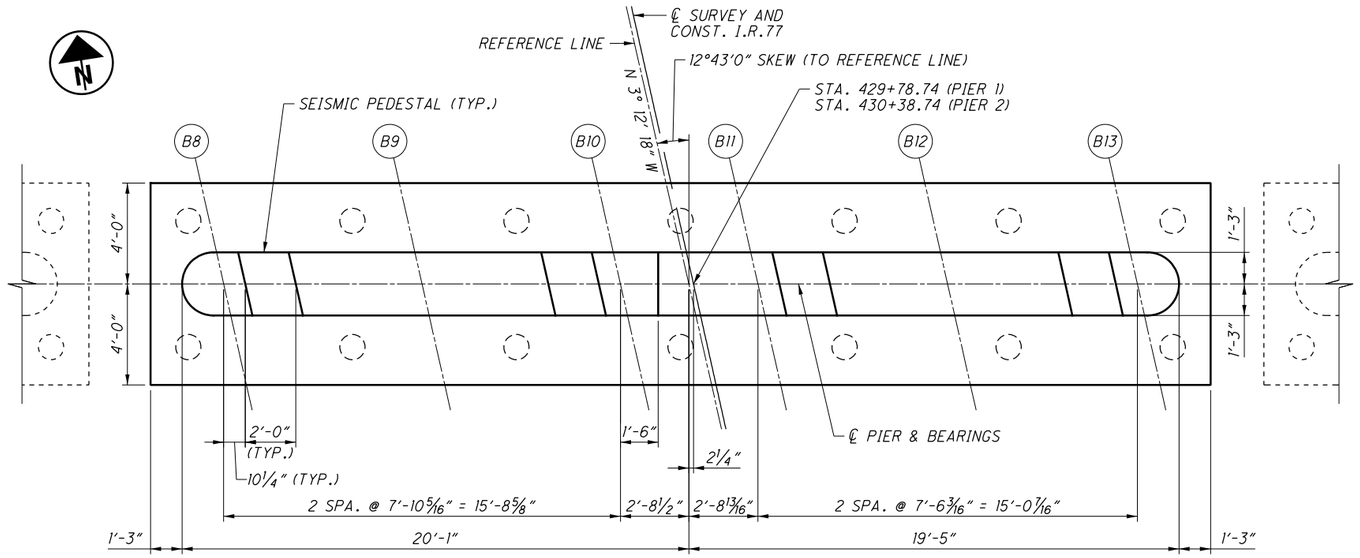


## PLAN

PIER 1 SHOWN. PIER 2 SIMILAR.

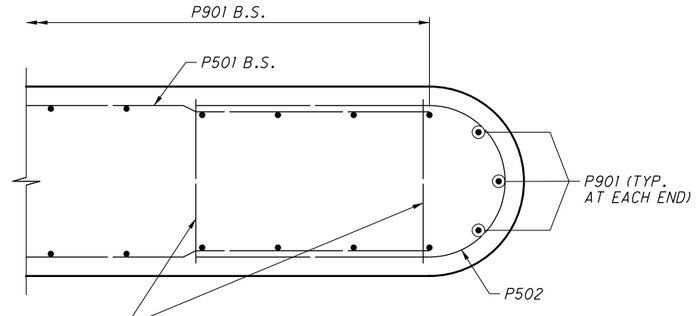


## SECTION A

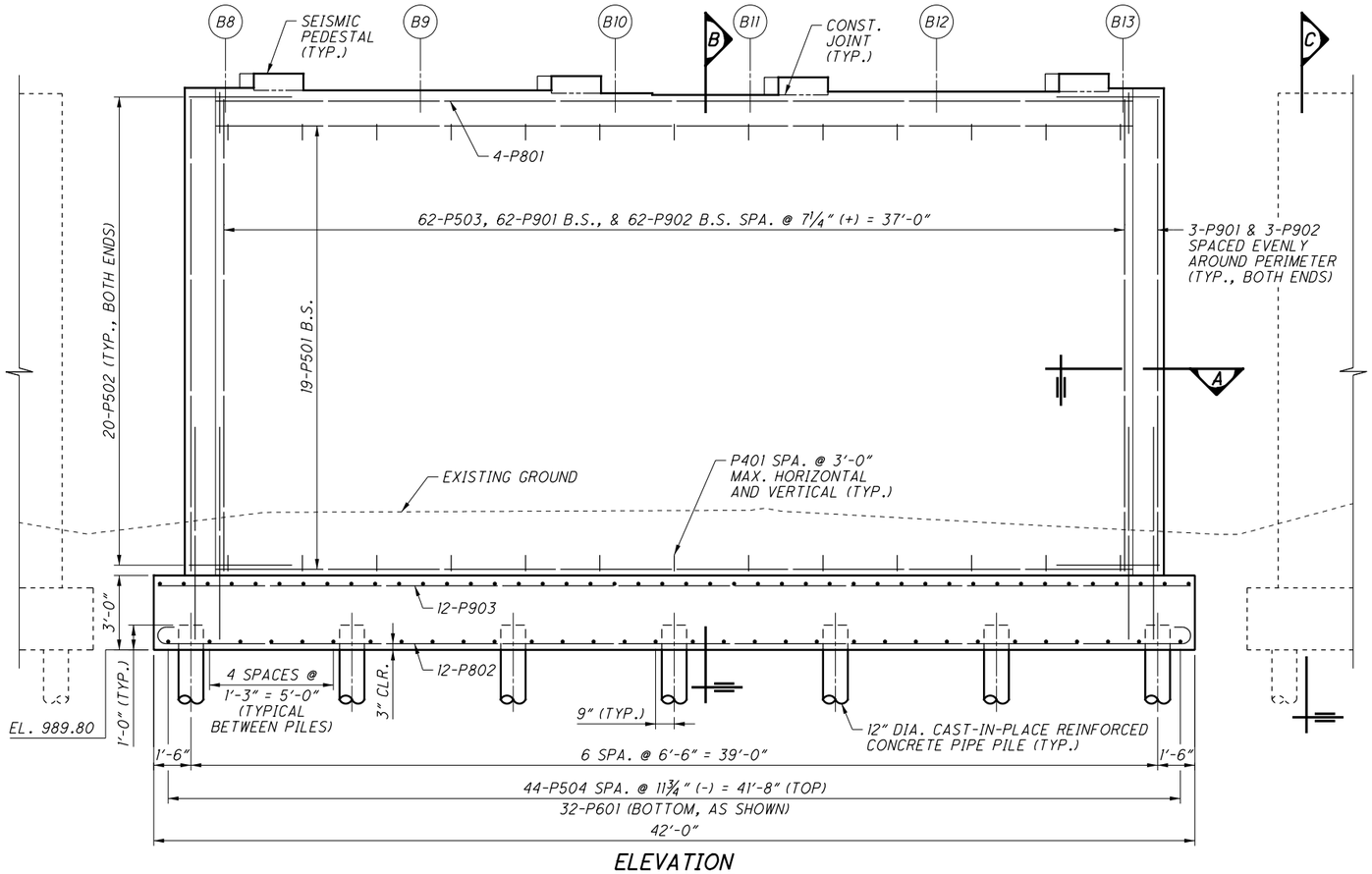


## ELEVATION

| BEAM SEAT ELEVATIONS | | |
|---|---|---|
| BEAM | PIER 1 | PIER 2 |
| B8 | 1012.47 | 1011.98 |
| B9 | 1012.37 | 1011.87 |
| B10 | 1012.26 | 1011.76 |
| B11 | 1012.19 | 1011.68 |
| B12 | 1012.32 | 1011.81 |
| B13 | 1012.46 | 1011.94 |

## LEGEND:

(B#) BEAM NUMBER

PROPOSED VERTICAL 12" DIA. CAST-IN-PLACE REINFORCED CONCRETE PIPE PILE

EXISTING VERTICAL 12" DIA. CAST-IN-PLACE REINFORCED CONCRETE PIPE PILE

## NOTES:

1. STATIONS ARE GIVEN TO ℄ SURVEY AND CONST. I.R.77.
2. ALL DIMENSIONS ARE GIVEN TO THE REFERENCE LINE.
3. FOR SECTIONS B & C AND SEISMIC PEDESTAL DETAILS, SEE SHEET 16/44.
4. MINIMUM REINFORCING STEEL LAP LENGTHS ARE AS FOLLOWS UNLESS NOTED OTHERWISE:

| | |
|---|---|
| NO. 5 HORIZONTAL | 3'-1" |
| NO. 9 VERTICAL | 5'-10" |

DESIGN AGENCY
GPD GROUP
520 South Main Street, Akron, OH 44311 330.572.2100
Gilbert, Pyle, Schimmel, Bland & DeMarco, Inc.
Copyright: Gilbert, Pyle, Schimmel, Bland & DeMarco, Inc., 2020

| DESIGNED | DRAWN | REVIEWED | DATE |
|---|---|---|---|
| MOJ | MOJ | DGN | 1-19-21 |
| CHECKED | REVISED | STRUCTURE FILE NUMBER | |
| RHC | | 7702558/7702582 | |

PIER PLAN AND ELEVATION
BRIDGE NO. SUM-77-0810 L/R
I.R. 77 OVER THE TUSCARAWAS RIVER

SUM-77/277/224
VARIOUS
PID No. 106002

15 / 44

1195
1288

O:\2017\2017258\ProjectData\SUM\106002\Design\Structures\SUM077_0810\Sheets\077_0810C_S100.dgn Sheet 1/17/2021 9:21:51 PM mjurcak

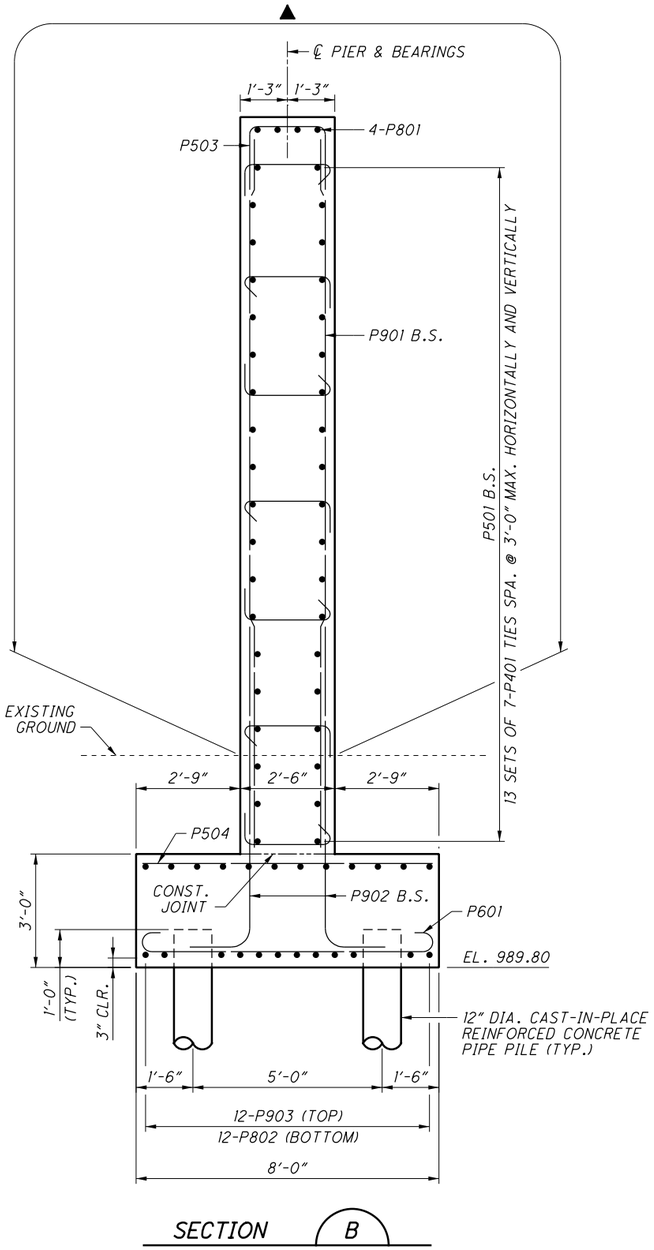


SECTION B

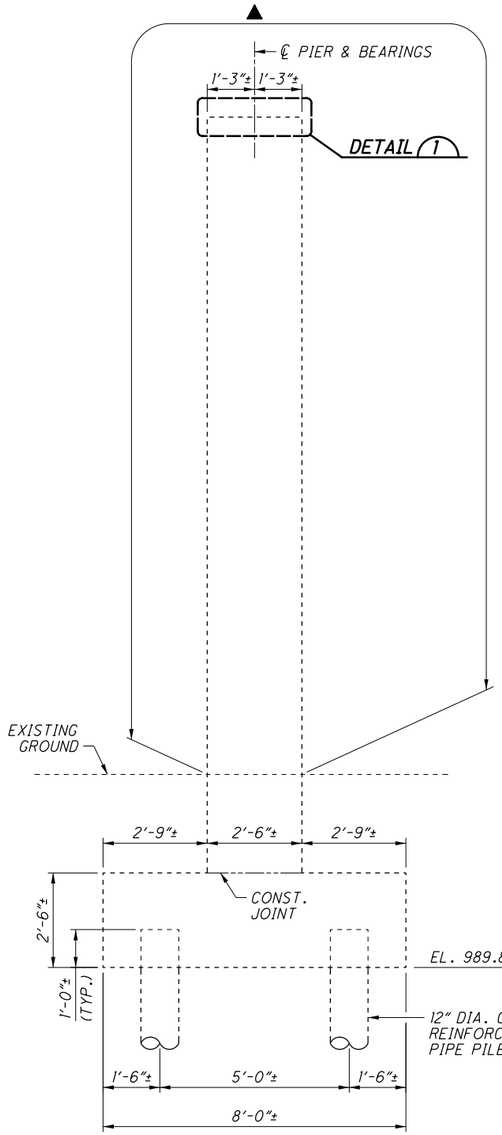


SECTION C

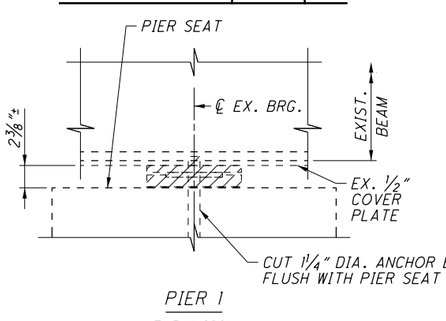


PIER 1
EXPANSION

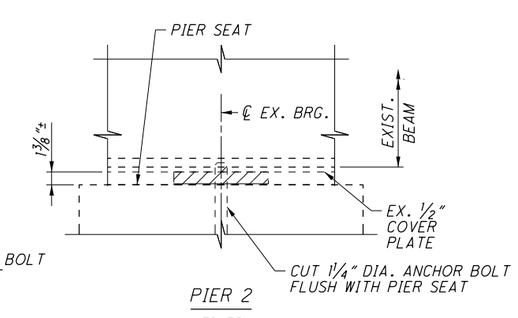


PIER 2
FIXED

DETAIL 1

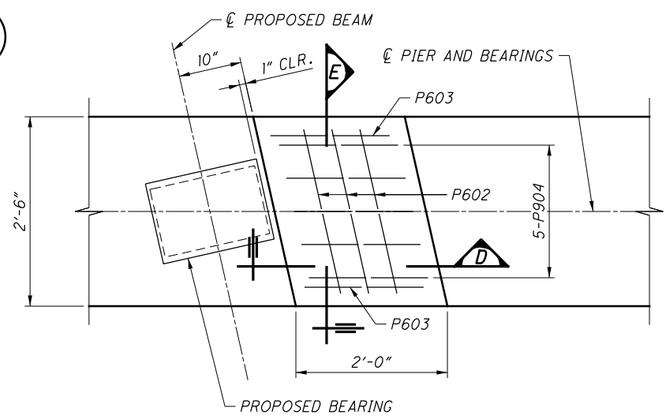


## TYPICAL SEISMIC PEDESTAL PLAN

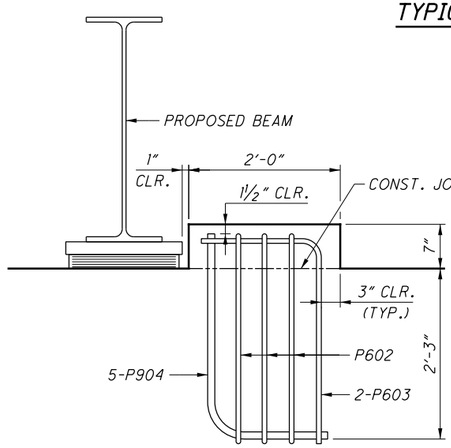


SECTION D

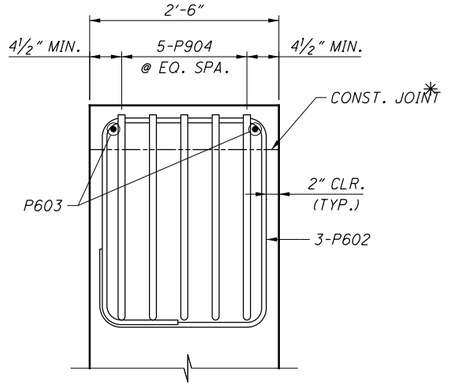


SECTION E

### LEGEND:

▲ ITEM 512 - SEALING OF CONCRETE SURFACES (EPOXY-URETHANE)

ITEM 202 - PORTIONS OF STRUCTURE REMOVED, OVER 20 FOOT SPAN, AS PER PLAN

* THE SURFACE OF THE BEAM SEAT IN THIS AREA SHALL BE FINISHED WITH A SERRATED TROWEL. THE SERRATIONS SHALL BE 1/4" DEEP MINIMUM.

### NOTES:

1. FOR THE LOCATION OF SECTIONS B AND C, SEE SHEET 15/44.
2. THE EXISTING BEAMS SHALL BE RAISED TO ACCOMODATE THE PROPOSED BEARINGS.

DESIGN AGENCY
GPD GROUP
Glaus, Pyle, Schomer, Burns & DeHaven, Inc.
520 South Main Street, Akron, OH 44311 330.572.2100
(Copyright claim: Pyle, Schomer, Burns & DeHaven, Inc. 2020)

| DESIGNED | DRAWN | REVIEWED | DATE |
|---|---|---|---|
| MOJ | MOJ | DGN | 1-19-21 |
| CHECKED | REVISED | STRUCTURE FILE NUMBER | |
| RHC | | 7702558/7702582 | |

PIER DETAILS
BRIDGE NO. SUM-77-0810 L/R
I.R. 77 OVER THE TUSCARAWAS RIVER

SUM-77/277/224
VARIOUS
PID No. 106002

16/44

1196
1288

0:\2017\2017258\ProjectData\SUM\06002\Design\Structures\SUM077_0810\Sheets\077_0810C_S001.dgn Sheet2 1/17/2021 9:21:52 PM mjurcak

| LOCATION | | LOAD PLATE | BEVELED PLATE | | | ELASTOMERIC PAD | | | | | | STEEL LAMINATES | | TYPE | DEAD LOAD (K) | * LIVE LOAD (K) | TOTAL LOAD (K) |
|---|---|---|---|---|---|---|---|---|---|---|---|---|---|---|---|---|---|
| SUBSTRUCTURE UNIT | BEAM | DIMENSIONS | DIMENSIONS | G | H | DIMENSIONS | T | NO. OF INTERNAL LAYERS | NO. OF EXTERNAL LAYERS | ti | te | NO. | THICK-NESS | | | | |
| REAR ABUT. | ALL BEAMS | 11" x 1'-2" x 1.5" | 11" x 1'-2" | 1 5/8 " | 1 1/2 " | 9" x 1'-1" | 1.85" | 5 | 1 | 0.26" | 0.18" | 5 | 0.0747" | EXP. | 79.6 | 59.3 | 138.9 |
| PIER 1 | 1-5, 8-13, & 16-20 | - | 1'-1" x 1'-6" | 2 1/8 " | 2" | 11" x 1'-5" | 2.25" | 5 | 1 | 0.33" | 0.23" | 5 | 0.0747" | EXP. | 103.5 | 109.9 | 213.4 |
| | 6-7 & 14-15 | 1'-1" x 1'-6" x 2" | 1'-1" x 1'-3 1/2" | 2 1/8 " | 2" | 11" x 1'-5" | 2.25" | 5 | 1 | 0.33" | 0.23" | 5 | 0.0747" | EXP. | 103.5 | 109.9 | 213.4 |
| PIER 2 | 1-5 & 8-10 | - | 1'-1" x 1'-6" | 2 1/16" | 2" | 11" x 1'-5" | 2.25" | 5 | 1 | 0.33" | 0.23" | 5 | 0.0747" | EXP. | 103.5 | 109.9 | 213.4 |
| | 6 & 7 | 1'-1" x 1'-6" x 2" | 1'-1" x 1'-3 1/2" | 2 1/16" | 2" | 11" x 1'-5" | 2.25" | 5 | 1 | 0.33" | 0.23" | 5 | 0.0747" | EXP. | 103.5 | 109.9 | 213.4 |
| | 11-13 & 16-20 | - | 1'-1" x 1'-6" | 2 1/8 " | 2" | 11" x 1'-5" | 2.25" | 5 | 1 | 0.33" | 0.23" | 5 | 0.0747" | EXP. | 103.5 | 109.9 | 213.4 |
| | 14 & 15 | 1'-1" x 1'-6" x 2" | 1'-1" x 1'-3 1/2" | 2 1/8 " | 2" | 11" x 1'-5" | 2.25" | 5 | 1 | 0.33" | 0.23" | 5 | 0.0747" | EXP. | 103.5 | 109.9 | 213.4 |
| FRWD. ABUT. | ALL BEAMS | 11" x 1'-2" x 1.5" | 11" x 1'-2" | 1 9/16" | 1 1/2 " | 9" x 1'-1" | 1.85" | 5 | 1 | 0.26" | 0.18" | 5 | 0.0747" | EXP. | 79.6 | 59.3 | 138.9 |

* WITHOUT IMPACT

| HP SHAPE HEIGHT | | |
|---|---|---|
| BEAM | REAR ABUT. | FRWD. ABUT. |
| 1 | 5 5/8 " | 6 13/16" |
| 2 | 5 1/2 " | 6 11/16" |
| 3 | 5 7/8 " | 6 7/16" |
| 4 | 6 1/8 " | 6 3/4 " |
| 5 | 6 1/16" | 6 1/2 " |
| 6 | 7 13/16" | 8 13/16" |
| 7 | 7 15/16" | 8 3/4 " |
| 8-13 | 6" | 6" |
| 14 | 7 13/16" | 9 11/16" |
| 15 | 8 1/16" | 9 9/16" |
| 16 | 6" | 7 1/16" |
| 17 | 6 1/8 " | 7 7/16" |
| 18 | 6 1/16" | 7 1/4 " |
| 19 | 6 3/8 " | 6 13/16" |
| 20 | 5 1/2 " | 6 1/2 " |

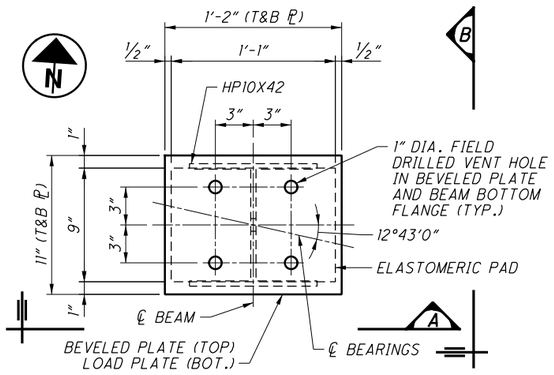


**PLAN**

ALL ABUTMENT BEARINGS

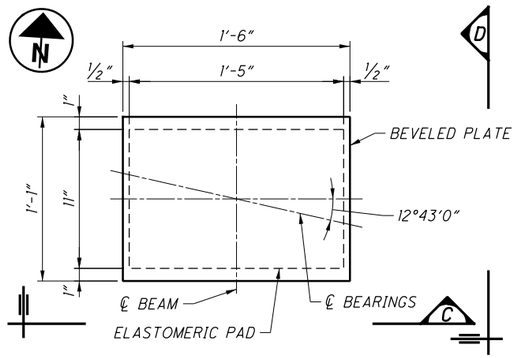


**PLAN**

PIER BEARINGS: PROPOSED BEAMS 8-13 AND EXISTING BEAMS 1-5 & 16-20

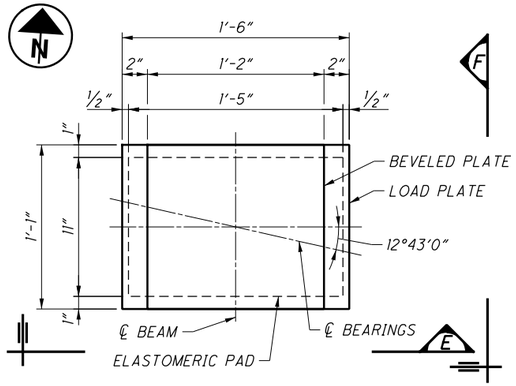


**PLAN**

PIER BEARINGS: EXISTING BEAMS 6-7 & 14-15

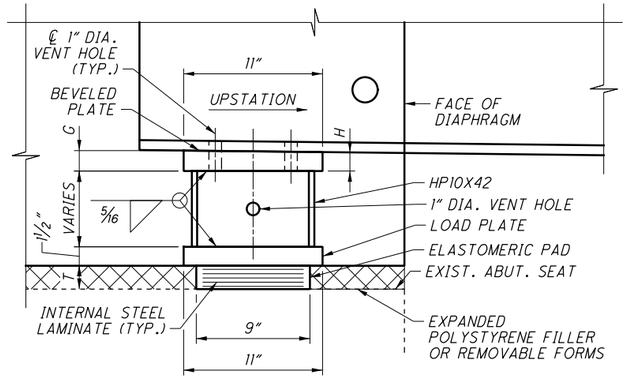


**VIEW B**

REAR ABUTMENT AND PROPOSED BEAM SHOWN. FORWARD ABUTMENT AND EXISTING BEAMS SIMILAR. DIMENSION H IS ALWAYS UPSTATION.

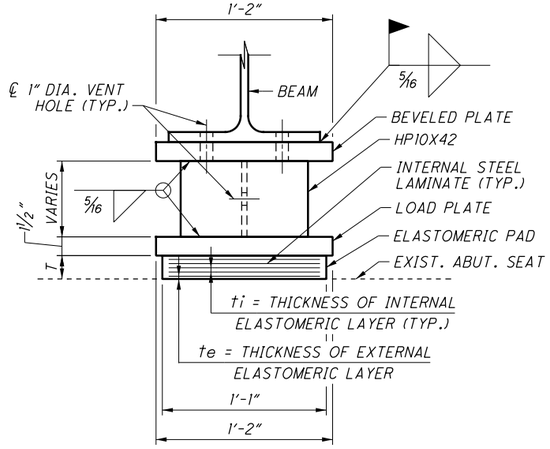


**VIEW A**

PROPOSED BEAM SHOWN. EXISTING BEAM SIMILAR.

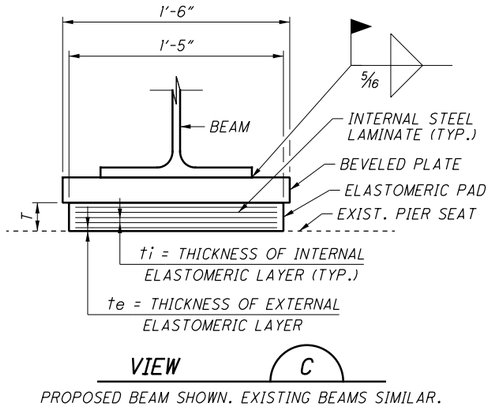


**VIEW C**

PROPOSED BEAM SHOWN. EXISTING BEAMS SIMILAR.

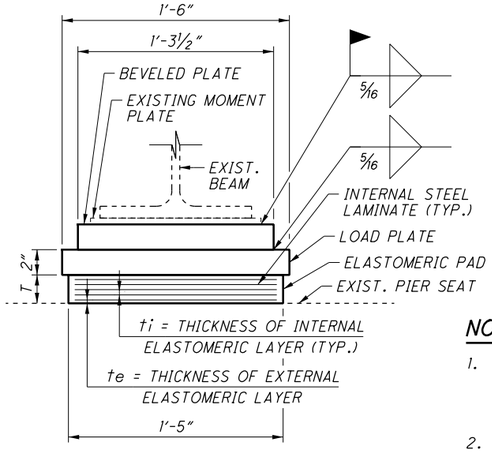


**VIEW E**

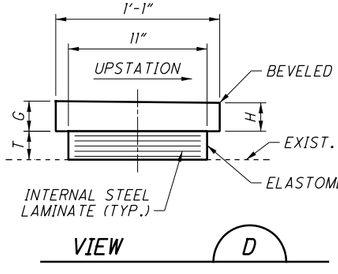


**VIEW D**

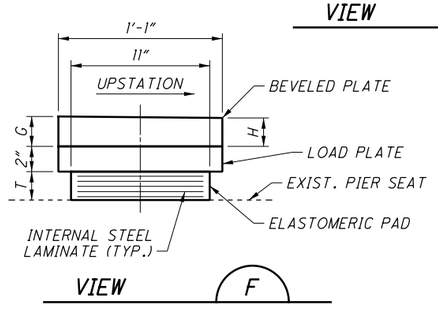


**VIEW F**

## NOTES:

1. EXISTING BEARINGS SHALL BE REMOVED AND ANCHOR BARS SHALL BE CUT FLUSH WITH THE BEAM SEAT IN ACCORDANCE WITH CMS 202. PAYMENT FOR THIS WORK SHALL BE INCLUDED IN ITEM 202 - PORTIONS OF STRUCTURES REMOVED, OVER 20 FOOT SPAN, AS PER PLAN.
2. ELASTOMERIC BEARINGS: THE ELASTOMER SHALL HAVE A HARDNESS OF 50 DUROMETER. THE BEARINGS WERE DESIGNED IN ACCORDANCE WITH SECTION 14.7.6 (METHOD A) OF THE AASHTO LRFD BRIDGE DESIGN SPECIFICATIONS. THE LONG-TERM COMPRESSION PROOF LOAD TEST (AASHTO STANDARD SPECIFICATIONS FOR HIGHWAY BRIDGES, DIVISION II, SECTION 18.7.2.6) IS NOT REQUIRED.
3. STEEL SHAPES AND PLATES SHALL BE ASTM A709, GRADE 50 STEEL (PAINTED). STEEL PLATES SHALL BE BONDED BY VULCANIZATION TO THE LAMINATED ELASTOMERIC BEARINGS DURING THE MOLDING PROCESS.
4. ALL BEARINGS SHALL BE MARKED PRIOR TO SHIPPING. THE MARKS SHALL INCLUDE THE BEARING LOCATION ON THE BRIDGE AND A DIRECTION ARROW THAT POINTS UP-STATION. ALL MARKS SHALL BE PERMANENT AND BE VISIBLE AFTER THE BEARING IS INSTALLED.
5. BASIS OF PAYMENT: THE UNIT PRICE BID SHALL INCLUDE ALL MATERIALS, LABOR AND INCIDENTALS NECESSARY TO FURNISH AND INSTALL THE LAMINATED ELASTOMERIC BEARINGS, STEEL LOAD & BEVELED PLATES, AND HP SHAPES. PAYMENT WILL BE MADE AT THE CONTRACT PRICE FOR ITEM 516 - ELASTOMERIC BEARING WITH INTERNAL LAMINATES AND LOAD PLATE (NEOPRENE), AS PER PLAN.


DESIGN AGENCY
GPD GROUP
Glaus, Pyle, Schomer, Burns & DeHaven, Inc.
520 South Main Street, Akron, OH 44311 330.572.2100

Copyright GPD Group, Akron, Ohio 2020

DESIGNED MOJ | DRAWN MOJ | REVIEWED DGN | DATE 1-19-21
CHECKED RHC | REVISED | STRUCTURE FILE NUMBER 7702558/7702582

BEARING DETAILS
BRIDGE NO. SUM-77-0810 L/R
I.R. 77 OVER THE TUSCARAWAS RIVER

SUM-77/277/224
VARIOUS
PID No. 106002

17 / 44

1197
1288

0:\2017\20172581\ProjectData\SUM\106002\Design\Structures\SUM077_0810\Sheets\077_0810C_SB001.dgn Sheet1 1/17/2021 2:53 PM mjurcak

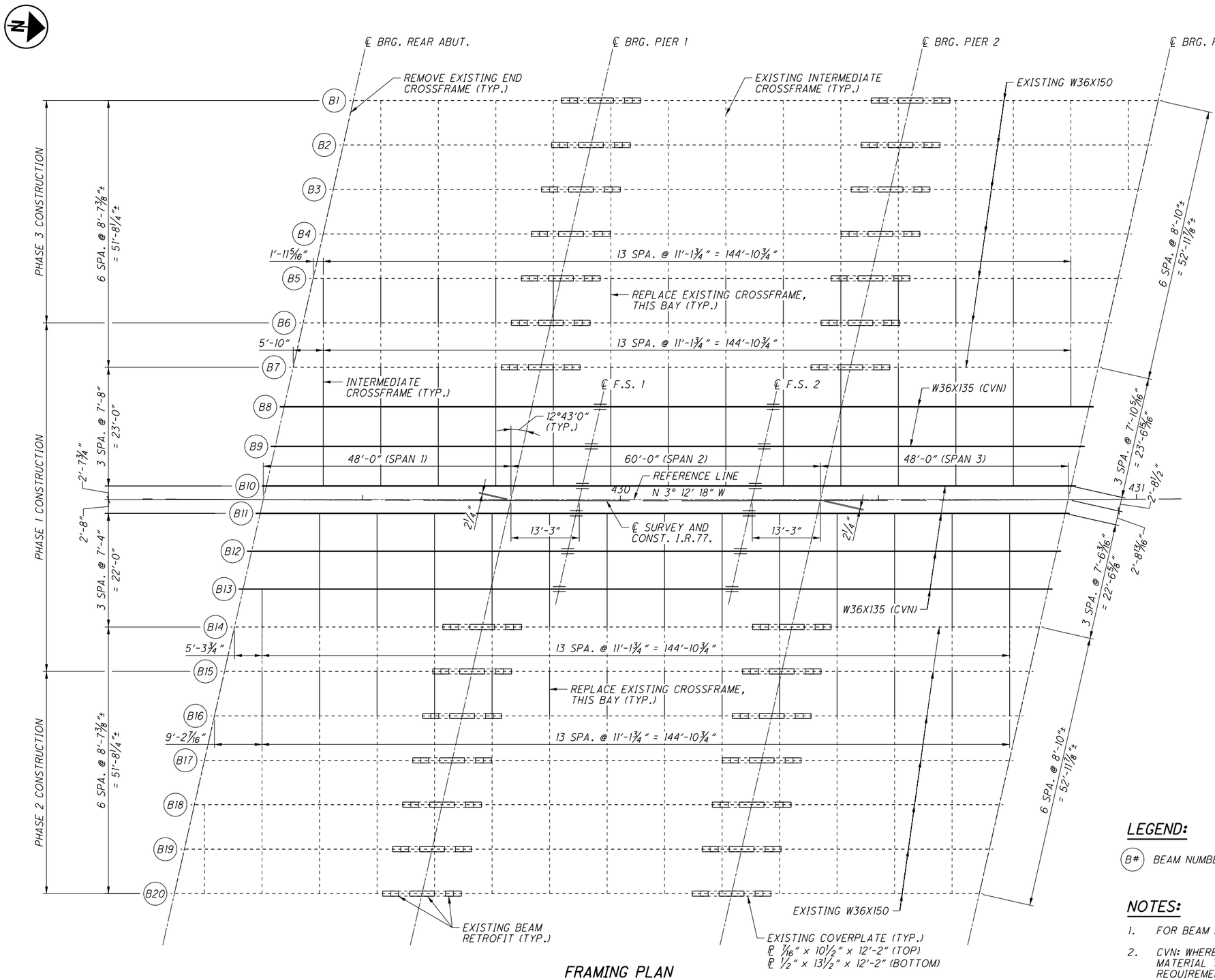


## FRAMING PLAN

### LEGEND:

(B#) BEAM NUMBER

### NOTES:

1. FOR BEAM DETAILS, SEE SHEETS 19/44 THROUGH 22/44.
2. CVN: WHERE A SHAPE OR PLATE IS DESIGNATED (CVN), FURNISH MATERIAL THAT MEETS THE MINIMUM NOTCH TOUGHNESS REQUIREMENTS AS SPECIFIED IN C&MS 711.01.
3. EXISTING CROSSFRAMES TO BE REPLACED SHALL BE REMOVED IN PHASE 1. THEY SHALL BE REPLACED IN PHASE 2 (NORTHBOUND) AND PHASE 3 (SOUTHBOUND).

DESIGN AGENCY
GPD GROUP
320 South Main Street, Akron, OH 44311 330.572.2100

| DESIGNED | DRAWN | REVIEWED | DATE |
|---|---|---|---|
| MOJ | MOJ | DGN | 1-19-21 |
| CHECKED | REVISED | STRUCTURE FILE NUMBER | |
| RHC | | 7702558/7702582 | |

FRAMING PLAN
BRIDGE NO. SUM-77-0810 L/R
I.R. 77 OVER THE TUSCARAWAS RIVER

SUM-77/277/224
VARIOUS
PID No. 106002



D:\2017\2017258\ProjectData\SUM\106002\Design\Structures\SUM077_0810\Sheets\077_0810C_SS001.dgn Sheet 1/17/2021 2:56 PM mjurcak

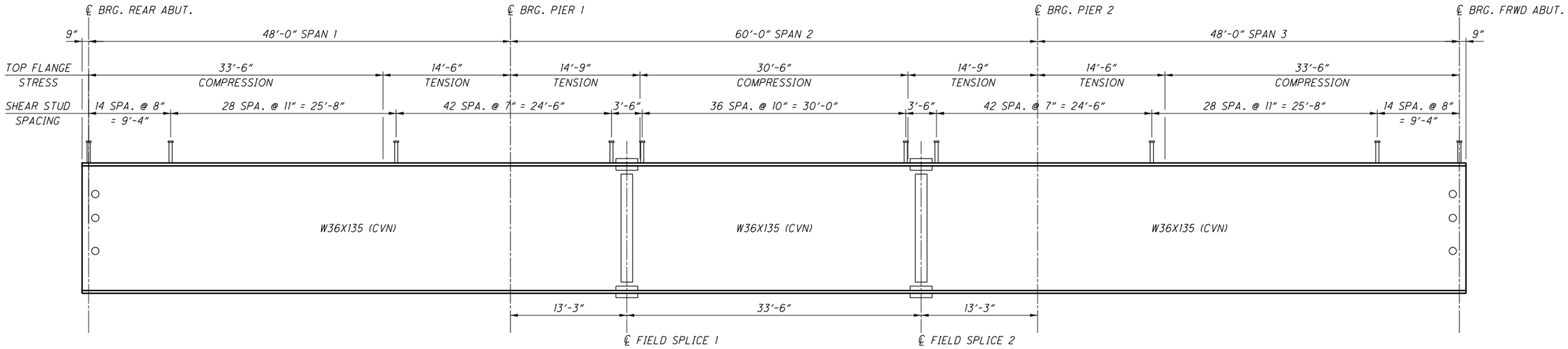


## PROPOSED BEAM ELEVATION

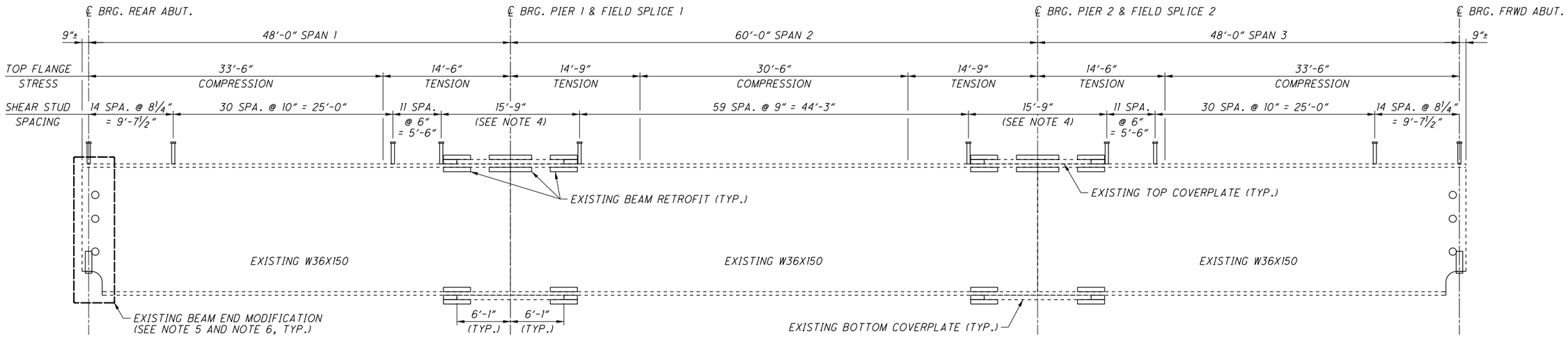


## EXISTING BEAM ELEVATION

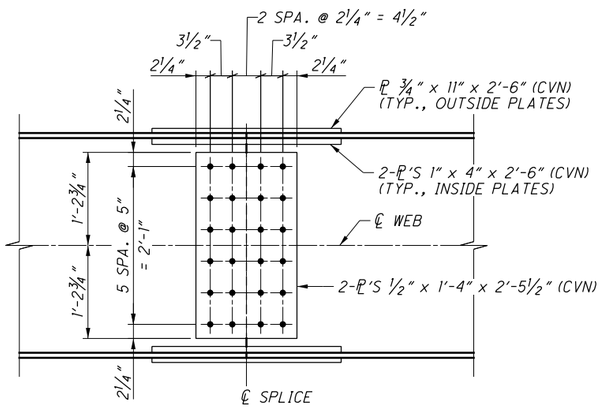


## SPLICE ELEVATION

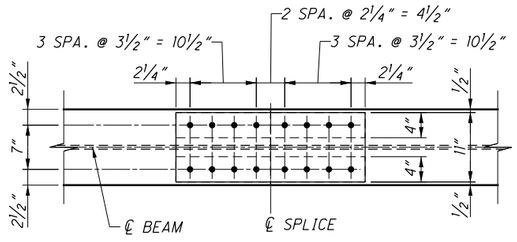


## SPLICE PLAN

TOP AND BOTTOM FLANGE SPLICES

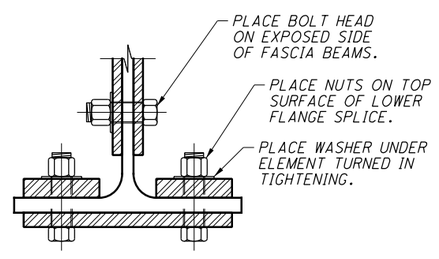


## PARTIAL SECTION

AT ℄ OF BEAM SPLICE

## NOTES:

1. CVN: WHERE A SHAPE OR PLATE IS DESIGNATED (CVN), FURNISH MATERIAL THAT MEETS THE MINIMUM NOTCH TOUGHNESS REQUIREMENTS AS SPECIFIED IN C&MS 711.01.
2. WELD ATTACHMENT OF SUPPORTS FOR CONCRETE DECK FINISHING MACHINE TO AREAS OF THE FASCIA STRINGER FLANGES DESIGNATED "COMPRESSION". DO NOT WELD ATTACHMENTS TO AREAS DESIGNATED "TENSION". FILLET WELDS TO COMPRESSION FLANGES SHALL BE AT LEAST 1" FROM EDGE OF FLANGE, BE NO MORE THAN 2" LONG, AND BE AT LEAST 5/16" THICK.
3. HIGH STRENGTH BOLTS SHALL BE 1" DIAMETER ASTM F3125, GRADE A325, TYPE 1 WITH STANDARD HOLES UNLESS OTHERWISE NOTED.
4. FOR EXISTING BEAM RETROFIT DETAILS AND SHEAR STUD LAYOUT & SPACING OVER THEM, SEE SHEET 21/44.
5. FOR EXISTING BEAM END MODIFICATION DETAILS, SEE SHEET 20/44.
6. AFTER ALL EXISTING BEAM END MODIFICATIONS HAVE BEEN COMPLETED AND BEFORE ENCASEMENT IN SEMI-INTEGRAL END DIAPHRAGMS, AREAS AT THE ENDS OF EXISTING BEAMS THAT WERE DISTURBED BY THE PROPOSED WORK SHALL BE FIELD PAINTED WITH A THREE-COAT PAINT SYSTEM CONSISTING OF AN ORGANIC ZINC PRIME COAT, AN EPOXY INTERMEDIATE COAT, AND A URETHANE FINISH COAT.

DESIGN AGENCY
GPD GROUP
Glaus, Pyle, Schomer, Burns & DeHaven, Inc.
520 South Main Street, Akron, OH 44311 330.572.2100
Copyright Glaus, Pyle, Schomer, Burns & DeHaven, Inc. 2020

DESIGNED MOJ | DRAWN MOJ | REVIEWED DGN | DATE 1-19-21
CHECKED RHC | REVISED | STRUCTURE FILE NUMBER 7702558/7702582

BEAM DETAILS
BRIDGE NO. SUM-77-0810 L/R
I.R. 77 OVER THE TUSCARAWAS RIVER

SUM-77/277/224
VARIOUS
PID No. 106002



D:\2017\2017258\ProjectData\SUM106002\Design\Structures\SUM077_0810\Sheets\077_0810C_SS002.dgn Sheet 1/17/2021 9:22:00 PM mjurcak

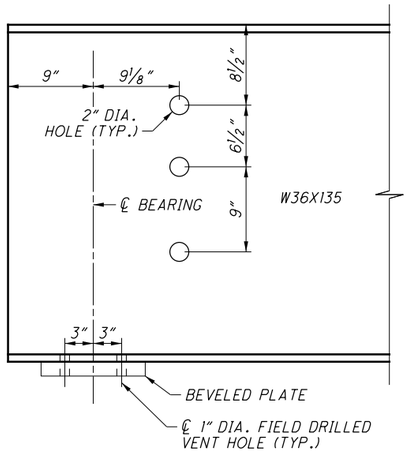


## PROPOSED BEAM END DEATILS

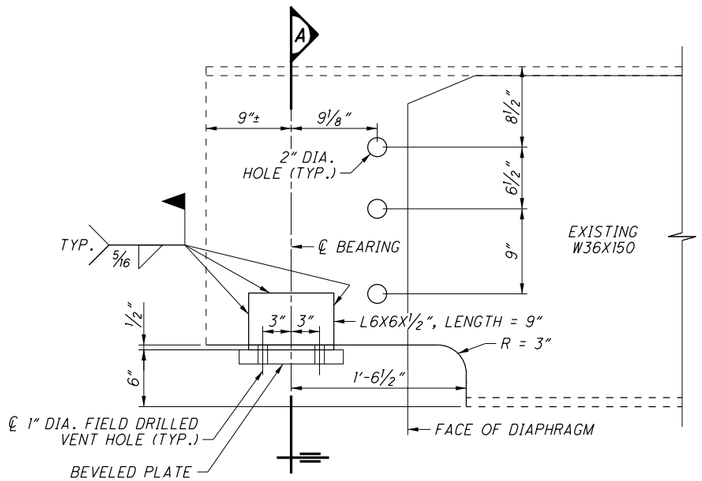


## EXISTING BEAM END MODIFICATIONS

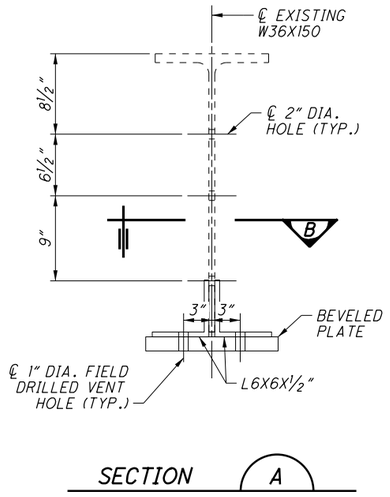


SECTION A

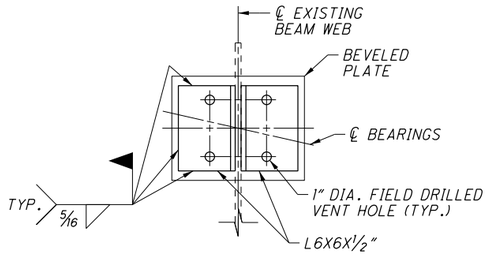


SECTION B

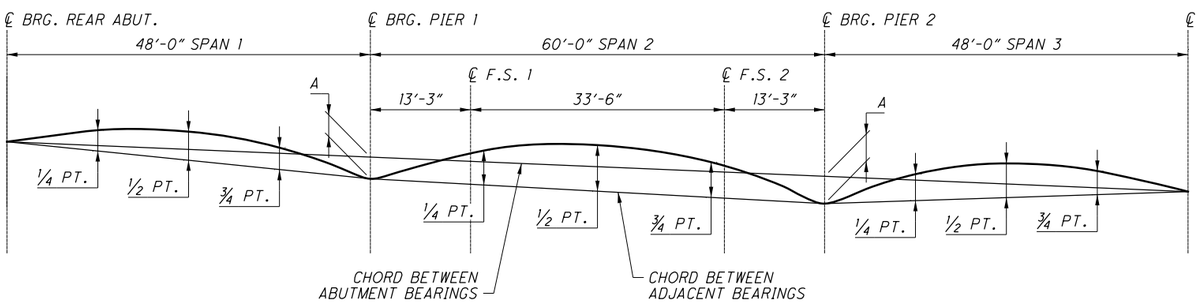


## CAMBER DIAGRAM

| BLOCKING (DIM. "A") | | |
|---|---|---|
| LOCATION | PIER 1 | PIER 2 |
| BEAM 8 | 1 1/16 | 1 1/16 |
| BEAM 9 | 1 1/16 | 1 1/16 |
| BEAM 10 | 1 1/16 | 1 1/16 |
| BEAM 11 | 1 1/8 | 1 1/8 |
| BEAM 12 | 1 1/8 | 1 1/8 |
| BEAM 13 | 1 1/8 | 1 1/8 |

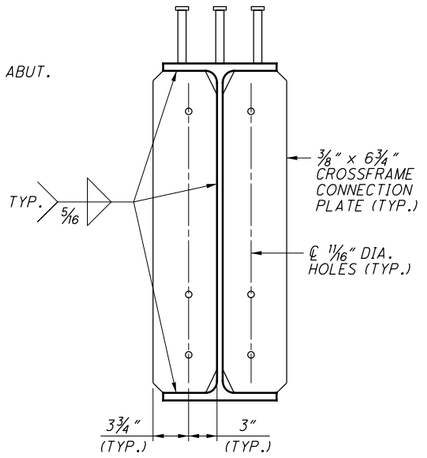


## CROSSFRAME CONNECTION PLATE DETAILS

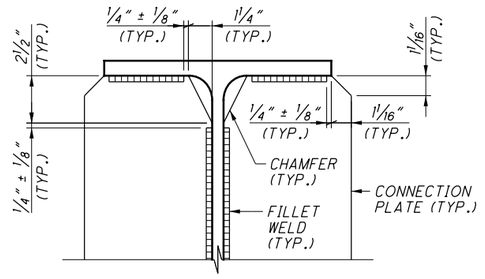


## CONNECTION PLATE WELD DETAILS

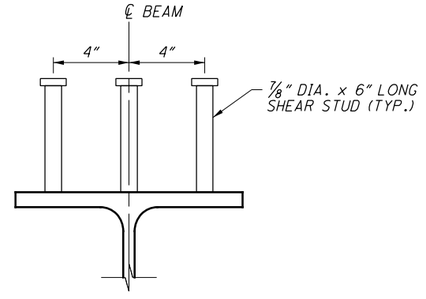


## SHEAR STUD DETAIL

*PROPOSED BEAM SHOWN. EXISTING BEAM SIMILAR UNLESS NOTED OTHERWISE.*

| BEAM NO. | CAMBER DESCRIPTION | REAR ABUT. | SPAN 1 | | | PIER 1 | SPAN 2 | | | | | PIER 2 | SPAN 3 | | | FRWD. ABUT. |
|---|---|---|---|---|---|---|---|---|---|---|---|---|---|---|---|---|
| | | | 1/4 PT. | 1/2 PT. | 3/4 PT. | | F.S. 1 | 1/4 PT. | 1/2 PT. | 3/4 PT. | F.S. 2 | | 1/4 PT. | 1/2 PT. | 3/4 PT. | |
| ALL PROPOSED BEAMS | DEFLECTION DUE TO WEIGHT OF STEEL | 0 | 0 | 0 | 0 | 0 | 0 | 0 | 1/16 | 0 | 0 | 0 | 0 | 0 | 0 | 0 |
| | DEFLECTION DUE TO REMAINING DEAD LOAD | 0 | 1/8 | 3/16 | 1/16 | 0 | 1/8 | 1/8 | 1/4 | 1/8 | 1/8 | 0 | 1/16 | 3/16 | 1/8 | 0 |
| | ADJUSTMENT DUE TO VERTICAL GEOMETRY | 0 | - 1/16 | - 1/8 | - 1/16 | 0 | - 1/8 | - 1/8 | - 3/16 | - 1/8 | - 1/8 | 0 | - 1/16 | - 1/8 | - 1/16 | 0 |
| | ADJUSTMENT DUE TO HORIZONTAL GEOMETRY | 0 | 0 | 0 | 0 | 0 | 0 | 0 | 0 | 0 | 0 | 0 | 0 | 0 | 0 | 0 |
| | REQUIRED SHOP CAMBER | 0 | 1/16 | 1/16 | 0 | 0 | 0 | 0 | 1/8 | 0 | 0 | 0 | 0 | 1/16 | 1/16 | 0 |

## NOTES:

1. FOR ADDITIONAL EXISTING BEAM END MODIFICATION NOTES, SEE SHEET 3/44.
2. THE BEVELED PLATE IS PART OF THE BEARING ASSEMBLY. NOT ALL BEARING DETAILS SHOWN. FOR ADDITIONAL BEARING DETAILS, SEE SHEET 17/44.
3. FOR ADDITIONAL CROSSFRAME DETAILS, SEE STD. DWG. GSD-1-19 AND SHEET 21/44.

DESIGN AGENCY
GPD GROUP
Glaus, Pyle, Schomer, Burns & DeHaven, Inc.
520 South Main Street, Akron, OH 44311 330.572.2100

DESIGNED MOJ | DRAWN MOJ | REVIEWED DGN | DATE 1-19-21
CHECKED RHC | REVISED | STRUCTURE FILE NUMBER 7702558/7702582

**BEAM DETAILS**
BRIDGE NO. SUM-77-0810 L/R
I.R. 77 OVER THE TUSCARAWAS RIVER

**SUM-77/277/224**
**VARIOUS**
**PID No. 106002**

20/44

1200
1288

D:\2017\2017258\ProjectData\SUM\06002\Design\Structures\SUM077_0810\Sheets\077_0810C_SS002.dgn Sheet2 1/17/2021 9:22:01 PM mjurcak

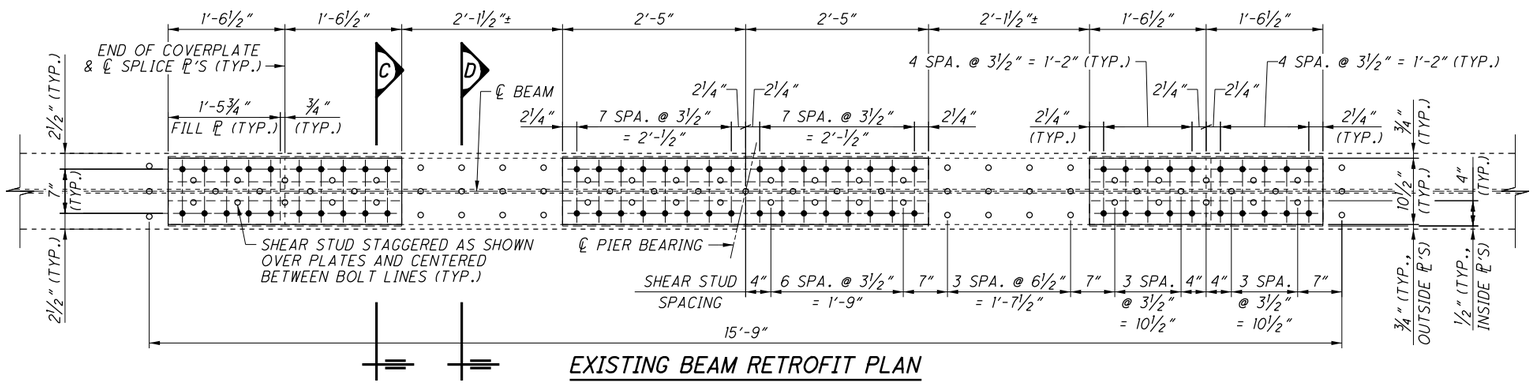


## EXISTING BEAM RETROFIT PLAN

TOP PLATES SHOWN. BOTTOM PLATES SIMILAR.
SHEAR STUDS (WITHIN LIMITS OF BEAM RETROFIT) AND SPLICES ARE SYMMETRICAL ABOUT ℄ PIER BEARING

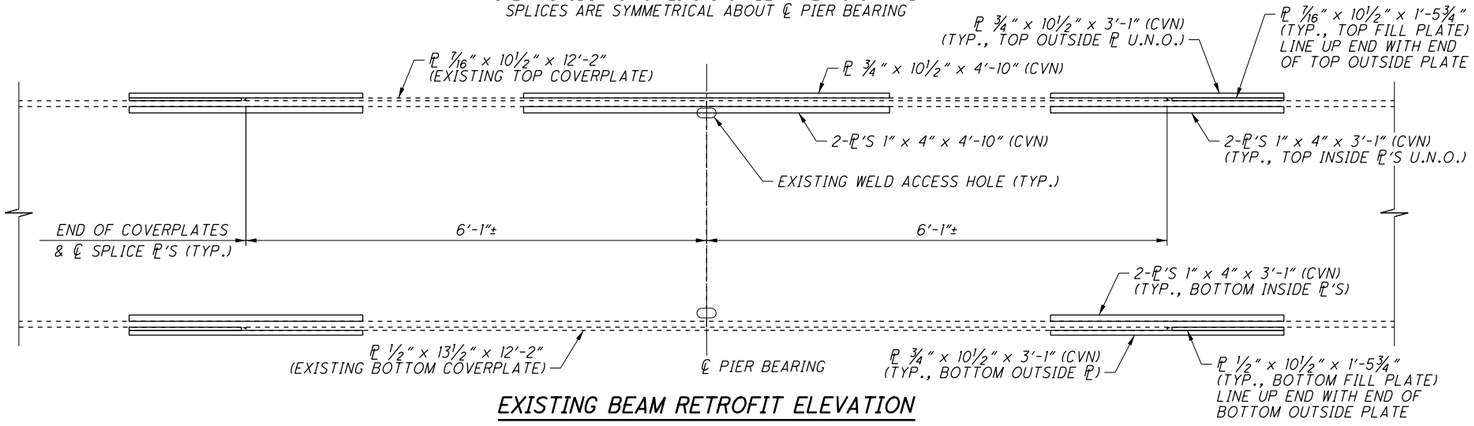


## EXISTING BEAM RETROFIT ELEVATION

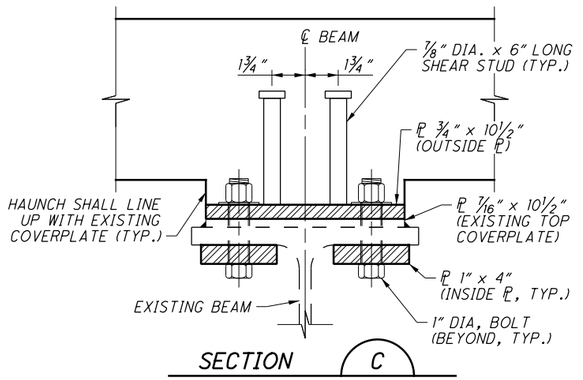


TWO SHEAR STUD CONFIGURATION SHOWN.
ONE SHEAR STUD CONFIGURATION SIMILAR (CENTERED ON BEAM).

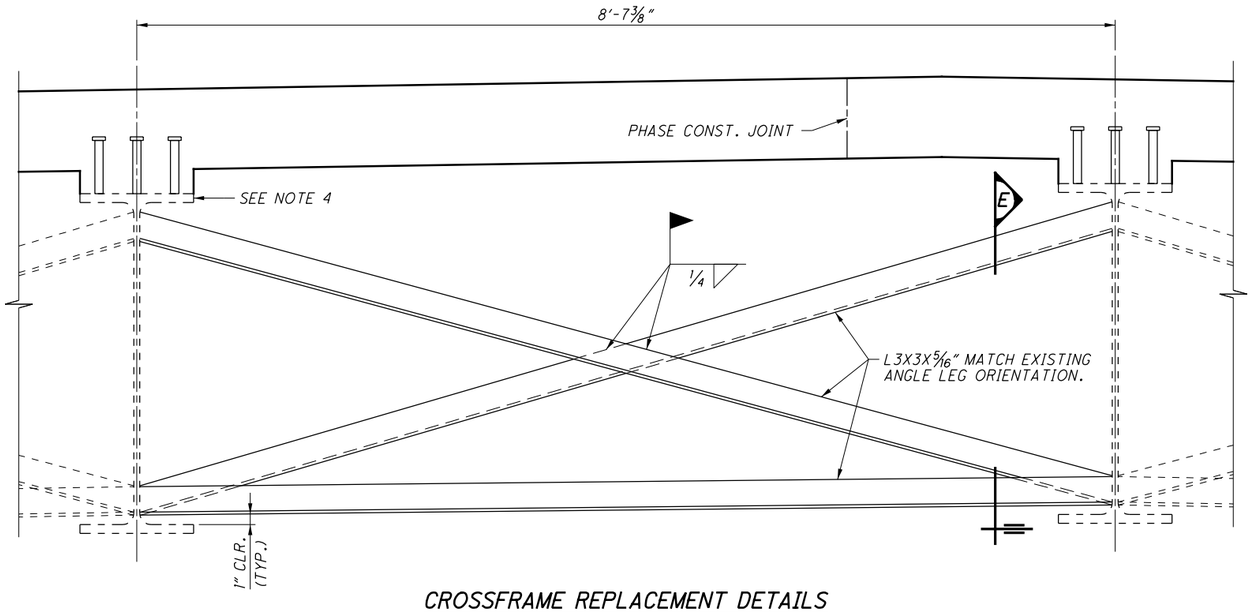


## CROSSFRAME REPLACEMENT DETAILS

SOUTHBOUND SHOWN. NORTHBOUND SIMILAR.

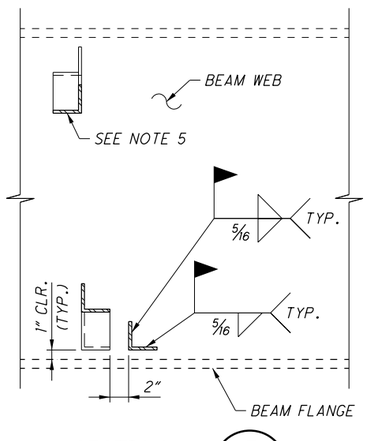


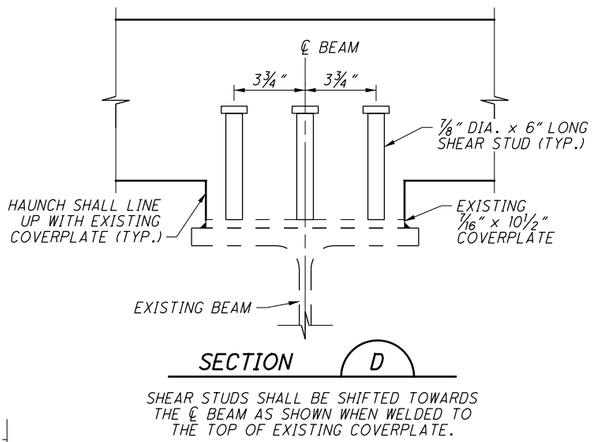


SHEAR STUDS SHALL BE SHIFTED TOWARDS THE ℄ BEAM AS SHOWN WHEN WELDED TO THE TOP OF EXISTING COVERPLATE.

## NOTES:

1. CVN: WHERE A SHAPE OR PLATE IS DESIGNATED (CVN), FURNISH MATERIAL THAT MEETS THE MINIMUM NOTCH TOUGHNESS REQUIREMENTS AS SPECIFIED IN C&MS 711.01.
2. HIGH STRENGTH BOLTS SHALL BE 1" DIAMETER ASTM F3125, GRADE A325, TYPE 1 WITH STANDARD HOLES UNLESS OTHERWISE NOTED.
3. ONE BOLT PER SIDE OF EXISTING BEAM RETROFIT PLATES MAY BE OMITTED WHERE AN EXISTING CROSSFRAME ANGLE PREVENTS INSTALLATION.
4. EDGES OF EXISTING BEAM TOP FLANGES SHALL BE FIELD PAINTED WITH A THREE-COAT PAINT SYSTEM CONSISTING OF AN ORGANIC ZINC PRIME COAT, AN EPOXY INTERMEDIATE COAT, AND A URETHANE FINISH COAT.
5. PORTIONS OF THE EXISTING BEAM PROTECTIVE COATING SYSTEM THAT BECOME DAMAGED FROM CONNECTION OF NEW OR REPLACEMENT CROSSFRAME MEMBERS SHALL BE FIELD PAINTED WITH A THREE-COAT PAINT SYSTEM CONSISTING OF AN ORGANIC ZINC PRIME COAT, AN EPOXY INTERMEDIATE COAT, AND A URETHANE FINISH COAT.

DESIGN AGENCY
GPD GROUP
Glaus, Pyle, Schomer, Burns & DeHaven, Inc.
320 South Main Street, Akron, OH 44311 330.572.2100
(Copyright Glaus, Pyle, Schomer, Burns & DeHaven, Inc., 2020)

DESIGNED MOJ | DRAWN MOJ | REVIEWED DGN | DATE 1-19-21
CHECKED RHC | REVISED | STRUCTURE FILE NUMBER 7702558/7702582

BEAM DETAILS
BRIDGE NO. SUM-77-0810 L/R
I.R. 77 OVER THE TUSCARAWAS RIVER

SUM-77/277/224
VARIOUS
PID No. 106002

21 / 44

1201
1288

O:\2017\20172581\ProjectData\SUM\106002\Design\Structures\SUM077_0810\Sheets\077_0810C_SS002.dgn Sheet3 1/17/2021 9:22:02 PM mjurcak

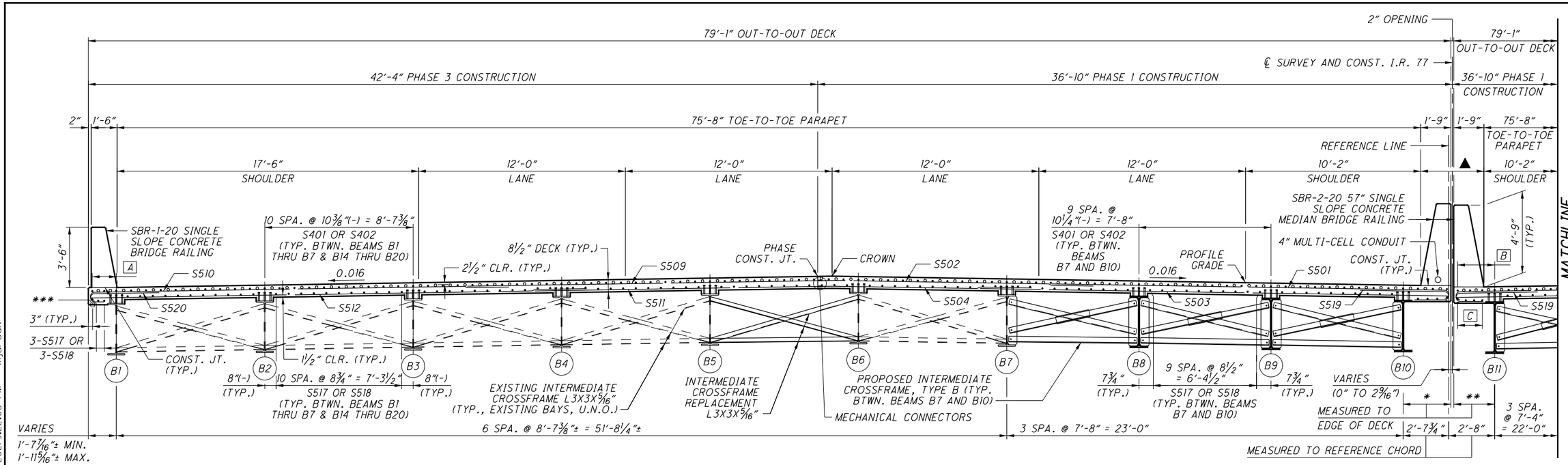


## TRANSVERSE SECTION

### LEGEND:

- ▲ ITEM 512 - SEALING OF CONCRETE SURFACES (EPOXY-URETHANE) (TYP.)
- ✳ VARIES: 2'-6 1/16" MIN. TO 2'-9 5/16" MAX.
- ✳✳ VARIES: 2'-4 7/16" MIN. TO 2'-7 1/16" MAX.
- ✳✳✳ 1" DIA. HALF-ROUND DRIP GROOVE (TYP.)
- [A] 2 EQ. SPA. OF S401 OR S402 (TOP EDGE)
- [B] 3 EQ. SPA. OF S401 OR S402 (TYP. TOP EDGE)
- [C] 3 EQ. SPA. OF S517 OR S518 (TYP. BOT. EDGE)
- [D] 4 EQ. SPA. OF S401 OR S402 (TOP EDGE)
- [E] 3 EQ. SPA. OF S517 OR S518 (BOT. EDGE)

### NOTES:

1. FOR RAILING DETAILS, SEE SHEET [36/44].
2. FOR ADDITIONAL CROSSFRAME DETAILS, SEE STD. DWG. GSD-1-19, SHEET [20/44], AND SHEET [21/44].
3. DECK SLAB CONCRETE QUANTITY: THE ESTIMATED QUANTITY OF DECK SLAB CONCRETE IS BASED ON THE CONSTANT DECK SLAB THICKNESS, AS SHOWN, PLUS THE QUANTITY OF CONCRETE THAT FORMS EACH BEAM HAUNCH. THE ESTIMATE ASSUMES AN AVERAGE HAUNCH THICKNESS OF 2⅝" OVER THE EXISTING BEAMS, A CONSTANT HAUNCH THICKNESS OF 2 ⅛" OVER THE PROPOSED BEAMS, AND A HAUNCH WIDTH EQUAL TO THE TOP FLANGE WIDTH. DEVIATE FROM THIS HAUNCH THICKNESS AS NECESSARY TO PLACE THE DECK SURFACE AT THE FINISHED GRADE.

THE HAUNCH THICKNESS WAS MEASURED AT THE CENTERLINE OF THE BEAM, FROM THE SURFACE OF THE DECK TO THE TOP OF THE TOP FLANGE MINUS THE DECK SLAB THICKNESS. THE AREA OF ALL EMBEDDED STEEL PLATES HAS BEEN DEDUCTED FROM THE HAUNCH QUANTITY IN ACCORDANCE WITH 511.23.

DESIGN AGENCY
GPD GROUP
Glaus, Pyle, Schomer, Burns & DeHaven, Inc.
520 South Main Street, Akron, OH 44311 330.572.2100
Copyright GPD Group, Akron, Ohio, USA (All Rights Reserved) Unpublished Work 2020

| DESIGNED | DRAWN | REVIEWED | DATE |
|---|---|---|---|
| MOJ | MOJ | DGN | 1-19-21 |

STRUCTURE FILE NUMBER 7702558/7702582

CHECKED RHC | REVISED

SUM-77/277/224
VARIOUS
PID No. 106002

22 / 44

1202
1288

0:\2017\2017258\ProjectData\SUM\106002\Design\Structures\SUM077_0810\Sheets\077_0810C_ST001.dgn Sheet 1/17/2021 9:22:05 PM mjurcak

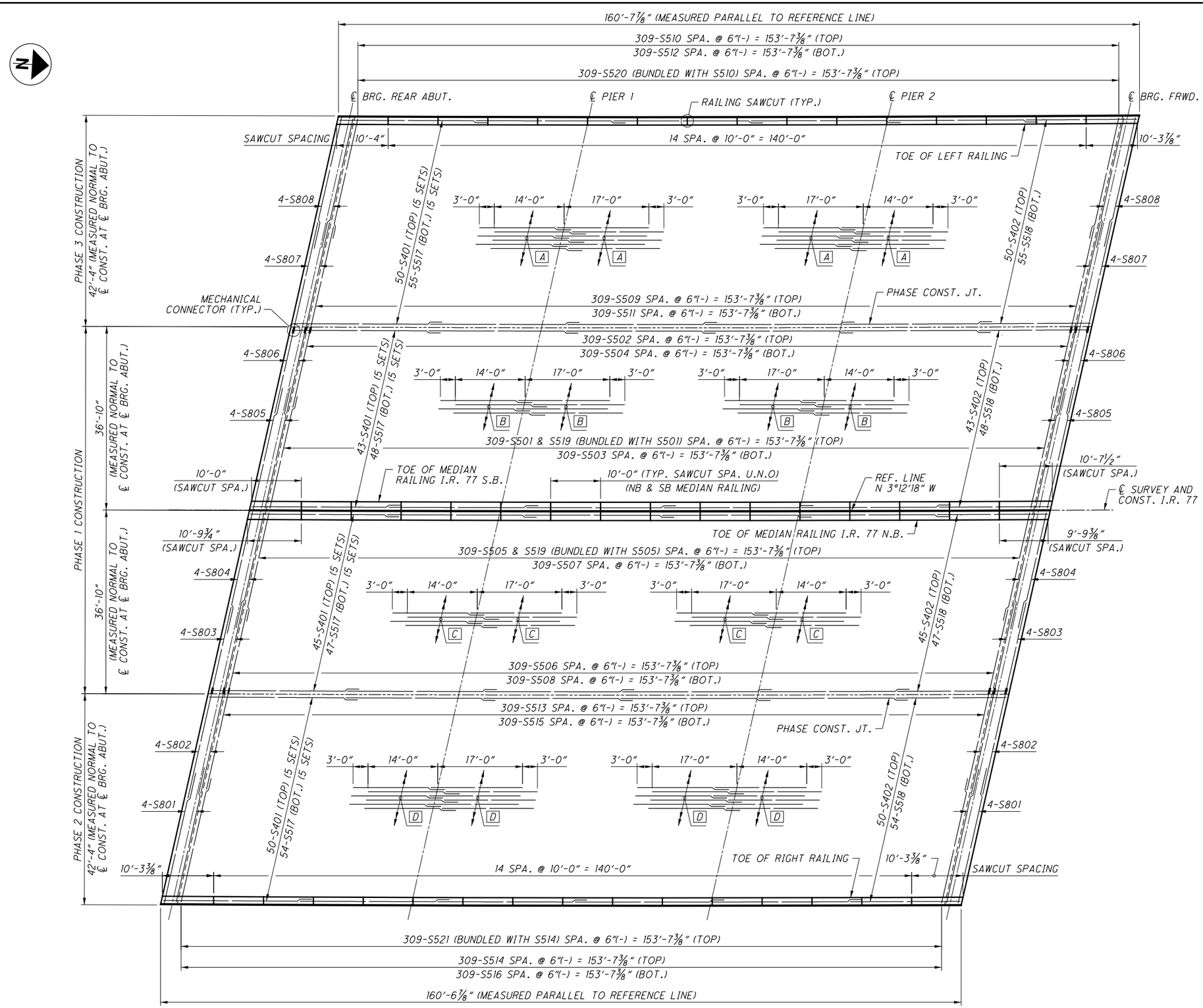


## DECK PLAN

DIAPHRAGM REINFORCING NOT SHOWN FOR CLARITY.

## LEGEND:

- A — 49-S601 (BTWN. S401 OVER PIER)
- B — 42-S601 (BTWN. S401 OVER PIER)
- C — 44-S601 (BTWN. S401 OVER PIER)
- D — 49-S601 (BTWN. S401 OVER PIER)

## NOTES:

1. MINIMUM REFORCING STEEL LAP LENGTHS ARE AS FOLLOWS:

| TRANSVERSE BARS | |
|---|---|
| TOP NO. 5 BARS | 2'-5" |
| BOT. NO. 5 BARS | 3'-0" |
| TOP NO. 8 BARS | 5'-4" |

| LONGITUDINAL BARS | |
|---|---|
| TOP NO. 4 BARS | 1'-11" |
| BOT. NO. 5 BARS | 2'-5" |
| TOP NO. 6 BARS | 2'-10" |

DESIGN AGENCY
GPD GROUP
520 South Main Street, Akron, OH 44311 330.572.2100
Copyright GPD Group, Akron, Ohio, USA

| DESIGNED | DRAWN | REVIEWED | DATE |
|---|---|---|---|
| MOJ | MOJ/JJB | DGN | 1-19-21 |
| CHECKED | REVISED | STRUCTURE FILE NUMBER | |
| RHC | | 7702558/7702582 | |

SLAB PLAN
BRIDGE NO. SUM-77-0810 L/R
I.R. 77 OVER THE TUSCARAWAS RIVER

SUM-77/277/224
VARIOUS
PID No. 106002

23/44

1203
1288

0:\2017\2017258\ProjectData\SUM\06002\Design\Structures\SUM077_0810\Sheets\077_0810C_SD00I.dgn Sheet 1/17/2021 9:22:07 PM mjurcak

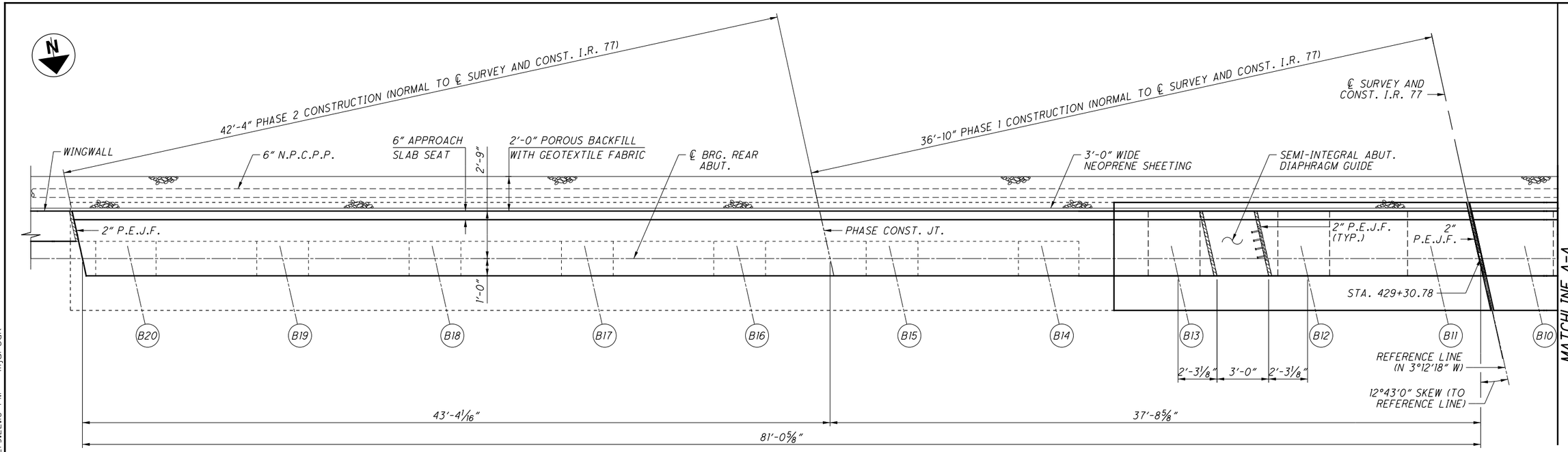


## PLAN

PARTIAL SOUTHBOUND PLAN SHOWN FOR REFERENCE PURPOSES

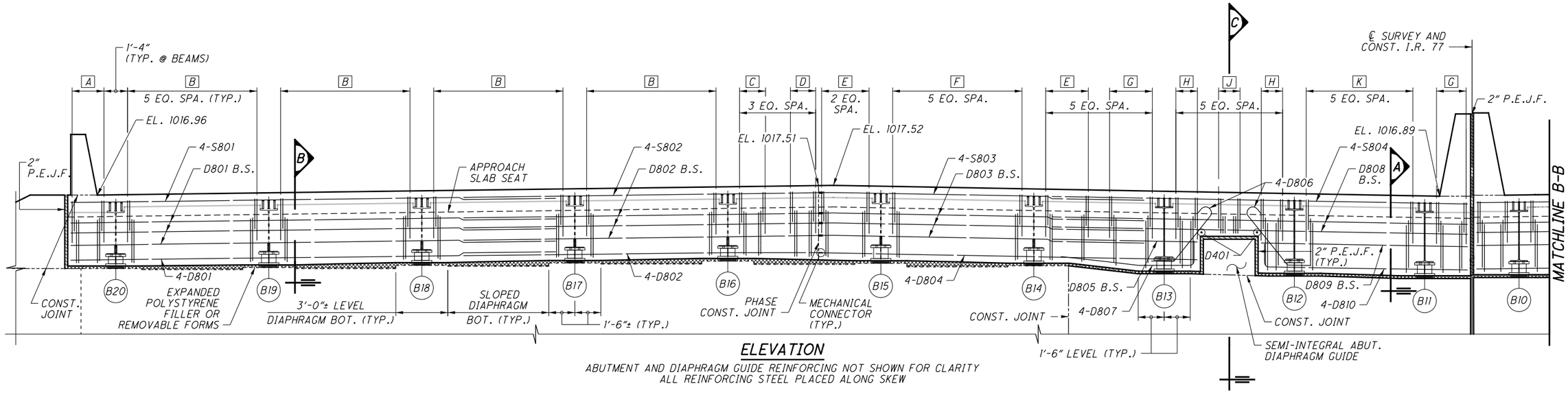


## ELEVATION

ABUTMENT AND DIAPHRAGM GUIDE REINFORCING NOT SHOWN FOR CLARITY
ALL REINFORCING STEEL PLACED ALONG SKEW

### LEGEND:

(B#) BEAM NUMBER

### NOTES:

1. STATIONS AND DIMENSIONS ARE GIVEN TO ℄ SURVEY AND CONST. I.R. 77.
2. FOR REINFORCING CALLOUT LEGEND AND SOUTHBOUND ABUTMENT DIAPHRAGM DETAILS, SEE SHEET 25/44.
3. FOR SECTIONS A THROUGH C, SEE SHEET 28/44.
4. ABUTMENT DIAPHRAGM CONCRETE, PHASED CONSTRUCTION: PLACE THE DIAPHRAGM CONCRETE ENCASING THE STRUCTURAL MEMBER ENDS OF AN INDIVIDUAL PHASE WITH THE DECK CONCRETE.
5. FOR SEMI-INTEGRAL ABUTMENT DIAPHRAGM GUIDE DETAILS, SEE SHEET 14/44.
6. FOR ADDITIONAL DETAILS AND NOTES, SEE STD. DWG. SICD-1-96.
7. MINIMUM REINFORCING STEEL LAP LENGTHS FOR #8 BARS SHALL BE 5'-4".
8. ELEVATIONS ARE GIVEN AT THE CENTERLINE OF ABUTMENT BEARING.

MATCHLINE A-A

MATCHLINE B-B

DESIGN AGENCY
GPD GROUP
Glaus, Pyle, Schomer, Burns & DeHaven, Inc.
520 South Main Street, Akron, OH 44311 330.572.2100
(Copyright: Glaus, Pyle, Schomer, Burns & DeHaven, Inc., 2020)

| DESIGNED | DRAWN | REVIEWED | DATE |
|---|---|---|---|
| MOJ | MOJ/JJB | DGN | 1-19-21 |
| CHECKED | REVISED | STRUCTURE FILE NUMBER | |
| RHC | | 7702558/7702582 | |

REAR ABUTMENT DIAPHRAGM DETAILS - NORTHBOUND
BRIDGE NO. SUM-77-0810 L/R
I.R. 77 OVER THE TUSCARAWAS RIVER

SUM-77/277/224
VARIOUS
PID No. 106002

24/44

1204
1288

D:\2017\2017258\Project Data\SUM\06002\Design\Structures\SUM077_0810\Sheets\077_0810C_SD002.dgn Sheet1 1/17/2021 9:22:10 PM mjurcak

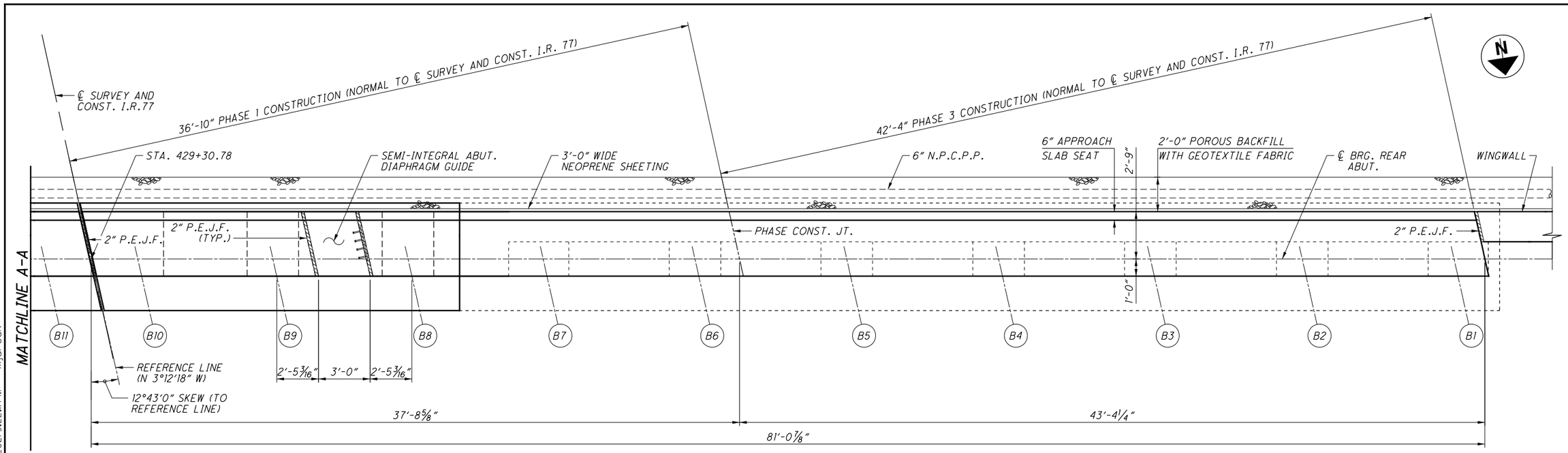


## PLAN

PARTIAL NORTHBOUND PLAN SHOWN FOR REFERENCE PURPOSES

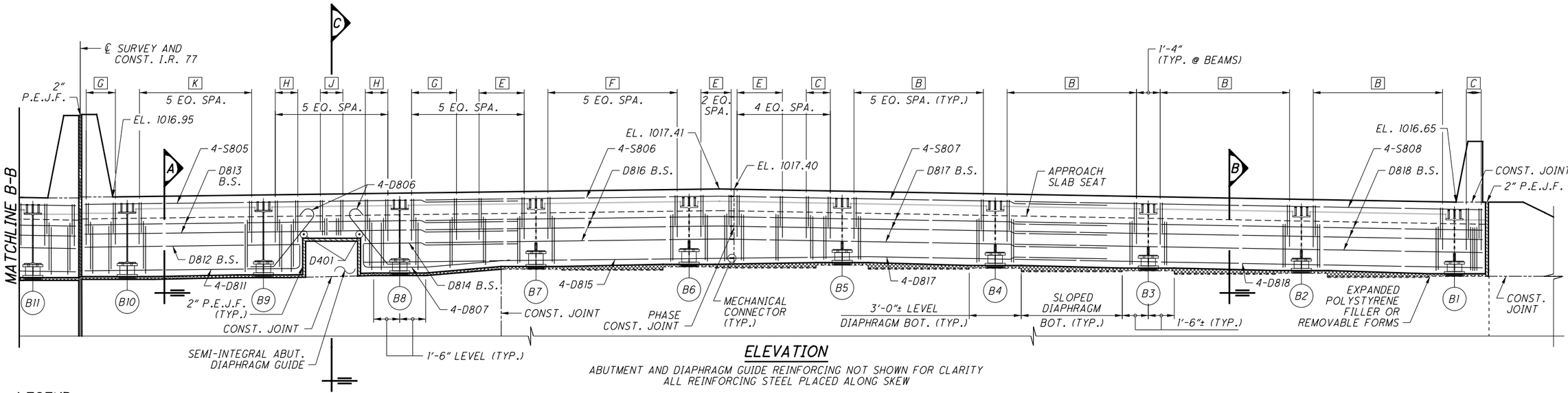


## ELEVATION

ABUTMENT AND DIAPHRAGM GUIDE REINFORCING NOT SHOWN FOR CLARITY
ALL REINFORCING STEEL PLACED ALONG SKEW

## LEGEND:

- (B#) BEAM NUMBER
- [A] 3 SETS OF D819, D501 & 2-D502
- [B] 6 SETS OF D819, D501 & 2-D502
- [C] 2 SETS OF D819, D501 & 2-D502
- [D] 2 SETS OF D819, D501 & 2-D503
- [E] 3 SETS OF D819, D501 & 2-D503
- [F] 6 SETS OF D819, D501 & 2-D503
- [G] 3 SETS OF D819, D501 & 2-D504
- [H] 2 SETS OF D819, D501 & 2-D504
- [J] 2 SETS OF D819, D505 & 2-D506
- [K] 6 SETS OF D819, D501 & 2-D504

## NOTES:

1. STATIONS AND DIMENSIONS ARE GIVEN TO ℄ SURVEY AND CONST. I.R. 77.
2. FOR NORTHBOUND ABUTMENT DIAPHRAGM DETAILS, SEE SHEET 24/44.
3. FOR SECTIONS A THROUGH C, SEE SHEET 28/44.
4. ABUTMENT DIAPHRAGM CONCRETE, PHASED CONSTRUCTION: PLACE THE DIAPHRAGM CONCRETE ENCASING THE STRUCTURAL MEMBER ENDS OF AN INDIVIDUAL PHASE WITH THE DECK CONCRETE.
5. FOR SEMI-INTEGRAL ABUTMENT DIAPHRAGM GUIDE DETAILS, SEE SHEET 14/44.
6. FOR ADDITIONAL DETAILS AND NOTES, SEE STD. DWG. SICD-1-96.
7. MINIMUM REINFORCING STEEL LAP LENGTHS FOR #8 BARS SHALL BE 5'-4".
8. ELEVATIONS ARE GIVEN AT THE CENTERLINE OF ABUTMENT BEARING.

DESIGN AGENCY
GPD GROUP
Glaus, Pyle, Schomer, Burns & DeHaven, Inc.
520 South Main Street, Akron, OH 44311 330.572.2100
Copyright Glaus, Pyle, Schomer, Burns & DeHaven, Inc. 2020

DESIGNED MOJ | DRAWN MOJ/JJB | REVIEWED DGN | DATE 1-19-21
CHECKED RHC | REVISED | STRUCTURE FILE NUMBER 7702558/7702582

REAR ABUTMENT DIAPHRAGM DETAILS - SOUTHBOUND
BRIDGE NO. SUM-77-0810 L/R
I.R. 77 OVER THE TUSCARAWAS RIVER

SUM-77/277/224
VARIOUS
PID No. 106002

25/44

1205
1288

O:\2017\2017258\ProjectData\SUM\06002\Design\Structures\SUM077_0810\Sheets\077_0810C_SD002.dgn Sheet2 1/17/2021 9:22:11 PM mjurcak

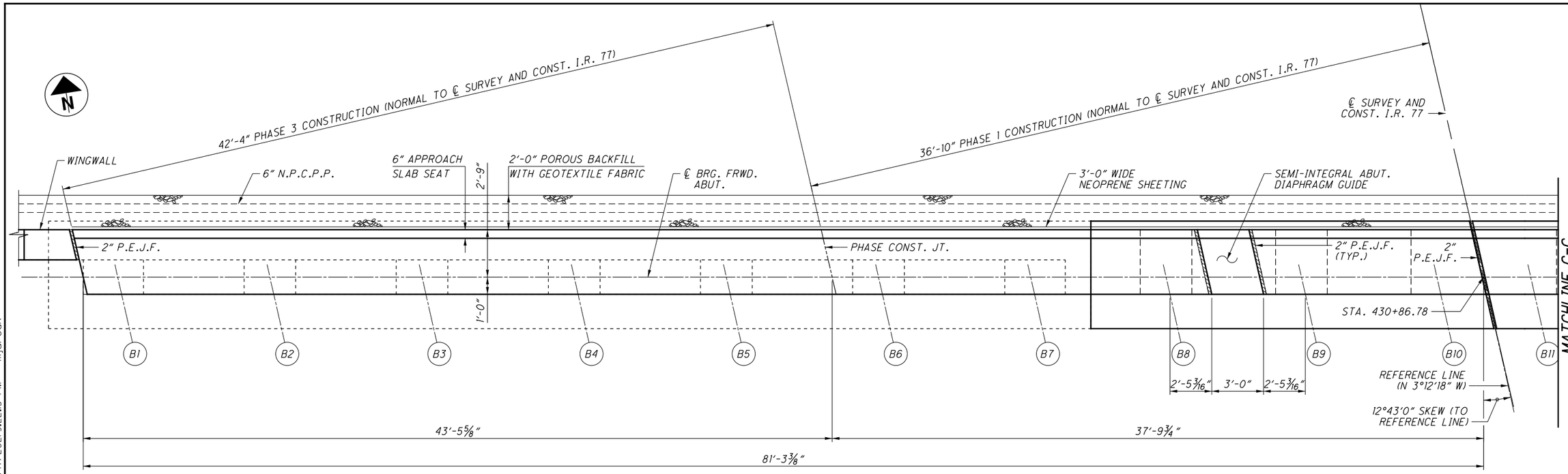


## PLAN

PARTIAL NORTHBOUND PLAN SHOWN FOR REFERENCE PURPOSES

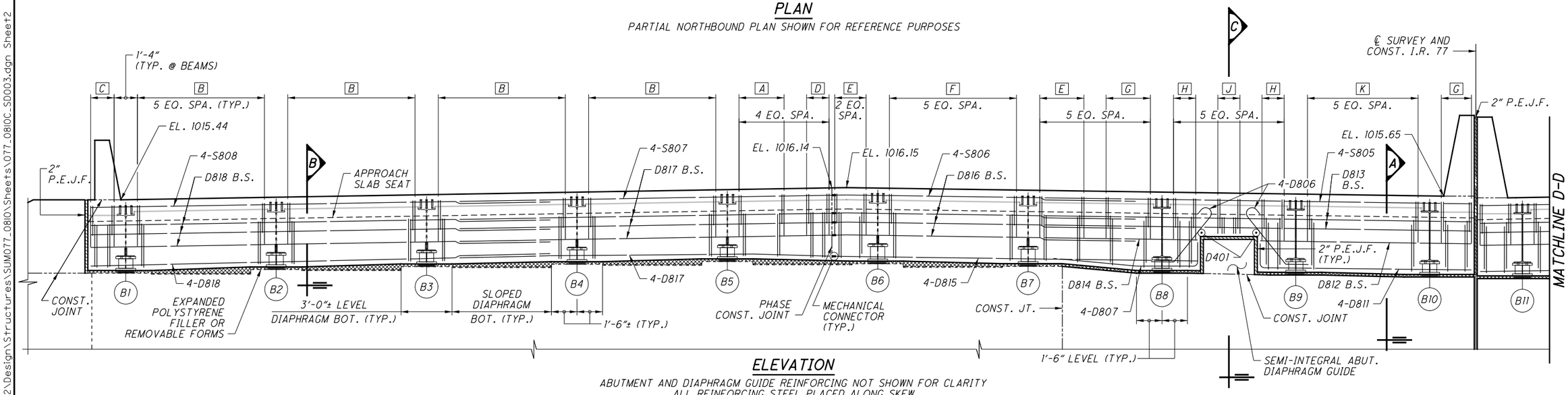


## ELEVATION

ABUTMENT AND DIAPHRAGM GUIDE REINFORCING NOT SHOWN FOR CLARITY
ALL REINFORCING STEEL PLACED ALONG SKEW

### LEGEND:

- (B#) BEAM NUMBER
- [A] 3 SETS OF D819, D501 & 2-D502
- [B] 6 SETS OF D819, D501 & 2-D502
- [C] 2 SETS OF D819, D501 & 2-D502
- [D] 2 SETS OF D819, D501 & 2-D503
- [E] 3 SETS OF D819, D501 & 2-D503
- [F] 6 SETS OF D819, D501 & 2-D503
- [G] 3 SETS OF D819, D501 & 2-D504
- [H] 2 SETS OF D819, D501 & 2-D504
- [J] 2 SETS OF D819, D505 & 2-D506
- [K] 6 SETS OF D819, D501 & 2-D504

### NOTES:

1. STATIONS AND DIMENSIONS ARE GIVEN TO ℄ SURVEY AND CONST. I.R. 77.
2. FOR NORTHBOUND ABUTMENT DIAPHRAGM DETAILS, SEE SHEET 27/44.
3. FOR SECTIONS A THROUGH C, SEE SHEET 28/44.
4. ABUTMENT DIAPHRAGM CONCRETE, PHASED CONSTRUCTION: PLACE THE DIAPHRAGM CONCRETE ENCASING THE STRUCTURAL MEMBER ENDS OF AN INDIVIDUAL PHASE WITH THE DECK CONCRETE.
5. FOR SEMI-INTEGRAL ABUTMENT DIAPHRAGM GUIDE DETAILS, SEE SHEET 14/44.
6. FOR ADDITIONAL DETAILS AND NOTES, SEE STD. DWG. SICD-1-96.
7. MINIMUM REINFORCING STEEL LAP LENGTHS FOR #8 BARS SHALL BE 5'-4".
8. ELEVATIONS ARE GIVEN AT THE CENTERLINE OF ABUTMENT BEARING.

DESIGN AGENCY
GPD GROUP
Glenn, Pike, Schiener, Burns & DeHaven, Inc.
520 South Main Street, Akron, OH 44311 330.572.2100

| DESIGNED | DRAWN | REVIEWED | DATE |
|---|---|---|---|
| MOJ | MOJ/JJB | DGN | 1-19-21 |
| CHECKED | REVISED | STRUCTURE FILE NUMBER | |
| RHC | | 7702558/7702582 | |

FORWARD ABUTMENT DIAPHRAGM DETAILS
BRIDGE NO. SUM-77-0810 L/R
I.R. 77 OVER THE TUSCARAWAS RIVER

SUM-77/277/224
VARIOUS
PID No. 106002

26 / 44

1206
1288

Copyright GPD Group, Inc. 2020

D:\2017\2017258\ProjectData\SUM\106002\Design\Structures\SUM077_0810\Sheets\077_0810C_SD003.dgn Sheet2 1/17/2021 9:22:13 PM mjurcak

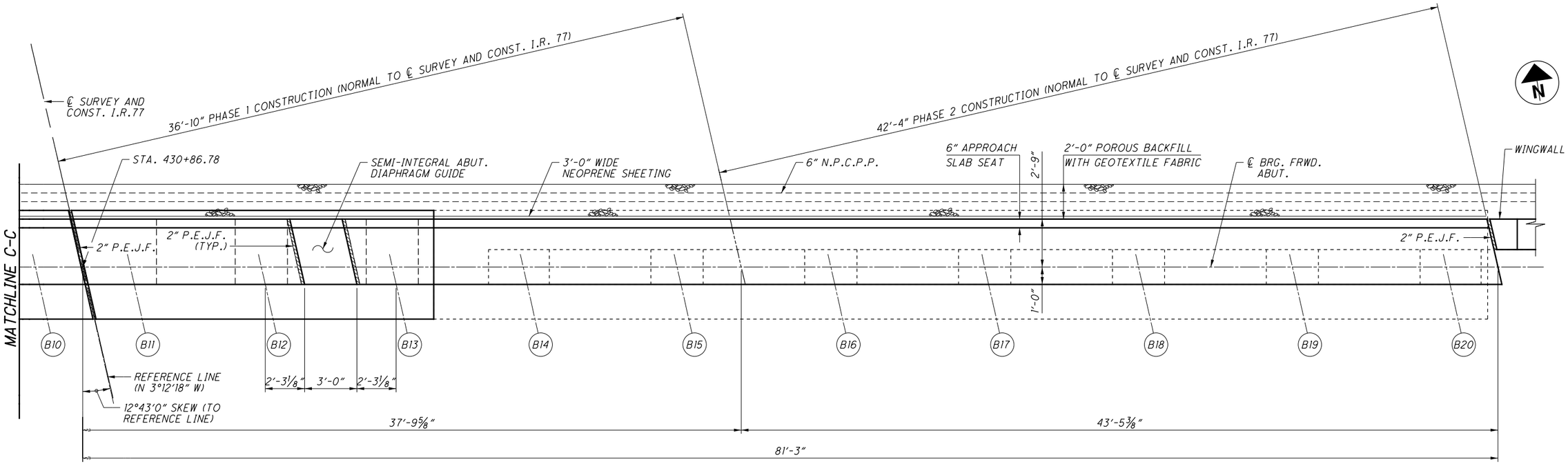


## PLAN

PARTIAL SOUTHBOUND PLAN SHOWN FOR REFERENCE PURPOSES

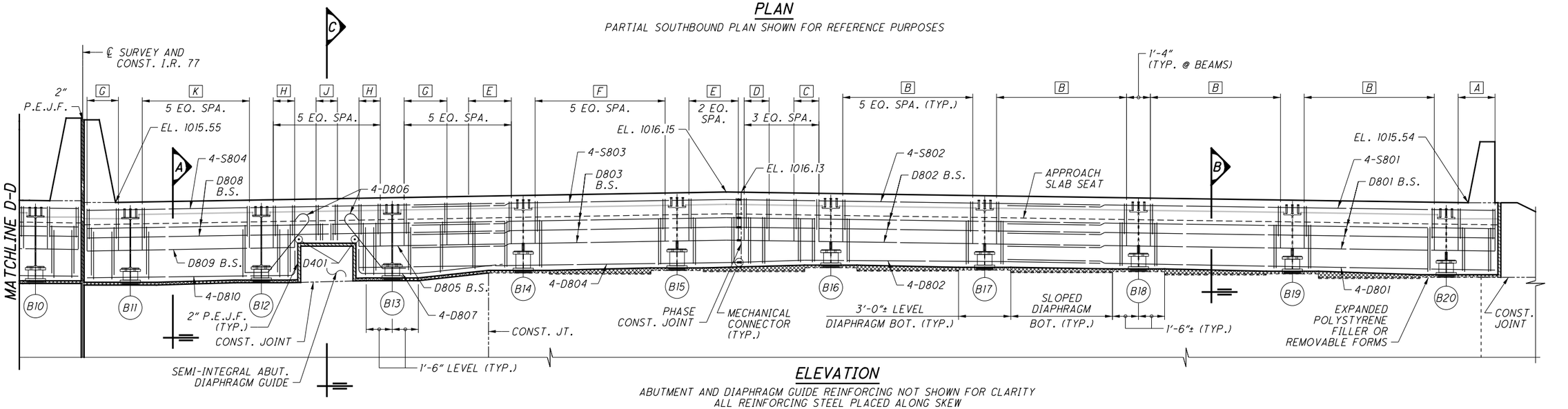


## ELEVATION

ABUTMENT AND DIAPHRAGM GUIDE REINFORCING NOT SHOWN FOR CLARITY
ALL REINFORCING STEEL PLACED ALONG SKEW

### LEGEND:

(B#) BEAM NUMBER

### NOTES:

1. STATIONS AND DIMENSIONS ARE GIVEN TO ℄ SURVEY AND CONST. I.R. 77.
2. FOR REINFORCING CALLOUT LEGEND AND SOUTHBOUND ABUTMENT DIAPHRAGM DETAILS, SEE SHEET 26/44.
3. FOR SECTIONS A THROUGH C, SEE SHEET 28/44.
4. ABUTMENT DIAPHRAGM CONCRETE, PHASED CONSTRUCTION: PLACE THE DIAPHRAGM CONCRETE ENCASING THE STRUCTURAL MEMBER ENDS OF AN INDIVIDUAL PHASE WITH THE DECK CONCRETE.
5. FOR SEMI-INTEGRAL ABUTMENT DIAPHRAGM GUIDE DETAILS, SEE SHEET 14/44.
6. FOR ADDITIONAL DETAILS AND NOTES, SEE STD. DWG. SICD-1-96.
7. MINIMUM REINFORCING STEEL LAP LENGTHS FOR #8 BARS SHALL BE 5'-4".
8. ELEVATIONS ARE GIVEN AT THE CENTERLINE OF ABUTMENT BEARING.

DESIGN AGENCY
GPD GROUP
520 South Main Street, Akron, OH 44311 330.572.2100
Copyright GPD Group, Akron, Ohio, USA

| DESIGNED | DRAWN | REVIEWED | DATE |
|---|---|---|---|
| MOJ | MOJ/JJB | DGN | 1-19-21 |
| CHECKED | REVISED | STRUCTURE FILE NUMBER | |
| RHC | | 7702558/7702582 | |

# FORWARD ABUTMENT DIAPHRAGM DETAILS

BRIDGE NO. SUM-77-0810 L/R
I.R. 77 OVER THE TUSCARAWAS RIVER

SUM-77/277/224
VARIOUS
PID No. 106002

27/44

1207
1288

D:\2017\20171258\ProjectData\SUM\106002\Design\Structures\SUM077_0810\Sheets\077_0810C_SD003.dgn Sheet1 1/17/2021 9:22:14 PM mjurcak

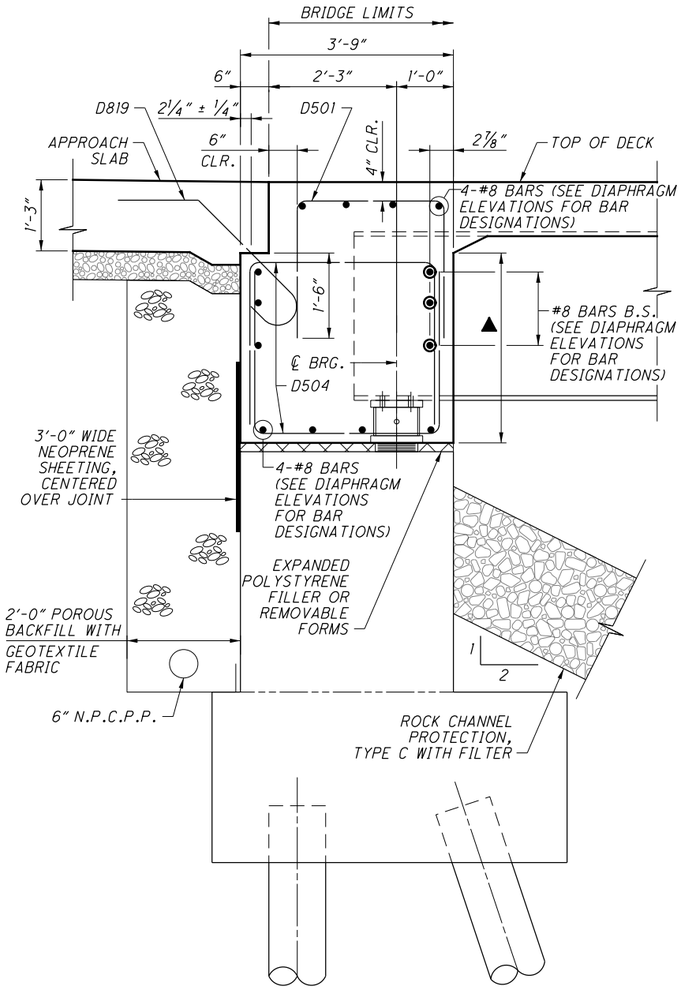


SECTION A

ABUTMENT REINFORCING AND DIMENSIONS NOT SHOWN FOR CLARITY

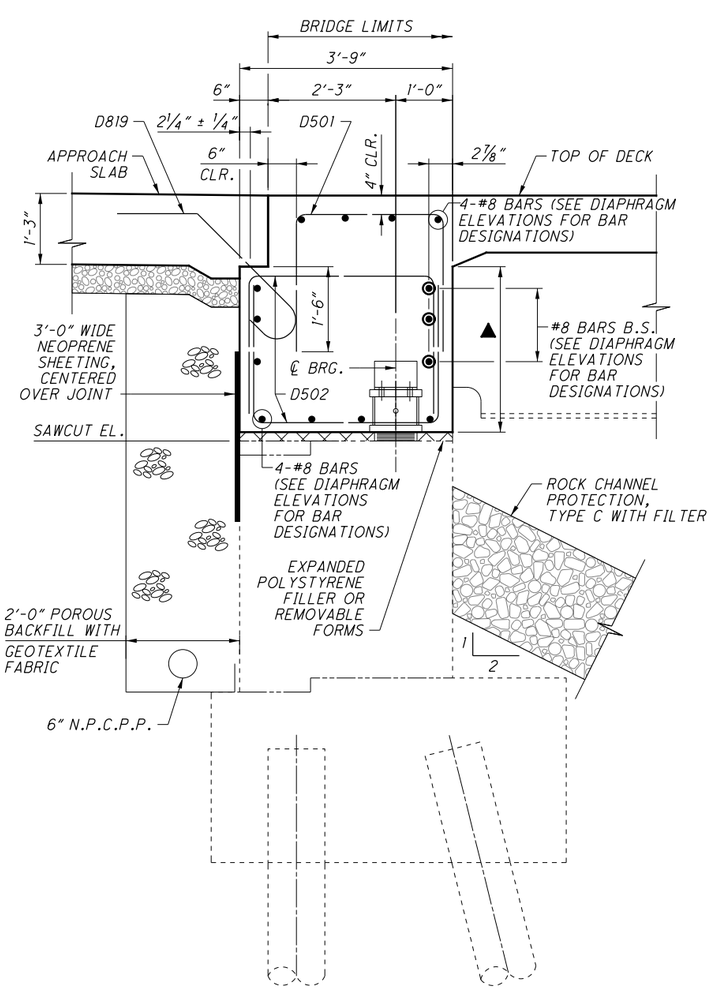


SECTION B

ABUTMENT REINFORCING AND DIMENSIONS NOT SHOWN FOR CLARITY

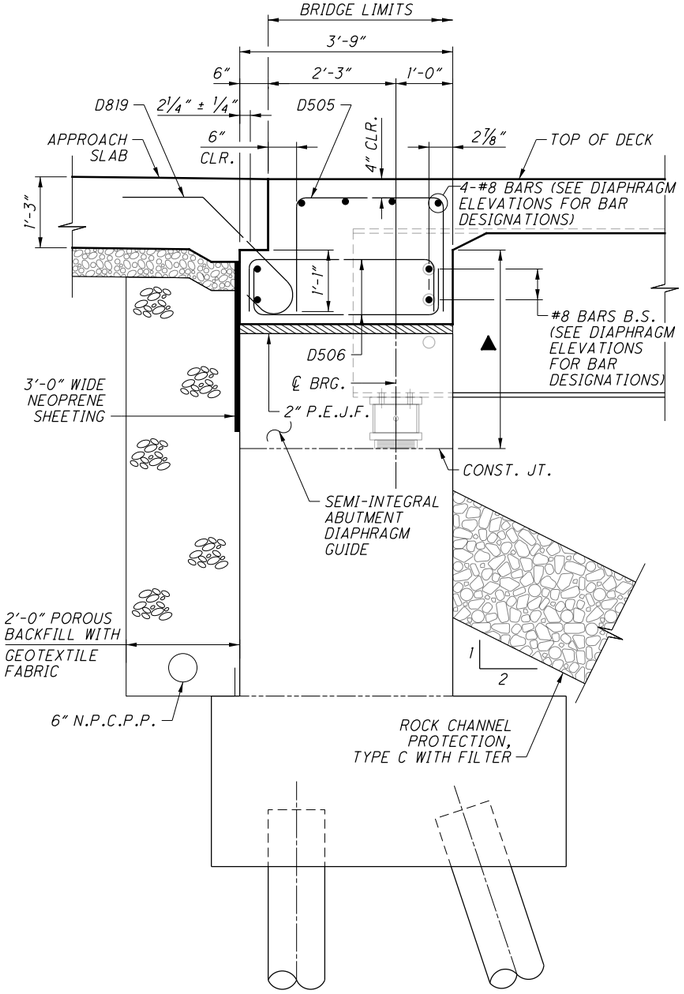


SECTION C

ABUTMENT REINFORCING AND DIMENSIONS NOT SHOWN FOR CLARITY

**LEGEND:**

▲ ITEM 512 - SEALING OF CONCRETE SURFACES (EPOXY-URETHANE)

**NOTES:**

1. FOR LOCATIONS OF SECTIONS A THROUGH C, SEE SHEETS 24/44 THROUGH 27/44.
2. FOR ADDITIONAL DETAILS AND NOTES, SEE STD. DWG. SICD-1-96.

DESIGN AGENCY
GPD GROUP
Glaus, Pyle, Schomer, Burns & DeHaven, Inc.
520 South Main Street, Akron, OH 44311 330.572.2100
Copyright Glaus, Pyle, Schomer, Burns & DeHaven, Inc. 2020

| DESIGNED | DRAWN | REVIEWED | DATE |
|---|---|---|---|
| MOJ | MOJ/JJB | DGN | 1-19-21 |
| CHECKED | REVISED | STRUCTURE FILE NUMBER | |
| RHC | | 7702558/7702582 | |

ABUTMENT DIAPHRAGM DETAILS
BRIDGE NO. SUM-77-0810 L/R
I.R. 77 OVER THE TUSCARAWAS RIVER

SUM-77/277/224
VARIOUS
PID No. 106002

28/44

1208
1288

O:\2017\20172581\ProjectData\SUM\106002\Design\Structures\SUM077_0810\Sheets\077_0810C_SD002.dgn Sheet3 1/17/2021 9:22:16 PM mjurcak

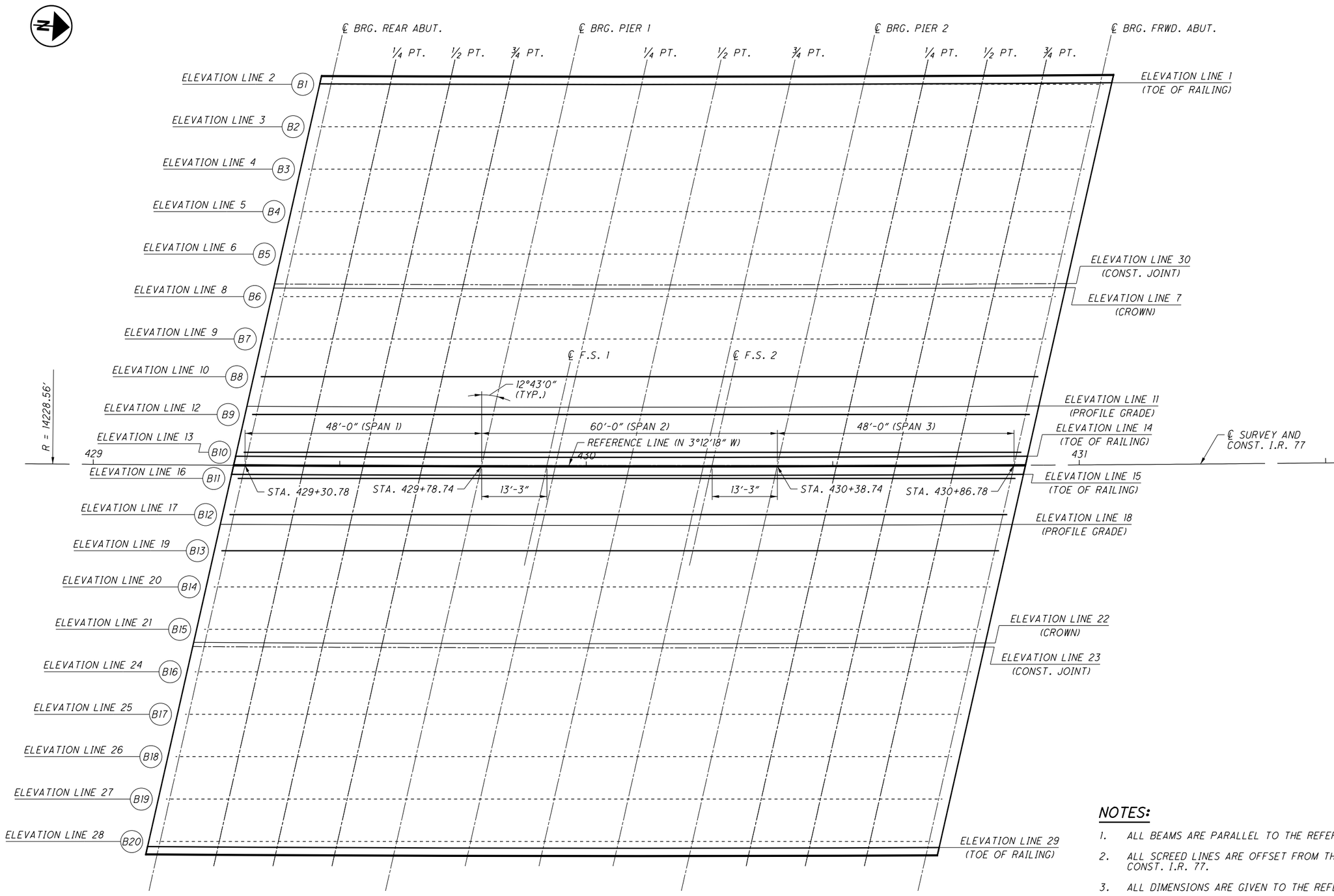


## ELEVATION LINE LOCATION PLAN

### NOTES:

1. ALL BEAMS ARE PARALLEL TO THE REFERENCE LINE.
2. ALL SCREED LINES ARE OFFSET FROM THE ℄ SURVEY AND CONST. I.R. 77.
3. ALL DIMENSIONS ARE GIVEN TO THE REFERENCE LINE.
4. FOR ELEVATION LINE LOCATION SECTION AND SCREED ELEVATIONS, SEE SHEET 30/44.
5. FOR TOP OF HAUNCH ELEVATIONS, SEE SHEET 31/44.
6. FOR FINAL DECK SURFACE ELEVATIONS, SEE SHEET 32/44.

DESIGN AGENCY
GPD GROUP
Glaus, Pyle, Schomer, Burns & DeHaven, Inc.
520 South Main Street, Akron, OH 44311 330.572.2100
Copyright Glaus, Pyle, Schomer, Burns & DeHaven, Inc. 2020

| DESIGNED | DRAWN | REVIEWED | DATE |
|---|---|---|---|
| MOJ | MOJ | DGN | 1-19-21 |
| CHECKED | REVISED | STRUCTURE FILE NUMBER | |
| RHC | | 7702558/7702582 | |

ELEVATION LINE LOCATION PLAN
BRIDGE NO. SUM-77-0810
I.R. 77 OVER THE TUSCARAWAS RIVER

SUM-77/277/224
VARIOUS
PID No. 106002

29/44

1209
1288

O:\2017\201258\ProjectData\SUM\106002\Design\Structures\SUM077_0810\Sheets\077_0810C_SS003.dgn Sheet 1/17/2021 9:22:19 PM mjurcak

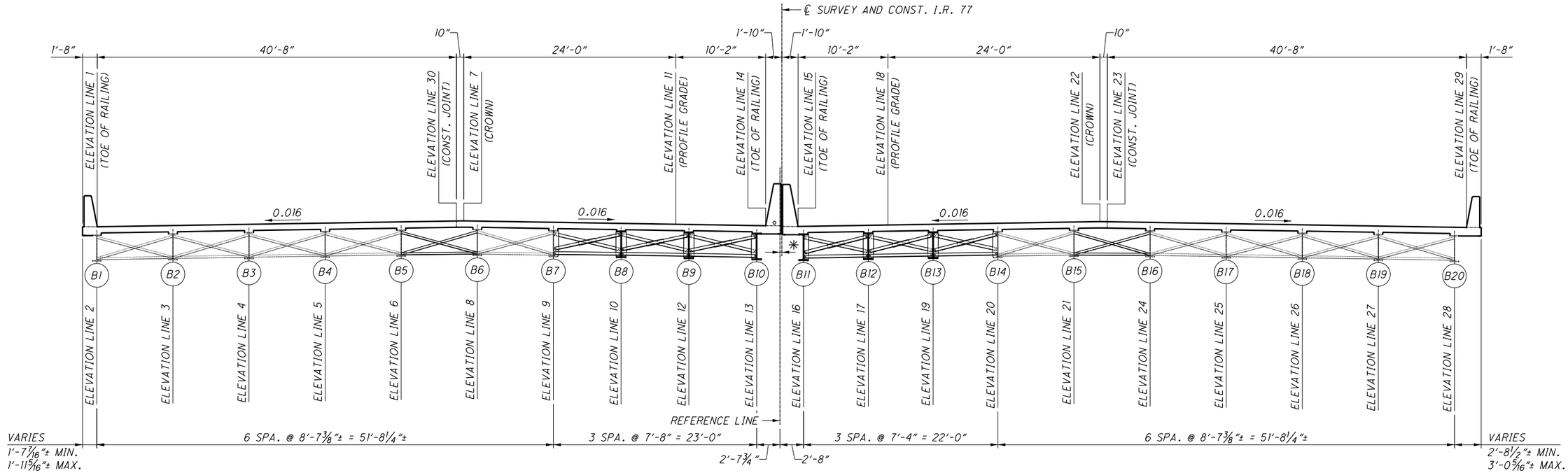


ELEVATION LINE LOCATION SECTION

## SCREED ELEVATIONS

| LOCATION | ELEVATION LINE 1 | | ELEVATION LINE 30 | | ELEVATION LINE 7 | | ELEVATION LINE 11 | | ELEVATION LINE 14 | |
|---|---|---|---|---|---|---|---|---|---|---|
| | STATION | SCREED ELEVATION | STATION | SCREED ELEVATION | STATION | SCREED ELEVATION | STATION | SCREED ELEVATION | STATION | SCREED ELEVATION |
| CL BRG. REAR ABUT. | 429+47.92 | 1016.65 | 429+38.90 | 1017.40 | 429+38.72 | 1017.41 | 429+33.42 | 1017.09 | 429+31.19 | 1016.95 |
| 1/4 SPAN 1 | 429+59.98 | 1016.54 | 429+50.92 | 1017.28 | 429+50.74 | 1017.30 | 429+45.42 | 1016.97 | 429+43.17 | 1016.83 |
| 1/2 SPAN 1 | 429+72.03 | 1016.42 | 429+62.94 | 1017.16 | 429+62.76 | 1017.18 | 429+57.42 | 1016.85 | 429+55.16 | 1016.71 |
| 3/4 SPAN 1 | 429+84.09 | 1016.30 | 429+74.97 | 1017.04 | 429+74.78 | 1017.05 | 429+69.42 | 1016.72 | 429+67.16 | 1016.58 |
| CL BRG. PIER 1 | 429+96.16 | 1016.19 | 429+86.99 | 1016.92 | 429+86.81 | 1016.93 | 429+81.43 | 1016.60 | 429+79.15 | 1016.46 |
| FIELD SPLICE 1 | - | - | - | - | - | - | 429+94.68 | 1016.49 | 429+92.40 | 1016.35 |
| 1/4 SPAN 2 | 430+11.24 | 1016.07 | 430+02.03 | 1016.80 | 430+01.84 | 1016.81 | 429+96.43 | 1016.48 | 429+94.15 | 1016.33 |
| 1/2 SPAN 2 | 430+26.32 | 1015.95 | 430+17.07 | 1016.68 | 430+16.88 | 1016.69 | 430+11.45 | 1016.36 | 430+09.15 | 1016.21 |
| 3/4 SPAN 2 | 430+41.41 | 1015.83 | 430+32.11 | 1016.55 | 430+31.92 | 1016.57 | 430+26.46 | 1016.23 | 430+24.15 | 1016.08 |
| FIELD SPLICE 2 | - | - | - | - | - | - | 430+28.21 | 1016.21 | 430+25.90 | 1016.07 |
| CL BRG. PIER 2 | 430+56.50 | 1015.72 | 430+47.16 | 1016.44 | 430+46.97 | 1016.45 | 430+41.48 | 1016.11 | 430+39.16 | 1015.96 |
| 1/4 SPAN 3 | 430+68.58 | 1015.65 | 430+59.20 | 1016.36 | 430+59.01 | 1016.37 | 430+53.50 | 1016.03 | 430+51.17 | 1015.88 |
| 1/2 SPAN 3 | 430+80.66 | 1015.58 | 430+71.24 | 1016.29 | 430+71.05 | 1016.30 | 430+65.52 | 1015.96 | 430+63.18 | 1015.81 |
| 3/4 SPAN 3 | 430+92.74 | 1015.51 | 430+83.28 | 1016.22 | 430+83.09 | 1016.23 | 430+77.54 | 1015.88 | 430+75.19 | 1015.73 |
| CL BRG. FRWD. ABUT. | 431+04.82 | 1015.44 | 430+95.33 | 1016.14 | 430+95.14 | 1016.15 | 430+89.56 | 1015.80 | 430+87.21 | 1015.65 |

## SCREED ELEVATIONS (CONTINUED)

| LOCATION | ELEVATION LINE 15 | | ELEVATION LINE 18 | | ELEVATION LINE 22 | | ELEVATION LINE 23 | | ELEVATION LINE 29 | |
|---|---|---|---|---|---|---|---|---|---|---|
| | STATION | SCREED ELEVATION | STATION | SCREED ELEVATION | STATION | SCREED ELEVATION | STATION | SCREED ELEVATION | STATION | SCREED ELEVATION |
| CL BRG. REAR ABUT. | 429+30.38 | 1016.89 | 429+28.15 | 1017.08 | 429+22.89 | 1017.52 | 429+22.70 | 1017.51 | 429+13.83 | 1016.96 |
| 1/4 SPAN 1 | 429+42.36 | 1016.77 | 429+40.12 | 1016.95 | 429+34.84 | 1017.39 | 429+34.66 | 1017.38 | 429+25.75 | 1016.83 |
| 1/2 SPAN 1 | 429+54.35 | 1016.64 | 429+52.10 | 1016.83 | 429+46.80 | 1017.27 | 429+46.61 | 1017.25 | 429+37.67 | 1016.70 |
| 3/4 SPAN 1 | 429+66.34 | 1016.51 | 429+64.08 | 1016.70 | 429+58.76 | 1017.13 | 429+58.57 | 1017.12 | 429+49.60 | 1016.57 |
| CL BRG. PIER 1 | 429+78.33 | 1016.39 | 429+76.06 | 1016.57 | 429+70.72 | 1017.01 | 429+70.53 | 1017.00 | 429+61.52 | 1016.44 |
| FIELD SPLICE 1 | 429+91.58 | 1016.28 | 429+89.30 | 1016.46 | - | - | - | - | - | - |
| 1/4 SPAN 2 | 429+93.33 | 1016.26 | 429+91.04 | 1016.44 | 429+85.67 | 1016.87 | 429+85.49 | 1016.86 | 429+76.43 | 1016.30 |
| 1/2 SPAN 2 | 430+08.32 | 1016.13 | 430+06.03 | 1016.32 | 430+00.63 | 1016.75 | 430+00.45 | 1016.73 | 429+91.34 | 1016.17 |
| 3/4 SPAN 2 | 430+23.32 | 1016.00 | 430+21.02 | 1016.18 | 430+15.59 | 1016.61 | 430+15.41 | 1016.60 | 430+06.26 | 1016.03 |
| FIELD SPLICE 2 | 430+25.07 | 1015.99 | 430+22.77 | 1016.17 | - | - | - | - | - | - |
| CL BRG. PIER 2 | 430+38.32 | 1015.88 | 430+36.01 | 1016.06 | 430+30.56 | 1016.48 | 430+30.37 | 1016.47 | 430+21.18 | 1015.89 |
| 1/4 SPAN 3 | 430+50.33 | 1015.79 | 430+48.01 | 1015.97 | 430+42.53 | 1016.40 | 430+42.35 | 1016.38 | 430+33.12 | 1015.80 |
| 1/2 SPAN 3 | 430+62.34 | 1015.72 | 430+60.00 | 1015.90 | 430+54.51 | 1016.32 | 430+54.32 | 1016.30 | 430+45.06 | 1015.72 |
| 3/4 SPAN 3 | 430+74.35 | 1015.64 | 430+72.01 | 1015.82 | 430+66.49 | 1016.23 | 430+66.30 | 1016.22 | 430+57.00 | 1015.63 |
| CL BRG. FRWD. ABUT. | 430+86.36 | 1015.55 | 430+84.01 | 1015.73 | 430+78.47 | 1016.15 | 430+78.28 | 1016.13 | 430+68.95 | 1015.54 |

## LEGEND:

✳ VARIES 0 TO 2 9/16" (REFERENCE LINE TO ℄ SURVEY AND CONST. I.R. 77)

## NOTES:

1. FOR ELEVATION LINE LOCATION PLAN, SEE SHEET 29/44.
2. FOR TOP OF HAUNCH ELEVATIONS, SEE SHEET 31/44.
3. FOR FINAL DECK SURFACE ELEVATIONS, SEE SHEET 32/44.
4. SCREED ELEVATIONS SHOWN REPRESENT THE THEORETICAL DECK SURFACE LOCATION PRIOR TO DEFLECTIONS CAUSED BY DECK PLACEMENT AND OTHER ANTICIPATED DEAD LOADS.
5. THE SCREED ELEVATIONS SHOWN ON THIS SHEET FOR POINTS ADJACENT TO EXISTING BEAMS (ELEVATION LINES 1, 30, 7, 22, 23, & 29) ARE BASED ON THEORETICAL EXISTING BEAM DEFLECTIONS AND ARE FOR REFERENCE ONLY. ACTUAL SCREED ELEVATIONS FOR POINTS ADJACENT TO EXISTING BEAMS SHALL BE BASED ON EXISTING BEAM REBOUND AS CALCULATED BY THE CONTRACTOR IN THE TABLES ON SHEETS 33/44 THROUGH 35/44.

DESIGN AGENCY
GPD GROUP
Glaus, Pyle, Schomer, Burns & DeHaven, Inc.
520 South Main Street, Akron, OH 44311 330.572.2100
Copyright Glaus, Pyle, Schomer, Burns & DeHaven, Inc. 2020

| DESIGNED | DRAWN | REVIEWED | DATE |
|---|---|---|---|
| MOJ | MOJ | DGN | 1-19-21 |
| CHECKED | REVISED | STRUCTURE FILE NUMBER | |
| RHC | | 7702558/7702582 | |

ELEVATION LINE LOCATION SECTION & SCREED ELEVATIONS

BRIDGE NO. SUM-77-0810 L/R
I.R. 77 OVER THE TUSCARAWAS RIVER

SUM-77/277/224
VARIOUS
PID No. 106002

30/44

1210
1288

O:\2017\2017258\Project Data\SUM\106002\Design\Structures\SUM077_0810\Sheets\077_0810C_SS003.dgn Sheet 2 1/17/2021 9:22:20 PM mjurcak

## TOP OF HAUNCH ELEVATIONS

| LOCATION | ELEVATION LINE 10 | | ELEVATION LINE 12 | | ELEVATION LINE 13 | | ELEVATION LINE 16 | | ELEVATION LINE 17 | | ELEVATION LINE 19 | |
|---|---|---|---|---|---|---|---|---|---|---|---|---|
| | STATION | TOH ELEVATION | STATION | TOH ELEVATION | STATION | TOH ELEVATION | STATION | TOH ELEVATION | STATION | TOH ELEVATION | STATION | TOH ELEVATION |
| CL BRG. REAR ABUT. | 429+34.75 | 1016.46 | 429+33.05 | 1016.36 | 429+31.36 | 1016.25 | 429+30.20 | 1016.19 | 429+28.58 | 1016.33 | 429+26.97 | 1016.47 |
| 1/4 SPAN 1 | 429+46.76 | 1016.34 | 429+45.06 | 1016.24 | 429+43.37 | 1016.13 | 429+42.19 | 1016.07 | 429+40.57 | 1016.21 | 429+38.96 | 1016.34 |
| 1/2 SPAN 1 | 429+58.78 | 1016.22 | 429+57.07 | 1016.12 | 429+55.37 | 1016.01 | 429+54.19 | 1015.95 | 429+52.56 | 1016.08 | 429+50.94 | 1016.22 |
| 3/4 SPAN 1 | 429+70.79 | 1016.10 | 429+69.08 | 1015.99 | 429+67.37 | 1015.89 | 429+66.19 | 1015.82 | 429+64.56 | 1015.95 | 429+62.93 | 1016.08 |
| CL BRG. PIER 1 | 429+82.81 | 1015.98 | 429+81.09 | 1015.87 | 429+79.37 | 1015.76 | 429+78.19 | 1015.69 | 429+76.55 | 1015.83 | 429+74.91 | 1015.96 |
| FIELD SPLICE 1 | 429+96.07 | 1015.87 | 429+94.35 | 1015.76 | 429+92.63 | 1015.65 | 429+91.43 | 1015.58 | 429+89.79 | 1015.71 | 429+88.15 | 1015.84 |
| 1/4 SPAN 2 | 429+97.83 | 1015.85 | 429+96.10 | 1015.75 | 429+94.38 | 1015.64 | 429+93.18 | 1015.56 | 429+91.54 | 1015.69 | 429+89.89 | 1015.83 |
| 1/2 SPAN 2 | 430+12.85 | 1015.73 | 430+11.11 | 1015.63 | 430+09.38 | 1015.52 | 430+08.18 | 1015.44 | 430+06.53 | 1015.57 | 430+04.88 | 1015.70 |
| 3/4 SPAN 2 | 430+27.86 | 1015.61 | 430+26.12 | 1015.50 | 430+24.38 | 1015.39 | 430+23.18 | 1015.31 | 430+21.52 | 1015.44 | 430+19.86 | 1015.57 |
| FIELD SPLICE 2 | 430+29.62 | 1015.59 | 430+27.87 | 1015.48 | 430+26.13 | 1015.38 | 430+24.93 | 1015.29 | 430+23.27 | 1015.42 | 430+21.61 | 1015.55 |
| CL BRG. PIER 2 | 430+42.88 | 1015.49 | 430+41.13 | 1015.38 | 430+39.39 | 1015.27 | 430+38.18 | 1015.18 | 430+36.51 | 1015.31 | 430+34.84 | 1015.44 |
| 1/4 SPAN 3 | 430+54.90 | 1015.41 | 430+53.14 | 1015.30 | 430+51.39 | 1015.19 | 430+50.17 | 1015.10 | 430+48.50 | 1015.23 | 430+46.83 | 1015.36 |
| 1/2 SPAN 3 | 430+66.91 | 1015.34 | 430+65.15 | 1015.22 | 430+63.39 | 1015.11 | 430+62.17 | 1015.02 | 430+60.49 | 1015.15 | 430+58.81 | 1015.28 |
| 3/4 SPAN 3 | 430+78.93 | 1015.26 | 430+77.16 | 1015.15 | 430+75.39 | 1015.04 | 430+74.17 | 1014.94 | 430+72.48 | 1015.07 | 430+70.80 | 1015.20 |
| CL BRG. FRWD. ABUT. | 430+90.94 | 1015.18 | 430+89.17 | 1015.07 | 430+87.39 | 1014.95 | 430+86.17 | 1014.86 | 430+84.47 | 1014.99 | 430+82.78 | 1015.11 |

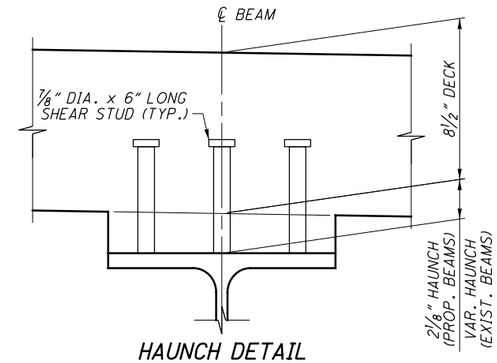


HAUNCH DETAIL

PROPOSED BEAM SHOWN. EXISTING BEAM SIMILAR.

### NOTES:

1. FOR ELEVATION LINE LOCATION PLAN, SEE SHEET 29/44.
2. FOR ELEVATION LINE LOCATION SECTION AND SCREED ELEVATIONS, SEE SHEET 30/44.
3. FOR FINAL DECK SURFACE ELEVATIONS, SEE SHEET 32/44.
4. TOP OF HAUNCH ELEVATIONS SHOWN REPRESENT THE THEORETICAL LOCATION OF THE BOTTOM OF THE DECK ABOVE THE BEAM HAUNCH PRIOR TO DEFLECTIONS CAUSED BY DECK PLACEMENT AND OTHER ANTICIPATED DEAD LOADS.

DESIGN AGENCY
GPD GROUP
Glenn Pha, Schaaf, Bunce & DeHaven, Inc.
520 South Main Street, Akron, OH 44311 330.572.2100
(Copyright Glenn Pha, Schaaf, Bunce & DeHaven, Inc. 2020)

REVIEWED DGN | DATE 1-19-21 | STRUCTURE FILE NUMBER 7702558/7702582
DRAWN MOJ | REVISED
DESIGNED MOJ | CHECKED RHC

TOP OF HAUNCH ELEVATIONS (PROPOSED BEAMS)
BRIDGE NO. SUM-77-0810 L/R
I.R. 77 OVER THE TUSCARAWAS RIVER

SUM-77/277/224
VARIOUS
PID No. 106002



O:\2017\2017258\ProjectData\SUM\06002\Design\Structures\SUM077_0810\Sheets\077_0810C_SS003.dgn Sheet 3 1/17/2021 9:22:21 PM mjurcak

## FINAL DECK SURFACE (FDS) ELEVATIONS

| LOCATION | ELEVATION LINE 1 | | ELEVATION LINE 2 | | ELEVATION LINE 3 | | ELEVATION LINE 4 | | ELEVATION LINE 5 | | ELEVATION LINE 6 | | ELEVATION LINE 30 | | ELEVATION LINE 7 | |
|---|---|---|---|---|---|---|---|---|---|---|---|---|---|---|---|---|
| | STATION | FDS ELEVATION | STATION | FDS ELEVATION | STATION | FDS ELEVATION | STATION | FDS ELEVATION | STATION | FDS ELEVATION | STATION | FDS ELEVATION | STATION | FDS ELEVATION | STATION | FDS ELEVATION |
| CL BRG. REAR ABUT. | 429+47.92 | 1016.65 | 429+47.90 | 1016.65 | 429+45.99 | 1016.81 | 429+44.07 | 1016.97 | 429+42.16 | 1017.13 | 429+40.25 | 1017.29 | 429+38.90 | 1017.40 | 429+38.72 | 1017.41 |
| 1/4 SPAN 1 | 429+59.98 | 1016.53 | 429+59.97 | 1016.53 | 429+58.04 | 1016.69 | 429+56.12 | 1016.84 | 429+54.20 | 1017.00 | 429+52.29 | 1017.16 | 429+50.92 | 1017.27 | 429+50.74 | 1017.29 |
| 1/2 SPAN 1 | 429+72.03 | 1016.41 | 429+72.03 | 1016.41 | 429+70.10 | 1016.57 | 429+68.17 | 1016.72 | 429+66.25 | 1016.88 | 429+64.32 | 1017.04 | 429+62.94 | 1017.15 | 429+62.76 | 1017.16 |
| 3/4 SPAN 1 | 429+84.09 | 1016.30 | 429+84.10 | 1016.30 | 429+82.16 | 1016.45 | 429+80.23 | 1016.61 | 429+78.29 | 1016.76 | 429+76.36 | 1016.92 | 429+74.97 | 1017.03 | 429+74.78 | 1017.05 |
| CL BRG. PIER 1 | 429+96.16 | 1016.19 | 429+96.17 | 1016.19 | 429+94.22 | 1016.34 | 429+92.28 | 1016.50 | 429+90.34 | 1016.65 | 429+88.40 | 1016.81 | 429+86.99 | 1016.92 | 429+86.81 | 1016.93 |
| FIELD SPLICE 1 | - | - | - | - | - | - | - | - | - | - | - | - | - | - | - | - |
| 1/4 SPAN 2 | 430+11.24 | 1016.06 | 430+11.25 | 1016.06 | 430+09.29 | 1016.21 | 430+07.34 | 1016.37 | 430+05.39 | 1016.52 | 430+03.44 | 1016.67 | 430+02.03 | 1016.79 | 430+01.84 | 1016.80 |
| 1/2 SPAN 2 | 430+26.32 | 1015.94 | 430+26.33 | 1015.94 | 430+24.37 | 1016.09 | 430+22.40 | 1016.24 | 430+20.44 | 1016.40 | 430+18.49 | 1016.55 | 430+17.07 | 1016.66 | 430+16.88 | 1016.68 |
| 3/4 SPAN 2 | 430+41.41 | 1015.83 | 430+41.41 | 1015.83 | 430+39.44 | 1015.98 | 430+37.47 | 1016.13 | 430+35.50 | 1016.28 | 430+33.53 | 1016.43 | 430+32.11 | 1016.54 | 430+31.92 | 1016.56 |
| FIELD SPLICE 2 | - | - | - | - | - | - | - | - | - | - | - | - | - | - | - | - |
| CL BRG. PIER 2 | 430+56.50 | 1015.72 | 430+56.49 | 1015.72 | 430+54.51 | 1015.87 | 430+52.53 | 1016.02 | 430+50.55 | 1016.17 | 430+48.58 | 1016.33 | 430+47.16 | 1016.44 | 430+46.97 | 1016.45 |
| 1/4 SPAN 3 | 430+68.58 | 1015.64 | 430+68.56 | 1015.64 | 430+66.57 | 1015.79 | 430+64.58 | 1015.94 | 430+62.60 | 1016.10 | 430+60.61 | 1016.25 | 430+59.20 | 1016.35 | 430+59.01 | 1016.37 |
| 1/2 SPAN 3 | 430+80.66 | 1015.57 | 430+80.63 | 1015.57 | 430+78.63 | 1015.72 | 430+76.63 | 1015.87 | 430+74.64 | 1016.02 | 430+72.65 | 1016.17 | 430+71.24 | 1016.28 | 430+71.05 | 1016.29 |
| 3/4 SPAN 3 | 430+92.74 | 1015.50 | 430+92.69 | 1015.51 | 430+90.69 | 1015.65 | 430+88.68 | 1015.80 | 430+86.68 | 1015.95 | 430+84.69 | 1016.10 | 430+83.28 | 1016.21 | 430+83.09 | 1016.22 |
| CL BRG. FRWD. ABUT. | 431+04.82 | 1015.44 | 431+04.76 | 1015.44 | 431+02.74 | 1015.59 | 431+00.73 | 1015.74 | 430+98.73 | 1015.89 | 430+96.72 | 1016.04 | 430+95.33 | 1016.14 | 430+95.14 | 1016.15 |

## FINAL DECK SURFACE (FDS) ELEVATIONS (CONTINUED)

| LOCATION | ELEVATION LINE 8 | | ELEVATION LINE 9 | | ELEVATION LINE 10 | | ELEVATION LINE 11 | | ELEVATION LINE 12 | | ELEVATION LINE 13 | | ELEVATION LINE 14 | | ELEVATION LINE 15 | |
|---|---|---|---|---|---|---|---|---|---|---|---|---|---|---|---|---|
| | STATION | FDS ELEVATION | STATION | FDS ELEVATION | STATION | FDS ELEVATION | STATION | FDS ELEVATION | STATION | FDS ELEVATION | STATION | FDS ELEVATION | STATION | FDS ELEVATION | STATION | FDS ELEVATION |
| CL BRG. REAR ABUT. | 429+38.34 | 1017.39 | 429+36.44 | 1017.27 | 429+34.75 | 1017.17 | 429+33.42 | 1017.09 | 429+33.05 | 1017.06 | 429+31.36 | 1016.96 | 429+31.19 | 1016.95 | 429+30.38 | 1016.89 |
| 1/4 SPAN 1 | 429+50.37 | 1017.26 | 429+48.46 | 1017.15 | 429+46.76 | 1017.04 | 429+45.42 | 1016.96 | 429+45.06 | 1016.94 | 429+43.37 | 1016.83 | 429+43.17 | 1016.82 | 429+42.36 | 1016.76 |
| 1/2 SPAN 1 | 429+62.40 | 1017.14 | 429+60.48 | 1017.02 | 429+58.78 | 1016.92 | 429+57.42 | 1016.83 | 429+57.07 | 1016.81 | 429+55.37 | 1016.71 | 429+55.16 | 1016.69 | 429+54.35 | 1016.63 |
| 3/4 SPAN 1 | 429+74.43 | 1017.03 | 429+72.50 | 1016.91 | 429+70.79 | 1016.80 | 429+69.42 | 1016.71 | 429+69.08 | 1016.69 | 429+67.37 | 1016.59 | 429+67.16 | 1016.57 | 429+66.34 | 1016.51 |
| CL BRG. PIER 1 | 429+86.46 | 1016.91 | 429+84.53 | 1016.79 | 429+82.81 | 1016.69 | 429+81.43 | 1016.60 | 429+81.09 | 1016.58 | 429+79.37 | 1016.47 | 429+79.15 | 1016.46 | 429+78.33 | 1016.39 |
| FIELD SPLICE 1 | - | - | - | - | 429+96.07 | 1016.57 | 429+94.68 | 1016.48 | 429+94.35 | 1016.46 | 429+92.63 | 1016.35 | 429+92.40 | 1016.34 | 429+91.58 | 1016.26 |
| 1/4 SPAN 2 | 430+01.50 | 1016.78 | 429+99.55 | 1016.66 | 429+97.83 | 1016.55 | 429+96.43 | 1016.46 | 429+96.10 | 1016.44 | 429+94.38 | 1016.34 | 429+94.15 | 1016.32 | 429+93.33 | 1016.25 |
| 1/2 SPAN 2 | 430+16.53 | 1016.66 | 430+14.58 | 1016.53 | 430+12.85 | 1016.42 | 430+11.45 | 1016.34 | 430+11.11 | 1016.32 | 430+09.38 | 1016.21 | 430+09.15 | 1016.19 | 430+08.32 | 1016.12 |
| 3/4 SPAN 2 | 430+31.57 | 1016.54 | 430+29.61 | 1016.41 | 430+27.86 | 1016.31 | 430+26.46 | 1016.22 | 430+26.12 | 1016.20 | 430+24.38 | 1016.09 | 430+24.15 | 1016.07 | 430+23.32 | 1015.99 |
| FIELD SPLICE 2 | - | - | - | - | 430+29.62 | 1016.29 | 430+28.21 | 1016.20 | 430+27.87 | 1016.18 | 430+26.13 | 1016.07 | 430+25.90 | 1016.06 | 430+25.07 | 1015.98 |
| CL BRG. PIER 2 | 430+46.61 | 1016.43 | 430+44.64 | 1016.30 | 430+42.88 | 1016.19 | 430+41.48 | 1016.11 | 430+41.13 | 1016.08 | 430+39.39 | 1015.97 | 430+39.16 | 1015.96 | 430+38.32 | 1015.88 |
| 1/4 SPAN 3 | 430+58.63 | 1016.34 | 430+56.66 | 1016.22 | 430+54.90 | 1016.11 | 430+53.50 | 1016.02 | 430+53.14 | 1016.00 | 430+51.39 | 1015.89 | 430+51.17 | 1015.87 | 430+50.33 | 1015.79 |
| 1/2 SPAN 3 | 430+70.66 | 1016.27 | 430+68.68 | 1016.14 | 430+66.91 | 1016.03 | 430+65.52 | 1015.94 | 430+65.15 | 1015.92 | 430+63.39 | 1015.81 | 430+63.18 | 1015.79 | 430+62.34 | 1015.70 |
| 3/4 SPAN 3 | 430+82.69 | 1016.19 | 430+80.70 | 1016.07 | 430+78.93 | 1015.96 | 430+77.54 | 1015.87 | 430+77.16 | 1015.84 | 430+75.39 | 1015.73 | 430+75.19 | 1015.72 | 430+74.35 | 1015.63 |
| CL BRG. FRWD. ABUT. | 430+94.72 | 1016.13 | 430+92.72 | 1016.00 | 430+90.94 | 1015.89 | 430+89.56 | 1015.80 | 430+89.17 | 1015.77 | 430+87.39 | 1015.66 | 430+87.21 | 1015.65 | 430+86.36 | 1015.55 |

## FINAL DECK SURFACE (FDS) ELEVATIONS (CONTINUED)

| LOCATION | ELEVATION LINE 16 | | ELEVATION LINE 17 | | ELEVATION LINE 18 | | ELEVATION LINE 19 | | ELEVATION LINE 20 | | ELEVATION LINE 21 | | ELEVATION LINE 22 | | ELEVATION LINE 23 | |
|---|---|---|---|---|---|---|---|---|---|---|---|---|---|---|---|---|
| | STATION | FDS ELEVATION | STATION | FDS ELEVATION | STATION | FDS ELEVATION | STATION | FDS ELEVATION | STATION | FDS ELEVATION | STATION | FDS ELEVATION | STATION | FDS ELEVATION | STATION | FDS ELEVATION |
| CL BRG. REAR ABUT. | 429+30.20 | 1016.90 | 429+28.58 | 1017.04 | 429+28.15 | 1017.08 | 429+26.97 | 1017.17 | 429+25.36 | 1017.31 | 429+23.47 | 1017.47 | 429+22.89 | 1017.52 | 429+22.70 | 1017.51 |
| 1/4 SPAN 1 | 429+42.19 | 1016.77 | 429+40.57 | 1016.90 | 429+40.12 | 1016.94 | 429+38.96 | 1017.04 | 429+37.34 | 1017.17 | 429+35.44 | 1017.33 | 429+34.84 | 1017.38 | 429+34.66 | 1017.37 |
| 1/2 SPAN 1 | 429+54.19 | 1016.64 | 429+52.56 | 1016.78 | 429+52.10 | 1016.81 | 429+50.94 | 1016.91 | 429+49.32 | 1017.04 | 429+47.42 | 1017.20 | 429+46.80 | 1017.25 | 429+46.61 | 1017.24 |
| 3/4 SPAN 1 | 429+66.19 | 1016.52 | 429+64.56 | 1016.65 | 429+64.08 | 1016.69 | 429+62.93 | 1016.79 | 429+61.30 | 1016.92 | 429+59.39 | 1017.08 | 429+58.76 | 1017.13 | 429+58.57 | 1017.12 |
| CL BRG. PIER 1 | 429+78.19 | 1016.40 | 429+76.55 | 1016.53 | 429+76.06 | 1016.57 | 429+74.91 | 1016.67 | 429+73.28 | 1016.80 | 429+71.36 | 1016.96 | 429+70.72 | 1017.01 | 429+70.53 | 1017.00 |
| FIELD SPLICE 1 | 429+91.43 | 1016.28 | 429+89.79 | 1016.41 | 429+89.30 | 1016.45 | 429+88.15 | 1016.54 | - | - | - | - | - | - | - | - |
| 1/4 SPAN 2 | 429+93.18 | 1016.26 | 429+91.54 | 1016.39 | 429+91.04 | 1016.43 | 429+89.89 | 1016.52 | 429+88.25 | 1016.66 | 429+86.32 | 1016.81 | 429+85.67 | 1016.87 | 429+85.49 | 1016.85 |
| 1/2 SPAN 2 | 430+08.18 | 1016.13 | 430+06.53 | 1016.26 | 430+06.03 | 1016.30 | 430+04.88 | 1016.39 | 430+03.23 | 1016.52 | 430+01.29 | 1016.68 | 430+00.63 | 1016.73 | 430+00.45 | 1016.72 |
| 3/4 SPAN 2 | 430+23.18 | 1016.00 | 430+21.52 | 1016.13 | 430+21.02 | 1016.17 | 430+19.86 | 1016.26 | 430+18.20 | 1016.40 | 430+16.25 | 1016.55 | 430+15.59 | 1016.60 | 430+15.41 | 1016.59 |
| FIELD SPLICE 2 | 430+24.93 | 1015.99 | 430+23.27 | 1016.12 | 430+22.77 | 1016.16 | 430+21.61 | 1016.25 | - | - | - | - | - | - | - | - |
| CL BRG. PIER 2 | 430+38.18 | 1015.89 | 430+36.51 | 1016.02 | 430+36.01 | 1016.06 | 430+34.84 | 1016.15 | 430+33.17 | 1016.28 | 430+31.22 | 1016.43 | 430+30.56 | 1016.48 | 430+30.37 | 1016.47 |
| 1/4 SPAN 3 | 430+50.17 | 1015.80 | 430+48.50 | 1015.93 | 430+48.01 | 1015.97 | 430+46.83 | 1016.06 | 430+45.15 | 1016.19 | 430+43.19 | 1016.34 | 430+42.53 | 1016.39 | 430+42.35 | 1016.38 |
| 1/2 SPAN 3 | 430+62.17 | 1015.72 | 430+60.49 | 1015.85 | 430+60.00 | 1015.88 | 430+58.81 | 1015.97 | 430+57.13 | 1016.10 | 430+55.16 | 1016.25 | 430+54.51 | 1016.30 | 430+54.32 | 1016.29 |
| 3/4 SPAN 3 | 430+74.17 | 1015.64 | 430+72.48 | 1015.77 | 430+72.01 | 1015.80 | 430+70.80 | 1015.90 | 430+69.11 | 1016.02 | 430+67.14 | 1016.17 | 430+66.49 | 1016.22 | 430+66.30 | 1016.21 |
| CL BRG. FRWD. ABUT. | 430+86.17 | 1015.57 | 430+84.47 | 1015.69 | 430+84.01 | 1015.73 | 430+82.78 | 1015.82 | 430+81.09 | 1015.95 | 430+79.11 | 1016.10 | 430+78.47 | 1016.15 | 430+78.28 | 1016.13 |

## FINAL DECK SURFACE (FDS) ELEVATIONS (CONTINUED)

| LOCATION | ELEVATION LINE 24 | | ELEVATION LINE 25 | | ELEVATION LINE 26 | | ELEVATION LINE 27 | | ELEVATION LINE 28 | | ELEVATION LINE 29 | |
|---|---|---|---|---|---|---|---|---|---|---|---|---|
| | STATION | FDS ELEVATION | STATION | FDS ELEVATION | STATION | FDS ELEVATION | STATION | FDS ELEVATION | STATION | FDS ELEVATION | STATION | FDS ELEVATION |
| CL BRG. REAR ABUT. | 429+21.58 | 1017.44 | 429+19.70 | 1017.32 | 429+17.82 | 1017.21 | 429+15.94 | 1017.09 | 429+14.06 | 1016.97 | 429+13.83 | 1016.96 |
| 1/4 SPAN 1 | 429+33.55 | 1017.30 | 429+31.66 | 1017.19 | 429+29.77 | 1017.07 | 429+27.88 | 1016.95 | 429+26.00 | 1016.84 | 429+25.75 | 1016.82 |
| 1/2 SPAN 1 | 429+45.51 | 1017.17 | 429+43.62 | 1017.06 | 429+41.72 | 1016.94 | 429+39.82 | 1016.82 | 429+37.93 | 1016.71 | 429+37.67 | 1016.69 |
| 3/4 SPAN 1 | 429+57.48 | 1017.05 | 429+55.57 | 1016.93 | 429+53.67 | 1016.81 | 429+51.77 | 1016.70 | 429+49.87 | 1016.58 | 429+49.60 | 1016.56 |
| CL BRG. PIER 1 | 429+69.44 | 1016.93 | 429+67.53 | 1016.81 | 429+65.62 | 1016.69 | 429+63.71 | 1016.57 | 429+61.80 | 1016.45 | 429+61.52 | 1016.44 |
| FIELD SPLICE 1 | - | - | - | - | - | - | - | - | - | - | - | - |
| 1/4 SPAN 2 | 429+84.40 | 1016.79 | 429+82.48 | 1016.67 | 429+80.56 | 1016.55 | 429+78.64 | 1016.43 | 429+76.72 | 1016.31 | 429+76.43 | 1016.29 |
| 1/2 SPAN 2 | 429+99.36 | 1016.65 | 429+97.42 | 1016.53 | 429+95.50 | 1016.41 | 429+93.57 | 1016.29 | 429+91.64 | 1016.17 | 429+91.34 | 1016.15 |
| 3/4 SPAN 2 | 430+14.31 | 1016.52 | 430+12.37 | 1016.40 | 430+10.43 | 1016.28 | 430+08.50 | 1016.16 | 430+06.56 | 1016.04 | 430+06.26 | 1016.02 |
| FIELD SPLICE 2 | - | - | - | - | - | - | - | - | - | - | - | - |
| CL BRG. PIER 2 | 430+29.27 | 1016.40 | 430+27.32 | 1016.28 | 430+25.37 | 1016.16 | 430+23.43 | 1016.03 | 430+21.48 | 1015.91 | 430+21.18 | 1015.89 |
| 1/4 SPAN 3 | 430+41.23 | 1016.31 | 430+39.28 | 1016.19 | 430+37.32 | 1016.06 | 430+35.37 | 1015.94 | 430+33.42 | 1015.82 | 430+33.12 | 1015.80 |
| 1/2 SPAN 3 | 430+53.20 | 1016.22 | 430+51.23 | 1016.10 | 430+49.27 | 1015.97 | 430+47.31 | 1015.85 | 430+45.36 | 1015.73 | 430+45.06 | 1015.71 |
| 3/4 SPAN 3 | 430+65.16 | 1016.14 | 430+63.19 | 1016.01 | 430+61.22 | 1015.89 | 430+59.26 | 1015.77 | 430+57.29 | 1015.64 | 430+57.00 | 1015.62 |
| CL BRG. FRWD. ABUT. | 430+77.13 | 1016.06 | 430+75.15 | 1015.94 | 430+73.17 | 1015.81 | 430+71.20 | 1015.69 | 430+69.23 | 1015.56 | 430+68.95 | 1015.54 |

### NOTES:

1. FOR ELEVATION LINE LOCATION PLAN, SEE SHEET 29/44.
2. FOR ELEVATION LINE LOCATION SECTION AND SCREED ELEVATIONS, SEE SHEET 30/44.
3. FOR TOP OF HAUNCH ELEVATIONS, SEE SHEET 31/44.
4. FINAL DECK SURFACE ELEVATIONS SHOWN REPRESENT THE DECK SURFACE LOCATION AFTER ALL ANTICIPATED DEAD LOAD DEFLECTIONS HAVE OCCURRED.

DESIGN AGENCY
GPD GROUP®
Glaus, Pyle, Schomer, Burns & DeHaven, Inc.
520 South Main Street, Akron, OH 44311 330.572.2100
Copyright Glaus, Pyle, Schomer, Burns & DeHaven, Inc. 2020

DESIGNED MOJ | DRAWN MOJ | REVIEWED DGN | DATE 1-19-21
CHECKED RHC | REVISED | STRUCTURE FILE NUMBER 7702558/7702582

FINAL DECK SURFACE ELEVATIONS
BRIDGE NO. SUM-77-0810 L/R
I.R. 77 OVER THE TUSCARAWAS RIVER

SUM-77/277/224
VARIOUS
PID No. 106002



1212
1288

D:\2017\2017258\ProjectData\SUM\06002\Design\Structures\SUM077_0810\Sheets\077_0810C_SS003.dgn Sheet 4 1/17/2021 9:22:22 PM mjurcak

# SCREED & TOP OF HAUNCH ELEVATION CALCULATIONS (EXIST. BEAMS)

| | | LOCATION | REAR ABUT. | SPAN 1 | | | PIER 1 | SPAN 2 | | | PIER 2 | SPAN 3 | | | FRWD. ABUT. |
|---|---|---|---|---|---|---|---|---|---|---|---|---|---|---|---|
| | | | | 1/4 PT. | 1/2 PT. | 3/4 PT. | | 1/4 PT. | 1/2 PT. | 3/4 PT. | | 1/4 PT. | 1/2 PT. | 3/4 PT. | |
| ELEVATION LINE 1 | - | STATION | 429+47.92 | 429+59.98 | 429+72.03 | 429+84.09 | 429+96.16 | 430+11.24 | 430+26.32 | 430+41.41 | 430+56.50 | 430+68.58 | 430+80.66 | 430+92.74 | 431+04.82 |
| | A | FINAL DECK ELEVATION | 1016.65 | 1016.53 | 1016.41 | 1016.30 | 1016.19 | 1016.06 | 1015.94 | 1015.83 | 1015.72 | 1015.64 | 1015.57 | 1015.50 | 1015.44 |
| | B | * BOTTOM OF FLANGE ELEVATION (BEFORE REMOVAL) | | | | | | | | | | | | | |
| | C | * BOTTOM OF FLANGE ELEVATION (AFTER REMOVAL) | | | | | | | | | | | | | |
| | D | * REBOUND (FT) | | | | | | | | | | | | | |
| | E | WEIGHT OF EXISTING DECK (KLF/BEAM) | 1.34 | 1.34 | 1.34 | 1.34 | 1.34 | 1.34 | 1.34 | 1.34 | 1.34 | 1.34 | 1.34 | 1.34 | 1.34 |
| | F | WEIGHT OF PROPOSED DECK (KLF/BEAM) | 1.04 | 1.04 | 1.04 | 1.04 | 1.04 | 1.04 | 1.04 | 1.04 | 1.04 | 1.04 | 1.04 | 1.04 | 1.04 |
| | G | * DECK DEFLECTION (FT) | | | | | | | | | | | | | |
| | H | DECK THICKNESS (FT) | 0.71 | 0.71 | 0.71 | 0.71 | 0.71 | 0.71 | 0.71 | 0.71 | 0.71 | 0.71 | 0.71 | 0.71 | 0.71 |
| | J | * SCREED ELEVATION | | | | | | | | | | | | | |
| | K | * TOP OF HAUNCH ELEVATION | - | - | - | - | - | - | - | - | - | - | - | - | - |
| ELEVATION LINE 2 | - | STATION | 429+47.90 | 429+59.97 | 429+72.03 | 429+84.10 | 429+96.17 | 430+11.25 | 430+26.33 | 430+41.41 | 430+56.49 | 430+68.56 | 430+80.63 | 430+92.69 | 431+04.76 |
| | A | FINAL DECK ELEVATION | 1016.65 | 1016.53 | 1016.41 | 1016.30 | 1016.19 | 1016.06 | 1015.94 | 1015.83 | 1015.72 | 1015.64 | 1015.57 | 1015.51 | 1015.44 |
| | B | * BOTTOM OF FLANGE ELEVATION (BEFORE REMOVAL) | | | | | | | | | | | | | |
| | C | * BOTTOM OF FLANGE ELEVATION (AFTER REMOVAL) | | | | | | | | | | | | | |
| | D | * REBOUND (FT) | | | | | | | | | | | | | |
| | E | WEIGHT OF EXISTING DECK (KLF/BEAM) | 1.34 | 1.34 | 1.34 | 1.34 | 1.34 | 1.34 | 1.34 | 1.34 | 1.34 | 1.34 | 1.34 | 1.34 | 1.34 |
| | F | WEIGHT OF PROPOSED DECK (KLF/BEAM) | 1.04 | 1.04 | 1.04 | 1.04 | 1.04 | 1.04 | 1.04 | 1.04 | 1.04 | 1.04 | 1.04 | 1.04 | 1.04 |
| | G | * DECK DEFLECTION (FT) | | | | | | | | | | | | | |
| | H | DECK THICKNESS (FT) | 0.71 | 0.71 | 0.71 | 0.71 | 0.71 | 0.71 | 0.71 | 0.71 | 0.71 | 0.71 | 0.71 | 0.71 | 0.71 |
| | J | * SCREED ELEVATION | - | - | - | - | - | - | - | - | - | - | - | - | - |
| | K | * TOP OF HAUNCH ELEVATION | | | | | | | | | | | | | |
| ELEVATION LINE 3 | - | STATION | 429+45.99 | 429+58.04 | 429+70.10 | 429+82.16 | 429+94.22 | 430+09.29 | 430+24.37 | 430+39.44 | 430+54.51 | 430+66.57 | 430+78.63 | 430+90.69 | 431+02.74 |
| | A | FINAL DECK ELEVATION | 1016.81 | 1016.69 | 1016.57 | 1016.45 | 1016.34 | 1016.21 | 1016.09 | 1015.98 | 1015.87 | 1015.79 | 1015.72 | 1015.65 | 1015.59 |
| | B | * BOTTOM OF FLANGE ELEVATION (BEFORE REMOVAL) | | | | | | | | | | | | | |
| | C | * BOTTOM OF FLANGE ELEVATION (AFTER REMOVAL) | | | | | | | | | | | | | |
| | D | * REBOUND (FT) | | | | | | | | | | | | | |
| | E | WEIGHT OF EXISTING DECK (KLF/BEAM) | 1.34 | 1.34 | 1.34 | 1.34 | 1.34 | 1.34 | 1.34 | 1.34 | 1.34 | 1.34 | 1.34 | 1.34 | 1.34 |
| | F | WEIGHT OF PROPOSED DECK (KLF/BEAM) | 1.04 | 1.04 | 1.04 | 1.04 | 1.04 | 1.04 | 1.04 | 1.04 | 1.04 | 1.04 | 1.04 | 1.04 | 1.04 |
| | G | * DECK DEFLECTION (FT) | | | | | | | | | | | | | |
| | H | DECK THICKNESS (FT) | 0.71 | 0.71 | 0.71 | 0.71 | 0.71 | 0.71 | 0.71 | 0.71 | 0.71 | 0.71 | 0.71 | 0.71 | 0.71 |
| | J | * SCREED ELEVATION | - | - | - | - | - | - | - | - | - | - | - | - | - |
| | K | * TOP OF HAUNCH ELEVATION | | | | | | | | | | | | | |
| ELEVATION LINE 4 | - | STATION | 429+44.07 | 429+56.12 | 429+68.17 | 429+80.23 | 429+92.28 | 430+07.34 | 430+22.40 | 430+37.47 | 430+52.53 | 430+64.58 | 430+76.63 | 430+88.68 | 431+00.73 |
| | A | FINAL DECK ELEVATION | 1016.97 | 1016.84 | 1016.72 | 1016.61 | 1016.50 | 1016.37 | 1016.24 | 1016.13 | 1016.02 | 1015.94 | 1015.87 | 1015.80 | 1015.74 |
| | B | * BOTTOM OF FLANGE ELEVATION (BEFORE REMOVAL) | | | | | | | | | | | | | |
| | C | * BOTTOM OF FLANGE ELEVATION (AFTER REMOVAL) | | | | | | | | | | | | | |
| | D | * REBOUND (FT) | | | | | | | | | | | | | |
| | E | WEIGHT OF EXISTING DECK (KLF/BEAM) | 1.34 | 1.34 | 1.34 | 1.34 | 1.34 | 1.34 | 1.34 | 1.34 | 1.34 | 1.34 | 1.34 | 1.34 | 1.34 |
| | F | WEIGHT OF PROPOSED DECK (KLF/BEAM) | 1.04 | 1.04 | 1.04 | 1.04 | 1.04 | 1.04 | 1.04 | 1.04 | 1.04 | 1.04 | 1.04 | 1.04 | 1.04 |
| | G | * DECK DEFLECTION (FT) | | | | | | | | | | | | | |
| | H | DECK THICKNESS (FT) | 0.71 | 0.71 | 0.71 | 0.71 | 0.71 | 0.71 | 0.71 | 0.71 | 0.71 | 0.71 | 0.71 | 0.71 | 0.71 |
| | J | * SCREED ELEVATION | - | - | - | - | - | - | - | - | - | - | - | - | - |
| | K | * TOP OF HAUNCH ELEVATION | | | | | | | | | | | | | |
| ELEVATION LINE 5 | - | STATION | 429+42.16 | 429+54.20 | 429+66.25 | 429+78.29 | 429+90.34 | 430+05.39 | 430+20.44 | 430+35.50 | 430+50.55 | 430+62.60 | 430+74.64 | 430+86.68 | 430+98.73 |
| | A | FINAL DECK ELEVATION | 1017.13 | 1017.00 | 1016.88 | 1016.76 | 1016.65 | 1016.52 | 1016.40 | 1016.28 | 1016.17 | 1016.10 | 1016.02 | 1015.95 | 1015.89 |
| | B | * BOTTOM OF FLANGE ELEVATION (BEFORE REMOVAL) | | | | | | | | | | | | | |
| | C | * BOTTOM OF FLANGE ELEVATION (AFTER REMOVAL) | | | | | | | | | | | | | |
| | D | * REBOUND (FT) | | | | | | | | | | | | | |
| | E | WEIGHT OF EXISTING DECK (KLF/BEAM) | 1.34 | 1.34 | 1.34 | 1.34 | 1.34 | 1.34 | 1.34 | 1.34 | 1.34 | 1.34 | 1.34 | 1.34 | 1.34 |
| | F | WEIGHT OF PROPOSED DECK (KLF/BEAM) | 1.04 | 1.04 | 1.04 | 1.04 | 1.04 | 1.04 | 1.04 | 1.04 | 1.04 | 1.04 | 1.04 | 1.04 | 1.04 |
| | G | * DECK DEFLECTION (FT) | | | | | | | | | | | | | |
| | H | DECK THICKNESS (FT) | 0.71 | 0.71 | 0.71 | 0.71 | 0.71 | 0.71 | 0.71 | 0.71 | 0.71 | 0.71 | 0.71 | 0.71 | 0.71 |
| | J | * SCREED ELEVATION | - | - | - | - | - | - | - | - | - | - | - | - | - |
| | K | * TOP OF HAUNCH ELEVATION | | | | | | | | | | | | | |
| ELEVATION LINE 6 | - | STATION | 429+40.25 | 429+52.29 | 429+64.32 | 429+76.36 | 429+88.40 | 430+03.44 | 430+18.49 | 430+33.53 | 430+48.58 | 430+60.61 | 430+72.65 | 430+84.69 | 430+96.72 |
| | A | FINAL DECK ELEVATION | 1017.29 | 1017.16 | 1017.04 | 1016.92 | 1016.81 | 1016.67 | 1016.55 | 1016.43 | 1016.33 | 1016.25 | 1016.17 | 1016.10 | 1016.04 |
| | B | * BOTTOM OF FLANGE ELEVATION (BEFORE REMOVAL) | | | | | | | | | | | | | |
| | C | * BOTTOM OF FLANGE ELEVATION (AFTER REMOVAL) | | | | | | | | | | | | | |
| | D | * REBOUND (FT) | | | | | | | | | | | | | |
| | E | WEIGHT OF EXISTING DECK (KLF/BEAM) | 1.34 | 1.34 | 1.34 | 1.34 | 1.34 | 1.34 | 1.34 | 1.34 | 1.34 | 1.34 | 1.34 | 1.34 | 1.34 |
| | F | WEIGHT OF PROPOSED DECK (KLF/BEAM) | 1.04 | 1.04 | 1.04 | 1.04 | 1.04 | 1.04 | 1.04 | 1.04 | 1.04 | 1.04 | 1.04 | 1.04 | 1.04 |
| | G | * DECK DEFLECTION (FT) | | | | | | | | | | | | | |
| | H | DECK THICKNESS (FT) | 0.71 | 0.71 | 0.71 | 0.71 | 0.71 | 0.71 | 0.71 | 0.71 | 0.71 | 0.71 | 0.71 | 0.71 | 0.71 |
| | J | * SCREED ELEVATION | - | - | - | - | - | - | - | - | - | - | - | - | - |
| | K | * TOP OF HAUNCH ELEVATION | | | | | | | | | | | | | |
| ELEVATION LINE 30 | - | STATION | 429+38.90 | 429+50.92 | 429+62.94 | 429+74.97 | 429+86.99 | 430+02.03 | 430+17.07 | 430+32.11 | 430+47.16 | 430+59.20 | 430+71.24 | 430+83.28 | 430+95.33 |
| | A | FINAL DECK ELEVATION | 1017.40 | 1017.27 | 1017.15 | 1017.03 | 1016.92 | 1016.79 | 1016.66 | 1016.54 | 1016.44 | 1016.35 | 1016.28 | 1016.21 | 1016.14 |
| | B | * BOTTOM OF FLANGE ELEVATION (BEFORE REMOVAL) | | | | | | | | | | | | | |
| | C | * BOTTOM OF FLANGE ELEVATION (AFTER REMOVAL) | | | | | | | | | | | | | |
| | D | * REBOUND (FT) | | | | | | | | | | | | | |
| | E | WEIGHT OF EXISTING DECK (KLF/BEAM) | 1.34 | 1.34 | 1.34 | 1.34 | 1.34 | 1.34 | 1.34 | 1.34 | 1.34 | 1.34 | 1.34 | 1.34 | 1.34 |
| | F | WEIGHT OF PROPOSED DECK (KLF/BEAM) | 1.04 | 1.04 | 1.04 | 1.04 | 1.04 | 1.04 | 1.04 | 1.04 | 1.04 | 1.04 | 1.04 | 1.04 | 1.04 |
| | G | * DECK DEFLECTION (FT) | | | | | | | | | | | | | |
| | H | DECK THICKNESS (FT) | 0.71 | 0.71 | 0.71 | 0.71 | 0.71 | 0.71 | 0.71 | 0.71 | 0.71 | 0.71 | 0.71 | 0.71 | 0.71 |
| | J | * SCREED ELEVATION | | | | | | | | | | | | | |
| | K | * TOP OF HAUNCH ELEVATION | - | - | - | - | - | - | - | - | - | - | - | - | - |

## LEGEND:

* TO BE COMPLETED BY THE CONTRACTOR AS FOLLOWS:
D=C-B
G=Dx(F/E)
J=A+G
K=A+G-H

## NOTES:

1. FOR ELEVATION LINE LOCATION PLAN, SEE SHEET 29/44.
2. FOR ELEVATION LINE LOCATION SECTION, SEE SHEET 30/44.
3. FINAL DECK SURFACE ELEVATIONS SHOWN REPRESENT THE DECK SURFACE LOCATION AFTER ALL ANTICIPATED DEAD LOAD DEFLECTIONS HAVE OCCURRED.
4. SCREED ELEVATIONS SHOWN REPRESENT THE THEORETICAL DECK SURFACE LOCATION PRIOR TO DEFLECTIONS CAUSED BY DECK PLACEMENT AND OTHER ANTICIPATED DEAD LOADS.
5. TOP OF HAUNCH ELEVATIONS SHOWN REPRESENT THE THEORETICAL LOCATION OF THE BOTTOM OF THE DECK ABOVE THE BEAM HAUNCH PRIOR TO DEFLECTIONS CAUSED BY DECK PLACEMENT AND OTHER ANTICIPATED DEAD LOADS.
6. SCREED ELEVATION CALCULATIONS SHALL USE DATA FROM THE NEAREST EXISTING BEAM.

DESIGN AGENCY
GPD GROUP
Glaus, Pyle, Schomer, Burns & DeHaven, Inc.
520 South Main Street, Akron, OH 44311 330.572.2100
Copyright Glaus, Pyle, Schomer, Burns & DeHaven, Inc. 2020

DESIGNED MOJ | DRAWN MOJ | REVIEWED DGN | DATE 1-19-21
CHECKED RHC | REVISED | STRUCTURE FILE NUMBER 7702558/7702582

SCREED & TOP OF HAUNCH ELEV. CALCULATIONS (EXIST. BEAMS)
BRIDGE NO. SUM-77-0810 L/R
I.R. 77 OVER THE TUSCARAWAS RIVER

SUM-77/277/224
VARIOUS
PID No. 106002



0:\2017\20172581Project Data\SUM\106002\Design\Structures\SUM077_0810\Sheets\077_0810C_SS003.dgn Sheet 5 1/17/2021 9:22:23 PM mjurcak

# SCREED & TOP OF HAUNCH ELEVATION CALCULATIONS (EXIST. BEAMS)

| | | LOCATION | REAR ABUT. | SPAN 1 | | | PIER 1 | SPAN 2 | | | PIER 2 | SPAN 3 | | | FRWD. ABUT. |
|---|---|---|---|---|---|---|---|---|---|---|---|---|---|---|---|
| | | | | 1/4 PT. | 1/2 PT. | 3/4 PT. | | 1/4 PT. | 1/2 PT. | 3/4 PT. | | 1/4 PT. | 1/2 PT. | 3/4 PT. | |
| ELEVATION LINE 7 | - | STATION | 429+38.72 | 429+50.74 | 429+62.76 | 429+74.78 | 429+86.81 | 430+01.84 | 430+16.88 | 430+31.92 | 430+46.97 | 430+59.01 | 430+71.05 | 430+83.09 | 430+95.14 |
| | A | FINAL DECK ELEVATION | 1017.41 | 1017.29 | 1017.16 | 1017.05 | 1016.93 | 1016.80 | 1016.68 | 1016.56 | 1016.45 | 1016.37 | 1016.29 | 1016.22 | 1016.15 |
| | B | * BOTTOM OF FLANGE ELEVATION (BEFORE REMOVAL) | | | | | | | | | | | | | |
| | C | * BOTTOM OF FLANGE ELEVATION (AFTER REMOVAL) | | | | | | | | | | | | | |
| | D | * REBOUND (FT) | | | | | | | | | | | | | |
| | E | WEIGHT OF EXISTING DECK (KLF/BEAM) | 1.34 | 1.34 | 1.34 | 1.34 | 1.34 | 1.34 | 1.34 | 1.34 | 1.34 | 1.34 | 1.34 | 1.34 | 1.34 |
| | F | WEIGHT OF PROPOSED DECK (KLF/BEAM) | 1.04 | 1.04 | 1.04 | 1.04 | 1.04 | 1.04 | 1.04 | 1.04 | 1.04 | 1.04 | 1.04 | 1.04 | 1.04 |
| | G | * DECK DEFLECTION (FT) | | | | | | | | | | | | | |
| | H | DECK THICKNESS (FT) | 0.71 | 0.71 | 0.71 | 0.71 | 0.71 | 0.71 | 0.71 | 0.71 | 0.71 | 0.71 | 0.71 | 0.71 | 0.71 |
| | J | * SCREED ELEVATION | | | | | | | | | | | | | |
| | K | * TOP OF HAUNCH ELEVATION | - | - | - | - | - | - | - | - | - | - | - | - | - |
| ELEVATION LINE 8 | - | STATION | 429+38.34 | 429+50.37 | 429+62.40 | 429+74.43 | 429+86.46 | 430+01.50 | 430+16.53 | 430+31.57 | 430+46.61 | 430+58.63 | 430+70.66 | 430+82.69 | 430+94.72 |
| | A | FINAL DECK ELEVATION | 1017.39 | 1017.26 | 1017.14 | 1017.03 | 1016.91 | 1016.78 | 1016.66 | 1016.54 | 1016.43 | 1016.34 | 1016.27 | 1016.19 | 1016.13 |
| | B | * BOTTOM OF FLANGE ELEVATION (BEFORE REMOVAL) | | | | | | | | | | | | | |
| | C | * BOTTOM OF FLANGE ELEVATION (AFTER REMOVAL) | | | | | | | | | | | | | |
| | D | * REBOUND (FT) | | | | | | | | | | | | | |
| | E | WEIGHT OF EXISTING DECK (KLF/BEAM) | 1.34 | 1.34 | 1.34 | 1.34 | 1.34 | 1.34 | 1.34 | 1.34 | 1.34 | 1.34 | 1.34 | 1.34 | 1.34 |
| | F | WEIGHT OF PROPOSED DECK (KLF/BEAM) | 1.04 | 1.04 | 1.04 | 1.04 | 1.04 | 1.04 | 1.04 | 1.04 | 1.04 | 1.04 | 1.04 | 1.04 | 1.04 |
| | G | * DECK DEFLECTION (FT) | | | | | | | | | | | | | |
| | H | DECK THICKNESS (FT) | 0.71 | 0.71 | 0.71 | 0.71 | 0.71 | 0.71 | 0.71 | 0.71 | 0.71 | 0.71 | 0.71 | 0.71 | 0.71 |
| | J | * SCREED ELEVATION | - | - | - | - | - | - | - | - | - | - | - | - | - |
| | K | * TOP OF HAUNCH ELEVATION | | | | | | | | | | | | | |
| ELEVATION LINE 9 | - | STATION | 429+36.44 | 429+48.46 | 429+60.48 | 429+72.50 | 429+84.53 | 429+99.55 | 430+14.58 | 430+29.61 | 430+44.64 | 430+56.66 | 430+68.68 | 430+80.70 | 430+92.72 |
| | A | FINAL DECK ELEVATION | 1017.27 | 1017.15 | 1017.02 | 1016.91 | 1016.79 | 1016.66 | 1016.53 | 1016.41 | 1016.30 | 1016.22 | 1016.14 | 1016.07 | 1016.00 |
| | B | * BOTTOM OF FLANGE ELEVATION (BEFORE REMOVAL) | | | | | | | | | | | | | |
| | C | * BOTTOM OF FLANGE ELEVATION (AFTER REMOVAL) | | | | | | | | | | | | | |
| | D | * REBOUND (FT) | | | | | | | | | | | | | |
| | E | WEIGHT OF EXISTING DECK (KLF/BEAM) | 1.34 | 1.34 | 1.34 | 1.34 | 1.34 | 1.34 | 1.34 | 1.34 | 1.34 | 1.34 | 1.34 | 1.34 | 1.34 |
| | F | WEIGHT OF PROPOSED DECK (KLF/BEAM) | 1.04 | 1.04 | 1.04 | 1.04 | 1.04 | 1.04 | 1.04 | 1.04 | 1.04 | 1.04 | 1.04 | 1.04 | 1.04 |
| | G | * DECK DEFLECTION (FT) | | | | | | | | | | | | | |
| | H | DECK THICKNESS (FT) | 0.71 | 0.71 | 0.71 | 0.71 | 0.71 | 0.71 | 0.71 | 0.71 | 0.71 | 0.71 | 0.71 | 0.71 | 0.71 |
| | J | * SCREED ELEVATION | - | - | - | - | - | - | - | - | - | - | - | - | - |
| | K | * TOP OF HAUNCH ELEVATION | | | | | | | | | | | | | |
| ELEVATION LINE 20 | - | STATION | 429+25.36 | 429+37.34 | 429+49.32 | 429+61.30 | 429+73.28 | 429+88.25 | 430+03.23 | 430+18.20 | 430+33.17 | 430+45.15 | 430+57.13 | 430+69.11 | 430+81.09 |
| | A | FINAL DECK ELEVATION | 1017.31 | 1017.17 | 1017.04 | 1016.92 | 1016.80 | 1016.66 | 1016.52 | 1016.40 | 1016.28 | 1016.19 | 1016.10 | 1016.02 | 1015.95 |
| | B | * BOTTOM OF FLANGE ELEVATION (BEFORE REMOVAL) | | | | | | | | | | | | | |
| | C | * BOTTOM OF FLANGE ELEVATION (AFTER REMOVAL) | | | | | | | | | | | | | |
| | D | * REBOUND (FT) | | | | | | | | | | | | | |
| | E | WEIGHT OF EXISTING DECK (KLF/BEAM) | 1.36 | 1.36 | 1.36 | 1.36 | 1.36 | 1.36 | 1.36 | 1.36 | 1.36 | 1.36 | 1.36 | 1.36 | 1.36 |
| | F | WEIGHT OF PROPOSED DECK (KLF/BEAM) | 1.04 | 1.04 | 1.04 | 1.04 | 1.04 | 1.04 | 1.04 | 1.04 | 1.04 | 1.04 | 1.04 | 1.04 | 1.04 |
| | G | * DECK DEFLECTION (FT) | | | | | | | | | | | | | |
| | H | DECK THICKNESS (FT) | 0.71 | 0.71 | 0.71 | 0.71 | 0.71 | 0.71 | 0.71 | 0.71 | 0.71 | 0.71 | 0.71 | 0.71 | 0.71 |
| | J | * SCREED ELEVATION | - | - | - | - | - | - | - | - | - | - | - | - | - |
| | K | * TOP OF HAUNCH ELEVATION | | | | | | | | | | | | | |
| ELEVATION LINE 21 | - | STATION | 429+23.47 | 429+35.44 | 429+47.42 | 429+59.39 | 429+71.36 | 429+86.32 | 430+01.29 | 430+16.25 | 430+31.22 | 430+43.19 | 430+55.16 | 430+67.14 | 430+79.11 |
| | A | FINAL DECK ELEVATION | 1017.47 | 1017.33 | 1017.20 | 1017.08 | 1016.96 | 1016.81 | 1016.68 | 1016.55 | 1016.43 | 1016.34 | 1016.25 | 1016.17 | 1016.10 |
| | B | * BOTTOM OF FLANGE ELEVATION (BEFORE REMOVAL) | | | | | | | | | | | | | |
| | C | * BOTTOM OF FLANGE ELEVATION (AFTER REMOVAL) | | | | | | | | | | | | | |
| | D | * REBOUND (FT) | | | | | | | | | | | | | |
| | E | WEIGHT OF EXISTING DECK (KLF/BEAM) | 1.36 | 1.36 | 1.36 | 1.36 | 1.36 | 1.36 | 1.36 | 1.36 | 1.36 | 1.36 | 1.36 | 1.36 | 1.36 |
| | F | WEIGHT OF PROPOSED DECK (KLF/BEAM) | 1.04 | 1.04 | 1.04 | 1.04 | 1.04 | 1.04 | 1.04 | 1.04 | 1.04 | 1.04 | 1.04 | 1.04 | 1.04 |
| | G | * DECK DEFLECTION (FT) | | | | | | | | | | | | | |
| | H | DECK THICKNESS (FT) | 0.71 | 0.71 | 0.71 | 0.71 | 0.71 | 0.71 | 0.71 | 0.71 | 0.71 | 0.71 | 0.71 | 0.71 | 0.71 |
| | J | * SCREED ELEVATION | - | - | - | - | - | - | - | - | - | - | - | - | - |
| | K | * TOP OF HAUNCH ELEVATION | | | | | | | | | | | | | |
| ELEVATION LINE 22 | - | STATION | 429+22.89 | 429+34.84 | 429+46.80 | 429+58.76 | 429+70.72 | 429+85.67 | 430+00.63 | 430+15.59 | 430+30.56 | 430+42.53 | 430+54.51 | 430+66.49 | 430+78.47 |
| | A | FINAL DECK ELEVATION | 1017.52 | 1017.38 | 1017.25 | 1017.13 | 1017.01 | 1016.87 | 1016.73 | 1016.60 | 1016.48 | 1016.39 | 1016.30 | 1016.22 | 1016.15 |
| | B | * BOTTOM OF FLANGE ELEVATION (BEFORE REMOVAL) | | | | | | | | | | | | | |
| | C | * BOTTOM OF FLANGE ELEVATION (AFTER REMOVAL) | | | | | | | | | | | | | |
| | D | * REBOUND (FT) | | | | | | | | | | | | | |
| | E | WEIGHT OF EXISTING DECK (KLF/BEAM) | 1.36 | 1.36 | 1.36 | 1.36 | 1.36 | 1.36 | 1.36 | 1.36 | 1.36 | 1.36 | 1.36 | 1.36 | 1.36 |
| | F | WEIGHT OF PROPOSED DECK (KLF/BEAM) | 1.04 | 1.04 | 1.04 | 1.04 | 1.04 | 1.04 | 1.04 | 1.04 | 1.04 | 1.04 | 1.04 | 1.04 | 1.04 |
| | G | * DECK DEFLECTION (FT) | | | | | | | | | | | | | |
| | H | DECK THICKNESS (FT) | 0.71 | 0.71 | 0.71 | 0.71 | 0.71 | 0.71 | 0.71 | 0.71 | 0.71 | 0.71 | 0.71 | 0.71 | 0.71 |
| | J | * SCREED ELEVATION | | | | | | | | | | | | | |
| | K | * TOP OF HAUNCH ELEVATION | - | - | - | - | - | - | - | - | - | - | - | - | - |
| ELEVATION LINE 23 | - | STATION | 429+22.70 | 429+34.66 | 429+46.61 | 429+58.57 | 429+70.53 | 429+85.49 | 430+00.45 | 430+15.41 | 430+30.37 | 430+42.35 | 430+54.32 | 430+66.30 | 430+78.28 |
| | A | FINAL DECK ELEVATION | 1017.51 | 1017.37 | 1017.24 | 1017.12 | 1017.00 | 1016.85 | 1016.72 | 1016.59 | 1016.47 | 1016.38 | 1016.29 | 1016.21 | 1016.13 |
| | B | * BOTTOM OF FLANGE ELEVATION (BEFORE REMOVAL) | | | | | | | | | | | | | |
| | C | * BOTTOM OF FLANGE ELEVATION (AFTER REMOVAL) | | | | | | | | | | | | | |
| | D | * REBOUND (FT) | | | | | | | | | | | | | |
| | E | WEIGHT OF EXISTING DECK (KLF/BEAM) | 1.36 | 1.36 | 1.36 | 1.36 | 1.36 | 1.36 | 1.36 | 1.36 | 1.36 | 1.36 | 1.36 | 1.36 | 1.36 |
| | F | WEIGHT OF PROPOSED DECK (KLF/BEAM) | 1.04 | 1.04 | 1.04 | 1.04 | 1.04 | 1.04 | 1.04 | 1.04 | 1.04 | 1.04 | 1.04 | 1.04 | 1.04 |
| | G | * DECK DEFLECTION (FT) | | | | | | | | | | | | | |
| | H | DECK THICKNESS (FT) | 0.71 | 0.71 | 0.71 | 0.71 | 0.71 | 0.71 | 0.71 | 0.71 | 0.71 | 0.71 | 0.71 | 0.71 | 0.71 |
| | J | * SCREED ELEVATION | | | | | | | | | | | | | |
| | K | * TOP OF HAUNCH ELEVATION | - | - | - | - | - | - | - | - | - | - | - | - | - |

## LEGEND:

* TO BE COMPLETED BY THE CONTRACTOR AS FOLLOWS:
D=C-B
G=Dx(F/E)
J=A+G
K=A+G-H

## NOTES:

1. FOR ELEVATION LINE LOCATION PLAN, SEE SHEET 29/44.
2. FOR ELEVATION LINE LOCATION SECTION, SEE SHEET 30/44.
3. FINAL DECK SURFACE ELEVATIONS SHOWN REPRESENT THE DECK SURFACE LOCATION AFTER ALL ANTICIPATED DEAD LOAD DEFLECTIONS HAVE OCCURRED.
4. SCREED ELEVATIONS SHOWN REPRESENT THE THEORETICAL DECK SURFACE LOCATION PRIOR TO DEFLECTIONS CAUSED BY DECK PLACEMENT AND OTHER ANTICIPATED DEAD LOADS.
5. TOP OF HAUNCH ELEVATIONS SHOWN REPRESENT THE THEORETICAL LOCATION OF THE BOTTOM OF THE DECK ABOVE THE BEAM HAUNCH PRIOR TO DEFLECTIONS CAUSED BY DECK PLACEMENT AND OTHER ANTICIPATED DEAD LOADS.
6. SCREED ELEVATION CALCULATIONS SHALL USE DATA FROM THE NEAREST EXISTING BEAM.

DESIGN AGENCY
GPD GROUP
Glaus, Pyle, Schomer, Burns & DeHaven, Inc.
520 South Main Street, Akron, OH 44311 330.572.2100
(Copyright Glaus, Pyle, Schomer, Burns & DeHaven, Inc. 2020)

DESIGNED MOJ | DRAWN MOJ | REVIEWED DGN | DATE 1-19-21
CHECKED RHC | REVISED | STRUCTURE FILE NUMBER 7702558/7702582

SCREED & TOP OF HAUNCH ELEV. CALCULATIONS (EXIST. BEAMS)
BRIDGE NO. SUM-77-0810 L/R
I.R. 77 OVER THE TUSCARAWAS RIVER

SUM-77/277/224
VARIOUS
PID No. 106002

34/44

1214
1288

0:\2017\20172581Project Data\SUM\106002\Design\Structures\SUM077_0810\Sheets\077_0810C_SS003.dgn Sheet 6 1/17/2021 9:22:24 PM mjurcak

# SCREED & TOP OF HAUNCH ELEVATION CALCULATIONS (EXIST. BEAMS)

| | | LOCATION | REAR ABUT. | SPAN 1 | | | PIER 1 | SPAN 2 | | | PIER 2 | SPAN 3 | | | FRWD. ABUT. |
|---|---|---|---|---|---|---|---|---|---|---|---|---|---|---|---|
| | | | | 1/4 PT. | 1/2 PT. | 3/4 PT. | | 1/4 PT. | 1/2 PT. | 3/4 PT. | | 1/4 PT. | 1/2 PT. | 3/4 PT. | |
| ELEVATION LINE 24 | - | STATION | 429+21.58 | 429+33.55 | 429+45.51 | 429+57.48 | 429+69.44 | 429+84.40 | 429+99.36 | 430+14.31 | 430+29.27 | 430+41.23 | 430+53.20 | 430+65.16 | 430+77.13 |
| | A | FINAL DECK ELEVATION | 1017.44 | 1017.30 | 1017.17 | 1017.05 | 1016.93 | 1016.79 | 1016.65 | 1016.52 | 1016.40 | 1016.31 | 1016.22 | 1016.14 | 1016.06 |
| | B | * BOTTOM OF FLANGE ELEVATION (BEFORE REMOVAL) | | | | | | | | | | | | | |
| | C | * BOTTOM OF FLANGE ELEVATION (AFTER REMOVAL) | | | | | | | | | | | | | |
| | D | * REBOUND (FT) | | | | | | | | | | | | | |
| | E | WEIGHT OF EXISTING DECK (KLF/BEAM) | 1.36 | 1.36 | 1.36 | 1.36 | 1.36 | 1.36 | 1.36 | 1.36 | 1.36 | 1.36 | 1.36 | 1.36 | 1.36 |
| | F | WEIGHT OF PROPOSED DECK (KLF/BEAM) | 1.04 | 1.04 | 1.04 | 1.04 | 1.04 | 1.04 | 1.04 | 1.04 | 1.04 | 1.04 | 1.04 | 1.04 | 1.04 |
| | G | * DECK DEFLECTION (FT) | | | | | | | | | | | | | |
| | H | DECK THICKNESS (FT) | 0.71 | 0.71 | 0.71 | 0.71 | 0.71 | 0.71 | 0.71 | 0.71 | 0.71 | 0.71 | 0.71 | 0.71 | 0.71 |
| | J | * SCREED ELEVATION | - | - | - | - | - | - | - | - | - | - | - | - | - |
| | K | * TOP OF HAUNCH ELEVATION | | | | | | | | | | | | | |
| ELEVATION LINE 25 | - | STATION | 429+19.70 | 429+31.66 | 429+43.62 | 429+55.57 | 429+67.53 | 429+82.48 | 429+97.42 | 430+12.37 | 430+27.32 | 430+39.28 | 430+51.23 | 430+63.19 | 430+75.15 |
| | A | FINAL DECK ELEVATION | 1017.32 | 1017.19 | 1017.06 | 1016.93 | 1016.81 | 1016.67 | 1016.53 | 1016.40 | 1016.28 | 1016.19 | 1016.10 | 1016.01 | 1015.94 |
| | B | * BOTTOM OF FLANGE ELEVATION (BEFORE REMOVAL) | | | | | | | | | | | | | |
| | C | * BOTTOM OF FLANGE ELEVATION (AFTER REMOVAL) | | | | | | | | | | | | | |
| | D | * REBOUND (FT) | | | | | | | | | | | | | |
| | E | WEIGHT OF EXISTING DECK (KLF/BEAM) | 1.36 | 1.36 | 1.36 | 1.36 | 1.36 | 1.36 | 1.36 | 1.36 | 1.36 | 1.36 | 1.36 | 1.36 | 1.36 |
| | F | WEIGHT OF PROPOSED DECK (KLF/BEAM) | 1.04 | 1.04 | 1.04 | 1.04 | 1.04 | 1.04 | 1.04 | 1.04 | 1.04 | 1.04 | 1.04 | 1.04 | 1.04 |
| | G | * DECK DEFLECTION (FT) | | | | | | | | | | | | | |
| | H | DECK THICKNESS (FT) | 0.71 | 0.71 | 0.71 | 0.71 | 0.71 | 0.71 | 0.71 | 0.71 | 0.71 | 0.71 | 0.71 | 0.71 | 0.71 |
| | J | * SCREED ELEVATION | - | - | - | - | - | - | - | - | - | - | - | - | - |
| | K | * TOP OF HAUNCH ELEVATION | | | | | | | | | | | | | |
| ELEVATION LINE 26 | - | STATION | 429+17.82 | 429+29.77 | 429+41.72 | 429+53.67 | 429+65.62 | 429+80.56 | 429+95.50 | 430+10.43 | 430+25.37 | 430+37.32 | 430+49.27 | 430+61.22 | 430+73.17 |
| | A | FINAL DECK ELEVATION | 1017.21 | 1017.07 | 1016.94 | 1016.81 | 1016.69 | 1016.55 | 1016.41 | 1016.28 | 1016.16 | 1016.06 | 1015.97 | 1015.89 | 1015.81 |
| | B | * BOTTOM OF FLANGE ELEVATION (BEFORE REMOVAL) | | | | | | | | | | | | | |
| | C | * BOTTOM OF FLANGE ELEVATION (AFTER REMOVAL) | | | | | | | | | | | | | |
| | D | * REBOUND (FT) | | | | | | | | | | | | | |
| | E | WEIGHT OF EXISTING DECK (KLF/BEAM) | 1.36 | 1.36 | 1.36 | 1.36 | 1.36 | 1.36 | 1.36 | 1.36 | 1.36 | 1.36 | 1.36 | 1.36 | 1.36 |
| | F | WEIGHT OF PROPOSED DECK (KLF/BEAM) | 1.04 | 1.04 | 1.04 | 1.04 | 1.04 | 1.04 | 1.04 | 1.04 | 1.04 | 1.04 | 1.04 | 1.04 | 1.04 |
| | G | * DECK DEFLECTION (FT) | | | | | | | | | | | | | |
| | H | DECK THICKNESS (FT) | 0.71 | 0.71 | 0.71 | 0.71 | 0.71 | 0.71 | 0.71 | 0.71 | 0.71 | 0.71 | 0.71 | 0.71 | 0.71 |
| | J | * SCREED ELEVATION | - | - | - | - | - | - | - | - | - | - | - | - | - |
| | K | * TOP OF HAUNCH ELEVATION | | | | | | | | | | | | | |
| ELEVATION LINE 27 | - | STATION | 429+15.94 | 429+27.88 | 429+39.82 | 429+51.77 | 429+63.71 | 429+78.64 | 429+93.57 | 430+08.50 | 430+23.43 | 430+35.37 | 430+47.31 | 430+59.26 | 430+71.20 |
| | A | FINAL DECK ELEVATION | 1017.09 | 1016.95 | 1016.82 | 1016.70 | 1016.57 | 1016.43 | 1016.29 | 1016.16 | 1016.03 | 1015.94 | 1015.85 | 1015.77 | 1015.69 |
| | B | * BOTTOM OF FLANGE ELEVATION (BEFORE REMOVAL) | | | | | | | | | | | | | |
| | C | * BOTTOM OF FLANGE ELEVATION (AFTER REMOVAL) | | | | | | | | | | | | | |
| | D | * REBOUND (FT) | | | | | | | | | | | | | |
| | E | WEIGHT OF EXISTING DECK (KLF/BEAM) | 1.36 | 1.36 | 1.36 | 1.36 | 1.36 | 1.36 | 1.36 | 1.36 | 1.36 | 1.36 | 1.36 | 1.36 | 1.36 |
| | F | WEIGHT OF PROPOSED DECK (KLF/BEAM) | 1.04 | 1.04 | 1.04 | 1.04 | 1.04 | 1.04 | 1.04 | 1.04 | 1.04 | 1.04 | 1.04 | 1.04 | 1.04 |
| | G | * DECK DEFLECTION (FT) | | | | | | | | | | | | | |
| | H | DECK THICKNESS (FT) | 0.71 | 0.71 | 0.71 | 0.71 | 0.71 | 0.71 | 0.71 | 0.71 | 0.71 | 0.71 | 0.71 | 0.71 | 0.71 |
| | J | * SCREED ELEVATION | - | - | - | - | - | - | - | - | - | - | - | - | - |
| | K | * TOP OF HAUNCH ELEVATION | | | | | | | | | | | | | |
| ELEVATION LINE 28 | - | STATION | 429+14.06 | 429+26.00 | 429+37.93 | 429+49.87 | 429+61.80 | 429+76.72 | 429+91.64 | 430+06.56 | 430+21.48 | 430+33.42 | 430+45.36 | 430+57.29 | 430+69.23 |
| | A | FINAL DECK ELEVATION | 1016.97 | 1016.84 | 1016.71 | 1016.58 | 1016.45 | 1016.31 | 1016.17 | 1016.04 | 1015.91 | 1015.82 | 1015.73 | 1015.64 | 1015.56 |
| | B | * BOTTOM OF FLANGE ELEVATION (BEFORE REMOVAL) | | | | | | | | | | | | | |
| | C | * BOTTOM OF FLANGE ELEVATION (AFTER REMOVAL) | | | | | | | | | | | | | |
| | D | * REBOUND (FT) | | | | | | | | | | | | | |
| | E | WEIGHT OF EXISTING DECK (KLF/BEAM) | 1.36 | 1.36 | 1.36 | 1.36 | 1.36 | 1.36 | 1.36 | 1.36 | 1.36 | 1.36 | 1.36 | 1.36 | 1.36 |
| | F | WEIGHT OF PROPOSED DECK (KLF/BEAM) | 1.04 | 1.04 | 1.04 | 1.04 | 1.04 | 1.04 | 1.04 | 1.04 | 1.04 | 1.04 | 1.04 | 1.04 | 1.04 |
| | G | * DECK DEFLECTION (FT) | | | | | | | | | | | | | |
| | H | DECK THICKNESS (FT) | 0.71 | 0.71 | 0.71 | 0.71 | 0.71 | 0.71 | 0.71 | 0.71 | 0.71 | 0.71 | 0.71 | 0.71 | 0.71 |
| | J | * SCREED ELEVATION | - | - | - | - | - | - | - | - | - | - | - | - | - |
| | K | * TOP OF HAUNCH ELEVATION | | | | | | | | | | | | | |
| ELEVATION LINE 29 | - | STATION | 429+13.83 | 429+25.75 | 429+37.67 | 429+49.60 | 429+61.52 | 429+76.43 | 429+91.34 | 430+06.26 | 430+21.18 | 430+33.12 | 430+45.06 | 430+57.00 | 430+68.95 |
| | A | FINAL DECK ELEVATION | 1016.96 | 1016.82 | 1016.69 | 1016.56 | 1016.44 | 1016.29 | 1016.15 | 1016.02 | 1015.89 | 1015.80 | 1015.71 | 1015.62 | 1015.54 |
| | B | * BOTTOM OF FLANGE ELEVATION (BEFORE REMOVAL) | | | | | | | | | | | | | |
| | C | * BOTTOM OF FLANGE ELEVATION (AFTER REMOVAL) | | | | | | | | | | | | | |
| | D | * REBOUND (FT) | | | | | | | | | | | | | |
| | E | WEIGHT OF EXISTING DECK (KLF/BEAM) | 1.36 | 1.36 | 1.36 | 1.36 | 1.36 | 1.36 | 1.36 | 1.36 | 1.36 | 1.36 | 1.36 | 1.36 | 1.36 |
| | F | WEIGHT OF PROPOSED DECK (KLF/BEAM) | 1.04 | 1.04 | 1.04 | 1.04 | 1.04 | 1.04 | 1.04 | 1.04 | 1.04 | 1.04 | 1.04 | 1.04 | 1.04 |
| | G | * DECK DEFLECTION (FT) | | | | | | | | | | | | | |
| | H | DECK THICKNESS (FT) | 0.71 | 0.71 | 0.71 | 0.71 | 0.71 | 0.71 | 0.71 | 0.71 | 0.71 | 0.71 | 0.71 | 0.71 | 0.71 |
| | J | * SCREED ELEVATION | | | | | | | | | | | | | |
| | K | * TOP OF HAUNCH ELEVATION | - | - | - | - | - | - | - | - | - | - | - | - | - |

## LEGEND:

* TO BE COMPLETED BY THE CONTRACTOR AS FOLLOWS:
D=C-B
G=Dx(F/E)
J=A+G
K=A+G-H

## NOTES:

1. FOR ELEVATION LINE LOCATION PLAN, SEE SHEET 29/44.
2. FOR ELEVATION LINE LOCATION SECTION, SEE SHEET 30/44.
3. FINAL DECK SURFACE ELEVATIONS SHOWN REPRESENT THE DECK SURFACE LOCATION AFTER ALL ANTICIPATED DEAD LOAD DEFLECTIONS HAVE OCCURRED.
4. SCREED ELEVATIONS SHOWN REPRESENT THE THEORETICAL DECK SURFACE LOCATION PRIOR TO DEFLECTIONS CAUSED BY DECK PLACEMENT AND OTHER ANTICIPATED DEAD LOADS.
5. TOP OF HAUNCH ELEVATIONS SHOWN REPRESENT THE THEORETICAL LOCATION OF THE BOTTOM OF THE DECK ABOVE THE BEAM HAUNCH PRIOR TO DEFLECTIONS CAUSED BY DECK PLACEMENT AND OTHER ANTICIPATED DEAD LOADS.
6. SCREED ELEVATION CALCULATIONS SHALL USE DATA FROM THE NEAREST EXISTING BEAM.

DESIGN AGENCY
GPD GROUP
Gilla, PMA, Schimoler, Burns & DeHaven, Inc.
520 South Main Street, Akron, OH 44311 330.572.2100
Copyright Gilla, PMA, Schimoler, Burns & DeHaven, Inc. 2020

DESIGNED MOJ | DRAWN MOJ | REVIEWED DGN | DATE 1-19-21
CHECKED RHC | REVISED | STRUCTURE FILE NUMBER 7702558/7702582

SCREED & TOP OF HAUNCH ELEV. CALCULATIONS (EXIST. BEAMS)
BRIDGE NO. SUM-77-0810 L/R
I.R. 77 OVER THE TUSCARAWAS RIVER

SUM-77/277/224
VARIOUS
PID No. 106002



O:\2017\20172581Project Data\SUM\106002\Design\Structures\SUM077_0810\Sheets\077_0810C_SS003.dgn Sheet 7 1/17/2021 9:22:25 PM mjurcak

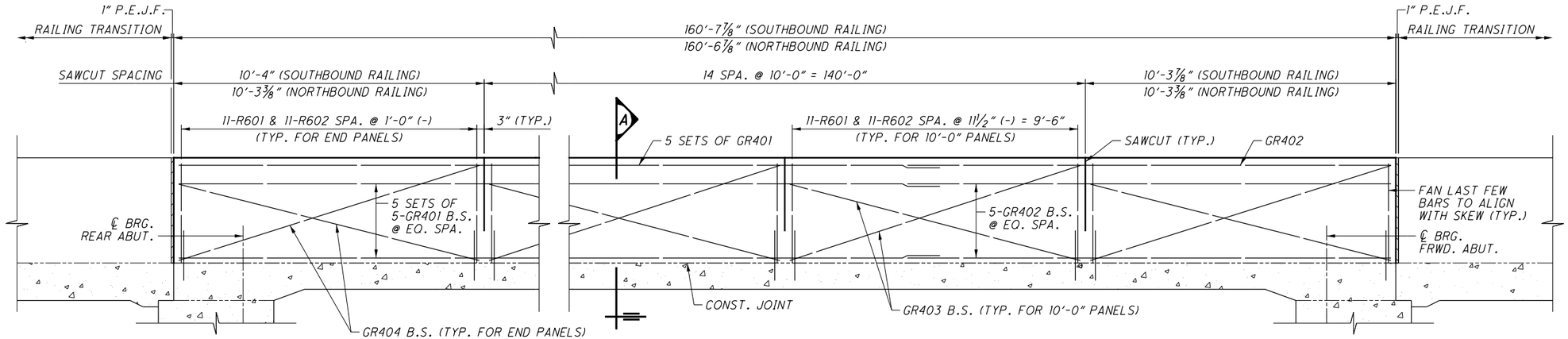


## SBR-1-20 RAILING ELEVATION

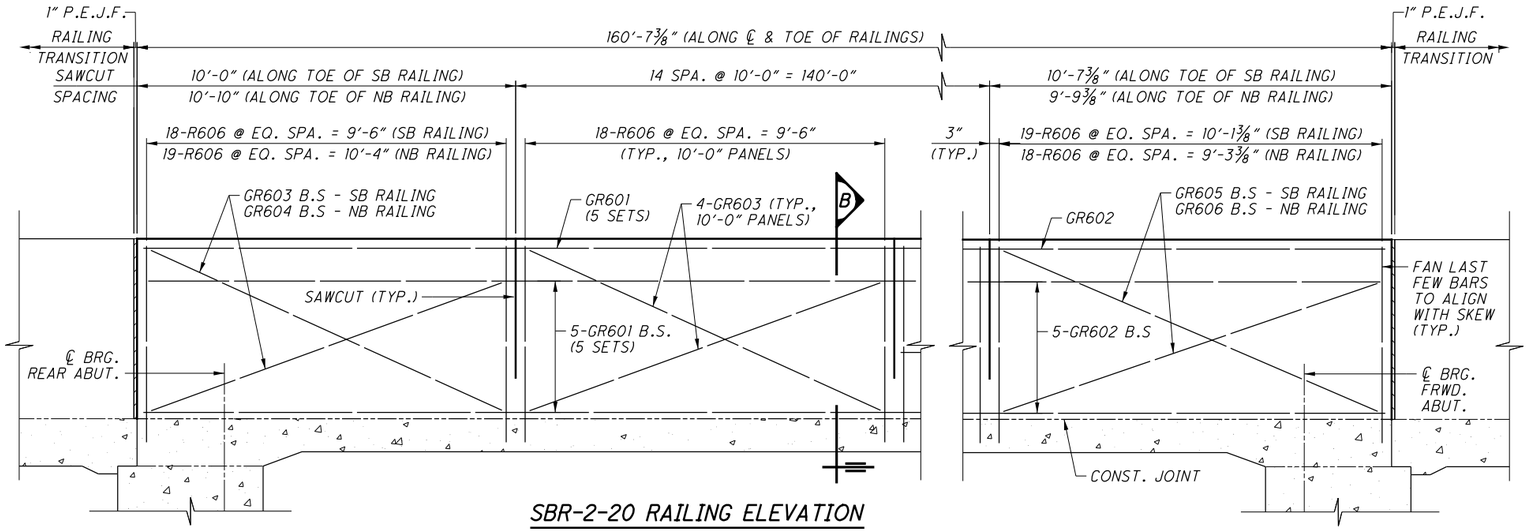


## SBR-2-20 RAILING ELEVATION

REINFORCING STEEL SHOWN IS TYPICAL OF NB AND SB RAILINGS U.N.O. SEE DECK PLAN FOR SAWCUT SPACING & LOCATIONS.

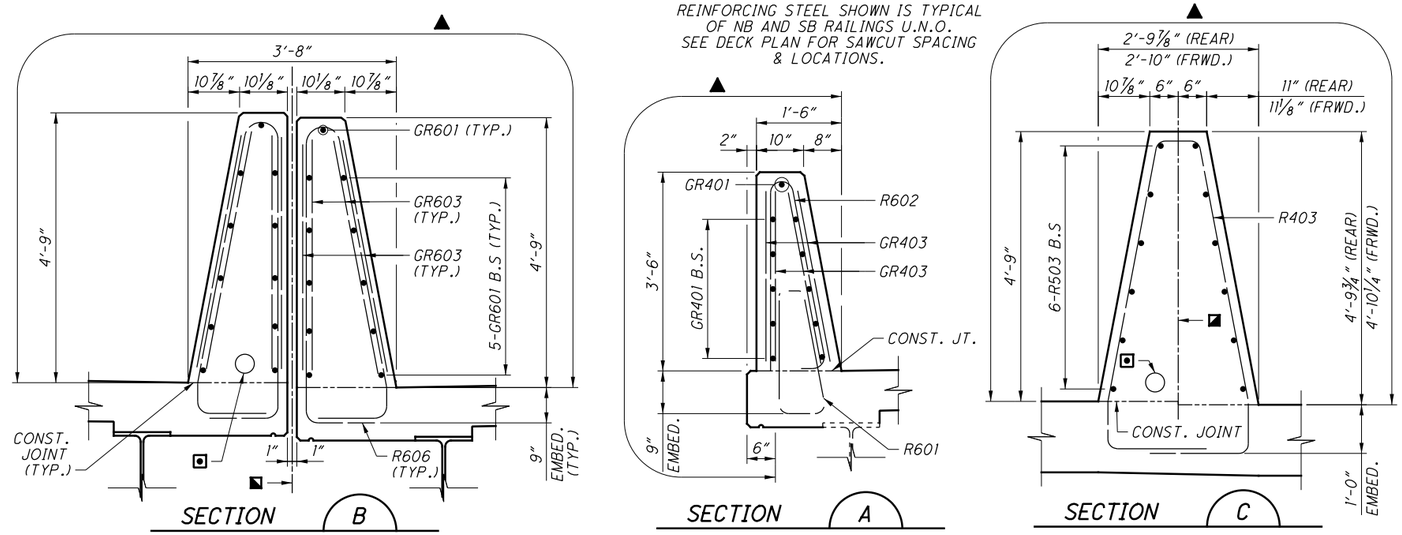


## LEGEND:

- ◪ ℄ SURVEY AND CONST. I.R. 77
- ▲ ITEM 512 - SEALING OF CONCRETE SURFACES (EPOXY-URETHANE)
- ⊡ 4" MULTI-CELL CONDUIT (SB RAILING), 725.20 (TO BE INCLUDED WITH THE ITS QUANTITIES FOR PAYMENT)

## NOTES:

1. FOR ADDITIONAL INFORMATION, SEE STANDARD DRAWINGS AS-2-15, SBR-1-20, & SBR-2-20.
2. FOR RAILING TRANSITION DETAILS AND LOCATION OF SECTION C, SEE SHEET 37/44.
3. REINFORCEMENT DESIGNATED WITH A "GR" PREFIX ARE GFRP RAILING BARS.
4. MINIMUM HORIZONTAL REINFORCING LAP LENGTHS ARE AS FOLLOWS:

| | |
|---|---|
| NO. 4 GFRP BARS | 1'-1" |
| NO. 6 GFRP BARS | 1'-8" |

DESIGN AGENCY
GPD GROUP
320 South Main Street, Akron, OH 44311 330.572.2100

DESIGNED MOJ | DRAWN MOJ | CHECKED RHC | REVIEWED DGN | DATE 1-19-21 | REVISED | STRUCTURE FILE NUMBER 7702558/7702582

BRIDGE RAILING DETAILS
BRIDGE NO. SUM-77-0810 L/R
I.R. 77 OVER THE TUSCARAWAS RIVER

SUM-77/277/224
VARIOUS
PID No. 106002

36/44

1216
1288

0:\2017\2017258\ProjectData\SUM\06002\Design\Structures\SUM077_0810\Sheets\077_0810C_SA001.dgn Sheet 1/17/2021 9:22:27 PM mjurcak

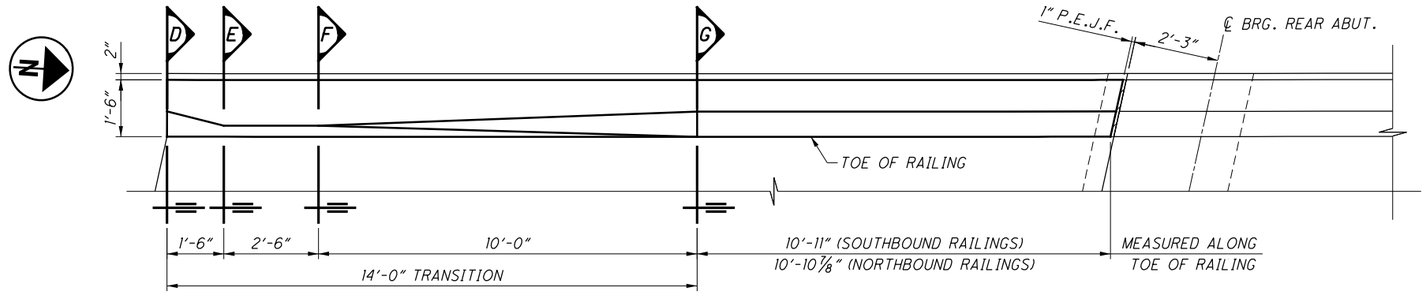


## EXTERIOR RAILING PLAN

SOUTHBOUND REAR RAILING SHOWN. OTHERS SIMILAR.

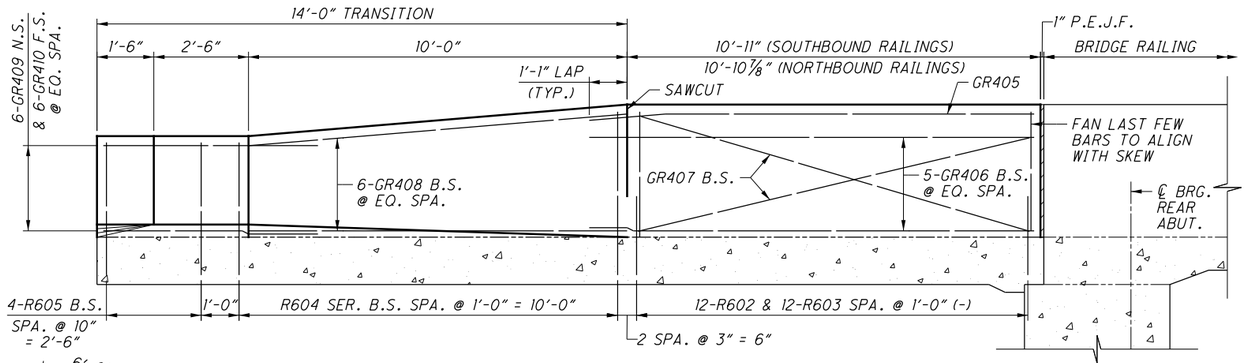


## ELEVATION

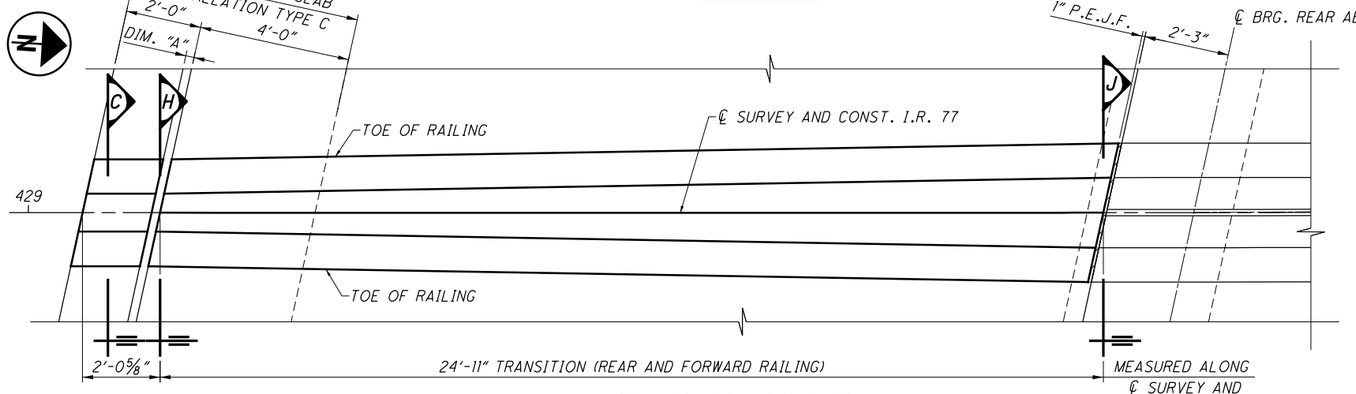


## MEDIAN RAILING PLAN

REAR RAILING SHOWN. FORWARD RAILING SIMILAR.

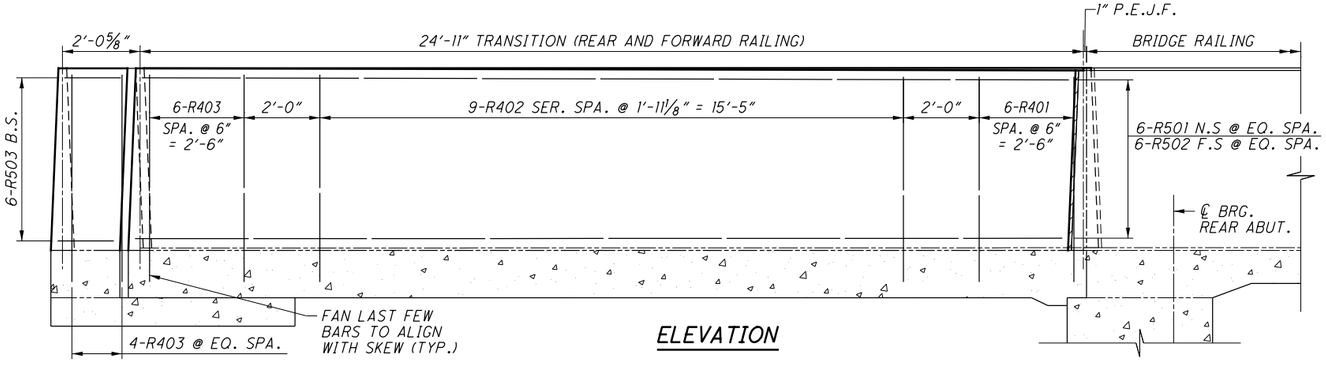


## ELEVATION

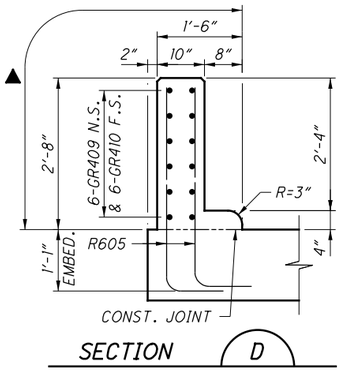


## SECTION D

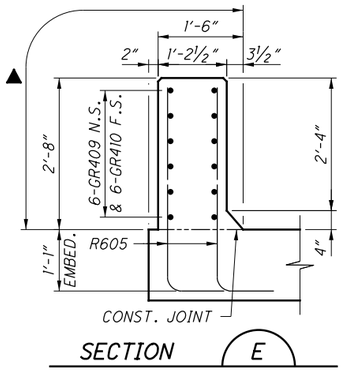


## SECTION E

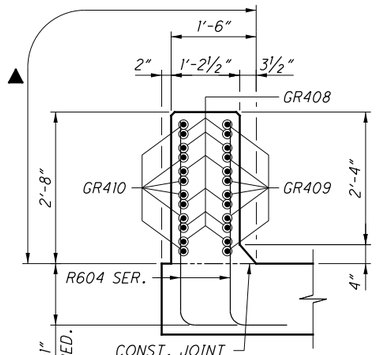


## SECTION F

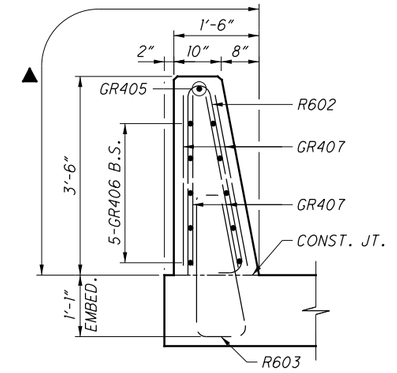


## SECTION G

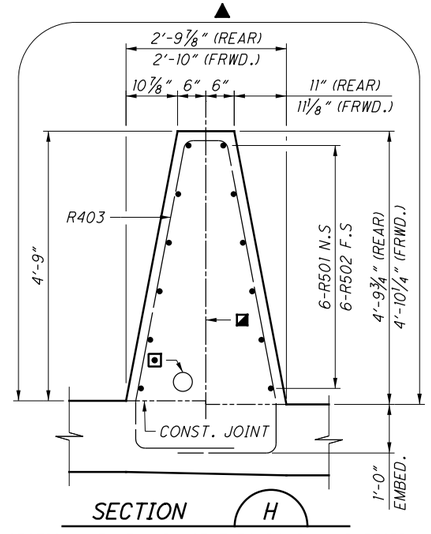


## SECTION H

SECTION H TAKEN ADJACENT TO ROADWAY BARRIER

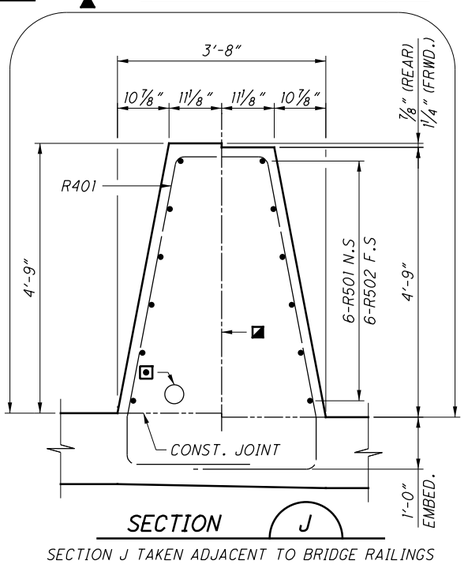


## SECTION J

SECTION J TAKEN ADJACENT TO BRIDGE RAILINGS

## NOTES:

1. FOR ADDITIONAL NOTES & DETAILS AND SECTION C, SEE SHEET 36/44.
2. FOR DIM. "A", SEE STANDARD DRAWING AS-2-15.
3. THE CONTRACTOR SHALL TRANSITION THE HORIZONTAL AND VERTICAL LOCATION OF THE CONDUITS THROUGHOUT THE TRANSITION SECTION TO MATCH THE LOCATION IN THE ADJACENT ROADWAY BARRIER.
4. GR409 BARS MAY BE PROVIDED AS EPOXY COATED STEEL REINFORCEMENT IF A GFRP FABRICATED SHAPE IS NOT AVAILABLE.

DESIGN AGENCY
GPD GROUP®
Glaus, Pyle, Schomer, Burns & DeHaven, Inc.
320 South Main Street, Akron, OH 44311 330.572.2100
Copyright Glaus, Pyle, Schomer, Burns & DeHaven, Inc. 2020

| DESIGNED | DRAWN | REVIEWED | DATE |
|---|---|---|---|
| MOJ | MOJ | DGN | 1-19-21 |

| CHECKED | REVISED | STRUCTURE FILE NUMBER |
|---|---|---|
| RHC | | 7702558/7702582 |

RAILING TRANSITION DETAILS
BRIDGE NO. SUM-77-0810 L/R
I.R. 77 OVER THE TUSCARAWAS RIVER

SUM-77/277/224
VARIOUS
PID No. 106002

37 / 44

1217
1288

O:\2017\20171258\Project Data\SUM\106002\Design\Structures\SUM077_0810\Sheets\077_0810C_SA001.dgn Sheet 2 1/17/2021 9:22:29 PM mjurcak

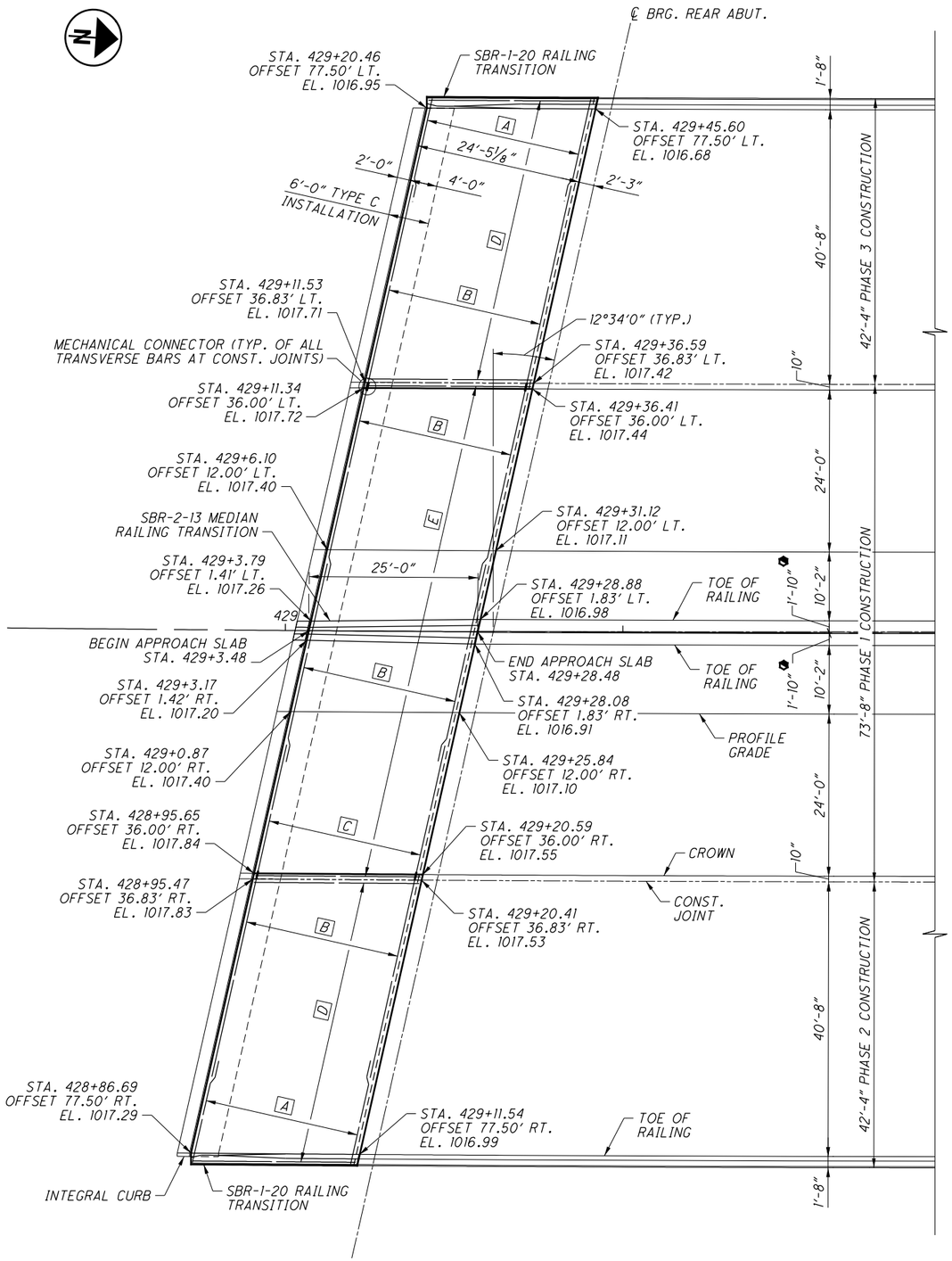


PLAN

## LEGEND:

◆ MEASURED TO ℄ SURVEY AND CONST. I.R. 77

A 18-AS502 SPA. @ 1'-5" (-) (TOP)
39-AS502 SPA. @ 7½" (+) (BOT.)

B 18-AS501 SPA. @ 1'-5" (-) (TOP)
39-AS501 SPA. @ 7½" (+) (BOT.)

C 18-AS503 SPA. @ 1'-5" (-) (TOP)
39-AS503 SPA. @ 7½" (+) (BOT.)

D 29-AS504 SPA. @ 1'-5¾" (±) (TOP)
74-AS1001 SPA. @ 7" (-) (BOT.)

E 50-AS504 SPA. @ 1'-6" (±) (TOP)
129-AS1001 SPA. @ 7" (-) (BOT.)

## NOTES:

1. STATIONS AND OFFSETS ARE GIVEN TO ℄ SURVEY AND CONST. I.R. 77 UNLESS NOTED OTHERWISE.
2. FOR ADDITIONAL INFORMATION, SEE STANDARD DRAWINGS AS-1-15 AND AS-2-15.
3. REINFORCING STEEL AND CONCRETE FOR RAILING TRANSITIONS SHALL BE PAID FOR UNDER SEPARATE ITEMS. FOR DETAILS, SEE SHEET 37/44.
4. TRANSVERSE REINFORCING STEEL SHALL PROTRUDE A MINIMUM OF 2'-6" FROM PHASE 1 CONSTRUCTION.
5. MINIMUM REINFORCING STEEL LAP LENGTHS ARE AS FOLLOWS:

NO. 5 BARS 2'-6"

DESIGN AGENCY
GPD GROUP
Glaus, Pyle, Schomer, Burns & DeHaven, Inc.
320 South Main Street, Akron, OH 44311 330.572.2100
Copyright Glaus, Pyle, Schomer, Burns & DeHaven, Inc. 2020

| DESIGNED | DRAWN | REVIEWED | DATE |
|---|---|---|---|
| MOJ | MOJ | DGN | 1-19-21 |
| CHECKED | REVISED | STRUCTURE FILE NUMBER | |
| RHC | | 7702558/7702582 | |

APPROACH SLAB DETAILS
BRIDGE NO. SUM-77-0810 L/R
I.R. 77 OVER THE TUSCARAWAS RIVER

SUM-77/277/224
VARIOUS
PID No. 106002



1218
1288

D:\2017\2017258\ProjectData\SUM\06002\Design\Structures\SUM077_0810\Sheets\077_0810C_SM001.dgn Sheet1 1/17/2021 9:22:31 PM mjurcak

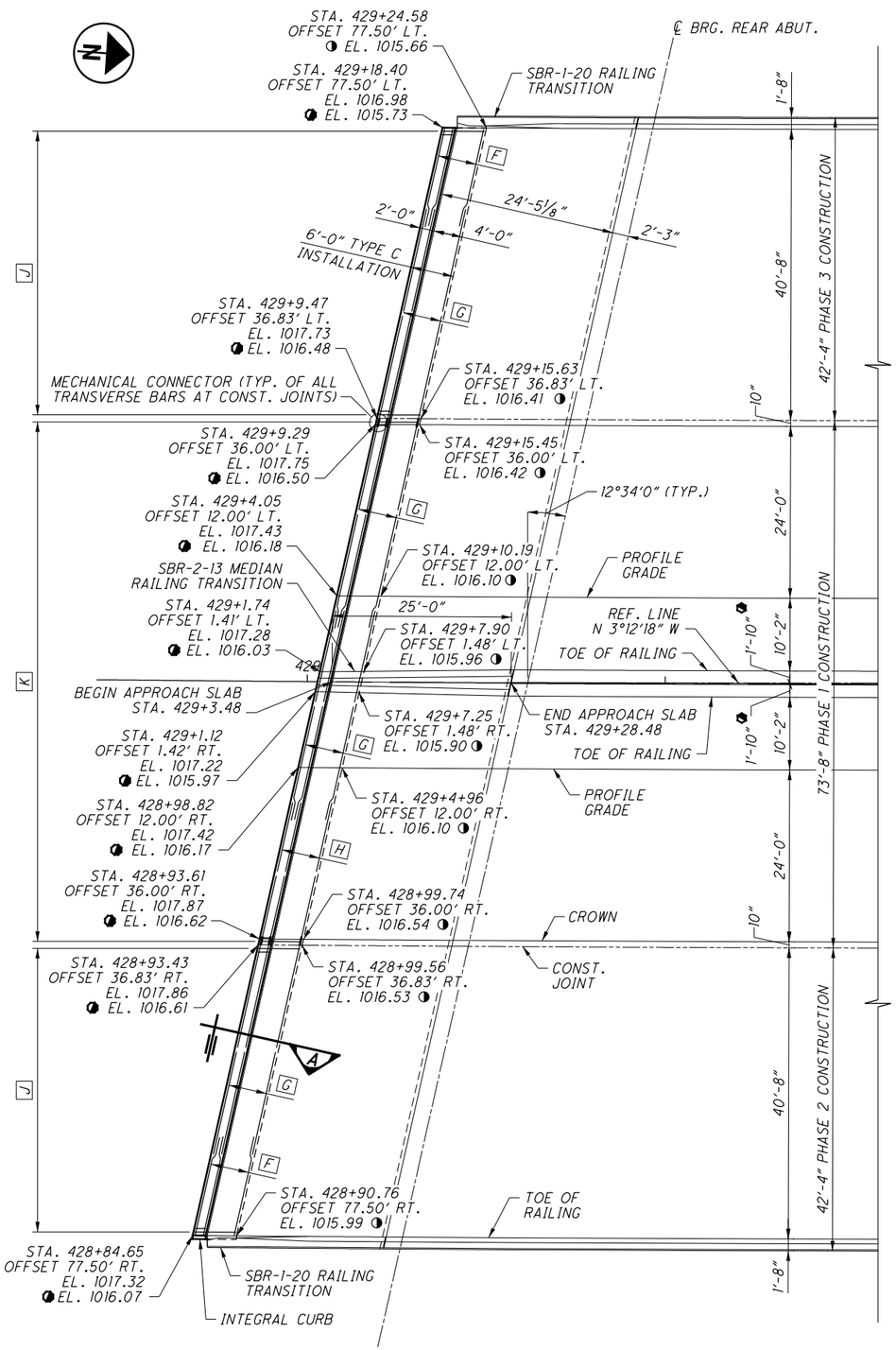


PLAN

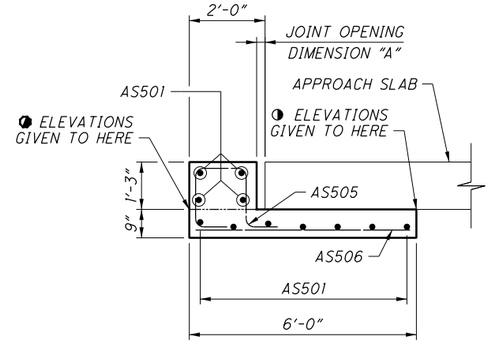


SECTION A

ARMORLESS PREFORMED JOINT SEAL NOT SHOWN

## LEGEND:

- ◖ MEASURED TO ℄ SURVEY AND CONST. I.R. 77
- F 2-AS507 (TOP & MIDDLE) 7-AS507 @ EQUAL SPA. (BOT.)
- G 2-AS501 (TOP & MIDDLE) 7-AS501 @ EQUAL SPA. (BOT.)
- H 2-AS503 (TOP & MIDDLE) 7-AS503 @ EQUAL SPA. (BOT.)
- J 41-AS505 SPA. @ 11¾" (+) (TOP) 41-AS506 SPA. @ 11¾" (+) (BOT.)
- K 75-AS505 SPA. @ 1'-0" (-) (TOP) 75-AS506 SPA. @ 1'-0" (-) (BOT.)

## NOTES:

1. STATIONS AND OFFSETS ARE GIVEN TO ℄ SURVEY AND CONST. I.R. 77 UNLESS NOTED OTHERWISE.
2. FOR ADDITIONAL INFORMATION AND JOINT OPENING DIMENSION "A", SEE STANDARD DRAWING AS-2-15.
3. FOR THE RAILING TRANSITIONS, REINFORCING STEEL SHALL BE PAID FOR UNDER ITEM 509 - EPOXY COATED REINFORCING STEEL AND CONCRETE SHALL BE PAID FOR UNDER ITEM 511 - CLASS QC2 CONCRETE WITH QC/QA, BRIDGE DECK (PARAPET). FOR DETAILS, SEE SHEET 37/44.
4. TRANSVERSE REINFORCING STEEL SHALL PROTRUDE A MINIMUM OF 2'-6" FROM PHASE I CONSTRUCTION.
5. MINIMUM REINFORCING STEEL LAP LENGTHS ARE AS FOLLOWS:

   NO. 5 BARS 2'-6"

DESIGN AGENCY
GPD GROUP
320 South Main Street, Akron, OH 44311 330.572.2100

| REVIEWED | DATE | STRUCTURE FILE NUMBER |
|---|---|---|
| DGN | 1-19-21 | 7702558/7702582 |
| DRAWN | REVISED | |
| MOJ | | |
| DESIGNED | CHECKED | |
| MOJ | RHC | |

# APPROACH SLAB INSTALLATION DETAILS

BRIDGE NO. SUM-77-0810 L/R
I.R. 77 OVER THE TUSCARAWAS RIVER

SUM-77/277/224
VARIOUS
PID No. 106002

39/44

1219
1288

Copyright GPD Group, Akron, Ohio, 2020

D:\2017\20171258\Project Data\SUM\106002\Design\Structures\SUM077_0810\Sheets\077_0810C_SM001.dgn Sheet2 1/17/2021 9:22:32 PM mjurcak

| MARK | NUMBER | | | LENGTH | WEIGHT | TYPE | DIMENSIONS | | | | |
|---|---|---|---|---|---|---|---|---|---|---|---|
| | REAR | FORWARD | TOTAL | | | | A | B | C | D | INC. |
| ABUTMENT BARS | | | | | | | | | | | |
| A501 | 30 | 31 | 61 | 17'-7" | 1,119 | 3 | 5'-11" | 2'-7" | | | |
| A502 | 2 | 2 | 4 | 17'-11" | 75 | 3 | 6'-1" | 2'-7" | | | |
| A503 | 30 | 31 | 61 | 15'-2" | 965 | 2 | 6'-0" | 3'-5" | 6'-0" | | |
| A504 | 30 | 31 | 61 | 11'-0" | 700 | 2 | 3'-11" | 3'-5" | 3'-11" | | |
| A505 | 2 | 2 | 4 | 15'-3" | 64 | 2 | 6'-0" | 3'-6" | 6'-0" | | |
| A506 | 2 | 2 | 4 | 11'-1" | 46 | 2 | 3'-11" | 3'-6" | 3'-11" | | |
| A507 | 8 | 6 | 14 | 10'-4" | 151 | 2 | 3'-7" | 3'-5" | 3'-7" | | |
| A508 | 1 SER. OF 4 | | 1 SER. OF 4 | 20'-1" TO 21'-5" | 87 | ST | | | | | 0'-5 3/8" |
| A509 | 1 SER. OF 4 | | 1 SER. OF 4 | 20'-4" TO 21'-8" | 88 | ST | | | | | 0'-5 3/8" |
| A510 | 4 | | 4 | 23'-0" | 96 | ST | | | | | |
| A511 | 4 | | 4 | 22'-3" | 93 | ST | | | | | |
| A512 | 4 | | 4 | 23'-8" | 99 | ST | | | | | |
| A513 | 4 | | 4 | 24'-5" | 102 | ST | | | | | |
| A514 | | 1 SER. OF 4 | 1 SER. OF 4 | 21'-8" TO 23'-0" | 93 | ST | | | | | 0'-5 3/8" |
| A515 | | 1 SER. OF 4 | 1 SER. OF 4 | 19'-1" TO 20'-5" | 82 | ST | | | | | 0'-5 3/8" |
| A516 | | 4 | 4 | 24'-0" | 100 | ST | | | | | |
| A517 | | 4 | 4 | 23'-3" | 97 | ST | | | | | |
| A518 | | 4 | 4 | 22'-9" | 95 | ST | | | | | |
| A519 | | 4 | 4 | 23'-5" | 98 | ST | | | | | |
| A520 | 2 SER. OF 6 | | 2 SER. OF 6 | 3'-10" TO 8'-10" | 79 | 2 | 1'-4" TO 3'-10" | 1'-5" | 1'-4" TO 3'-10" | | 1'-0" |
| A521 | 5 | 5 | 10 | 9'-2" | 96 | 2 | 4'-0" | 1'-5" | 4'-0" | | |
| A522 | 1 | | 1 | 7'-11" | 8 | ST | | | | | |
| A523 | 1 | | 1 | 7'-8" | 8 | ST | | | | | |
| A524 | 1 SER. OF 3 | | 1 SER. OF 3 | 3'-7" TO 7'-3" | 17 | ST | | | | | 1'-10" |
| A525 | 1 SER. OF 3 | | 1 SER. OF 3 | 3'-4" TO 7'-0" | 16 | ST | | | | | 1'-10" |
| A526 | 1 | | 1 | 9'-3" | 10 | 13 | 8" | 3'-2" | 5'-10" | 2'-0" | |
| A527 | 1 | | 1 | 9'-0" | 9 | 13 | 8" | 3'-2" | 5'-10" | 1'-9" | |
| A528 | 1 | | 1 | 8'-7" | 9 | ST | | | | | |
| A529 | 1 | | 1 | 8'-10" | 9 | ST | | | | | |
| A530 | 1 SER. OF 3 | | 1 SER. OF 3 | 4'-3" TO 7'-11" | 19 | ST | | | | | 1'-10" |
| A531 | 1 SER. OF 3 | | 1 SER. OF 3 | 4'-6" TO 8'-2" | 20 | ST | | | | | 1'-11" |
| A532 | 1 | | 1 | 9'-11" | 10 | 13 | 8" | 3'-2" | 5'-10" | 2'-8" | |
| A533 | 1 | | 1 | 10'-2" | 11 | 13 | 8" | 3'-2" | 5'-10" | 2'-11" | |
| A534 | | 1 | 1 | 9'-2" | 10 | ST | | | | | |

## BAR BENDING DIAGRAMS

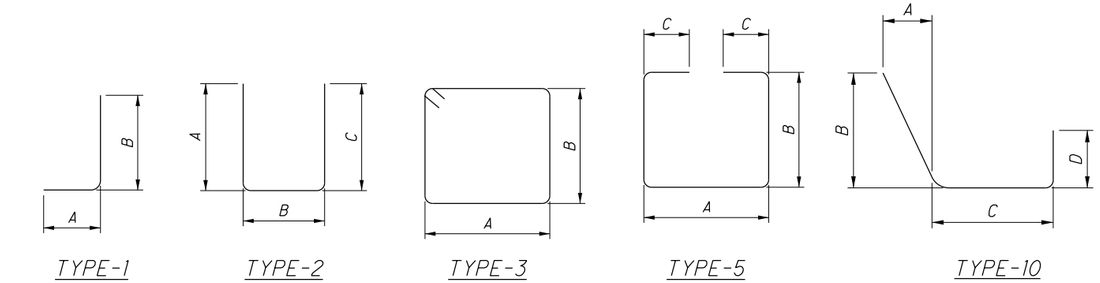


## NOTES:

1. BAR DIMENSIONS ARE OUT-TO-OUT UNLESS NOTED OTHERWISE.
2. ALL BARS ARE EPOXY COATED.
3. WHEN NO BAR LEG DIMENSIONS ARE SHOWN, IT INDICATES A STANDARD BEND.
4. BAR SIZE AND LOCATION ARE INDICATED IN THE BAR MARK. THE FIRST ALPHABETICAL LETTER(S) INDICATES LOCATION. THE NEXT DIGIT OF THE THREE DIGIT SERIES AND THE NEXT TWO DIGITS OF THE FOUR DIGIT SERIES INDICATE BAR SIZE NUMBER.

EXAMPLES: GR401 — NO. 4 SIZE BAR, GFRP RAILING

AS1001 — NO. 10 SIZE BAR, APPROACH SLAB

DESIGN AGENCY
GPD GROUP
Glaus, Pyle, Schomer, Burns & DeHaven, Inc.
520 South Main Street, Akron, OH 44311 330.572.2100
(Copyright, Glaus, Pyle, Schomer, Burns & DeHaven, Inc., 2020)

| DESIGNED | DRAWN | REVIEWED | DATE |
|---|---|---|---|
| MOJ | MOJ | DGN | 1-19-21 |
| CHECKED | REVISED | STRUCTURE FILE NUMBER | |
| JJB | | 7702558/7702582 | |

REINFORCING BAR LISTS
BRIDGE NO. SUM-77-0810 L/R
I.R. 77 OVER THE TUSCARAWAS RIVER

SUM-77/277/224
VARIOUS
PID No. 106002

40/44

1220
1288

0:\2017\2017258\ProjectData\SUM\106002\Design\Structures\SUM077_0810\Sheets\077_0810C_SL001.dgn Sheet 1/17/2020 9:22:34 PM mjurcak

| MARK | NUMBER | | | LENGTH | WEIGHT | TYPE | DIMENSIONS | | | | |
|---|---|---|---|---|---|---|---|---|---|---|---|
| | REAR | FORWARD | TOTAL | | | | A | B | C | D | INC. |
| ABUTMENT BARS (CONTINUED) | | | | | | | | | | | |
| A535 | | 1 | 1 | 8'-11" | 9 | ST | | | | | |
| A536 | | 1 SER. OF 3 | 1 SER. OF 3 | 4'-7" TO 8'-6" | 20 | ST | | | | | 1'-11 1/2" |
| A537 | | 1 SER. OF 3 | 1 SER. OF 3 | 4'-3" TO 8'-3" | 20 | ST | | | | | 2'-0" |
| A538 | | 1 | 1 | 10'-7" | 11 | 13 | 8" | 3'-3" | 6'-5" | 2'-9" | |
| A539 | | 1 | 1 | 10'-3" | 11 | 13 | 8" | 3'-3" | 6'-5" | 2'-5" | |
| A540 | | 2 SER. OF 6 | 2 SER. OF 6 | 3'-10" TO 8'-4" | 76 | 2 | 1'-4" TO 3'-7" | 1'-5" | 1'-4" TO 3'-7" | | 0'-10 3/4" |
| A541 | | 1 | 1 | 7'-5" | 8 | ST | | | | | |
| A542 | | 1 | 1 | 7'-9" | 8 | ST | | | | | |
| A543 | | 1 SER. OF 3 | 1 SER. OF 3 | 2'-9" TO 6'-9" | 15 | ST | | | | | 2'-0" |
| A544 | | 1 SER. OF 3 | 1 SER. OF 3 | 3'-1" TO 7'-1" | 16 | ST | | | | | 2'-0" |
| A545 | | 1 | 1 | 8'-8" | 9 | 13 | 8" | 3'-3" | 6'-4" | 11" | |
| A546 | | 1 | 1 | 9'-0" | 9 | 13 | 8" | 3'-3" | 6'-4" | 1'-3" | |
| | | | | | | | | | | | |
| A601 | 48 | 46 | 94 | 3'-6" | 494 | ST | | | | | |
| A602 | 38 | 38 | 76 | 2'-0" | 228 | ST | | | | | |
| | | | | | | | | | | | |
| A801 | 1 SER. OF 4 | | 1 SER. OF 4 | 20'-1" TO 21'-5" | 222 | ST | | | | | 0'-5 3/8" |
| A802 | 1 SER. OF 4 | | 1 SER. OF 4 | 20'-4" TO 21'-8" | 224 | ST | | | | | 0'-5 3/8" |
| A803 | 1 SER. OF 4 | | 1 SER. OF 4 | 22'-3" TO 23'-0" | 242 | ST | | | | | 0'-3" |
| A804 | 1 SER. OF 4 | | 1 SER. OF 4 | 23'-8" TO 24'-5" | 257 | ST | | | | | 0'-3" |
| A805 | | 1 SER. OF 4 | 1 SER. OF 4 | 21'-8" TO 23'-0" | 239 | ST | | | | | 0'-5 3/8" |
| A806 | | 1 SER. OF 4 | 1 SER. OF 4 | 19'-1" TO 20'-5" | 211 | ST | | | | | 0'-5 3/8" |
| A807 | | 1 SER. OF 4 | 1 SER. OF 4 | 23'-3" TO 24'-0" | 252 | ST | | | | | 0'-3" |
| A808 | | 1 SER. OF 4 | 1 SER. OF 4 | 22'-8" TO 23'-5" | 246 | ST | | | | | 0'-3" |
| TOTAL | | | | | 7,408 | LBS | | | | | |

| MARK | NUMBER | | | LENGTH | WEIGHT | TYPE | DIMENSIONS | | |
|---|---|---|---|---|---|---|---|---|---|
| | REAR | FORWARD | TOTAL | | | | A | B | C |
| DIAPHRAGM GUIDE BARS | | | | | | | | | |
| DG601 | 10 | 10 | 20 | 15'-0" | 451 | 3 | 3'-6" | 3'-8 1/2" | |
| | | | | | | | | | |
| DG801 | 14 | 14 | 28 | 13'-8" | 1,022 | 5 | 2'-8" | 3'-7" | 2'-4" |
| TOTAL | | | | | 1,473 | LBS | | | |

| MARK | NUMBER | | | LENGTH | WEIGHT | TYPE | DIMENSIONS | | | | |
|---|---|---|---|---|---|---|---|---|---|---|---|
| | PIER 1 | PIER 2 | TOTAL | | | | A | B | C | D | R |
| PIER BARS | | | | | | | | | | | |
| P401 | 91 | 91 | 182 | 3'-6" | 426 | 9 | 6" | 6" | 2'-2" | 10" | |
| | | | | | | | | | | | |
| P501 | 38 | 38 | 76 | 37'-0" | 2,933 | ST | | | | | |
| P502 | 40 | 40 | 80 | 9'-7" | 800 | 24 | 2'-2" | 3'-1" | | | 1'-1" |
| P503 | 62 | 62 | 124 | 8'-5" | 1,089 | 2 | 3'-3" | 2'-2" | 3'-3" | | |
| P504 | 44 | 44 | 88 | 7'-8" | 704 | ST | | | | | |
| | | | | | | | | | | | |
| P601 | 32 | 32 | 64 | 9'-0" | 865 | 17 | 7'-8" | | | | |
| P602 | 12 | 12 | 24 | 10'-10" | 391 | 33 | 2'-2" | 2'-8" | 1'-0" | | |
| P603 | 8 | 8 | 16 | 4'-1" | 98 | 1 | 1'-7" | 2'-8" | | | |
| | | | | | | | | | | | |
| P801 | 4 | 4 | 8 | 37'-0" | 790 | ST | | | | | |
| P802 | 12 | 12 | 24 | 43'-6" | 2,787 | 17 | 41'-8" | | | | |
| | | | | | | | | | | | |
| P901 | 130 | 130 | 260 | 18'-8" | 16,501 | ST | | | | | |
| P902 | 130 | 130 | 260 | 9'-10" | 8,693 | 1 | 1'-7" | 8'-6" | | | |
| P903 | 12 | 12 | 24 | 41'-8" | 3,400 | ST | | | | | |
| P904 | 20 | 20 | 40 | 4'-0" | 544 | 1 | 1'-7" | 2'-8" | | | |
| TOTAL | | | | | 40,021 | LBS | | | | | |

## NOTES:

1. DIAPHRAGM GUIDE BARS ARE SHOWN FOR REFERENCE ONLY. PAYMENT FOR THESE BARS SHALL BE INCLUDED IN ITEM 511 - SEMI-INTEGRAL DIAPHRAGM GUIDE.
2. FOR ADDITIONAL NOTES AND BAR BENDING DIAGRAMS, SEE SHEET 40/44.

DESIGN AGENCY
GPD GROUP
Glaus, Pyle, Schomer, Burns & DeHaven, Inc.
520 South Main Street, Akron, OH 44311 330.572.2100
(Copyright claim: Pyle, Schomer, Burns & Deheven, Inc. 2020)

| DESIGNED | DRAWN | REVIEWED | DATE |
|---|---|---|---|
| MOJ | MOJ | DGN | 1-19-21 |
| CHECKED | REVISED | STRUCTURE FILE NUMBER | |
| JJB | | 7702558/7702582 | |

REINFORCING BAR LISTS
BRIDGE NO. SUM-77-0810 L/R
I.R. 77 OVER THE TUSCARAWAS RIVER

SUM-77/277/224
VARIOUS
PID No. 106002

41/44

1221
1288

D:\2017\2017258\ProjectData\SUM\06002\Design\Structures\SUM077_0810\Sheets\077_0810C_SL001.dgn Sheet2 1/17/2021 9:22:35 PM mjurcak

| MARK | NUMBER | LENGTH | WEIGHT | TYPE | DIMENSIONS | | | | | |
|---|---|---|---|---|---|---|---|---|---|---|
| | | | | | A | B | C | D | E | INC. |
| DECK SLAB BARS | | | | | | | | | | |
| S401 | 940 | 30'-0" | 18,838 | ST | | | | | | |
| S402 | 188 | 20'-0" | 2,512 | ST | | | | | | |
| | | | | | | | | | | |
| S501 | 309 | 24'-2" | 7,789 | 16 | 23'-7" | | | | | |
| ◑ S502 | 309 | 16'-6" | 5,318 | ST | | | | | | |
| S503 | 309 | 27'-10" | 8,970 | ST | | | | | | |
| ◑ S504 | 309 | 13'-1" | 4,217 | ST | | | | | | |
| S505 | 309 | 22'-11" | 7,386 | 16 | 22'-4" | | | | | |
| ◑ S506 | 309 | 17'-8" | 5,694 | ST | | | | | | |
| S507 | 309 | 26'-5" | 8,514 | ST | | | | | | |
| ◑ S508 | 309 | 14'-3" | 4,593 | ST | | | | | | |
| ◑ S509 | 309 | 20'-11" | 6,741 | ST | | | | | | |
| S510 | 309 | 25'-5" | 8,191 | 16 | 24'-10" | | | | | |
| ◑ S511 | 309 | 16'-9" | 5,398 | ST | | | | | | |
| S512 | 309 | 29'-10" | 9,615 | ST | | | | | | |
| ◑ S513 | 309 | 19'-6" | 6,285 | ST | | | | | | |
| S514 | 309 | 26'-10" | 8,648 | 16 | 26'-3" | | | | | |
| ◑ S515 | 309 | 24'-5" | 7,869 | ST | | | | | | |
| S516 | 309 | 22'-2" | 7,144 | ST | | | | | | |
| S517 | 1,020 | 30'-0" | 31,916 | ST | | | | | | |
| S518 | 204 | 22'-6" | 4,787 | ST | | | | | | |
| S519 | 618 | 7'-9" | 4,995 | 16 | 7'-2" | | | | | |
| S520 | 309 | 6'-10" | 2,202 | 16 | 6'-3" | | | | | |
| S521 | 309 | 7'-11" | 2,551 | 16 | 7'-4" | | | | | |
| | | | | | | | | | | |
| S601 | 736 | 18'-5" | 20,359 | ST | | | | | | |
| | | | | | | | | | | |
| S801 | 8 | 28'-0" | 598 | ST | | | | | | |
| ◑ S802 | 8 | 20'-10" | 445 | ST | | | | | | |
| ◑ S803 | 8 | 19'-0" | 406 | ST | | | | | | |
| S804 | 8 | 24'-0" | 513 | ST | | | | | | |
| S805 | 8 | 24'-9" | 529 | ST | | | | | | |
| ◑ S806 | 8 | 18'-3" | 390 | ST | | | | | | |
| ◑ S807 | 8 | 22'-2" | 473 | ST | | | | | | |
| S808 | 8 | 26'-10" | 573 | ST | | | | | | |
| TOTAL | | | 204,459 | LBS | | | | | | |

| MARK | NUMBER | | | LENGTH | WEIGHT (LBS) | TYPE | DIMENSIONS | | | | |
|---|---|---|---|---|---|---|---|---|---|---|---|
| | REAR | FORWARD | TOTAL | | | | A | B | C | D | INC. |
| END DIAPHRAGM BARS | | | | | | | | | | | |
| D401 | 4 | 4 | 8 | 3'-5" | 18 | ST | | | | | |
| | | | | | | | | | | | |
| D501 | 118 | 118 | 236 | 7'-3" | 1,785 | 2 | 2'-5" | 2'-8" | 2'-5" | | |
| D502 | 114 | 116 | 230 | 8'-3" | 1,979 | 2 | 2'-6" | 3'-6" | 2'-6" | | |
| D503 | 58 | 56 | 114 | 8'-7" | 1,021 | 2 | 2'-8" | 3'-6" | 2'-8" | | |
| D504 | 64 | 64 | 128 | 9'-1" | 1,213 | 2 | 2'-11" | 3'-6" | 2'-11" | | |
| D505 | 4 | 4 | 8 | 6'-5" | 54 | 2 | 2'-0" | 2'-8" | 2'-0" | | |
| D506 | 8 | 8 | 16 | 5'-1" | 85 | 2 | 11" | 3'-6" | 11" | | |
| | | | | | | | | | | | |
| D801 | 10 | 10 | 20 | 28'-0" | 1,495 | ST | | | | | |
| ◑ D802 | 10 | 10 | 20 | 20'-10" | 1,113 | ST | | | | | |
| ◑ D803 | 6 | 6 | 12 | 19'-0" | 609 | ST | | | | | |
| ◑ D804 | 4 | 4 | 8 | 21'-7" | 461 | ST | | | | | |
| D805 | 2 | 2 | 4 | 8'-5" | 90 | ST | | | | | |
| D806 | 8 | 8 | 16 | 6'-0" | 256 | 18 | 3'-9" | 11" | 1'-0" | | |
| D807 | 8 | 8 | 16 | 9'-6" | 406 | 10 | 4'-10" | 6" | 3'-7" | 1'-4" | |
| D808 | 4 | 4 | 8 | 24'-0" | 513 | ST | | | | | |
| D809 | 2 | 2 | 4 | 12'-1" | 129 | ST | | | | | |
| D810 | 4 | 4 | 8 | 13'-3" | 283 | 1 | 1'-5" | 12'-1" | | | |
| D811 | 4 | 4 | 8 | 13'-7" | 290 | 1 | 1'-5" | 12'-5" | | | |
| D812 | 2 | 2 | 4 | 12'-5" | 133 | ST | | | | | |
| D813 | 4 | 4 | 8 | 24'-9" | 529 | ST | | | | | |
| D814 | 2 | 2 | 4 | 9'-0" | 96 | ST | | | | | |
| ◑ D815 | 4 | 4 | 8 | 21'-4" | 456 | ST | | | | | |
| ◑ D816 | 6 | 6 | 12 | 18'-3" | 585 | ST | | | | | |
| ◑ D817 | 10 | 10 | 20 | 22'-2" | 1,184 | ST | | | | | |
| D818 | 10 | 10 | 20 | 26'-10" | 1,433 | ST | | | | | |
| D819 | 118 | 118 | 236 | 4'-11" | 3,098 | 18 | 2'-8" | 1'-0" | 1'-0" | | |
| TOTAL | | | | | 19,314 | FT | | | | | |

## LEGEND:

◑ BARS THAT REQUIRE MECHANICAL CONNECTORS

## NOTES:

1. FOR NOTES AND BAR BENDING DIAGRAMS, SEE SHEET 40/44.

DESIGN AGENCY
GPD GROUP
Glaus, Pyle, Schomer, Burns & DeHaven, Inc.
520 South Main Street, Akron, OH 44311 330.572.2100
Copyright Glaus, Pyle, Schomer, Burns & DeHaven, Inc. 2020

DESIGNED MOJ | DRAWN MOJ | REVIEWED DGN | DATE 1-19-21
CHECKED JJB | REVISED | STRUCTURE FILE NUMBER 7702558/7702582

REINFORCING BAR LISTS
BRIDGE NO. SUM-77-0810 L/R
I.R. 77 OVER THE TUSCARAWAS RIVER

SUM-77/277/224
VARIOUS
PID No. 106002



1222
1288

O:\2017\2017258\ProjectData\SUM\106002\Design\Structures\SUM077_0810\Sheets\077_0810C_SL001.dgn Sheet#3 1/17/2021 9:22:35 PM mjurcak

| MARK | TOTAL | LENGTH | WEIGHT (LBS.) | TYPE | DIMENSIONS | | | | | | |
|---|---|---|---|---|---|---|---|---|---|---|---|
| | | | | | A | B | C | D | E | R | INC. |
| RAILING BARS | | | | | | | | | | | |
| R401 | 12 | 16'-6" | 132 | 36 | 1'-0" | 1'-2" | 3'-3" | 1'-4" | 4'-6" | | |
| R402 | 2 SER. OF 9 | 15'-5" TO 16'-7" | 192 | 36 | 1'-0" | 1'-0" | 2'-7" TO 3'-2" | 9" TO 1'-4" | 4'-6" | | 1 3/4" |
| R403 | 16 | 15'-3" | 163 | 36 | 1'-0" | 1'-0" | 2'-6" | 8" | 4'-6" | | |
| | | | | | | | | | | | |
| R501 | 12 | 24'-5" | 306 | ST | | | | | | | |
| R502 | 12 | 24'-8" | 309 | ST | | | | | | | |
| R503 | 24 | 1'-5" | 35 | ST | | | | | | | |
| | | | | | | | | | | | |
| R601 | 352 | 7'-8" | 4,053 | 200 | 9 1/2" | 2'-2" | 7" | 1'-0" | | | |
| R602 | 400 | 7'-1" | 4,256 | 23 | 6" | 3'-3" | 3'-3" | | | 2" | |
| R603 | 48 | 8'-5" | 607 | 200 | 9 1/2" | 2'-6" | 7" | 1'-0" | | | |
| R604 | 8 SER. OF 11 | 4'-5" TO 5'-3" | 639 | 1 | 1'-0" | 3'-7" TO 4'-5" | | | | | 1" |
| R605 | 32 | 4'-5" | 212 | 1 | 1'-0" | 3'-7" | | | | | |
| R606 | 578 | 13'-0" | 11,286 | 201 | 10" | 10" | 5'-4" | | | 2" | |
| TOTAL | | | 22,190 | LBS | | | | | | | |

| MARK | TOTAL | LENGTH (EACH) | LENGTH (TOTAL) (FEET) | TYPE | DIMENSIONS | | | | |
|---|---|---|---|---|---|---|---|---|---|
| | | | | | A | B | C | D | E |
| RAILING BARS - GFRP REINFORCING | | | | | | | | | |
| GR401 | 110 | 30'-0" | 3,300 | ST | | | | | |
| GR402 | 22 | 15'-10" | 348 | ST | | | | | |
| GR403 | 112 | 10'-2" | 1,139 | ST | | | | | |
| GR404 | 16 | 10'-5" | 167 | ST | | | | | |
| GR405 | 4 | 11'-10" | 47 | 19 | 10'-9" | 1'-1" | 1" | | |
| GR406 | 40 | 11'-10" | 473 | ST | | | | | |
| GR407 | 16 | 10'-9" | 172 | ST | | | | | |
| GR408 | 48 | 10'-0" | 480 | ST | | | | | |
| GR409 | 24 | 6'-4" | 152 | 25 | 2'-6" | 2'-5" | 1'-4 1/4" | 1 1/2" | 5" |
| GR410 | 24 | 5'-1" | 122 | ST | | | | | |
| TOTAL NO. 4 GFRP BARS | | | 6,400 | FT | | | | | |
| | | | | | | | | | |
| GR601 | 110 | 30'-0" | 3,300 | ST | | | | | |
| GR602 | 22 | 18'-8" | 411 | ST | | | | | |
| GR603 | 116 | 10'-2" | 1,179 | ST | | | | | |
| GR604 | 4 | 11'-2" | 45 | ST | | | | | |
| GR605 | 4 | 11'-0" | 44 | ST | | | | | |
| GR606 | 4 | 10'-4" | 41 | ST | | | | | |
| TOTAL NO. 6 GFRP BARS | | | 5,020 | FT | | | | | |

**NOTES:**

1. FOR NOTES AND BAR BENDING DIAGRAMS, SEE SHEET 40/44.

DESIGN AGENCY
GPD GROUP
Glaus, Pyle, Schomer, Burns & DeHaven, Inc.
520 South Main Street, Akron, OH 44311 330.572.2100
Copyright Glaus, Pyle, Schomer, Burns & DeHaven, Inc. 2020

DESIGNED MOJ | DRAWN MOJ | REVIEWED DGN | DATE 1-19-21
CHECKED JJB | REVISED | STRUCTURE FILE NUMBER 7702558/7702582

REINFORCING BAR LISTS
BRIDGE NO. SUM-77-0810 L/R
I.R. 77 OVER THE TUSCARAWAS RIVER

SUM-77/277/224
VARIOUS
PID No. 106002



1223
1288

O:\2017\2017258\ProjectData\SUM\106002\Design\Structures\SUM077_0810\Sheets\077_0810C_SL001.dgn Sheet4 1/17/2021 9:22:36 PM mjurcak

| MARK | NUMBER | | | LENGTH | WEIGHT (LBS) | TYPE | DIMENSIONS | | | |
|---|---|---|---|---|---|---|---|---|---|---|
| | REAR | FORWARD | TOTAL | | | | A | B | C | D |
| APPROACH SLAB BARS | | | | | | | | | | |
| ◑ AS501 | 272 | 272 | 544 | 30'-0" | 17,022 | ST | | | | |
| AS502 | 114 | 114 | 228 | 15'-9" | 3,745 | ST | | | | |
| ◑ AS503 | 68 | 68 | 136 | 20'-8" | 2,932 | ST | | | | |
| AS504 | 108 | 108 | 216 | 24'-6" | 5,520 | ST | | | | |
| AS505 | 157 | 157 | 314 | 5'-8" | 1,856 | 30 | 10" | 1'-4" | 1'-7" | 1'-7" |
| AS506 | 157 | 157 | 314 | 5'-7" | 1,829 | ST | | | | |
| AS507 | 22 | 22 | 44 | 14'-4" | 658 | ST | | | | |
| | | | | | | | | | | |
| AS1001 | 277 | 277 | 554 | 25'-11" | 61,782 | 16 | 24'-6" | | | |
| TOTAL | | | | | 95,344 | LBS | | | | |

◑ 408 OF 544 AS501 BARS AND ALL 136 AS503 BARS REQUIRE MECHANICAL CONNECTORS

## NOTES:

1. APPROACH SLAB BARS ARE SHOWN FOR REFERENCE ONLY. PAYMENT FOR THESE BARS SHALL BE INCLUDED IN ITEM 526 - REINFORCED CONCRETE APPROACH SLABS WITH QC/QA (T=15"), AS PER PLAN AND ITEM 526 - TYPE C INSTALLATION, AS PER PLAN.
2. FOR ADDITIONAL NOTES AND BAR BENDING DIAGRAMS, SEE SHEET 40/44.

DESIGN AGENCY
GPD GROUP
Glaus, Pyle, Schomer, Burns & DeHaven, Inc.
520 South Main Street, Akron, OH 44311 330.572.2100
(Copyright Glaus, Pyle, Schomer, Burns & DeHaven, Inc. 2020)

| REVIEWED | DATE |
|---|---|
| DGN | 1-19-21 |
| STRUCTURE FILE NUMBER | |
| 7702558/7702582 | |

| DESIGNED | DRAWN |
|---|---|
| MOJ | MOJ |
| CHECKED | REVISED |
| JJB | |

REINFORCING BAR LISTS
BRIDGE NO. SUM-77-0810 L/R
I.R. 77 OVER THE TUSCARAWAS RIVER

SUM-77/277/224
VARIOUS
PID No. 106002

44/44

1224
1288

O:\2017\2017258\ProjectData\SUM\106002\Design\Structures\SUM077_0810\Sheets\077_0810C_SL001.dgn Sheet#5 1/17/2021 9:22:37 PM mjurcak

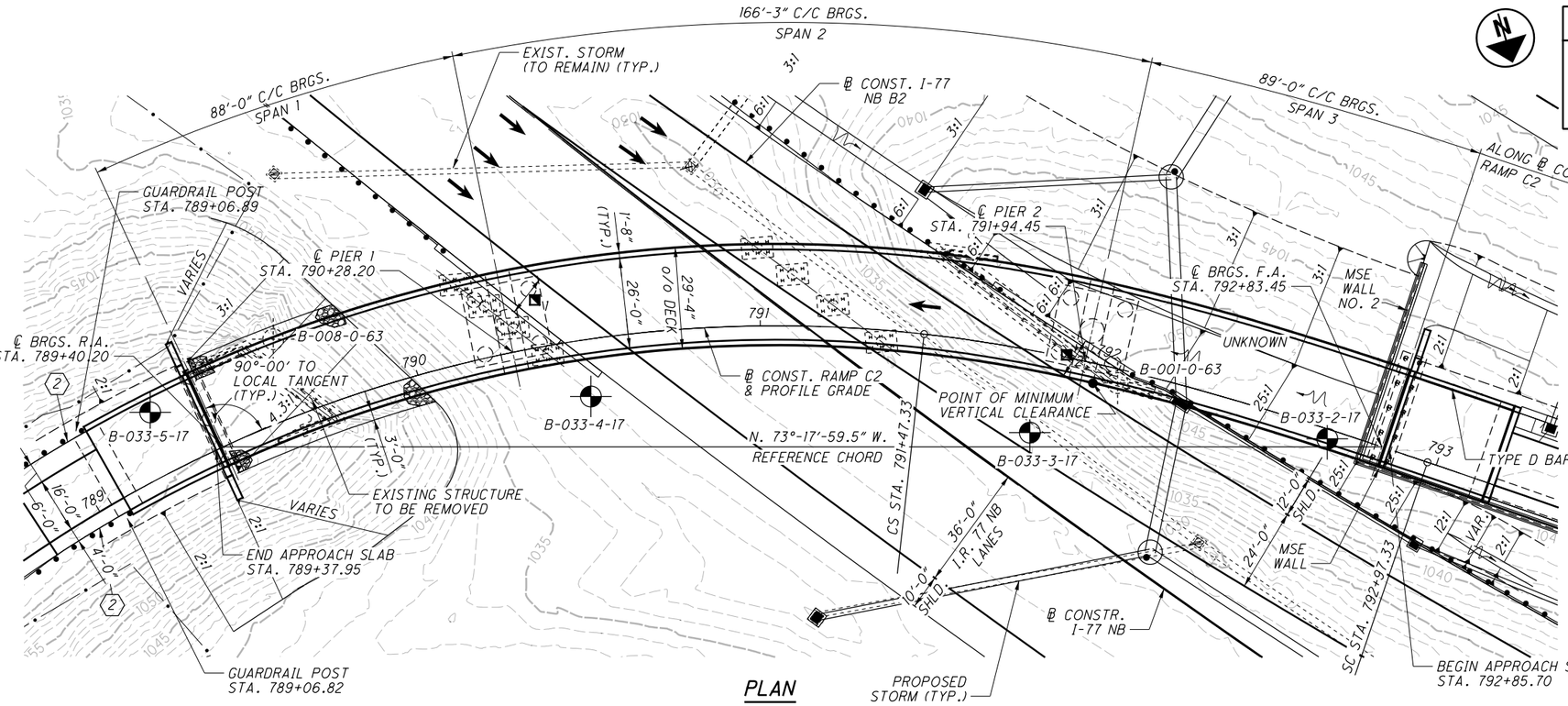


PLAN

## BENCHMARK DATA

| POINT | NORTHING | EASTING | ELEV. | DESCRIPTION |
|---|---|---|---|---|
| CP05 | 493895.1420 | 2245390.8980 | 1073.53 | CONC. MONUMENT |
| CP06 | 493906.9643 | 244750.3816 | 1090.46 | CONC. MONUMENT |
| CP07 | 498481.9448 | 2243140.4162 | 1064.39 | CONC. MONUMENT |
| CP08 | 499070.7218 | 2243262.6440 | 1076.40 | CONC. MONUMENT |

FOR ADDITIONAL BENCHMARK INFORMATION, SEE ROADWAY PLANS.

## NOTES

1. EARTHWORK LIMITS SHOWN ARE APPROXIMATE. ACTUAL SLOPES SHALL CONFORM TO PLAN CROSS SECTIONS.
2. FOR GEOMETRIC LAYOUT AND HORIZONTAL CURVE DATA, SEE SHEET 2/33.

DESIGN TRAFFIC:
2020 ADT = 6030 2020 ADTT = 241
2040 ADT = 6240 2040 ADTT = 250
DIRECTIONAL DISTRIBUTION = 100 %

## LEGEND

- PROJECT BORING LOCATION
- (2) - MGS BRIDGE TERMINAL ASSEMBLY, TYPE 2
- HISTORIC BORING LOCATION (APPROXIMATE BASED ON EXISTING PLANS)
- * THE FOUNDATION OF EXISTING PIER 1 AND FORWARD ABUTMENT TO BE REMOVED

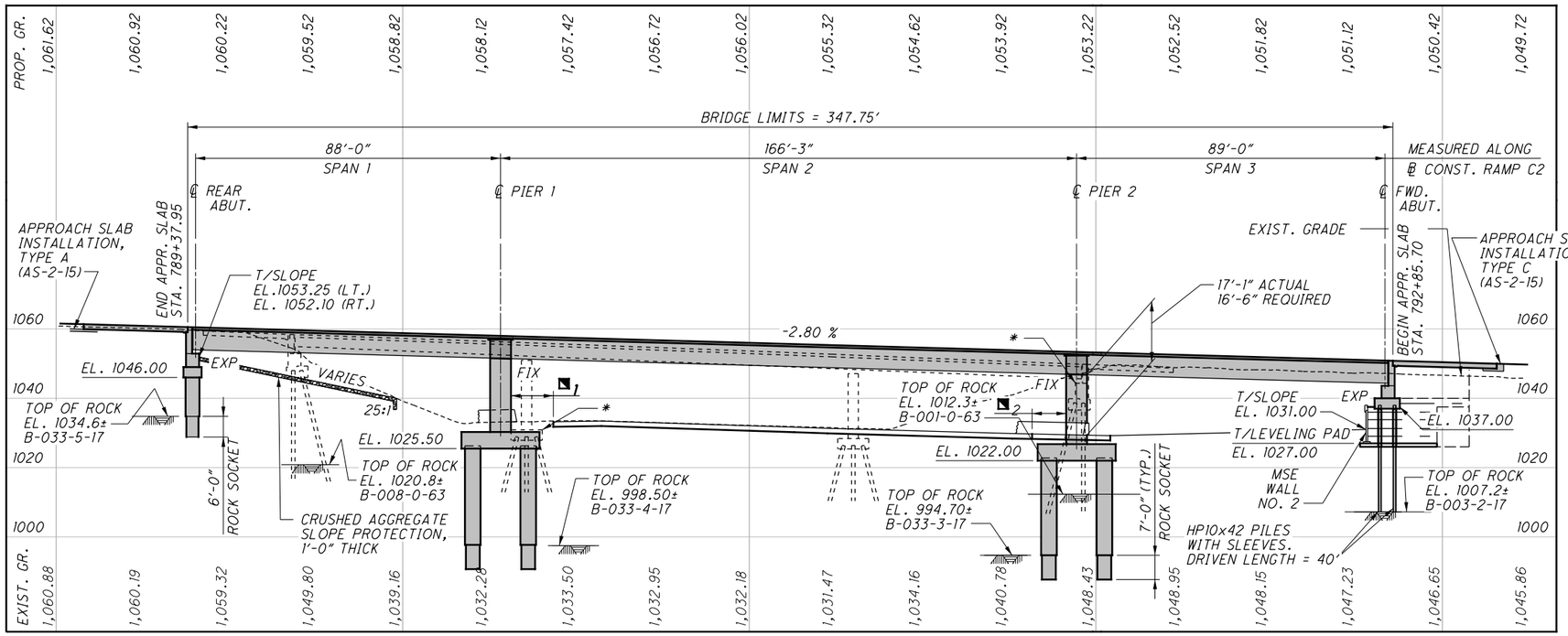


PROFILE ALONG ℄ CONSTRUCTION RAMP C2

EXISTING GRADE ELEVATION ARE GIVEN ALONG THE NEW PROPOSED PROFILE GRADE LINE

**HORIZONTAL CLEARANCE:**
1 11.97' ACTUAL 10.00' REQUIRED
2 11.71' ACTUAL 10.00' REQUIRED

## EXISTING STRUCTURE

TYPE: THREE-SPAN CONTINUOUS STEEL GIRDER WITH NON-COMPOSITE REINFORCED CONCRETE DECK ON STUB ABUTMENTS AND CAP AND COLUMN PIERS
SPANS: 65'-1"±, 84'-3"±, 66'-1"± C/C BEARINGS
ROADWAY: 28'-0"± F/F PARAPETS
LOADING: CF2000 ADEQUATE FOR AASHO ALTERNATE LOADING
SKEW: 54°-10'-51"± R.F. TO LOCAL TANGENT
WEARING SURFACE: MONOLITHIC CONCRETE
APPROACH SLABS: 25'-0" LONG (AS-1-54)
ALIGNMENT: 15°-00'-00" LT. (EXIST ALIGNMENT)
SUPERELEVATION: 0.0833 FT/FT
STRUCTURAL FILE NUMBER: 7702647
DATE BUILT: 1968
DISPOSITION: TO BE REMOVED

## PROPOSED STRUCTURE

TYPE: THREE-SPAN CONTINUOUS STEEL CURVED GIRDER BRIDGE ASTM A709 GRADE 50 STEEL (PAINTED) WITH REINFORCED COMPOSITE CONCRETE DECK, STUB ABUTMENTS ON REAR SPILL-THRU SLOPE AND FORWARD MSE WALL EMBANKMENT, AND SINGLE COLUMN POST-TENSIONED PIERS
SPANS: 88'-0", 166'-3", 89'-0" C/C BEARINGS ALONG ℄ CONSTRUCTION RAMP C2
ROADWAY: 26'-0" TOE/TOE PARAPET
LOADING: HL93 AND 0.060 KSF FUTURE WEARING SURFACE
SKEW: RADIAL
WEARING SURFACE: 1" MONOLITHIC CONCRETE
APPROACH SLABS: 30'-0" LONG (AS-1-15) TYPE A & C INSTALLATION (AS-2-15)
ALIGNMENT: 15°-00'-00" CURVE RIGHT
SUPERELEVATION: VARIES
DECK AREA: 10,300 SQ. FT.
COORDINATES: LATITUDE 41°-01'-25.15"
LONGITUDE 81°-29'-56.13"

DESIGN AGENCY
GPD GROUP
320 South Main Street, Akron, OH 44311 330.572.2100
Copyright GPD Group, Akron, Ohio, USA. All Rights Reserved. Unauthorized use of these plans without the express written permission of GPD Group is prohibited by law and may subject violators to civil and criminal penalties.

| DESIGNED | DRAWN | REVIEWED | DATE |
|---|---|---|---|
| RHC | RHC | TJW | 1-18-21 |
| CHECKED | REVISED | STRUCTURE FILE NUMBER | |
| DGN | | 7702648 | |

SUMMIT COUNTY
STA. 789+37.95
STA. 792+85.70

SITE PLAN
BRIDGE NO. SUM-77-0927R
RAMP C2 OVER I.R. 77 NB

SUM-077/277/224-VAR
PID No. 106002



O:\2017\2017258\ProjectData\SUM\106002\Design\Structures\SUM077_0927R\Sheets\077_0927R_SP001.dgn 1/17/2021 7:20:12 PM rvitelli

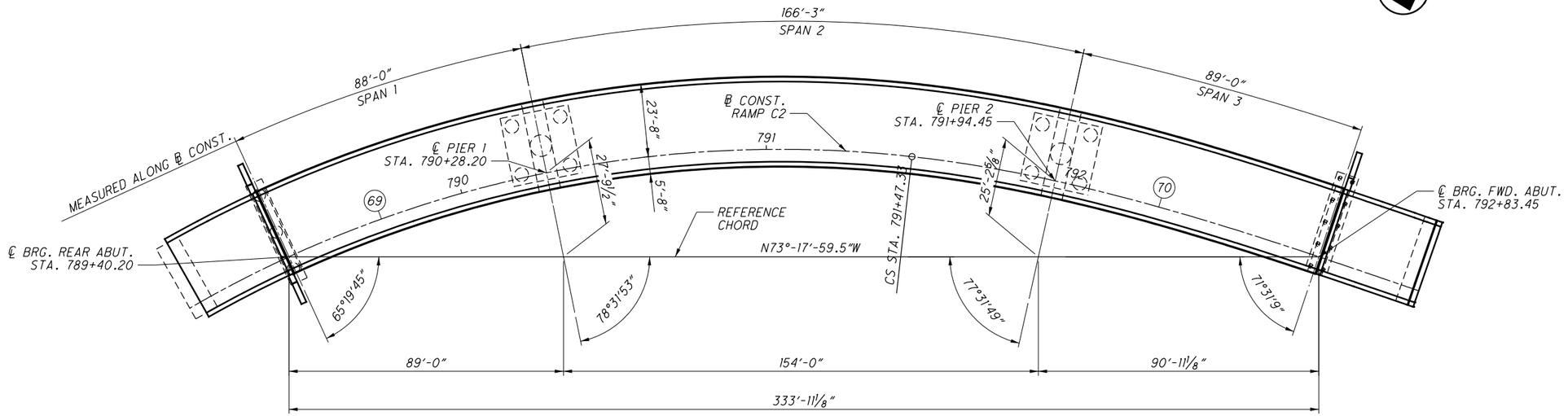


## GEOMETRIC LAYOUT

## HORIZONTAL CURVE DATA

**(69) ℄ CONST. RAMP C-2**

P.I. Sta. 789+63.04
Δ = 62° 13' 11" (RT)
Dc = 15° 00' 00"
R = 381.97'
T = 230.51'
L = 414.80'
E = 64.16'
C = 394.72'
C.B. = S 81° 59' 26" W
D.S. = 35 MPH
$e_{max}$ = 0.06
P.C. STA. 787+32.53
P.T. STA. 791+47.33

**(70) ℄ CONST. RAMP C-2**

P.I. STA. 792+02.11
Ls = 150.00'
θs = 12° 22' 30"
LT = 95.72'
ST = 54.79'
x = 149.23'
y = 11.74'
k = 74.88'
p = 2.21'
D.S. = 35 MPH
$e_{max}$ = 0.06
C.S. STA. 791+47.33
S.C. STA. 792+97.33

0:\2017\2017258\ProjectData\SUM\06002\Design\Structures\SUM077_0927R\Sheets\077_0927R_SG001.dgn Sheet 1/17/2021 7:20:16 PM rvitelli

DESIGN AGENCY
GPD GROUP
Glaus, Pyle, Schomer, Burns & DeHaven, Inc.
520 South Main Street, Akron, OH 44311 330.572.2100

| DESIGNED | DRAWN | REVIEWED | DATE |
|---|---|---|---|
| RHC | RHC | TJW | 1-18-21 |
| CHECKED | REVISED | STRUCTURE FILE NUMBER | |
| DGN | | 7702648 | |

**GEOMETRY PLAN**
BRIDGE NO. SUM-77-0927R
RAMP C2 OVER I.R.77 NB

**SUM-077/277/224-VAR**
**PID No. 106002**



1226
1288

**DESIGN SPECIFICATIONS:**

THIS STRUCTURE CONFORMS TO THE 8TH EDITION OF THE "LRFD BRIDGE DESIGN SPECIFICATIONS" ADOPTED BY THE AMERICAN ASSOCIATION OF STATE HIGHWAY AND TRANSPORTATION OFFICIALS, AND THE ODOT BRIDGE DESIGN MANUAL, 2020.

**REFER TO THE FOLLOWING STANDARD BRIDGE DRAWINGS:**

| | | |
|---|---|---|
| AS-1-15 | REVISED | 7-17-15 |
| AS-2-15 | REVISED | 1-18-19 |
| EXJ-4-87 | REVISED | 1-18-19 |
| GSD-1-19 | DATED | 1-15-21 |
| SBR-1-20 | REVISED | 7-17-20 |

**AND TO THE FOLLOWING SUPPLEMENTAL SPECIFICATIONS:**

| | | |
|---|---|---|
| 800 | DATED | 1-15-21 |
| 840 | DATED | 1-15-21 |
| 846 | DATED | 4-17-15 |
| 855 | DATED | 4-20-18 |
| 869 | DATED | 10-17-14 |

**SPECIAL DESIGN SPECIFICATIONS:**

THIS BRIDGE REQUIRED THE USE OF A THREE DIMENSIONAL MODEL USING THE FINITE ELEMENT METHOD TO ANALYZE THE STRUCTURE. THE COMPUTER PROGRAM USED FOR STRUCTURAL ANALYSIS WAS MIDAS CIVIL 2020 (v 1.2). THE BRIDGE COMPONENTS DESIGNED BY THIS METHOD WERE THE STEEL GIRDERS, INTERMEDIATE CROSSFRAMES, CAST-IN-PLACE POST-TENSIONED INTEGRAL PIER CAPS AND CAST-IN-PLACE PIER COLUMNS.

DEAD LOAD DISTRIBUTION: WEIGHT OF DECK AND STRUCTURAL STEEL WERE USED FOR THE NON-COMPOSITE LOAD BASED ON TRIBUTARY AREA. THE WEIGHT OF THE PARAPETS WERE APPLIED TO THE DECK AND FUTURE WEARING SURFACE COURSE WAS BASED ON TRIBUTARY AREA FOR THE COMPOSITE LOAD.

LIVE LOAD DISTRIBUTION FACTORS: DISTRIBUTION FACTORS FOR LIVE LOAD MOMENT AND SHEAR AT INTERIOR AND EXTERIOR MEMBERS VARIED ACROSS THE STRUCTURE AND WERE BASED ON AASHTO LRFD BRIDGE DESIGN SPECIFICATIONS, SECTION 4.

**REDUNDANCY:**

THE PIER COLUMNS WERE CONSIDERED NON-REDUNDANT AND INCLUDE A LOAD MODIFIER OF 1.05 IN ACCORDANCE WITH THE AASHTO LRFD BRIDGE DESIGN SPECIFICATIONS, ARTICLE 1.3.4.

**OPERATIONAL IMPORTANCE:**

A LOAD MODIFIER OF 1.00 HAS BEEN ASSUMED FOR THE DESIGN OF THIS STRUCTURE IN ACCORDANCE WITH THE AASHTO LRFD BRIDGE DESIGN SPECIFICATIONS, ARTICLE 1.3.5 AND THE ODOT BRIDGE DESIGN MANUAL.

**DESIGN LOADING:**

HL-93
FUTURE WEARING SURFACE (FWS) OF 0.060 KSF

**DESIGN DATA:**

CONCRETE CLASS QC5, WITH ⅜" MAX. AGGREGATE SIZE - COMPRESSIVE STRENGTH 4.5 KSI (DRILLED SHAFTS)
CONCRETE CLASS QC2 - COMPRESSIVE STRENGTH 4.5 KSI (SUPERSTRUCTURE)
CONCRETE CLASS QC4 - COMPRESSIVE STRENGTH 7.0 KSI (INTEGRAL PIER CAPS)
CONCRETE CLASS QC1 - COMPRESSIVE STRENGTH 4.0 KSI (SUBSTRUCTURE)
REINFORCING STEEL - MINIMUM YIELD STRENGTH 60 KSI
STRUCTURAL STEEL - ASTM A709 GRADE 50 - YIELD STRENGTH 50 KSI
STEEL H-PILES - ASTM A572 - YIELD STRENGTH 50 KSI

**MONOLITHIC WEARING SURFACE:**

MONOLITHIC WEARING SURFACE IS ASSUMED, FOR DESIGN PURPOSES, TO BE 1 INCH THICK.

**POST-TENSIONING DESIGN DATA:**

DIAMETER: 0.60" (AREA<= 0.217 SQ IN)
WOBBLE COEFFICIENT: = 0.0002
FRICTION COEFFICIENT: = 0.25
ANCHOR SET: 0.25"
MAXIMUM STRESS AT ANCOHARAGE AFTER SEATING: 179 KSI
MAXIMUM STESS OTHER LOCATIONS AFTER SEATING: 181 KSI
APPARENT MODULUS OF ELASTICITY: 28500 KSI

**DECK PLACEMENT DESIGN ASSUMPTIONS:**

THE FOLLOWING ASSUMPTIONS OF CONSTRUCTION MEANS AND METHODS WERE MADE FOR THE ANALYSIS AND DESIGN OF THE SUPERSTRUCTURE. THE CONTRACTOR IS RESPONSIBLE FOR THE DESIGN OF THE FALSEWORK SUPPORT SYSTEM WITHIN THESE PARAMETERS AND WILL ASSUME RESPONSIBILITY FOR SUPERSTRUCTURE ANALYSIS FOR DEVIATION FROM THESE DESIGN ASSUMPTIONS.

- AN EIGHT WHEEL FINISHING MACHINE WITH A MAXIMUM WHEEL LOAD OF 2.20 KIPS
- A MINIMUM OUT-TO-OUT WHEEL SPACING AT EACH END OF THE MACHINE OF 103".
- A MAXIMUM SPACING OF OVERHANG FALSEWORK BRACKETS OF 48".
- A MAXIMUM DISTANCE FROM THE CENTERLINE OF THE FASCIA GIRDER TO THE FACE OF THE SAFETY HANDRAIL OF 65".

PILES TO BEDROCK:

DRIVE PILES TO REFUSAL ON BEDROCK. THE DEPARTMENT WILL CONSIDER REFUSAL TO BE OBTAINED WHEN THE PILE PENETRATION IS AN INCH OR LESS AFTER RECEIVING AT LEAST 20 BLOWS FROM THE PILE HAMMER. SELECT THE HAMER SIZE TO ACHIEVE THE REQUIRED DEPTH TO BEDROCK AND REFUSAL.

THE TOTAL FACTORED LOAD IS 267 KIPS FOR THE FORWARD ABUTMENT PILES.

FORWARD ABUTMENT PILES:

10 PILES 40 FEET LONG, ORDER LENGTH

ROCK SOCKETED DRILLED SHAFTS

THE MAXIMUM FACTORED LOAD TO BE SUPPORTED BY EACH DRILLED SHAFT IS 567 KIPS AT THE REAR ABUTMENT AND 1278 KIPS AT THE PIERS. THIS LOAD IS RESISTED BY SIDE RESISTANCE WITHIN A PORTION OF THE BEDROCK SOCKET AND BY TIP RESISTANCE. AT THE REAR ABUTMENT, THE FACTORED SIDE RESISTANCE IS 845 KIPS ASSUMED TO ACT ALONG THE BOTTOM 4.0 FEET OF THE DRILLED SHAFT SOCKET, AND THE FACTORED TIP RESISTANCE IS 8330 KIPS. AT THE PIERS, THE FACTORED SIDE RESISTANCE IS 289 KIPS AT PIER 1 AND 1073 KIPS AT PIER 2 ASSUMED TO ACT ALONG THE BOTTOM 5 FEET OF THE DRILLED SHAFT, AND THE FACTORED TIP RESISTANCE IS 16002 KIPS AT PIER 1 AND 7152 KIPS AT PIER 2.

ITEM 202-STRUCTURE REMOVED, OVER 20 FOOT SPAN, AS PER PLAN:

THIS STRUCTURE SHALL BE REMOVED IN ACCORDANCE WITH CMS 202, AND AS SHOWN IN THE SITE PLAN AND SHALL BE COORDINATED WITH MAINTENANCE OF TRAFFIC PLANS. THE EXISTING STRUCTURE SHALL BE COMPLETELY REMOVED UPON RECEIVING PERMISSION FROM THE ENGINEER. THE CONTRACTOR MUST REVIEW THE STRUCTURE WHEN PREPARING THE BID.

ITEM 513 - STRUCTURAL STEEL MEMBERS, LEVEL 5, AS PER PLAN

IN ADDITION TO THE REQUIREMENTS OF CMS 513, THIS ITEM SHALL INCLUDE THE WELDED SHEAR STUDS AND THE PREDRILLING OF HOLES IN THE GIRDER WEB AT THE LOCATIONS OF THE PIERS AS DETAILED IN THE PLANS.

ITEM 514 - FIELD PAINTING STRUCTURAL STEEL, FINISH COAT

ALL NEW STRUCTURAL STEEL SHALL BE PAINTED USING THE IZEU COATING SYSTEM. THE URETHANE TOP COAT SHALL BE TINTED TO MEET AMS-STD-595A COLOR No. 15526 - BLUE.

ITEM 524 - DRILLED SHAFTS, 42", 48" AND 54" DIAMETER, INTO OR ABOVE BEDROCK WITH OC/QA, AS PER PLAN

IN ADDITION TO THE PROVISIONS OF CMS 524.10, FOR ALL DRILLED SHAFTS, USE CONCRETE THAT CONFORMS TO ODOT SUPPLEMENTAL SPECIFICATION 1126 (11206.02D) AND THE MAXIMUM AGGREGATE SIZE SHALL BE ⅜ INCHES

ITEM SPECIAL - STRUCTURES: TEMPORARY SUPPORT OF STEEL GIRDERS

THIS ITEM SHALL INCLUDE ALL LABOR, EQUIPMENT, AND MATERIALS REQUIRED FOR THE TEMPORARY SUPPORT OF THE PROPOSED STEEL GIRDERS DURING ERECTION AND WHILE THE INTEGRAL PIER CAPS ARE BEING CONSTRUCTED.

THE CONTRACTOR IS RESPONSIBLE FOR THE DESIGN OF THE TEMPORARY SUPPORT. THE CONTRACTOR'S DESIGN MUST BE SUFFICIENT ENOUGH TO SUPPORT THE LOADS DESIGNATED IN THE PLANS. THE CONTRACTOR'S DESIGN SHALL BE PREPARED AND SUBMITTED IN ACCORDANCE WITH CMS 501.05.

PAYMENT FOR THE DESIGN AND CONSTRUCTION OF THE TEMPORARY SUPPORTS FOR PROPOSED STEEL GIRDERS SHALL BE INCLUDED WITH ITEM SPECIAL - STRUCTURES: TEMPORARY SUPPORT OF STEEL GIRDERS.

ITEM 869 - HIGH LOAD MULTI-ROTATIONAL (HLMR) BEARINGS, AS PER PLAN:

THIS ITEM OF WORK SHALL CONFORM TO SUPPLEMENTAL SPECIFICATION 869, THE DETAILS ON THE PLANS AND THE REQUIREMENTS HEREIN.

BEVELED LOAD PLATES AND MASONRY PLATES SHALL BE ASTM A709 GRADE 50, WITH CORROSION PROTECTION PER SS 869.13. BEVELED LOAD PLATES AND MASONRY PLATES SHALL BE INCLUDED WITH THE BEARINGS FOR PAYMENT.

ANCHOR RODS SHALL BE ASTM F1554 GRADE 105, GALVANIZED ACCORDING TO 711.02.

ACCOUNT FOR DIFFERENCES BETWEEN THE BEARING HEIGHT DETAILED IN THE PLANS AND THE BEARING HEIGHT SUPPLIED BY THE FABRICATOR PER SS 869.06. IF BEAM SEAT ELEVATIONS ARE ADJUSTED IN ORDER TO ACCOUNT FOR THESE DIFFERENCES, THEN ADJUST THE LOCATION OF REINFORCING STEEL AS NECESSARY TO AVOID INTERFERENCE WITH THE BEARING ANCHORS AND TO MAINTAIN MINIMUM CONCRETE COVER AND MINIMUM SPACING AS REQUIRED IN THE PROJECT PLANS. OBTAIN WRITTEN APPROVAL FROM THE ENGINEER FOR ANY ADJUSTMENTS TO THE ABUTMENT BEAM SEAT ELEVATIONS.

**ABBREVIATIONS:**

| | |
|---|---|
| ABUT. | ABUTMENT |
| BOT. | BOTTOM |
| BRG. | BEARING |
| B.S. | BOTH SIDES |
| BTWN. | BETWEEN |
| C.I.P. | CAST-IN-PLACE |
| C.J. | CONSTRUCTION JOINT |
| CLR. | CLEAR |
| CONST. | CONSTRUCTION |
| DIA. | DIAMETER |
| DIM. | DIMENSION |
| EL. | ELEVATION |
| EQ. | EQUAL |
| EX. OR EXIST. | EXISTING |
| FRWD. | FORWARD |
| F.S. | FAR SIDE |
| GFRP | GLASS FIBER REINFORCED POLYMER |
| LT. | LEFT |
| MAX. | MAXIMUM |
| MIN. | MINIMUM |
| NB | NORTHBOUND |
| NO. | NUMBER |
| N.S. | NEAR SIDE |
| P.E.J.F. | PREFORMED EXPANSION JONT FILLER |
| RT. | RIGHT |
| SB | SOUTHBOUND |
| SER. | SERIES |
| SPA. | SPACES OR SPACING |
| STA. | STATION |
| STD. DWG. | STANDARD DRAWING |
| T&B | TOP AND BOTTOM |
| TYP. | TYPICAL |

DESIGN AGENCY
GPD GROUP
Glaus, Pyle, Schomer, Burns & DeHaven, Inc.
520 South Main Street, Akron, OH 44311 330.572.2100
Copyright Glaus, Pyle, Schomer, Burns & DeHaven, Inc. 2020

DESIGNED RHC | DRAWN RHC | CHECKED DGN | REVIEWED TJW | DATE 1-18-21 | REVISED | STRUCTURE FILE NUMBER 7702648

GENERAL NOTES
BRIDGE NO. SUM-77-0927R
RAMP C2 OVER I.R.77 NB

SUM-077/277/224-VAR
PID No. 106002



1227
1288

O:\2017\2017258\ProjectData\SUM\06002\Design\Structures\SUM077_0927R\Sheets\077_0927R_SN001.dgn Sheet 1/29/2021 1:48:20 PM rcummins

# ESTIMATED QUANTITIES

CALCULATED BY: RHC DATE: 1-15-21
CHECKED BY: DGN DATE: 1-15-21

| ITEM | EXT. | TOTAL | PARTICIPATION 05/IMR/BR | UNITS | DESCRIPTION | ABUTMENT | PIER | SUPER-STRUCTURE | GENERAL | REFERENCE SHEET NO. |
|---|---|---|---|---|---|---|---|---|---|---|
| | | | | | | | | | | |
| 202 | 11003 | LS | LS | | STRUCTURE REMOVED, OVER 20 FOOT SPAN, AS PER PLAN | | | | | 3 |
| 202 | 22900 | 156 | 156 | SY | APPROACH SLAB REMOVED | | | | 156 | |
| | | | | | | | | | | |
| 503 | 21100 | 502 | 502 | CY | UNCLASSIFIED EXCAVATION | 213 | 289 | | | |
| | | | | | | | | | | |
| 505 | 11100 | LS | LS | | PILE DRIVING EQUIPMENT MOBILIZATION | | | | | |
| | | | | | | | | | | |
| 507 | 00100 | 400 | 400 | FT | STEEL PILES HP10X42, FURNISHED | 400 | | | | |
| 507 | 00150 | 350 | 350 | FT | STEEL PILES HP10X42, DRIVEN | 350 | | | | |
| | | | | | | | | | | |
| 509 | 10000 | 223,559 | 223,559 | LB | EPOXY COATED REINFORCING STEEL | 13,190 | 97,512 | 112,857 | | |
| 509 | 30020 | 12,353 | 12,353 | FT | NO. 4 GFRP DEFORMED BARS | | | 12,353 | | |
| | | | | | | | | | | |
| 511 | 34446 | 315 | 315 | CY | CLASS QC2 CONCRETE WITH QC/QA, BRIDGE DECK | | | 315 | | |
| 511 | 34450 | 126 | 126 | CY | CLASS QC2 CONCRETE WITH QC/QA, BRIDGE DECK (PARAPET) | | | 126 | | |
| 511 | 44112 | 94 | 94 | CY | CLASS QC1 CONCRETE WITH QC/QA, ABUTMENT NOT INCLUDING FOOTING | 94 | | | | |
| 511 | 45600 | 45 | 45 | CY | CLASS QC4 MASS CONCRETE, SUBSTRUCTURE (PIER COLUMNS) | | 45 | | | |
| 511 | 46512 | 228 | 228 | CY | CLASS QC1 CONCRETE WITH QC/QA, FOOTING | 50 | 178 | | | |
| 511 | 53016 | 79 | 79 | CY | CLASS QC4 CONCRETE, MISC.: INTEGRAL POST-TENSIONED PIER CAPS | | 79 | | | |
| | | | | | | | | | | |
| 512 | 10100 | 1,213 | 1,213 | SY | SEALING OF CONCRETE SURFACES (EPOXY-URETHANE) | 112 | 198 | 903 | | |
| | | | | | | | | | | |
| 513 | 10301 | 658,400 | 658,400 | LB | STRUCTURAL STEEL MEMBERS, LEVEL 5, AS PER PLAN | | | 658,400 | | 3 |
| 513 | 20000 | 5,001 | 5,001 | EACH | WELDED STUD SHEAR CONNECTORS | | | 5,001 | | |
| | | | | | | | | | | |
| 514 | 00060 | 27,500 | 27,500 | SF | FIELD PAINTING STRUCTURAL STEEL, INTERMEDIATE COAT | | | 27,500 | | |
| 514 | 00066 | 27,500 | 27,500 | SF | FIELD PAINTING STRUCTURAL STEEL, FINISH COAT | | | 27,500 | | |
| 514 | 10000 | 42 | 42 | EACH | FINAL INSPECTION REPAIR | | | 42 | | |
| | | | | | | | | | | |
| 516 | 10010 | 29 | 29 | FT | ARMORLESS PREFORMED JOINT SEAL | | | | 29 | |
| 516 | 11210 | 57 | 57 | FT | STRUCTURAL EXPANSION JOINT INCLUDING ELASTOMERIC STRIP SEAL | | | | 57 | |
| | | | | | | | | | | |
| 518 | 21200 | 61 | 61 | CY | POROUS BACKFILL WITH GEOTEXTILE FABRIC | 61 | | | | |
| 518 | 40000 | 91 | 91 | FT | 6" PERFORATED CORRUGATED PLASTIC PIPE | 91 | | | | |
| 518 | 40010 | 10 | 10 | FT | 6" NON-PERFORATED CORRUGATED PLASTIC PIPE INCLUDING SPECIALS | 10 | | | | |
| | | | | | | | | | | |
| 524 | 95445 | 18 | 18 | FT | DRILLED SHAFTS, 42" DIAMETER, INTO BEDROCK WITH QC/QA, AS PER PLAN | 18 | | | | 3 |
| 524 | 95453 | 34 | 34 | FT | DRILLED SHAFTS, 48" DIAMETER, ABOVE BEDROCK WITH QC/QA, AS PER PLAN | 34 | | | | 3 |
| 524 | 95455 | 56 | 56 | FT | DRILLED SHAFTS, 48" DIAMETER, INTO BEDROCK WITH QC/QA, AS PER PLAN | | 56 | | | 3 |
| 524 | 95463 | 218 | 218 | FT | DRILLED SHAFTS, 54" DIAMETER, ABOVE BEDROCK WITH QC/QA, AS PER PLAN | | 218 | | | 3 |
| | | | | | | | | | | |
| 526 | 30010 | 194 | 194 | SY | REINFORCED CONCRETE APPROACH SLABS WITH QC/QA (T=17") | | | | 194 | |
| 526 | 90010 | 26 | 26 | FT | TYPE A INSTALLATION | | | | 26 | |
| 526 | 90030 | 29 | 29 | FT | TYPE C INSTALLATION | | | | 29 | |
| | | | | | | | | | | |
| SPECIAL | 53000200 | LS | LS | | STRUCTURES: TEMPORARY SUPPORT OF STEEL GIRDERS | | | | | 3 |
| | | | | | | | | | | |
| ◑ 601 | 20000 | 210 | 210 | SY | CRUSHED AGGREGATE SLOPE PROTECTION | | | | 210 | |
| | | | | | | | | | | |
| 846 | 00110 | 8 | 8 | CF | POLYMER MODIFIED ASPHALT EXPANSION JOINT SYSTEM | | | | 8 | |
| | | | | | | | | | | |
| 855 | 00010 | 4,665 | 4,665 | LB | POST-TENSIONING STRAND TENDON | | 4,665 | | | |
| | | | | | | | | | | |
| 869 | 00101 | 8 | 8 | EACH | HIGH LOAD MUTLI-ROTATIONAL (HLMR) BEARINGS, AS PER PLAN | | | 8 | | 3 |

◑ INCLUDED FOR PAYMENT WITH THE EROSION CONTROL QUANTITIES - SEE THE GENERAL SUMMARY.

| REVISIONS | | |
|---|---|---|
| NO. | DATE | DESCRIPTION |
| 7 | 04/28/21 | REVISED ITEM 511 - BRIDGE DECK CONCRETE QUANTITY |

DESIGN AGENCY
GPD GROUP
Gray, Pape & Dohanyan, Inc.
520 South Main Street, Akron, OH 44311 330.572.2100
Copyright GPD Group, Akron, Ohio, USA

DESIGNED RHC | DRAWN JJB | REVIEWED TJW | DATE 1-18-21
CHECKED DGN | REVISED | STRUCTURE FILE NUMBER 7702648

ESTIMATED QUANTITIES
BRIDGE NO. SUM-77-0927R
RAMP C2 OVER I.R.77 NB

SUM-077/277/224-VAR
PID No. 106002



1228
1288

O:\2017\2017258\ProjectData\SUM\06002\Design\Structures\SUM077_0927R\Sheets\077_0927R_E0001.dgn Sheet 4/28/2021 2:02:00 PM rcummins

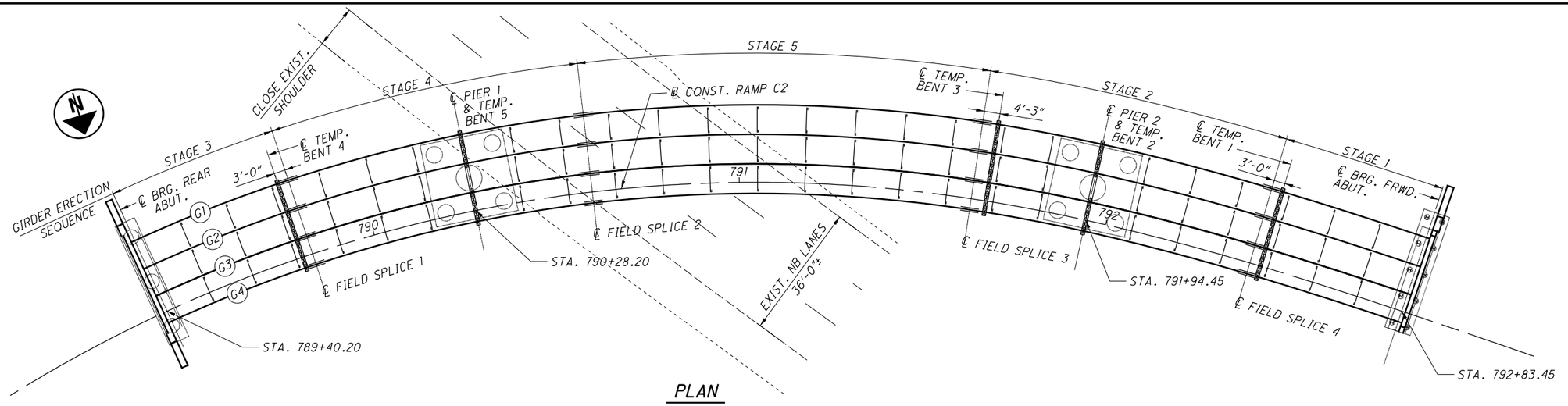


PLAN

## MAXIMUM TEMPORARY BENT GIRDER DEAD LOAD REACTIONS (KIPS):

| LOCATION | STAGE 1 | STAGE 2 | STAGE 3 | STAGE 4 | STAGE 5 |
|---|---|---|---|---|---|
| TEMP. BENT 1 | 6.7 | 19.7 | 19.7 | 19.7 | 19.6 |
| TEMP. BENT 2 | - | 25.1 | 25.1 | 25.1 | 80.4* |
| TEMP. BENT 3 | - | 6.9 | 6.9 | 6.9 | 21.0 |
| TEMP. BENT 4 | - | - | 6.9 | 14.3 | 5.8 |
| TEMP. BENT 5 | - | - | - | 38.7 | 108.3* |

* INCLUDES WET CONCRETE LOAD FROM PIER CAPS

## MAXIMUM TEMPORARY BENT GIRDER TRANSVERSE WIND LOAD REACTIONS (KIPS):

| LOCATION | STAGE 1 | STAGE 2 | STAGE 3 | STAGE 4 | STAGE 5 |
|---|---|---|---|---|---|
| TEMP. BENT 1 | 1.0 | 1.7 | 1.7 | 1.7 | 1.7 |
| TEMP. BENT 2 | - | 2.4 | 2.4 | 2.4 | 2.1 |
| TEMP. BENT 3 | - | 0.3 | 0.3 | 0.3 | 1.4 |
| TEMP. BENT 4 | - | - | 1.0 | 1.5 | 1.4 |
| TEMP. BENT 5 | - | - | - | 3.4 | 2.4 |

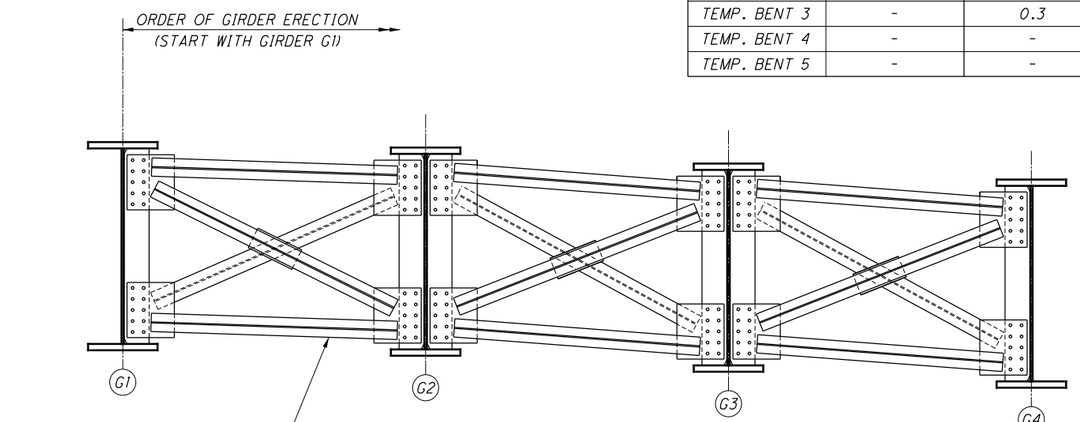


ERECTION TRANSVERSE SECTION

## ERECTION GENERAL NOTES:

1. THE METHODS USED BY THE CONTRACTOR SHALL BE DOCUMENTED ON THE ERECTION DRAWINGS WITH ALL SUPPORTING STABILITY CALCULATIONS SUBMITTED IN ACCORDANCE WITH CMS ITEMS 501 AND 513.
2. THE CONTRACTOR'S ATTENTION IS DIRECTED TO REQUIREMENTS FOR STABILITY OF STEEL GIRDERS DURING ERECTION (CMS 513.26) AND THE SUBMITTAL REQUIREMENTS OF 501.05.B.4.
3. THIS BRIDGE SHALL BE STABILIZED DURING ERECTION USING FALSE WORK, TEMPORARY BRACING, COMPRESSION FLANGE STIFFENING TRUSS, EXISTING SUBSTRUCTURES OR USING A HOLDING CRANE UNTIL A SUFFICIENT NUMBER OF GIRDERS HAVE BEEN ERECTED AND CRASSFRAMES INSTALLED.
4. WIND LOADING ON THE PARTIALLY ERECTED STRUCTURE SHALL BE CONSIDERED IN THE DEVELOPMENT OF ERECTION PLANS AND ANY SHORING TOWERS. ERECTION PLANS SHALL CONVEY WIND SPEED WORK LIMITATIONS AND ANY PROCEDURES FOR HIGH WIND EVENTS. THE FOLLOWING LOADS ARE RECOMMENDED AS THE MINIMUM GUIDELINES FOR ERECTION WIND LOADING:

   A. FOR THE FIRST LIFT IN EACH STEP AND GROUND- BASED ERECTION BLOCKING REQUIREMENTS, DETERMINE PRESSURES BASED UPON A DESIGN WIND VELOCITY OF 60 MPH.

   B. ONCE A GIRDER PAIR ARE FULLY SPLICED AND FULLY CONNECTED TOGETHER WITH CROSSFRAMES (WITH 100% OF BOLTS FULLY TENSIONED), DETERMINE PRESSURES BASED UPON A DESIGN WIND VELOCITY OF 100 MPH.
5. ERECTION SCHEMES THAT PLACE SINGLE GIRDERS SECTIONS AT A TIME SHALL DOCUMENT THEIR STABILITY DURING EACH STEP OF ERECTION. THE MINIMUM DESIGN WIND VELOCITY TO VERIFY STABILITY OF ERECTION STEPS ANTICIPATED TO EXPOSED FOR LONG DURATIONS (MORE THAN 2 DAYS) SHALL VERIFY STABILITY USING A DESIGN WIND VELOCITY OF 100 MPH.
6. GROUND ERECTION WILL INCLUDE 100% OF CONNECTION BOLTS (EXCEPT SPLICES) TO BE FULLY INSTALLED AND PRE TENSIONED.
7. REFERENCE SHALL BE MADE TO "FHWA-NHI-15-044 ENGINEERING FOR STRUCTURAL STABILITY IN BRIDGE CONSTRUCTION" FOR THE DESIGN OF THE ERECTION PLAN.

DESIGN AGENCY
GPD GROUP
Glaus, Pyle, Schomer, Burns & DeHaven, Inc.
320 South Main Street, Akron, OH 44311 330.572.2100
Copyright Glaus, Pyle, Schomer, Burns & DeHaven, Inc. 2020

DESIGNED RHC/DGN | DRAWN RHC | REVIEWED TJW | DATE 1-18-21
CHECKED MOJ | REVISED | STRUCTURE FILE NUMBER 7702648

GIRDER ERECTION PLAN AND NOTES
BRIDGE NO. SUM-77-0927R
RAMP C2 OVER I.R.77 NB

SUM-077/277/224-VAR
PID No. 106002

5 / 37

1229
1288

O:\2017\20172581Project Data\SUM\106002\Design\Structures\SUM077_0927R\Sheets\077_0927R_SS008.dgn Sheet 1 1/17/2021 7:20:31 PM rvitelli

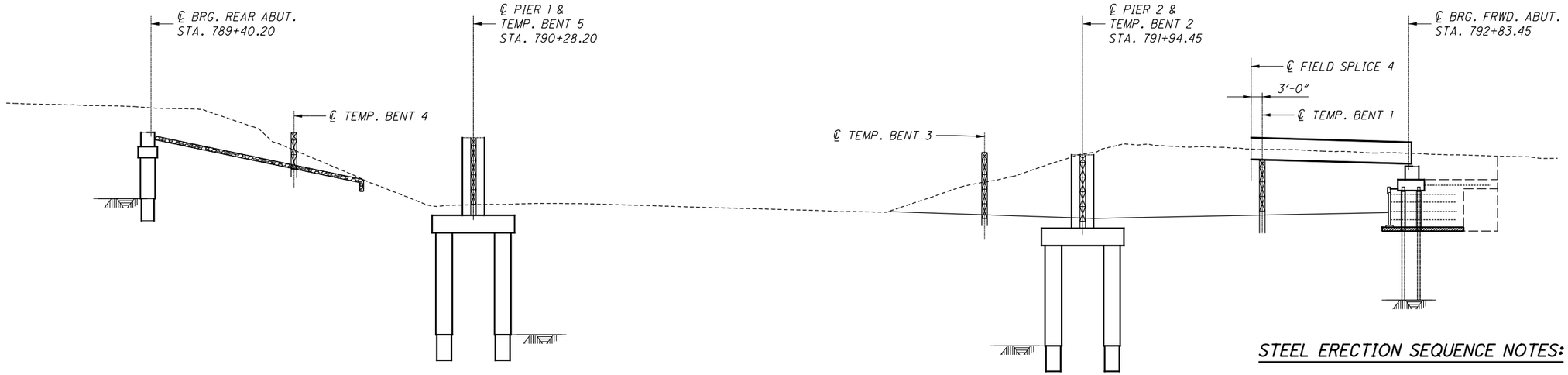


## STAGE 1 NOTES:

CONSTRUCT ABUTMENTS AND PIERS (EXCEPT POST-TENSIONED PIER CAPS) AND ALL TEMPORARY BENTS. SET BEARINGS AT ABUTMENTS AND BLOCK ALL BEARINGS AT THE ABUTMENTS TO PREVENT TRANSLATION AND MOVEMENT IN THE LONGITUDINAL DIRECTION. ERECT STAGE 1 GIRDERS AND CROSSFRAMES AND FULLY TIGHTEN ALL BOLTS.

## STAGE 1

## STEEL ERECTION SEQUENCE NOTES:

THE ERECTION STAGES SHOWN ON THIS SHEET THROUGH SHEET 8/37 ARE PRESENTED AS CONCEPTUAL ERECTION PROCEDURE. THE CONTRACTOR IS TO SUBMIT THE ERECTION PROCEDURE FOR APPROVAL. THIS PROCEDURE MAY INCLUDE MODIFICATION OF THE THIS CONCEPTUAL ERECTION PROCEDURE. THE CONTRACTOR MUST SUBMIT FOR APPROVAL A FULLY DEVELOPED SET OF DRAWINGS AND CALCULATIONS PREPARED, SIGNED, SEALED AND DATED BY A REGISTERED PROFESSIONAL ENGINEER IN THE STATE OF OHIO, INDICATING THE PROPOSED ERECTION PROCEDURE WHICH INCLUDES ALL ASSUMPTION, CRANE PLACEMENTS AND TEMPORARY BENT LOCATIONS INCLUDING DESIGN OF TEMPORARY BENTS, TEMPORARY BENT FOUNDATIONS AND NECESSARY TEMPORARY EXCAVATION SUPPORT AND PROTECTION SYSTEMS REQUIRED TO CONSTRUCT TEMPORARY BENT FOUNDATIONS. THE PREPARER AND CHECKER SHALL BE TWO DIFFERENT ENGINEERS. REFER TO 501.05(B)(4) IN THE ODOT CMS.

THE CONTRACTOR MUST ENSURE STABILITY OF THE GIRDERS AND TEMPORARY BENTS AT ALL TIMES.

SEE THE ERECTION PLAN VIEW AND ERECTION TRANSVERSE SECTION ON SHEET 5/37 FOR ADDITIONAL INFORMATION PERTAINING TO THE LOCATION OF EACH ERECTION STAGE AND THE SEQUENCE OF GIRDER ERECTION IN EACH STAGE.

TO FACILITATE CONSTRUCTION OF TMEPORARY BENT 5 AND PIER 1 FOUNDATION, THE RIGHT SHOULDER OF THE NB LANES SHALL BE PERMANENTLY CLOSED TO TRAFFIC. ONE LANE OF THE NB LANES MAY BE CLOSED DAILY BETWEEN THE HOURS OF 10PM TO 5AM.

## TEMPORARY BENTS:

THE DESIGN OF TEMPORARY BENTS AND FOUNDATIONS FOR TEMPORARY BENTS SHALL BE PREPARED, SIGNED, SEALED AND DATED BY AN OHIO REGISTERED ENGINEER AND SHALL BE SUBMITTED TO THE STATE FOR REVIEW. THE PREPARER AND CHECKER SHALL BE TWO DIFFERENT ENGINEERS. REFER TO 501.05(B)(4) IN THE ODOT CMS.

DESIGN THE FOUNDATIONS FOR TEMPORARY BENTS IN ACCORDANCE WITH MOST CURRENT AASHTO LRFD BRIDGE DESIGN SPECIFICATIONS AND DESIGN MANUAL, PART 5 SPECIFICATION, CURRENT FHWA GUIDELINES AND AASHTO GUIDE SPECIFICATIONS. DESIGN THE FOUNDATIONS FOR THE TEMPORARY BENTS FOR FINAL CONDITIONS AND ALL CONSTRUCTION STAGES. WHERE APPROPRIATE, INCLUDE SURCHARGE LOADS DUE TO VEHICLE TRAFFIC AND SURCHARGE DUE TO CONSTRUCTION EQUIPMENT IN THE DESIGN. SUBMIT DESIGN CALCULATIONS AND DETAILED DRAWINGS, SIGNED AND SEALED, BY A PROFESSIONAL ENGINEER IN THE STATE OF OHIO, TO THE STATE FOR REVIEW. INCLUDE IN THE DESIGN CALCULATIONS ALL MATERIAL PROPERTIES, DESIGN LOADS AND DESIGN ASSUMPTIONS. INCLUDE THE COMPLETED DETAILED DRAWINGS OF THE FOUNDATIONS. ALL DESIGN DIMENSIONS, LIMIT OF WORK, ELEVATIONS AND MATERIAL SPECIFIC CONSTRUCTION PROCEDURES AND TESTING REQUIREMENTS ARE TO BE INCLUDED AS PART OF THE SUBMITTAL. ALLOW 14 DAYS FOR REVIEW OF THE SUBMISSION BY THE DEPARTMENT.

DESIGN AGENCY
GPD GROUP
Glaus, Pyle, Schomer, Burns & DeHaven, Inc.
320 South Main Street, Akron, OH 44311 330.572.2100
Copyright Glaus, Pyle, Schomer, Burns & DeHaven, Inc. 2020

DESIGNED RHC/DGN | DRAWN RHC | REVIEWED TJW | DATE 1-18-21
CHECKED MOJ | REVISED | STRUCTURE FILE NUMBER 7702648

GIRDER ERECTION SEQUENCE - 1
BRIDGE NO. SUM-77-0927R
RAMP C2 OVER I.R.77 NB

SUM-077/277/224-VAR
PID No. 106002

6/37

1230
1288

D:\2017\2017258\ProjectData\SUM\06002\Design\Structures\SUM077_0927R\Sheets\077_0927R_SS008.dgn Sheet 2 1/17/2021 7:20:32 PM rvitelli

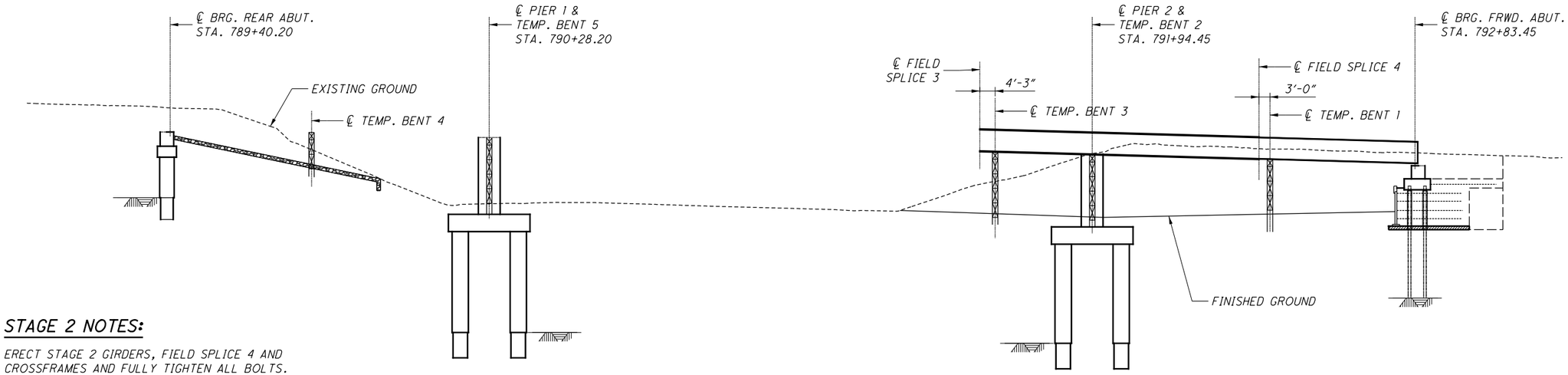


## STAGE 2 NOTES:

ERECT STAGE 2 GIRDERS, FIELD SPLICE 4 AND CROSSFRAMES AND FULLY TIGHTEN ALL BOLTS.

## STAGE 2

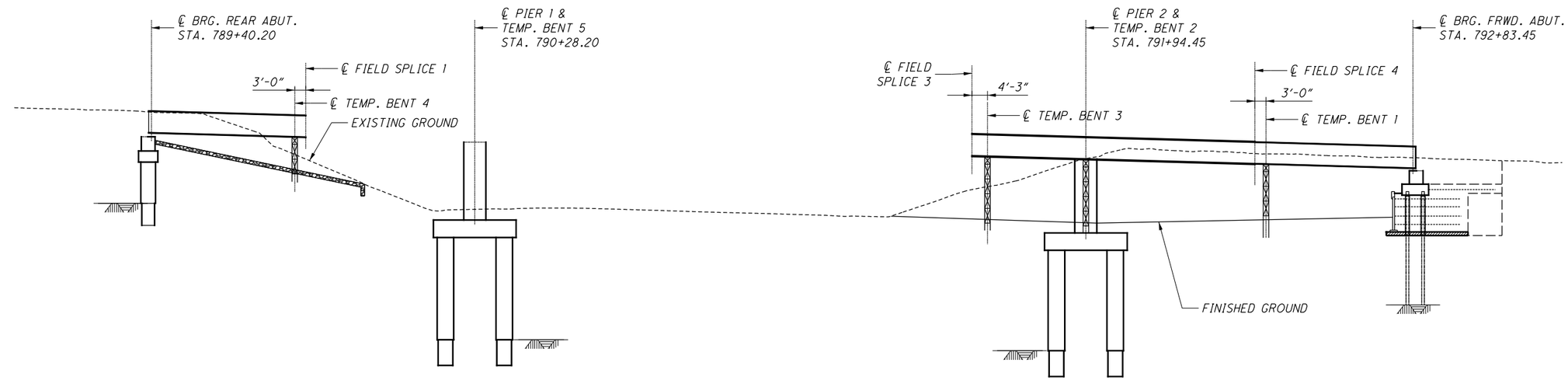


## STAGE 3 NOTES:

ERECT STAGE 3 GIRDERS AND CROSSFRAMES AND FULLY TIGHTEN ALL BOLTS.

## STAGE 3

DESIGN AGENCY
GPD GROUP
520 South Main Street, Akron, OH 44311 330.572.2100
Copyright Glaus, Pyle, Schomer, Burns & DeHaven, Inc. 2020

| DESIGNED | DRAWN | REVIEWED | DATE |
|---|---|---|---|
| RHC/DGN | RHC | TJW | 1-18-21 |
| CHECKED | REVISED | STRUCTURE FILE NUMBER | |
| MOJ | | 7702648 | |

GIRDER ERECTION SEQUENCE - 2
BRIDGE NO. SUM-77-0927R
RAMP C2 OVER I.R.77 NB

SUM-077/277/224-VAR
PID No. 106002

7 / 37

1231
1288

O:\2017\2017258\ProjectData\SUM\06002\Design\Structures\SUM077_0927R\Sheets\077_0927R_SS008.dgn Sheet 3 1/17/2021 7:20:32 PM rvitelli

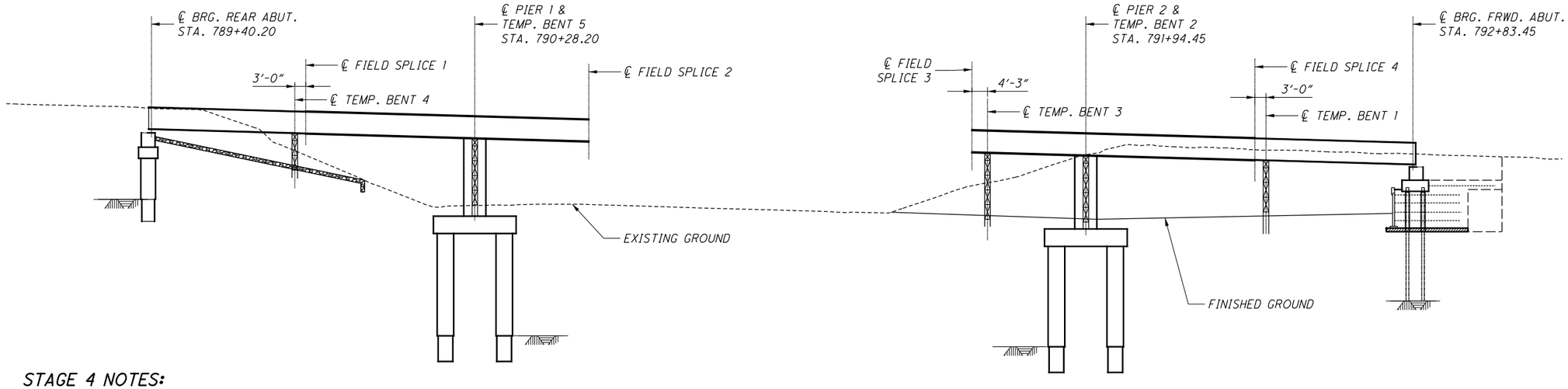


## STAGE 4 NOTES:

ERECT STAGE 4 GIRDERS, FIELD SPLICE 1 AND CROSSFRAMES AND FULLY TIGHTEN ALL BOLTS.

## STAGE 4

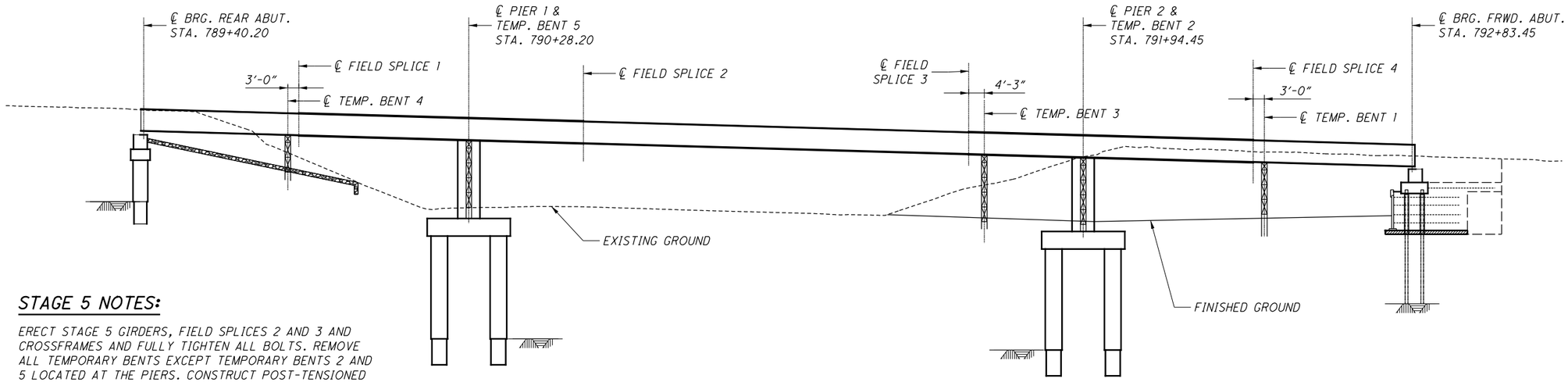


## STAGE 5 NOTES:

ERECT STAGE 5 GIRDERS, FIELD SPLICES 2 AND 3 AND CROSSFRAMES AND FULLY TIGHTEN ALL BOLTS. REMOVE ALL TEMPORARY BENTS EXCEPT TEMPORARY BENTS 2 AND 5 LOCATED AT THE PIERS. CONSTRUCT POST-TENSIONED PIER CAPS AS PER THE PIER DETAILS AND NOTES AND THEN REMOVE BLOCKING AT ABUTMENT BEARINGS AND TEMPORARY BENTS 2 AND 5.

## STAGE 5

# GIRDER ERECTION SEQUENCE - 3

BRIDGE NO. SUM-77-0927R
RAMP C2 OVER I.R.77 NB

SUM-077/277/224-VAR
PID No. 106002

8 / 37

1232
1288

DESIGNED RHC/DGN
DRAWN RHC
CHECKED MOJ
REVISED
REVIEWED TJW
DATE 1-18-21
STRUCTURE FILE NUMBER 7702648

DESIGN AGENCY
GPD GROUP
Glaus, Pyle, Schomer, Burns & DeHaven, Inc.
520 South Main Street, Akron, OH 44311 330.572.2100
Copyright Glaus, Pyle, Schomer, Burns & DeHaven, Inc. 2020

O:\2017\2017258\ProjectData\SUM\06002\Design\Structures\SUM077_0927R\Sheets\077_0927R_SS008.dgn Sheet 4 1/17/2021 7:20:32 PM rvitelli

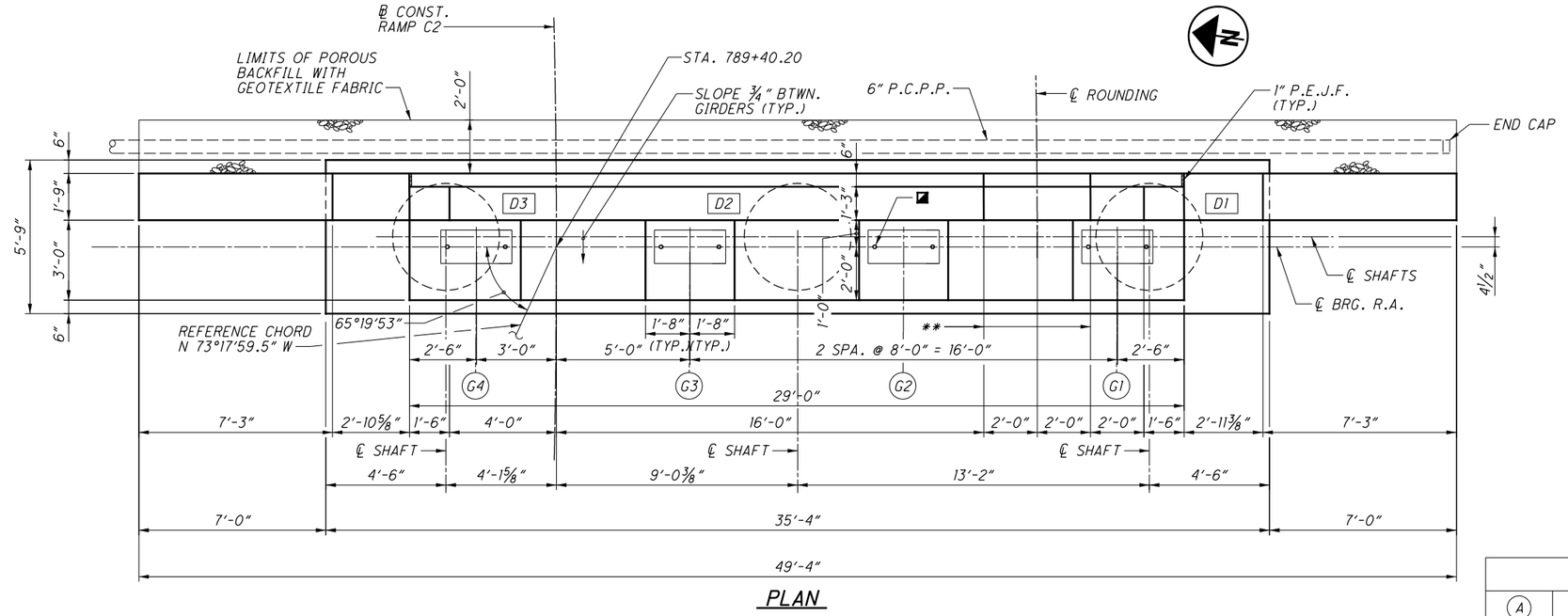


PLAN

| ELEVATIONS | | | | | | |
|---|---|---|---|---|---|---|
| (A) | (B) | (C) | (D) | (E) | (F) | (G) |
| 1054.49 | 1054.31 | 1053.83 | 1053.35 | 1058.00 | 1061.50 | 1061.44 |
| (H) | (J) | (K) | (L) | (M) | (P) | |
| 1061.52 | 1061.48 | 1060.52 | 1060.28 | 1060.30 | 1056.80 | |

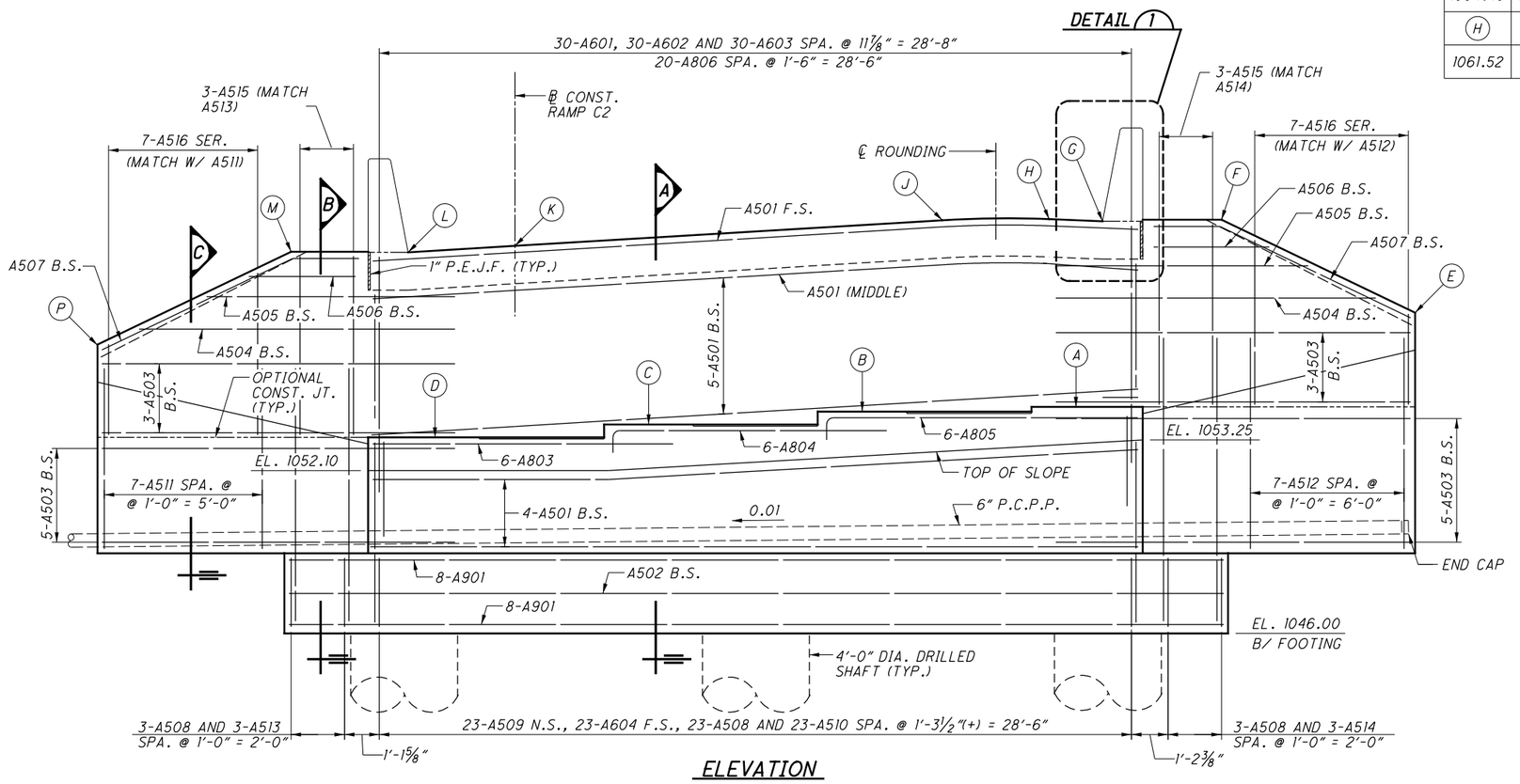


ELEVATION

## LEGEND

| | |
|---|---|
| D# | DRILLED SHAFT NUMBER DESIGNATION (4'-0" DIAMETER AT REAR ABUTMENT) |
| ◪ | BEARING ANCHOR RODS - SEE NOTE 1 (TYP.) |
| ** | ROUNDING LIMITS |

## NOTES:

1. FOR BEARING ANCHOR ROD DETAILS, SEE SHT. NO. 19/37.
2. FOR SECTIONS A, B & C, SEE SHT. NO. 10/37.
3. ACCURATELY PLACE REINFORCING STEEL IN THE VICINITY OF THE BRIDGE SEAT TO AVOID INTERFERENCE WITH THE DRILLING OF BEARING ANCHOR HOLES OR THE PRE-SETTING OF BEARING ANCHORS.
4. FOR DRILLED SHAFT DETAILS, SEE SHT. NO. 10/37.
5. FOR DETAIL 1, SEE SHT. NO. 13/37.
6. MINIMUM LAP SPLICE LENGTHS ARE AS FOLLOWS:
   #5 BARS (HORIZONTAL) = 3'-1"
   #5 BARS (VERTICAL) = 2'-5"
   #6 BARS = 3'-7"

DESIGN AGENCY
GPD GROUP
Glaus, Pyle, Schomer, Burns & DeHaven, Inc.
320 South Main Street, Akron, OH 44311 330.572.2100

| DESIGNED | DRAWN | REVIEWED | DATE |
|---|---|---|---|
| DJC | DJC | DGN | 1-18-21 |
| CHECKED | REVISED | STRUCTURE FILE NUMBER | |
| RHC | | 7702648 | |

REAR ABUTMENT PLAN & ELEVATION
BRIDGE NO. SUM-77-0927R
RAMP C2 OVER I.R.77 NB

SUM-077/277/224-VAR
PID No. 106002

9 / 37

1233
1288

O:\2017\20172581Project Data\SUM\106002\Design\Structures\SUM077_0927R\Sheets\077_0927R_SR001.dgn Sheet1 1/17/2021 7:20:35 PM rvitelli

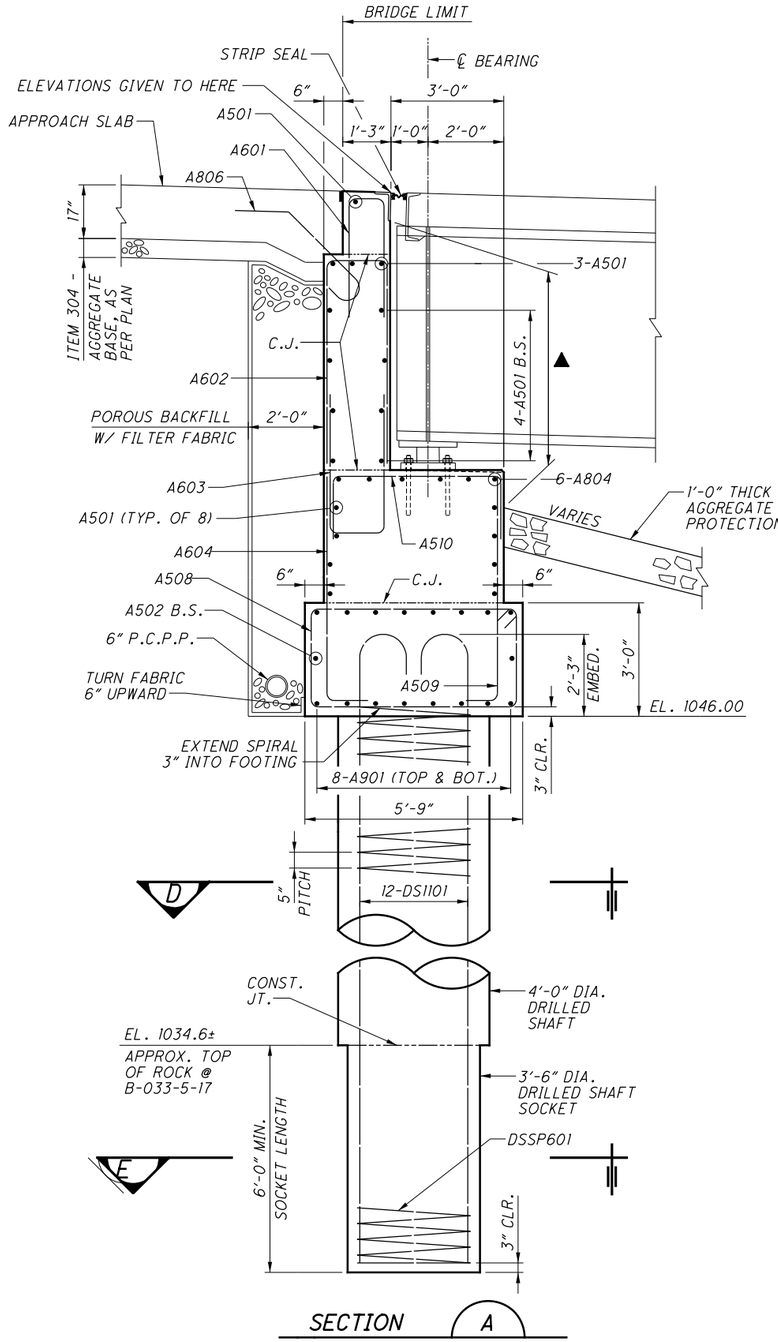


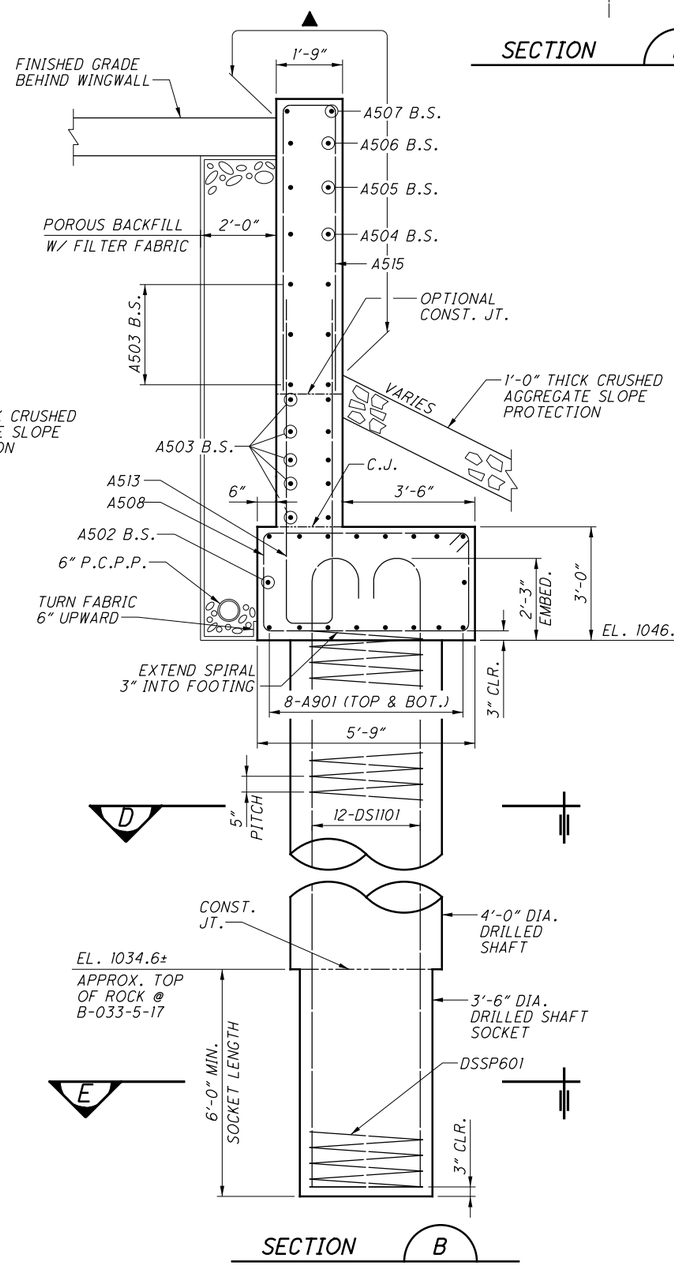


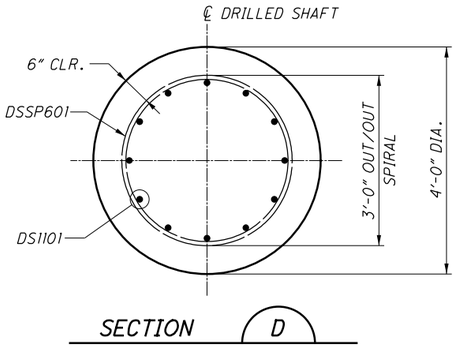


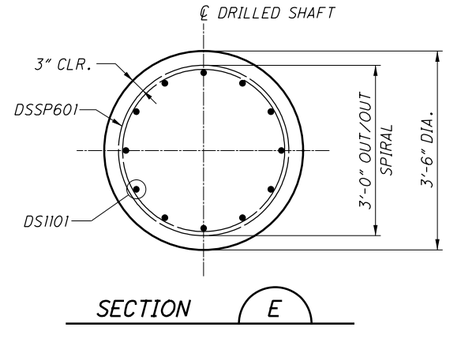


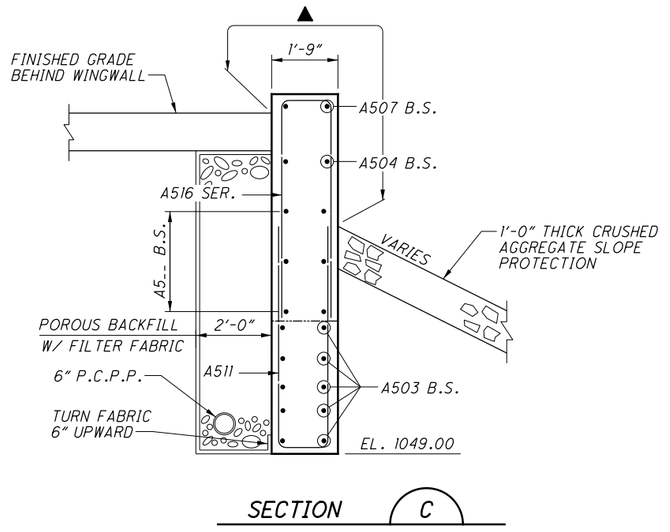


## LEGEND

▲ ITEM 512 - SEALING OF CONCRETE SURFACES (EPOXY-URETHANE)

## NOTES:

1. FOR ADDITIONAL NOTES, SEE SHT. NO. 9/37.

DESIGN AGENCY
GPD GROUP
Glaus, Pyle, Schomer, Burns & DeHaven, Inc.
520 South Main Street, Akron, OH 44311 330.572.2100
(Copyright claim, Mk. Schomer, Burns & DeHaven, Inc., 2020)

| DESIGNED | DRAWN | REVIEWED | DATE |
|---|---|---|---|
| DJC | DJC | DGN | 1-18-21 |
| CHECKED | REVISED | STRUCTURE FILE NUMBER | |
| RHC | | 7702648 | |

REAR ABUTMENT DETAILS
BRIDGE NO. SUM-77-0927R
RAMP C2 OVER I.R.77 NB

SUM-077/277/224-VAR
PID No. 106002

10 / 37

1234
1288

O:\2017\20171258\ProjectData\SUM\106002\Design\Structures\SUM077_0927R\Sheets\077_0927R_SR002.dgn Sheet 1/17/2021 7:20:36 PM rvitelli

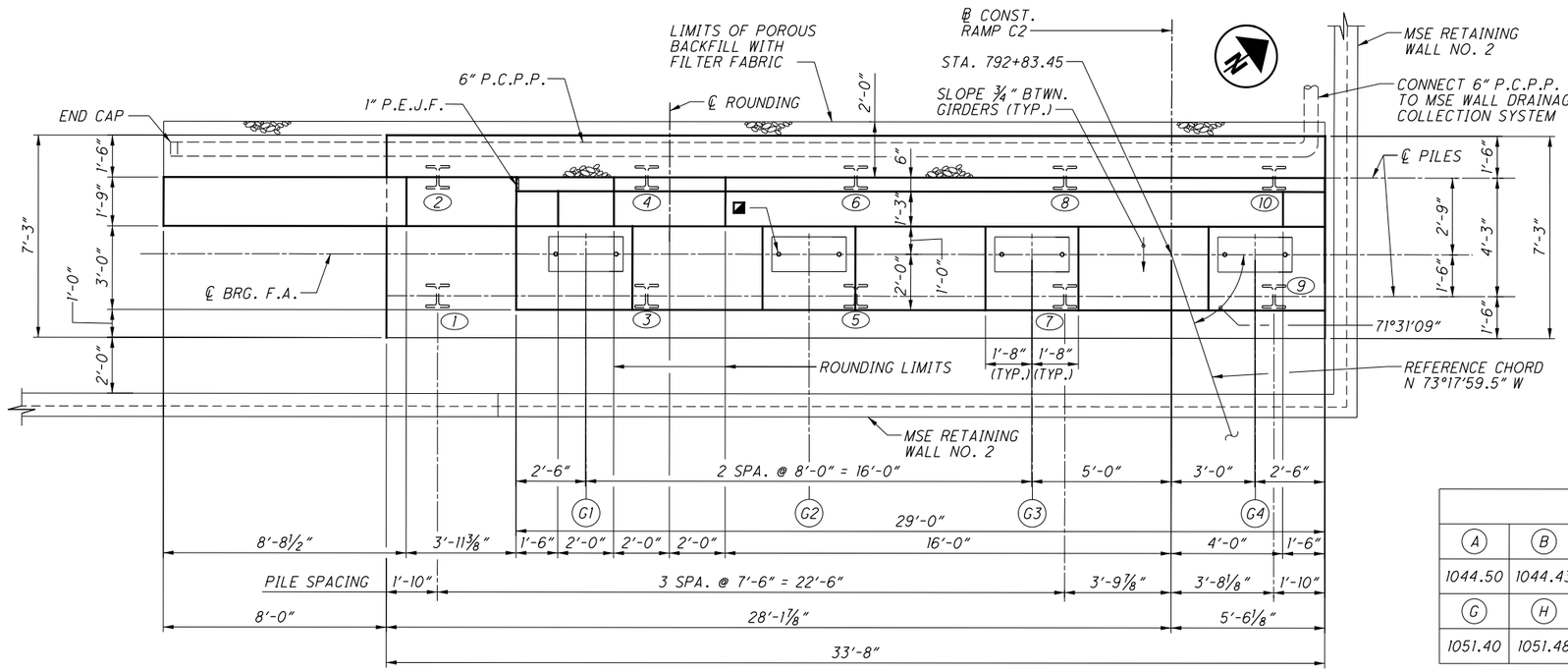


PLAN

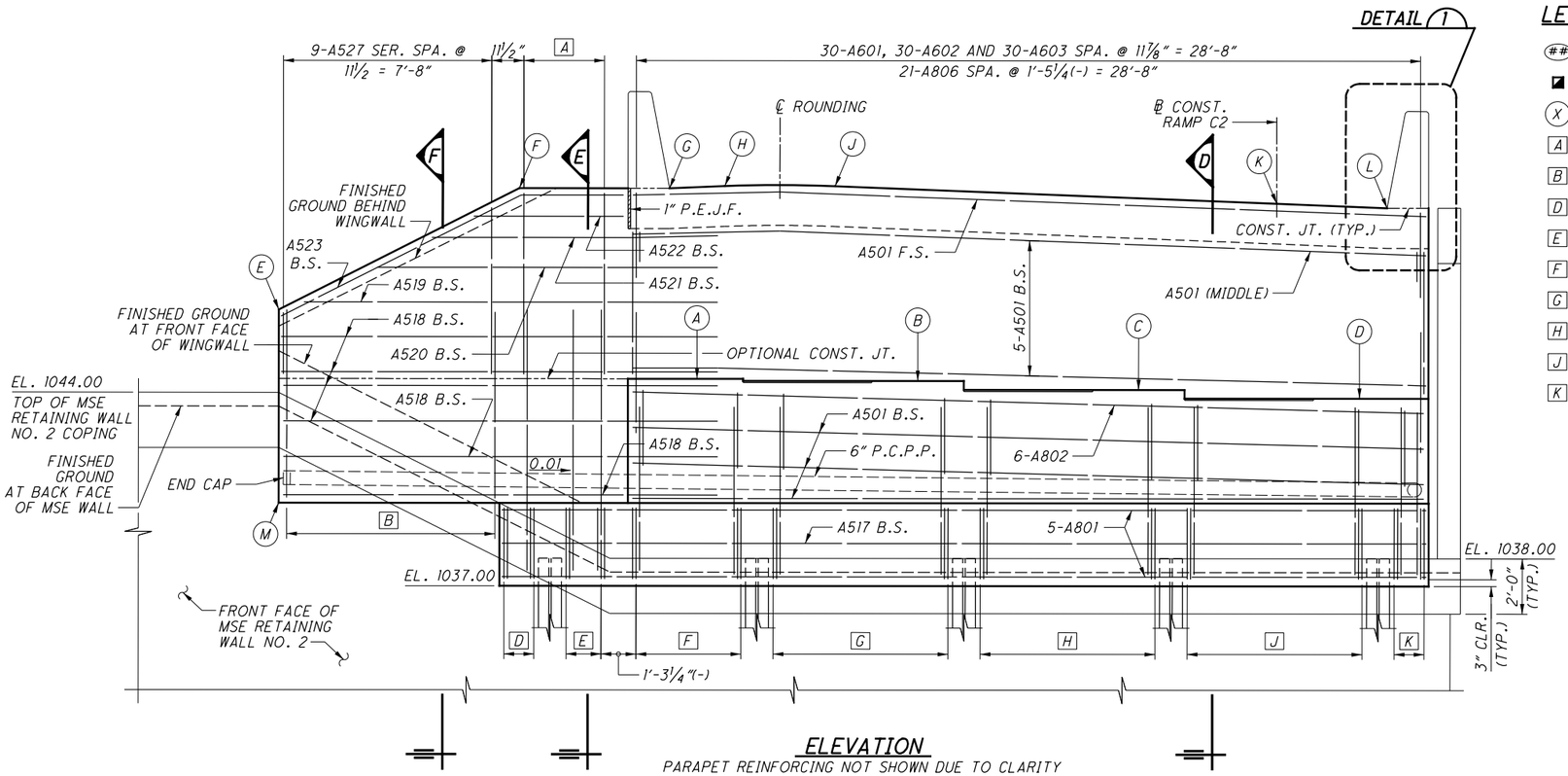


ELEVATION

PARAPET REINFORCING NOT SHOWN DUE TO CLARITY

| ELEVATIONS | | | | | |
|---|---|---|---|---|---|
| (A) | (B) | (C) | (D) | (E) | (F) |
| 1044.50 | 1044.43 | 1044.11 | 1043.80 | 1047.00 | 1051.40 |
| (G) | (H) | (J) | (K) | (L) | (M) |
| 1051.40 | 1051.48 | 1051.48 | 1050.86 | 1050.70 | 1040.00 |

## LEGEND

- (##) HP 10x42 PILE NUMBER
- ◪ BEARING ANCHOR RODS - SEE NOTE 1 (TYP.)
- (X) ELEVATION CALLOUTS
- [A] 3 SETS OF A524, A525 N.S. & A606 F.S. SPA. WITH A528 & A607
- [B] 9-A526 SPA. @ 11½" = 2'-10½"
- [D] 2 SETS OF A528 & A607 SPA. @ 1'-1"
- [E] 2 SETS OF A528 & A607 SPA. @ 1'-3¼"(-)
- [F] 4 SETS OF A528, A607, A529 N.S., A605 F.S. @ A510 SPA. @ 1'-3¼"(-) = 3'-9⅝(-)"
- [G] 6 SETS OF A528, A607, A529 N.S., A605 F.S. @ A510 SPA. @ 1'-3¼"(-) = 6'-4"
- [H] 6 SETS OF A528, A607, A529 N.S., A605 F.S. @ A510 SPA. @ 1'-31#4"(-) = 6'-4"
- [J] 6 SETS OF A528, A607, A529 N.S., A605 F.S. @ A510 SPA. @ 1'-31#4"(-) = 6'-4"
- [K] 2 SETS OF A528, A607, A529 N.S., A605 F.S. @ A510 SPA. @ 1'-1"

## NOTES:

1. FOR BEARING ANCHOR ROD DETAILS, SEE SHT. NO. [19/37].
2. FOR SECTION D, SEE SHT. NO. [12/37].
3. FOR SECTIONS E & F & DETAIL 1, SEE SHT. NO. [13/37].
4. ACCURATELY PLACE REINFORCING STEEL IN THE VICINITY OF THE BRIDGE SEAT TO AVOID INTERFERENCE WITH THE DRILLING OF BEARING ANCHOR HOLES OR THE PRE-SETTING OF BEARING ANCHORS.
5. MINIMUM LAP SPLICE LENGTHS ARE AS FOLLOWS:
   #5 BARS (HORIZONTAL) = 3'-1"
   #5 BARS (VERTICAL) = 2'-5"
   #6 BARS = 3'-7"

DESIGN AGENCY
GPD GROUP
Gray, Pape & Dohnavin, Inc.
520 South Main Street, Akron, OH 44311 330.572.2100
Copyright GPD, Inc. Gray, Pape & Dohnavin, Inc. 2020

| DESIGNED | DRAWN | REVIEWED | DATE |
|---|---|---|---|
| DJC | DJC | DGN | 1-18-21 |
| CHECKED | REVISED | STRUCTURE FILE NUMBER | |
| RHC | | 7702648 | |

FORWARD ABUTMENT PLAN & ELEVATION
BRIDGE NO. SUM-77-0927R
RAMP C2 OVER I.R.77 NB

SUM-077/277/224-VAR
PID No. 106002

11 / 37

1235
1288

O:\2017\2017258\ProjectData\SUM106002\Design\Structures\SUM077_0927R\Sheets\077_0927R_SF001.dgn Sheet 11/17/2021 7:20:38 PM rvitelli

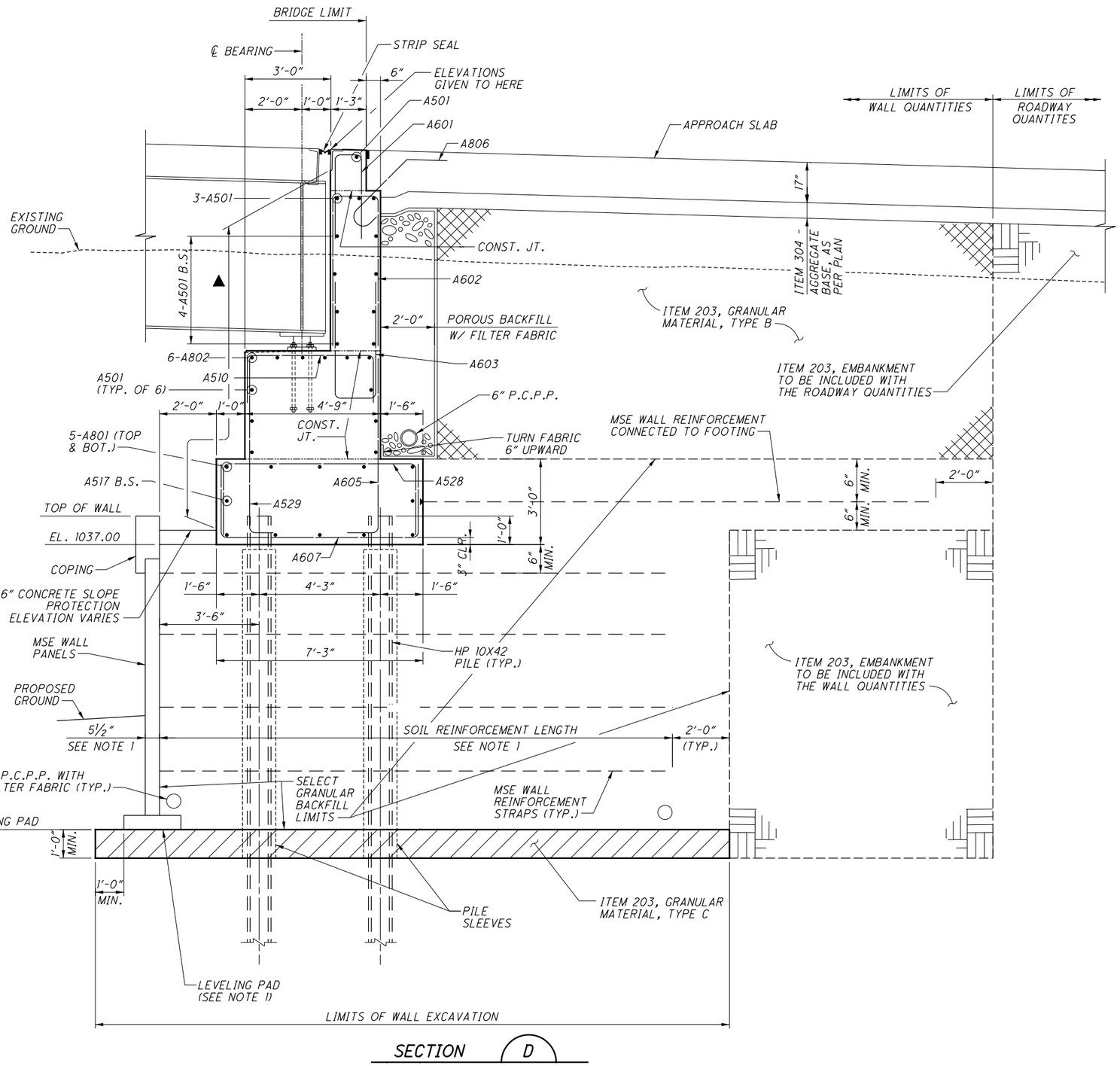


SECTION D

## LEGEND

▲ ITEM 512 - SEALING OF CONCRETE SURFACES (EPOXY-URETHANE)

## NOTES:

1. ALL DETAILS SHOWN HERE FOR THE MSE WALL, INCLUDING THE WALL COMPONENTS, WALL REINFORCEMENT, WALL BACKFILL, AND WALL FOUNDATION, ARE FOR REFERENCE ONLY. DETAILS OF THESE MSE WALL COMPONENTS ARE INCLUDED IN THE RETAINING WALL NO. 2 PLANS.

DESIGN AGENCY
GPD GROUP
Glaus, Pyle, Schomer, Burns & DeHaven, Inc.
520 South Main Street, Akron, OH 44311 330.572.2100
(Copyright Glaus, Pyle, Schomer, Burns & DeHaven, Inc. 2020)

| DESIGNED | DRAWN | REVIEWED | DATE |
|---|---|---|---|
| DJC | DJC | DGN | 1-18-21 |
| CHECKED | REVISED | STRUCTURE FILE NUMBER | |
| RHC | | 7702648 | |

FORWARD ABUTMENT DETAILS
BRIDGE NO. SUM-77-0927R
RAMP C2 OVER I.R.77 NB

SUM-077/277/224-VAR
PID No. 106002

12 / 37

1236
1288

0:\2017\2017258\ProjectData\SUM\06002\Design\Structures\SUM077_0927R\Sheets\077_0927R_SF002.dgn Sheet 1/17/2021 7:20:39 PM rvitelli

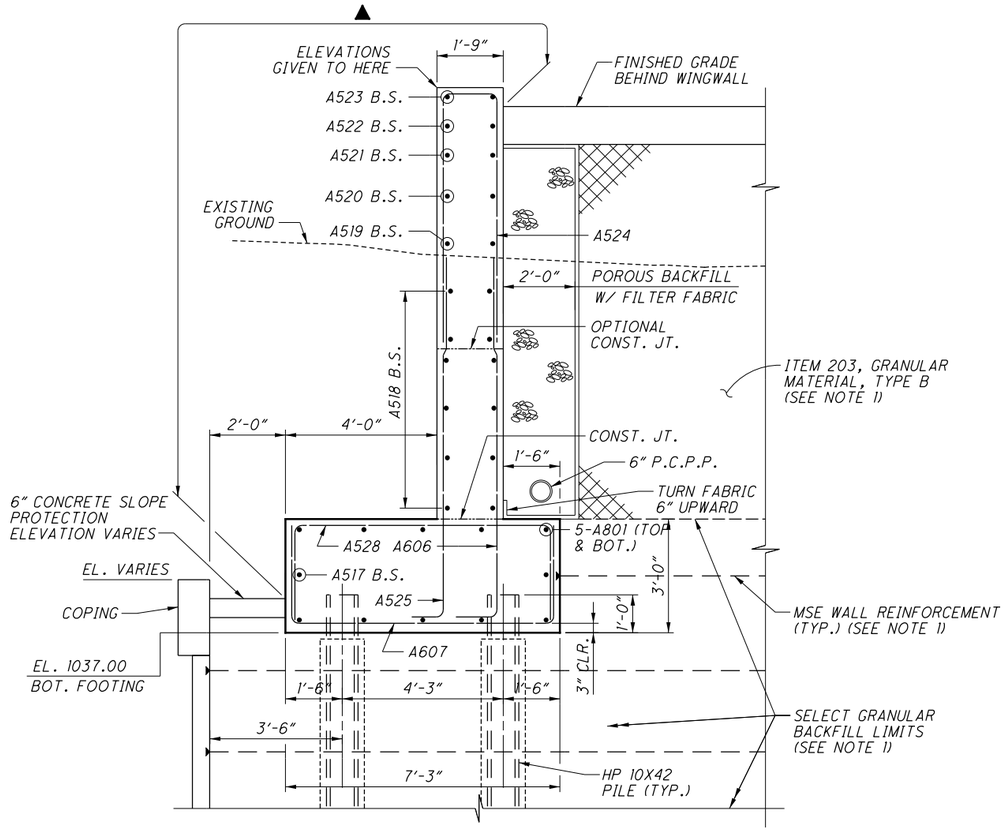


SECTION E

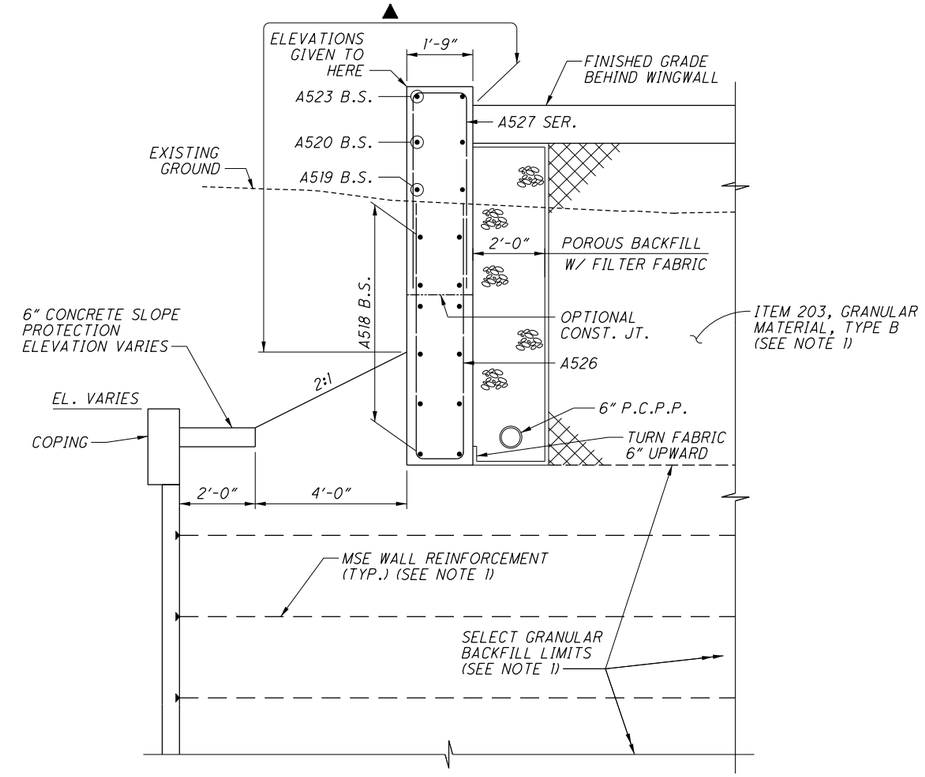


SECTION F

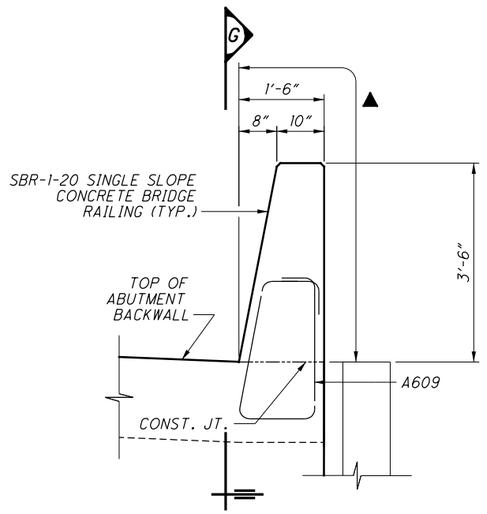


DETAIL 1

ABUTMENT AND PARAPET REINFORCING NOT SHOWN FOR CLARITY.FORWARD ABUTMENT SHOWN, REAR ABUTMENT SIMILAR.RIGHT PARAPET SHOWN, LEFT PARRAPET SIMILAR.

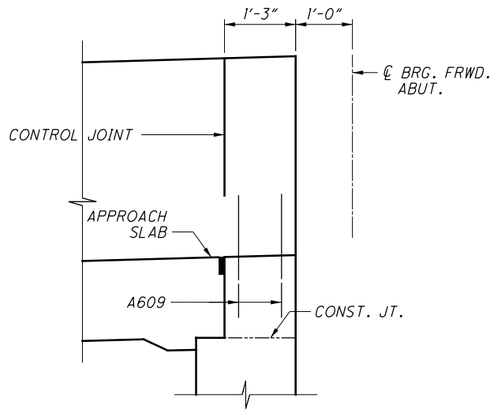


SECTION G

APPROACH SLAB, ABUTMENT AND PARAPET REINFORCING NOT SHOWN FOR CLARITY.

## LEGEND

▲ ITEM 512 - SEALING OF CONCRETE SURFACES (EPOXY-URETHANE)

## NOTES:

1. ALL DETAILS SHOWN HERE FOR THE MSE WALL, INCLUDING THE WALL COMPONENTS, WALL REINFORCEMENT, WALL BACKFILL, AND WALL FOUNDATION, ARE FOR REFERENCE ONLY. DETAILS OF THESE MSE WALL COMPONENTS ARE INCLUDED IN THE RETAINING WALL NO. 2 PLANS. FOR MORE INFORMATION, SEE SHEETS 1/10 THRU 10/10 .

DESIGN AGENCY
GPD GROUP
Glaus, Pyle, Schomer, Burns & DeHaven, Inc.
320 South Main Street, Akron, OH 44311 330.572.2100
Copyright Glaus, Pyle, Schomer, Burns & DeHaven, Inc. 2020

| DESIGNED | DRAWN | REVIEWED | DATE |
|---|---|---|---|
| DJC | DJC | DGN | 1-18-21 |
| CHECKED | REVISED | STRUCTURE FILE NUMBER | |
| RHC | | 7702648 | |

FORWARD ABUTMENT DETAILS
BRIDGE NO. SUM-77-0927R
RAMP C2 OVER I.R.77 NB

SUM-077/277/224-VAR
PID No. 106002

13 / 37

1237
1288

0:\2017\20172581Project Data\SUM\106002\Design\Structures\SUM077_0927R\Sheets\077_0927R_SF003.dgn Sheet 1/17/2021 7:20:41 PM rvitelli

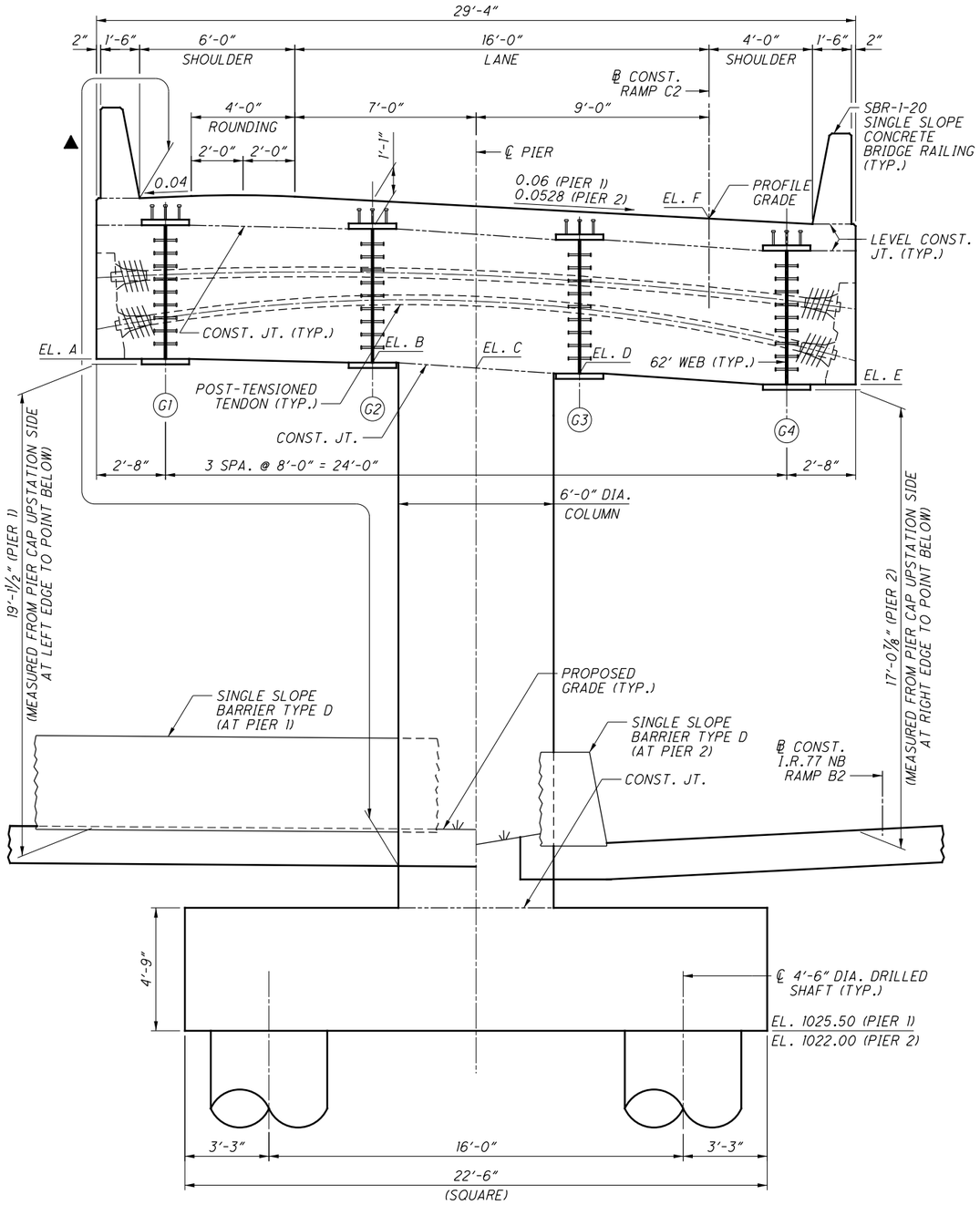


## ELEVATION

PIER 2 SHOWN, LOOKING UPSTATION. PIER 1 SIMILAR, UNLESS NOTED OTHERWISE.
TRANSVERSE DIMENSIONS AND PIER CAP ELEVATIONS ARE TAKEN ALONG ℄ PIER CAP.
DRILLED SHAFT REINFORCING NOT SHOWN FOR CLARITY.

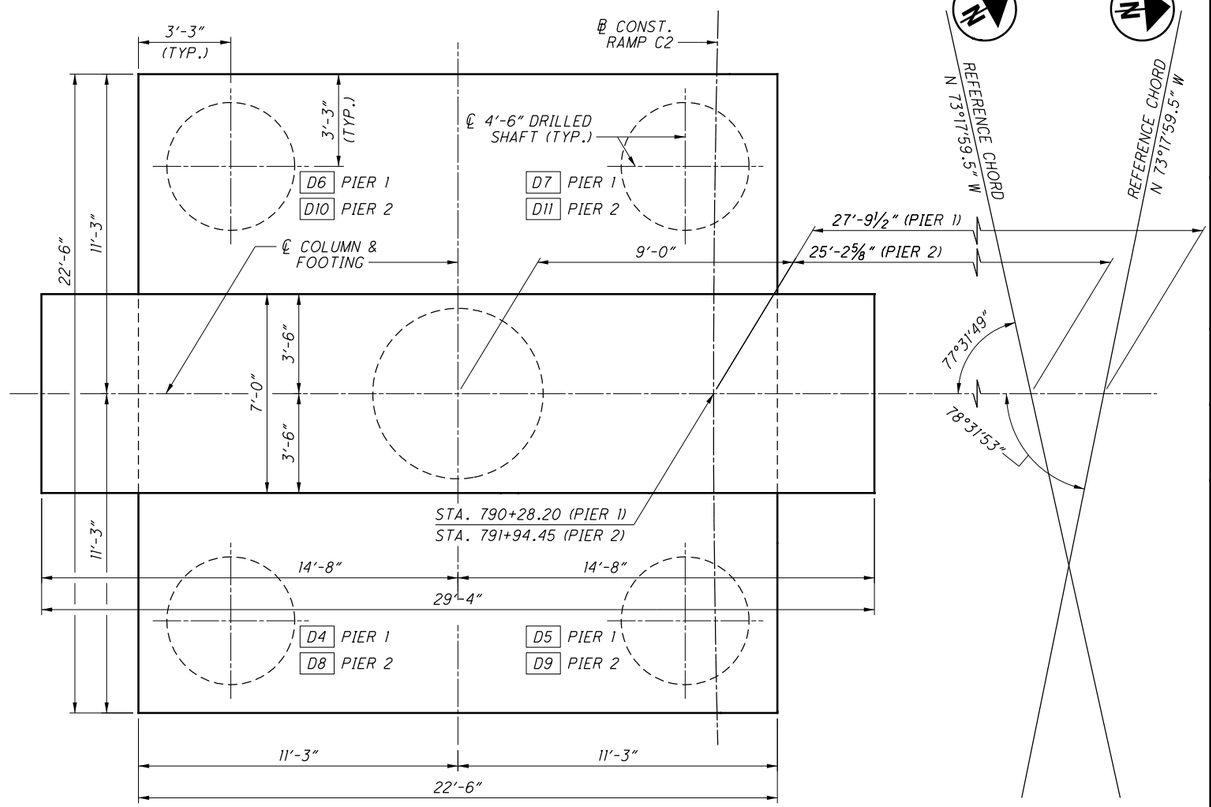


## PLAN

| PIER CAP ELEVATION @ ℄ PIER/COLUMN | | |
|---|---|---|
| ELEVATION | PIER 1 | PIER 2 |
| A | 1052.74 | 1047.96 |
| B | 1052.56 | 1047.82 |
| C | 1052.32 | 1047.60 |
| D | 1052.08 | 1047.39 |
| E | 1051.60 | 1046.97 |
| F | 1058.03 | 1053.38 |

## LEGEND:

- (G#) GIRDER NUMBER
- [D#] DRILLED SHAFT NUMBER
- ▲ INDICATES LIMITS OF "ITEM 512 - SEALING OF CONCRETE SURFACES (EPOXY-URETHANE)" (TYP.)

## NOTES:

1. FOR CONSTRUCTION SEQUENCE NOTES, SEE SHT. NO. [18/37].
2. FOR PIER REINFORCING, SEE SHT. NO. [15/37] THRU [17/37].

DESIGN AGENCY
GPD GROUP
Gray, Pape & Dohnavin, Inc.
520 South Main Street, Akron, OH 44311 330.572.2100
Copyright GPD Group, Akron, Ohio, USA, Inc. 2020

| DESIGNED | DRAWN | REVIEWED | DATE |
|---|---|---|---|
| RHC/DGN | JJB | DJC | 1-18-21 |
| CHECKED | REVISED | STRUCTURE FILE NUMBER | |
| TJW | | 7702648 | |

PIER PLAN AND ELEVATION
BRIDGE NO. SUM-77-0927R
RAMP C2 OVER I.R.77 NB

SUM-077/277/224-VAR
PID No. 106002

14 / 37

1238
1288

D:\2017\2017258\ProjectData\SUM\06002\Design\Structures\SUM077_0927R\Sheets\077_0927R_SI00I.dgn Sheet I I/17/2021 7:20:50 PM rvitelli

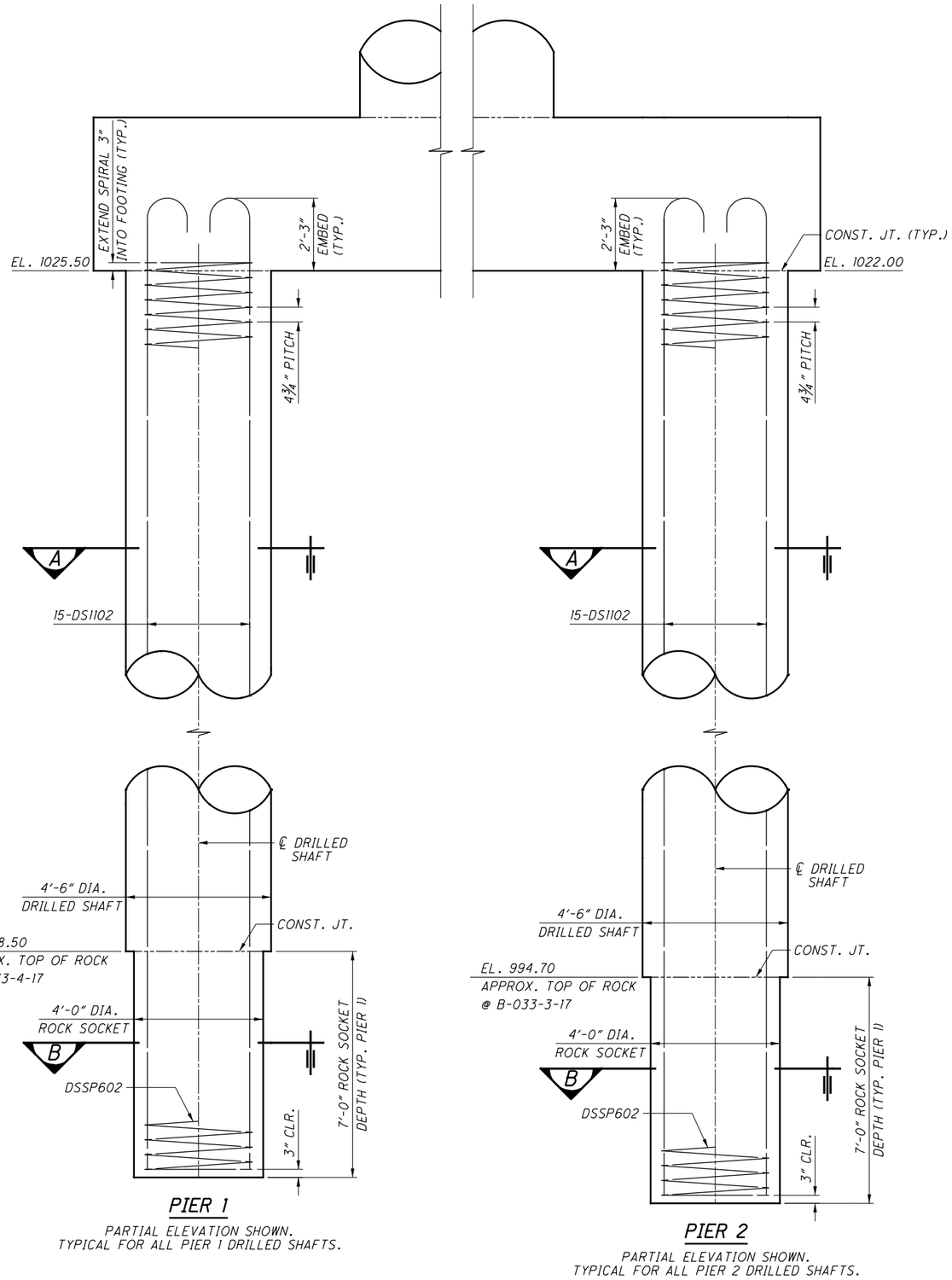


## PIER 1

PARTIAL ELEVATION SHOWN.
TYPICAL FOR ALL PIER 1 DRILLED SHAFTS.

## PIER 2

PARTIAL ELEVATION SHOWN.
TYPICAL FOR ALL PIER 2 DRILLED SHAFTS.

## ELEVATION

PIER FOOTING AND COLUMN REINFORCING NOT SHOWN FOR CLARITY.

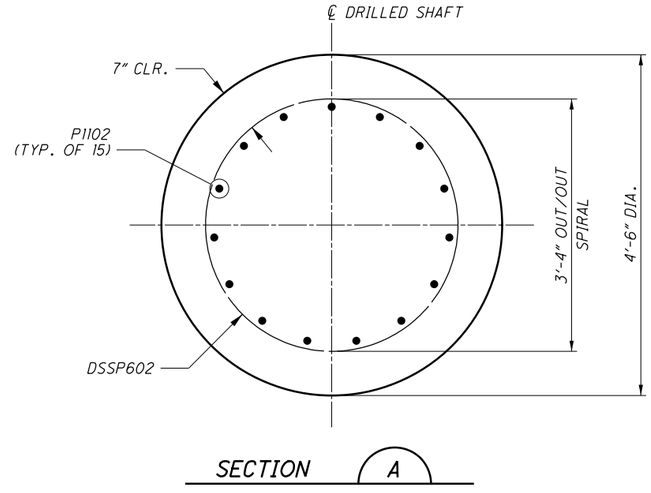


## SECTION A

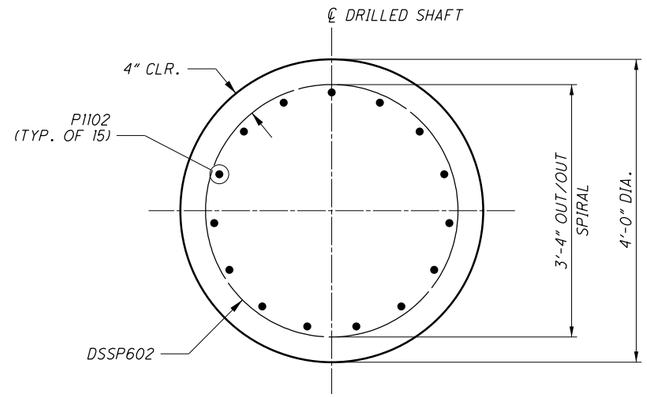


## SECTION B

## NOTES:

1. FOR PIER PLAN AND ELEVATION, SEE SHT. NO. 14/37.
2. FOR PIER REINFORCING, SEE SHT. NO. 16/37 AND 17/37.
3. MINIMUM REINFORCING LAP SPLICE ARE AS FOLLOWS:
   NO. 10 BARS 6'-0"

DESIGN AGENCY
GPD GROUP
320 South Main Street, Akron, OH 44311 330.572.2100

| DESIGNED | DRAWN | REVIEWED | DATE |
|---|---|---|---|
| RHC/DGN | JJB | DJC | 1-18-21 |
| CHECKED | REVISED | STRUCTURE FILE NUMBER | |
| TJW | | 7702648 | |

PIER DRILLED SHAFT DETAILS
BRIDGE NO. SUM-77-0927R
RAMP C2 OVER I.R.77 NB

SUM-077/277/224-VAR
PID No. 106002

15 / 37

1239
1288

0:\2017\2017258\ProjectData\SUM\06002\Design\Structures\SUM077_0927R\Sheets\077_0927R_SI005.dgn Sheet 1/17/2021 7:20:51 PM rvitelli

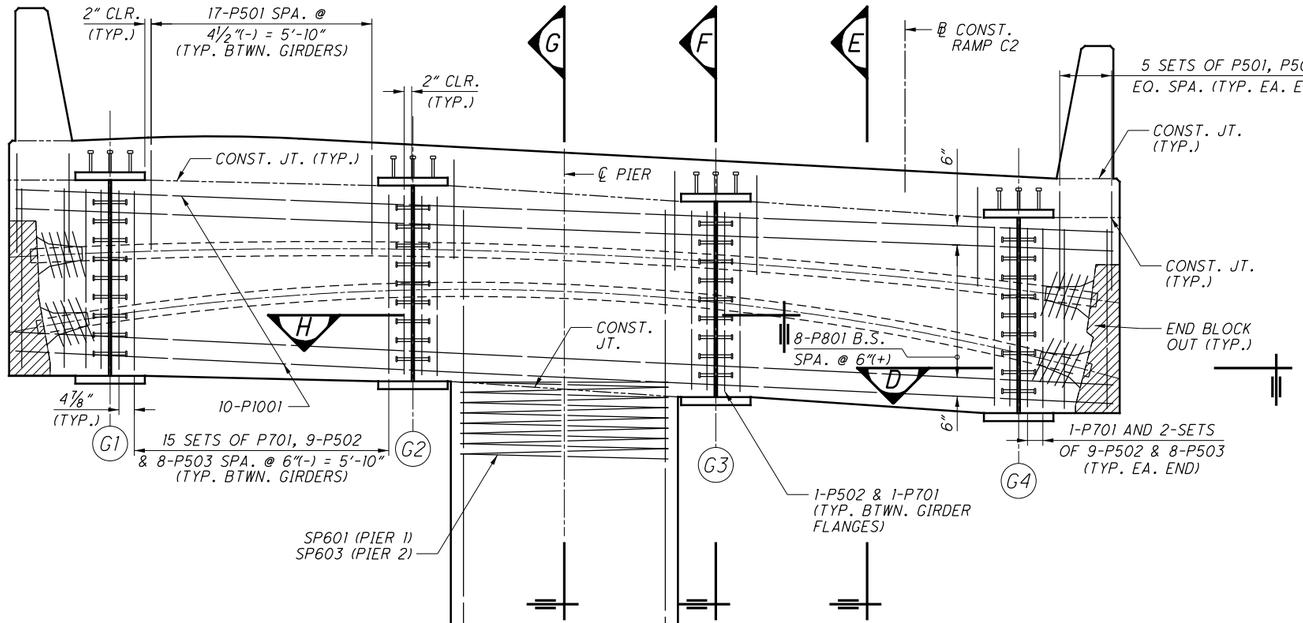


## ELEVATION

TYPICAL FOR PIERS 1 & 2 UNLESS NOTED OTHERWISE
DRILLED SHAFT AND END CLOSURE POUR REINFORCING NOT SHOWN FOR CLARITY.

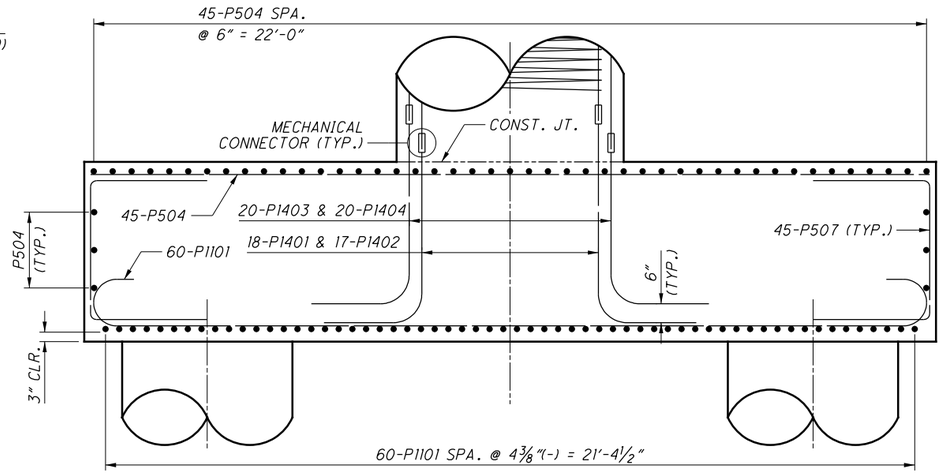


## VIEW C

SINGLE SLOPE BARRIER TYPE D NOT SHOWN FOR CLARITY




## SECTION A




## SECTION B

### LEGEND:

(G#) GIRDER NUMBER

### NOTES:

1. COLUMN SPIRAL REINFORCING MAY BE DISCONTINUED AT 2" ABOVE BOTTOM OF PIER CAP AT LOWEST POINT.
2. FOR CONSTRUCTION SEQUENCE NOTES, SEE SHT. NO. 18/37.
3. FOR SECTIONS E, F, G AND H, SEE SHT. NO. 17/37.
4. FOR END BLOCK OUT DETAIL, SEE SHT. NO. 17/37.

DESIGN AGENCY
GPD GROUP
Glaus, Pyle, Schomer, Burns & DeHaven, Inc.
520 South Main Street, Akron, OH 44311 330.572.2100
(Copyright claim, Pyle, Schomer, Burns & DeHaven, Inc. 2020)

| DESIGNED | DRAWN | REVIEWED | DATE |
|---|---|---|---|
| RHC/DGN | JJB | DJC | 1-18-21 |
| CHECKED | | REVISED | STRUCTURE FILE NUMBER |
| TJW | | | 7702648 |

PIER DETAILS
BRIDGE NO. SUM-77-0927R
RAMP C2 OVER I.R.77 NB

SUM-077/277/224-VAR
PID No. 106002

16 / 37

1240
1288

0:\2017\2017258\ProjectData\SUM\06002\Design\Structures\SUM077_0927R\Sheets\077_0927R_SI002.dgn Sheet | 1/17/2021 7:20:53 PM rvitelli

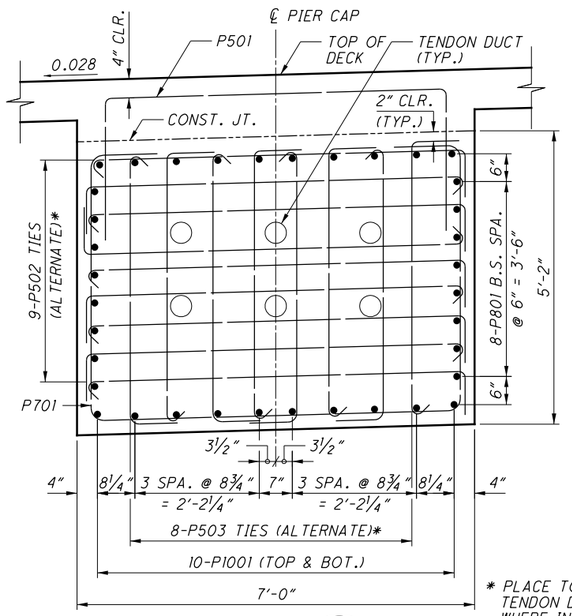


SECTION E

PIER 1 SHOWN, PIER 2 SIMILAR.
DECK REINFORCING NOT SHOWN FOR CLARITY.

* PLACE TO AVOID TENDON DUCTS WHERE INTERFERENCE OCCURS.

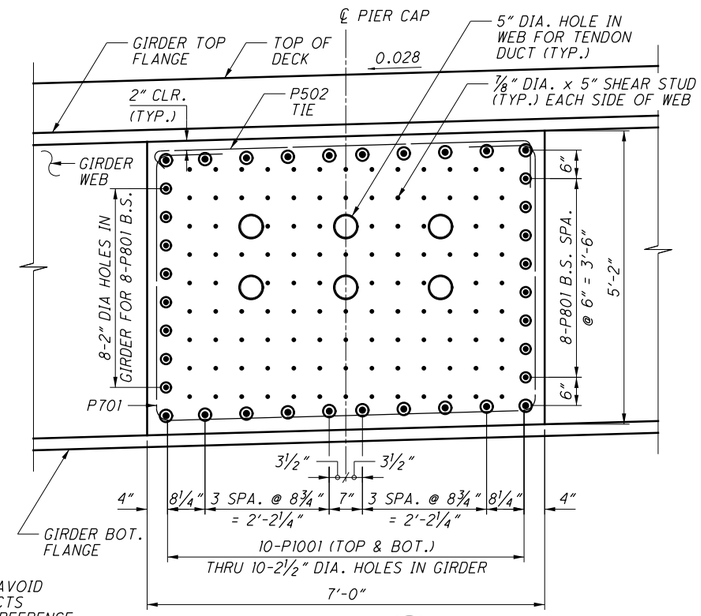


SECTION F

PIER 1 SHOWN, PIER 2 SIMILAR.
GIRDER 3 SHOWN, REMAINING GIRDERS SIMILAR.
SHEAR STUDS ON TOP OF GIRDER AND DECK REINFORCING NOT SHOWN FOR CLARITY.

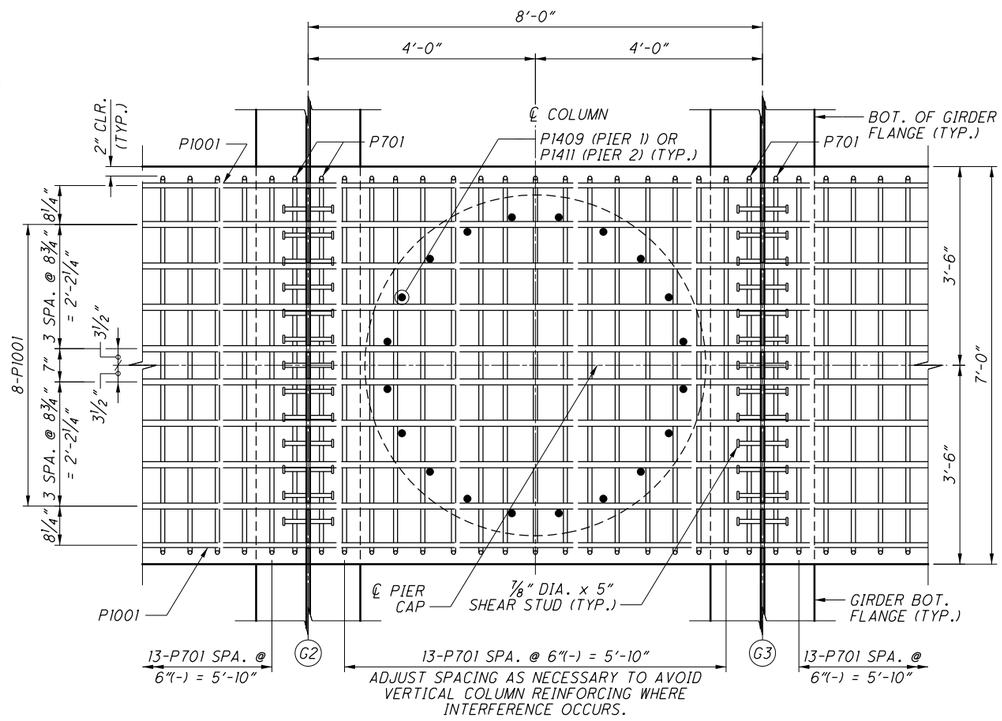


ADJUST SPACING AS NECESSARY TO AVOID VERTICAL COLUMN REINFORCING WHERE INTERFERENCE OCCURS.

SECTION H

BAR TIES NOT SHOWN FOR CLARITY.

## LEGEND:

(G#) GIRDER NUMBER

## NOTES:

1. TYPICAL SHEAR STUD QUANTITY FOR EACH GIRDER = 111 STUDS ON EACH SIDE OF THE WEB, FOR A TOTAL OF 222 STUDS FOR EACH GIRDER (TYP. FOR BOTH PIERS).
2. FOR CONSTRUCTION SEQUENCE NOTES, SEE SHT. NO. 18/37.

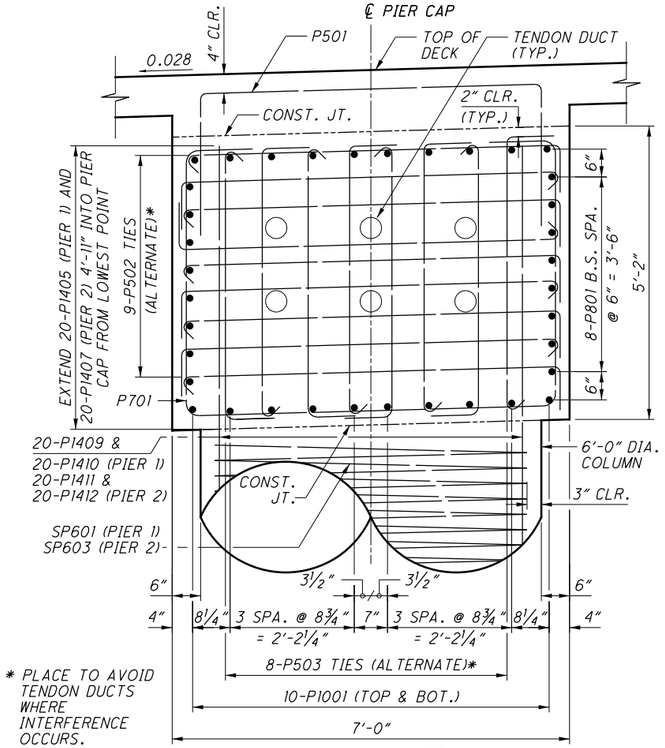


* PLACE TO AVOID TENDON DUCTS WHERE INTERFERENCE OCCURS.

SECTION G

PIER 1 SHOWN, PIER 2 SIMILAR, UNLESS NOTED OTHERWISE.
COLUMN SPIRAL EXTENDING INTO PIER CAP NOT SHOWN FOR CLARITY.

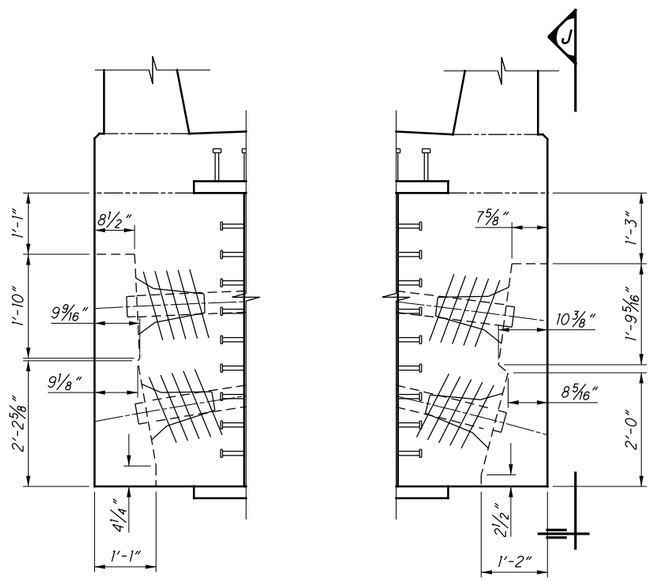


END BLOCK OUT DETAIL

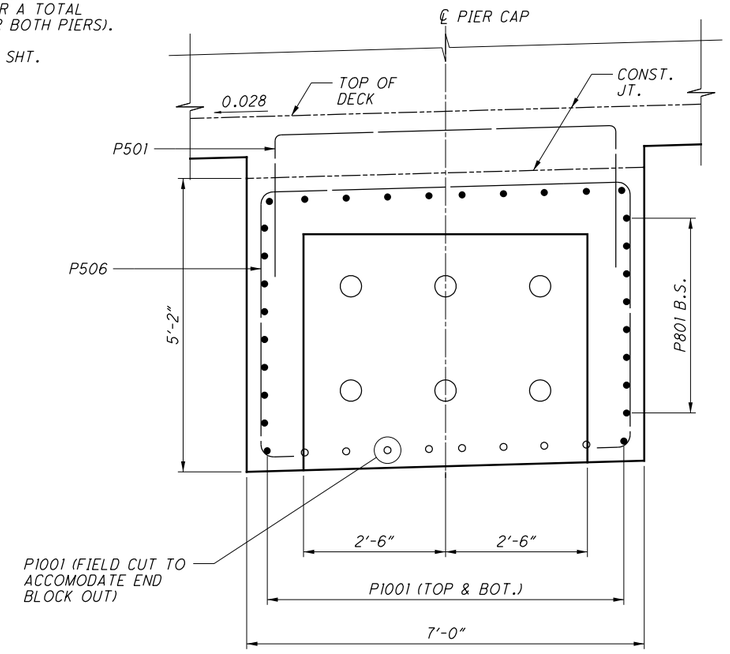


VIEW J

PIER 1 SHOWN, PIER 2 SIMILAR BUT MIRRORED.

DESIGN AGENCY
GPD GROUP
Consulting Engineers
320 South Main Street, Akron, OH 44311 330.572.2100

| DESIGNED | DRAWN | REVIEWED | DATE |
|---|---|---|---|
| RHC/DGN | JJB | DJC | 1-18-21 |
| CHECKED | REVISED | STRUCTURE FILE NUMBER | |
| TJW | | 7702648 | |

PIER DETAILS

BRIDGE NO. SUM-77-0927R
RAMP C2 OVER I.R.77 NB

SUM-077/277/224-VAR
PID No. 106002

17 / 37

1241
1288

0:\2017\2017258\ProjectData\SUM\06002\Design\Structures\SUM077_0927R\Sheets\077_0927R_SI003.dgn Sheet 1 1/17/2021 12:20:55 PM rvitelli

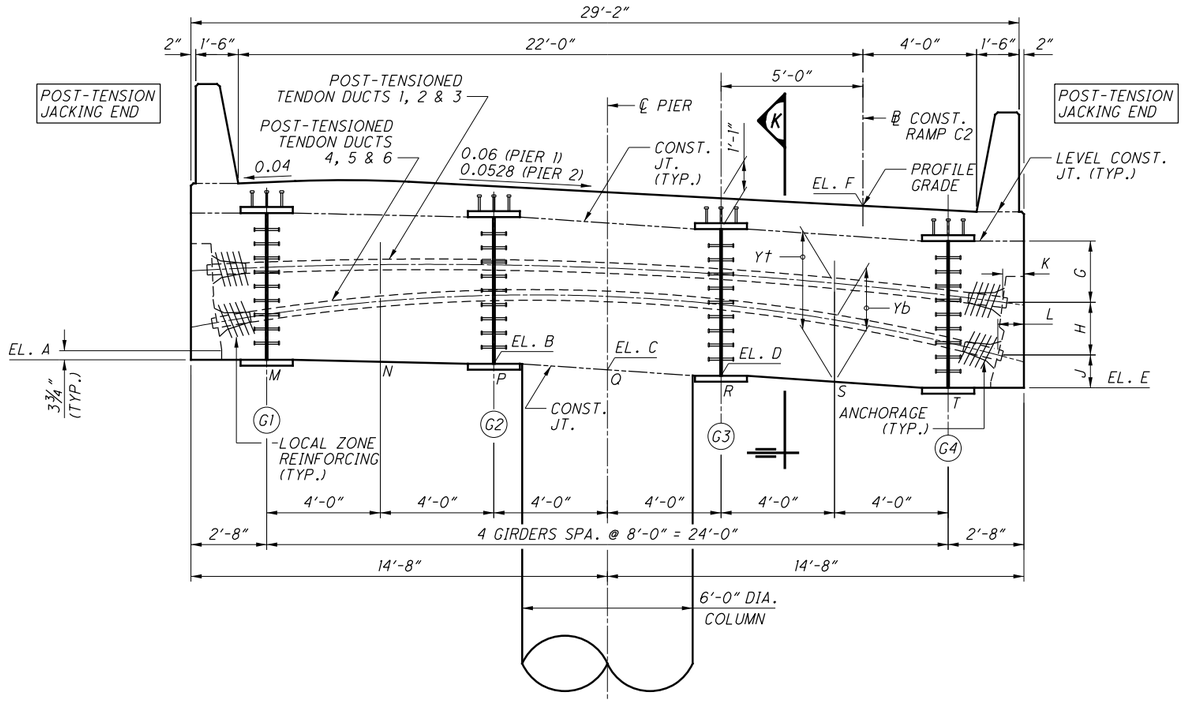


## POST TENSIONING PIER CAP ELEVATION

PIER 2 SHOWN, LOOKING UPSTATION. PIER 1 SIMILAR, UNLESS NOTED OTHERWISE.
TRANSVERSE AND VERTICAL DIMENSIONS AND PIER CAP ELEVATIONS ARE TAKEN ALONG ℄ PIER CAP.

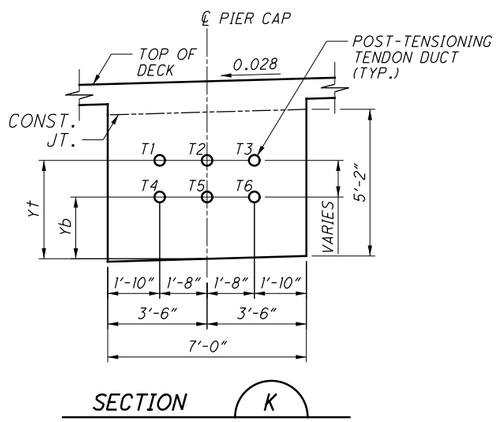


SECTION K

### DIMENSIONS TO POST-TENSIONING TENDON DUCTS

| | PIER 1 | | PIER 2 | |
|---|---|---|---|---|
| DIM. | LEFT | RIGHT | LEFT | RIGHT |
| G | 1'-11⅞" | 2'-2" | 2'-0" | 2'-1⅞" |
| H | 1'-10" | 1'-9¾" | 1'-10" | 1'-9¾" |
| J | 1'-4⅛" | 1'-2¼" | 1'-4" | 1'-2⅜" |
| K | 8⅝" | 9" | 8⅝" | 9" |
| L | 1'-0⅝" | 1'-1" | 1'-0⅝" | 1'-0⅞" |

### STRESSING SEQUENCE

T2, T5, T1, T3, T4, T6

### POST-TENSIONING TENDON DUCT PROFILE POINTS

| POINT | M | N | P | Q | R | S | T | |
|---|---|---|---|---|---|---|---|---|
| Yt | 3'-3" | 3'-5" | 3'-5¾" | 3'-7" | 3'-7" | 3'-5⅝" | 3'-3" | DUCTS 1, 2 & 3 |
| Yb | 1'-7⅛" | 2'-1½" | 2'-4⅛" | 2'-7" | 2'-6⅛" | 2'-2⅛" | 1'-7⅛" | DUCTS 4, 5 & 6 |

## CONSTRUCTION SEQUENCE

POST-TENIONED PIER CAP

1. CONSTRUCT TEMPORARY BENTS FOR SUPERSTRUCTURE STEEL FRAMING AND PIER CAPS. LOCATION OF THE BENTS FOR THE SUPERSTRUCTURE SHALL BE ON BOTH SIDE OF THE CAP AS CLOSE AS CONSTRUCTION OF THE CAP WILL ALLOW AND NOT BEYOND THE NEAREST CROSS FRAME CONNECTION POINT.

   DETAILS OF THE TEMPORARY BENTS SHALL BE DESIGNED, PREPAIRED AND STAMPED BY AN OHIO REGISTERED PROFESSIONAL ENGINEER AND SUBMITTED TO THE DIRECTOR FOR APPROVAL AT LEAST THIRTY (30) DAYS BEFORE ACTUAL WORK IS TO BEGIN. FOR OVERALL CONSTRUCTION SEQUENCE, TEMPORARY BENT REACTIONS, AND ALLOWABLE LANE/SHOULDER CLOSURES FOR CONSTRUCTION, SEE SHEETS 5/37 THRU 8/37.
2. ERECT SUPERSTRUCTURE GIRDERS AND CROSS FRAMES.
3. CONSTRUCT PIER CAP FORMS.
4. INSTALL PIER CAP REINFORCEMENT, TENDON DUCTS, AND ANCHORAGE AND PLACE PIER CAP CONCRETE.
5. AFTER 7 DAYS, PLACEMENT OF BRIDGE DECK FORMS AND DECK REINFORCING MAY BEGIN.
6. WHEN THE PIER CAP CONCRETE STRENGTH REACHES 7000 PSI, COMPLETE POST-TENSIONING INCLUDING GROUTING OF THE DUCTS. TAILS CANNOT BE CUT OFF NOR DUCT GROUTING BEGIN UNTIL STRESSING RECORDS AS PER SS 855.
7. PRIOR TO BEGINNING THE FINAL SEQUENCE, ALL TENDONS ARE TO BE STESSED TO A PRELIMINARY FORCE OF 10% OF THE TOTAL JACKING FORCE.
8. REMOVE TEMPORARY FALSEWORK AND PEIR CAP FORMWORK.
9. PLACE THE DECK CONCRETE ACCORDING TO POURING SEQUENCE SHOWN ON SHT. NO. 27/37.
10. FILL IN POST-TENSIONING BLOCK OUTS AT ENDS OF PIER CAPS.
11. PLACE DECK PARAPETS AND SEAL CONCRETE SURFACES.

## LEGEND:

(G#) GIRDER NUMBER

## NOTES:

1. PRESTRESSING STEEL SHALL BE 0.60" DIAMETER UNCOATED 7-WIRE, LOW RELAXATION, GRADE 270 KSI, CONFORMING TO ASTM A416. TENDONS SHALL BE 19 STRAND TENDONS WITH AREA = 4.123 SQ IN.
2. TENDON DUCTS SHALL BE CORRUGATED PLASTIC PIPE AS PER SS 855:
   FRICTION COEFFICIENT, $\mu = 0.25$
   WOBBLE COEFFICIENT, $\kappa = 0.0002$
3. THE MAXIMUM REQUIRED TENSIONING FORCE AT THE JACK IS 834 KIPS PER TENDON. COMPUTATIONS OF GAUGE PRESSURE AND ELONGATION SHALL BE SUPPLIED BY THE CONTRACTOR IN THE SHOP DRAWING SUBMITTAL FOR REVIEW AS PER SS 855.
4. THE TENDONS SHALL BE STRESSED AT BOTH ENDS WITH A MAXIMUM TEMPORARY JACK FORCE OF 75% OF THE SPECIFIED MINIMUM ULTIMATE TENSILE STRENGTH OF THE PRESTRESSING STEEL ANCHOR SET = 0.25".
5. LOCAL ZONE ANCHORAGE AND REINFORCING SHALL BE THE RESPONSIBILITY OF THE SUPPLIER. SHOP DRAWINGS OF THE ANCHORAGE, REINFORCING, TENDONS, DUCTS AND ALL POST-TENSIONING HARDWARE SHALL BE SUBMITTED IN ACCORDANCE WITH SS 855 PRIOR TO FABRICATION.
6. NO CAMBER OF THE PIER CAP IS REQUIRED.
7. FOR ELEVATIONS A THRU F, SEE SHT. NO. 14/37.
8. FOR COLUMN AND FOOTING DETAILS, SEE SHT. NO. 16/37.

DESIGN AGENCY
GPD GROUP
520 South Main Street, Akron, OH 44311 330.572.2100
Copyright GPD Group, Akron, Ohio, USA

| DESIGNED | DRAWN | REVIEWED | DATE |
|---|---|---|---|
| RHC/DGN | JJB | DJC | 1-18-21 |
| CHECKED | REVISED | STRUCTURE FILE NUMBER | |
| TJW | | 7702648 | |

PIER DETAILS
BRIDGE NO. SUM-77-0927R
RAMP C2 OVER I.R.77 NB

SUM-077/277/224-VAR
PID No. 106002

18 / 37

1242
1288

O:\2017\2017258\ProjectData\SUM\06002\Design\Structures\SUM077_0927R\Sheets\077_0927R_SI004.dgn Sheet 1 1/17/2021 7:20:55 PM rvitelli

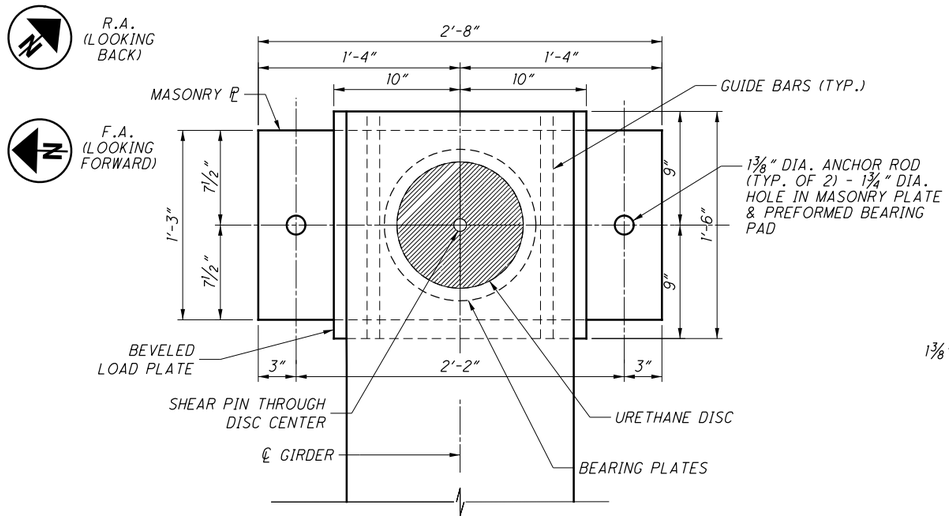


## ABUTMENT EXPANSION BEARING PLAN

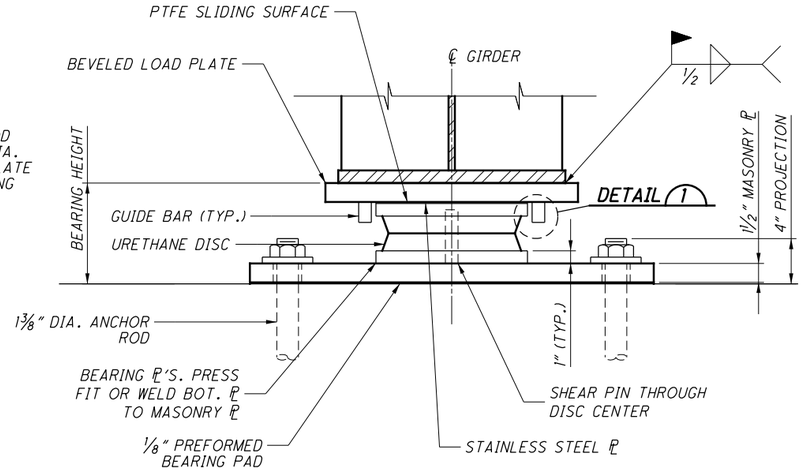


## ABUTMENT EXPANSION BEARING ELEVATION

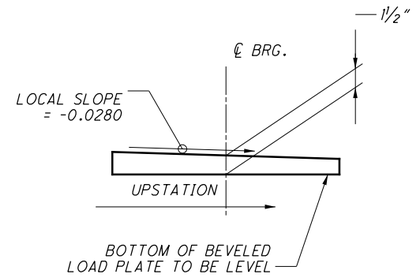


## BEVELED LOAD PLATE DETAIL

GIRDER AND BEARING ASSEMBLY NOT SHOWN

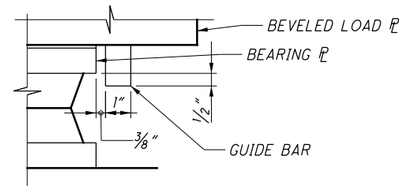


## DETAIL 1

HLMR BEARING DATA TABLE

| LOCATION | | QUANTITY | BEARING TYPE | ASSUMED BRG. HEIGHT (IN.) | DIM "W" (IN.) (SEE NOTE 7) | DIM "T" (IN.) (SEE NOTE 8) | SERVICE LIMIT STATE | | | | | STRENGTH LIMIT STATE | | | | | | | |
|---|---|---|---|---|---|---|---|---|---|---|---|---|---|---|---|---|---|---|---|
| | | | | | | | VERTICAL LOAD (KIPS) | | | HORIZ. LOAD (KIPS) | | VERTICAL LOAD (KIPS) | | | HORIZ. LOAD (KIPS) | | MOVEMENT (IN.) | | ROTATION |
| ABUT. | GIRDERS | | | | | | DEAD | LIVE | TOTAL | LONG. | TRANS. | DEAD | LIVE | TOTAL | LONG. | TRANS. | LONG. | TRANS. | (RADS) |
| REAR | G1 | 1 | LG | 7.625 | 20.00 | 0.15 | 56.4 | 71.0 | 127.4 | 2.3 | 12.7 | 70.5 | 124.3 | 194.8 | 2.8 | 16.5 | 1.39 | - | 0.012 |
| | G2 | 1 | LG | 7.625 | 20.00 | 0.15 | 26.8 | 77.1 | 103.9 | 1.1 | 28.6 | 33.5 | 134.9 | 168.4 | 1.3 | 36.9 | 1.36 | - | 0.012 |
| | G3 | 1 | LG | 7.625 | 20.00 | 0.15 | 20.9 | 72.2 | 93.1 | 0.8 | 35.6 | 26.1 | 126.4 | 152.5 | 1.0 | 45.6 | 1.32 | - | 0.011 |
| | G4 | 1 | LG | 7.625 | 20.00 | 0.14 | 22.3 | 62.2 | 84.5 | 0.9 | 24.1 | 27.9 | 108.9 | 136.8 | 1.1 | 30.6 | 1.28 | - | 0.011 |
| FRWD. | G1 | 1 | LG | 7.625 | 20.00 | 0.15 | 57.7 | 70.5 | 128.2 | 2.3 | 13.0 | 72.1 | 123.4 | 195.5 | 2.9 | 16.9 | 1.31 | - | 0.012 |
| | G2 | 1 | LG | 7.625 | 20.00 | 0.14 | 28.6 | 83.4 | 112.0 | 1.1 | 29.1 | 35.8 | 146.0 | 181.8 | 1.4 | 37.5 | 1.29 | - | 0.011 |
| | G3 | 1 | LG | 7.625 | 20.00 | 0.14 | 23.3 | 82.5 | 105.8 | 0.9 | 35.7 | 29.1 | 144.4 | 173.5 | 1.2 | 45.7 | 1.26 | - | 0.011 |
| | G4 | 1 | LG | 7.625 | 20.00 | 0.14 | 25.1 | 67.7 | 92.8 | 1.0 | 23.7 | 31.4 | 118.5 | 149.9 | 1.3 | 30.1 | 1.23 | - | 0.011 |

## NOTES:

1. DEAD LOAD INCLUDES FUTURE WEARING SURFACE.
2. PER AASHTO LRFD BRIDGE DESIGN SPECIFICATIONS, SECTION 14.4.1, LIVE LOAD DOES NOT INCLUDE DYNAMIC LOAD ALLOWANCE.
3. ROTATION IS FOR LIVE LOAD ONLY AND INCLUDES A FABRICATION/INSTALLATION TOLERANCE OF 0.005 RADS, AND AN ALLOWANCE FOR UNCERTAINTIES OF 0.005 RADS, FOR A TOTAL TOLERANCE OF 0.010 RADS. PER THE AASHTO LRFD BRIDGE DESIGN SPECIFICATIONS, SECTION 14.4.2.2.1.
4. FOR HORIZONTAL LOADS, THE ASSUMED FRICTION IS 4% OF THE SERVICE LIMIT STATE VERTICAL DEAD LOAD.
5. BEARING HEIGHT IS THE TOTAL VERTICAL DIMENSION OF THE PREFORMED BEARING PAD, MASONRY PLATE, BEARING ASSEMBLY AND BEVELED LOAD PLATE AT THE CENTERLINE OF THE BEARING.
6. HORIZONTAL LONGITUDINAL MOVEMENT GIVEN IS THE MAXIMUM CONTRACTION OR EXPANSION WHEN GIRDER IS PLACED AT 60°AND INCLUDES A FACTOR OF 1.20 PER THE AASHTO LRFD BRIDGEDESIGN SPECIFICATIONS TABLE 3.4.1-1.
7. THE MASONRY PLATE DIMENSIONS AND ANCHOR ROD LOCATIONS SHOWN ASSUME A MAXIMUM WIDTH (IN THE TRANSVERSE DIRECTION) OF THE UPPER PLATE OF THE BEARING ASSEMBLY EQUALTO THE DIMENSION "W" AS SHOWN IN THE HLMR BEARING DATA TABLE. THE CONTRACTOR SHALL ENSURE THAT THE UPPER PLATE OF THE BEARING ASSEMBLY DOES NOT INTERFERE WITH THE ANCHOR BOLTS AT ALL EXPECTED EXPANSION POSITIONS. ADJUST THE MASONRY PLATE LENGTH AND ANCHOR ROD LOCATIONS TO PROVIDE ADEQUATE CLEARANCES TO THE ANCHOR RODS. SHOW THE FINAL MASONRY PLATE DIMENSIONS AND ANCHOR ROD LOCATIONS ON THE SHOP DRAWINGS.
8. THE POSITION OF THE LOAD PLATE IS TEMPERATURE DEPENDENT. PRIOR TO (AND WITHIN 2 HOURS OF) ERECTING GIRDERS, ADJUST LOAD PLATE POSITION BY DIM. "T", AS SHOWN IN THE HLMR BEARING DATA TABLE, FOR EACH 10°F FALL OR RISE (FROM 60°F) AT TIME OF GIRDER ERECTION. FOR BEARINGS AT THE REAR ABUTMENT, MOVE LOAD PLATE UPSTATION FOR TEMPERATURES LESS THAN 60°F AND DOWNSTATION FOR TEMPERATURES GREATER THAN 60°F. FOR BEARINGS AT THE FORWARD ABUTMENT, MOVE LOAD PLATE DOWNSTATION FOR TEMPERATURES LESS THAN 60°F AND UPSTATION FOR TEMPERATURES GREATER THAN 60°F. TO PREVENT CONTAMINATION OF THE SLIDING SURFACE, ADJUST LOAD PLATE POSITION BY SLIDING THE LOAD PLATE HORIZONTALLY. DO NOT LIFT THE LOAD PLATE.
9. THE LONGITUDINAL DIRECTION IS DEFINED AS PARALLEL TO THE DIRECTION OF MOVEMENT INDICATED ON THE PLANS. THE TRANSVERSE DIRECTION IS DEFINED AS PERPENDICULAR TO THE DIRECTION OF MOVEMENT.
10. ALL BEARINGS SHALL BE MARKED PRIOR TO SHIPPING. THE MARKS SHALL INCLUDE THE BEARING LOCATION ON THE BRIDGE, AND A DIRECTION ARROW THAT POINTS UP-STATION. ALL MARKS SHALL BE PERMANENT AND BE VISIBLE AFTER THE BEARING IS INSTALLED.
11. THE ABUTMENT BEAM SEAT ELEVATIONS ARE BASED ON OVERALL BEARING HEIGHTS PROVIDED IN THE HLMR BEARING DATA TABLE ABOVE. IF THE CONTRACTOR'S SELECTED BEARING MANUFACTURER HAS A DESIGN THAT DOES NOT CONFORM TO THE HEIGHTS PROVIDED IN THE TABLE, ADJUST THE BEARING SEAT ELEVATIONS AT NO ADDITIONAL COST TO THE STATE. ADJUST THE LOCATION OF REINFORCING STEEL HORIZONTALLY AS NECESSARY TO AVOID INTERFERENCE WITH THE BEARING ANCHOR BOLTS. MAINTAIN THE MINIMUM CONCRETE COVER AND MINIMUM SPACING REQUIRED BY THE PROJECT PLANS. IF THE REINFORCING STEEL CANNOT BE MOVED TO PROVIDE THE REQUIRED POSITION FOR THE ANCHOR BOLTS, THE CONTRACTOR'S BEARING MANUFACTURER SHALL REDESIGN THE BEARINGS TO ACCOMMODATE AN ACCEPTABLE ANCHOR BOLT CONFIGURATION.
12. SEE GENERAL NOTES FOR ADDITIONAL HLMR BEARING REQUIREMENTS.

## LEGEND:

G# - GIRDER NUMBER DESIGNATION

LG - LONGITUDINALLY EDGE GUIDED BEARINGS ARE RESTRAINED TRANSVERSELY AND ALLOW FOR LONGITUDINAL MOVEMENT AND ROTATION ABOUT BOTH AXES

DESIGN AGENCY
GPD GROUP
Glaus, Pyle, Schomer, Burns & DeHaven, Inc.
520 South Main Street, Akron, OH 44311 330.572.2100
Copyright Glaus, Pyle, Schomer, Burns & DeHaven, Inc. 2020

DESIGNED DJC | DRAWN DJC | REVIEWED DGN | DATE 1-18-21
CHECKED TJW | REVISED | STRUCTURE FILE NUMBER 7702648

HLMR BEARING DATA TABLE
BRIDGE NO. SUM-77-0927R
RAMP C2 OVER I.R.77 NB

SUM-077/277/
224-VAR
PID No. 106002

19 / 37

1243
1288

D:\2017\2017258\ProjectData\SUM\106002\Design\Structures\SUM077_0927R\Sheets\077_0927R_SB001.dgn 1/17/2021 7:20:58 PM rvitelli

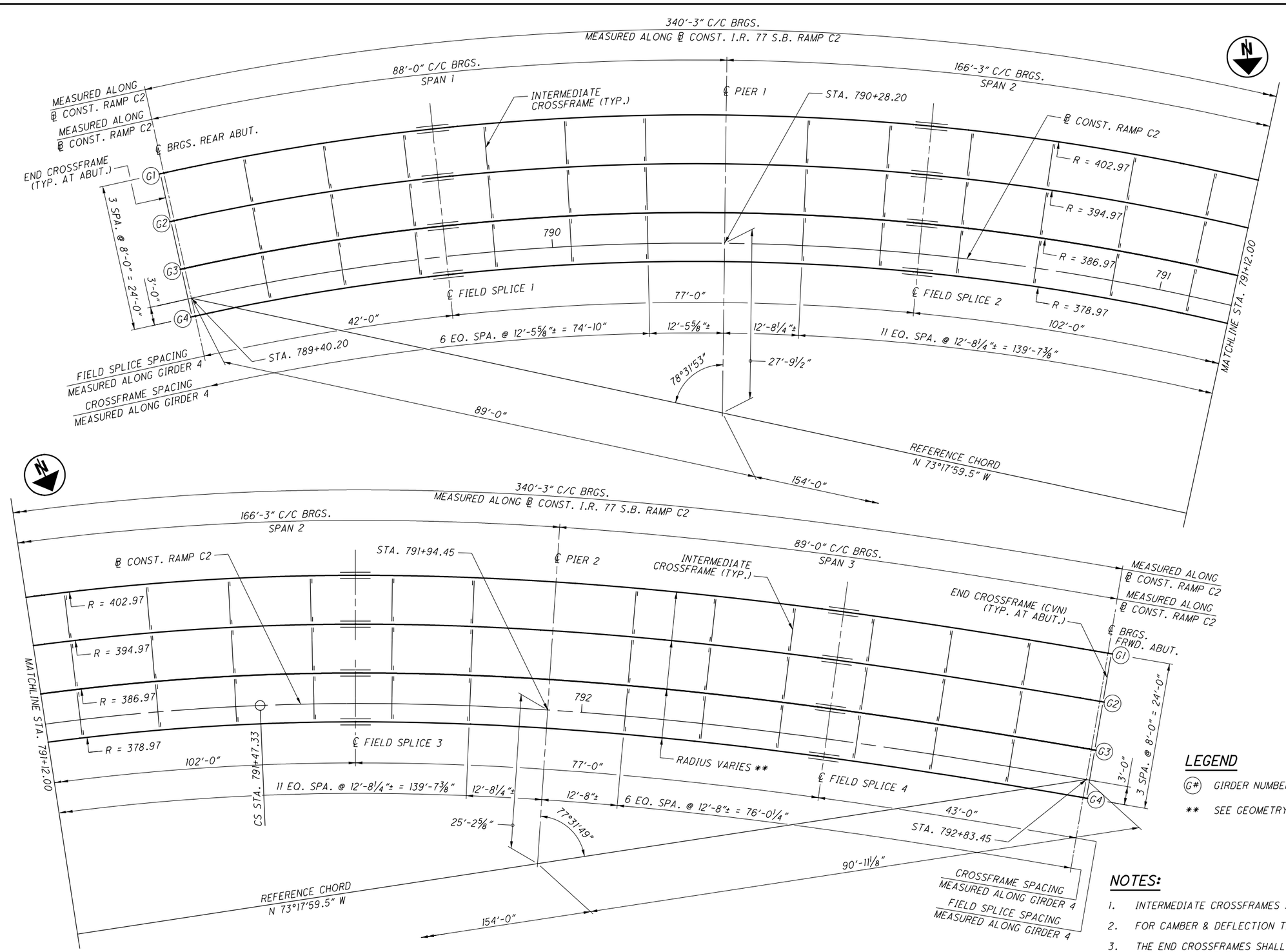


## GIRDER FRAMING PLAN

### LEGEND

(G#) GIRDER NUMBER

** SEE GEOMETRY PLAN FOR SPIRAL INFORMATION

### NOTES:

1. INTERMEDIATE CROSSFRAMES SHALL USE WT5X15 (CVN) TEES.
2. FOR CAMBER & DEFLECTION TABLE, SEE SHT. NO. 25/37 .
3. THE END CROSSFRAMES SHALL BE AS PER STANDARD DRAWING GSD-1-19 EXCEPT THE ANGLES AND GUSSET PLATES SHALL BE DESIGNATED (CVN).
4. GIRDERS SHALL BE DETAILED FOR NO-LOAD FIT (NLF) SUCH THAT THE CROSSFRAMES AND SPLICES ARE DETAILED TO FIT TO THE GIRDERS IN THEIR FABRICATED, PLUMB, FULLY-CAMBERED POSITION UNDER ZERO DEAD LOAD.

DESIGN AGENCY
GPD GROUP
520 South Main Street, Akron, OH 44311 330.572.2100
Copyright GBAI, PSA, Schimmelpfennig & Behlen, Inc. Schneider Smeltz Ranney & Bennett, Inc. 2020

| DESIGNED | DRAWN | REVIEWED | DATE |
|---|---|---|---|
| RHC/DGN | JJB | TJW | 1-18-21 |
| CHECKED | REVISED | STRUCTURE FILE NUMBER | |
| MOJ | | 7702648 | |

FRAMING PLAN
BRIDGE NO. SUM-77-0927R
RAMP C2 OVER I.R.77 NB

SUM-077/277/224-VAR
PID No. 106002

20/37

1244
1288

O:\2017\20172581\ProjectData\SUM\106002\Design\Structures\SUM077_0927R\Sheets\077_0927R_SS001.dgn Sheet 1/17/2021 7:21:00 PM rvitelli

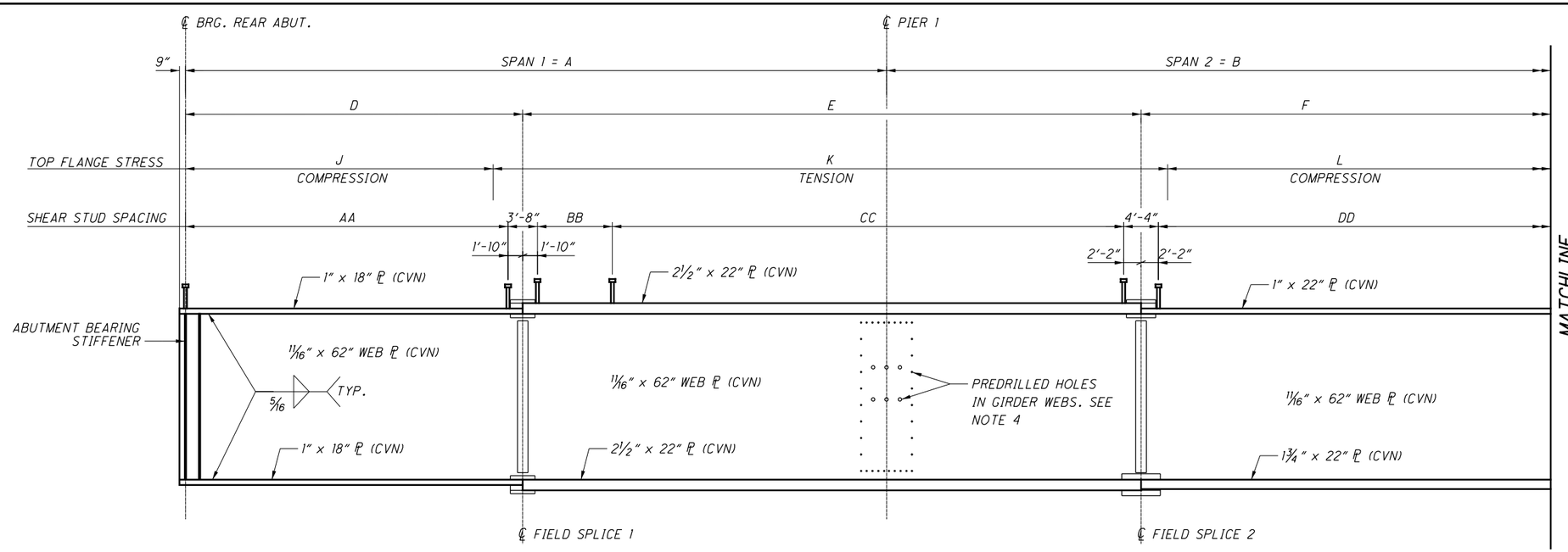


ELEVATION

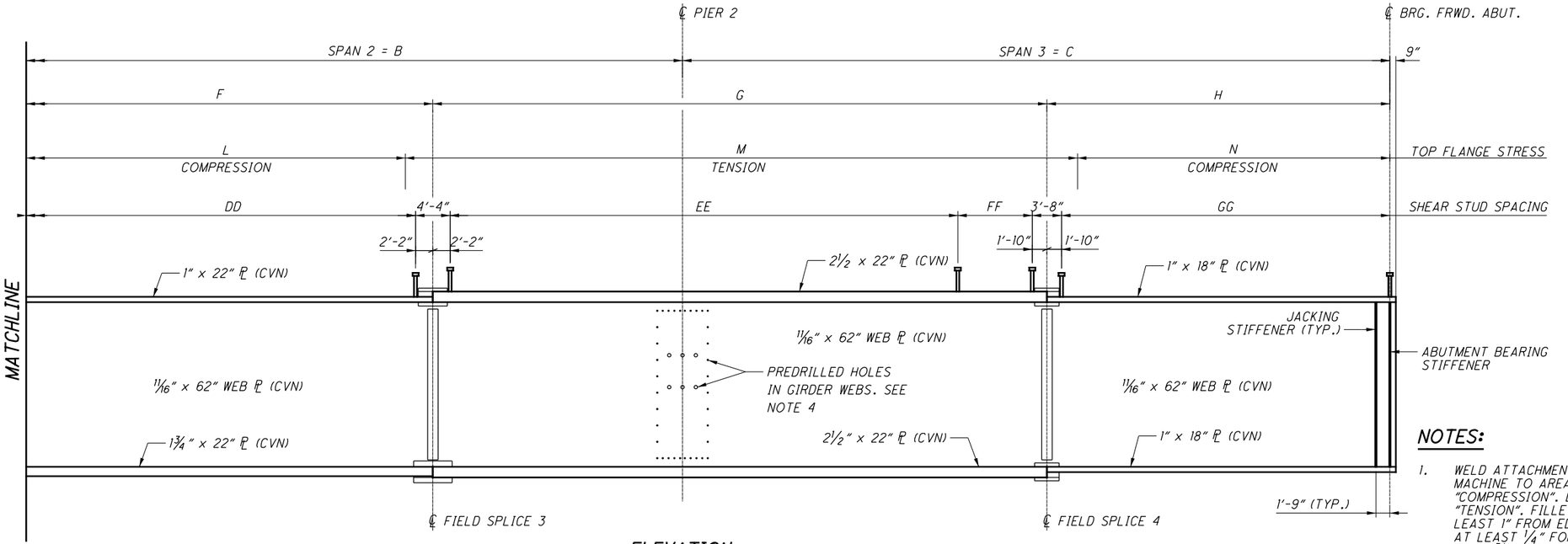


ELEVATION

## LEGEND

CP COMPLETE PENETRATION GROOVE WELD

CS FLANGE BUTT WELD SUBJECTED ONLY TO COMPRESSIVE STRESSES

## NOTES:

1. WELD ATTACHMENTS OF SUPPORTS FOR CONCRETE DECK FINISHING MACHINE TO AREAS OF THE FASCIA STRINGER FLANGES DESIGNATED "COMPRESSION". DO NOT WELD ATTACHMENTS TO AREAS DESIGNATED "TENSION". FILLET WELDS TO COMPRESSION FLANGES SHALL BE AT LEAST 1" FROM EDGE OF FLANGE, BE NO MORE THAN 2" LONG, AND BE AT LEAST ¼" FOR THICKNESS UP TO ¾" OR 5/16" FOR GREATER THAN ¾" THICK.
2. CVN: WHERE A SHAPE OR PLATE IS DESIGNATED (CVN), FURNISH MATERIAL THAT MEETS THE MINIMUM NOTCH TOUGHNESS REQUIREMENTS AS SPECIFIED IN CMS 711.01.
3. FOR GIRDER ELEVATION DIMENSION TABLES AND FIELD SPLICE DETAILS, SEE SHT. NO. 24/37 .
4. FOR PREDRILLED HOLES DETAILS, SEE SHT. NO. 23/37 .
5. FOR ADDITIONAL GIRDER DETAILS, SEE SHT. NO. 22/37 .

DESIGN AGENCY
GPD GROUP
Glaus, Pyle, Schomer, Burns & DeHaven, Inc.
520 South Main Street, Akron, OH 44311 330.572.2100
Copyright Glaus, Pyle, Schomer, Burns & DeHaven, Inc. 2020

| DESIGNED | DRAWN | REVIEWED | DATE |
|---|---|---|---|
| RHC/DGN | RHC | TJW | 1-18-21 |
| CHECKED | REVISED | STRUCTURE FILE NUMBER | |
| MOJ | | 7702648 | |

GIRDER ELEVATION
BRIDGE NO. SUM-77-0927R
RAMP C2 OVER I.R.77 NB

SUM-077/277/224-VAR
PID No. 106002

21 / 37

1245
1288

O:\2017\2017258\ProjectData\SUM\106002\Design\Structures\SUM077_0927R\Sheets\077_0927R_SS002.dgn Sheet 1/17/2021 7:21:05 PM rvitelli

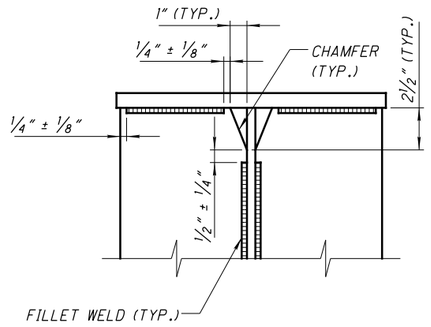


## STIFFENER WELD DETAIL

TYPICAL FOR BOTH BEARING STIFFENERS AND INTERMEDIATE CROSSFRAME CONNECTION PLATES

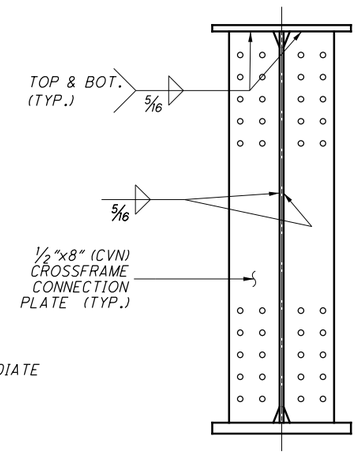


## CROSSFRAME CONNECTION PLATE DETAIL

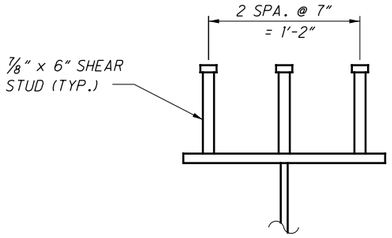


## SHEAR STUD CONNECTION LAYOUT

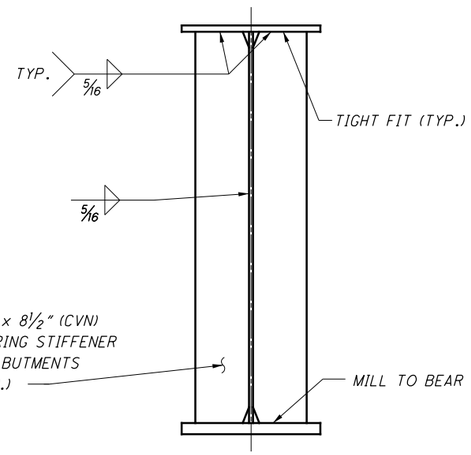


## BEARING & JACKING STIFFENER DETAIL

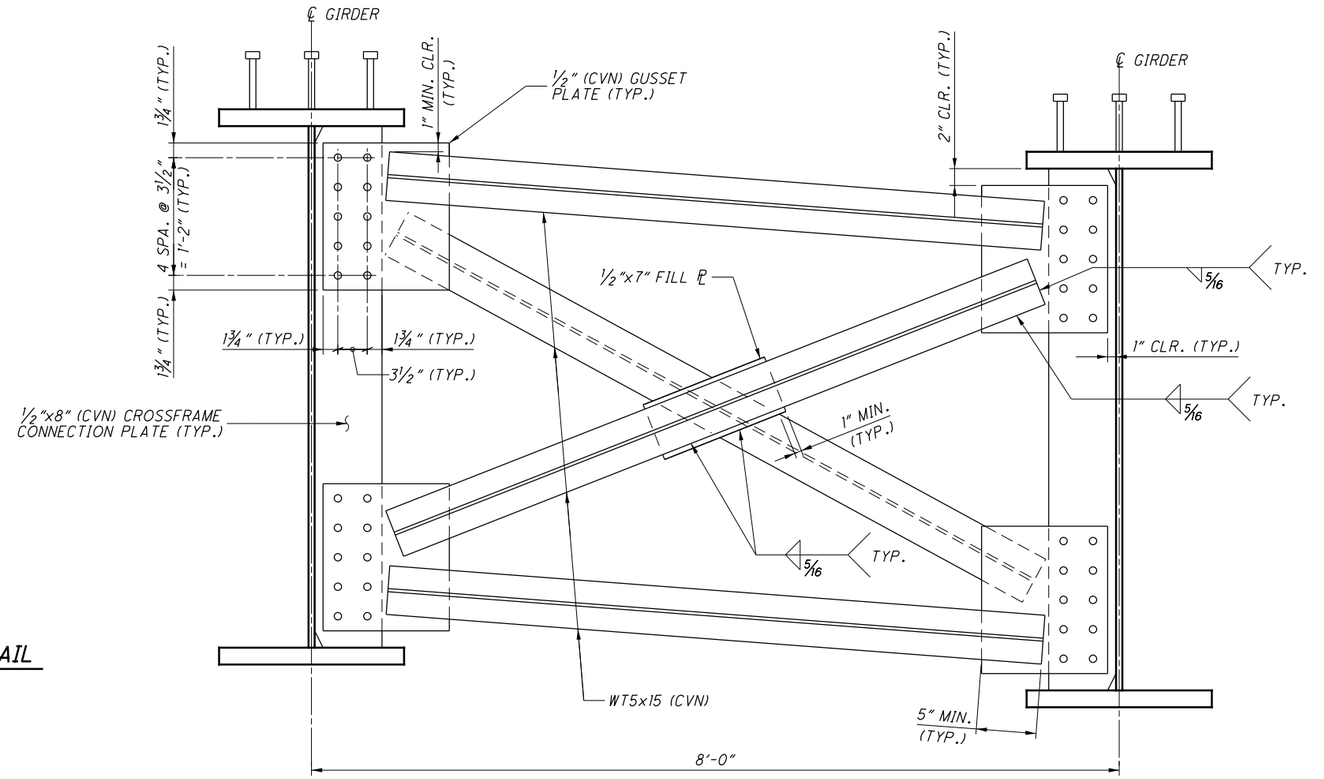


## INTERMEDIATE CROSSFRAME DETAIL

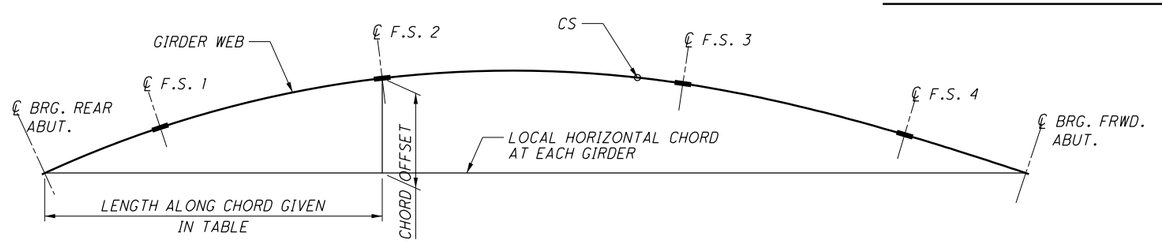


## SCHEMATIC HORIZONTAL OFFSET DIAGRAM

| LOCATION | FIELD SPLICE 1 (F.S. 1) | | FIELD SPLICE 2 (F.S. 2) | | CURVE TO SPIRAL (CS) | | FIELD SPLICE 3 (F.S. 3) | | FIELD SPLICE 4 (F.S. 4) | |
|---|---|---|---|---|---|---|---|---|---|---|
| | LENGTH ALONG CHORD | OFFSET TO CHORD | LENGTH ALONG CHORD | OFFSET TO CHORD | LENGTH ALONG CHORD | OFFSET TO CHORD | LENGTH ALONG CHORD | OFFSET TO CHORD | LENGTH ALONG CHORD | OFFSET TO CHORD |
| GIRDER 1 | 41'-6 7/8" | 16'-3 1/16" | 121'-4 15/16" | 33'-9 1/16" | 213'-2 15/16" | 33'-9" | 229'-5 3/4" | 31'-6 3/4" | 307'-7 3/16" | 13'-4 5/16" |
| GIRDER 2 | 40'-8 13/16" | 15'-11 5/8" | 118'-11 1/16" | 33'-2 1/4" | 208'-11 3/16" | 33'-3 3/16 | 224'-10 7/8" | 31'-1 5/8" | 301'-11 13/16" | 13'-2 7/8" |
| GIRDER 3 | 39'-10 11/16" | 15'-8 3/16" | 116'-6 3/8" | 32'-7 1/2" | 204'-8 3/4" | 32'-9 5/16" | 220'-3 5/8" | 30'-8 7/16" | 296'-4 3/8" | 13'-1 3/8" |
| GIRDER 4 | 39'-0 5/8" | 15'-4 3/4" | 114'-1 1/8" | 32'-0 1/16 | 200'-4 13/16" | 32'-3 3/16 | 215'-9 1/4" | 30'-3 1/4" | 209'-8 15/16" | 12'-11 7/8" |

## NOTES:

1. CVN: WHERE A SHAPE OR PLATE IS DESIGNATED (CVN), FURNISH MATERIAL AHAT MEETS THE MINIMUM NOTCH TOUGHNESS REQUIREMENTS AS SPECIFIED IN 711.01
2. HIGH STRENGTH BOLTS FOR CROSSFRAMES SHALL BE "1" DIA. ASTM F3125, GRADE A325, TYPE 1 WITH 1 1/4" DIA. HOLES. BOLT HOLES IN CROSSFRAME CONNECTION PLATES SHALL BE 1 1/8"

DESIGN AGENCY
GPD GROUP
320 South Main Street, Akron, OH 44311 330.572.2100

DESIGNED RHC/DGN | DRAWN RHC | REVIEWED TJW | DATE 1-18-21
CHECKED MOJ | REVISED | STRUCTURE FILE NUMBER 7702648

GIRDER DETAILS
BRIDGE NO. SUM-77-0927R
RAMP C2 OVER I.R.77 NB

SUM-077/277/224-VAR
PID No. 106002

22 / 37

1246 / 1288

O:\2017\20172581Project Data\SUM\106002\Design\Structures\SUM077_0927R\Sheets\077_0927R_SS004.dgn Sheet 1/17/2021 7:21:07 PM rvitelli

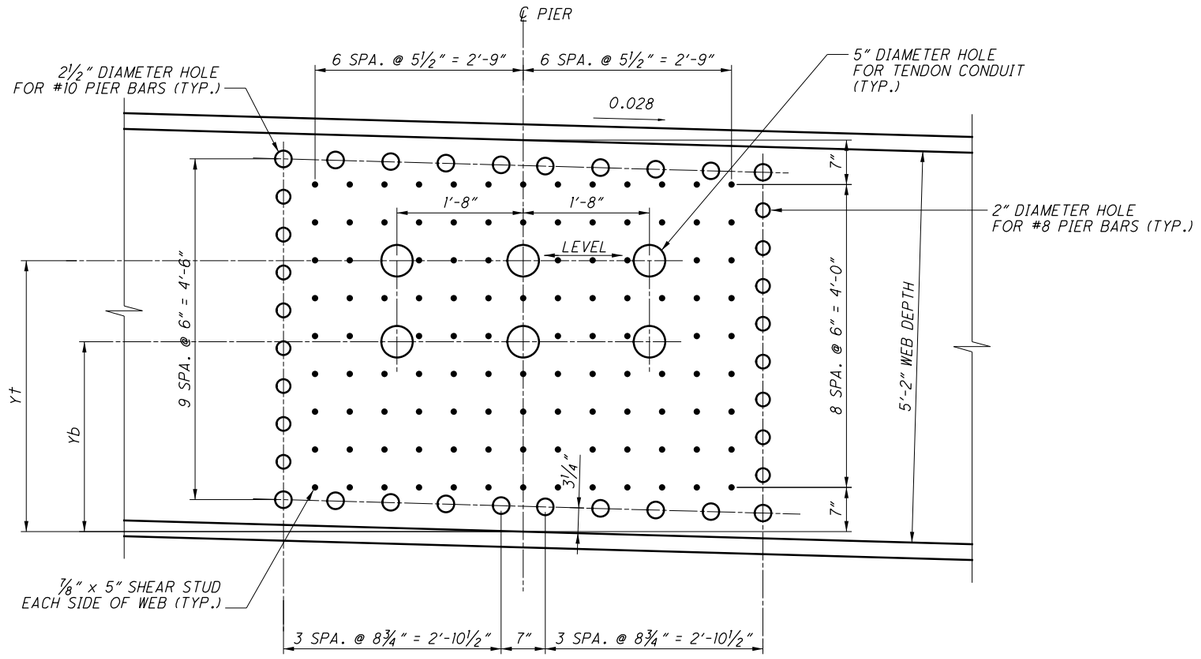


## GIRDER WEB PREDRILLED HOLE DETAIL

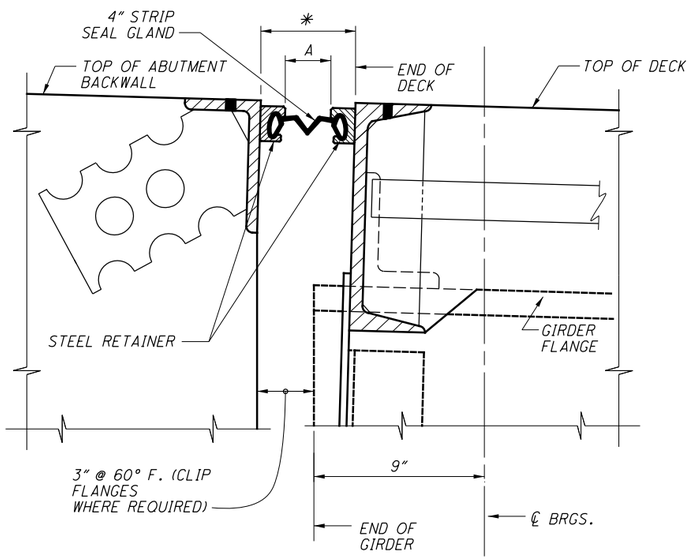


## EXPANSION JOINT DETAIL

REAR ABUTMENT SHOWN, FORWARD ABUTMENT SIMILAR.

| 4" STRIP SEAL JOINT WIDTH | |
|---|---|
| AMBIENT TEMPERATURE | DIMENSION "A" |
| 90° | 1⅝" |
| 80° | 1¾" |
| 70° | 1⅞" |
| 60° | 2" |
| 50° | 2⅛" |
| 40° | 2¼" |
| 30° | 2⅜" |

## LEGEND:

* REPRESENTS THE SUM OF 2 STEEL RETAINER WIDTHS + DIM. "A"

## NOTES:

1. FOR DIMENSIONS "Yb" AND "Yt" SEE SHT. NO. 18/37.
2. SLIGHTLY SHIFT SPACING OR OMIT SHEAR STUDS WHICH INTERFERE WITH HOLE LOCATIONS. MINIMUM REQUIRED CLEARANCE FROM EDGE OF STUD TO HOLE IS 1 INCH.

DESIGN AGENCY
GPD GROUP
Glaus, Pyle, Schomer, Burns & DeHaven, Inc.
520 South Main Street, Akron, OH 44311 330.572.2100

| DESIGNED | DRAWN | REVIEWED | DATE |
|---|---|---|---|
| RHC/DGN | RHC | TJW | 1-18-21 |
| CHECKED | REVISED | STRUCTURE FILE NUMBER | |
| MOJ | | 7702648 | |

MISC. GIRDER DETAILS
BRIDGE NO. SUM-77-0927R
RAMP C2 OVER I.R.77 NB

SUM-077/277/224-VAR
PID No. 106002



D:\2017\20172581\ProjectData\SUM\06002\Design\Structures\SUM077_0927R\Sheets\077_0927R_SS007.dgn 1/17/2021 7:21:09 PM rvitelli

## GIRDER DIMENSION TABLE

| LOCATION | A | B | C | D | E | F | G | H |
|---|---|---|---|---|---|---|---|---|
| GIRDER 1 | 92'-10 1/16" | 175'-0 1/4" | 91'-2 3/8" | 44'-7 15/16" | 81'-10 9/16" | 108'-4 15/16" | 80'-3 3/8" | 43'-10 1/16" |
| GIRDER 2 | 91'-0" | 171'-8 3/16" | 90'-4 5/16" | 43'-9 1/4" | 80'-3" | 106'-3 3/8" | 79'-2 1/4" | 43'-6 3/4" |
| GIRDER 3 | 89'-1 13/16" | 168'-4 1/16" | 89'-6 3/8" | 42'-10 11/16" | 78'-7 9/16" | 104'-1 11/16" | 78'-1 1/16" | 43'-3 1/4" |
| GIRDER 4 | 87'-3 3/4" | 165'-0" | 88'-8 1/4" | 42'-0" | 77'-0" | 102'-0" | 77'-0" | 42'-11 7/8" |

## TOP FLANGE STRESS TABLE

| LOCATION | J | K | L | M | N |
|---|---|---|---|---|---|
| GIRDER 1 | 47'-5 7/8" | 84'-3 3/4" | 95'-7 11/16" | 82'-2 3/8" | 49'-5 1/16" |
| GIRDER 2 | 46'-6 3/8" | 82'-8 1/4" | 93'-10 3/16" | 81'-0 3/4" | 48'-10 15/16" |
| GIRDER 3 | 45'-7 1/16" | 81'-0 1/2" | 91'-11 5/8" | 79'-1 11/16" | 49'-3 1/2" |
| GIRDER 4 | 44'-7 11/16" | 75'-8 1/16" | 93'-6" | 78'-4 7/16" | 48'-9 13/16" |

## SHEAR STUD DIMENSION TABLE

| LOCATION | GIRDER 1 | GIRDER 2 | GIRDER 3 | GIRDER 4 |
|---|---|---|---|---|
| AA | 64 SPA. @ 8"(+) = 42'-9 15/16" | 71 SPA. @ 7"(+) = 41'-11 1/4" | 70 SPA. 7"(+) = 41'-0 5/8" | 60 SPA. @ 8"(+) = 40'-2" |
| BB | 14 SPA. @ 8" = 9'-4" | 16 SPA. @ 7" = 9'-4" | 16 SPA. @ 7" = 9'-4" | 14 SPA. @ 8" = 9'-4" |
| CC | 75 SPA. @ 11"(-) = 68'-6 1/2" | 89 SPA. @ 9"(+) = 66'-11" | 87 SPA. @ 9"(+) = 65'-3 1/2" | 76 SPA. @ 10"(+) = 63'-8" |
| DD | 83 SPA. @ 15"(+) = 104'-0 15/16" | 94 SPA. @ 13"(+) = 101'-11 5/16" | 92 SPA. @ 13"(+) = 99'-9 5/8" | 78 SPA. @ 15"(+) = 97'-8" |
| EE | 73 SPA. @ 11"(+) = 66'-11 5/16" | 87 SPA. @ 9"(+) = 65'-10 1/4" | 86 SPA. @ 9"(+) = 64'-9 1/8" | 76 SPA. @ 10"(+) = 63'-8" |
| FF | 14 SPA. @ 8" = 9'-4" | 16 SPA. @ 7" = 9'-4" | 16 SPA. @ 7" = 9'-4" | 14 SPA. @ 8" = 9'-4" |
| GG | 63 SPA. @ 8"(+) = 42'-0 1/16" | 71 SPA. @ 7"(+) = 41'-8 11/16" | 71 SPA. @ 7"(+) = 41'-5 5/16" | 61 SPA. @ 8"(+) = 41'-1 7/8" |

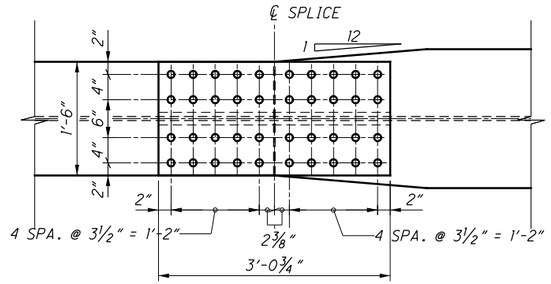


### TOP & BOT. FLANGE SPLICE PLAN
FIELD SPLICES 1 AND 4

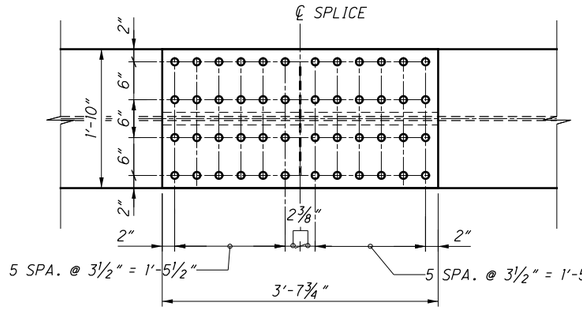


### TOP FLANGE SPLICE PLAN
FIELD SPLICES 2 AND 3

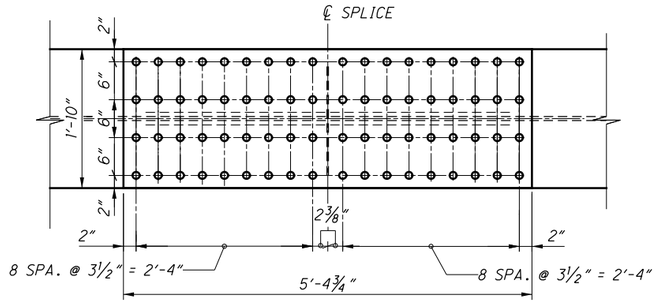


### BOT. FLANGE SPLICE PLAN
FIELD SPLICES 2 AND 3

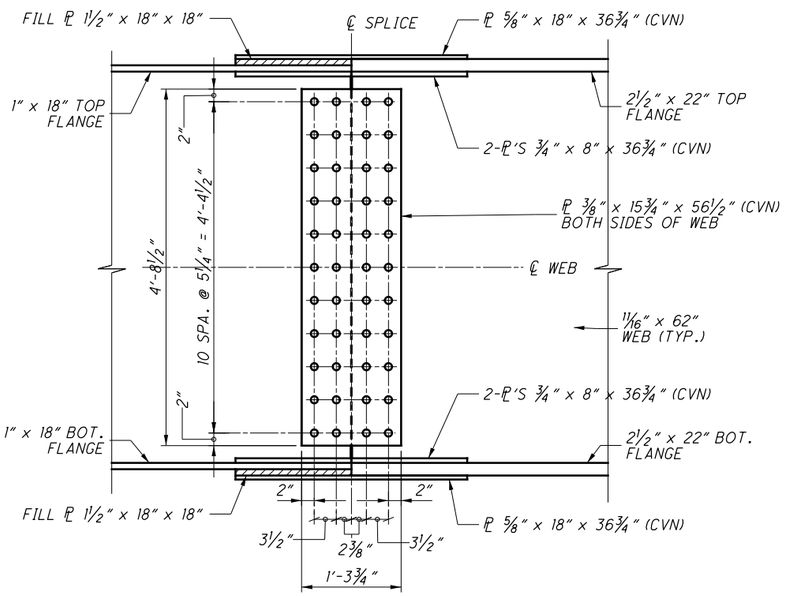


### SPLICE ELEVATION
FIELD SPLICES 1 AND 4

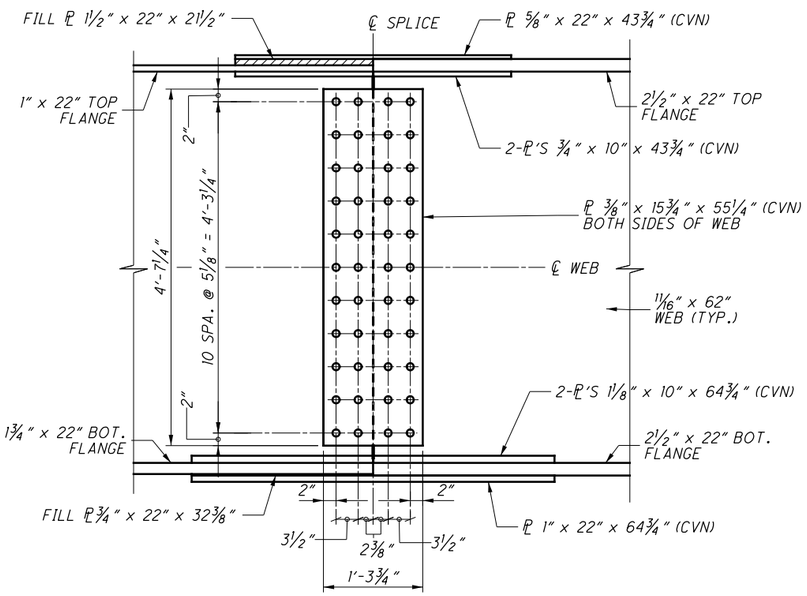


### SPLICE ELEVATION
FIELD SPLICES 2 AND 3

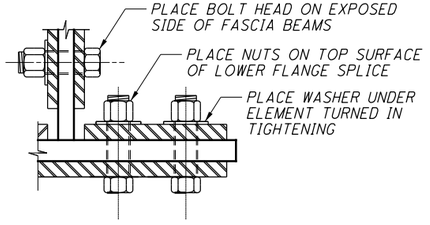


### PARTIAL SECTION
AT ℄ OF BEAM SPLICE

**NOTES:**

1. HIGH STRENGTH BOLTS FOR SPLICES SHALL BE "1" DIA. ASTM F3125, GRADE A325, TYPE 1 WITH 1 1/16" DIA. HOLES

DESIGN AGENCY
GPD GROUP
Glaus, Pyle, Schomer, Burns & DeHaven, Inc.
520 South Main Street, Akron, OH 44311 330.572.2100
Copyright Glaus, Pyle, Schomer, Burns & DeHaven, Inc. 2020

DESIGNED RHC/DGN | DRAWN RHC | REVIEWED TJW | DATE 1-18-21
CHECKED MOJ | REVISED | STRUCTURE FILE NUMBER 7702648

GIRDER DIMENSION TABLES & SPLICE DETAILS
BRIDGE NO. SUM-77-0927R
RAMP C2 OVER I.R.77 NB

SUM-077/277/224-VAR
PID No. 106002



1248
1288

O:\2017\2017258\ProjectData\SUM\106002\Design\Structures\SUM077_0927R_SS003.dgn Sheet 1/17/2021 7:21:10 PM rvitelli

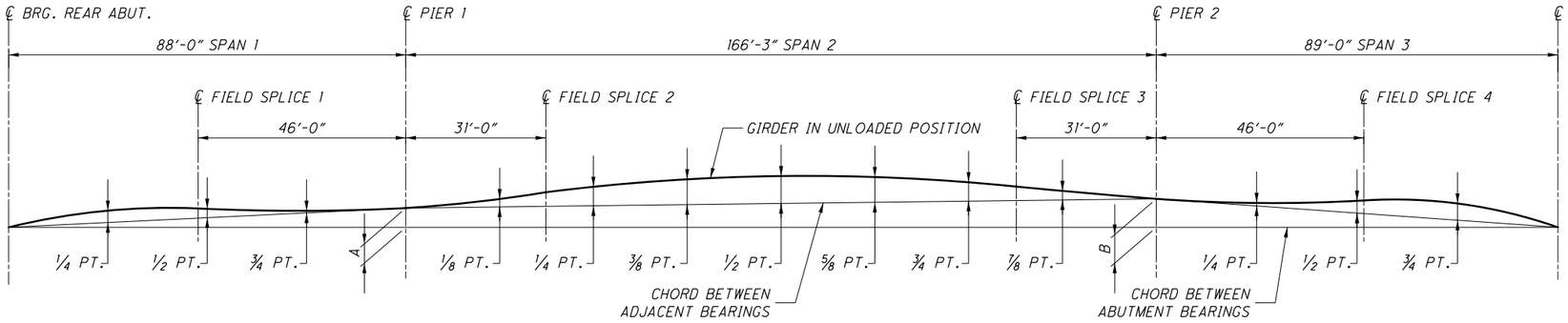


## CAMBER DIAGRAM

### BLOCKING (DIM. "A")

| LOCATION | PIER 1 | PIER 2 |
|---|---|---|
| GIRDER 1 | 0'-1 1/8" | 0'-1 3/4" |
| GIRDER 2 | 0'-0 13/16" | 0'-1 5/16" |
| GIRDER 3 | 0'-0 5/16" | 0'-0 1/2" |
| GIRDER 4 | -0'-0 3/16" | -0'-0 5/16" |

| GIRDER NO. | CAMBER DESCRIPTION | REAR ABUT. | SPAN NO. 1 | | | | PIER 1 | SPAN NO. 2 | | | | | | | | | PIER 2 | SPAN NO. 3 | | | | FRWD. ABUT. |
|---|---|---|---|---|---|---|---|---|---|---|---|---|---|---|---|---|---|---|---|---|---|---|
| | | | 1/4 | 1/2 | FS 1 | 3/4 | | 1/8 | FS 2 | 1/4 | 3/8 | 1/2 | 5/8 | 3/4 | FS 3 | 7/8 | | 1/4 | 1/2 | FS 1 | 3/4 | |
| 1 | DEFLECTION DUE TO WEIGHT OF STEEL | 0 | -1/8" | -1/4" | -1/4" | -3/16" | 0" | 7/16" | 13/16" | 15/16" | 1 3/8" | 1 9/16" | 1 3/8" | 15/16" | 11/16" | 7/16" | 0" | -1/8" | -3/16" | -3/16" | -1/16" | 0" |
| | DEFLECTION DUE TO REMAINING DEAD LOAD | 0 | 1/8" | 1/16" | 0" | -1/16" | 0" | 1/16" | 1 5/16" | 1 13/16" | 2 11/16" | 3 1/16" | 2 11/16" | 1 13/16" | 1 5/16" | 13/16" | 0" | -1/16" | 0" | 0" | 1/16" | 0" |
| | ADJUSTMENT DUE TO VERTICAL GEOMETRY | 0 | 0" | 0" | 0" | 0" | 0" | 3/16" | 5/16" | 3/8" | 9/16" | 3/4" | 1" | 1" | 3/4" | 1/2" | 0" | 0" | 0" | 0" | 0" | 0" |
| | REQUIRED SHOP CAMBER | 0 | 0" | -3/16" | -1/4" | -1/4" | 0" | 11/16" | 2 7/16" | 3 1/8" | 4 5/8" | 5 3/8" | 5 1/16" | 3 3/4" | 2 3/4" | 1 3/4" | 0" | -3/16" | -3/16" | -3/16" | 0" | 0" |
| 2 | DEFLECTION DUE TO WEIGHT OF STEEL | 0 | -1/16" | -1/8" | -1/8" | -1/8" | 0" | 3/8" | 11/16" | 3/4" | 1 1/8" | 1 1/4" | 1 1/8" | 3/4" | 9/16" | 3/8" | 0" | -1/8" | -1/8" | -1/8" | -1/16" | 0" |
| | DEFLECTION DUE TO REMAINING DEAD LOAD | 0 | 1/16" | 0" | 0" | -1/16" | 0" | 1/16" | 1 1/8" | 1 9/16" | 2 1/4" | 2 9/16" | 2 1/4" | 1 9/16" | 1 1/8" | 11/16" | 0" | -1/8" | 0" | 0" | 1/16" | 0" |
| | ADJUSTMENT DUE TO VERTICAL GEOMETRY | 0 | 0" | 0" | 0" | 0" | 0" | 1/8" | 3/16" | 5/16" | 7/16" | 9/16" | 11/16" | 11/16" | 9/16" | 3/8" | 0" | 0" | 0" | 0" | 0" | 0" |
| | REQUIRED SHOP CAMBER | 0 | 0" | -1/8" | -1/8" | -3/16" | 0" | 9/16" | 2" | 2 5/8" | 3 13/16" | 4 3/8" | 4 1/16" | 3" | 2 1/4" | 1 7/16" | 0" | -1/4" | -1/8" | -1/8" | 0" | 0" |
| 3 | DEFLECTION DUE TO WEIGHT OF STEEL | 0 | 0" | -1/16" | -1/16" | -1/16" | 0" | 5/16" | 9/16" | 5/8" | 7/8" | 15/16" | 7/8" | 5/8" | 7/16" | 5/16" | 0" | -1/16" | -1/16" | -1/16" | 0" | 0" |
| | DEFLECTION DUE TO REMAINING DEAD LOAD | 0 | 1/16" | 0" | 0" | -1/16" | 0" | 1/16" | 1" | 1 5/16" | 1 7/8" | 2 3/16" | 1 15/16" | 1 5/16" | 15/16" | 9/16" | 0" | -1/8" | 0" | 0" | 1/16" | 0" |
| | ADJUSTMENT DUE TO VERTICAL GEOMETRY | 0 | 0" | 0" | 0" | 0" | 0" | 1/16" | 1/16" | 1/8" | 3/16" | 3/16" | 1/4" | 1/4" | 3/16" | 1/8" | 0" | 0" | 0" | 0" | 0" | 0" |
| | REQUIRED SHOP CAMBER | 0 | 1/16" | -1/16" | -1/16" | -1/8" | 0" | 7/16" | 1 5/8" | 2 1/16" | 2 15/16" | 3 5/16" | 3 1/16" | 2 3/16" | 1 9/16" | 1" | 0" | -3/16" | -1/16" | -1/16" | 1/16" | 0" |
| 4 | DEFLECTION DUE TO WEIGHT OF STEEL | 0 | 0" | 0" | 0" | 0" | 0" | 1/4" | 7/16" | 7/16" | 5/8" | 11/16" | 5/8" | 7/16" | 5/16" | 3/16" | 0" | 0" | 0" | 0" | 0" | 0" |
| | DEFLECTION DUE TO REMAINING DEAD LOAD | 0 | 1/16" | 0" | 0" | -1/16" | 0" | 1/16" | 13/16" | 1 1/8" | 1 9/16" | 1 3/4" | 1 9/16" | 1 1/16" | 13/16" | 1/2" | 0" | -1/16" | 0" | 0" | 1/16" | 0" |
| | ADJUSTMENT DUE TO VERTICAL GEOMETRY | 0 | 0" | 0" | 0" | 0" | 0" | -1/16" | -1/16" | -1/16" | -1/8" | -1/8" | -3/16" | -3/16" | -1/8" | -1/16" | 0" | 0" | 0" | 0" | 0" | 0" |
| | REQUIRED SHOP CAMBER | 0 | 1/16" | 0" | 0" | -1/16" | 0" | 1/4" | 1 3/16" | 1 1/2" | 2 1/16" | 2 5/16" | 2" | 1 5/16" | 1" | 5/8" | 0" | -1/16" | 0" | 0" | 1/16" | 0" |

### NOTES:

1. DIMENSIONS SHOWN IN CAMBER DIAGRAM ARE TAKEN ALONG THE ℄ CONST. FOR INDIVIDUAL GIRDER SPAN LENGTHS AND DIMENSIONS, SEE SHT. NO. 24/37.
2. GIRDERS MAY BE HEAT CURVED PER CMS 513.15. IF HEAT CURVING IS USED, THE FABRICATOR SHALL ACCOUNT FOR EXPECTED LOSS OF CAMBER PER THE "AASHTO LRFD BRIDGE CONSTRUCTION SPECIFICATIONS", CURRENT EDITION. CAMBER ADDED TO ACCOUNT FOR EXPECTED LOSS OF CAMBER DUE TO HEAT CURVING SHALL BE ADDED TO THE SCREED AND TOP OF HAUNCH TABLES.
3. BLOCKING DIMENSIONS ARE FROM THE LEVEL BASELINE TO THE BOTTOM OF BOTTOM FLANGE STEEL.

DESIGN AGENCY
GPD GROUP
Glaus, Pyle, Schomer, Burns & DeHaven, Inc.
520 South Main Street, Akron, OH 44311 330.572.2100
Copyright Glaus, Pyle, Schomer, Burns & DeHaven, Inc. 2020

DATE 1-18-21
REVIEWED TJW
STRUCTURE FILE NUMBER 7702648
DRAWN RHC
REVISED
DESIGNED RHC/DGN
CHECKED MOJ

CAMBER DIAGRAM AND TABLES
BRIDGE NO. SUM-77-0927R
RAMP C2 OVER I.R.77 NB

SUM-077/277/224-VAR
PID No. 106002

25/37

1249
1288

O:\2017\2017258\ProjectData\SUM\06002\Design\Structures\SUM077_0927R\Sheets\077_0927R_SS005.dgn 1/17/2021 7:21:11 PM rvitelli

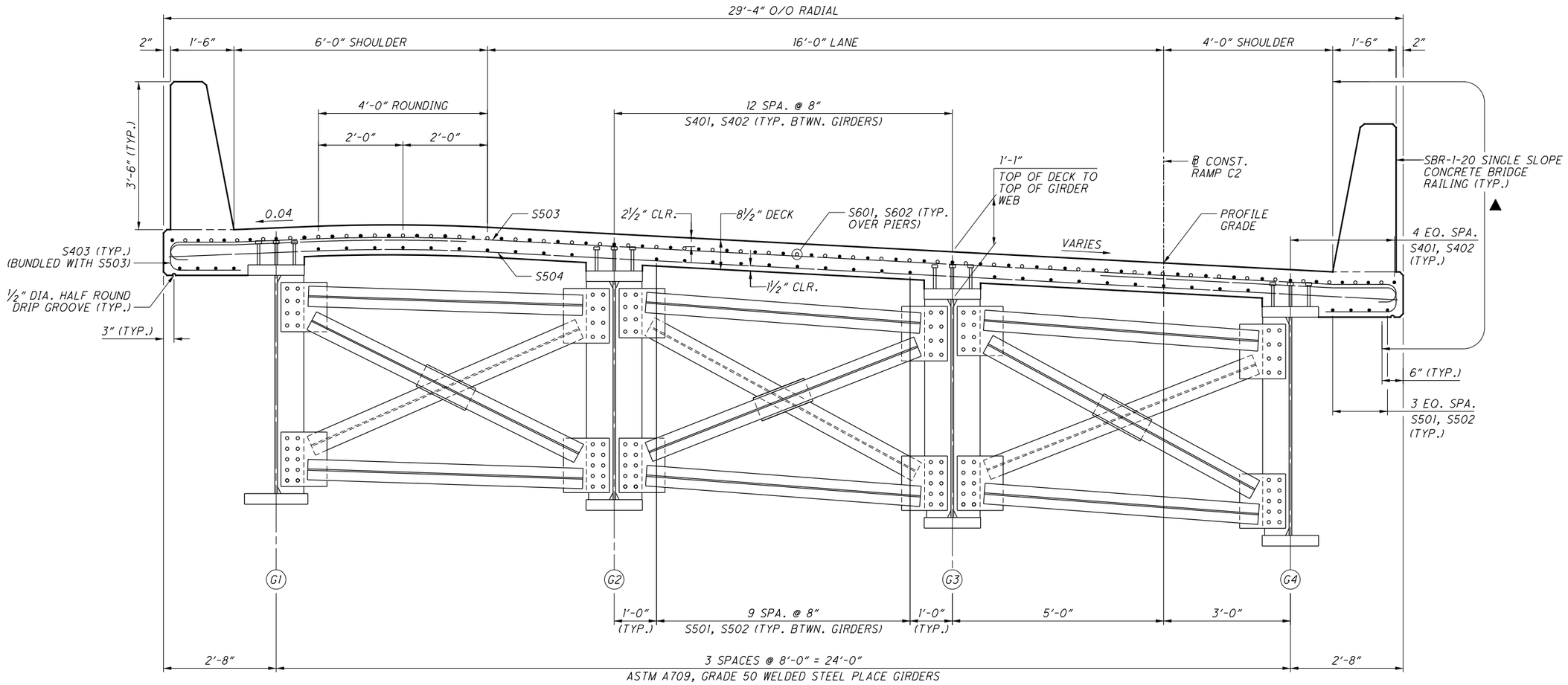


## TRANSVERSE SECTION

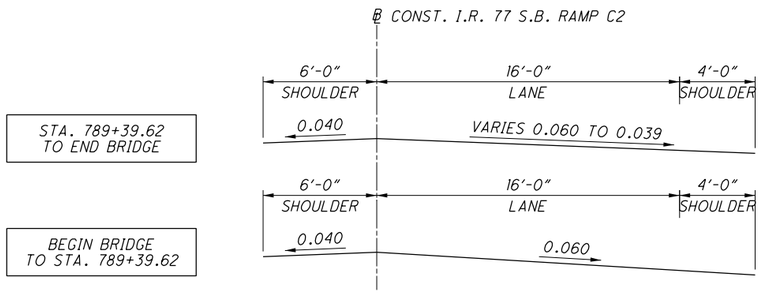


## SUPERELEVATION TRANSITION DIAGRAM

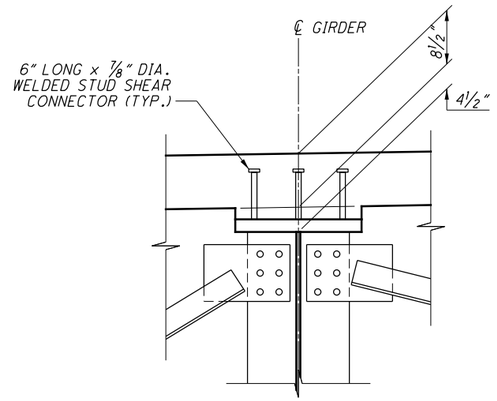


## DETAIL 1

DECK SLAB REINFORCING NOT SHOWN

**LEGEND:**

▲ INDICATES LIMITS OF "ITEM 512 - SEALING OF CONCRETE SURFACES (EPOXY-URETHANE)"

**NOTES:**

1. DECK SLAB CONCRETE QUANTITY: THE ESTIMATED QUANTITY OF DECK SLAB CONCRETE IS BASED ON THE CONSTANT DECK SLAB THICKNESS, AS SHOWN, PLUS THE QUANTITY OF CONCRETE THAT FORMS EACH GIRDER HAUNCH. THE ESTIMATE ASSUMES A CONSTANT HAUNCH THICKNESS OF 2" AND A HAUNCH WIDTH EQUAL TO THE TOP FLANGE WIDTH. DEVIATE FROM THIS HAUNCH THICKNESS AS NECESSARY TO PLACE THE DECK SURFACE AT THE FINISHED GRADE.

   THE HAUNCH THICKNESS WAS MEASURED AT THE CENTERLINE OF THE GIRDER, FROM THE SURFACE OF THE DECK TO THE BOTTOM OF THE TOP FLANGE MINUS THE DECK SLAB THICKNESS. THE AREA OF ALL EMBEDDED STEEL PLATES HAS BEEN DEDUCTED FROM THE HAUNCH QUANTITY IN ACCORDANCE WITH CMS 511.23.

2. FOR DECK SLAB PLAN, SEE SHT. NO. 27/37 .
3. FOR PARAPET REINFORCING, SEE SHT. NO. 31/37 THRU 33/37 .
4. FOR SCREED, TOP OF HAUNCH, AND FINISHED ELEVATIONS, SEE SHT. NO. 28/37 THRU 30/37 .

DESIGN AGENCY
GPD GROUP
Gray, Pape & Dohnavin, Inc.
520 South Main Street, Akron, OH 44311 330.572.2100
Copyright Gray, Pape & Dohnavin, Inc. 2020

| DESIGNED | DRAWN | REVIEWED | DATE |
|---|---|---|---|
| RHC | RFV | TJW | 1-18-21 |
| CHECKED | REVISED | STRUCTURE FILE NUMBER | |
| DGN | | 7702648 | |

TRANSVERSE SECTION
BRIDGE NO. SUM-77-0927R
RAMP C2 OVER I.R.77 NB

SUM-077/277/224-VAR
PID No. 106002

26/37

1250
1288

0:\2017\2017258\ProjectData\SUM\06002\Design\Structures\SUM077_0927R\Sheets\077_0927R_TS001.dgn Sheet 1/17/2021 7:2:14 PM rvitelli

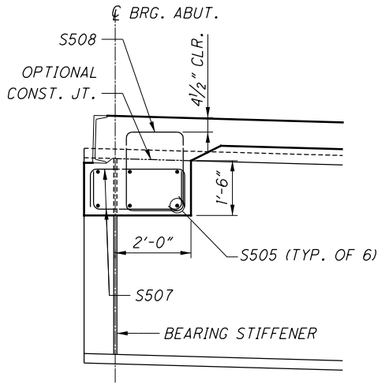


## SECTION A
COUNTER WEIGHT DETAIL

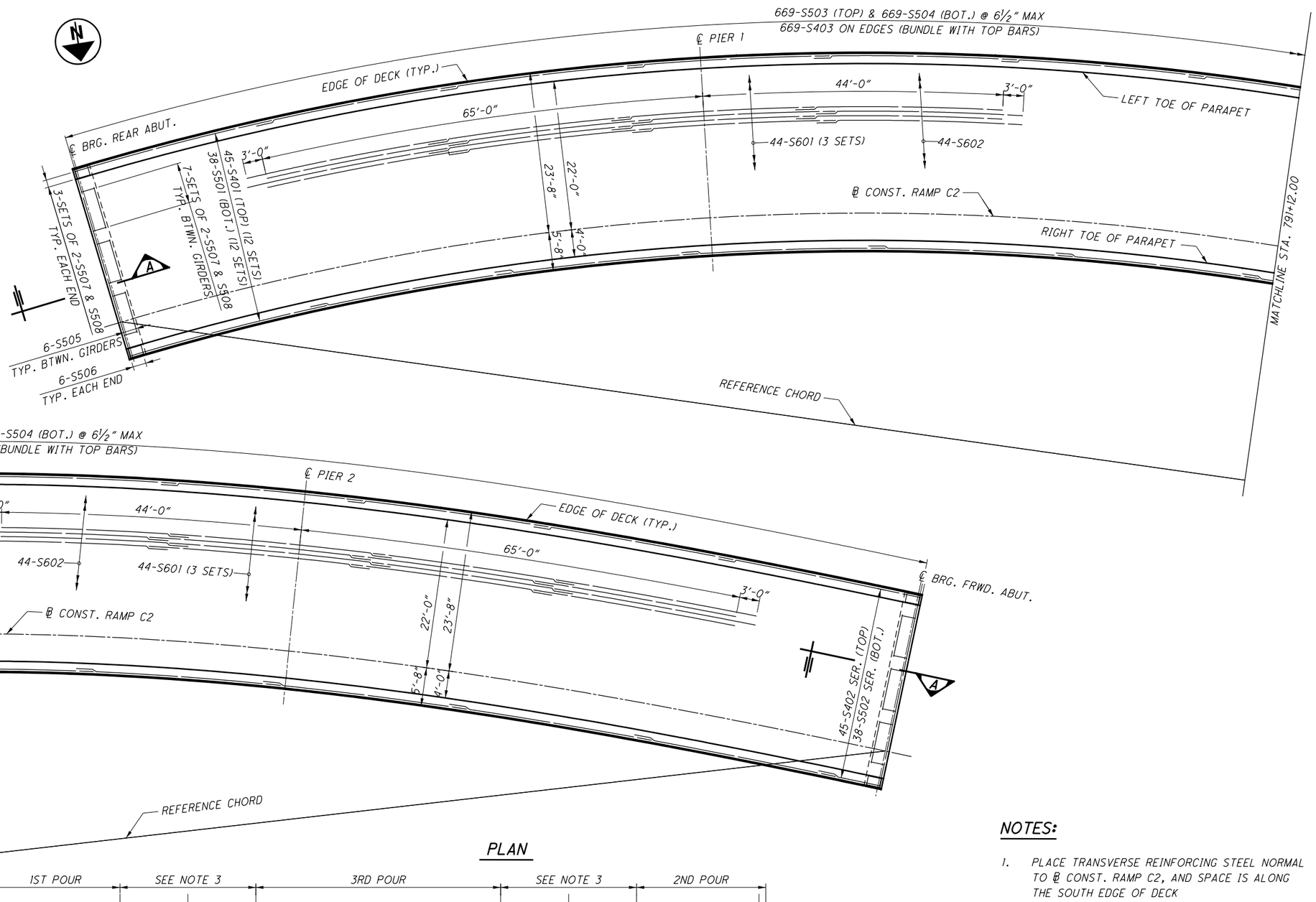


## PLAN

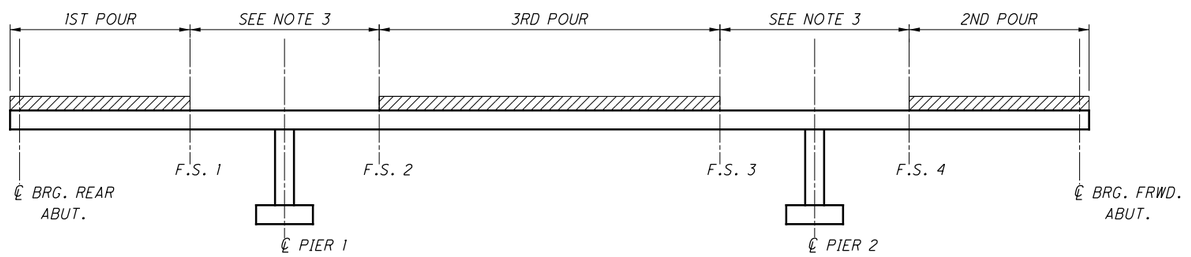


## DECK POUR SEQUENCE

## NOTES:

1. PLACE TRANSVERSE REINFORCING STEEL NORMAL TO ℄ CONST. RAMP C2, AND SPACE IS ALONG THE SOUTH EDGE OF DECK
2. PLACE LONGITUDINAL REINFORCING STEEL PARALLEL TO ℄ CONST. RAMP C2.
3. AFTER A MINIMUM 48 HOUR CURE TIME, POUR THE REMAINING PORTION OF THE DECK SLAB OVER THE PIERS
4. MINIMUM LAPS LENGTHS ARE AS FOLLOWS:
   - # 4 BAR LONGITUDINAL: 1'-11"
   - # 5 BAR LONGITUDINAL: 2'-5"
   - # 6 BAR LONGITUDINAL: 2'-10"

DESIGN AGENCY
GPD GROUP
Glaus, Pyle, Schomer, Burns & DeHaven, Inc.
320 South Main Street, Akron, OH 44311 330.572.2100
Copyright Glaus, Pyle, Schomer, Burns & DeHaven, Inc., 2020

| DESIGNED | DRAWN | REVIEWED | DATE |
|---|---|---|---|
| RHC | RFV | TJW | 1-18-21 |
| CHECKED | REVISED | STRUCTURE FILE NUMBER | |
| DGN | | 7702648 | |

**DECK PLAN**
BRIDGE NO. SUM-77-0927R
RAMP C2 OVER I.R.77 NB

**SUM-077/277/224-VAR**
**PID No. 106002**

27 / 37

1251
1288

O:\2017\2017258\ProjectData\SUM\106002\Design\Structures\SUM077_0927R\Sheets\077_0927R_DP001.dgn Sheet1 1/17/2021 7:2:16 PM rvitelli

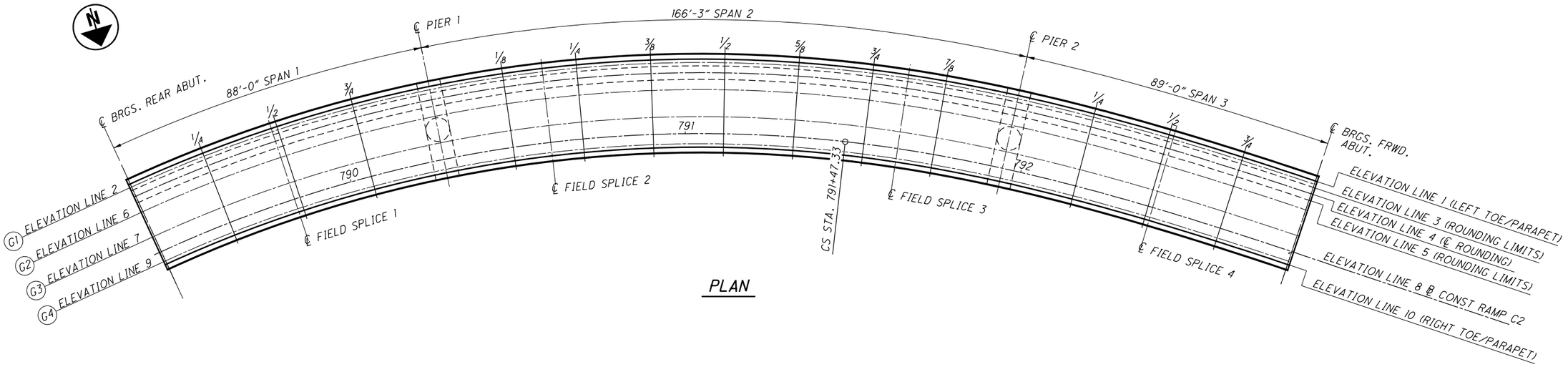


PLAN

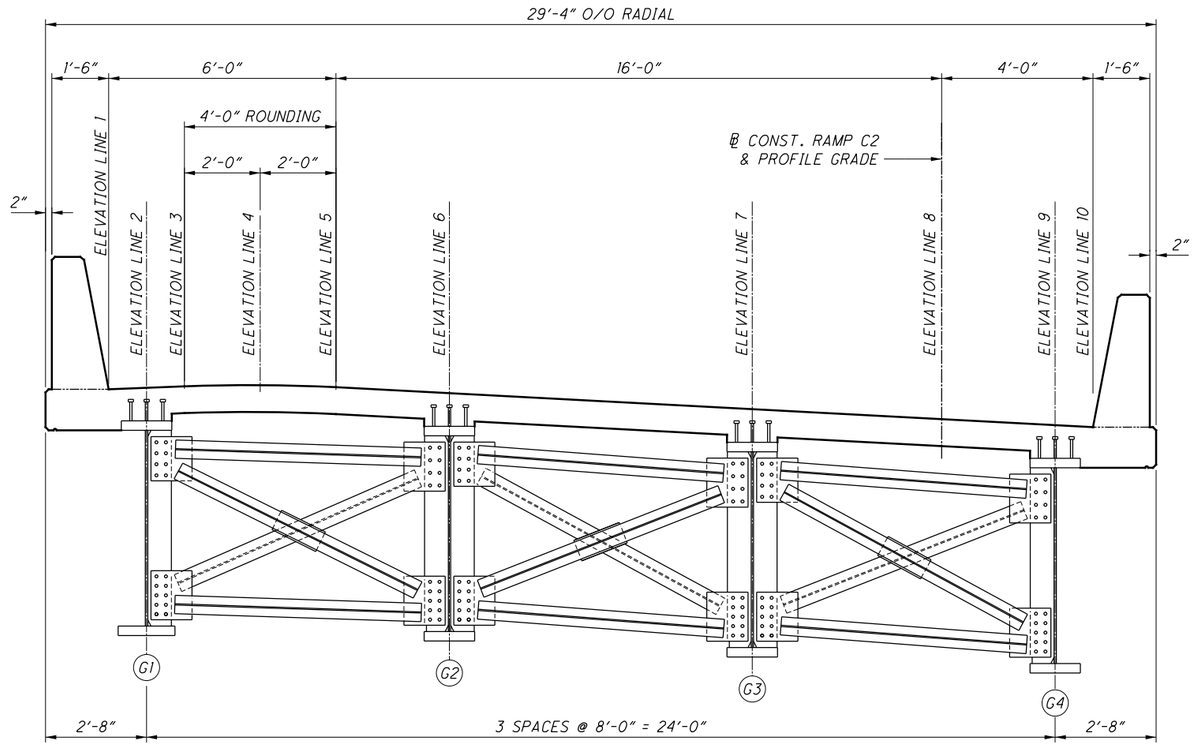


TRANSVERSE SECTION

**NOTES:**

1. FOR SCREED AND TOP OF HAUNCH ELEVATIONS, SEE SHT. NO. 29/37 .
2. FOR FINISHED ELEVATIONS, SEE SHT. NO. 30/37 .

DESIGN AGENCY
GPD GROUP
Glaus, Pyle, Schomer, Burns & DeHaven, Inc.
520 South Main Street, Akron, OH 44311 330.572.2100
(Copyright Glaus, Pyle, Schomer, Burns & DeHaven, Inc. 2020

| DESIGNED | DRAWN | REVIEWED | DATE |
|---|---|---|---|
| RHC | RHC | DGN | 1-18-21 |
| CHECKED | REVISED | STRUCTURE FILE NUMBER | |
| MOJ | | 7702648 | |

ELEVATION LINE PLAN AND LOCATION
BRIDGE NO. SUM-77-0927R
RAMP C2 OVER I.R.77 NB

SUM-077/277/224-VAR
PID No. 106002

28 / 37

1252
1288

O:\2017\2017258\ProjectData\SUM\106002\Design\Structures\SUM077_0927R\Sheets\077_0927R_SS006.dgn Sheet 11/17/2021 7:21:17 PM rvitelli

## SCREED ELEVATIONS

| LOCATION | ELEVATION LINE 1 | | ELEVATION LINE 3 | | ELEVATION LINE 4 | | ELEVATION LINE 5 | | ELEVATION LINE 8 | | ELEVATION LINE 10 | |
|---|---|---|---|---|---|---|---|---|---|---|---|---|
| | STATION | FINISHED ELEVATIONS | STATION | FINISHED ELEVATIONS | STATION | FINISHED ELEVATIONS | STATION | FINISHED ELEVATIONS | STATION | FINISHED ELEVATIONS | STATION | FINISHED ELEVATIONS |
| CL BRG. REAR ABUT. | 789+40.20 | 1061.41 | 789+40.20 | 1061.49 | 789+40.20 | 1061.52 | 789+40.20 | 1061.49 | 789+40.20 | 1060.49 | 789+40.20 | 1060.25 |
| 1/4 SPAN 1 | 789+62.20 | 1060.81 | 789+62.20 | 1060.89 | 789+62.20 | 1060.92 | 789+62.20 | 1060.89 | 789+62.20 | 1059.89 | 789+62.20 | 1059.65 |
| F.S. 1 | 789+82.53 | 1060.23 | 789+82.53 | 1060.31 | 789+82.53 | 1060.34 | 789+82.53 | 1060.31 | 789+82.53 | 1059.31 | 789+82.53 | 1059.07 |
| 1/2 SPAN 1 | 789+84.20 | 1060.19 | 789+84.20 | 1060.27 | 789+84.20 | 1060.30 | 789+84.20 | 1060.27 | 789+84.20 | 1059.26 | 789+84.20 | 1059.03 |
| 3/4 SPAN 1 | 790+06.20 | 1059.56 | 790+06.20 | 1059.64 | 790+06.20 | 1059.67 | 790+06.20 | 1059.64 | 790+06.20 | 1058.64 | 790+06.20 | 1058.40 |
| CL PIER 1 | 790+28.20 | 1058.95 | 790+28.20 | 1059.03 | 790+28.20 | 1059.06 | 790+28.20 | 1059.03 | 790+28.20 | 1058.03 | 790+28.20 | 1057.79 |
| 1/8 SPAN 2 | 790+48.98 | 1058.38 | 790+48.98 | 1058.46 | 790+48.98 | 1058.49 | 790+48.98 | 1058.46 | 790+48.98 | 1057.45 | 790+48.98 | 1057.21 |
| F.S. 2 | 790+60.14 | 1058.17 | 790+60.14 | 1058.25 | 790+60.14 | 1058.27 | 790+60.14 | 1058.24 | 790+60.14 | 1057.21 | 790+60.14 | 1056.97 |
| 1/4 SPAN 2 | 790+69.76 | 1057.94 | 790+69.76 | 1058.02 | 790+69.76 | 1058.04 | 790+69.76 | 1058.01 | 790+69.76 | 1056.97 | 790+69.76 | 1056.72 |
| 3/8 SPAN 2 | 790+90.54 | 1057.43 | 790+90.54 | 1057.51 | 790+90.54 | 1057.53 | 790+90.54 | 1057.49 | 790+90.54 | 1056.43 | 790+90.54 | 1056.18 |
| 1/2 SPAN 2 | 791+11.33 | 1056.88 | 791+11.33 | 1056.96 | 791+11.33 | 1056.98 | 791+11.33 | 1056.94 | 791+11.33 | 1055.86 | 791+11.33 | 1055.61 |
| 5/8 SPAN 2 | 791+32.11 | 1056.27 | 791+32.11 | 1056.34 | 791+32.11 | 1056.36 | 791+32.11 | 1056.33 | 791+32.11 | 1055.26 | 791+32.11 | 1055.01 |
| 3/4 SPAN 2 | 791+52.89 | 1055.60 | 791+52.89 | 1055.67 | 791+52.89 | 1055.70 | 791+52.89 | 1055.66 | 791+52.89 | 1054.64 | 791+52.89 | 1054.40 |
| F.S. 3 | 791+62.94 | 1055.25 | 791+62.94 | 1055.32 | 791+62.94 | 1055.35 | 791+62.94 | 1055.32 | 791+62.94 | 1054.33 | 791+62.94 | 1054.10 |
| 7/8 SPAN 2 | 791+73.67 | 1054.87 | 791+73.67 | 1054.95 | 791+73.67 | 1054.98 | 791+73.67 | 1054.95 | 791+73.67 | 1054.01 | 791+73.67 | 1053.78 |
| CL PIER 2 | 791+94.45 | 1054.17 | 791+94.45 | 1054.25 | 791+94.45 | 1054.28 | 791+94.45 | 1054.25 | 791+94.45 | 1053.38 | 791+94.45 | 1053.17 |
| 1/4 SPAN 3 | 792+16.70 | 1053.48 | 792+16.70 | 1053.56 | 792+16.70 | 1053.59 | 792+16.70 | 1053.56 | 792+16.70 | 1052.75 | 792+16.70 | 1052.55 |
| 1/2 SPAN 3 | 792+38.95 | 1052.80 | 792+38.95 | 1052.88 | 792+38.95 | 1052.91 | 792+38.95 | 1052.88 | 792+38.95 | 1052.13 | 792+38.95 | 1051.95 |
| F.S. 4 | 792+40.36 | 1052.76 | 792+40.36 | 1052.84 | 792+40.36 | 1052.87 | 792+40.36 | 1052.84 | 792+40.36 | 1052.09 | 792+40.36 | 1051.91 |
| 3/4 SPAN 3 | 792+61.20 | 1052.12 | 792+61.20 | 1052.20 | 792+61.20 | 1052.23 | 792+61.20 | 1052.20 | 792+61.20 | 1051.52 | 792+61.20 | 1051.35 |
| CL BRG. FRWD. ABUT. | 792+83.45 | 1051.43 | 792+83.45 | 1051.51 | 792+83.45 | 1051.54 | 792+83.45 | 1051.51 | 792+83.45 | 1050.89 | 792+83.45 | 1050.73 |

## TOP OF HAUNCH (TOH) ELEVATIONS

| LOCATION | ELEVATION LINE 2 | | ELEVATION LINE 6 | | ELEVATION LINE 7 | | ELEVATION LINE 9 | |
|---|---|---|---|---|---|---|---|---|
| | STATION | FINISHED ELEVATIONS | STATION | FINISHED ELEVATIONS | STATION | FINISHED ELEVATIONS | STATION | FINISHED ELEVATIONS |
| CL BRG. REAR ABUT. | 789+40.20 | 1060.75 | 789+40.20 | 1060.57 | 789+40.20 | 1060.09 | 789+40.20 | 1059.61 |
| 1/4 SPAN 1 | 789+62.20 | 1060.14 | 789+62.20 | 1059.96 | 789+62.20 | 1059.48 | 789+62.20 | 1059.00 |
| F.S. 1 | 789+82.53 | 1059.57 | 789+82.53 | 1059.38 | 789+82.53 | 1058.90 | 789+82.53 | 1058.42 |
| 1/2 SPAN 1 | 789+84.20 | 1059.52 | 789+84.20 | 1059.34 | 789+84.20 | 1058.86 | 789+84.20 | 1058.38 |
| 3/4 SPAN 1 | 790+06.20 | 1058.89 | 790+06.20 | 1058.71 | 790+06.20 | 1058.23 | 790+06.20 | 1057.75 |
| CL PIER 1 | 790+28.20 | 1058.28 | 790+28.20 | 1058.10 | 790+28.20 | 1057.62 | 790+28.20 | 1057.14 |
| 1/8 SPAN 2 | 790+48.98 | 1057.71 | 790+48.98 | 1057.53 | 790+48.98 | 1057.05 | 790+48.98 | 1056.57 |
| F.S. 2 | 790+60.14 | 1057.50 | 790+60.14 | 1057.30 | 790+60.14 | 1056.81 | 790+60.14 | 1056.32 |
| 1/4 SPAN 2 | 790+69.76 | 1057.27 | 790+69.76 | 1057.07 | 790+69.76 | 1056.57 | 790+69.76 | 1056.07 |
| 3/8 SPAN 2 | 790+90.54 | 1056.76 | 790+90.54 | 1056.55 | 790+90.54 | 1056.04 | 790+90.54 | 1055.53 |
| 1/2 SPAN 2 | 791+11.33 | 1056.21 | 791+11.33 | 1055.99 | 791+11.33 | 1055.48 | 791+11.33 | 1054.96 |
| 5/8 SPAN 2 | 791+32.11 | 1055.60 | 791+32.11 | 1055.38 | 791+32.11 | 1054.87 | 791+32.11 | 1054.36 |
| 3/4 SPAN 2 | 791+52.89 | 1054.93 | 791+52.89 | 1054.73 | 791+52.89 | 1054.24 | 791+52.89 | 1053.75 |
| F.S. 3 | 791+62.94 | 1054.58 | 791+62.94 | 1054.40 | 791+62.94 | 1053.92 | 791+62.94 | 1053.45 |
| 7/8 SPAN 2 | 791+73.67 | 1054.21 | 791+73.67 | 1054.04 | 791+73.67 | 1053.58 | 791+73.67 | 1053.13 |
| CL PIER 2 | 791+94.45 | 1053.50 | 791+94.45 | 1053.36 | 791+94.45 | 1052.93 | 791+94.45 | 1052.51 |
| 1/4 SPAN 3 | 792+16.70 | 1052.81 | 792+16.70 | 1052.68 | 792+16.70 | 1052.29 | 792+16.70 | 1051.89 |
| 1/2 SPAN 3 | 792+38.95 | 1052.13 | 792+38.95 | 1052.02 | 792+38.95 | 1051.65 | 792+38.95 | 1051.29 |
| F.S. 4 | 792+40.36 | 1052.09 | 792+40.36 | 1051.98 | 792+40.36 | 1051.61 | 792+40.36 | 1051.25 |
| 3/4 SPAN 3 | 792+61.20 | 1051.45 | 792+61.20 | 1051.36 | 792+61.20 | 1051.02 | 792+61.20 | 1050.68 |
| CL BRG. FRWD. ABUT. | 792+83.45 | 1050.76 | 792+83.45 | 1050.69 | 792+83.45 | 1050.38 | 792+83.45 | 1050.06 |

**NOTES:**

1. SCREED ELEVATIONS SHOWN REPRESENT THE THEORETICAL DECK SURFACE LOCATION PRIOR TO DEFLECTIONS CAUSED BY DECK PLACEMENT AND OTHER ANTICIPATED DEAD LOADS.
2. FOR LOCATION OF ELEVATION LINES, SEE SHT. NO. 28/37.
3. TOP OF HAUNCH ELEVATIONS SHOWN REPRESENT THE THEORETICAL LOCATION OF THE BOTTOM OF THE DECK ABOVE THE GIRDER HAUNCH PRIOR TO DEFLECTIONS CAUSED BY DECK PLACEMENT AND OTHER ANTICIPATED DEAD LOADS.

DESIGN AGENCY
GPD GROUP
Glaus, Pyle, Schomer, Burns & DeHaven, Inc.
520 South Main Street, Akron, OH 44311 330.572.2100
Copyright Glaus, Pyle, Schomer, Burns & DeHaven, Inc. 2020

DESIGNED RHC | DRAWN JJB | REVIEWED DGN | DATE 1-18-21 | CHECKED MOJ | REVISED | STRUCTURE FILE NUMBER 7702648

SCREED AND TOP OF HAUNCH ELEVATIONS
BRIDGE NO. SUM-77-0927R
RAMP C2 OVER I.R.77 NB

SUM-077/277/224-VAR
PID No. 106002



1253/1288

O:\2017\2017258\ProjectData\SUM\106002\Design\Structures\SUM077_0927R\Sheets\077_0927R_SS006.dgn Sheet 2 1/17/2021 7:24:48 PM rvitelli

## FINISHED ELEVATIONS

| LOCATION | ELEVATION LINE 1 | | ELEVATION LINE 2 | | ELEVATION LINE 3 | | ELEVATION LINE 4 | | ELEVATION LINE 5 | | ELEVATION LINE 6 | | ELEVATION LINE 7 | | ELEVATION LINE 8 | |
|---|---|---|---|---|---|---|---|---|---|---|---|---|---|---|---|---|
| | STATION | FINISHED ELEVATIONS | STATION | FINISHED ELEVATIONS | STATION | FINISHED ELEVATIONS | STATION | FINISHED ELEVATIONS | STATION | FINISHED ELEVATIONS | STATION | FINISHED ELEVATIONS | STATION | FINISHED ELEVATIONS | STATION | FINISHED ELEVATIONS |
| CL BRG. REAR ABUT. | 789+40.20 | 1061.41 | 789+40.20 | 1061.45 | 789+40.20 | 1061.49 | 789+40.20 | 1061.52 | 789+40.20 | 1061.49 | 789+40.20 | 1061.27 | 789+40.20 | 1060.79 | 789+40.20 | 1060.49 |
| 1/4 SPAN 1 | 789+62.20 | 1060.80 | 789+62.20 | 1060.84 | 789+62.20 | 1060.88 | 789+62.20 | 1060.91 | 789+62.20 | 1060.88 | 789+62.20 | 1060.66 | 789+62.20 | 1060.18 | 789+62.20 | 1059.88 |
| F.S. 1 | 789+82.53 | 1060.23 | 789+82.53 | 1060.27 | 789+82.53 | 1060.31 | 789+82.53 | 1060.34 | 789+82.53 | 1060.31 | 789+82.53 | 1060.09 | 789+82.53 | 1059.61 | 789+82.53 | 1059.31 |
| 1/2 SPAN 1 | 789+84.20 | 1060.18 | 789+84.20 | 1060.22 | 789+84.20 | 1060.26 | 789+84.20 | 1060.29 | 789+84.20 | 1060.26 | 789+84.20 | 1060.04 | 789+84.20 | 1059.56 | 789+84.20 | 1059.26 |
| 3/4 SPAN 1 | 790+06.20 | 1059.57 | 790+06.20 | 1059.61 | 790+06.20 | 1059.65 | 790+06.20 | 1059.68 | 790+06.20 | 1059.65 | 790+06.20 | 1059.43 | 790+06.20 | 1058.95 | 790+06.20 | 1058.65 |
| CL PIER 1 | 790+28.20 | 1058.95 | 790+28.20 | 1058.99 | 790+28.20 | 1059.03 | 790+28.20 | 1059.06 | 790+28.20 | 1059.03 | 790+28.20 | 1058.81 | 790+28.20 | 1058.33 | 790+28.20 | 1058.03 |
| 1/8 SPAN 2 | 790+48.98 | 1058.37 | 790+48.98 | 1058.41 | 790+48.98 | 1058.45 | 790+48.98 | 1058.48 | 790+48.98 | 1058.45 | 790+48.98 | 1058.23 | 790+48.98 | 1057.75 | 790+48.98 | 1057.45 |
| F.S. 2 | 790+60.14 | 1058.06 | 790+60.14 | 1058.10 | 790+60.14 | 1058.14 | 790+60.14 | 1058.17 | 790+60.14 | 1058.14 | 790+60.14 | 1057.92 | 790+60.14 | 1057.44 | 790+60.14 | 1057.14 |
| 1/4 SPAN 2 | 790+69.76 | 1057.79 | 790+69.76 | 1057.83 | 790+69.76 | 1057.87 | 790+69.76 | 1057.90 | 790+69.76 | 1057.87 | 790+69.76 | 1057.65 | 790+69.76 | 1057.17 | 790+69.76 | 1056.87 |
| 3/8 SPAN 2 | 790+90.54 | 1057.21 | 790+90.54 | 1057.25 | 790+90.54 | 1057.29 | 790+90.54 | 1057.32 | 790+90.54 | 1057.29 | 790+90.54 | 1057.07 | 790+90.54 | 1056.59 | 790+90.54 | 1056.29 |
| 1/2 SPAN 2 | 791+11.33 | 1056.63 | 791+11.33 | 1056.67 | 791+11.33 | 1056.71 | 791+11.33 | 1056.74 | 791+11.33 | 1056.71 | 791+11.33 | 1056.49 | 791+11.33 | 1056.01 | 791+11.33 | 1055.71 |
| 5/8 SPAN 2 | 791+32.11 | 1056.04 | 791+32.11 | 1056.08 | 791+32.11 | 1056.12 | 791+32.11 | 1056.15 | 791+32.11 | 1056.12 | 791+32.11 | 1055.90 | 791+32.11 | 1055.42 | 791+32.11 | 1055.12 |
| 3/4 SPAN 2 | 791+52.89 | 1055.45 | 791+52.89 | 1055.49 | 791+52.89 | 1055.53 | 791+52.89 | 1055.56 | 791+52.89 | 1055.53 | 791+52.89 | 1055.31 | 791+52.89 | 1054.84 | 791+52.89 | 1054.54 |
| F.S. 3 | 791+62.94 | 1055.14 | 791+62.94 | 1055.18 | 791+62.94 | 1055.22 | 791+62.94 | 1055.25 | 791+62.94 | 1055.22 | 791+62.94 | 1055.01 | 791+62.94 | 1054.55 | 791+62.94 | 1054.26 |
| 7/8 SPAN 2 | 791+73.67 | 1054.81 | 791+73.67 | 1054.85 | 791+73.67 | 1054.89 | 791+73.67 | 1054.92 | 791+73.67 | 1054.89 | 791+73.67 | 1054.69 | 791+73.67 | 1054.24 | 791+73.67 | 1053.96 |
| CL PIER 2 | 791+94.45 | 1054.17 | 791+94.45 | 1054.21 | 791+94.45 | 1054.25 | 791+94.45 | 1054.28 | 791+94.45 | 1054.25 | 791+94.45 | 1054.06 | 791+94.45 | 1053.64 | 791+94.45 | 1053.38 |
| 1/4 SPAN 3 | 792+16.70 | 1053.48 | 792+16.70 | 1053.52 | 792+16.70 | 1053.56 | 792+16.70 | 1053.59 | 792+16.70 | 1053.56 | 792+16.70 | 1053.40 | 792+16.70 | 1053.00 | 792+16.70 | 1052.76 |
| 1/2 SPAN 3 | 792+38.95 | 1052.80 | 792+38.95 | 1052.84 | 792+38.95 | 1052.88 | 792+38.95 | 1052.91 | 792+38.95 | 1052.88 | 792+38.95 | 1052.73 | 792+38.95 | 1052.36 | 792+38.95 | 1052.13 |
| F.S. 4 | 792+40.36 | 1052.76 | 792+40.36 | 1052.80 | 792+40.36 | 1052.84 | 792+40.36 | 1052.87 | 792+40.36 | 1052.84 | 792+40.36 | 1052.69 | 792+40.36 | 1052.32 | 792+40.36 | 1052.09 |
| 3/4 SPAN 3 | 792+61.20 | 1052.12 | 792+61.20 | 1052.16 | 792+61.20 | 1052.20 | 792+61.20 | 1052.23 | 792+61.20 | 1052.20 | 792+61.20 | 1052.06 | 792+61.20 | 1051.72 | 792+61.20 | 1051.51 |
| CL BRG. FRWD. ABUT. | 792+83.45 | 1051.43 | 792+83.45 | 1051.47 | 792+83.45 | 1051.51 | 792+83.45 | 1051.54 | 792+83.45 | 1051.51 | 792+83.45 | 1051.40 | 792+83.45 | 1051.08 | 792+83.45 | 1050.89 |

## FINISHED ELEVATIONS (CONT.)

| LOCATION | ELEVATION LINE 9 | | ELEVATION LINE 10 | |
|---|---|---|---|---|
| | STATION | FINISHED ELEVATIONS | STATION | FINISHED ELEVATIONS |
| CL BRG. REAR ABUT. | 789+40.20 | 1060.31 | 789+40.20 | 1060.25 |
| 1/4 SPAN 1 | 789+62.20 | 1059.70 | 789+62.20 | 1059.64 |
| F.S. 1 | 789+82.53 | 1059.13 | 789+82.53 | 1059.07 |
| 1/2 SPAN 1 | 789+84.20 | 1059.08 | 789+84.20 | 1059.02 |
| 3/4 SPAN 1 | 790+06.20 | 1058.47 | 790+06.20 | 1058.41 |
| CL PIER 1 | 790+28.20 | 1057.85 | 790+28.20 | 1057.79 |
| 1/8 SPAN 2 | 790+48.98 | 1057.27 | 790+48.98 | 1057.21 |
| F.S. 2 | 790+60.14 | 1056.96 | 790+60.14 | 1056.90 |
| 1/4 SPAN 2 | 790+69.76 | 1056.69 | 790+69.76 | 1056.63 |
| 3/8 SPAN 2 | 790+90.54 | 1056.11 | 790+90.54 | 1056.05 |
| 1/2 SPAN 2 | 791+11.33 | 1055.53 | 791+11.33 | 1055.47 |
| 5/8 SPAN 2 | 791+32.11 | 1054.94 | 791+32.11 | 1054.88 |
| 3/4 SPAN 2 | 791+52.89 | 1054.36 | 791+52.89 | 1054.31 |
| F.S. 3 | 791+62.94 | 1054.09 | 791+62.94 | 1054.03 |
| 7/8 SPAN 2 | 791+73.67 | 1053.79 | 791+73.67 | 1053.74 |
| CL PIER 2 | 791+94.45 | 1053.22 | 791+94.45 | 1053.17 |
| 1/4 SPAN 3 | 792+16.70 | 1052.61 | 792+16.70 | 1052.56 |
| 1/2 SPAN 3 | 792+38.95 | 1052.00 | 792+38.95 | 1051.95 |
| F.S. 4 | 792+40.36 | 1051.96 | 792+40.36 | 1051.91 |
| 3/4 SPAN 3 | 792+61.20 | 1051.38 | 792+61.20 | 1051.34 |
| CL BRG. FRWD. ABUT. | 792+83.45 | 1050.77 | 792+83.45 | 1050.73 |

**NOTES:**

1. FOR LOCATION OF ELEVATION LINES, SEE SHT. NO. 28/37 .
2. FINAL DECK SURFACE ELEVATIONS SHOWN REPRESENT THE DECK SURFACE LOCATION AFTER ALL ANTICIPATED DEAD LOAD DEFLECTIONS HAVE OCCURED.

DESIGN AGENCY
GPD GROUP
Glaus, Pyle, Schomer, Burns & DeHaven, Inc.
520 South Main Street, Akron, OH 44311 330.572.2100
Copyright GPD Group, Glaus, Pyle, Schomer, Burns & DeHaven, Inc. 2020

DESIGNED RHC | DRAWN JJB | REVIEWED DGN | DATE 1-18-21
CHECKED MOJ | REVISED | STRUCTURE FILE NUMBER 7702648

FININSHED ELEVATIONS
BRIDGE NO. SUM-77-0927R
RAMP C2 OVER I.R.77 NB

SUM-077/277/224-VAR
PID No. 106002

30/37

1254/1288

O:\2017\2017258\ProjectData\SUM\106002\Design\Structures\SUM077_0927R\Sheets\077_0927R_SS006.dgn Sheet 3 1/17/2021 7:28:18 PM rvitelli

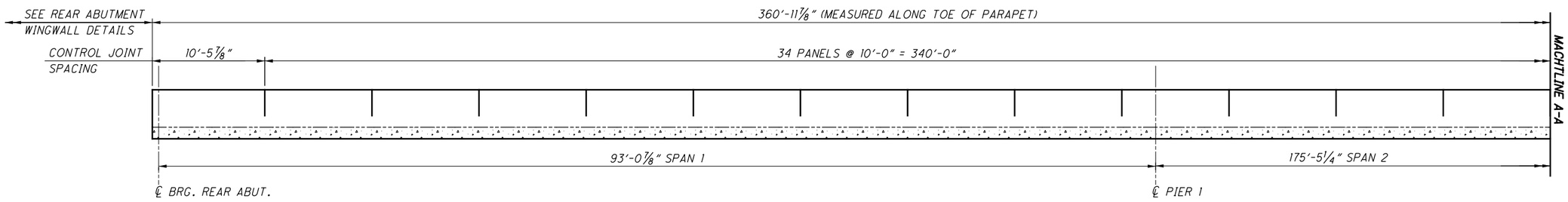


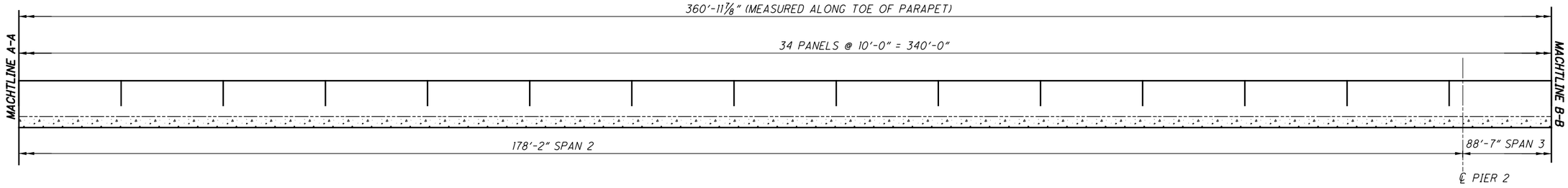


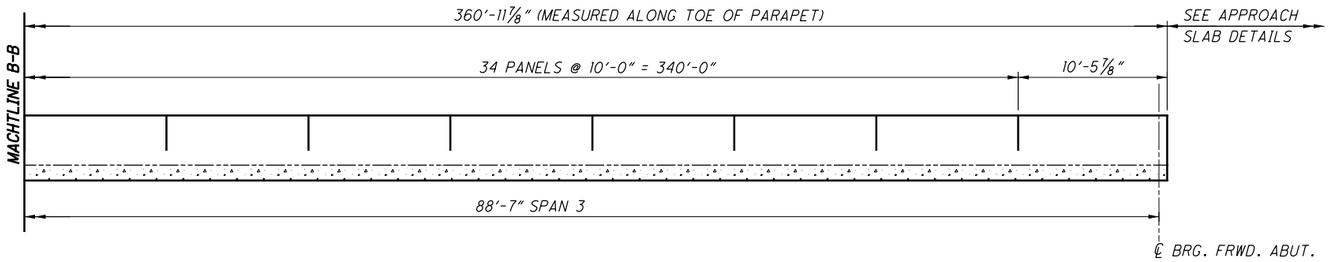


## LEFT PARAPET ELEVATION

O:\2017\2017258\ProjectData\SUM\06002\Design\Structures\SUM077_0927R\Sheets\077_0927R_DP002.dgn Sheet 11/17/2021 7:21:20 PM rvitelli

DESIGN AGENCY
GPD GROUP
Glaus, Pyle, Schomer, Burns & DeHaven, Inc.
520 South Main Street, Akron, OH 44311 330.572.2100

| DESIGNED | DRAWN | REVIEWED | DATE |
|---|---|---|---|
| RFV | RFV | T.JW | 1-18-21 |
| CHECKED | REVISED | STRUCTURE FILE NUMBER | |
| DGN | | 7702648 | |

LEFT PARAPET ELEVATION
BRIDGE NO. SUM-77-0927R
RAMP C2 OVER I.R.77 NB

SUM-077/277/224-VAR
PID No. 106002



1255
1288

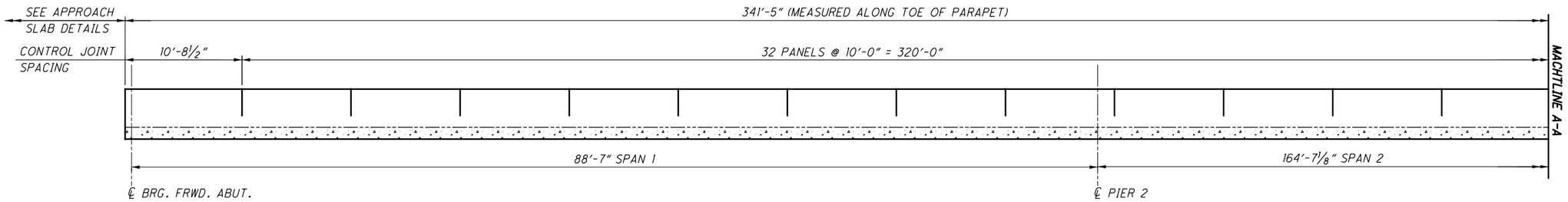


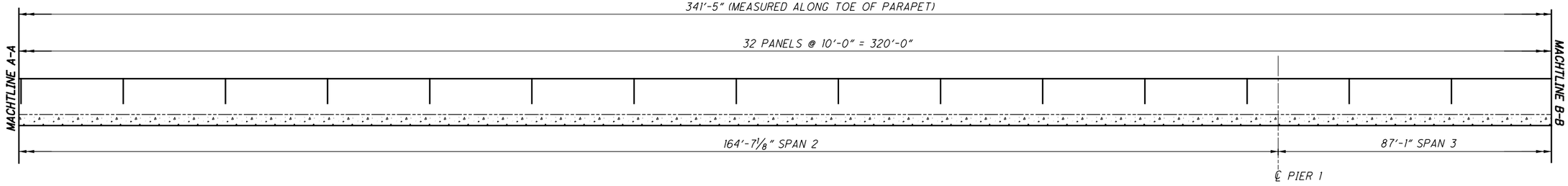


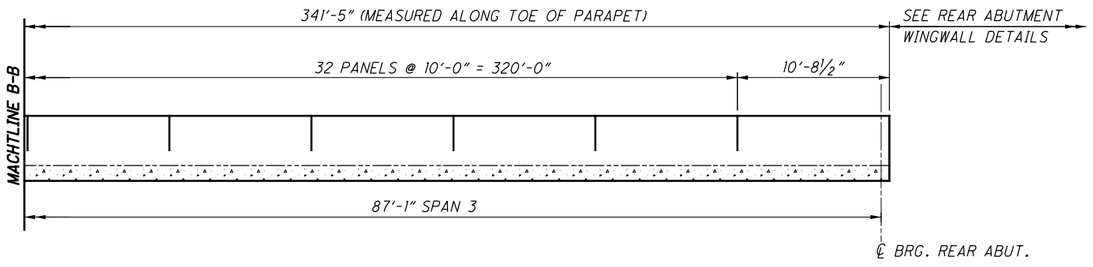


## RIGHT PARAPET ELEVATION

O:\2017\2017258\ProjectData\SUM\06002\Design\Structures\SUM077_0927R\Sheets\077_0927R_DP002.dgn Sheet 2 1/17/2021 7:21:21 PM rvitelli

DESIGN AGENCY
GPD GROUP
320 South Main Street, Akron, OH 44311 330.572.2100

| DESIGNED | DRAWN | REVIEWED | DATE |
|---|---|---|---|
| RFV | RFV | TJW | 1-18-21 |
| CHECKED | REVISED | STRUCTURE FILE NUMBER | |
| DGN | | 7702648 | |

RIGHT PARAPET ELEVATION
BRIDGE NO. SUM-77-0927R
RAMP C2 OVER I.R.77 NB

SUM-077/277/224-VAR
PID No. 106002

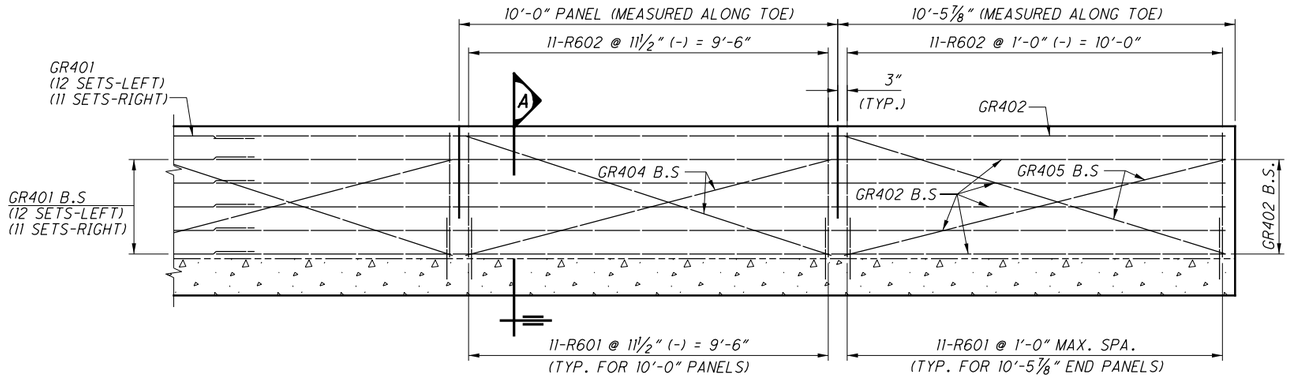


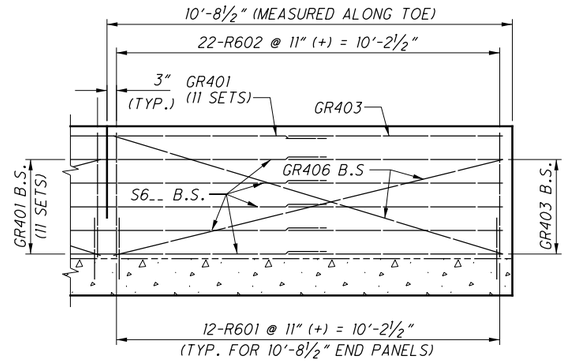


## PARAPET DETAILS

(LEFT DENOTES LEFT PARAPET & RIGHT DENOTES RIGHT PARAPET)

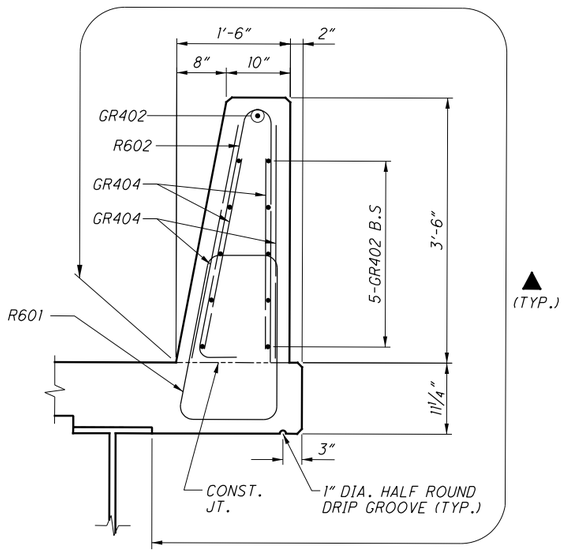


SECTION A

DECK SLAB REINFORCING NOT SHOWN

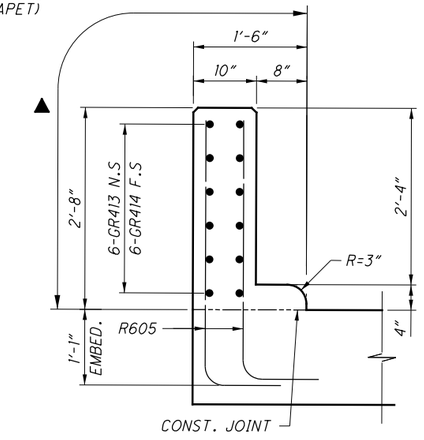


SECTION H

APPROACH SLAB REINFORCING NOT SHOWN

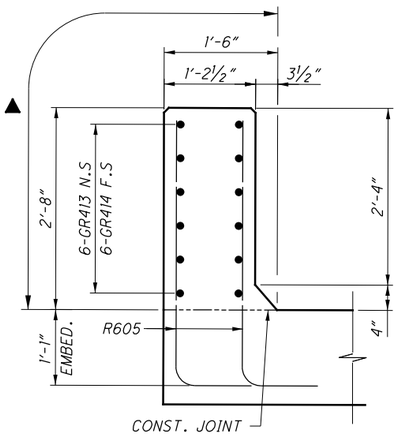


SECTION I

APPROACH SLAB REINFORCING NOT SHOWN

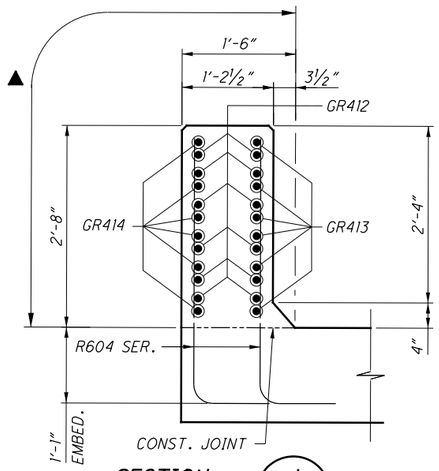


SECTION J

APPROACH SLAB REINFORCING NOT SHOWN

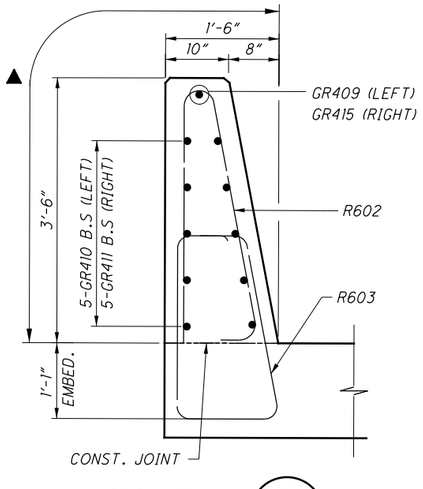


SECTION G

APPROACH SLAB REINFORCING NOT SHOWN

## NOTES:

1. LAP SPLICE LENGTH FOR ALL HORIZONTAL GFRP REBAR = 1'-1" MINIMUM.
2. FOR DETAILS, SECTIONS & NOTES NOT SHOWN, SEE STANDARD DRAWING SBR-1-20.
3. FOR LOCATION OF SECTIONS G, H, I & J, SEE SHT. 35/37 .

DESIGN AGENCY
GPD GROUP
320 South Main Street, Akron, OH 44311 330.572.2100
Copyright GPD Group, Akron, Ohio, USA

| DESIGNED | DRAWN | REVIEWED | DATE |
|---|---|---|---|
| RFV | RFV | RHC | 1-18-21 |
| CHECKED | REVISED | STRUCTURE FILE NUMBER | |
| DGN | | 7702648 | |

PARAPET DETAILS
BRIDGE NO. SUM-77-0927R
RAMP C2 OVER I.R.77 NB

SUM-077/277/224-VAR
PID No. 106002

33 / 37

1257 / 1288

0:\2017\2017258\ProjectData\SUM\06002\Design\Structures\SUM077_0927R\Sheets\077_0927R_DP002.dgn Sheet 3 1/17/2021 7:42:21 PM rvitelli

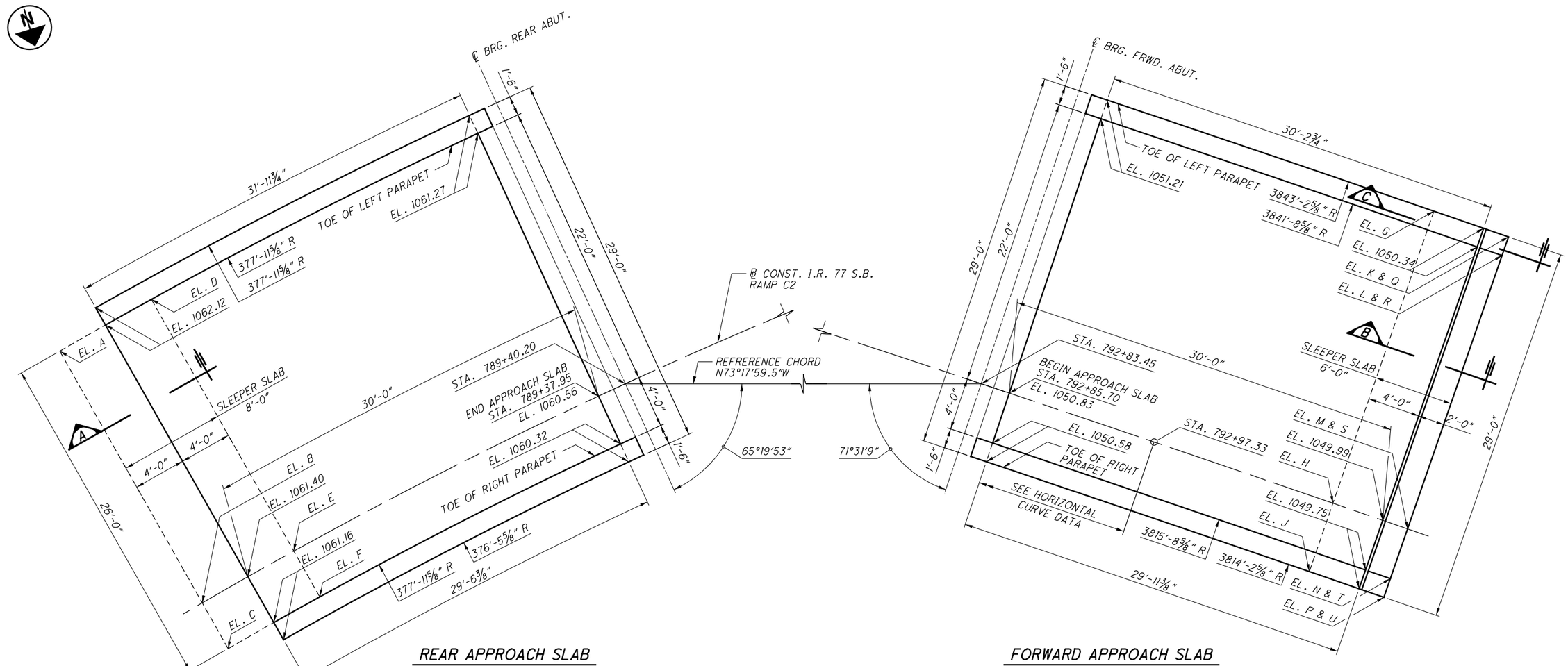


REAR APPROACH SLAB

FORWARD APPROACH SLAB

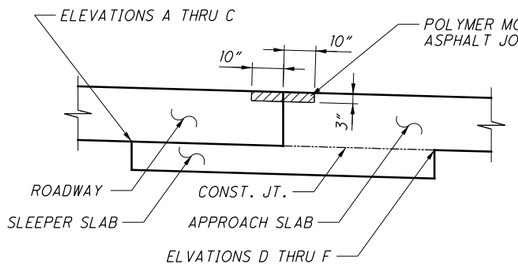


SECTION A

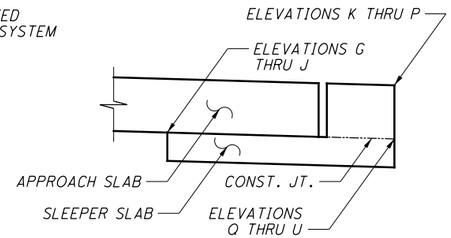


SECTION B

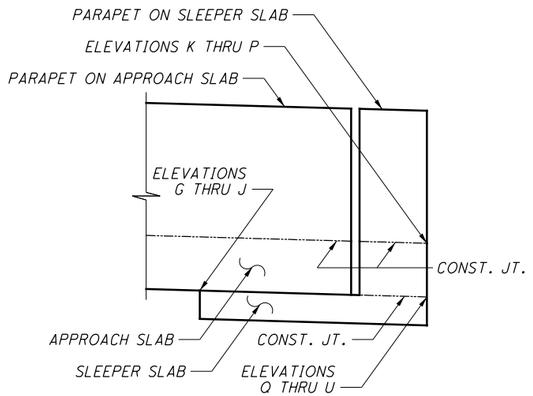


SECTION C

| SLEEPER SLAB ELEVATIONS | | | |
|---|---|---|---|
| CALLOUT | ELEVATION | CALLOUT | ELEVATION |
| A | 1060.81 | L | 1050.28 |
| B | 1060.09 | M | 1049.93 |
| C | 1059.85 | N | 1049.69 |
| D | 1059.60 | P | 1049.60 |
| E | 1059.87 | Q | 1048.80 |
| F | 1059.63 | R | 1048.86 |
| G | 1048.97 | S | 1048.51 |
| H | 1048.68 | T | 1048.27 |
| J | 1048.35 | U | 1048.18 |
| K | 1050.22 | | |

**NOTE:**

FOR REINFORCING, SEE SHT. NO. 35/37 .

DESIGN AGENCY
GPD GROUP
Glaus, Pyle, Schomer, Burns & DeHaven, Inc.
520 South Main Street, Akron, OH 44311 330.572.2100
(Copyright ©Glaus, Pyle, Schomer, Burns & DeHaven, Inc. 2020)

| DESIGNED | DRAWN | REVIEWED | DATE |
|---|---|---|---|
| RHC | JJB | DGN | 1-18-21 |
| CHECKED | REVISED | STRUCTURE FILE NUMBER | |
| MOJ | | 7702648 | |

APPROACH SLAB PLAN
BRIDGE NO. SUM-77-0927R
RAMP C2 OVER I.R.77 NB

SUM-077/277/224-VAR
PID No. 106002

34/37

1258
1288

O:\2017\20172581\ProjectData\SUM\106002\Design\Structures\SUM077_0927R\Sheets\077_0927R_SM001.dgn Sheet 1 1/17/2021 7:21:24 PM rvitelli

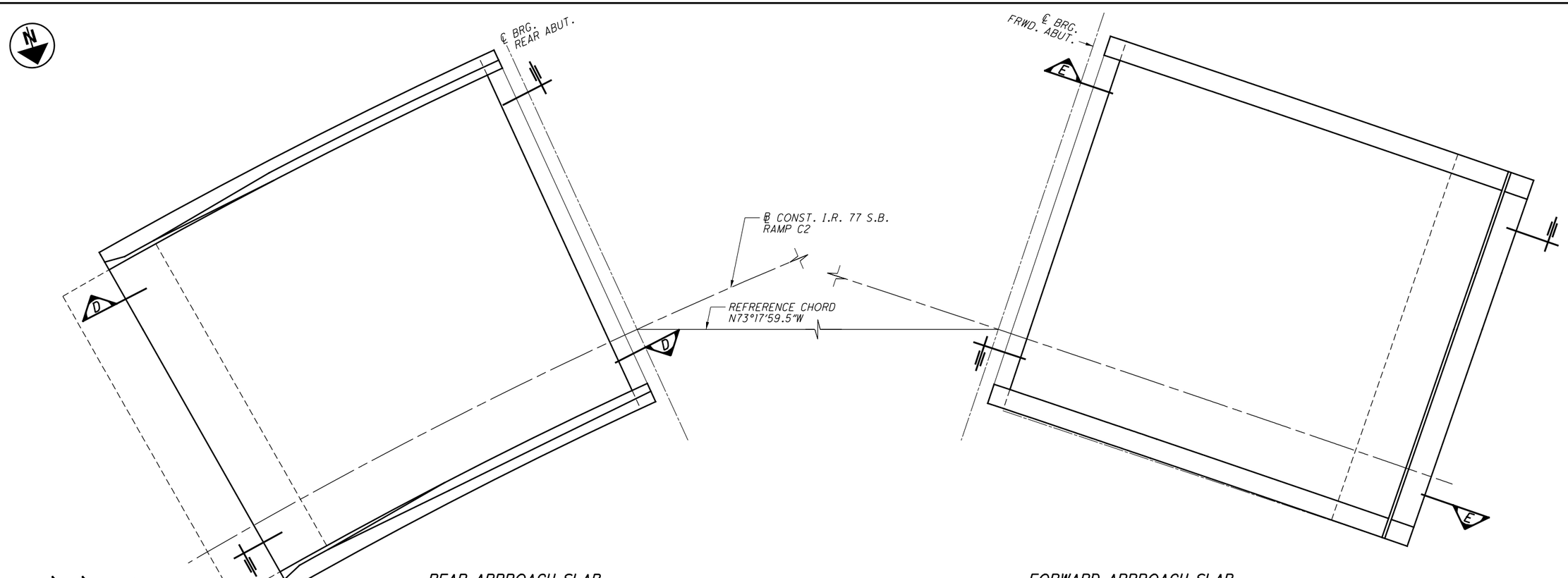


## REAR APPROACH SLAB

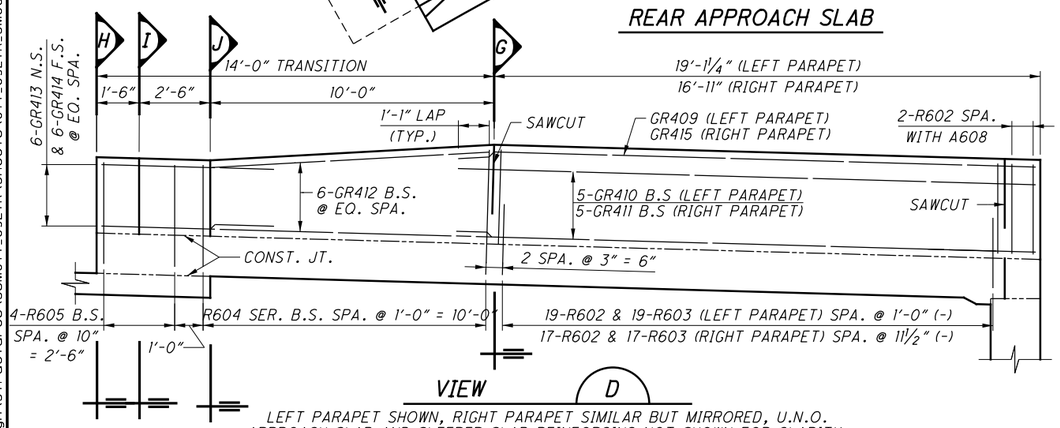


VIEW D

LEFT PARAPET SHOWN, RIGHT PARAPET SIMILAR BUT MIRRORED, U.N.O.
APPROACH SLAB AND SLEEPER SLAB REINFORCING NOT SHOWN FOR CLARITY.

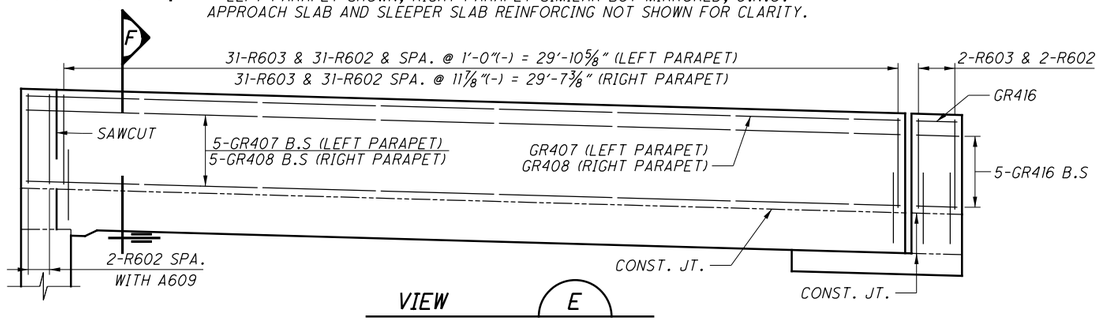


VIEW E

LEFT PARAPET SHOWN, RIGHT PARAPET SIMILAR BUT MIRRORED, U.N.O.
APPROACH SLAB AND SLEEPER SLAB REINFORCING NOT SHOWN FOR CLARITY.

## FORWARD APPROACH SLAB

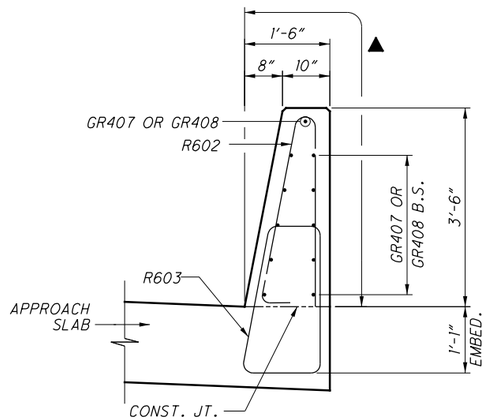


SECTION F

APPROACH SLAB REINFORCING NOT SHOWN

### LEGEND:

▲ INDICATES LIMITS OF "ITEM 512 - SEALING OF CONCRETE SURFACES (EPOXY-URETHANE)"

### NOTE:

1. REINFORCEMENT STEEL SHOWN IS IN ADDITION TO STANDARD REINFORCEMENT. FOR STANDARD APPROACH SLAB REINFORCEMENT AND DETAILS, SEE STD. DWGS. AS-1-15 AND AS-2-15.
2. FOR SLEEPER SLAB NOTES AND DETAILS, SEE STD. DWG. AS-2-15. PAYMENT FOR THE SLEEPER SLABS SHALL BE INCLUDED WITH ITEM 526 - TYPE C INSTALLATION, AND ITEM 526 - TYPE A INSTALLATION.
3. THE FOLLOWING ARE INCLUDED WITH THE QUANTITY FOR ITEM 526 - REINFORCED CONCRETE APPROACH SLABS WITH OC/OA (T=17):
   - CONCRETE FOR APPROACH SLABS.
   - ALL ASSOCIATED REINFORCING STEEL.
   - ALL PREFORMED EXPANSION JOINT FILLERS AND SEALERS.
4. THE FOLLOWING ARE INCLUDED WITH THE QUANTITIES FOR ITEM 526 - TYPE C INSTALLATION AND ITEM 526 - TYPE A INSTALLATION:
   - CONCRETE FOR SLEEPER SLABS.
   - ALL ASSOCIATED REINFORCING STEEL.
   - ALL PREFORMED EXPANSION JOINT FILLERS AND SEALERS.
5. FOR SECTIONS G, H, I & J, SEE SHT. 33/37 .

DESIGN AGENCY
GPD GROUP
520 South Main Street, Akron, OH 44311 330.572.2100
Copyright GBAK, PA, Schneider Burtch & DeHaven, Inc.
Copyright GBAK, Mac, Schneider, Burtch & DeHaven, Inc. 2020

| DESIGNED | DRAWN | REVIEWED | DATE |
|---|---|---|---|
| RHC | JJB | DGN | 1-18-21 |
| CHECKED | REVISED | STRUCTURE FILE NUMBER | |
| MOJ | | 7702648 | |

APPROACH SLAB DETAILS
BRIDGE NO. SUM-77-0927R
RAMP C2 OVER I.R.77 NB

SUM-077/277/224-VAR
PID No. 106002

35/37

1259
1288

O:\2017\20172581\ProjectData\SUM\106002\Design\Structures\SUM077_0927R\Sheets\077_0927R_SM002.dgn Sheet: 1/17/2021 7:26:27 PM rvitelli

| MARK | NUMBER | | | LENGTH | WEIGHT | TYPE | DIMENSIONS | | | | |
|---|---|---|---|---|---|---|---|---|---|---|---|
| | REAR | FORWARD | TOTAL | | | | A | B | C | INC. | R |
| ABUTMENT BARS | | | | | | | | | | | |
| A501 | 20 | 18 | 38 | 28'-8" | 1,136 | ST | | | | | |
| A502 | 2 | | 2 | 35'-0" | 73 | ST | | | | | |
| A503 | 32 | | 32 | 13'-4" | 445 | ST | | | | | |
| A504 | 4 | | 4 | 12'-0" | 50 | ST | | | | | |
| A505 | 4 | | 4 | 9'-5" | 39 | ST | | | | | |
| A506 | 4 | | 4 | 4'-3" | 18 | ST | | | | | |
| A507 | 4 | | 4 | 10'-3" | 43 | 19 | 7'-10" | 2'-3" | 1'-0" | | |
| A508 | 29 | | 29 | 16'-7" | 502 | 3 | 2'-7" | 5'-5" | | | |
| A509 | 23 | | 23 | 7'-5" | 178 | 1 | 10" | 6'-8" | | | |
| A510 | 23 | 24 | 47 | 11'-6" | 564 | 2 | 3'-8" | 4'-5" | 3'-8" | | |
| A511 | 7 | | 7 | 14'-8" | 107 | 2 | 6'-9" | 1'-5" | 6'-9" | | |
| A512 | 7 | | 7 | 17'-0" | 124 | 2 | 7'-11" | 1'-5" | 7'-11" | | |
| A513 | 3 | | 3 | 20'-3" | 63 | 2 | 9'-6" | 1'-5" | 9'-6" | | |
| A514 | 3 | | 3 | 22'-6" | 70 | 2 | 10'-8" | 1'-5" | 10'-8" | | |
| A515 | 3 | | 3 | 14'-7" | 46 | 2 | 6'-8" | 1'-5" | 6'-8" | | |
| A516 | 2<br><br>7 | | 2<br>SER. OF<br>7 | 7'-6"<br>TO<br>13'-4" | 152 | 2 | 3'-2"<br>TO<br>6'-1" | 1'-5" | 3'-2"<br>TO<br>6'-1" | 0'-11 5/8" | |
| A517 | | 2 | 2 | 33'-4" | 70 | ST | | | | | |
| A518 | | 12 | 12 | 15'-9" | 197 | ST | | | | | |
| A519 | | 2 | 2 | 15'-0" | 31 | ST | | | | | |
| A520 | | 2 | 2 | 12'-6" | 26 | ST | | | | | |
| A521 | | 2 | 2 | 10'-5" | 22 | ST | | | | | |
| A522 | | 2 | 2 | 5'-5" | 11 | ST | | | | | |
| A523 | | 2 | 2 | 13'-3" | 28 | 19 | 9'-7" | 3'-4" | 1'-8" | | |
| A524 | | 3 | 3 | 14'-6" | 45 | 2 | 6'-8" | 1'-5" | 6'-8" | | |
| A525 | | 3 | 3 | 10'-4" | 32 | 1 | 10" | 9'-7" | | | |
| A526 | | 9 | 9 | 14'-8" | 138 | 2 | 6'-9" | 1'-5" | 6'-9" | | |
| A527 | | 1<br><br>9 | 1<br>SER. OF<br>9 | 5'-8"<br>TO<br>13'-2" | 88 | 2 | 2'-3"<br>TO<br>6'-0" | 1'-5" | 2'-3"<br>TO<br>6'-0" | 0'-11 1/4" | |
| A528 | | 28 | 28 | 11'-10" | 346 | 2 | 2'-7" | 6'-11" | 2'-7" | | |
| A529 | | 24 | 24 | 6'-8" | 167 | 1 | 10" | 5'-11" | | | |
| | | | | | | | | | | | |
| A601 | 30 | 30 | 60 | 6'-1" | 548 | 2 | 2'-9" | 11" | 2'-9" | | |
| A602 | 30 | 30 | 60 | 11'-5" | 1,029 | 2 | 5'-2" | 1'-5" | 5'-2" | | |
| A603 | 30 | 30 | 60 | 14'-3" | 1,284 | 2 | 6'-7" | 1'-5" | 6'-7" | | |
| A604 | 23 | | 23 | 7'-6" | 259 | 1 | 6'-8" | 1'-0" | | | |
| A605 | | 24 | 24 | 6'-11" | 249 | 1 | 6'-1" | 1'-0" | | | |
| A606 | | 3 | 3 | 11'-6" | 52 | 1 | 10'-8" | 1'-0" | | | |
| A607 | | 28 | 28 | 11'-9" | 494 | 2 | 2'-7" | 6'-11" | 2'-7" | | |
| A609 | 4 | 4 | 8 | 8'-5" | 101 | 200 | 1'-5" | 1'-0" | | | |
| | | | | | | | | | | | |
| | | | | | | | | | | | |
| A801 | | 10 | 10 | 33'-4" | 890 | ST | | | | | |
| A802 | | 6 | 6 | 28'-8" | 459 | ST | | | | | |
| A803 | 6 | | 6 | 11'-3" | 180 | ST | | | | | |
| A804 | 6 | | 6 | 11'-5" | 183 | 1 | 1'-4" | 10'-3" | | | |
| A805 | 6 | | 6 | 12'-9" | 204 | 1 | 1'-4" | 11'-7" | | | |
| A806 | 20 | 20 | 40 | 5'-1" | 543 | 18 | 2'-10" | 1'-0" | 1'-0" | | |
| | | | | | | | | | | | |
| A901 | 16 | | 16 | 35'-0" | 1,904 | ST | | | | | |
| | | | | | | | | | | | |
| TOTAL | | | | | 13,190 | LBS | | | | | |

| MARK | NUMBER | | | LENGTH | WEIGHT | TYPE | DIMENSIONS | | | |
|---|---|---|---|---|---|---|---|---|---|---|
| | PIER 1 | PIER 2 | TOTAL | | | | A | B | C | D |
| PIER BARS | | | | | | | | | | |
| P501 | 61 | 61 | 122 | 12'-1" | 1,538 | 202 | 3'-1" | 6'-2" | 3'-1" | 0'-2.25" |
| P502 | 441 | 441 | 882 | 7'-9" | 7,129 | 38 | 6'-7" | 10" | | |
| P503 | 392 | 392 | 784 | 5'-10" | 4,770 | 38 | 4'-8" | 10" | | |
| P504 | 102 | 102 | 204 | 22'-2" | 4,716 | ST | | | | |
| P505 | 90 | 90 | 180 | 10'-3" | 1,924 | 2 | 3'-1" | 4'-4" | 3'-1" | |
| P506 | 10 | 10 | 20 | 16'-9" | 349 | 203 | 6'-7" | 4'-9" | 7" | 2" |
| P507 | 90 | 90 | 180 | 9'-9" | 1,830 | 2 | | 3'-10" | 3'-1" | |
| | | | | | | | | | | |
| SP601 | 1 | | 1 | 22'-4" | 2,233 | 27 | 0'-3.25" | 5'-6" | 22'-4" | |
| SP602 | 1 | | 1 | 11'-1" | 1,143 | 27 | 0'-3.25" | 4'-7" | 11'-1" | |
| SP603 | | 1 | 1 | 21'-1" | 2,155 | 27 | 0'-3.25" | 5'-6" | 21'-1" | |
| SP604 | | 1 | 1 | 10'-6" | 1,091 | 27 | 0'-3.25" | 4'-7" | 10'-6" | |
| | | | | | | | | | | |
| P701 | 55 | 55 | 110 | 17'-9" | 3,991 | 203 | 6'-7" | 4'-9" | 1'-2" | 0'-2.25" |
| | | | | | | | | | | |
| P801 | 16 | 16 | 32 | 29'-0" | 2,478 | ST | | | | |
| | | | | | | | | | | |
| P1001 | 20 | 20 | 40 | 29'-0" | 4,991 | ST | | | | |
| | | | | | | | | | | |
| P1101 | 120 | 120 | 240 | 25'-4" | 32,303 | 17 | 22'-2" | | | |
| | | | | | | | | | | |
| P1401 | 18 | 18 | 36 | 9'-10" | 2,708 | 1 | 2'-7" | 7'-9" | | |
| P1402 | 17 | 17 | 34 | 8'-10" | 2,298 | 1 | 2'-7" | 6'-9" | | |
| P1403 | 20 | 20 | 40 | 2'-7" | 791 | ST | | 5'-3" | | |
| P1404 | 20 | 20 | 40 | 2'-7" | 791 | ST | | 4'-3" | | |
| P1405 | 18 | | 18 | 7'-11" | 1,090 | ST | | | | |
| P1406 | 17 | | 17 | 6'-11" | 900 | ST | | | | |
| P1407 | | 18 | 18 | 7'-4" | 1,010 | ST | | | | |
| P1408 | | 17 | 17 | 6'-4" | 824 | ST | | | | |
| P1409 | 20 | | 20 | 26'-2" | 4,004 | ST | | | | |
| P1410 | 20 | | 20 | 20'-8" | 3,162 | ST | | | | |
| P1411 | | 20 | 20 | 25'-0" | 3,825 | ST | | | | |
| P1412 | | 20 | 20 | 22'-8" | 3,468 | ST | | | | |
| | | | | | | | | | | |
| TOTAL | | | | | 97,512 | LBS | | | | |

## NOTES:

1. FOR BAR BENDING DIAGRAGMS, SEE SHT. NO. 37/37.
2. BAR DIMENSIONS ARE OUT-TO-OUT UNLESS NOTED OTHERWISE.
3. ALL BARS ARE EPOXY COATED.
4. WHEN NO BAR LEG DIMENSIONS ARE SHOWN, IT INDICATES A STANDARD BEND.
5. BAR SIZE AND LOCATION ARE INDICATED IN THE BAR MARK. THE FIRST ALPHABETICAL LETTER(S) INDICATES LOCATION. THE NEXT DIGIT OF THE THREE DIGIT SERIES AND THE NEXT TWO DIGITS OF THE FOUR DIGIT SERIES INDICATE BAR SIZE NUMBER.

EXAMPLES: S501 — NO. 5 SIZE BAR, SUPERSTRUCTURE; GR401 — NO. 5 SIZE BAR, SUPERSTRUCTURE

DESIGN AGENCY
GPD GROUP
Glaus, Pyle, Schomer, Burns & DeHaven, Inc.
520 South Main Street, Akron, OH 44311 330.572.2100
Copyright Glaus, Pyle, Schomer, Burns & DeHaven, Inc. 2020

DESIGNED MOJ | DRAWN MOJ | CHECKED RHC | REVIEWED DGN | DATE 1-18-21 | REVISED | STRUCTURE FILE NUMBER 7702648

REINFORCING BAR LISTS
BRIDGE NO. SUM-77-0927R
RAMP C2 OVER I.R.77 NB

SUM-077/277/224-VAR
PID No. 106002



1260
1288

D:\2017\20172581ProjectData\SUM\06002\Design\Structures\SUM077_0927R\Sheets\077_0927R_SL001.dgn Sheet 1 1/17/2021 12:12:28 PM rvitelli

| MARK | NUMBER | LENGTH | WEIGHT | TYPE | DIMENSIONS | | | | | |
|---|---|---|---|---|---|---|---|---|---|---|
| | | | | | A | B | C | D | E | INC. |
| SUPERSTRUCTURE BARS | | | | | | | | | | |
| S401 | 540 | 30'-0" | 10,822 | ST | | | | | | |
| S402 | 1 SER. OF 45 | 3'-0" TO 24'-9" | 417 | ST | | | | | | 0'-5 7/8" |
| S403 | 1,338 | 9'-2" | 8,193 | 2 | 7'-0" | 8" | 1'-8" | | | |
| | | | | | | | | | | |
| S501 | 456 | 30'-0" | 14,268 | ST | | | | | | |
| S502 | 1 SER. OF 38 | 8'-7" TO 30'-9" | 779 | ST | | | | | | 0'-7 1/4" |
| S503 | 669 | 30'-2" | 21,049 | 17 | 29'-0" | | | | | |
| S504 | 669 | 29'-0" | 20,235 | ST | | | | | | |
| S505 | 36 | 7'-8" | 288 | ST | | | | | | |
| S506 | 24 | 2'-3" | 56 | ST | | | | | | |
| S507 | 108 | 4'-2" | 469 | 2 | 1'-1" | 2'-3" | 1'-1" | | | |
| S508 | 54 | 8'-0" | 451 | 3 | 1'-8" | 2'-1" | | | | |
| | | | | | | | | | | |
| S601 | 264 | 30'-0" | 11,896 | ST | | | | | | |
| S602 | 88 | 30'-6" | 4,031 | ST | | | | | | |
| | | | | | | | | | | |
| TOTAL | | | 92,954 | LBS | | | | | | |

| MARK | NUMBER | LENGTH | WEIGHT | TYPE | DIMENSIONS | | | | | | |
|---|---|---|---|---|---|---|---|---|---|---|---|
| | | | | | A | B | C | D | E | R | INC. |
| RAILING BARS | | | | | | | | | | | |
| R601 | 772 | 7'-8" | 8,890 | 200 | 9 1/2" | 2'-2" | 7" | 1'-0" | | | |
| R602 | 874 | 7'-1" | 9,299 | 23 | 6" | 3'-3" | 3'-3" | | | 2" | |
| R603 | 102 | 8'-5" | 1,289 | 200 | 9 1/2" | 2'-6" | 7" | 1'-0" | | | |
| R604 | 4 SER. OF 11 | 4'-5" TO 5'-3" | 319 | 1 | 1'-0" | 3'-7" TO 4'-5" | | | | | 0'-1" |
| R605 | 16 | 4'-5" | 106 | 1 | 1'-0" | 3'-7" | | | | | |
| | | | | | | | | | | | |
| TOTAL | | | 19,903 | LBS | | | | | | | |

| MARK | NUMBER | LENGTH | WEIGHT | TYPE | DIMENSIONS | | | | | |
|---|---|---|---|---|---|---|---|---|---|---|
| | | | | | A | B | C | D | E | INC. |
| DRILLED SHAFT BARS | | | | | | | | | | |
| DSSP601 | 3 | 17'-5" | 1,913 | 27 | 0'-5" | 3'-0" | 17'-5" | | | |
| DSSP602 | 8 | 34'-2" | 11,333 | 27 | 0'-4.75" | 3'-4" | 34'-2" | | | |
| | | | | | | | | | | |
| DS1101 | 36 | 21'-0" | 4,017 | 16 | 19'-5" | | | | | |
| DS1102 | 120 | 37'-9" | 24,068 | 16 | 36'-2" | | | | | |
| | | | | | | | | | | |
| TOTAL | | | 41,331 | LBS | | | | | | |

| MARK | TOTAL | LENGTH (EACH) | LENGTH (TOTAL) (FEET) | TYPE | DIMENSIONS | | | | |
|---|---|---|---|---|---|---|---|---|---|
| | | | | | A | B | C | D | E |
| RAILING BARS - GFRP REINFORCING | | | | | | | | | |
| GR401 | 253 | 30'-0" | 7,590 | ST | | | | | |
| GR402 | 11 | 15'-0" | 165 | ST | | | | | |
| GR403 | 11 | 22'-0" | 242 | ST | | | | | |
| GR404 | 264 | 10'-2" | 2,684 | ST | | | | | |
| GR405 | 8 | 10'-6" | 84 | ST | | | | | |
| GR406 | 8 | 10'-9" | 86 | ST | | | | | |
| GR407 | 11 | 31'-1" | 342 | ST | | | | | |
| GR408 | 11 | 30'-10" | 339 | ST | | | | | |
| GR409 | 1 | 18'-11" | 19 | 19 | 17'-10" | 1'-1" | 3" | | |
| GR410 | 10 | 20'-1" | 201 | ST | | | | | |
| GR411 | 10 | 17'-10" | 178 | ST | | | | | |
| GR412 | 24 | 10'-0" | 240 | ST | | | | | |
| GR413 | 12 | 6'-4" | 76 | 25 | 2'-6" | 2'-5" | 1'-4 1/2" | 1 1/2" | 5" |
| GR414 | 12 | 4'-11" | 59 | ST | | | | | |
| GR415 | 1 | 16'-6" | 17 | 19 | 15'-5" | 1'-1" | 3" | | |
| GR416 | 22 | 1'-5" | 31 | ST | | | | | |
| | | | | | | | | | |
| TOTAL NO. 4 GFRP BARS | | | 12,353 | FT | | | | | |

## BAR BENDING DIAGRAMS

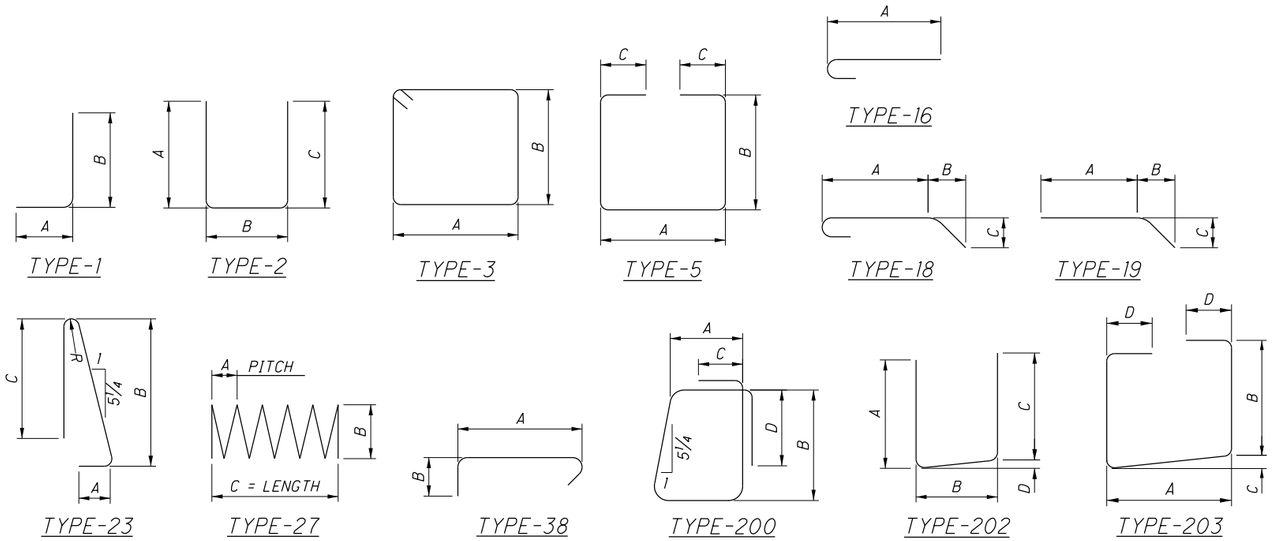


**NOTE:**

1. FOR ADDITIONAL NOTES, SEE SHT. NO. 36/37 .

DESIGN AGENCY
GPD GROUP
Gray, Pape & Dohanyan, Inc.
320 South Main Street, Akron, OH 44311 330.572.2100
Copyright GPD, Inc. Schemer, Aurora Reviewers, Inc. 2020

DESIGNED MOJ | DRAWN MOJ | REVIEWED DGN | DATE 1-18-21
CHECKED RHC | REVISED | STRUCTURE FILE NUMBER 7702648

REINFORCING BAR LISTS
BRIDGE NO. SUM-77-0927R
RAMP C2 OVER I.R.77 NB

SUM-077/277/224-VAR
PID No. 106002

37/37

1261
1288

O:\2017\2017258\ProjectData\SUM\06002\Design\Structures\SUM077_0927R\Sheets\077_0927R_SL001.dgn Sheet 2 1/17/2021 7:21:28 PM rvitelli

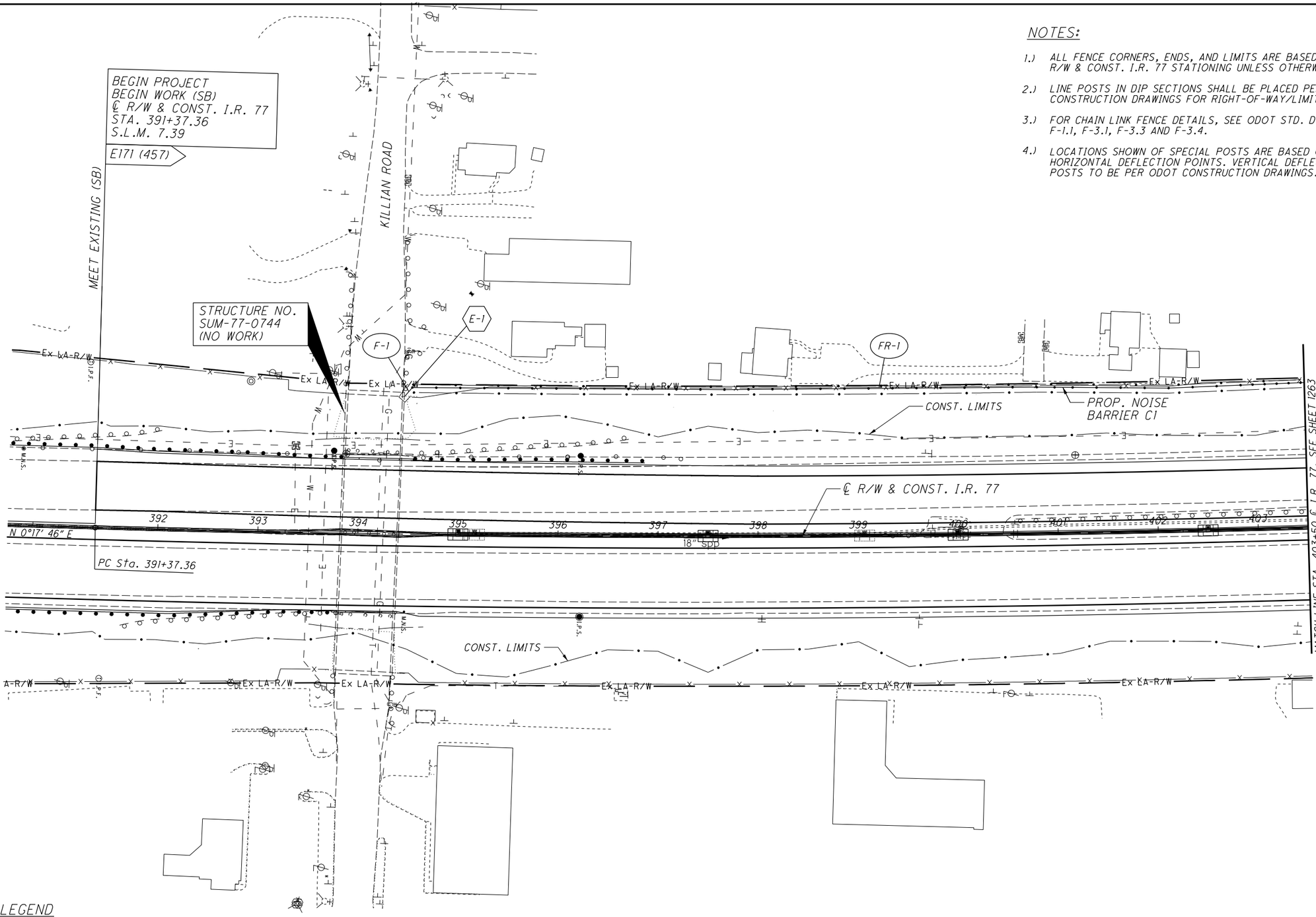


NOTES:

1.) ALL FENCE CORNERS, ENDS, AND LIMITS ARE BASED ON ℄ R/W & CONST. I.R. 77 STATIONING UNLESS OTHERWISE NOTED.

2.) LINE POSTS IN DIP SECTIONS SHALL BE PLACED PER ODOT CONSTRUCTION DRAWINGS FOR RIGHT-OF-WAY/LIMITED ACCESS FENCE.

3.) FOR CHAIN LINK FENCE DETAILS, SEE ODOT STD. DWGS. F-1.1, F-3.1, F-3.3 AND F-3.4.

4.) LOCATIONS SHOWN OF SPECIAL POSTS ARE BASED ON HORIZONTAL DEFLECTION POINTS. VERTICAL DEFLECTION POSTS TO BE PER ODOT CONSTRUCTION DRAWINGS.

FENCE LEGEND

E-# END POST ASSEMBLY

I-# INTERMEDIATE POST ASSEMBLY

EXISTING FENCE

PROPOSED FENCE

**FENCE LEGEND TABLE**

| | |
|---|---|
| E-1 | STA. 394+52.39<br>146.50' LT. I.R. 77<br>PLACED NEXT TO NOISE WALL |

FOR ESTIMATED QUANTITIES, SEE SHEET 423

HORIZONTAL SCALE IN FEET
0 25 50 100

CALCULATED KRM
CHECKED PJF

# FENCE PLAN - I.R. 77
# STA. 390+50 TO STA. 403+50

SUM-77 / 277 / 224
VARIOUS

1262
1288

D:\2017\2017258\ProjectData\SUM\106002\Design\Roadway\Sheets\106002_GX003.dgn Sheet 1/15/2021 3:55:34 PM lkirkland

## NOTES:

1.) ALL FENCE CORNERS, ENDS, AND LIMITS ARE BASED ON ℄ R/W & CONST. I.R. 77 STATIONING UNLESS OTHERWISE NOTED.

2.) LINE POSTS IN DIP SECTIONS SHALL BE PLACED PER ODOT CONSTRUCTION DRAWINGS FOR RIGHT-OF-WAY/LIMITED ACCESS FENCE.

3.) FOR CHAIN LINK FENCE DETAILS, SEE ODOT STD. DWGS. F-1.1, F-3.1, F-3.3 AND F-3.4.

4.) LOCATIONS SHOWN OF SPECIAL POSTS ARE BASED ON HORIZONTAL DEFLECTION POINTS. VERTICAL DEFLECTION POSTS TO BE PER ODOT CONSTRUCTION DRAWINGS.

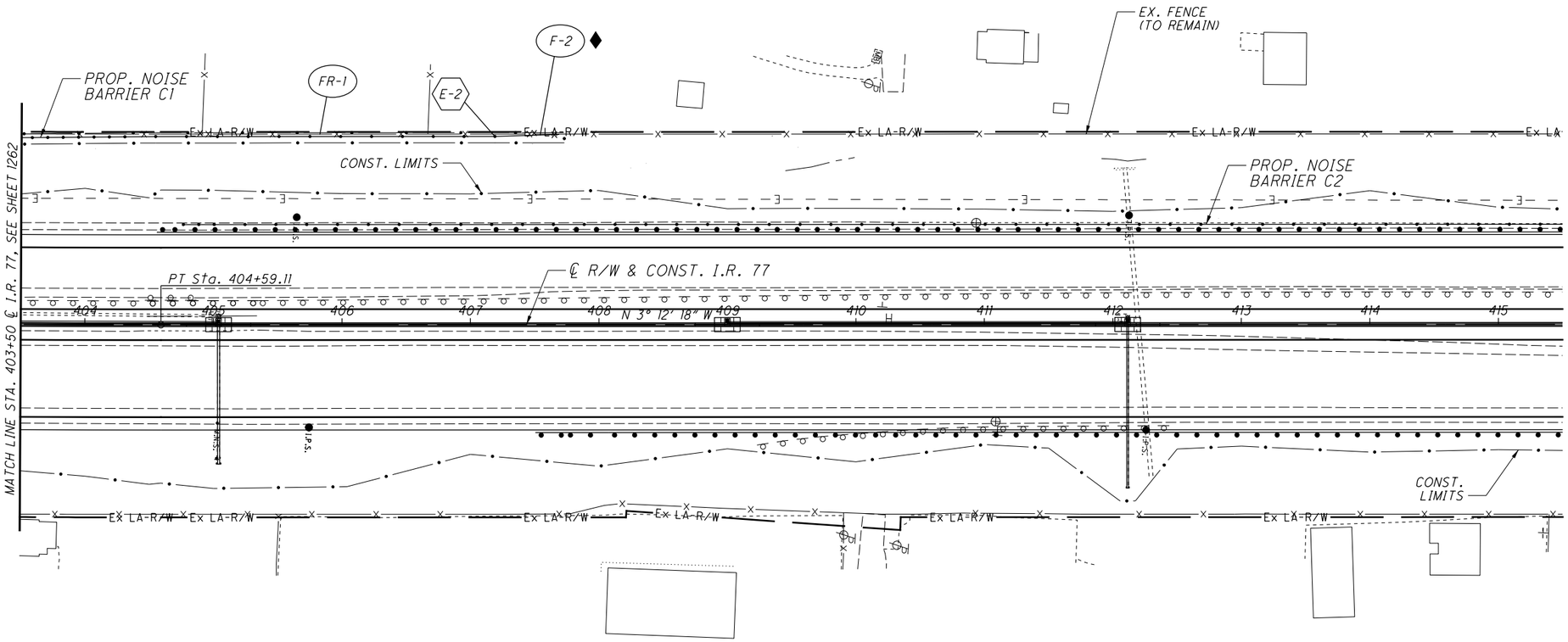


### FENCE LEGEND

- E-# — END POST ASSEMBLY
- I-# — INTERMEDIATE POST ASSEMBLY
- EXISTING FENCE
- PROPOSED FENCE

♦ = CUT AND REATTACH EXISTNG FENCE TO NEW LINE POST. MAINTAIN TENSION ON EXISTING FENCE.

**FENCE LEGEND TABLE**

| | |
|---|---|
| E-2 | STA. 407+19.12<br>146.50' LT. I.R. 77<br>PLACED NEXT TO NOISE WALL |

FOR ESTIMATED QUANTITIES, SEE SHEET 423

HORIZONTAL SCALE IN FEET
0 25 50 100

CALCULATED KRM
CHECKED PJF

FENCE PLAN - I.R. 77
STA. 403+50 TO STA. 415+50

SUM-77 / 277 / 224
VARIOUS

1263
1288

0:\2017\2017258\Project Data\SUM\06002\Design\Roadway\Sheets\06002_GX004.dgn Sheet 1/15/2021 3:55:37 PM lkirkland

## NOTES:

1.) ALL FENCE CORNERS, ENDS, AND LIMITS ARE BASED ON ℄ R/W & CONST. I.R. 77 STATIONING UNLESS OTHERWISE NOTED.

2.) LINE POSTS IN DIP SECTIONS SHALL BE PLACED PER ODOT CONSTRUCTION DRAWINGS FOR RIGHT-OF-WAY/LIMITED ACCESS FENCE.

3.) FOR CHAIN LINK FENCE DETAILS, SEE ODOT STD. DWGS. F-1.1, F-3.1, F-3.3 AND F-3.4.

4.) LOCATIONS SHOWN OF SPECIAL POSTS ARE BASED ON HORIZONTAL DEFLECTION POINTS. VERTICAL DEFLECTION POSTS TO BE PER ODOT CONSTRUCTION DRAWINGS.

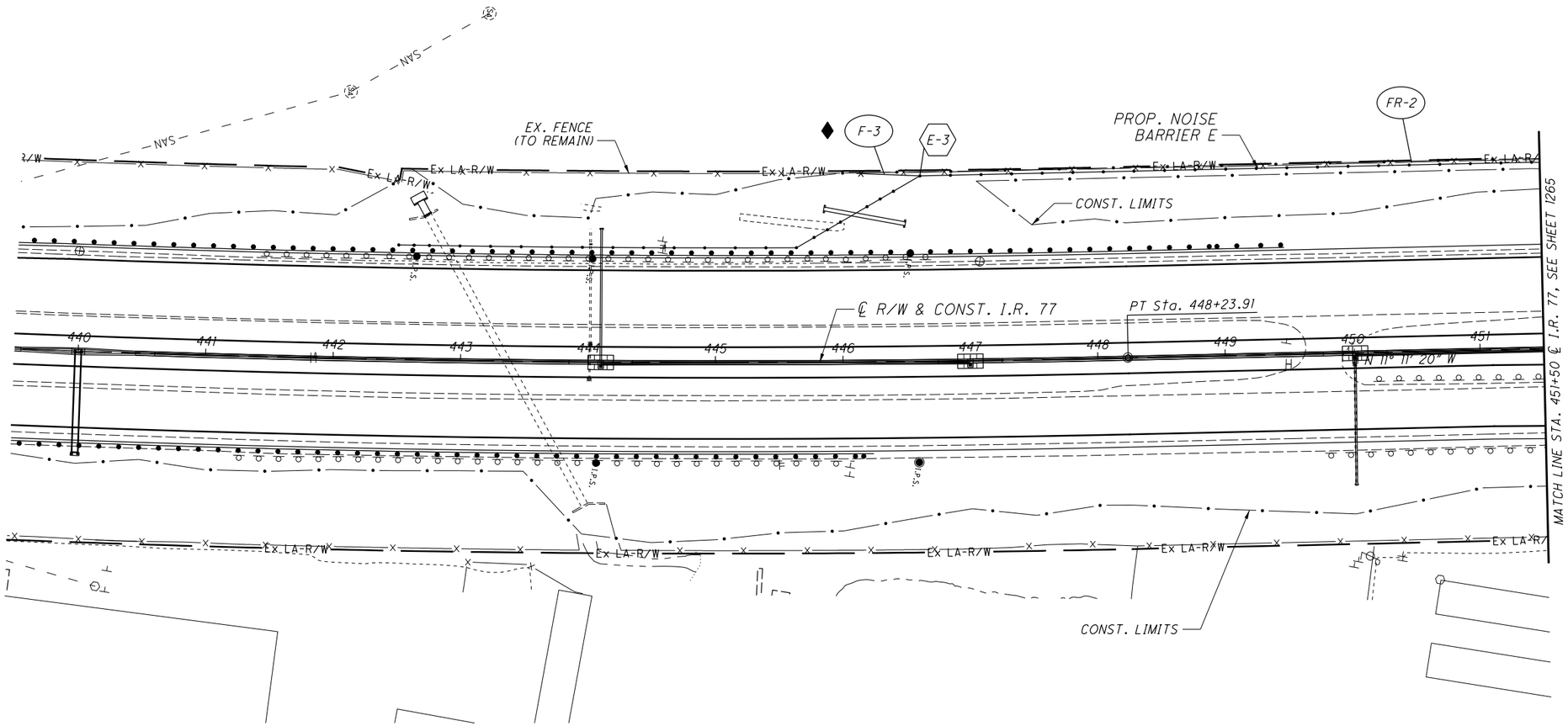


### FENCE LEGEND

- E-# — END POST ASSEMBLY
- I-# — INTERMEDIATE POST ASSEMBLY
- EXISTING FENCE
- PROPOSED FENCE

♦ = CUT AND REATTACH EXISTNG FENCE TO NEW LINE POST. MAINTAIN TENSION ON EXISTING FENCE.

| FENCE LEGEND TABLE | |
|---|---|
| E-3 | STA. 446+61.98<br>145.59' LT. I.R. 77<br>PLACED NEXT TO NOISE WALL |

FOR ESTIMATED QUANTITIES, SEE SHEET 423

N

0 25 50 100 HORIZONTAL SCALE IN FEET

CALCULATED KRM | CHECKED PJF

# FENCE PLAN - I.R. 77
# STA. 439+50 TO STA. 451+50

SUM-77/277/224
VARIOUS

1264
1288

O:\2017\2017258\ProjectData\SUM\06002\Design\Roadway\Sheets\06002_GX007.dgn Sheet 1/15/2021 3:55:41 PM lkirkland

## NOTES:

1.) ALL FENCE CORNERS, ENDS, AND LIMITS ARE BASED ON ℄ R/W & CONST. I.R. 77 STATIONING UNLESS OTHERWISE NOTED.

2.) LINE POSTS IN DIP SECTIONS SHALL BE PLACED PER ODOT CONSTRUCTION DRAWINGS FOR RIGHT-OF-WAY/LIMITED ACCESS FENCE.

3.) FOR CHAIN LINK FENCE DETAILS, SEE ODOT STD. DWGS. F-1.1, F-3.1, F-3.3 AND F-3.4.

4.) LOCATIONS SHOWN OF SPECIAL POSTS ARE BASED ON HORIZONTAL DEFLECTION POINTS. VERTICAL DEFLECTION POSTS TO BE PER ODOT CONSTRUCTION DRAWINGS.

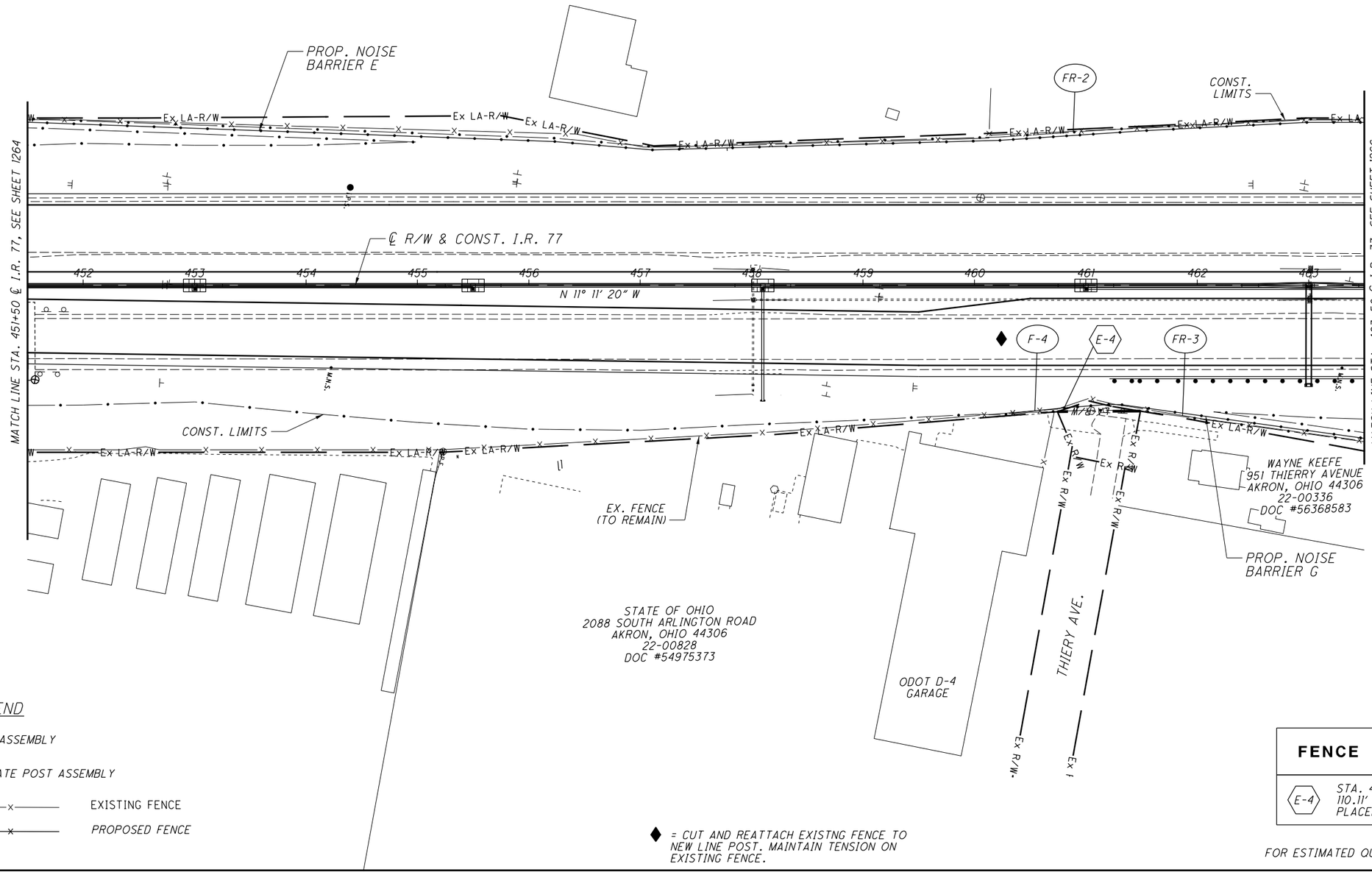


### FENCE LEGEND

- E-# — END POST ASSEMBLY
- I-# — INTERMEDIATE POST ASSEMBLY
- EXISTING FENCE
- PROPOSED FENCE

♦ = CUT AND REATTACH EXISTNG FENCE TO NEW LINE POST. MAINTAIN TENSION ON EXISTING FENCE.

| FENCE LEGEND TABLE | |
|---|---|
| E-4 | STA. 460+80.59<br>110.11' RT. I.R. 77<br>PLACED NEXT TO NOISE WALL |

FOR ESTIMATED QUANTITIES, SEE SHEET 423

HORIZONTAL SCALE IN FEET
0 25 50 100

CALCULATED KRM
CHECKED PJF

# FENCE PLAN - I.R. 77
# STA. 451+50 TO STA. 463+50

SUM-77/277/224
VARIOUS

1265
1288

0:\2017\2017258\ProjectData\SUM\106002\Design\Roadway\Sheets\106002_GX008.dgn Sheet 1/15/2021 3:55:45 PM lkirkland

NOTES:

1.) ALL FENCE CORNERS, ENDS, AND LIMITS ARE BASED ON ℄ R/W & CONST. I.R. 77 STATIONING UNLESS OTHERWISE NOTED.

2.) LINE POSTS IN DIP SECTIONS SHALL BE PLACED PER ODOT CONSTRUCTION DRAWINGS FOR RIGHT-OF-WAY/LIMITED ACCESS FENCE.

3.) FOR CHAIN LINK FENCE DETAILS, SEE ODOT STD. DWGS. F-1.1, F-3.1, F-3.3 AND F-3.4.

4.) LOCATIONS SHOWN OF SPECIAL POSTS ARE BASED ON HORIZONTAL DEFLECTION POINTS. VERTICAL DEFLECTION POSTS TO BE PER ODOT CONSTRUCTION DRAWINGS.

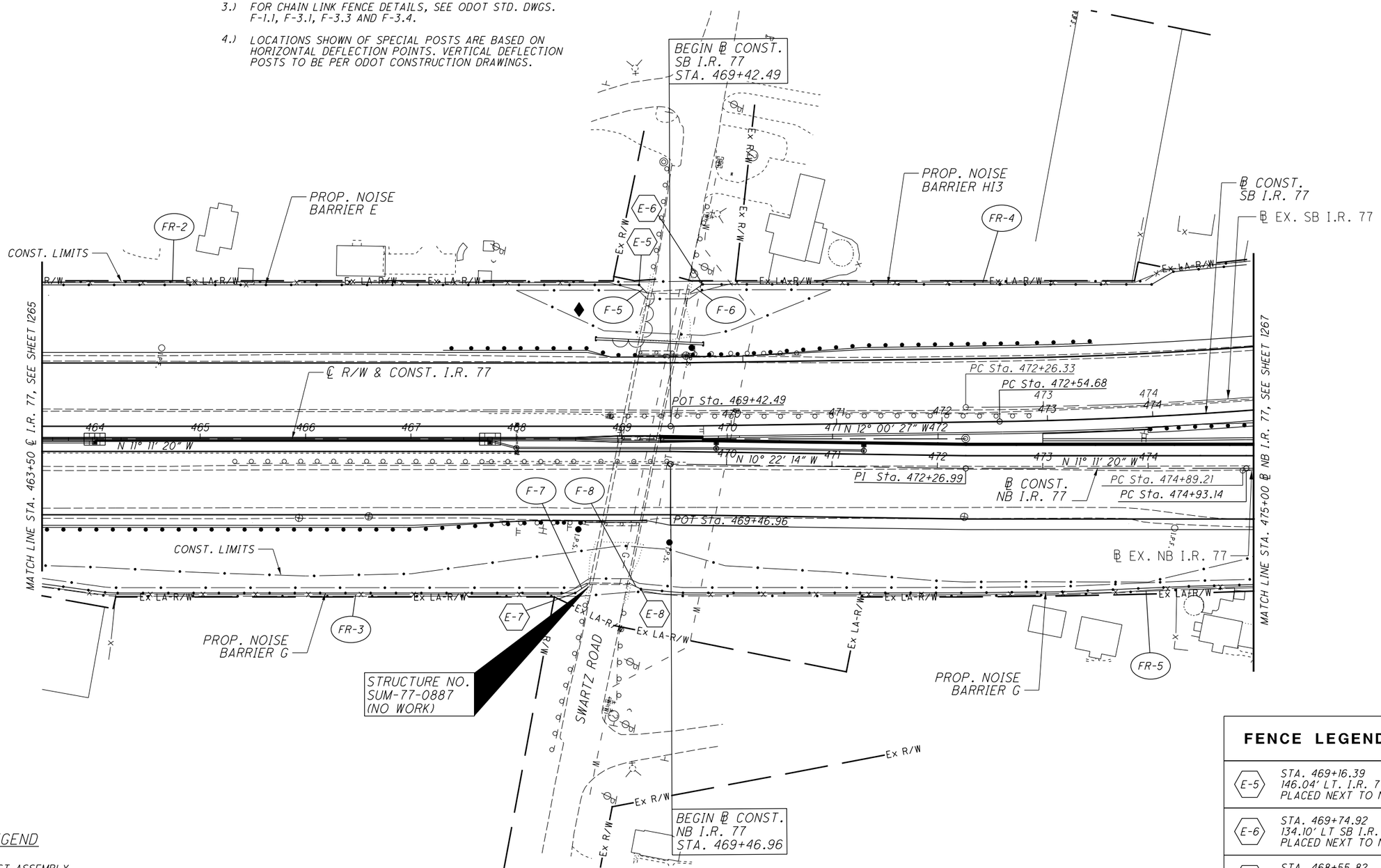


FENCE LEGEND

E-# END POST ASSEMBLY

I-# INTERMEDIATE POST ASSEMBLY

EXISTING FENCE

PROPOSED FENCE

| FENCE LEGEND TABLE | |
|---|---|
| E-5 | STA. 469+16.39<br>146.04' LT. I.R. 77<br>PLACED NEXT TO NOISE WALL |
| E-6 | STA. 469+74.92<br>134.10' LT SB I.R. 77<br>PLACED NEXT TO NOISE WALL |
| E-7 | STA. 468+55.82<br>146.25' RT. I.R. 77<br>PLACED NEXT TO NOISE WALL |
| E-8 | STA. 469+18.21<br>142.39' RT. I.R. 77<br>PLACED NEXT TO NOISE WALL |

FOR ESTIMATED QUANTITIES, SEE SHEET 423

HORIZONTAL SCALE IN FEET 0 25 50 100

CALCULATED KRM CHECKED PJF

# FENCE PLAN - I.R. 77/NB I.R. 77/SB I.R. 77 STA. 463+50 TO STA. 475+00

SUM-77/277/224 VARIOUS



0:\2017\2017258\Project Data\SUM\06002\Design\Roadway\Sheets\06602_GX009.dgn Sheet 1/15/2021 3:55:49 PM lkirkland

## NOTES:

1.) ALL FENCE CORNERS, ENDS, AND LIMITS ARE BASED ON ℄ CONST. SB I.R. 77 STATIONING UNLESS OTHERWISE NOTED.

2.) LINE POSTS IN DIP SECTIONS SHALL BE PLACED PER ODOT CONSTRUCTION DRAWINGS FOR RIGHT-OF-WAY/LIMITED ACCESS FENCE.

3.) FOR CHAIN LINK FENCE DETAILS, SEE ODOT STD. DWGS. F-1.1, F-3.1, F-3.3 AND F-3.4.

4.) LOCATIONS SHOWN OF SPECIAL POSTS ARE BASED ON HORIZONTAL DEFLECTION POINTS. VERTICAL DEFLECTION POSTS TO BE PER ODOT CONSTRUCTION DRAWINGS.

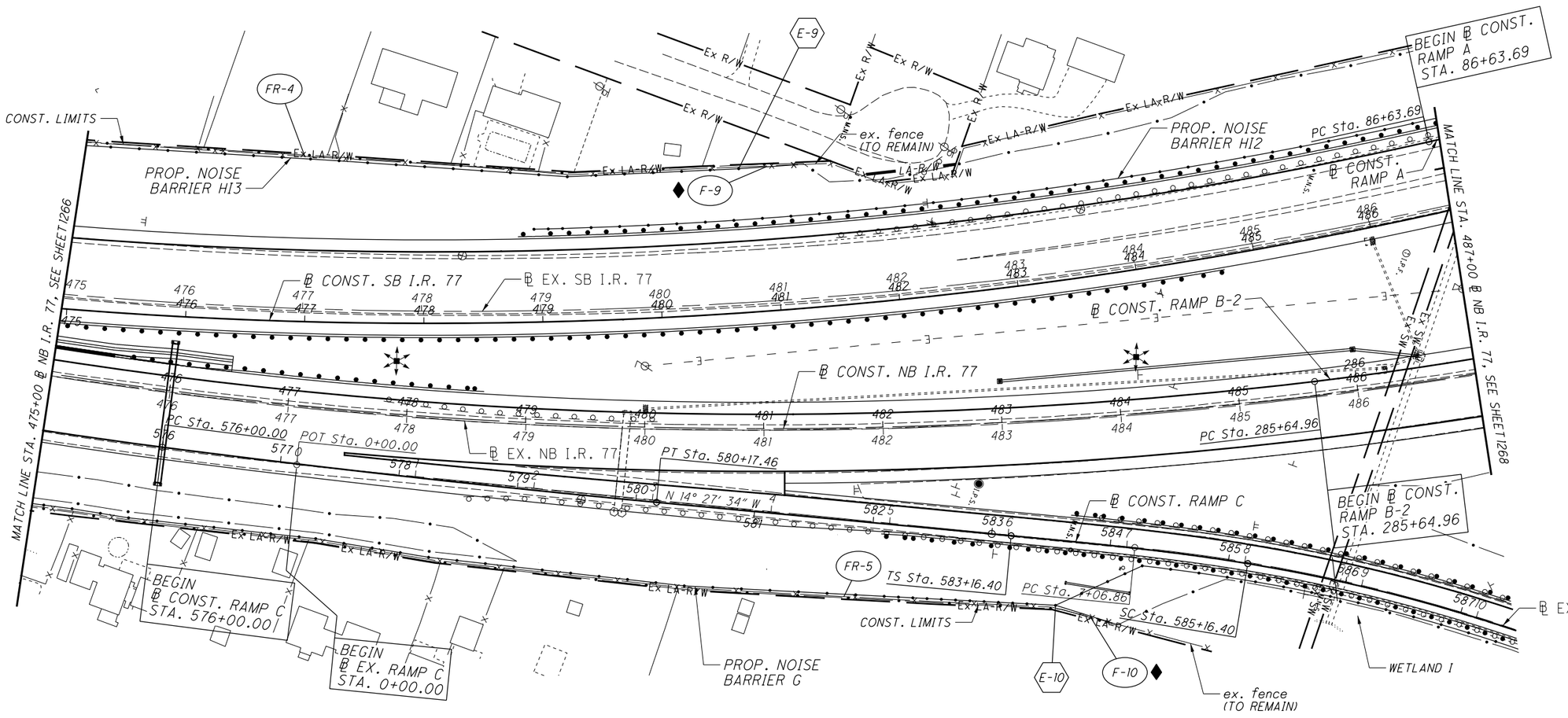


### FENCE LEGEND

E-# END POST ASSEMBLY

I-# INTERMEDIATE POST ASSEMBLY

EXISTING FENCE

PROPOSED FENCE

♦ = CUT AND REATTACH EXISTNG FENCE TO NEW LINE POST. MAINTAIN TENSION ON EXISTING FENCE.

| FENCE LEGEND TABLE | |
|---|---|
| E-9 | STA. 480+72.73<br>120.96' LT. SB I.R. 77<br>PLACED NEXT TO NOISE WALL |
| E-10 | STA. 583+59.12<br>54.64' RT. RAMP C<br>PLACED NEXT TO NOISE WALL |

FOR ESTIMATED QUANTITIES, SEE SHEET 423

HORIZONTAL SCALE IN FEET
0 25 50 100

CALCULATED KRM
CHECKED PJF

# SUM-77/277/224 VARIOUS

# FENCE PLAN - I.R. 77/NB I.R. 77/SB I.R. 77 STA. 475+00 TO STA. 487+00



D:\2017\2017258\ProjectData\SUM\I06002\Design\Roadway\Sheets\I06002_GX010.dgn Design 1/15/2021 3:55:52 PM Ikirkland

## NOTES:

1.) ALL FENCE CORNERS, ENDS, AND LIMITS ARE BASED ON ℄ CONST. RAMP A STATIONING UNLESS OTHERWISE NOTED.

2.) LINE POSTS IN DIP SECTIONS SHALL BE PLACED PER ODOT CONSTRUCTION DRAWINGS FOR RIGHT-OF-WAY/LIMITED ACCESS FENCE.

3.) FOR CHAIN LINK FENCE DETAILS, SEE ODOT STD. DWGS. F-1.1, F-3.1, F-3.3 AND F-3.4.

4.) LOCATIONS SHOWN OF SPECIAL POSTS ARE BASED ON HORIZONTAL DEFLECTION POINTS. VERTICAL DEFLECTION POSTS TO BE PER ODOT CONSTRUCTION DRAWINGS.

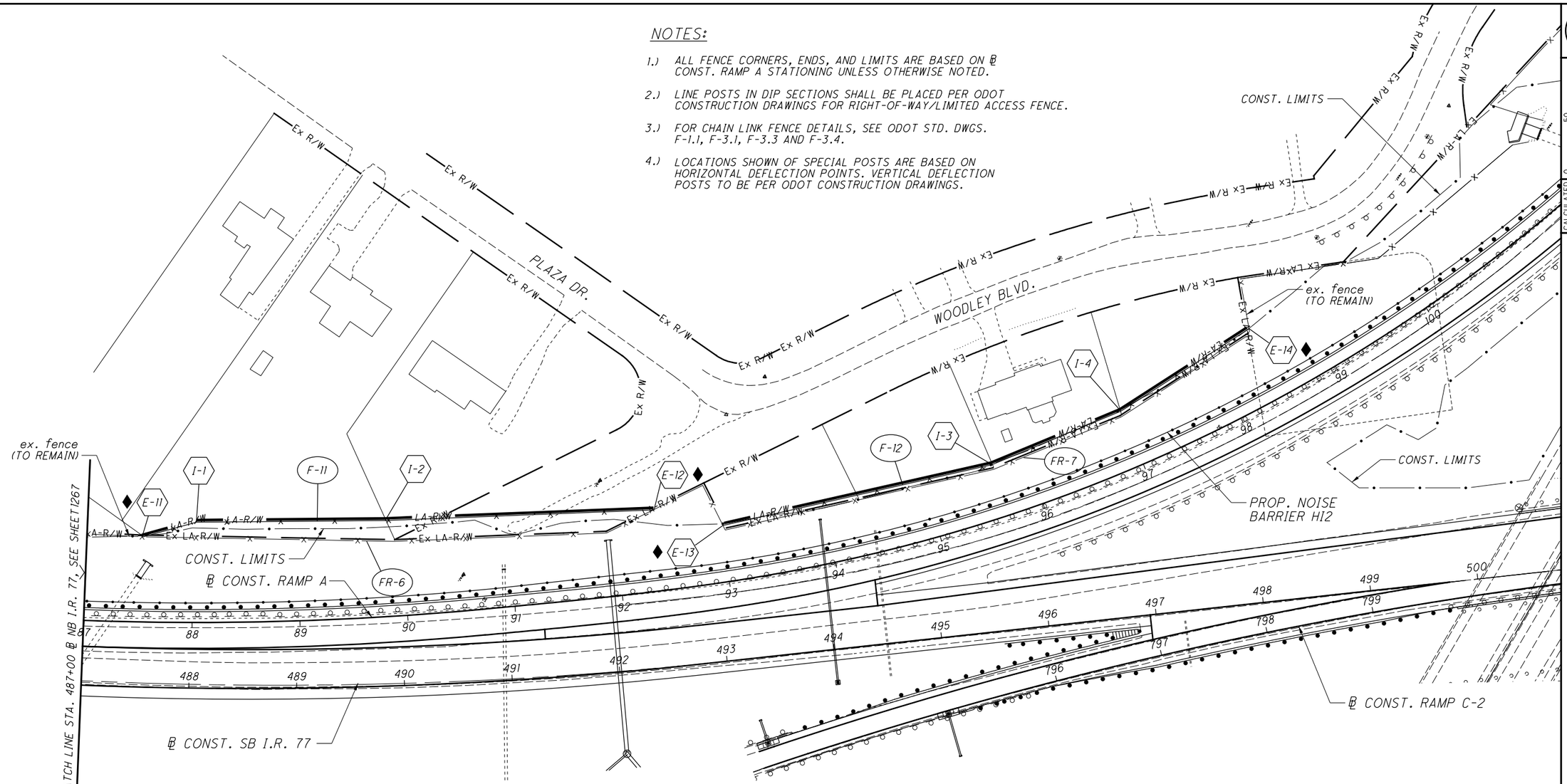


## FENCE LEGEND

- E-# — END POST ASSEMBLY
- I-# — INTERMEDIATE POST ASSEMBLY
- EXISTING FENCE
- PROPOSED FENCE

♦ = CUT AND REATTACH EXISTNG FENCE TO NEW END POST. MAINTAIN TENSION ON EXISTING FENCE.

## FENCE LEGEND TABLE

| | |
|---|---|
| I-1 STA. 88+04.01 92.95' LT. RAMP A | E-11 STA. 87+52.08 78.60' LT. RAMP A MEET EXISTING FENCE |
| I-2 STA. 89+84.65 89.03' LT. RAMP A | E-12 STA. 92+38.86 75.22' LT. RAMP A MEET EXISTING FENCE |
| I-3 STA. 95+66.50 49.45' RT. RAMP A | E-13 STA. 93+01.79 52.27' LT. RAMP A MEET EXISTING FENCE |
| I-4 STA. 97+00.44 53.32' RT. RAMP A | E-14 STA. 98+46.73 69.82' LT. RAMP A MEET EXISTING FENCE |

FOR ESTIMATED QUANTITIES, SEE SHEET 423

HORIZONTAL SCALE IN FEET: 0, 25, 50, 100

CALCULATED KRM | CHECKED PJF

# FENCE PLAN
## STA. 487+00 TO STA. 500+00

SUM-77/277/224
VARIOUS

1268
1288

O:\2017\2017258\Project Data\SUM\06002\Design\Roadway\Sheets\06002_GX001.dgn Sheet 1/15/2021 3:56:03 PM lkirkland

## NOTES:

1.) ALL FENCE CORNERS, ENDS, AND LIMITS ARE BASED ON ℄ R/W & CONST. I.R. 277/U.S. 224 STATIONING UNLESS OTHERWISE NOTED.

2.) LINE POSTS IN DIP SECTIONS SHALL BE PLACED PER ODOT CONSTRUCTION DRAWINGS FOR RIGHT-OF-WAY/LIMITED ACCESS FENCE.

3.) FOR CHAIN LINK FENCE DETAILS, SEE ODOT STD. DWGS. F-1.1, F-3.1, F-3.3 AND F-3.4.

4.) LOCATIONS SHOWN OF SPECIAL POSTS ARE BASED ON HORIZONTAL DEFLECTION POINTS. VERTICAL DEFLECTION POSTS TO BE PER ODOT CONSTRUCTION DRAWINGS.

END WORK
RAMP B-2
STA. 33+82.00

END ℄ EX. RAMP B
STA. 27+97.76

BEGIN ℄ CONST.
RAMP B
STA. 197+05.36

CONST. LIMITS

EX. FENCE
(TO REMAIN)

Ex LA-R/W

℄ CONST. RAMP B-2

℄ EX. RAMP B

ST Sta. 197+05.36

ST Sta. 24+64.81

POT Sta. 27+97.76

S 83° 32' 30" W

28 S 83° 15' 20" W 27

N 84° 41' 15" E

POT Sta. 33+82.00

℄ R/W & CONST. I.R. 277/U.S. 224

MATCH LINE STA. 234+50 ℄ I.R. 277/U.S. 224, SEE SHEET 1270

I.P.S.

E-15

F-13

FR-8

PROP. NOISE BARRIER HII

BEGIN WORK (WB)
I.R. 277/U.S. 224
STA. 225+00.00

### FENCE LEGEND

E-# END POST ASSEMBLY

I-# INTERMEDIATE POST ASSEMBLY

EXISTING FENCE

PROPOSED FENCE

♦ = CUT AND REATTACH EXISTNG FENCE TO NEW LINE POST. MAINTAIN TENSION ON EXISTING FENCE.

### FENCE LEGEND TABLE

| | |
|---|---|
| E-15 | STA. 232+10.61<br>121.63' RT. I.R. 277/U.S. 224<br>PLACED NEXT TO NOISE WALL |

FOR ESTIMATED QUANTITIES, SEE SHEET 423

HORIZONTAL SCALE IN FEET
0 25 50 100

CALCULATED KRM
CHECKED PJF

# FENCE PLAN - I.R. 277 / U.S. 224
# BEGIN TO STA. 234+50

SUM-77 / 277 / 224
VARIOUS



D:\2017\20171258\ProjectData\SUM\106002\Design\Roadway\Sheets\106002_GX020.dgn Sheet 1/15/2021 3:56:15 PM lkirkland

## NOTES:

1.) ALL FENCE CORNERS, ENDS, AND LIMITS ARE BASED ON ℄ R/W & CONST. I.R. 277/U.S. 224 STATIONING UNLESS OTHERWISE NOTED.

2.) LINE POSTS IN DIP SECTIONS SHALL BE PLACED PER ODOT CONSTRUCTION DRAWINGS FOR RIGHT-OF-WAY/LIMITED ACCESS FENCE.

3.) FOR CHAIN LINK FENCE DETAILS, SEE ODOT STD. DWGS. F-1.1, F-3.1, F-3.3 AND F-3.4.

4.) LOCATIONS SHOWN OF SPECIAL POSTS ARE BASED ON HORIZONTAL DEFLECTION POINTS. VERTICAL DEFLECTION POSTS TO BE PER ODOT CONSTRUCTION DRAWINGS.

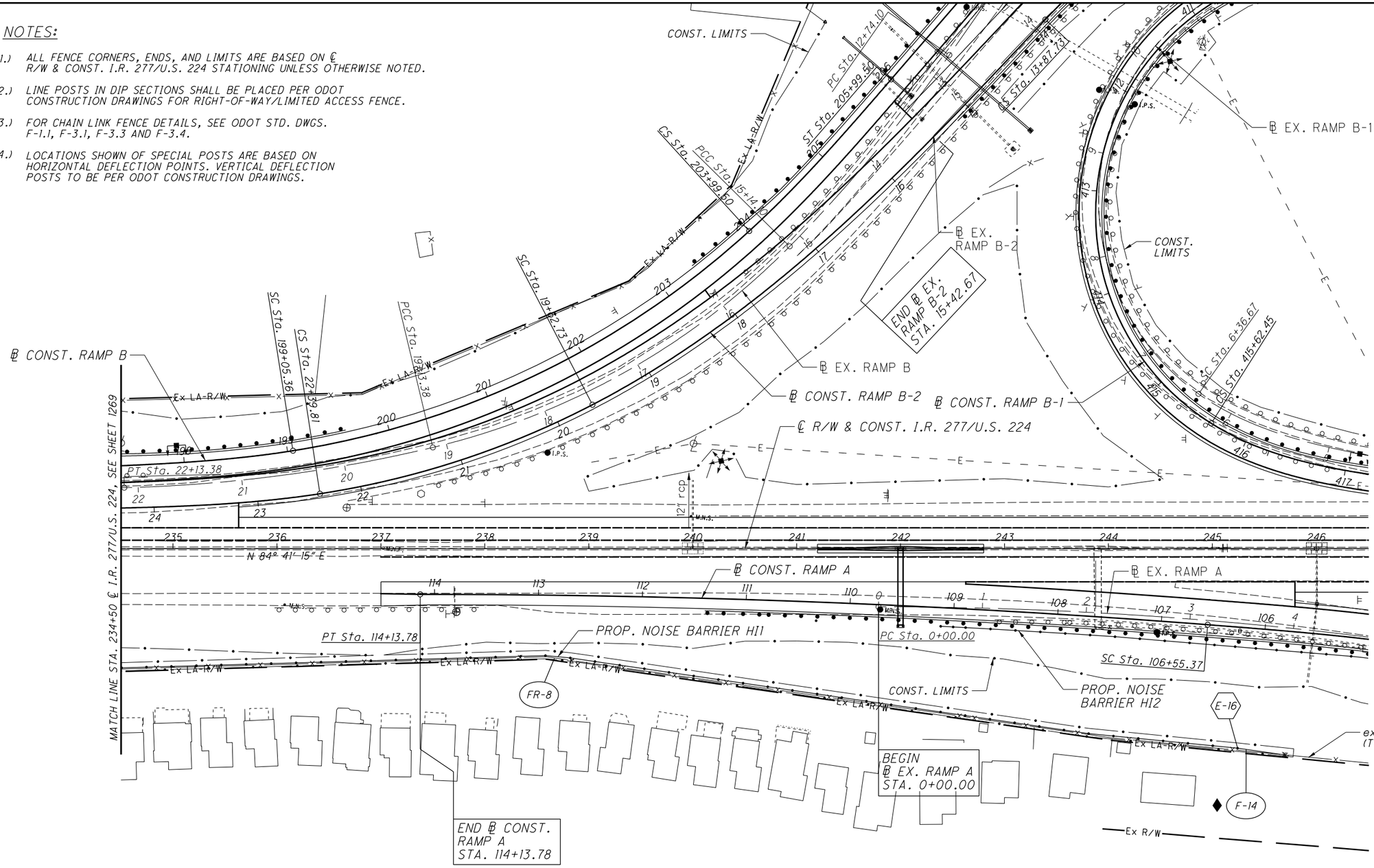


## FENCE LEGEND

- E-# — END POST ASSEMBLY
- I-# — INTERMEDIATE POST ASSEMBLY
- EXISTING FENCE
- PROPOSED FENCE

♦ = CUT AND REATTACH EXISTNG FENCE TO NEW LINE POST. MAINTAIN TENSION ON EXISTING FENCE.

| FENCE LEGEND TABLE | |
|---|---|
| E-16 | STA. 106+17.26<br>116.20' LT. RAMP A<br>PLACED NEXT TO NOISE WALL |

FOR ESTIMATED QUANTITIES, SEE SHEET 423

HORIZONTAL SCALE IN FEET: 0, 25, 50, 100

CALCULATED KRM
CHECKED PJF

# FENCE PLAN - I.R. 277 / U.S. 224
## STA. 234+50 TO STA. 246+50

SUM-77 / 277 / 224
VARIOUS

1270
1288

O:\2017\2017258\ProjectData\SUM\106002\Design\Roadway\Sheets\106002_GX021.dgn Sheet 1/15/2021 3:56:18 PM lkirkland

## NOTES:

1.) ALL FENCE CORNERS, ENDS, AND LIMITS ARE BASED ON ℄ R/W & CONST. I.R. 277/U.S. 224 STATIONING UNLESS OTHERWISE NOTED.

2.) LINE POSTS IN DIP SECTIONS SHALL BE PLACED PER ODOT CONSTRUCTION DRAWINGS FOR RIGHT-OF-WAY/LIMITED ACCESS FENCE.

3.) FOR CHAIN LINK FENCE DETAILS, SEE ODOT STD. DWGS. F-1.1, F-3.1, F-3.3 AND F-3.4.

4.) LOCATIONS SHOWN OF SPECIAL POSTS ARE BASED ON HORIZONTAL DEFLECTION POINTS. VERTICAL DEFLECTION POSTS TO BE PER ODOT CONSTRUCTION DRAWINGS.

PROP. NOISE BARRIER K

℄ EX. RAMP D

CONST. LIMITS

ex. fence (TO REMAIN)

BEGIN ℄ EX. RAMP D STA. 0+00.00

BEGIN ℄ CONST. RAMP D STA. 887+98.38

℄ CONST. RAMP D

PC Sta. 0+00.00

PC Sta. 887+98.38

F-15

E-17

FR-9

SAWCUT

TYPE E

℄ R/W & CONST. I.R. 277/U.S. 224

N 84° 41' 15" E

MATCH LINE STA. 270+50 ℄ I.R. 277/U.S. 224, SEE SHEET 1272

CS Sta. 899+01.12

SC Sta. 897+17.13

CS Sta. 895+17.13

CS Sta. 9+43.78

CS Sta. 7+53.78

Ex LA-R/W

PT Sta. 4+23.08

TS Sta. 4+39.07

CS Sta. 683+18.39

SC Sta. 685+18.39

SC Sta. 6+39.07

℄ EX. RAMP C-1

BEGIN ℄ CONST. RAMP C-2 STA. 781+45.30

END ℄ EX. RAMP C-2 STA. 17+81.12

℄ CONST. RAMP C-2

POT Sta. 17+81.12

℄ EX. RAMP C-2

TS Sta. 784+82.55

PT Sta. 16+61.74

℄ CONST. RAMP C-1

CST Sta. 694+94.95

CST Sta. 15+62.36

PCC Sta. 22+23.50

PCC Sta. 599+38.22

℄ EX. RAMP C

PC Sta. 781+45.30

℄ CONST. RAMP C

CS Sta. 782+93.84

Ex LA-R/W

I.P.S.

M.N.S.

SAN

### FENCE LEGEND

E-# END POST ASSEMBLY

I-# INTERMEDIATE POST ASSEMBLY

EXISTING FENCE

PROPOSED FENCE

### FENCE LEGEND TABLE

| | |
|---|---|
| E-17 | STA. 890+62.72<br>75.44' RT. RAMP D<br>PLACED NEXT TO NOISE WALL |

♦ = CUT AND REATTACH EXISTNG FENCE TO NEW LINE POST. MAINTAIN TENSION ON EXISTING FENCE.

FOR ESTIMATED QUANTITIES, SEE SHEET 423

HORIZONTAL SCALE IN FEET
0 25 50 100

CALCULATED KRM
CHECKED PJF

# FENCE PLAN - I.R. 277/U.S. 224
## STA. 258+50 TO STA. 270+50

SUM-77/277/224
VARIOUS



D:\2017\20172581\ProjectData\SUM\06002\Design\Roadway\Sheets\06002_GX023.dgn Sheet 1/15/2021 3:56:22 PM lkirkland

## NOTES:

1.) ALL FENCE CORNERS, ENDS, AND LIMITS ARE BASED ON ℄ R/W & CONST. I.R. 277/U.S. 224 STATIONING UNLESS OTHERWISE NOTED.

2.) LINE POSTS IN DIP SECTIONS SHALL BE PLACED PER ODOT CONSTRUCTION DRAWINGS FOR RIGHT-OF-WAY/LIMITED ACCESS FENCE.

3.) FOR CHAIN LINK FENCE DETAILS, SEE ODOT STD. DWGS. F-1.1, F-3.1, F-3.3 AND F-3.4.

4.) LOCATIONS SHOWN OF SPECIAL POSTS ARE BASED ON HORIZONTAL DEFLECTION POINTS. VERTICAL DEFLECTION POSTS TO BE PER ODOT CONSTRUCTION DRAWINGS.

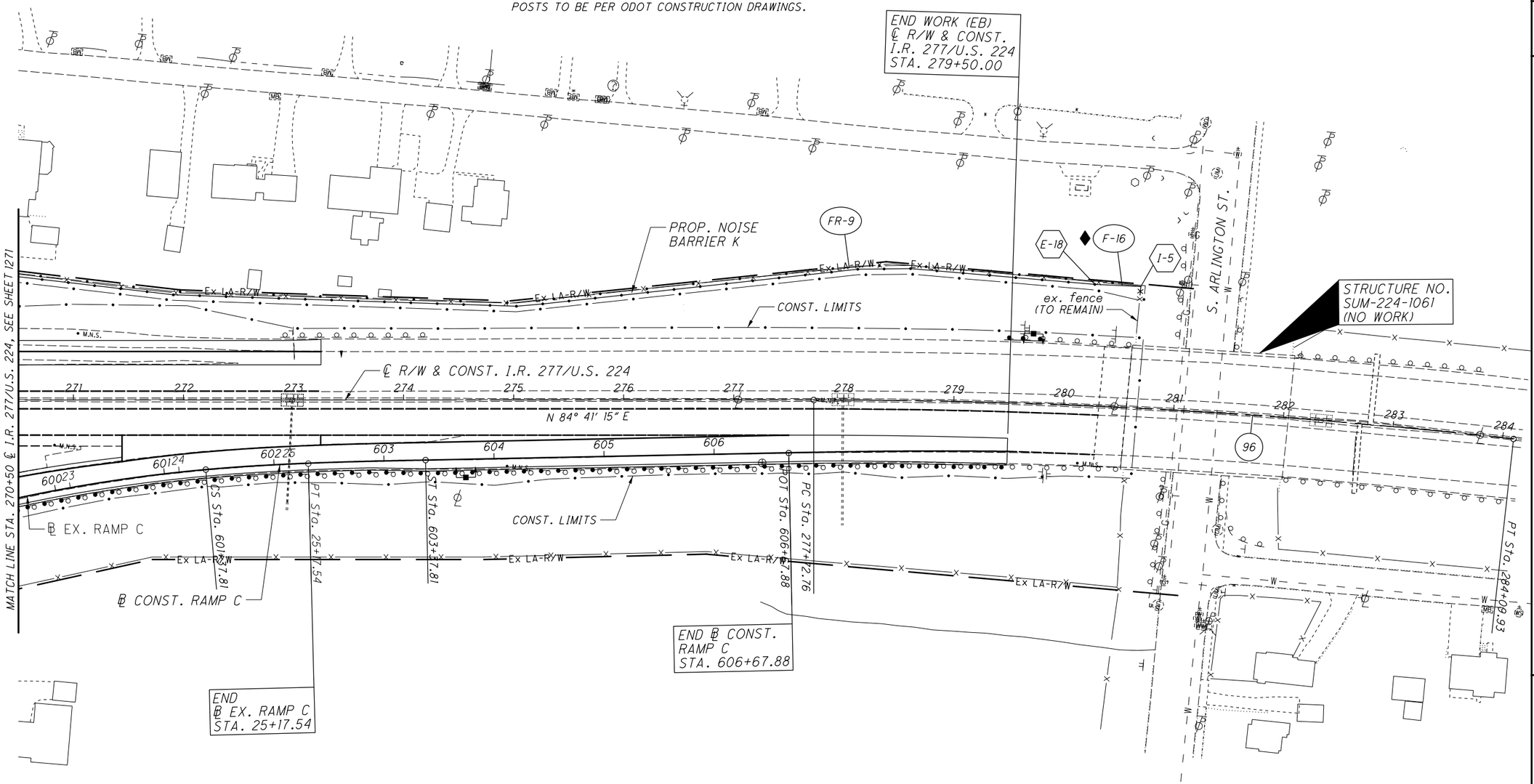


## FENCE LEGEND

- E-# — END POST ASSEMBLY
- I-# — INTERMEDIATE POST ASSEMBLY
- EXISTING FENCE
- PROPOSED FENCE

♦ = CUT AND REATTACH EXISTNG FENCE TO NEW LINE POST. MAINTAIN TENSION ON EXISTING FENCE.

| FENCE LEGEND TABLE | |
|---|---|
| E-18 | STA. 280+23.33<br>110.63' LT. I.R. 277/U.S. 224<br>PLACED NEXT TO NOISE WALL |
| I-5 | STA. 280+64.43<br>110.64' LT. I.R. 277/U.S. 224<br>MEET EXISTING FENCE |

FOR ESTIMATED QUANTITIES, SEE SHEET 423

HORIZONTAL SCALE IN FEET
0 25 50 100

CALCULATED KRM
CHECKED PJF

# FENCE PLAN - I.R. 277/U.S. 224 STA. 270+50 TO END

SUM-77/277/224
VARIOUS



O:\2017\2017258\ProjectData\SUM\06002\Design\Roadway\Sheets\06602_GX024.dgn Sheet 1/15/2021 3:56:25 PM lkirkland

# RIGHT OF WAY LEGEND SHEET SUM-77/277/224

SUMMIT COUNTY
COVENTRY TOWNSHIP
R-11, T-1, TRACT 11

## PROJECT DESCRIPTION

PROJECT CONSISTS OF FULL DEPTH RECONSTRUCTION OF 2.7 MILES OF I-77, INCLUDING AN ADDITIONAL THROUGH LANE, AND RECONSTRUCTION OF THE I-77/I-277/US-224 INTERCHANGE IN SUMMIT COUNTY. PROJECT ALSO INCLUDES THE RECONSTRUCITON OF THE RAMP C-2 BRIDGES OVER WARNER ROAD AND WIDENING AND REDECKING OF THE I-77 BRIDGES OVER THE TUSCARAWAS RIVER.

THIS IMPROVEMENT IS ESPECIALLY DESIGNED FOR THROUGH TRAFFIC AND HAS BEEN DECLARED A LIMITED ACCESS HIGHWAY OR FREEWAY BY ACTION OF THE DIRECTOR IN ACCORDANCE WITH THE PROVISIONS OF SECTION 5511.02 OF THE REVISED CODE OF OHIO.

TYPES OF TITLE LEGEND:
WL = FEE SIMPLE WITH LIMITATION OF ACCESS

NOTES: THE LOCATION OF THE UNDERGROUND UTILITIES SHOWN ON THE PLANS ARE OBTAINED FROM THE OWNER OF THE UTILITIES AS REQUIRED BY SECTION 153.64 O.R.C.

| UTILITY OWNERS | | | |
|---|---|---|---|
| Type | Name and Address | Type | Name and Address |
| Comm. | AT&T - Ohio<br>50 W. Bowery St., 6th floor<br>Akron, OH 44313 | Comm. | Everstream<br>1228 Euclid Ave., Suite 250<br>Cleveland, OH 44115 |
| Comm. | Charter Communication<br>(Spectrum/TimeWarner)<br>1200 Brownstone Ave.<br>Akron, OH 44310 | Electric | First Energy (Ohio Edison)<br>1910 W. Market St. Bldg. 3<br>Akron, OH 44313 |
| Water | Akron Water Distribution<br>1420 Triplett Blvd.<br>Akron, OH 44306 | Gas | G & O Resources LTD<br>96 E. Crosier St.<br>Akron, OH 44311 |
| Sewer | Akron Sewer Maintenance<br>2460 Akron Peninsula Rd.<br>Akron, OH 44313 | Gas | Knox Energy Coop<br>5940 S.R. 7<br>Kinsman, OH 44428 |
| Traffic | City of Akron Traffic<br>1420 Triplett Blvd., Bldg #2<br>Akron, OH 44306 | Comm. | Lightower Fiber Networks (Crown Castle)<br>15565 Neo Parkway<br>Garfield Heights, OH 44128 |
| Comm. | Crown Castle (Lightower)<br>15565 Neo Parkway<br>Garfield Heights, OH 44128 | Comm. | MCI (Verizon)<br>120 Ravine St.<br>Akron, OH 44303 |
| Gas | Dominion Energy Ohio<br>320 Springside Dr., Suite 320<br>Akron, OH 44333 | Traffic | Odot District 4 (Traffic)<br>2088 S. Arlington Rd.<br>Akron, OH 44306 |
| Gas | Everflow Eastern Partners LP<br>29093 S.R. 62<br>Salem, OH 44460 | Sewer | Summit County Sanitary Department<br>1180 S. Main St, Suite 201<br>Akron, OH 44301 |

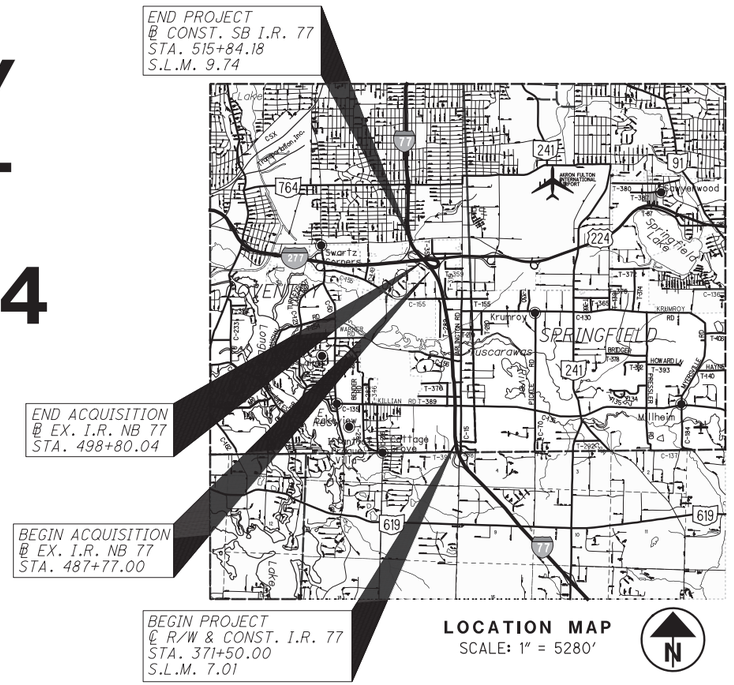


LOCATION MAP
SCALE: 1" = 5280'

## INDEX OF SHEETS:


| | |
|---|---|
| LEGEND SHEET | 1 |
| CENTERLINE PLAT | 2-12 |
| PROPERTY MAP | 13 |
| SUMMARY OF ADDITIONAL R/W | 14 |
| R/W TOPOGRAPHIC SHEET | 15 |
| R/W BOUNDARY SHEET | 16 |


**UNDERGROUND UTILITIES**
Contact Two Working Days Before You Dig
OHIO811.org Before You Dig
OHIO811, 8-1-1, or 1-800-362-2764
(Non-members must be called directly)

## PLANS PREPARED BY:

FIRM NAME : NEAS Inc.
R/W DESIGNER: WEBSTER STOWE
R/W REVIEWER: CHARLES W. PRICE JR.
FIELD REVIEWER: DANIEL G. LOSONCY
PRELIMINARY FIELD REVIEW DATE:
TRACINGS FIELD REVIEW DATE: 02/20/2020
OWNERSHIP UPDATED BY: WEBSTER STOWE
DATE COMPLETED: 04/09/2020
PLAN COMPLETION DATE: 04/10/2020

## STRUCTURE KEY

RESIDENTIAL
COMMERCIAL
OUT-BUILDING

## CONVENTIONAL SYMBOLS

County Line
Township Line
Section Line
Corporation Line or
Fence Line (Ex) (Pr)
Center Line
Right of Way (Ex) Ex R/W
Right of Way (Pr) R/W
Limited Access (Ex) Ex LA-R/W
Limited Access (Pr) LA-R/W
Standard Highway Ease.(Ex) Ex SH
Standard Highway Ease.(Pr) SH
Temporary Right of Way TMP
Channel Ease. (Pr) CH
Utility Ease. (Ex) Ex U
Railroad or
Guardrail (Ex) (Pr)
Construction Limits
Edge of Pavement (Ex)
Edge of Pavement (Pr)
Edge of Shoulder (Ex)
Edge of Shoulder ( Pr)
Ditch / Creek (Ex)
Ditch / Creek (Pr)
Tree Line (Ex)
Ownership Hook Symbol , Example
Property Line Symbol , Example
Break Line Symbol , Example
Tree (Pr) , Tree (Ex) , Shrub (Ex)
Tree (Remove) , Shrub (Remove)
Evergreen (Ex) , Stump
Evergreen (Remove) , Stump (Remove)
Wetland (Pr) , Grass (Pr) , Aerial Target
Post (Ex) , Mailbox (Ex) MB , Mailbox (Pr) MB
Light (Ex) , Telephone Marker (Ex) HTEL
Fire Hydrant (Ex) , Water Meter (Ex) W
Water Valve (Ex) , Utility Valve Unknown (Ex.)
Telephone Pole (Ex) , Power Pole (Ex)
Light Pole (Ex)

SURVEYORS SEAL

STATE OF OHIO · JOSHUA R. MIHELCIC · REGISTERED PROFESSIONAL SURVEYOR · 04-09-2020

I, Joshua R. Mihelcic, P. S. have conducted a survey of the existing conditions for the Ohio Department of Transportation between the months of November 2017 through January 2020. The results of that survey are contained herein. The horizontal coordinates expressed herein are based on the Ohio State Plane Coordinates System, North Zone, NAD 83(2011). Coordinates are ground coordinates and distances are ground distances. Scale the ground coordinates about point 0,0,0 by the project adjustment factor of 0.99989474882 to obtain grid coordinates. Topographic features shown herein are a combination of conventional ground survey and aerial survey. The aerial survey was collected during the winter/spring of 2018. As a part of this project I have reestablished the locations of the existing property lines and the existing centerline of Right of Way for property takes contained herein. All of my work contained herein was conducted in accordance with Ohio Administrative Code 4733-37 commonly known as "Minimum Standards for Boundary Surveys in the State of Ohio" unless noted. The words I and my as used herein are to mean either myself or someone working under my direct supervision.

04-09-2020
Joshua R. Mihelcic, Professional Land Surveyor of Ohio, No. 8453 Date

SURVEYORS SEAL

STATE OF OHIO · CHARLES W. PRICE, JR. S-7825 · REGISTERED PROFESSIONAL SURVEYOR

I, Charles W. Price, Jr., P. S. have established the proposed property lines, calculated the Gross Take, Present Roadway Occupied (PRO), Net Take and Net Residue; as well as prepared the legal descriptions necessary to acquire these parcels as shown herein. As a part of this work I have set right of way monuments at the property corners, property line intersections, points along the right of way and/or angle points on the right of way, Section Corners and other points as shown herein. All of my work contained herein was conducted in accordance with Ohio Administrative Code 4733-37 commonly known as "Minimum Standards for Boundary Surveys in the State of Ohio" unless noted. The words I and my as used herein are to mean either myself or someone working under my direct supervision.

4-14-2020
Charles W. Price Jr., Professional Land Surveyor of Ohio, No. 7825 Date

FEDERAL PROJECT NO. E171(457)
PID NO. 106002
CALCULATED WWS CHECKED CWP

RIGHT OF WAY LEGEND SHEET
SUM-77/277/224
VARIOUS

1 / 16

1273
1288

P:\ODOTcadd\Projects\Data\17-029\SUM77_277_224\06002_SUM_77_277_224\Design\RW Sheets\06002_RL001.dgn Sheet 4/9/2020 9:05:01 AM Wstowe

SETTING OF ALL MONUMENTS SHALL BE PERFORMED BY A SURVEYOR REGISTERED IN THE STATE OF OHIO. THE MONUMENT ASSEMBLIES AND REFERENCE MONUMENTS WILL BE INSTALLED BY THE CONTRACTOR AT THE TIME OF CONSTRUCTION. THE IRON PIN AND CAP (WHEN REQUIRED) ARE TO BE INSTALLED BY THE CONTRACTOR'S SURVEYOR.

CHANGES OR ALTERATIONS TO THE LOCATION OF ANY MONUMENTS SHOWN IN THIS TABLE, REQUIRE PRIOR APPROVAL FROM THE DISTRICT REAL ESTATE ADMINISTRATOR OF THE OHIO DEPARTMENT OF TRANSPORTATION. IN THE EVENT THAT CHANGES OR ALTERATIONS ARE APPROVED, A REVISED CENTERLINE PLAT WITH THE NEW LOCATIONS SHALL BE RECORDED IN THE SUMMIT COUNTY FISCAL OFFICE RECORDING DIVISION RECORDS AND THE OHIO DEPARTMENT OF TRANSPORTATION. SPECIFICATIONS FOR MONUMENT ASSEMBLIES, REFERENCE MONUMENTS AND RIGHT OF WAY MONUMENTS ARE SHOWN ON STANDARD CONSTRUCTION DRAWING RM-1.1.

# SUM-77/277/224
# SUMMIT COUNTY
# CONVENTRY TOWNSHIP
# R-11, T-1, TRACT 13

## BASIS FOR BEARINGS:

ALL BEARINGS SHOWN ARE FOR PROJECT USE ONLY. THE BEARINGS REFERRED TO HEREIN ARE RELATING TO GRID NORTH OF THE OHIO STATE PLANE COORDINATE SYSTEM, NORTH ZONE NAD 83(2011) DATUM AND ARE FOR THE PURPOSE OF DEFINING ANGULAR MEASUREMENTS.

## BASIS OF EXISTING R/W:

- ODOT RESOLVED ℄ INFORMATION FOR INTERSTATE 77 & INTERSTATE 277 INTERCHANGE PER SUM-77-9.58 PID 98061 HOLDING STATIONING.
- ODOT R/W PLAN SUM-8-6.72 1961.
- ODOT R/W PLAN SUM-77-3.97 1997.
- ADDITIONAL PLATS, SURVEY RECORDS, AND DEEDS LISTED WITHIN THE R/W PLANS.
- ALL RECORDS LISTED ARE FROM THE RECORDS OF SUMMIT COUNTY, OHIO.

## MONUMENT LEGEND

- EXISTING R/W MONUMENT BOX
- PROPOSED R/W MONUMENT BOX
- EXISTING CONCRETE MONUMENT
- PROPOSED CONCRETE MONUMENT
- RAILROAD SPIKE FOUND
- RAILROAD SPIKE SET
- I.R.F. IRON PIN FOUND
- I.R.F. IRON PIN FOUND W/ ID CAP
- I.R.S. IRON PIN SET W/ ID CAP
- P.F. IRON PIPE FOUND
- P.S. IRON PIPE SET
- P.K.F. P.K. NAIL FOUND
- P.K.S. P.K. NAIL SET

(1) CURVE DATA
R = 200.00'
Δ = 33° 44' 40"
L = 117.79'
Ch BRG = N 18° 46' 55" E
Ch DIST = 116.10'

(2) CURVE DATA
R = 100.00'
Δ = 97° 15' 8"
L = 169.74'
Ch BRG = S 84° 16' 49" W
Ch DIST = 150.08'

(3) CURVE DATA
R = 200.00'
Δ = 11° 20' 17"
L = 39.58'
Ch BRG = N 41° 25' 29" W
Ch DIST = 39.51'

(4) SPIRAL CURVE DATA
$R_s$ = 200.00'
$R_e$ = 3819.72'
$L_s$ = 200.00'
$\theta_s$ = 28° 38' 52"
LT = 135.12'
ST = 68.30'

(5) CURVE DATA
R = 3819.72'
Δ = 6° 12' 36"
L = 414.00'
Ch BRG = S 4° 0' 10" E
Ch DIST = 413.80'

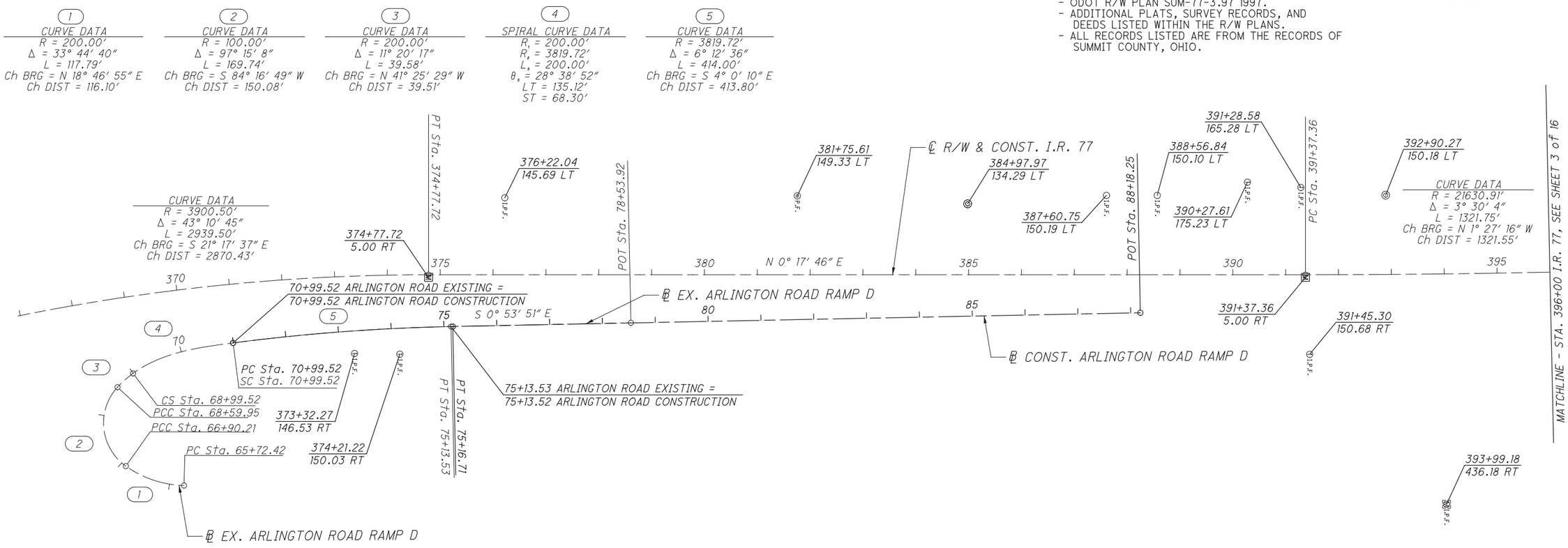


*NOTES:*

1. *ALL STATIONS AND OFFSETS ARE REFERENCED TO THE ℄ R/W & CONST. I.R. 77.*
2. *SEE SHEET 11 of 16 FOR EXISTING AND PROPOSED MONUMENTS.*

RECEIVED _____, 20____
RECORDED _____, 20____
BOOK _____ PAGE _____
COUNTY RECORDER

*SURVEYORS SEAL*

STATE OF OHIO
JOSHUA R. MIHELCIC
04-09-2020
REGISTERED PROFESSIONAL SURVEYOR

*SURVEYORS SEAL*

STATE OF OHIO
CHARLES W. PRICE, JR. S-7825
REGISTERED PROFESSIONAL SURVEYOR

I, Joshua R. Mihelcic, P. S. have conducted a survey of the existing conditions for the Ohio Department of Transportation between the months of November 2017 through January 2020. The results of that survey are contained herein. The horizontal coordinates expressed herein are based on the Ohio State Plane Coordinates System, North Zone, NAD 83(2011). Coordinates are ground coordinates and distances are ground distances. Scale the ground coordinates about point 0,0,0 by the project adjustment factor of 0.99989474882 to obtain grid coordinates. Topographic features shown herein are a combination of conventional ground survey and aerial survey. The aerial survey was collected during the winter/spring of 2018. As a part of this project I have reestablished the locations of the existing property lines and the existing centerline of Right of Way for property takes contained herein. All of my work contained herein was conducted in accordance with Ohio Administrative Code 4733-37 commonly known as "Minimum Standards for Boundary Surveys in the State of Ohio" unless noted. The words I and my as used herein are to mean either myself or someone working under my direct supervision.

Joshua R. Mihelcic, Professional Land Surveyor of Ohio, No. 8453 — Date 04-09-2020

I, Charles W. Price, Jr., P. S. have established the proposed property lines, calculated the Gross Take, Present Roadway Occupied (PRO), Net Take and Net Residue; as well as prepared the legal descriptions necessary to acquire these parcels as shown herein. As a part of this work I have set right of way monuments at the property corners, property line intersections, points along the right of way and/or angle points on the right of way, Section Corners and other points as shown herein. All of my work contained herein was conducted in accordance with Ohio Administrative Code 4733-37 commonly known as "Minimum Standards for Boundary Surveys in the State of Ohio" unless noted. The words I and my as used herein are to mean either myself or someone working under my direct supervision.

Charles W. Price Jr., Professional Land Surveyor of Ohio, No. 7825 — Date 4-14-2020

HORIZONTAL SCALE IN FEET
0 50 100 200

PID NO. 106002

R/W DESIGNER WWS
R/W REVIEWER CWP

CENTERLINE PLAT
1 OF 1

SUM-77 / 277 / 224
VARIOUS

2 / 16

1274
1288

P:\ODOTcadd\ProjectData\17-0129\SUM77_277_224\106002_SUM_77_277_224\Design\RW\Sheets\106002_RC001.dgn Sheet 4/9/2020 9:15:26 AM Wstowe

SUM-77/277/224
SUMMIT COUNTY
CONVENTRY TOWNSHIP
R-11, T-1, TRACTS 12 & 13

**MONUMENT LEGEND**

- EXISTING R/W MONUMENT BOX
- PROPOSED R/W MONUMENT BOX
- EXISTING CONCRETE MONUMENT
- PROPOSED CONCRETE MONUMENT
- RAILROAD SPIKE FOUND
- RAILROAD SPIKE SET
- I.R.F. IRON PIN FOUND
- I.R.F. IRON PIN FOUND W/ ID CAP
- I.R.S. IRON PIN SET W/ ID CAP
- P.F. IRON PIPE FOUND
- P.S. IRON PIPE SET
- P.K.F. P.K. NAIL FOUND
- P.K.S. P.K. NAIL SET

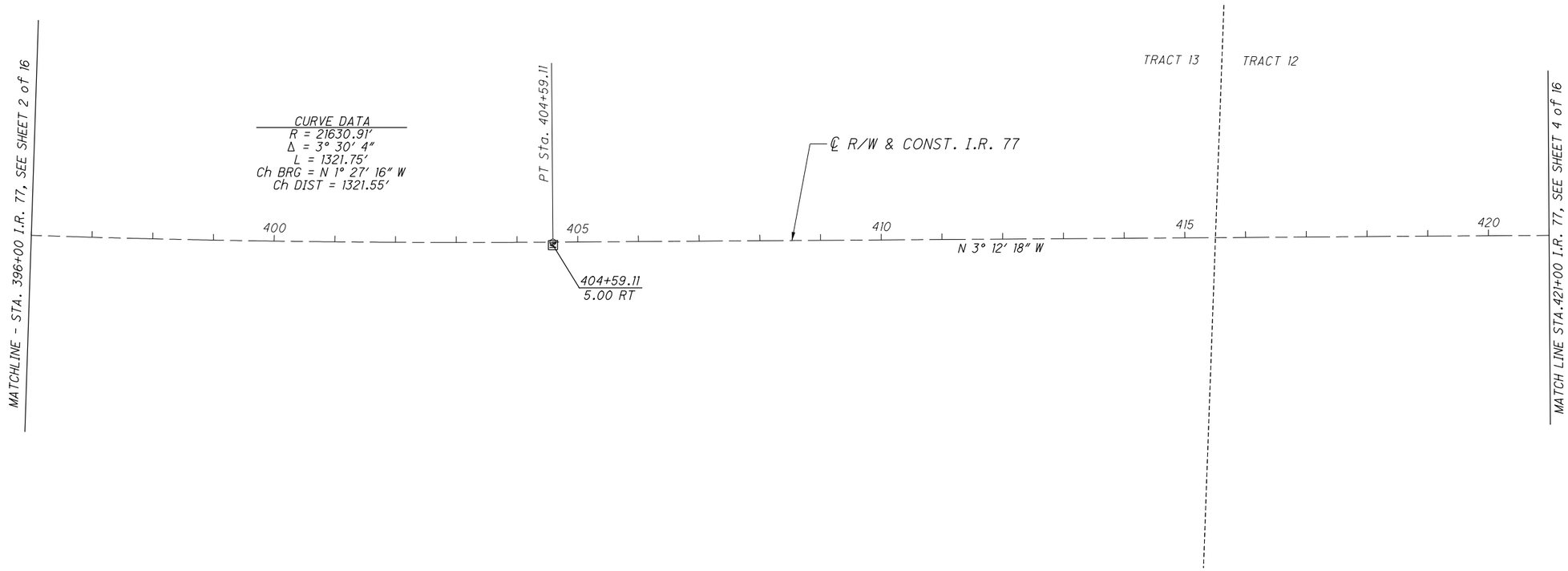


NOTES:

1. ALL STATIONS AND OFFSETS ARE REFERENCED TO THE ℄ R/W & CONST. I.R. 77.
2. SEE SHEET 11 of 16 FOR EXISTING AND PROPOSED MONUMENTS.
3. SEE SHEET 2 OF 16 FOR BASIS OF BEARINGS.
4. SEE SHEET 2 OF 16 FOR BASIS OF EXISITNG R/W WIDTH AND LOCATION.
5. SEE SHEET 2 OF 16 FOR NOTE REGARDING THE SETTING OF PROPOSED MONUMENTS.
6. TRACT LINES ARE SHOWN FOR GRAPHICAL PURPOSES ONLY.

RECEIVED _____, 20___
RECORDED _____, 20___
BOOK _____ PAGE _____
COUNTY RECORDER

HORIZONTAL SCALE IN FEET
0 50 100 200

PID NO. 106002

R/W DESIGNER WWS
R/W REVIEWER CWP

CENTERLINE PLAT
2 OF 11

SUM-77/277/224
VARIOUS

3 / 16

1275
1288

P:\ODOTcadd\ProjectData\17-0129SUM77_277_224\106002_SUM_77_277_224\Design\RW\Sheets\106002_RC002.dgn 4/14/2020 10:2h5 PM Wstowe

# SUM-77/277/224
# SUMMIT COUNTY
# CONVENTRY TOWNSHIP
# R-11, T-1, TRACT 12

**MONUMENT LEGEND**

- EXISTING R/W MONUMENT BOX
- PROPOSED R/W MONUMENT BOX
- EXISTING CONCRETE MONUMENT
- PROPOSED CONCRETE MONUMENT
- RAILROAD SPIKE FOUND
- RAILROAD SPIKE SET
- I.R.F. IRON PIN FOUND
- I.R.F. IRON PIN FOUND W/ ID CAP
- I.R.S. IRON PIN SET W/ ID CAP
- P.F. IRON PIPE FOUND
- P.S. IRON PIPE SET
- P.K.F. P.K. NAIL FOUND
- P.K.S. P.K. NAIL SET

HORIZONTAL SCALE IN FEET: 0, 50, 100, 200

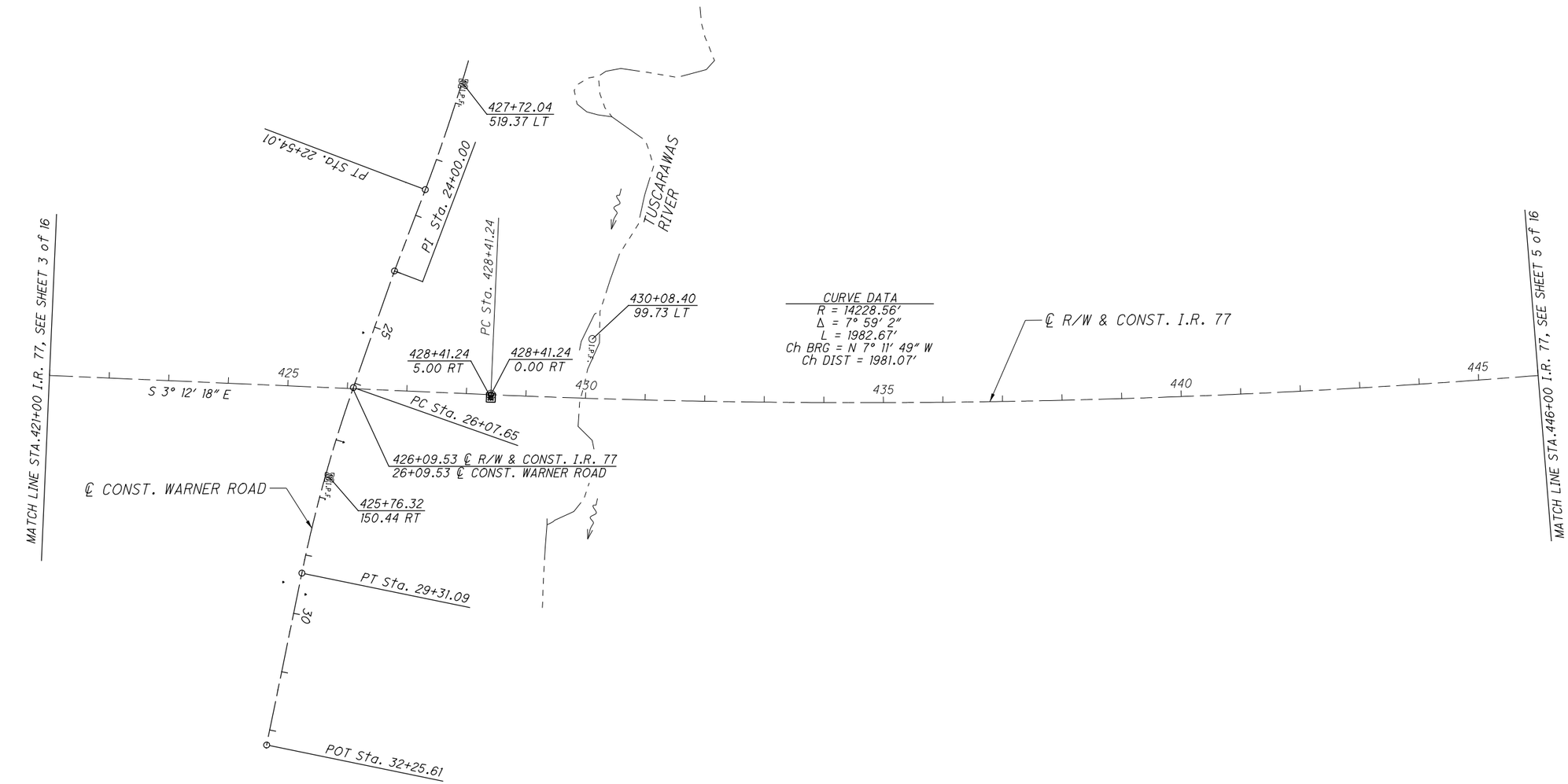


NOTES:

1. ALL STATIONS AND OFFSETS ARE REFERENCED TO THE ℄ R/W & CONST. I.R. 77.
2. SEE SHEET 11 of 16 FOR EXISTING AND PROPOSED MONUMENTS.
3. SEE SHEET 2 OF 16 FOR BASIS OF BEARINGS.
4. SEE SHEET 2 OF 16 FOR BASIS OF EXISITNG R/W WIDTH AND LOCATION.
5. SEE SHEET 2 OF 16 FOR NOTE REGARDING THE SETTING OF PROPOSED MONUMENTS.

RECEIVED _____, 20____
RECORDED _____, 20____
BOOK _____ PAGE _____
COUNTY RECORDER

R/W DESIGNER WWS
R/W REVIEWER CWP

PID NO. 106002

**CENTERLINE PLAT**
**3 OF 11**

**SUM-77/277/224**
**VARIOUS**

4 / 16

1276
1288

P:\ODOTcadd\Project Data\17-0129\SUM77_277_224\06002_SUM_77_277_224\Design\RW Sheets\06002_RC003.dgn Sheet 4/14/2020 10:20:39 PM Wstowe

# SUM-77/277/224
# SUMMIT COUNTY
# CONVENTRY TOWNSHIP
# R-11, T-1, TRACT 11 & 12

**MONUMENT LEGEND**

- EXISTING R/W MONUMENT BOX
- PROPOSED R/W MONUMENT BOX
- EXISTING CONCRETE MONUMENT
- PROPOSED CONCRETE MONUMENT
- RAILROAD SPIKE FOUND
- RAILROAD SPIKE SET
- I.R.F. IRON PIN FOUND
- I.R.F. IRON PIN FOUND W/ ID CAP
- I.R.S. IRON PIN SET W/ ID CAP
- P.F. IRON PIPE FOUND
- P.S. IRON PIPE SET
- P.K.F. P.K. NAIL FOUND
- P.K.S. P.K. NAIL SET

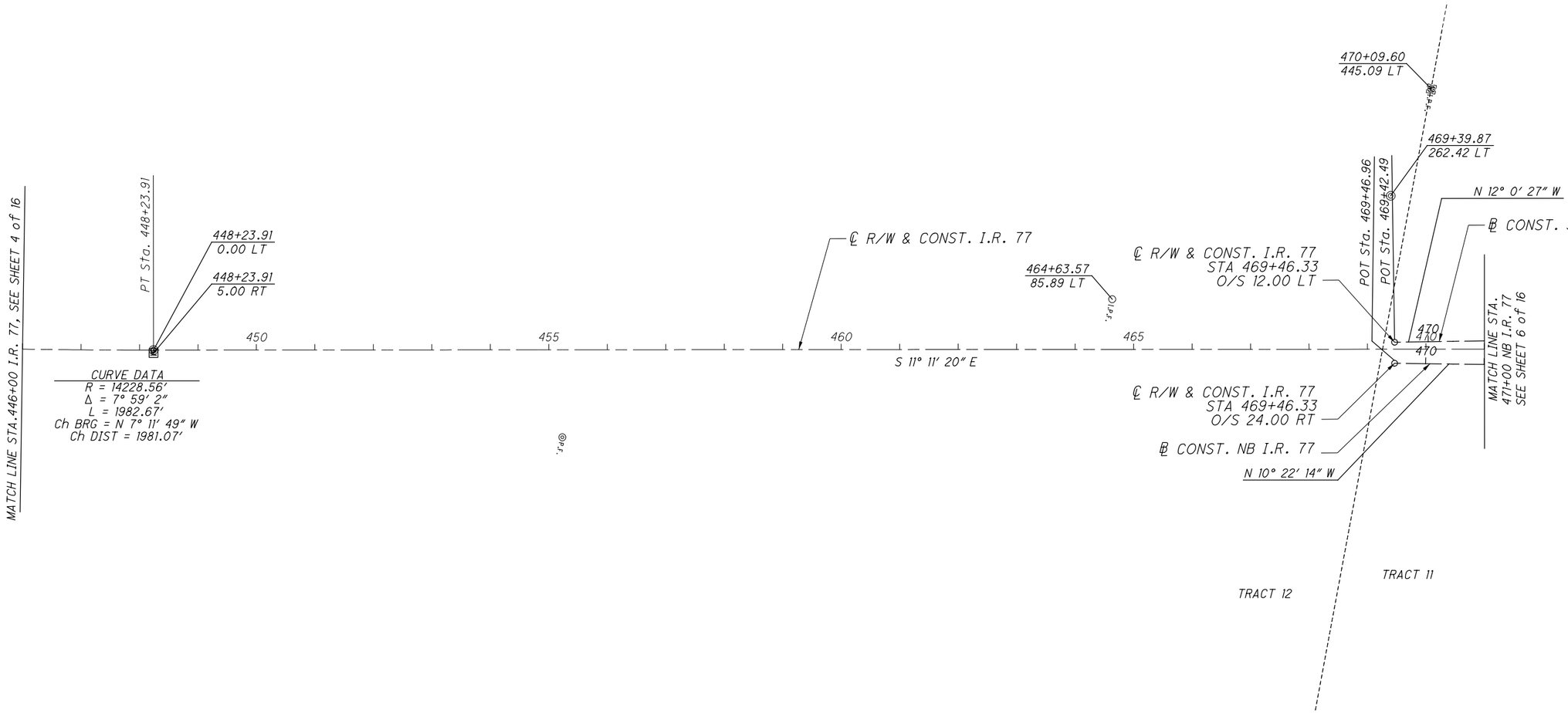


NOTES:

1. ALL STATIONS AND OFFSETS ARE REFERENCED TO THE ℄ R/W & CONST. I.R. 77.
2. SEE SHEET 11 of 16 FOR EXISTING AND PROPOSED MONUMENTS.
3. SEE SHEET 2 OF 16 FOR BASIS OF BEARINGS.
4. SEE SHEET 2 OF 16 FOR BASIS OF EXISITNG R/W WIDTH AND LOCATION.
5. SEE SHEET 2 OF 16 FOR NOTE REGARDING THE SETTING OF PROPOSED MONUMENTS.
6. TRACT LINES ARE SHOWN FOR GRAPHICAL PURPOSES ONLY.

RECEIVED _____, 20___
RECORDED _____, 20___
BOOK _____ PAGE _____
COUNTY RECORDER

HORIZONTAL SCALE IN FEET
0 50 100 200

PID NO. 106002

R/W DESIGNER WWS
R/W REVIEWER CWP

CENTERLINE PLAT
4 OF 11

SUM-77/277/224
VARIOUS

5 / 16

1277
1288

P:\ODOTcadd\Project Data\17-0129\SUM77_277_224\106002_SUM_77_277_224\Design\RW\Sheets\106002_RC004.dgn 4/14/2020 10:20:14 PM Wstowe

# SUM-77/277/224
# SUMMIT COUNTY
# CONVENTRY TOWNSHIP
# R-11, T-1, TRACT 11

**MONUMENT LEGEND**

- EXISTING R/W MONUMENT BOX
- PROPOSED R/W MONUMENT BOX
- EXISTING CONCRETE MONUMENT
- PROPOSED CONCRETE MONUMENT
- RAILROAD SPIKE FOUND
- RAILROAD SPIKE SET
- I.R.F. IRON PIN FOUND
- I.R.F. IRON PIN FOUND W/ ID CAP
- I.R.S. IRON PIN SET W/ ID CAP
- R.F. IRON PIPE FOUND
- R.S. IRON PIPE SET
- P.K.F. P.K. NAIL FOUND
- P.K.S. P.K. NAIL SET

HORIZONTAL SCALE IN FEET: 0, 50, 100, 200

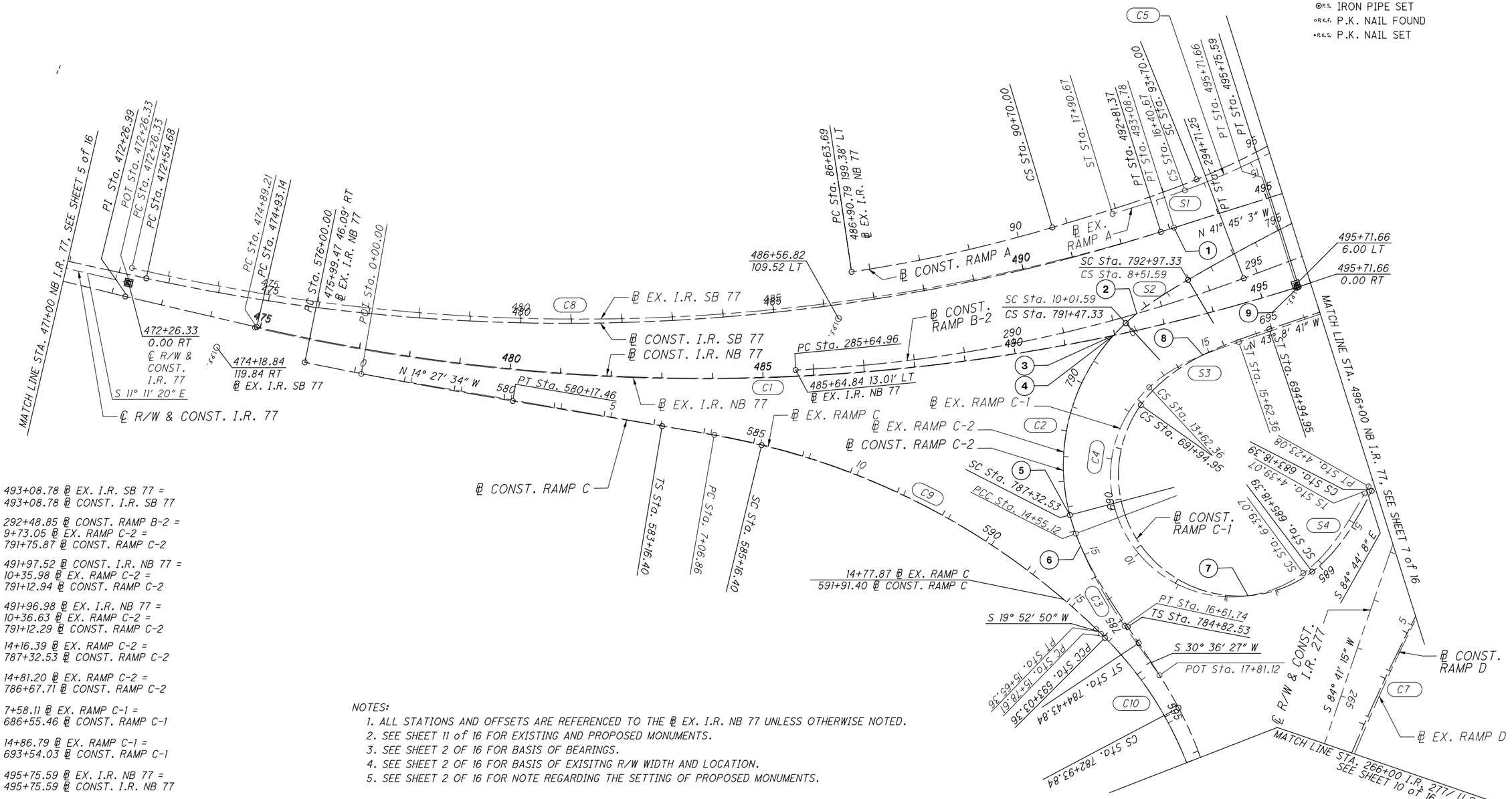


1. 493+08.78 ℄ EX. I.R. SB 77 = 493+08.78 ℄ CONST. I.R. SB 77
2. 292+48.85 ℄ CONST. RAMP B-2 = 9+73.05 ℄ EX. RAMP C-2 = 791+75.87 ℄ CONST. RAMP C-2
3. 491+97.52 ℄ CONST. I.R. NB 77 = 10+35.98 ℄ EX. RAMP C-2 = 791+12.94 ℄ CONST. RAMP C-2
4. 491+96.98 ℄ EX. I.R. NB 77 = 10+36.63 ℄ EX. RAMP C-2 = 791+12.29 ℄ CONST. RAMP C-2
5. 14+16.39 ℄ EX. RAMP C-2 = 787+32.53 ℄ CONST. RAMP C-2
6. 14+81.20 ℄ EX. RAMP C-2 = 786+67.71 ℄ CONST. RAMP C-2
7. 7+58.11 ℄ EX. RAMP C-1 = 686+55.46 ℄ CONST. RAMP C-1
8. 14+86.79 ℄ EX. RAMP C-1 = 693+54.03 ℄ CONST. RAMP C-1
9. 495+75.59 ℄ EX. I.R. NB 77 = 495+75.59 ℄ CONST. I.R. NB 77

*NOTES:*

1. ALL STATIONS AND OFFSETS ARE REFERENCED TO THE ℄ EX. I.R. NB 77 UNLESS OTHERWISE NOTED.
2. SEE SHEET 11 of 16 FOR EXISTING AND PROPOSED MONUMENTS.
3. SEE SHEET 2 OF 16 FOR BASIS OF BEARINGS.
4. SEE SHEET 2 OF 16 FOR BASIS OF EXISITNG R/W WIDTH AND LOCATION.
5. SEE SHEET 2 OF 16 FOR NOTE REGARDING THE SETTING OF PROPOSED MONUMENTS.

RECEIVED _____, 20___
RECORDED _____, 20___
BOOK _____ PAGE _____
_____
COUNTY RECORDER

P:\ODOTcadd\Project Data\17-0129\SUM77_277_224\106002_SUM_77_277_224\Design\RW\Sheets\106002_RC005.dgn Sheet 4/14/2020 10:19:43 PM Wstowe

R/W DESIGNER WWS
R/W REVIEWER CWP

PID NO. 106002

**CENTERLINE PLAT**
**5 OF 11**

**SUM-77/277/224**
**VARIOUS**

6 / 16

1278
1288

SUM-77/277/224
SUMMIT COUNTY
CONVENTRY TOWNSHIP
R-11, T-1, TRACT 11

**MONUMENT LEGEND**
- EXISTING R/W MONUMENT BOX
- PROPOSED R/W MONUMENT BOX
- EXISTING CONCRETE MONUMENT
- PROPOSED CONCRETE MONUMENT
- RAILROAD SPIKE FOUND
- RAILROAD SPIKE SET
- I.R.F. IRON PIN FOUND
- I.R.F. IRON PIN FOUND W/ ID CAP
- I.R.S. IRON PIN SET W/ ID CAP
- R.F. IRON PIPE FOUND
- R.S. IRON PIPE SET
- P.K.F. P.K. NAIL FOUND
- P.K.S. P.K. NAIL SET

MATCH LINE STA. 243+00 I.R. 277/ U.S. 224, SEE SHEET 9 of 16

℄ CONST. RAMP B
ST Sta. 205+99.50
PC Sta. 12+74.10
N 37° 50' 46" E
TS Sta. 207+73.39
ST Sta. 10+78.65
N 29° 42' 47" E
SC Sta. 209+73.39
CS Sta. 8+78.65
℄ EX. RAMP B
℄ EX. RAMP B-2
℄ CONST. RAMP B1
POT Sta. 14+42.67
ST Sta. 14+62.67
CS Sta. 13+87.73
CS Sta. 13+12.67
CS Sta. 415+62.45
SC Sta. 415+36.67
TS Sta. 4+36.67
PT Sta. 4+20.64
SC Sta. 417+62.45
CS Sta. 408+50.17
CS Sta. 12+73.07
PCC Sta. 14+73.07
SC Sta. 407+01.68
PT Sta. 16+86.91
TS Sta. 405+01.68
SC Sta. 7+36.18
PCC Sta. 7+36.18
℄ CONST. RAMP B-2
℄ EX. RAMP A
℄ R/W & CONST. I.R. 277
PC Sta. 0+00.00
N 43° 8' 41" W
POT Sta. 402+43.78
℄ CONST. RAMP A
℄ CONST. RAMP C-2
S 41° 45' 3" E
POT Sta. 17+90.88
TS Sta. 502+03.04
SC Sta. 506+03.04
EQUATION:
Sta 308+15.76 BK =
Sta 7+36.18 AH
℄ R/W & CONST. I.R. SB 77
℄ R/W & CONST. I.R. NB 77
SC Sta. 510+65.75
510+65.75
6.00 LT
℄ EX. RAMP C-2
PC Sta. 297+94.13
PT Sta. 423+24.13
PC Sta. 0+00.00
PT Sta. 801+48.92
℄ CONST. RAMP D
℄ EX. RAMP D
POT Sta. 18+62.36
S 43° 8' 41" E
℄ EX. RAMP C-1
PC Sta. 0+00.00
PC Sta. 678+94.49
257+02.17
0.25 LT
℄ R/W
I.R. 277
℄ CONST. RAMP C-1
PT Sta. 300+94.13
SC Sta. 901+01.12
CS Sta. 899+01.12
SC Sta. 9+03.78
SC Sta. 897+17.13
CS Sta. 7+53.78
CS Sta. 17+10.12
TS Sta. 506+65.75
SC Sta. 18+60.12
CS Sta. 908+55.05
SC Sta. 910+55.05
PT Sta. 21+60.12
PT Sta. 916+89.75
POT Sta. 0+00.00
POT Sta. 219+25.00
MATCH LINE STA. 521+00 NB I.R. 77, SEE SHEET 8 of 16
506+65.75
6.00 LT
PROPOSED MON.
506+65.75
0.00 RT
EXISTING MON.
499+99.53
6.00 LT
PROPOSED MON.
499+99.45
0.03 LT
EXISTING MON.
MATCH LINE STA. 496+00, NB I.R. 77, SEE SHEET 6 of 16
SC Sta. 106+55.37
CS Sta. 104+55.37
CS Sta. 5+09.70
SC Sta. 6+59.70
℄ R/W
I.R. 277
247+02.24
0.19 LT
S 84° 47' 47" E
℄ EX. R/W
I.R. 277
COVENTRY TOWNSHIP
CITY OF AKRON
CS Sta. 213+58.80
SC Sta. 5+66.20
SI Sta. 215+58.80
TS Sta. 3+66.20

(11) 0+55.27 ℄ EX. RAMP C-1 = 679+45.38 ℄ CONST. RAMP C-1
(11) 9+16.81 ℄ EX. RAMP D = 898+34.76 ℄ CONST. RAMP D
(12) 11+29.57 ℄ EX. RAMP D = 900+47.48 ℄ CONST. RAMP D
(13) 255+77.38 ℄ R/W & CONST. I.R. 277 = 699+60.33 ℄ CONST. RAMP C-1
(14) 255+11.48 ℄ R/W & CONST. I.R. 277 = 499+99.53 ℄ R/W & CONST. I.R. NB 77
(15) 254+20.47 ℄ R/W & CONST. I.R. 277 = 300+48.31 ℄ CONST. RAMP B-2
(16) 252+97.40 ℄ R/W & CONST. I.R. 277 = 0+89.37 ℄ EX. RAMP C-2 = 800+59.55 ℄ CONST. RAMP C-2
(17) 252+81.18 ℄ R/W & CONST. I.R. 277 = 500+69.19 ℄ R/W & CONST. I.R. SB 77
(18) 9+04.29 ℄ EX. RAMP B-1 = 412+58.78 ℄ CONST. RAMP B-1
(19) 13+12.67 ℄ EX. RAMP B-2 = 13+12.67 ℄ CONST. RAMP B-2
(20) 13+15.71 ℄ EX. RAMP B-1 = 408+53.19 ℄ CONST. RAMP B-1
(21) 508+26.71 ℄ R/W & CONST. I.R. SB 77 = 8+21.85 ℄ EX. RAMP B-2 = 8+21.85 ℄ CONST. RAMP B-2
(22) 7+36.18 ℄ EX. RAMP B-2 = 308+15.76 BK ℄ CONST. RAMP B-2 = 7+36.18 AH ℄ CONST. RAMP B-2

NOTES:
1. ALL STATIONS AND OFFSETS ARE REFERENCED TO THE ℄ R/W & CONST. I.R. NB 77 UNLESS OTHERWISE NOTED.
2. SEE SHEET 11 of 16 FOR EXISTING AND PROPOSED MONUMENTS.
3. SEE SHEET 2 OF 16 FOR BASIS OF BEARINGS.
4. SEE SHEET 2 OF 16 FOR BASIS OF EXISITNG R/W WIDTH AND LOCATION.
5. SEE SHEET 2 OF 16 FOR NOTE REGARDING THE SETTING OF PROPOSED MONUMENTS.

RECEIVED _____, 20___
RECORDED _____, 20___
BOOK _____ PAGE _____
_____
COUNTY RECORDER

HORIZONTAL SCALE IN FEET
0 50 100 200

PID NO. 106002

R/W DESIGNER WWS
R/W REVIEWER CWP

CENTERLINE PLAT
6 OF 11

SUM-77/277/224
VARIOUS

7 / 16

1279
1288

P:\ODOTcadd\Project Data\17-0129\SUM77_277_224\106002_SUM_77_277_224\Design\RW\Sheets\106002_RC006.dgn Sheet 4/14/2020 10:04:25 PM Wstowe

SUM-77/277/224
SUMMIT COUNTY
CITY OF AKRON

**MONUMENT LEGEND**

- EXISTING R/W MONUMENT BOX
- PROPOSED R/W MONUMENT BOX
- EXISTING CONCRETE MONUMENT
- PROPOSED CONCRETE MONUMENT
- RAILROAD SPIKE FOUND
- RAILROAD SPIKE SET
- I.R.F. IRON PIN FOUND
- I.R.F. IRON PIN FOUND W/ ID CAP
- I.R.S. IRON PIN SET W/ ID CAP
- R.P.F. IRON PIPE FOUND
- R.P.S. IRON PIPE SET
- P.K.F. P.K. NAIL FOUND
- P.K.S. P.K. NAIL SET

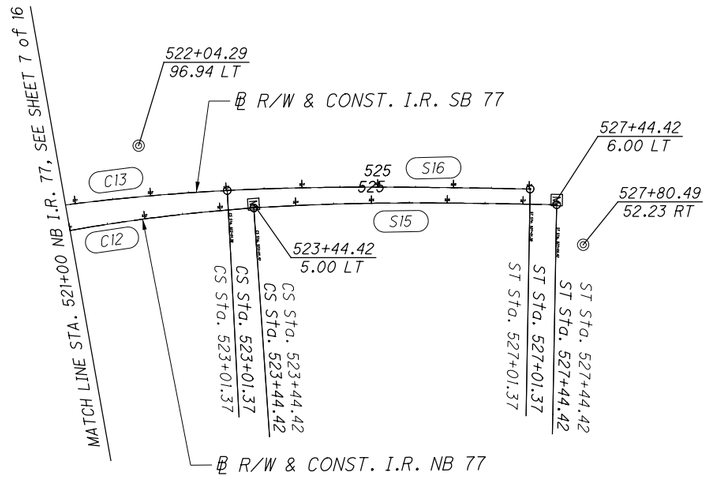


NOTES:

1. ALL STATIONS AND OFFSETS ARE REFERENCED TO THE ℄ R/W & CONST. I.R. NB 77 UNLESS OTHERWISE NOTED.
2. SEE SHEET 11 of 16 FOR EXISTING AND PROPOSED MONUMENTS.
3. SEE SHEET 2 OF 16 FOR BASIS OF BEARINGS.
4. SEE SHEET 2 OF 16 FOR BASIS OF EXISITNG R/W WIDTH AND LOCATION.
5. SEE SHEET 2 OF 16 FOR NOTE REGARDING THE SETTING OF PROPOSED MONUMENTS.

RECEIVED _____, 20___
RECORDED _____, 20___
BOOK _____ PAGE _____
COUNTY RECORDER

HORIZONTAL SCALE IN FEET
0 50 100 200

PID NO. 106002

R/W DESIGNER WWS
R/W REVIEWER CWP

CENTERLINE PLAT
7 OF 11

SUM-77/277/224
VARIOUS

8 / 16

1280
1288

P:\ODOTcadd\ProjectData\17-0129SUM77_277_224\106002_SUM_77_277_224\Design\RW\Sheets\106002_RC007.dgn Sheet 4/14/2020 10:05:40 PM Wstowe

SUM-77/277/224
SUMMIT COUNTY
CONVENTRY TOWNSHIP
R-11, T-1, TRACT 11

**MONUMENT LEGEND**

- EXISTING R/W MONUMENT BOX
- PROPOSED R/W MONUMENT BOX
- EXISTING CONCRETE MONUMENT
- PROPOSED CONCRETE MONUMENT
- RAILROAD SPIKE FOUND
- RAILROAD SPIKE SET
- I.R.F. IRON PIN FOUND
- I.R.F. IRON PIN FOUND W/ ID CAP
- I.R.S. IRON PIN SET W/ ID CAP
- R.F. IRON PIPE FOUND
- R.S. IRON PIPE SET
- P.K.F. P.K. NAIL FOUND
- P.K.S. P.K. NAIL SET

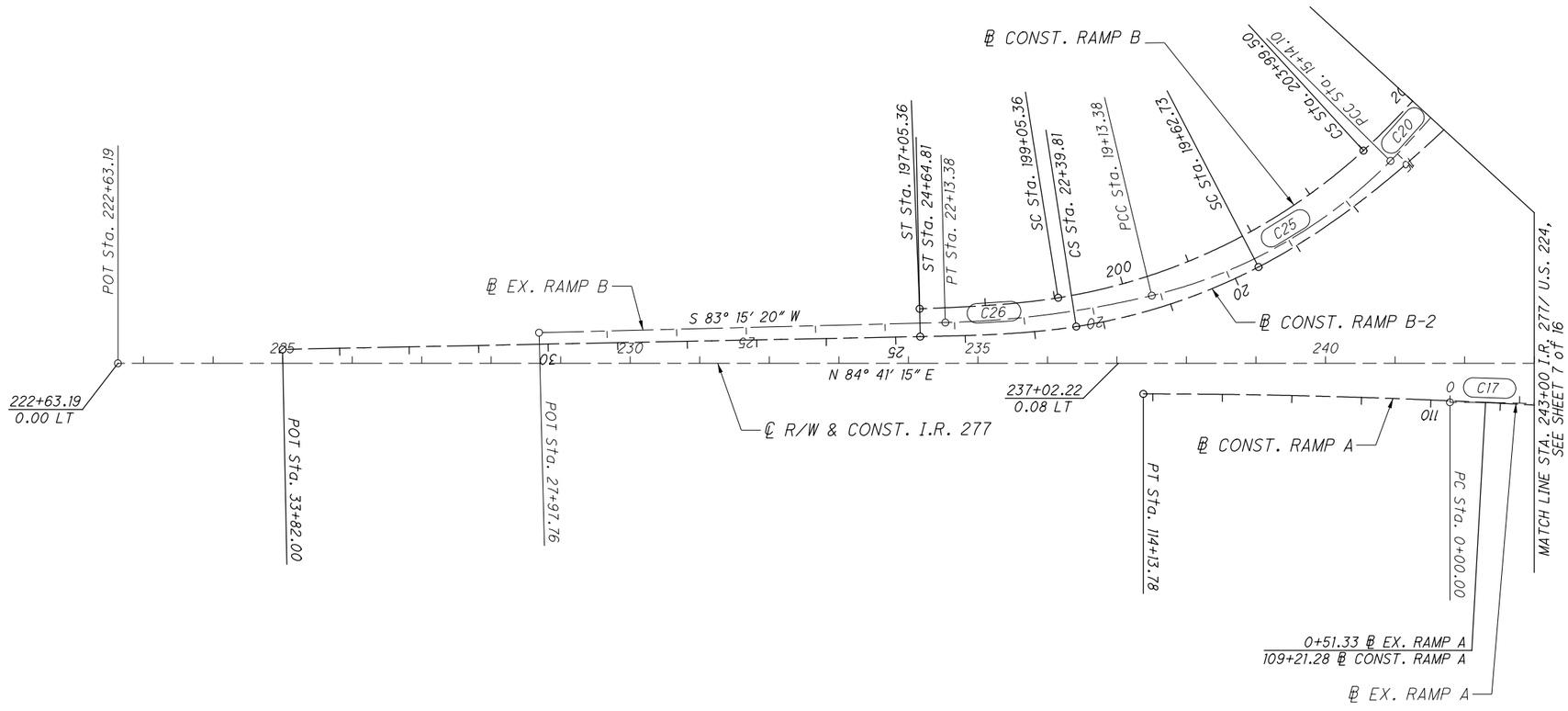


NOTES:

1. ALL STATIONS AND OFFSETS ARE REFERENCED TO THE ℄ R/W & CONST. I.R. 277.
2. SEE SHEET 11 of 16 FOR EXISTING AND PROPOSED MONUMENTS.
3. SEE SHEET 2 OF 16 FOR BASIS OF BEARINGS.
4. SEE SHEET 2 OF 16 FOR BASIS OF EXISITNG R/W WIDTH AND LOCATION.
5. SEE SHEET 2 OF 16 FOR NOTE REGARDING THE SETTING OF PROPOSED MONUMENTS.

RECEIVED _____, 20___
RECORDED _____, 20___
BOOK _____ PAGE _____

COUNTY RECORDER

HORIZONTAL SCALE IN FEET
0 50 100 200

PID NO. 106002

R/W DESIGNER WWS
R/W REVIEWER CWP

CENTERLINE PLAT
8 OF 16

SUM-77/277/224
VARIOUS

9 / 16

1281
1288

P:\ODOTcadd\ProjectData\17-0129\SUM77.277.224\106002.SUM_77.277.224\Design\RW\Sheets\106002_RC008.dgn Sheet 4/14/2020 10:09:37 PM Wstowe

SUM-77/277/224
SUMMIT COUNTY
CONVENTRY TOWNSHIP
R-11, T-1, TRACT 11

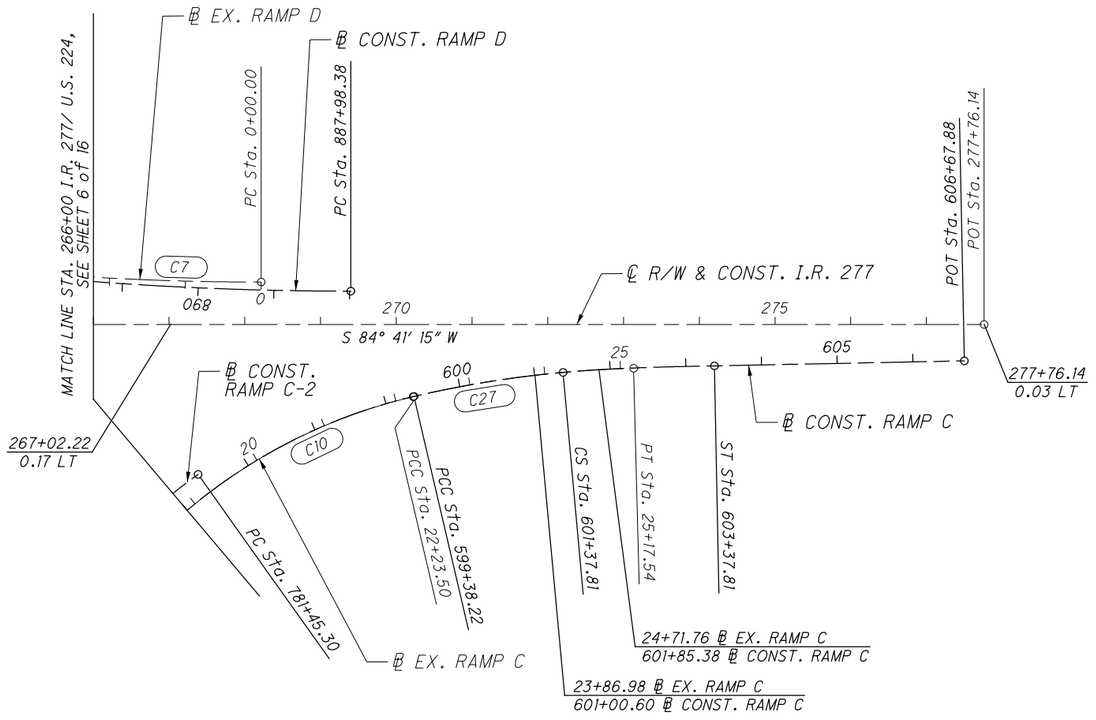


**MONUMENT LEGEND**

- EXISTING R/W MONUMENT BOX
- PROPOSED R/W MONUMENT BOX
- EXISTING CONCRETE MONUMENT
- PROPOSED CONCRETE MONUMENT
- RAILROAD SPIKE FOUND
- RAILROAD SPIKE SET
- I.R.F. IRON PIN FOUND
- I.R.F. IRON PIN FOUND W/ ID CAP
- I.R.S. IRON PIN SET W/ ID CAP
- R.F. IRON PIPE FOUND
- R.S. IRON PIPE SET
- P.K.F. P.K. NAIL FOUND
- P.K.S. P.K. NAIL SET

HORIZONTAL SCALE IN FEET
0 50 100 200

PID NO. 106002

R/W DESIGNER WWS
R/W REVIEWER CWP

CENTERLINE PLAT
9 OF 11

SUM-77/277/224
VARIOUS

10 / 16

1282
1288

*NOTES:*

1. *ALL STATIONS AND OFFSETS ARE REFERENCED TO THE ℄ R/W & CONST. I.R. 277.*
2. *SEE SHEET 11 of 16 FOR EXISTING AND PROPOSED MONUMENTS.*
3. *SEE SHEET 2 OF 16 FOR BASIS OF BEARINGS.*
4. *SEE SHEET 2 OF 16 FOR BASIS OF EXISITNG R/W WIDTH AND LOCATION.*
5. *SEE SHEET 2 OF 16 FOR NOTE REGARDING THE SETTING OF PROPOSED MONUMENTS.*

RECEIVED _____, 20___
RECORDED _____, 20___
BOOK _____ PAGE _____

COUNTY RECORDER

P:\ODOTcadd\ProjectData\17-0129\SUM77_277_224\106002_SUM_77_277_224\Design\RW\Sheets\106002_RC009.dgn Sheet 4/14/2020 10:11:25 PM Wstowe

# SUM-77/277/224
# SUMMIT COUNTY
# CONVENTRY TOWNSHIP
# R-11, T-1, TRACT 11, 12, & 13

EXISTING MONUMENTS TABLE

| REFERENCE ALIGNMENT | STATION | OFFSET | PROJECT COORDINATES SEE SURVEY CERTIFICATION | | NAD83(2011), OHIO STATE PLANE, NORTH ZONE, US SURVEY FEET | | R/W MON. EXPECTED TO BE DISTURBED | DESCRIPTION |
|---|---|---|---|---|---|---|---|---|
| | | | NORTH (Y) | EAST (X) | NORTH (Y) | EAST (X) | R/W MON. | |
| CL of R/W & CONST. I.R. 77 | 373+32.39 | 146.53 RT | 484405.1100 | 2246613.6809 | 484354.1269 | 2246377.2272 | | IRON PIN FOUND W/ ID CAP |
| CL of R/W & CONST. I.R. 77 | 374+21.35 | 150.04 RT | 484490.7397 | 2246615.4149 | 484439.7476 | 2246378.9611 | | IRON PIN FOUND W/ ID CAP |
| CL of R/W & CONST. I.R. 77 | 376+22.04 | 145.69 LT | 484690.7916 | 2246319.5506 | 484639.7784 | 2246083.1279 | | IRON PIN FOUND |
| CL of R/W & CONST. I.R. 77 | 384+97.97 | 134.29 LT | 485566.6495 | 2246336.2535 | 485515.5441 | 2246099.8290 | | IRON PIPE FOUND |
| CL of R/W & CONST. I.R. 77 | 387+60.75 | 150.19 LT | 485829.5077 | 2246321.7072 | 485778.3747 | 2246085.2843 | | IRON PIN FOUND |
| CL of R/W & CONST. I.R. 77 | 388+56.84 | 150.10 LT | 485925.5950 | 2246322.2996 | 485874.4519 | 2246085.8766 | | IRON PIN FOUND |
| CL of R/W & CONST. I.R. 77 | 390+27.73 | 175.23 LT | 486096.6118 | 2246298.0464 | 486045.4507 | 2246061.6260 | | IRON PIN FOUND W/ ID CAP |
| CL of R/W & CONST. I.R. 77 | 391+28.58 | 165.28 LT | 486197.4128 | 2246308.5180 | 486146.2410 | 2246072.0965 | | IRON PIN FOUND W/ ID CAP |
| CL of R/W & CONST. I.R. 77 | 391+45.42 | 150.67 RT | 486212.6740 | 2246624.5571 | 486161.5006 | 2246388.1023 | | IRON PIN FOUND W/ ID CAP |
| CL of R/W & CONST. I.R. 77 | 392+90.27 | 150.18 LT | 486357.9587 | 2246323.9150 | 486306.7700 | 2246087.4918 | | IRON PIPE FOUND |
| CL of R/W & CONST. I.R. 77 | 393+99.18 | 436.18 RT | 486470.1808 | 2246909.7798 | 486418.9803 | 2246673.2950 | | IRON PIN FOUND IN MON. BOX |
| CL of R/W & CONST. I.R. 77 | 425+76.32 | 150.44 RT | 489648.7680 | 2246472.1339 | 489597.2330 | 2246235.6951 | 1 | IRON PIN FOUND W/ ID CAP IN MON. BOX |
| CL of R/W & CONST. I.R. 77 | 427.72.04 | 519.37 LT | 489806.7342 | 2245792.4284 | 489755.1826 | 2245556.0612 | | IRON PIN FOUND W/ ID CAP IN MON. BOX |
| CL of R/W & CONST. I.R. 77 | 428+41.24 | 0.00 RT | 489904.8574 | 2246307.1152 | 489853.2954 | 2246070.6938 | 1 | EXISTING CONCRETE MONUMENT |
| CL of R/W & CONST. I.R. 77 | 430+08.40 | 99.73 LT | 490064.9579 | 2246197.2846 | 490013.3791 | 2245960.8748 | | IRON PIN FOUND |
| CL of R/W & CONST. I.R. 77 | 448+23.91 | 0.00 LT | 491870.3195 | 2246058.9248 | 491818.5507 | 2245822.5295 | 1 | EXISITNG CONCRETE MONUMENT |
| CL of R/W & CONST. I.R. 77 | 464+63.57 | 85.89 LT | 493462.1455 | 2245656.5030 | 493410.2091 | 2245420.1501 | 1 | IRON PIN FOUND |
| CL of R/W & CONST. I.R. 77 | 466+62.96 | 1278.15 RT | 493922.4297 | 2246955.9279 | 493870.4449 | 2246719.4382 | | IRON PIN FOUND IN MON.BOX |
| CL of R/W & CONST. I.R. 77 | 469+39.87 | 262.42 LT | 493895.1420 | 2245390.8980 | 493843.1601 | 2245154.5730 | | EXISTING CONCRETE MONUMENT |
| CL of R/W & CONST. I.R. 77 | 470+09.60 | 445.09 LT | 493928.0934 | 2245198.1757 | 493876.1080 | 2244961.8710 | | IRON PIN FOUND W/ CAP IN MON. BOX |
| CL of R/W & CONST. I.R. 77 | 470+75.76 | 888.47 LT | 493906.9643 | 2244750.3816 | 493854.9811 | 2244514.1240 | | EXISTING CONCRETE MONUMENT |
| CL of R/W & CONST. I.R. 77 | 472+26.33 | 0.00 RT | 494227.0752 | 2245592.7486 | 494175.0583 | 2245356.4024 | 1 | EXISITNG CONCRETE MONUMENT |
| BL EX I.R. SB 77 | 474+18.84 | 119.84 RT | 494438.1242 | 2245637.5940 | 494386.0851 | 2245401.2431 | 1 | IRON PIN FOUND |
| BL EX I.R. NB 77 | 486+56.82 | 109.52 LT | 495533.4979 | 2245081.5661 | 495481.3435 | 2244845.2737 | 1 | IRON PIN FOUND W/ ID CAP |
| BL EX I.R. NB 77 | 495+71.66 | 0.00 RT | 496332.7896 | 2244653.9519 | 496280.5511 | 2244417.7045 | 1 | IRON PIN FOUND |
| BL R/W & CONST. I.R. 77 NB | 499+99.45 | 0.03 LT | 496651.9183 | 2244369.0644 | 496599.6462 | 2244132.8470 | 1 | MON. IN MON. BOX FND |
| BL R/W & CONST. I.R. 77 NB | 506+65.75 | 0.00 RT | 497149.0356 | 2243925.4052 | 497096.7112 | 2243689.2345 | 1 | MON. IN MON. BOX FND |
| BL R/W & CONST. I.R. 77 NB | 522+04.29 | 96.94 LT | 498481.9448 | 2243140.4160 | 498429.4801 | 2242904.3279 | | EXISITNG CONCRETE MONUMENT |
| CL of R/W & CONST. I.R. 277 | 222+63.19 | 0.00 LT | 496351.2535 | 2241134.7009 | 496299.0131 | 2240898.8239 | | MAG NAIL FOUND |
| CL of R/W & CONST. I.R. 277 | 237+02.22 | 0.08 LT | 496484.5661 | 2242567.5366 | 496432.3116 | 2242331.5088 | | MAG NAIL FOUND |
| CL of R/W & CONST. I.R. 277 | 247+02.24 | 0.19 LT | 496577.2672 | 2243563.2532 | 496525.0030 | 2243327.1206 | | MAG NAIL FOUND |
| CL of R/W & CONST. I.R. 277 | 257+02.17 | 0.25 LT | 496669.9038 | 2244558.8819 | 496617.6298 | 2244322.6445 | | MAG NAIL FOUND |
| CL of R/W & CONST. I.R. 277 | 267+02.22 | 0.17 LT | 496762.4175 | 2245554.6466 | 496710.1338 | 2245318.3044 | | MAG NAIL FOUND |
| CL of R/W & CONST. I.R. 277 | 277+76.14 | 0.03 LT | 496861.7122 | 2246624.0163 | 496809.4180 | 2246387.5615 | | MAG NAIL FOUND |

TOTAL = 10

PROPOSED MONUMENT TABLE

| REFERENCE ALIGNMENT | STATION | OFFSET | PROJECT COORDINATES SEE SURVEY CERTIFICATION | | NAD83(2011), OHIO STATE PLANE, NORTH ZONE, US SURVEY FEET | | MONUMENTS TO BE SET DURING CONSTRUCTION | | MONUMENTS TO BE ADJUSTED TO GRADE | DESCRIPTION |
|---|---|---|---|---|---|---|---|---|---|---|
| | | | NORTH (Y) | EAST (X) | NORTH (Y) | EAST (X) | MON. ASSY. | REF. MON. | | |
| CL of R/W & CONST. I.R. 77 | 374+77.72 | 5.00 RT | 484545.6938 | 2246470.2701 | 484494.6959 | 2246233.8315 | 1 | | | PROPOSED MON. AND BOX |
| CL of R/W & CONST. I.R. 77 | 391+37.36 | 5.00 RT | 486205.3094 | 2246478.8441 | 486154.1368 | 2246242.4046 | 1 | | | PROPOSED MON. AND BOX |
| CL of R/W & CONST. I.R. 77 | 404+59.11 | 5.00 RT | 487526.7383 | 2246445.2908 | 487475.4266 | 2246208.8549 | 1 | | | PROPOSED MON. AND BOX |
| CL of R/W & CONST. I.R. 77 | 425+76.32 | 150.44 RT | 489648.7680 | 2246472.1339 | 489597.2330 | 2246235.6951 | | | 1 | IRON PIN FOUND W/ ID CAP IN MON. BOX MON. BOX TO BE ADJUSTED |
| CL of R/W & CONST. I.R. 77 | 428+41.24 | 5.00 RT | 489905.1369 | 2246312.1074 | 489853.5749 | 2246075.6855 | 1 | | | PROPOSED MON. AND BOX |
| CL of R/W & CONST. I.R. 77 | 448+23.91 | 5.00 RT | 491871.2897 | 2246063.8298 | 491819.5208 | 2245827.4340 | 1 | | | PROPOSED MON. AND BOX |
| CL of R/W & CONST. I.R. 77 | 472+26.33 | 0.00 RT | 494227.0752 | 2245592.7486 | 494175.0583 | 2245356.4024 | 1 | | 1 | PROPOSED MON. AND BOX |
| BL EX I.R. 77 NB | 495+71.66 | 6.00 LT | 496328.7943 | 2244649.4756 | 496276.5562 | 2244413.2287 | 1 | | | PROPOSED MON. AND BOX |
| BL of R/W & CONST. I.R. 77 NB | 499+99.53 | 6.00 LT | 496648.0073 | 2244364.5596 | 496595.7356 | 2244128.3427 | 1 | | | PROPOSED MON. AND BOX |
| BL of R/W & CONST. I.R. 77 NB | 506+65.75 | 6.00 LT | 497145.0403 | 2243920.9289 | 497092.7163 | 2243684.7586 | 1 | | | PROPOSED MON. AND BOX |
| BL of R/W & CONST. I.R. 77 NB | 510+65.75 | 6.00 LT | 497451.3816 | 2243663.1199 | 497399.0254 | 2243426.9768 | 1 | | | PROPOSED MON. AND BOX |
| BL of R/W & CONST. I.R. 77 NB | 523+44.42 | 5.00 LT | 498634.6959 | 2243215.4189 | 498582.2151 | 2242979.3229 | 1 | | | PROPOSED MON. AND BOX |
| BL of R/W & CONST. I.R. 77 NB | 527+44.42 | 6.00 LT | 499034.8720 | 2243204.2787 | 498982.3491 | 2242968.1839 | 1 | | | PROPOSED MON. AND BOX |

TOTAL = 12 TOTAL = 2

RECEIVED _____, 20____
RECORDED _____, 20____
BOOK _____ PAGE _____
COUNTY RECORDER

P:\000Tcadd\ProjectData\17-0129\SUM77_277_224\106002_SUM_77_277_224\Design\RW Sheets\106002_RC010.dgn Sheet 4/14/2020 10:12:28 PM Wstowe

R/W DESIGNER WWS
R/W REVIEWER CWP

PID NO. 106002

CENTERLINE PLAT
10 OF 11

SUM-77/277/224
VARIOUS

11 / 16

1283
1288

# SUM-77/277/224
# SUMMIT COUNTY
# CONVENTRY TOWNSHIP
# R-11, T-1, TRACTS 11, 12, & 13

**C1**
CURVE DATA
R = 3904.07'
Δ = 30° 33' 43"
L = 2082.45'
Ch BRG = N 26° 28' 11" W
Ch DIST = 2057.85'

**C2**
CURVE DATA
R = 381.97'
Δ = 68° 1' 46"
L = 453.53'
Ch BRG = N 79° 5' 8" E
Ch DIST = 427.35'

**C3**
CURVE DATA
R = 818.51'
Δ = 14° 27' 48"
L = 206.62'
Ch BRG = N 37° 50' 21" E
Ch DIST = 206.07'

**C4**
CURVE DATA
R = 238.73'
Δ = 173° 35' 27"
L = 723.30'
Ch BRG = S 26° 3' 36" W
Ch DIST = 476.72'

**C5**
CURVE DATA
R = 1432.39'
Δ = 39° 14' 19"
L = 980.96'
Ch BRG = S 63° 55' 21" E
Ch DIST = 961.90'

**C6**
CURVE DATA
R = 3819.72'
Δ = 12° 46' 26"
L = 851.59'
Ch BRG = N 48° 8' 16" W
Ch DIST = 849.83'

**C7**
CURVE DATA
R = 3819.72'
Δ = 11° 18' 24"
L = 753.78'
Ch BRG = N 89° 39' 33" W
Ch DIST = 752.56'

**C8**
CURVE DATA
R = 3904.07'
Δ = 30° 33' 43"
L = 2082.45'
Ch BRG = N 26° 28' 11" W
Ch DIST = 2057.85'

**C9**
CURVE DATA
R = 1432.39'
Δ = 34° 20' 24"
L = 858.50'
Ch BRG = S 2° 42' 38" W
Ch DIST = 845.71'

**C10**
CURVE DATA
R = 716.20'
Δ = 51° 35' 29"
L = 644.89'
Ch BRG = N 45° 40' 34" E
Ch DIST = 623.33'

**C11**
CURVE DATA
R = 3819.72'
Δ = 12° 46' 26"
L = 851.59'
Ch BRG = N 48° 8' 16" W
Ch DIST = 849.83'

**C12**
CURVE DATA
R = 2291.83'
Δ = 31° 58' 0"
L = 1278.67'
Ch BRG = N 20° 46' 3" W
Ch DIST = 1262.15'

**C13**
CURVE DATA
R = 2864.79'
Δ = 33° 58' 0"
L = 1698.33'
Ch BRG = N 20° 46' 3" W
Ch DIST = 1673.57'

**C14**
CURVE DATA
R = 1432.39'
Δ = 8° 33' 13"
L = 213.84'
Ch BRG = S 47° 25' 17" E
Ch DIST = 213.64'

**C15**
CURVE DATA
R = 229.18'
Δ = 159° 5' 53"
L = 636.39'
Ch BRG = N 19° 45' 10" E
Ch DIST = 450.76'

**C16**
CURVE DATA
R = 2291.83'
Δ = 10° 30' 58"
L = 420.64'
Ch BRG = S 89° 56' 44" W
Ch DIST = 420.05'

**C17**
CURVE DATA
R = 3819.72'
Δ = 7° 38' 44"
L = 509.70'
Ch BRG = N 88° 30' 37" E
Ch DIST = 509.33'

**C18**
CURVE DATA
R = 2864.79'
Δ = 11° 43' 25"
L = 586.18'
Ch BRG = N 47° 36' 45" W
Ch DIST = 585.16'

**C19**
CURVE DATA
R = 477.46'
Δ = 78° 11' 12"
L = 651.55'
Ch BRG = S 76° 55' 56" W
Ch DIST = 602.16'

**C20**
CURVE DATA
R = 1432.39'
Δ = 9° 36' 0"
L = 240.00'
Ch BRG = S 34° 30' 47" W
Ch DIST = 239.72'

**C21**
CURVE DATA
R = 716.20'
Δ = 24° 59' 46"
L = 312.45'
Ch BRG = S 9° 12' 54" W
Ch DIST = 309.98'

**C22**
CURVE DATA
R = 1637.02'
Δ = 28° 13' 19"
L = 806.34'
Ch BRG = N 66° 8' 41" W
Ch DIST = 798.21'

**C23**
CURVE DATA
R = 2083.48'
Δ = 8° 15' 0"
L = 300.00'
Ch BRG = N 43° 13' 17" W
Ch DIST = 299.74'

**C24**
CURVE DATA
R = 2291.83'
Δ = 10° 34' 37"
L = 423.08'
Ch BRG = N 89° 58' 34" E
Ch DIST = 422.48'

**C25**
CURVE DATA
R = 716.19'
Δ = 31° 56' 33"
L = 399.28'
Ch BRG = N 55° 17' 3" E
Ch DIST = 394.13'

**C26**
CURVE DATA
R = 1432.43'
Δ = 12° 0' 0"
L = 300.01'
Ch BRG = N 77° 15' 20" E
Ch DIST = 299.46'

**C27**
CURVE DATA
R = 1432.39'
Δ = 11° 45' 41"
L = 294.03'
Ch BRG = N 77° 21' 9" E
Ch DIST = 293.52'

**S1**
SPIRAL CURVE DATA
R = 1432.39'
$L_s$ = 150.00'
$\theta_s$ = 3° 00' 00"
LT = 100.01'
ST = 50.01'

**S2**
SPIRAL CURVE DATA
$R_1$ = 3819.72'
$R_2$ = 381.97'
$L_s$ = 150.00'
$\theta_s$ = 12° 22' 30"
LT = 95.72'
ST = 54.79'

**S3**
SPIRAL CURVE DATA
R = 238.73'
$L_s$ = 200.00'
$\theta_s$ = 24° 00' 00"
LT = 134.58'
ST = 67.80'

**S4**
SPIRAL CURVE DATA
R = 238.73'
$L_s$ = 200.00'
$\theta_s$ = 24° 00' 00"
LT = 134.58'
ST = 67.80'

**S5**
SPIRAL CURVE DATA
$R_1$ = 3819.72'
$R_2$ = 1637.02
$L_s$ = 150.00'
$\theta_s$ = 3° 45' 00"
LT = 85.03'
ST = 65.03'

**S6**
SPIRAL CURVE DATA
$R_1$ = 1637.02'
$R_2$ = 2083.48'
$L_s$ = 150.00'
$\theta_s$ = 4° 41' 15"
LT = 78.04'
ST = 72.04'

**S7**
SPIRAL CURVE DATA
R = 2864.79'
$L_s$ = 400.00'
$\theta_s$ = 4° 00' 00"
LT = 266.73'
ST = 133.40

**S8**
SPIRAL CURVE DATA
$R_1$ = 229.18'
$R_2$ = 1432.39
$L_s$ = 200.00'
$\theta_s$ = 29° 00' 00"
LT = 126.18'
ST = 77.74'

**S9**
SPIRAL CURVE DATA
R = 229.18'
$L_s$ = 200.00'
$\theta_s$ = 25° 00' 00"
LT = 134.69'
ST = 67.90'

**S10**
SPIRAL CURVE DATA
$R_1$ = 3819.72
$R_2$ = 1432.39
$L_s$ = 150.00'
$\theta_s$ = 4° 07' 30"
LT = 86.40'
ST = 63.67'

**S11**
SPIRAL CURVE DATA
R = 716.20'
$L_s$ = 200.00'
$\theta_s$ = 8° 00' 00"
LT = 133.47'
ST = 66.79'

**S12**
SPIRAL CURVE DATA
R = 716.20'
$L_s$ = 200.00'
$\theta_s$ = 8° 00' 00"
LT = 133.47'
ST = 66.79'

**S13**
SPIRAL CURVE DATA
R = 477.46'
$L_s$ = 150.00'
$\theta_s$ = 9° 00' 00"
LT = 100.13'
ST = 50.12'

**S14**
SPIRAL CURVE DATA
R = 2291.83'
$L_s$ = 400.00'
$\theta_s$ = 5° 00' 00"
LT = 266.77'
ST = 133.43'

**S15**
SPIRAL CURVE DATA
R = 2291.83'
$L_s$ = 400.00'
$\theta_s$ = 5° 00' 00"
LT = 266.77'
ST = 133.43'

**S16**
SPIRAL CURVE DATA
R = 2864.79'
$L_s$ = 400.00'
$\theta_s$ = 4° 00' 00"
LT = 266.73'
ST = 133.40'

RECEIVED _____, 20___
RECORDED _____, 20___
BOOK _____ PAGE _____
_____
COUNTY RECORDER

P:\ODOTcadd\ProjectData\17-0129\SUM77_277_224\106002_SUM_77_277_224\Design\RW\Sheets\106002_RC011.dgn Sheet 4/14/2020 10:4:00 PM Wstowe

FEDERAL PROJECT NO.

PID NO. 106002

CALCULATED WWS
CHECKED CWP

CENTERLINE PLAT
11 OF 11

SUM-77/277/224
VARIOUS

12 / 16

1284
1288

# SUM-77/277/224
# SUMMIT COUNTY
# CONVENTRY TOWNSHIP
# R-11, T-1, TRACT 11

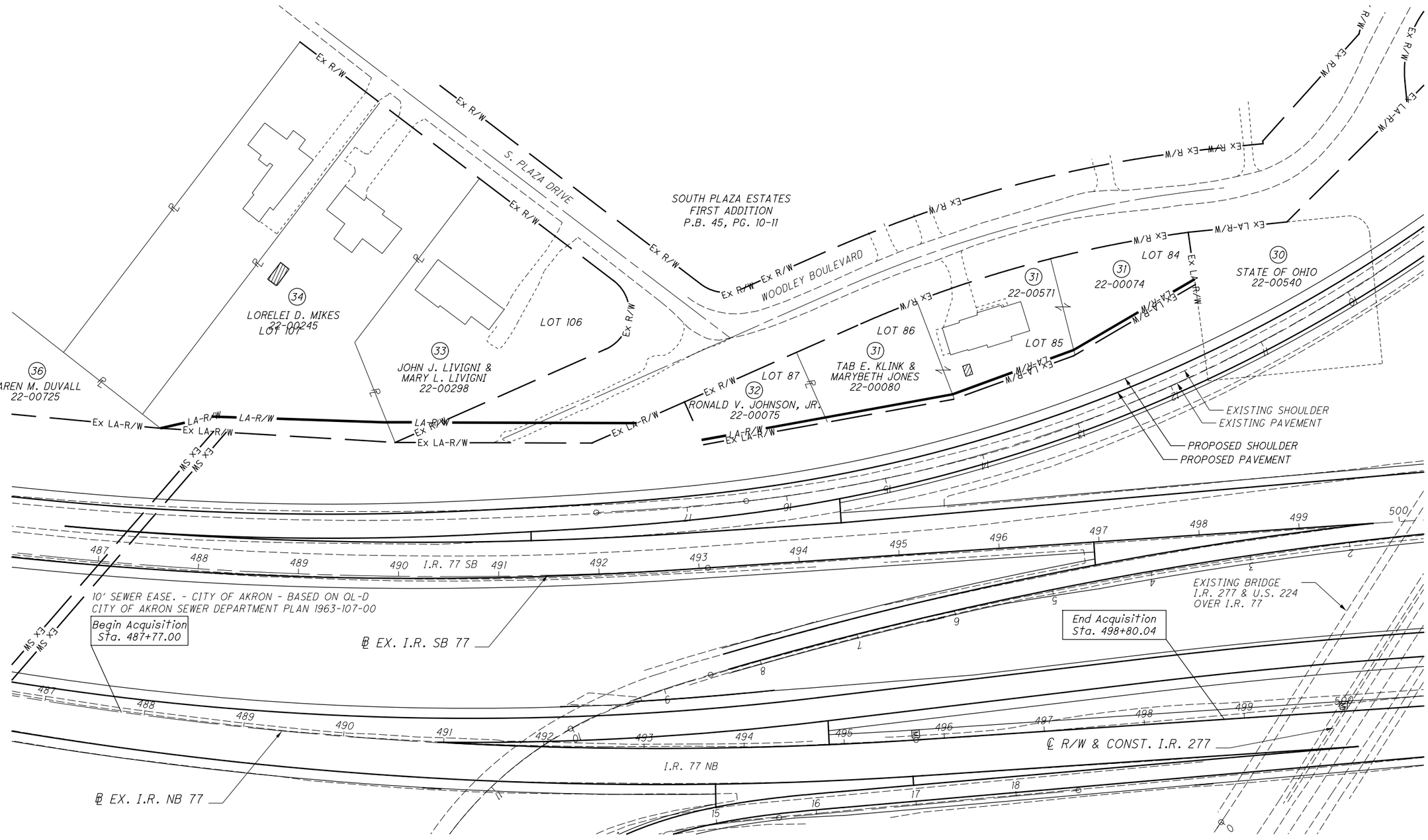


| REV. BY | DATE | DESCRIPTION |
|---|---|---|
| DATE COMPLETED | | |

HORIZONTAL SCALE IN FEET
0 25 50 100

PID NO. 106002

R/W DESIGNER WWS
R/W REVIEWER CWP

PROPERTY MAP

SUM-77/277/224
VARIOUS

13 / 16

1285
1288

P:\ODOTcadd\ProjectData\17-0129\SUM77_277_224\106002_SUM_77_277_224\Design\RW\Sheets\106002_RW001.dgn Sheet 4/16/2020 12:19:43 PM Wstowe

**TOTAL NUMBER OF :**

4 OWNERSHIPS 0 TOTAL TAKES

4 PARCELS 0 OWNERSHIPS W/ STRUCTURES INVOLVED

**GRANTEE:**

ALL RIGHT OF WAY ACQUIRED IN THE NAME OF THE STATE OF OHIO DEPARTMENT OF TRANSPORTATION UNLESS OTHERWISE SHOWN.

ALL AREAS IN ACRES

| PARCEL NO. | OWNER | SHEET NO. | OWNERS RECORD BOOK | OWNERS RECORD PAGE | AUDITOR'S PARCEL | AUDITOR'S AREA | TOTAL P.R.O. | GROSS TAKE | P.R.O. IN TAKE | NET TAKE | STRUC-TURE | NET RESIDUE LEFT | NET RESIDUE RIGHT | TYPE FUND | REMARKS | AS ACQUIRED BOOK | AS ACQUIRED PAGE |
|---|---|---|---|---|---|---|---|---|---|---|---|---|---|---|---|---|---|
| 1-29 | NOT USED | | | | | | | | | | | | | 100% STATE | | | |
| 30 | STATE OF OHIO | 15, 16 | | | 2200540 | 0.6100 | | | | | | | | | NO TAKE | | |
| 31-WL | TAB E. KLINK AND MARYBETH JONES | 15, 16 | 54250969 | | 2200074 | 0.2300 | 0.0000 | 0.0160 | 0.0000 | 0.0160 | | 0.2140 | | | | | |
| | | 15, 16 | 54250969 | | 2200571 | 0.3100 | 0.0000 | 0.0155 | 0.0000 | 0.0155 | | 0.2945 | | | | | |
| | | 15, 16 | 54250969 | | 2200080 | 0.2400 | 0.0000 | 0.0148 | 0.0000 | 0.0148 | | 0.2252 | | | | | |
| | TOTAL | | | | | 0.7800 | 0.0000 | 0.0463 | 0.0000 | 0.0463 | | 0.7337 | | | | | |
| 32-WL | RONALD V. JOHNSON, JR. | 15, 16 | 55200146 | | 2200075 | 0.1500 | 0.0000 | 0.0144 | 0.0000 | 0.0144 | | 0.1356 | | | | | |
| 33-WL | JOHN J. LIVIGNI AND MARY L. LIVIGNI | 15, 16 | 55310703 | | 2200298 | 1.2800 | 0.0000 | 0.0121 | 0.0000 | 0.0121 | | 1.2679 | | | | | |
| 34-WL | LORELEI D. MIKES | 15, 16 | 56529187 | | 2200245 | 1.0600 | 0.0000 | 0.0795 | 0.0000 | 0.0795 | | 0.9805 | | | | | |
| 35 | NOT USED | | | | | | | | | | | | | | | | |
| 36 | KAREN M. DUVALL HTTA KAREN M. CULP | 15, 16 | 56106610 | | 2200725 | 0.6700 | | | | | | | | | NO TAKE | | |

TYPES OF TITLE LEGEND:
WL = FEE SIMPLE WITH LIMITATION OF ACCESS

NET RESIDUE = RECORD AREA - TOTAL PRO - NET TAKE
NET TAKE = GROSS TAKE - PRO IN TAKE

| REV. BY | DATE | DESCRIPTION |
|---|---|---|
| | | |
| | | |
| | | |
| | | |
| | | |

FIELD REVIEW BY DATE:

OWNERSHIP VERIFIED BY WWS DATE: 2/14/2020

DATE COMPLETED

FEDERAL PROJECT NO. E171(457)

PID NO. 106002

STATE JOB NO. 442107

R/W DESIGNER WWS

R/W REVIEWER CWP

SUMMARY OF ADDITIONAL RIGHT OF WAY

SUM-77/277/224

VARIOUS

14 / 16

1286
1288

P:\ODOTcadd\Project Data\17-0129(SUM77-277-224)\106002_SUM_77_277_224\Design\RW\Sheets\106002_RS001.dgn Sheet 4/14/2020 10:16:41 PM Wstowe

# SUM-77/277/224
# SUMMIT COUNTY
# CONVENTRY TOWNSHIP
# R-11, T-1, TRACT 11

RESIDENTIAL
(31-1)
TAB E. KLINK &
MARYBETH JONES
WOODLEY BOULEVARD
AKRON, OHIO 44319
22-00074, 22-00571, 22-00080
DOC #54250969

RESIDENTIAL
(32)
RONALD V. JOHNSON, JR.
WOODLEY BOULEVARD
AKRON, OHIO 44319
22-00075
DOC #55200146

RESIDENTIAL
(33)
JOHN J. LIVIGNI &
MARY L. LIVIGNI
2011 SOUTH PLAZA DRIVE
AKRON, OHIO 44319
22-00298
DOC #55310703

RESIDENTIAL
(34)
LORELEI D. MIKES
2025 SOUTH PLAZA DRIVE
AKRON, OHIO 44319
22-00245
DOC #56529187

RESIDENTIAL
(36)
KAREN M. DUVALL
2008 DARNELL DRIVE
AKRON, OHIO 44319
22-00725
DOC #56106610
BLOCK B - GREGG
SUBDIVISION

VACANT
(30)
STATE OF OHIO
WOODLEY BOULEVARD
AKRON, OHIO 44319
22-00540

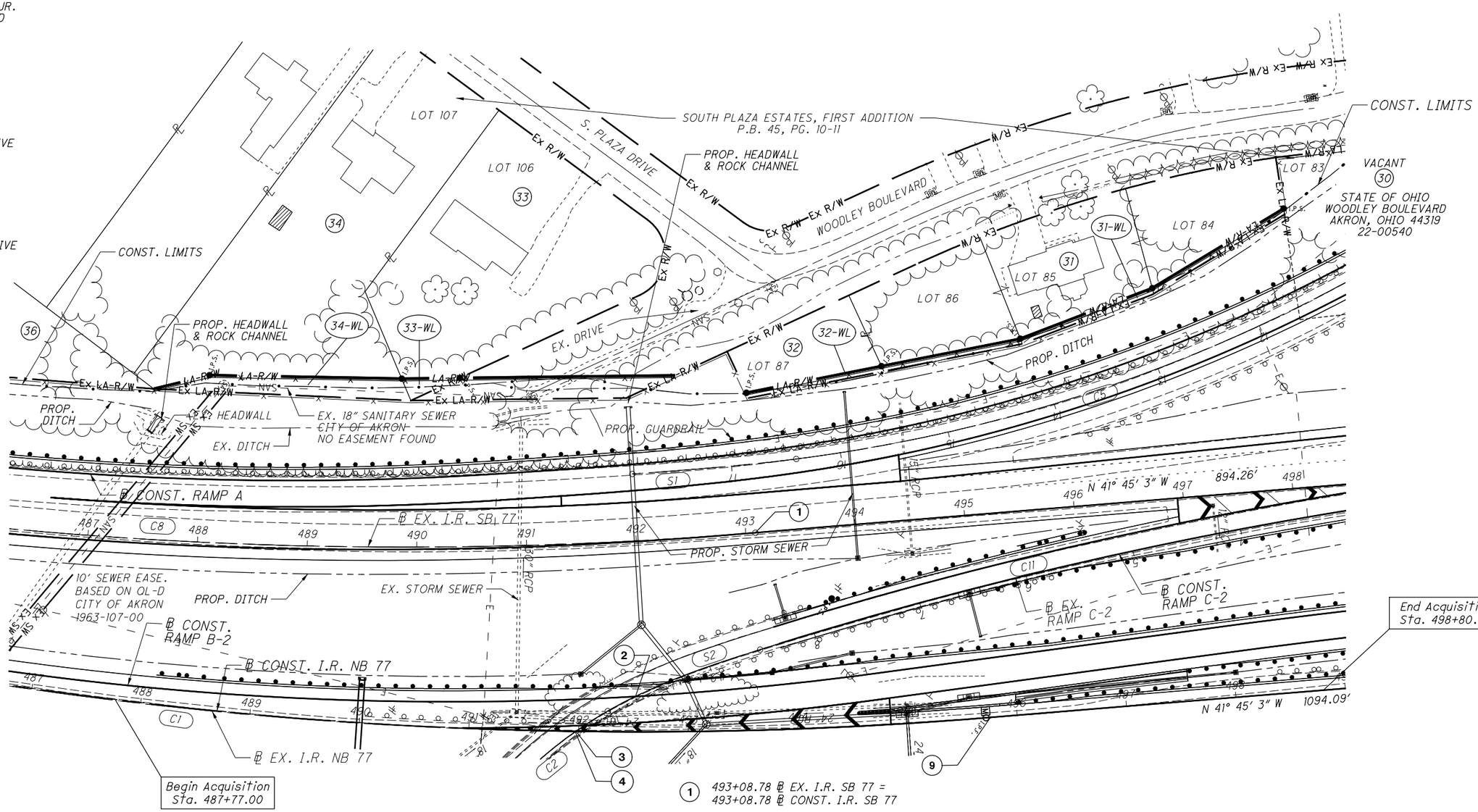


C1
CURVE DATA
R = 3904.07'
Δ = 30° 33' 43"
L = 2082.45'
Ch BRG = N 26° 28' 11" W
Ch DIST = 2057.85'

C2
CURVE DATA
R = 381.97'
Δ = 68° 1' 46"
L = 453.53'
Ch BRG = N 79° 5' 8" E
Ch DIST = 427.35'

C5
CURVE DATA
R = 1432.39'
Δ = 39° 14' 19"
L = 980.96'
Ch BRG = S 63° 55' 21" E
Ch DIST = 961.90'

C8
CURVE DATA
R = 3904.07'
Δ = 30° 33' 43"
L = 2082.45'
Ch BRG = N 26° 28' 11" W
Ch DIST = 2057.85'

C11
CURVE DATA
R = 3819.72'
Δ = 12° 46' 26"
L = 851.59'
Ch BRG = N 48° 8' 16" W
Ch DIST = 849.83'

S1
SPIRAL CURVE DATA
R = 1432.39'
$L_s$ = 150.00'
$\theta_s$ = 3° 00' 00"
LT = 100.01'
ST = 50.01'

S2
SPIRAL CURVE DATA
$R_1$ = 3819.72'
$R_2$ = 381.97'
$L_s$ = 150.00'
$\theta_s$ = 12° 22' 30"
LT = 95.72'
ST = 54.79'

1 493+08.78 ℄ EX. I.R. SB 77 =
493+08.78 ℄ CONST. I.R. SB 77

2 292+48.85 ℄ CONST. RAMP B-2 =
9+73.05 ℄ EX. RAMP C-2 =
791+75.87 ℄ CONST. RAMP C-2

3 491+97.52 ℄ CONST. I.R. NB 77 =
10+35.98 ℄ EX. RAMP C-2 =
791+12.94 ℄ CONST. RAMP C-2

4 491+96.98 ℄ EX. I.R. NB 77 =
10+36.63 ℄ EX. RAMP C-2 =
791+12.29 ℄ CONST. RAMP C-2

9 495+75.59 ℄ EX. I.R. NB 77 =
495+75.59 ℄ CONST. I.R. NB 77

| REV. BY | DATE | DESCRIPTION |
|---|---|---|
| | | |
| | | |
| | | |
| | | |
| | | |
| | | |
| | | |

DATE COMPLETED

HORIZONTAL SCALE IN FEET
0 25 50 100

PID NO. 106002

R/W DESIGNER WWS
R/W REVIEWER CWP

RIGHT OF WAY TOPO SHEET

SUM-77 / 277 / 224
VARIOUS

15 / 16

1287
1288

P:\DOTcadd\Project Data\17-0129\SUM77_277_224\06002_SUM_77_277_224\Design\RW Sheets\06002_RT001.dgn Sheet 4/16/2020 12:20:20 PM Wstowe

# SUM-77/277/224
# SUMMIT COUNTY
# CONVENTRY TOWNSHIP
# R-11, T-1, TRACT 11

RESIDENTIAL (31-1)
TAB E. KLINK &
MARYBETH JONES
WOODLEY BOULEVARD
AKRON, OHIO 44319
22-00074, 22-00571, 22-00080
DOC #54250969

RESIDENTIAL (36)
KAREN M. DUVALL
2008 DARNELL DRIVE
AKRON, OHIO 44319
22-00725
DOC #56106610
BLOCK B - GREGG
SUBDIVISION

RESIDENTIAL (32)
RONALD V. JOHNSON, JR.
WOODLEY BOULEVARD
AKRON, OHIO 44319
22-00075
DOC #55200146

RESIDENTIAL (33)
JOHN J. LIVIGNI &
MARY L. LIVIGNI
2011 SOUTH PLAZA DRIVE
AKRON, OHIO 44319
22-00298
DOC #55310703

RESIDENTIAL (34)
LORELEI D. MIKES
2025 SOUTH PLAZA DRIVE
AKRON, OHIO 44319
22-00245
DOC #56529187

VACANT (30)
STATE OF OHIO
WOODLEY BOULEVARD
AKRON, OHIO 44319
22-00540

SOUTH PLAZA ESTATES, FIRST ADDITION
P.B. 45, PG. 10-11

S. PLAZA DRIVE 50' WIDE

WOODLEY BOULEVARD 80' WIDE

LOT 107 | LOT 106 | LOT 87 | LOT 86 | LOT 85 | LOT 84 | LOT 83

BLOCK B GREGG SUBDIVISION

P.O.C. INTERSECTION OF ℄ WOODLEY BLVD & ℄ S. PLAZA DRIVE STA. 493+94.83 409.15 LT

487+77.00 286.00 LT

488+30.08 304.24 LT

490+19.94 315.71 LT

490+30.27 296.33 LT P.O.B. 33-WL P.O.B. 34-WL

490+77.42 319.10 LT

492+43.19 304.51 LT

492+91.17 324.87 LT

493+25.69 382.57 LT

493+43.32 345.90 LT

493+63.71 303.07 LT P.O.B. 32-WL

493+61.48 307.80 LT

494+96.55 326.51 LT

494+98.57 321.71 LT P.O.B. 31-WL

496+30.86 341.76 LT

496+31.63 336.77 LT

496+32.33 336.97 LT

497+53.97 372.00 LT

497+54.58 377.89 LT

497+55.52 372.77 LT

498+79.66 440.30 LT

498+80.04 434.90 LT

N 50° 52′ 26″ W 52.35

N 36° 00′ 51″ W 175.15

234.56

S 34° 28′ 13″ E

N 37° 45′ 00″ W 196.18

S 37° 45′ 00″ E 196.69

98.09′

258.28′

67.58′

S 61° 48′ 59″ E

N 48° 13′ 58″ W 125.49

S 48° 13′ 58″ E 125.46

N 48° 14′ 56″ W 128.86

S 48° 13′ 58″ E 127.85

N 58° 01′ 54″ W 128.88

S 57° 48′ 45″ E 126.59

N 68° 16′ 12″ W 139.79

S 68° 16′ 12″ E 139.16

N 41° 45′ 3″ W 894.26′

N 41° 45′ 3″ W 1094.09′

℄ CONST. RAMP A

℄ EX. I.R. SB 77

℄ CONST. I.R. SB 77

℄ CONST. RAMP B-2

℄ CONST. I.R. NB 77

℄ EX. I.R. NB 77

℄ EX. RAMP A

℄ EX. RAMP C-2

℄ CONST. RAMP C-2

10′ SEWER EASE. BASED ON OL-D CITY OF AKRON 1963-107-00

Ex R/W

Ex LA-R/W

LA-R/W

Ex MS

I.P.S.

TIE LINE

33-WL

34-WL

31-WL

32-WL

Begin Acquisition Sta. 487+77.00

End Acquisition Sta. 498+80.04

C1
CURVE DATA
R = 3904.07′
Δ = 30° 33′ 43″
L = 2082.45′
Ch BRG = N 26° 28′ 11″ W
Ch DIST = 2057.85′

C2
CURVE DATA
R = 381.97′
Δ = 68° 1′ 46″
L = 453.53′
Ch BRG = N 79° 5′ 8″ E
Ch DIST = 427.35′

C5
CURVE DATA
R = 1432.39′
Δ = 39° 14′ 19″
L = 980.96′
Ch BRG = S 63° 55′ 21″ E
Ch DIST = 961.90′

C8
CURVE DATA
R = 3904.07′
Δ = 30° 33′ 43″
L = 2082.45′
Ch BRG = N 26° 28′ 11″ W
Ch DIST = 2057.85′

C11
CURVE DATA
R = 3819.72′
Δ = 12° 46′ 26″
L = 851.59′
Ch BRG = N 48° 8′ 16″ W
Ch DIST = 849.83′

S1
SPIRAL CURVE DATA
R = 1432.39′
$L_s$ = 150.00′
$\theta_s$ = 3° 00′ 00″
LT = 100.01′
ST = 50.01′

S2
SPIRAL CURVE DATA
$R_s$ = 3819.72′
$R_r$ = 381.97′
$L_s$ = 150.00′
$\theta_s$ = 12° 22′ 30″
LT = 95.72′
ST = 54.79′

(1) 493+08.78 ℄ EX. I.R. SB 77 = 493+08.78 ℄ CONST. I.R. SB 77

(2) 292+48.85 ℄ CONST. RAMP B-2 = 9+73.05 ℄ EX. RAMP C-2 = 791+75.87 ℄ CONST. RAMP C-2

(3) 491+97.52 ℄ CONST. I.R. NB 77 = 10+35.98 ℄ EX. RAMP C-2 = 791+12.94 ℄ CONST. RAMP C-2

(4) 491+96.98 ℄ EX. I.R. NB 77 = 10+36.63 ℄ EX. RAMP C-2 = 791+12.29 ℄ CONST. RAMP C-2

(9) 495+75.59 ℄ EX. I.R. NB 77 = 495+75.59 ℄ CONST. I.R. NB 77

| LINE TABLE | | |
|---|---|---|
| | BEARING | DISTANCE |
| L1 | N 30° 07′ 01″ E | 21.59 |
| L2 | N 37° 45′ 00″ W | 52.92 |
| L3 | S 61° 48′ 59″ E | 49.04 |
| L4 | S 62° 03′ 40″ E | 48.58 |
| L5 | S 27° 51′ 58″ W | 5.15 |
| L6 | N 28° 11′ 01″ E | 5.14 |
| L7 | S 31° 13′ 42″ W | 5.00 |
| L8 | N 37° 53′ 25″ E | 5.21 |
| L9 | S 68° 16′ 12″ E | 1.72 |
| L10 | N 44° 17′ 16″ E | 5.41 |
| L11 | S 57° 48′ 45″ E | 0.72 |
| L12 | N 28° 11′ 01″ E | 40.00 |
| L13 | N 27° 51′ 58″ E | 46.73 |

NOTE:
ALL STATIONS AND OFFSETS ARE REFERENCED TO THE ℄ EX. I.R. 77 NB

| REV. BY | DATE | DESCRIPTION |
|---|---|---|
| | | |
| DATE COMPLETED | | |

HORIZONTAL SCALE IN FEET: 0, 25, 50, 100

PID NO. 106002

R/W DESIGNER WWS
R/W REVIEWER CWP

SUM-77/277/224
VARIOUS

RIGHT OF WAY BOUNDARY SHEET

16 / 16

1288
1288

P:\ODOTcadd\Projects\07-0129\SUM77_277_224\106002_SUM_77_277_224\Design\RW\Sheets\106002_RB001.dgn Sheet 4/16/2020 1:56:36 PM Wstowe

## PROJECT DESCRIPTION

THE SUM-77/277/224 (PID 106002) PROJECT IS PROPOSED TO REDUCE THE CONGESTION ALONG THE IR-77 CORRIDOR BETWEEN THE IR-77, IR-277 AND US-224 INTERCHANGE AND ARLINGTON RD, AS WELL AS IMPROVE BOTH SAFETY AND THE INFRASTRUCTURE CONDITION WITHIN THE PROJECT LIMITS. THE PROJECT INCLUDES THE REPLACEMENT OF BRIDGES SUM-76-0927R AND SUM-77-0887, THE WIDENING OF BRIDGES SUM-77-0801 L&R AND SUM-77-0802 L&R, THE WIDENING OF THE IR-77 AND IR-277 FREEWAY SEGMENTS WITHIN THE PROJECT LIMITS, THE WIDENING AND RECONFIGURATION OF EXISTING IR-77 AND IR-277 INTERCHANGE RAMPS (RAMP A, RAMP B, RAMP B-1, RAMP B-2, RAMP C, RAMP C-1 AND RAMP C-2), THE RECONSTRUCTION OF PROJECT CULVERTS, THE CONSTRUCTION OF NEW RETAINING WALLS TO FACILITATE THE PROPOSED WIDENING AND THE CONSTRUCTION OF FIVE (5) NOISE WALLS (NOISE WALL HI, NOISE WALL E, NOISE WALL C, NOISE WALL G, AND NOISE WALL K).

## HISTORIC RECORDS

HISTORIC CONSTRUCTION PLAN SETS AND SOIL PROFILES FOR THE SUM-8-6.72 PROJECT DATED 1961, THE SUM-224-9.55 PROJECT DATED 1963, THE SUM-8-9.07 PROJECT DATED 1964, THE SUM-277-0.00 PROJECT DATED 1969, THE SUM-76/277-5.19/0.00 PROJECT DATED 1980, THE SUM-277-0.00 PROJECT DATED 1990, AND THE SUM-77-3.97 PROJECT DATED 1996 WERE REVIEWED FOR THIS PROJECT. THE RECORDS DID NOT PROVIDE ADEQUATE INFORMATION FOR USE ON THE DESIGN OF THIS PROJECT THEREFORE NO HISTORIC DATA FROM THESE PROJECTS HAVE BEEN PRESENTED ON THIS SOIL PROFILE.

IN 1961, AN EXPLORATION WAS PERFORMED FOR THE STRUCTURE SUM-77-0810 L&R AS PART OF THE SUM-8-6.70 PROJECT AT THAT TIME. ONE BORING, B-010-0-61, HAS BEEN USED FOR DESIGN OF THE CURRENT PROJECT AND IS PRESENTED HERE AS B-010-1-61 TO AVOID DUPLICATE BORING LABELS.

IN 1963, AN EXPLORATION WAS PERFORMED FOR THE STRUCTURE SUM-8-0930 AS PART OF THE SUM-224-9.55 PROJECT AT THAT TIME. TWO BORINGS, B-001-0-63 AND B-008-0-63, HAVE BEEN USED FOR DESIGN OF THE CURRENT PROJECT AND ARE PRESENTED HERE.

IN 2014, AN EXPLORATION WAS PERFORMED FOR DESIGN BUILD PROJECT SUM-77-0958L (PID 98061) AT THAT TIME. SEVENTEEN BORINGS, B-001-0-14 THROUGH B-004-0-14, B-007-0-14 THROUGH B-011-0-14 AND OFFSET BORINGS B-003-1-14, B-009-1-14, B-009-2-14, AND B-010-1-14, HAVE BEEN USED FOR DESIGN OF THE CURRENT PROJECT AND ARE PRESENTED HERE.

ADDITIONAL HISTORICAL SUBSURFACE INVESTIGATION INFORMATION INCLUDING BORINGS FROM THE REFERENCED EXPLORATIONS NOT SHOWN WITHIN THESE PROJECT SOIL PROFILE SHEETS, IS AVAILABLE FROM ODOT TRANSPORTATION INFORMATION SYSTEM (TIMS) HTTPS://GIS.DOT.STATE.OH.US/TIMS.

## GEOLOGY

THE PROJECT SITE IS LOCATED WITHIN THE AKRON-CANTON INTERLOBATE PLATEAU, PART OF THE GLACIATED ALLEGHENY PLATEAUS. THIS IS A MODERATE RELIEF, HUMMOCKY AREA BETWEEN TWO CONVERGING GLACIAL LOBES DOMINATED BY KAMES, KAME TERRACES, ESKERS, KETTLES, KETTLE LAKES, AND BOGS/FENS. SOILS IN THIS REGION ARE CHARACTERISTICALLY SANDY WISCONSINAN-AGE CLAY TO LOAM TILL OVER MISSISSIPPIAN AND PENNSYLVANIAN-AGE SHALES, SANDSTONES, CONGLOMERATES AND COALS.

THE GEOLOGY IN THE NORTHERN PART OF THE PROJECT SITE (NORTHERN PROJECT LIMITS TO ABOUT A QUARTER MILE SOUTH OF SWARTZ ROAD) IS MAPPED AS UP TO 30 FT OF TILL OVER PENNSYLVANIAN-AGE SANDSTONE OR CONGLOMERATE BEDROCK WITH SUBORDINATE AMOUNTS OF SHALE, SILTSTONE, CLAY AND COAL BEDROCK. WITHIN THE SOUTHERN PART OF THE PROJECT SITE, THE GEOLOGY IS MAPPED AS UP TO 60 FT OF ICE CONTACT DEPOSITS, FOLLOWED BY UP TO 30 FT OF TILL UNDERLAIN BY UP TO 290 FT OF SAND AND GRAVEL ALL OVER MISSISSIPPIAN-AGE SANDSTONE AND SHALE BEDROCK. THE TILL MAPPED WITHIN BOTH THE NORTHERN AND SOUTHERN PORTIONS OF THE PROJECT IS DESCRIBED AS CONSISTING OF AN UNSORTED MIX OF CLAY, SILT, GRAVEL AND BOULDERS WITH POSSIBLE SILT, SAND AND GRAVEL LENSES. THE ICE-CONTACT DEPOSITS, MAPPED IN THE SOUTHERN PORTION OF THE PROJECT, ARE GENERALLY DESCRIBED AS HIGHLY VARIABLE DEPOSITS OF POORLY SORTED GRAVEL AND SAND WITH INCLUSIONS OF SILT, CLAY AND TILL LENSES, WHILE THE SAND AND GRAVEL SOILS ARE DESCRIBED AS CONSISTING OF WELL-SORTED, INTERBEDDED SAND AND GRAVEL COMMONLY CONTAINING THIN, DISCONTINUOUS LAYERS OF SILT AND CLAY.

BASED ON THE BEDROCK GEOLOGIC UNITS MAP OF OHIO, BEDROCK WITHIN MOST OF THE PROJECT AREA (WITH THE EXCEPTION OF A SEGMENT OF IR-77 STARTING NEAR THE EAST WARNER ROAD (RD) OVERPASS AND EXTENDING ABOUT A 0.5 MILE NORTH) CONSISTS OF THE ALLEGHENY AND POTTSVILLE GROUPS WHICH CONSIST OF UNDIVIDED PENNSYLVANIAN-AGED SHALE, SILTSTONE, AND UNDERCLAY WHICH ARE CALCAREOUS IN PART AND LOCALLY CONTAIN MARINE FOSSILS. THE PRIMARY AND SECONDARY ROCK TYPES ARE SHALE AND SILTSTONE, RESPECTIVELY, WITH OTHER ROCK TYPES INCLUDING CLAYSTONE, SANDSTONE, LIMESTONE, AND COAL. THE REMAINDER OF THE SITE LIES WITHIN THE UNDIVIDED MAXVILLE LIMESTONE; RUSHVILLE, LOGAN, AND CUYAHOGA FORMATIONS. THIS GROUP IS VERY CLOSE TO THE ALLEGHENY AND POTTSVILLE GROUPS WITH RESPECT TO ROCK TYPES, COMPOSITION, AND LITHOLOGICAL DESCRIPTION, THOUGH THE MAXVILLE LIMESTONE GROUP IS IDENTIFIED AS MISSISSIPPIAN-AGED. ACCORDING TO THE ODNR BEDROCK TOPOGRAPHY MAP OF OHIO, BEDROCK ELEVATIONS AT THE PROJECT SITE CAN BE EXPECTED TO RANGE FROM 1050 FT ABOVE MEAN SEA LEVEL (AMSL) IN NORTHERN AND SOUTHERN PARTS OF THE PROJECT SITE TO 750 FT AMSL AT THE TUSCARAWAS RIVER

## LEGEND

| | | ODOT CLASS | CLASSIFIED MECH./VISUAL | |
|---|---|---|---|---|
| | GRAVEL AND/OR STONE FRAGMENTS | A-1-a | 9 | 26 |
| | GRAVEL AND/OR STONE FRAGMENTS WITH SAND | A-1-b | 41 | 244 |
| | GRAVEL AND/OR ST. FRAGS. WITH SAND AND SILT | A-2-4 | 38 | 108 |
| | FINE SAND | A-3 | 0 | 3 |
| | COARSE AND FINE SAND | A-3a | 36 | 215 |
| | SANDY SILT | A-4a | 275 | 422 |
| | SILT | A-4b | 41 | 37 |
| | SILT AND CLAY | A-6a | 27 | 40 |
| | SILTY CLAY | A-6b | 2 | 3 |
| | ELASTIC CLAY | A-7-5 | 1 | 2 |
| | CLAY | A-7-6 | 2 | 3 |
| | | TOTAL | 474 | 1110 |
| | SANDSTONE | VISUAL | | |
| | SHALE | VISUAL | | |
| | SOD AND TOPSOIL = X = APPROXIMATE THICKNESS | VISUAL | | |
| | PAVEMENT OR BASE = X = APPROXIMATE THICKNESS | VISUAL | | |
| | EXPLORATION LOCATION - PLAN VIEW | | | |
| | HISTORIC BORING LOCATION - PLAN VIEW | | | |
| | DRIVE SAMPLE AND/OR ROCK CORE BORING PLOTTED TO VERTICAL SCALE ONLY. HORIZONTAL BAR INDICATES A CHANGE IN STRATIGRAPHY. | | | |
| WC | INDICATES WATER CONTENT IN PERCENT. | | | |
| W— | INDICATES FREE WATER ELEVATION. | | | |
| ▼— | INDICATES STATIC WATER ELEVATION. | | | |
| $N_{60}$ | INDICATES STANDARD PENETRATION RESISTANCE NORMALIZED TO 60% DRILL ROD ENERGY RATIO. | | | |
| X/Y/D" | NUMBER OF BLOWS FOR STANDARD PENETRATION TEST (SPT): X= NUMBER OF BLOWS FOR 6 INCHES (UNCORRECTED). Y/D"= NUMBER OF BLOWS (UNCORRECTED) FOR D" OF PENETRATION AT REFUSAL. | | | |
| SS | INDICATES A SPLIT-SPOON SAMPLE. | | | |
| NP | INDICATES A NON-PLASTIC SAMPLE. | | | |
| TR | INDICATES THE TOP OF ROCK. | | | |
| SO4 | INDICATES SULFATE CONTENT IN SOIL | | | |

## GEOLOGY (CONTINUED)

THE MAJORITY OF SOILS DIRECTLY UNDERLYING PROJECT SITE HAVE BEEN MAPPED (WEB SOIL SURVEY) BY THE NATURAL RESOURCES CONSERVATION SERVICE AS BEING UDORTHENTS. UDORTHENTS ARE SOILS THAT HAVE BEEN DISTURBED BY CUTTING OR FILLING AND ARE NOT RATED FOR LOCAL ROADS. THOUGH UDORTHENTS WAS MAPPED AS THE DOMINANT UNIT UNDERLYING THE PROJECT SITE, VARIOUS OTHER SOIL SERIES WERE MAPPED ADJACENT TO THE PROJECT BOUNDARIES. OF THESE UNITS, THE MOST DOMINANT INCLUDED THE CHILI, WOOSTER, AND CANFIELD SERIES. THE CHILI SERIES IS DESCRIBED AS VERY DEEP, WELL DRAINED SOILS ON OUTWASH PLAINS, TERRACES, KAMES AND BEACH RIDGES, AND CLASSIFIES AS NON-COHESIVE A-1, A-2 AND A-4 SOILS (AASHTO METHOD OF SOIL CLASSIFICATION). THE WOOSTER SERIES IS DESCRIBED AS DEEP, WELL DRAINED SOILS FORMED IN LOW-LIME LOAMY GLACIAL TILL WITH THIN LOESS MANTLE IN SOME PLACES, AND CLASSIFIES AS BOTH COHESIVE AND NON-COHESIVE A-4 SOILS (AASHTO METHOD OF SOIL CLASSIFICATION). THE CANFIELD SERIES IS DESCRIBED AS VERY DEEP, MODERATELY WELL DRAINED SOILS FORMED IN WISCONSINAN-AGE TILL ON PLAINS WITH A THIN LOESS MANTLE IN SOME PLACES, AND CLASSIFIES AS COHESIVE A-4, A-6 AND A-7-5 SOILS OR NON-COHESIVE A-1-B, A-2-4, A-2-6 AND A-4 SOILS ACCORDING TO THE AASHTO METHOD OF SOIL CLASSIFICATION.

**RECON. -** EB 09/26/2019

**DRILLING -** CA, JH 06/19/2019 - 08/07/2020

**DRAWN -** EB, KA, MJ, ZM 11/2020 - 01/2021

**REVIEWED -** BPA, 11/16/2020

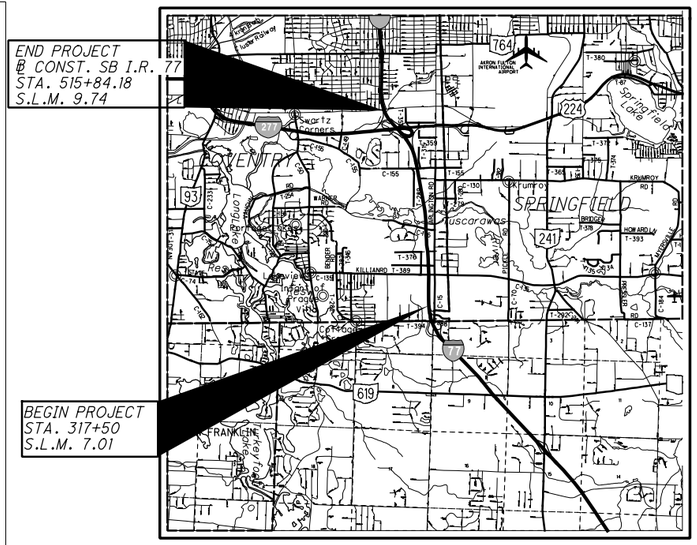


## PARTICLE SIZE DEFINITIONS

| 12" | 3" | 2.0 mm | 0.42 mm | 0.074 mm | 0.005 mm |
|---|---|---|---|---|---|
| BOULDERS | COBBLES | GRAVEL | COARSE SAND | FINE SAND | SILT | CLAY |
| | | No. 10 SIEVE | No. 40 SIEVE | No. 200 SIEVE | | |

| | HISTORIC BORING DESCRIPTION | ODOT CLASS | CLASSIFIED MECH./VISUAL | |
|---|---|---|---|---|
| | GRAVEL AND/OR STONE FRAGMENTS | A-1-a | 25 | 1 |
| | GRAVEL AND/OR STONE FRAGMENTS WITH SAND | A-1-b | 41 | 16 |
| | GRAVEL AND/OR ST. FRAGS. WITH SAND AND SILT | A-2-4 | 8 | 0 |
| | GRAVEL AND/OR ST. FRAGS. WITH SAND, SILT AND CLAY | A-2-6 | 1 | 0 |
| | FINE SAND | A-3 | 2 | 0 |
| | COARSE AND FINE SAND | A-3a | 16 | 2 |
| | SANDY SILT | A-4a | 43 | 34 |
| | SILT | A-4b | 7 | 2 |
| | SILT AND CLAY | A-6a | 6 | 13 |
| | SILTY CLAY | A-6b | 3 | 0 |
| | ELASTIC CLAY | A-7-5 | 1 | 0 |
| | CLAY | A-7-6 | 1 | 0 |
| | | TOTAL | 154 | 68 |
| | UNCONTROLLED FILL | VISUAL | | |
| | WEATHERED SHALE | VISUAL | | |
| | WEATHERED SANDSTONE | VISUAL | | |
| | LIMESTONE | VISUAL | | |
| | SILTSTONE | VISUAL | | |


DESIGN AGENCY
NEAS, INC.
2800 CORPORATE EXCHANGE DR., STE 240
COLUMBUS, OH 43231
(614) 714-0270 FAX (614) 714-0323


PID NO. 106002

# SOIL PROFILE

SUM-77/277/224
VARIOUS



P:\17-0129 (106002 SUM-76-10.95 Part 3 - SUM-77_277_224)\106002\geotechnical\sheets\106002IC001.dgn Sheet 1/7/2021 11:11:20 PM karens

## SUBSURFACE EXPLORATION

THE SUBSURFACE EXPLORATIONS WERE CONDUCTED BETWEEN NOVEMBER 28, 2017 AND AUGUST 07, 2020 AND INCLUDED 201 BORINGS DRILLED BETWEEN 5.5 FT AND 100.0 FT BELOW GROUND SURFACE.

BORINGS WERE DRILLED USING EITHER A CME 55T TRUCK OR CME 55X TRACK MOUNTED DRILLING RIG EACH UTILIZING 3.25-INCH DIAMETER HOLLOW STEM AUGERS AND NQ2 CORING EQUIPMENT. ST ANDA RD PENETRATION TESTS CSPT) WERE CONDUCTED USING A CALIBRATED CME AUTO-HAMMER. THE AUTO-HAMMERS WERE CA LIBRA TED TO RANGE FROM BEING 68.4% AND 85.4% EFFICIENT DEPENDING ON THE RIG AND CALIBRATED DATE.

IN GENERAL, SOIL SAMPLES WERE RECOVERED AT INTERVALS OF 2.5-FT TO A DEPTH OF 30 FT BGS AND AT 5.0-FT INTERVALS UNTIL BEDROCK WAS ENCOUNTERED USING AN 18-INCH SPLIT SPOON SAMPLER (AASHTO T206 "STANDARD METHOD FOR PENETRATION TEST AND SPLIT BARREL SAMPLING OF SOILS."). SAMPLES COLLECTED FROM SUBGRADE BORINGS AND THE TOP 7.5 FT OF BRIDGE BORINGS WERE SAMPLED CONTINUOUSLY FOR SUBGRADE EVALUATION PURPOSES.

SPLIT SPOON SAMPLES COLLECTED AS PART OF THE SPT WERE PLACED IN SEALED GLASS CONTAINERS AND TRANSPORTED TO NEAS'S GEOTECHNICAL LABO RA TORY IN COLUMBUS, OH. AFTER COMPLETING THE BORINGS, THE BOREHOLES WERE BACKFILLED WITH EITHER AUGER CUTTINGS, BENTONITE CHIPS, OR A COMBINATION OF THESE MATERIALS AND PATCHED ACCORDINGLY WITH THE COLD PATCH ASPHALT AND/OR CEMENT WHEN DRILLING THROUGH THE ROADWAY. FIELD BORING LOGS WERE PREPARED BY DRILLING PERSONNEL, LITHOLOGICAL DESCRIPTION, SPT RESULTS RECORDED AS BLOWS PER 6-INCH INCREMENT OF PENETRATION AND ESTIMATED UNCONFINED SHEAR STRENGTH VALUES ON SPECIMENS EXHIBITING COHESION (USING A HAND-PENETROMETER). GROUNDWATER RELATED OBSERVATIONS WERE RECORDED AS APPROPRIATE.

## RECONNAISSANCE

A FIELD RECONNAISSANCE WAS COMPLETED FOR THE PROJECT ROADWAY SEGMENTS AS WELL AS EACH PROPOSED STRUCTURE BETWEEN SEPTEMBER 2019 AND JANUARY OF 2020. DURING THE VISITS SITE CONDITIONS, INCLUDING THE EXISTING PAVEMENT AND STRUCTURE CONDITIONS, WERE NOTED AND PHOTOGRAPHED.

ROADWAY SUBGRADE

THE PAVEMENT CONDITION ALONG IR-277/US-224 WAS OBSERVED TO BE FAIR TO GOOD WITH MINOR SIGNS OF WEATHERING AND SURFACE WEAR. LOW TO MODERATE SEVERITY LONGITUDINAL AND TRANSVERSE CRACKING WAS COMMON ALONG THESE SECTIONS, AS WELL AS OCCASIONAL LOW SEVERITY POTHOLES AND LOW SEVERITY CRACK SEALING DEFICIENCIES.
THE CONDITION OF THE PAVEMENT ALONG IR-77 CAN BE CATEGORIZED INTO TWO SECTIONS: 1) THE PAVEMENT BETWEEN APPROXIMATE STA. 372+50 AND STA. 395+00; AND, 2) THE PAVEMENT BETWEEN APPROXIMATE STA. 395+00 AND STA. 516+00. THE PAVEMENT CONDITION OF IR 77 BETWEEN APPROXIMATE STA. 372+50 AND STA. 395+00 WAS OBSERVED TO BE GOOD WITH MINOR SIGNS OF WEATHERING AND SURFACE WEAR. LOW TO MODERATE SEVERITY LONGITUDINAL AND TRANSVERSE CRACKING WAS COMMON AS WELL AS LOW SEVERITY CRACK SEALING DEFICIENCIES. THE PAVEMENT CONDITION ALONG IR-77 BETWEEN APPROXIMATE STA. 395+00 AND STA. 516+00 WAS FAIR WITH MODERATE SIGNS OF WEATHERING AND SURFACE WEAR. LOW TO MODERATE SEVERITY LONGITUDINAL AND TRANSVERSE CRACKING WAS COMMON AS WELL AS FREQUENT TO EXTENSIVE MODERATE SEVERITY PAVEMENT PATCHING.

THE PAVEMENT CONDITION ALONG CONNECTING RAMP A, RAMP B, RAMP B-2, RAMP C, RAMP C-1, RAMP C-2 AND RAMP D WERE GENERALLY OBSERVED TO BE IN FAIR TO GOOD CONDITION WITH LOW SEVERITY TRANSVERSE CRACKING, LONGITUDINAL CRACKING, EDGE CRACKING, AND CRACK SEALING DEFICIENCIES. RAMP B-1 WAS OBSERVED TO BE IN FAIR CONDITION WITH LOW TO MODERATE SEVERITY LONGITUDINAL, EDGE, TRANSVERSE, AND MAP CRACKING.

SUM-77-0802 L&R (OVER E WARNER RD.)

THE EXISTING BRIDGE CARRYING IR-77 OVER WARNER RD IS A THREE-SPAN REINFORCED CONCRETE CONTINUOUS SLAB BRIDGE SUPPORTED ON CAP AND COLUMN PIERS AND STUB ABUTMENTS. IN THE AREA OF THE REFERENCED BRIDGE, IR-77 IS SUPPORTED ON AN EMBANKMENT CONSTRUCTED ABOUT 15 FT ABOVE THE SURROUNDING AREA. EXISTING EMBANKMENT SLOPES AND ABUTMENT SLOPES BENEATH THE STRUCTURES EACH APPEARED TO BE APPROXIMATELY 2 HORIZONTAL TO 1 VERTICAL (2H:1V) WITH NO SIGNS OF INSTABILITY OBSERVED DURING OUR SITE VISIT. THE SLOPES IN FRONT OF THE ABUTMENTS ARE RIPRAP COVERED, WHILE THE SLOPES IN BETWEEN THE L AND R BRIDGES ARE HEAVILY VEGETATED. OVERALL, THE BRIDGE APPEARED TO BE IN GOOD CONDITION WITH FEW SIGNS OF DISTRESS OBSERVED. OCCASIONAL SIGNS OF CORROSION WERE OBSERVED ON THE UNDERSIDE OF THE BRIDGE DECK. NO APPARENT SIGNS OF STRUCTURAL DISTRESS DUE TO GEOTECHNICAL CONCERNS WERE NOTED DURING OUR FIELD RECONNAISSANCE VISIT.

THE ASPHALT WEARING COURSE A TOP THE BRIDGE DECK AND APPROACH SLAB WERE OBSERVED TO BE IN FAIR CONDITION WITH MODERATE HIGH SEVERITY LATERAL AND LONGITUDINAL CRACKING AND CRACK SEALING DEFICIENCIES. IN GENERAL, THE ASPHALT PAVEMENT LEADING TO THE BRIDGE APPROACHES APPEARED BE IN SIMILAR CONDITION TO THE WEARING COURSE WITH MODERATE SEVERITY PATCHING OBSERVED IN THE PAVEMENT LEADING UP TO THE APPROACH SLABS. PAVEMENT AT THE BRIDGE SITE APPEARED TO BE GENERALL y WELL DRAINED, WITH NO SIGNS OF PONDING OR DRAINAGE ISSUES OBSERVED DURING OUR FIELD VISIT. DRAINAGE WAS CONVEYED BY OPEN DITCHES LOCATED EITHER IN THE MEDIAN OR ALONG THE EDGES OF THE ROADWAY FOR IR-77 AND WARNER RD, RESPECTIVELY.

## RECONNAISSANCE (CONTINUED)

SUM-77-0810 L&R (OVER THE TUSCARAWAS RIVER)

THE EXISTING BRIDGE CARRYING IR-77 OVER THE TUSCARAWAS RIVER CONSISTS OF TWIN, THREE-SPAN, CONTINUOUS STEEL BEAM BRIDGES EACH WITH A REINFORCED CONCRETE BRIDGE DECK ATOP STUB ABUTMENTS AND SOLID WALL TYPE PIERS. IN THE AREA OF THE REFERENCED BRIDGE, IR-77 IS SUPPORTED ON AN EMBANKMENT CONSTRUCTED ABOUT 15 FT ABOVE THE SURROUNDING AREA. EXISTING EMBANKMENT SLOPES AND BRIDGE SPILL THROUGH SLOPES EACH APPEARED TO BE APPROXIMATELY 2H:1V WITH NO SIGNS OF INSTABILITY OBSERVED DURING OUR SITE VISIT. THE EXISTING SPILL THROUGH SLOPES AT THE BRIDGE SITE ARE CONTINUOUS BETWEEN BOTH THE LEFT AND RIGHT BRIDGES WITH THE SLOPES IN FRONT OF THE ABUTMENTS BEING RIPRAP COVERED, WHILE SPILL THROUGH SLOPES BETWEEN THE LEFT AND RIGHT STRUCTURES WERE VEGETATION COVERED. THE OVERALL BRIDGE STRUCTURE APPEARED TO BE IN GOOD CONDITION WITH FEW SIGNS OF DISTRESS OBSERVED. THE OUTER BEARINGS ATOP THE PIERS AND ABUTMENTS WERE OBSERVED TO HAVE EXPERIENCED SOME CORROSION. NO APPARENT SIGNS OF DISTRESS DUE TO GEOTECHNICAL CONCERNS WERE NOTED DURING OUR FIELD RECONNAISSANCE VISIT.

THE BRIDGE DECK AND APPROACH SLAB'S ASPHALT WEARING COURSE WAS OBSERVED TO BE IN FAIR TO GOOD CONDITION WITH OCCASIONAL LOW TO HIGH SEVERITY TRANSVERSE AND LONGITUDINAL CRACKING, CRACK SEALING DEFICIENCIES AS WELL AS MEDIUM SEVERITY PATCHING IN THE PAVEMENT LEADING UP TO THE APPROACH SLABS. WITH RESPECT TO DRAINAGE, THE BRIDGE DECK AND ADJACENT PAVEMENT APPEARED TO BE WELL DRAINED, WITH NO SIGNS OF PONDING OR DRAINAGE ISSUES OBSERVED DURING OUR FIELD VISIT. THE ADJACENT IR-77 ROADWAY APPEARED TO DRAIN TO A GRASSY DRAINAGE SWALE LOCATED IN THE MEDIAN, WHILE THE BRIDGE DECK DRAINED TO SCUPPERS LOCATED ON EITHER SIDE OF THE STRUCTURE WHICH OUTLETS DIRECTLY BELOW THE BRIDGE.

SUM-77-0927R (OVER I-77 NB)

THE EXISTING BRIDGE CARRYING RAMP C-2 OVER IR-77 NB IS A THREE SPAN, CONTINUOUS WELDED PLATE GIRDER BRIDGE WITH A REINFORCED CONCRETE BRIDGE DECK SUPPORTED ON STUB ABUTMENTS AND COLUMN TYPE PIERS. IN THE AREA DIRECTLY ADJACENT TO THE REFERENCED BRIDGE, RAMP C-2 IS SUPPORTED ON EMBANKMENTS CONSTRUCTED ABOUT 20 FT AND 30 FT ABOVE THE SURROUNDING AREA ON AT THE REAR AND FORWARD ABUTMENT LOCATIONS, RESPECTIVELY. EXISTING EMBANKMENT SLOPES APPEARED TO BE APPROXIMATELY 2H:1V AND ARE HEAVILY VEGETATED WITH BOTH BRUSH AND GRASSES. NO SIGNS OF GEOTECHNICAL INST ABILITY WERE OBSERVED ALONG THE EMBANKMENTS DURING OUR SITE VISIT. OVERALL, THE BRIDGE APPEARED TO BE IN GOOD CONDITION WITH FEW SIGNS OF DISTRESS OBSERVED. OCCASIONAL RUST STAINING ON THE BRIDGE GIRDERS AS WELL AS BOLT CORROSION WAS OBSERVED. NO APPARENT SIGNS OF STRUCTURAL DISTRESS DUE TO GEOTECHNICAL CONCERNS WERE NOTED DURING OUR FIELD RECONNAISSANCE VISIT.

THE BRIDGE DECK AND APPROACH SLAB WERE OBSERVED TO BE IN GOOD CONDITION WITH OCCASIONAL LOW SEVERITY POTHOLING AND MODERATE SEVERITY SPALLING AT THE EXPANSION JOINTS. ASPHALT PAVEMENT LEADING TO THE BRIDGE APPROACHES APPEARED BE IN GOOD CONDITION WITH OCCASIONAL MODERATE TO LOW SEVERITY LATERAL AND LONGITUDINAL CRACKING. PAVEMENT AT THE BRIDGE SITE APPEARED TO BE GENERALLY WELL DRAINED, WITH NO SIGNS OF PONDING OR DRAINAGE ISSUES OBSERVED DURING OUR FIELD VISIT.

RETAINING WALL 1

THE PROPOSED WALL ALIGNMENT IS LOCATED ALONG THE MEDIAN SEPARATING IR-77 NB AND SB JUST NORTH OF THE SWARTZ RD OVERPASS. THIS PORTION OF THE MEDIAN CONSISTS OF DRAINAGE DITCHES ALONG EACH INTERIOR SHOULDER OF IR-77 NB AND SB WHICH ARE SEPARATED BY A MOUND OR SMALL HILL. THE MOUND WITHIN THE MEDIAN IS SLOPED FROM THE APPROXIMATE CENTER AT ABOUT 2H:1V ON THE EAST FACE AND AT ABOUT 3H:1V ON THE WEST FACE. THE OVERALL GROUND SURF ACE ALONG THE LENGTH OF THE RETAINING WALL ALIGNMENT GRADUALLY SLOPES UPWARD FROM SOUTH TO NORTH. THE INDICATED MOUND AND DRAINAGE DITCHES WERE VEGETATED MAINLY WITH GRASSES AND WEEDS WITH NO VISIBLE SIGNS OF EROSION OBSERVED DURING OUR VISIT. THE SITE APPEARED TO BE GENERALLY WELL DRAINED WITH FEW SIGNS OF PONDING AND MINOR DRAINAGE ISSUES OBSERVED DURING OUR FIELD RECONNAISSANCE VISIT.

ASPHALT PAVEMENT ON IR-77 NB AND SB IN THE AREA OF THE PROPOSED RETAINING WALL WAS OBSERVED TO BE IN FAIR CONDITION WITH SOME SIGNS OF WEAR AND DISTRESS. MODERATE LIGHT SEVERITY LATERAL AND TRANSVERSE CRACKING WAS OBSERVED. EXTENSIVE HIGH SEVERITY PATCHING WAS ALSO NOTED. PAVEMENT IN THE AREA OF THE PROPOSED RETAINING WALL APPEARED TO BE GENERALLY WELL DRAINED, WITH NO SIGNS OF PONDING OR OTHER DRAINAGE ISSUES OBSERVED DURING OUR FIELD VISIT.

IR-277 EB RAMP A CULVERT (STA. 102+19)

THE PROPOSED CULVERT EXTENSION RUNS PERPENDICULAR TO THE RAMP A ALIGNMENT AT STA. 102+19 AND THE EXISTING CULVERT RUNS UNDERNEATH THE EXISTING EMBANKMENT THAT SUPPORTS RAMP A. THE EMBANKMENT LOCATED TO THE EAST AND WEST OF THE EXISTING CULVERT AND CULVERT HEADWALL SLOPES DOWN TO THE SURROUNDING LAND AT AN APPROXIMATE 2H:1V SLOPE, WHILE THE EMBANKMENT DIRECTLY ABOVE THE CULVERT APPEARED TO SLOPES DOWN TO THE HEADWALL OFTHE CULVERT AT AN APPROXIMATE 2 .5H:1V SLOPE. THE EXISTING EMBANKMENT SLOPES APPEARED TO SHOW NO SIGNS OF INSTABILITY DURING OUR SITE VISIT.

THE SURROUNDING AREA APPEARED TO BE RELATIVELY WELL DRAINED TO THE CHANNEL THAT FEEDS INTO THE CULVERT INLET. THE CULVERT AND HEADWALL APPEARED TO BE IN GOOD CONDITION WITH FEW SIGNS OF WEAR OR DAMAGE. THE CONCRETE CHANNEL PROTECTION LEADING TO THE CULVERT INLET WAS NOTED TO HAVE CONCRETE CRACKING AND APPARENT DISPLACEMENT WAS OBSERVED.

## RECONNAISSANCE (CONTINUED)

NOISE WALLS HI & E

THE PROPOSED NOISE WALLS HI & E RUN ALONG 3 ALIGNMENTS STARTING WITH THE WESTERN RIGHT-OF-WAY (ROW) OF IR-77 FROM APPROXIMATE STA. 442+75 TO STA. 487+00, CONTINUING ALONG RAMP A FROM APPROXIMATE STA. 86+60 TO STA. 114+13, THEN ALONG THE SOUTHERN ROW OF IR-277 FROM STA. 237+50 TO STA. 224+00. ALONG IR-77 FROM ABOUT STA. 446+00 TO STA. 460+00 THE GRADES BETWEEN THE PROPOSED NOISE WALL AND ROADWAY GRADES (WEST TO EAST) ARE RELATIVELY CONSISTENT WITH THE EXCEPTION OF THE DRAINAGE SWALE LOCATED BETWEEN THE TWO LOCATIONS. FROM ABOUT STA. 460+00 TO STA. 480+00 THE NOISE WALL IS PROPOSED ATOP AN EMBANKMENT WHICH EXTENDS UP FROM THE ROADWAY ELEVATION ON SLOPES RANGING FROM FLATTER THAN 3 HORIZONTAL TO 1 VERTICAL (3H:1V) TO SLIGHTLY STEEPER THAN ABOUT 2H:1V. FROM IR-77 STA. 480+00 TO RAMP A STA. 107+00 THE PROPOSED NOISE WALL IS LOCATED NEAR THE SOUTH WESTERN SHOULDER OF THE ROADWAY AND SITS A TOP AN EMBANKMENT WHICH SLOPES DOWN TO THE SURROUNDING AREA AT A 2H:1V. ALONG RAMP A FROM STA. 107+00 TO STA. 114+00 AND CONTINUING ALONG IR-277 FROM STA. 237+50 TO STA. 33+00 THE PROPOSED NOISE WALL AND ROADWAY GRADES (NORTH TO SOUTH) ARE RELATIVELY CONSISTENT WITH THE EXCEPTION OF THE DRAINAGE SWALE LOCATED BETWEEN THE TWO LOCATIONS. ALONG IR-277 FROM STA. 230+00 TO STA. 224+00 THE NOISE WALL RUNS ALONG THE SOUTHERN EDGE OF THE ROADWAY WHICH SITS ATOP AN EMBANKMENT THAT SLOPES DOWN TO THE SURROUNDING AREA AT A 2H:1V. THE SLOPES APPEARED TO BE STABLE WITH NO SIGNS OF GEOTECHNICAL INSTABILITY. MINOR SIGNS OF EROSION WERE OBSERVED DUE TO WATER RUNOFF. THE EMBANKMENTS APPEARED TO BE WELL DRAINED WITH NO STANDING WATER OBSERVED.

NOISE WALL G

THE PROPOSED NW-G RUNS ALONG 2 ALIGNMENTS, STARTING WITH THE EASTERN ROW OF IR-77 FROM STA. 461+00 TO STA. 476+00 CONTINUING ALONG RAMP C FROM STA. 576+00 TO STA. 587+75. ALONG IR-77 FROM STA. 461+00 TO STA. 469+00 THE PROPOSED NOISE WALL AND ROADWAY GRADES (EAST TO WEST) ARE RELATIVELY CONSISTENT WITH THE EXCEPTION OF THE DRAINAGE SWALE LOCATED BETWEEN THE TWO LOCATIONS. FROM IR-77 STA. 469+00 TO RAMP C STA. 583+00 THE NOISE WALL IS PROPOSED ATOP AN EMBANKMENT WHICH EXTENDS UP FROM THE ROADWAY ELEVATION ON SLOPES RANGING FROM FLATTER THAN 3 HORIZONTAL TO 1 VERTICAL (3H:1V) TO SLIGHTLY STEEPER THAN ABOUT 2H:1V. FROM RAMP C STA. 583+00 TO STA. 587+75 THE NOISE WALL RUNS ALONG THE EASTERN EDGE OF THE ROADWAY WHICH SITS ATOP AN EMBANKMENT WITH 2H:1V SLOPES DOWN TO THE SURROUNDING AREA. THE SLOPES APPEARED TO BE STABLE WITH NO SIGNS OF GEOTECHNICAL INSTABILITY. THE EMBANKMENTS APPEARED TO BE WELL DRAINED WITH NO STANDING WATER OBSERVED WITH THE EXCEPTION OF THE AREA EAST OF THE EMBANKMENT NEAR STA. 588+00 WHERE CATTAILS WERE OBSERVED.

NOISE WALL K

THE PROPOSED NW-K RUNS ALONG 2 ALIGNMENTS STARTING WITH THE NORTHERN ROW OF RAMP D FROM STA. 899+50 TO STA. 888+00 CONTINUING ALONG US-224 FROM STA. 269+50 TO STA. 280+00. ALONG RAMP D FROM STA. 899+50 TO STA. 892+00 THE NOISE WALL RUNS ALONG THE NORTHERN EDGE OF THE RAMP WHICH AND SITS ATOP AN EMBANKMENT THAT SLOPES DOWN AT 2H:1V TO THE SURROUNDING AREA. FROM RAMP D STA. 892+00 TO US-224 STA. 276+00 THE NOISE WALL RUNS ALONG THE NORTHERN ROW OF THE AFOREMENTIONED ROAD SEGMENTS AND IS PROPOSED ATOP AN EMBANKMENT THAT EXTEND UP FROM THE ROADWAY ELEVATION AT SLOPE GRADES LESS THAN 3H:1V. ALONG US-224 FROM STA. 276+00 TO STA. 280+00 THE NOISE WALL IS PROPOSED DOWN SLOPE (2H:1V) FROM ROADWAY ELEVATION NEAR THE BOTTOM OF THE ROADWAY EMBANKMENT AND ALONG THE ROW LIMITS. THE SLOPES APPEARED TO BE STABLE WITH NO SIGNS OF GEOTECHNICAL INSTABILITY. THE EMBANKMENTS APPEARED TO BE MODERATELY DRAINED WITH MINOR SIGNS OF PONDING WATER SUCH AS CATTAILS ALONG THE BOTTOM OF THE EMBANKMENTS.

NOISE WALL C

THE PROPOSED NW-C RUNS ALONG THE IR-77 ALIGNMENT NEAR THE WESTERN ROW OF IR-77 FROM STA. 394+00 TO STA. 425+00. ALONG IR-77 FROM STA. 394+00 TO STA. 409+00 THE NOISE WALL IS PROPOSED NEAR THE ROW EDGE THAT IS LOCATED CLOSE TO THE CREST OF A SLOPE THAT EXTENDS UP FROM THE ROADWAY ELEVATION AT 2.5H:1V. EXTENDING NORTH AT APPROXIMATELY STA. 409+00, NW-C TRANSITIONS FROM BEING LOCATED UPSLOPE OF IR-77 TO DOWNSLOPE OF IR-77. FROM BOUT STA. 409+00 TO 425+00, NW-C IS PROPOSED WITHIN THE EXISTING ROADWAY EMBANKMENT THAT SLOPE DOWN TO THE SURROUNDING AREA AT 2H:1V. THE SLOPES APPEARED TO BE ST ABLE WITH NO SIGNS OF GEOTECHNICAL INSTABILITY. THE EMBANKMENTS APPEARED TO BE WELL DRAINED WITH FEW SIGNS OF PONDING WATER.

## EXPLORATION FINDINGS

ROADWAY SUBGRADE

THE SUBGRADE CONDITIONS IN THE PROJECT AREA ARE RELATIVELY CONSISTENT AND ARE GENERALLY COMPRISED OF EITHER FILL SOILS (I.E., EMBANKMENT FILL, HISTORICAL/URBAN FILL, ETC.) OR NATURAL SOILS CONSISTING OF GRAVEL, SAND AND SILT, OR LOW TO MODERATELY PLASTIC SANDY SILT AND SILT/CLAY COMBINATIONS. THE SUBGRADE SOILS ENCOUNTERED WITHIN THE PROJECT LIMITS ARE GENERALLY CLASSIFIED AS EITHER A-1-a, A-1-b, A-2-4, A-2-6, A-3a, A-4a, A-4b, OR A-6a TYPE SOILS.

SUM-77-0802 L&R (OVER E WARNER RD.)

THE SUBSURFACE PROFILE AT THE SUM-77-0802 L&R BRIDGE SITE GENERALLY CONSISTS OF SURFICIAL MATERIALS COMPRISED OF EITHER TOPSOIL OR AN EXISTING PAVEMENT SECTION WHICH IS GENERALLY UNDERLAIN BY EITHER "MAN-MADE" FILL SOILS AND/OR NATURAL GLACIAL DEPOSITED SOIL. THE BORINGS PERFORMED WITHIN THE IR-77 MEDIAN ADJACENT TO THE EXISTING ABUTMENTS (B-013-1-17 AND B-013-4-17) WERE EXTENDED THROUGH THE IR-77 EMBANKMENT AND ENCOUNTERED 17 TO 22 FT OF FILL. THE REFERENCED FILL SOILS CONSISTED OF BOTH STIFF TO VERY STIFF, MODERATELY PLASTIC COHESIVE MATERIAL AND MEDIUM DENSE TO DENSE NON-COHESIVE MATERIAL. THE NATURAL GLACIAL SOILS (ICE-CONTACT DEPOSITS AND/OR GLACIAL TILL) ENCOUNTERED EITHER UNDERLYING THE EMBANKMENT FILL OR IMMEDIATELY AT THE GROUND SURFACE (B-013-2-17 AND B-013-3-17) CAN BE DESCRIBED AS PREDOMINANTLY LOOSE TO DENSE NON-COHESIVE GRANULAR MATERIAL. BEDROCK WAS NOT ENCOUNTERED WITHIN DEPTHS OF THE FOUR BORINGS PERFORMED AT THE BRIDGE SITE.

DRAWN EB | CHECKED KCA

SOIL PROFILE EXPLORATION NOTES (CONT.)

SUM-77/277/224
VARIOUS



P:\17-0129 (106002 SUM-76-10.95 Part 3 - SUM-77_277_224)\106002\geotechnical\sheets\106002ICO02.dgn Sheet 1/7/2021 11:11:22 PM karens

## EXPLORATION FINDINGS (CONTINUED)

SUM-77-0810 L&R (OVER THE TUSCARAWAS RIVER)

THE SUBSURFACE PROFILE AT THE SUM-77-0810 L&R BRIDGE SITE GENERALLY CONSISTS OF NON-COHESIVE NATURAL GLACIAL ICE-CONTACT DEPOSITS OVERLAIN BY EITHER "MAN-MADE" FILL SOILS (ABUTMENTS) OR NATURAL ALLUVIAL SOILS (PIER). THE BORINGS PERFORMED WITHIN THE IR-77 MEDIAN ADJACENT TO THE EXISTING ABUTMENTS (B 014-1-17 AND B-014-3-17) WERE EXTENDED THROUGH THE IR 77 EMBANKMENT AND ENCOUNTERED 17 TO 19 FT OF FILL. THE REFERENCED FILL SOILS CONSISTED PREDOMINANTLY OF NON-COHESIVE GRANULAR MATERIAL. THE BORING PERFORMED IN THE MEDIAN AND ADJACENT TO THE EXISTING FORWARD PIER LOCATION (B-014-2-17) ENCOUNTERED APPROXIMATELY 14.5 FT OF ALLUVIAL SOILS ALSO CONSISTING OF NON-COHESIVE GRANULAR MATERIAL. THE NATURAL GLACIAL ICE-CONTACT DEPOSITS ENCOUNTERED UNDERLYING EITHER THE FILL SOILS OR ALLUVIAL SOILS CAN BE DESCRIBED AS PREDOMINANTLY MEDIUM DENSE TO VERY DENSE NON-COHESIVE, GRANULAR MATERIAL. BEDROCK WAS NOT ENCOUNTERED WITHIN DEPTHS OF THE THREE BORINGS PERFORMED AT THE BRIDGE SITE.

SUM-77-0927R (OVER I-77 NB)

THE SUBSURFACE PROFILE AT THE SUM-77-0927R SITE CONSISTS OF AN EXISTING PAVEMENT SECTION (WITHIN RAMP C-2 AND IR-77 ROADWAYS) UNDERLAIN BY EITHER EMBANKMENT FILL (ABUTMENTS) AND/OR NATURAL GLACIAL TILL SOILS, ALL OVER INTERBEDDED SHALE AND SANDSTONE BEDROCK. THE EMBANKMENT FILLS AT THE SITE GENERALLY CONSISTED OF MEDIUM DENSE TO VERY DENSE NONCOHESIVE GRANULAR MATERIALS AT THE REAR ABUTMENT AND STIFF TO HARD COHESIVE MATERIALS AT THE FORWARD ABUTMENT. THE NATURAL MATERIAL AT THE SITE CONSISTED OF BOTH VERY STIFF TO HARD COHESIVE SOILS AND MEDIUM DENSE TO VERY DENSE NONCOHESIVE GRANULAR SOILS. BEDROCK WAS ENCOUNTERED WITHIN THE BORINGS PERFORMED AT THE BRIDGE SITE BETWEEN DEPTHS 17.2 FT AND 40.3 FT BGS (ELEVATIONS 1034.8 FT AND 994.7 FT AMSL).

RETAINING WALL 1

THE SUBSURFACE PROFILE ALONG THE PROPOSED RETAINING WALL 1 ALIGNMENT, CONSISTS OF 7 TO 18 INCHES OF TOPSOIL UNDERLAIN BY EITHER SANDSTONE BEDROCK OR UP TO 17 FT OF NATURAL, NON-COHESIVE GLACIAL TILL OVER SANDSTONE BEDROCK. THE TILL AT THE SITE CAN GENERALLY BE DESCRIBED AS LOOSE TO VERY DENSE NON-COHESIVE SOIL CONSISTING OF SAND, SILT AND GRAVEL MIXTURES. BEDROCK WAS ENCOUNTERED IN THE SIX BORINGS PERFORMED ALONG THE RETAINING WALL ALIGNMENT AT DEPTHS RANGING FROM 10 TO 17 FT BGS (APPROXIMATE ELEVATIONS 1037 TO 1045 FT AMSL).

IR-277 EB RAMP A CULVERT (STA. 102+19)

THE SUBSURFACE AT THE CULVERT SITE CONSISTED OF TWO DIFFERENT PROFILES BASED ON THE TWO BORINGS PERFORMED AT THE SITE. THE SOIL PROFILE AT THE INLET (B-088-0-17) CONSISTED OF 9.5 FT OF NON-COHESIVE, GRANULAR FILL OVER NATURAL NON-COHESIVE, GRANULAR TILL ALL ATOP SANDSTONE BEDROCK. THE SOIL PROFILE NEAR THE RAMP A SHOULDER PAVEMENT (B-089-0-17), UPSLOPE OF THE CULVERT INLET, CONSISTED OF 25 TO 30 FT OF COHESIVE EMBANKMENT FILL ATOP NATURAL COHESIVE TILL. THE GRANULAR FILL CAN BE DESCRIBED AS VERY LOOSE TO LOOSE IN COMPACTNESS WHILE THE COHESIVE FILL CAN BE DESCRIBED AS VERY STIFF TO HARD IN CONSISTENCY. THE NATURAL GRANULAR TILL AT THE SITE CAN BE DESCRIBED AS MEDIUM DENSE TO VERY DENSE IN COMPACTNESS WHILE THE COHESIVE TILL CAN BE DESCRIBED AS VERY STIFF TO HARD IN CONSISTENCY. BEDROCK WAS ENCOUNTERED AT A DEPTH OF 23.6 FT (ELEVATION 998.4 FT AMSL) AT THE CULVERT INLET (B-088-0-17) AND WAS DESCRIBED AS INTERBEDDED SANDSTONE AND SHALE.

NOISE WALL HI

THE SUBSURFACE ALONG THE PROPOSED NOISE WALL HI ALIGNMENT FROM BORING B-070-0-17 TO B-075-0-17 GENERALLY CONSISTED OF 11 TO 18.5 FT OF NATURAL GLACIAL TILL SOIL OVERBURDENING SANDSTONE OR SHALE BEDROCK. THE NATURAL SOILS CONSISTED OF INTERMIXED GRANULAR AND LOW TO MODERATE PLASTICITY FINE-GRAINED SOILS. BEDROCK VISUALLY CLASSIFIED AS HIGHLY WEATHERED SANDSTONE WAS ENCOUNTERED BENEATH THE OVERBURDEN SOILS AT DEPTHS RANGING FROM 11 TO 18.5 FT BGS (ELEVATIONS 1049.7 TO 1039.8 FT AMSL).
THE SOIL PROFILE ALONG THE NW-HI ALIGNMENT FROM BORING B-076-0-17 TO B-102-0-17 GENERALLY CONSISTED OF 0 TO 25 FT OF EMBANKMENT FILL FOLLOWED BY 0 TO 22 FT OF NATURAL GLACIAL TILL SOIL OVERBURDENING SANDSTONE OR SHALE BEDROCK. FILL SOIL CONSISTED OF EITHER LOW TO MODERATE PLASTICITY, FINE-GRAINED SOILS AND/OR GRANULAR SOILS WITH THE NATURAL SOILS CONSISTING OF SIMILAR SOIL COMBINATIONS. BEDROCK WITHIN THIS RANGE WAS VISUALLY CLASSIFIED AS SLIGHTLY TO SEVERELY WEATHERED SANDSTONE OR SHALE AND WAS ENCOUNTERED BENEATH THE OVERBURDEN SOILS AT DEPTHS RANGING FROM 11 TO 26 FT BGS (ELEVATIONS 1032.1 TO 1018.1 FT AMSL).

NOISE WALL E

THE SUBSURFACE ALONG THE PROPOSED NOISE WALL E ALIGNMENT (B-055-0-17 TO B-069-0-17) GENERALLY CONSISTED OF 3 TO 25 FT OF NATURAL GLACIAL TILL SOIL OVERBURDENING SANDSTONE OR SHALE BEDROCK. THE NATURAL SOILS CONSISTED OF INTERMIXED GRANULAR AND LOW TO MODERATE PLASTICITY FINE-GRAINED SOILS (B-055-0-17, B-056-0-17, B-057-0-17, B-059-0-17 TO B-062-0-17, AND B-066-0-17 TO B-068-0-17) OR GRANULAR SOILS (B-058-0-17, B-064-0-17, AND B-069-0-17). THE EXCEPTION BEING BORING B-065-0-17, IN WHICH ELASTIC CLAYS WERE PRESENT FROM 10.5 TO 18.5 FT BGS (1045.3 TO 1037.3 FT AMSL). BEDROCK VISUALLY CLASSIFIED AS HIGHLY WEATHERED SANDSTONE WAS ENCOUNTERED BENEATH THE OVERBURDEN SOILS AT DEPTHS RANGING FROM 3 TO 18.5 FT BGS (ELEVATIONS 1056.7 TO 1037.3 FT AMSL).

## EXPLORATION FINDINGS (CONTINUED)

NOISE WALL G

THE SUBSURFACE ALONG THE PROPOSED NOISE WALL G ALIGNMENT (B-103-0-17 TO B-114-0-17) GENERALLY CONSISTED OF 6 TO 25 FT OF NATURAL GLACIAL TILL SOILS COMPRISED OF INTERMIXED GRANULAR AND LOW TO MODERATE PLASTICITY FINE-GRAINED SOILS (B-103-0-17, B-105-0-17, B-106-0-17, AND B-107-0-17 TO B-109-0-17) OR GRANULAR SOILS (B-104-0-17, B108-1-17 AND B-110-0-17 TO B-114-0-17) OVERBURDENING SANDSTONE OR SHALE BEDROCK.
BEDROCK VISUALLY CLASSIFIED AS SLIGHTLY TO MODERATELY WEATHERED SANDSTONE OR SHALE WAS ENCOUNTERED BENEATH THE OVERBURDEN SOILS AT DEPTHS RANGING FROM 6 TO 25 FT BGS (ELEVATIONS 1055.1 TO 1028.6 FT AMSL).

NOISE WALL K

THE SUBSURFACE ALONG THE PROPOSED NOISE WALL K ALIGNMENT FROM BORING B-118-0-17 TO B-122-0-17 GENERALLY CONSISTED OF 3 TO 15 FT OF EMBANKMENT FILL FOLLOWED BY 10 TO 21 FT OF NATURAL GLACIAL TILL SOIL OVERBURDENING SANDSTONE OR SHALE BEDROCK. THE FILL AND NATURAL SOILS GENERALLY CONSISTED OF LOW TO MODERATE PLASTICITY, FINE-GRAINED SOILS. WITHIN THIS PORTION OF NW-K, BEDROCK WAS VISUALLY CLASSIFIED AS MODERATELY TO SEVERELY WEATHERED SANDSTONE OR SHALE AND WAS ENCOUNTERED BENEATH THE OVERBURDEN SOILS AT A DEPTH OF 27.5FT BGS (ELEVATION 1044.9 FT).
THE SOIL PROFILE ALONG THE NW-K ALIGNMENT FROM BORING B-123-0-17 TO B-130-17 GENERALLY CONSISTED OF 6 TO 16.5 FT OF NATURAL GLACIAL TILL SOIL OVERBURDENING SANDSTONE OR SHALE BEDROCK. THE NATURAL SOILS CONSISTED OF LOW TO MODERATE PLASTICITY, FINE-GRAINED SOILS AND/OR GRANULAR SOILS. WITHIN THIS PORTION OF NW-K, BEDROCK WAS VISUALLY CLASSIFIED AS HIGHLY TO SEVERELY WEATHERED SANDSTONE OR SHALE AND WAS ENCOUNTERED BENEATH THE OVERBURDEN SOILS AT DEPTHS RANGING FROM 6.3 TO 16.5 FT BGS (ELEVATIONS 1110.2 TO 1084.2 FT).

NOISE WALL C

THE SUBSURFACE ALONG THE PROPOSED NOISE WALL C ALIGNMENT FROM BORING B-131-0-17 TO B-139-0-17 GENERALLY CONSISTED OF 24 TO 25 FT OF NATURAL GLACIAL TILL SOILS CONSISTING OF INTERMIXED GRANULAR AND LOW TO MODERATE PLASTICITY FINE-GRAINED SOILS (B-131-0-17 TO B-133-0-17 AND B-135-17 TO B-139-0-17) OR GRANULAR SOILS (B-134-0-17). BEDROCK WAS NOT ENCOUNTERED WITHIN THE REFERENCED RANGE OF BORINGS.
THE SOIL PROFILE ALONG THE NW-C ALIGNMENT FROM BORING B-140-0-17 TO B-147-0-17 GENERALLY CONSISTED OF 5 TO 14 FT OF EMBANKMENT FILL FOLLOWED BY 16 TO 20 FT OF NATURAL GLACIAL TILL SOIL OVERBURDENING SANDSTONE OR SHALE BEDROCK. THE FILL AND NATURAL SOILS ALSO CONSISTED OF INTERMIXED GRANULAR AND LOW TO MODERATE PLASTICITY FINE-GRAINED SOILS. THE EXCEPTION TO THIS IS B-145-0-17 WHICH IS GRANULAR THROUGHOUT THE DEPTH OF THE BORING. BEDROCK WAS NOT ENCOUNTERED WITHIN THE REFERENCED RANGE OF BORINGS.

## SPECIFICATIONS

THIS GEOTECHNICAL EXPLORATION WAS PERFORMED IN ACCORDANCE WITH THE STATE OF OHIO DEPARTMENT OF TRANSPORTATION OFFICE OF GEOTECHNICAL ENGINEERING SPECIFICATIONS FOR GEOTECHNICAL EXPLORATION DATED JANUARY 2019.

## AVAILABLE INFORMATION

ALL AVAILABLE SOIL AND BEDROCK INFORMATION THAT CAN BE CONVENIENTLY SHOWN ON THE GEOTECHNICAL EXPLORATION SHEETS HAS BEEN SO REPORTED. ADDITIONAL EXPLORATIONS MAY HAVE BEEN MADE TO STUDY SOME SPECIAL ASPECT OF THE PROJECT. COPIES OF THIS DATA IF ANY MAY BE INSPECTED IN THE DISTRICT DEPUTY DIRECTORS OFFICE, THE OFFICE OF GEOTECHNICAL ENGINEERING AT 1600 WEST BROAD STREET OR THE OFFICE OF STRUCTURAL ENGINEERING AT 1980 WEST BROAD STREET.

INDEX OF SHEETS

SUMMARY OF SOIL TEST DATA, SHEETS 4-9

| LOCATION FROM STA. | LOCATION TO STA. | PLAN VIEW SHEET | PROFILE SHEET | CROSS-SECTION SHEET | CUT MAX. | FILL EMB. MAX. |
|---|---|---|---|---|---|---|
| SOIL PROFILES | | | | | | |
| I.R. 77 | | | | | | |
| 371+00 | 385+00 | 12 | 13 | - | <1 FT | <1 FT |
| 385+00 | 399+00 | 14 | 15 | - | <1 FT | <1 FT |
| 399+00 | 413+00 | 16 | 17 | - | <1 FT | <1 FT |
| 413+00 | 427+00 | 18 | 19 | - | <1 FT | <1 FT |
| 427+00 | 441+00 | 20 | 21 | - | <1 FT | <1 FT |
| 441+00 | 454+00 | 22 | 23 | - | <1 FT | <2 FT |
| 454+00 | 467+00 | 24 | 25 | - | <1 FT | <1 FT |
| 467+00 | 472+00 | 26 | 27 | - | <1 FT | <1 FT |
| NB I.R. 77 | | | | | | |
| 470+00 | 483+00 | 28 | 28 | - | <1 FT | <1 FT |
| 483+00 | 498+00 | 29 | 29 | - | <1 FT | <1 FT |
| 498+00 | 512+50 | 30 | 30 | - | <1 FT | <1 FT |
| 512+50 | 527+00 | 31 | 31 | - | <1 FT | <1 FT |
| SB I.R. 77 | | | | | | |
| 470+00 | 483+00 | 32 | 32 | - | <1 FT | <1 FT |
| 483+00 | 498+00 | 33 | 33 | - | <1 FT | <1 FT |
| 498+00 | 513+00 | 34 | 34 | - | <1 FT | <1 FT |
| 513+00 | 527+00 | 35 | 35 | - | <1 FT | <1 FT |
| I.R. 277/U.S. 224 | | | | | | |
| 223+00 | 237+00 | 36 | 36 | - | <1 FT | <1 FT |
| 237+00 | 251+00 | 37 | 37 | - | <1 FT | <1 FT |
| 251+00 | 264+00 | 38 | 38 | - | <1 FT | <1 FT |
| 264+00 | 277+00 | 39 | 39 | - | <1 FT | <1 FT |
| RAMP A | | | | | | |
| 87+00 | 100+00 | 40 | 40 | - | <1 FT | <2 FT |
| 100+00 | 114+00 | 41 | 41 | - | <1 FT | <1 FT |
| RAMP B | | | | | | |
| 197+00 | 209+00 | 42 | 42 | - | 3 FT | 12 FT |
| 209+00 | 219+00 | 43 | 43 | - | <1 FT | <1 FT |
| RAMP B-1 | | | | | | |
| 402+50 | 413+00 | 44 | 45 | - | <1 FT | <1 FT |
| RAMP B-2 | | | | | | |
| 285+50 | 298+00 | 46 | 46 | - | 12 FT | <1 FT |
| 298+00 | 10+00 | 47 | 47 | - | 4 FT | 12 FT |
| 10+00 | 23+00 | 48 | 48 | - | <1 FT | <1 FT |
| 307+50 & 16+50 | | - | - | 62 | 5 FT | 2 FT |
| 23+00 | 34+00 | 49 | 49 | - | <1 FT | <1 FT |
| RAMP C | | | | | | |
| 576+00 | 589+00 | 50 | 50 | - | <1 FT | <1 FT |
| 589+00 | 602+00 | 51 | 51 | - | <1 FT | <1 FT |
| 602+00 | 606+50 | 52 | 52 | - | <1 FT | <1 FT |
| RAMP C-1 | | | | | | |
| 679+00 | 703+00 | 53 | 54 | - | <1 FT | <1 FT |
| RAMP C-2 | | | | | | |
| 781+50 | 791+00 | 55 | 55 | - | <1 FT | <1 FT |
| 791+00 | 801+50 | 56 | 56 | - | <1 FT | 4 FT |
| RAMP D | | | | | | |
| 887+50 | 897+00 | 57 | 57 | - | <1 FT | <1 FT |
| 897+00 | 907+00 | 58 | 58 | - | <1 FT | <1 FT |
| 907+00 | 917+00 | 59 | 59 | - | <1 FT | <1 FT |
| ARLINGTON ROAD RAMP D | | | | | | |
| 71+00 | 79+00 | 60 | 60 | - | <1 FT | <1 FT |
| 79+00 | 88+50 | 61 | 61 | - | <1 FT | <1 FT |

DRAWN EB | CHECKED KCA

SOIL PROFILE
EXPLORATION NOTES (CONT.)

SUM-77/277/224
VARIOUS

3/209

P:\17-0129 (106002 SUM-76-10.95 Part 3 - SUM-77_277_224)\106002\geotechnical\sheets\106002IC003.dgn Sheet 1/7/2021 11:11:23 PM karens

| INDEX OF SHEETS (CONTINUED) | | | | | | |
|---|---|---|---|---|---|---|
| LOCATION FROM STA. | TO STA. | PLAN VIEW SHEET | PROFILE SHEET | CROSS-SECTION SHEET | CUT MAX. | FILL EMB. MAX. |
| SFE | | | | | | |
| SUM-77-0802 L & R | | | | | | |
| 424+00 | 428+00 | 63 | 64 | - | <1 FT | <1 FT |
| SUM-77-0810 L & R | | | | | | |
| 428+00 | 432+00 | 65 | 66 | - | <1 FT | <1 FT |
| SUM-77-0927R | | | | | | |
| 789+00 | 793+50 | 67 | 68 | - | <1 FT | <1 FT |
| RETAINING WALL 1 | | | | | | |
| 467+00 | 478+00 | 69 | 69 | - | <1 FT | <1 FT |
| RETAINING WALL 2 | | | | | | |
| 791+50 | 795+50 | 70 | 70 | - | 17 FT | <1 FT |
| CULVERT AT RAMP A STA. 102+19 | | | | | | |
| 19+00 | 24+50 | 71 | 71 | - | <1 FT | <1 FT |
| NOISE WALL C | | | | | | |
| 10+00 | 14+50 | 72 | 72 | - | - | - |
| 14+50 | 19+50 | 73 | 73 | - | - | - |
| 19+50 | 24+50 | 74 | 74 | - | - | - |
| 24+50 | 29+50 | 75 | 75 | - | - | - |
| 29+50 | 34+50 | 76 | 76 | - | - | - |
| 34+50 | 39+50 | 77 | 77 | - | - | - |
| 39+50 | END | 78 | 78 | - | - | - |
| NOISE WALL E | | | | | | |
| 10+00 | 15+00 | 79 | 79 | - | - | - |
| 15+00 | 20+00 | 80 | 80 | - | - | - |
| 20+00 | 25+00 | 81 | 81 | - | - | - |
| 25+00 | 30+00 | 82 | 82 | - | - | - |
| 30+00 | 35+00 | 83 | 83 | - | - | - |
| 35+00 | END | 84 | 84 | - | - | - |
| NOISE WALL G | | | | | | |
| 10+00 | 14+00 | 85 | 85 | - | - | - |
| 14+00 | 19+00 | 86 | 86 | - | - | - |
| 19+00 | 24+00 | 87 | 87 | - | - | - |
| 24+00 | 29+00 | 88 | 88 | - | - | - |
| 29+00 | 34+00 | 89 | 89 | - | - | - |
| 34+00 | END | 90 | 90 | - | - | - |
| NOISE WALL HI | | | | | | |
| 10+00 | 15+00 | 91 | 91 | - | - | - |
| 15+00 | 20+00 | 92 | 92 | - | - | - |
| 20+00 | 25+00 | 93 | 93 | - | - | - |
| 25+00 | 30+00 | 94 | 94 | - | - | - |
| 30+00 | 35+00 | 95 | 95 | - | - | - |
| 35+00 | 40+00 | 96 | 96 | - | - | - |
| 40+00 | 45+00 | 97 | 97 | - | - | - |
| 45+00 | 50+00 | 98 | 98 | - | - | - |
| 50+00 | 55+00 | 99 | 99 | - | - | - |
| 55+00 | 60+00 | 100 | 100 | - | - | - |
| 60+00 | 65+00 | 101 | 101 | - | - | - |
| 65+00 | END | 102 | 102 | - | - | - |
| NOISE WALL K | | | | | | |
| 10+00 | 15+00 | 103 | 103 | - | - | - |
| 15+00 | 20+00 | 104 | 104 | - | - | - |
| 20+00 | 25+00 | 105 | 105 | - | - | - |
| 25+00 | 30+00 | 106 | 106 | - | - | - |
| 30+00 | END | 107 | 107 | - | - | - |
| CCTV POLE | | | | | | |
| IR-77 STA. 422+00 | | - | - | 108 | 4 FT | <1 FT |
| BORING LOGS, SHEETS 109-204 | | | | | | |
| ROCK TESTING, SHEETS 205-209 | | | | | | |

P:\17-0129 (106002 SUM-76-10.95 Part 3 - SUM-77_277_224)\106002\geotechnical\sheets\106002IC004.dgn Sheet 1/7/2021 11:11:24 PM korens

DRAWN EB | CHECKED BPA

# SOIL PROFILE EXPLORATION NOTES (CONT.)

SUM-77/277/224
VARIOUS

| SUM-77/277/224 VARIOUS | | |
|---|---|---|
| BORING ID | PLAN VIEW SHEETS | PROFILE SHEET |
| B-001-0-14 | 29, 33, 46, 53, 56, 66, 69 | 46 |
| B-001-0-17 | 12, 60 | 60 |
| B-001-0-63 | 33, 53, 56, 66, 69 | 67 |
| B-002-0-14 | 30, 33, 38, 47, 53, 56 | 47 |
| B-002-0-17 | 12, 60 | 60 |
| B-003-0-14 | 30, 34, 44, 47, 58 | 47 |
| B-003-0-17 | 12, 61 | 61 |
| B-003-1-14 | 30, 34, 44, 47, 59 | 62 |
| B-004-0-14 | 30, 34, 44, 47, 59 | 47, 62 |
| B-004-0-17 | 14, 61 | 15 |
| B-005-0-17 | 14, 61 | 15 |
| B-006-0-17 | 14, 61 | 15 |
| B-007-0-14 | 30, 34, 43, 44, 47 | 47 |
| B-007-0-17 | 14 | 15 |
| B-008-0-14 | 42, 44, 48 | 48 |
| B-008-0-17 | 16 | 17 |
| B-008-0-63 | 29, 33, 46, 53, 55, 66 | 67 |
| B-009-0-14 | 37, 42, 44, 48 | 62 |
| B-009-0-17 | 16 | 17 |
| B-009-1-14 | 37, 42, 44, 48 | 62 |
| B-009-2-14 | 37, 42, 48 | 42 |
| B-010-0-14 | 37, 41, 42, 48 | 48 |
| B-010-0-17 | 16 | 17 |
| B-010-1-61 | 20, 64 | 65 |
| B-010-1-14 | 36, 42, 48 | 42 |
| B-011-0-14 | 36, 42, 49 | 42 |
| B-011-0-17 | 18, 74 | 19 |
| B-012-0-17 | 18, 75 | 19 |
| B-013-0-17 | 18 | 19, 108 |
| B-013-1-17 | 18, 62, 77 | 63 |
| B-013-2-17 | 18, 62, 77 | 63 |
| B-013-3-17 | 18, 62, 77 | 63 |
| B-013-4-17 | 18, 62, 77 | 63 |
| B-014-0-17 | 20, 64 | 21 |
| B-014-1-17 | 20, 64 | 65 |
| B-014-2-17 | 20, 64 | 65 |
| B-014-3-17 | 20, 64 | 65 |
| B-015-0-17 | 20 | 21 |
| B-016-0-17 | 20 | 21 |
| B-017-0-17 | 22, 78 | 23 |
| B-018-0-17 | 22, 79 | 23 |
| B-019-0-17 | 22 | 23 |
| B-019-1-17 | 22 | 23 |
| B-019-2-17 | 24 | 25 |
| B-019-3-17 | 24 | 25 |
| B-020-0-17 | 24 | 25 |
| B-020-1-17 | 24 | 25 |
| B-020-2-17 | 24 | 25 |
| B-021-0-17 | 24 | 25 |
| B-021-1-17 | 24 | 25 |
| B-021-2-17 | 24 | 25 |
| B-021-3-17 | 24 | 25 |
| B-022-0-17 | 24, 82 | 25 |
| B-022-1-17 | 24 | 25 |
| B-022-2-17 | 26, 68 | 68 |
| B-022-3-17 | 26, 32, 68 | 68 |
| B-022-4-17 | 26, 28, 32, 68 | 68 |
| B-023-0-17 | 26, 28, 32, 68, 86 | 28 |
| B-023-1-17 | 26, 28, 32, 68 | 68 |
| B-023-2-17 | 26, 28, 32, 68 | 68 |
| B-024-0-17 | 26, 28, 32, 68 | 32 |
| B-024-1-17 | 26, 28, 32, 50, 68 | 68 |
| B-024-2-17 | 26, 28, 32, 50, 68 | 68 |
| B-024-3-17 | 26, 28, 32, 50, 68 | 68 |
| B-024-4-17 | 26, 28, 32, 50, 68, 87 | 68 |
| B-025-0-17 | 26, 28, 32, 50, 68 | 28 |
| B-026-0-17 | 15, 28, 32, 50, 68, 99 | 32 |
| B-027-0-17 | 28, 32, 50, 88 | 50 |
| B-028-0-17 | 28, 32, 50, 99 | 32 |
| B-029-0-17 | 29, 33, 50, 89 | 50 |
| B-029-3-17 | 50, 89 | 50 |
| B-030-0-17 | 29, 33, 40, 46, 50 | 46 |
| B-031-0-17 | 29, 33, 40, 46, 98 | 40 |
| B-032-0-17 | 29, 33, 46, 53, 66 | 29 |
| B-033-0-17 | 29, 33, 40, 46, 56, 66, 97 | 33 |
| B-033-1-17 | 29, 33, 40, 46, 53, 56, 66, 69 | 56, 69 |
| B-033-2-17 | 29, 33, 46, 53, 56, 66, 69 | 56, 67, 69 |
| B-033-3-17 | 29, 33, 46, 53, 56, 66, 69 | 67 |
| B-033-4-17 | 29, 33, 46, 53, 55, 66 | 67 |
| B-033-5-17 | 29, 46, 51, 53, 55, 66 | 55, 67 |
| B-034-0-17 | 29, 33, 46, 53, 56, 66 | 54 |
| B-034-1-17 | 38, 53, 58 | 54 |
| B-034-2-17 | 38, 53, 57 | 54 |
| B-034-3-17 | 51, 53, 55 | 54 |
| B-035-0-17 | 29, 33, 40, 46, 53, 56, 96 | 33 |
| B-036-0-17 | 29, 33, 38, 46, 53, 56 | 54 |
| B-036-1-17 | 30, 34, 38, 44, 47, 53, 56, 58 | 30 |
| B-037-0-17 | 30, 34, 38, 44, 47, 53, 56 | 47 |
| B-038-0-17 | 30, 34, 44, 47, 53, 56, 58 | 47 |
| B-039-0-17 | 30, 34, 44, 59 | 30 |
| B-040-0-17 | 43 | 43 |
| B-041-0-17 | 42, 44, 48 | 42 |
| B-042-0-17 | 42, 44, 48 | 42, 62 |
| B-043-0-17 | 36, 49, 91 | 49 |
| B-044-0-17 | 36, 49, 90 | 49 |
| B-045-0-17 | 30, 34, 40, 44, 53, 56, 96 | 40 |
| B-046-0-17 | 37, 41, 44, 70, 95 | 41 |
| B-047-0-17 | 37, 41, 44, 94 | 41 |
| B-047-1-17 | 37, 41, 44, 48 | 45 |
| B-047-2-17 | 30, 34, 44, 47 | 45 |
| B-048-0-17 | 37, 41, 44, 93 | 41 |
| B-049-0-17 | 37, 41, 42, 92 | 41 |
| B-050-0-17 | 29, 33, 40, 46, 53, 56 | 56 |
| B-050-1-17 | 30, 34, 38, 44, 47, 53, 56 | 34 |
| B-050-2-17 | 30, 34, 44, 47 | 34 |
| B-050-3-17 | 31, 35, 43, 59 | 35 |
| B-051-0-17 | 51, 53, 55 | 55 |
| B-051-1-17 | 39, 51, 55, 57 | 51 |
| B-052-0-17 | 38, 47, 53, 58, 102 | 58 |
| B-052-1-17 | 30, 34, 47, 58 | 58 |
| B-052-2-17 | 30, 34, 44, 58 | 58 |
| B-052-3-17 | 30, 34, 59 | 59 |
| B-053-0-17 | 38, 53, 57, 102 | 57 |
| B-054-0-17 | 39, 53, 57, 103 | 57 |
| B-054-1-17 | 39, 51, 55 | 51 |
| B-054-2-17 | 39, 52 | 52 |
| B-054-3-17 | 52, 106 | 52 |
| B-055-0-17 | 22, 78 | 78 |
| B-056-0-17 | 22, 78 | 78 |
| B-057-0-17 | 22, 78 | 78 |
| B-058-0-17 | 22, 79 | 79 |
| B-059-0-17 | 22, 79 | 79 |
| B-060-0-17 | 22, 79 | 79 |
| B-061-0-17 | 24, 80 | 80 |
| B-062-0-17 | 24, 80 | 80 |
| B-063-0-17 | 24, 81 | 81 |
| B-064-0-17 | 24, 81 | 81 |
| B-065-0-17 | 24, 81 | 81 |
| B-066-0-17 | 24, 82 | 82 |
| B-067-0-17 | 24, 82 | 82 |
| B-068-0-17 | 24, 68, 82 | 82 |
| B-069-0-17 | 26, 28, 32, 68, 83, 101 | 83 |
| B-070-0-17 | 26, 28, 32, 68, 83, 101 | 101 |
| B-071-0-17 | 26, 28, 32, 68, 83, 101 | 101 |
| B-072-0-17 | 26, 28, 32, 68, 100 | 100 |
| B-073-0-17 | 26, 28, 32, 50, 100 | 100 |
| B-074-0-17 | 26, 28, 32, 50, 99 | 99 |
| B-075-0-17 | 28, 32, 50, 99 | 99 |
| B-076-0-17 | 28, 32, 50, 99 | 99 |
| B-076-1-17 | 29, 33, 50 | 29 |
| B-077-0-17 | 29, 33, 46, 98 | 98 |
| B-078-0-17 | 29, 33, 40, 46, 98 | 98 |
| B-079-0-17 | 29, 33, 40, 46, 98 | 98 |
| B-080-0-17 | 29, 33, 40, 46, 97 | 97 |
| B-081-0-17 | 29, 33, 40, 46, 56, 97 | 97 |
| B-082-0-17 | 29, 33, 40, 46, 56, 66, 97 | 97 |
| B-083-0-17 | 29, 33, 40, 46, 53, 56, 66, 97 | 97 |
| B-084-0-17 | 29, 33, 40, 46, 53, 56, 96 | 96 |
| B-085-0-17 | 29, 33, 40, 46, 53, 56, 96 | 96 |
| B-086-0-17 | 30, 33, 40, 44, 53, 56, 96 | 96 |
| B-087-0-17 | 38, 40, 44, 95 | 95 |
| B-088-0-17 | 41, 70 | 70 |
| B-089-0-17 | 37, 41, 44, 70, 95 | 70, 95 |
| B-090-0-17 | 37, 41, 44, 94 | 94 |
| B-091-0-17 | 37, 41, 44, 94 | 94 |
| B-092-0-17 | 37, 41, 44, 94 | 94 |
| B-093-0-17 | 37, 41, 44, 93 | 93 |
| B-094-0-17 | 37, 41, 44, 93 | 93 |
| B-095-0-17 | 37, 41, 42, 92 | 92 |
| B-096-0-17 | 36, 42, 92 | 92 |
| B-097-0-17 | 36, 42, 49, 92 | 92 |
| B-098-0-17 | 36, 49, 91 | 91 |
| B-099-0-17 | 36, 49, 91 | 91 |
| B-099-1-17 | 36, 49 | 49 |
| B-100-0-17 | 36, 49, 90 | 90 |
| B-101-0-17 | 36, 49, 90 | 90 |
| B-102-0-17 | 36, 49, 90 | 90 |
| B-103-0-17 | 24, 84 | 84 |
| B-104-0-17 | 24, 84 | 84 |
| B-105-0-17 | 24, 85 | 85 |
| B-106-0-17 | 26, 68, 85 | 85 |
| B-106-1-17 | 26, 68, 85 | 85 |
| B-107-0-17 | 26, 68, 85 | 85 |
| B-107-1-17 | 26, 28, 32, 68, 86 | 86 |
| B-108-0-17 | 26, 28, 32, 68, 86 | 86 |
| B-108-1-17 | 26, 28, 32, 68, 86 | 86 |
| B-109-0-17 | 26, 28, 32, 68, 86 | 86 |
| B-110-0-17 | 26, 28, 32, 50, 68, 87 | 87 |
| B-111-0-17 | 26, 28, 32, 50, 68, 87 | 87 |
| B-112-0-17 | 28, 32, 50, 87 | 87 |
| B-113-0-17 | 28, 32, 50, 88 | 88 |
| B-114-0-17 | 28, 32, 50, 88 | 88 |
| B-115-0-17 | 29, 33, 50, 88 | 88 |
| B-116-0-17 | 46, 50, 89 | 89 |
| B-117-0-17 | 46, 50, 89 | 89 |
| B-118-0-17 | 38, 47, 53, 58, 102 | 102 |
| B-119-0-17 | 38, 53, 58, 102 | 102 |
| B-119-1-17 | 38, 53, 57, 102 | 102 |
| B-120-0-17 | 38, 53, 57, 102 | 102 |
| B-121-0-17 | 38, 53, 57, 103 | 103 |
| B-122-0-17 | 39, 53, 57, 103 | 103 |
| B-123-0-17 | 39, 57, 104 | 104 |
| B-124-0-17 | 39, 57, 104 | 104 |
| B-125-0-17 | 39, 51, 57, 104 | 104 |
| B-126-0-17 | 39, 52, 105 | 105 |
| B-127-0-17 | 39, 52, 105 | 105 |
| B-128-0-17 | 39, 52, 105 | 105 |
| B-129-0-17 | 52, 106 | 106 |
| B-129-1-17 | 52, 106 | 106 |
| B-130-0-17 | 52, 106 | 106 |
| B-131-0-17 | 14, 71 | 71 |
| B-132-0-17 | 14, 71 | 71 |
| B-133-0-17 | 14, 71 | 71 |
| B-134-0-17 | 16, 72 | 72 |
| B-135-0-17 | 16, 72 | 72 |
| B-136-0-17 | 16, 73 | 73 |
| B-137-0-17 | 16, 73 | 73 |
| B-138-0-17 | 16, 73 | 73 |
| B-139-0-17 | 16, 74 | 74 |
| B-140-0-17 | 16, 74 | 74 |
| B-141-0-17 | 18, 74 | 74 |
| B-142-0-17 | 18, 75 | 75 |
| B-143-0-17 | 18, 75 | 75 |
| B-144-0-17 | 18, 76 | 76 |
| B-145-0-17 | 18, 76 | 76, 108 |
| B-145-1-17 | 18 | 108 |
| B-146-0-17 | 18, 62, 76 | 76 |
| B-147-0-17 | 18, 62, 77 | 77 |

DRAWN EB | CHECKED BPA

# SOIL PROFILE EXPLORATION NOTES (CONT.)

SUM-77/277/224 VARIOUS

5 /209

P:\17-0129 (106002 SUM-76-10.95 Part 3 - SUM-77_277_224)\106002\geotechnical\sheets\106002IC005.dgn Sheet 1/7/2021 11:11:25 PM karens

SUMMARY OF SOIL TEST DATA
PROJECT BORINGS - IR-77

| EXPLORATION NO., STATION & OFFSET | FROM | | TO | SAMPLE ID | N60 | % REC | HP tsf | % GR | % CS | % FS | % SILT | % CLAY | LL | PL | PI | % WC | ODOT CLASS (GI) | ppm SO4 <100 |
|---|---|---|---|---|---|---|---|---|---|---|---|---|---|---|---|---|---|---|
| B-001-0-17 | 01.50 | - | 03.00 | SS-1 | 36 | 89 | 3.5 | | | | SAME AS SS-2 | | | | | 13 | A-4a (VISUAL) | <100 |
| STA. 374+25, 76' RT | 03.00 | - | 04.50 | SS-2 | 31 | 89 | 2.5 | 14 | 17 | 33 | 25 | 11 | 19 | 14 | 5 | 10 | A-4a (0) | |
| LATITUDE = 40.991784 | 04.50 | - | 06.00 | SS-3 | 12 | 78 | 1.5 | 16 | 18 | 24 | 27 | 15 | 23 | 14 | 9 | 12 | A-4a (1) | |
| LONGITUDE = -81.493625 | 06.00 | - | 07.50 | SS-4 | 17 | 89 | 1.5 | | | | SAME AS SS-3 | | | | | 8 | A-4a (VISUAL) | |
| B-002-0-17 | 01.50 | - | 03.00 | SS-1 | 17 | 67 | 3.5 | | | | SAME AS SS-2 | | | | | 14 | A-4a (VISUAL) | 333 |
| STA. 378+16, 70' RT | 03.00 | - | 04.50 | SS-2 | 21 | 100 | 4.5 | 2 | 4 | 29 | 48 | 17 | 19 | 15 | 4 | 14 | A-4a (6) | |
| LATITUDE = 40.993046 | 04.50 | - | 06.00 | SS-3 | 14 | 100 | 4 | 2 | 4 | 26 | 51 | 17 | 21 | 16 | 5 | 16 | A-4b (7) | |
| LONGITUDE = -81.493544 | 06.00 | - | 07.50 | SS-4 | 18 | 100 | 2.5 | | | | SAME AS SS-3 | | | | | 17 | A-4b (VISUAL) | |
| B-003-0-17 | 01.50 | - | 03.00 | SS-1 | 27 | 67 | 4.5+ | | | | SAME AS SS-2 | | | | | 11 | A-4a (VISUAL) | 573 |
| STA. 381+55, 86' RT | 03.00 | - | 04.50 | SS-2 | 53 | 89 | 4.5+ | 8 | 11 | 37 | 32 | 12 | 15 | 12 | 3 | 7 | A-4a (2) | |
| LATITUDE = 40.993976 | 04.50 | - | 06.00 | SS-3 | 38 | 100 | 4.5+ | 7 | 10 | 35 | 34 | 14 | 14 | 11 | 3 | 7 | A-4a (3) | |
| LONGITUDE = -81.493564 | 06.00 | - | 07.50 | SS-4 | 25 | 100 | 3.0 - 4.5+ | | | | SAME AS SS-3 | | | | | 9 | A-4a (VISUAL) | |
| B-004-0-17 | 01.50 | - | 03.00 | SS-1 | 13 | 83 | - | | | | SAME AS SS-2 | | | | | 9 | A-2-4 (VISUAL) | 107 |
| STA. 385+14, 9' RT | 03.00 | - | 04.50 | SS-2 | 21 | 67 | - | 27 | 11 | 30 | 23 | 9 | 14 | 12 | 2 | 9 | A-2-4 (0) | |
| LATITUDE = 40.994963 | 04.50 | - | 06.00 | SS-3 | 21 | 100 | 3.25 - 4.5+ | 7 | 9 | 30 | 39 | 15 | 20 | 16 | 4 | 14 | A-4a (4) | |
| LONGITUDE = -81.493802 | 06.00 | - | 07.50 | SS-4 | 29 | 100 | 2.0 - 4.5+ | | | | SAME AS SS-3 | | | | | 15 | A-4a (VISUAL) | |
| B-005-0-17 | 01.50 | - | 03.00 | SS-1 | 9 | 78 | 3.1 | | | | SAME AS SS-2 | | | | | 19 | A-4a (VISUAL) | <100 |
| STA. 389+59, 82' RT | 03.00 | - | 04.50 | SS-2 | 42 | 100 | 4.5+ | 9 | 15 | 32 | 32 | 12 | 18 | 14 | 4 | 8 | A-4a (2) | |
| LATITUDE = 40.996180 | 04.50 | - | 06.00 | SS-3 | 20 | 100 | 4.25 | 4 | 7 | 19 | 50 | 20 | 21 | 14 | 7 | 16 | A-4b (7) | |
| LONGITUDE = -81.493508 | 06.00 | - | 07.50 | SS-4 | 39 | 100 | 4.5+ | | | | SAME AS SS-3 | | | | | 13 | A-4b (VISUAL) | |
| B-006-0-17 | 01.50 | - | 03.00 | SS-1 | 27 | 56 | - | | | | BROWN, GRAVEL WITH SAND | | | | | 6 | A-1-b (VISUAL) | 1480 |
| STA. 390+24, 62' LT | 03.00 | - | 04.50 | SS-2 | 26 | 89 | 4.5+ | 7 | 12 | 23 | 40 | 18 | 21 | 14 | 7 | 10 | A-4a (5) | |
| LATITUDE = 40.996365 | 04.50 | - | 06.00 | SS-3 | 17 | 100 | 4.5+ | 6 | 10 | 31 | 38 | 15 | 18 | 14 | 4 | 11 | A-4a (4) | |
| LONGITUDE = -81.494028 | 06.00 | - | 07.50 | SS-4 | 21 | 100 | 4.5+ | | | | SAME AS SS-3 | | | | | 9 | A-4a (VISUAL) | |
| B-007-0-17 | 02.50 | - | 04.00 | SS-1 | 43 | 44 | - | 50 | 23 | 14 | 10 | 3 | NP | NP | NP | 4 | A-1-a (0) | |
| STA. 397+54, 23' LT | 05.00 | - | 06.50 | SS-2 | 30 | 56 | - | | | | SAME AS SS-1 | | | | | 5 | A-1-a (VISUAL) | <100 |
| LATITUDE = 40.998365 | 07.50 | - | 09.00 | SS-3 | 26 | 89 | 4.5+ | 11 | 10 | 33 | 34 | 12 | NP | NP | NP | 12 | A-4a (2) | |
| LONGITUDE = -81.493875 | 09.00 | - | 10.50 | SS-4 | 29 | 100 | 4.5+ | | | | SAME AS SS-3 | | | | | 12 | A-4a (VISUAL) | |
| B-008-0-17 | 00.00 | - | 01.50 | SS-1 | 9 | 100 | - | 22 | 40 | 28 | 6 | 4 | NP | NP | NP | 7 | A-1-b (0) | |
| STA. 401+53, 7' LT | 01.50 | - | 03.00 | SS-2 | 10 | 100 | - | | | | SAME AS SS-1 | | | | | 7 | A-1-b (VISUAL) | <100 |
| LATITUDE = 40.999461 | 03.00 | - | 04.00 | SS-3A | 6 | 100 | - | 52 | 23 | 15 | 7 | 3 | NP | NP | NP | 9 | A-1-a (0) | |
| LONGITUDE = -81.493844 | 04.00 | - | 04.50 | SS-3B | - | - | 2 | | | | SAME AS SS-4 | | | | | 21 | A-4a (VISUAL) | |
| | 04.50 | - | 06.00 | SS-4 | 10 | 100 | 2 | 1 | 4 | 28 | 47 | 20 | 24 | 17 | 7 | 20 | A-4a (6) | |
| | 06.00 | - | 07.50 | SS-5 | 10 | 0 | - | | | | | | | | | | | |
| | 07.50 | - | 09.00 | SS-6 | 11 | 100 | 3 | | | | SAME AS SS-4 | | | | | 21 | A-4a (VISUAL) | |
| | 09.00 | - | 10.50 | SS-7 | 44 | 100 | 4.5+ | | | | SAME AS SS-4 | | | | | 10 | A-4a (VISUAL) | |
| B-009-0-17 | 01.50 | - | 03.00 | SS-1 | 30 | 56 | 4.5+ | | | | SAME AS SS-2 | | | | | 11 | A-4a (VISUAL) | 120 |
| STA. 405+54, 12' RT | 03.00 | - | 04.50 | SS-2 | 16 | 39 | 4.5+ | 20 | 12 | 27 | 29 | 12 | 19 | 14 | 5 | 9 | A-4a (1) | |
| LATITUDE = 41.000562 | 04.50 | - | 06.00 | SS-3 | 23 | 33 | 4.5+ | | | | SAME AS SS-2 | | | | | 11 | A-4a (VISUAL) | |
| LONGITUDE = -81.493832 | 06.00 | - | 07.50 | SS-4 | 21 | 100 | - | 9 | 4 | 44 | 34 | 9 | NP | NP | NP | 11 | A-4a (2) | |
| B-010-0-17 | 00.00 | - | 01.50 | SS-1 | 20 | 0 | - | | | | | | | | | | | |
| STA. 409+54, 12' LT | 01.50 | - | 03.00 | SS-2 | 36 | 100 | 4.5+ | 6 | 10 | 30 | 37 | 17 | 22 | 15 | 7 | 13 | A-4a (4) | |
| LATITUDE = 41.001656 | 03.00 | - | 04.50 | SS-3 | 63 | 100 | 4.5+ | | | | SAME AS SS-2 | | | | | 10 | A-4a (VISUAL) | 400 |
| LONGITUDE = -81.493985 | 04.50 | - | 06.00 | SS-4 | 20 | 100 | 4.5+ | | | | SAME AS SS-2 | | | | | 14 | A-4a (VISUAL) | |
| | 06.00 | - | 07.50 | SS-5 | 31 | 100 | 4.5+ | 12 | 11 | 28 | 34 | 15 | 24 | 16 | 8 | 12 | A-4a (3) | |
| | 07.50 | - | 09.00 | SS-6 | 24 | 100 | 4 | | | | SAME AS SS-5 | | | | | 12 | A-4a (VISUAL) | |
| | 09.00 | - | 10.50 | SS-7 | 27 | 100 | 4.5+ | | | | SAME AS SS-5 | | | | | 13 | A-4a (VISUAL) | |
| B-011-0-17 | 01.50 | - | 03.00 | SS-1 | 20 | 100 | 4.5+ | 8 | 9 | 29 | 40 | 14 | 19 | 15 | 4 | 15 | A-4a (4) | |
| STA. 413+58, 73' LT | 03.00 | - | 04.50 | SS-2 | 20 | 100 | 4.5+ | | | | SAME AS SS-1 | | | | | 11 | A-4a (VISUAL) | <100 |
| LATITUDE = 41.002756 | 04.50 | - | 06.00 | SS-3 | 23 | 100 | 4.5+ | 7 | 6 | 29 | 42 | 16 | 20 | 15 | 5 | 12 | A-4a (5) | |
| LONGITUDE = -81.494271 | 06.00 | - | 07.50 | SS-4 | 25 | 100 | 4.5+ | | | | SAME AS SS-3 | | | | | 13 | A-4a (VISUAL) | |
| B-012-0-17 | 00.00 | - | 01.50 | SS-1 | 21 | 100 | 3.5 | 9 | 12 | 36 | 29 | 14 | 20 | 16 | 4 | 13 | A-4a (2) | |
| STA. 417+53, 4' LT | 01.50 | - | 03.00 | SS-2 | 24 | 100 | 3 | | | | SAME AS SS-1 | | | | | 9 | A-4a (VISUAL) | 540 |
| LATITUDE = 41.003848 | 03.00 | - | 04.50 | SS-3 | 7 | 100 | 2 | 7 | 13 | 33 | 34 | 13 | 22 | 17 | 5 | 15 | A-4a (2) | |
| LONGITUDE = -81.494084 | 04.50 | - | 06.00 | SS-4 | 16 | 100 | 4.5+ | | | | SAME AS SS-3 | | | | | 11 | A-4a (VISUAL) | |
| | 06.00 | - | 07.50 | SS-5 | 46 | 100 | 4.5+ | | | | SAME AS SS-3 | | | | | 13 | A-4a (VISUAL) | |
| | 07.50 | - | 09.00 | SS-6 | 20 | 100 | 4.5+ | 5 | 5 | 16 | 44 | 30 | 35 | 20 | 15 | 16 | A-6a (10) | |
| | 09.00 | - | 10.50 | SS-7 | 30 | 100 | 4.5+ | | | | SAME AS SS-6 | | | | | 15 | A-6a (VISUAL) | |
| B-013-0-17 | 01.50 | - | 03.00 | SS-1 | 22 | 78 | - | | | | SAME AS SS-2 | | | | | 11 | A-3a (VISUAL) | 167 |
| STA. 421+52, 54' RT | 03.00 | - | 04.50 | SS-2 | 34 | 89 | - | 20 | 19 | 32 | 21 | 8 | NP | NP | NP | 8 | A-3a (0) | |
| LATITUDE = 41.004950 | 04.50 | - | 06.00 | SS-3 | 30 | 83 | - | 20 | 20 | 33 | 20 | 7 | NP | NP | NP | 10 | A-3a (0) | |
| LONGITUDE = -81.493938 | 06.00 | - | 07.50 | SS-4 | 22 | 94 | - | | | | SAME AS SS-3 | | | | | 14 | A-3a (VISUAL) | |
| B-014-0-17 | 01.50 | - | 02.30 | SS-1A | 21 | 67 | 2.5 - 4.5+ | 12 | 18 | 32 | 25 | 13 | 20 | 14 | 6 | 11 | A-4a (1) | |
| STA. 432+92, 73' LT | 02.30 | - | 03.00 | SS-1B | - | - | - | | | | SAME AS SS-3 | | | | | 8 | A-2-4 (VISUAL) | |
| LATITUDE = 41.008050 | 03.00 | - | 04.50 | SS-2 | 22 | 89 | - | | | | SAME AS SS-3 | | | | | 10 | A-2-4 (VISUAL) | <100 |
| LONGITUDE = -81.494605 | 04.50 | - | 06.00 | SS-3 | 34 | 78 | - | 25 | 18 | 29 | 21 | 7 | NP | NP | NP | 12 | A-2-4 (0) | |
| | 06.00 | - | 07.50 | SS-4 | 23 | 83 | - | LT BROWN, GRAVEL AND STONE FRAG. WITH SAND & SILT | | | | | | | | 15 | A-1-b (VISUAL) | |
| B-015-0-17 | 00.00 | - | 01.50 | SS-1 | 10 | 100 | - | 7 | 12 | 41 | 30 | 10 | NP | NP | NP | 15 | A-4a (1) | |
| STA. 436+85, 2' LT | 01.50 | - | 03.00 | SS-2 | 6 | 100 | 1 | | | | SAME AS SS-1 | | | | | 18 | A-4a (VISUAL) | <100 |
| LATITUDE = 41.009140 | 03.00 | - | 04.50 | SS-3 | 3 | 100 | 0.75 | | | | SAME AS SS-1 | | | | | 18 | A-4a (VISUAL) | |
| LONGITUDE = -81.494477 | 04.50 | - | 06.00 | SS-4 | 3 | 100 | - | 6 | 11 | 54 | 20 | 9 | NP | NP | NP | 17 | A-3a (0) | |
| | 06.00 | - | 07.50 | SS-5 | 21 | 100 | - | BROWN & GRAY, GRAVEL & STONE FRAG WITH SAND & SILT | | | | | | | | 17 | A-2-4 (VISUAL) | |
| | 07.50 | - | 09.00 | SS-6 | 21 | 100 | - | BROWN & GRAY, GRAVEL & STONE FRAG WITH SAND & SILT | | | | | | | | 12 | A-2-4 (VISUAL) | |
| | 09.00 | - | 10.50 | SS-7 | 26 | 100 | 4.5+ | 9 | 15 | 29 | 28 | 19 | 24 | 15 | 9 | 13 | A-4a (2) | |
| B-016-0-17 | 01.50 | - | 03.00 | SS-1 | 12 | 11 | | | | | DARK BROWN, GRAVEL WITH SAND | | | | | 6 | A-1-b (VISUAL) | <100 |
| STA. 440+91, 70' RT | 03.00 | - | 04.50 | SS-2 | 30 | 89 | | | | | SAME AS SS-2 | | | | | 9 | A-3a (VISUAL) | |
| LATITUDE = 41.010271 | 04.50 | - | 06.00 | SS-3 | 12 | 100 | - | 5 | 10 | 56 | 18 | 11 | NP | NP | NP | 11 | A-3a (0) | |
| LONGITUDE = -81.494393 | 06.00 | - | 07.50 | SS-4 | 16 | 89 | - | 8 | 23 | 31 | 30 | 8 | NP | NP | NP | 14 | A-4a (1) | |

SUMMARY OF SOIL TEST DATA
PROJECT BORINGS - IR-77 (CONTINUED)

| EXPLORATION NO., STATION & OFFSET | FROM | | TO | SAMPLE ID | N60 | % REC | HP tsf | % GR | % CS | % FS | % SILT | % CLAY | LL | PL | PI | % WC | ODOT CLASS (GI) | ppm SO4 |
|---|---|---|---|---|---|---|---|---|---|---|---|---|---|---|---|---|---|---|
| B-017-0-17 | 00.00 | - | 01.50 | SS-1 | 17 | 100 | 2 | 7 | 10 | 27 | 41 | 15 | 23 | 17 | 6 | 16 | A-4a (4) | |
| STA. 444+92, 3' LT | 01.50 | - | 03.00 | SS-2 | 38 | 100 | 4.25 | | | | SAME AS SS-2 | | | | | 11 | A-4a (VISUAL) | 153 |
| LATITUDE = 41.011334 | 03.00 | - | 04.50 | SS-3 | 26 | 100 | 2.5 | 16 | 18 | 29 | 26 | 11 | 28 | 22 | 6 | 17 | A-4a (0) | |
| LONGITUDE = -81.494868 | 04.50 | - | 06.00 | SS-4 | 16 | 89 | 2.5 | | | | SAME AS SS-3 | | | | | 14 | A-4a (VISUAL) | |
| | 06.00 | - | 07.50 | SS-5 | 28 | 100 | 4.25 | | | | SAME AS SS-3 | | | | | 16 | A-4a (VISUAL) | |
| | 07.50 | - | 09.00 | SS-6 | 21 | 100 | 4.5+ | | | | SAME AS SS-7 | | | | | 11 | A-4a (VISUAL) | |
| | 09.00 | - | 10.50 | SS-7 | 36 | 100 | 4.5+ | 4 | 7 | 34 | 37 | 18 | 21 | 15 | 6 | 12 | A-4a (4) | |
| B-018-0-17 | 01.50 | - | 03.00 | SS-1 | 16 | 100 | 2.5 - 4.5+ | 8 | 7 | 23 | 41 | 21 | 26 | 16 | 10 | 14 | A-4a (5) | |
| STA. 448+88, 39' LT | 03.00 | - | 04.50 | SS-2 | 18 | 100 | 4.5+ | | | | SAME AS SS-1 | | | | | 19 | A-4a (VISUAL) | <100 |
| LATITUDE = 41.012386 | 04.50 | - | 06.00 | SS-3 | 25 | 100 | - | 20 | 21 | 29 | 19 | 11 | 23 | 17 | 6 | 10 | A-2-4 (0) | |
| LONGITUDE = -81.495243 | 06.00 | - | 07.50 | SS-4 | 27 | 100 | - | | | | SAME AS SS-3 | | | | | 10 | A-2-4 (VISUAL) | |
| B-019-0-17 | 00.00 | - | 01.50 | SS-1 | 16 | 100 | - | | | | SAME AS SS-2 | | | | | 15 | A-2-4 (VISUAL) | <100 |
| STA. 452+86, 2' LT | 01.50 | - | 03.00 | SS-2 | 17 | 89 | - | 26 | 24 | 20 | 18 | 12 | 32 | 23 | 9 | 16 | A-2-4 (0) | |
| LATITUDE = 41.013478 | 03.00 | - | 04.50 | SS-3 | 28 | 67 | - | 27 | 17 | 37 | 10 | 9 | NP | NP | NP | 12 | A-3a (0) | |
| LONGITUDE = -81.495376 | 04.50 | - | 06.00 | SS-4 | 21 | 83 | - | | | | SAME AS SS-3 | | | | | 20 | A-3a (VISUAL) | |
| | 06.00 | - | 07.50 | SS-5 | 30 | 56 | - | 33 | 27 | 16 | 17 | 7 | NP | NP | NP | 14 | A-1-b (0) | |
| | 07.50 | - | 09.00 | SS-6 | 24 | 50 | - | | | | SAME AS SS-5 | | | | | 12 | A-1-b (VISUAL) | |
| | 09.00 | - | 10.50 | SS-7 | 11 | 33 | - | | | | SAME AS SS-5 | | | | | 11 | A-1-b (VISUAL) | |
| B-020-0-17 | 01.50 | - | 03.00 | SS-1 | 56 | 83 | | | | | SAME AS SS-2 | | | | | 8 | A-2-6 (VISUAL) | 227 |
| STA. 457+03, 35' RT | 03.00 | - | 04.50 | SS-2 | 33 | 78 | - | 26 | 21 | 20 | 18 | 15 | 31 | 17 | 14 | 11 | A-2-6 (1) | |
| LATITUDE = 41.014623 | 04.50 | - | 06.00 | SS-3 | 17 | 89 | | | | | SAME AS SS-2 | | | | | 10 | A-2-6 (VISUAL) | |
| LONGITUDE = -81.495520 | 06.00 | - | 07.50 | SS-4 | 20 | 56 | - | 23 | 36 | 20 | 13 | 8 | NP | NP | NP | 9 | A-1-b (0) | |
| B-021-0-17 | 00.00 | - | 01.50 | SS-1 | 24 | 100 | - | 16 | 19 | 31 | 23 | 11 | 24 | 17 | 7 | 13 | A-2-4 (0) | |
| STA. 460+99, 0' CL | 01.50 | - | 03.00 | SS-2 | 37 | 100 | - | | | | SAME AS SS-1 | | | | | 11 | A-2-4 (VISUAL) | 200 |
| LATITUDE = 41.015674 | 03.00 | - | 03.50 | SS-3A | 30 | 100 | - | | | | SAME AS SS-2 | | | | | 12 | A-2-4 (VISUAL) | |
| LONGITUDE = -81.495905 | 03.50 | - | 04.50 | SS-3B | - | - | - | 1 | 10 | 57 | 22 | 10 | NP | NP | NP | 11 | A-3a (0) | |
| | 04.50 | - | 06.00 | SS-4 | 46 | 100 | - | 6 | 14 | 59 | 13 | 8 | NP | NP | NP | 10 | A-3a (0) | |
| | 06.00 | - | 07.50 | SS-5 | 57 | 44 | - | | | | SAME AS SS-4 | | | | | 11 | A-3a (VISUAL) | |
| | 07.50 | - | 09.00 | SS-6 | 33 | 89 | - | | | | SAME AS SS-4 | | | | | 8 | A-3a (VISUAL) | |
| | 09.00 | - | 10.50 | SS-7 | 46 | 100 | - | | | | SAME AS SS-4 | | | | | 8 | A-3a (VISUAL) | |
| B-022-0-17 | 01.50 | - | 02.50 | SS-1A | 60 | 56 | - | 51 | 24 | 10 | 11 | 4 | 25 | 20 | 5 | 7 | A-1-a (0) | |
| STA. 464+91, 72' LT | 02.50 | - | 03.00 | SS-1B | - | - | - | | | | SAME AS SS-2 | | | | | 15 | A-4a (VISUAL) | <100 |
| LATITUDE = 41.016696 | 03.00 | - | 04.50 | SS-2 | 44 | 33 | - | 18 | 34 | 12 | 22 | 14 | 30 | 21 | 9 | 12 | A-4a (0) | |
| LONGITUDE = -81.496422 | 04.50 | - | 04.92 | SS-3 | 50/5" | 40 | - | | | | SAME AS SS-2 | | | | | 13 | A-4a (VISUAL) | |
| | 06.00 | - | 07.50 | SS-4 | 46 | 56 | - | BROWN & GRAY, GRAVEL & STONE FRAG WITH SAND & SILT | | | | | | | | 10 | A-2-4 (VISUAL) | |
| B-023-0-17 | 01.50 | - | 03.00 | SS-1 | 25 | 78 | - | | | | SAME AS SS-2 | | | | | 7 | A-1-b (VISUAL) | 320 |
| STA. 471+65, 63' RT | 03.00 | - | 04.50 | SS-2 | 20 | 89 | - | 46 | 17 | 18 | 14 | 5 | NP | NP | NP | 11 | A-1-b (0) | |
| LATITUDE = 41.018582 | 04.50 | - | 06.00 | SS-3 | 12 | 67 | - | 51 | 14 | 16 | 13 | 6 | NP | NP | NP | 11 | A-1-b (0) | |
| LONGITUDE = -81.496386 | 06.00 | - | 07.50 | SS-4 | 12 | 28 | - | | | | SAME AS SS-3 | | | | | 12 | A-1-b (VISUAL) | |

SUMMARY OF SOIL TEST DATA
PROJECT BORINGS - IR-77 NB

| EXPLORATION NO., STATION & OFFSET | FROM | | TO | SAMPLE ID | N60 | % REC | HP tsf | % GR | % CS | % FS | % SILT | % CLAY | LL | PL | PI | % WC | ODOT CLASS (GI) | ppm SO4 |
|---|---|---|---|---|---|---|---|---|---|---|---|---|---|---|---|---|---|---|
| B-025-0-17 | 01.50 | - | 03.00 | SS-1 | 20 | 83 | - | | | | SAME AS SS-2 | | | | | 6 | A-4a (VISUAL) | <100 |
| STA. 477+81, 8' LT | 03.00 | - | 04.50 | SS-2 | 77 | 89 | - | 16 | 11 | 26 | 39 | 8 | NP | NP | NP | 7 | A-4a (2) | |
| LATITUDE = 41.020214 | 04.50 | - | 05.50 | SS-3 | 17/50/6" | 67 | - | 32 | 12 | 30 | 20 | 6 | NP | NP | NP | 8 | A-2-4 (0) | |
| LONGITUDE = -81.496984 | 06.00 | - | 06.33 | SS-4 | 50/4" | 25 | - | | | | SAME AS SS-3 | | | | | 8 | A-2-4 (VISUAL) | |
| B-027-0-17 | 01.50 | - | 03.00 | SS-1 | 20 | 89 | 4.25 | | | | SAME AS SS-2 | | | | | 16 | A-4a (VISUAL) | 247 |
| STA. 481+74, 50' RT | 03.00 | - | 04.50 | SS-2 | 18 | 78 | 3.25 | 10 | 10 | 22 | 36 | 22 | 26 | 16 | 10 | 15 | A-4a (5) | |
| LATITUDE = 41.021295 | 04.50 | - | 06.00 | SS-3 | 29 | 89 | 4.5+ | 18 | 12 | 27 | 29 | 14 | 22 | 15 | 7 | 11 | A-4a (2) | |
| LONGITUDE = -81.497219 | 06.00 | - | 07.50 | SS-4 | 21 | 83 | 4.5+ | | | | SAME AS SS-3 | | | | | 17 | A-4a (VISUAL) | |
| B-030-0-17 | 01.50 | - | 03.00 | SS-1 | 22 | 28 | - | 22 | 19 | 19 | 27 | 13 | 27 | 19 | 8 | 8 | A-4a (1) | |
| STA. 486+21, 9' LT | 03.00 | - | 04.50 | SS-2 | 23 | 89 | 4.5+ | | | | SAME AS SS-1 | | | | | 11 | A-4a (VISUAL) | 127 |
| LATITUDE = 41.022357 | 04.50 | - | 06.00 | SS-3 | 18 | 89 | 4.25 | 12 | 9 | 25 | 38 | 16 | 25 | 17 | 8 | 14 | A-4a (4) | |
| LONGITUDE = -81.498070 | 06.00 | - | 07.50 | SS-4 | 25 | 28 | 3 | | | | SAME AS SS-3 | | | | | 10 | A-4a (VISUAL) | |
| B-032-0-17 | 01.50 | - | 03.00 | SS-1 | 21 | 44 | 3.25 | | | | SAME AS SS-2 | | | | | 13 | A-4a (VISUAL) | 493 |
| STA. 490+50, 43' RT | 03.00 | - | 04.50 | SS-2 | 26 | 100 | 3.25 - 4.5+ | 20 | 14 | 24 | 26 | 16 | 27 | 17 | 10 | 14 | A-4a (1) | |
| LATITUDE = 41.023449 | 04.50 | - | 06.00 | SS-3 | 42 | 89 | 4.25 - 4.5+ | | | | SAME AS SS-2 | | | | | 14 | A-4a (VISUAL) | |
| LONGITUDE = -81.498693 | 06.00 | - | 07.50 | SS-4 | 65 | 89 | - | 6 | 10 | 59 | 17 | 8 | NP | NP | NP | 11 | A-3a (0) | |
| B-036-1-17 | 01.50 | - | 03.00 | SS-1 | 6 | 17 | - | BROWN & GRAY, COARSE AND FINE SAND | | | | | | | | 11 | A-3a (VISUAL) | 1273 |
| STA.503+17, 51' RT | 03.00 | - | 04.50 | SS-2 | 10 | 50 | 2.5 | 4 | 11 | 28 | 35 | 22 | 22 | 16 | 6 | 17 | A-4a (4) | |
| LATITUDE = 41.026158 | 04.50 | - | 06.00 | SS-3 | 12 | 39 | 1 | | | | SAME AS SS-2 | | | | | 16 | A-4a (VISUAL) | |
| LONGITUDE = -81.501601 | 06.00 | - | 06.50 | SS-4A | 26 | 44 | 1.75 | | | | SAME AS SS-2 | | | | | 16 | A-4a (VISUAL) | |
| B-001-0-14 | 01.00 | - | 02.50 | SS-1 | 25 | 67 | 3.5-4.5+ | 13 | 9 | 22 | 33 | 23 | 26 | 16 | 10 | 12 | A-4a (4) | |
| STA. 494+41, 15' LT | 02.50 | - | 04.00 | SS-2 | 27 | 100 | 3.5-4.5+ | 8 | 8 | 25 | 39 | 20 | 23 | 16 | 7 | 14 | A-4a (5) | |
| LATITUDE = 41.024237 | 04.00 | - | 05.50 | SS-3 | 13 | 94 | 2.5-4.5+ | | | | SAME AS SS-2 | | | | | 17 | A-4a (VISUAL) | |
| LONGITUDE = -81.499717 | 05.50 | - | 07.00 | SS-4 | 13 | 67 | 3.5-4.5+ | 20 | 7 | 20 | 38 | 15 | 18 | 15 | 3 | 12 | A-4a (4) | |
| | 08.50 | - | 10.00 | SS-5 | 14 | 100 | 4.0-4.5+ | | | | SAME AS SS-4 | | | | | 9 | A-4a (VISUAL) | |
| B-002-0-14 | 01.00 | - | 02.50 | SS-1 | 8 | 67 | 1.5-2.5 | 12 | 14 | 31 | 30 | 13 | 20 | 15 | 4 | 14 | A-4a (2) | |
| STA. 498+45.63, 22' LT | 02.50 | - | 04.00 | SS-2 | 6 | 100 | 1.5-2.8 | | | | SAME AS SS-1 | | | | | 14 | A-4a (VISUAL) | |
| LATITUDE = 41.025052 | 04.00 | - | 05.50 | SS-3 | 22 | 100 | 4.0-4.5+ | 41 | 3 | 15 | 26 | 15 | 22 | 16 | 6 | 11 | A-4a (1) | |
| LONGITUDE = -81.500678 | 05.50 | - | 07.00 | SS-4 | 56 | 100 | 4.0-4.5+ | | | | SAME AS SS-3 | | | | | 13 | A-4a (VISUAL) | |
| | 08.50 | - | 10.00 | SS-5 | 18 | 100 | 3.5-4.5+ | 27 | 9 | 6 | 31 | 27 | 30 | 17 | 13 | 9 | A-6a (6) | |
| B-039-0-17 | 01.50 | - | 03.00 | SS-1 | 21 | 78 | | BROWN AND GRAY, GRAVEL WITH SAND | | | | | | | | 16 | A-1-b (VISUAL) | 2133 |
| STA. 508+17, 43' RT | 03.00 | - | 04.50 | SS-2 | 18 | 89 | 4.5+ | 9 | 14 | 24 | 36 | 17 | 25 | 16 | 9 | 13 | A-4a (4) | |
| LATITUDE = 41.027178 | 04.50 | - | 06.00 | SS-3 | 13 | 0 | - | | | | | | | | | | | |
| LONGITUDE = -81.502811 | 06.00 | - | 06.40 | SS-4A | 18 | 39 | 3.00 | | | | SAME AS SS-2 | | | | | 15 | A-4a (VISUAL) | |
| | 06.40 | - | 07.50 | SS-4B | - | - | - | BROWN AND GRAY, GRAVEL AND STONE FRAG. WITH SAND | | | | | | | | 14 | A-1-b (VISUAL) | |

SUMMARY OF SOIL TEST DATA
PROJECT BORINGS - IR-77 SB

| EXPLORATION NO., STATION & OFFSET | FROM | TO | SAMPLE ID | N60 | % REC | HP tsf | % GR | % CS | % FS | % SILT | % CLAY | LL | PL | PI | % WC | ODOT CLASS (GI) | ppm SO4 <100 |
|---|---|---|---|---|---|---|---|---|---|---|---|---|---|---|---|---|---|
| B-024-0-17 | 00.00 | 01.50 | SS-1 | 24 | 100 | - | 28 | 37 | 26 | 7 | 2 | NP | NP | NP | 9 | A-1-b (0) | |
| STA. 474+52, 7' LT | 01.50 | 03.00 | SS-2 | 34 | 89 | - | | | | SAME AS SS-1 | | | | | 7 | A-1-b (VISUAL) | <100 |
| LATITUDE = 41.019318 | 03.00 | 04.50 | SS-3 | 20 | 50 | - | 44 | 6 | 20 | 21 | 9 | 20 | 17 | 3 | 8 | A-2-4 (0) | |
| LONGITUDE = -81.496916 | 04.50 | 06.00 | SS-4 | 48 | 56 | - | | | | SAME AS SS-3 | | | | | 8 | A-2-4 (VISUAL) | |
| | 06.00 | 07.50 | SS-5 | 90 | 100 | - | | | | SAME AS SS-3 | | | | | 5 | A-2-4 (VISUAL) | |
| | 07.50 | 09.00 | SS-6 | 44 | 100 | - | | | | SAME AS SS-3 | | | | | 7 | A-2-4 (VISUAL) | |
| | 09.00 | 09.33 | SS-7 | 50/4" | 100 | - | | | | SAME AS SS-3 | | | | | 8 | A-2-4 (VISUAL) | |
| B-026-0-17 | 01.50 | 03.00 | SS-1 | 18 | 83 | - | 12 | 33 | 40 | 11 | 4 | NP | NP | NP | 11 | A-3a (0) | |
| STA. 478+56, 55' LT | 03.00 | 04.50 | SS-2 | 20 | 78 | - | 5 | 8 | 52 | 26 | 9 | NP | NP | NP | 10 | A-3a (0) | 180 |
| LATITUDE = 41.020331 | 04.50 | 06.00 | SS-3 | 29 | 89 | - | GRAYISH & LT BROWN, GRAVEL & STONE FRAG WITH SAND | | | | | | | | 12 | A-1-b (VISUAL) | |
| LONGITUDE = -81.497510 | 06.00 | 07.50 | SS-4 | 38 | 100 | - | GRAYISH & LT BROWN, GRAVEL & STONE FRAG WITH SAND | | | | | | | | 11 | A-1-b (VISUAL) | |
| B-028-0-17 | 00.00 | 01.50 | SS-1 | 14 | 56 | - | | | | SAME AS SS-2 | | | | | 11 | A-2-4 (VISUAL) | <100 |
| STA. 482+48, 3' RT | 01.50 | 03.00 | SS-2 | 40 | 100 | - | 23 | 6 | 40 | 21 | 10 | 19 | 14 | 5 | 10 | A-2-4 (0) | |
| LATITUDE = 41.021374 | 03.00 | 04.50 | SS-3 | 40 | 78 | - | 33 | 8 | 30 | 20 | 9 | 20 | 15 | 5 | 14 | A-2-4 (0) | |
| LONGITUDE = -81.497870 | 04.50 | 06.00 | SS-4 | 46 | 100 | - | | | | SAME AS SS-3 | | | | | 9 | A-2-4 (VISUAL) | |
| | 06.00 | 07.50 | SS-5 | 16 | 56 | 1.75 | | | | SAME AS SS-6 | | | | | 19 | A-4a (VISUAL) | |
| | 07.50 | 09.00 | SS-6 | 40 | 78 | 3.0 - 4.5+ | 12 | 8 | 37 | 30 | 13 | 21 | 13 | 8 | 12 | A-4a (2) | |
| | 09.00 | 10.50 | SS-7 | 17 | 100 | 2.25 | | | | SAME AS SS-6 | | | | | 16 | A-4a (VISUAL) | |
| B-031-0-17 | 01.50 | 03.00 | SS-1 | 12 | 56 | - | 21 | 25 | 23 | 20 | 11 | 21 | 15 | 6 | 13 | A-2-4 (0) | |
| STA. 486+49, 56' LT | 03.00 | 04.50 | SS-2 | 8 | 67 | - | | | | SAME AS SS-1 | | | | | 16 | A-2-4 (VISUAL) | 107 |
| LATITUDE = 41.022253 | 04.50 | 06.00 | SS-3 | 13 | 56 | - | | | | SAME AS SS-1 | | | | | 15 | A-2-4 (VISUAL) | |
| LONGITUDE = -81.498752 | 06.00 | 07.50 | SS-4 | 17 | 89 | - | 21 | 11 | 33 | 24 | 11 | 19 | 15 | 4 | 9 | A-2-4 (0) | |
| B-033-0-17 | 00.00 | 01.50 | SS-1 | 17 | 100 | 0.5 | BROWN & DARK BROWN, SILT AND CLAY | | | | | | | | 20 | A-6a (VISUAL) | <100 |
| STA. 490+40, 6' RT | 01.50 | 03.00 | SS-2 | 11 | 89 | 4.0 - 4.5+ | 20 | 8 | 33 | 26 | 13 | 20 | 13 | 7 | 10 | A-4a (1) | |
| LATITUDE = 41.023227 | 03.00 | 04.50 | SS-3 | 34 | 44 | - | 17 | 20 | 43 | 13 | 7 | NP | NP | NP | 11 | A-3a (0) | |
| LONGITUDE = -81.499369 | 04.50 | 06.00 | SS-4 | 68 | 100 | - | | | | SAME AS SS-3 | | | | | 8 | A-3a (VISUAL) | |
| | 06.00 | 07.50 | SS-5 | 68 | 100 | - | 5 | 14 | 44 | 27 | 10 | 17 | 13 | 4 | 11 | A-4a (0) | |
| | 07.50 | 09.00 | SS-6 | 58 | 100 | - | | | | SAME AS SS-5 | | | | | 11 | A-4a (VISUAL) | |
| | 09.00 | 10.50 | SS-7 | 51 | 100 | - | | | | SAME AS SS-5 | | | | | 12 | A-4a (VISUAL) | |
| B-035-0-17 | 01.50 | 02.50 | SS-1A | 14 | 67 | - | 26 | 30 | 34 | 7 | 3 | NP | NP | NP | 7 | A-1-b (0) | |
| STA. 495+35, 37' LT | 02.50 | 03.00 | SS-1B | - | - | 2.00 | | | | SAME AS SS-3 | | | | | 15 | A-4a (VISUAL) | |
| LATITUDE = 41.024187 | 03.00 | 04.50 | SS-2 | 18 | 89 | 4.5+ | | | | SAME AS SS-3 | | | | | 12 | A-4a (VISUAL) | 193 |
| LONGITUDE = -81.500647 | 04.50 | 06.00 | SS-3 | 31 | 100 | 4.5+ | 11 | 9 | 41 | 25 | 14 | 21 | 15 | 6 | 10 | A-4a (1) | |
| | 06.00 | 07.50 | SS-4 | 38 | 100 | 4.5+ | | | | SAME AS SS-3 | | | | | 13 | A-4a (VISUAL) | |
| B-050-1-17 | 01.50 | 03.00 | SS-1 | 17 | 56 | - | | | | SAME AS SS-2 | | | | | 13 | A-1-b (VISUAL) | <100 |
| STA. 500+26, 54' LT | 03.00 | 04.50 | SS-2 | 18 | 83 | - | 17 | 43 | 33 | 4 | 3 | NP | NP | NP | 14 | A-1-b (0) | |
| LATITUDE = 41.025171 | 04.50 | 06.00 | SS-3 | 9 | 33 | - | 38 | 26 | 23 | 9 | 4 | NP | NP | NP | 19 | A-1-b (0) | |
| LONGITUDE = -81.496312 | 06.00 | 07.50 | SS-4 | 12 | 44 | - | | | | SAME AS SS-3 | | | | | 16 | A-1-b (VISUAL) | |
| B-050-2-17 | 1.50 | 3.00 | SS-1 | 21 | 33 | 4.25 | 15 | 18 | 22 | 29 | 16 | 24 | 17 | 7 | 10 | A-4a (2) | |
| STA. 504+51, 9' RT | 3.00 | 4.50 | SS-2 | 12 | 67 | 4.25 | 11 | 11 | 22 | 36 | 20 | 26 | 18 | 8 | 14 | A-4a (4) | 273 |
| LATITUDE = 41.026168 | 4.50 | 6.00 | SS-3 | 20 | 89 | 3 | | | | SAME AS SS-2 | | | | | 11 | A-4a (VISUAL) | |
| LONGITUDE = -81.502304 | 6.00 | 7.50 | SS-4 | 30 | 72 | 2.25 | BROWN MOTTLED WITH ORANGISH BROWN, SILT & CLAY | | | | | | | | 22 | A-6a (VISUAL) | |
| B-050-3-17 | 1.50 | 3.00 | SS-1 | 10 | 56 | 1.5 | | | | SAME AS SS-2 | | | | | 16 | A-4a (VISUAL) | |
| STA. 503+22, 40' LT | 3.00 | 4.50 | SS-2 | 10 | 56 | 2 | 13 | 7 | 30 | 31 | 19 | 23 | 16 | 7 | 13 | A-4a (3) | |
| LATITUDE = 41.028141 | 4.50 | 6.00 | SS-3 | 12 | 89 | 2.25 | 10 | 10 | 30 | 31 | 19 | 24 | 17 | 7 | 14 | A-4a (3) | 153 |
| LONGITUDE = -81.504493 | 6.00 | 7.50 | SS-4 | 16 | 100 | 4.5+ | | | | SAME AS SS-3 | | | | | 17 | A-4a (VISUAL) | |

SUMMARY OF SOIL TEST DATA
PROJECT BORINGS - IR-277

| EXPLORATION NO., STATION & OFFSET | FROM | TO | SAMPLE ID | N60 | % REC | HP tsf | % GR | % CS | % FS | % SILT | % CLAY | LL | PL | PI | % WC | ODOT CLASS (GI) | ppm SO4 <100 |
|---|---|---|---|---|---|---|---|---|---|---|---|---|---|---|---|---|---|
| B-054-3-17 | 1.50 | 3.00 | SS-1 | 10 | 56 | 4.5+ | 14 | 7 | 25 | 31 | 23 | 25 | 16 | 9 | 12 | A-4a (4) | 127 |
| STA. 279+39, 52' LT | 3.00 | 4.50 | SS-2 | 18 | 67 | 4.5+ | 18 | 18 | 23 | 24 | 17 | 25 | 17 | 8 | 11 | A-4a (1) | |
| LATITUDE = 41.026085 | 4.50 | 6.00 | SS-3 | 21 | 89 | 3.5 | | | | SAME AS SS-2 | | | | | 13 | A-4a (VISUAL) | |
| LONGITUDE = -81.492233 | 6.00 | 7.50 | SS-4 | 27 | 100 | 4.25 | | | | SAME AS SS-3 | | | | | 13 | A-4a (VISUAL) | |

SUMMARY OF SOIL TEST DATA
PROJECT BORINGS - RAMP A

| EXPLORATION NO., STATION & OFFSET | FROM | TO | SAMPLE ID | N60 | % REC | HP tsf | % GR | % CS | % FS | % SILT | % CLAY | LL | PL | PI | % WC | ODOT CLASS (GI) | ppm SO4 <100 |
|---|---|---|---|---|---|---|---|---|---|---|---|---|---|---|---|---|---|
| B-045-0-17 | 01.50 | 03.00 | SS-1 | 17 | 83 | - | 43 | 16 | 23 | 14 | 4 | NP | NP | NP | 7 | A-1-b (0) | |
| STA. 98+26, 11' RT | 03.00 | 04.50 | SS-2 | 16 | 100 | 4.5+ | | | | SAME AS SS-3 | | | | | 12 | A-4a (VISUAL) | 300 |
| LATITUDE = 41.024547 | 04.50 | 06.00 | SS-3 | 20 | 100 | 4.5+ | 8 | 9 | 24 | 41 | 18 | 23 | 15 | 8 | 13 | A-4a (5) | |
| LONGITUDE = -81.501708 | 06.00 | 07.50 | SS-4 | 16 | 100 | 2.75 - 4.5+ | | | | SAME AS SS-3 | | | | | 11 | A-4a (VISUAL) | |
| B-046-0-17 | 01.50 | 02.00 | SS-1A | 17 | 94 | 3.10 | 5 | 12 | 30 | 36 | 17 | 21 | 14 | 7 | 12 | A-4a (4) | |
| STA. 102+20, 5' RT | 02.00 | 03.00 | SS-1B | - | - | - | BROWN , GRAVEL WITH SAND (FILL) | | | | | | | | 6 | A-1-b (VISUAL) | 100 |
| LATITUDE = 41.024897 | 03.00 | 04.50 | SS-2 | 21 | 89 | - | BROWN , GRAVEL WITH SAND (FILL) | | | | | | | | 7 | A-1-b (VISUAL) | |
| LONGITUDE = -81.503063 | 04.50 | 05.20 | SS-3A | 9 | 83 | - | BROWN , GRAVEL WITH SAND (FILL) | | | | | | | | 7 | A-1-b (VISUAL) | |
| | 05.20 | 06.00 | SS-3B | - | - | 0.25 | 13 | 17 | 29 | 25 | 16 | 26 | 15 | 11 | 15 | A-6a (1) | |
| | 06.00 | 07.50 | SS-4 | 16 | 94 | 4.5+ | BROWN AND GRAY, SANDY SILT | | | | | | | | 10 | A-4a (VISUAL) | |
| B-047-0-17 | 01.50 | 02.50 | SS-1A | 12 | 67 | - | 17 | 23 | 45 | 12 | 3 | NP | NP | NP | 11 | A-3a (0) | |
| STA. 106+13, 5' RT | 02.50 | 03.00 | SS-1B | - | - | 3.5 - 4.5+ | BROWN AND GRAYISH BROWN, SANDY SILT | | | | | | | | 13 | A-4a (VISUAL) | 133 |
| LATITUDE = 41024997 | 03.00 | 04.50 | SS-2 | 14 | 78 | 1.75 | BROWN AND GRAYISH BROWN, SANDY SILT | | | | | | | | 15 | A-4a (VISUAL) | |
| LONGITUDE = -81.504478 | 04.50 | 06.00 | SS-3 | 20 | 100 | - | 25 | 27 | 30 | 11 | 7 | 21 | 18 | 3 | 11 | A-1-b (0) | |
| | 06.00 | 07.50 | SS-4 | 17 | 100 | - | | | | SAME AS SS-3 | | | | | 11 | A-1-b (VISUAL) | |

SUMMARY OF SOIL TEST DATA
PROJECT BORINGS - RAMP A (CONTINUED)

| EXPLORATION NO., STATION & OFFSET | FROM | | TO | SAMPLE ID | N60 | % REC | HP tsf | % GR | % CS | % FS | % SILT | % CLAY | LL | PL | PI | % WC | ODOT CLASS (GI) | ppm SO4 <100 |
|---|---|---|---|---|---|---|---|---|---|---|---|---|---|---|---|---|---|---|
| B-048-0-17 | 01.50 | - | 03.00 | SS-1 | 10 | 83 | - | 5 | 11 | 55 | 21 | 8 | NP | NP | NP | 13 | A-3a (0) | |
| STA. 110+04, 7' LT | 03.00 | - | 04.50 | SS-2 | 12 | 94 | | | | SAME AS SS-3 | | | | | | 23 | A-4b (VISUAL) | 293 |
| LATITUDE = 41.024941 | 04.50 | - | 06.00 | SS-3 | 14 | 89 | - | 3 | 3 | 7 | 64 | 23 | 28 | 20 | 8 | 20 | A-4b (8) | |
| LONGITUDE = -81.505897 | 06.00 | - | 07.50 | SS-4 | 14 | 100 | | | | SAME AS SS-3 | | | | | | 18 | A-4b (VISUAL) | |
| B-049-0-17 | 01.50 | - | 03.00 | SS-1 | 13 | 89 | - | 42 | 13 | 14 | 20 | 11 | 20 | 14 | 6 | 8 | A-2-4 (0) | |
| STA. 114+07, 4' LT | 03.00 | - | 04.50 | SS-2 | 14 | 83 | - | | | | SAME AS SS-1 | | | | | 12 | A-2-4 (VISUAL) | 300 |
| LATITUDE = 41.024883 | 04.50 | - | 06.00 | SS-3 | 17 | 11 | - | 40 | 10 | 16 | 22 | 12 | 21 | 14 | 7 | 9 | A-2-4 (0) | |
| LONGITUDE = -81.507352 | 06.00 | - | 07.50 | SS-4 | 18 | 17 | - | | | | SAME AS SS-3 | | | | | 11 | A-2-4 (VISUAL) | |

SUMMARY OF SOIL TEST DATA
PROJECT BORINGS - RAMP B

| EXPLORATION NO., STATION & OFFSET | FROM | | TO | SAMPLE ID | N60 | % REC | HP tsf | % GR | % CS | % FS | % SILT | % CLAY | LL | PL | PI | % WC | ODOT CLASS (GI) | ppm SO4 <100 |
|---|---|---|---|---|---|---|---|---|---|---|---|---|---|---|---|---|---|---|
| B-011-0-14 | 01.00 | - | 02.50 | SS-1 | 11 | 67 | 4.0-4.5+ | 9 | 8 | 19 | 46 | 18 | 22 | 17 | 5 | 15 | A-4a (6) | |
| STA. 197+05, 15' RT | 02.50 | - | 04.00 | SS-2 | 11 | 33 | 2.5-4.5+ | | | | SAME AS SS-1 | | | | | 12 | A-4a (VISUAL) | |
| LATITUDE = 41.025112 | 04.00 | - | 04.50 | SS-3A | | 100 | 3.5-4.5+ | 5 | 8 | 32 | 36 | 19 | 29 | 21 | 8 | 19 | A-4a (4) | |
| LONGITUDE = -81.508598 | 04.50 | - | 05.50 | SS-3B | 14 | 100 | 1.00 | | | | SAME AS SS-3A | | | | | 19 | A-4a (VISUAL) | |
| | 05.50 | - | 07.00 | SS-4 | 6 | 67 | 1.60 | | | | SAME AS SS-3A | | | | | 14 | A-4a (VISUAL) | |
| B-010-1-14 | 01.00 | - | 02.50 | SS-1 | 14 | 33 | 4.0-4.5+ | | | | SAME AS SS-2 | | | | | 15 | A-6a (VISUAL) | |
| STA. 198+89, 17' LT | 03.50 | - | 05.00 | SS-2 | 22 | 78 | 4.5+ | 8 | 5 | 22 | 41 | 24 | 27 | 16 | 11 | 14 | A-6a (6) | |
| LATITUDE = 41.025282 | 07.50 | - | 08.00 | SS-3 | 18 | 100 | 1.6-2.5 | | | | SAME AS SS-2 | | | | | 15 | A-6a (VISUAL) | |
| LONGITUDE = -81.507161 | 08.50 | - | 10.00 | SS-4 | 9 | 89 | 2.0-3.0 | | | | SAME AS SS-2 | | | | | 15 | A-6a (VISUAL) | |
| B-010-0-14 | 01.50 | - | 03.00 | SS-1 | 19 | 100 | 4.5+ | 11 | 11 | 26 | 29 | 23 | 24 | 16 | 8 | 11 | A-4a (3) | |
| STA. 200+87, 53' RT | 03.00 | - | 04.50 | SS-2 | 76 | 100 | 4.5+ | | | | SAME AS SS-1 | | | | | 12 | A-4a (VISUAL) | |
| LATITUDE = 41.025282 | 04.50 | - | 06.00 | SS-3 | 66 | 100 | 4.5+ | 12 | 10 | 24 | 31 | 23 | 24 | 15 | 9 | 11 | A-4a (4) | |
| LONGITUDE = -81.507161 | 06.00 | - | 07.50 | SS-4 | 38 | 100 | 4.5+ | | | | SAME AS SS-3 | | | | | 10 | A-4a (VISUAL) | |
| B-009-2-17 | 01.00 | - | 02.50 | SS-1 | 14 | 89 | 4.5+ | | | | SAME AS SS-2 | | | | | 13 | A-4a (VISUAL) | |
| STA. 202+71, 16' RT | 3.5 | - | 5 | SS-2 | 15 | 100 | 3.0-4.5+ | 11 | 9 | 22 | 34 | 24 | 24 | 16 | 8 | 12 | A-4a (5) | |
| LATITUDE = 41.025648 | 6.00 | - | 7.50 | SS-3 | 37 | 100 | 4.5+ | | | | SAME AS SS-2 | | | | | 11 | A-4a (VISUAL) | |
| LONGITUDE = -81.506644 | 8.50 | - | 10.00 | SS-4 | 46 | 100 | 4.5+ | | | | SAME AS SS-2 | | | | | 11 | A-4a (VISUAL) | |
| B-009-0-14 | 1.50 | - | 3.00 | SS-1 | 27 | 100 | 4.5+ | 10 | 8 | 24 | 39 | 19 | 23 | 16 | 7 | 11 | A-4a (5) | |
| STA. 204+58, 64' RT | 3.00 | - | 4.50 | SS-2 | 47 | 100 | 4.5+ | | | | SAME AS SS-1 | | | | | 8 | A-4a (VISUAL) | |
| LATITUDE = 41.025929 | 4.50 | - | 6.00 | SS-3 | 30 | 67 | 3.0-4.5+ | 3 | 5 | 25 | 46 | 21 | 22 | 16 | 6 | 11 | A-4a (6) | |
| LONGITUDE = -81.506019 | 6.00 | - | 7.50 | SS-4 | 10 | 100 | 3.0-4.5+ | | | | SAME AS SS-3 | | | | | 15 | A-4a (VISUAL) | |
| B-042-0-17 | 2.50 | - | 4.00 | SS-1 | 11 | 100 | 1.75 | 8 | 9 | 28 | 42 | 13 | 21 | 14 | 7 | 15 | A-4a (4) | |
| STA. 204+77, 6' RT | 5.00 | - | 6.50 | SS-2 | 19 | 100 | 1.5 | | | | SAME AS SS-1 | | | | | 15 | A-4a (VISUAL) | |
| LATITUDE = 41.026071 | 7.50 | - | 9.00 | SS-3 | 26 | 100 | 3.75 - 4.5+ | 9 | 8 | 29 | 37 | 17 | 22 | 14 | 8 | 14 | A-4a (4) | |
| LONGITUDE = -81.506139 | 10.00 | - | 11.50 | SS-4 | 33 | 100 | 4.5+ | | | | SAME AS SS-3 | | | | | 12 | A-4a (VISUAL) | |
| | 12.50 | - | 14.00 | SS-5 | 21 | 100 | 3 | | | | SAME AS SS-3 | | | | | 15 | A-4a (VISUAL) | |
| | 15.00 | - | 15.42 | SS-6 | 50/5" | 100 | - | REDDISH BROWN, STONE FRAGMENTS WITH SAND | | | | | | | | 9 | A-1-b (VISUAL) | |
| B-041-0-17 | 1.50 | - | 3.00 | SS-1 | 9 | 56 | 4.5+ | 16 | 9 | 25 | 35 | 15 | 20 | 14 | 6 | 11 | A-4a (3) | |
| STA. 206+95, 18' RT | 3.00 | - | 4.50 | SS-2 | 16 | 44 | 4.5+ | | | | SAME AS SS-3 | | | | | 14 | A-4a (VISUAL) | 293 |
| LATITUDE = 41.026666 | 4.50 | - | 6.00 | SS-3 | 17 | 67 | 2.5 | 11 | 7 | 18 | 45 | 19 | 23 | 17 | 6 | 15 | A-4a (6) | |
| LONGITUDE = -81.505542 | 6.00 | - | 7.50 | SS-4 | 22 | 100 | - | | | | SAME AS SS-3 | | | | | 13 | A-4a (VISUAL) | |
| B-040-0-17 | 1.50 | - | 2.60 | SS-1A | 12 | 39 | - | BROWN AND BLACK, GRAVEL WITH SAND | | | | | | | | 6 | A-1-b (VISUAL) | 127 |
| STA. 211+19, 7' LT | 2.60 | - | 3.00 | SS-1B | - | - | 2.0 - 4.5+ | | | | SAME AS SS-2 | | | | | 13 | A-4a (VISUAL) | |
| LATITUDE = 41.027567 | 3.00 | - | 4.50 | SS-2 | 16 | 44 | 4.5+ | 8 | 10 | 20 | 43 | 19 | 22 | 16 | 6 | 12 | A-4a (5) | |
| LONGITUDE = -81.504938 | 4.50 | - | 6.00 | SS-3 | 9 | 89 | 4.25 | 6 | 4 | 25 | 48 | 17 | 22 | 16 | 6 | 16 | A-4a (6) | |
| | 6.00 | - | 7.50 | SS-4 | 12 | 83 | 4.5+ | | | | SAME AS SS-3 | | | | | 17 | A-4a (VISUAL) | |

SUMMARY OF SOIL TEST DATA
PROJECT BORINGS - RAMP B-1

| EXPLORATION NO., STATION & OFFSET | FROM | | TO | SAMPLE ID | N60 | % REC | HP tsf | % GR | % CS | % FS | % SILT | % CLAY | LL | PL | PI | % WC | ODOT CLASS (GI) | ppm SO4 <100 |
|---|---|---|---|---|---|---|---|---|---|---|---|---|---|---|---|---|---|---|
| B-047-2-17 | 1.50 | - | 3.00 | SS-1 | 14 | 6 | | | | SAME AS SS-3 | | | | | | 6 | A-1-b (VISUAL) | |
| STA.407+02, 13' LT | 3.00 | - | 4.50 | SS-2 | 8 | 44 | | | | SAME AS SS-3 | | | | | | 7 | A-1-b (VISUAL) | 320 |
| LATITUDE = 41.026500 | 4.50 | - | 6.00 | SS-3 | 6 | 50 | - | 59 | 12 | 11 | 13 | 5 | NP | NP | NP | 8 | A-1-b (0) | |
| LONGITUDE = -81.503555 | 6.00 | - | 7.10 | SS-4A | 8 | 78 | | | | SAME AS SS-3 | | | | | | 8 | A-1-b (VISUAL) | |
| | 7.10 | - | 7.50 | SS-4B | - | - | | BROWN, GRAVEL WITH SAND AND SILT | | | | | | | | 12 | A-2-4 (VISUAL) | |
| B-047-1-17 | 1.50 | - | 3.00 | SS-1 | 21 | 67 | 4.5+ | 14 | 8 | 20 | 42 | 16 | 21 | 16 | 5 | 12 | A-4a (5) | 127 |
| STA. 416+26, 23' LT | 3.00 | - | 4.50 | SS-2 | 29 | 89 | 4.5+ | 2 | 1 | 36 | 47 | 14 | 21 | 16 | 5 | 13 | A-4a (5) | |
| LATITUDE = 41.025514 | 4.50 | - | 6.00 | SS-3 | 17 | 78 | 4.5+ | | | | SAME AS SS-2 | | | | | 12 | A-4a (VISUAL) | |
| LONGITUDE = -81.504432 | 6.00 | - | 7.50 | SS-4 | 18 | 89 | 4.25 | | | | SAME AS SS-2 | | | | | 18 | A-4a (VISUAL) | |

SUMMARY OF SOIL TEST DATA
PROJECT BORINGS - RAMP B-2

| EXPLORATION NO., STATION & OFFSET | FROM | | TO | SAMPLE ID | N60 | % REC | HP tsf | % GR | % CS | % FS | % SILT | % CLAY | LL | PL | PI | % WC | ODOT CLASS (GI) | ppm SO4 <100 |
|---|---|---|---|---|---|---|---|---|---|---|---|---|---|---|---|---|---|---|
| B-037-0-17 | 0 | - | 1.5 | SS-1 | 28 | 100 | - | | | | SAME AS SS-2 | | | | | 14 | A-2-4 (VISUAL) | <100 |
| STA. 301+30, 16' RT | 1.5 | - | 3 | SS-2 | 80 | 56 | - | 34 | 5 | 30 | 23 | 8 | 19 | 13 | 6 | 8 | A-2-4 (0) | |
| LATITUDE = 41.025586 | 3 | - | 4.5 | SS-3 | 21 | 100 | - | | | | SAME AS SS-2 | | | | | 16 | A-2-4 (VISUAL) | |
| LONGITUDE = -81.501465 | 4.5 | - | 6 | SS-4 | 56 | 100 | - | | | | SAME AS SS-2 | | | | | 12 | A-2-4 (VISUAL) | |
| | 6 | - | 7.5 | SS-5 | 91 | 100 | - | 34 | 12 | 20 | 26 | 8 | 21 | 19 | 2 | 9 | A-2-4 (0) | |
| | 7.5 | - | 9 | SS-6 | 68 | 100 | - | | | | SAME AS SS-5 | | | | | 11 | A-2-4 (VISUAL) | |
| | 9 | - | 10.5 | SS-7 | 19 | 100 | 4.0 - 4.5+ | REDDISH BROWN & ORANGISH BROWN, SANDY SILT | | | | | | | | 13 | A-4a (VISUAL) | |
| B-038-0-17 | 0 | - | 1.5 | SS-1 | 9 | 100 | 2 | 22 | 8 | 18 | 35 | 17 | 33 | 21 | 12 | 18 | A-6a (4) | |
| STA. 304+37, 5' RT | 1.5 | - | 3 | SS-2 | 14 | 100 | 1.5 | | | | SAME AS SS-1 | | | | | 18 | A-6a (VISUAL) | |
| LATITUDE = 41.026203 | 3 | - | 4.5 | SS-3 | 7 | 100 | 0.5 | 11 | 8 | 24 | 32 | 25 | 43 | 21 | 22 | 32 | A-7-6 (10) | |
| LONGITUDE = -81.502227 | 4.5 | - | 6 | SS-4 | 10 | 56 | 0.5 | | | | SAME AS SS-3 | | | | | 25 | A-7-6 (VISUAL) | |
| | 6 | - | 7.5 | SS-5 | 10 | 0 | - | | | | | | | | | | | |
| | 7.5 | - | 9 | SS-6 | 9 | 100 | 1 | 20 | 12 | 26 | 34 | 8 | 20 | 14 | 6 | 16 | A-4a (1) | |
| | 9 | - | 10.5 | SS-7 | 27 | 100 | 2.25 | | | | SAME AS SS-6 | | | | | 17 | A-4a (VISUAL) | |
| B-003-0-14 | 02.00 | - | 03.50 | SS-1 | 18 | 67 | 3.5-4.5+ | 11 | 8 | 30 | 31 | 20 | 25 | 14 | 11 | 12 | A-6a (4) | |
| STA. 305+51, 39' RT | 03.50 | - | 05.00 | SS-2 | 20 | 100 | 2.5-4.5+ | | | | SAME AS SS-1 | | | | | 14 | A-6a (VISUAL) | |
| LATITUDE = 41.022357 | 05.00 | - | 06.50 | SS-3 | 65 | 100 | | 30 | 7 | 48 | 9 | 6 | NP | NP | NP | 6 | A-3a (0) | |
| LONGITUDE = -81.498070 | 06.50 | - | 08.00 | SS-4 | 46 | 67 | | | | | BROWN, SANDY SILT | | | | | 9 | A-4a (VISUAL) | |
| | 08.50 | - | 10.00 | SS-5 | 39 | 10 | | 46 | 7 | 27 | 12 | 8 | NP | NP | NP | 6 | A-1-b (0) | |
| | 11.00 | - | 12.50 | SS-6 | 25 | 100 | | | | | BROWN, SANDY SILT | | | | | 9 | A-4a (VISUAL) | |
| | 13.50 | | 15.00 | SS-7 | 16 | 67 | 3-3.5 | | | | BROWN, SANDY SILT | | | | | 14 | A-4a (VISUAL) | |
| B-004-0-14 | 02.50 | - | 04.00 | SS-1 | 6 | 33 | 2.1-3.0 | 11 | 9 | 29 | 29 | 22 | 26 | 17 | 9 | 17 | A-4a (3) | |
| STA. 7+58, 18' RT | 04.00 | - | 05.50 | SS-2 | 5 | 67 | 2.5-3.0 | 14 | 9 | 27 | 31 | 19 | 23 | 15 | 8 | 14 | A-4a (3) | |
| LATITUDE = 41.026965 | 05.50 | - | 07.00 | SS-3 | 3 | 100 | 0.6-1.0 | | | | SAME AS SS-2 | | | | | 20 | A-4a (VISUAL) | |
| LONGITUDE = -81.503282 | 07.00 | - | 08.50 | SS-4 | 4 | 67 | 0.7-1.0 | 12 | 9 | 30 | 29 | 20 | 24 | 16 | 8 | 15 | A-4a (3) | |
| | 08.50 | - | 10.00 | SS-5 | 3 | 33 | 1.0-1.6 | | | | SAME AS SS-4 | | | | | 15 | A-4a (VISUAL) | |
| B-007-0-14 | 01.50 | - | 03.00 | SS-1 | 15 | 67 | | 13 | 11 | 46 | 17 | 13 | NP | NP | NP | 10 | A-3a (0) | |
| STA. 9+95, 18' RT | 03.00 | - | 04.50 | SS-2 | 15 | 100 | 3.5-4.5 | | | | SAME AS SS-3 | | | | | 12 | A-4a (VISUAL) | |
| LATITUDE = 41.027080 | 04.50 | - | 06.00 | SS-3 | 13 | 67 | 4.0-4.5+ | 18 | 7 | 33 | 25 | 17 | 23 | 14 | 9 | 11 | A-4a (1) | |
| LONGITUDE = -81.504150 | 06.00 | - | 07.50 | SS-4 | 14 | 100 | 3.0-4.5 | | | | BROWN, SILT AND CLAY | | | | | 12 | A-6a (VISUAL) | |
| B-008-0-14 | 01.00 | - | 02.50 | SS-1 | 14 | 100 | 2.0-3.0 | 3 | 4 | 19 | 51 | 23 | 26 | 17 | 9 | 22 | A-4b (8) | |
| STA. 12+81, 18' RT | 02.50 | - | 04.00 | SS-2 | 41 | 100 | | 34 | 24 | 25 | 11 | 6 | NP | NP | NP | 8 | A-1-b (0) | |
| LATITUDE = 41.026786 | 04.00 | - | 05.50 | SS-3 | 19 | 67 | 1.0-2.0 | | | | BROWN, SANDY SILT | | | | | 15 | A-4a (VISUAL) | |
| LONGITUDE = -81.505137 | 05.50 | - | 07.00 | SS-4 | 18 | 67 | | | | | BROWN, GRAVEL WITH SAND | | | | | 12 | A-1-b (VISUAL) | |
| B-043-0-17 | 1.50 | - | 3.00 | SS-1 | 13 | 78 | 4.5+ | 5 | 6 | 21 | 48 | 20 | 23 | 16 | 7 | 15 | A-4a (7) | |
| STA. 29+35, 15' LT | 3.00 | - | 4.50 | SS-2 | 17 | 83 | 4.5+ | | | | SAME AS SS-1 | | | | | 15 | A-4a (VISUAL) | 240 |
| LATITUDE = 41.024876 | 4.50 | - | 6.00 | SS-3 | 16 | 100 | 3.75 | 5 | 8 | 23 | 44 | 20 | 24 | 17 | 7 | 15 | A-4a (6) | |
| LONGITUDE = -81.510252 | 6.00 | - | 7.50 | SS-4 | 21 | 100 | 4.5+ | | | | SAME AS SS-3 | | | | | 18 | A-4a (VISUAL) | |
| B-044-0-17 | 1.50 | - | 3.00 | SS-1 | 30 | 78 | - | 31 | 21 | 28 | 15 | 5 | NP | NP | NP | 7 | A-1-b (0) | |
| STA. 32+34, 29' RT | 3.00 | - | 4.50 | SS-2 | 17 | 89 | SAME AS SS-1 | | | | | | | | | 9 | A-1-b (VISUAL) | <100 |
| LATITUDE = 41.024912 | 4.50 | - | 6.00 | SS-3 | 22 | 100 | - | 12 | 22 | 49 | 11 | 6 | NP | NP | NP | 8 | A-3a (0) | |
| LONGITUDE = -81.511345 | 6.00 | - | 7.50 | SS-4 | 27 | 100 | - | | | | SAME AS SS-3 | | | | | 12 | A-3a (VISUAL) | |

SUMMARY OF SOIL TEST DATA
PROJECT BORINGS - RAMP C

| EXPLORATION NO., STATION & OFFSET | FROM | | TO | SAMPLE ID | N60 | % REC | HP tsf | % GR | % CS | % FS | % SILT | % CLAY | LL | PL | PI | % WC | ODOT CLASS (GI) | ppm SO4 <100 |
|---|---|---|---|---|---|---|---|---|---|---|---|---|---|---|---|---|---|---|
| B-029-0-17 | 01.50 | - | 03.00 | SS-1 | 9 | 78 | - | 73 | 11 | 8 | 6 | 2 | NP | NP | NP | 6 | A-1-a (0) | 160 |
| STA. 584+65, 1' RT | 03.00 | - | 04.50 | SS-2 | 8 | 22 | 4 | | | | SAME AS SS-3 | | | | | 11 | A-4a (VISUAL) | |
| LATITUDE = 41.022082 | 04.50 | - | 06.00 | SS-3 | 22 | 67 | 4.5+ | 8 | 7 | 24 | 35 | 26 | 26 | 16 | 10 | 14 | A-4a (5) | |
| LONGITUDE = -81.497363 | 06.00 | - | 07.50 | SS-4 | 21 | 89 | 4.5+ | | | | SAME AS SS-3 | | | | | 13 | A-4a (VISUAL) | |
| B-029-3-17 | 01.50 | - | 03.00 | SS-1 | 13 | 56 | - | 36 | 26 | 17 | 15 | 6 | NP | NP | NP | 5 | A-1-b (0) | 353 |
| STA. 588+74, 2' RT | 03.00 | - | 03.80 | SS-2A | 5 | 56 | - | | | | SAME AS SS-1 | | | | | 6 | A-1-b (VISUAL) | |
| LATITUDE = 41.023188 | 03.80 | - | 04.50 | SS-2B | - | - | 4.00 | | | | SAME AS SS-3 | | | | | 17 | A-4a (VISUAL) | |
| LONGITUDE = -81.497457 | 04.50 | - | 06.00 | SS-3 | 16 | 67 | 4.25 | 22 | 7 | 16 | 36 | 19 | 28 | 18 | 10 | 16 | A-4a (4) | |
| | 06.00 | - | 07.50 | SS-4 | 18 | 72 | 4.50 | | | | SAME AS SS-3 | | | | | 14 | A-4a (VISUAL) | |
| B-051-1-17 | 1.50 | - | 3.00 | SS-1 | 9 | 56 | 3.00 | 12 | 10 | 29 | 29 | 20 | 22 | 14 | 8 | 13 | A-4a (3) | |
| STA. 596+80, 3' RT | 3.00 | - | 4.50 | SS-2 | 13 | 78 | 4.5+ | 11 | 9 | 26 | 33 | 21 | 22 | 15 | 7 | 11 | A-4a (4) | 193 |
| LATITUDE = 41.025149 | 4.50 | - | 6.00 | SS-3 | 26 | 83 | 4.5+ | | | | SAME AS SS-2 | | | | | 13 | A-4a (VISUAL) | |
| LONGITUDE = -81.496312 | 6.00 | - | 7.50 | SS-4 | 26 | 89 | 4.5+ | | | | SAME AS SS-2 | | | | | 11 | A-4a (VISUAL) | |
| B-054-1-17 | 1.50 | - | 2.00 | SS-1A | 10 | 67 | 3.25 | | | | BROWN, SANDY SILT | | | | | 16 | A-4a (VISUAL) | |
| STA. 600+79, 3' RT | 2.00 | - | 3.00 | SS-1B | - | - | - | | | | SAME AS SS-2 | | | | | 8 | A-1-a (VISUAL) | <100 |
| LATITUDE = 41.025577 | 3.00 | - | 4.50 | SS-2 | 14 | 78 | - | 65 | 13 | 12 | 7 | 3 | NP | NP | NP | 7 | A-1-a (0) | |
| LONGITUDE = -81.495003 | 4.50 | - | 6.00 | SS-3 | 8 | 83 | 2.25 | 21 | 8 | 16 | 38 | 17 | 25 | 18 | 7 | 16 | A-4a (4) | |
| | 6.00 | - | 7.50 | SS-4 | 12 | 83 | 4.5+ | | | | SAME AS SS-3 | | | | | 13 | A-4a (VISUAL) | |
| B-054-2-17 | 1.50 | - | 3.00 | SS-1 | 12 | 33 | | | | | BROWN, COARSE AND FINE SAND | | | | | 12 | A-3a (VISUAL) | 807 |
| STA. 604+80, 6' RT | 3.00 | - | 4.10 | SS-2A | 18 | 67 | - | 43 | 21 | 17 | 12 | 7 | NP | NP | NP | 10 | A-1-b (0) | |
| LATITUDE = 41.025707 | 4.10 | - | 4.50 | SS-2B | - | - | 1.75 | | | | SAME AS SS-3 | | | | | 17 | A-4a (VISUAL) | |
| LONGITUDE = -81.493562 | 4.50 | - | 6.00 | SS-3 | 16 | 72 | 4.5+ | 11 | 10 | 22 | 33 | 24 | 26 | 16 | 10 | 13 | A-4a (4) | |
| | 6.00 | - | 7.50 | SS-4 | 18 | 89 | 4.25 | | | | SAME AS SS-3 | | | | | 14 | A-4a (VISUAL) | |

SUMMARY OF SOIL TEST DATA
PROJECT BORINGS - RAMP C-1

| EXPLORATION NO., STATION & OFFSET | FROM | | TO | SAMPLE ID | N60 | % REC | HP tsf | % GR | % CS | % FS | % SILT | % CLAY | LL | PL | PI | % WC | ODOT CLASS (GI) | ppm SO4 <100 |
|---|---|---|---|---|---|---|---|---|---|---|---|---|---|---|---|---|---|---|
| B-034-0-17 | 01.50 | - | 03.00 | SS-1 | 20 | 89 | - | 17 | 19 | 24 | 27 | 13 | 22 | 16 | 6 | 10 | A-4a (1) | |
| STA. 692+91, 6' LT | 03.00 | - | 04.50 | SS-2 | 22 | 100 | 4.5+ | | | | SAME AS SS-1 | | | | | 14 | A-4a (VISUAL) | 113 |
| LATITUDE = 41.024089 | 04.50 | - | 06.00 | SS-3 | 25 | 100 | 4.5+ | 1 | 6 | 9 | 63 | 21 | 28 | 20 | 8 | 13 | A-4b (8) | |
| LONGITUDE = -81.499080 | 06.00 | - | 07.50 | SS-4 | 35 | 89 | 4.5+ | | | | SAME AS SS-3 | | | | | 11 | A-4b (VISUAL) | |
| B-034-1-17 | 01.80 | - | 03.00 | SS-1B | - | - | 2.25 | | | | SAME AS SS-2 | | | | | 14 | A-6a (VISUAL) | <100 |
| STA. 680+91, 4' RT | 03.00 | - | 04.50 | SS-2 | 16 | 100 | 3.00 | 6 | 6 | 23 | 38 | 27 | 27 | 15 | 12 | 16 | A-6a (7) | |
| LATITUDE = 41.025349 | 04.50 | - | 06.00 | SS-3 | 10 | 33 | 2.75 | 5 | 10 | 31 | 30 | 24 | 21 | 14 | 7 | 14 | A-4a (4) | |
| LONGITUDE = -81.499674 | 06.00 | - | 07.50 | SS-4 | 16 | 28 | 1.50 | | | | SAME AS SS-4 | | | | | 16 | A-4a (VISUAL) | |
| B-034-2-17 | 01.70 | - | 03.00 | SS-1B | - | - | 4.5+ | 15 | 10 | 27 | 28 | 20 | 19 | 13 | 6 | 11 | A-4a (3) | 140 |
| STA. 684+89, 16' RT | 03.00 | - | 04.50 | SS-2 | 14 | 44 | - | 19 | 19 | 27 | 20 | 15 | 19 | 13 | 6 | 10 | A-2-4 (0) | |
| LATITUDE = 41.025213 | 04.50 | - | 06.00 | SS-3 | 17 | 39 | 4.5+ | | | | BROWNISH GRAY, SANDY SILT | | | | | 15 | A-4a (VISUAL) | |
| LONGITUDE = -81.498263 | 06.00 | - | 07.50 | SS-4 | 17 | 100 | 4.25 | | | | BROWNISH GRAY, SANDY SILT | | | | | 14 | A-4a (VISUAL) | |
| B-034-3-17 | 01.50 | - | 03.00 | SS-1 | 21 | 100 | - | 17 | 17 | 45 | 11 | 10 | NP | NP | NP | 9 | A-3a (0) | <100 |
| STA. 688+91, 7' LT | 03.00 | - | 04.50 | SS-2 | 17 | 44 | - | 14 | 17 | 47 | 12 | 10 | NP | NP | NP | 10 | A-3a (0) | |
| LATITUDE = 41.024321 | 04.50 | - | 06.00 | SS-3 | 17 | 39 | - | | | | SAME AS SS-2 | | | | | 13 | A-3a (VISUAL) | |
| LONGITUDE = -81.497791 | 06.00 | - | 07.50 | SS-4 | 25 | 100 | - | | | | SAME AS SS-2 | | | | | 14 | A-3a (VISUAL) | |
| B-036-0-17 | 01.50 | - | 03.00 | SS-1 | 27 | 89 | - | | | | SAME AS SS-2 | | | | | 7 | A-1-b (VISUAL) | 480 |
| STA. 696+87, 4' RT | 03.00 | - | 04.50 | SS-2 | 18 | 78 | - | 18 | 33 | 38 | 9 | 2 | NP | NP | NP | 7 | A-1-b (0) | |
| LATITUDE = 41.024876 | 04.50 | - | 06.00 | SS-3 | 8 | 44 | - | 64 | 9 | 14 | 10 | 3 | NP | NP | NP | 11 | A-1-a (0) | |
| LONGITUDE = -81.500072 | 06.00 | - | 07.50 | SS-4 | 23 | 100 | - | | | | SAME AS SS-3 | | | | | 13 | A-1-a (VISUAL) | |

SUMMARY OF SOIL TEST DATA
PROJECT BORINGS - RAMP C-2

| EXPLORATION NO., STATION & OFFSET | FROM | | TO | SAMPLE ID | N60 | % REC | HP tsf | % GR | % CS | % FS | % SILT | % CLAY | LL | PL | PI | % WC | ODOT CLASS (GI) | ppm SO4 <100 |
|---|---|---|---|---|---|---|---|---|---|---|---|---|---|---|---|---|---|---|
| B-050-0-17 | 01.50 | - | 03.00 | SS-1 | 12 | 67 | 3.25 | 23 | 11 | 20 | 29 | 17 | 25 | 16 | 9 | 12 | A-4a (2) | |
| STA. 796+94, 22' LT | 03.00 | - | 04.50 | SS-2 | 20 | 100 | 4.5+ | | | | SAME AS SS-1 | | | | | 13 | A-4a (VISUAL) | <100 |
| LATITUDE = 41.024609 | 04.50 | - | 05.00 | SS-3A | 33 | 89 | 4.00 | | | | SAME AS SS-1 | | | | | 14 | A-4a (VISUAL) | |
| LONGITUDE = -81.500873 | 05.00 | - | 06.00 | SS-3B | - | - | - | 8 | 13 | 60 | 12 | 7 | NP | NP | NP | 7 | A-3a (0) | |
| | 06.00 | - | 07.50 | SS-4 | 36 | 78 | - | | | | SAME AS SS-3B | | | | | 9 | A-3a (VISUAL) | |
| B-051-0-17 | 00.00 | - | 01.50 | SS-1 | 12 | 78 | 4.5+ | 9 | 10 | 32 | 34 | 15 | 30 | 20 | 10 | 10 | A-4a (3) | |
| STA. 785+15, 22' LT | 01.50 | - | 03.00 | SS-2 | 16 | 100 | 4.5+ | | | | SAME AS SS-1 | | | | | 9 | A-4a (VISUAL) | <100 |
| LATITUDE = 41.024313 | 03.00 | - | 04.50 | SS-3 | 22 | 83 | 4.5+ | 10 | 8 | 33 | 32 | 17 | 22 | 14 | 8 | 4 | A-4a (3) | |
| LONGITUDE = -81.497254 | 04.50 | - | 06.00 | SS-4 | 21 | 94 | 4.5+ | | | | SAME AS SS-3 | | | | | 12 | A-4a (VISUAL) | |
| | 06.00 | - | 07.50 | SS-5 | 23 | 89 | 4.5+ | | | | SAME AS SS-3 | | | | | 17 | A-4a (VISUAL) | |
| | 07.50 | - | 09.00 | SS-6 | 17 | 89 | 3.75 | 2 | 6 | 24 | 42 | 26 | 28 | 18 | 10 | 16 | A-4a (7) | |
| | 09.00 | - | 10.50 | SS-7 | 25 | 100 | 4.25 | | | | SAME AS SS-6 | | | | | 13 | A-4a (VISUAL) | |

SUMMARY OF SOIL TEST DATA
PROJECT BORINGS - RAMP D

| EXPLORATION NO., STATION & OFFSET | FROM | | TO | SAMPLE ID | N60 | % REC | HP tsf | % GR | % CS | % FS | % SILT | % CLAY | LL | PL | PI | % WC | ODOT CLASS (GI) | ppm SO4 <100 |
|---|---|---|---|---|---|---|---|---|---|---|---|---|---|---|---|---|---|---|
| B-054-0-17 | 01.50 | - | 02.50 | SS-1A | 23 | 67 | 4.5+ | | | | BROWN, SANDY SILT | | | | | 13 | A-4a (VISUAL) | 167 |
| STA. 891+79, 19' LT | 02.50 | - | 03.00 | SS-1B | - | - | - | | | | SAME AS SS-2 | | | | | 8 | A-2-4 (VISUAL) | |
| LATITUDE = 41.025755 | 03.00 | - | 04.50 | SS-2 | 16 | 78 | - | 36 | 12 | 17 | 24 | 11 | 21 | 17 | 4 | 9 | A-2-4 (0) | |
| LONGITUDE = -81.497216 | 04.50 | - | 06.00 | SS-3 | 22 | 100 | 4.5+ | 4 | 8 | 24 | 38 | 26 | 26 | 16 | 10 | 11 | A-4a (6) | |
| | 06.00 | - | 07.50 | SS-4 | 26 | 89 | 4.5+ | | | | SAME AS SS-3 | | | | | 13 | A-4a (VISUAL) | |
| B-053-0-17 | 01.50 | - | 03.00 | SS-1 | 13 | 89 | 3.75 | 6 | 7 | 23 | 44 | 20 | 24 | 17 | 7 | 15 | A-4a (6) | |
| STA. 895+33, 27' LT | 03.00 | - | 04.50 | SS-2 | 12 | 83 | 2.00 | | | | SAME AS SS-1 | | | | | 15 | A-4a (VISUAL) | 287 |
| LATITUDE = 41.025773 | 04.50 | - | 06.00 | SS-3 | 20 | 89 | 4.0 - 4.5+ | 10 | 8 | 27 | 34 | 21 | 25 | 15 | 10 | 13 | A-4a (4) | |
| LONGITUDE = -81.498507 | 06.00 | - | 07.50 | SS-4 | 20 | 94 | 4.5+ | | | | SAME AS SS-3 | | | | | 12 | A-4a (VISUAL) | |
| | 07.50 | - | 09.00 | SS-5 | 22 | 89 | 4.5+ | | | | SAME AS SS-6 | | | | | 12 | A-4a (VISUAL) | |
| | 09.00 | - | 10.50 | SS-6 | 27 | 89 | 4.5+ | 7 | 7 | 30 | 33 | 23 | 24 | 15 | 9 | 11 | A-4a (4) | |
| B-052-0-17 | 01.50 | - | 03.00 | SS-1 | 14 | 67 | 4.5+ | 11 | 14 | 33 | 28 | 14 | 18 | 13 | 5 | 9 | A-4a (1) | |
| STA. 899+01, 4' RT | 03.00 | - | 04.50 | SS-2 | 18 | 56 | 4.5+ | | | | SAME AS SS-1 | | | | | 10 | A-4a (VISUAL) | 240 |
| LATITUDE = 41.026005 | 04.50 | - | 06.00 | SS-3 | 22 | 56 | 4.5+ | 11 | 8 | 27 | 32 | 22 | 24 | 15 | 9 | 11 | A-4a (4) | |
| LONGITUDE = -81.499812 | 06.00 | - | 07.50 | SS-4 | 18 | 33 | 4.5+ | | | | SAME AS SS-3 | | | | | 11 | A-4a (VISUAL) | |
| B-052-1-17 | 01.50 | - | 03.00 | SS-1 | 14 | 33 | - | | | | SAME AS SS-2 | | | | | 6 | A-1-a (VISUAL) | <100 |
| STA. 902+70, 5' RT | 03.00 | - | 04.50 | SS-2 | 10 | 44 | - | 69 | 13 | 8 | 7 | 3 | NP | NP | NP | 6 | A-1-a (0) | |
| LATITUDE = 41.026351 | 04.50 | - | 05.30 | SS-3A | 21 | 78 | - | | | | SAME AS SS-2 | | | | | 5 | A-1-a (VISUAL) | |
| LONGITUDE = -81.501083 | 05.30 | - | 06.00 | SS-3B | - | - | 4.5+ | | | | SAME AS SS-4 | | | | | 13 | A-4a (VISUAL) | |
| | 06.00 | - | 07.50 | SS-4 | 23 | 83 | 4.5+ | 8 | 8 | 27 | 33 | 24 | 24 | 16 | 8 | 12 | A-4a (4) | |
| B-052-2-17 | 03.00 | - | 04.50 | SS-2 | 10 | 44 | | | | | BROWN, COARSE AND FINE SAND | | | | | 11 | A-3a (VISUAL) | 273 |
| STA. 906+79, 7' RT | 04.50 | - | 06.00 | SS-3 | 12 | 56 | - | 35 | 20 | 28 | 10 | 7 | NP | NP | NP | 9 | A-1-b (0) | |
| LATITUDE =41.026903 | 06.00 | - | 07.50 | SS-4 | 13 | 72 | | | | | SAME AS SS-3 | | | | | 10 | A-1-b (VISUAL) | |
| LONGITUDE = -81.503303 | | | | | | | | | | | | | | | | | | |
| B-052-3-17 | 01.50 | - | 03.00 | SS-1 | 10 | 100 | - | 33 | 39 | 21 | 4 | 3 | NP | NP | NP | 8 | A-1-b (0) | 2640 |
| STA. 910+78, 2' RT | 03.00 | - | 04.50 | SS-2 | 10 | 67 | 1.50 | 12 | 20 | 29 | 23 | 16 | 22 | 15 | 7 | 13 | A-4a (1) | |
| LATITUDE = 41.027731 | 04.50 | - | 06.00 | SS-3 | 14 | 78 | 2.25 | | | | SAME AS SS-2 | | | | | 16 | A-4a (VISUAL) | |
| LONGITUDE = -81.502349 | 06.00 | - | 07.50 | SS-4 | 17 | 56 | - | | | | SAME AS SS-2 | | | | | 13 | A-2-4 (VISUAL) | |

P:\17-0129 (106002 SUM-76-10.95 Part 3 - SUM-77_277_224)\106002\geotechnical\sheets\106002IP009.dgn Sheet 1/7/2021 11:12:03 PM karens

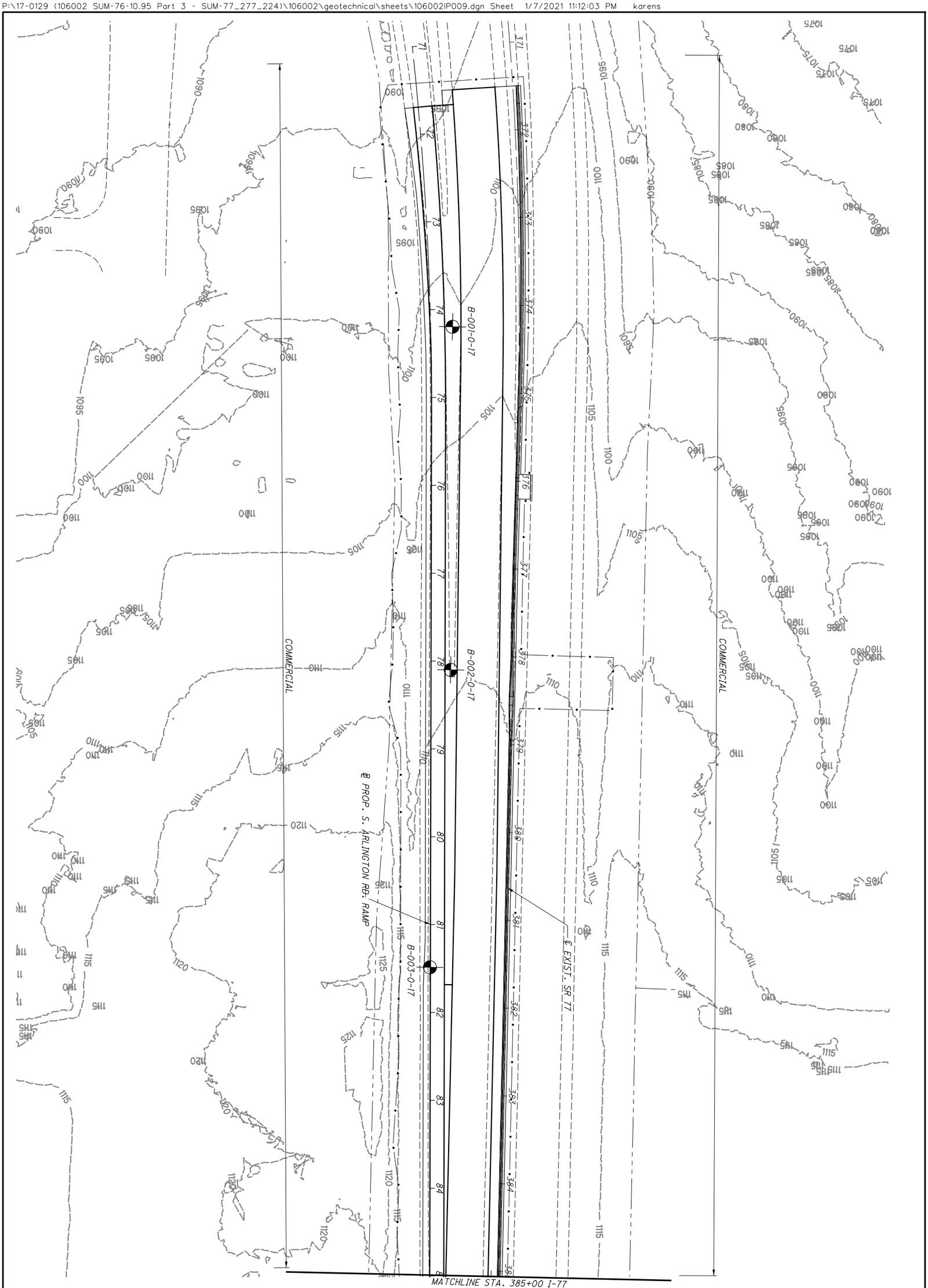


| | | | | | |
|---|---|---|---|---|---|
| 12/209 | SUM-77/277/224 VARIOUS | SOIL PROFILE I-77 BEGIN TO STA. 385+00 | DRAWN MJ CHECKED BPA | 0 50 25 100 HORIZONTAL SCALE IN FEET | N |

P:\17-0129 (106002 SUM-76-10.95 Part 3 - SUM-77_277_224)\106002\geotechnical\sheets\106002IF009.dgn Sheet 1/7/2021 11:12:07 PM karens

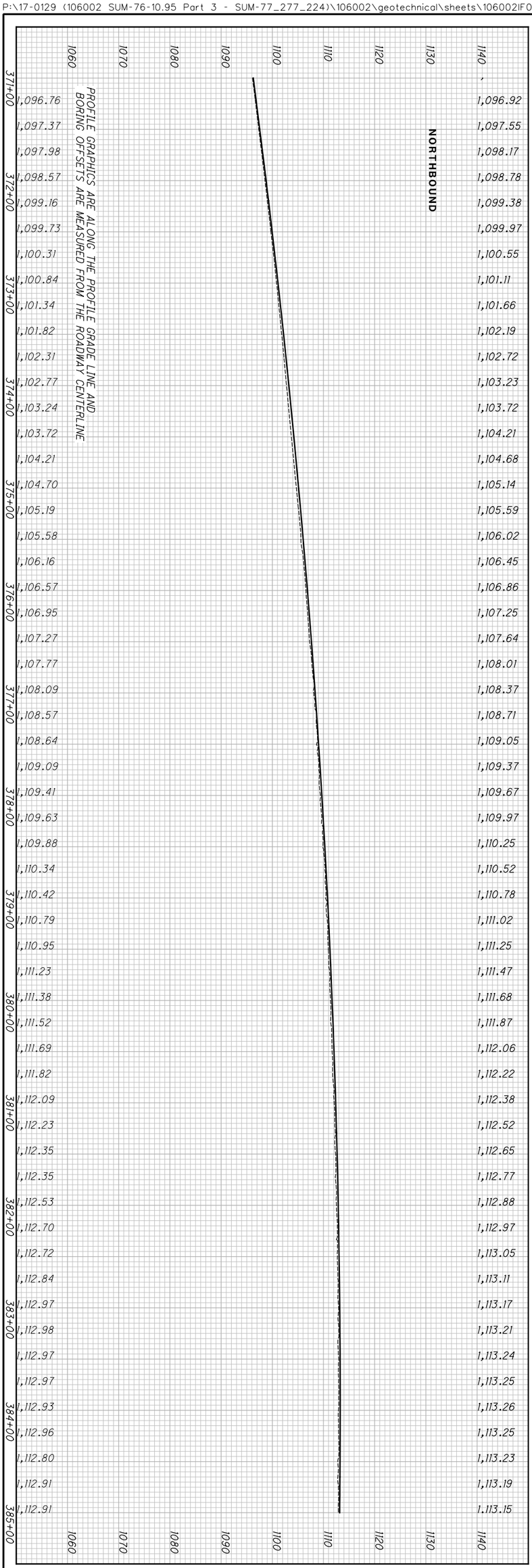


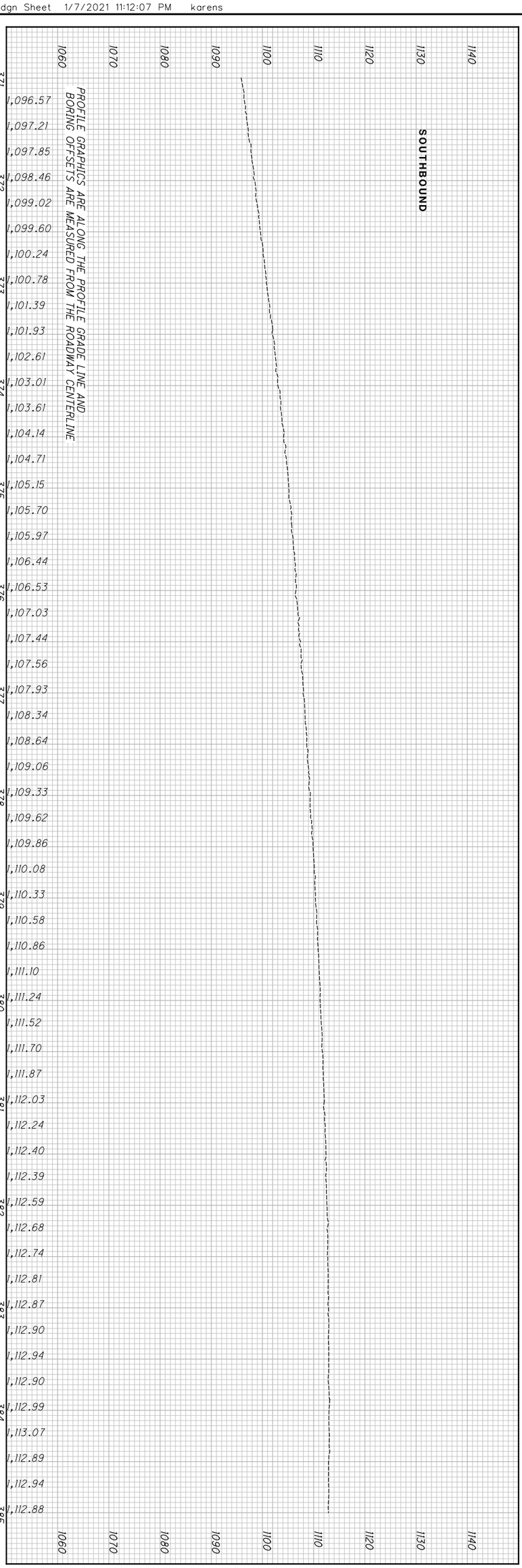


| | | | | |
|---|---|---|---|---|
| 13/209 | SUM-77/277/224<br>VARIOUS | SOIL PROFILE<br>I-77 BEGIN TO STA. 385+00 | DRAWN ZM<br>CHECKED BPA | 0 25 50 100<br>HORIZONTAL SCALE IN FEET |

P:\17-0129 (106002 SUM-76-10.95 Part 3 - SUM-77_277_224)\106002\geotechnical\sheets\106002IP010.dgn Sheet 1/7/2021 11:12:35 PM karens

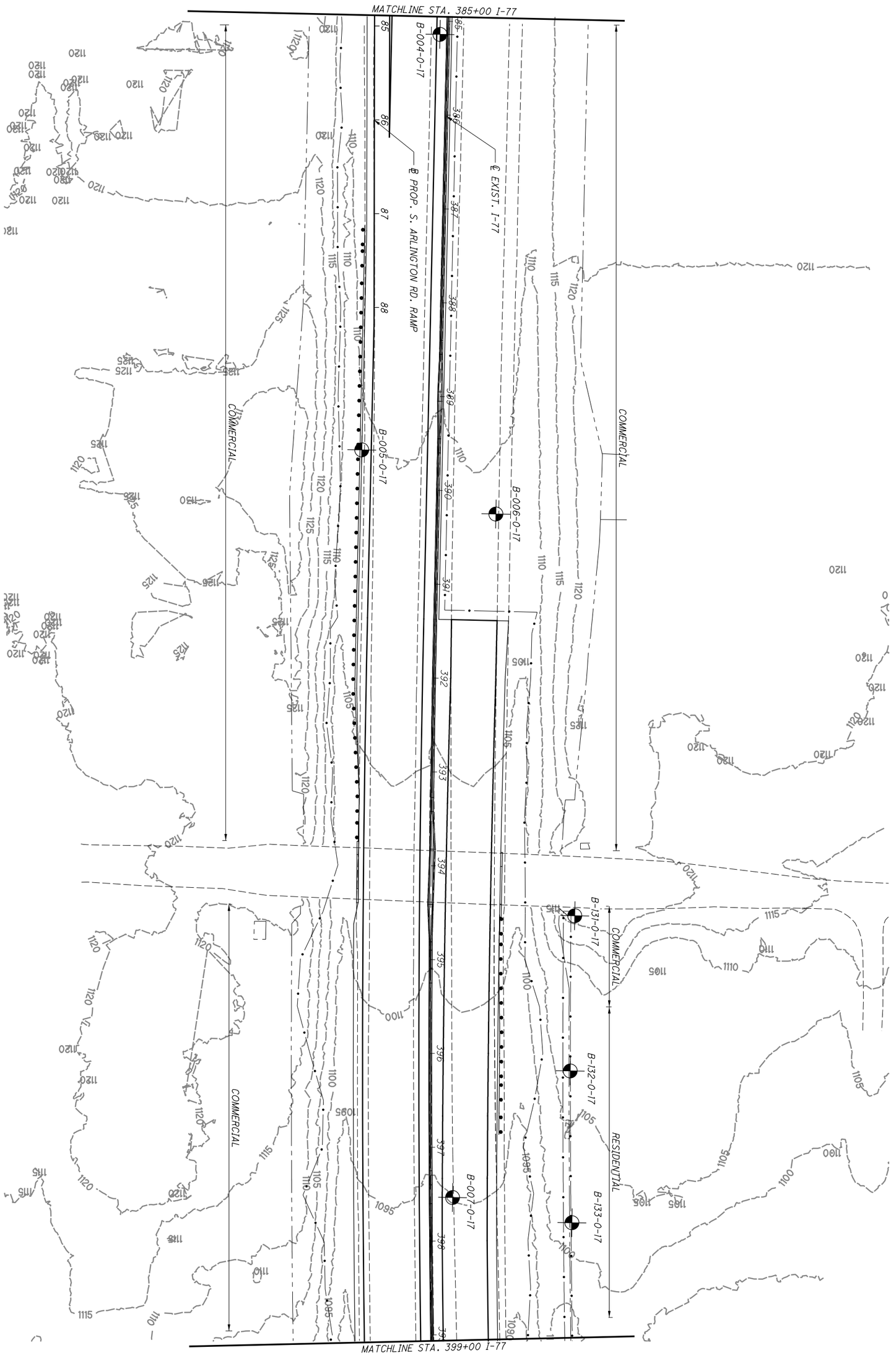


| | | | | | |
|---|---|---|---|---|---|
| | 14/209 | **SUM-77/277/224**<br>**VARIOUS** | **SOIL PROFILE**<br>**I-77 STA. 385+00 TO STA. 399+00** | DRAWN MJ<br>CHECKED BPA | 0 50<br>25 100<br>HORIZONTAL SCALE IN FEET |

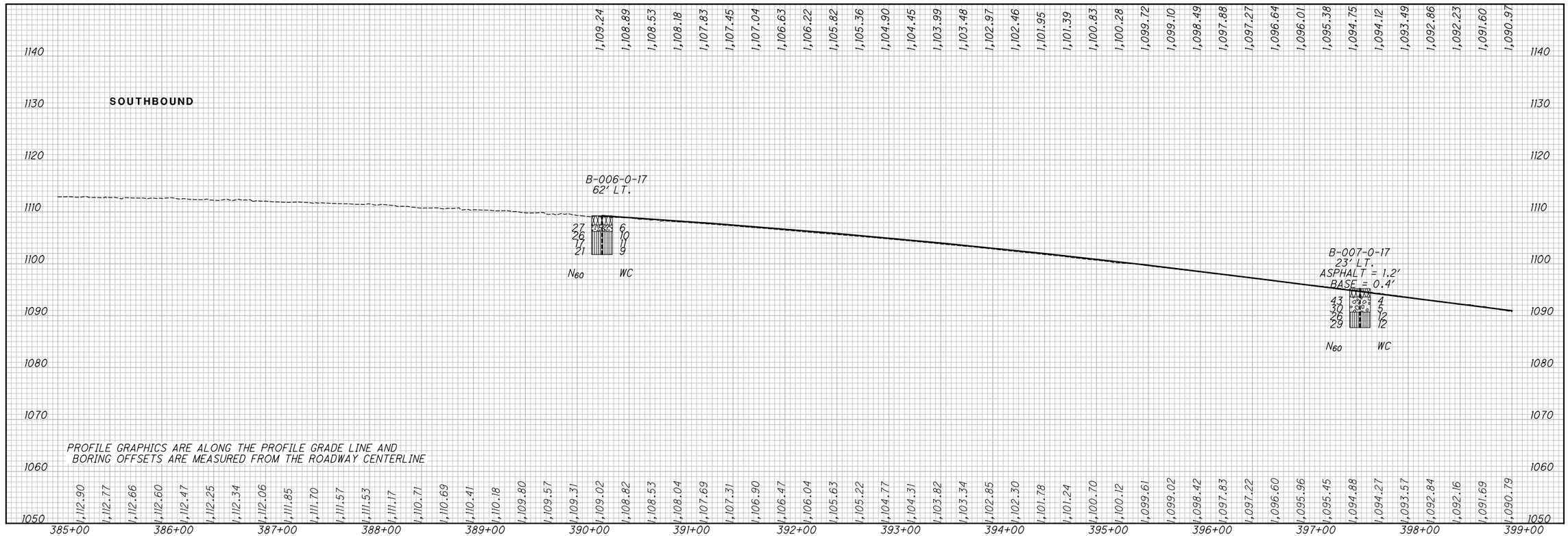


HORIZONTAL SCALE IN FEET
0 25 50 100

DRAWN ZM
CHECKED BPA

# SOIL PROFILE
## I-77 STA. 385+00 TO STA. 399+00

SUM-77/277/224
VARIOUS

15 / 209

1

P:\17-0129 (106002 SUM-76-10.95 Part 3 - SUM-77_277_224)\106002\geotechnical\sheets\106002IF010.dgn karens 1/7/2021 11:12:39 PM Sheet

P:\17-0129 (106002 SUM-76-10.95 Part 3 - SUM-77_277_224)\106002\geotechnical\sheets\106002IP011.dgn Sheet 1/7/2021 11:13:06 PM karens

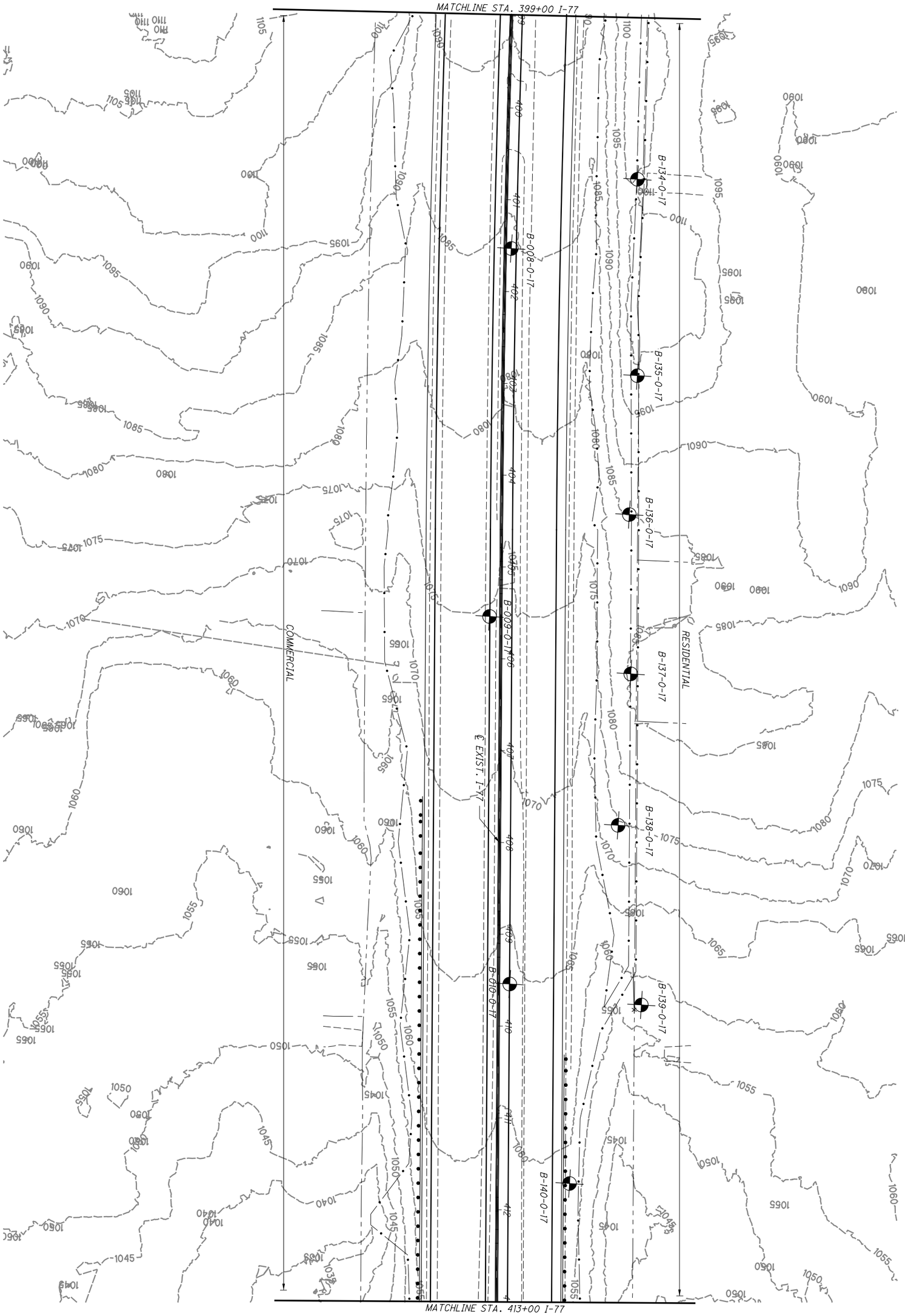


| | | | | | |
|---|---|---|---|---|---|
| 16 / 209 | SUM-77 / 277 / 224<br>VARIOUS | SOIL PROFILE<br>I-77 STA. 399+00 TO 413+00 | DRAWN MJ<br>CHECKED BPA | 0 50<br>25 100<br>HORIZONTAL SCALE IN FEET | N |

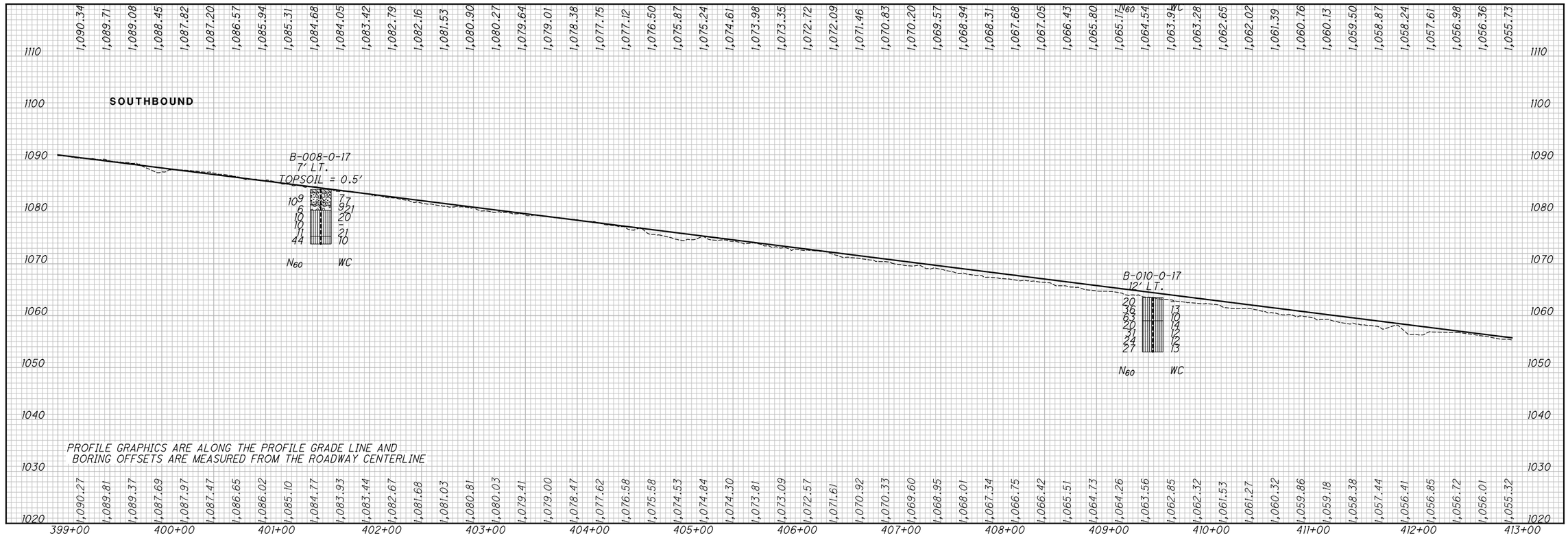


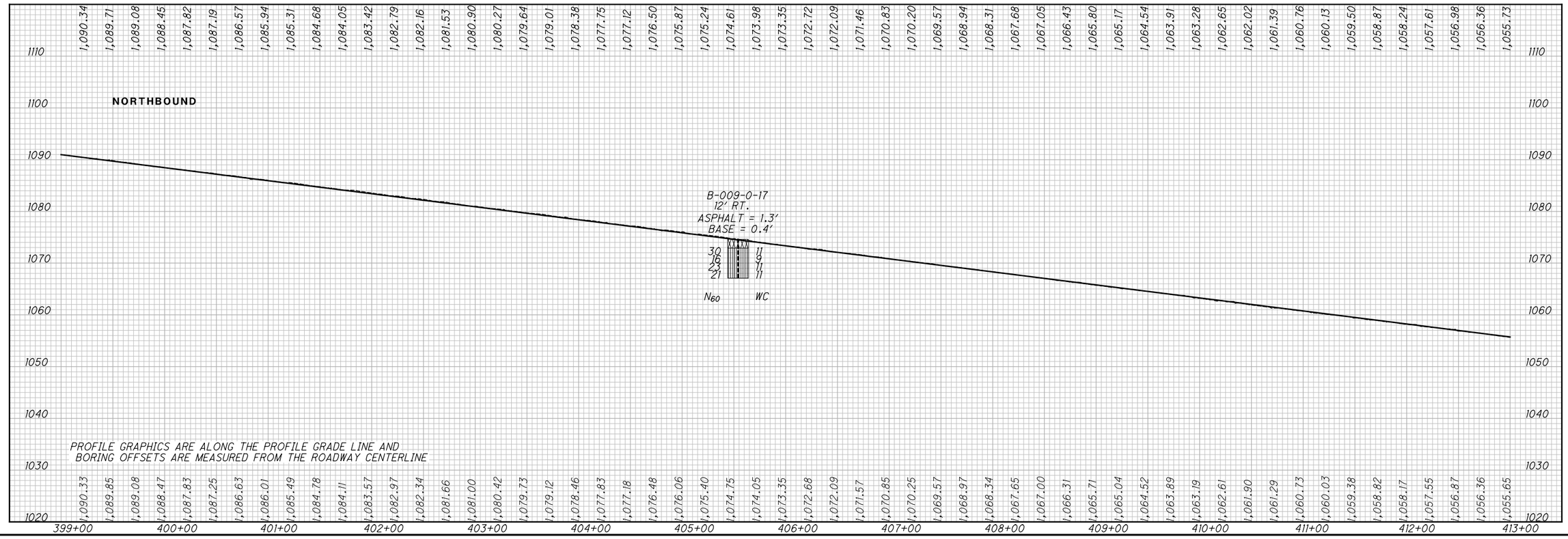


0 25 50 100
HORIZONTAL SCALE IN FEET

DRAWN ZM
CHECKED BPA

# SOIL PROFILE
## I-77 STA. 399+00 TO STA. 413+00

SUM-77/277/224
VARIOUS

17 / 209

P:\17-0129 (106002 SUM-76-10.95 Part 3 - SUM-77_277_224)\106002\geotechnical\sheets\106002IF011.dgn 1/7/2021 11:13:11 PM korens

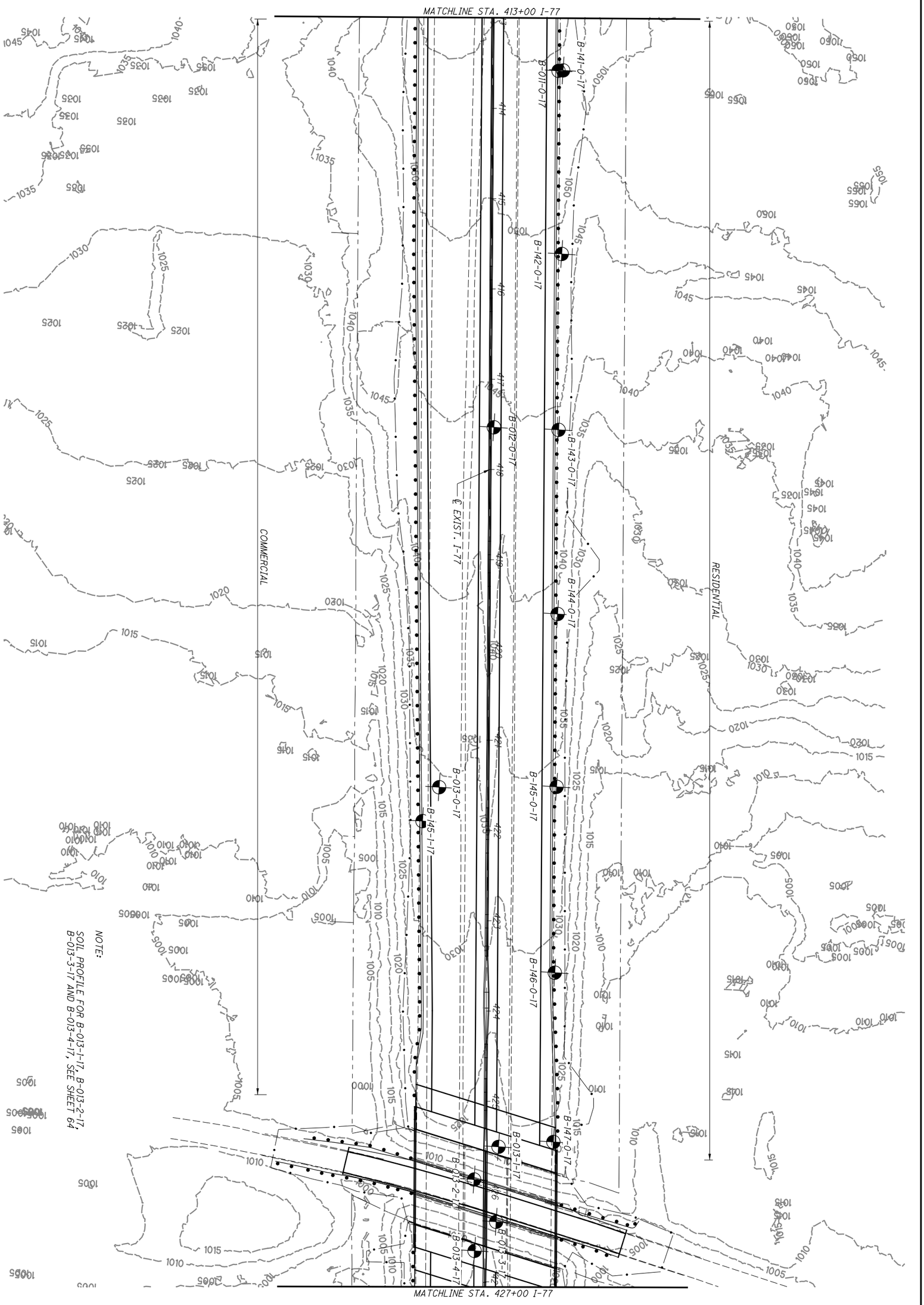


| | | | | | |
|---|---|---|---|---|---|
| 18 / 209 | SUM-77 / 277 / 224<br>VARIOUS | SOIL PROFILE<br>I-77 STA. 413+00 TO STA. 427+00 | DRAWN MJ<br>CHECKED BPA | 0 50<br>25 100<br>HORIZONTAL SCALE IN FEET | N |

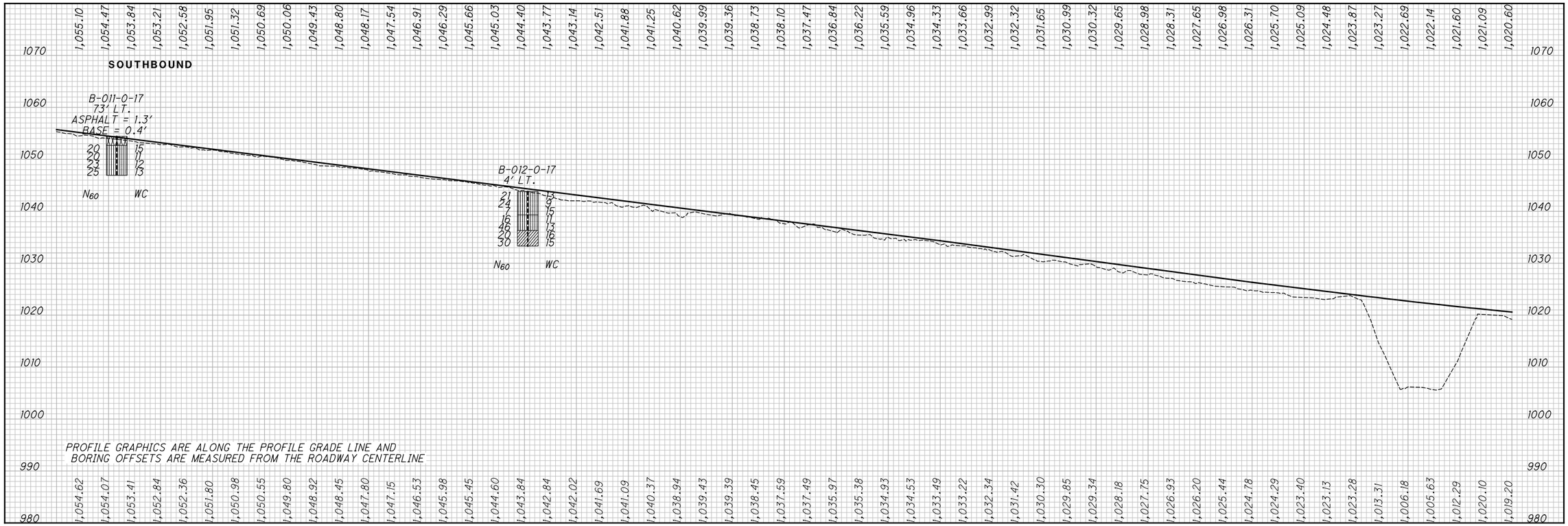


HORIZONTAL SCALE IN FEET
0 25 50 100

DRAWN ZM
CHECKED BPA

# SOIL PROFILE
## I-77 STA. 413+00 TO STA. 427+00

SUM-77/277/224
VARIOUS

19 / 209

P:\17-0129 (106002 SUM-76-10.95 Part 3 - SUM-77_277_224)\106002\geotechnical\sheets\106002IF012.dgn Sheet 1/7/2021 11:13:43 PM karens

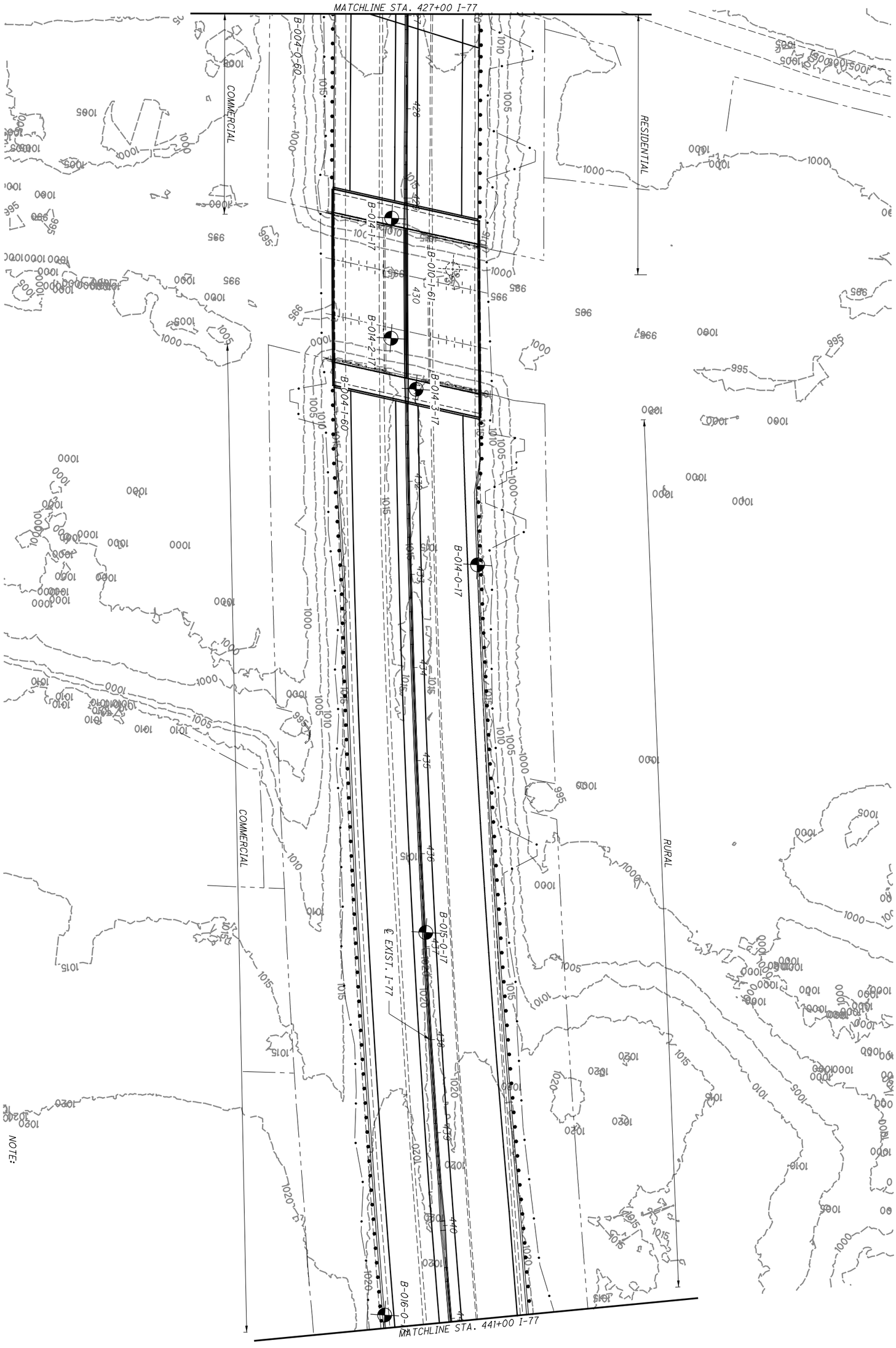


NOTE:
SOIL PROFILE FOR B-014-1-17, B-014-2-17, B-014-3-17 AND B-010-1-61, SEE SHEET 66.

| | | | | | |
|---|---|---|---|---|---|
| | 20/209 | SUM-77/277/224<br>VARIOUS | SOIL PROFILE<br>I-77 STA. 427+00 TO STA. 441+00 | DRAWN MJ<br>CHECKED BPA | 0 50<br>25 100<br>HORIZONTAL SCALE IN FEET |

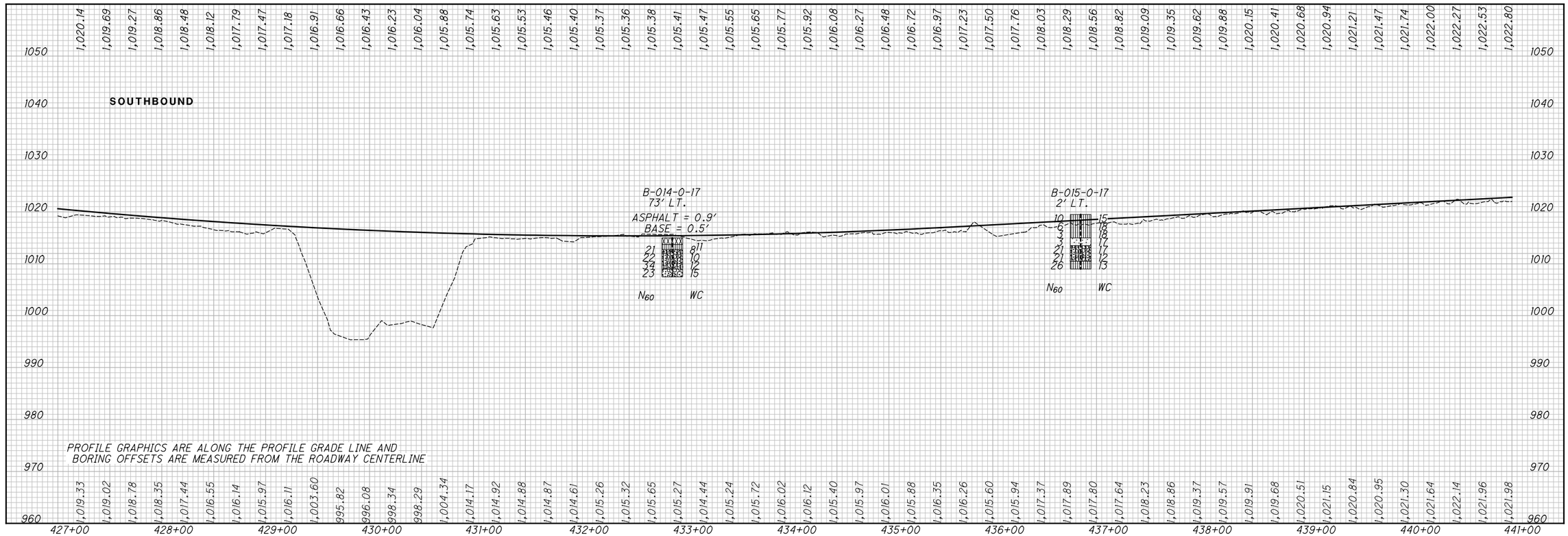


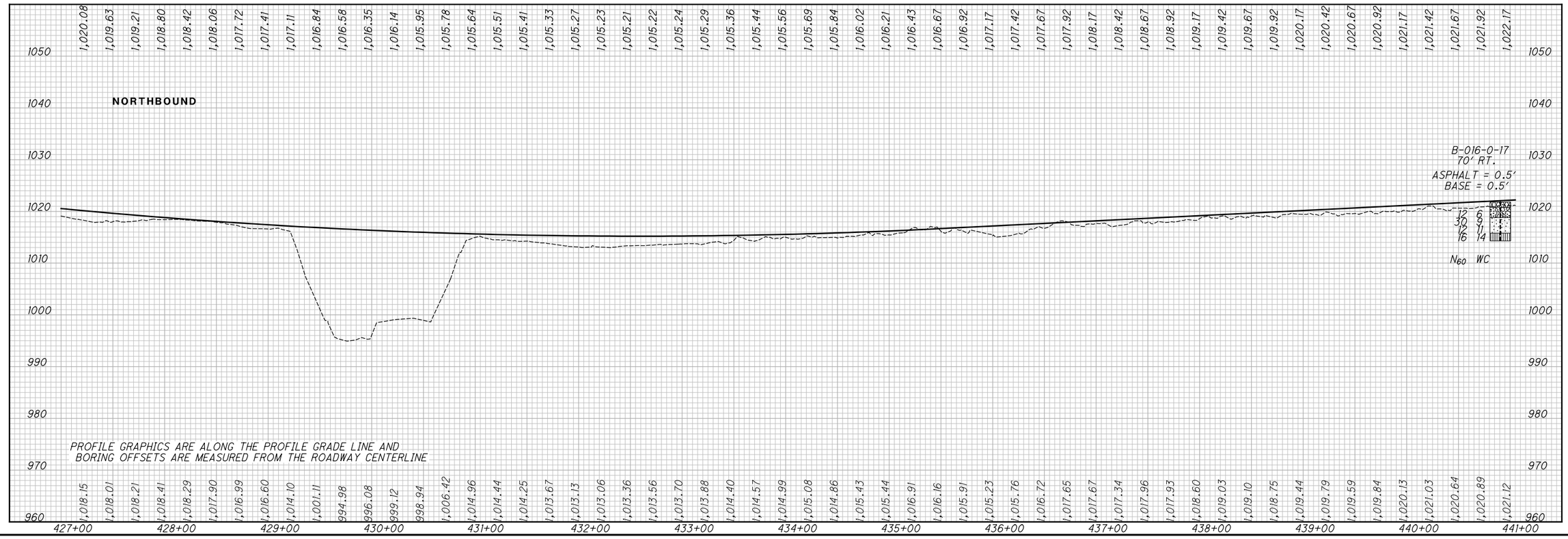


HORIZONTAL SCALE IN FEET
0 25 50 100

DRAWN ZM
CHECKED BPA

# SOIL PROFILE
## I-77 STA. 427+00 TO STA. 441+00

SUM-77/277/224
VARIOUS

21 / 209

P:\17-0129 (106002 SUM-76-10.95 Part 3 - SUM-77_277_224)\106002\geotechnical\sheets\106002IF013.dgn Sheet 1/7/2021 11:14:14 PM karens

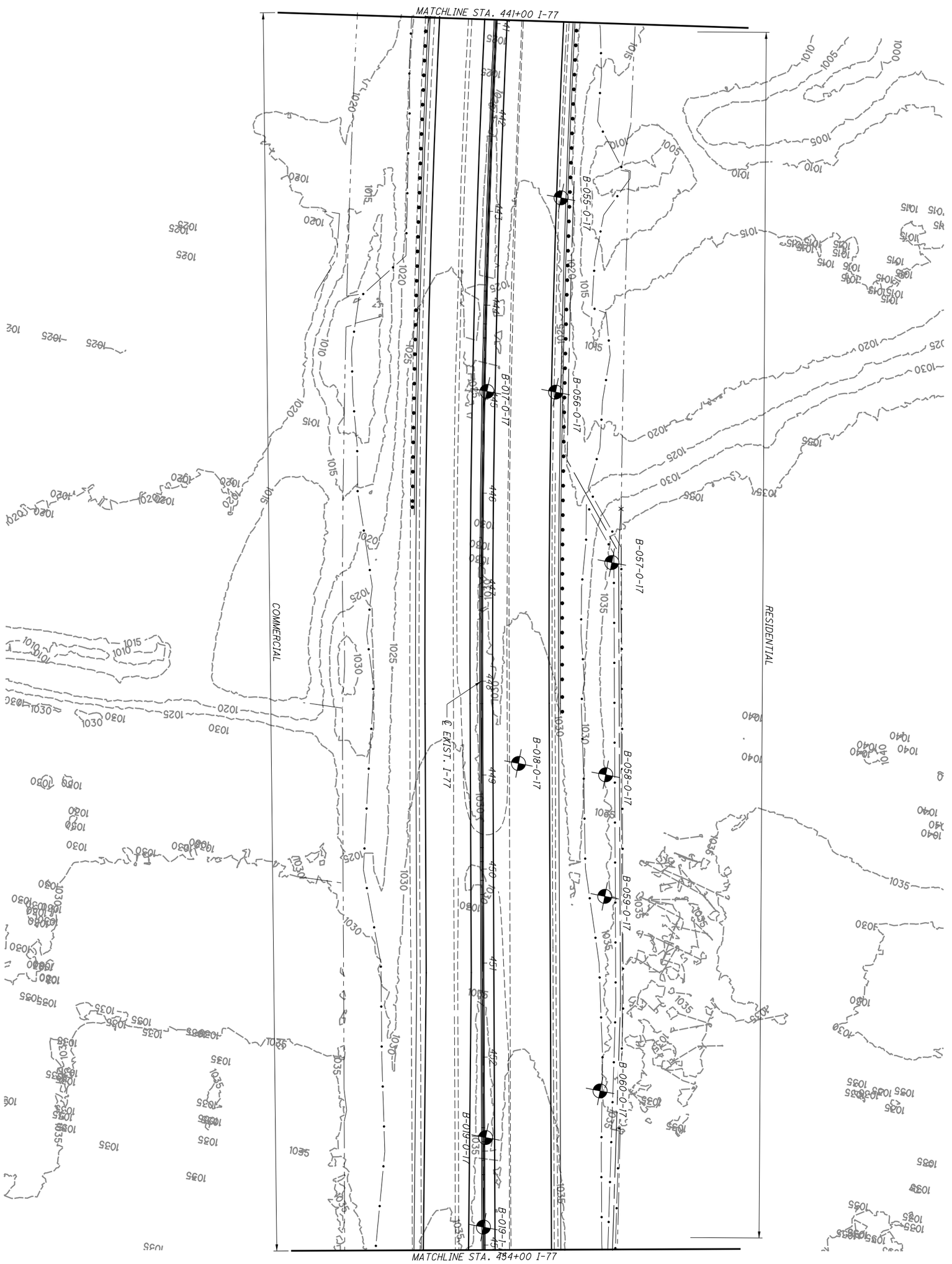


| | | | | | |
|---|---|---|---|---|---|
| | 22/209 | SUM-77/277/224<br>VARIOUS | SOIL PROFILE<br>I-77 STA. 441+00 TO STA. 454+00 | DRAWN MJ<br>CHECKED BPA | 0 50<br>25 100<br>HORIZONTAL SCALE IN FEET |

HORIZONTAL SCALE IN FEET
0 25 50 100

DRAWN ZM
CHECKED BPA

# SOIL PROFILE
## I-77 STA. 441+00 TO STA. 454+00

SUM-77/277/224
VARIOUS

23 / 209

P:\17-0129 (106002 SUM-76-10.95 Part 3 - SUM-77_277_224)\106002\geotechnical\sheets\106002IF014.dgn Sheet 1/7/2021 11:14:45 PM korens

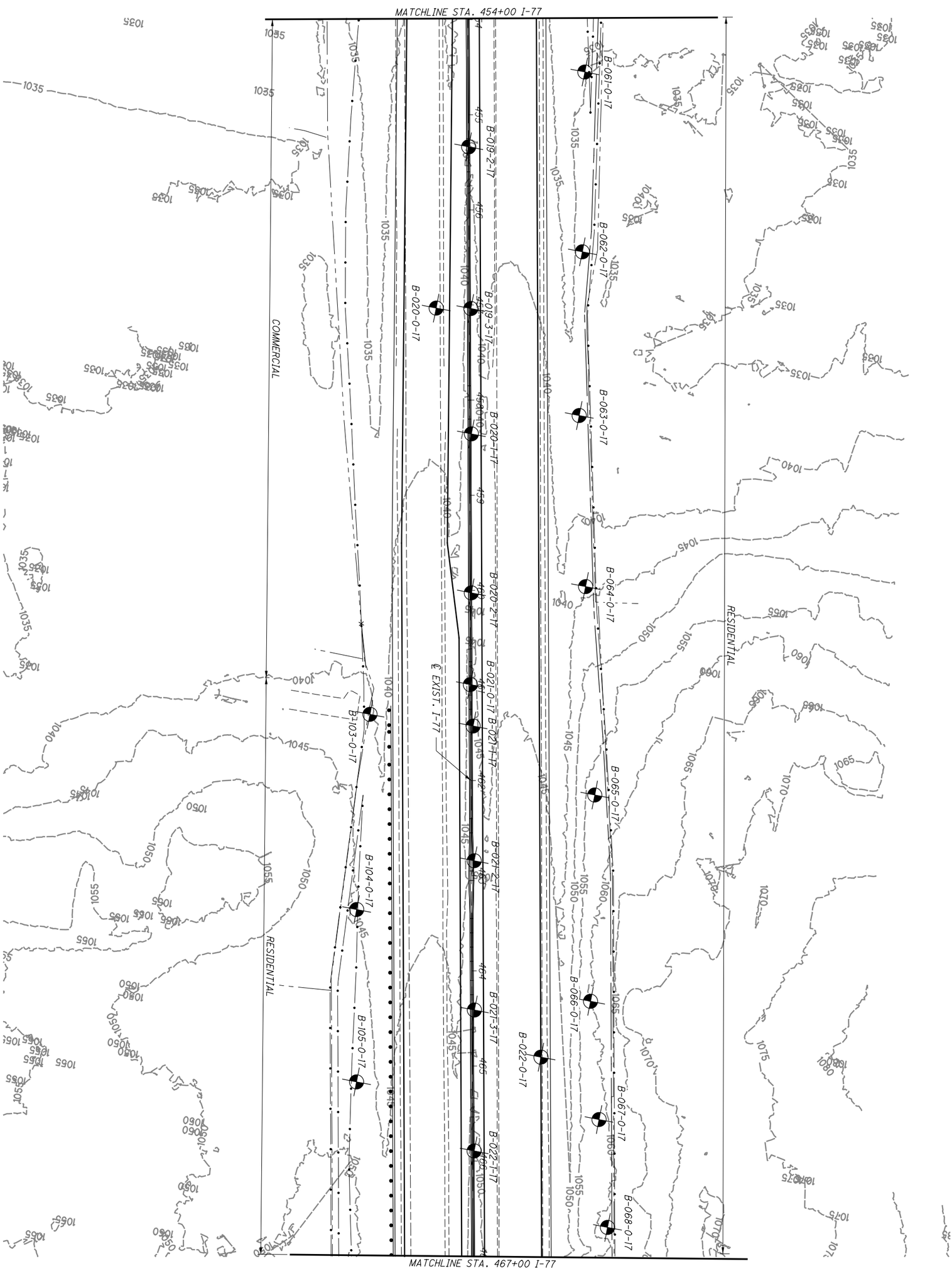


| | | | | | |
|---|---|---|---|---|---|
| 24/209 | SUM-77/277/224<br>VARIOUS | SOIL PROFILE<br>I-77 STA.454+00 TO STA.467+00 | DRAWN EB<br>CHECKED CH | 0 50<br>25 100<br>HORIZONTAL SCALE IN FEET | N |

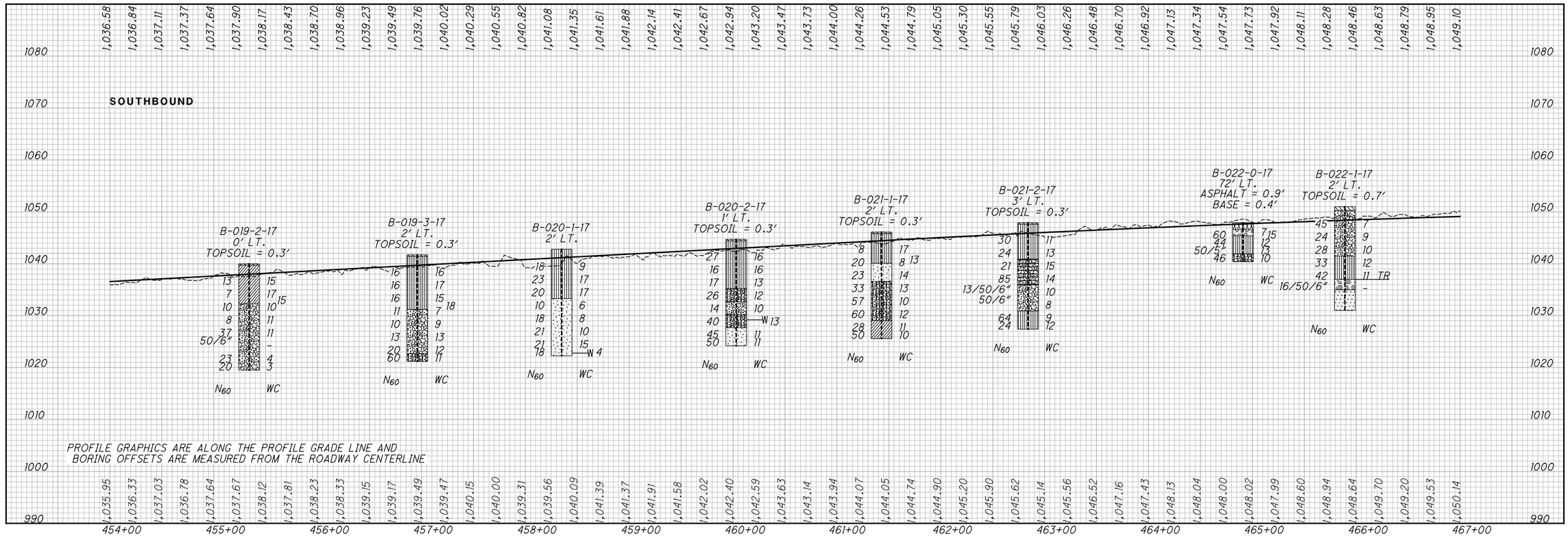


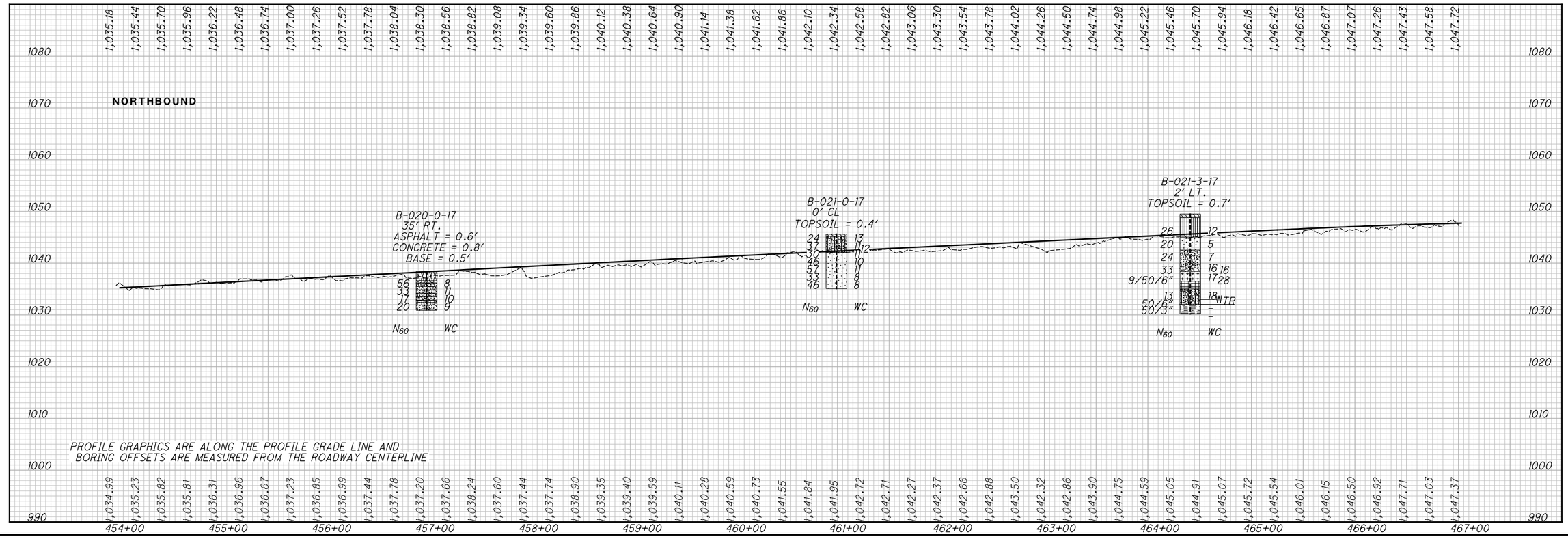


HORIZONTAL SCALE IN FEET
0 25 50 100

DRAWN ZM
CHECKED BPA

# SOIL PROFILE
## I-77 STA. 454+00 TO STA. 467+00

SUM-77/277/224
VARIOUS

25/209

P:\17-0129 (106002 SUM-76-10.95 Part 3 - SUM-77_277_224)\106002\geotechnical\sheets\106002IF015.dgn Sheet 1/7/2021 11:15:15 PM karens

P:\17-0129 (106002 SUM-76-10.95 Part 3 - SUM-77_277_224)\106002\geotechnical\sheets\106002IP043.dgn Sheet 1/7/2021 11:15:44 PM karens

NOTE:

SOIL PROFILE FOR B-022-2-17, B-022-3-17, B-022-4-17, B-023-I-17, B-023-2-17, B-024-I-17, B-024-2-17, B-024-3-17 AND B-024-4-17 SEE SHEET 69

SOIL PROFILE FOR B-025-017, SEE SHEET 28

SOIL PROFILE FOR B-026-017, SEE SHEET 32

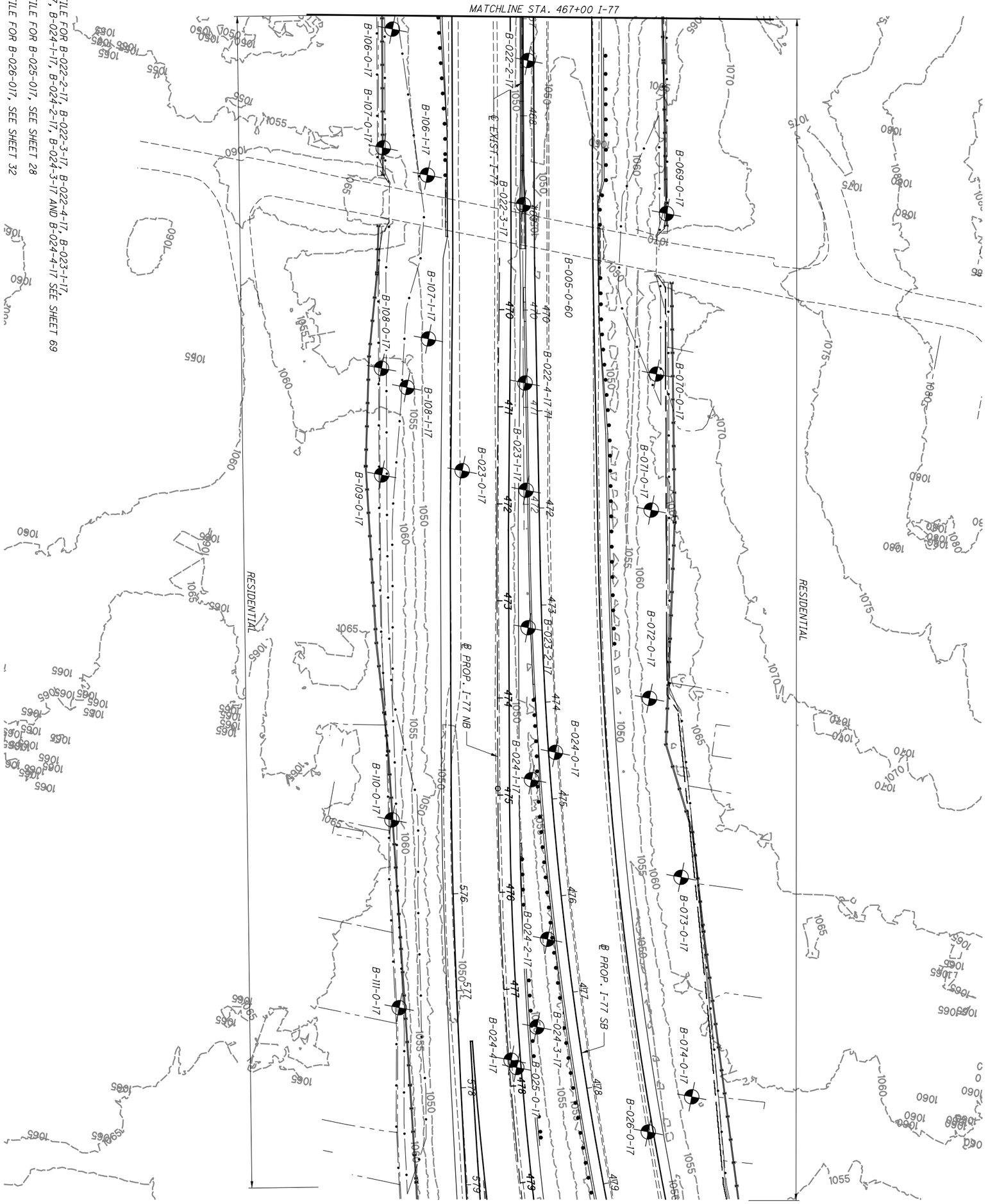


| | | | | | |
|---|---|---|---|---|---|
| | 26/209 | SUM-77/277/224 VARIOUS | SOIL PROFILE I-77 STA.467+00 TO END | DRAWN MJ / CHECKED BPA | 0 50 / 25 100 HORIZONTAL SCALE IN FEET |

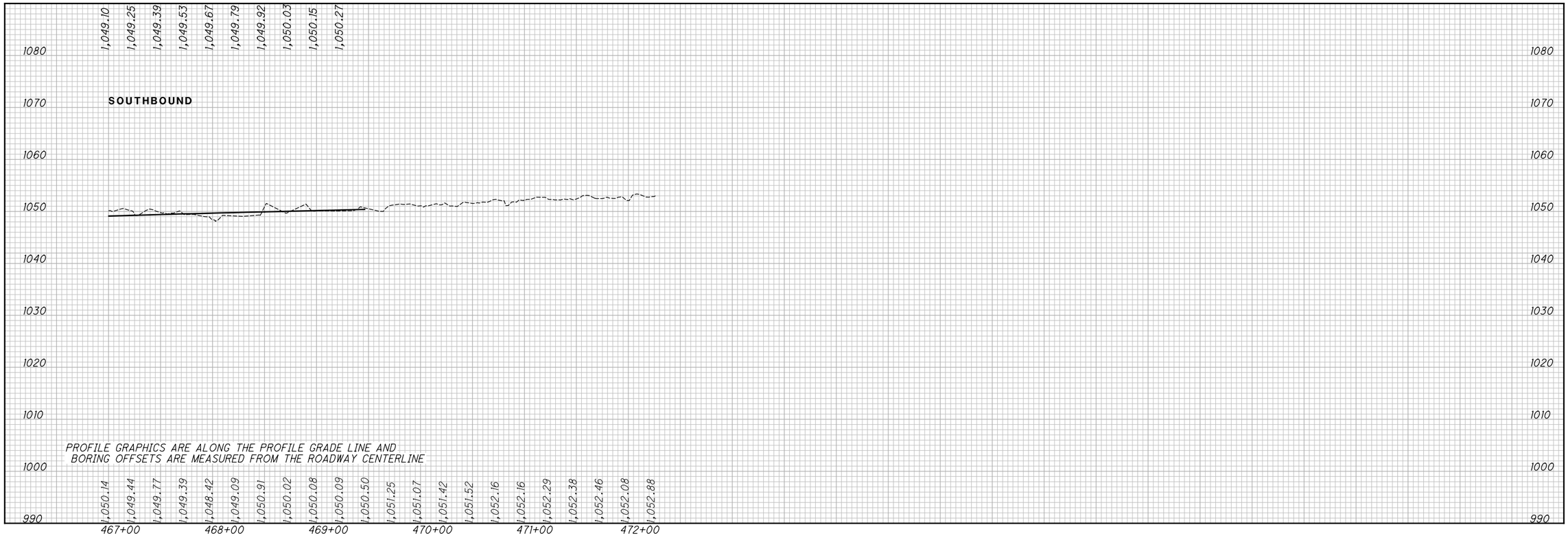


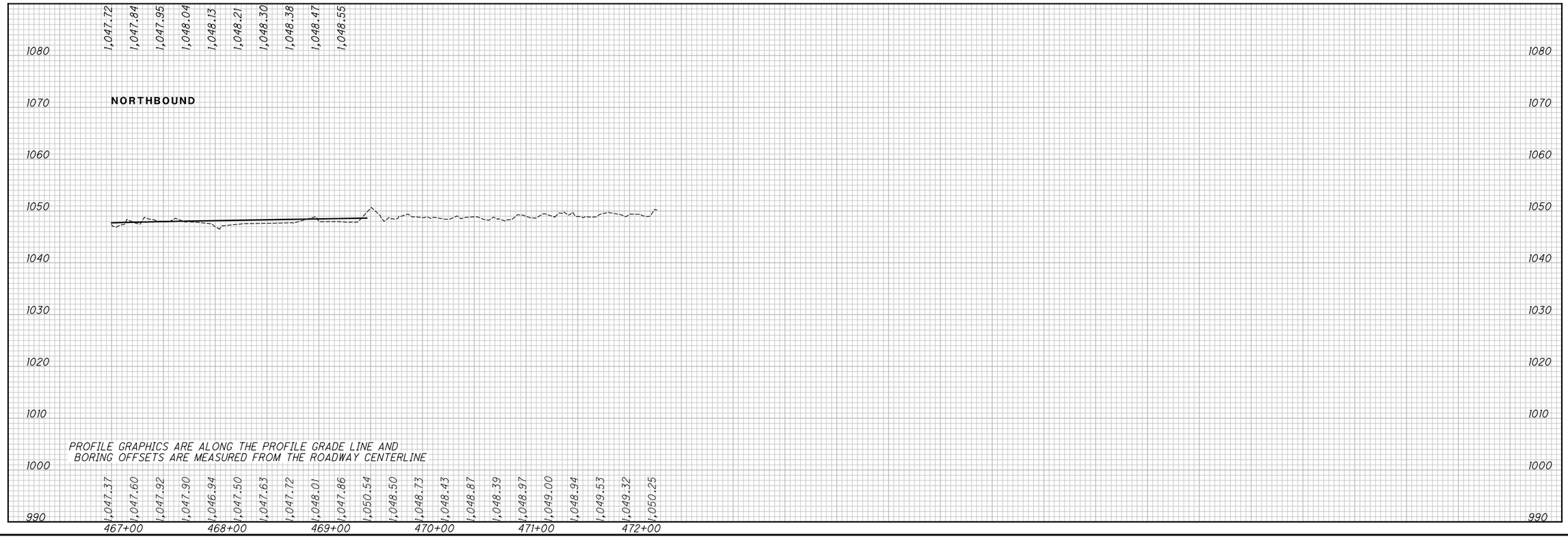


0 25 50 100
HORIZONTAL SCALE IN FEET

DRAWN ZM
CHECKED BPA

# SOIL PROFILE
## I-77 STA. 467+00 TO END

SUM-77/277/224
VARIOUS

27 209

P:\17-0129 (106002 SUM-76-10.95 Part 3 - SUM-77_277_224)\106002\geotechnical\sheets\106002IF043.dgn Sheet 1/7/2021 11:15:48 PM karens

P:\17-0129 (106002 SUM-76-10.95 Part 3 - SUM-77_277_224)\106002\geotechnical\sheets\106002IP038.dgn Sheet 1/7/2021 11:16:16 PM karens

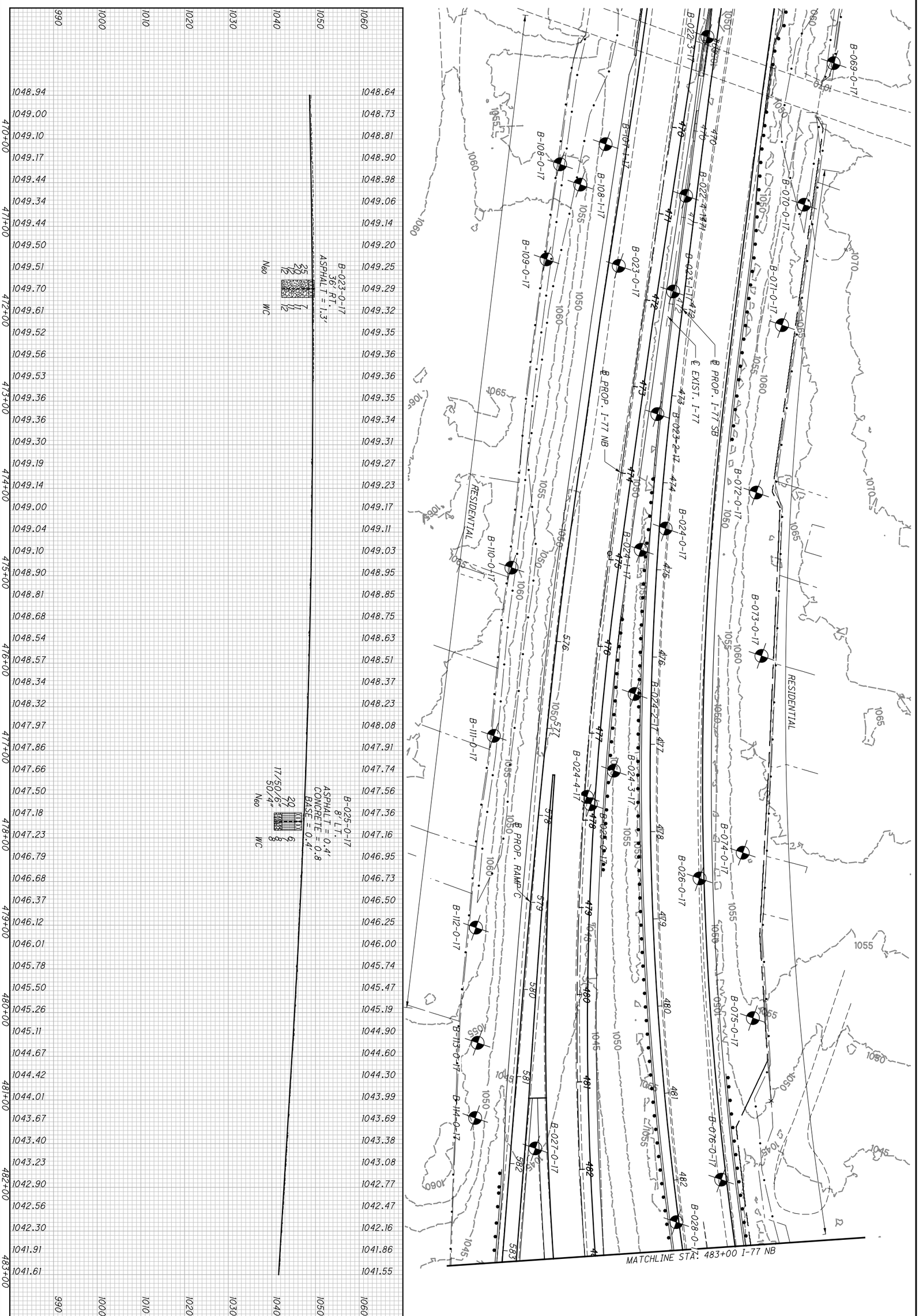


| | | | | | | |
|---|---|---|---|---|---|---|
| 28 / 209 | SUM-77 / 277 / 224<br>VARIOUS | SOIL PROFILE<br>I-77 NB BEGIN TO STA. 483+00 | DRAWN MJ<br>CHECKED BPA | 0 50<br>25 100<br>HORIZONTAL SCALE IN FEET | N |

# SOIL PROFILE
## I-77 NB STA. 483+00 TO STA. 498+00

SUM-77/277/224
VARIOUS

HORIZONTAL SCALE IN FEET
0 25 50 100

DRAWN MJ
CHECKED BPA



P:\17-0129 (106002 SUM-76-10.95 Part 3 - SUM-77_277_224)\106002\geotechnical\sheets\106002IP039.dgn Sheet 1/7/2021 11:16:30 PM karens

P:\17-0129 (106002 SUM-76-10.95 Part 3 - SUM-77_277_224)\106002\geotechnical\sheets\106002IP040.dgn Sheet 1/7/2021 11:16:33 PM karens

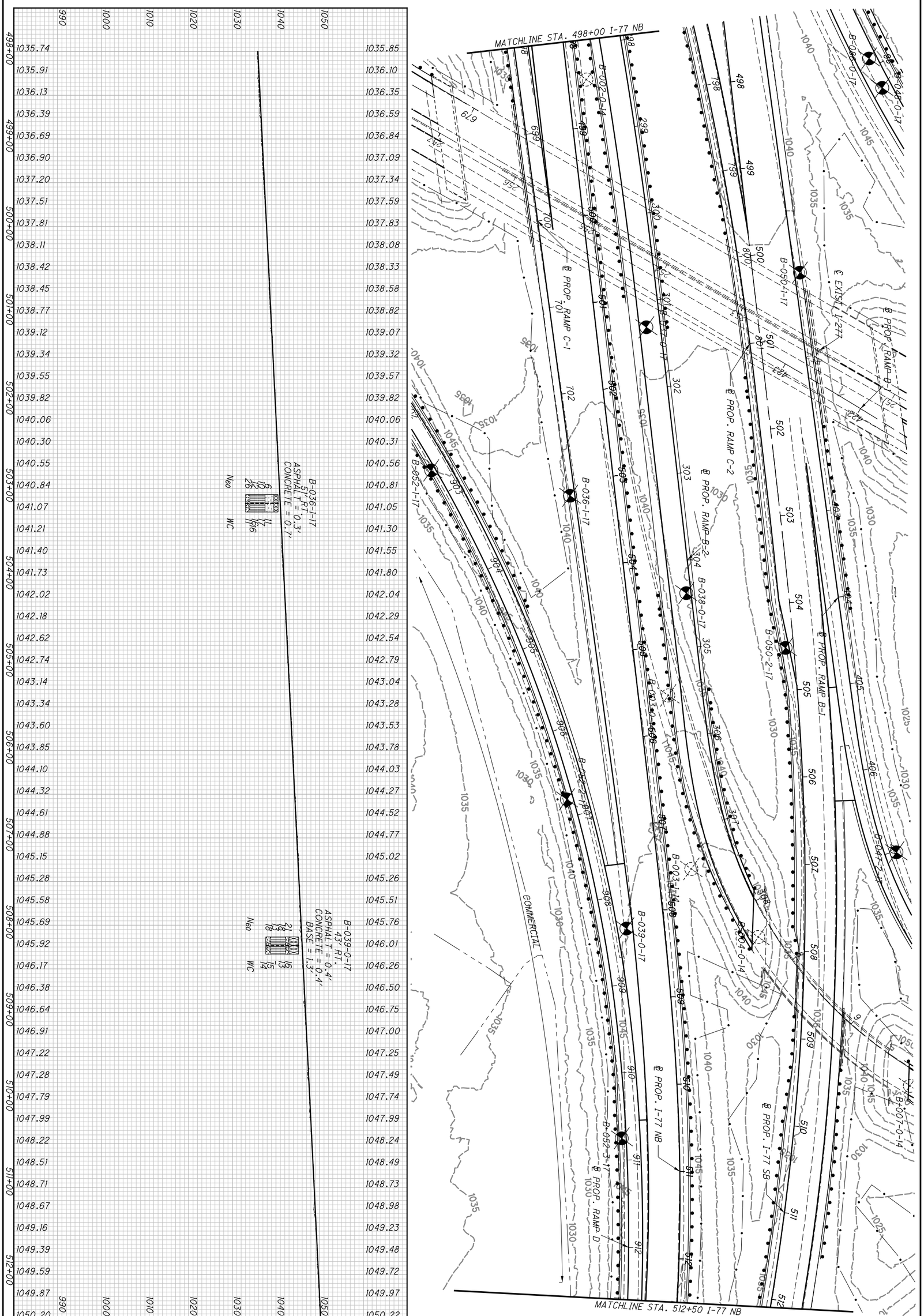


| | | | | | |
|---|---|---|---|---|---|
| 30 / 209 | SUM-77 / 277 / 224<br>VARIOUS | SOIL PROFILE<br>I-77 NB STA. 498+00 TO STA. 512+50 | DRAWN MJ<br>CHECKED BPA | 0 50<br>25 100<br>HORIZONTAL SCALE IN FEET | |

| | | | | | |
|---|---|---|---|---|---|
| | 31 / 209 | **SUM-77 / 277 / 224**<br>**VARIOUS** | **SOIL PROFILE**<br>**I-77 NB STA. 512+50 TO END** | DRAWN MJ<br>CHECKED BPA | 0 50<br>25 100<br>HORIZONTAL SCALE IN FEET |

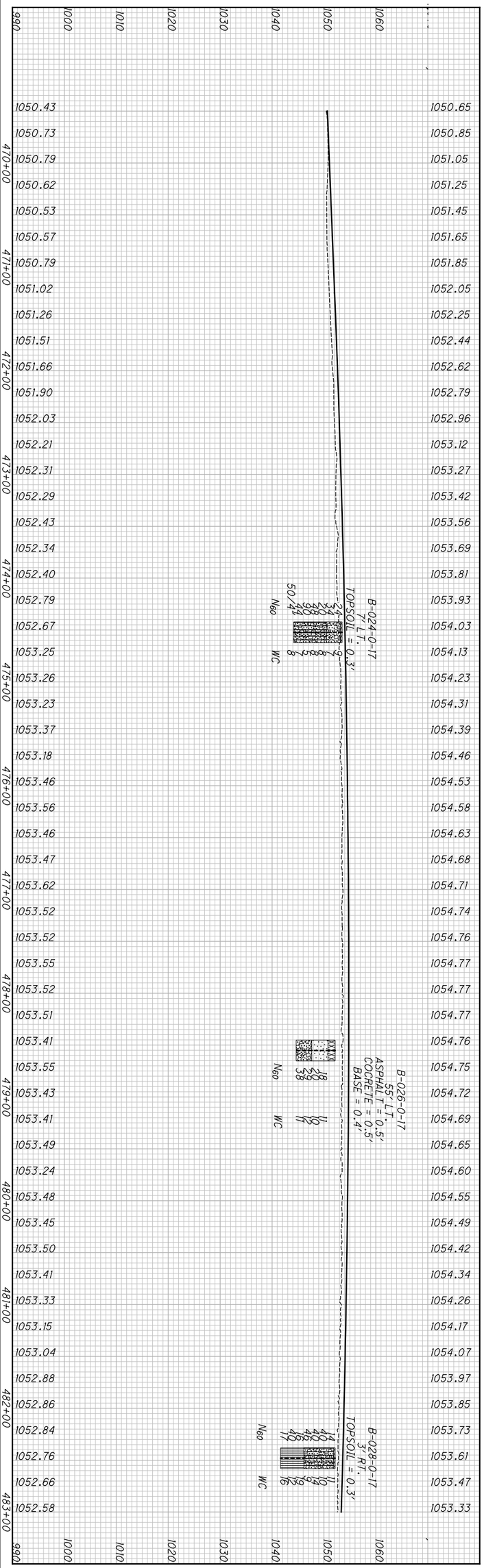


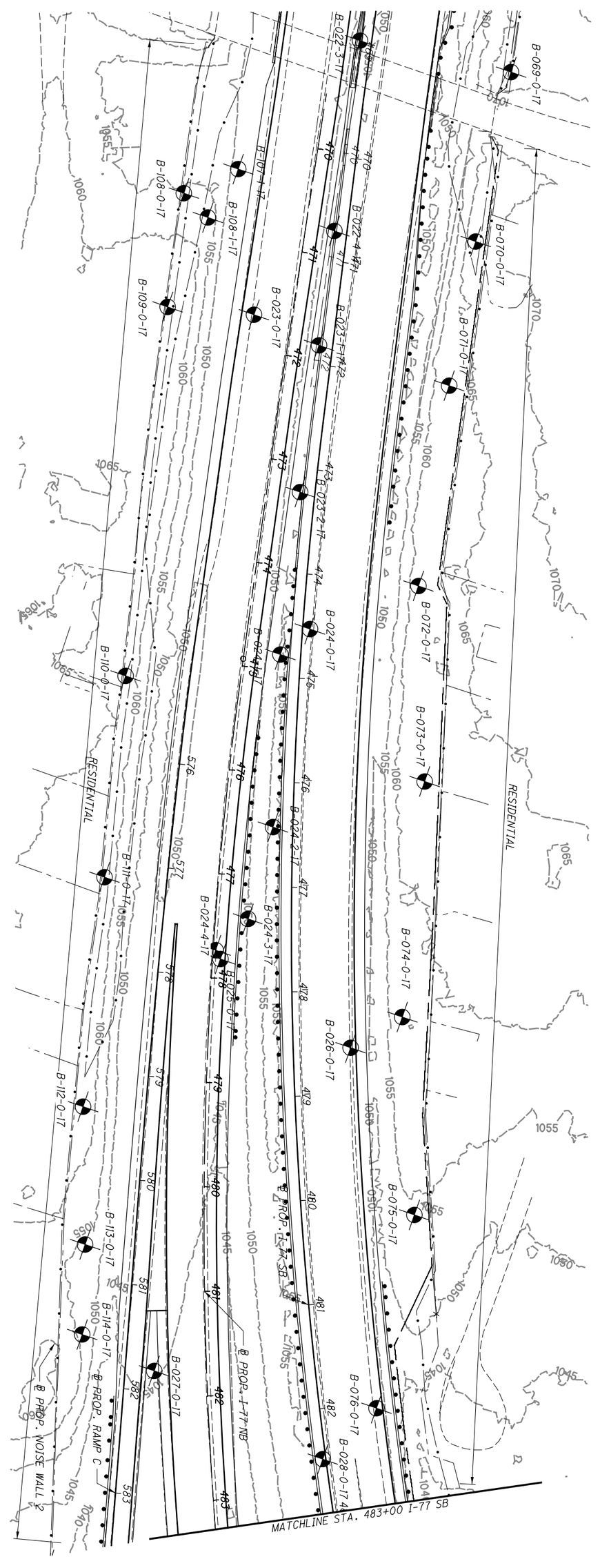


| | | | | | |
|---|---|---|---|---|---|
| 32 / 209 | SUM-77 / 277 / 224<br>VARIOUS | SOIL PROFILE<br>I-77 SB BEGIN TO STA. 483+00 | DRAWN MJ<br>CHECKED BPA | 0 50<br>25 100<br>HORIZONTAL SCALE IN FEET | N |

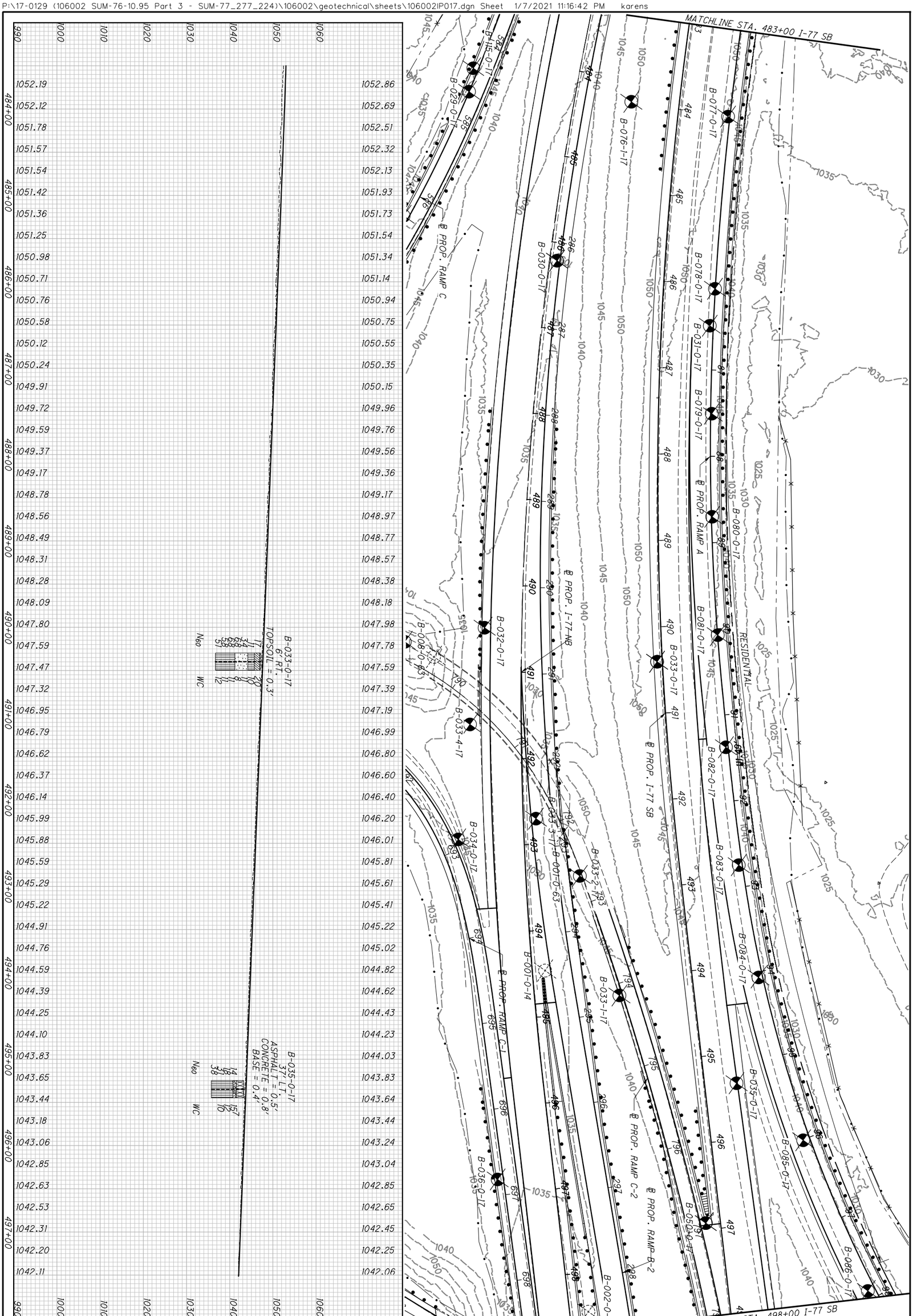


| | | | | | |
|---|---|---|---|---|---|
| 33/209 | SUM-77/277/224<br>VARIOUS | SOIL PROFILE<br>I-77 SB STA. 483+00 TO STA. 498+00 | DRAWN MJ<br>CHECKED BPA | 0 50<br>25 100<br>HORIZONTAL SCALE IN FEET | |

P:\17-0129 (106002 SUM-76-10.95 Part 3 - SUM-77_277_224)\106002\geotechnical\sheets\106002IP018.dgn Sheet 1/7/2021 11:16:45 PM karens

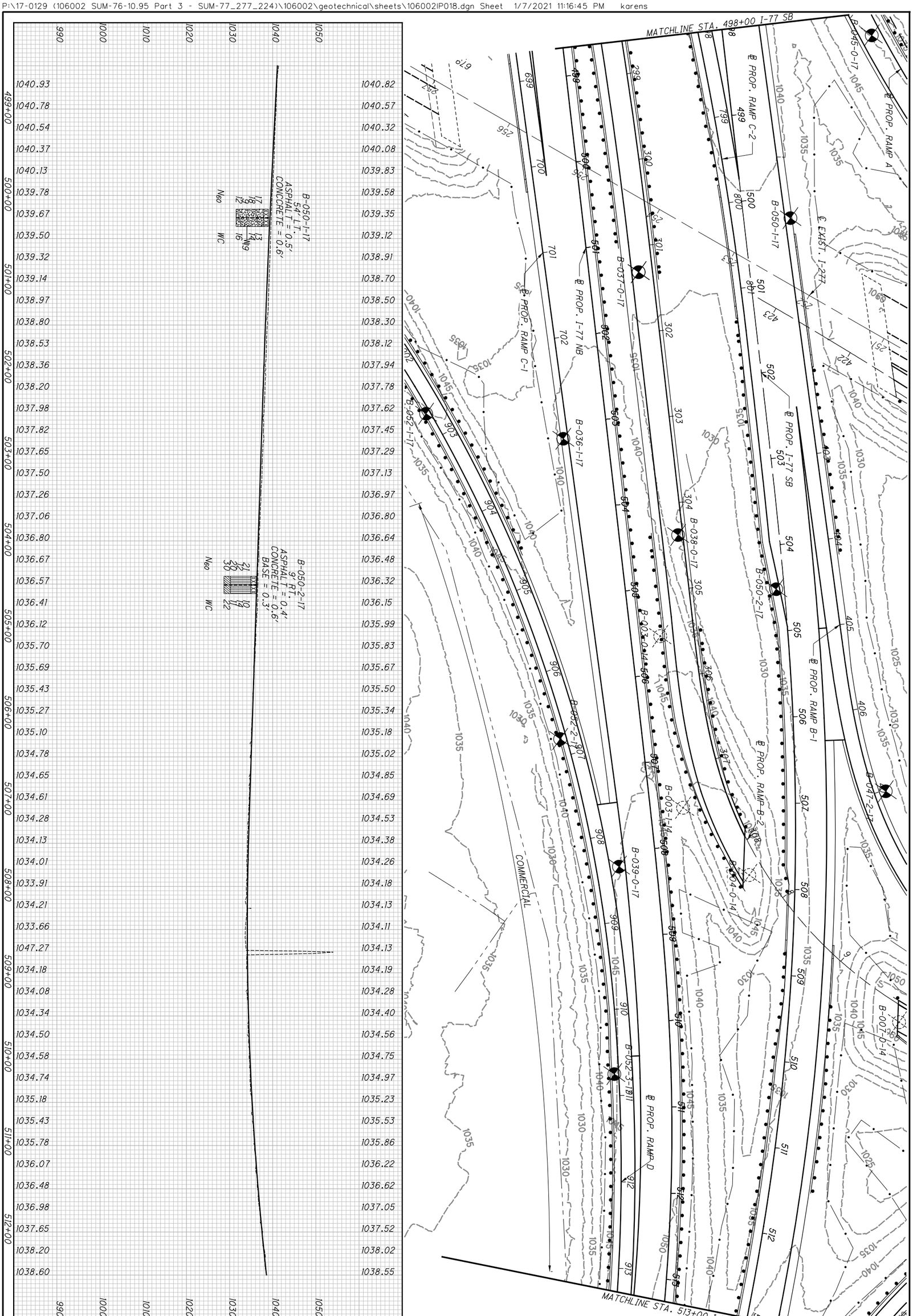


| | | | | | |
|---|---|---|---|---|---|
| 34/209 | SUM-77/277/224<br>VARIOUS | SOIL PROFILE<br>I-77 SB STA. 498+00 TO STA. 513+00 | DRAWN EB<br>CHECKED BPA | 0 50<br>25 100<br>HORIZONTAL SCALE IN FEET | |

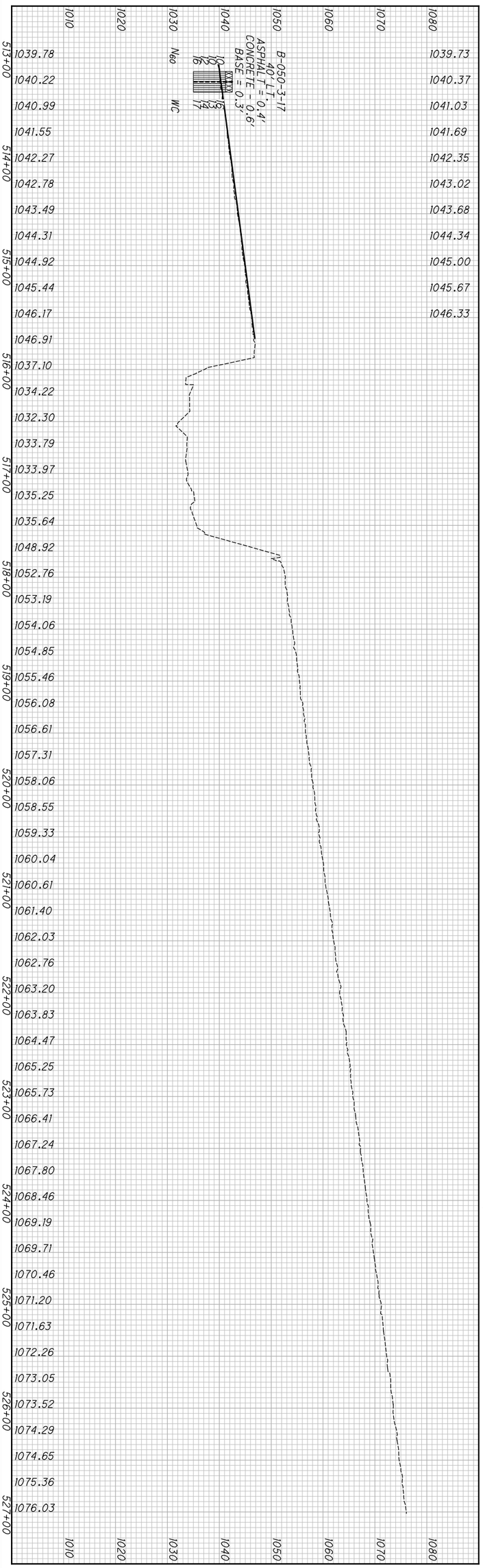


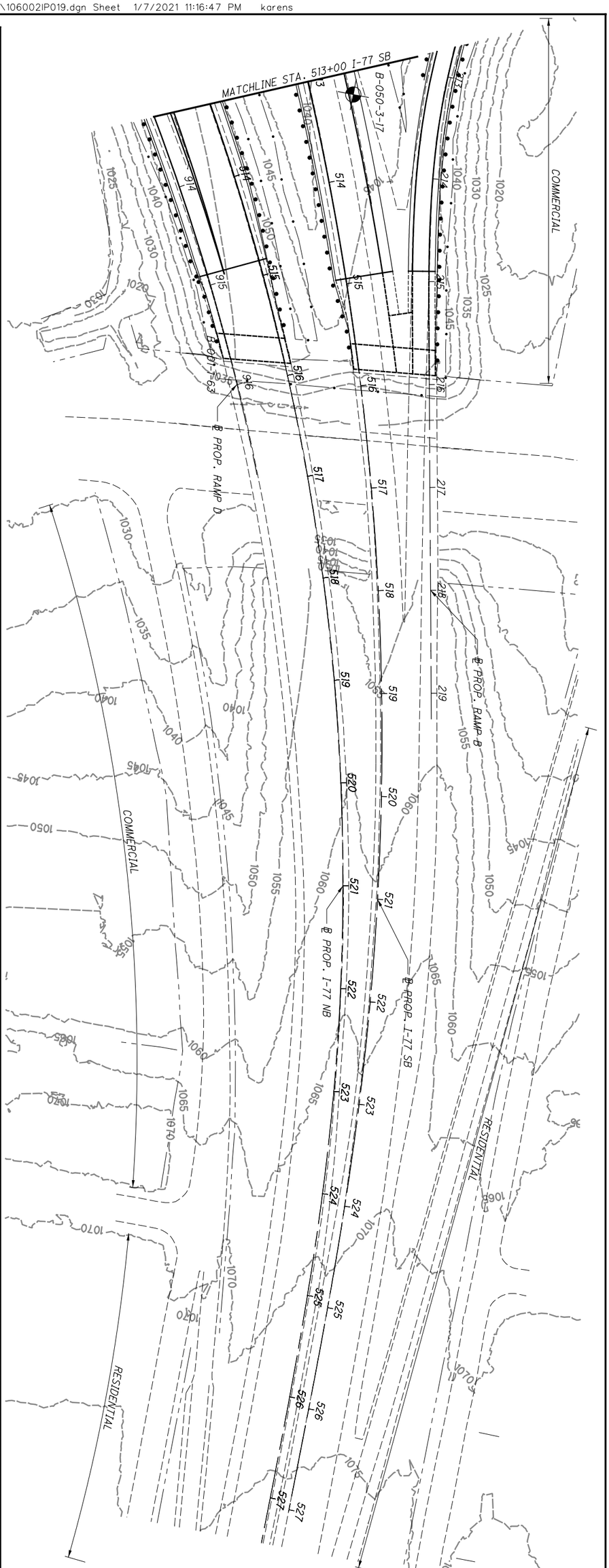




**SUM-77/277/224**
**VARIOUS**

**SOIL PROFILE**
**I-77 SB STA. 513+00 TO END**

DRAWN MJ
CHECKED BPA

0 25 50 100
HORIZONTAL SCALE IN FEET

COMMERCIAL

RESIDENTIAL

B-102-0-17
B-101-0-17
B-100-0-17
B-099-0-17
B-098-0-17
B-097-0-17
B-096-0-17
B-044-0-17
B-099-1-17
B-043-0-17
B-010-1-14
B-011-0-14

℄ PROP. RAMP B
℄ PROP. RAMP B-2
℄ EXIST. I-277

MATCHLINE STA. 237+00 I-277

223+00 224+00 225+00 226+00 227+00 228+00 229+00 230+00 231+00 232+00 233+00 234+00 235+00 236+00

1019.77 1020.07 1020.19 1020.38 1020.50 1020.74 1020.75 1021.16 1021.48 1021.81 1022.04 1022.27 1022.54 1022.67 1022.88 1023.07 1023.28 1023.52 1023.73 1024.09 1024.32 1024.69 1025.10 1025.55 1025.71 1026.10 1026.50 1026.86 1027.26 1027.47 1028.09 1028.57 1028.98 1029.28 1029.67 1030.09 1030.43 1030.79 1031.25 1031.64 1032.02 1032.40 1032.73 1033.17 1033.52 1033.87 1034.27 1034.69 1035.14 1035.49 1035.84 1036.18 1036.63 1037.03 1037.33 1037.73 1038.13 1038.53

HORIZONTAL SCALE IN FEET
0 25 50 100

DRAWN MJ
CHECKED CH

**SOIL PROFILE**
**I-277 BEGIN TO STA. 237+00**

**SUM-77/277/224**
**VARIOUS**

36 209

P:\17-0129 (106002 SUM-76-10.95 Part 3 - SUM-77_277_224)\106002\geotechnical\sheets\106002IP001.dgn Sheet 1/7/2021 11:16:50 PM karens

P:\17-0129 (106002 SUM-76-10.95 Part 3 - SUM-77_277_224)\106002\geotechnical\sheets\106002IP002.dgn Sheet 1/7/2021 11:16:54 PM karens

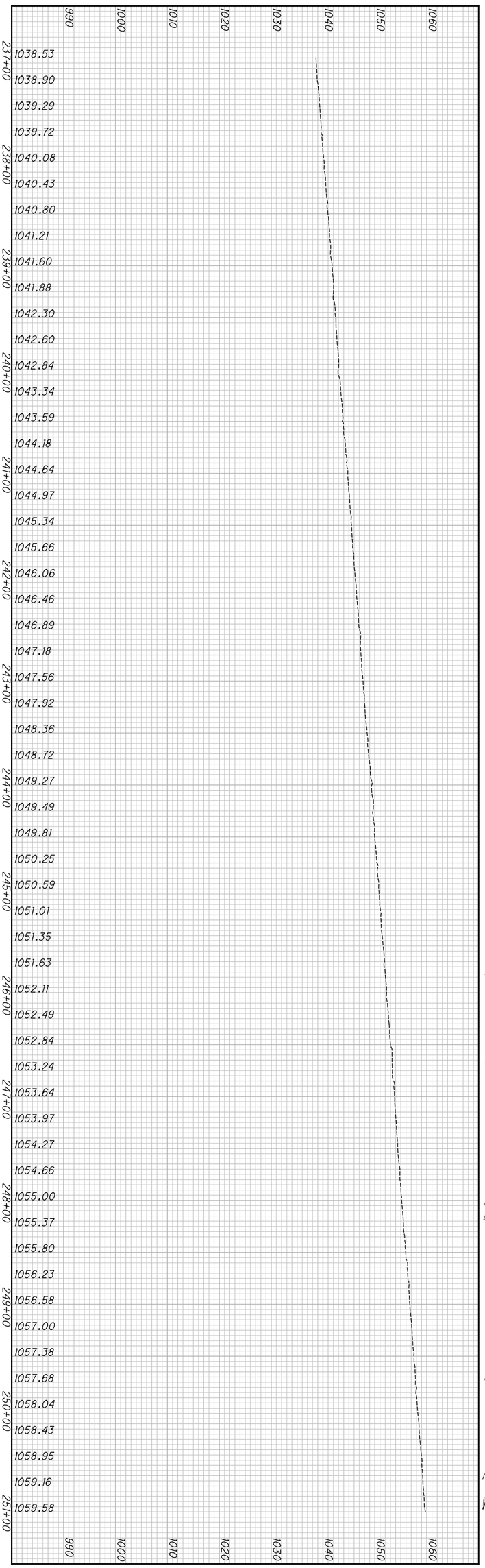


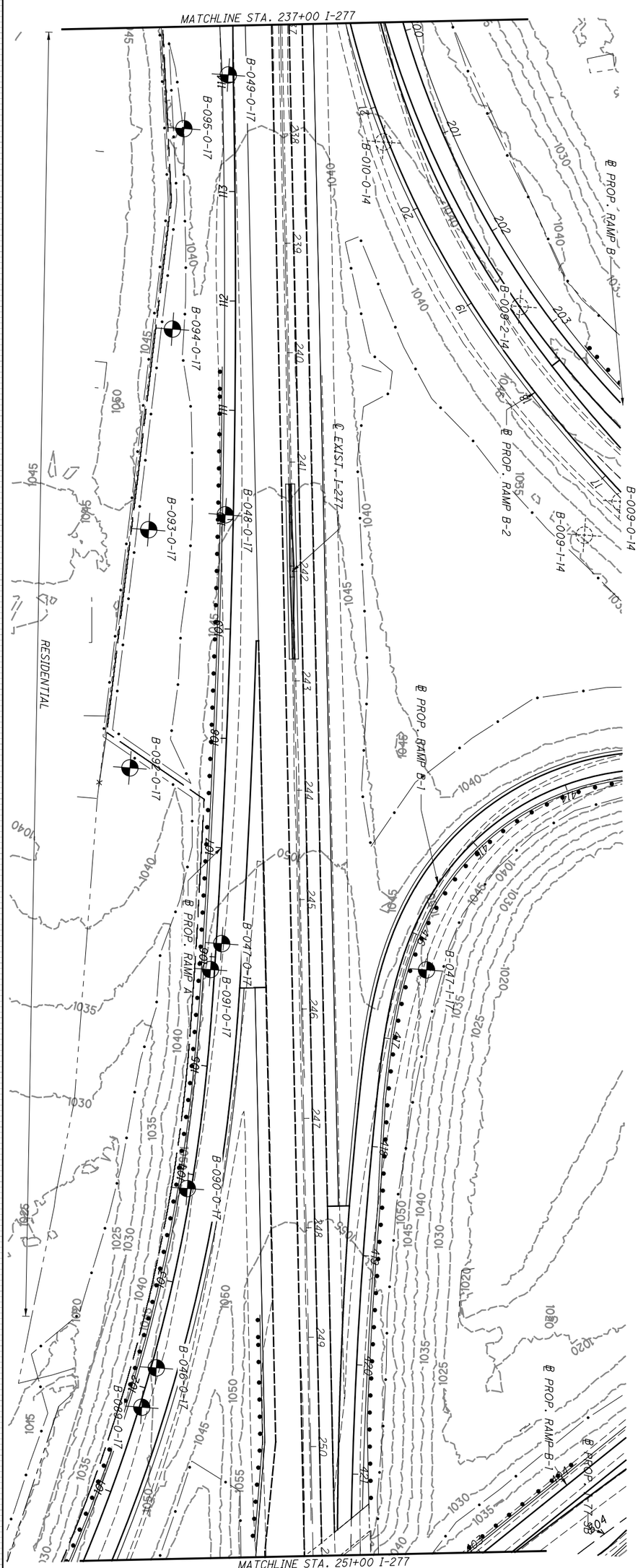


| | | | | | |
|---|---|---|---|---|---|
| 37/209 | SUM-77/277/224<br>VARIOUS | SOIL PROFILE<br>I-277 STA. 237+00 TO STA. 251+00 | DRAWN MJ<br>CHECKED BPA | 0 50<br>25 100<br>HORIZONTAL SCALE IN FEET | N |

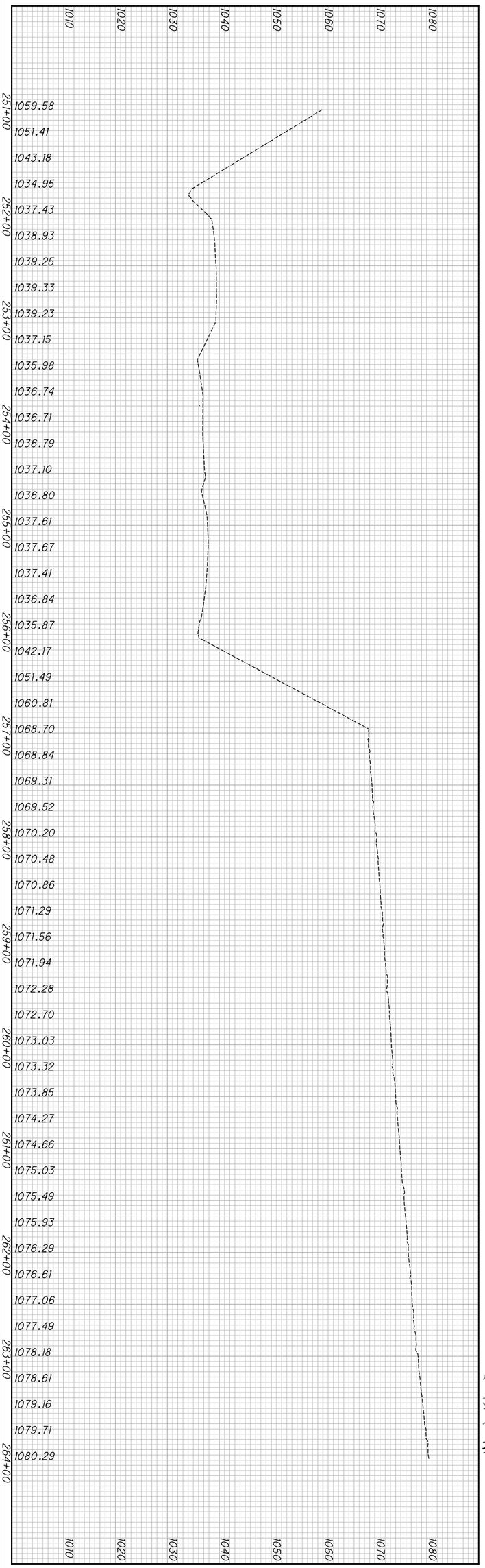


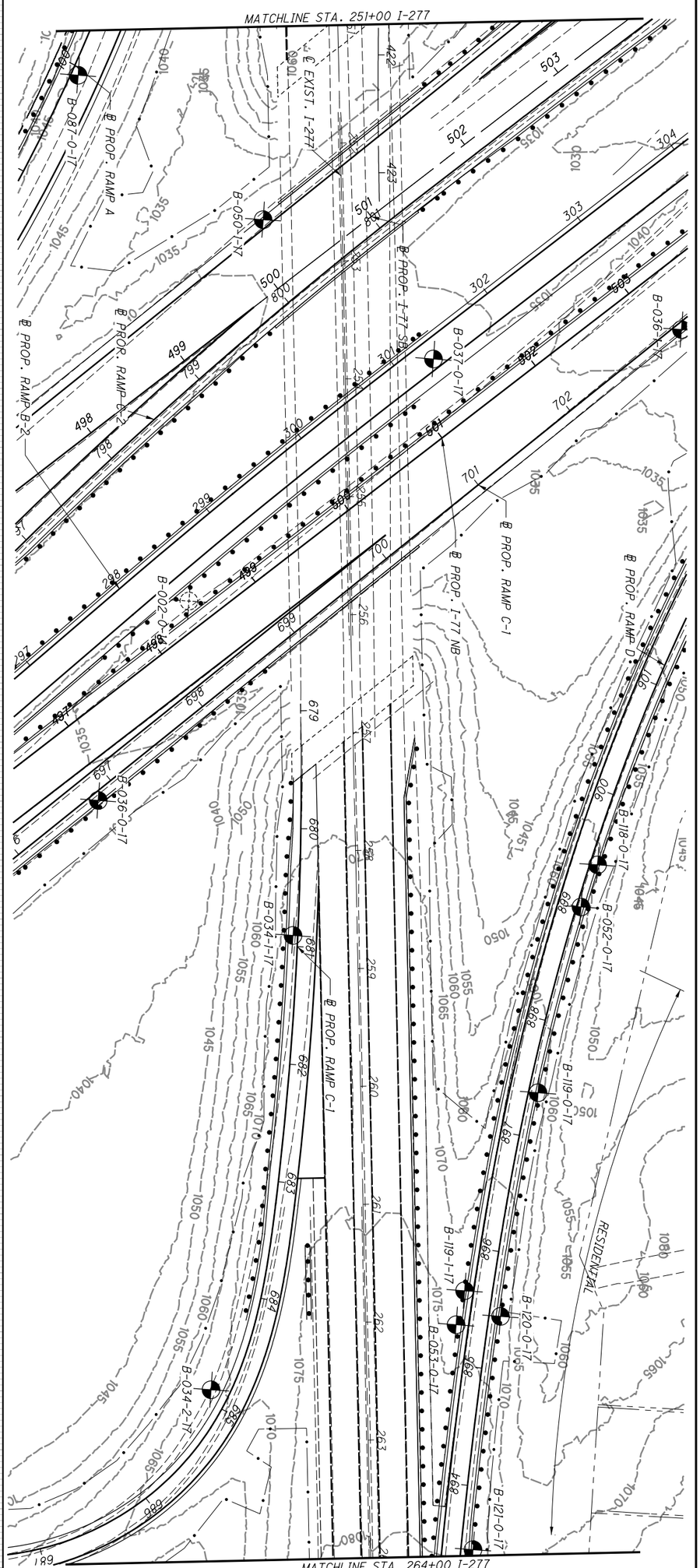


| | | | | | |
|---|---|---|---|---|---|
| 38/209 | SUM-77/277/224<br>VARIOUS | SOIL PROFILE<br>I-277 STA. 251+00 TO STA. 264+00 | DRAWN MJ<br>CHECKED CH | 0 50<br>25 100<br>HORIZONTAL SCALE IN FEET | N |

P:\17-0129 (106002 SUM-76-10.95 Part 3 - SUM-77_277_224)\106002\geotechnical\sheets\106002IP004.dgn Sheet 1/7/2021 11:16:59 PM karens

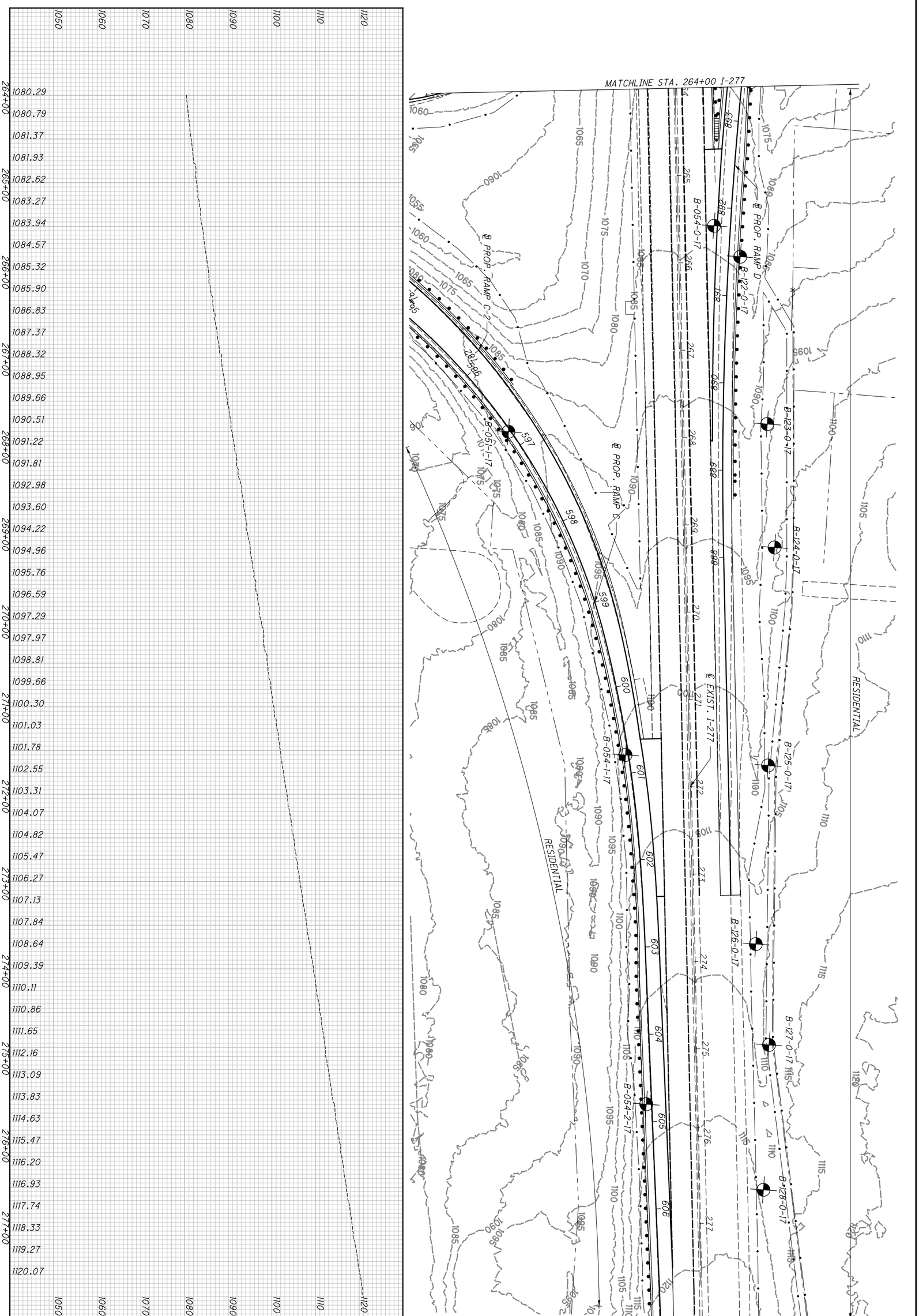


| | | | | | |
|---|---|---|---|---|---|
| 39/209 | SUM-77/277/224<br>VARIOUS | SOIL PROFILE<br>I-277 STA. 264+00 TO END | DRAWN MJ<br>CHECKED CH | 0 50<br>25 100<br>HORIZONTAL SCALE IN FEET | N |

P:\17-0129 (106002 SUM-76-10.95 Part 3 - SUM-77_277_224)\106002\geotechnical\sheets\106002IP020.dgn Sheet 1/7/2021 11:17:02 PM karens

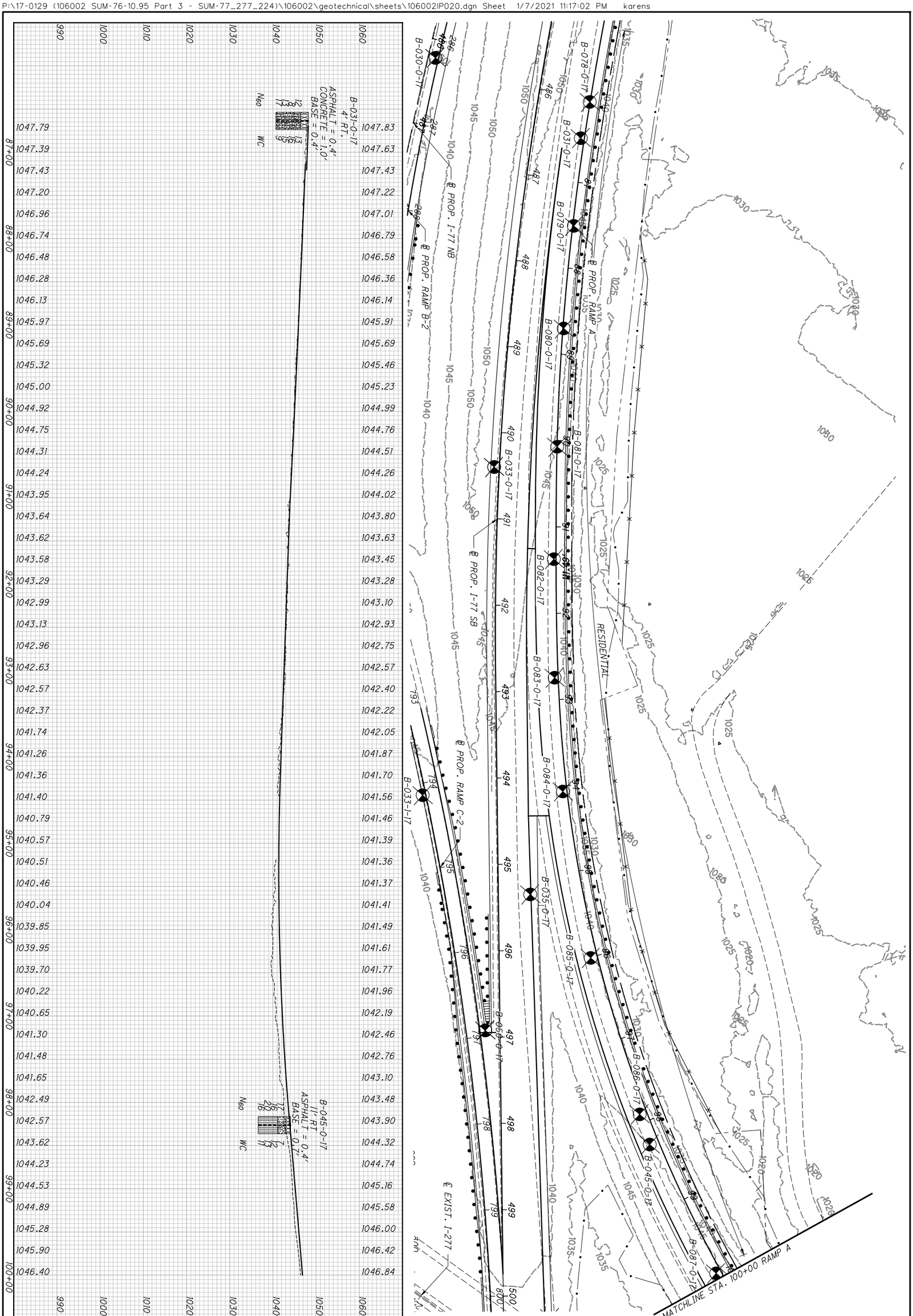


| | | | | | |
|---|---|---|---|---|---|
| 40 / 209 | SUM-77 / 277 / 224<br>VARIOUS | SOIL PROFILE<br>RAMP A BEGIN TO STA. 100+00 | DRAWN MJ<br>CHECKED BPA | 0 50<br>25 100<br>HORIZONTAL SCALE IN FEET | |

P:\17-0129 (106002 SUM-76-10.95 Part 3 - SUM-77_277_224)\106002\geotechnical\sheets\106002IP021.dgn Sheet 1/7/2021 11:17:05 PM karens

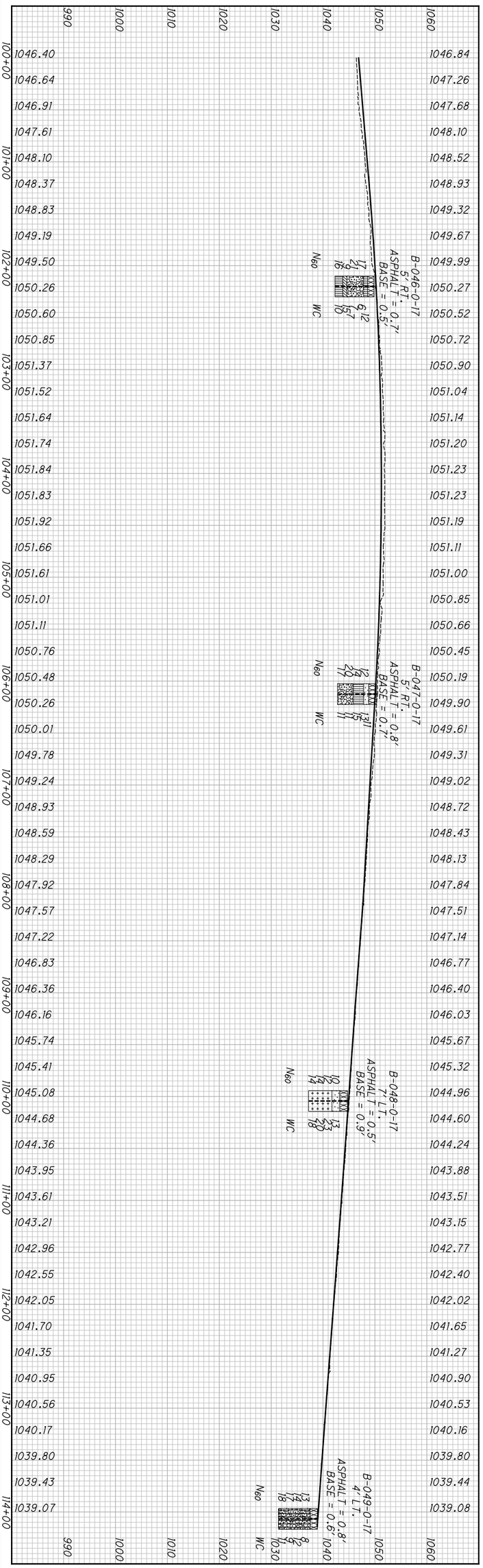


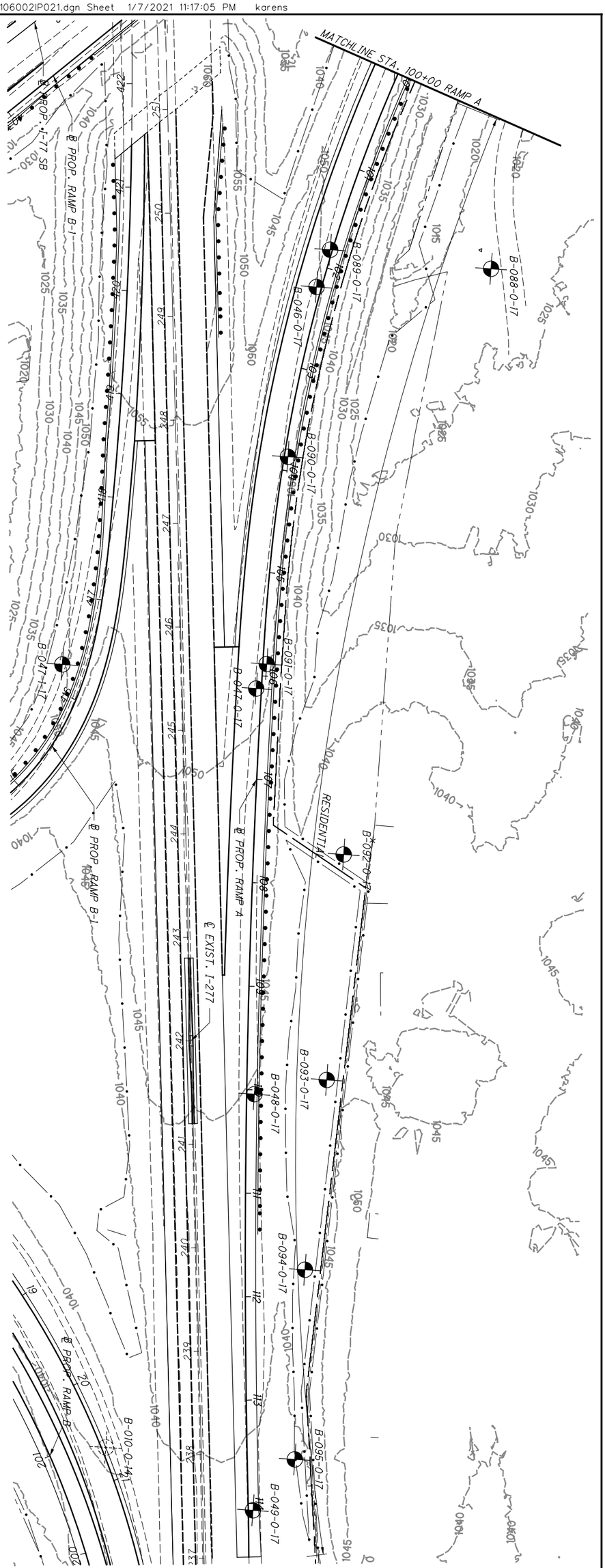


| | | | | | |
|---|---|---|---|---|---|
| | 41 / 209 | SUM-77 / 277 / 224<br>VARIOUS | SOIL PROFILE<br>RAMP A STA. 100+00 TO END | DRAWN MJ<br>CHECKED BPA | 0 50<br>25 100<br>HORIZONTAL SCALE IN FEET |

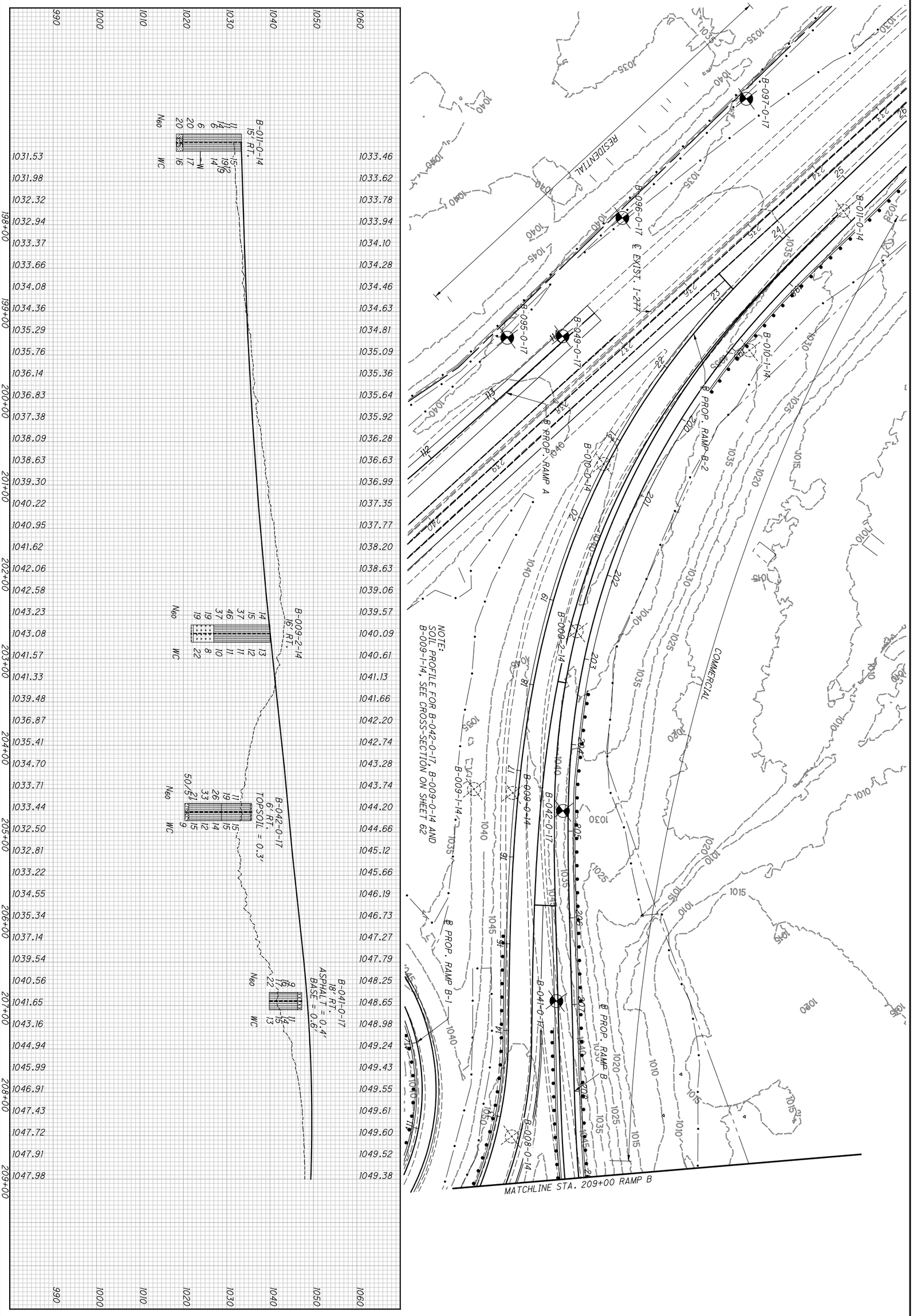


| | | | | | |
|---|---|---|---|---|---|
| 42/209 | SUM-77/277/224<br>VARIOUS | SOIL PROFILE<br>RAMP B BEGIN TO STA. 209+00 | DRAWN MJ<br>CHECKED BPA | 0 50<br>25 100<br>HORIZONTAL SCALE IN FEET | |

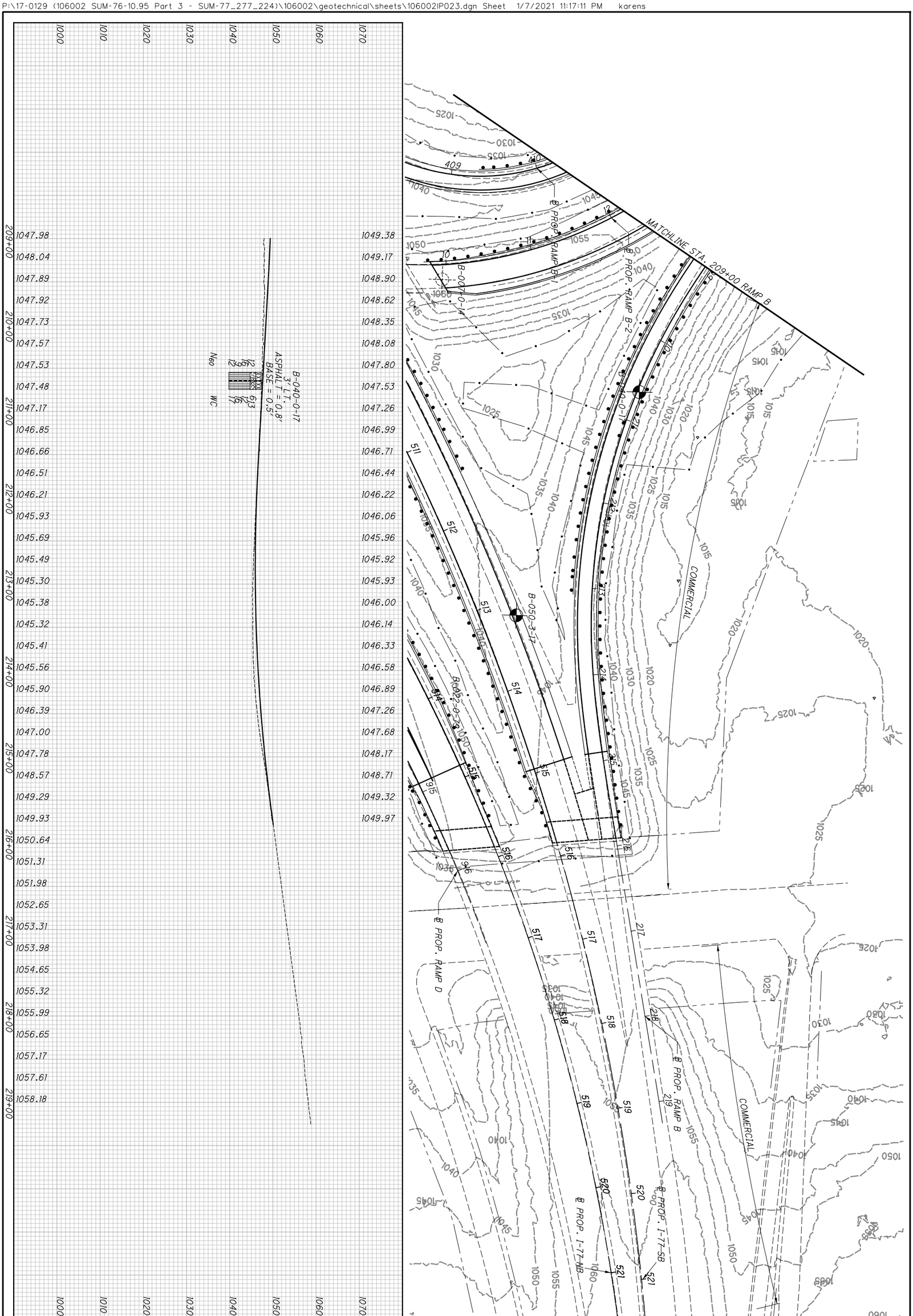


| | | | | | |
|---|---|---|---|---|---|
| | 43/209 | SUM-77/277/224<br>VARIOUS | SOIL PROFILE<br>RAMP B STA. 209+00 TO END | DRAWN MJ<br>CHECKED BPA | 0 50<br>25 100<br>HORIZONTAL SCALE IN FEET |

P:\17-0129 (106002 SUM-76-10.95 Part 3 - SUM-77_277_224)\106002\geotechnical\sheets\106002IP034.dgn Sheet 1/7/2021 11:17:13 PM karens

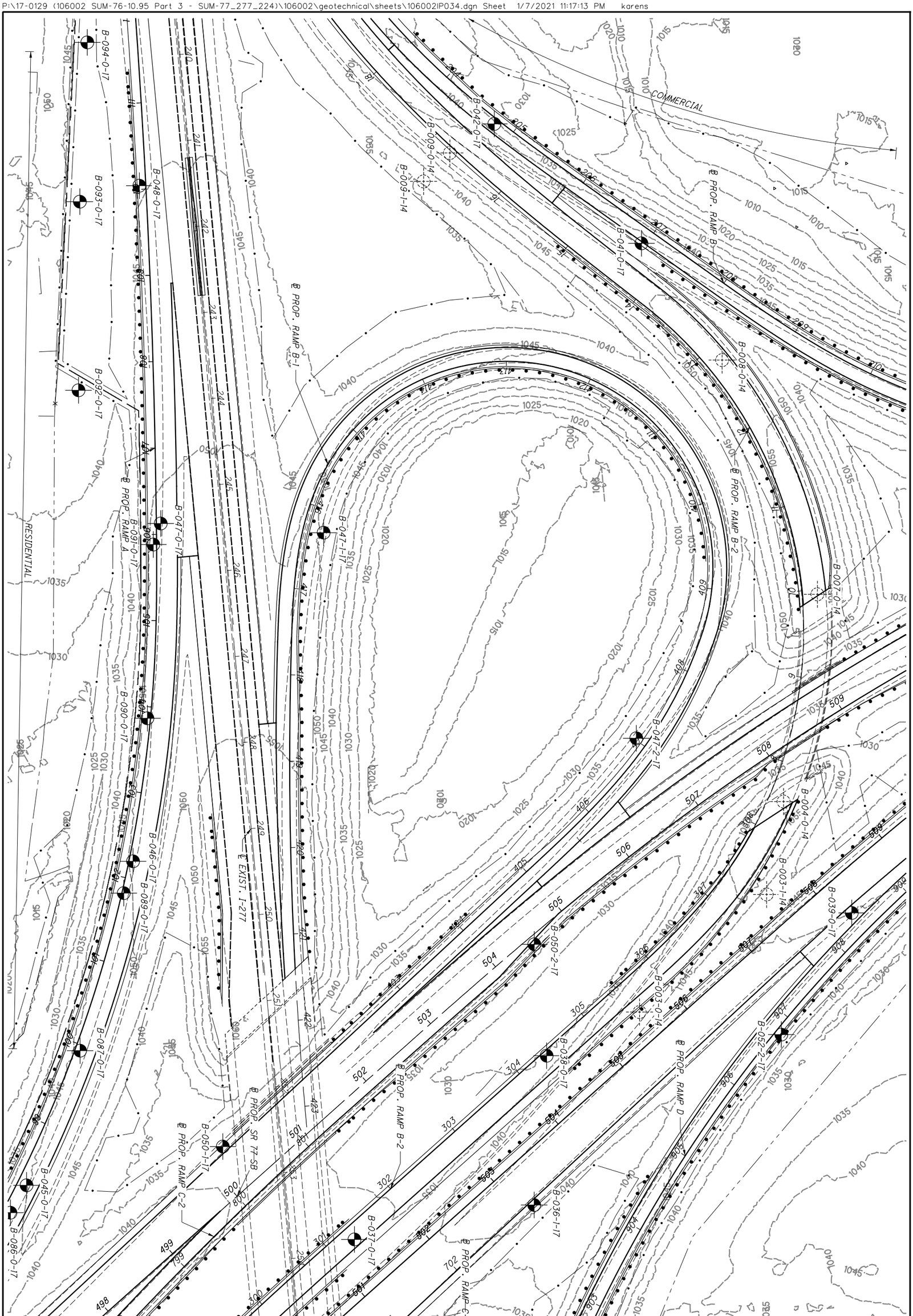


| | | | | | |
|---|---|---|---|---|---|
| | 44 / 209 | SUM-77 / 277 / 224<br>VARIOUS | SOIL PROFILE<br>RAMP B-1 BEGIN TO END | DRAWN MJ<br>CHECKED BPA | 0 50<br>25 100<br>HORIZONTAL SCALE IN FEET |

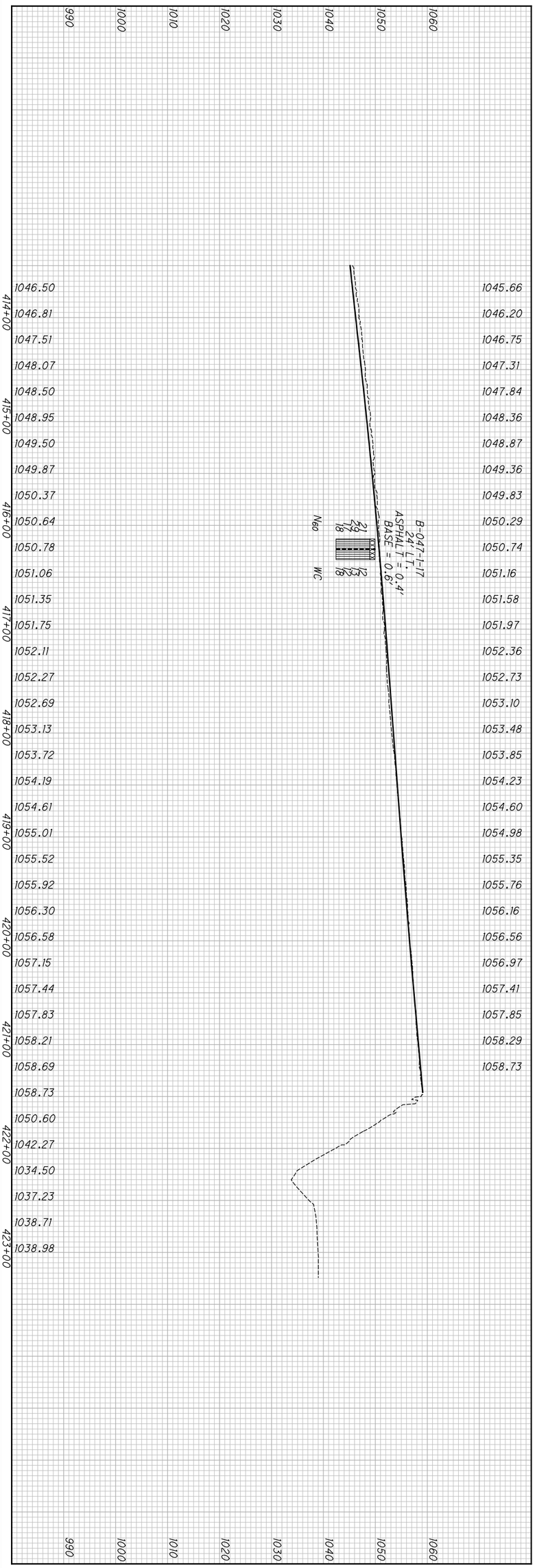


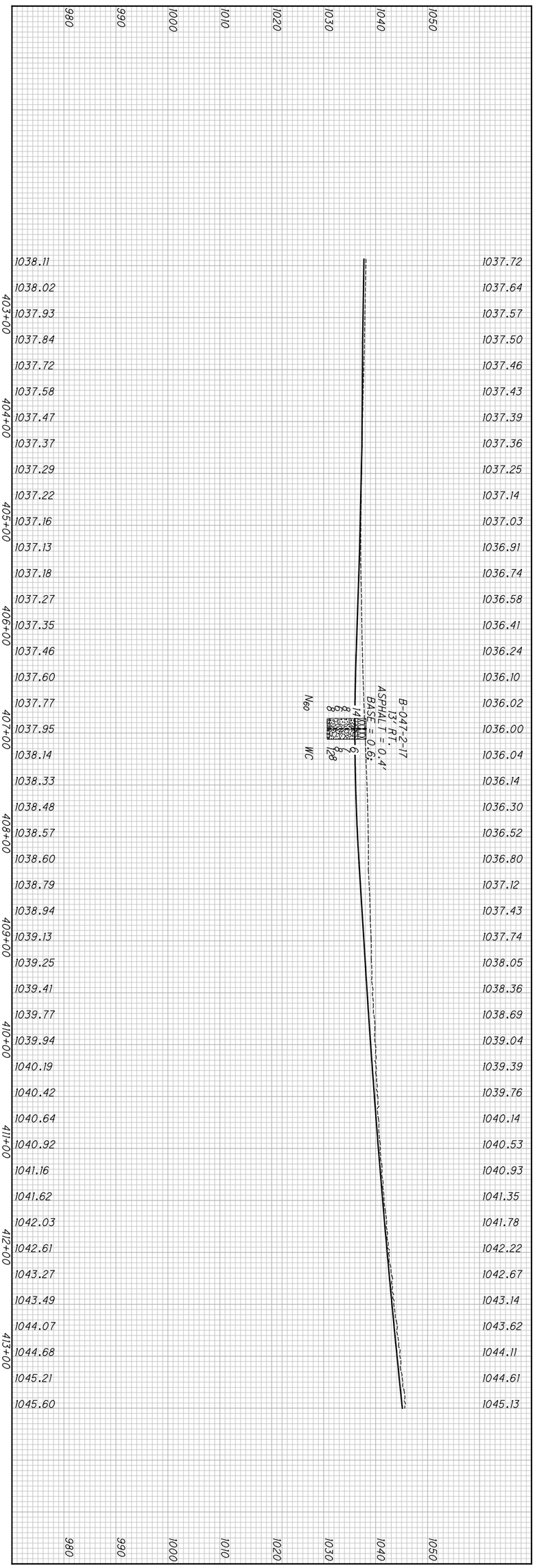


| | | | | |
|---|---|---|---|---|
| 45/209 | SUM-77/277/224<br>VARIOUS | SOIL PROFILE<br>RAMP B-1 BEGIN TO END | DRAWN MJ<br>CHECKED CH | 0 50<br>25 100<br>HORIZONTAL SCALE IN FEET |

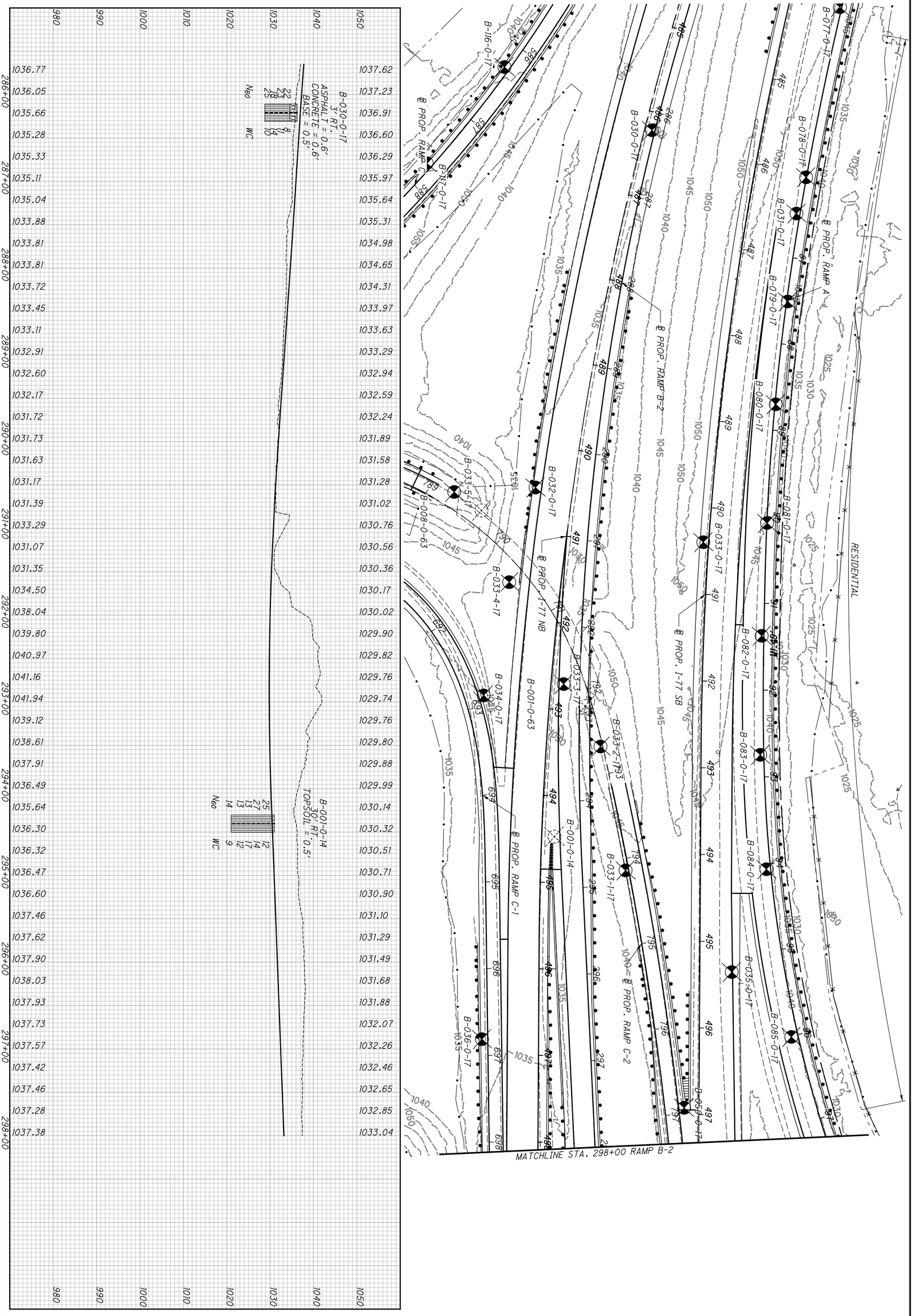




**SUM-77/277/224**
**VARIOUS**

# SOIL PROFILE
## RAMP B-2 BEGIN TO STA. 298+00

DRAWN MJ
CHECKED BPA

0 50
25 100
HORIZONTAL SCALE IN FEET

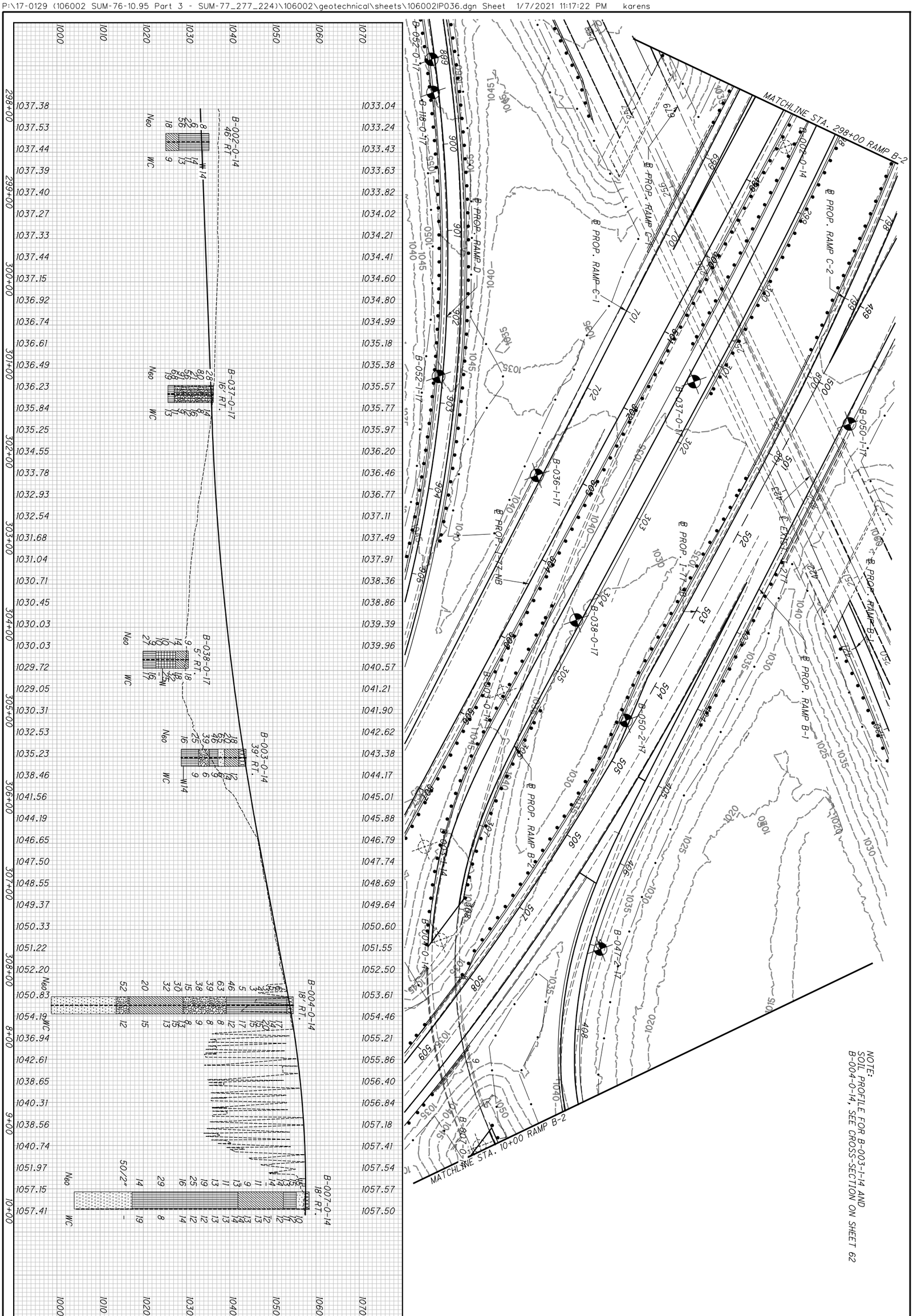




**SUM-77/277/224**
**VARIOUS**

# SOIL PROFILE
## RAMP B-2 STA. 298+00 TO STA. 10+00

DRAWN MJ
CHECKED BPA

0 50
25 100
HORIZONTAL SCALE IN FEET

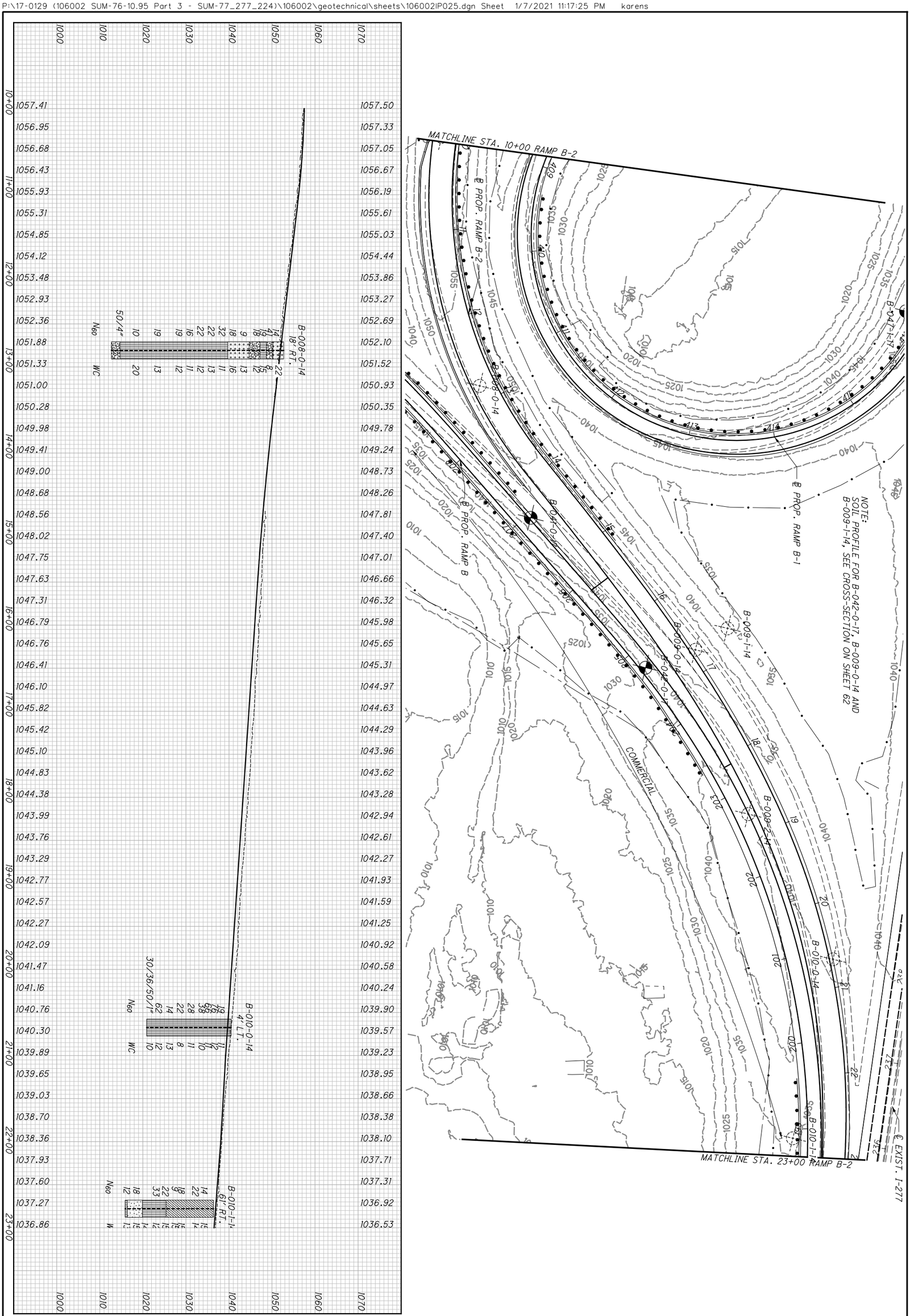


| | | | | | |
|---|---|---|---|---|---|
| | 48 / 209 | SUM-77 / 277 / 224<br>VARIOUS | SOIL PROFILE<br>RAMP B-2 STA. 10+00 TO STA. 23+00 | DRAWN MJ<br>CHECKED BPA | 0 50<br>25 100<br>HORIZONTAL SCALE IN FEET |

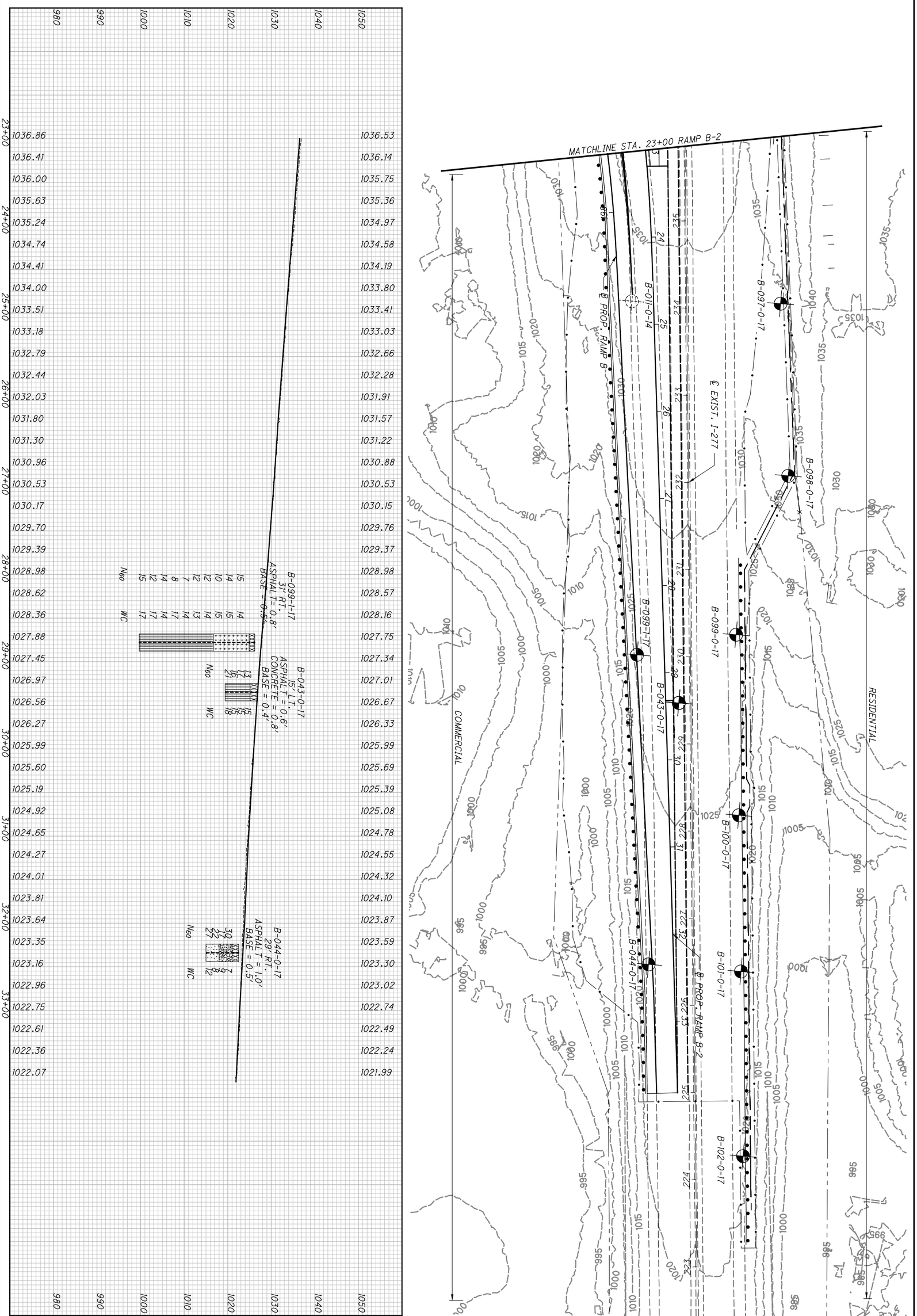


| | | | | | |
|---|---|---|---|---|---|
| 49/209 | SUM-77/277/224<br>VARIOUS | SOIL PROFILE<br>RAMP B-2 STA. 23+00 TO END | DRAWN MJ<br>CHECKED BPA | 0 50<br>25 100<br>HORIZONTAL SCALE IN FEET | N |

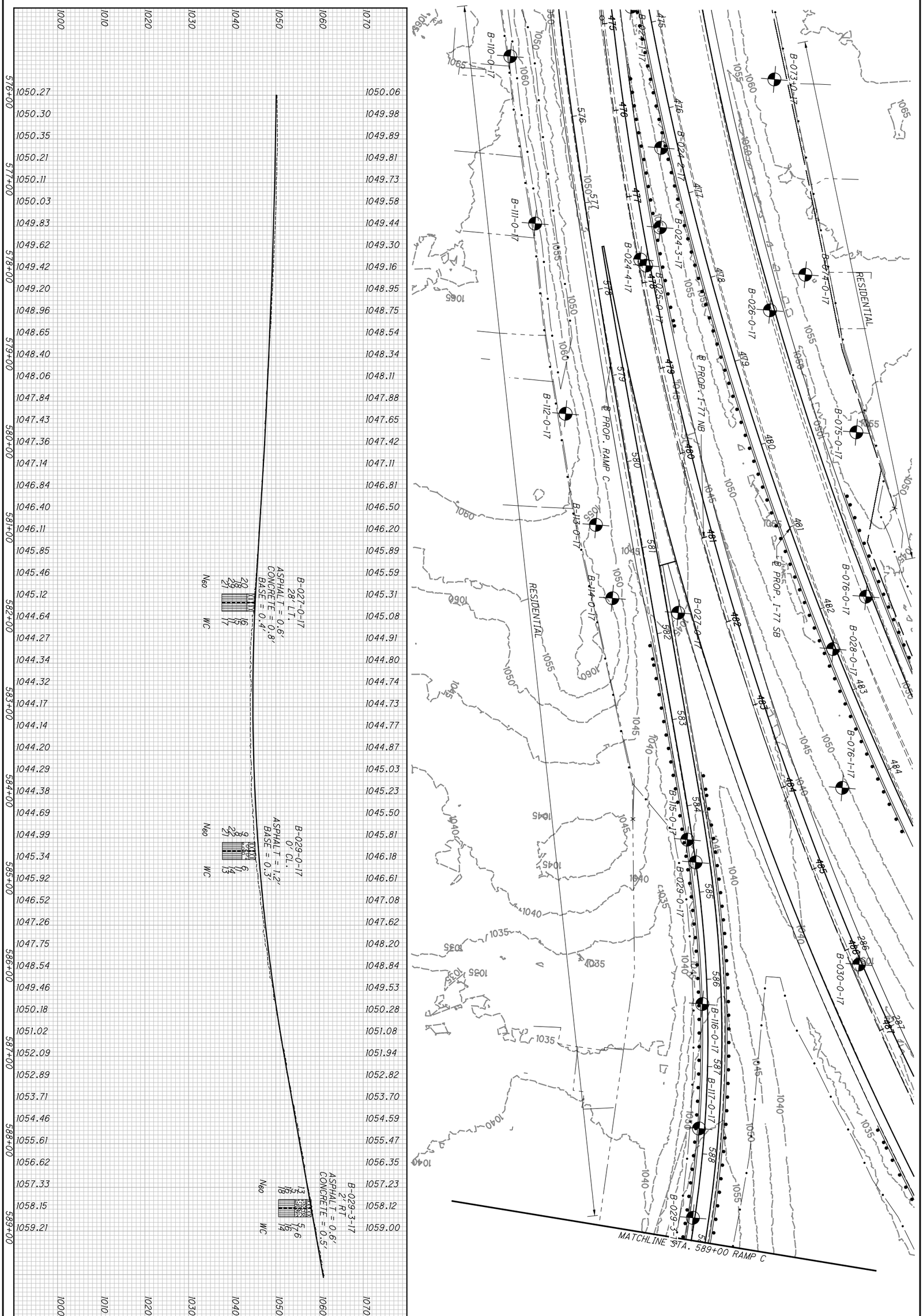


| | | | | | |
|---|---|---|---|---|---|
| 50 / 209 | SUM-77 / 277 / 224<br>VARIOUS | SOIL PROFILE<br>RAMP C BEGIN TO STA. 589+00 | DRAWN MJ<br>CHECKED BPA | 0 50<br>25 100<br>HORIZONTAL SCALE IN FEET | N |

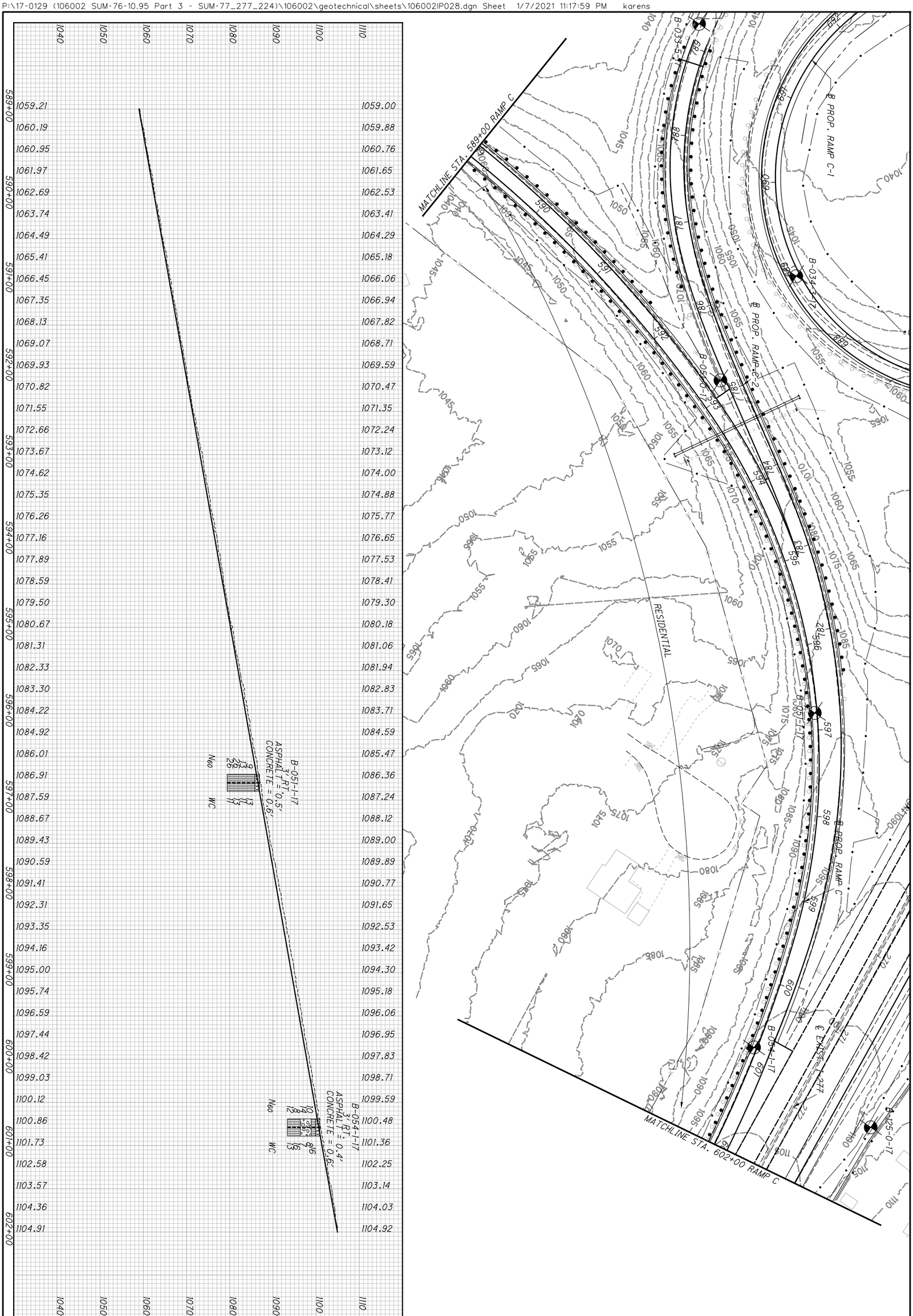


| | | | | | |
|---|---|---|---|---|---|
| 51/209 | SUM-77/277/224<br>VARIOUS | SOIL PROFILE<br>RAMP C STA. 589+00 TO STA. 602+00 | DRAWN MJ<br>CHECKED CH | 0 50<br>25 100<br>HORIZONTAL SCALE IN FEET | |

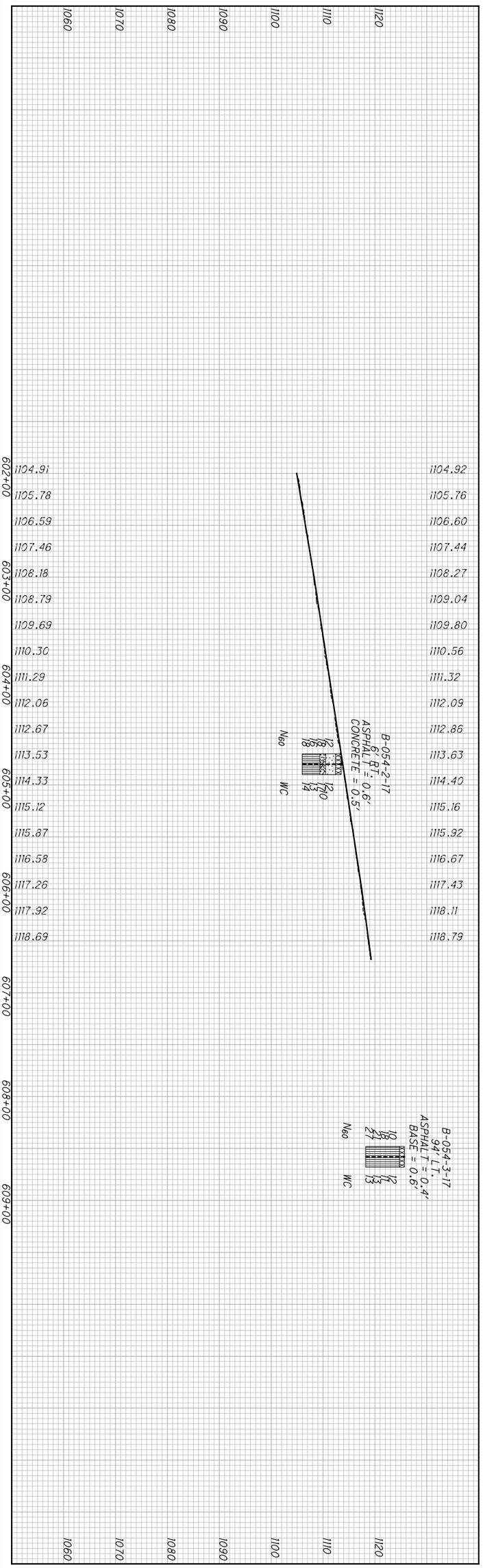


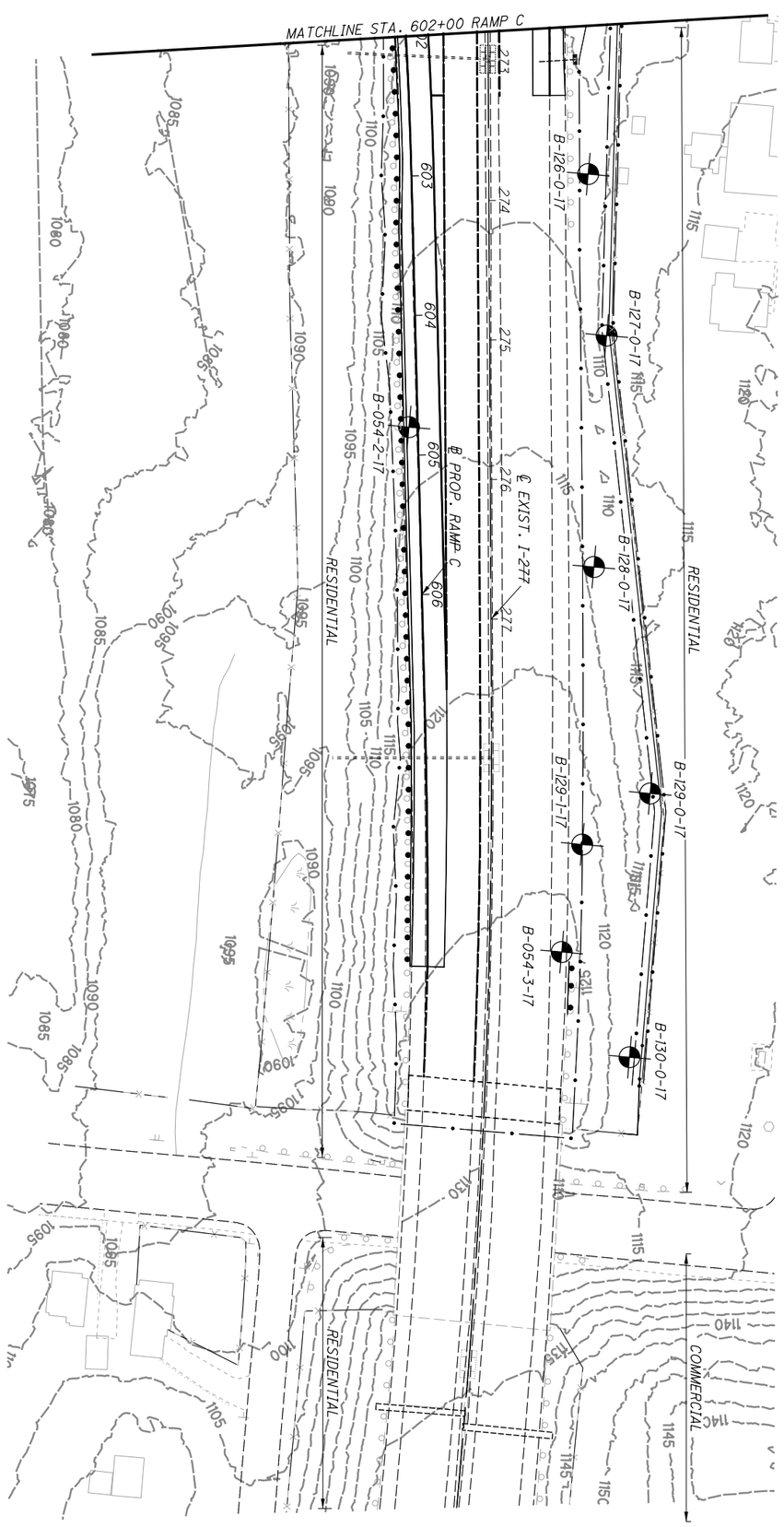




**SUM-77/277/224**
**VARIOUS**

# SOIL PROFILE
## RAMP C STA. 602+00 TO END

DRAWN MJ
CHECKED BPA

0 25 50 100
HORIZONTAL SCALE IN FEET

P:\17-0129 (106002 SUM-76-10.95 Part 3 - SUM-77_277_224)\106002\geotechnical\sheets\106002IP035.dgn Sheet 1/7/2021 11:19:16 PM karens

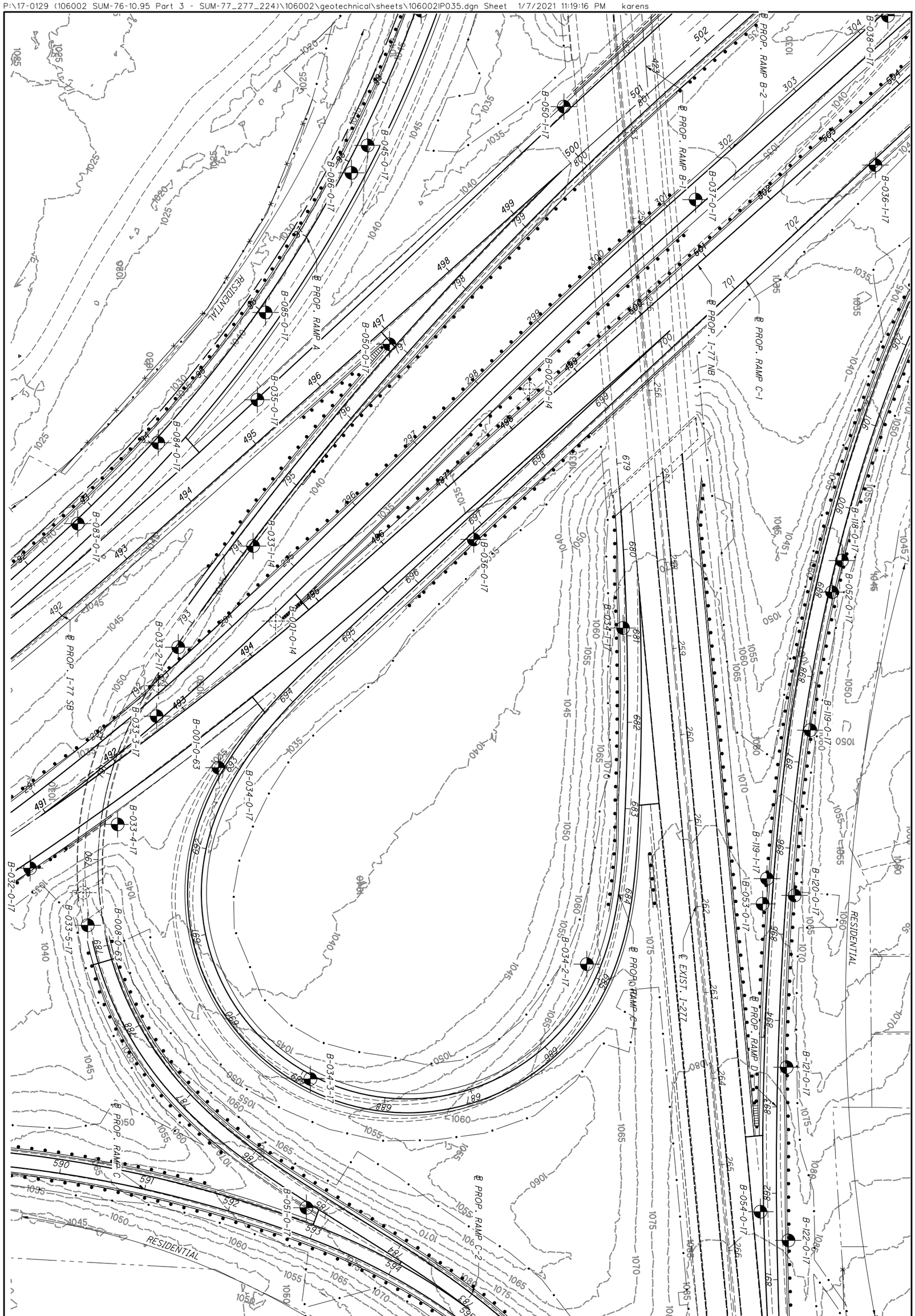


| 53/209 | SUM-77/277/224 VARIOUS | SOIL PROFILE RAMP C-1 BEGIN TO END | DRAWN MJ CHECKED BPA | 0 50 25 100 HORIZONTAL SCALE IN FEET | N |
|---|---|---|---|---|---|

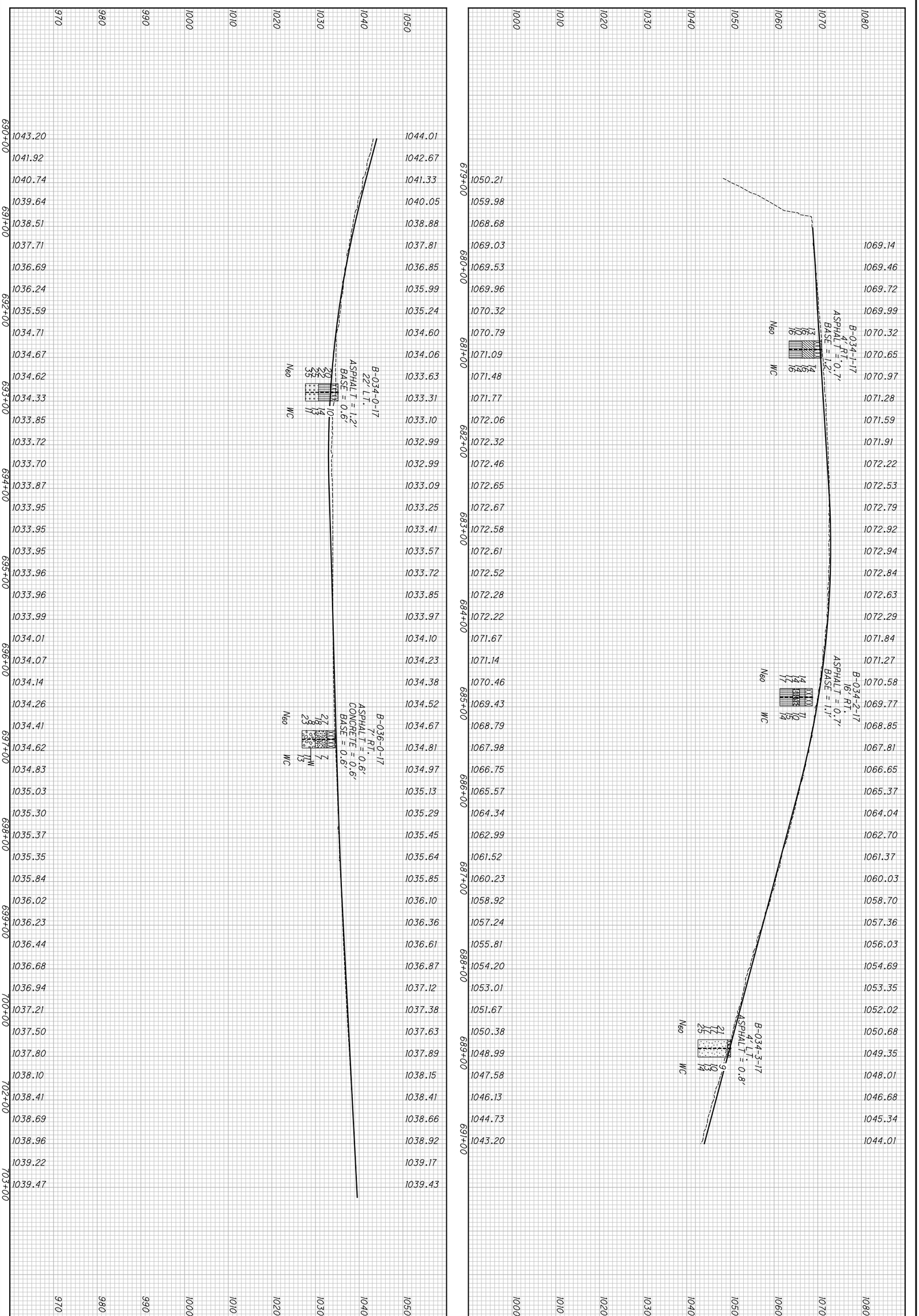




**SUM-77/277/224**
**VARIOUS**

# SOIL PROFILE
## RAMP C-1 BEGIN TO END

DRAWN MJ
CHECKED CH

0 50
25 100
HORIZONTAL SCALE IN FEET

P:\17-0129 (106002 SUM-76-10.95 Part 3 - SUM-77_277_224)\106002\geotechnical\sheets\106002IP031.dgn Sheet 1/7/2021 11:19:46 PM karens

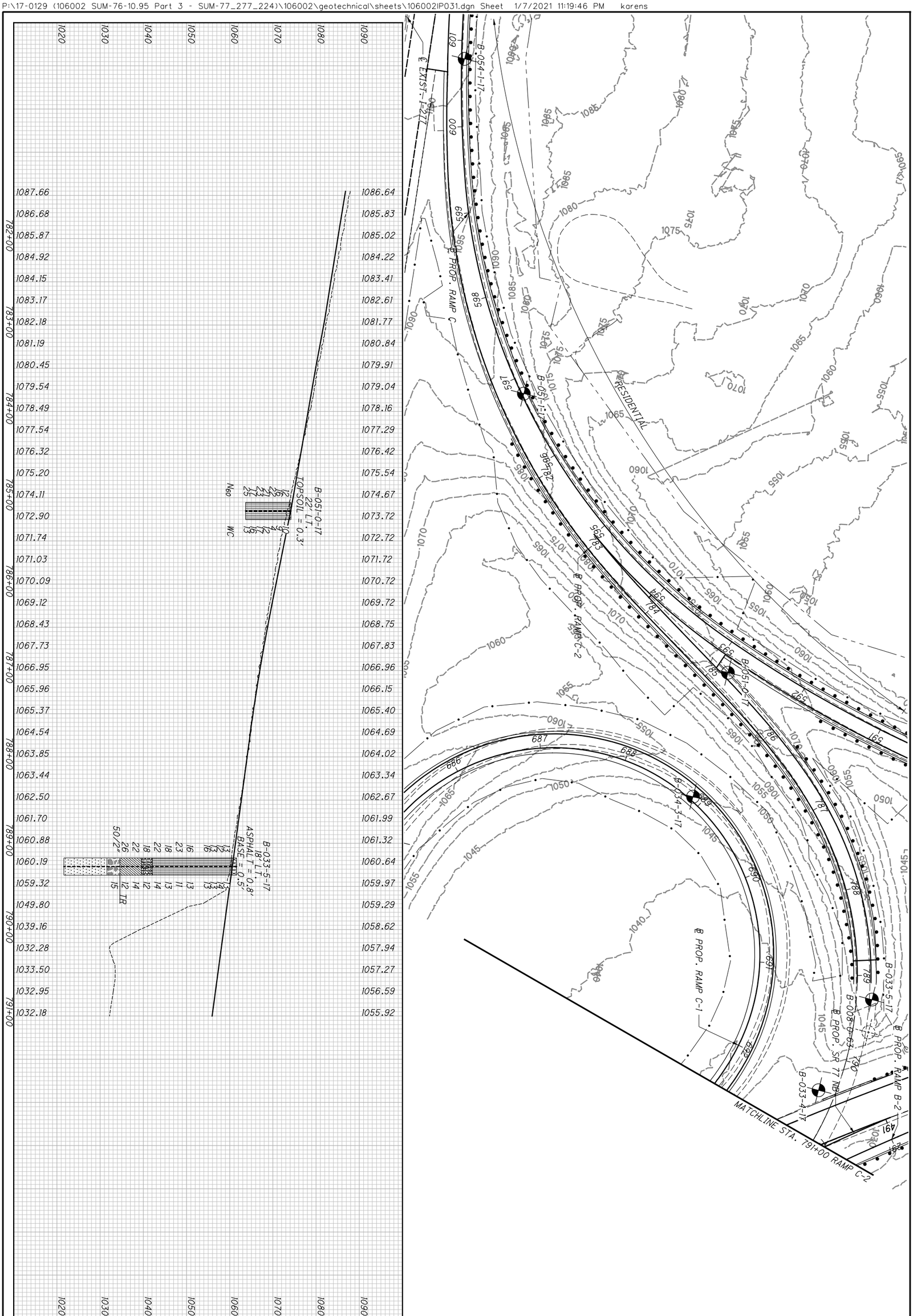


| | | | | | |
|---|---|---|---|---|---|
| 55/209 | SUM-77/277/224<br>VARIOUS | SOIL PROFILE<br>RAMP C-2 BEGIN TO STA. 791+00 | DRAWN MJ<br>CHECKED BPA | 0 50<br>25 100<br>HORIZONTAL SCALE IN FEET | N |

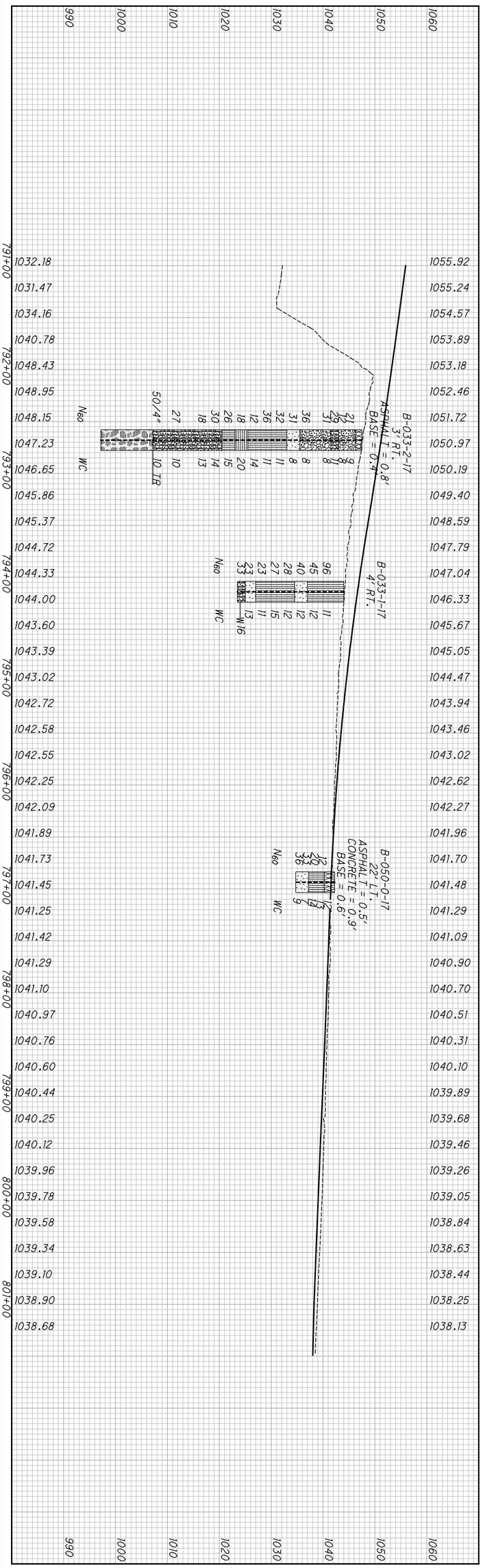


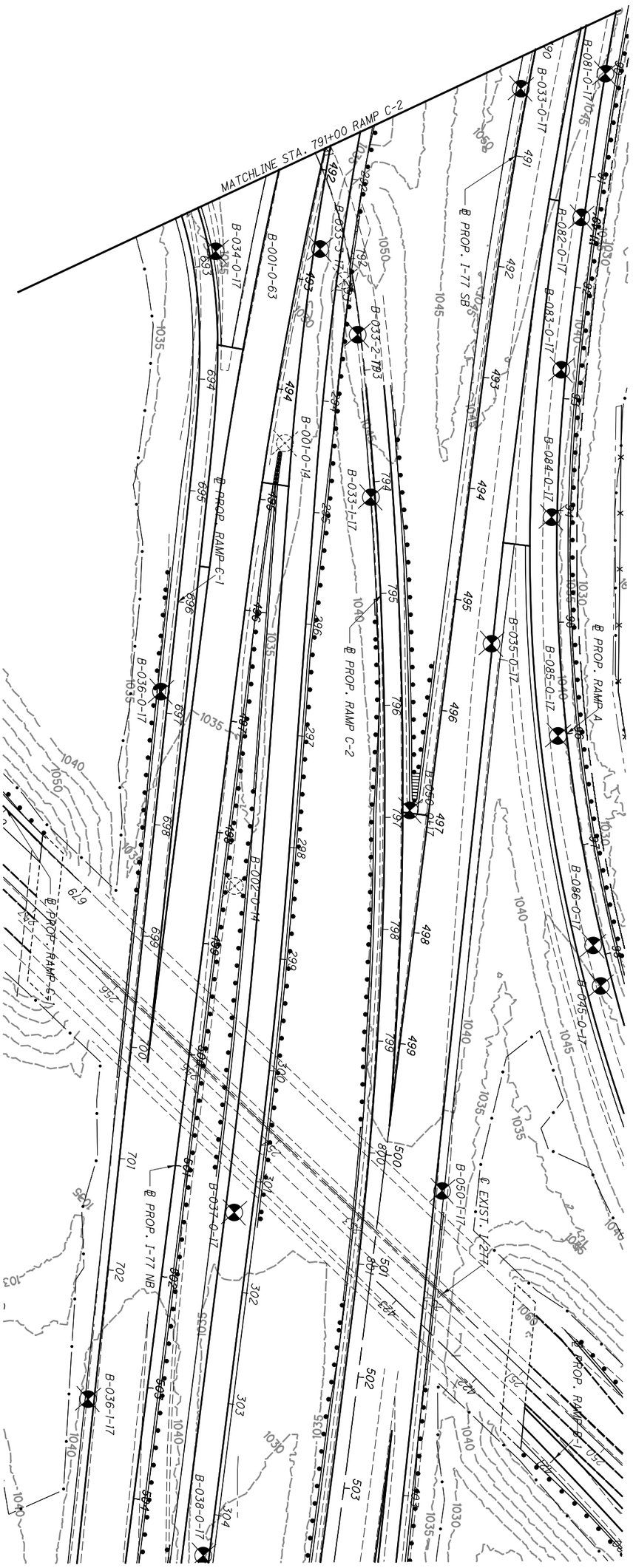


| | | | | | |
|---|---|---|---|---|---|
| 56 / 209 | SUM-77 / 277 / 224<br>VARIOUS | SOIL PROFILE<br>RAMP C-2 STA. 791+00 TO END | DRAWN MJ<br>CHECKED CH | 0 50<br>25 100<br>HORIZONTAL SCALE IN FEET | |

P:\17-0129 (106002 SUM-76-10.95 Part 3 - SUM-77_277_224)\106002\geotechnical\sheets\106002IP032.dgn Sheet 1/7/2021 11:20:07 PM karens

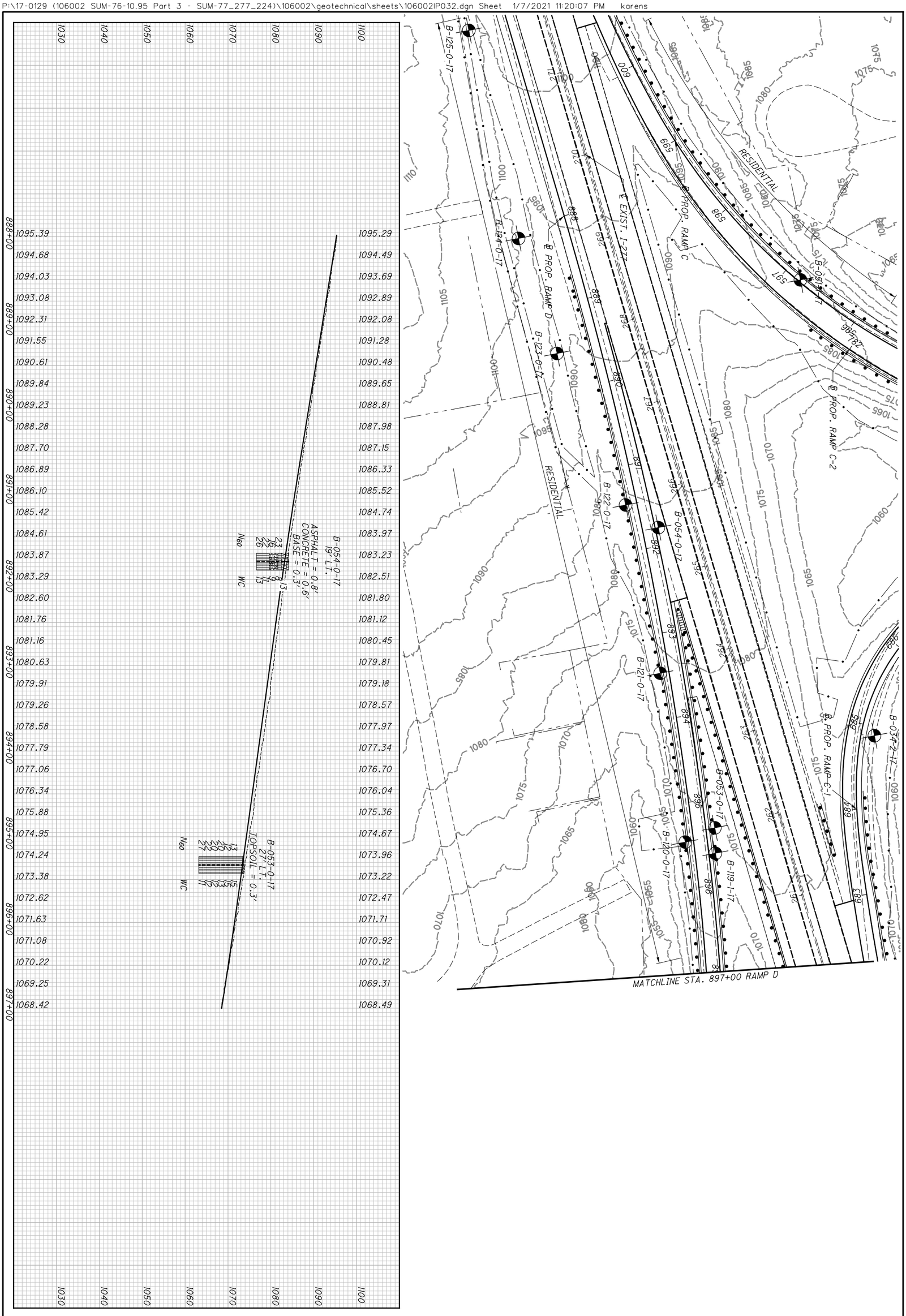


| | | | | | |
|---|---|---|---|---|---|
| 57/209 | SUM-77/277/224<br>VARIOUS | SOIL PROFILE<br>RAMP D BEGIN TO STA. 897+00 | DRAWN MJ<br>CHECKED BPA | 0 50<br>25 100<br>HORIZONTAL SCALE IN FEET | N |

P:\17-0129 (106002 SUM-76-10.95 Part 3 - SUM-77_277_224)\106002\geotechnical\sheets\106002IP033.dgn Sheet 1/7/2021 11:20:10 PM karens

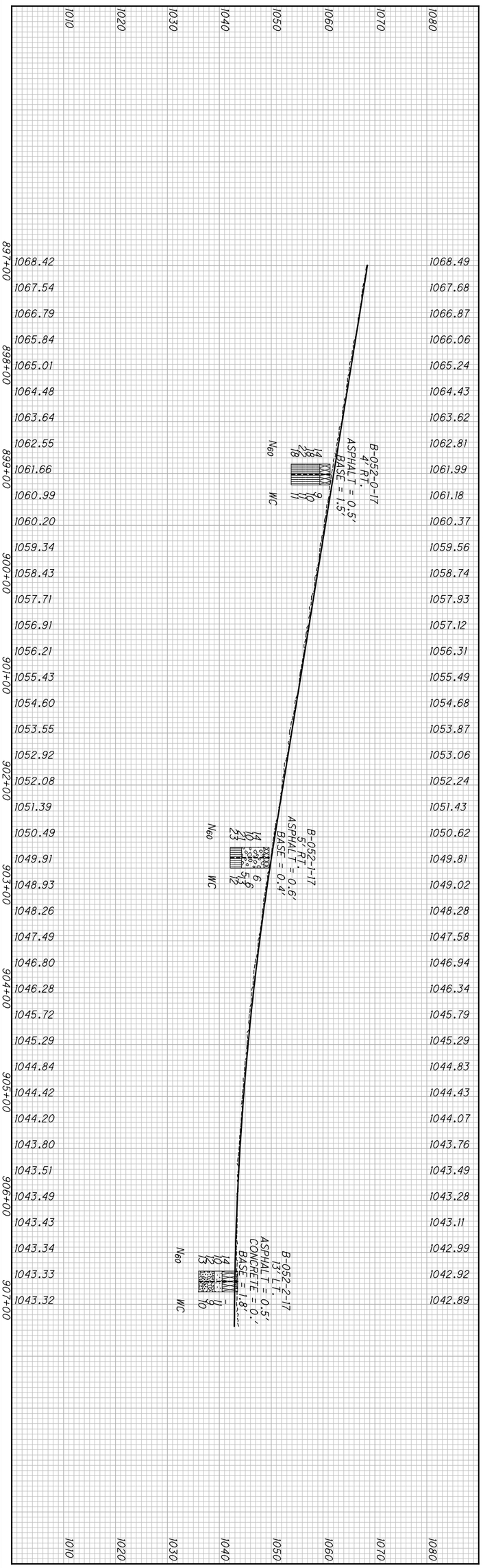


| | | | | | |
|---|---|---|---|---|---|
| 58/209 | SUM-77/277/224<br>VARIOUS | SOIL PROFILE<br>RAMP D STA. 897+00 TO STA. 907+00 | DRAWN MJ<br>CHECKED BPA | 0 50<br>25 100<br>HORIZONTAL SCALE IN FEET | N |

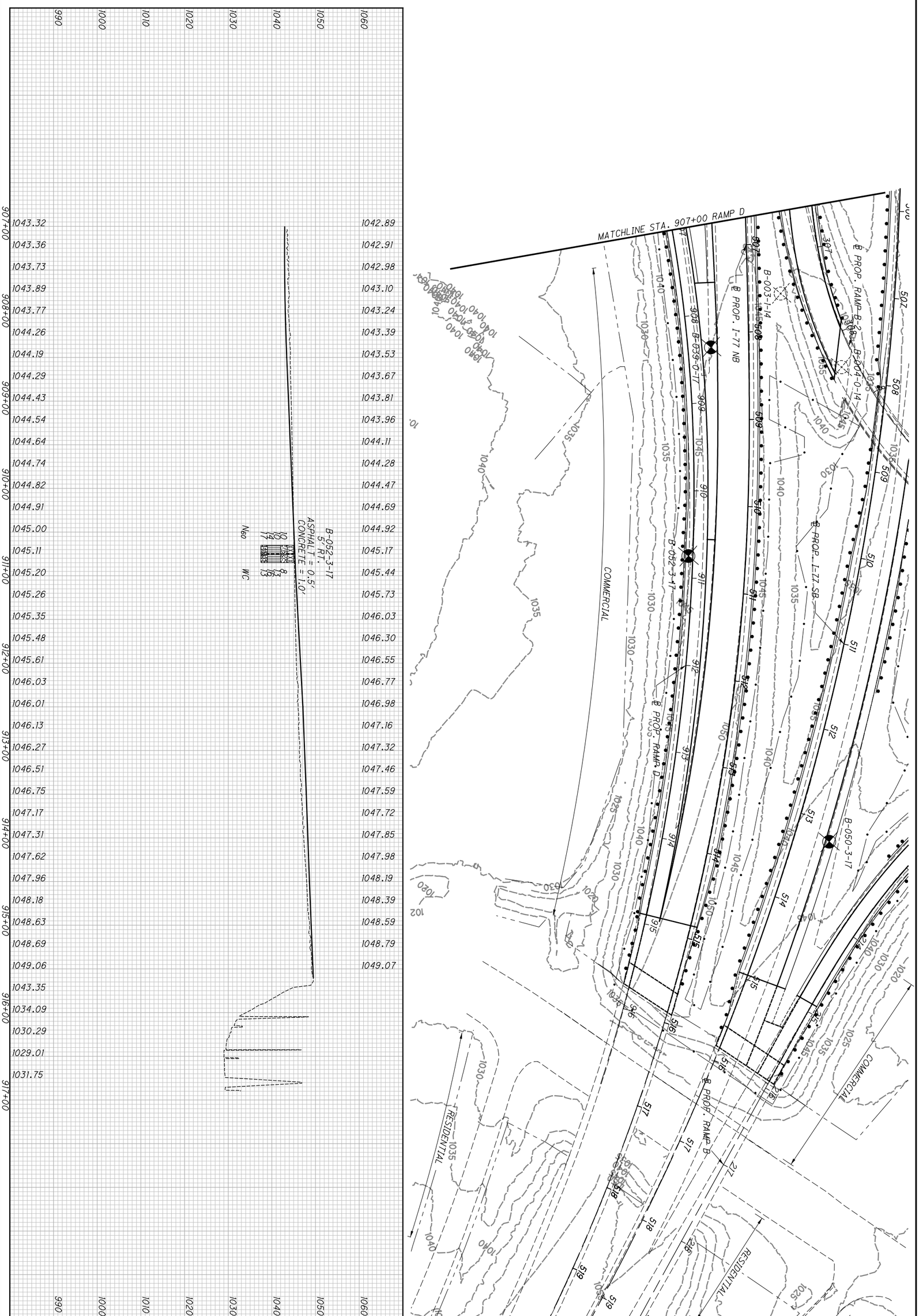


| | | | | | |
|---|---|---|---|---|---|
| 59 / 209 | SUM-77 / 277 / 224<br>VARIOUS | SOIL PROFILE<br>RAMP D STA. 907+00 TO END | DRAWN MJ<br>CHECKED BPA | 0 50<br>25 100<br>HORIZONTAL SCALE IN FEET | |

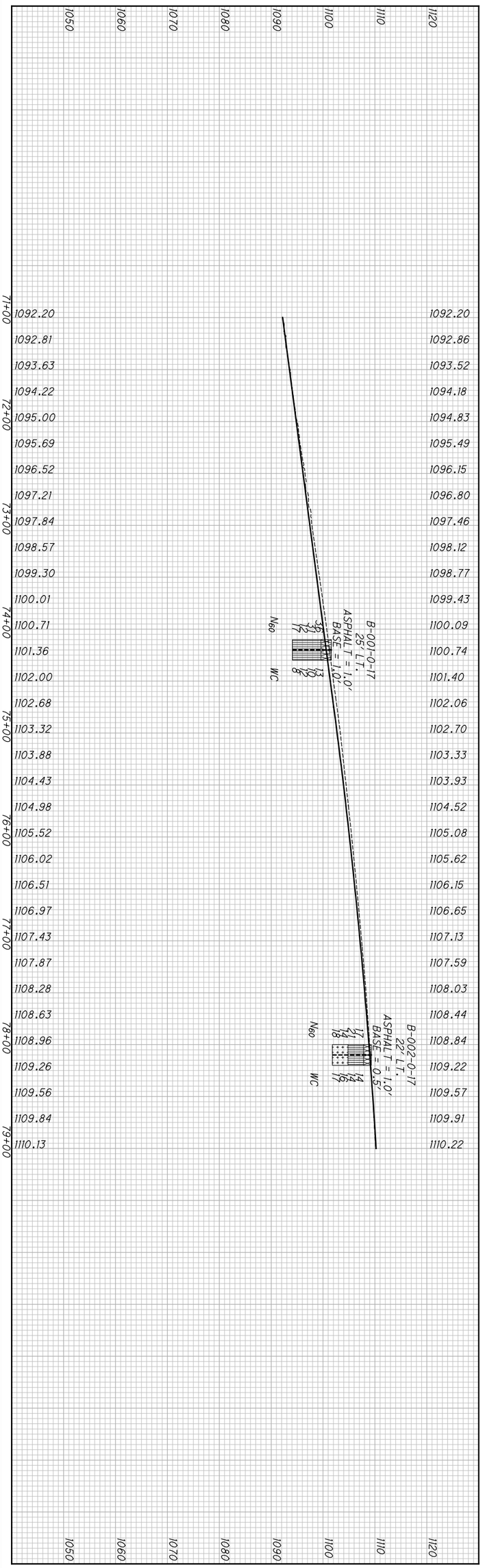


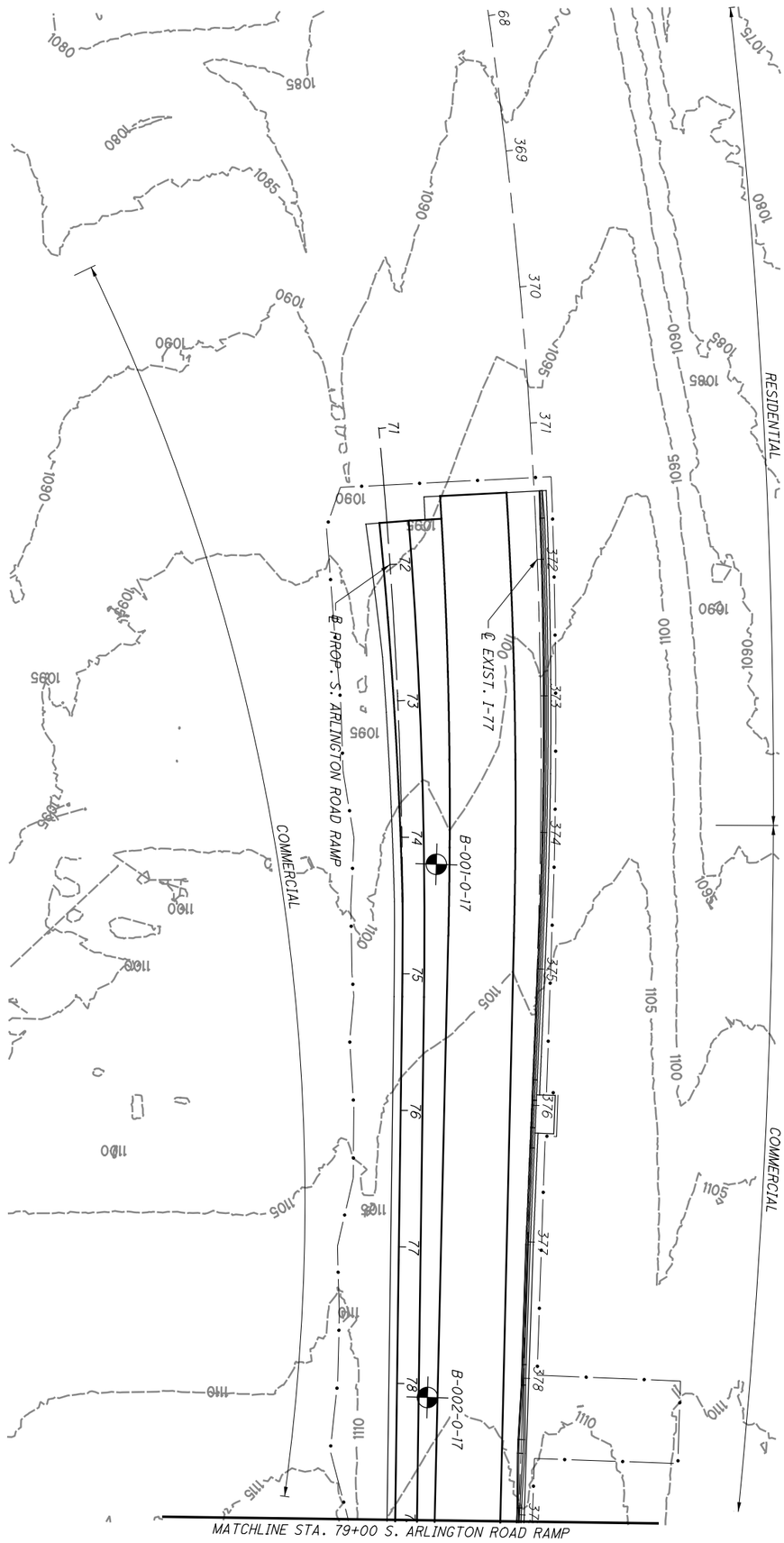


| | | | | | | |
|---|---|---|---|---|---|---|
| | 60 209 | SUM-77/277/224 VARIOUS | SOIL PROFILE S. ARLINGTON RD. RAMP START TO STA. 79+00 | DRAWN MJ | 0 50 25 100 HORIZONTAL SCALE IN FEET | N |
| | | | | CHECKED BPA | | |

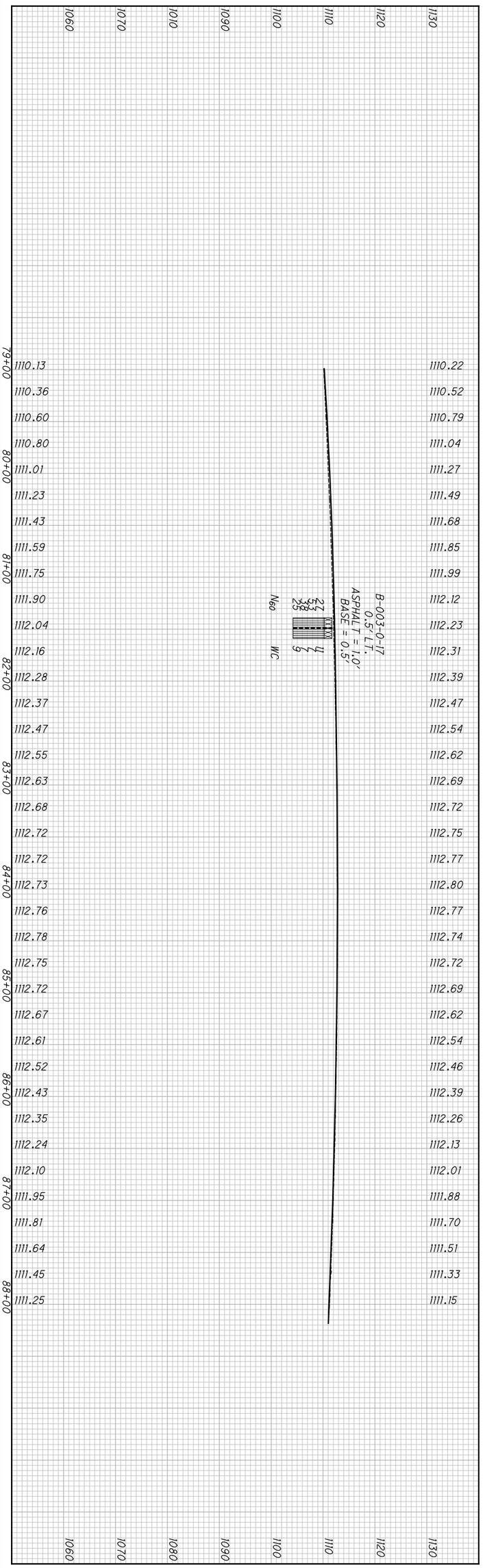


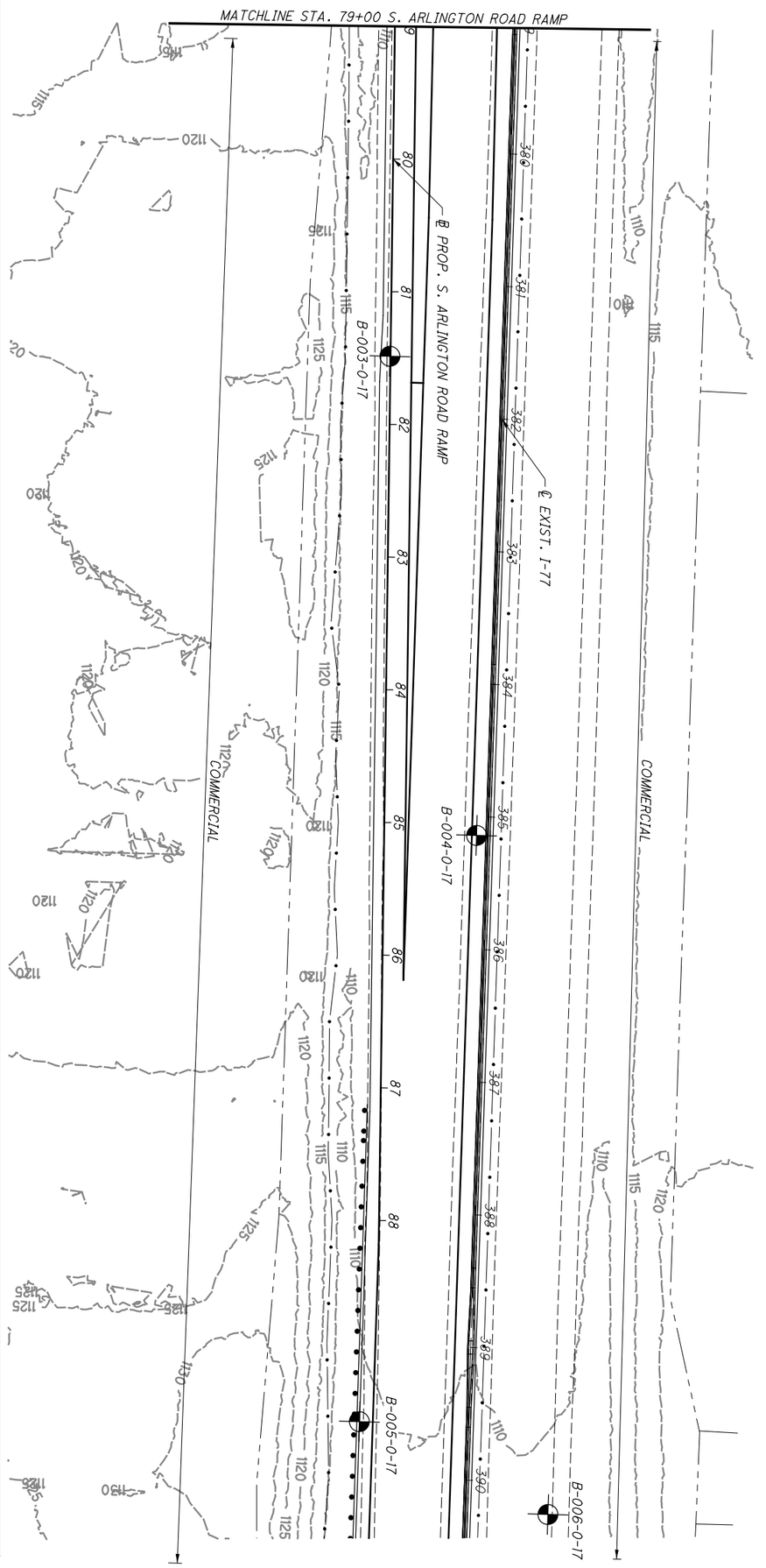


| | | | | | |
|---|---|---|---|---|---|
| | 61 / 209 | SUM-77/277/224<br>VARIOUS | SOIL PROFILE<br>S. ARLINGTON RD. RAMP STA. 79+00 TO END | DRAWN MJ<br>CHECKED BPA | 0 50<br>25 100<br>HORIZONTAL SCALE IN FEET |

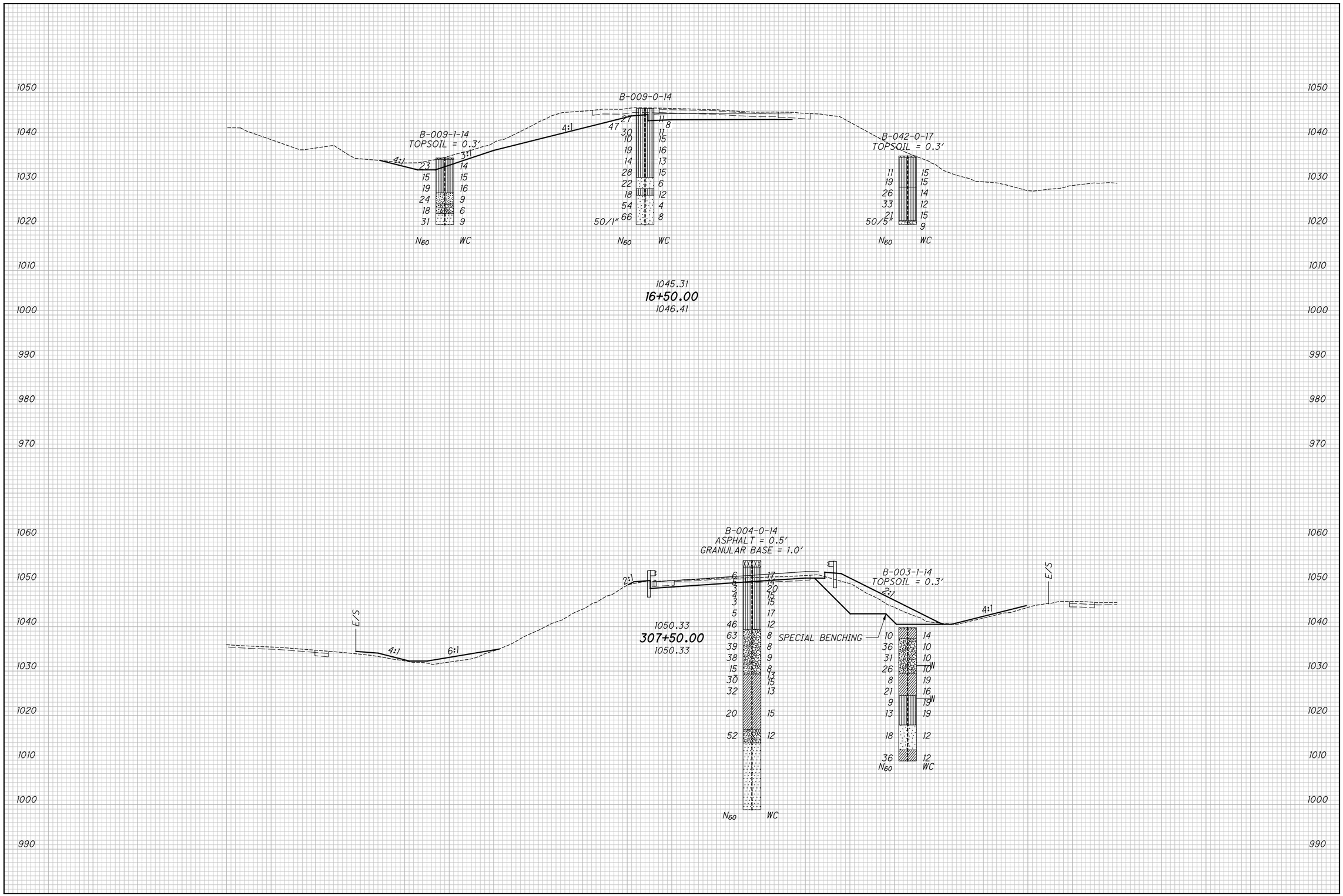


HORIZONTAL SCALE IN FEET
0 10 20 40

DRAWN KCA
CHECKED BPA

# SOIL PROFILE
## CROSS SECTIONS STA. 16+50 & STA. 307+50
## RAMP B-2

SUM-77 / 277 / 224
VARIOUS

62 / 209

P:\17-0129 (106002 SUM-76-10.95 Part 3 - SUM-77_277_224)\106002\geotechnical\sheets\106002_IX001.dgn Sheet 1/7/2021 1:58:24 PM karens

P:\17-0129 (106002 SUM-76-10.95 Part 3 - SUM-77_277_224)\106002\geotechnical\sheets\106002ZP001.dgn Sheet 1/7/2021 11:20:27 PM karens

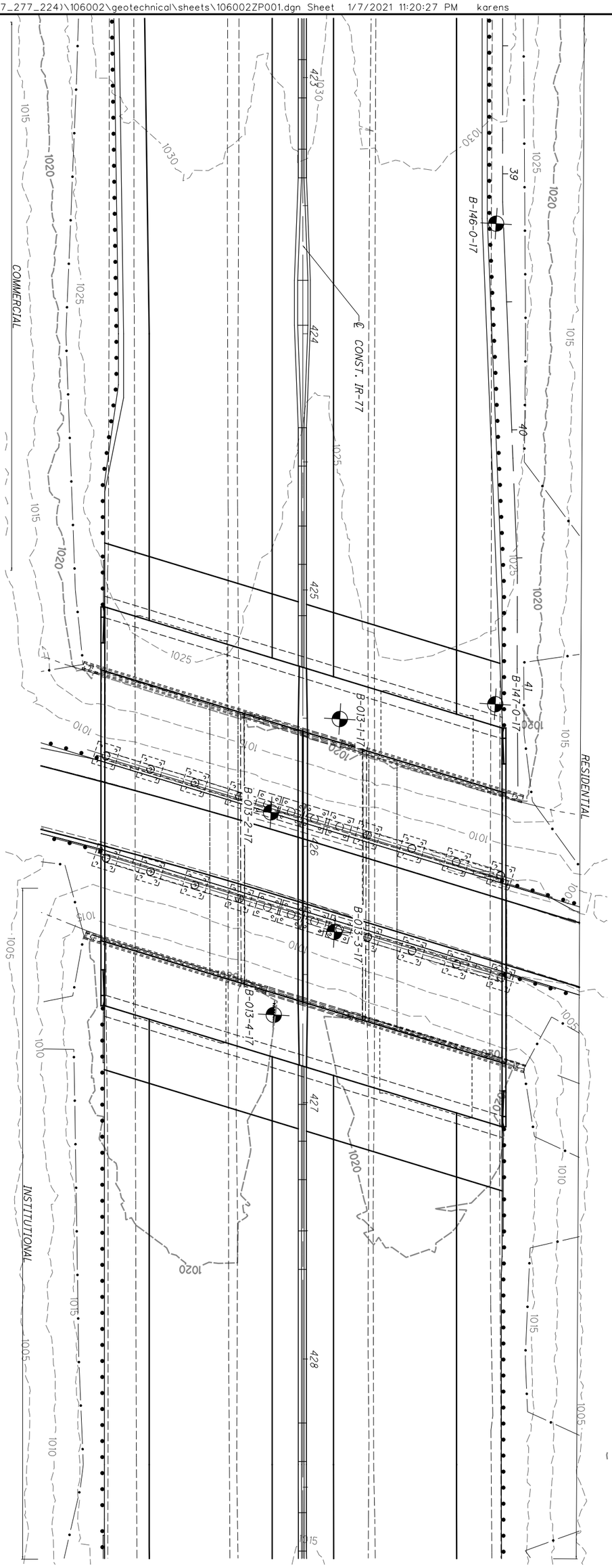


| | | | | | |
|---|---|---|---|---|---|
| | 63/209 | SUM-77/277/224<br>VARIOUS | STRUCTURE FOUNDATION EXPLORATION<br>BRIDGE SUM-77-0802 L&R OVER E WARNER RD | DRAWN EB<br>CHECKED BPA | 0 10 20 40<br>HORIZONTAL SCALE IN FEET |

P:\17-0129 (106002 SUM-76-10.95 Part 3 - SUM-77_277_224)\106002\geotechnical\sheets\106002ZF101.dgn Sheet 1/8/2021 10:27:32 AM karens

HORIZONTAL SCALE IN FEET
0 10 20 40

DRAWN EB
CHECKED BPA

STRUCTURE FOUNDATION EXPLORATION
BRIDGE SUM-77-0802 L&R OVER E WARNER RD

SUM-77/277/224
VARIOUS

P:\17-0129 (106002 SUM-76-10.95 Part 3 - SUM-77_277_224)\106002\geotechnical\sheets\106002ZP002.dgn Sheet 1/7/2021 11:21:09 PM karens

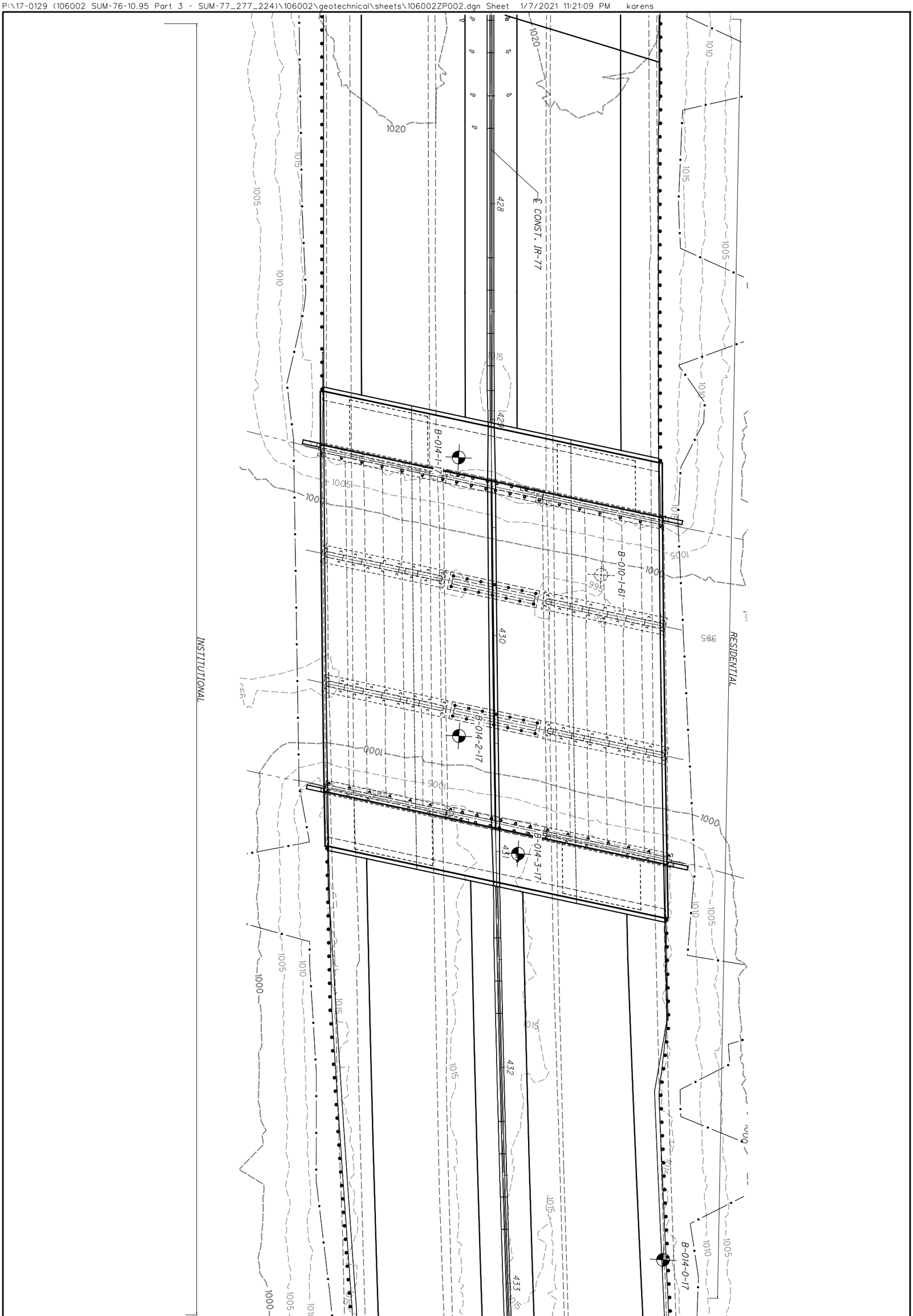


| | | | | | |
|---|---|---|---|---|---|
| | 65/209 | **SUM-77/277/224**<br>**VARIOUS** | **STRUCTURE FOUNDATION EXPLORATION**<br>**BRIDGE SUM-77-0810 L&R OVER THE TUSCARAWAS RIVER** | DRAWN EB<br>CHECKED BPA | 0 20<br>10 40<br>HORIZONTAL SCALE IN FEET |

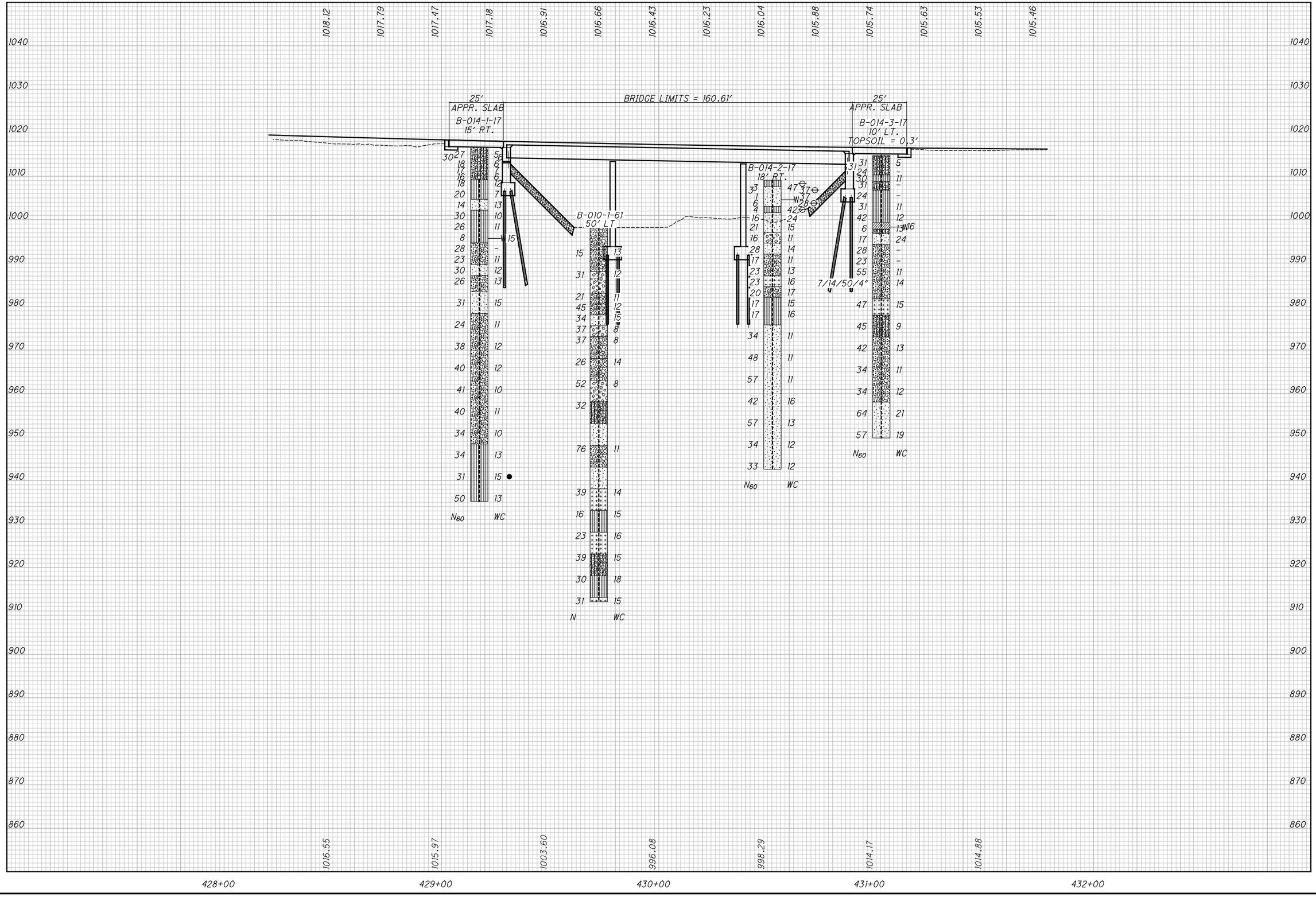


HORIZONTAL SCALE IN FEET
0 10 20 40

DRAWN EB
CHECKED BPA

**STRUCTURE FOUNDATION EXPLORATION**
**BRIDGE SUM-77-0810 L&R OVER THE TUSCARAWAS RIVER**

**SUM-77/277/224**
**VARIOUS**

66/209

P:\17-0129 (106002 SUM-76-10.95 Part 3 - SUM-77_277_224)\106002\geotechnical\sheets\106002ZF102.dgn Sheet 1/8/2021 10:28:51 AM karens

P:\17-0129 (106002 SUM-76-10.95 Part 3 - SUM-77_277_224)\106002\geotechnical\sheets\106002ZP003.dgn Sheet 1/7/2021 11:23:20 PM karens

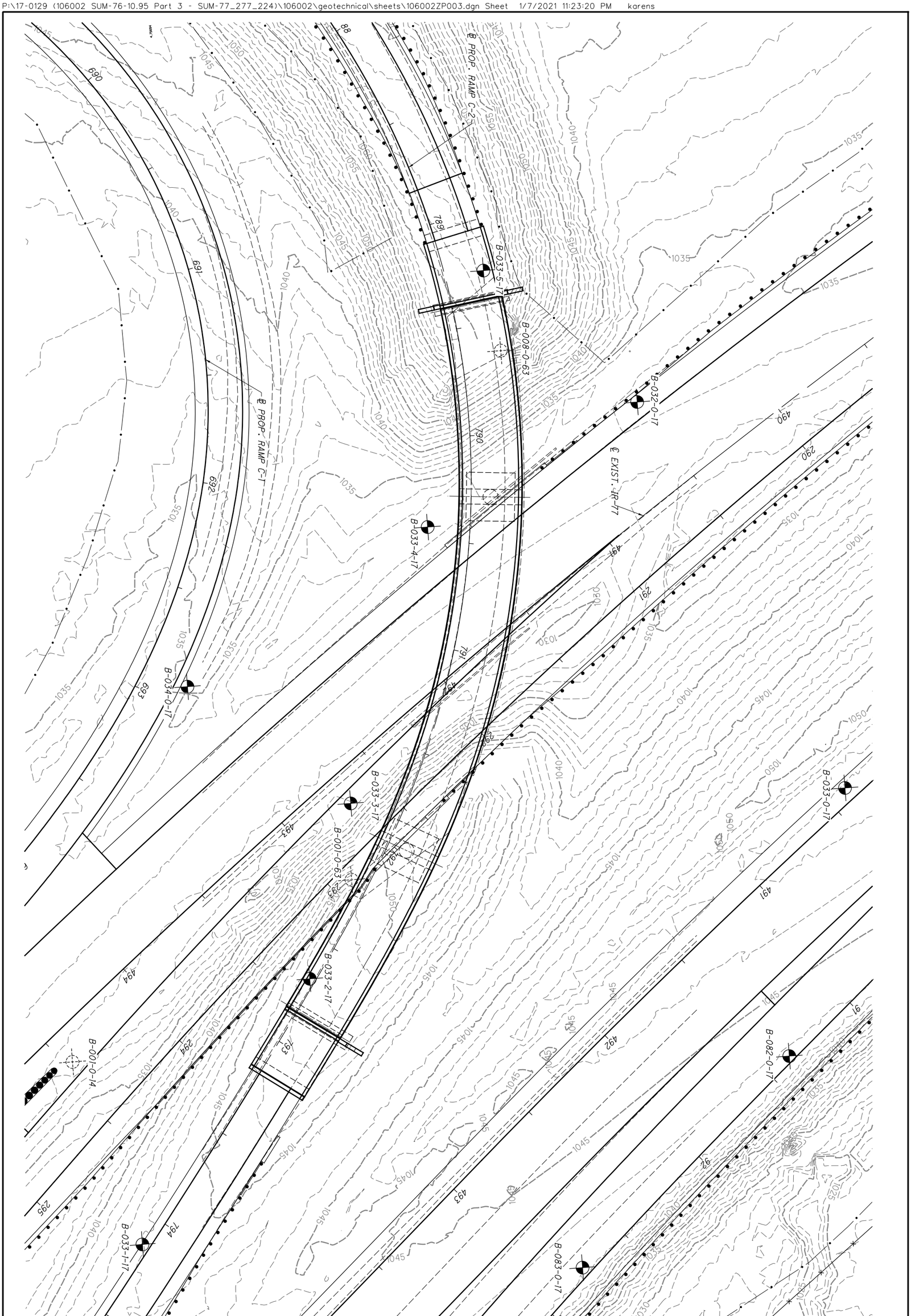


| | | | | | |
|---|---|---|---|---|---|
| 67/209 | SUM-77/277/224<br>VARIOUS | STRUCTURE FOUNDATION EXPLORATION<br>BRIDGE SUM-77-0927R NB IR-77 UNDER SB IR-77 RAMP C2 | DRAWN EB<br>CHECKED BPA | 0 10 20 40<br>HORIZONTAL SCALE IN FEET | N |

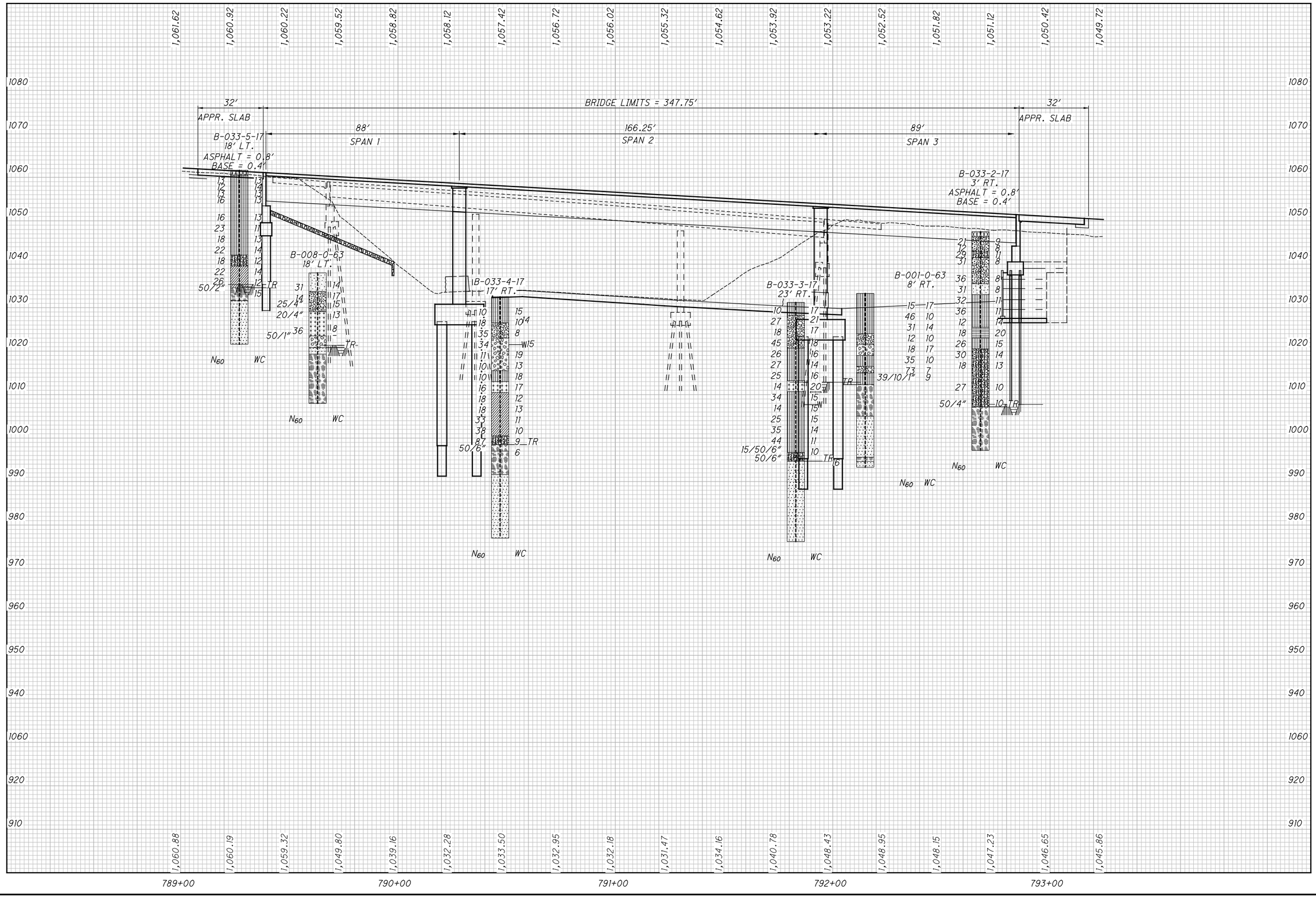


HORIZONTAL SCALE IN FEET
0 10 20 40

DRAWN EB
CHECKED BPA

# STRUCTURE FOUNDATION EXPLORATION
## BRIDGE SUM-77-0927R

SUM-77 / 277 / 224
VARIOUS

68 | 209

P:\17-0129 (106002 SUM-76-10.95 Part 3 - SUM-77_277_224\106002\geotechnical\sheets\106002ZF103.dgn Sheet 1/8/2021 10:29:42 AM karens

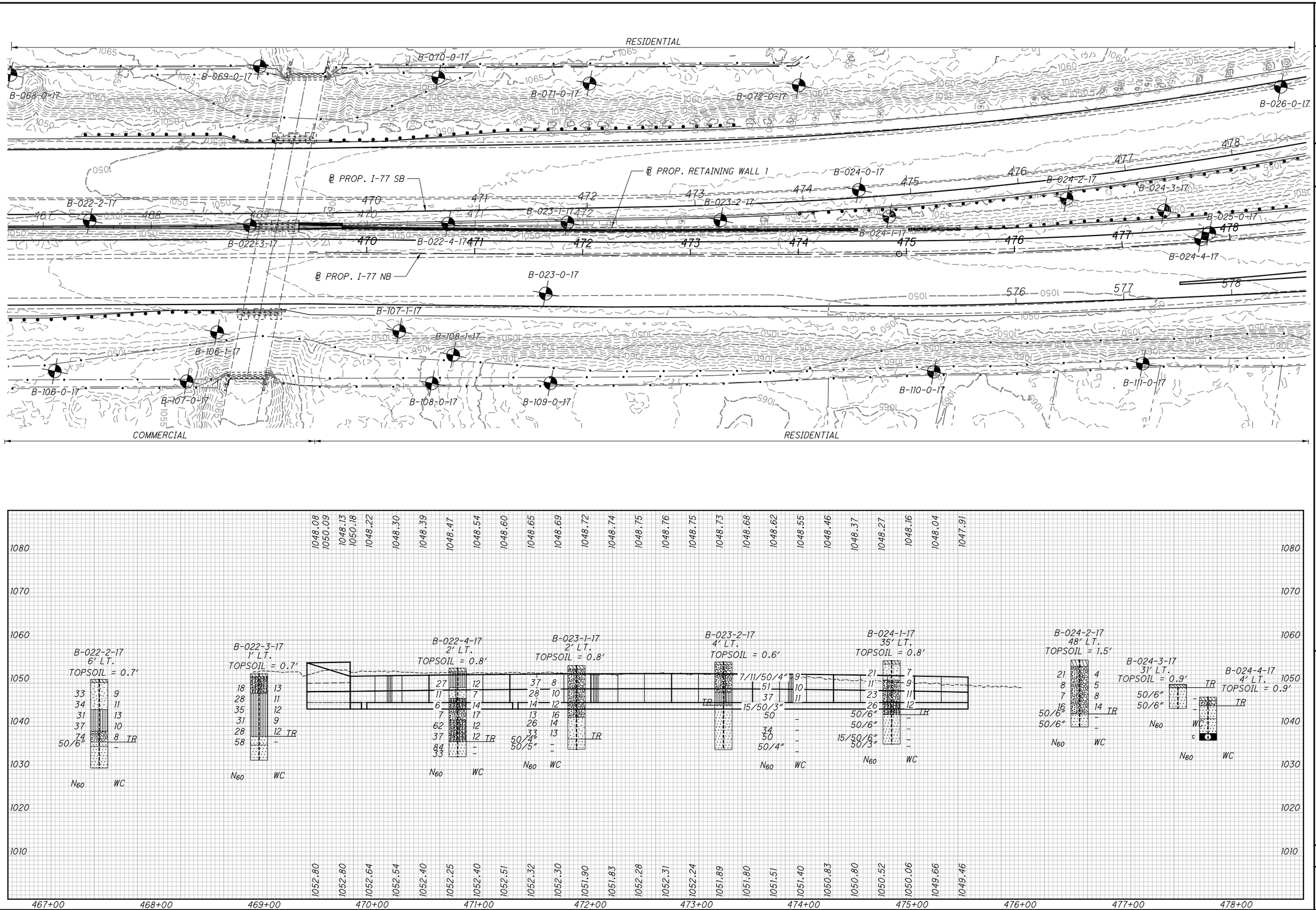


HORIZONTAL SCALE IN FEET
0 20 40 80

DRAWN EB
CHECKED BPA

# STRUCTURE FOUNDATION EXPLORATION
# RETAINING WALL 1

SUM-77/277/224
VARIOUS

69/209

P:\17-0129 (106002 SUM-76-10.95 Part 3 - SUM-77_277_224)\106002\geotechnical\sheets\106002ZP005.dgn Sheet 1/7/2021 11:25:29 PM karens

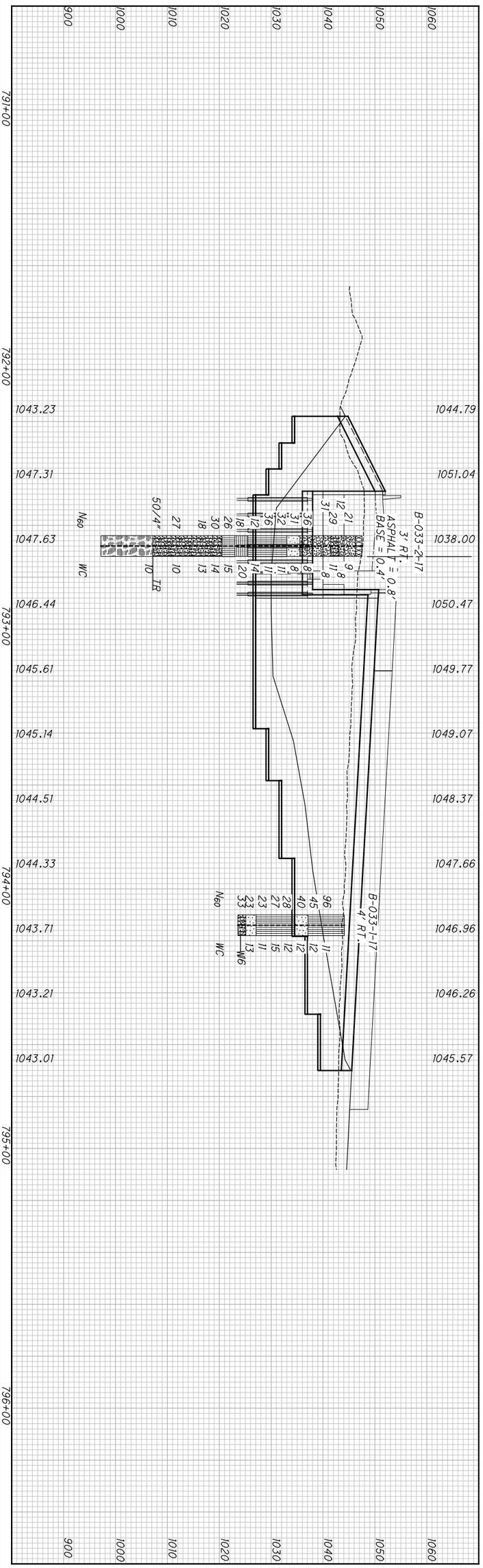


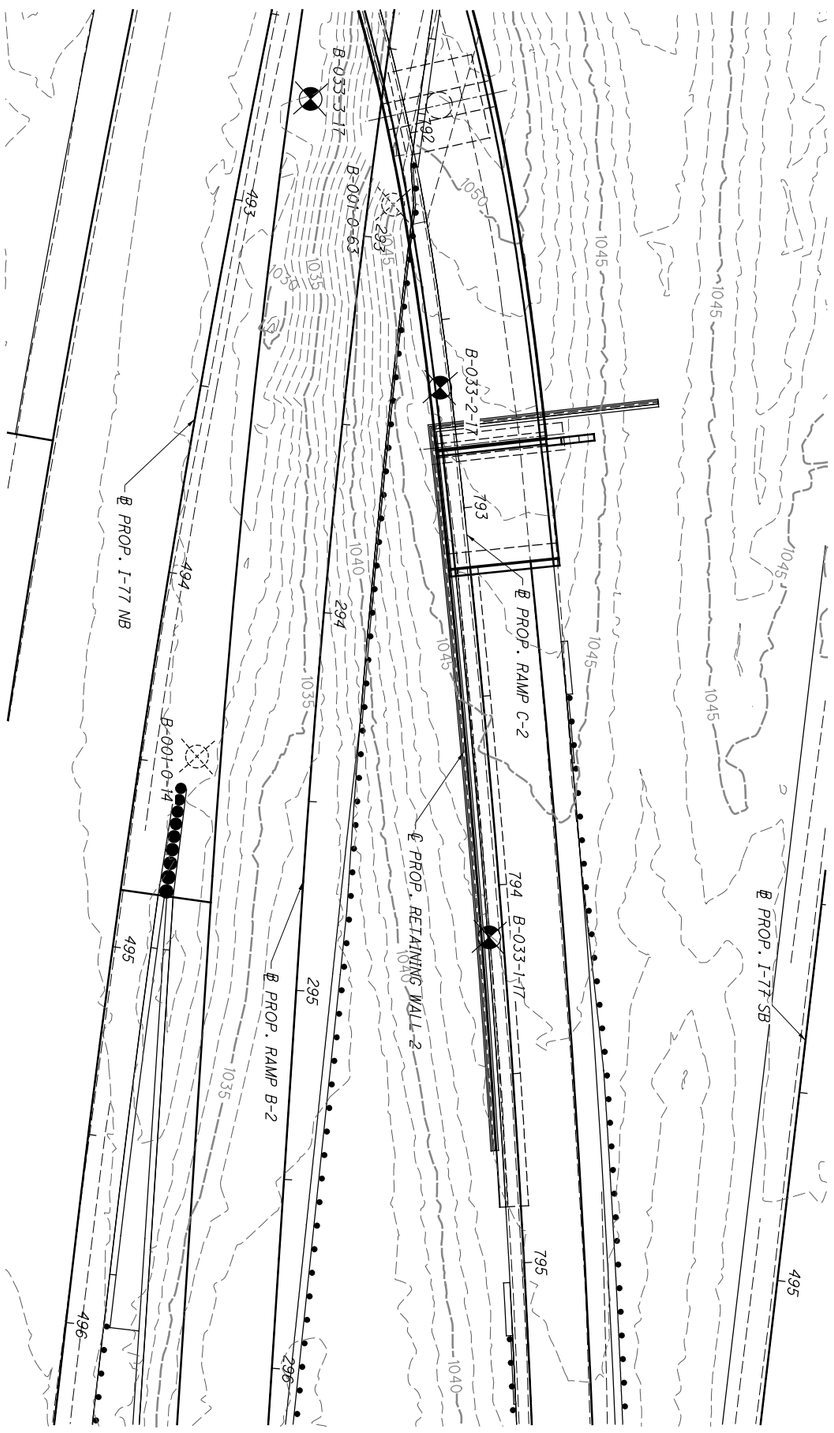


| | | | | | | |
|---|---|---|---|---|---|---|
| | 70/209 | SUM-77/277/224<br>VARIOUS | STRUCTURE FOUNDATION EXPLORATION<br>RETAINING WALL 2 | DRAWN EB<br>CHECKED BPA | 0 20<br>10 40<br>HORIZONTAL SCALE IN FEET | |

P:\17-0129 (106002 SUM-76-10.95 Part 3 - SUM-77_277_224)\106002\geotechnical\sheets\106002ZP007.dgn Sheet 1/7/2021 11:29:32 PM karens

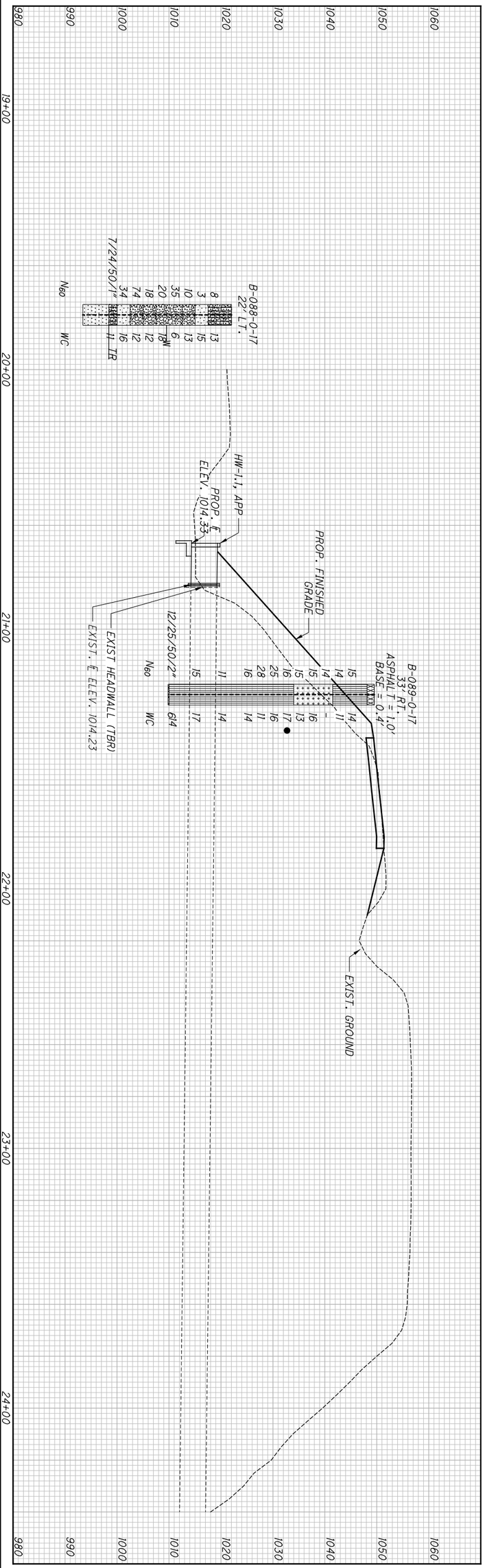


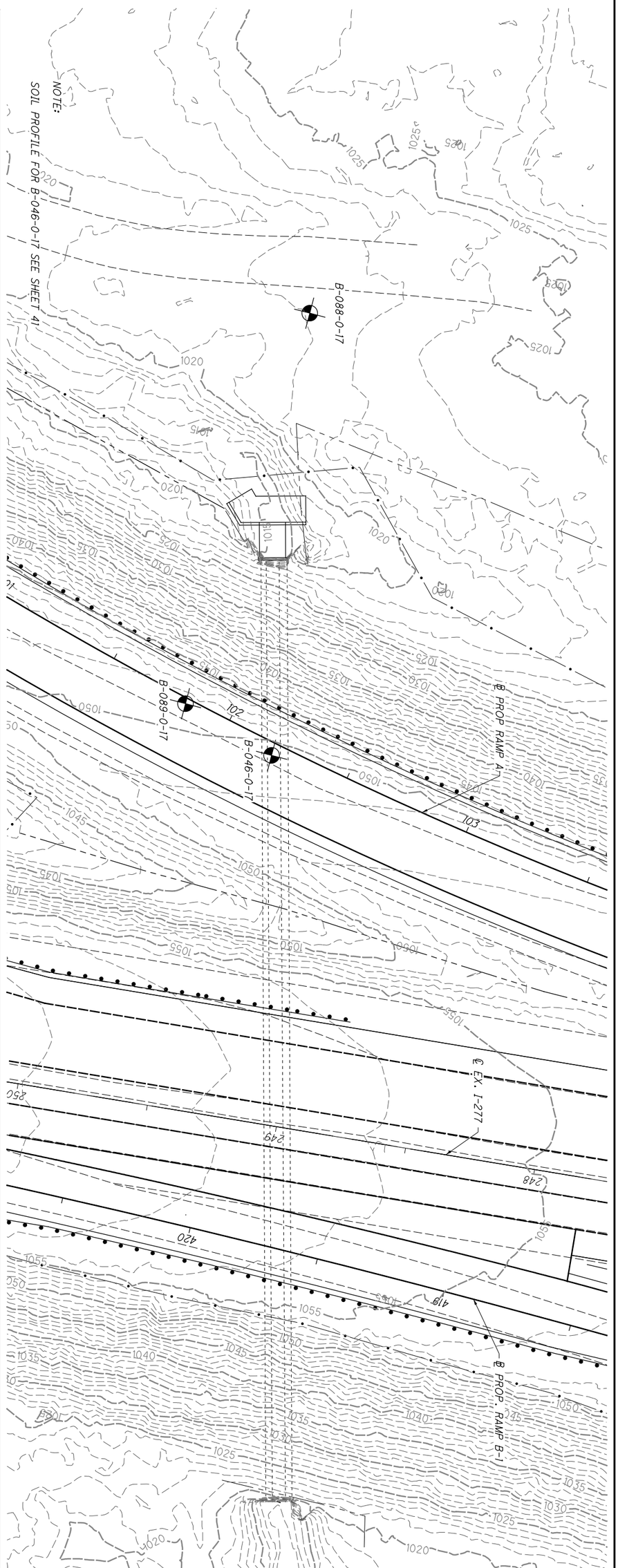


| | | | | | |
|---|---|---|---|---|---|
| | 71/209 | SUM-77/277/224<br>VARIOUS | STRUCTURE FOUNDATION EXPLORATION<br>I.R. 277 EB RAMP A STA. 102+19 CULVERT | DRAWN EB<br>CHECKED BPA | 0 20<br>10 40<br>HORIZONTAL SCALE IN FEET |

P:\17-0129 (106002 SUM-76-10.95 Part 3 - SUM-77_277_224)\106002\geotechnical\sheets\106002ZP101.dgn Sheet 1/7/2021 11:31:38 PM karens

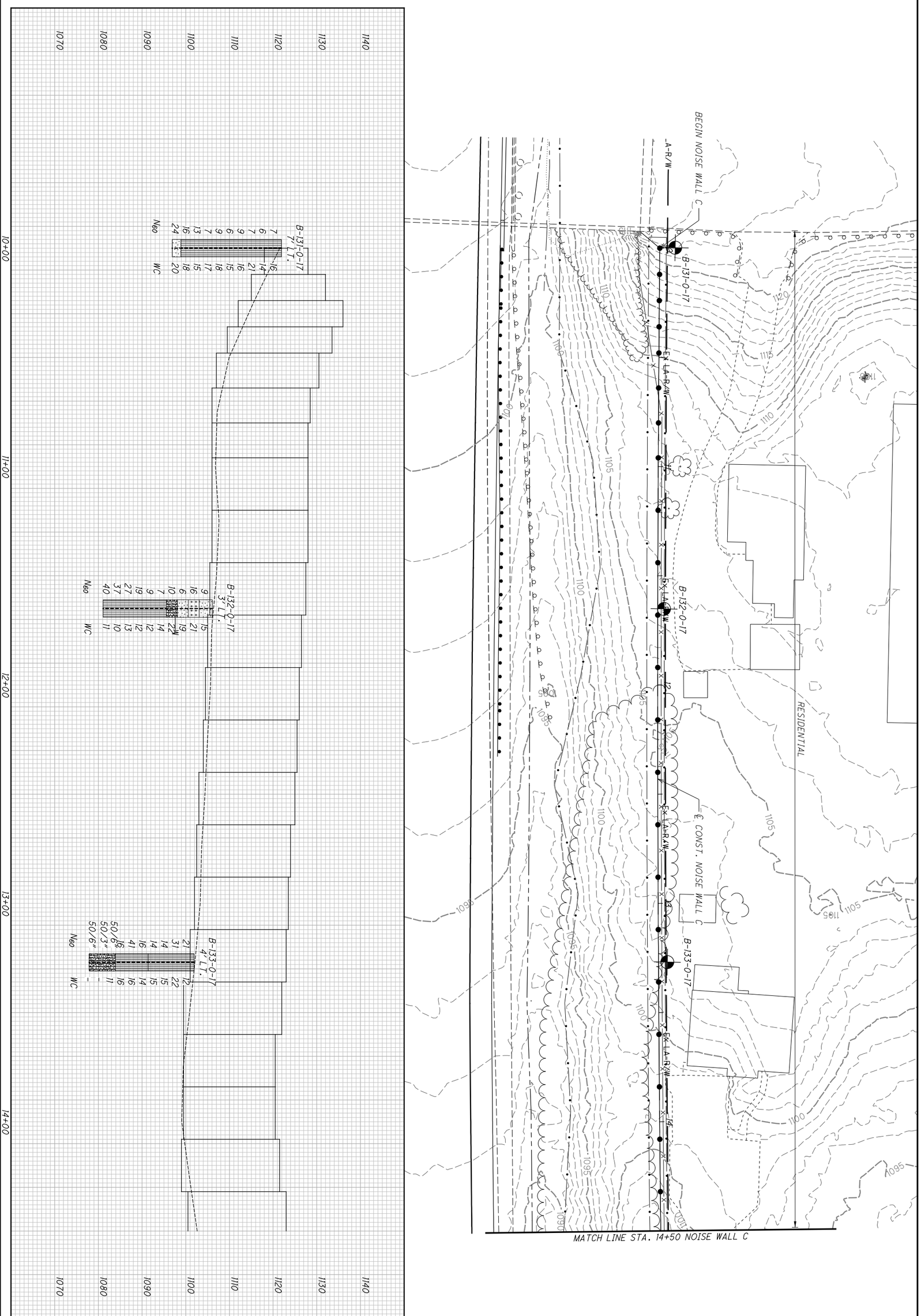


| | | | | | |
|---|---|---|---|---|---|
| | 72/209 | SUM-77/277/224<br>VARIOUS | STRUCTURE FOUNDATION EXPLORATION<br>NOISE WALL C BEGIN TO STA. 14+50 | DRAWN KCA<br>CHECKED BPA | 0 20<br>10 40<br>HORIZONTAL SCALE IN FEET |

P:\17-0129 (106002 SUM-76-10.95 Part 3 - SUM-77_277_224)\106002\geotechnical\sheets\106002ZP102.dgn Sheet 1/7/2021 11:33:43 PM karens

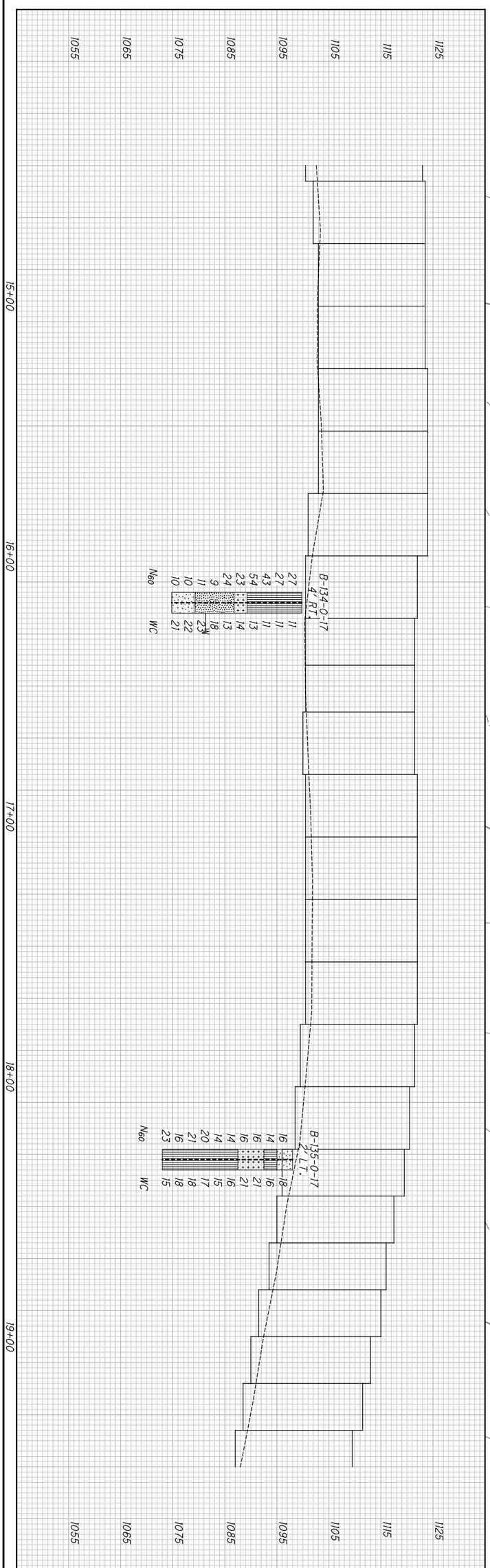


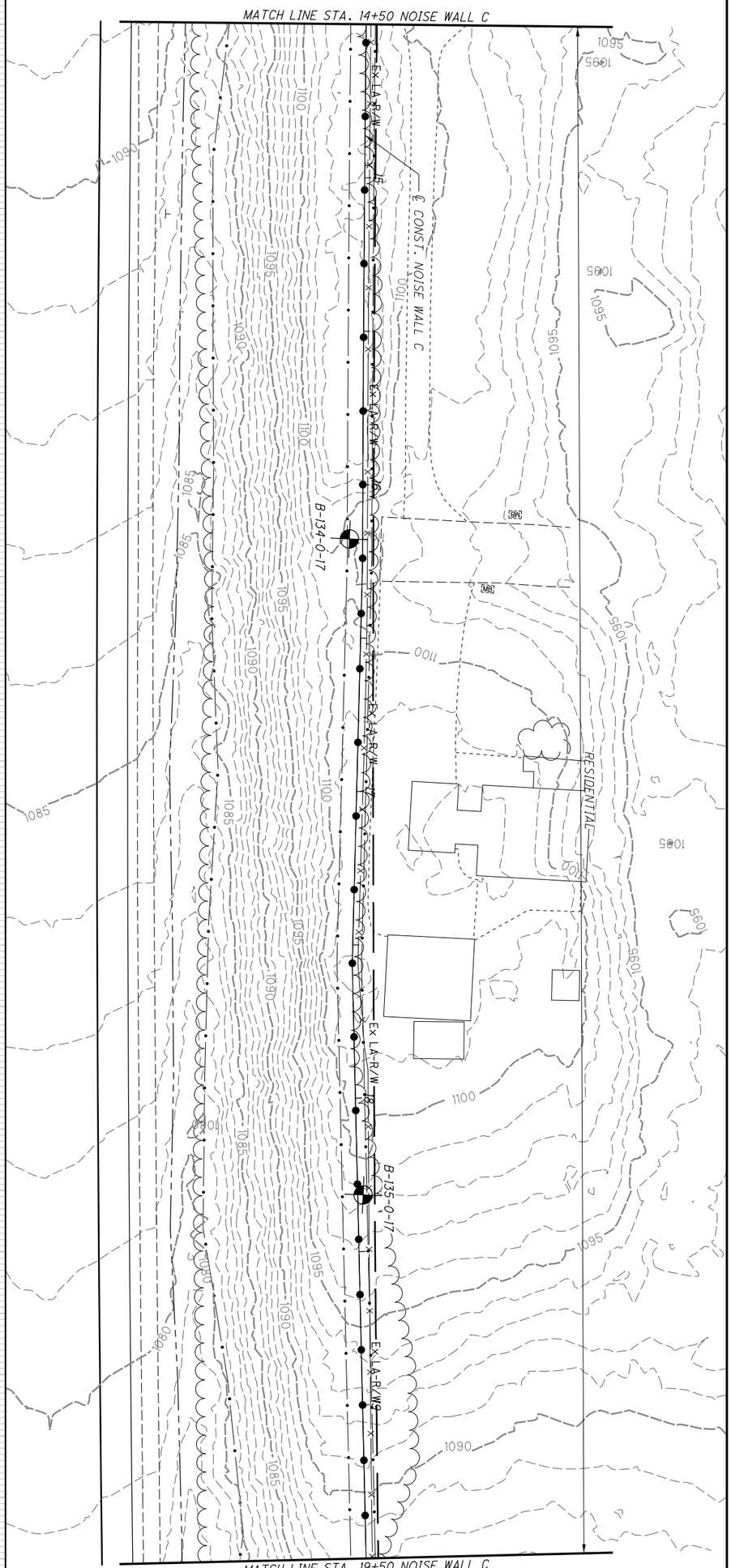


| | | | | | |
|---|---|---|---|---|---|
| 1 | 73/209 | SUM-77/277/224<br>VARIOUS | STRUCTURE FOUNDATION EXPLORATION<br>NOISE WALL C STA. 14+50 TO STA. 19+50 | DRAWN KCA<br>CHECKED BPA | 0 20<br>10 40<br>HORIZONTAL SCALE IN FEET |

P:\17-0129 (106002 SUM-76-10.95 Part 3 - SUM-77_277_224)\106002\geotechnical\sheets\106002ZP103.dgn Sheet 1/7/2021 11:35:47 PM karens

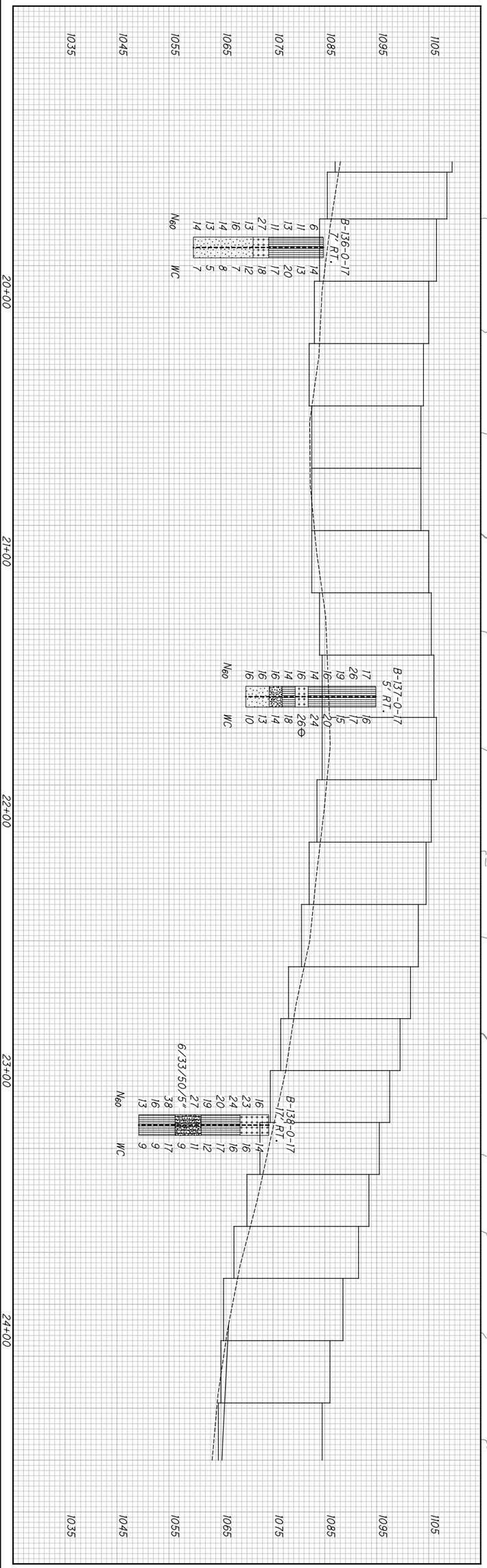


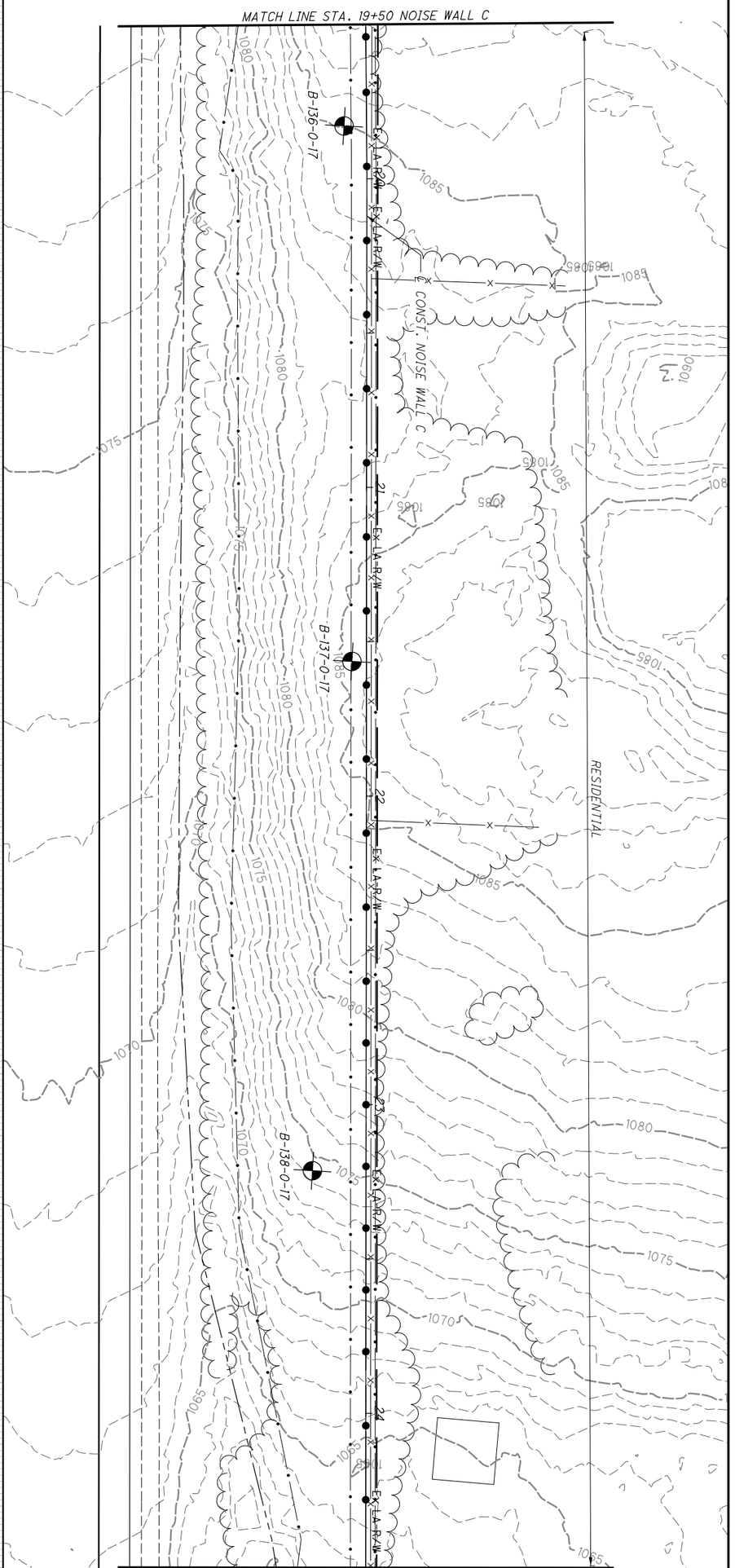


| | | | | | |
|---|---|---|---|---|---|
| 74/209 | SUM-77/277/224<br>VARIOUS | STRUCTURE FOUNDATION EXPLORATION<br>NOISE WALL C STA. 19+50 TO STA. 24+50 | DRAWN KCA<br>CHECKED BPA | 0 20<br>10 40<br>HORIZONTAL SCALE IN FEET | N |

P:\17-0129 (106002 SUM-76-10.95 Part 3 - SUM-77_277_224)\106002\geotechnical\sheets\106002ZP104.dgn Sheet 1/7/2021 11:37:52 PM karens

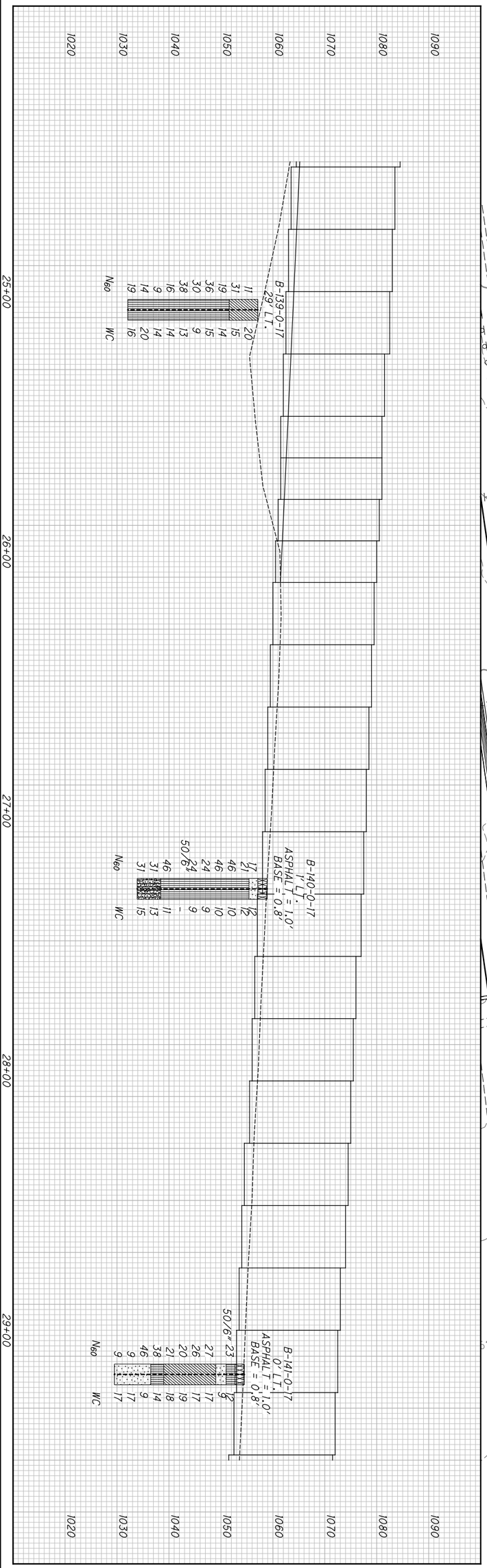


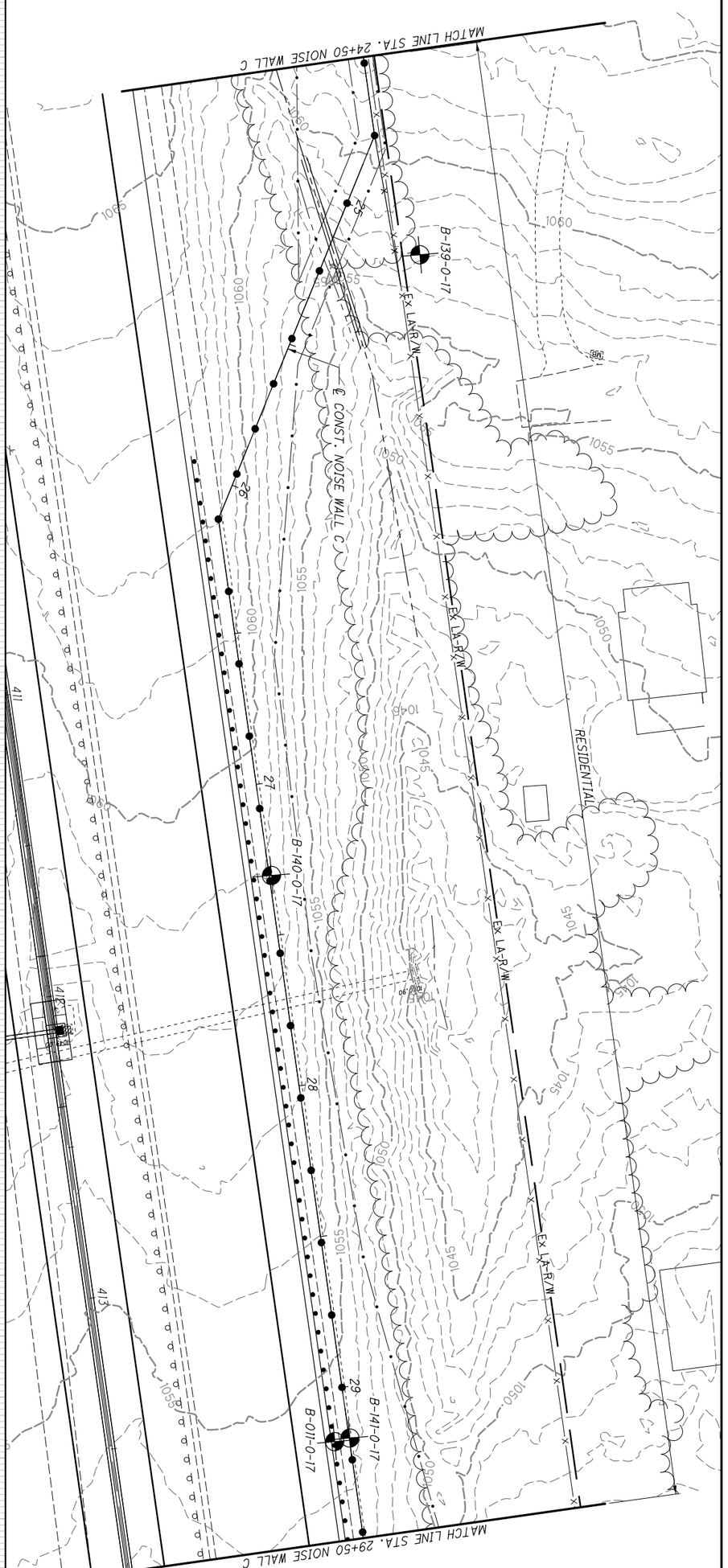


| | | | | | |
|---|---|---|---|---|---|
| | 75/209 | SUM-77/277/224<br>VARIOUS | STRUCTURE FOUNDATION EXPLORATION<br>NOISE WALL C STA. 24+50 TO STA. 29+50 | DRAWN KCA<br>CHECKED BPA | 0 20<br>10 40<br>HORIZONTAL SCALE IN FEET |

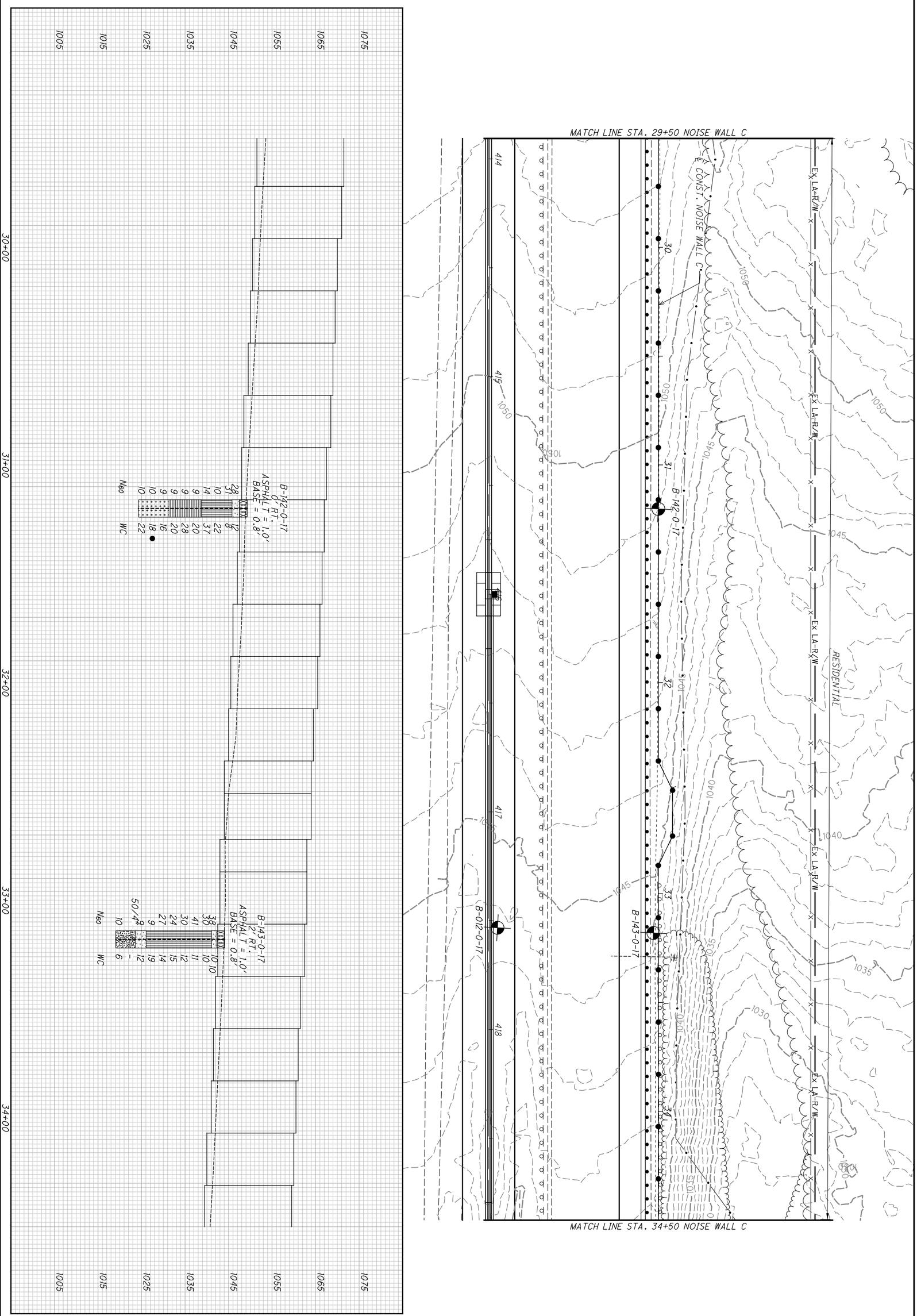


| | | | | | |
|---|---|---|---|---|---|
| 76/209 | SUM-77/277/224 VARIOUS | STRUCTURE FOUNDATION EXPLORATION NOISE WALL C STA. 29+50 TO STA. 34+50 | DRAWN KCA | 0 20 | N |
| | | | CHECKED BPA | 10 40 HORIZONTAL SCALE IN FEET | |

P:\17-0129 (106002 SUM-76-10.95 Part 3 - SUM-77_277_224)\106002\geotechnical\sheets\106002ZP106.dgn Sheet 1/7/2021 11:42:01 PM karens

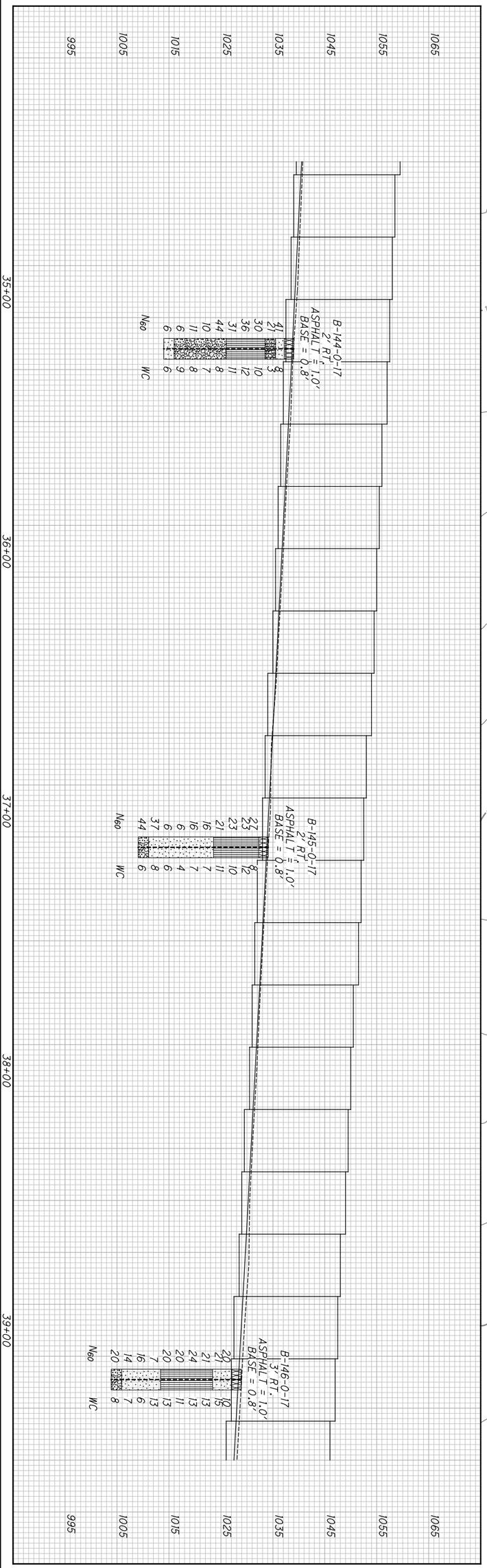


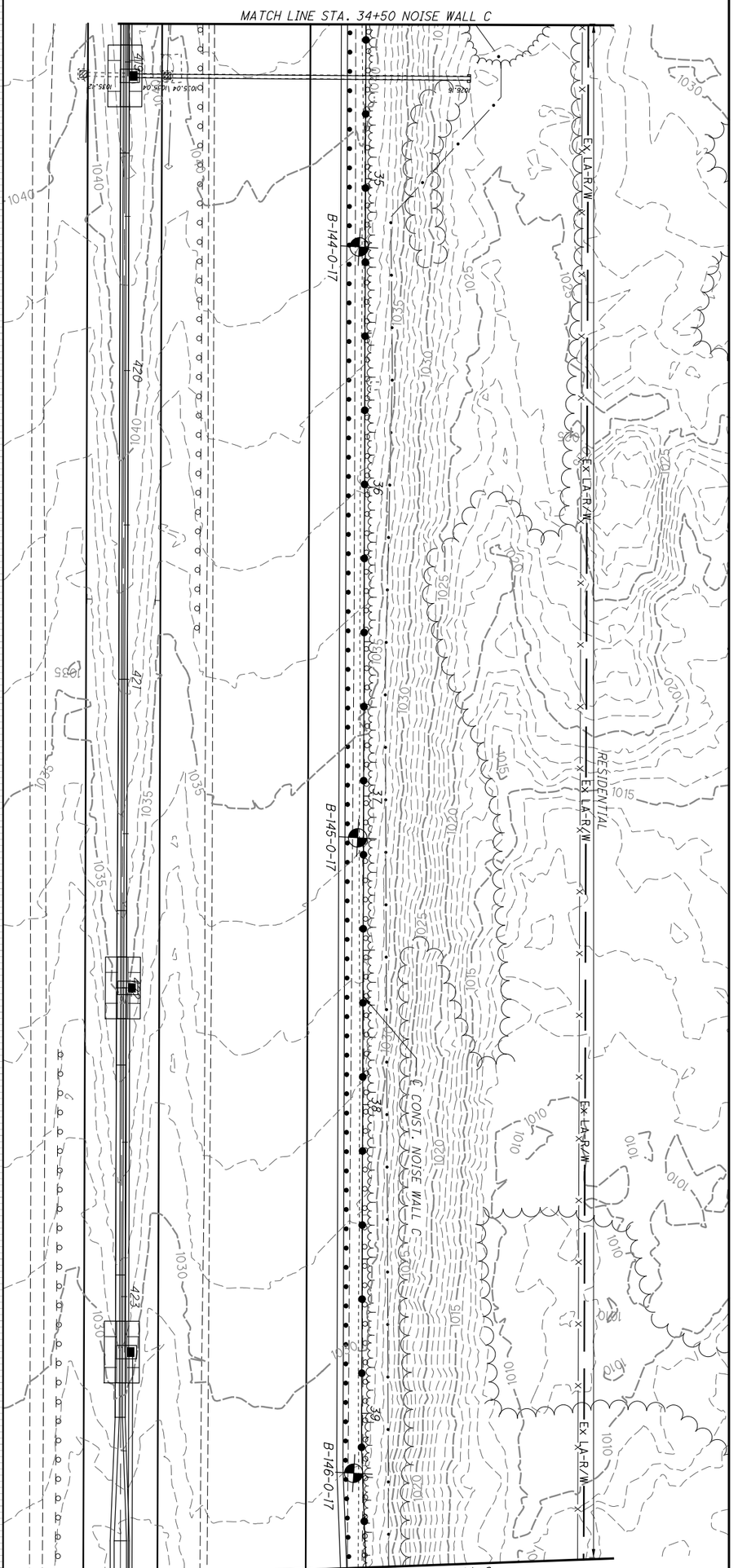


| | | | | | |
|---|---|---|---|---|---|
| 77/209 | SUM-77/277/224<br>VARIOUS | STRUCTURE FOUNDATION EXPLORATION<br>NOISE WALL C STA. 34+50 TO STA. 39+50 | DRAWN KCA<br>CHECKED BPA | 0 20<br>10 40<br>HORIZONTAL SCALE IN FEET | N |

P:\17-0129 (106002 SUM-76-10.95 Part 3 - SUM-77_277_224)\106002\geotechnical\sheets\106002ZP107.dgn Sheet 1/7/2021 11:44:06 PM karens

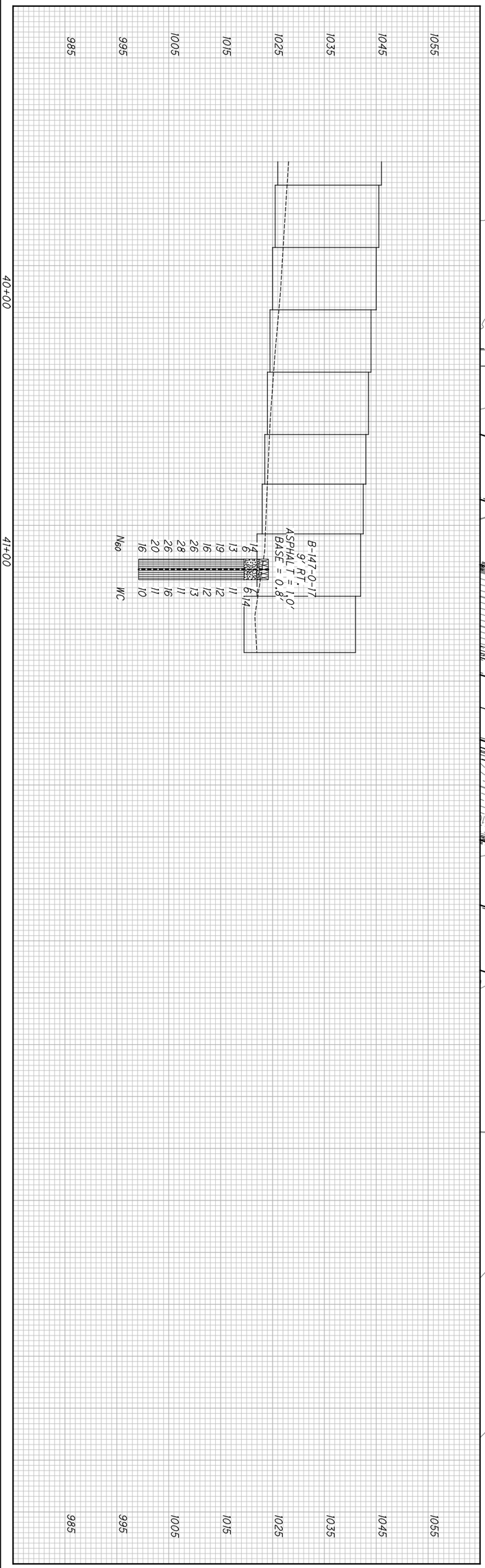


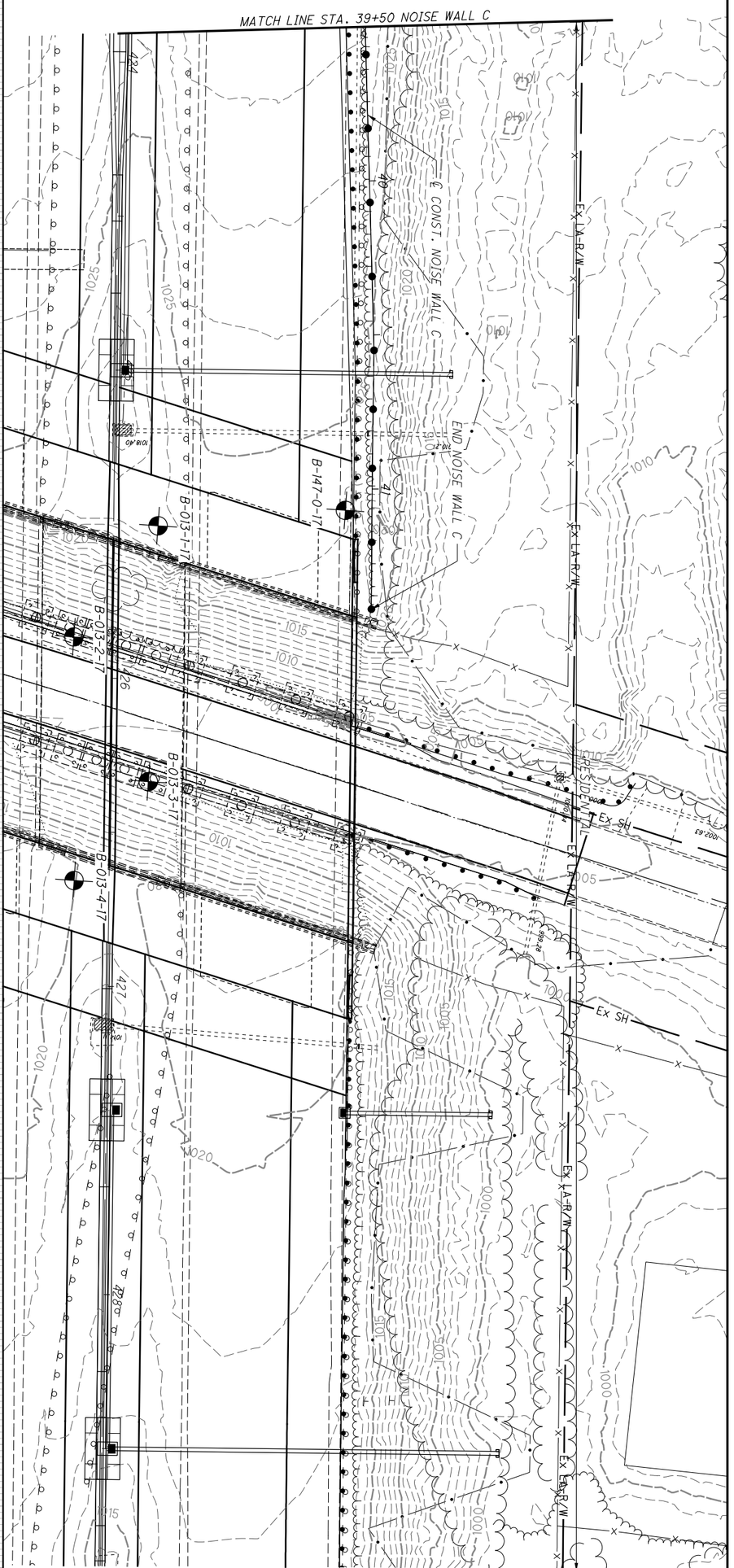


| | | | | | |
|---|---|---|---|---|---|
| 78/209 | SUM-77/277/224<br>VARIOUS | STRUCTURE FOUNDATION EXPLORATION<br>NOISE WALL C STA. 39+50 TO END | DRAWN KCA<br>CHECKED BPA | 0 20<br>10 40<br>HORIZONTAL SCALE IN FEET | N |

P:\17-0129 (106002 SUM-76-10.95 Part 3 - SUM-77_277_224)\106002\geotechnical\sheets\106002ZP201.dgn Sheet 1/7/2021 11:46:10 PM karens

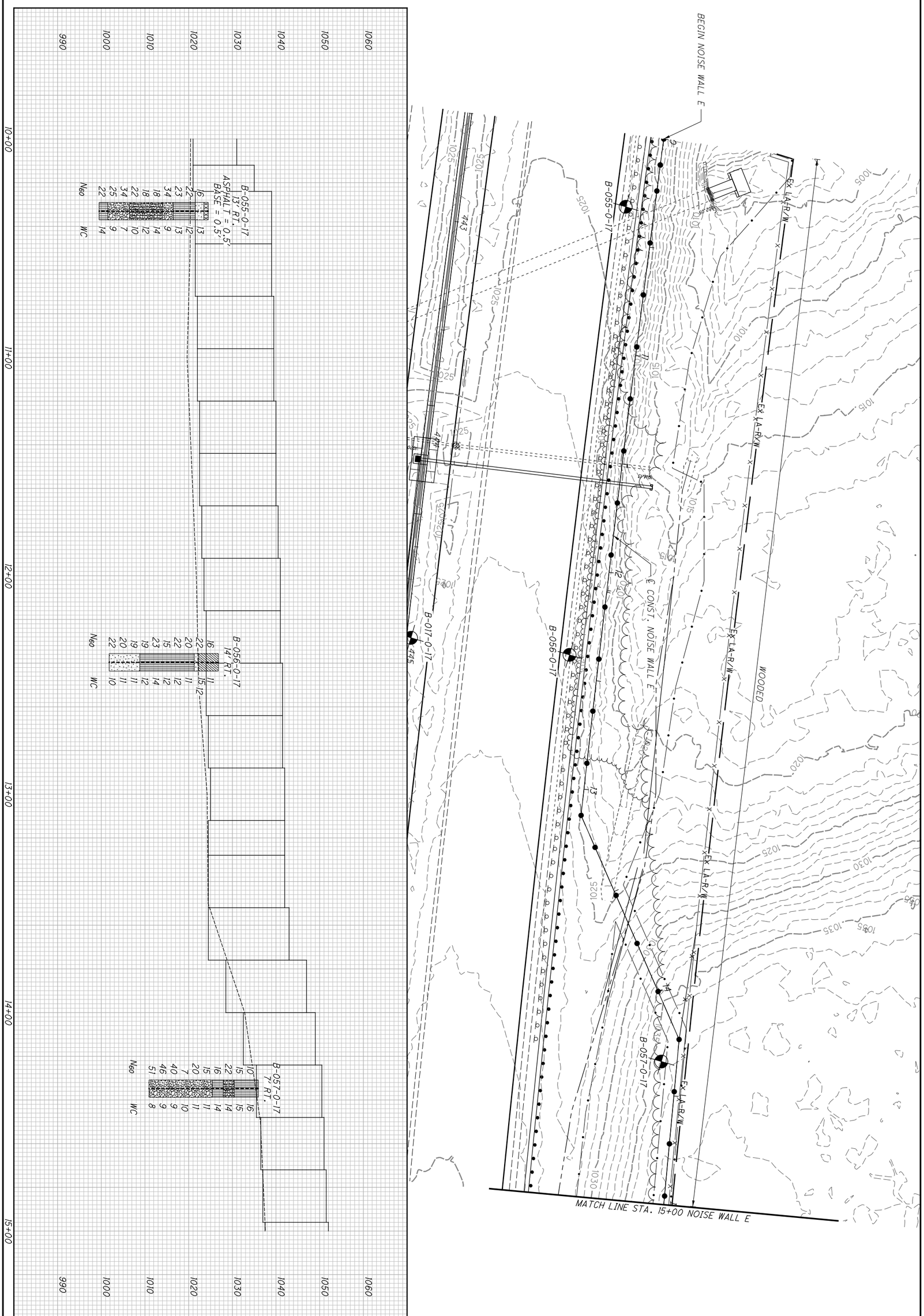


| | | | | | |
|---|---|---|---|---|---|
| 1 | 79/209 | SUM-77/277/224<br>VARIOUS | STRUCTURE FOUNDATION EXPLORATION<br>NOISE WALL E BEGIN TO STA. 15+00 | DRAWN KCA<br>CHECKED BPA | 0 20<br>10 40<br>HORIZONTAL SCALE IN FEET |

P:\17-0129 (106002 SUM-76-10.95 Part 3 - SUM-77_277_224)\106002\geotechnical\sheets\106002ZP202.dgn Sheet 1/7/2021 11:48:13 PM karens

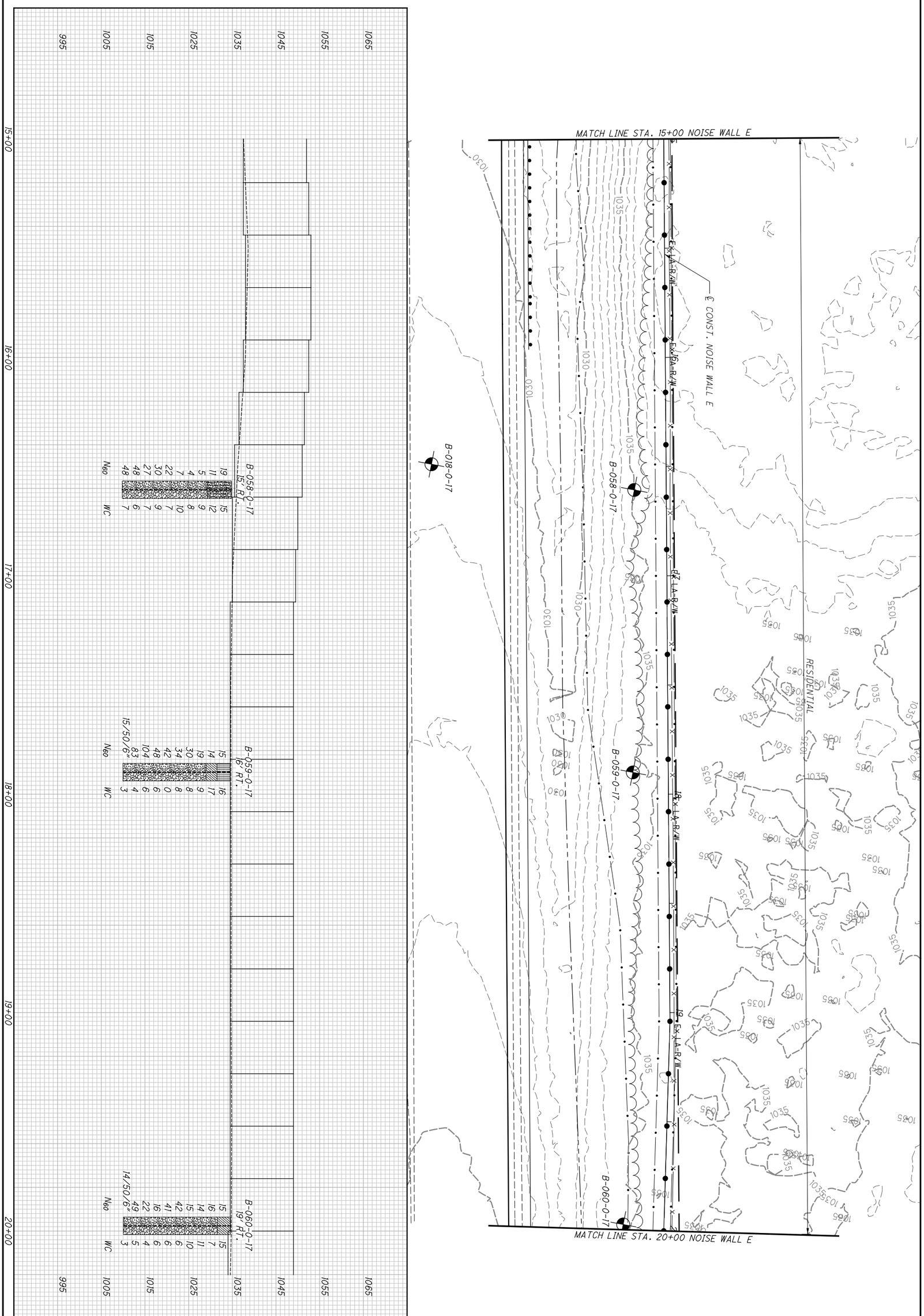


| | | | | | |
|---|---|---|---|---|---|
| | 80/209 | SUM-77/277/224 VARIOUS | STRUCTURE FOUNDATION EXPLORATION NOISE WALL E STA. 15+00 TO STA. 20+00 | DRAWN KCA / CHECKED BPA | 0 20 / 10 40 HORIZONTAL SCALE IN FEET |

P:\17-0129 (106002 SUM-76-10.95 Part 3 - SUM-77_277_224)\106002\geotechnical\sheets\106002ZP203.dgn Sheet 1/7/2021 11:50:18 PM karens

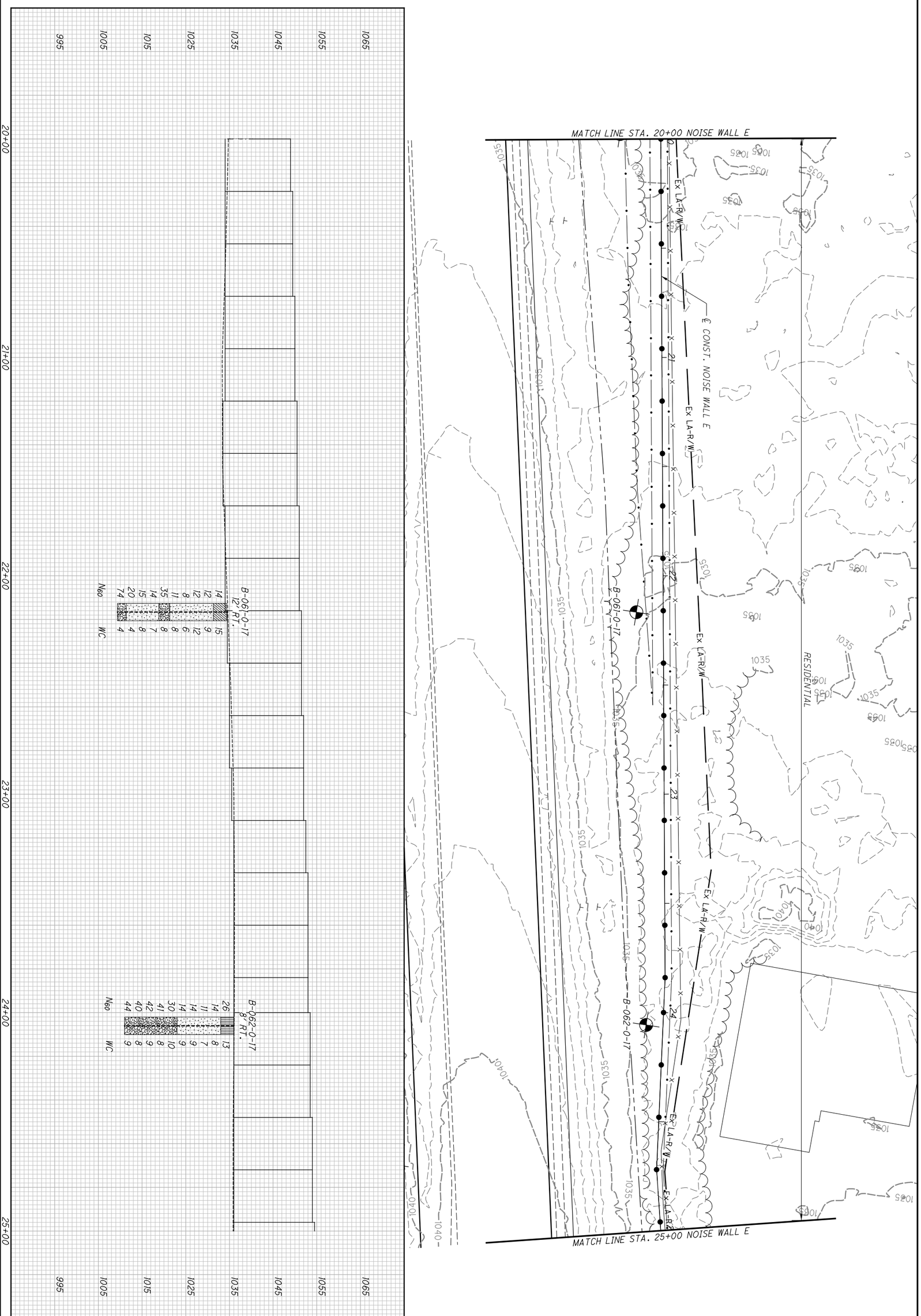


| | | | | | |
|---|---|---|---|---|---|
| | 81/209 | SUM-77/277/224<br>VARIOUS | STRUCTURE FOUNDATION EXPLORATION<br>NOISE WALL E STA. 25+00 TO STA. 30+00 | DRAWN KCA<br>CHECKED BPA | 0 20<br>10 40<br>HORIZONTAL SCALE IN FEET |

P:\17-0129 (106002 SUM-76-10.95 Part 3 - SUM-77_277_224)\106002\geotechnical\sheets\106002ZP204.dgn Sheet 1/7/2021 11:52:21 PM karens

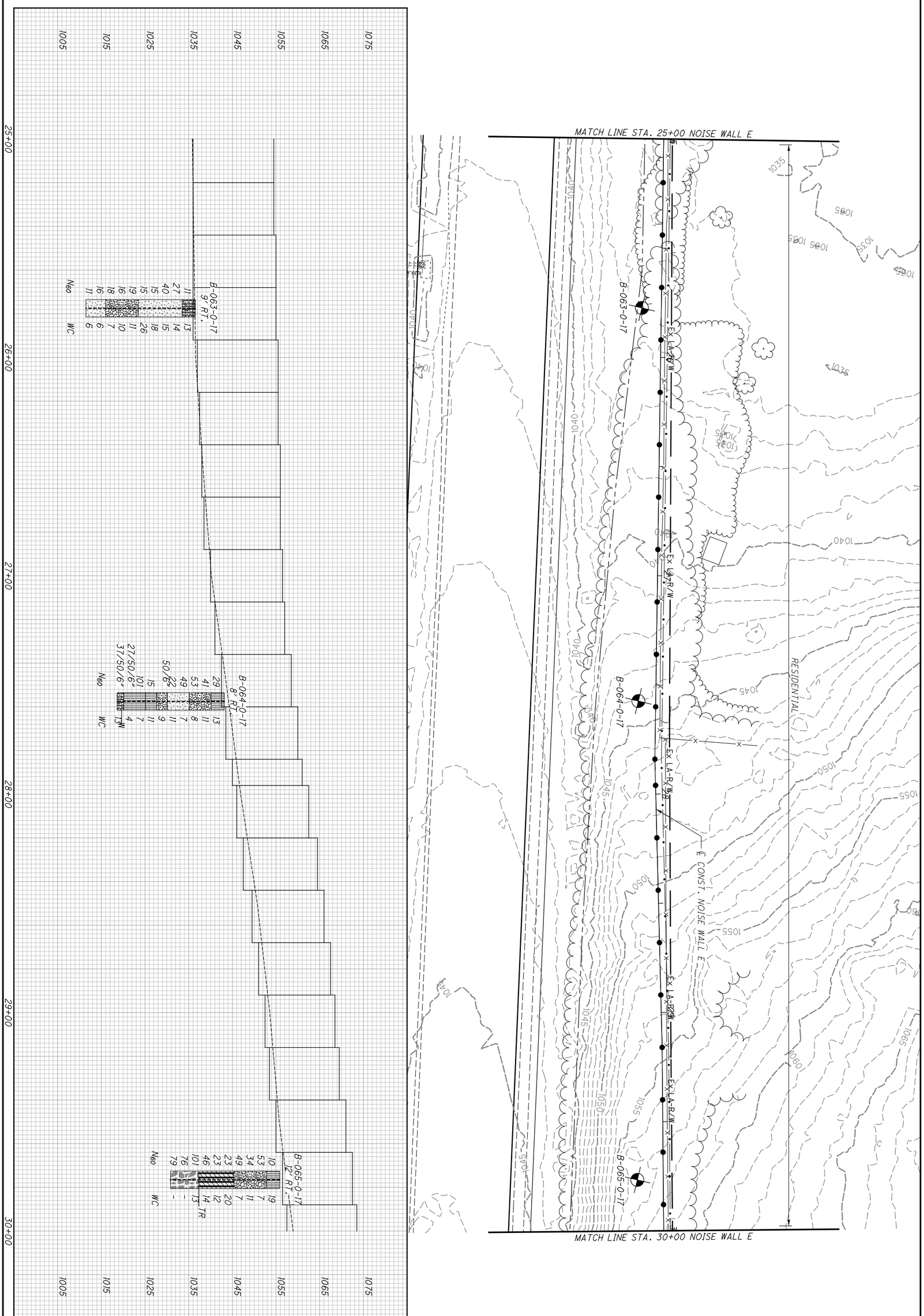


| | | | | | |
|---|---|---|---|---|---|
| 82/209 | SUM-77/277/224<br>VARIOUS | STRUCTURE FOUNDATION EXPLORATION<br>NOISE WALL E STA. 25+00 TO STA. 30+00 | DRAWN KCA<br>CHECKED BPA | 0 20<br>10 40<br>HORIZONTAL SCALE IN FEET | N |

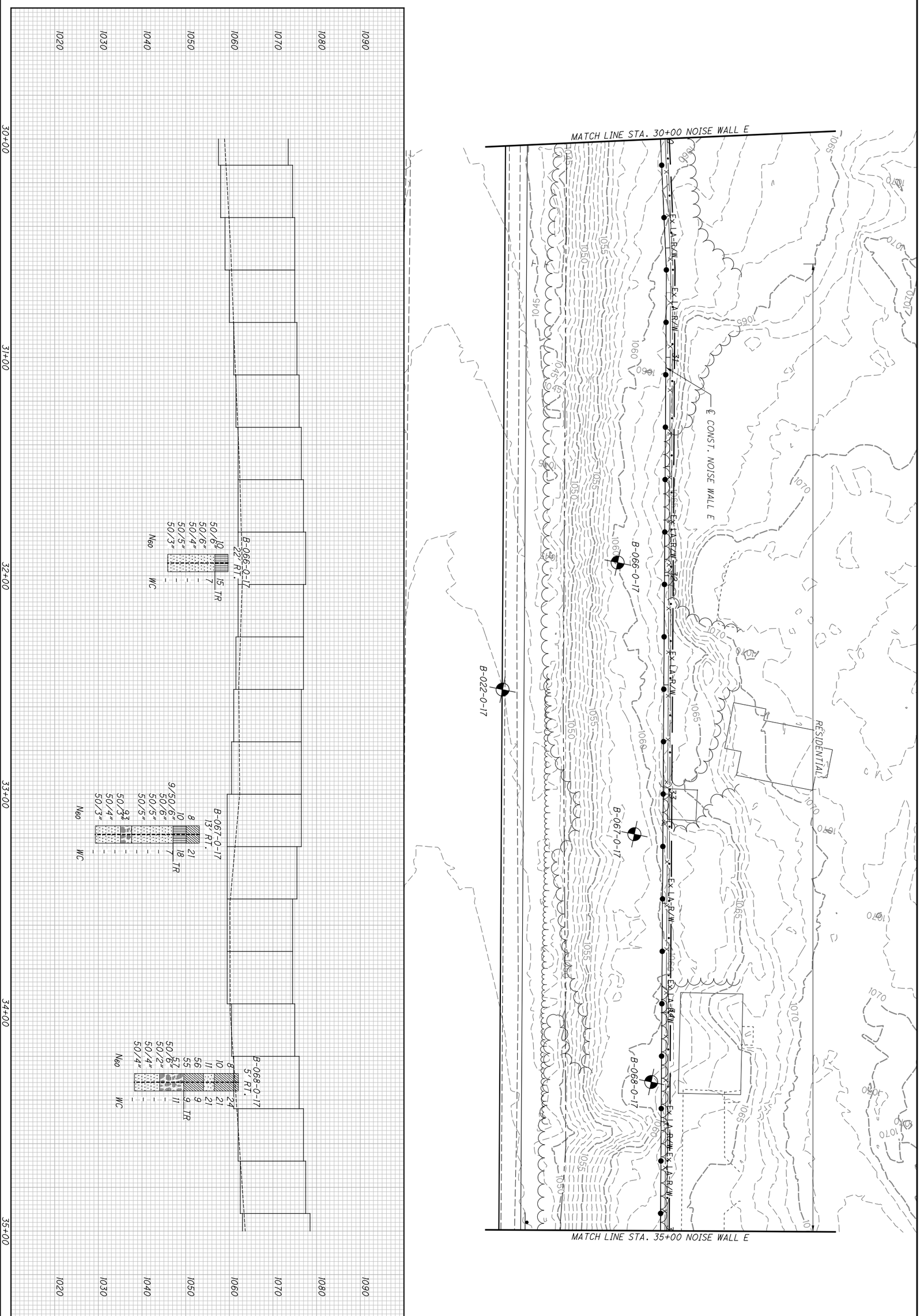


| | | | | | |
|---|---|---|---|---|---|
| | 83/209 | SUM-77/277/224 VARIOUS | STRUCTURE FOUNDATION EXPLORATION NOISE WALL E STA. 30+00 TO STA. 35+00 | DRAWN KCA / CHECKED BPA | 0 20 10 40 HORIZONTAL SCALE IN FEET |

P:\17-0129 (106002 SUM-76-10.95 Part 3 - SUM-77_277_224)\106002\geotechnical\sheets\106002ZP206.dgn Sheet 1/7/2021 11:56:31 PM karens

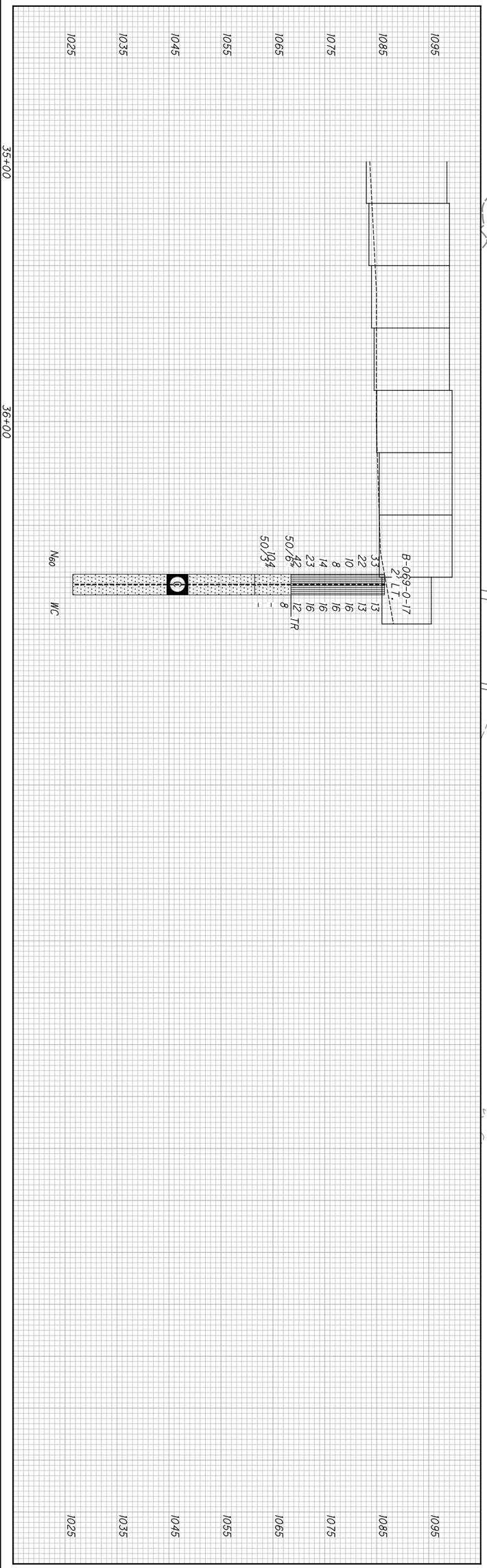


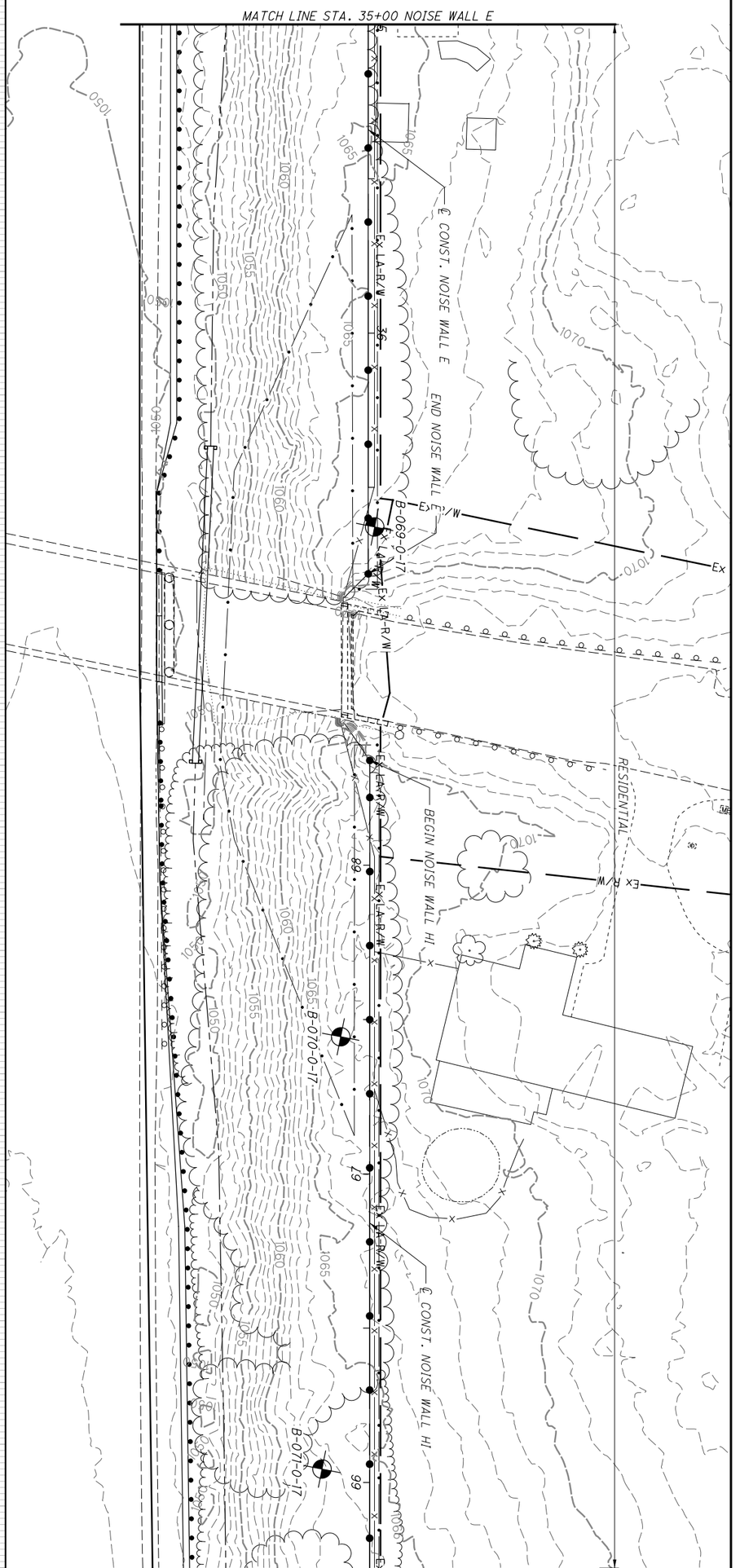


| | | | | | |
|---|---|---|---|---|---|
| | 84/209 | SUM-77/277/224<br>VARIOUS | STRUCTURE FOUNDATION EXPLORATION<br>NOISE WALL E STA. 35+00 TO END | DRAWN KCA<br>CHECKED BPA | 0 20<br>10 40<br>HORIZONTAL SCALE IN FEET |

P:\17-0129 (106002 SUM-76-10.95 Part 3 - SUM-77_277_224)\106002\geotechnical\sheets\106002ZP301.dgn Sheet 1/7/2021 11:58:36 PM karens

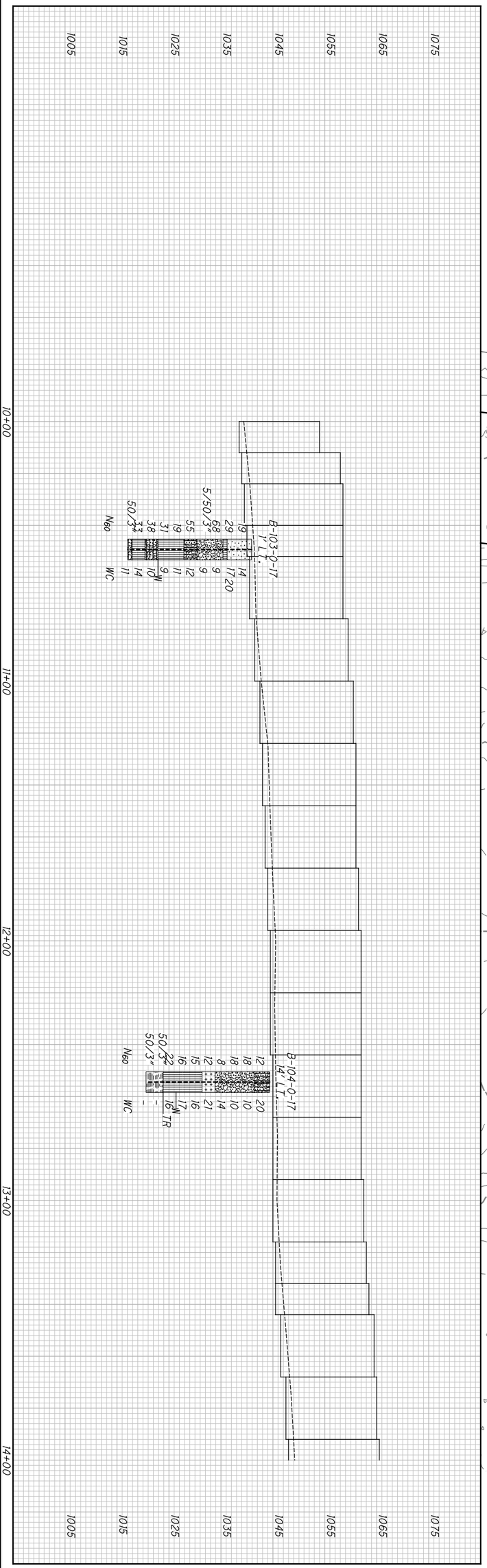


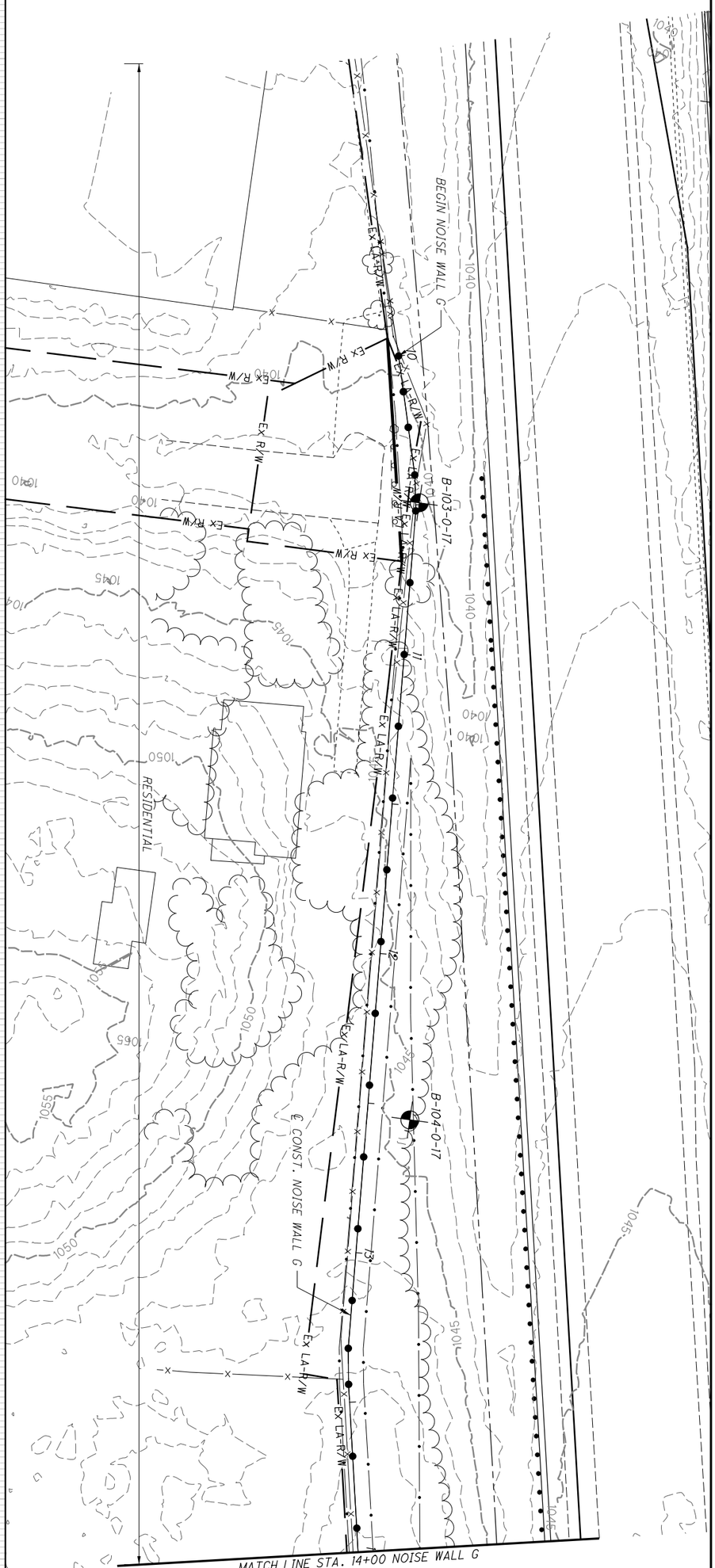


| | | | | | |
|---|---|---|---|---|---|
| | 85/209 | SUM-77/277/224<br>VARIOUS | STRUCTURE FOUNDATION EXPLORATION<br>NOISE WALL G BEGIN TO STA. 14+00 | DRAWN KCA<br>CHECKED BPA | 0 20<br>10 40<br>HORIZONTAL SCALE IN FEET |

P:\17-0129 (106002 SUM-76-10.95 Part 3 - SUM-77_277_224)\106002\geotechnical\sheets\106002ZP302.dgn Sheet 1/8/2021 12:00:43 AM karens

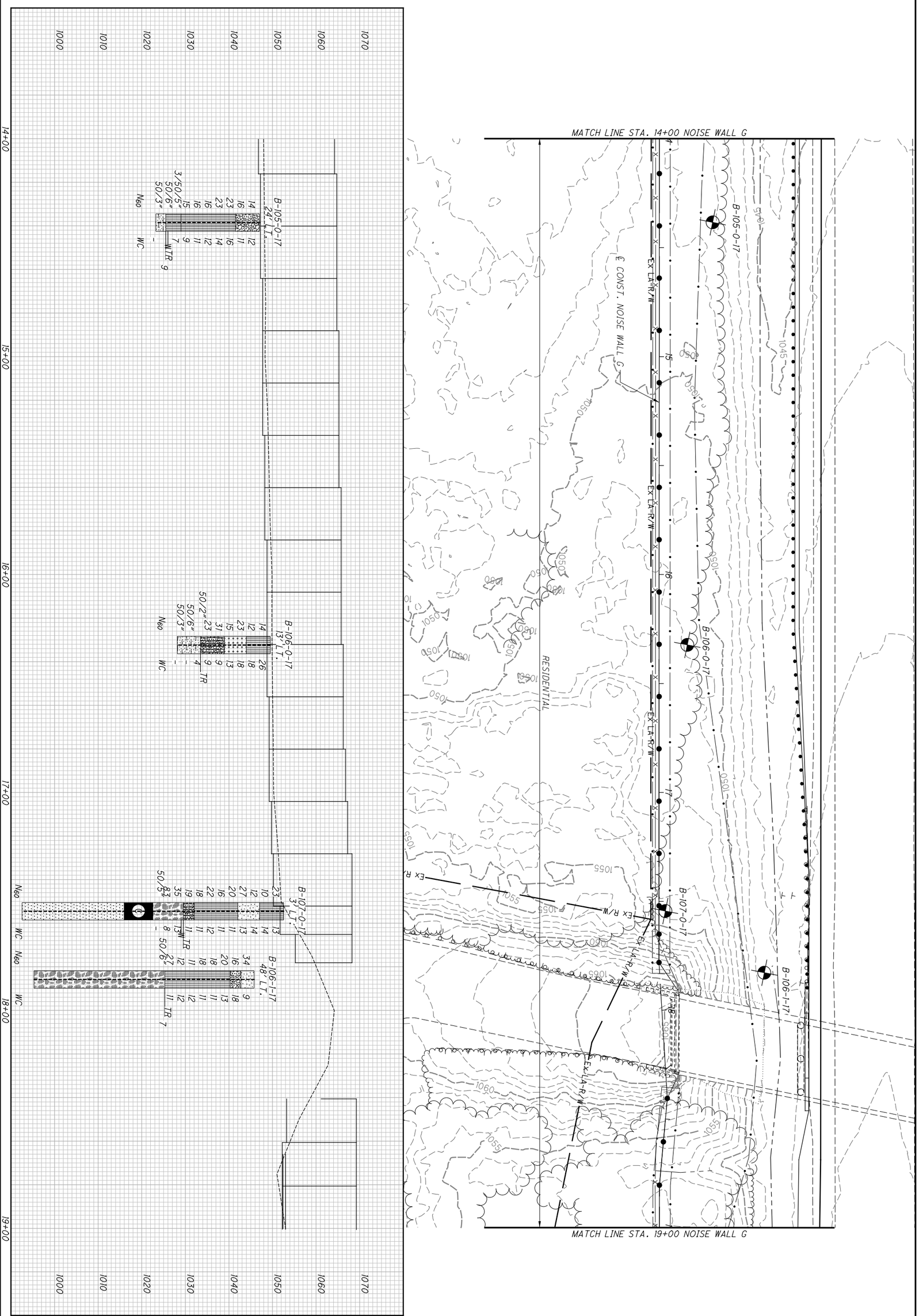


| | | | | | |
|---|---|---|---|---|---|
| 86/209 | SUM-77/277/224 VARIOUS | STRUCTURE FOUNDATION EXPLORATION NOISE WALL G STA. 14+00 TO STA. 19+00 | DRAWN KCA | 0 20 | N |
| | | | CHECKED BPA | 10 40 HORIZONTAL SCALE IN FEET | |

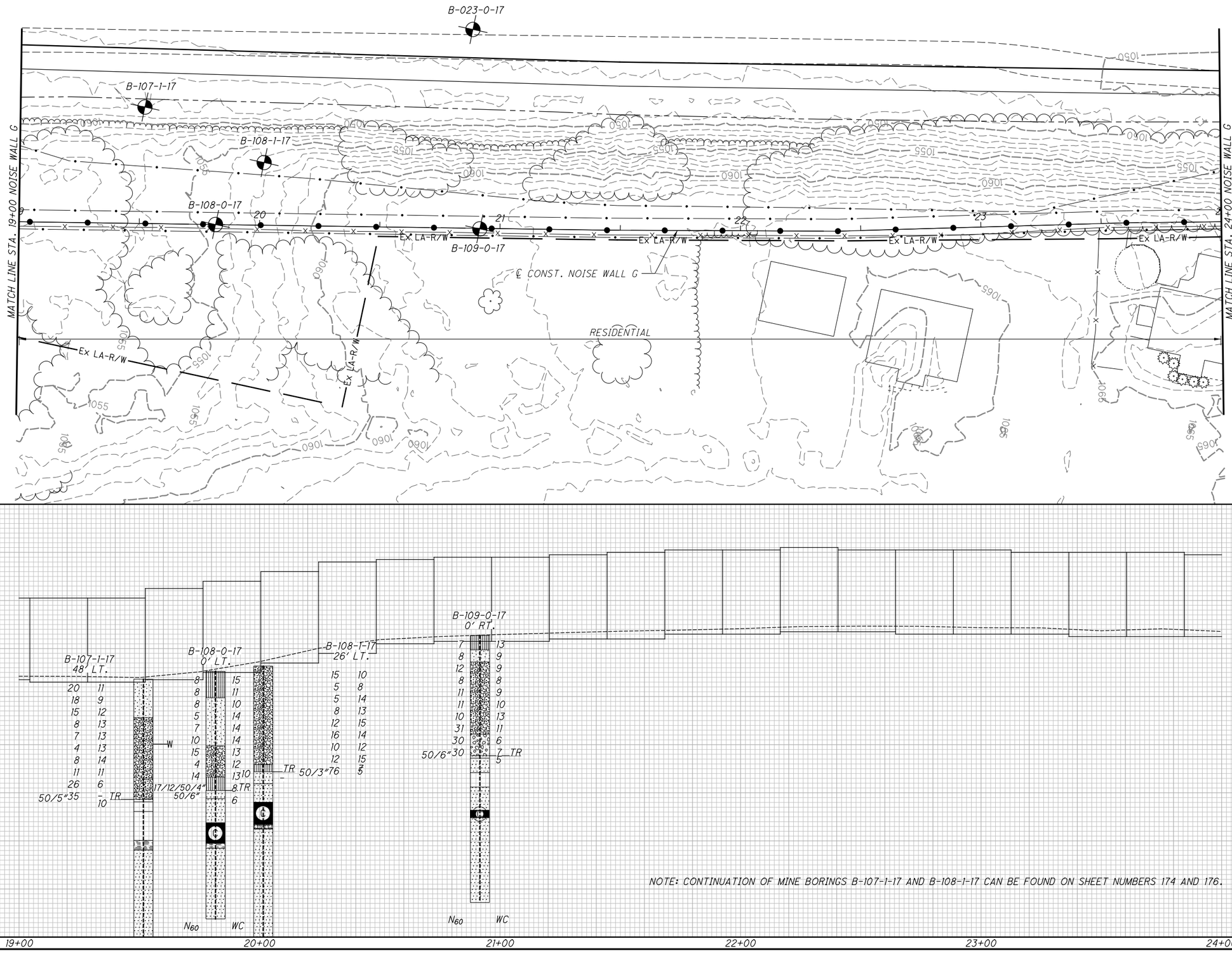


HORIZONTAL SCALE IN FEET
0 10 20 40

DRAWN KCA
CHECKED BPA

# STRUCTURE FOUNDATION EXPLORATION
## NOISE WALL G STA. 19+00 TO STA. 24+00

SUM-77/277/224
VARIOUS

87/209

P:\17-0129 (106002 SUM-76-10.95 Part 3 - SUM-77_277_224)\106002\geotechnical\sheets\106002FP303.dgn Sheet 1/8/2021 12:02:46 AM karens

P:\17-0129 (106002 SUM-76-10.95 Part 3 - SUM-77_277_224)\106002\geotechnical\sheets\106002ZP304.dgn Sheet 1/8/2021 12:04:50 AM karens

**SUM-77/277/224**
**VARIOUS**

# STRUCTURE FOUNDATION EXPLORATION
## NOISE WALL G STA. 24+00 TO STA. 29+00

DRAWN KCA
CHECKED BPA

0 20
10 40
HORIZONTAL SCALE IN FEET

P:\17-0129 (106002 SUM-76-10.95 Part 3 - SUM-77_277_224)\106002\geotechnical\sheets\106002ZP305.dgn Sheet 1/8/2021 12:06:53 AM karens

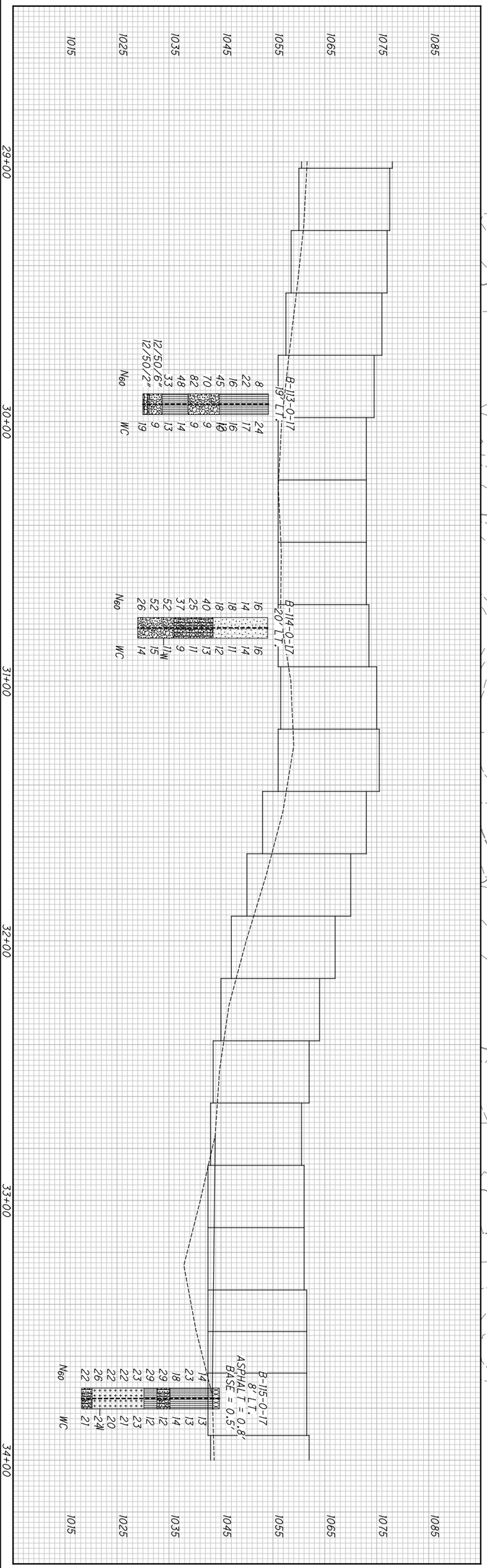


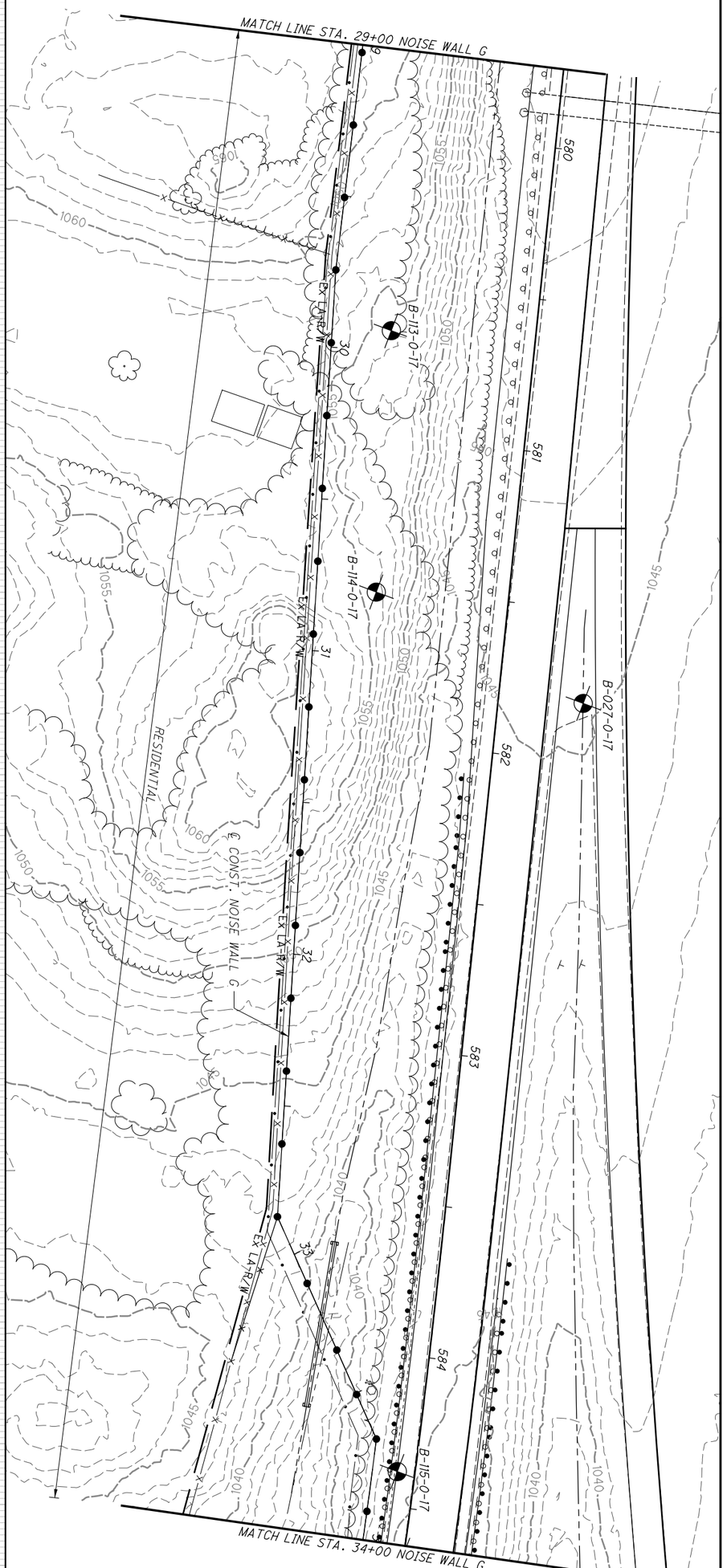


| | | | | | |
|---|---|---|---|---|---|
| | 89/209 | SUM-77/277/224 VARIOUS | STRUCTURE FOUNDATION EXPLORATION NOISE WALL G STA. 29+00 TO STA. 34+00 | DRAWN KCA / CHECKED BPA | 0 10 20 40 HORIZONTAL SCALE IN FEET |

P:\17-0129 (106002 SUM-76-10.95 Part 3 - SUM-77_277_224)\106002\geotechnical\sheets\106002ZP306.dgn Sheet 1/8/2021 12:08:55 AM karens

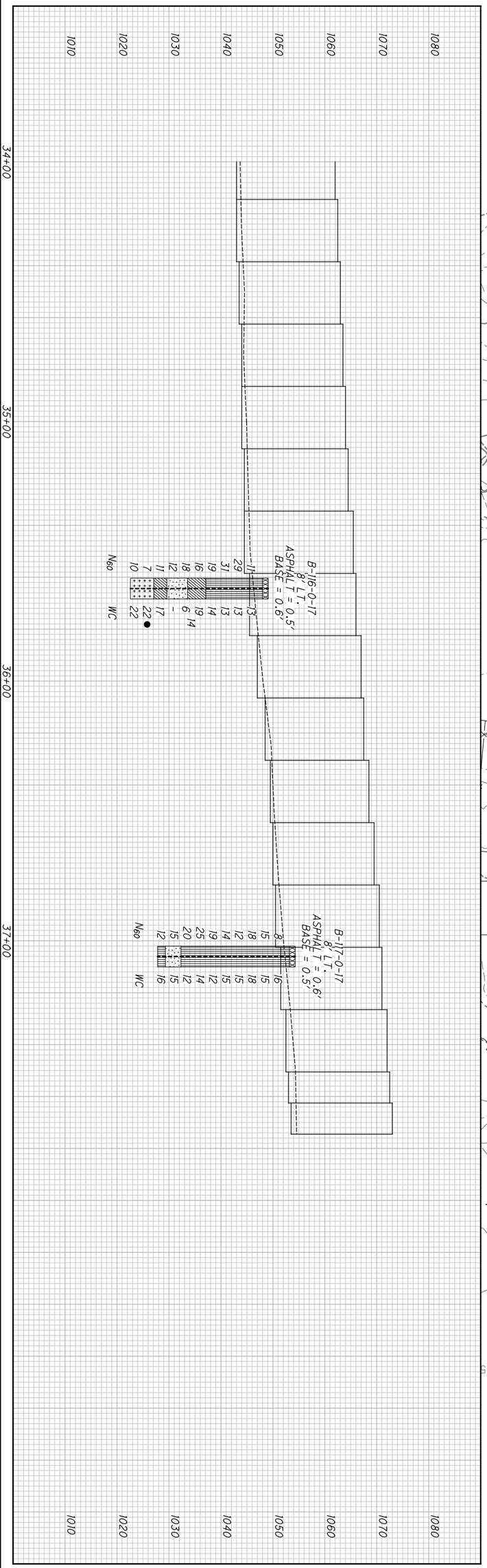


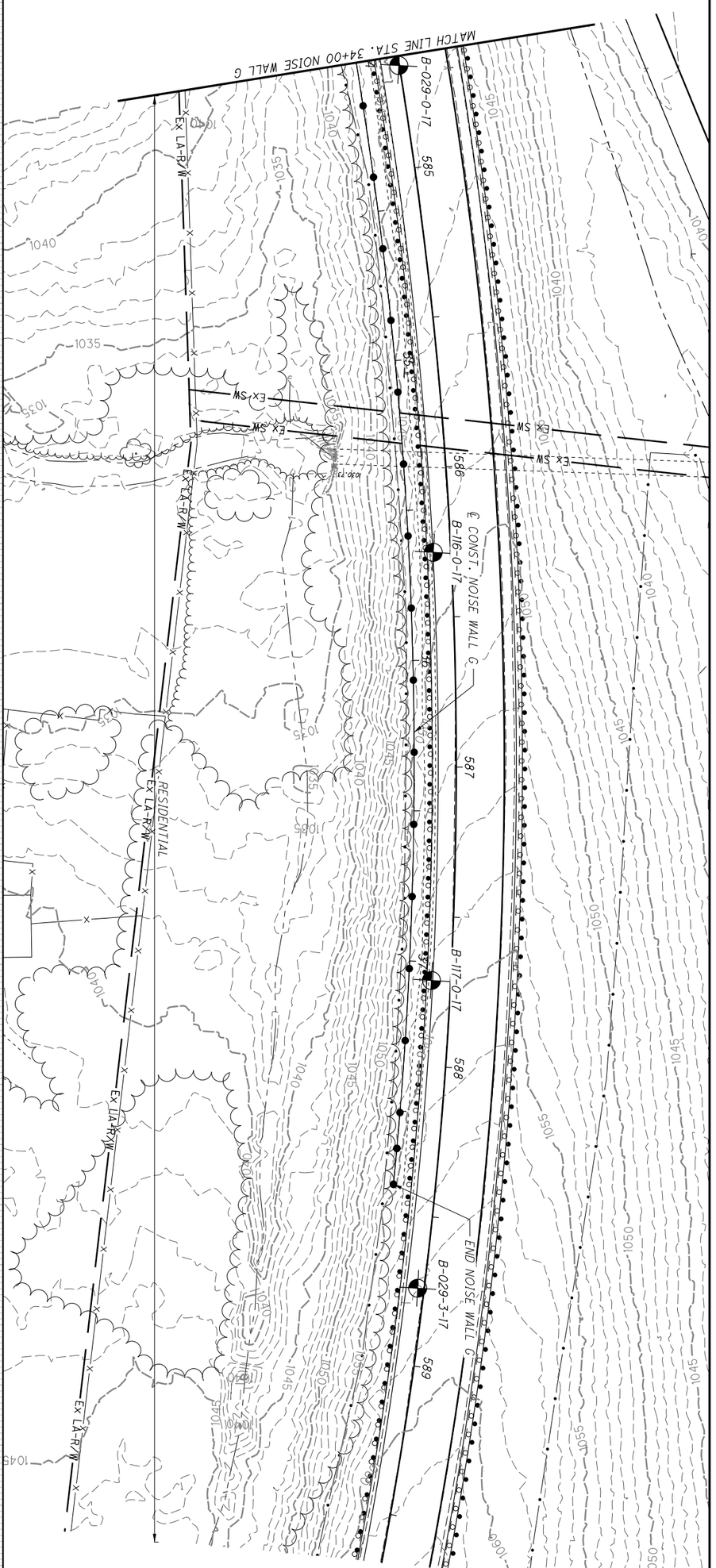


| | | | | | |
|---|---|---|---|---|---|
| | 90/209 | SUM-77/277/224<br>VARIOUS | STRUCTURE FOUNDATION EXPLORATION<br>NOISE WALL G STA. 34+00 TO END | DRAWN KCA<br>CHECKED BPA | 0 20<br>10 40<br>HORIZONTAL SCALE IN FEET |

P:\17-0129 (106002 SUM-76-10.95 Part 3 - SUM-77_277_224)\106002\geotechnical\sheets\106002ZP401.dgn Sheet 1/8/2021 12:10:59 AM karens

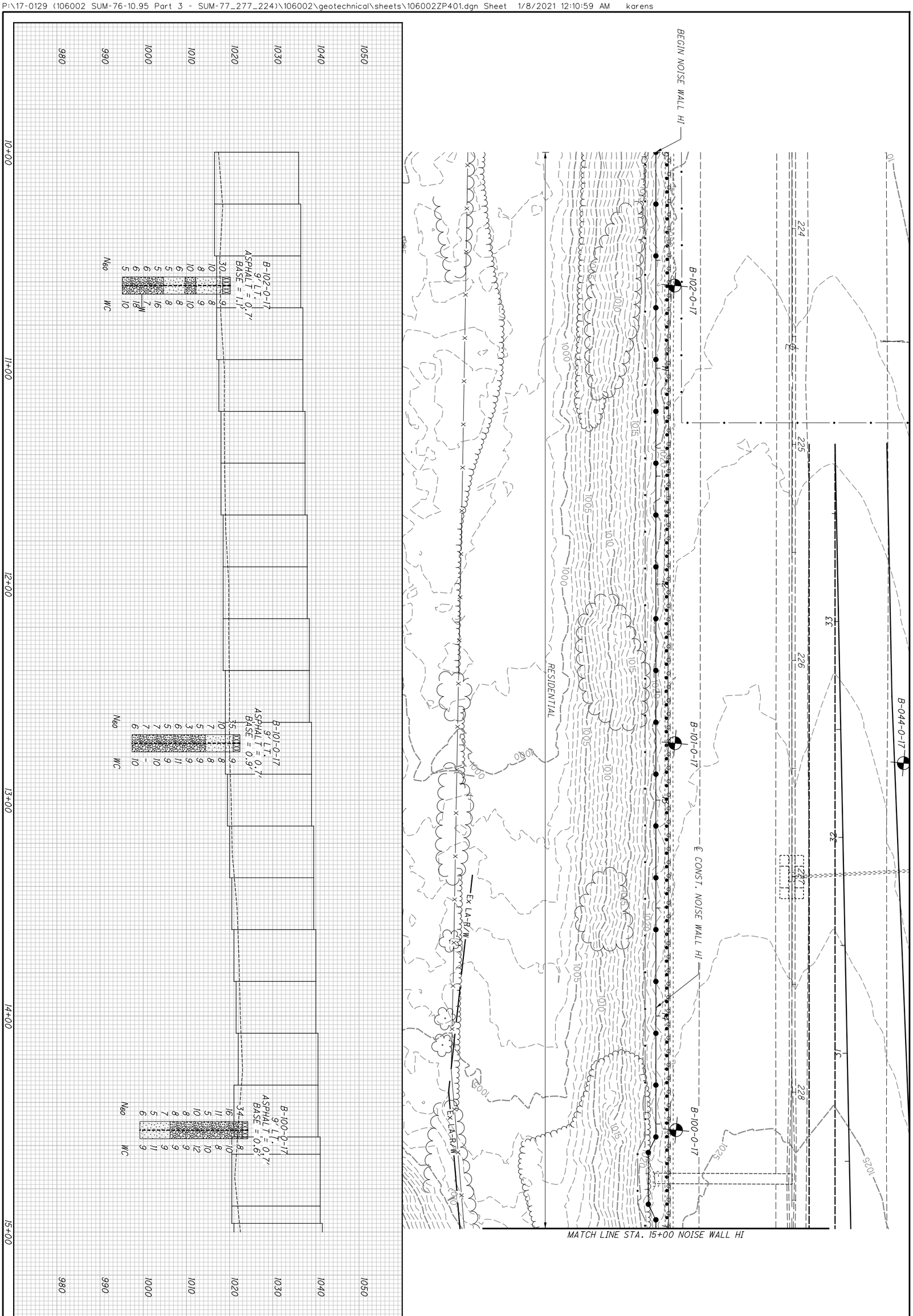


| | | | | | |
|---|---|---|---|---|---|
| | 91/209 | SUM-77/277/224 VARIOUS | STRUCTURE FOUNDATION EXPLORATION NOISE WALL HI BEGIN TO STA. 15+00 | DRAWN KCA / CHECKED BPA | 0 20 10 40 HORIZONTAL SCALE IN FEET |

P:\17-0129 (106002 SUM-76-10.95 Part 3 - SUM-77_277_224)\106002\geotechnical\sheets\106002ZP402.dgn Sheet 1/8/2021 12:13:03 AM karens

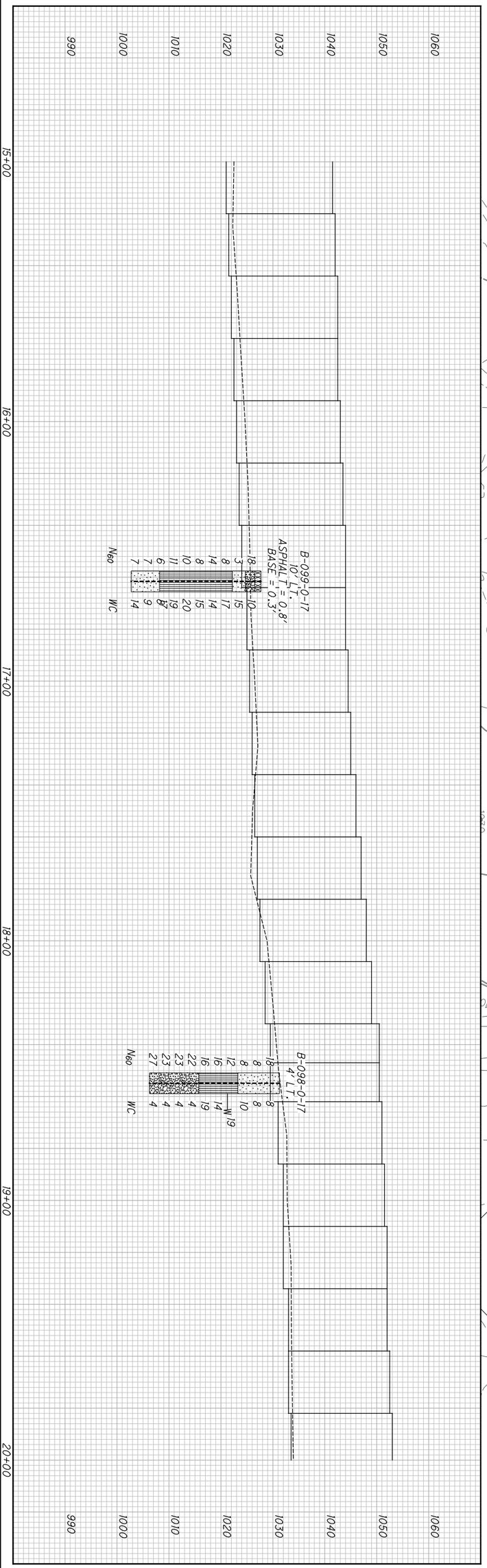


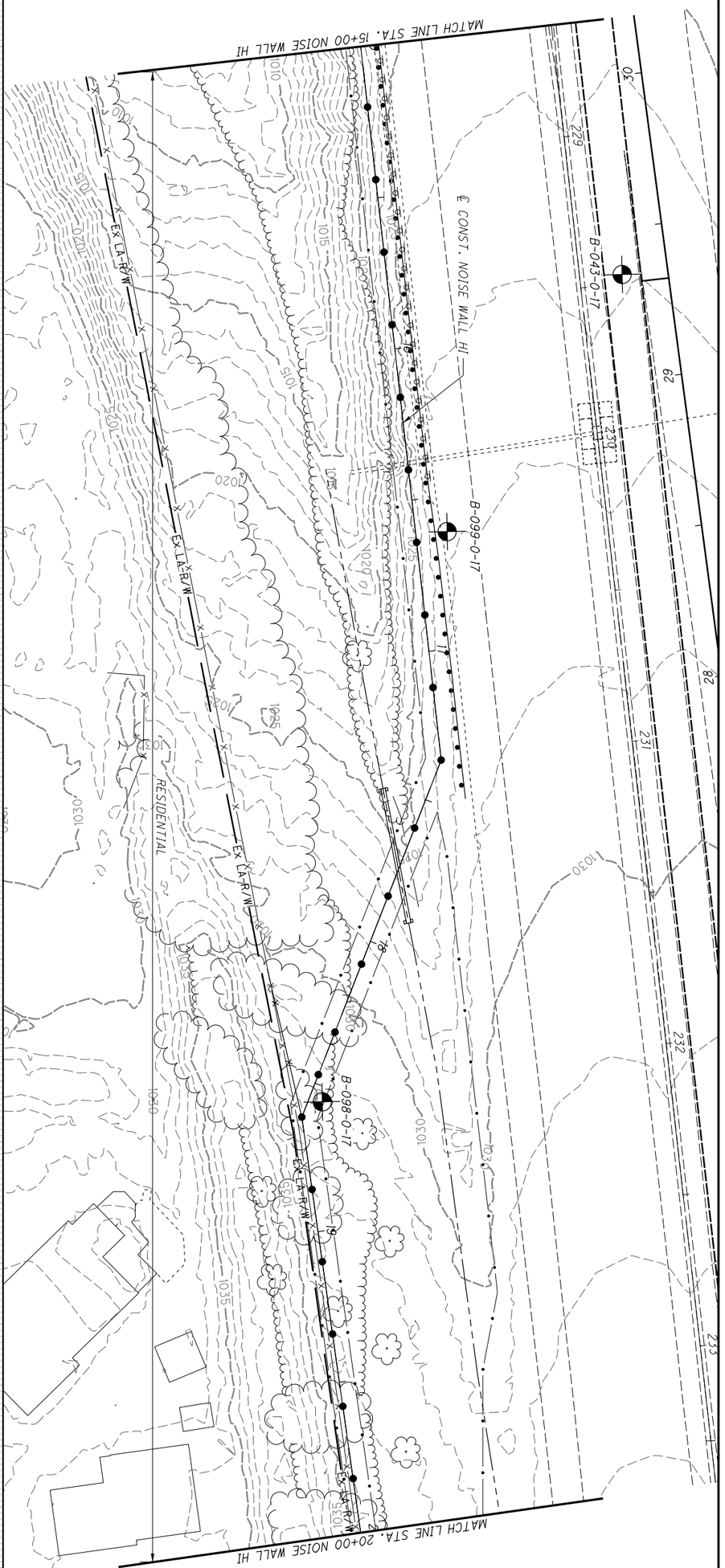


92/209

**SUM-77/277/224**
**VARIOUS**

# STRUCTURE FOUNDATION EXPLORATION
## NOISE WALL HI STA. 15+00 TO STA. 20+00

DRAWN KCA
CHECKED BPA

0 10 20 40
HORIZONTAL SCALE IN FEET

N

P:\17-0129 (106002 SUM-76-10.95 Part 3 - SUM-77_277_224)\106002\geotechnical\sheets\106002ZP403.dgn Sheet 1/8/2021 12:15:05 AM karens

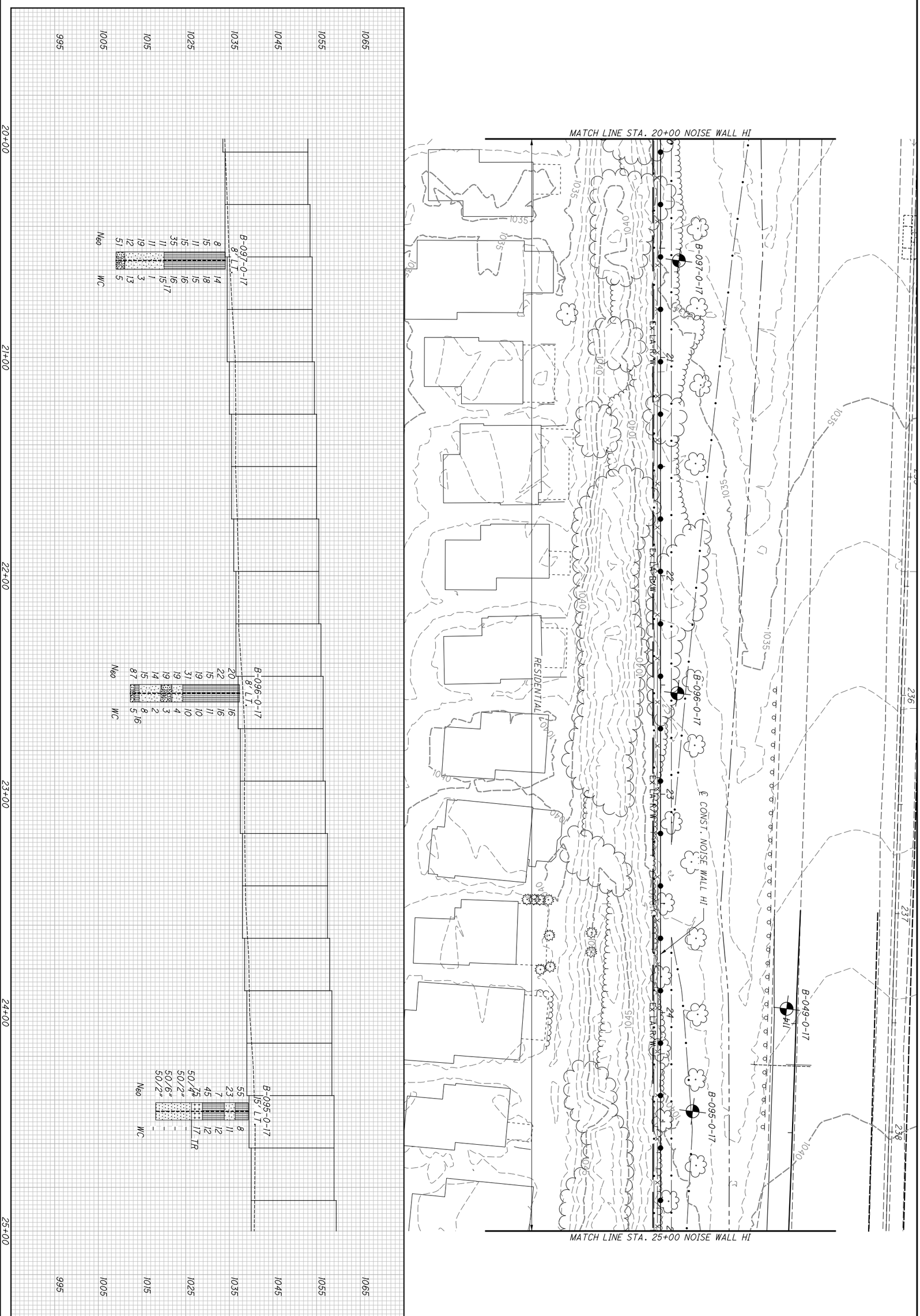


| | | | | | |
|---|---|---|---|---|---|
| | 93/209 | SUM-77/277/224<br>VARIOUS | STRUCTURE FOUNDATION EXPLORATION<br>NOISE WALL HI STA. 20+00 TO STA. 25+00 | DRAWN KCA<br>CHECKED BPA | 0 20<br>10 40<br>HORIZONTAL SCALE IN FEET |

P:\17-0129 (106002 SUM-76-10.95 Part 3 - SUM-77_277_224)\106002\geotechnical\sheets\106002ZP404.dgn Sheet 1/8/2021 12:17:09 AM karens

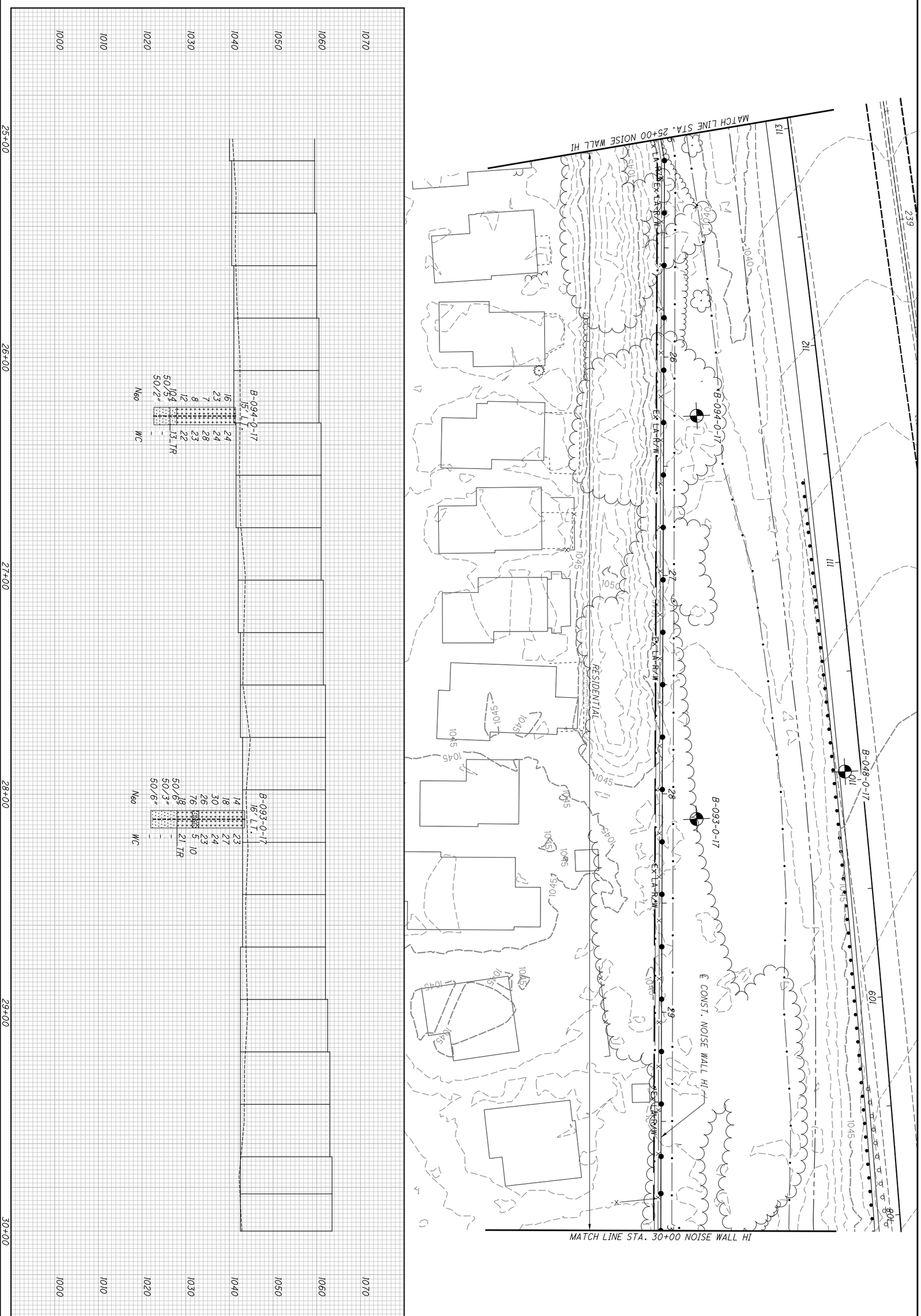


| | | | | | |
|---|---|---|---|---|---|
| 94/209 | SUM-77/277/224<br>VARIOUS | STRUCTURE FOUNDATION EXPLORATION<br>NOISE WALL HI STA. 25+00 TO STA. 30+00 | DRAWN KCA<br>CHECKED BPA | 0 20<br>10 40<br>HORIZONTAL SCALE IN FEET | N |

P:\17-0129 (106002 SUM-76-10.95 Part 3 - SUM-77_277_224)\106002\geotechnical\sheets\106002ZP405.dgn Sheet 1/8/2021 12:19:13 AM karens

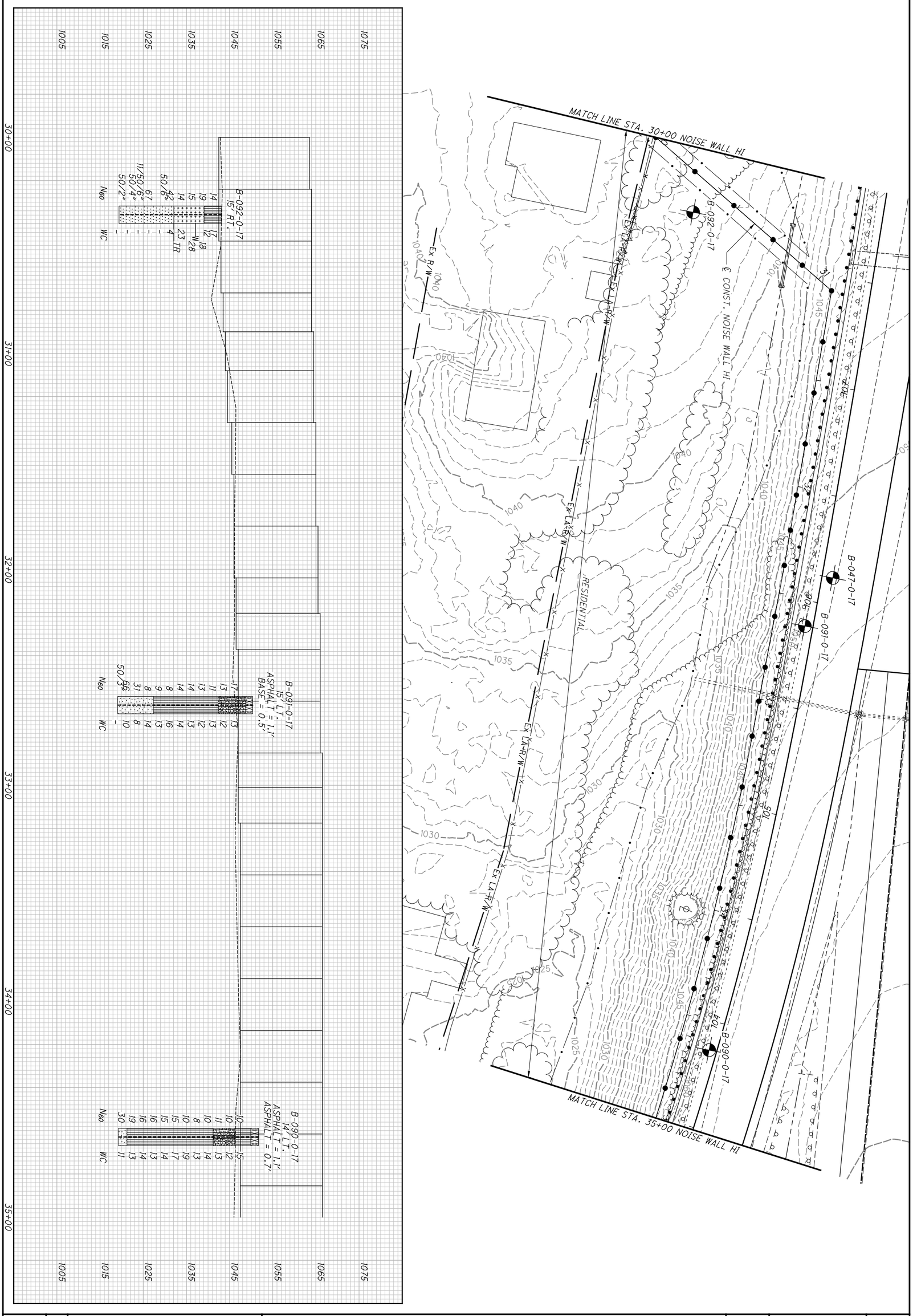


| | | | | | |
|---|---|---|---|---|---|
| | 95/209 | **SUM-77/277/224**<br>**VARIOUS** | **STRUCTURE FOUNDATION EXPLORATION**<br>**NOISE WALL HI STA. 30+00 TO STA. 35+00** | DRAWN KCA<br>CHECKED BPA | 0 20<br>10 40<br>HORIZONTAL SCALE IN FEET |

P:\17-0129 (106002 SUM-76-10.95 Part 3 - SUM-77_277_224)\106002\geotechnical\sheets\106002ZP406.dgn Sheet 1/8/2021 12:21:18 AM karens

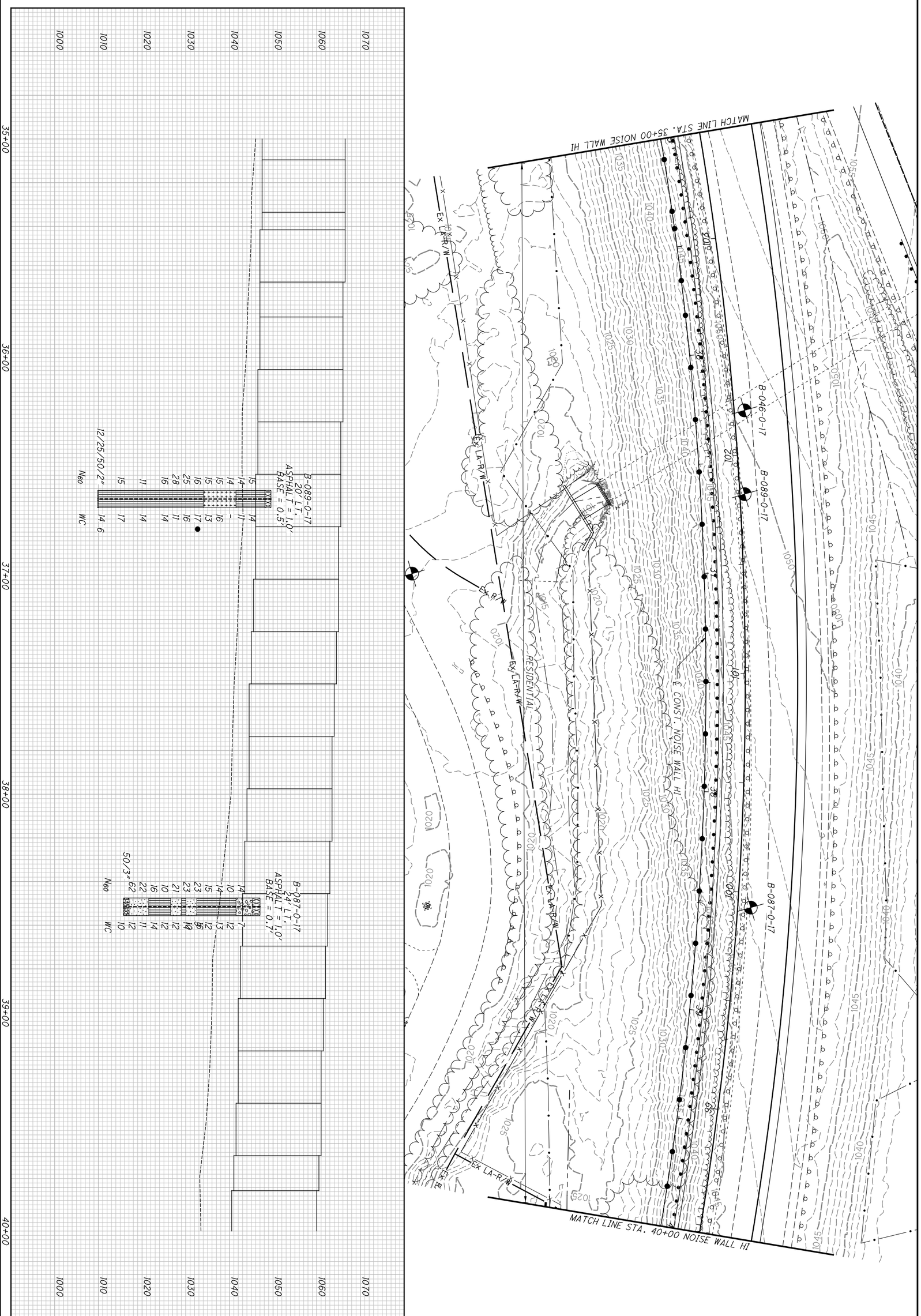


| | | | | | |
|---|---|---|---|---|---|
| | 96/209 | SUM-77/277/224<br>VARIOUS | STRUCTURE FOUNDATION EXPLORATION<br>NOISE WALL HI STA. 35+00 TO STA. 40+00 | DRAWN KCA<br>CHECKED BPA | 0 20<br>10 40<br>HORIZONTAL SCALE IN FEET |

P:\17-0129 (106002 SUM-76-10.95 Part 3 - SUM-77_277_224)\106002\geotechnical\sheets\106002ZP407.dgn Sheet 1/8/2021 12:23:23 AM karens

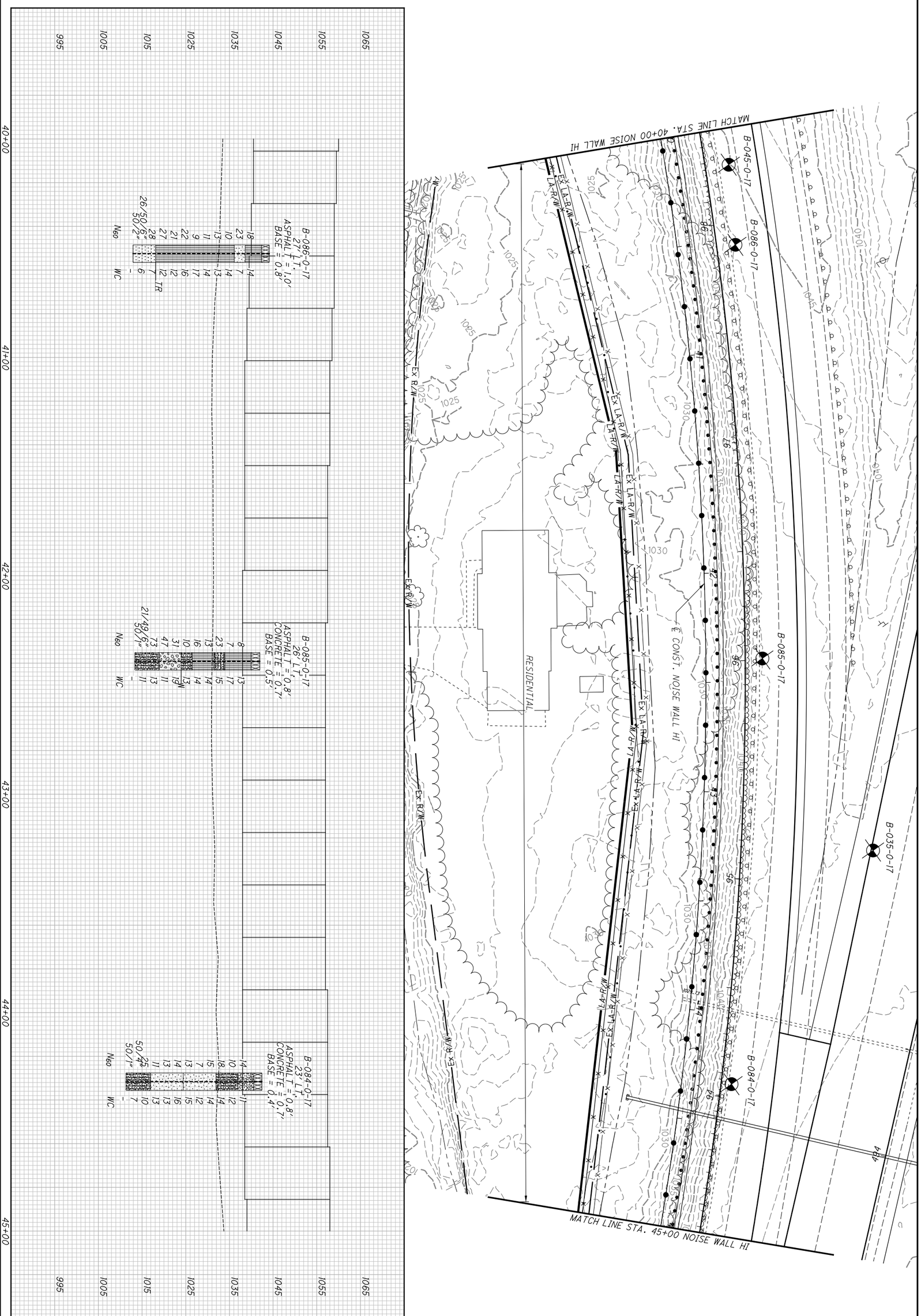


| | | | | | |
|---|---|---|---|---|---|
| | 97/209 | **SUM-77/277/224**<br>**VARIOUS** | **STRUCTURE FOUNDATION EXPLORATION**<br>**NOISE WALL HI STA. 40+00 TO STA. 45+00** | DRAWN KCA<br>CHECKED BPA | 0 20<br>10 40<br>HORIZONTAL SCALE IN FEET |

HORIZONTAL SCALE IN FEET
0 10 20 40

DRAWN KCA
CHECKED BPA

# STRUCTURE FOUNDATION EXPLORATION
# NOISE WALL HI STA. 45+00 TO STA. 50+00

SUM-77/277/224
VARIOUS

98/209

P:\17-0129 (106002 SUM-76-10.95 Part 3 - SUM-77_277_224)\106002\geotechnical\sheets\106002ZP408.dgn Sheet 1/8/2021 12:25:36 AM karens

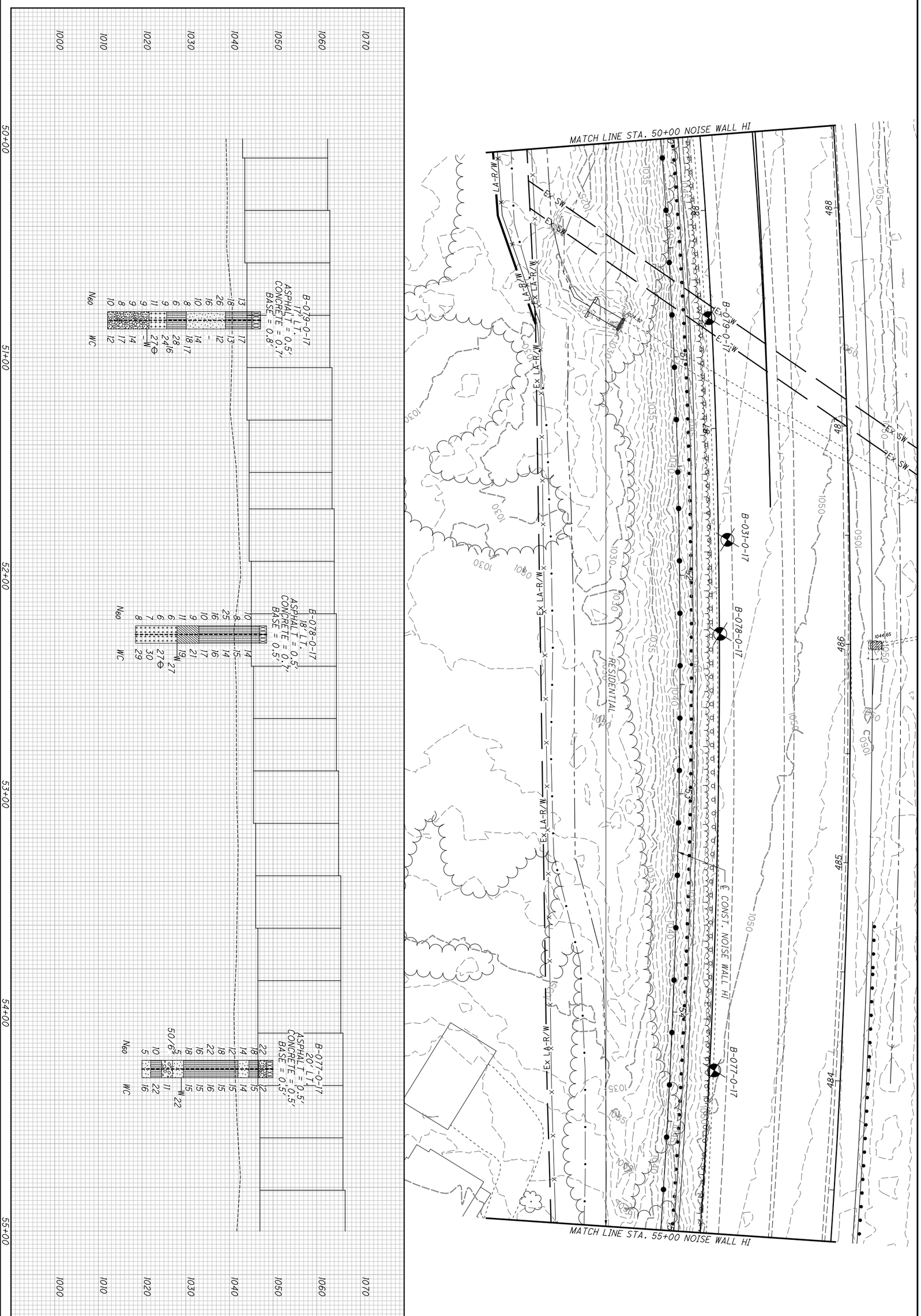


| | | | | | | |
|---|---|---|---|---|---|---|
| | 99/209 | SUM-77/277/224<br>VARIOUS | STRUCTURE FOUNDATION EXPLORATION<br>NOISE WALL HI STA. 50+00 TO STA. 55+00 | DRAWN KCA<br>CHECKED BPA | 0 20<br>10 40<br>HORIZONTAL SCALE IN FEET | N |

P:\17-0129 (106002 SUM-76-10.95 Part 3 - SUM-77_277_224)\106002\geotechnical\sheets\106002ZP410.dgn Sheet 1/8/2021 12:29:48 AM karens

| | | | | | |
|---|---|---|---|---|---|
| | 100/209 | SUM-77/277/224<br>VARIOUS | STRUCTURE FOUNDATION EXPLORATION<br>NOISE WALL HI STA. 55+00 TO STA. 60+00 | DRAWN KCA<br>CHECKED BPA | 0 20<br>10 40<br>HORIZONTAL SCALE IN FEET |

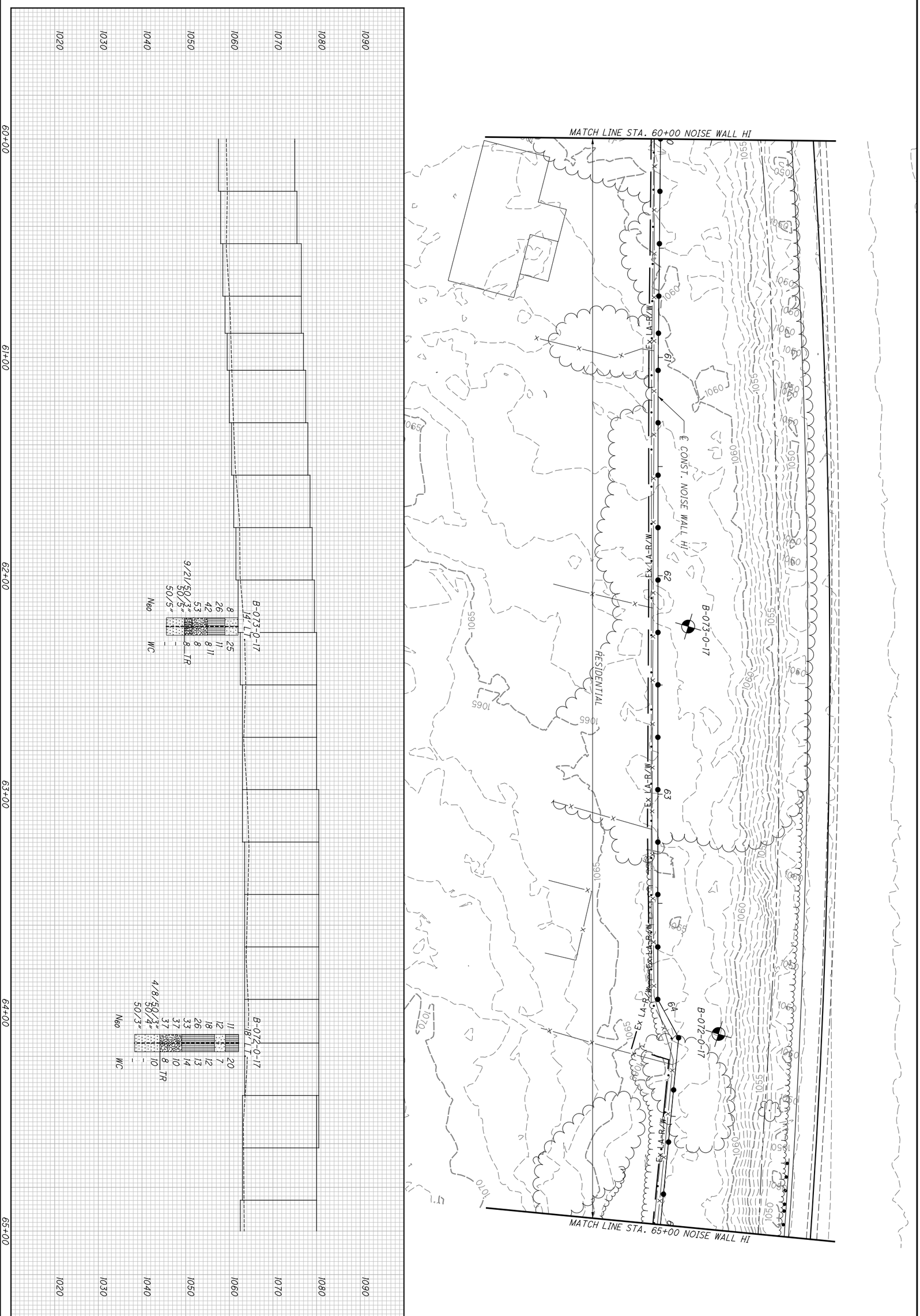


| | | | | | |
|---|---|---|---|---|---|
| 101/209 | SUM-77/277/224<br>VARIOUS | STRUCTURE FOUNDATION EXPLORATION<br>NOISE WALL HI STA. 60+00 TO STA. 65+00 | DRAWN KCA<br>CHECKED BPA | 0 20<br>10 40<br>HORIZONTAL SCALE IN FEET | N |

P:\17-0129 (106002 SUM-76-10.95 Part 3 - SUM-77_277_224)\106002\geotechnical\sheets\106002ZP412.dgn Sheet 1/8/2021 12:33:57 AM karens

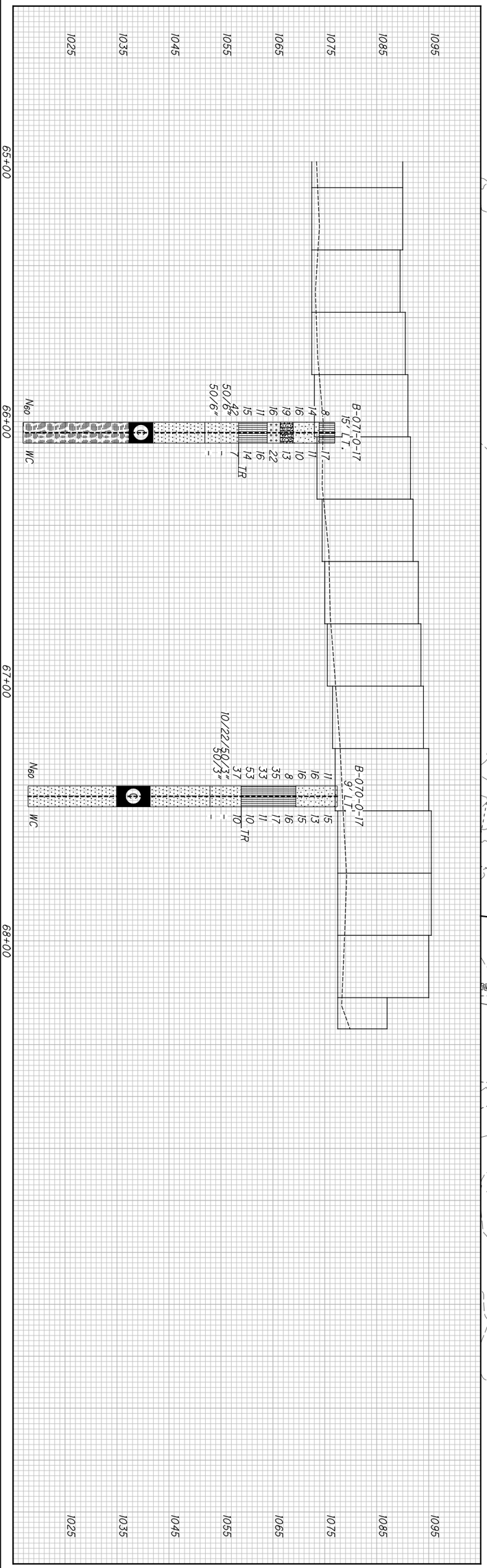


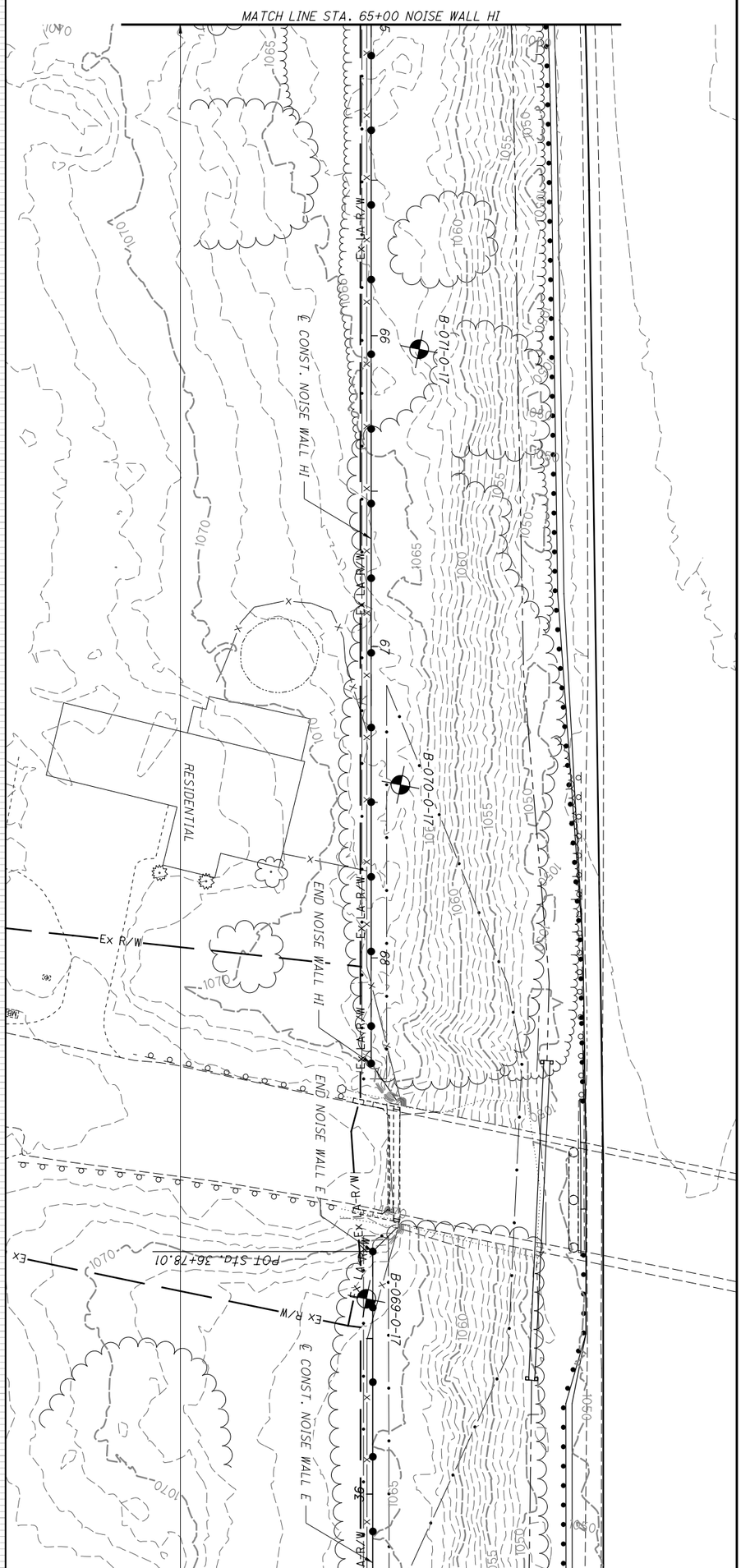


| | | | | | |
|---|---|---|---|---|---|
| 102/209 | SUM-77/277/224<br>VARIOUS | STRUCTURE FOUNDATION EXPLORATION<br>NOISE WALL HI STA. 65+00 TO END | DRAWN KCA<br>CHECKED BPA | 0 20<br>10 40<br>HORIZONTAL SCALE IN FEET | N |

# STRUCTURE FOUNDATION EXPLORATION
## NOISE WALL K BEGIN TO STA. 15+00

SUM-77/277/224
VARIOUS

DRAWN KCA
CHECKED BPA

HORIZONTAL SCALE IN FEET
0 10 20 40

103/209

BEGIN NOISE WALL K

MATCH LINE STA. 15+00 NOISE WALL K

℄ CONST. NOISE WALL K

RESIDENTIAL

Ex LA R/W

B-052-0-17
B-118-0-17
B-119-0-17
B-120-0-17
B-119-1-17
B-053-0-17

B-118-0-17
8' RT.
ASPHALT = 0.5'
BASE = 0.5'

| $N_{60}$ | WC |
|---|---|
| 12 | 7 |
| 23 | 15 |
| 26 | 12 |
| 23 | 15 |
| 26 | 13 |
| 23 | 17 |
| 11 | 20 |
| 8 | 18 |
| 10 | 21 |
| 20 | 23 |

B-119-0-17
6' RT.
ASPHALT = 0.5'
BASE = 0.5'

| $N_{60}$ | WC |
|---|---|
| 12 | 6 |
| 27 | 11 |
| 25 | 14 |
| 27 | 13 |
| 25 | 14 |
| 23 | 16 |
| 15 | 13 |
| 18 | 21 |
| 10 | 17 |
| 10 | 15 |
| 14 | 16 |
| 29 | 15 |

30

B-119-1-17
38' RT.

| N60 | WC |
|---|---|
| 27 | 15 |
| 22 | 16 |
| 25 | 15 |
| 16 | 13 |
| 33 | 15 |
| 18 | 14 |
| 8 | 15 |
| 14 | 14 |
| 10/50/6" | 13 |
| 25 | 12 |
| 50/6" | 4 |
| 63 | 10 |

TR

B-120-0-17
4' RT.
ASPHALT = 0.8'
BASE = 0.3'

| $N_{60}$ | WC |
|---|---|
| 10 | 15 |
| 9 | 15 |
| 10 | 13 |
| 10 | 14 |
| 15 | 13 |
| 15 | 13 |
| 11 | 14 |
| 11 | 17 |
| 11 | 13 |
| 33 | 8 |

1085 1075 1065 1055 1045 1035 1025 1015

10+00 11+00 12+00 13+00 14+00 15+00

P:\17-0129 (106002 SUM-76-10.95 Part 3 - SUM-77_277_224)\106002\geotechnical\sheets\106002ZP501.dgn Sheet 1/8/2021 12:36:02 AM karens

P:\17-0129 (106002 SUM-76-10.95 Part 3 - SUM-77_277_224)\106002\geotechnical\sheets\106002ZP502.dgn Sheet 1/8/2021 12:38:07 AM karens

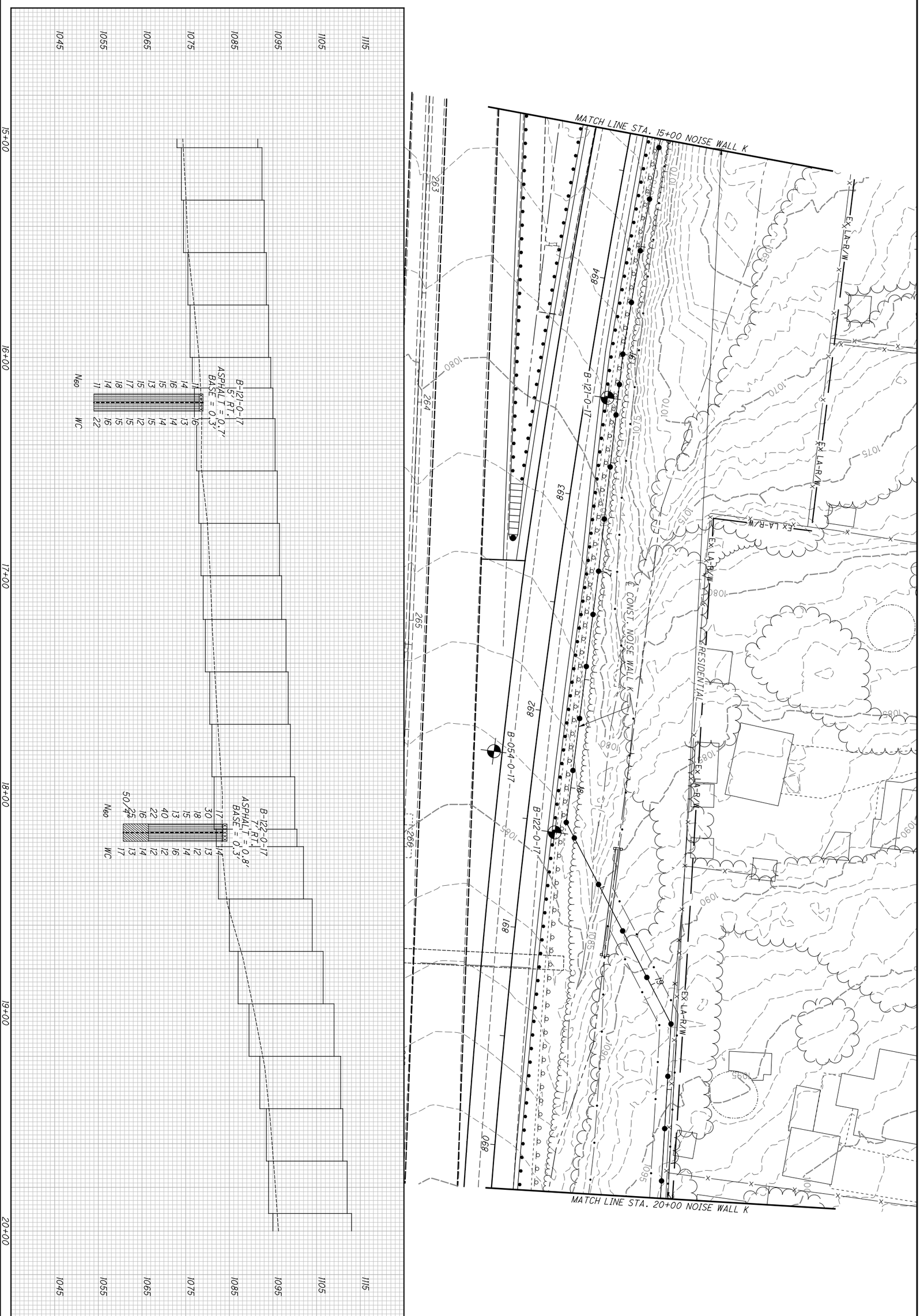


| | | | | | |
|---|---|---|---|---|---|
| 104/209 | SUM-77/277/224<br>VARIOUS | STRUCTURE FOUNDATION EXPLORATION<br>NOISE WALL K STA. 15+00 TO STA. 20+00 | DRAWN KCA<br>CHECKED BPA | 0 20<br>10 40<br>HORIZONTAL SCALE IN FEET | N |

P:\17-0129 (106002 SUM-76-10.95 Part 3 - SUM-77_277_224)\106002\geotechnical\sheets\106002ZP503.dgn Sheet 1/8/2021 12:40:10 AM karens

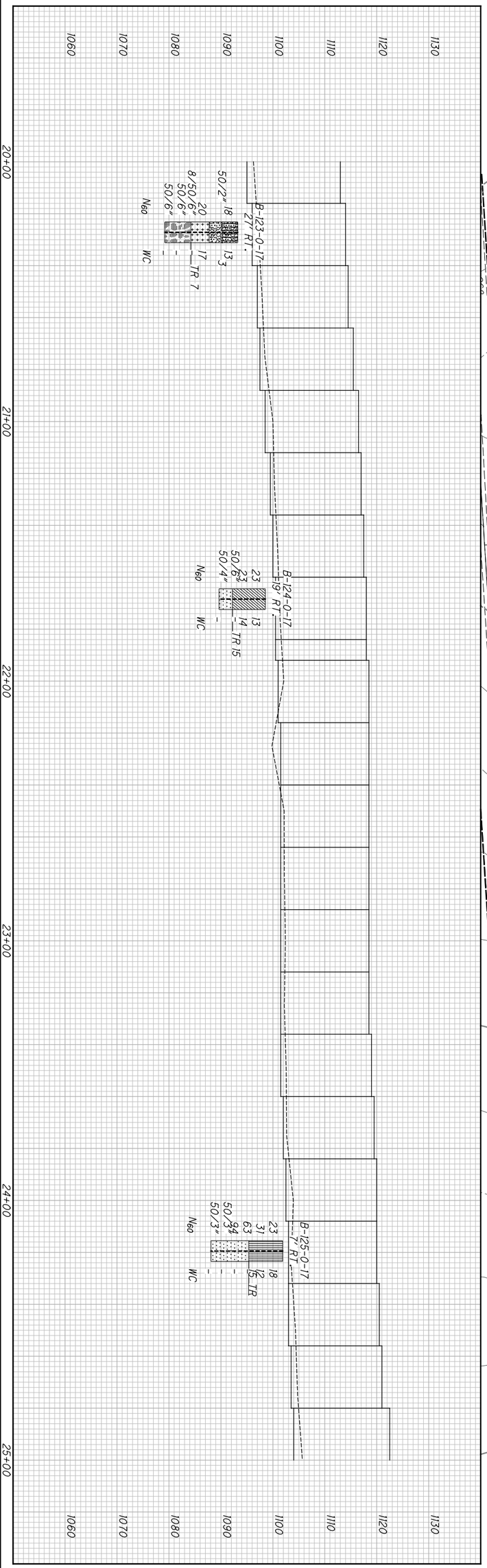


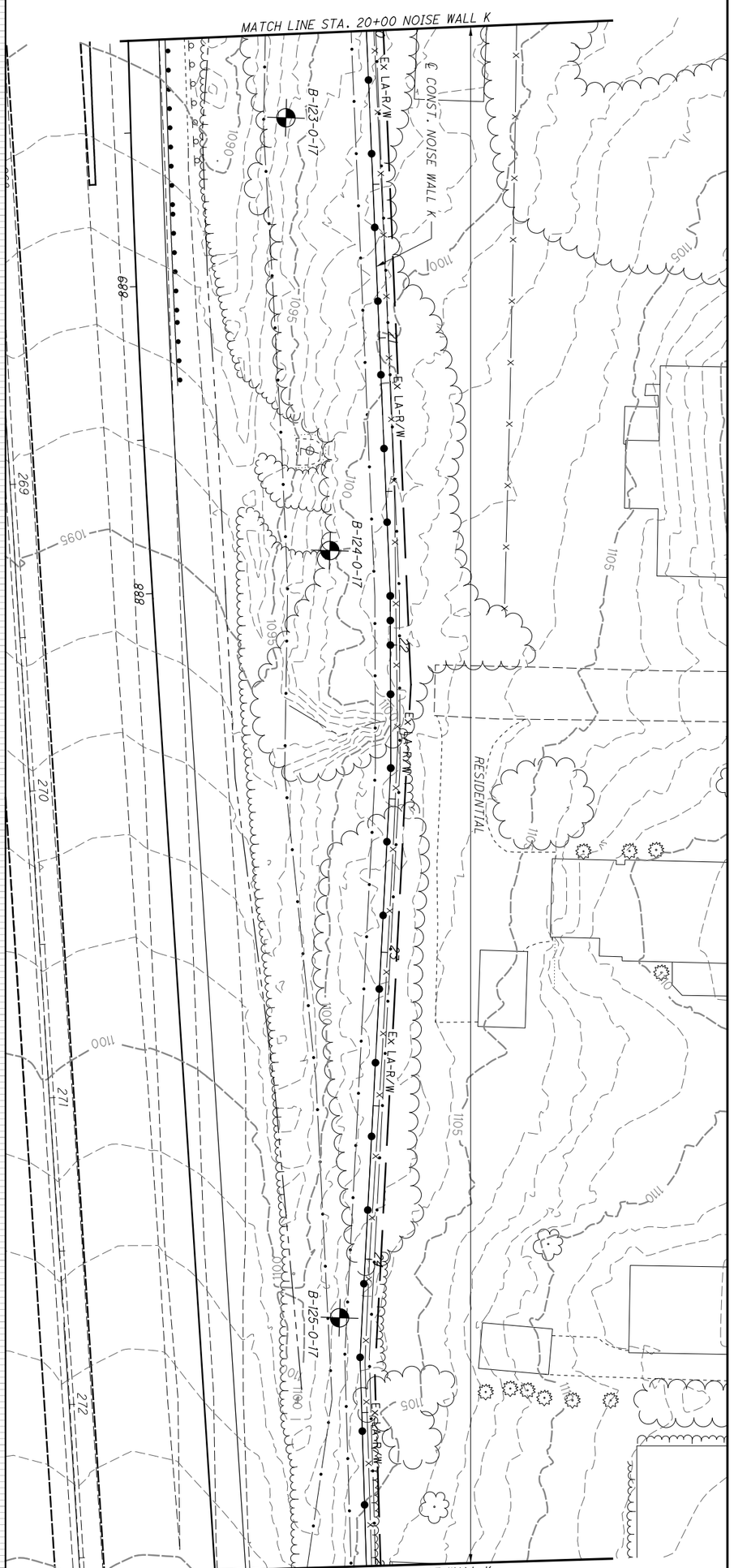


105/209

**SUM-77/277/224**
**VARIOUS**

# STRUCTURE FOUNDATION EXPLORATION
## NOISE WALL K STA. 20+00 TO STA. 25+00

DRAWN KCA
CHECKED BPA

0 10 20 40
HORIZONTAL SCALE IN FEET

N

P:\17-0129 (106002 SUM-76-10.95 Part 3 - SUM-77_277_224)\106002\geotechnical\sheets\106002ZP504.dgn Sheet 1/8/2021 12:42:15 AM karens

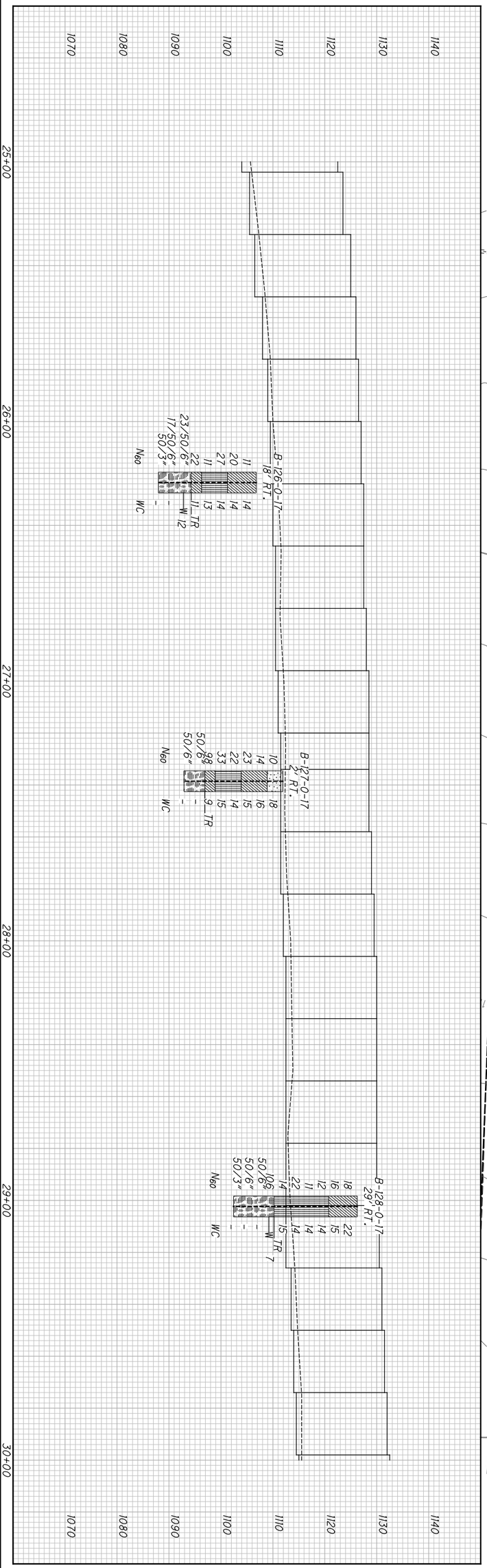


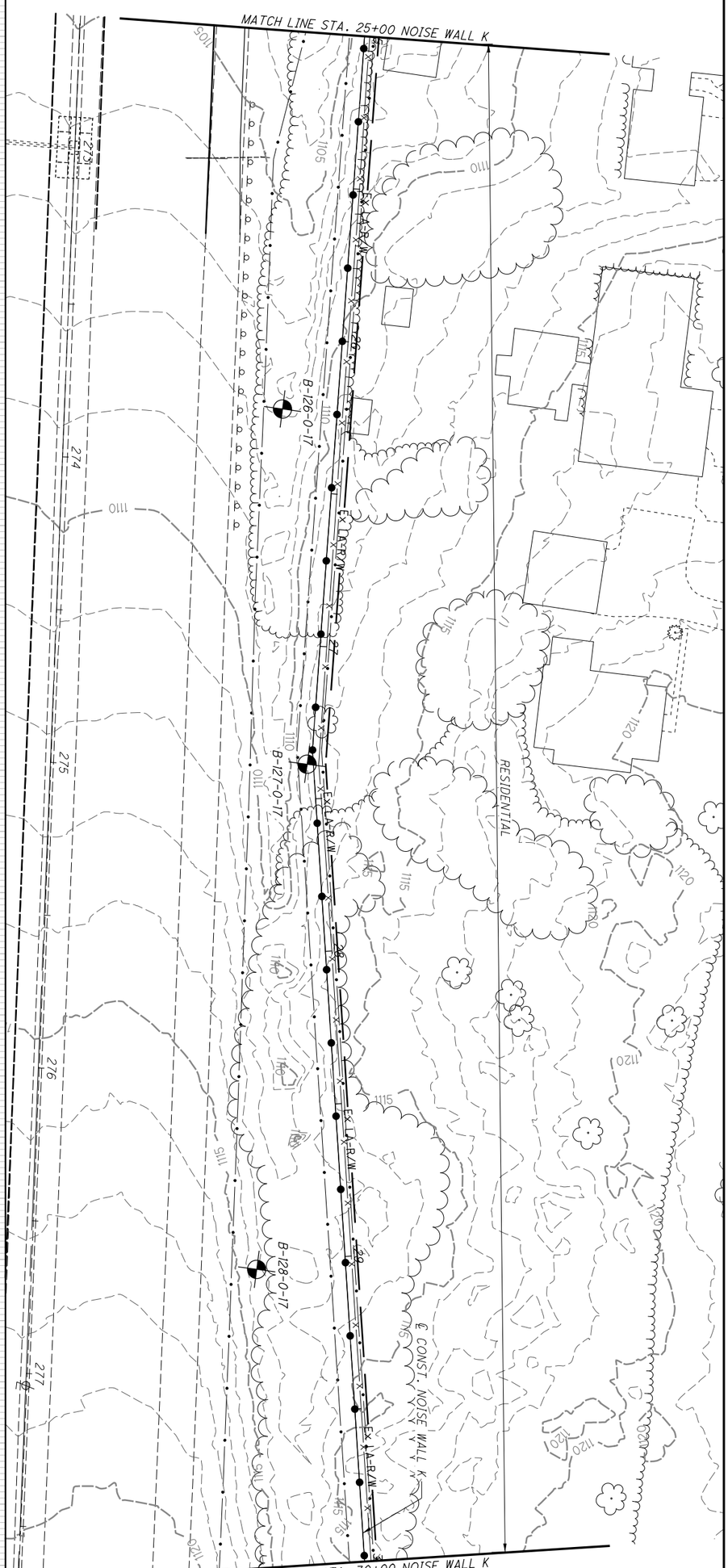


106/209

**SUM-77/277/224**
**VARIOUS**

# STRUCTURE FOUNDATION EXPLORATION
## NOISE WALL K STA. 25+00 TO STA. 30+00

DRAWN KCA
CHECKED BPA

0 10 20 40
HORIZONTAL SCALE IN FEET

P:\17-0129 (106002 SUM-76-10.95 Part 3 - SUM-77_277_224)\106002\geotechnical\sheets\106002ZP505.dgn Sheet 1/8/2021 12:44:20 AM karens

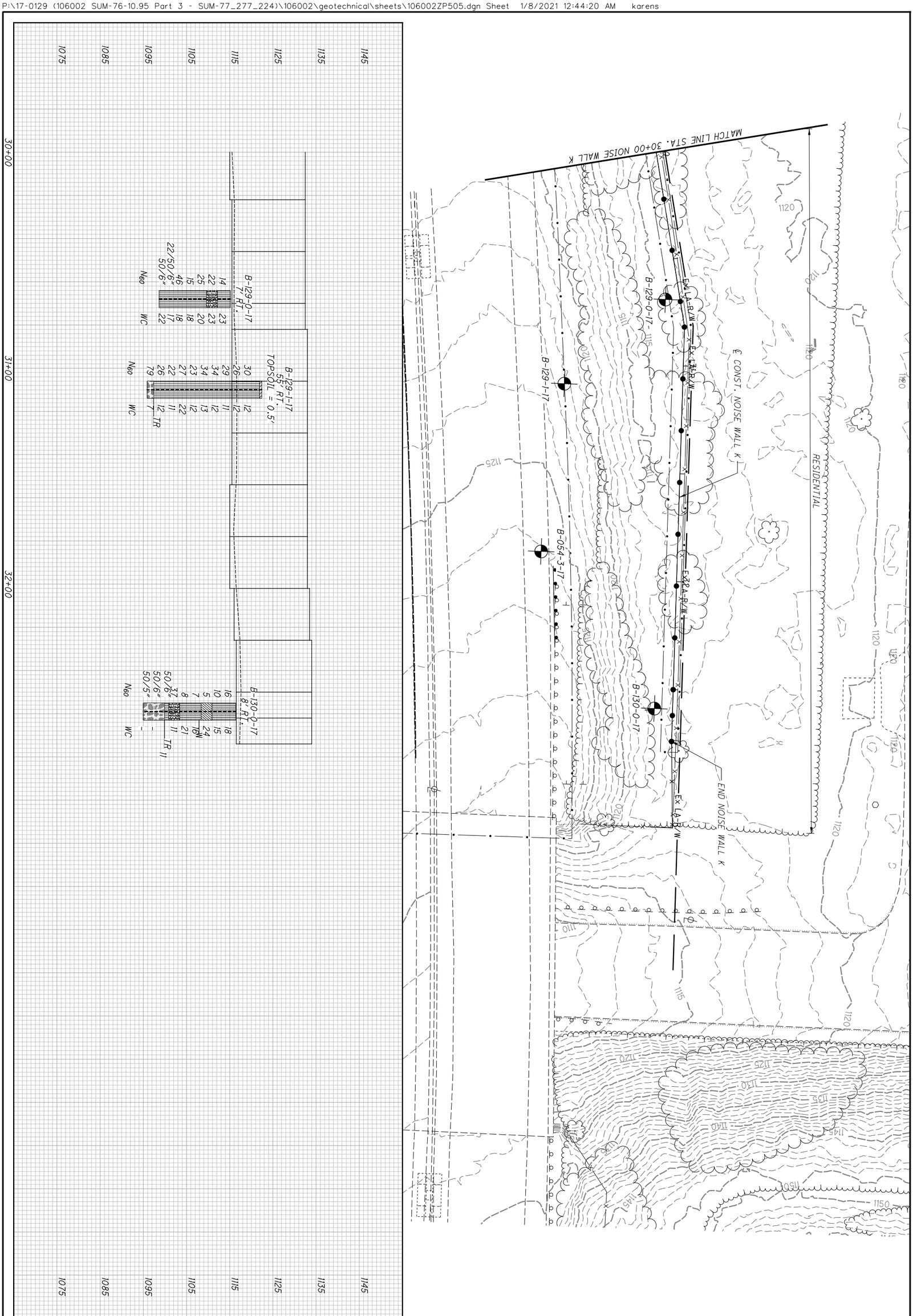


| | | | | | |
|---|---|---|---|---|---|
| 107/209 | SUM-77/277/224<br>VARIOUS | STRUCTURE FOUNDATION EXPLORATION<br>NOISE WALL K STA. 30+00 TO END | DRAWN KCA<br>CHECKED BPA | 0 20<br>10 40<br>HORIZONTAL SCALE IN FEET | N |

HORIZONTAL SCALE IN FEET
0 10 20 40

DRAWN KCA
CHECKED BPA

# STRUCTURE FOUNDATION EXPLORATION
## CCTV POLE CROSS SECTION AT I-77 STA. 422+00

SUM-77/277/224
VARIOUS

108/209

P:\17-0129 I106002 SUM-76-10.95 Part 3 - SUM-77_277_224\I06002\geotechnical\sheets\I06002_IX002.dgn Sheet 1/7/2021 5:03 PM Karens

| | | | | | |
|---|---|---|---|---|---|
| PROJECT: SUM-77-277/224 | DRILLING FIRM / OPERATOR: NEAS / J. HODGES | DRILL RIG: CME 55X | STATION / OFFSET: 425+50, 14' LT. | EXPLORATION ID B-013-1-17 |
| TYPE: BRIDGE | SAMPLING FIRM / LOGGER: NEAS / J.HODGES | HAMMER: CME AUTOMATIC | ALIGNMENT: IR-77 | |
| PID: 106002 SFN: 7702493 | DRILLING METHOD: 3.25" HSA | CALIBRATION DATE: 11/21/17 | ELEVATION: 1023.6 (MSL) EOB: 100.0 ft. | PAGE 1 OF 2 |
| START: 7/24/19 END: 7/25/19 | SAMPLING METHOD: SPT | ENERGY RATIO (%): 85.4 | LAT / LONG: 41.006033, -81.494250 | |

| MATERIAL DESCRIPTION AND NOTES | ELEV. | DEPTHS | SPT/ RQD | $N_{60}$ | REC (%) | SAMPLE ID | HP (tsf) | GRADATION (%) GR | CS | FS | SI | CL | ATTERBERG LL | PL | PI | WC | ODOT CLASS (GI) | HOLE SEALED |
|---|---|---|---|---|---|---|---|---|---|---|---|---|---|---|---|---|---|---|
| **6.0" TOPSOIL (DRILLERS DESCRIPTION)** | 1023.6 | | | | | | | | | | | | | | | | | |
| STIFF TO HARD, BROWN, **SANDY SILT**, LITTLE CLAY, TRACE TO LITTLE GRAVEL, SS-1 CONTAINS ROOTS, DAMP | 1023.1 | | 1 2 4 | 9 | 100 | SS-1 | 4.25 | - | - | - | - | - | - | - | - | 12 | A-4a (V) | |
| | | | 3 5 6 | 16 | 100 | SS-2 | 3.25 | - | - | - | - | - | - | - | - | 11 | A-4a (V) | |
| | | | 2 2 2 | 6 | 100 | SS-3 | 1.75 | 10 | 12 | 36 | 28 | 14 | 24 | 18 | 6 | 16 | A-4a (1) | |
| | | | 2 3 4 | 10 | 100 | SS-4 | 4.5+ | - | - | - | - | - | - | - | - | 13 | A-4a (V) | |
| @6.0' TO 7.5'; SS-5 NO INTACT SOIL FOR HP READINGS, CONTAINS IRON STAINING | | | 2 5 7 | 17 | 17 | SS-5 | - | - | - | - | - | - | - | - | - | 13 | A-4a (V) | |
| | | | 3 4 6 | 14 | 100 | SS-6 | 4.5+ | - | - | - | - | - | - | - | - | 12 | A-4a (V) | |
| | | | 2 4 7 | 16 | 100 | SS-7 | 4.5+ | - | - | - | - | - | - | - | - | 12 | A-4a (V) | |
| | | | 2 4 9 | 19 | 100 | SS-8 | 4.50 | 10 | 9 | 29 | 35 | 17 | 22 | 16 | 6 | 11 | A-4a (3) | |
| | | | 4 7 7 | 20 | 100 | SS-9 | 4.25 | - | - | - | - | - | - | - | - | 13 | A-4a (V) | |
| | | | 4 11 13 | 34 | 100 | SS-10 | 4.5+ | - | - | - | - | - | - | - | - | 9 | A-4a (V) | |
| | 1001.6 | | | | | | | | | | | | | | | | | |
| MEDIUM DENSE TO DENSE, DARK BROWN, **GRAVEL AND STONE FRAGMENTS WITH SAND AND SILT**, LITTLE TO SOME CLAY, CONTAINS TRACE IRON STAINING, DAMP TO MOIST | | | 7 10 16 | 37 | 100 | SS-11 | - | - | - | - | - | - | - | - | - | 11 | A-2-4 (V) | |
| | | W 997.6 | 4 9 10 | 27 | 44 | SS-12 | - | - | - | - | - | - | - | - | - | 16 | A-2-4 (V) | |
| | 996.6 | | | | | | | | | | | | | | | | | |
| MEDIUM DENSE, BROWN, **STONE FRAGMENTS**, LITTLE SAND, TRACE SILT, TRACE CLAY, WET @27.5' TO 100.0'; ADDED WATER AS CUTTINGS CIRCULATION FLUID | 994.1 | | 4 4 4 | 11 | 44 | SS-13 | - | - | - | - | - | - | - | - | - | 22 | A-1-a (V) | |
| VERY STIFF, GRAY, **SANDY SILT**, SOME CLAY, TRACE GRAVEL, MOIST | 990.3 | | 3 4 5 | 13 | 50 | SS-14 | 3.00 | 5 | 5 | 16 | 49 | 25 | 21 | 15 | 6 | 16 | A-4a (8) | |
| MEDIUM DENSE, GRAY, **COARSE AND FINE SAND**, SOME SILT, LITTLE CLAY, LITTLE GRAVEL, MOIST | | | 4 5 5 | 14 | 100 | SS-15 | - | - | - | - | - | - | - | - | - | 15 | A-3a (V) | |
| | | | 3 6 3 | 13 | 100 | SS-16 | - | - | - | - | - | - | - | - | - | 16 | A-3a (V) | |
| | 980.3 | | | | | | | | | | | | | | | | | |
| VERY STIFF, GRAY, **SANDY SILT**, LITTLE CLAY, TRACE GRAVEL, MOIST | | | 2 3 3 | 9 | 100 | SS-17 | 3.00 | 5 | 6 | 32 | 39 | 18 | 17 | 12 | 5 | 14 | A-4a (4) | |
| | | | 2 5 5 | 14 | 44 | SS-18 | 3.00 | - | - | - | - | - | - | - | - | 13 | A-4a (V) | |
| | 970.3 | | | | | | | | | | | | | | | | | |
| MEDIUM DENSE TO DENSE, GRAY, **GRAVEL**, SOME TO "AND" SAND, TRACE SILT, TRACE CLAY, GRAVEL IS ROUNDED TO SUBROUNDED, MOIST TO WET | | | 5 6 6 | 17 | 44 | SS-19 | - | - | - | - | - | - | - | - | - | 14 | A-1-a (V) | |

STANDARD ODOT SOIL BORING LOG (11 X 17) - OH DOT.GDT - 11/19/20 18:32 - C:\USERS\KARENS\DESKTOP\SUM-77-277-224 MOD 8 COMBINED WITH 2017 ARCHIVE.GPJ

PID: 106002 | SFN: | PROJECT: SUM-77-277/224 | STATION / OFFSET: 425+50, 14' LT. | START: 7/24/19 | END: 7/25/19 | PG 2 OF 2 | B-013-1-17

| MATERIAL DESCRIPTION AND NOTES | ELEV. | DEPTHS | SPT/ RQD | $N_{60}$ | REC (%) | SAMPLE ID | HP (tsf) | GRADATION (%) GR | CS | FS | SI | CL | ATTERBERG LL | PL | PI | WC | ODOT CLASS (GI) | HOLE SEALED |
|---|---|---|---|---|---|---|---|---|---|---|---|---|---|---|---|---|---|---|
| MEDIUM DENSE TO DENSE, GRAY, **GRAVEL**, SOME TO "AND" SAND, TRACE SILT, TRACE CLAY, GRAVEL IS ROUNDED TO SUBROUNDED, MOIST TO WET *(continued)* | 963.6 | 61 | 7 7 7 | 20 | 100 | SS-20 | - | - | - | - | - | - | - | - | - | 13 | A-1-a (V) | |
| | | 62 | | | | | | | | | | | | | | | | |
| | | 63 | | | | | | | | | | | | | | | | |
| | | 64 | | | | | | | | | | | | | | | | |
| | | 65 | 5 6 6 | 17 | 100 | SS-21 | - | - | - | - | - | - | - | - | - | 12 | A-1-a (V) | |
| | | 66 | | | | | | | | | | | | | | | | |
| | | 67 | | | | | | | | | | | | | | | | |
| | | 68 | | | | | | | | | | | | | | | | |
| | | 69 | | | | | | | | | | | | | | | | |
| | | 70 | | | | | | | | | | | | | | | | |
| | | 71 | 7 9 7 | 23 | 100 | SS-22 | - | - | - | - | - | - | - | - | - | 12 | A-1-a (V) | |
| | | 72 | | | | | | | | | | | | | | | | |
| | | 73 | | | | | | | | | | | | | | | | |
| | | 74 | | | | | | | | | | | | | | | | |
| | | 75 | | | | | | | | | | | | | | | | |
| | | 76 | 7 9 10 | 27 | 100 | SS-23 | - | - | - | - | - | - | - | - | - | 12 | A-1-a (V) | |
| | | 77 | | | | | | | | | | | | | | | | |
| | | 78 | | | | | | | | | | | | | | | | |
| | | 79 | | | | | | | | | | | | | | | | |
| | | 80 | | | | | | | | | | | | | | | | |
| | | 81 | 7 7 8 | 21 | 100 | SS-24 | - | 59 | 24 | 13 | 2 | 2 | NP | NP | NP | 11 | A-1-a (0) | |
| | | 82 | | | | | | | | | | | | | | | | |
| | | 83 | | | | | | | | | | | | | | | | |
| | | 84 | | | | | | | | | | | | | | | | |
| | | 85 | | | | | | | | | | | | | | | | |
| | | 86 | 6 6 8 | 20 | 100 | SS-25 | - | - | - | - | - | - | - | - | - | 13 | A-1-a (V) | |
| | | 87 | | | | | | | | | | | | | | | | |
| | | 88 | | | | | | | | | | | | | | | | |
| | | 89 | | | | | | | | | | | | | | | | |
| | | 90 | | | | | | | | | | | | | | | | |
| | | 91 | 11 12 20 | 46 | 100 | SS-26 | - | - | - | - | - | - | - | - | - | 15 | A-1-a (V) | |
| | | 92 | | | | | | | | | | | | | | | | |
| | | 93 | | | | | | | | | | | | | | | | |
| | | 94 | | | | | | | | | | | | | | | | |
| | | 95 | | | | | | | | | | | | | | | | |
| | | 96 | 11 13 19 | 46 | 100 | SS-27 | - | - | - | - | - | - | - | - | - | 15 | A-1-a (V) | |
| | | 97 | | | | | | | | | | | | | | | | |
| | | 98 | | | | | | | | | | | | | | | | |
| | | 99 | 11 11 14 | 36 | 100 | SS-28 | - | - | - | - | - | - | - | - | - | 10 | A-1-a (V) | |
| | 923.6 | 100 EOB | | | | | | | | | | | | | | | | |

NOTES: GROUNDWATER ENCOUNTERED AT 26.0' DURING DRILLING. HOLE DID NOT CAVE.

ABANDONMENT METHODS, MATERIALS, QUANTITIES: PUMPED 150 GAL. BENTONITE GROUT

STANDARD ODOT SOIL BORING LOG (11 X 17) - OH DOT.GDT - 11/19/20 18:32 - C:\USERS\KARENS\DESKTOP\SUM-77-277-224 MOD 8 COMBINED WITH 2017 ARCHIVE.GPJ

P:\17-0129 (106002 SUM-76-10.95 Part 3 - SUM-77_277_224)\106002\geotechnical\sheets\106002ZL003.dgn Sheet 1/8/2021 12:45:28 AM karens

| | | | | |
|---|---|---|---|---|
| PROJECT: SUM-77-277/224 | DRILLING FIRM / OPERATOR: NEAS / ASHBAUGH | DRILL RIG: CME 55T | STATION / OFFSET: 425+87, 12' RT. | EXPLORATION ID B-013-2-17 |
| TYPE: BRIDGE | SAMPLING FIRM / LOGGER: NEAS / ASHBAUGH | HAMMER: CME AUTOMATIC | ALIGNMENT: IR-77 | |
| PID: 106002 SFN: 7702523 | DRILLING METHOD: 3.25" HSA | CALIBRATION DATE: 11/21/17 | ELEVATION: 1005.9 (MSL) EOB: 91.5 ft. | PAGE 1 OF 2 |
| START: 10/9/19 END: 10/9/19 | SAMPLING METHOD: SPT | ENERGY RATIO (%): 78.2 | LAT / LONG: 41.006136, -81.494159 | |

| MATERIAL DESCRIPTION AND NOTES | ELEV. | DEPTHS | SPT/ RQD | $N_{60}$ | REC (%) | SAMPLE ID | HP (tsf) | GRADATION (%) GR | CS | FS | SI | CL | ATTERBERG LL | PL | PI | WC | ODOT CLASS (GI) | HOLE SEALED |
|---|---|---|---|---|---|---|---|---|---|---|---|---|---|---|---|---|---|---|
| **10.0" ASPHALT AND 6.0" BASE (DRILLERS DESCRIPTION)** | 1005.9 | | | | | | | | | | | | | | | | | |
| | 1004.6 | | | | | | | | | | | | | | | | | |
| LOOSE, BLACK AND BROWN, **GRAVEL WITH SAND**, LITTLE SILT, TRACE CLAY, DRY TO DAMP | | | 8 4 4 | 10 | 11 | SS-1 | - | - | - | - | - | - | - | - | - | 2 | A-1-b (V) | |
| @5.0' TO 6.5'; BECOMES VERY DENSE | 998.9 | | 18 21 32 | 69 | 78 | SS-2 | - | 26 | 24 | 27 | 16 | 7 | NP | NP | NP | 7 | A-1-b (0) | |
| STIFF, DARK BROWN AND BLACK, **SANDY SILT**, SOME CLAY, SOME GRAVEL, CONTAINS A STRONG PETROLIFEROUS ODOR, WET | 996.4 | | 10 3 3 | 8 | 56 | SS-3 | 1.50 | - | - | - | - | - | - | - | - | 19 | A-4a (V) | |
| LOOSE, GRAY, **GRAVEL WITH SAND AND SILT**, TRACE CLAY, CONTAINS A STRONG PETROLIFEROUS ODOR, DAMP | 993.9 | W 993.9 | 3 5 3 | 10 | 50 | SS-4 | - | 24 | 22 | 25 | 21 | 8 | 21 | 19 | 2 | 12 | A-2-4 (0) | |
| MEDIUM DENSE, GRAY, **COARSE AND FINE SAND**, SOME GRAVEL, LITTLE SILT, LITTLE CLAY, CONTAINS A STRONG PETROLIFEROUS ODOR, MOIST | 991.4 | | 3 5 7 | 16 | 56 | SS-5 | - | - | - | - | - | - | - | - | - | 13 | A-3a (V) | |
| LOOSE, GRAY, **GRAVEL WITH SAND**, LITTLE SILT, TRACE CLAY, CONTAINS A STRONG PETROLIFEROUS ODOR, WET @15.0'; HOLE BEGAN TO HEAVE | 988.9 | | 3 2 3 | 7 | 67 | SS-6 | - | - | - | - | - | - | - | - | - | 15 | A-1-b (V) | |
| LOOSE TO DENSE, BROWN, **COARSE AND FINE SAND**, LITTLE GRAVEL, TRACE SILT, TRACE CLAY, CONTAINS A STRONG PETROLIFEROUS ODOR, WET TO MOIST | | | 5 6 6 | 16 | 56 | SS-7 | - | - | - | - | - | - | - | - | - | 19 | A-3a (V) | |
| | | | 6 3 5 | 10 | 100 | SS-8 | - | - | - | - | - | - | - | - | - | 12 | A-3a (V) | |
| | | | 10 12 16 | 36 | 28 | SS-9 | - | - | - | - | - | - | - | - | - | 21 | A-3a (V) | |
| | | | 1 3 4 | 9 | 78 | SS-10 | - | - | - | - | - | - | - | - | - | 19 | A-3a (V) | |
| | 978.9 | | | | | | | | | | | | | | | | | |
| MEDIUM DENSE TO DENSE, GRAY, **SANDY SILT**, LITTLE CLAY, TRACE GRAVEL, CONTAINS A STRONG PETROLIFEROUS ODOR, DAMP TO MOIST | | | 9 12 12 | 31 | 50 | SS-11 | - | - | - | - | - | - | - | - | - | 13 | A-4a (V) | |
| | | | 10 7 9 | 21 | 100 | SS-12 | - | 0 | 4 | 31 | 48 | 17 | NP | NP | NP | 15 | A-4a (6) | |
| | 972.6 | | | | | | | | | | | | | | | | | |
| SOFT TO VERY STIFF, GRAY, **SILT**, SOME SAND, SOME CLAY, TRACE GRAVEL, CONTAINS A STRONG PETROLIFEROUS ODOR, DAMP TO MOIST | | | 7 10 8 | 23 | 89 | SS-13 | 2.50 | - | - | - | - | - | - | - | - | 14 | A-4b (V) | |
| | | | 4 6 7 | 17 | 100 | SS-14 | 0.30 | 0 | 2 | 24 | 53 | 21 | 19 | 15 | 4 | 16 | A-4b (8) | |
| @45.0' TO 51.5'; BECOMES MEDIUM DENSE, LITTLE CLAY | | | 5 6 7 | 17 | 100 | SS-15 | - | - | - | - | - | - | - | - | - | 14 | A-4b (V) | |
| | | | 3 4 7 | 14 | 100 | SS-16 | - | 2 | 3 | 27 | 52 | 16 | NP | NP | NP | 15 | A-4b (7) | |
| | 952.6 | | | | | | | | | | | | | | | | | |
| MEDIUM DENSE, GRAY, **SANDY SILT**, LITTLE GRAVEL, TRACE TO LITTLE CLAY, CONTAINS A STRONG PETROLIFEROUS ODOR, DAMP | | | 3 5 6 | 14 | 100 | SS-17 | - | 20 | 26 | 18 | 27 | 9 | NP | NP | NP | 13 | A-4a (0) | |

STANDARD ODOT SOIL BORING LOG (11 X 17) - OH DOT.GDT - 11/19/20 18:32 - C:\USERS\KARENS\DESKTOP\SUM-77-277-224 MOD 8 COMBINED WITH 2017 ARCHIVE.GPJ

| | | | |
|---|---|---|---|
| 11/2009 | **SUM-77/277/224 VARIOUS** | **STRUCTURE FOUNDATION EXPLORATION BRIDGE SUM-77-08.02 BORING LOG B-013-2-17** | DRAWN EB CHECKED BPA |

PID: 106002 | SFN: | PROJECT: SUM-77-277/224 | STATION / OFFSET: 425+87, 12' RT. | START: 10/9/19 | END: 10/9/19 | PG 2 OF 2 | B-013-2-17

| MATERIAL DESCRIPTION AND NOTES | ELEV. | DEPTHS | SPT/ RQD | $N_{60}$ | REC (%) | SAMPLE ID | HP (tsf) | GRADATION (%) GR | CS | FS | SI | CL | ATTERBERG LL | PL | PI | WC | ODOT CLASS (GI) | HOLE SEALED |
|---|---|---|---|---|---|---|---|---|---|---|---|---|---|---|---|---|---|---|
| MEDIUM DENSE, GRAY, **SANDY SILT**, LITTLE GRAVEL, TRACE TO LITTLE CLAY, CONTAINS A STRONG PETROLIFEROUS ODOR, DAMP *(continued)* | 945.9 | 60 | 5 7 8 | 20 | 100 | SS-18 | - | - | - | - | - | - | - | - | - | 13 | A-4a (V) | |
| | | 61 | | | | | | | | | | | | | | | | |
| | | 62 | | | | | | | | | | | | | | | | |
| | | 63 | | | | | | | | | | | | | | | | |
| | | 64 | | | | | | | | | | | | | | | | |
| @65.0' TO 71.5'; BECOMES STIFF TO VERY STIFF | | 65 | 5 7 10 | 22 | 100 | SS-19 | 2.75 | - | - | - | - | - | - | - | - | 12 | A-4a (V) | |
| | | 66 | | | | | | | | | | | | | | | | |
| | | 67 | | | | | | | | | | | | | | | | |
| | | 68 | | | | | | | | | | | | | | | | |
| | | 69 | | | | | | | | | | | | | | | | |
| | | 70 | 4 6 7 | 17 | 100 | SS-20 | 2.00 | 19 | 14 | 26 | 28 | 13 | 16 | 14 | 2 | 9 | A-4a (1) | |
| | | 71 | | | | | | | | | | | | | | | | |
| | 932.6 | 72 | | | | | | | | | | | | | | | | |
| MEDIUM DENSE, GRAY AND BROWN, **COARSE AND FINE SAND**, LITTLE SILT, LITTLE GRAVEL, TRACE CLAY, CONTAINS A STRONG PETROLIFEROUS ODOR, MOIST | | 73 | | | | | | | | | | | | | | | | |
| | | 74 | | | | | | | | | | | | | | | | |
| | | 75 | 7 5 6 | 14 | 100 | SS-21 | - | - | - | - | - | - | - | - | - | 13 | A-3a (V) | |
| | | 76 | | | | | | | | | | | | | | | | |
| | | 77 | | | | | | | | | | | | | | | | |
| | | 78 | | | | | | | | | | | | | | | | |
| | | 79 | | | | | | | | | | | | | | | | |
| | | 80 | 6 6 7 | 17 | 100 | SS-22 | - | - | - | - | - | - | - | - | - | 12 | A-3a (V) | |
| | | 81 | | | | | | | | | | | | | | | | |
| | 922.6 | 82 | | | | | | | | | | | | | | | | |
| DENSE, GRAY, **GRAVEL AND STONE FRAGMENTS WITH SAND AND SILT**, LITTLE CLAY, CONTAINS A STRONG PETROLIFEROUS ODOR, MOIST | | 83 | | | | | | | | | | | | | | | | |
| | | 84 | | | | | | | | | | | | | | | | |
| | | 85 | 10 13 11 | 31 | 100 | SS-23 | - | - | - | - | - | - | - | - | - | 10 | A-2-4 (V) | |
| | | 86 | | | | | | | | | | | | | | | | |
| | 917.6 | 87 | | | | | | | | | | | | | | | | |
| DENSE, GRAY, **SANDY SILT**, SOME CLAY, TRACE GRAVEL, CONTAINS A STRONG PETROLIFEROUS ODOR, WET | | 88 | | | | | | | | | | | | | | | | |
| | | 89 | | | | | | | | | | | | | | | | |
| | | 90 | 12 10 16 | 34 | 100 | SS-24 | - | - | - | - | - | - | - | - | - | 16 | A-4a (V) | |
| | 914.4 | 91 | | | | | | | | | | | | | | | | |
| | | EOB | | | | | | | | | | | | | | | | |

NOTES: GROUNDWATER ENCOUNTERED AT 12.0' DURING DRILLING, 22.0' AFTER DRILLING. HOLE DID NOT CAVE. HEAVE FROM 15.0' TO TD.

ABANDONMENT METHODS, MATERIALS, QUANTITIES: PLACED 0.5 BAG ASPHALT PATCH; PUMPED 135 GAL. BENTONITE GROUT

STANDARD ODOT SOIL BORING LOG (11 X 17) - OH DOT.GDT - 11/19/20 18:32 - C:\USERS\KARENS\DESKTOP\SUM-77-277-224 MOD 8 COMBINED WITH 2017 ARCHIVE.GPJ

| | | | | | |
|---|---|---|---|---|---|
| PROJECT: SUM-77-277/224 | DRILLING FIRM / OPERATOR: NEAS / ASHBAUGH | DRILL RIG: CME 55T | STATION / OFFSET: 426+33, 12' LT. | EXPLORATION ID B-013-3-17 |
| TYPE: BRIDGE | SAMPLING FIRM / LOGGER: NEAS / ASHBAUGH | HAMMER: CME AUTOMATIC | ALIGNMENT: IR-77 | |
| PID: 106002 SFN: 7702493 | DRILLING METHOD: 3.25" HSA | CALIBRATION DATE: 11/21/17 | ELEVATION: 1005.9 (MSL) EOB: 91.5 ft. | PAGE 1 OF 2 |
| START: 10/10/19 END: 10/10/19 | SAMPLING METHOD: SPT | ENERGY RATIO (%): 78.2 | LAT / LONG: 41.006261, -81.494256 | |

| MATERIAL DESCRIPTION AND NOTES | ELEV. | DEPTHS | SPT/ RQD | $N_{60}$ | REC (%) | SAMPLE ID | HP (tsf) | GRADATION (%) GR | CS | FS | SI | CL | ATTERBERG LL | PL | PI | WC | ODOT CLASS (GI) | HOLE SEALED |
|---|---|---|---|---|---|---|---|---|---|---|---|---|---|---|---|---|---|---|
| **7.0" TOPSOIL (DRILLERS DESCRIPTION)** | 1005.9 | | | | | | | | | | | | | | | | | |
| STIFF, BROWN, **SANDY SILT**, LITTLE CLAY, TRACE GRAVEL, MOIST | 1005.3 | | 4 3 2 | 7 | 100 | SS-1 | 1.50 | - | - | - | - | - | - | - | - | 15 | A-4a (V) | |
| MEDIUM DENSE, BROWN AND GRAY, **GRAVEL WITH SAND**, LITTLE SILT, TRACE CLAY, CONTAINS A STRONG PETROLIFEROUS ODOR, DAMP | 1001.4 | | 12 12 10 | 29 | 89 | SS-2 | - | 32 | 21 | 24 | 16 | 7 | NP | NP | NP | 9 | A-1-b (0) | |
| VERY STIFF, BLACK AND GRAY, **SILTY CLAY**, SOME SAND, TRACE GRAVEL, SLIGHTLY ORGANIC, CONTAINS TRACE IRON STAINING AND A STRONG PETROLIFEROUS ODOR, MOIST | 998.9 | | 3 3 3 | 8 | 100 | SS-3 | 2.25 | - | - | - | - | - | - | - | - | 26 | A-6b (V) | |
| LOOSE, GRAY, **GRAVEL WITH SAND AND SILT**, TRACE TO LITTLE CLAY, CONTAINS A STRONG PETROLIFEROUS ODOR, WET | 996.4 | | 2 3 5 | 10 | 67 | SS-4 | - | - | - | - | - | - | - | - | - | 18 | A-2-4 (V) | |
| | | W 993.4 | 7 5 2 | 9 | 67 | SS-5 | - | - | - | - | - | - | - | - | - | 18 | A-2-4 (V) | |
| LOOSE TO MEDIUM DENSE, BROWN, **COARSE AND FINE SAND**, SOME GRAVEL, TRACE SILT, TRACE CLAY, CONTAINS A STRONG PETROLIFEROUS ODOR, SS-8 BECOMES TRACE GRAVEL, MOIST TO WET @15.0'; ADDED MUD TO ASSIST WITH CIRCULATION | 991.4 | | 2 3 6 | 12 | 56 | SS-6 | - | - | - | - | - | - | - | - | - | 15 | A-3a (V) | |
| | | | 8 6 5 | 14 | 56 | SS-7 | - | - | - | - | - | - | - | - | - | 16 | A-3a (V) | |
| | | | 3 4 4 | 10 | 50 | SS-8 | - | - | - | - | - | - | - | - | - | 20 | A-3a (V) | |
| STIFF TO HARD, GRAY, **SANDY SILT**, LITTLE TO SOME CLAY, TRACE GRAVEL, CONTAINS A STRONG PETROLIFEROUS ODOR, DAMP TO MOIST | 983.9 | ▼ | 4 6 7 | 17 | 78 | SS-9 | 4.5+ | - | - | - | - | - | - | - | - | 14 | A-4a (V) | |
| | | | 5 5 8 | 17 | 89 | SS-10 | 4.5+ | 3 | 8 | 23 | 45 | 21 | 19 | 14 | 5 | 13 | A-4a (6) | |
| | | | 5 4 5 | 12 | 100 | SS-11 | 2.75 | 5 | 9 | 22 | 46 | 18 | 19 | 15 | 4 | 14 | A-4a (6) | |
| @30.0'; HOLE BEGAN TO HEAVE | 975.4 | | 3 3 5 | 10 | 100 | SS-12A | 1.50 | - | - | - | - | - | - | - | - | 15 | A-4a (V) | |
| LOOSE TO MEDIUM DENSE, BROWN AND GRAY BECOMING GRAY, **COARSE AND FINE SAND**, LITTLE TO SOME GRAVEL, LITTLE SILT, TRACE CLAY, CONTAINS A STRONG PETROLIFEROUS ODOR, WET | | | | | | SS-12B | - | - | - | - | - | - | - | - | - | 21 | A-3a (V) | |
| | | | 8 11 10 | 27 | 100 | SS-13 | - | - | - | - | - | - | - | - | - | 18 | A-3a (V) | |
| | | | 5 6 8 | 18 | 100 | SS-14 | - | - | - | - | - | - | - | - | - | 17 | A-3a (V) | |
| | | | 6 7 7 | 18 | 100 | SS-15 | - | 23 | 30 | 21 | 18 | 8 | 20 | 16 | 4 | 16 | A-3a (0) | |
| | | | 4 5 8 | 17 | 100 | SS-16 | - | - | - | - | - | - | - | - | - | 18 | A-3a (V) | |
| | | | 4 5 9 | 18 | 100 | SS-17 | - | - | - | - | - | - | - | - | - | 21 | A-3a (V) | |
| | 947.6 | | | | | | | | | | | | | | | | | |
| MEDIUM DENSE, GRAY, **GRAVEL WITH SAND AND SILT**, TRACE TO LITTLE CLAY, CONTAINS A STRONG PETROLIFEROUS ODOR, WET TO MOIST | | | | | | | | | | | | | | | | | | |

STANDARD ODOT SOIL BORING LOG (11 X 17) - OH DOT.GDT - 11/19/20 18:32 - C:\USERS\KARENS\DESKTOP\SUM-77-277-224 MOD 8 COMBINED WITH 2017 ARCHIVE.GPJ

PID: 106002 | SFN: | PROJECT: SUM-77-277/224 | STATION / OFFSET: 426+33, 12' LT. | START: 10/10/19 | END: 10/10/19 | PG 2 OF 2 | B-013-3-17

| MATERIAL DESCRIPTION AND NOTES | ELEV. | DEPTHS | SPT/ RQD | $N_{60}$ | REC (%) | SAMPLE ID | HP (tsf) | GRADATION (%) GR | CS | FS | SI | CL | ATTERBERG LL | PL | PI | WC | ODOT CLASS (GI) | HOLE SEALED |
|---|---|---|---|---|---|---|---|---|---|---|---|---|---|---|---|---|---|---|
| MEDIUM DENSE, GRAY, **GRAVEL WITH SAND AND SILT**, TRACE TO LITTLE CLAY, CONTAINS A STRONG PETROLIFEROUS ODOR, WET TO MOIST *(continued)* | 945.9 | 61 | 6 8 8 | 21 | 100 | SS-18 | - | 19 | 26 | 23 | 22 | 10 | 20 | 15 | 5 | 17 | A-2-4 (0) | |
| | | 65 | 7 7 11 | 23 | 100 | SS-19 | - | - | - | - | - | - | - | - | - | 22 | A-2-4 (V) | |
| | | 70 | 5 7 9 | 21 | 100 | SS-20 | - | 26 | 18 | 24 | 20 | 12 | 24 | 16 | 8 | 20 | A-2-4 (0) | |
| | | 75 | 7 7 6 | 17 | 100 | SS-21 | - | - | - | - | - | - | - | - | - | 21 | A-2-4 (V) | |
| | | 80 | 7 8 8 | 21 | 100 | SS-22 | - | 27 | 21 | 22 | 19 | 11 | 23 | 16 | 7 | 16 | A-2-4 (0) | |
| DENSE, BROWN, **GRAVEL WITH SAND**, LITTLE SILT, TRACE CLAY, CONTAINS A STRONG PETROLIFEROUS ODOR, MOIST | 922.6 | 85 | 10 14 13 | 35 | 100 | SS-23 | - | - | - | - | - | - | - | - | - | 12 | A-1-b (V) | |
| | 914.4 | 90 | 12 12 18 | 39 | 100 | SS-24 | - | - | - | - | - | - | - | - | - | 11 | A-1-b (V) | |
| | | EOB | | | | | | | | | | | | | | | | |

NOTES: GROUNDWATER ENCOUNTERED AT 12.5' DURING DRILLING, 24.0' AFTER DRILLING. HOLE DID NOT CAVE. HEAVE FROM 30.0' TO TD.

ABANDONMENT METHODS, MATERIALS, QUANTITIES: PUMPED 135 GAL. BENTONITE GROUT

STANDARD ODOT SOIL BORING LOG (11 X 17) - OH DOT.GDT - 11/19/20 18:32 - C:\USERS\KARENS\DESKTOP\SUM-77-277-224 MOD 8 COMBINED WITH 2017 ARCHIVE.GPJ

| | | | | | |
|---|---|---|---|---|---|
| PROJECT: SUM-77-277/224 | DRILLING FIRM / OPERATOR: NEAS / J. HODGES | DRILL RIG: CME 55X | STATION / OFFSET: 426+66, 11' RT. | EXPLORATION ID B-013-4-17 |
| TYPE: BRIDGE | SAMPLING FIRM / LOGGER: NEAS / J.HODGES | HAMMER: CME AUTOMATIC | ALIGNMENT: IR-77 | |
| PID: 106002 SFN: 7702523 | DRILLING METHOD: 3.25" HSA | CALIBRATION DATE: 11/21/17 | ELEVATION: 1020.5 (MSL) EOB: 66.5 ft. | PAGE 1 OF 2 |
| START: 10/16/19 END: 10/17/19 | SAMPLING METHOD: SPT | ENERGY RATIO (%): 85.4 | LAT / LONG: 41.006352, -81.494175 | |

| MATERIAL DESCRIPTION AND NOTES | ELEV. | DEPTHS | SPT/ RQD | $N_{60}$ | REC (%) | SAMPLE ID | HP (tsf) | GRADATION (%) GR | CS | FS | SI | CL | ATTERBERG LL | PL | PI | WC | ODOT CLASS (GI) | HOLE SEALED |
|---|---|---|---|---|---|---|---|---|---|---|---|---|---|---|---|---|---|---|
| MEDIUM DENSE TO DENSE, BROWN, **COARSE AND FINE SAND**, LITTLE TO SOME SILT, LITTLE GRAVEL, TRACE TO LITTLE CLAY, SS-1 AND SS-2 CONTAIN TRACE ROOT HAIRS, DAMP | 1020.5 | | 2 9 15 | 34 | 67 | SS-1 | - | - | - | - | - | - | - | - | - | 7 | A-3a (V) | |
| | | 1 | 10 10 11 | 30 | 67 | SS-2 | - | - | - | - | - | - | - | - | - | 5 | A-3a (V) | |
| | | 2 | 9 10 10 | 28 | 100 | SS-3 | - | 14 | 26 | 34 | 16 | 10 | NP | NP | NP | 6 | A-3a (0) | |
| | | 3 | 2 4 6 | 14 | 67 | SS-4 | - | - | - | - | - | - | - | - | - | 8 | A-3a (V) | |
| | 1014.0 | 4 | | | | SS-5A | - | - | - | - | - | - | - | - | - | 9 | A-3a (V) | |
| VERY STIFF, BROWN, **SANDY SILT**, SOME CLAY, LITTLE GRAVEL, DAMP | 1013.0 | 5 | 5 9 12 | 30 | 100 | SS-5B | 3.25 | - | - | - | - | - | - | - | - | 14 | A-4a (V) | |
| MEDIUM DENSE TO DENSE, BROWN, **COARSE AND FINE SAND**, LITTLE TO SOME GRAVEL, LITTLE TO SOME SILT, LITTLE CLAY, DAMP TO MOIST | | 6 | 5 10 8 | 26 | 67 | SS-6 | - | 23 | 18 | 32 | 16 | 11 | 19 | 15 | 4 | 9 | A-3a (0) | |
| | | 7 | | | | | | | | | | | | | | | | |
| | | 8 | 5 13 13 | 37 | 100 | SS-7 | - | - | - | - | - | - | - | - | - | 11 | A-3a (V) | |
| | | 9 | | | | | | | | | | | | | | | | |
| | | 10 | 3 7 6 | 19 | 67 | SS-8 | - | - | - | - | - | - | - | - | - | 9 | A-3a (V) | |
| | | 11 | | | | | | | | | | | | | | | | |
| | 1003.5 | 12 | 2 2 7 | 13 | 100 | SS-9 | - | 15 | 20 | 32 | 21 | 12 | 21 | 15 | 6 | 12 | A-3a (0) | |
| HARD, BROWN, **SANDY SILT**, LITTLE CLAY, TRACE TO LITTLE GRAVEL, DAMP | | 13 | | | | | | | | | | | | | | | | |
| | | 14 | 2 5 10 | 21 | 67 | SS-10 | 4.25 | - | - | - | - | - | - | - | - | 11 | A-4a (V) | |
| | | 15 | | | | | | | | | | | | | | | | |
| | | 16 | 3 17 16 | 47 | 33 | SS-11 | 4.5+ | 9 | 13 | 25 | 34 | 19 | 24 | 16 | 8 | 12 | A-4a (4) | |
| | | 17 | | | | | | | | | | | | | | | | |
| | | 18 | 2 8 10 | 26 | 17 | SS-12 | 4.5+ | - | - | - | - | - | - | - | - | 12 | A-4a (V) | |
| | | 19 | | | | | | | | | | | | | | | | |
| | | 20 | | | | | | | | | | | | | | | | |
| @25.0' TO 26.5'; SS-13 BECOMES STIFF, DARK BROWN, WET | | 21 W 995.5 | 2 8 8 | 23 | 17 | SS-13 | 1.25 | - | - | - | - | - | - | - | - | 23 | A-4a (V) | |
| | 993.5 | 22 | | | | | | | | | | | | | | | | |
| MEDIUM DENSE TO DENSE, DARK GRAY, **GRAVEL WITH SAND AND SILT**, TRACE TO LITTLE CLAY, GRAVEL IS WELL ROUNDED, MOIST | | 23 | 3 6 6 | 17 | 33 | SS-14 | - | - | - | - | - | - | - | - | - | 15 | A-2-4 (V) | |
| | | 24 | | | | | | | | | | | | | | | | |
| | | 25 | 5 8 14 | 31 | 67 | SS-15 | - | - | - | - | - | - | - | - | - | 15 | A-2-4 (V) | |
| | 987.2 | 26 | | | | | | | | | | | | | | | | |
| DENSE, BROWN AND GRAY, **GRAVEL WITH SAND**, LITTLE SILT, TRACE CLAY, GRAVEL IS WELL ROUNDED, MOIST | | 27 | | | | | | | | | | | | | | | | |
| | | 28 | | | | | | | | | | | | | | | | |
| | | 29 | | | | | | | | | | | | | | | | |
| | | 30 | 18 13 16 | 41 | 100 | SS-16 | - | - | - | - | - | - | - | - | - | 10 | A-1-b (V) | |
| | | 31 | | | | | | | | | | | | | | | | |
| | | 32 | | | | | | | | | | | | | | | | |
| @40.0' TO 41.5'; SS-17 NO WC TESTING DUE TO BROKEN SAMPLE JAR | | 33 | 8 12 11 | 33 | 67 | SS-17 | - | - | - | - | - | - | - | - | - | - | A-1-b (V) | |
| | 977.2 | 34 | | | | | | | | | | | | | | | | |
| DENSE, BROWN AND GRAY, **GRAVEL**, SOME SAND, TRACE TO LITTLE SILT, TRACE CLAY, GRAVEL IS WELL ROUNDED, MOIST | | 35 | | | | | | | | | | | | | | | | |
| | | 36 | 7 11 11 | 31 | 100 | SS-18 | - | - | - | - | - | - | - | - | - | 9 | A-1-a (V) | |
| | | 37 | | | | | | | | | | | | | | | | |
| | | 38 | | | | | | | | | | | | | | | | |
| | | 39 | | | | | | | | | | | | | | | | |
| | | 40 | 6 10 15 | 36 | 100 | SS-19 | - | - | - | - | - | - | - | - | - | 10 | A-1-a (V) | |
| | | 41 | | | | | | | | | | | | | | | | |
| | 967.2 | 42 | | | | | | | | | | | | | | | | |
| DENSE, GRAY, **SILT**, SOME SAND, LITTLE CLAY, TRACE GRAVEL, DAMP | | 43 | | | | | | | | | | | | | | | | |
| | | 44 | | | | | | | | | | | | | | | | |
| | | 45 | | | | | | | | | | | | | | | | |
| | | 46 | 8 11 14 | 36 | 100 | SS-20 | - | 1 | 2 | 25 | 53 | 19 | NP | NP | NP | 14 | A-4b (7) | |
| | | 47 | | | | | | | | | | | | | | | | |
| | 962.2 | 48 | | | | | | | | | | | | | | | | |
| DENSE, GRAY, **SANDY SILT**, LITTLE CLAY, TRACE GRAVEL, DAMP | | 49 | | | | | | | | | | | | | | | | |
| | | 50 | | | | | | | | | | | | | | | | |
| | | 51 | | | | | | | | | | | | | | | | |
| | | 52 | | | | | | | | | | | | | | | | |
| | | 53 | | | | | | | | | | | | | | | | |
| | | 54 | | | | | | | | | | | | | | | | |
| | | 55 | | | | | | | | | | | | | | | | |
| | | 56 | | | | | | | | | | | | | | | | |
| | | 57 | | | | | | | | | | | | | | | | |
| | | 58 | | | | | | | | | | | | | | | | |
| | | 59 | | | | | | | | | | | | | | | | |

STANDARD ODOT SOIL BORING LOG (11 X 17) - OH DOT.GDT - 11/19/20 18:32 - C:\USERS\KARENS\DESKTOP\SUM-77-277-224 MOD 8 COMBINED WITH 2017 ARCHIVE.GPJ

| PID: 106002 | SFN: | PROJECT: SUM-77-277/224 | STATION / OFFSET: 426+66, 11' RT. | START: 10/16/19 | END: 10/17/19 | PG 2 OF 2 | B-013-4-17 |
|---|---|---|---|---|---|---|---|

| MATERIAL DESCRIPTION AND NOTES | ELEV. | DEPTHS | SPT/ RQD | $N_{60}$ | REC (%) | SAMPLE ID | HP (tsf) | GRADATION (%) GR | CS | FS | SI | CL | ATTERBERG LL | PL | PI | WC | ODOT CLASS (GI) | HOLE SEALED |
|---|---|---|---|---|---|---|---|---|---|---|---|---|---|---|---|---|---|---|
| DENSE, GRAY, **SANDY SILT**, LITTLE CLAY, TRACE GRAVEL, DAMP *(continued)* | 960.5 | 61 | 9 10 12 | 31 | 100 | SS-21 | - | - | - | - | - | - | - | - | - | 13 | A-4a (V) | |
| | | 62 | | | | | | | | | | | | | | | | |
| | | 63 | | | | | | | | | | | | | | | | |
| | | 64 | | | | | | | | | | | | | | | | |
| | | 65 | | | | | | | | | | | | | | | | |
| | 954.0 | 66 EOB | 7 9 13 | 31 | 100 | SS-22 | - | 3 | 5 | 33 | 42 | 17 | 17 | 14 | 3 | 13 | A-4a (5) | |

NOTES: GROUNDWATER ENCOUNTERED AT 25.0' DURING DRILLING. HOLE DID NOT CAVE.

ABANDONMENT METHODS, MATERIALS, QUANTITIES: PUMPED 100 GAL. BENTONITE GROUT

STANDARD ODOT SOIL BORING LOG (11 X 17) - OH DOT.GDT - 11/19/20 18:32 - C:\USERS\KARENS\DESKTOP\SUM-77-277-224 MOD 8 COMBINED WITH 2017 ARCHIVE.GPJ

| | | | | | |
|---|---|---|---|---|---|
| PROJECT: SUM-77-277/224 | DRILLING FIRM / OPERATOR: NEAS / J. HODGES | DRILL RIG: CME 55X | STATION / OFFSET: 429+17, 15' RT. | EXPLORATION ID B-014-1-17 |
| TYPE: BRIDGE | SAMPLING FIRM / LOGGER: NEAS / J.HODGES | HAMMER: CME AUTOMATIC | ALIGNMENT: IR-77 | |
| PID: 106002 SFN: 7702582 | DRILLING METHOD: 3.25" HSA | CALIBRATION DATE: 11/21/17 | ELEVATION: 1016.7 (MSL) EOB: 81.5 ft. | PAGE 1 OF 2 |
| START: 10/15/19 END: 10/16/19 | SAMPLING METHOD: SPT | ENERGY RATIO (%): 85.4 | LAT / LONG: 41.007043, -81.494203 | |

| MATERIAL DESCRIPTION AND NOTES | ELEV. | DEPTHS | SPT/ RQD | $N_{60}$ | REC (%) | SAMPLE ID | HP (tsf) | GRADATION (%) GR | CS | FS | SI | CL | ATTERBERG LL | PL | PI | WC | ODOT CLASS (GI) | HOLE SEALED |
|---|---|---|---|---|---|---|---|---|---|---|---|---|---|---|---|---|---|---|
| MEDIUM DENSE, LIGHT BROWN BECOMING BROWN, **GRAVEL WITH SAND AND SILT**, LITTLE CLAY, SS-2 TO SS-5 CONTAINS TRACE ROOT HAIRS, DAMP | 1016.7 | | 5 10 9 | 27 | 67 | SS-1 | - | - | - | - | - | - | - | - | - | 5 | A-2-4 (V) | |
| | | 1 | 5 10 11 | 30 | 67 | SS-2 | - | - | - | - | - | - | - | - | - | 6 | A-2-4 (V) | |
| | | 2 | 6 7 6 | 19 | 67 | SS-3 | - | 18 | 20 | 29 | 20 | 13 | 21 | 15 | 6 | 6 | A-2-4 (0) | |
| | | 3 | 2 7 5 | 17 | 89 | SS-4 | - | - | - | - | - | - | - | - | - | 7 | A-2-4 (V) | |
| | | 4 | 4 5 6 | 16 | 44 | SS-5 | - | - | - | - | - | - | - | - | - | 6 | A-2-4 (V) | |
| | 1009.2 | 5 | | | | | | | | | | | | | | | | |
| HARD, BROWN AND DARK BROWN, **SANDY SILT**, LITTLE CLAY, TRACE GRAVEL, DAMP | | | 5 5 8 | 19 | 67 | SS-6 | 4.5+ | - | - | - | - | - | - | - | - | 12 | A-4a (V) | |
| | | 6 | | | | | | | | | | | | | | | | |
| | | 7 | | | | | | | | | | | | | | | | |
| | | 8 | | | | | | | | | | | | | | | | |
| | | 9 | | | | | | | | | | | | | | | | |
| | | 10 | 2 5 9 | 20 | 100 | SS-7 | 4.5+ | 10 | 13 | 28 | 30 | 19 | 25 | 17 | 8 | 7 | A-4a (3) | |
| | 1004.7 | 11 | | | | | | | | | | | | | | | | |
| MEDIUM DENSE, BROWN, **COARSE AND FINE SAND**, LITTLE SILT, LITTLE GRAVEL, LITTLE CLAY, DAMP | | | | | | | | | | | | | | | | | | |
| | 1002.2 | 12 | | | | | | | | | | | | | | | | |
| HARD, BROWN BECOMING BROWN AND GRAY, **SANDY SILT**, LITTLE GRAVEL, LITTLE CLAY, CONTAINS IRON STAINING, DAMP | | | 4 3 7 | 14 | 67 | SS-8 | - | - | - | - | - | - | - | - | - | 13 | A-3a (V) | |
| | | 13 | | | | | | | | | | | | | | | | |
| | | 14 | | | | | | | | | | | | | | | | |
| | | 15 | 5 9 12 | 30 | 100 | SS-9 | 4.25 | - | - | - | - | - | - | - | - | 10 | A-4a (V) | |
| | | 16 | | | | | | | | | | | | | | | | |
| | | 17 | | | | | | | | | | | | | | | | |
| | | 18 | 6 9 9 | 26 | 56 | SS-10 | 4.5+ | 19 | 13 | 25 | 28 | 15 | 24 | 17 | 7 | 11 | A-4a (2) | |
| | | 19 | | | | | | | | | | | | | | | | |
| | | 20 | | | | | | | | | | | | | | | | |
| | W 995.7 | 21 | 2 4 2 | 9 | 100 | SS-11 | 4.25 | 12 | 12 | 28 | 31 | 17 | 23 | 16 | 7 | 15 | A-4a (3) | |
| | 994.7 | 22 | | | | | | | | | | | | | | | | |
| MEDIUM DENSE, GRAY, **GRAVEL WITH SAND**, LITTLE SILT, TRACE CLAY, MOIST @22.5' TO 24.0'; SS-12 HAS NO RECOVERY | | | | | | | | | | | | | | | | | | |
| | | 23 | 5 5 15 | 28 | 0 | SS-12 | - | - | - | - | - | - | - | - | - | - | | |
| | | 24 | | | | | | | | | | | | | | | | |
| | | 25 | | | | | | | | | | | | | | | | |
| | | 26 | 10 10 6 | 23 | 39 | SS-13 | - | - | - | - | - | - | - | - | - | 11 | A-1-b (V) | |
| | 989.7 | 27 | | | | | | | | | | | | | | | | |
| MEDIUM DENSE, GRAY, **COARSE AND FINE SAND**, SOME GRAVEL, TRACE SILT, TRACE CLAY, MOIST | | | | | | | | | | | | | | | | | | |
| | | 28 | 15 10 11 | 30 | 44 | SS-14 | - | - | - | - | - | - | - | - | - | 12 | A-3a (V) | |
| | 987.2 | 29 | | | | | | | | | | | | | | | | |
| MEDIUM DENSE, GRAY, **GRAVEL WITH SAND**, LITTLE SILT, TRACE CLAY, MOIST | | | | | | | | | | | | | | | | | | |
| | | 30 | 8 10 8 | 26 | 100 | SS-15 | - | - | - | - | - | - | - | - | - | 13 | A-1-b (V) | |
| | 983.4 | 31 | | | | | | | | | | | | | | | | |
| DENSE, GRAY, **COARSE AND FINE SAND**, SOME GRAVEL, TRACE SILT, TRACE CLAY, MOIST | | | | | | | | | | | | | | | | | | |
| | | 32 | | | | | | | | | | | | | | | | |
| | | 33 | | | | | | | | | | | | | | | | |
| | | 34 | | | | | | | | | | | | | | | | |
| | | 35 | 7 9 13 | 31 | 100 | SS-16 | - | - | - | - | - | - | - | - | - | 15 | A-3a (V) | |
| | 978.4 | 36 | | | | | | | | | | | | | | | | |
| MEDIUM DENSE TO DENSE, GRAY, **GRAVEL WITH SAND**, TRACE SILT, TRACE CLAY, MOIST | | | | | | | | | | | | | | | | | | |
| | | 37 | | | | | | | | | | | | | | | | |
| | | 38 | | | | | | | | | | | | | | | | |
| | | 39 | | | | | | | | | | | | | | | | |
| | | 40 | 11 9 8 | 24 | 67 | SS-17 | - | - | - | - | - | - | - | - | - | 11 | A-1-b (V) | |
| | | 41 | | | | | | | | | | | | | | | | |
| | | 42 | | | | | | | | | | | | | | | | |
| | | 43 | | | | | | | | | | | | | | | | |
| | | 44 | | | | | | | | | | | | | | | | |
| | | 45 | 11 12 15 | 38 | 72 | SS-18 | - | - | - | - | - | - | - | - | - | 12 | A-1-b (V) | |
| | | 46 | | | | | | | | | | | | | | | | |
| | | 47 | | | | | | | | | | | | | | | | |
| | | 48 | | | | | | | | | | | | | | | | |
| | | 49 | | | | | | | | | | | | | | | | |
| | | 50 | 9 11 17 | 40 | 100 | SS-19 | - | - | - | - | - | - | - | - | - | 12 | A-1-b (V) | |
| | | 51 | | | | | | | | | | | | | | | | |
| | | 52 | | | | | | | | | | | | | | | | |
| | | 53 | | | | | | | | | | | | | | | | |
| | | 54 | | | | | | | | | | | | | | | | |
| | | 55 | 12 13 16 | 41 | 67 | SS-20 | - | - | - | - | - | - | - | - | - | 10 | A-1-b (V) | |
| | | 56 | | | | | | | | | | | | | | | | |
| | | 57 | | | | | | | | | | | | | | | | |
| | | 58 | | | | | | | | | | | | | | | | |
| | | 59 | | | | | | | | | | | | | | | | |

STANDARD ODOT SOIL BORING LOG (11 X 17) - OH DOT.GDT - 11/19/20 18:32 - C:\USERS\KARENS\DESKTOP\SUM-77-277-224 MOD 8 COMBINED WITH 2017 ARCHIVE.GPJ

| | | | |
|---|---|---|---|
| 117 209 | **SUM-77/277/224 VARIOUS** | **STRUCTURE FOUNDATION EXPLORATION BRIDGE SUM-77-08.01 BORING LOG B-014-1-17** | DRAWN EB CHECKED BPA |

PID: 106002 | SFN: | PROJECT: SUM-77-277/224 | STATION / OFFSET: 429+17, 15' RT. | START: 10/15/19 | END: 10/16/19 | PG 2 OF 2 | B-014-1-17

| MATERIAL DESCRIPTION AND NOTES | ELEV. | DEPTHS | SPT/ RQD | $N_{60}$ | REC (%) | SAMPLE ID | HP (tsf) | GRADATION (%) GR | CS | FS | SI | CL | ATTERBERG LL | PL | PI | WC | ODOT CLASS (GI) | HOLE SEALED |
|---|---|---|---|---|---|---|---|---|---|---|---|---|---|---|---|---|---|---|
| MEDIUM DENSE TO DENSE, GRAY, **GRAVEL WITH SAND**, TRACE SILT, TRACE CLAY, MOIST *(continued)* | 956.7 | 61 | 10 13 15 | 40 | 100 | SS-21 | - | - | - | - | - | - | - | - | - | 11 | A-1-b (V) | |
| | | 62 | | | | | | | | | | | | | | | | |
| | | 63 | | | | | | | | | | | | | | | | |
| | | 64 | | | | | | | | | | | | | | | | |
| | | 65 | 11 11 13 | 34 | 72 | SS-22 | - | - | - | - | - | - | - | - | - | 10 | A-1-b (V) | |
| | | 66 | | | | | | | | | | | | | | | | |
| | | 67 | | | | | | | | | | | | | | | | |
| | 948.4 | 68 | | | | | | | | | | | | | | | | |
| VERY STIFF, GRAY, **SANDY SILT**, LITTLE CLAY, TRACE GRAVEL, MOIST TO WET | | 69 | | | | | | | | | | | | | | | | |
| | | 70 | | | | | | | | | | | | | | | | |
| | | 71 | 10 12 12 | 34 | 67 | SS-23 | 3.75 | - | - | - | - | - | - | - | - | 13 | A-4a (V) | |
| | | 72 | | | | | | | | | | | | | | | | |
| | | 73 | | | | | | | | | | | | | | | | |
| | | 74 | | | | | | | | | | | | | | | | |
| | | 75 | 7 10 12 | 31 | 100 | SS-24 | 3.50 | 0 | 4 | 43 | 39 | 14 | 15 | 13 | 2 | 15 | A-4a (4) | |
| | | 76 | | | | | | | | | | | | | | | | |
| | | 77 | | | | | | | | | | | | | | | | |
| | | 78 | | | | | | | | | | | | | | | | |
| | | 79 | | | | | | | | | | | | | | | | |
| | | 80 | 7 10 25 | 50 | 100 | SS-25 | 3.50 | - | - | - | - | - | - | - | - | 13 | A-4a (V) | |
| | 935.2 | 81 EOB | | | | | | | | | | | | | | | | |

NOTES: GROUNDWATER ENCOUNTERED AT 21.0' DURING DRILLING. HOLE DID NOT CAVE.

ABANDONMENT METHODS, MATERIALS, QUANTITIES: PUMPED 120 GAL. BENTONITE GROUT

STANDARD ODOT SOIL BORING LOG (11 X 17) - OH DOT.GDT - 11/19/20 18:32 - C:\USERS\KARENS\DESKTOP\SUM-77-277-224 MOD 8 COMBINED WITH 2017 ARCHIVE.GPJ

| | | | | | |
|---|---|---|---|---|---|
| PROJECT: SUM-77-277/224 | DRILLING FIRM / OPERATOR: NEAS / J. HODGES | DRILL RIG: CME 55X | STATION / OFFSET: 430+47, 8' RT. | EXPLORATION ID B-014-2-17 |
| TYPE: BRIDGE | SAMPLING FIRM / LOGGER: NEAS / J.HODGES | HAMMER: CME AUTOMATIC | ALIGNMENT: IR-77 | |
| PID: 106002 SFN: 7702582 | DRILLING METHOD: 3.25" HSA | CALIBRATION DATE: 11/21/17 | ELEVATION: 999.0 (MSL) EOB: 66.5 ft. | PAGE 1 OF 2 |
| START: 10/14/19 END: 10/15/19 | SAMPLING METHOD: SPT | ENERGY RATIO (%): 85.4 | LAT / LONG: 41.007396, -81.494224 | |

| MATERIAL DESCRIPTION AND NOTES | ELEV. 999.0 | DEPTHS | SPT/ RQD | $N_{60}$ | REC (%) | SAMPLE ID | HP (tsf) | GRADATION (%) GR | CS | FS | SI | CL | ATTERBERG LL | PL | PI | WC | ODOT CLASS (GI) | HOLE SEALED |
|---|---|---|---|---|---|---|---|---|---|---|---|---|---|---|---|---|---|---|
| VERY LOOSE, DARK BROWN, **SANDY SILT**, LITTLE CLAY, TRACE GRAVEL, SLIGHTLY ORGANIC, CONTAINS A SLIGHT PETROLEUM ODOR AND TRACE ROOTS, WET | 997.5 | | WOH 1 1 | 3 | 33 | SS-1 | - | 1 | 1 | 54 | 32 | 12 | NP | NP | NP | 47 | A-4a (2) | |
| VERY LOOSE TO LOOSE, DARK BROWN, **COARSE AND FINE SAND**, LITTLE SILT, TRACE CLAY, TRACE GRAVEL, SLIGHTLY ORGANIC, CONTAINS A SLIGHT PETROLEUM ODOR AND TRACE ROOTS, WET | 993.0 | W 994.5 | WOH 1 1 | 3 | 56 | SS-2 | - | 1 | 5 | 64 | 20 | 10 | NP | NP | NP | 37 | A-3a (0) | |
| | | | WOH WOH 1 | 1 | 17 | SS-3 | - | - | - | - | - | - | - | - | - | 37 | A-3a (V) | |
| | | | 2 2 2 | 6 | 78 | SS-4 | - | 0 | 19 | 64 | 11 | 6 | NP | NP | NP | 28 | A-3a (0) | |
| VERY LOOSE, BROWN AND BLACK, **SANDY SILT**, LITTLE GRAVEL, LITTLE CLAY. SLIGHTLY ORGANIC, WET | 991.5 | | 2 1 2 | 4 | 100 | SS-5 | - | 13 | 15 | 34 | 27 | 11 | NP | NP | NP | 42 | A-4a (1) | |
| MEDIUM DENSE, BROWN AND BLACK, **COARSE AND FINE SAND**, SOME GRAVEL, LITTLE SILT, TRACE CLAY, CONTAINS A SLIGHT PETROLEUM ODOR, WET TO MOIST | 987.0 | | 2 4 7 | 16 | 67 | SS-6 | - | - | - | - | - | - | - | - | - | 24 | A-3a (V) | |
| | | | 4 7 8 | 21 | 100 | SS-7 | - | - | - | - | - | - | - | - | - | 15 | A-3a (V) | |
| MEDIUM DENSE, BROWN AND GRAY, **GRAVEL**, SOME SAND, TRACE SILT, TRACE CLAY, MOIST | 984.5 | | 3 4 7 | 16 | 33 | SS-8 | - | 68 | 22 | 7 | 2 | 1 | NP | NP | NP | 11 | A-1-a (0) | |
| MEDIUM DENSE, BROWN AND GRAY, **COARSE AND FINE SAND**, SOME GRAVEL, TRACE SILT, TRACE CLAY, MOIST | 982.0 | | 7 10 10 | 28 | 67 | SS-9 | - | - | - | - | - | - | - | - | - | 14 | A-3a (V) | |
| MEDIUM DENSE, BROWN, **GRAVEL WITH SAND**, TRACE SILT, TRACE CLAY, MOIST | 977.0 | | 7 5 7 | 17 | 33 | SS-10 | - | - | - | - | - | - | - | - | - | 11 | A-1-b (V) | |
| | | | 5 7 9 | 23 | 33 | SS-11 | - | - | - | - | - | - | - | - | - | 13 | A-1-b (V) | |
| MEDIUM DENSE, GRAY, **SILT**, SOME SAND, LITTLE CLAY, TRACE GRAVEL, MOIST | 974.5 | | 7 7 9 | 23 | 33 | SS-12 | - | 10 | 8 | 16 | 52 | 14 | NP | NP | NP | 16 | A-4b (6) | |
| MEDIUM DENSE, GRAY, **GRAVEL WITH SAND**, TRACE SILT, TRACE CLAY, WET | 972.0 | | 7 7 7 | 20 | 6 | SS-13 | - | - | - | - | - | - | - | - | - | 17 | A-1-b (V) | |
| MEDIUM DENSE, GRAY, **SANDY SILT**, LITTLE GRAVEL, TRACE CLAY, MOIST | 965.7 | | 4 6 6 | 17 | 44 | SS-14 | - | - | - | - | - | - | - | - | - | 15 | A-4a (V) | |
| | | | 4 5 7 | 17 | 100 | SS-15 | - | 18 | 11 | 29 | 32 | 10 | NP | NP | NP | 16 | A-4a (1) | |
| DENSE TO VERY DENSE, GRAY, **COARSE AND FINE SAND**, LITTLE TO SOME GRAVEL, TRACE TO LITTLE SILT, TRACE CLAY, MOIST | | | 7 12 12 | 34 | 100 | SS-16 | - | - | - | - | - | - | - | - | - | 11 | A-3a (V) | |
| | | | 10 19 15 | 48 | 100 | SS-17 | - | - | - | - | - | - | - | - | - | 11 | A-3a (V) | |
| | | | 17 18 22 | 57 | 100 | SS-18 | - | - | - | - | - | - | - | - | - | 11 | A-3a (V) | |
| | | | 9 12 18 | 43 | 100 | SS-19 | - | - | - | - | - | - | - | - | - | 16 | A-3a (V) | |
| | | | 9 18 22 | 57 | 100 | SS-20 | - | - | - | - | - | - | - | - | - | 13 | A-3a (V) | |

STANDARD ODOT SOIL BORING LOG (11 X 17) - OH DOT.GDT - 11/19/20 18:32 - C:\USERS\KARENS\DESKTOP\SUM-77-277-224 MOD 8 COMBINED WITH 2017 ARCHIVE.GPJ

| PID: 106002 | SFN: | PROJECT: SUM-77-277/224 | STATION / OFFSET: 430+47, 8' RT. | START: 10/14/19 | END: 10/15/19 | PG 2 OF 2 | B-014-2-17 |
|---|---|---|---|---|---|---|---|

| MATERIAL DESCRIPTION AND NOTES | ELEV. | DEPTHS | SPT/ RQD | $N_{60}$ | REC (%) | SAMPLE ID | HP (tsf) | GRADATION (%) GR | CS | FS | SI | CL | ATTERBERG LL | PL | PI | WC | ODOT CLASS (GI) | HOLE SEALED |
|---|---|---|---|---|---|---|---|---|---|---|---|---|---|---|---|---|---|---|
| DENSE TO VERY DENSE, GRAY, **COARSE AND FINE SAND**, LITTLE TO SOME GRAVEL, TRACE TO LITTLE SILT, TRACE CLAY, MOIST *(continued)* | 939.0 | 61 | 10 13 11 | 34 | 33 | SS-21 | - | - | - | - | - | - | - | - | - | 12 | A-3a (V) | |
| | | 62 | | | | | | | | | | | | | | | | |
| | | 63 | | | | | | | | | | | | | | | | |
| | | 64 | | | | | | | | | | | | | | | | |
| | | 65 | | | | | | | | | | | | | | | | |
| | 932.5 | 66 EOB | 9 10 13 | 33 | 28 | SS-22 | - | - | - | - | - | - | - | - | - | 12 | A-3a (V) | |

NOTES: GROUNDWATER ENCOUNTERED AT 4.5' DURING DRILLING. HOLE DID NOT CAVE.

ABANDONMENT METHODS, MATERIALS, QUANTITIES: PUMPED 100 GAL. BENTONITE GROUT

STANDARD ODOT SOIL BORING LOG (11 X 17) - OH DOT.GDT - 11/19/20 18:32 - C:\USERS\KARENS\DESKTOP\SUM-77-277-224 MOD 8 COMBINED WITH 2017 ARCHIVE.GPJ

PROJECT: SUM-77-277/224
TYPE: BRIDGE
PID: 106002 SFN: 7702582
START: 7/8/19 END: 7/9/19

DRILLING FIRM / OPERATOR: NEAS / J. HODGES
SAMPLING FIRM / LOGGER: NEAS / J. LITTERAL
DRILLING METHOD: 3.25" HSA
SAMPLING METHOD: SPT

DRILL RIG: CME 55X
HAMMER: CME AUTOMATIC
CALIBRATION DATE: 11/21/17
ENERGY RATIO (%): 85.4

STATION / OFFSET: 431+01, 10' LT.
ALIGNMENT: IR-77
ELEVATION: 1014.6 (MSL) EOB: 65.0 ft.
LAT / LONG: 41.007543, -81.494332

EXPLORATION ID B-014-3-17


| MATERIAL DESCRIPTION AND NOTES | ELEV. | DEPTHS | SPT/ RQD | $N_{60}$ | REC (%) | SAMPLE ID | HP (tsf) | GRADATION (%) GR | CS | FS | SI | CL | ATTERBERG LL | PL | PI | WC | ODOT CLASS (GI) | HOLE SEALED |
|---|---|---|---|---|---|---|---|---|---|---|---|---|---|---|---|---|---|---|
| **4.0" TOPSOIL (DRILLERS DESRIPTION)** | 1014.6 | | | | | | | | | | | | | | | | | |
| MEDIUM DENSE TO DENSE, BROWN, **GRAVEL AND STONE FRAGMENTS WITH SAND AND SILT**, TRACE CLAY, CONTAINS TRACE ROOTS AND ASPHALT FRAGMENTS, DAMP @1.5' TO 4.5'; SS-2 AND SS-3 SAMPLE JARS BROKE DURING TRANSPORT. NO WC TESTED. | 1010.1 | | 3 10 12 | 31 | 44 | SS-1 | - | - | - | - | - | - | - | - | - | 5 | A-2-4 (V) | |
| | | | 8 12 10 | 31 | 78 | SS-2 | - | - | - | - | - | - | - | - | - | - | A-2-4 (V) | |
| | | | 5 10 7 | 24 | 33 | SS-3 | - | - | - | - | - | - | - | - | - | - | A-2-4 (V) | |
| HARD, BROWN AND ORANGISH BROWN, **SANDY SILT**, SOME GRAVEL, LITTLE CLAY, CONTAINS IRON STAINING, DAMP | 1008.6 | | 7 10 11 | 30 | 78 | SS-4 | 4.25 | - | - | - | - | - | - | - | - | 11 | A-4a (V) | |
| DENSE, BROWN, **STONE FRAGMENTS WITH SAND AND SILT**, TRACE CLAY, DAMP @6.0' TO 7.5'; SS-5 SAMPLE JAR BROKE DURING TRANSPORT. NO WC TESTED. | 1006.6 | | 14 12 10 | 31 | 78 | SS-5 | - | - | - | - | - | - | - | - | - | - | A-2-4 (V) | |
| VERY STIFF TO HARD, BROWN MOTTLED WITH ORANGISH BROWN AND BLACK, **SANDY SILT**, LITTLE CLAY, TRACE TO LITTLE GRAVEL, SLIGHTLY ORGANIC, CONTAINS A PETROLIFEROUS ODOR AND TRACE IRON STAINING, DAMP @8.5' TO 10.0'; SS-6 SAMPLE JAR BROKE DURING TRANSPORT. NO WC TESTED. | 999.1 | | 3 6 11 | 24 | 78 | SS-6 | 4.5+ | - | - | - | - | - | - | - | - | - | A-4a (V) | |
| | | | 4 8 14 | 31 | 67 | SS-7 | 4.50 | 10 | 15 | 39 | 22 | 14 | 18 | 14 | 4 | 11 | A-4a (0) | |
| | | | 4 15 15 | 43 | 33 | SS-8 | 2.50 | - | - | - | - | - | - | - | - | 12 | A-4a (V) | |
| STIFF, DARK GRAY AND ORANGISH BROWN, **SILT AND CLAY**, "AND" SAND, TRACE GRAVEL, SLIGHTLY ORGANIC, CONTAINS A PETROLIFEROUS ODOR AND TRACE IRON STAINING, DAMP | 997.6 | W 998.1 | 4 2 2 | 6 | 78 | SS-9A | 1.25 | 5 | 6 | 30 | 39 | 20 | 31 | 18 | 13 | 16 | A-6a (6) | |
| | | | | | | SS-9B | - | - | - | - | - | - | - | - | - | 13 | A-2-4 (V) | |
| LOOSE, BROWN WITH ORANGISH BROWN AND DARK GRAY, **GRAVEL WITH SAND AND SILT**, TRACE CLAY, CONTAINS IRON STAINING, MOIST | 996.6 | | | | | | | | | | | | | | | | | |
| MEDIUM DENSE, DARK GRAY AND ORANGISH BROWN, **COARSE AND FINE SAND**, LITTLE GRAVEL, TRACE SILT, TRACE CLAY, CONTAINS IRON STAINING AND A PETROLIFEROUS ODOR, WET | 994.1 | | 3 6 6 | 17 | 67 | SS-10 | - | - | - | - | - | - | - | - | - | 24 | A-3a (V) | |
| MEDIUM DENSE TO VERY DENSE, GRAY AND BROWN, **GRAVEL WITH SAND**, TRACE TO LITTLE SILT, TRACE CLAY, DAMP TO MOIST @21.0' TO 25.0'; SS-11 AND SS-12 SAMPLE JARS BROKE DURING TRANSPORT. NO WC TESTED. | | | 6 7 13 | 28 | 33 | SS-11 | - | - | - | - | - | - | - | - | - | - | A-1-b (V) | |
| | | | 3 6 10 | 23 | 78 | SS-12 | - | - | - | - | - | - | - | - | - | - | A-1-b (V) | |
| | | | 8 19 20 | 56 | 100 | SS-13 | - | - | - | - | - | - | - | - | - | 11 | A-1-b (V) | |
| | | | 7 14 50/4" | - | 100 | SS-14 | - | - | - | - | - | - | - | - | - | 14 | A-1-b (V) | |
| | 981.6 | | | | | | | | | | | | | | | | | |
| DENSE, GRAY, **SILT**, SOME SAND, LITTLE CLAY, TRACE GRAVEL, DAMP | 977.9 | | 7 12 21 | 47 | 78 | SS-15 | 4.5+ | 8 | 8 | 21 | 50 | 13 | NP | NP | NP | 15 | A-4b (6) | |
| DENSE, GRAY, **GRAVEL WITH SAND AND SILT**, LITTLE CLAY, DAMP | 972.9 | | 7 14 18 | 46 | 100 | SS-16 | - | 20 | 10 | 37 | 20 | 13 | 16 | 12 | 4 | 9 | A-2-4 (0) | |
| DENSE, GRAY, **GRAVEL WITH SAND**, TRACE SILT, TRACE CLAY, MOIST | | | 11 14 16 | 43 | 67 | SS-17 | - | - | - | - | - | - | - | - | - | 13 | A-1-b (V) | |
| | | | 9 7 17 | 34 | 100 | SS-18 | - | - | - | - | - | - | - | - | - | 11 | A-1-b (V) | |
| | | | 7 12 12 | 34 | 100 | SS-19 | - | 34 | 27 | 30 | 6 | 3 | NP | NP | NP | 12 | A-1-b (0) | |
| | 957.9 | | | | | | | | | | | | | | | | | |
| VERY DENSE, LIGHT BROWNISH GRAY, **COARSE AND FINE SAND**, TRACE GRAVEL, TRACE SILT, TRACE CLAY, WET | | | 12 22 23 | 64 | 56 | SS-20 | - | - | - | - | - | - | - | - | - | 21 | A-3a (V) | |

STANDARD ODOT SOIL BORING LOG (11 X 17) - OH DOT.GDT - 11/19/20 18:32 - C:\USERS\KARENS\DESKTOP\SUM-77-277-224 MOD 8 COMBINED WITH 2017 ARCHIVE.GPJ

| PID: 106002 | SFN: | PROJECT: SUM-77-277/224 | STATION / OFFSET: 431+01, 10' LT. | START: 7/8/19 | END: 7/9/19 | PG 2 OF 2 | B-014-3-17 |
|---|---|---|---|---|---|---|---|

| MATERIAL DESCRIPTION AND NOTES | ELEV. | DEPTHS | SPT/ RQD | $N_{60}$ | REC (%) | SAMPLE ID | HP (tsf) | GRADATION (%) GR | CS | FS | SI | CL | ATTERBERG LL | PL | PI | WC | ODOT CLASS (GI) | HOLE SEALED |
|---|---|---|---|---|---|---|---|---|---|---|---|---|---|---|---|---|---|---|
| VERY DENSE, LIGHT BROWNISH GRAY, **COARSE AND FINE SAND**, TRACE GRAVEL, TRACE SILT, TRACE CLAY, WET *(continued)* | 954.6 | 61<br>62<br>63<br>64 | 7<br>14<br>26 | 57 | 56 | SS-21 | - | - | - | - | - | - | - | - | - | 19 | A-3a (V) | |
| | 949.6 | EOB 65 | | | | | | | | | | | | | | | | |

NOTES: GROUNDWATER ENCOUNTERED AT 16.5' DURING DRILLING. HOLE DID NOT CAVE.

ABANDONMENT METHODS, MATERIALS, QUANTITIES: PUMPED 100 GAL. BENTONITE GROUT

STANDARD ODOT SOIL BORING LOG (11 X 17) - OH DOT.GDT - 11/19/20 18:32 - C:\USERS\KARENS\DESKTOP\SUM-77-277-224 MOD 8 COMBINED WITH 2017 ARCHIVE.GPJ

| PID: 106002 | SFN: | PROJECT: SUM-77-277/224 | STATION / OFFSET: 431+01, 10' LT. | START: 7/8/19 | END: 7/9/19 | PG 2 OF 2 | B-014-3-17 |
|---|---|---|---|---|---|---|---|

| MATERIAL DESCRIPTION AND NOTES | ELEV. | DEPTHS | SPT/ RQD | $N_{60}$ | REC (%) | SAMPLE ID | HP (tsf) | GRADATION (%) GR | CS | FS | SI | CL | ATTERBERG LL | PL | PI | WC | ODOT CLASS (GI) | HOLE SEALED |
|---|---|---|---|---|---|---|---|---|---|---|---|---|---|---|---|---|---|---|
| VERY DENSE, LIGHT BROWNISH GRAY, **COARSE AND FINE SAND**, TRACE GRAVEL, TRACE SILT, TRACE CLAY, WET *(continued)* | 954.6 | 61<br>62<br>63<br>64 | | | | | | | | | | | | | | | | |
| | 949.6 | EOB 65 | 7<br>14<br>26 | 57 | 56 | SS-21 | - | - | - | - | - | - | - | - | - | 19 | A-3a (V) | |

NOTES: GROUNDWATER ENCOUNTERED AT 16.5' DURING DRILLING. HOLE DID NOT CAVE.

ABANDONMENT METHODS, MATERIALS, QUANTITIES: PUMPED 100 GAL. BENTONITE GROUT

STANDARD ODOT SOIL BORING LOG (11 X 17) - OH DOT.GDT - 11/19/20 18:32 - C:\USERS\KARENS\DESKTOP\SUM-77-277-224 MOD 8 COMBINED WITH 2017 ARCHIVE.GPJ

PROJECT: SUM-77-277/224 | DRILLING FIRM / OPERATOR: NEAS / J. HODGES | DRILL RIG: CME 55X | STATION / OFFSET: 453+81, RT. | EXPLORATION ID B-019-1-17
TYPE: RETAINING WALL | SAMPLING FIRM / LOGGER: NEAS / J. LITTERAL | HAMMER: CME AUTOMATIC | ALIGNMENT: IR-77
PID: 106002 SFN: | DRILLING METHOD: 3.25" HSA | CALIBRATION DATE: 11/21/17 | ELEVATION: 1038.2 (MSL) EOB: 20.5 ft. | PAGE 1 OF 1
START: 7/9/19 END: 7/9/19 | SAMPLING METHOD: SPT | ENERGY RATIO (%): 85.4 | LAT / LONG: 41.013737, -81.495429

| MATERIAL DESCRIPTION AND NOTES | ELEV. | DEPTHS | SPT/ RQD | $N_{60}$ | REC (%) | SAMPLE ID | HP (tsf) | GRADATION (%) GR | CS | FS | SI | CL | ATTERBERG LL | PL | PI | WC | ODOT CLASS (GI) | SO4 ppm | BACK FILL |
|---|---|---|---|---|---|---|---|---|---|---|---|---|---|---|---|---|---|---|---|
| **4.0" TOPSOIL (DRILLERS DESRIPTION)** | 1038.2 / 1037.9 | | | | | | | | | | | | | | | | | | |
| VERY STIFF, BROWN AND LIGHT BROWN, **SILT**, SOME SAND, SOME CLAY, TRACE GRAVEL, DAMP | | | 3 3 3 | 9 | 67 | SS-1 | 3.50 | 4 | 7 | 18 | 50 | 21 | 28 | 20 | 8 | 18 | A-4b (7) | - | |
| | 1033.7 | | | | | | | | | | | | | | | | | | |
| VERY STIFF, BROWN AND LIGHT BROWN, **SANDY SILT**, SOME CLAY, TRACE GRAVEL, DAMP | | | 2 2 3 | 7 | 67 | SS-2 | 3.25 | 4 | 7 | 16 | 49 | 24 | 29 | 19 | 10 | 18 | A-4a (8) | - | |
| | 1030.2 | | | | | | | | | | | | | | | | | | |
| MEDIUM DENSE, ORANGISH BROWN, **GRAVEL WITH SAND**, TRACE SILT, TRACE CLAY, CONTAINS IRON STAINING, DAMP | 1028.7 | | 3 5 7 | 17 | 67 | SS-3A | 2.50 | - | - | - | - | - | - | - | - | 18 | A-4a (V) | - | |
| | | | | | | SS-3B | - | - | - | - | - | - | - | - | - | 8 | A-1-b (V) | - | |
| MEDIUM DENSE, BROWN WITH LIGHT BROWN AND ORANGISH BROWN, **STONE FRAGMENTS WITH SAND AND SILT**, LITTLE CLAY, CONTAINS IRON STAINING, STONE FRAGMENTS ARE SANDSTONE, MOIST | 1026.2 | | 4 8 9 | 24 | 67 | SS-4 | - | - | - | - | - | - | - | - | - | 13 | A-2-4 (V) | - | |
| MEDIUM DENSE TO DENSE, BROWN AND ORANGISH BROWN, **GRAVEL WITH SAND**, TRACE SILT, TRACE CLAY, SS-6 AND SS-7 CONTAIN IRON STAINING, DAMP | | | 7 10 12 | 31 | 67 | SS-5 | - | - | - | - | - | - | - | - | - | 7 | A-1-b (V) | - | |
| | | | 5 5 5 | 14 | 56 | SS-6 | - | - | 7 | 46 | 39 | 6 | 2 | NP | NP | NP | 7 | A-1-b (0) | - |
| | | | 7 7 7 | 20 | 56 | SS-7 | - | - | - | - | - | - | - | - | - | - | 10 | A-1-b (V) | - |
| | 1017.7 | EOB | 7 7 7 | 20 | 56 | SS-8 | - | - | - | - | - | - | - | - | - | - | 5 | A-1-b (V) | - |

NOTES: GROUNDWATER NOT ENCOUNTERED DURING DRILLING. HOLE DID NOT CAVE.
ABANDONMENT METHODS, MATERIALS, QUANTITIES: SHOVELED SOIL CUTTINGS

PROJECT: SUM-77-277/224 | DRILLING FIRM / OPERATOR: NEAS / J. HODGES | DRILL RIG: CME 55X | STATION / OFFSET: 455+34, LT. | EXPLORATION ID B-019-2-17
TYPE: RETAINING WALL | SAMPLING FIRM / LOGGER: NEAS / J. LITTERAL | HAMMER: CME AUTOMATIC | ALIGNMENT: IR-77
PID: 106002 SFN: | DRILLING METHOD: 3.25" HSA | CALIBRATION DATE: 11/21/17 | ELEVATION: 1040.0 (MSL) EOB: 20.5 ft. | PAGE 1 OF 1
START: 7/10/19 END: 7/10/19 | SAMPLING METHOD: SPT | ENERGY RATIO (%): 85.4 | LAT / LONG: 41.014149, -81.495533

| MATERIAL DESCRIPTION AND NOTES | ELEV. | DEPTHS | SPT/ RQD | $N_{60}$ | REC (%) | SAMPLE ID | HP (tsf) | GRADATION (%) GR | CS | FS | SI | CL | ATTERBERG LL | PL | PI | WC | ODOT CLASS (GI) | SO4 ppm | BACK FILL |
|---|---|---|---|---|---|---|---|---|---|---|---|---|---|---|---|---|---|---|---|
| **4.0" TOPSOIL (DRILLERS DESRIPTION)** | 1040.0 / 1039.7 | | | | | | | | | | | | | | | | | | |
| VERY STIFF, BROWN, **SILT AND CLAY**, SOME SAND, TRACE GRAVEL, CONTAINS TRACE ROOTS, DAMP | | | 4 5 4 | 13 | 56 | SS-1 | 3.50 | - | - | - | - | - | - | - | - | 15 | A-6a (V) | - | |
| | | | 2 2 3 | 7 | 67 | SS-2 | 3.00 | 3 | 8 | 23 | 42 | 24 | 30 | 18 | 12 | 17 | A-6a (7) | - | |
| | 1032.3 | | | | | | | | | | | | | | | | | | |
| LOOSE TO VERY DENSE, BROWN AND ORANGISH BROWN, **GRAVEL WITH SAND**, LITTLE SILT, TRACE CLAY, CONTAINS IRON STAINING, MOIST TO DAMP | | | 3 3 4 | 10 | 67 | SS-3A | 2.50 | - | - | - | - | - | - | - | - | 15 | A-6a (V) | - | |
| | | | | | | SS-3B | - | - | - | - | - | - | - | - | - | 10 | A-1-b (V) | - | |
| | | | 2 3 3 | 9 | 67 | SS-4 | - | 20 | 39 | 21 | 13 | 7 | NP | NP | NP | 11 | A-1-b (0) | - | |
| | | | 4 6 20 | 37 | 100 | SS-5 | - | - | - | - | - | - | - | - | - | 11 | A-1-b (V) | - | |
| @15.0' TO 15.5'; SS-6 HAS NO RECOVERY (ENCOUNTERED POSSIBLE BOULDER) | | | 50 | - | 0 | SS-6 | - | - | - | - | - | - | - | - | - | - | | - | |
| | | | 4 6 10 | 23 | 67 | SS-7 | - | - | - | - | - | - | - | - | - | 4 | A-1-b (V) | - | |
| | 1019.5 | EOB | 5 5 9 | 20 | 78 | SS-8 | - | - | - | - | - | - | - | - | - | 3 | A-1-b (V) | - | |

NOTES: GROUNDWATER NOT ENCOUNTERED DURING DRILLING. HOLE DID NOT CAVE.
ABANDONMENT METHODS, MATERIALS, QUANTITIES: SHOVELED SOIL CUTTINGS

STANDARD ODOT LOG W/ SULFATES (8.5 X 11) - OH DOT.GDT - 11/13/20 16:44 - C:\USERS\KAREN\DESKTOP\SUM-77-277-224 MOD 8 COMBINED WITH 2017 ARCHIVE.GPJ

PROJECT: SUM-77-277/224 | DRILLING FIRM / OPERATOR: NEAS / J. HODGES | DRILL RIG: CME 55X | STATION / OFFSET: 457+04, 2' LT. | EXPLORATION ID B-019-3-17
TYPE: RETAINING WALL | SAMPLING FIRM / LOGGER: NEAS / J. LITTERAL | HAMMER: CME AUTOMATIC | ALIGNMENT: IR-77
PID: 106002 SFN: | DRILLING METHOD: 3.25" HSA | CALIBRATION DATE: 11/21/17 | ELEVATION: 1041.7 (MSL) EOB: 20.5 ft. | PAGE 1 OF 1
START: 7/10/19 END: 7/10/19 | SAMPLING METHOD: SPT | ENERGY RATIO (%): 85.4 | LAT / LONG: 41.014607, -81.495651

| MATERIAL DESCRIPTION AND NOTES | ELEV. | DEPTHS | SPT/ RQD | $N_{60}$ | REC (%) | SAMPLE ID | HP (tsf) | GRADATION (%) GR | CS | FS | SI | CL | ATTERBERG LL | PL | PI | WC | ODOT CLASS (GI) | SO4 ppm | BACK FILL |
|---|---|---|---|---|---|---|---|---|---|---|---|---|---|---|---|---|---|---|---|
| **4.0" TOPSOIL (DRILLERS DESRIPTION)** | 1041.4 | | | | | | | | | | | | | | | | | | |
| VERY STIFF TO HARD, BROWN, **SANDY SILT**, LITTLE TO SOME CLAY, TRACE TO LITTLE GRAVEL, CONTAINS IRON STAINING, DAMP | | | 4 5 6 | 16 | 78 | SS-1 | 4.5+ | - | - | - | - | - | - | - | - | 16 | A-4a (V) | - | |
| | | | 2 4 7 | 16 | 100 | SS-2 | 4.00 | 6 | 9 | 21 | 44 | 20 | 28 | 20 | 8 | 17 | A-4a (6) | - | |
| | | | 4 5 6 | 16 | 100 | SS-3 | 2.50 | - | - | - | - | - | - | - | - | 15 | A-4a (V) | - | |
| @10.0' TO 10.5'; SS-4A BECOMES MEDIUM STIFF TO STIFF | 1031.2 | | 5 4 4 | 11 | 100 | SS-4A | 1.00 | - | - | - | - | - | - | - | - | 18 | A-4a (V) | - | |
| | | | | | | SS-4B | | - | - | - | - | - | - | - | - | 7 | A-1-b (V) | - | |
| LOOSE TO MEDIUM DENSE, BROWN, **GRAVEL WITH SAND**, TRACE SILT, TRACE CLAY, SS-4B CONTAINS IRON STAINING, DAMP TO MOIST | | | 3 3 4 | 10 | 67 | SS-5 | - | 18 | 54 | 19 | 5 | 4 | NP | NP | NP | 9 | A-1-b (0) | - | |
| | | | 4 4 5 | 13 | 78 | SS-6 | - | - | - | - | - | - | - | - | - | 13 | A-1-b (V) | - | |
| | 1022.7 | | 3 3 11 | 20 | 100 | SS-7 | - | - | - | - | - | - | - | - | - | 12 | A-1-b (V) | - | |
| VERY DENSE, BROWN AND GRAY, **GRAVEL AND STONE FRAGMENTS WITH SAND AND SILT**, TRACE CLAY, STONE FRAGMENTS ARE SHALE AND SANDSTONE, DAMP | 1021.2 | EOB | 14 22 20 | 60 | 67 | SS-8 | - | - | - | - | - | - | - | - | - | 11 | A-2-4 (V) | - | |

NOTES: GROUNDWATER NOT ENCOUNTERED DURING DRILLING. HOLE DID NOT CAVE.
ABANDONMENT METHODS, MATERIALS, QUANTITIES: BACKFILLED WITH SOIL CUTTINGS

STANDARD ODOT LOG W/ SULFATES (8.5 X 11) - OH DOT.GDT - 11/13/20 16:44 - C:\USERSIKAREN\DESKTOP\SUM-77-277-224 MOD 8 COMBINED WITH 2017 ARCHIVE.GPJ

PROJECT: SUM-77-277/224 | DRILLING FIRM / OPERATOR: NEAS / J. LITTERAL | DRILL RIG: CME 55X | STATION / OFFSET: 458+35, 2' LT. | EXPLORATION ID B-020-1-17
TYPE: RETAINING WALL | SAMPLING FIRM / LOGGER: NEAS / J. HODGES | HAMMER: CME AUTOMATIC | ALIGNMENT: IR-77
PID: 106002 SFN: | DRILLING METHOD: 3.25" HSA | CALIBRATION DATE: 11/21/17 | ELEVATION: 1042.6 (MSL) EOB: 20.5 ft. | PAGE 1 OF 1
START: 7/10/19 END: 7/10/19 | SAMPLING METHOD: SPT | ENERGY RATIO (%): 85.4 | LAT / LONG: 41.014962, -81.495738

| MATERIAL DESCRIPTION AND NOTES | ELEV. | DEPTHS | SPT/ RQD | $N_{60}$ | REC (%) | SAMPLE ID | HP (tsf) | GRADATION (%) GR | CS | FS | SI | CL | ATTERBERG LL | PL | PI | WC | ODOT CLASS (GI) | SO4 ppm | BACK FILL |
|---|---|---|---|---|---|---|---|---|---|---|---|---|---|---|---|---|---|---|---|
| HARD, BROWN BECOMING DARK BROWN, **SANDY SILT**, LITTLE CLAY, LITTLE GRAVEL, CONTAINS IRON STAINING, DAMP | | | 6 6 7 | 19 | 100 | SS-1 | 4.5+ | - | - | - | - | - | - | - | - | 9 | A-4a (V) | - | |
| | | | 3 7 9 | 23 | 100 | SS-2 | 4.5+ | - | - | - | - | - | - | - | - | 17 | A-4a (V) | - | |
| | | | 5 7 7 | 20 | 100 | SS-3 | 4.5+ | 11 | 12 | 22 | 37 | 18 | 30 | 22 | 8 | 17 | A-4a (4) | - | |
| LOOSE TO MEDIUM DENSE, BROWN, **COARSE AND FINE SAND**, TRACE GRAVEL, TRACE SILT, TRACE CLAY, DAMP TO MOIST | 1033.1 | | 5 4 3 | 10 | 100 | SS-4 | - | - | - | - | - | - | - | - | - | 6 | A-3a (V) | - | |
| | | | 5 6 7 | 19 | 100 | SS-5 | - | 9 | 17 | 62 | 7 | 5 | NP | NP | NP | 8 | A-3a (0) | - | |
| | | | 4 7 8 | 21 | 100 | SS-6 | - | - | - | - | - | - | - | - | - | 10 | A-3a (V) | - | |
| @17.5' TO 19.0'; SS-7 BECOMES SOME GRAVEL | | | 4 8 7 | 21 | 100 | SS-7 | - | - | - | - | - | - | - | - | - | 15 | A-3a (V) | - | |
| | 1022.1 | W 1022.6 EOB | 6 5 8 | 19 | 100 | SS-8 | - | - | - | - | - | - | - | - | - | 4 | A-3a (V) | - | |

NOTES: GROUNDWATER ENCOUNTERED AT 20.0' DURING DRILLING. HOLE DID NOT CAVE.
ABANDONMENT METHODS, MATERIALS, QUANTITIES: SHOVELED SOIL CUTTINGS

STANDARD ODOT LOG W/ SULFATES (8.5 X 11) - OH DOT.GDT - 11/13/20 16:44 - C:\USERSIKAREN\DESKTOP\SUM-77-277-224 MOD 8 COMBINED WITH 2017 ARCHIVE.GPJ

PROJECT: SUM-77-277/224 | DRILLING FIRM / OPERATOR: NEAS / J. HODGES | DRILL RIG: CME 55X | STATION / OFFSET: 460+03, 1' LT. | EXPLORATION ID B-020-2-17
TYPE: RETAINING WALL | SAMPLING FIRM / LOGGER: NEAS / J. LITTERAL | HAMMER: CME AUTOMATIC | ALIGNMENT: IR-77
PID: 106002 SFN: | DRILLING METHOD: 3.25" HSA | CALIBRATION DATE: 11/21/17 | ELEVATION: 1044.8 (MSL) EOB: 20.5 ft. | PAGE 1 OF 1
START: 7/11/19 END: 7/11/19 | SAMPLING METHOD: SPT | ENERGY RATIO (%): 85.4 | LAT / LONG: 41.015414, -81.495846

| MATERIAL DESCRIPTION AND NOTES | ELEV. | DEPTHS | SPT/ RQD | $N_{60}$ | REC (%) | SAMPLE ID | HP (tsf) | GRADATION (%) GR | CS | FS | SI | CL | ATTERBERG LL | PL | PI | WC | ODOT CLASS (GI) | SO4 ppm | BACK FILL |
|---|---|---|---|---|---|---|---|---|---|---|---|---|---|---|---|---|---|---|---|
| **4.0" TOPSOIL (DRILLERS DESRIPTION)** | 1044.5 | | | | | | | | | | | | | | | | | | |
| HARD, BROWN, **SANDY SILT**, LITTLE CLAY, TRACE GRAVEL, CONTAINS IRON STAINING, DAMP | | | 4 10 9 | 27 | 67 | SS-1 | 4.5+ | - | - | - | - | - | - | - | - | 16 | A-4a (V) | - | |
| | | | 5 6 5 | 16 | 100 | SS-2 | 4.5+ | 9 | 18 | 22 | 35 | 16 | 28 | 20 | 8 | 16 | A-4a (3) | - | |
| | | | 3 5 7 | 17 | 67 | SS-3 | 4.5+ | - | - | - | - | - | - | - | - | 13 | A-4a (V) | - | |
| | 1035.3 | | | | | | | | | | | | | | | | | | |
| MEDIUM DENSE, BROWN, **GRAVEL AND STONE FRAGMENTS WITH SAND AND SILT**, TRACE CLAY, CONTAINS TRACE IRON STAINING, DAMP | | | 4 9 9 | 26 | 67 | SS-4 | - | - | - | - | - | - | - | - | - | 12 | A-2-4 (V) | - | |
| | 1032.8 | | | | | | | | | | | | | | | | | | |
| MEDIUM DENSE, BROWN, **GRAVEL AND STONE FRAGMENTS WITH SAND**, LITTLE SILT, TRACE CLAY, CONTAINS TRACE IRON STAINING, DAMP | | | 3 5 5 | 14 | 78 | SS-5 | - | - | - | - | - | - | - | - | - | 10 | A-1-b (V) | - | |
| | 1030.3 | | | | | | | | | | | | | | | | | | |
| DENSE, BROWN AND GRAY, **GRAVEL AND STONE FRAGMENTS WITH SAND AND SILT**, LITTLE CLAY, CONTAINS TRACE IRON STAINING, DAMP | | ▼ 1029.3 | 4 13 15 | 40 | 56 | SS-6 | - | - | - | - | - | - | - | - | - | 13 | A-2-4 (V) | - | |
| | 1027.8 | | | | | | | | | | | | | | | | | | |
| DENSE, BROWN, **COARSE AND FINE SAND**, LITTLE SILT, LITTLE GRAVEL, TRACE CLAY, CONTAINS TRACE IRON STAINING, MOIST | | | 4 16 16 | 46 | 78 | SS-7 | - | 13 | 9 | 50 | 18 | 10 | NP | NP | NP | 11 | A-3a (0) | - | |
| | | | 4 16 19 | 50 | 78 | SS-8 | - | - | - | - | - | - | - | - | - | 11 | A-3a (V) | - | |
| | 1024.3 | EOB | | | | | | | | | | | | | | | | | |

NOTES: GROUNDWATER ENCOUNTERED AT 15.5' DURING DRILLING. HOLE DID NOT CAVE.
ABANDONMENT METHODS, MATERIALS, QUANTITIES: SHOVELED SOIL CUTTINGS

PROJECT: SUM-77-277/224 | DRILLING FIRM / OPERATOR: NEAS / J. HODGES | DRILL RIG: CME 55X | STATION / OFFSET: 461+43, 2' LT. | EXPLORATION ID B-021-1-17
TYPE: RETAINING WALL | SAMPLING FIRM / LOGGER: NEAS / J. LITTERAL | HAMMER: CME AUTOMATIC | ALIGNMENT: IR-77
PID: 106002 SFN: | DRILLING METHOD: 3.25" HSA | CALIBRATION DATE: 11/21/17 | ELEVATION: 1046.1 (MSL) EOB: 20.5 ft. | PAGE 1 OF 1
START: 7/11/19 END: 7/11/19 | SAMPLING METHOD: SPT | ENERGY RATIO (%): 85.4 | LAT / LONG: 41.015791, -81.495943

| MATERIAL DESCRIPTION AND NOTES | ELEV. | DEPTHS | SPT/ RQD | $N_{60}$ | REC (%) | SAMPLE ID | HP (tsf) | GRADATION (%) GR | CS | FS | SI | CL | ATTERBERG LL | PL | PI | WC | ODOT CLASS (GI) | SO4 ppm | BACK FILL |
|---|---|---|---|---|---|---|---|---|---|---|---|---|---|---|---|---|---|---|---|
| **4.0" TOPSOIL (DRILLERS DESRIPTION)** | 1045.8 | | | | | | | | | | | | | | | | | | |
| VERY STIFF TO HARD, BROWN, **SANDY SILT**, LITTLE CLAY, LITTLE GRAVEL, DAMP | | | 5 3 3 | 9 | 67 | SS-1 | 2.75 | 11 | 9 | 17 | 43 | 20 | 28 | 19 | 9 | 17 | A-4a (6) | - | |
| | 1040.1 | | 6 7 7 | 20 | 89 | SS-2A | 4.5+ | - | - | - | - | - | - | - | - | 13 | A-4a (V) | - | |
| MEDIUM DENSE, BROWN, **COARSE AND FINE SAND**, SOME SILT, LITTLE CLAY, TRACE GRAVEL, DAMP TO WET | | | SS-2B | - | - | - | - | - | - | - | - | - | - | - | - | 8 | A-3a (V) | - | |
| | | | 4 7 9 | 23 | 89 | SS-3 | - | 0 | 9 | 56 | 22 | 13 | NP | NP | NP | 14 | A-3a (0) | - | |
| | 1036.6 | | | | | | | | | | | | | | | | | | |
| DENSE TO VERY DENSE, BROWN BECOMING LIGHT BROWN AND DARK GRAY, **GRAVEL AND STONE FRAGMENTS WITH SAND AND SILT**, TRACE TO LITTLE CLAY, DAMP TO MOIST | | | 6 10 13 | 33 | 89 | SS-4 | - | - | - | - | - | - | - | - | - | 13 | A-2-4 (V) | - | |
| | | | 5 21 19 | 57 | 89 | SS-5 | - | - | - | - | - | - | - | - | - | 10 | A-2-4 (V) | - | |
| | | | 4 21 21 | 60 | 89 | SS-6 | - | - | - | - | - | - | - | - | - | 12 | A-2-4 (V) | - | |
| | 1029.1 | | | | | | | | | | | | | | | | | | |
| HARD, GRAY, **SILT AND CLAY**, LITTLE SAND, LITTLE STONE FRAGMENTS, RELIC ROCK STRUCTURE, CONTAINS IRON STAINING, DAMP | | | 4 10 10 | 28 | 78 | SS-7 | 4.5+ | 14 | 5 | 9 | 50 | 22 | 35 | 24 | 11 | 11 | A-6a (8) | - | |
| | | | 8 15 20 | 50 | 56 | SS-8 | 4.5+ | - | - | - | - | - | - | - | - | 10 | A-6a (V) | - | |
| | 1025.6 | EOB | | | | | | | | | | | | | | | | | |

NOTES: GROUNDWATER NOT ENCOUNTERED DURING DRILLING. HOLE DID NOT CAVE.
ABANDONMENT METHODS, MATERIALS, QUANTITIES: SHOVELED SOIL CUTTINGS

STANDARD ODOT LOG W/ SULFATES (8.5 X 11) - OH DOT.GDT - 11/13/20 16:44 - C:\USERS\KAREN\DESKTOP\SUM-77-277-224 MOD 8 COMBINED WITH 2017 ARCHIVE.GPJ

PROJECT: SUM-77-277/224 | DRILLING FIRM / OPERATOR: NEAS / J. HODGES | DRILL RIG: CME 55X | STATION / OFFSET: 462+84, 3' LT. | EXPLORATION ID B-021-2-17
TYPE: RETAINING WALL | SAMPLING FIRM / LOGGER: NEAS / J. LITTERAL | HAMMER: CME AUTOMATIC | ALIGNMENT: IR-77
PID: 106002 SFN: | DRILLING METHOD: 3.25" HSA | CALIBRATION DATE: 11/21/17 | ELEVATION: 1047.9 (MSL) EOB: 20.5 ft. | PAGE 1 OF 1
START: 7/11/19 END: 7/11/19 | SAMPLING METHOD: SPT | ENERGY RATIO (%): 85.4 | LAT / LONG: 41.016173, -81.496039

| MATERIAL DESCRIPTION AND NOTES | ELEV. | DEPTHS | SPT/ RQD | $N_{60}$ | REC (%) | SAMPLE ID | HP (tsf) | GRADATION (%) GR | CS | FS | SI | CL | ATTERBERG LL | PL | PI | WC | ODOT CLASS (GI) | SO4 ppm | BACK FILL |
|---|---|---|---|---|---|---|---|---|---|---|---|---|---|---|---|---|---|---|---|
| **4.0" TOPSOIL (DRILLERS DESRIPTION)** | 1047.6 | | | | | | | | | | | | | | | | | | |
| VERY STIFF TO HARD, BROWN, **SANDY SILT**, LITTLE CLAY, TRACE TO LITTLE GRAVEL, SS-1 CONTAINS NO INTACT SOIL FOR HP READINGS, CONTAINS IRON STAINING, DAMP | | | 5 13 8 | 30 | 33 | SS-1 | - | - | - | - | - | - | - | - | - | 11 | A-4a (V) | - | |
| | | | 4 9 8 | 24 | 78 | SS-2 | 4.00 | - | - | - | - | - | - | - | - | 13 | A-4a (V) | - | |
| | 1040.9 | | | | | | | | | | | | | | | | | | |
| MEDIUM DENSE TO VERY DENSE, BROWN, **GRAVEL WITH SAND, SILT, AND CLAY**, CONTAINS IRON STAINING, MOIST | | | 5 7 8 | 21 | 67 | SS-3 | - | 26 | 19 | 20 | 22 | 13 | 28 | 17 | 11 | 15 | A-2-6 (0) | - | |
| | | | 5 28 32 | 85 | 33 | SS-4 | - | - | - | - | - | - | - | - | - | 14 | A-2-6 (V) | - | |
| | 1035.9 | | | | | | | | | | | | | | | | | | |
| VERY DENSE, LIGHT BROWN AND GRAY, **GRAVEL AND STONE FRAGMENTS WITH SAND**, LITTLE SILT, TRACE CLAY, STONE FRAGMENTS ARE SANDSTONE, DAMP TO MOIST | | | 13 50 | - | 50 | SS-5 | - | - | - | - | - | - | - | - | - | 10 | A-1-b (V) | - | |
| | | | 50 | - | 50 | SS-6 | - | - | - | - | - | - | - | - | - | 8 | A-1-b (V) | - | |
| | 1030.9 | | | | | | | | | | | | | | | | | | |
| VERY STIFF, GRAY, **SANDY SILT**, SOME STONE FRAGMENTS, LITTLE CLAY, SS-7 CONTAINS NO INTACT SOIL FOR HP READINGS, RELIC ROCK STRUCTURE, CONTAINS IRON STAINING, DAMP | | | 13 15 30 | 64 | 67 | SS-7 | - | - | - | - | - | - | - | - | - | 9 | A-4a (V) | - | |
| | 1027.4 | EOB | 9 8 9 | 24 | 44 | SS-8 | 2.25 | 32 | 5 | 9 | 36 | 18 | 27 | 18 | 9 | 12 | A-4a (4) | - | |

NOTES: GROUNDWATER NOT ENCOUNTERED DURING DRILLING. HOLE DID NOT CAVE.
ABANDONMENT METHODS, MATERIALS, QUANTITIES: SHOVELED SOIL CUTTINGS

PROJECT: SUM-77-277/224 | DRILLING FIRM / OPERATOR: NEAS / J. HODGES | DRILL RIG: CME 55X | STATION / OFFSET: 464+41, 2' LT. | EXPLORATION ID B-021-3-17
TYPE: RETAINING WALL | SAMPLING FIRM / LOGGER: NEAS / J. LITTERAL | HAMMER: CME AUTOMATIC | ALIGNMENT: IR-77
PID: 106002 SFN: | DRILLING METHOD: 3.25" HSA | CALIBRATION DATE: 11/21/17 | ELEVATION: 1049.5 (MSL) EOB: 19.3 ft. | PAGE 1 OF 1
START: 7/16/19 END: 7/16/19 | SAMPLING METHOD: SPT | ENERGY RATIO (%): 85.4 | LAT / LONG: 41.016596, -81.496141

| MATERIAL DESCRIPTION AND NOTES | ELEV. | DEPTHS | SPT/ RQD | $N_{60}$ | REC (%) | SAMPLE ID | HP (tsf) | GRADATION (%) GR | CS | FS | SI | CL | ATTERBERG LL | PL | PI | WC | ODOT CLASS (GI) | SO4 ppm | BACK FILL |
|---|---|---|---|---|---|---|---|---|---|---|---|---|---|---|---|---|---|---|---|
| **8.0" TOPSOIL (DRILLERS DESCRIPTION)** | 1048.8 | | | | | | | | | | | | | | | | | | |
| HARD, BROWN, **SANDY SILT**, SOME GRAVEL, LITTLE CLAY, CONTAINS TRACE IRON STAINING, DAMP | | | 8 11 7 | 26 | 78 | SS-1 | 4.50 | 28 | 13 | 15 | 27 | 17 | 28 | 18 | 10 | 12 | A-4a (2) | - | |
| | 1045.0 | | | | | | | | | | | | | | | | | | |
| MEDIUM DENSE, BROWN, **COARSE AND FINE SAND**, SOME GRAVEL, TRACE SILT, TRACE CLAY, DAMP | | | 6 7 7 | 20 | 67 | SS-2 | - | - | - | - | - | - | - | - | - | 5 | A-3a (V) | - | |
| | 1042.5 | | | | | | | | | | | | | | | | | | |
| MEDIUM DENSE TO DENSE, BROWN, **GRAVEL WITH SAND**, TRACE SILT, TRACE CLAY, DAMP TO WET | | | 9 7 10 | 24 | 11 | SS-3 | - | - | - | - | - | - | - | - | - | 7 | A-1-b (V) | - | |
| | 1038.4 | | 8 15 8 | 33 | 67 | SS-4A | - | - | - | - | - | - | - | - | - | 16 | A-1-b (V) | - | |
| MEDIUM DENSE, BROWN, **SILT**, "AND" SAND, TRACE CLAY, TRACE GRAVEL, MOIST | | | | | | SS-4B | - | - | - | - | - | - | - | - | - | 16 | A-4b (V) | - | |
| | 1036.5 | | 9 50 | - | 100 | SS-5A | - | 1 | 2 | 37 | 50 | 10 | NP | NP | NP | 17 | A-4b (5) | - | |
| STIFF, BROWNISH GRAY, **CLAY**, SOME SILT, LITTLE SAND, TRACE GRAVEL, MOIST | | | | | | SS-5B | 1.25 | - | - | - | - | - | - | - | - | 28 | A-7-6 (V) | - | |
| | 1035.0 | | | | | | | | | | | | | | | | | | |
| MEDIUM DENSE, GRAY AND ORANGISH BROWN, **GRAVEL WITH SAND AND SILT**, LITTLE CLAY, CONTAINS IRON STAINING, MOIST | | | 8 5 4 | 13 | 67 | SS-6 | - | - | - | - | - | - | - | - | - | 18 | A-2-4 (V) | - | |
| | 1032.0 | W 1033.0 TR | | | | | | | | | | | | | | | | | |
| **SHALE**, DARK GRAY, HIGHLY WEATHERED, VERY WEAK TO WEAK, FISSILE. | | | 50 | - | 100 | SS-7 | - | - | - | - | - | - | - | - | - | - | Rock (V) | - | |
| | 1030.2 | EOB | 50/3" | - | 33 | SS-8 | - | - | - | - | - | - | - | - | - | - | Rock (V) | - | |

NOTES: GROUNDWATER ENCOUNTERED AT 16.5' DURING DRILLING. HOLE DID NOT CAVE.
ABANDONMENT METHODS, MATERIALS, QUANTITIES: SHOVELED SOIL CUTTINGS

STANDARD ODOT LOG W/ SULFATES (8.5 X 11) - OH DOT.GDT - 11/13/20 16:44 - C:\USERS\KAREN\DESKTOP\SUM-77-277-224 MOD 8 COMBINED WITH 2017 ARCHIVE.GPJ

PROJECT: SUM-77-277/224 | DRILLING FIRM / OPERATOR: NEAS / J. HODGES | DRILL RIG: CME 55X | STATION / OFFSET: 465+89, 2' LT. | EXPLORATION ID B-022-1-17
TYPE: RETAINING WALL | SAMPLING FIRM / LOGGER: NEAS / J. LITTERAL | HAMMER: CME AUTOMATIC | ALIGNMENT: IR-77
PID: 106002 SFN: | DRILLING METHOD: 3.25" HSA / NQ2 | CALIBRATION DATE: 11/21/17 | ELEVATION: 1051.0 (MSL) EOB: 20.0 ft. | PAGE 1 OF 1
START: 7/15/19 END: 7/15/19 | SAMPLING METHOD: SPT / NQ2 | ENERGY RATIO (%): 85.4 | LAT / LONG: 41.016996, -81.496236

| MATERIAL DESCRIPTION AND NOTES | ELEV. | DEPTHS | SPT/ RQD | $N_{60}$ | REC (%) | SAMPLE ID | HP (tsf) | GRADATION (%) GR | CS | FS | SI | CL | ATTERBERG LL | PL | PI | WC | ODOT CLASS (GI) | SO4 ppm | BACK FILL |
|---|---|---|---|---|---|---|---|---|---|---|---|---|---|---|---|---|---|---|---|
| **8.0" TOPSOIL (DRILLERS DESCRIPTION)** | 1050.3 | | | | | | | | | | | | | | | | | | |
| MEDIUM DENSE TO DENSE, BROWN, **GRAVEL WITH SAND**, TRACE SILT, TRACE CLAY, CONTAINS IRON STAINING, DAMP | | | 9 14 18 | 46 | 33 | SS-1 | - | - | - | - | - | - | - | - | - | 7 | A-1-b (V) | - | |
| | | | 2 8 9 | 24 | 44 | SS-2 | - | 34 | 36 | 19 | 6 | 5 | NP | NP | NP | 9 | A-1-b (0) | - | |
| | | | 13 10 10 | 28 | 56 | SS-3 | - | - | - | - | - | - | - | - | - | 10 | A-1-b (V) | - | |
| | 1041.5 | | | | | | | | | | | | | | | | | | |
| HARD, GRAY, **SANDY SILT**, SOME CLAY, LITTLE GRAVEL, RELIC ROCK STRUCTURE, DAMP | | | 7 10 13 | 33 | 89 | SS-4 | 4.5+ | 18 | 9 | 11 | 37 | 25 | 30 | 20 | 10 | 12 | A-4a (5) | - | |
| | | | 7 10 20 | 43 | 89 | SS-5 | 4.5+ | - | - | - | - | - | - | - | - | 11 | A-4a (V) | - | |
| | 1037.0 | TR | | | | | | | | | | | | | | | | | |
| **SHALE**, GRAY, HIGHLY WEATHERED, VERY WEAK, FISSILE. | | | 16 50 | - | 50 | SS-6 | - | - | - | - | - | - | - | - | - | - | Rock (V) | - | |
| | 1035.0 | | | | | | | | | | | | | | | | | | |
| **INTERBEDDED SANDSTONE (60%) AND SHALE (40%)**, BEDDING DISCONTINUITIES: LOW ANGLE, HIGHLY FRACTURED TO MODERATELY FRACTURED, OPEN TO TIGHT, SLIGHTLY ROUGH, BLOCKY/DISTURBED/SEAMY, GOOD SURFACE CONDITION, RQD 23%, REC. 98%; **SANDSTONE**, GRAY AND BROWN, SLIGHTLY WEATHERED, STRONG WITH VERY WEAK LAYERS, VERY FINE TO FINE GRAINED. VERY THIN TO LAMINATED, CONTAINS VERY WEAK CLAYSTONE LAYERS; **SHALE**, BLACK, MODERATELY WEATHERED, WEAK, LAMINATED, FISSILE. @16.9' TO 17.3'; Qu = 87 PSI | | | 23 | | 98 | NQ2-1 | | | | | | | | | | | | CORE | | |
| | 1031.0 | EOB | | | | | | | | | | | | | | | | | |

NOTES: GROUNDWATER NOT ENCOUNTERED DURING DRILLING. HOLE DID NOT CAVE.
ABANDONMENT METHODS, MATERIALS, QUANTITIES: SHOVELED SOIL CUTTINGS

PROJECT: SUM-77-277/224 | DRILLING FIRM / OPERATOR: NEAS / J. HODGES | DRILL RIG: CME 55X | STATION / OFFSET: 467+43, 6' LT. | EXPLORATION ID B-022-2-17
TYPE: RETAINING WALL | SAMPLING FIRM / LOGGER: NEAS / J.HODGES | HAMMER: CME AUTOMATIC | ALIGNMENT: IR-77
PID: 106002 SFN: | DRILLING METHOD: 3.25" HSA / NQ2 | CALIBRATION DATE: 11/21/17 | ELEVATION: 1051.3 (MSL) EOB: 20.5 ft. | PAGE 1 OF 1
START: 7/15/19 END: 7/15/19 | SAMPLING METHOD: SPT / NQ2 | ENERGY RATIO (%): 85.4 | LAT / LONG: 41.017409, -81.496354

| MATERIAL DESCRIPTION AND NOTES | ELEV. | DEPTHS | SPT/ RQD | $N_{60}$ | REC (%) | SAMPLE ID | HP (tsf) | GRADATION (%) GR | CS | FS | SI | CL | ATTERBERG LL | PL | PI | WC | ODOT CLASS (GI) | SO4 ppm | BACK FILL |
|---|---|---|---|---|---|---|---|---|---|---|---|---|---|---|---|---|---|---|---|
| **8.0" TOPSOIL (DRILLERS DESCRIPTION)** | 1050.6 | | | | | | | | | | | | | | | | | | |
| DENSE, BROWN, **COARSE AND FINE SAND**, SOME SILT, LITTLE GRAVEL, LITTLE CLAY, CONTAINS IRON STAINING, DAMP | | | 5 10 13 | 33 | 44 | SS-1 | - | 14 | 19 | 34 | 22 | 11 | 20 | 16 | 4 | 9 | A-3a (0) | - | |
| | | | 9 13 11 | 34 | 100 | SS-2 | - | - | - | - | - | - | - | - | - | 11 | A-3a (V) | - | |
| | 1044.3 | | | | | | | | | | | | | | | | | | |
| HARD, BROWN BECOMING GRAY, **SANDY SILT**, SOME GRAVEL, LITTLE CLAY, DAMP | | | 5 10 12 | 31 | 78 | SS-3 | 4.25 | 21 | 16 | 21 | 28 | 14 | 24 | 18 | 6 | 13 | A-4a (1) | - | |
| | | | 5 13 13 | 37 | 56 | SS-4 | 4.5+ | - | - | - | - | - | - | - | - | 10 | A-4a (V) | - | |
| | 1039.3 | | | | | | | | | | | | | | | | | | |
| VERY DENSE, BROWN AND GRAY, **GRAVEL AND STONE FRAGMENTS WITH SAND**, LITTLE SILT, TRACE CLAY, DAMP | | | 13 33 19 | 74 | 67 | SS-5 | - | - | - | - | - | - | - | - | - | 8 | A-1-b (V) | - | |
| | 1036.8 | TR | | | | | | | | | | | | | | | | | |
| **SANDSTONE**, BROWN AND GRAY, HIGHLY WEATHERED, SLIGHTLY STRONG. | 1035.8 | | 50 | - | 83 | SS-6 | - | - | - | - | - | - | - | - | - | - | Rock (V) | - | |
| @15.8' TO 16.3'; COARSE AND FINE SAND SEAM, POSSIBLY SEVERELY WEATHERED SANDSTONE **INTERBEDDED SANDSTONE (84%) AND SHALE (16%)**, BEDDING DISCONTINUITIES: LOW ANGLE, HIGHLY FRACTURED TO FRACTURED, NARROW TO TIGHT, SLIGHTLY ROUGH, BLOCKY/DISTURBED/SEAMY, FAIR SURFACE CONDITION, RQD 0%, REC. 100%; **SANDSTONE**, GRAY, MODERATELY WEATHERED, MODERATELY STRONG, VERY FINE TO FINE GRAINED, THINLY LAMINATED TO LAMINATED; **SHALE**, DARK GRAY TO BLACK, WEAK, FISSILE. @19.9' TO 20.2'; Qu = 4156 PSI | | | 0 | | 100 | NQ2-1 | | | | | | | | | | | | CORE | | |
| | 1030.8 | EOB | | | | | | | | | | | | | | | | | |

NOTES: GROUNDWATER NOT ENCOUNTERED DURING DRILLING. HOLE DID NOT CAVE.
ABANDONMENT METHODS, MATERIALS, QUANTITIES: SHOVELED SOIL CUTTINGS

STANDARD ODOT LOG W/ SULFATES (8.5 X 11) - OH DOT.GDT - 11/13/20 16:44 - C:\USERS\KAREN\DESKTOP\SUM-77-277-224 MOD 8 COMBINED WITH 2017 ARCHIVE.GPJ



**SUM-77/277/224**
**VARIOUS**

**STRUCTURE FOUNDATION EXPLORATION**
**RETAINING WALL 1**
**BORING LOGS B-022-1-17 & B-022-2-17**

DRAWN EB
CHECKED BPA

PROJECT: SUM-77-277/224 | DRILLING FIRM / OPERATOR: NEAS / J. HODGES | DRILL RIG: CME 55X | STATION / OFFSET: 468+91, 1' LT. | EXPLORATION ID B-022-3-17
TYPE: RETAINING WALL | SAMPLING FIRM / LOGGER: NEAS / J. LITTERAL | HAMMER: CME AUTOMATIC | ALIGNMENT: IR-77
PID: 106002 SFN: | DRILLING METHOD: 3.25" HSA / NQ2 | CALIBRATION DATE: 11/21/17 | ELEVATION: 1052.6 (MSL) EOB: 20.0 ft. | PAGE 1 OF 1
START: 7/15/19 END: 7/15/19 | SAMPLING METHOD: SPT / NQ2 | ENERGY RATIO (%): 85.4 | LAT / LONG: 41.017812, -81.496434

| MATERIAL DESCRIPTION AND NOTES | ELEV. | DEPTHS | SPT/ RQD | $N_{60}$ | REC (%) | SAMPLE ID | HP (tsf) | GRADATION (%) GR | CS | FS | SI | CL | ATTERBERG LL | PL | PI | WC | ODOT CLASS (GI) | SO4 ppm | BACK FILL |
|---|---|---|---|---|---|---|---|---|---|---|---|---|---|---|---|---|---|---|---|
| **8.0" TOPSOIL (DRILLERS DESCRIPTION)** | 1052.6 / 1051.9 | | | | | | | | | | | | | | | | | | |
| MEDIUM DENSE, BROWN, **GRAVEL WITH SAND AND SILT**, TRACE CLAY, CONTAINS TRACE IRON STAINING, DAMP | 1048.1 | | 6 6 7 | 19 | 56 | SS-1 | - | 23 | 21 | 25 | 21 | 10 | 21 | 15 | 6 | 13 | A-2-4 (0) | - | |
| HARD, BROWN BECOMING GRAY, **SANDY SILT**, LITTLE CLAY, LITTLE GRAVEL, DAMP | 1038.1 | | 5 8 12 | 28 | 28 | SS-2 | 4.25 | - | - | - | - | - | - | - | - | 11 | A-4a (V) | - | |
| | | | 6 9 16 | 36 | 100 | SS-3 | 4.5+ | - | - | - | - | - | - | - | - | 12 | A-4a (V) | - | |
| | | | 5 10 12 | 31 | 67 | SS-4 | 4.5+ | 14 | 9 | 30 | 31 | 16 | 17 | 13 | 4 | 9 | A-4a (2) | - | |
| | | | 5 10 10 | 28 | 67 | SS-5 | 4.5+ | - | - | - | - | - | - | - | - | 12 | A-4a (V) | - | |
| **SANDSTONE**, GRAY, HIGHLY WEATHERED, MODERATELY STRONG. | 1036.1 | TR | 5 20 21 | 58 | 39 | SS-6 | - | - | - | - | - | - | - | - | - | - | Rock (V) | - | |
| **SANDSTONE**, GRAY AND BROWN, MODERATELY TO HIGHLY WEATHERED, STRONG WITH WEAK LAYERS, VERY FINE TO MEDIUM GRAINED, VERY THIN BEDDED, CONTAINS INTERBEDDED SHALE LAMINATIONS, BEDDING DISCONTINUITIES: LOW ANGLE, HIGHLY FRACTURED, OPEN TO NARROW, SLIGHTLY ROUGH, BLOCKY/DISTURBED/SEAMY TO DISINTIGRATED, FAIR TO POOR SURFACE CONDITION; RQD 0%, REC 55%. | 1032.6 | EOB | 0 | | 55 | NQ2-1 | | | | | | | | | | | CORE | | |

NOTES: GROUNDWATER NOT ENCOUNTERED DURING DRILLING. HOLE DID NOT CAVE.
ABANDONMENT METHODS, MATERIALS, QUANTITIES: SHOVELED SOIL CUTTINGS

PROJECT: SUM-77-277/224 | DRILLING FIRM / OPERATOR: NEAS / J. HODGES | DRILL RIG: CME 55X | STATION / OFFSET: 470+75, 2' LT. | EXPLORATION ID B-022-4-17
TYPE: RETAINING WALL | SAMPLING FIRM / LOGGER: NEAS / J.HODGES | HAMMER: CME AUTOMATIC | ALIGNMENT: IR-77
PID: 106002 SFN: | DRILLING METHOD: 3.25" HSA | CALIBRATION DATE: 11/21/17 | ELEVATION: 1053.9 (MSL) EOB: 20.5 ft. | PAGE 1 OF 1
START: 7/16/19 END: 7/16/19 | SAMPLING METHOD: SPT | ENERGY RATIO (%): 85.4 | LAT / LONG: 41.018307, -81.496558

| MATERIAL DESCRIPTION AND NOTES | ELEV. | DEPTHS | SPT/ RQD | $N_{60}$ | REC (%) | SAMPLE ID | HP (tsf) | GRADATION (%) GR | CS | FS | SI | CL | ATTERBERG LL | PL | PI | WC | ODOT CLASS (GI) | SO4 ppm | BACK FILL |
|---|---|---|---|---|---|---|---|---|---|---|---|---|---|---|---|---|---|---|---|
| **9.0" TOPSOIL (DRILLERS DESCRIPTION)** | 1053.9 / 1053.1 | | | | | | | | | | | | | | | | | | |
| HARD, BROWN, **SANDY SILT**, LITTLE CLAY, LITTLE GRAVEL, DAMP | 1049.4 | | 2 8 11 | 27 | 100 | SS-1 | 4.5+ | 13 | 20 | 24 | 29 | 14 | 22 | 16 | 6 | 12 | A-4a (2) | - | |
| MEDIUM DENSE, BROWN, **COARSE AND FINE SAND**, TRACE GRAVEL, TRACE SILT, TRACE CLAY, DAMP | 1046.9 | | 2 4 4 | 11 | 78 | SS-2 | - | - | - | - | - | - | - | - | - | 7 | A-3a (V) | - | |
| LOOSE, BROWN, **GRAVEL WITH SAND AND SILT**, TRACE CLAY, DAMP | 1044.4 | | 2 2 2 | 6 | 33 | SS-3 | - | 35 | 20 | 24 | 12 | 9 | 23 | 16 | 7 | 14 | A-2-4 (0) | - | |
| LOOSE, BROWN, **GRAVEL WITH SAND**, LITTLE SILT, TRACE CLAY, WET | 1041.9 | | 1 2 3 | 7 | 33 | SS-4 | - | - | - | - | - | - | - | - | - | 17 | A-1-b (V) | - | |
| DENSE TO VERY DENSE, BROWN AND GRAY, **GRAVEL AND STONE FRAGMENTS WITH SAND AND SILT**, TRACE TO LITTLE CLAY, CONTAINS IRON STAINING, DAMP | 1036.9 | | 4 34 10 | 63 | 78 | SS-5 | - | - | - | - | - | - | - | - | - | 12 | A-2-4 (V) | - | |
| | | | 5 11 15 | 37 | 89 | SS-6 | - | - | - | - | - | - | - | - | - | 12 | A-2-4 (V) | - | |
| **SANDSTONE**, LIGHT BROWN, HIGHLY WEATHERED, SLIGHTLY STRONG, VERY FINE TO MEDIUM GRAINED, SS-8 CONTAINS INTERBEDDED DARK GRAY SEVERELY WEATHERED VERY WEAK SHALE. | 1033.4 | TR EOB | 17 34 25 | 84 | 89 | SS-7 | - | - | - | - | - | - | - | - | - | - | Rock (V) | - | |
| | | | 15 8 15 | 33 | 100 | SS-8 | - | - | - | - | - | - | - | - | - | - | Rock (V) | - | |

NOTES: GROUNDWATER NOT ENCOUNTERED DURING DRILLING. HOLE DID NOT CAVE.
ABANDONMENT METHODS, MATERIALS, QUANTITIES: SHOVELED SOIL CUTTINGS

STANDARD ODOT LOG W/ SULFATES (8.5 X 11) - OH DOT.GDT - 11/13/20 16:45 - C:\USERS\KAREN\DESKTOP\SUM-77-277-224 MOD 8 COMBINED WITH 2017 ARCHIVE.GPJ

PROJECT: SUM-77-277/224
TYPE: RETAINING WALL
PID: 106002 SFN:
START: 7/17/19 END: 7/17/19

DRILLING FIRM / OPERATOR: NEAS / J. HODGES
SAMPLING FIRM / LOGGER: NEAS / J.HODGES
DRILLING METHOD: 3.25" HSA
SAMPLING METHOD: SPT

DRILL RIG: CME 55X
HAMMER: CME AUTOMATIC
CALIBRATION DATE: 11/21/17
ENERGY RATIO (%): 85.4

STATION / OFFSET: 471+85, 2' LT.
ALIGNMENT: IR-77
ELEVATION: 1054.5 (MSL) EOB: 19.4 ft.
LAT / LONG: 41.018605, -81.496634

EXPLORATION ID B-023-1-17
PAGE 1 OF 1

| MATERIAL DESCRIPTION AND NOTES | ELEV. | DEPTHS | SPT/ RQD | $N_{60}$ | REC (%) | SAMPLE ID | HP (tsf) | GRADATION (%) GR | CS | FS | SI | CL | ATTERBERG LL | PL | PI | WC | ODOT CLASS (GI) | SO4 ppm | BACK FILL |
|---|---|---|---|---|---|---|---|---|---|---|---|---|---|---|---|---|---|---|---|
| **9.0" TOPSOIL (DRILLERS DESCRIPTION)** | 1053.7 | | | | | | | | | | | | | | | | | | |
| MEDIUM DENSE TO DENSE, BROWN, **GRAVEL AND STONE FRAGMENTS WITH SAND**, TRACE TO LITTLE SILT, TRACE CLAY, CONTAINS TRACE IRON STAINING, DAMP TO MOIST | | | 2 14 12 | 37 | 67 | SS-1 | - | - | - | - | - | - | - | - | - | 8 | A-1-b (V) | - | |
| | | | 1 6 14 | 28 | 100 | SS-2 | - | - | - | - | - | - | - | - | - | 10 | A-1-b (V) | - | |
| | | | 4 4 6 | 14 | 78 | SS-3 | - | 41 | 24 | 17 | 10 | 8 | NP | NP | NP | 12 | A-1-b (0) | - | |
| | | | 2 4 5 | 13 | 100 | SS-4 | - | - | - | - | - | - | - | - | - | 16 | A-1-b (V) | - | |
| | 1042.5 | | | | | | | | | | | | | | | | | | |
| MEDIUM DENSE TO DENSE, BROWN AND ORANGISH BROWN, **COARSE AND FINE SAND**, SOME GRAVEL, LITTLE SILT, TRACE CLAY, CONTAINS IRON STAINING, WET | | | 9 9 9 | 26 | 100 | SS-5 | - | 30 | 11 | 39 | 14 | 6 | NP | NP | NP | 14 | A-3a (0) | - | |
| | | | 4 11 12 | 33 | 78 | SS-6 | - | - | - | - | - | - | - | - | - | 13 | A-3a (V) | - | |
| | 1037.5 | TR | | | | | | | | | | | | | | | | | |
| **SANDSTONE**, LIGHT BROWN AND GRAY, HIGHLY WEATHERED, MODERATELY STRONG. | | | 50/4" | - | 75 | SS-7 | - | - | - | - | - | - | - | - | - | - | Rock (V) | - | |
| | 1035.1 | EOB | 50/5" | - | 60 | SS-8 | - | - | - | - | - | - | - | - | - | - | Rock (V) | - | |

NOTES: GROUNDWATER NOT ENCOUNTERED DURING DRILLING. HOLE DID NOT CAVE.
ABANDONMENT METHODS, MATERIALS, QUANTITIES: SHOVELED SOIL CUTTINGS

PROJECT: SUM-77-277/224
TYPE: RETAINING WALL
PID: 106002 SFN:
START: 7/17/19 END: 7/17/19

DRILLING FIRM / OPERATOR: NEAS / J. HODGES
SAMPLING FIRM / LOGGER: NEAS / J.HODGES
DRILLING METHOD: 3.25" HSA
SAMPLING METHOD: SPT

DRILL RIG: CME 55X
HAMMER: CME AUTOMATIC
CALIBRATION DATE: 11/21/17
ENERGY RATIO (%): 85.4

STATION / OFFSET: 473+23, 27' RT.
ALIGNMENT: IR-77 SB
ELEVATION: 1054.9 (MSL) EOB: 20.3 ft.
LAT / LONG: 41.018986, -81.496733

EXPLORATION ID B-023-2-17
PAGE 1 OF 1

| MATERIAL DESCRIPTION AND NOTES | ELEV. | DEPTHS | SPT/ RQD | $N_{60}$ | REC (%) | SAMPLE ID | HP (tsf) | GRADATION (%) GR | CS | FS | SI | CL | ATTERBERG LL | PL | PI | WC | ODOT CLASS (GI) | SO4 ppm | BACK FILL |
|---|---|---|---|---|---|---|---|---|---|---|---|---|---|---|---|---|---|---|---|
| **7.0" TOPSOIL (DRILLERS DESCRIPTION)** | 1054.3 | | | | | | | | | | | | | | | | | | |
| VERY DENSE, BROWN, **GRAVEL AND STONE FRAGMENTS WITH SAND**, LITTLE SILT, TRACE CLAY, CONTAINS TRACE IRON STAINING, DAMP | | | 7 11 50/4" | - | 75 | SS-1 | - | - | - | - | - | - | - | - | - | 9 | A-1-b (V) | - | |
| | | | 8 15 21 | 51 | 100 | SS-2 | - | - | - | - | - | - | - | - | - | 10 | A-1-b (V) | - | |
| | 1047.9 | | | | | | | | | | | | | | | | | | |
| DENSE, DARK GRAY AND BROWN, **SANDY SILT**, SOME GRAVEL, SOME CLAY, CONTAINS IRON STAINING, DAMP | | | 9 13 13 | 37 | 100 | SS-3 | - | 27 | 5 | 13 | 34 | 21 | 27 | 19 | 8 | 11 | A-4a (4) | - | |
| | 1044.9 | TR | | | | | | | | | | | | | | | | | |
| **SANDSTONE**, BROWN AND GRAY, HIGHLY TO MODERATELY WEATHERED, SLIGHTLY TO MODERATELY STRONG. | | | 15 50/3" | - | 89 | SS-4 | - | - | - | - | - | - | - | - | - | - | Rock (V) | - | |
| | | | 50 | - | 50 | SS-5 | - | - | - | - | - | - | - | - | - | - | Rock (V) | - | |
| @15.0' TO 16.5'; SS-6 CONTAINS SEVERELY WEATHERED, VERY WEAK SHALE LAYERS | | | 17 12 12 | 34 | 100 | SS-6 | - | - | - | - | - | - | - | - | - | - | Rock (V) | - | |
| | | | 50 | - | 50 | SS-7 | - | - | - | - | - | - | - | - | - | - | Rock (V) | - | |
| | 1034.6 | EOB | 50/4" | - | 25 | SS-8 | - | - | - | - | - | - | - | - | - | - | Rock (V) | - | |

NOTES: GROUNDWATER NOT ENCOUNTERED DURING DRILLING. HOLE DID NOT CAVE.
ABANDONMENT METHODS, MATERIALS, QUANTITIES: SHOVELED SOIL CUTTINGS

STANDARD ODOT LOG W/ SULFATES (8.5 X 11) - OH DOT.GDT - 11/13/20 16:45 - C:\USERS\KAREN\DESKTOP\SUM-77-277-224 MOD 8 COMBINED WITH 2017 ARCHIVE.GPJ

PROJECT: SUM-77-277/224 | DRILLING FIRM / OPERATOR: NEAS / J. HODGES | DRILL RIG: CME 55X | STATION / OFFSET: 474+79, 19' RT. | EXPLORATION ID B-024-1-17
TYPE: RETAINING WALL | SAMPLING FIRM / LOGGER: NEAS / J.HODGES | HAMMER: CME AUTOMATIC | ALIGNMENT: IR-77 SB
PID: 106002 SFN: | DRILLING METHOD: 3.25" HSA | CALIBRATION DATE: 11/21/17 | ELEVATION: 1055.2 (MSL) EOB: 19.3 ft. | PAGE 1 OF 1
START: 7/18/19 END: 7/18/19 | SAMPLING METHOD: SPT | ENERGY RATIO (%): 85.4 | LAT / LONG: 41.019407, -81.496846

| MATERIAL DESCRIPTION AND NOTES | ELEV. 1055.2 | DEPTHS | SPT/ RQD | $N_{60}$ | REC (%) | SAMPLE ID | HP (tsf) | GRADATION (%) GR | CS | FS | SI | CL | ATTERBERG LL | PL | PI | WC | ODOT CLASS (GI) | SO4 ppm | BACK FILL |
|---|---|---|---|---|---|---|---|---|---|---|---|---|---|---|---|---|---|---|---|
| **9.0" TOPSOIL (DRILLERS DESCRIPTION)** | 1054.4 | | | | | | | | | | | | | | | | | | |
| MEDIUM DENSE, BROWN, **COARSE AND FINE SAND**, SOME GRAVEL, TRACE SILT, TRACE CLAY, CONTAINS IRON STAINING, DAMP | 1050.7 | | 4 7 8 | 21 | 44 | SS-1 | - | - | - | - | - | - | - | - | - | 7 | A-3a (V) | - | |
| MEDIUM DENSE, BROWN AND LIGHT BROWN, **GRAVEL AND STONE FRAGMENTS WITH SAND**, LITTLE SILT, TRACE CLAY, CONTAINS IRON STAINING, DAMP TO MOIST | 1045.7 | | 3 3 5 | 11 | 67 | SS-2 | - | 46 | 21 | 15 | 13 | 5 | NP | NP | NP | 9 | A-1-b (0) | - | |
| | | | 4 8 8 | 23 | 100 | SS-3 | - | - | - | - | - | - | - | - | - | 11 | A-1-b (V) | - | |
| MEDIUM DENSE, GRAY AND ORANGISH BROWN, **GRAVEL AND STONE FRAGMENTS WITH SAND AND SILT**, LITTLE CLAY, CONTAINS IRON STAINING, DAMP | 1042.7 | | 3 9 9 | 26 | 78 | SS-4 | - | - | - | - | - | - | - | - | - | 12 | A-2-4 (V) | - | |
| **SANDSTONE**, LIGHT BROWN, MODERATELY TO HIGHLY WEATHERED, SLIGHTLY TO MODERATELY STRONG. | | TR | 50 | - | 50 | SS-5 | - | - | - | - | - | - | - | - | - | - | Rock (V) | - | |
| | | | 50 | - | 50 | SS-6 | - | - | - | - | - | - | - | - | - | - | Rock (V) | - | |
| | | | 15 50 | - | 17 | SS-7 | - | - | - | - | - | - | - | - | - | - | Rock (V) | - | |
| | 1035.9 | EOB | 50/3" | - | 67 | SS-8 | - | - | - | - | - | - | - | - | - | - | Rock (V) | - | |

NOTES: GROUNDWATER NOT ENCOUNTERED DURING DRILLING. HOLE DID NOT CAVE.
ABANDONMENT METHODS, MATERIALS, QUANTITIES: SHOVELED SOIL CUTTINGS

PROJECT: SUM-77-277/224 | DRILLING FIRM / OPERATOR: NEAS / J. HODGES | DRILL RIG: CME 55X | STATION / OFFSET: 476+43, 19' RT. | EXPLORATION ID B-024-2-17
TYPE: RETAINING WALL | SAMPLING FIRM / LOGGER: NEAS / J.HODGES | HAMMER: CME AUTOMATIC | ALIGNMENT: IR-77 SB
PID: 106002 SFN: | DRILLING METHOD: 3.25" HSA | CALIBRATION DATE: 11/21/17 | ELEVATION: 1055.9 (MSL) EOB: 15.5 ft. | PAGE 1 OF 1
START: 7/22/19 END: 7/22/19 | SAMPLING METHOD: SPT | ENERGY RATIO (%): 85.4 | LAT / LONG: 41.019842, -81.497012

| MATERIAL DESCRIPTION AND NOTES | ELEV. 1055.9 | DEPTHS | SPT/ RQD | $N_{60}$ | REC (%) | SAMPLE ID | HP (tsf) | GRADATION (%) GR | CS | FS | SI | CL | ATTERBERG LL | PL | PI | WC | ODOT CLASS (GI) | SO4 ppm | BACK FILL |
|---|---|---|---|---|---|---|---|---|---|---|---|---|---|---|---|---|---|---|---|
| **18.0" TOPSOIL (DRILLERS DESCRIPTION)** | 1054.4 | | | | | | | | | | | | | | | | | | |
| LOOSE TO MEDIUM DENSE, BROWN AND ORANGISH BROWN, **GRAVEL WITH SAND**, TRACE SILT, TRACE CLAY, CONTAINS IRON STAINING, DAMP TO MOIST | | | 3 7 8 | 21 | 100 | SS-1 | - | - | - | - | - | - | - | - | - | 4 | A-1-b (V) | - | |
| | | | 2 3 3 | 9 | 100 | SS-2 | - | - | - | - | - | - | - | - | - | 5 | A-1-b (V) | - | |
| | | | 2 2 3 | 7 | 100 | SS-3 | - | 16 | 52 | 24 | 5 | 3 | NP | NP | NP | 8 | A-1-b (0) | - | |
| | 1043.4 | | 3 5 6 | 16 | 100 | SS-4 | - | - | - | - | - | - | - | - | - | 14 | A-1-b (V) | - | |
| **SANDSTONE**, BROWN, MODERATELY WEATHERED, MODERATELY STRONG, FINE GRAINED. | | TR | 50 | - | 50 | SS-5 | - | - | - | - | - | - | - | - | - | - | Rock (V) | - | |
| | 1040.4 | EOB | 50 | - | 67 | SS-6 | - | - | - | - | - | - | - | - | - | - | Rock (V) | - | |

NOTES: GROUNDWATER NOT ENCOUNTERED DURING DRILLING. HOLE DID NOT CAVE.
ABANDONMENT METHODS, MATERIALS, QUANTITIES: SHOVELED SOIL CUTTINGS

STANDARD ODOT LOG W/ SULFATES (8.5 X 11) - OH DOT.GDT - 11/13/20 16:45 - C:\USERS\KAREN\DESKTOP\SUM-77-277-224 MOD 8 COMBINED WITH 2017 ARCHIVE.GPJ



**SUM-77/277/224**
**VARIOUS**

**STRUCTURE FOUNDATION EXPLORATION**
**RETAINING WALL 1**
**BORING LOGS B-024-1-17 & B-024-2-17**

DRAWN EB
CHECKED BPA

PROJECT: SUM-77-277/224
TYPE: RETAINING WALL
PID: 106002 SFN:
START: 7/22/19 END: 7/22/19

DRILLING FIRM / OPERATOR: NEAS / J. HODGES
SAMPLING FIRM / LOGGER: NEAS / J.HODGES
DRILLING METHOD: 3.25" HSA
SAMPLING METHOD: SPT

DRILL RIG: CME 55X
HAMMER: CME AUTOMATIC
CALIBRATION DATE: 11/21/17
ENERGY RATIO (%): 85.4

STATION / OFFSET: 477+41, 31' LT.
ALIGNMENT: IR-77 NB
ELEVATION: 1050.1 (MSL) EOB: 5.5 ft.
LAT / LONG: 41.020092, -81.497031

EXPLORATION ID B-024-3-17
PAGE 1 OF 1

| MATERIAL DESCRIPTION AND NOTES | ELEV. | DEPTHS | SPT/ RQD | $N_{60}$ | REC (%) | SAMPLE ID | HP (tsf) | GRADATION (%) GR | CS | FS | SI | CL | ATTERBERG LL | PL | PI | WC | ODOT CLASS (GI) | SO4 ppm | BACK FILL |
|---|---|---|---|---|---|---|---|---|---|---|---|---|---|---|---|---|---|---|---|
| **8.0" TOPSOIL (DRILLERS DESCRIPTION)** | 1049.4 | TR | | | | | | | | | | | | | | | | | |
| **SANDSTONE**, BROWN BECOMING GRAY, SLIGHTLY WEATHERED, MODERATELY STRONG, FINE TO COARSE GRAINED. | | 1 2 3 | 50 | - | 50 | SS-1 | - | - | - | - | - | - | - | - | - | - | Rock (V) | - | |
| | 1044.6 | EOB 4 5 | 50 | - | 50 | SS-2 | - | - | - | - | - | - | - | - | - | - | Rock (V) | - | |

NOTES: GROUNDWATER NOT ENCOUNTERED DURING DRILLING. HOLE DID NOT CAVE.
ABANDONMENT METHODS, MATERIALS, QUANTITIES: SHOVELED SOIL CUTTINGS

PROJECT: SUM-77-277/224
TYPE: RETAINING WALL
PID: 106002 SFN:
START: 7/23/19 END: 7/23/19

DRILLING FIRM / OPERATOR: NEAS / J. HODGES
SAMPLING FIRM / LOGGER: NEAS / J.HODGES
DRILLING METHOD: 3.25" HSA / NQ2
SAMPLING METHOD: SPT / NQ2

DRILL RIG: CME 55X
HAMMER: CME AUTOMATIC
CALIBRATION DATE: 11/21/17
ENERGY RATIO (%): 85.4

STATION / OFFSET: 477+73, 2' LT.
ALIGNMENT: IR-77 NB
ELEVATION: 1047.3 (MSL) EOB: 10.0 ft.
LAT / LONG: 41.020197, -81.496958

EXPLORATION ID B-024-4-17
PAGE 1 OF 1

| MATERIAL DESCRIPTION AND NOTES | ELEV. | DEPTHS | SPT/ RQD | $N_{60}$ | REC (%) | SAMPLE ID | HP (tsf) | GRADATION (%) GR | CS | FS | SI | CL | ATTERBERG LL | PL | PI | WC | ODOT CLASS (GI) | SO4 ppm | BACK FILL |
|---|---|---|---|---|---|---|---|---|---|---|---|---|---|---|---|---|---|---|---|
| **10.0" TOPSOIL (DRILLERS DESCRIPTION)** | 1046.5 | | | | | | | | | | | | | | | | | | |
| BROWN, **STONE FRAGMENTS WITH SAND**, TRACE SILT, TRACE CLAY, **(DRILLERS DESCRIPTION OF CUTTINGS)** | 1045.3 | TR 1 2 3 4 | | | | | | | | | | | | | | | | | |
| **SANDSTONE**, BROWN, HIGHLY WEATHERED, MODERATELY STRONG, VERY FINE TO MEDIUM GRAINED, **(DRILLERS DESCRIPTION OF CUTTINGS)**. | 1042.3 | 5 | | | | | | | | | | | | | | | | | |
| **SANDSTONE**, BROWN, SLIGHTLY WEATHERED, MODERATELY STRONG, VERY FINE TO MEDIUM GRAINED, THIN TO MEDIUM BEDDED, BEDDING DISCONTINUITIES: LOW ANGLE, FRACTURED TO SLIGHTLY FRACTURED, OPEN TO TIGHT, SLIGHTLY ROUGH, BLOCKY, INTACT FROM 6.4' TO 7.8', GOOD SURFACE CONDITION; RQD 42%, REC 100%. @7.4' TO 7.8'; Qu = 5734 PSI | 1038.9 | 6 7 8 | 28 | | 87 | NQ2-1 | | | | | | | | | | | CORE | | |
| C | | | | | | | | | | | | | | | | | | | |
| **COAL**, BLACK, MODERATELY TO HIGHLY WEATHERED, VERY WEAK, LAMINATED, FOSSILIFEROUS, BEDDING DISCONTINUITIES: LOW ANGLE, JOINT DISCONTINUITIES: HIGH ANGLE FROM 9.6' TO 10.0', HIGHLY FRACTURED TO FRACTURED, NARROW, SLIGHTLY ROUGH, BLOCKY/DISTURBED/SEAMY, FAIR TO POOR SURFACE CONDITION; RQD 0%, REC 63%. | 1037.3 | EOB 9 10 | | | | | | | | | | | | | | | | | |

NOTES: GROUNDWATER NOT ENCOUNTERED DURING DRILLING. HOLE DID NOT CAVE.
ABANDONMENT METHODS, MATERIALS, QUANTITIES: SHOVELED SOIL CUTTINGS

STANDARD ODOT LOG W/ SULFATES (8.5 X 11) - OH DOT.GDT - 11/13/20 16:45 - C:\USERS\KAREN\DESKTOP\SUM-77-277-224 MOD 8 COMBINED WITH 2017 ARCHIVE.GPJ

PROJECT: SUM-77-277/224
TYPE: RETAINING WALL
PID: 106002 SFN:
START: 10/17/19 END: 10/17/19

DRILLING FIRM / OPERATOR: NEAS / J. HODGES
SAMPLING FIRM / LOGGER: NEAS / J. HODGES
DRILLING METHOD: 3.25" HSA
SAMPLING METHOD: SPT

DRILL RIG: CME 55X
HAMMER: CME AUTOMATIC
CALIBRATION DATE: 11/21/17
ENERGY RATIO (%): 85.4

STATION / OFFSET: 794+14, 4' RT.
ALIGNMENT: RAMP C2
ELEVATION: 1044.1 (MSL) EOB: 20.5 ft.
LAT / LONG: 41.024168, -81.500033

EXPLORATION ID B-033-1-17
PAGE 1 OF 1

| MATERIAL DESCRIPTION AND NOTES | ELEV. 1044.1 | DEPTHS | SPT/ RQD | $N_{60}$ | REC (%) | SAMPLE ID | HP (tsf) | GRADATION (%) GR | CS | FS | SI | CL | ATTERBERG LL | PL | PI | WC | ODOT CLASS (GI) | SO4 ppm | BACK FILL |
|---|---|---|---|---|---|---|---|---|---|---|---|---|---|---|---|---|---|---|---|
| VERY STIFF, BROWN AND GRAY, **SANDY SILT**, LITTLE GRAVEL, LITTLE CLAY, CONTAINS TRACE BRICK FRAGMENTS AND TRACE ROOTS, DAMP **(FILL)** | | | 19 32 36 | 97 | 100 | SS-1 | 2.25 | 15 | 11 | 37 | 23 | 14 | 19 | 15 | 4 | 11 | A-4a (0) | - | |
| | | | 9 14 18 | 46 | 67 | SS-2 | 2.50 | - | - | - | - | - | - | - | - | 12 | A-4a (V) | - | |
| | 1037.1 | | | | | | | | | | | | | | | | | | |
| DENSE, BROWN, **COARSE AND FINE SAND**, LITTLE GRAVEL, TRACE SILT, TRACE CLAY, DAMP | | | 8 12 16 | 40 | 100 | SS-3 | - | - | - | - | - | - | - | - | - | 12 | A-3a (V) | - | |
| | 1034.6 | | | | | | | | | | | | | | | | | | |
| HARD, BROWN WITH TRACE GRAY MOTTLES, **SANDY SILT**, SOME CLAY, TRACE TO LITTLE GRAVEL, CONTAINS TRACE IRON STAINING, DAMP TO MOIST | | | 5 7 13 | 28 | 100 | SS-4 | 4.5+ | 2 | 10 | 35 | 32 | 21 | 23 | 14 | 9 | 12 | A-4a (4) | - | |
| | | | 3 9 10 | 27 | 67 | SS-5 | 4.5+ | - | - | - | - | - | - | - | - | 15 | A-4a (V) | - | |
| | | | 3 7 9 | 23 | 56 | SS-6 | 4.25 | - | - | - | - | - | - | - | - | 11 | A-4a (V) | - | |
| | 1027.1 | | | | | | | | | | | | | | | | | | |
| MEDIUM DENSE, BROWN, **COARSE AND FINE SAND**, SOME SILT, TRACE CLAY, TRACE GRAVEL, DAMP | | | 4 8 8 | 23 | 100 | SS-7 | - | - | - | - | - | - | - | - | - | 13 | A-3a (V) | - | |
| | 1025.1 | | | | | | | | | | | | | | | | | | |
| DENSE, GRAY AND BROWN, **GRAVEL AND STONE FRAGMENTS WITH SAND AND SILT**, LITTLE CLAY, MOIST | 1023.6 | ▼ 1024.1 EOB | 8 13 10 | 33 | 100 | SS-8 | - | - | - | - | - | - | - | - | - | 16 | A-2-4 (V) | - | |

NOTES: GROUNDWATER ENCOUNTERED AT 20.0' DURING DRILLING. HOLE DID NOT CAVE.
ABANDONMENT METHODS, MATERIALS, QUANTITIES: SHOVELED SOIL CUTTINGS

STANDARD ODOT LOG W/ SULFATES (8.5 X 11) - OH DOT.GDT - 11/13/20 16:45 - C:\USERS\KARENS\DESKTOP\SUM-77-277-224 MOD 8 COMBINED WITH 2017 ARCHIVE.GPJ

| | | | |
|---|---|---|---|
| 133/209 | **SUM-77/277/224 VARIOUS** | **STRUCTURE FOUNDATION EXPLORATION BRIDGE SUM-77-0927R BORING LOG B-033-1-17** | DRAWN EB / CHECKED BPA |

| | | | | | |
|---|---|---|---|---|---|
| PROJECT: SUM-77-277/224 | DRILLING FIRM / OPERATOR: NEAS / ASHBAUGH | DRILL RIG: CME 55T | STATION / OFFSET: 792+68, 3' RT. | EXPLORATION ID B-033-2-17 |
| TYPE: BRIDGE | SAMPLING FIRM / LOGGER: NEAS / ASHBAUGH | HAMMER: CME AUTOMATIC | ALIGNMENT: RAMP C2 | |
| PID: 106002 SFN: 7702649 | DRILLING METHOD: 3.25" HSA / NQ2 | CALIBRATION DATE: 11/21/17 | ELEVATION: 1047.5 (MSL) EOB: 50.3 ft. | PAGE 1 OF 1 |
| START: 10/17/19 END: 10/18/19 | SAMPLING METHOD: SPT / NQ2 | ENERGY RATIO (%): 78.2 | LAT / LONG: 41.023927, -81.499612 | |

| MATERIAL DESCRIPTION AND NOTES | ELEV. | DEPTHS | SPT/ RQD | $N_{60}$ | REC (%) | SAMPLE ID | HP (tsf) | GRADATION (%) GR | CS | FS | SI | CL | ATTERBERG LL | PL | PI | WC | ODOT CLASS (GI) | HOLE SEALED |
|---|---|---|---|---|---|---|---|---|---|---|---|---|---|---|---|---|---|---|
| **9.0" ASPHALT AND 5.0" BASE (DRILLERS DESCRIPTION)** | 1047.5 | | | | | | | | | | | | | | | | | |
| | 1046.3 | | | | | | | | | | | | | | | | | |
| MEDIUM DENSE, BROWN, **GRAVEL WITH SAND**, LITTLE SILT, TRACE CLAY, CONTAINS IRON STAINING AND TRACE ASPHALT FRAGMENTS, DAMP **(FILL)** | | | 4 7 9 | 21 | 56 | SS-1 | - | - | - | - | - | - | - | - | - | 9 | A-1-b (V) | |
| | 1043.0 | | 6 4 5 | 12 | 67 | SS-2 | - | 39 | 12 | 28 | 13 | 8 | NP | NP | NP | 8 | A-1-b (0) | |
| MEDIUM DENSE, BROWN MOTTLED WITH ORANGISH BROWN AND BLACK, **GRAVEL WITH SAND AND SILT**, LITTLE CLAY, CONTAINS IRON STAINING, DAMP | 1041.5 | | 9 12 10 | 29 | 89 | SS-3 | - | 23 | 7 | 41 | 16 | 13 | NP | NP | NP | 11 | A-2-4 (0) | |
| DENSE, BROWN AND GRAY, **GRAVEL AND STONE FRAGMENTS WITH SAND**, LITTLE SILT, TRACE CLAY, CONTAINS IRON STAINING, DAMP | | | 10 11 13 | 31 | 83 | SS-4 | - | - | - | - | - | - | - | - | - | 8 | A-1-b (V) | |
| | 1035.5 | | 9 12 16 | 36 | 100 | SS-5 | - | - | - | - | - | - | - | - | - | 8 | A-1-b (V) | |
| DENSE, BROWN, **COARSE AND FINE SAND**, SOME SILT, LITTLE GRAVEL, TRACE CLAY, DAMP | 1033.0 | | 10 10 14 | 31 | 100 | SS-6 | - | - | - | - | - | - | - | - | - | 8 | A-3a (V) | |
| MEDIUM DENSE TO DENSE, BROWN, **SANDY SILT**, LITTLE GRAVEL, LITTLE CLAY. CONTAINS IRON STAINING, DAMP TO MOIST | | | 10 12 13 | 33 | 100 | SS-7 | - | - | - | - | - | - | - | - | - | 11 | A-4a (V) | |
| | | | 11 13 15 | 36 | 100 | SS-8 | - | 17 | 8 | 33 | 26 | 16 | NP | NP | NP | 11 | A-4a (1) | |
| | 1025.5 | | 7 4 5 | 12 | 100 | SS-9 | - | - | - | - | - | - | - | - | - | 14 | A-4a (V) | |
| VERY STIFF, GRAY MOTTLED WITH ORANGISH BROWN, **SILTY CLAY**, "AND" SAND, TRACE GRAVEL, CONTAINS IRON STAINING, MOIST | 1023.0 | | 5 7 7 | 18 | 100 | SS-10 | 2.50 | 3 | 7 | 30 | 32 | 28 | 36 | 17 | 19 | 20 | A-6b (9) | |
| VERY STIFF, BROWN, **SANDY SILT**, LITTLE GRAVEL, LITTLE CLAY, MOIST | 1020.5 | | 6 7 13 | 26 | 100 | SS-11 | 3.25 | - | - | - | - | - | - | - | - | 15 | A-4a (V) | |
| MEDIUM DENSE, GRAY, **GRAVEL AND STONE FRAGMENTS WITH SAND AND SILT**, TRACE TO LITTLE CLAY, DAMP | | | 8 10 13 | 30 | 100 | SS-12 | - | - | - | - | - | - | - | - | - | 14 | A-2-4 (V) | |
| | | | 4 7 7 | 18 | 56 | SS-13 | - | 30 | 14 | 25 | 21 | 10 | 19 | 16 | 3 | 13 | A-2-4 (0) | |
| | | | 6 9 12 | 27 | 56 | SS-14 | - | - | - | - | - | - | - | - | - | 10 | A-2-4 (V) | |
| | 1007.2 | TR | 50/4" | - | 100 | SS-15 | - | - | - | - | - | - | - | - | - | 10 | A-2-4 (V) | |
| @40.0' TO 40.3'; SS-15 BECOMES VERY DENSE, CONTAINS A RELIC SHALE ROCK STRUCTURE | | | | | | | | | | | | | | | | | | |
| **INTERBEDDED SHALE (59%) AND SANDSTONE (41%)**, BEDDING DISCONTINUITIES: LOW ANGLE, JOINT DISCONTINUITIES: HIGH ANGLE FROM 40.3' - 41.3', 42.7' - 44.8', HIGHLY FRACTURED TO FRACTURED, OPEN TO NARROW, SLIGHTLY ROUGH, BLOCKY/DISTURBED/SEAMY TO DISINTIGRATED, FAIR TO POOR SURFACE CONDITION, RQD 25%, REC. 88%; **SHALE**, DARK GRAY, MODERATELY TO HIGHLY WEATHERED, WEAK TO SLIGHTLY STRONG, LAMINATED, FISSILE; **SANDSTONE**, GRAY, SLIGHTLY WEATHERED, MODERATELY STRONG TO STRONG, VERY FINE TO FINE GRAINED, THIN BEDDED, FRACTURED TO SLIGHTLY FRACTURED, SLIGHTLY ROUGH, INTACT, GOOD SURFACE CONDITION. @46.2' TO 46.6'; Qu = 4062 PSI (SANDSTONE) | | | 25 | | 88 | NQ2-1 | | | | | | | | | | | CORE | |
| | 997.2 | EOB | | | | | | | | | | | | | | | | |

NOTES: GROUNDWATER NOT ENCOUNTERED DURING DRILLING. HOLE DID NOT CAVE.

ABANDONMENT METHODS, MATERIALS, QUANTITIES: PLACED 0.5 BAG ASPHALT PATCH; PUMPED 70 GAL. BENTONITE GROUT

STANDARD ODOT SOIL BORING LOG (11 X 17) - OH DOT.GDT - 11/19/20 18:33 - C:\USERS\KARENS\DESKTOP\SUM-77-277-224 MOD 8 COMBINED WITH 2017 ARCHIVE.GPJ

| | | | |
|---|---|---|---|
| 134/209 | **SUM-77/277/224 VARIOUS** | **STRUCTURE FOUNDATION EXPLORATION BRIDGE SUM-77-0927R BORING LOG B-033-2-17** | DRAWN EB / CHECKED BPA |

| | | | | | |
|---|---|---|---|---|---|
| PROJECT: SUM-77-277/224 | DRILLING FIRM / OPERATOR: NEAS / J. HODGES | DRILL RIG: CME 55X | STATION / OFFSET: 791+83, 23' RT. | EXPLORATION ID B-033-3-17 |
| TYPE: BRIDGE | SAMPLING FIRM / LOGGER: NEAS / J. HODGES | HAMMER: CME AUTOMATIC | ALIGNMENT: RAMP C2 | |
| PID: 95831 SFN: 7702649 | DRILLING METHOD: 3.25" HSA / NQ2 | CALIBRATION DATE: 12/5/19 | ELEVATION: 1031.2 (MSL) EOB: 55.0 ft. | PAGE 1 OF 1 |
| START: 3/19/20 END: 3/19/20 | SAMPLING METHOD: SPT / NQ2 | ENERGY RATIO (%): 81.9 | LAT / LONG: 41.023852, -81.499317 | |

| MATERIAL DESCRIPTION AND NOTES | ELEV. | DEPTHS | SPT/ RQD | $N_{60}$ | REC (%) | SAMPLE ID | HP (tsf) | GRADATION (%) GR | CS | FS | SI | CL | ATTERBERG LL | PL | PI | WC | ODOT CLASS (GI) | HOLE SEALED |
|---|---|---|---|---|---|---|---|---|---|---|---|---|---|---|---|---|---|---|
| STIFF, BROWN, **SANDY SILT**, LITTLE CLAY, LITTLE GRAVEL, DAMP | 1031.2 | | 2 3 4 | 10 | 100 | SS-1 | 1.50 | 11 | 11 | 23 | 36 | 19 | 25 | 17 | 8 | 17 | A-4a (4) | |
| MEDIUM DENSE TO DENSE, BROWN, **STONE FRAGMENTS WITH SAND** TRACE TO LITTLE SILT, TRACE CLAY, STONE FRAGMENTS ARE FRIABLE SANDSTONE, WET TO MOIST | 1028.2 | | 12 13 7 | 27 | 17 | SS-2 | - | - | - | - | - | - | - | - | - | 21 | A-1-b (V) | |
| | | | 5 6 7 | 18 | 67 | SS-3 | - | - | - | - | - | - | - | - | - | 17 | A-1-b (V) | |
| | | | 6 11 22 | 45 | 100 | SS-4 | - | - | - | - | - | - | - | - | - | 18 | A-1-b (V) | |
| MEDIUM DENSE, BROWN AND GRAY, **SANDY SILT**, LITTLE CLAY, TRACE GRAVEL, DAMP | 1020.7 | | 5 8 11 | 26 | 50 | SS-5 | - | - | - | - | - | - | - | - | - | 16 | A-4a (V) | |
| | | | 5 12 8 | 27 | 100 | SS-6 | - | 4 | 6 | 49 | 29 | 12 | NP | NP | NP | 14 | A-4a (1) | |
| | | | 5 8 10 | 25 | 100 | SS-7 | - | - | - | - | - | - | - | - | - | 16 | A-4a (V) | |
| HARD, BROWN MOTTLED WITH GRAY AND ORANGISH BROWN, **SILT**, LITTLE SAND, LITTLE CLAY, TRACE GRAVEL, CONTAINS IRON STAINING, DAMP | 1013.2 | | 5 5 5 | 14 | 100 | SS-8 | 4.50 | 3 | 7 | 13 | 58 | 19 | 27 | 22 | 5 | 20 | A-4b (8) | |
| MEDIUM DENSE TO VERY DENSE, BROWN AND GRAY, **SANDY SILT**, LITTLE TO SOME GRAVEL AND STONE FRAGMENTS, TRACE TO LITTLE CLAY, DAMP | 1010.7 | | 3 8 17 | 34 | 67 | SS-9 | - | 14 | 11 | 33 | 36 | 6 | NP | NP | NP | 15 | A-4a (1) | |
| | | W 1007.7 | 9 6 4 | 14 | 22 | SS-10 | - | - | - | - | - | - | - | - | - | 15 | A-4a (V) | |
| | | | 3 5 13 | 25 | 33 | SS-11 | - | - | - | - | - | - | - | - | - | 15 | A-4a (V) | |
| @28.5'; BECOMES GRAY | | | 7 9 17 | 35 | 56 | SS-12 | - | - | - | - | - | - | - | - | - | 14 | A-4a (V) | |
| | | | 7 13 19 | 44 | 100 | SS-13 | - | - | - | - | - | - | - | - | - | 11 | A-4a (V) | |
| | 996.7 | | 15 50 | - | 100 | SS-14 | - | - | - | - | - | - | - | - | - | 10 | A-4a (V) | |
| VERY DENSE, GRAY, **STONE FRAGMENTS WITH SAND AND SILT**, LITTLE CLAY, STONE FRAGMENTS ARE SANDSTONE, MOIST | 994.7 | TR | 50 | - | 50 | SS-15 | - | - | - | - | - | - | - | - | - | 16 | A-2-4 (V) | |
| **INTERBEDDED SANDSTONE (69%) AND SHALE (31%)** THICK BEDDED FROM 47.1' - 49.7' AND 53.0' - 55.0', FRIABLE, SILTY FROM 36.5' - 45.0', BEDDING DISCONTINUITIES: LOW ANGLE, JOINT DISCONTINUITIES: HIGH ANGLE FROM 36.8' - 37.4', 37.8', 39.5', 40.2' - 40.8' AND 41.3', MODERATELY FRACTURED TO SLIGHTLY FRACTURED, HIGHLY FRACTURED TO MODERATELY FRACTURED FROM 36.5' - 41.6', OPEN TO NARROW, SLIGHTLY ROUGH, DISINTIGRATED FROM 36.5' - 41.6', INTACT FROM 41.6' - 50.4', BLOCKY/DISTURBED/SEAMY FROM 50.4' - 53.0', INTACT FROM 53.0' - 55.0', FAIR TO GOOD SURFACE CONDITION, RQD 58.8%, REC. 92.8%; **SANDSTONE**, GRAY TO LIGHT GRAY, SLIGHTLY TO MODERATELY WEATHERED, MODERATELY STRONG, VERY FINE TO MEDIUM GRAINED, VERY THIN TO THIN BEDDED; **SHALE**, GRAY TO DARK GRAY, HIGHLY WEATHERED, VERY WEAK, LAMINATED, FISSILE. @37.4' TO 37.8'; Qu = 4548 PSI (SANDSTONE) @42.3' TO 42.7'; Qu = 77 PSI (SHALE) | | | 13 | | 62 | NQ2-1 | | | | | | | | | | | CORE | |
| | | | 72 | | 100 | NQ2-2 | | | | | | | | | | | CORE | |
| | | | 77 | | 100 | NQ2-3 | | | | | | | | | | | CORE | |
| | 976.2 | EOB | 60 | | 100 | NQ2-4 | | | | | | | | | | | CORE | |

NOTES: GROUNDWATER ENCOUNTERED AT 23.5' DURING DRILLING. HOLE DID NOT CAVE.

ABANDONMENT METHODS, MATERIALS, QUANTITIES: PUMPED 150 GAL. BENTONITE GROUT

STANDARD ODOT SOIL BORING LOG (11 X 17) - OH DOT.GDT - 5/8/20 16:31 - X:\ACTIVE PROJECTS\ACTIVE SOIL PROJECTS\SUM-77-277-224 (FORMERLY SUM-76-10.95)\GINT FILES\PHASE 2\SUM-77-277-224 PHASE 2.GPJ

| NO. | DATE | REVISIONS DESCRIPTION |
|---|---|---|
| A | 04/27/21 | REVISED BORING LOG |

135/209

**SUM-77/277/224**
**VARIOUS**

**STRUCTURE FOUNDATION EXPLORATION**
**BRIDGE SUM-77-0927R**
**BORING LOG B-033-3-17**

DRAWN EB
CHECKED BPA

| | | | |
|---|---|---|---|
| PROJECT: SUM-77-277/224 | DRILLING FIRM / OPERATOR: NEAS / J. HODGES | DRILL RIG: CME 55X | STATION / OFFSET: 790+47, 17' RT. |
| TYPE: BRIDGE | SAMPLING FIRM / LOGGER: NEAS / J. HODGES | HAMMER: CME AUTOMATIC | ALIGNMENT: RAMP C2 |
| PID: 95831 SFN: 7702649 | DRILLING METHOD: 3.25" HSA / NQ2 | CALIBRATION DATE: 12/5/19 | ELEVATION: 1032.5 (MSL) EOB: 55.5 ft. |
| START: 4/6/20 END: 4/6/20 | SAMPLING METHOD: SPT / NQ2 | ENERGY RATIO (%): 81.9 | LAT / LONG: 41.023721, -81.498886 |

EXPLORATION ID B-033-4-17

PAGE 1 OF 1

| MATERIAL DESCRIPTION AND NOTES | ELEV. | DEPTHS | SPT/ RQD | $N_{60}$ | REC (%) | SAMPLE ID | HP (tsf) | GRADATION (%) GR | CS | FS | SI | CL | ATTERBERG LL | PL | PI | WC | ODOT CLASS (GI) | HOLE SEALED |
|---|---|---|---|---|---|---|---|---|---|---|---|---|---|---|---|---|---|---|
| MEDIUM STIFF TO VERY STIFF, BROWN AND GRAY, **SANDY SILT**, LITTLE GRAVEL, LITTLE CLAY, CONTAINS IRON STAINING, DAMP | 1032.5 | | 1 3 4 | 10 | 22 | SS-1 | 2.50 | - | - | - | - | - | - | - | - | 15 | A-4a (V) | |
| | 1026.5 | | 2 5 8 | 18 | 100 | SS-2A | 1.00 | 16 | 10 | 33 | 27 | 14 | 21 | 16 | 5 | 14 | A-4a (1) | |
| MEDIUM DENSE TO DENSE, BROWN, **STONE FRAGMENTS WITH SAND** TRACE TO LITTLE SILT, TRACE CLAY, STONE FRAGMENTS ARE FRIABLE SANDSTONE, CONTAINS IRON STAINING, DAMP | | | | | | SS-2B | - | - | - | - | - | - | - | - | - | 10 | A-1-b (V) | |
| | 1023.0 | | 5 17 9 | 35 | 100 | SS-3 | - | - | - | - | - | - | - | - | - | 8 | A-1-b (V) | |
| LOOSE TO DENSE, BROWN, **STONE FRAGMENTS** SOME SAND, TRACE SILT, TRACE CLAY, STONE FRAGMENTS ARE FRIABLE SANDSTONE, CONTAINS IRON STAINING, MOIST TO WET | | ▼1021.5 | 4 9 16 | 34 | 100 | SS-4 | - | - | - | - | - | - | - | - | - | 15 | A-1-a (V) | |
| | | | 4 4 4 | 11 | 28 | SS-5 | - | - | - | - | - | - | - | - | - | 19 | A-1-a (V) | |
| | 1015.5 | | 5 3 4 | 10 | 6 | SS-6 | - | - | - | - | - | - | - | - | - | 13 | A-1-a (V) | |
| VERY STIFF, BROWN MOTTLED WITH GRAY AND ORANGISH BROWN, **SANDY SILT**, LITTLE CLAY, TRACE GRAVEL, CONTAINS IRON STAINING, MOIST | 1013.0 | | 2 2 5 | 10 | 100 | SS-7 | 3.75 | 7 | 12 | 28 | 34 | 19 | 25 | 15 | 10 | 18 | A-4a (4) | |
| MEDIUM DENSE, GRAY AND BROWN, **SILT**, SOME SAND, LITTLE CLAY, TRACE GRAVEL, MOIST | 1010.5 | | 2 6 6 | 16 | 100 | SS-8 | - | 4 | 7 | 18 | 55 | 16 | NP | NP | NP | 17 | A-4b (7) | |
| VERY STIFF TO HARD, GRAY, **SILT AND CLAY**, SOME SAND, TRACE TO LITTLE GRAVEL AND STONE FRAGMENTS, DAMP | | | 4 6 7 | 18 | 100 | SS-9 | 4.00 | - | - | - | - | - | - | - | - | 12 | A-6a (V) | |
| | | | 4 6 7 | 18 | 100 | SS-10 | 4.25 | 14 | 15 | 14 | 36 | 21 | 29 | 18 | 11 | 13 | A-6a (5) | |
| | | | 5 8 16 | 33 | 100 | SS-11 | 4.50 | - | - | - | - | - | - | - | - | 11 | A-6a (V) | |
| | 1000.5 | | 5 11 17 | 38 | 100 | SS-12 | 4.50 | - | - | - | - | - | - | - | - | 10 | A-6a (V) | |
| VERY DENSE, GRAY, **STONE FRAGMENTS WITH SAND AND SILT**, LITTLE CLAY, STONE FRAGMENTS ARE SILTY SHALE, DAMP | 998.5 | TR | 6 26 38 | 87 | 100 | SS-13 | - | - | - | - | - | - | - | - | - | 9 | A-2-4 (V) | |
| **SHALE**, GRAY, HIGHLY WEATHERED, VERY WEAK TO WEAK, SILTY. | 997.0 | | 50 | - | 33 | SS-14 | - | - | - | - | - | - | - | - | - | 6 | Rock (V) | |
| **SHALE**, GRAY, MODERATELY WEATHERED, VERY WEAK TO WEAK, THINLY LAMINATED TO VERY THIN, SILTY, FISSILE, BEDDING DISCONTINUITIES: LOW ANGLE, JOINT DISCONTINUITIES: HIGH ANGLE FROM 37.8' - 38.0' AND 38.2' - 38.6', HIGHLY FRACTURED TO MODERATELY FRACTURED, NARROW TO TIGHT, SLIGHTLY ROUGH, BLOCKY, FAIR SURFACE CONDITION; RQD 54.8%, REC 100%. @39.4' TO 39.8'; Qu = 230 PSI | 991.6 | | 59 | | 100 | NQ2-1 | | | | | | | | | | | CORE | |
| **INTERBEDDED SANDSTONE (76%) AND SHALE (24%)** BEDDING DISCONTINUITIES: LOW ANGLE FROM 40.9' - 48.2', BEDDING DISCONTINUITIES: HIGH ANGLE FROM 48.2' - 55.2', JOINT DISCONTINUITIES: HIGH ANGLE FROM 42.8' - 44.3', HIGHLY FRACTURED TO MODERATELY FRACTURED FROM 40.9' - 51.5', FRACTURED TO SLIGHTLY FRACTURED FROM 51.5' - 55.5', NARROW TO TIGHT, SLIGHTLY ROUGH, BLOCKY, GOOD SURFACE CONDITION, RQD 42%, REC. 98.2%; **SANDSTONE**, LIGHT GRAY AND ORANGISH BROWN, SLIGHTLY WEATHERED, STRONG, FINE TO MEDIUM GRAINED, MEDIUM TO LAMINATED BEDDING, FRIABLE; **SHALE**, GRAY, MODERATELY WEATHERED, VERY WEAK TO WEAK, FISSILE. @44.9' TO 45.3'; Qu = 9236 PSI (SANDSTONE) | | | 20 | | 95 | NQ2-2 | | | | | | | | | | | CORE | |
| | | | 35 | | 100 | NQ2-3 | | | | | | | | | | | CORE | |
| | 977.0 | EOB | 68 | | 100 | NQ2-4 | | | | | | | | | | | CORE | |

NOTES: GROUNDWATER ENCOUNTERED AT 11.0' DURING DRILLING. HOLE DID NOT CAVE. NO WATER CIRCULATION DURING CORING OPERATIONS.

ABANDONMENT METHODS, MATERIALS, QUANTITIES: PUMPED 85 GAL. BENTONITE GROUT

STANDARD ODOT SOIL BORING LOG (11 X 17) - OH DOT.GDT - 5/8/20 16:31 - X:\ACTIVE PROJECTS\ACTIVE SOIL PROJECTS\SUM-77-277-224 (FORMERLY SUM-76-10.95)\GINT FILES\PHASE 2\SUM-77-277-224 PHASE 2.GPJ

| NO. | DATE | REVISIONS DESCRIPTION |
|---|---|---|
| A | 04/27/21 | REVISED BORING LOG |

136/209

**SUM-77/277/224**
**VARIOUS**

**STRUCTURE FOUNDATION EXPLORATION**
**BRIDGE SUM-77-0927R**
**BORING LOG B-033-4-17**

DRAWN EB
CHECKED BPA

| | | | | |
|---|---|---|---|---|
| PROJECT: SUM-77-277/224 | DRILLING FIRM / OPERATOR: NEAS / ASHBAUGH | DRILL RIG: CME 55T | STATION / OFFSET: 789+27, 18' LT. | EXPLORATION ID B-033-5-17 |
| TYPE: BRIDGE | SAMPLING FIRM / LOGGER: NEAS / ASHBAUGH | HAMMER: CME AUTOMATIC | ALIGNMENT: RAMP C2 | |
| PID: 106002 SFN: 7702649 | DRILLING METHOD: 3.25" HSA / NQ2 | CALIBRATION DATE: 11/21/17 | ELEVATION: 1061.6 (MSL) EOB: 40.0 ft. | PAGE 1 OF 1 |
| START: 10/17/19 END: 10/22/19 | SAMPLING METHOD: SPT / NQ2 | ENERGY RATIO (%): 78.2 | LAT / LONG: 41.023629, -81.498450 | |

| MATERIAL DESCRIPTION AND NOTES | ELEV. | DEPTHS | SPT/ RQD | $N_{60}$ | REC (%) | SAMPLE ID | HP (tsf) | GRADATION (%) GR | CS | FS | SI | CL | ATTERBERG LL | PL | PI | WC | ODOT CLASS (GI) | HOLE SEALED |
|---|---|---|---|---|---|---|---|---|---|---|---|---|---|---|---|---|---|---|
| **9.0" ASPHALT AND 5.0" BASE (DRILLERS DESCRIPTION)** | 1061.6 | | | | | | | | | | | | | | | | | |
| VERY STIFF TO HARD, BROWN BECOMING BROWN AND GRAY, **SANDY SILT**, LITTLE TO SOME CLAY, TRACE TO LITTLE GRAVEL, DAMP | 1060.4 | | 6 5 5 | 13 | 78 | SS-1 | 4.5+ | 9 | 7 | 26 | 34 | 24 | 24 | 16 | 8 | 13 | A-4a (5) | |
| | | | 5 4 5 | 12 | 89 | SS-2 | 4.50 | 14 | 6 | 24 | 36 | 20 | 23 | 16 | 7 | 14 | A-4a (4) | |
| | | | 5 5 5 | 13 | 67 | SS-3 | 4.50 | - | - | - | - | - | - | - | - | 13 | A-4a (V) | |
| @6.0' TO 7.5'; SS-4 BECOMES GRAY, SOME GRAVEL AND STONE FRAGMENTS | | | 5 6 6 | 16 | 78 | SS-4 | 2.25 | - | - | - | - | - | - | - | - | 13 | A-4a (V) | |
| | | | 5 7 5 | 16 | 72 | SS-5 | 3.50 | 15 | 6 | 28 | 30 | 21 | 23 | 15 | 8 | 13 | A-4a (3) | |
| | | | 8 8 10 | 23 | 83 | SS-6 | 4.5+ | - | - | - | - | - | - | - | - | 11 | A-4a (V) | |
| | | | 5 6 8 | 18 | 89 | SS-7 | 3.00 | 14 | 8 | 23 | 33 | 22 | 25 | 16 | 9 | 13 | A-4a (4) | |
| @17.5' TO 19.0'; SS-8 BECOMES GRAY MOTTLED WITH BLACK, CONTAINS TRACE COAL FRAGMENTS | | | 6 7 10 | 22 | 78 | SS-8 | 3.25 | - | - | - | - | - | - | - | - | 14 | A-4a (V) | |
| MEDIUM DENSE, GRAY AND BLACK, **GRAVEL AND STONE FRAGMENTS WITH SAND AND SILT**, LITTLE CLAY, CONTAINS TRACE COAL FRAGMENTS, DAMP | 1042.1 | | 5 7 7 | 18 | 33 | SS-9 | - | - | - | - | - | - | - | - | - | 12 | A-2-4 (V) | |
| HARD, ORANGISH BROWN MOTTLED WITH GRAY, **SILT AND CLAY**, SOME SAND, TRACE GRAVEL, CONTAINS IRON STAINING AND ROOTS, DAMP | 1039.6 | | 6 7 10 | 22 | 78 | SS-10 | 4.5+ | 5 | 10 | 25 | 35 | 25 | 28 | 17 | 11 | 14 | A-6a (5) | |
| | | | 8 10 10 | 26 | 89 | SS-11 | 4.5+ | - | - | - | - | - | - | - | - | 12 | A-6a (V) | |
| **SHALE**, DARK GRAY, HIGHLY WEATHERED, SLIGHTLY STRONG. | 1034.6 | TR | 60/2" | - | 100 | SS-12 | - | - | - | - | - | - | - | - | - | 15 | Rock (V) | |
| **INTERBEDDED SANDSTONE (60%) AND SHALE (40%)**, BEDDING DISCONTINUITIES: LOW ANGLE, HIGHLY FRACTURED TO MODERATELY FRACTURED, MODERATELY FRACTURED TO SLIGHTLY FRACTURED FROM 30.3' - 35.2', OPEN TO NARROW, SLIGHTLY ROUGH, INTACT TO BLOCKY, DISINTIGRATED FROM 30.0' - 30.3', GOOD SURFACE CONDITION, RQD 54%, REC. 96%;<br>**SANDSTONE**, GRAY, SLIGHTLY WEATHERED, MODERATELY STRONG TO STRONG, VERY FINE TO FINE GRAINED, THIN TO MEDIUM BEDDED;<br>**SHALE**, DARK GRAY, MODERATELY WEATHERED, EXTREMELY WEAK TO WEAK, LAMINATED, FISSILE.<br>@30.4' TO 30.8'; Qu = 7991 PSI (SANDSTONE)<br>@34.8' TO 35.2'; Qu = 38 PSI (SHALE) | 1031.6 | | 54 | | 96 | NQ2-1 | | | | | | | | | | | CORE | |
| | 1021.6 | EOB | | | | | | | | | | | | | | | | |

NOTES: GROUNDWATER NOT ENCOUNTERED DURING DRILLING. HOLE DID NOT CAVE.

ABANDONMENT METHODS, MATERIALS, QUANTITIES: PLACED 0.5 BAG ASPHALT PATCH; PUMPED 45 GAL. BENTONITE GROUT; POURED 1 BAG HOLE PLUG

STANDARD ODOT SOIL BORING LOG (11 X 17) - OH DOT.GDT - 11/19/20 18:33 - C:\USERS\KARENS\DESKTOP\SUM-77-277-224 MOD 8 COMBINED WITH 2017 ARCHIVE.GPJ

| | | | |
|---|---|---|---|
| 137/209 | **SUM-77/277/224 VARIOUS** | **STRUCTURE FOUNDATION EXPLORATION BRIDGE SUM-77-0927R BORING LOG B-033-5-17** | DRAWN EB / CHECKED BPA |

PROJECT: SUM-77-277/224
TYPE: NOISE WALL
PID: 106002 SFN:
START: 3/17/20 END: 3/17/20

DRILLING FIRM / OPERATOR: NEAS / J. HODGES
SAMPLING FIRM / LOGGER: NEAS / J. HODGES
DRILLING METHOD: 3.25" HSA
SAMPLING METHOD: SPT

DRILL RIG: CME 55X
HAMMER: CME AUTOMATIC
CALIBRATION DATE: 12/5/19
ENERGY RATIO (%): 81.9

STATION / OFFSET: 10+33, 13' RT.
ALIGNMENT: NOISE WALL E
ELEVATION: 1024.5 (MSL) EOB: 25.0 ft.
LAT / LONG: 41.010739, -81.495015

EXPLORATION ID B-055-0-17
PAGE 1 OF 1

| MATERIAL DESCRIPTION AND NOTES | ELEV. | DEPTHS | SPT/ RQD | $N_{60}$ | REC (%) | SAMPLE ID | HP (tsf) | GRADATION (%) GR | CS | FS | SI | CL | ATTERBERG LL | PL | PI | WC | ODOT CLASS (GI) | SO4 ppm | BACK FILL |
|---|---|---|---|---|---|---|---|---|---|---|---|---|---|---|---|---|---|---|---|
| **6.0" ASPHALT AND 6.0" BASE (DRILLERS DESCRIPTION)** | 1024.5 | | | | | | | | | | | | | | | | | | |
| MEDIUM DENSE, BROWN, **COARSE AND FINE SAND**, SOME GRAVEL, LITTLE SILT, TRACE CLAY, CONTAINS IRON STAINING, DAMP | 1023.5 | | 3 5 7 | 16 | 100 | SS-1 | - | - | - | - | - | - | - | - | - | 13 | A-3a (V) | - | |
| HARD, BROWN, **SANDY SILT**, LITTLE CLAY, TRACE GRAVEL, CONTAINS IRON STAINING, DAMP | 1021.5 | | 4 9 7 | 22 | 67 | SS-2 | 4.50 | 6 | 13 | 30 | 37 | 14 | 20 | 14 | 6 | 12 | A-4a (3) | - | |
| | | | 4 8 9 | 23 | 33 | SS-3 | 4.50 | - | - | - | - | - | - | - | - | 13 | A-4a (V) | - | |
| DENSE, BROWN, **GRAVEL WITH SAND**, LITTLE SILT, TRACE CLAY, CONTAINS IRON STAINING, DAMP | 1016.5 | | 3 12 13 | 34 | 22 | SS-4 | - | - | - | - | - | - | - | - | - | 9 | A-1-b (V) | - | |
| MEDIUM DENSE, DARK GRAYISH BROWN AND BROWN, **GRAVEL WITH SAND AND SILT**, LITTLE CLAY, CONTAINS IRON STAINING, DAMP | 1014.0 | | 4 5 8 | 18 | 33 | SS-5 | - | - | - | - | - | - | - | - | - | 14 | A-2-4 (V) | - | |
| | | | 2 7 6 | 18 | 100 | SS-6 | - | 24 | 18 | 26 | 20 | 12 | NP | NP | NP | 12 | A-2-4 (0) | - | |
| | 1006.5 | | 5 7 9 | 22 | 56 | SS-7 | - | - | - | - | - | - | - | - | - | 10 | A-2-4 (V) | - | |
| MEDIUM DENSE TO DENSE, BROWN, **STONE FRAGMENTS WITH SAND**, LITTLE SILT, TRACE CLAY, CONTAINS IRON STAINING, DAMP | | | 8 12 13 | 34 | 33 | SS-8 | - | - | - | - | - | - | - | - | - | 7 | A-1-b (V) | - | |
| | 1001.5 | | 8 10 8 | 25 | 33 | SS-9 | - | - | - | - | - | - | - | - | - | 9 | A-1-b (V) | - | |
| HARD, BROWN, **SANDY SILT**, LITTLE CLAY, TRACE GRAVEL, CONTAINS IRON STAINING, DAMP | 999.5 | EOB | 6 8 8 | 22 | 39 | SS-10 | 4.50 | 2 | 6 | 26 | 46 | 20 | 21 | 15 | 6 | 14 | A-4a (6) | - | |

NOTES: GROUNDWATER NOT ENCOUNTERED DURING DRILLING. HOLE DID NOT CAVE.
ABANDONMENT METHODS, MATERIALS, QUANTITIES: PLACED 0.5 BAG ASPHALT PATCH; SHOVELED SOIL CUTTINGS

PROJECT: SUM-77-277/224
TYPE: NOISE WALL
PID: 106002 SFN:
START: 3/17/20 END: 3/17/20

DRILLING FIRM / OPERATOR: NEAS / J. HODGES
SAMPLING FIRM / LOGGER: NEAS / J. HODGES
DRILLING METHOD: 3.25" HSA
SAMPLING METHOD: SPT

DRILL RIG: CME 55X
HAMMER: CME AUTOMATIC
CALIBRATION DATE: 12/5/19
ENERGY RATIO (%): 81.9

STATION / OFFSET: 12+40, 14' RT.
ALIGNMENT: NOISE WALL E
ELEVATION: 1026.8 (MSL) EOB: 25.0 ft.
LAT / LONG: 41.011300, -81.495128

EXPLORATION ID B-056-0-17
PAGE 1 OF 1

| MATERIAL DESCRIPTION AND NOTES | ELEV. | DEPTHS | SPT/ RQD | $N_{60}$ | REC (%) | SAMPLE ID | HP (tsf) | GRADATION (%) GR | CS | FS | SI | CL | ATTERBERG LL | PL | PI | WC | ODOT CLASS (GI) | SO4 ppm | BACK FILL |
|---|---|---|---|---|---|---|---|---|---|---|---|---|---|---|---|---|---|---|---|
| MEDIUM STIFF TO STIFF, BROWN AND DARK GRAY, **SILT AND CLAY**, "AND" SAND, TRACE GRAVEL, SS-1 CONTAINS ASPHALT FRAGMENTS, DAMP | 1026.8 | | 2 4 8 | 16 | 22 | SS-1 | 1.00 | - | - | - | - | - | - | - | - | 11 | A-6a (V) | - | |
| | 1022.3 | | 3 8 8 | 22 | 67 | SS-2A | 1.25 | 10 | 12 | 28 | 32 | 18 | 27 | 16 | 11 | 15 | A-6a (3) | - | |
| MEDIUM DENSE, ORANGISH BROWN, **COARSE AND FINE SAND**, LITTLE GRAVEL AND STONE FRAGMENTS, TRACE SILT, TRACE CLAY, CONTAINS IRON STAINING, MOIST | 1021.3 | | | | | SS-2B | - | - | - | - | - | - | - | - | - | 12 | A-3a (V) | - | |
| HARD, BROWN, **SANDY SILT**, LITTLE TO SOME GRAVEL AND STONE FRAGMENTS, LITTLE CLAY, CONTAINS IRON STAINING, DAMP | | | 3 7 8 | 20 | 100 | SS-3 | 4.50 | - | - | - | - | - | - | - | - | 11 | A-4a (V) | - | |
| | | | 3 8 8 | 22 | 33 | SS-4 | 4.25 | - | - | - | - | - | - | - | - | 12 | A-4a (V) | - | |
| | | | 4 5 6 | 15 | 100 | SS-5 | 4.50 | 11 | 12 | 31 | 30 | 16 | 21 | 15 | 6 | 12 | A-4a (2) | - | |
| | | | 5 5 12 | 23 | 100 | SS-6 | 4.50 | - | - | - | - | - | - | - | - | 14 | A-4a (V) | - | |
| | 1008.8 | | 4 6 8 | 19 | 56 | SS-7 | 4.50 | - | - | - | - | - | - | - | - | 12 | A-4a (V) | - | |
| MEDIUM DENSE, BROWN AND ORANGISH BROWN, **COARSE AND FINE SAND**, SOME GRAVEL AND STONE FRAGMENTS, LITTLE SILT, TRACE CLAY, CONTAINS IRON STAINING, DAMP | | | 7 6 8 | 19 | 100 | SS-8 | - | - | - | - | - | - | - | - | - | 11 | A-3a (V) | - | |
| | | | 7 9 6 | 20 | 67 | SS-9 | - | - | - | - | - | - | - | - | - | 11 | A-3a (V) | - | |
| | 1001.8 | EOB | 4 7 9 | 22 | 50 | SS-10 | - | - | - | - | - | - | - | - | - | 10 | A-3a (V) | - | |

NOTES: GROUNDWATER NOT ENCOUNTERED DURING DRILLING. HOLE DID NOT CAVE.
ABANDONMENT METHODS, MATERIALS, QUANTITIES: PLACED 0.5 BAG ASPHALT PATCH; SHOVELED SOIL CUTTINGS

STANDARD ODOT LOG W/ SULFATES (8.5 X 11) - OH DOT.GDT - 11/13/20 22:36 - C:\USERS\KAREN\DESKTOP\GINT FILES\SUM-77-277-224 PHASE 2.GPJ



**SUM-77/277/224**
**VARIOUS**

**STRUCTURE FOUNDATION EXPLORATION**
**BARRIER E**
**BORING LOGS B-055-0-17 & B-056-0-17**

DRAWN EB
CHECKED BPA

PROJECT: SUM-77-277/224
TYPE: NOISE WALL
PID: 106002 SFN:
START: 3/25/20 END: 3/25/20

DRILLING FIRM / OPERATOR: NEAS / J. HODGES
SAMPLING FIRM / LOGGER: NEAS / J. HODGES
DRILLING METHOD: 3.25" HSA
SAMPLING METHOD: SPT

DRILL RIG: CME 55X
HAMMER: CME AUTOMATIC
CALIBRATION DATE: 12/5/19
ENERGY RATIO (%): 81.9

STATION / OFFSET: 14+35, 7' RT.
ALIGNMENT: NOISE WALL E
ELEVATION: 1035.9 (MSL) EOB: 25.0 ft.
LAT / LONG: 41.011760, -81.495459

EXPLORATION ID B-057-0-17
PAGE 1 OF 1

| MATERIAL DESCRIPTION AND NOTES | ELEV. | DEPTHS | SPT/ RQD | $N_{60}$ | REC (%) | SAMPLE ID | HP (tsf) | GRADATION (%) GR | CS | FS | SI | CL | ATTERBERG LL | PL | PI | WC | ODOT CLASS (GI) | SO4 ppm | BACK FILL |
|---|---|---|---|---|---|---|---|---|---|---|---|---|---|---|---|---|---|---|---|
| VERY STIFF, BROWN, **SANDY SILT**, LITTLE TO SOME GRAVEL, TRACE TO LITTLE CLAY, CONTAINS IRON STAINING, DAMP | 1035.9 | 0 | 2 3 4 | 10 | 100 | SS-1 | 2.50 | - | - | - | - | - | - | - | - | 16 | A-4a (V) | - | |
| | 1030.4 | 5 | 2 6 5 | 15 | 56 | SS-2 | 3.00 | 34 | 13 | 16 | 27 | 10 | 31 | 21 | 10 | 15 | A-4a (0) | - | |
| MEDIUM DENSE, BROWN, **GRAVEL AND STONE FRAGMENTS WITH SAND AND SILT**, LITTLE CLAY, CONTAINS IRON STAINING, DAMP | 1027.9 | 10 | 4 11 5 | 22 | 78 | SS-3 | - | - | - | - | - | - | - | - | - | 14 | A-2-4 (V) | - | |
| STIFF TO VERY STIFF, BROWN, **SANDY SILT**, SOME GRAVEL, LITTLE CLAY, CONTAINS IRON STAINING, DAMP | 1025.4 | 15 | 3 6 6 | 16 | 22 | SS-4 | 2.00 | 23 | 21 | 19 | 25 | 12 | 25 | 18 | 7 | 14 | A-4a (0) | - | |
| LOOSE TO MEDIUM DENSE, BROWN, **GRAVEL AND STONE FRAGMENTS WITH SAND**, LITTLE SILT, TRACE CLAY, CONTAINS IRON STAINING, DAMP | | | 7 6 5 | 15 | 67 | SS-5 | - | - | - | - | - | - | - | - | - | 11 | A-1-b (V) | - | |
| | | 20 | 2 7 8 | 20 | 33 | SS-6 | - | - | - | - | - | - | - | - | - | 11 | A-1-b (V) | - | |
| | | | 2 2 3 | 7 | 44 | SS-7 | - | - | - | - | - | - | - | - | - | 10 | A-1-b (V) | - | |
| @18.5' TO 25.0'; SS-8 TO SS-9 BECOME DENSE TO VERY DENSE | | | 11 12 17 | 40 | 67 | SS-8 | - | - | - | - | - | - | - | - | - | 9 | A-1-b (V) | - | |
| | | 25 | 8 15 19 | 46 | 100 | SS-9 | - | - | - | - | - | - | - | - | - | 9 | A-1-b (V) | - | |
| | 1010.9 | EOB | 10 17 20 | 51 | 50 | SS-10 | - | - | - | - | - | - | - | - | - | 8 | A-1-b (V) | - | |

NOTES: GROUNDWATER NOT ENCOUNTERED DURING DRILLING. HOLE DID NOT CAVE.
ABANDONMENT METHODS, MATERIALS, QUANTITIES: SHOVELED SOIL CUTTINGS

PROJECT: SUM-77-277/224
TYPE: NOISE WALL
PID: 106002 SFN:
START: 3/25/20 END: 3/25/20

DRILLING FIRM / OPERATOR: NEAS / J. HODGES
SAMPLING FIRM / LOGGER: NEAS / J. HODGES
DRILLING METHOD: 3.25" HSA
SAMPLING METHOD: SPT

DRILL RIG: CME 55X
HAMMER: CME AUTOMATIC
CALIBRATION DATE: 12/5/19
ENERGY RATIO (%): 81.9

STATION / OFFSET: 16+61, 15' RT.
ALIGNMENT: NOISE WALL E
ELEVATION: 1034.8 (MSL) EOB: 25.0 ft.
LAT / LONG: 41.012373, -81.495582

EXPLORATION ID B-058-0-17
PAGE 1 OF 1

| MATERIAL DESCRIPTION AND NOTES | ELEV. | DEPTHS | SPT/ RQD | $N_{60}$ | REC (%) | SAMPLE ID | HP (tsf) | GRADATION (%) GR | CS | FS | SI | CL | ATTERBERG LL | PL | PI | WC | ODOT CLASS (GI) | SO4 ppm | BACK FILL |
|---|---|---|---|---|---|---|---|---|---|---|---|---|---|---|---|---|---|---|---|
| MEDIUM DENSE, BROWN, **GRAVEL AND STONE FRAGMENTS WITH SAND AND SILT**, TRACE CLAY, CONTAINS IRON STAINING, DAMP | 1034.8 | 0 | 3 6 8 | 19 | 28 | SS-1 | - | - | - | - | - | - | - | - | - | 15 | A-2-4 (V) | - | |
| | 1029.3 | 5 | 3 5 3 | 11 | 39 | SS-2 | - | 45 | 17 | 20 | 12 | 6 | 29 | 19 | 10 | 12 | A-2-4 (0) | - | |
| VERY LOOSE TO LOOSE, BROWN, **GRAVEL AND STONE FRAGMENTS WITH SAND**, LITTLE SILT, TRACE CLAY, CONTAINS IRON STAINING, DAMP | | 10 | 3 2 2 | 5 | 44 | SS-3 | - | - | - | - | - | - | - | - | - | 9 | A-1-b (V) | - | |
| | | | 2 2 1 | 4 | 67 | SS-4 | - | - | - | - | - | - | - | - | - | 8 | A-1-b (V) | - | |
| | | 15 | 2 2 3 | 7 | 44 | SS-5 | - | - | - | - | - | - | - | - | - | 10 | A-1-b (V) | - | |
| @13.5' TO 20.0'; SS-6 TO SS-8 BECOME MEDIUM DENSE | | | 2 6 10 | 22 | 100 | SS-6 | - | - | - | - | - | - | - | - | - | 7 | A-1-b (V) | - | |
| | | 20 | 8 11 11 | 30 | 78 | SS-7 | - | - | - | - | - | - | - | - | - | 9 | A-1-b (V) | - | |
| | | | 10 10 10 | 27 | 100 | SS-8 | - | - | - | - | - | - | - | - | - | 7 | A-1-b (V) | - | |
| @21.0' TO 25.0'; SS-9 AND SS-10 BECOME DENSE | | 25 | 10 15 20 | 48 | 94 | SS-9 | - | - | - | - | - | - | - | - | - | 6 | A-1-b (V) | - | |
| | 1009.8 | EOB | 5 19 16 | 48 | 33 | SS-10 | - | - | - | - | - | - | - | - | - | 7 | A-1-b (V) | - | |

NOTES: GROUNDWATER NOT ENCOUNTERED DURING DRILLING. HOLE DID NOT CAVE.
ABANDONMENT METHODS, MATERIALS, QUANTITIES: SHOVELED SOIL CUTTINGS

STANDARD ODOT LOG W/ SULFATES (8.5 X 11) - OH DOT.GDT - 11/13/20 22:36 - C:\USERS\KAREN\DESKTOP\GINT FILES\SUM-77-277-224 PHASE 2.GPJ

PROJECT: SUM-77-277/224 | DRILLING FIRM / OPERATOR: NEAS / J. HODGES | DRILL RIG: CME 55X | STATION / OFFSET: 17+90, 16' RT. | EXPLORATION ID B-059-0-17
TYPE: NOISE WALL | SAMPLING FIRM / LOGGER: NEAS / J. HODGES | HAMMER: CME AUTOMATIC | ALIGNMENT: NOISE WALL E
PID: 106002 SFN: | DRILLING METHOD: 3.25" HSA | CALIBRATION DATE: 12/5/19 | ELEVATION: 1034.5 (MSL) EOB: 24.5 ft. | PAGE 1 OF 1
START: 3/25/20 END: 3/25/20 | SAMPLING METHOD: SPT | ENERGY RATIO (%): 81.9 | LAT / LONG: 41.012723, -81.495662

| MATERIAL DESCRIPTION AND NOTES | ELEV. | DEPTHS | SPT/ RQD | $N_{60}$ | REC (%) | SAMPLE ID | HP (tsf) | GRADATION (%) GR | CS | FS | SI | CL | ATTERBERG LL | PL | PI | WC | ODOT CLASS (GI) | SO4 ppm | BACK FILL |
|---|---|---|---|---|---|---|---|---|---|---|---|---|---|---|---|---|---|---|---|
| VERY STIFF, BROWN, **SANDY SILT**, LITTLE CLAY, TRACE GRAVEL, CONTAINS TRACE ROOTS, DAMP | 1034.5 | | 5 5 6 | 15 | 44 | SS-1 | 2.25 | - | - | - | - | - | - | - | - | 16 | A-4a (V) | - | |
| MEDIUM STIFF TO STIFF, BROWN, **SILT AND CLAY**, "AND" SAND, TRACE GRAVEL, DAMP | 1031.5 | | 3 4 6 | 14 | 44 | SS-2 | 1.00 | 9 | 11 | 30 | 34 | 16 | 30 | 17 | 13 | 17 | A-6a (4) | - | |
| MEDIUM DENSE TO DENSE, BROWN AND GRAY, **GRAVEL AND STONE FRAGMENTS WITH SAND**, TRACE TO LITTLE SILT, TRACE CLAY, ENCOUNTERED COBBLES DURING DRILLING, DAMP | 1029.0 | | 4 7 7 | 19 | 44 | SS-3 | - | - | - | - | - | - | - | - | - | 9 | A-1-b (V) | - | |
| | | | 6 10 12 | 30 | 33 | SS-4 | - | - | - | - | - | - | - | - | - | 8 | A-1-b (V) | - | |
| | | | 7 11 14 | 34 | 28 | SS-5 | - | - | - | - | - | - | - | - | - | 8 | A-1-b (V) | - | |
| @13.5'; SS-6 CONTAINS STONE FRAGMENTS GREATER THAN 1.25" | | | 11 12 19 | 42 | 11 | SS-6 | - | - | - | - | - | - | - | - | - | 0 | A-1-b (V) | - | |
| | | | 10 16 19 | 48 | 100 | SS-7 | - | - | - | - | - | - | - | - | - | 6 | A-1-b (V) | - | |
| @18.5' TO 24.5'; SS-8 TO SS-10 BECOME VERY DENSE | | | 10 26 50 | 104 | 67 | SS-8 | - | - | - | - | - | - | - | - | - | 6 | A-1-b (V) | - | |
| | | | 15 29 32 | 83 | 39 | SS-9 | - | - | - | - | - | - | - | - | - | 4 | A-1-b (V) | - | |
| | 1010.0 | EOB | 15 50 | - | 75 | SS-10 | - | - | - | - | - | - | - | - | - | 3 | A-1-b (V) | - | |

NOTES: GROUNDWATER NOT ENCOUNTERED DURING DRILLING. HOLE DID NOT CAVE.
ABANDONMENT METHODS, MATERIALS, QUANTITIES: SHOVELED SOIL CUTTINGS

STANDARD ODOT LOG W/ SULFATES (8.5 X 11) - OH DOT.GDT - 11/13/20 22:36 - C:\USERS\KAREN\DESKTOP\GINT FILES\SUM-77-277-224 PHASE 2.GPJ

PROJECT: SUM-77-277/224 | DRILLING FIRM / OPERATOR: NEAS / J. HODGES | DRILL RIG: CME 55X | STATION / OFFSET: 19+98, 19' RT. | EXPLORATION ID B-060-0-17
TYPE: NOISE WALL | SAMPLING FIRM / LOGGER: NEAS / J. HODGES | HAMMER: CME AUTOMATIC | ALIGNMENT: NOISE WALL E
PID: 106002 SFN: | DRILLING METHOD: 3.25" HSA | CALIBRATION DATE: 12/5/19 | ELEVATION: 1034.6 (MSL) EOB: 24.5 ft. | PAGE 1 OF 1
START: 3/25/20 END: 3/25/20 | SAMPLING METHOD: SPT | ENERGY RATIO (%): 81.9 | LAT / LONG: 41.013285, -81.495778

| MATERIAL DESCRIPTION AND NOTES | ELEV. | DEPTHS | SPT/ RQD | $N_{60}$ | REC (%) | SAMPLE ID | HP (tsf) | GRADATION (%) GR | CS | FS | SI | CL | ATTERBERG LL | PL | PI | WC | ODOT CLASS (GI) | SO4 ppm | BACK FILL |
|---|---|---|---|---|---|---|---|---|---|---|---|---|---|---|---|---|---|---|---|
| HARD, BROWN, **SILT AND CLAY**, SOME SAND, LITTLE GRAVEL, CONTAINS IRON STAINING, DAMP | 1034.6 | | 5 5 6 | 15 | 100 | SS-1 | 4.50 | 14 | 8 | 21 | 37 | 20 | 33 | 18 | 15 | 15 | A-6a (6) | - | |
| MEDIUM DENSE TO DENSE, BROWN AND GRAY, **GRAVEL AND STONE FRAGMENTS WITH SAND**, TRACE TO LITTLE SILT, TRACE CLAY, CONTAINS IRON STAINING, ENCOUNTERED COBBLES DURING DRILLING, DAMP | 1031.6 | | 8 6 6 | 16 | 67 | SS-2 | - | - | - | - | - | - | - | - | - | 7 | A-1-b (V) | - | |
| | | | 5 5 5 | 14 | 100 | SS-3 | - | - | - | - | - | - | - | - | - | 11 | A-1-b (V) | - | |
| | | | 5 6 5 | 15 | 33 | SS-4 | - | - | - | - | - | - | - | - | - | 10 | A-1-b (V) | - | |
| | | | 12 14 17 | 42 | 39 | SS-5 | - | - | - | - | - | - | - | - | - | 6 | A-1-b (V) | - | |
| | | | 19 15 15 | 41 | 50 | SS-6 | - | 49 | 14 | 24 | 11 | 2 | NP | NP | NP | 6 | A-1-b (0) | - | |
| | | | 3 6 6 | 16 | 44 | SS-7 | - | - | - | - | - | - | - | - | - | 6 | A-1-b (V) | - | |
| | | | 4 8 8 | 22 | 11 | SS-8 | - | - | - | - | - | - | - | - | - | 4 | A-1-b (V) | - | |
| | | | 12 17 19 | 49 | 56 | SS-9 | - | - | - | - | - | - | - | - | - | 5 | A-1-b (V) | - | |
| 23.5'; SS-10 BECOMES VERY DENSE | 1010.1 | EOB | 14 50 | - | 17 | SS-10 | - | - | - | - | - | - | - | - | - | 3 | A-1-b (V) | - | |

NOTES: GROUNDWATER NOT ENCOUNTERED DURING DRILLING. HOLE DID NOT CAVE.
ABANDONMENT METHODS, MATERIALS, QUANTITIES: SHOVELED SOIL CUTTINGS

STANDARD ODOT LOG W/ SULFATES (8.5 X 11) - OH DOT.GDT - 11/13/20 22:36 - C:\USERS\KAREN\DESKTOP\GINT FILES\SUM-77-277-224 PHASE 2.GPJ

PROJECT: SUM-77-277/224 | DRILLING FIRM / OPERATOR: NEAS / J. HODGES | DRILL RIG: CME 55X | STATION / OFFSET: 22+17, 12' RT. | EXPLORATION ID B-061-0-17
TYPE: NOISE WALL | SAMPLING FIRM / LOGGER: NEAS / J. HODGES | HAMMER: CME AUTOMATIC | ALIGNMENT: NOISE WALL E
PID: 106002 SFN: | DRILLING METHOD: 3.25" HSA | CALIBRATION DATE: 12/5/19 | ELEVATION: 1034.4 (MSL) EOB: 25.0 ft. | PAGE 1 OF 1
START: 3/24/20 END: 3/24/20 | SAMPLING METHOD: SPT | ENERGY RATIO (%): 81.9 | LAT / LONG: 41.013876, -81.495917

| MATERIAL DESCRIPTION AND NOTES | ELEV. | DEPTHS | SPT/ RQD | $N_{60}$ | REC (%) | SAMPLE ID | HP (tsf) | GRADATION (%) GR | CS | FS | SI | CL | ATTERBERG LL | PL | PI | WC | ODOT CLASS (GI) | SO4 ppm | BACK FILL |
|---|---|---|---|---|---|---|---|---|---|---|---|---|---|---|---|---|---|---|---|
| STIFF, BROWN, **SILT AND CLAY**, SOME SAND, SOME GRAVEL, CONTAINS IRON STAINING AND TRACE ROOTS, DAMP | 1034.4 | | 5 5 5 | 14 | 56 | SS-1 | 1.75 | 22 | 13 | 21 | 28 | 16 | 30 | 17 | 13 | 15 | A-6a (3) | - | |
| LOOSE TO MEDIUM DENSE, BROWN, **COARSE AND FINE SAND**, SOME GRAVEL, TRACE TO LITTLE SILT, TRACE CLAY, DAMP TO MOIST | 1031.4 | | 3 4 5 | 12 | 33 | SS-2 | - | - | - | - | - | - | - | - | - | 9 | A-3a (V) | - | |
| | | | 4 4 5 | 12 | 56 | SS-3 | - | - | - | - | - | - | - | - | - | 12 | A-3a (V) | - | |
| | | | 5 3 3 | 8 | 39 | SS-4 | - | - | - | - | - | - | - | - | - | 6 | A-3a (V) | - | |
| | | | 6 5 3 | 11 | 56 | SS-5 | - | - | - | - | - | - | - | - | - | 8 | A-3a (V) | - | |
| DENSE, BROWN, **GRAVEL AND STONE FRAGMENTS WITH SAND**, LITTLE SILT, TRACE CLAY, DAMP | 1021.4 | | 5 7 19 | 35 | 100 | SS-6 | - | 43 | 15 | 21 | 15 | 6 | NP | NP | NP | 8 | A-1-b (0) | - | |
| MEDIUM DENSE, BROWN, **COARSE AND FINE SAND**, TRACE SILT, TRACE GRAVEL, TRACE CLAY, DAMP | 1018.9 | | 5 5 5 | 14 | 100 | SS-7 | - | - | - | - | - | - | - | - | - | 7 | A-3a (V) | - | |
| | | | 6 6 5 | 15 | 100 | SS-8 | - | - | - | - | - | - | - | - | - | 8 | A-3a (V) | - | |
| | | | 6 5 10 | 20 | 100 | SS-9 | - | - | - | - | - | - | - | - | - | 4 | A-3a (V) | - | |
| VERY DENSE, BROWN AND GRAY, **GRAVEL AND STONE FRAGMENTS WITH SAND**, LITTLE SILT, TRACE CLAY, DAMP | 1011.4 | | 16 26 28 | 74 | 44 | SS-10 | - | - | - | - | - | - | - | - | - | 4 | A-1-b (V) | - | |
| | 1009.4 | EOB | | | | | | | | | | | | | | | | | |

NOTES: GROUNDWATER NOT ENCOUNTERED DURING DRILLING. HOLE DID NOT CAVE.
ABANDONMENT METHODS, MATERIALS, QUANTITIES: SHOVELED SOIL CUTTINGS

PROJECT: SUM-77-277/224 | DRILLING FIRM / OPERATOR: NEAS / J. HODGES | DRILL RIG: CME 55X | STATION / OFFSET: 24+06, 8' RT. | EXPLORATION ID B-062-0-17
TYPE: NOISE WALL | SAMPLING FIRM / LOGGER: NEAS / J. HODGES | HAMMER: CME AUTOMATIC | ALIGNMENT: NOISE WALL E
PID: 106002 SFN: | DRILLING METHOD: 3.25" HSA | CALIBRATION DATE: 12/5/19 | ELEVATION: 1036.0 (MSL) EOB: 25.0 ft. | PAGE 1 OF 1
START: 3/24/20 END: 3/24/20 | SAMPLING METHOD: SPT | ENERGY RATIO (%): 81.9 | LAT / LONG: 41.014388, -81.496030

| MATERIAL DESCRIPTION AND NOTES | ELEV. | DEPTHS | SPT/ RQD | $N_{60}$ | REC (%) | SAMPLE ID | HP (tsf) | GRADATION (%) GR | CS | FS | SI | CL | ATTERBERG LL | PL | PI | WC | ODOT CLASS (GI) | SO4 ppm | BACK FILL |
|---|---|---|---|---|---|---|---|---|---|---|---|---|---|---|---|---|---|---|---|
| VERY STIFF, BROWN, **SANDY SILT**, "AND" GRAVEL, TRACE CLAY, DAMP | 1036.0 | | 7 10 9 | 26 | 78 | SS-1 | 3.00 | 36 | 10 | 18 | 26 | 10 | 30 | 21 | 9 | 13 | A-4a (0) | - | |
| MEDIUM DENSE, BROWN, **COARSE AND FINE SAND**, LITTLE TO SOME GRAVEL, TRACE SILT, TRACE CLAY, DAMP | 1033.0 | | 4 6 4 | 14 | 22 | SS-2 | - | - | - | - | - | - | - | - | - | 8 | A-3a (V) | - | |
| | | | 3 4 4 | 11 | 33 | SS-3 | - | - | - | - | - | - | - | - | - | 7 | A-3a (V) | - | |
| | | | 3 4 6 | 14 | 56 | SS-4 | - | - | - | - | - | - | - | - | - | 9 | A-3a (V) | - | |
| | | | 4 4 6 | 14 | 100 | SS-5 | - | - | - | - | - | - | - | - | - | 9 | A-3a (V) | - | |
| MEDIUM DENSE TO DENSE, BROWN AND GRAY, **GRAVEL AND STONE FRAGMENTS WITH SAND**, TRACE TO LITTLE SILT, TRACE CLAY, CONTAINS IRON STAINING, DAMP | 1023.0 | | 20 10 12 | 30 | 100 | SS-6 | - | - | - | - | - | - | - | - | - | 10 | A-1-b (V) | - | |
| | | | 10 15 15 | 41 | 56 | SS-7 | - | - | - | - | - | - | - | - | - | 8 | A-1-b (V) | - | |
| | | | 18 12 19 | 42 | 67 | SS-8 | - | - | - | - | - | - | - | - | - | 9 | A-1-b (V) | - | |
| | | | 9 16 13 | 40 | 39 | SS-9 | - | - | - | - | - | - | - | - | - | 8 | A-1-b (V) | - | |
| | | | 14 17 15 | 44 | 100 | SS-10 | - | - | - | - | - | - | - | - | - | 9 | A-1-b (V) | - | |
| | 1011.0 | EOB | | | | | | | | | | | | | | | | | |

NOTES: GROUNDWATER NOT ENCOUNTERED DURING DRILLING. HOLE DID NOT CAVE.
ABANDONMENT METHODS, MATERIALS, QUANTITIES: SHOVELED SOIL CUTTINGS

STANDARD ODOT LOG W/ SULFATES (8.5 X 11) - OH DOT.GDT - 11/13/20 22:36 - C:\USERS\KAREN\DESKTOP\GINT FILES\SUM-77-277-224 PHASE 2.GPJ



**SUM-77/277/224**
**VARIOUS**

**STRUCTURE FOUNDATION EXPLORATION**
**BARRIER E**
**BORING LOGS B-061-0-17 & B-062-0-17**

DRAWN EB
CHECKED BPA

PROJECT: SUM-77-277/224 | DRILLING FIRM / OPERATOR: NEAS / J. HODGES | DRILL RIG: CME 55X | STATION / OFFSET: 25+77, 9' RT. | EXPLORATION ID B-063-0-17
TYPE: NOISE WALL | SAMPLING FIRM / LOGGER: NEAS / J. HODGES | HAMMER: CME AUTOMATIC | ALIGNMENT: NOISE WALL E
PID: 106002 SFN: | DRILLING METHOD: 3.25" HSA | CALIBRATION DATE: 12/5/19 | ELEVATION: 1036.5 (MSL) EOB: 25.0 ft. | PAGE 1 OF 1
START: 3/24/20 END: 3/24/20 | SAMPLING METHOD: SPT | ENERGY RATIO (%): 81.9 | LAT / LONG: 41.014855, -81.496130

| MATERIAL DESCRIPTION AND NOTES | ELEV. | DEPTHS | SPT/ RQD | $N_{60}$ | REC (%) | SAMPLE ID | HP (tsf) | GRADATION (%) GR | CS | FS | SI | CL | ATTERBERG LL | PL | PI | WC | ODOT CLASS (GI) | SO4 ppm | BACK FILL |
|---|---|---|---|---|---|---|---|---|---|---|---|---|---|---|---|---|---|---|---|
| MEDIUM DENSE, BROWN, **GRAVEL WITH SAND AND SILT**, LITTLE CLAY, CONTAINS ROOT HAIRS AND TRACE IRON STAINING, DAMP | 1036.5 | | 3 4 4 | 11 | 78 | SS-1 | - | 16 | 16 | 38 | 19 | 11 | 22 | 15 | 7 | 13 | A-2-4 (0) | - | |
| MEDIUM DENSE TO DENSE, BROWN, **COARSE AND FINE SAND**, LITTLE TO SOME SILT, TRACE GRAVEL, TRACE CLAY, MOIST TO WET | 1033.5 | | 3 9 11 | 27 | 22 | SS-2 | - | - | - | - | - | - | - | - | - | 14 | A-3a (V) | - | |
| | | | 5 11 18 | 40 | 33 | SS-3 | - | - | - | - | - | - | - | - | - | 15 | A-3a (V) | - | |
| | | | 4 5 6 | 15 | 56 | SS-4 | - | - | - | - | - | - | - | - | - | 18 | A-3a (V) | - | |
| | | | 4 5 6 | 15 | 100 | SS-5 | - | - | - | - | - | - | - | - | - | 26 | A-3a (V) | - | |
| MEDIUM DENSE, BROWN, **GRAVEL AND STONE FRAGMENTS WITH SAND**, LITTLE SILT, TRACE CLAY, CONTAINS IRON STAINING, DAMP | 1023.5 | | 2 8 6 | 19 | 100 | SS-6 | - | - | - | - | - | - | - | - | - | 11 | A-1-b (V) | - | |
| | | | 4 6 6 | 16 | 56 | SS-7 | - | - | - | - | - | - | - | - | - | 10 | A-1-b (V) | - | |
| | | | 8 7 6 | 18 | 67 | SS-8 | - | - | - | - | - | - | - | - | - | 7 | A-1-b (V) | - | |
| MEDIUM DENSE, BROWN, **COARSE AND FINE SAND**, TRACE SILT, TRACE GRAVEL, TRACE CLAY, DAMP | 1016.0 | | 12 6 6 | 16 | 39 | SS-9 | - | - | - | - | - | - | - | - | - | 6 | A-3a (V) | - | |
| | 1011.5 | EOB | 4 4 4 | 11 | 100 | SS-10 | - | - | - | - | - | - | - | - | - | 6 | A-3a (V) | - | |

NOTES: GROUNDWATER NOT ENCOUNTERED DURING DRILLING. HOLE DID NOT CAVE.
ABANDONMENT METHODS, MATERIALS, QUANTITIES: SHOVELED SOIL CUTTINGS

PROJECT: SUM-77-277/224 | DRILLING FIRM / OPERATOR: NEAS / J. HODGES | DRILL RIG: CME 55X | STATION / OFFSET: 27+57, 8' RT. | EXPLORATION ID B-064-0-17
TYPE: NOISE WALL | SAMPLING FIRM / LOGGER: NEAS / J. HODGES | HAMMER: CME AUTOMATIC | ALIGNMENT: NOISE WALL E
PID: 106002 SFN: | DRILLING METHOD: 3.25" HSA | CALIBRATION DATE: 12/5/19 | ELEVATION: 1043.2 (MSL) EOB: 24.5 ft. | PAGE 1 OF 1
START: 3/25/20 END: 3/25/20 | SAMPLING METHOD: SPT | ENERGY RATIO (%): 81.9 | LAT / LONG: 41.015337, -81.496270

| MATERIAL DESCRIPTION AND NOTES | ELEV. | DEPTHS | SPT/ RQD | $N_{60}$ | REC (%) | SAMPLE ID | HP (tsf) | GRADATION (%) GR | CS | FS | SI | CL | ATTERBERG LL | PL | PI | WC | ODOT CLASS (GI) | SO4 ppm | BACK FILL |
|---|---|---|---|---|---|---|---|---|---|---|---|---|---|---|---|---|---|---|---|
| VERY STIFF, BROWN, **SANDY SILT**, LITTLE CLAY, TRACE GRAVEL, CONTAINS IRON STAINING, DAMP | 1043.2 | | 4 8 13 | 29 | 67 | SS-1 | 2.75 | 10 | 5 | 48 | 26 | 11 | 21 | 16 | 5 | 13 | A-4a (0) | - | |
| DENSE TO VERY DENSE, BROWN, **GRAVEL AND STONE FRAGMENTS WITH SAND**, LITTLE SILT, TRACE CLAY, DAMP | 1040.2 | | 7 15 15 | 41 | 100 | SS-2 | - | - | - | - | - | - | - | - | - | 11 | A-1-b (V) | - | |
| | | | 2 20 19 | 53 | 33 | SS-3 | - | - | - | - | - | - | - | - | - | 8 | A-1-b (V) | - | |
| MEDIUM DENSE TO DENSE, BROWN, **COARSE AND FINE SAND**, SOME SILT, LITTLE GRAVEL, TRACE CLAY, DAMP TO MOIST | 1035.2 | | 4 19 17 | 49 | 22 | SS-4 | - | - | - | - | - | - | - | - | - | 7 | A-3a (V) | - | |
| | | | 4 7 9 | 22 | 28 | SS-5 | - | 15 | 6 | 47 | 22 | 10 | NP | NP | NP | 11 | A-3a (0) | - | |
| VERY DENSE, BROWN, **GRAVEL AND STONE FRAGMENTS WITH SAND**, LITTLE SILT, TRACE CLAY, STONE FRAGMENTS ARE FRIABLE SANDSTONE, DAMP | 1030.2 | | 50 | - | 83 | SS-6 | - | - | - | - | - | - | - | - | - | 9 | A-1-b (V) | - | |
| MEDIUM DENSE, BROWN, **SANDY SILT**, LITTLE CLAY, TRACE GRAVEL, CONTAINS TRACE ROOT HAIRS, DAMP | 1027.7 | | 3 4 7 | 15 | 22 | SS-7 | - | - | - | - | - | - | - | - | - | 11 | A-4a (V) | - | |
| VERY DENSE, GRAY, **SANDY SILT**, LITTLE CLAY, LITTLE GRAVEL AND STONE FRAGMENTS, CONTAINS A RELIC SHALE ROCK STRUCTURE, DAMP | 1025.2 | | 9 24 50 | 101 | 67 | SS-8 | - | 15 | 6 | 10 | 49 | 20 | NP | NP | NP | 7 | A-4a (7) | - | |
| | | | 27 50 | - | 33 | SS-9 | - | - | - | - | - | - | - | - | - | 4 | A-4a (V) | - | |
| VERY DENSE, BROWN AND GRAY, **GRAVEL AND STONE FRAGMENTS WITH SAND AND SILT**, LITTLE CLAY, MOIST | 1020.2 | W 1019.7 | 37 50 | - | 75 | SS-10 | - | - | - | - | - | - | - | - | - | 13 | A-2-4 (V) | - | |
| | 1018.7 | EOB | | | | | | | | | | | | | | | | | |

NOTES: GROUNDWATER ENCOUNTERED AT 23.5' DURING DRILLING. HOLE DID NOT CAVE.
ABANDONMENT METHODS, MATERIALS, QUANTITIES: SHOVELED SOIL CUTTINGS

STANDARD ODOT LOG W/ SULFATES (8.5 X 11) - OH DOT.GDT - 11/13/20 22:36 - C:\USERS\KAREN\DESKTOP\GINT FILES\SUM-77-277-224 PHASE 2.GPJ



**SUM-77/277/224**
**VARIOUS**

**STRUCTURE FOUNDATION EXPLORATION**
**BARRIER E**
**BORING LOGS B-063-0-17 & B-064-0-17**

DRAWN EB
CHECKED BPA

PROJECT: SUM-77-277/224
TYPE: NOISE WALL
PID: 106002 SFN:
START: 4/17/20 END: 4/17/20

DRILLING FIRM / OPERATOR: NEAS / J. HODGES
SAMPLING FIRM / LOGGER: NEAS / J. HODGES
DRILLING METHOD: 3.25" HSA
SAMPLING METHOD: SPT

DRILL RIG: CME 55X
HAMMER: CME AUTOMATIC
CALIBRATION DATE: 12/5/19
ENERGY RATIO (%): 81.9

STATION / OFFSET: 29+77, 12' RT.
ALIGNMENT: NOISE WALL E
ELEVATION: 1055.8 (MSL) EOB: 25.0 ft.
LAT / LONG: 41.015924, -81.496446

EXPLORATION ID B-065-0-17
PAGE 1 OF 1

| MATERIAL DESCRIPTION AND NOTES | ELEV. 1055.8 | DEPTHS | SPT/ RQD | $N_{60}$ | REC (%) | SAMPLE ID | HP (tsf) | GRADATION (%) GR | CS | FS | SI | CL | ATTERBERG LL | PL | PI | WC | ODOT CLASS (GI) | SO4 ppm | BACK FILL |
|---|---|---|---|---|---|---|---|---|---|---|---|---|---|---|---|---|---|---|---|
| STIFF TO VERY STIFF, BROWN, **SANDY SILT**, LITTLE CLAY, TRACE GRAVEL, CONTAINS ROOTS, MOIST | 1052.8 | 0 | 2 3 4 | 10 | 67 | SS-1 | 2.00 | 2 | 3 | 30 | 49 | 16 | 23 | 18 | 5 | 19 | A-4a (6) | - | |
| DENSE TO VERY DENSE, LIGHT BROWN, **STONE FRAGMENTS WITH SAND**, TRACE SILT, TRACE CLAY, STONE FRAGMENTS ARE FRIABLE SANDSTONE, DAMP | 1045.3 | 4 | 12 15 24 | 53 | 100 | SS-2 | - | - | - | - | - | - | - | - | - | 7 | A-1-b (V) | - | |
| | | 6 | 7 11 14 | 34 | 67 | SS-3 | - | - | - | - | - | - | - | - | - | 11 | A-1-b (V) | - | |
| | | 8 | 8 19 17 | 49 | 100 | SS-4 | - | - | - | - | - | - | - | - | - | 7 | A-1-b (V) | - | |
| HARD, BLACK WITH DARK BROWN AND ORANGISH BROWN, **ELASTIC CLAY**, SOME SILT, SOME SAND, LITTLE STONE FRAGMENTS, CONTAINS A RELIC SHALE ROCK STRUCTURE, CONTAINS IRON STAINING, DAMP | 1037.3 | 10 | 4 7 10 | 23 | 78 | SS-5 | 4.50 | 14 | 17 | 15 | 32 | 22 | 43 | 30 | 13 | 20 | A-7-5 (5) | - | |
| | | | 4 7 10 | 23 | 56 | SS-6 | 4.50 | - | - | - | - | - | - | - | - | 12 | A-7-5 (V) | - | |
| | | 16 | 6 11 23 | 46 | 67 | SS-7 | 4.50 | - | - | - | - | - | - | - | - | 14 | A-7-5 (V) | - | |
| **SHALE**, GRAY, SEVERELY WEATHERED, VERY WEAK TO WEAK, FISSILE. | TR | 18 | 18 24 50 | 101 | 83 | SS-8 | - | - | - | - | - | - | - | - | - | 13 | Rock (V) | - | |
| | | 20 | 10 24 32 | 76 | 78 | SS-9 | - | - | - | - | - | - | - | - | - | - | Rock (V) | - | |
| @23.5'; SS-10 CONTAINS NO RECOVERY | 1030.8 EOB | 24 | 14 30 28 | 79 | 0 | SS-10 | - | - | - | - | - | - | - | - | - | - | | - | |

NOTES: GROUNDWATER NOT ENCOUNTERED DURING DRILLING. HOLE DID NOT CAVE.
ABANDONMENT METHODS, MATERIALS, QUANTITIES: SHOVELED SOIL CUTTINGS

STANDARD ODOT LOG W/ SULFATES (8.5 X 11) - OH DOT.GDT - 11/13/20 22:36 - C:\USERS\KAREN\DESKTOP\GINT FILES\SUM-77-277-224 PHASE 2.GPJ

PROJECT: SUM-77-277/224
TYPE: NOISE WALL
PID: 106002 SFN:
START: 4/17/20 END: 4/20/20

DRILLING FIRM / OPERATOR: NEAS / J. HODGES
SAMPLING FIRM / LOGGER: NEAS / J. HODGES
DRILLING METHOD: 3.25" HSA
SAMPLING METHOD: SPT

DRILL RIG: CME 55X
HAMMER: CME AUTOMATIC
CALIBRATION DATE: 12/5/19
ENERGY RATIO (%): 81.9

STATION / OFFSET: 31+94, 22' RT.
ALIGNMENT: NOISE WALL E
ELEVATION: 1059.7 (MSL) EOB: 13.8 ft.
LAT / LONG: 41.016512, -81.496570

EXPLORATION ID B-066-0-17
PAGE 1 OF 1

| MATERIAL DESCRIPTION AND NOTES | ELEV. 1059.7 | DEPTHS | SPT/ RQD | $N_{60}$ | REC (%) | SAMPLE ID | HP (tsf) | GRADATION (%) GR | CS | FS | SI | CL | ATTERBERG LL | PL | PI | WC | ODOT CLASS (GI) | SO4 ppm | BACK FILL |
|---|---|---|---|---|---|---|---|---|---|---|---|---|---|---|---|---|---|---|---|
| VERY STIFF, GRAY, **SANDY SILT**, LITTLE CLAY, TRACE STONE FRAGMENTS, CONTAINS A RELIC SHALE ROCK STRUCTURE, CONTAINS ROOTS, DAMP | 1056.7 | 0 | 2 3 4 | 10 | 89 | SS-1 | 2.50 | 9 | 9 | 19 | 46 | 17 | 35 | 25 | 10 | 15 | A-4a (6) | - | |
| **SANDSTONE**, BROWN BECOMING LIGHT GRAY, HIGHLY WEATHERED, SLIGHTLY TO MODERATELY STRONG, FINE TO MEDIUM GRAINED, FRIABLE. | TR | 4 | 50 | - | 67 | SS-2 | - | - | - | - | - | - | - | - | - | 7 | Rock (V) | - | |
| | | 6 | 50 | - | 67 | SS-3 | - | - | - | - | - | - | - | - | - | - | Rock (V) | - | |
| | | 9 | 50/4" | - | 75 | SS-4 | - | - | - | - | - | - | - | - | - | - | Rock (V) | - | |
| | | 11 | 50/5" | - | 80 | SS-5 | - | - | - | - | - | - | - | - | - | - | Rock (V) | - | |
| | 1045.9 EOB | | 50/3" | - | 67 | SS-6 | - | - | - | - | - | - | - | - | - | - | Rock (V) | - | |

NOTES: GROUNDWATER NOT ENCOUNTERED DURING DRILLING. HOLE DID NOT CAVE.
ABANDONMENT METHODS, MATERIALS, QUANTITIES: SHOVELED SOIL CUTTINGS

STANDARD ODOT LOG W/ SULFATES (8.5 X 11) - OH DOT.GDT - 11/13/20 22:36 - C:\USERS\KAREN\DESKTOP\GINT FILES\SUM-77-277-224 PHASE 2.GPJ

PROJECT: SUM-77-277/224
TYPE: NOISE WALL
PID: 106002 SFN:
START: 4/20/20 END: 4/20/20

DRILLING FIRM / OPERATOR: NEAS / J. HODGES
SAMPLING FIRM / LOGGER: NEAS / J. HODGES
DRILLING METHOD: 3.25" HSA
SAMPLING METHOD: SPT

DRILL RIG: CME 55X
HAMMER: CME AUTOMATIC
CALIBRATION DATE: 12/5/19
ENERGY RATIO (%): 81.9

STATION / OFFSET: 33+18, 13' RT.
ALIGNMENT: NOISE WALL E
ELEVATION: 1053.1 (MSL) EOB: 23.8 ft.
LAT / LONG: 41.016843, -81.496683

EXPLORATION ID B-067-0-17
PAGE 1 OF 1

| MATERIAL DESCRIPTION AND NOTES | ELEV. | DEPTHS | SPT/ RQD | $N_{60}$ | REC (%) | SAMPLE ID | HP (tsf) | GRADATION (%) GR | CS | FS | SI | CL | ATTERBERG LL | PL | PI | WC | ODOT CLASS (GI) | SO4 ppm | BACK FILL |
|---|---|---|---|---|---|---|---|---|---|---|---|---|---|---|---|---|---|---|---|
| STIFF, BROWN, **SILT AND CLAY**, SOME SAND, TRACE GRAVEL, CONTAINS TRACE ROOT HAIRS, MOIST | 1053.1 | | 2 2 4 | 8 | 100 | SS-1 | 1.50 | 0 | 4 | 17 | 53 | 26 | 33 | 20 | 13 | 21 | A-6a (9) | - | |
| VERY STIFF, BROWN, **SANDY SILT**, LITTLE CLAY, TRACE GRAVEL, CONTAINS TRACE ROOT HAIRS, MOIST | 1050.1 | | 2 3 4 | 10 | 100 | SS-2 | 2.25 | 0 | 4 | 37 | 43 | 16 | 25 | 17 | 8 | 18 | A-4a (5) | - | |
| **SANDSTONE**, BROWN, HIGHLY WEATHERED, MODERATELY STRONG, VERY FINE TO MEDIUM GRAINED, CONTAINS INTERBEDDED SHALE LAYERS. | 1047.1 | TR | 9 50 | - | 83 | SS-3 | - | - | - | - | - | - | - | - | - | 7 | Rock (V) | - | |
| | | | 50 | - | 67 | SS-4 | - | - | - | - | - | - | - | - | - | - | Rock (V) | - | |
| | | | 50/5" | - | 80 | SS-5 | - | - | - | - | - | - | - | - | - | - | Rock (V) | - | |
| | | | 50/5" | - | 80 | SS-6 | - | - | - | - | - | - | - | - | - | - | Rock (V) | - | |
| **SHALE**, DARK GRAY, HIGHLY WEATHERED, WEAK, FISSILE. | 1037.6 | | 6 18 50 | 93 | 67 | SS-7 | - | - | - | - | - | - | - | - | - | - | Rock (V) | - | |
| **SANDSTONE**, GRAY, HIGHLY WEATHERED, SLIGHTLY STRONG TO STRONG, VERY FINE TO MEDIUM GRAINED, CONTAINS INTERBEDDED SHALE LAYERS. | 1035.1 | | 50/3" | - | 67 | SS-8 | - | - | - | - | - | - | - | - | - | - | Rock (V) | - | |
| | | | 50/4" | - | 0 | SS-9 | - | - | - | - | - | - | - | - | - | - | Rock (V) | - | |
| | 1029.3 | EOB | 50/3" | - | 67 | SS-10 | - | - | - | - | - | - | - | - | - | - | Rock (V) | - | |

NOTES: GROUNDWATER NOT ENCOUNTERED DURING DRILLING. HOLE DID NOT CAVE. BORING OFFSET 4' EAST DUE TO OVERHEAD OBSTRUCTION.
ABANDONMENT METHODS, MATERIALS, QUANTITIES: SHOVELED SOIL CUTTINGS

STANDARD ODOT LOG W/ SULFATES (8.5 X 11) - OH DOT.GDT - 11/13/20 22:36 - C:\USERS\KAREN\DESKTOP\GINT FILES\SUM-77-277-224 PHASE 2.GPJ

PROJECT: SUM-77-277/224
TYPE: NOISE WALL
PID: 106002 SFN:
START: 4/20/20 END: 4/20/20

DRILLING FIRM / OPERATOR: NEAS / J. HODGES
SAMPLING FIRM / LOGGER: NEAS / J. HODGES
DRILLING METHOD: 3.25" HSA
SAMPLING METHOD: SPT

DRILL RIG: CME 55X
HAMMER: CME AUTOMATIC
CALIBRATION DATE: 12/5/19
ENERGY RATIO (%): 81.9

STATION / OFFSET: 34+32, 5' RT.
ALIGNMENT: NOISE WALL E
ELEVATION: 1062.1 (MSL) EOB: 23.8 ft.
LAT / LONG: 41.017304, -81.496787

EXPLORATION ID B-068-0-17
PAGE 1 OF 1

| MATERIAL DESCRIPTION AND NOTES | ELEV. | DEPTHS | SPT/ RQD | $N_{60}$ | REC (%) | SAMPLE ID | HP (tsf) | GRADATION (%) GR | CS | FS | SI | CL | ATTERBERG LL | PL | PI | WC | ODOT CLASS (GI) | SO4 ppm | BACK FILL |
|---|---|---|---|---|---|---|---|---|---|---|---|---|---|---|---|---|---|---|---|
| STIFF TO VERY STIFF, BROWN MOTTLED WITH GRAY AND ORANGISH BROWN, **SILT AND CLAY**, "AND" SAND, TRACE GRAVEL, CONTAINS IRON STAINING AND ROOTS, MOIST | 1062.1 | | 2 3 3 | 8 | 100 | SS-1 | 2.50 | - | - | - | - | - | - | - | - | 24 | A-6a (V) | - | |
| MEDIUM DENSE, BROWN WITH GRAY AND ORANGISH BROWN, **COARSE AND FINE SAND**, SOME SILT, TRACE CLAY, TRACE GRAVEL, CONTAINS IRON STAINING, WET | 1056.6 | | 2 4 3 | 10 | 100 | SS-2 | 1.75 | 0 | 5 | 33 | 40 | 22 | 31 | 16 | 15 | 21 | A-6a (7) | - | |
| | 1054.1 | | 2 4 4 | 11 | 100 | SS-3 | - | - | - | - | - | - | - | - | - | 21 | A-3a (V) | - | |
| HARD, BROWN AND GRAY, **SILT AND CLAY**, SOME SAND, TRACE GRAVEL AND STONE FRAGMENTS, CONTAINS IRON STAINING, DAMP | 1049.6 | TR | 5 16 25 | 56 | 100 | SS-4 | 4.50 | - | - | - | - | - | - | - | - | 9 | A-6a (V) | - | |
| | | | 9 19 21 | 55 | 100 | SS-5 | 4.50 | 2 | 12 | 11 | 54 | 21 | 32 | 21 | 11 | 9 | A-6a (8) | - | |
| **SHALE**, DARK GRAY, SEVERELY TO HIGHLY WEATHERED, WEAK, FISSILE. | 1044.1 | | 7 17 25 | 57 | 78 | SS-6 | - | - | - | - | - | - | - | - | - | 11 | Rock (V) | - | |
| | | | 50 | - | 33 | SS-7 | - | - | - | - | - | - | - | - | - | - | Rock (V) | - | |
| **SANDSTONE**, GRAY, MODERATELY WEATHERED, MODERATELY STRONG TO STRONG. @18.5'; SS-8 CONTAINS NO RECOVERY | | | 60/2" | - | 0 | SS-8 | - | - | - | - | - | - | - | - | - | - | | - | |
| | | | 50/4" | - | 50 | SS-9 | - | - | - | - | - | - | - | - | - | - | Rock (V) | - | |
| | 1038.3 | EOB | 50/4" | - | 25 | SS-10 | - | - | - | - | - | - | - | - | - | - | Rock (V) | - | |

NOTES: GROUNDWATER NOT ENCOUNTERED DURING DRILLING. HOLE DID NOT CAVE. BORING OFFSET 54' SOUTH DUE TO DRAINAGE DITCH.
ABANDONMENT METHODS, MATERIALS, QUANTITIES: SHOVELED SOIL CUTTINGS

STANDARD ODOT LOG W/ SULFATES (8.5 X 11) - OH DOT.GDT - 11/13/20 22:36 - C:\USERS\KAREN\DESKTOP\GINT FILES\SUM-77-277-224 PHASE 2.GPJ



**SUM-77/277/224**
**VARIOUS**

**STRUCTURE FOUNDATION EXPLORATION**
**BARRIER E**
**BORING LOGS B-067-0-17 & B-068-0-17**

DRAWN EB
CHECKED BPA

PROJECT: SUM-77-277/224
TYPE: UNDERGROUND MINE
PID: 106002 SFN:
START: 4/30/20 END: 4/30/20

DRILLING FIRM / OPERATOR: NEAS / J. HODGES
SAMPLING FIRM / LOGGER: NEAS / J. HODGES
DRILLING METHOD: 3.25" HSA / NQ2
SAMPLING METHOD: SPT / NQ2

DRILL RIG: CME 55X
HAMMER: CME AUTOMATIC
CALIBRATION DATE: 12/5/19
ENERGY RATIO (%): 81.9

STATION / OFFSET: 36+63, 2' LT.
ALIGNMENT: NOISE WALL E
ELEVATION: 1066.5 (MSL) EOB: 60.0 ft.
LAT / LONG: 41.017764, -81.496965

EXPLORATION ID B-069-0-17

PAGE 1 OF 1

| MATERIAL DESCRIPTION AND NOTES | ELEV. | DEPTHS | SPT/ RQD | $N_{60}$ | REC (%) | SAMPLE ID | HP (tsf) | GRADATION (%) GR | CS | FS | SI | CL | ATTERBERG LL | PL | PI | WC | ODOT CLASS (GI) | SO4 ppm | HOLE SEALED |
|---|---|---|---|---|---|---|---|---|---|---|---|---|---|---|---|---|---|---|---|
| VERY STIFF TO HARD, BROWN BECOMING BROWN AND GRAY, **SANDY SILT**, LITTLE CLAY, TRACE GRAVEL AND STONE FRAGMENTS, CONTAINS TRACE IRON STAINING, DAMP TO MOIST | 1066.5 | | 6 12 12 | 33 | 100 | SS-1 | 4.50 | - | - | - | - | - | - | - | - | 13 | A-4a (V) | - | |
| | | | 8 8 8 | 22 | 100 | SS-2 | 4.50 | 7 | 11 | 35 | 34 | 13 | 21 | 15 | 6 | 13 | A-4a (2) | - | |
| | | | 3 3 4 | 10 | 89 | SS-3 | 2.50 | - | - | - | - | - | - | - | - | 16 | A-4a (V) | - | |
| | | | 2 3 3 | 8 | 100 | SS-4 | 2.75 | - | - | - | - | - | - | - | - | 16 | A-4a (V) | - | |
| @11.0' TO 17.5'; SS-5 TO SS-7 BECOME MEDIUM DENSE TO DENSE | | | 4 4 6 | 14 | 100 | SS-5 | - | 4 | 10 | 30 | 42 | 14 | NP | NP | NP | 16 | A-4a (4) | - | |
| | | | 5 8 9 | 23 | 100 | SS-6 | - | - | - | - | - | - | - | - | - | 16 | A-4a (V) | - | |
| | | | 5 11 20 | 42 | 100 | SS-7 | - | - | - | - | - | - | - | - | - | 12 | A-4a (V) | - | |
| | 1048.5 | TR | | | | | | | | | | | | | | | | | |
| **SANDSTONE**, BROWN AND ORANGISH BROWN, HIGHLY WEATHERED, SLIGHTLY TO MODERATELY STRONG, FINE TO MEDIUM GRAINED. | | | 50 | - | 67 | SS-8 | - | - | - | - | - | - | - | - | - | 8 | Rock (V) | - | |
| | | | 25 26 50 | 104 | 78 | SS-9 | - | - | - | - | - | - | - | - | - | - | Rock (V) | - | |
| | | | 50/3" | - | 67 | SS-10 | - | - | - | - | - | - | - | - | - | - | Rock (V) | - | |
| | 1041.5 | | | | | | | | | | | | | | | | | | |
| **INTERBEDDED SANDSTONE (83%) AND SHALE (17%)**, BEDDING DISCONTINUITIES: LOW ANGLE, JOINT DISCONTINUITIES: HIGH ANGLE FROM 26.1' - 26.3', 26.6' - 27.0', 27.6' - 27.7', 28.0' - 28.3', AND 29.5' - 30.0', HIGHLY FRACTURED TO MODERATELY FRACTURED, NARROW TO TIGHT, SLIGHTLY ROUGH TO VERY ROUGH, BLOCKY/DISTURBED/SEAMY, GOOD TO FAIR SURFACE CONDITION, RQD 29%, REC. 96%;<br>**SANDSTONE**, GRAY AND LIGHT GRAY, SLIGHTLY TO MODERATELY WEATHERED, MODERATELY STRONG TO STRONG, VERY FINE TO MEDIUM GRAINED, LAMINATED TO THIN BEDDED, CONTAINS ARGILLACEOUS LENSES AND LAMINATIONS;<br>**SHALE**, GRAY AND DARK GRAY, MODERATELY WEATHERED, WEAK TO SLIGHTLY STRONG, FISSILE.<br>**@32.5' TO 37.0'; LOSS OF CIRCULATION** | | | 18 | | 99 | NQ2-1 | | | | | | | | | | | CORE | | |
| | | | 35 | | 92 | NQ2-2 | | | | | | | | | | | CORE | | |
| | | | 21 | | 78 | NQ2-3 | | | | | | | | | | | CORE | | |
| | 1028.7 | | | | | | | | | | | | | | | | | | |
| **COAL**, BLACK, HIGHLY WEATHERED, VERY WEAK TO WEAK, THINLY LAMINATED TO LAMINATED, FISSILE, PYRITIC, FOSSILIFEROUS, BEDDING DISCONTINUITIES: LOW ANGLE, JOINT DISCONTINUITIES: HIGH ANGLE THROUGHOUT, HIGHLY FRACTURED, OPEN, SLIGHTLY ROUGH TO VERY ROUGH, DISINTIGRATED, FAIR TO POOR SURFACE CONDITION; RQD 0%, REC 55%. | | | | | | | | | | | | | | | | | | | |
| | 1024.6 | | | | | | | | | | | | | | | | | | |
| **INTERBEDDED SANDSTONE (85%) AND SHALE (15%)**, BEDDING DISCONTINUITIES: LOW ANGLE, HIGHLY FRACTURED TO SLIGHTLY FRACTURED, NARROW TO TIGHT, SLIGHTLY ROUGH TO VERY ROUGH, BLOCKY TO INTACT, GOOD TO VERY GOOD SURFACE CONDITION, RQD 66%, REC. 99%;<br>**SANDSTONE**, LIGHT GRAY AND GRAY, UNWEATHERED TO SLIGHTLY WEATHERED, STRONG, VERY FINE TO FINE GRAINED, LAMINATED TO MEDIUM BEDDED, CONTAINS ARGILLACEOUS LENSES AND LAMINATIONS;<br>**SHALE**, GRAY AND DARK GRAY, SLIGHTLY TO MODERATELY WEATHERED, WEAK TO SLIGHTLY STRONG, FISSILE. | | | 46 | | 84 | NQ2-4 | | | | | | | | | | | CORE | | |
| | | | 73 | | 99 | NQ2-5 | | | | | | | | | | | CORE | | |
| | | | 74 | | 98 | NQ2-6 | | | | | | | | | | | CORE | | |
| | 1006.5 | EOB | 46 | | 97 | NQ2-7 | | | | | | | | | | | CORE | | |

NOTES: GROUNDWATER NOT ENCOUNTERED DURING DRILLING. HOLE DID NOT CAVE. NO DISCERNABLE VOIDS DURING CORING.

ABANDONMENT METHODS, MATERIALS, QUANTITIES: PUMPED 150 GAL. BENTONITE GROUT

STANDARD ODOT LOG W/ SULFATES (11 X 17) - OH DOT GDT - 11/13/20 22:54 - C:\USERS\KAREN\DESKTOP\GINT FILES\SUM-77-277-224 PHASE 2.GPJ



**SUM-77/277/224**
**VARIOUS**

**STRUCTURE FOUNDATION EXPLORATION**
**BARRIER E**
**BORING LOG B-069-0-17**

DRAWN EB
CHECKED BPA

| | | | | | |
|---|---|---|---|---|---|
| PROJECT: SUM-77-277/224 | DRILLING FIRM / OPERATOR: NEAS / J. HODGES | DRILL RIG: CME 55X | STATION / OFFSET: 67+44, 9' LT. | EXPLORATION ID B-070-0-17 |
| TYPE: UNDERGROUND MINE | SAMPLING FIRM / LOGGER: NEAS / J. HODGES | HAMMER: CME AUTOMATIC | ALIGNMENT: NOISE WALL HI | |
| PID: 106002 SFN: | DRILLING METHOD: 3.25" HSA / NQ2 | CALIBRATION DATE: 12/5/19 | ELEVATION: 1067.4 (MSL) EOB: 59.5 ft. | PAGE 1 OF 1 |
| START: 4/21/20 END: 4/22/20 | SAMPLING METHOD: SPT / NQ2 | ENERGY RATIO (%): 81.9 | LAT / LONG: 41.018216, -81.497035 | |

| MATERIAL DESCRIPTION AND NOTES | ELEV. | DEPTHS | SPT/ RQD | $N_{60}$ | REC (%) | SAMPLE ID | HP (tsf) | GRADATION (%) GR | CS | FS | SI | CL | ATTERBERG LL | PL | PI | WC | ODOT CLASS (GI) | SO4 ppm | HOLE SEALED |
|---|---|---|---|---|---|---|---|---|---|---|---|---|---|---|---|---|---|---|---|
| MEDIUM DENSE, BROWN AND ORANGISH BROWN, **COARSE AND FINE SAND**, SOME SILT, TRACE CLAY, TRACE GRAVEL, CONTAINS IRON STAINING, DAMP TO MOIST | 1067.4 | | 2 4 4 | 11 | 100 | SS-1 | - | - | - | - | - | - | - | - | - | 15 | A-3a (V) | - | |
| | | | 4 6 6 | 16 | 100 | SS-2 | - | - | - | - | - | - | - | - | - | 13 | A-3a (V) | - | |
| | | | 4 6 6 | 16 | 100 | SS-3 | - | - | - | - | - | - | - | - | - | 15 | A-3a (V) | - | |
| | 1059.4 | | | | | | | | | | | | | | | | | | |
| VERY STIFF TO HARD, BROWN AND ORANGISH BROWN, **SANDY SILT**, TRACE TO LITTLE CLAY, TRACE TO LITTLE GRAVEL, CONTAINS IRON STAINING, DAMP | | | 4 3 3 | 8 | 100 | SS-4 | 4.00 | 6 | 7 | 26 | 42 | 19 | 24 | 17 | 7 | 16 | A-4a (5) | - | |
| | | | 8 12 14 | 35 | 100 | SS-5 | 4.25 | - | - | - | - | - | - | - | - | 17 | A-4a (V) | - | |
| | | | 3 8 16 | 33 | 100 | SS-6 | 4.50 | - | - | - | - | - | - | - | - | 11 | A-4a (V) | - | |
| | | | 15 16 23 | 53 | 100 | SS-7 | 4.50 | 15 | 8 | 39 | 29 | 9 | 17 | 14 | 3 | 10 | A-4a (1) | - | |
| | 1048.9 | TR | | | | | | | | | | | | | | | | | |
| **SANDSTONE**, LIGHT BROWN AND LIGHT GRAY, HIGHLY WEATHERED, MODERATELY STRONG, VERY FINE TO FINE GRAINED. | | | 6 13 14 | 37 | 100 | SS-8 | - | - | - | - | - | - | - | - | - | 10 | Rock (V) | - | |
| | | | 10 22 50/3" | - | 67 | SS-9 | - | - | - | - | - | - | - | - | - | - | Rock (V) | - | |
| | | | 50/3" | - | 33 | SS-10 | - | - | - | - | - | - | - | - | - | - | Rock (V) | - | |
| | 1042.9 | | | | | | | | | | | | | | | | | | |
| **SANDSTONE**, LIGHT GRAY AND ORANGISH BROWN, MODERATELY TO SLIGHTLY WEATHERED, MODERATELY STRONG TO STRONG, VERY FINE TO FINE GRAINED. VERY THIN TO THIN BEDDED, BEDDING DISCONTINUITIES: LOW ANGLE, JOINT DISCONTINUITIES: HIGH ANGLE FROM 27.8' - 28.2', 28.3' - 28.6', AND 30.0' - 30.6', HIGHLY FRACTURED TO MODERATELY FRACTURED, NARROW TO TIGHT, SLIGHTLY ROUGH, BLOCKY, FAIR TO GOOD SURFACE CONDITION; RQD 31%, REC 97%. | | | 18 | | 95 | NQ2-1 | | | | | | | | | | | CORE | | |
| | | | 47 | | 98 | NQ2-2 | | | | | | | | | | | CORE | | |
| | 1031.4 | | | | | | | | | | | | | | | | | | |
| **INTERBEDDED COAL (87%) AND SANDSTONE (13%)**, BEDDING DISCONTINUITIES: LOW ANGLE, JOINT DISCONTINUITIES THROUGHOUT, HIGHLY FRACTURED, OPEN, SLIGHTLY ROUGH, DISINTIGRATED, POOR SURFACE CONDITION, RQD 8%, REC. 49%; **COAL**, BLACK, HIGHLY WEATHERED, VERY WEAK TO WEAK, THINLY LAMINATED TO LAMINATED, FOSSILIFEROUS, PYRITIC, FISSILE; **SANDSTONE**, GRAY, SLIGHTLY WEATHERED, STRONG, VERY FINE TO MEDIUM GRAINED. | | | 17 | | 65 | NQ2-3 | | | | | | | | | | | CORE | | |
| | 1024.9 | | | | | | | | | | | | | | | | | | |
| **INTERBEDDED SANDSTONE (57%) AND SHALE (43%)**, BEDDING DISCONTINUITIES: LOW ANGLE, HIGHLY TO MODERATELY FRACTURED, NARROW TO TIGHT, SLIGHTLY TO VERY ROUGH, BLOCKY, FAIR TO GOOD SURFACE CONDITION, RQD 53%, REC. 98%; **SANDSTONE**, GRAY AND LIGHT GRAY, UNWEATHERED TO SLIGHTLY WEATHERED, STRONG, VERY FINE TO MEDIUM GRAINED, LAMINATED TO THIN BEDDED, CONTAINS COAL AND ARGILLACEOUS LENSES AND LAMINATIONS, SILTY; **SHALE**, DARK GRAY AND GRAY, MODERATELY WEATHERED, WEAK TO SLIGHTLY STRONG, LAMINATED, FISSILE, FOSSILIFEROUS. | | | 30 | | 68 | NQ2-4 | | | | | | | | | | | CORE | | |
| | | | 42 | | 94 | NQ2-5 | | | | | | | | | | | CORE | | |
| | | | 45 | | 100 | NQ2-6 | | | | | | | | | | | CORE | | |
| | | | 62 | | 100 | NQ2-7 | | | | | | | | | | | CORE | | |
| | 1007.9 | EOB | | | | | | | | | | | | | | | | | |

NOTES: GROUNDWATER NOT ENCOUNTERED DURING DRILLING. HOLE DID NOT CAVE. NO DISCERNABLE VOIDS DURING CORING.

ABANDONMENT METHODS, MATERIALS, QUANTITIES: PUMPED 150 GAL. BENTONITE GROUT

STANDARD ODOT LOG W/ SULFATES (11 X 17) - OH DOT.GDT - 11/13/20 22:54 - C:\USERS\KARENS\DESKTOP\GINT FILES\SUM-77-277-224 PHASE 2.GPJ



**SUM-77/277/224**
**VARIOUS**

**STRUCTURE FOUNDATION EXPLORATION**
**BARRIER HI**
**BORING LOG B-070-0-17**

DRAWN EB
CHECKED BPA

| | | | | | |
|---|---|---|---|---|---|
| PROJECT: SUM-77-277/224 | DRILLING FIRM / OPERATOR: NEAS / J. HODGES | DRILL RIG: CME 55X | STATION / OFFSET: 66+04, 15' LT. | EXPLORATION ID B-071-0-17 |
| TYPE: UNDERGROUND MINE | SAMPLING FIRM / LOGGER: NEAS / J. HODGES | HAMMER: CME AUTOMATIC | ALIGNMENT: NOISE WALL HI | |
| PID: 106002 SFN: | DRILLING METHOD: 3.25" HSA / NQ2 | CALIBRATION DATE: 12/5/19 | ELEVATION: 1066.9 (MSL) EOB: 60.0 ft. | PAGE 1 OF 1 |
| START: 4/23/20 END: 4/23/20 | SAMPLING METHOD: SPT / NQ2 | ENERGY RATIO (%): 81.9 | LAT / LONG: 41.018607, -81.497013 | |

| MATERIAL DESCRIPTION AND NOTES | ELEV. | DEPTHS | SPT/ RQD | $N_{60}$ | REC (%) | SAMPLE ID | HP (tsf) | GRADATION (%) GR | CS | FS | SI | CL | ATTERBERG LL | PL | PI | WC | ODOT CLASS (GI) | SO4 ppm | HOLE SEALED |
|---|---|---|---|---|---|---|---|---|---|---|---|---|---|---|---|---|---|---|---|
| VERY STIFF, ORANGISH BROWN, **SANDY SILT**, LITTLE CLAY, TRACE GRAVEL, CONTAINS IRON STAINING, MOIST | 1066.9 | | 3 3 3 | 8 | 100 | SS-1 | 3.25 | 0 | 5 | 35 | 43 | 17 | 22 | 16 | 6 | 17 | A-4a (5) | - | |
| MEDIUM DENSE, ORANGISH BROWN, **COARSE AND FINE SAND**, TRACE SILT, TRACE GRAVEL, TRACE CLAY, CONTAINS IRON STAINING, DAMP | 1063.9 | | 3 4 6 | 14 | 100 | SS-2 | - | - | - | - | - | - | - | - | - | 11 | A-3a (V) | - | |
| @6.0'; SS-3 BECOMES SOME GRAVEL | | | 3 5 7 | 16 | 100 | SS-3 | - | - | - | - | - | - | - | - | - | 10 | A-3a (V) | - | |
| MEDIUM DENSE, BROWN AND ORANGISH BROWN, **GRAVEL AND STONE FRAGMENTS WITH SAND AND SILT**, TRACE CLAY, CONTAINS IRON STAINING, DAMP | 1058.9 | | 5 7 7 | 19 | 67 | SS-4 | - | - | - | - | - | - | - | - | - | 13 | A-2-4 (V) | - | |
| MEDIUM DENSE, BROWN AND ORANGISH BROWN, **SILT**, SOME SAND, LITTLE CLAY, TRACE GRAVEL, CONTAINS IRON STAINING, WET | 1056.4 | | 4 5 7 | 16 | 100 | SS-5 | - | 1 | 1 | 24 | 58 | 16 | NP | NP | NP | 22 | A-4b (8) | - | |
| VERY STIFF TO HARD, BROWN BECOMING GRAYISH BROWN, **SANDY SILT**, LITTLE GRAVEL, LITTLE CLAY, CONTAINS IRON STAINING, MOIST TO DAMP | 1053.9 | | 2 3 5 | 11 | 78 | SS-6 | 4.50 | - | - | - | - | - | - | - | - | 16 | A-4a (V) | - | |
| | | | 4 4 7 | 15 | 89 | SS-7 | 3.50 | 20 | 9 | 28 | 29 | 14 | 21 | 15 | 6 | 14 | A-4a (2) | - | |
| **SANDSTONE**, LIGHT BROWN AND GRAY, HIGHLY WEATHERED, MODERATELY STRONG, VERY FINE TO MEDIUM GRAINED. | 1048.4 | TR | 5 14 17 | 42 | 56 | SS-8 | - | - | - | - | - | - | - | - | - | 7 | Rock (V) | - | |
| | | | 50 | - | 67 | SS-9 | - | - | - | - | - | - | - | - | - | - | Rock (V) | - | |
| | | | 50 | - | 33 | SS-10 | - | - | - | - | - | - | - | - | - | - | Rock (V) | - | |
| **INTERBEDDED SANDSTONE (88%) AND SHALE (12%)**, BEDDING DISCONTINUITIES: LOW ANGLE, JOINT DISCONTINUITIES: HIGH ANGLE FROM 25.0' - 25.5', 25.9' - 26.1', 26.7' - 27.5', AND 28.3' - 28.8', HIGHLY FRACTURED TO MODERATELY FRACTURED, OPEN TO NARROW, SLIGHTLY ROUGH TO VERY ROUGH, BLOCKY, DISINTIGRATED FROM 27.8' - 28.3', GOOD TO FAIR SURFACE CONDITION, RQD 32%, REC. 93%;<br>**SANDSTONE**, LIGHT GRAY, SLIGHTLY TO MODERATELY WEATHERED, MODERATELY STRONG TO STRONG, VERY FINE TO FINE GRAINED, LAMINATED TO THIN BEDDED, CONTAINS ARGILLACEOUS LENSES AND THIN LAMINATIONS;<br>**SHALE**, DARK GRAY AND GRAY, HIGHLY TO MODERATELY WEATHERED, WEAK, FISSILE, SILTY. | 1041.9 | | 10 | | 89 | NQ2-1 | | | | | | | | | | | CORE | | |
| | | | 54 | | 96 | NQ2-2 | | | | | | | | | | | CORE | | |
| **INTERBEDDED COAL (78%) AND SANDSTONE (22%)**, BEDDING DISCONTINUITIES: LOW ANGLE, JOINT DISCONTINUITIES THROUGHOUT, HIGHLY FRACTURED TO MODERATELY FRACTURED, OPEN TO NARROW, SLIGHTLY ROUGH, BLOCKY/DISTURBED/SEAMY, GOOD TO FAIR SURFACE CONDITION, RQD 10%, REC. 91%;<br>**COAL**, BLACK, MODERATELY WEATHERED, VERY WEAK TO WEAK, THINLY LAMINATED TO THIN BEDDED, FOSSILIFEROUS, FISSILE, PYRITIC;<br>**SANDSTONE**, GRAY, SLIGHTLY WEATHERED, STRONG, VERY FINE TO FINE GRAINED, CONTAINS ARGILLACEOUS LENSES AND LAMINATIONS. | 1031.9 | | 9 | | 92 | NQ2-3 | | | | | | | | | | | CORE | | |
| **INTERBEDDED SHALE (59%) AND SANDSTONE (41%)**, BEDDING DISCONTINUITIES: LOW TO MODERATE ANGLE, JOINT DISCONTINUITIES: HIGH ANGLE FROM 45.8' - 46.2', 50.9' - 51.3', HIGHLY FRACTURED TO MODERATELY FRACTURED, NARROW TO TIGHT, SLIGHTLY ROUGH, BLOCKY, FAIR TO GOOD SURFACE CONDITION, RQD 44%, REC. 97%;<br>**SHALE**, DARK GRAY AND GRAY, SLIGHTLY TO MODERATELY WEATHERED, WEAK TO SLIGHTLY STRONG, LAMINATED TO THIN BEDDED, FISSILE, SILTY;<br>**SANDSTONE**, GRAY, SLIGHTLY WEATHERED, MODERATELY STRONG TO STRONG, VERY FINE TO FINE GRAINED, CONTAINS COAL AND ARGILLACEOUS LENSES AND LAMINATIONS. | 1027.3 | | 48 | | 99 | NQ2-4 | | | | | | | | | | | CORE | | |
| | | | 32 | | 100 | NQ2-5 | | | | | | | | | | | CORE | | |
| | | | 50 | | 95 | NQ2-6 | | | | | | | | | | | CORE | | |
| | 1006.9 | EOB | 48 | | 92 | NQ2-7 | | | | | | | | | | | CORE | | |

NOTES: GROUNDWATER NOT ENCOUNTERED DURING DRILLING. HOLE DID NOT CAVE. NO DISCERNABLE VOIDS DURING CORING. NO WATER CIRCULATION DURING CORING.

ABANDONMENT METHODS, MATERIALS, QUANTITIES: PUMPED 200 GAL. BENTONITE GROUT

STANDARD ODOT LOG W/ SULFATES (11 X 17) - OH DOT GDT - 11/13/20 22:54 - C:\USERS\KARENS\DESKTOP\GINT FILES\SUM-77-277-224 PHASE 2.GPJ

| | | | | |
|---|---|---|---|---|
| 147/209 | SUM-77/277/224 VARIOUS | STRUCTURE FOUNDATION EXPLORATION BARRIER HI BORING LOG B-071-0-17 | DRAWN EB | CHECKED BPA |

PROJECT: SUM-77-277/224
TYPE: NOISE WALL
PID: 106002 SFN:
START: 4/24/20 END: 4/24/20

DRILLING FIRM / OPERATOR: NEAS / J. HODGES
SAMPLING FIRM / LOGGER: NEAS / J. HODGES
DRILLING METHOD: 3.25" HSA
SAMPLING METHOD: SPT

DRILL RIG: CME 55X
HAMMER: CME AUTOMATIC
CALIBRATION DATE: 12/5/19
ENERGY RATIO (%): 81.9

STATION / OFFSET: 64+14, 18' LT.
ALIGNMENT: NOISE WALL HI
ELEVATION: 1062.1 (MSL) EOB: 23.8 ft.
LAT / LONG: 41.019121, -81.497225

EXPLORATION ID B-072-0-17
PAGE 1 OF 1

| MATERIAL DESCRIPTION AND NOTES | ELEV. | DEPTHS | SPT/ RQD | $N_{60}$ | REC (%) | SAMPLE ID | HP (tsf) | GRADATION (%) GR | CS | FS | SI | CL | ATTERBERG LL | PL | PI | WC | ODOT CLASS (GI) | SO4 ppm | BACK FILL |
|---|---|---|---|---|---|---|---|---|---|---|---|---|---|---|---|---|---|---|---|
| VERY STIFF, DARK BROWN, **SANDY SILT**, LITTLE CLAY, TRACE GRAVEL, DAMP | 1062.1 | | 3 4 4 | 11 | 100 | SS-1 | 3.00 | 2 | 12 | 29 | 42 | 15 | 29 | 22 | 7 | 20 | A-4a (4) | - | |
| MEDIUM DENSE, ORANGISH BROWN, **COARSE AND FINE SAND**, LITTLE GRAVEL, TRACE SILT, TRACE CLAY, CONTAINS IRON STAINING, DAMP | 1059.1 | | 3 4 5 | 12 | 100 | SS-2 | - | - | - | - | - | - | - | - | - | 7 | A-3a (V) | - | |
| VERY STIFF TO HARD, BROWN AND GRAY, **SANDY SILT**, LITTLE CLAY, LITTLE GRAVEL, CONTAINS IRON STAINING, DAMP | 1056.6 | | 5 6 7 | 18 | 100 | SS-3 | 4.25 | - | - | - | - | - | - | - | - | 12 | A-4a (V) | - | |
| | 1049.1 | | 6 9 10 | 26 | 100 | SS-4 | 3.25 | 13 | 10 | 31 | 31 | 15 | 21 | 16 | 5 | 13 | A-4a (2) | - | |
| | | | 4 10 14 | 33 | 44 | SS-5 | 2.25 | - | - | - | - | - | - | - | - | 14 | A-4a (V) | - | |
| DENSE, BROWN, **GRAVEL AND STONE FRAGMENTS WITH SAND**, LITTLE SILT, TRACE CLAY, CONTAINS IRON STAINING, DAMP | 1044.1 | TR | 3 12 15 | 37 | 44 | SS-6 | - | - | - | - | - | - | - | - | - | 10 | A-1-b (V) | - | |
| | | | 8 11 16 | 37 | 44 | SS-7 | - | - | - | - | - | - | - | - | - | 8 | A-1-b (V) | - | |
| **SANDSTONE**, BROWN AND LIGHT GRAY, HIGHLY WEATHERED, MODERATELY STRONG, VERY FINE TO MEDIUM GRAINED. | 1038.3 | EOB | 4 8 50/3" | - | 33 | SS-8 | - | - | - | - | - | - | - | - | - | 10 | Rock (V) | - | |
| | | | 50/4" | - | 50 | SS-9 | - | - | - | - | - | - | - | - | - | - | Rock (V) | - | |
| | | | 50/3" | - | 33 | SS-10 | - | - | - | - | - | - | - | - | - | - | Rock (V) | - | |

NOTES: GROUNDWATER NOT ENCOUNTERED DURING DRILLING. HOLE DID NOT CAVE.
ABANDONMENT METHODS, MATERIALS, QUANTITIES: SHOVELED SOIL CUTTINGS

STANDARD ODOT LOG W/ SULFATES (8.5 X 11) - OH DOT.GDT - 11/13/20 22:36 - C:\USERS\KAREN\DESKTOP\GINT FILES\SUM-77-277-224 PHASE 2.GPJ

PROJECT: SUM-77-277/224
TYPE: NOISE WALL
PID: 106002 SFN:
START: 4/24/20 END: 4/24/20

DRILLING FIRM / OPERATOR: NEAS / J. HODGES
SAMPLING FIRM / LOGGER: NEAS / J. HODGES
DRILLING METHOD: 3.25" HSA
SAMPLING METHOD: SPT

DRILL RIG: CME 55X
HAMMER: CME AUTOMATIC
CALIBRATION DATE: 12/5/19
ENERGY RATIO (%): 81.9

STATION / OFFSET: 62+23, 14' LT.
ALIGNMENT: NOISE WALL HI
ELEVATION: 1062.0 (MSL) EOB: 16.4 ft.
LAT / LONG: 41.019603, -81.497460

EXPLORATION ID B-073-0-17
PAGE 1 OF 1

| MATERIAL DESCRIPTION AND NOTES | ELEV. | DEPTHS | SPT/ RQD | $N_{60}$ | REC (%) | SAMPLE ID | HP (tsf) | GRADATION (%) GR | CS | FS | SI | CL | ATTERBERG LL | PL | PI | WC | ODOT CLASS (GI) | SO4 ppm | BACK FILL |
|---|---|---|---|---|---|---|---|---|---|---|---|---|---|---|---|---|---|---|---|
| LOOSE, DARK BROWN, **COARSE AND FINE SAND**, SOME SILT, TRACE CLAY, TRACE GRAVEL, CONTAINS MANY ROOTS UP TO 0.5" IN DIAMETER, WET | 1062.0 | | 3 3 3 | 8 | 78 | SS-1 | - | - | - | - | - | - | - | - | - | 25 | A-3a (V) | - | |
| HARD, BROWN, **SANDY SILT**, LITTLE CLAY, TRACE GRAVEL AND STONE FRAGMENTS, CONTAINS IRON STAINING, DAMP | 1059.0 | | 7 9 10 | 26 | 100 | SS-2 | 4.50 | 7 | 15 | 26 | 37 | 15 | 22 | 15 | 7 | 11 | A-4a (3) | - | |
| | 1055.0 | | 4 11 20 | 42 | 78 | SS-3A | 4.50 | - | - | - | - | - | - | - | - | 11 | A-4a (V) | - | |
| DENSE TO VERY DENSE, BROWN AND GRAY, **STONE FRAGMENTS WITH SAND**, TRACE TO LITTLE SILT, TRACE CLAY, STONE FRAGMENTS ARE FRIABLE SANDSTONE, DAMP | | | | | | SS-3B | - | - | - | - | - | - | - | - | - | 8 | A-1-b (V) | - | |
| | 1051.5 | | 9 19 20 | 53 | 67 | SS-4 | - | - | - | - | - | - | - | - | - | 8 | A-1-b (V) | - | |
| VERY DENSE, BROWN, **STONE FRAGMENTS WITH SAND AND SILT**, TRACE CLAY, STONE FRAGMENTS ARE FRIABLE SANDSTONE, DAMP | 1049.7 | TR | 9 21 50/3" | - | 67 | SS-5 | - | - | - | - | - | - | - | - | - | 8 | A-2-4 (V) | - | |
| **SANDSTONE**, BROWN AND GRAY, HIGHLY WEATHERED, MODERATELY STRONG TO STRONG, VERY FINE TO MEDIUM GRAINED, FRIABLE. | | | 50/5" | - | 60 | SS-6 | - | - | - | - | - | - | - | - | - | - | Rock (V) | - | |
| | 1045.6 | EOB | 50/5" | - | 60 | SS-7 | - | - | - | - | - | - | - | - | - | - | Rock (V) | - | |

NOTES: GROUNDWATER NOT ENCOUNTERED DURING DRILLING. HOLE DID NOT CAVE.
ABANDONMENT METHODS, MATERIALS, QUANTITIES: SHOVELED SOIL CUTTINGS

STANDARD ODOT LOG W/ SULFATES (8.5 X 11) - OH DOT.GDT - 11/13/20 22:36 - C:\USERS\KAREN\DESKTOP\GINT FILES\SUM-77-277-224 PHASE 2.GPJ

PROJECT: SUM-77-277/224 | DRILLING FIRM / OPERATOR: NEAS / J. HODGES | DRILL RIG: CME 55X | STATION / OFFSET: 59+97, 24' LT. | EXPLORATION ID B-074-0-17
TYPE: NOISE WALL | SAMPLING FIRM / LOGGER: NEAS / J. HODGES | HAMMER: CME AUTOMATIC | ALIGNMENT: NOISE WALL HI
PID: 106002 SFN: | DRILLING METHOD: 3.25" HSA | CALIBRATION DATE: 12/5/19 | ELEVATION: 1058.3 (MSL) EOB: 23.7 ft. | PAGE 1 OF 1
START: 4/24/20 END: 4/24/20 | SAMPLING METHOD: SPT | ENERGY RATIO (%): 81.9 | LAT / LONG: 41.020208, -81.497646

| MATERIAL DESCRIPTION AND NOTES | ELEV. | DEPTHS | SPT/ RQD | $N_{60}$ | REC (%) | SAMPLE ID | HP (tsf) | GRADATION (%) GR | CS | FS | SI | CL | ATTERBERG LL | PL | PI | WC | ODOT CLASS (GI) | SO4 ppm | BACK FILL |
|---|---|---|---|---|---|---|---|---|---|---|---|---|---|---|---|---|---|---|---|
| STIFF, BROWN AND ORANGISH BROWN, **SILT AND CLAY**, SOME SAND, TRACE GRAVEL, CONTAINS ROOTS AND IRON STAINING, MOIST | 1058.3 | | 2 3 3 | 8 | 100 | SS-1 | 1.50 | - | - | - | - | - | - | - | - | 20 | A-6a (V) | - | |
| STIFF TO HARD, BROWN AND ORANGISH BROWN, **SANDY SILT**, LITTLE GRAVEL AND STONE FRAGMENTS, LITTLE CLAY, CONTAINS IRON STAINING, DAMP | 1055.3 | | 6 9 9 | 25 | 33 | SS-2 | 1.75 | - | - | - | - | - | - | - | - | 12 | A-4a (V) | - | |
| HARD, BROWN, **SILT**, SOME CLAY, LITTLE SAND, TRACE GRAVEL, DAMP | 1050.3 | | 5 7 12 | 26 | 100 | SS-3 | 4.50 | 15 | 15 | 25 | 31 | 14 | 22 | 15 | 7 | 13 | A-4a (2) | - | |
| MEDIUM DENSE, BROWNISH GRAY, **STONE FRAGMENTS WITH SAND**, LITTLE SILT, TRACE CLAY, STONE FRAGMENTS ARE FRIABLE SANDSTONE, DAMP | 1047.8 | | 2 4 6 | 14 | 100 | SS-4 | 4.50 | 2 | 6 | 11 | 53 | 28 | 27 | 20 | 7 | 20 | A-4b (8) | - | |
| MEDIUM DENSE TO DENSE, BROWN AND LIGHT BROWN BECOMING BROWNISH GRAY, **GRAVEL AND STONE FRAGMENTS WITH SAND AND SILT**, LITTLE CLAY, STONE FRAGMENTS ARE FRIABLE SANDSTONE, DAMP | 1045.3 | | 7 10 10 | 27 | 100 | SS-5 | - | - | - | - | - | - | - | - | - | 14 | A-1-b (V) | - | |
| | 1039.8 | W 1043.3 | 8 11 14 | 34 | 83 | SS-6 | - | - | - | - | - | - | - | - | - | 12 | A-2-4 (V) | - | |
| | | | 5 7 7 | 19 | 89 | SS-7 | - | - | - | - | - | - | - | - | - | 12 | A-2-4 (V) | - | |
| **SANDSTONE**, BROWN AND LIGHT GRAY, HIGHLY WEATHERED, MODERATELY STRONG TO STRONG, VERY FINE TO MEDIUM GRAINED, FRIABLE. | 1034.6 | TR EOB | 3 7 50/2" | - | 86 | SS-8 | - | - | - | - | - | - | - | - | - | 15 | Rock (V) | - | |
| | | | 50/5" | - | 40 | SS-9 | - | - | - | - | - | - | - | - | - | - | Rock (V) | - | |
| | | | 50/2" | - | 100 | SS-10 | - | - | - | - | - | - | - | - | - | - | Rock (V) | - | |

NOTES: GROUNDWATER ENCOUNTERED AT 15.0' DURING DRILLING. HOLE DID NOT CAVE.
ABANDONMENT METHODS, MATERIALS, QUANTITIES: SHOVELED SOIL CUTTINGS

STANDARD ODOT LOG W/ SULFATES (8.5 X 11) - OH DOT.GDT - 11/13/20 22:36 - C:\USERS\KAREN\DESKTOP\GINT FILES\SUM-77-277-224 PHASE 2.GPJ

PROJECT: SUM-77-277/224 | DRILLING FIRM / OPERATOR: NEAS / J. HODGES | DRILL RIG: CME 55X | STATION / OFFSET: 58+10, 14' LT. | EXPLORATION ID B-075-0-17
TYPE: NOISE WALL | SAMPLING FIRM / LOGGER: NEAS / J. HODGES | HAMMER: CME AUTOMATIC | ALIGNMENT: NOISE WALL HI
PID: 106002 SFN: | DRILLING METHOD: 3.25" HSA | CALIBRATION DATE: 12/5/19 | ELEVATION: 1053.8 (MSL) EOB: 23.8 ft. | PAGE 1 OF 1
START: 4/24/20 END: 4/24/20 | SAMPLING METHOD: SPT | ENERGY RATIO (%): 81.9 | LAT / LONG: 41.020690, -81.497903

| MATERIAL DESCRIPTION AND NOTES | ELEV. | DEPTHS | SPT/ RQD | $N_{60}$ | REC (%) | SAMPLE ID | HP (tsf) | GRADATION (%) GR | CS | FS | SI | CL | ATTERBERG LL | PL | PI | WC | ODOT CLASS (GI) | SO4 ppm | BACK FILL |
|---|---|---|---|---|---|---|---|---|---|---|---|---|---|---|---|---|---|---|---|
| VERY STIFF TO HARD, BROWN BECOMING BROWN MOTTLED WITH ORANGISH BROWN DARK BROWN AND GRAY, **SANDY SILT**, LITTLE CLAY, TRACE TO LITTLE GRAVEL AND STONE FRAGMENTS, CONTAINS IRON STAINING AND ROOTS, DAMP | 1053.8 | | 4 5 6 | 15 | 100 | SS-1 | 3.00 | - | - | - | - | - | - | - | - | 17 | A-4a (V) | - | |
| MEDIUM DENSE TO DENSE, BROWN AND LIGHT BROWN, **STONE FRAGMENTS WITH SAND AND SILT**, TRACE CLAY, CONTAINS >1.25" STONE FRAGMENTS, STONE FRAGMENTS ARE FRIABLE SANDSTONE, DAMP | 1048.3 | | 6 8 10 | 25 | 67 | SS-2 | 4.50 | 18 | 7 | 27 | 32 | 16 | 25 | 19 | 6 | 13 | A-4a (3) | - | |
| | | | 6 7 8 | 20 | 100 | SS-3 | - | - | - | - | - | - | - | - | - | 11 | A-2-4 (V) | - | |
| | 1042.8 | W 1042.8 TR | 4 14 9 | 31 | 61 | SS-4 | - | - | - | - | - | - | - | - | - | 11 | A-2-4 (V) | - | |
| **SANDSTONE**, BROWN AND LIGHT GRAY, SEVERELY TO HIGHLY WEATHERED, SLIGHTLY STRONG TO STRONG, VERY FINE TO MEDIUM GRAINED, FRIABLE. | 1038.8 | | 5 15 20 | 48 | 89 | SS-5 | - | - | - | - | - | - | - | - | - | 14 | Rock (V) | - | |
| | | | 50 | - | 50 | SS-6 | - | - | - | - | - | - | - | - | - | - | Rock (V) | - | |
| **COAL**, BLACK, SEVERELY WEATHERED, VERY WEAK. | 1035.8 | | 8 26 25 | 70 | 56 | SS-7 | - | - | - | - | - | - | - | - | - | 18 | Rock (V) | - | |
| **SHALE**, GRAY, SEVERELY TO HIGHLY WEATHERED, VERY WEAK TO WEAK, FISSILE, ARENACEOUS. | 1030.0 | EOB | 17 50 | - | 100 | SS-8 | - | - | - | - | - | - | - | - | - | - | Rock (V) | - | |
| | | | 50/4" | - | 50 | SS-9 | - | - | - | - | - | - | - | - | - | - | Rock (V) | - | |
| | | | 50/4" | - | 75 | SS-10 | - | - | - | - | - | - | - | - | - | - | Rock (V) | - | |

NOTES: GROUNDWATER ENCOUNTERED AT 11.0' DURING DRILLING. HOLE DID NOT CAVE.
ABANDONMENT METHODS, MATERIALS, QUANTITIES: SHOVELED SOIL CUTTINGS

STANDARD ODOT LOG W/ SULFATES (8.5 X 11) - OH DOT.GDT - 11/13/20 22:36 - C:\USERS\KAREN\DESKTOP\GINT FILES\SUM-77-277-224 PHASE 2.GPJ



**SUM-77/277/224**
**VARIOUS**

**STRUCTURE FOUNDATION EXPLORATION**
**BARRIER HI**
**BORING LOGS B-074-0-17 & B-075-0-17**

DRAWN EB
CHECKED BPA

PROJECT: SUM-77-277/224 | DRILLING FIRM / OPERATOR: NEAS / J. HODGES | DRILL RIG: CME 55X | STATION / OFFSET: 56+18, 24' LT. | EXPLORATION ID B-076-0-17
TYPE: NOISE WALL | SAMPLING FIRM / LOGGER: NEAS / J. HODGES | HAMMER: CME AUTOMATIC | ALIGNMENT: NOISE WALL HI
PID: 106002 SFN: | DRILLING METHOD: 3.25" HSA | CALIBRATION DATE: 12/5/19 | ELEVATION: 1051.2 (MSL) EOB: 23.6 ft. | PAGE 1 OF 1
START: 3/16/20 END: 3/16/20 | SAMPLING METHOD: SPT | ENERGY RATIO (%): 81.9 | LAT / LONG: 41.021203, -81.497991

| MATERIAL DESCRIPTION AND NOTES | ELEV. | DEPTHS | SPT/ RQD | $N_{60}$ | REC (%) | SAMPLE ID | HP (tsf) | GRADATION (%) GR | CS | FS | SI | CL | ATTERBERG LL | PL | PI | WC | ODOT CLASS (GI) | SO4 ppm | BACK FILL |
|---|---|---|---|---|---|---|---|---|---|---|---|---|---|---|---|---|---|---|---|
| **6.0" ASPHALT AND 6.0" CONCRETE AND 6.0" BASE (DRILLERS DESCRIPTION)** | 1051.2 | | | | | | | | | | | | | | | | | | |
| MEDIUM DENSE, BROWN, **STONE FRAGMENTS WITH SAND**, TRACE SILT, TRACE CLAY, STONE FRAGMENTS ARE SANDSTONE, DAMP | 1049.7 | | 3 6 12 | 25 | 22 | SS-1 | - | - | - | - | - | - | - | - | - | 13 | A-1-b (V) | - | |
| MEDIUM DENSE, GRAYISH BROWN, **COARSE AND FINE SAND**, SOME GRAVEL, LITTLE SILT, TRACE CLAY, DAMP | 1047.9 | | 2 4 7 | 15 | 100 | SS-2 | - | - | - | - | - | - | - | - | - | 12 | A-3a (V) | - | |
| VERY STIFF TO HARD, BROWN WITH ORANGISH BROWN AND GRAY, **SANDY SILT**, LITTLE CLAY, LITTLE GRAVEL AND STONE FRAGMENTS, CONTAINS IRON STAINING, DAMP | 1045.7 | | 4 5 6 | 15 | 100 | SS-3 | 3.75 | - | - | - | - | - | - | - | - | 14 | A-4a (V) | - | |
| | | | 5 6 8 | 19 | 67 | SS-4 | 4.25 | 13 | 11 | 32 | 27 | 17 | 26 | 16 | 10 | 14 | A-4a (2) | - | |
| | 1037.9 | | 3 4 4 | 11 | 67 | SS-5 | 2.50 | - | - | - | - | - | - | - | - | 15 | A-4a (V) | - | |
| VERY DENSE, LIGHT BROWN, **STONE FRAGMENTS WITH SAND**, TRACE SILT, TRACE CLAY, STONE FRAGMENTS ARE SANDSTONE, DAMP | 1035.7 | | 8 50 | - | 50 | SS-6 | - | - | - | - | - | - | - | - | - | 9 | A-1-b (V) | - | |
| MEDIUM DENSE, BROWN, **COARSE AND FINE SAND**, SOME SILT, TRACE CLAY, TRACE GRAVEL, DAMP | 1032.7 | | 6 7 8 | 20 | 100 | SS-7 | - | - | - | - | - | - | - | - | - | 10 | A-3a (V) | - | |
| **SANDSTONE**, GRAY, HIGHLY WEATHERED, SLIGHTLY TO MODERATELY STRONG, FRIABLE. | 1027.6 | TR / EOB | 50/3" | - | 67 | SS-8 | - | - | - | - | - | - | - | - | - | 9 | Rock (V) | - | |
| | | | 50/3" | - | 67 | SS-9 | - | - | - | - | - | - | - | - | - | 11 | Rock (V) | - | |
| | | | 50/1" | - | 100 | SS-10 | - | - | - | - | - | - | - | - | - | 12 | Rock (V) | - | |

NOTES: GROUNDWATER NOT ENCOUNTERED DURING DRILLING. HOLE DID NOT CAVE.
ABANDONMENT METHODS, MATERIALS, QUANTITIES: PLACED 0.5 BAG ASPHALT PATCH; SHOVELED SOIL CUTTINGS

PROJECT: SUM-77-277/224 | DRILLING FIRM / OPERATOR: NEAS / J. HODGES | DRILL RIG: CME 55X | STATION / OFFSET: 54+26, 20' LT. | EXPLORATION ID B-077-0-17
TYPE: NOISE WALL | SAMPLING FIRM / LOGGER: NEAS / J. HODGES | HAMMER: CME AUTOMATIC | ALIGNMENT: NOISE WALL HI
PID: 106002 SFN: | DRILLING METHOD: 3.25" HSA | CALIBRATION DATE: 12/5/19 | ELEVATION: 1050.0 (MSL) EOB: 30.0 ft. | PAGE 1 OF 1
START: 3/16/20 END: 3/16/20 | SAMPLING METHOD: SPT | ENERGY RATIO (%): 81.9 | LAT / LONG: 41.021672, -81.498318

| MATERIAL DESCRIPTION AND NOTES | ELEV. | DEPTHS | SPT/ RQD | $N_{60}$ | REC (%) | SAMPLE ID | HP (tsf) | GRADATION (%) GR | CS | FS | SI | CL | ATTERBERG LL | PL | PI | WC | ODOT CLASS (GI) | SO4 ppm | BACK FILL |
|---|---|---|---|---|---|---|---|---|---|---|---|---|---|---|---|---|---|---|---|
| **6.0" ASPHALT AND 6.0" CONCRETE AND 6.0" BASE (DRILLERS DESCRIPTION)** | 1050.0 | | | | | | | | | | | | | | | | | | |
| MEDIUM DENSE, BROWN, **STONE FRAGMENTS WITH SAND**, TRACE SILT, TRACE CLAY, DAMP | 1048.5 | | 4 6 10 | 22 | 17 | SS-1 | - | - | - | - | - | - | - | - | - | 12 | A-1-b (V) | - | |
| VERY STIFF, BROWN, **SANDY SILT**, LITTLE CLAY, LITTLE STONE FRAGMENTS, STONE FRAGMENTS ARE SANDSTONE, DAMP | 1046.7 | | 3 6 7 | 18 | 22 | SS-2 | 2.50 | - | - | - | - | - | - | - | - | 15 | A-4a (V) | - | |
| MEDIUM DENSE, ORANGISH BROWN, **COARSE AND FINE SAND**, LITTLE SILT, LITTLE STONE FRAGMENTS, TRACE CLAY, CONTAINS IRON STAINING, STONE FRAGMENTS ARE SANDSTONE, MOIST | 1044.5 | | 3 4 6 | 14 | 56 | SS-3 | - | - | - | - | - | - | - | - | - | 14 | A-3a (V) | - | |
| VERY STIFF TO HARD, BROWN BECOMING DARK GRAYISH BROWN, **SANDY SILT**, LITTLE TO SOME CLAY, TRACE GRAVEL, SS-4 CONTAINS IRON STAINING, DAMP TO MOIST | 1042.0 | | 3 4 5 | 12 | 67 | SS-4 | 4.25 | 8 | 7 | 25 | 38 | 22 | 25 | 16 | 9 | 15 | A-4a (5) | - | |
| | | | 3 6 7 | 18 | 67 | SS-5 | 3.50 | - | - | - | - | - | - | - | - | 15 | A-4a (V) | - | |
| | | | 3 8 8 | 22 | 100 | SS-6 | 4.25 | - | - | - | - | - | - | - | - | 16 | A-4a (V) | - | |
| | | | 3 5 7 | 16 | 56 | SS-7 | 4.25 | 4 | 9 | 31 | 37 | 19 | 23 | 15 | 8 | 15 | A-4a (4) | - | |
| | 1029.5 | | 4 8 5 | 18 | 56 | SS-8 | 4.50 | - | - | - | - | - | - | - | - | 15 | A-4a (V) | - | |
| LOOSE, BROWN, **COARSE AND FINE SAND**, SOME SILT, TRACE CLAY, TRACE GRAVEL, WET | 1027.0 | W 1029.0 | 2 2 2 | 5 | 100 | SS-9 | - | - | - | - | - | - | - | - | - | 22 | A-3a (V) | - | |
| VERY DENSE, GRAY, **STONE FRAGMENTS**, TRACE SAND, TRACE SILT, TRACE CLAY, STONE FRAGMENTS ARE SANDSTONE, MOIST | 1024.5 | | 50 | - | 33 | SS-10 | - | - | - | - | - | - | - | - | - | 11 | A-1-a (V) | - | |
| VERY SOFT TO SOFT, BROWN, **SANDY SILT**, LITTLE CLAY, TRACE GRAVEL, MOIST | 1022.0 | | 2 3 4 | 10 | 56 | SS-11 | 0.25 | 5 | 8 | 33 | 34 | 20 | 26 | 16 | 10 | 22 | A-4a (4) | - | |
| LOOSE, GRAY, **COARSE AND FINE SAND**, LITTLE GRAVEL, TRACE SILT, TRACE CLAY, MOIST | 1020.0 | EOB | 2 2 2 | 5 | 67 | SS-12 | - | - | - | - | - | - | - | - | - | 16 | A-3a (V) | - | |

NOTES: GROUNDWATER ENCOUNTERED AT 21.0' DURING DRILLING. HOLE DID NOT CAVE.
ABANDONMENT METHODS, MATERIALS, QUANTITIES: PLACED 0.5 BAG ASPHALT PATCH; POURED 1 BAG BENTONITE CHIPS; SHOVELED SOIL CUTTINGS

STANDARD ODOT LOG W/ SULFATES (8.5 X 11) - OH DOT.GDT - 11/13/20 22:36 - C:\USERS\KAREN\DESKTOP\GINT FILES\SUM-77-277-224 PHASE 2.GPJ

| | | | |
|---|---|---|---|
| 150/209 | **SUM-77/277/224 VARIOUS** | **STRUCTURE FOUNDATION EXPLORATION BARRIER HI BORING LOGS B-076-0-17 & B-077-0-17** | DRAWN EB / CHECKED BPA |

P:\17-0129 (106002 SUM-76-10.95 Part 3 - SUM-77_277_224)\106002\geotechnical\sheets\106002ZL043.dgn Sheet 1/8/2021 1:06:28 AM karens

| | | | | |
|---|---|---|---|---|
| PROJECT: SUM-77-277/224 | DRILLING FIRM / OPERATOR: NEAS / J. HODGES | DRILL RIG: CME 55X | STATION / OFFSET: 483+97, 55' RT. | EXPLORATION ID B-076-1-17 |
| TYPE: LIGHT TOWER | SAMPLING FIRM / LOGGER: NEAS / ASHBAUGH | HAMMER: CME AUTOMATIC | ALIGNMENT: IR-77 SB | |
| PID: 106002 SFN: | DRILLING METHOD: 3.25" HSA | CALIBRATION DATE: 11/21/17 | ELEVATION: 1026.2 (MSL) EOB: 26.5 ft. | PAGE 1 OF 1 |
| START: 8/7/20 END: 8/7/20 | SAMPLING METHOD: SPT | ENERGY RATIO (%): 85.4 | LAT / LONG: 41.021808, -81.497949 | |

| MATERIAL DESCRIPTION AND NOTES | ELEV. | DEPTHS | SPT/ RQD | $N_{60}$ | REC (%) | SAMPLE ID | HP (tsf) | GRADATION (%) GR | CS | FS | SI | CL | ATTERBERG LL | PL | PI | WC | ODOT CLASS (GI) | BACK FILL |
|---|---|---|---|---|---|---|---|---|---|---|---|---|---|---|---|---|---|---|
| **5.0" TOPSOIL (DRILLERS DESCRIPTION)** | 1025.8 | | | | | | | | | | | | | | | | | |
| HARD, BROWN BECOMING BROWN AND GRAY, **SANDY SILT**, SOME GRAVEL AND STONE FRAGMENTS, LITTLE CLAY, SS-1 AND SS-2 CONTAIN TRACE ROOTS, DAMP | | 1 | | | | | | | | | | | | | | | | |
| | | 2 | | | | | | | | | | | | | | | | |
| | | 3 | 12 14 10 | 34 | 56 | SS-1 | 4.50 | - | - | - | - | - | - | - | - | 8 | A-4a (V) | |
| | | 4 | | | | | | | | | | | | | | | | |
| @5.0'; BECOMES TRACE GRAVEL | | 5 | 9 11 12 | 33 | 72 | SS-2 | 4.50 | 10 | 16 | 22 | 34 | 18 | 26 | 18 | 8 | 10 | A-4a (3) | |
| | | 6 | | | | | | | | | | | | | | | | |
| | | 7 | | | | | | | | | | | | | | | | |
| | | 8 | 4 7 7 | 20 | 56 | SS-3 | 4.50 | - | - | - | - | - | - | - | - | 11 | A-4a (V) | |
| | | 9 | | | | | | | | | | | | | | | | |
| | | 10 | | | | | | | | | | | | | | | | |
| | | 11 | 9 21 16 | 53 | 44 | SS-4 | 4.25 | - | - | - | - | - | - | - | - | 13 | A-4a (V) | |
| | 1014.2 | 12 | | | | | | | | | | | | | | | | |
| DENSE, ORANGISH BROWN, **STONE FRAGMENTS WITH SAND AND SILT**, TRACE CLAY, CONTAINS IRON STAINING, DAMP | | 13 | 10 12 12 | 34 | 78 | SS-5 | - | 25 | 13 | 33 | 20 | 9 | NP | NP | NP | 10 | A-2-4 (0) | |
| | 1011.7 | 14 | | | | | | | | | | | | | | | | |
| HARD, GRAY MOTTLED WITH ORANGISH BROWN, **SANDY SILT**, LITTLE CLAY, TRACE TO LITTLE GRAVEL AND STONE FRAGMENTS, CONTAINS TRACE IRON STAINING, DAMP | | 15 | | | | | | | | | | | | | | | | |
| | | 16 | 4 7 9 | 23 | 67 | SS-6 | 4.50 | - | - | - | - | - | - | - | - | 16 | A-4a (V) | |
| | | 17 | | | | | | | | | | | | | | | | |
| | | 18 | 7 8 11 | 27 | 89 | SS-7 | 4.50 | - | - | - | - | - | - | - | - | 13 | A-4a (V) | |
| | | 19 | | | | | | | | | | | | | | | | |
| | | 20 | | | | | | | | | | | | | | | | |
| | | 21 | 5 4 6 | 14 | 94 | SS-8 | 4.50 | 8 | 9 | 30 | 36 | 17 | 26 | 17 | 9 | 16 | A-4a (4) | |
| | | 22 | | | | | | | | | | | | | | | | |
| | | 23 | 6 6 7 | 19 | 72 | SS-9 | 4.50 | - | - | - | - | - | - | - | - | 16 | A-4a (V) | |
| | 1001.7 | 24 | | | | | | | | | | | | | | | | |
| VERY STIFF, DARK GRAY AND BROWN, **SILT AND CLAY**, SOME SAND, TRACE GRAVEL, MOIST | | 25 | | | | | | | | | | | | | | | | |
| | 999.7 | 26 | 5 6 7 | 19 | 100 | SS-10 | 2.75 | - | - | - | - | - | - | - | - | 26 | A-6a (V) | |
| | | EOB | | | | | | | | | | | | | | | | |

NOTES: GROUNDWATER NOT ENCOUNTERED DURING DRILLING. HOLE DID NOT CAVE.

ABANDONMENT METHODS, MATERIALS, QUANTITIES: SHOVELED SOIL CUTTINGS

STANDARD ODOT SOIL BORING LOG (8.5 X 11) - OH DOT.GDT - 11/19/20 18:38 - C:\USERS\KAREN\DESKTOP\SUM-77-277-224 MOD 8 COMBINED WITH 2017 ARCHIVE.GPJ

| | | | | |
|---|---|---|---|---|
| PROJECT: SUM-77-277/224 | DRILLING FIRM / OPERATOR: NEAS / ASHBAUGH | DRILL RIG: CME 55T | STATION / OFFSET: 52+27, 18' LT. | EXPLORATION ID B-078-0-17 |
| TYPE: NOISE WALL | SAMPLING FIRM / LOGGER: NEAS / ASHBAUGH | HAMMER: CME AUTOMATIC | ALIGNMENT: NOISE WALL HI | |
| PID: 106002 SFN: | DRILLING METHOD: 3.25" HSA | CALIBRATION DATE: 12/5/19 | ELEVATION: 1048.5 (MSL) EOB: 30.0 ft. | PAGE 1 OF 1 |
| START: 3/11/20 END: 3/11/20 | SAMPLING METHOD: SPT | ENERGY RATIO (%): 68.4 | LAT / LONG: 41.022146, -81.498682 | |

| MATERIAL DESCRIPTION AND NOTES | ELEV. | DEPTHS | SPT/ RQD | $N_{60}$ | REC (%) | SAMPLE ID | HP (tsf) | GRADATION (%) GR | CS | FS | SI | CL | ATTERBERG LL | PL | PI | WC | ODOT CLASS (GI) | SO4 ppm | BACK FILL |
|---|---|---|---|---|---|---|---|---|---|---|---|---|---|---|---|---|---|---|---|
| **5.5" ASPHALT AND 8.5" CONCRETE AND 6.0" BASE (DRILLERS DESCRIPTION)** | 1048.5 | | | | | | | | | | | | | | | | | | |
| | 1046.8 | | | | | | | | | | | | | | | | | | |
| VERY STIFF, BROWN AND ORANGISH BROWN, **SANDY SILT**, LITTLE CLAY, TRACE TO LITTLE GRAVEL AND STONE FRAGMENTS, CONTAINS IRON STAINING, DAMP TO MOIST | | | 3 5 4 | 10 | 56 | SS-1 | 2.50 | - | - | - | - | - | - | - | - | 14 | A-4a (V) | - | |
| | | | 4 3 4 | 8 | 72 | SS-2 | 2.75 | - | - | - | - | - | - | - | - | 15 | A-4a (V) | - | |
| @8.5' TO 15.0'; SS-3 TO SS-5 BECOME BROWN MOTTLED WITH GRAY AND ORANGISH BROWN | | | 10 10 12 | 25 | 83 | SS-3 | 2.25 | 13 | 10 | 40 | 22 | 15 | 21 | 15 | 6 | 14 | A-4a (0) | - | |
| | | | 7 7 7 | 16 | 94 | SS-4 | 2.50 | - | - | - | - | - | - | - | - | 16 | A-4a (V) | - | |
| | | | 5 4 5 | 10 | 100 | SS-5 | 2.50 | - | - | - | - | - | - | - | - | 17 | A-4a (V) | - | |
| | 1033.0 | | | | | | | | | | | | | | | | | | |
| VERY STIFF TO HARD, DARK GRAY, **SILT AND CLAY**, LITTLE SAND, TRACE GRAVEL, DAMP | | | 5 4 4 | 9 | 100 | SS-6 | 3.50 | 1 | 5 | 15 | 56 | 23 | 35 | 21 | 14 | 21 | A-6a (10) | - | |
| | | | 3 4 6 | 11 | 100 | SS-7 | 4.50 | - | - | - | - | - | - | - | - | 19 | A-6a (V) | - | |
| | 1028.0 | ▼ 1028.0 | | | | | | | | | | | | | | | | | |
| STIFF, GRAY AND ORANGISH BROWN, **SILT**, LITTLE CLAY, TRACE SAND, TRACE GRAVEL, CONTAINS IRON STAINING, WET | | | 2 2 3 | 6 | 100 | SS-8 | 1.50 | - | - | - | - | - | - | - | - | 27 | A-4b (V) | - | |
| @23.5' TO 30.0'; SS-9 TO SS-11 BECOME LOOSE, GRAY, TRACE CLAY | | | 3 2 3 | 6 | 100 | SS-9 | - | 1 | 0 | 6 | 85 | 8 | NP | NP | NP | 27 | A-4b (8) | - | |
| | | | 3 2 4 | 7 | 89 | SS-10 | - | - | - | - | - | - | - | - | - | 30 | A-4b (V) | - | |
| | 1018.5 | EOB | 2 4 3 | 8 | 44 | SS-11 | - | - | - | - | - | - | - | - | - | 29 | A-4b (V) | - | |

NOTES: GROUNDWATER ENCOUNTERED AT 20.5' DURING DRILLING. HOLE CAVED IN AT 23.0'.

ABANDONMENT METHODS, MATERIALS, QUANTITIES: PLACED 0.5 BAG ASPHALT PATCH; SHOVELED SOIL CUTTINGS

STANDARD ODOT LOG W/ SULFATES (11 X 17) - OH DOT.GDT - 11/13/20 22:54 - C:\USERS\KARENS\DESKTOP\GINT FILES\SUM-77-277-224 PHASE 2.GPJ

| | | | |
|---|---|---|---|
| 152/209 | **SUM-77/277/224 VARIOUS** | **STRUCTURE FOUNDATION EXPLORATION BARRIER HI BORING LOG B-078-0-17** | DRAWN EB / CHECKED BPA |

| | | | | |
|---|---|---|---|---|
| PROJECT: SUM-77-277/224 | DRILLING FIRM / OPERATOR: NEAS / ASHBAUGH | DRILL RIG: CME 55T | STATION / OFFSET: 50+83, 17' LT. | EXPLORATION ID B-079-0-17 |
| TYPE: NOISE WALL | SAMPLING FIRM / LOGGER: NEAS / ASHBAUGH | HAMMER: CME AUTOMATIC | ALIGNMENT: NOISE WALL HI | |
| PID: 106002 SFN: | DRILLING METHOD: 3.25" HSA | CALIBRATION DATE: 12/5/19 | ELEVATION: 1047.1 (MSL) EOB: 35.0 ft. | PAGE 1 OF 1 |
| START: 3/11/20 END: 3/11/20 | SAMPLING METHOD: SPT | ENERGY RATIO (%): 68.4 | LAT / LONG: 41.022479, -81.498968 | |

| MATERIAL DESCRIPTION AND NOTES | ELEV. | DEPTHS | SPT/ RQD | $N_{60}$ | REC (%) | SAMPLE ID | HP (tsf) | GRADATION (%) GR | CS | FS | SI | CL | ATTERBERG LL | PL | PI | WC | ODOT CLASS (GI) | SO4 ppm | BACK FILL |
|---|---|---|---|---|---|---|---|---|---|---|---|---|---|---|---|---|---|---|---|
| **6.0" ASPHALT AND 8.0" CONCRETE AND 10.0" BASE (DRILLERS DESCRIPTION)** | 1047.1 | | | | | | | | | | | | | | | | | | |
| | 1045.1 | | | | | | | | | | | | | | | | | | |
| VERY STIFF, BROWN CHANGING TO BROWN AND ORANGISH BROWN, **SANDY SILT**, LITTLE CLAY, TRACE TO LITTLE GRAVEL AND STONE FRAGMENTS, CONTAINS CONCRETE AND ASPHALT FRAGMENTS, STONE FRAGMENTS ARE FRIABLE SANDSTONE, SS-2 CONTAINS IRON STAINING, MOIST TO DAMP **(FILL)** | | | 8 6 5 | 13 | 11 | SS-1 | 2.75 | - | - | - | - | - | - | - | - | 17 | A-4a (V) | - | |
| | | | 13 10 6 | 18 | 39 | SS-2 | 2.50 | 10 | 12 | 30 | 32 | 16 | 20 | 15 | 5 | 13 | A-4a (3) | - | |
| | 1039.1 | | | | | | | | | | | | | | | | | | |
| LOOSE TO MEDIUM DENSE, ORANGISH BROWN, **COARSE AND FINE SAND**, SOME STONE FRAGMENTS, LITTLE SILT, TRACE CLAY, STONE FRAGMENTS ARE FRIABLE SANDSTONE, CONTAINS IRON STAINING, DAMP TO MOIST | | | 9 11 12 | 26 | 56 | SS-3 | - | - | - | - | - | - | - | - | - | 12 | A-3a (V) | - | |
| @11.0'; SS-4 CONTAINS NO RECOVERY | | | 5 7 7 | 16 | 0 | SS-4 | - | - | - | - | - | - | - | - | - | - | | - | |
| | | | 10 6 3 | 10 | 17 | SS-5 | - | - | - | - | - | - | - | - | - | 14 | A-3a (V) | - | |
| | 1030.1 | | | | | | | | | | | | | | | | | | |
| MEDIUM STIFF TO STIFF, DARK GRAY AND BROWN, **SANDY SILT**, LITTLE CLAY, TRACE GRAVEL, SLIGHTLY ORGANIC, DAMP TO MOIST | | | 3 4 3 | 8 | 28 | SS-6A | - | - | - | - | - | - | - | - | - | 18 | A-3a (V) | - | |
| | | | | | | SS-6B | 0.75 | - | - | - | - | - | - | - | - | 17 | A-4a (V) | - | |
| | | | 2 2 3 | 6 | 39 | SS-7 | 1.00 | 5 | 14 | 34 | 31 | 16 | 32 | 23 | 9 | 28 | A-4a (2) | - | |
| | 1025.6 | | | | | | | | | | | | | | | | | | |
| LOOSE TO MEDIUM DENSE, BROWN BECOMING GRAY, **SILT**, TRACE CLAY, TRACE SAND, TRACE GRAVEL, WET | | | 3 4 4 | 9 | 56 | SS-8A | 1.25 | - | - | - | - | - | - | - | - | 16 | A-4a (V) | - | |
| | | | | | | SS-8B | - | - | - | - | - | - | - | - | - | 24 | A-4b (V) | - | |
| | | | 3 5 5 | 11 | 78 | SS-9 | - | 0 | 0 | 1 | 92 | 7 | NP | NP | NP | 27 | A-4b (8) | - | |
| | 1021.6 | | | | | | | | | | | | | | | | | | |
| LOOSE, GRAY, **GRAVEL WITH SAND**, LITTLE SILT, TRACE CLAY, MOIST TO WET @26.0'; SS-10 CONTAINS NO RECOVERY | | ▼ 1021.1 | 3 3 5 | 9 | 0 | SS-10 | - | - | - | - | - | - | - | - | - | - | | - | |
| | | | 4 3 5 | 9 | 28 | SS-11 | - | - | - | - | - | - | - | - | - | 14 | A-1-b (V) | - | |
| | | | 2 3 4 | 8 | 22 | SS-12 | - | - | - | - | - | - | - | - | - | 17 | A-1-b (V) | - | |
| | 1012.1 | EOB | 6 4 5 | 10 | 28 | SS-13 | - | - | - | - | - | - | - | - | - | 12 | A-1-b (V) | - | |

NOTES: GROUNDWATER ENCOUNTERED AT 26.0' DURING DRILLING. HOLE CAVED IN AT 21.0'.

ABANDONMENT METHODS, MATERIALS, QUANTITIES: PLACED 0.5 BAG ASPHALT PATCH; SHOVELED SOIL CUTTINGS

STANDARD ODOT LOG W/ SULFATES (11 X 17) - OH DOT.GDT - 11/13/20 22:54 - C:\USERS\KARENS\DESKTOP\GINT FILES\SUM-77-277-224 PHASE 2.GPJ

| | | | |
|---|---|---|---|
| 153/209 | SUM-77/277/224 VARIOUS | STRUCTURE FOUNDATION EXPLORATION BARRIER HI BORING LOG B-079-0-17 | DRAWN EB CHECKED BPA |

| | | | | |
|---|---|---|---|---|
| PROJECT: SUM-77-277/224 | DRILLING FIRM / OPERATOR: NEAS / ASHBAUGH | DRILL RIG: CME 55T | STATION / OFFSET: 49+64, 17' LT. | EXPLORATION ID B-080-0-17 |
| TYPE: NOISE WALL | SAMPLING FIRM / LOGGER: NEAS / ASHBAUGH | HAMMER: CME AUTOMATIC | ALIGNMENT: NOISE WALL HI | |
| PID: 106002 SFN: | DRILLING METHOD: 3.25" HSA | CALIBRATION DATE: 12/5/19 | ELEVATION: 1046.1 (MSL) EOB: 35.0 ft. | PAGE 1 OF 1 |
| START: 3/11/20 END: 3/11/20 | SAMPLING METHOD: SPT | ENERGY RATIO (%): 68.4 | LAT / LONG: 41.022748, -81.499215 | |

| MATERIAL DESCRIPTION AND NOTES | ELEV. | DEPTHS | SPT/ RQD | $N_{60}$ | REC (%) | SAMPLE ID | HP (tsf) | GRADATION (%) GR | CS | FS | SI | CL | ATTERBERG LL | PL | PI | WC | ODOT CLASS (GI) | SO4 ppm | BACK FILL |
|---|---|---|---|---|---|---|---|---|---|---|---|---|---|---|---|---|---|---|---|
| **6.0" ASPHALT AND 8.0" CONCRETE AND 7.0" BASE (DRILLERS DESCRIPTION)** | 1046.1 | | | | | | | | | | | | | | | | | | |
| | 1044.3 | | | | | | | | | | | | | | | | | | |
| MEDIUM DENSE, BROWN AND ORANGISH BROWN, **GRAVEL AND STONE FRAGMENTS WITH SAND**, LITTLE SILT, TRACE CLAY, STONE FRAGMENTS ARE FRIABLE SANDSTONE, CONTAINS IRON STAINING, DAMP TO MOIST | | | 4 10 13 | 26 | 39 | SS-1 | - | - | - | - | - | - | - | - | - | 10 | A-1-b (V) | - | |
| | | | 5 9 8 | 19 | 56 | SS-2 | - | - | - | - | - | - | - | - | - | 12 | A-1-b (V) | - | |
| | | | 4 6 11 | 19 | 67 | SS-3 | - | - | - | - | - | - | - | - | - | 16 | A-1-b (V) | - | |
| | 1035.6 | | | | | | | | | | | | | | | | | | |
| HARD, BROWN, **SANDY SILT**, LITTLE CLAY, TRACE GRAVEL, DAMP | | | 7 8 7 | 17 | 72 | SS-4 | 4.50 | 8 | 12 | 40 | 26 | 14 | 19 | 14 | 5 | 11 | A-4a (1) | - | |
| | 1033.1 | | | | | | | | | | | | | | | | | | |
| MEDIUM DENSE, BROWN, **COARSE AND FINE SAND**, LITTLE STONE FRAGMENTS, TRACE SILT, TRACE CLAY, DAMP | 1031.6 | | 7 9 10 | 22 | 89 | SS-5A | - | - | - | - | - | - | - | - | - | 8 | A-3a (V) | - | |
| | | | | | | SS-5B | 2.50 | - | - | - | - | - | - | - | - | 24 | A-2-4 (V) | - | |
| STIFF TO VERY STIFF, DARK GRAY AND BROWN, **GRAVEL WITH SAND AND SILT**, LITTLE CLAY, MOIST | | | 4 5 3 | 9 | 50 | SS-6 | 1.50 | 26 | 14 | 26 | 23 | 11 | 27 | 20 | 7 | 21 | A-2-4 (0) | - | |
| | | W 1028.1 | | | | | | | | | | | | | | | | | |
| | | | 5 3 3 | 7 | 56 | SS-7 | 2.00 | - | - | - | - | - | - | - | - | 21 | A-2-4 (V) | - | |
| | 1025.6 | | | | | | | | | | | | | | | | | | |
| LOOSE, BROWN BECOMING GRAY, **SILT**, TRACE TO LITTLE SAND, TRACE TO LITTLE CLAY, TRACE GRAVEL, MOIST TO WET | | | 4 4 3 | 8 | 100 | SS-8 | - | - | - | - | - | - | - | - | - | 22 | A-4b (V) | - | |
| | | | 3 3 4 | 8 | 100 | SS-9 | - | 0 | 1 | 12 | 75 | 12 | NP | NP | NP | 25 | A-4b (8) | - | |
| | | | 3 3 3 | 7 | 100 | SS-10 | - | - | - | - | - | - | - | - | - | 25 | A-4b (V) | - | |
| | | | 3 3 2 | 6 | 100 | SS-11 | - | - | - | - | - | - | - | - | - | 30 | A-4b (V) | - | |
| | | | 3 3 2 | 6 | 100 | SS-12 | - | 0 | 0 | 6 | 89 | 5 | NP | NP | NP | 28 | A-4b (8) | - | |
| | | | 2 2 3 | 6 | 100 | SS-13 | - | - | - | - | - | - | - | - | - | 30 | A-4b (V) | - | |
| | 1011.1 | EOB | | | | | | | | | | | | | | | | | |

NOTES: GROUNDWATER ENCOUNTERED AT 18.0' DURING DRILLING. HOLE CAVED IN AT 16.0'.

ABANDONMENT METHODS, MATERIALS, QUANTITIES: PLACED 0.5 BAG ASPHALT PATCH; SHOVELED SOIL CUTTINGS

STANDARD ODOT LOG W/ SULFATES (11 X 17) - OH DOT.GDT - 11/13/20 22:54 - C:\USERS\KARENS\DESKTOP\GINT FILES\SUM-77-277-224 PHASE 2.GPJ

| | | | |
|---|---|---|---|
| 154/209 | SUM-77/277/224 VARIOUS | STRUCTURE FOUNDATION EXPLORATION BARRIER HI BORING LOG B-080-0-17 | DRAWN EB / CHECKED BPA |

| | | | | |
|---|---|---|---|---|
| PROJECT: SUM-77-277/224 | DRILLING FIRM / OPERATOR: NEAS / ASHBAUGH | DRILL RIG: CME 55T | STATION / OFFSET: 48+28, 18' LT. | EXPLORATION ID B-081-0-17 |
| TYPE: NOISE WALL | SAMPLING FIRM / LOGGER: NEAS / ASHBAUGH | HAMMER: CME AUTOMATIC | ALIGNMENT: NOISE WALL HI | |
| PID: 106002 SFN: | DRILLING METHOD: 3.25" HSA | CALIBRATION DATE: 12/5/19 | ELEVATION: 1044.9 (MSL) EOB: 35.0 ft. | PAGE 1 OF 1 |
| START: 3/10/20 END: 3/10/20 | SAMPLING METHOD: SPT | ENERGY RATIO (%): 68.4 | LAT / LONG: 41.023048, -81.499516 | |

| MATERIAL DESCRIPTION AND NOTES | ELEV. | DEPTHS | SPT/ RQD | $N_{60}$ | REC (%) | SAMPLE ID | HP (tsf) | GRADATION (%) GR | CS | FS | SI | CL | ATTERBERG LL | PL | PI | WC | ODOT CLASS (GI) | SO4 ppm | BACK FILL |
|---|---|---|---|---|---|---|---|---|---|---|---|---|---|---|---|---|---|---|---|
| **6.0" ASPHALT AND 8.0" CONCRETE AND 8.0" BASE (DRILLERS DESCRIPTION)** | 1044.9 | | | | | | | | | | | | | | | | | | |
| | 1043.1 | | | | | | | | | | | | | | | | | | |
| MEDIUM DENSE, BROWN, **SANDY SILT**, LITTLE TO SOME GRAVEL AND STONE FRAGMENTS, LITTLE CLAY, CONTAINS IRON STAINING, MOIST TO DAMP | | | 5 3 7 | 11 | 56 | SS-1 | - | 15 | 12 | 36 | 24 | 13 | NP | NP | NP | 15 | A-4a (0) | - | |
| | | | 6 5 6 | 13 | 11 | SS-2 | - | - | - | - | - | - | - | - | - | 16 | A-4a (V) | - | |
| | | | 4 7 9 | 18 | 39 | SS-3 | - | - | - | - | - | - | - | - | - | 14 | A-4a (V) | - | |
| | 1034.4 | | | | | | | | | | | | | | | | | | |
| VERY DENSE, BROWN AND ORANGISH BROWN, **STONE FRAGMENTS WITH SAND**, LITTLE SILT, TRACE TO LITTLE CLAY, POSSIBLY PUSHED ON SANDSTONE COBBLE, CONTAINS IRON STAINING, DAMP | | | 50 | - | 50 | SS-4 | - | - | - | - | - | - | - | - | - | 11 | A-1-b (V) | - | |
| | | | 50/5" | - | 20 | SS-5 | - | - | - | - | - | - | - | - | - | 9 | A-1-b (V) | - | |
| | 1029.4 | | | | | | | | | | | | | | | | | | |
| LOOSE, BROWN, **COARSE AND FINE SAND**, LITTLE SILT, TRACE GRAVEL, TRACE CLAY, CONTAINS IRON STAINING, MOIST | 1027.9 | | 5 3 5 | 9 | 61 | SS-6A | - | - | - | - | - | - | - | - | - | 16 | A-3a (V) | - | |
| STIFF, BROWN MOTTLED WITH ORANGISH BROWN AND GRAY, **SILT AND CLAY**, SOME SAND, TRACE GRAVEL, CONTAINS IRON STAINING, MOIST | 1026.2 | | | | | SS-6B | 1.25 | - | - | - | - | - | - | - | - | 24 | A-6a (V) | - | |
| MEDIUM DENSE, BROWN AND ORANGISH BROWN, **COARSE AND FINE SAND**, SOME STONE FRAGMENTS, LITTLE SILT, TRACE CLAY, CONTAINS IRON STAINING, DAMP | | | | | | SS-7A | 1.50 | - | - | - | - | - | - | - | - | 24 | A-6a (V) | - | |
| | | | 5 8 11 | 22 | 56 | SS-7B | - | - | - | - | - | - | - | - | - | 14 | A-3a (V) | - | |
| | | | 6 8 10 | 21 | 50 | SS-8 | - | - | - | - | - | - | - | - | - | 13 | A-3a (V) | - | |
| | 1021.9 | | | | | | | | | | | | | | | | | | |
| LOOSE TO MEDIUM DENSE, BROWN AND GRAY, **STONE FRAGMENTS WITH SAND**, LITTLE SILT, TRACE CLAY, DAMP | | | 13 11 8 | 22 | 22 | SS-9 | - | - | - | - | - | - | - | - | - | 11 | A-1-b (V) | - | |
| | | | 4 4 5 | 10 | 17 | SS-10 | - | - | - | - | - | - | - | - | - | 10 | A-1-b (V) | - | |
| | | | 6 8 8 | 18 | 28 | SS-11 | - | - | - | - | - | - | - | - | - | 7 | A-1-b (V) | - | |
| | 1014.4 | | | | | | | | | | | | | | | | | | |
| MEDIUM DENSE, GRAY, **COARSE AND FINE SAND**, SOME SILT, LITTLE GRAVEL, TRACE CLAY, WET | | | 5 7 6 | 15 | 33 | SS-12 | - | - | - | - | - | - | - | - | - | 18 | A-3a (V) | - | |
| | | | 7 5 9 | 16 | 50 | SS-13 | - | - | - | - | - | - | - | - | - | 21 | A-3a (V) | - | |
| | 1009.9 | EOB | | | | | | | | | | | | | | | | | |

NOTES: GROUNDWATER NOT ENCOUNTERED DURING DRILLING. HOLE CAVED IN AT 23.0'.

ABANDONMENT METHODS, MATERIALS, QUANTITIES: PLACED 0.5 BAG ASPHALT PATCH; SHOVELED SOIL CUTTINGS

STANDARD ODOT LOG W/ SULFATES (11 X 17) - OH DOT.GDT - 11/13/20 22:54 - C:\USERS\KARENS\DESKTOP\GINT FILES\SUM-77-277-224 PHASE 2.GPJ

| | | | |
|---|---|---|---|
| 155/209 | SUM-77/277/224 VARIOUS | STRUCTURE FOUNDATION EXPLORATION BARRIER HI BORING LOG B-081-0-17 | DRAWN EB / CHECKED BPA |

PROJECT: SUM-77-277/224 | DRILLING FIRM / OPERATOR: NEAS / ASHBAUGH | DRILL RIG: CME 55T | STATION / OFFSET: 46+98, 21' LT. | EXPLORATION ID B-082-0-17
TYPE: NOISE WALL | SAMPLING FIRM / LOGGER: NEAS / ASHBAUGH | HAMMER: CME AUTOMATIC | ALIGNMENT: NOISE WALL HI | PAGE 1 OF 1
PID: 106002 SFN: | DRILLING METHOD: 3.25" HSA | CALIBRATION DATE: 12/5/19 | ELEVATION: 1043.8 (MSL) EOB: 30.0 ft.
START: 3/10/20 END: 3/10/20 | SAMPLING METHOD: SPT | ENERGY RATIO (%): 68.4 | LAT / LONG: 41.023327, -81.499811

| MATERIAL DESCRIPTION AND NOTES | ELEV. | DEPTHS | SPT/ RQD | $N_{60}$ | REC (%) | SAMPLE ID | HP (tsf) | GRADATION (%) GR | CS | FS | SI | CL | ATTERBERG LL | PL | PI | WC | ODOT CLASS (GI) | SO4 ppm | BACK FILL |
|---|---|---|---|---|---|---|---|---|---|---|---|---|---|---|---|---|---|---|---|
| **6.5" ASPHALT AND 7.5" CONCRETE AND 6.0" BASE (DRILLERS DESCRIPTION)** | 1043.8 | | | | | | | | | | | | | | | | | | |
| | 1042.1 | | | | | | | | | | | | | | | | | | |
| VERY STIFF TO HARD, BROWN, **SANDY SILT**, LITTLE TO SOME GRAVEL AND STONE FRAGMENTS, LITTLE CLAY, CONTAINS TRACE IRON STAINING, DAMP TO MOIST | | 1 | | | | | | | | | | | | | | | | | |
| | | 2 | | | | | | | | | | | | | | | | | |
| | | 3 | | | | | | | | | | | | | | | | | |
| | | 4 | 13 5 6 | 13 | 56 | SS-1 | 4.50 | - | - | - | - | - | - | - | - | 12 | A-4a (V) | - | |
| | | 5 | | | | | | | | | | | | | | | | | |
| | | 6 | 4 7 8 | 17 | 56 | SS-2 | 4.25 | - | - | - | - | - | - | - | - | 13 | A-4a (V) | - | |
| | | 7 | | | | | | | | | | | | | | | | | |
| | | 8 | | | | | | | | | | | | | | | | | |
| | | 9 | 7 8 6 | 16 | 67 | SS-3 | 3.50 | 16 | 10 | 32 | 27 | 15 | 22 | 15 | 7 | 13 | A-4a (1) | - | |
| | | 10 | | | | | | | | | | | | | | | | | |
| | | 11 | | | | | | | | | | | | | | | | | |
| | | 12 | 7 9 | 18 | 78 | SS-4 | 2.50 | - | - | - | - | - | - | - | - | 14 | A-4a (V) | - | |
| | | 13 | | | | | | | | | | | | | | | | | |
| | | 14 | 3 5 7 | 14 | 50 | SS-5 | 2.50 | - | - | - | - | - | - | - | - | 16 | A-4a (V) | - | |
| | 1028.3 | 15 | | | | | | | | | | | | | | | | | |
| VERY STIFF, DARK GRAY, **SILT AND CLAY**, SOME SAND, TRACE GRAVEL, CONTAINS TRACE IRON STAINING, MOIST | | 16 | | | | | | | | | | | | | | | | | |
| | 1025.8 | 17 | 5 5 6 | 13 | 72 | SS-6 | 2.25 | 3 | 7 | 23 | 38 | 29 | 36 | 21 | 15 | 26 | A-6a (8) | - | |
| HARD, BROWN MOTTLED WITH GRAY AND ORANGISH BROWN, **SANDY SILT**, LITTLE CLAY, TRACE GRAVEL, CONTAINS IRON STAINING, DAMP | | 18 | | | | | | | | | | | | | | | | | |
| | | 19 | 7 5 6 | 13 | 100 | SS-7 | 4.50 | - | - | - | - | - | - | - | - | 17 | A-4a (V) | - | |
| | | 20 | | | | | | | | | | | | | | | | | |
| | | 21 | | | | | | | | | | | | | | | | | |
| | | 22 | 6 7 8 | 17 | 100 | SS-8 | 4.25 | 5 | 7 | 24 | 49 | 15 | 23 | 18 | 5 | 16 | A-4a (6) | - | |
| | | 23 | | | | | | | | | | | | | | | | | |
| | | 24 | 7 10 11 | 24 | 78 | SS-9 | 4.50 | - | - | - | - | - | - | - | - | 14 | A-4a (V) | - | |
| | 1018.3 | 25 | | | | | | | | | | | | | | | | | |
| MEDIUM DENSE, GRAY, **COARSE AND FINE SAND**, SOME GRAVEL AND STONE FRAGMENTS, LITTLE SILT, TRACE CLAY, DAMP | | 26 | | | | | | | | | | | | | | | | | |
| | | 27 | 9 11 12 | 26 | 100 | SS-10 | - | - | - | - | - | - | - | - | - | 12 | A-3a (V) | - | |
| | | 28 | | | | | | | | | | | | | | | | | |
| | 1013.8 | 29 | 10 14 9 | 26 | 100 | SS-11 | - | - | - | - | - | - | - | - | - | 10 | A-3a (V) | - | |
| | | EOB | | | | | | | | | | | | | | | | | |

NOTES: GROUNDWATER NOT ENCOUNTERED DURING DRILLING. HOLE CAVED IN AT 20.0'.

ABANDONMENT METHODS, MATERIALS, QUANTITIES: PLACED 0.5 BAG ASPHALT PATCH; SHOVELED SOIL CUTTINGS

STANDARD ODOT LOG W/ SULFATES (8.5 X 11) - OH DOT.GDT - 11/13/20 22:37 - C:\USERS\KAREN\DESKTOP\GINT FILES\SUM-77-277-224 PHASE 2.GPJ

PROJECT: SUM-77-277/224 | DRILLING FIRM / OPERATOR: NEAS / ASHBAUGH | DRILL RIG: CME 55T | STATION / OFFSET: 45+62, 22' LT. | EXPLORATION ID B-083-0-17
TYPE: NOISE WALL | SAMPLING FIRM / LOGGER: NEAS / ASHBAUGH | HAMMER: CME AUTOMATIC | ALIGNMENT: NOISE WALL HI | PAGE 1 OF 1
PID: 106002 SFN: | DRILLING METHOD: 3.25" HSA | CALIBRATION DATE: 12/5/19 | ELEVATION: 1043.3 (MSL) EOB: 28.9 ft.
START: 3/6/20 END: 3/6/20 | SAMPLING METHOD: SPT | ENERGY RATIO (%): 68.4 | LAT / LONG: 41.023612, -81.500135

| MATERIAL DESCRIPTION AND NOTES | ELEV. | DEPTHS | SPT/ RQD | $N_{60}$ | REC (%) | SAMPLE ID | HP (tsf) | GRADATION (%) GR | CS | FS | SI | CL | ATTERBERG LL | PL | PI | WC | ODOT CLASS (GI) | SO4 ppm | BACK FILL |
|---|---|---|---|---|---|---|---|---|---|---|---|---|---|---|---|---|---|---|---|
| **10.0" ASPHALT AND 6.0" CONCRETE AND 5.0" BASE (DRILLERS DESCRIPTION)** | 1043.3 | | | | | | | | | | | | | | | | | | |
| | 1041.5 | | | | | | | | | | | | | | | | | | |
| MEDIUM DENSE, BROWN, **COARSE AND FINE SAND**, SOME GRAVEL AND STONE FRAGMENTS, LITTLE SILT, TRACE CLAY, CONTAINS CONCRETE FRAGMENTS, DAMP **(FILL)** | | 1 | | | | | | | | | | | | | | | | | |
| | | 2 | | | | | | | | | | | | | | | | | |
| | | 3 | | | | | | | | | | | | | | | | | |
| | | 4 | 6 7 13 | 23 | 44 | SS-1 | - | - | - | - | - | - | - | - | - | 9 | A-3a (V) | - | |
| | 1037.8 | 5 | | | | | | | | | | | | | | | | | |
| VERY STIFF TO HARD, BROWNISH GRAY AND BROWN, **SANDY SILT**, LITTLE CLAY, TRACE GRAVEL, SS-2 IS SLIGHTLY ORGANIC, DAMP TO MOIST | | 6 | | | | | | | | | | | | | | | | | |
| | | 7 | 3 5 5 | 11 | 28 | SS-2 | 4.25 | - | - | - | - | - | - | - | - | 15 | A-4a (V) | - | |
| | | 8 | | | | | | | | | | | | | | | | | |
| | | 9 | 4 5 7 | 14 | 94 | SS-3 | 4.50 | 10 | 6 | 30 | 35 | 19 | 23 | 16 | 7 | 15 | A-4a (4) | - | |
| | | 10 | | | | | | | | | | | | | | | | | |
| | | 11 | | | | | | | | | | | | | | | | | |
| | | 12 | 4 3 4 | 8 | 100 | SS-4 | 3.00 | - | - | - | - | - | - | - | - | 14 | A-4a (V) | - | |
| | | 13 | | | | | | | | | | | | | | | | | |
| | | 14 | 5 4 3 | 8 | 100 | SS-5 | 2.75 | - | - | - | - | - | - | - | - | 24 | A-4a (V) | - | |
| | | 15 | | | | | | | | | | | | | | | | | |
| | | 16 | | | | | | | | | | | | | | | | | |
| @16.0' TO 20.0'; SS-6 AND SS-7 BECOME BROWN MOTTLED WITH GRAY AND ORANGISH BROWN, CONTAINS IRON STAINING | | 17 | 4 6 5 | 13 | 67 | SS-6 | 3.25 | 7 | 7 | 20 | 46 | 20 | 29 | 19 | 10 | 17 | A-4a (6) | - | |
| | | 18 | | | | | | | | | | | | | | | | | |
| | | 19 | 6 5 7 | 14 | 78 | SS-7 | 4.25 | - | - | - | - | - | - | - | - | 22 | A-4a (V) | - | |
| | 1022.8 | 20 | | | | | | | | | | | | | | | | | |
| MEDIUM DENSE, BROWN AND GRAY, **SANDY SILT**, LITTLE CLAY, TRACE GRAVEL, MOIST | | 21 | | | | | | | | | | | | | | | | | |
| | | 22 | 7 9 9 | 21 | 78 | SS-8 | - | - | - | - | - | - | - | - | - | 16 | A-4a (V) | - | |
| | | 23 | | | | | | | | | | | | | | | | | |
| | | 24 | 7 8 11 | 22 | 89 | SS-9 | - | 7 | 10 | 27 | 45 | 11 | NP | NP | NP | 15 | A-4a (4) | - | |
| | 1017.8 | 25 | | | | | | | | | | | | | | | | | |
| STIFF TO VERY STIFF, BROWN MOTTLED WITH ORANGISH BROWN AND GRAY, **SILT AND CLAY**, SOME SAND, TRACE GRAVEL, CONTAINS IRON STAINING, MOIST | | 26 | | | | | | | | | | | | | | | | | |
| | 1015.8 | 27 | 10 12 46 | 66 | 78 | SS-10 | 2.00 | - | - | - | - | - | - | - | - | 22 | A-6a (V) | - | |
| VERY DENSE, BROWN, **GRAVEL AND STONE FRAGMENTS WITH SAND AND SILT**, LITTLE CLAY, MOIST | 1014.4 | 28 | | | | | | | | | | | | | | | | | |
| | | EOB | 50/5" | - | 60 | SS-11 | - | - | - | - | - | - | - | - | - | 14 | A-2-4 (V) | - | |

NOTES: GROUNDWATER NOT ENCOUNTERED DURING DRILLING. HOLE CAVED IN AT 19.0'.

ABANDONMENT METHODS, MATERIALS, QUANTITIES: PLACED 0.5 BAG ASPHALT PATCH; SHOVELED SOIL CUTTINGS

STANDARD ODOT LOG W/ SULFATES (8.5 X 11) - OH DOT.GDT - 11/13/20 22:37 - C:\USERS\KAREN\DESKTOP\GINT FILES\SUM-77-277-224 PHASE 2.GPJ



**SUM-77/277/224**
**VARIOUS**

**STRUCTURE FOUNDATION EXPLORATION**
**BARRIER HI**
**BORING LOGS B-082-0-17 & B-083-0-17**

DRAWN EB
CHECKED BPA

| | | | | |
|---|---|---|---|---|
| PROJECT: SUM-77-277/224 | DRILLING FIRM / OPERATOR: NEAS / ASHBAUGH | DRILL RIG: CME 55T | STATION / OFFSET: 44+32, 23' LT. | EXPLORATION ID B-084-0-17 |
| TYPE: NOISE WALL | SAMPLING FIRM / LOGGER: NEAS / ASHBAUGH | HAMMER: CME AUTOMATIC | ALIGNMENT: NOISE WALL HI | |
| PID: 106002 SFN: | DRILLING METHOD: 3.25" HSA | CALIBRATION DATE: 12/5/19 | ELEVATION: 1042.4 (MSL) EOB: 31.1 ft. | PAGE 1 OF 1 |
| START: 3/6/20 END: 3/6/20 | SAMPLING METHOD: SPT | ENERGY RATIO (%): 68.4 | LAT / LONG: 41.023871, -81.500471 | |

| MATERIAL DESCRIPTION AND NOTES | ELEV. | DEPTHS | SPT/ RQD | $N_{60}$ | REC (%) | SAMPLE ID | HP (tsf) | GRADATION (%) GR | CS | FS | SI | CL | ATTERBERG LL | PL | PI | WC | ODOT CLASS (GI) | SO4 ppm | BACK FILL |
|---|---|---|---|---|---|---|---|---|---|---|---|---|---|---|---|---|---|---|---|
| **10.0" ASPHALT AND 8.0" CONCRETE AND 5.0" BASE (DRILLERS DESCRIPTION)** | 1042.4 | | | | | | | | | | | | | | | | | | |
| | 1040.5 | | | | | | | | | | | | | | | | | | |
| MEDIUM DENSE, BROWN, **STONE FRAGMENTS WITH SAND**, TRACE SILT, TRACE CLAY, STONE FRAGMENTS ARE FRIABLE SANDSTONE, CONTAINS TRACE BRICK FRAGMENTS, MOIST **(FILL)** | | | 4 5 7 | 14 | 17 | SS-1 | - | - | - | - | - | - | - | - | - | 11 | A-1-b (V) | - | |
| | 1036.9 | | | | | | | | | | | | | | | | | | |
| LOOSE TO MEDIUM DENSE, GRAY AND BROWN, **GRAVEL AND STONE FRAGMENTS WITH SAND AND SILT**, LITTLE CLAY, STONE FRAGMENTS ARE FRIABLE SANDSTONE, DAMP TO MOIST | | | 4 4 5 | 10 | 33 | SS-2 | - | - | - | - | - | - | - | - | - | 12 | A-2-4 (V) | - | |
| | | | 5 8 8 | 18 | 56 | SS-3 | - | - | - | - | - | - | - | - | - | 14 | A-2-4 (V) | - | |
| | 1031.9 | | | | | | | | | | | | | | | | | | |
| LOOSE TO MEDIUM DENSE, BROWN MOTTLED WITH GRAY AND ORANGISH BROWN, **COARSE AND FINE SAND**, SOME SILT, LITTLE CLAY, TRACE GRAVEL, CONTAINS IRON STAINING, MOIST | | | 4 6 7 | 15 | 100 | SS-4 | - | - | - | - | - | - | - | - | - | 14 | A-3a (V) | - | |
| | | | 5 3 3 | 7 | 100 | SS-5 | - | 0 | 11 | 57 | 21 | 11 | NP | NP | NP | 12 | A-3a (0) | - | |
| | | | 5 5 6 | 13 | 100 | SS-6 | - | - | - | - | - | - | - | - | - | 15 | A-3a (V) | - | |
| | 1024.4 | | | | | | | | | | | | | | | | | | |
| MEDIUM DENSE, BROWN MOTTLED WITH GRAY AND ORANGISH BROWN, **COARSE AND FINE SAND**, LITTLE TO SOME SILT, TRACE TO LITTLE CLAY, LITTLE GRAVEL, CONTAINS IRON STAINING, MOIST | | | 4 5 7 | 14 | 100 | SS-7 | - | - | - | - | - | - | - | - | - | 16 | A-3a (V) | - | |
| | | | 6 5 6 | 13 | 100 | SS-8 | - | 20 | 24 | 27 | 20 | 9 | NP | NP | NP | 13 | A-3a (0) | - | |
| | | | 5 4 6 | 11 | 100 | SS-9 | - | - | - | - | - | - | - | - | - | 13 | A-3a (V) | - | |
| | 1016.9 | | | | | | | | | | | | | | | | | | |
| MEDIUM DENSE TO VERY DENSE, GRAY, **GRAVEL WITH SAND AND SILT**, LITTLE CLAY, DAMP | | | 7 9 13 | 25 | 56 | SS-10 | - | - | - | - | - | - | - | - | - | 10 | A-2-4 (V) | - | |
| | | | 50/4" | - | 50 | SS-11 | - | - | - | - | - | - | - | - | - | 7 | A-2-4 (V) | - | |
| | 1011.3 | EOB | | | | | | | | | | | | | | | | | |
| @31.0'; SS-12 CONTAINS NO RECOVERY | | | 50/1" | - | 0 | SS-12 | - | - | - | - | - | - | - | - | - | - | | - | |

NOTES: GROUNDWATER NOT ENCOUNTERED DURING DRILLING. HOLE CAVED IN AT 20.0'.

ABANDONMENT METHODS, MATERIALS, QUANTITIES: PLACED 0.5 BAG ASPHALT PATCH; SHOVELED SOIL CUTTINGS

STANDARD ODOT LOG W/ SULFATES (11 X 17) - OH DOT.GDT - 11/13/20 22:54 - C:\USERS\KARENS\DESKTOP\GINT FILES\SUM-77-277-224 PHASE 2.GPJ

| | | | |
|---|---|---|---|
| 157/209 | SUM-77/277/224 VARIOUS | STRUCTURE FOUNDATION EXPLORATION BARRIER HI BORING LOG B-084-0-17 | DRAWN EB CHECKED BPA |

P:\17-0129 (106002 SUM-76-10.95 Part 3 - SUM-77_277_224)\106002\geotechnical\sheets\106002ZL050.dgn Sheet 1/8/2021 1:10:03 AM karens

PROJECT: SUM-77-277/224
TYPE: NOISE WALL
PID: 106002 SFN:
START: 3/5/20 END: 3/5/20

DRILLING FIRM / OPERATOR: NEAS / ASHBAUGH
SAMPLING FIRM / LOGGER: NEAS / ASHBAUGH
DRILLING METHOD: 3.25" HSA
SAMPLING METHOD: SPT

DRILL RIG: CME 55T
HAMMER: CME AUTOMATIC
CALIBRATION DATE: 12/5/19
ENERGY RATIO (%): 68.4

STATION / OFFSET: 42+39, 26' LT.
ALIGNMENT: NOISE WALL HI
ELEVATION: 1042.0 (MSL) EOB: 28.6 ft.
LAT / LONG: 41.024216, -81.501012

EXPLORATION ID B-085-0-17

PAGE 1 OF 1

| MATERIAL DESCRIPTION AND NOTES | ELEV. | DEPTHS | SPT/ RQD | $N_{60}$ | REC (%) | SAMPLE ID | HP (tsf) | GRADATION (%) GR | CS | FS | SI | CL | ATTERBERG LL | PL | PI | WC | ODOT CLASS (GI) | SO4 ppm | BACK FILL |
|---|---|---|---|---|---|---|---|---|---|---|---|---|---|---|---|---|---|---|---|
| **10.0" ASPHALT AND 8.0" CONCRETE AND 6.0" BASE (DRILLERS DESCRIPTION)** | 1042.0 | | | | | | | | | | | | | | | | | | |
| | 1040.0 | | | | | | | | | | | | | | | | | | |
| VERY STIFF TO HARD, BROWN AND GRAY, **SANDY SILT**, SOME CLAY, LITTLE GRAVEL, SS-2 CONTAINS TRACE IRON STAINING, DAMP TO MOIST | | | 4 4 3 | 8 | 56 | SS-1 | 4.50 | - | - | - | - | - | - | - | - | 13 | A-4a (V) | - | |
| | | | 2 2 4 | 7 | 44 | SS-2 | 2.75 | - | - | - | - | - | - | - | - | 17 | A-4a (V) | - | |
| | 1034.0 | | | | | | | | | | | | | | | | | | |
| MEDIUM DENSE, BROWN, **STONE FRAGMENTS WITH SAND, SILT, AND CLAY**, DAMP | | | 8 9 11 | 23 | 50 | SS-3 | - | - | - | - | - | - | - | - | - | 15 | A-2-6 (V) | - | |
| | 1031.5 | | | | | | | | | | | | | | | | | | |
| VERY STIFF TO HARD, BROWN AND ORANGISH BROWN, **SANDY SILT**, LITTLE GRAVEL AND STONE FRAGMENTS, LITTLE CLAY, CONTAINS IRON STAINING, DAMP | | | 4 5 6 | 13 | 100 | SS-4 | 4.50 | 16 | 11 | 25 | 37 | 11 | 21 | 17 | 4 | 14 | A-4a (3) | - | |
| | | | 3 6 8 | 16 | 100 | SS-5 | 2.50 | - | - | - | - | - | - | - | - | 14 | A-4a (V) | - | |
| | 1026.5 | | | | | | | | | | | | | | | | | | |
| LOOSE, BROWN, **GRAVEL AND STONE FRAGMENTS WITH SAND AND SILT**, LITTLE CLAY, MOIST | | | 4 5 4 | 10 | 39 | SS-6 | - | - | - | - | - | - | - | - | - | 13 | A-2-4 (V) | - | |
| | 1024.0 | ▼1024.0 | | | | | | | | | | | | | | | | | |
| DENSE, BROWN, **STONE FRAGMENTS**, LITTLE SAND, TRACE SILT, TRACE CLAY, WET TO MOIST | | | 4 7 20 | 31 | 56 | SS-7 | - | - | - | - | - | - | - | - | - | 19 | A-1-a (V) | - | |
| | | | 8 11 30 | 47 | 61 | SS-8 | - | - | - | - | - | - | - | - | - | 11 | A-1-a (V) | - | |
| | 1019.0 | | | | | | | | | | | | | | | | | | |
| VERY DENSE, BROWN AND GRAY, **GRAVEL AND STONE FRAGMENTS WITH SAND AND SILT**, LITTLE CLAY, MOIST | | | 4 20 44 | 73 | 78 | SS-9 | - | - | - | - | - | - | - | - | - | 13 | A-2-4 (V) | - | |
| | | | 21 49 | - | 25 | SS-10 | - | - | - | - | - | - | - | - | - | 11 | A-2-4 (V) | - | |
| | 1013.4 | EOB | | | | | | | | | | | | | | | | | |
| @28.5'; SS-11 CONTAINS NO RECOVERY | | | 50/1" | - | 0 | SS-11 | - | - | - | - | - | - | - | - | - | - | | - | |

NOTES: GROUNDWATER ENCOUNTERED AT 18.0' DURING DRILLING. HOLE CAVED IN AT 16.0'.

ABANDONMENT METHODS, MATERIALS, QUANTITIES: PLACED 0.5 BAG ASPHALT PATCH; SHOVELED SOIL CUTTINGS

STANDARD ODOT LOG W/ SULFATES (8.5 X 11) - OH DOT.GDT - 11/13/20 22:37 - C:\USERS\KAREN\DESKTOP\GINT FILES\SUM-77-277-224 PHASE 2.GPJ

158/209

**SUM-77/277/224**
**VARIOUS**

**STRUCTURE FOUNDATION EXPLORATION**
**BARRIER HI**
**BORING LOG B-085-0-17**

DRAWN EB
CHECKED BPA

| | | | | |
|---|---|---|---|---|
| PROJECT: SUM-77-277/224 | DRILLING FIRM / OPERATOR: NEAS / ASHBAUGH | DRILL RIG: CME 55T | STATION / OFFSET: 40+53, 27' LT. | EXPLORATION ID B-086-0-17 |
| TYPE: NOISE WALL | SAMPLING FIRM / LOGGER: NEAS / ASHBAUGH | HAMMER: CME AUTOMATIC | ALIGNMENT: NOISE WALL HI | |
| PID: 106002 SFN: | DRILLING METHOD: 3.25" HSA | CALIBRATION DATE: 12/5/19 | ELEVATION: 1044.1 (MSL) EOB: 31.2 ft. | PAGE 1 OF 1 |
| START: 3/4/20 END: 3/4/20 | SAMPLING METHOD: SPT | ENERGY RATIO (%): 68.4 | LAT / LONG: 41.024494, -81.501594 | |

| MATERIAL DESCRIPTION AND NOTES | ELEV. | DEPTHS | SPT/ RQD | $N_{60}$ | REC (%) | SAMPLE ID | HP (tsf) | GRADATION (%) GR | CS | FS | SI | CL | ATTERBERG LL | PL | PI | WC | ODOT CLASS (GI) | SO4 ppm | BACK FILL |
|---|---|---|---|---|---|---|---|---|---|---|---|---|---|---|---|---|---|---|---|
| **12.0" ASPHALT AND 9.0" BASE (DRILLERS DESCRIPTION)** | 1044.1 | | | | | | | | | | | | | | | | | | |
| | 1042.3 | | | | | | | | | | | | | | | | | | |
| HARD, BROWN, **SANDY SILT**, LITTLE CLAY, TRACE GRAVEL, DAMP | | | 7 7 9 | 18 | 67 | SS-1 | 4.50 | - | - | - | - | - | - | - | - | 14 | A-4a (V) | - | |
| | 1038.6 | | | | | | | | | | | | | | | | | | |
| MEDIUM DENSE, BROWN, **COARSE AND FINE SAND**, LITTLE SILT, TRACE GRAVEL, TRACE CLAY, DAMP | | | 5 8 12 | 23 | 78 | SS-2 | - | - | - | - | - | - | - | - | - | 7 | A-3a (V) | - | |
| | 1036.1 | | | | | | | | | | | | | | | | | | |
| VERY STIFF TO HARD, BROWN BECOMING GRAY, **SANDY SILT**, TRACE TO LITTLE GRAVEL AND STONE FRAGMENTS, TRACE TO LITTLE CLAY, DAMP | | | 5 4 5 | 10 | 56 | SS-3 | 4.50 | - | - | - | - | - | - | - | - | 14 | A-4a (V) | - | |
| | | | 5 5 6 | 13 | 56 | SS-4 | 4.50 | 9 | 10 | 29 | 37 | 15 | 21 | 15 | 6 | 13 | A-4a (3) | - | |
| | | | 3 4 6 | 11 | 67 | SS-5 | 4.50 | - | - | - | - | - | - | - | - | 14 | A-4a (V) | - | |
| | | | 5 4 4 | 9 | 72 | SS-6 | 4.50 | 6 | 10 | 32 | 37 | 15 | 24 | 18 | 6 | 17 | A-4a (3) | - | |
| @18.5' TO 25.0'; SS-7 TO SS-9 BECOME BROWN | | | 5 7 12 | 22 | 89 | SS-7 | 4.50 | - | - | - | - | - | - | - | - | 16 | A-4a (V) | - | |
| | | | 5 8 10 | 21 | 78 | SS-8 | 3.50 | 17 | 14 | 33 | 26 | 10 | 20 | 15 | 5 | 12 | A-4a (0) | - | |
| | | | 6 10 14 | 27 | 100 | SS-9 | 4.50 | - | - | - | - | - | - | - | - | 12 | A-4a (V) | - | |
| | 1018.1 | TR | | | | | | | | | | | | | | | | | |
| **SANDSTONE**, GRAY, HIGHLY WEATHERED, SLIGHTLY TO MODERATELY STRONG, FINE TO COARSE GRAINED, FRIABLE. | | | 10 11 14 | 29 | 44 | SS-10 | - | - | - | - | - | - | - | - | - | 7 | Rock (V) | - | |
| | | | 26 50 | - | 50 | SS-11 | - | - | - | - | - | - | - | - | - | 6 | Rock (V) | - | |
| @31.0'; SS-12 CONTAINS NO RECOVERY | 1012.9 | EOB | 50/2" | - | 0 | SS-12 | - | - | - | - | - | - | - | - | - | - | | - | |

NOTES: GROUNDWATER NOT ENCOUNTERED DURING DRILLING. HOLE CAVED IN AT 19.0'.

ABANDONMENT METHODS, MATERIALS, QUANTITIES: PLACED 0.5 BAG ASPHALT PATCH; SHOVELED SOIL CUTTINGS

STANDARD ODOT LOG W/ SULFATES (11 X 17) - OH DOT GDT - 11/13/20 22:54 - C:\USERS\KARENS\DESKTOP\GINT FILES\SUM-77-277-224 PHASE 2.GPJ



**SUM-77/277/224**
**VARIOUS**

**STRUCTURE FOUNDATION EXPLORATION**
**BARRIER HI**
**BORING LOG B-086-0-17**

DRAWN EB
CHECKED BPA

| | | | | |
|---|---|---|---|---|
| PROJECT: SUM-77-277/224 | DRILLING FIRM / OPERATOR: NEAS / ASHBAUGH | DRILL RIG: CME 55T | STATION / OFFSET: 38+52, 24' LT. | EXPLORATION ID B-087-0-17 |
| TYPE: NOISE WALL | SAMPLING FIRM / LOGGER: NEAS / ASHBAUGH | HAMMER: CME AUTOMATIC | ALIGNMENT: NOISE WALL HI | |
| PID: 106002 SFN: | DRILLING METHOD: 3.25" HSA | CALIBRATION DATE: 12/5/19 | ELEVATION: 1047.0 (MSL) EOB: 31.3 ft. | PAGE 1 OF 1 |
| START: 3/4/20 END: 3/4/20 | SAMPLING METHOD: SPT | ENERGY RATIO (%): 68.4 | LAT / LONG: 41.024721, -81.502271 | |

| MATERIAL DESCRIPTION AND NOTES | ELEV. | DEPTHS | SPT/ RQD | $N_{60}$ | REC (%) | SAMPLE ID | HP (tsf) | GRADATION (%) GR | CS | FS | SI | CL | ATTERBERG LL | PL | PI | WC | ODOT CLASS (GI) | SO4 ppm | BACK FILL |
|---|---|---|---|---|---|---|---|---|---|---|---|---|---|---|---|---|---|---|---|
| **12.0" ASPHALT AND 8.5" BASE (DRILLERS DESCRIPTION)** | 1047.0 | | | | | | | | | | | | | | | | | | |
| | 1045.3 | | | | | | | | | | | | | | | | | | |
| MEDIUM DENSE, BLACK, **STONE FRAGMENTS**, TRACE SAND, TRACE SILT, TRACE CLAY, STONE FRAGMENTS ARE ASPHALT, DAMP **(FILL)** | | | 4 6 6 | 14 | 11 | SS-1 | - | - | - | - | - | - | - | - | - | 7 | A-1-a (V) | - | |
| | 1041.5 | | | | | | | | | | | | | | | | | | |
| HARD, BROWN, **SANDY SILT**, LITTLE CLAY, TRACE TO LITTLE GRAVEL AND STONE FRAGMENTS, DAMP | | | 4 5 4 | 10 | 44 | SS-2 | 4.25 | - | - | - | - | - | - | - | - | 12 | A-4a (V) | - | |
| | | | 4 5 7 | 14 | 67 | SS-3 | 4.50 | 8 | 8 | 21 | 46 | 17 | 24 | 18 | 6 | 13 | A-4a (6) | - | |
| | | | 5 7 6 | 15 | 67 | SS-4 | 4.50 | - | - | - | - | - | - | - | - | 12 | A-4a (V) | - | |
| | 1032.5 | | 6 8 12 | 23 | 78 | SS-5A | 4.50 | - | - | - | - | - | - | - | - | 16 | A-4a (V) | - | |
| MEDIUM DENSE, BROWN, **COARSE AND FINE SAND**, TRACE SILT, TRACE CLAY, TRACE GRAVEL, DAMP | | | | | | SS-5B | - | - | - | - | - | - | - | - | - | 9 | A-3a (V) | - | |
| | 1030.0 | | 4 9 11 | 23 | 89 | SS-6A | - | - | - | - | - | - | - | - | - | 10 | A-3a (V) | - | |
| HARD, BROWN, **SANDY SILT**, LITTLE CLAY, TRACE GRAVEL, DAMP | 1029.0 | | | | | SS-6B | 4.50 | - | - | - | - | - | - | - | - | 14 | A-4a (V) | - | |
| MEDIUM DENSE, BROWN, **COARSE AND FINE SAND**, LITTLE SILT, TRACE CLAY, TRACE GRAVEL, MOIST | | | 5 8 10 | 21 | 83 | SS-7 | - | - | - | - | - | - | - | - | - | 12 | A-3a (V) | - | |
| | 1026.5 | | | | | | | | | | | | | | | | | | |
| VERY STIFF TO HARD, BROWN AND GRAY, **SANDY SILT**, LITTLE CLAY, TRACE GRAVEL, DAMP | | | 6 4 5 | 10 | 50 | SS-8 | 4.50 | 8 | 12 | 32 | 34 | 14 | 21 | 15 | 6 | 12 | A-4a (3) | - | |
| | | | 5 5 9 | 16 | 28 | SS-9 | 3.25 | - | - | - | - | - | - | - | - | 14 | A-4a (V) | - | |
| | 1021.5 | | | | | | | | | | | | | | | | | | |
| MEDIUM DENSE TO VERY DENSE, BROWN, **COARSE AND FINE SAND**, SOME GRAVEL, LITTLE SILT, TRACE CLAY, MOIST | | | 7 8 11 | 22 | 56 | SS-10 | - | - | - | - | - | - | - | - | - | 11 | A-3a (V) | - | |
| | 1017.0 | | | | | | | | | | | | | | | | | | |
| VERY DENSE, BROWN, **STONE FRAGMENTS WITH SAND AND SILT**, TRACE CLAY, MOIST | 1015.7 | EOB | 9 21 33 | 62 | 67 | SS-11 | - | - | - | - | - | - | - | - | - | 12 | A-3a (V) | - | |
| | | | 50/3" | - | 100 | SS-12 | - | - | - | - | - | - | - | - | - | 10 | A-2-4 (V) | - | |

NOTES: GROUNDWATER NOT ENCOUNTERED DURING DRILLING. HOLE CAVED IN AT 16.0'.

ABANDONMENT METHODS, MATERIALS, QUANTITIES: PLACED 0.5 BAG ASPHALT PATCH; SHOVELED SOIL CUTTINGS

STANDARD ODOT LOG W/ SULFATES (11 X 17) - OH DOT GDT - 11/13/20 22:54 - C:\USERS\KARENS\DESKTOP\GINT FILES\SUM-77-277-224 PHASE 2.GPJ

| | | | |
|---|---|---|---|
| 160/209 | SUM-77/277/224 VARIOUS | STRUCTURE FOUNDATION EXPLORATION BARRIER HI BORING LOG B-087-0-17 | DRAWN EB CHECKED BPA |

P:\17-0129 (106002 SUM-76-10.95 Part 3 - SUM-77_277_224)\106002\geotechnical\sheets\106002ZL053.dgn Sheet 1/8/2021 1:11:26 AM karens

| | | | | | |
|---|---|---|---|---|---|
| PROJECT: SUM-77-277/224 | DRILLING FIRM / OPERATOR: NEAS / J. HODGES | DRILL RIG: CME 55X | STATION / OFFSET: 36+95, 134' RT. | EXPLORATION ID B-088-0-17 |
| TYPE: CULVERT | SAMPLING FIRM / LOGGER: NEAS / J. HODGES | HAMMER: CME AUTOMATIC | ALIGNMENT: NOISE WALL HI | |
| PID: 106002 SFN: 7709781 | DRILLING METHOD: 3.25" HSA / NQ2 | CALIBRATION DATE: 12/5/19 | ELEVATION: 1022.0 (MSL) EOB: 28.6 ft. | PAGE 1 OF 1 |
| START: 4/7/20 END: 4/7/20 | SAMPLING METHOD: SPT / NQ2 | ENERGY RATIO (%): 81.9 | LAT / LONG: 41.024437, -81.502965 | |

| MATERIAL DESCRIPTION AND NOTES | ELEV. | DEPTHS | SPT/ RQD | $N_{60}$ | REC (%) | SAMPLE ID | HP (tsf) | GRADATION (%) GR | CS | FS | SI | CL | ATTERBERG LL | PL | PI | WC | ODOT CLASS (GI) | SO4 ppm | BACK FILL |
|---|---|---|---|---|---|---|---|---|---|---|---|---|---|---|---|---|---|---|---|
| LOOSE, BROWN, **GRAVEL WITH SAND AND SILT**, TRACE CLAY, CONTAINS IRON STAINING, DAMP **(FILL)** | 1022.0 | | | | | | | | | | | | | | | | | | |
| | 1017.5 | | 4 3 3 | 8 | 100 | SS-1 | - | 17 | 6 | 43 | 25 | 9 | NP | NP | NP | 13 | A-2-4 (0) | - | |
| VERY LOOSE, BROWN, **COARSE AND FINE SAND**, LITTLE SILT, LITTLE CLAY, TRACE GRAVEL, CONTAINS IRON STAINING, MOIST **(FILL)** | 1015.0 | | 1 1 1 | 3 | 44 | SS-2 | - | - | - | - | - | - | - | - | - | 15 | A-3a (V) | - | |
| LOOSE, BROWN AND GRAY, **GRAVEL WITH SAND**, LITTLE SILT ,TRACE CLAY, CONTAINS SLAG AND IRON STAINING, MOIST **(FILL)** | 1012.5 | | 2 3 4 | 10 | 67 | SS-3 | - | - | - | - | - | - | - | - | - | 13 | A-1-b (V) | - | |
| MEDIUM DENSE TO DENSE, GRAY AND LIGHT BROWN, **STONE FRAGMENTS WITH SAND**, TRACE TO LITTLE SILT, TRACE CLAY, DAMP | | | 9 14 12 | 35 | 56 | SS-4 | - | - | - | - | - | - | - | - | - | 6 | A-1-b (V) | - | |
| @12.5' TO 14.0'; SS-5 BECOMES WET | 1009.5 | | 14 10 5 | 20 | 56 | SS-5 | - | 51 | 13 | 17 | 14 | 5 | NP | NP | NP | 18 | A-1-b (0) | - | |
| | 1007.5 | | 7 6 7 | 18 | 33 | SS-6 | - | - | - | - | - | - | - | - | - | 12 | A-1-b (V) | - | |
| MEDIUM DENSE, GRAY, **GRAVEL WITH SAND**, TRACE SILT, TRACE CLAY, MOIST | 1005.0 | | | | | | | | | | | | | | | | | | |
| VERY DENSE, LIGHT GRAY AND DARK GRAY, **STONE FRAGMENTS WITH SAND**, LITTLE SILT, TRACE CLAY, CONTAINS A RELIC ROCK STRUCTURE, MOIST | 1002.5 | | 11 40 14 | 74 | 67 | SS-7 | - | - | - | - | - | - | - | - | - | 12 | A-1-b (V) | - | |
| DENSE, GRAY, **COARSE AND FINE SAND**, SOME GRAVEL AND STONE FRAGMENTS, TRACE SILT, TRACE CLAY, WET | 1000.0 | | 14 13 12 | 34 | 100 | SS-8 | - | - | - | - | - | - | - | - | - | 16 | A-3a (V) | - | |
| VERY DENSE, GRAY, **STONE FRAGMENTS WITH SAND AND SILT**, LITTLE CLAY, CONTAINS A RELIC ROCK STRUCTURE, MOIST | 998.4 | TR | 7 24 50/1" | - | 100 | SS-9 | - | - | - | - | - | - | - | - | - | 11 | A-2-4 (V) | - | |
| **INTERBEDDED SANDSTONE (83%) AND SHALE (17%)**, MEDIUM BEDDED FROM 27.1' - 28.6', BEDDING DISCONTINUITIES: LOW ANGLE, HIGHLY FRACTURED TO FRACTURED, INTACT FROM 27.1' - 28.6', OPEN TO NARROW, SLIGHTLY ROUGH, BLOCKY/DISTURBED/SEAMY, INTACT FROM 27.1' - 28.6', GOOD TO FAIR SURFACE CONDITION, RQD 29.6%, REC. 100%; **SANDSTONE**, LIGHT GRAY AND ORANGISH BROWN, SLIGHTLY TO MODERATELY WEATHERED, STRONG, FINE TO MEDIUM GRAINED, THINLY LAMINATED TO VERY THIN; **SHALE**, GRAY, MODERATELY WEATHERED, VERY WEAK TO WEAK, FISSILE. | 993.4 | EOB | 30 | | 100 | NQ2-1 | | | | | | | | | | | CORE | | |

NOTES: GROUNDWATER ENCOUNTERED AT 12.5' DURING DRILLING. HOLE DID NOT CAVE. BORING OFFSET 35.0' SOUTH DUE TO OVERHEAD UTILITIES.

ABANDONMENT METHODS, MATERIALS, QUANTITIES: PUMPED 5 GAL. BENTONITE GROUT; SHOVELED SOIL CUTTINGS

STANDARD ODOT LOG W/ SULFATES (11 X 17) - OH DOT.GDT - 11/13/20 22:54 - C:\USERS\KARENS\DESKTOP\GINT FILES\SUM-77-277-224 PHASE 2.GPJ

| | | | | |
|---|---|---|---|---|
| PROJECT: SUM-77-277/224 | DRILLING FIRM / OPERATOR: NEAS / ASHBAUGH | DRILL RIG: CME 55T | STATION / OFFSET: 36+65, 20' LT. | EXPLORATION ID B-089-0-17 |
| TYPE: CULVERT | SAMPLING FIRM / LOGGER: NEAS / ASHBAUGH | HAMMER: CME AUTOMATIC | ALIGNMENT: NOISE WALL HI | |
| PID: 106002 SFN: 7709781 | DRILLING METHOD: 3.25" HSA | CALIBRATION DATE: 12/5/19 | ELEVATION: 1049.5 (MSL) EOB: 39.7 ft. | PAGE 1 OF 1 |
| START: 3/4/20 END: 3/4/20 | SAMPLING METHOD: SPT | ENERGY RATIO (%): 68.4 | LAT / LONG: 41.024866, -81.502930 | |

| MATERIAL DESCRIPTION AND NOTES | ELEV. | DEPTHS | SPT/ RQD | $N_{60}$ | REC (%) | SAMPLE ID | HP (tsf) | GRADATION (%) GR | CS | FS | SI | CL | ATTERBERG LL | PL | PI | WC | ODOT CLASS (GI) | SO4 ppm | BACK FILL |
|---|---|---|---|---|---|---|---|---|---|---|---|---|---|---|---|---|---|---|---|
| **12.0" ASPHALT AND 5.0" BASE (DRILLERS DESCRIPTION)** | 1049.5<br>1048.1 | | | | | | | | | | | | | | | | | | |
| HARD, BROWN AND GRAY, **SANDY SILT**, LITTLE CLAY, LITTLE GRAVEL, DAMP | | | 7 6 7 | 15 | 56 | SS-1 | 4.50 | - | - | - | - | - | - | - | - | 14 | A-4a (V) | - | |
| | | | 5 6 6 | 14 | 100 | SS-2 | 4.50 | - | - | - | - | - | - | - | - | 11 | A-4a (V) | - | |
| HARD, BROWN, **SILT**, SOME SAND, LITTLE CLAY, TRACE GRAVEL, DAMP<br>@8.5' TO 10.0'; SS-3 CONTAINS NO RECOVERY | 1041.5 | | 4 4 8 | 14 | 0 | SS-3 | - | - | - | - | - | - | - | - | - | - | | - | |
| | | | 5 7 6 | 15 | 89 | SS-4 | 4.50 | 5 | 5 | 19 | 54 | 17 | 24 | 19 | 5 | 16 | A-4b (7) | - | |
| | | | 6 6 7 | 15 | 78 | SS-5 | 4.50 | - | - | - | - | - | - | - | - | 13 | A-4b (V) | - | |
| VERY STIFF TO HARD, BROWN, **SANDY SILT**, LITTLE CLAY, TRACE TO LITTLE GRAVEL AND STONE FRAGMENTS, WET TO MOIST<br>@16.0' TO 17.5'; SS-6 CONTAINS A 2.0" COARSE AND FINE SAND SEAM | 1034.0 | | 6 7 7 | 16 | 67 | SS-6 | 3.50 | 4 | 7 | 40 | 37 | 12 | 18 | 14 | 4 | 17 | A-4a (3) | - | |
| | | | 9 10 12 | 25 | 56 | SS-7 | 4.50 | - | - | - | - | - | - | - | - | 16 | A-4a (V) | - | |
| @21.0' TO 39.5'; SS-8 TO SS-12A BECOME DAMP | | | 10 11 14 | 29 | 83 | SS-8 | 4.50 | 18 | 10 | 24 | 36 | 12 | 23 | 17 | 6 | 11 | A-4a (3) | - | |
| | | | 5 8 6 | 16 | 89 | SS-9 | 4.50 | - | - | - | - | - | - | - | - | 14 | A-4a (V) | - | |
| @28.5'; BECOMES BROWNISH GRAY, CONTAINS TRACE IRON STAINING | | | 5 4 6 | 11 | 100 | SS-10 | 4.50 | - | - | - | - | - | - | - | - | 14 | A-4a (V) | - | |
| | | | 7 6 7 | 15 | 67 | SS-11 | 2.50 | 4 | 8 | 31 | 41 | 16 | 23 | 17 | 6 | 17 | A-4a (4) | - | |
| | 1010.0 | | 12 25 50/2" | - | 50 | SS-12A | 4.50 | - | - | - | - | - | - | - | - | 14 | A-4a (V) | - | |
| VERY DENSE, GRAY, **STONE FRAGMENTS WITH SAND**, TRACE SILT, TRACE CLAY, STONE FRAGMENTS ARE SILTSTONE, DAMP | 1009.8 | EOB | | | | SS-12B | - | - | - | - | - | - | - | - | - | 6 | A-1-b (V) | - | |

NOTES: GROUNDWATER NOT ENCOUNTERED DURING DRILLING. HOLE CAVED IN AT 18.2'.

ABANDONMENT METHODS, MATERIALS, QUANTITIES: PLACED 0.5 BAG ASPHALT PATCH; SHOVELED SOIL CUTTINGS

STANDARD ODOT LOG W/ SULFATES (11 X 17) - OH DOT GDT - 11/13/20 22:54 - C:\USERS\KARENS\DESKTOP\GINT FILES\SUM-77-277-224 PHASE 2.GPJ

| | | | |
|---|---|---|---|
| 162/209 | SUM-77/277/224 VARIOUS | STRUCTURE FOUNDATION EXPLORATION CULVERT SNF: 7709781 & BARRIER HI BORING LOG B-089-0-17 | DRAWN EB CHECKED BPA |

| | | | | |
|---|---|---|---|---|
| PROJECT: SUM-77-277/224 | DRILLING FIRM / OPERATOR: NEAS / ASHBAUGH | DRILL RIG: CME 55T | STATION / OFFSET: 34+63, 14' LT. | EXPLORATION ID B-090-0-17 |
| TYPE: NOISE WALL | SAMPLING FIRM / LOGGER: NEAS / ASHBAUGH | HAMMER: CME AUTOMATIC | ALIGNMENT: NOISE WALL HI | |
| PID: 106002 SFN: | DRILLING METHOD: 3.25" HSA | CALIBRATION DATE: 12/5/19 | ELEVATION: 1051.7 (MSL) EOB: 32.5 ft. | PAGE 1 OF 1 |
| START: 3/4/20 END: 3/4/20 | SAMPLING METHOD: SPT | ENERGY RATIO (%): 68.4 | LAT / LONG: 41.024947, -81.503662 | |

| MATERIAL DESCRIPTION AND NOTES | ELEV. | DEPTHS | SPT/ RQD | $N_{60}$ | REC (%) | SAMPLE ID | HP (tsf) | GRADATION (%) GR | CS | FS | SI | CL | ATTERBERG LL | PL | PI | WC | ODOT CLASS (GI) | SO4 ppm | BACK FILL |
|---|---|---|---|---|---|---|---|---|---|---|---|---|---|---|---|---|---|---|---|
| **13.0" ASPHALT AND 8.0" BASE (DRILLERS DESCRIPTION)** | 1051.7 | | | | | | | | | | | | | | | | | | |
| | 1049.9 | | | | | | | | | | | | | | | | | | |
| HARD, BROWN AND GRAYISH BROWN, **SANDY SILT**, LITTLE CLAY, TRACE GRAVEL, DAMP | | | 2 4 5 | 10 | 56 | SS-1 | 4.50 | - | - | - | - | - | - | - | - | 15 | A-4a (V) | - | |
| | 1046.2 | | | | | | | | | | | | | | | | | | |
| LOOSE TO MEDIUM DENSE, BROWN AND GRAYISH BROWN, **GRAVEL WITH SAND AND SILT**, TRACE CLAY, DAMP | | | 5 4 5 | 10 | 83 | SS-2 | - | 27 | 15 | 33 | 17 | 8 | NP | NP | NP | 12 | A-2-4 (0) | - | |
| | | | 6 5 5 | 11 | 78 | SS-3 | - | - | - | - | - | - | - | - | - | 13 | A-2-4 (V) | - | |
| | 1041.2 | | | | | | | | | | | | | | | | | | |
| VERY STIFF TO HARD, BROWN AND GRAYISH BROWN, **SANDY SILT**, LITTLE CLAY, TRACE GRAVEL, DAMP TO MOIST | | | 2 4 5 | 10 | 89 | SS-4 | 4.50 | - | - | - | - | - | - | - | - | 14 | A-4a (V) | - | |
| | | | 3 4 3 | 8 | 67 | SS-5 | 3.50 | 9 | 12 | 32 | 32 | 15 | 21 | 15 | 6 | 13 | A-4a (2) | - | |
| @16.0' TO 25.0'; SS-6 TO SS-9 CONTAIN INTERBEDDED SILT LENSES | | | 4 4 5 | 10 | 83 | SS-6 | 2.25 | - | - | - | - | - | - | - | - | 19 | A-4a (V) | - | |
| @18.5' TO 20.0'; SS-7 BECOMES BROWN AND DARK GRAY, CONTAINS TRACE ROOTS | | | 4 5 8 | 15 | 100 | SS-7 | 3.50 | - | - | - | - | - | - | - | - | 17 | A-4a (V) | - | |
| | | | 6 6 7 | 15 | 100 | SS-8 | 4.00 | 10 | 13 | 28 | 35 | 14 | 22 | 16 | 6 | 14 | A-4a (3) | - | |
| | | | 5 6 8 | 16 | 100 | SS-9 | 4.50 | - | - | - | - | - | - | - | - | 13 | A-4a (V) | - | |
| @26.0' TO 27.5'; SS-10 BECOMES STIFF, CONTAINS IRON STAINING | | | 3 5 9 | 16 | 100 | SS-10 | 1.50 | - | - | - | - | - | - | - | - | 14 | A-4a (V) | - | |
| @28.5' TO 30.0'; SS-11 BECOMES MEDIUM DENSE | | | 5 7 10 | 19 | 100 | SS-11 | - | 6 | 10 | 42 | 31 | 11 | NP | NP | NP | 13 | A-4a (1) | - | |
| | 1021.2 | | | | | | | | | | | | | | | | | | |
| MEDIUM DENSE, BROWN AND ORANGISH BROWN, **COARSE AND FINE SAND**, LITTLE SILT, TRACE GRAVEL, TRACE CLAY, CONTAINS IRON STAINING, MOIST | 1019.2 | EOB | 10 11 15 | 30 | 100 | SS-12 | - | - | - | - | - | - | - | - | - | 11 | A-3a (V) | - | |

NOTES: GROUNDWATER NOT ENCOUNTERED DURING DRILLING. HOLE CAVED IN AT 17.0'.

ABANDONMENT METHODS, MATERIALS, QUANTITIES: PLACED 0.5 BAG ASPHALT PATCH; SHOVELED SOIL CUTTINGS

STANDARD ODOT LOG W/ SULFATES (11 X 17) - OH DOT.GDT - 11/13/20 22:54 - C:\USERS\KARENS\DESKTOP\GINT FILES\SUM-77-277-224 PHASE 2.GPJ



**SUM-77/277/224**
**VARIOUS**

**STRUCTURE FOUNDATION EXPLORATION**
**BARRIER HI**
**BORING LOG B-090-0-17**

DRAWN EB
CHECKED BPA

| | | | | |
|---|---|---|---|---|
| PROJECT: SUM-77-277/224 | DRILLING FIRM / OPERATOR: NEAS / ASHBAUGH | DRILL RIG: CME 55T | STATION / OFFSET: 32+63, 15' LT. | EXPLORATION ID B-091-0-17 |
| TYPE: NOISE WALL | SAMPLING FIRM / LOGGER: NEAS / ASHBAUGH | HAMMER: CME AUTOMATIC | ALIGNMENT: NOISE WALL HI | |
| PID: 106002 SFN: | DRILLING METHOD: 3.25" HSA | CALIBRATION DATE: 12/5/19 | ELEVATION: 1050.4 (MSL) EOB: 31.3 ft. | PAGE 1 OF 1 |
| START: 3/4/20 END: 3/4/20 | SAMPLING METHOD: SPT | ENERGY RATIO (%): 68.4 | LAT / LONG: 41.024972, -81.504391 | |

| MATERIAL DESCRIPTION AND NOTES | ELEV. | DEPTHS | SPT/ RQD | $N_{60}$ | REC (%) | SAMPLE ID | HP (tsf) | GRADATION (%) GR | CS | FS | SI | CL | ATTERBERG LL | PL | PI | WC | ODOT CLASS (GI) | SO4 ppm | BACK FILL |
|---|---|---|---|---|---|---|---|---|---|---|---|---|---|---|---|---|---|---|---|
| **13.0" ASPHALT AND 6.0" BASE (DRILLERS DESCRIPTION)** | 1050.4 | | | | | | | | | | | | | | | | | | |
| | 1048.8 | | | | | | | | | | | | | | | | | | |
| MEDIUM DENSE, BROWN, **GRAVEL WITH SAND AND SILT**, TRACE CLAY, MOIST | | 1 | | | | | | | | | | | | | | | | | |
| | | 2 | | | | | | | | | | | | | | | | | |
| | | 3 | | | | | | | | | | | | | | | | | |
| | | 4 | 7 9 6 | 17 | 56 | SS-1 | - | - | - | - | - | - | - | - | - | 13 | A-2-4 (V) | - | |
| | | 5 | | | | | | | | | | | | | | | | | |
| | | 6 | 5 6 5 | 13 | 50 | SS-2 | - | - | - | - | - | - | - | - | - | 12 | A-2-4 (V) | - | |
| | 1042.4 | 7 | | | | | | | | | | | | | | | | | |
| VERY STIFF TO HARD, BROWN BECOMING BROWNISH GRAY, **SANDY SILT**, LITTLE TO SOME CLAY, TRACE GRAVEL, DAMP | | 8 | | | | | | | | | | | | | | | | | |
| | | 9 | 4 4 6 | 11 | 78 | SS-3 | 4.50 | - | - | - | - | - | - | - | - | 13 | A-4a (V) | - | |
| | | 10 | | | | | | | | | | | | | | | | | |
| | | 11 | | | | | | | | | | | | | | | | | |
| | | 12 | 5 6 5 | 13 | 100 | SS-4 | 4.50 | 9 | 10 | 23 | 40 | 18 | 22 | 15 | 7 | 12 | A-4a (5) | - | |
| | | 13 | | | | | | | | | | | | | | | | | |
| | | 14 | 3 5 7 | 14 | 89 | SS-5 | 4.25 | - | - | - | - | - | - | - | - | 13 | A-4a (V) | - | |
| | | 15 | | | | | | | | | | | | | | | | | |
| | | 16 | | | | | | | | | | | | | | | | | |
| | | 17 | 4 5 7 | 14 | 100 | SS-6 | 3.50 | - | - | - | - | - | - | - | - | 14 | A-4a (V) | - | |
| | | 18 | | | | | | | | | | | | | | | | | |
| @18.5' TO 22.5'; SS-7 AND SS-8 CONTAIN INTERBEDDED SILT LENSES | | 19 | 4 3 4 | 8 | 78 | SS-7 | 3.25 | 4 | 5 | 20 | 49 | 22 | 26 | 18 | 8 | 16 | A-4a (7) | - | |
| | | 20 | | | | | | | | | | | | | | | | | |
| | | 21 | | | | | | | | | | | | | | | | | |
| | | 22 | 4 4 4 | 9 | 83 | SS-8 | 3.50 | - | - | - | - | - | - | - | - | 13 | A-4a (V) | - | |
| | 1027.4 | 23 | | | | | | | | | | | | | | | | | |
| LOOSE, BROWN, **COARSE AND FINE SAND**, LITTLE SILT, TRACE CLAY, TRACE GRAVEL AND STONE FRAGMENTS, MOIST TO DAMP | | 24 | 3 4 3 | 8 | 100 | SS-9 | - | - | - | - | - | - | - | - | - | 14 | A-3a (V) | - | |
| | | 25 | | | | | | | | | | | | | | | | | |
| @26.0' TO 31.3'; SS-10 TO SS-11 BECOME DENSE TO VERY DENSE, SOME GRAVEL AND STONE FRAGMENTS | | 26 | | | | | | | | | | | | | | | | | |
| | | 27 | 10 13 14 | 31 | 56 | SS-10 | - | - | - | - | - | - | - | - | - | 8 | A-3a (V) | - | |
| | | 28 | | | | | | | | | | | | | | | | | |
| | | 29 | 13 15 43 | 66 | 56 | SS-11 | - | - | - | - | - | - | - | - | - | 10 | A-3a (V) | - | |
| | | 30 | | | | | | | | | | | | | | | | | |
| | 1019.1 | 31 | | | | | | | | | | | | | | | | | |
| @31.0'; SS-12 BECOMES VERY DENSE, CONTAINS NO RECOVERY | | EOB | 50/3" | - | 0 | SS-12 | - | - | - | - | - | - | - | - | - | - | | - | |

NOTES: GROUNDWATER NOT ENCOUNTERED DURING DRILLING. HOLE CAVED IN AT 17.1'.

ABANDONMENT METHODS, MATERIALS, QUANTITIES: PLACED 0.5 BAG ASPHALT PATCH; SHOVELED SOIL CUTTINGS

STANDARD ODOT LOG W/ SULFATES (11 X 17) - OH DOT.GDT - 11/13/20 22:54 - C:\USERS\KARENS\DESKTOP\GINT FILES\SUM-77-277-224 PHASE 2.GPJ

| | | | |
|---|---|---|---|
| 164/209 | SUM-77/277/224 VARIOUS | STRUCTURE FOUNDATION EXPLORATION BARRIER HI BORING LOG B-091-0-17 | DRAWN EB CHECKED BPA |

PROJECT: SUM-77-277/224 | DRILLING FIRM / OPERATOR: NEAS / J. HODGES | DRILL RIG: CME 55X | STATION / OFFSET: 30+36, 15' RT. | EXPLORATION ID B-092-0-17
TYPE: NOISE WALL | SAMPLING FIRM / LOGGER: NEAS / J. HODGES | HAMMER: CME AUTOMATIC | ALIGNMENT: NOISE WALL HI
PID: 106002 SFN: | DRILLING METHOD: 3.25" HSA | CALIBRATION DATE: 12/5/19 | ELEVATION: 1043.1 (MSL) EOB: 23.7 ft. | PAGE 1 OF 1
START: 3/3/20 END: 3/3/20 | SAMPLING METHOD: SPT | ENERGY RATIO (%): 81.9 | LAT / LONG: 41.024740, -81.505041

| MATERIAL DESCRIPTION AND NOTES | ELEV. 1043.1 | DEPTHS | SPT/ RQD | $N_{60}$ | REC (%) | SAMPLE ID | HP (tsf) | GRADATION (%) GR | CS | FS | SI | CL | ATTERBERG LL | PL | PI | WC | ODOT CLASS (GI) | SO4 ppm | BACK FILL |
|---|---|---|---|---|---|---|---|---|---|---|---|---|---|---|---|---|---|---|---|
| VERY STIFF TO HARD, BROWN, **SANDY SILT**, LITTLE CLAY, TRACE GRAVEL, CONTAINS TRACE IRON STAINING AND ROOTS, DAMP | | | 4 4 6 | 14 | 100 | SS-1 | 4.50 | 1 | 9 | 31 | 41 | 18 | 23 | 19 | 4 | 17 | A-4a (5) | - | |
| | 1039.1 | | | | | SS-2A | 3.50 | - | - | - | - | - | - | - | - | 12 | A-4a (V) | - | |
| VERY STIFF TO HARD, BROWN, **SILT**, LITTLE TO SOME CLAY, TRACE TO LITTLE SAND, TRACE GRAVEL, DAMP | | | 4 6 8 | 19 | 100 | SS-2B | 4.25 | 1 | 3 | 13 | 64 | 19 | 25 | 20 | 5 | 18 | A-4b (8) | - | |
| @6.0' TO 10.0'; SS-3 TO SS-4 BECOME WET TO MOIST | | W 1037.1 | 4 5 6 | 15 | 67 | SS-3 | 4.50 | - | - | - | - | - | - | - | - | 28 | A-4b (V) | - | |
| | | | 2 3 7 | 14 | 44 | SS-4 | 2.25 | 0 | 1 | 8 | 69 | 22 | 27 | 21 | 6 | 23 | A-4b (8) | - | |
| | 1032.1 | TR | | | | | | | | | | | | | | | | | |
| **SANDSTONE**, LIGHT TAN AND BROWN, HIGHLY WEATHERED, WEAK TO MODERATELY STRONG, FINE TO COARSE GRAINED, FRIABLE. | | | 12 15 16 | 42 | 56 | SS-5 | - | - | - | - | - | - | - | - | - | 4 | Rock (V) | - | |
| | | | 50 | - | 100 | SS-6 | - | - | - | - | - | - | - | - | - | - | Rock (V) | - | |
| | | | 12 24 25 | 67 | 100 | SS-7 | - | - | - | - | - | - | - | - | - | - | Rock (V) | - | |
| | | | 11 50 | - | 100 | SS-8 | - | - | - | - | - | - | - | - | - | - | Rock (V) | - | |
| @21.0'; SS-9 CONTAINS NO RECOVERY | | | 50/4" | - | 0 | SS-9 | - | - | - | - | - | - | - | - | - | - | | - | |
| | 1019.4 | EOB | 60/2" | - | 100 | SS-10 | - | - | - | - | - | - | - | - | - | - | Rock (V) | - | |

NOTES: GROUNDWATER ENCOUNTERED AT 6.0' DURING DRILLING. HOLE DID NOT CAVE.
ABANDONMENT METHODS, MATERIALS, QUANTITIES: SHOVELED SOIL CUTTINGS

PROJECT: SUM-77-277/224 | DRILLING FIRM / OPERATOR: NEAS / J. HODGES | DRILL RIG: CME 55X | STATION / OFFSET: 28+11, 16' LT. | EXPLORATION ID B-093-0-17
TYPE: NOISE WALL | SAMPLING FIRM / LOGGER: NEAS / J. HODGES | HAMMER: CME AUTOMATIC | ALIGNMENT: NOISE WALL HI
PID: 106002 SFN: | DRILLING METHOD: 3.25" HSA | CALIBRATION DATE: 12/5/19 | ELEVATION: 1043.5 (MSL) EOB: 21.5 ft. | PAGE 1 OF 1
START: 3/3/20 END: 3/3/20 | SAMPLING METHOD: SPT | ENERGY RATIO (%): 81.9 | LAT / LONG: 41.024752, -81.505832

| MATERIAL DESCRIPTION AND NOTES | ELEV. 1043.5 | DEPTHS | SPT/ RQD | $N_{60}$ | REC (%) | SAMPLE ID | HP (tsf) | GRADATION (%) GR | CS | FS | SI | CL | ATTERBERG LL | PL | PI | WC | ODOT CLASS (GI) | SO4 ppm | BACK FILL |
|---|---|---|---|---|---|---|---|---|---|---|---|---|---|---|---|---|---|---|---|
| VERY STIFF, BROWN AND GRAY, **SILT**, SOME CLAY, TRACE SAND, TRACE GRAVEL, CONTAINS IRON STAINING, DAMP TO MOIST | | | 5 5 5 | 14 | 100 | SS-1 | 3.75 | - | - | - | - | - | - | - | - | 23 | A-4b (V) | - | |
| | | | 5 6 7 | 18 | 100 | SS-2 | 3.75 | - | - | - | - | - | - | - | - | 27 | A-4b (V) | - | |
| | | | 5 9 13 | 30 | 100 | SS-3 | 4.00 | 0 | 2 | 6 | 70 | 22 | 31 | 25 | 6 | 24 | A-4b (8) | - | |
| | | | 4 9 10 | 26 | 100 | SS-4 | 3.50 | - | - | - | - | - | - | - | - | 23 | A-4b (V) | - | |
| | 1033.0 | | | | | | | | | | | | | | | | | | |
| DENSE, LIGHT BROWN AND TAN, **STONE FRAGMENTS WITH SAND**, TRACE SILT, TRACE CLAY, STONE FRAGMENTS ARE SANDSTONE, DAMP | 1031.5 | | 13 26 30 | 76 | 44 | SS-5A | - | - | - | - | - | - | - | - | - | 5 | A-1-b (V) | - | |
| | | | | | | SS-5B | 4.25 | - | - | - | - | - | - | - | - | 10 | A-4b (V) | - | |
| STIFF TO HARD, BROWN, **SANDY SILT**, LITTLE CLAY, TRACE GRAVEL, DAMP TO MOIST | | | 7 8 5 | 18 | 100 | SS-6 | 2.00 | 2 | 2 | 17 | 61 | 18 | 26 | 19 | 7 | 21 | A-4b (8) | - | |
| | 1028.0 | TR | | | | | | | | | | | | | | | | | |
| **SANDSTONE**, LIGHT TAN, HIGHLY WEATHERED, SLIGHTLY STRONG, FINE TO COARSE GRAINED. | | | 50 | - | 100 | SS-7 | - | - | - | - | - | - | - | - | - | - | Rock (V) | - | |
| | | | 60/3" | - | 100 | SS-8 | - | - | - | - | - | - | - | - | - | - | Rock (V) | - | |
| | 1022.0 | EOB | 50 | - | 100 | SS-9 | - | - | - | - | - | - | - | - | - | - | Rock (V) | - | |

NOTES: GROUNDWATER NOT ENCOUNTERED DURING DRILLING. HOLE DID NOT CAVE.
ABANDONMENT METHODS, MATERIALS, QUANTITIES: SHOVELED SOIL CUTTINGS

STANDARD ODOT LOG W/ SULFATES (8.5 X 11) - OH DOT.GDT - 11/13/20 22:37 - C:\USERS\KAREN\DESKTOP\GINT FILES\SUM-77-277-224 PHASE 2.GPJ

PROJECT: SUM-77-277/224
TYPE: NOISE WALL
PID: 106002 SFN:
START: 3/2/20 END: 3/2/20

DRILLING FIRM / OPERATOR: NEAS / J. HODGES
SAMPLING FIRM / LOGGER: NEAS / J. HODGES
DRILLING METHOD: 3.25" HSA
SAMPLING METHOD: SPT

DRILL RIG: CME 55X
HAMMER: CME AUTOMATIC
CALIBRATION DATE: 12/5/19
ENERGY RATIO (%): 81.9

STATION / OFFSET: 26+27, 15' LT.
ALIGNMENT: NOISE WALL HI
ELEVATION: 1041.4 (MSL) EOB: 18.7 ft.
LAT / LONG: 41.024781, -81.506500

EXPLORATION ID B-094-0-17
PAGE 1 OF 1

| MATERIAL DESCRIPTION AND NOTES | ELEV. | DEPTHS | SPT/ RQD | $N_{60}$ | REC (%) | SAMPLE ID | HP (tsf) | GRADATION (%) GR | CS | FS | SI | CL | ATTERBERG LL | PL | PI | WC | ODOT CLASS (GI) | SO4 ppm | BACK FILL |
|---|---|---|---|---|---|---|---|---|---|---|---|---|---|---|---|---|---|---|---|
| LOOSE TO MEDIUM DENSE, BROWN, **SILT**, TRACE CLAY, TRACE SAND, TRACE GRAVEL, SS-1 CONTAINS TRACE ROOTS, MOIST TO WET | | | 5 5 7 | 16 | 67 | SS-1 | - | - | - | - | - | - | - | - | - | 24 | A-4b (V) | - | |
| | | | 5 8 9 | 23 | 100 | SS-2 | - | 0 | 0 | 3 | 88 | 9 | NP | NP | NP | 24 | A-4b (8) | - | |
| @6.0' TO 12.5'; SS-3 TO SS-5 BECOME ORANGISH BROWN AND GRAY, SOME CLAY, CONTAINS IRON STAINING | | | 2 2 3 | 7 | 100 | SS-3 | - | - | - | - | - | - | - | - | - | 28 | A-4b (V) | - | |
| | | | 2 3 3 | 8 | 100 | SS-4 | - | 1 | 2 | 3 | 70 | 24 | NP | NP | NP | 23 | A-4b (8) | - | |
| | | | 3 3 6 | 12 | 100 | SS-5 | - | 1 | 1 | 2 | 75 | 21 | NP | NP | NP | 22 | A-4b (8) | - | |
| | 1027.9 | | | | | | | | | | | | | | | | | | |
| VERY DENSE, BROWN, **COARSE AND FINE SAND**, SOME SILT, LITTLE GRAVEL, TRACE CLAY, DAMP | 1026.4 | | 7 26 50 | 104 | 100 | SS-6 | - | - | - | - | - | - | - | - | - | 13 | A-3a (V) | - | |
| **SANDSTONE**, LIGHT BROWN AND LIGHT GRAY, HIGHLY WEATHERED, SLIGHTLY STRONG, FINE TO COARSE GRAINED. | | TR | 50/5" | - | 40 | SS-7 | - | - | - | - | - | - | - | - | - | - | Rock (V) | - | |
| | 1022.7 | EOB | 50/2" | - | 100 | SS-8 | - | - | - | - | - | - | - | - | - | - | Rock (V) | - | |

NOTES: GROUNDWATER NOT ENCOUNTERED DURING DRILLING. HOLE DID NOT CAVE.
ABANDONMENT METHODS, MATERIALS, QUANTITIES: SHOVELED SOIL CUTTINGS

PROJECT: SUM-77-277/224
TYPE: NOISE WALL
PID: 106002 SFN:
START: 3/2/20 END: 3/2/20

DRILLING FIRM / OPERATOR: NEAS / J. HODGES
SAMPLING FIRM / LOGGER: NEAS / J. HODGES
DRILLING METHOD: 3.25" HSA
SAMPLING METHOD: SPT

DRILL RIG: CME 55X
HAMMER: CME AUTOMATIC
CALIBRATION DATE: 12/5/19
ENERGY RATIO (%): 81.9

STATION / OFFSET: 24+45, 15' LT.
ALIGNMENT: NOISE WALL HI
ELEVATION: 1039.4 (MSL) EOB: 21.2 ft.
LAT / LONG: 41.024780, -81.507166

EXPLORATION ID B-095-0-17
PAGE 1 OF 1

| MATERIAL DESCRIPTION AND NOTES | ELEV. | DEPTHS | SPT/ RQD | $N_{60}$ | REC (%) | SAMPLE ID | HP (tsf) | GRADATION (%) GR | CS | FS | SI | CL | ATTERBERG LL | PL | PI | WC | ODOT CLASS (GI) | SO4 ppm | BACK FILL |
|---|---|---|---|---|---|---|---|---|---|---|---|---|---|---|---|---|---|---|---|
| HARD, GRAY, **SANDY SILT**, LITTLE CLAY, TRACE GRAVEL, DAMP | | | 10 20 20 | 55 | 67 | SS-1 | 4.50 | - | - | - | - | - | - | - | - | 8 | A-4a (V) | - | |
| | 1036.4 | | | | | | | | | | | | | | | | | | |
| MEDIUM DENSE, BROWN, **COARSE AND FINE SAND**, SOME SILT, SOME GRAVEL, TRACE CLAY, DAMP | | | 4 8 9 | 23 | 100 | SS-2 | - | - | - | - | - | - | - | - | - | 11 | A-3a (V) | - | |
| | 1033.9 | | | | | | | | | | | | | | | | | | |
| STIFF TO HARD, GRAY BECOMING BROWN AND ORANGISH BROWN, **SANDY SILT**, LITTLE CLAY, TRACE TO LITTLE GRAVEL, CONTAINS IRON STAINING, DAMP | | | 2 2 3 | 7 | 100 | SS-3 | 1.50 | 7 | 9 | 28 | 38 | 18 | 19 | 14 | 5 | 12 | A-4a (4) | - | |
| | | | 10 16 17 | 45 | 100 | SS-4 | 4.50 | 11 | 12 | 32 | 32 | 13 | 21 | 15 | 6 | 12 | A-4a (2) | - | |
| | 1028.9 | | | | | | | | | | | | | | | | | | |
| HARD, ORANGISH BROWN AND GRAY, **SILT**, SOME CLAY, TRACE SAND, TRACE GRAVEL, CONTAINS IRON STAINING, DAMP | | | 6 25 30 | 75 | 67 | SS-5 | 4.50 | 1 | 1 | 6 | 71 | 21 | 26 | 21 | 5 | 17 | A-4b (8) | - | |
| | 1026.4 | TR | | | | | | | | | | | | | | | | | |
| **SANDSTONE**, LIGHT TAN, HIGHLY WEATHERED, SLIGHTLY STRONG, FINE TO COARSE GRAINED, FRIABLE. | | | 50/4" | - | 100 | SS-6 | - | - | - | - | - | - | - | - | - | - | Rock (V) | - | |
| | | | 50/2" | - | 100 | SS-7 | - | - | - | - | - | - | - | - | - | - | Rock (V) | - | |
| | | | 50 | - | 100 | SS-8 | - | - | - | - | - | - | - | - | - | - | Rock (V) | - | |
| | 1018.2 | EOB | 50/2" | - | 100 | SS-9 | - | - | - | - | - | - | - | - | - | - | Rock (V) | - | |

NOTES: GROUNDWATER NOT ENCOUNTERED DURING DRILLING. HOLE DID NOT CAVE.
ABANDONMENT METHODS, MATERIALS, QUANTITIES: SHOVELED SOIL CUTTINGS

STANDARD ODOT LOG W/ SULFATES (8.5 X 11) - OH DOT.GDT - 11/13/20 22:37 - C:\USERS\KAREN\DESKTOP\GINT FILES\SUM-77-277-224 PHASE 2.GPJ

PROJECT: SUM-77-277/224
TYPE: NOISE WALL
PID: 106002 SFN:
START: 2/27/20 END: 2/27/20

DRILLING FIRM / OPERATOR: NEAS / J. HODGES
SAMPLING FIRM / LOGGER: NEAS / J. HODGES
DRILLING METHOD: 3.25" HSA
SAMPLING METHOD: SPT

DRILL RIG: CME 55X
HAMMER: CME AUTOMATIC
CALIBRATION DATE: 12/5/19
ENERGY RATIO (%): 81.9

STATION / OFFSET: 22+54, 8' LT.
ALIGNMENT: NOISE WALL HI
ELEVATION: 1037.3 (MSL) EOB: 25.0 ft.
LAT / LONG: 41.024703, -81.507852

EXPLORATION ID B-096-0-17
PAGE 1 OF 1

| MATERIAL DESCRIPTION AND NOTES | ELEV. | DEPTHS | SPT/ RQD | $N_{60}$ | REC (%) | SAMPLE ID | HP (tsf) | GRADATION (%) GR | CS | FS | SI | CL | ATTERBERG LL | PL | PI | WC | ODOT CLASS (GI) | SO4 ppm | BACK FILL |
|---|---|---|---|---|---|---|---|---|---|---|---|---|---|---|---|---|---|---|---|
| VERY STIFF TO HARD, BROWN BECOMING GRAY, **SANDY SILT**, LITTLE TO SOME CLAY, TRACE GRAVEL, SS-1 AND SS-2 CONTAIN IRON STAINING, DAMP | 1037.3 | | 6 7 8 | 20 | 67 | SS-1 | 4.50 | - | - | - | - | - | - | - | - | 16 | A-4a (V) | - | |
| | | | 3 7 9 | 22 | 100 | SS-2 | 2.75 | 7 | 8 | 21 | 42 | 22 | 25 | 16 | 9 | 16 | A-4a (6) | - | |
| @6.0' TO 7.5'; SS-3 CONTAINS NO INTACT SOIL FOR HP READINGS | | | 3 6 5 | 15 | 50 | SS-3 | - | - | - | - | - | - | - | - | - | 11 | A-4a (V) | - | |
| | | | 4 8 6 | 19 | 28 | SS-4 | 4.50 | - | - | - | - | - | - | - | - | 10 | A-4a (V) | - | |
| @11.0' TO 12.5'; SS-5 BECOMES LITTLE GRAVEL AND STONE FRAGMENTS | | | 7 14 9 | 31 | 44 | SS-5 | 4.50 | 18 | 10 | 18 | 37 | 17 | 21 | 14 | 7 | 10 | A-4a (4) | - | |
| MEDIUM DENSE, BROWN, **COARSE AND FINE SAND**, TRACE SILT, TRACE CLAY, TRACE GRAVEL, DAMP | 1024.3 | | 3 8 6 | 19 | 100 | SS-6 | - | - | - | - | - | - | - | - | - | 4 | A-3a (V) | - | |
| MEDIUM DENSE, BROWN, **GRAVEL WITH SAND**, TRACE SILT, TRACE CLAY, DAMP | 1021.8 | | 3 7 7 | 19 | 39 | SS-7 | - | - | - | - | - | - | - | - | - | 3 | A-1-b (V) | - | |
| MEDIUM DENSE, BROWN, **COARSE AND FINE SAND**, TRACE SILT, TRACE CLAY, TRACE GRAVEL, DAMP | 1019.3 | | 3 4 6 | 14 | 100 | SS-8 | - | - | - | - | - | - | - | - | - | 2 | A-3a (V) | - | |
| @21.0' TO 22.5'; SS-9 BECOMES SOME SILT | | | 3 4 7 | 15 | 100 | SS-9 | - | - | - | - | - | - | - | - | - | 8 | A-3a (V) | - | |
| HARD, BROWN, **SANDY SILT**, LITTLE CLAY, LITTLE GRAVEL AND STONE FRAGMENTS, MOIST | 1014.3 | | 17 29 35 | 87 | 100 | SS-10A | 4.50 | - | - | - | - | - | - | - | - | 16 | A-4a (V) | - | |
| VERY DENSE, LIGHT BROWN, **STONE FRAGMENTS WITH SAND**, TRACE SILT, TRACE CLAY, STONE FRAGMENTS ARE SANDSTONE, DAMP | 1013.3 | | | | | SS-10B | - | - | - | - | - | - | - | - | - | 5 | A-1-b (V) | - | |
| | 1012.3 | EOB | | | | | | | | | | | | | | | | | |

NOTES: GROUNDWATER NOT ENCOUNTERED DURING DRILLING. HOLE DID NOT CAVE.
ABANDONMENT METHODS, MATERIALS, QUANTITIES: SHOVELED SOIL CUTTINGS

PROJECT: SUM-77-277/224
TYPE: NOISE WALL
PID: 106002 SFN:
START: 2/27/20 END: 2/27/20

DRILLING FIRM / OPERATOR: NEAS / J. HODGES
SAMPLING FIRM / LOGGER: NEAS / J. HODGES
DRILLING METHOD: 3.25" HSA
SAMPLING METHOD: SPT

DRILL RIG: CME 55X
HAMMER: CME AUTOMATIC
CALIBRATION DATE: 12/5/19
ENERGY RATIO (%): 81.9

STATION / OFFSET: 20+56, 8' LT.
ALIGNMENT: NOISE WALL HI
ELEVATION: 1034.1 (MSL) EOB: 25.0 ft.
LAT / LONG: 41.024645, -81.508566

EXPLORATION ID B-097-0-17
PAGE 1 OF 1

| MATERIAL DESCRIPTION AND NOTES | ELEV. | DEPTHS | SPT/ RQD | $N_{60}$ | REC (%) | SAMPLE ID | HP (tsf) | GRADATION (%) GR | CS | FS | SI | CL | ATTERBERG LL | PL | PI | WC | ODOT CLASS (GI) | SO4 ppm | BACK FILL |
|---|---|---|---|---|---|---|---|---|---|---|---|---|---|---|---|---|---|---|---|
| MEDIUM STIFF TO VERY STIFF, BROWN, **SANDY SILT**, LITTLE CLAY, TRACE TO LITTLE GRAVEL, CONTAINS TRACE IRON STAINING, DAMP | 1034.1 | | 2 3 3 | 8 | 67 | SS-1 | 0.75 | - | - | - | - | - | - | - | - | 14 | A-4a (V) | - | |
| | | | 3 4 7 | 15 | 100 | SS-2 | 3.00 | 11 | 10 | 20 | 40 | 19 | 25 | 18 | 7 | 18 | A-4a (5) | - | |
| @6.0' TO 7.5'; SS-3 CONTAINS NO INTACT SOIL FOR HP READINGS | | | 3 4 4 | 11 | 100 | SS-3 | - | - | - | - | - | - | - | - | - | 15 | A-4a (V) | - | |
| @8.5' TO 14.0'; SS-4 TO SS-6A BECOME HARD | | | 3 4 7 | 15 | 67 | SS-4 | 4.50 | - | - | - | - | - | - | - | - | 16 | A-4a (V) | - | |
| | | | 7 12 14 | 35 | 100 | SS-5 | 4.50 | 7 | 9 | 24 | 48 | 12 | 21 | 17 | 4 | 16 | A-4a (5) | - | |
| | 1020.1 | | | | | SS-6A | 4.50 | - | - | - | - | - | - | - | - | 17 | A-4a (V) | - | |
| MEDIUM DENSE, BROWN, **COARSE AND FINE SAND**, TRACE SILT, TRACE CLAY, TRACE GRAVEL, MOIST | | | 3 3 5 | 11 | 100 | SS-6B | - | - | - | - | - | - | - | - | - | 15 | A-3a (V) | - | |
| @16.0' TO 17.5'; SS-7 BECOMES DRY | | | 2 4 4 | 11 | 67 | SS-7 | - | - | - | - | - | - | - | - | - | 1 | A-3a (V) | - | |
| @18.5' TO 20.0'; SS-8 BECOMES DAMP | | | 6 6 8 | 19 | 50 | SS-8 | - | - | - | - | - | - | - | - | - | 3 | A-3a (V) | - | |
| | | | 3 5 4 | 12 | 39 | SS-9 | - | - | - | - | - | - | - | - | - | 13 | A-3a (V) | - | |
| VERY DENSE, BROWN, **STONE FRAGMENTS WITH SAND**, TRACE SILT, TRACE CLAY, STONE FRAGMENTS ARE SANDSTONE, DAMP | 1011.1 | | 5 14 23 | 51 | 50 | SS-10 | - | - | - | - | - | - | - | - | - | 5 | A-1-b (V) | - | |
| | 1009.1 | EOB | | | | | | | | | | | | | | | | | |

NOTES: GROUNDWATER NOT ENCOUNTERED DURING DRILLING. HOLE DID NOT CAVE.
ABANDONMENT METHODS, MATERIALS, QUANTITIES: SHOVELED SOIL CUTTINGS

STANDARD ODOT LOG W/ SULFATES (8.5 X 11) - OH DOT.GDT - 11/13/20 22:37 - C:\USERS\KAREN\DESKTOP\GINT FILES\SUM-77-277-224 PHASE 2.GPJ



**SUM-77/277/224**
**VARIOUS**

**STRUCTURE FOUNDATION EXPLORATION**
**BARRIER HI**
**BORING LOGS B-096-0-17 & B-097-0-17**

DRAWN EB
CHECKED BPA

PROJECT: SUM-77-277/224
TYPE: NOISE WALL
PID: 106002 SFN:
START: 2/26/20 END: 2/26/20

DRILLING FIRM / OPERATOR: NEAS / J. HODGES
SAMPLING FIRM / LOGGER: NEAS / J. HODGES
DRILLING METHOD: 3.25" HSA
SAMPLING METHOD: SPT

DRILL RIG: CME 55X
HAMMER: CME AUTOMATIC
CALIBRATION DATE: 12/5/19
ENERGY RATIO (%): 81.9

STATION / OFFSET: 18+55, 4' LT.
ALIGNMENT: NOISE WALL HI
ELEVATION: 1031.3 (MSL) EOB: 25.0 ft.
LAT / LONG: 41.024583, -81.509278

EXPLORATION ID B-098-0-17
PAGE 1 OF 1

| MATERIAL DESCRIPTION AND NOTES | ELEV. | DEPTHS | SPT/ RQD | $N_{60}$ | REC (%) | SAMPLE ID | HP (tsf) | GRADATION (%) GR | CS | FS | SI | CL | ATTERBERG LL | PL | PI | WC | ODOT CLASS (GI) | SO4 ppm | BACK FILL |
|---|---|---|---|---|---|---|---|---|---|---|---|---|---|---|---|---|---|---|---|
| LOOSE TO MEDIUM DENSE, BROWN, **COARSE AND FINE SAND**, TRACE TO LITTLE SILT, TRACE GRAVEL, TRACE CLAY, DAMP | 1031.3 | 1 | 6 6 7 | 18 | 67 | SS-1 | - | - | - | - | - | - | - | - | - | 8 | A-3a (V) | - | |
| | | 2 | | | | | | | | | | | | | | | | | |
| | | 3 | 4 3 3 | 8 | 100 | SS-2 | - | - | - | - | - | - | - | - | - | 8 | A-3a (V) | - | |
| | | 4 | | | | | | | | | | | | | | | | | |
| | | 5 | 2 3 3 | 8 | 67 | SS-3 | - | - | - | - | - | - | - | - | - | 10 | A-3a (V) | - | |
| | 1023.3 | 6 | | | | | | | | | | | | | | | | | |
| MEDIUM DENSE, BROWN, **SANDY SILT**, TRACE TO LITTLE GRAVEL, TRACE TO LITTLE CLAY, CONTAINS IRON STAINING, DAMP TO MOIST | | 7 | 2 3 6 | 12 | 100 | SS-4 | - | - | - | - | - | - | - | - | - | 19 | A-4a (V) | - | |
| | | 8 | | | | | | | | | | | | | | | | | |
| | | 9 | | | | | | | | | | | | | | | | | |
| | ▼1021.3 | 10 | 5 6 6 | 16 | 100 | SS-5 | - | 20 | 13 | 31 | 27 | 9 | NP | NP | NP | 14 | A-4a (0) | - | |
| | | 11 | | | | | | | | | | | | | | | | | |
| | | 12 | | | | | | | | | | | | | | | | | |
| | | 13 | 3 5 7 | 16 | 17 | SS-6 | - | - | - | - | - | - | - | - | - | 19 | A-4a (V) | - | |
| | 1015.8 | 14 | | | | | | | | | | | | | | | | | |
| MEDIUM DENSE, BROWN, **GRAVEL WITH SAND**, TRACE SILT, TRACE CLAY, DAMP | | 15 | | | | | | | | | | | | | | | | | |
| | | 16 | 4 6 10 | 22 | 67 | SS-7 | - | 31 | 39 | 21 | 8 | 1 | NP | NP | NP | 4 | A-1-b (0) | - | |
| | | 17 | | | | | | | | | | | | | | | | | |
| | | 18 | 7 8 9 | 23 | 100 | SS-8 | - | - | - | - | - | - | - | - | - | 4 | A-1-b (V) | - | |
| | | 19 | | | | | | | | | | | | | | | | | |
| | | 20 | | | | | | | | | | | | | | | | | |
| | | 21 | 3 8 9 | 23 | 67 | SS-9 | - | - | - | - | - | - | - | - | - | 4 | A-1-b (V) | - | |
| | | 22 | | | | | | | | | | | | | | | | | |
| | | 23 | | | | | | | | | | | | | | | | | |
| | 1006.3 | 24 | 8 10 10 | 27 | 100 | SS-10 | - | - | - | - | - | - | - | - | - | 4 | A-1-b (V) | - | |
| | EOB | 25 | | | | | | | | | | | | | | | | | |

NOTES: GROUNDWATER ENCOUNTERED AT 10.0' DURING DRILLING. HOLE DID NOT CAVE.
ABANDONMENT METHODS, MATERIALS, QUANTITIES: SHOVELED SOIL CUTTINGS

STANDARD ODOT LOG W/ SULFATES (8.5 X 11) - OH DOT.GDT - 11/13/20 22:37 - C:\USERS\KAREN\DESKTOP\GINT FILES\SUM-77-277-224 PHASE 2.GPJ

PROJECT: SUM-77-277/224
TYPE: NOISE WALL
PID: 106002 SFN:
START: 3/3/20 END: 3/3/20

DRILLING FIRM / OPERATOR: NEAS / ASHBAUGH
SAMPLING FIRM / LOGGER: NEAS / ASHBAUGH
DRILLING METHOD: 3.25" HSA
SAMPLING METHOD: SPT

DRILL RIG: CME 55T
HAMMER: CME AUTOMATIC
CALIBRATION DATE: 12/5/19
ENERGY RATIO (%): 68.4

STATION / OFFSET: 16+62, 10' LT.
ALIGNMENT: NOISE WALL HI
ELEVATION: 1027.7 (MSL) EOB: 25.0 ft.
LAT / LONG: 41.024711, -81.509952

EXPLORATION ID B-099-0-17
PAGE 1 OF 1

| MATERIAL DESCRIPTION AND NOTES | ELEV. | DEPTHS | SPT/ RQD | $N_{60}$ | REC (%) | SAMPLE ID | HP (tsf) | GRADATION (%) GR | CS | FS | SI | CL | ATTERBERG LL | PL | PI | WC | ODOT CLASS (GI) | SO4 ppm | BACK FILL |
|---|---|---|---|---|---|---|---|---|---|---|---|---|---|---|---|---|---|---|---|
| **10.0" ASPHALT AND 4.0" BASE (DRILLERS DESCRIPTION)** | 1026.5 | 1 | 12 7 9 | 18 | 50 | SS-1 | - | - | - | - | - | - | - | - | - | 10 | A-1-b (V) | - | |
| MEDIUM DENSE, BROWN, **GRAVEL WITH SAND**, TRACE SILT, TRACE CLAY, CONTAINS ASPHALT FRAGMENTS, DAMP | 1024.7 | 2 | | | | | | | | | | | | | | | | | |
| VERY LOOSE, BROWN, **COARSE AND FINE SAND**, SOME SILT, LITTLE CLAY, LITTLE GRAVEL, CONTAINS IRON STAINING, MOIST | | 3 | | | | | | | | | | | | | | | | | |
| | | 4 | 1 1 2 | 3 | 50 | SS-2 | - | - | - | - | - | - | - | - | - | 15 | A-3a (V) | - | |
| | 1022.2 | 5 | | | | | | | | | | | | | | | | | |
| STIFF TO HARD, BROWN, **SANDY SILT**, LITTLE CLAY, TRACE GRAVEL, CONTAINS IRON STAINING, DAMP TO MOIST | | 6 | 3 3 4 | 8 | 89 | SS-3 | 1.25 | - | - | - | - | - | - | - | - | 17 | A-4a (V) | - | |
| | | 7 | | | | | | | | | | | | | | | | | |
| | | 8 | | | | | | | | | | | | | | | | | |
| | | 9 | 4 5 7 | 14 | 100 | SS-4 | 2.50 | 5 | 10 | 31 | 37 | 17 | 23 | 16 | 7 | 14 | A-4a (4) | - | |
| | | 10 | | | | | | | | | | | | | | | | | |
| | | 11 | 3 3 4 | 8 | 100 | SS-5 | 3.00 | - | - | - | - | - | - | - | - | 15 | A-4a (V) | - | |
| | | 12 | | | | | | | | | | | | | | | | | |
| | | 13 | | | | | | | | | | | | | | | | | |
| | | 14 | 3 4 5 | 10 | 100 | SS-6 | 3.25 | - | - | - | - | - | - | - | - | 20 | A-4a (V) | - | |
| | | 15 | | | | | | | | | | | | | | | | | |
| | | 16 | | | | | | | | | | | | | | | | | |
| | | 17 | 7 6 4 | 11 | 78 | SS-7 | 1.25 | 8 | 6 | 20 | 47 | 19 | 25 | 17 | 8 | 19 | A-4a (6) | - | |
| | | 18 | | | | | | | | | | | | | | | | | |
| | 1008.2 | 19 | 3 2 3 | 6 | 78 | SS-8A | 4.25 | - | - | - | - | - | - | - | - | 17 | A-4a (V) | - | |
| LOOSE, BROWN, **COARSE AND FINE SAND**, LITTLE SILT, TRACE GRAVEL, TRACE CLAY, DAMP TO MOIST | | 20 | | | | SS-8B | - | - | - | - | - | - | - | - | - | 8 | A-3a (V) | - | |
| | | 21 | | | | | | | | | | | | | | | | | |
| | | 22 | 3 4 2 | 7 | 67 | SS-9 | - | - | - | - | - | - | - | - | - | 9 | A-3a (V) | - | |
| | | 23 | | | | | | | | | | | | | | | | | |
| | 1002.7 | 24 | 2 3 3 | 7 | 72 | SS-10 | - | - | - | - | - | - | - | - | - | 14 | A-3a (V) | - | |
| | EOB | 25 | | | | | | | | | | | | | | | | | |

NOTES: GROUNDWATER NOT ENCOUNTERED DURING DRILLING. HOLE CAVED IN AT 20.0'.
ABANDONMENT METHODS, MATERIALS, QUANTITIES: PLACED 0.5 BAG ASPHALT PATCH; SHOVELED SOIL CUTTINGS

STANDARD ODOT LOG W/ SULFATES (8.5 X 11) - OH DOT.GDT - 11/13/20 22:37 - C:\USERS\KAREN\DESKTOP\GINT FILES\SUM-77-277-224 PHASE 2.GPJ



**SUM-77/277/224**
**VARIOUS**

**STRUCTURE FOUNDATION EXPLORATION**
**BARRIER HI**
**BORING LOGS B-098-0-17 & B-099-0-17**

DRAWN EB
CHECKED BPA

PROJECT: SUM-77-277/224
TYPE: LIGHT TOWER
PID: 106002 SFN:
START: 8/7/20 END: 8/7/20

DRILLING FIRM / OPERATOR: NEAS / J. HODGES
SAMPLING FIRM / LOGGER: NEAS / ASHBAUGH
DRILLING METHOD: 3.25" HSA
SAMPLING METHOD: SPT

DRILL RIG: CME 55X
HAMMER: CME AUTOMATIC
CALIBRATION DATE: 12/5/19
ENERGY RATIO (%): 81.9

STATION / OFFSET: 28+78, 31' RT.
ALIGNMENT: RAMP B-2
ELEVATION: 1026.2 (MSL) EOB: 26.5 ft.
LAT / LONG: 41.025050, -81.510097

EXPLORATION ID B-099-1-17



| MATERIAL DESCRIPTION AND NOTES | ELEV. | DEPTHS | SPT/ RQD | $N_{60}$ | REC (%) | SAMPLE ID | HP (tsf) | GR | CS | FS | SI | CL | LL | PL | PI | WC | ODOT CLASS (GI) | BACK FILL |
|---|---|---|---|---|---|---|---|---|---|---|---|---|---|---|---|---|---|---|
| **10.0" ASPHALT AND 6.0" BASE (DRILLERS DESCRIPTION)** | 1024.9 | | | | | | | | | | | | | | | | | |
| HARD, BROWN, **SILT**, SOME SAND, LITTLE CLAY, TRACE GRAVEL, DAMP | | | 6 6 5 | 15 | 56 | SS-1 | 4.50 | - | - | - | - | - | - | - | - | 14 | A-4b (V) | |
| | | | 8 4 6 | 14 | 67 | SS-2 | 4.50 | 2 | 5 | 18 | 55 | 20 | 25 | 18 | 7 | 15 | A-4b (8) | |
| | 1016.7 | | 3 3 4 | 10 | 78 | SS-3 | 4.50 | - | - | - | - | - | - | - | - | 15 | A-4b (V) | |
| VERY STIFF TO HARD, BROWN, **SANDY SILT**, LITTLE CLAY, TRACE GRAVEL, DAMP TO MOIST | | | 3 4 5 | 12 | 100 | SS-4 | 4.50 | - | - | - | - | - | - | - | - | 14 | A-4a (V) | |
| | | | 5 4 5 | 12 | 100 | SS-5 | 4.50 | - | - | - | - | - | - | - | - | 13 | A-4a (V) | |
| | | | 3 2 3 | 7 | 44 | SS-6 | 3.25 | - | - | - | - | - | - | - | - | 14 | A-4a (V) | |
| | | | 3 3 3 | 8 | 56 | SS-7 | 2.25 | 2 | 11 | 30 | 38 | 19 | 23 | 15 | 8 | 17 | A-4a (4) | |
| | | | 3 5 5 | 14 | 56 | SS-8 | 4.25 | - | - | - | - | - | - | - | - | 14 | A-4a (V) | |
| @22.5'; BECOMES BROWN AND GRAY | | | 4 5 4 | 12 | 50 | SS-9 | 2.25 | - | - | - | - | - | - | - | - | 17 | A-4a (V) | |
| | 999.7 | EOB | 5 5 6 | 15 | 78 | SS-10 | 4.25 | - | - | - | - | - | - | - | - | 17 | A-4a (V) | |

NOTES: GROUNDWATER NOT ENCOUNTERED DURING DRILLING. HOLE DID NOT CAVE.
ABANDONMENT METHODS, MATERIALS, QUANTITIES: PLACED 0.5 BAG ASPHALT PATCH; SHOVELED SOIL CUTTINGS

STANDARD ODOT SOIL BORING LOG (8.5 X 11) - OH DOT.GDT - 11/19/20 18:03 - C:\USERS\BANDREWS\DESKTOP\277-224\SUM-77-277 LIGHT POLES.GPJ



**SUM-77/277/224**
**VARIOUS**

**STRUCTURE FOUNDATION EXPLORATION**
**LIGHT TOWER**
**BORING LOG B-099-1-17**

DRAWN EB
CHECKED BPA

PROJECT: SUM-77-277/224 | DRILLING FIRM / OPERATOR: NEAS / ASHBAUGH | DRILL RIG: CME 55T | STATION / OFFSET: 14+53, 9' LT. | EXPLORATION ID B-100-0-17
TYPE: NOISE WALL | SAMPLING FIRM / LOGGER: NEAS / ASHBAUGH | HAMMER: CME AUTOMATIC | ALIGNMENT: NOISE WALL HI
PID: 106002 SFN: | DRILLING METHOD: 3.25" HSA | CALIBRATION DATE: 12/5/19 | ELEVATION: 1024.2 (MSL) EOB: 25.0 ft. | PAGE 1 OF 1
START: 3/3/20 END: 3/3/20 | SAMPLING METHOD: SPT | ENERGY RATIO (%): 68.4 | LAT / LONG: 41.024662, -81.510700

| MATERIAL DESCRIPTION AND NOTES | ELEV. | DEPTHS | SPT/ RQD | $N_{60}$ | REC (%) | SAMPLE ID | HP (tsf) | GRADATION (%) GR | CS | FS | SI | CL | ATTERBERG LL | PL | PI | WC | ODOT CLASS (GI) | SO4 ppm | BACK FILL |
|---|---|---|---|---|---|---|---|---|---|---|---|---|---|---|---|---|---|---|---|
| **8.5" ASPHALT AND 7.0" BASE (DRILLERS DESCRIPTION)** | 1024.2 / 1022.9 | | | | | | | | | | | | | | | | | | |
| MEDIUM DENSE TO DENSE, BROWN, **GRAVEL AND STONE FRAGMENTS WITH SAND**, TRACE TO LITTLE SILT, TRACE CLAY, DAMP TO MOIST | | | 12 13 17 | 34 | 67 | SS-1 | - | - | - | - | - | - | - | - | - | 8 | A-1-b (V) | - | |
| | | | 10 7 7 | 16 | 56 | SS-2 | - | - | - | - | - | - | - | - | - | 10 | A-1-b (V) | - | |
| | | | 6 5 5 | 11 | 61 | SS-3 | - | 28 | 23 | 31 | 12 | 6 | NP | NP | NP | 8 | A-1-b (0) | - | |
| @8.5' TO 17.5'; SS-4 TO SS-7 BECOME LOOSE | | | 5 2 2 | 5 | 17 | SS-4 | - | - | - | - | - | - | - | - | - | 10 | A-1-b (V) | - | |
| | | | 4 4 5 | 10 | 33 | SS-5 | - | - | - | - | - | - | - | - | - | 12 | A-1-b (V) | - | |
| | | | 7 4 3 | 8 | 39 | SS-6 | - | - | - | - | - | - | - | - | - | 9 | A-1-b (V) | - | |
| | 1006.2 | | 4 3 4 | 8 | 28 | SS-7 | - | - | - | - | - | - | - | - | - | 9 | A-1-b (V) | - | |
| LOOSE, BROWN, **COARSE AND FINE SAND**, LITTLE GRAVEL, LITTLE SILT, TRACE CLAY, DAMP TO MOIST | | | 3 3 3 | 7 | 50 | SS-8 | - | - | - | - | - | - | - | - | - | 9 | A-3a (V) | - | |
| | | | 2 2 2 | 5 | 67 | SS-9 | - | 19 | 29 | 31 | 15 | 6 | NP | NP | NP | 11 | A-3a (0) | - | |
| | 999.2 | EOB | 3 2 3 | 6 | 56 | SS-10 | - | - | - | - | - | - | - | - | - | 9 | A-3a (V) | - | |

NOTES: GROUNDWATER NOT ENCOUNTERED DURING DRILLING. HOLE CAVED IN AT 16.0'.
ABANDONMENT METHODS, MATERIALS, QUANTITIES: PLACED 0.5 BAG ASPHALT PATCH; SHOVELED SOIL CUTTINGS

STANDARD ODOT LOG W/ SULFATES (8.5 X 11) - OH DOT.GDT - 11/13/20 22:37 - C:\USERS\KAREN\DESKTOP\GINT FILES\SUM-77-277-224 PHASE 2.GPJ

PROJECT: SUM-77-277/224 | DRILLING FIRM / OPERATOR: NEAS / ASHBAUGH | DRILL RIG: CME 55T | STATION / OFFSET: 12+74, 9' LT. | EXPLORATION ID B-101-0-17
TYPE: NOISE WALL | SAMPLING FIRM / LOGGER: NEAS / ASHBAUGH | HAMMER: CME AUTOMATIC | ALIGNMENT: NOISE WALL HI
PID: 106002 SFN: | DRILLING METHOD: 3.25" HSA | CALIBRATION DATE: 12/5/19 | ELEVATION: 1022.4 (MSL) EOB: 25.0 ft. | PAGE 1 OF 1
START: 3/3/20 END: 3/3/20 | SAMPLING METHOD: SPT | ENERGY RATIO (%): 68.4 | LAT / LONG: 41.024620, -81.511347

| MATERIAL DESCRIPTION AND NOTES | ELEV. | DEPTHS | SPT/ RQD | $N_{60}$ | REC (%) | SAMPLE ID | HP (tsf) | GRADATION (%) GR | CS | FS | SI | CL | ATTERBERG LL | PL | PI | WC | ODOT CLASS (GI) | SO4 ppm | BACK FILL |
|---|---|---|---|---|---|---|---|---|---|---|---|---|---|---|---|---|---|---|---|
| **8.0" ASPHALT AND 11.0" BASE (DRILLERS DESCRIPTION)** | 1022.4 / 1020.8 | | | | | | | | | | | | | | | | | | |
| DENSE, BROWN, **COARSE AND FINE SAND**, SOME GRAVEL, TRACE TO LITTLE SILT, TRACE CLAY, DAMP | | | 12 14 17 | 35 | 56 | SS-1 | - | - | - | - | - | - | - | - | - | 9 | A-3a (V) | - | |
| @3.5' TO 7.5'; SS-2 TO SS-3 BECOME LOOSE | | | 10 5 4 | 10 | 33 | SS-2 | - | - | - | - | - | - | - | - | - | 8 | A-3a (V) | - | |
| | 1014.4 | | 4 3 3 | 7 | 50 | SS-3 | - | - | - | - | - | - | - | - | - | 8 | A-3a (V) | - | |
| VERY LOOSE TO LOOSE, BROWN, **GRAVEL WITH SAND**, TRACE TO LITTLE SILT, TRACE CLAY, DAMP | | | 3 2 2 | 5 | 28 | SS-4 | - | - | - | - | - | - | - | - | - | 9 | A-1-b (V) | - | |
| | | | 2 1 2 | 3 | 39 | SS-5 | - | - | - | - | - | - | - | - | - | 9 | A-1-b (V) | - | |
| | | | 3 2 3 | 6 | 33 | SS-6 | - | - | - | - | - | - | - | - | - | 11 | A-1-b (V) | - | |
| | | | 2 2 2 | 5 | 50 | SS-7 | - | - | - | - | - | - | - | - | - | 9 | A-1-b (V) | - | |
| | | | 2 3 3 | 7 | 56 | SS-8 | - | 34 | 27 | 24 | 10 | 5 | NP | NP | NP | 10 | A-1-b (0) | - | |
| @21.0' TO 22.5'; SS-9 CONTAINS NO RECOVERY | | | 3 3 3 | 7 | 0 | SS-9 | - | - | - | - | - | - | - | - | - | - | | - | |
| | 997.4 | EOB | 3 2 3 | 6 | 11 | SS-10 | - | - | - | - | - | - | - | - | - | 10 | A-1-b (V) | - | |

NOTES: GROUNDWATER NOT ENCOUNTERED DURING DRILLING. HOLE CAVED IN AT 18.0'.
ABANDONMENT METHODS, MATERIALS, QUANTITIES: PLACED 0.5 BAG ASPHALT PATCH; SHOVELED SOIL CUTTINGS

STANDARD ODOT LOG W/ SULFATES (8.5 X 11) - OH DOT.GDT - 11/13/20 22:37 - C:\USERS\KAREN\DESKTOP\GINT FILES\SUM-77-277-224 PHASE 2.GPJ

| | | | |
|---|---|---|---|
| 17/0209 | **SUM-77/277/224 VARIOUS** | **STRUCTURE FOUNDATION EXPLORATION BARRIER HI BORING LOGS B-100-0-17 & B-101-0-17** | DRAWN EB / CHECKED BPA |

PROJECT: SUM-77-277/224 | DRILLING FIRM / OPERATOR: NEAS / ASHBAUGH | DRILL RIG: CME 55T | STATION / OFFSET: 10+62, 9' LT. | EXPLORATION ID B-102-0-17
TYPE: NOISE WALL | SAMPLING FIRM / LOGGER: NEAS / ASHBAUGH | HAMMER: CME AUTOMATIC | ALIGNMENT: NOISE WALL HI
PID: 106002 SFN: | DRILLING METHOD: 3.25" HSA | CALIBRATION DATE: 12/5/19 | ELEVATION: 1020.2 (MSL) EOB: 25.0 ft. | PAGE 1 OF 1
START: 3/3/20 END: 3/3/20 | SAMPLING METHOD: SPT | ENERGY RATIO (%): 68.4 | LAT / LONG: 41.024573, -81.512113

| MATERIAL DESCRIPTION AND NOTES | ELEV. | DEPTHS | SPT/ RQD | $N_{60}$ | REC (%) | SAMPLE ID | HP (tsf) | GRADATION (%) GR | CS | FS | SI | CL | ATTERBERG LL | PL | PI | WC | ODOT CLASS (GI) | SO4 ppm | BACK FILL |
|---|---|---|---|---|---|---|---|---|---|---|---|---|---|---|---|---|---|---|---|
| **8.0" ASPHALT AND 13.5" BASE (DRILLERS DESCRIPTION)** | 1020.2 | | | | | | | | | | | | | | | | | | |
| MEDIUM DENSE, BROWN, **COARSE AND FINE SAND**, LITTLE TO SOME GRAVEL, TRACE SILT, TRACE CLAY, DAMP @3.5' TO 7.5'; SS-2 TO SS-3 BECOME LOOSE | 1018.4 | | 7 12 14 | 30 | 78 | SS-1 | - | - | - | - | - | - | - | - | - | 9 | A-3a (V) | - | |
| | | | 8 5 4 | 10 | 67 | SS-2 | - | - | - | - | - | - | - | - | - | 8 | A-3a (V) | - | |
| | 1012.2 | | 4 3 4 | 8 | 67 | SS-3 | - | - | - | - | - | - | - | - | - | 9 | A-3a (V) | - | |
| LOOSE, BROWN, **GRAVEL WITH SAND**, LITTLE SILT, TRACE CLAY, DAMP | 1009.7 | | 3 4 5 | 10 | 83 | SS-4 | - | 23 | 32 | 23 | 16 | 6 | NP | NP | NP | 10 | A-1-b (0) | - | |
| LOOSE, BROWN, **COARSE AND FINE SAND**, LITTLE GRAVEL, TRACE SILT, TRACE CLAY, DAMP | 1004.7 | | 3 3 2 | 6 | 50 | SS-5 | - | - | - | - | - | - | - | - | - | 8 | A-3a (V) | - | |
| | | | 2 2 2 | 5 | 39 | SS-6 | - | - | - | - | - | - | - | - | - | 8 | A-3a (V) | - | |
| LOOSE, BROWN, **GRAVEL WITH SAND**, TRACE SILT, TRACE CLAY, DAMP TO MOIST | | | 1 2 2 | 5 | 50 | SS-7 | - | - | - | - | - | - | - | - | - | 16 | A-1-b (V) | - | |
| | | | 2 3 2 | 6 | 72 | SS-8 | - | - | - | - | - | - | - | - | - | 7 | A-1-b (V) | - | |
| | | W 999.7 | | | | | | | | | | | | | | | | | |
| | | | 1 2 3 | 6 | 39 | SS-9 | - | - | - | - | - | - | - | - | - | 18 | A-1-b (V) | - | |
| | 995.2 | EOB | 2 2 2 | 5 | 67 | SS-10 | - | - | - | - | - | - | - | - | - | 10 | A-1-b (V) | - | |

NOTES: GROUNDWATER ENCOUNTERED AT 20.5' DURING DRILLING. HOLE CAVED IN AT 18.0'.
ABANDONMENT METHODS, MATERIALS, QUANTITIES: PLACED 0.5 BAG ASPHALT PATCH; SHOVELED SOIL CUTTINGS

STANDARD ODOT LOG W/ SULFATES (8.5 X 11) - OH DOT.GDT - 11/13/20 22:37 - C:\USERS\KAREN\DESKTOP\GINT FILES\SUM-77-277-224 PHASE 2.GPJ

PROJECT: SUM-77-277/224 | DRILLING FIRM / OPERATOR: NEAS / J. HODGES | DRILL RIG: CME 55X | STATION / OFFSET: 10+49, 1' LT. | EXPLORATION ID B-103-0-17
TYPE: NOISE WALL | SAMPLING FIRM / LOGGER: NEAS / J. HODGES | HAMMER: CME AUTOMATIC | ALIGNMENT: NOISE WALL G
PID: 106002 SFN: | DRILLING METHOD: 3.25" HSA | CALIBRATION DATE: 12/5/19 | ELEVATION: 1040.9 (MSL) EOB: 23.8 ft. | PAGE 1 OF 1
START: 3/4/20 END: 3/4/20 | SAMPLING METHOD: SPT | ENERGY RATIO (%): 81.9 | LAT / LONG: 41.015811, -81.495548

| MATERIAL DESCRIPTION AND NOTES | ELEV. | DEPTHS | SPT/ RQD | $N_{60}$ | REC (%) | SAMPLE ID | HP (tsf) | GRADATION (%) GR | CS | FS | SI | CL | ATTERBERG LL | PL | PI | WC | ODOT CLASS (GI) | SO4 ppm | BACK FILL |
|---|---|---|---|---|---|---|---|---|---|---|---|---|---|---|---|---|---|---|---|
| MEDIUM DENSE, ORANGISH BROWN, **COARSE AND FINE SAND**, SOME SILT, TRACE GRAVEL, TRACE CLAY, CONTAINS IRON STAINING, MOIST | 1040.9 | | 3 7 7 | 19 | 67 | SS-1 | - | - | - | - | - | - | - | - | - | 14 | A-3a (V) | - | |
| | 1036.2 | | 5 10 11 | 29 | 100 | SS-2A | - | - | - | - | - | - | - | - | - | 17 | A-3a (V) | - | |
| HARD, BROWN AND ORANGISH BROWN, **SANDY SILT**, LITTLE CLAY, TRACE GRAVEL, CONTAINS IRON STAINING, MOIST | 1035.4 | | | | | SS-2B | 4.50 | - | - | - | - | - | - | - | - | 20 | A-4a (V) | - | |
| VERY DENSE, BROWN AND LIGHT BROWN, **GRAVEL AND STONE FRAGMENTS WITH SAND**, LITTLE SILT, TRACE CLAY, DAMP | | | 5 19 31 | 68 | 56 | SS-3 | - | - | - | - | - | - | - | - | - | 9 | A-1-b (V) | - | |
| | 1030.4 | | 5 50/3" | - | 100 | SS-4 | - | - | - | - | - | - | - | - | - | 9 | A-1-b (V) | - | |
| VERY DENSE, BROWN AND LIGHT BROWN, **STONE FRAGMENTS WITH SAND AND SILT**, TRACE CLAY, MOIST | 1027.9 | | 20 19 21 | 55 | 67 | SS-5 | - | - | - | - | - | - | - | - | - | 12 | A-2-4 (V) | - | |
| HARD, DARK GRAY, **SANDY SILT**, LITTLE STONE FRAGMENTS, LITTLE CLAY, CONTAINS A RELIC SHALE ROCK STRUCTURE, DAMP | | | 6 6 8 | 19 | 100 | SS-6 | 4.25 | 17 | 21 | 15 | 32 | 15 | 27 | 20 | 7 | 11 | A-4a (2) | - | |
| | 1022.9 | W 1022.9 | 8 6 17 | 31 | 67 | SS-7 | 4.50 | - | - | - | - | - | - | - | - | 9 | A-4a (V) | - | |
| DENSE, LIGHT GRAY, **STONE FRAGMENTS WITH SAND, SILT, AND CLAY**, STONE FRAGMENTS ARE SHALE, MOIST | 1020.4 | | 7 17 11 | 38 | 100 | SS-8 | - | - | - | - | - | - | - | - | - | 10 | A-2-6 (V) | - | |
| VERY SOFT, GRAY AND DARK GRAY, **SANDY SILT**, SOME STONE FRAGMENTS, LITTLE CLAY, STONE FRAGMENTS ARE SHALE, DAMP | 1017.9 | | 4 7 17 | 33 | 28 | SS-9 | 0.25 | 27 | 13 | 16 | 26 | 18 | 25 | 17 | 8 | 14 | A-4a (2) | - | |
| VERY DENSE, GRAY, **STONE FRAGMENTS WITH SAND, SILT, AND CLAY**, STONE FRAGMENTS ARE SHALE, MOIST | 1017.1 | EOB | 50/3" | - | 100 | SS-10 | - | - | - | - | - | - | - | - | - | 11 | A-2-6 (V) | - | |

NOTES: GROUNDWATER ENCOUNTERED AT 18.0' DURING DRILLING. HOLE DID NOT CAVE.
ABANDONMENT METHODS, MATERIALS, QUANTITIES: SHOVELED SOIL CUTTINGS

STANDARD ODOT LOG W/ SULFATES (8.5 X 11) - OH DOT.GDT - 11/13/20 22:37 - C:\USERS\KAREN\DESKTOP\GINT FILES\SUM-77-277-224 PHASE 2.GPJ

PROJECT: SUM-77-277/224 | DRILLING FIRM / OPERATOR: NEAS / J. HODGES | DRILL RIG: CME 55X | STATION / OFFSET: 12+54, 14' LT. | EXPLORATION ID B-104-0-17
TYPE: NOISE WALL | SAMPLING FIRM / LOGGER: NEAS / J. HODGES | HAMMER: CME AUTOMATIC | ALIGNMENT: NOISE WALL G | PAGE 1 OF 1
PID: 106002 SFN: | DRILLING METHOD: 3.25" HSA | CALIBRATION DATE: 12/5/19 | ELEVATION: 1044.4 (MSL) EOB: 23.8 ft.
START: 3/4/20 END: 3/4/20 | SAMPLING METHOD: SPT | ENERGY RATIO (%): 81.9 | LAT / LONG: 41.016371, -81.495631

| MATERIAL DESCRIPTION AND NOTES | ELEV. | DEPTHS | SPT/ RQD | $N_{60}$ | REC (%) | SAMPLE ID | HP (tsf) | GRADATION (%) GR | CS | FS | SI | CL | ATTERBERG LL | PL | PI | WC | ODOT CLASS (GI) | SO4 ppm | BACK FILL |
|---|---|---|---|---|---|---|---|---|---|---|---|---|---|---|---|---|---|---|---|
| MEDIUM DENSE, BROWN, **STONE FRAGMENTS WITH SAND AND SILT**, LITTLE CLAY, CONTAINS ROOTS, MOIST | 1044.4 | | 3 3 6 | 12 | 67 | SS-1 | - | - | - | - | - | - | - | - | - | 20 | A-2-4 (V) | - | |
| LOOSE TO MEDIUM DENSE, BROWN, **GRAVEL WITH SAND**, LITTLE SILT, TRACE CLAY, DAMP TO MOIST | 1041.4 | | 4 7 6 | 18 | 44 | SS-2 | - | - | - | - | - | - | - | - | - | 10 | A-1-b (V) | - | |
| | | | 6 8 5 | 18 | 67 | SS-3 | - | - | - | - | - | - | - | - | - | 10 | A-1-b (V) | - | |
| | 1033.9 | | 3 3 3 | 8 | 67 | SS-4 | - | - | - | - | - | - | - | - | - | 14 | A-1-b (V) | - | |
| MEDIUM DENSE, GRAY, **SILT**, LITTLE SAND, LITTLE CLAY, TRACE GRAVEL, WET | 1031.4 | | 3 4 5 | 12 | 56 | SS-5 | - | - | - | - | - | - | - | - | - | 21 | A-4b (V) | - | |
| MEDIUM DENSE, GRAY AND ORANGISH BROWN, **SANDY SILT**, LITTLE CLAY, TRACE GRAVEL, CONTAINS IRON STAINING, MOIST | | | 5 5 6 | 15 | 100 | SS-6 | - | 4 | 9 | 23 | 49 | 15 | NP | NP | NP | 16 | A-4a (6) | - | |
| | | | 4 6 6 | 16 | 100 | SS-7 | - | - | - | - | - | - | - | - | - | 17 | A-4a (V) | - | |
| | | W 1026.4 | | | | | | | | | | | | | | | | | |
| | | | 5 8 8 | 22 | 50 | SS-8 | - | - | - | - | - | - | - | - | - | 16 | A-4a (V) | - | |
| | 1023.9 | TR | | | | | | | | | | | | | | | | | |
| **SHALE**, DARK GRAY, SEVERELY WEATHERED, VERY WEAK TO WEAK, FISSILE. | | | 50/3" | - | 100 | SS-9 | - | - | - | - | - | - | - | - | - | - | Rock (V) | - | |
| | 1020.6 | EOB | 50/3" | - | 100 | SS-10 | - | - | - | - | - | - | - | - | - | - | Rock (V) | - | |

NOTES: GROUNDWATER ENCOUNTERED AT 18.0' DURING DRILLING. HOLE DID NOT CAVE.
ABANDONMENT METHODS, MATERIALS, QUANTITIES: SHOVELED SOIL CUTTINGS

STANDARD ODOT LOG W/ SULFATES (8.5 X 11) - OH DOT.GDT - 11/13/20 22:38 - C:\USERS\KAREN\DESKTOP\GINT FILES\SUM-77-277-224 PHASE 2.GPJ

PROJECT: SUM-77-277/224 | DRILLING FIRM / OPERATOR: NEAS / J. HODGES | DRILL RIG: CME 55X | STATION / OFFSET: 14+38, 24' LT. | EXPLORATION ID B-105-0-17
TYPE: NOISE WALL | SAMPLING FIRM / LOGGER: NEAS / J. HODGES | HAMMER: CME AUTOMATIC | ALIGNMENT: NOISE WALL G | PAGE 1 OF 1
PID: 106002 SFN: | DRILLING METHOD: 3.25" HSA | CALIBRATION DATE: 12/5/19 | ELEVATION: 1048.3 (MSL) EOB: 23.8 ft.
START: 3/4/20 END: 3/4/20 | SAMPLING METHOD: SPT | ENERGY RATIO (%): 81.9 | LAT / LONG: 41.016861, -81.495748

| MATERIAL DESCRIPTION AND NOTES | ELEV. | DEPTHS | SPT/ RQD | $N_{60}$ | REC (%) | SAMPLE ID | HP (tsf) | GRADATION (%) GR | CS | FS | SI | CL | ATTERBERG LL | PL | PI | WC | ODOT CLASS (GI) | SO4 ppm | BACK FILL |
|---|---|---|---|---|---|---|---|---|---|---|---|---|---|---|---|---|---|---|---|
| MEDIUM DENSE, BROWN, **GRAVEL WITH SAND**, LITTLE TO SOME SILT, TRACE CLAY, SS-1 CONTAINS TRACE ROOT HAIRS, DAMP | 1048.3 | | 5 5 5 | 14 | 100 | SS-1 | - | - | - | - | - | - | - | - | - | 12 | A-1-b (V) | - | |
| | 1042.8 | | 3 6 6 | 16 | 100 | SS-2 | - | - | - | - | - | - | - | - | - | 11 | A-1-b (V) | - | |
| VERY STIFF TO HARD, BROWN AND GRAYISH BROWN, **SANDY SILT**, LITTLE CLAY, TRACE TO LITTLE GRAVEL, SS-3 CONTAINS ROOTS, DAMP | | | 5 6 11 | 23 | 67 | SS-3 | 2.50 | - | - | - | - | - | - | - | - | 16 | A-4a (V) | - | |
| | | | 3 7 10 | 23 | 100 | SS-4 | 4.50 | 5 | 9 | 27 | 45 | 14 | 21 | 17 | 4 | 14 | A-4a (5) | - | |
| @11.0'; BECOMES GRAY | | | 3 4 8 | 16 | 100 | SS-5 | 4.50 | - | - | - | - | - | - | - | - | 12 | A-4a (V) | - | |
| | | | 4 5 7 | 16 | 44 | SS-6 | 4.25 | - | - | - | - | - | - | - | - | 11 | A-4a (V) | - | |
| @16.0'; SS-7 BECOMES SOME GRAVEL, TRACE CLAY | | | 3 4 7 | 15 | 100 | SS-7 | 4.25 | 31 | 12 | 18 | 29 | 10 | 20 | 15 | 5 | 9 | A-4a (1) | - | |
| | 1030.3 | | | | | | | | | | | | | | | | | | |
| HARD, GRAY, **SANDY SILT**, LITTLE CLAY, LITTLE STONE FRAGMENTS, CONTAINS A RELIC SHALE ROCK STRUCTURE, DAMP | | | 3 50/5" | - | 55 | SS-8 | 4.50 | - | - | - | - | - | - | - | - | 7 | A-4a (V) | - | |
| | 1026.8 | W 1027.3 TR | 50 | - | 83 | SS-9 | 4.50 | - | - | - | - | - | - | - | - | 9 | A-4a (V) | - | |
| **SILTSTONE**, GRAY, MODERATELY WEATHERED, STRONG. | 1024.5 | EOB | 50/3" | - | 100 | SS-10 | - | - | - | - | - | - | - | - | - | - | Rock (V) | - | |

NOTES: GROUNDWATER ENCOUNTERED AT 21.0' DURING DRILLING. HOLE DID NOT CAVE.
ABANDONMENT METHODS, MATERIALS, QUANTITIES: SHOVELED SOIL CUTTINGS

STANDARD ODOT LOG W/ SULFATES (8.5 X 11) - OH DOT.GDT - 11/13/20 22:38 - C:\USERS\KAREN\DESKTOP\GINT FILES\SUM-77-277-224 PHASE 2.GPJ



**SUM-77/277/224**
**VARIOUS**

**STRUCTURE FOUNDATION EXPLORATION**
**BARRIER G**
**BORING LOGS B-104-0-17 & B-105-0-17**

DRAWN EB
CHECKED BPA

PROJECT: SUM-77-277/224
TYPE: NOISE WALL
PID: 106002 SFN:
START: 3/3/20 END: 3/3/20

DRILLING FIRM / OPERATOR: NEAS / J. HODGES
SAMPLING FIRM / LOGGER: NEAS / J. HODGES
DRILLING METHOD: 3.25" HSA
SAMPLING METHOD: SPT

DRILL RIG: CME 55X
HAMMER: CME AUTOMATIC
CALIBRATION DATE: 12/5/19
ENERGY RATIO (%): 81.9

STATION / OFFSET: 16+32, 13' LT.
ALIGNMENT: NOISE WALL G
ELEVATION: 1050.7 (MSL) EOB: 21.3 ft.
LAT / LONG: 41.017390, -81.495835

EXPLORATION ID B-106-0-17
PAGE 1 OF 1

| MATERIAL DESCRIPTION AND NOTES | ELEV. | DEPTHS | SPT/ RQD | $N_{60}$ | REC (%) | SAMPLE ID | HP (tsf) | GRADATION (%) GR | CS | FS | SI | CL | ATTERBERG LL | PL | PI | WC | ODOT CLASS (GI) | SO4 ppm | BACK FILL |
|---|---|---|---|---|---|---|---|---|---|---|---|---|---|---|---|---|---|---|---|
| HARD, BROWN, **SANDY SILT**, LITTLE CLAY, TRACE GRAVEL, SS-1 CONTAINS MANY ROOTS AND NO INTACT SOIL FOR HP READINGS, MOIST TO DAMP | 1050.7 | | 3 5 5 | 14 | 44 | SS-1 | - | - | - | - | - | - | - | - | - | 26 | A-4a (V) | - | |
| @3.5' TO 5.0'; SS-2 BECOMES BROWN MOTTLED WITH GRAY AND ORANGISH BROWN, SOME CLAY, CONTAINS IRON STAINING | 1045.2 | | 3 4 5 | 12 | 100 | SS-2 | 4.25 | 6 | 4 | 19 | 45 | 26 | 28 | 19 | 9 | 18 | A-4a (7) | - | |
| MEDIUM DENSE, BROWN BECOMING GRAY, **SILT**, SOME SAND, SOME CLAY, TRACE GRAVEL, MOIST TO DAMP | 1040.2 | | 4 6 11 | 23 | 78 | SS-3 | - | - | - | - | - | - | - | - | - | 18 | A-4b (V) | - | |
| | | | 2 4 7 | 15 | 100 | SS-4 | - | 5 | 8 | 15 | 51 | 21 | NP | NP | NP | 13 | A-4b (7) | - | |
| HARD, GRAY AND DARK GRAY, **GRAVEL AND STONE FRAGMENTS WITH SAND AND SILT**, LITTLE CLAY, DAMP | 1034.7 | | 4 11 12 | 31 | 100 | SS-5 | 4.50 | - | - | - | - | - | - | - | - | 9 | A-2-4 (V) | - | |
| | | | 7 9 8 | 23 | 100 | SS-6 | 4.50 | 38 | 13 | 14 | 23 | 12 | 23 | 17 | 6 | 9 | A-2-4 (0) | - | |
| **SILTSTONE**, GRAY, HIGHLY WEATHERED, SLIGHTLY STRONG. | | TR | 50/2" | - | 150/ | SS-7 | - | - | - | - | - | - | - | - | - | 4 | Rock (V) | - | |
| | | | 50 | - | 83 | SS-8 | - | - | - | - | - | - | - | - | - | - | Rock (V) | - | |
| | 1029.4 | EOB | 50/3" | - | 100 | SS-9 | - | - | - | - | - | - | - | - | - | - | Rock (V) | - | |

NOTES: GROUNDWATER NOT ENCOUNTERED DURING DRILLING. HOLE DID NOT CAVE.
ABANDONMENT METHODS, MATERIALS, QUANTITIES: SHOVELED SOIL CUTTINGS

STANDARD ODOT LOG W/ SULFATES (8.5 X 11) - OH DOT.GDT - 11/13/20 22:38 - C:\USERS\KAREN\DESKTOP\GINT FILES\SUM-77-277-224 PHASE 2.GPJ

| | | | |
|---|---|---|---|
| 173/209 | SUM-77/277/224 VARIOUS | STRUCTURE FOUNDATION EXPLORATION BARRIER G BORING LOG B-106-0-17 | DRAWN EB / CHECKED BPA |

P:\17-0129 (106002 SUM-76-10.95 Part 3 - SUM-77_277_224)\106002\geotechnical\sheets\106002ZL066.dgn Sheet 1/8/2021 1:17:57 AM karens

| | | | | |
|---|---|---|---|---|
| PROJECT: SUM-77-277/224 | DRILLING FIRM / OPERATOR: NEAS / J. HODGES | DRILL RIG: CME 55X | STATION / OFFSET: 17+86, 48' LT. | EXPLORATION ID B-106-1-17 |
| TYPE: UNDERGROUND MINE | SAMPLING FIRM / LOGGER: NEAS / J. HODGES | HAMMER: CME AUTOMATIC | ALIGNMENT: NOISE WALL G | |
| PID: 106002 SFN: | DRILLING METHOD: 3.25" HSA / NQ2 | CALIBRATION DATE: 12/5/19 | ELEVATION: 1047.0 (MSL) EOB: 50.5 ft. | PAGE 1 OF 1 |
| START: 4/14/20 END: 4/14/20 | SAMPLING METHOD: SPT / NQ2 | ENERGY RATIO (%): 81.9 | LAT / LONG: 41.017780, -81.496100 | |

| MATERIAL DESCRIPTION AND NOTES | ELEV. | DEPTHS | SPT/ RQD | $N_{60}$ | REC (%) | SAMPLE ID | HP (tsf) | GRADATION (%) GR | CS | FS | SI | CL | ATTERBERG LL | PL | PI | WC | ODOT CLASS (GI) | SO4 ppm | HOLE SEALED |
|---|---|---|---|---|---|---|---|---|---|---|---|---|---|---|---|---|---|---|---|
| DENSE, BROWN, **COARSE AND FINE SAND**, SOME GRAVEL AND STONE FRAGMENTS, LITTLE SILT, TRACE CLAY, CONTAINS IRON STAINING, DAMP | 1047.0 | | 8 12 13 | 34 | 78 | SS-1 | - | 22 | 18 | 37 | 15 | 8 | NP | NP | NP | 9 | A-3a (0) | - | |
| MEDIUM DENSE, BROWN, **GRAVEL WITH SAND**, LITTLE SILT, TRACE CLAY, WET | 1044.0 | | 7 7 5 | 16 | 100 | SS-2 | - | - | - | - | - | - | - | - | - | 18 | A-1-b (V) | - | |
| MEDIUM DENSE, GRAY, **SANDY SILT**, LITTLE CLAY, TRACE GRAVEL AND STONE FRAGMENTS, DAMP | 1041.5 | | 5 7 8 | 20 | 89 | SS-3 | - | 7 | 7 | 22 | 48 | 16 | NP | NP | NP | 13 | A-4a (6) | - | |
| | | | 4 6 7 | 18 | 56 | SS-4 | - | - | - | - | - | - | - | - | - | 11 | A-4a (V) | - | |
| | | | 4 6 7 | 18 | 67 | SS-5 | - | - | - | - | - | - | - | - | - | 11 | A-4a (V) | - | |
| @13.5' TO 20.5'; SS-6 TO SS-9 BECOME VERY STIFF | | | 2 4 4 | 11 | 100 | SS-6 | 3.25 | 10 | 10 | 29 | 36 | 15 | 17 | 13 | 4 | 12 | A-4a (3) | - | |
| | | | 2 3 6 | 12 | 56 | SS-7 | 3.00 | - | - | - | - | - | - | - | - | 12 | A-4a (V) | - | |
| | | | 7 8 12 | 27 | 33 | SS-8 | 2.50 | - | - | - | - | - | - | - | - | 11 | A-4a (V) | - | |
| | 1026.5 | TR | 50 | - | 33 | SS-9 | 3.50 | - | - | - | - | - | - | - | - | 7 | A-4a (V) | - | |
| **INTERBEDDED SHALE (73%) AND SANDSTONE (27%)**, CONTAINS ANTHRACITE COAL LAMINATIONS, BEDDING DISCONTINUITIES: LOW ANGLE, JOINT DISCONTINUITIES: HIGH ANGLE FROM 20.8' - 21.4' AND 25.3' - 25.5', HIGHLY FRACTURED TO MODERATELY FRACTURED, OPEN TO NARROW, SLIGHTLY ROUGH TO VERY ROUGH, BLOCKY/DISTURBED/SEAMY, FAIR TO POOR SURFACE CONDITION, RQD 5%, REC. 38%; **SHALE**, DARK GRAY AND BLACK, MODERATELY WEATHERED, WEAK TO SLIGHTLY STRONG, LAMINATED TO THIN BEDDED, FISSILE, PYRITIC, SILTY; **SANDSTONE**, LIGHT GRAY AND GRAY, SLIGHTLY WEATHERED, SEVERELY WEATHERED FROM 20.5' - 21.5', VERY FINE TO MEDIUM GRAINED, MODERATELY STRONG TO STRONG, CONTAINS ARGILLACEOUS LENSES. | | | 28 | | 98 | NQ2-1 | | | | | | | | | | | CORE | | |
| | | | 0 | | 55 | NQ2-2 | | | | | | | | | | | CORE | | |
| @30.5' TO 35.5'; NQ2-3 CONTAINS NO RECOVERY, IT WAS NOTED THAT CORING OPERATIONS FELT NORMAL WITH NO DISCERNABLE VOIDS | | | 0 | | 0 | NQ2-3 | | | | | | | | | | | CORE | | |
| | | | 0 | | 19 | NQ2-4 | | | | | | | | | | | CORE | | |
| | | | 0 | | 23 | NQ2-5 | | | | | | | | | | | CORE | | |
| | 996.5 | EOB | 0 | | 31 | NQ2-6 | | | | | | | | | | | CORE | | |

NOTES: GROUNDWATER NOT ENCOUNTERED DURING DRILLING. HOLE DID NOT CAVE. NO DISCERNABLE VOIDS DURING CORING. NO WATER CIRCULATION DURING CORING.

ABANDONMENT METHODS, MATERIALS, QUANTITIES: PUMPED 200 GAL. BENTONITE GROUT

STANDARD ODOT LOG W/ SULFATES (11 X 17) - OH DOT GDT - 11/13/20 22:54 - C:\USERS\KARENS\DESKTOP\GINT FILES\SUM-77-277-224 PHASE 2.GPJ

| | | | |
|---|---|---|---|
| 174/209 | SUM-77/277/224 VARIOUS | STRUCTURE FOUNDATION EXPLORATION UNDERGROUND MINE BORING LOG B-106-1-17 | DRAWN EB / CHECKED BPA |

P:\17-0129 (106002 SUM-76-10.95 Part 3 - SUM-77_277_224)\106002\geotechnical\sheets\106002ZL067.dgn Sheet 1/8/2021 1:18:29 AM karens

| | | | | | |
|---|---|---|---|---|---|
| PROJECT: SUM-77-277/224 | DRILLING FIRM / OPERATOR: NEAS / J. HODGES | DRILL RIG: CME 55X | STATION / OFFSET: 17+54, 3' LT. | EXPLORATION ID B-107-0-17 |
| TYPE: UNDERGROUND MINE | SAMPLING FIRM / LOGGER: NEAS / J. HODGES | HAMMER: CME AUTOMATIC | ALIGNMENT: NOISE WALL G | |
| PID: 106002 SFN: | DRILLING METHOD: 3.25" HSA / NQ2 | CALIBRATION DATE: 12/5/19 | ELEVATION: 1053.8 (MSL) EOB: 60.0 ft. | PAGE 1 OF 1 |
| START: 4/28/20 END: 4/29/20 | SAMPLING METHOD: SPT / NQ2 | ENERGY RATIO (%): 81.9 | LAT / LONG: 41.017724, -81.495881 | |

| MATERIAL DESCRIPTION AND NOTES | ELEV. | DEPTHS | SPT/ RQD | $N_{60}$ | REC (%) | SAMPLE ID | HP (tsf) | GRADATION (%) GR | CS | FS | SI | CL | ATTERBERG LL | PL | PI | WC | ODOT CLASS (GI) | SO4 ppm | HOLE SEALED |
|---|---|---|---|---|---|---|---|---|---|---|---|---|---|---|---|---|---|---|---|
| STIFF TO HARD, BROWN, **SANDY SILT**, LITTLE CLAY, TRACE GRAVEL, CONTAINS TRACE ROOT HAIRS AND IRON STAINING, DAMP | 1053.8 | | 5 8 9 | 23 | 100 | SS-1 | 4.50 | - | - | - | - | - | - | - | - | 13 | A-4a (V) | - | |
| | | | 3 3 4 | 10 | 100 | SS-2 | 1.75 | 2 | 31 | 28 | 28 | 11 | 24 | 17 | 7 | 14 | A-4a (1) | - | |
| MEDIUM DENSE, BROWN, **COARSE AND FINE SAND**, LITTLE TO SOME GRAVEL, LITTLE SILT, TRACE CLAY, MOIST | 1048.3 | | 3 3 6 | 12 | 78 | SS-3 | - | - | - | - | - | - | - | - | - | 14 | A-3a (V) | - | |
| | | | 6 9 11 | 27 | 22 | SS-4 | - | - | - | - | - | - | - | - | - | 13 | A-3a (V) | - | |
| VERY STIFF TO HARD, GRAY, **SANDY SILT**, LITTLE CLAY, LITTLE GRAVEL, CONTAINS TRACE IRON STAINING, DAMP | 1043.3 | | 4 6 9 | 20 | 78 | SS-5 | 4.50 | - | - | - | - | - | - | - | - | 11 | A-4a (V) | - | |
| | | | 3 5 7 | 16 | 100 | SS-6 | 4.50 | 16 | 6 | 22 | 38 | 18 | 21 | 16 | 5 | 11 | A-4a (4) | - | |
| | | | 4 7 9 | 22 | 89 | SS-7 | 4.50 | - | - | - | - | - | - | - | - | 12 | A-4a (V) | - | |
| | | | 4 5 8 | 18 | 83 | SS-8 | 3.50 | - | - | - | - | - | - | - | - | 11 | A-4a (V) | - | |
| MEDIUM DENSE, GRAY, **GRAVEL AND STONE FRAGMENTS WITH SAND AND SILT**, LITTLE CLAY, DAMP | 1033.3 | | 2 5 9 | 19 | 56 | SS-9 | - | - | - | - | - | - | - | - | - | 11 | A-2-4 (V) | - | |
| | 1030.8 | | | | | | | | | | | | | | | | | | |
| **SHALE**, DARK GRAY AND BLACK, HIGHLY WEATHERED, WEAK, FISSILE. | | TR 1030.3 | 5 12 14 | 35 | 61 | SS-10 | - | - | - | - | - | - | - | - | - | 13 | Rock (V) | - | |
| | | | 9 11 50 | 83 | 78 | SS-11 | - | - | - | - | - | - | - | - | - | 8 | Rock (V) | - | |
| | | | 50/5" | - | 60 | SS-12 | - | - | - | - | - | - | - | - | - | - | Rock (V) | - | |
| | 1023.8 | | | | | | | | | | | | | | | | | | |
| **INTERBEDDED COAL (57%) AND SHALE (43%)**, BEDDING DISCONTINUITIES: LOW ANGLE, JOINT DISCONTINUITIES: HIGH ANGLE THROUGHOUT, HIGHLY FRACTURED TO FRACTURED, OPEN TO NARROW, SLIGHTLY ROUGH TO VERY ROUGH, BLOCKY/DISTURBED/SEAMY TO DISINTIGRATED, FAIR TO POOR SURFACE CONDITION, RQD 5%, REC. 98%; **COAL**, BLACK, HIGHLY TO MODERATELY WEATHERED, VERY WEAK TO WEAK, THINLY LAMINATED TO LAMINATED, FISSILE, FOSSILIFEROUS, PYRITIC; **SHALE**, DARK GRAY AND GRAY, MODERATELY WEATHERED, WEAK TO SLIGHTLY STRONG, FISSILE. | | | 0 | | 98 | NQ2-1 | | | | | | | | | | | | CORE | | |
| | 1017.2 | | 25 | | 98 | NQ2-2 | | | | | | | | | | | CORE | | |
| **INTERBEDDED SANDSTONE (88%) AND SHALE (12%)**, BEDDING DISCONTINUITIES: LOW ANGLE, HIGHLY FRACTURED TO MODERATELY FRACTURED, FRACTURED TO SLIGHTLY FRACTURED FROM 50.2' - 60.0', NARROW TO TIGHT, SLIGHTLY ROUGH TO VERY ROUGH, RQD 51%, REC. 97%; **SANDSTONE**, LIGHT GRAY AND GRAY, UNWEATHERED TO SLIGHTLY WEATHERED, MODERATELY STRONG TO STRONG, VERY FINE TO MEDIUM GRAINED, LAMINATED TO THIN BEDDED, VERY THIN TO THICK BEDDED FROM 50.2' - 60.0', CONTAINS COAL AND ARGILLACEOUS LENSES AND LAMINATIONS; **SHALE**, DARK GRAY, SLIGHTLY WEATHERED, WEAK TO SLIGHTLY STRONG, FISSILE. | | | 37 | | 95 | NQ2-3 | | | | | | | | | | | | CORE | | |
| | | | 45 | | 96 | NQ2-4 | | | | | | | | | | | CORE | | |
| | | | 66 | | 98 | NQ2-5 | | | | | | | | | | | CORE | | |
| | 993.8 | EOB | 71 | | 99 | NQ2-6 | | | | | | | | | | | CORE | | |

NOTES: GROUNDWATER ENCOUNTERED AT 23.5' DURING DRILLING. HOLE DID NOT CAVE. NO DISCERNABLE VOIDS DURING CORING. BORING WAS OFFSET.

ABANDONMENT METHODS, MATERIALS, QUANTITIES: PUMPED 150 GAL. BENTONITE GROUT

STANDARD ODOT LOG W/ SULFATES (11 X 17) - OH DOT GDT - 11/13/20 22:54 - C:\USERS\KARENS\DESKTOP\GINT FILES\SUM-77-277-224 PHASE 2.GPJ

| | | | |
|---|---|---|---|
| 175/209 | SUM-77/277/224 VARIOUS | STRUCTURE FOUNDATION EXPLORATION UNDERGROUND MINE BORING LOG B-107-0-17 | DRAWN EB CHECKED BPA |

PROJECT: SUM-77-277/224
TYPE: UNDERGROUND MINE
PID: 106002 SFN:
START: 4/13/20 END: 4/13/20

DRILLING FIRM / OPERATOR: NEAS / J. HODGES
SAMPLING FIRM / LOGGER: NEAS / J. HODGES
DRILLING METHOD: 3.25" HSA / NQ2
SAMPLING METHOD: SPT / NQ2

DRILL RIG: CME 55X
HAMMER: CME AUTOMATIC
CALIBRATION DATE: 12/5/19
ENERGY RATIO (%): 81.9

STATION / OFFSET: 19+52, 48' LT.
ALIGNMENT: NOISE WALL G
ELEVATION: 1053.6 (MSL) EOB: 55.5 ft.
LAT / LONG: 41.018250, -81.496100

EXPLORATION ID B-107-1-17
PAGE 1 OF 1

| MATERIAL DESCRIPTION AND NOTES | ELEV. / DEPTHS | SPT/RQD | $N_{60}$ | REC (%) | SAMPLE ID | HP (tsf) | GRADATION (%) GR | CS | FS | SI | CL | ATTERBERG LL | PL | PI | WC | ODOT CLASS (GI) | SO4 ppm | HOLE SEALED |
|---|---|---|---|---|---|---|---|---|---|---|---|---|---|---|---|---|---|---|
| MEDIUM DENSE, BROWN, **COARSE AND FINE SAND**, LITTLE GRAVEL, LITTLE SILT, TRACE CLAY, DAMP TO MOIST | 1053.6 | 3 6 9 | 20 | 100 | SS-1 | - | 20 | 24 | 28 | 19 | 9 | NP | NP | NP | 11 | A-3a (0) | - | |
| | | 4 7 6 | 18 | 39 | SS-2 | - | - | - | - | - | - | - | - | - | 9 | A-3a (V) | - | |
| | | 4 4 7 | 15 | 67 | SS-3 | - | - | - | - | - | - | - | - | - | 12 | A-3a (V) | - | |
| VERY LOOSE TO LOOSE, BROWN BECOMING LIGHT BROWNISH GRAY, **GRAVEL AND STONE FRAGMENTS WITH SAND**, LITTLE SILT, TRACE CLAY, STONE FRAGMENTS ARE FRIABLE SANDSTONE, DAMP TO MOIST | 1045.6 | 2 3 3 | 8 | 44 | SS-4 | - | 28 | 29 | 22 | 15 | 6 | NP | NP | NP | 13 | A-1-b (0) | - | |
| | | 3 2 3 | 7 | 17 | SS-5 | - | - | - | - | - | - | - | - | - | 13 | A-1-b (V) | - | |
| | W 1040.1 | 2 1 2 | 4 | 67 | SS-6 | - | - | - | - | - | - | - | - | - | 13 | A-1-b (V) | - | |
| | | 2 3 3 | 8 | 44 | SS-7 | - | - | - | - | - | - | - | - | - | 14 | A-1-b (V) | - | |
| @18.5' TO 25.0'; SS-8 TO SS-10 BECOME MEDIUM DENSE TO DENSE | | 4 5 3 | 11 | 33 | SS-8 | - | - | - | - | - | - | - | - | - | 11 | A-1-b (V) | - | |
| | | 5 9 10 | 26 | 56 | SS-9 | - | - | - | - | - | - | - | - | - | 6 | A-1-b (V) | - | |
| @23.5'; SS-10 CONTAINS NO RECOVERY | 1028.6 | 5 12 14 | 35 | 0 | SS-10 | - | - | - | - | - | - | - | - | - | - | | - | |
| **SANDSTONE**, LIGHT GRAY AND BROWN, HIGHLY WEATHERED, MODERATELY STRONG. | 1028.1 TR | 50/5" | - | 60 | SS-11 | - | - | - | - | - | - | - | - | - | 10 | Rock (V) | - | |
| **INTERBEDDED SHALE (82%) AND SANDSTONE (18%)**, BEDDING DISCONTINUITIES: LOW ANGLE, JOINT DISCONTINUITIES: HIGH ANGLE FROM 26.0' - 26.2' AND 26.7' - 26.8', HIGHLY FRACTURED, OPEN TO NARROW, SLIGHTLY ROUGH, BLOCKY/DISTURBED/SEAMY, DISINTIGRATED FROM 33.9' - 34.9', FAIR TO POOR SURFACE CONDITION, RQD 0%, REC. 44%; **SHALE**, GRAY AND BLACK, MODERATELY TO HIGHLY WEATHERED, WEAK, LAMINATED, FISSILE; **SANDSTONE**, LIGHT GRAY AND GRAY, SLIGHTLY TO MODERATELY WEATHERED, SLIGHTLY TO MODERATELY STRONG, CONTAINS ARGILLACEOUS LAMINATIONS AND LENSES. | 1026.1 | 0 | | 48 | NQ2-1 | | | | | | | | | | | CORE | | |
| **@27.5' TO 33.5'; DRILLER NOTED VOID ENCOUNTERED** | 1020.1 | 0 | | 39 | NQ2-2 | | | | | | | | | | | CORE | | |
| **SANDSTONE**, LIGHT GRAY AND GRAY, UNWEATHERED TO SLIGHTLY WEATHERED, MODERATELY STRONG TO STRONG, VERY FINE TO MEDIUM GRAINED, LAMINATED TO THIN FROM 35.5' - 46.5', VERY THIN TO MEDIUM BEDDED FROM 46.5' - 55.5', CONTAINS ARGILLACEOUS LAMINATIONS AND LENSES, BEDDING DISCONTINUITIES: LOW ANGLE, JOINT DISCONTINUITIES: HIGH ANGLE FROM 54.6 - 55.1', HIGHLY FRACTURED TO MODERATELY FRACTURED FROM 35.5' - 46.5', FRACTURED TO SLIGHTLY FRACTURED FROM 46.5' - 55.5', NARROW TO TIGHT, SLIGHTLY ROUGH TO VERY ROUGH, BLOCKY TO INTACT, GOOD TO VERY GOOD SURFACE CONDITION; RQD 52%, REC 96%. | 1018.1 | 24 | | 100 | NQ2-3 | | | | | | | | | | | CORE | | |
| | | 48 | | 98 | NQ2-4 | | | | | | | | | | | CORE | | |
| | | 66 | | 87 | NQ2-5 | | | | | | | | | | | CORE | | |
| | 998.1 EOB | 70 | | 100 | NQ2-6 | | | | | | | | | | | CORE | | |

NOTES: GROUNDWATER ENCOUNTERED AT 13.5' DURING DRILLING. HOLE DID NOT CAVE. VOIDS ENCOUNTERED DURING DRILLING. NO WATER CIRCULATION DURING CORING.

ABANDONMENT METHODS, MATERIALS, QUANTITIES: PUMPED 200 GAL. BENTONITE GROUT

STANDARD ODOT LOG W/ SULFATES (11 X 17) - OH DOT GDT - 11/13/20 22:55 - C:\USERS\KARENS\DESKTOP\GINT FILES\SUM-77-277-224 PHASE 2.GPJ

| | | | |
|---|---|---|---|
| 176/209 | SUM-77/277/224 VARIOUS | STRUCTURE FOUNDATION EXPLORATION UNDERGROUND MINE BORING LOG B-107-1-17 | DRAWN EB / CHECKED BPA |

| | | | | | |
|---|---|---|---|---|---|
| PROJECT: SUM-77-277/224 | DRILLING FIRM / OPERATOR: NEAS / J. HODGES | DRILL RIG: CME 55X | STATION / OFFSET: 19+82, 0' LT. | EXPLORATION ID B-108-0-17 |
| TYPE: UNDERGROUND MINE | SAMPLING FIRM / LOGGER: NEAS / J. HODGES | HAMMER: CME AUTOMATIC | ALIGNMENT: NOISE WALL G | |
| PID: 106002 SFN: | DRILLING METHOD: 3.25" HSA / NQ2 | CALIBRATION DATE: 12/5/19 | ELEVATION: 1055.3 (MSL) EOB: 51.5 ft. | PAGE 1 OF 1 |
| START: 4/8/20 END: 4/9/20 | SAMPLING METHOD: SPT / NQ2 | ENERGY RATIO (%): 81.9 | LAT / LONG: 41.018338, -81.496022 | |

| MATERIAL DESCRIPTION AND NOTES | ELEV. | DEPTHS | SPT/ RQD | $N_{60}$ | REC (%) | SAMPLE ID | HP (tsf) | GRADATION (%) GR | CS | FS | SI | CL | ATTERBERG LL | PL | PI | WC | ODOT CLASS (GI) | SO4 ppm | HOLE SEALED |
|---|---|---|---|---|---|---|---|---|---|---|---|---|---|---|---|---|---|---|---|
| STIFF TO VERY STIFF, BROWN, **SANDY SILT**, LITTLE CLAY, LITTLE GRAVEL. CONTAINS ROOT HAIRS AND IRON STAINING, DAMP | 1055.3 | | 3 3 3 | 8 | 100 | SS-1 | 3.50 | 11 | 22 | 22 | 32 | 13 | 25 | 19 | 6 | 15 | A-4a (2) | - | |
| | | | 4 3 3 | 8 | 100 | SS-2 | 1.75 | - | - | - | - | - | - | - | - | 11 | A-4a (V) | - | |
| LOOSE, BROWN AND ORANGISH BROWN, **COARSE AND FINE SAND**, LITTLE TO SOME GRAVEL, LITTLE SILT, TRACE CLAY, CONTAINS IRON STAINING, DAMP TO MOIST | 1049.8 | | 3 4 2 | 8 | 78 | SS-3 | - | - | - | - | - | - | - | - | - | 10 | A-3a (V) | - | |
| | | | 2 2 2 | 5 | 100 | SS-4 | - | - | - | - | - | - | - | - | - | 14 | A-3a (V) | - | |
| | | | 1 2 3 | 7 | 44 | SS-5 | - | - | - | - | - | - | - | - | - | 14 | A-3a (V) | - | |
| | | | 2 5 2 | 10 | 83 | SS-6 | - | - | - | - | - | - | - | - | - | 14 | A-3a (V) | - | |
| VERY LOOSE TO MEDIUM DENSE, BROWN AND ORANGISH BROWN, **GRAVEL AND STONE FRAGMENTS WITH SAND**, LITTLE SILT, TRACE CLAY, CONTAINS IRON STAINING, MOIST | 1039.8 | | 2 6 5 | 15 | 44 | SS-7 | - | - | - | - | - | - | - | - | - | 13 | A-1-b (V) | - | |
| | | | 2 2 1 | 4 | 33 | SS-8 | - | - | - | - | - | - | - | - | - | 12 | A-1-b (V) | - | |
| | | | 1 5 5 | 14 | 33 | SS-9A | - | - | - | - | - | - | - | - | - | 10 | A-1-b (V) | - | |
| | 1033.3 | | | | | SS-9B | 2.50 | - | - | - | - | - | - | - | - | 13 | A-4a (V) | - | |
| VERY STIFF TO HARD, BROWN AND GRAY, **SANDY SILT**, LITTLE CLAY, LITTLE GRAVEL AND STONE FRAGMENTS, CONTAINS TRACE IRON STAINING, DAMP | 1030.5 | TR | 17 12 50/4" | - | 81 | SS-10 | 4.25 | 12 | 8 | 14 | 49 | 17 | 25 | 16 | 9 | 8 | A-4a (6) | - | |
| **SANDSTONE**, GRAY, HIGHLY WEATHERED, STRONG. | 1028.8 | | 50 | - | 50 | SS-11 | - | - | - | - | - | - | - | - | - | 6 | Rock (V) | - | |
| **NO DISCERNABLE VOIDS DURING DRILLING INTERBEDDED SANDSTONE (64%) AND SHALE (36%)**, BEDDING DISCONTINUITIES: LOW ANGLE, JOINT DISCONTINUITIES: HIGH ANGLE FROM 28.2' - 28.4', HIGHLY FRACTURED TO MODERATELY FRACTURED, OPEN TO NARROW, SLIGHTLY ROUGH, BLOCKY/DISTURBED/SEAMY, FAIR SURFACE CONDITION, RQD 8%, REC. 63%; **SANDSTONE**, GRAY, MODERATELY WEATHERED, SLIGHTLY STRONG TO STRONG, VERY FINE TO FINE GRAINED. LAMINATED TO VERY THIN BEDDED, SILTY; **SHALE**, DARK GRAY, HIGHLY WEATHERED, WEAK, FISSILE. | 1023.8 | | 8 | | 63 | NQ2-1 | | | | | | | | | | | CORE | | |
| **COAL**, BLACK, HIGHLY WEATHERED, WEAK, THINLY LAMINATED, PYRITIC, BEDDING DISCONTINUITIES: LOW ANGLE, HIGHLY FRACTURED, OPEN, SLIGHTLY ROUGH, LAMINATED, FAIR TO POOR SURFACE CONDITION; RQD 0%, REC 29%. | 1019.5 | | 8 | | 39 | NQ2-2 | | | | | | | | | | | CORE | | |
| **@35.3'; 4.0" BLACK WOOD FRAGMENT** | 1018.5 | | | | | | | | | | | | | | | | | | |
| **SHALE**, GRAY AND DARK GRAY, HIGHLY WEATHERED, VERY WEAK TO WEAK, LAMINATED, FISSILE, BEDDING DISCONTINUITIES: LOW ANGLE, HIGHLY FRACTURED TO MODERATELY FRACTURED, NARROW, SLIGHTLY ROUGH, BLOCKY/DISTURBED/SEAMY, POOR SURFACE CONDITION; RQD 42%, REC 100%. | | | 18 | | 100 | NQ2-3 | | | | | | | | | | | CORE | | |
| **SANDSTONE**, GRAY AND LIGHT GRAY, SLIGHTLY WEATHERED, SLIGHTLY STRONG TO STRONG, VERY FINE TO MEDIUM GRAINED, LAMINATED TO THIN BEDDED FROM 36.8' - 41.8', VERY THIN TO MEDIUM BEDDED FROM 41.8' - 51.5', VERY SILTY FROM 36.8' - 38.6', CONTAINS COAL AND ARGILLACEOUS LENSES AND LAMINATIONS, BEDDING DISCONTINUITIES: LOW TO MODERATELY HIGH ANGLE, JOINT DISCONTINUITIES: HIGH ANGLE FROM 36.8' - 37.4', 39.7' - 40.5', AND 46.8' - 47.0', HIGHLY FRACTURED TO MODERATELY FRACTURED FROM 36.8' - 41.8', HIGHLY FRACTURED TO SLIGHTLY FRACTURED FROM 41.8' - 51.5', NARROW TO TIGHT, SLIGHTLY ROUGH TO VERY ROUGH, BLOCKY TO INTACT, GOOD SURFACE CONDITION; RQD 41%, REC 98%. | | | 61 | | 98 | NQ2-4 | | | | | | | | | | | CORE | | |
| | | | 41 | | 94 | NQ2-5 | | | | | | | | | | | CORE | | |
| | 1003.8 | EOB | | | | | | | | | | | | | | | | | |

NOTES: GROUNDWATER NOT ENCOUNTERED DURING DRILLING. HOLE DID NOT CAVE. NO DISCERNABLE VOIDS DURING CORING. NO WATER CIRCULATION DURING CORING.

ABANDONMENT METHODS, MATERIALS, QUANTITIES: PUMPED 200 GAL. BENTONITE GROUT

STANDARD ODOT LOG W/ SULFATES (11 X 17) - OH DOT.GDT - 11/13/20 22:55 - C:\USERS\KARENS\DESKTOP\GINT FILES\SUM-77-277-224 PHASE 2.GPJ

| | | | |
|---|---|---|---|
| 177/209 | SUM-77/277/224 VARIOUS | STRUCTURE FOUNDATION EXPLORATION UNDERGROUND MINE BORING LOG B-108-0-17 | DRAWN EB CHECKED BPA |

| | | | | | |
|---|---|---|---|---|---|
| PROJECT: SUM-77-277/224 | DRILLING FIRM / OPERATOR: NEAS / J. HODGES | DRILL RIG: CME 55X | STATION / OFFSET: 20+02, 26' LT. | EXPLORATION ID B-108-1-17 |
| TYPE: UNDERGROUND MINE | SAMPLING FIRM / LOGGER: NEAS / J. HODGES | HAMMER: CME AUTOMATIC | ALIGNMENT: NOISE WALL G | |
| PID: 106002 SFN: | DRILLING METHOD: 3.25" HSA / NQ2 | CALIBRATION DATE: 12/5/19 | ELEVATION: 1056.4 (MSL) EOB: 59.5 ft. | PAGE 1 OF 1 |
| START: 4/9/20 END: 4/10/20 | SAMPLING METHOD: SPT / NQ2 | ENERGY RATIO (%): 81.9 | LAT / LONG: 41.018380, -81.496100 | |

| MATERIAL DESCRIPTION AND NOTES | ELEV. | DEPTHS | SPT/ RQD | $N_{60}$ | REC (%) | SAMPLE ID | HP (tsf) | GRADATION (%) GR | CS | FS | SI | CL | ATTERBERG LL | PL | PI | WC | ODOT CLASS (GI) | SO4 ppm | HOLE SEALED |
|---|---|---|---|---|---|---|---|---|---|---|---|---|---|---|---|---|---|---|---|
| LOOSE TO MEDIUM DENSE, BROWN AND ORANGISH BROWN, **GRAVEL AND STONE FRAGMENTS WITH SAND**, TRACE TO LITTLE SILT, TRACE CLAY, CONTAINS IRON STAINING, MOIST TO WET | 1056.4 | | 4 6 5 | 15 | 100 | SS-1 | - | - | - | - | - | - | - | - | - | 10 | A-1-b (V) | - | |
| | | | 2 2 2 | 5 | 39 | SS-2 | - | - | - | - | - | - | - | - | - | 8 | A-1-b (V) | - | |
| | | | 2 2 2 | 5 | 67 | SS-3 | - | 24 | 52 | 15 | 5 | 4 | NP | NP | NP | 14 | A-1-b (0) | - | |
| | | | 3 3 3 | 8 | 56 | SS-4 | - | - | - | - | - | - | - | - | - | 13 | A-1-b (V) | - | |
| | | | 3 3 6 | 12 | 44 | SS-5 | - | - | - | - | - | - | - | - | - | 15 | A-1-b (V) | - | |
| | | | 3 6 6 | 16 | 44 | SS-6 | - | - | - | - | - | - | - | - | - | 14 | A-1-b (V) | - | |
| | | | 4 4 3 | 10 | 33 | SS-7 | - | - | - | - | - | - | - | - | - | 12 | A-1-b (V) | - | |
| | | | 3 3 6 | 12 | 67 | SS-8 | - | - | - | - | - | - | - | - | - | 15 | A-1-b (V) | - | |
| | 1035.9 | | | | | | | | | | | | | | | | | | |
| VERY DENSE, GRAY, **SANDY SILT**, LITTLE CLAY, LITTLE STONE FRAGMENTS, CONTAINS A RELIC ROCK STRUCTURE, DAMP | 1034.4 | | 4 6 50 | 76 | 56 | SS-9A | - | - | - | - | - | - | - | - | - | 7 | A-4a (V) | - | |
| | | TR | | | | SS-9B | - | - | - | - | - | - | - | - | - | 5 | Rock (V) | - | |
| **SANDSTONE**, GRAY, HIGHLY WEATHERED, STRONG, VERY FINE TO FINE GRAINED. | | | 50/3" | - | 67 | SS-10 | - | - | - | - | - | - | - | - | - | - | Rock (V) | - | |
| | 1031.9 | | | | | | | | | | | | | | | | | | |
| **NO DISCERNABLE VOIDS DURING DRILLING** **SANDSTONE**, GRAY AND BROWNISH GRAY, HIGHLY TO MODERATELY WEATHERED, MODERATELY STRONG TO STRONG, VERY FINE TO FINE GRAINED, LAMINATED TO VERY THIN BEDDED, SILTY, CONTAINS ARGILLACEOUS LENSES, BEDDING DISCONTINUITIES: LOW ANGLE, HIGHLY FRACTURED TO FRACTURED, OPEN TO NARROW, SLIGHTLY ROUGH, BLOCKY/DISTURBED/SEAMY, FAIR SURFACE CONDITION; RQD 0%, REC 99%. | 1028.1 | | 0 | | 93 | NQ2-1 | | | | | | | | | | | CORE | | |
| **COAL**, BLACK, SLIGHTLY WEATHERED, VERY WEAK TO WEAK, LAMINATED, FOSSILIFEROUS, PYRITIC, BEDDING DISCONTINUITIES: LOW ANGLE, JOINT DISCONTINUITIES: HIGH ANGLE FROM 29.5' - 31.2', HIGHLY FRACTURED, OPEN TO NARROW, SLIGHTLY ROUGH TO VERY ROUGH, BLOCKY/DISTURBED/SEAMY, GOOD SURFACE CONDITION; RQD 0%, REC 65%. | 1023.5 | | 16 | | 74 | NQ2-2 | | | | | | | | | | | CORE | | |
| **UNDERCLAY**, DARK GRAY, SEVERELY WEATHERED, VERY WEAK, FOSSILIFEROUS, BEDDING DISCONTINUITIES: LOW ANGLE, FRACTURED, OPEN, SLIGHTLY ROUGH, INTACT, POOR SURFACE CONDITION; RQD 38%, REC 100%. | 1022.5 | | 48 | | 98 | NQ2-3 | | | | | | | | | | | CORE | | |
| **SANDSTONE**, GRAY AND DARK GRAY, UNWEATHERED TO SLIGHTLY WEATHERED, STRONG, VERY FINE TO MEDIUM GRAINED, THINLY LAMINATED TO VERY THIN FROM 33.9' - 36.1', LAMINATED TO THIN FROM 36.1' - 59.5', CONTAINS ARGILLACEOUS LENSES AND LAMINATIONS, BEDDING DISCONTINUITIES: LOW ANGLE, HIGHLY FRACTURED TO SLIGHTLY FRACTURED, NARROW TO TIGHT, SLIGHTLY ROUGH TO VERY ROUGH, BLOCKY TO INTACT, GOOD TO VERY GOOD SURFACE CONDITION; RQD 49%, REC 91%. | | | 53 | | 99 | NQ2-4 | | | | | | | | | | | CORE | | |
| | | | 0 | | 58 | NQ2-5 | | | | | | | | | | | CORE | | |
| **@48.0'; GAINED CIRCULATION DURING CORING** | | | 72 | | 97 | NQ2-6 | | | | | | | | | | | CORE | | |
| | | | 72 | | 100 | NQ2-7 | | | | | | | | | | | CORE | | |
| | 996.9 | EOB | | | | | | | | | | | | | | | | | |

NOTES: GROUNDWATER NOT ENCOUNTERED DURING DRILLING. HOLE DID NOT CAVE. NO DISCERNABLE VOIDS DURING CORING. NO WATER CIRCULATION UNTIL 48.0'.

ABANDONMENT METHODS, MATERIALS, QUANTITIES: PUMPED 150 GAL. BENTONITE GROUT

STANDARD ODOT LOG W/ SULFATES (11 X 17) - OH DOT GDT - 11/13/20 22:55 - C:\USERS\KARENS\DESKTOP\GINT FILES\SUM-77-277-224 PHASE 2.GPJ

| | | | |
|---|---|---|---|
| 178/209 | SUM-77/277/224 VARIOUS | STRUCTURE FOUNDATION EXPLORATION UNDERGROUND MINE BORING LOG B-108-1-17 | DRAWN EB CHECKED BPA |

PROJECT: SUM-77-277/224
TYPE: UNDERGROUND MINE
PID: 106002 SFN:
START: 3/11/20 END: 3/11/20

DRILLING FIRM / OPERATOR: NEAS / J. HODGES
SAMPLING FIRM / LOGGER: NEAS / J. HODGES
DRILLING METHOD: 3.25" HSA / NQ2
SAMPLING METHOD: SPT / NQ2

DRILL RIG: CME 55X
HAMMER: CME AUTOMATIC
CALIBRATION DATE: 12/5/19
ENERGY RATIO (%): 81.9

STATION / OFFSET: 20+92, 0' RT.
ALIGNMENT: NOISE WALL G
ELEVATION: 1062.7 (MSL) EOB: 55.5 ft.
LAT / LONG: 41.018635, -81.496093

EXPLORATION ID B-109-0-17
PAGE 1 OF 1

| MATERIAL DESCRIPTION AND NOTES | ELEV. | DEPTHS | SPT/ RQD | $N_{60}$ | REC (%) | SAMPLE ID | HP (tsf) | GRADATION (%) GR | CS | FS | SI | CL | ATTERBERG LL | PL | PI | WC | ODOT CLASS (GI) | SO4 ppm | HOLE SEALED |
|---|---|---|---|---|---|---|---|---|---|---|---|---|---|---|---|---|---|---|---|
| STIFF, BROWN, **SANDY SILT**, LITTLE CLAY, TRACE GRAVEL, CONTAINS ROOT HAIRS AND IRON STAINING, DAMP | 1062.7 | | 2 2 3 | 7 | 67 | SS-1 | 1.50 | 10 | 26 | 21 | 30 | 13 | 26 | 19 | 7 | 13 | A-4a (2) | - | |
| LOOSE, BROWN, **COARSE AND FINE SAND**, SOME GRAVEL AND STONE FRAGMENTS, TRACE SILT, TRACE CLAY, CONTAINS TRACE IRON STAINING, DAMP | 1059.7 | | 2 3 3 | 8 | 67 | SS-2 | - | - | - | - | - | - | - | - | - | 9 | A-3a (V) | - | |
| LOOSE TO MEDIUM DENSE, BROWN, **GRAVEL AND STONE FRAGMENTS WITH SAND**, TRACE SILT, TRACE CLAY, CONTAINS TRACE IRON STAINING, DAMP | 1057.2 | | 2 3 6 | 12 | 67 | SS-3 | - | - | - | - | - | - | - | - | - | 9 | A-1-b (V) | - | |
| | | | 3 3 3 | 8 | 56 | SS-4 | - | - | - | - | - | - | - | - | - | 8 | A-1-b (V) | - | |
| | | | 4 4 4 | 11 | 28 | SS-5 | - | - | - | - | - | - | - | - | - | 9 | A-1-b (V) | - | |
| @13.5' TO 20.0'; SS-6 TO SS-8 BECOME BROWN AND GRAY, LITTLE SILT | | | 4 4 4 | 11 | 56 | SS-6 | - | - | - | - | - | - | - | - | - | 10 | A-1-b (V) | - | |
| | | | 3 4 3 | 10 | 56 | SS-7 | - | - | - | - | - | - | - | - | - | 13 | A-1-b (V) | - | |
| @18.5'; SS-8 BECOMES DENSE | 1042.2 | | 3 9 14 | 31 | 100 | SS-8 | - | - | - | - | - | - | - | - | - | 11 | A-1-b (V) | - | |
| MEDIUM DENSE, LIGHT BROWNISH GRAY, **STONE FRAGMENTS**, SOME SAND, TRACE SILT, TRACE CLAY, DAMP | 1037.7 | | 10 15 7 | 30 | 67 | SS-9 | - | - | - | - | - | - | - | - | - | 6 | A-1-a (V) | - | |
| | | | 6 6 16 | 30 | 56 | SS-10 | - | - | - | - | - | - | - | - | - | 7 | A-1-a (V) | - | |
| **SANDSTONE**, LIGHT GRAY, MODERATELY WEATHERED, MODERATELY STRONG, VERY FINE TO FINE GRAINED, FRIABLE. **@25.5' TO 40.5'; 4.0" TO 6.0" VOIDS ENCOUNTERED DURING DRILLING** | 1037.2 | TR | 50 | - | 67 | SS-11 | - | - | - | - | - | - | - | - | - | 5 | Rock (V) | - | |
| **SANDSTONE**, GRAY AND ORANGISH BROWN, MODERATELY WEATHERED, MODERATELY STRONG TO STRONG, VERY FINE TO FINE GRAINED, LAMINATED TO VERY THIN BEDDED, CONTAINS ARGILLACEOUS LENSES AND LAMINATIONS, BEDDING DISCONTINUITIES: LOW ANGLE, HIGHLY FRACTURED TO FRACTURED, OPEN TO NARROW, SLIGHTLY ROUGH TO VERY ROUGH, BLOCKY/DISTURBED/SEAMY, FAIR TO GOOD SURFACE CONDITION; RQD 0%, REC 38%. **3.0' VOID ENCOUNTERED DURING DRILLING.** | 1034.2 | | 0 | | 66 | NQ2-1 | | | | | | | | | | | | CORE | | |
| | 1031.2 | | 0 | | 40 | NQ2-2 | | | | | | | | | | | | CORE | | |
| **COAL**, BLACK, HIGHLY WEATHERED, WEAK, LAMINATED, PYRITIC, BEDDING DISCONTINUITIES: LOW ANGLE, HIGHLY FRACTURED, OPEN, SLIGHTLY ROUGH, BLOCKY/DISTURBED/SEAMY, POOR SURFACE CONDITION; RQD 0%, REC 42%. | 1026.4 | | 25 | | 80 | NQ2-3 | | | | | | | | | | | | CORE | | |
| **SANDSTONE**, GRAY AND LIGHT GRAY, UNWEATHERED TO SLIGHTLY WEATHERED, MODERATELY STRONG TO STRONG, VERY FINE TO MEDIUM GRAINED, LAMINATED TO THIN BEDDED FROM 37.9' - 46.3', VERY THIN TO MEDIUM BEDDED FROM 46.3' - 55.5', CONTAINS ARGILLACEOUS LENSES AND LAMINATIONS, BEDDING DISCONTINUITIES: LOW ANGLE, JOINT DISCONTINUITIES: HIGH ANGLE FROM 38.5' - 39.4', HIGHLY FRACTURED TO MODERATELY FRACTURED FROM 37.9' - 46.3', HIGHLY FRACTURED TO SLIGHTLY FRACTURED FROM 46.3' - 55.5', NARROW TO TIGHT, SLIGHTLY ROUGH TO VERY ROUGH, BLOCKY TO INTACT, GOOD TO VERY GOOD SURFACE CONDITION; RQD 41%, REC 80%. | 1024.8 | | 47 | | 83 | NQ2-4 | | | | | | | | | | | | CORE | | |
| | | | 42 | | 97 | NQ2-5 | | | | | | | | | | | | CORE | | |
| | 1007.2 | EOB | 29 | | 52 | NQ2-6 | | | | | | | | | | | | CORE | | |

NOTES: GROUNDWATER NOT ENCOUNTERED DURING DRILLING. HOLE DID NOT CAVE. VOIDS ENCOUNTERED DURING DRILLING. NO WATER CIRCULATION DURING CORING.

ABANDONMENT METHODS, MATERIALS, QUANTITIES: PUMPED 200 GAL. BENTONITE GROUT

STANDARD ODOT LOG W/ SULFATES (11 X 17) - OH DOT.GDT - 11/13/20 22:55 - C:\USERS\KARENS\DESKTOP\GINT FILES\SUM-77-277-224 PHASE 2.GPJ

| | | | | |
|---|---|---|---|---|
| 179/209 | SUM-77/277/224 VARIOUS | STRUCTURE FOUNDATION EXPLORATION UNDERGROUND MINE BORING LOG B-109-0-17 | DRAWN EB | CHECKED BPA |

PROJECT: SUM-77-277/224
TYPE: NOISE WALL
PID: 106002 SFN:
START: 3/11/20 END: 3/11/20

DRILLING FIRM / OPERATOR: NEAS / J. HODGES
SAMPLING FIRM / LOGGER: NEAS / J. HODGES
DRILLING METHOD: 3.25" HSA
SAMPLING METHOD: SPT

DRILL RIG: CME 55X
HAMMER: CME AUTOMATIC
CALIBRATION DATE: 12/5/19
ENERGY RATIO (%): 81.9

STATION / OFFSET: 24+47, 0' LT.
ALIGNMENT: NOISE WALL G
ELEVATION: 1064.1 (MSL) EOB: 24.0 ft.
LAT / LONG: 41.019589, -81.496361

EXPLORATION ID B-110-0-17
PAGE 1 OF 1

| MATERIAL DESCRIPTION AND NOTES | ELEV. | DEPTHS | SPT/ RQD | $N_{60}$ | REC (%) | SAMPLE ID | HP (tsf) | GRADATION (%) GR | CS | FS | SI | CL | ATTERBERG LL | PL | PI | WC | ODOT CLASS (GI) | SO4 ppm | BACK FILL |
|---|---|---|---|---|---|---|---|---|---|---|---|---|---|---|---|---|---|---|---|
| LOOSE TO MEDIUM DENSE, BROWN, **GRAVEL WITH SAND**, TRACE SILT, TRACE CLAY, DAMP | 1064.1 | | 2 3 3 | 8 | 100 | SS-1 | - | - | - | - | - | - | - | - | - | 8 | A-1-b (V) | - | |
| | | | 4 2 3 | 7 | 100 | SS-2 | - | - | - | - | - | - | - | - | - | 8 | A-1-b (V) | - | |
| | | | 2 2 3 | 7 | 67 | SS-3 | - | 25 | 41 | 23 | 7 | 4 | NP | NP | NP | 7 | A-1-b (0) | - | |
| | | | 2 4 4 | 11 | 33 | SS-4 | - | - | - | - | - | - | - | - | - | 4 | A-1-b (V) | - | |
| MEDIUM DENSE, BROWN BECOMING LIGHT BROWNISH GRAY, **STONE FRAGMENTS WITH SAND**, TRACE SILT, TRACE CLAY, SS-5 CONTAINS IRON STAINING, DAMP | 1053.6 | | 5 10 5 | 20 | 44 | SS-5 | - | - | - | - | - | - | - | - | - | 9 | A-1-b (V) | - | |
| | | | 4 8 8 | 22 | 44 | SS-6 | - | - | - | - | - | - | - | - | - | 5 | A-1-b (V) | - | |
| **SANDSTONE**, GRAY, MODERATELY WEATHERED, MODERATELY STRONG, FINE TO MEDIUM GRAINED, FRIABLE. | 1048.1 | TR | 4 24 50/5" | - | 59 | SS-7 | - | - | - | - | - | - | - | - | - | 7 | Rock (V) | - | |
| | | | 15 14 31 | 61 | 100 | SS-8 | - | - | - | - | - | - | - | - | - | 7 | Rock (V) | - | |
| | | | 50/4" | - | 100 | SS-9 | - | - | - | - | - | - | - | - | - | 6 | Rock (V) | - | |
| | 1040.1 | EOB | 50 | - | 67 | SS-10 | - | - | - | - | - | - | - | - | - | - | Rock (V) | - | |

NOTES: GROUNDWATER NOT ENCOUNTERED DURING DRILLING. HOLE DID NOT CAVE.
ABANDONMENT METHODS, MATERIALS, QUANTITIES: SHOVELED SOIL CUTTINGS

STANDARD ODOT LOG W/ SULFATES (8.5 X 11) - OH DOT.GDT - 11/13/20 22:38 - C:\USERS\KARENS\DESKTOP\GINT FILES\SUM-77-277-224 PHASE 2.GPJ

PROJECT: SUM-77-277/224
TYPE: NOISE WALL
PID: 106002 SFN:
START: 3/6/20 END: 3/6/20

DRILLING FIRM / OPERATOR: NEAS / J. HODGES
SAMPLING FIRM / LOGGER: NEAS / J. HODGES
DRILLING METHOD: 3.25" HSA
SAMPLING METHOD: SPT

DRILL RIG: CME 55X
HAMMER: CME AUTOMATIC
CALIBRATION DATE: 12/5/19
ENERGY RATIO (%): 81.9

STATION / OFFSET: 26+41, 1' LT.
ALIGNMENT: NOISE WALL G
ELEVATION: 1062.2 (MSL) EOB: 21.1 ft.
LAT / LONG: 41.020107, -81.496512

EXPLORATION ID B-111-0-17
PAGE 1 OF 1

| MATERIAL DESCRIPTION AND NOTES | ELEV. | DEPTHS | SPT/ RQD | $N_{60}$ | REC (%) | SAMPLE ID | HP (tsf) | GRADATION (%) GR | CS | FS | SI | CL | ATTERBERG LL | PL | PI | WC | ODOT CLASS (GI) | SO4 ppm | BACK FILL |
|---|---|---|---|---|---|---|---|---|---|---|---|---|---|---|---|---|---|---|---|
| MEDIUM DENSE, BROWN, **COARSE AND FINE SAND**, LITTLE TO SOME GRAVEL AND STONE FRAGMENTS, LITTLE SILT, TRACE CLAY, CONTAINS ROOTS, DAMP | 1062.2 | | 2 4 5 | 12 | 100 | SS-1 | - | - | - | - | - | - | - | - | - | 12 | A-3a (V) | - | |
| | | | 7 9 6 | 20 | 100 | SS-2 | - | - | - | - | - | - | - | - | - | 12 | A-3a (V) | - | |
| MEDIUM DENSE, BROWN, **GRAVEL AND STONE FRAGMENTS WITH SAND**, LITTLE SILT, TRACE CLAY, SS-3 CONTAINS ROOTS, DAMP | 1056.7 | | 2 5 5 | 14 | 100 | SS-3 | - | - | - | - | - | - | - | - | - | 10 | A-1-b (V) | - | |
| | | | 3 6 9 | 20 | 100 | SS-4 | - | - | - | - | - | - | - | - | - | 7 | A-1-b (V) | - | |
| | | | 4 9 12 | 29 | 67 | SS-5 | - | - | - | - | - | - | - | - | - | 9 | A-1-b (V) | - | |
| **SANDSTONE**, LIGHT GRAY, MODERATELY WEATHERED, MODERATELY STRONG, FINE TO COARSE GRAINED, FRIABLE. | 1048.7 | TR | 6 12 22 | 46 | 100 | SS-6 | - | - | - | - | - | - | - | - | - | 8 | Rock (V) | - | |
| | | | 50/3" | - | 67 | SS-7 | - | - | - | - | - | - | - | - | - | - | Rock (V) | - | |
| | | | 50/2" | - | 50 | SS-8 | - | - | - | - | - | - | - | - | - | - | Rock (V) | - | |
| | 1041.1 | EOB | 50/1" | - | 100 | SS-9 | - | - | - | - | - | - | - | - | - | - | Rock (V) | - | |

NOTES: GROUNDWATER NOT ENCOUNTERED DURING DRILLING. HOLE DID NOT CAVE.
ABANDONMENT METHODS, MATERIALS, QUANTITIES: SHOVELED SOIL CUTTINGS

STANDARD ODOT LOG W/ SULFATES (8.5 X 11) - OH DOT.GDT - 11/13/20 22:38 - C:\USERS\KARENS\DESKTOP\GINT FILES\SUM-77-277-224 PHASE 2.GPJ

PROJECT: SUM-77-277/224
TYPE: NOISE WALL
PID: 106002 SFN:
START: 3/6/20 END: 3/6/20

DRILLING FIRM / OPERATOR: NEAS / J. HODGES
SAMPLING FIRM / LOGGER: NEAS / J. HODGES
DRILLING METHOD: 3.25" HSA
SAMPLING METHOD: SPT

DRILL RIG: CME 55X
HAMMER: CME AUTOMATIC
CALIBRATION DATE: 12/5/19
ENERGY RATIO (%): 81.9

STATION / OFFSET: 28+61, 6' LT.
ALIGNMENT: NOISE WALL G
ELEVATION: 1061.1 (MSL) EOB: 21.1 ft.
LAT / LONG: 41.020697, -81.496694

EXPLORATION ID B-112-0-17
PAGE 1 OF 1

| MATERIAL DESCRIPTION AND NOTES | ELEV. | DEPTHS | SPT/ RQD | $N_{60}$ | REC (%) | SAMPLE ID | HP (tsf) | GRADATION (%) GR | CS | FS | SI | CL | ATTERBERG LL | PL | PI | WC | ODOT CLASS (GI) | SO4 ppm | BACK FILL |
|---|---|---|---|---|---|---|---|---|---|---|---|---|---|---|---|---|---|---|---|
| MEDIUM DENSE, BROWN, **GRAVEL WITH SAND**, LITTLE SILT, TRACE CLAY, DAMP | 1061.1 | | 2 3 5 | 11 | 100 | SS-1 | - | - | - | - | - | - | - | - | - | 8 | A-1-b (V) | - | |
| MEDIUM DENSE, BROWN, **STONE FRAGMENTS WITH SAND AND SILT**, TRACE CLAY, DAMP | 1058.1 | | 4 6 10 | 22 | 100 | SS-2 | - | 23 | 9 | 33 | 26 | 9 | NP | NP | NP | 10 | A-2-4 (0) | - | |
| **SANDSTONE**, LIGHT GRAY AND LIGHT BROWN, MODERATELY WEATHERED, MODERATELY STRONG, FINE TO MEDIUM GRAINED, FRIABLE. | 1055.1 | TR | 9 19 23 | 57 | 67 | SS-3 | - | - | - | - | - | - | - | - | - | 5 | Rock (V) | - | |
| | | | 2 24 30 | 74 | 100 | SS-4 | - | - | - | - | - | - | - | - | - | 5 | Rock (V) | - | |
| | | | 50 | - | 67 | SS-5 | - | - | - | - | - | - | - | - | - | - | Rock (V) | - | |
| | | | 25 50 | - | 75 | SS-6 | - | - | - | - | - | - | - | - | - | - | Rock (V) | - | |
| | | | 50/2" | - | 50 | SS-7 | - | - | - | - | - | - | - | - | - | - | Rock (V) | - | |
| | | | 50/4" | - | 50 | SS-8 | - | - | - | - | - | - | - | - | - | - | Rock (V) | - | |
| @21.0'; SS-9 CONTAINS NO RECOVERY | 1040.0 | EOB | 50/1" | - | 0 | SS-9 | - | - | - | - | - | - | - | - | - | - | | - | |

NOTES: GROUNDWATER NOT ENCOUNTERED DURING DRILLING. HOLE DID NOT CAVE.
ABANDONMENT METHODS, MATERIALS, QUANTITIES: SHOVELED SOIL CUTTINGS

STANDARD ODOT LOG W/ SULFATES (8.5 X 11) - OH DOT.GDT - 11/13/20 22:38 - C:\USERS\KAREN\DESKTOP\GINT FILES\SUM-77-277-224 PHASE 2.GPJ

PROJECT: SUM-77-277/224
TYPE: NOISE WALL
PID: 106002 SFN:
START: 3/5/20 END: 3/5/20

DRILLING FIRM / OPERATOR: NEAS / J. HODGES
SAMPLING FIRM / LOGGER: NEAS / J. HODGES
DRILLING METHOD: 3.25" HSA
SAMPLING METHOD: SPT

DRILL RIG: CME 55X
HAMMER: CME AUTOMATIC
CALIBRATION DATE: 12/5/19
ENERGY RATIO (%): 81.9

STATION / OFFSET: 29+93, 19' LT.
ALIGNMENT: NOISE WALL G
ELEVATION: 1054.2 (MSL) EOB: 24.2 ft.
LAT / LONG: 41.021038, -81.496852

EXPLORATION ID B-113-0-17
PAGE 1 OF 1

| MATERIAL DESCRIPTION AND NOTES | ELEV. | DEPTHS | SPT/ RQD | $N_{60}$ | REC (%) | SAMPLE ID | HP (tsf) | GRADATION (%) GR | CS | FS | SI | CL | ATTERBERG LL | PL | PI | WC | ODOT CLASS (GI) | SO4 ppm | BACK FILL |
|---|---|---|---|---|---|---|---|---|---|---|---|---|---|---|---|---|---|---|---|
| LOOSE TO MEDIUM DENSE, BROWN, **SANDY SILT**, LITTLE CLAY, TRACE GRAVEL, WET TO MOIST | 1054.2 | | 3 3 3 | 8 | 100 | SS-1 | - | - | - | - | - | - | - | - | - | 24 | A-4a (V) | - | |
| | | | 4 8 8 | 22 | 100 | SS-2 | - | - | - | - | - | - | - | - | - | 17 | A-4a (V) | - | |
| | | | 4 5 7 | 16 | 67 | SS-3 | - | 1 | 4 | 43 | 37 | 15 | NP | NP | NP | 16 | A-4a (3) | - | |
| | 1044.7 | | 8 11 22 | 45 | 100 | SS-4A | - | - | - | - | - | - | - | - | - | 12 | A-4a (V) | - | |
| DENSE TO VERY DENSE, BROWN AND GRAY, **GRAVEL AND STONE FRAGMENTS WITH SAND**, LITTLE SILT, TRACE CLAY, DAMP | | | | | | SS-4B | - | - | - | - | - | - | - | - | - | 10 | A-1-b (V) | - | |
| | | | 4 23 28 | 70 | 100 | SS-5 | - | - | - | - | - | - | - | - | - | 9 | A-1-b (V) | - | |
| | 1038.7 | | 4 30 30 | 82 | 100 | SS-6 | - | - | - | - | - | - | - | - | - | 9 | A-1-b (V) | - | |
| DENSE, BROWN AND GRAY, **SANDY SILT**, LITTLE GRAVEL AND STONE FRAGMENTS, LITTLE CLAY, DAMP | | | 5 13 22 | 48 | 67 | SS-7 | - | - | - | - | - | - | - | - | - | 14 | A-4a (V) | - | |
| | 1033.7 | | 4 10 14 | 33 | 100 | SS-8 | - | 16 | 6 | 38 | 29 | 11 | NP | NP | NP | 13 | A-4a (1) | - | |
| VERY DENSE, BROWN, **STONE FRAGMENTS WITH SAND**, LITTLE SILT, TRACE CLAY, STONE FRAGMENTS ARE FRIABLE SANDSTONE, DAMP | | | 12 50 | - | 100 | SS-9 | - | - | - | - | - | - | - | - | - | 9 | A-1-b (V) | - | |
| | 1031.2 | | | | | | | | | | | | | | | | | | |
| VERY DENSE, BROWN, **STONE FRAGMENTS WITH SAND, SILT, AND CLAY**, MOIST | 1030.0 | EOB | 12 50/2" | - | 75 | SS-10 | - | - | - | - | - | - | - | - | - | 19 | A-2-6 (V) | - | |

NOTES: GROUNDWATER NOT ENCOUNTERED DURING DRILLING. HOLE DID NOT CAVE.
ABANDONMENT METHODS, MATERIALS, QUANTITIES: SHOVELED SOIL CUTTINGS

STANDARD ODOT LOG W/ SULFATES (8.5 X 11) - OH DOT.GDT - 11/13/20 22:38 - C:\USERS\KAREN\DESKTOP\GINT FILES\SUM-77-277-224 PHASE 2.GPJ



**SUM-77/277/224**
**VARIOUS**

**STRUCTURE FOUNDATION EXPLORATION**
**BARRIER G**
**BORING LOGS B-112-0-17 & B-113-0-17**

DRAWN EB
CHECKED BPA

PROJECT: SUM-77-277/224 | DRILLING FIRM / OPERATOR: NEAS / J. HODGES | DRILL RIG: CME 55X | STATION / OFFSET: 30+79, 20' LT. | EXPLORATION ID B-114-0-17
TYPE: NOISE WALL | SAMPLING FIRM / LOGGER: NEAS / J. HODGES | HAMMER: CME AUTOMATIC | ALIGNMENT: NOISE WALL G
PID: 106002 SFN: | DRILLING METHOD: 3.25" HSA | CALIBRATION DATE: 12/5/19 | ELEVATION: 1054.0 (MSL) EOB: 25.0 ft. | PAGE 1 OF 1
START: 3/5/20 END: 3/5/20 | SAMPLING METHOD: SPT | ENERGY RATIO (%): 81.9 | LAT / LONG: 41.021265, -81.496942

| MATERIAL DESCRIPTION AND NOTES | ELEV. | DEPTHS | SPT/ RQD | $N_{60}$ | REC (%) | SAMPLE ID | HP (tsf) | GRADATION (%) GR | CS | FS | SI | CL | ATTERBERG LL | PL | PI | WC | ODOT CLASS (GI) | SO4 ppm | BACK FILL |
|---|---|---|---|---|---|---|---|---|---|---|---|---|---|---|---|---|---|---|---|
| MEDIUM DENSE, ORANGISH BROWN BECOMING BROWN, **COARSE AND FINE SAND**, LITTLE SILT, TRACE GRAVEL, TRACE CLAY, SS-1 CONTAINS IRON STAINING, DAMP TO MOIST | 1054.0 | | 4 4 8 | 16 | 100 | SS-1 | - | - | - | - | - | - | - | - | - | 16 | A-3a (V) | - | |
| | | | 4 4 6 | 14 | 100 | SS-2 | - | - | - | - | - | - | - | - | - | 14 | A-3a (V) | - | |
| | | | 4 6 7 | 18 | 100 | SS-3 | - | - | - | - | - | - | - | - | - | 11 | A-3a (V) | - | |
| | | | 3 6 7 | 18 | 67 | SS-4 | - | - | - | - | - | - | - | - | - | 12 | A-3a (V) | - | |
| MEDIUM DENSE TO DENSE, BROWN BECOMING GRAY, **GRAVEL AND STONE FRAGMENTS WITH SAND AND SILT**, TRACE CLAY, CONTAINS IRON STAINING AND 1.5" SANDSTONE STONE FRAGMENTS, DAMP | 1043.5 | | 9 12 17 | 40 | 67 | SS-5 | - | - | - | - | - | - | - | - | - | 13 | A-2-4 (V) | - | |
| | | | 7 7 11 | 25 | 100 | SS-6 | - | 25 | 11 | 29 | 26 | 9 | NP | NP | NP | 11 | A-2-4 (0) | - | |
| | 1036.0 | | 4 14 13 | 37 | 67 | SS-7 | - | - | - | - | - | - | - | - | - | 9 | A-2-4 (V) | - | |
| MEDIUM DENSE TO VERY DENSE, GRAY, **STONE FRAGMENTS WITH SAND**, LITTLE SILT, TRACE CLAY, CONTAINS 1.5" SANDSTONE STONE FRAGMENTS, DAMP TO MOIST | | W 1034.0 | 14 10 28 | 52 | 67 | SS-8 | - | - | - | - | - | - | - | - | - | 11 | A-1-b (V) | - | |
| | | | 14 10 28 | 52 | 67 | SS-9 | - | - | - | - | - | - | - | - | - | 15 | A-1-b (V) | - | |
| | 1029.0 | EOB | 4 9 10 | 26 | 100 | SS-10 | - | - | - | - | - | - | - | - | - | 14 | A-1-b (V) | - | |

NOTES: GROUNDWATER ENCOUNTERED AT 20.0' DURING DRILLING. HOLE DID NOT CAVE.
ABANDONMENT METHODS, MATERIALS, QUANTITIES: SHOVELED SOIL CUTTINGS

PROJECT: SUM-77-277/224 | DRILLING FIRM / OPERATOR: NEAS / ASHBAUGH | DRILL RIG: CME 45B | STATION / OFFSET: 33+76, 8' LT. | EXPLORATION ID B-115-0-17
TYPE: NOISE WALL | SAMPLING FIRM / LOGGER: NEAS / ASHBAUGH | HAMMER: CME AUTOMATIC | ALIGNMENT: NOISE WALL G
PID: 106002 SFN: | DRILLING METHOD: 3.25" HSA | CALIBRATION DATE: 12/5/19 | ELEVATION: 1044.7 (MSL) EOB: 26.5 ft. | PAGE 1 OF 1
START: 10/8/20 END: 10/8/20 | SAMPLING METHOD: SPT | ENERGY RATIO (%): 81.7 | LAT / LONG: 41.022004, -81.497323

| MATERIAL DESCRIPTION AND NOTES | ELEV. | DEPTHS | SPT/ RQD | $N_{60}$ | REC (%) | SAMPLE ID | HP (tsf) | GRADATION (%) GR | CS | FS | SI | CL | ATTERBERG LL | PL | PI | WC | ODOT CLASS (GI) | SO4 ppm | BACK FILL |
|---|---|---|---|---|---|---|---|---|---|---|---|---|---|---|---|---|---|---|---|
| **10.0" ASPHALT AND 6.0" BASE (DRILLERS DESCRIPTION)** | 1043.4 | | | | | | | | | | | | | | | | | | |
| HARD, BROWN AND ORANGISH BROWN, **SANDY SILT**, LITTLE TO SOME CLAY, TRACE TO LITTLE GRAVEL, CONTAINS IRON STAINING AND PLASTIC TRASH FRAGMENTS, DAMP **(FILL)** | | | 3 4 6 | 14 | 67 | SS-1 | 4.50 | 20 | 7 | 23 | 32 | 18 | 24 | 15 | 9 | 13 | A-4a (3) | - | |
| | | | 8 7 10 | 23 | 56 | SS-2 | 4.50 | 10 | 7 | 24 | 36 | 23 | 25 | 16 | 9 | 13 | A-4a (5) | - | |
| | 1035.2 | | 4 3 10 | 18 | 72 | SS-3 | 4.50 | - | - | - | - | - | - | - | - | 14 | A-4a (V) | - | |
| MEDIUM DENSE, BROWNISH GRAY AND ORANGISH BROWN, **STONE FRAGMENTS WITH SAND AND SILT**, TRACE CLAY, CONTAINS IRON STAINING, DAMP | 1032.7 | | 7 10 11 | 29 | 67 | SS-4 | - | - | - | - | - | - | - | - | - | 12 | A-2-4 (V) | - | |
| MEDIUM DENSE, BROWN AND ORANGISH BROWN, **SANDY SILT**, LITTLE CLAY, TRACE GRAVEL, CONTAINS IRON STAINING, DAMP | 1030.2 | | 7 9 12 | 29 | 89 | SS-5 | - | 3 | 10 | 38 | 33 | 16 | NP | NP | NP | 12 | A-4a (3) | - | |
| MEDIUM DENSE, GRAY, **SILT**, LITTLE CLAY, TRACE TO LITTLE SAND, TRACE GRAVEL, WET | | | 6 6 11 | 23 | 78 | SS-6 | - | - | - | - | - | - | - | - | - | 23 | A-4b (V) | - | |
| | | | 6 7 9 | 22 | 83 | SS-7 | - | 1 | 2 | 8 | 77 | 12 | NP | NP | NP | 21 | A-4b (8) | - | |
| | | | 5 9 7 | 22 | 100 | SS-8 | - | - | - | - | - | - | - | - | - | 20 | A-4b (V) | - | |
| | | W 1021.7 | 8 8 11 | 26 | 56 | SS-9 | - | - | - | - | - | - | - | - | - | 24 | A-4b (V) | - | |
| | 1020.2 | | | | | | | | | | | | | | | | | | |
| MEDIUM DENSE, GRAY, **STONE FRAGMENTS WITH SAND AND SILT**, TRACE CLAY, WET | 1018.2 | EOB | 7 10 6 | 22 | 67 | SS-10 | - | - | - | - | - | - | - | - | - | 21 | A-2-4 (V) | - | |

NOTES: GROUNDWATER ENCOUNTERED AT 23.0' DURING DRILLING. HOLE DID NOT CAVE.
ABANDONMENT METHODS, MATERIALS, QUANTITIES: PLACED 0.5 BAG ASPHALT PATCH; SHOVELED SOIL CUTTINGS

STANDARD ODOT LOG W/ SULFATES (8.5 X 11) - OH DOT.GDT - 11/13/20 22:38 - C:\USERS\KAREN\DESKTOP\GINT FILES\SUM-77-277-224 PHASE 2.GPJ

PROJECT: SUM-77-277/224 | DRILLING FIRM / OPERATOR: NEAS / ASHBAUGH | DRILL RIG: CME 45B | STATION / OFFSET: 35+64, 8' LT. | EXPLORATION ID B-116-0-17
TYPE: NOISE WALL | SAMPLING FIRM / LOGGER: NEAS / ASHBAUGH | HAMMER: CME AUTOMATIC | ALIGNMENT: NOISE WALL G
PID: 106002 SFN: | DRILLING METHOD: 3.25" HSA | CALIBRATION DATE: 12/5/19 | ELEVATION: 1049.1 (MSL) EOB: 26.5 ft. | PAGE 1 OF 1
START: 10/8/20 END: 10/9/20 | SAMPLING METHOD: SPT | ENERGY RATIO (%): 81.7 | LAT / LONG: 41.022516, -81.497433

| MATERIAL DESCRIPTION AND NOTES | ELEV. | DEPTHS | SPT/ RQD | $N_{60}$ | REC (%) | SAMPLE ID | HP (tsf) | GRADATION (%) GR | CS | FS | SI | CL | ATTERBERG LL | PL | PI | WC | ODOT CLASS (GI) | SO4 ppm | BACK FILL |
|---|---|---|---|---|---|---|---|---|---|---|---|---|---|---|---|---|---|---|---|
| **6.0" ASPHALT AND 7.0" BASE (DRILLERS DESCRIPTION)** | 1048.0 | | | | | | | | | | | | | | | | | | |
| VERY STIFF TO HARD, BROWN WITH ORANGISH BROWN AND GRAY, **SANDY SILT**, LITTLE TO SOME CLAY, TRACE TO SOME GRAVEL, CONTAINS IRON STAINING, DAMP | 1049.1 | | 4 4 4 | 11 | 56 | SS-1 | 4.50 | 22 | 8 | 19 | 34 | 17 | 26 | 17 | 9 | 13 | A-4a (3) | - | |
| | | | 8 10 11 | 29 | 67 | SS-2 | 4.50 | - | - | - | - | - | - | - | - | 13 | A-4a (V) | - | |
| | | | 10 10 13 | 31 | 78 | SS-3 | 4.50 | 8 | 6 | 27 | 39 | 20 | 25 | 16 | 9 | 13 | A-4a (5) | - | |
| | | | 5 7 7 | 19 | 17 | SS-4 | 3.00 | - | - | - | - | - | - | - | - | 14 | A-4a (V) | - | |
| HARD, BROWN AND DARK BROWNISH GRAY, **SILT AND CLAY**, "AND" SAND, TRACE GRAVEL, DAMP | 1037.1 | | 5 6 6 | 16 | 56 | SS-5 | 4.25 | 5 | 7 | 31 | 37 | 20 | 31 | 20 | 11 | 19 | A-6a (5) | - | |
| MEDIUM DENSE, ORANGISH BROWN, **COARSE AND FINE SAND**, LITTLE GRAVEL, LITTLE SILT, TRACE CLAY, CONTAINS IRON STAINING, DAMP | 1033.6 | | 5 7 6 | 18 | 78 | SS-6A | 4.50 | - | - | - | - | - | - | - | - | 14 | A-6a (V) | - | |
| | | | | | | SS-6B | - | - | - | - | - | - | - | - | - | 6 | A-3a (V) | - | |
| @17.5' TO 19.0'; SS-7 CONTAINS NO RECOVERY | | | 5 4 5 | 12 | 0 | SS-7 | - | - | - | - | - | - | - | - | - | - | | - | |
| STIFF, DARK GRAY AND BLACK, **SILT AND CLAY**, "AND" SAND, TRACE GRAVEL, MODERATELY ORGANIC, DAMP | 1029.6 | | 5 4 4 | 11 | 33 | SS-8 | 1.75 | - | - | - | - | - | - | - | - | 17 | A-6a (V) | - | |
| LOOSE, GRAY, **SILT**, LITTLE CLAY, LITTLE SAND, TRACE GRAVEL, MOIST | 1027.1 | | 3 2 3 | 7 | 56 | SS-9 | - | 1 | 0 | 14 | 66 | 19 | 21 | 17 | 4 | 22 | A-4b (8) | - | |
| | 1022.6 | EOB | 3 3 4 | 10 | 72 | SS-10 | - | - | - | - | - | - | - | - | - | 22 | A-4b (V) | - | |

NOTES: GROUNDWATER NOT ENCOUNTERED DURING DRILLING. HOLE DID NOT CAVE.
ABANDONMENT METHODS, MATERIALS, QUANTITIES: PLACED 0.5 BAG ASPHALT PATCH; SHOVELED SOIL CUTTINGS

STANDARD ODOT LOG W/ SULFATES (8.5 X 11) - OH DOT.GDT - 11/13/20 22:38 - C:\USERS\KAREN\DESKTOP\GINT FILES\SUM-77-277-224 PHASE 2.GPJ

PROJECT: SUM-77-277/224 | DRILLING FIRM / OPERATOR: NEAS / ASHBAUGH | DRILL RIG: CME 45B | STATION / OFFSET: 37+06, 8' LT. | EXPLORATION ID B-117-0-17
TYPE: NOISE WALL | SAMPLING FIRM / LOGGER: NEAS / ASHBAUGH | HAMMER: CME AUTOMATIC | ALIGNMENT: NOISE WALL G
PID: 106002 SFN: | DRILLING METHOD: 3.25" HSA | CALIBRATION DATE: 12/5/19 | ELEVATION: 1054.3 (MSL) EOB: 26.5 ft. | PAGE 1 OF 1
START: 10/9/20 END: 10/9/20 | SAMPLING METHOD: SPT | ENERGY RATIO (%): 81.7 | LAT / LONG: 41.022907, -81.497456

| MATERIAL DESCRIPTION AND NOTES | ELEV. | DEPTHS | SPT/ RQD | $N_{60}$ | REC (%) | SAMPLE ID | HP (tsf) | GRADATION (%) GR | CS | FS | SI | CL | ATTERBERG LL | PL | PI | WC | ODOT CLASS (GI) | SO4 ppm | BACK FILL |
|---|---|---|---|---|---|---|---|---|---|---|---|---|---|---|---|---|---|---|---|
| **7.0" ASPHALT AND 6.0" BASE (DRILLERS DESCRIPTION)** | 1053.2 | | | | | | | | | | | | | | | | | | |
| HARD, BROWNISH GRAY AND GRAY, **SANDY SILT**, LITTLE TO SOME CLAY, TRACE TO LITTLE GRAVEL, CONTAINS IRON STAINING, DAMP TO MOIST | 1054.3 | | 4 3 3 | 8 | 56 | SS-1 | 4.50 | - | - | - | - | - | - | - | - | 16 | A-4a (V) | - | |
| | | | 4 5 6 | 15 | 67 | SS-2 | 4.50 | 10 | 6 | 23 | 43 | 18 | 24 | 16 | 8 | 15 | A-4a (5) | - | |
| | | | 7 6 7 | 18 | 72 | SS-3 | 4.50 | - | - | - | - | - | - | - | - | 18 | A-4a (V) | - | |
| | | | 4 4 5 | 12 | 83 | SS-4 | 4.50 | - | - | - | - | - | - | - | - | 15 | A-4a (V) | - | |
| | | | 6 5 5 | 14 | 67 | SS-5 | 4.50 | - | - | - | - | - | - | - | - | 15 | A-4a (V) | - | |
| | | | 7 7 7 | 19 | 83 | SS-6 | 4.50 | 9 | 8 | 25 | 35 | 23 | 26 | 16 | 10 | 12 | A-4a (5) | - | |
| | | | 5 8 10 | 25 | 89 | SS-7 | 4.50 | - | - | - | - | - | - | - | - | 14 | A-4a (V) | - | |
| | 1032.3 | | 7 6 9 | 20 | 72 | SS-8 | 4.50 | - | - | - | - | - | - | - | - | 12 | A-4a (V) | - | |
| MEDIUM DENSE, BROWN AND BLACK, **COARSE AND FINE SAND**, SOME STONE FRAGMENTS, LITTLE SILT, TRACE CLAY, CONTAINS ROOTS AND IRON STAINING, MOIST | 1029.3 | | 10 5 6 | 15 | 61 | SS-9 | - | - | - | - | - | - | - | - | - | 15 | A-3a (V) | - | |
| MEDIUM DENSE, BROWN AND GREENISH GRAY, **SANDY SILT**, LITTLE CLAY, TRACE GRAVEL, CONTAINS ROOTS AND IRON STAINING, MOIST | 1027.8 | EOB | 7 4 5 | 12 | 72 | SS-10 | - | 3 | 11 | 41 | 30 | 15 | NP | NP | NP | 16 | A-4a (2) | - | |

NOTES: GROUNDWATER NOT ENCOUNTERED DURING DRILLING. HOLE DID NOT CAVE.
ABANDONMENT METHODS, MATERIALS, QUANTITIES: PLACED 0.5 BAG ASPHALT PATCH; SHOVELED SOIL CUTTINGS

STANDARD ODOT LOG W/ SULFATES (8.5 X 11) - OH DOT.GDT - 11/13/20 22:38 - C:\USERS\KAREN\DESKTOP\GINT FILES\SUM-77-277-224 PHASE 2.GPJ

PROJECT: SUM-77-277/224 | DRILLING FIRM / OPERATOR: NEAS / J. HODGES | DRILL RIG: CME 55X | STATION / OFFSET: 10+31, 8' RT. | EXPLORATION ID B-118-0-17
TYPE: NOISE WALL | SAMPLING FIRM / LOGGER: NEAS / J. HODGES | HAMMER: CME AUTOMATIC | ALIGNMENT: NOISE WALL K
PID: 106002 SFN: | DRILLING METHOD: 3.25" HSA | CALIBRATION DATE: 12/5/19 | ELEVATION: 1060.3 (MSL) EOB: 25.0 ft. | PAGE 1 OF 1
START: 3/16/20 END: 3/16/20 | SAMPLING METHOD: SPT | ENERGY RATIO (%): 81.9 | LAT / LONG: 41.026038, -81.499944

| MATERIAL DESCRIPTION AND NOTES | ELEV. | DEPTHS | SPT/ RQD | $N_{60}$ | REC (%) | SAMPLE ID | HP (tsf) | GRADATION (%) GR | CS | FS | SI | CL | ATTERBERG LL | PL | PI | WC | ODOT CLASS (GI) | SO4 ppm | BACK FILL |
|---|---|---|---|---|---|---|---|---|---|---|---|---|---|---|---|---|---|---|---|
| **6.0" ASPHALT AND 6.0" BASE (DRILLERS DESCRIPTION)** | 1059.3 | | | | | | | | | | | | | | | | | | |
| MEDIUM DENSE, BROWN, **COARSE AND FINE SAND**, SOME GRAVEL, LITTLE SILT, TRACE CLAY, DAMP | 1057.3 | | 2 4 5 | 12 | 100 | SS-1 | - | - | - | - | - | - | - | - | - | 7 | A-3a (V) | - | |
| HARD, BROWN AND GRAYISH BROWN, **SANDY SILT**, LITTLE TO SOME CLAY, TRACE TO LITTLE GRAVEL, CONTAINS TRACE IRON STAINING AND ROOT HAIRS, DAMP TO MOIST | | | 6 8 9 | 23 | 67 | SS-2 | 4.50 | 9 | 9 | 25 | 35 | 22 | 27 | 17 | 10 | 15 | A-4a (4) | - | |
| | | | 7 9 10 | 26 | 100 | SS-3 | 4.50 | - | - | - | - | - | - | - | - | 12 | A-4a (V) | - | |
| | | | 5 7 10 | 23 | 100 | SS-4 | 4.50 | - | - | - | - | - | - | - | - | 15 | A-4a (V) | - | |
| | | | 4 7 12 | 26 | 50 | SS-5 | 4.50 | 11 | 7 | 19 | 40 | 23 | 27 | 18 | 9 | 13 | A-4a (6) | - | |
| @13.5' TO 15.0'; SS-6 CONTAINS TRACE ANTHRACITE COAL FRAGMENTS<br>@13.5' TO 22.5'; SS-6 TO SS-9 BECOME MEDIUM STIFF TO VERY STIFF, GRAY | | | 4 8 9 | 23 | 100 | SS-6 | 2.75 | - | - | - | - | - | - | - | - | 17 | A-4a (V) | - | |
| | | | 2 3 5 | 11 | 56 | SS-7 | 1.00 | - | - | - | - | - | - | - | - | 20 | A-4a (V) | - | |
| | | | 3 3 3 | 8 | 100 | SS-8 | 0.50 | 5 | 14 | 41 | 26 | 14 | 24 | 15 | 9 | 18 | A-4a (1) | - | |
| | 1037.3 | | 3 3 4 | 10 | 67 | SS-9 | 2.75 | - | - | - | - | - | - | - | - | 21 | A-4a (V) | - | |
| MEDIUM DENSE, BROWN, **SILT**, SOME CLAY, TRACE SAND, TRACE GRAVEL, WET | 1035.3 | EOB | 4 7 8 | 20 | 100 | SS-10 | - | 0 | 0 | 5 | 74 | 21 | NP | NP | NP | 23 | A-4b (8) | - | |

NOTES: GROUNDWATER NOT ENCOUNTERED DURING DRILLING. HOLE DID NOT CAVE.
ABANDONMENT METHODS, MATERIALS, QUANTITIES: PLACED 0.5 BAG ASPHALT PATCH; SHOVELED SOIL CUTTINGS

PROJECT: SUM-77-277/224 | DRILLING FIRM / OPERATOR: NEAS / J. HODGES | DRILL RIG: CME 55X | STATION / OFFSET: 12+30, 6' RT. | EXPLORATION ID B-119-0-17
TYPE: NOISE WALL | SAMPLING FIRM / LOGGER: NEAS / J. HODGES | HAMMER: CME AUTOMATIC | ALIGNMENT: NOISE WALL K
PID: 106002 SFN: | DRILLING METHOD: 3.25" HSA | CALIBRATION DATE: 12/5/19 | ELEVATION: 1066.7 (MSL) EOB: 30.0 ft. | PAGE 1 OF 1
START: 3/17/20 END: 3/17/20 | SAMPLING METHOD: SPT | ENERGY RATIO (%): 81.9 | LAT / LONG: 41.025931, -81.499234

| MATERIAL DESCRIPTION AND NOTES | ELEV. | DEPTHS | SPT/ RQD | $N_{60}$ | REC (%) | SAMPLE ID | HP (tsf) | GRADATION (%) GR | CS | FS | SI | CL | ATTERBERG LL | PL | PI | WC | ODOT CLASS (GI) | SO4 ppm | BACK FILL |
|---|---|---|---|---|---|---|---|---|---|---|---|---|---|---|---|---|---|---|---|
| **6.0" ASPHALT AND 6.0" BASE (DRILLERS DESCRIPTION)** | 1065.7 | | | | | | | | | | | | | | | | | | |
| MEDIUM DENSE, BROWN, **GRAVEL WITH SAND**, TRACE SILT, TRACE CLAY, DAMP | 1063.7 | | 2 4 5 | 12 | 100 | SS-1 | - | - | - | - | - | - | - | - | - | 6 | A-1-b (V) | - | |
| HARD, BROWN BECOMING GRAYISH BROWN, **SANDY SILT**, SOME CLAY, TRACE GRAVEL, DAMP | | | 7 10 10 | 27 | 100 | SS-2 | 4.50 | 9 | 8 | 26 | 35 | 22 | 24 | 16 | 8 | 11 | A-4a (4) | - | |
| | | | 6 9 9 | 25 | 33 | SS-3 | 4.50 | - | - | - | - | - | - | - | - | 14 | A-4a (V) | - | |
| | | | 7 8 12 | 27 | 67 | SS-4 | 4.50 | - | - | - | - | - | - | - | - | 13 | A-4a (V) | - | |
| | | | 5 9 9 | 25 | 100 | SS-5 | 4.50 | 9 | 9 | 21 | 37 | 24 | 29 | 19 | 10 | 14 | A-4a (5) | - | |
| | | | 5 8 9 | 23 | 100 | SS-6 | 4.50 | - | - | - | - | - | - | - | - | 16 | A-4a (V) | - | |
| | 1049.7 | | 3 4 7 | 15 | 39 | SS-7A | 4.50 | - | - | - | - | - | - | - | - | 13 | A-4a (V) | - | |
| STIFF TO VERY STIFF, GRAY MOTTLED WITH ORANGISH BROWN, **CLAY**, SOME SILT, SOME SAND, TRACE GRAVEL, CONTAINS IRON STAINING, MOIST | | | | | | SS-7B | 2.00 | - | - | - | - | - | - | - | - | 30 | A-7-6 (V) | - | |
| | 1046.2 | | 4 4 9 | 18 | 67 | SS-8 | 2.75 | 3 | 8 | 25 | 33 | 31 | 42 | 17 | 25 | 21 | A-7-6 (12) | - | |
| STIFF TO HARD, BROWN, **SANDY SILT**, LITTLE GRAVEL AND STONE FRAGMENTS, LITTLE CLAY, DAMP TO MOIST | | | 3 3 4 | 10 | 67 | SS-9 | 2.25 | - | - | - | - | - | - | - | - | 17 | A-4a (V) | - | |
| | | | 2 3 4 | 10 | 100 | SS-10 | 1.50 | 14 | 12 | 28 | 34 | 12 | 20 | 15 | 5 | 15 | A-4a (2) | - | |
| | | | 4 4 6 | 14 | 39 | SS-11 | 4.50 | - | - | - | - | - | - | - | - | 16 | A-4a (V) | - | |
| | 1036.7 | EOB | 8 8 13 | 29 | 100 | SS-12 | 4.50 | - | - | - | - | - | - | - | - | 15 | A-4a (V) | - | |

NOTES: GROUNDWATER NOT ENCOUNTERED DURING DRILLING. HOLE DID NOT CAVE.
ABANDONMENT METHODS, MATERIALS, QUANTITIES: PLACED 0.5 BAG ASPHALT PATCH; SHOVELED SOIL CUTTINGS

STANDARD ODOT LOG W/ SULFATES (8.5 X 11) - OH DOT.GDT - 11/13/20 22:38 - C:\USERS\KAREN\DESKTOP\GINT FILES\SUM-77-277-224 PHASE 2.GPJ

| | | | | | |
|---|---|---|---|---|---|
| PROJECT: SUM-77-277/224 | DRILLING FIRM / OPERATOR: NEAS / J. HODGES | DRILL RIG: CME 55X | STATION / OFFSET: 895+63, 24' LT. | EXPLORATION ID B-119-1-17 |
| TYPE: NOISE WALL | SAMPLING FIRM / LOGGER: NEAS / J. HODGES | HAMMER: CME AUTOMATIC | ALIGNMENT: RAMP D | |
| PID: 106002 SFN: | DRILLING METHOD: 3.25" HSA / NQ2 | CALIBRATION DATE: 11/21/17 | ELEVATION: 1071.8 (MSL) EOB: 48.0 ft. | PAGE 1 OF 1 |
| START: 4/16/20 END: 4/16/20 | SAMPLING METHOD: SPT / NQ2 | ENERGY RATIO (%): 85.4 | LAT / LONG: 41.025790, -81.498600 | |

| MATERIAL DESCRIPTION AND NOTES | ELEV. | DEPTHS | SPT/ RQD | $N_{60}$ | REC (%) | SAMPLE ID | HP (tsf) | GRADATION (%) GR | CS | FS | SI | CL | ATTERBERG LL | PL | PI | WC | ODOT CLASS (GI) | HOLE SEALED |
|---|---|---|---|---|---|---|---|---|---|---|---|---|---|---|---|---|---|---|
| HARD, BROWN WITH GRAY AND ORANGISH BROWN, **SANDY SILT**, SOME CLAY, TRACE GRAVEL, CONTAINS IRON STAINING AND TRACE ROOTS, DAMP | 1071.8 | | 6 7 13 | 28 | 67 | SS-1 | 4.50 | 7 | 6 | 21 | 44 | 22 | 26 | 18 | 8 | 15 | A-4a (6) | |
| | | | 4 6 10 | 23 | 100 | SS-2 | 4.25 | - | - | - | - | - | - | - | - | 16 | A-4a (V) | |
| | | | 6 8 10 | 26 | 78 | SS-3 | 4.50 | - | - | - | - | - | - | - | - | 15 | A-4a (V) | |
| | | | 3 5 7 | 17 | 100 | SS-4 | 4.50 | 8 | 7 | 24 | 38 | 23 | 26 | 17 | 9 | 13 | A-4a (5) | |
| | | | 4 12 12 | 34 | 67 | SS-5 | 4.25 | - | - | - | - | - | - | - | - | 15 | A-4a (V) | |
| HARD, GRAYISH BROWN AND BROWN, **SILT AND CLAY**, SOME SAND, TRACE GRAVEL, CONTAINS IRON STAINING AND TRACE ROOTS, DAMP | 1057.3 | | 5 6 7 | 19 | 100 | SS-6 | 4.50 | 7 | 6 | 25 | 40 | 22 | 27 | 16 | 11 | 14 | A-6a (6) | |
| | | | 2 3 3 | 9 | 44 | SS-7 | 4.25 | - | - | - | - | - | - | - | - | 15 | A-6a (V) | |
| VERY STIFF TO HARD, BROWN AND GRAY, **SANDY SILT**, LITTLE CLAY, LITTLE GRAVEL AND STONE FRAGMENTS, DAMP | 1051.8 | | 3 4 6 | 14 | 67 | SS-8 | 4.00 | 16 | 8 | 26 | 34 | 16 | 24 | 17 | 7 | 14 | A-4a (3) | |
| VERY DENSE, ORANGISH BROWN AND GRAY, **GRAVEL AND STONE FRAGMENTS WITH SAND AND SILT**, LITTLE CLAY, POSSIBLE SANDSTONE COBBLE, CONTAINS IRON STAINING, DAMP | 1049.8 | | 10 50 | - | 42 | SS-9 | - | - | - | - | - | - | - | - | - | 13 | A-2-4 (V) | |
| HARD, GRAY, **SILT AND CLAY**, SOME SAND, LITTLE GRAVEL, DAMP | 1047.3 | | 4 9 9 | 26 | 100 | SS-10 | 4.50 | - | - | - | - | - | - | - | - | 12 | A-6a (V) | |
| **SANDSTONE**, LIGHT GRAY, MODERATELY WEATHERED, MODERATELY STRONG, VERY FINE TO FINE GRAINED. | 1044.3 | TR | 50 | - | 33 | SS-11 | - | - | - | - | - | - | - | - | - | 4 | Rock (V) | |
| **SHALE**, GRAY, SEVERELY WEATHERED, VERY WEAK, FISSILE. | 1042.8 | | 6 19 27 | 65 | 67 | SS-12 | - | - | - | - | - | - | - | - | - | 10 | Rock (V) | |
| **INTERBEDDED SHALE (77%) AND SANDSTONE (23%)**, BEDDING DISCONTINUITIES: LOW ANGLE, HIGHLY FRACTURED TO MODERATELY FRACTURED, OPEN TO NARROW, SLIGHTLY ROUGH, BLOCKY/DISTURBED/SEAMY, FAIR TO POOR SURFACE CONDITION, RQD 15%, REC. 78%; **SHALE**, GRAY AND DARK GRAY, MODERATELY TO HIGHLY WEATHERED, VERY WEAK TO WEAK, LAMINATED, FISSILE, FOSSILIFEROUS; **SANDSTONE**, GRAY AND LIGHT GRAY, SLIGHTLY WEATHERED, MODERATELY STRONG TO STRONG, VERY FINE TO FINE GRAINED, CONTAINS ARGILLACEOUS LAMINATIONS AND LENSES. | 1040.3 | | 34 | | 57 | NQ2-1 | | | | | | | | | | | CORE | |
| | | | 17 | | 91 | NQ2-2 | | | | | | | | | | | CORE | |
| | | | 0 | | 80 | NQ2-3 | | | | | | | | | | | CORE | |
| | 1023.8 | EOB | 0 | | 100 | NQ2-4 | | | | | | | | | | | CORE | |

NOTES: GROUNDWATER NOT ENCOUNTERED DURING DRILLING. HOLE DID NOT CAVE. NO DISCERNABLE VOIDS DURING CORING. NO LOSS OF WATER CIRCULATION.

ABANDONMENT METHODS, MATERIALS, QUANTITIES: PUMPED 100 GAL. BENTONITE GROUT

STANDARD ODOT SOIL BORING LOG (11 X 17) - OH DOT.GDT - 11/19/20 18:43 - C:\USERS\KARENS\DESKTOP\SUM-77-277-224 MOD 8 COMBINED WITH 2017 ARCHIVE.GPJ

PROJECT: SUM-77-277/224 | DRILLING FIRM / OPERATOR: NEAS / ASHBAUGH | DRILL RIG: CME 55T | STATION / OFFSET: 14+22, 4' RT. | EXPLORATION ID B-120-0-17
TYPE: NOISE WALL | SAMPLING FIRM / LOGGER: NEAS / ASHBAUGH | HAMMER: CME AUTOMATIC | ALIGNMENT: NOISE WALL K
PID: 106002 SFN: | DRILLING METHOD: 3.25" HSA | CALIBRATION DATE: 12/5/19 | ELEVATION: 1073.1 (MSL) EOB: 25.0 ft. | PAGE 1 OF 1
START: 3/2/20 END: 3/2/20 | SAMPLING METHOD: SPT | ENERGY RATIO (%): 68.4 | LAT / LONG: 41.025875, -81.498541

| MATERIAL DESCRIPTION AND NOTES | ELEV. | DEPTHS | SPT/ RQD | $N_{60}$ | REC (%) | SAMPLE ID | HP (tsf) | GRADATION (%) GR | CS | FS | SI | CL | ATTERBERG LL | PL | PI | WC | ODOT CLASS (GI) | SO4 ppm | BACK FILL |
|---|---|---|---|---|---|---|---|---|---|---|---|---|---|---|---|---|---|---|---|
| **9.0" ASPHALT AND 3.0" BASE (DRILLERS DESCRIPTION)** | 1072.1 | | | | | | | | | | | | | | | | | | |
| VERY STIFF TO HARD, BROWN AND BROWNISH GRAY, **SANDY SILT**, SOME CLAY, TRACE TO LITTLE GRAVEL, SS-1 TO SS-4 CONTAIN IRON STAINING, DAMP | | | 6 4 5 | 10 | 56 | SS-1 | 3.00 | - | - | - | - | - | - | - | - | 15 | A-4a (V) | - | |
| | | | 3 3 5 | 9 | 67 | SS-2 | 3.25 | 11 | 7 | 22 | 37 | 23 | 26 | 17 | 9 | 15 | A-4a (5) | - | |
| | | | 5 4 5 | 10 | 89 | SS-3 | 4.25 | - | - | - | - | - | - | - | - | 13 | A-4a (V) | - | |
| | | | 4 4 5 | 10 | 67 | SS-4 | 4.25 | - | - | - | - | - | - | - | - | 14 | A-4a (V) | - | |
| | | | 5 6 7 | 15 | 89 | SS-5 | 4.50 | 11 | 7 | 25 | 35 | 22 | 25 | 16 | 9 | 13 | A-4a (4) | - | |
| | | | 5 5 8 | 15 | 100 | SS-6 | 4.50 | - | - | - | - | - | - | - | - | 13 | A-4a (V) | - | |
| | 1055.1 | | 5 4 6 | 11 | 100 | SS-7 | 4.50 | - | - | - | - | - | - | - | - | 14 | A-4a (V) | - | |
| STIFF TO VERY STIFF, GRAY AND BROWN, **SILT AND CLAY**, "AND" SAND, TRACE GRAVEL, DAMP | 1052.6 | | 3 4 6 | 11 | 89 | SS-8 | 2.00 | 8 | 8 | 28 | 34 | 22 | 28 | 17 | 11 | 17 | A-6a (5) | - | |
| HARD, BROWN AND BROWNISH GRAY, **SANDY SILT**, LITTLE CLAY, LITTLE GRAVEL, DAMP | 1050.1 | | 4 5 5 | 11 | 56 | SS-9 | 4.50 | 12 | 10 | 19 | 39 | 20 | 24 | 17 | 7 | 13 | A-4a (5) | - | |
| DENSE, ORANGISH BROWN AND GRAY, **STONE FRAGMENTS WITH SAND**, TRACE SILT, TRACE CLAY, CONTAINS IRON STAINING, DAMP | 1048.1 | EOB | 8 13 16 | 33 | 28 | SS-10 | - | - | - | - | - | - | - | - | - | 8 | A-1-b (V) | - | |

NOTES: GROUNDWATER NOT ENCOUNTERED DURING DRILLING. HOLE CAVED IN AT 21.2'.
ABANDONMENT METHODS, MATERIALS, QUANTITIES: PLACED 0.5 BAG ASPHALT PATCH; SHOVELED SOIL CUTTINGS

PROJECT: SUM-77-277/224 | DRILLING FIRM / OPERATOR: NEAS / ASHBAUGH | DRILL RIG: CME 55T | STATION / OFFSET: 16+21, 5' RT. | EXPLORATION ID B-121-0-17
TYPE: NOISE WALL | SAMPLING FIRM / LOGGER: NEAS / ASHBAUGH | HAMMER: CME AUTOMATIC | ALIGNMENT: NOISE WALL K
PID: 106002 SFN: | DRILLING METHOD: 3.25" HSA | CALIBRATION DATE: 12/5/19 | ELEVATION: 1079.0 (MSL) EOB: 25.0 ft. | PAGE 1 OF 1
START: 3/2/20 END: 3/2/20 | SAMPLING METHOD: SPT | ENERGY RATIO (%): 68.4 | LAT / LONG: 41.025844, -81.497821

| MATERIAL DESCRIPTION AND NOTES | ELEV. | DEPTHS | SPT/ RQD | $N_{60}$ | REC (%) | SAMPLE ID | HP (tsf) | GRADATION (%) GR | CS | FS | SI | CL | ATTERBERG LL | PL | PI | WC | ODOT CLASS (GI) | SO4 ppm | BACK FILL |
|---|---|---|---|---|---|---|---|---|---|---|---|---|---|---|---|---|---|---|---|
| **8.0" ASPHALT AND 3.0" BASE (DRILLERS DESCRIPTION)** | 1078.1 | | | | | | | | | | | | | | | | | | |
| VERY STIFF TO HARD, BROWN AND BROWNISH GRAY, **SANDY SILT**, LITTLE TO SOME CLAY, TRACE TO LITTLE GRAVEL, DAMP | | | 4 5 5 | 11 | 50 | SS-1 | 3.00 | - | - | - | - | - | - | - | - | 16 | A-4a (V) | - | |
| | | | 4 5 7 | 14 | 56 | SS-2 | 4.50 | - | - | - | - | - | - | - | - | 13 | A-4a (V) | - | |
| | | | 5 5 9 | 16 | 78 | SS-3 | 4.00 | 6 | 9 | 24 | 37 | 24 | 25 | 16 | 9 | 14 | A-4a (5) | - | |
| | | | 7 6 7 | 15 | 72 | SS-4 | 4.50 | - | - | - | - | - | - | - | - | 14 | A-4a (V) | - | |
| | | | 5 5 6 | 13 | 89 | SS-5 | 4.50 | 5 | 6 | 24 | 44 | 21 | 26 | 17 | 9 | 15 | A-4a (6) | - | |
| | | | 4 5 8 | 15 | 100 | SS-6 | 4.50 | - | - | - | - | - | - | - | - | 12 | A-4a (V) | - | |
| | | | 4 6 9 | 17 | 100 | SS-7 | 4.50 | - | - | - | - | - | - | - | - | 15 | A-4a (V) | - | |
| | | | 5 7 9 | 18 | 100 | SS-8 | 4.50 | 11 | 6 | 21 | 42 | 20 | 26 | 18 | 8 | 15 | A-4a (5) | - | |
| | | | 4 5 7 | 14 | 100 | SS-9 | 4.50 | - | - | - | - | - | - | - | - | 16 | A-4a (V) | - | |
| @23.5' TO 25.0'; SS-10 BECOMES BLACK, LITTLE CLAY, CONTAINS ANTHRACITE COAL FRAGMENTS, MOIST | 1054.0 | EOB | 4 5 5 | 11 | 100 | SS-10 | 4.50 | - | - | - | - | - | - | - | - | 22 | A-4a (V) | - | |

NOTES: GROUNDWATER NOT ENCOUNTERED DURING DRILLING. HOLE CAVED IN AT 16.5'.
ABANDONMENT METHODS, MATERIALS, QUANTITIES: PLACED 0.5 BAG ASPHALT PATCH; SHOVELED SOIL CUTTINGS

STANDARD ODOT LOG W/ SULFATES (8.5 X 11) - OH DOT.GDT - 11/13/20 22:38 - C:\USERS\KAREN\DESKTOP\GINT FILES\SUM-77-277-224 PHASE 2.GPJ

PROJECT: SUM-77-277/224
TYPE: NOISE WALL
PID: 106002 SFN:
START: 3/2/20 END: 3/2/20

DRILLING FIRM / OPERATOR: NEAS / ASHBAUGH
SAMPLING FIRM / LOGGER: NEAS / ASHBAUGH
DRILLING METHOD: 3.25" HSA
SAMPLING METHOD: SPT

DRILL RIG: CME 55T
HAMMER: CME AUTOMATIC
CALIBRATION DATE: 12/5/19
ENERGY RATIO (%): 68.4

STATION / OFFSET: 18+18, 7' RT.
ALIGNMENT: NOISE WALL K
ELEVATION: 1084.5 (MSL) EOB: 23.8 ft.
LAT / LONG: 41.025843, -81.497094

EXPLORATION ID B-122-0-17
PAGE 1 OF 1

| MATERIAL DESCRIPTION AND NOTES | ELEV. | DEPTHS | SPT/ RQD | $N_{60}$ | REC (%) | SAMPLE ID | HP (tsf) | GRADATION (%) GR | CS | FS | SI | CL | ATTERBERG LL | PL | PI | WC | ODOT CLASS (GI) | SO4 ppm | BACK FILL |
|---|---|---|---|---|---|---|---|---|---|---|---|---|---|---|---|---|---|---|---|
| **9.0" ASPHALT AND 3.0" BASE (DRILLERS DESCRIPTION)** | 1084.5 | | | | | | | | | | | | | | | | | | |
| HARD, BROWNISH GRAY AND BROWN, **SANDY SILT**, SOME CLAY, TRACE TO LITTLE GRAVEL, DAMP | 1083.5 | | 4 4 11 | 17 | 67 | SS-1 | 4.50 | - | - | - | - | - | - | - | - | 14 | A-4a (V) | - | |
| | | | 4 9 17 | 30 | 89 | SS-2 | 4.50 | 11 | 8 | 23 | 36 | 22 | 26 | 16 | 10 | 13 | A-4a (5) | - | |
| | | | 7 7 9 | 18 | 78 | SS-3 | 4.50 | - | - | - | - | - | - | - | - | 12 | A-4a (V) | - | |
| | | | 5 6 7 | 15 | 56 | SS-4 | 4.50 | - | - | - | - | - | - | - | - | 14 | A-4a (V) | - | |
| | | | 5 5 6 | 13 | 78 | SS-5 | 4.50 | 4 | 7 | 22 | 44 | 23 | 27 | 17 | 10 | 16 | A-4a (6) | - | |
| | | | 9 12 23 | 40 | 89 | SS-6 | 4.50 | - | - | - | - | - | - | - | - | 12 | A-4a (V) | - | |
| | | | 8 7 12 | 22 | 89 | SS-7 | 4.50 | - | - | - | - | - | - | - | - | 12 | A-4a (V) | - | |
| HARD, BROWNISH GRAY, **SILT AND CLAY**, LITTLE SAND, TRACE GRAVEL, DAMP | 1066.5 | | 5 8 6 | 16 | 56 | SS-8 | 4.50 | 6 | 4 | 16 | 59 | 15 | 27 | 16 | 11 | 14 | A-6a (8) | - | |
| | | | 6 10 12 | 25 | 56 | SS-9 | 4.50 | - | - | - | - | - | - | - | - | 13 | A-6a (V) | - | |
| @23.5'; SS-10 BECOMES SOFT TO MEDIUM STIFF, GRAY, SOME STONE FRAGMENTS, MOIST | 1060.7 | EOB | 50/4" | - | 100 | SS-10 | 0.50 | - | - | - | - | - | - | - | - | 17 | A-6a (V) | - | |

NOTES: GROUNDWATER NOT ENCOUNTERED DURING DRILLING. HOLE CAVED IN AT 20.7'.
ABANDONMENT METHODS, MATERIALS, QUANTITIES: PLACED 0.5 BAG ASPHALT PATCH; SHOVELED SOIL CUTTINGS

PROJECT: SUM-77-277/224
TYPE: NOISE WALL
PID: 106002 SFN:
START: 2/26/20 END: 2/26/20

DRILLING FIRM / OPERATOR: NEAS / J. HODGES
SAMPLING FIRM / LOGGER: NEAS / J. HODGES
DRILLING METHOD: 3.25" HSA
SAMPLING METHOD: SPT

DRILL RIG: CME 55X
HAMMER: CME AUTOMATIC
CALIBRATION DATE: 12/5/19
ENERGY RATIO (%): 81.9

STATION / OFFSET: 20+27, 27' RT.
ALIGNMENT: NOISE WALL K
ELEVATION: 1093.2 (MSL) EOB: 14.0 ft.
LAT / LONG: 41.025959, -81.496408

EXPLORATION ID B-123-0-17
PAGE 1 OF 1

| MATERIAL DESCRIPTION AND NOTES | ELEV. | DEPTHS | SPT/ RQD | $N_{60}$ | REC (%) | SAMPLE ID | HP (tsf) | GRADATION (%) GR | CS | FS | SI | CL | ATTERBERG LL | PL | PI | WC | ODOT CLASS (GI) | SO4 ppm | BACK FILL |
|---|---|---|---|---|---|---|---|---|---|---|---|---|---|---|---|---|---|---|---|
| MEDIUM DENSE, BROWN, **GRAVEL AND STONE FRAGMENTS WITH SAND AND SILT**, LITTLE CLAY, CONTAINS IRON STAINING, DAMP | 1093.2 | | 5 5 8 | 18 | 67 | SS-1 | - | - | - | - | - | - | - | - | - | 13 | A-2-4 (V) | - | |
| VERY DENSE, LIGHT BROWN, **STONE FRAGMENTS WITH SAND**, TRACE SILT, TRACE CLAY, (POSSIBLE SANDSTONE BOULDER OR COBBLE), DAMP | 1090.2 | | 60/2" | - | 100 | SS-2 | - | - | - | - | - | - | - | - | - | 3 | A-1-b (V) | - | |
| HARD, BROWN, **SILT**, SOME CLAY, LITTLE SAND, TRACE GRAVEL, DAMP | 1087.7 | | 6 7 8 | 20 | 100 | SS-3 | 4.50 | 3 | 5 | 12 | 57 | 23 | 27 | 21 | 6 | 17 | A-4b (8) | - | |
| @8.5'; SS-4A CONTAINS A RELIC ROCK STRUCTURE | 1084.2 | TR | 8 50 | - | 100 | SS-4A<br>SS-5B | 4.50<br>- | - | - | - | - | - | - | - | - | 7<br>- | A-4b (V)<br>Rock (V) | - | |
| **SHALE**, GRAY, SEVERELY WEATHERED, VERY WEAK. | | | 50 | - | 100 | SS-5 | - | - | - | - | - | - | - | - | - | - | Rock (V) | - | |
| | 1079.2 | EOB | 50 | - | 33 | SS-6 | - | - | - | - | - | - | - | - | - | - | Rock (V) | - | |

NOTES: GROUNDWATER NOT ENCOUNTERED DURING DRILLING. HOLE DID NOT CAVE.
ABANDONMENT METHODS, MATERIALS, QUANTITIES: SHOVELED SOIL CUTTINGS

STANDARD ODOT LOG W/ SULFATES (8.5 X 11) - OH DOT.GDT - 11/13/20 22:38 - C:\USERS\KAREN\DESKTOP\GINT FILES\SUM-77-277-224 PHASE 2.GPJ



**SUM-77/277/224**
**VARIOUS**

**STRUCTURE FOUNDATION EXPLORATION**
**BARRIER K**
**BORING LOGS B-122-0-17 & B-123-0-17**

DRAWN EB
CHECKED BPA

PROJECT: SUM-77-277/224
TYPE: NOISE WALL
PID: 106002 SFN:
START: 2/26/20 END: 2/26/20

DRILLING FIRM / OPERATOR: NEAS / J. HODGES
SAMPLING FIRM / LOGGER: NEAS / J. HODGES
DRILLING METHOD: 3.25" HSA
SAMPLING METHOD: SPT

DRILL RIG: CME 55X
HAMMER: CME AUTOMATIC
CALIBRATION DATE: 12/5/19
ENERGY RATIO (%): 81.9

STATION / OFFSET: 21+68, 19' RT.
ALIGNMENT: NOISE WALL K
ELEVATION: 1098.5 (MSL) EOB: 8.9 ft.
LAT / LONG: 41.026005, -81.495899

EXPLORATION ID B-124-0-17
PAGE 1 OF 1

| MATERIAL DESCRIPTION AND NOTES | ELEV. | DEPTHS | SPT/ RQD | $N_{60}$ | REC (%) | SAMPLE ID | HP (tsf) | GRADATION (%) GR | CS | FS | SI | CL | ATTERBERG LL | PL | PI | WC | ODOT CLASS (GI) | SO4 ppm | BACK FILL |
|---|---|---|---|---|---|---|---|---|---|---|---|---|---|---|---|---|---|---|---|
| VERY STIFF TO HARD, BROWN MOTTLED WITH GRAY AND ORANGISH BROWN, **SILT AND CLAY**, TRACE TO LITTLE SAND, TRACE GRAVEL, CONTAINS IRON STAINING, DAMP | 1098.5 | | 3 8 9 | 23 | 67 | SS-1 | 4.50 | - | - | - | - | - | - | - | - | 13 | A-6a (V) | - | |
| | | | 5 7 10 | 23 | 100 | SS-2 | 4.50 | 0 | 1 | 5 | 53 | 41 | 31 | 19 | 12 | 14 | A-6a (9) | - | |
| | 1092.2 | TR | 50 | - | 67 | SS-3A | 3.75 | - | - | - | - | - | - | - | - | 15 | A-6a (V) | - | |
| **SANDSTONE**, LIGHT BROWN, MODERATELY WEATHERED, STRONG, FINE TO MEDIUM GRAINED. | | | | | | SS-3B | - | - | - | - | - | - | - | - | - | - | Rock (V) | - | |
| | 1089.6 | EOB | 50/4" | - | 150 | SS-4 | - | - | - | - | - | - | - | - | - | - | Rock (V) | - | |

NOTES: GROUNDWATER NOT ENCOUNTERED DURING DRILLING. HOLE DID NOT CAVE.
ABANDONMENT METHODS, MATERIALS, QUANTITIES: SHOVELED SOIL CUTTINGS

PROJECT: SUM-77-277/224
TYPE: NOISE WALL
PID: 106002 SFN:
START: 2/26/20 END: 2/26/20

DRILLING FIRM / OPERATOR: NEAS / J. HODGES
SAMPLING FIRM / LOGGER: NEAS / J. HODGES
DRILLING METHOD: 3.25" HSA
SAMPLING METHOD: SPT

DRILL RIG: CME 55X
HAMMER: CME AUTOMATIC
CALIBRATION DATE: 12/5/19
ENERGY RATIO (%): 81.9

STATION / OFFSET: 24+19, 7' RT.
ALIGNMENT: NOISE WALL K
ELEVATION: 1101.9 (MSL) EOB: 13.8 ft.
LAT / LONG: 41.026026, -81.494995

EXPLORATION ID B-125-0-17
PAGE 1 OF 1

| MATERIAL DESCRIPTION AND NOTES | ELEV. | DEPTHS | SPT/ RQD | $N_{60}$ | REC (%) | SAMPLE ID | HP (tsf) | GRADATION (%) GR | CS | FS | SI | CL | ATTERBERG LL | PL | PI | WC | ODOT CLASS (GI) | SO4 ppm | BACK FILL |
|---|---|---|---|---|---|---|---|---|---|---|---|---|---|---|---|---|---|---|---|
| STIFF TO VERY STIFF, BROWN, **SANDY SILT**, LITTLE TO SOME CLAY, TRACE GRAVEL, CONTAINS IRON STAINING, MOIST TO DAMP | 1101.9 | | 3 4 13 | 23 | 67 | SS-1 | 2.00 | 3 | 11 | 34 | 30 | 22 | 25 | 17 | 8 | 18 | A-4a (3) | - | |
| @3.5' TO 6.5'; SS-2 AND SS-3A BECOME SOME GRAVEL | | | 3 8 15 | 31 | 100 | SS-2 | 3.00 | - | - | - | - | - | - | - | - | 12 | A-4a (V) | - | |
| | 1095.4 | TR | 8 | | | SS-3A | 1.50 | 32 | 8 | 22 | 25 | 13 | 22 | 15 | 7 | 15 | A-4a (1) | - | |
| **SANDSTONE**, LIGHT BROWN AND GRAY, HIGHLY WEATHERED, STRONG, FINE TO MEDIUM GRAINED. | | | 15 31 | 63 | 33 | SS-3B | - | - | - | - | - | - | - | - | - | - | Rock (V) | - | |
| | | | 12 19 50 | 94 | 100 | SS-4 | - | - | - | - | - | - | - | - | - | - | Rock (V) | - | |
| | | | 50/3" | - | 100 | SS-5 | - | - | - | - | - | - | - | - | - | - | Rock (V) | - | |
| | 1088.1 | EOB | 50/3" | - | 100 | SS-6 | - | - | - | - | - | - | - | - | - | - | Rock (V) | - | |

NOTES: GROUNDWATER NOT ENCOUNTERED DURING DRILLING. HOLE DID NOT CAVE.
ABANDONMENT METHODS, MATERIALS, QUANTITIES: SHOVELED SOIL CUTTINGS

STANDARD ODOT LOG W/ SULFATES (8.5 X 11) - OH DOT.GDT - 11/13/20 22:38 - C:\USERS\KAREN\DESKTOP\GINT FILES\SUM-77-277-224 PHASE 2.GPJ

PROJECT: SUM-77-277/224
TYPE: NOISE WALL
PID: 106002 SFN:
START: 2/25/20 END: 2/25/20

DRILLING FIRM / OPERATOR: NEAS / J. HODGES
SAMPLING FIRM / LOGGER: NEAS / J. HODGES
DRILLING METHOD: 3.25" HSA
SAMPLING METHOD: SPT

DRILL RIG: CME 55X
HAMMER: CME AUTOMATIC
CALIBRATION DATE: 12/5/19
ENERGY RATIO (%): 81.9

STATION / OFFSET: 26+24, 18' RT.
ALIGNMENT: NOISE WALL K
ELEVATION: 1106.8 (MSL) EOB: 18.8 ft.
LAT / LONG: 41.026021, -81.494252

EXPLORATION ID B-126-0-17
PAGE 1 OF 1

| MATERIAL DESCRIPTION AND NOTES | ELEV. | DEPTHS | SPT/ RQD | $N_{60}$ | REC (%) | SAMPLE ID | HP (tsf) | GRADATION (%) GR | CS | FS | SI | CL | ATTERBERG LL | PL | PI | WC | ODOT CLASS (GI) | SO4 ppm | BACK FILL |
|---|---|---|---|---|---|---|---|---|---|---|---|---|---|---|---|---|---|---|---|
| VERY STIFF TO HARD, BROWN, **SILT AND CLAY**, LITTLE TO SOME GRAVEL, SOME SAND, CONTAINS IRON STAINING, DAMP | 1106.8 | | 2 3 5 | 11 | 44 | SS-1 | 2.75 | - | - | - | - | - | - | - | - | 14 | A-6a (V) | - | |
| | | | 5 7 8 | 20 | 100 | SS-2 | 4.50 | 25 | 7 | 16 | 26 | 26 | 29 | 18 | 11 | 14 | A-6a (4) | - | |
| VERY STIFF TO HARD, BROWN, **SANDY SILT**, SOME CLAY, TRACE GRAVEL, CONTAINS IRON STAINING, DAMP | 1101.3 | | 6 10 10 | 27 | 56 | SS-3 | 4.25 | - | - | - | - | - | - | - | - | 14 | A-4a (V) | - | |
| | 1096.3 | | 3 4 4 | 11 | 100 | SS-4 | 2.50 | 9 | 9 | 25 | 36 | 21 | 22 | 15 | 7 | 13 | A-4a (4) | - | |
| HARD, DARK GRAY, **SILT AND CLAY**, SOME SAND, TRACE GRAVEL, RELIC ROCK STRUCTURE, DAMP | 1094.3 | | 5 6 10 | 22 | 67 | SS-5 | 4.50 | - | - | - | - | - | - | - | - | 11 | A-6a (V) | - | |
| **SHALE**, GRAY, SEVERELY WEATHERED, VERY WEAK. | | TR | | | | | | | | | | | | | | | | | |
| | | ▼ 1092.8 | 23 50 | - | 67 | SS-6 | - | - | - | - | - | - | - | - | - | 12 | Rock (V) | - | |
| | | | 17 50 | - | 100 | SS-7 | - | - | - | - | - | - | - | - | - | - | Rock (V) | - | |
| | 1088.0 | EOB | 50/3" | - | 100 | SS-8 | - | - | - | - | - | - | - | - | - | - | Rock (V) | - | |

NOTES: GROUNDWATER ENCOUNTERED AT 14.0' DURING DRILLING. HOLE DID NOT CAVE.
ABANDONMENT METHODS, MATERIALS, QUANTITIES: SHOVELED SOIL CUTTINGS

STANDARD ODOT LOG W/ SULFATES (8.5 X 11) - OH DOT.GDT - 11/13/20 22:39 - C:\USERS\KAREN\DESKTOP\GINT FILES\SUM-77-277-224 PHASE 2.GPJ

PROJECT: SUM-77-277/224
TYPE: NOISE WALL
PID: 106002 SFN:
START: 2/25/20 END: 2/25/20

DRILLING FIRM / OPERATOR: NEAS / J. HODGES
SAMPLING FIRM / LOGGER: NEAS / J. HODGES
DRILLING METHOD: 3.25" HSA
SAMPLING METHOD: SPT

DRILL RIG: CME 55X
HAMMER: CME AUTOMATIC
CALIBRATION DATE: 12/5/19
ENERGY RATIO (%): 81.9

STATION / OFFSET: 27+39, 2' RT.
ALIGNMENT: NOISE WALL K
ELEVATION: 1111.9 (MSL) EOB: 19.0 ft.
LAT / LONG: 41.026081, -81.493837

EXPLORATION ID B-127-0-17
PAGE 1 OF 1

| MATERIAL DESCRIPTION AND NOTES | ELEV. | DEPTHS | SPT/ RQD | $N_{60}$ | REC (%) | SAMPLE ID | HP (tsf) | GRADATION (%) GR | CS | FS | SI | CL | ATTERBERG LL | PL | PI | WC | ODOT CLASS (GI) | SO4 ppm | BACK FILL |
|---|---|---|---|---|---|---|---|---|---|---|---|---|---|---|---|---|---|---|---|
| LOOSE, ORANGISH BROWN AND DARK BROWN, **COARSE AND FINE SAND**, SOME SILT, LITTLE GRAVEL, TRACE CLAY, CONTAINS TRACE ROOTS AND IRON STAINING, WET | 1111.9 | | 3 4 3 | 10 | 67 | SS-1 | - | 16 | 14 | 40 | 23 | 7 | NP | NP | NP | 18 | A-3a (0) | - | |
| | 1108.9 | | 3 4 6 | 14 | 100 | SS-2 | 2.50 | - | - | - | - | - | - | - | - | 16 | A-6a (V) | - | |
| STIFF TO VERY STIFF, BROWN MOTTLED WITH GRAY AND ORANGISH BROWN, **SILT AND CLAY**, SOME SAND, TRACE GRAVEL, CONTAINS IRON STAINING, DAMP | 1103.9 | | 3 7 10 | 23 | 56 | SS-3 | 1.25 | - | - | - | - | - | - | - | - | 15 | A-6a (V) | - | |
| VERY STIFF, BROWN, **SANDY SILT**, SOME GRAVEL, LITTLE CLAY, CONTAINS TRACE IRON STAINING, DAMP | | | 3 8 8 | 22 | 100 | SS-4 | 3.50 | 24 | 16 | 17 | 25 | 18 | 28 | 20 | 8 | 14 | A-4a (2) | - | |
| | 1098.9 | | 3 12 12 | 33 | 67 | SS-5 | 3.75 | - | - | - | - | - | - | - | - | 15 | A-4a (V) | - | |
| HARD, GRAYISH BROWN, **SILT AND CLAY**, LITTLE SAND, TRACE STONE FRAGMENTS, RELIC ROCK STRUCTURE, DAMP | 1096.9 | | 6 22 50 | 98 | 100 | SS-6 | 4.50 | - | - | - | - | - | - | - | - | 9 | A-6a (V) | - | |
| **SHALE**, GRAY, SEVERELY WEATHERED, VERY WEAK. | | TR | | | | | | | | | | | | | | | | | |
| | | | 50 | - | 200 | SS-7 | - | - | - | - | - | - | - | - | - | - | Rock (V) | - | |
| | 1092.9 | EOB | 50 | - | 100 | SS-8 | - | - | - | - | - | - | - | - | - | - | Rock (V) | - | |

NOTES: GROUNDWATER NOT ENCOUNTERED DURING DRILLING. HOLE DID NOT CAVE. OFFSET 27' SOUTH TO AVOID DITCH.
ABANDONMENT METHODS, MATERIALS, QUANTITIES: SHOVELED SOIL CUTTINGS

STANDARD ODOT LOG W/ SULFATES (8.5 X 11) - OH DOT.GDT - 11/13/20 22:39 - C:\USERS\KAREN\DESKTOP\GINT FILES\SUM-77-277-224 PHASE 2.GPJ

PROJECT: SUM-77-277/224 | DRILLING FIRM / OPERATOR: NEAS / J. HODGES | DRILL RIG: CME 55X | STATION / OFFSET: 29+02, 29' RT. | EXPLORATION ID B-128-0-17
TYPE: NOISE WALL | SAMPLING FIRM / LOGGER: NEAS / J. HODGES | HAMMER: CME AUTOMATIC | ALIGNMENT: NOISE WALL K
PID: 106002 SFN: | DRILLING METHOD: 3.25" HSA | CALIBRATION DATE: 12/5/19 | ELEVATION: 1126.2 (MSL) EOB: 23.8 ft. | PAGE 1 OF 1
START: 2/25/20 END: 2/25/20 | SAMPLING METHOD: SPT | ENERGY RATIO (%): 81.9 | LAT / LONG: 41.026091, -81.493236

| MATERIAL DESCRIPTION AND NOTES | ELEV. | DEPTHS | SPT/ RQD | $N_{60}$ | REC (%) | SAMPLE ID | HP (tsf) | GRADATION (%) GR | CS | FS | SI | CL | ATTERBERG LL | PL | PI | WC | ODOT CLASS (GI) | SO4 ppm | BACK FILL |
|---|---|---|---|---|---|---|---|---|---|---|---|---|---|---|---|---|---|---|---|
| STIFF TO HARD, BROWN MOTTLED WITH GRAY AND ORANGISH BROWN, **SILT AND CLAY**, SOME SAND, TRACE TO LITTLE GRAVEL AND STONE FRAGMENTS, CONTAINS TRACE ROOTS AND IRON STAINING, MOIST TO DAMP | 1126.2 | | 3 6 7 | 18 | 67 | SS-1 | 1.25 | - | - | - | - | - | - | - | - | 22 | A-6a (V) | - | |
| | | | 3 5 7 | 16 | 100 | SS-2 | 4.25 | - | - | - | - | - | - | - | - | 15 | A-6a (V) | - | |
| STIFF TO HARD, BROWN MOTTLED WITH ORANGISH BROWN, **SANDY SILT**, LITTLE GRAVEL AND STONE FRAGMENTS, LITTLE CLAY, CONTAINS IRON STAINING, DAMP | 1120.7 | | 2 5 4 | 12 | 67 | SS-3 | 2.25 | - | - | - | - | - | - | - | - | 14 | A-4a (V) | - | |
| | | | 2 3 5 | 11 | 67 | SS-4 | 2.00 | 20 | 9 | 24 | 32 | 15 | 21 | 15 | 6 | 14 | A-4a (2) | - | |
| | | | 5 7 9 | 22 | 56 | SS-5 | 4.50 | - | - | - | - | - | - | - | - | 14 | A-4a (V) | - | |
| @13.5'; SS-6 BECOMES BROWNISH GRAY MOTTLED WITH DARK GRAY AND ORANGISH BROWN | 1110.2 | | 3 4 6 | 14 | 44 | SS-6 | 3.75 | 11 | 21 | 18 | 31 | 19 | 30 | 21 | 9 | 15 | A-4a (3) | - | |
| **SHALE**, GRAY, SEVERELY WEATHERED, VERY WEAK TO WEAK. | | TR W 1109.2 | 15 28 50 | 106 | 100 | SS-7 | - | - | - | - | - | - | - | - | - | 7 | Rock (V) | - | |
| | | | 50 | - | 100 | SS-8 | - | - | - | - | - | - | - | - | - | - | Rock (V) | - | |
| | | | 50 | - | 133 | SS-9 | - | - | - | - | - | - | - | - | - | - | Rock (V) | - | |
| | 1102.4 | EOB | 50/3" | - | 100 | SS-10 | - | - | - | - | - | - | - | - | - | - | Rock (V) | - | |

NOTES: GROUNDWATER ENCOUNTERED AT 17.0' DURING DRILLING. HOLE DID NOT CAVE.
ABANDONMENT METHODS, MATERIALS, QUANTITIES: SHOVELED SOIL CUTTINGS

STANDARD ODOT LOG W/ SULFATES (8.5 X 11) - OH DOT.GDT - 11/13/20 22:39 - C:\USERS\KAREN\DESKTOP\GINT FILES\SUM-77-277-224 PHASE 2.GPJ

PROJECT: SUM-77-277/224 | DRILLING FIRM / OPERATOR: NEAS / J. HODGES | DRILL RIG: CME 55X | STATION / OFFSET: 30+68, 7' RT. | EXPLORATION ID B-129-0-17
TYPE: NOISE WALL | SAMPLING FIRM / LOGGER: NEAS / J. HODGES | HAMMER: CME AUTOMATIC | ALIGNMENT: NOISE WALL K
PID: 106002 SFN: | DRILLING METHOD: 3.25" HSA | CALIBRATION DATE: 12/5/19 | ELEVATION: 1115.1 (MSL) EOB: 16.5 ft. | PAGE 1 OF 1
START: 2/24/20 END: 2/24/20 | SAMPLING METHOD: SPT | ENERGY RATIO (%): 81.9 | LAT / LONG: 41.026235, -81.492661

| MATERIAL DESCRIPTION AND NOTES | ELEV. | DEPTHS | SPT/ RQD | $N_{60}$ | REC (%) | SAMPLE ID | HP (tsf) | GRADATION (%) GR | CS | FS | SI | CL | ATTERBERG LL | PL | PI | WC | ODOT CLASS (GI) | SO4 ppm | BACK FILL |
|---|---|---|---|---|---|---|---|---|---|---|---|---|---|---|---|---|---|---|---|
| SOFT TO MEDIUM STIFF, BROWN AND DARK GRAY, **SANDY SILT**, LITTLE GRAVEL AND STONE FRAGMENTS, LITTLE CLAY, CONTAINS A PETROLIFEROUS ODOR, TRACE ROOTS AND IRON STAINING, MOIST | 1115.1 | | 3 5 5 | 14 | 67 | SS-1 | 0.50 | 14 | 9 | 32 | 32 | 13 | 27 | 21 | 6 | 23 | A-4a (2) | - | |
| MEDIUM DENSE, BROWN AND BLACK WITH ORANGISH BROWN MOTTLES, **STONE FRAGMENTS WITH SAND AND SILT**, LITTLE CLAY, CONTAINS A STRONG PETROLIFEROUS ODOR, WET | 1112.1 | | 4 4 12 | 22 | 33 | SS-2 | - | - | - | - | - | - | - | - | - | 23 | A-2-4 (V) | - | |
| SOFT TO VERY STIFF, BROWNISH GRAY, **SANDY SILT**, SOME CLAY, TRACE TO LITTLE GRAVEL AND STONE FRAGMENTS, CONTAINS A STRONG PETROLIFEROUS ODOR, TRACE IRON STAINING AND ROOTS, DAMP TO MOIST | 1109.6 | | 6 8 10 | 25 | 44 | SS-3 | 0.50 | - | - | - | - | - | - | - | - | 20 | A-4a (V) | - | |
| | | | 2 5 6 | 15 | 100 | SS-4 | 2.00 | 8 | 8 | 20 | 41 | 23 | 26 | 17 | 9 | 18 | A-4a (6) | - | |
| | | | 3 12 22 | 46 | 44 | SS-5 | 1.00 | - | - | - | - | - | - | - | - | 18 | A-4a (V) | - | |
| | | | 22 50 | - | 100 | SS-6 | 1.00 | - | - | - | - | - | - | - | - | 17 | A-4a (V) | - | |
| @16.0' TO 16.5'; SS-7 CONTAINS NO INTACT SOIL FOR HP READINGS, BECOMES GRAY, CONTAINS A RELIC ROCK STRUCTURE | 1098.6 | EOB | 50 | - | 100 | SS-7 | - | - | - | - | - | - | - | - | - | 22 | A-4a (V) | - | |

NOTES: GROUNDWATER NOT ENCOUNTERED DURING DRILLING. HOLE DID NOT CAVE.
ABANDONMENT METHODS, MATERIALS, QUANTITIES: SHOVELED SOIL CUTTINGS

STANDARD ODOT LOG W/ SULFATES (8.5 X 11) - OH DOT.GDT - 11/13/20 22:39 - C:\USERS\KAREN\DESKTOP\GINT FILES\SUM-77-277-224 PHASE 2.GPJ

P:\17-0129 (106002 SUM-76-10.95 Part 3 - SUM-77_277_224)\106002\geotechnical\sheets\106002ZL083.dgn Sheet 1/8/2021 1:27:09 AM karens

PROJECT: SUM-77-277/224
TYPE: LIGHT TOWER
PID: 106002 SFN:
START: 8/7/20 END: 8/7/20

DRILLING FIRM / OPERATOR: NEAS / J. HODGES
SAMPLING FIRM / LOGGER: NEAS / ASHBAUGH
DRILLING METHOD: 3.25" HSA
SAMPLING METHOD: SPT

DRILL RIG: CME 55X
HAMMER: CME AUTOMATIC
CALIBRATION DATE: 11/21/17
ENERGY RATIO (%): 85.4

STATION / OFFSET: 31+10, 55' RT.
ALIGNMENT: NOISE WALL K
ELEVATION: 1122.4 (MSL) EOB: 26.5 ft.
LAT / LONG: 41.026109, -81.492515

EXPLORATION ID B-129-1-17



| MATERIAL DESCRIPTION AND NOTES | ELEV. | DEPTHS | SPT/ RQD | $N_{60}$ | REC (%) | SAMPLE ID | HP (tsf) | GRADATION (%) GR | CS | FS | SI | CL | ATTERBERG LL | PL | PI | WC | ODOT CLASS (GI) | BACK FILL |
|---|---|---|---|---|---|---|---|---|---|---|---|---|---|---|---|---|---|---|
| **6.0" TOPSOIL (DRILLERS DESCRIPTION)** | 1121.9 | | | | | | | | | | | | | | | | | |
| HARD, BROWN, **SANDY SILT**, LITTLE TO SOME CLAY, TRACE TO LITTLE GRAVEL, CONTAINS TRACE IRON STAINING, DAMP | | 1 | | | | | | | | | | | | | | | | |
| | | 2 | | | | | | | | | | | | | | | | |
| | | 3 | 15 12 10 | 31 | 67 | SS-1 | 4.50 | - | - | - | - | - | - | - | - | 12 | A-4a (V) | |
| | | 4 | | | | | | | | | | | | | | | | |
| | | 5 | | | | | | | | | | | | | | | | |
| | | 6 | 14 9 10 | 27 | 78 | SS-2 | 4.50 | 11 | 11 | 27 | 32 | 19 | 26 | 18 | 8 | 12 | A-4a (3) | |
| | | 7 | | | | | | | | | | | | | | | | |
| | | 8 | 10 10 11 | 30 | 100 | SS-3 | 4.50 | - | - | - | - | - | - | - | - | 11 | A-4a (V) | |
| | | 9 | | | | | | | | | | | | | | | | |
| | | 10 | | | | | | | | | | | | | | | | |
| | | 11 | 13 12 13 | 36 | 100 | SS-4 | 4.50 | - | - | - | - | - | - | - | - | 12 | A-4a (V) | |
| | | 12 | | | | | | | | | | | | | | | | |
| | | 13 | 12 14 11 | 36 | 100 | SS-5 | 4.50 | 6 | 6 | 23 | 42 | 23 | 26 | 16 | 10 | 13 | A-4a (6) | |
| | | 14 | | | | | | | | | | | | | | | | |
| | | 15 | | | | | | | | | | | | | | | | |
| | | 16 | 12 7 10 | 24 | 100 | SS-6 | 4.50 | - | - | - | - | - | - | - | - | 12 | A-4a (V) | |
| | | 17 | | | | | | | | | | | | | | | | |
| @17.5' TO 19.0'; SS-7 BECOMES MOIST | | 18 | 9 9 11 | 28 | 100 | SS-7 | 4.25 | - | - | - | - | - | - | - | - | 22 | A-4a (V) | |
| | | 19 | | | | | | | | | | | | | | | | |
| | | 20 | | | | | | | | | | | | | | | | |
| | | 21 | 12 7 9 | 23 | 100 | SS-8 | 4.50 | - | - | - | - | - | - | - | - | 11 | A-4a (V) | |
| | | 22 | | | | | | | | | | | | | | | | |
| | | 23 | 10 8 11 | 27 | 100 | SS-9 | 4.50 | 10 | 14 | 19 | 37 | 20 | 27 | 17 | 10 | 12 | A-4a (4) | |
| | 1097.4 | 24 | | | | | | | | | | | | | | | | |
| | | 25 | TR | | | | | | | | | | | | | | | |
| **SHALE**, GRAY, SEVERELY WEATHERED, VERY WEAK TO WEAK, FISSILE. | 1095.9 | 26 | 12 18 40 | 83 | 89 | SS-10 | - | - | - | - | - | - | - | - | - | 7 | Rock (V) | |
| | | | EOB | | | | | | | | | | | | | | | |

NOTES: GROUNDWATER NOT ENCOUNTERED DURING DRILLING. HOLE DID NOT CAVE.
ABANDONMENT METHODS, MATERIALS, QUANTITIES: SHOVELED SOIL CUTTINGS

STANDARD ODOT SOIL BORING LOG (8.5 X 11) - OH DOT.GDT - 11/19/20 18:44 - C:\USERS\KAREN\DESKTOP\SUM-77-277-224 MOD 8 COMBINED WITH 2017 ARCHIVE.GPJ

PROJECT: SUM-77-277/224 | DRILLING FIRM / OPERATOR: NEAS / J. HODGES | DRILL RIG: CME 55X | STATION / OFFSET: 32+59, 8' RT. | EXPLORATION ID B-130-0-17
TYPE: NOISE WALL | SAMPLING FIRM / LOGGER: NEAS / J. HODGES | HAMMER: CME AUTOMATIC | ALIGNMENT: NOISE WALL K
PID: 106002 SFN: | DRILLING METHOD: 3.25" HSA | CALIBRATION DATE: 12/5/19 | ELEVATION: 1116.4 (MSL) EOB: 21.4 ft. | PAGE 1 OF 1
START: 2/24/20 END: 2/24/20 | SAMPLING METHOD: SPT | ENERGY RATIO (%): 81.9 | LAT / LONG: 41.026234, -81.491974

| MATERIAL DESCRIPTION AND NOTES | ELEV. 1116.4 | DEPTHS | SPT/ RQD | $N_{60}$ | REC (%) | SAMPLE ID | HP (tsf) | GRADATION (%) GR | CS | FS | SI | CL | ATTERBERG LL | PL | PI | WC | ODOT CLASS (GI) | SO4 ppm | BACK FILL |
|---|---|---|---|---|---|---|---|---|---|---|---|---|---|---|---|---|---|---|---|
| VERY STIFF, BROWN AND GRAY, **SANDY SILT**, LITTLE CLAY, TRACE GRAVEL AND STONE FRAGMENTS, CONTAINS TRACE ROOTS AND IRON STAINING, DAMP | | | 10 6 6 | 16 | 67 | SS-1 | 3.50 | 10 | 8 | 26 | 37 | 19 | 27 | 19 | 8 | 18 | A-4a (4) | - | |
| @3.5' TO 5.0'; SS-2 BECOMES BROWN AND BLACK, CONTAINS 1.0" WOOD FRAGMENTS, SLIGHTLY ORGANIC | 1110.9 | | 2 3 4 | 10 | 44 | SS-2 | 3.25 | - | - | - | - | - | - | - | - | 15 | A-4a (V) | - | |
| STIFF, BROWN AND BLACK, **SILT AND CLAY**, SOME SAND, TRACE GRAVEL, CONTAINS TRACE ROOTS, SLIGHTLY ORGANIC, MOIST | 1108.4 | | 1 2 2 | 5 | 44 | SS-3 | 1.25 | - | - | - | - | - | - | - | - | 24 | A-6a (V) | - | |
| SOFT TO STIFF, GRAY, **SANDY SILT**, LITTLE CLAY, LITTLE GRAVEL AND STONE FRAGMENTS, CONTAINS TRACE ROOTS, MOIST TO WET | 1103.4 | ▼ 1107.9 | 2 2 3 | 7 | 100 | SS-4 | 1.00 | 11 | 13 | 32 | 32 | 12 | 21 | 15 | 6 | 16 | A-4a (2) | - | |
| | | | 1 4 2 | 8 | 33 | SS-5 | 0.50 | - | - | - | - | - | - | - | - | 21 | A-4a (V) | - | |
| DENSE, BROWN AND GRAY, **STONE FRAGMENTS WITH SAND AND SILT**, LITTLE CLAY, DAMP | 1100.9 | | 1 10 17 | 37 | 100 | SS-6 | - | - | - | - | - | - | - | - | - | 11 | A-2-4 (V) | - | |
| VERY STIFF, BROWN, **SANDY SILT**, LITTLE CLAY, TRACE STONE FRAGMENTS, DAMP | 1099.9 | TR | 50 | - | 100 | SS-7 | 2.50 | 4 | 7 | 27 | 46 | 16 | 24 | 19 | 5 | 11 | A-4a (5) | - | |
| **SHALE**, BROWN AND BROWNISH GRAY, SEVERELY TO HIGHLY WEATHERED, VERY WEAK TO WEAK. | | | 50 | - | 100 | SS-8 | - | - | - | - | - | - | - | - | - | - | Rock (V) | - | |
| | 1095.0 | EOB | 50/5" | - | 100 | SS-9 | - | - | - | - | - | - | - | - | - | - | Rock (V) | - | |

NOTES: GROUNDWATER ENCOUNTERED AT 8.5' DURING DRILLING. HOLE DID NOT CAVE.
ABANDONMENT METHODS, MATERIALS, QUANTITIES: SHOVELED SOIL CUTTINGS

STANDARD ODOT LOG W/ SULFATES (8.5 X 11) - OH DOT.GDT - 11/13/20 22:39 - C:\USERS\KAREN\DESKTOP\GINT FILES\SUM-77-277-224 PHASE 2.GPJ

PROJECT: SUM-77-277/224 | DRILLING FIRM / OPERATOR: NEAS / J. HODGES | DRILL RIG: CME 55X | STATION / OFFSET: 10+00, 7' LT. | EXPLORATION ID B-131-0-17
TYPE: NOISE WALL | SAMPLING FIRM / LOGGER: NEAS / J. HODGES | HAMMER: CME AUTOMATIC | ALIGNMENT: NOISE WALL C
PID: 106002 SFN: | DRILLING METHOD: 3.25" HSA | CALIBRATION DATE: 12/5/19 | ELEVATION: 1121.9 (MSL) EOB: 25.0 ft. | PAGE 1 OF 1
START: 6/10/20 END: 6/10/20 | SAMPLING METHOD: SPT | ENERGY RATIO (%): 81.9 | LAT / LONG: 40.997539, -81.494341

| MATERIAL DESCRIPTION AND NOTES | ELEV. 1121.9 | DEPTHS | SPT/ RQD | $N_{60}$ | REC (%) | SAMPLE ID | HP (tsf) | GRADATION (%) GR | CS | FS | SI | CL | ATTERBERG LL | PL | PI | WC | ODOT CLASS (GI) | SO4 ppm | BACK FILL |
|---|---|---|---|---|---|---|---|---|---|---|---|---|---|---|---|---|---|---|---|
| MEDIUM STIFF TO VERY STIFF, BROWN AND GRAYISH BROWN, **SANDY SILT**, LITTLE CLAY, TRACE TO LITTLE GRAVEL, SS-1 CONTAINS ROOTS, DAMP TO MOIST | | | 3 2 3 | 7 | 100 | SS-1 | 3.75 | - | - | - | - | - | - | - | - | 16 | A-4a (V) | - | |
| | | | 2 2 2 | 5 | 44 | SS-2 | 1.25 | - | - | - | - | - | - | - | - | 14 | A-4a (V) | - | |
| | | | 2 2 3 | 7 | 67 | SS-3 | 0.75 | 5 | 10 | 24 | 42 | 19 | 26 | 18 | 8 | 21 | A-4a (5) | - | |
| | | | 2 3 3 | 8 | 100 | SS-4 | 1.00 | - | - | - | - | - | - | - | - | 16 | A-4a (V) | - | |
| | | | 2 2 2 | 5 | 100 | SS-5 | 2.50 | - | - | - | - | - | - | - | - | 15 | A-4a (V) | - | |
| | | | 2 3 3 | 8 | 100 | SS-6 | 1.00 | 9 | 13 | 42 | 24 | 12 | 22 | 16 | 6 | 18 | A-4a (0) | - | |
| | | | 2 2 3 | 7 | 44 | SS-7 | 1.00 | - | - | - | - | - | - | - | - | 17 | A-4a (V) | - | |
| | | | 3 4 5 | 12 | 67 | SS-8 | 1.25 | - | - | - | - | - | - | - | - | 15 | A-4a (V) | - | |
| @21.0'; SS-9 BECOMES BROWN MOTTLED WITH GRAY AND ORANGISH BROWN | 1098.9 | | 3 4 7 | 15 | 100 | SS-9 | 1.50 | 2 | 11 | 38 | 32 | 17 | 24 | 14 | 10 | 18 | A-4a (3) | - | |
| MEDIUM DENSE, ORANGISH BROWN AND GRAY, **COARSE AND FINE SAND**, LITTLE SILT, LITTLE GRAVEL, TRACE CLAY, CONTAINS IRON STAINING, WET | 1096.9 | EOB | 4 7 10 | 23 | 100 | SS-10 | - | - | - | - | - | - | - | - | - | 20 | A-3a (V) | - | |

NOTES: GROUNDWATER NOT ENCOUNTERED DURING DRILLING. HOLE DID NOT CAVE. OFFSET 30' WEST DUE TO UTILITIES.
ABANDONMENT METHODS, MATERIALS, QUANTITIES: SHOVELED SOIL CUTTINGS

STANDARD ODOT LOG W/ SULFATES (8.5 X 11) - OH DOT.GDT - 11/13/20 22:39 - C:\USERS\KAREN\DESKTOP\GINT FILES\SUM-77-277-224 PHASE 2.GPJ



**SUM-77/277/224**
**VARIOUS**

**STRUCTURE FOUNDATION EXPLORATION**
**BARRIER K & BARRIER C**
**BORING LOGS B-130-0-17 & B-131-0-17**

DRAWN EB
CHECKED BPA

PROJECT: SUM-77-277/224 | DRILLING FIRM / OPERATOR: NEAS / J. HODGES | DRILL RIG: CME 55X | STATION / OFFSET: 11+65, 3' LT. | EXPLORATION ID B-132-0-17
TYPE: NOISE WALL | SAMPLING FIRM / LOGGER: NEAS / J. HODGES | HAMMER: CME AUTOMATIC | ALIGNMENT: NOISE WALL C
PID: 106002 SFN: | DRILLING METHOD: 3.25" HSA | CALIBRATION DATE: 12/5/19 | ELEVATION: 1106.1 (MSL) EOB: 25.0 ft. | PAGE 1 OF 1
START: 6/10/20 END: 6/10/20 | SAMPLING METHOD: SPT | ENERGY RATIO (%): 81.9 | LAT / LONG: 40.997993, -81.494326

| MATERIAL DESCRIPTION AND NOTES | ELEV. | DEPTHS | SPT/ RQD | $N_{60}$ | REC (%) | SAMPLE ID | HP (tsf) | GRADATION (%) GR | CS | FS | SI | CL | ATTERBERG LL | PL | PI | WC | ODOT CLASS (GI) | SO4 ppm | BACK FILL |
|---|---|---|---|---|---|---|---|---|---|---|---|---|---|---|---|---|---|---|---|
| LOOSE, BROWN, **COARSE AND FINE SAND**, SOME SILT, TRACE GRAVEL, TRACE CLAY, CONTAINS IRON STAINING, DAMP | 1106.1 | | 3 3 3 | 8 | 67 | SS-1 | - | - | - | - | - | - | - | - | - | 15 | A-3a (V) | - | |
| VERY STIFF, ORANGISH BROWN AND GRAY, **SILT**, SOME SAND, LITTLE CLAY, TRACE GRAVEL, CONTAINS IRON STAINING, DAMP | 1103.1 | | 4 4 7 | 15 | 100 | SS-2 | 3.50 | 5 | 14 | 13 | 50 | 18 | 29 | 21 | 8 | 21 | A-4b (7) | - | |
| LOOSE, ORANGISH BROWN, **COARSE AND FINE SAND**, LITTLE SILT, TRACE GRAVEL, TRACE CLAY, CONTAINS IRON STAINING, MOIST | 1100.6 | | 2 2 2 | 5 | 100 | SS-3 | - | - | - | - | - | - | - | - | - | 19 | A-3a (V) | - | |
| LOOSE, ORANGISH BROWN AND GRAY, **GRAVEL AND STONE FRAGMENTS WITH SAND AND SILT**, TRACE CLAY, CONTAINS IRON STAINING, WET | 1098.1 | ▼ 1097.6 | 2 4 3 | 10 | 67 | SS-4 | - | - | - | - | - | - | - | - | - | 22 | A-2-4 (V) | - | |
| LOOSE TO MEDIUM DENSE, GRAY, **SANDY SILT**, LITTLE GRAVEL, TRACE TO LITTLE CLAY, DAMP TO MOIST | 1095.6 | | 2 2 3 | 7 | 100 | SS-5 | - | - | - | - | - | - | - | - | - | 14 | A-4a (V) | - | |
| | | | 2 3 3 | 8 | 100 | SS-6 | - | 16 | 15 | 27 | 32 | 10 | NP | NP | NP | 12 | A-4a (1) | - | |
| | | | 3 6 7 | 18 | 50 | SS-7 | - | - | - | - | - | - | - | - | - | 12 | A-4a (V) | - | |
| | | | 5 9 10 | 26 | 33 | SS-8 | - | - | - | - | - | - | - | - | - | 13 | A-4a (V) | - | |
| @21.0'; SS-9 AND SS-10 BECOME DENSE | | | 7 12 14 | 35 | 56 | SS-9 | - | 12 | 10 | 38 | 30 | 10 | NP | NP | NP | 10 | A-4a (1) | - | |
| | 1081.1 | EOB | 10 12 16 | 38 | 100 | SS-10 | - | - | - | - | - | - | - | - | - | 11 | A-4a (V) | - | |

NOTES: GROUNDWATER ENCOUNTERED AT 8.5' DURING DRILLING. HOLE DID NOT CAVE.
ABANDONMENT METHODS, MATERIALS, QUANTITIES: SHOVELED SOIL CUTTINGS

STANDARD ODOT LOG W/ SULFATES (8.5 X 11) - OH DOT.GDT - 11/13/20 22:39 - C:\USERS\KAREN\DESKTOP\GINT FILES\SUM-77-277-224 PHASE 2.GPJ

PROJECT: SUM-77-277/224 | DRILLING FIRM / OPERATOR: NEAS / J. HODGES | DRILL RIG: CME 55X | STATION / OFFSET: 13+27, 4' LT. | EXPLORATION ID B-133-0-17
TYPE: NOISE WALL | SAMPLING FIRM / LOGGER: NEAS / J. HODGES | HAMMER: CME AUTOMATIC | ALIGNMENT: NOISE WALL C
PID: 106002 SFN: | DRILLING METHOD: 3.25" HSA | CALIBRATION DATE: 12/5/19 | ELEVATION: 1101.9 (MSL) EOB: 24.0 ft. | PAGE 1 OF 1
START: 6/9/20 END: 6/9/20 | SAMPLING METHOD: SPT | ENERGY RATIO (%): 81.9 | LAT / LONG: 40.998437, -81.494336

| MATERIAL DESCRIPTION AND NOTES | ELEV. | DEPTHS | SPT/ RQD | $N_{60}$ | REC (%) | SAMPLE ID | HP (tsf) | GRADATION (%) GR | CS | FS | SI | CL | ATTERBERG LL | PL | PI | WC | ODOT CLASS (GI) | SO4 ppm | BACK FILL |
|---|---|---|---|---|---|---|---|---|---|---|---|---|---|---|---|---|---|---|---|
| STIFF TO HARD, ORANGISH BROWN AND GRAY, **SANDY SILT**, LITTLE CLAY, TRACE GRAVEL, CONTAINS IRON STAINING, DAMP TO MOIST | 1101.9 | | 4 7 8 | 20 | 100 | SS-1 | 4.50 | - | - | - | - | - | - | - | - | 12 | A-4a (V) | - | |
| @3.5'; SS-2 CONTAINS ROOTS, BECOMES WET | | | 4 11 11 | 30 | 33 | SS-2 | 1.25 | - | - | - | - | - | - | - | - | 22 | A-4a (V) | - | |
| | | | 1 5 5 | 14 | 100 | SS-3 | 4.50 | 4 | 10 | 34 | 39 | 13 | 20 | 15 | 5 | 15 | A-4a (3) | - | |
| | 1091.4 | | 4 5 5 | 14 | 100 | SS-4 | 4.50 | - | - | - | - | - | - | - | - | 15 | A-4a (V) | - | |
| MEDIUM DENSE TO DENSE, BROWN AND ORANGISH BROWN, **SANDY SILT**, LITTLE CLAY, TRACE GRAVEL, CONTAINS TRACE IRON STAINING, DAMP TO MOIST | | | 3 5 6 | 15 | 44 | SS-5 | - | - | - | - | - | - | - | - | - | 14 | A-4a (V) | - | |
| | | | 11 11 18 | 40 | 22 | SS-6 | - | - | - | - | - | - | - | - | - | 16 | A-4a (V) | - | |
| @16.0' TO 17.5'; SS-7 BECOMES GRAY AND BROWN | 1083.9 | | 3 3 8 | 15 | 33 | SS-7 | - | 8 | 7 | 28 | 44 | 13 | NP | NP | NP | 16 | A-4a (4) | - | |
| VERY DENSE, GRAY, **STONE FRAGMENTS WITH SAND AND SILT**, TRACE CLAY, STONE FRAGMENTS ARE SANDSTONE, DAMP @18.5' TO 24.0'; DRILLER NOTED POSSIBLE BOULDER AND/OR COBBLES | | | 50 | - | 67 | SS-8 | - | - | - | - | - | - | - | - | - | 11 | A-2-4 (V) | - | |
| @21.0'; NO RECOVERY | | | 50/3" | - | 0 | SS-9 | - | - | - | - | - | - | - | - | - | - | | - | |
| @23.5'; NO RECOVERY | 1077.9 | EOB | 50 | - | 0 | SS-10 | - | - | - | - | - | - | - | - | - | - | | - | |

NOTES: GROUNDWATER NOT ENCOUNTERED DURING DRILLING. HOLE DID NOT CAVE.
ABANDONMENT METHODS, MATERIALS, QUANTITIES: SHOVELED SOIL CUTTINGS

STANDARD ODOT LOG W/ SULFATES (8.5 X 11) - OH DOT.GDT - 11/13/20 22:39 - C:\USERS\KAREN\DESKTOP\GINT FILES\SUM-77-277-224 PHASE 2.GPJ



**SUM-77/277/224**
**VARIOUS**

**STRUCTURE FOUNDATION EXPLORATION**
**BARRIER C**
**BORING LOGS B-132-0-17 & B-133-0-17**

DRAWN EB
CHECKED BPA

PROJECT: SUM-77-277/224 | DRILLING FIRM / OPERATOR: NEAS / J. HODGES | DRILL RIG: CME 55X | STATION / OFFSET: 16+18, 4' RT. | EXPLORATION ID B-134-0-17
TYPE: NOISE WALL | SAMPLING FIRM / LOGGER: NEAS / J. HODGES | HAMMER: CME AUTOMATIC | ALIGNMENT: NOISE WALL C
PID: 106002 SFN: | DRILLING METHOD: 3.25" HSA | CALIBRATION DATE: 12/5/19 | ELEVATION: 1099.8 (MSL) EOB: 25.0 ft. | PAGE 1 OF 1
START: 6/9/20 END: 6/9/20 | SAMPLING METHOD: SPT | ENERGY RATIO (%): 81.9 | LAT / LONG: 40.999235, -81.494327

| MATERIAL DESCRIPTION AND NOTES | ELEV. | DEPTHS | SPT/ RQD | $N_{60}$ | REC (%) | SAMPLE ID | HP (tsf) | GRADATION (%) GR | CS | FS | SI | CL | ATTERBERG LL | PL | PI | WC | ODOT CLASS (GI) | SO4 ppm | BACK FILL |
|---|---|---|---|---|---|---|---|---|---|---|---|---|---|---|---|---|---|---|---|
| MEDIUM DENSE TO VERY DENSE, BROWN, **SANDY SILT**, LITTLE CLAY, TRACE TO LITTLE GRAVEL, SS-1 CONTAINS IRON STAINING AND MANY ROOTS, DAMP | 1099.8 | | 13 10 9 | 26 | 33 | SS-1 | - | - | - | - | - | - | - | - | - | 11 | A-4a (V) | - | |
| | | | 10 10 9 | 26 | 50 | SS-2 | - | 3 | 8 | 41 | 36 | 12 | NP | NP | NP | 11 | A-4a (3) | - | |
| | | | 8 12 18 | 41 | 78 | SS-3 | - | - | - | - | - | - | - | - | - | 11 | A-4a (V) | - | |
| | | | 5 17 21 | 52 | 100 | SS-4 | - | - | - | - | - | - | - | - | - | 13 | A-4a (V) | - | |
| MEDIUM DENSE, BROWN, **SILT**, SOME SAND, TRACE CLAY, TRACE GRAVEL, DAMP | 1089.3 | | 3 8 8 | 22 | 100 | SS-5 | - | 1 | 2 | 33 | 56 | 8 | NP | NP | NP | 14 | A-4b (6) | - | |
| LOOSE TO MEDIUM DENSE, BROWN, **FINE SAND**, LITTLE COARSE SAND, LITTLE SILT, TRACE CLAY, TRACE GRAVEL, DAMP TO WET | 1086.8 | | 5 8 9 | 23 | 100 | SS-6 | - | - | - | - | - | - | - | - | - | 13 | A-3 (V) | - | |
| F S | | | 2 3 3 | 8 | 67 | SS-7 | - | - | - | - | - | - | - | - | - | 18 | A-3 (V) | - | |
| | | ▼ 1081.3 | 3 3 5 | 11 | 100 | SS-8 | - | - | - | - | - | - | - | - | - | 23 | A-3 (V) | - | |
| LOOSE, BROWN, **COARSE AND FINE SAND**, TRACE SILT, TRACE GRAVEL, TRACE CLAY, WET | 1079.3 | | 2 3 4 | 10 | 100 | SS-9 | - | - | - | - | - | - | - | - | - | 22 | A-3a (V) | - | |
| | 1074.8 | EOB | 2 3 4 | 10 | 89 | SS-10 | - | - | - | - | - | - | - | - | - | 21 | A-3a (V) | - | |

NOTES: GROUNDWATER ENCOUNTERED AT 18.5' DURING DRILLING. HOLE DID NOT CAVE.
ABANDONMENT METHODS, MATERIALS, QUANTITIES: SHOVELED SOIL CUTTINGS

PROJECT: SUM-77-277/224 | DRILLING FIRM / OPERATOR: NEAS / J. HODGES | DRILL RIG: CME 55X | STATION / OFFSET: 18+32, 2' LT. | EXPLORATION ID B-135-0-17
TYPE: NOISE WALL | SAMPLING FIRM / LOGGER: NEAS / J. HODGES | HAMMER: CME AUTOMATIC | ALIGNMENT: NOISE WALL C
PID: 106002 SFN: | DRILLING METHOD: 3.25" HSA | CALIBRATION DATE: 12/5/19 | ELEVATION: 1098.0 (MSL) EOB: 25.0 ft. | PAGE 1 OF 1
START: 6/5/20 END: 6/5/20 | SAMPLING METHOD: SPT | ENERGY RATIO (%): 81.9 | LAT / LONG: 40.999821, -81.494366

| MATERIAL DESCRIPTION AND NOTES | ELEV. | DEPTHS | SPT/ RQD | $N_{60}$ | REC (%) | SAMPLE ID | HP (tsf) | GRADATION (%) GR | CS | FS | SI | CL | ATTERBERG LL | PL | PI | WC | ODOT CLASS (GI) | SO4 ppm | BACK FILL |
|---|---|---|---|---|---|---|---|---|---|---|---|---|---|---|---|---|---|---|---|
| MEDIUM DENSE, BROWN, **COARSE AND FINE SAND**, LITTLE SILT, LITTLE GRAVEL, TRACE CLAY, TRACE ROOTS, WET | 1098.0 | | 3 5 6 | 15 | 89 | SS-1 | - | - | - | - | - | - | - | - | - | 18 | A-3a (V) | - | |
| HARD, BROWN, **SANDY SILT**, SOME CLAY, LITTLE GRAVEL, DAMP | 1095.0 | | 5 5 5 | 14 | 100 | SS-2 | 4.50 | 12 | 6 | 14 | 43 | 25 | 28 | 19 | 9 | 16 | A-4a (7) | - | |
| HARD, BROWN, **SILT**, SOME CLAY, LITTLE SAND, TRACE GRAVEL, MOIST | 1092.5 | | 2 5 6 | 15 | 100 | SS-3 | 4.50 | 2 | 6 | 11 | 57 | 24 | 29 | 20 | 9 | 21 | A-4b (8) | - | |
| | 1087.5 | | 3 4 7 | 15 | 100 | SS-4 | 4.50 | - | - | - | - | - | - | - | - | 21 | A-4b (V) | - | |
| MEDIUM DENSE, BROWN, **SANDY SILT**, LITTLE CLAY, TRACE GRAVEL, DAMP TO WET | | | 2 4 6 | 14 | 100 | SS-5 | - | - | - | - | - | - | - | - | - | 16 | A-4a (V) | - | |
| | | | 3 4 6 | 14 | 100 | SS-6 | - | 0 | 9 | 37 | 43 | 11 | NP | NP | NP | 15 | A-4a (4) | - | |
| | | | 4 6 8 | 19 | 100 | SS-7 | - | - | - | - | - | - | - | - | - | 17 | A-4a (V) | - | |
| | | | 3 6 9 | 20 | 100 | SS-8 | - | - | - | - | - | - | - | - | - | 18 | A-4a (V) | - | |
| | | | 3 5 6 | 15 | 100 | SS-9 | - | 2 | 7 | 31 | 48 | 12 | NP | NP | NP | 18 | A-4a (5) | - | |
| | 1073.0 | EOB | 3 7 9 | 22 | 100 | SS-10 | - | - | - | - | - | - | - | - | - | 15 | A-4a (V) | - | |

NOTES: GROUNDWATER NOT ENCOUNTERED DURING DRILLING. HOLE DID NOT CAVE.
ABANDONMENT METHODS, MATERIALS, QUANTITIES: SHOVELED SOIL CUTTINGS

STANDARD ODOT LOG W/ SULFATES (8.5 X 11) - OH DOT.GDT - 11/13/20 22:39 - C:\USERS\KAREN\DESKTOP\GINT FILES\SUM-77-277-224 PHASE 2.GPJ

PROJECT: SUM-77-277/224 | DRILLING FIRM / OPERATOR: NEAS / J. HODGES | DRILL RIG: CME 55X | STATION / OFFSET: 19+83, 7' RT. | EXPLORATION ID B-136-0-17
TYPE: NOISE WALL | SAMPLING FIRM / LOGGER: NEAS / J. HODGES | HAMMER: CME AUTOMATIC | ALIGNMENT: NOISE WALL C
PID: 106002 SFN: | DRILLING METHOD: 3.25" HSA | CALIBRATION DATE: 12/5/19 | ELEVATION: 1084.7 (MSL) EOB: 25.0 ft. | PAGE 1 OF 1
START: 6/5/20 END: 6/5/20 | SAMPLING METHOD: SPT | ENERGY RATIO (%): 81.9 | LAT / LONG: 41.000237, -81.494362

| MATERIAL DESCRIPTION AND NOTES | ELEV. | DEPTHS | SPT/ RQD | $N_{60}$ | REC (%) | SAMPLE ID | HP (tsf) | GRADATION (%) GR | CS | FS | SI | CL | ATTERBERG LL | PL | PI | WC | ODOT CLASS (GI) | SO4 ppm | BACK FILL |
|---|---|---|---|---|---|---|---|---|---|---|---|---|---|---|---|---|---|---|---|
| LOOSE TO MEDIUM DENSE, BROWN, **SANDY SILT**, LITTLE CLAY, TRACE TO LITTLE GRAVEL, SS-1 AND SS-2 CONTAIN ROOTS, DAMP TO MOIST | 1084.7 | | 2 2 2 | 5 | 100 | SS-1 | - | - | - | - | - | - | - | - | - | 14 | A-4a (V) | - | |
| | | | 2 4 4 | 11 | 100 | SS-2 | - | 6 | 11 | 39 | 32 | 12 | NP | NP | NP | 13 | A-4a (2) | - | |
| | | | 2 3 6 | 12 | 100 | SS-3 | - | - | - | - | - | - | - | - | - | 20 | A-4a (V) | - | |
| | | | 2 4 4 | 11 | 100 | SS-4 | - | - | - | - | - | - | - | - | - | 17 | A-4a (V) | - | |
| VERY STIFF, BROWN, **SILT**, SOME SAND, LITTLE CLAY, TRACE GRAVEL, DAMP | 1074.2 | | 4 6 13 | 26 | 100 | SS-5 | 2.25 | 2 | 7 | 19 | 56 | 16 | 24 | 19 | 5 | 18 | A-4b (7) | - | |
| MEDIUM DENSE, BROWN, **COARSE AND FINE SAND**, LITTLE SILT, TRACE GRAVEL, MOIST TO DAMP | 1071.2 | | 3 4 5 | 12 | 56 | SS-6 | - | - | - | - | - | - | - | - | - | 12 | A-3a (V) | - | |
| | | | 4 5 6 | 15 | 67 | SS-7 | - | - | - | - | - | - | - | - | - | 7 | A-3a (V) | - | |
| | | | 4 5 5 | 14 | 89 | SS-8 | - | - | - | - | - | - | - | - | - | 8 | A-3a (V) | - | |
| | | | 3 4 5 | 12 | 100 | SS-9 | - | - | - | - | - | - | - | - | - | 5 | A-3a (V) | - | |
| | 1059.7 | EOB | 3 4 6 | 14 | 100 | SS-10 | - | - | - | - | - | - | - | - | - | 7 | A-3a (V) | - | |

NOTES: GROUNDWATER NOT ENCOUNTERED DURING DRILLING. HOLE DID NOT CAVE.
ABANDONMENT METHODS, MATERIALS, QUANTITIES: SHOVELED SOIL CUTTINGS

PROJECT: SUM-77-277/224 | DRILLING FIRM / OPERATOR: NEAS / J. HODGES | DRILL RIG: CME 55X | STATION / OFFSET: 21+56, 5' RT. | EXPLORATION ID B-137-0-17
TYPE: NOISE WALL | SAMPLING FIRM / LOGGER: NEAS / J. HODGES | HAMMER: CME AUTOMATIC | ALIGNMENT: NOISE WALL C
PID: 106002 SFN: | DRILLING METHOD: 3.25" HSA | CALIBRATION DATE: 12/5/19 | ELEVATION: 1094.8 (MSL) EOB: 25.0 ft. | PAGE 1 OF 1
START: 6/5/20 END: 6/5/20 | SAMPLING METHOD: SPT | ENERGY RATIO (%): 81.9 | LAT / LONG: 41.000712, -81.494400

| MATERIAL DESCRIPTION AND NOTES | ELEV. | DEPTHS | SPT/ RQD | $N_{60}$ | REC (%) | SAMPLE ID | HP (tsf) | GRADATION (%) GR | CS | FS | SI | CL | ATTERBERG LL | PL | PI | WC | ODOT CLASS (GI) | SO4 ppm | BACK FILL |
|---|---|---|---|---|---|---|---|---|---|---|---|---|---|---|---|---|---|---|---|
| VERY STIFF TO HARD, BROWN AND ORANGISH BROWN WITH GRAY, **SANDY SILT**, LITTLE TO SOME GRAVEL, LITTLE CLAY, CONTAINS IRON STAINING AND TRACE ROOTS, DAMP TO MOIST | 1094.8 | | 3 5 7 | 16 | 100 | SS-1 | 3.50 | - | - | - | - | - | - | - | - | 16 | A-4a (V) | - | |
| | | | 4 5 13 | 25 | 100 | SS-2 | 2.50 | - | - | - | - | - | - | - | - | 17 | A-4a (V) | - | |
| | | | 3 6 7 | 18 | 44 | SS-3 | 2.25 | 21 | 14 | 15 | 37 | 13 | 27 | 19 | 8 | 15 | A-4a (3) | - | |
| | | | 3 5 6 | 15 | 100 | SS-4 | 4.50 | - | - | - | - | - | - | - | - | 20 | A-4a (V) | - | |
| | 1081.8 | | 4 4 6 | 14 | 67 | SS-5 | 2.50 | - | - | - | - | - | - | - | - | 24 | A-4a (V) | - | |
| MEDIUM DENSE, BROWN, **SILT**, LITTLE CLAY, TRACE SAND, TRACE GRAVEL, WET | 1079.3 | | 3 4 7 | 15 | 50 | SS-6 | - | 1 | 1 | 8 | 75 | 15 | NP | NP | NP | 26 | A-4b (8) | - | |
| VERY STIFF, BROWN, **SANDY SILT**, LITTLE CLAY, TRACE GRAVEL, CONTAINS IRON STAINING, DAMP | 1076.8 | | 3 5 5 | 14 | 50 | SS-7 | 3.00 | 9 | 14 | 21 | 42 | 14 | 25 | 18 | 7 | 18 | A-4a (4) | - | |
| MEDIUM DENSE, BROWN, **GRAVEL WITH SAND**, TRACE SILT, TRACE CLAY, CONTAINS IRON STAINING, MOIST | 1074.3 | | 5 5 6 | 15 | 100 | SS-8 | - | - | - | - | - | - | - | - | - | 14 | A-1-b (V) | - | |
| MEDIUM DENSE, BROWN, **COARSE AND FINE SAND**, TRACE SILT, TRACE CLAY, TRACE GRAVEL, MOIST TO DAMP | 1069.8 | EOB | 5 5 6 | 15 | 44 | SS-9 | - | - | - | - | - | - | - | - | - | 13 | A-3a (V) | - | |
| | | | 3 5 6 | 15 | 56 | SS-10 | - | - | - | - | - | - | - | - | - | 10 | A-3a (V) | - | |

NOTES: GROUNDWATER NOT ENCOUNTERED DURING DRILLING. HOLE DID NOT CAVE.
ABANDONMENT METHODS, MATERIALS, QUANTITIES: SHOVELED SOIL CUTTINGS

STANDARD ODOT LOG W/ SULFATES (8.5 X 11) - OH DOT.GDT - 11/13/20 22:39 - C:\USERS\KAREN\DESKTOP\GINT FILES\SUM-77-277-224 PHASE 2.GPJ



**SUM-77/277/224**
**VARIOUS**

**STRUCTURE FOUNDATION EXPLORATION**
**BARRIER C**
**BORING LOGS B-136-0-17 & B-137-0-17**

DRAWN EB
CHECKED BPA

PROJECT: SUM-77-277/224 | DRILLING FIRM / OPERATOR: NEAS / J. HODGES | DRILL RIG: CME 55X | STATION / OFFSET: 23+21, 17' RT. | EXPLORATION ID B-138-0-17
TYPE: NOISE WALL | SAMPLING FIRM / LOGGER: NEAS / J. HODGES | HAMMER: CME AUTOMATIC | ALIGNMENT: NOISE WALL C
PID: 106002 SFN: | DRILLING METHOD: 3.25" HSA | CALIBRATION DATE: 12/5/19 | ELEVATION: 1074.2 (MSL) EOB: 25.0 ft. | PAGE 1 OF 1
START: 6/4/20 END: 6/4/20 | SAMPLING METHOD: SPT | ENERGY RATIO (%): 81.9 | LAT / LONG: 41.001166, -81.494380

| MATERIAL DESCRIPTION AND NOTES | ELEV. | DEPTHS | SPT/ RQD | $N_{60}$ | REC (%) | SAMPLE ID | HP (tsf) | GRADATION (%) GR | CS | FS | SI | CL | ATTERBERG LL | PL | PI | WC | ODOT CLASS (GI) | SO4 ppm | BACK FILL |
|---|---|---|---|---|---|---|---|---|---|---|---|---|---|---|---|---|---|---|---|
| HARD, BROWN, **SILT**, SOME CLAY, LITTLE SAND, TRACE GRAVEL, SS-1 CONTAINS ROOTS AND IRON STAINING, DAMP | 1074.2 | 1 | 2 4 7 | 15 | 100 | SS-1 | 4.50 | - | - | - | - | - | - | - | - | 14 | A-4b (V) | - | |
| | 1068.7 | 4 | 3 7 9 | 22 | 100 | SS-2 | 4.50 | 3 | 4 | 13 | 50 | 30 | 30 | 20 | 10 | 16 | A-4b (8) | - | |
| MEDIUM DENSE, BROWN, **SANDY SILT**, TRACE TO LITTLE CLAY, TRACE GRAVEL, MOIST TO DAMP | | | 5 7 10 | 23 | 100 | SS-3 | - | - | - | - | - | - | - | - | - | 16 | A-4a (V) | - | |
| | | 9 | 3 6 8 | 19 | 100 | SS-4 | - | - | - | - | - | - | - | - | - | 17 | A-4a (V) | - | |
| | 1061.2 | 12 | 4 6 7 | 18 | 100 | SS-5 | - | 9 | 13 | 32 | 36 | 10 | NP | NP | NP | 12 | A-4a (2) | - | |
| MEDIUM DENSE TO VERY DENSE, BROWN, **GRAVEL AND STONE FRAGMENTS WITH SAND AND SILT**, TRACE CLAY, CONTAINS IRON STAINING, DAMP | | | 7 8 11 | 26 | 100 | SS-6 | - | - | - | - | - | - | - | - | - | 11 | A-2-4 (V) | - | |
| | 1056.2 | 17 | 6 33 50/5" | - | 94 | SS-7 | - | - | - | - | - | - | - | - | - | 9 | A-2-4 (V) | - | |
| DENSE, BROWN AND DARK BROWN, **SANDY SILT**, TRACE TO LITTLE GRAVEL, TRACE TO LITTLE CLAY, WET | | 19 | 9 11 16 | 37 | 33 | SS-8 | - | - | - | - | - | - | - | - | - | 17 | A-4a (V) | - | |
| @21.0'; BECOMES MEDIUM DENSE, GRAY, DAMP | | 22 | 4 5 6 | 15 | 100 | SS-9 | - | 18 | 12 | 30 | 30 | 10 | NP | NP | NP | 9 | A-4a (1) | - | |
| | 1049.2 | EOB 25 | 3 4 5 | 12 | 100 | SS-10 | - | - | - | - | - | - | - | - | - | 9 | A-4a (V) | - | |

NOTES: GROUNDWATER NOT ENCOUNTERED DURING DRILLING. HOLE DID NOT CAVE.
ABANDONMENT METHODS, MATERIALS, QUANTITIES: SHOVELED SOIL CUTTINGS

STANDARD ODOT LOG W/ SULFATES (8.5 X 11) - OH DOT.GDT - 11/13/20 22:39 - C:\USERS\KAREN\DESKTOP\GINT FILES\SUM-77-277-224 PHASE 2.GPJ

PROJECT: SUM-77-277/224 | DRILLING FIRM / OPERATOR: NEAS / J. HODGES | DRILL RIG: CME 55X | STATION / OFFSET: 25+07, 29' LT. | EXPLORATION ID B-139-0-17
TYPE: NOISE WALL | SAMPLING FIRM / LOGGER: NEAS / J. HODGES | HAMMER: CME AUTOMATIC | ALIGNMENT: NOISE WALL C
PID: 106002 SFN: | DRILLING METHOD: 3.25" HSA | CALIBRATION DATE: 12/5/19 | ELEVATION: 1057.1 (MSL) EOB: 25.0 ft. | PAGE 1 OF 1
START: 6/4/20 END: 6/4/20 | SAMPLING METHOD: SPT | ENERGY RATIO (%): 81.9 | LAT / LONG: 41.001699, -81.494508

| MATERIAL DESCRIPTION AND NOTES | ELEV. | DEPTHS | SPT/ RQD | $N_{60}$ | REC (%) | SAMPLE ID | HP (tsf) | GRADATION (%) GR | CS | FS | SI | CL | ATTERBERG LL | PL | PI | WC | ODOT CLASS (GI) | SO4 ppm | BACK FILL |
|---|---|---|---|---|---|---|---|---|---|---|---|---|---|---|---|---|---|---|---|
| HARD, BROWN, **SILT AND CLAY**, LITTLE SAND, TRACE GRAVEL, MOIST TO DAMP | 1057.1 | 1 | 4 4 4 | 11 | 89 | SS-1 | 4.25 | - | - | - | - | - | - | - | - | 20 | A-6a (V) | - | |
| | 1051.6 | 4 | 4 10 12 | 30 | 100 | SS-2 | 4.50 | 1 | 3 | 10 | 50 | 36 | 31 | 19 | 12 | 15 | A-6a (9) | - | |
| HARD, BROWN, **SANDY SILT**, LITTLE CLAY, TRACE TO LITTLE GRAVEL, DAMP TO MOIST | | | 3 6 7 | 18 | 100 | SS-3 | 4.25 | - | - | - | - | - | - | - | - | 14 | A-4a (V) | - | |
| | | 9 | 4 8 17 | 34 | 100 | SS-4 | 4.50 | - | - | - | - | - | - | - | - | 15 | A-4a (V) | - | |
| @11.0' TO 12.5'; BECOMES MEDIUM DENSE, GRAY, SOME GRAVEL | | 12 | 2 11 10 | 29 | 89 | SS-5 | - | - | - | - | - | - | - | - | - | 9 | A-4a (V) | - | |
| @13.5' TO 15.0'; BECOMES BROWN AND ORANGISH BROWN, CONTAINS IRON STAINING | | 14 | 2 12 15 | 37 | 100 | SS-6 | 4.50 | 4 | 10 | 33 | 39 | 14 | 22 | 17 | 5 | 13 | A-4a (4) | - | |
| @16.0' TO 25.0'; BECOMES LOOSE TO MEDIUM DENSE, GRAY | | 17 | 2 5 6 | 15 | 100 | SS-7 | - | - | - | - | - | - | - | - | - | 14 | A-4a (V) | - | |
| | | 19 | 2 3 3 | 8 | 100 | SS-8 | - | - | - | - | - | - | - | - | - | 14 | A-4a (V) | - | |
| | | 22 | 3 4 6 | 14 | 67 | SS-9 | - | - | - | - | - | - | - | - | - | 20 | A-4a (V) | - | |
| | 1032.1 | EOB 25 | 3 4 9 | 18 | 78 | SS-10 | - | 15 | 5 | 18 | 46 | 16 | NP | NP | NP | 16 | A-4a (5) | - | |

NOTES: GROUNDWATER NOT ENCOUNTERED DURING DRILLING. HOLE DID NOT CAVE.
ABANDONMENT METHODS, MATERIALS, QUANTITIES: SHOVELED SOIL CUTTINGS

STANDARD ODOT LOG W/ SULFATES (8.5 X 11) - OH DOT.GDT - 11/13/20 22:39 - C:\USERS\KAREN\DESKTOP\GINT FILES\SUM-77-277-224 PHASE 2.GPJ



**SUM-77/277/224**
**VARIOUS**

**STRUCTURE FOUNDATION EXPLORATION**
**BARRIER C**
**BORING LOGS B-138-0-17 & B-139-0-17**

DRAWN EB
CHECKED BPA

PROJECT: SUM-77-277/224 | DRILLING FIRM / OPERATOR: NEAS / J. HODGES | DRILL RIG: CME 55X | STATION / OFFSET: 27+30, 1' LT. | EXPLORATION ID B-140-0-17
TYPE: NOISE WALL | SAMPLING FIRM / LOGGER: NEAS / J. HODGES | HAMMER: CME AUTOMATIC | ALIGNMENT: NOISE WALL C
PID: 106002 SFN: | DRILLING METHOD: 3.25" HSA | CALIBRATION DATE: 12/5/19 | ELEVATION: 1058.9 (MSL) EOB: 25.0 ft. | PAGE 1 OF 1
START: 6/2/20 END: 6/2/20 | SAMPLING METHOD: SPT | ENERGY RATIO (%): 81.9 | LAT / LONG: 41.002243, -81.494261

| MATERIAL DESCRIPTION AND NOTES | ELEV. | DEPTHS | SPT/ RQD | $N_{60}$ | REC (%) | SAMPLE ID | HP (tsf) | GRADATION (%) GR | CS | FS | SI | CL | ATTERBERG LL | PL | PI | WC | ODOT CLASS (GI) | SO4 ppm | BACK FILL |
|---|---|---|---|---|---|---|---|---|---|---|---|---|---|---|---|---|---|---|---|
| **12.0" ASPHALT AND 10.0" BASE (DRILLERS DESCRIPTION)** | 1058.9 | | | | | | | | | | | | | | | | | | |
| | 1057.1 | | | | | | | | | | | | | | | | | | |
| MEDIUM DENSE, BROWN, **COARSE AND FINE SAND**, SOME SILT, LITTLE GRAVEL, TRACE CLAY, DAMP | 1055.4 | | 5 7 5 | 16 | 56 | SS-1 | - | - | - | - | - | - | - | - | - | 12 | A-3a (V) | - | |
| HARD, BROWN AND GRAY, **SANDY SILT**, LITTLE CLAY, TRACE GRAVEL, DAMP | | | 5 5 10 | 20 | 100 | SS-2 | 4.50 | - | - | - | - | - | - | - | - | 12 | A-4a (V) | - | |
| | | | 3 12 20 | 44 | 89 | SS-3 | 4.50 | 5 | 12 | 28 | 36 | 19 | 23 | 15 | 8 | 10 | A-4a (4) | - | |
| | | | 4 14 18 | 44 | 100 | SS-4 | 4.50 | - | - | - | - | - | - | - | - | 10 | A-4a (V) | - | |
| | | | 2 7 10 | 23 | 56 | SS-5 | 4.50 | - | - | - | - | - | - | - | - | 9 | A-4a (V) | - | |
| @13.5' TO 20.0'; BECOMES SOME GRAVEL | | | 3 6 11 | 23 | 67 | SS-6 | 4.50 | 21 | 16 | 22 | 27 | 14 | 24 | 15 | 9 | 9 | A-4a (1) | - | |
| @16.0'; NO RECOVERY | | | 50 | - | 0 | SS-7 | - | - | - | - | - | - | - | - | - | - | | - | |
| | | | 2 10 22 | 44 | 100 | SS-8 | 4.50 | - | - | - | - | - | - | - | - | 11 | A-4a (V) | - | |
| | 1038.4 | | | | | | | | | | | | | | | | | | |
| MEDIUM DENSE, BROWN WITH GRAY AND ORANGISH BROWN, **GRAVEL WITH SAND AND SILT**, LITTLE CLAY, CONTAINS IRON STAINING, DAMP | | | 9 10 12 | 30 | 89 | SS-9 | - | 24 | 15 | 33 | 16 | 12 | NP | NP | NP | 13 | A-2-4 (0) | - | |
| | 1033.9 | EOB | 10 10 12 | 30 | 78 | SS-10 | - | - | - | - | - | - | - | - | - | 15 | A-2-4 (V) | - | |

NOTES: GROUNDWATER NOT ENCOUNTERED DURING DRILLING. HOLE DID NOT CAVE.
ABANDONMENT METHODS, MATERIALS, QUANTITIES: PLACED 0.5 BAG ASPHALT PATCH; SHOVELED SOIL CUTTINGS

PROJECT: SUM-77-277/224 | DRILLING FIRM / OPERATOR: NEAS / J. HODGES | DRILL RIG: CME 55X | STATION / OFFSET: 29+17, 0' LT. | EXPLORATION ID B-141-0-17
TYPE: NOISE WALL | SAMPLING FIRM / LOGGER: NEAS / J. HODGES | HAMMER: CME AUTOMATIC | ALIGNMENT: NOISE WALL C
PID: 106002 SFN: | DRILLING METHOD: 3.25" HSA | CALIBRATION DATE: 12/5/19 | ELEVATION: 1054.5 (MSL) EOB: 25.0 ft. | PAGE 1 OF 1
START: 6/2/20 END: 6/2/20 | SAMPLING METHOD: SPT | ENERGY RATIO (%): 81.9 | LAT / LONG: 41.002754, -81.494289

| MATERIAL DESCRIPTION AND NOTES | ELEV. | DEPTHS | SPT/ RQD | $N_{60}$ | REC (%) | SAMPLE ID | HP (tsf) | GRADATION (%) GR | CS | FS | SI | CL | ATTERBERG LL | PL | PI | WC | ODOT CLASS (GI) | SO4 ppm | BACK FILL |
|---|---|---|---|---|---|---|---|---|---|---|---|---|---|---|---|---|---|---|---|
| **12.0" ASPHALT AND 10.0" BASE (DRILLERS DESCRIPTION)** | 1054.5 | | | | | | | | | | | | | | | | | | |
| | 1052.7 | | | | | | | | | | | | | | | | | | |
| HARD, BROWN, **SANDY SILT**, LITTLE CLAY, TRACE GRAVEL, DAMP | 1051.0 | | 5 6 10 | 22 | 67 | SS-1 | 4.50 | 6 | 9 | 28 | 42 | 15 | 20 | 15 | 5 | 12 | A-4a (4) | - | |
| VERY DENSE, DARK BROWN, **COARSE AND FINE SAND**, SOME GRAVEL, LITTLE SILT, TRACE CLAY, DAMP | 1049.0 | | 50 | - | 83 | SS-2 | - | - | - | - | - | - | - | - | - | 9 | A-3a (V) | - | |
| HARD, BROWN, **SILT AND CLAY**, TRACE TO LITTLE SAND, TRACE GRAVEL, DAMP | | | 3 7 12 | 26 | 100 | SS-3 | 4.50 | 2 | 3 | 10 | 52 | 33 | 32 | 21 | 11 | 17 | A-6a (8) | - | |
| | | | 4 8 10 | 25 | 100 | SS-4 | 4.50 | - | - | - | - | - | - | - | - | 17 | A-6a (V) | - | |
| | | | 4 7 7 | 19 | 100 | SS-5 | 4.50 | 0 | 2 | 8 | 52 | 38 | 35 | 22 | 13 | 19 | A-6a (9) | - | |
| | 1039.0 | | 4 6 9 | 20 | 67 | SS-6 | 4.50 | - | - | - | - | - | - | - | - | 18 | A-6a (V) | - | |
| HARD, BROWN, **SANDY SILT**, SOME CLAY, LITTLE GRAVEL, DAMP | 1036.5 | | 5 12 15 | 37 | 89 | SS-7 | 4.50 | 18 | 14 | 17 | 28 | 23 | 27 | 18 | 9 | 14 | A-4a (3) | - | |
| DENSE, BROWN, **COARSE AND FINE SAND**, LITTLE TO SOME SILT, TRACE CLAY, TRACE GRAVEL, DAMP | | | 5 15 17 | 44 | 56 | SS-8 | - | - | - | - | - | - | - | - | - | 9 | A-3a (V) | - | |
| @21.0'; BECOMES LOOSE, WET | | | 2 3 3 | 8 | 67 | SS-9 | - | - | - | - | - | - | - | - | - | 17 | A-3a (V) | - | |
| | 1029.5 | EOB | 3 3 3 | 8 | 78 | SS-10 | - | - | - | - | - | - | - | - | - | 17 | A-3a (V) | - | |

NOTES: GROUNDWATER NOT ENCOUNTERED DURING DRILLING. HOLE DID NOT CAVE.
ABANDONMENT METHODS, MATERIALS, QUANTITIES: PLACED 0.5 BAG ASPHALT PATCH; SHOVELED SOIL CUTTINGS

STANDARD ODOT LOG W/ SULFATES (8.5 X 11) - OH DOT.GDT - 11/13/20 22:39 - C:\USERS\KAREN\DESKTOP\GINT FILES\SUM-77-277-224 PHASE 2.GPJ

PROJECT: SUM-77-277/224
TYPE: NOISE WALL
PID: 106002 SFN:
START: 6/2/20 END: 6/2/20

DRILLING FIRM / OPERATOR: NEAS / J. HODGES
SAMPLING FIRM / LOGGER: NEAS / J. HODGES
DRILLING METHOD: 3.25" HSA
SAMPLING METHOD: SPT

DRILL RIG: CME 55X
HAMMER: CME AUTOMATIC
CALIBRATION DATE: 12/5/19
ENERGY RATIO (%): 81.9

STATION / OFFSET: 31+20, 0' RT.
ALIGNMENT: NOISE WALL C
ELEVATION: 1049.3 (MSL) EOB: 25.0 ft.
LAT / LONG: 41.003312, -81.494321

EXPLORATION ID B-142-0-17
PAGE 1 OF 1

| MATERIAL DESCRIPTION AND NOTES | ELEV. 1049.3 | DEPTHS | SPT/ RQD | $N_{60}$ | REC (%) | SAMPLE ID | HP (tsf) | GRADATION (%) GR | CS | FS | SI | CL | ATTERBERG LL | PL | PI | WC | ODOT CLASS (GI) | SO4 ppm | BACK FILL |
|---|---|---|---|---|---|---|---|---|---|---|---|---|---|---|---|---|---|---|---|
| **12.0" ASPHALT AND 10.0" BASE (DRILLERS DESCRIPTION)** | 1047.5 | | | | | | | | | | | | | | | | | | |
| MEDIUM DENSE, BROWN, **COARSE AND FINE SAND**, SOME SILT, TRACE CLAY, TRACE GRAVEL, MOIST | 1045.8 | | 5 7 13 | 27 | 100 | SS-1 | - | - | - | - | - | - | - | - | - | 12 | A-3a (V) | - | |
| HARD, BROWN AND DARK BROWN, **SANDY SILT**, SOME CLAY, TRACE GRAVEL, DAMP | | | 5 8 14 | 30 | 67 | SS-2 | 4.50 | - | - | - | - | - | - | - | - | 8 | A-4a (V) | - | |
| @6.0' TO 10.0'; SS-3 AND SS-4 BECOME MOIST TO WET, SLIGHTLY TO MODERATELY ORGANIC | 1038.8 | | 2 3 4 | 10 | 100 | SS-3 | 4.50 | 2 | 6 | 16 | 47 | 29 | 31 | 21 | 10 | 22 | A-4a (8) | - | |
| | | | 3 4 6 | 14 | 100 | SS-4 | 4.50 | - | - | - | - | - | - | - | - | 37 | A-4a (V) | - | |
| SOFT TO STIFF, DARK GRAY AND DARK BROWN, **SILTY CLAY**, LITTLE SAND, TRACE GRAVEL, DAMP TO MOIST | | | 2 3 3 | 8 | 100 | SS-5 | 0.50 | - | - | - | - | - | - | - | - | 20 | A-6b (V) | - | |
| | | | 3 3 3 | 8 | 100 | SS-6 | 1.00 | 1 | 2 | 15 | 50 | 32 | 37 | 20 | 17 | 28 | A-6b (11) | - | |
| | 1031.3 | | 3 3 3 | 8 | 100 | SS-7 | 1.75 | - | - | - | - | - | - | - | - | 20 | A-6b (V) | - | |
| VERY STIFF, GRAY, **SILT**, SOME SAND, SOME CLAY, TRACE GRAVEL, MOIST TO WET | | | 3 3 3 | 8 | 100 | SS-8 | 2.25 | - | - | - | - | - | - | - | - | 16 | A-4b (V) | - | |
| | | | 3 3 4 | 10 | 100 | SS-9 | 2.50 | 1 | 4 | 21 | 52 | 22 | 21 | 16 | 5 | 18 | A-4b (8) | - | |
| | 1024.3 | EOB | 2 3 4 | 10 | 100 | SS-10 | 2.50 | - | - | - | - | - | - | - | - | 22 | A-4b (V) | - | |

NOTES: GROUNDWATER NOT ENCOUNTERED DURING DRILLING. HOLE DID NOT CAVE.
ABANDONMENT METHODS, MATERIALS, QUANTITIES: PLACED 0.5 BAG ASPHALT PATCH; SHOVELED SOIL CUTTINGS

PROJECT: SUM-77-277/224
TYPE: NOISE WALL
PID: 106002 SFN:
START: 6/2/20 END: 6/2/20

DRILLING FIRM / OPERATOR: NEAS / J. HODGES
SAMPLING FIRM / LOGGER: NEAS / J. HODGES
DRILLING METHOD: 3.25" HSA
SAMPLING METHOD: SPT

DRILL RIG: CME 55X
HAMMER: CME AUTOMATIC
CALIBRATION DATE: 12/5/19
ENERGY RATIO (%): 81.9

STATION / OFFSET: 33+18, 2' RT.
ALIGNMENT: NOISE WALL C
ELEVATION: 1044.1 (MSL) EOB: 25.0 ft.
LAT / LONG: 41.003846, -81.494344

EXPLORATION ID B-143-0-17
PAGE 1 OF 1

| MATERIAL DESCRIPTION AND NOTES | ELEV. 1044.1 | DEPTHS | SPT/ RQD | $N_{60}$ | REC (%) | SAMPLE ID | HP (tsf) | GRADATION (%) GR | CS | FS | SI | CL | ATTERBERG LL | PL | PI | WC | ODOT CLASS (GI) | SO4 ppm | BACK FILL |
|---|---|---|---|---|---|---|---|---|---|---|---|---|---|---|---|---|---|---|---|
| **12.0" ASPHALT AND 10.0" BASE (DRILLERS DESCRIPTION)** | 1042.3 | | | | | | | | | | | | | | | | | | |
| MEDIUM DENSE, BROWN, **COARSE AND FINE SAND**, TRACE SILT, TRACE GRAVEL, TRACE CLAY, DAMP | 1041.1 | | 7 12 15 | 37 | 89 | SS-1A | - | - | - | - | - | - | - | - | - | 10 | A-3a (V) | - | |
| | | | | | | SS-1B | - | - | - | - | - | - | - | - | - | 10 | A-4a (V) | - | |
| MEDIUM DENSE TO DENSE, BROWN, **SANDY SILT**, TRACE TO LITTLE GRAVEL, TRACE TO LITTLE CLAY, DAMP TO MOIST | | | 5 7 14 | 29 | 100 | SS-2 | - | - | - | - | - | - | - | - | - | 10 | A-4a (V) | - | |
| | | | 12 14 15 | 40 | 67 | SS-3 | - | 15 | 16 | 26 | 32 | 11 | NP | NP | NP | 11 | A-4a (2) | - | |
| | | | 8 9 12 | 29 | 56 | SS-4 | - | - | - | - | - | - | - | - | - | 12 | A-4a (V) | - | |
| @11.0' TO 17.5'; SS-5 TO SS-7 BECOMES VERY STIFF TO HARD, BROWN MOTTLED WITH GRAY AND ORANGISH BROWN, CONTAINS IRON STAINING | | | 3 8 9 | 23 | 67 | SS-5 | 4.50 | - | - | - | - | - | - | - | - | 15 | A-4a (V) | - | |
| | | | 4 7 12 | 26 | 100 | SS-6 | 4.50 | 12 | 8 | 29 | 36 | 15 | 23 | 17 | 6 | 14 | A-4a (3) | - | |
| | 1026.1 | | 3 3 3 | 8 | 44 | SS-7 | 3.50 | - | - | - | - | - | - | - | - | 19 | A-4a (V) | - | |
| LOOSE, BROWN, **COARSE AND FINE SAND**, LITTLE GRAVEL, LITTLE SILT, TRACE CLAY, MOIST | 1023.6 | | 2 3 3 | 8 | 39 | SS-8 | - | - | - | - | - | - | - | - | - | 12 | A-3a (V) | - | |
| LOOSE, BROWN, **GRAVEL WITH SAND**, TRACE SILT, TRACE CLAY, DAMP<br>@21.0' TO 22.5'; NO RECOVERY, VERY DENSE, POSSIBLE COBBLE | | | 50/4" | - | 0 | SS-9 | - | - | - | - | - | - | - | - | - | - | | - | |
| | 1019.1 | EOB | 3 3 4 | 10 | 67 | SS-10 | - | - | - | - | - | - | - | - | - | 6 | A-1-b (V) | - | |

NOTES: GROUNDWATER NOT ENCOUNTERED DURING DRILLING. HOLE DID NOT CAVE.
ABANDONMENT METHODS, MATERIALS, QUANTITIES: PLACED 0.5 BAG ASPHALT PATCH; SHOVELED SOIL CUTTINGS

STANDARD ODOT LOG W/ SULFATES (8.5 X 11) - OH DOT.GDT - 11/13/20 22:39 - C:\USERS\KAREN\DESKTOP\GINT FILES\SUM-77-277-224 PHASE 2.GPJ



**SUM-77/277/224**
**VARIOUS**

**STRUCTURE FOUNDATION EXPLORATION**
**BARRIER C**
**BORING LOGS B-142-0-17 & B-143-0-17**

DRAWN EB
CHECKED BPA

PROJECT: SUM-77-277/224
TYPE: NOISE WALL
PID: 106002 SFN:
START: 6/1/20 END: 6/1/20

DRILLING FIRM / OPERATOR: NEAS / J. HODGES
SAMPLING FIRM / LOGGER: NEAS / J. HODGES
DRILLING METHOD: 3.25" HSA
SAMPLING METHOD: SPT

DRILL RIG: CME 55X
HAMMER: CME AUTOMATIC
CALIBRATION DATE: 12/5/19
ENERGY RATIO (%): 81.9

STATION / OFFSET: 35+22, 2' RT.
ALIGNMENT: NOISE WALL C
ELEVATION: 1039.0 (MSL) EOB: 25.0 ft.
LAT / LONG: 41.004406, -81.494378

EXPLORATION ID B-144-0-17
PAGE 1 OF 1

| MATERIAL DESCRIPTION AND NOTES | ELEV. | DEPTHS | SPT/ RQD | $N_{60}$ | REC (%) | SAMPLE ID | HP (tsf) | GRADATION (%) GR | CS | FS | SI | CL | ATTERBERG LL | PL | PI | WC | ODOT CLASS (GI) | SO4 ppm | BACK FILL |
|---|---|---|---|---|---|---|---|---|---|---|---|---|---|---|---|---|---|---|---|
| **12.0" ASPHALT AND 10.0" BASE (DRILLERS DESCRIPTION)** | 1039.0<br>1037.2 | | | | | | | | | | | | | | | | | | |
| DENSE, BROWN, **COARSE AND FINE SAND**, SOME GRAVEL, LITTLE SILT, TRACE CLAY, CONTAINS IRON STAINING, DAMP | 1035.5 | | 8 13 16 | 40 | 67 | SS-1 | - | - | - | - | - | - | - | - | - | 8 | A-3a (V) | - | |
| MEDIUM DENSE, LIGHT BROWN, **STONE FRAGMENTS WITH SAND AND SILT**, TRACE CLAY, DAMP | 1033.5 | | 9 6 9 | 20 | 11 | SS-2 | - | - | - | - | - | - | - | - | - | 3 | A-2-4 (V) | - | |
| VERY STIFF TO HARD, BROWN, **SANDY SILT**, LITTLE CLAY, LITTLE GRAVEL, DAMP | 1026.0 | | 14 9 12 | 29 | 67 | SS-3 | 3.50 | - | - | - | - | - | - | - | - | 10 | A-4a (V) | - | |
| | | | 6 10 15 | 34 | 83 | SS-4 | 4.50 | 11 | 8 | 25 | 38 | 18 | 25 | 16 | 9 | 12 | A-4a (4) | - | |
| | | | 6 10 12 | 30 | 50 | SS-5 | 4.25 | - | - | - | - | - | - | - | - | 11 | A-4a (V) | - | |
| DENSE, BROWN, **GRAVEL WITH SAND**, TRACE SILT, TRACE CLAY, DAMP<br><br>@16.0' - 20.0'; BECOMES LOOSE TO MEDIUM DENSE | 1016.0 | | 12 15 16 | 42 | 39 | SS-6 | - | - | - | - | - | - | - | - | - | 8 | A-1-b (V) | - | |
| | | | 2 3 4 | 10 | 33 | SS-7 | - | - | - | - | - | - | - | - | - | 7 | A-1-b (V) | - | |
| | | | 4 4 4 | 11 | 33 | SS-8 | - | - | - | - | - | - | - | - | - | 8 | A-1-b (V) | - | |
| | | | 2 2 2 | 5 | 44 | SS-9 | - | 38 | 32 | 16 | 9 | 5 | NP | NP | NP | 9 | A-1-b (0) | - | |
| LOOSE, BROWN, **COARSE AND FINE SAND**, TRACE SILT, TRACE CLAY, TRACE GRAVEL, DAMP | 1014.0 | EOB | 2 2 2 | 5 | 33 | SS-10 | - | - | - | - | - | - | - | - | - | 6 | A-3a (V) | - | |

NOTES: GROUNDWATER NOT ENCOUNTERED DURING DRILLING. HOLE DID NOT CAVE.
ABANDONMENT METHODS, MATERIALS, QUANTITIES: PLACED 0.5 BAG ASPHALT PATCH; SHOVELED SOIL CUTTINGS

PROJECT: SUM-77-277/224
TYPE: NOISE WALL
PID: 106002 SFN:
START: 6/1/20 END: 6/1/20

DRILLING FIRM / OPERATOR: NEAS / J. HODGES
SAMPLING FIRM / LOGGER: NEAS / J. HODGES
DRILLING METHOD: 3.25" HSA
SAMPLING METHOD: SPT

DRILL RIG: CME 55X
HAMMER: CME AUTOMATIC
CALIBRATION DATE: 12/5/19
ENERGY RATIO (%): 81.9

STATION / OFFSET: 37+14, 2' RT.
ALIGNMENT: NOISE WALL C
ELEVATION: 1034.1 (MSL) EOB: 25.0 ft.
LAT / LONG: 41.004931, -81.494409

EXPLORATION ID B-145-0-17
PAGE 1 OF 1

| MATERIAL DESCRIPTION AND NOTES | ELEV. | DEPTHS | SPT/ RQD | $N_{60}$ | REC (%) | SAMPLE ID | HP (tsf) | GRADATION (%) GR | CS | FS | SI | CL | ATTERBERG LL | PL | PI | WC | ODOT CLASS (GI) | SO4 ppm | BACK FILL |
|---|---|---|---|---|---|---|---|---|---|---|---|---|---|---|---|---|---|---|---|
| **12.0" ASPHALT AND 10.0" BASE (DRILLERS DESCRIPTION)** | 1034.1<br>1032.3 | | | | | | | | | | | | | | | | | | |
| MEDIUM DENSE, BROWN, **SANDY SILT**, TRACE TO LITTLE GRAVEL, TRACE TO LITTLE CLAY, DAMP | 1023.6 | | 6 7 12 | 26 | 39 | SS-1 | - | 15 | 19 | 28 | 28 | 10 | NP | NP | NP | 8 | A-4a (1) | - | |
| | | | 8 7 9 | 22 | 100 | SS-2 | - | - | - | - | - | - | - | - | - | 12 | A-4a (V) | - | |
| | | | 5 6 10 | 22 | 67 | SS-3 | - | - | - | - | - | - | - | - | - | 10 | A-4a (V) | - | |
| | | | 6 6 9 | 20 | 78 | SS-4 | - | 10 | 14 | 37 | 28 | 11 | NP | NP | NP | 11 | A-4a (1) | - | |
| LOOSE TO DENSE, ORANGISH BROWN AND LIGHT BROWN, **COARSE AND FINE SAND**, TRACE SILT, TRACE GRAVEL, TRACE GRAVEL, CONTAINS IRON STAINING, DAMP | 1011.1 | | 4 5 6 | 15 | 100 | SS-5 | - | - | - | - | - | - | - | - | - | 7 | A-3a (V) | - | |
| | | | 5 5 6 | 15 | 100 | SS-6 | - | - | - | - | - | - | - | - | - | 7 | A-3a (V) | - | |
| | | | 2 2 2 | 5 | 67 | SS-7 | - | - | - | - | - | - | - | - | - | 4 | A-3a (V) | - | |
| | | | 2 2 2 | 5 | 67 | SS-8 | - | - | - | - | - | - | - | - | - | 6 | A-3a (V) | - | |
| | | | 6 11 15 | 35 | 78 | SS-9 | - | - | - | - | - | - | - | - | - | 8 | A-3a (V) | - | |
| DENSE, BROWN, **STONE FRAGMENTS WITH SAND**, LITTLE SILT, TRACE CLAY, DAMP | 1009.1 | EOB | 7 13 18 | 42 | 56 | SS-10 | - | - | - | - | - | - | - | - | - | 6 | A-1b (V) | - | |

NOTES: GROUNDWATER NOT ENCOUNTERED DURING DRILLING. HOLE DID NOT CAVE.
ABANDONMENT METHODS, MATERIALS, QUANTITIES: PLACED 0.5 BAG ASPHALT PATCH; SHOVELED SOIL CUTTINGS

STANDARD ODOT LOG W/ SULFATES (8.5 X 11) - OH DOT.GDT - 11/13/20 22:39 - C:\USERS\KAREN\DESKTOP\GINT FILES\SUM-77-277-224 PHASE 2.GPJ



**SUM-77/277/224**
**VARIOUS**

**STRUCTURE FOUNDATION EXPLORATION**
**BARRIER C**
**BORING LOGS B-144-0-17 & B-145-0-17**

DRAWN EB
CHECKED BPA

PROJECT: SUM-77-277/224 | DRILLING FIRM / OPERATOR: GPD / J. TETER | DRILL RIG: B54 | STATION / OFFSET: 421+90, 72' RT. | EXPLORATION ID B-145-1-17
TYPE: CCTV POLE | SAMPLING FIRM / LOGGER: NEAS / J. TETER | HAMMER: CME AUTOMATIC | ALIGNMENT: IR-77
PID: 106002 SFN: | DRILLING METHOD: 3.25" HSA | CALIBRATION DATE: 9/11/20 | ELEVATION: 1033.2 (MSL) EOB: 25.0 ft. | PAGE 1 OF 1
START: 12/3/20 END: 12/4/20 | SAMPLING METHOD: SPT | ENERGY RATIO (%): 80.9 | LAT / LONG: 41.005055, -81.493878

| MATERIAL DESCRIPTION AND NOTES | ELEV. 1033.2 | DEPTHS | SPT/ RQD | $N_{60}$ | REC (%) | SAMPLE ID | HP (tsf) | GRADATION (%) GR | CS | FS | SI | CL | ATTERBERG LL | PL | PI | WC | ODOT CLASS (GI) | BACK FILL |
|---|---|---|---|---|---|---|---|---|---|---|---|---|---|---|---|---|---|---|
| **9.5" ASPHALT (DRILLERS DESCRIPTION)** | 1032.4 | | | | | | | | | | | | | | | | | |
| MEDIUM DENSE, BROWN, **COARSE AND FINE SAND**, TRACE GRAVEL, TRACE SILT, TRACE CLAY, DAMP | 1031.2 | | 4 4 6 | 13 | 72 | SS-1A | - | - | - | - | - | - | - | - | - | 8 | A-3a (V) | |
| | | | | | | SS-1B | 4.50 | - | - | - | - | - | - | - | - | 9 | A-4a (V) | |
| HARD, BROWN, **SANDY SILT**, SOME CLAY, LITTLE GRAVEL, DAMP | 1030.2 | | | | | | | | | | | | | | | | | |
| MEDIUM DENSE, BROWN, **COARSE AND FINE SAND**, SOME SILT, LITTLE GRAVEL, TRACE CLAY, DAMP | 1027.7 | | 7 6 8 | 19 | 78 | SS-2 | - | - | - | - | - | - | - | - | - | 11 | A-3a (V) | |
| VERY STIFF TO HARD, BROWN AND GRAYISH BROWN, **SANDY SILT**, LITTLE TO SOME CLAY, TRACE TO LITTLE GRAVEL, DAMP | | ▽ 1025.2 | 4 3 3 | 8 | 67 | SS-3 | 3.25 | 8 | 11 | 31 | 35 | 15 | 21 | 15 | 6 | 12 | A-4a (3) | |
| | | | 3 2 4 | 8 | 78 | SS-4 | 2.50 | - | - | - | - | - | - | - | - | 15 | A-4a (V) | |
| | | | 6 10 9 | 26 | 94 | SS-5 | 4.50 | 6 | 7 | 23 | 42 | 22 | 27 | 17 | 10 | 12 | A-4a (6) | |
| | | | 8 7 8 | 20 | 100 | SS-6 | 4.50 | - | - | - | - | - | - | - | - | 14 | A-4a (V) | |
| | | | 6 6 5 | 15 | 100 | SS-7 | 4.50 | - | - | - | - | - | - | - | - | 14 | A-4a (V) | |
| | | | 2 6 8 | 19 | 100 | SS-8 | 4.50 | 15 | 19 | 24 | 28 | 14 | 24 | 15 | 9 | 10 | A-4a (1) | |
| LOOSE TO MEDIUM DENSE, BROWN, **COARSE AND FINE SAND**, TRACE SILT, TRACE GRAVEL, TRACE CLAY, DAMP | 1012.7 | | 5 4 4 | 11 | 67 | SS-9 | - | - | - | - | - | - | - | - | - | 3 | A-3a (V) | |
| | 1008.2 | EOB | 3 4 3 | 9 | 86 | SS-10 | - | - | - | - | - | - | - | - | - | 4 | A-3a (V) | |

NOTES: GROUNDWATER NOT ENCOUNTERED DURING DRILLING, 8.0' AT END OF DRILLING. HOLE DID NOT CAVE.
ABANDONMENT METHODS, MATERIALS, QUANTITIES: PLACED 0.5 BAG ASPHALT PATCH; SHOVELED SOIL CUTTINGS

STANDARD ODOT SOIL BORING LOG (8.5 X 11) - OH DOT.GDT - 1/7/21 11:01 - X:\ACTIVE PROJECTS\ACTIVE SOIL PROJECTS\SUM-77-277 LIGHT POLES\GINT FILES\SUM-77-277 LIGHT POLES.(

PROJECT: SUM-77-277/224 | DRILLING FIRM / OPERATOR: NEAS / J. HODGES | DRILL RIG: CME 55X | STATION / OFFSET: 39+19, 3' RT. | EXPLORATION ID B-146-0-17
TYPE: NOISE WALL | SAMPLING FIRM / LOGGER: NEAS / J. HODGES | HAMMER: CME AUTOMATIC | ALIGNMENT: NOISE WALL C
PID: 106002 SFN: | DRILLING METHOD: 3.25" HSA | CALIBRATION DATE: 12/5/19 | ELEVATION: 1028.9 (MSL) EOB: 25.0 ft. | PAGE 1 OF 1
START: 6/1/20 END: 6/1/20 | SAMPLING METHOD: SPT | ENERGY RATIO (%): 81.9 | LAT / LONG: 41.005495, -81.494440

| MATERIAL DESCRIPTION AND NOTES | ELEV. 1028.9 | DEPTHS | SPT/ RQD | $N_{60}$ | REC (%) | SAMPLE ID | HP (tsf) | GRADATION (%) GR | CS | FS | SI | CL | ATTERBERG LL | PL | PI | WC | ODOT CLASS (GI) | SO4 ppm | BACK FILL |
|---|---|---|---|---|---|---|---|---|---|---|---|---|---|---|---|---|---|---|---|
| **12.0" ASPHALT AND 10.0" BASE (DRILLERS DESCRIPTION)** | 1027.1 | | | | | | | | | | | | | | | | | | |
| MEDIUM DENSE, BROWN, **COARSE AND FINE SAND**, SOME SILT, LITTLE GRAVEL, TRACE CLAY, DAMP TO MOIST | 1023.4 | | 7 7 7 | 19 | 67 | SS-1 | - | 15 | 17 | 34 | 25 | 9 | NP | NP | NP | 10 | A-3a (0) | - | |
| | | | 4 6 9 | 20 | 100 | SS-2 | - | - | - | - | - | - | - | - | - | 15 | A-3a (V) | - | |
| HARD, BROWN, **SANDY SILT**, LITTLE CLAY, TRACE GRAVEL, DAMP | | | 3 7 8 | 20 | 100 | SS-3 | 4.50 | - | - | - | - | - | - | - | - | 13 | A-4a (V) | - | |
| | | | 4 8 9 | 23 | 100 | SS-4 | 4.50 | 6 | 8 | 27 | 43 | 16 | 23 | 16 | 7 | 13 | A-4a (5) | - | |
| | | | 3 7 7 | 19 | 44 | SS-5 | 4.50 | - | - | - | - | - | - | - | - | 11 | A-4a (V) | - | |
| | 1013.4 | | 4 6 8 | 19 | 56 | SS-6 | 4.50 | - | - | - | - | - | - | - | - | 13 | A-4a (V) | - | |
| LOOSE TO MEDIUM DENSE, BROWN AND ORANGISH BROWN, **COARSE AND FINE SAND**, SOME SILT, TRACE GRAVEL, TRACE CLAY, CONTAINS IRON STAINING, DAMP TO MOIST | | | 2 2 3 | 7 | 44 | SS-7 | - | - | - | - | - | - | - | - | - | 13 | A-3a (V) | - | |
| | | | 2 5 6 | 15 | 67 | SS-8 | - | - | - | - | - | - | - | - | - | 6 | A-3a (V) | - | |
| | 1005.9 | | 4 4 6 | 14 | 56 | SS-9 | - | - | - | - | - | - | - | - | - | 7 | A-3a (V) | - | |
| MEDIUM DENSE, BROWN AND ORANGISH BROWN, **GRAVEL AND STONE FRAGMENTS WITH SAND**, TRACE SILT, TRACE CLAY, CONTAINS IRON STAINING, DAMP | 1003.9 | EOB | 5 6 8 | 19 | 56 | SS-10 | - | - | - | - | - | - | - | - | - | 8 | A-1-b (V) | - | |

NOTES: GROUNDWATER NOT ENCOUNTERED DURING DRILLING. HOLE DID NOT CAVE.
ABANDONMENT METHODS, MATERIALS, QUANTITIES: PLACED 0.5 BAG ASPHALT PATCH; SHOVELED SOIL CUTTINGS

STANDARD ODOT LOG W/ SULFATES (8.5 X 11) - OH DOT.GDT - 11/13/20 22:39 - C:\USERS\KAREN\DESKTOP\GINT FILES\SUM-77-277-224 PHASE 2.GPJ

| | | | |
|---|---|---|---|
| 2007 2009 | **SUM-77/277/224 VARIOUS** | **STRUCTURE FOUNDATION EXPLORATION CCTV POLE & BARRIER C BORING LOGS B-145-1-17 & B-146-0-17** | DRAWN EB / CHECKED BPA |

| | | | | |
|---|---|---|---|---|
| PROJECT: SUM-77-277/224 | DRILLING FIRM / OPERATOR: NEAS / J. HODGES | DRILL RIG: CME 55X | STATION / OFFSET: 41+07, 9' RT. | EXPLORATION ID B-147-0-17 |
| TYPE: NOISE WALL | SAMPLING FIRM / LOGGER: NEAS / J. HODGES | HAMMER: CME AUTOMATIC | ALIGNMENT: NOISE WALL C | |
| PID: 106002 SFN: | DRILLING METHOD: 3.25" HSA | CALIBRATION DATE: 12/5/19 | ELEVATION: 1024.2 (MSL) EOB: 25.0 ft. | PAGE 1 OF 1 |
| START: 6/1/20 END: 6/1/20 | SAMPLING METHOD: SPT | ENERGY RATIO (%): 81.9 | LAT / LONG: 41.006009, -81.494469 | |

| MATERIAL DESCRIPTION AND NOTES | ELEV. | DEPTHS | SPT/ RQD | $N_{60}$ | REC (%) | SAMPLE ID | HP (tsf) | GRADATION (%) GR | CS | FS | SI | CL | ATTERBERG LL | PL | PI | WC | ODOT CLASS (GI) | SO4 ppm | BACK FILL |
|---|---|---|---|---|---|---|---|---|---|---|---|---|---|---|---|---|---|---|---|
| **12.0" ASPHALT AND 10.0" BASE (DRILLERS DESCRIPTION)** | 1024.2 | | | | | | | | | | | | | | | | | | |
| | 1022.4 | | | | | | | | | | | | | | | | | | |
| LOOSE TO MEDIUM DENSE, BROWN, **GRAVEL WITH SAND**, TRACE SILT, TRACE CLAY, DAMP | | | 5 5 5 | 14 | 44 | SS-1 | - | - | - | - | - | - | - | - | - | 7 | A-1-b (V) | - | |
| | 1019.5 | | 2 2 2 | 5 | 33 | SS-2A | - | - | - | - | - | - | - | - | - | 6 | A-1-b (V) | - | |
| | | | | | | SS-2B | 1.00 | - | - | - | - | - | - | - | - | 14 | A-4a (V) | - | |
| MEDIUM STIFF TO HARD, BROWN, **SANDY SILT**, LITTLE CLAY, TRACE TO LITTLE GRAVEL, DAMP TO MOIST | | | 2 5 4 | 12 | 56 | SS-3 | 4.25 | - | - | - | - | - | - | - | - | 11 | A-4a (V) | - | |
| | | | 6 6 7 | 18 | 50 | SS-4 | 4.50 | 7 | 9 | 35 | 34 | 15 | 20 | 14 | 6 | 12 | A-4a (3) | - | |
| | | | 4 5 6 | 15 | 44 | SS-5 | 4.50 | - | - | - | - | - | - | - | - | 12 | A-4a (V) | - | |
| @13.5' TO 17.5'; SS-6 AND SS-7 BECOME MEDIUM DENSE | | | 6 8 10 | 25 | 67 | SS-6 | - | - | - | - | - | - | - | - | - | 13 | A-4a (V) | - | |
| | | | 5 9 11 | 27 | 67 | SS-7 | - | 9 | 8 | 34 | 36 | 13 | NP | NP | NP | 11 | A-4a (3) | - | |
| | | | 5 8 10 | 25 | 100 | SS-8 | 4.50 | - | - | - | - | - | - | - | - | 16 | A-4a (V) | - | |
| | | | 4 6 8 | 19 | 50 | SS-9 | 4.25 | - | - | - | - | - | - | - | - | 11 | A-4a (V) | - | |
| | 999.2 | EOB | 2 3 8 | 15 | 56 | SS-10 | 4.00 | 15 | 12 | 29 | 32 | 12 | 22 | 16 | 6 | 10 | A-4a (2) | - | |

NOTES: GROUNDWATER NOT ENCOUNTERED DURING DRILLING. HOLE DID NOT CAVE.

ABANDONMENT METHODS, MATERIALS, QUANTITIES: PLACED 0.5 BAG ASPHALT PATCH; SHOVELED SOIL CUTTINGS

STANDARD ODOT LOG W/ SULFATES (8.5 X 11) - OH DOT.GDT - 11/13/20 22:39 - C:\USERS\KAREN\DESKTOP\GINT FILES\SUM-77-277-224 PHASE 2.GPJ

| | | | |
|---|---|---|---|
| 2017/209 | **SUM-77/277/224 VARIOUS** | **STRUCTURE FOUNDATION EXPLORATION BARRIER C BORING LOG B-147-0-17** | DRAWN EB / CHECKED BPA |

P:\17-0129 (106002 SUM-76-10.95 Part 3 - SUM-77_277_224)\106002\geotechnical\sheets\106002ZL094.dgn Sheet 1/8/2021 1:32:30 AM karens

State of Ohio
Department of Highways
Testing Laboratory

# LOG OF BORING

Date Started 2-15-61 Sampler: Type SS Dia. 1 3/8" Water Elev: Immediate
Date Completed 2-17-61 Casing: Length 60' Dia. 3 1/2" After ___ Hours

Project Identification: SUMMIT
SUM-8-0.72
SUM-8-0814
OVER TUSCARAWAS RIVER

Boring No. B-10 Station & Offset 429+77, 48'LT. (REAR PIER) Surface Elev. 998.1

| Elev. | Depth | Std. Pen. (N) | Description | Field No. | Lab. Nos. So. | Physical Characteristics % Agg. | % C.S. | % F.S. | % Silt | % Clay | LL. | PI. | W.C. | SHTL Class. |
|---|---|---|---|---|---|---|---|---|---|---|---|---|---|---|
| 998.1 | 0 | | | | | | | | | | | | | |
| | 2 | | | | | | | | | | | | | |
| | 4 | | | | | | | | | | | | | |
| 993.1 | 6 | 8/7 | Dark Gray Gravelly Sand | 1 | 98008 | 39 | 37 | 19 | -5- | | NP | NP | 13 | |
| | 8 | | | | | | | | | | | | | |
| 988.1 | 10 | 12/19 | Gray Sandy Gravel | 2 | 98009 | 57 | 19 | 18 | -6- | | NP | NP | 12 | |
| | 12 | | | | | | | | | | | | | |
| | 14 | | | | | | | | | | | | | |
| 983.1 | 16 | 9/12 | Gray Sandy Gravel | 3 | 98010 | 54 | 21 | 17 | -8- | | NP | NP | 11 | |
| 980.6 | 18 | 19/26 | Gray Sandy Gravel | 4 | 98011 | 55 | 16 | 21 | -8- | | NP | NP | 12 | |
| 978.1 | 20 | 14/20 | Gray Gravelly Sand | 5 | 98012 | 26 | 26 | 39 | -9- | | NP | NP | 15 | |
| 975.6 | 22 | 15/22 | Gray Sandy Gravel | 6 | 98013 | 60 | 17 | 17 | -6- | | NP | NP | 8 | |
| 973.1 | 24 | 18/19 | Gray Sandy Gravel | 7 | 98014 | 54 | 15 | 25 | -6- | | NP | NP | 8 | |
| | 26 | | | | | | | | | | | | | |
| | 28 | | | | | | | | | | | | | |
| 968.1 | 30 | 11/15 | Gray Gravelly Sand | 8 | 98015 | 37 | 35 | 20 | -8- | | NP | NP | 14 | |
| | 32 | | | | | | | | | | | | | |
| | 34 | | | | | | | | | | | | | |
| 963.1 | 36 | 27/25 | Gray Sandy Gravel | 9 | 98016 | 67 | 15 | 13 | -5- | | NP | NP | 8 | |

Particle Sizes: Agg. = >2.00mm , Coarse Sand = 2.00 - 0.42mm, Fine Sand = 0.42-0.074mm, Silt = 0.074 -0.005mm , Clay = < 0.005 mm

SHEET 7 of 33 Sheets

Boring No. B-10 Station & Offset 429+77, 48' LT Surface Elev. 998.1 Project: SUM-8-0814

| Elev. | Depth | Std. Pen. (N) | Description | Field No. | Lab. Nos. So. | Physical Characteristics % Agg. | % C.S. | % F.S. | % Silt | % Clay | LL. | PI. | W.C. | SHTL Class. |
|---|---|---|---|---|---|---|---|---|---|---|---|---|---|---|
| | 38 | | | | | | | | | | | | | |
| 958.1 | 40 | 17/15 | Sand and Gravel | 10 | | | V | I | S | U | A | L | | |
| | 42 | | | | | | | | | | | | | |
| | 44 | | | | | | | | | | | | | |
| 953.1 | 46 | | Gray Gravelly Sand (Wash Sample)(Heaved 4') | 11 | 98017 | | V | I | S | U | A | L | | |
| | 48 | | | | | | | | | | | | | |
| 948.1 | 50 | 30/46 | Brownish-Gray Silty Sandy Gravel | 12 | 98018 | 60 | 17 | 13 | -10- | | NP | NP | 11 | |
| | 52 | | | | | | | | | | | | | |
| | 54 | | | | | | | | | | | | | |
| 943.1 | 56 | | Gray Gravelly Sand (Wash Sample)(Heaved 4') | 13 | 98019 | | V | I | S | U | A | L | | |
| | 58 | | | | | | | | | | | | | |
| 938.1 | 60 | 19/20 | Gray Sandy Silt | 14 | 98020 | 4 | 16 | 10 | 57 | 13 | NP | NP | 14 | |
| | 62 | | | | | | | | | | | | | |
| | 64 | | | | | | | | | | | | | |
| 933.1 | 66 | 8/8 | Gray Silty Sand | 15 | 98021 | 0 | 15 | 46 | 19 | 20 | NP | NP | 15 | |
| | 68 | | | | | | | | | | | | | |
| 928.1 | 70 | 11/12 | Gray Sandy Silt | 16 | 98022 | 0 | 1 | 33 | 54 | 12 | NP | NP | 16 | |
| | 72 | | | | | | | | | | | | | |
| 923.1 | 74 | 17/22 | Gray Silty Gravelly Sand | 17 | 98023 | 24 | 6 | 40 | 14 | 16 | NP | NP | 15 | |
| | 76 | | | | | | | | | | | | | |
| | 78 | | | | | | | | | | | | | |
| 918.1 | 80 | | | | | | | | | | | | | |

SHEET 8 of 33 Sheets



SUM-77/277/224
VARIOUS

STRUCTURE FOUNDATION EXPLORATION
BRIDGE SUM-77-0810
HISTORICAL BORING LOG B-010-1-61

DRAWN EB
CHECKED BPA

Boring No. B-10 Station 8 Offset 429+77, 48' LT. Surface Elev. 998.1 Project SUM-8-0814

| Elev. 918.1 | Depth | Std. Pen. (N) | Rec ft | Loss ft | Description | Field No. | Lab. Nos. So. | Physical Characteristics % Agg. | % C.S. | % F.S. | % Silt | % Clay | LL | P.I. | W.C. | SHTL Class. |
|---|---|---|---|---|---|---|---|---|---|---|---|---|---|---|---|---|
| | 82 | 13/17 | | | Gray Gravelly Sandy Silt | 18 | 98024 | 17 | 4 | 21 | 41 | 17 | NP | NP | 18 | |
| 913.1 912.1 | 84 86 | 12/19 | | | Gray Sandy Silt | 19 | 98025 | 0 | 2 | 22 | 54 | 22 | NP | NP | 15 | |
| | | | | | BOTTOM OF BORING | | | | | | | | | | | |
| | 88 | | | | | | | | | | | | | | | |
| | 90 | | | | | | | | | | | | | | | |
| | 92 | | | | | | | | | | | | | | | |
| | 94 | | | | | | | | | | | | | | | |
| | 96 | | | | | | | | | | | | | | | |
| | 98 | | | | | | | | | | | | | | | |
| | 100 | | | | | | | | | | | | | | | |
| | 102 | | | | | | | | | | | | | | | |
| | 104 | | | | | | | | | | | | | | | |
| | 106 | | | | | | | | | | | | | | | |
| | 108 | | | | | | | | | | | | | | | |
| | 110 | | | | | | | | | | | | | | | |
| | 112 | | | | | | | | | | | | | | | |
| | 114 | | | | | | | | | | | | | | | |
| | 116 | | | | | | | | | | | | | | | |
| | 118 | | | | | | | | | | | | | | | |
| | 120 | | | | | | | | | | | | | | | |
| | 122 | | | | | | | | | | | | | | | |
| | 124 | | | | | | | | | | | | | | | |

SHEET 9 of 33 Sheets

Form FE - 2m

P:\17-0129 (106002 SUM-76-10.95 Part 3 - SUM-77_277_224)\106002\geotechnical\sheets\106002ZL096.dgn Sheet 1/8/2021 1:33:19 AM karens

LOG OF BORING

Date Started 10-2-63 | Sampler Type SS | Dia. 1 3/8" | Water Elev. ____
Date Completed 10-2-63 | Casing: Length 20' | Dia. 3 1/2"
Boring No. B-1 | Station & Offset 944, 4' Lt (REAR ABUTMENT) | Surface Elev. 1033.9'

| Elev. | Depth | Std. Pen. (N) | Rec. ft. | Loss ft. | Description | Sample No. | Physical Characteristics: % Agg | % C.S. | % F.S. | % Silt | % Clay | L.L. | P.I. | W.C. | SHTL Class. |
|---|---|---|---|---|---|---|---|---|---|---|---|---|---|---|---|
| 1033.9 | 0 | | | | | | | | | | | | | | |
| 1031.4 | 2 | | | | | | | | | | | | | | |
| | 4 | 7/8 | | | Brown and Gray Sandy Gravelly Silt | 1 | 22 | 1 | 17 | 45 | 15 | 20 | 4 | 17 | |
| 1028.9 | 6 | 27/19 | | | Brown Broken Sandstone with Soil | 2 | | V | I | S | U | A | L | 10 | |
| 1026.4 | 8 | 22/9 | | | Brown Silty Sandy Gravel | 3 | 36 | 4 | 20 | 28 | 12 | NP | NP | 14 | |
| 1023.9 | 10 | 7/5 | | | Gray Silty Sandy Gravel | 4 | 56 | 6 | 18 | 13 | 7 | NP | NP | 10 | |
| 1021.4 | 12 | | | | | | | | | | | | | | |
| | 14 | 9/9 | | | Gray Sandy Gravel | 5 | 53 | 29 | 13 | -5 | - | NP | NP | 17 | |
| 1018.9 | 16 | 15/20 | | | Gray Gravelly Silt | 6 | 46 | 1 | 6 | 31 | 16 | NP | NP | 10 | |
| 1016.4 | 18 | 27/46 | | | Gray Silty Gravel | 7 | 66 | 8 | 2 | 16 | 8 | | | 7 | |
| 1013.9 | 20 | 39/10* | | | | | | | | | | | | | |
| 1012.9 | | (0.6') | | | Gray Silt with Shale Fragments | 8 | 52 | 1 | 2 | 30 | 15 | 25 | 8 | 9 | |
| | 22 | | | | ← TOP OF ROCK | | | | | | | | | | |
| | 24 | | | | Clay shale, dark-gray, soft, very moist. Core loss 96%. | | | | | | | | | | |
| | 26 | | 2.0 | 3.0 | | | | | | | | | | | |
| 1005.6 | 28 | | | | | | | | | | | | | | |
| | 30 | | | | Sandstone, gray, firm, fine-grained, with argillaceous, carbonaceous cross-bedded laminae; sandstone is porous and damp throughout. Few frequent intervals of thin dark-gray carbonaceous, clay shale (comprises 5% of interval); an interval of clay shale, dark-gray, firm, carbonaceous, very arenaceous, between 37.7' and 38.7'. Core loss 6%. | | | | | | | | | | |
| | 32 | | 4.6 | 0.4 | | | | | | | | | | | |
| | 34 | | | | | | | | | | | | | | |
| | 36 | | | | | | | | | | | | | | |
| | 38 | | 4.8 | 0.2 | | | | | | | | | | | |
| 993.9 | 40 | | | | ← BOTTOM OF BORING | | | | | | | | | | |

*REFUSAL

LOG OF BORING

Date Started 10-2-63 | Sampler Type SS | Dia. 1 3/8" | Water Elev. ____
Date Completed 10-3-63 | Casing: Length 18' | Dia. 3 1/2"
Boring No. B-8 | Station & Offset 11+84, 23' Rt (FORWARD ABUTMENT) | Surface Elev. 1038.6'

| Elev. | Depth | Std. Pen. (N) | Rec. ft. | Loss ft. | Description | Sample No. | Physical Characteristics: % Agg | % C.S. | % F.S. | % Silt | % Clay | L.L. | P.I. | W.C. | SHTL Class. |
|---|---|---|---|---|---|---|---|---|---|---|---|---|---|---|---|
| 1038.6 | 0 | | | | | | | | | | | | | | |
| 1036.1 | 2 | | | | | | | | | | | | | | |
| | 4 | 15/16 | | | Brownish-Gray Silty Sandy Gravel | 1 | 47 | 6 | 14 | 17 | 16 | 24 | 4 | 14 | |
| 1033.6 | 6 | 5/9 | | | Brown Silty Sandy Gravel | 2 | 57 | 3 | 20 | 12 | 8 | NP | NP | 17 | |
| 1031.1 | 8 | 25* (0.3') | | | Brown Silty Sandy Gravel | 3 | 45 | 6 | 34 | -1 | 5- | NP | NP | 15 | |
| 1028.6 | 10 | 20* (0.3') | | | Gray Silt with Stone Fragments | 4 | V | I | S | U | A L | 25 | 6 | 13 | |
| 1026.1 | 12 | | | | | | | | | | | | | | |
| | 14 | 16/20 | | | Gray Silt | 5 | 0 | 1 | 3 | 66 | 30 | 26 | 6 | 8 | |
| 1023.6 | 16 | * | | | No Sample Recovered - Gravel | | | V | I | S | U | A | L | | |
| 1021.4 | | | | | ← TOP OF ROCK | | | | | | | | | | |
| | 18 | | 2.8 | 2.2 | Sandstone, light-gray, firm, with carbonaceous laminae (comprising 80% of interval) ** | | | | | | | | | | |
| 1019.9 | 20 | | | | | | | | | | | | | | |
| | 22 | | 2.8 | 2.2 | Shale, dark-gray, soft to firm, carbonaceous, arenaceous, very broken throughout. Core loss 24%. | | | | | | | | | | |
| | 24 | | | | | | | | | | | | | | |
| | 26 | | | | | | | | | | | | | | |
| | 28 | | 5.0 | 0.0 | | | | | | | | | | | |
| 1008.6 | 30 | | | | ← BOTTOM OF BORING | | | | | | | | | | |

*REFUSAL

** interbedded with dark-gray, broken arenaceous, shale (comprising 20% of interval). Core loss 50%.

NEAS
National Engineering & Architectural Services Inc.
5710 Westbourne Avenue
Columbus, OH 43213
614-892-0162

## Unconfined Compressive Strength of Rock Core (ASTM D7012 Method C)

(Project: SUM-77/277/224, Boring Location: B-022-1-17, NQ2-1, Depth: 16.9 - 17.3ft)

Tested Date: 8/29/2019

### Specimen Properties

| | |
|---|---|
| Average Dia., $D_{avg}$ (in): | 2.00 |
| Average Height, $H_{avg}$ (in): | 4.31 |
| Length to Diameter Ratio: | 2.15 |
| Area, $A$ ($in^2$): | 3.15 |
| Volume, $V$ ($in^3$): | 13.58 |
| Wet Mass of Specimen (lb): | 1.1 |
| Moisture Content (%): | 6.3 |
| Dry Mass of Specimen (lb): | 1.1 |
| Wet Unit Weight, $\gamma$ ($lb/ft^3$): | 144.4 |
| Dry Unit Weight, $\gamma_d$ ($lb/ft^3$): | 135.9 |

### Final Specimen Figure

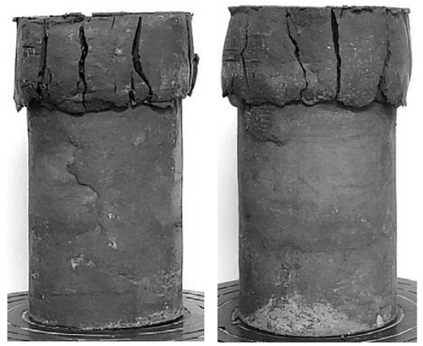

### Results

Unconfined Compressive Strength (psi): **87** **1** (MPa)

Strain (%): **5.6**

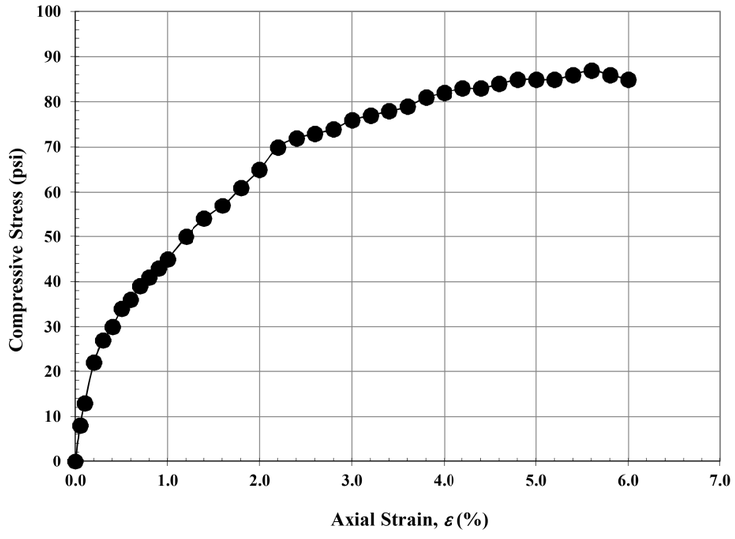


**Notes:** SANDSTONE, brown, slightly weathered, strong, very fine grained. Top 1.25" is CLAYSTONE, gray, highly weathered, very weak. Sandstone layer was unaffected from testing.

Sample trimming procedure does not conform to ASTM D4543 and the results reported may differ from the results obtained from a test specimen that meets the requirements of Practice D4543.

NEAS
National Engineering & Architectural Services Inc.
5710 Westbourne Avenue
Columbus, OH 43213
614-892-0162

## Unconfined Compressive Strength of Rock Core (ASTM D7012 Method C)

(Project: SUM-77/277/224, Boring Location: B-022-2-17, NQ2-1, Depth: 19.9 - 20.2ft)

Tested Date: 8/29/2019

### Specimen Properties

| | |
|---|---|
| Average Dia., $D_{avg}$ (in): | 1.99 |
| Average Height, $H_{avg}$ (in): | 4.08 |
| Length to Diameter Ratio: | 2.06 |
| Area, $A$ ($in^2$): | 3.10 |
| Volume, $V$ ($in^3$): | 12.63 |
| Wet Mass of Specimen (lb): | 1.1 |
| Moisture Content (%): | 2.0 |
| Dry Mass of Specimen (lb): | 1.1 |
| Wet Unit Weight, $\gamma$ ($lb/ft^3$): | 152.9 |
| Dry Unit Weight, $\gamma_d$ ($lb/ft^3$): | 149.9 |

### Final Specimen Figure

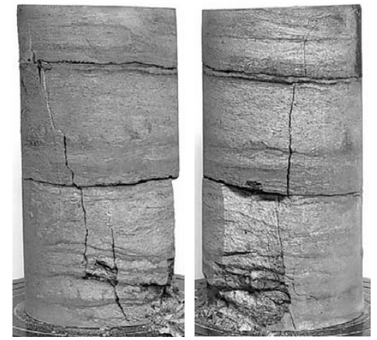

### Results

Unconfined Compressive Strength (psi): **4156** **29** (MPa)

Strain (%): **1.6**

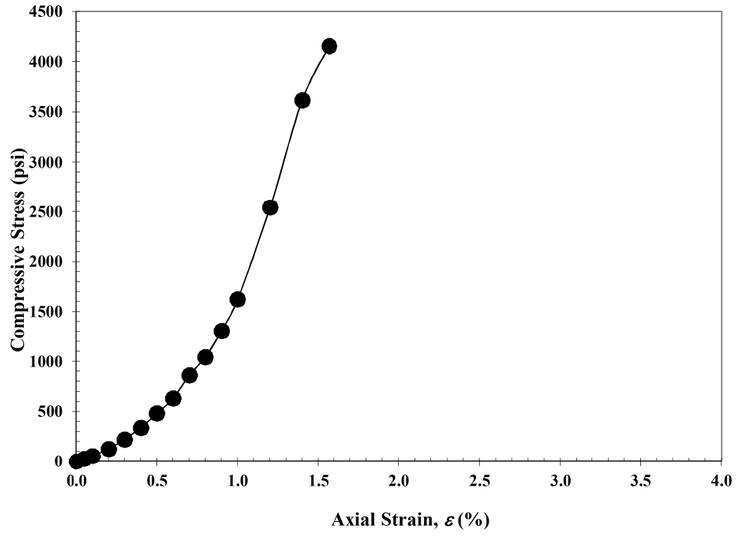


**Notes:** SANDSTONE INTERBEDDED WITH SHALE, brown and gray, moderately weathered, moderately strong.

Sample trimming procedure does not conform to ASTM D4543 and the results reported may differ from the results obtained from a test specimen that meets the requirements of Practice D4543.

DRAWN EB CHECKED BPA

STRUCTURE FOUNDATION EXPLORATION
UNCONFINED COMPRESSIVE STRENGTH TEST RESULTS
BORINGS B-022-1-17 & B-022-2-17

SUM-77/277/224
VARIOUS

205/209

P:\17-0129 (106002 SUM-76-10.95 Part 3 - SUM-77_277_224)\106002\geotechnical\sheets\106002ZD001.dgn 1/8/2021 1:33:53 AM karens

NEAS
National Engineering & Architectural Services Inc.
5710 Westbourne Avenue
Columbus, OH 43213
614-892-0162

## Unconfined Compressive Strength of Rock Core (ASTM D7012 Method C)

(Project: SUM-77/277/224, Boring Location: B-024-4-17, NQ2-1, Depth: 7.4 - 7.8ft)

Tested Date: 8/29/2019

### Specimen Properties

| | |
|---|---|
| Average Dia., $D_{avg}$ (in): | 1.98 |
| Average Height, $H_{avg}$ (in): | 4.41 |
| Length to Diameter Ratio: | 2.23 |
| Area, $A$ ($in^2$): | 3.08 |
| Volume, $V$ ($in^3$): | 13.60 |
| Wet Mass of Specimen (lb): | 1.1 |
| Moisture Content (%): | 2.3 |
| Dry Mass of Specimen (lb): | 1.1 |
| Wet Unit Weight, $\gamma$ ($lb/ft^3$): | 140.2 |
| Dry Unit Weight, $\gamma_d$ ($lb/ft^3$): | 137.1 |

### Final Specimen Figure

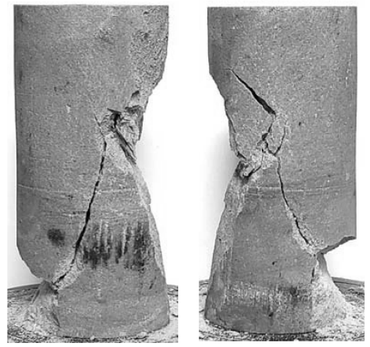

### Results

Unconfined Compressive Strength (psi): **5734** **40** (MPa)

Strain (%): **1.1**

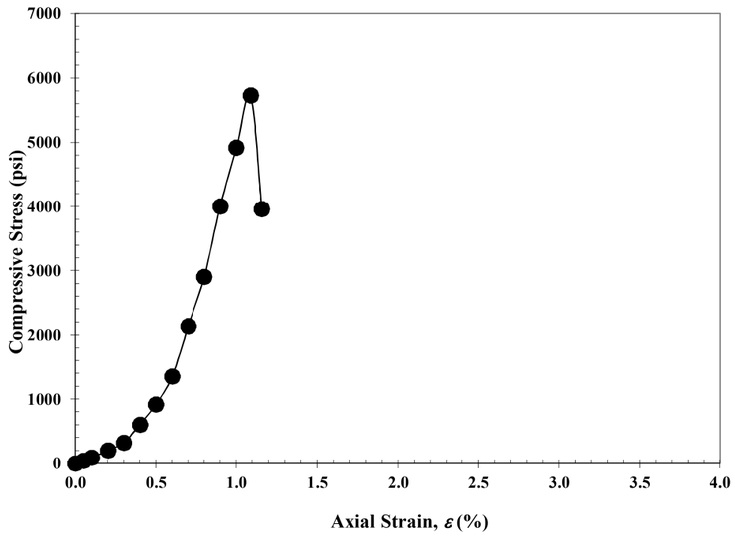


**Notes:** SANDSTONE, brown, slightly weathered, moderately strong, very fine to medium grained.

Sample trimming procedure does not conform to ASTM D4543 and the results reported may differ from the results obtained from a test specimen that meets the requirements of Practice D4543.

NEAS
National Engineering & Architectural Services Inc.
5710 Westbourne Avenue
Columbus, OH 43213
614-892-0162

## Unconfined Compressive Strength of Rock Core (ASTM D7012 Method C)

(Project: SUM-77-277/224 , Boring Location: B-033-2-17, NQ2-1, Depth: 46.2 - 46.6ft)

Tested Date: 11/12/2019

### Specimen Properties

| | |
|---|---|
| Average Dia., $D_{avg}$ (in): | 1.98 |
| Average Height, $H_{avg}$ (in): | 4.66 |
| Length to Diameter Ratio: | 2.35 |
| Area, $A$ ($in^2$): | 3.09 |
| Volume, $V$ ($in^3$): | 14.42 |
| Wet Mass of Specimen (lb): | 1.2 |
| Moisture Content (%): | 6.3 |
| Dry Mass of Specimen (lb): | 1.1 |
| Wet Unit Weight, $\gamma$ ($lb/ft^3$): | 145.2 |
| Dry Unit Weight, $\gamma_d$ ($lb/ft^3$): | 136.6 |

### Final Specimen Figure

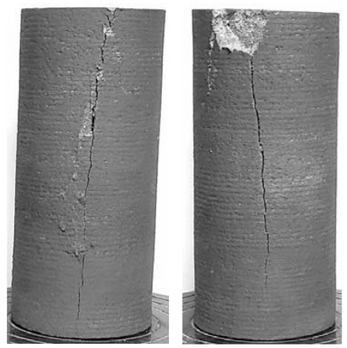

### Results

Unconfined Compressive Strength (psi): **4062** **28** (MPa)

Strain (%): **0.9**

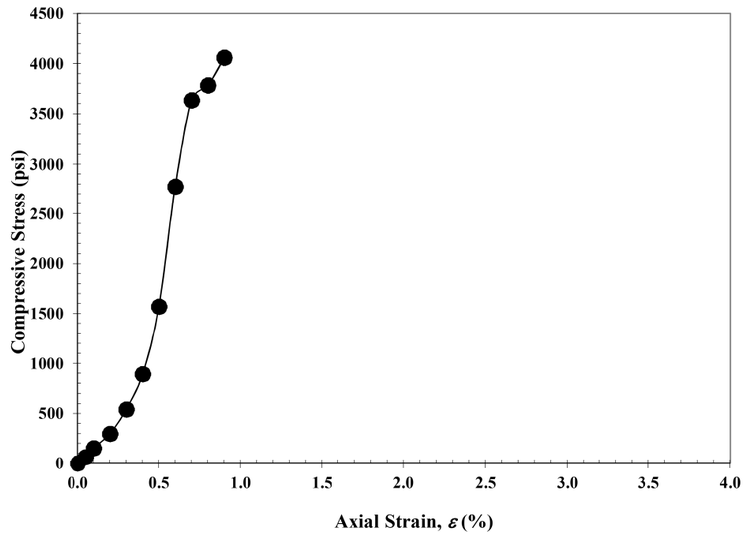


**Notes:** SANDSTONE, gray, slightly weathered, very fine to fine grained, moderately strong.

Sample trimming prccedure does not conform to ASTM D4543 and the results reported may differ from the results obtained from a test specimen that meets the requirements of Practice D4543.

DRAWN EB CHECKED BPA

STRUCTURE FOUNDATION EXPLORATION
UNCONFINED COMPRESSIVE STRENGTH TEST RESULTS
BORINGS B-024-4-17 & B-033-2-17

SUM-77/277/224
VARIOUS

206/209

P:\17-0129 (106002 SUM-76-10.95 Part 3 - SUM-77_277_224)\106002\geotechnical\sheets\106002ZD002.dgn 1/8/2021 11:34:25 AM karens

NEAS
National Engineering & Architectural Services Inc.
5710 Westbourne Avenue
Columbus, OH 43213
614-892-0162

## Unconfined Compressive Strength of Rock Core (ASTM D7012 Method C)

(Project: SUM-77-277/224 , Boring Location: B-033-3-17, NQ2-1, Depth: 37.4 - 37.8ft)

Tested Date: 3/26/2020

### Specimen Properties

| | |
|---|---|
| Average Dia., $D_{avg}$ (in): | 1.96 |
| Average Height, $H_{avg}$ (in): | 4.57 |
| Length to Diameter Ratio: | 2.33 |
| Area, $A$ ($in^2$): | 3.01 |
| Volume, $V$ ($in^3$): | 13.77 |
| Wet Mass of Specimen (lb): | 1.2 |
| Moisture Content (%): | 3.4 |
| Dry Mass of Specimen (lb): | 1.2 |
| Wet Unit Weight, $\gamma$ ($lb/ft^3$): | 153.4 |
| Dry Unit Weight, $\gamma_d$ ($lb/ft^3$): | 148.4 |

### Final Specimen Figure

### Results

Unconfined Compressive Strength (psi): **4548** **31** (MPa)

Strain (%): **1.3**

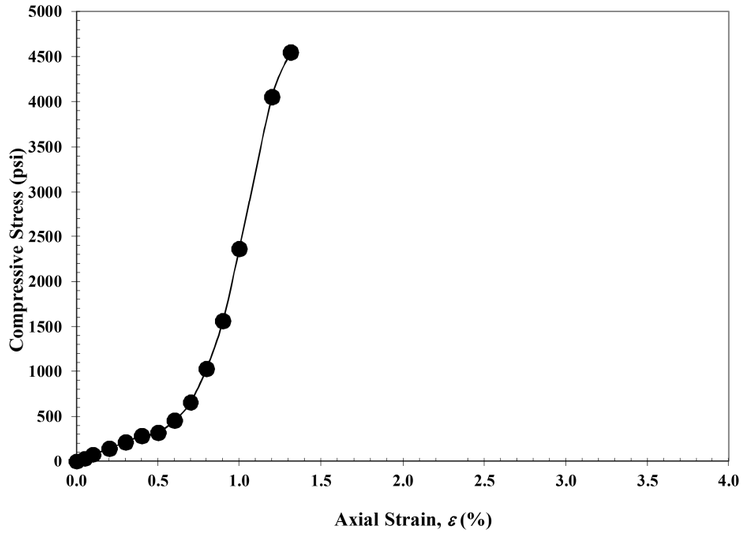


**Notes:** Sandstone, gray, slightly weathered, very fine to medium grained, moderately strong, moderately friable.

Sample trimming procedure does not conform to ASTM D4543 and the results reported may differ from the results obtained from a test specimen that meets the requirements of Practice D4543.

NEAS
National Engineering & Architectural Services Inc.
5710 Westbourne Avenue
Columbus, OH 43213
614-892-0162

## Unconfined Compressive Strength of Rock Core (ASTM D7012 Method C)

(Project: SUM-77-277/224 , Boring Location: B-033-3-17, NQ2-2, Depth: 42.3 - 42.7ft)

Tested Date: 3/26/2020

### Specimen Properties

| | |
|---|---|
| Average Dia., $D_{avg}$ (in): | 1.99 |
| Average Height, $H_{avg}$ (in): | 4.24 |
| Length to Diameter Ratio: | 2.12 |
| Area, $A$ ($in^2$): | 3.12 |
| Volume, $V$ ($in^3$): | 13.23 |
| Wet Mass of Specimen (lb): | 1.1 |
| Moisture Content (%): | 5.8 |
| Dry Mass of Specimen (lb): | 1.1 |
| Wet Unit Weight, $\gamma$ ($lb/ft^3$): | 147.9 |
| Dry Unit Weight, $\gamma_d$ ($lb/ft^3$): | 139.8 |

### Final Specimen Figure

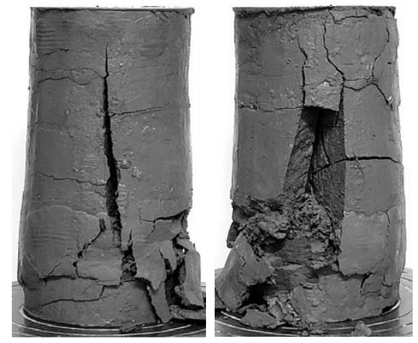

### Results

Unconfined Compressive Strength (psi): **77** **1** (MPa)

Strain (%): **4.8**

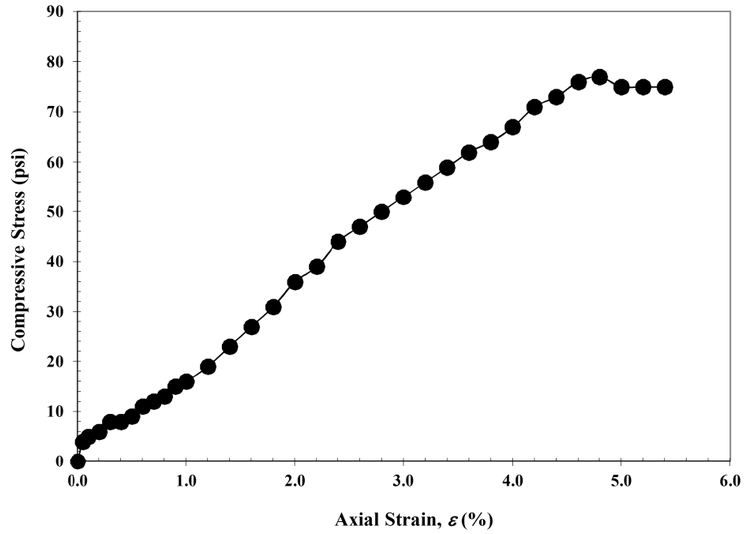


**Notes:** Shale, dark gray, highly weathered, very weak.

Sample trimming prccedure does not conform to ASTM D4543 and the results reported may differ from the results obtained from a test specimen that meets the requirements of Practice D4543.

DRAWN EB CHECKED BPA

STRUCTURE FOUNDATION EXPLORATION
UNCONFINED COMPRESSIVE STRENGTH TEST RESULTS
BORING B-033-3-17

SUM-77/277/224
VARIOUS

207/209

P:\17-0129 (106002 SUM-76-10.95 Part 3 - SUM-77_277_224)\106002\geotechnical\sheets\106002ZD003.dgn 1/8/2021 11:34:57 AM karens

NEAS
National Engineering & Architectural Services Inc.
5710 Westbourne Avenue
Columbus, OH 43213
614-892-0162

## Unconfined Compressive Strength of Rock Core (ASTM D7012 Method C)

(Project: SUM-77-277/224 , Boring Location: B-033-4-17, NQ2-1, Depth: 39.4 - 39.8ft)

Tested Date: 4/13/2020

### Specimen Properties

| | |
|---|---|
| Average Dia., $D_{avg}$ (in): | 1.98 |
| Average Height, $H_{avg}$ (in): | 4.32 |
| Length to Diameter Ratio: | 2.19 |
| Area, $A$ ($in^2$): | 3.06 |
| Volume, $V$ ($in^3$): | 13.23 |
| Wet Mass of Specimen (lb): | 1.2 |
| Moisture Content (%): | 5.1 |
| Dry Mass of Specimen (lb): | 1.1 |
| Wet Unit Weight, $\gamma$ ($lb/ft^3$): | 152.6 |
| Dry Unit Weight, $\gamma_d$ ($lb/ft^3$): | 145.2 |

### Final Specimen Figure

### Results

Unconfined Compressive Strength (psi): **230** **2** (MPa)

Strain (%): **2.8**

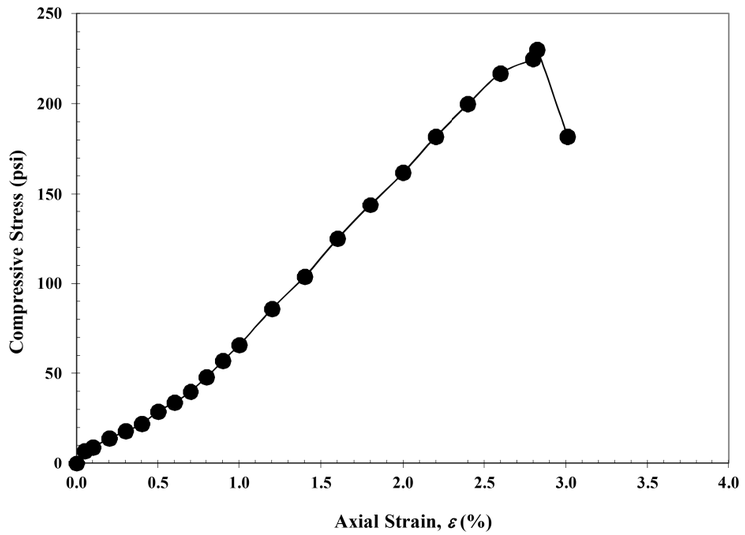


**Notes:** Shale, gray, moderately weathered, very weak.

Sample trimming procedure does not conform to ASTM D4543 and the results reported may differ from the results obtained from a test specimen that meets the requirements of Practice D4543.

NEAS
National Engineering & Architectural Services Inc.
5710 Westbourne Avenue
Columbus, OH 43213
614-892-0162

## Unconfined Compressive Strength of Rock Core (ASTM D7012 Method C)

(Project: SUM-77-277/224 , Boring Location: B-033-4-17, NQ2-2, Depth: 44.9 - 45.3ft)

Tested Date: 4/13/2020

### Specimen Properties

| | |
|---|---|
| Average Dia., $D_{avg}$ (in): | 1.97 |
| Average Height, $H_{avg}$ (in): | 4.59 |
| Length to Diameter Ratio: | 2.33 |
| Area, $A$ ($in^2$): | 3.04 |
| Volume, $V$ ($in^3$): | 13.97 |
| Wet Mass of Specimen (lb): | 1.1 |
| Moisture Content (%): | 2.5 |
| Dry Mass of Specimen (lb): | 1.1 |
| Wet Unit Weight, $\gamma$ ($lb/ft^3$): | 142.2 |
| Dry Unit Weight, $\gamma_d$ ($lb/ft^3$): | 138.8 |

### Final Specimen Figure

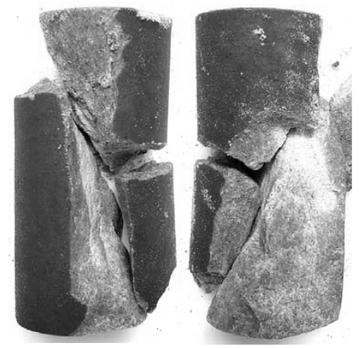

### Results

Unconfined Compressive Strength (psi): **9236** **64** (MPa)

Strain (%): **1.1**

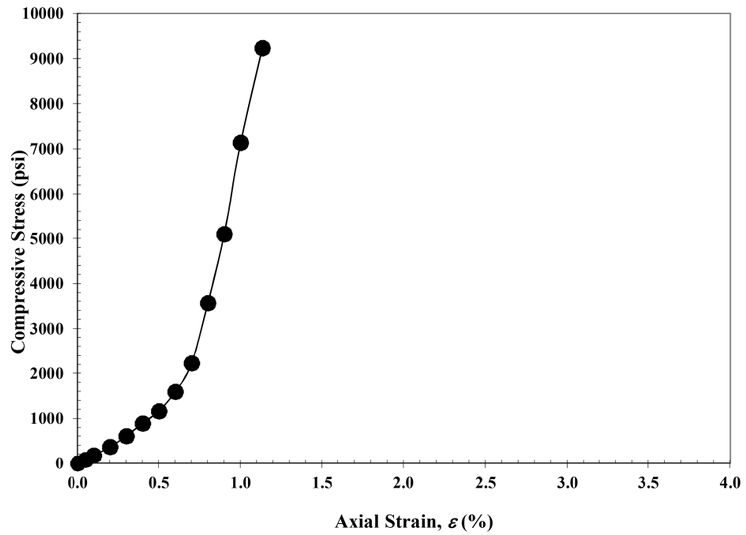


**Notes:** Sandstone, light gray, slightly weathered, strong, friable.

Sample trimming prccedure does not conform to ASTM D4543 and the results reported may differ from the results obtained from a test specimen that meets the requirements of Practice D4543.

DRAWN EB CHECKED BPA

STRUCTURE FOUNDATION EXPLORATION
UNCONFINED COMPRESSIVE STRENGTH TEST RESULTS
BORING B-033-4-17

SUM-77/277/224
VARIOUS

208/209

P:\17-0129 (106002 SUM-76-10.95 Part 3 - SUM-77_277_224)\106002\geotechnical\sheets\106002ZD004.dgn 1/8/2021 1:35:28 AM karens

NEAS
National Engineering & Architectural Services Inc.
5710 Westbourne Avenue
Columbus, OH 43213
614-892-0162

## Unconfined Compressive Strength of Rock Core (ASTM D7012 Method C)

(Project: SUM-77-277/224 , Boring Location: B-033-5-17, NQ2-1, Depth: 30.4 - 30.8ft)

Tested Date: 11/13/2019

### Specimen Properties

| | |
|---|---|
| Average Dia., $D_{avg}$ (in): | 1.98 |
| Average Height, $H_{avg}$ (in): | 4.66 |
| Length to Diameter Ratio: | 2.35 |
| Area, $A$ ($in^2$): | 3.09 |
| Volume, $V$ ($in^3$): | 14.39 |
| Wet Mass of Specimen (lb): | 1.3 |
| Moisture Content (%): | 4.1 |
| Dry Mass of Specimen (lb): | 1.2 |
| Wet Unit Weight, $\gamma$ ($lb/ft^3$): | 151.5 |
| Dry Unit Weight, $\gamma_d$ ($lb/ft^3$): | 145.5 |

### Final Specimen Figure

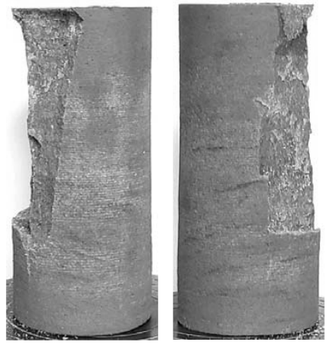

### Results

Unconfined Compressive Strength (psi): **7991** **55.1** (MPa)

Strain (%): **0.8**

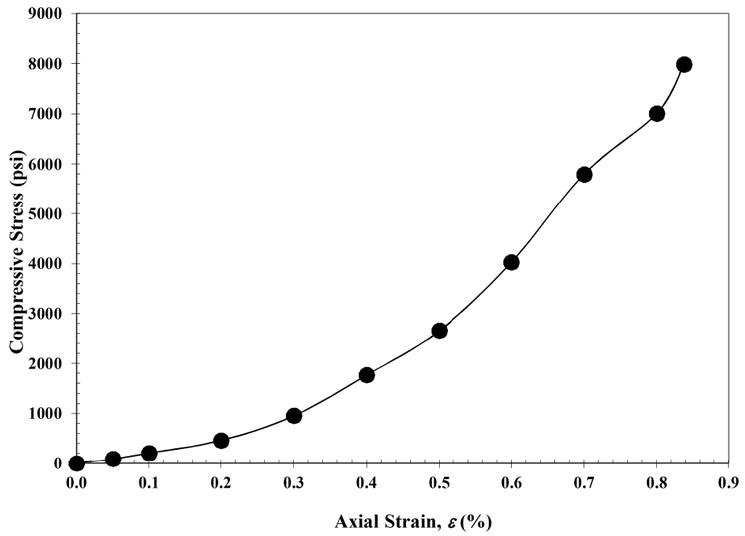


**Notes:** SANDSTONE, gray, slightly weathered, very fine to fine grained, strong.

Sample trimming procedure does not conform to ASTM D4543 and the results reported may differ from the results obtained from a test specimen that meets the requirements of Practice D4543.

NEAS
National Engineering & Architectural Services Inc.
5710 Westbourne Avenue
Columbus, OH 43213
614-892-0162

## Unconfined Compressive Strength of Rock Core (ASTM D7012 Method C)

(Project: SUM-77-277/224 , Boring Location: B-033-5-17, NQ2-1, Depth: 34.8 - 35.2ft)

Tested Date: 11/12/2019

### Specimen Properties

| | |
|---|---|
| Average Dia., $D_{avg}$ (in): | 2.01 |
| Average Height, $H_{avg}$ (in): | 4.60 |
| Length to Diameter Ratio: | 2.29 |
| Area, $A$ ($in^2$): | 3.16 |
| Volume, $V$ ($in^3$): | 14.53 |
| Wet Mass of Specimen (lb): | 1.2 |
| Moisture Content (%): | 5.7 |
| Dry Mass of Specimen (lb): | 1.2 |
| Wet Unit Weight, $\gamma$ ($lb/ft^3$): | 147.9 |
| Dry Unit Weight, $\gamma_d$ ($lb/ft^3$): | 139.9 |

### Final Specimen Figure

### Results

Unconfined Compressive Strength (psi): **38** **0.3** (MPa)

Strain (%): **4.3**

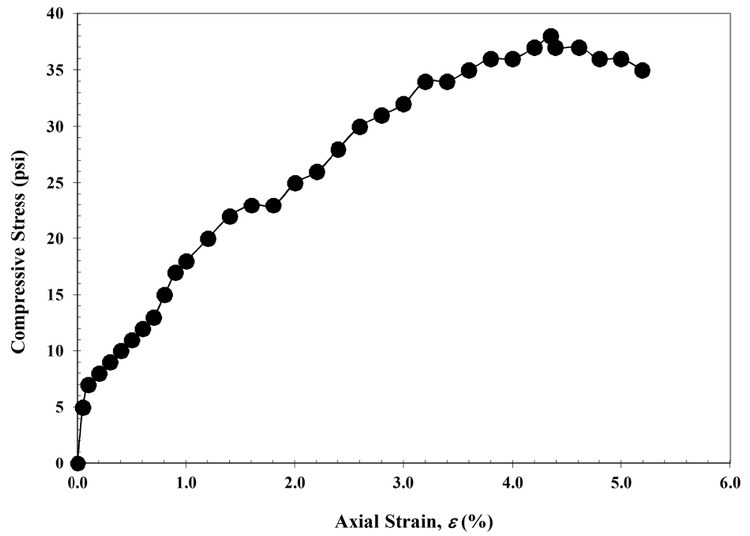


**Notes:** SHALE, dark gray, moderately weathered, extremely weak.

Sample trimming prccedure does not conform to ASTM D4543 and the results reported may differ from the results obtained from a test specimen that meets the requirements of Practice D4543.

DRAWN EB CHECKED BPA

STRUCTURE FOUNDATION EXPLORATION
UNCONFINED COMPRESSIVE STRENGTH TEST RESULTS
BORING B-033-5-17

SUM-77/277/224
VARIOUS

209/209

P:\17-0129 (106002 SUM-76-10.95 Part 3 - SUM-77_277_224)\106002\geotechnical\sheets\106002ZD005.dgn 1/8/2021 11:35:59 AM karens

# SPECIAL PROVISIONS

# WATERWAY PERMITS CONDITIONS

## C-R-S: SUM-77/277/224/Various

## PID: 106002

## Date: April 22, 2021



Special Provisions: SUM-77/277/224/Various, PID 106002

1. Waterway Permits Time Restrictions:

Section 404 Regional General Permit A – Linear Transportation (RGP A) is authorized for SUM-77/277/224/Various, PID 106002. A copy of the RGP A and United States Army Corps of Engineers (USACE) authorization letter (USACE ID #LRH-2020-00204-TUS) shall be kept at the work site at all times and made available to all contractors and subcontractors. The permit is effective starting: April 22, 2021. The permit expires: October 24, 2024.

Section 404 Nationwide Permit 23 – Approved Categorical Exclusions (NWP 23) is authorized for SUM-77/277/224/Various, PID 106002. A copy of the NWP 23 and United States Army Corps of Engineers (USACE) authorization letter (USACE ID #LRH-2020-00204-TUS) shall be kept at the work site at all times and made available to all contractors and subcontractors. The permit is effective starting: April 22, 2021. The permit expires: March 18, 2022.

For authorized work in aquatic resources (including streams, wetlands, jurisdictional ditches, captured streams, lakes, ponds), the Department will consider the Contractor's submission of a reauthorization to the waterway permit expiration date based on project constraints. If more than one permit is authorized for the project, then all permits become invalid once the first permit expires. In order for the request to be considered, the Contractor must submit a justification to the Engineer at least 90 days prior to the waterway permit expiration date. The Engineer will submit the request for a time extension to the Ohio Department of Transportation, Office of Environmental Services, Waterway Permits Unit (ODOT-OES-WPU) for consideration and coordination with the U.S. Army Corps of Engineers (USACE), Ohio Environmental Protection Agency (OEPA), U.S. Coast Guard (USCG), U.S. Fish and Wildlife Service (USFWS), and Ohio Department of Natural Resources (ODNR) as appropriate.

2. Deviations From Permitted Construction Activities:

No deviation from the requirements for work in aquatic resources depicted in the plans, Special Provisions, and/or Working Drawings may be made unless a modification has been submitted to ODOT-OES-WPU and approved by the appropriate agencies (i.e., USACE, OEPA, USCG, ODNR, and USFWS).

NOTE: Plan sheets approved by the USACE with the Pre-Construction Notification are included in these Special Provisions.

For emergency situations resulting in unanticipated impacts to aquatic resources, provide notification (verbal or written) to the Engineer as soon as possible following discovery of the situation. Written notification to the Engineer and notification to the ODOT-OES-WPU (614-466-2159) must be made within 24 hours.

For non-emergency situations, notify the Engineer in writing for submission to the ODOT-OES-WPU (614-466-2159) for consideration and coordination with the appropriate agencies. Notification must be made at least 90 days prior to planned, non-permitted activities. Consideration of the requested deviation is at the discretion of the Director and must be coordinated with the appropriate regulatory agencies.

3. In-Stream Work Restrictions:

Work in the following aquatic resources is further restricted as follows:

| Stream Name /Description | Location (Station) | Work restriction dates (No in-stream work permitted) |
|---|---|---|
| Tuscarawas River | 430+50 | April 15 – June 30 |
| Stream 2 | 443+36.5 | None |
| Stream 3 | 207+00, 102+19, and 87+50 | None |
| Stream 4 | 206+00 | None |

*Restriction dates do not apply if the stream has been dewatered prior to April 15.

In-stream work has been defined as the placement and/or removal of fill materials (temporary or permanent) below ordinary high water of a stream. Examples of "fill" include, but are not limited to: bridge piers, abutments, culverts, rock channel protection, scour protection, and temporary access fills.

Fills placed within a stream identified in the above table (outside of the work restriction dates) can continue to be worked from during the work restriction dates, but cannot be expanded, removed, or otherwise modified (below ordinary high water) until once again outside of the work restriction dates.

4. Materials:

Materials utilized in or adjacent to aquatic resources for temporary or permanent fill or bank protection shall consist of suitable material free from toxic contaminants in other than trace quantities. Asphalt products are specifically excluded for use as fill. Chromated Copper Arsenate (CCA), creosote, and other pressure treated lumber shall not be used in structures that are placed in aquatic resources.

5. Cultural Resources:

Per CMS 107.10, if archeological sites, historical sites, or human remains are discovered, cease all work in the immediate area and notify the Engineer who will immediately contact the ODOT-District Environmental Coordinator and ODOT-OES-Cultural Resource Section at 614-466-2159. In the event of human remains are identified by OES-Cultural Resources Section, the Engineer shall also contact the Summit County Sheriff's Office at (330) 643-2122.

6. Aquatic Resource Demarcation:

Attached Tables A and B include detailed fill quantities authorized within the aquatic resources. Aquatic resources and proposed impacts included in these Special Provisions shall be demarcated in the field as per SS 832 prior to site disturbance. The fence shall remain in place and be maintained throughout the construction process. Following the completion of the project, the fence and posts shall be removed.



7. Spill containment:

Provide and Maintain an Oil Spill Kit with a minimum capacity of 65 gallons. The Spill Kit shall contain:
- 6 - 3 in. X 8 ft. Oil only socks
- 4 - 18 in. X18 in. Oil only pillows
- 2 - 5 in. X 10ft. Booms
- 50 - 16in. X 20 in. Oil only pads
- 10- Disposable Bags
- 1 - 65 Gallon drum with lid
- 25 pounds of Granular Oil Absorbent

The Oil Spill Kit shall be located within 150 feet of any equipment working in a stream or wetland. The oil Spill Kit shall be maintained for the life of the contract. Any materials utilized during the project will be replaced within 48 hours. All costs associated with furnishing and maintaining the above referenced spill containment kit is incidental to work.

8. Blasting:

State law requires notification to the Ohio Department of Natural Resources should blasting be required within or near stream channels (See ORC 1533.58 & CMS 107.09). Notify the Engineer, in writing, a minimum of 30 days in advance of blasting, for submission to ODOT-OES-WPU (614-466-2159) for coordination with ODNR.

9. Project Inspection:

Inspection of Work may include inspection by representatives of other government agencies or railroad corporations that pay a portion of the cost of the Work or regulate the Work through State and Federal law. Comments from the representatives of these agencies shall be directed to the Engineer who will immediately contact the ODOT-District Environmental Coordinator and ODOT-OES-WPU at 614-466-2159.

10. Temporary Access Fills:

**Special Provisions Notes:**

**Definitions:**

**Hydraulic Opening**
The cross-sectional area allowing an unimpeded discharge equal to twice the highest monthly flow without producing a rise in the backwater above the Ordinary High Water Mark (OHWM).

**Standard Temporary Discharge**
Discharge equal to twice the *highest monthly flow* without producing a rise in the backwater above the OHWM. The U.S. Geologic Service publication "Techniques for estimating Selected Streamflow Characteristics of Rural Unregulated Streams in Ohio" provides equations that estimate monthly flow for Ohio Waterways These flows are also available in a web application by USGS StreamStats, (https://water.usgs.gov/osw/streamstats/ohio.html). The highest monthly flow is the highest monthly mean discharge occurring in a 12-month period from January to December.

**Average Monthly Flow**
The average monthly flow represents the estimated "normal" flow.

**Temporary Access Fills (TAFs)**
Include, but are not limited to, dewatering fills, causeways, cofferdams, access pads, temporary bridges, etc. below the OHWM.

**Requirements**

21 calendar days prior to the initiation of any in-stream work, provide the Engineer with Working Drawings that include:

- Plan view drawing (50 scale or less) showing the location of all TAFs proposed for use on the project
- Scaled cross section and profile drawing showing the OHWM and the proposed hydraulic opening.
- Identify the minimum diameter size, placement location and thickness of non-erodible Dumped Rock Fill material on the plan and profile.
- Calculations analyzing the hydraulic impacts of the TAF on the waterway. Include in the calculations an analysis of the hydraulic opening sized adequately to pass the Standard Temporary Discharge without producing a rise in backwater above the OHWM. Include, in the analysis, calculated channel velocities adjacent to the TAF, culvert exit velocities, calculated headwater and tailwater elevations, and any additional appropriate calculations to assess potential impacts to the waterway during normal and anticipated high flow (twice the highest monthly flow) events.
- A description of all temporary material to be placed below the OHWM elevation.
- A description of the installation and staging of all temporary fill over the life of the contract.
- Identify the protection methods and/or structural Best Management Practices for minimizing impacts to the waterway.
- Volume of temporary fill below the OHWM elevation.
- A description of the diversion ditches, equipment, conduits or means for maintaining normal flows in the waterway.
- A description of the removal of all temporary fill and restoration of the channel and all areas impacted by the TAFs.
- A schedule outlining the timing of the placement and removal of all temporary fill.
- Have competent individuals prepare and check the Working Drawings and hydraulic calculations. Provide a cover sheet containing the preparer(s) and checker(s): First Name, Last Name and Initials. The preparer(s) and checker(s) shall not be the same individual. Have an Ohio Registered Engineer review, approve, sign, seal and date the Working Drawings and hydraulic calculations according to ORC 4733 and OAC 4733-35. Include the following statement on the Working Drawings:

"These Working Drawings were prepared in compliance with the terms of these Special Provisions and all contract documents."

Do not begin in-stream work until the Engineer has accepted the Working Drawings and hydraulic calculations.

The design and construction of the Contractor's TAF must minimize impacts to water bodies, stream banks, stream beds, and riparian zones to the maximum extent practicable.

Fording of waterways and other aquatic resources is prohibited.

Construct TAFs in such a manner that will maintain flows, minimize upstream flooding, and avoid overtopping the TAF on a regular basis. ***TAFs shall be designed and constructed so that the hydraulic opening provides capacity for a discharge equal to twice the highest monthly flow without producing a rise in the backwater above the (OHWM)***.

If the Contractor proposes a TAF which does not meet all the requirements of these Special Provisions, the Contractor must submit a request in writing for a modified TAF to the Engineer. The request must include all Working Drawings and hydraulic calculations required by these Special Provisions. The



Department makes no guarantee to grant the request. The Contractor's proposed TAF request will be coordinated by OES with the USACE and the OEPA, as appropriate. The time frame allowed for the coordination of the contractor's proposed TAF will be a minimum of 60 days.

Installation of any temporary fill without appropriate authorization is strictly prohibited. All direct coordination with the USACE and/or OEPA will be performed through OES.

**TAFs Construction and Payment**

Begin planning and installing causeways and access fills as early in construction as possible to avoid conflicts with these Special Provisions or other environmental commitments that have been included in the construction plans.

TAFs in Streams and Rivers may include, but are not limited to, causeways, cofferdams, access pads, sheet piling, temporary bridges, etc. The Contractor must make every attempt to minimize disturbance to waterbodies, stream banks, stream beds and riparian zones during the construction, maintenance, and removal of the TAF. Construct the TAFs as narrow as practical. Install in-stream conduits parallel to the stream banks. Make the TAFs in shallow areas rather than deep pools where possible. Minimize clearing, grubbing, and excavation of stream banks, and approach sections. Construct the TAFs as to not cause erosion or allow sediment deposits in the waterway.

Prior to the initiation of any in-stream work, establish a monument upstream of the proposed TAF to visually monitor the water elevation in the waterway where the fill is permitted. Maintain the monument throughout the project. Provide a visual mark on the monument that identifies the elevation 1 foot above the OHWM. Ensure that the monument can be read from the bank of the waterway. Have this elevation set and certified by an Ohio Registered Surveyor. All costs associated with furnishing and maintaining the above referenced monument is incidental to the work.

Should the surface water elevation exceed the elevation 1 foot above OHWM, the Department will compensate the Contractor for repair of any resulting damage to the TAF up to the elevation of 1 foot above the OHWM, except as noted. The Department will recognize this event as an excusable, non-compensable delay in accordance with Section 108.06 B. of the Construction & Materials Specifications.

Follow the requirements in Item 502 for Structures for Maintaining Traffic and in Item 503 for Cofferdams and Excavation Bracing and any modifications to these items as shown in the plans. The Department will not pay for repair and maintenance of TAFs associated with Items 502 and 503 as a result of surface water elevation exceeding 1 foot above the OHWM. Compensation for damages associated with waterway flows will be provided as described in Items 502 and 503.

Construct the TAFs, not including Items 502 and 503, to a water elevation at least 1 foot (0.3 m) above the OHWM. If more than one-third the width of the stream is filled, then use culvert pipes to allow the movement of aquatic life. Ensure that any ponding of water behind the TAF will not damage property, flood roadways, or threaten human health and safety.

The following minimum requirements apply to TAFs where culverts are used.

A. Furnish culverts on the existing stream bottom.
B. Avoid a drop in water elevation at the downstream end of the culvert that would result in an adverse impact to the waterway.
C. Furnish a sufficient number of culverts in addition to stream openings to provide a discharge equal to twice the highest monthly flow without producing a rise in the backwater above the OHWM.
D. Furnish culverts with a minimum diameter of 18 inches (0.5 m).

All TAFs must be constructed of suitable materials. Causeways and access fills must be encapsulated with clean, non-erodible, nontoxic Dumped Rock Fill, Type A, B, C, or D, meeting the requirements of C&MS 703.19.B. Utilize appropriately sized Dumped Rock Fill determined by the Contractor's engineer for encapsulating the sides of the TAF. Encapsulate all sides of the TAF with the non-erodible material.

For causeways, contractors may use clean aggregate meeting C&MS 703.01 Size Number 1 and 2 for creating a working surface above the OHWM. Extend the non-erodible encapsulating material to at least the elevation of the top of the working surface. Extend clean aggregate up the slope from the original stream bank for 50 feet (10 m) to remove erodible material and prevent tracking from equipment onto the TAF.

When the work requiring TAF is complete, all portions of the TAF (including all rock and culverts) will be removed in its entirety. Do not dispose of TAF material in other aquatic resources or where erosion into another aquatic resource is possible. The stream bottom affected by the TAFs will be restored to its pre-construction elevations. The TAFs will not be paid as a separate item but will be included by the Contractor as part of the total project cost.

Unless specific TAF compensation is included in the plans, all environmental protection and control associated with the authorized activities, are incidental to the work within the boundaries of the aquatic resources.

11. Excavation Activities:

Excavated material will be placed at an upland site and disposed of in such a manner that sediment and runoff to streams and other aquatic resources is controlled and minimized. Additionally, no more than incidental fallback into jurisdictional waters of the U.S. is permitted during the excavation process. If any changes to the proposed work are deemed necessary, notify the Engineer who will immediately contact the ODOT-District Environmental Coordinator and ODOT-OES-WPU at 614-466-2159

12. Temporary Fill Activities:

Temporary fill into Wetlands C, D, E, F, G, J, and K is not authorized for this project. Temporary fill includes, but is not limited to, causeways, work pads, cofferdams, sheet piling, temporary bridges, and construction equipment. Any unauthorized temporary impacts that occur will be in violation of Section 404 and 401 of the Clean Water Act.

13. Construction Completion Certification:

Upon completion of the work, notify the Engineer. The USACE Construction Completion Certification must be completed and signed by the Engineer then provided via US mail or email to:

Waterway Permits Program Manager
ODOT - Office of Environmental Services
1980 West Broad Street, Mail Stop 4170
Columbus, Ohio 43223
Adrienne.Earley@dot.ohio.gov

A copy of the certification form is attached to these Special Provisions.

14. Demolition Debris:

The intentional discharge of demolition debris from any structure (including but not limited to bridges, culverts, abutments, wing walls, piers) is not authorized for this project. If any demolition debris inadvertently falls into aquatic resources, it must be removed immediately. Notify the Engineer immediately in writing of any inadvertent fill discharged into aquatic resources. The Engineer will immediately contact ODOT-OES-WPU at 614-466-2159 if any unintentional discharge occurs.



15. Wetland A Restoration:

Restoration of temporary impacts to Wetland A is required per the Section 404 permit. Restoration specifications are outlined in the environmental plan note Temporary Wetland Impacts.

Version: July 2020

Special Provisions: SUM-77/277/224/Various, PID 106002

Table A. Detailed Fill and Discharge Quantities into Streams

| STREAMS | | | | Permanent Fill Within/Below OHWM | | | | | | Total Permanent Fill Within OHWM | | | Total Temporary Fill Within OHWM | | | TOTAL IMPACT (Upstream to Downstream) |
|---|---|---|---|---|---|---|---|---|---|---|---|---|---|---|---|---|
| Aquatic Resource ID | Station | Description of Impacts/Activities Within OHWM | Total Length Within Project Area | Proposed Concrete (Includes Culvert, Piers, Walls, Abutments, etc.) | | | Proposed RCP | | | | | | | | | |
| | | | | Length (LF) | Area (AC) | Volume (CY) | Length (LF) | Area (AC) | Volume (CY) | Length (LF) | Area (AC) | Volume (CY) | Length (LF) | Area (AC) | Volume (CY) | Length (LF) |
| Tuscarawas River | 430+50 | Concrete Pier Widening /Sheet Pile Cofferdam & TAF | 367 | 52 | 0.024 | 77.0 | 0.0 | 0.000 | 0.0 | 52 | 0.024 | 77.0 | 92 | 0.063 | 204.4 | 92 |
| Stream 2 | 443+36.5 | Culvert extension/Concrete Pipe & RCP / Clean, Non-Erodible Materials (Sheeting, Rock/Fabric, Sandbags) | 482 | 18 | 0.003 | 2.3 | 22.0 | 0.004 | 2.9 | 40 | 0.006 | 5.2 | 10 | 0.000 | 0.0 | 40 |
| Stream 3 | 207+00 | Culvert extension/Concrete Pipe & RCP / Clean, Non-Erodible Materials (Sheeting, Rock/Fabric, Sandbags) | 2613 | 20 | 0.002 | 3.0 | 24.0 | 0.002 | 3.6 | 44 | 0.004 | 6.5 | 10 | 0.000 | 0.0 | 44 |
| | 102+19 | Culvert extension/Concrete Pipe & RCP / Clean, Non-Erodible Materials (Sheeting, Rock/Fabric, Sandbags) | | 26 | 0.002 | 3.9 | 8.0 | 0.001 | 1.2 | 34 | 0.003 | 5.0 | 10 | 0.001 | 1.5 | 44 |
| | 87+50 | Culvert extension Bank stabilization, & Stream Relocation /Concrete Pipe & RCP / Clean, Non-Erodible Materials (Sheeting, Rock/Fabric, Sandbags) | | 16 | 0.001 | 2.4 | 453.0 | 0.042 | 67.1 | 469 | 0.043 | 69.5 | 7 | 0.001 | 1.0 | 476 |
| Stream 4 | 206+00 | Bank stabilization, & Stream Relocation/RCP / Clean, Non Erodible Materials (Sheeting, Rock/Fabric, Sandbags) | 1060 | 0 | 0.000 | 0.0 | 434.0 | 0.149 | 60.3 | 434 | 0.149 | 60.3 | 10 | 0.003 | 1.4 | 444 |
| | | | SUM: | 132 | 0.032 | 88.6 | 941.0 | 0.198 | 135.0 | 1,073 | 0.229 | 223.5 | 139 | 0.068 | 208.3 | 1,140 |



Special Provisions: SUM-77/277/224/Various, PID 106002

Table B. Detailed Fill and Discharge Quantities into Wetlands

| WETLANDS, JURISDICTIONAL DITCHES, PONDS | | | | Permanent Fill Within Wetland Boundary | | | | | | | | | Total Permanent Fill Within Wetland Boundary | | | Total Temporary Fill Within Wetland Boundary | | | TOTAL IMPACT |
|---|---|---|---|---|---|---|---|---|---|---|---|---|---|---|---|---|---|---|---|
| Aquatic Resource ID | Station | Description of Impacts/Activities within Wetland Boundary | Total Acreage Within Project Area | Proposed Concrete (Includes Culvert, Piers, Walls, Abutments, etc.) | | | Proposed RCP | | | Proposed Earthen, Granular, or Embankment Fill | | | | | | | | | |
| | | | | Length (LF) | Area (AC) | Volume (CY) | Length (LF) | Area (AC) | Volume (CY) | Length (LF) | Area (AC) | Volume (CY) | Length (LF) | Area (AC) | Volume (CY) | Length (LF) | Area (AC) | Volume (CY) | Area (AC) |
| Wetland A | 430+50 | Concrete Pier Widening/Access Fill - Granular | 6.68 | 45 | 0.007 | 11.3 | 0 | 0.000 | 0.0 | 7 | 0.048 | 77.4 | 52 | 0.055 | 88.7 | 160 | 0.210 | 338.8 | 0.055 |
| | 431+25 | Culvert installation /Pipe, RCP, Earthen Fill | | 15 | 0.001 | 1.6 | 10 | 0.001 | 0.0 | 10 | 0.009 | 14.5 | 35 | 0.011 | 16.1 | 0 | 0.000 | 0.0 | 0.011 |
| | 431+50 | Culvert installation /RCP & Earthen Fill | | 0 | 0.000 | 0.0 | 5 | 0.001 | 0.0 | 10 | 0.001 | 1.6 | 15 | 0.002 | 1.6 | 0 | 0.000 | 0.0 | 0.002 |
| | 432+50 | Culvert installation /Earthen Fill | | 0 | 0.000 | 0.0 | 0 | 0.000 | 0.0 | 10 | 0.001 | 1.6 | 10 | 0.001 | 1.6 | 0 | 0.000 | 0.0 | 0.001 |
| | 436+00 | Culvert installation /Earthen Fill | | 0 | 0.000 | 0.0 | 0 | 0.000 | 0.0 | 10 | 0.001 | 1.6 | 10 | 0.001 | 1.6 | 0 | 0.000 | 0.0 | 0.001 |
| Wetland C | 504+00 | Grading (ramp reconfiguration, embankment slope)/Earthen Fill | 0.11 | 0 | 0.000 | 0.0 | 0 | 0.000 | 0.0 | 30 | 0.110 | 177.5 | 30 | 0.110 | 177.5 | 0 | 0.000 | 0.0 | 0.110 |
| Wetland D | 502+50 | Culvert extension /Earthen Fill | 0.03 | 0 | 0.000 | 0.0 | 0 | 0.000 | 0.0 | 10 | 0.004 | 6.5 | 10 | 0.004 | 6.5 | 0 | 0.000 | 0.0 | 0.004 |
| Wetland E | 894+00 | Overhead sign power connection/ Earthen Fill | 0.11 | 0 | 0.000 | 0.0 | 0 | 0.000 | 0.0 | 15 | 0.007 | 11.3 | 15 | 0.007 | 11.3 | 0 | 0.000 | 0.0 | 0.007 |
| Wetland F | 500+00 | Grading (ramp reconfiguration, embankment slope)/Earthen Fill | 0.12 | 0 | 0.000 | 0.0 | 0 | 0.000 | 0.0 | 10 | 0.021 | 33.9 | 10 | 0.021 | 33.9 | 0 | 0.000 | 0.0 | 0.021 |
| Wetland G | 783+00 | Grading (ramp reconfiguration, embankment slope)/Earthen Fill | 0.11 | 0 | 0.000 | 0.0 | 0 | 0.000 | 0.0 | 10 | 0.019 | 30.7 | 10 | 0.019 | 30.7 | 0 | 0.000 | 0.0 | 0.019 |
| Wetland J | 274+00 | Noise Wall/Fill - Earthen | 0.03 | 0 | 0.000 | 0.0 | 0 | 0.000 | 0.0 | 12 | 0.030 | 48.4 | 12 | 0.030 | 48.4 | 0 | 0.000 | 0.0 | 0.030 |
| Wetland K | 593+00 | Culvert extension /RCP & Earthen Fill | 0.03 | 0 | 0.000 | 0.0 | 10 | 0.001 | 1.613 | 27 | 0.002 | 3.2 | 37 | 0.003 | 4.8 | 0 | 0.000 | 0.0 | 0.003 |
| | | | SUM: | 60 | 0.008 | 12.9 | 25 | 0.003 | 1.6 | 161 | 0.253 | 408.2 | 246 | 0.264 | 422.7 | 160 | 0.210 | 338.8 | 0.264 |

LF = linear feet; AC = acres; CY = cubic yards; RCP = rock channel protection or the like (specify if different, ie. concrete block matting); NA = Not Applicable

# PROJECT SITE PLAN
## STA. 421+00 TO STA. 446+00

SUM-77/277/224
VARIOUS

446
1288

CALCULATED Z.JP
CHECKED P.JF
HORIZONTAL SCALE IN FEET
0 50 100 200

ITEM 601 - RIPRAP
ITEM 670 - DITCH EROSION PROTECTION
ITEM 836 - SEEDING AND EROSION CONTROL W/ TURF REINFORCING MAT, TYPE 1
ITEM 836 - SEEDING AND EROSION CONTROL W/ TURF REINFORCING MAT, TYPE 2
ITEM 601 - ROCK CHANNEL PROTECTION

WETLAND AREA IMPACTED
WETLAND AREA NOT TO BE DISTURBED
ITEM 670 - DITCH EROSION PROTECTION (VEGETATED BIOFILTER PER DETAIL ON SHEET 55)
ITEM 670 - SLOPE EROSION PROTECTION (VEGETATED FILTER STRIP W/ 4" ITEM 659 - TOPSOIL)
TIED CONCRETE BLOCK

FOR GEOMETRIC PLAN, SEE SHEETS 13 -22
FOR CURVE DATA, SEE SHEETS 23-26

MATCH LINE STA. 446+00 I.R. 77, SEE SHEET447
MATCH LINE STA. 421+00 I.R. 77, SEE SHEET445

EX. 66" RCP
PROP. NOISE WALL E
STREAM 2
STREAM 1
EX. 8' x 4' CONC. BOX
℄ R/W & CONST. I.R. 77
STRUCTURE NO. SUM-77-0810L
STRUCTURE NO. SUM-77-0802L
STRUCTURE NO. SUM-77-0802R
STRUCTURE NO. SUM-77-0801R
WETLANDS
O.H. TRANSMISSION ELEC. LINES TO REMAIN
O.H. ELEC. LINE TO REMAIN
TUSCARAWAS RIVER
WETLAND A
WETLAND I
℄ CONST. WARNER ROAD (CH 1561)
END WORK WARNER ROAD STA. 28+45.93
BEGIN WORK WARNER ROAD STA. 24+40.08
PROP. NOISE WALL C2
PROP. RETAINING WALL I
℄ R/W & CONST. I.R. 77
END ℄ R/W & CONST. I.R. 77 STA. 412+26.33
BEGIN ℄ EX. SB I.R. 77 STA. 472+26.33
℄ EX. SB I.R. 77
℄ CONST. SB I.R. 77
℄ EX. NB I.R. 77
℄ CONST. NB I.R. 77
℄ CONST. RAMP C
PROP. NOISE WALL G
BEGIN ℄ EX. RAMP C STA. 0+00.00
BEGIN ℄ CONST. RAMP C STA. 576+00.00
BEGIN ℄ EX. NB I.R. 77 STA. 474+89.21
PROP. NOISE WALL H13
BEGIN ℄ CONST. RAMP B-2 STA. 285+64.96
℄ CONST. RAMP A
EX. 60" RCP
BEGIN ℄ CONST. RAMP A STA. 86+63.69
STREAM 3
BEGIN ℄ EX. RAMP A STA. 17+90.67
PROP. NOISE WALL H12

0:\2017\2017258\Project\SUM\06002\Design\Drainage\Sheets\06002-DE003.dgn Design 1/15/2021 4:46:24 PM klrkland



# PROJECT SITE PLAN
## STA. 471+00 TO STA. 496+00

SUM-77/277/224
VARIOUS

448
1288

CALCULATED Z.JP
CHECKED P.JF
HORIZONTAL SCALE IN FEET
0 50 100 200

ITEM 601 - RIPRAP
ITEM 670 - DITCH EROSION PROTECTION
ITEM 836 - SEEDING AND EROSION CONTROL W/ TURF REINFORCING MAT, TYPE 1
ITEM 836 - SEEDING AND EROSION CONTROL W/ TURF REINFORCING MAT, TYPE 2
ITEM 601 - ROCK CHANNEL PROTECTION

WETLAND AREA IMPACTED
WETLAND AREA NOT TO BE DISTURBED
ITEM 670 - DITCH EROSION PROTECTION (VEGETATED BIOFILTER PER DETAIL ON SHEET 55)
ITEM 670 - SLOPE EROSION PROTECTION (VEGETATED FILTER STRIP W/ 4" ITEM 659 - TOPSOIL)
TIED CONCRETE BLOCK

FOR GEOMETRIC PLAN, SEE SHEETS 13 -22
FOR CURVE DATA, SEE SHEETS 23-26

MATCH LINE STA. 496+00 NB I.R. 77, SEE SHEET449
MATCH LINE STA. 471+00 NB I.R. 77, SEE SHEET447

VEGETATED BIOFILTER 20
℄ CONST. RAMP D
WETLAND E
DITCH I
℄ EX. RAMP D
PROP. NOISE WALL K
MATCH LINE STA. 286+00 I.R. 277/ I.S. 224, SEE SHEET451
I.R. 277/I.S. 224
℄ R/W & CONST.
END ℄ EX. RAMP C-2 STA. 17+81.42
WETLAND G
℄ CONST. RAMP C-1
VEGETATED FILTER STRIP 7
VEGETATED BIOFILTER I5
℄ EX. RAMP C-1
PROP. RETAINING WALL 2
WETLAND K
WETLAND I
STRUCTURE NO. SUM-77-0821R
VEGETATED BIOFILTER 9
℄ CONST. RAMP C-2
℄ EX. RAMP C-2
VEGETATED BIOFILTER H
VEGETATED BIOFILTER 19
℄ CONST. NB I.R. 77
℄ EX. NB I.R. 77
℄ CONST. SB I.R. 77
℄ EX. SB I.R. 77
VEGETATED BIOFILTER 10
℄ EX. RAMP C
℄ CONST. RAMP C
PROP. NOISE WALL G
BEGIN ℄ EX. RAMP C STA. 0+00.00
BEGIN ℄ CONST. RAMP C STA. 576+00.00
BEGIN ℄ EX. NB I.R. 77 STA. 474+89.21
PROP. NOISE WALL H13
BEGIN ℄ CONST. RAMP B-2 STA. 285+64.96
PROP. RETAINING WALL I
℄ R/W & CONST. I.R. 77
END ℄ R/W & CONST. I.R. 77 STA. 412+26.33
BEGIN ℄ EX. SB I.R. 77 STA. 472+26.33
PROP. NOISE WALL H12

0:\2017\2017258\Project\SUM\06002\Design\Drainage\Sheets\06002-DE004.dgn Design 1/15/2021 4:47:35 PM klrkland

PROJECT SITE PLAN
STA. 496+00 TO STA. 521+00
SUM-77/277/224
VARIOUS
449
1288
CALCULATED
CHECKED
HORIZONTAL
SCALE IN FEET
TIED CONCRETE BLOCK
WETLAND AREA NOT TO BE DISTURBED
ITEM 670 - DITCH EROSION PROTECTION
ITEM 670 - SLOPE EROSION PROTECTION
ITEM 601 - RIPRAP
ITEM 836 - SEEDING AND EROSION CONTROL
ITEM 836 - SEEDING AND EROSION CONTROL
ITEM 601 - ROCK CHANNEL PROTECTION
WETLAND AREA IMPACTED
PROP. NOISE WALL H11
PROP. NOISE WALL H12
PROP. NOISE WALL K
E. WATERLOO RD
STREAM 4
STREAM 3
STREAM 2
STREAM 1
WETLAND A
WETLAND B
WETLAND D
WETLAND E
DITCH I
VEGETATED BIOFILTER 1
VEGETATED BIOFILTER 4
VEGETATED BIOFILTER 5
VEGETATED BIOFILTER 6
VEGETATED BIOFILTER 12
VEGETATED BIOFILTER 22
VEGETATED BIOFILTER 24
VEGETATED FILTER STRIP 8
EX. 96" CMP
EX. 84" TWIN CMP
EX. 10' x 5' CONC. BOX
STRUCTURE NO. SUM-77-0373L (NO WORK)
STRUCTURE NO. SUM-77-0373R (NO WORK)
STRUCTURE NO. SUM-72-0358L
STRUCTURE NO. SUM-77-0369 (NO WORK)
STRUCTURE NO. SUM-247-0369
BEGIN PROJECT SUM-76/77/8 8.42 (P.I. 77+00.00 OB (PID 92329)
END PROJECT END WORK @ CONST. STA. 514+85.00 S.B. I.R. 77 S.L.M. 9.74
END WORK @ CONST. NB I.R. 77 STA. 514+85.00
END WORK @ CONST. RAMP D STA. 914+89.43
END @ CONST. RAMP D STA. 916+89.79
END WORK RAMP B @ EX. STA. 402+43.78
END @ EX. RAMP B-2 STA. 15+42.67
END @ EX. RAMP B-1 STA. 17+90.88
END @ EX. RAMP C-1 STA. 18+62.36
END @ EX. RAMP C-2 STA. 19+60.12
BEGIN @ EX. RAMP B-2 STA. 0+00.00
BEGIN @ EX. RAMP C-1 STA. 0+00.00
BEGIN @ CONST. RAMP C-1 STA. 801+48.32
BEGIN @ CONST. RAMP C-2 STA. 702+11.45
END @ CONST. RAMP C-1 STA. 702+11.45
END @ CONST. RAMP C-2 STA. 801+48.32
BEGIN @ EX. RAMP A STA. 0+00.00
END @ EX. RAMP A STA. 0+00.00
BEGIN @ CONST. RAMP B STA. 402+43.78
BEGIN @ CONST. RAMP C-1 STA. 702+11.45
BEGIN @ CONST. RAMP C-2 STA. 801+48.32
BEGIN @ EX. RAMP C-1 STA. 818+54.49
BEGIN @ EX. RAMP C-2 STA. 819+54.49
BEGIN @ EX. RAMP D STA. 0+00.00
BEGIN @ CONST. RAMP D STA. 0+00.00
BEGIN @ EX. RAMP B STA. 0+00.00
BEGIN @ CONST. RAMP B STA. 0+00.00
BEGIN @ CONST. RAMP A STA. 0+00.00
END @ CONST. RAMP A STA. 0+00.00
END @ CONST. RAMP B STA. 0+00.00
END @ CONST. RAMP C-1 STA. 0+00.00
END @ CONST. RAMP C-2 STA. 0+00.00
END @ EX. RAMP D STA. 0+00.00
END @ EX. RAMP C-1 STA. 0+00.00
END @ EX. RAMP C-2 STA. 0+00.00
BEGIN @ EX. RAMP A STA. 0+00.00
BEGIN @ EX. RAMP B STA. 0+00.00
BEGIN @ EX. RAMP C-1 STA. 0+00.00
BEGIN @ EX. RAMP C-2 STA. 0+00.00
BEGIN @ EX. RAMP D STA. 0+00.00
BEGIN @ CONST. RAMP A STA. 0+00.00
BEGIN @ CONST. RAMP B STA. 0+00.00
BEGIN @ CONST. RAMP C-1 STA. 0+00.00
BEGIN @ CONST. RAMP C-2 STA. 0+00.00
BEGIN @ CONST. RAMP D STA. 0+00.00
STA. 243+00 MATCH LINE SEE SHEET 449
MATCH LINE STA. 496+00, NB I.R. 77, SEE SHEET448
℄ R/W & CONST. I.R. 277/ U.S. 224
FOR GEOMETRIC PLAN, SEE SHEETS 13 -22
FOR CURVE DATA, SEE SHEETS 23 -26






PROJECT SITE PLAN
BEGIN TO STA. 243+00 I.R. 277/ U.S. 224
SUM-77/277/224
VARIOUS
450
1288
CALCULATED
CHECKED
HORIZONTAL
SCALE IN FEET
WETLAND AREA IMPACTED
WETLAND AREA NOT TO BE DISTURBED
ITEM 670 - DITCH EROSION PROTECTION
ITEM 670 - SLOPE EROSION PROTECTION
ITEM 601 - RIPRAP
ITEM 836 - SEEDING AND EROSION CONTROL
ITEM 836 - SEEDING AND EROSION CONTROL
ITEM 601 - ROCK CHANNEL PROTECTION
TIED CONCRETE BLOCK
PROP. NOISE WALL H11
STREAM 4
WETLAND H
VEGETATED FILTER STRIP B
VEGETATED BIOFILTER 6
VEGETATED BIOFILTER 16
BEGIN @ EX. RAMP A STA. 0+00.00
END @ CONST. RAMP A STA. 114+13.78
BEGIN @ CONST. RAMP B STA. 197+05.36
END @ EX. RAMP B STA. 27+97.16
END RAMP B2 STA. 33+82.00
BEGIN WORK @ R/W & CONST. I.R. 277/ U.S. 224 STA. 225+00.00
MATCH LINE STA. 243+00 I.R. 277/ U.S. 224, SEE SHEET449
℄ CONST. RAMP A
℄ CONST. RAMP B
℄ CONST. RAMP B-2
℄ EX. RAMP A
℄ EX. RAMP B
℄ R/W & CONST. I.R. 277/ U.S. 224
FOR GEOMETRIC PLAN, SEE SHEETS 13 -22
FOR CURVE DATA, SEE SHEETS 23 -26

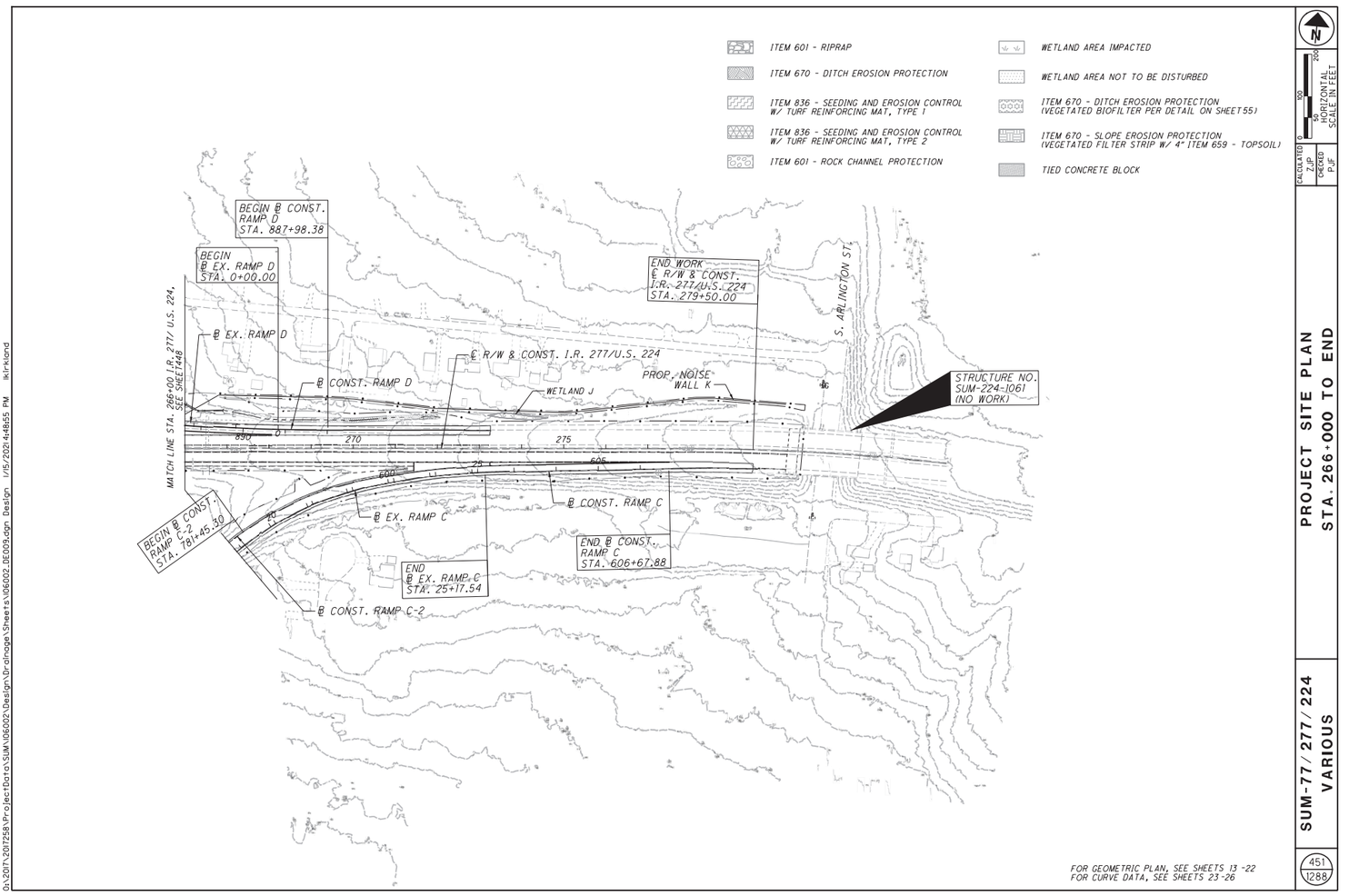
ITEM 601 - RIPRAP
ITEM 670 - DITCH EROSION PROTECTION
ITEM 836 - SEEDING AND EROSION CONTROL W/ TURF REINFORCING MAT, TYPE 1
ITEM 836 - SEEDING AND EROSION CONTROL W/ TURF REINFORCING MAT, TYPE 2
ITEM 601 - ROCK CHANNEL PROTECTION
WETLAND AREA IMPACTED
WETLAND AREA NOT TO BE DISTURBED
ITEM 670 - DITCH EROSION PROTECTION (VEGETATED BIOFILTER PER DETAIL ON SHEET 55)
ITEM 670 - SLOPE EROSION PROTECTION (VEGETATED FILTER STRIP W/ 4" ITEM 659 - TOPSOIL)
TIED CONCRETE BLOCK
BEGIN ℄ CONST. RAMP D STA. 887+98.38
BEGIN ℄ EX. RAMP D STA. 0+00.00
℄ EX. RAMP D
℄ CONST. RAMP D
MATCH LINE STA. 266+00 I.R. 277/ U.S. 224, SEE SHEET 448
℄ R/W & CONST. I.R. 277/U.S. 224
WETLAND J
PROP. NOISE WALL K
END WORK ℄ R/W & CONST. I.R. 277/U.S. 224 STA. 279+50.00
S. ARLINGTON ST.
STRUCTURE NO. SUM-224-1061 (NO WORK)
BEGIN ℄ CONST. RAMP C STA. 781+45.30
℄ EX. RAMP C
℄ CONST. RAMP C
END ℄ CONST. RAMP C STA. 606+67.88
END ℄ EX. RAMP C STA. 25+17.54
℄ CONST. RAMP C-2
FOR GEOMETRIC PLAN, SEE SHEETS 13 -22
FOR CURVE DATA, SEE SHEETS 23 -26
PROJECT SITE PLAN
STA. 266+000 TO END
SUM-77/277/224
VARIOUS
451
1288



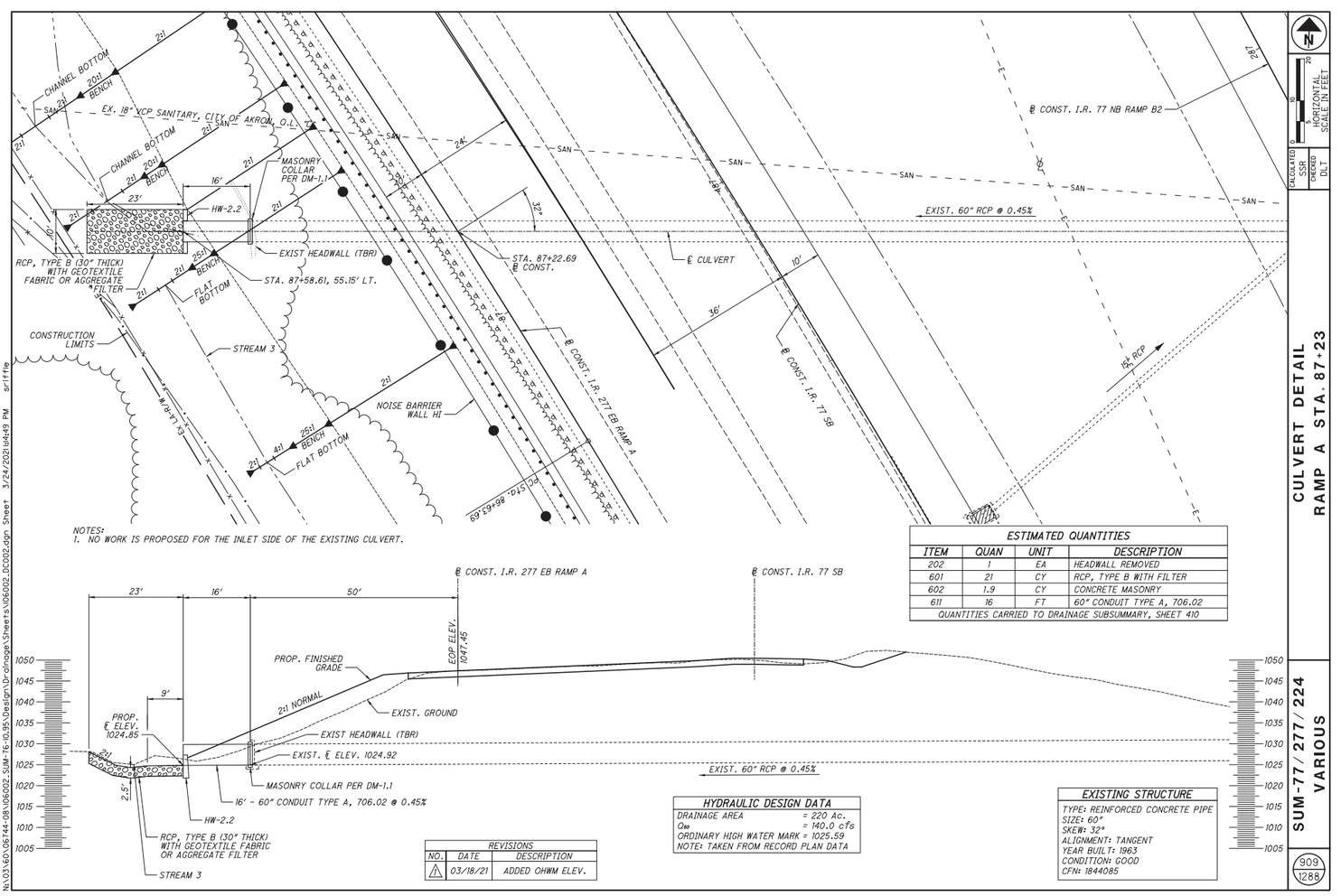
CHANNEL BOTTOM
20:1 BENCH
EX. 18" VCP SANITARY, CITY OF AKRON, O.L.
MASONRY COLLAR PER DM-1.1
HW-2.2
EXIST HEADWALL (TBR)
STA. 87+58.61, 55.15' LT.
RCP, TYPE B (30" THICK) WITH GEOTEXTILE FABRIC OR AGGREGATE FILTER
FLAT BOTTOM
CONSTRUCTION LIMITS
STREAM 3
NOISE BARRIER WALL H1
STA. 88+63.69
℄ CONST. I.R. 277 EB RAMP A
℄ CONST. I.R. 77 NB RAMP B2
EXIST. 60" RCP @ 0.45%
℄ CULVERT
STA. 87+22.69 ℄ CONST.
℄ CONST. I.R. 77 SB
15" RCP
NOTES:
1. NO WORK IS PROPOSED FOR THE INLET SIDE OF THE EXISTING CULVERT.
PROP. FINISHED GRADE
EOP ELEV. 1047.45
2:1 NORMAL
EXIST. GROUND
PROP. ℄ ELEV. 1024.85
EXIST. ℄ ELEV. 1024.92
16' - 60" CONDUIT TYPE A, 706.02 @ 0.45%
ESTIMATED QUANTITIES
ITEM | QUAN | UNIT | DESCRIPTION
202 | 1 | EA | HEADWALL REMOVED
601 | 21 | CY | RCP, TYPE B WITH FILTER
602 | 1.9 | CY | CONCRETE MASONRY
611 | 16 | FT | 60" CONDUIT TYPE A, 706.02
QUANTITIES CARRIED TO DRAINAGE SUBSUMMARY, SHEET 410
HYDRAULIC DESIGN DATA
DRAINAGE AREA = 220 Ac.
Qw = 140.0 cfs
ORDINARY HIGH WATER MARK = 1025.59
NOTE: TAKEN FROM RECORD PLAN DATA
EXISTING STRUCTURE
TYPE: REINFORCED CONCRETE PIPE
SIZE: 60"
SKEW: 32°
ALIGNMENT: TANGENT
YEAR BUILT: 1963
CONDITION: GOOD
CFN: 1844085
REVISIONS
NO. | DATE | DESCRIPTION
1 | 03/18/21 | ADDED OHWM ELEV.
CULVERT DETAIL
RAMP A STA. 87+23
SUM-77/277/224
VARIOUS
809
1288

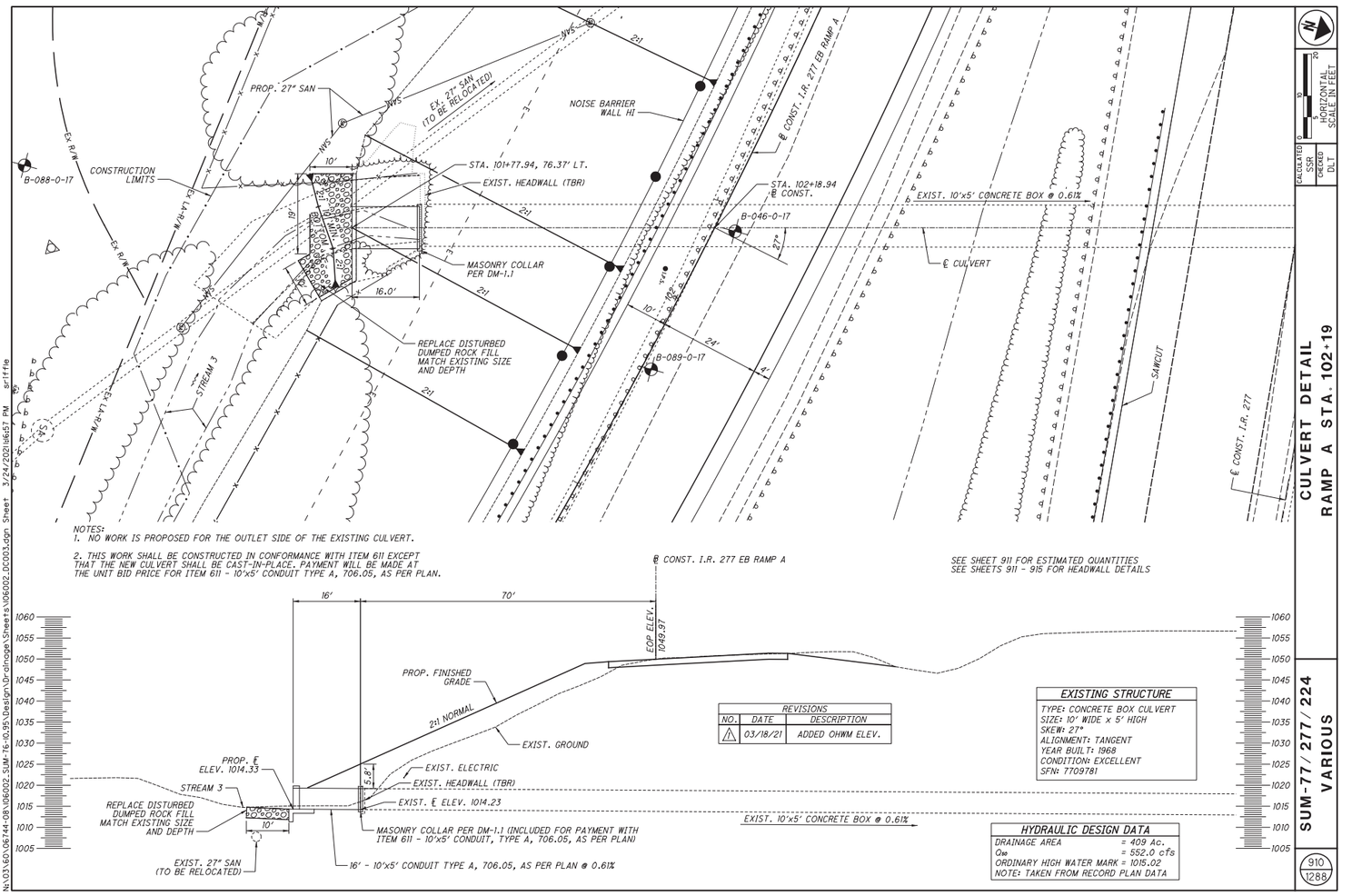
PROP. 27" SAN
EX. 27" SAN (TO BE RELOCATED)
NOISE BARRIER WALL H1
CONSTRUCTION LIMITS
B-088-0-17
STA. 101+77.94, 76.37' LT.
EXIST. HEADWALL (TBR)
MASONRY COLLAR PER DM-1.1
REPLACE DISTURBED DUMPED ROCK FILL MATCH EXISTING SIZE AND DEPTH
STREAM 3
℄ CONST. I.R. 277 EB RAMP A
STA. 102+18.94 ℄ CONST.
B-046-0-17
EXIST. 10'x5' CONCRETE BOX @ 0.61%
℄ CULVERT
B-089-0-17
SAWCUT
℄ CONST. I.R. 277
NOTES:
1. NO WORK IS PROPOSED FOR THE OUTLET SIDE OF THE EXISTING CULVERT.
2. THIS WORK SHALL BE CONSTRUCTED IN CONFORMANCE WITH ITEM 611 EXCEPT THAT THE NEW CULVERT SHALL BE CAST-IN-PLACE. PAYMENT WILL BE MADE AT THE UNIT BID PRICE FOR ITEM 611 - 10'x5' CONDUIT TYPE A, 706.05, AS PER PLAN.
SEE SHEET 911 FOR ESTIMATED QUANTITIES
SEE SHEETS 911 - 915 FOR HEADWALL DETAILS
EOP ELEV. 1049.97
PROP. FINISHED GRADE
2:1 NORMAL
EXIST. GROUND
PROP. ℄ ELEV. 1014.33
EXIST. ELECTRIC
EXIST. ℄ ELEV. 1014.23
MASONRY COLLAR PER DM-1.1 (INCLUDED FOR PAYMENT WITH ITEM 611 - 10'x5' CONDUIT, TYPE A, 706.05, AS PER PLAN)
16' - 10'x5' CONDUIT TYPE A, 706.05, AS PER PLAN @ 0.61%
EXIST. 27" SAN (TO BE RELOCATED)
EXIST. 10'x5' CONCRETE BOX @ 0.61%
REVISIONS
NO. DATE DESCRIPTION
1 03/18/21 ADDED OHWM ELEV.
EXISTING STRUCTURE
TYPE: CONCRETE BOX CULVERT
SIZE: 10' WIDE x 5' HIGH
SKEW: 27°
ALIGNMENT: TANGENT
YEAR BUILT: 1968
CONDITION: EXCELLENT
SFN: 7709781
HYDRAULIC DESIGN DATA
DRAINAGE AREA = 409 Ac.
Q100 = 552.0 cfs
ORDINARY HIGH WATER MARK = 1015.02
NOTE: TAKEN FROM RECORD PLAN DATA
CULVERT DETAIL
RAMP A STA. 102+19
SUM-77/277/224
VARIOUS
910
1288



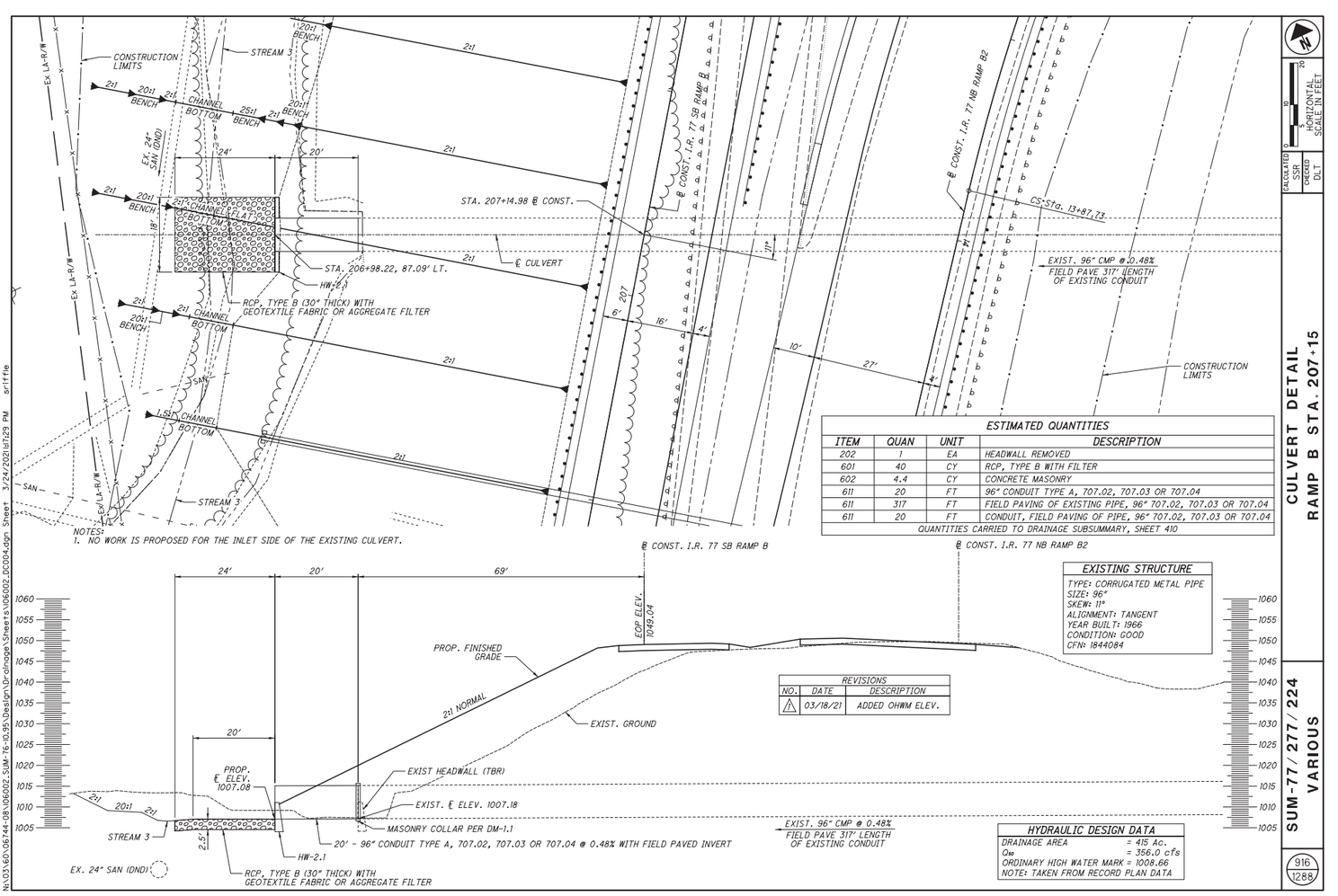
CONSTRUCTION LIMITS
STREAM 3
20:1 BENCH
CHANNEL BOTTOM
25:1 BENCH
EX. 24" SAN (DND)
STA. 207+14.98 ℄ CONST.
STA. 206+98.22, 87.09' LT.
HW-2.1
RCP, TYPE B (30" THICK) WITH GEOTEXTILE FABRIC OR AGGREGATE FILTER
℄ CULVERT
℄ CONST. I.R. 77 SB RAMP B
℄ CONST. I.R. 77 NB RAMP B2
CS-Sta. 13+87.73
EXIST. 96" CMP @ 0.48% FIELD PAVE 317' LENGTH OF EXISTING CONDUIT
CONSTRUCTION LIMITS
NOTES:
1. NO WORK IS PROPOSED FOR THE INLET SIDE OF THE EXISTING CULVERT.
ESTIMATED QUANTITIES
ITEM QUAN UNIT DESCRIPTION
202 1 EA HEADWALL REMOVED
601 40 CY RCP, TYPE B WITH FILTER
602 4.4 CY CONCRETE MASONRY
611 20 FT 96" CONDUIT TYPE A, 707.02, 707.03 OR 707.04
611 317 FT FIELD PAVING OF EXISTING PIPE, 96" 707.02, 707.03 OR 707.04
611 20 FT CONDUIT, FIELD PAVING OF PIPE, 96" 707.02, 707.03 OR 707.04
QUANTITIES CARRIED TO DRAINAGE SUBSUMMARY, SHEET 410
EOP ELEV. 1049.04
PROP. FINISHED GRADE
2:1 NORMAL
EXIST. GROUND
PROP. ℄ ELEV. 1007.08
EXIST HEADWALL (TBR)
EXIST. ℄ ELEV. 1007.18
MASONRY COLLAR PER DM-1.1
20' - 96" CONDUIT TYPE A, 707.02, 707.03 OR 707.04 @ 0.48% WITH FIELD PAVED INVERT
EXIST. 96" CMP @ 0.48% FIELD PAVE 317' LENGTH OF EXISTING CONDUIT
EX. 24" SAN (DND)
REVISIONS
NO. DATE DESCRIPTION
1 03/18/21 ADDED OHWM ELEV.
EXISTING STRUCTURE
TYPE: CORRUGATED METAL PIPE
SIZE: 96"
SKEW: 11°
ALIGNMENT: TANGENT
YEAR BUILT: 1966
CONDITION: GOOD
CFN: 1844084
HYDRAULIC DESIGN DATA
DRAINAGE AREA = 415 Ac.
Q100 = 356.0 cfs
ORDINARY HIGH WATER MARK = 1008.66
NOTE: TAKEN FROM RECORD PLAN DATA
CULVERT DETAIL
RAMP B STA. 207+15
SUM-77/277/224
VARIOUS
916
1288

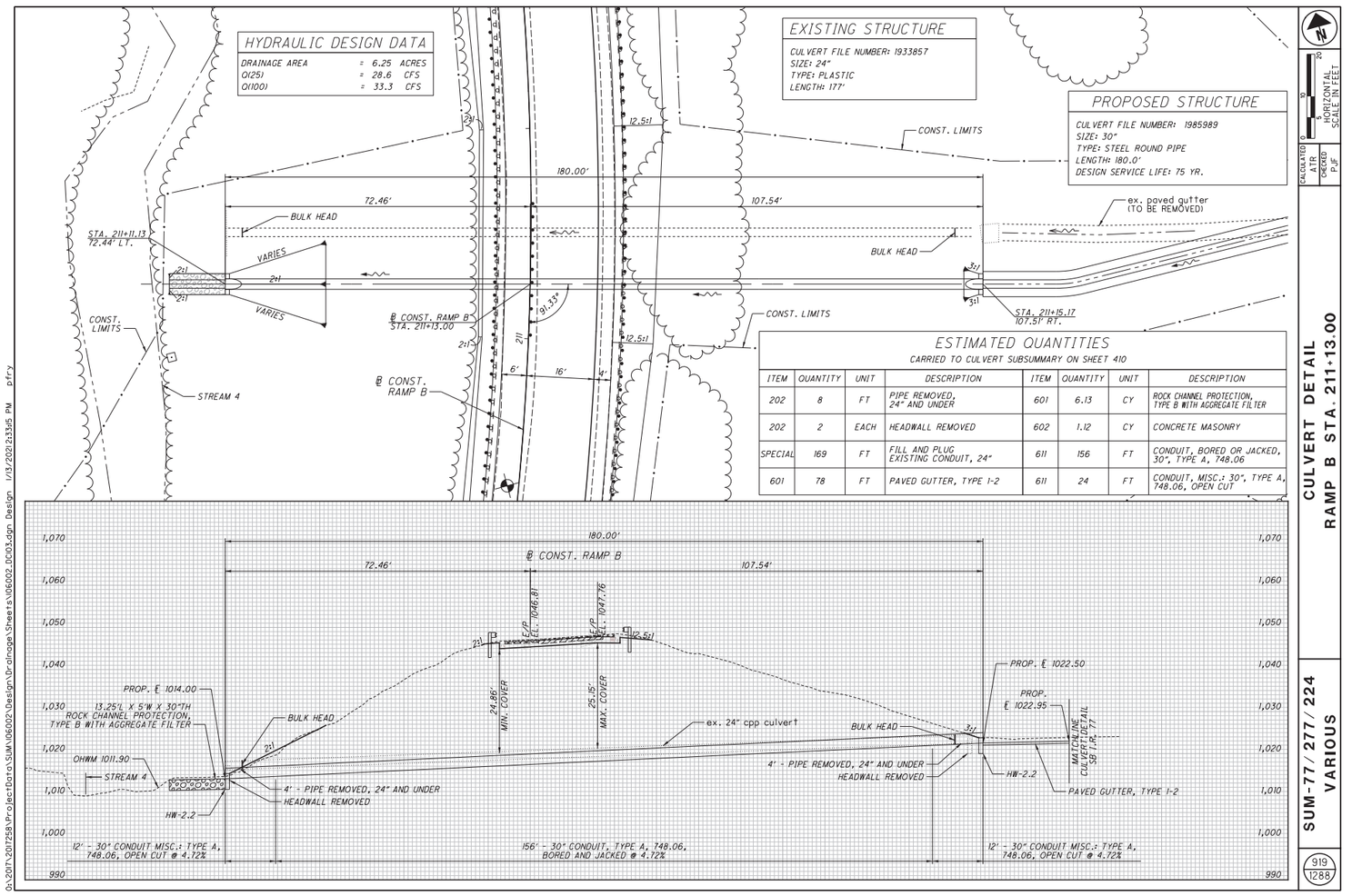


CULVERT DETAIL
RAMP B STA. 211+13.00

SUM-77/277/224
VARIOUS

919
1288



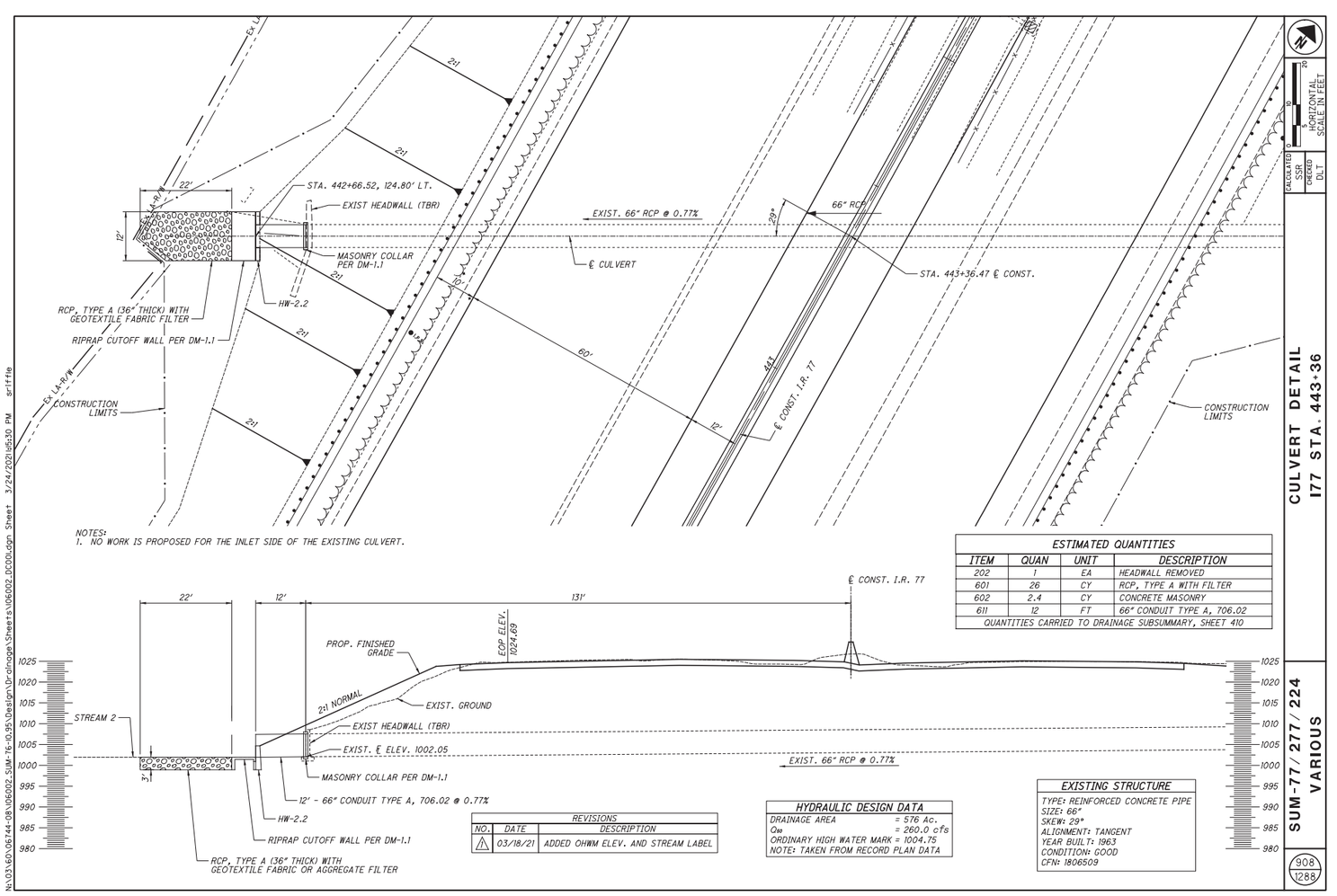


CULVERT DETAIL
I77 STA. 443+36

SUM-77/277/224
VARIOUS

908
1288

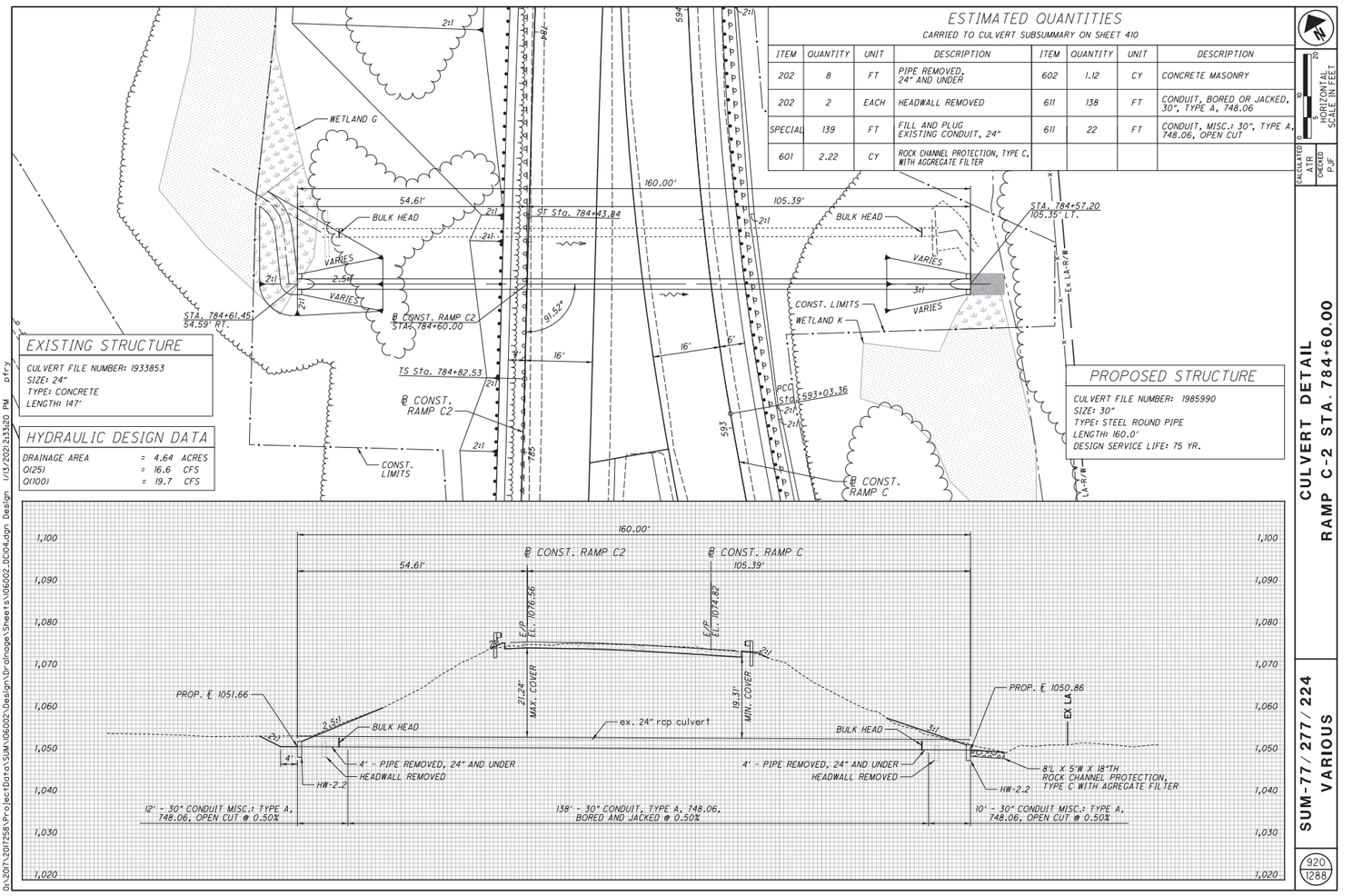
ESTIMATED QUANTITIES
CARRIED TO CULVERT SUBSUMMARY ON SHEET 410
ITEM | QUANTITY | UNIT | DESCRIPTION | ITEM | QUANTITY | UNIT | DESCRIPTION
202 | 8 | FT | PIPE REMOVED, 24" AND UNDER | 602 | 1.12 | CY | CONCRETE MASONRY
202 | 2 | EACH | HEADWALL REMOVED | 611 | 138 | FT | CONDUIT, BORED OR JACKED, 30", TYPE A, 748.06
SPECIAL | 139 | FT | FILL AND PLUG EXISTING CONDUIT, 24" | 611 | 22 | FT | CONDUIT, MISC.: 30", TYPE A, 748.06, OPEN CUT
601 | 2.22 | CY | ROCK CHANNEL PROTECTION, TYPE C, WITH AGGREGATE FILTER
EXISTING STRUCTURE
CULVERT FILE NUMBER: 1933853
SIZE: 24"
TYPE: CONCRETE
LENGTH: 147'
HYDRAULIC DESIGN DATA
DRAINAGE AREA = 4.64 ACRES
Q(25) = 16.6 CFS
Q(100) = 19.7 CFS
PROPOSED STRUCTURE
CULVERT FILE NUMBER: 1985990
SIZE: 30"
TYPE: STEEL ROUND PIPE
LENGTH: 160.0'
DESIGN SERVICE LIFE: 75 YR.
WETLAND G
WETLAND K
℄ CONST. RAMP C2
℄ CONST. RAMP C
CONST. LIMITS
BULK HEAD
TS Sta. 784+82.53
ST Sta. 784+43.84
PCO Sta. 593+03.36
STA. 784+61.45' 54.59' RT.
STA. 784+57.20 105.35' LT.
160.00'
54.61'
105.39'
PROP. ℄ 1051.66
PROP. ℄ 1050.86
E/P EL. 1076.56
E/P EL. 1074.82
21.34' MAX. COVER
19.31' MIN. COVER
ex. 24" rcp culvert
4' - PIPE REMOVED, 24" AND UNDER
HEADWALL REMOVED
HW-2.2
8'L X 5'W X 18"TH ROCK CHANNEL PROTECTION, TYPE C WITH AGGREGATE FILTER
12' - 30" CONDUIT MISC.: TYPE A, 748.06, OPEN CUT @ 0.50%
138' - 30" CONDUIT, TYPE A, 748.06, BORED AND JACKED @ 0.50%
10' - 30" CONDUIT MISC.: TYPE A, 748.06, OPEN CUT @ 0.50%
CULVERT DETAIL
RAMP C-2 STA. 784+60.00
SUM-77/277/224
VARIOUS
920
1288



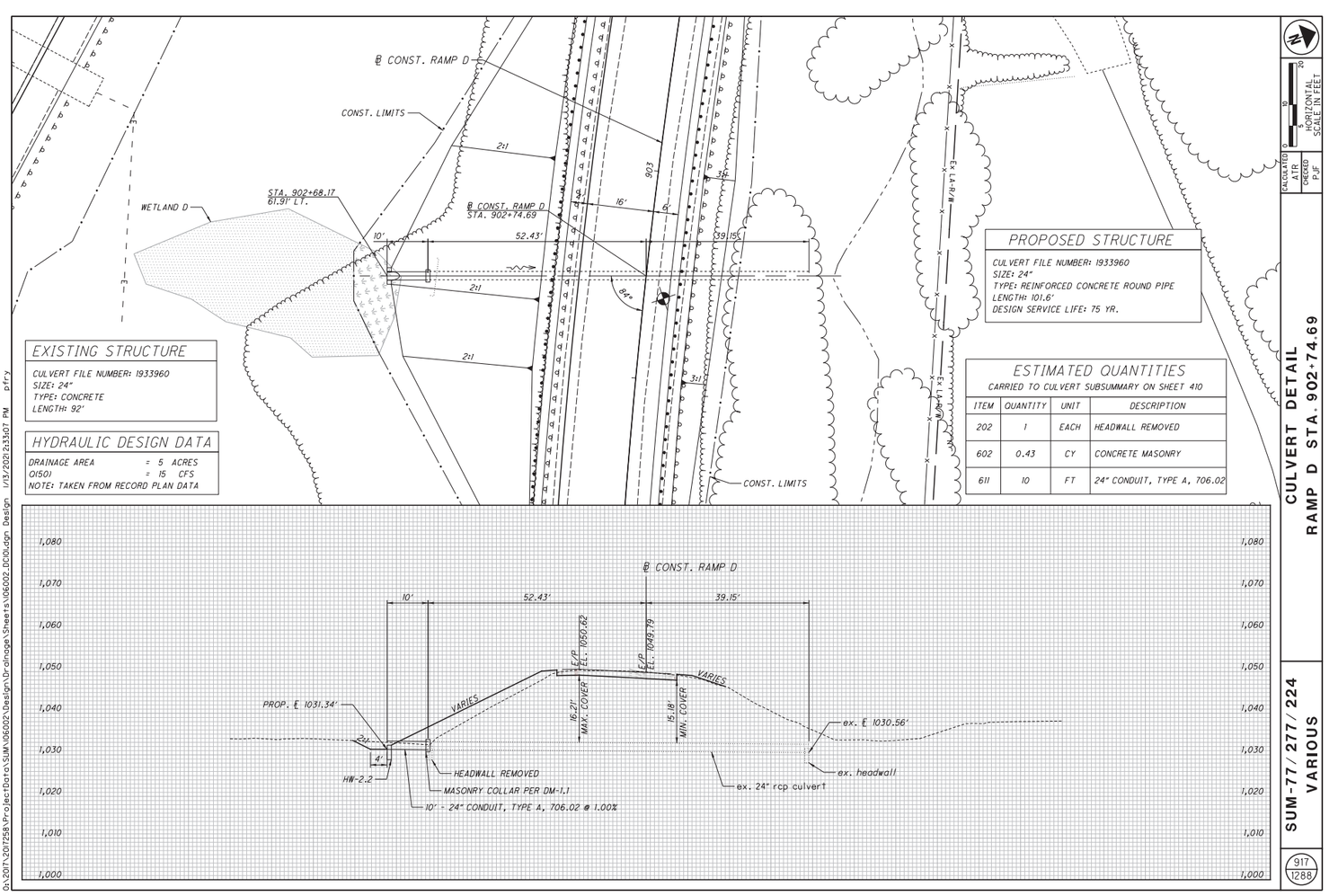
℄ CONST. RAMP D
CONST. LIMITS
WETLAND D
STA. 902+68.17 61.91' LT.
℄ CONST. RAMP D STA. 902+74.69
52.43'
39.15'
PROPOSED STRUCTURE
CULVERT FILE NUMBER: 1933960
SIZE: 24"
TYPE: REINFORCED CONCRETE ROUND PIPE
LENGTH: 101.6'
DESIGN SERVICE LIFE: 75 YR.
EXISTING STRUCTURE
CULVERT FILE NUMBER: 1933960
SIZE: 24"
TYPE: CONCRETE
LENGTH: 92'
HYDRAULIC DESIGN DATA
DRAINAGE AREA = 5 ACRES
Q(50) = 15 CFS
NOTE: TAKEN FROM RECORD PLAN DATA
ESTIMATED QUANTITIES
CARRIED TO CULVERT SUBSUMMARY ON SHEET 410
ITEM | QUANTITY | UNIT | DESCRIPTION
202 | 1 | EACH | HEADWALL REMOVED
602 | 0.43 | CY | CONCRETE MASONRY
611 | 10 | FT | 24" CONDUIT, TYPE A, 706.02
E/P EL. 1050.82
E/P EL. 1048.79
16.21' MAX. COVER
15.18' MIN. COVER
PROP. ℄ 1031.34'
ex. ℄ 1030.56'
ex. headwall
ex. 24" rcp culvert
HEADWALL REMOVED
MASONRY COLLAR PER DM-1.1
10' - 24" CONDUIT, TYPE A, 706.02 @ 1.00%
CULVERT DETAIL
RAMP D STA. 902+74.69
SUM-77/277/224
VARIOUS
917
1288

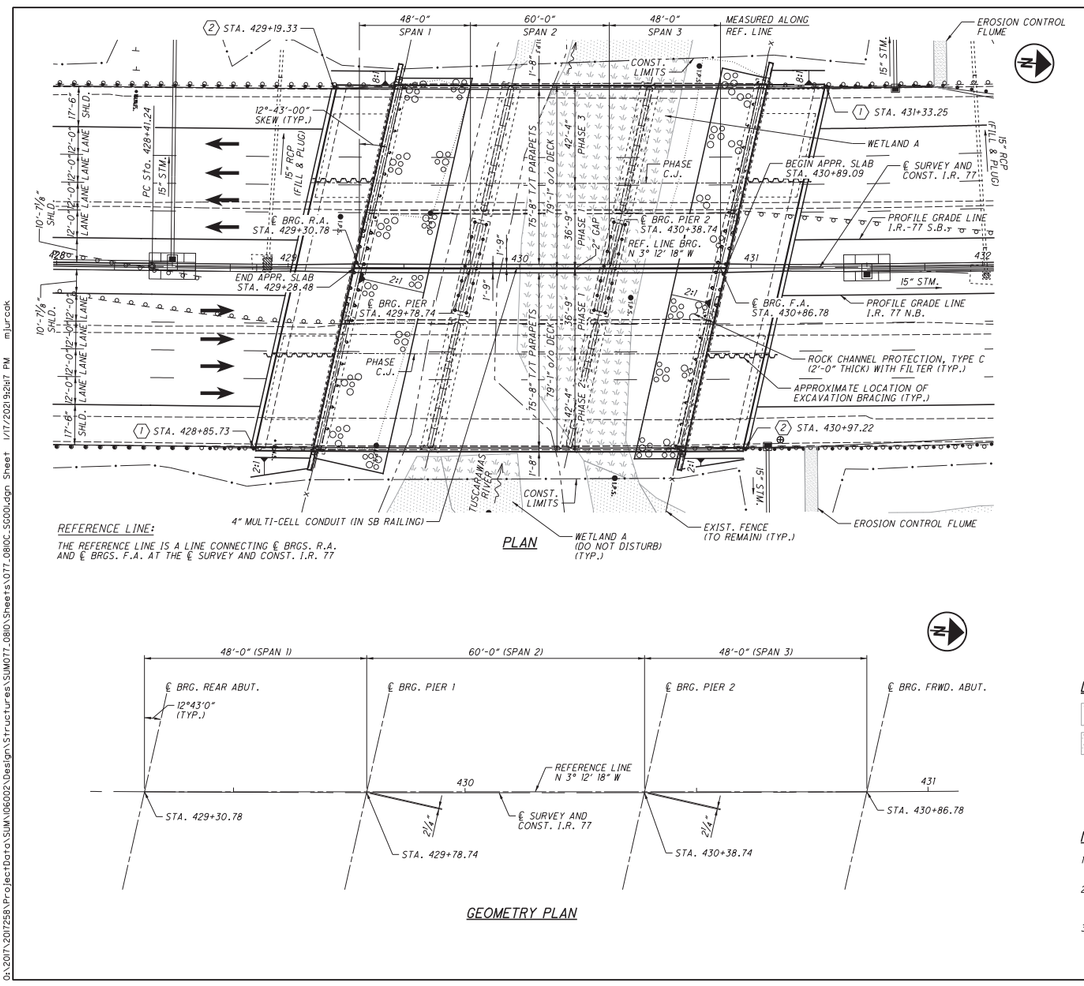


PLAN

**REFERENCE LINE:**

THE REFERENCE LINE IS A LINE CONNECTING ℄ BRGS. R.A. AND ℄ BRGS. F.A. AT THE ℄ SURVEY AND CONST. I.R. 77




GEOMETRY PLAN

**HORIZONTAL CURVE DATA:**

P.I. STA. 438+34.18
Δ = 7° 59' 02" (LT)
Dc = 0° 24' 10"
R = 14,228.56'
T = 992.94'
L = 1982.67'
E = 34.60'
C = 1,981.07'

**LEGEND:**

WETLAND

WETLAND AREA NOT TO BE DISTURBED

(1) MGS BRIDGE TERMINAL ASSEMBLY, TYPE 1 FIRST POST LOCATION (SEE STD. DWG. MGS-3.1)

(2) MGS BRIDGE TERMINAL ASSEMBLY, TYPE 2 FIRST POST LOCATION (SEE STD. DWG. MGS-3.2)

**NOTES:**

1. EARTHWORK LIMITS SHOWN ARE APPROXIMATE. ACTUAL SLOPES SHALL CONFORM TO PLAN CROSS SECTIONS.
2. THE EXISTING AND PROPOSED BEAMS ARE PARALLEL TO THE REFERENCE LINE. SPAN LENGTHS AND SUBSTRUCTURE SKEWS ARE MEASURED TO THE REFERENCE LINE.
3. THE BRIDGE DECKS, CONSTRUCTION JOINTS, CROWNS, AND PROFILE GRADES ARE OFFSETS FROM THE ℄ SURVEY AND CONST. I.R. 77.

DESIGN AGENCY: GPD GROUP, 520 South Main Street, Akron, OH 44311, 330.572.2100
DATE: 1-13-21
REVISED: STRUCTURE FILE NO. 7702558/7702582
DRAWN: REVISED
DESIGNED: MJD
CHECKED: RHC

GENERAL PLAN
BRIDGE NO. SUM-77-0810 L/R
I.R. 77 OVER THE TUSCARAWAS RIVER

SUM-77 / 277 / 224
VARIOUS
PID No. 106002

2 / 44

1182
1288

0:\2017\2017258\ProjectData\SUM\06002\Design\Structures\SUM077.0810C_SG00.dgn Sheet 1/17/2020 9:26:21 PM mjurcak



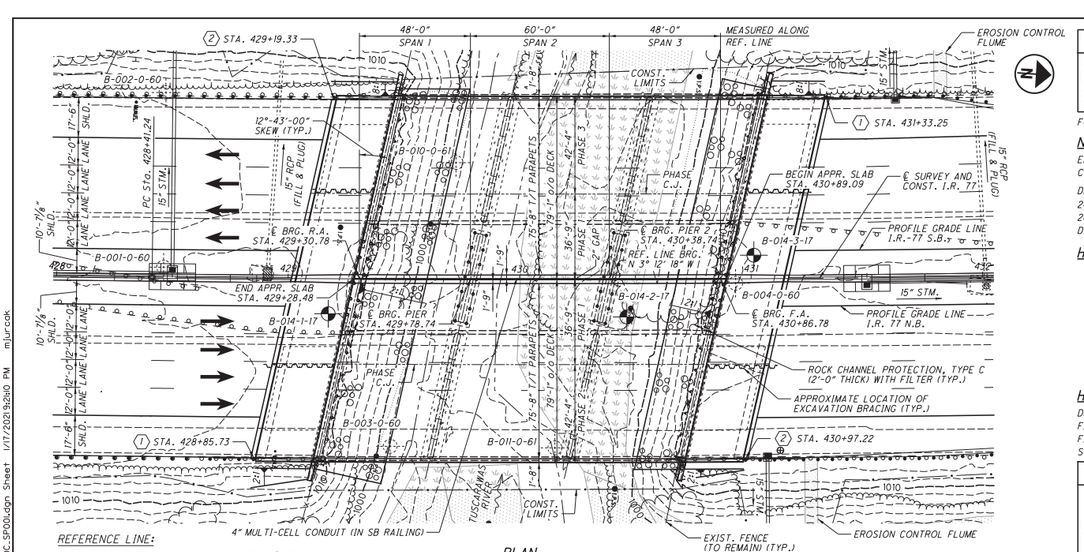


PLAN

**REFERENCE LINE:**

THE REFERENCE LINE IS A LINE CONNECTING ℄ BRGS. R.A. AND ℄ BRGS. F.A. AT THE ℄ SURVEY AND CONST. I.R. 77

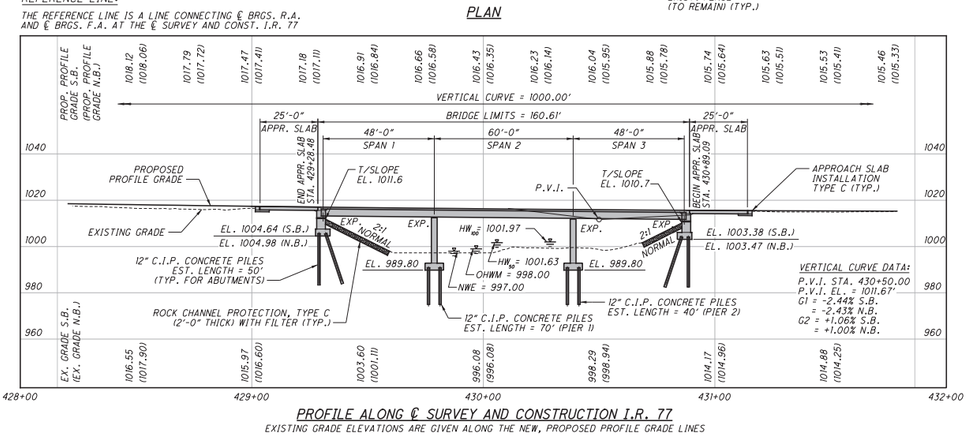


PROFILE ALONG ℄ SURVEY AND CONSTRUCTION I.R. 77

EXISTING GRADE ELEVATIONS ARE GIVEN ALONG THE NEW, PROPOSED PROFILE GRADE LINES

**BENCHMARK DATA**

| POINT | NORTHING | EASTING | ELEV. | DESCRIPTION |
|---|---|---|---|---|
| CP03 | 485566.6495 | 2246336.2535 | 1117.76 | CONC. MONUMENT |
| CP04 | 486357.9587 | 2246323.9152 | 1121.63 | CONC. MONUMENT |
| CP05 | 493895.1420 | 2245390.8980 | 1073.53 | CONC. MONUMENT |
| CP06 | 493906.9643 | 2244750.3816 | 1090.46 | CONC. MONUMENT |

FOR ADDITIONAL BENCHMARK INFORMATION. SEE ROADWAY PLANS.

**NOTES**

EARTHWORK LIMITS SHOWN ARE APPROXIMATE. ACTUAL SLOPES SHALL CONFORM TO PLAN CROSS SECTIONS.

DESIGN TRAFFIC:
2020 ADT = 118,630 2020 ADTT = 10,680
2040 ADT = 141,010 2040 ADTT = 12,690
DIRECTIONAL DISTRIBUTION = 57%

**HORIZONTAL CURVE DATA:**

P.I. STA. 438+34.18
Δ = 7° 59' 02" (LT)
Dc = 0° 24' 10"
R = 14,228.56'
T = 992.94'
L = 1982.67'
E = 34.60'
C = 1,981.07'

**LEGEND:**

PROJECT BORING LOCATION
HISTORIC BORING LOCATION
(1) MGS BTA, TYPE 1 FIRST POST LOCATION (SEE STD. DWG. MGS-3.1)
(2) MGS BTA, TYPE 2 FIRST POST LOCATION (SEE STD. DWG. MGS-3.2)

**HYDRAULIC DATA**

DRAINAGE AREA = 32.90 SQ. MILES
FIS Q (50) = 2,519 CFS V (50) = 7.17 FT/S
FIS Q (100) = 2,914 CFS V (100) = 7.79 FT/S
STRUCTURE CLEARS THE 50 YEAR DESIGN HW BY 10.9 FEET.

**EXISTING STRUCTURE**

TYPE: CONTINUOUS STEEL BEAMS WITH REINFORCED CONCRETE DECK, STUB ABUTMENTS AND WALL TYPE PIERS.
SPANS: 48'-0"±, 60'-0"±, 48'-0"± C/C BRGS. ALONG REF. LINE
ROADWAY: 53'-0"± F/F CURBS
LOADING: CF = 2000 (57)
SKEW: 12°-43'-00"± L.F.
WEARING SURFACE: 4"± ASPHALT
APPROACH SLABS: AS-1-54 (25'-0" LONG)
ALIGNMENT: CURVE LEFT
CROWN: 0.016 FT/FT
STRUCTURAL FILE NUMBER: 7702558 (LT) & 7702582 (RT)
DATE BUILT: 1965
DISPOSITION: TO BE REHABILITATED

**PROPOSED STRUCTURE**

PROPOSED WORK: 3-SPAN EXIST. CONTINUOUS STEEL BEAM (A7) & NEW CONTINUOUS STEEL BEAM (A709 GRADE 50, PAINTED) BRIDGE W/ NEW COMPOSITE REINF. CONC. DECK ON WIDENED SEMI-INTEGRAL ABUTS. & WALL TYPE PIERS
SPANS: 48'-0", 60'-0", 48'-0" C/C BRGS. ALONG REF. LINE
ROADWAY: 75'-8" TOE/TOE PARAPET (S.B. AND N.B.)
VEHICULAR LIVE LOAD: (SEE GENERAL NOTES)
FUTURE WEARING SURFACE: (SEE GENERAL NOTES)
SKEW: 12°-43'-00" L.F. (TO REFERENCE CHORD)
WEARING SURFACE: 1" MONOLITHIC CONCRETE
DECK AREA: 12,702 SQ. FT. (N.B.), 12,702 SQ. FT. (S.B.)
APPROACH SLABS: 25'-0" LONG (MODIFIED) (AS-1-15) TYPE C INSTALLATION (AS-2-15)
ALIGNMENT: 0°-24'-10" CURVE LEFT
CROWN: 0.016 FT/FT
COORDINATES: LATITUDE 41°-00'-25.56" (SB) 41°-00'-25.42" (NB)
LONGITUDE 81°-29'-40.05" (SB) 81°-29'-38.40" (NB)

DESIGN AGENCY: GPD GROUP, 520 South Main Street, Akron, OH 44311, 330.572.2100
DATE: 1-13-21
REVISED: STRUCTURE FILE NO. 7702558/7702582
DRAWN: REVISED
DESIGNED: MJD
CHECKED: RHC

SUMMIT COUNTY
STA. 429+28.48
STA. 430+89.09

SITE PLAN
BRIDGE NO. SUM-77-0810 L/R
I.R. 77 OVER THE TUSCARAWAS RIVER

SUM-77 / 277 / 224
VARIOUS
PID No. 106002

1 / 44

1181
1288

0:\2017\2017258\ProjectData\SUM\06002\Design\Structures\SUM077.0810S_SP00.dgn Sheet 1/17/2020 9:26:50 PM mjurcak

| BMP TYPE | LOCATION | SIDE | DITCH WIDTH | STATION | LATITUDE | LONGITUDE | EDA CREDIT (ACRES) |
|---|---|---|---|---|---|---|---|
| FILTER STRIP 2 | E. R/W & CONST. LIM. I-71 | LT. | N/A | 453+38 | 41.013525° N | -81.496739° W | 0.90 |
| | | | | 458+67 | 41.015600° N | -81.496089° W | |
| FILTER STRIP 3 | E. R/W & CONST. LIM. I-71 | RT. | N/A | 455+28 | 41.014719° N | -81.495213° W | 0.25 |
| | | | | 457+00 | 41.014645° N | -81.495306° W | |
| FILTER STRIP 4 | RAMP B1 | LT. | N/A | 402+87 | 41.026574° N | -81.502519° W | 0.56 |
| | | | | 408+50 | 41.026680° N | -81.504017° W | |
| FILTER STRIP 5 | RAMP B1 | LT. | N/A | 414+68 | 41.025706° N | -81.504890° W | 0.28 |
| | | | | 417+56 | 41.025459° N | -81.503995° W | |
| FILTER STRIP 6 | RAMP B2 | LT. | N/A | 15+16 | 41.026211° N | -81.505574° W | 0.29 |
| | | | | 16+67 | 41.025902° N | -81.505949° W | |
| FILTER STRIP 7 | RAMP C1 | RT. | N/A | 683+45 | 41.025282° N | -81.498754° W | 0.72 |
| | | | | 690+50 | 41.024060° N | -81.498253° W | |
| FILTER STRIP 8 | RAMP C2 | RT. | N/A | 795+45 | 41.024421° N | -81.500314° W | 0.15 |
| | | | | 796+95 | 41.024699° N | -81.500774° W | |
| FILTER STRIP 9 | SB I.R. 77 | LT. | N/A | 498+00 | 41.024686° N | -81.501350° W | 0.40 |
| | | | | 500+44 | 41.025183° N | -81.501945° W | |
| | | | | | TREATMENT PROVIDED | | 24.05 |
| | | | | | TREATMENT REQUIRED* | | 24.02 |

* CALCULATED PER L&D VOL. 2, SEC. 1115.7

FOR TYPICAL SECTIONS, SEE SHEET 55
FOR PROJECT SITE PLANS, SEE SHEETS 444 - 451

| BMP TYPE | LOCATION | SIDE | DITCH WIDTH | STATION | LATITUDE | LONGITUDE | EDA CREDIT (ACRES) |
|---|---|---|---|---|---|---|---|
| BIOFILTER 1 | SB I.R. 77 | RT. | 4.0' | 510+00 | 41.027451° N | -81.503705° W | 1.57 |
| | | | | 514+95 | 41.028651° N | -81.504493° W | |
| BIOFILTER 2 | ARLINGTON ROAD RAMP D | RT. | 4.0' | 78+50 | 40.993766° N | -81.483466° W | 1.24 |
| | | | | 83+50 | 40.994528° N | -81.483472° W | |
| BIOFILTER 3 | ARLINGTON ROAD RAMP D | RT. | 4.0' | 83+50 | 40.994528° N | -81.483472° W | 0.71 |
| | | | | 87+00 | 40.995489° N | -81.483460° W | |
| BIOFILTER 4 | E. R/W & CONST. LIM. I-71 | RT. | 4.0' | 416+50 | 41.035581° N | -81.483716° W | 0.24 |
| | | | | 418+00 | 41.037988° N | -81.483740° W | |
| BIOFILTER 6 | RAMP B | LT. | 4.0' | 198+00 | 41.025269° N | -81.508252° W | 1.02 |
| | | | | 203+00 | 41.025781° N | -81.506654° W | |
| BIOFILTER 7 | RAMP B2 | LT. | 4.0' | 19+00 | 41.025412° N | -81.506536° W | 0.54 |
| | | | | 21+00 | 41.025581° N | -81.507231° W | |
| BIOFILTER 8 | RAMP B1 | RT. | 4.0' | 408+50 | 41.026864° N | -81.503936° W | 0.72 |
| | | | | 411+00 | 41.026657° N | -81.504931° W | |
| BIOFILTER 9 | NB I.R. 77 | RT. | 4.0' | 483+00 | 41.022627° N | -81.497365° W | 1.68 |
| | | | 6.0' | | | | |
| | | | 8.0' | 488+50 | 41.023009° N | -81.498238° W | |
| BIOFILTER 10 | NB I.R. 77 | LT. | 5.0' | 483+00 | 41.021532° N | -81.497612° W | 0.91 |
| | | | | 486+00 | 41.022274° N | -81.498120° W | |
| BIOFILTER 11 | RAMP B2 | LT. | 5.0' | 286+00 | 41.022274° N | -81.498120° W | 1.44 |
| | | | 4.0' | 290+50 | 41.023118° N | -81.498362° W | |
| BIOFILTER 12 | RAMP B2 | RT. | 4.0' | 301+00 | 41.025579° N | -81.501312° W | 0.68 |
| | | | | 305+50 | 41.026520° N | -81.502368° W | |
| BIOFILTER 13 | RAMP C1 | LT. | 4.0' | 689+00 | 41.024260° N | -81.497121° W | 0.87 |
| | | | | 692+00 | 41.023889° N | -81.498802° W | |
| BIOFILTER 14 | RAMP C1 | RT. | 4.0' | 696+50 | 41.024834° N | -81.499932° W | 0.64 |
| | | | | 697+50 | 41.025035° N | -81.500179° W | |
| BIOFILTER 15 | RAMP C1 | RT. | 4.0' | 690+50 | 41.024110° N | -81.499103° W | 1.04 |
| | | | | 692+50 | 41.024104° N | -81.498907° W | |
| BIOFILTER 16 | E. R/W & CONST. LIM. I-71 | RT. | 4.0' | 232+00 | 41.024684° N | -81.509312° W | 2.29 |
| | | | 6.0' | 242+00 | 41.024893° N | -81.505698° W | |
| BIOFILTER 17 | RAMP B1 | RT. | 4.0' | 413+00 | 41.026192° N | -81.505445° W | 0.69 |
| | | | | 416+50 | 41.025331° N | -81.504406° W | |
| BIOFILTER 19 | SB I.R. 77 | RT. | 4.0' | 484+00 | 41.021772° N | -81.498056° W | 0.87 |
| | | | | 493+00 | 41.023810° N | -81.499320° W | |
| BIOFILTER 20 | RAMP D | LT. | 4.0' | 894+00 | 41.025743° N | -81.498032° W | 0.38 |
| | | | | 896+50 | 41.025754° N | -81.498939° W | |
| BIOFILTER 21 | SB I.R. 77 | RT. | 4.0' | 504+00 | 41.026137° N | -81.502456° W | 1.10 |
| | | | 5.0' | 507+00 | 41.026128° N | -81.503205° W | |
| BIOFILTER 22 | RAMP A | RT. | 4.0' | 102+00 | 41.025046° N | -81.502941° W | 0.32 |
| | | | | 103+50 | 41.025067° N | -81.503508° W | |
| BIOFILTER 23 | RAMP B2 | LT. | 4.0' | 301+50 | 41.025549° N | -81.501833° W | 1.03 |
| | | | 5.0' | 304+60 | 41.026137° N | -81.502456° W | |
| BIOFILTER 24 | SB I.R. 77 | LT. | 4.0' | 496+00 | 41.024271° N | -81.500877° W | 0.46 |
| | | | | 498+00 | 41.024645° N | -81.501413° W | |

| SUM-77/277/224 VARIOUS | 452 1288 |
|---|---|
| BMP TABLE | CALCULATED ATR CHECKED CJC |

O:\2017\2017258\Project\SUM\060021\Design\Drainage\Sheets\060021-DE010.dgn Design 1/15/2021 4:48:58 PM ikirkland



**US Army Corps of Engineers**
**Huntington District**

Permit Number: 2020-00204-TUS

Name of Permittee: Ohio Department of Transportation

Date of Issuance: April 8, 2021

Upon completion of the activity authorized by this permit and any mitigation required by the permit, sign this certification and return it to the following address:

U.S. Army Corps of Engineers - Huntington District
Building 10/ Section 10
PO Box 3990
Columbus, OH 43218-3990

Please note that your permitted activity is subject to a compliance inspection by an U.S. Army Corps of Engineers representative. If you fail to comply with this permit you are subject to permit suspension, modification, or revocation.

I hereby certify that the work authorized by the above-referenced permit has been completed in accordance with the terms and conditions of the said permit, and required mitigation was completed in accordance with the permit conditions.

_____ _____
Signature of Permittee Date