STATE OF OHIO
DEPARTMENT OF TRANSPORTATION
FRA-315-3.04
CITY OF COLUMBUS
CLINTON TOWNSHIP
FRANKLIN COUNTY

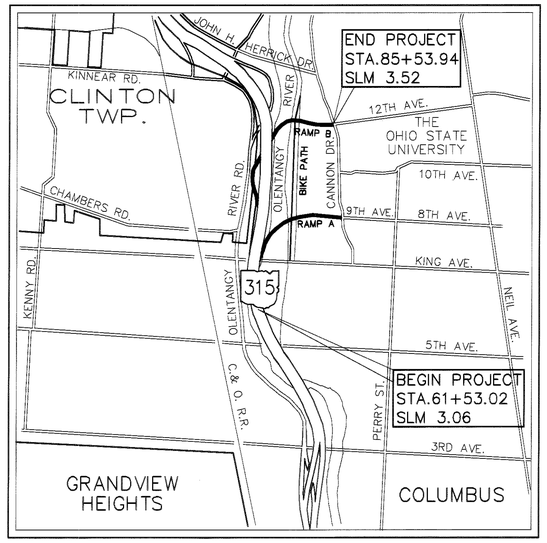

LOCATION MAP

LATITUDE: 39°59'40" LONGITUDE: 83°01'30"

0 1000 2000
SCALE IN FEET

LEGEND

PROJECT LOCATION....
STATE.....
COUNTY & TOWNSHIP. C.R. 69
STREETS.....

DESIGN DESIGNATION

	RAMP "A"	RAMP "B"
CURRENT ADT (2003)	7130	8790
DESIGN YEAR ADT (2023)	9090	11,710
DESIGN HOURLY VOLUME	909	1171
TRUCKS (24 HOUR B&C)	0.03	0.03
DESIGN SPEED	—	—
LEGAL SPEED	—	—

DESIGN FUNCTIONAL CLASSIFICATION -- URBAN FREEWAY

DESIGN EXCEPTIONS

DESIGN FEATURE	APPROVAL DATE	SHEET NUMBERS
NONE REQUIRED		

UNDERGROUND UTILITIES
TWO WORKING DAYS
BEFORE YOU DIG
Call...800 362-2764 (Toll Free)
OHIO UTILITIES
PROTECTION SERVICE
NON-MEMBERS
MUST BE CALLED DIRECTLY

PLANS PREPARED BY
ERIKSSON ENGINEERING, LTD.
COLUMBUS, OHIO

ENGINEERS SEAL

STATE OF OHIO
CARL E. ERIKSSON
PE-25802
REGISTERED ENGINEER

SIGNED: Carl E. Eriksson
DATE: 6.25.2002

INDEX OF SHEETS

TITLE SHEET	1
SCHEMATIC PLAN	2
REFERENCES	3
TYPICAL SECTIONS	4–7
GENERAL NOTES	8–10
MAINTENANCE OF TRAFFIC	11–24F
GENERAL SUMMARY	25–28
SUB SUMMARY	29–30
CALCULATIONS	31–32
STORM WATER POLLUTION PREVENTION PLAN	33–33A
RAMP A	
PLAN & PROFILE	34–37
CROSS-SECTIONS	38–43
PAVEMENT DETAILS	44–46
RAMP B	
PLAN & PROFILE	47–53
CROSS-SECTIONS	54–69
PAVEMENT DETAILS	70–73
BIKE PATH	
PLAN & PROFILE	74–77
CROSS-SECTIONS	78–85
MISCELLANEOUS DETAILS	
CURB RAMP DETAILS	86–86C
AA-S123 DETAILS	87
APPROACH SLAB DETAILS	88
DRAINAGE DETAILS	
DRAINAGE INDEX	89
CULVERTS	90–91
STORM SEWERS	92–95
PUMP STATION	96–99
LIGHTING	100–131
TRAFFIC CONTROL	132–147C
TRAFFIC SIGNALS	148–155A
RETAINING WALLS	156–168
UNDERPASS DETAILS	169–172
STRUCTURES OVER 20' SPAN	
FRA-315-0278	173–185
FRA-315-0320	186–208
FRA-315-0354	209–227
FENCE PLAN	228–230
RIGHT-OF-WAY	231–238

SHEETS ADDED

NO.13A,
NO.24A, NO.24B, NO.24C, NO.24D, NO.24E, NO.24F
NO.147A, NO.147B, NO.147C
NO.155A

PROJECT DESCRIPTION

CONSTRUCTION OF AN OFF RAMP AND AN ON RAMP ON S.R. 315 JUST NORTH OF KING AVENUE IN COLUMBUS, OHIO, INCLUDING CONSTRUCTION OF STRUCTURES OVER THE OLENTANGY RIVER FOR BOTH RAMPS AND WIDENING OF A PORTION OF THE S.R. 315 STRUCTURE OVER THE OLENTANGY RIVER. THE LENGTH OF WORK IS 0.36 MILES FOR THE OFF RAMP AND 0.52 MILES FOR THE ON RAMP.

LIMITED ACCESS

THIS IMPROVEMENT IS ESPECIALLY DESIGNED FOR THROUGH TRAFFIC AND HAS BEEN DECLARED A LIMITED ACCESS HIGHWAY OR FREEWAY BY ACTION OF THE DIRECTOR IN ACCORDANCE WITH THE PROVISIONS OF SECTION 5511.02 OF THE REVISED CODE OF OHIO.

1997 SPECIFICATIONS

THE STANDARD SPECIFICATIONS OF THE STATE OF OHIO, DEPARTMENT OF TRANSPORTATION, INCLUDING CHANGES AND SUPPLEMENTAL SPECIFICATIONS LISTED IN THE PROPOSAL, SHALL GOVERN THIS IMPROVEMENT.

I HEREBY APPROVE THESE PLANS AND DECLARE THAT THE MAKING OF THIS IMPROVEMENT WILL NOT REQUIRE THE CLOSING TO TRAFFIC OF THE HIGHWAY AND THAT PROVISIONS FOR THE MAINTENANCE AND SAFETY OF TRAFFIC WILL BE AS SET FORTH ON THE PLANS AND ESTIMATES.

APPROVED _____
DATE 7/1/02 ASSOCIATE VICE PRESIDENT
PHYSICAL FACILITIES, THE OHIO STATE UNIVERSITY

APPROVED _____
DATE 7/9/02 DISTRICT DEPUTY DIRECTOR OF TRANSPORTATION

APPROVED _____
DATE 9-11-02 DIRECTOR, DEPARTMENT OF TRANSPORTATION

APPROVED _____
DATE _____ CITY OF COLUMBUS, DIRECTOR OF THE PUBLIC SERVICE DEPARTMENT

APPROVED _____
DATE _____ CITY OF COLUMBUS, ADMINISTRATOR OF THE TRANSPORTATION DIVISION

STANDARD DRAWINGS								SUPPLEMENTAL SPECIFICATIONS	
BP-2.1	07-28-00	HW-2.1	07-20-01	TC-21.20	01-19-01	TC-85.10	04-19-02		
BP-2.2	07-28-00	HW-2.2	07-20-01	TC-21.40	01-18-02	TC-85.20	05-01-00	814	06-02-98
BP-2.3	07-28-00	MH-1.2	07-20-01	TC-22.10	01-19-01			816	04-21-97
BP-5.1	07-28-00			TC-22.20	01-19-01	MT-35.10	04-20-01	830	10-21-98
BP-6.1	07-28-00	HL-10.11	04-19-02	TC-31.21	04-20-01	MT-95.30	04-19-02	842	01-06-99
BP-7.1	07-28-00	HL-10.12	04-19-02	TC-32.10	04-19-02	MT-95.31	04-19-02	844	01-06-99
CB-2.2	07-20-01	HL-10.13 M	05-01-95	TC-32.11	10-19-01	MT-95.40	04-19-02	846	09-09-97
CB-3.2	07-20-01	HL-20.11	04-19-02	TC-41.10	01-19-01	MT-97.10	04-19-02	851	06-06-00
DM-1.1	07-20-01	HL-20.13	04-19-02	TC-41.20	01-19-01	MT-98.19 M	03-01-96	863	10-12-99
DM-4.1	07-20-01	HL-20.14 M	05-01-95	TC-41.40	01-18-02			864	07-11-00
DM-4.2	07-20-01	HL-20.15 M	03-31-95	TC-41.41	01-19-01	MT-101.60 M	04-25-94	865	02-22-00
DM-4.3	07-20-01	HL-30.11	04-19-02	TC-41.50	01-19-01	MT-102.10 M	01-30-95	806	09-09-97
DM-4.4	07-20-01	HL-30.21	04-19-02	TC-42.10	01-19-01	MT-102.20 M	01-30-95	899	10-21-98
F-1.1	07-28-00	HL-30.22	04-19-02	TC-42.20	04-20-01	MT-105.10 M	04-25-94	932	10-02-96
F-3.1	07-28-00	HL-30.31 M	05-01-95	TC-51.11	04-20-01	MT-105.11 M	04-25-94	954	09-09-97
GR-1.1 M	10-21-97	HL-30.32	04-19-02	TC-52.10	04-20-01				
GR-1.2 M	01-03-96	HL-30.33	04-19-02	TC-52.20	04-20-01	AS-1-81	04-20-01	870	03-27-01
GR-2.1 M	04-14-98	HL-40.10	04-19-02	TC-65.10	10-19-01	GSD-1-96	04-20-01	877	04-13-99
GR-2.4 M	10-21-97	HL-50.21	04-19-02	TC-65.11	10-19-01	EXJ-4-87	04-20-01		
GR-3.1 M	10-21-97	HL-50.22	01-18-02	TC-71.10	04-19-02	BR-1	01-06-99	905	04-01-98
GR-3.2 M	10-21-97	HL-60.11	07-20-01	TC-72.20	01-19-01	BS-1-93	12-19-94	906	05-05-98
GR-4.2 M	10-21-97	HL-60.12	07-20-01	TC-73.10	01-19-01	RB-1-55	02-02-59	907	10-21-98
RM-4.1 M	10-21-97	HL-60.31	07-20-01	TC-81.10	05-01-00	PCB-91	07-06-99	908	11-07-00
RM-4.3 M	10-21-97	TC-07.65	01-19-01	TC-82.10	01-19-01	SPECIAL PROVISIONS			
RM-4.4 M	10-21-97	TC-12.30	01-19-01	TC-84.20	05-01-00	FRA. 315-3.04 FOR SOIL NAILS		10-10-01	
RM-4.5 M	10-21-97	TC-21.10	01-19-01	TC-84.21	03-06-00	FRA. 315-3.04 FOR SHOTCRETE		10-10-01	

NATION WIDE PERMIT (NWP) #14 9-13-01

PLANS CERTIFIED BY:
NAME: [illegible] DATE: 8/23/02
DISTRICT 6
OHIO DEPT. OF TRANSPORTATION

FEDERAL PROJECT NO. TE21 - G020(422)
PID NO. 7930
CONSTRUCTION PROJECT NO.
RAILROAD INVOLVEMENT NONE
FRA-315-3.04
1 / 238

FRA - SR 315 - 3.04
020508
PID# 7930
DIST 06
11-20-02

06-19-02
345311TL

SCHEMATIC PLAN

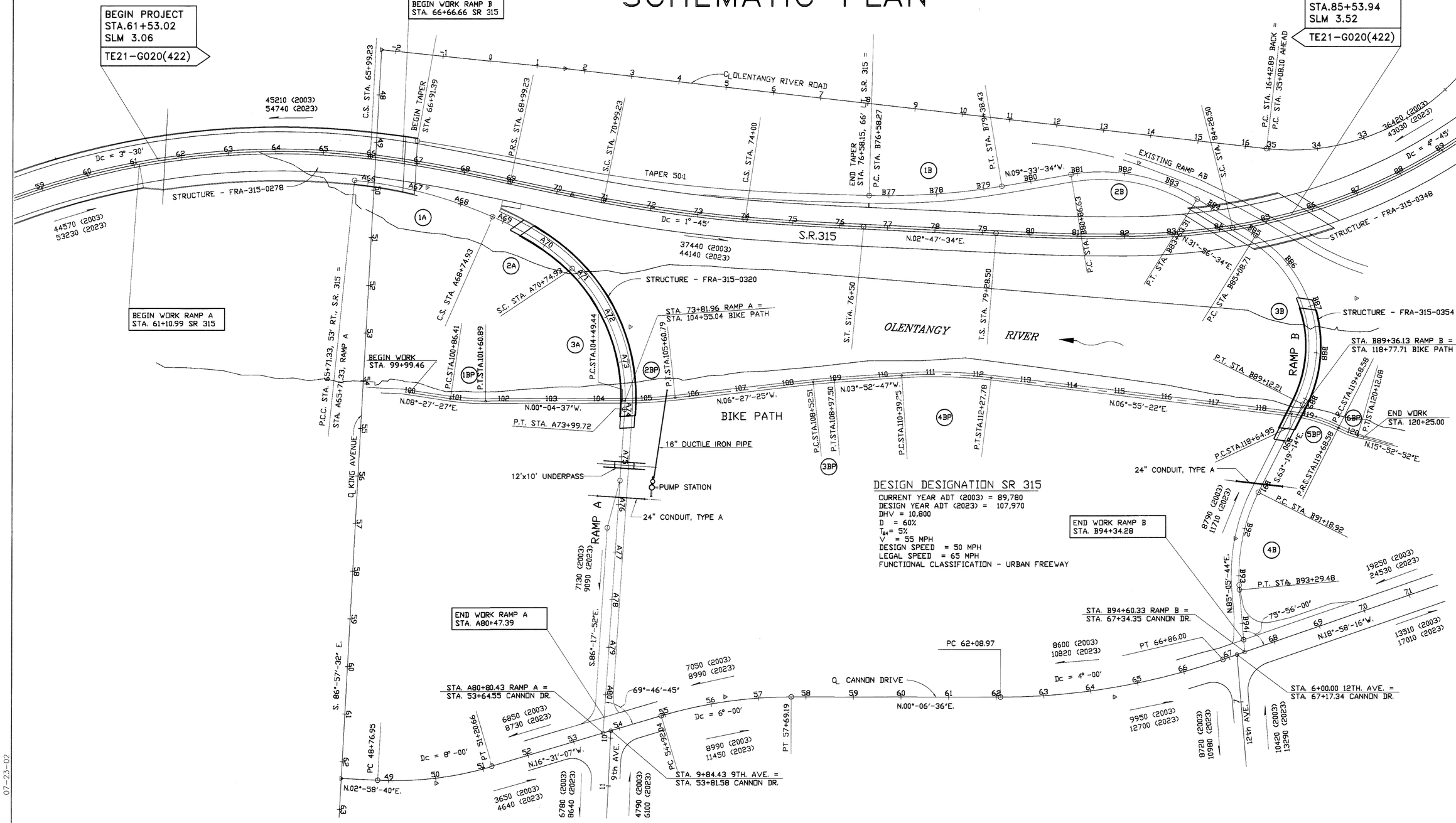

DESIGN DESIGNATION SR 315

CURRENT YEAR ADT (2003) = 89,780
DESIGN YEAR ADT (2023) = 107,970
DHV = 10,800
D = 60%
T_{SU} = 5%
V = 55 MPH
DESIGN SPEED = 50 MPH
LEGAL SPEED = 65 MPH
FUNCTIONAL CLASSIFICATION - URBAN FREEWAY

CURVE DATA

RAMP A			RAMP B					BIKE PATH					
1A	2A	3A	1B	2B	3B	4B	1BP	2BP	3BP	4BP	5BP	6BP
P.I. STA. A67+24.42	P.I. STA. A69+90.31	P.I. STA. A72+47.87	P.I. STA. B77+98.80	P.I. STA. B82+31.35	P.I. STA. B87+57.56	P.I. STA. B92+26.95	P.I. STA. 101+23.72	P.I. STA. 105+05.17	P.I. STA. 108+75.01	P.I. STA. 111+33.80	P.I. STA. 119+17.29	P.I. STA. 119+90.39
△ = 18°-12'-58"	△ = 21°-00'	△ = 48°-43'-09"	△ = 11°-12'-23"	△ = 41°-30'-08"	△ = 84°-44'-12"	△ = 31°-35'-02"	△ = 08°-32'-04"	△ = 06°-22'-48"	△ = 02°-34'-38"	△ = 10°-48'-08"	△ = 19°-47'-31"	△ = 10°-50'-01"
Dc = 6°-00'	Bs = 9°-00'	Dc = 15°-00'	Dc = 4°-00'	Dc = 15°-00'	Dc = 21°-00'	Dc = 15°-00'	R = 500.00'	R = 1000.00'	R = 1000.00'	R = 1000.00'	R = 300.00'	R = 230.00'
R = 954.93'	Ls = 200'	R = 381.97'	R = 1432.39'	R = 381.97'	R = 272.84'	R = 381.97'	L = 74.48'	L = 111.35'	L = 44.98'	L = 188.54'	L = 103.63'	L = 43.49'
L = 303.60'	T_1 = 115.38'	L = 324.79'	L = 280.16'	L = 276.68'	L = 403.51'	L = 210.56'	T = 37.31'	T = 55.73'	T = 22.50'	T = 94.55'	T = 52.34'	T = 21.81'
T = 153.09'	T_2 = 86.82'	T = 172.94'	T = 140.53'	T = 144.72'	T = 248.86'	T = 108.03'	E = 1.39'	E = 1.55'	E = 0.25'	E = 4.46'	E = 4.53'	E = 1.03'
E = 12.19'		E = 37.33'	E = 6.88'	E = 26.50'	E = 96.45'	E = 14.98'	e = 0.0208	e = 0.0208	e = 0.0208	e = 0.0208	e = 0.0208	e = 0.0208
e = 0.06		e = 0.06	e = 0.06	e = 0.06	e = 0.06	e = 0.058						

CALCULATED MJT 9/01
CHECKED WOY 9/01

SCHEMATIC PLAN

FRA-315-3.04

07-23-02

Q:\OSU_RAMP\schematic>dwg

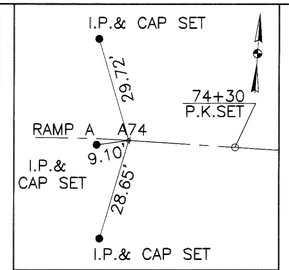

P.T. 73+99.72 RAMP "A"

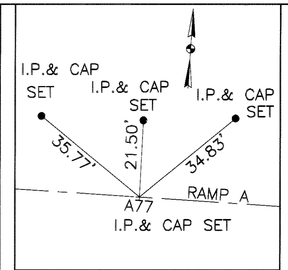

STA.77+00.00 RAMP "A"

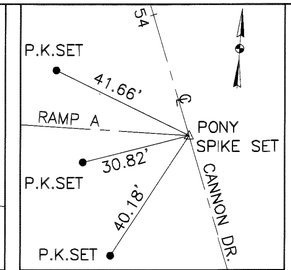

STA.80+80.41 RAMP "A"
STA.53+84.55 CANNON DR.

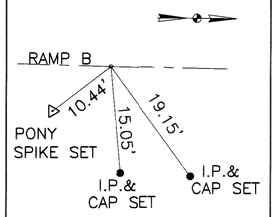

P.C. 76+58.27 RAMP "B"

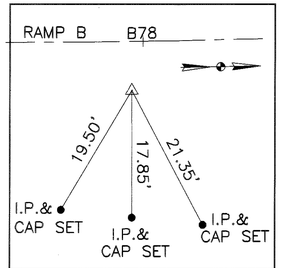

P.I. STA.77+98.80 RAMP "B"

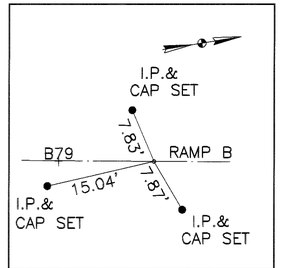

P.T. 79+38.43 RAMP "B"

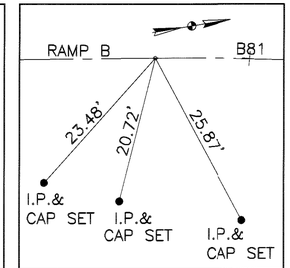

P.C. 80+86.63 RAMP "B"

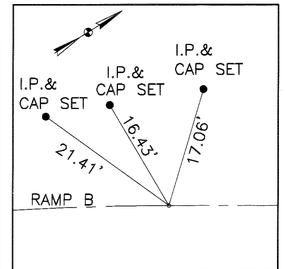

P.T. 83+63.31 RAMP "B"

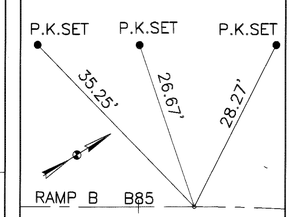

P.C. 85+08.71 RAMP "B"

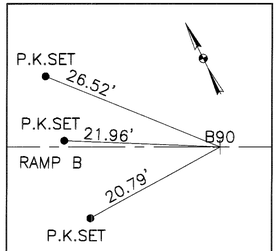

STA.90+00.00 RAMP "B"

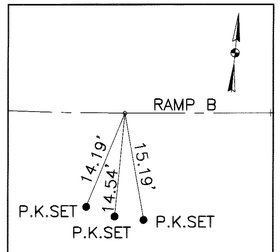

P.T. 93+29.48 RAMP "B"

CALCULATED
CHECKED

REFERENCE POINTS

FRA-315-3.04

315RE3 09-17-01

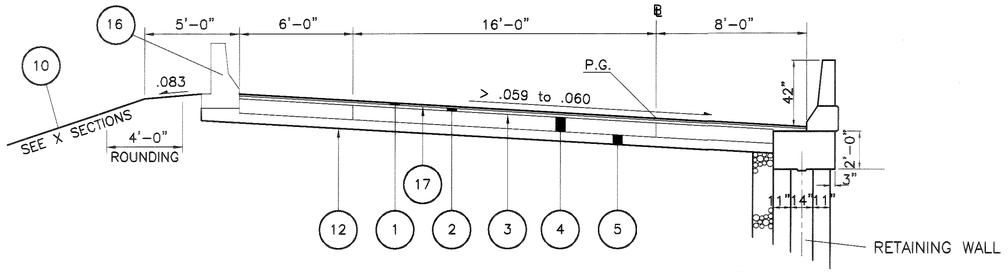

STA. A68+82.74 TO STA. A69+24.11 = 41.37 L.F.

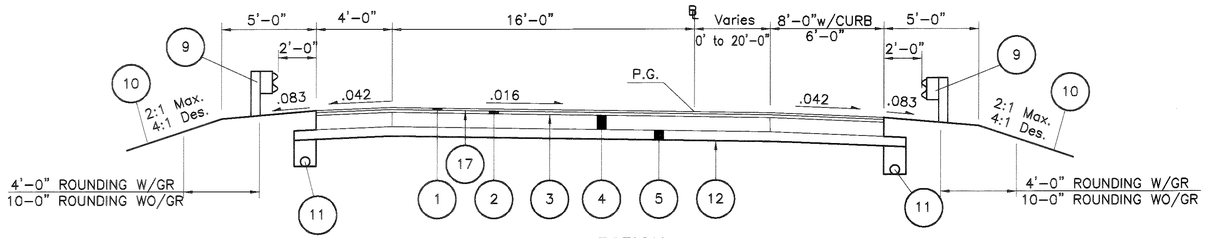

NORMAL SECTION

STA. A74+75.00 TO STA. A80+47.39 = 572.39 L.F.

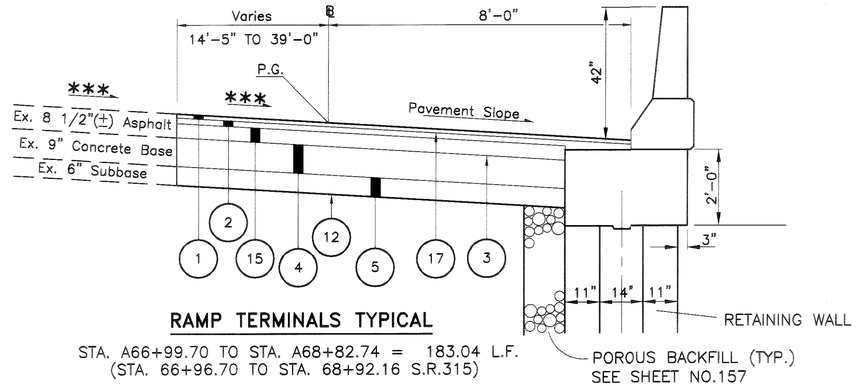

RAMP TERMINALS TYPICAL

STA. A66+99.70 TO STA. A68+82.74 = 183.04 L.F.
(STA. 66+96.70 TO STA. 68+92.16 S.R.315)

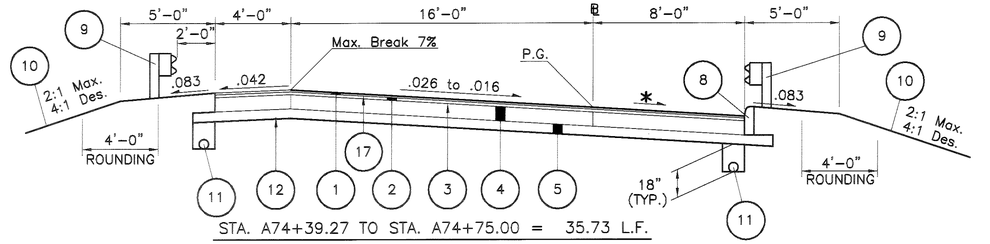

STA. A74+39.27 TO STA. A74+75.00 = 35.73 L.F.

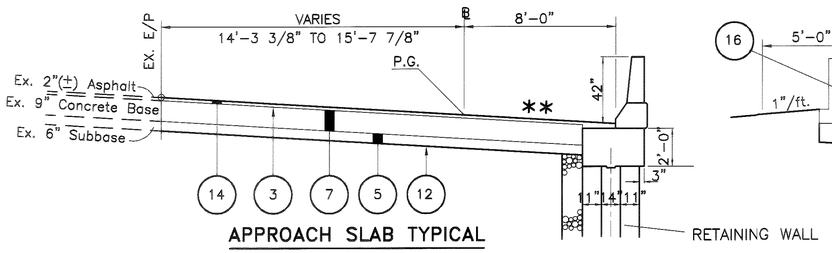

APPROACH SLAB TYPICAL

STA. A66+74.50 TO STA. A66+99.70 = 25.20 L.F.
(STA. 66+71.70 TO STA. 66+96.70 S.R.315)

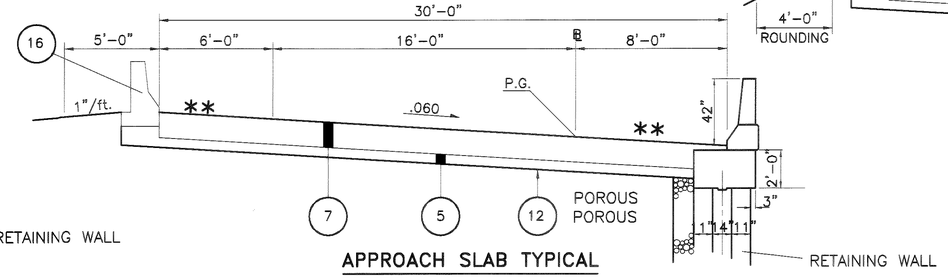

APPROACH SLAB TYPICAL

STA. A69+24.11 TO STA. A69+49.11 = 25.00 L.F.

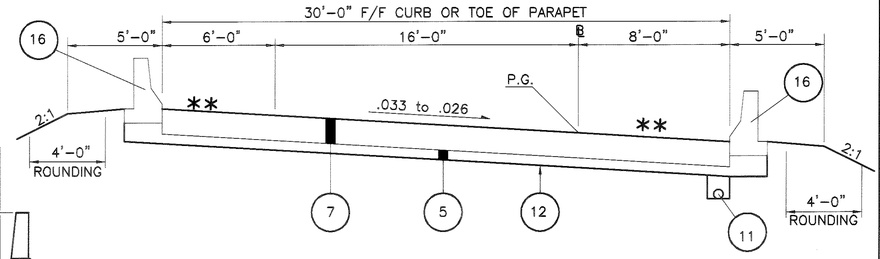

APPROACH SLAB TYPICAL

STA. A74+14.27 TO STA. A74+39.27 = 25.00 L.F.

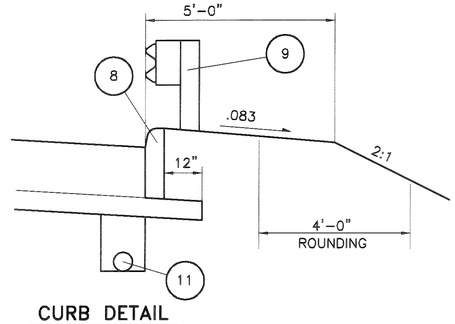

CURB DETAIL

STA. A74+40.26 TO STA. A75+09.75 RT.

LEGEND

1	ITEM 446	1 1/4" ASPHALT CONCRETE SURFACE COURSE, TYPE 1, PG64-22
2	ITEM 446	1 3/4" ASPHALT CONCRETE INTERMEDIATE COURSE, TYPE 2, PG64-22
3	ITEM 407	TACK COAT, 702.13 (SEE GENERAL NOTES)
4	ITEM 305	9" CONCRETE BASE
5	ITEM 304	6" AGGREGATE BASE
6	ITEM 408	BITUMINOUS PRIME COAT APPLIED AT THE RATE OF 0.4 GAL/S.Y.
7	ITEM 611	REINFORCED CONCRETE APPROACH SLAB (t=15")
8	ITEM 830	CURB, TYPE 6
9	ITEM 606	GUARDRAIL, TYPE 5
10	ITEM 870	SEEDING AND MULCHING
11	ITEM 605	6" SHALLOW PIPE UNDERDRAIN, 707.31 OR 707.41
12	ITEM 203	SUBGRADE COMPACTION
13	ITEM 446	2 1/2" ASPHALT CONCRETE SURFACE COURSE, TYPE 1, PG64-22
14	ITEM 446	2" (±) ASPHALT CONCRETE SURFACE COURSE, TYPE 1, PG64-22
15	ITEM 301	5 1/2" (±) BITUMINOUS AGGREGATE BASE, PG64-22
16	ITEM 622	CONCRETE BARRIER, TYPE D
17	ITEM 407	TACK COAT FOR INTERMEDIATE COURSE (SEE GENERAL NOTES)
18	ITEM 608	6" CONCRETE WALK
19	ITEM 605	4" PIPE UNDERDRAIN, 707.31 OR 707.41
20	ITEM 622	CONCRETE BARRIER, TYPE B1

NOTES:

* .042'/ft. or Pavement Slope if Greater.

** Transition Approach Slab From Bridge Section to Roadway Section Slopes in Approach Slab Section Length.

*** See Pavement Details for Slope.

TYPICAL SECTIONS - RAMP A

FRA-315-3.04

3453 TYPA 06-14-02

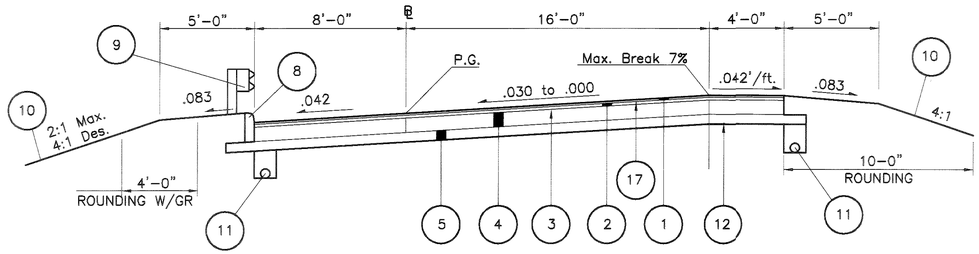

STA. B79+50.00 TO STA. B80+25.00 = 75.00 L.F.

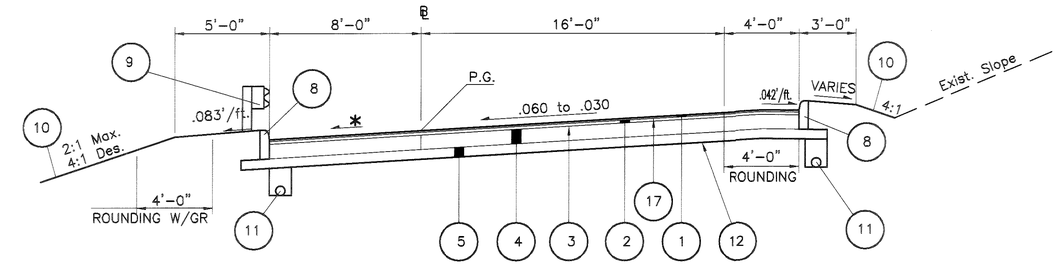

STA. B78+26.94 TO STA. B79+50.00 = 123.06 L.F.

RAMP TERMINALS TYPICAL

STA. 66+91.39(S.R.315) TO STA. 78+28.89(S.R.315) = 1137.50 L.F.
STA. 78+28.89(S.R.315) BACK = STA. B78+26.94(RAMP B) AHEAD

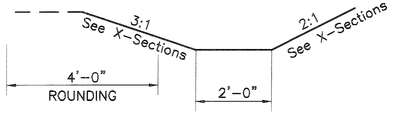

TYPICAL DITCH SECTION

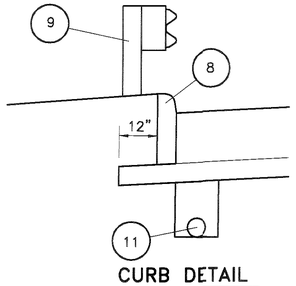

CURB DETAIL

STA. 66+91.39(S.R.315) TO STA. B80+48.47

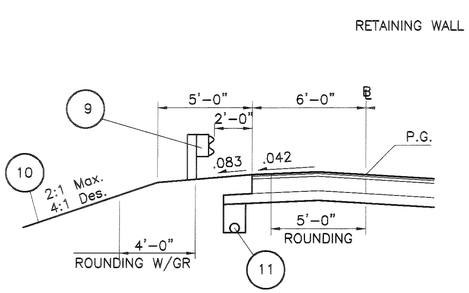

SHOULDER DETAIL

STA. B85+75.00 TO STA. B86+82.54

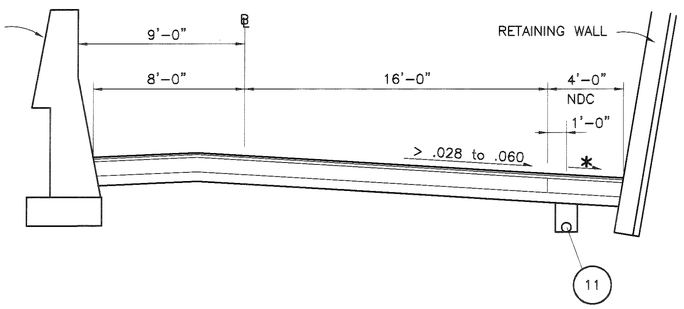

SHOULDER DETAIL

STA. B82+88.00 TO STA. B85+50.00 RT.
STA. B81+47.00 TO STA. B85+71.95 LT.

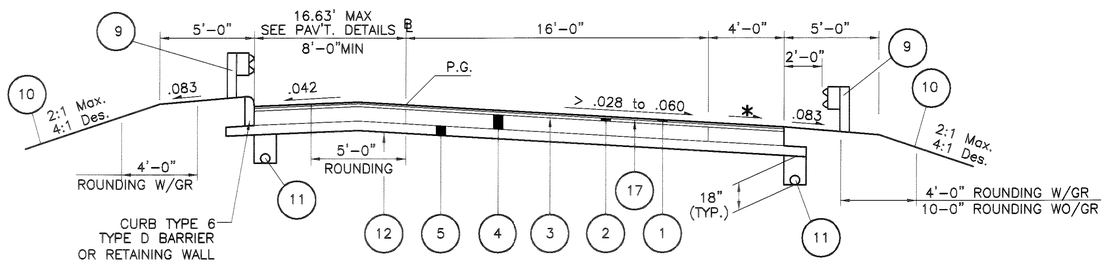

STA. B80+90.00 TO STA. B86+82.54 = 592.54 L.F.

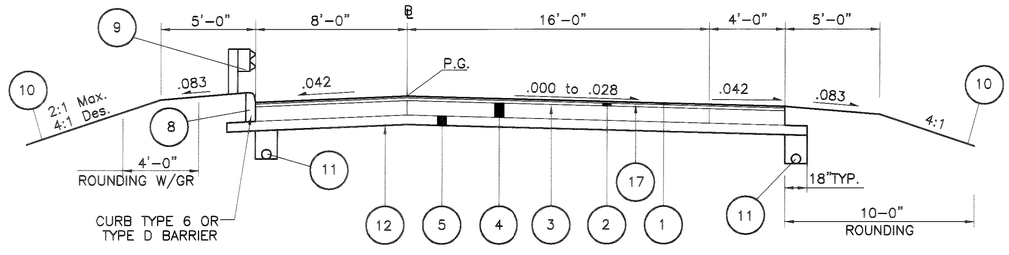

STA. B80+25.00 TO STA. B80+90.00 = 65.00 L.F.

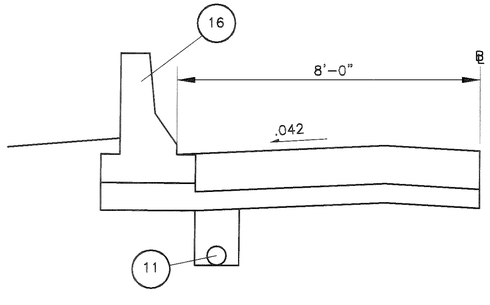

BARRIER DETAIL

STA. B80+48.47 TO STA. B81+47.00

NOTES:

* 1/2"/ft. or Pavement Slope if Greater.

** Transition Approach Slab From Bridge Section to Roadway Section Slopes in Approach Slab Section Length.

*** See Pavement Details for Slope.

FOR LEGEND SEE SHEET 4

TYPICAL SECTIONS – RAMP B

FRA-315-3.04

3453 TYPB1 05-24-02

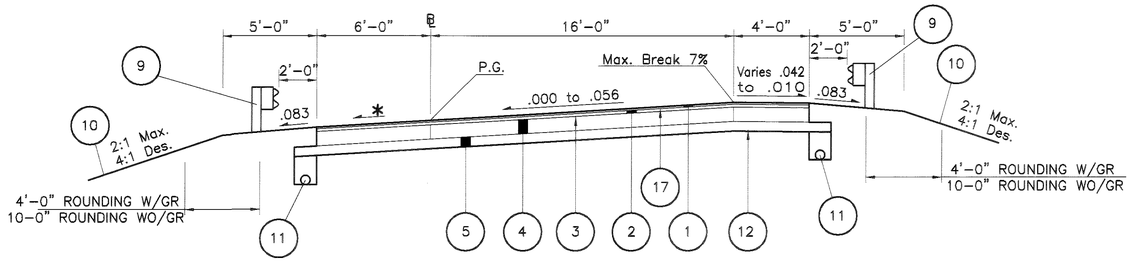

STA. B90+25.00 TO STA. B94+34.28 = 409.28 L.F.

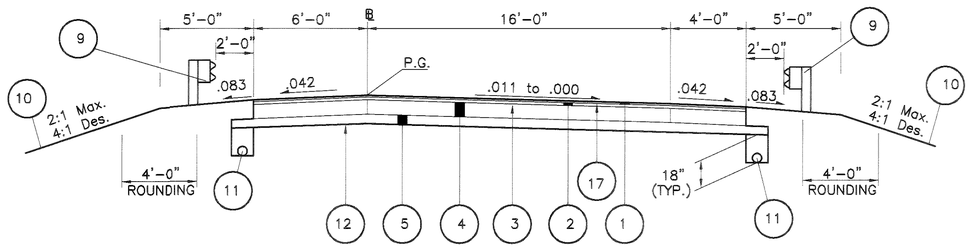

STA. B89+97.38 TO STA. B90+25.00 = 27.62 L.F.

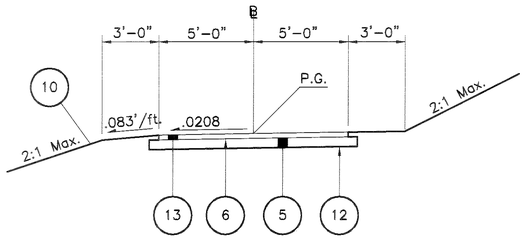

BIKE PATH TYPICAL

STA. 99+99.46 TO STA. 120+25 = 2025.54 L.F.

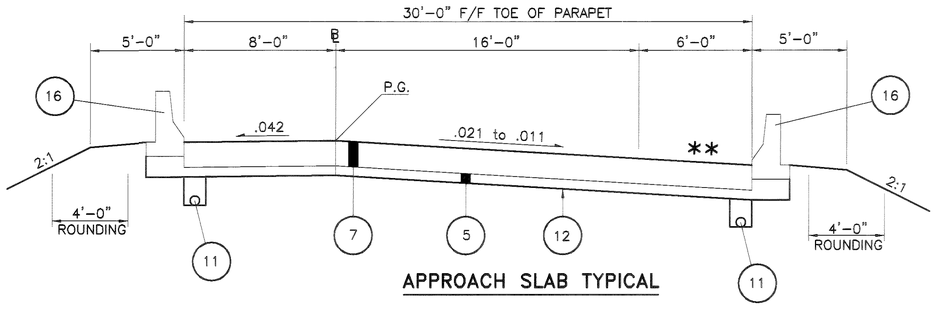

APPROACH SLAB TYPICAL

STA. B89+72.38 TO STA. B89+97.38 = 25.00 L.F.

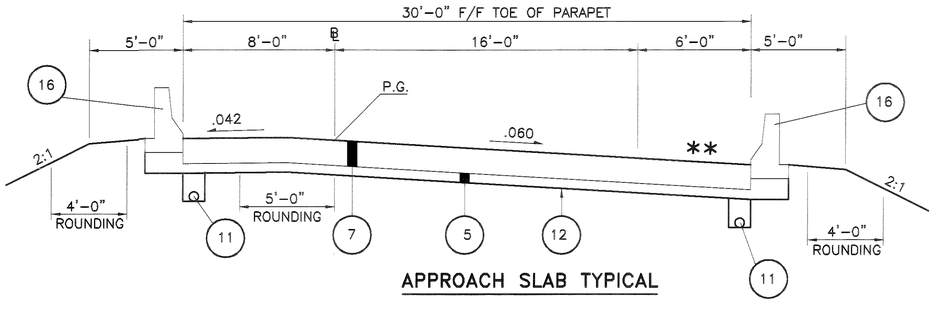

APPROACH SLAB TYPICAL

STA. B86+82.54 TO STA. B87+07.54 = 25.00 L.F.

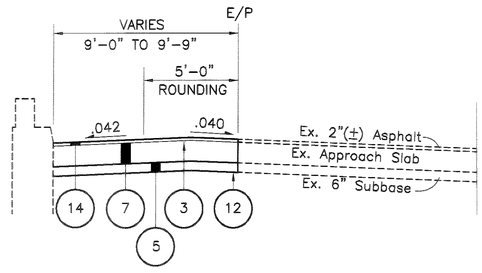

APPROACH SLAB DETAIL

STA. 66+67.55 SR 315 TO STA. 66+91.39 SR 315 = 23.84 L.F.

NOTES:

* 1/2"/ft. or Pavement Slope if Greater.

** Transition Approach Slab From Bridge Section to Roadway Section Slopes in Approach Slab Section Length.

*** See Pavement Details for Slope.

FOR LEGEND SEE SHEET 4

TYPICAL SECTIONS – RAMP B

FRA-315-3.04

3453 TYP32 09-20-001

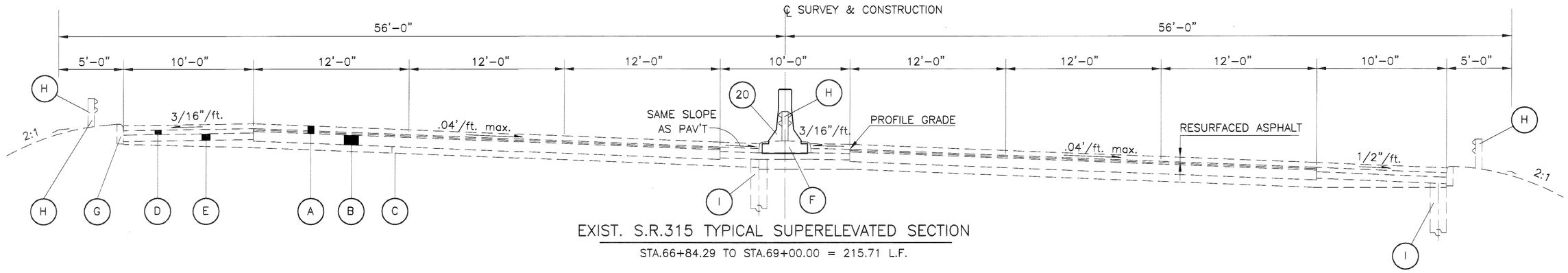

EXIST. S.R.315 TYPICAL SUPERELEVATED SECTION

STA.66+84.29 TO STA.69+00.00 = 215.71 L.F.

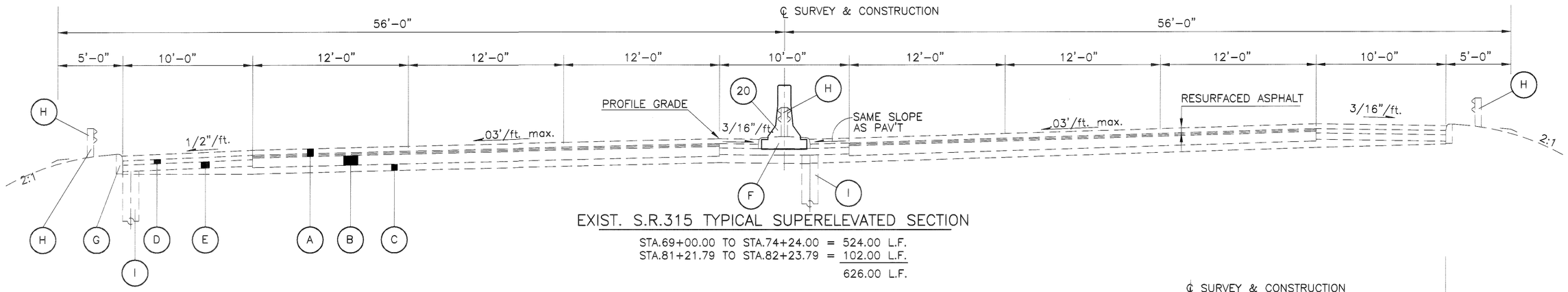

EXIST. S.R.315 TYPICAL SUPERELEVATED SECTION

STA.69+00.00 TO STA.74+24.00 = 524.00 L.F.
STA.81+21.79 TO STA.82+23.79 = 102.00 L.F.
626.00 L.F.

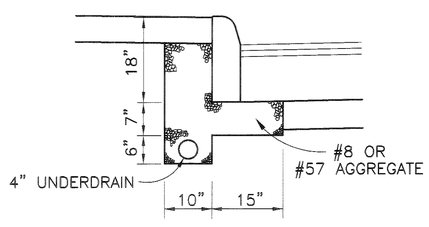

TYPE "A"
TYPE 6 CURB
UNDERDRAIN DETAIL

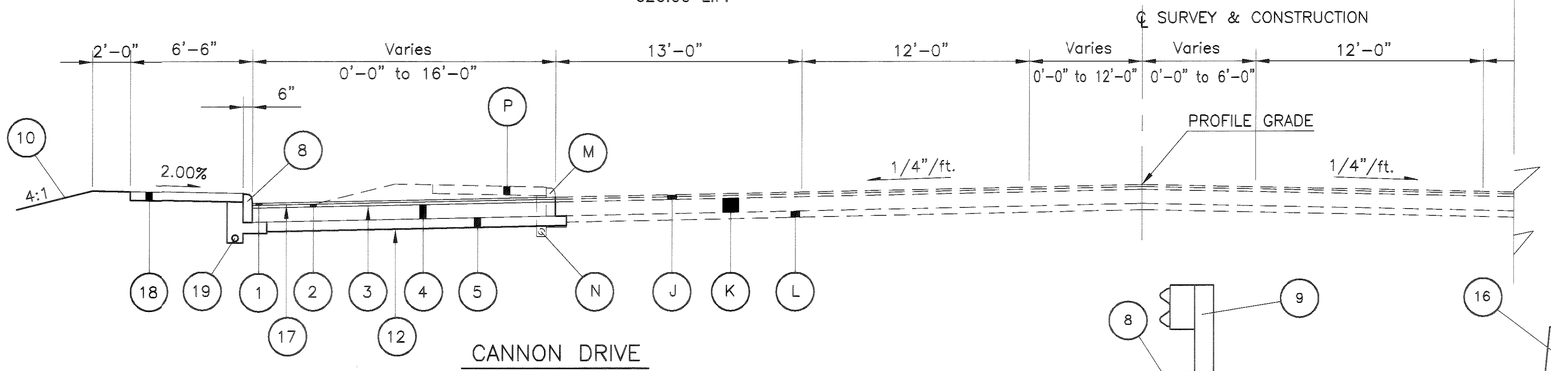

CANNON DRIVE

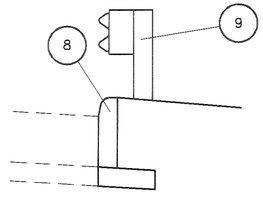

CURB DETAIL

STA. 69+02.60 TO STA. 69+31.45 S.R.315 RT.

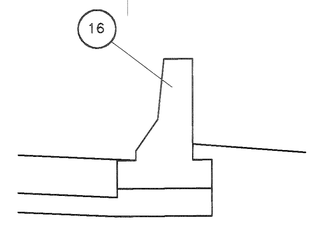

BARRIER DETAIL

STA. 68+92.16 TO STA. 69+02.60 S.R.315 RT.

LEGEND FOR S.R. 315

A	ITEM 404&402	9"(±) ASPHALT CONCRETE W/RESURFACING	F	ITEM 612	CONCRETE MEDIAN
B	ITEM 305	9" PORTLAND CEMENT CONCRETE BASE	G	ITEM 609	CURB TYPE 6
C	ITEM 310	6" SUBBASE	H	ITEM 606	GUARD RAIL
D	ITEM 301	3"BITUMINOUS AGGREGATE BASE	I	ITEM 605	6" PIPE UNDERDRAIN
E	ITEM 304	6" AGGREGATE BASE			

LEGEND FOR CANNON DR.

J	ITEM 404&402	3" ASPHALT CONCRETE
K	ITEM 305	9" CONCRETE BASE, CLASS F.
L	ITEM 310	4" SUBBASE
M	ITEM 609	CONCRETE CURB, STANDARD TYPE 6
N	ITEM 605	4" PIPE UNDERDRAIN
P	ITEM 608	5 1/2" CONCRETE WALK

FOR PROPOSED WORK LEGEND SEE SHEET 4

TYPICAL SECTIONS - EXISTING PAVEMENT

FRA-315-3.04

3453 TYPEX 06-14-02

ROUNDING

THE ROUNDING AT SLOPE BREAKPOINTS SHOWN ON THE TYPICAL SECTIONS APPLY TO ALL CROSS-SECTIONS EVEN THOUGH OTHERWISE SHOWN.

UTILITIES

LISTED BELOW ARE THE UTILITIES LOCATED WITHIN THE PROJECT CONSTRUCTION LIMITS TOGETHER WITH THEIR RESPECTIVE OWNERS:

COLUMBIA GAS OF OHIO
920 WEST GOODALE BOULEVARD
COLUMBUS, OHIO 43212
PHONE: (614) 460-2238

AMERICAN ELECTRIC POWER
850 TECH CENTER DRIVE
GAHANNA, OHIO 43230
PHONE: (614) 883-6829

AMERITECH
150 EAST GAY STREET, ROOM 6C
COLUMBUS, OHIO 43215
PHONE: (614) 223-7162

WARNER CABLE
1266 DUBLIN ROAD, P.O. BOX 2553
COLUMBUS, OHIO 43216-2553
PHONE: (614) 481-5263

CITY OF COLUMBUS
DEPARTMENT OF PUBLIC UTILITIES
ELECTRICITY DIVISION
3500 INDIANOLA AVENUE
COLUMBUS, OHIO 43214
PHONE: (614) 645-7627 (SWITCHBOARD)

CITY OF COLUMBUS
DIVISION OF SEWERAGE & DRAINAGE
910 DUBLIN ROAD
COLUMBUS, OHIO 43215
PHONE: (614) 645-8156

CITY OF COLUMBUS
PUBLIC SERVICE DEPARTMENT
TRAFFIC ENGINEERING & PARKING DIVISION
109 N. FRONT STREET, 2ND FLOOR
COLUMBUS, OHIO 43215-9024
PHONE: (614) 645-7790

THE LOCATION OF THE UNDERGROUND UTILITIES SHOWN ON THE PLANS ARE AS OBTAINED FROM THE OWNERS AS REQUIRED BY SECTION 153.64 O.R.C.

CONTINGENCY QUANTITIES

THE CONTRACTOR SHALL NOT ORDER MATERIALS OR PERFORM WORK FOR ITEMS DESIGNATED BY PLAN NOTE TO BE USED "AS DIRECTED BY THE ENGINEER" UNLESS AUTHORIZED BY THE ENGINEER. THE ACTUAL WORK LOCATIONS AND QUANTITIES USED FOR SUCH ITEMS SHALL BE INCORPORATED INTO THE FINAL CHANGE ORDER GOVERNING COMPLETION OF THIS PROJECT.

ELEVATION DATUM

ALL ELEVATIONS ARE BASED ON U.S.G.S. 1929 DATUM.

WORK LIMITS

THE WORK LIMITS SHOWN ON THESE PLANS ARE FOR PHYSICAL CONSTRUCTION ONLY. THE INSTALLATION AND OPERATION OF ALL TEMPORARY TRAFFIC CONTROL AND TEMPORARY TRAFFIC CONTROL DEVICES REQUIRED BY THESE PLANS SHALL BE PROVIDED BY THE CONTRACTOR WHETHER INSIDE OR OUTSIDE THESE WORK LIMITS.

CLEARING AND GRUBBING

ALL TREES AND STUMPS SPECIFICALLY MARKED FOR REMOVAL WITHIN THE CONSTRUCTION LIMITS SHALL BE REMOVED UNDER THE LUMP SUM BID FOR ITEM 201, CLEARING AND GRUBBING. THE FOLLOWING IS AN APPROXIMATE ESTIMATE OF THE NUMBER OF TREES AND STUMPS TO BE REMOVED:

SIZES	NO. TREES	NO. STUMPS	TOTAL
15"	26	00	26
30"	06	00	06
48"	00	00	00
60"	00	00	00

BENCHING OF FOUNDATION SLOPES

ALTHOUGH CROSS-SECTIONS INDICATE SPECIFIC DIMENSIONS FOR PROPOSED BENCHING OF THE EMBANKMENT FOUNDATION IN CERTAIN AREAS, NO WAIVER OF THE SPECIFICATIONS IS INTENDED. ALL OTHER SLOPED EMBANKMENT AREAS SHALL BE BENCHED AS SET FORTH IN 203.09. NO ADDITIONAL PAYMENT WILL BE MADE FOR BENCHING REQUIRED UNDER THE PROVISIONS OF 203.09.

ITEM 203, PROOF ROLLING

AN ESTIMATED QUANTITY FOR THIS ITEM HAS BEEN PROVIDED IN THE GENERAL SUMMARY FOR USE AS DIRECTED BY THE ENGINEER.

CONNECTION BETWEEN EXISTING AND PROPOSED GUARDRAIL

WHEN IT IS NECESSARY TO SPLICE PROPOSED GUARDRAIL TO EXISTING GUARDRAIL, ONLY THE EXISTING GUARDRAIL SHALL BE CUT, DRILLED OR PUNCHED. THE CONNECTION SHALL BE MADE USING A "W-BEAM RAIL SPLICE" AS SHOWN IN AASHTO M 180. PAYMENT SHALL BE INCLUDED IN THE CONTRACT PRICE FOR THE RESPECTIVE GUARDRAIL ITEMS.

SEEDING AND MULCHING

THE FOLLOWING QUANTITIES ARE PROVIDED TO PROMOTE GROWTH AND CARE OF PERMANENT SEEDED AREAS:

870, SEEDING AND MULCHING	22306 SQ. YD.
870, SOIL ANALYSIS TEST	2 EACH
870, PLACING TOPSOIL	1240 CU. YD.
870, COMMERCIAL FERTILIZER	3.01 TON
870, AGRICULTURAL LIME	4.24 TON
870, WATER	121 M GAL
870, MOWING	50 M SQ. FT.

SEEDING AND MULCHING SHALL BE APPLIED TO ALL AREAS OF EXPOSED SOIL BETWEEN THE RIGHT-OF-WAY LINES, AND WITHIN THE CONSTRUCTION LIMITS FOR AREAS OUTSIDE THE RIGHT-OF-WAY LINES COVERED BY WORK AGREEMENT OR SLOPE EASEMENT. QUANTITY CALCULATIONS FOR SEEDING AND MULCHING, ARE BASED ON THESE LIMITS.

CONVERSION OF STANDARD CONSTRUCTION DRAWINGS

THE METRIC STANDARD DRAWINGS REFERENCED IN THIS PLAN SHALL BE CONVERTED TO ENGLISH UNITS USING THE SI (METRIC) TO ENGLISH CONVERSION FACTORS PROVIDED IN SECTION 109.011 OF THE 1997 CONSTRUCTION AND MATERIALS SPECIFICATIONS. THE APPENDIX OF ASTM E380 SHALL BE UTILIZED FOR ANY ADDITIONAL CONVERSION FACTORS REQUIRED. CONVERSIONS SHALL BE APPROPRIATELY PRECISE AND SHALL REFLECT STANDARD INDUSTRY ENGLISH VALUES WHERE SUITABLE.

TEMPORARY SOIL EROSION AND SEDIMENT CONTROL

THE FOLLOWING ESTIMATED QUANTITIES ARE TO BE PLACED BY THE CONTRACTOR WITH THE ENGINEER'S CONCURRENCE FOR TEMPORARY EROSION AND SEDIMENT CONTROL MEASURES:

877, TEMPORARY SEEDING AND MULCHING	4462 SQ. YD.
877, TEMPORARY SLOPE DRAINS	260 LIN. FT.
877, TEMPORARY SEDIMENT BASINS AND SEDIMENT DAMS	1200 CU. YD.
877, TEMPORARY PERIMETER FILTER FABRIC FENCE	3775 LIN. FT.
877, TEMPORARY DITCH CHECK FILTER FABRIC FENCE	3775 LIN. FT.
877, TEMPORARY INLET PROTECTION FILTER FABRIC FENCE	200 LIN. FT.
877, TEMPORARY DIKES	5200 CU. YD.
877, TEMPORARY DITCH PROTECTION	215 SQ. YD.
877, SEDIMENT REMOVAL	300 CU. YD.
601, ROCK CHANNEL PROTECTION, TYPE C (WITH FILTER)	240 CU. YD.
601, ROCK CHANNEL PROTECTION, TYPE C (WITHOUT FILTER)	150 CU. YD.
870, COMMERCIAL FERTILIZER	0.20 TON
870, REPAIR, SEEDING AND MULCHING	1125 SQ. YD.
870, WATER	12 M GAL.
870, INTER-SEEDING	1125 SQ. YD.

EROSION CONTROL

ITEMS 601, AND 670, ARE PROVIDED IN THE PLANS FOR EROSION CONTROL. ROCK OF A STABLE NATURE SHALL NOT BE REMOVED IN ORDER TO PLACE ANY OF THESE ITEMS AND TURF OF A STABLE NATURE SHALL NOT BE REMOVED IN ORDER TO PLACE ITEM 670. THE ENGINEER SHALL CHECK AND NON PERFORM QUANTITIES OR ADJUST LOCATIONS AND QUANTITIES OF THESE ITEMS WHERE INDICATED BY FIELD CONDITIONS DURING CONSTRUCTION. IN ADDITION, THESE ITEMS SHALL MEET THE REQUIREMENT OF 108.04.

CALCULATED 000 01/001
CHECKED WGY 01/001

GENERAL NOTES

FRA-315-3.04

3553GN1 04-22-2002

CALCULATED 000 01/001 | CHECKED WSY 01/001

GENERAL NOTES

USE OF FIRE HYDRANTS

THE CONTRACTOR SHALL MAKE THE PROPER ARRANGEMENTS WITH THE DIVISION OF FIRE AND THE DIVISION OF WATER FOR THE USE OF FIRE HYDRANTS WHEN USED FOR WORK PERFORMED UNDER THIS CONTRACT. BEFORE THE FINAL ESTIMATE IS PAID, THE CONTRACTOR SHALL SUBMIT A LETTER FROM THE DIVISION OF WATER TO THE PROJECT ENGINEER STATING THAT HE AND HIS SUBCONTRACTORS HAVE RETURNED THE SIAMESE VALVE TO THE DIVISION OF WATER AND PAID ALL COSTS ARISING FROM THE USE OF THE FIRE HYDRANTS.

ITEM 407 – TACK COAT AND ITEM 407 – TACK COAT FOR INTERMEDIATE COURSE

THE RATE OF APPLICATION OF THE 407 TACK COAT SHALL BE SUBJECT TO ADJUSTMENT AS DIRECTED BY THE ENGINEER. FOR ESTIMATING PURPOSES ONLY, THE PLAN QUANTITIES INDICATE AN AVERAGE APPLICATION RATE OF:

407, TACK COAT, 702.13	.075 GAL. PER SQ. YARD
407, TACK COAT FOR INTERMEDIATE COURSE, 702.13	.04 GAL. PER SQ. YARD

CONTRACTION AND/OR EXPANSION JOINTS

ALTHOUGH SPECIFIC LOCATIONS OF CERTAIN CONTRACTION AND EXPANSION JOINTS HAVE BEEN DETAILED ON THIS PLAN, NO WAIVER OF THE SPECIFICATIONS IS INTENDED. PROVISION OF EXPANSION JOINTS AT ALL MAJOR STRUCTURES AND THE MAXIMUM SPACING BETWEEN CONTRACTION JOINTS SHALL, IN ALL CASES, BE IN ACCORDANCE WITH STANDARD CONSTRUCTION DRAWING BP–2.2 AND THE SPECIFICATIONS.

CONTRACTION JOINTS IN CONCRETE PAVEMENT OR BASE WIDENING

WHERE NEW CONCRETE IS PLACED ADJACENT TO EXISTING CONCRETE, CONTRACTION JOINTS SHALL BE PROVIDED IN THE NEW CONCRETE SO AS TO FORM CONTINUOUS JOINTS WITH THOSE IN THE EXISTING CONCRETE.

THE MAXIMUM DISTANCE BETWEEN THE JOINTS IN THE NEW CONCRETE SHALL BE IN ACCORDANCE WITH STANDARD CONSTRUCTION DRAWING BP– 2.2, IF NECESSARY, ADDITIONAL JOINTS SHALL BE PROVIDED IN THE NEW CONCRETE AT APPROXIMATELY EQUAL INTERVALS BETWEEN EXISTING JOINTS THAT EXCEED THE MAXIMUM SPACING.

REVIEW OF DRAINAGE FACILITIES

BEFORE ANY WORK IS STARTED ON THE PROJECT AND AGAIN BEFORE FINAL ACCEPTANCE BY THE STATE, REPRESENTATIVES OF THE STATE AND THE CONTRACTOR, ALONG WITH LOCAL REPRESENTATIVES, SHALL MAKE AN INSPECTION OF ALL EXISTING SEWERS WHICH ARE TO REMAIN IN SERVICE AND WHICH MAY BE AFFECTED BY THE WORK. THE CONDITION OF THE EXISTING CONDUITS AND THEIR APPURTENANCES SHALL BE DETERMINED FROM FIELD OBSERVATIONS. RECORDS OF THE INSPECTION SHALL BE KEPT IN WRITING BY THE STATE.

ALL NEW CONDUITS, INLETS, CATCH BASINS, AND MANHOLES CONSTRUCTED AS A PART OF THE PROJECT SHALL BE FREE OF ALL FOREIGN MATTER AND IN A CLEAN CONDITION BEFORE THE PROJECT WILL BE ACCEPTED BY THE STATE.

ALL EXISTING SEWERS INSPECTED INITIALLY BY THE ABOVE MENTIONED PARTIES SHALL BE MAINTAINED AND LEFT IN A CONDITION REASONABLY COMPARABLE TO THAT DETERMINED BY THE ORIGINAL INSPECTION. ANY CHANGE IN THE CONDITION RESULTING FROM THE CONTRACTOR'S OPERATIONS SHALL BE CORRECTED BY THE CONTRACTOR TO THE SATISFACTION OF THE ENGINEER.

PAYMENT FOR ALL OPERATIONS DESCRIBED ABOVE SHALL BE INCLUDED IN THE CONTRACT PRICE FOR THE PERTINENT 603 CONDUIT ITEMS.

CROSSINGS AND CONNECTIONS TO EXISTING PIPES AND UTILITIES

WHERE PLANS PROVIDE FOR A PROPOSED CONDUIT TO BE CONNECTED TO, OR CROSS OVER OR UNDER AN EXISTING SEWER OR UNDERGROUND UTILITY, THE CONTRACTOR SHALL LOCATE THE EXISTING PIPES OR UTILITIES BOTH AS TO LINE AND GRADE BEFORE STARTING TO LAY THE PROPOSED CONDUIT.

IF IT IS DETERMINED THAT THE ELEVATION OF THE EXISTING CONDUIT, OR EXISTING APPURTENANCE TO BE CONNECTED, DIFFERS FROM THE PLAN ELEVATION OR RESULTS IN A CHANGE IN THE PLAN CONDUIT SLOPE, THE ENGINEER SHALL BE NOTIFIED BEFORE STARTING CONSTRUCTION OF ANY PORTION OF THE PROPOSED CONDUIT WHICH WILL BE AFFECTED BY THE VARIANCE IN THE EXISTING ELEVATIONS.

IF IT IS DETERMINED THAT THE PROPOSED CONDUIT WILL INTERSECT AN EXISTING SEWER OR UNDERGROUND UTILITY IF CONSTRUCTED AS SHOWN ON THE PLAN, THE ENGINEER SHALL BE NOTIFIED BEFORE STARTING CONSTRUCTION OF ANY PORTION OF THE PROPOSED CONDUIT WHICH WOULD BE AFFECTED BY THE INTERFERENCE WITH AN EXISTING FACILITY.

PAYMENT FOR ALL THE OPERATIONS DESCRIBED ABOVE SHALL BE INCLUDED IN THE CONTRACT PRICE FOR THE PERTINENT 603 CONDUIT ITEM.

ITEM 606 – IMPACT ATTENUATOR, TYPE 2–98, MODEL #QFCBCVR–U, UNIDIRECTIONAL

THIS ITEM SHALL CONSIST OF FURNISHING AND INSTALLING A QUADGUARD IMPACT ATTENUATOR MANUFACTURED BY ENERGY ABSORPTION SYSTEMS, INC., ONE EAST WACKER DRIVE, CHICAGO, IL 60601 (TELEPHONE: 312–467–6750).

INSTALLATION SHALL BE AT THE LOCATIONS SPECIFIED IN THE PLANS, IN ACCORDANCE WITH THE MANUFACTURER'S SPECIFICATIONS AS DETAILED ON THE FOLLOWING PRE–APPROVED SHOP DRAWINGS:

DWG.#	DRAWING NAME	DWG./REV. DATE	ODOT APPROVAL DATE
QFCBCVR–U	QUADGUARD SYSTEM W/90" CONCRETE BACKUPS	9–4–97 REV. D	3–6–98
35–40–08	QUADGUARD SYSTEM CONCRETE BACKUP,QG ON GRADE	10/14/97 REV. F	8/27/99

PAYMENT FOR THE ABOVE WORK SHALL BE MADE AT THE UNIT PRICE BID FOR ITEM 606, IMPACT ATTENUATOR, TYPE 2–98, MODEL #QFCBCVR–U, UNIDIRECTIONAL, EACH, AND SHALL INCLUDE ALL LABOR, TOOLS, EQUIPMENT AND MATERIALS NECESSARY TO CONSTRUCT A COMPLETE AND FUNCTIONAL IMPACT ATTENUATOR SYSTEM, INCLUDING ALL RELATED BACKUPS, TRANSITIONS, HARDWARE AND GRADING, NOT SEPARATELY SPECIFIED, AS REQUIRED BY THE MANUFACTURER.

ITEM 606, ANCHOR ASSEMBLY, TYPE E–98

THIS ITEM SHALL CONSIST OF FURNISHING AND INSTALLING EITHER OF THE FOLLOWING GUARDRAIL END TERMINALS.

1) THE ET–2000 (1997) MANUFACTURED BY SYRO, INC., 1170 NORTH STATE STREET, GIRARD, OHIO 44420 (TELEPHONE: 330–545–4373).

   THE LENGTH OF THE ET–2000 (1997) SYSTEM IS CONSIDERED TO BE 50'–0", INCLUSIVE OF TWO 25'–0" LONG RAIL ELEMENTS. INSTALLATION SHALL BE AT THE LOCATIONS SPECIFIED IN THE PLANS, IN ACCORDANCE WITH THE MANUFACTURER'S SPECIFICATIONS AS DETAILED ON THE FOLLOWING PRE–APPROVED SHOP DRAWINGS:

DWG. #	DRAWING NAME	DWG./ REV. DATE	ODOT APPROVAL DATE
SS265M	ET–2000 (1997) PLAN, ELEV. & SECTIONS	6/20/97	3/6/98

2) THE SKT–350 MANUFACTURED BY ROAD SYSTEMS, INC., 7631 NEW CASTLE DRIVE, FRANKFORT, IL 60423 (TELEPHONE: 815–464–5917).

   THE LENGTH OF THE SKT–350 SYSTEM IS CONSIDERED TO BE 50'–0", INCLUSIVE OF FOUR 12'–6" LONG RAIL ELEMENTS. INSTALLATION SHALL BE AT THE LOCATIONS SPECIFIED IN THE PLANS, IN ACCORDANCE WITH THE MANUFACTURER'S SPECIFICATIONS AS DETAILED ON THE FOLLOWING PRE–APPROVED SHOP DRAWINGS:

DWG. #	DRAWING NAME	DWG./ REV. DATE	ODOT APPROVAL DATE
SKT–4M	SEQUENTIAL KINKING TERMINAL (SKT–350) ASSEMBLY WITH 4 FOUNDATION TUBES	12/11/97	3/6/98

THE FACE OF THE TYPE E–98 IMPACT HEAD SHALL BE COVERED WITH A SHEET OF TYPE G REFLECTIVE SHEETING, PER CMS 730.19, APPROX. 18"x18".

PAYMENT FOR THE ABOVE WORK SHALL BE MADE AT THE UNIT PRICE BID FOR ITEM 606, ANCHOR ASSEMBLY, TYPE E–98, EACH, AND SHALL INCLUDE ALL LABOR, TOOLS, EQUIPMENT AND MATERIALS NECESSARY TO CONSTRUCT A COMPLETE AND FUNCTIONAL ANCHOR ASSEMBLY SYSTEM, INCLUDING ALL RELATED TRANSITIONS, DELINEATORS, HARDWARE AND GRADING, NOT SEPARATELY SPECIFIED, AS REQUIRED BY THE MANUFACTURER.

CONNECTION BETWEEN EXISTING AND PROPOSED GUARDRAIL

WHEN IT IS NECESSARY TO SPLICE PROPOSED GUARDRAIL TO EXISTING GUARDRAIL ONLY THE EXISTING GUARDRAIL SHALL BE CUT, DRILLED, OR PUNCHED. THE CONNECTION SHALL BE MADE USING A "W–BEAM RAIL SPLICE" AS SHOWN IN AASHTO M 180. PAYMENT SHALL BE INCLUDED IN THE CONTRACT PRICE BID FOR THE RESPECTIVE GUARDRAIL ITEMS.

FENCE LENGTHS

THE LENGTHS OF FENCE SHOWN IN THE PLANS ARE HORIZONTAL DIMENSIONS. MEASUREMENTS OF THE FINAL QUANTITIES SHALL BE MADE IN ACCORDANCE WITH ITEM 607.

345.3GN2 06–17–02

UNRECORDED SANITARY CONNECTIONS

ANY UNRECORDED ACTIVE CONNECTION TO A SANITARY SEWER ENCOUNTERED DURING CONSTRUCTION SHALL BE RECONNECTED TO THE EXISTING SANITARY SEWER TO THE SATISFACTION OF THE ENGINEER.

THE FOLLOWING CONDUIT TYPES MAY BE USED: 707.42, 707.43, 707.44, 707.45, 707.46, 707.47, 707.51, 707.52 PS46 MIN., 706.01, 706.02, OR 706.08 WITH JOINTS AS PER 706.11 OR 706.12.

THE FOLLOWING ESTIMATED QUANTITIES HAVE BEEN INCLUDED IN THE GENERAL SUMMARY FOR USE AS DIRECTED BY THE ENGINEER FOR THE WORK NOTED ABOVE:

603, 6" CONDUIT, TYPE C, FOR SANITARY	100 L.F.
603, 6" CONDUIT, TYPE B, FOR SANITARY	100 L.F.

MANHOLES, INLETS AND CATCH BASINS

IT SHALL BE THE CONTRACTOR'S RESPONSIBILITY TO CONSTRUCT THE INLETS AND CATCH BASINS SO THAT THEY ARE ORIENTED CORRECTLY AND CONFORM IN ELEVATION WITH THE DITCHES, GUTTERS AND PAVEMENT EDGES THAT THEY ARE INTENDED TO SERVE. MANHOLE CASTINGS IN PAVED AREAS SHALL CONFORM WITH THE PAVEMENT GRADES.

THE PROPOSED ELEVATIONS AND LOCATIONS OF INLETS, CATCH BASINS, MANHOLES AND PIPES AND THE ESTIMATED LENGTH OF PIPES MAY BE ADJUSTED BY THE ENGINEER DURING CONSTRUCTION.

MAINTAINING FLOW

THE CONTRACTOR SHALL CONDUCT HIS OPERATIONS SO THAT THE FLOW IN THE EXISTING SEWERS WILL BE MAINTAINED AT ALL TIMES. ANY ADDITIONAL COST INVOLVED IN MAINTAINING THIS FLOW BY PUMPING OR OTHER APPROVED METHOD SHALL BE INCLUDED IN THE UNIT PRICE BID FOR THE PERTINENT DRAINAGE ITEMS.

EXISTING SEWERS

THE CONTRACTOR SHALL EXERCISE DUE CARE TO KEEP DEBRIS OUT OF EXISTING SEWERS DURING CONSTRUCTION.

CONNECTIONS OF EXISTING PIPES

AT LOCATIONS IN THE PLANS WHERE PROPOSED STORM SEWERS ARE TO BE CONNECTED TO EXISTING PIPE, IT SHALL BE THE RESPONSIBILITY OF THE CONTRACTOR TO LOCATE THE EXISTING PIPE BOTH AS TO LINE AND GRADE BEFORE STARTING TO CONSTRUCT THE PROPOSED PIPE. THE COST OF THIS OPERATION SHALL BE INCLUDED IN THE UNIT PRICE BID FOR THE PERTINENT STORM SEWER ITEMS.

INLET NO.I–3D, AS PER PLAN

I–3D INLET, AS PER PLAN SHALL INCLUDE THE COST OF RESTORING THE SHOULDER PAVEMENT WITH ITEM 304 AGGREGATE BASE, ITEM 408 PRIME COAT, AND ITEM 446 ASPHALT CONCRETE. IT SHALL ALSO INCLUDE THE COST OF RECONNECTING THE 6" PIPE UNDERDRAIN.

CONSTRUCTION NOISE

HOURS OF OPERATION SHALL CONFORM WITH ANY LOCAL ORDINANCES.

INDIANA BAT TREES

ANY UNAVOIDABLE CUTTING OF TREES WITH SUITABLE ROOSTING AND BROOD-REARING HABITAT FOR THE INDIANA BAT (LIVING OR STANDING DEAD TREES WITH EXFOLIATING, PEELING OR LOOSE BARK, SPLIT TRUNKS AND/OR BRANCHES, OR CAVITIES) WILL BE PERFORMED ONLY BEFORE APRIL 15 OR AFTER SEPTEMBER 15 WHEN THE SPECIES WOULD NOT BE USING SUCH HABITAT.

NECESSARY IN-STREAM WORK

IN THE EVENT THAT WORK IN THE RIVER IS NECESSARY (I.E. BARGE TIPS OVER, BARGE GETS STUCK, ETC.) THE CONTRACTOR SHALL COORDINATE WITH THE ODOT OFFICE OF ENVIRONMENTAL SERVICES BY CONTACTING BILL CODY AT 614 466-5198.

EXCAVATED MATERIAL FOR PIER CONSTRUCTION

ANY MATERIAL EXCAVATED FOR PIER CONSTRUCTION WILL BE DISPOSED OF OFF-SITE, AWAY FROM THE RIVER CHANNEL AND THE RIVER BANKS.

WETLANDS

TWO JURISDICTIONAL WETLANDS HAVE BEEN IDENTIFIED: 1) TO THE RIGHT OF APPROXIMATE STATIONS A67+25 TO A68+25 ON RAMP A, AS SHOWN ON PLAN SHEET 33. 2) TO THE LEFT OF APPROXIMATE STATIONS 101+20 TO 102+10 ON THE BIKE PATH, AS SHOWN ON PLAN SHEET 33 AND 74. EVERY EFFORT SHALL BE MADE BY THE ENGINEER AND THE CONTRACTOR TO PRESERVE AND PROTECT THE ENTIRE WETLAND AREA. EROSION CONTROL ITEMS, AS DETAILED ON SHEET 33 AND 34 OF THE PLAN, SHALL BE IN PLACE. UNDER NO CIRCUMSTANCES IS THE CONTRACTOR TO PERFORM ANY WORK OR HAVE ANY EQUIPMENT WITHIN THE LIMITS OF THE EXISTING WETLAND.

CALCULATED WG 01/001
CHECKED WGY 01/001

GENERAL NOTES

FRA-315-3.04

345GN3 03-14-01

MAINTENANCE OF TRAFFIC SUB-SUMMARY

ITEM	SHEET NUMBERS																	ITEM	ITEM EXTENSION	GRAND TOTAL	UNIT	DESCRIPTION
	12	13		15	16	17			18	19	20	21		22	23	24	24A					
410		50																410	12000	50	C.Y.	TRAFFIC COMPACTED SURFACE, TYPE A OR B
410		10																410	13000	10	C.Y.	TRAFFIC COMPACTED SURFACE, TYPE C
614	LUMP																	614	11000	LUMP		MAINTAINING TRAFFIC
614	100																	614	11100	100	HOUR	LAW ENFORCEMENT OFFICER WITH PATROL CAR
614					37	18				34	29				36	14		614	13300	168	EACH	BARRIER REFLECTOR, TYPE B
614					37	18				34	29				36	14		614	13350	168	EACH	OBJECT MARKER
614					1													614	12336	1	EACH	TEMPORARY IMPACT ATTENUATOR (UNIDIRECTIONAL)
614		5																614	13000	5	C.Y.	BITUMINOUS CONC. FOR MAINTAINING TRAFFIC
614				0.30	0.38	0.34			0.29	0.76	0.83	0.14		0.10	0.38	0.42	0.07	614	22200	4.01	MILE	TEMPORARY EDGE LINE, CLASS I, 740.06, TYPE 1
614				1604	2000	1782			1540	4000	4400	756		540	2000	2200	348	614	23400	21170	LIN FT	TEMP. CHANNELIZING LINE, CLASS I, 740.06, TYPE 1
SPECIAL	40																	SPECIAL	61412500	40	SQ FT	REPLACEMENT SIGN
SPECIAL	50																	SPECIAL	61412600	50	EACH	REPLACEMENT DRUM
616	100	1																616	10000	101	M GAL	WATER
616		1.00																616	20000	1.00	TON	CALCIUM CHLORIDE
622					970	440				950	740				820	600		622	40020	4520	LIN FT	PORTABLE CONCRETE BARRIER, 32"

QUANTITIES CARRIED TO GENERAL SUMMARY
SEE SHEET NO. 28

CALCULATED MJT 6/02
CHECKED WGY 6/02

MAINTENANCE OF TRAFFIC SUBSUMMARY

FRA-315-3.04

345.3MTSS 06-06-02

MAINTENANCE OF TRAFFIC NOTES

CALCULATED MJT 6/02
CHECKED CE 6/02

MAINTAINING TRAFFIC

LENGTH AND DURATION OF LANE CLOSURES AND RESTRICTIONS SHALL BE AT THE APPROVAL OF THE ENGINEER. IT IS THE INTENT TO MINIMIZE THE IMPACT TO THE TRAVELING PUBLIC. LANE CLOSURES OR RESTRICTIONS OVER SEGMENTS OF THE PROJECT IN WHICH NO WORK IS ANTICIPATED WITHIN A REASONABLE TIME FRAME, AS DETERMINED BY THE ENGINEER, SHALL NOT BE PERMITTED. THE LEVEL OF UTILIZATION OF MAINTENANCE OF TRAFFIC DEVICES SHALL BE COMMENSURATE WITH THE WORK IN PROGRESS. SEE SHEET 13 FOR CONSTRUCTION PHASING.

THE OHIO STATE UNIVERSITY OFFICE OF TRAFFIC AND PARKING SHALL LOCATE AND MARK ALL UNDERGROUND TRAFFIC CONTROL CABLES. THE OHIO STATE UNIVERSITY OFFICE OF TRAFFIC AND PARKING (292–3125) AND THE CITY OF COLUMBUS DIVISION SYSTEMS ENGINEER (645–7790) SHALL BE NOTIFIED (645–7790) AT LEAST 48 HOURS (6 WEEKS FOR SIGNAL REVISIONS AND/OR POLE RELOCATIONS) PRIOR TO THE BEGINNING OF ANY WORK WITHIN 300' OF THE SIGNALIZED INTERSECTION OF CANNON DRIVE AND 9TH AVENUE AND CANNON DRIVE AND 12TH AVENUE OR WITHIN ANY POSTED AREA WHERE THE DIVISION HAS UNDERGROUND CABLE.

NO EXCAVATION SHALL BE MADE WITHIN FIVE FEET (5') OF ANY POLE THAT SUPPORTS TRAFFIC SIGNAL DISPLAYS OR SIGNS BY MAST ARM OR SIGNAL SPAN. EXCAVATION WITHIN EIGHT FEET (8') BUT MORE THAN FIVE FEET (5') SHALL REQUIRE ADDITIONAL SUPPORT (DOWN GUY, HEAD GUY, BASE GUY, ETC.). THE CONTRACTOR SHALL CONTACT THE DIVISION SYSTEM ENGINEER (614) 645–7790 AT LEAST TWO (2) WORKING DAYS PRIOR TO SUCH EXCAVATION, SO THAT THE DIVISION MAY INSTALL SUCH SUPPORTS AT THE OWNER'S/CONTRACTING AGENCY'S EXPENSE.

ALL PERMANENT TRAFFIC CONTROLS NOT IN CONFLICT WITH THE TEMPORARY TRAFFIC CONTROLS SHALL BE MAINTAINED THROUGHOUT THIS PROJECT BY THE CONTRACTOR. PERMANENT TRAFFIC CONTROLS MAY BE TEMPORARILY RELOCATED, AS APPROVED BY THE ENGINEER. THE CONTRACTOR SHALL ASSUME ALL LIABILITY FOR MISSING, DAMAGED AND IMPROPERLY PLACED SIGNS.

ANY WORK DONE BY THE OHIO STATE UNIVERSITY OFFICE OF TRAFFIC AND PARKING, INCLUDING INSTALLATION, RELOCATION, REMOVAL AND/OR REPLACEMENT OF PERMANENT TRAFFIC CONTROL DEVICES AS A RESULT OF WORK DONE BY THE CONTRACTOR OR AS A RESULT OF THE NEGLIGENCE OF THE CONTRACTOR SHALL BE AT THE EXPENSE OF THE CONTRACTOR.

ITEM 614, MAINTAINING TRAFFIC, AS PER PLAN

ALL WORK AND TRAFFIC CONTROL DEVICES SHALL BE IN ACCORDANCE WITH 614 AND OTHER APPLICABLE PORTIONS OF THE SPECIFICATIONS, AS WELL AS THE OHIO MANUAL OF UNIFORM TRAFFIC CONTROL DEVICES. PAYMENT FOR ALL LABOR, EQUIPMENT AND MATERIALS SHALL BE INCLUDED IN THE LUMP SUM CONTRACT PRICE FOR ITEM 614, MAINTAINING TRAFFIC, UNLESS SEPARATELY ITEMIZED IN THE PLAN.

THE CONTRACTOR SHALL NOTIFY THE OHIO STATE UNIVERSITY OFFICE OF TRAFFIC AND PARKING, 292–3125 AND THE SYSTEMS ENGINEER, CITY OF COLUMBUS, 645–7790 AT LEAST THREE (3) DAYS BEFORE BEGINNING ANY ACTUAL CONSTRUCTION WORK ON THIS PROJECT.

THE CONTRACTOR SHALL, AT ALL TIMES, MAINTAIN THE EXISTING AND/OR PROPOSED TRAFFIC SIGNAL HEADS TO ACCOMMODATE THE CHANGING TRAFFIC PATHS. FOR THE PURPOSE OF MOVING OR ERECTING SIGNAL HEADS, THE CONTRACTOR MAY CLOSE THE ENTIRE INTERSECTION FOR A TOTAL OF TEN (10) MINUTES WITHIN A THIRTY (30) MINUTE PERIOD. EACH SEPARATE CLOSURE SHALL BE FOR A PERIOD LONG ENOUGH TO ALLOW QUEUED TRAFFIC TO CLEAR. SUCH CLOSURES MUST BE SHOWN TO BE NECESSARY AND MUST BE APPROVED BY THE ENGINEER BEFORE ANY CLOSURE IS MADE. THE CONTRACTOR SHALL PROVIDE A SPECIAL DUTY UNIFORMED OFFICER TO DIRECT TRAFFIC DURING SUCH CLOSURES. THE CONTRACTOR SHALL ACQUIRE UNIFORMED OFFICERS THROUGH THE OSU DEPARTMENT OF PUBLIC SAFETY 614– 292–9944. A TWO (2) WORKING DAY NOTICE SHALL BE GIVEN.

ITEM 614 – LAW ENFORCEMENT OFFICER WITH PATROL CAR

IN ADDITION TO THE REQUIREMENTS OF 614 AND THE LATEST EDITION OF THE OHIO MANUAL OF UNIFORM TRAFFIC CONTROL DEVICES (OMUTCD), A UNIFORMED LAW ENFORCEMENT OFFICER AND OFFICIAL PATROL CAR WITH WORKING TOP MOUNTED EMERGENCY FLASHING LIGHTS SHALL BE PROVIDED FOR CONTROLLING TRAFFIC FOR THE FOLLOWING TASKS ON THIS PROJECT.

FOR LANE CLOSURES: DURING INITIAL SET–UP PERIODS, TEAR DOWN PERIODS, SUBSTANTIAL SHIFTS OF A CLOSURE POINT OR WHEN NEW OR LANE CLOSURE ARRANGEMENTS ARE INITIATED.

DURING THE ENTIRE ADVANCE PREPARATION AND CLOSURE SEQUENCE WHERE COMPLETE BLOCKAGE OF TRAFFIC IS REQUIRED.

DURING SIGNAL REMOVAL AND ERECTION AT THE INTERSECTION OF CANNON DRIVE/9TH AVENUE AND CANNON DRIVE/12TH AVENUE.

LAW ENFORCEMENT OFFICERS (L.E.O.'S) SHOULD NOT BE USED WHERE THE OMUTCD INTENDS THAT FLAGGERS BE USED. THE LEO'S ARE CONSIDERED TO BE EMPLOYED BY THE CONTRACTOR AND THE CONTRACTOR SHALL BE RESPONSIBLE FOR THEIR ACTIONS. ALTHOUGH THEY ARE EMPLOYED BY THE CONTRACTOR, THE PROJECT ENGINEER SHALL HAVE CONTROL OVER THEIR PLACEMENT. THE OFFICIAL PATROL CAR SHALL BE A PUBLIC SAFETY VEHICLE AS REQUIRED BY THE OHIO REVISED CODE.

THE CONTRACTOR SHALL MAKE ARRANGEMENTS FOR THESE SERVICES WITH THE LAW ENFORCEMENT AGENCY WITH JURISDICTION. CONTACTS AS GIVEN BELOW:

CITY OF COLUMBUS,DIVISION OF POLICE AT 614–645–4795
THE OHIO STATE UNIVERSITY AT 614–292–9944.

LAW ENFORCEMENT OFFICERS WITH PATROL CAR REQUIRED BY THE TRAFFIC MAINTENANCE TASKS ABOVE SHALL BE PAID FOR ON A UNIT PRICE HOURLY BASIS UNDER ITEM 614 – LAW ENFORCEMENT OFFICER (WITH PATROL CAR). THE FOLLOWING ESTIMATED QUANTITIES HAVE BEEN CARRIED TO THE GENERAL SUMMARY.

ITEM 614: LAW ENFORCEMENT OFFICER WITH PATROL CAR – 100 HOURS.

THE HOURS PAID SHALL INCLUDE MINIMUM SHOW–UP TIME REQUIRED BY THE LAW ENFORCEMENT AGENCY INVOLVED.

IF THE CONTRACTOR WISHES TO UTILIZE LEO'S FOR FLAGGING AND TRAFFIC CONTROL OTHER THAN FOR THAT REQUIRED IN THESE PLANS, HE MAY DO SO AT HIS OWN EXPENSE. PAYMENT FOR THE EXCESS ABOVE THE CONTRACT REQUIREMENTS WILL BE INCLUDED UNDER ITEM 614 MAINTAINING TRAFFIC, AS PER PLAN.

DUST CONTROL

THE CONTRACTOR SHALL FURNISH AND APPLY WATER FOR DUST CONTROL, AS DIRECTED BY THE ENGINEER. THE FOLLOWING CONTINGENCY QUANTITY HAS BEEN INCLUDED FOR DUST CONTROL PURPOSES:

616, WATER 100 M. GAL.

COVERING OF SIGNS

WHERE THE PLANS CALL FOR A PERMANENT SIGN TO BE COVERED, THE CONTRACTOR SHALL DO SO IN SUCH A MANNER AS TO AVOID DAMAGING THE PERMANENT SIGN WHEN THE COVER IS REMOVED. THE COVER SHALL BE TOTALLY OPAQUE. THE USE OF ADHESIVE TAPE APPLIED DIRECTLY TO A SIGN FACE IS STRICTLY PROHIBITED.

REPLACEMENT OF PAVEMENT MARKINGS

THE EXISTING CONFLICTING PAVEMENT MARKINGS SHALL BE REMOVED. THE APPROPRIATE TEMPORARY PAVEMENT MARKINGS SHALL BE APPLIED. AFTER COMPLETION OF THE WORK, TEMPORARY PAVEMENT MARKINGS SHALL BE REMOVED IN ACCORDANCE WITH 641.10. THE ORIGINAL PAVEMENT MARKINGS SHALL BE RE–APPLIED AND PAYMENT INCLUDED IN THE LUMP SUM BID FOR THE 614 "MAINTAINING TRAFFIC", AS PER PLAN, UNLESS SEPARATELY ITEMIZED IN THESE PLANS.

ITEM 614, BARRIER REFLECTORS AND OBJECT MARKERS

BARRIER REFLECTORS AND/OR OBJECT MARKERS SHALL BE INSTALLED ON ALL PORTABLE CONCRETE BARRIER USED FOR MAINTAINING TRAFFIC. BARRIER REFLECTORS SHALL CONFORM TO ITEM 626 EXCEPT THAT THE SPACING SHALL BE 25 FEET. OBJECT MARKERS 9"x15" WITH ORANGE REFLECTIVE SHEETING, TYPE G (730.19), SHALL BE MOUNTED ON THE TOP SURFACE OF THE PCB MIDWAY BETWEEN THE FACE MOUNTED BARRIER REFLECTORS ALSO ON THE TOP SURFACE OF EACH TAPERED END SECTION AND EXPOSED ENDS. AN ESTIMATED QUANTITY OF ITEM 614–BARRIER REFLECTORS, TYPE B AND ITEM 614–OBJECT MARKERS HAVE BEEN PROVIDED IN THE MAINTENANCE OF TRAFFIC PLANS AND CARRIED TO THE GENERAL SUMMARY.

ITEM SPECIAL, REPLACEMENT SIGN

FLAT SHEET SIGNS FURNISHED BY THE CONTRACTOR IN ACCORDANCE WITH THE REQUIREMENTS OF THE PLANS, SPECIFICATIONS AND PROPOSAL WHICH BECOME DAMAGED BY TRAFFIC FOR REASONS BEYOND THE CONTROL OF THE CONTRACTOR SHALL BE REPLACED IN KIND WHEN ORDERED BY THE ENGINEER. REPLACEMENT SIGNS SHALL BE NEW. OTHER MATERIALS MAY BE IN USED BUT GOOD CONDITION SUBJECT TO APPROVAL BY THE ENGINEER.

PAYMENT FOR THE NEW SIGNS SHALL BE MADE AT THE CONTRACT PRICE PER SQUARE FEET FOR ITEM SPECIAL, REPLACEMENT SIGN, AND SHALL INCLUDE THE COST OF REMOVING AND DISPOSING OF DAMAGED SIGNS, HARDWARE, AND SUPPORTS, AND PROVIDING THE NECESSARY REPLACEMENT HARDWARE, SUPPORTS, ETC.

AN ESTIMATED QUANTITY OF 40 SQUARE FEET HAS BEEN PROVIDED IN THE GENERAL SUMMARY.

ITEM SPECIAL, REPLACEMENT DRUM

DRUMS FURNISHED BY THE CONTRACTOR IN ACCORDANCE WITH THE REQUIREMENTS OF THE PLANS, SPECIFICATIONS AND PROPOSAL WHICH BECOME DAMAGED BY TRAFFIC FOR REASONS BEYOND THE CONTROL OF THE CONTRACTOR SHALL BE REPLACED IN KIND WHEN ORDERED BY THE ENGINEER. REPLACEMENT DRUMS SHALL BE NEW.

PAYMENT FOR THE NEW DRUMS SHALL BE MADE AT THE CONTRACT PRICE PER EACH ITEM SPECIAL, REPLACEMENT DRUM, AND SHALL INCLUDE THE COST OF REMOVING AND DISPOSING OF THE DAMAGED DRUM, AND PROVIDING AND MAINTAINING THE REPLACEMENT DRUM IN ACCORDANCE WITH THE CONTRACT REQUIREMENTS FOR THE ORIGINAL DRUM.

AN ESTIMATED QUANTITY OF 50 EACH HAS BEEN PROVIDED IN THE GENERAL SUMMARY.

DETOUR SIGNING

ALL DETOUR SIGNING IS TO BE PROVIDED, INSTALLED, MAINTAINED AND REMOVED BY THE CONTRACTOR. PAYMENT SHALL BE MADE UNDER THE LUMP SUM PRICE BID FOR ITEM 614 - MAINTAINING TRAFFIC, AS PER PLAN.

MAINTENANCE OF TRAFFIC NOTES

FRA-315-3.04

3453MTN1 03-14-01

MAINTENANCE OF TRAFFIC NOTES

SPECIAL DATES

THE CONTRACTOR SHALL NOT WORK IN ANY AREA OF THE PROJECT AND SHALL PROVIDE MAXIMUM ACCESS TO THE STREETS, ROADS, PARKING LOTS AND BUILDINGS ON THE DATES LISTED BELOW:

FRI., JUNE 13, 2003, SPRING QUARTER COMMENCEMENT

SAT., AUG. 30, 2003, OSU FOOTBALL
SAT., SEPT. 13, 2003, OSU FOOTBALL
SAT., SEPT. 20, 2003, OSU FOOTBALL
SAT., SEPT. 27, 2003, OSU FOOTBALL
SAT., OCT. 18, 2003, OSU FOOTBALL
SAT., NOV. 8, 2003, OSU FOOTBALL
SAT., NOV. 15, 2003, OSU FOOTBALL

THE CONTRACTOR SHALL NOT WORK IN THE AREAS NEAR THE EVENTS LISTED BELOW AND SHALL PROVIDE ACCESS TO THE EVENT AREA. THE CONTRACTOR SHALL HAVE PRIOR APPROVAL OF THE ENGINEER AND OSU TRANSPORTATION AND PARKING BEFORE WORKING ON THE DATES AND EVENTS LISTED BELOW:

SUN., OCT. 20, 2002, COLUMBUS MARATHON

SUN., OCT. 19, 2003, COLUMBUS MARATHON

THERE WILL BE OTHER EVENTS LATER IN THE YEAR THAT HAVE NOT BEEN SCHEDULED ON ANY UNIVERSITY CALENDAR. THE CONTRACTOR SHALL CONTACT OSU TRANSPORTATION AND PARKING AND THE ENGINEER FOR ADDITIONAL DATES AND EVENTS. THE CONTRACTOR SHALL SCHEDULE WORK AS NOTED ABOVE.

NO WORK SHALL BE PERFORMED AND ALL EXISTING LANES SHALL BE OPENED TO TRAFFIC DURING THE FOLLOWING DESIGNATED HOLIDAYS AND EVENTS:

CHRISTMAS	NEW YEARS	MEMORIAL DAY	RED WHITE AND BOOM
FOURTH OF JULY	LABOR DAY	THANKSGIVING	

THE PERIOD OF TIME THAT THE LANES ARE TO BE OPEN DEPENDS ON THE DAY OF THE WEEK ON WHICH THE HOLIDAY HOLIDAY OR EVENT FALLS. THE FOLLOWING SCHEDULE SHALL BE USED TO DETERMINE THIS PERIOD:

DAY OF THE WEEK	TIME ALL LANES MUST BE OPENED TO TRAFFIC
SUNDAY	12:00N FRIDAY THROUGH 12:00N MONDAY
MONDAY	12:00N FRIDAY THROUGH 12:00N TUESDAY
TUESDAY	12:00N MONDAY THROUGH 12:00N WEDNESDAY
WEDNESDAY	12:00N TUESDAY THROUGH 12:00N THURSDAY
THURSDAY	12:00N WEDNESDAY THROUGH 12:00N MONDAY
FRIDAY	12:00N THURSDAY THROUGH 12:00N MONDAY
SATURDAY	12:00N FRIDAY THROUGH 12:00N MONDAY

NO EXTENSION OF TIME SHALL BE GRANTED FOR DELAYS IN MATERIAL DELIVERIES, UNLESS SUCH DELAYS ARE INDUSTRY–WIDE, OR FOR LABOR STRIKES, UNLESS SUCH STRIKES ARE AREA–WIDE.

SHOULD THE CONTRACTOR FAIL TO MEET ANY OF THESE REQUIREMENTS, THE CONTRACTOR SHALL BE ASSESSED LIQUIDATED DAMAGES AS SHOWN ON THIS SHEET.

LIQUIDATED DAMAGES

THE CONTRACTOR SHALL BE ASSESSED LIQUIDATED DAMAGES IN THE AMOUNT OF $300 FOR THE FIRST ONE–HALF HOUR (OR ANY PART THEREOF) AND $100 PER MINUTE THEREAFTER.

ALTERNATE METHODS

IF THE CONTRACTOR SO ELECTS, HE MAY SUBMIT ALTERNATE METHODS FOR THE MAINTENANCE OF TRAFFIC, PROVIDED THE INTENT OF THE ABOVE PLAN PROVISIONS IS FOLLOWED AND NO ADDITIONAL INCONVENIENCE TO THE TRAVELING PUBLIC RESULTS THEREFROM. NO ALTERNATE PLANS SHALL BE PLACED INTO EFFECT UNTIL APPROVAL HAS BEEN GRANTED, IN WRITING, BY THE OHIO STATE UNIVERSITY, THE CITY OF COLUMBUS, AND THE OHIO DEPARTMENT OF TRANSPORTATION.

CONSTRUCTION PHASING

PHASE 1 NORTHBOUND SR 315 EXIT RAMP

THIS PHASE WILL BE USED ONLY TO CONSTRUCT THE SR–315 BRIDGE WIDENING FOR RAMP A.
THREE LANES OF TRAFFIC SHALL BE MAINTAINED AT ALL TIMES AS SHOWN ON SHEETS 14 TO 17 (EXCEPT FOR THE TIME RESTRICTIONS AS NOTED ON THIS SHEET WHEN THE RIGHT LANE (OR TWO) MAY BE CLOSED AS SHOWN ON STANDARD CONSTRUCTION DRAWING MT–95.30). LIQUIDATED DAMAGES SHALL BE ASSESSED AS SHOWN ON THIS SHEET FOR THE PERIOD OF TIME THE LANES ARE CLOSED TO TRAFFIC BEYOND THE SPECIFIED LIMIT. THIS MAY BE DONE ONLY WHILE ACTIVELY WORKING ON THE SUPERSTRUCTURE OF THE SR–315 BRIDGE. THE EXIT RAMP SHALL THEN BE CLOSED TO ALL TRAFFIC AS SHOWN ON STANDARD CONSTRUCTION DRAWING MT–98.19M. WHEN THIS WORK IS COMPLETED, THE CONTRACTOR SHALL RESTORE ALL LANES TO THE ORIGINAL LAYOUT AND PROCEED TO PHASE 2.

KING AVENUE CLOSURE:
KING AVENUE MAY BE CLOSED FOR THE PURPOSE OF ERECTING THE GIRDER OVER KING AVENUE AND SETTING THE FORMS. THE ALLOWABLE PERIOD OF CLOSURE IS NOTED ON THIS SHEET. LIQUIDATED DAMAGES SHALL BE ASSESSED AS SHOWN ON THIS SHEET FOR THE PERIOD OF TIME KING AVENUE IS CLOSED TO TRAFFIC BEYOND THE SPECIFIED LIMIT. SEE SHEET 24F FOR DETOUR ROUTE AND SIGNING.

PHASE 2 SR 315 MEDIAN

THREE LANES OF TRAFFIC SHALL BE MAINTAINED IN BOTH DIRECTIONS AT ALL TIMES AS SHOWN ON SHEETS 18 TO 21 EXCEPT FOR THE TIME RESTRICTIONS AS NOTED ON THIS SHEET WHEN THE LEFT SOUTH BOUND LANE MAY BE CLOSED AS SHOWN ON STANDARD CONSTRUCTION DRAWING MT–95.30. LIQUIDATED DAMAGES SHALL BE ASSESSED AS SHOWN ON THIS SHEET FOR THE PERIOD OF TIME THE LANES ARE CLOSED BEYOND THE SPECIFIED LIMIT. CONSTRUCT THE NEW MEDIAN INCLUDING NEW INLETS AND SIGN SUPPORTS. WHEN THIS WORK IS COMPLETED THE CONTRACTOR MAY PROCEED TO PHASE 3. THIS WORK SHALL BEGIN AT THE NORTH END AND PROCEED TO THE SOUTH.

PHASE 3 SOUTHBOUND SR 315 ENTRANCE RAMP

THREE LANES OF TRAFFIC SHALL BE MAINTAINED AT ALL TIMES AS SHOWN ON SHEETS 22 TO 24A EXCEPT FOR THE TIME RESTRICTIONS AS NOTED ON THIS SHEET WHEN THE RIGHT LANE MAY BE CLOSED AS SHOWN ON STANDARD CONSTRUCTION DRAWING MT–95.30. LIQUIDATED DAMAGES SHALL BE ASSESSED AS SHOWN ON THIS SHEET FOR THE PERIOD OF TIME THE LANE IS CLOSED TO TRAFFIC BEYOND THE SPECIFIED LIMIT. THIS PHASE WILL BE USED ONLY TO CONSTRUCT THE RAMP B ACCELERATION LANE.

PHASE 4 CANNON DRIVE

THE INTERSECTION WORK AT CANNON DRIVE SHALL BE CONSTRUCTED AT A TIME WHEN STUDENTS ARE NOT IN SCHOOL. THIS WILL ALLOW THE RIGHT CURB LANE TO BE CLOSED USING STANDARD CONSTRUCTION DRAWING MT–95.31. SEE SHEETS 24B TO 24D.
THIS CLOSURE MAY ONLY BE USED WHEN STUDENTS ARE OUT OF SCHOOL FOR A PERIOD OF AT LEAST ONE WEEK OR MORE.

THE REMAINING PORTIONS OF RAMP A AND RAMP B MAY BE CONSTRUCTED BEFORE, DURING, OR AFTER THE PHASING NOTED ABOVE. ALL ADVANCE SIGNS FOR RAMP A SHALL BE COVERED UNTIL THE RAMP IS OPENED TO TRAFFIC.

OVERHEAD SIGN RELOCATION:

SHORT TERM ROLLING CLOSURES USING LEO'S WILL BE PERMITTED ON SR–315 IN ORDER TO REMOVE THE OVERHEAD SIGN TRUSS AND TO REINSTALL THE TRUSS IN ITS NEW LOCATION. THESE SHORT TERM CLOSURES WILL ONLY BE PERMITTED FROM 10:00 PM TO 5:00 AM MONDAY THROUGH THURSDAY.

FOR THE PURPOSE OF MOVING OR ERECTING OVERHEAD TRAFFIC SIGNS AND TRUSSES, THE CONTRACTOR MAY CLOSE SR–315 FOR A TOTAL OF TEN (10) MINUTES WITHIN A (30) MINUTE PERIOD. EACH SEPARATE CLOSURE SHALL BE FOLLOWED BY A PERIOD LONG ENOUGH TO ALLOW QUEUED TRAFFIC TO CLEAR. SUCH CLOSURES MUST BE SHOWN TO BE NECESSARY AND MUST BE APPROVED BY THE ENGINEER BEFORE ANY CLOSURE IS MADE. THE CONTRACTOR SHALL PROVIDE A SPECIAL DUTY UNIFORMED OFFICER TO DIRECT TRAFFIC DURING SUCH CLOSURES. THE CONTRACTOR SHALL ACQUIRE UNIFORMED OFFICERS THROUGH THE CITY OF COLUMBUS, DIVISION OF POLICE AT 614–645–4795. A TWO (2) WORKING DAY NOTICE SHALL BE GIVEN.

BIKE PATH

THE EXISTING BIKE PATH SHALL BE CLOSED AND BIKE TRAFFIC DETOURED UNTIL SUCH TIME AS THE NEW BIKE PATH IS CONSTRUCTED AND OPENED TO TRAFFIC. ALL BRIDGE WORK ON RAMP A AND RAMP B MUST BE COMPLETED PRIOR TO OPENING THE BIKE PATH. SEE SHEET 24E FOR DETOUR ROUTE AND SIGNING.

TIME RESTRICTIONS;

SR–315 NB MAY BE REDUCED TO TWO LANES BETWEEN:
MONDAY THROUGH THURSDAY: 8:00PM TO 6:00AM
8:00PM FRIDAY TO 6:00AM MONDAY
SR–315 SB MAY BE REDUCED TO TWO LANES BETWEEN:
MONDAY THROUGH THURSDAY: 8:00PM TO 5:00AM
8:00PM FRIDAY TO 5:00AM MONDAY
SR–315 NB & SB MAY BE REDUCED TO ONE LANE IN EACH DIRECTION BETWEEN:
MONDAY THROUGH THURSDAY: 10:00PM TO 5:00AM
SATURDAY 12:00AM TO 9:00AM
SUNDAY 12:00AM TO 11:00AM
KING AVENUE MAY BE CLOSED TO TRAFFIC BETWEEN:
MONDAY THROUGH THURSDAY: 8:00PM TO 5:00AM
8:00PM FRIDAY TO 5:00AM MONDAY

LANE REDUCTIONS ON SR-315:

DUE TO THE ALIGNMENT OF SR-315, THE ADVANCE WARNING AND BUFFER ZONES WILL LIKELY BE LONGER THAN THE MINIMUM VALUES SHOWN ON MT-95.30. IN THE NORTHBOUND DIRECTION, THIS MAY REQUIRE YIELD SIGNING AT THE ENTRANCE RAMP FROM I-670 DURING TWO-LANE CLOSURES. LOCATION OF THE TAPER ZONES MAY BE ADJUSTED AS DIRECTED BY THE ENGINEER.

THE FOLLOWING ESTIMATED QUANTITIES HAVE BEEN INCLUDED IN THE GENERAL SUMMARY FOR USE AS DIRECTED BY THE ENGINEER FOR THE MAINTENANCE OF TRAFFIC.

410, TRAFFIC COMPACTED SURFACE, TYPE A OR B	50	CU. YD.
410, TRAFFIC COMPACTED SURFACE, TYPE C	10	CU. YD.
614, BITUMINOUS CONCRETE FOR MAINTAINING TRAFFIC	5	CU. YD.
616, CALCIUM CHLORIDE	1.00	TONS
616, WATER	1	M. GALS.

CONSTRUCTION INITIATION

THE CONTRACTOR SHALL ADVISE THE DISTRICT OFFICE OF COMMUNICATIONS AT (614)644–8309, OR BY FAX AT (614) 466–1768, FOURTEEN DAYS PRIOR TO THE START OF CONSTRUCTION ACTIVITIES. THE CONTRACTOR WILL IMMEDIATELY INFORM THE DISTRICT OFFICE OF COMMUNICATIONS AND AND THE DISTRICT MAINTENANCE OF TRAFFIC ENGINEER AT (740) 363–1251, EXT. 323 OF ANY AND ALL DELAYS AND/OR CHANGES REGARDING THE CONSTRUCTION PROJECT. THE PROJECT ENGINEER WILL PROVIDE ASSISTANCE/ CLARIFICATION FOR ANY QUESTIONS ABOUT THE NOTIFICATION REQUIREMENT.

COORDINATION WITH ODOT'S CENTRAL OHIO TRAFFIC MAINTENANCE PROGRAM (COTMP):

FOR ALL WORK DONE IN FRANKLIN COUNTY, THE CONTRACTOR SHALL NOTIFY THE PROJECT ENGINEER IN WRITING OF ALL TRAFFIC RESTRICTIONS AND UPCOMING MAINTENANCE OF TRAFFIC CHANGES ON A WEEKLY BASIS. WHEN DETOURS ARE PLANNED, THIS NOTIFICATION SHALL BE AT THE PRE CONSTRUCTION MEETING OR 30 DAYS IN ADVANCE ONCE CONSTRUCTION HAS BEGUN. LANE CLOSURES FOR 2 OR MORE WEEKS SHALL BE REPORTED 2 WEEKS IN ADVANCE OF CLOSURE. LANE CLOSURES OF LESS THAN 2 WEEKS DURATION AND MORE THAN 2 DAYS SHALL BE REPORTED AT LEAST 3 WORKING DAYS IN ADVANCE. FOR SHORT TERM LANE CLOSURES (2 DAYS OR LESS) NOTIFICATION SHALL BE MADE AT LEAST 1 WORKING DAY IN ADVANCE. INFORMATION SHALL INCLUDE BUT NOT BE LIMITED TO ALL CONSTRUCTION ACTIVITIES THAT IMPACT TRAFFIC AT PRESENT AND IN THE NEXT 30 DAYS. THE CONTRACTOR SHALL DESIGNATE AN INDIVIDUAL WHO WILL BE RESPONSIBLE FOR PREPARING THIS REPORT AT THE PRE CONSTRUCTION MEETING. ANY UNFORESEEN IMPACTS TO TRAFFIC SHALL BE REPORTED TO THE PROJECT ENGINEER AS SOON AS POSSIBLE. THE PROJECT ENGINEER SHALL PROVIDE THIS INFORMATION TO THE PROGRAM. ALL CONSTRUCTION ACTIVITIES THAT INTERFERE WITH TRAFFIC SHALL BE REPORTED TO THE PROGRAM. THIS INFORMATION SHALL BE PROVIDED TO THE PROGRAM MANAGER AT (740) 363–1251 EXT. 323, OR THE PROGRAM INFORMATION OFFICER AT (614) 644–8309, OR BY FAX AT (614)466–1768.

CALCULATED MJT 6/02 | CHECKED WCY 6/02

MAINTENANCE OF TRAFFIC NOTES

FLOOD LIGHTING

FLOODLIGHTING OF THE WORK SITE FOR OPERATIONS CONDUCTED DURING NIGHT TIME PERIODS SHALL BE ACCOMPLISHED SO THAT THE LIGHTS DO NOT CAUSE GLARE TO THE DRIVERS ON THE ROADWAY. TO ENSURE THE ADEQUACY OF THE FLOOD LIGHT PLACEMENT, THE CONTRACTOR AND THE ENGINEER SHALL DRIVE THROUGH THE WORK SITE EACH NIGHT WHEN THE LIGHTING IS IN PLACE AND OPERATIVE PRIOR TO COMMENCING ANY WORK. IF GLARE IS DETECTED, THE LIGHT PLACEMENT AND SHIELDING SHALL BE ADJUSTED TO THE SATISFACTION OF THE ENGINEER BEFORE WORK PROCEEDS.

PAYMENT FOR ALL LABOR, EQUIPMENT AND MATERIALS SHALL BE INCLUDED IN THE LUMP SUM CONTRACT PRICE FOR ITEM 614– MAINTAINING TRAFFIC, AS PER PLAN

DWG.#	DRAWING NAME	DWG./REV. DATE	ODOT APPROVAL DATE
SS450 SS450M	CRASH–CUSHION ATTENUATING TERMINAL PLAN, ELEVATION & SECTIONS	3/12/99 REV.1 3/12/99 REV.1	8/27/99 8/27/99
SS455	TRACC TRANSITION TO W–BEAM MEDIAN BARRIER PLAN, ELEVATION & SECTIONS	2/18/99	8/27/99
SS461	TRACC TRANSITION TO CONCRETE SAFETY SHAPE BARRIER PLAN, ELEVATION & SECTIONS	6/30/99 REV.1	8/27/99
SS462	TRACC TRANSITION TO CONCRETE BARRIER SINGLE SLOPE PLAN, ELEVATION & SECTIONS	6/30/99	8/27/99

ITEM 614 – WORK ZONE IMPACT ATTENUATOR, (UNIDIRECTIONAL)

THIS ITEM SHALL CONSIST OF FURNISHING AND INSTALLING EITHER OF THE FOLLOWING IMPACT ATTENUATORS:

1) THE QUADGUARD CZ, (24" WIDE 6–BAY) WORK ZONE IMPACT ATTENUATOR MANUFACTURED BY ENERGY ABSORPTION SYSTEMS, INC., ONE EAST WACKER DRIVE, CHICAGO, IL. 60601 (TELEPHONE: 312–467–6750)

   THE LENGTH OF THE 6–BAY QUADGUARD CZ IS 20'–9" . INSTALLATION SHALL BE AT THE LOCATIONS SPECIFIED IN THE PLANS, IN ACCORDANCE WITH THE MANUFACTURER'S SPECIFICATIONS AS DETAILED ON THE FOLLOWING PRE–APPROVED SHOP DRAWINGS.

DWG.#	DRAWING NAME	DWG./REV. DATE	ODOT APPROVAL DATE
QSCZCVR–T4	QUADGUARD CZ SYSTEM FOR CONSTRUCTION ZONES	5/13/99 REV.J	8/27/99
35–40–10	QUADGUARD SYSTEM CONCRETE PAD, CZ, QG	11/19/97 REV.D	8/27/99
35–40–16	QUADGUARD SYSTEM BACKUP ASSEMBLY, CZ, QG	7/30/99 REV.F	8/27/99
354051Z	QUADGUARD CZ SYSTEM NOSE ASSEMBLY, CZ, QG, 24, 30, 36	5/17/99	8/27/99
35–40–18	TRANSITION ASSEMBLY, 4 OFFSET, QG	6/25/99 REV.F	8/27/99
3540260	QUADGUARD SYSTEM PCMB ANCHOR ASSEMBLY	11/19/97 REV.C	8/27/99

2) THE TRACC (TRINITY ATTENUATING CRASH CUSHION) MANUFACTURED BY TRINITY INDUSTRY, 1170 N. STATE STREET, GIRARD, OHIO 44420 (TELEPHONE 330–545–4373).

   THE TRACC IS 21'–0" LONG AND 2'–7" WIDE. INSTALLATION SHALL BE AT THE LOCATIONS SPECIFIED IN THE PLANS, IN ACCORDANCE WITH THE MANUFACTURER'S SPECIFICATIONS AS DETAILED ON THE FOLLOWING PRE–APPROVED SHOP DRAWINGS.

3) THE GREAT CZ IMPACT ATTENUATOR MANUFACTURED BY ENERGY ABSORPTION SYSTEMS INC. THIS ATTENUATOR MAY BE USED UNTIL JANUARY 1, 2007 IF THE ITEM WAS PURCHASED BEFORE OCTOBER 1, 1998 AND IS IN THE CONTRACTORS INVENTORY.

THE CONTRACTOR SHALL PROVIDE A REPLACEMENT UNIT WHEN AN IMPACT IS SEVERE ENOUGH TO REQUIRE COMPLETE REPLACEMENT OF THE ATTENUATOR. THE CONTRACTOR SHALL HAVE A SPARE PARTS PACKAGE AVAILABLE ON THE PROJECT SITE AT ALL TIMES WHEN AN ATTENUATOR IS IN PLACE. THE CONTRACTOR SHALL PROVIDE A MINIMUM OF ONE COMPLETE SPARE PARTS PACKAGE FOR EVERY 1 TO 6 UNITS INSTALLED ON THE PROJECT SITE. FOR EXAMPLE, 5 INSTALLED UNITS REQUIRE 1 SPARE PARTS PACKAGE AND 7 INSTALLED UNITS REQUIRE 2 SPARE PARTS PACKAGES.

WHEN BI–DIRECTIONAL DESIGNS ARE SPECIFIED, THE CONTRACTOR SHALL SUPPLY APPROPRIATE TRANSITIONS. PAYMENT FOR THE ABOVE WORK SHALL BE MADE AT THE UNIT PRICE BID FOR ITEM 614, WORK ZONE IMPACT ATTENUATOR, (UNIDIRECTIONAL), EACH, AND SHALL INCLUDE ALL LABOR, TOOLS, EQUIPMENT AND MATERIALS NECESSARY TO CONSTRUCT, MAINTAIN, REPAIR, REPLACE OR RELOCATE A COMPLETE AND FUNCTIONAL IMPACT ATTENUATOR SYSTEM, INCLUDING ALL RELATED BACKUPS, TRANSITIONS, LEVELING PADS, HARDWARE AND GRADING, NOT SEPARATELY SPECIFIED, AS REQUIRED BY THE MANUFACTURER.

USE OF WEIGHTED CHANNELIZER:

THE WEIGHTED CHANNELIZER MAY BE USED IN ACCORDANCE WITH THIS SECTION. THE WEIGHTED CHANNELIZER SHALL BE PREDOMINANTLY ORANGE IN COLOR AND SHALL BE MADE OF LIGHTWEIGHT, FLEXIBLE, AND DEFORMABLE MATERIAL. THEY SHALL BE AT LEAST 42 INCHES IN HEIGHT WITH A WEIGHTED BASE. THEY MAY HAVE A HANDLE OR LIFTING DEVICE WHICH EXTENDS ABOVE THE 42" MINIMUM HEIGHT.

THE MARKINGS ON THE WEIGHTED CHANNELIZER SHALL BE HORIZONTAL, CIRCUMFERENTIAL, ALTERNATING ORANGE AND WHITE RETROREFLECTIVE STRIPES 6 INCHES WIDE. EACH WEIGHTED CHANNELIZER SHALL HAVE A MINIMUM OF TWO ORANGE AND TWO WHITE STRIPES. ANY NON–RETROREFLECTIVE SPACES BETWEEN THE HORIZONTAL ORANGE AND WHITE STRIPES SHALL NOT EXCEED 2 INCHES WIDE. THE WEIGHTED CHANNELIZER SHALL HAVE A 4–INCH MINIMUM WIDTH, REGARDLESS OF ORIENTATION.

USE OF WEIGHTED CHANNELIZERS ON FREEWAYS AND MULTILANE HIGHWAYS SHALL BE LIMITED TO SHORT–TERM OPERATION FOR EITHER DAY OR NIGHT. UPON COMPLETION OF WORK, THE WEIGHTED CHANNELIZERS SHALL BE REMOVED. THE WEIGHTED CHANNELIZERS MAY AGAIN BE PLACED ON THE HIGHWAY WHEN THE WORK IS TO RESUME ON THE FOLLOWING DAY OR NIGHT. ANY LANE CLOSURE USING CHANNELIZATION DEVICES, EXPECTED TO REMAIN FOR MORE THAN TWELVE HOURS, SHALL REQUIRE THE USE OF DRUMS OR BARRIERS.

WHEN USED AT NIGHT, WEIGHTED CHANNELIZERS SHALL ONLY BE PLACED IN THE TANGENT AREA. THE TANGENT AREA IS DEFINED AS THE AREA AFTER THE TRANSITION TAPER WHERE THE WORK TAKES PLACE. DRUMS SHALL BE USED IN THE TRANSITION TAPERS FOR NIGHT OPERATIONS.

MAXIMUM SPACING OF THE WEIGHTED CHANNELIZER SHALL BE 40 FEET.

STEPS SHOULD BE TAKEN TO ENSURE THAT THE WEIGHTED CHANNELIZERS WILL NOT BE BLOWN OVER OR DISPLACED BY WIND OR MOVING TRAFFIC. BALLASTS SHOULD NOT PRESENT A HAZARD IF THE WEIGHTED CHANNELIZERS ARE INADVERTENTLY STRUCK, NOR SHOULD THEY AFFECT THE VISIBILITY OF THE WEIGHTED CHANNELIZERS. ALL BALLASTS USED SHOULD BE IN ACCORDANCE WITH THE MANUFACTURER'S SPECIFICATIONS.

CALCULATED MJT 6/02
CHECKED WGY 6/02

MAINTENANCE OF TRAFFIC NOTES

FRA-315-3.04

3453M.TN3 07-19-02

MAINTENANCE OF TRAFFIC PLAN

SEE STANDARD DRAWING MT-102.10M FOR ADDITIONAL DETAILS AND SIGNING ON SR 315

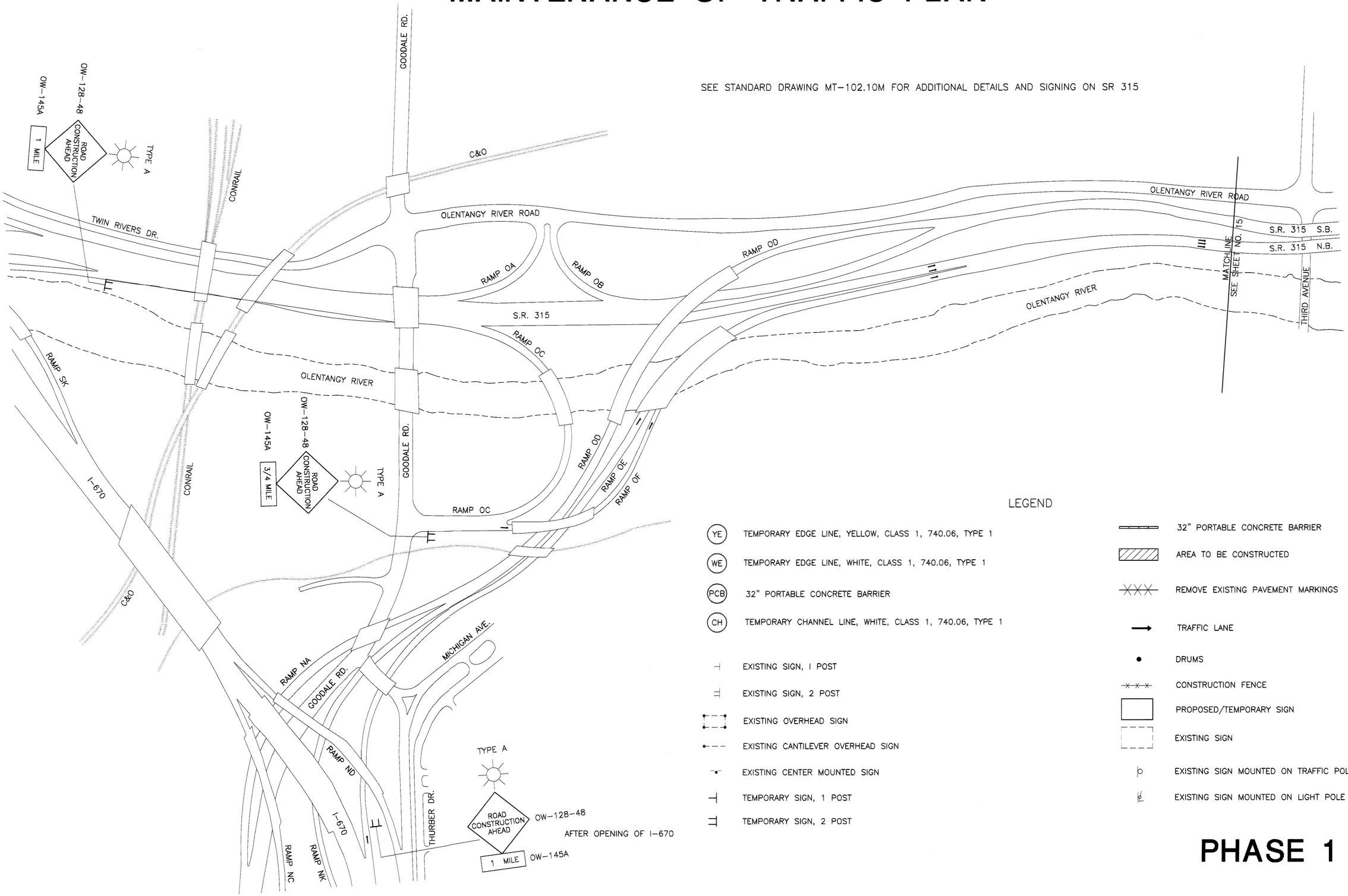

LEGEND

- (YE) TEMPORARY EDGE LINE, YELLOW, CLASS 1, 740.06, TYPE 1
- (WE) TEMPORARY EDGE LINE, WHITE, CLASS 1, 740.06, TYPE 1
- (PCB) 32" PORTABLE CONCRETE BARRIER
- (CH) TEMPORARY CHANNEL LINE, WHITE, CLASS 1, 740.06, TYPE 1
- EXISTING SIGN, 1 POST
- EXISTING SIGN, 2 POST
- EXISTING OVERHEAD SIGN
- EXISTING CANTILEVER OVERHEAD SIGN
- EXISTING CENTER MOUNTED SIGN
- TEMPORARY SIGN, 1 POST
- TEMPORARY SIGN, 2 POST
- 32" PORTABLE CONCRETE BARRIER
- AREA TO BE CONSTRUCTED
- REMOVE EXISTING PAVEMENT MARKINGS
- TRAFFIC LANE
- DRUMS
- CONSTRUCTION FENCE
- PROPOSED/TEMPORARY SIGN
- EXISTING SIGN
- EXISTING SIGN MOUNTED ON TRAFFIC POLE
- EXISTING SIGN MOUNTED ON LIGHT POLE

PHASE 1

N

0 100 200 400 HORIZONTAL SCALE IN FEET

CALCULATED MJT 6/02
CHECKED WGY 6/02

MAINTENANCE OF TRAFFIC
S.R. 315/I-670 FREEWAY & GOODALE RD./OLENTANGY RIVER RD.

FRA-315-3.04

14
238

Q:\OSU_RAMP\315MOTPH1_1>dwg 06-19-02

MAINTENANCE OF TRAFFIC PLAN

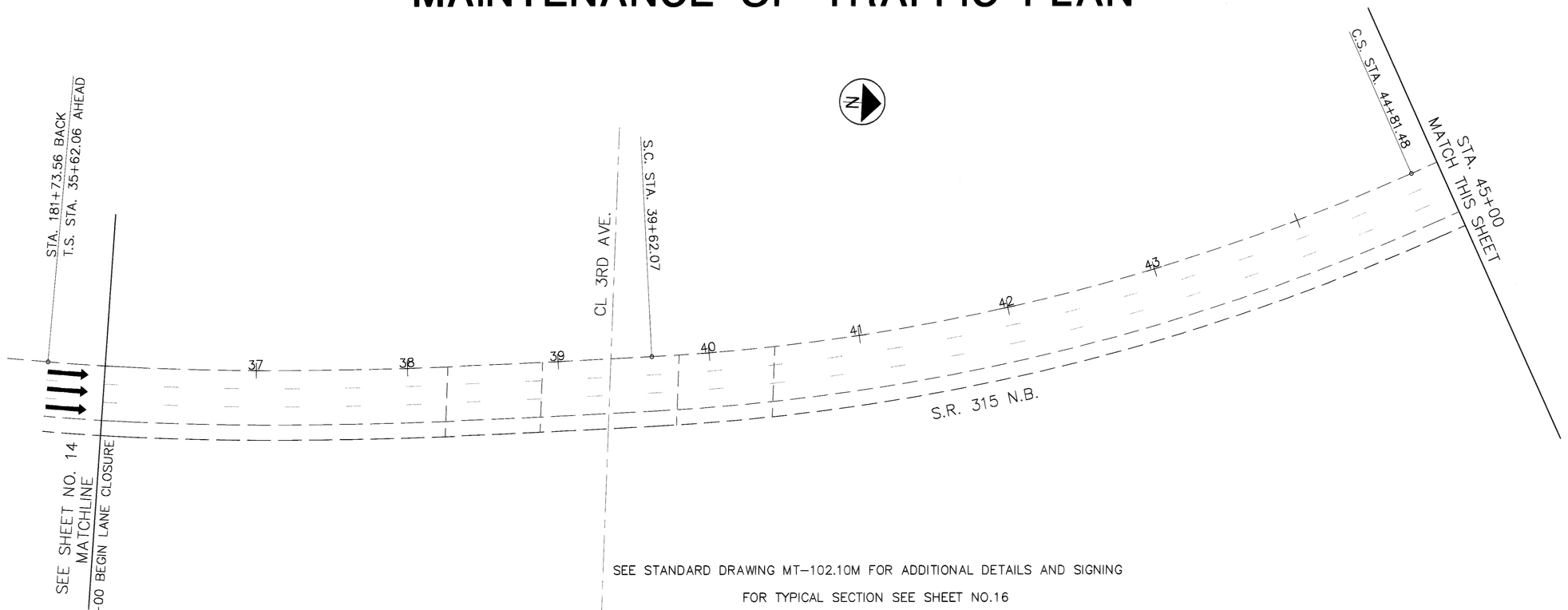

SEE STANDARD DRAWING MT-102.10M FOR ADDITIONAL DETAILS AND SIGNING

FOR TYPICAL SECTION SEE SHEET NO.16

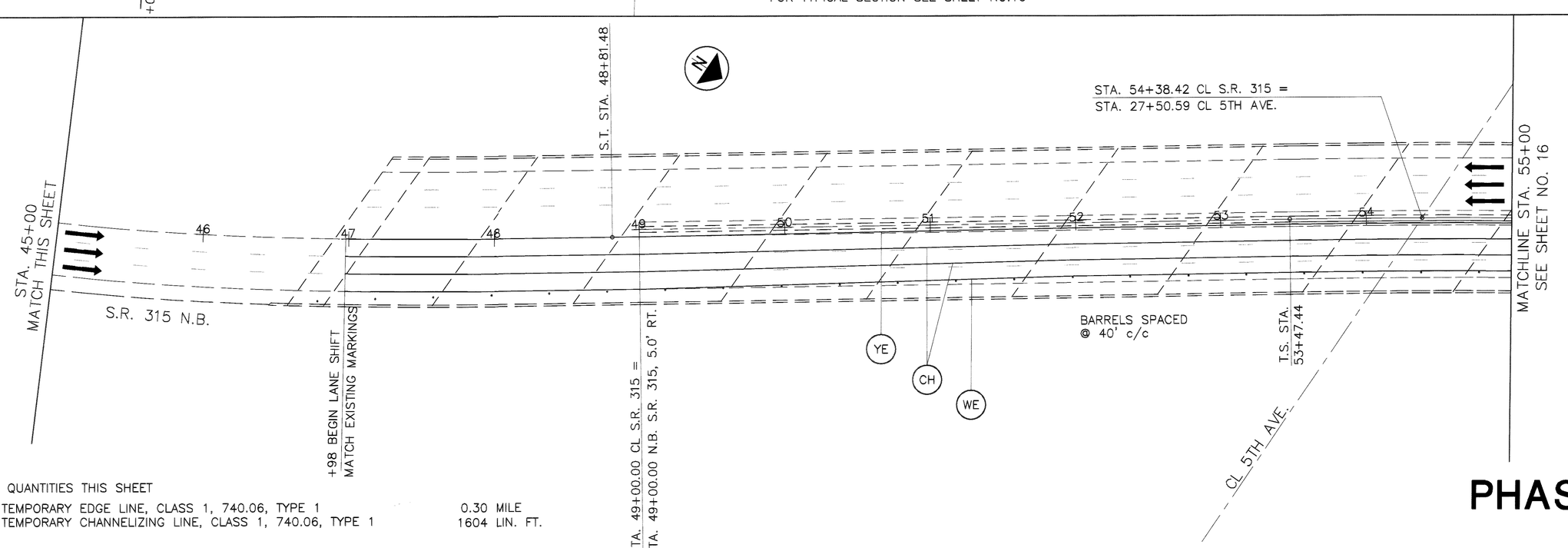

ESTIMATED QUANTITIES THIS SHEET

ITEM 614 TEMPORARY EDGE LINE, CLASS 1, 740.06, TYPE 1	0.30 MILE
ITEM 614 TEMPORARY CHANNELIZING LINE, CLASS 1, 740.06, TYPE 1	1604 LIN. FT.

PHASE 1

FOR LEGEND, SEE SHEET NO. 14

HORIZONTAL SCALE IN FEET
0 20 40 80

CALCULATED MJT 6/02
CHECKED WGY 6/02

MAINTENANCE OF TRAFFIC
STA. 36+00 S.R. 315 N.B. TO STA. 55+00 S.R. 315

FRA-315-3.04

15
238

Q:\OSU_RAMP\315MOTPH1_2>dwg 06-19-02

MAINTENANCE OF TRAFFIC PLAN

SEE STANDARD DRAWING MT-102.10M FOR ADDITIONAL DETAILS AND SIGNING

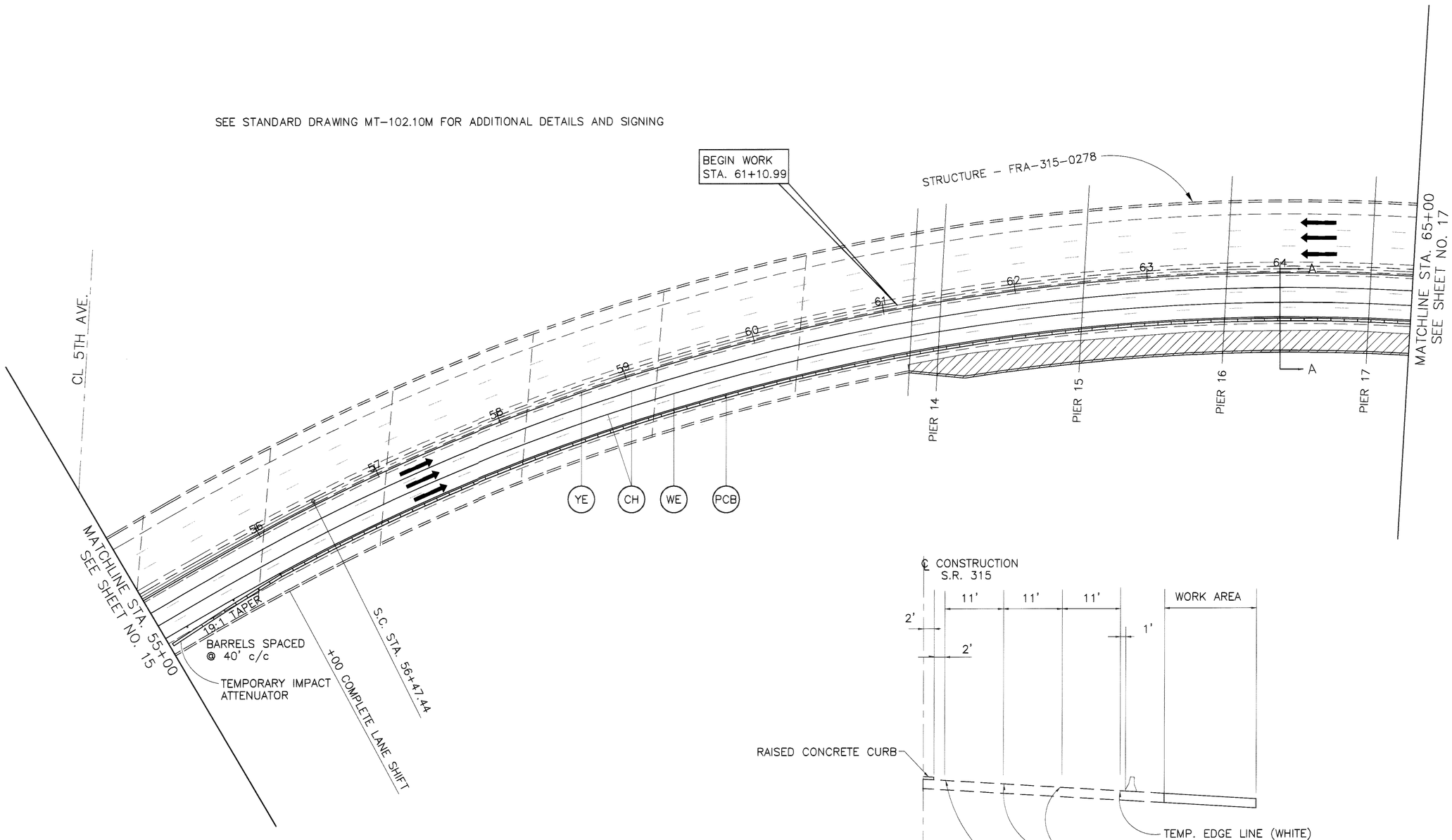

ESTIMATED QUANTITIES THIS SHEET

ITEM 614 BARRIER REFLECTOR, TYPE B AT 25'	37	EACH
ITEM 614 OBJECT MARKER AT 25'	37	EACH
ITEM 614 TEMPORARY EDGE LINE, CLASS 1, 740.06, TYPE 1	0.38	MILE
ITEM 614 TEMPORARY CHANNELIZING LINE, CLASS 1, 740.06, TYPE 1	2000	LIN. FT.
ITEM 614 TEMPORARY IMPACT ATTENUATOR	1	EACH
ITEM 622 PORTABLE CONCRETE BARRIER, 32"	970	LIN. FT.

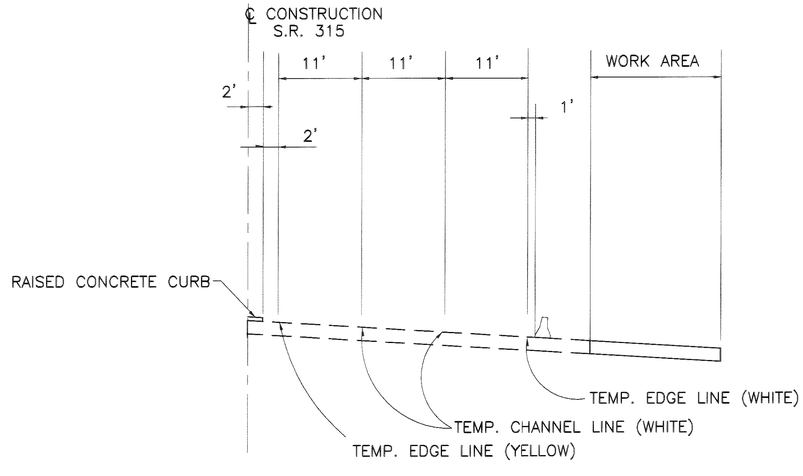

SECTION A-A

PHASE 1

FOR LEGEND, SEE SHEET NO. 14

CALCULATED M.JT 6/02
CHECKED WOY 6/02

0 20 40 80 HORIZONTAL SCALE IN FEET

MAINTENANCE OF TRAFFIC
STA. 55+00 TO STA. 65+00 S.R. 315

FRA-315-3.04

16
238

Q:\OSU_RAMP\315MOTPH1_3>dwg 06-05-02

MAINTENANCE OF TRAFFIC PLAN

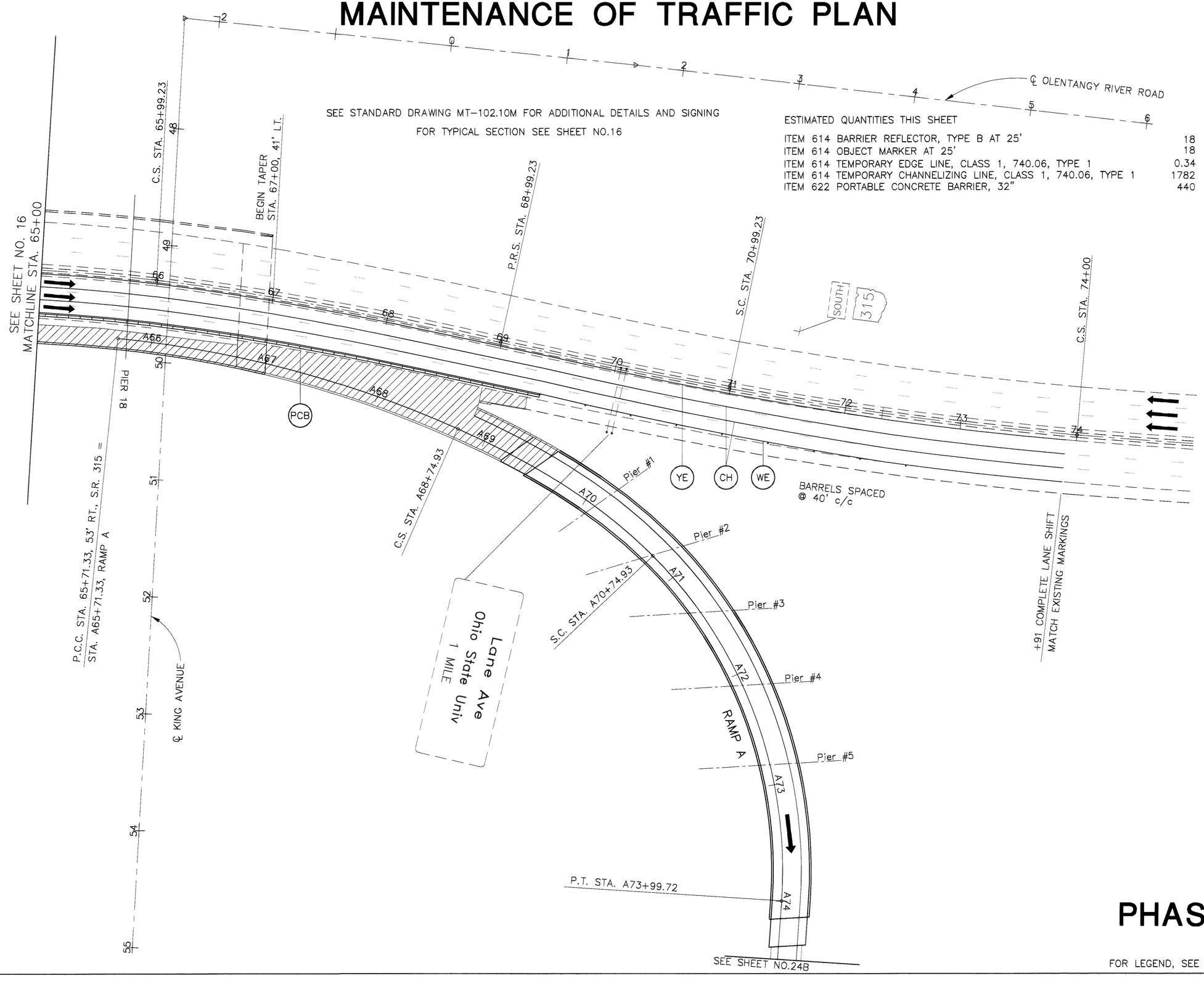

PHASE 1

FOR LEGEND, SEE SHEET NO. 14

CALCULATED MJT 6/02
CHECKED WGY 6/02

HORIZONTAL SCALE IN FEET
0 20 40 80

MAINTENANCE OF TRAFFIC
STA. 65+00 TO STA. 75+00 S.R. 315

FRA-315-3.04

17
238

Q:\OSU_RAMP\315MOTPH1_4>dwg 06-05-02

MAINTENANCE OF TRAFFIC PLAN

SEE STANDARD DRAWING MT-102.10M (NORTH BOUND) AND
MT-102.20M (SOUTH BOUND) FOR ADDITIONAL DETAILS AND SIGNING

FOR TYPICAL SECTION SEE SHEET NO.19

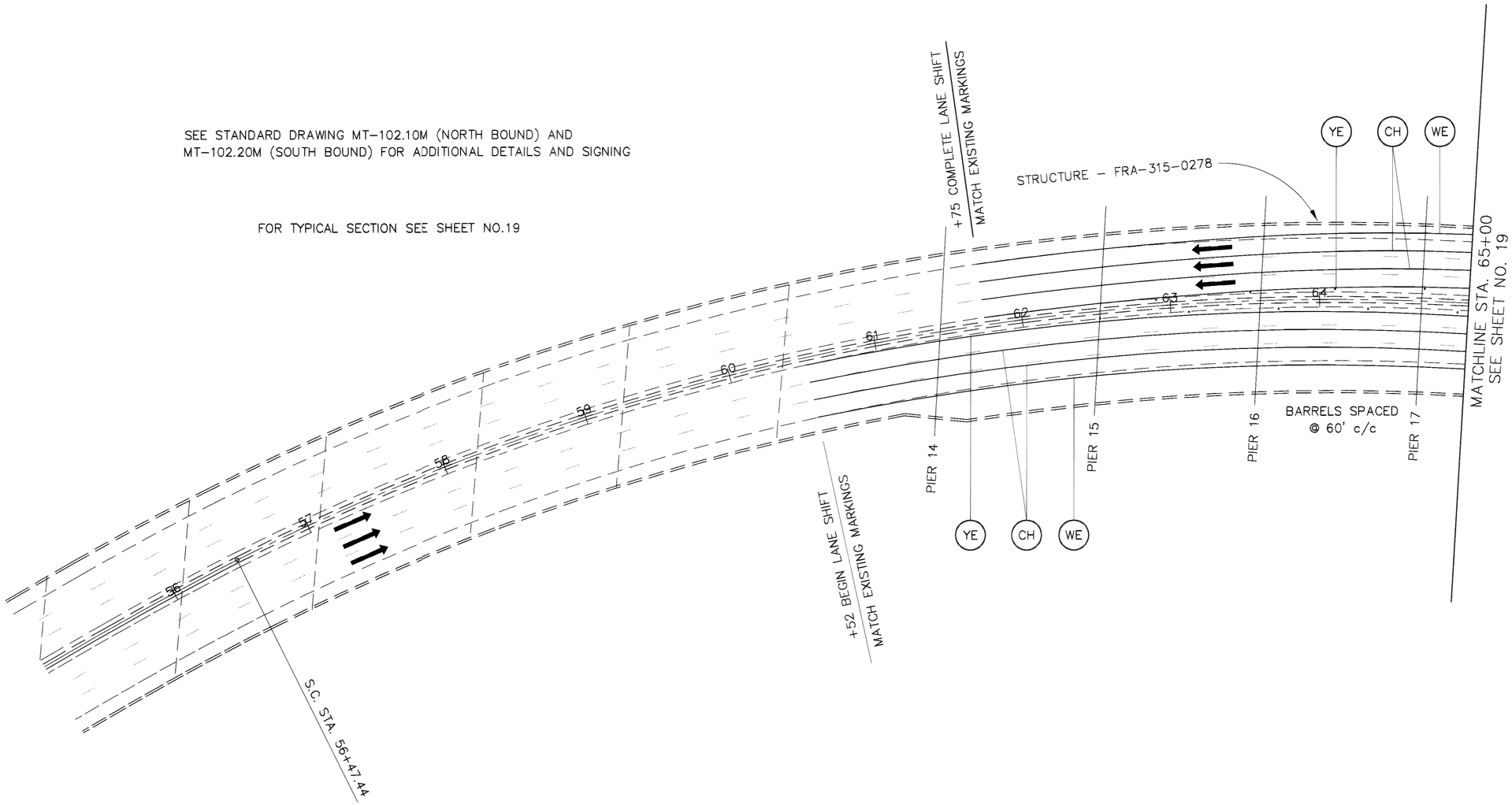

ESTIMATED QUANTITIES THIS SHEET

ITEM 614 TEMPORARY EDGE LINE, CLASS 1, 740.06, TYPE 1	0.29	MILE
ITEM 614 TEMPORARY CHANNELIZING LINE, CLASS 1, 740.06, TYPE 1	1540	LIN. FT.

PHASE 2

FOR LEGEND, SEE SHEET NO. 14

N

0 20 40 80 HORIZONTAL SCALE IN FEET

CALCULATED MJT 6/02
CHECKED WCY 6/02

MAINTENANCE OF TRAFFIC
STA. 55+00 TO STA. 65+00 S.R. 315

FRA-315-3.04

Q:\OSU_RAMP\315MOTPH2_1>dwg 06-05-02

MAINTENANCE OF TRAFFIC PLAN

SEE STANDARD DRAWING MT-102.10M (NORTH BOUND) AND
MT-102.20M (SOUTH BOUND) FOR ADDITIONAL DETAILS AND SIGNING

ESTIMATED QUANTITIES THIS SHEET

ITEM 614 BARRIER REFLECTOR, TYPE B AT 25'	34	EACH
ITEM 614 OBJECT MARKER AT 25'	34	EACH
ITEM 614 TEMPORARY EDGE LINE, CLASS 1, 740.06, TYPE 1	0.76	MILE
ITEM 614 TEMPORARY CHANNELIZING LINE, CLASS 1, 740.06, TYPE 1	4000	LIN. FT.
ITEM 622 PORTABLE CONCRETE BARRIER, 32"	950	LIN. FT.

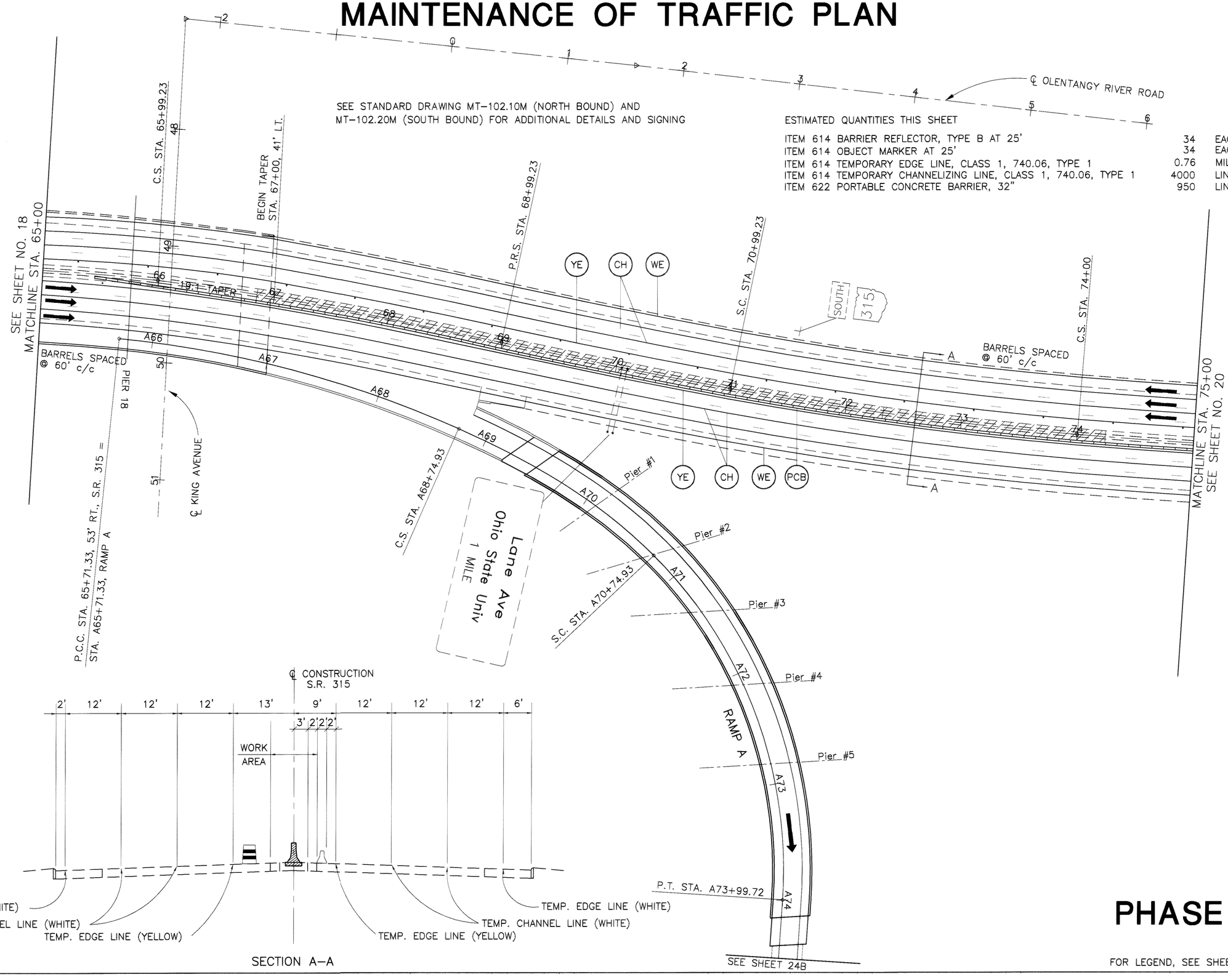

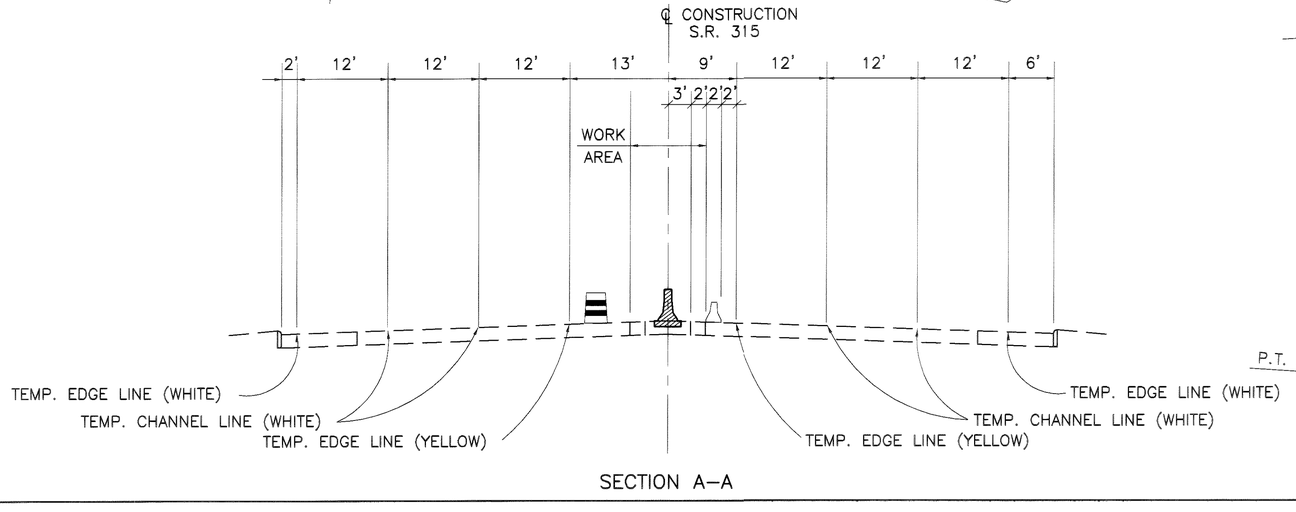

SECTION A-A

PHASE 2

FOR LEGEND, SEE SHEET NO. 14

CALCULATED MJT 6/02
CHECKED WGY 6/02

HORIZONTAL SCALE IN FEET
0 20 40 80

MAINTENANCE OF TRAFFIC
STA. 65+00 TO STA. 75+00 S.R. 315

FRA-315-3.04

19
238

Q:\OSU_RAMP\315MOTPH2_2>dwg 06-05-02

MAINTENANCE OF TRAFFIC PLAN

SEE STANDARD DRAWING MT-102.10M (NORTH BOUND) AND
MT-102.20M (SOUTH BOUND) FOR ADDITIONAL DETAILS AND SIGNING

ESTIMATED QUANTITIES THIS SHEET

ITEM 614 BARRIER REFLECTOR, TYPE B AT 25'	29	EACH
ITEM 614 OBJECT MARKER AT 25'	29	EACH
ITEM 614 TEMPORARY EDGE LINE, CLASS 1, 740.06, TYPE 1	0.83	MILE
ITEM 614 TEMPORARY CHANNELIZING LINE, CLASS 1, 740.06, TYPE 1	4400	LIN. FT.
ITEM 622 PORTABLE CONCRETE BARRIER, 32"	740	LIN. FT.

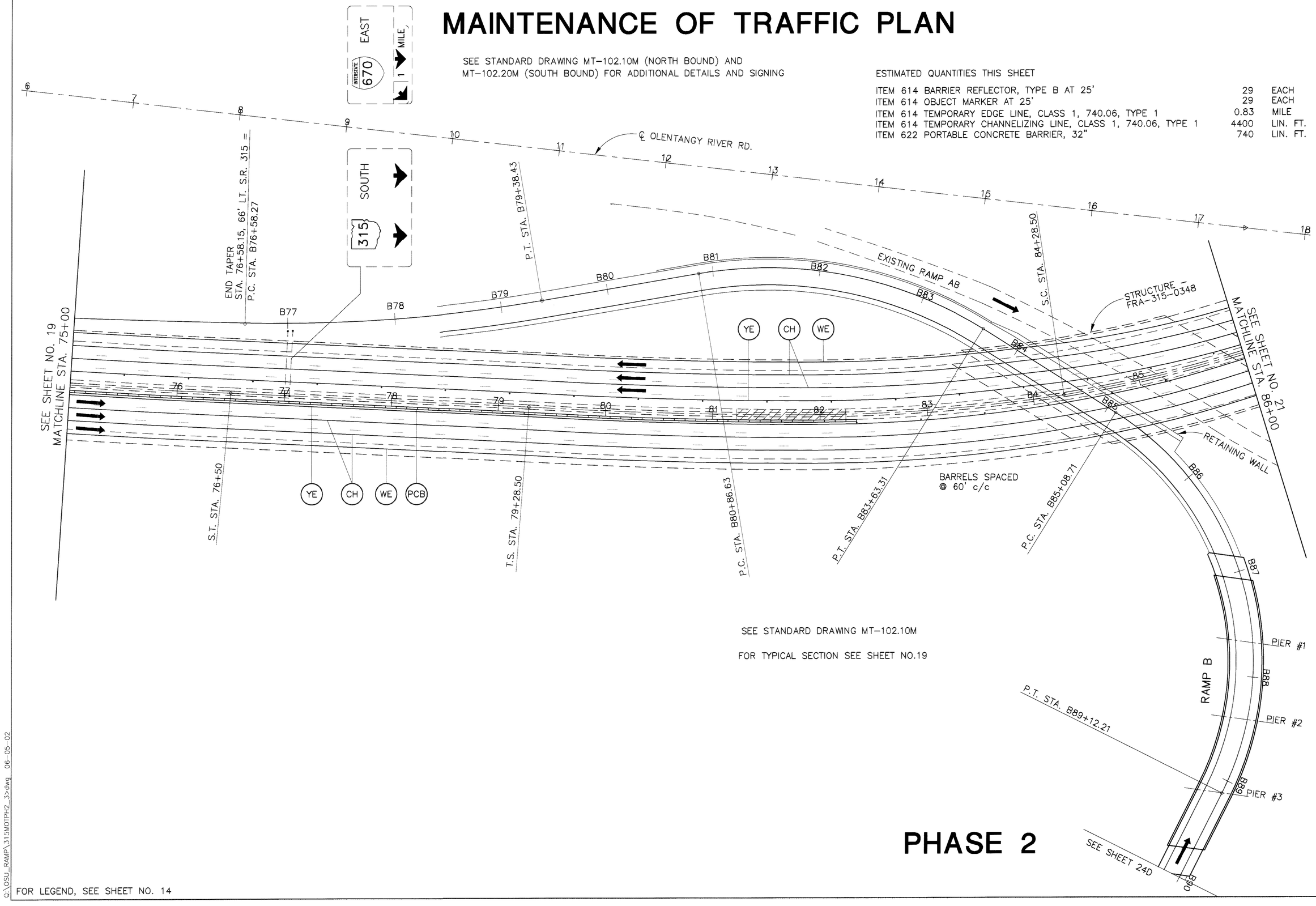

PHASE 2

FOR LEGEND, SEE SHEET NO. 14

CALCULATED MJT 6/02
CHECKED WGY 6/02

HORIZONTAL SCALE IN FEET
0 20 40 80

MAINTENANCE OF TRAFFIC
STA. 75+00 TO STA. 86+00 S.R. 315

FRA-315-3.04

20
238

Q:\OSU_RAMP\315MOTPH2_3>dwg 06-05-02

MAINTENANCE OF TRAFFIC PLAN

SEE STANDARD DRAWING MT-102.10M (NORTH BOUND) AND
MT-102.20M (SOUTH BOUND) FOR ADDITIONAL DETAILS AND SIGNING

FOR TYPICAL SECTION SEE SHEET NO.19

ESTIMATED QUANTITIES THIS SHEET

ITEM 614 TEMPORARY EDGE LINE, CLASS 1, 740.06, TYPE 1	0.14	MILE
ITEM 614 TEMPORARY CHANNELIZING LINE, CLASS 1, 740.06, TYPE 1	756	LIN. FT.

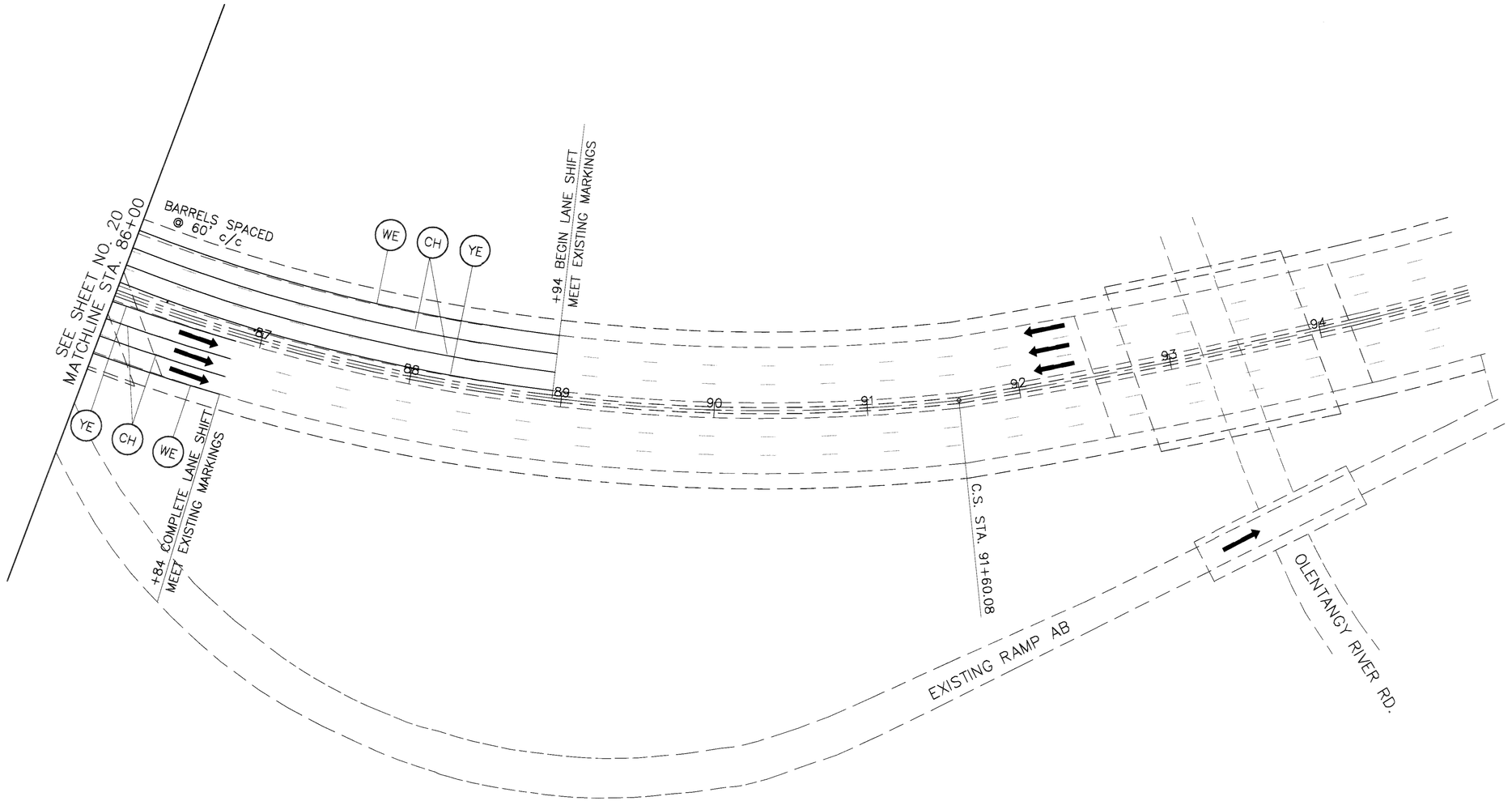

PHASE 2

FOR LEGEND, SEE SHEET NO.14

HORIZONTAL SCALE IN FEET
0 20 40 80

CALCULATED MJT 6/02
CHECKED WGY 6/02

MAINTENANCE OF TRAFFIC
STA. 86+00 TO STA. 95+00 S.R. 315

FRA-315-3.04

21
238

Q:\OSU_RAMP\315MOTPH2_4>dwg 06-05-02

MAINTENANCE OF TRAFFIC PLAN

SEE STANDARD DRAWING MT-102.10M FOR ADDITIONAL DETAILS AND SIGNING

FOR TYPICAL SECTION SEE SHEET NO.24

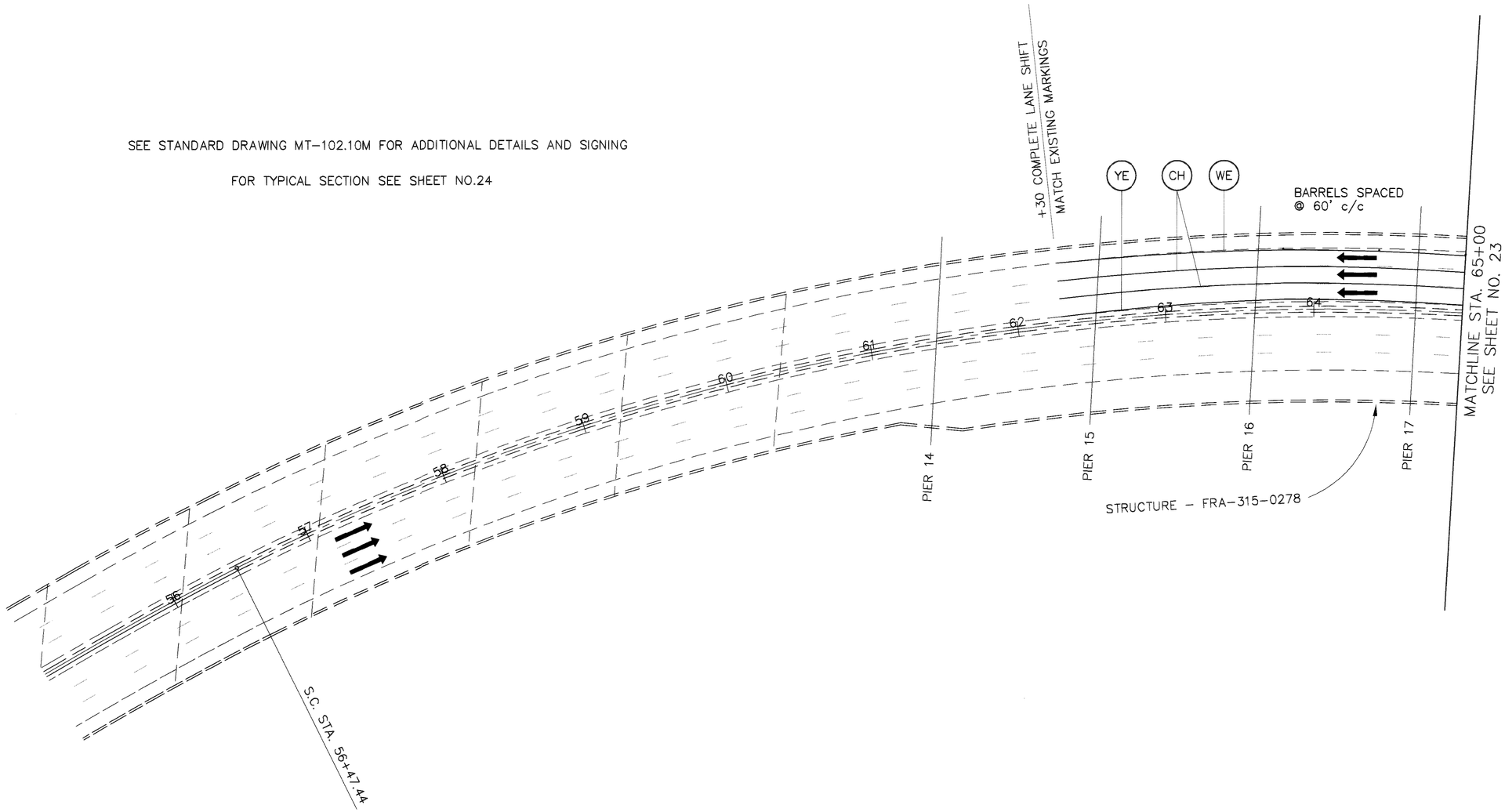

ESTIMATED QUANTITIES THIS SHEET

ITEM 614 TEMPORARY EDGE LINE, CLASS 1, 740.06, TYPE 1	0.10	MILE
ITEM 614 TEMPORARY CHANNELIZING LINE, CLASS 1, 740.06, TYPE 1	540	LIN. FT.

PHASE 3

FOR LEGEND, SEE SHEET NO. 14

N

0 20 40 80 HORIZONTAL SCALE IN FEET

CALCULATED MJT 6/02
CHECKED WCY 6/02

MAINTENANCE OF TRAFFIC
STA. 55+00 TO STA. 65+00 S.R. 315

FRA-315-3.04

Q:\OSU_RAMP\315MOTPH3_1>dwg 06-05-02

MAINTENANCE OF TRAFFIC PLAN

SEE STANDARD DRAWING MT-102.10M FOR ADDITIONAL DETAILS AND SIGNING

FOR TYPICAL SECTION SEE SHEET NO.24

ESTIMATED QUANTITIES THIS SHEET

ITEM 614 BARRIER REFLECTOR, TYPE B AT 25'	36	EACH
ITEM 614 OBJECT MARKER AT 25'	36	EACH
ITEM 614 TEMPORARY EDGE LINE, CLASS 1, 740.06, TYPE 1	0.38	MILE
ITEM 614 TEMPORARY CHANNELIZING LINE, CLASS 1, 740.06, TYPE 1	2000	LIN. FT.
ITEM 622 PORTABLE CONCRETE BARRIER, 32"	820	LIN. FT.

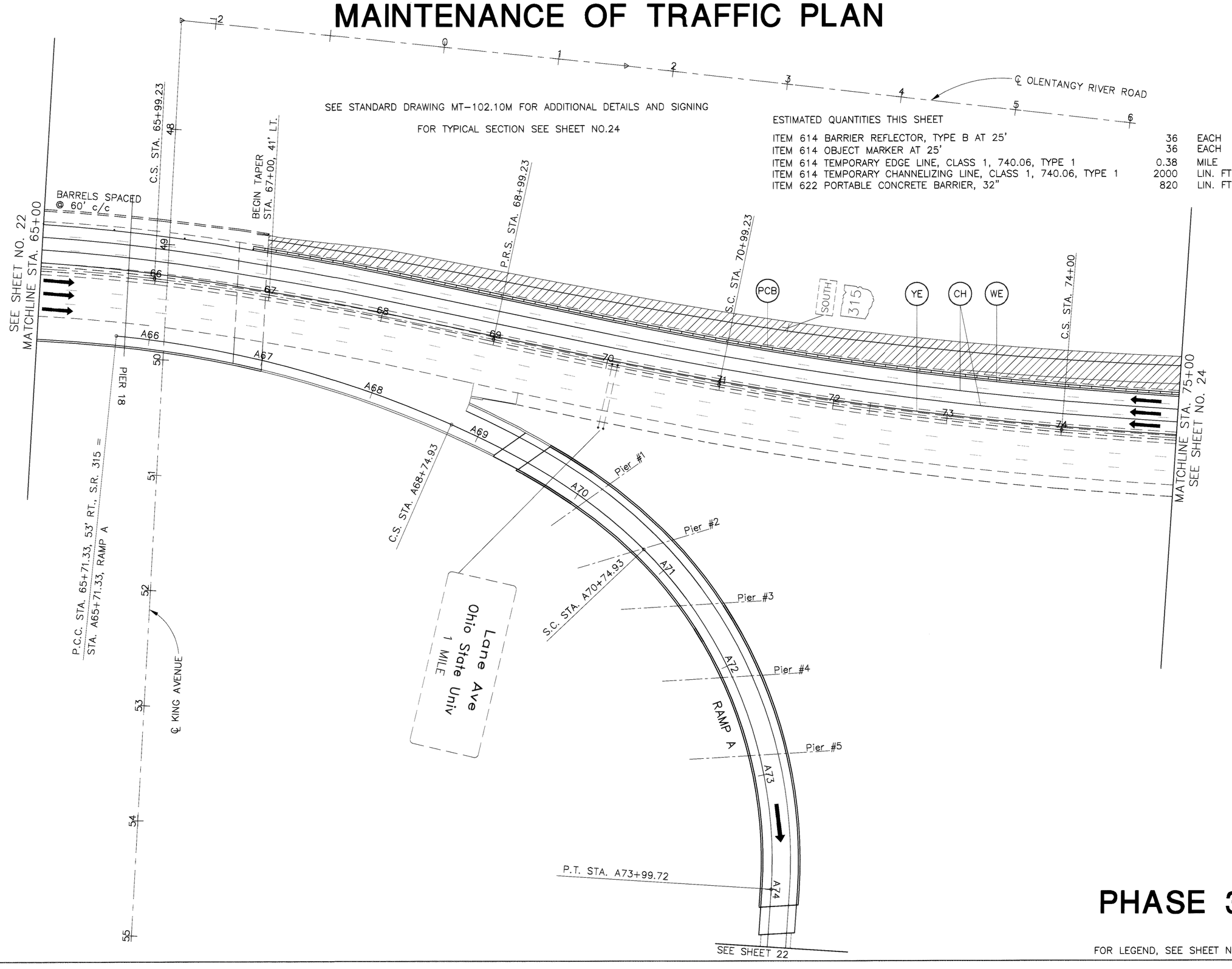

PHASE 3

FOR LEGEND, SEE SHEET NO. 14

N

HORIZONTAL SCALE IN FEET
0 20 40 80

CALCULATED MJT 6/02
CHECKED WCY 6/02

MAINTENANCE OF TRAFFIC
STA. 65+00 TO STA. 75+00 S.R. 315

FRA-315-3.04

23
238

Q:\OSU_RAMP\315MOTPH3_2>dwg 06-05-02

MAINTENANCE OF TRAFFIC PLAN

ESTIMATED QUANTITIES THIS SHEET

ITEM 614 BARRIER REFLECTOR, TYPE B AT 25'	14	EACH
ITEM 614 OBJECT MARKER AT 25'	14	EACH
ITEM 614 TEMPORARY EDGE LINE, CLASS 1, 740.06, TYPE 1	0.42	MILE
ITEM 614 TEMPORARY CHANNELIZING LINE, CLASS 1, 740.06, TYPE 1	2200	LIN. FT.
ITEM 622 PORTABLE CONCRETE BARRIER, 32"	600	LIN. FT.

EAST
INTERSTATE 670
1 MILE

SOUTH
315

℄ OLENTANGY RIVER RD.

END TAPER
STA. 76+58.15, 66' LT. S.R. 315 =
P.C. STA. B76+58.27

P.T. STA. B79+38.43

EXISTING RAMP AB

S.C. STA. 84+28.50

STRUCTURE – FRA-315-0348

SEE SHEET NO. 23
MATCHLINE STA. 75+00

SEE SHEET NO. 24A
MATCHLINE STA. 86+00

BARRELS SPACED @ 60' c/c

19:1 TAPER

PCB

YE

CH

WE

RETAINING WALL

B76 B77 B78 B79 B80 B81 B82 B83 B84 B85 B86 B87 B88 B89 B90

S.T. STA. 76+50

T.S. STA. 79+28.50

P.C. STA. B80+86.63

P.T. STA. B83+63.31

P.C. STA. B85+08.71

P.T. STA. B89+12.21

RAMP B

PIER #1

PIER #2

PIER #3

SEE SHEET 24D

A — A

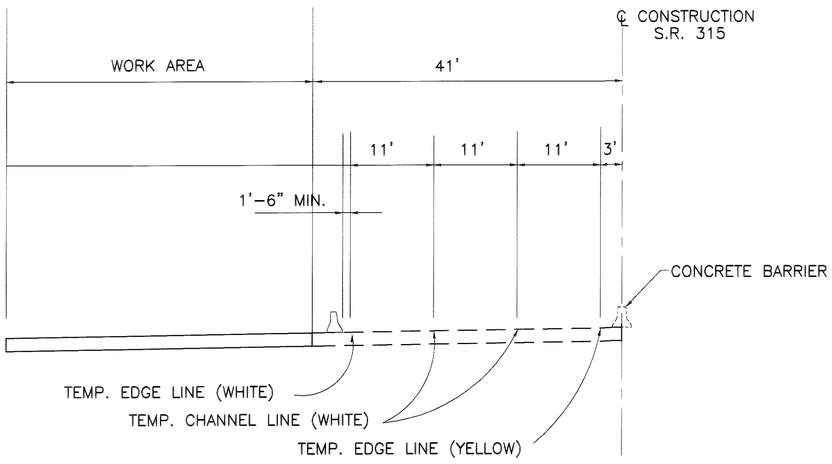

SECTION A–A

SEE STANDARD DRAWING MT–102.10M FOR ADDITIONAL DETAILS AND SIGNING

PHASE 3

FOR LEGEND, SEE SHEET NO. 14

Q:\OSU_RAMP\315MOTPH3_3>dwg 06-05-02

CALCULATED MJT 6/02
CHECKED WGY 6/02

HORIZONTAL SCALE IN FEET
0 20 40 80

MAINTENANCE OF TRAFFIC
STA. 75+00 TO STA. 86+00 S.R. 315

FRA-315-3.04

MAINTENANCE OF TRAFFIC PLAN

ESTIMATED QUANTITIES THIS SHEET

ITEM 614 TEMPORARY EDGE LINE, CLASS 1, 740.06, TYPE 1	0.07	MILE
ITEM 614 TEMPORARY CHANNELIZING LINE, CLASS 1, 740.06, TYPE 1	348	LIN. FT.

SEE STANDARD DRAWING MT-102.10M FOR ADDITIONAL DETAILS AND SIGNING

FOR TYPICAL SECTION SEE SHEET NO.24

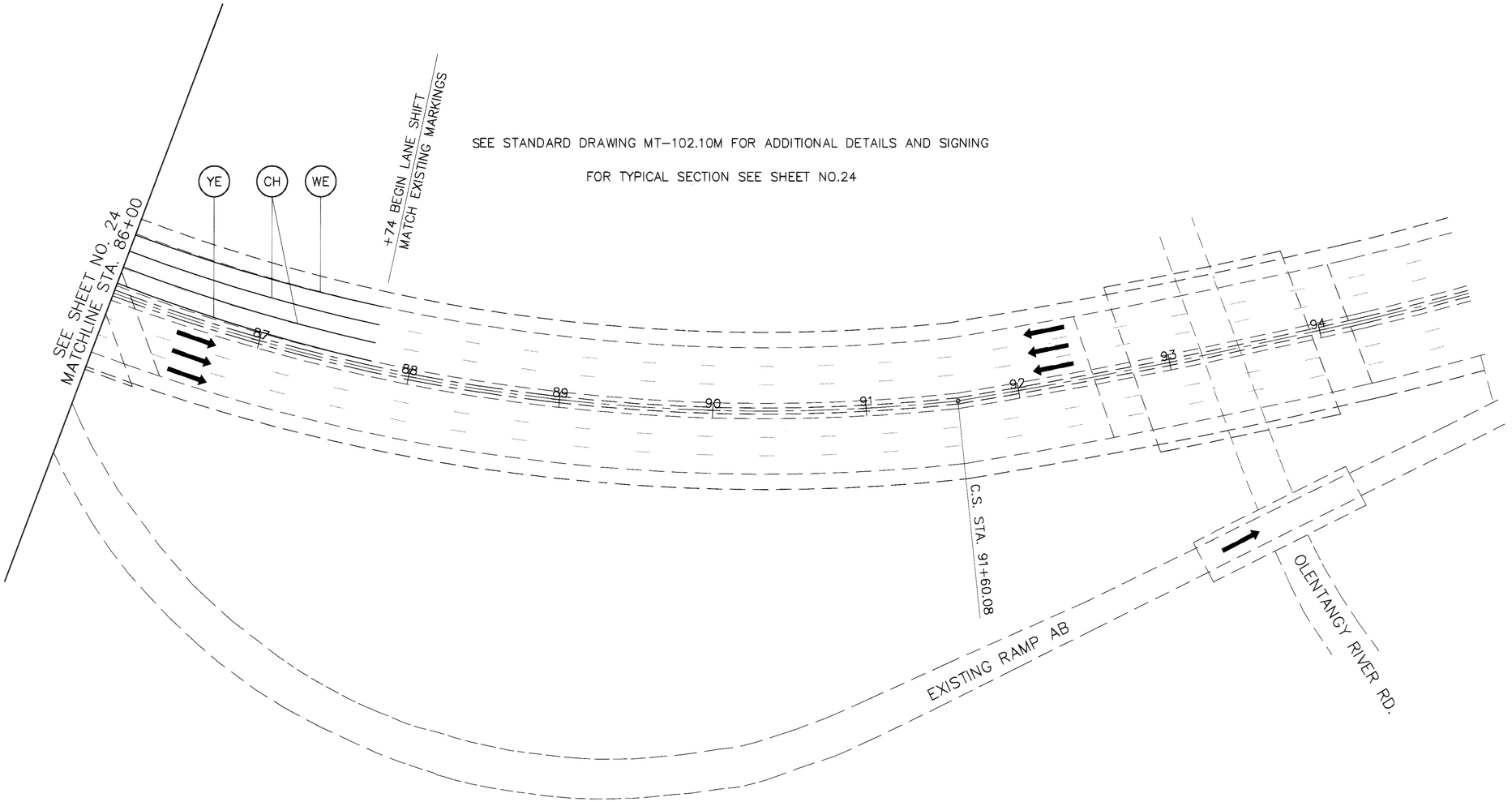

PHASE 3

FOR LEGEND, SEE SHEET NO.14

HORIZONTAL SCALE IN FEET
0 20 40 80

CALCULATED MJT 6/02
CHECKED WGY 6/02

MAINTENANCE OF TRAFFIC
STA. 86+00 TO STA. 95+00 S.R. 315

FRA-315-3.04

24A
238

Q:\OSU_RAMP\315MOTPH3_4>dwg 06-05-02

MAINTENANCE OF TRAFFIC PLAN

SEE SHEETS NO.17, NO.19 & NO.23

A76 A77 A78 A79 A80

RAMP A

ROAD CLOSED BARRICADES AS PER MT-101.60M

SIDEWALK CLOSED

SEE SHEET NO. 24C MATCHLINE STA. 54+50

ONLY ONLY ONLY

University Medical Center
W. 9th. Ave.
N. 9th. Ave.

SPEED LIMIT 25

ONLY ONLY

UNIVERSITY SIGNS

The William H. Davis Medical Research Center
Dodd Hall
Rehabilitation Services

The Ohio State University
P Parking for:
James Cancer Hospital & Solove Research Institute
Dental Clinic
Lane Avenue to SR 315 S
King Avenue to SR 315 N

9th AVE.

SPEED LIMIT 20

CANNON DR.

W. 9TH AVE.

CANNON DR.

STOP

DRIVE

UNIVERSITY SIGN
South Dodd Lot
B Staff
B Staff
OSU decal required
No overnight parking
No parking in drive lanes
SPEED LIMIT 10

SPEED LIMIT 25

UNIVERSITY SIGN
Emergency & Trauma Center
H University Hospitals & Clinics
H James Cancer Hospital & Solove Research Institute

STOP

STA. A80+80.43 RAMP A =
STA. 53+64.55 CANNON DR.

BARRELS SPACED @ 10' C/C

SIDEWALK CLOSED

W. 9TH AVE.
CANNON DR.

SEE STANDARD DRAWING MT-95.31 FOR ADDITIONAL DETAILS AND SIGNING

℄ CONSTRUCTION
CANNON DR.

WORK AREA 31'

13' 12' 6'

2'

EXIST. LANE LINE

TYPICAL SECTION

UNIVERSITY SIGN
The Ohio State University
P Parking for:
James Cancer Hospital & Solove Research Institute
Dental Clinic

71 INTERSTATE
SOUTH
TO

ONLY ONLY

NO OUTLET

CROSSWALK CLOSED AHEAD
CROSS HERE

55 56 57 58 59 60 61 62 63

KING AVE.

PHASE 4

FOR LEGEND, SEE SHEET NO.14

N

0 20 40 80 HORIZONTAL SCALE IN FEET

CALCULATED MJT 6/02
CHECKED WGY 6/02

MAINTENANCE OF TRAFFIC
STA. 48+00 TO STA. 54.+50 CANNON DRIVE

FRA-315-3.04

24B
238

Q:\OSU_RAMP\CANNMOTPH4_1>dwg 06-20-02

MAINTENANCE OF TRAFFIC PLAN

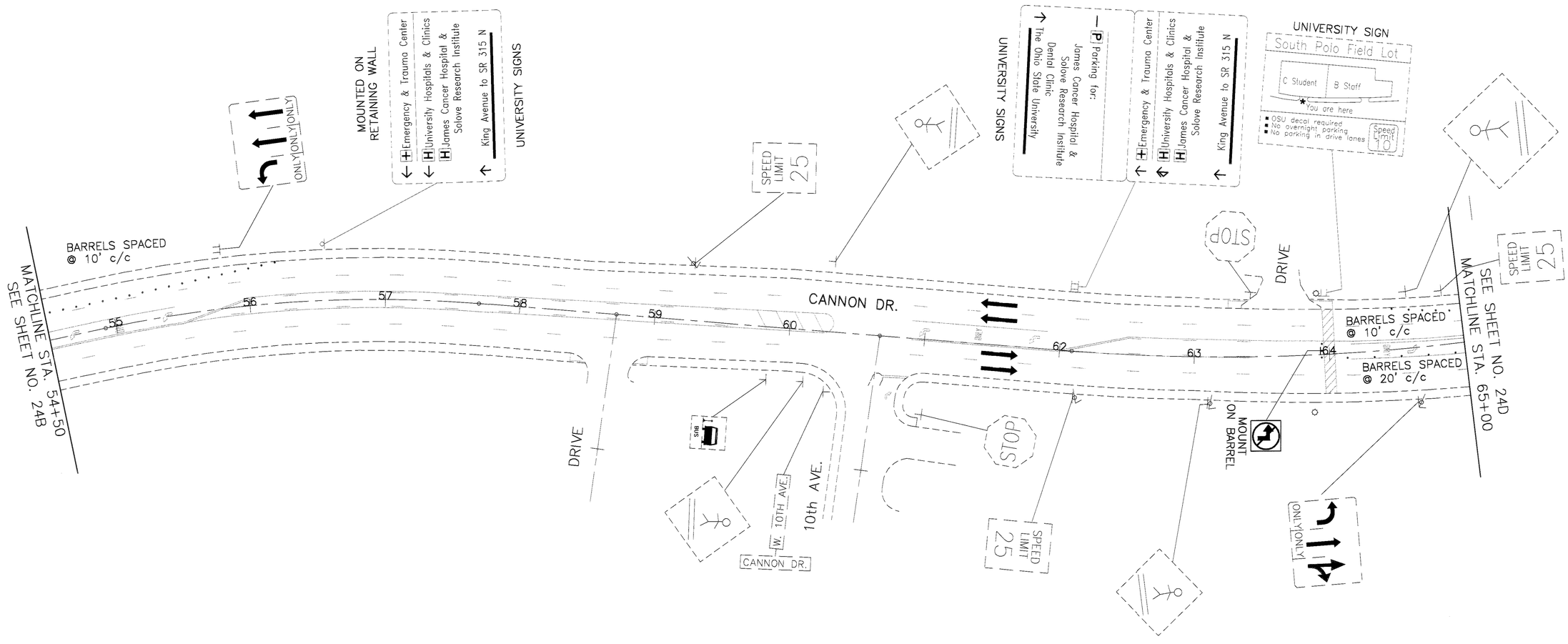

SEE STANDARD DRAWING MT-95.31 FOR ADDITIONAL DETAILS AND SIGNING

FOR TYPICAL SECTION SEE SHEET NO.24B

PHASE 4

FOR LEGEND, SEE SHEET NO.14

HORIZONTAL SCALE IN FEET
0 20 40 80

CALCULATED MJT 6/02
CHECKED WGY 6/02

MAINTENANCE OF TRAFFIC
STA. 54+50 TO STA. 65+00 CANNON DRIVE

FRA-315-3.04

24C
238

Q:\OSU_RAMP\CANNMOTPH4_2>dwg 06-20-02

MAINTENANCE OF TRAFFIC PLAN

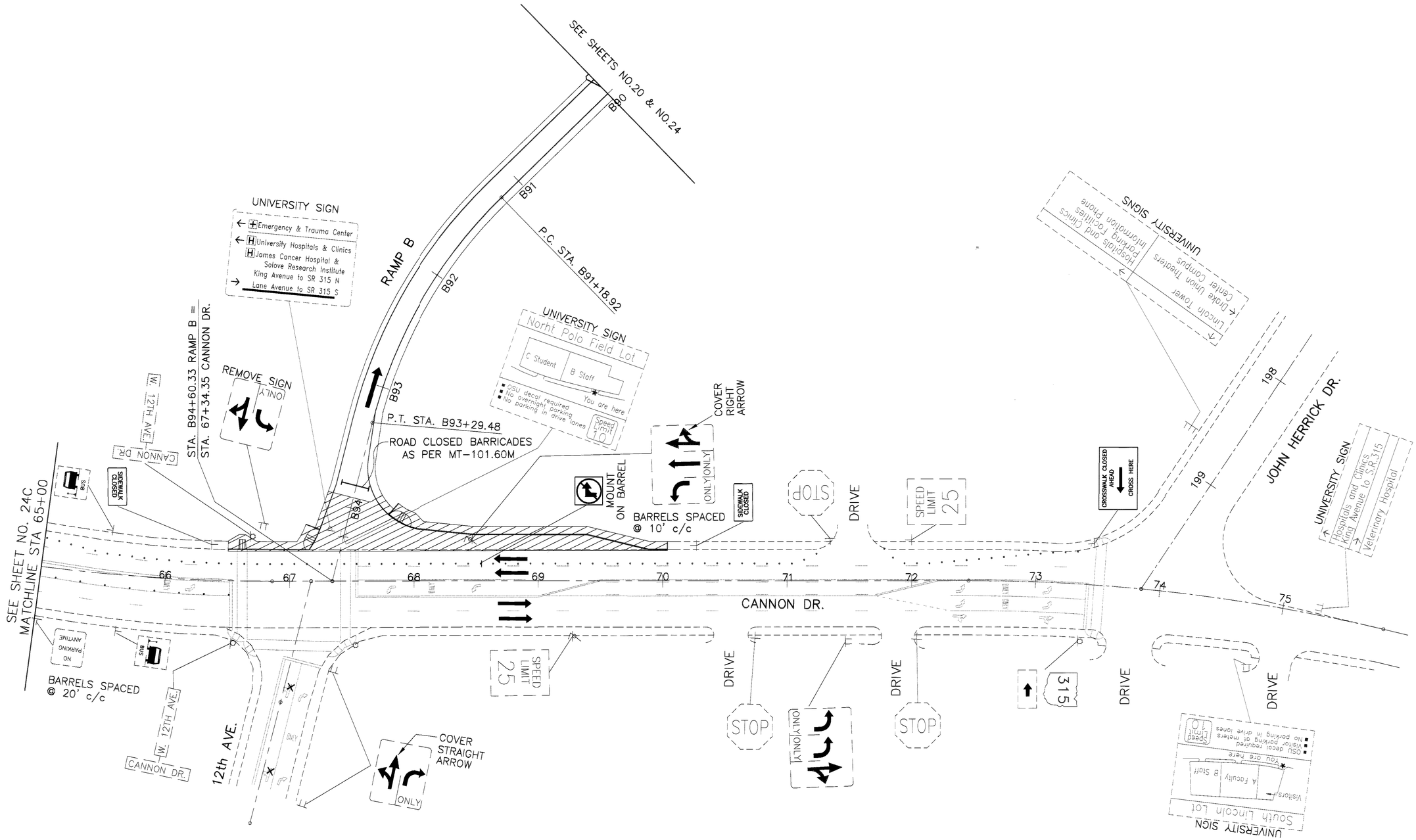

SEE STANDARD DRAWING MT-95.31 FOR ADDITIONAL DETAILS AND SIGNING

FOR TYPICAL SECTION SEE SHEET NO.24B

PHASE 4

FOR LEGEND, SEE SHEET NO.14

CALCULATED MJT 6/02
CHECKED WGY 6/02

HORIZONTAL SCALE IN FEET
0 20 40 80

MAINTENANCE OF TRAFFIC
STA. 65+00 TO STA. 75+00 CANNON DRIVE

FRA-315-3.04

24D
238

Q:\OSU_RAMP\CANNMOTPH4_3>dwg 06-20-02

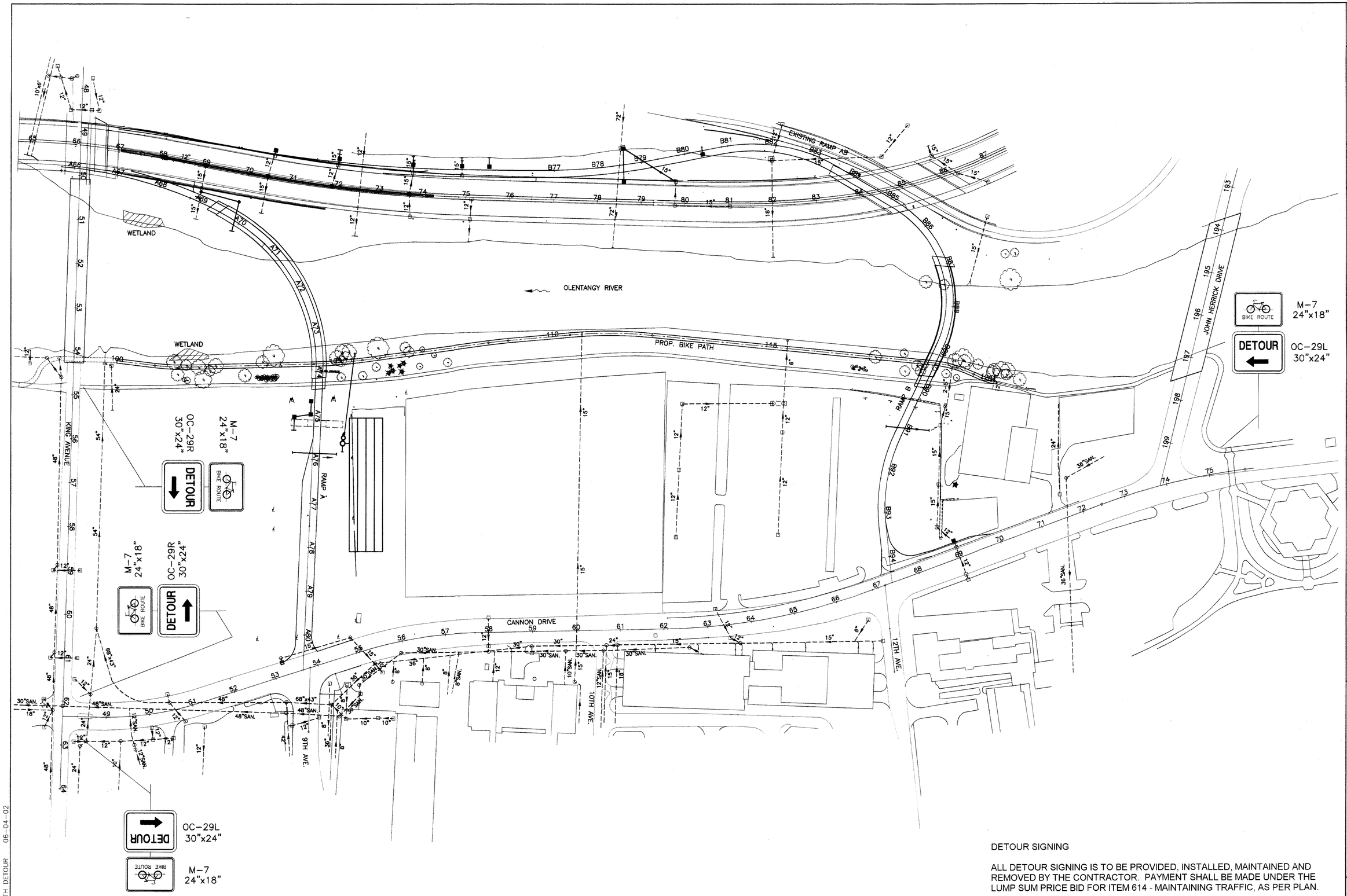

DETOUR SIGNING

ALL DETOUR SIGNING IS TO BE PROVIDED, INSTALLED, MAINTAINED AND REMOVED BY THE CONTRACTOR. PAYMENT SHALL BE MADE UNDER THE LUMP SUM PRICE BID FOR ITEM 614 - MAINTAINING TRAFFIC, AS PER PLAN.

HORIZONTAL SCALE IN FEET
0 50 100 200

CALCULATED MJO 6/02
CHECKED WGY 6/02

BIKEPATH DETOUR

FRA-315-3.04

24E
238

BIKEPATH DETOUR 06-04-02

MAINTENANCE OF TRAFFIC PLAN

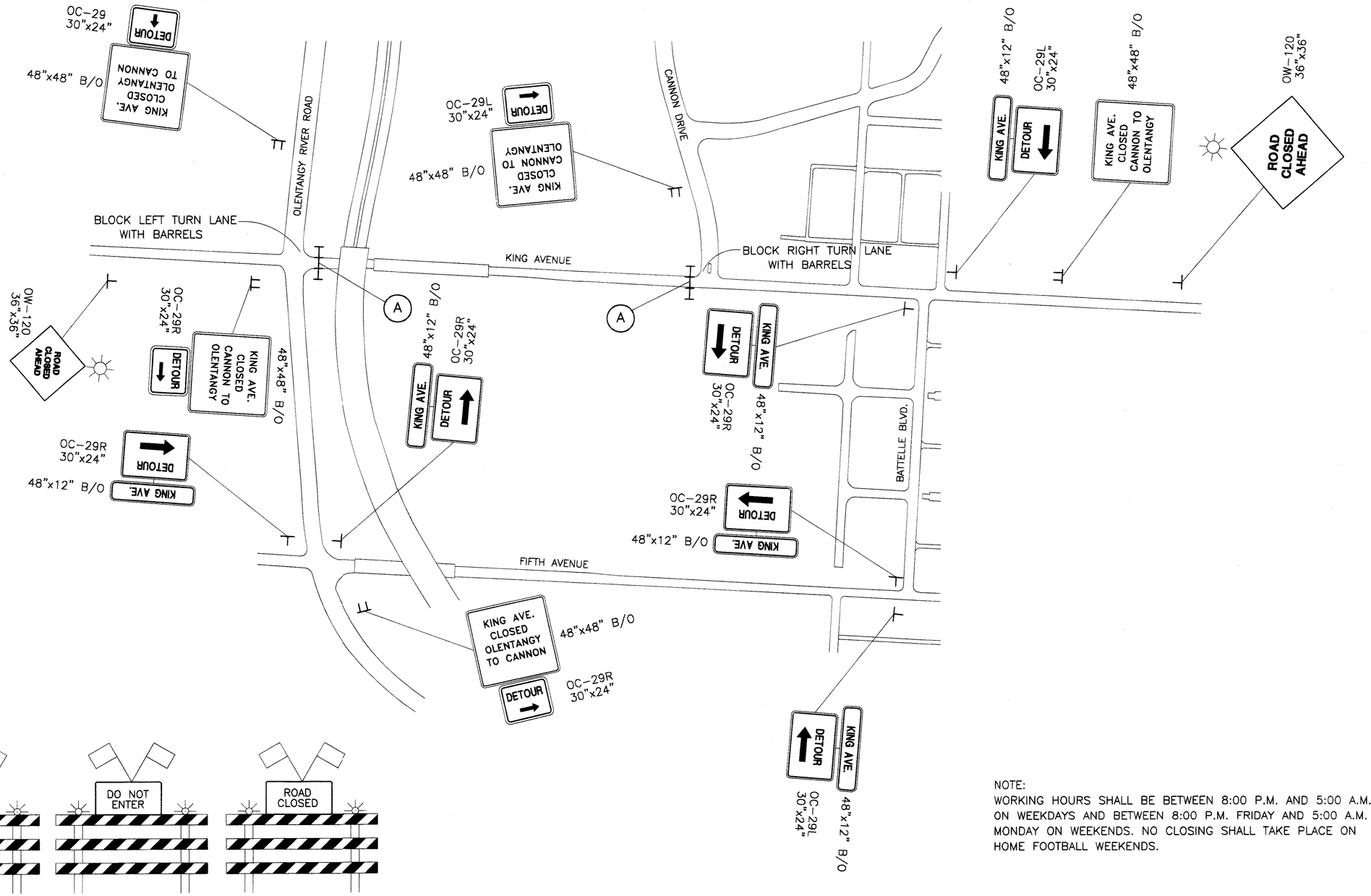

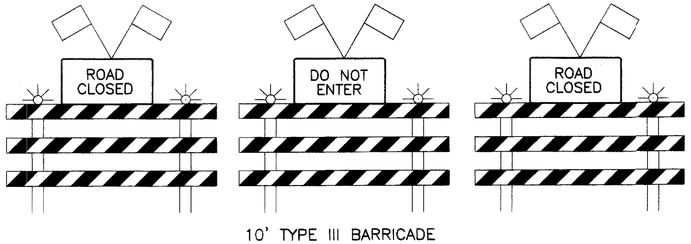

10' TYPE III BARRICADE

(A)

NOTE:
WORKING HOURS SHALL BE BETWEEN 8:00 P.M. AND 5:00 A.M. ON WEEKDAYS AND BETWEEN 8:00 P.M. FRIDAY AND 5:00 A.M. MONDAY ON WEEKENDS. NO CLOSING SHALL TAKE PLACE ON HOME FOOTBALL WEEKENDS.

DETOUR SIGNING

ALL DETOUR SIGNING IS TO BE PROVIDED, INSTALLED, MAINTAINED AND REMOVED BY THE CONTRACTOR. PAYMENT SHALL BE MADE UNDER THE LUMP SUM PRICE BID FOR ITEM 614 - MAINTAINING TRAFFIC, AS PER PLAN.

N

0 100 200 400
HORIZONTAL SCALE IN FEET

CALCULATED MJ 6/02
CHECKED MJG 6/02

MAINTENANCE OF TRAFFIC
KING AVENUE CLOSURE

FRA-315-3.04

24F
238

O:\OSU_RAMP\KINGCLOSURE>dwg 06-18-02

SHEET NUMBER																					ITEM	ITEM EXT.	GRAND TOTAL	UNIT	DESCRIPTION	AS PER PLAN SHT. NO.
8	29	32	35	36	37	47	48	49	50	51	52	53	74	75	76	77	93	228	229	230						
																									ROADWAY	
LUMP																					201	11000	LUMP		CLEARING AND GRUBBING	
	2628																				202	30000	2628	SQ FT	WALK REMOVED	
	330																				202	30600	330	SQ YD	CONCRETE MEDIAN REMOVED	
	102																				202	30700	102	LIN FT	CONCRETE BARRIER REMOVED	
	1836																				202	32000	1836	LIN FT	CURB REMOVED	
	4																				202	32700	4	SQ YD.	GUTTER REMOVED	
	630																				202	32800	630	SQ YD.	CONCRETE SLOPE PROTECTION REMOVED	
	41																				202	35100	41	LIN FT	PIPE REMOVED, 24" AND UNDER	
	1016																				202	38000	1016	LIN FT	GUARDRAIL REMOVED	
	737																				202	38300	737	LIN FT	GUARDRAIL REMOVED, BARRIER DESIGN	
	100																				SPECIAL	20252990	100	EACH	PARKING BLOCK REMOVED	
	13																				202	58300	13	EACH	CATCH BASIN OR INLET REMOVED	
	473																				202	75000	473	LIN FT	FENCE REMOVED	
			287	349	533	380	1049	358	1568	140	272	102	90	113	108	1665	4				203	12000	7018	CU YD	EXCAVATION NOT INCLUDING EMBANKMENT CONSTRUCTION	
			1323	4818	4866	251	597	2584	1293	4844	1893	22	28	43	56	5	73				203	20000	22696	CU YD	EMBANKMENT	
		5																			203	45000	5	HOURS	PROOF ROLLING	
		14093																			203	50000	14093	SQ YD	SUBGRADE COMPACTION	
	2725																				606	13000	2725	LIN FT	GUARDRAIL, TYPE 5	
	100																				606	13020	100	LIN FT	GUARDRAIL, TYPE 5,WITH DOUBLE RAILS	
	18.75																				606	15500	18.75	LIN FT	GUARDRAIL BARRIER DESIGN, TYPE 5	
	2																				606	22010	2	EACH	ANCHOR ASSEMBLY, TYPE E-98	
	3																				606	26500	3	EACH	ANCHOR ASSEMBLY, TYPE T	
	3																				606	35000	3	EACH	BRIDGE TERMINAL ASSEMBLY, TYPE 1	
	2																				606	35004	2	EACH	BRIDGE TERMINAL ASSEMBLY, TYPE 1, BARRIER DESIGN	
	4																				606	35100	4	EACH	BRIDGE TERMINAL ASSEMBLY, TYPE 2	
	1																				606	60020	1	EACH	IMPACT ATTENUATOR, TYPE 2-98 MODEL #QFCBCVR-U (UNIDIRECTIONAL)	9
																		1397	130	904	607	20000	2431	LIN FT	FENCE, TYPE CL	
																		1			607	50900	1	EACH	GATE, TYPE CL	
	2318																				608	13000	2318	SQ FT	6" CONCRETE WALK	
	5																				608	49000	5	EACH	CURB RAMP	
	25																				622	23402	25	LIN FT	CONCRETE BARRIER, TYPE B, REINFORCED	
	697																				622	23404	697	LIN FT	CONCRETE BARRIER, TYPE B1	
	238																				622	24000	238	LIN FT	CONCRETE BARRIER, TYPE D	
	100																				622	24004	100	LIN FT	CONCRETE BARRIER, TYPE D1	

CALCULATED

CHECKED

GENERAL SUMMARY

FRA-315-3.04

SHEET NUMBER										ITEM	ITEM EXT.	GRAND TOTAL	UNIT	DESCRIPTION
8		30	33	33 A	92	93	94	95	157					
														EROSION CONTROL
									4	601	20500	4	CU YD	**CRUSHED AGGREGATE SLOPE PROTECTION**
		39								601	21000	39	SQ YD	CONCRETE SLOPE PROTECTION
240		258				1	3	1		601	32200	502	CU YD	ROCK CHANNEL PROTECTION, TYPE C WITH FILTER
					2					601	32300	2	CU YD	ROCK CHANNEL PROTECTION, TYPE D WITH FILTER
150										601	34200	150	CU YD	ROCK CHANNEL PROTECTION, TYPE C WITHOUT FILTER
		49								660	20000	49	SQ YD	SODDING REINFORCED
		890								670	40000	890	SQ YD	DITCH EROSION PROTECTION
		390								670	41000	390	SQ YD	SLOPE EROSION PROTECTION
2										870	00100	2	EACH	SOIL ANALYSIS TEST
1240										870	00300	1240	CU YD	TOP SOIL
22306										870	10000	22306	SQ YD	SEEDING AND MULCHING
1125										870	14000	1125	SQ YD	REPAIR SEEDING AND MULCHING
1125										870	15000	1125	SQ YD	INTER-SEEDING
3.21										870	20000	3.21	TON	COMMERCIAL FERTILIZER
4.24										870	30000	4.24	TON	AGRICULTURAL LIME
50										870	35000	133	M GAL	WATER
										870	40000	50	M SQ FT	MOWING
4462										877	10000	4462	SQ YD	TEMPORARY SEEDING AND MULCHING
3775			4100	3450						877	30100	11325	LIN FT	TEMPORARY PERIMETER FILTER FABRIC FENCE
3775			35	35						877	30200	3845	LIN FT	TEMPORARY DITCH CHECK FILTER FABRIC FENCE
200			200	200						877	30300	600	LIN FT	TEMPORARY INLET PROTECTION FILTER FABRIC FENCE
260										877	40000	260	LIN FT	TEMPORARY SLOPE DRAINS
1200			585	585						877	50000	2370	CU YD	TEMPORARY SEDIMENT BASINS AND DAMS
5200										877	55000	5200	CU YD	TEMPORARY DIKES
215										877	55500	215	SQ YD	TEMPORARY DITCH PROTECTION
300										877	60000	300	CU YD	SEDIMENT REMOVAL

CALCULATED | CHECKED

GENERAL SUMMARY

FRA-315-3.04

365JGS2 08-07-02

SHEET NUMBER												ITEM	ITEM EXT.	GRAND TOTAL	UNIT	DESCRIPTION	AS PER PLAN SHT. NO.	CALCULATED	CHECKED
10	29	30	31	32	90	91	92	93	94	95	97								
																DRAINAGE			
					0.86	0.86	0.54	1.00	0.81	0.42		602	20000	4.49	CU YD	CONCRETE MASONRY			
		44										603	00406	44	LIN FT	4" CONDUIT, TYPE F			
		73										603	00900	73	LIN FT	6" CONDUIT, TYPE B			
100												603	00900	100	LIN FT	6" CONDUIT, TYPE B, 706.01 OR 706.08 W/JOINTS PER 706.11 OR 706.12 (SANITARY)			
100												603	01100	100	LIN FT	6" CONDUIT, TYPE C, 706.01 OR 706.08 W/JOINTS PER 706.11 OR 706.12 (SANITARY)			
		255										603	01500	255	LIN FT	6" CONDUIT, TYPE F			
							16	41	8	6		603	04400	71	LIN FT	12" CONDUIT, TYPE B, 706.02, 706.08, 707.43 OR 707.45			
										33		603	04600	33	LIN FT	12" CONDUIT, TYPE C, 706.02, 706.08, 707.43 OR 707.45			
							73		231			603	05900	304	LIN FT	15" CONDUIT, TYPE B, 706.02, 706.08, 707.43, OR 707.45			
							98	24	57			603	06100	179	LIN FT	15" CONDUIT, TYPE C, 706.02, 706.08, 707.43, OR 707.45			
							126					603	06700	126	LIN FT	15" CONDUIT, TYPE F, 707.05 TYPE C			
								192				603	98300	192	LIN FT	CONDUIT, MISC.; 16" DUCTILE IRON PIPE			
					101	99						603	10200	200	LIN FT	24" CONDUIT, TYPE A, 706.02, 706.08, 707.03, 707.04 OR 707.21			
								14				603	10600	14	LIN FT	24" CONDUIT, TYPE C, 706.02, 706.08 OR 707.43			
											11	603	10600	11	LIN FT	24" CONDUIT, TYPE C, 707.33 OR 707.43			
											1672	603	21100	1672	LIN FT	48" CONDUIT, TYPE C, 707.33 OR 707.43			
									1	1		604	00400	2	EACH	CATCH BASIN, NO. 3			
							2	2	3	1		604	00800	8	EACH	CATCH BASIN, NO. 3A			
							1					604	04900	1	EACH	CATCH BASIN, NO. 2-3			
									1	1		604	09500	2	EACH	CATCH BASIN, RECONSTRUCTED TO GRADE			
							2	2	1			604	15151	5	EACH	INLET, NO. 3D, AS PER PLAN	10		
							2					604	31500	2	EACH	MANHOLE, NO. 3			
		5										604	36600	5	EACH	PRECAST REINFORCED CONCRETE OUTLET			
								1				604	98000	1	EACH	DRAINAGE STRUCTURE, MISC.: CITY OF COLUMBUS 42" CURB INLET AA-S123			
											10	604	98000	10	EACH	DRAINAGE STRUCTURE, MISC.: DETENTION SYSTEM RISER			
		189										605	05100	189	LIN FT	4" SHALLOW PIPE UNDERDRAIN, 707.31 OR 707.41			
		4733										605	11100	4733	LIN FT	6" SHALLOW PIPE UNDERDRAIN, 707.31 OR 707.41			
		20										605	13300	20	LIN FT	6" UNCLASSIFIED PIPE UNDERDRAIN, 707.31 OR 707.41			
								1				SPECIAL	68019500	1	EACH	PUMP STATION			
																WATER WORK			
								1				638	11300	1	EACH	1" AIR RELEASE VALVE			
																PAVEMENT			
			597									301	46000	597	CU YD	BITUMINOUS AGGREGATE BASE, PG64-22			
				2566								304	20000	2566	CU YD	AGGREGATE BASE			
			11327									305	13000	11327	SQ YD	9" CONCRETE BASE			
				856								407	13900	856	GALLON	TACK COAT, 702.13			
				455								407	14010	455	GALLON	TACK COAT FOR INTERMEDIATE COURSE, 702.13			
				898								408	10000	898	GALLON	BITUMINOUS PRIME COAT			
			552									446	46050	552	CU YD	ASPHALT CONCRETE INTERMEDIATE COURSE, TYPE 2, PG64-22			
			553									446	47020	553	CU YD	ASPHALT CONCRETE SURFACE COURSE, TYPE 1, PG64-22			
				381								611	25000	381	SQ YD	REINFORCED CONCRETE APPROACH SLAB (T=15")			
	86											SPECIAL	45130000	86	LIN FT	PRESSURE RELIEF JOINT, TYPE A			
	1967											830	26000	1967	LIN FT	CURB, TYPE 6			
	24											830	50000	24	SQ YD	4" CONCRETE TRAFFIC ISLAND			
	10											830	72000	10	SQ YD	CONCRETE MEDIAN			
																FOR LIGHTING GENERAL SUMMARY, SEE SHEET NO. 103			
																FOR TRAFFIC CONTROL GENERAL SUMMARY, SEE SHEET NO. 132			
																FOR TRAFFIC SIGNALS GENERAL SUMMARY, SEE SHEET NO. 148			
																FOR RETAINING WALL GENERAL SUMMARIES, SEE SHEETS NO.157 & NO.162			

GENERAL SUMMARY

FRA-315-3.04

3453053 06-19-02

SHEET NUMBER										ITEM	ITEM EXT.	GRAND TOTAL	UNIT	DESCRIPTION	SEE SHEET NO.
	12	154	156												
														MAINTENANCE OF TRAFFIC	
	50									410	12000	50	CU YD	TRAFFIC COMPACTED SURFACE, TYPE A OR B	
	10									410	13000	10	CU YD	TRAFFIC COMPACTED SURFACE, TYPE C	
	100	8	8							614	11100	116	HOUR	LAW ENFORCEMENT OFFICER WITH PATROL CAR	
	40									SPECIAL	61412500	40	SQ FT	REPLACEMENT SIGN	
	50									SPECIAL	61412600	50	EACH	REPLACEMENT DRUM	
	1									614	12336	1	EACH	TEMPORARY IMPACT ATTENUATOR (UNIDIRECTIONAL)	
	5									614	13000	5	CU YD	BITUMINOUS CONCRETE FOR MAINTAINING TRAFFIC	
	168									614	13300	168	EACH	BARRIER REFLECTOR, TYPE B	
	168									614	13350	168	EACH	OBJECT MARKER	
	4.01									614	22200	4.01	MILE	TEMPORARY EDGE LINE, CLASS 1, 740.06, TYPE 1	
	21170									614	23400	21170	LIN FT	TEMPORARY CHANNELIZING LINE, CLASS 1, 740.06, TYPE 1	
	101									616	10000	101	M GAL	WATER	
	11.00									616	20000	11.00	TON	CALCIUM CHLORIDE	
	4520									622	40020	4520	LIN FT	PORTABLE CONCRETE BARRIER, 32"	
														STRUCTURES OVER 20'	
														FOR STRUCTURE FRA-315-0278 GENERAL SUMMARY, SEE SHEET NO.175	
														FOR STRUCTURE FRA-315-0320 GENERAL SUMMARY, SEE SHEET NO.188	
														FOR STRUCTURE FRA-315-0354 GENERAL SUMMARY, SEE SHEET NO.211	
														STRUCTURES 20' AND UNDER	
														FOR RAMP A PEDESTRIAN UNDERPASS GENERAL SUMMARY, SEE SHEET NO.169	
										614	11001		LUMP	MAINTAINING TRAFFIC, **AS PER PLAN**	12, 150
										623	10000		LUMP	CONSTRUCTION LAYOUT STAKES	
										624	10000		LUMP	MOBILIZATION	
										806	16020	20	MONTH	FIELD OFFICE, TYPE C	

CALCULATED | CHECKED

GENERAL SUMMARY

FRA-315-3.04

SHEET NO.	REF. NO.	STATION TO STATION	SIDE	202												606									608		830			622				SPEC.	CALCULATED / CHECKED
				CURB REMOVED	CONCRETE SLOPE PROTECT. REMOVED	PARKING BLOCK REMOVED	WALK REMOVED	CONCRETE MEDIAN REMOVED	CONCRETE BARRIER REMOVED	GUTTER REMOVED	GUARDRAIL REMOVED	GUARDRAIL REMOVED BARRIER DESIGN	FENCE REMOVED	CATCH BASIN OR INLET REMOVED	PIPE REMOVED 24" & UNDER	GUARDRAIL TYPE 5	GUARDRAIL TYPE 5 WITH DOUBLE RAILS	GUARDRAIL BARRIER DESIGN TYPE 5	BRIDGE TERMINAL ASSEMBLY TYPE 1	BRIDGE TERMINAL ASSEMBLY TYPE 2	BRIDGE TERM ASSEM TYPE1 BARRIER DESIGN	ANCHOR ASSEMBLY, TYPE E-98	ANCHOR ASSEMBLY, TYPE T	IMPACT ATTENUATOR TYPE 2-98	6" CONCRETE WALK	CURB RAMP	CURB, TYPE 6	4" CONCRETE TRAFFIC ISLAND	CONCRETE MEDIAN	CONCRETE BARRIER TYPE B1	CONCRETE BARRIER TYPE D1	CONCRETE BARRIER TYPE B, REINFORCED	CONCRETE BARRIER TYPE D	PRESSURE RELIEF JOINT TYPE A	
				LIN. FT.	SQ. YD.	EACH	SQ. FT.	SQ.YD	LIN.FT.	SQ.YD	LIN. FT.	LF	LIN. FT.	EACH	LIN. FT.	LIN. FT.	LIN. FT.	LF	EACH		EACH	EACH	EACH	EACH	SQ. FT.	EACH	LIN. FT.	SY	SY	LIN. FT.		LIN. FT.		LF	
35	1-R	66+96.52 TO 69+31.45 S.R.315	RT	233																														
35	2-R	66+96.52 TO 70+12.55 S.R.315	RT								316																							
35	3-R	68+95.12 S.R.315	RT											1																				
37	4-R	53+19.79 TO 54+18.56 CANNON DR.	LT				594																											
37	5-R	53+19.79 TO 54+18.56 CANNON DR.	LT	99																														
37	6-R	53+25.00 CANNON DR.	LT											1																				
47,48	7-R	67+02.45 TO 74+07.64 S.R.315	LT								700																							
47,48,49	8-R	66+91.04 TO 78+55.17 S.R.315	LT	1165																														
47	9-R	70+50.88 S.R.315	LT											1																				
48	10-R	72+01.68 S.R.315	LT											1																				
48	11-R	73+75.16 S.R.315	LT											1																				
48	12-R	74+85.37 S.R.315	LT											1																				
51	13-R	90+40.00 TO 93+68.00 RAMP B	LT&RT			100																												
52	14-R	66+50.00 TO 69+89.00 CANNON DR.	LT				2034																											
52	15-R	66+50.00 TO 69+89.00 CANNON DR.	LT	339																														
53	16-R	69+00.00 CANNON DR.	LT											1																				
53	17-R	69+00.00 CANNON DR.	LT											1	30																			
49,50	18-R	81+21.79 TO 82+23.79 S.R.315	℄						102																									
49	19-R	80+00.00 TO 83+51.18 RAMP B	LT&RT										353																					
50	20-R	85+18.51 TO 86+18.90 RAMP B	LT&RT										120																					
50	21-R	83+50 TO 85+47 RAMP B	RT		630																													
47	22-R	67+96.00 S.R.315	LT											1	11																			
47	23-R	68+96.00 S.R.315	℄											1																				
47	24-R	70+46.00 S.R.315	℄											1																				
48	25-R	71+96.00 S.R.315	℄											1																				
48	26-R	73+71.00 S.R.315	℄											1																				
77	27-R	120+18 BIKEPATH	LT							4																								
35	1-GR	69+00.47 TO 70+12.55 S.R.315	RT													112.5					1													
36,37	3-GR	74+38.26 TO 78+23.39 RAMP A	RT													337.5	37.50			1			1											
36,37	4-GR	74+34.53 TO 78+22.03 RAMP A	LT													337.5	37.50			1			1											
47,48,49	5-GR	67+02.45 S.R.315 TO 80+50.47 RAMP B	LT													1312.50	25																	
50	6-GR	85+47.22 TO 86+74.97 RAMP B	RT													100.00			1	1														
50	7-GR	85+77.41 TO 86+86.92 RAMP B	LT													112.50				1			1											
51,52	8-GR	90+02.07 TO 92+50.73 RAMP B	RT													206.25			1			1												
51,52	9-GR	89+92.57 TO 92+51.60 RAMP B	LT													206.25			1			1												
35	1-C	69+02.60 TO 69+31.45 S.R.315	RT																							29								
36	2-C	74+40.26 TO 75+09.75 RAMP A	RT																							70								
47,48,49	3-C	66+91.39 S.R.315 TO 80+48.47 RAMP B	LT																							1350								
49	4-C	78+46.94 TO 79+50.00 RAMP B	RT																							103								
49	5-C	78+48.89 TO 78+65.18 S.R.315	LT																							17								
37	1-SW	80+26.83 RAMP A LT. TO 54+29 CANNON DR.	LT																						153	1	38								
37	2-SW	80+46.03 RAMP A RT. TO 53+19.79 CANNON DR.	LT																						185	1	39								
52	3-SW	94+22.41 RAMP B RT. TO 66+50 CANNON DR.	LT																						624	2	95								
52,53	4-SW	67+79.13 TO 69+89 CANNON DR.	LT																						1356	1	226								
36	1-B	74+11.53 TO 74+36.53 RAMP A	LT																														25	
36	2-B	74+15.26 TO 74+40.26 RAMP A	RT																														25	
49	3-B	80+48.47 TO 81+47.00 RAMP B	LT																												100			
50,51	4-B	86+84.77 TO 87+11.04 RAMP B	LT																														27	
50	5-B	86+72.80 TO 86+96.63 RAMP B	RT																														22	
51	6-B	89+69.67 TO 89+94.67 RAMP B	LT																														25	
51	7-B	89+79.81 TO 90+04.17 RAMP B	RT																														24	
49,50	8-B	81+21.79 TO 82+23.79 S.R.315	℄																											92				
47,48	9-B	66+84.29 TO 74+24.00 S.R.315	℄					330				737						18.75			1									605		25		
35	10-B	68+92.16 TO 69+02.60 S.R.315	RT																														10	
35	11-B	68+56.65 TO 69+60.80 RAMP A	LT																					1									80	
36	1-PJ	74+41.28 RAMP A	LT&RT																															29
50	2-PJ	86+80.23 RAMP B	LT&RT																															30
51	3-PJ	89+99.49 RAMP B	LT&RT																															27
49	1-M	12+88.00 TO 12+96.50 O.R.R.	℄					10																				10						
49	1-IS	78+28.89 TO 78+48.89 S.R.315	LT																								24							
		TOTAL TO SHEET NO. 25 AND NO.27		1836	630	100	2628	340	102	4	1016	737	473	13	41	2725	100	18.75	3	4	2	2	3	1	2318	5	1967	24	10	697	100	25	238	86	

SUBSUM1 06-11-02

SUB-SUMMARY

FRA-315-3.04

SHEET NO.	REF. NO.	STATION TO STATION	SIDE	603			604	605								601			660	670		
					4" CONDUIT TYPE F	6" CONDUIT TYPE B	6" CONDUIT TYPE F	PRECAST REINFORCED CONCRETE OUTLET	4" SHALLOW PIPE UNDERDRAIN 707.31 OR 707.41	6" SHALLOW PIPE UNDERDRAIN 707.31 OR 707.41	6" UNCLASS. PIPE UNDERDRAIN 707.31 OR 707.41	BENDS AND BRANCHES						ROCK CHANNEL PROTECTION TYPE C W/FILTER	CONCRETE SLOPE PROTECTION		SODDING REINFORCED	DITCH EROSION PROTECTION	SLOPE EROSION PROTECTION
												4"x60° BEND	6"x60° BEND	6"x90° BEND	6" TEE	6" WYE	6" CROSS					
					LIN. FT.	LIN. FT.	LIN. FT.	EACH	LIN. FT.	LIN. FT.	LIN. FT.	EACH	EACH	EACH	EACH	EACH	EACH	C.Y.	S.Y.		S.Y.	S.Y.	S.Y.
36	1-UD	74+20 TO 74+66 RAMP A	RT			10				36												
36	2-UD	74+43.4 TO 74+46.9 RAMP A	LT/RT							28					2							
36	3-UD	74+17 TO 74+97 RAMP A	LT/RT			28				80				1								
36,37	4-UD	74+29 TO 80+36.43 RAMP A	RT				20	1		510				1								
36,37	5-UD	74+29 TO 80+09.69 RAMP A	LT				20	1		481				1								
35	6-UD	68+75.95 TO 68+85.00 RAMP A	LT				10						1									
47	7-UD	67+00 TO 70+52.34 S.R.315	LT				10			344												
47	8-UD	70+41 TO 70+52.34 S.R.315	LT				15						1									
47,48	9-UD	70+57.43 TO 72+01.29 S.R.315	LT				10			132												
48	10-UD	71+91.74 TO 72+01.29 S.R.315	LT				17						1									
48	11-UD	72+06.40 TO 73+73.51 S.R.315	LT				10			154												
48	12-UD	73+65.22 TO 73+73.51 S.R.315	LT				18						1									
48	13-UD	73+78.67 TO 74+86.94 S.R.315	LT				10			96												
48	14-UD	74+65 TO 74+86.94 S.R.315	LT				30						1									
48	15-UD	74+86.94 TO 75+46.21 S.R.315	LT				10			49												
48,49	16-UD	75+51.26 S.R.315 TO 80+41 RAMP B	LT				20			467												
49,50	17-UD	78+55 TO 82+03.67 RAMP B	RT				12			341				1								
49,50	18-UD	80+47.75 TO 85+69.86 RAMP B	LT/RT			35		1		530				1	1		1					
50	19-UD	82+12.46 TO 85+69.86 RAMP B	RT				17			347												
50,51	20-UD	85+69.86 TO 87+05.15 RAMP B	LT							119	20											
50	21-UD	85+69.86 TO 86+92.07 RAMP B	RT							113												
51,52	22-UD	89+76 TO 93+81.16 RAMP B	LT				10	1		404				1								
51,52	23-UD	89+85 TO 94+13 RAMP B	RT				16	1		440					1							
52,53	24-UD	67+80.15 TO 69+00 CANNON DR.	LT		10				114													
53	25-UD	69+00 TO 69+84.31 CANNON DR.	LT		10				75													
53	26-UD	68+90 TO 69+00 CANNON DR.	LT		12							1										
53	27-UD	69+00 TO 69+10 CANNON DR.	LT		12							1										
50	28-UD	86+54.44 TO 86+76.56 RAMP B	LT/RT							33						2						
51	29-UD	90+04.20 TO 90+13.49 RAMP B	LT/RT							29						2						
36,37	1-EC	75+75 TO 76+60 RAMP A	RT																		71	
36,37	2-EC	75+79 TO 77+42 RAMP A	LT																		136	
47	3-EC	69+50 TO 71+00 RAMP B	LT																			390
48	4-EC	72+02 TO 73+71.2 S.R.315	LT																		141	
48	5-EC	73+74.7 TO 74+85.7 S.R.315	LT																		94	
48	6-EC	74+88.2 TO 75+50 S.R.315	LT																		51	
48,49	7-EC	75+52.5 S.R.315 TO 78+54 RAMP B	LT																		246	
49	8-EC	78+68 TO 80+50 RAMP B	LT																		151	
35	9-EC	66+46 TO 66+71 RAMP A	RT															39				
36	10-EC	73+91 TO 74+13 RAMP A	LT/RT														60					
51	11-EC	89+43 TO 89+79 RAMP B	LT/RT														116					
50	12-EC	85+77 RAMP B	LT																16			
50	13-EC	86+82.5 RAMP B	LT																18			
50	14-EC	86+69.5 RAMP B	RT																18			
51	15-EC	87+11 TO 87+35 RAMP B	LT/RT														82					
TOTAL TO SHEET NO. 27					44	73	255	5	189	4733	20						258	39		49	890	390

CALCULATED / CHECKED

SUB-SUMMARY

FRA-315-3.04

SUBSUM2 08-07-02

PAVEMENT AREAS (INCLUDING SHOULDERS)
RAMP A

STA 66+99.70 TO STA 68+82.74
COMPUTER AREA = 698.1 S.Y.

SR 315 SHOULDER
STA 68+92.16 TO STA 69+31.45 RT
39.3' X 11' AVE. / 9 S.F/S.Y. = 48.0 S.Y.

STA 68+82.74 TO STA 69+24.11
COMPUTER AREA = 147.7 S.Y.

STA 74+39.27 TO STA 75+09.75
71.23' AVE X 28' / 9 S.F./S.Y.= 221.6 S.Y.

STA. 75+09.75 TO STA 75+49.41
36.66 L.F. X 26' / 9 S.F/S.Y. = 105.9 S.Y.

STA 75+49.41 TO STA 76+49.41
1/2 (26.00' + 46.00') X 100 L.F. / 9 S.F/S.Y. = 400.0 S.Y.

STA 76+49.41 TO 80+00.70
46.00' X 351.29 L.F. / 9 S.F./S.Y. = 53.3 S.Y.
1795.5 S.Y.

STA 80+00.70 TO STA 80+47.39
COMPUTER AREA = 272.3 S.Y.
3742.4 S.Y.

RAMP B

STA 66+91.39 SR 315 TO STA 78+26.94 RAMP B
COMPUTER AREA = 3196.3 S.Y.

SR 315 SHOULDER
STA 78+28.89 TO STA 78+65.18 LT
10' X 36.29' / 9 S.F/S.Y. = 40.3 S.Y.

STA 78+26.94 TO STA 79+38.43
28.00' X 111.96' AVE / 9 S.F./S.Y. = 348.3 S.Y.

STA 79+38.43 TO STA 80+86.63
28.00' X 148.20' / 9 S.F./S.Y. = 461.1S.Y.

STA 80+86.63 TO STA 83+63.31
28.00' X 272.33' AVE / 9 S.F./S.Y. = 847.2 S.Y.

STA 83+63.31 TO STA 85+73.84
COMPUTER AREA = 690.5 S.Y.

STA 85+73.84 TO STA 86+82.54
COMPUTER AREA = 294.8 S.Y.

STA 89+97.38 TO STA 91+18.92
26' X 119.18 L.F. AVE / 9 S.F./S.Y. = 344.3 S.Y.

STA 91+18.92 TO STA 93+19.62
26' X 204.38' AVE / 9 S.F./S.Y. = 590.4 S.Y.

STA 93+19.62 TO STA 94+34.56
COMPUTER AREA = 582.8 S.Y.
7396.0 S.Y.

CANNON DRIVE

STA 68+07.53 TO STA 68+47.53
1/2 (16' + 12') X 40 L.F. / 9 S.F./S.Y. = 62.2 S.Y.

STA 68+47.53 TO STA 69+39.00
12' X 91.47 L.F. / 9 S.F./S.Y. = 122.0 S.Y.

STA 69+39.00 TO STA 69+89.00
1/2 (12') X 50 L.F. / 9 S.F./S.Y. = 33.3 S.Y.
217.5 S.Y.

BIKE PATH

STA 99+99.46 TO STA 120+00
10' X 2000.54' / 9 S.F./S.Y. = 2222.8 S.Y.

STA 120+00 TO STA 120+25.00
COMPUTER AREA = 23.3 S.Y.
2246.1 S.Y.

EDGE COURSE FOR ITEM 304
RAMP A

STA 74+40.26 TO STA 75+09.75 RT = 69.5 L.F.
STA 75+09.75 TO STA 75+49.41 RT = 39.7 L.F.
STA 75+49.41 TO STA 76+49.41 RT = 102.0 L.F.
STA 76+49.41 TO STA 80+36.81 RT = 388.0 L.F.
STA 74+36.22 TO STA 80+17.62 LT = 582.4 L.F.
1268.5 L.F.

RAMP B

STA 66+91.39 SR 315 TO STA 78+26.94 RAMP B LT = 1135.6 L.F.
SR 315 SHOULDER
STA 78+48.89 TO STA 78+65.18 LT = 16.7 L.F.
STA 78+26.94 TO STA 80+48.47 LT = 221.5 L.F.
STA 78+46.94 TO STA 83+00.00 RT = 473.1 L.F.
STA 85+73.84 TO STA 86+82.54 LT = 113.4 L.F.
STA 85+50.00 TO STA 86+82.54 RT = 114.3 L.F.
STA 89+97.38 TO STA 93+92.51 LT = 400.3 L.F.
STA 89+97.38 TO STA 94+23.64 RT = 438.3 L.F.
2913.2 L.F.

AREA UNDER CONCRETE BARRIER
RAMP A

STA 86+82.54 TO STA 87+07.54 LT & RT = 25' X 2' = 50.0 L.F.

RAMP B

STA 80+48.47 TO STA 81+47.00 LT = 100.0 L.F.
STA 86+82.54 TO STA 87+07.54 LT & RT = 25' X 2' = 50.0 L.F.
STA 89+72.38 TO STA 89+97.38 LT & RT = 25' X 2' = 50.0 L.F.
200.0 L.F.

BIKE PATH

STA 99+99.46 TO STA 120+25.00 = 2025..54 L.F. X 2 = 4051.1 L.F.

APPROACH SLABS
SR 315

STA 66+67.55 TO STA 66+91.39 LT.
COMPUTER AREA = 25.5 S.Y.

STA 66+74.50 TO STA 66+99.70 RT.
COMPUTER AREA = 22.4 S.Y.

RAMP A

STA 69+24.11 TO STA 69+49.11
COMPUTER AREA = 83.5 S.Y.

STA 74+14.27 TO STA 74+39.27
30' X 25' / 9 S.F./S.Y. = 83.3 S.Y.

RAMP B

STA 86+82.54 TO STA 87+07.54
30' X 25' / 9 S.F./S.Y. = 83.3 S.Y.

STA 89+72.38 TO STA 89+97.38
30' X 25' / 9 S.F./S.Y. = 83.3 S.Y.
381.3 S.Y.

ITEM 446 ASPHALT CONCRETE SURFACE COURSE, TYPE 1, PG64–22

(3742.4 S.Y. + 7396.0 S.Y. + 217.5 S.Y.) X 1.25" / 36 "/YD = 394.3 C.Y.
(25.5 S.Y.+22.4 S.Y.) X 2" / 36 "/YD. = 2.7 C.Y.
2246.1 S.Y. X 2.5" / 36 "/YD = 156.0 C.Y.
553.0 C.Y. = **553 C.Y.**

ITEM 446 ASPHALT CONCRETE INTERMEDIATE COURSE, TYPE 2, PG 64–22

(3742.4 S.Y. + 7396.0 S.Y. + 217.5 S.Y.) X 1.75" /36 "/YD. = 552.0 C.Y. = **552 C.Y.**

ITEM 301 BITUMINOUS AGGREGATE BASE, PG 64–22
RAMP A

698.1 S.Y. – [(174.37' X 1.5') / 9 S.F./S.Y] (RETAIN. WALL) = 669.0 S.Y.
669.0 S.Y. X 5.5" / 36 "/YD. = 102.2 C.Y.

RAMP B

3196.3 S.Y. X 5.5" / 36 "/YD. = 488.3 C.Y.

S.R.315

40.3 S.Y. X 5.5" / 36 "/YD. = 6.2 C.Y.
596.7 C.Y. = **597 C.Y.**

ITEM 305 9" CONCRETE BASE

3742.4 S.Y. + 7396.0 S.Y. + 217.5 S.Y. = 11355.9 S.Y.
DEDUCT FOR RAMP A RETAINING WALL
174.37 L.F. X 1.5' / 9 S.F./S.Y. = – 29.1 S.Y.
11326.8 S.Y. = **11327 S.Y.**

TOTAL TO SHEET NO.27

ITEM 304 AGGREGATE BASE

(3742.4 S.Y. + 7396.0 S.Y. + 217.5 S.Y.) X 6" / 36 "/YD. = 1892.7 C.Y.

381.3 S.Y. X 6" / 36 "/YD. = 63.6 C.Y.

2246.1 S.Y. X 6" / 36 "/YD. = 374.4 C.Y.

ADD EDGE COURSE

(1181.6 + 2913.2) X 1.5' X 0.5' / 27 C.F./C.Y. = 113.7 C.Y.

CONCRETE BARRIER

338 L.F. X 1.5' X 1.08' / 27 C.F./C.Y. = 20.3 C.Y.

BIKEPATH

4051.1 L.F. X 0.5' X 0.5' / 27 C.F./C.Y. = 37.5 C.Y.

APPROACH SLABS

381.3 S.Y. X 6" / 36"/YD. = 63.6 C.Y.

2565.8 C.Y. = **2566 C.Y.**

ITEM 407 TACK COAT, 702.13

(3742.4 S.Y. + 7396.0 S.Y. + 217.5 S.Y. + 25.5 S.Y. + 22.4 S.Y.) X .075 GAL./S.Y. = 855.3 GAL. = **856 GAL.**

ITEM 407 TACK COAT FOR INTERMEDIATE COURSE

(3742.4 S.Y. + 7396.0 S.Y. + 217.5 S.Y.) X .04 GAL./S.Y. = 454.3 GAL. = **455 GAL.**

ITEM 408 BITUMINOUS PRIME COAT

2246.1 S.Y. X 0.4 GAL./S.Y. = 898.4 GAL. = **898 GAL.**

ITEM 611 REINFORCED CONCRETE APPROACH SLAB (t=15")

381.3 S.Y. = **381 S.Y.**

ITEM 203 SUBGRADE COMPACTION
PAVEMENT

3742.4 S.Y. + 7396.0 S.Y. + 217.5 S.Y. + 2246.1 S.Y. + 381.3 S.Y. = 13983.3 S.Y.

ADD FOR CURB 1967 L.F. X 0.5' / 9 S.F./S.Y. = 109.3 S.Y.

14092.6 S.Y. = **14093 S.Y.**

ITEM 203 PROOF ROLLIMG

14,093 S.Y. x 1 Hr./ 3000 S.Y. = 4.7 Hrs = **5 Hrs**

TOTAL TO SHEET NO. 25 AND NO. 27

3453 CALC 06-11-02

PROJECT DATA	
TOTAL AREA (RIGHT-OF-WAY)	18 AC
AREA TO UNDERGO EXCAVATION EMB OR GRADING	0.80 AC
RUNOFF COEFFICIENT FOR PRE-CONSTRUCTION SITE	.4 – .9
RUNOFF COEFFICIENT FOR POST CONSTRUCTION SITE	.5 – .9
SOIL DATA	SEE SOIL PROFILE
IMMEDIATE RECEIVING WATERS	OLENTANGY RIVER
SUBSEQUENT RECEIVING WATERS	SCIOTA RIVER

USGS QUADRANTS:

SOUTHEAST COLUMBUS, OHIO
SOUTHWEST COLUMBUS, OHIO

LONGITUDE: 82° 59'56"
LATITUDE: 39° 59'52"

PROJECT DESCRIPTION

CONSTRUCTION OF AN OFF RAMP AND AN ON RAMP ON S.R. 315 JUST NORTH OF KING AVENUE IN COLUMBUS, OHIO, INCLUDING CONSTRUCTION OF STRUCTURES OVER THE OLENTANGY RIVER FOR BOTH RAMPS AND WIDENING OF A PORTION OF THE S.R. 315 STRUCTURE OVER THE OLENTANGY RIVER. THE LENGTH OF WORK IS 0.36 MILES FOR THE OFF RAMP AND 0.52 MILES FOR THE ON RAMP.

ITEM 877–TEMPORARY SEDIMENT BASINS AND SEDIMENT DAMS

THE SEDIMENT BASIN QUANTITIES LISTED ON THIS STORM WATER POLLUTION PREVENTION PLAN ARE THE STORAGE VOLUMES REQUIRED FOR THE SEDIMENT BASIN. THE PAY QUANTITY FOR EACH BASIN SHALL BE DETERMINED AS THE ACTUAL AMOUNT OF EXCAVATION OR EMBANKMENT REQUIRED TO PROVIDE THAT STORAGE VOLUME

STORM WATER POLLUTION PREVENTION PLAN

THE CONDITIONS OF THE NPDES CONSTRUCTION STORM WATER GENERAL PERMIT (SEE PROPOSAL) SHALL BE MET DURING ALL STAGES OF CONSTRUCTION. THE LOCATION AND TIMING OF ALL EROSION AND SEDIMENT CONTROL ITEMS SHALL BE FIELD ADJUSTED TO PREVENT SIGNIFICANT IMPACTS ON RECEIVING WATERS. IMPLEMENTATION OF THIS STORM WATER POLLUTION PREVENTION PLAN SHALL CONTINUE THROUGHOUT THE DURATION OF THE PROJECT OR UNTIL SUCH TIME THAT THE UPSLOPE DISTURBED AREAS ARE STABILIZED.

INSTALLATION OF SEDIMENT BASINS/DAMS, PERIMETER FILTER FABRIC FENCE, AND DITCH CHECKS SHALL BE CONCURRENT WITH CLEARING AND GRUBBING AND/OR GRADING OPERATIONS.

ALL REASONABLE ATTEMPTS SHOULD BE MADE TO MINIMIZE THE TOTAL AREA OF DISTURBED LAND.

AREAS TO REMAIN DORMANT FOR MORE THAN 45 DAYS SHOULD BE IMMEDIATELY STABILIZED WITH TEMPORARY SEEDING AND MULCHING, EROSION CONTROL MATTING OR OTHER APPROPRIATE EROSION CONTROL MEASURES.

ADDITIONAL QUANTITIES OF TEMPORARY SOIL EROSION AND SEDIMENT CONTROL ITEMS ARE GIVEN IN THE GENERAL NOTES.

ESTIMATED QUANTITIES

	LOCATION	SIDE	877 TEMPORARY PERIMETER FILTER FABRIC FENCE LIN. FT.	877 TEMP. DITCH CHECK FILTER FABRIC FENCE LIN. FT.		877 TEMPORARY INLET PROTECTION FILTER FABRIC FENCE LIN. FT.			877 TEMPORARY SEDIMENT BASINS AND DAMS CU. YD.
RAMP A	66+50 TO 70+00	RT/LT	350						
RAMP A	74+00 TO 80+00	RT	550						
RAMP A	74+00 TO 80+00	LT	600						
RAMP B	67+00 TO 77+00	LT	1000						
BIKE PATH	100+00 TO 110+00	LT	1600						
	AT DITCH CHECKS			35					
	AT INLETS					200			
	SEDIMENT BASINS								585
	TOTAL TO SHEET NO. 26		4100	35		200			585

LEGEND

- TEMP. INLET PROTECTION FILTER FABRIC FENCE
- TEMP. DITCH CHECK (FILTER FABRIC FENCE)
- FF — TEMP. PERIMETER FILTER FABRIC FENCE
- MANHOLE
- SEDIMENT BASIN

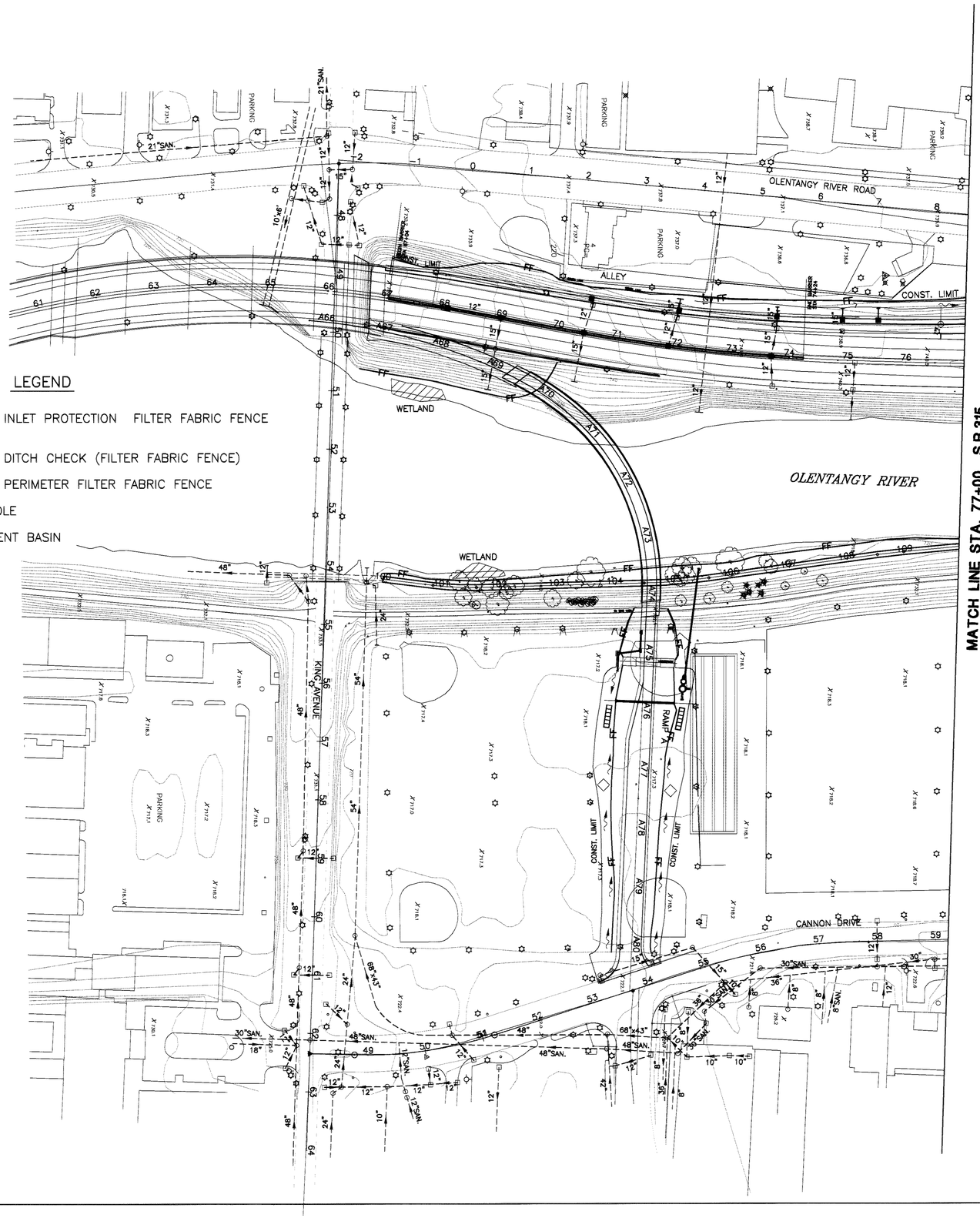

CALCULATED MJT 1/00
CHECKED WGY 1/00

HORIZONTAL SCALE IN FEET
0 50 100 200

STORM WATER POLLUTION PREVENTION PLAN

FRA-315-3.04

33
238

3453SWPPP1 06-19-02

ESTIMATED QUANTITIES									
			877						
	LOCATION	SIDE	TEMPORARY PERIMETER FILTER FABRIC FENCE	TEMP. DITCH CHECK FILTER FABRIC FENCE		TEMPORARY INLET PROTECTION FILTER FABRIC FENCE			TEMPORARY SEDIMENT BASINS AND DAMS
			LIN. FT.	LIN. FT.		LIN. FT.			CU. YD.
RAMP B	77+00 TO 81+50	LT	450						
RAMP B	85+50 TO 87+25	RT/LT	350						
RAMP B	89+50 TO 94+00	RT	450						
RAMP B	89+50 TO 70+00 CANNON	LT	600						
BIKE PATH	110+00 TO 120+00	LT	1600						
	AT DITCH CHECKS			35					
	AT INLETS					200			
	SEDIMENT BASINS								585
	TOTAL TO SHEET NO. 26		3450	35		200			585

CALCULATED MJT 1/00
CHECKED WGY 1/00

0 50 100 200
HORIZONTAL SCALE IN FEET

STORM WATER POLLUTION PREVENTION PLAN

FRA-315-3.04

33 A
238

345.3SWPPP2 05-28-02

BEGIN WORK
STA. A61+10.99

BEGIN PROJECT
STA.61+53.02
SLM 3.06
TE21-G020(422)

100' F/F CURB
9' 36' 5' 5' 36' 9'

HINGE, +22.88
PIER 14, +44.38
HINGE, +65.88
PIER 15, +52.38
PIER 16, +60.38
PIER 17, +68.38
PIER 18, +76.38

+10.99
50' RT.

+53.02
61' RT.

EX. 10'X6' BOX CULV.
EX. 12"STM
EX. 12"W
EX. 8"W
EX. 8"S
EX. 12"S
EX. 8"SAN
EX. 8"G
EX. 8"T
EX. 8"OHU
EX. 8"OHP
EX. 8"OHC
EX. 8"OHT
EX. 8"OHC
EX. 8"OHP
EX. 8"OHU
EX. 8"T
EX. 8"G
EX. 8"SAN
EX. 12"S
EX. 8"S
EX. 8"W
EX. 12"W
EX. 12"STM
WARNER CABLE
EX. R/W
EX. R/W
8' 12'
OLENTANGY RIVER
MATCH LINE STA. 66+00
SEE SHEET NO.35
S.R. 315 RT.
RAMP A
STA. 65+99.23
C.S. STA. 65+71.33 53' RT.
STA. A65+71.33 RAMP A

S.R. 315	RAMP A
P.I. STA. 61+56.61	P.I. STA. A67+24.42
△ = 43°-48'-46"	△ = 18°-12'-58"
Dc = 3°-30'	Dc = 6°-00'
Rc = 1637.02'	Rc = 954.93'
Lc = 951.79'	Lc = 303.60'
Ls = 300.00	Tc = 153.09'
Ts = 809.17'	SE = 0.060

NOTE : PROFILE OF S.R. 315 IS 1" ABOVE ORIGINAL PROFILE TO ACCOUNT FOR LATEX OVERLAY ON STRUCTURE.

FOR TYPICAL SECTIONS, SEE SHEET NO. 4 AND NO. 7
FOR PAVEMENT DETAILS, SEE SHEET NO. 44

P.V.I. STA. 65+75 (S.R. 315)
ELEV. 761.69
+0.4%
-3.00%

P.V.C. STA. 62+75
ELEV. 760.49
600' V.C.
NORMAL POOL
ELEV. 716.50

760 755 750 745 740 735 730

759.39 759.49 759.59 759.69 759.79 759.89 759.99 760.09 760.19 760.29 760.39 760.49 760.57 760.62 760.63 760.61 760.55 760.45 760.32 760.16 759.96 759.72 759.45 759.14 758.80

60 61 62 63 64 65 A66

HORIZONTAL SCALE IN FEET
0 10 20 40

CALCULATED MJT 1/00
CHECKED WGY 1/00

PLAN AND PROFILE S.R.315
STA. 60+00 TO STA. 66+00

FRA-315-3.04

34
238

3453APP1 MJT 07-18-2002

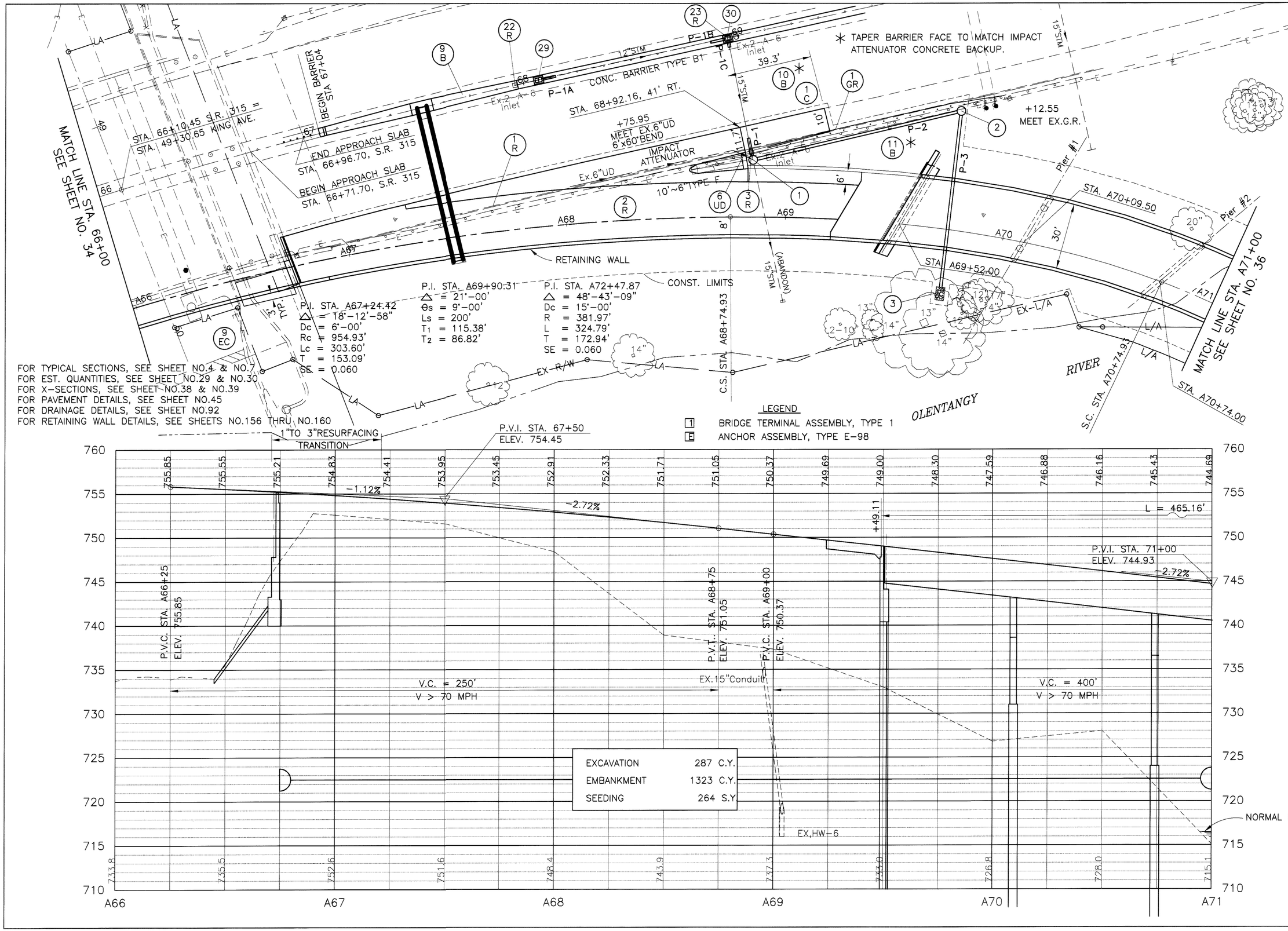

EXCAVATION	287 C.Y.
EMBANKMENT	1323 C.Y.
SEEDING	264 S.Y.

N

0 20 40
HORIZONTAL SCALE IN FEET

CALCULATED MJT 1/00
CHECKED WGY 1/00

PLAN AND PROFILE RAMP A
STA. A66+00 TO STA. A71+00

FRA-315-3.04

3453APP2 06-11-02

FOR TYPICAL SECTIONS, SEE SHEET NO.4
FOR EST. QUANTITIES, SEE SHEET NO.29 & NO.30
FOR X-SECTIONS, SEE SHEET NO.40 & NO.41
FOR PAVEMENT DETAILS, SEE SHEET NO.45 & NO.46
FOR BIKE PATH, SEE SHEETS NO.74 THRU NO.85
FOR CULVERT DETAILS, SEE SHEETS NO.90
FOR DRAINAGE DETAILS, SEE SHEETS NO.92 & NO.93
FOR PUMP STATION DETAILS, SEE SHEETS NO.96 THRU NO.99
FOR UNDERPASS DETAILS, SEE SHEETS NO.169 THRU NO.172

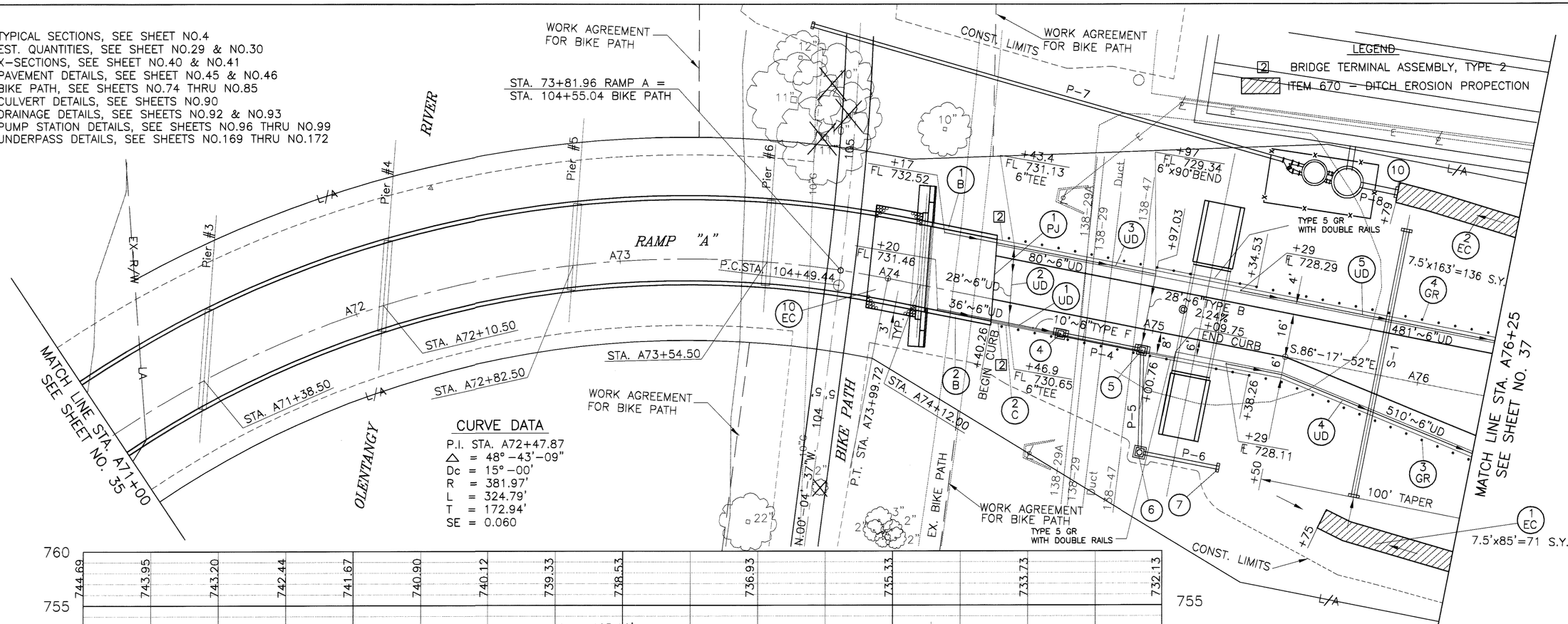

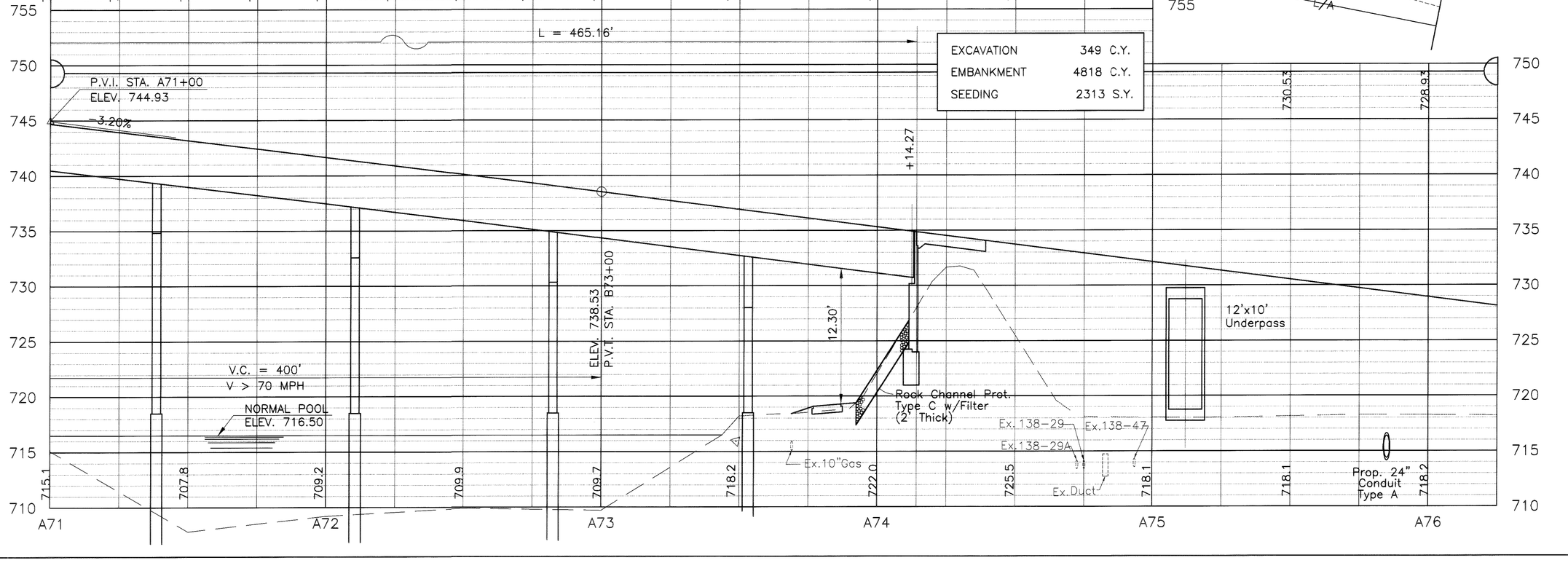

EXCAVATION	349 C.Y.
EMBANKMENT	4818 C.Y.
SEEDING	2313 S.Y.

CALCULATED MJT 1/00
CHECKED WGY 1/00

HORIZONTAL SCALE IN FEET

PLAN AND PROFILE RAMP A
STA. A71+00 TO STA. A76+25

FRA-315-3.04

3453APP3 08-07-02

FOR TYPICAL SECTIONS, SEE SHEET NO.4 & NO.7
FOR EST. QUANTITIES, SEE SHEET NO.29 & NO.30
FOR X-SECTIONS, SEE SHEETS NO.41 THRU NO.43
FOR PAVEMENT DETAILS, SEE SHEET NO.46
FOR DRAINAGE DETAILS, SEE SHEET NO.93
FOR CURB RAMP DETAILS, SEE SHEET NO.86

WORK AGREEMENT FOR PUMP STATION

STA. A80+00.70, 66' LT. RAMP "A"

SEE SHEET NO. 36
MATCH LINE STA. A76+25

2 EC 7.5'x163' = 136 S.Y.

CONST. LIMITS

L/A

+42

4 GR

5 UD

+22.03 END GR

481'~6"UD

RAMP "A"

A77 A78 S.86°-17'-52"E. A79 A80

4'
16'
20'
6'

+50

100' TAPER

3 GR

4 UD

510'~6"UD

+23.39 END GR

CONST. LIMITS

L/A

+60

1 EC 7.5'x85'=71 S.Y.

△ = 45°-03'-20"
R = 50'
T = 20.74'
L = 39.32'

FL 717.50

20'~6"TYPE F @ 4.20%

+30 6"x 90°BEND FL 718.34

+09.69 FL 718.92

1 SW

54+29

54+08.66

5 R

69°-46'-45"

END WORK STA. A80+47.39

20'~6"TYPE F @ 1.00%

+30 6"x 90°BEND FL 717.68

+36.43 FL 718.80

2 SW

53+29

FL 717.48

△ = 69°-46'-45"
R = 50'
T = 34.87'
L = 60.89'

STA. A80+19.89 70' RT. RAMP "A"

STA. A80+80.43 RAMP A = STA. 53+64.55 CANNON DR.

53+19.79 31' LT.

N.16°-31'-07"W.

4 R

11

6 R

10 R

EX.MH

30"SAN EX.MH

42"W

12"W

30"SAN

36"STM

10"STM

15"STM

8"STM

36"STM

8"STM

12"W

EX.MH

15"STM

R/W

25'

28'-W

8'

CANNON DR.

9th AVE.

68"x43"STM

48"SAN

60' F/F CURB

62' F/F CURB

20"W

48"STM

LA

LEGEND

T ANCHOR ASSEMBLY, TYPE T

ITEM 670 – DITCH EROSION PROTECTION

EXCAVATION	533 C.Y.
EMBANKMENT	4866 C.Y.
SEEDING	3371 S.Y.

V.C. = 250'
V = 41 MPH

-3.20%

P.V.C. STA. A77+50
ELEV. 724.13

P.V.I. STA. A78+75
ELEV. 720.13

+1.20%

P.V.T. STA. A80+00
ELEV. 721.63

+47.37 E/P CANNON DR.
ELEV. 722.22

+80.43 ℄ CANNON DR.
ELEV. 722.56

EX.ELEC. DUCT

EX.ELEC. DUCT (EXACT LOC. UNKNOWN)

EX.15"STM.

| | | |

Q:\OSU_RAMP\3453AXS1 03-21-001

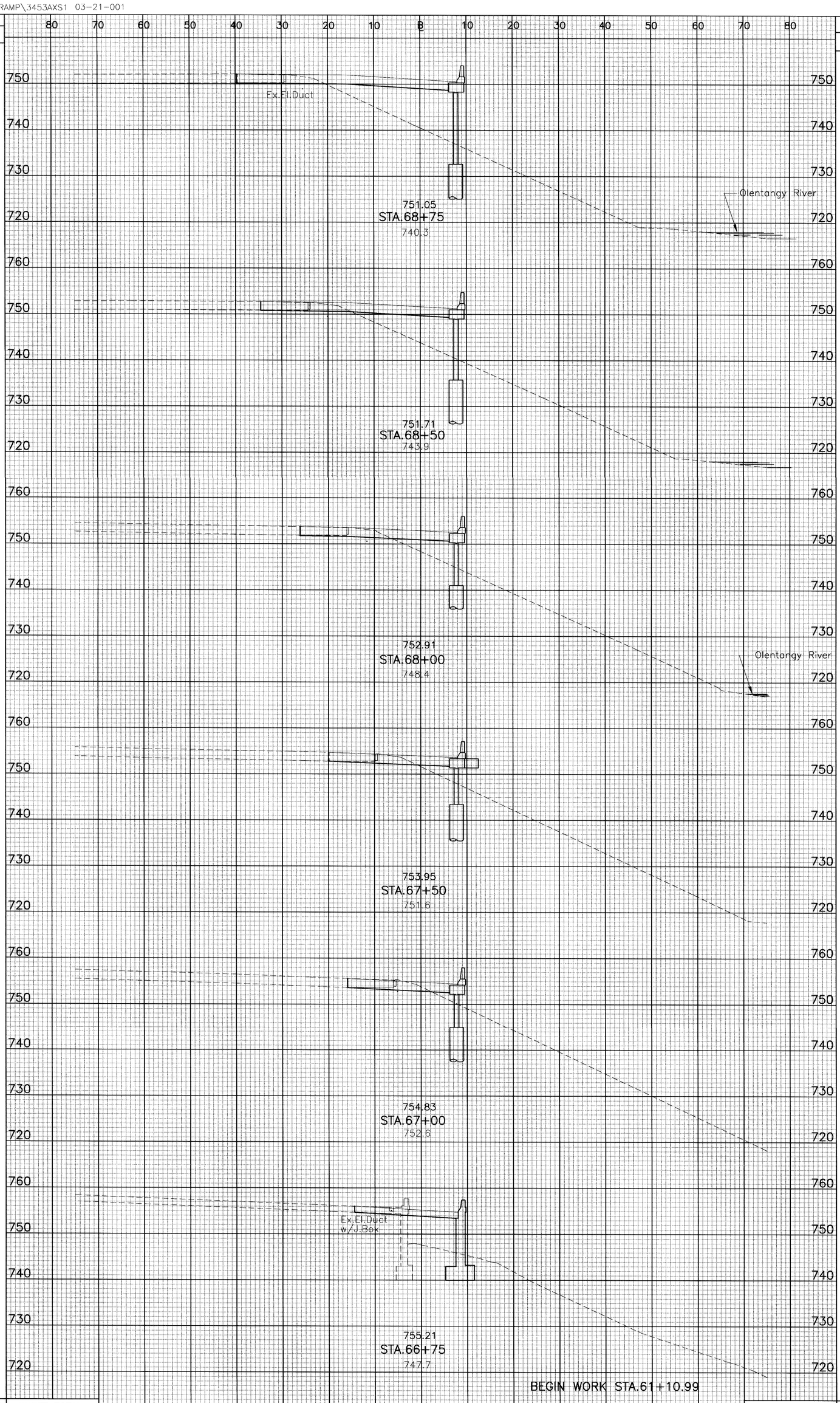

SEEDING END WIDTH	SEEDING SQ. YDS.	END AREA CUT	END AREA FILL	VOLUME CUT	VOLUME FILL
5		31	157		
	14			30	119
5		31	96		
	25			63	124
4		33	37		
	22			63	46
4		33	14		
	25			62	17
5		33	5		
	14			24	34
5		20	69		
	100	SHEET TOTAL		SHEET TOTAL	242 340

238 / 38

FRA-315-3.04

S.R.315 - RAMP A X-SECTIONS
STA. 66+75 TO STA. 68+75

CALCULATED GM 01/001
CHECKED WGY 1/001

Q:\OSU_RAMP\3453AXS2 06-11-02

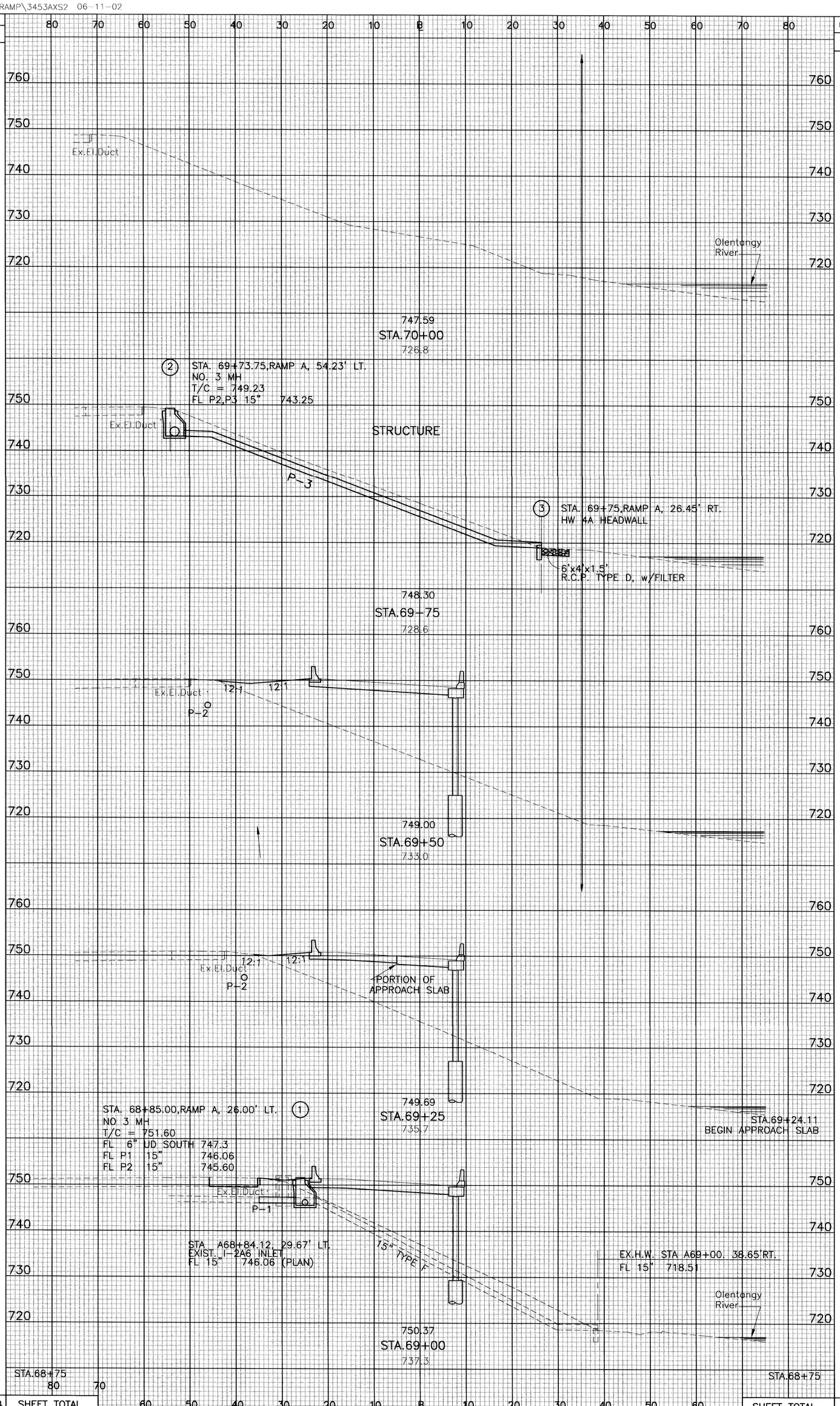

SEEDING END WIDTH	SEEDING SQ. YDS.	END AREA CUT	END AREA FILL	VOLUME CUT	VOLUME FILL
0		0	0		
	40			0	193
29		0	417		
	70			0	342
21					
	19	0	320		
				15	262
20					
	35	32	245		
				30	186
5		31	157		
	164 SHEET TOTAL		SHEET TOTAL	45	983

39 / 238	**FRA-315-3.04**	**S.R.315 - RAMP A X-SECTIONS** **STA. 69+00 TO STA. 70+00**

CALCULATED MJT 1/00
CHECKED WCY 1/00

Q:\OSU_RAMP\3453AXS3 08-07-02

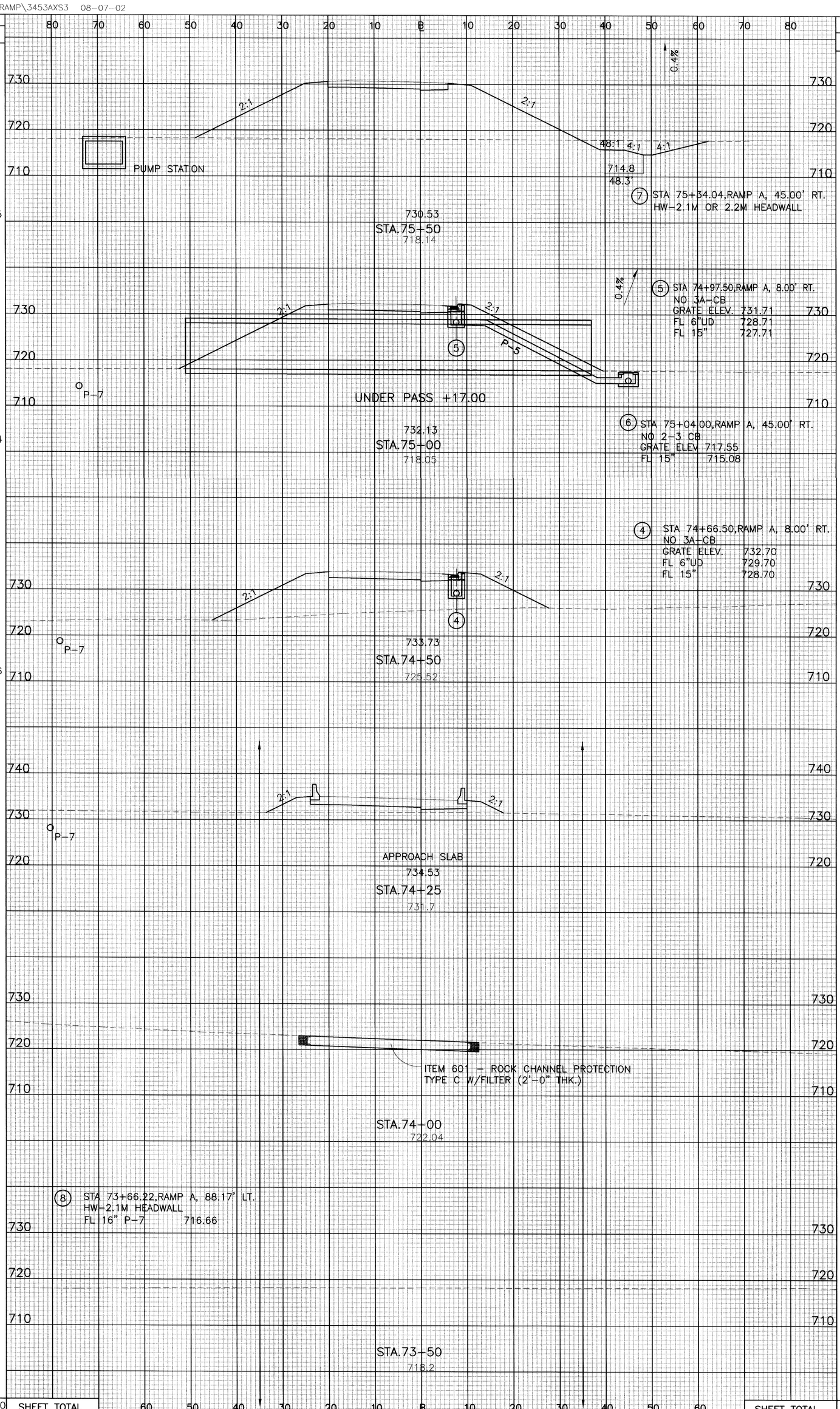

238 40

FRA-315-3.04

S.R.315 - RAMP A X-SECTIONS
STA. 73+50 TO STA. 75+50

CALCULATED GM 1/01
CHECKED WGY 1/01

Q:\OSU_RAMP\3453AXS4 06-19-02

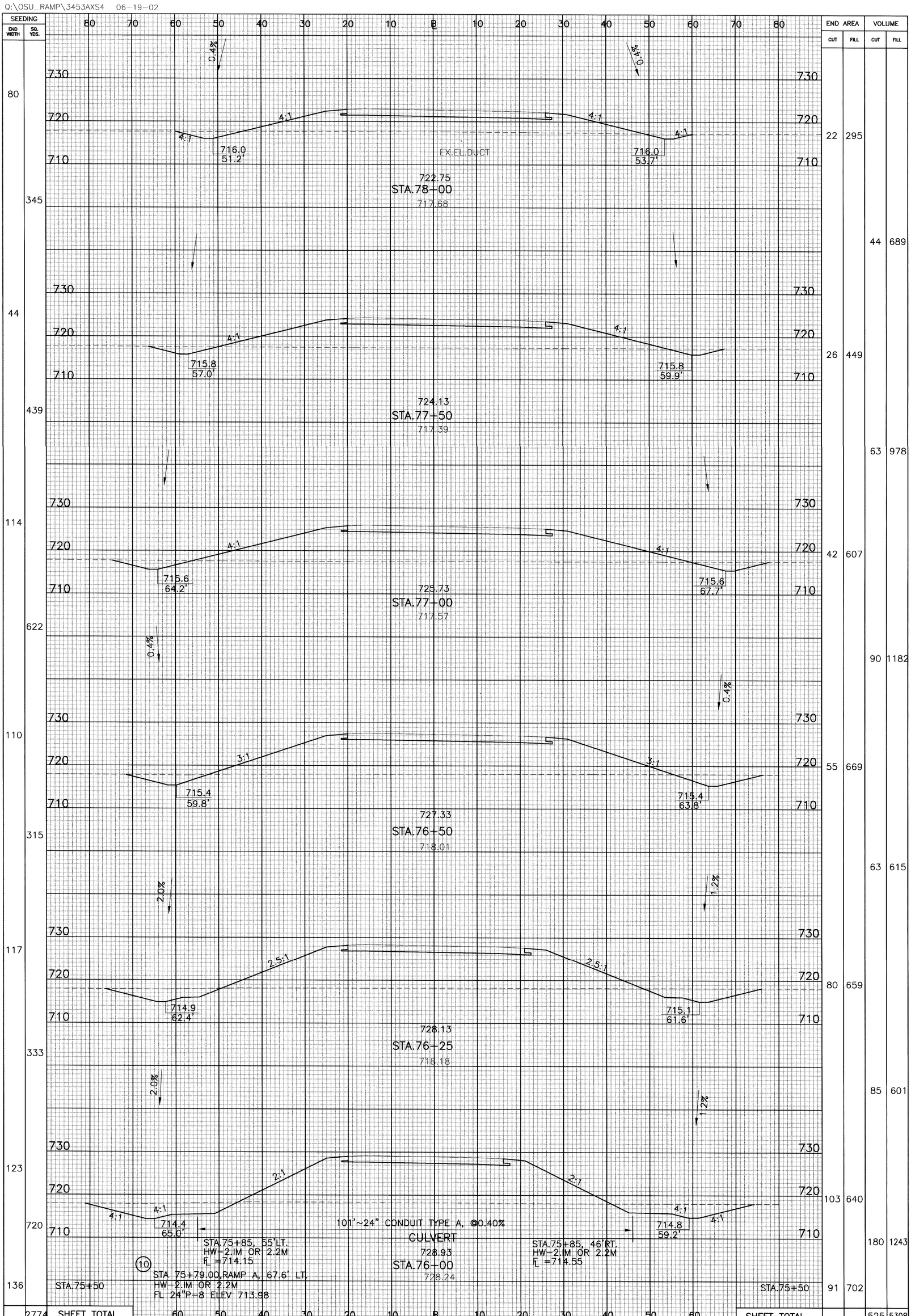

41
238

FRA-315-3.04

S.R.315 - RAMP A X-SECTIONS
STA. 76+00 TO STA. 78+00

CALCULATED CM 1/01
CHECKED WGY 1/01

Q:\OSU_RAMP\3453AXS5 03-14-01

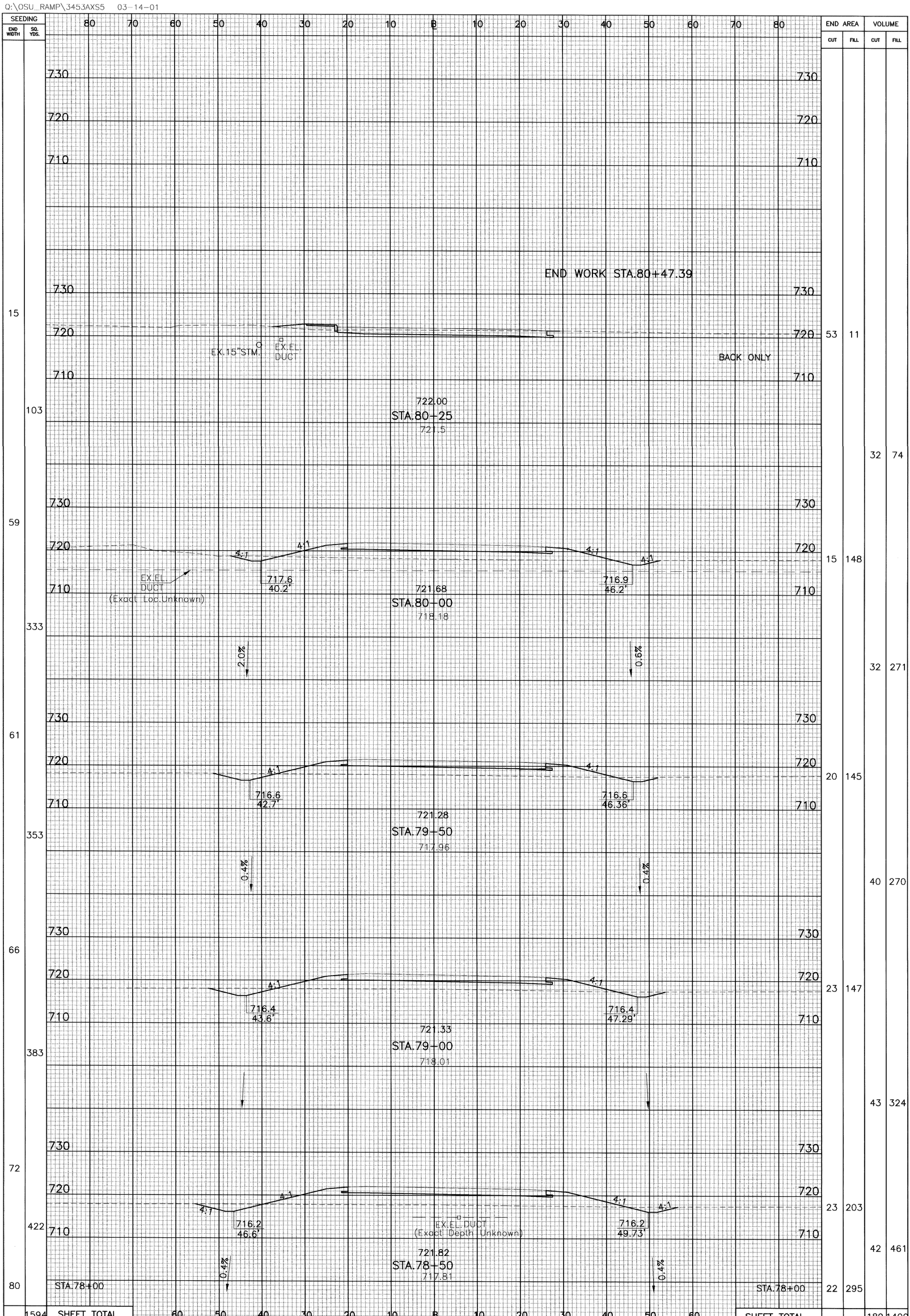

42
238

FRA-315-3.04

S.R.315 - RAMP A X-SECTIONS
STA. 78+50 TO STA. 80+25

CALCULATED GM 05/00
CHECKED WGY 1/00

Q:\OSU_RAMP\CANAXS_1 03-22-001

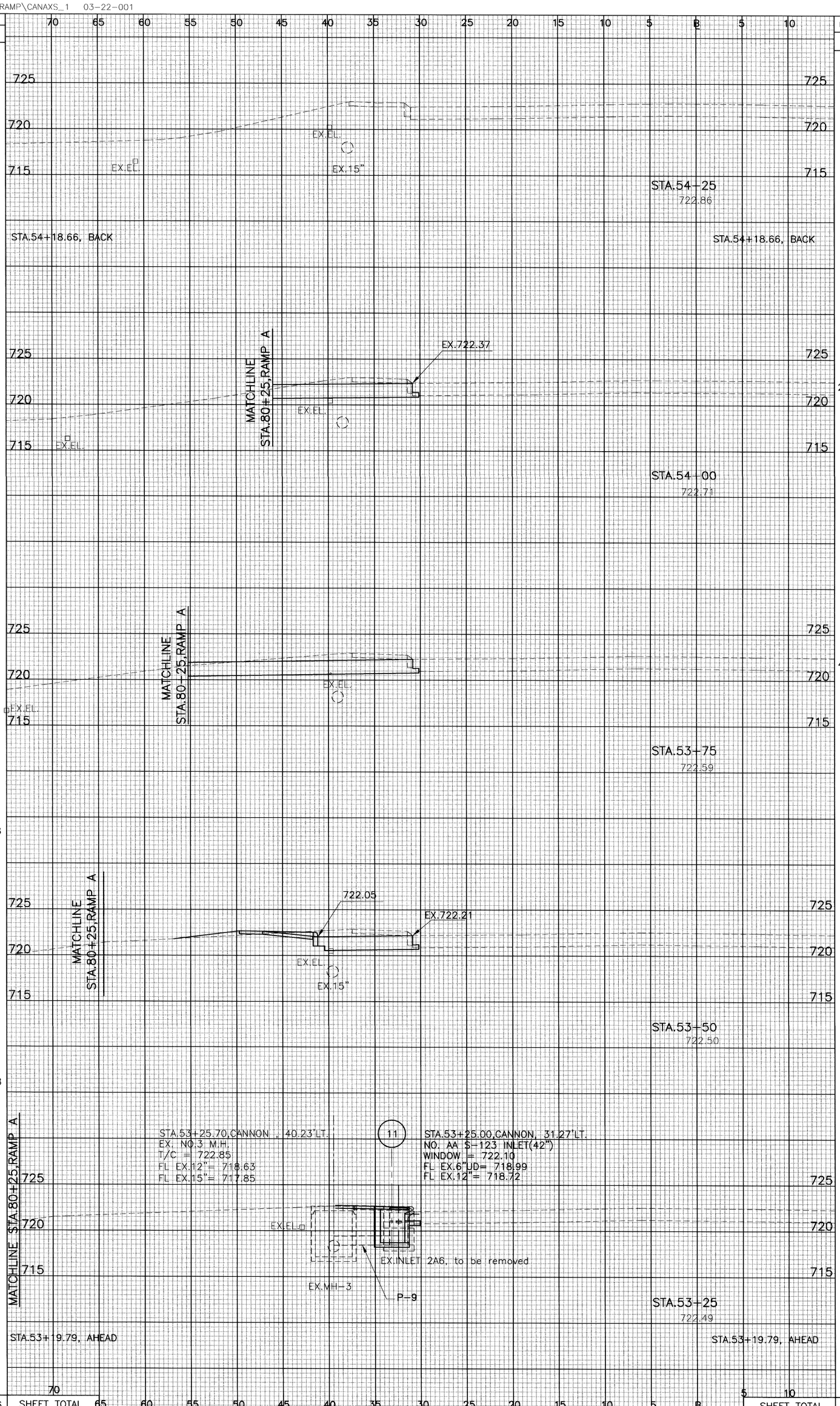

SEEDING END WIDTH	SEEDING SQ. YDS.	END AREA CUT	END AREA FILL	VOLUME CUT	VOLUME FILL
0	0	10	0	12	0
0	0	25	0	31	0
0	0	42	0	30	1
20	28	23	2	11	1
0	28	0	0	0	0
0	0	0	0		
0	0	0	0		
	56	SHEET TOTAL		SHEET TOTAL	
				84	2

238 / 43

FRA-315-3.04

CANNON DR. - RAMP A X-SECTIONS
STA. 53+25 TO STA. 54+25

CALCULATED MJT 1/00
CHECKED WGY 1/00

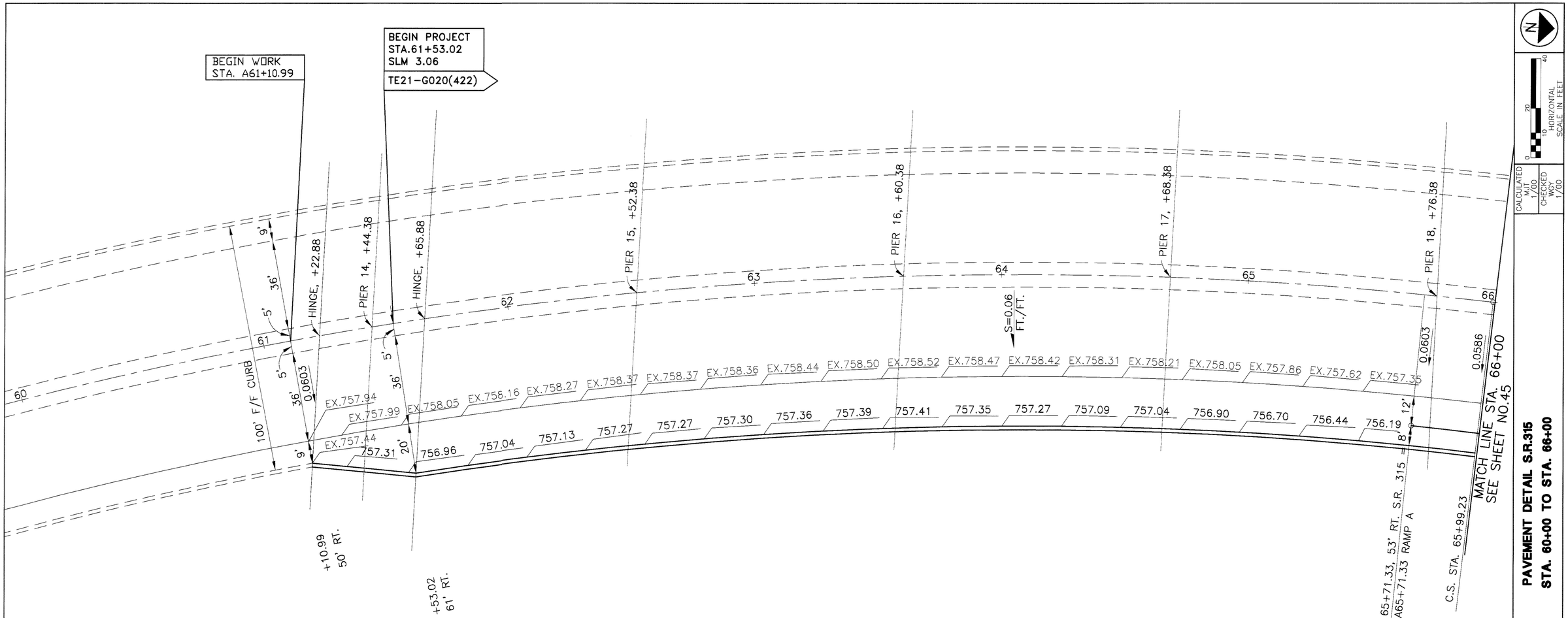

CURVE DATA		
	S.R. 315	RAMP A
P.I.	STA. 61+56.61	STA. A67+24.42
△	43° 48'46"	18° 12'58"
Dc	3° -30'	6° -00'
Rc	1637.02'	954.93'
Lc	951.79'	303.60'
Ls	300'	
Tc		153.09'
Ts	809.17'	

CALCULATED MJT 1/00
CHECKED WGY 1/00

HORIZONTAL SCALE IN FEET
0 10 20 40

PAVEMENT DETAIL S.R.315
STA. 60+00 TO STA. 66+00

FRA-315-3.04

44
238

3453APD1 MT 05-28-02

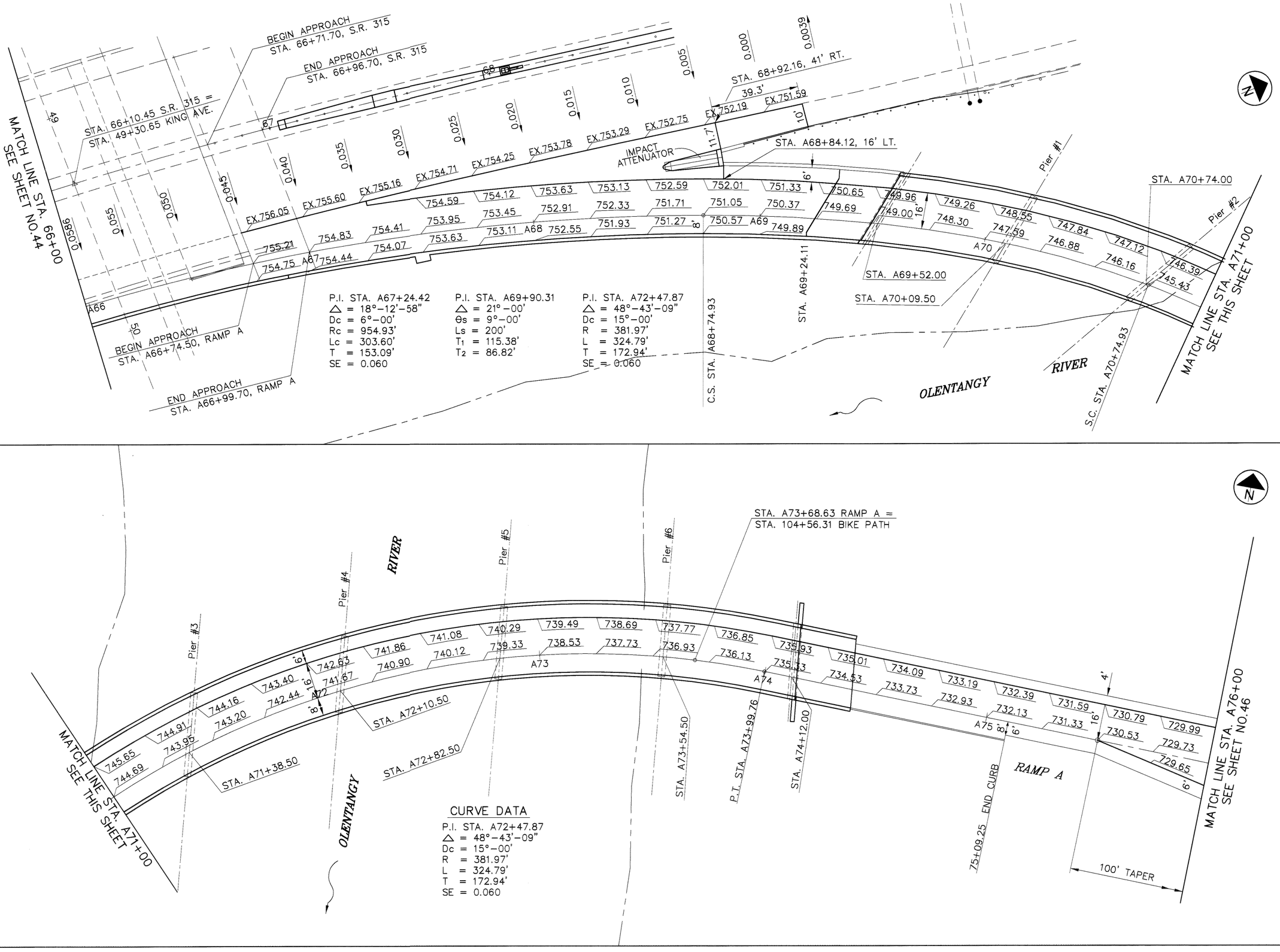

PAVEMENT DETAILS RAMP A
STA. A66+00 TO STA. A76+00

CALCULATED MJT 1/00
CHECKED WGY 1/00

0 20 40
10 HORIZONTAL SCALE IN FEET

FRA-315-3.04

45
238

3453AP02 05-21-02

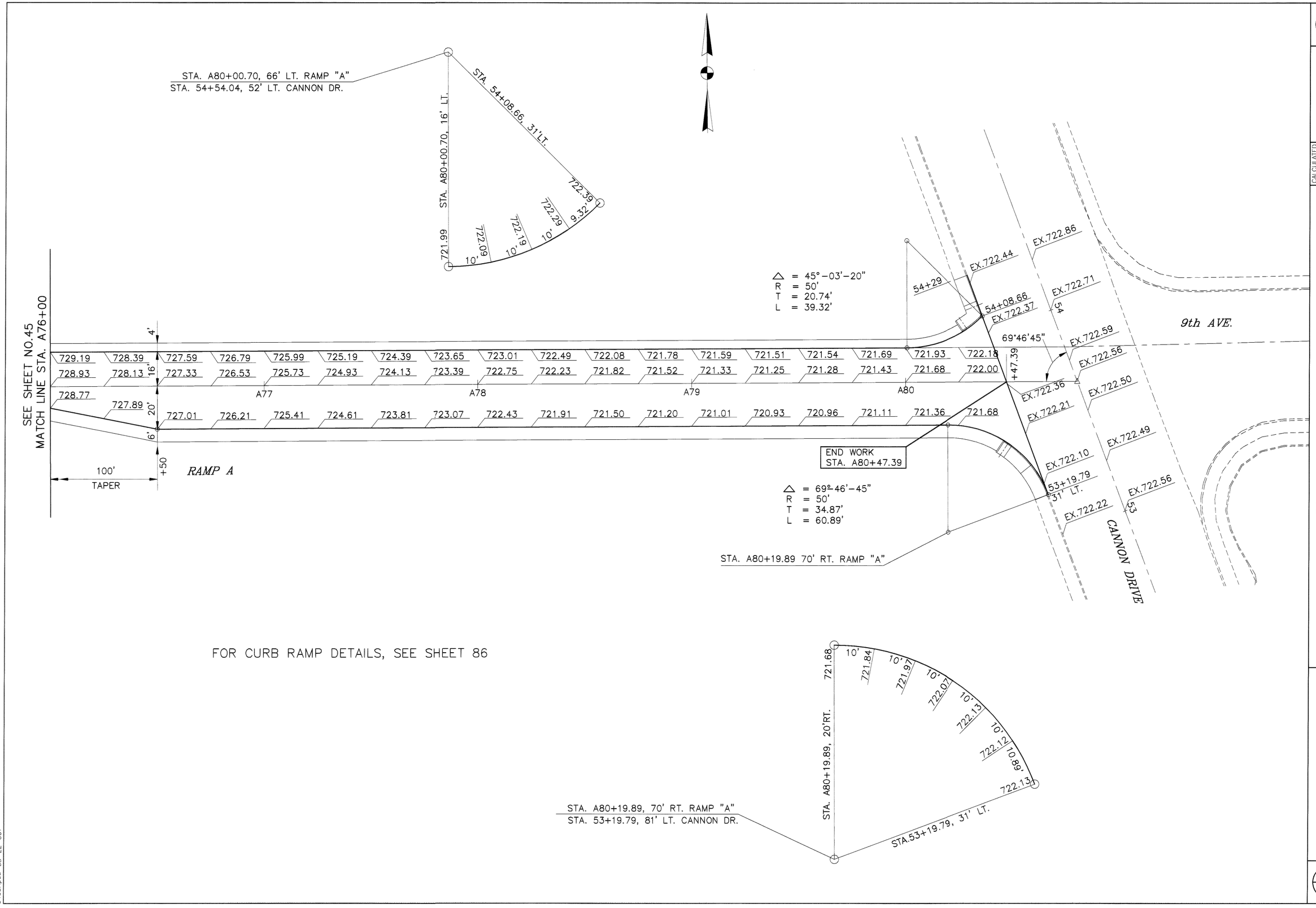

N

0 10 20 40
HORIZONTAL SCALE IN FEET

CALCULATED MJT 1/00
CHECKED WGY 1/00

PAVEMENT DETAILS RAMP A
STA. A76+00 TO STA. A81+00

FRA-315-3.04

3453Apd3 03-22-001

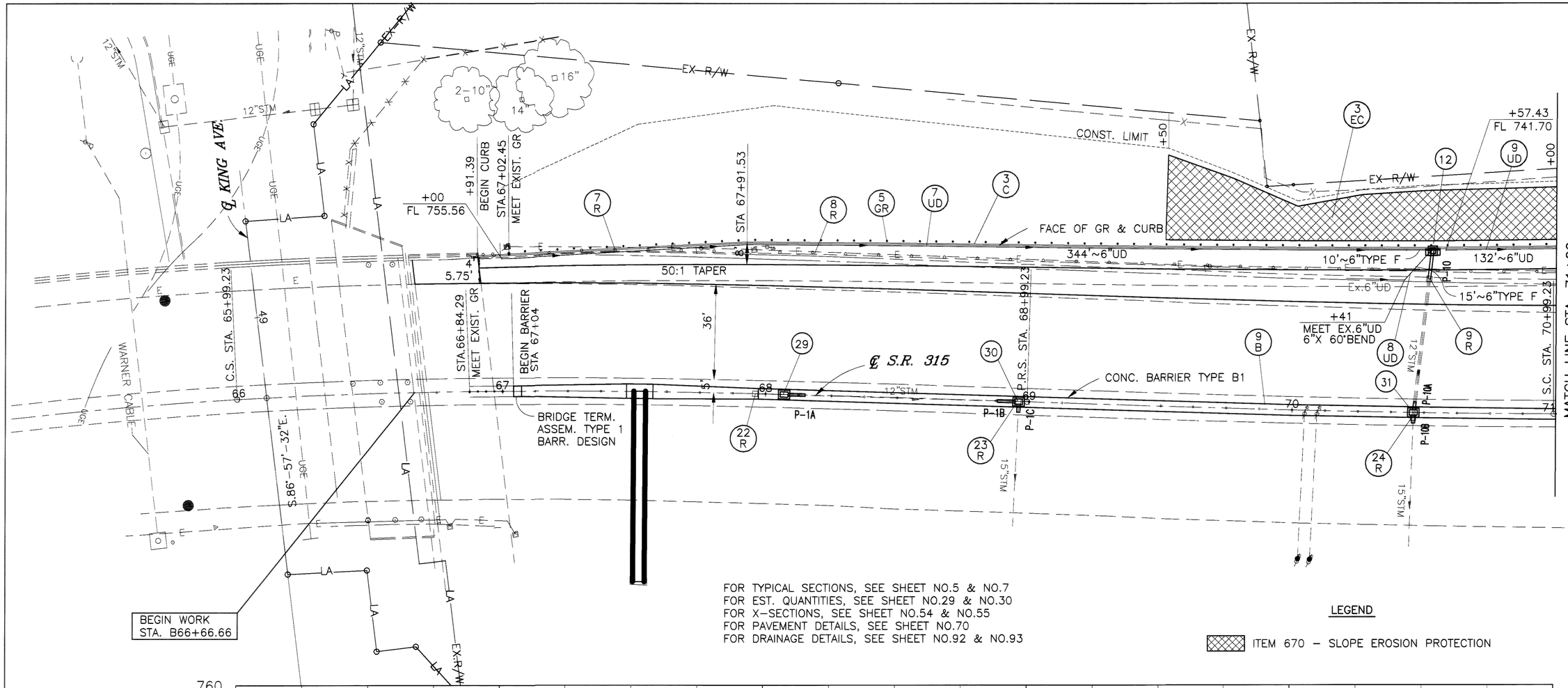

FOR TYPICAL SECTIONS, SEE SHEET NO.5 & NO.7
FOR EST. QUANTITIES, SEE SHEET NO.29 & NO.30
FOR X-SECTIONS, SEE SHEET NO.54 & NO.55
FOR PAVEMENT DETAILS, SEE SHEET NO.70
FOR DRAINAGE DETAILS, SEE SHEET NO.92 & NO.93

LEGEND

ITEM 670 – SLOPE EROSION PROTECTION

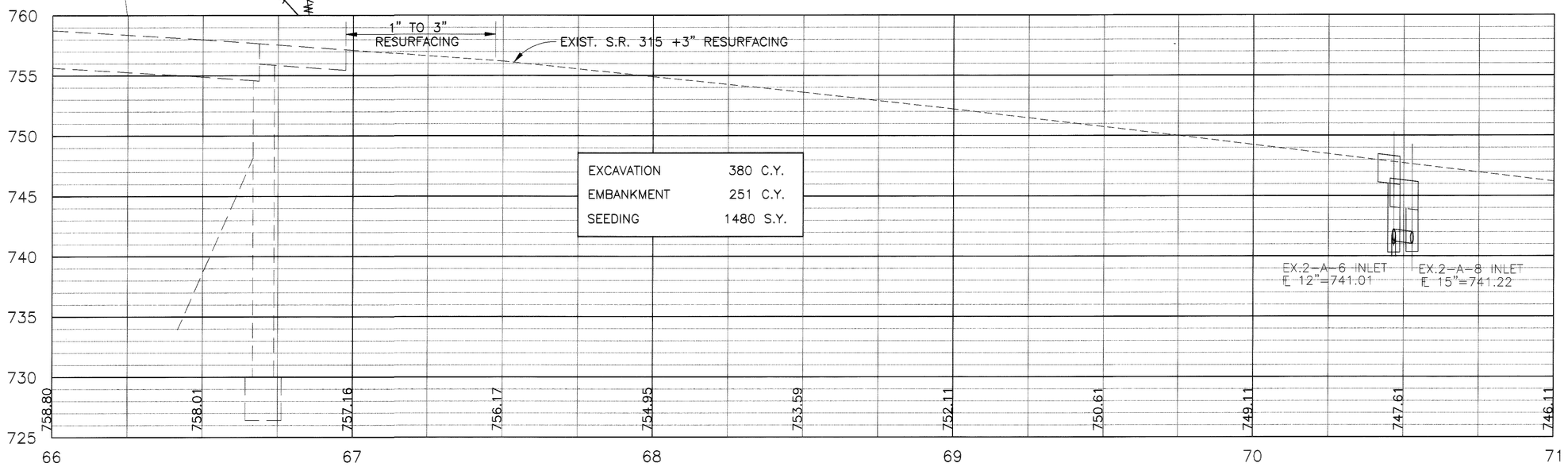

EXCAVATION	380 C.Y.
EMBANKMENT	251 C.Y.
SEEDING	1480 S.Y.

EX.2-A-6 INLET
℄ 12"=741.01

EX.2-A-8 INLET
℄ 15"=741.22

CALCULATED MJT 1/00
CHECKED WGY 1/00

HORIZONTAL SCALE IN FEET
0 10 20 40

PLAN AND PROFILE S.R.315
STA. 66+00 TO STA. 71+00

FRA-315-3.04

3453BPP1 MJT 09-20-2001

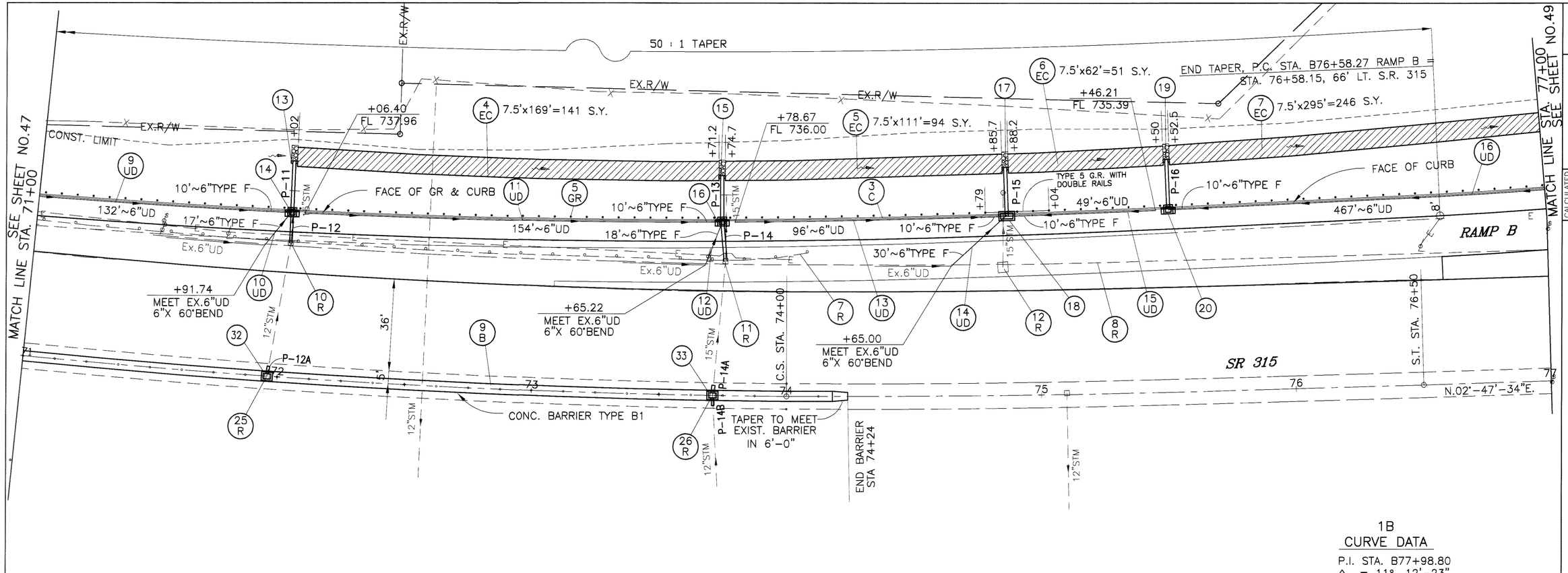

1B
CURVE DATA

P.I. STA. B77+98.80
△ = 11°-12'-23"
Dc = 4°-00'
R = 1432.39'
L = 280.16'
T = 140.53'
E = 6.88'
SE = 0.060

LEGEND

ITEM 670 – DITCH EROSION PROTECTION

FOR TYPICAL SECTIONS, SEE SHEET NO.5 & NO.7
FOR EST. QUANTITIES, SEE SHEET NO.29 & NO.30
FOR X-SECTIONS, SEE SHEET NO.56 THRU NO.58
FOR PAVEMENT DETAILS, SEE SHEET NO.70
FOR DRAINAGE DETAILS, SEE SHEETS NO.93 & NO.94

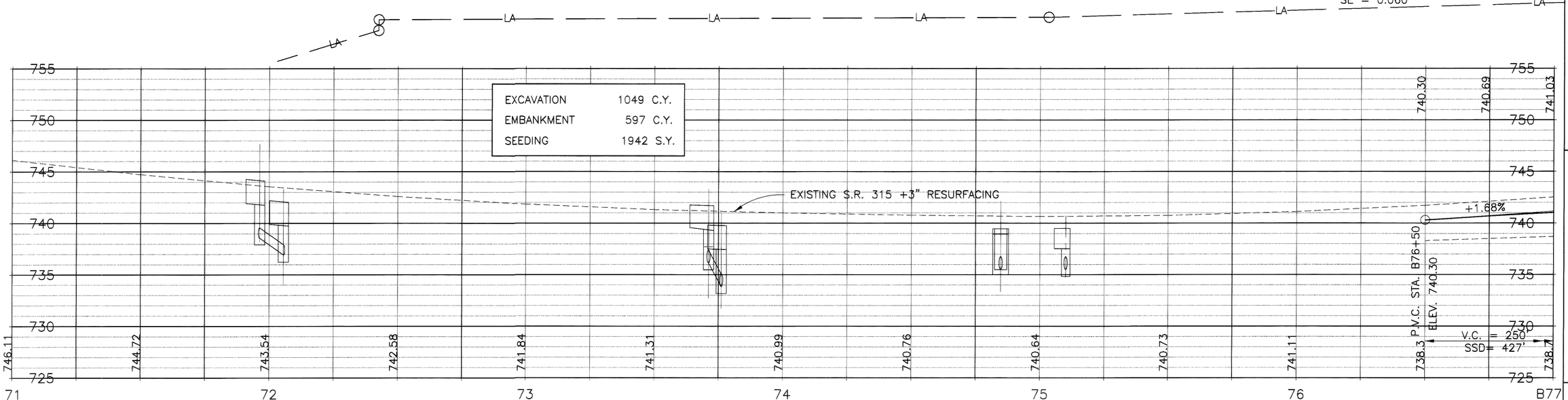

EXCAVATION	1049 C.Y.
EMBANKMENT	597 C.Y.
SEEDING	1942 S.Y.

PLAN AND PROFILE S.R.315
STA. 71+00 TO STA. 77+00

FRA-315-3.04

CALCULATED MJT 1/00
CHECKED WGY 1/00

HORIZONTAL SCALE IN FEET
0 10 20 40

05-28-02
3453BPP2

1B CURVE DATA

P.I. STA. B77+98.80
△ = 11°–12'–23"
Dc = 4°–00'
R = 1432.39'
L = 280.16'
T = 140.53'
E = 6.88'
SE = 0.060

REMOVE FOUNDATION. SEE TRAFFIC CONTROL PLANS

OLENTANGY RIVER RD.

CONST. LIMIT

7 EC 7.5x295=246 S.Y.

8 EC 7.5x181=151 S.Y.

EX.R/W

+47.75 FL 736.44

+48.47 END CURB

CONST. LIMIT

EXIST. RAMP AB

RET.WALL

CONC. BARRIER, TYPE D50

P-18 10'~6"TYPE F

530'~6"UD

EX.R/W

+50 FL 738.44

467'~6"UD

B77 B78 B79 B80

N.09°–33'–34"W.

P.T. STA. B79+38.43

+50 END CURB

RAMP B

P-17A

P-17

+46.94 BEGIN CURB

+26.94

72"STM

+54

+68

+50.47

341'~6"UD

CURB, TYPE 6

+55 FL 739.84

CONST. LIMIT

P.C. STA. B80+86.63

Ex. 2A-12 INLET

15"STM

23'

36'

5'

78+28.89

+48.89 BEGIN CURB

+65.18 END CURB

T.S. STA. 79+28.50

OVERHEAD SIGN TO BE REMOVED

SEE SHEET NO.48
MATCH LINE STA. B77+00

MATCH LINE STA. B82+00
SEE SHEET NO.50

N. 02°–47'–34" F.

77 78 79 80 81

℄ S.R. 315

TAPER TO MEET EXISTING BARRIER IN 6'–0"

2B CURVE DATA

P.I. STA. B82+31.35
△ = 41°–30'–08"
Dc = 15°–00'
R = 381.97'
L = 276.68'
T = 144.72
SE = 0.060

LEGEND

2 BRIDGE TERMINAL ASSEMBLY, TYPE 2

ITEM 670 – DITCH EROSION PROPECTION

FOR TYPICAL SECTIONS, SEE SHEET NO.5 & NO.7
FOR EST. QUANTITIES, SEE SHEET NO.29 & NO.30
FOR X–SECTIONS, SEE SHEET NO.58 THRU NO.60
FOR PAVEMENT DETAILS, SEE SHEET NO.71
FOR DRAINAGE DETAILS, SEE SHEETS NO.94 & NO.95

EXCAVATION	358 C.Y.
EMBANKMENT	2584 C.Y.
SEEDING	2118 S.Y.

P.V.I. STA. B77+75
ELEV. 742.40

+1.68%

–0.52%

EX. GROUND

P.V.C.C. STA. B79+00
ELEV. 741.75

P–17

P–17A

EX.ELEC. DUCT

EX.72"CONC.

V.C. = 250'
SSD = 427'

P.V.I. STA. B80+25
ELEV. 741.10

–3.32%

–3.32%

EX.12"GAS (EXACT LOC. UNKNOWN)

P.V.T. STA. B81+50
ELEV. 736.95

P.V.C. STA. B82+00
ELEV. 735.29

V.C. = 250'
SSD = 362'

741.03 741.31 741.54 741.71 741.83 741.89 741.90 741.85 741.75 741.59 741.35 741.05 740.67 740.23 739.71 739.13 738.47 737.75 736.95 736.12 735.29

738.7 738.9 738.9 738.6 737.7 735.9 733.1 733.3 734.3 735.6 736.1

755 750 745 740 735 730 725 720 715

B77 B78 B79 B80 B81 B82

CALCULATED MJT 1/00
CHECKED WGY 1/00

HORIZONTAL SCALE IN FEET 0 10 20 40

PLAN AND PROFILE RAMP B
STA. B77+00 TO STA. B82+00

FRA-315-3.04

3453BPP3 MJT 05–28–02

℄ EXISTING OLENTANGY RIVER RD.

MATCH LINE STA. B82+00
SEE SHEET NO.49

END PROJECT
STA.85+53.94
SLM 3.52
TE21-G020(422)

STA. B84+71.93 RAMP B =
STA. 84+45.96 S.R. 315

EXISTING RAMP AB

EX.R/W

RETAINING WALL

RAMP B

℄ S.R. 315

530'~6"UD
N. 31°-56'-34" E.

347'~6"UD

341'~6"UD

12'~6"TYPE F

35'~6"TYPE B @1.88%

17'~6"TYPE F @1.00%

119'~6"UD

113'~6"UD

33'~6"UD

20'~6"UNCL UD

TOE OF RET. WALL AT ABUTMENT

END APPROACH SLAB +0.06

P.C. STA. B85+08.71

83 P.T. STA. B83+63.31

TAPER TO MEET EXISTING BARRIER IN 6'-0"

+03.67
6"x90°BEND
FL 738.41

+12.46
FL 730.67

+56.68

+88

+69.86
6"TEE
FL 727.72

+69.86
6"x90°BEND
FL 727.86

+69.86
6"CROSS
FL 727.20

+89.86
FL 728.38

+76.56
6" WYE
FL 728.85

+86.92

+58.44
FL 727.52
6" WYE

+74.97

+92.07
FL 727.74

+47.22

+77.4

+82

+50

8'(AVG)x15'=13 S.Y.

7.5'(AVG)x22'=18 S.Y.

7.5'(AVG)x21'=18 S.Y.

MATCH LINE STA. B87+00
SEE SHEET NO.51

2B
CURVE DATA

P.I. STA. B82+31.35
△ = 41°-30'-08"
Dc = 15°-00'
R = 381.97'
L = 276.68'
T = 144.72'
SE = 0.060

3B
CURVE DATA

P.I. STA. B87+57.56
△ = 84°-44'-12"
Dc = 21°-00'
R = 272.84'
L = 403.51'
T = 248.86'
SE = 0.060

LEGEND

T ANCHOR ASSEMBLY, TYPE T
1 BRIDGE TERMINAL ASSEMBLY, TYPE 1
2 BRIDGE TERMINAL ASSEMBLY, TYPE 2
ITEM 660 – SODDING REINFORCED

FOR TYPICAL SECTIONS, SEE SHEET NO.5 & NO.7
FOR EST. QUANTITIES, SEE SHEET NO.29 & NO.30
FOR X-SECTIONS, SEE SHEETS NO.60 THRU NO.62
FOR PAVEMENT DETAILS, SEE SHEET NO.71
FOR RETAINING WALL DETAILS, SEE SHEETS NO.161 THRU NO.168

EX. SLOPE EASEMENT
OLENTANGY RIVER

EXCAVATION	1568 C.Y.
EMBANKMENT	1293 C.Y.
SEEDING	1120 S.Y.

V.C. = 200'
SSD = 391'

V.C. = 300'
SSD = EXCEEDS 70 MPH

P.V.C. STA. B82+00
ELEV. 735.29

P.V.I. STA. B83+00
ELEV. 731.97

P.V.T. STA. B84+00
ELEV. 731.69

P.V.C. STA. B85+00
ELEV. 731.41

P.V.I. STA. B86+50
ELEV. 730.99

VERTICAL CLEARANCE 15.80'

PROP. PROFILE

EX.ELEC.

EX.ELEC. DUCT

EX.12"STM.

EX.15"STM.

EX.12"GAS (EXACT LOC. UNKNOWN)

-3.32%
-0.28%
-0.28%
-0.28%
+1.52%

735.29 734.51 733.82 733.23 732.73 732.33 732.02 731.81 731.69 731.55 731.41 731.36 731.35 731.37 731.43 731.53 731.67 731.84 732.05

736.1 736.3 735.4 733.5 732.0 731.3 730.5 727.9 727.2 725.3 723.7

760 755 750 745 740 735 730 725 720 715

B82 B83 B84 B85 B86 B87

HORIZONTAL SCALE IN FEET
0 10 20 40

CALCULATED MJT 12/01
CHECKED WGY 12/01

PLAN AND PROFILE RAMP B
STA. B82+00 TO STA. B87+00

FRA-315-3.04

50
238

3453BPP4 05-28-02

WORK AGREEMENT FOR BIKE PATH

RIVER

STA. B89+36.13 RAMP B =
STA. 118+77.71 BIKE PATH

EX. SLOPE EASEMENT

15"STM

+05.15
FL 729.07

Sta.87+10.00

Sta.87+68.00

Sta.88+40.00

Sta.89+12.21

B88

B89

B90

B91

B92

30' F/F OF TOE OF PARAPET

118+64.95

P.T. STA. B89+12.21

MATCH LINE STA. B87+00
SEE SHEET NO.50

119'~6"UD

L/A

3B
CURVE DATA

P.I. STA. B87+57.56
△ = 84°-44'-12"
Dc = 21°-00'
R = 272.84'
L = 403.51'
T = 248.86'
SE = 0.060

OLENTANGY

N. 08°-55'-22" E. 118

BIKE PATH

BIKEPATH
CURVE DATA

P.I. STA. 119+17.29
△ = 19°-47'-31"
Dc = 19°-05'-55"
R = 300.00'
L = 103.63'
T = 52.34'

GAS REG STA

WORK AGREEMENT FOR BIKE PATH

2-5" PVC in STL Casing

LIFT STATION

+76
FL 731.57

END STRUCTURE STA. B89 +70

+92.57

+04.20
FL 731.34
6" WYE

+02.07

+13.49
FL 731.22
6" WYE

+85
FL 731.40

WORK AGREEMENT FOR DITH

MH

15"STM

CONST. LIMIT

4B
CURVE DATA

P.I. STA. B92+26.95
△ = 31°-35'-02"
Dc = 15°-00'
R = 381.97'
L = 210.56'
T = 108.03'
SE = 0.056

P.C. STA. B91+18.92

S 63°-19'-14" E. B91

404'~6"UD

440'~6"UD

RAMP B

16'

6'

4'

S-2

138-29A
138-29
Duct
138-47

MATCH LINE STA. B92+00
SEE SHEET NO.52

FOR TYPICAL SECTIONS, SEE SHEETS NO.5 & NO.6
FOR EST. QUANTITIES, SEE SHEETS NO.29 & NO.30
FOR X-SECTIONS, SEE SHEETS NO.62 THRU NO.64
FOR PAVEMENT DETAILS, SEE SHEET NO.72
FOR BIKEPATH DETAILS, SEE SHEETS NO.74 THRU NO.85
FOR CULVERT DETAIL, SEE SHEET NO.91

LEGEND

[1] BRIDGE TERMINAL ASSEMBLY, TYPE 1

EXCAVATION	140 C.Y.
EMBANKMENT	4844 C.Y.
SEEDING	2817 S.Y.

V.C. = 300'
SSD = EXCEEDS 70 MPH

L = 264.84'

ELEV. 733.27
P.V.T. STA. B88+00

+07.54

+72.38

P.V.I. STA. B90+00
El. 736.31

+1.52%

+1.52%

-3.80%

-3.80%

P.V.C. STA. B88+75
ELEV. 734.41

9.66' CLEARANCE

ELEV. 731.56
P.V.T. STA. 91+25

EX. GROUND

ITEM 601 - ROCK CHANNEL PROTECTION
TYPE C W/FILTER (2'-0" THK.)

NORMAL POOL 716.50

V.C. = 250'
SSD = 250'

ITEM 601 - ROCK CHANNEL PROTECTION
TYPE C W/FILTER (2'-0" THK.)

EX.10"G

EX.ELEC. DUCT

Duct

138-29A
138-29

138-47

PROP. 24" COND. TYPE A

| | | |

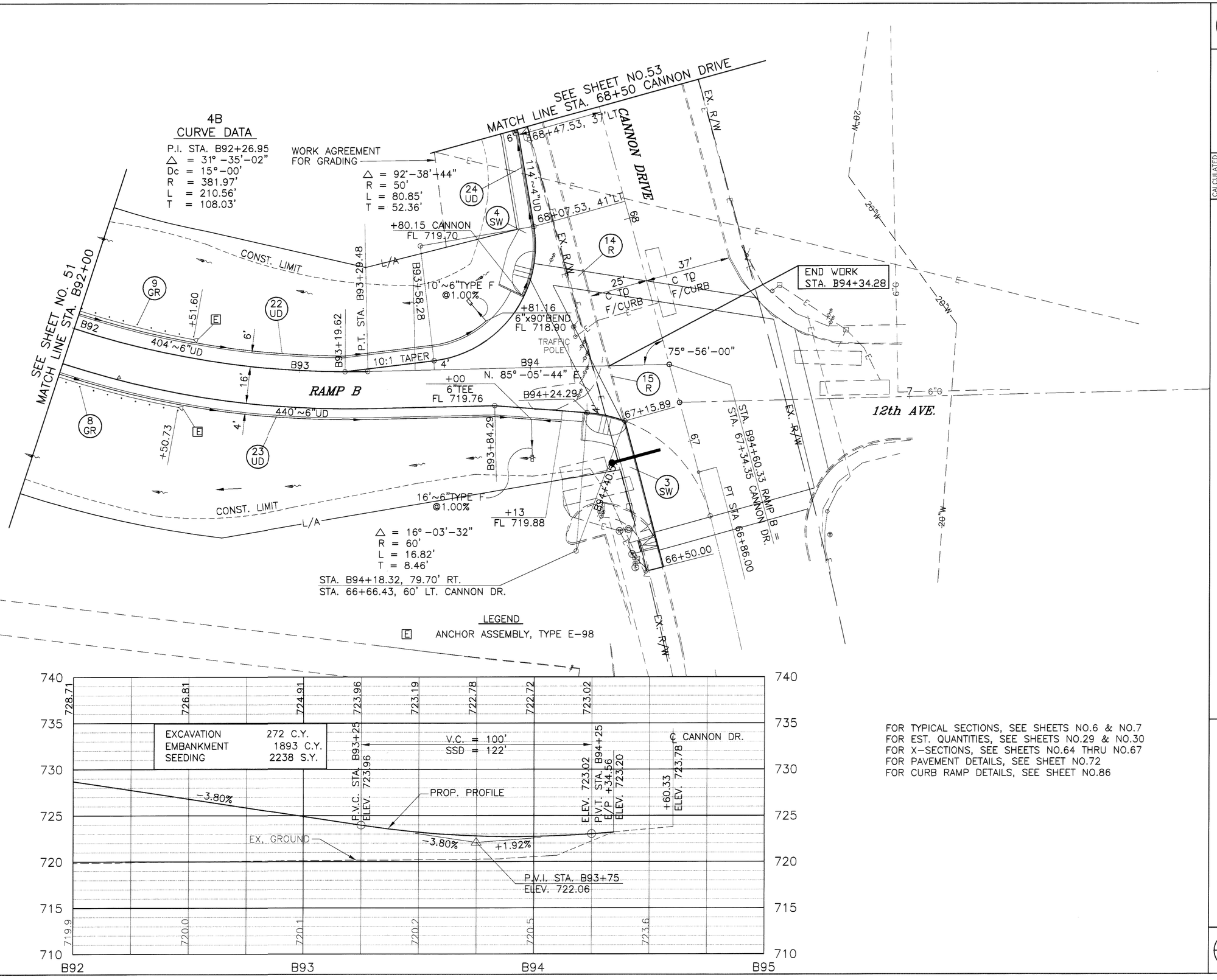

FOR TYPICAL SECTIONS, SEE SHEETS NO.6 & NO.7
FOR EST. QUANTITIES, SEE SHEETS NO.29 & NO.30
FOR X-SECTIONS, SEE SHEETS NO.64 THRU NO.67
FOR PAVEMENT DETAILS, SEE SHEET NO.72
FOR CURB RAMP DETAILS, SEE SHEET NO.86

N

HORIZONTAL SCALE IN FEET
0 10 20 40

CALCULATED MJT 12/01
CHECKED WGY 12/01

PLAN AND PROFILE RAMP B
STA. B92+00 TO STA. B95+00

FRA-315-3.04

52
238

3453Bpp6 05-29-02

EXCAVATION	102 C.Y.
EMBANKMENT	22 C.Y.
SEEDING	118 S.Y.

FOR TYPICAL SECTIONS, SEE SHEET NO.7
FOR EST. QUANTITIES, SEE SHEETS NO.29 & NO.30
FOR X-SECTIONS, SEE SHEETS NO.68 & NO.69
FOR PAVEMENT DETAILS, SEE SHEET NO.73
FOR DRAINAGE DETAILS, SEE SHEET NO.95

N

0 10 20 40
HORIZONTAL
SCALE IN FEET

CALCULATED DWD 5/00
CHECKED CE 5/00

PLAN CANNON DRIVE
STA. 68+50 TO STA. 71+00

FRA-315-3.04

53
238

CanBplan7 02-19-2002

3453BXS1 09-17-001

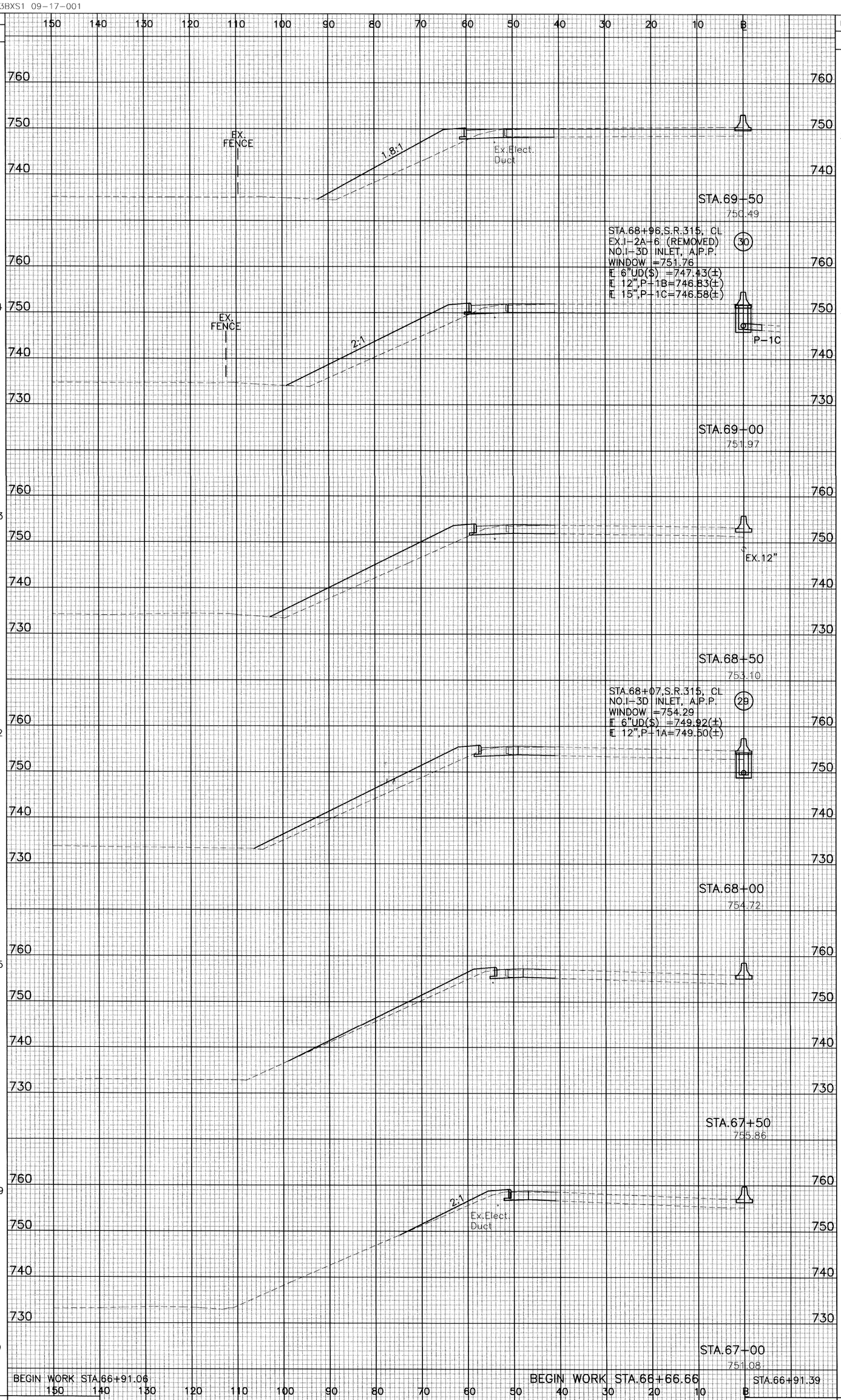

SEEDING END WIDTH	SEEDING SQ. YDS.	END AREA CUT	END AREA FILL	VOLUME CUT	VOLUME FILL
48		26	38	48	51
	284	25	17		
54				45	21
	273	23	5		
44				41	6
	192	21	1		
25				39	1
	125	21	0		
20				40	1
	139	22	1		
30				7	2
	30	22	1		
	1043 SHEET TOTAL	SHEET TOTAL		220	82

238 / 54

FRA-315-3.04

S.R.315 - RAMP B X-SECTIONS
STA. 67+00 TO STA. 69+50

CALCULATED MJT 3-00
CHECKED WGY 3-00

3453BXS2 09-17-001

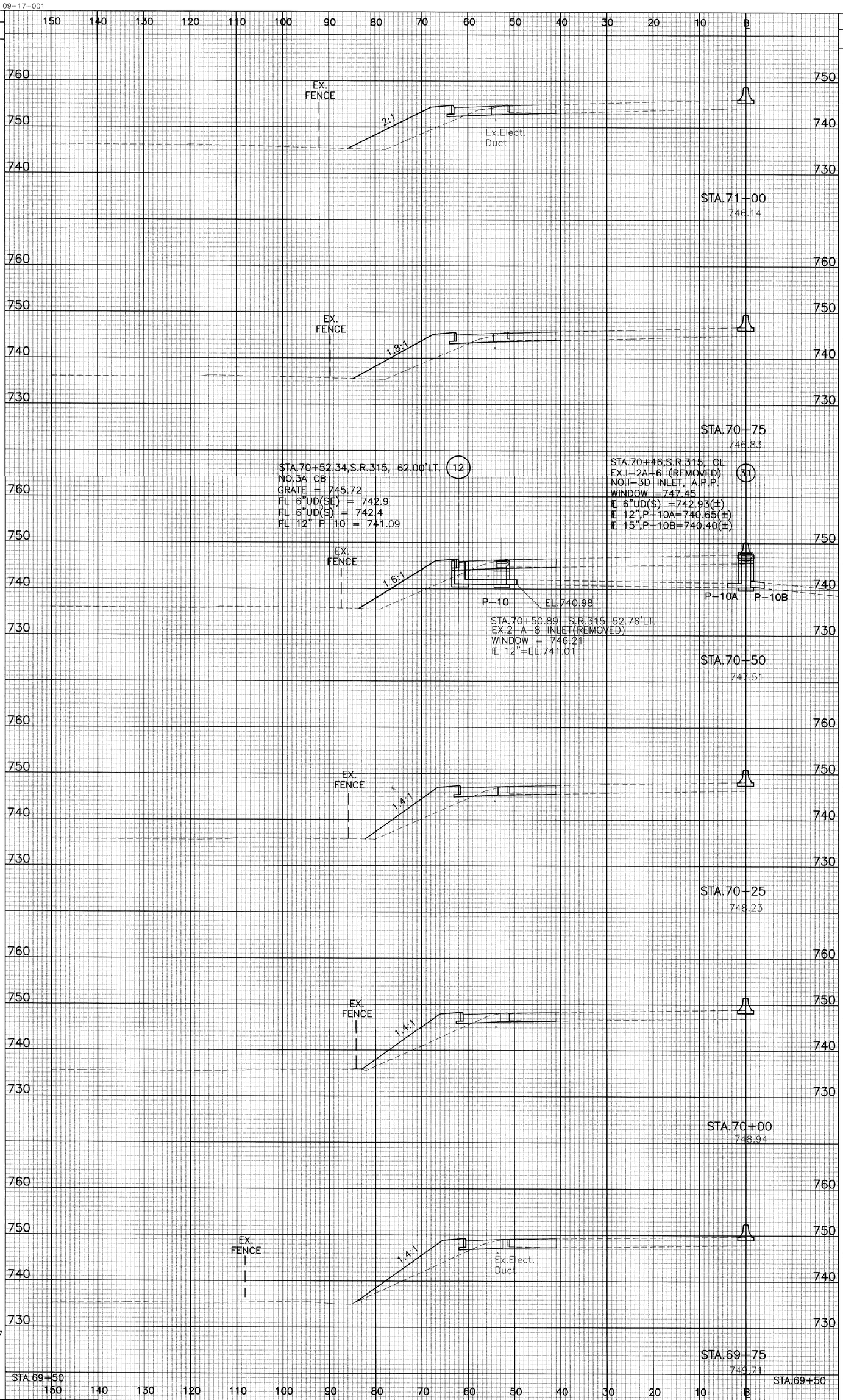

| | | |

3453BXS3 09-17-001

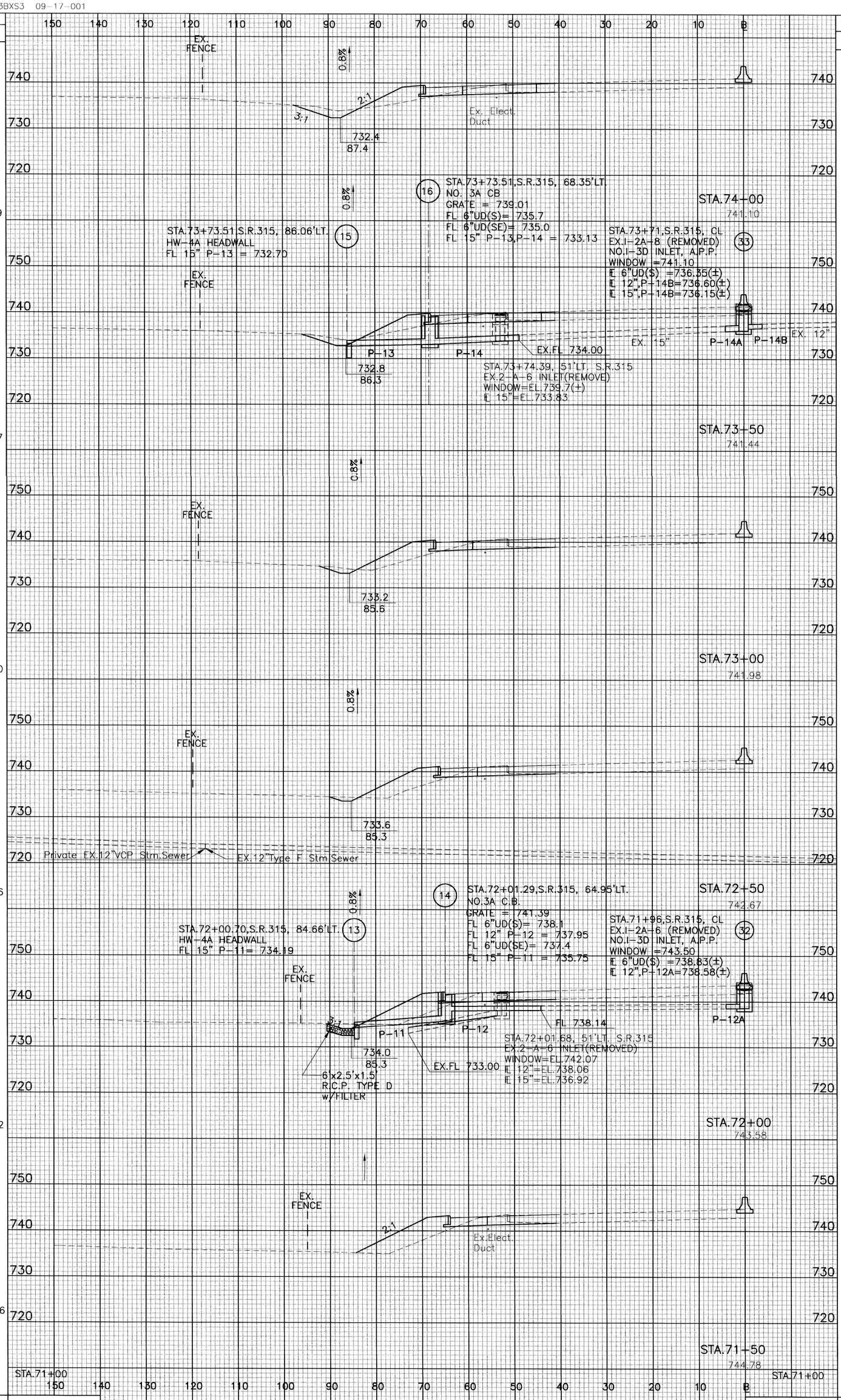

| | | |

3453BXS4 05-29-02

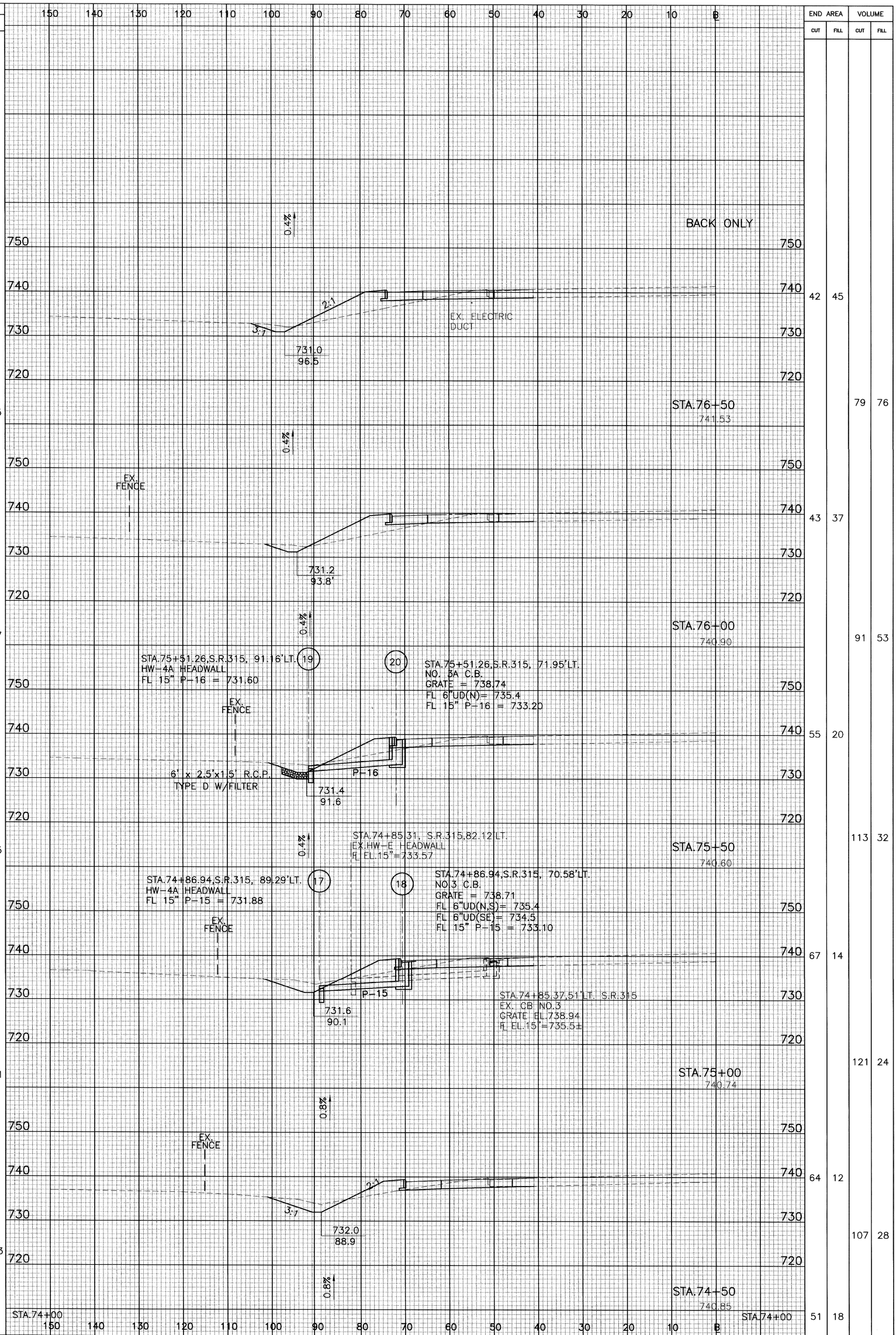

57
238

FRA-315-3.04

S.R.315 - RAMP B X-SECTIONS
STA. 74+50 TO STA. 76+50

CALCULATED MJT 3-00
CHECKED WGY 3-00

3453BXS5 05-28-02

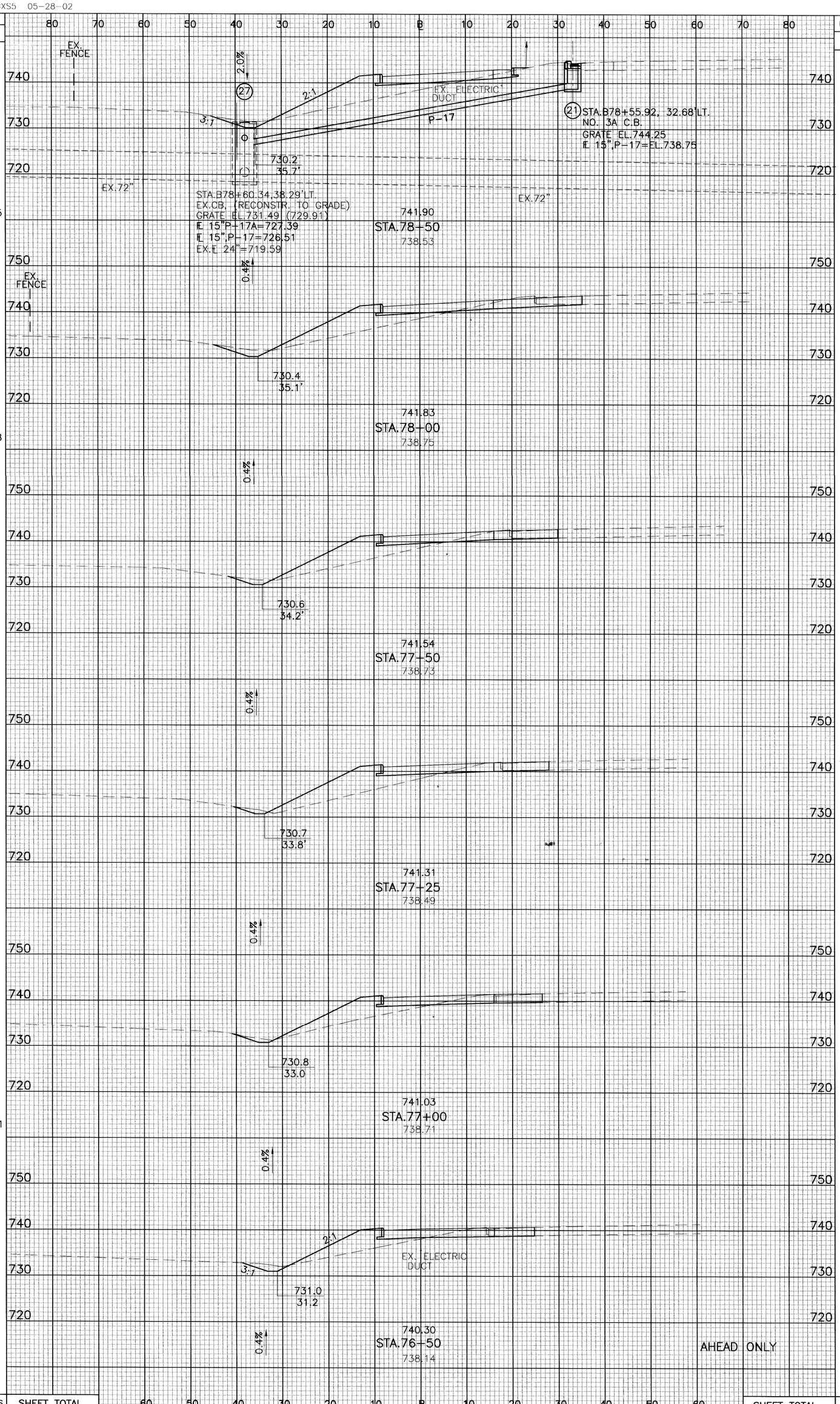

SEEDING END WIDTH	SEEDING SQ. YDS.	END AREA CUT	END AREA FILL	VOLUME CUT	VOLUME FILL
43		18	87		
				67	152
38	225	54	77		
				88	138
33	198	41	72		
				36	71
33	91	36	81		
				34	62
32	91	37	53		
				73	91
33	181	42	45		
	786	SHEET TOTAL		298	514

SHEET TOTAL

238 58

FRA-315-3.04

RAMP B X-SECTIONS
STA. 76+50 TO STA. 78+50

CALCULATED MJT 3-00
CHECKED WGY 3-00

3453BXS6 05-28-02

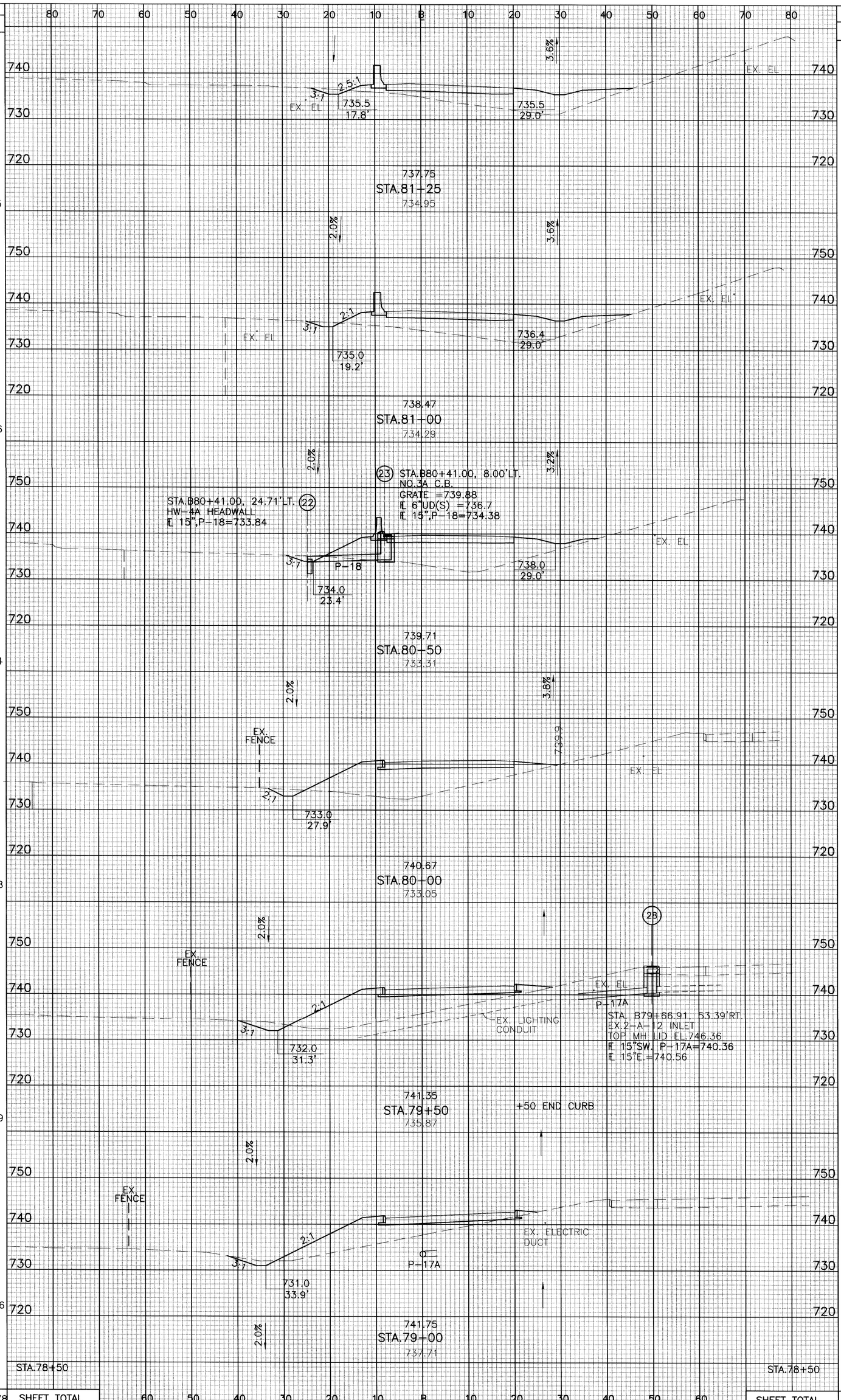

SEEDING END WIDTH	SEEDING SQ. YDS.	END AREA CUT	END AREA FILL	VOLUME CUT	VOLUME FILL
44	125	5	146	5	157
46		5	193		
	236			10	390
39		6	228		
	214			12	408
38		7	212		
	228			16	369
44		10	186		
	239			16	289
42		7	126		
	236			23	197
43		18	87		
	1278 SHEET TOTAL		SHEET TOTAL	82	1810

238/59

FRA-315-3.04

RAMP B X-SECTIONS
STA. 79+00 TO STA. 81+25

CALCULATED MJT 3-00
CHECKED WGY 3-00

3453BXS7 08-14-001

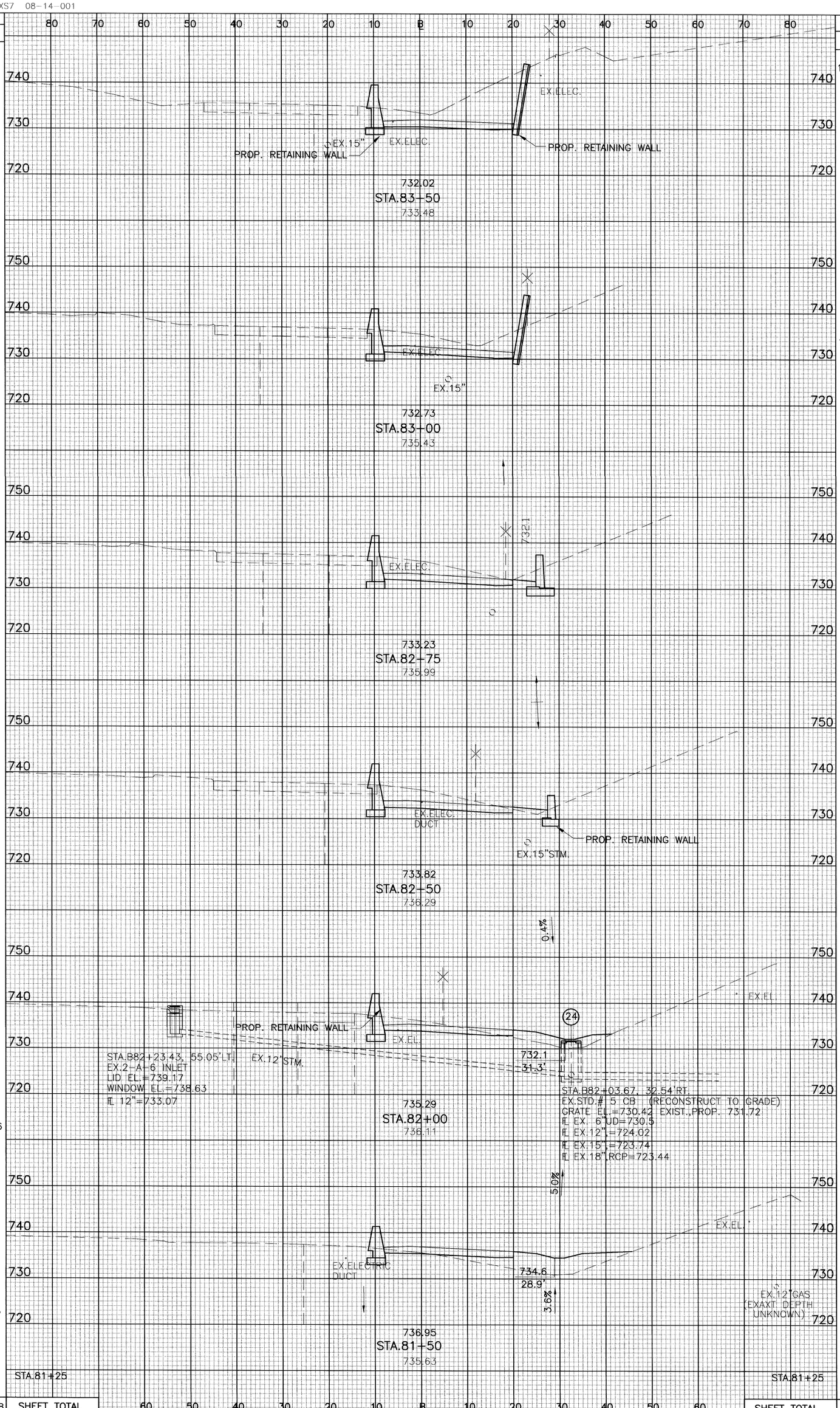

SEEDING END WIDTH	SEEDING SQ. YDS.	END AREA CUT	END AREA FILL	VOLUME CUT	VOLUME FILL
0	0	166	0	248	0
0	0	101	0	87	3
0	14	86	5	77	6
10	89	80	7	114	43
22	136	43	39	46	126
27	99	6	97	5	225
44		5	146		
	338 SHEET TOTAL	SHEET TOTAL		577	403

238 60

FRA-315-3.04

RAMP B X-SECTIONS
STA. 81+50 TO STA. 83+50

CALCULATED MJT 3-00
CHECKED WGY 3-00

3453BXS8 06-17-02

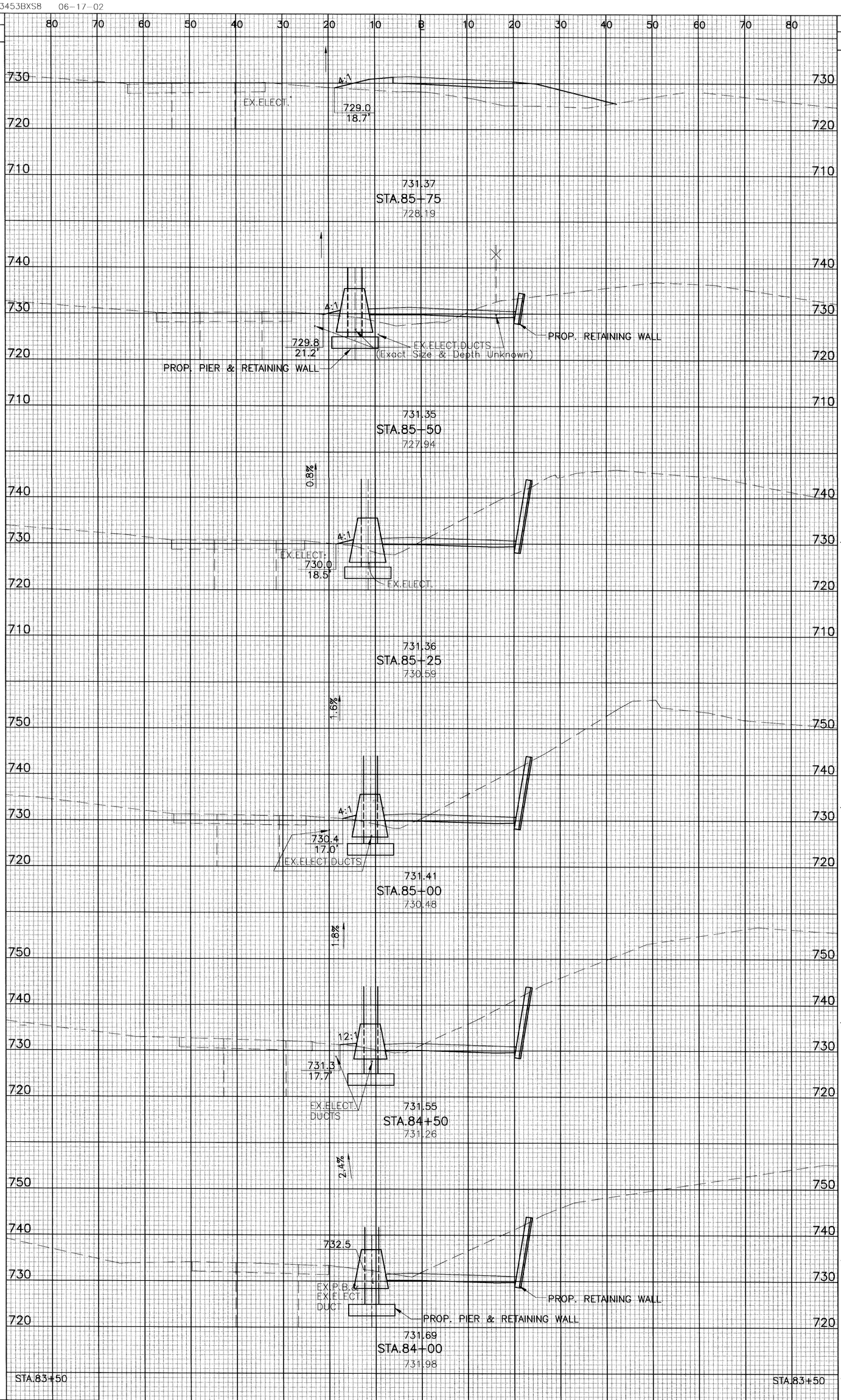

SEEDING END WIDTH	SEEDING SQ. YDS.	END AREA CUT	END AREA FILL	VOLUME CUT	VOLUME FILL
60		0	170		
	84			17	88
0		29	20		
	0			77	16
0		136	14		
	0			123	13
0		130	14		
	0			243	20
0		132	7		
	0			257	7
0		146	0		
	0			289	0
0		166	0		
	84	SHEET TOTAL		1006	144

STA.83+50 STA.83+50 SHEET TOTAL

61/238

FRA-315-3.04

RAMP B X-SECTIONS
STA. 84+00 TO STA. 85+75

CALCULATED MJT 3-00
CHECKED WGY 3-00

3453BXS9 08-07-02

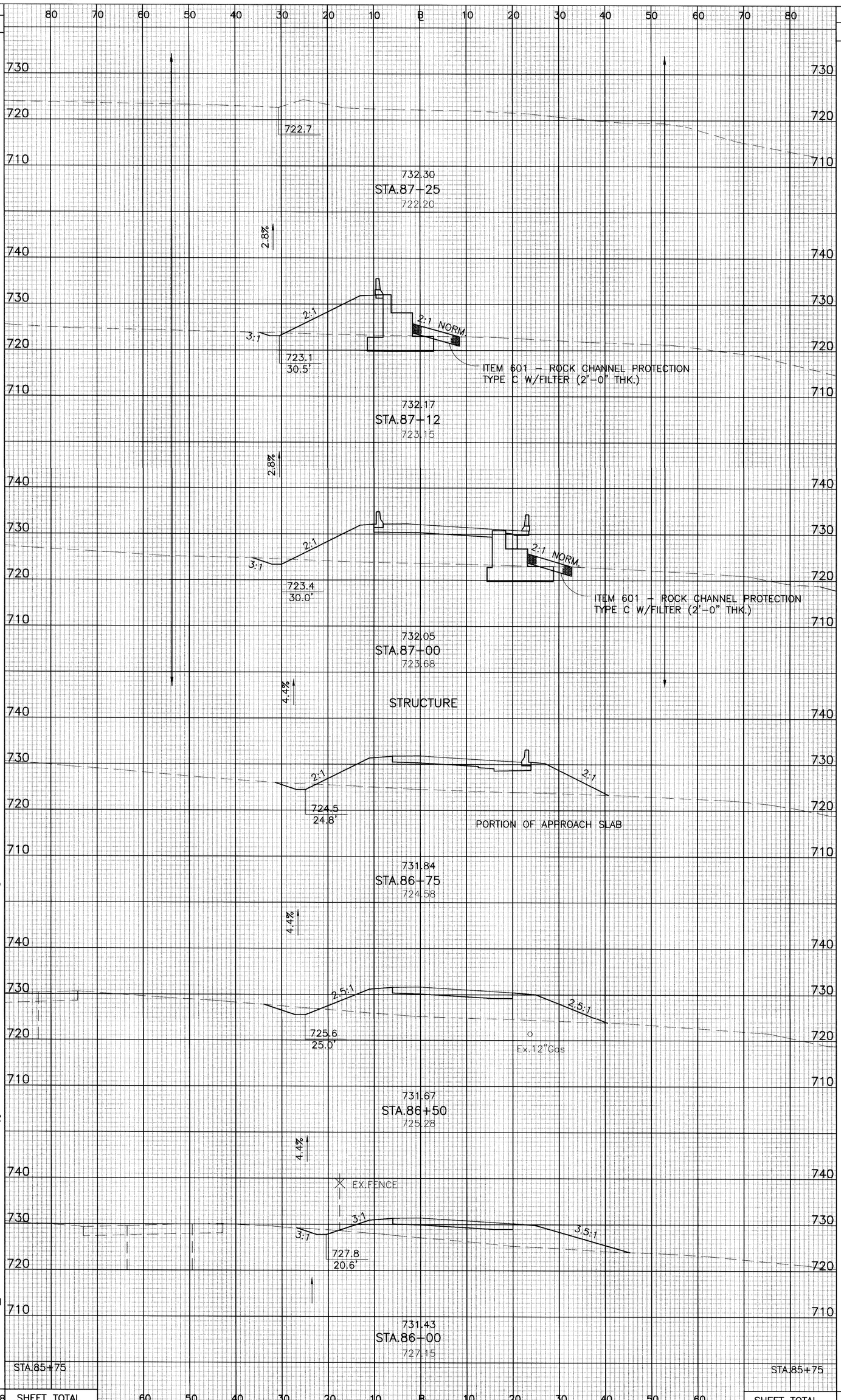

SEEDING END WIDTH	SEEDING SQ. YDS.	
50	78	
57	77	
58	171	
65	189	
71	392	
70	181	
60		STA.85+75
	1088	SHEET TOTAL

END AREA CUT	END AREA FILL	VOLUME CUT	VOLUME FILL
0	0		
		1	30
3	125		
		3	92
7	289		
		7	271
7	296		
		9	255
12	255		
		17	407
6	184		
		3	164
0	170		
		40	1219

STA.85+75 SHEET TOTAL

238 62

FRA-315-3.04

RAMP B X-SECTIONS
STA. 86+00 TO STA. 87+25

CALCULATED MJT 3-00
CHECKED WGY 3-00

3453BXS10 03-26-001

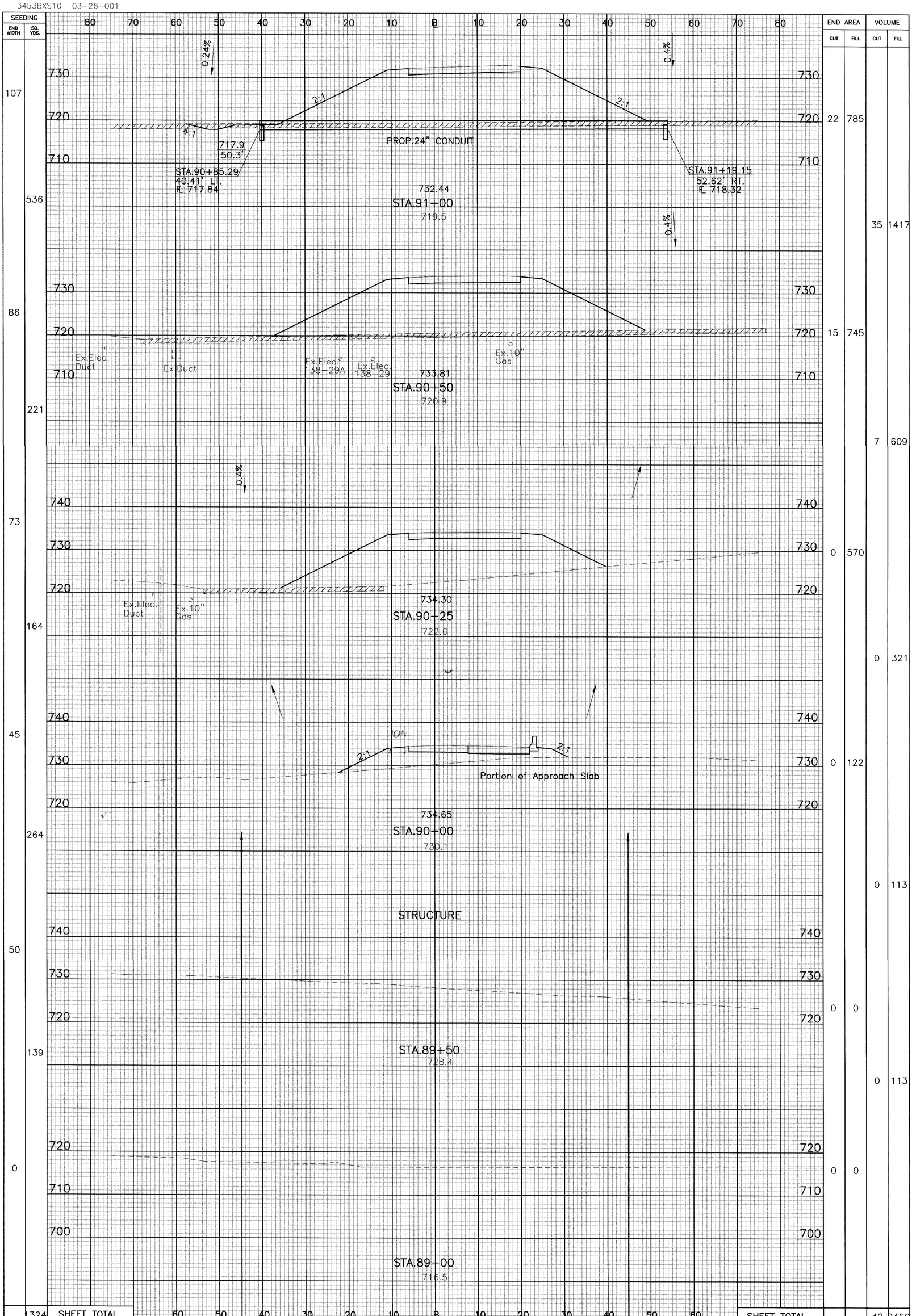

238 63

FRA-315-3.04

RAMP B X-SECTIONS
STA. 89+00 TO STA. 91+00

CALCULATED MJT 1/00
CHECKED WGY 1/00

3453BXS11 03-26-001

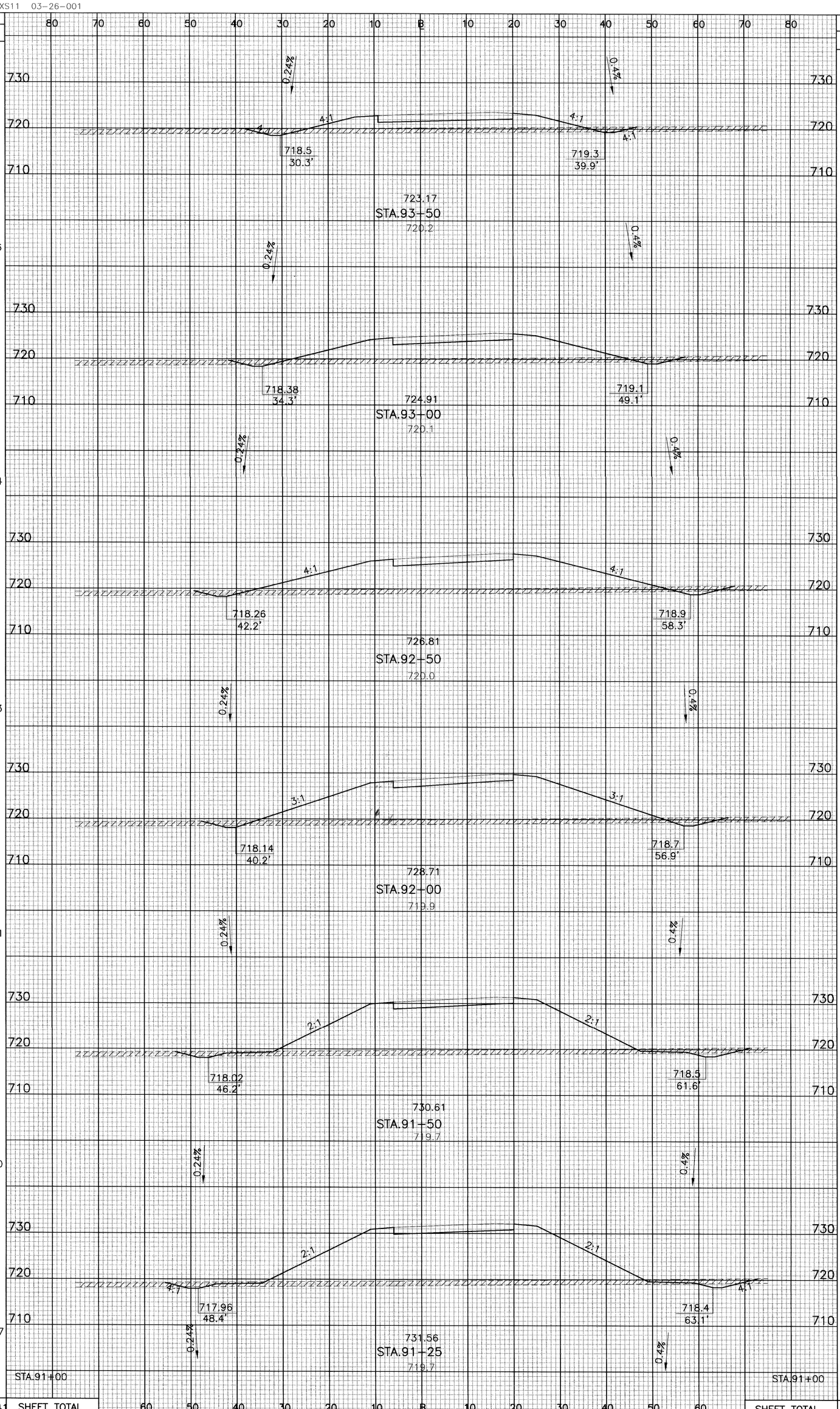

SEEDING END WIDTH	SEEDING SQ. YDS.	END AREA CUT	END AREA FILL	VOLUME CUT	VOLUME FILL
79	486	15	100	31	298
96	584	18	222	38	566
114	633	23	389	43	836
114	661	23	514	41	1017
124	350	21	584	26	576
128	327	35	660	27	669
107		22	785		
	3041 SHEET TOTAL		SHEET TOTAL	206	3962

238 64

FRA-315-3.04

RAMP B X-SECTIONS
STA. 91+25 TO STA. 93+50

CALCULATED MJT 1/00
CHECKED WGY 1/00

3453BXS12 03-26-001

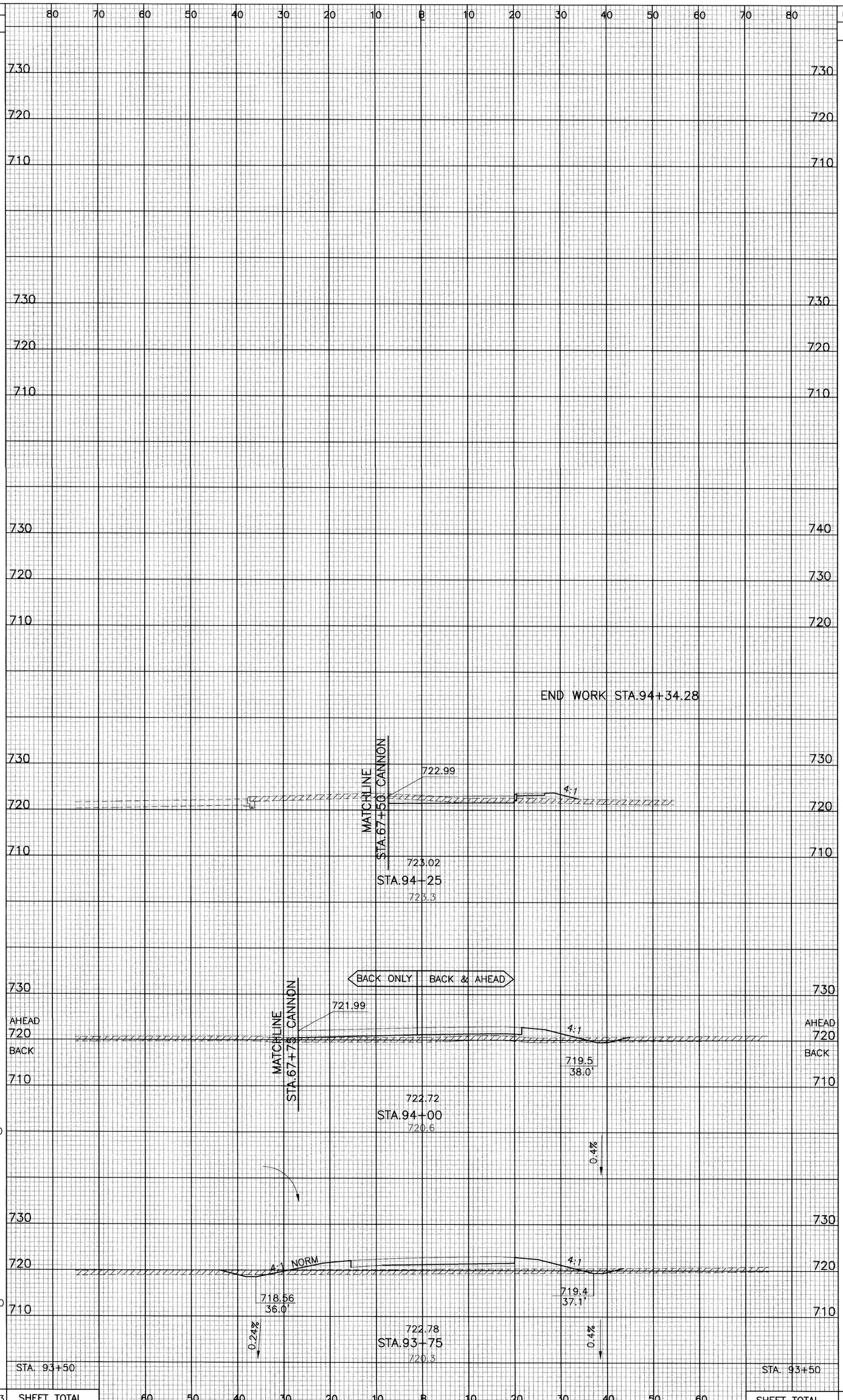

238/65

FRA-315-3.04

RAMP B X-SECTIONS
STA. 93+75 TO STA. 94+25

CALCULATED MJT 1/00
CHECKED WGY 1/00

Q:\OSU_RAMP\CANBXS_1 03-27-001

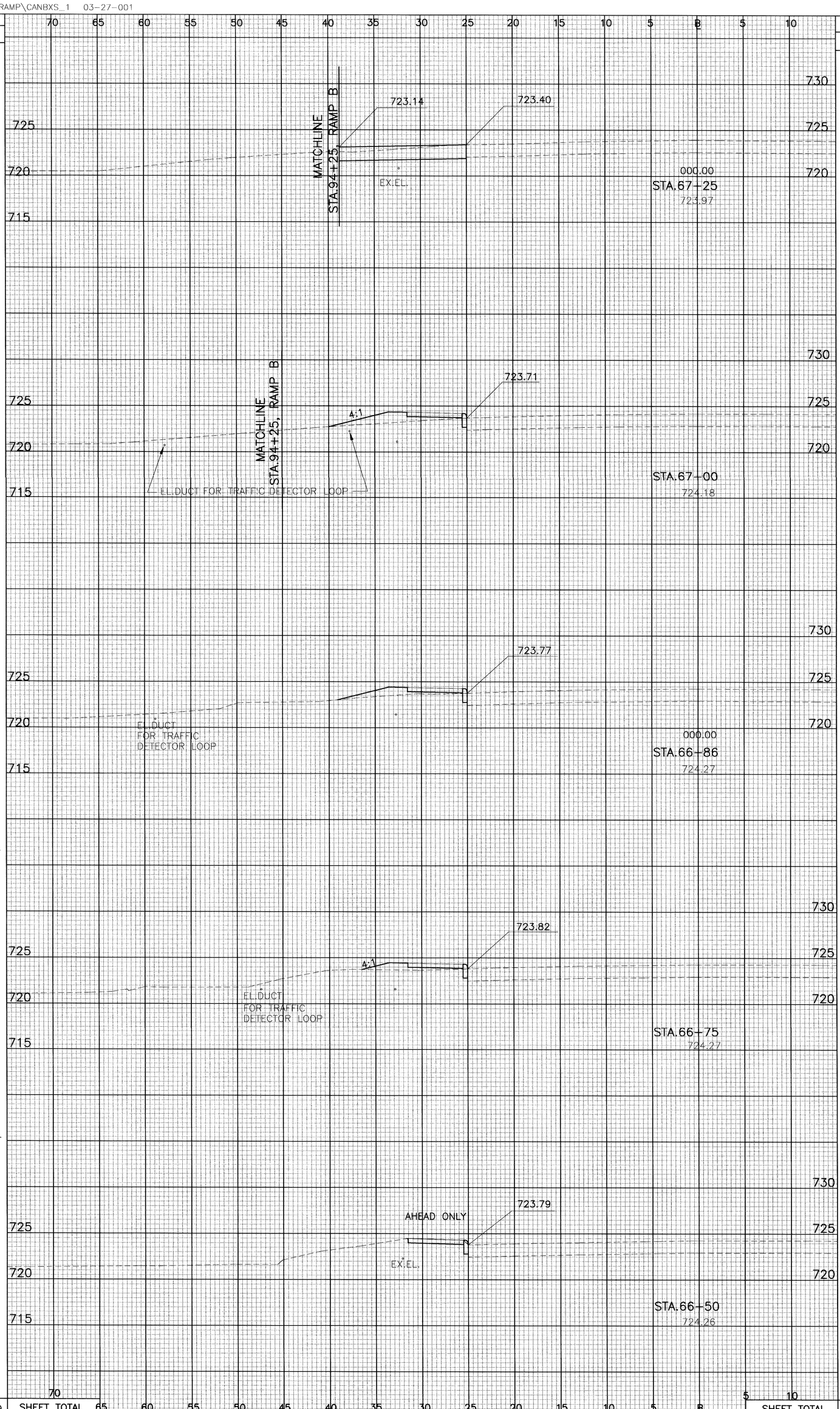

SEEDING END WIDTH	SEEDING SQ. YDS.	END AREA CUT	END AREA FILL	VOLUME CUT	VOLUME FILL
0	20	17	0	9	4
14	21	1	8	1	4
13	14	1	5	1	2
10	24	1	4	1	2
7	79	0	0		
	SHEET TOTAL			12	12

66 / 238

FRA-315-3.04

CANNON DR. - RAMP B X-SECTIONS
STA. 66+50 TO STA. 67+25

CALCULATED MJT 1/00
CHECKED WGY 1/00

Q:\OSU_RAMP\CANBXS_2 03-27-001

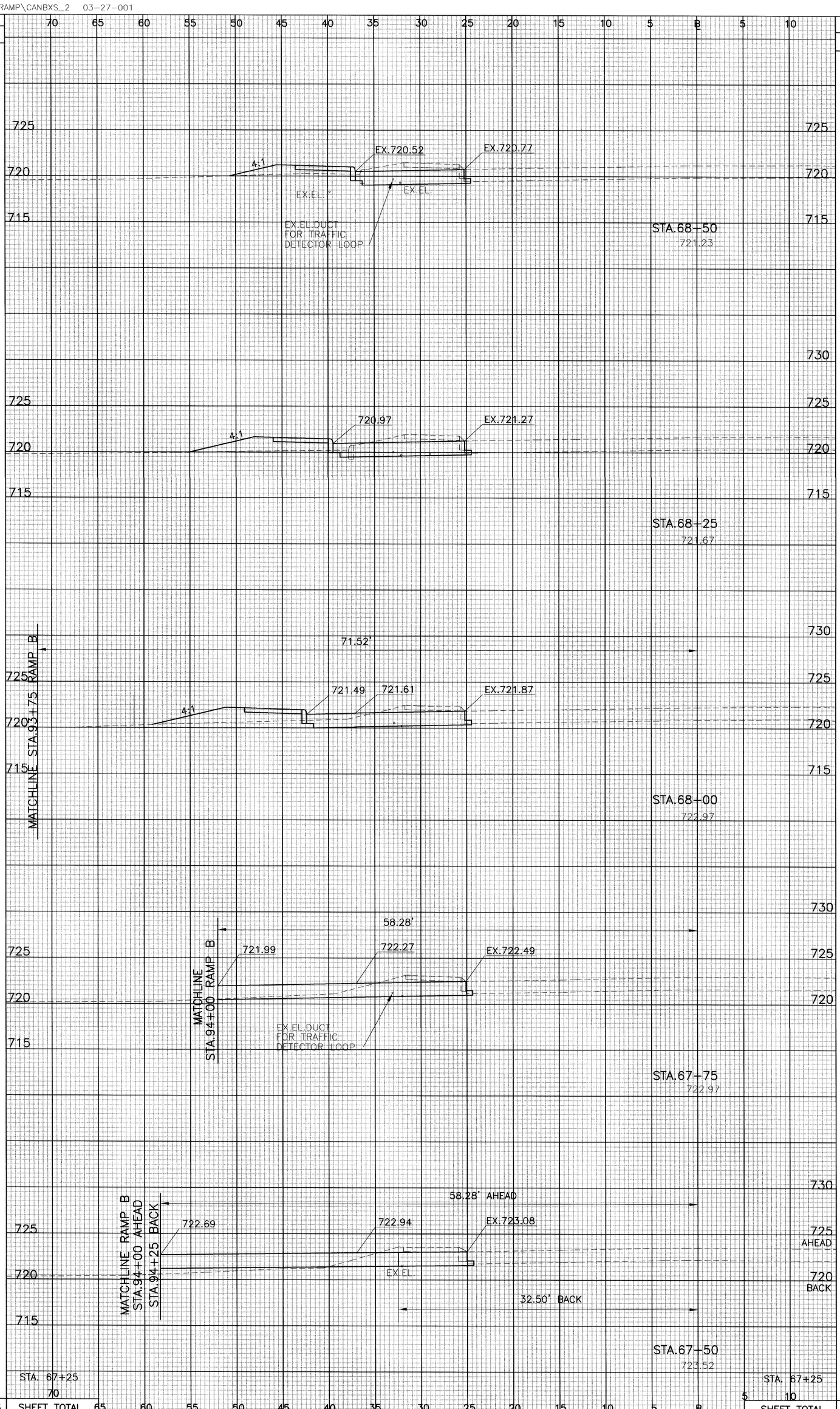

SEEDING END WIDTH	SEEDING SQ. YDS.
9	25
10	31
12	17
0	0
0	0
0	0
0	
	73

END AREA CUT	END AREA FILL	VOLUME CUT	VOLUME FILL
22	7	21	10
23	14	22	14
24	15	23	7
25	0	21	3
20	6		
12	0	14	0
17	0		
SHEET TOTAL		101	34

67/238

FRA-315-3.04

CANNON DR. - RAMP B X-SECTIONS
STA.67+50 TO STA. 68+50

CALCULATED MJT 1/00
CHECKED WGY 1/00

Q:\OSU_RAMP\CANBXS_3 03-27-001

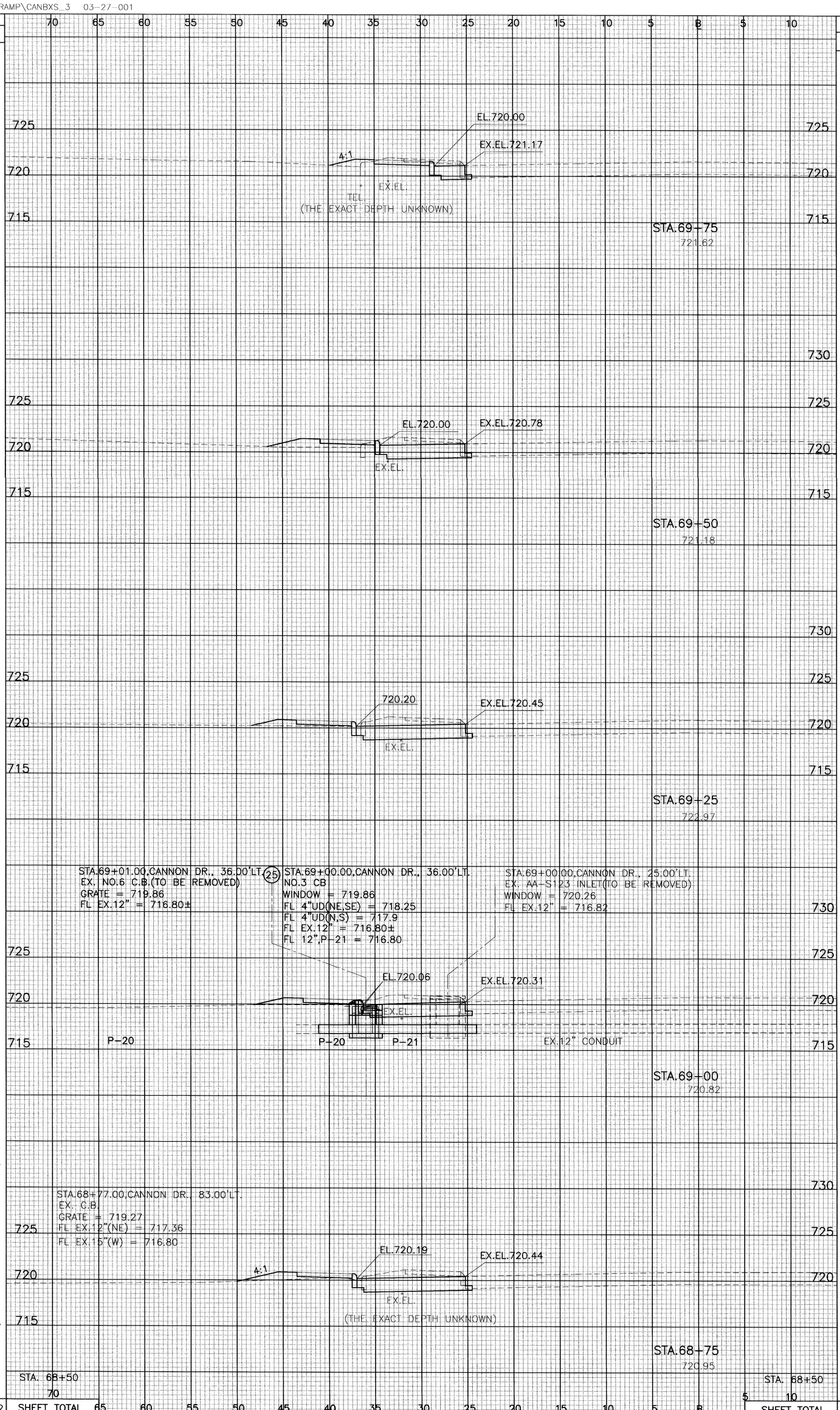

SEEDING END WIDTH	SEEDING SQ. YDS.		END AREA CUT	END AREA FILL	VOLUME CUT	VOLUME FILL
7	21		10	3	14	4
8	21		20	5	21	4
7	21		24	4	22	4
8	24		23	5	21	4
9	25		22	4	21	5
9			22	7	99	21
	112	SHEET TOTAL				

68
238

FRA-315-3.04

CANNON DR. - RAMP B X-SECTIONS
STA.68+75 TO STA. 69+75

CALCULATED MJT 1/00
CHECKED WGY 1/00

Q:\OSU_RAMP\CANBXS_4 03-27-001

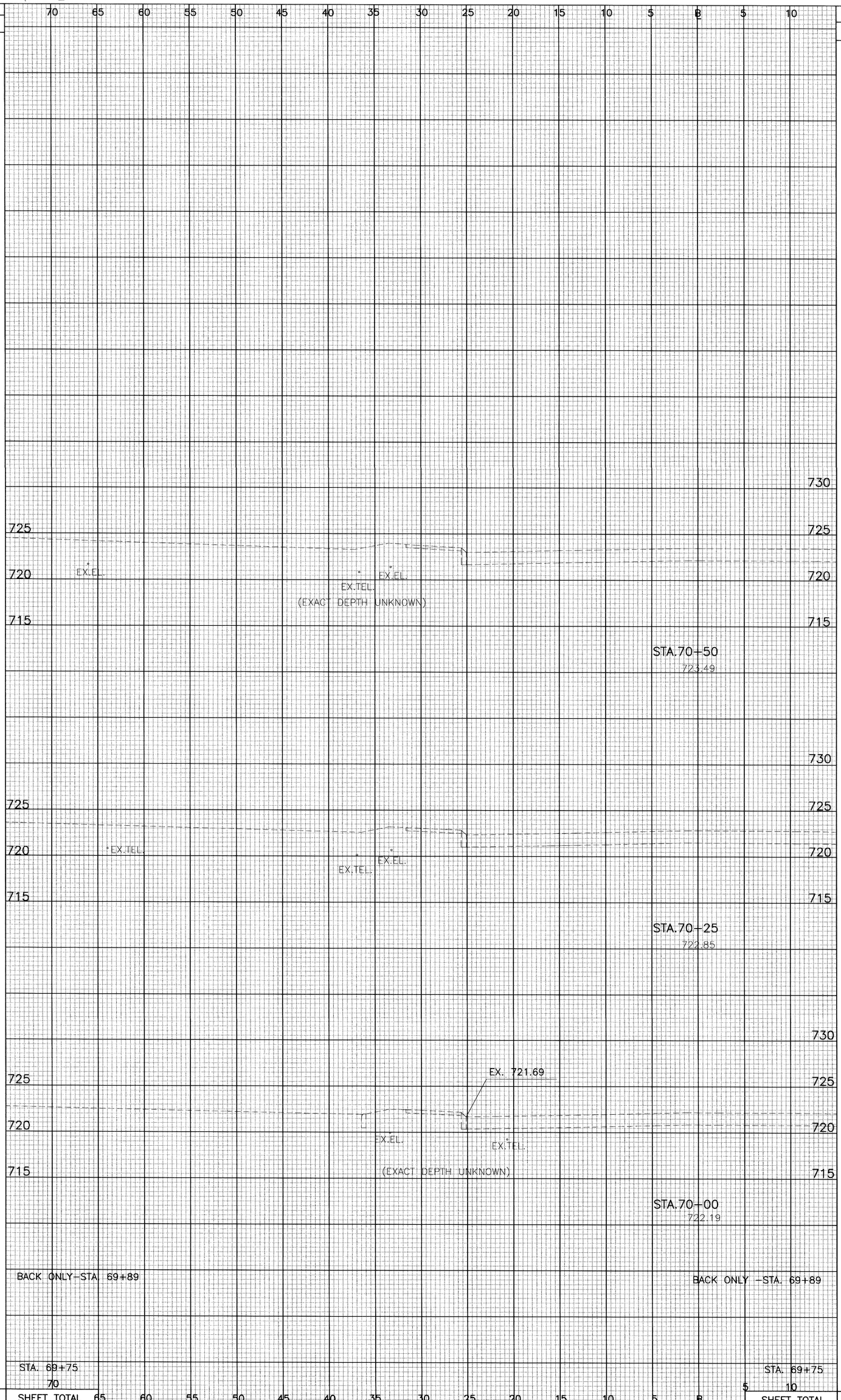

SEEDING END WIDTH	SEEDING SQ. YDS.	END AREA CUT	END AREA FILL	VOLUME CUT	VOLUME FILL
0		0	0		
	6			3	1
7		10	3		
	6			3	1

69
238

FRA-315-3.04

CANNON DR. - RAMP B X-SECTIONS
STA.70+00 TO STA. 70+50

CALCULATED MJT 1/00
CHECKED WGY 1/00

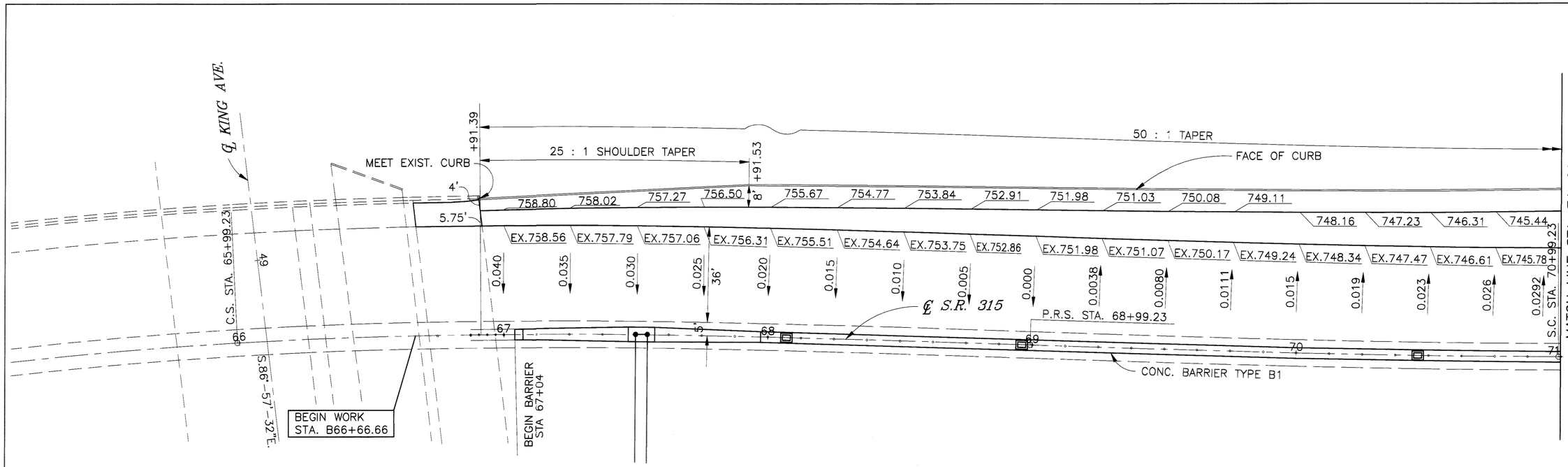

1B
CURVE DATA

P.I. STA. B77+98.80
△ = 11°-12'-23"
Dc = 4°-00'
R = 1432.39'
L = 280.16'
T = 140.53'
SE = 0.060

CALCULATED MJT 1/00
CHECKED WGY 1/00

HORIZONTAL SCALE IN FEET
0 10 20 40

PAVEMENT DETAILS S.R.315
STA. 66+00 TO STA. 77+00

FRA-315-3.04

3453bpd1 05-28-02

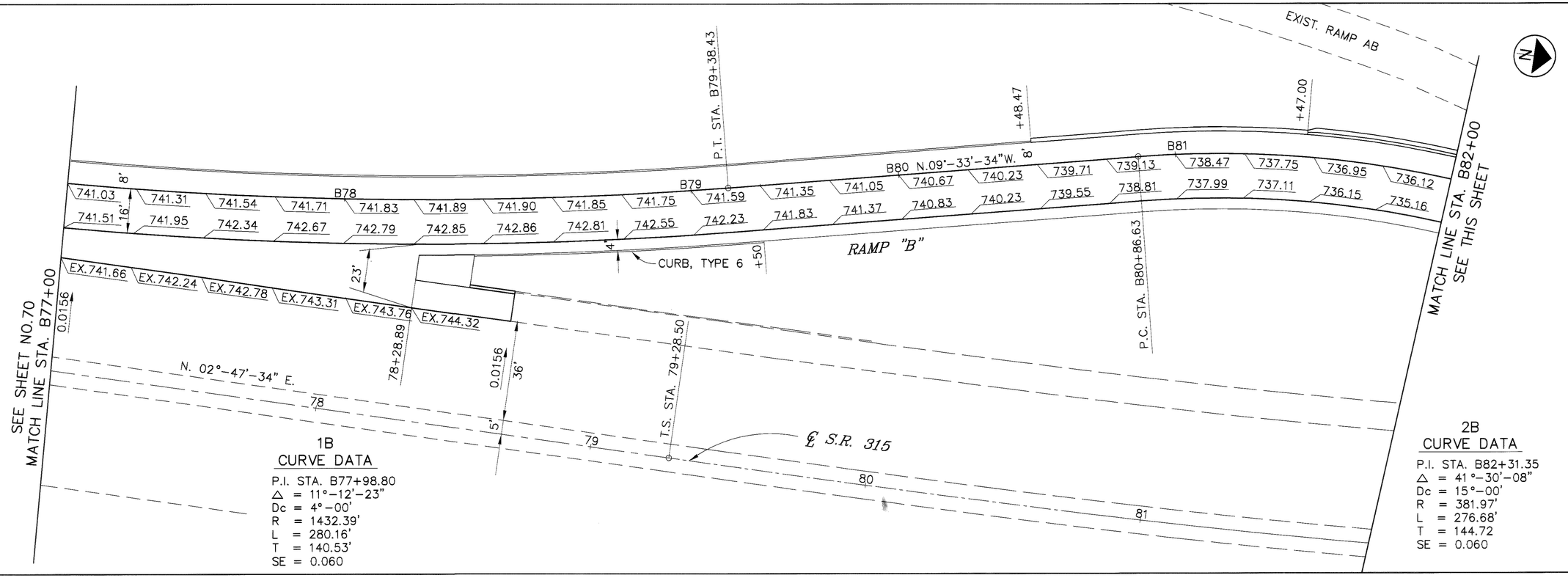

CALCULATED MJT 1/00
CHECKED WGY 1/00

0 20 40
10
HORIZONTAL
SCALE IN FEET

PAVEMENT DETAILS RAMP B
STA. B77+00 TO STA. B87+00

FRA-315-3.04

34535pd2 05-28-02

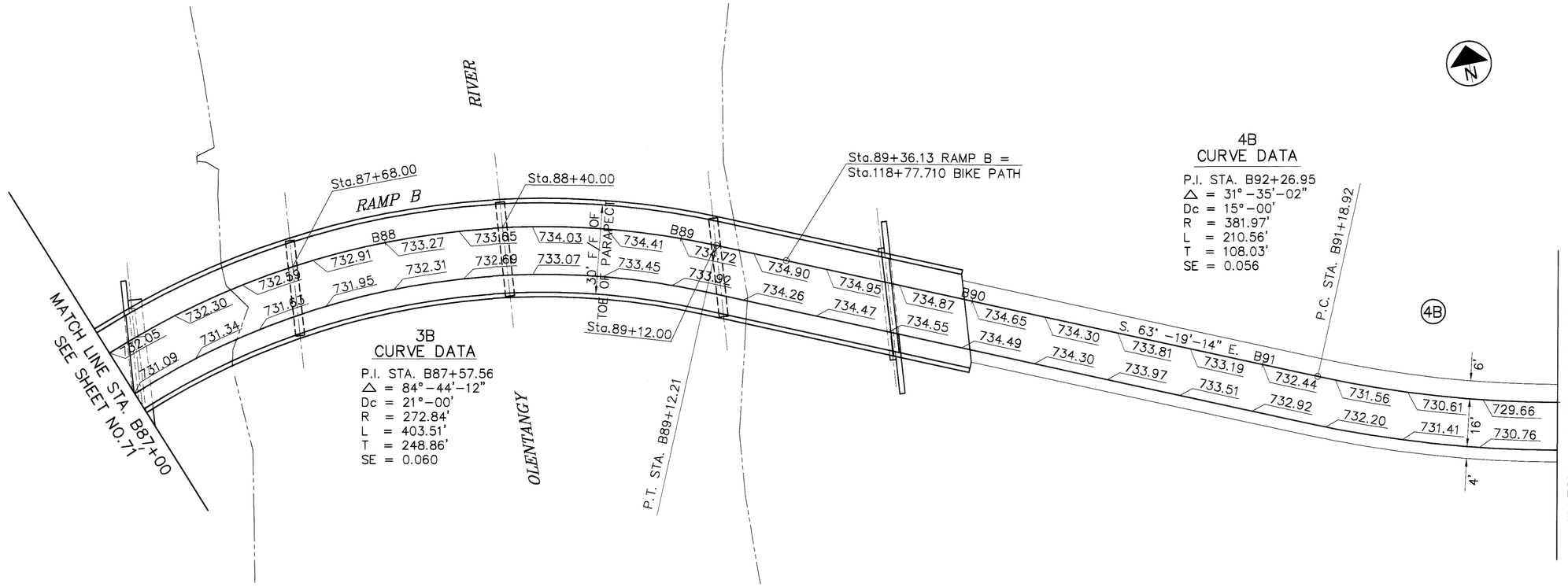
RIVER
OLENTANGY
RAMP B
Sta.87+68.00
Sta.88+40.00
Sta.89+12.00
Sta.89+36.13 RAMP B =
Sta.118+77.710 BIKE PATH
30' F/F OF PARAPET
TOE OF
P.T. STA. B89+12.21
P.C. STA. B91+18.92
B88
B89
B90
B91
732.99
732.91
733.27
733.85
734.03
734.41
732.30
732.31
733.07
733.45
731.63
731.95
732.69
733.92
732.05
731.34
731.09
734.26
734.47
734.87
734.90
734.95
734.55
734.49
734.65
734.30
734.30
733.81
733.97
733.19
733.51
732.44
732.92
731.56
732.20
730.61
731.41
729.66
730.76
6'
16'
4'
S. 63°-19'-14" E.
MATCH LINE STA. B87+00
SEE SHEET NO.71
MATCH LINE STA. B92+00
SEE THIS SHEET
3B
CURVE DATA
P.I. STA. B87+57.56
△ = 84°-44'-12"
Dc = 21°-00'
R = 272.84'
L = 403.51'
T = 248.86'
SE = 0.060
4B
CURVE DATA
P.I. STA. B92+26.95
△ = 31°-35'-02"
Dc = 15°-00'
R = 381.97'
L = 210.56'
T = 108.03'
SE = 0.056
4B
N
SEE SHEET NO. 73
MATCH LINE STA. 68+50 CANNON DRIVE
68+47.53
37.00'
EX.721.10
EX.721.67
720.55
720.97
EX.721.27
EX.722.27
EX.721.87
68'
721.49
EX.722.47
EX.722.97
25'
37'
EX.723.08
EX.723.52
75°-56'-00"
△ = 92°-38'-44"
R = 50'
L = 80.85"
T = 52.36'
STA.68+07.53,41' LT.
STA.B93+58.28
P.T. STA. B93+29.41
B93+19.62
10:1 TAPER
B92
B93
B94
N.85°-05'-44"E.
728.71
729.81
727.76
728.66
726.81
727.71
725.86
726.76
724.91
725.65
723.96
724.54
723.19
723.61
722.78
723.04
722.72
722.94
723.02
723.16
6'
4'
16'
STA. B94+60.33 RAMP B =
STA. 67+34.35 CANNON DR.
END WORK
STA. B94+34.28
12th AVE.
B93+84.29
B94+24.29
67+15.89
67'
EX.723.71
EX.723.82
66+50.00
EX.723.79
B94+40.57
CANNON DRIVE
△ = 16°-03'-32"
R = 60'
L = 16.82'
T = 8.46'
STA. B94+18.32, 79.70' RT.
STA. 66+66.43, 60' LT. CANNON DR.
FOR CURB RAMP DETAILS, SEE SHEET 86
STA.68+07.53,
41' LT. CANNON DR.
721.35
10.85'
721.54
10'
721.68
721.80
721.95
722.16
722.43
722.68
722.91
STA.B93+58.28
4' LT. RAMP B
B94+24.29
B94+40.57
723.17
723.37
6.82'
723.52
HORIZONTAL
SCALE IN FEET
0
10
20
40
CALCULATED
MJT
1/00
CHECKED
WGY
1/00
PAVEMENT DETAILS RAMP B
STA. B87+00 TO STA. B95+00
FRA-315-3.04
72
238
34538pd3 08-14-001

N

0 10 20 40
HORIZONTAL SCALE IN FEET

CALCULATED DWD 5/00
CHECKED CE 5/00

WIDENING PAVEMENT DETAIL CANNON DRIVE
STA. 68+50 TO STA. 71+00

FRA-315-3.04

3746BPD4 03-26-001

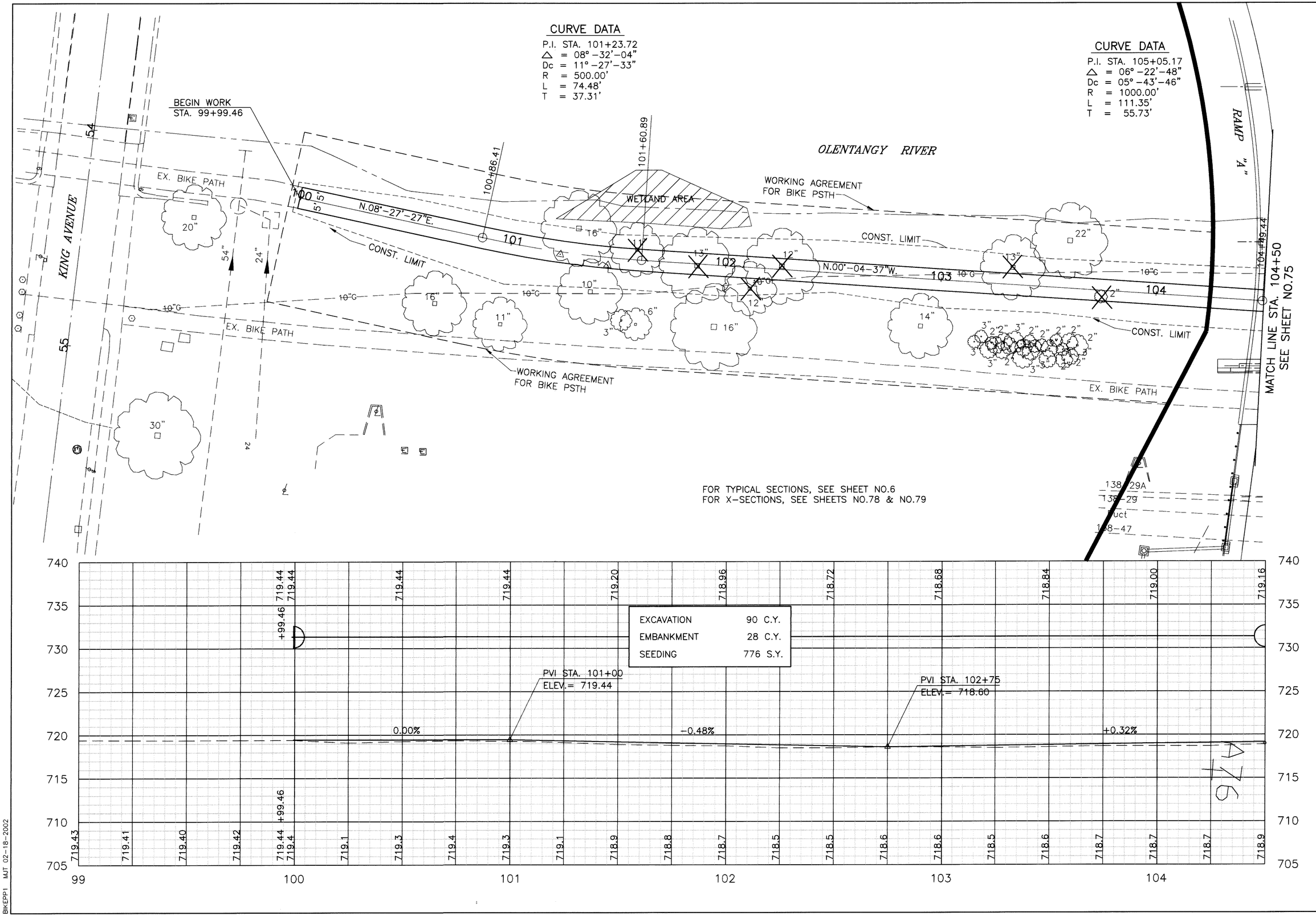

PLAN AND PROFILE BIKEPATH
STA. 99+00 TO STA. 104+50

FRA-315-3.04

BIKEPP1 MJT 02-18-2002

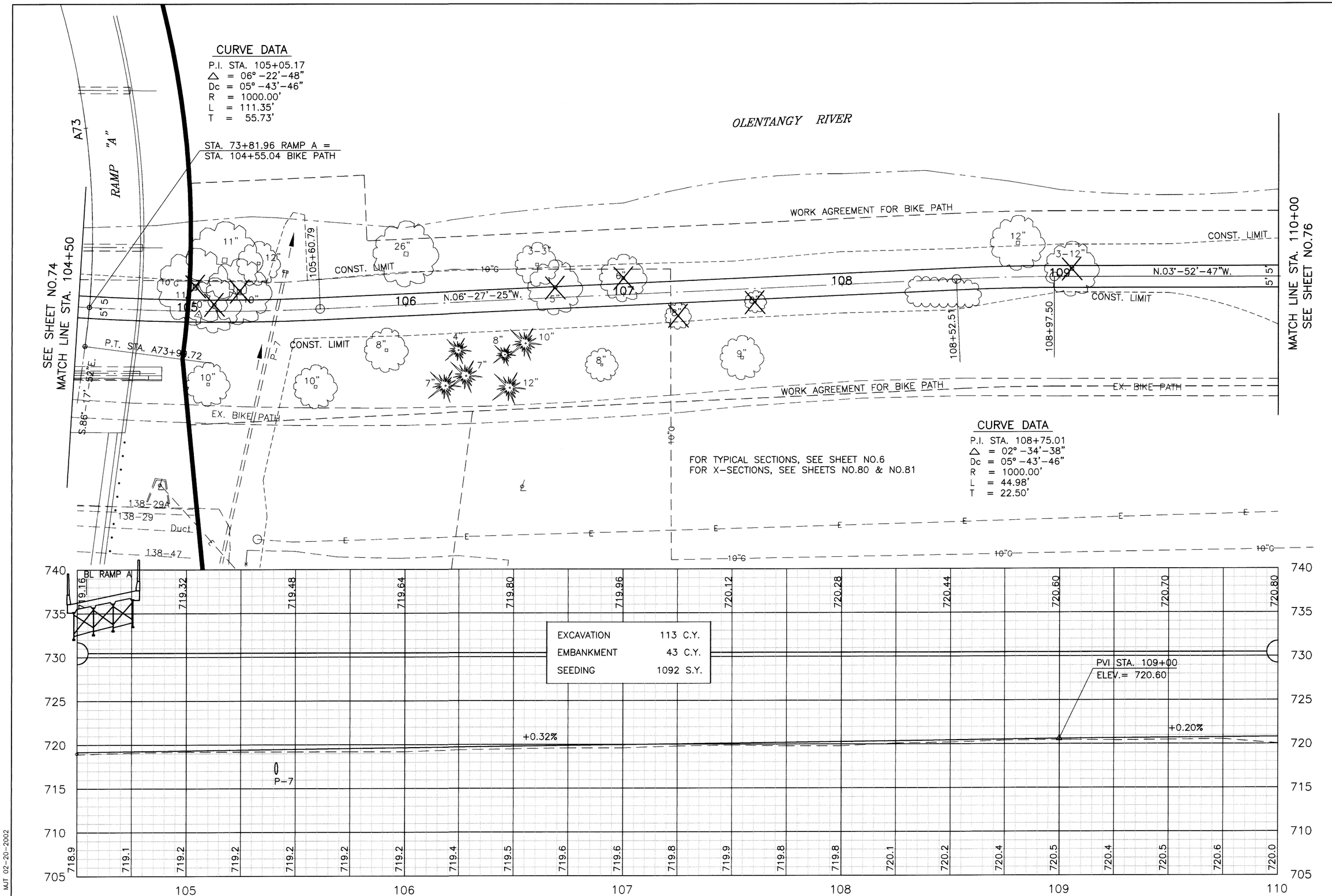

CALCULATED MJT 6-28
CHECKED WGY 6-28

HORIZONTAL SCALE IN FEET 0 10 20 40

PLAN AND PROFILE BIKEPATH
STA. 104+50 TO STA. 110+00

FRA-315-3.04

BIKEPP2 MJT 02-20-2002

OLENTANGY RIVER

SEE SHEET NO.75
MATCH LINE STA. 110+00

MATCH LINE STA. 115+50
SEE SHEET NO.77

WORK AGREEMENT FOR BIKE PATH

CONST. LIMIT

N.03°-52'-47"W

111

112

113

N.06°-55'-22"E.

114

115

112+27.78

5'

5'

30"

18"

24"

8"

24"

6"

15"

SAVE

110+35.25

EX. BIKE PATH

WORK AGREEMENT FOR BIKE PATH

EX. BIKE PATH

CONST. LIMIT

CONST. LIMIT

CONST. LIMIT

10"G

10"G

10"G

10"G

10"G

E

E

E

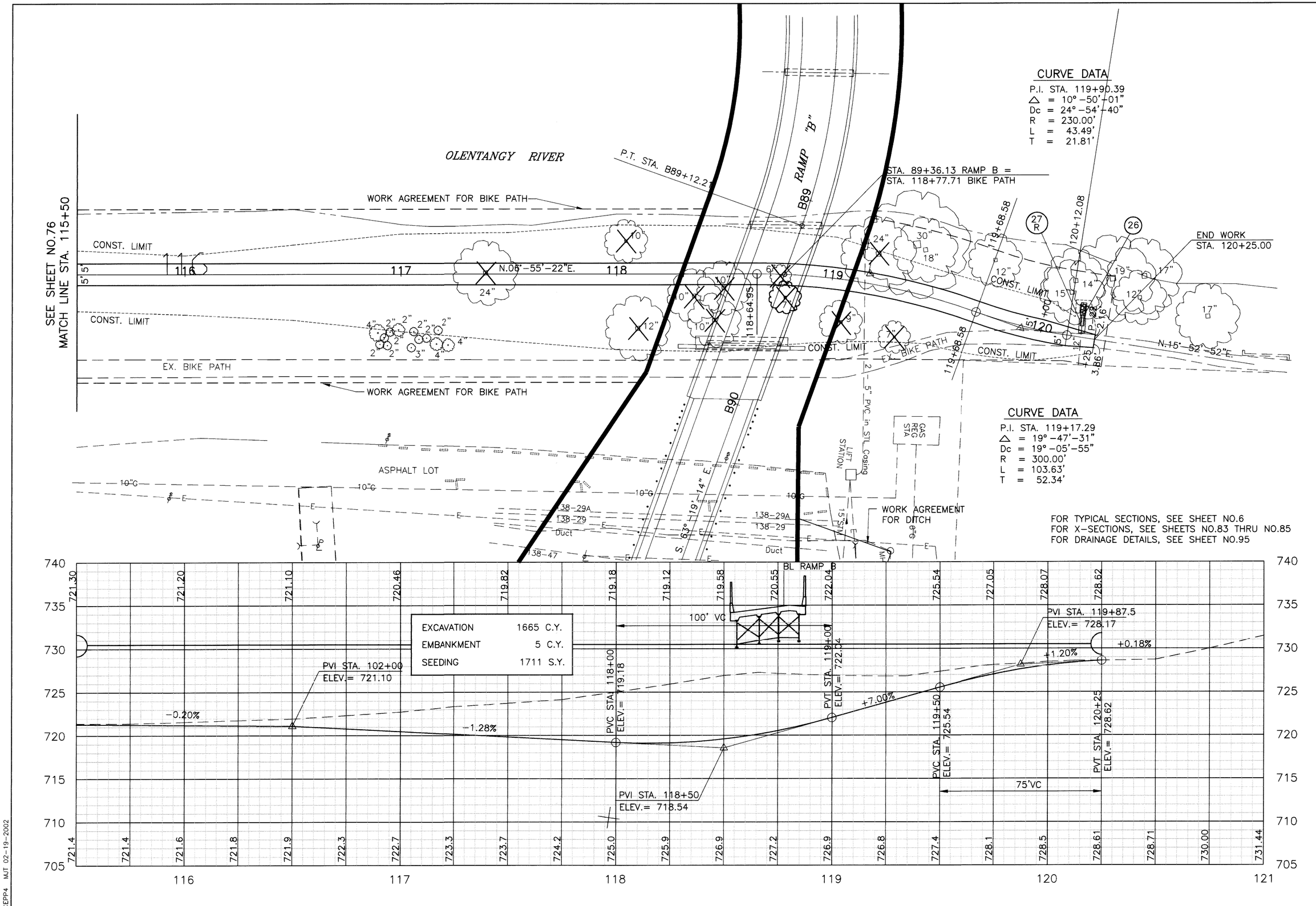

HORIZONTAL SCALE IN FEET

CALCULATED MJT 2/01

CHECKED WGY 2/01

PLAN AND PROFILE BIKEPATH
STA. 115+50 TO STA. 121+00

FRA-315-3.04

BIKEPP4 MJT 02-19-2002

BPXS_01 06-28-01

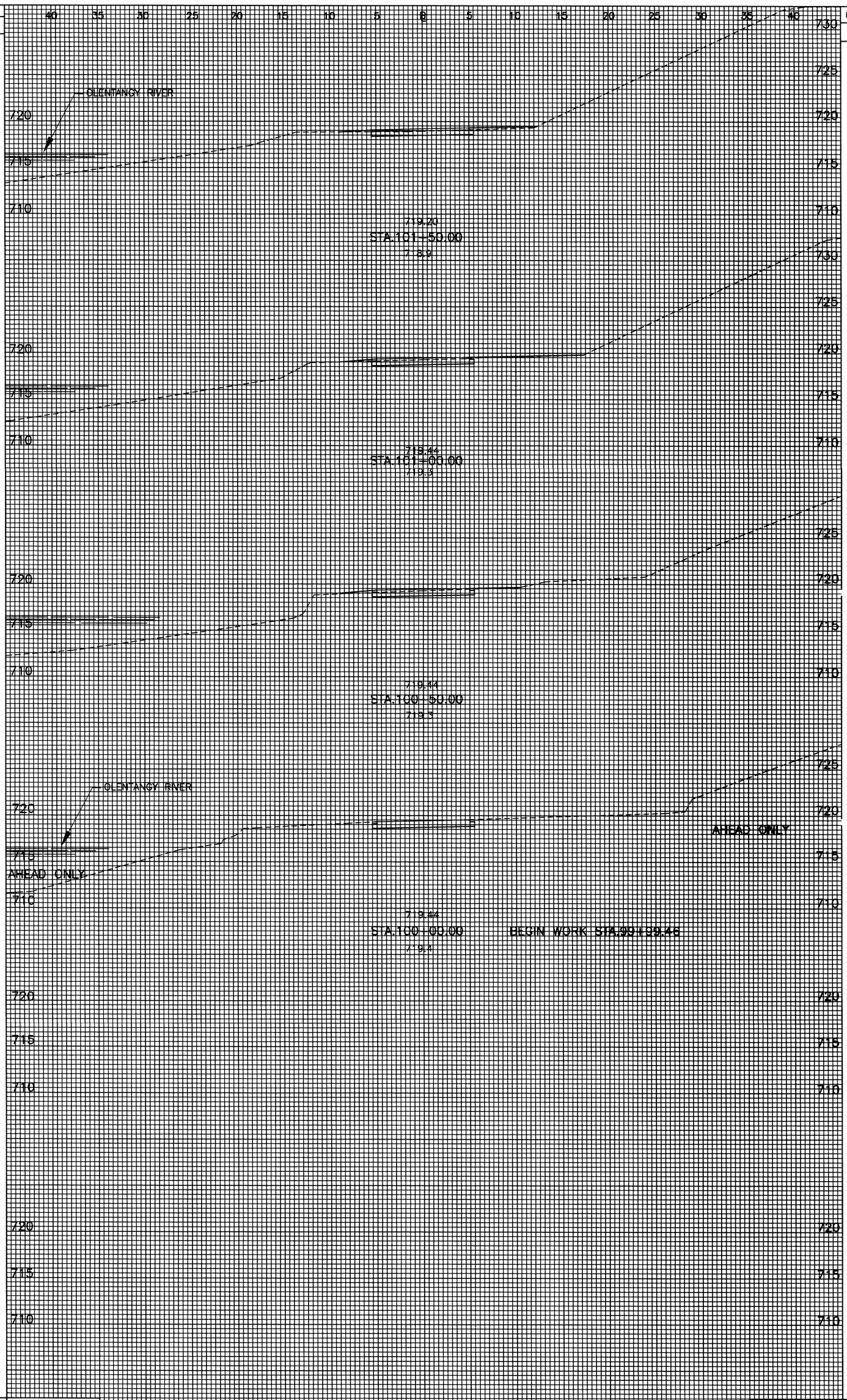

SEEDING END WIDTH	SEEDING SQ. YDS.	END AREA CUT	END AREA FILL	VOLUME CUT	VOLUME FILL
10		7	0		
	69			12	1
15		6	1		
	75			11	2
12		6	1		
	44			11	1
4		6	0		
	188 SHEET TOTAL		SHEET TOTAL	34	4

78 / 238	FRA-315-3.04	BIKEPATH X-SECTIONS STA. 100+00 TO STA. 101+50	CALCULATED GM 02-001 CHECKED WGY 02-001

BPXS_02 06-28-01

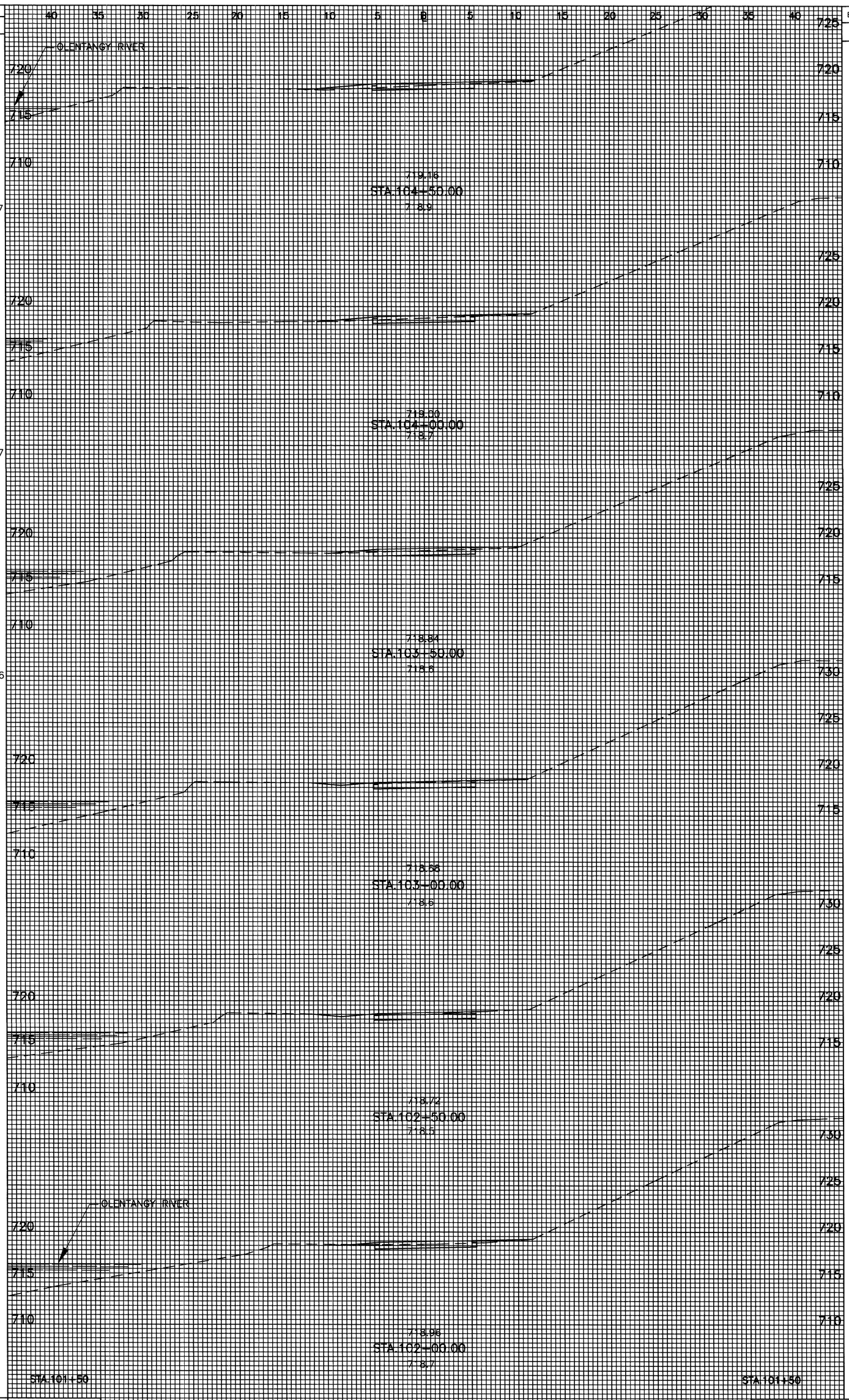

SEEDING END WIDTH	SEEDING SQ. YDS.	END AREA CUT	END AREA FILL	VOLUME CUT	VOLUME FILL
26	147	4	4	7	7
27	147	4	4	7	7
26	116	3	4	7	7
16	75	5	3	9	3
11	53	5	0	12	0
8	50	8	0	14	0
10		7	0		
	588	SHEET TOTAL		56	24

79 / 238	FRA-315-3.04	BIKEPATH X-SECTIONS STA. 102+00 TO STA. 104+50

CALCULATED GM 02-001
CHECKED WGY 02-001

BPXS_03 06-28-01

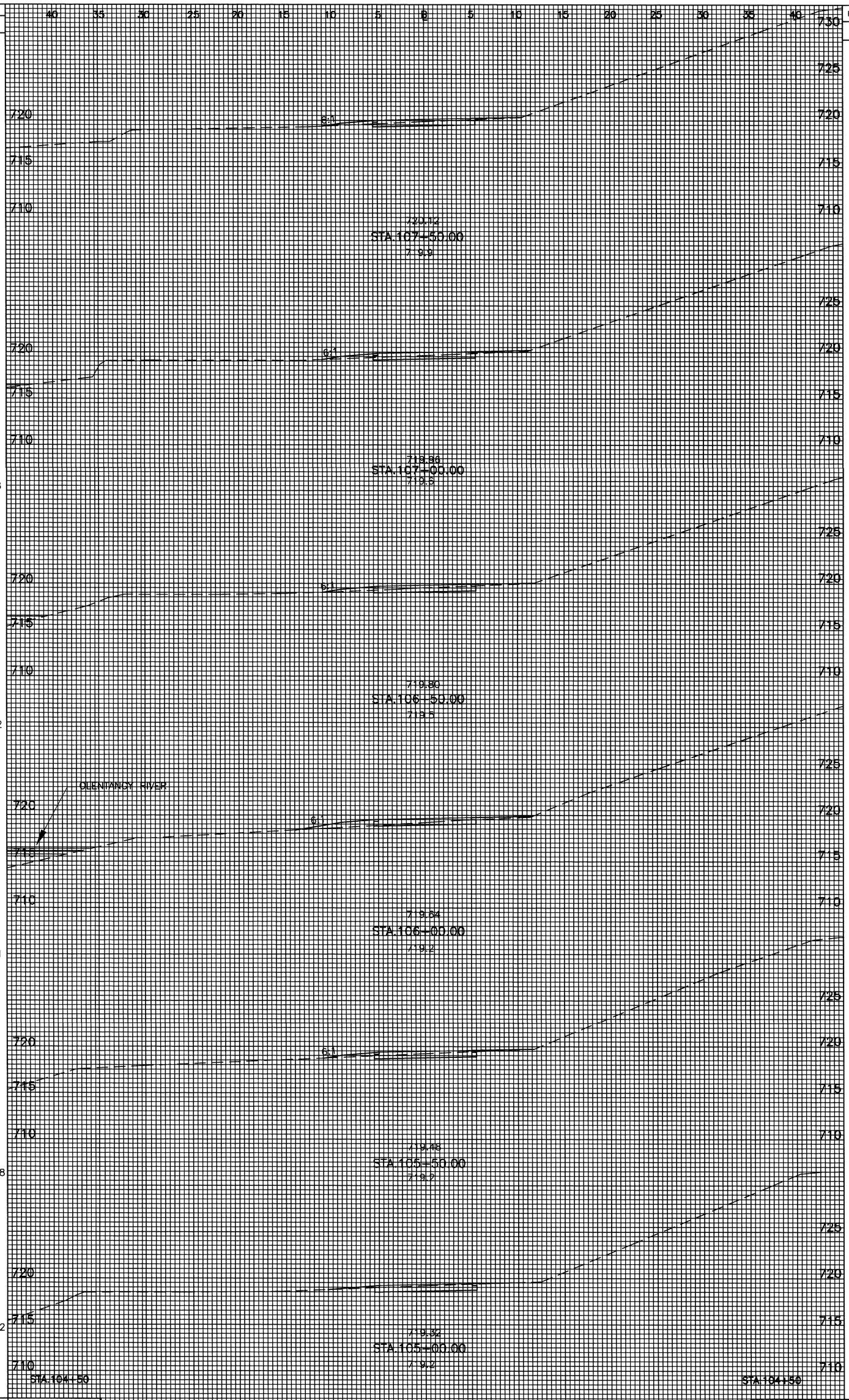

SEEDING END WIDTH	SEEDING SQ. YDS.	END AREA CUT	END AREA FILL	VOLUME CUT	VOLUME FILL
10	47	7	1	13	1
7	58	7	0	14	0
14	142	8	0	11	4
37	181	4	4	8	6
28	128	5	2	10	3
18	122	6	1	9	5
26	80	4	4		
	678 SHEET TOTAL		SHEET TOTAL	65	19

238

FRA-315-3.04

BIKEPATH X-SECTIONS STA. 105+00 TO STA. 107+50

CALCULATED GM 02-001

CHECKED WGY 02-001

BPXS_04 03-22-01

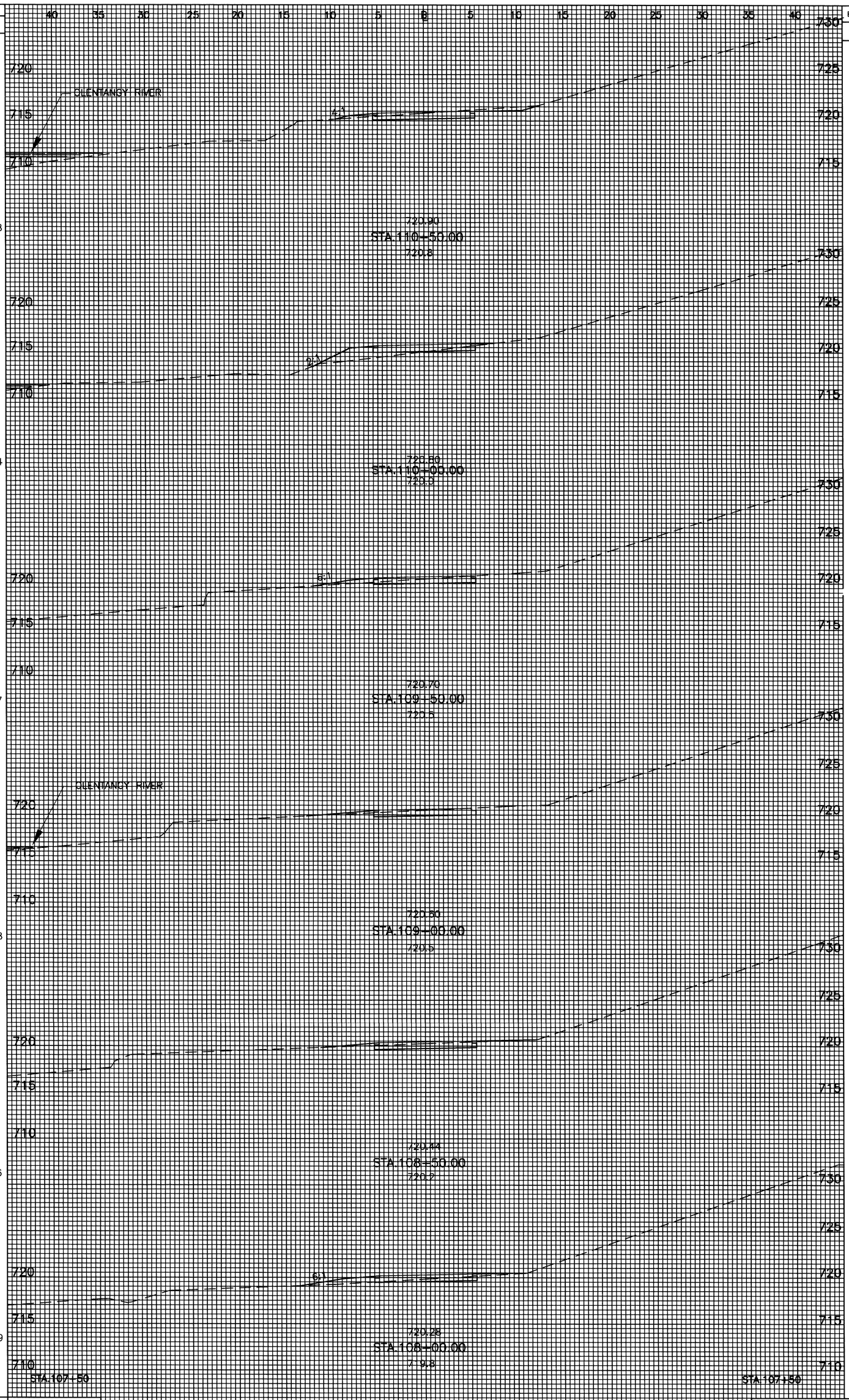

17	128	8	1					8	9
29	114	1	8					6	10
12	67	5	3					10	4
12	58	6	1					12	1
9	86	7	0					10	4
22	89	4	4					10	5
10		7	1						
542	SHEET TOTAL							56	33

81/238

FRA-315-3.04

BIKEPATH X-SECTIONS STA. 108+00 TO STA. 110+50

CALCULATED GM 02-001

CHECKED WGY 02-001

BPXS_05 03-22-01

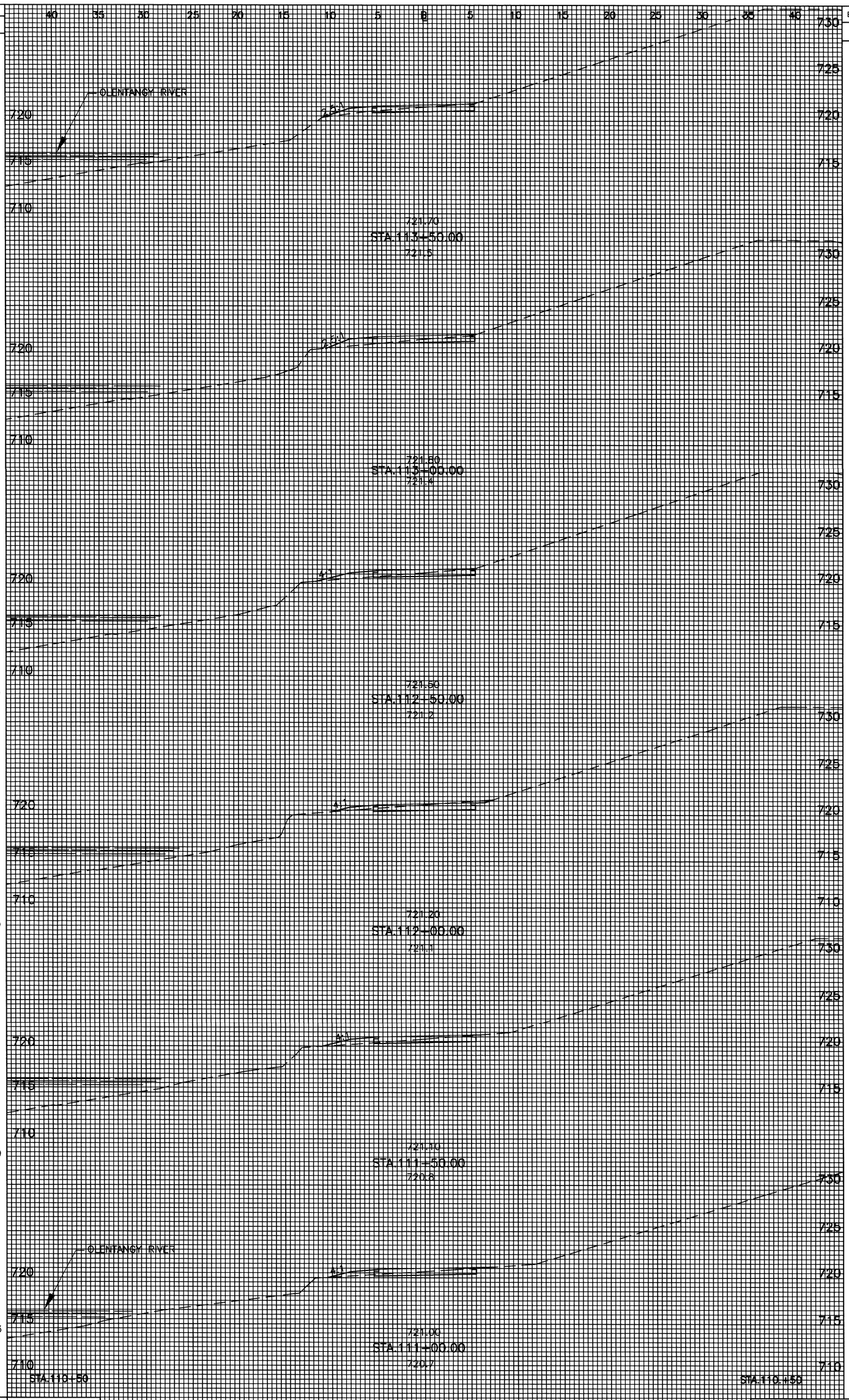

238 | 82

FRA-315-3.04

BIKEPATH X-SECTIONS STA. 111+00 TO STA. 113+50

CALCULATED GM 02-001

CHECKED WGY 02-001

BPXS_06 03-22-01

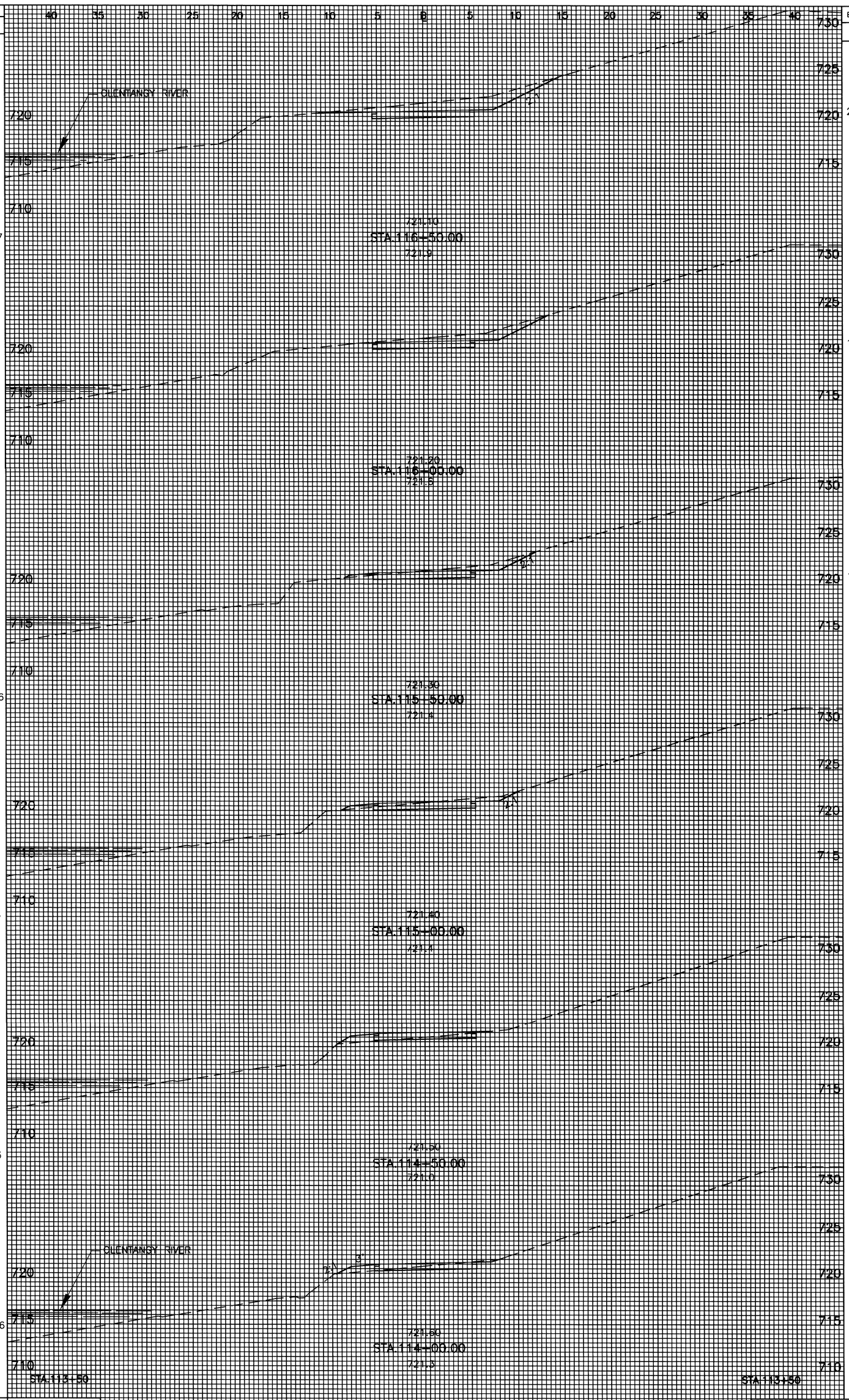

238 83

FRA-315-3.04

BIKEPATH X-SECTIONS STA. 114+00 TO STA. 116+50

CALCULATED GM 02-001

CHECKED WGY 02-001

BPXS_07 03-22-01

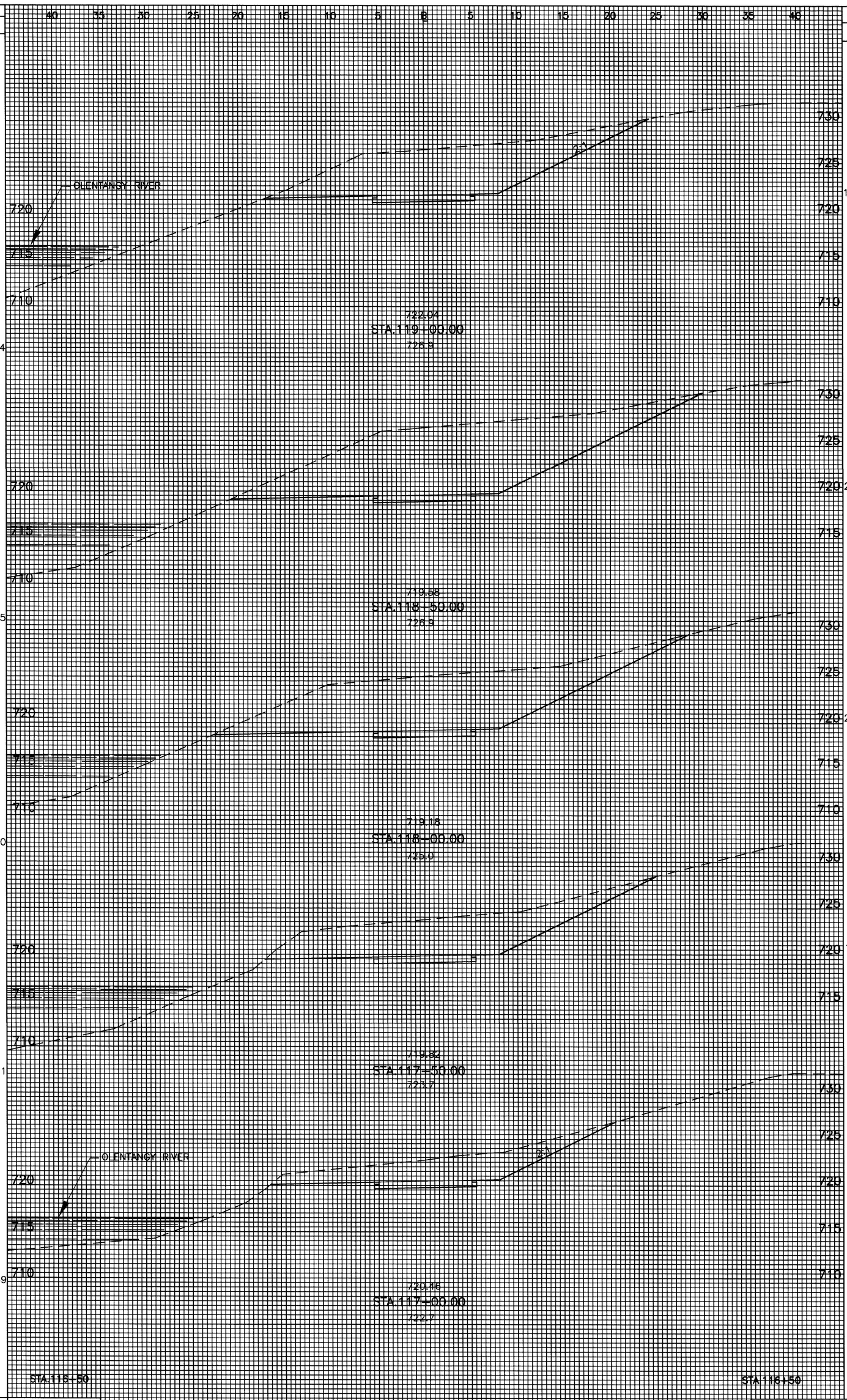

FRA-315-3.04

BIKEPATH X-SECTIONS STA. 117+00 TO STA. 118+50

CALCULATED GM 02-001

CHECKED WGY 02-001

BPXS_08 05-30-02

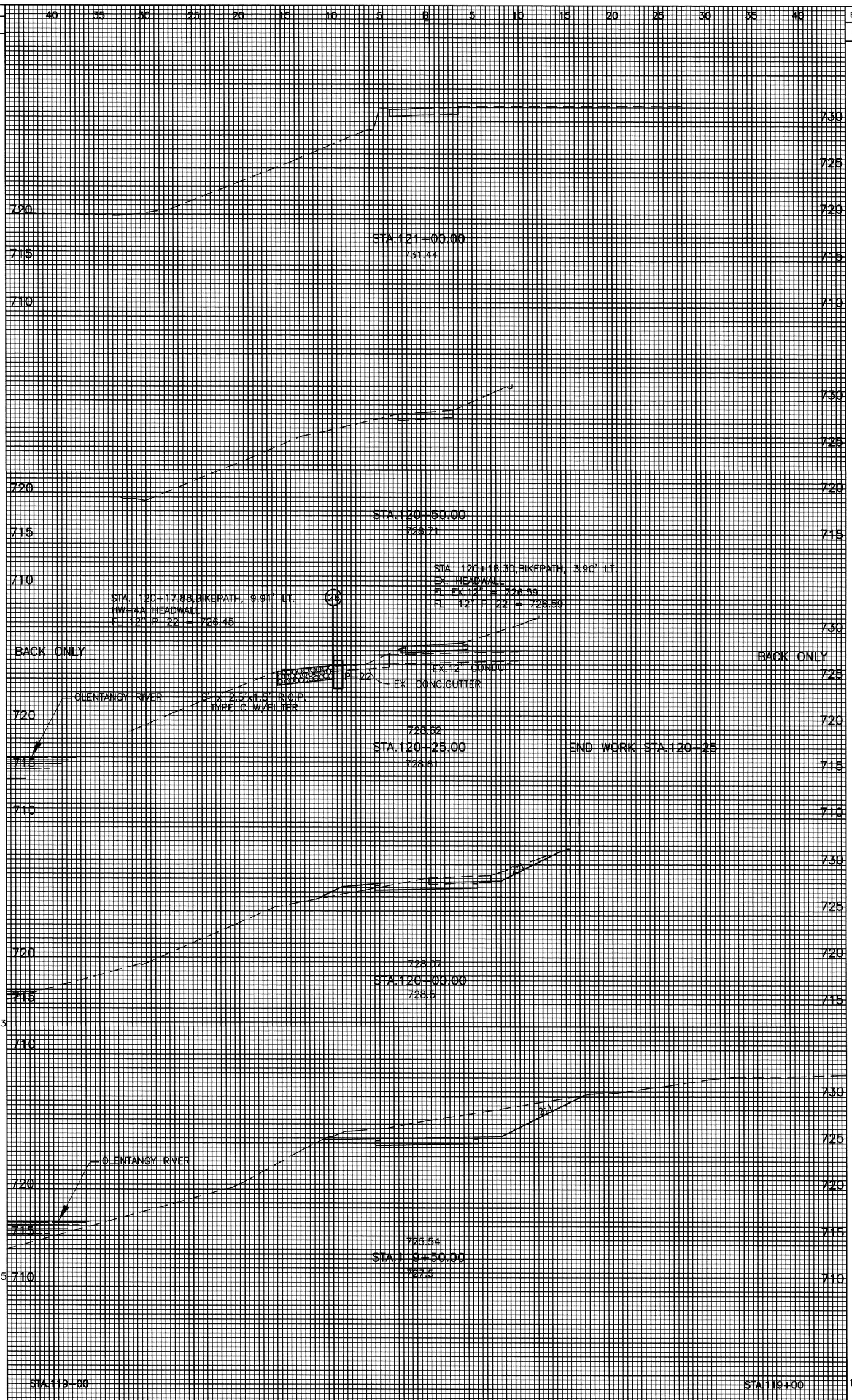

SEEDING END WIDTH	SEEDING SQ. YDS.	END AREA CUT	END AREA FILL	VOLUME CUT	VOLUME FILL
0		0	0		
5	0			0	0
24	40	18	4	11	2
24	133	51	0	64	2
39	175	144	0	181	0
	348 SHEET TOTAL	SHEET TOTAL		256	4

238 | 85

FRA-315-3.04

BIKEPATH X-SECTIONS STA. 119+50 TO STA. 120+25

CALCULATED GM 02-001

CHECKED WGY 02-001

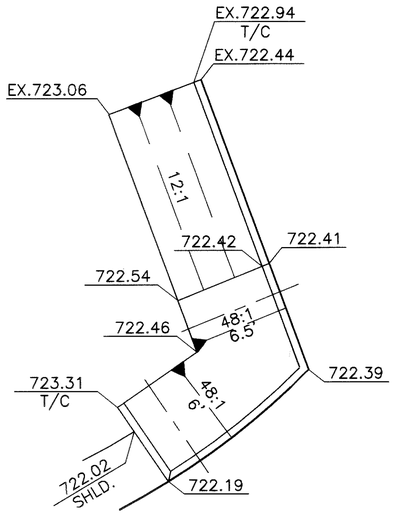

SIDEWALK & CURB RAMP DETAIL

RAMP A N.W. RETURN

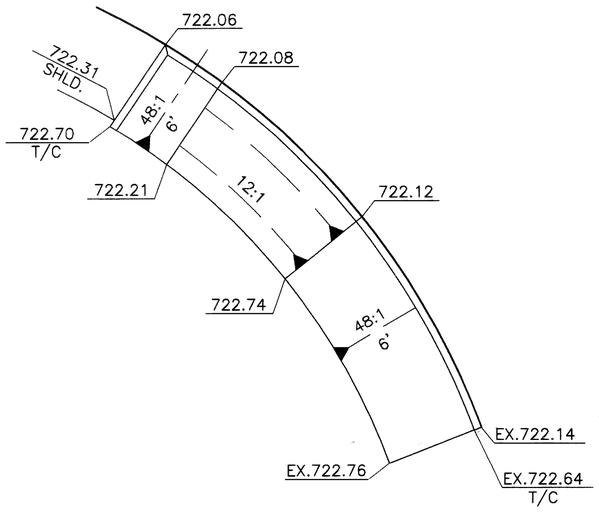

SIDEWALK & CURB RAMP DETAIL

RAMP A S.W. RETURN

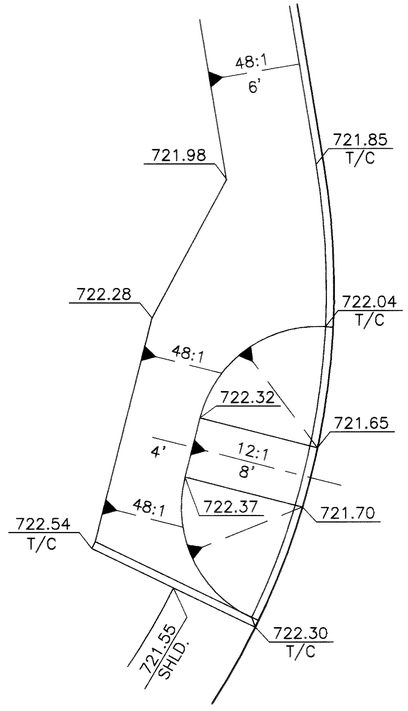

SIDEWALK & CURB RAMP DETAIL

RAMP B N.W. RETURN

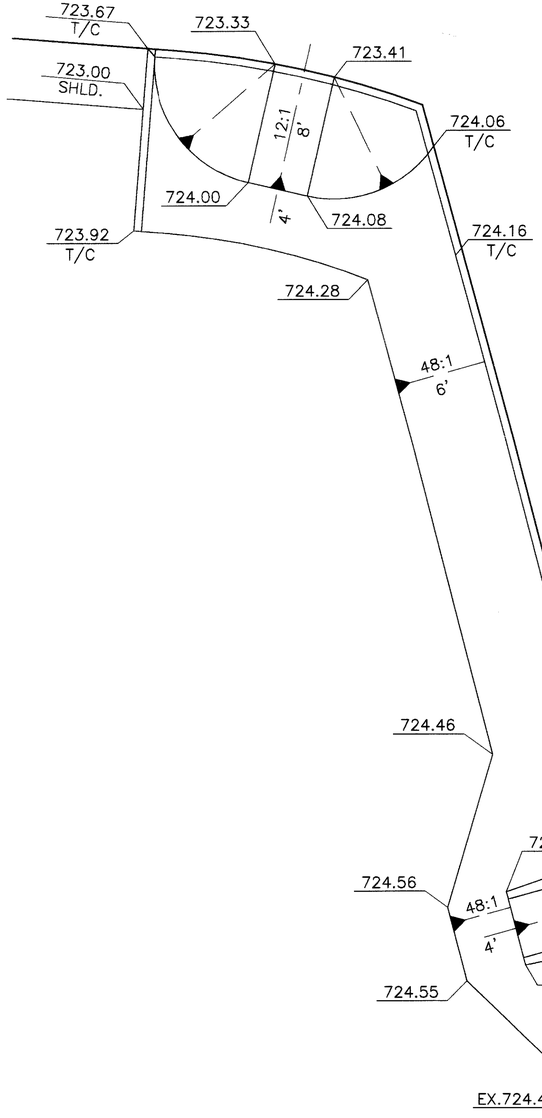

SIDEWALK & CURB RAMP DETAIL

RAMP B S.W. RETURN

CALCULATED MJ/01 11/01
CHECKED WGY 11/01

HORIZONTAL SCALE IN FEET

CURB RAMP DETAILS

FRA-315-3.04

CURBRAMPS 11-30-01

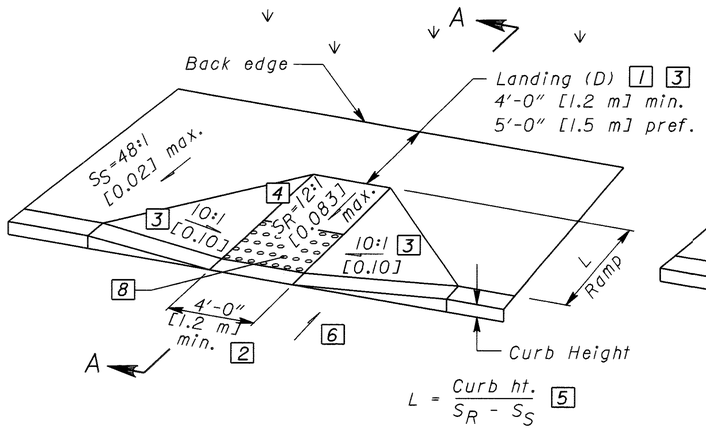

See Sht. 3/3 for SECTION A-A

PERPENDICULAR CURB RAMP DETAIL

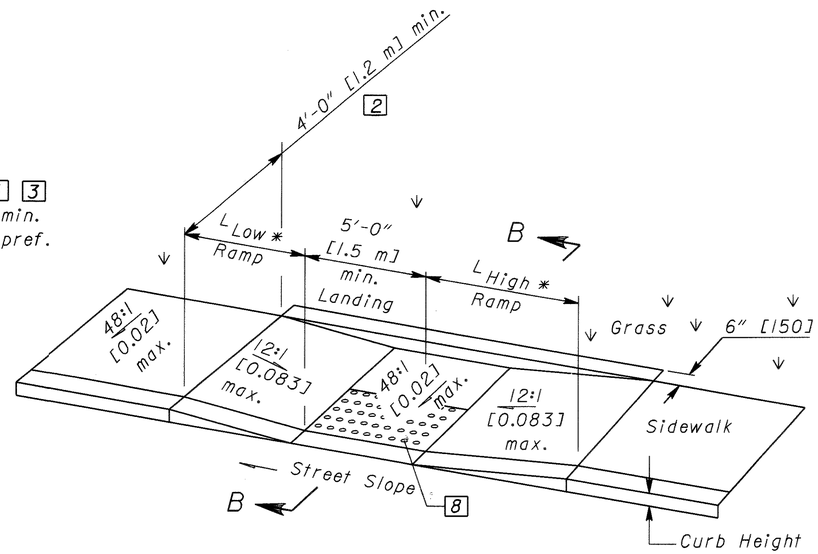

See Sht. 3/3 for SECTION B-B

PARALLEL CURB RAMP DETAIL (DOUBLE)

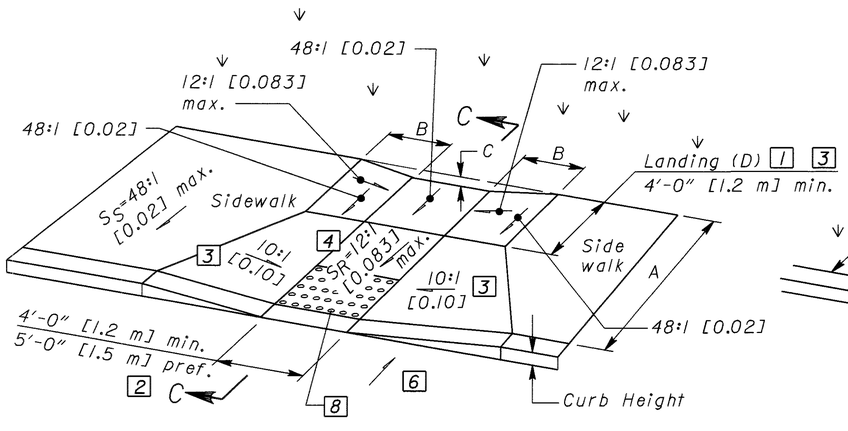

See Sht. 3/3 for SECTION C-C

COMBINED CURB RAMP DETAIL

$B = C / 0.083$

$C = [\text{Curb ht.} + A(S_S)] - [(A-D)S_R + D(0.02)]$

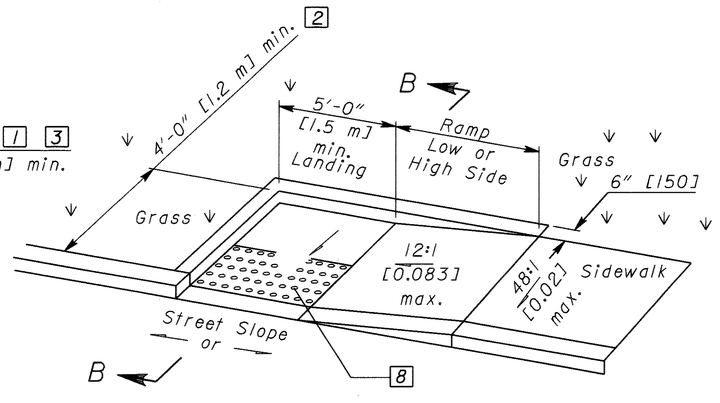

See Sht. 3/3 for SECTION B-B

PARALLEL CURB RAMP DETAIL (SINGLE)

Street Slope	Ramp Length @ 1"/ft [0.083]	
	$L_{LOW\ SIDE}$ *	$L_{HIGH\ SIDE}$ *
0.01	5'-6" [1.7 m]	7'-2" [2.2 m]
0.02	5'-0" [1.5 m]	8'-4" [2.5 m]
0.03	4'-6" [1.4 m]	10'-0" [3.0 m]
0.04	4'-2" [1.3 m]	12'-6" [3.8 m]
0.05	3'-10" [1.2 m]	16'-8" [5.1 m]
* Measured along the back of a 6" [150] high curb.		

$$L_{HIGH} = \frac{\text{Curb ht.}}{0.083 - \text{Street Slope}}$$ 7

$$L_{LOW} = \frac{\text{Curb ht.}}{0.083 + \text{Street Slope}}$$ 7

LEGEND

1 May be reduced to 3'-0" [915] in existing sidewalks if the landing is unconstrained along the back edge.

2 May be reduced to 3'-4" [1.02 m] in existing sidewalks to better fit the walk configuration or where site conditions are restricted by narrow walks, pole foundations, drainage inlets, etc. The width may be tapered.

3 Where landing width (D) has been reduced to 3'-0" [915] the flared sides shall have a maximum slope of 12:1 [0.083].

Flared sides are not required where the edges of a curb ramp are protected by landscaping or other barriers to travel by wheel chair users or pedestrians across the edge of the curb ramp. However, if the flared sides are used in these areas, they may be of any slope.

The slope of the ramp toward the curb is preferred to be 12:1 [0.083] or flatter related to the horizontal, but the maximum slope shall be 12:1 [0.083] relative to the existing or proposed walk slope.

In existing sidewalks, where the maximum ramp slope (S_R) is not feasible, it may be reduced as follows:

A) 10:1 [0.10] for a max. rise of 6" [150],
B) 8:1 [0.125] for a max. rise of 3" [75],
C) 6:1 [0.167] over a max. run of 2'-0" [610] for historic areas where a flatter slope is not feasible.

5 The minimum length of a perpendicular ramp is 6' [2.0 m] from the back of a 6" [150] curb and may be increased where feasible to obtain a flatter ramp slope or to better blend with the walk configuration.

6 Gutter counter slopes at the foot of perpendicular curb ramps should not exceed 20:1 [0.05] over a distance of 2'-0" [610] from the curb.

7 Dimensions derived by equation are nominal. Construct ramps to meet required slopes and existing conditions.

8 Detectable Warnings (truncated domes) are to be installed in the location shown. Dimensions of the domes are 24" [610] from the back of the curb by the width of the ramp. See NOTES on sheet 3.

6-05-02

CURB RAMPS WITH TRUNCATED DOMES

FRA-315-3.04

NOTES

SURFACE TEXTURE: Texture of concrete surfaces shall be obtained by coarse brooming transverse to the ramp slopes and shall be rougher than adjacent walk.

TRUNCATED DOMES: Install detectable warnings (truncated domes) for a distance of 24" [610] from the back of the curb for the entire width of the ramp opening as shown on details on Sheet 1.

Pavers will meet ASTM C 902 Class SX, Type 1, or C 936, or C 1272 Type R.

Acceptable manufacturers and products are:
1) Whitacre-Greer Fireproofing Company,
   1400 S. Mahoning Ave, Alliance, OH, 44601,
   ADA Paver, 4"x8"x2-1/4", Clear Red (Rustic) #30.
2) Hanover Architectural Products,
   240 Bender Rd., Hanover, PA. 17331,
   Detectable Warning Paver, 4"x8"x2", Red or Quarry Red.
3) Endicott Clay Products,
   PO Box 17, Fairbury, NE, 68352,
   Handicap Detectable Warning Paver,
   4"x8"x2-1/4", Red Blend.

Pavers will laid on top of a 4" [100] unreinforced concrete base. Setting bed and joints to be mortared in accordance with manufacturer's instruction, or with a maximum 1/2" [13] thick bed of latex modified cement mortar. Mortar joints to a width not greater than 5/32" [4] and not less than 1/16" [1.5]. Pavers shall not be directly touching each other unless they have spacing bars.

Mortared joints are to be flush with top surface and struck so as to give a smooth surface. Pavers shall be laid such that joints are level with adjoining joints so as to provide a smooth transition from brick to brick and brick to concrete surface.

The surface of any two adjacent units should not differ by more than 1/8" [3] in height. Bricks shall be placed in a running bond pattern. Face of all brick shall be clean of cement and protected so as to avoid chipping during constructionn.

EXPANSION JOINTS: shall be provided in the curb ramp as extensions of walk joints and consistent with Item 608.03 requirements for a new concrete walk. A 1/2" [13] Item 705.03 expansion joint filler shall be provided around the edge of ramps built in existing concrete walk. Lines shown on this drawing indicate the ramp edge and slope changes and are not necessarily joint lines.

PAYMENT: Walk and curb, Items 608 and 609, shall be measured through the curb ramp area paid for under their respective Items. **Item 608 - Curb Ramp, As Per Plan, Each** constructed in new curb and walk shall include the cost of any additional materials and installation (including truncated domes), grading, forming and finishing. **Item 608 - Curb Ramp. As Per Plan, Square Foot [Meter],** constructed in existing curb and walk shall include the cost of furnishing and installing all materials (including truncated domes), grading, forming, and finishing of the curb and walk of the curb ramp. Removal of existing curb and walk shall be paid for under Item 202.

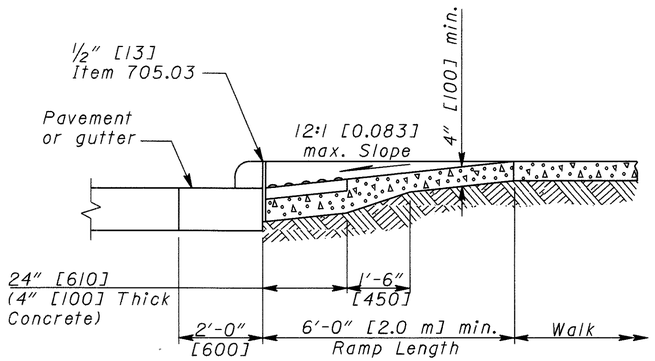

SECTION A-A
NORMAL DETAIL
See Sheet 1 of 3.
(Gutter shown)

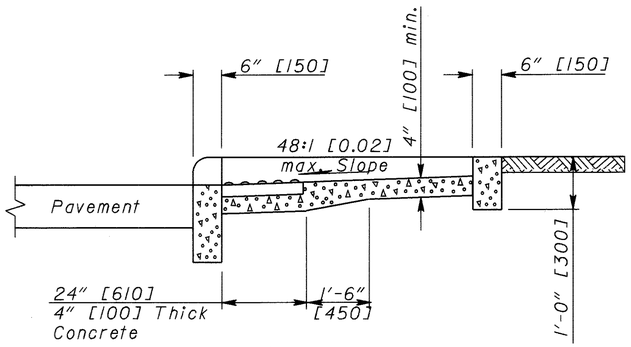

SECTION B-B
See Sheet 1 of 3.

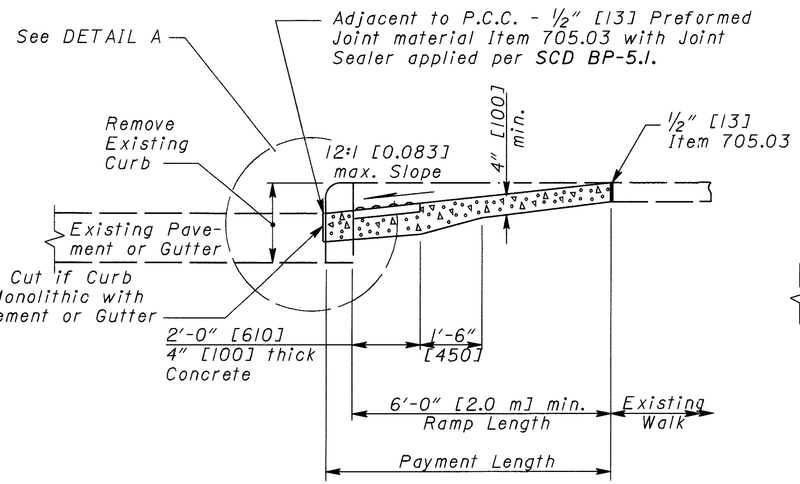

SECTION A-A
EXISTING WALK DETAIL
See Sheet 1 of 3.

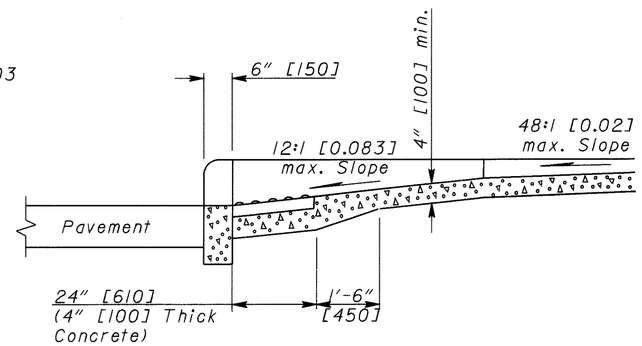

SECTION C-C
See Sheet 1 of 3.

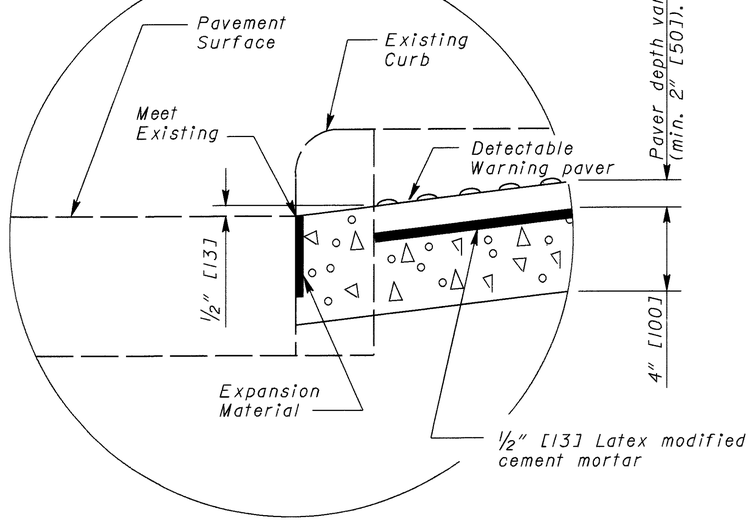

DETAIL A

6-05-02

CURB RAMPS WITH TRUNCATED DOMES

FRA-315-3.04

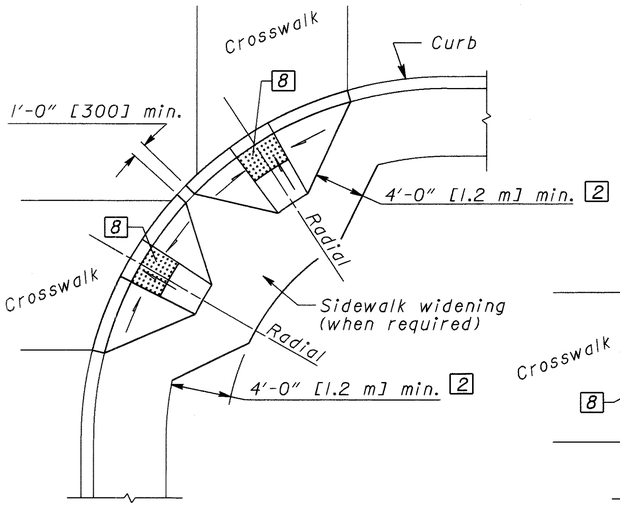

DESIGN A
PERPENDICULAR RAMP

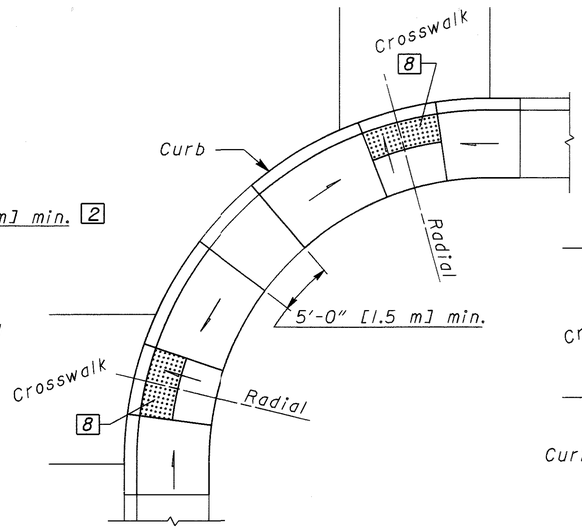

DESIGN B
PARALLEL RAMP

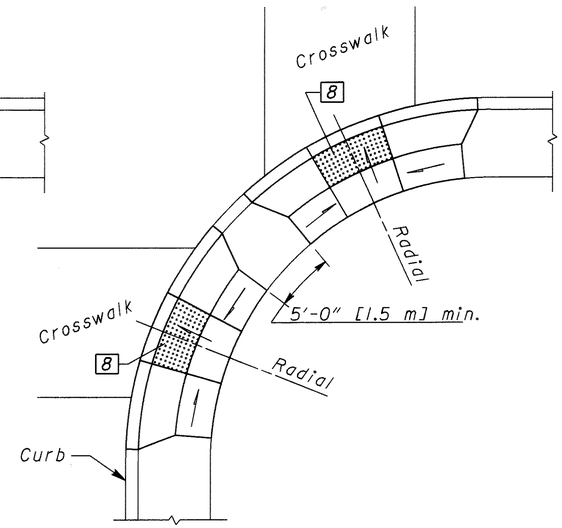

DESIGN C
COMBINATION RAMP

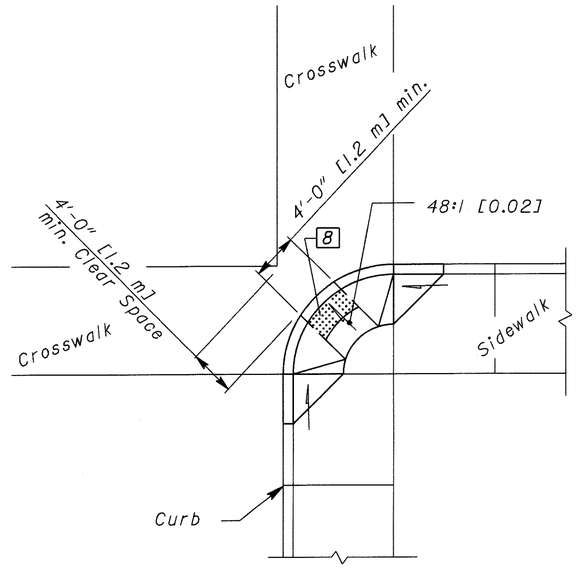

DESIGN D
DIAGONAL RAMP

Use in existing walks only and when site constraints prohibit other designs. The diagonal ramp may be perpendcular, parallel or combination.

Avoid using where curb radii are less than 20'-0" [6.0 m].

CORNER CURB RAMP DESIGNS

(See Curb Ramp Details on Sht. 1/3 for additional requirements.)

For LEGEND, See sheet 1.

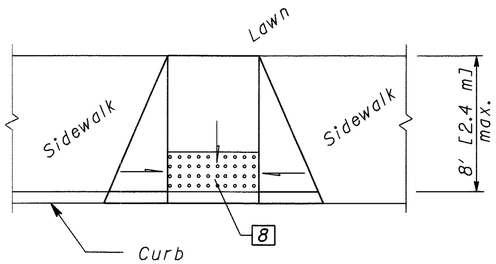

DESIGN E
PERPENDICULAR RAMP

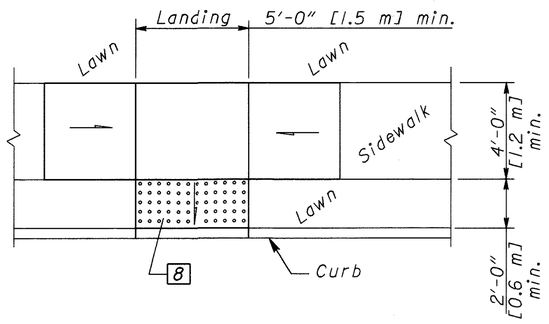

DESIGN F
PARALLEL RAMP

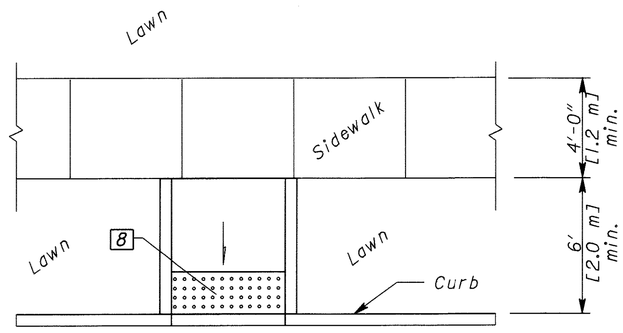

DESIGN G
PERPENDICULAR RAMPS
w/o FLARES

MID BLOCK CURB RAMP DESIGNS

(See Curb Ramp Details on Sht. 1/3 for additional requirements.)

6-05-02

CURB RAMPS WITH TRUNCATED DOMES

FRA-315-3.04

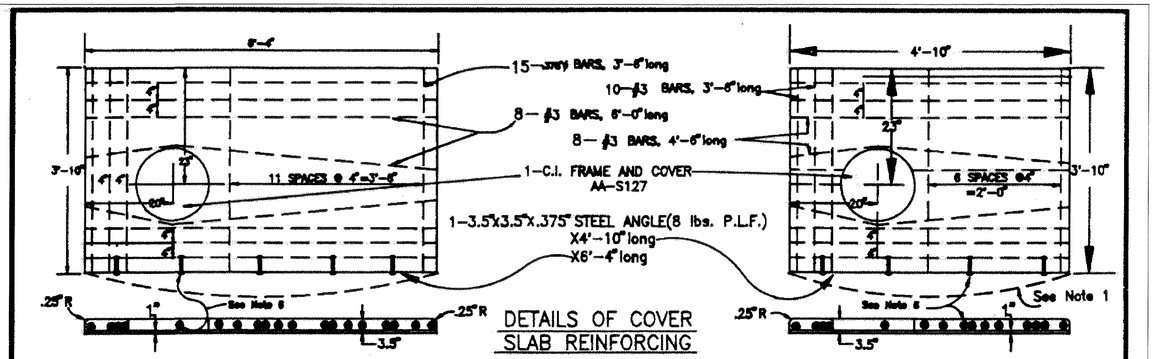

DETAILS OF COVER SLAB REINFORCING

SLAB FOR 60" CURB INLET

SLAB FOR 42" CURB INLET

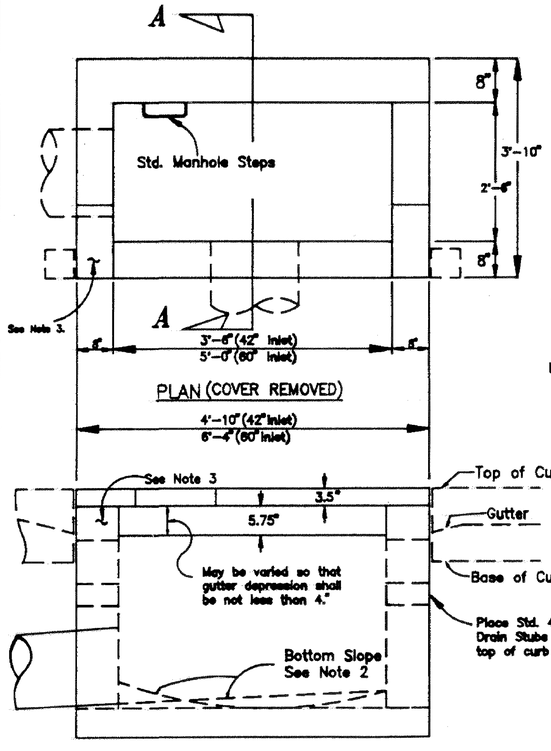

ELEVATION

This drawing previously AA-S50 & AA-S51.

NOTES:

1. Where inlet is to be located within limits of circle curb, if ordered, the slab edge of curb line shall be built to conform to the required radius.
2. The inlet bottom shall be shaped to provide slope of 3" to 4" to outlet pipe, the cross sectional form of bottom and longitudinal slope to be adapted to location of outlet pipe, as directed.
3. In brick wall construction, suitable concrete or stone blocks not less than 8"x8"x16" in size shall be used at corners abutting curb.
4. Outlet pipe may be located in end or side wall. In either case the outlet pipe shall be directed towards the center of the basin.
5. In existing pavements an area approximately 12'x4' for 60" inlets, or 10'x4' for 42" inlets, or as otherwise ordered shall be cut out so that repaving may be shaped to meet the depressed lip of the inlet opening as directed.
6. For anchors use .375" bolts 6" long or .375" steel reinforcement bars 10" long with each end bent over 2" at 90° with one 2" end bend welded to inside face of angle in approved manner.
7. When used in conjunction with curb opening extension(AA-S124) top finished surface of inlet wall to be built at lower level as directed.
8. Construct walls of Class "C" Concrete or brick. If walls are constructed of brick, plaster outside face with lime-cement mortar .5" thick.
9. Precast units shall have a minimum thickness of six inches and be reinforced sufficiently to permit shipping and handling without damage.

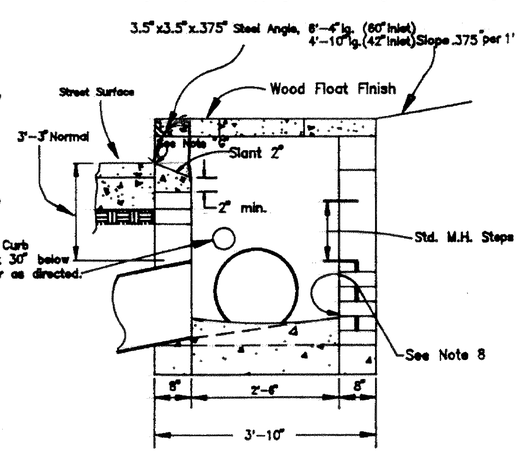

SECTION A-A

STORMWATER PROGRAM MANAGER

ADMINISTRATOR

APPROVED 12/15/93

REVISED

42" & 60" CURB INLETS

CITY OF COLUMBUS, OHIO
DEPARTMENT OF PUBLIC UTILITIES
DIVISION OF SEWERAGE & DRAINAGE

STANDARD CONSTRUCTION DRAWING

DR. JMR	SHEET 1	FILE NO.
CK.	OF 1	AA-S123

CALCULATED MJT 11/01
CHECKED WGY 11/01

AA-S123 DETAILS

FRA-315-3.04

AA-S123DETAILS 12-10-01

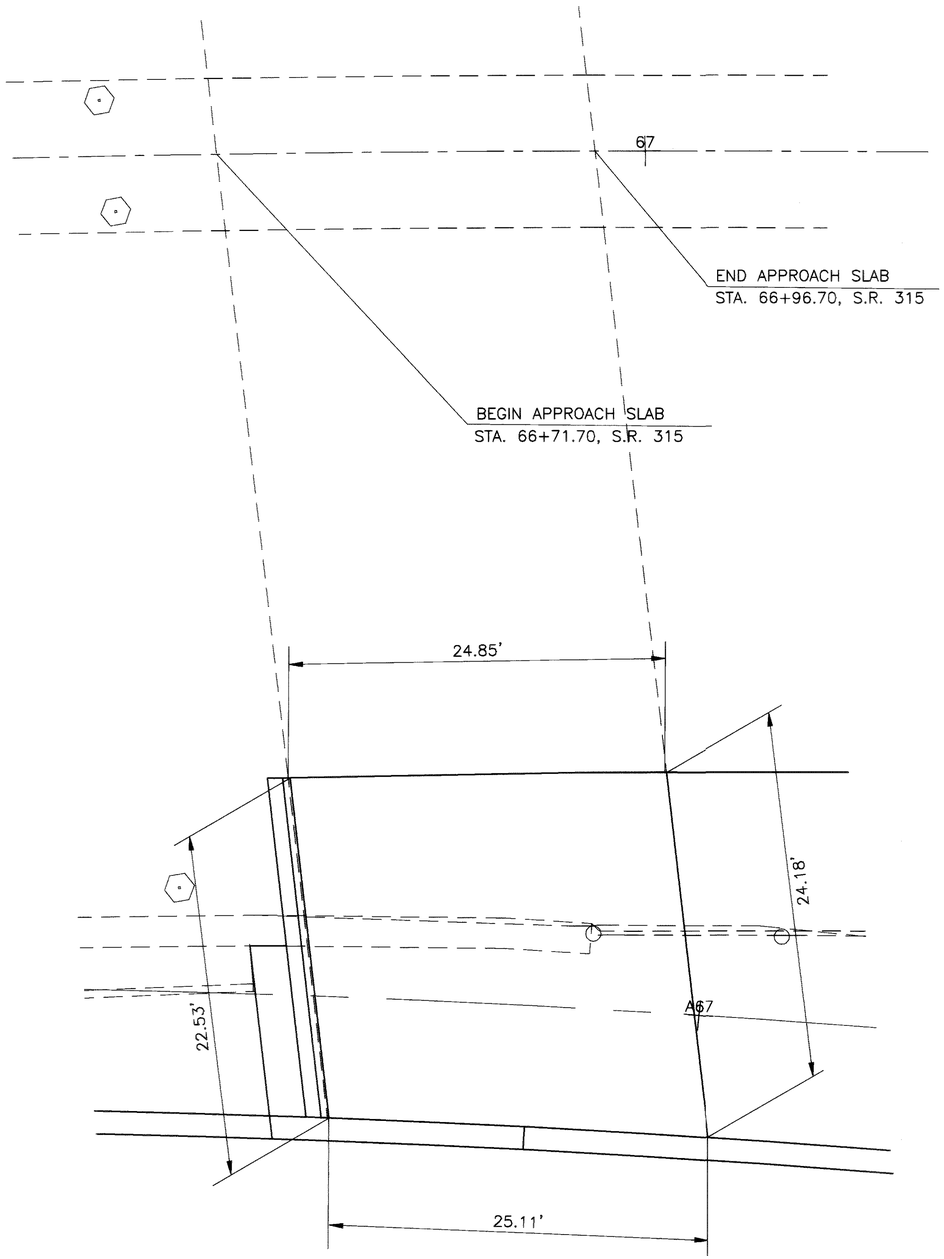

RAMP A

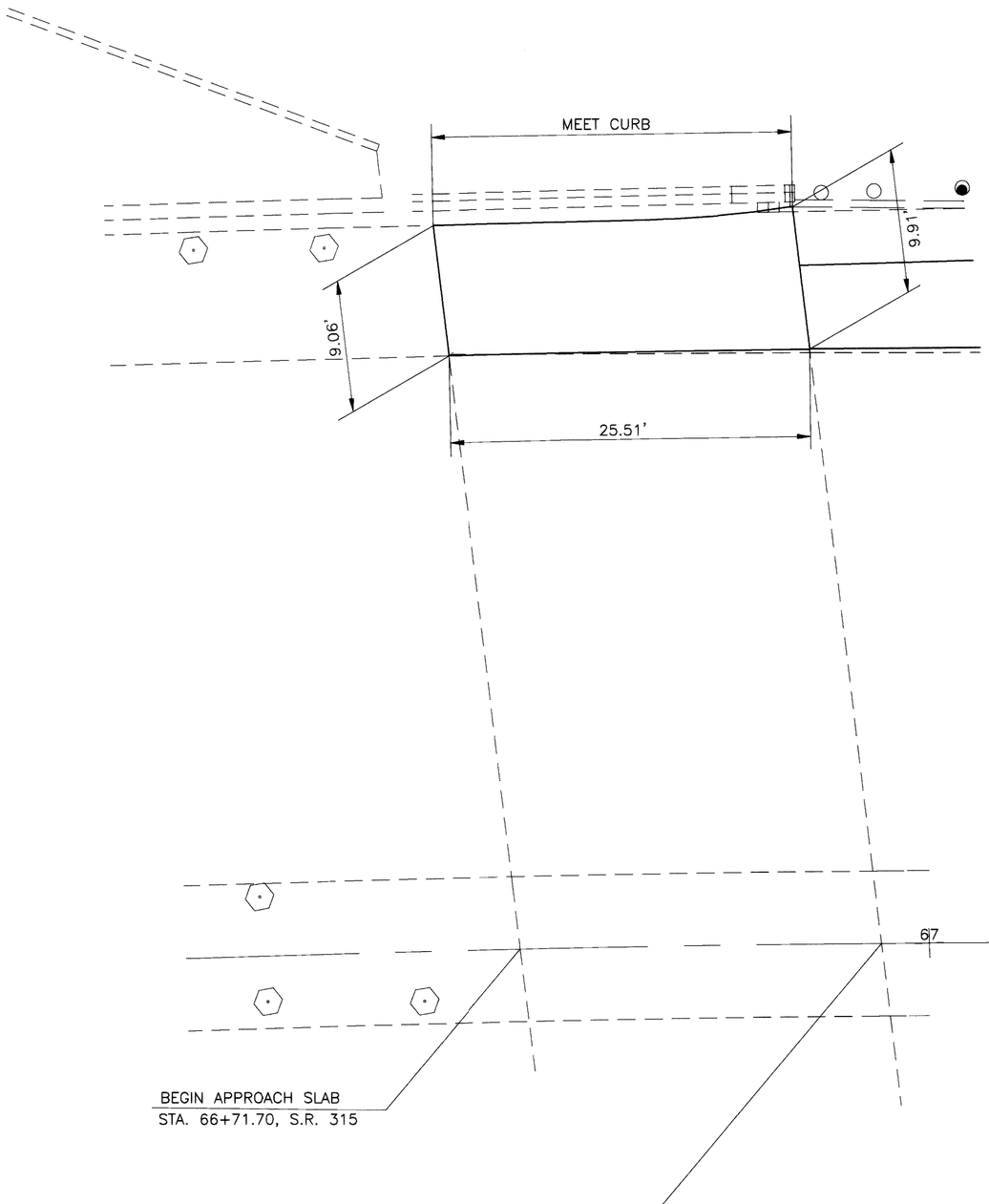

RAMP A

N

0 2.5 5 10
HORIZONTAL SCALE IN FEET

CALCULATED MJ/01 12/01
CHECKED WGY 12/01

APPROACH SLAB DETAILS

FRA-315-3.04

88
238

APPRSLABDETAILS 12-07-01

OLENTANGY RIVER ROAD
ALLEY
EXISTING RAMP A6
WETLAND
OLENTANGY RIVER
WETLAND
PROP. BIKE PATH
KING AVENUE
RAMP A
RAMP B
CANNON DRIVE
9TH AVE.
10TH AVE.
12TH AVE.
21"SAN.
30"SAN.
36"SAN.
48"SAN.
66"x43"SAN.

N

HORIZONTAL SCALE IN FEET
0 50 100 200

CALCULATED JJT 1/00
CHECKED WGY 1/00

DRAINAGE INDEX MAP

FRA-315-3.04

89
238

DRAININDEX 06-19-02

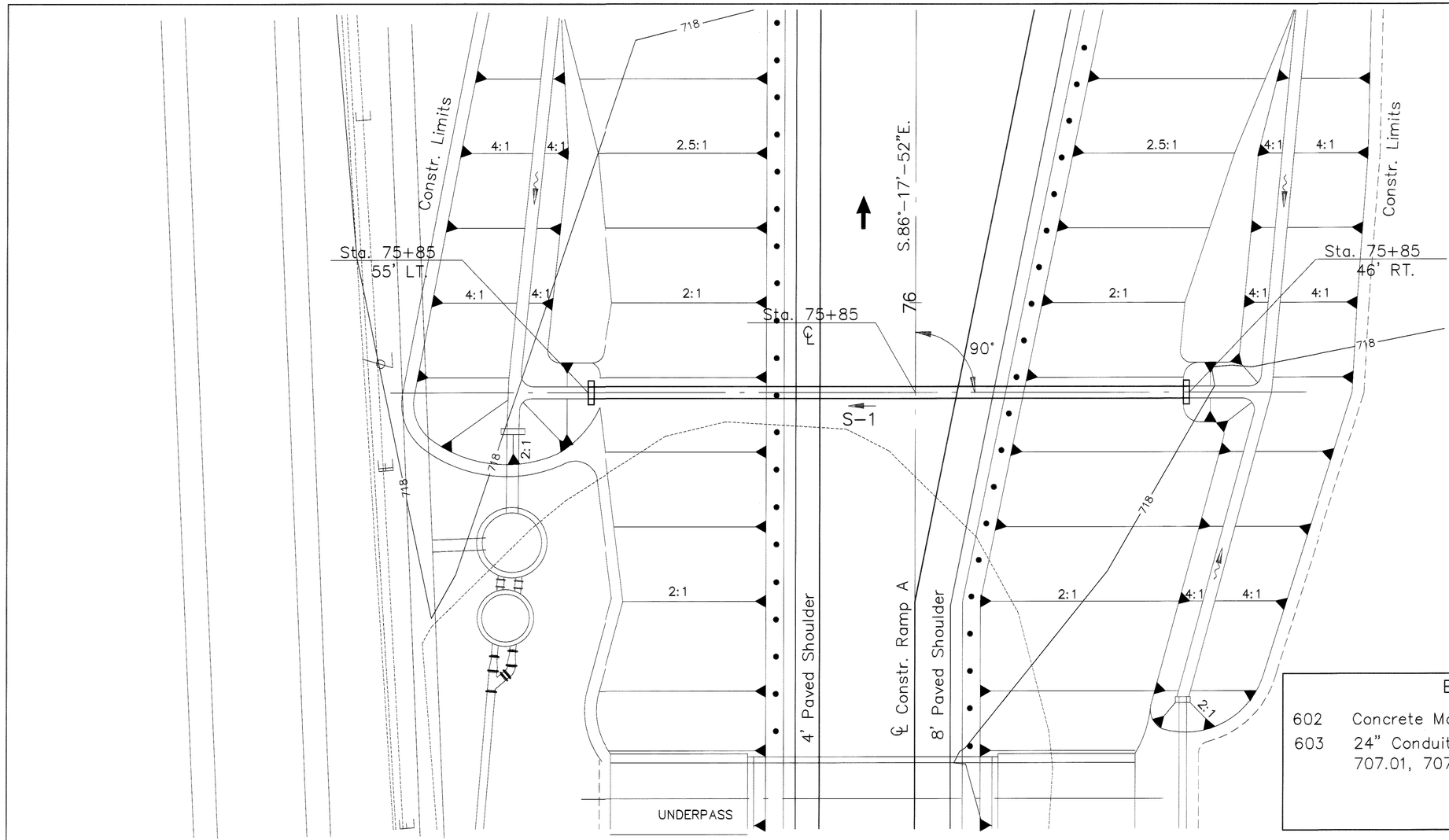

HYDRAULIC DESIGN DATA	
DRAINAGE AREA	= 2.0 Ac.
Q 25	= 8 cfs
Q 100	= 10 cfs
HW 25	= 716.34
HW 100	= 716.54
V 25	= 4.9 fps
V 100	= 5.1 fps

ESTIMATED QUANTITIES

602	Concrete Masonry	=0.86 Cu.Yd.
603	24" Conduit, Type A 706.02, 706.08, 707.01, 707.04, OR 707.21	=101 Lin.Ft.

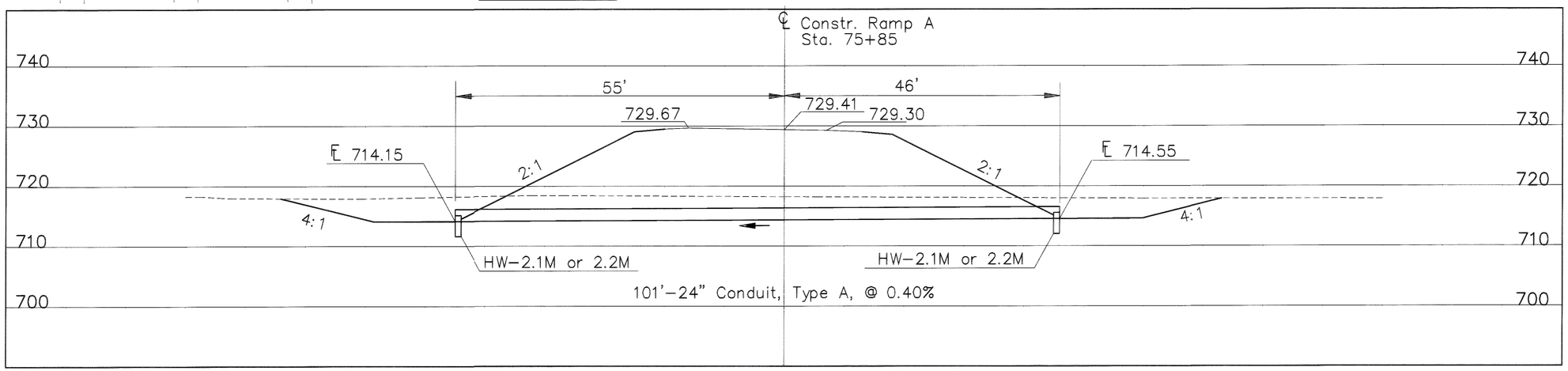

CALCULATED MJT 11-00
CHECKED WGY 11-00

HORIZONTAL SCALE IN FEET 0 5 10 20

CULVERT DETAIL S-1
RAMP A - STA. 75+35

FRA-315-3.04

S-1

90
238

ACULDET1 06-19-02

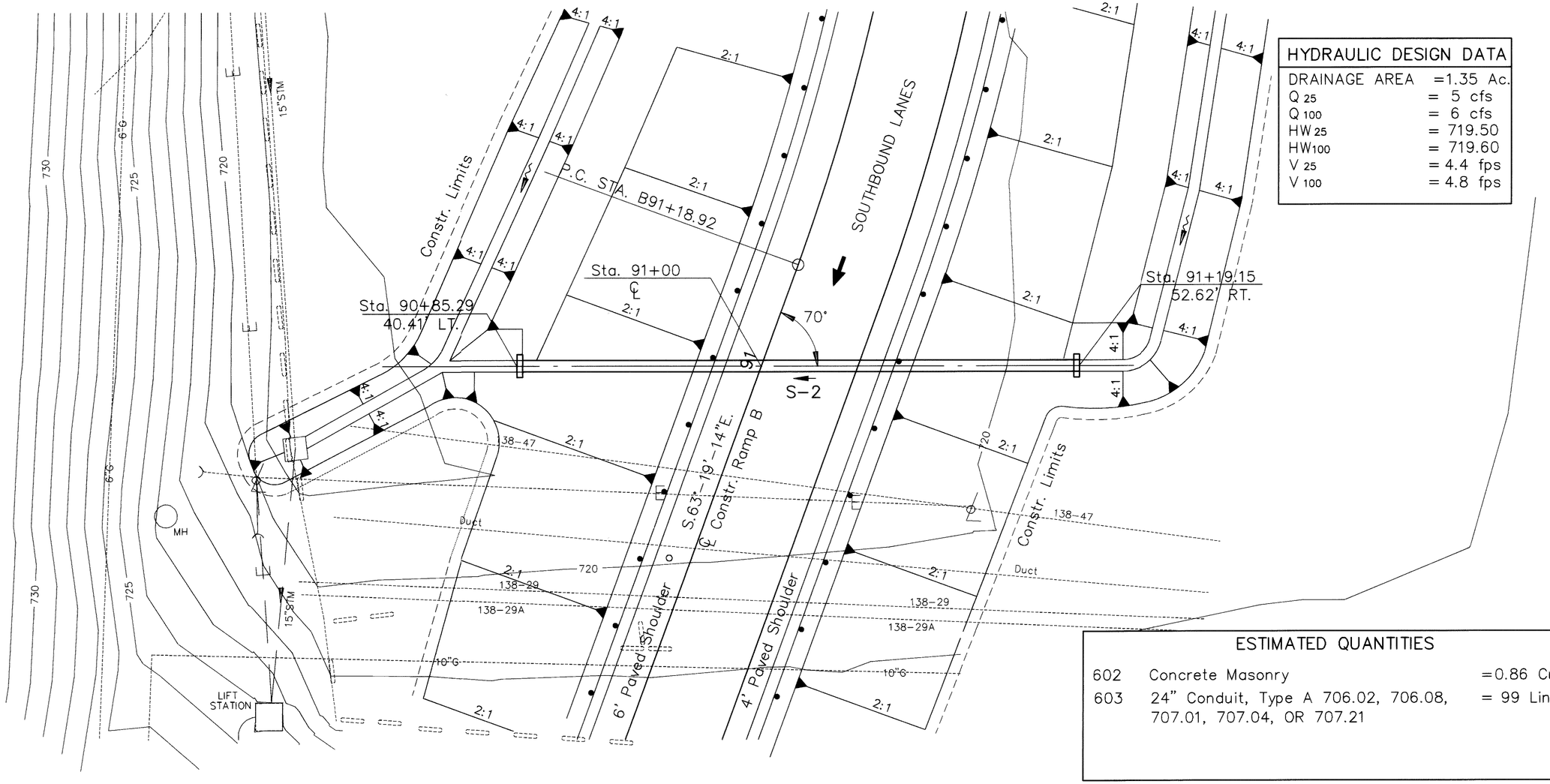

HYDRAULIC DESIGN DATA

DRAINAGE AREA	=1.35 Ac.
Q 25	= 5 cfs
Q 100	= 6 cfs
HW 25	= 719.50
HW100	= 719.60
V 25	= 4.4 fps
V 100	= 4.8 fps

ESTIMATED QUANTITIES

602	Concrete Masonry	=0.86 Cu.Yd.
603	24" Conduit, Type A 706.02, 706.08, 707.01, 707.04, OR 707.21	= 99 Lin.Ft.

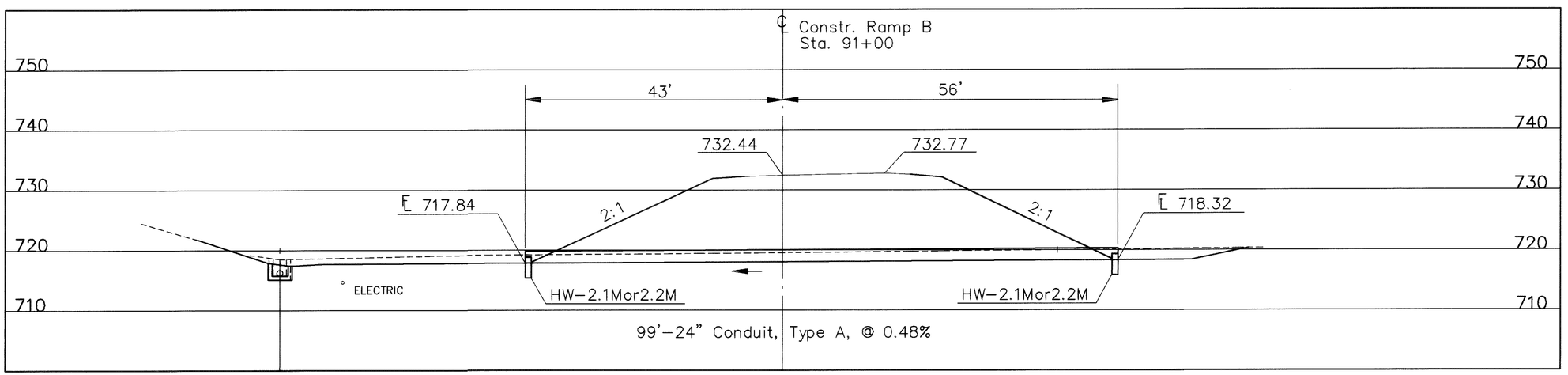

CALCULATED MJT 3-00
CHECKED GGY 3-00

HORIZONTAL SCALE IN FEET
0 5 10 20

CULVERT DETAIL S-2
RAMP B - STA. 91+00

FRA-315-3.04

91
238

S-2

BCULDET2 05-21-01

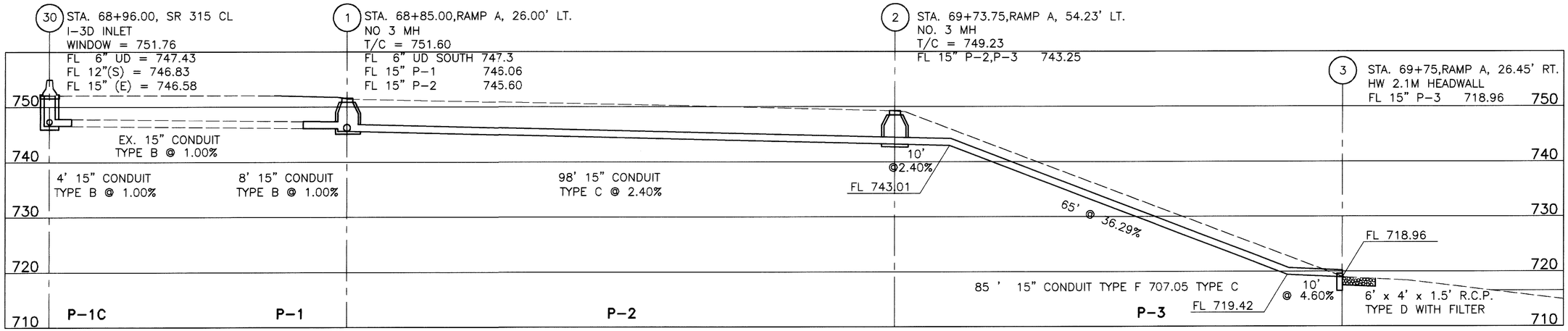

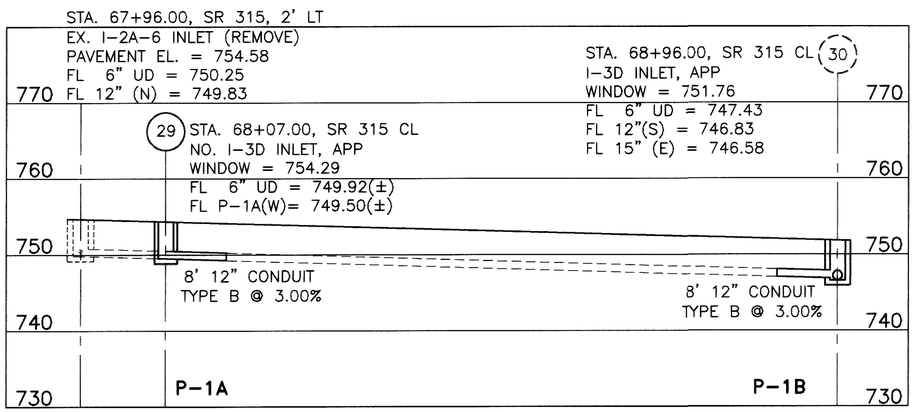

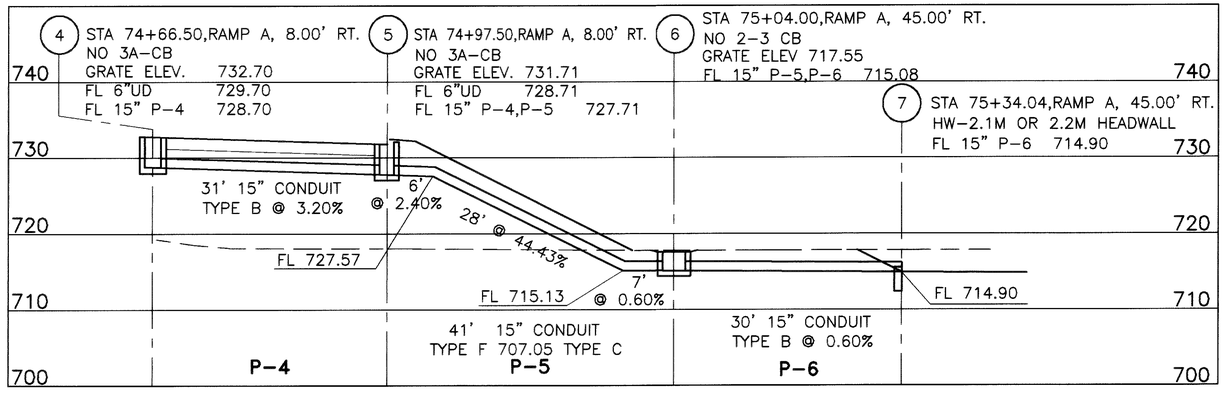

* 707.05 TYPE C ** SEE SHEET 10

QUANTITIES

PIPE REFERENCE	STRUCTURES INCLUDED	601 ROCK CHAN. PROTECT. TYPE D W/FILTER	602 CONCRETE MASONRY	603 12" CONDUIT TYPE B	603 15" CONDUIT TYPE B	603 15" CONDUIT TYPE C	603 15" CONDUIT TYPE F *	604 INLET No. I-3D AS PER PLAN **	604 CATCH BASIN, NO.2-3	604 CATCH BASIN, NO.3A	604	604 MANHOLE NO. 3		SEE SHEET NO.
		CU.YD.	CU.YD.	LF	LF	LF	LF	EACH	EACH	EACH		EACH		
P-1	1				8							1		
P-2	2					98						1		
P-3	3	2	0.27				85							
P-4	4,5				31				1	1				
P-5	6						41			1				
P-6	7		0.27		30									
P-1A	29			8				1						
P-1B	30			8				1						
P-1C					4									
TOTALS		2	0.54	16	73	98	126	2	1	2		2		

CALCULATED M.J.T. 1/00
CHECKED W.G.Y. 1/00

PIPE PROFILES P-1 TO P-6

FRA-315-3.04

92
238

PPRO1 05-30-02

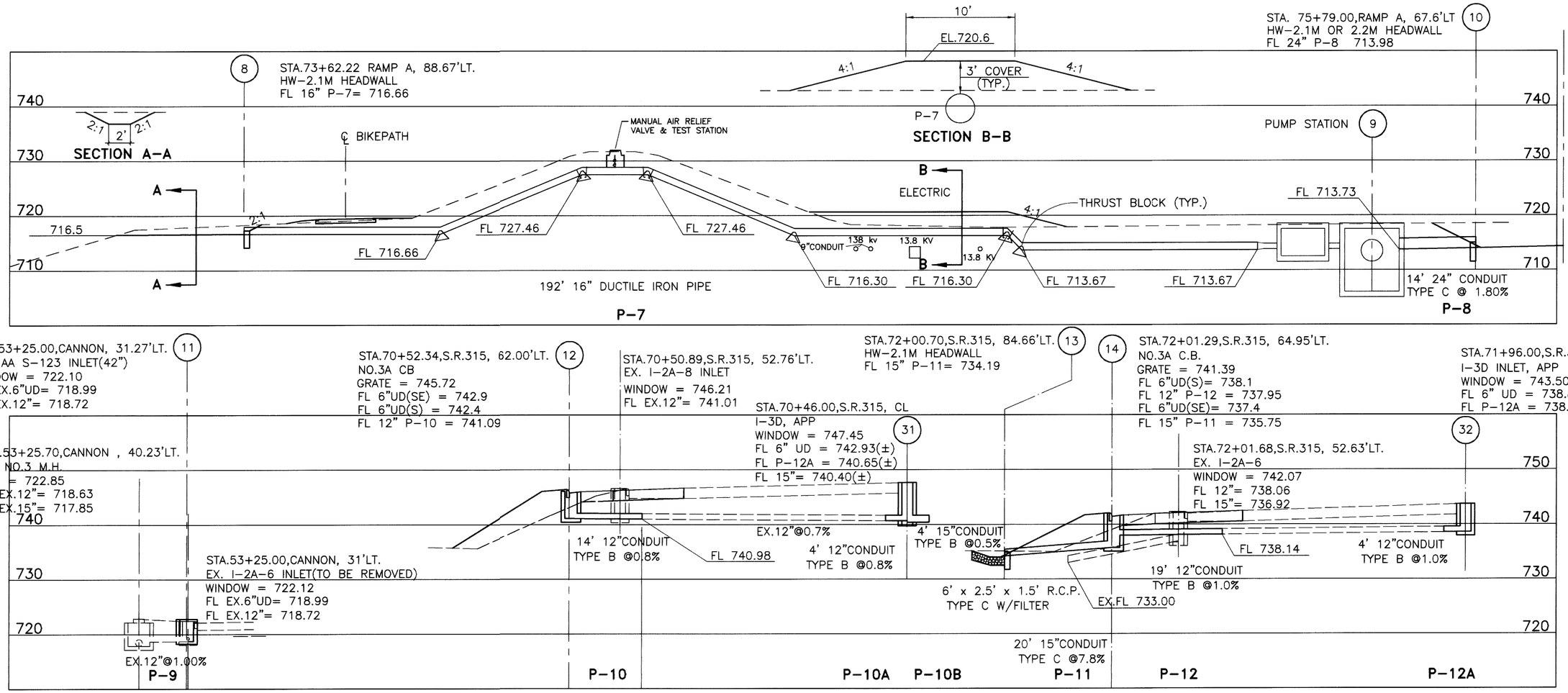

** SEE SHEET 10

QUANTITIES

PIPE REFERENCE	STRUCTURES INCLUDED	203 EMBANKMENT	203 EXCAVATION NOT INCLUDING EMBANKMENT CONSTRUCTION	601 ROCK CHAN. PROTECT. TYPE C W/FILTER	602 CONCRETE MASONRY	603 12" CONDUIT TYPE B	603 15" CONDUIT TYPE C	603 CONDUIT MISC.; 16" DUCTILE IRON PIPE	603 24" CONDUIT TYPE C	604 INLET No. I-3D AS PER PLAN **	604 CATCH BASIN, NO.3A			638 1" AIR RELEASE VALVE	SPECIAL PUMP STATION	604 CITY OF COLUMBUS AA-S123 INLET(42")		SEE SHEET NO.
		CU.YD.	CU.YD.	CU.YD.	CU.YD.	LF	LF	LF	LF	EACH	EACH			EACH	EACH	EACH		
P-7	8,9	73	4		0.27			192						1	1			
P-8	10				0.46				14									
P-9	11															1		
P-10	12					14					1							
P-11	13			1	0.27		20											
P-12	14					19					1							
P-10A	31					4	4			1								
P-12A	32					4				1								
TOTALS		73	4	1	1.00	41	24	192	14	2	2			1	1	1		

PPRO2 06-19-02

CALCULATED MJT 1/00
CHECKED WGY 1/00

PIPE PROFILES P-7 TO P-12

FRA-315-3.04

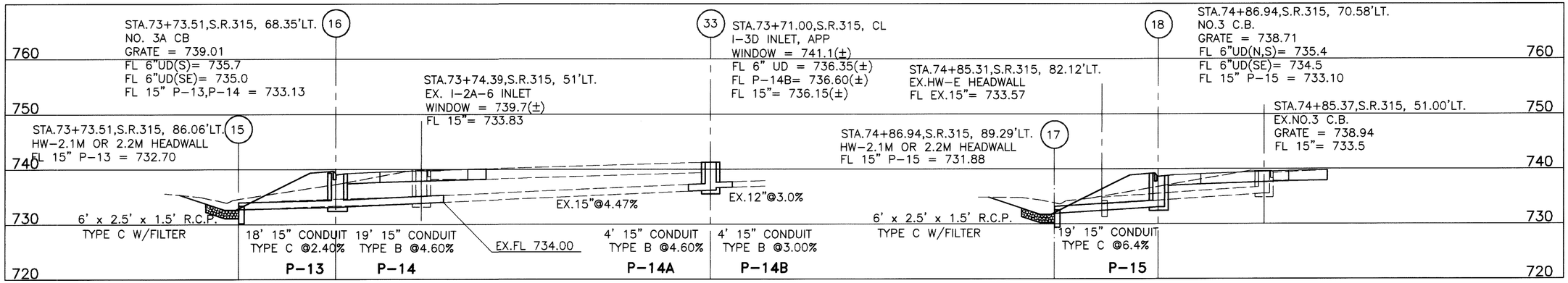

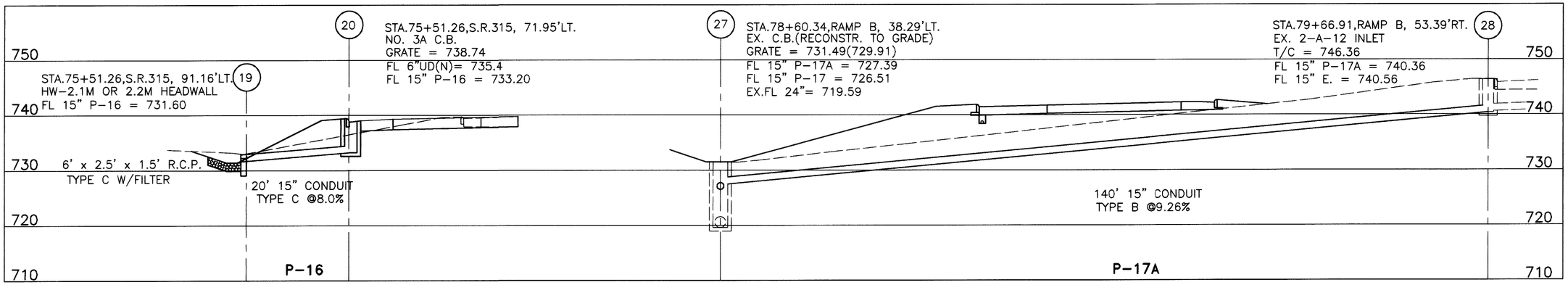

** SEE SHEET 10

PIPE REFERENCE	STRUCTURES INCLUDED	601 ROCK CHAN. PROTECT. TYPE C W/FILTER	602 CONCRETE MASONRY	603 12" CONDUIT TYPE B	603 15" CONDUIT TYPE B	603 15" CONDUIT TYPE C	604 INLET I-3D, AS PER PLAN **	604 CATCH BASIN, RECONSTR. TO GRADE	604 CATCH BASIN, NO.3	604 CATCH BASIN, NO.3A	SEE SHEET NO.
		QUANTITIES									
		CU.YD.	CU.YD.	LF	LF	LF	EACH	EACH	EACH	EACH	
P-13	15	1	0.27			18					
P-14	16				19					1	
P-15	17,18	1	0.27			19			1		
P-16	19,20	1	0.27			20				1	
P-17	21,27				72			1		1	
P-17A					140						
P-14A	33			4			1				
P-14B				4							
TOTALS		3	0.81	8	231	57	1	1	1	3	

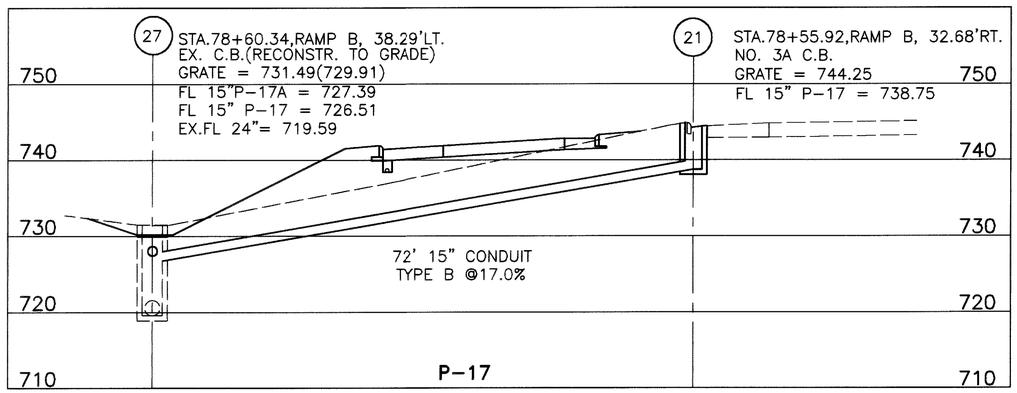

PIPE PROFILES P-13 TO P-17A

FRA-315-3.04

PPR03 05-29-02

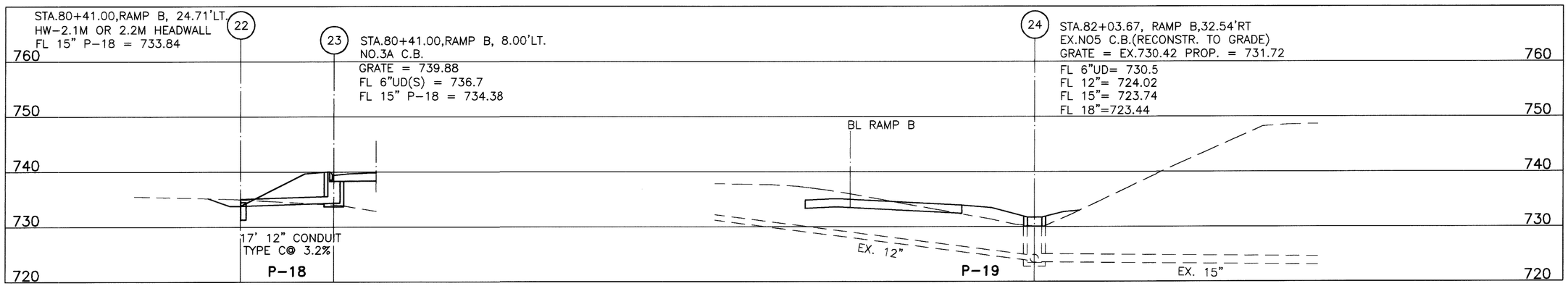

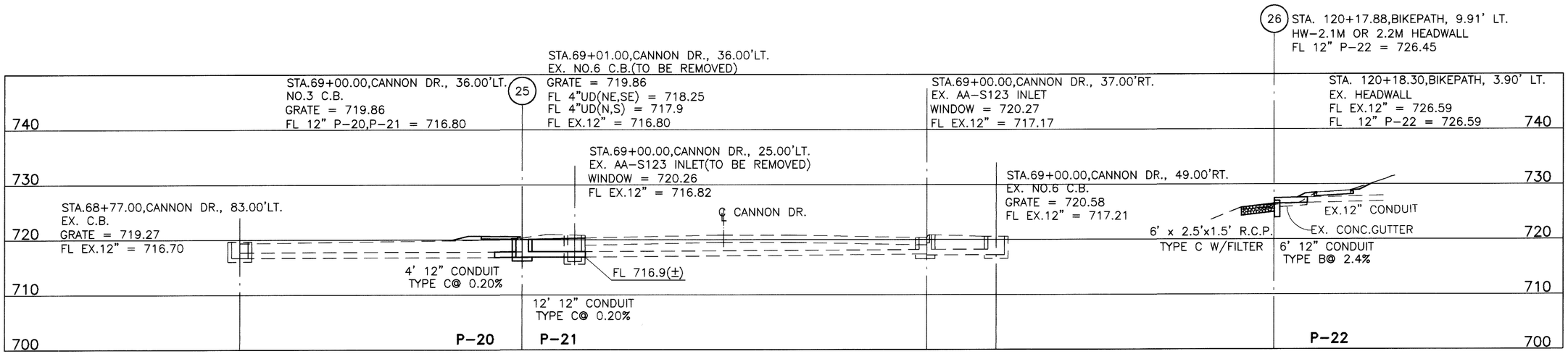

QUANTITIES

PIPE REFERENCE	STRUCTURES INCLUDED	601 ROCK CHAN. PROTECT. TYPE C W/FILTER	602 CONCRETE MASONRY	603 12" CONDUIT TYPE B	603 12" CONDUIT TYPE C			604 CATCH BASIN, NO.3	604 CATCH BASIN, NO.3A	604 CATCH BASIN, RECONSTR. TO GRADE			SEE SHEET NO.
		CU.YD.	CU.YD.	LF	LF			EACH	EACH	EACH			
P-18	22,23		0.21		17				1				
P-19	24									1			
P-20	25				4								
P-21	25				12			1					
P-22	26	1	0.21	6									
TOTALS		1	0.42	6	33			1	1	1			

CALCULATED MJT 1/00
CHECKED WGY 1/00

PIPE PROFILES P-18 TO P-22

FRA-315-3.04

PPR04 03-22-01

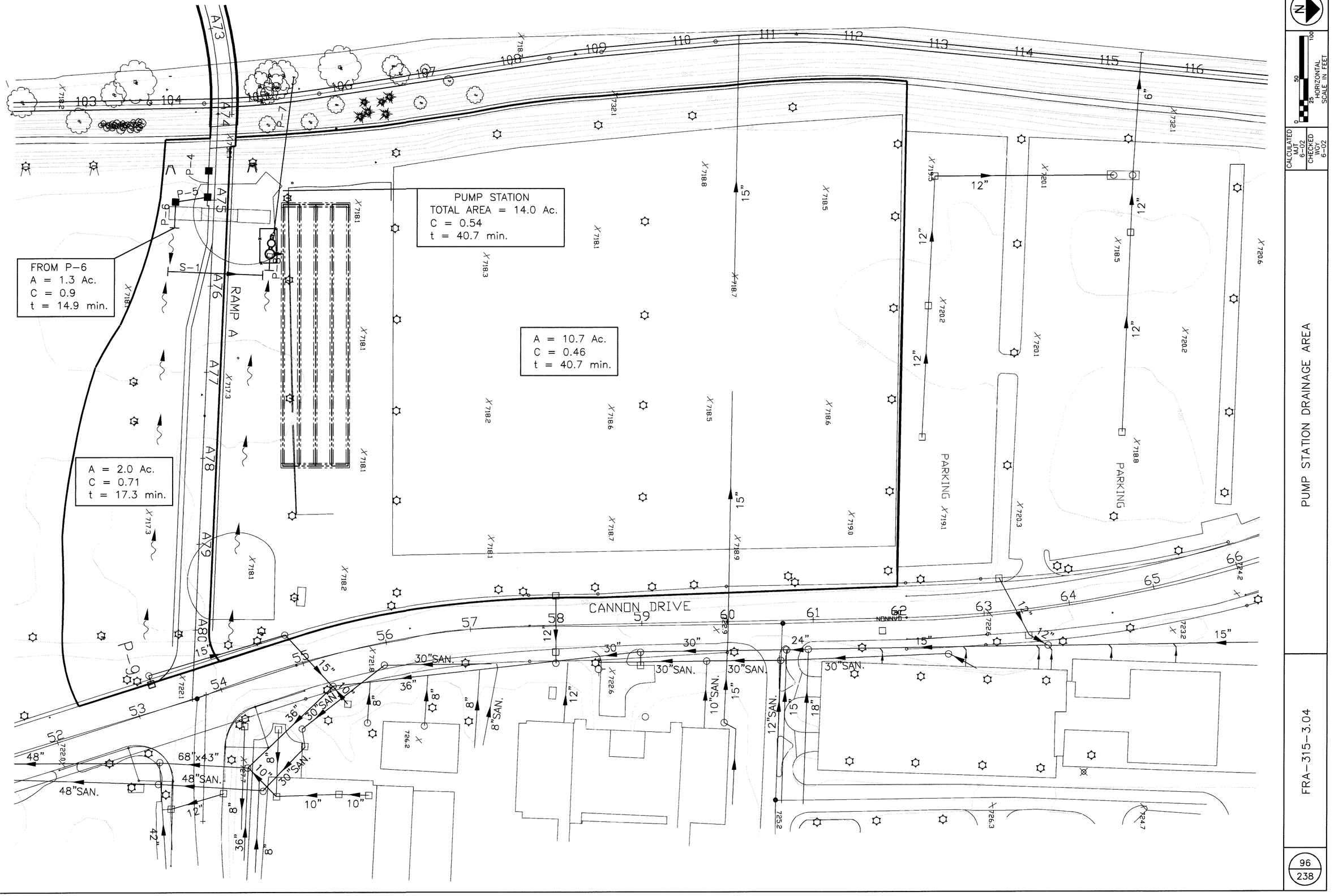

HORIZONTAL SCALE IN FEET
0 25 50 100

CALCULATED AJJ 6-02
CHECKED WGY 6-02

PUMP STATION DRAINAGE AREA

FRA-315-3.04

96
238

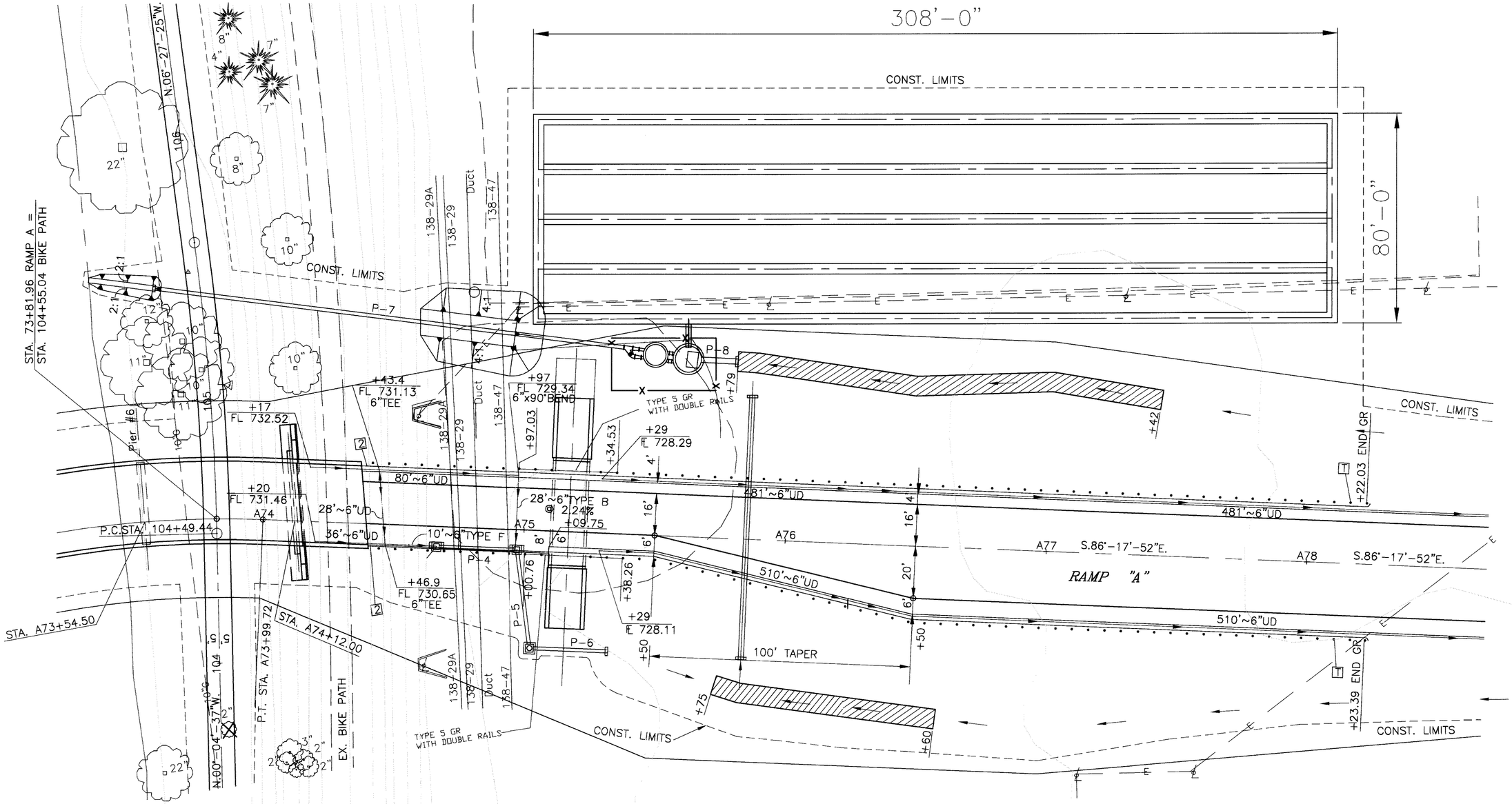

ESTIMATED QUANTITIES FOR DETENTION SYSTEM				
ITEM	ITEM EXT.	GRAND TOTAL	UNIT	DESCRIPTION
603	10600	11	LIN FT	24" CONDUIT, TYPE C, 707.33 OR 707.43
603	21100	1672	LIN FT	48" CONDUIT, TYPE C, 707.33 OR 707.43
604	98000	10	EACH	DRAINAGE STRUCTURE, MISC.: DETENTION SYSTEM RISER
BENDS & BRANCHES				
		6	EACH	48" TEE
		4	EACH	48"x90° BEND
TOTALS CARRIED TO GENERAL SUMMARY SHEET NO.27				

HORIZONTAL SCALE IN FEET
0 10 20 40
CALCULATED AJH 6-02
CHECKED WGY 6-02

48" DIA. HDPE DETENTION SYSTEM

FRA-315-3.04

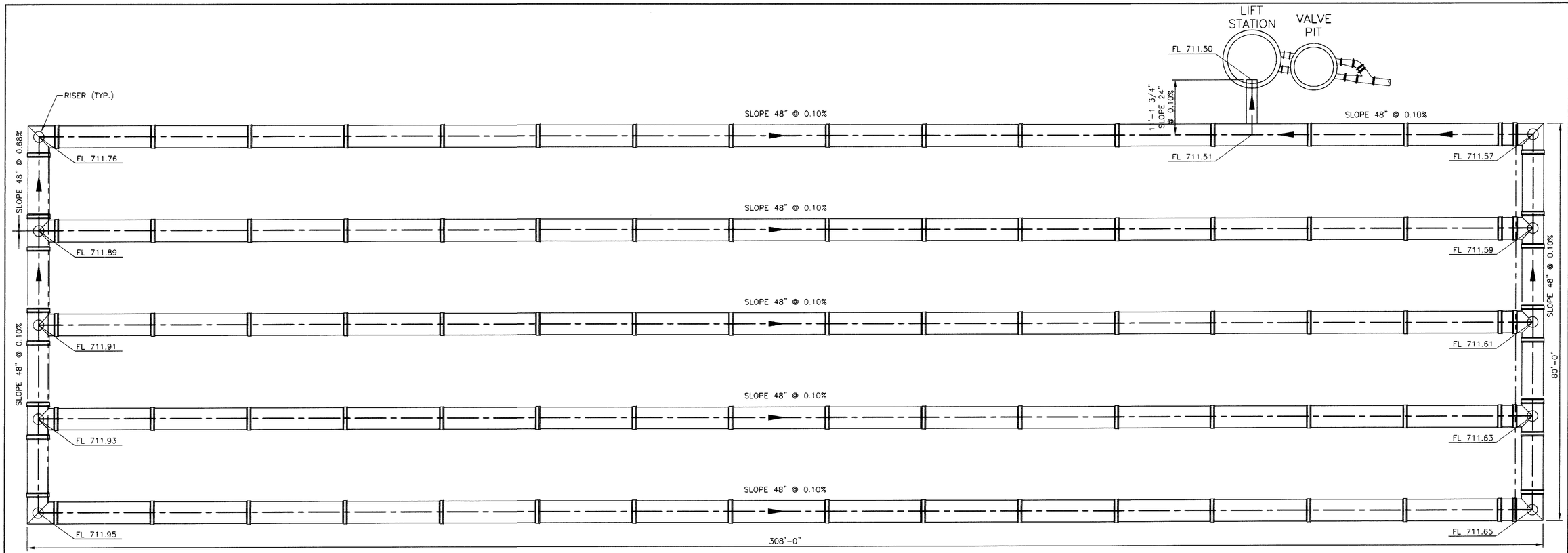

DETENTION SYSTEM PLAN

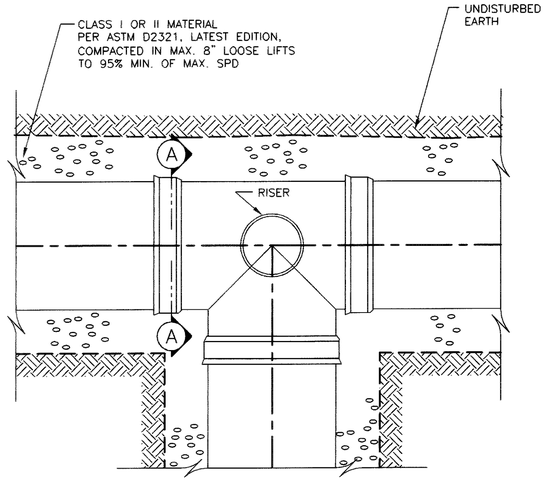

RISER PLAN

NOTE: THE COST OF THE RISER SHALL INCLUDE PIPE, COVER & FRAME, AND THE CONCRETE COLLAR.

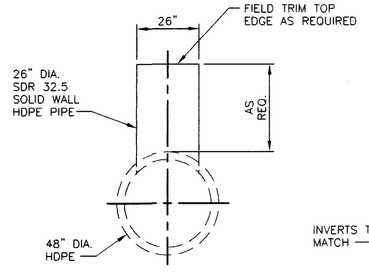

RISER DETAIL

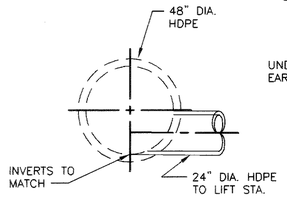

EFFLUENT DETAIL

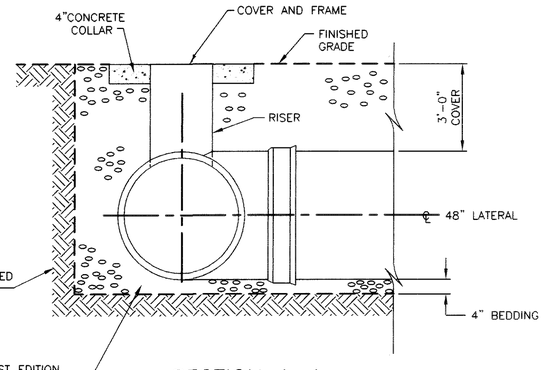

SECTION A–A

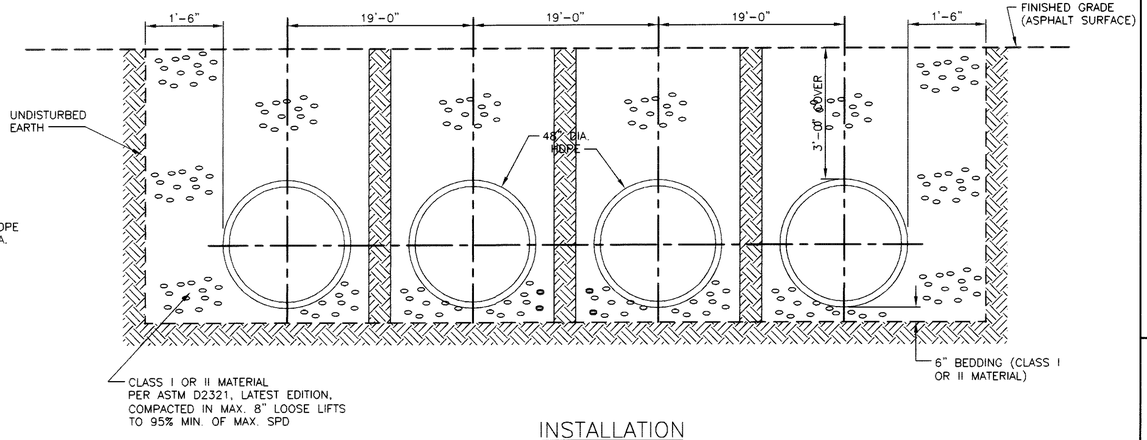

INSTALLATION

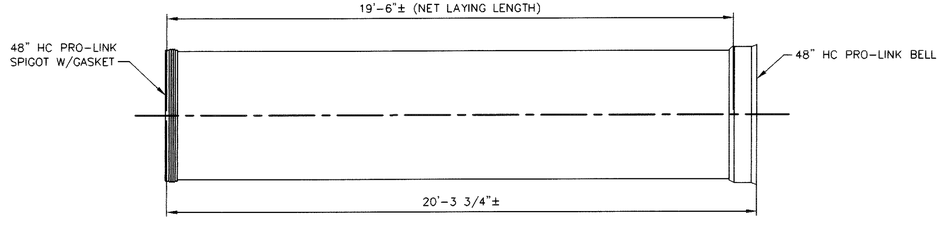

TYPICAL 48" DIA. HDPE JOINT

NOT TO SCALE

CALCULATED AJT 6-01
CHECKED WCY 6-01

48" DIA. HDPE DETENTION SYSTEM

FRA-315-3.04

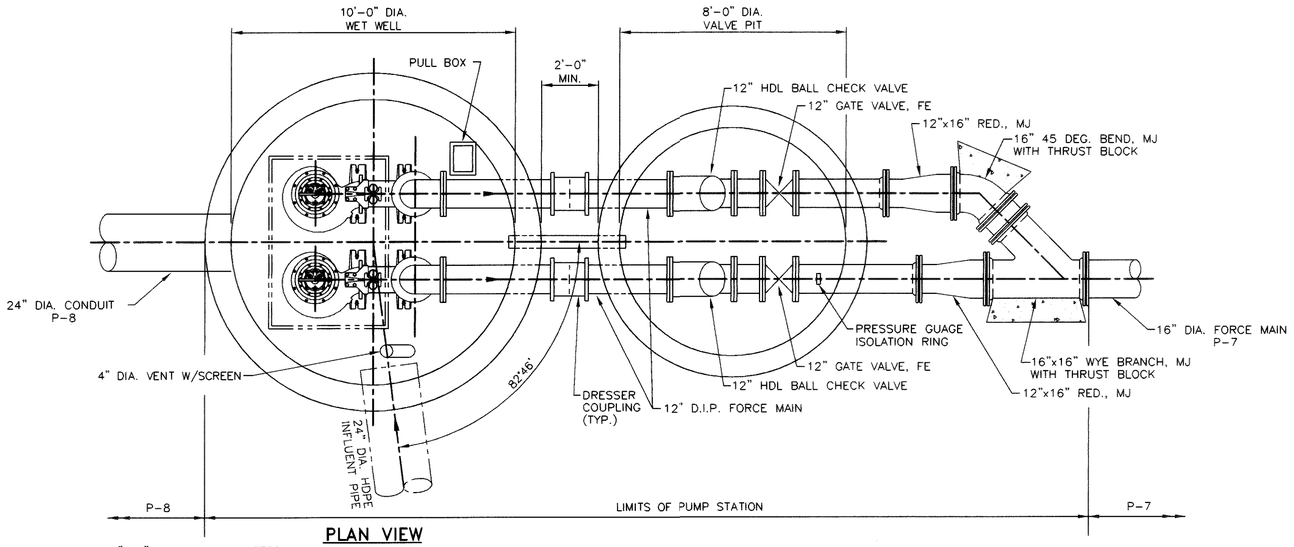

PLAN VIEW

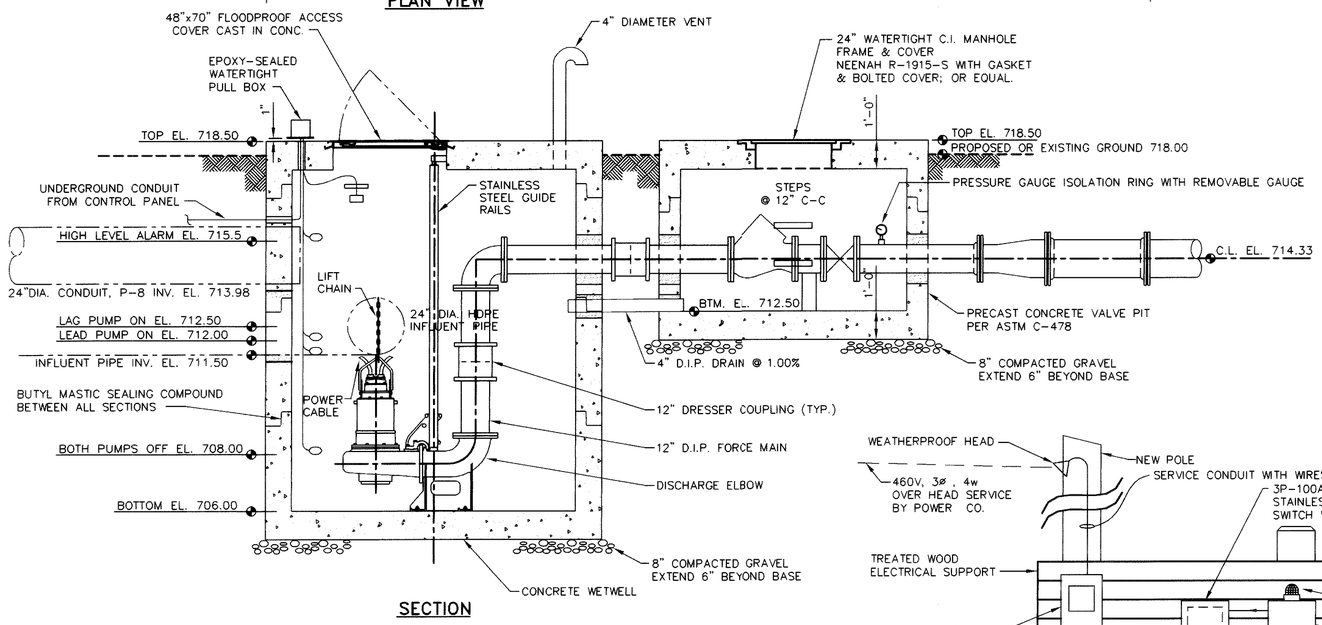

SECTION

PUMP STATION DETAILS

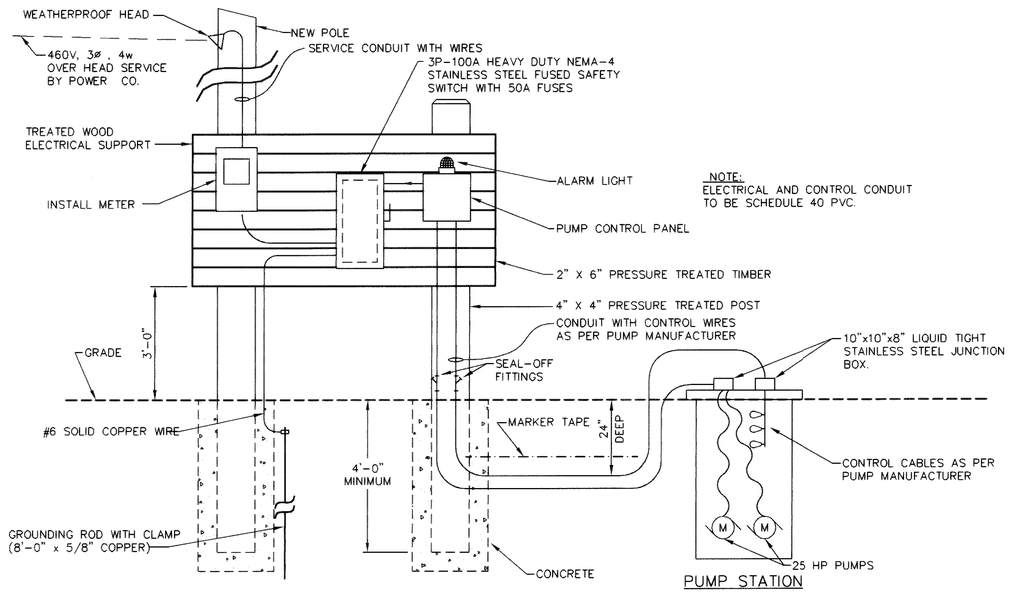

PUMP STATION

NOTE:
ELECTRICAL AND CONTROL CONDUIT TO BE SCHEDULE 40 PVC.

POWER AND CONTROL - STATION RISER DIAGRAM

NOTE:

PUMP STATION SHALL INCLUDE ALL MATERIALS, LABOR, PUMPS, PLUMBING, POWER, AND CONTROL STATION ITEMS NECESSARY TO COMPLETE THIS ITEM. PAYMENT SHALL BE MADE AT THE UNIT PRICE BID FOR ITEM SPECIAL 680- PUMP STATION.

PUMP STATION DATA TABLE

	PUMP STATION
PUMP OPERATION CONDITIONS	
FLOW (gpm)	2250
TDH (feet)	32
PUMP RPM	1170
MOTOR HP	25
*PUMP MODEL OR EQUAL	FLYGT CP-3170
IMPELLER	603
PUMP DISCHARGE SIZE	12"
ELECTRIC SERVICE AVAILABLE:	3Ø
PHASE	3Ø 4W
VOLTAGE	460V
PROPOSED AND EXISTING GROUND ELEVATION	718.00
WETWELL TOP ELEVATION	718.50
WETWELL INSIDE DIAMETER	10'-0"
INLET INVERT	711.50
HIGH LEVEL ALARM	715.50
LAG PUMP ON	712.50
LEAD PUMP ON	712.00
BOTH PUMPS OFF	708.00
WETWELL BOTTOM ELEVATION	706.00
VALVE PIT INSIDE DIAMETER	8'-0"
VALVE PIT TOP ELEVATION	718.50
VALVE PIT BOTTOM ELEVATION	712.50
FORCE MAIN SIZE THRU VALVE PIT	12"
FORCE MAIN ℄ ELEVATION	714.33
CHECK VALVE SIZE	12"
GATE VALVE SIZE	12"
WYE SIZE	16"x16"
REDUCER SIZE	12"x16"
MAIN SIZE BEYOND REDUCER	16"

* PUMPS SHALL BE FLYGT MODEL CP-3107, ABS MODEL AFP 2523, ESSCO 6X6X14X3, OR EQUAL

NOTE:

PRESSURE GAUGE ISOLATION RINGS SHALL BE ISO-RING AS MANUFACTURED BY RONNINGEN-PETTER OR EQUAL. RINGS SHALL HAVE CARBON STEEL HOUSING, CARBON STEEL ASSEMBLY FLANGES, BUNA N INNER FLEXIBLE WALL AND 50% WATER/50% ETHYL GLYCOL CAPTIVE SENSING LIQUID. A BRONZE 2 1/2" GLYCERIN-FILLED PRESSURE GUAGE SHALL BE SUPPLIED WITH A 0-100 PSI RANGE.

HORIZONTAL SCALE IN INCHES: 0, 16, 32, 64

CALCULATED MJT 6-02

CHECKED WGY 6-02

PUMP STATION DETAIL

FRA-315-3.04

PUMPDET 06-19-02

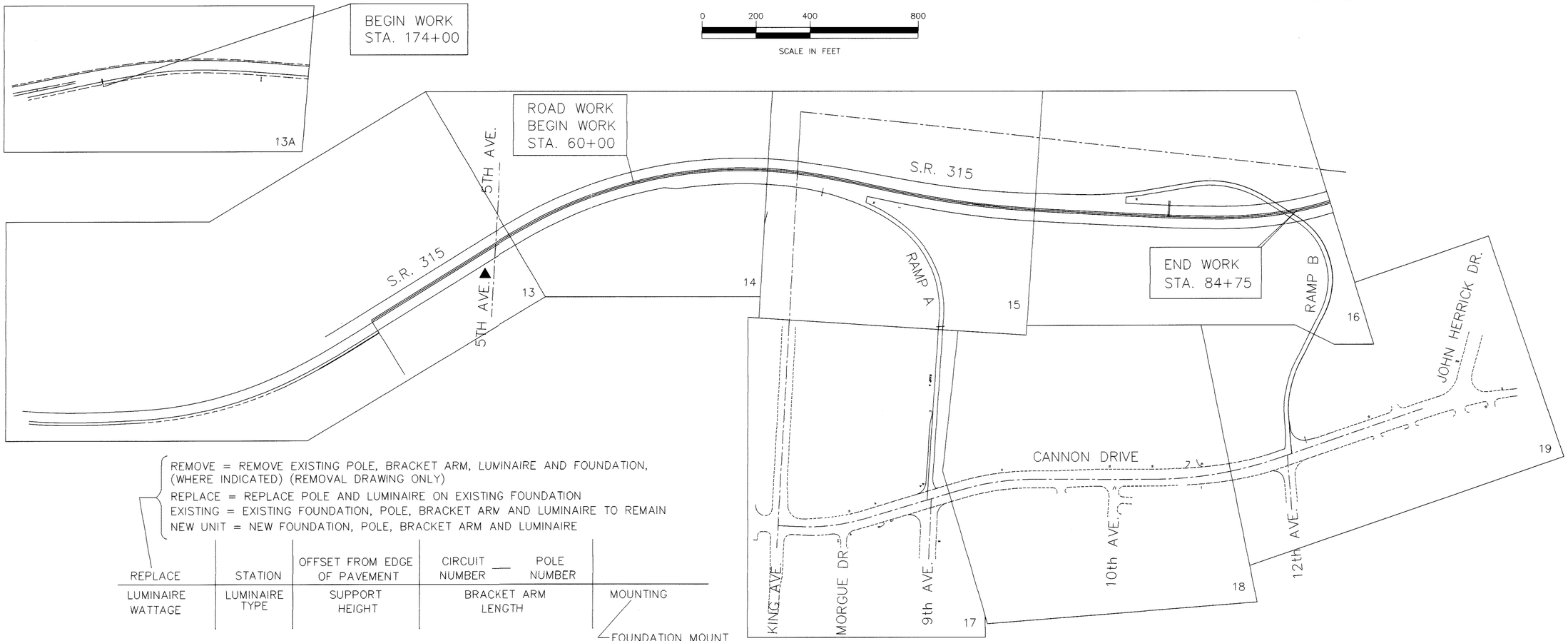

REMOVE = REMOVE EXISTING POLE, BRACKET ARM, LUMINAIRE AND FOUNDATION, (WHERE INDICATED) (REMOVAL DRAWING ONLY)
REPLACE = REPLACE POLE AND LUMINAIRE ON EXISTING FOUNDATION
EXISTING = EXISTING FOUNDATION, POLE, BRACKET ARM AND LUMINAIRE TO REMAIN
NEW UNIT = NEW FOUNDATION, POLE, BRACKET ARM AND LUMINAIRE

REPLACE	STATION	OFFSET FROM EDGE OF PAVEMENT	CIRCUIT NUMBER — POLE NUMBER	
LUMINAIRE WATTAGE	LUMINAIRE TYPE	SUPPORT HEIGHT	BRACKET ARM LENGTH	MOUNTING

POLE LEGEND

FOUNDATION MOUNT
STRUCTURE MOUNT
WALL MOUNT
BARRIER MOUNT
NOT – APPLICABLE

- PROPOSED 40' LIGHT POLE, 200 WATT HIGH PRESSURE SODIUM LAMP, MOUNTED ON BRIDGE
- EXISTING 32.5' LIGHT POLE TO REMAIN, 200 WATT HIGH PRESSURE SODIUM LAMP, MOUNTED ON BRIDGE OR FOUNDATION MOUNTED
- EXISTING 40' LIGHT POLE TO REMAIN, 250 WATT HIGH PRESSURE SODIUM LAMP, FOUNDATION MOUNTED
- PROPOSED 32.5' LIGHT POLE, 150 WATT HIGH PRESSURE SODIUM LAMP
- PROPOSED 40' LIGHT POLE, 200 WATT HIGH PRESSURE SODIUM LAMP, FOUNDATION MOUNTED
- EXISTING POST TOP POLE AND LUMINAIRE AND 150 WATT HIGH PRESSURE SODIUM TO REMAIN, OWNED AND MAINTAINED BY OTHERS EXCEPT WHERE NOTED OTHERWISE
- EXISTING PULL BOX
- PROPOSED PULL BOX
- EXISTING CONTROL CENTER
- EXISTING CONDUIT TO REMAIN

LEGEND

- PROPOSED CONDUIT, SIZE AS INDICATED
- 1 1/2" CABLE–IN–DUCT WITH 2 – #4 AWG CONDUCTORS
- PROPOSED UNDERPASS LUMINAIRE
- 3" STEEL CONDUIT
- EXISTING UNDERPASS LUMINAIRE
- PROPOSED GUARDRAIL
- CIRCUIT STUB AND CAP
- UNDERPASS LUMINAIRE
- PROPOSED CATCH BASIN & STORM
- PROPOSED CANTILEVER OVERHEAD SIGN
- PROPOSED CENTER MOUNTED SIGN
- PROPOSED OVERHEAD SIGN
- EXISTING OVERHEAD SIGN TO REMAIN
- EXISTING SIGN, 1 POST
- EXISTING SIGN, 2 POST
- PROPOSED GROUND MOUNTED SIGN, 1 POST
- PROPOSED GROUND MOUNTED SIGN, 2 POST
- PROPOSED DISCONNECT SWITCH

DESIGN AGENCY
ERIKSSON ENGINEERING LTD.
1523 CHESAPEAKE AVENUE
COLUMBUS, OH 43212

REVIEWED	DATE	STRUCTURE FILE NO.
DRAWN DCR	REVISED	
DESIGNED RDC	CHECKED HMC	

LIGHTING SCHEMATIC PLAN

FRA–315–3.04

1 / 26

100 / 238

625.03 – POWER SERVICE

THE POWER SUPPLYING AGENCY FOR THIS PROJECT IS:

CITY OF COLUMBUS DIVISION OF ELECTRICITY
3568 INDIANOLA AVENUE
COLUMBUS, OHIO 43214
(614) 645–7627

MAIN LINE 315 AND RAMPS A AND B LIGHTING IS SUPPLIED BY A 480 VOLT TWO(2) WIRE GROUNDED DISTRIBUTION SYSTEM THROUGH EXISTING CONTROL CENTER 429. ENERGY CONSUMED BY THESE SERVICES DURING CONSTRUCTION WILL CONTINUE TO BE CHARGED TO THE MAINTAINING AGENCY.

625.07 – 713.11 LUMINAIRES

STYLE A LUMINAIRES SHALL HAVE SINGLE RATED 480 VOLT, 150 WATT, INTEGRAL REGULATOR BALLASTS FOR USE WITH HIGH PRESSURE SODIUM LAMPS AND SHALL BE GENERAL ELECTRIC M250R, WESTING– HOUSE OV–14, ITT AMERICAN 250 OR EQUAL APPROVED BY THE ENGINEER.

STYLE B LUMINAIRES SHALL HAVE SINGLE RATED 480 VOLT, 200 WATT, INTEGRAL REGULATOR BALLASTS FOR USE WITH HIGH PRESSURE SODIUM LAMPS AND SHALL BE GENERAL ELECTRIC M400, CROUSE HINES OV–25 OVM ITT AMERICAN 25/26, OR EQUAL APPROVED BY THE ENGINEER.

STYLE C LUMINAIRES SHALL HAVE SINGLE RATED 480 VOLT, 310 WATT, INTEGRAL REGULATOR BALLASTS FOR USE WITH HIGH PRESSURE SODIUM LAMPS AND SHALL BE GENERAL ELECTRIC M–1000, CROUSE HINES OV– 50, ITT AMERICAN 1000, OR EQUAL APPROVED BY THE ENGINEER.

625.07 – 713.13 UNDERPASS LUMINAIRES

UNDERPASS LUMINAIRES WHERE RAMP B PASSES UNDER S.R. 315 AND WIRED INTO CIRCUIT 144C SHALL BE HOLOPHANE "UNDERPASS WALLPACK", WESTINGHOUSE, OR GENERAL ELECTRIC WL–20 UNDERPASS UNIT OR EQUAL APPROVED BY THE ENGINEER, AND SHALL BE FURNISHED WITH AN INTEGRAL FUSE HOLDER AND 10–AMPERE FUSE. THE INTEGRAL HIGH PRESSURE SODIUM BALLAST SHALL BE OF A REGULATOR TYPE RATED FOR 480 VOLTS, 1C0 WATTS.

UNDERPASS LUMINAIRES WHERE PEDESTRIAN PATH PASSED UNDER RAMP "A" SHALL BE HUBBELL PERIMALITER MODEL PVL–0100S–116 WITH A TRI–TAP BALLAST FOR OPERATION ON 277 VOLTS. EQUIVALENT LUMINAIRES ACCEPTABLE ARE COOPER WALLPAK MODEL WPK10SWN AND HOLOPHANE WALLPACK MODEL WL2K100HPSMTBZF1U

713.14 LAMPS

HIGH PRESSURE SODIUM LAMPS SHALL BE GENERAL ELECTRC "LUCALOX", WESTINGHOUSE "CERMALUX", SYLVANIA "LUMALUX", OR EQUAL APPROVED BY THE ENGINEER.

UNDERDRAINS FOR PULL BOXES

REFERENCE IS MADE TO STANDARD DRAWING HL–30.11 FOR DETAILS OF DRAINING PULL BOXES. UNDERDRAINS FOR PULL BOXES SHALL BE USED AS DIRECTED BY THE ENGINEER AND SHALL BE PROVIDED WHERE THE LENGTH REQUIRED FOR A SATISFACTORY OUTLET DOES NOT EXCEED APPROXIMATELY 20 FEET. AN ESTIMATED QUANTITY OF " 10 LINEAR FEET OF ITEM 603, 4" CONDUIT TYPE E IS INCLUDED IN THE LIGHTING GENERAL SUMMARY FOR THIS PURPOSE.

ELECTRICAL SERVICE FOR ILLUMINATED SIGNS

THE PAY ITEMS IN THE LIGHTING GENERAL SUMMARY INCLUDE THE PULL BOX OR JUNCTION BOX ADJACENT TO EACH LIGHTED SIGN AND THE ELECTRICAL SERVICE CONNECTIONS LEADING INTO THE BOX, INCLUDING SPLICES OR CONNECTOR KITS IN THE PULL BOX OR JUNCTION BOX. QUANTITIES FOR ELECTRICAL SERVICE FROM THE CONNECTION IN THE PULL BOX OR JUNCTION BOX TO THE SIGN ARE INCLUDED IN THE TRAFFIC CONTROL GENERAL SUMMARY.

PADLOCKS AND KEYS

PADLOCKS FURNISHED SHALL BE EITHER BRASS OR BRONZE, EQUAL TO MASTER NO. 4BKA OR WILSON BOHANNAN 660A, AND SHALL BE KEYED IN ACCORDANCE WITH SPECIFICATION 631.08, PARAGRAPH 3. PAYMENT SHALL BE INCLUDED IN THE BID FOR THE ITEM BEING LOCKED.

ITEM 202 – LUMINAIRE REMOVED, AS PER PLAN

THIS ITEM OF WORK SHALL CONSIST OF REMOVING AN EXISTING COBRA STYLE LUMINAIRE WHERE INDICATED ON THE PLANS AND THE POST TOP STYLE LUMINAIRE A–27 ON CANNON DRIVE OWNED BY OHIO STATE UNIVERSITY. THE COBRA STYLE LUMINAIRES REMOVED SHALL BECOME THE PROPERTY OF THE CONTRACTOR AND BE PROPERLY DISPOSED. THE POST TOP LUMINAIRE SHALL REMAIN THE PROPERTY OF OSU AND SHALL BE CAREFULLY REMOVED AND STORED WITHIN THE PROJECT SITE FOR REINSTALLATION BY THIS CONTRACTOR.

PAYMENT WILL BE MADE FOR EACH ITEM 202 "LUMINAIRE REMOVED, AS PER PLAN.

ITEM 202 – LIGHT POLE REMOVED, AS PER PLAN

THIS ITEM OF WORK SHALL CONSIST OF REMOVING AN EXISTING LIGHT POLE INCLUDING THE BRACKET ARM(S) AND TRANSFORMER BASE (IF USED). ALL REMOVED MATERIAL SHALL BECOME THE PROPERTY OF THE CONTRACTOR AND SHALL BE DISPOSED OF OFF THE PROJECT SITE.

PAYMENT WILL BE MADE AT THIS UNIT BID PRICE FOR EACH ITEM 202 "LIGHT POLE REMOVED, AS PER PLAN".

ITEM 202 – LIGHT POLE FOUNDATION REMOVED, AS PER PLAN

THIS ITEM OF WORK SHALL CONSIST OF REMOVING AN EXISTING LIGHT POLE FOUNDATION TO A MINIMUM OF ONE FOOT BELOW FINISHED GRADE, BACKFILLING THE RESULTANT DEPRESSION WITH COMPACTED SOIL AND RESTORING THE DISTURBED AREA.

PAYMENT WILL BE MADE FOR EACH ITEM 202 "LIGHT POLE FOUNDATION REMOVED, AS PER PLAN".

ITEM 202 – PULL BOX REMOVED, AS PER PLAN

THIS ITEM OF WORK SHALL CONSIST OF REMOVING EXISTING PULL BOXES WHICH SHALL THEN BE PROPERLY DISPOSED OF. THE RESULTANT OPENING SHALL THEN BE BACKFILLED TO GRADE WITH SUITABLE COMPACTED SOIL AND RESTORED TO MATCH THE SURROUNDING AREA.

PAYMENT WILL BE MADE FOR EACH ITEM 202 "PULL BOX REMOVED, AS PER PLAN".

ITEM 202 – LIGHT POLE LUMINAIRE REMOVED, AS PER PLAN (CANNON DRIVE)

THIS ITEM OF WORK SHALL CONSIST OF REMOVING AN EXISTING DECORATIVE LIGHT POLE OWNED BY OSU ON CANNON DRIVE. EACH REMOVED LIGHT POLE SHALL REMAIN THE PROPERTY OF OSU, BE CAREFULLY REMOVED WITHOUT DAMAGE, AND BE STORED WITHIN THE PROJECT SITE FOR REINSTALLATION BY CONTRACTOR.

PAYMENT WILL BE MADE FOR EACH ITEM 202 "LIGHT POLE REMOVED, AS PER PLAN (CANNON DRIVE).

ITEM SPECIAL – PLASTIC CAUTION TAPE

THE LOCATION OF UNDERGROUND DUCT CABLE OR NONMETALLIC CONDUIT SHALL BE MARKED BY THE USE OF IDENTIFYING TAPE BURIED IN THE TRENCH ABOVE THE LINE. THE IDENTIFYING TAPE SHALL BE BE AN INERT MATERIAL, APPROXIMATELY 6" WIDE, COMPOSED OF POLYETHYLENE PLASTIC, HIGHLY RESISTANT TO ALKALIS, ACID OR OTHER CHEMICAL COMPONENTS LIKELY TO BE ENCOUNTERED IN SOILS. THE TAPE SHALL BE BRIGHT YELLOW WITH IDENTIFYING PRINTING "ELECTRIC" IN BLACK LETTERS, ON ONE SIDE ONLY. TAPES SHALL BE SUPPLIED IN CONTINUOUS ROLLS WITH THE IDENTIFYING LETTERING REPEATED CONTINUOUSLY THE FULL LENGTH OF THE TAPE. IDENTIFYING TAPES SHALL BE BURIED IN THE ELECTRIC LINE TRENCH WITH ONE STRIP PLACED APPROXIMATELY DOWN THE CENTERLINE AND LOCATED APPROXIMATELY 8" TO 12" BELOW THE FINAL FINISHED GRADE. THE TAPE SHALL BE PLACED IN THE TRENCH WITH PRINTED SIDE UP AND SHALL BE ESSENTIALLY PARALLEL WITH THE FINISHED SURFACES. THE CONTRACTOR SHALL TAKE NECESSARY PRECAUTIONS TO INSURE THAT THE TAPE IS NOT PULLED, DISTORTED, OR OTHERWISE MISPLACED IN COMPLETING THE TRENCH BACKFILL. TAPE SHALL BE ALLEN SYSTEM'S, TERRA TAPE, TECTA TAPE OR EQUAL AS APPROVED BY THE ENGINEER.

ITEM 202 – REMOVAL MISC., SERVICE TO UNDERPASS, AS PER PLAN

THIS ITEM OF WORK SHALL CONSIST OF REMOVING THE EXISTING UNDERPASS LIGHTING SYSTEM LOCATED ON BRIDGE STRUCTURE FRA–315–0348 LIGHTING EXISTING RAMP AB. WORK INCLUDED IN THIS ITEM CONSIST OF REMOVING 4 UNDERPASS LUMINAIRES, AND REMOVAL OF THE WIRING, CONDUITS, AND JUNCTION BOXES LOCATED ON THE STRUCTURE WHICH PROVIDE ELECTRIC SERVICE TO THE UNDERPASS LUMINAIRES.

ALL MATERIALS REMOVED, INCLUDING THE 4 LUMINAIRES, SHALL BECOME THE PROPERTY OF THE CONTRACTOR AND SHALL BE PROPERLY DISPOSED OF BY THE CONTRACTOR OFF THE PROJECT SITE. PAYMENT SHALL BE MADE AT THE UNIT BID PRICE FOR THE ITEM "202, REMOVAL MISC., SERVICE TO UNDERPASS, AS PER PLAN", AND SHALL BE FULL COMPENSATION FOR ALL LABOR, MATERIALS, AND INCIDENTALS REQUIRED TO COMPLETE THE REMOVAL IN A SATISFACTORY WORKMAN LIKE MANNER.

CANNON DRIVE EXISTING LIGHT UNIT RELOCATION

EXISTING POST LIGHT UNIT ON CANNON DRIVE NO. A–25 AT THE INTERSECTION WITH NEW RAMP "B" AND THE UNDERGROUND WIRING FROM LIGHT POST UNIT A–23 TO A–27 SHALL BE REMOVED AND REINSTALLED APPROXIMATELY 12 FEET FARTHER WEST TO ALLOW THE WIDENING OF CANNON DRIVE TO ACCOMMODATE A DECELERATION TURN LANE. THE LUMINAIRE, POST AND MECHANICAL FOUNDATION SHALL BE SALVAGED AND REINSTALLED. THE EXISTING UNDERGROUND CIRCUIT WIRING TO THIS UNIT SHALL BE ABANDONED AND NEW UNDERGROUND WIRING SHALL BE INSTALLED TO LIGHT POLE A–25 AND RECONNECT CIRCUIT "A" FROM LUMINAIRE A–23 THROUGH A–25 TO A–27 TO RESTORE CIRCUIT CONTINUITY. OTHER EXISTING CIRCUITS CARRIED THROUGH THE CONDUIT TO BE ABANDONED SHALL BE CARRIED THROUGH THE NEW CONDUIT AS DETAILED. THE NEW CABLES INSTALLED SHALL BE PULLED FROM LIGHT POLE A–29 TO LIGHT POLE A–25 (INCLUDING PULL BOXES) WITHOUT SPLICES EXCEPT AT LIGHT POLE 27 WHERE CONNECTOR KITS ARE REQUIRED TO POWER LUMINAIRE. THE REMOVAL AND REERECTION, SPLICE KITS AND CONNECTOR KITS SHALL BE PAID FOR SEPARATELY UNDER THE ITEMS PROVIDED PER 202 AND 625.

BARRIER MEDIAN AND BRIDGE STRUCTURES

A 2' POLYVINYL CHLORIDE RACEWAY AS DETAIL ON STANDARD DRAWING MC–9.3 AND IN ACCORDANCE WITH ITEM 713.07 AND THESE NOTES, SHALL BE PROVIDED FOR THE ENTIRE LENGTH OF ALL BARRIER MEDIAN AND BRIDGE STRUCTURES ON THIS PROJECT. THE RACEWAY SHALL CONTAIN A PULL WIRE (AS PER 625.13) AND SHALL BE CAPPED AT BOTH ENDS OF THE BARRIER AS PER ITEM 625.13. PAYMENT FOR THE RACEWAY, PULL WIRE AND CAPPING SHALL BE INCLUDED IN THE UNIT PRICE BID FOR "ITEM 622 CONCRETE BARRIER" IN THE GENERAL SUMMARY.

CONTROL CENTER MAINTENANCE ITEM (625), AS PER PLAN

THIS ITEM OF WORK SHALL CONSIST OF THE REFURBISHING EXISTING CONTROL CENTER 429.

ALL EXISTING LIGHTING CIRCUIT END CONNECTIONS SHALL BE REMOVED FROM THE EXISTING SWITCH GEAR. WHERE EXISTING CONDUIT IS TO BE REUSED, THE CONDUIT SHALL BE CLEANED OF ALL MUD AND DEBRIS. THE ENCLOSURE AND RELATED COMPONENTS OF THE CONTROL CENTER SHALL BE REMOVED. THE EXISTING CONTROL SWITCH GEAR TRANSFORMER, PHOTOCELL, AND CONTACTOR COIL SHALL BE REMOVED AND REPLACED WITH NEW SO THAT RESULTANT CONTROL CENTER AND WIRING BE AS PER STANDARD DRAWINGS AND AS DETAILED ON THE PLANS. ALL REMOVED MATERIALS SHALL REMAIN THE PROPERTY OF THE OWNER AND DELIVERED WHERE DIRECTED BY THE ENGINEER. A NEW SPECIAL CAST IN PLACE CONCRETE PULL BOX 30" X 30" X 24" SHALL BE INSTALLED DIRECTLY BELOW THE SWITCH GEAR AND ALL WIRING, NEW AND EXISTING, SHALL BE ROUTED THROUGH IT. PULL BOX SHALL BE PER ODOT HL–30.11M.

PAYMENT WILL BE MADE AT THE UNIT BID PRICE FOR EACH ITEM 625 CONTROL CENTER MAINTENANCE AND SHALL BE FULL COMPENSATION FOR ALL LABOR, MATERIALS AND INCIDENTALS REQUIRED TO COMPLETE THE INSTALLATION IN A SATISFACTORY WORKMANLIKE MANNER.

ITEM 202 – LIGHT FOUNDATION REMOVED, AS PER PLAN (CANNON DRIVE)

THE MECHANICAL FOUNDATION ON CANNON DRIVE, LIGHT POLE A–27 (OWNED BY OSU) SHALL BE POWER REMOVED WITH CARE AS TO NOT DAMAGE THE UNIT. THE CONCRETE CAP SHALL ALSO BE REMOVED AND BOTH UNITS STORED FOR REINSTALLATION.

PAYMENT WILL BE MADE FOR EACH LIGHT POLE FOUNDATION REMOVED, AS PER PLAN.

REERECT EXISTING MECHANICAL FOUNDATION, AS PER PLAN

THE MECHANICAL FOUNDATION ON CANNON DRIVE, SHALL BE POWER INSTALLED WITH FREQUENT CHECKING FOR PLUMBNESS. THE BASE PLATE SHALL BE SET SO THE TOP OF THE FOUNDATION IS SET AT FINAL GRADE. THE MECHANICAL SCREW FOUNDATION SHALL BE INSTALLED TO ASSURE PROPER ALIGNMENT OF POLE, LUMINAIRE AND CONDUIT ENTRY. THE CONCRETE FOUNDATION CAP SHALL BE INSTALLED PRIOR TO INSTALLING THE LIGHT POLE AND LUMINAIRE.

PAYMENT WILL BE MADE FOR EACH LIGHT POLE MECHANICAL FOUNDATION.

DESIGN AGENCY
ERIKSSON ENGINEERING LTD.
1523 CHESAPEAKE AVENUE
COLUMBUS, OH 43212

DESIGNED	DRAWN	REVIEWED	DATE
RDC	DCR	STRUCTURE FILE NO.	
CHECKED	REVISED		
HMC			

LIGHTING NOTES

FRA–315–3.04

Q:\OSU_RAMP_315NT1>dwg SEPT. 14, 1999

CONDUIT ON STRUCTURE

EXPANSION FITTINGS FOR CONDUIT ON STRUCTURES SHALL BE OZ TYPE AX, CROUSE-HINDS TYPE XJ-4, APPLETON TYPE XJ-4, OR EQUAL APPROVED BY THE ENGINEER.

ITEM SPECIAL – DISCONNECT EXISTING CIRCUIT

THIS ITEM OF WORK SHALL CONSIST OF THE DISCONNECTION OF AND EXISTING LIGHT CIRCUIT AT A PULL BOX OR TRANSFORMER BASE.

DISCONNECTION AT A PULL BOX SHALL INVOLVE CUTTING THE EXISTING CIRCUIT AND REMOVING ALL SPLICE KITS. ANY CABLE THAT IS TO BE ABANDONED SHALL BE TERMINATED FROM THE PULL BOX SO THAT NO CABLE IS LEFT IN THE PULL BOX.

DISCONNECTION AT A TRANSFORMER BASE SHALL INVOLVE CUTTING THE EXISTING CIRCUIT AND REMOVING ALL CONNECTOR KITS. ALL DUCT-CABLE NOT TO BE REUSED SHALL BE REMOVED FROM THE TRANSFORMER BASE AND THE EXISTING CONDUIT IN THE FOUNDATION SHALL BE CLEANED OF ALL CABLE AND DEBRIS SO THAT THE NEW DUCT-CABLE CAN BE INSTALLED. ALL EXISTING CABLE TO REMAIN ACTIVE SHALL BE CUT IN A MANNER SO THAT THERE IS SUFFICIENT CABLE LEFT FOR RECONNECTION.

PAYMENT SHALL BE MADE AT THE UNIT BID PRICE FOR EACH ITEM SPECIAL "DISCONNECT EXISTING CIRCUIT" AND SHALL BE FULL COMPENSATION FOR ALL LABOR, MATERIALS AND INCIDENTALS REQUIRED TO COMPLETE THE DISCONNECTION IN A SATISFACTORY WORKMANLIKE MANNER.

ITEM SPECIAL – LIGHT POLE ANCHOR ON STRUCTURE

ANCHOR BOLTS FOR MOUNTING LIGHT POLES ON BRIDGES AND RETAINING WALLS SHALL CONFORM TO THE REQUIREMENTS OF 713.01 AND DETAILS SHOWN ON THE PLANS AND STANDARD DRAWINGS, OR THE APPROVED SHOP DRAWINGS, FOR THE RESPECTIVE POLES TO BE PLACED THEREON. PAYMENT SHALL BE MADE AT THE UNIT PRICE BID FOR EACH SET OF THE SIZE REQUIRED AND NECESSARY TO INSTALL ONE POLE, AND THESE PAYMENT SHALL CONSTITUTE FULL COMPENSATION FOR FURNISHING AND PLACING THE BOLTS.

HIGH VOLTAGE DIRECT CURRENT TEST

A HIGH VOLTAGE DIRECT CURRENT TEST, AS DESCRIBED IN SUPPLEMENTAL SPECIFICATION 839, SHALL BE PERFORMED ON ALL (DISTRIBUTION CABLE), AND (DUCT CABLE) SYSTEMS TO BE INSTALLED ON THIS PROJECT. THE TEST SHALL NOT BE PERFORMED UNTIL AFTER ALL NEW CONSTRUCTION, SUCH AS GUARDRAIL, FENCE DELINEATOR POSTS, SIGN SUPPORTS, ETC., IN THE IMMEDIATE VICINITY OF THE LOCATION OF THE CABLE RUN BEING TESTED, HAS BEEN COMPLETED.

ITEM 625 – CONDUIT JACKED UNDER PAVEMENT, AS PER PLAN

THIS ITEM SHALL CONSIST OF FURNISHING AND INSTALLING CONDUIT OF THE SIZE OR SIZES INDICATED UNDER EXISTING PAVEMENT AND CONTIGUOUS SHOULDERS BY AN APPROVED METHOD SUCH AS "DRILLING" OR "JACKING".

THE CONTRACTOR SHALL PLACE THE CONDUIT WITH THE LEAST AMOUNT DISTURBANCE TO THE EXISTING PAVEMENT, SUBBASE, BERM PAVEMENT, OR SHOULDERS OF THE ROADWAY. ALL PUSH PITS OR ANY NECESSARY EXCAVATIONS SHALL BE BACKFILLED AND RESTORED IN ACCORDANCE WITH 625.01.

MEASUREMENT OF THE CONDUIT SHALL BE THE ACTUAL AMOUNT OF LINEAL FEET INSTALLED UNDER PAVEMENT AND SHOULDERS, MEASURED IN PLACE, AS ACCEPTED BY THE ENGINEER. THE UNIT PRICE BID FOR ITEM 625 "CONDUIT JACKED UNDER PAVEMENT, AS PER PLAN" SHALL BE FULL COMPENSATION FOR EXCAVATION, DRILLING OR JACKING, BACKFILLING, COMPACTION, RESTORATION, AND ALL LABOR, MATERIAL, EQUIPMENT, AND INCIDENTALS NECESSARY TO COMPLETE THE WORK AS SPECIFIED.

ITEM 625 – SERVICE TO UNDERPASS LIGHTING, AS PER PLAN (RAMP B)

THIS ITEM SHALL CONSIST OF PROVIDING COMPLETE ELECTRICAL SERVICE, EXCEPT FOR LUMINAIRES AND STRUCTURE GROUNDING, FOR AN UNDERPASS LIGHTING SYSTEM ON STRUCTURE NO. FRA-315-0304 RAMP B STATE ROUTE 315. THE INSTALLATION WORK SHALL INCLUDE CONDUITS, CONDUIT GROUNDING, MOUNTINGS, FITTINGS, JUNCTION BOXES, CABLES, AND ALL INCIDENTALS NECESSARY TO COMPLETE, READY FOR USE, THE SERVICE AS DETAILED ON SHEET 122. THE LUMP SUM PRICE BID FOR "ITEM 625, SERVICE TO UNDERPASS LIGHTING, AS PER PLAN" SHALL INCLUDE PAYMENT FOR ALL EQUIPMENT, LABOR, AND MATERIALS NECESSARY TO COMPLETE THE WORK AS SPECIFIED. COMPONENT PARTS NOT SPECIFICALLY MENTIONED BUT REQUIRED FOR SATISFACTORY OPERATION OF THE ITEM SHALL BE FURNISHED AND CONSIDERED PAID FOR AS PART OF THE ITEM.

ITEM 625 – SERVICE TO UNDERPASS LIGHTING, AS PER PLAN (RAMP A– PEDESTRIAN TUNNEL)

THIS ITEM SHALL CONSIST OF PROVIDING COMPLETE ELECTRICAL SERVICE, EXCEPT FOR LUMINAIRES , FOR AN UNDERPASS LIGHTING SYSTEM UNDER NEW RAMP A FOR PEDESTRIAN TRAFFIC. THE INSTALLATION WORK SHALL INCLUDE CONDUITS, CONDUIT GROUNDING, MOUNTINGS, FITTINGS, JUNCTION BOXES, CABLES, AND ALL INCIDENTALS NECESSARY TO COMPLETE, READY FOR USE, THE SERVICE AS DETAILED ON SHEET 123. THE LUMP SUM PRICE BID FOR "ITEM 625, SERVICE TO UNDERPASS LIGHTING, AS PER PLAN" (RAMP A– PEDESTRIAN TUNNEL) SHALL INCLUDE PAYMENT FOR ALL EQUIPMENT, LABOR, AND MATERIALS NECESSARY TO COMPLETE THE WORK AS SPECIFIED. COMPONENT PARTS NOT SPECIFICALLY MENTIONED BUT REQUIRED FOR SATISFACTORY OPERATION OF THE ITEM SHALL BE FURNISHED AND CONSIDERED PAID FOR AS PART OF THE ITEM.

ITEM SPECIAL – MAINTAIN EXISTING LIGHTING

ALL OF THE EXISTING LIGHTING ON S.R. 315 MAIN LINE SUPPLIED BY POWER THROUGH CONTROL CENTER 144 THAT ARE NOT TO BE REPLACED SHALL BE MAINTAINED OPERATIONAL AT ALL TIMES.

ALL OF THE EXISTING LIGHTING ON OLENTANGY RIVER ROAD SUPPLIED BY POWER THROUGH CONTROL CENTER 429 SHALL BE MAINTAINED OPERATIONAL AT ALL TIMES. THIS WILL REQUIRE ALL NEW CIRCUITRY AND LIGHTING EQUIPMENT TO BE INSTALLED AND MADE OPERATIONAL ON OLENTANGY RIVER ROAD AND ON THE NORTH SIDE OF RAMP "AB" PRIOR TO THE REMOVAL, REFURBISHING, OR DISRUPTION OF ANY EXISTING LIGHTING CIRCUIT POWERED BY LIGHTING CONTROL CENTER 429. ALSO ALL EXISTING LIGHTING LUMINAIRES LOCATED NORTH OF EXISTING RAMP "AB" SHALL BE MAINTAINED OPERATIONAL AT ALL TIMES BY NOT DISRUPTING THE EXISTING CIRCUIT POWERING THEM AND MAKING THE CHANGE OVER CONNECTION TO THE NEW CIRCUITRY AS SOON AS IT IS COMPLETED. THE NEW CIRCUITRY EXTENDED ON THE NORTH SIDE OF EXISTING RAMP "AB" IS PROVIDED FOR THIS PURPOSE.

ALL OF THE EXISTING LIGHTING ON S.R. 315 MAIN LINE SUPPLIED BY POWER FROM EXISTING CONTROL CENTER 429 WHICH ARE NOT TO BE REMOVED AND REPLACED SHALL BE MAINTAINED OPERATIONAL AT ALL TIMES. THIS WILL REQUIRE THE CONTRACTOR TO PROTECT AND MAINTAIN OPERATION, THE EXISTING UNDERGROUND ROAD AND RAMP SERVICE CROSSING LOCATED AT APPROXIMATELY STATION 79+50 UNTIL THE NEW SERVICE CROSSINGS ARE INSTALLED, COMPLETED AND MADE OPERATIONAL.

THE CONTRACTOR, AS A PORTION OF THIS CONTRACT, SHALL TAKE OVER RESPONSIBILITY FOR THE OPERATION AND MAINTENANCE OF CONTROL CENTER 429 AND FURNISH ALL LABOR OR MATERIALS NECESSARY TO MAINTAIN ALL SPECIFIED LIGHTING UNITS OPERATIONAL THROUGH THE DURATION OF THE CONTRACT. THE RENOVATION OF THIS CONTROL CENTER SHALL BE ACCOMPLISHED AFTER ALL WORK TO THE LIGHTING CIRCUITS HAS BEEN COMPLETED AND THE WORK SHALL BE PERFORMED DURING DAYLIGHT HOURS MAINTAINING THE CONTROL CENTER OPERATIONAL DURING NIGHTTIME HOURS WHEN THE LUMINAIRES SHALL BE OPERATIONAL.

THE EXISTING LIGHTING ON CANNON DRIVE SHALL BE MAINTAINED OPERATIONAL EXCEPT FOR A MAXIMUM OF TWO DAYS WHEN NEW CIRCUITRY EXTENDED ACROSS RAMP A IS CHANGED OVER AND CONNECTED TO THE EXISTING LIGHTS. THE EXISTING CIRCUITRY SHALL BE MAINTAINED OPERATIONAL UNTIL THE NEW CIRCUITRY ACROSS THE RAMP IS INSTALLED AND THE CHANGE OVER IS MADE.

THE LIGHTS SHALL BE MAINTAINED OPERATIONAL BY INSTALLING ALL NEW CABLES REQUIRED, PULL BOXES AND CONNECTIONS PRIOR TO DISCONNECTING THE LIGHTING SYSTEM FROM THE EXISTING CIRCUITRY SO THAT THE CHANGE OVER CAN BE PERFORMED AT THE SAME TIME PERIOD THAT THE MODIFICATIONS TO CONTROL CENTER NO. 429 ARE ACCOMPLISHED. NO SUPPLEMENTAL LIGHT POLES WILL BE REQUIRED AS THE NEW CIRCUITRY SHALL BE IN PLACE PRIOR TO ABANDONING THE EXISTING CIRCUIT.

ALL COST FOR MAINTAINING THE REQUIRED EXISTING CIRCUITS OPERATIONAL SHALL BE INCLUDED IN THE LUMP SUM ITEM BID, "MAINTAINING EXISTING LIGHTING".

ANY REQUIRED, RELOCATION, SUPPORT, PROTECTION OR ANY OTHER ACTIVITY CONCERN WITH THE CITY'S STREET LIGHTING SYSTEM IN THE CONSTRUCTION AREA IS TO BE PERFORMED SOLELY BY THE CONTRACTOR UNDER LOCAL, STATE AND FEDERAL SAFETY CODES. THE CONTRACTOR SHALL RESTORE ALL DISTURBED AREAS TO AN EQUAL OR BETTER CONDITION THAN EXISTED PRIOR TO CONSTRUCTION.

PRIOR TO ANY WORK ON CITY'S STREET LIGHTING SYSTEM THE CONTRACTOR SHALL NOTIFY THE DIVISION OF ELECTRICITY FOR ANY CABLE LOCATION AT 645-7627 – DISPATCH CENTER.

IT IS NECESSARY FOR ANY ELECTRICAL CONTRACTOR WORKING ON CITY'S STREET LIGHTING SYSTEM TO PERFORM LOCK OUT/TAG OUT PROCEDURE CALLING THE ABOVE NUMBER.

ALL REMOVED STREET LIGHTS SHALL BE DISMANTLED AND DELIVERED TO DIVISION OF ELECTRICITY AT 3500 INDIANOLA AVE.

THE DIVISION OF ELECTRICITY HAS A CONDUCTOR SAFETY POLICY WHICH SHALL BE FOLLOWED BY ANY PERSON WORKING ON OR NEAR CITY'S FACILITIES. COPIES OF THE CONDUCTOR SAFETY POLICY CAN BE OBTAINED THROUGH THE DIVISION OF ELECTRICITY 3568 INDIANOLA AVE.

ITEM SPECIAL – CLEANING EXISTING CONDUIT

PORTIONS OF THIS CONTRACT WILL INCLUDE INSTALLING NEW CABLE IN EXISTING CONDUIT. THE EXISTING CONDUIT SYSTEM IS 2 INCH METAL BRIDGE CONDUIT AND 2 INCH PVC CONDUIT. CLEANING PROCEDURES FOR THE EXISTING CONDUIT SHALL BE THE SAME AS FOR NEW DUCT.

THE COST OF CLEANING CONDUIT SHALL BE ON A LINEAR FOOT BASIS.

GROUNDING

GROUNDING IS TO BE PROVIDED ON ALL NEUTRAL CONDUCTORS, TRANSFORMER NEUTRALS, TRANSFORMER ENCLOSURES, TERMINATORS, LIGHTING ARRESTERS AND GROUND CABLES IN STRUCTURE. GROUND WIRE FOR WOOD POLES SHALL BE TIED TO EQUIPMENT RUN DOWN POLE AND CONNECTED TO GROUND ROD. GROUND WIRE SHALL BE PROTECTED BY HALF ROUND WOOD, PLASTIC OR FIBER MOLDING FROM GROUND LINE TO A POINT AT LEAST 8 FT. ABOVE GROUND LINE AND THROUGH OUT THE COMMUNICATION AND TRANSFORMER SPACES. GROUND WIRES IN STRUCTURES SHALL BE TIED TO EQUIPMENT OR GROUND CABLE AND CONNECTED TO BRIDGE STRUCTURE AND GROUND ROD. ALL CONNECTIONS SHALL BE MADE WITH SODERLESS CONNECTORS OR BY THE EXOTHERMIC WELDING PROCESS USING NO. 2 AWG BARE COPPER WIRE.

GROUND RODS SHALL BE DRIVEN FULL LENGTH IN UNDISTURBED EARTH IN ACCORDANCE WITH THE CONSTRUCTION DRAWINGS. THE TOP SHALL BE AT LEAST 12 INCHES BELOW THE SURFACE OF THE EARTH. THE GROUND WIRE SHALL BE ATTACHED TO THE ROD WITH A CLAMP AND SECURED TO THE POLE WITH STAPLES. THE STAPLES ON THE GROUND WIRE SHALL BE SPACED TWO FEET APART EXCEPT FOR A DISTANCE OF EIGHT FEET ABOVE THE GROUND AND EIGHT FEET DOWN FROM THE TOP OF THE POLE WHERE THEY SHALL BE SIX INCHES APART.

ALL EQUIPMENT GROUNDS, NEUTRAL WIRES, JUNCTION BOXES, ANCHOR BOLTS, CONDUITS AND LIGHTING PROTECTIVE EQUIPMENT SHALL BE INTERCONNECTED AND ATTACHED TO A GROUND WIRE AND OR GROUND ROD.

ALL GROUNDING SHALL BE CONTINUOUS AND COMPLY WITH THE ODOT STANDARD CONSTRUCTION DRAWINGS NUMBER HL-50.21M AND HL-20.14M AND SPECIFICATIONS PARAGRAPH 625.2.

CONTROL CENTER DATA

CONTROL CENTER	CONNECTED LOAD KVA	SERVICE ENTRANCE CONDUCTOR SIZE – AWG.	ENCLOSURE RATING AMPS	EXISTING CONNECTED LOAD			PROPOSED CONNECTED LOAD			REMARKS
				CIRCUIT NUMBER	CIRCUIT LOAD AMPS	CIRCUIT FUSE SIZE AMPS	CIRCUIT NUMBER	CIRCUIT LOAD AMPS	CIRCUIT FUSE SIZE AMPS	
144	48.92	#4 AWG	100	A	14.87	60	A	14.87	60	NO LOAD CHANGE
				B	17.50	60	B	17.50	60	NO LOAD CHANGE
				C	12.2	60	C	16.55	60	ADDED 4.35 AMPS
429	51.45	#2 AWG	DOUBLE 100 AMP	A	11.33	60	A	11.33	60	NO LOAD CHANGE
				B	10.89	60	B	10.89	60	NO LOAD CHANGE
				C	12.27	60	C	18.17	60	ADDED 5.9 AMPS
				D	11.06	60	D	11.06	60	NEW CIRCUIT

DESIGN AGENCY
ERIKSSON ENGINEERING LTD.
1523 CHESAPEAKE AVENUE
COLUMBUS, OH 43212

DESIGNED RDC
DRAWN DCR
CHECKED HMC
REVIEWED
DATE
REVISED
STRUCTURE FILE NO.

LIGHTING NOTES

FRA-315-3.04

Q:\OSU_RAMP\315NT1>dwg SEPT 14, 1999

SHEET NO.									ITEM NO.	ITEM EXT.	GRAND TOTAL	UNIT	DESCRIPTION	REFERENCE SHEET NO.
104	105	106	107	108	109	110	111	126						
								100	202	98200	100	LIN.FT.	REMOVAL MISC.: CONDUIT REMOVED, AS PER PLAN	
								8	202	75301	8	EACH	PULL BOX REMOVED, AS PER PLAN	101
								17	202	75401	17	EACH	LIGHT POLE REMOVED, AS PER PLAN	101
								11	202	75501	11	EACH	LIGHT POLE FOUNDATION REMOVED, AS PER PLAN	101
								17	202	75507	17	EACH	LUMINAIRE REMOVED, AS PER PLAN	101
						1	1	13	202	75801	15	EACH	DISCONNECT EXISTING CIRCUIT, AS PER PLAN	102
								1	202	75501	1	EACH	LIGHT POLE FOUNDATION REMOVED, AS PER PLAN (CANNON DRIVE)	101
								1	202	75403	1	EACH	LIGHT POLE REMOVED FOR STORAGE, AS PER PLAN (CANNON DRIVE)	101
								1	202	75505	1	EACH	LUMINAIRE REMOVED FOR STORAGE, AS PER PLAN (CANNON DRIVE)	101
								LUMP	202	98000	LUMP		REMOVAL MISC.; SERVICE TO UNDERPASS LIGHTING, AS PER PLAN	101
								210	202	98200	210	LIN.FT.	REMOVAL MISC.: CIRCUIT CABLE REMOVED, AS PER PLAN	
60						120	30		603	00401	210	LIN.FT.	4" CONDUIT, TYPE E, AS PER PLAN	101
		20	8			11	3		625	00500	42	EACH	CONNECTOR KIT, TYPE II	
		20	8			11	3		625	00600	42	EACH	CONNECTOR KIT, TYPE III	
		16				32	32		625	01500	80	EACH	CABLE SPLICING KIT	
3				2					625	03200	5	EACH	LIGHT POLE, DESIGN A10B32.5 (STRUCTURE)	
6	1			4					625	03206	11	EACH	LIGHT POLE, DESIGN AT12B32.5 (FOUNDATION)	
				1					625	03300	1	EACH	LIGHT POLE, DESIGN A12B32.5 (STRUCTURE WALL)	
				2					625	10500	2	EACH	LIGHT POLE MISC.: LIGHT POLE, DESIGN A12BB32.5 (STRUCTURE WALL)	
6	1								625	05400	7	EACH	LIGHT POLE, DESIGN A15B40 (STRUCTURE)	
3	6								625	10500	9	EACH	LIGHT POLE MISC.; LIGHT POLE, DESIGN AT15B40 (FOUNDATION)	
7						4			625	10591	11	EACH	LIGHT POLE ANCHOR BOLTS, AS PER PLAN	102
6	1			4					625	14000	11	EACH	LIGHT POLE FOUNDATION, 24" X 6' DEEP	
3	6								625	14100	9	EACH	LIGHT POLE FOUNDATION, 24" X 8' DEEP	
				1					625	14307	1	EACH	MEDIAN LIGHT POLE FOUNDATION, 10' DEEP, AS PER PLAN	121
					1				625	14600	1	EACH	LIGHT POLE FOUNDATIONS MISC.: REERECT EXISTING MECHANICAL FOUNDATION, AS PER PLAN (CANNON DRIVE)	124
							3240		625	23000	3240	LIN.FT.	NO. 4 AWG, 600 VOLT, DISTRIBUTION CABLE (CANNON DRIVE OSU)	
		3086				2994	686		625	23200	6766	LIN.FT.	NO. 4 AWG, 5000 VOLT, DISTRIBUTION CABLE	
							405		625	23304	405	LIN.FT.	NO. 8 AWG, 600 VOLT, DISTRIBUTION CABLE (CANNON DRIVE OSU)	
		2015	1015			952	42		625	23400	4024	LIN.FT.	NO. 10 AWG, POLE AND BRACKET CABLE	
		1442	1252			937	190		625	24100	3821	LIN.FT.	1 1/2" DUCT CABLE, WITH TWO NO. 4 AWG 5000 VOLT CABLES	
				12	365				625	25400	377	LIN.FT.	CONDUIT, 2", 713.04	
				98					625	25502	98	LIN.FT.	CONDUIT, 3", 713.07	
				396					625	25900	396	LIN.FT.	CONDUIT , JACKED OR DRILLED, (3". 713.04)	
22				95	239				625	25500	356	LIN.FT.	CONDUIT, 3", 713.04	
								102	625	25911	102	LIN.FT.	CONDUIT CLEANED AND CABLES REMOVED, AS PER PLAN	102
9	7								625	26250	16	EACH	LUMINAIRE, CONVENTIONAL 200 WATT HPS, TYPE III, STYLE B	
9	1			11					625	26250	21	EACH	LUMINAIRE, CONVENTIONAL 150 WATT HPS, TYPE II, STYLE A	
				8					625	27501	8	EACH	LUMINAIRE, UNDERPASS 100 WATT HPS, AS PER PLAN (RAMP B)	101, 102
4									625	27501	4	EACH	LUMINAIRE, UNDERPASS 100 WATT HPS, AS PER PLAN (RAMP A – PEDESTRIAN TUNNEL)	
1245	1182			901	784				625	29002	4112	LIN.FT.	TRENCH 24" DEEP	
				4					625	29900	4	EACH	JUNCTION BOX (HL20.13M)	
8				2					625	29920	10	EACH	STRUCTURE JUNCTION BOX (TYPE II HL20.14M)	
7				12	5				625	30700	24	EACH	PULL BOX,713.08, 18"	
					1				625	30706	1	EACH	PULL BOX, 713.08, 24"	
10	7			4	1				625	32000	22	EACH	GROUND ROD	
	1					2			625	33001	3	EACH	STRUCTURE GROUNDING SYSTEM, AS PER PLAN	125
							1		625	34507	1	EACH	CONTROL CENTER MAINTENANCE ITEM, AS PER PLAN	101
					1				625	35001	1	EACH	REERECT EXISTING LIGHT POLE, AS PER PLAN (CANNON DRIVE)	101
					1				625	35101	1	EACH	REERECT EXISTING LUMINAIRE, AS PER PLAN (CANNON DRIVE)	101
1245	1182			901	784				SPECIAL	625 36000	4112	LIN.FT.	PLASTIC CAUTION TAPE	101
						1			625	37101	1	EACH	SERVICE TO UNDERPASS LIGHTING, AS PER PLAN (RAMP B)	102,122
		1							625	37101	1	EACH	SERVICE TO UNDERPASS LIGHTING, AS PER PLAN (RAMP A – PEDESTRIAN TUNNEL)	102,123
									625	38000	LUMP		HIGH VOLTAGE TEST	102
									SPECIAL	625 40000	LUMP		MAINTAIN EXISTING LIGHTING	102

CALCULATED | CHECKED

315 LIGHTING GENERAL SUMMARY

FRA-315-3.04

3610LTGS

| SHEET NUMBER | STATION | SIDE | ROADWAY | CIRCUIT | 625 | | | | | | | | | | | | | | | | 603 | | | | | | | | | | | | | | | |

SHEET NUMBER	STATION	SIDE	ROADWAY	CIRCUIT	625 LUMINAIRE, CONVENTIONAL 200 WATT HPS, TYPE III, STYLE B	LUMINAIRE, CONVENTIONAL 150 WATT HPS, TYPE II, STYLE A	LIGHT POLE, DESIGN A15B40 (STRUCTURE)	LIGHT POLE, DESIGN AT15B40	LIGHT POLE, DESIGN AT12B32.5	LIGHT POLE FOUNDATION, 24" X 8' DEEP	LIGHT POLE FOUNDATION, 24" X 6' DEEP	GROUND ROD	TRENCH, 24", DEEP	PLASTIC CAUTION TAPE	STRUCTURAL GROUNDING SYSTEM
					EACH	EACH	EACH	EACH	EACH	EACH	EACH	EACH	LIN. FT.	LIN. FT.	EACH
114	65+74 144C-26	LT	SR 315	144C	1		1								1
114	67+75 429D-22	LT	SR 315	429D	1			1		1		1			
114	67+75 to 69+67	LT	SR 315	429D									192	192	
114	69+67 429D-21	LT	SR 315	429D	1			1		1		1			
114	69+67 to 71+95	LT	SR 315	429D									228	228	
114	71+95 429D-20	LT	SR 315	429D	1			1		1		1			
114	71+95 to 74+03	LT	SR 315	429D									208	208	
114	74+03 429D-19	LT	SR 315	429D	1			1		1		1			
114	74+03 to 76+40	LT	SR 315	429D									237	237	
115	76+40 429D-18	LT	SR 315	429D	1			1		1		1			
115	76+40 to 78+32	LT	SR 315	429D									192	192	
115	78+32 429D-17	LT	RAMP B	429D	1			1		1		1			
115	78+32 to 79+47	LT	RAMP B	429D									115	115	
115	79+47 429D-26	LT	RAMP B	429D		1			1		1	1			
115	79+47 to 79+57	LT	RAMP B	429D									10	10	
		TOTALS SHEET 105			7	1	1	6	1	6	1	7	1182	1182	1
		TOTALS CARRIED TO LIGHTING GENERAL SUMMARY													

315 LIGHTING SUB-SUMMARY

FRA-315-3.04

SHEET NUMBER	STATION	SIDE	ROADWAY	CIRCUIT	625							
					1 1/2" DUCT CABLE, WITH TWO NO. 4 AWG 5000 VOLT CABLES	NO. 4 AWG, 5000 VOLT, DISTRIBUTION CABLE	NO. 10 AWG, POLE AND BRACKET CABLE	CONNECTOR KIT, TYPE II	CONNECTOR KIT, TYPE III	CABLE SPLICING KIT	SERVICE TO UNDERPASS LIGHTING, AS PER PLAN RAMP A -PEDESTRIAN UNDERPASS	
					LIN. FT.	LIN. FT.	LIN. FT.	EACH	EACH	EACH	LUMP	
112A	173+95 PULL BOX 1	RT	SR 315	B						2		
112A	173+95 to 173+40 EX LIGHT B-4	RT	SR 315	B	68			1	1			
112	41+05 PULL BOX 2	RT	SR 315	144C						2		
112	41+05 to 41+75 EX LIGHT A-6	RT	SR 315	144C	87			1	1			
113	60+21 to 62+43	RT	SR 315	144C		464						
113	62+43 144C-5 JB 1	RT	SR 315	144C			130	1	1			
113	62+43 to 64+67	RT	SR 315	144C		468						
113	64+67 144C-6 JB 2	RT	SR 315	144C			130	1	1			
113	64+67 to 66+79	RT	SR 315	144C		444						
114	66+79 144C-7 JB 3	RT	RAMP A	144C			130	1	1			
114	66+79 to 67+47	RT	RAMP A	144C		160						
114	67+47 JB 4	RT	RAMP A	144C						2		
114	67+47 to 68+42	RT	RAMP A	144C		210						
114	68+42 144C-8 JB 5	RT	RAMP A	144C			130	1	1			
114	68+42 to 69+89	RT	RAMP A	144C		314						
114	69+89 144C-9 JB 6	RT	RAMP A	144C			105	1	1			
114	69+89 to 71+35	RT	RAMP A	144C		312						
114	71+35 144C-10 JB 7	RT	RAMP A	144C			105	1	1			
114	71+35 to 72+83	RT	RAMP A	144C		316						
114	72+83 144C-11 JB 8	RT	RAMP A	144C			105	1	1			
114	72+83 to 74+40	RT	RAMP A	144C		334						
114	74+40 PULL BOX 3	RT	RAMP A	144C						2		
114	74+40 to 74+46	RT	RAMP A	144C	16							
114	74+46 144C-12	RT	RAMP A	144C			110	1	1			
114	74+46 to 75+07	RT	RAMP A	144C	71							
116	75+07 PULL BOX 4	RT	RAMP A	144C						2		
116	75+07 to 75+29	RT	RAMP A	144C		64						
116	75+29 PULL BOX 5	RT	RAMP A	144C						2		
116	75+07 to 75+05	RT	RAMP A	144C								
116	75+05 PULL BOX 6	RT	RAMP A	144C						2		
116	75+08 – 13,14,15,16	RT	RAMP A	144C							1	
116	75+29 to 75+74	RT	RAMP A	144C	55							
116	75+74 144C-17	RT	RAMP A	144C			105	1	1			
116	75+74 to 77+09	RT	RAMP A	144C	145							
116	77+09 144C-18	RT	RAMP A	144C			105	1	1			
116	77+09 to 77+95	RT	RAMP A	144C	96							
116	77+95 PULL BOX 7	RT	RAMP A	144C						2		
116	77+95 to 78+40	RT	RAMP A	144C	55		105	1	1			
116	78+40 144C-19	RT	RAMP A	144C								
116	78+40 to 79+65	RT	RAMP A	144C	135		105	1	1			
116	79+65 144C-20	RT	RAMP A	144C								
114	70+90 429C-25	RT	SR 315	429C			130	1	1			
114	70+90 to 73+00	RT	SR 315	429C	220							
114	73+00 429C-24	RT	SR 315	429C			130	1	1			
114	73+00 to 75+06	RT	SR 315	429C	216							
115	75+06 429C-23	RT	SR 315	429C			130	1	1			
115	75+06 to 77+74	RT	SR 315	429C	278			1	1			
113	61+56 144C-28	LT	SR 315	144C			130	1	1			
113	63+65 144C-27	LT	SR 315	144C			130	1	1			
	TOTALS SHEET 106				1442	3086	2015	20	20	16	1	
	TOTALS CARRIED TO LIGHTING GENERAL SUMMARY											

315 LIGHTING SUB-SUMMARY

FRA-315-3.04

SHEET NUMBER	STATION	SIDE	ROADWAY	CIRCUIT	625			
					1 1/2" DUCT CABLE, WITH TWO NO. 4 AWG 5000 VOLT CABLES	NO. 10 AWG, POLE AND BRACKET CABLE	CONNECTOR KIT, TYPE II	CONNECTOR KIT, TYPE III
					LIN. FT.	LIN. FT.	EACH	EACH
114	65+74 144C-26	LT	SR 315	144C		130	1	1
114	67+75 429D-22	LT	SR 315	429D		130	1	1
114	67+75 to 69+67	LT	SR 315	429D	202			
114	69+67 429D-21	LT	SR 315	429D		130	1	1
114	69+67 to 71+95	LT	SR 315	429D	238			
114	71+95 429D-20	LT	SR 315	429D		130	1	1
114	71+95 to 74+03	LT	SR 315	429D	218			
114	74+03 429D-19	LT	SR 315	429D		130	1	1
114	74+03 to 76+40	LT	SR 315	429D	247			
115	76+40 429D-18	LT	SR 315	429D		130	1	1
115	76+40 to 78+32	LT	SR 315	429D	202			
115	78+32 429D-17	LT	RAMP B	429D		130	1	1
115	78+32 to 79+47	LT	RAMP B	429D	125			
115	79+47 429D-26	LT	RAMP B	429D		105	1	1
115	79+47 to 79+57	LT	RAMP B	429C	20			
	TOTALS SHEET 107				1252	1015	8	8
	TOTALS CARRIED TO LIGHTING GENERAL SUMMARY							

315 LIGHTING SUB-SUMMARY

FRA-315-3.04

SHEET NUMBER	STATION	SIDE	ROADWAY	CIRCUIT	625																		
					LUMINAIRE, 150 WATT HPS, TYPE II, STYLE A	LUMINAIRE, UNDERPASS 100 WATT HPS, AS PER PLAN (RAMP B)	LIGHT POLE, DESIGN A12B32.5 STRUCTURE WALL	LIGHT POLE, DESIGN A12B32.5 STRUCTURE WALL	LIGHT POLE, DESIGN AT12B32.5 FOUNDATION	LIGHT POLE, DESIGN A10B32.5 STRUCTURE	LIGHT POLE FOUNDATION, 24" X 6' DEEP	MEDIAN LIGHT POLE FOUNDATION, 10' DEEP AS PER PLAN	GROUND ROD	PULL BOX, 18", 713.08	JUNCTION BOX	STRUCTURE JUNCTION BOX TYPE II HL-20.14M	TRENCH, 24" DEEP	PLASTIC CAUTION TAPE, AS PER PLAN	CONDUIT 3", 713.04	CONDUIT 2", 713.04	CONDUIT 3", 713.07	CONDUIT 3", 713.04 JACKED OR DRILLED
					EACH	EACH	EACH	EACH	EACH	EACH	EACH	EACH	EACH	EACH	EACH	EACH	LIN. FT.	LIN. FT.	LIN. FT.	LIN. FT.	LIN. FT.	LIN. FT.
115	79+57 to 80+41	LT	RAMP B	429D													84	84				
115	80+41 PULL BOX 12	LT	RAMP B	429D										1								
115	80+41 to 80+50	LT	RAMP B	429D													12	12		12		
115	80+50 JUNCTION BOX 9	LT	RAMP B	429D											1							
115	80+50 to 80+72	LT	RAMP B	429D																		
115	80+72 429D-27	LT	RAMP B	429D	1			1				1										
115	80+72 to 82+03	LT	RAMP B	429D																		
115	82+03 429D-28	LT	RAMP B	429D	2		1															
115	82+03 to 83+50	LT	RAMP B	429D																		
115	83+50 429D-29	LT	RAMP B	429D	2		1															
115	83+50 to 84+77	LT	RAMP B	429D																		
115	84+77 JUNCTION BOX 10	LT	RAMP B	429D											1							
115	84+89 JUNCTION BOX 11	LT	RAMP B	429D											1							
115	429D - 30,31,32,33,40,41,42,43	LT	RAMP B	429D		8																
115	84+89 to 85+67	LT	RAMP B	429D																		
115	85+67 JUNCTION BOX 12	LT	RAMP B	429D											1							
115	85+67 to 85+75	LT	RAMP B	429D													4	4			4	
115	85+75 PULL BOX 20	LT	RAMP B	429D										1								
115	85+75 to 85+75	LT	RAMP B	429D													48	48	48			
115	85+75 PULL BOX 19	RT	RAMP B	429D										1								
115	85+75 to 86+14	RT	RAMP B	429D													35	35				
115	86+14 429D-34	RT	RAMP B	429D	1				1		1		1									
115	86+14 to 86+66	RT	RAMP B	429D													48	48				
115	86+66 PULL BOX 22	RT	RAMP B	429D										1								
115	86+66 to 87+51	RT	RAMP B	429D													10	10			10	
115	87+51 429D-35 JB 13	RT	RAMP B	429D	1					1						1						
115	87+51 to 88+89	RT	RAMP B	429D																		
115	88+89 429D-36 JB 14	RT	RAMP B	429D	1					1						1						
115	88+89 to 90+08	RT	RAMP B	429D													10	10			10	
118	90+08 PULL BOX 23	RT	RAMP B	429D										1								
118	90+08 to 90+39	RT	RAMP B	429D													31	31				
118	90+39 429D-37	RT	RAMP B	429D	1				1		1		1									
118	90+39 to 91+96	RT	RAMP B	429D													157	157				
118	91+96 429D-38	RT	RAMP B	429D	1				1		1		1									
118	91+96 to 93+49	RT	RAMP B	429D													153	153				
118	93+49 429D-39	RT	RAMP B	429D	1				1		1		1									
115	EX LIGHT to 81+34	RT	RAMP AB	429A													74	74			74	
115	81+34 PULL BOX 13	RT	RAMP AB	429A										1								
115	81+34 to 81+81	RT	RAMP AB	429A													55	55				
115	81+81 PULL BOX 14	RT	RAMP AB	429A										1								
115	81+81 to 82+16	LT	RAMP AB	429A																		52
115	82+16 PULL BOX 15	LT	RAMP AB	429A										1								
115	82+16 to 82+87	LT	RAMP AB	429A													83	83				
115	82+87 PULL BOX 16	LT	RAMP AB	429A										1								
115	82+87 to 83+20	LT	RAMP AB	429A													42	42				
115	83+20 PULL BOX 17	LT	RAMP AB	429A										1								
115	83+20 to 86+23	LT	RAMP AB	429A																		344
115	86+23 PULL BOX 18	LT	RAMP AB	429A										1								
115	86+23 to 86+42	RT	RAMP AB	429A													47	47	47			
115	86+42 PULL BOX 21	RT	RAMP AB	429A										1								
115	86+42 to 86+20 - EX LIGHT 429A-9		RAMP AB	429A													8	8				
			TOTALS SHEET 108		11	8	2	1	4	2	4	1	4	12	4	2	901	901	95	12	98	396
			TOTALS CARRIED TO LIGHTING GENERAL SUMMARY																			

SHEET NUMBER	STATION	SIDE	ROADWAY	CIRCUIT	625										
					REERECT EXISTING MECHANICAL FOUNDATION AS PER PLAN (CANNON DRIVE)	REERECT EXISTING LIGHT POLE, AS PER PLAN (CANNON DRIVE)	REERECT EXISTING LUMINAIRE, AS PER PLAN (CANNON DRIVE)	GROUND ROD	PULL BOX, 18", 713.08	PULL BOX, 24", 713.08	TRENCH, 24" DEEP	PLASTIC CAUTION TAPE, AS PER PLAN	CONDUIT 3", 713.04	CONDUIT 2", 713.04
					EACH	EACH	EACH	EACH	EACH	EACH	LIN. FT.	LIN. FT.	LIN. FT.	LIN. FT.
118	66+57 EX LIGHT A25 to 67+13	LT	CANNON DR.	OSU							56	56		56
118	67+13 PULL BOX 24	LT	CANNON DR.	OSU					1					
118	67+13 to 68+00	LT	CANNON DR.	OSU							87	87		87
118	68+00 PULL BOX 25	LT	CANNON DR.	OSU					1					
118	68+00 to 68+46 EX LIGHT A27	LT	CANNON DR.	OSU	1	1	1	1			50	50		50
118	68+46 to 70+12 EX LIGHT A29	LT	CANNON DR.	OSU							172	172		172
115	79+70 PB 10 CC429	LT	RAMP B	429C-D						1				
115	79+70 to 79+57										53	53	53	
115	79+57 PULL BOX 9	LT							1					
115	79+57 TO 79+50			429C							43	43	43	
115	79+50 PULL BOX 8	RT		429C					1					
115	79+50 EXISTING PB										32	32	32	
115	EXISTING PB	LT	315											
115	EXISTING PB to 81+75										180	180		
115	81+75 PULL BOX 11			429C					1					
115	EXISTING PULL BOX													
115	EXISTING PB to EXISTING PB	LT/RT									111	111	111	
115	EXISTING PULL BOX	RT	315	429C										
		TOTALS SHEET 109			1	1	1	1	5	1	784	784	239	365
		TOTALS CARRIED TO LIGHTING GENERAL SUMMARY												

315 LIGHTING SUB-SUMMARY

FRA-315-3.04

SHEET NUMBER	STATION	SIDE	ROADWAY	CIRCUIT	625										603
					1 1/2" DUCT CABLE, WITH TWO NO. 4 AWG 5000 VOLT CABLES	NO. 4 AWG, 5000 VOLT, DISTRIBUTION CABLE	NO. 10 AWG, POLE AND BRACKET CABLE	CONNECTOR KIT, TYPE II	CONNECTOR KIT, TYPE III	CABLE SPLICING KIT	STRUCTURE GROUNDING SYSTEM, AS PER PLAN	SERVICE TO UNDERPASS LIGHTING, AS PER PLAN RAMP B	LIGHT POLE ANCHOR BOLTS, AS PER PLAN	DISCONNECT EXISTING CIRCUIT, AS PER PLAN	CONDUIT 4", TYPE E
					LIN. FT.	LIN. FT.	LIN. FT.	EACH	EACH	EACH	EACH	LUMP	EACH	LUMP	LIN. FT.
115	79+57 to 80+41	LT	RAMP B	429D	94										
115	80+41 PULL BOX 12	LT	RAMP B	429D						2					10
115	80+41 to 80+50	LT	RAMP B	429D		44									
115	80+50 JUNCTION BOX 9	LT	RAMP B	429D						2	1				
115	80+50 to 80+72	LT	RAMP B	429D		64									
115	80+72 429D-27	LT	RAMP B	429D				1	1						
115	80+72 to 82+03	LT	RAMP B	429D		282									
115	82+03 429D-28	LT	RAMP B	429D			153	1	1				1		
115	82+03 to 83+50	LT	RAMP B	429D		314									
115	83+50 429D-29	LT	RAMP B	429D			153	1	1				1		
115	83+50 to 84+77	LT	RAMP B	429D		274									
115	84+77 JUNCTION BOX 10	LT	RAMP B	429D						2					
115	84+89 JUNCTION BOX 11	LT	RAMP B	429D						2					
115	429D – 30,31,32,33,40,41,42,43	LT	RAMP B	429D								1			
115	84+89 to 85+67	LT	RAMP B	429D		176									
115	85+67 JUNCTION BOX 12	LT	RAMP B	429D						2					
115	85+67 to 85+75	LT	RAMP B	429D		36									
115	85+75 PULL BOX 20	LT	RAMP B	429D						2					10
115	85+75 to 85+75	LT	RAMP B	429D		116									
115	85+75 PULL BOX 19	RT	RAMP B	429D						2					10
115	85+75 to 86+14	RT	RAMP B	429D	45										
115	86+14 429D-34	RT	RAMP B	429D			109	1	1						
115	86+14 to 86+66	RT	RAMP B	429D	58										
115	86+66 PULL BOX 22	RT	RAMP B	429D						2	1				10
115	86+66 to 87+51	RT	RAMP B	429D		190									
115	87+51 429D-35 JB 13	RT	RAMP B	429D			105	1	1				1		
115	87+51 to 88+89	RT	RAMP B	429D		296									
115	88+89 429D-36 JB 14	RT	RAMP B	429D			105	1	1				1		
115	88+89 to 90+08	RT	RAMP B	429D		258									
118	90+09 PULL BOX 23	RT	RAMP B	429D						2					10
118	90+08 to 90+39	RT	RAMP B	429D	41										
118	90+39 429D-37	RT	RAMP B	429D			109	1	1						
118	90+39 to 91+96	RT	RAMP B	429D	167										
118	91+96 429D-38	RT	RAMP B	429D			109	1	1						
118	91+96 to 93+49	RT	RAMP B	429D	163										
118	93+49 429D-39	RT	RAMP B	429D			109	1	1						
115	EX LIGHT to 81+34	RT	RAMP AB	429A	84			1	1					1	
115	81+34 PULL BOX 13	RT	RAMP AB	429A						2					10
115	81+34 to 81+81	RT	RAMP AB	429A	65										
115	81+81 PULL BOX 14	RT	RAMP AB	429A						2					10
115	81+81 to 82+16	LT	RAMP AB	429A		120									
115	82+16 PULL BOX 15	LT	RAMP AB	429A						2					10
115	82+16 to 82+87	LT	RAMP AB	429A	93										
115	82+87 PULL BOX 16	LT	RAMP AB	429A						2					10
115	82+87 to 83+20	LT	RAMP AB	429A	52										
115	83+20 PULL BOX 17	LT	RAMP AB	429A						2					10
115	83+20 to 86+23	LT	RAMP AB	429A		708									
115	86+23 PULL BOX 18	LT	RAMP AB	429A						2					10
115	86+23 to 86+42	RT	RAMP AB	429A	57	116									
115	86+42 PULL BOX 21	RT	RAMP AB	429A						2					10
115	86+42 to 86+20 – EX LIGHT	429A-9	RAMP AB	429A	18			1	1						
	TOTALS SHEET 110				937	2994	952	11	11	32	2	1	4	1	120
	TOTALS CARRIED TO LIGHTING GENERAL SUMMARY														

315 LIGHTING SUB-SUMMARY

FRA-315-3.04

SHEET NUMBER	STATION	SIDE	ROADWAY	CIRCUIT	625											603
					1 1/2" DUCT CABLE, WITH TWO NO. 4 AWG 5000 VOLT CABLES	NO. 4 AWG, 5000 VOLT, DISTRIBUTION CABLE	NO. 10 AWG, POLE AND BRACKET CABLE	CONNECTOR KIT, TYPE II	CONNECTOR KIT, TYPE III	CABLE SPLICING KIT	CONTROL CENTER (429), MAINTENANCE ITEM, AS PER PLAN	NO. 4 AWG, 600 VOLT DISTRIBUTION CABLE (CANNON DRIVE, OSU)	NO. 8 AWG, 600 VOLT DISTRIBUTION CABLE (CANNON DRIVE, OSU)	DISCONNECT EXISTING CIRCUIT, AS PER PLAN	CONDUIT 4", TYPE E
					LIN. FT.	LIN. FT.	LIN. FT.	EACH	EACH	EACH	EACH	LIN. FT.	LIN. FT.	LUMP	LIN. FT.
118	66+57 EX LIGHT A25 to 67+13	LT	CANNON DR.	OSU				1	1	6		528	66	1	
118	67+13 PULL BOX 24	LT	CANNON DR.	OSU											10
118	67+13 to 68+00	LT	CANNON DR.	OSU								776	97		
118	68+00 PULL BOX 25	LT	CANNON DR.	OSU											10
118	68+00 to 68+46 EX LIGHT A27	LT	CANNON DR.	OSU			42	1	1			480	60		
118	68+46 to 70+12 EX LIGHT A29	LT	CANNON DR.	OSU				1	1	6		1456	182		
115	79+70 PB 10 CC 429	LT	RAMP B	429C-D						8	1				
115	79+70 to 79+57					252									
115	79+57 PULL BOX 9	LT								4					10
115	79+57 to 79+50			429C		106									
115	79+50 PULL BOX 8	RT		429C						2					
115	79+50 to EXISTING PB					86									
115	EXISTING PB	LT	315							2					
115	EXISTING PB to 81+75				190										
115	81+75 PULL BOX 11			429C						2					
115	EXISTING PULL BOX														
115	EXISTING PB to EXISTING PB	LT/RT				242									
115	EXISTING PULL BOX	RT	315	429C						2					
	TOTALS SHEET 111				190	686	42	3	3	32	1	3240	405	1	30
	TOTALS CARRIED TO LIGHTING GENERAL SUMMARY														

315 LIGHTING SUB-SUMMARY

FRA-315-3.04

STA. 53+30 DIAGRAM OF EXISTING CONTROL CENTER 144
SHOWING CIRCUIT AND DISTRIBUTION WIRING IDENTIFICATION
SCALE 1"=40'

0 40 80 160
SCALE IN FEET

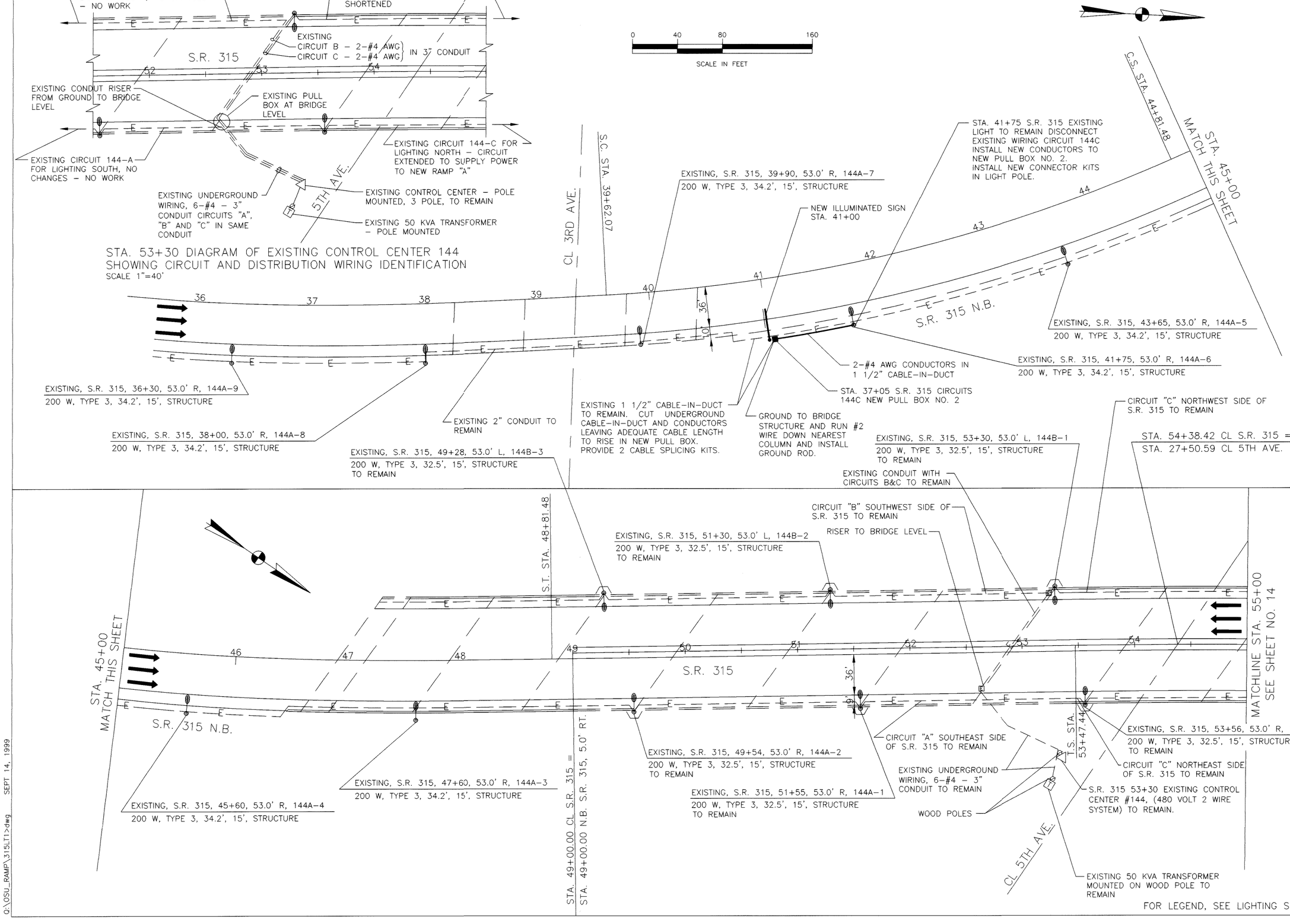

FOR LEGEND, SEE LIGHTING SCHEMATIC PLAN

Q:\OSU_RAMP\315LT1>dwg SEPT 14, 1999

DESIGN AGENCY
ERIKSSON ENGINEERING LTD.
1523 CHESAPEAKE AVENUE
COLUMBUS, OH 43212

REVIEWED	DATE	STRUCTURE FILE NO.
		.

DRAWN	REVISED
DCR	

DESIGNED	CHECKED
RDC	HMC

LIGHTING PLAN
S.R. 315 AND CONTROL CENTER 144
STA. 36+00 S.R. 315 N.B. TO STA. 55+00 S.R. 315

FRA-315-3.04

13 / 26

112 / 238

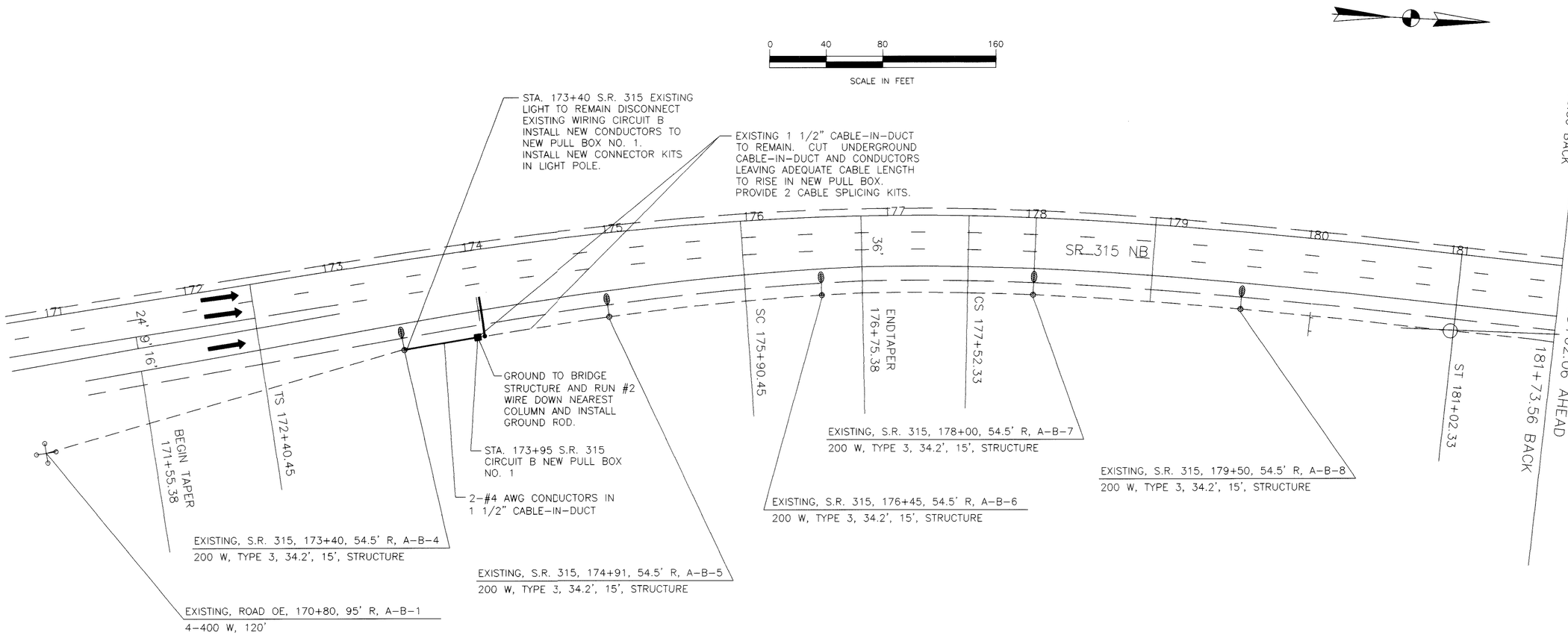

FOR LEGEND, SEE LIGHTING SCHEMATIC PLAN

Q:\OSU_RAMP\315LT1>dwg SEPT 14, 1999

DESIGN AGENCY
ERIKSSON ENGINEERING LTD.
1523 CHESAPEAKE AVENUE
COLUMBUS, OH 43212

DESIGNED	DRAWN	REVIEWED	DATE
RDC	DCR		
CHECKED	REVISED		
HMC			

STRUCTURE FILE NO.

LIGHTING PLAN
STA. 170+66.08 S.R. 315 N.B. TO
STA. 181+73.56 S.R. 315

FRA-315-3.04

13A / 26

112A / 238

0 40 80 160

SCALE IN FEET

NEW REPLACEMENT, S.R. 315, 63+65, 53.0' L, 144C-27
200 W, TYPE 3, 40', 15', STRUCTURE

A) REINSTALL NEW POLE, ARM AND LUMINAIRE
B) INSTALL NEW POLE AND BRACKET WIRING AND CONNECTOR KITS - USE EXISTING CIRCUIT WIRING
C) INSTALL OVER EXISTING ANCHOR BOLTS

NEW REPLACEMENT, S.R. 315, 61+56, 53.0' L, 144C-28
200 W, TYPE 3, 40', 15', STRUCTURE

A) REINSTALL NEW POLE, ARM AND LUMINAIRE
B) INSTALL NEW POLE AND BRACKET WIRING AND CONNECTOR KITS - USE EXISTING CIRCUIT WIRING
C) INSTALL OVER EXISTING ANCHOR BOLTS

CIRCUT "C" ON WEST SIDE OF MAIN LINE TO REMAIN

EXISTING WIRING BETWEEN STA. 59+45 AND STA. 61+56 TO REMAIN.

STRUCTURE - FRA-315-0278

EXISTING CIRCUIT 144C TO REMAIN

EXISTING CIRCUIT 144C TO REMAIN

EXISTING, S.R. 315, 59+45, 53.0' L, 144C-29
200 W, TYPE 3, 32.5', 15', STRUCTURE
TO REMAIN

SPLICE 2" CONDUIT IN EXISTING BRIDGE STRUCTURE TO NEW 2" CONDUIT IN NEW BRIDGE STRUCTURE

EXISTING, S.R. 315, 57+35, 53.0' L, 144C-30
200 W, TYPE 3, 32.5', 15', STRUCTURE
TO REMAIN

EXISTING, S.R. 315, 55+31, 53.0' L, 144C-31
200 W, TYPE 3, 32.5', 15', STRUCTURE
TO REMAIN

CL 5TH AVE.

CIRCUIT 144C TO REMAIN

EXISTING CONDUIT

36'

48'

HINGE STA 61+22.88

PIER 14

PIER 15

PIER 16

PIER 17

NEW 2" CONDUIT WITH 2-#4 AWG CABLES IN 2" CONDUIT EMBEDDED IN BRIDGE STRUCTURE

CIRCUIT 144C
S.R. 315 , 64+67 ,64.0' R
STRUCTURE JUNCTION BOX 2, TYPE 2

S.R. 315 , 62+43 ,64.0' R
STRUCTURE JUNCTION BOX 1, TYPE 2

MATCHLINE STA. 65+00
SEE SHEET NO. 15

EXISTING WIRING 2-#4 IN 2" CONDUIT SOUTH OF STATION 60+21 TO REMAIN.

CONNECT NEW 2-#4 AWG WIRING IN POLE BASE WITH NEW CONNECTOR KIT.

CONNECT EXISTING 2" CONDUIT TO NEW 2" CONDUIT.

NEW WIRING IN BRIDGE ROADWAY RAILING 2-#4 IN 2" CONDUIT. SEE HL-20.15.

EXISTING, S.R. 315, 58+00, 53.0' R, 144C-3
200 W, TYPE 3, 32.5', 15', STRUCTURE
TO REMAIN

INSTALL NEW WIRING 2-#4 AWG FROM LIGHT POLE 144C-4 NORTH THROUGH 2" CONDUIT LOCATED IN BRIDGE STRUCTURE TO JUNCTION BOX 1.

NEW, S.R. 315, 62+43, 64.0' R, 144C-5
200 W, TYPE 3, 40', 15', STRUCTURE

NEW, S.R. 315, 64+67, 64.0' R, 144C-6
200 W, TYPE 3, 40', 15', STRUCTURE

S.C. STA. 56+47.44

CIRCUIT 144C EXISTING WIRING 2-#4 IN 2" CONDUIT TO REMAIN ON S.R. 315 SOUTH TO LIGHT POLE 144C-4 AT STATION 60+21.

EXISTING, S.R. 315, 60+21, 53.0' R, 144C-4
200 W, TYPE 3, 32.5', 15', STRUCTURE
TO REMAIN

MATCHLINE STA. 55+00
SEE SHEET NO. 13

CIRCUIT 144C
TO REMAIN

EXISTING, S.R. 315, 55+75, 53.0' R, 144C-2
200 W, TYPE 3, 32.5', 15', STRUCTURE
TO REMAIN

FOR LEGEND, SEE LIGHTING SCHEMATIC PLAN

Q:\OSU_RAMP\315LT2>.dwg SEPT 14, 1999

DESIGN AGENCY
ERIKSSON ENGINEERING LTD.
1523 CHESAPEAKE AVENUE
COLUMBUS, OH 43212

REVIEWED	DATE	STRUCTURE FILE NO.
DRAWN	DCR	REVISED
DESIGNED	RDC	
CHECKED	HMC	

LIGHTING PLAN
STA. 55+00 TO STA. 65+00 S.R. 315

FRA-315-3.04

14 / 26

113
238

A) INSTALL NEW POLE, ARM AND LUMINAIRE
B) INSTALL NEW POLE WIRING
C) INSTALL OVER EXISTING ANCHOR BOLTS

REPLACE, S.R. 315, 65+74, 53.0' L, 144C-26
200 W, TYPE 3, 40', 15', STRUCTURE

NORTH END OF CIRCUIT 144C ON WEST SIDE OF MAIN LINE TO REMAIN

CIRCUIT 144C

STATION 65+74 TERMINATE CIRCUIT 144C ON WEST SIDE OF S.R. 315 BUT MAINTAIN WIRING TO 5 UNDERPASS LIGHTS.

FIVE (5) EXISTING UNDERPASS LIGHTS, 100 EACH, 500 TOTAL WATT HPS SURFACE MOUNT TO REMAIN.

ABANDON EXISTING AND NO CONDUCTORS NEED TO BE INSTALLED BETWEEN LIGHT POLE 144C-26 AND LIGHT POLE 429D-22

ABANDON WIRING

BEGIN TAPER STA. 67+00, 41' LT.

C.S. STA. 65+99.23

SEE SHEET NO. 14
MATCHLINE STA. 65+00

2-#4 AWG CABLES IN BRIDGE STRUCTURE FOR HL-20.14 - INSTALL IN 2" CONDUIT.

CIRCUIT 144C

S.R. 315 , 66+79 ,64' R
STRUCTURE JUNCTION BOX 3 TYPE 2

NEW, S.R. 315, 66+79, 64.0' R, 144C-7
200 W, TYPE 3, 40', 15', STRUCTURE

ILLUMINATED SIGN

RAMP A , 67+47 ,11' R
STRUCTURE JUNCTION BOX 4

RAMP A , 68+42 ,8.7' R
STRUCTURE JUNCTION BOX 5

P.C.C. STA. 65+71.33, 53' RT., S.R. 315 =
STA. A65+71.33, RAMP A

NEW RAMP A, 68+42, 11.0' R, 144C-8
200 W, TYPE 3, 40', 15', STRUCTURE

C.S. STA. A68+74.93

NEW, S.R. 315, 67+75, 61.5' L, 429D-22
200 W, TYPE 3, 40', 15', FOUNDATION

SOUTH END OF CIRCUIT 429D

P.R.S. STA. 68+99.23

NEW, S.R. 315, 69+67, 69.5' L, 429D-21
200 W, TYPE 3, 40', 15', FOUNDATION

NEW UNDERGROUND 1 1/2" CABLE-IN-DUCT WITH 2-#4 AWG CONDUCTORS.

S.C. STA. 70+99.23

NEW, S.R. 315, 71+95, 74.5' L, 429D-20
200 W, TYPE 3, 40', 15', FOUNDATION

NEW, S.R. 315, 74+03, 79.5' L, 429D-19
200 W, TYPE 3, 40', 15', FOUNDATION

NEW UNDERGROUND 1 1/2" CABLE-IN-DUCT WITH 2-#4 AWG CONDUCTORS.

C.S. STA. 74+00

CIRCUIT 429D

MATCHLINE STA. 75+00
SEE SHEET NO. 16

NEW UNDERGROUND 1 1/2" CABLE-IN-DUCT WITH 2-#4 CONDUCTORS.

NEW, S.R. 315, 70+90, 55.5' R, 429C-25
200 W, TYPE 3, 40', 15', FOUNDATION

CIRCUIT 429C

NEW, S.R. 315, 73+00, 55.5' R, 429C-24
200 W, TYPE 3, 40', 15', FOUNDATION

℄ KING AVENUE

NEW, RAMP A, 69+89, 11.0' R, 144C-9
150 W, TYPE 2, 32.5', 10', STRUCTURE

RAMP A , 69+89 ,11' R
STRUCTURE JUNCTION BOX 6

S.C. STA. A70+74.93

NEW, RAMP A, 71+35, 11.0' R, 144C-10
150 W, TYPE 2, 32.5', 10', STRUCTURE

RAMP A , 71+35 ,11' R
STRUCTURE JUNCTION BOX 7

NEW WIRING IN BRIDGE ROADWAY 2-#4 INSTALL IN 2" CONDUIT. SEE HL-20.15.

BRIDGE STRUCTURE MOUNTING PER HL-20.14 FOR PILASTER WITH ROADWAY RAILING.

NEW, RAMP A, 72+83, 11.0' R, 144C-11
150 W, TYPE 2, 32.5', 10', STRUCTURE

RAMP A , 72+83 ,11' R
STRUCTURE JUNCTION BOX 8

RAMP A , 74+40 ,12.5' R
PULL BOX 3

PROVIDE A STRUCTURE CAVITY AND FOR EXPANSION SYSTEM WITH FITTINGS PER HL-30.31.

CIRCUIT 144C

NEW, RAMP A, 74+46, 12.5' R, 144C-12
150 W, TYPE 2, 32.5', 12', FOUNDATION

74.3158'

18" PULL BOX AT STATION 74+40 AND TRANSITION TO BRIDGE PER CONSTRUCTION DRAWING HL-30.31 AND HL-30.11.

MATCHLINE STA. A74+50
SEE SHEET NO. 17

FOR LEGEND, SEE LIGHTING SCHEMATIC PLAN

℄ OLENTANGY RIVER ROAD

SCALE IN FEET 0 40 80 160

Pier #1 Pier #2 Pier #3 Pier #4 Pier #5 Pier #6

RAMP A

Q:\OSU_RAMP\315LT3>dwg SEPT 14, 1999

DESIGN AGENCY
ERIKSSON ENGINEERING LTD.
1523 CHESAPEAKE AVENUE
COLUMBUS, OH 43212

REVIEWED	DATE	
		STRUCTURE FILE NO.

DESIGNED	RDC
DRAWN	DCR
CHECKED	HMC
REVISED	

LIGHTING PLAN
STA. 65+00 TO STA. 75+00 S.R. 315
STA. A66+00 TO STA. A74+50 RAMP A

FRA-315-3.04

15 / 26

114 / 238

NEW, S.R. 315, 76+40, 81.5' L, 429D-18
200 W, TYPE 3, 40', 15', FOUNDATION

RAMP B , 79+57 ,14.5' L
PULL BOX 9

NEW, RAMP B, 79+47, 14.5' L, 429D-26
150 W, TYPE 2, 32.5', 12', FOUNDATION

79+70 S.R. 315 NEW CAST IN PLACE CONCRETE PULL BOX 10, FOR ALL CIRCUITS 24" X 24" HL-30.11

RAMP AB , 81+81 ,47.8' L
PULL BOX 14

EXISTING, S.R. 315, 79+60, 55.5' L, 429C-3
250 W, TYPE 3, 40', 15', FOUNDATION

RAMP AB , 81+34 ,25' L
PULL BOX 13

EXISTING S.L. CIRCUIT TO BE MAINTIANED AT ALL TIMES

EXISTING, S.R. 315, 82+60, 55.5' L, 429C-5
250 W, TYPE 3, 40', 15', FOUNDATION

NEW, RAMP B, 78+32, 14.5' L, 429D-17
200 W, TYPE 3, 40', 15', FOUNDATION

NEW, RAMP B, 80+72, 8.7' L, 429D-27
150 W, TYPE 2, 32.5', 12', MOUNT CENTER BARRIER

NEW, RAMP B, 83+50, 8.7' L, 429D-29
150 W, TYPE 2, 32.5', 12', MOUNT ON WALL

SCALE IN FEET
0 40 80 160

MAINTAIN EXISTING CIRCUIT OPERATIONAL AT ALL TIMES

1 1/2" CABLE-IN-DUCT WITH 2-#4 AWG CONDUCTORS

CONDUIT TO BE DRILLED OR PUSHED UNDER PAVEMENT WITH 2-#4 AWG DISTRIBUTION CABLE IN 3" STEEL CONDUIT.

FOUR (4) NEW UNDERPASS LIGHTS, 100 WATT HPS, TYPE 3, SURFACE MOUNT, LIGHTS 429D-30, 429D-31, 429D-32, 429D-33. SEE DETAIL SHEET 23.

FOUR (4) NEW UNDERPASS LIGHTS, 100 WATT HPS, TYPE 3, SURFACE MOUNT, LIGHTS 429D-40, 429D-41, 429D-42, 429D-43, SEE DETAIL SHEET 23.

℄ OLENTANGY RIVER RD.

CIRCUIT 429A

EXISTING 1 1/2" CABLE-IN-DUCT WITH 2-#4 CONDUCTORS TO REMAIN

EXISTING OVERHEAD WIRING

CIRCUIT B

EXISTING LIGHT POLE #100 CONNECT NEW WIRING TO EXISTING CIRCUIT A

EXISITING CIRCUIT A

NEW, RAMP B, 82+03, 8.7' L, 429D-28
150 W, TYPE 2, 32.5', 12', MOUNT ON WALL

SPLICE NEW CONDUCTORS TO EXISTING.

EXISTING, S.R. 315, 85+72, 55.5' L, 429C-7
250 W, TYPE 3, 40', 15', FOUNDATION

CIRCUIT C AND D 4-#4 AWG IN 3" STEEL CONDUIT

CIRCUIT D NEW UNDERGROUND 1 1/2" CABLE-IN-DUCT WITH 2-#4 CONDUCTORS.

EXISTING POLE AND TRANSFORMER TO REMAIN

RENOVATE EXISTING CONTROL CENTER 429 STATION 79+47 COMPLETE RENOVATION DETAIL SHOWN ON SHEET 23

NEW RAMP AB , 82+16 ,47.8' L
PULL BOX 15

CIRCUIT 429A

EXISTING LIGHT POLE A-19

1 1/4" RISER TO FEED UNDERPASS LUMINIARES. SEE DETAIL SHEET 3 OF 14.

2-#4 DISTRIBUTION CABLE AWG IN 3" STEEL CONDUIT.

2-#4 AWG DISTRIBUTION CABLE IN 2" PVC CONDUIT

2" CONDUIT 713.07

STRUCTURE FRA-315-0348

3" RIGID STEEL CONDUIT TO BE JACKED, DRILLED OR PUSHED UNDER EXISTING PAVEMENT.

END OF WALL STA. 85+71

NEW CIRCUIT D, 2-#4 AWG IN 1 1/2" CABLE-IN-DUCT

2-#4 AWG IN 3" STEEL CONDUIT FOR CIRCUIT C

RAMP B , 79+50 ,27' R
PULL BOX 8

2" STEEL CONDUIT

ILLUMINATED SIGN

RAMP AB , 82+87 ,160.5' L
PULL BOX 16

CIRCUIT C

79+48 EXISTING PULL BOX

2-#4 AWG IN 1 1/2" CABLE-IN-DUCT

RAMP B , 80+50 ,8.7' L
JUNCTION BOX 9

SEE SHEET NO. 15 MATCHLINE STA. 75+00

S.R. 315 , 87+75 ,55.5' R
PULL BOX 11

CIRCUIT C

RAMP B , 80+41 ,14.5' L
PULL BOX 12

CIRCUIT D, 2-#4 AWG IN RACEWAY BARRIER

EXISTING WIRING

RAMP B , 85+67 ,19.3' L
JUNCTION BOX 12

1 1/2" CABLE-IN-DUCT WITH 2-#4 AWG CONDUCTORS

P.C. STA. B85+08.71

NEW UNDERGROUND 1 1/2" CABLE-IN-DUCT WITH 2-#4 CONDUCTORS.

EXTEND CIRCUIT "C" CONNECT NEW WIRING EXTENDING SOUTHWARD TO EXISTING WIRING WITH NEW FUSED CONNECTOR KIT.

EXISTING CIRCUIT C

ILLUMINATED SIGN

79+48 EXISTING PULL BOX TO REMAIN

EXISTING 3" CROSSOVER CONDUIT (REUSE)

EXISTING CIRCUIT C

RAMP AB , 83+20 ,47.8' L
PULL BOX 17

RAMP B , 84+77 ,14.2' L
JUNCTION BOX 10

RAMP B , 86+23 ,93.2' L
PULL BOX 18

RAMP B , 85+75 ,26.4' R
PULL BOX 19

MAINTAIN EXISTING CIRCUIT OPERATIONAL WITH MINIMAL INTERRUPTION.

RAMP B , 84+89 ,14.2' L
JUNCTION BOX 11

RAMP B , 85+75 ,21.2' L
PULL BOX 20

CIRCUIT 429A CONTINUED DO NOT DISTURB

2-#4 AWG IN 1 1/2" CABLE-IN-DUCT

NEW, RAMP B, 86+14, 26.5' R, 429D-34
150 W, TYPE 2, 32.5', 12', FOUNDATION

2-#4 AWG DISTRIBUTION CABLES

EXISTING, S.R. 315, 77+74, 55.5' R, 429C-2
250 W, TYPE 3, 40', 15', FOUNDATION

PROTECT AND MAINTAIN EXISTING S.L. UNDERGROUND CROSSINGS DURING CONSTRUCTION PRIOR TO INSTALLING THE NEW CROSSING UNDER NEW ROADWAY.

2-#4 AWG IN 4" CONDUIT EMBEDDED IN CENTER BARRIER. SEE UNDER PASS LIGHTING DETAIL. 4" CONDUIT TO BE INCLUDED IN COST FOR THE CONCRETE BARRIER WALL.

EXISTING 1 1/2" CABLE-IN-DUCT WITH 2-#4 AWG CONDUCTORS

EXISTING, S.R. 315, 80+75, 55.5' R, 429C-4
250 W, TYPE 3, 40', 15', FOUNDATION

RAMP B , 86+42 ,53.1' L
PULL BOX 21

RAMP B , 86+66 ,26.5' R
PULL BOX 22

NEW, S.R. 315, 75+06, 55.5' R, 429C-23
200 W, TYPE 3, 40', 15', FOUNDATION

EXISTING, S.R. 315, 83+75, 55.5' R, 429C-6
250 W, TYPE 3, 40', 15', FOUNDATION

EXISTING, RAMP AB, 86+20, 55.5' R, 429A-9
250 W, TYPE 3, 32.5', 15', FOUNDATION

NEW, RAMP B, 87+51, 25.0' R, 429D-35 HL-20.15M
150 W, TYPE 2, 32.5', 10', STRUCTURE

PIER #1

RAMP B , 87+51 ,25' R
STRUCTURE JUNCTION BOX 13

ALL EXISTING LIGHTING UNITS LOCATED NORTH OF AND INCLUDING THIS LIGHT POLE SHALL BE MAINTAINED OPERATIONAL AT ALL TIMES.

NEW WIRING IN CONDUIT IN BRIDGE STRUCTURE 2-#4 IN 2" CONDUIT. SEE HL-20.15.

2-#4 AWG CIRCUIT "D" IN RACEWAY IN STRUCTURE

PIER #2

P.T. STA. B89+12.21

NEW, RAMP B, 88+89, 25.0' R, 429D-36
150 W, TYPE 2, 32.5', 10', STRUCTURE

RAMP B , 88+89 ,25' R
STRUCTURE JUNCTION BOX 14

PIER #3

EXISTING LIGHT POLE #102 CONNECT NEW CIRCUIT "A" WIRING TO EXISTING CIRCUIT. INSTALL NEW CONNECTOR KITS.

IN ORDER TO MAINTAIN EXISTING S.L. CIRCUITS NORTH OF THE CONSTRUCTION AREA BUILD THE NEW CIRCUIT (HATCHED AREA) FIRST PRIOR TO ANY REMOVAL OF CIRCUITS AND ROADWAY CONSTRUCTION.

CONDUIT TO BE DRILLED OR PUSHED STAYING A MINIMUM OF 3' OFF EDGE OF EX. PAVEMENT AND FACE OF EX. COLUMNS.

EXISTING S.L. CIRCUIT TO BE MAINTAINED AT ALL TIMES.

MATCHLINE STA. B90+00 SEE SHEET NO. 19

RAMP B

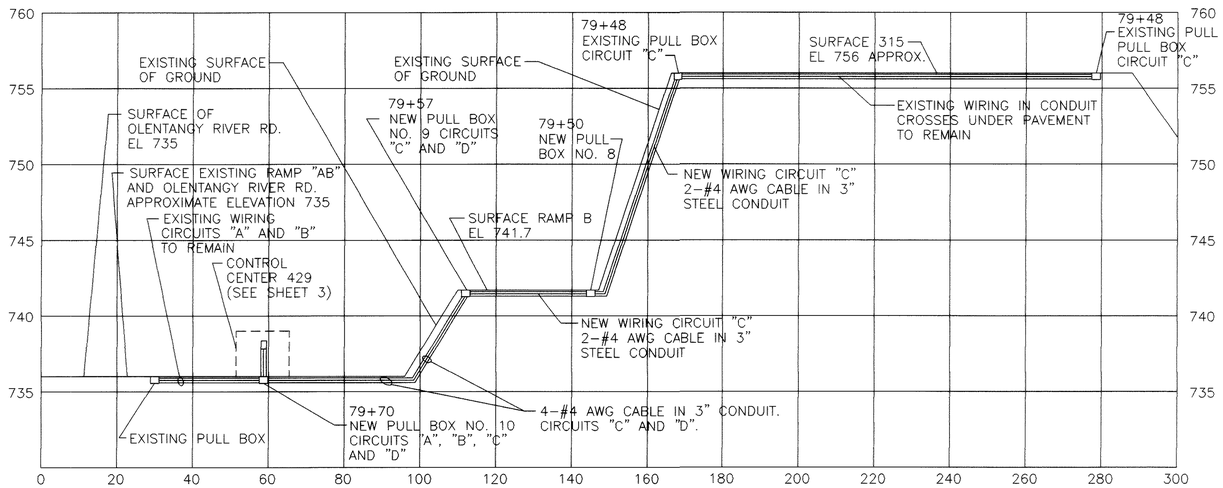

PROFILE AT CONTROL CENTER 429 STATION 79+50

VERTICAL SCALE: 1"=5'-0"
HORIZONTAL SCALE: 1"=20'-0"

FOR LEGEND, SEE LIGHTING SCHEMATIC PLAN

DESIGN AGENCY
ERIKSSON ENGINEERING LTD.
1523 CHESAPEAKE AVENUE
COLUMBUS, OH 43212

REVIEWED	DATE	STRUCTURE FILE NO.
DRAWN	DCR	REVISED
DESIGNED	RDC	CHECKED HMC

LIGHTING PLAN
STA. 75+00 TO STA. 86+00 S.R. 315
STA. B77+00 TO STA. B90+00 RAMP B

FRA-315-3.48

16 | 26

115
238

Q:\OSU_RAMP\315LT4>dwg SEPT 14, 1999

LIGHTING WIRING CROSSES BURIED HIGH VOLTAGE POWER LINES, EXCAVATE WITH CAUTION. CONFER WITH UNIVERSITY PERSONNEL ON EXACT DEPTH BEFORE DIGGING.

RAMP A , 75+05 ,29.4' L
PULL BOX 6

PEDESTRIAN UNDERPASS WITH LIGHTING, SEE DETAILS FOR LIGHTING PLAN AND CIRCUITRY ON SHEET 19.

RAMP A, STA. 75+08, FOUR LUMINAIRES, 100 WATT HPS, 277 VOLT, TRI-TAP BALLAST, SHALL BE MOUNTED IN UNDERPASS.

RAMP A , 75+29 ,12.5' R
PULL BOX 5

RAMP A , 77+95 ,34.5' R
PULL BOX 7

SEE SHEET NO. 15
MATCHLINE STA. A74+50

A75 A76 A77 A78 A79 A80

RAMP A

100' TAPER

SEE ENLARGED DETAIL ON DRAWING NO. 18

NEW UNDERGROUND 1 1/2" CABLE-IN-DUCT WITH 2-#4 CONDUCTORS

NEW, RAMP A, 75+74, 20.5' R, 144C-17
150 W, TYPE 2, 32.5', 12', FOUNDATION

NEW, RAMP A, 78+40, 34.5' R, 144C-19
150 W, TYPE 2, 32.5', 12', FOUNDATION

NEW, RAMP A, 77+09, 34.5' R, 144C-18
150 W, TYPE 2, 32.5', 12', FOUNDATION

NEW, RAMP A, 79+65, 34.5' R, 144C-20
150 W, TYPE 2, 32.5', 12', FOUNDATION

RAMP A , 75+07 ,12.5' R
PULL BOX 4

PULL BOXES 4 AND 5 (SEE DETAILS ON SHEET 24) 1 1/2" CABLE-IN-DUCT SHALL ENTER AND TERMINATE IN PULL BOXES NUMBERED 4 & 5 ON BOTH EAST AND WEST SIDE OF THIS BIKE PATH UNDERPASS. LIGHTING WIRING SHALL CONTINUE ACROSS THIS UNDERPASS IN 3" GALVANIZED STEEL CONDUIT, BURIED IN THE 9" CONCRETE OVERPASS ROAD BED SLAB. A JUNCTION BOX AND BRANCH WIRING TO THE UNDERPASS LIGHTING SHALL ALSO BE BURIED AND CAST INTO THIS SLAB AND WIRED TO PULL BOX NO. 6 NORTH OF RAMP, WHERE IT IS TO BE CONNECTED TO AN UNDERGROUND CIRCUIT INSTALLED BY OHIO STATE UNIVERSITY. THIS CONTRACT WIRING ENDS WITH THIS CONNECTION. THE CIRCUIT SUPPLIED BY O.S.U. IS A 2 TWO WIRE 277 VOLT. THE PRECAST CONCRETE UNDERPASS SHELL SHALL BE DRILLED WITH OPENINGS TO ADMIT WIRING INTO INTERIOR OF TUNNEL. A COMPLETE DETAIL OF THIS UNDERPASS WIRING AND LIGHTING IS SHOWN ON SHEET 24.

0 40 80 160
SCALE IN FEET

SEE SHEET NO. 18
MATCHLINE STA. 54+50

EXISTING OSU CIRCUIT "A"

EXISTING OSU CIRCUIT "A"

9th AVE.

DO NOT DISTURB EXISTING CONDUIT AND CIRCUIT CABLES.

STA. A80+80.43 RAMP A =
STA. 53+64.55 CANNON DR.

DRIVE

MORGUE DR.

CANNON DRIVE

KING AVE.

A-1 A-2 A-3 A-4 A-5 A-6 A-7 A-8

NOTES

A-1 EXISTING OSU LIGHTS TO REMAIN

—E— EXISTING OSU LIGHTS TO REMAIN

FOR LEGEND, SEE LIGHTING SCHEMATIC PLAN

Q:\OSU_RAMP\CANNLT1>dwg SEPT 14, 1999

DESIGN AGENCY
ERIKSSON ENGINEERING LTD.
1523 CHESAPEAKE AVENUE
COLUMBUS, OH 43212

REVIEWED	DATE	
		STRUCTURE FILE NO.

DESIGNED	DRAWN	
RDC	DCR	REVISED
CHECKED		
HMC		

LIGHTING PLAN
STA. A74+50 TO STA. A80+50 RAMP A
STA. 48+00 TO STA. 54+50 CANNON DRIVE

FRA-315-3.04

17 | 26

116
238

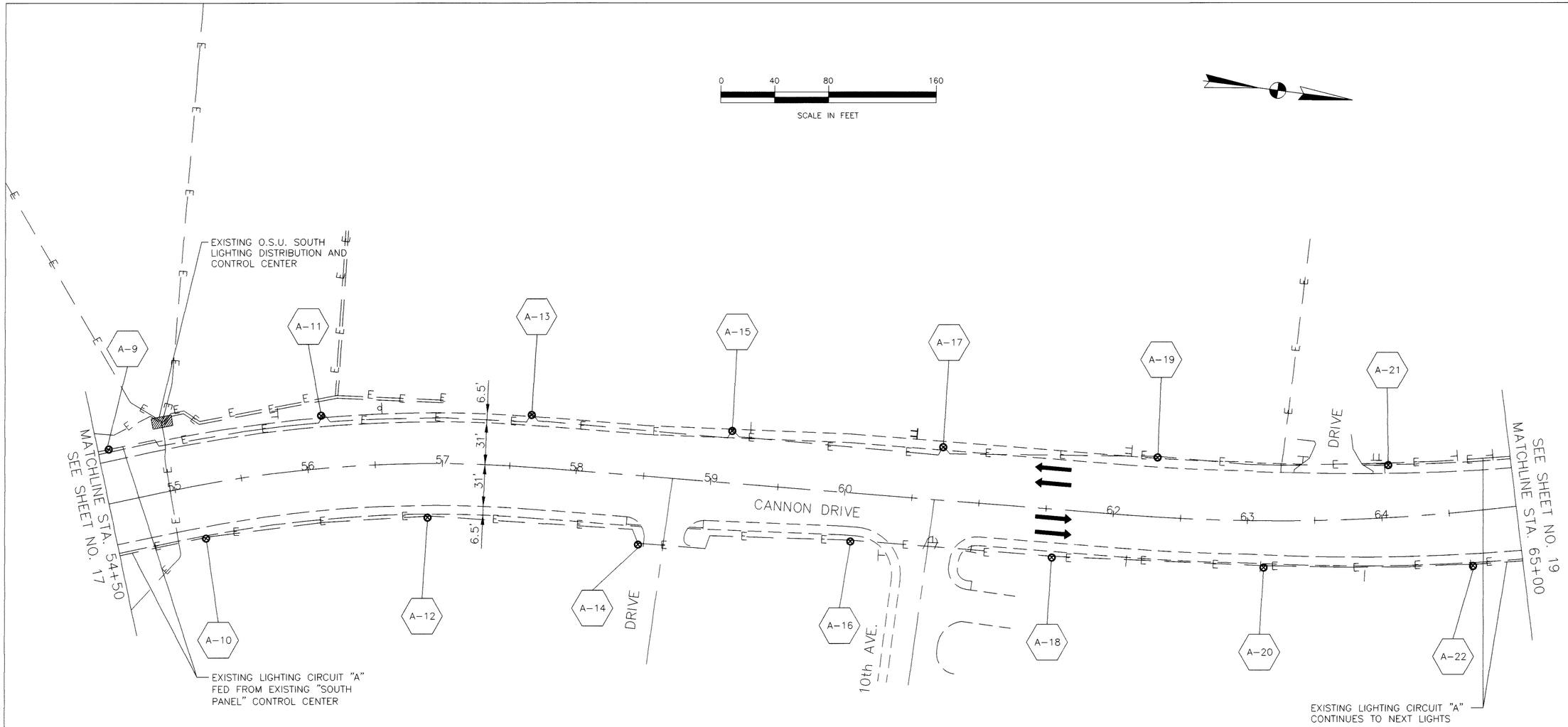

NO WORK ON THIS DRAWING

1. THIS DRAWING IS FOR REFERENCE ONLY AND SHOWS EXISTING OHIO STATE UNIVERSITY STREET LIGHTS AND ELECTRIC CIRCUITS WHICH ARE TO REMAIN UNTOUCHED AS IS.
2. O.S.U. DRAWINGS OF ABOVE LIGHTING ENTITLED "CANNON DRIVE ROADWAY IMPROVEMENTS" PROJECT NO. 315-82-226 ARE AVAILABLE FROM THE UNIVERSITY ARCHITECTS OFFICE.
3. ⊗ OR A-1 — EXISTING O.S.U. LIGHTS TO REMAIN EXCEPT AS NOTED OTHERWISE
4. —— E —— EXISTING OSU UNDERGROUND ELECTRIC WIRING TO REMAIN

FOR LEGEND, SEE LIGHTING SCHEMATIC PLAN

Q:\OSU_RAMP\CANNLT2>dwg SEPT 14, 1999

DESIGN AGENCY
ERIKSSON ENGINEERING LTD.
1523 CHESAPEAKE AVENUE
COLUMBUS, OH 43212

DESIGNED	DRAWN	REVIEWED	DATE
RDC	DCR		
CHECKED	REVISED		
HMC			

STRUCTURE FILE NO.

LIGHTING PLAN
STA. 54+50 TO STA. 65+00 CANNON DRIVE

FRA-315-3.04

18" PULL BOX AT STATION 90+08 AND TRANSITION TO BRIDGE GUARDRAIL PER CONSTRUCTION DRAWING HL-30.31 AND HL-30.11.

RAMP B , 90+08 ,26.5' R
PULL BOX 23

NEW, RAMP B, 90+39, 26.5' R, 429D-37
150 W, TYPE 2, 32.5', 12', FOUNDATION

NEW UNDERGROUND 1 1/2" CABLE-IN-DUCT WITH 2-#4 CONDUCTORS

NEW, RAMP B, 91+96, 26.5' R, 429D-38
150 W, TYPE 2, 32.5', 12', FOUNDATION

NEW, RAMP B, 93+49, 26.5' R, 429D-39
150 W, TYPE 2, 32.5', 12', FOUNDATION

CANNON DRIVE, 67+13, 47' L
PULL BOX 24 - NO SPLICES

NEW 8-#4 AWG AND 1-#8 AWG (GROUND) IN 2" PVC CONDUIT UNDER RAMP "B" TO BE ENCASED IN CONCRETE ENVELOPE

CANNON DRIVE, 68+00, 54' L
PULL BOX 25 - NO SPLICES

RELOCATE EXISTING STREET LIGHT A-27 STA. 68+46 OFFSET 54'-0" SEE COMPLETE RENOVATION DRAWING SHEET 20.

NEW 8-#4 AWG 600 VOLT AND 1-#8 AWG 600 VOLT (GROUND) DISTRIBUTION CABLE IN 2" PVC CONDUIT.

EXISTING WIRING TO BE ABANDONED

EXISTING STREET LIGHT A-29 STA. 70+12 TO REMAIN.

RECONNECT NEW WIRING SOUTH OF POST TOP A-29. INSTALL 2 FUSED AND 1 UNFUSED NEW CONNECTOR KITS.

EXISTING LIGHTING CIRCUIT

LOCATE AND EXPOSE EXISTING PA CONDUIT. DO NOT DISTURB.

SEE SHEET NO. 16 MATCHLINE STA B90+00

SEE SHEET NO. 18 MATCHLINE STA 65+00

RAMP B

CANNON DRIVE

JOHN HERRICK DR.

12th AVE.

DRIVE

A-23 A-24 A-25 A-26 A-27 A-28 A-29 A-30 A-31 A-32 A-33 A-34

0 40 80 160
SCALE IN FEET

NOTE:
CANNON DRIVE OSU CIRCUITS SHALL BE DISCONNECTED AND RECONNECTED AT LIGHT POLES A-29 AND A-25. INSTALL NEW CONNECTOR KITS ON CABLES FEEDING LUMINAIRES AND SPLICE KITS ON CABLES CONTINUING THROUGH FOUNDATION BETWEEN LIGHT POLES A-29 AND A-25. CABLE SHALL BE PULLED THROUGH PULL BOXES AND LIGHT BASES WITHOUT SPLICES EXCEPT AT LIGHT POLE A-27 WHERE CONNECTOR KITS ARE NEEDED TO POWER THE LUMINAIRE. SPLICE KITS AND CONNECTOR KITS SHALL BE PAID FOR SEPARATELY UNDER THE ITEMS PROVIDED PER 625.

FOR LEGEND, SEE LIGHTING SCHEMATIC PLAN

DESIGN AGENCY
ERIKSSON ENGINEERING LTD.
1523 CHESAPEAKE AVENUE
COLUMBUS, OH 43212

REVIEWED	DATE	STRUCTURE FILE NO.
		.

DESIGNED	DRAWN	REVISED
RDC	DCR	
CHECKED		
HMC		

LIGHTING PLAN
STA. 65+00 TO STA. 76+00 CANNON DRIVE

FRA-315-3.04

19 / 26

118
238

Q:\OSU_RAMP\CANNLT3>dwg SEPT 14, 1999

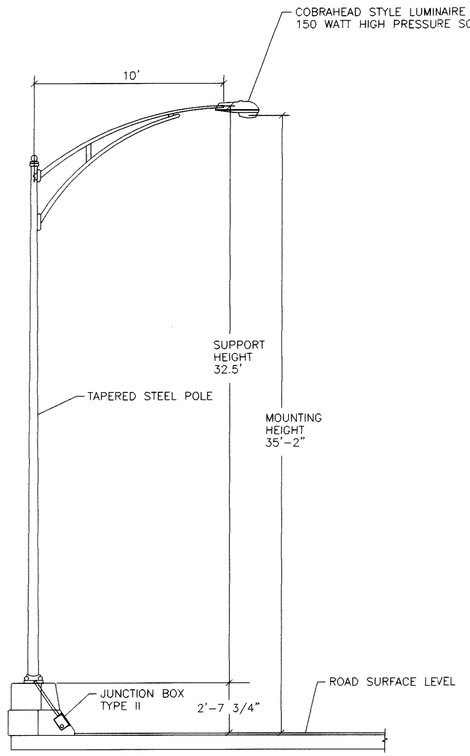

LIGHTING UNIT STYLE I FOR STRUCTURE
MOUNTING NEW RAMPS "A" AND "B"

SCALE: 1/4" = 1' ODOT STANDARD CONSTRUCTION DRAWING HL-10.11 AND HL-20.14

DESIGN NUMBER A10B32.5
32.5' STEEL POLE, 10' BRACKET ARM AND
150 WATT HIGH PRESSURE SODIUM
COBRAHEAD STYLE LUMINAIRE SHOWN
MOUNTED ON BRIDGE STRUCTURE

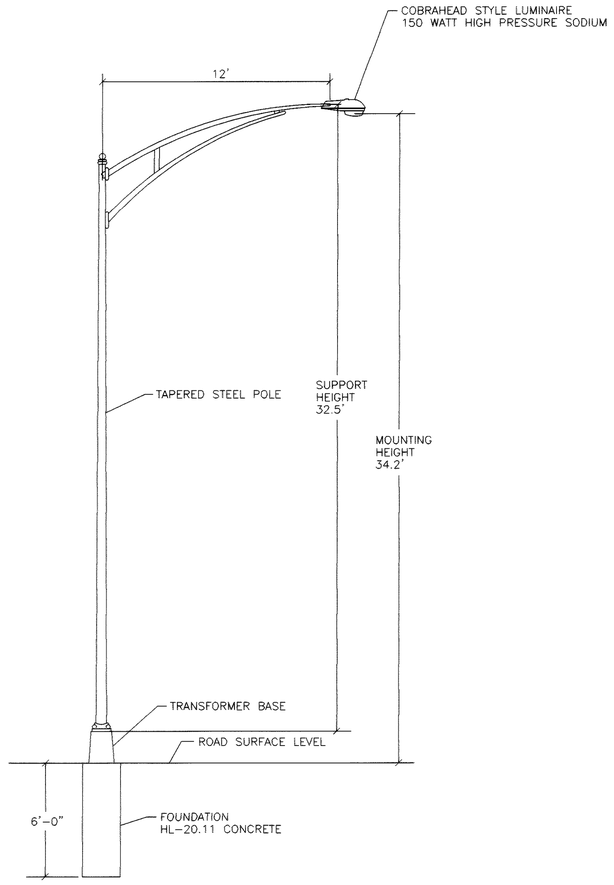

LIGHTING UNIT STYLE IIA FOR FOUNDATION
MOUNTING NEW RAMPS "A" AND "B"

SCALE: 1/4" = 1' ODOT STANDARD CONSTRUCTION DRAWING HL-10.11

DESIGN NUMBER AT12B32.5
TRANSFORMER BASE, 32.5' STEEL POLE, 12'
BRACKET ARM AND 150 WATT HIGH PRESSURE
SODIUM COBRAHEAD STYLE LUMINAIRE AND
CAST IN PLACE REINFORCED CONCRETE
FOUNDATION

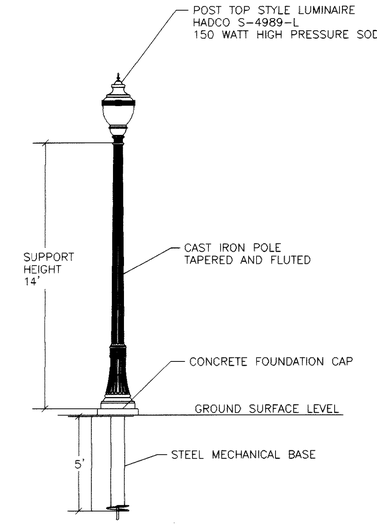

EXISTING LIGHTING UNIT
STYLE ON CANNON DRIVE

SCALE: 1/4" = 1' OSU STANDARD STREET LIGHT

150 WATT HIGH PRESSURE SODIUM POST TOP
LUMINAIRE WITH MECHANICAL BASE

Q:\OSU_RAMP\3150T>dwg SEPT 14, 1999

DESIGN AGENCY
ERIKSSON ENGINEERING LTD.
1523 CHESAPEAKE AVENUE
COLUMBUS, OH 43212

REVIEWED	DATE	STRUCTURE FILE NO.
		.

DESIGNED	DRAWN	REVISED
RDC	DCR	
CHECKED		
HMC		

LIGHTING DETAILS
LUMINAIRE AND POLE COMBINATION
INSTALLATIONS

FRA-315-3.04

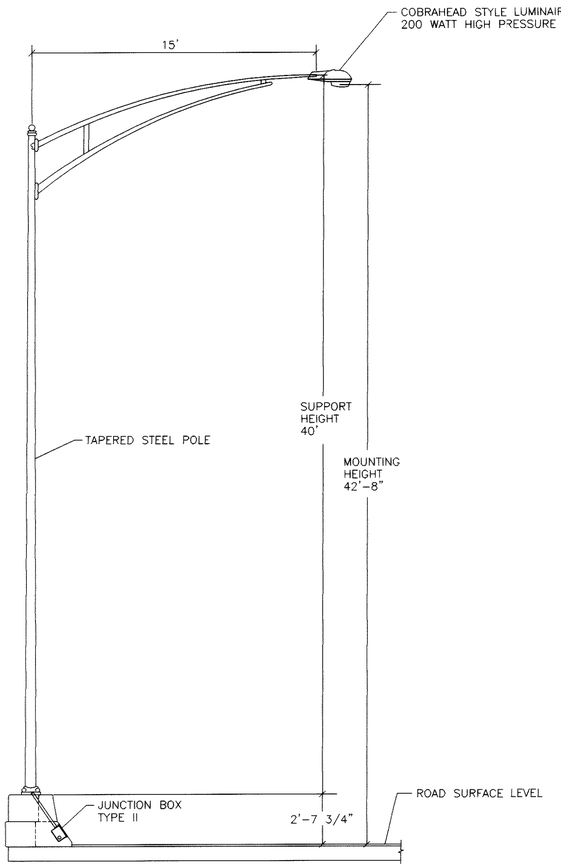

LIGHTING UNIT STYLE IIA FOR STRUCTURE
MOUNTING MAINLINE S.R. 315
SCALE: 1/4" = 1' ODOT STANDARD CONSTRUCTION DRAWING HL-10.11

DESIGN NUMBER A15B40
STEEL 40' POLE, 15' BRACKET ARM AND 200
WATT HIGH PRESSURE SODIUM COBRAHEAD
STYLE LUMINAIRE SHOWN MOUNTED ON
BRIDGE STRUCTURE

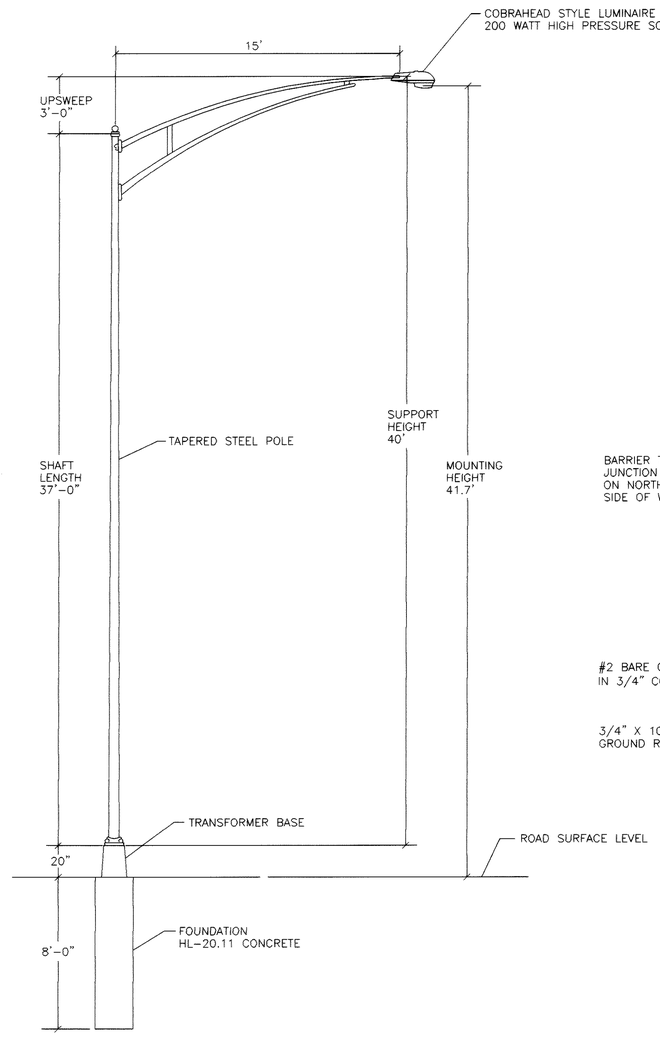

LIGHTING UNIT STYLE IIA FOR
MAINLINE S.R. 315
SCALE: 1/4" = 1' ODOT STANDARD CONSTRUCTION DRAWING HL-10.11

DESIGN NUMBER AT15B40
TRANSFORMER BASE, STEEL 40' POLE, 15'
BRACKET ARM AND 200 WATT HIGH PRESSURE
SODIUM COBRAHEAD STYLE LUMINAIRE AND
CAST IN PLACE REINFORCED CONCRETE
FOUNDATION

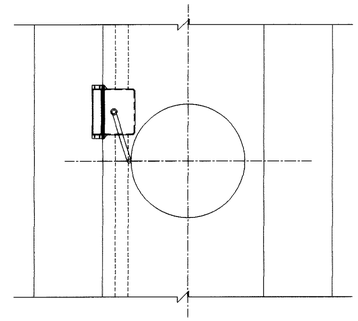

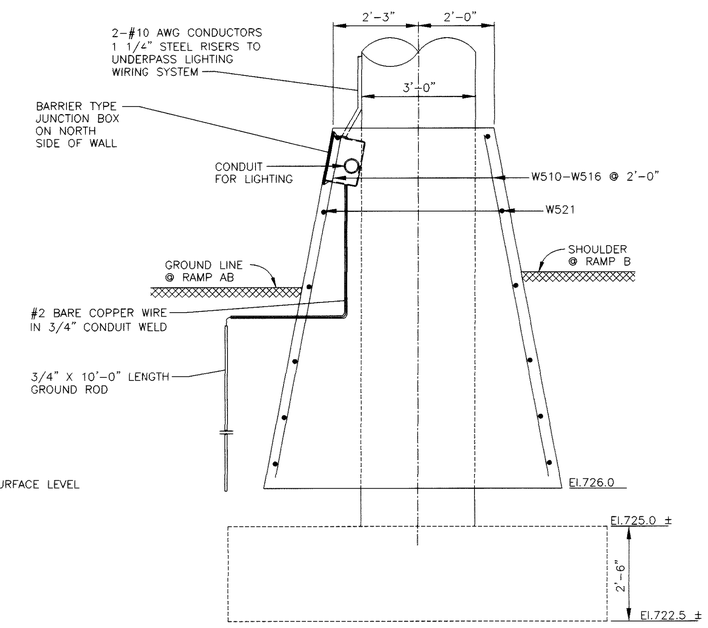

WALL BARRIER AND COLUMN
IN UNDERPASS RAMP "B"
SCALE: 1/2" = 1'

DESIGN AGENCY
ERIKSSON ENGINEERING LTD.
1523 CHESAPEAKE AVENUE
COLUMBUS, OH 43212

REVIEWED	DATE
STRUCTURE FILE NO.	

DRAWN	DESIGNED
DCR	RDC
REVISED	CHECKED
	HMC

LIGHTING DETAILS
LUMINAIRE AND POLE COMBINATION
INSTALLATIONS

FRA-315-3.04

21 / 26

120
238

Q:\OSU_RAMP\315DT>dwg SEPT 14, 1999

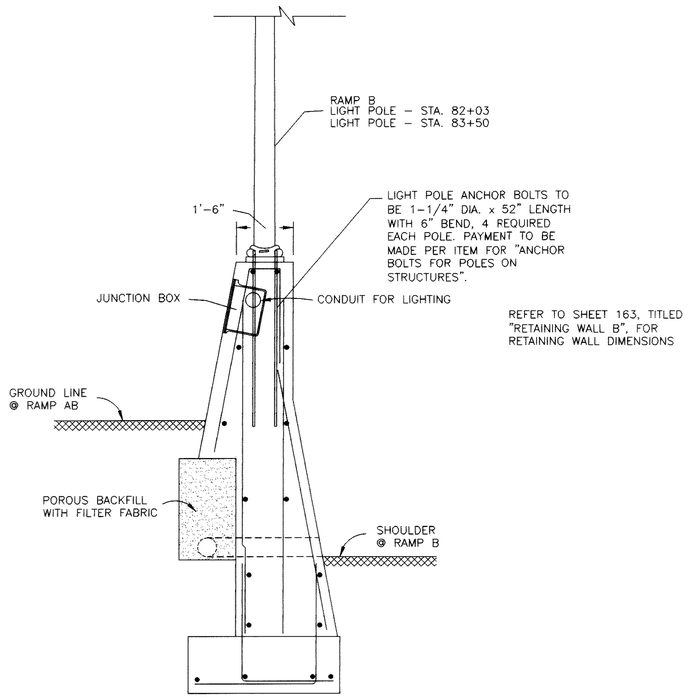

TYPICAL RETAINING WALL MOUNTED LIGHT POLE DETAIL
NO SCALE

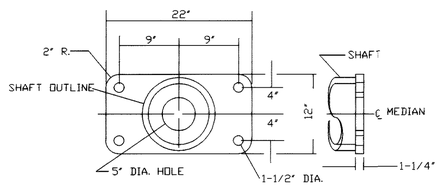

BARRIER AND RETAINING WALL
LIGHT POLE BASE PLATE DETAIL

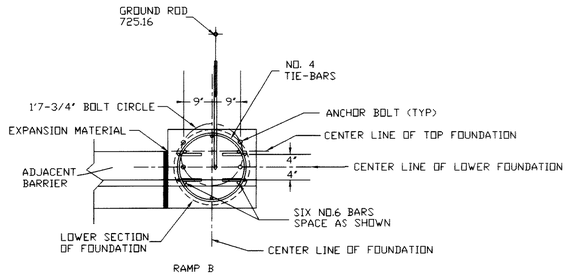

SECTION B–B

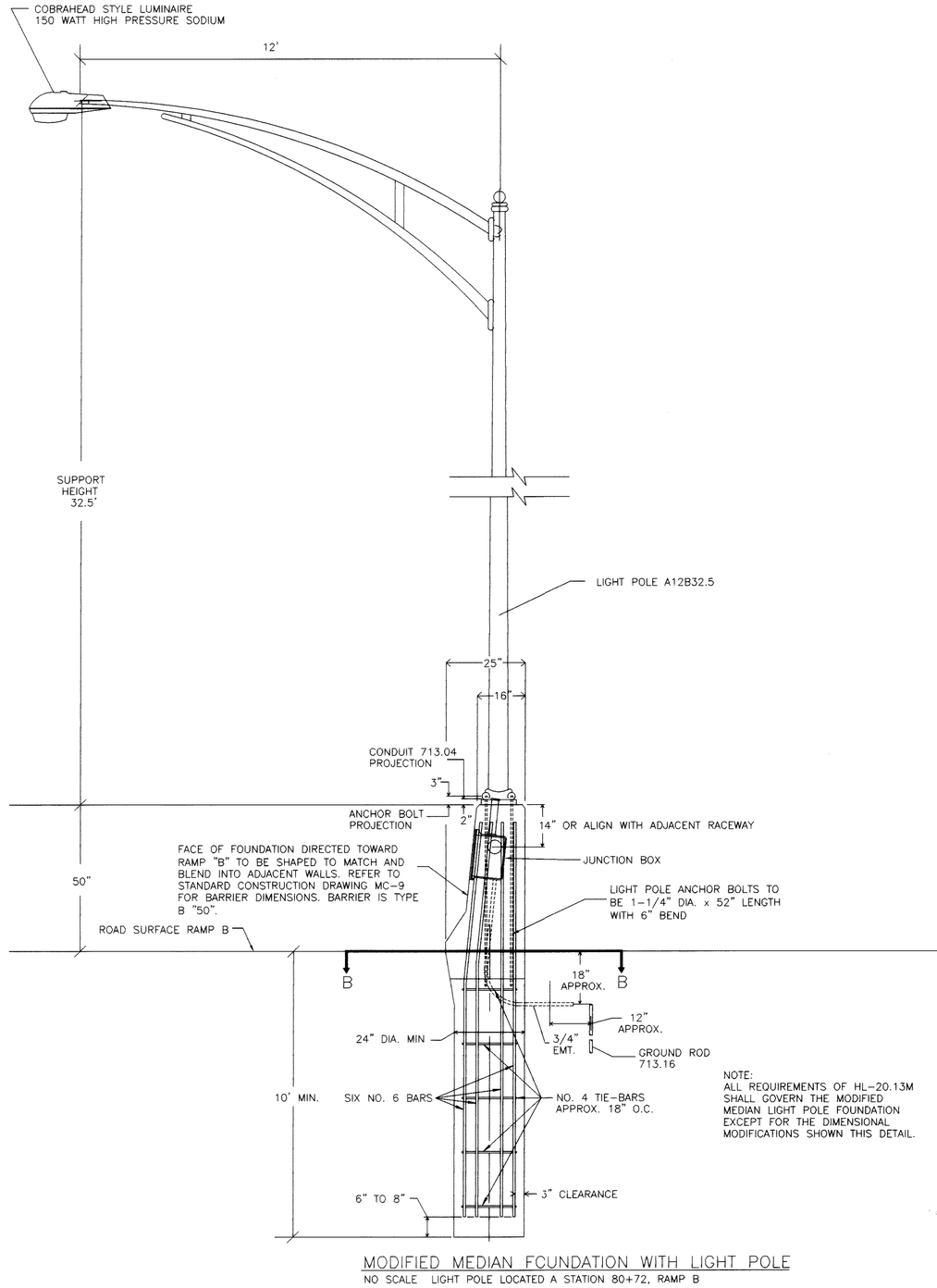

MODIFIED MEDIAN FOUNDATION WITH LIGHT POLE
NO SCALE LIGHT POLE LOCATED A STATION 80+72, RAMP B

DESIGN AGENCY
ERIKSSON ENGINEERING LTD.
1523 CHESAPEAKE AVENUE
COLUMBUS, OH 43212

DESIGNED	DRAWN	REVIEWED	DATE
RDC	DCR		
CHECKED	REVISED		
HMC	CJC		

STRUCTURE FILE NO.

LIGHTING DETAILS
LUMINAIRE AND POLE COMBINATION INSTALLATIONS

FRA-315-3.04

Q:\OSU_RAMP\315DET2A>dwg JUNE 26, 2002

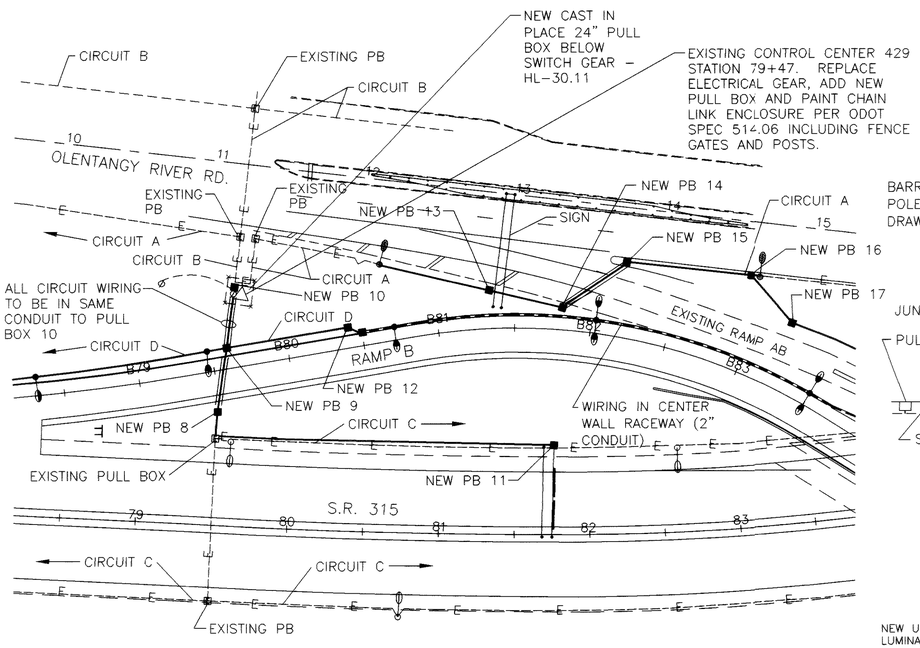

CONTROL CENTER 429 WIRING DIAGRAM SHOWING NEW AND EXISTNG CIRCUIT WIRING
SCALE 1"=50'

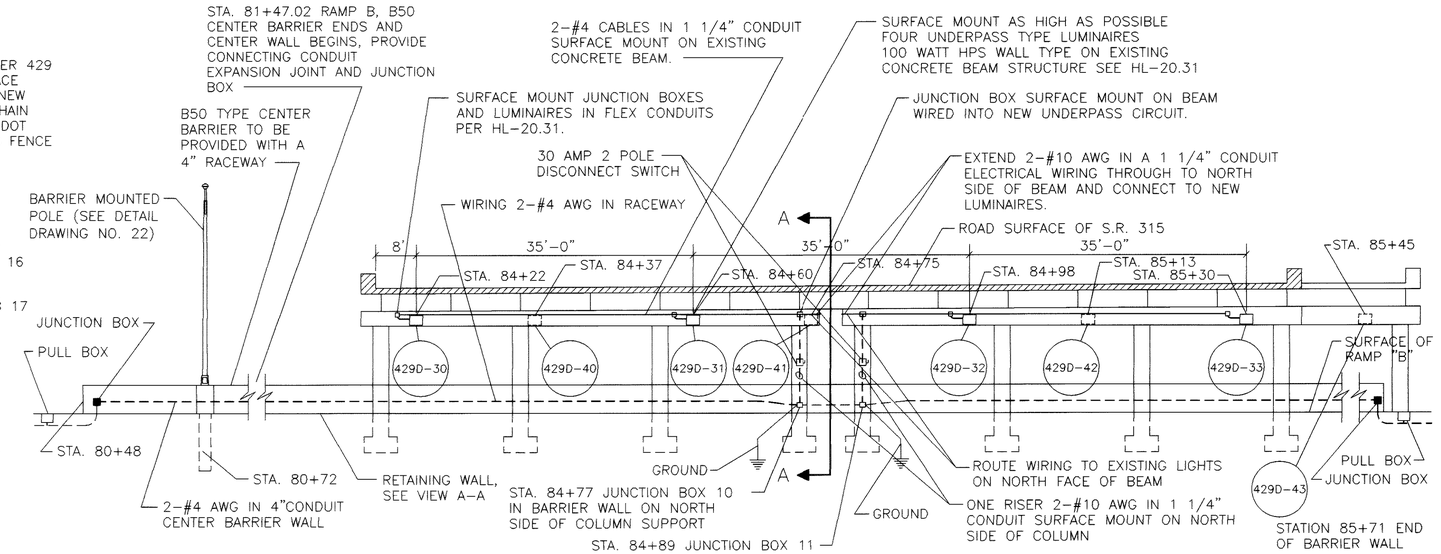

SHOWING RAMP "B" UNDERPASS LIGHTING AND CONDUIT IN CENTER WALL
(NO SCALE)

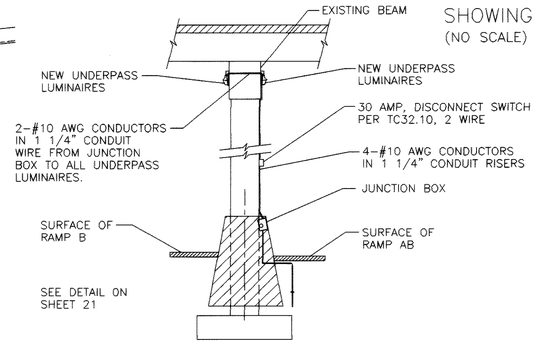

SECTION A-A

4" RACEWAY EMBEDDED IN CONCRETE RETAINING WALL NEAR NORTH FACE SO AS TO PASS ON NORTH SIDE OF EXISTING COLUMNS.

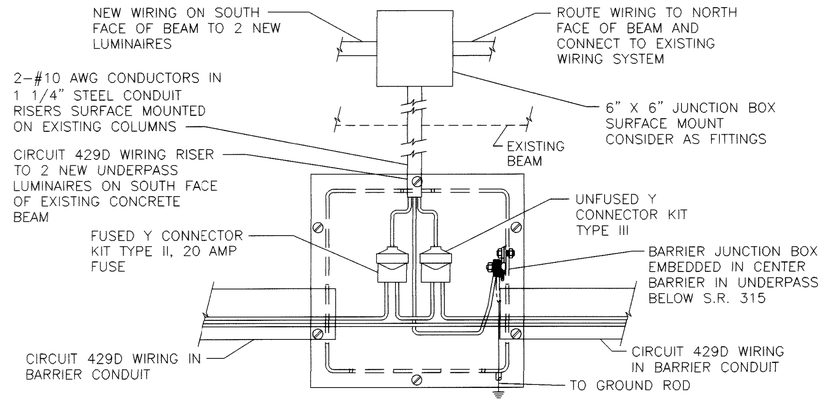

NEW RAMP "B" AND EXISTING RAMP "AB" JUNCTION BOX LIGHTING WIRING DIAGRAM

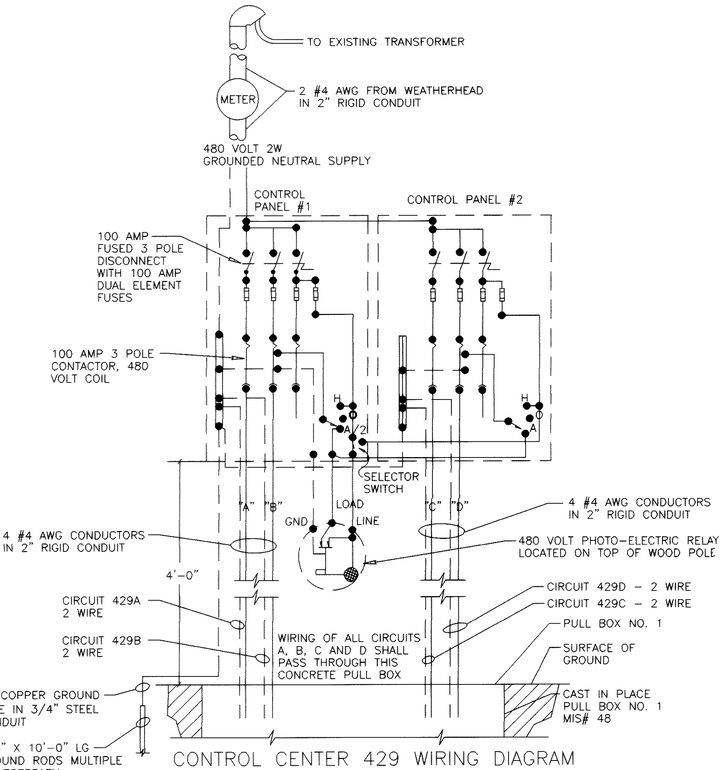

CONTROL CENTER 429 WIRING DIAGRAM
WIRING OF CONTROL CENTER 429 DOUBLE UNIT AND PULL BOX NO. 1 PER ODOT DESIGN STANDARD HL-60.31

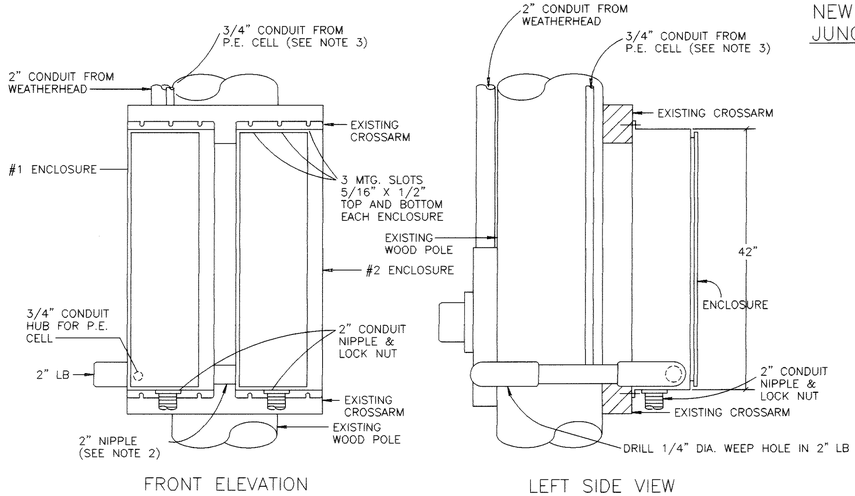

FRONT ELEVATION

LEFT SIDE VIEW

ARRANGEMENT OF CONTROL CENTER 429 DOUBLE UNIT
THESE ENCLOSURES AND ARRANGEMENT ARE PER ODOT DESIGN STANDARD HL-40.10

REFURBISH CONTROL CENTER 429 (CIRCUITS "A", "B", "C" AND "D")
RENOVATION OF CONTROL CENTER 429 INSTALL AND WIRE TO ODOT STANDARD DRAWING HL-40.10 AND HL 60.31

A. PROVIDE AND INSTALL NEW ITEMS AS FOLLOWS
   1. DISCONNECT SWITCHES 100 AMP 3 POLE FUSED
   2. CONTACTORS 100 AMP, 3 POLE, ELECTRICALLY HELD
   3. CONTROL TRANSFORMER 120 VOLT SECONDARY
   4. HAND OFF AUTO SWITCHES
   5. PHOTOELECTRIC SENSOR, RELAY
   6. ALL SHALL COMPLY WITH SECTION 713.19 POWER SERVICE COMPONENTS IN ODOT CONSTRUCTION AND MATERIAL SPECIFICATIONS
   7. ALL COMPONENTS AND WIRING CIRCUITRY SHALL BE FOR 480 VOLT, 2 WIRE GROUNDED NEUTRAL TO SUPPLY (4) FOUR LIGHTING CIRCUITS A, B, C AND D.
   8. PULL BOX (24"X24" CONCRETE) TO BE LOCATED DIRECTLY BELOW SWITCH GEAR – ALL CIRCUIT WIRING FROM SWITCH GEAR SHALL PASS THROUGH THIS PULL BOX. PULL BOX WILL BE PAID SEPARATELY.

B. EXISTING ITEMS TO REMAIN
   1. DOUBLE ENCLOSURES WITH CONDUIT.
   2. (2) TWO WOOD POLES AND POWER WIRING
   3. TRANSFORMER AND WIRING
   4. ELECTRIC METER AND WIRING
   5. CHAIN LINK SECURITY FENCE, POLES AND GATES SHALL BE PAINTED PER ODOT STANDARD SPECIFICATION 514.06 WITH METALLIC TYPE METAL COATING SUITABLE FOR ADHESION AND PROTECTION OF GALVANIZE.

GROUNDING
PROVIDE GROUNDING OF NEW ITEM TO BRIDGE STRUCTURE AND OR GROUND ROD AS DESCRIBED IN SPECIFICATIONS AND ODOT STANDARD CONSTRUCTION DRAWING HL-50.21M AND OR SHOWN ON DETAIL DRAWING.

DESIGN AGENCY
ERIKSSON ENGINEERING LTD.
1523 CHESAPEAKE AVENUE
COLUMBUS, OH 43212

DATE
REVIEWED
STRUCTURE FILE NO.
DRAWN DCR REVISED
DESIGNED RDC CHECKED HMC

LIGHTING DETAILS
CONTROL CENTER 429 AND RAMP B UNDERPASS

FRA-315-3.04

23 | 26

122
238

Q:\OSU_RAMP\315DT>dwg SEPT 14, 1999

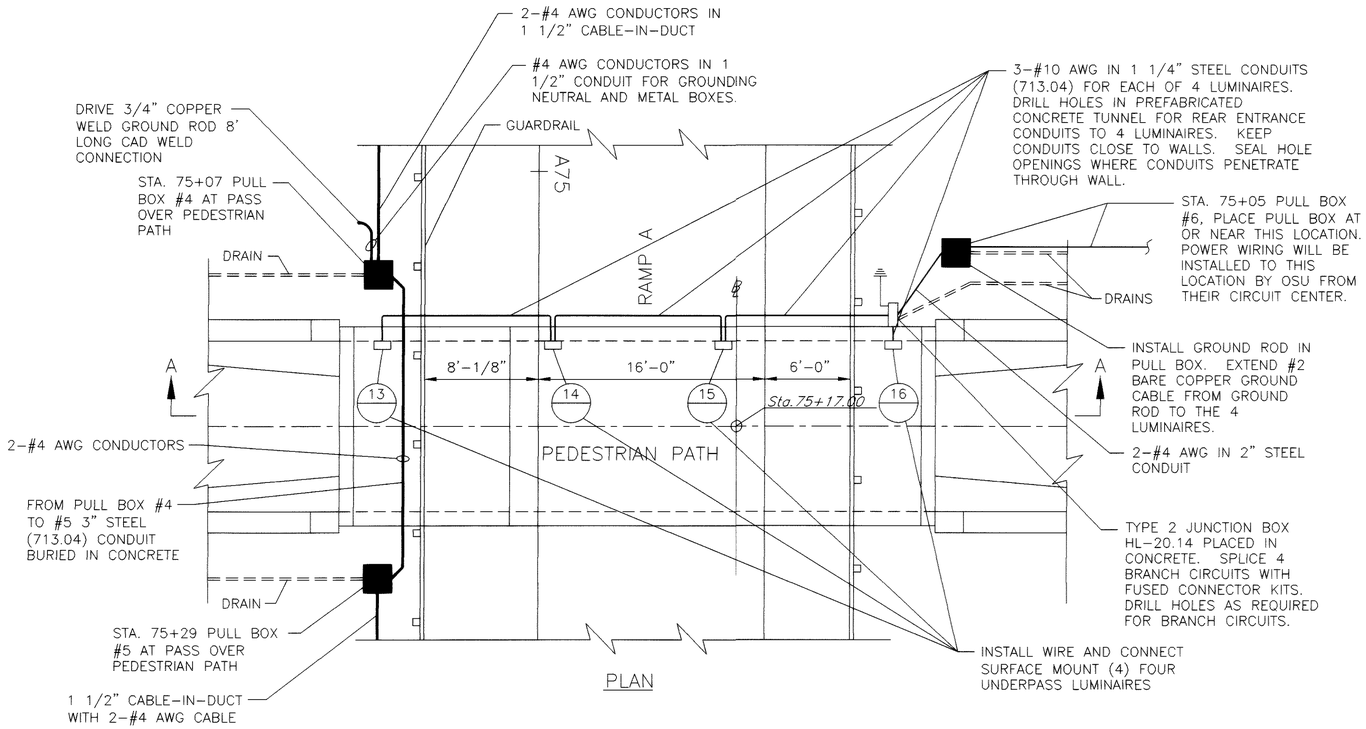

PLAN

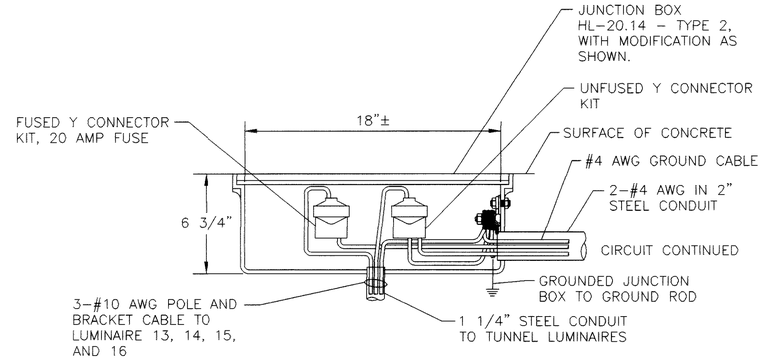

PEDESTRIAN TRAIL UNDERPASS LIGHTING JUNCTION BOX WIRING
SCALE 1"=1"

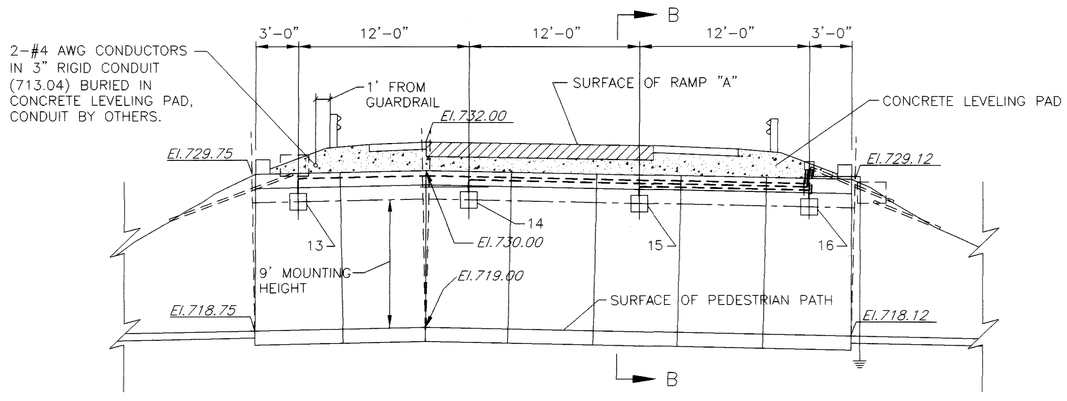

SECTION A–A

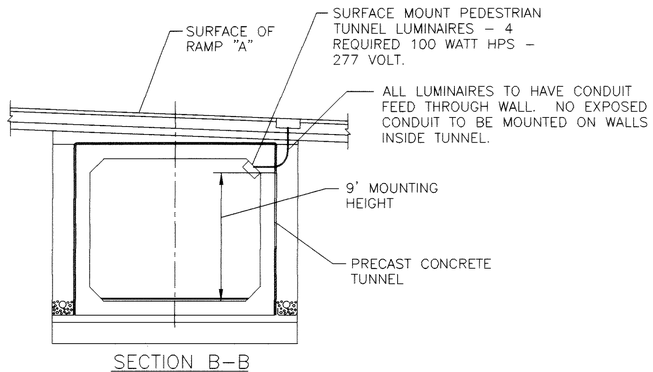

SECTION B–B

RAMP "A" UNDERPASS LIGHTING FOR PEDESTRIAN TRAIL
SCALE 3/16"=1'

GROUNDING
PROVIDE GROUNDING OF NEW ITEM TO BRIDGE STRUCTURE AND OR GROUND ROD AS DESCRIBED IN SPECIFICATIONS AND ODOT STANDARD CONSTRUCTION DRAWING HL–50.21M AND OR SHOWN ON DETAIL DRAWING.

DESIGN AGENCY
ERIKSSON ENGINEERING LTD.
1523 CHESAPEAKE AVENUE
COLUMBUS, OH 43212

DATE .
REVIEWED
DRAWN REVISED
DESIGNED CHECKED .

SFN : .

LIGHTING DETAILS
RAMP A PEDESTRIAN UNDERPASS LIGHTING

FRA–315–3.04

Feb. 11, 2000 315Aund.dwg

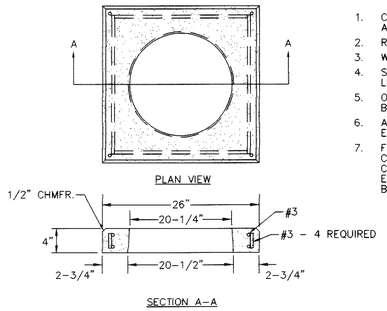

1. CONCRETE - 4000 PSI. - 28 DAYS AIR 6%\2 - REF O.D.O.T. ITEM 511.
2. REBAR GRD 40
3. WEIGHT - 117#
4. STANDARD FINISH CONCRETE TO BE LIGHT SANDBLASTED.
5. OPENING DIMENSIONS MAY VARY BY ±1/8".
6. AS BY A.B. CHANCE OR APPROVED EQUAL.
7. FILL GAP BETWEEN POLE BASE AND CONCRETE CAP WITH SILICONE CAULK. CAULK TO BE PROVIDED BY ELECTRICAL CONTRACTOR CAULK TO BE BLACK IN COLOR.

POLE FOUNDATION CAP

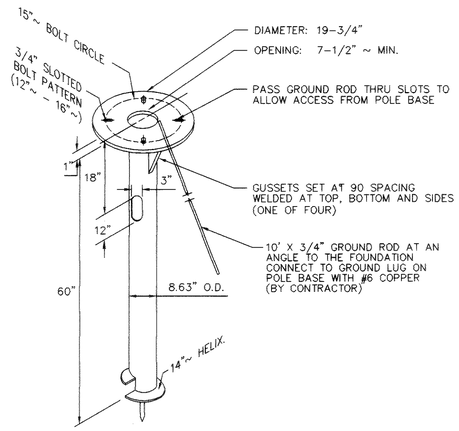

OSU CANNON DRIVE LIGHT MECHANICAL FOUNDATION

TO BE SALVAGED AND REUSED

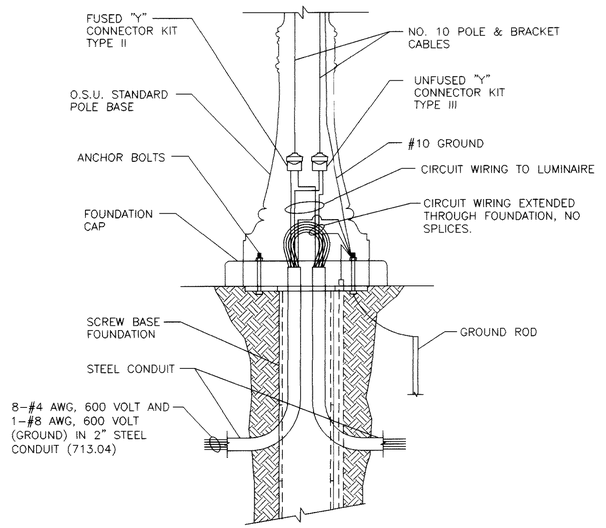

POLE BASE ELECTRIC DETAIL

SCALE 1"=1'

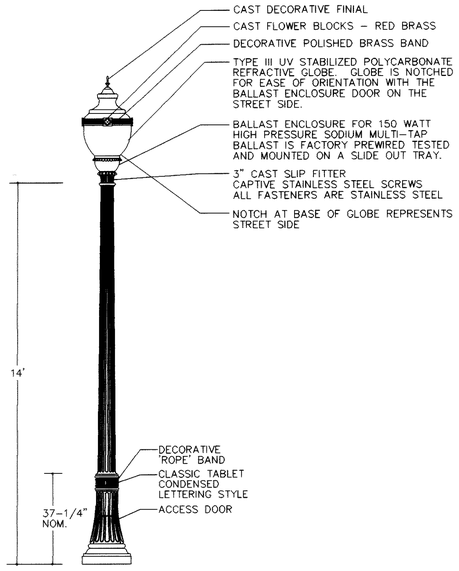

EXISTING OSU CANNON DRIVE POST LIGHT

TO BE SALVAGED AND REUSED
150 WATT HPS POST TOP

GROUNDING
PROVIDE GROUNDING OF NEW ITEM TO BRIDGE STRUCTURE AND OR GROUND ROD AS DESCRIBED IN SPECIFICATIONS AND ODOT STANDARD CONSTRUCTION DRAWING HL-50.21M AND OR SHOWN ON DETAIL DRAWING.

DESIGN AGENCY
ERIKSSON ENGINEERING LTD.
1523 CHESAPEAKE AVENUE
COLUMBUS, OH 43212

DESIGNED	DRAWN	REVIEWED	DATE
RDC	DCR	STRUCTURE FILE NO. .	
CHECKED	REVISED		
HMC			

LIGHTING DETAILS
OSU LIGHT POLE, LUMINAIRE AND MECHANINCAL FOUNDATION

FRA-315-3.04

25 / 26

124
238

Q:\OSU_RAMP\315DT>dwg SEPT 14, 1999

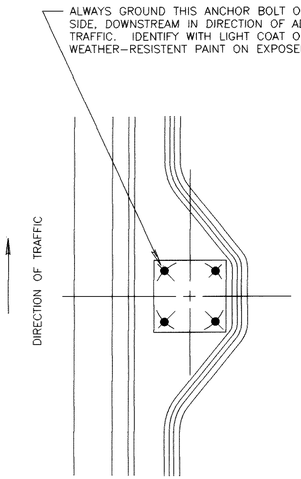

LIGHT POLE PARAPET PLAN

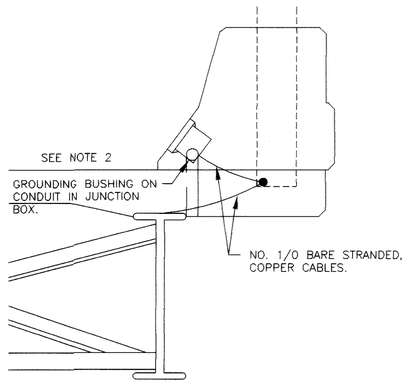

ANCHOR BOLT GROUNDING ON BRIDGE WITH STANDARD ROADWAY RAILING

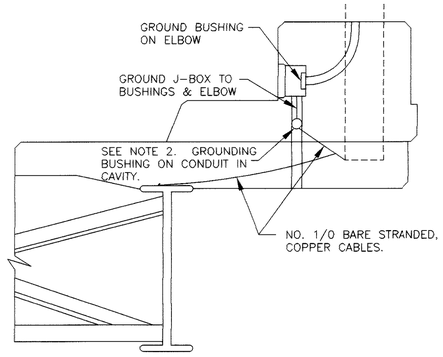

ANCHOR BOLT GROUNDING ON BRIDGE WITH SIDEWALK RAILING

NOTES:

1. COPPER GROUNDING CABLE SHALL BE CONNECTED TO STRUCTURAL STEEL, PILE ENCASEMENT, PILING, GROUND RODS, JUNCTION BOXES, AND ANCHOR BOLTS BY MEANS OF EXOTHERMIC WELDING.
2. STRUCTURE GROUNDING SYSTEM SHALL BE CONNECTED TO STRUCTURE CONDUIT SYSTEM BY THE USE OF CONDUIT GROUNDING BUSHINGS AS SHOWN IN THIS DRAWING.

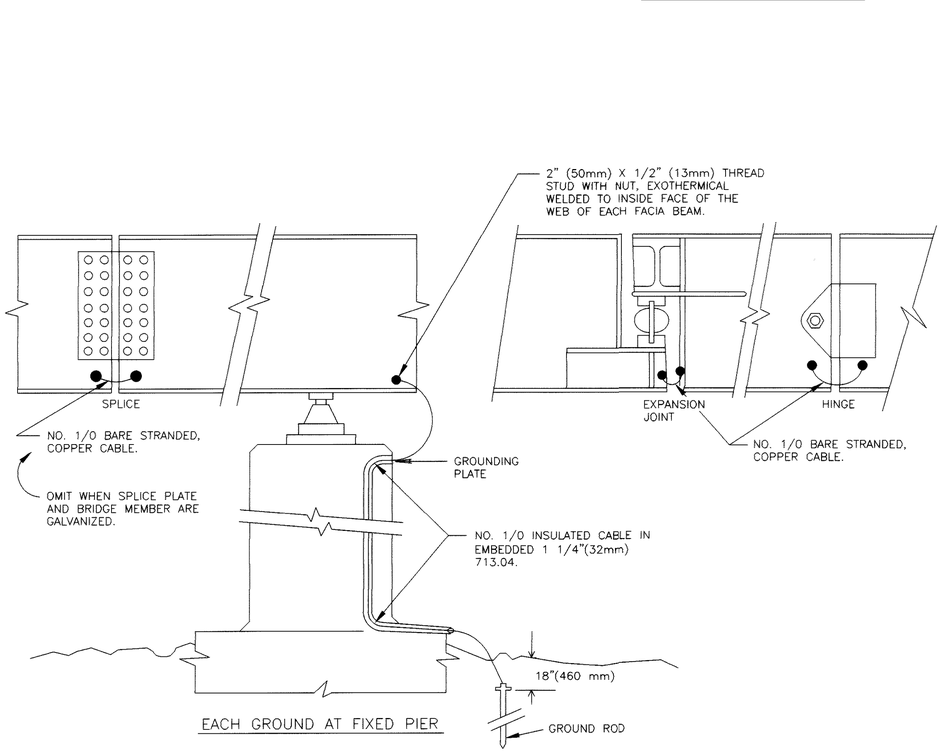

EACH GROUND AT FIXED PIER

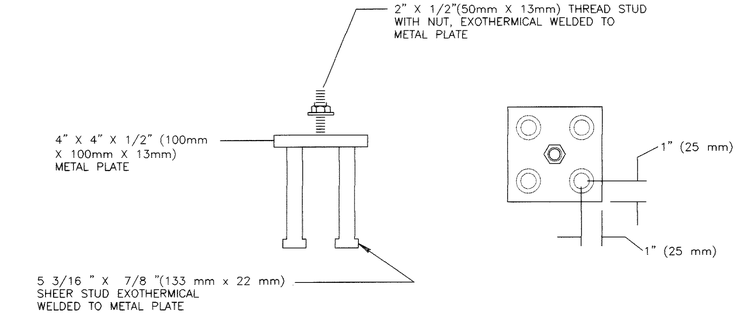

GROUNDING PLATE DETAILS

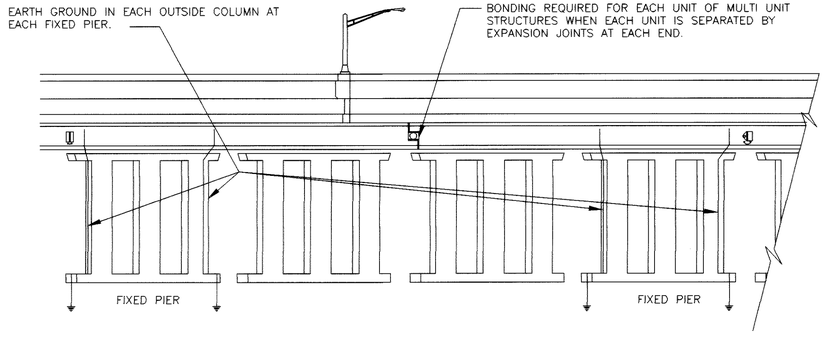

MINIMUM GROUNDING OF BRIDGES

DESIGN AGENCY
ERIKSSON ENGINEERING LTD.
1523 CHESAPEAKE AVENUE
COLUMBUS, OH 43212

DESIGNED	DRAWN	REVIEWED	DATE
RDC	DCR		
CHECKED	REVISED		
HMC			

STRUCTURE FILE NO.

LIGHTING DETAILS
STRUCTURE GROUNDING
STEEL BEAM BRIDGE

FRA-315-3.04

26 / 26

125
238

SEPT 14, 1999

Q:\OSU_RAMP\3150T>.dwg

SHEET NUMBER	STATION	SIDE	ROADWAY	CIRCUIT	202											625
					LUMINAIRE REMOVED, AS PER PLAN	LIGHT POLE REMOVED, AS PER PLAN	LIGHT POLE FOUNDATION REMOVED, AS PER PLAN	PULL BOX REMOVED, AS PER PLAN	DISCONNECT EXISTING CIRCUIT, AS PER PLAN	LIGHT POLE FOUNDATION REMOVED, AS PER PLAN, (CANNON DRIVE)	REMOVAL MISC. CIRCUIT CABLE REMOVED	LIGHT POLE REMOVED FOR STORAGE, AS PER PLAN (CANNON DRIVE)	LUMINAIRE 150 W REMOVED FOR STORAGE, AS PER PLAN (CANNON DRIVE)	REMOVE MISC. CONDUIT REMOVED, AS PER PLAN	REMOVAL MISC., SERVICE TO UNDERPASS LIGHTING, AS PER PLAN	CONDUIT CLEANED AND CABLES REMOVED, AS PER PLAN
					EACH	EACH	EACH	EACH	EACH	EACH	LIN. FT.	EACH	EACH	LIN. FT.	LUMP	LIN. FT.
127	41+75	RT	SR 315	144A					1							
128	60+21 TO 61+23	RT	SR 315	144C					1							102
128	61+56 SR 315 144C-28	LT	SR 315	144C	1	1			1							
128	62+43 SR 315 144C-5	RT	SR 315	144C	1	1										
128	63+65 SR 315 144C-27	LT	SR 315	144C	1	1			1							
128	64+67 SR 315 144C-6	RT	SR 315	144C	1	1										
129	65+74 SR 315 144C-26	LT	SR 315	144C	1	1			1							
129	66+70 SR 315 144C-7	RT	SR 315	144C	1	1										
129	67+03 SR 315 PULL BOX 144C	RT	SR 315	144C				1								
129	67+07 SR 315 PULL BOX 144C	RT	SR 315	144C				1								
129	67+75 SR 315 429C-25	LT	SR 315	429C	1	1	1									
129	67+88 SR 315 PULL BOX 144C	RT	SR 315	144C				1								
129	68+80 SR 315 144C-8	RT	SR 315	144C	1	1	1									
129	69+70 SR 315 144C-24	LT	SR 315	144C	1	1	1									
129	70+16 SR 315 PULL BOX 144C	RT	SR 315	144C				1	1							
129	70+90 SR 315 144C-9	RT	SR 315	144C	1	1	1									
129	71+75 144C-23	LT	SR 315	144C	1	1	1									
129	73+00 SR 315 144C-10	RT	SR 315	144C	1	1	1									
129	73+65 144C-22	LT	SR 315	144C	1	1	1									
130	75+06 SR 315 144C-11	RT	SR 315	144C	1	1	1									
130	76+40 429C-18	LT	SR 315	144C	1	1	1									
130	77+74 429 C-2	RT	SR 315	429C					1							
130	79+50 PULL BOX	LT	SR 315	429A					1							
130	11+15 TO 79+50	RT	OLENTANGY	429A					1		210			100		
130	11+15 TO C.C. 429	RT	OLENTANGY	429A												
130	12+15 429 A-2	RT	OLENTANGY	429A					1							
130	13+40 SIGN	RT	RAMP AB	429A												
130	13+48 PULL BOX	RT	RAMP AB	429A				1								
130	13+50 A-3	RT	RAMP AB	429A	1	1	1									
130	14+70 PULL BOX	LT	RAMP AB	429A					1							
130	14+75 PULL BOX	LT	RAMP AB	429A				1								
130	14+75 PULL BOX	RT	RAMP AB	429A				1								
130	15+27 A-4	RT	RAMP AB	429A	1	1	1									
130	15+57 PULL BOX	RT	RAMP AB	429A				1								
130	15+57 TO 17+10	RT	RAMP AB	429A											1	
131	66+55 A-25 CANNON DR	LT	CANNON DR	OSU					1							
131	68+48 A-27 CANNON DR	LT	CANNON DR	OSU						1		1	1			
131	70+12 A-29 CANNON DR	LT	CANNON DR	OSU					1							
	TOTALS SHEET 126				17	17	11	8	13	1	210	1	1	100	1	102
	TOTALS CARRIED TO LIGHTING GENERAL SUMMARY															

315 REMOVAL SUB-SUMMARY

FRA-315-3.04

0 40 80 160

SCALE IN FEET

T.S. STA. 35+62.07 AHEAD
STA. 181+73.57 BACK

CL 3RD AVE.

S.C. STA. 39+62.07

C.S. STA. 44+81.48

STA. 45+00
MATCH THIS SHEET

36 37 38 39 40 41 42 43 44

36'

10'

S.R. 315 N.B.

E

EXISTING, S.R. 315, 36+30, 53.0' R, 144A-9
200 W, TYPE 3, 34.2', 15', STRUCTURE

EXISTING, S.R. 315, 38+00, 53.0' R, 144A-8
200 W, TYPE 3, 34.2', 15', STRUCTURE

EXISTING, S.R. 315, 39+90, 53.0' R, 144A-7
200 W, TYPE 3, 34.2', 15', STRUCTURE

EXISTING, S.R. 315, 41+75, 53.0' R, 144A-6
200 W, TYPE 3, 34.2', 15', STRUCTURE

DISCONNECT EXISTING CIRCUIT

EXISTING, S.R. 315, 43+65, 53.0' R, 144A-5
200 W, TYPE 3, 34.2', 15', STRUCTURE

CIRCUIT "C" NORTHWEST SIDE OF S.R. 315 TO REMAIN

STA. 54+38.42 CL S.R. 315 =
STA. 27+50.59 CL 5TH AVE.

EXISTING, S.R. 315, 49+28, 53.0' L, 144B-3
200 W, TYPE 3, 34.2', 15', STRUCTURE

EXISTING, S.R. 315, 53+30, 53.0' L, 144B-1
200 W, TYPE 3, 34.2', 15', STRUCTURE

S.T. STA. 48+81.48

EXISTING, S.R. 315, 51+30, 53.0' L, 144B-2
200 W, TYPE 3, 34.2', 15', STRUCTURE

CIRCUIT "B" SOUTHWEST SIDE OF S.R. 315 TO REMAIN

RISER TO BRIDGE LEVEL

CIRCUITS B&C TO REMAIN

CIRCUITS A,B&C TO REMAIN

MATCHLINE STA. 55+00
SEE SHEET NO. 3

STA. 45+00
MATCH THIS SHEET

46 47 48 49 50 51 52 53 54

36'

9'

S.R. 315 N.B.

EXISTING, S.R. 315, 45+60, 53.0' R, 144A-4
200 W, TYPE 3, 34.2', 15', STRUCTURE

EXISTING, S.R. 315, 47+60, 53.0' R, 144A-3
200 W, TYPE 3, 34.2', 15', STRUCTURE

STA. 49+00.00 CL S.R. 315 =
STA. 49+00.00 N.B. S.R. 315, 5.0' RT.

EXISTING, S.R. 315, 49+54, 53.0' R, 144A-2
200 W, TYPE 3, 34.2', 15', STRUCTURE

EXISTING, S.R. 315, 51+55, 53.0' R, 144A-2
200 W, TYPE 3, 34.2', 15', STRUCTURE

CIRCUIT "A" SOUTHEAST SIDE OF S.R. 315 TO REMAIN

T.S. STA. 53+47.44

CIRCUIT "C" NORTHEAST SIDE OF S.R. 315 TO REMAIN

EXISTING, S.R. 315, 53+56, 53.0' R, 144C-1
200 W, TYPE 3, 34.2', 15', STRUCTURE

EXISTING UNDERGROUND WIRING, 6-#4 - 3" CONDUIT TO REMAIN

WOOD POLE

S.R. 315 53+30 EXISTING CONTROL CENTER #144, (480 VOLT 2 WIRE SYSTEM) TO REMAIN.

CL 5TH AVE.

EXISTING 50 KVA TRANSFORMER MOUNTED ON WOOD POLE TO REMAIN.

NOTES
1. ALL EXISTING LIGHTING UNITS, POLES, LUMINAIRES, AND WIRING ON THIS SHEET TO REMAIN.

FOR LEGEND, SEE LIGHTING SCHEMATIC PLAN

Q:\OSU_RAMP\315LT1>dwg SEPT 14, 1999

DESIGN AGENCY
ERIKSSON ENGINEERING LTD.
1523 CHESAPEAKE AVENUE
COLUMBUS, OH 43212

DESIGNED	DRAWN	REVIEWED	DATE
RDC	DCR		
CHECKED	REVISED		
HMC			

STRUCTURE FILE NO.
.

REMOVALS
STA. 36+00 S.R. 315 N.B. TO STA. 55+00 S.R. 315

FRA-315-3.04

2 6

127
238

0 40 80 160

SCALE IN FEET

CL 5TH AVE.

EXISTING, S.R. 315, 59+45, 53.0' L, 144C-29
200 W, TYPE 3, 34.2', 15', STRUCTURE

EXISTING, S.R. 315, 57+35, 53.0' L, 144C-30
200 W, TYPE 3, 34.2', 15', STRUCTURE

EXISTING, S.R. 315, 55+31, 53.0' L, 144C-31
200 W, TYPE 3, 34.2', 15', STRUCTURE

REMOVE, S.R. 315, 61+56, 53.0' L, 144C-28
200 W, TYPE 3, 34.2', 15', STRUCTURE
EXISTING POLE, BRACKET ARM, LUMINAIRE AND DISCONNECT EXISTING CIRCUIT. EXISTING MOUNTING STRUCTURE AND BOLTS TO REMAIN FOR REUSE.

CONDUIT FROM HINGE STATION 61+22.88 NORTH TO BE ABANDONED - CLEAN EXISTING CIRCUIT SOUTH.

REMOVE, S.R. 315, 63+65, 53.0' L, 144C-27
200 W, TYPE 3, 34.2', 15', STRUCTURE
EXISTING POLE, BRACKET ARM, LUMINAIRE, AND DISCONNECT EXISTING CIRCUIT. EXISTING MOUNTING STRUCTURE AND BOLTS TO REMAIN FOR REUSE.

EXISTING CIRCUIT 144C TO REMAIN

STRUCTURE - FRA-315-0278

MATCHLINE STA. 65+00
SEE SHEET NO. 4

56 57 58 59 60 61 62 63 64

36'

DISCONNECT EXISTING CIRCUIT NORTH FROM THIS POINT

EXISTING CIRCUIT CABLES TO REMAIN FROM LIGHT POLE 144C-4 SOUTH.

EXISTING, S.R. 315, 58+00, 53.0' R, 144C-3
200 W, TYPE 3, 34.2', 15', STRUCTURE

EXISTING CIRCUIT 144C TO REMAIN

MATCHLINE STA. 55+00
SEE SHEET NO. 2

S.C. STA. 56+47.44

EXISTING, S.R. 315, 55+75, 53.0' R, 144C-2
200 W, TYPE 3, 34.2', 15', STRUCTURE

HINGE STA 61+22.88

PIER 14

PIER 15

PIER 16

PIER 17

ABANDON WIRING AND CONDUIT

ABANDON WIRING AND CONDUIT

REMOVE, S.R. 315, 62+43, 53.0' R, 144C-5
200 W, TYPE 3, 34.2', 15', STRUCTURE

A) REMOVE EXISTING POLE, BRACKET ARM AND LUMINAIRE.

CONDUIT AND CABLE TO BE ABANDONED ON RIGHT SIDE OF BRIDGE STRUCTURE FROM STATION 61+22.88 NORTH.

BRIDGE DEMOLITION LIMIT

JOIN EXISTING AND NEW CONDUIT AS PER STRUCTURE CONDUIT DETAIL "A", HL-30.31.

REMOVE, S.R. 315, 64+67, 53.0' R, 144C-6
200 W, TYPE 3, 34.2', 15', STRUCTURE

A) REMOVE EXISTING POLE, BRACKET ARM AND LUMINAIRE.

REMOVE EXISTING CIRCUIT CABLES NORTH FROM LIGHT POLE 144C-4 AND CLEAN EXISTING CONDUIT.

EXISTING, S.R. 315, 60+21, 53.0' R, 144C-4
200 W, TYPE 3, 34.2', 15', STRUCTURE
DISCONNECT CONDUCTORS AND CONNECTOR KITS IN BASE OF LIGHT POLE. REMOVE CABLE AND EXISTING CONDUIT NORTH THROUGH BRIDGE STRUCTURE.

NOTE:
POLE LEGEND ON REMOVAL DRAWINGS INDICATES POLE STYLE WHICH ARE PRESENTLY INSTALLED.

FOR LEGEND, SEE LIGHTING SCHEMATIC PLAN

Q:\OSU_RAMP\315LT2>dwg SEPT 14, 1999

DESIGN AGENCY
ERIKSSON ENGINEERING LTD.
1523 CHESAPEAKE AVENUE
COLUMBUS, OH 43212

DESIGNED	DRAWN	REVIEWED	DATE
RDC	DCR		
CHECKED	REVISED		
HMC			

STRUCTURE FILE NO.
.

REMOVALS
STA. 55+00 TO STA. 65+00 S.R. 315

FRA-315-3.04

3 / 6

128
238

SEE SHEET NO. 3
MATCHLINE STA. 65+00

REMOVE, S.R. 315, 65+74, 53.0' L, 144C-26
200 W, TYPE 3, 34.2', 15', STRUCTURE
EXISTING POLE, BRACKET ARM AND
LUMINAIRE, AND DISCONNECT EXISTING
CIRCUIT. EXISTING MOUNTING STRUCTURE
AND BOLTS TO REMAIN FOR REUSE.

ABANDON WIRING
AND CONDUIT

C.S. STA. 65+99.23

BEGIN TAPER
STA. 67+00, 41' L.T.

67+03 PULL BOX
REMOVED

REMOVE, S.R. 315, 67+75, 55.5' L, 429C-22
200 W, TYPE 3, 34.2', 15', FOUNDATION
POLE, ARM, LUMINAIRE AND FOUNDATION

67+88 PULL BOX
REMOVED

68+00
ILLUMINATED SIGN

ABANDON WIRING
AND CONDUIT

P.R.S. STA. 68+99.23

REMOVE, S.R. 315, 69+70, 55.5' L, 144C-24
200 W, TYPE 3, 34.2', 15', FOUNDATION
POLE, ARM, LUMINAIRE AND FOUNDATION

ABANDON WIRING
AND CONDUIT

P.S.C. STA. 70+99.23

REMOVE, S.R. 315, 71+75, 55.5' L, 144C-23
200 W, TYPE 3, 34.2', 15', FOUNDATION
POLE, ARM, LUMINAIRE AND FOUNDATION

ABANDON WIRING
AND CONDUIT

C.S. STA. 74+00

REMOVE, S.R. 315, 73+65, 55.5' L, 144C-22
200 W, TYPE 3, 34.2', 15', FOUNDATION
POLE, ARM, LUMINAIRE AND FOUNDATION

MATCHLINE STA. 75+00
SEE SHEET NO. 5

℄ OLENTANGY RIVER ROAD

SCALE IN FEET
0 40 80 160

PIER 18

ABANDON WIRING
AND CONDUIT

67+07 PULL BOX
REMOVED

ABANDON WIRING
AND CONDUIT

REMOVE, S.R. 315, 66+70, 55.5' R, 144C-7
200 W, TYPE 3, 34.2', 15', STRUCTURE
POLE, ARM, AND LUMINAIRE ONLY

FIVE (5) EXISTING UNDERPASS LIGHTS,
100 WATT HPS SURFACE MOUNT TO
REMAIN.

70+06 REMOVE
PULL BOX

70+06
ILLUMINATED SIGN

ABANDON WIRING
AND CONDUIT

ABANDON WIRING
AND CONDUIT

REMOVE, S.R. 315, 68+80, 55.5' R, 144C-8
200 W, TYPE 3, 34.2', 15', FOUNDATION
POLE, ARM, LUMINAIRE AND FOUNDATION

REMOVE, S.R. 315, 70+90, 55.5' R, 144C-9
200 W, TYPE 3, 34.2', 15', FOUNDATION
POLE, ARM, LUMINAIRE AND FOUNDATION

ABANDON WIRING
AND CONDUIT

ABANDON WIRING
AND CONDUIT

REMOVE, S.R. 315, 73+00, 55.5' R, 144C-10
200 W, TYPE 3, 34.2', 15', FOUNDATION
POLE, ARM, LUMINAIRE AND FOUNDATION

P.C.C. STA. 65+71.33, 53' RT., S.R. 315 =
STA. A65+71.33, RAMP A

℄ KING AVENUE

36'
50'

FOR LEGEND, SEE LIGHTING SCHEMATIC PLAN

Q:\OSU_RAMP\315LT3>dwg SEPT 14, 1999

DESIGN AGENCY
ERIKSSON ENGINEERING LTD.
1523 CHESAPEAKE AVENUE
COLUMBUS, OH 43212

DESIGNED	DRAWN	REVIEWED	DATE
RDC	DCR		
CHECKED	REVISED		
HMC			

STRUCTURE FILE NO.

REMOVALS
STA. 65+00 TO STA. 75+00 S.R. 315

FRA-315-3.04

4 / 6

129
238

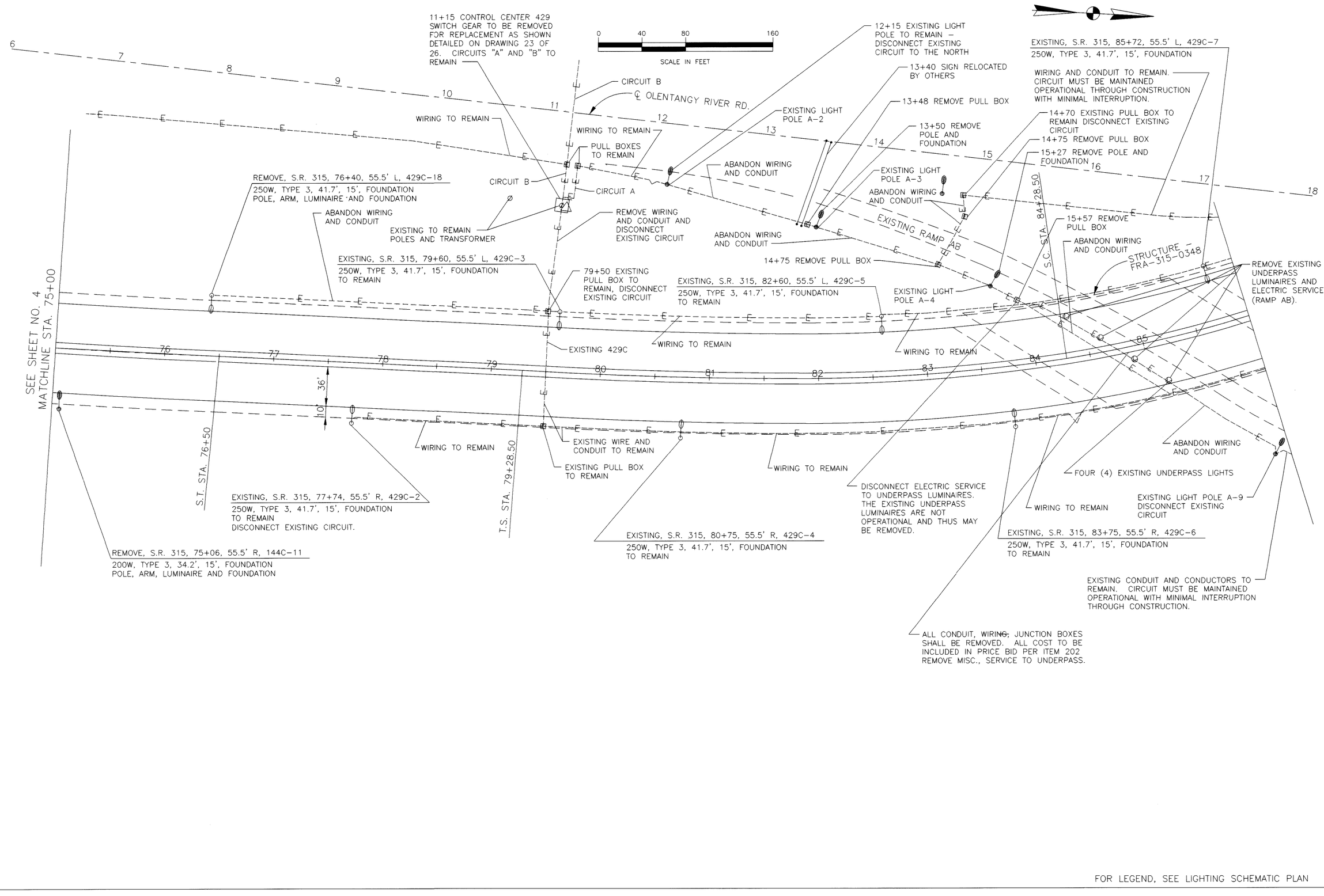

FOR LEGEND, SEE LIGHTING SCHEMATIC PLAN

DESIGN AGENCY
ERIKSSON ENGINEERING LTD.
1523 CHESAPEAKE AVENUE
COLUMBUS, OH 43212

DESIGNED	DRAWN	REVIEWED	DATE
RDC	DCR		
CHECKED	REVISED		
HMC			

STRUCTURE FILE NO.

REMOVALS
STA. 75+00 TO STA. 86+00 S.R. 315

FRA-315-3.04

5 / 6

130
238

Q:\OSU_RAMP\315_T4>dwg SEPT 14, 1999

0 40 80 160

SCALE IN FEET

ABANDON THE EXISTING UNDERGROUND PA CONTROL WIRING BETWEEN STA. 66+55 AND STA. 70+12 AND DISCONNECT EXISTING CIRCUIT NEAR UNITS A–25 AND A–29.

REMOVE UNIT A–27 ONLY EXISTING CANNON DRIVE STA. 68+46 POST TOP LIGHTING UNIT TO BE REMOVED. REMOVE POST, LUMINAIRE, MECHANICAL FOUNDATION AND DISCONNECT EXISTING CIRCUIT – SEE DETAIL OF THESE ITEMS ON DRAWING 25 OF 26.

ABANDON THE EXISTING UNDERGROUND WIRING BETWEEN STA. 66+55 AND STA. 70+12 AND DISCONNECT EXISTING CIRCUIT NEAR UNITS A–25 AND A–29.

MATCHLINE STA 65+00

A–23 A–24 A–25 A–26 A–27 A–28 A–29 A–30 A–31 A–32 A–33 A–34

STA. 66+55

STA. 68+46

STA. 70+12

PA PA

6.5' 25' 37' 6.5'

66 67 68 69 70 71 72 73 74 75

CANNON DRIVE

DRIVE DRIVE DRIVE DRIVE DRIVE

12th AVE.

198 199

JOHN HERRICK DR.

FOR LEGEND, SEE TITLE SHEET

Q:\OSU_RAMP\CANNLT3>dwg SEPT 14, 1999

DESIGN AGENCY
ERIKSSON ENGINEERING LTD.
1523 CHESAPEAKE AVENUE
COLUMBUS, OH 43212

DESIGNED	DRAWN	REVIEWED	DATE
CHECKED	REVISED	STRUCTURE FILE NO.	

REMOVALS
STA. 65+00 TO STA. 75+00 CANNON DRIVE

FRA–315–3.04

6 / 6

131
238

SHEET NUMBER											ITEM	ITEM EXT.	GRAND TOTAL	UNIT	DESCRIPTION	SEE SHEET
133	134		144	145	146	147	147A	147B	147C							
															TRAFFIC CONTROL	
	12										620	10300	12	EACH	DELINEATOR, TYPE C, POST MOUNTED	
	17										620	11000	17	EACH	DELINEATOR, TYPE C, BRACKET MOUNTED	
	9										620	15300	9	EACH	DELINEATOR, TYPE D, POST MOUNTED	
	8										620	16000	8	EACH	DELINEATOR, TYPE D, BRACKET MOUNTED	
	59										621	00100	59	EACH	RAISED PAVEMENT MARKER	
			1	1	1	1	1	1	1		625	32000	7	EACH	GROUND ROD	
	36										626	00100	36	EACH	BARRIER REFLECTOR, TYPE A	
	55										626	00200	55	EACH	BARRIER REFLECTOR, TYPE B	
62											630	02100	62	LIN. FT.	GROUND MOUNTED SUPPORT, NO.2 POST	
114											630	03100	114	LIN. FT.	GROUND MOUNTED SUPPORT, NO.3 POST	
62											630	04100	62	LIN. FT.	GROUND MOUNTED SUPPORT, NO.4 POST	
29											630	06400	29	LIN. FT.	GROUND MOUNTED SUPPORT, S4x7.7 BEAM	
			48								630	07600	48	LIN. FT.	GROUND MOUNTED SUPPORT, W10x12 BEAM	
2											630	09000	2	EACH	BREAKAWAY BEAM CONNECTION	
									1		630	20100	1	EACH	OVERHEAD SIGN SUPPORT, TC-12.30, DESIGN 1	
			1	1							630	20800	2	EACH	OVERHEAD SIGN SUPPORT, TC-12.30, DESIGN 8	
					1		1	1			630	35500	3	EACH	OVERHEAD SIGN SUPPORT, TC-7.65, DESIGN 6	
						1					630	74500	1	EACH	OVERHEAD SIGN SUPPORT, MISC.: END FRAME, TC-7.65 DESIGN 6	
8								4	6		630	79500	18	EACH	SIGN SUPPORT ASSEMBLY, POLE MOUNTED	
2											630	79600	2	EACH	SIGN SUPPORT ASSEMBLY, BRIDGE MOUNTED	
128			6	6	6	2		14	12		630	80102	174	SQ. FT.	SIGN, FLAT SHEET, TYPE G	
2											630	80103	2	SQ. FT.	SIGN, FLAT SHEET, TYPE G, AS PER PLAN	137
30			238	153	130		155	152	99		630	80204	957	SQ. FT.	SIGN, EXTRUSHEET, TYPE G	
2			2								630	84500	4	EACH	GROUND MOUNTED BEAM SUPPORT FOUNDATION	
			1	1	1	2	2	2	1		630	84510	10	EACH	RIGID OVERHEAD SIGN SUPPORT FOUNDATION	
9											630	84900	9	EACH	REMOVAL OF GROUND MOUNTED SIGN AND DISPOSAL	
6											630	85100	6	EACH	REMOVAL OF GROUND MOUNTED SIGN AND REERECTION	
13											630	86002	13	EACH	REMOVAL OF GROUND MOUNTED POST SUPPORT AND DISPOSAL	
					1	2					630	87100	3	EACH	REMOVAL OF OVERHEAD MOUNTED SIGN AND REERECTION	
							3				630	87400	3	EACH	REMOVAL OF OVERHEAD MOUNTED SIGN AND DISPOSAL	
1											630	87500	1	EACH	REMOVAL OF POLE MOUNTED SIGN AND DISPOSAL	
						1					630	88900	1	EACH	REMOVAL OF OVERHEAD SIGN SUPPORT AND REERECTION	
							1				630	89702	1	EACH	REMOVAL OF OVERHEAD SIGN SUPPORT AND DISPOSAL	
			1	1	2	2	3	1	2		631	84000	12	EACH	SIGN SERVICE	
			1	1	2	2	3	1	2		631	84300	12	EACH	SIGN WIRED	
			1	1	1	1	1	1	1		631	85100	7	EACH	DISCONNECT SWITCH WITH ENCLOSURE, TYPE X	
						4	4	5	2		631	87102	15	EACH	BALLAST, TYPE CMRI-100-480, INTEGRAL	
			2	2	6						631	87202	10	EACH	BALLAST, TYPE CMRI-175-480, INTEGRAL	
						4	4	5	2		631	89100	15	EACH	MERCURY VAPOR LUMINAIR, TYPE TC-31.21, WITH 100 WATT LAMP	
			2	2	6						631	89200	10	EACH	MERCURY VAPOR LUMINAIR, TYPE TC-31.21, WITH 175 WATT LAMP	
	1.58										644	00100	1.58	MILE	EDGE LINE	
	0.12										644	00200	0.12	MILE	LANE LINE	
	0.07										644	00300	0.07	MILE	CENTERLINE	
	2070										644	00400	2070	LIN. FT.	CHANNELIZING LINE	
	96										644	00500	96	LIN. FT.	STOP LINE	
	443										644	00600	443	LIN. FT.	CROSSWALK LINE	
	473										644	00700	473	LIN. FT.	TRANSVERSE LINE	
	21										644	01300	21	EACH	LANE ARROW	
	9										644	01400	9	EACH	WORD ON PAVEMENT, 72"	
	1554										644	30000	1554	LIN. FT.	REMOVAL OF PAVEMENT MARKING	
	9										644	30020	9	EACH	REMOVAL OF PAVEMENT MARKING	

CALCULATED MJT 11/01
CHECKED WGY 11/01

TRAFFIC CONTROL GENERAL SUMMARY

TRAFFIC

FRA-315-3.04

OSUsggs 07-18-02

SHEET NO.	REFERENCE NO.	STATION	SIDE	CODE	SIZE (INCHES)	POST LOCATION OFFSET FROM EDGE OF PAVEMENT		630																
						POST 1	POST 2			SIGN, FLAT SHEET, TYPE G	SIGN, EXTRUSHEET, TYPE G	GROUND MOUNTED SUPPORTS POSTS 2	GROUND MOUNTED SUPPORTS POSTS 3	GROUND MOUNTED SUPPORTS POSTS 4	GROUND MOUNTED SUPPORT, S4X7.7 BEAM	BREAKAWAY BEAM CONNECTION	REMOVAL OF POLE MOUNTED SIGN & DISPOSAL	REMOVAL OF GROUND MOUNTED SIGN & DISPOSAL	REMOVAL OF GROUND MOUNTED SIGN & REERECTION	REMOVAL OF GROUND MOUNTED POST SUPPORT & DISPOSAL		SIGN SUPPORT ASSEMBLY BRIDGE MOUNTED	SIGN SUPPORT ASSEMBLY POLE MOUNTED	GROUND MOUNTED BEAM SUPPORT FOUNDATION
							FEET	SQ. FT.			SQ. FT.	LIN. FT.	LIN. FT.	LIN. FT.	LIN. FT.	EACH	EACH	EACH	EACH	EACH		EACH	EACH	EACH
135	1	SEE SHEET NO.144																						
135	2	SEE SHEET NO.144																						
136	3	SEE SHEET NO.145																						
137	4	58+28 S.R.315	RT.	N-45	12x12					1												1		
			LT.	N-45	12x12					1												1		
138	5	SEE SHEET NO.146																						
138	6	69+00 RAMP A	LT.	GF	72x60	8.85	12.21				30				14.5/14.5	2								2
138	7	71+50 S.R.315	LT.	EX. SIGN		13.56							14						2	1				
139	8	78+75 S.R.315	LT.	W49R-48	48x48	13.6	16.1			16			15/15											
139	9	SEE SHEET NO.147																						
139	10	12+78 OLENTANGY RIVER RD.	RT.	EX. SIGN		25						12.5							1	1				
139	11	13+11 OLENTANGY RIVER RD.	RT.	EX. SIGN		24							14						2	1				
139	12	SEE SHEET NO.147A																						
140	13	SEE SHEET NO.147B																						
140	14	80+21 RAMP A	RT.	R43L-48	48x18	13.5				6				14										
				R43R-48	48x18					6														
				R41B-36	36x36					9														
140	15	80+20 RAMP A	LT.	R43L-48	48x18					6													2	
				R43R-48	48x18					6													2	
				R41B-36	36x36					9													2	
140	16	50+75 CANNON DR.	LT.	M-8	24x12	8.0				2				16										
				M-37	24x12					2														
				M-2-24-3	30x24					5														
				M-24	21x15					2.2														
140	17	51+00 CANNON DR.	LT.	EX. SIGN														3		1				
142	18	66+80 CANNON DR.	LT.	EX. SIGN														2		2				
142	19	SEE SHEET 147C																						
142	20	93+75 RAMP B	LT.	R-15B	30x18	13.25				3.75		12.5												
		94+00 RAMP B	RT.	R-15B	30x18	11.25				3.75		12.5												
142	21	67+45 CANNON DR.(OSU SIGN)	LT.	EX. SIGN														1		2				
142	22	68+46 CANNON DR.	LT.	R31T-54	54x30					11.25													2	
142	23	68+50 CANNON DR.	LT.	EX. SIGN													1							
142	24	6+66.6 12TH. AVE.	LT.	R31M-48	48x30	10.75	13.75			10			14/14					1	1	2				
				OSU SIGN																				
142	25	7+76.8 12TH. AVE.	LT.	R31M-48	48x30	10.75	13.75			10			14/14					1		2				
142	26	8+55 12TH. AVE.	LT.	M-45	42x60	11	13			17.5				16/16										
142	27	94+10 RAMP B(OSU SIGN)	RT.	EX. SIGN														1		1				
143	28	111+08 S.R.315	RT.	N-45	12x12	16.5				1		12												
			LT.	N-45	12x12	16.5				1		12												
SUB-TOTAL										129.4		61.5												
TOTAL CARRIED TO GENERAL SUMMARY SHEET NO.132										130	30	62	114	62	29	2	1	9	6	13		2	8	2

CALCULATED MJT 11/01
CHECKED WCY 11/01

SIGNING SUB-SUMMARY

FRA-315-3.04

133
238

OSUsgss1 05-14-02

CALCULATED MJT 11/01 | CHECKED WGY 11/01

PAVEMENT MARKING SUB-SUMMARY

SHEET NO.	LOCATION	STATION		SIDE	621 DELINEATOR,TYPE C, POST MOUNTED EACH	621 DELINEATOR,TYPE C, BRACKET MOUNTED EACH	621 DELINEATOR,TYPE D, POST MOUNTED EACH	621 DELINEATOR,TYPE D, BRACKET MOUNTED EACH	621 RAISED PAVEMENT MARKER, 2-WAY YELLOW/RED EACH	621 RAISED PAVEMENT MARKER, 2-WAY WHITE/RED EACH	626 BARRIER REFLECTOR TYPE A EACH	626 BARRIER REFLECTOR TYPE B EACH	644 EDGE LINE, YELLOW LIN. FT.	644 EDGE LINE, WHITE LIN. FT.	644 LANE LINE, WHITE LIN. FT.	644 CHANNELIZING LINE LIN. FT.	644 TRANSVERSE LINE, WHITE LIN. FT.	644 LANE ARROW EACH	644 WORD "ONLY" ON PAVEMENT, 72" EACH	644 CENTER LINE, DOUBLE SOLID LIN. FT.	644 STOP LINE LIN.FT.	644 CROSSWALK LINE LIN.FT.	644 REMOVAL OF PAVEMENT MARKING LIN.FT.	644 REMOVAL OF PAVEMENT MARKING EACH
137,138, 140	S.R.315 – RAMP A	61+08	80+19	RT.										1903										
137,138	S.R.315	64+42	67+06	RT.											266									
138	S.R.315	67+06	68+92	RT.												393								
138	S.R.315	67+06	68+92	RT.													235							
138	S.R.315	68+92	69+31	LT.											39									
138,139	S.R.315	72+04	75+08	LT.											304									
139	S.R.315	75+08	78+35	RT.										327										
137	RAMP A			RT.		2						4												
138,140	RAMP A	69+74	80+19	LT.									1166											
140	RAMP A	76+70	80+19	RT.												349								
140	RAMP A	76+70	80+19	LT.												349								
140	RAMP A	80+19		LT/RT																		40		
140	RAMP A	80+38		LT/RT																			117	
140	RAMP A	76+93		LT/RT														3						
140	RAMP A	78+55		LT/RT														3						
140	RAMP A	79+89		LT/RT														3						
140	RAMP A	79+21		LT/RT															3					
138,139,	S.R.315–RAMP B–CANNON DR.	64+10	69+89	LT/CL										3213										
139	S.R.315 – RAMP B	75+75	76+58	RT.												83								
139,142	RAMP B	76+58	94+29	RT.									1749											
142	RAMP B	94+24		LT/RT																			131	
140	9th AVE.	10+36	12+75	LT/RT																				674 3
140	9th AVE.	10+66		RT.														1						
140	9th AVE.	12+46		RT.														1						
140	9th AVE.	11+34		RT.															1					
140	9th AVE.	10+32	12+58	LT.												226								
140	9th AVE.	10+36	12+58	CL/LT												222								
140	9th AVE.	10+32	12+58	LT.													238							
142	CANNON DR.	67+68		LT/RT																			195	
142	CANNON DR.	67+97		LT/RT																		56		
142	CANNON DR.	67+97	69+89	RT.																195				
142	CANNON DR.	67+97	69+26	CL												129								
142	CANNON DR.	67+97	69+26	LT.												129								
142	CANNON DR.	68+28		LT/RT														2						
142	CANNON DR.	69+03		LT/RT														2						
142	CANNON DR.	68+67		LT/RT															2					
142	CANNON DR.	67+41	69+89	LT/RT																			596	3
142	12TH. AVE.	6+64	8+12	LT/RT																			284	3
142	12TH. AVE.	6+64	8+12	RT.																150				
142	12TH. AVE.	6+64	7+70	LT.												105								
142	12TH. AVE.	6+64	7+70	LT.												105								
142	12TH. AVE.	6+87		LT/RT														3						
142	12TH. AVE.	7+23		LT/RT															3					
142	12TH. AVE.	7+57		LT/RT														3						
138	RAMP A, RAMP B			LT/RT	4	4	3	7			11	27												
139	RAMP B			LT/RT	5	11		1			9	24												
140	RAMP A			LT/RT	3		1				8													
142	RAMP B			RT.			5				8													
138	RAMP A	65+00	74+50	LT.					7	9														
140	RAMP A	74+50	80+80	LT/RT					7	10														
139	RAMP B	75+00	90+00	RT.					16	4														
142	RAMP B	90+00	94+60	RT.					6															
	SUB–TOTAL								36	23			2915 L.F. 0.55 MI.	5443 L.F. 1.03 MI.	609 L.F.					345 L.F.				
	TOTAL CARRIED TO GENERAL SUMMARY SHEET NO.132				12	17	9	8	59		36	55	1.58 MI.		0.12 MI.	2070	473	21	9	0.07 MI.		96	443	1554 9

FRA–315–3.04

05-09-02 OSUpmss

TRAFFIC CONTROL PLAN

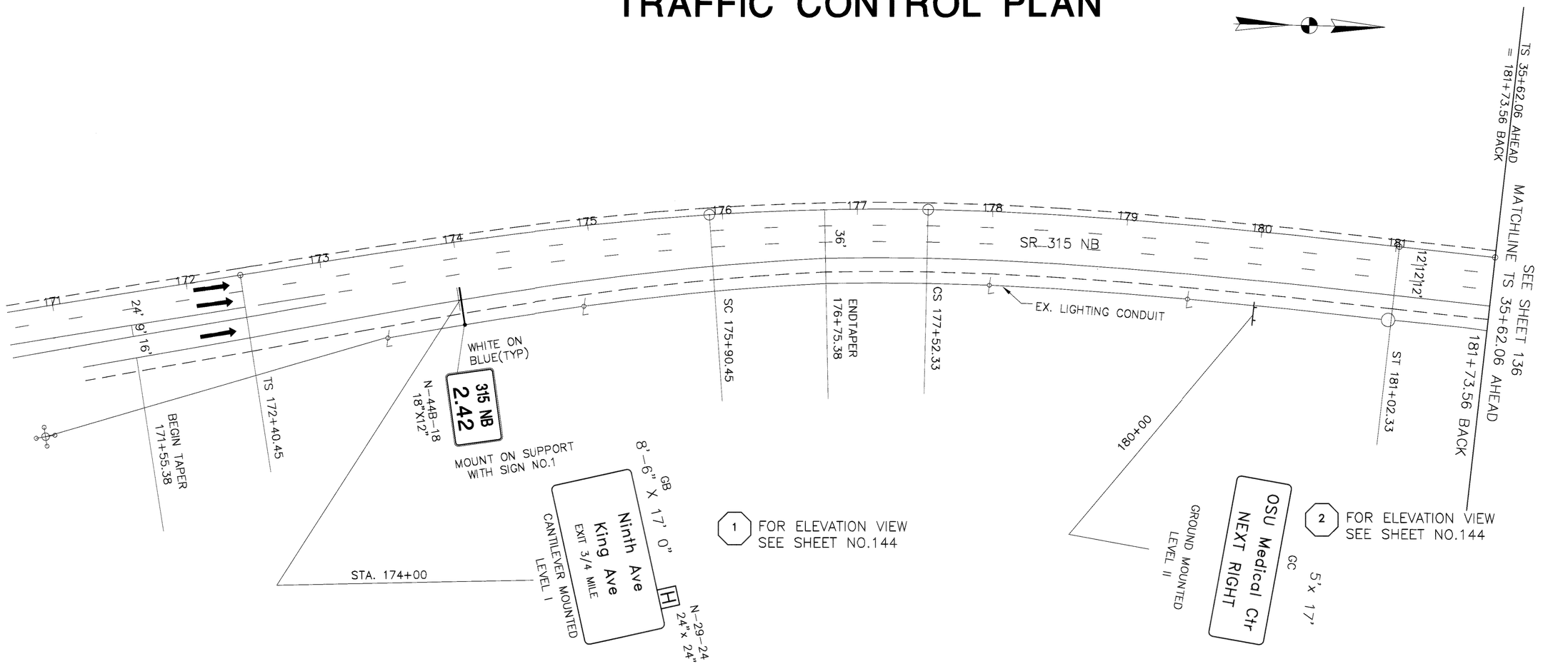

LEGEND

- (A) LANE ARROW
- (WP) WORD ON PAVEMENT, 72"
- (SL) STOP LINE, 20"
- (XW) CROSSWALK LINE, 10"
- (DY) CENTER LINE, DOUBLE SOLID
- (CH) CHANNELIZING LINE, 10"
- (LL) LANE LINE, 5" DASHED
- (WT) TRANSVERSE LINE, 24" WHITE
- (WE) EDGE LINE, 5" WHITE
- (YE) EDGE LINE, 5" YELLOW

- EXISTING SIGN, 1 POST
- EXISTING SIGN, 2 POST
- EXISTING OVERHEAD SIGN
- EXISTING CANTILEVER OVERHEAD SIGN
- EXISTING CENTER MOUNTED SIGN
- PROPOSED GROUND MOUNTED SIGN, 1 POST
- PROPOSED GROUND MOUNTED SIGN, 2 POST
- PROPOSED CANTILEVER OVERHEAD SIGN
- PROPOSED CENTER MOUNTED SIGN
- PROPOSED OVERHEAD SIGN

- RAISED PAVEMENT MARKERS, 2 WAY (WHITE/RED)
- RAISED PAVEMENT MARKERS, 2 WAY (YELLOW/RED)
- EXISTING SIGN MOUNTED ON TRAFFIC POLE
- EXISTING SIGN MOUNTED ON LIGHT POLE
- TRAFFIC LANE
- PROPOSED SIGN
- EXISTING SIGN TO REMAIN
- EXISTING SIGN FOR REMOVAL & REERECTION
- EXISTING SIGN FOR REMOVAL

HORIZONTAL SCALE IN FEET
0 20 40 80

CALCULATED MJT 11/01
CHECKED WGY 11/01

TRAFFIC CONTROL
STA. 36+00 S.R. 315 N.B. TO STA. 45+00 S.R. 315

FRA-315-3.04

Q:\OSU_RAMP\315TC1A>dwg 07-18-02

TRAFFIC CONTROL PLAN

CALCULATED MJT 11/01
CHECKED WGY 11/01

0 20 40 80
HORIZONTAL
SCALE IN FEET

TRAFFIC CONTROL
STA. 36+00 S.R. 315 N.B. TO STA. 45+00 S.R. 315

FRA-315-3.04

136
238

Q:\OSU_RAMP\315TC1.dwg 07-18-02

TRAFFIC CONTROL PLAN

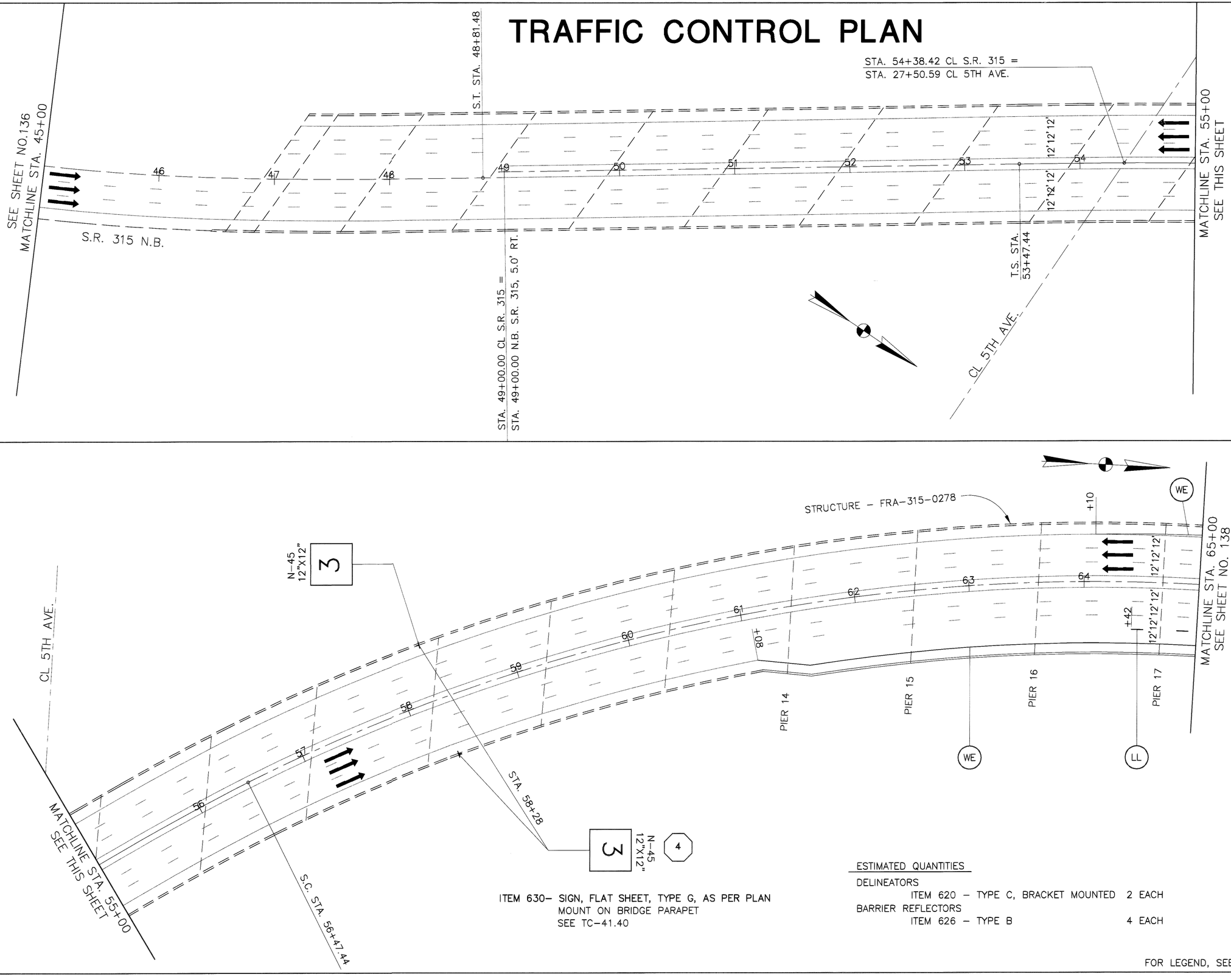

ITEM 630- SIGN, FLAT SHEET, TYPE G, AS PER PLAN
MOUNT ON BRIDGE PARAPET
SEE TC-41.40

ESTIMATED QUANTITIES

DELINEATORS		
ITEM 620 - TYPE C, BRACKET MOUNTED	2	EACH
BARRIER REFLECTORS		
ITEM 626 - TYPE B	4	EACH

FOR LEGEND, SEE SHEET NO.135

HORIZONTAL SCALE IN FEET
0 20 40 80

CALCULATED MJT 11/01
CHECKED WGY 11/01

TRAFFIC CONTROL
STA. 45+00 TO STA. 65+00 S.R. 315

FRA-315-3.04

Q:\OSU_RAMP\3151C2.dwg 07-18-02

TRAFFIC CONTROL PLAN

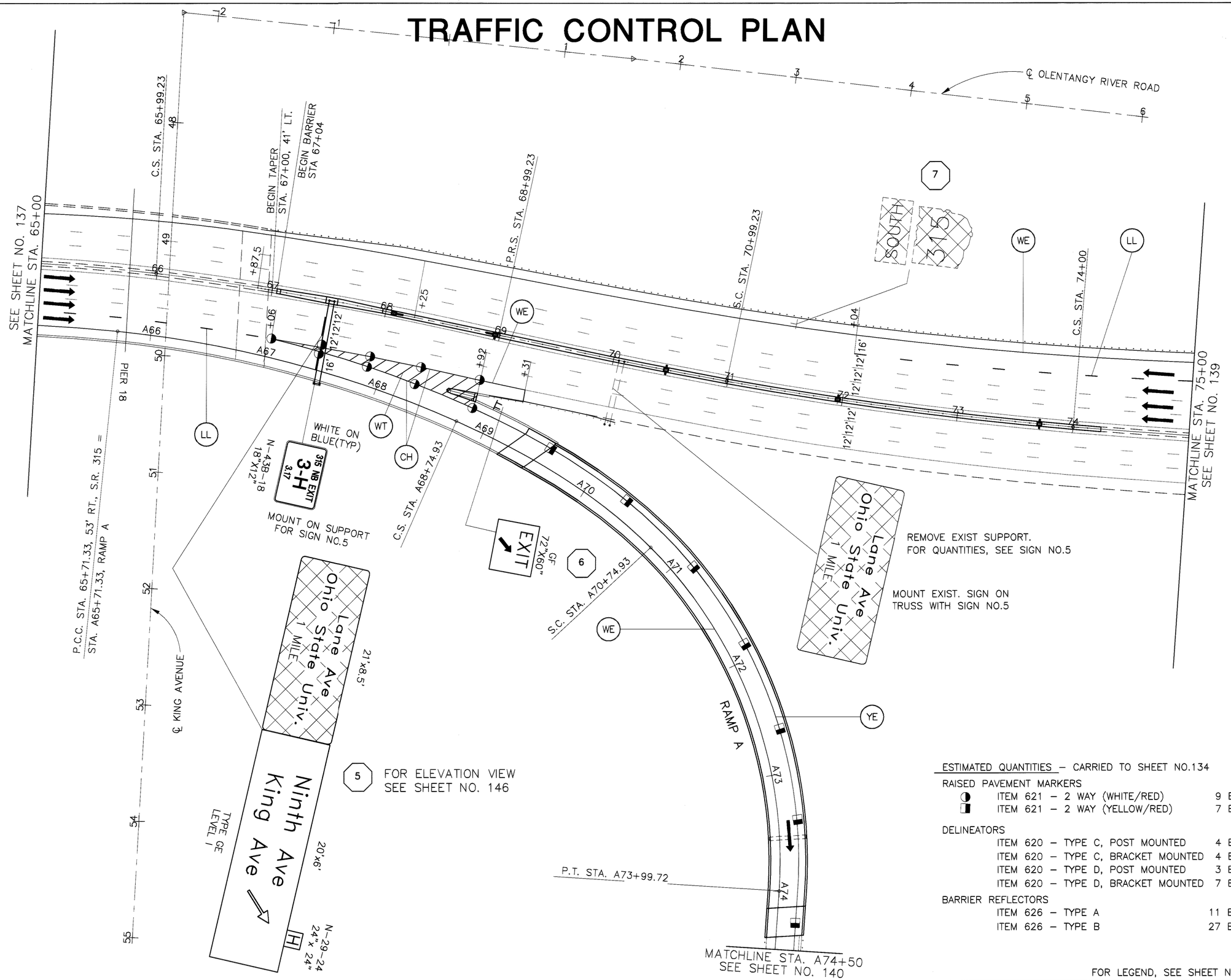

ESTIMATED QUANTITIES – CARRIED TO SHEET NO.134

RAISED PAVEMENT MARKERS		
	ITEM 621 – 2 WAY (WHITE/RED)	9 EACH
	ITEM 621 – 2 WAY (YELLOW/RED)	7 EACH
DELINEATORS		
	ITEM 620 – TYPE C, POST MOUNTED	4 EACH
	ITEM 620 – TYPE C, BRACKET MOUNTED	4 EACH
	ITEM 620 – TYPE D, POST MOUNTED	3 EACH
	ITEM 620 – TYPE D, BRACKET MOUNTED	7 EACH
BARRIER REFLECTORS		
	ITEM 626 – TYPE A	11 EACH
	ITEM 626 – TYPE B	27 EACH

FOR LEGEND, SEE SHEET NO.135

CALCULATED MJT 11/01
CHECKED WGY 11/01

HORIZONTAL SCALE IN FEET
0 20 40 80

TRAFFIC CONTROL
STA. 65+00 TO STA. 75+00 S.R. 315

FRA-315-3.04

Q:\OSU_RAMP\315TC3>dwg 07-18-02

TRAFFIC CONTROL PLAN

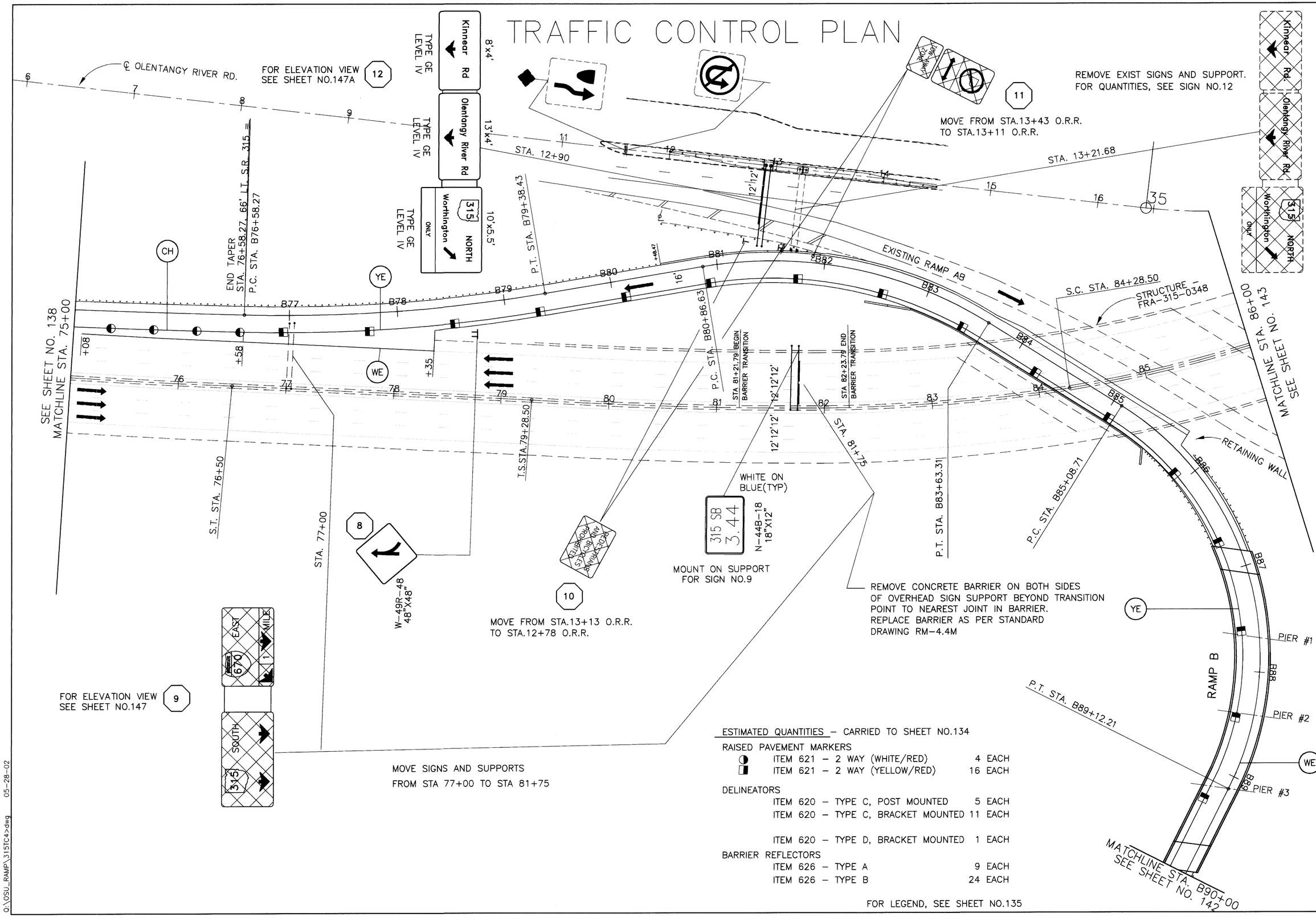

ESTIMATED QUANTITIES – CARRIED TO SHEET NO.134

RAISED PAVEMENT MARKERS

◑	ITEM 621 – 2 WAY (WHITE/RED)	4 EACH
◨	ITEM 621 – 2 WAY (YELLOW/RED)	16 EACH

DELINEATORS

ITEM 620 – TYPE C, POST MOUNTED	5 EACH
ITEM 620 – TYPE C, BRACKET MOUNTED	11 EACH
ITEM 620 – TYPE D, BRACKET MOUNTED	1 EACH

BARRIER REFLECTORS

ITEM 626 – TYPE A	9 EACH
ITEM 626 – TYPE B	24 EACH

FOR LEGEND, SEE SHEET NO.135

HORIZONTAL SCALE IN FEET 0 20 40 80

CALCULATED MJT 11/01
CHECKED WGY 11/01

TRAFFIC CONTROL
STA. 75+00 TO STA. 86+00 S.R. 315

FRA-315-3.04

Q:\OSU_RAMP\315TC4>dwg 05-28-02

TRAFFIC CONTROL PLAN

SEE SHEET NO. 138
MATCHLINE STA. A74+50

SEE SHEET NO. 141
MATCHLINE STA. 54+50

STA. A80+80.43 RAMP A =
STA. 53+64.55 CANNON DR.

RAMP A

100' TAPER

A78+00

MOUNT ON TRAFFIC POLE

R-43L-48 48"X18"
R-41B-36 36"X36"
R-43R-48 48"X18"
ONE WAY
DO NOT ENTER

WHITE ON BLUE(TYP)
N-43B-18 18"X12"
315 NB EXIT 3-H 3.37

MOUNT ON SUPPORT FOR SIGN NO.13

WRONG WAY 36"X24" R-41A-36

MOUNT ON SUPPORT WITH SIGN NO.13

R-43L-48 48"X18"
R-41B-36 36"X36"
R-43R-48 48"X18"

FOR ELEVATION VIEW
SEE SHEET NO. 147B

R-26A ONLY BLACK ON WHITE
TYPE GG LEVEL IV
Cannon Dr. 12'x3.5'

R-30A ONLY BLACK ON WHITE
TYPE GG LEVEL IV
Ninth Ave OSU Medical Ctr. 15'x3.5'

R-27A ONLY BLACK ON WHITE
TYPE GG LEVEL IV
King Ave. 11'x3.5'

UNIVERSITY SIGN
The Ohio State University
P Parking for:
James Cancer Hospital & Solove Research Institute
Dental Clinic

UNIVERSITY SIGNS
The William H. Davis Medical Research Center
Dodd Hall Rehabilitation Services
The Ohio State University
P Parking for: James Cancer Hospital & Solove Research Institute Dental Clinic
Lane Avenue to SR 315 S
King Avenue to SR 315 N

W. 9th. Ave.
University Medical Center

SPEED LIMIT 25
SPEED LIMIT 20
SPEED LIMIT 25

ONLY

W. 9TH AVE.
CANNON DR.

9th AVE.

EX. DOUBLE YELLOW CENTERLINE TO REMAIN

STOP
DRIVE

UNIVERSITY SIGN
Emergency & Trauma Center
University Hospitals & Clinics
James Cancer Hospital & Solove Research Institute

OSU decals required
No overnight parking
No parking in drive lanes
You are here
B Staff
Speed 10
UNIVERSITY SIGN South Dodd Lot

STOP

NO OUTLET

M-24 21"X15"
M-2-24-3 30"X24"
M-37 24"X12"
M-8 24"X12"
315 NORTH TO

ESTIMATED QUANTITIES – CARRIED TO SHEET NO.134

RAISED PAVEMENT MARKERS
ITEM 621 – 2 WAY (WHITE/RED) 10 EACH
ITEM 621 – 2 WAY (YELLOW/RED) 7 EACH

DELINEATORS
ITEM 620 – TYPE C, POST MOUNTED 3 EACH
ITEM 620 – TYPE D, POST MOUNTED 1 EACH

BARRIER REFLECTORS
ITEM 626 – TYPE A 8 EACH

KING AVE.

FOR LEGEND, SEE SHEET NO.135

N
HORIZONTAL SCALE IN FEET
0 20 40 60

CALCULATED MT 11/01
CHECKED WGY 11/01

TRAFFIC CONTROL
STA. 54+50 CANNON DRIVE
STA. 48+00 TO STA.

FRA-315-3.04

Q:\OSU_RAMP\CANNTC1.dwg 05-23-02

TRAFFIC CONTROL PLAN

FOR LEGEND, SEE SHEET NO.135

N

0 20 40 80 HORIZONTAL SCALE IN FEET

CALCULATED MJT 11/01
CHECKED WGY 11/01

TRAFFIC CONTROL
STA. 54+50 TO STA. 65+00 CANNON DRIVE

FRA-315-3.04

141
238

Q:\OSU_RAMP\CANNTC2>dwg 11-27-01

TRAFFIC CONTROL PLAN

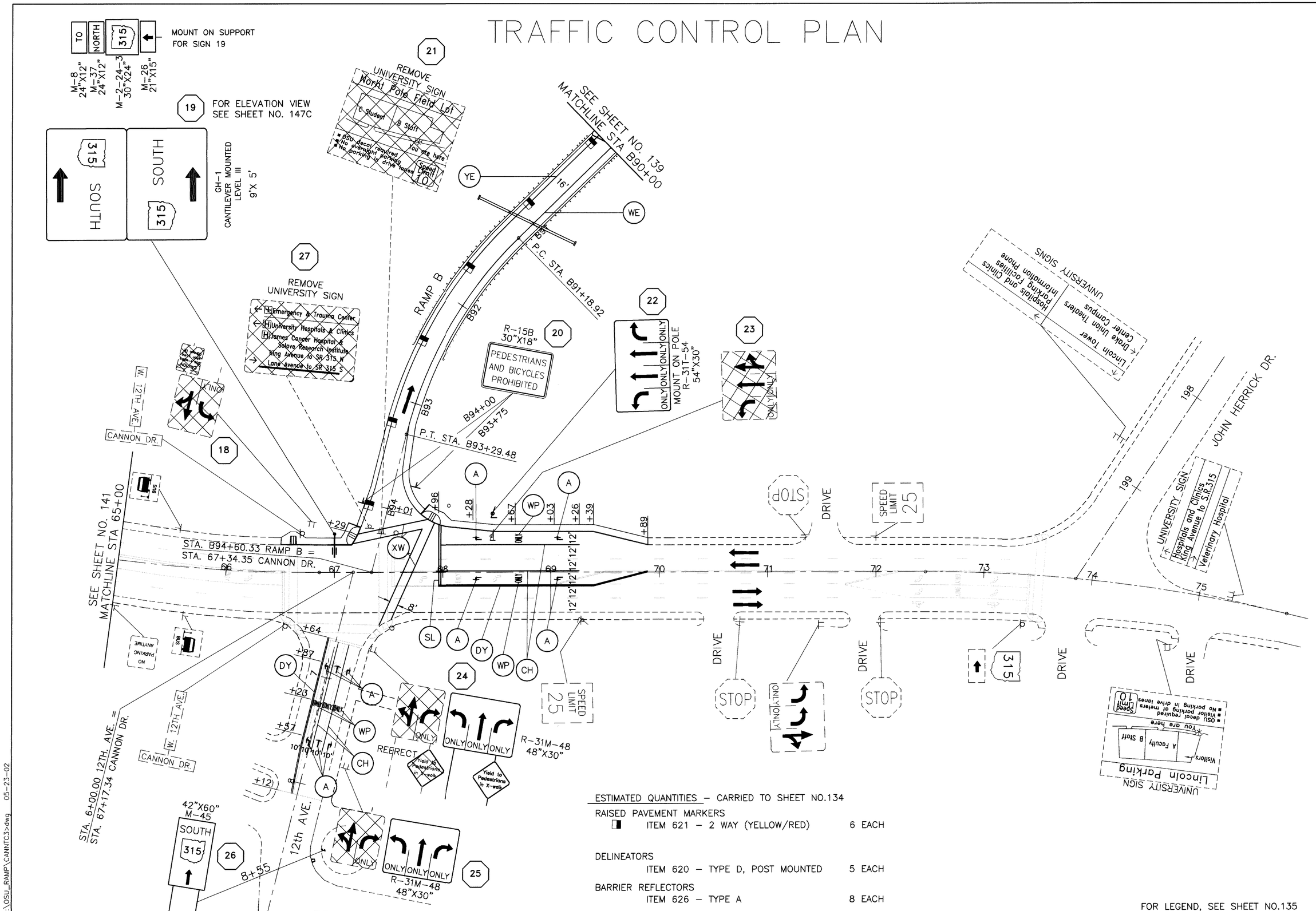

ESTIMATED QUANTITIES – CARRIED TO SHEET NO.134

RAISED PAVEMENT MARKERS

▮	ITEM 621 – 2 WAY (YELLOW/RED)	6 EACH

DELINEATORS

	ITEM 620 – TYPE D, POST MOUNTED	5 EACH

BARRIER REFLECTORS

	ITEM 626 – TYPE A	8 EACH

FOR LEGEND, SEE SHEET NO.135

HORIZONTAL SCALE IN FEET 0 20 40 80

CALCULATED MJT 11/01
CHECKED WGY 11/01

TRAFFIC CONTROL
STA. 65+00 TO STA. 75+00 CANNON DRIVE

FRA-315-3.04

Q:\OSU_RAMP\CANNTC3>dwg 05-23-02

TRAFFIC CONTROL PLAN

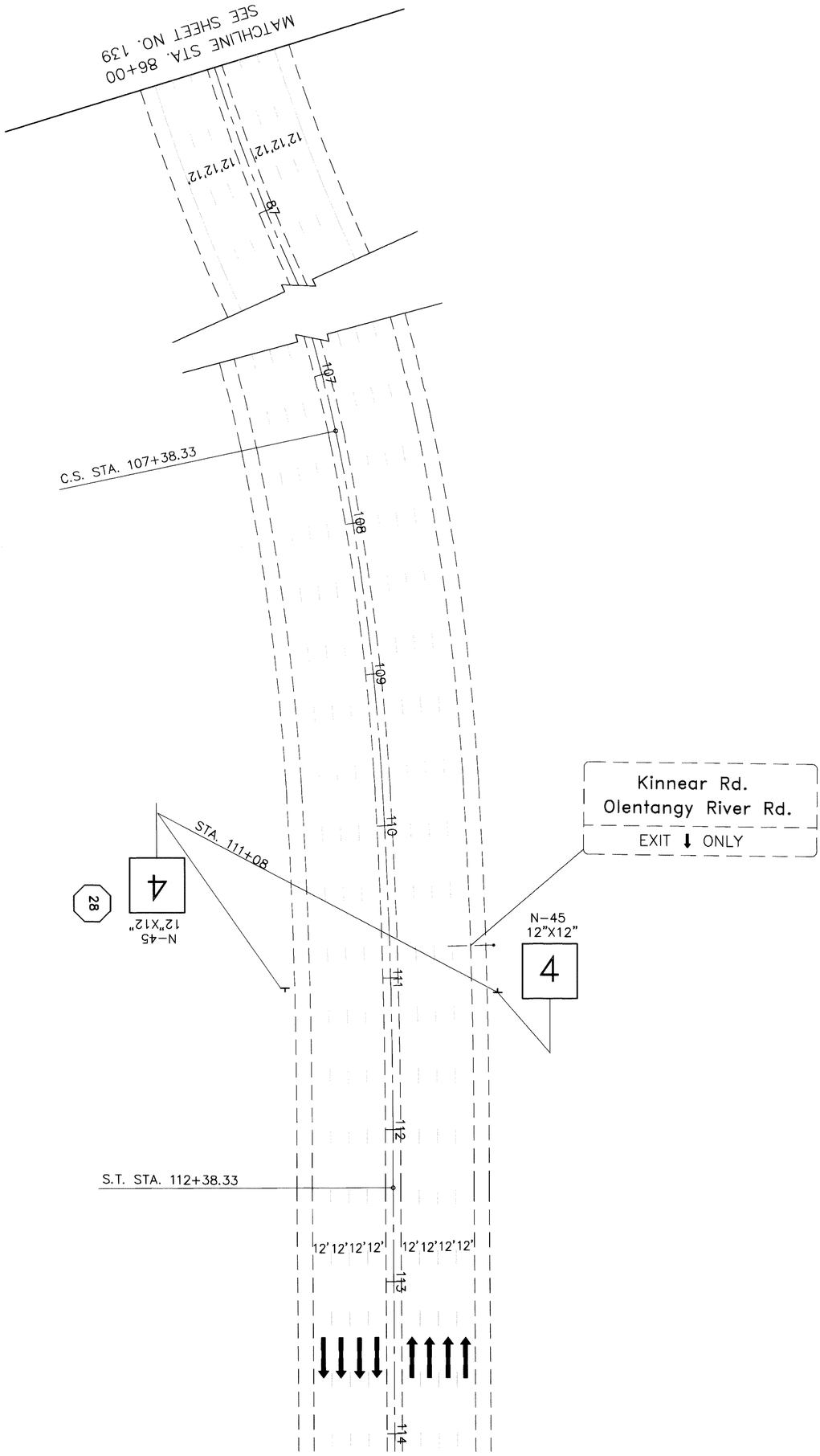

FOR LEGEND, SEE SHEET NO.135

FRA-315-3.04

TRAFFIC CONTROL
STA. 86+00 TO STA. 114+00 S.R. 315

CALCULATED MJT 11/01
CHECKED WGY 11/01

0 40
20 80
HORIZONTAL SCALE IN FEET

N

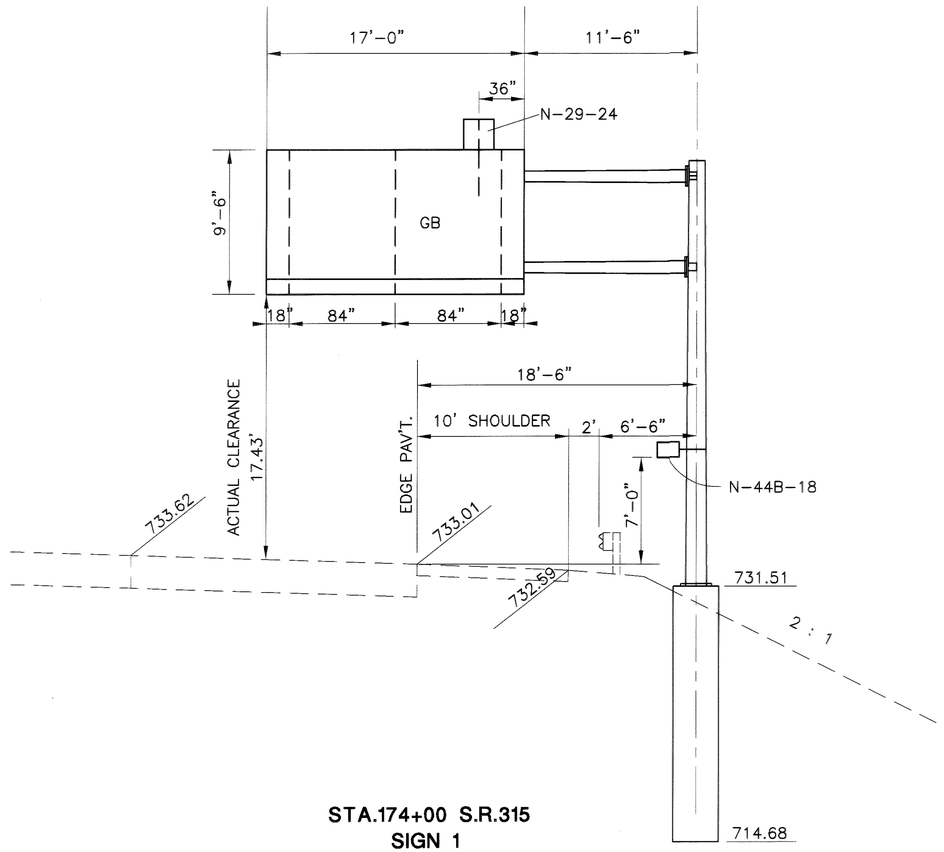

STA.174+00 S.R.315
SIGN 1

12.30 DESIGN 8
ARM = 28'-0"
POLE = 28'-0"

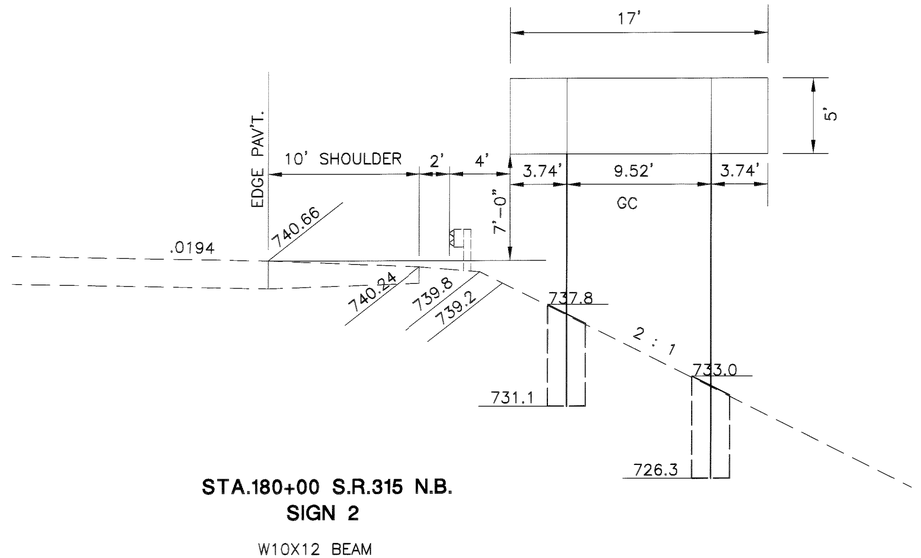

STA.180+00 S.R.315 N.B.
SIGN 2

W10X12 BEAM

REFERENCE NO.	SIGN LOCATION	SIDE	CODE	ACTUAL SIGN SIZE	SIZE (INCHES)	POST LOCATION OFFSET FROM EDGE OF PVT. FEET POST 1	POST LOCATION OFFSET FROM EDGE OF PVT. FEET POST 2	SIGN FLAT SHEET TYPE G	630 TYPE G EXTRUSHEET SIGNS	630 RIGID OVERHEAD SIGN SUPPORT FOUNDATION	630 OVERHEAD SIGN SUPPORT TYPE TC-12.30 DESIGN 8	630 GROUND MOUNTED SUPPORT, W10x12 BEAM	630 GROUND MOUNTED BEAM SUPPORT FOUNDATION		631 SIGN SERVICE	631 SIGN WIRED	631 DISCONNECT SWITCH W/ENCLOSURE TYPE X	631 BALLAST, TYPE CMRI-175-480, INTEGRAL	631 MERCURY VAPOR LUMINAIRE, TYPE TC-31.21 W/175 WATT LAMP	625 GROUND ROD
								SQ. FT.	SQ. FT.	EACH	EACH	LIN. FT.	EACH		EACH	EACH	EACH	EACH	EACH	EACH
1	174+00	RT.	GB	17' x 9'			18.5'		153	1	1				1	1	1	2	2	1
			N-44B-18		18x12			1.5												
			N-29		24x24			4												
2	180+00	RT.	GC	17' x 5'		16'	29.26'		85			21.6/26.4	2							
TOTALS								5.5	238	1	1	48	2		1	1	1	2	2	1
TOTALS CARRIED TO GENERAL SUMMARY SHEET NO.132								6	238	1	1	48	2		1	1	1	2	2	1

CALCULATED MJT 11/01
CHECKED WGY 11/01

SIGNING DETAILS

FRA-315-3.04

SIGNELEV1 07-18-02

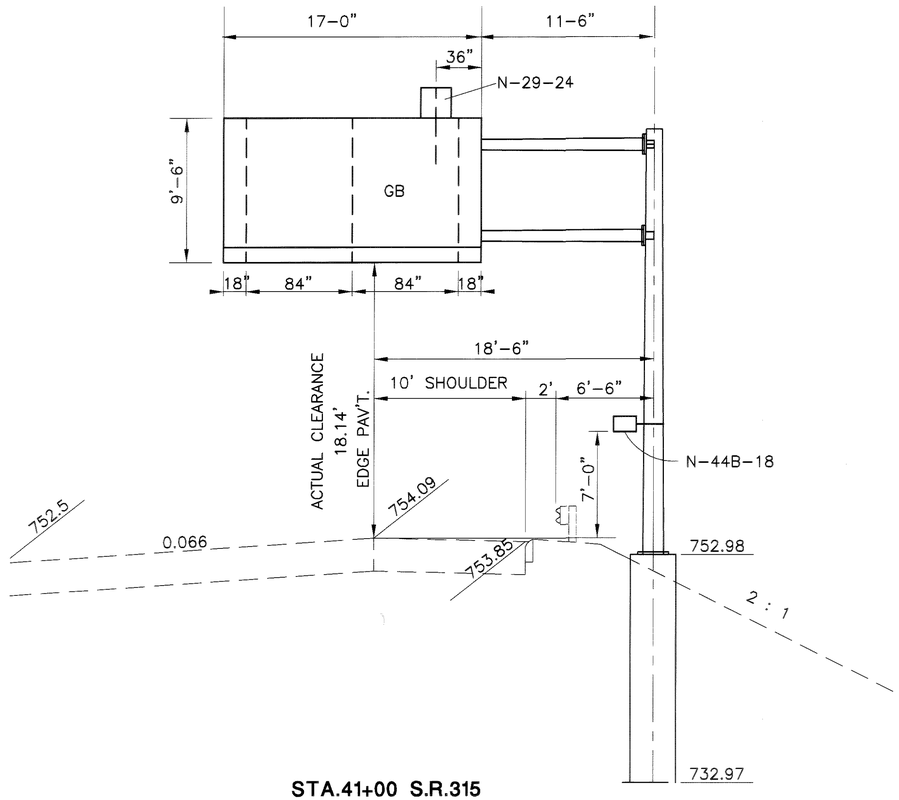

STA.41+00 S.R.315
SIGN 3

12.30 DESIGN 8
ARM = 28'–0"
POLE = 28'–0"

REFERENCE NO.	SIGN LOCATION	SIDE	CODE	ACTUAL SIGN SIZE	SIZE (INCHES)	POST LOCATE OFFSET FROM EP	SIGN FLAT SHEET TYPE G	630				631					625
								TYPE G EXTRUSHEET SIGNS	RIGID OVERHEAD SIGN SUPPORT FOUNDATION	OVERHEAD SIGN SUPPORT TYPE TC–12.30 DESIGN 8		SIGN SERVICE	SIGN WIRED	DISCONNECT SWITCH W/ENCLOSURE TYPE X	BALLAST, TYPE CMRI–175–480, INTEGRAL	MERCURY VAPOR LUMINAIRE, TYPE TC–31.21 W/175 WATT LAMP	GROUND ROD
							SQ. FT.	SQ. FT.	EACH	EACH		EACH	EACH	EACH	EACH	EACH	EACH
3	41+00	RT.	GB	17' x 9'		18.5'		153	1	1		1	1	1	2	2	1
			N–44B–18		18x12		1.5										
			N–29		24x24		4										
TOTALS							5.5	153	1	1		1	1	1	2	2	1
TOTALS CARRIED TO GENERAL SUMMARY SHEET NO.132							6	153	1	1		1	1	1	2	2	1

CALCULATED MJT 11/01
CHECKED WGY 11/01

SIGNING DETAILS

FRA-315-3.04

SIGNELEV2 07–18–02

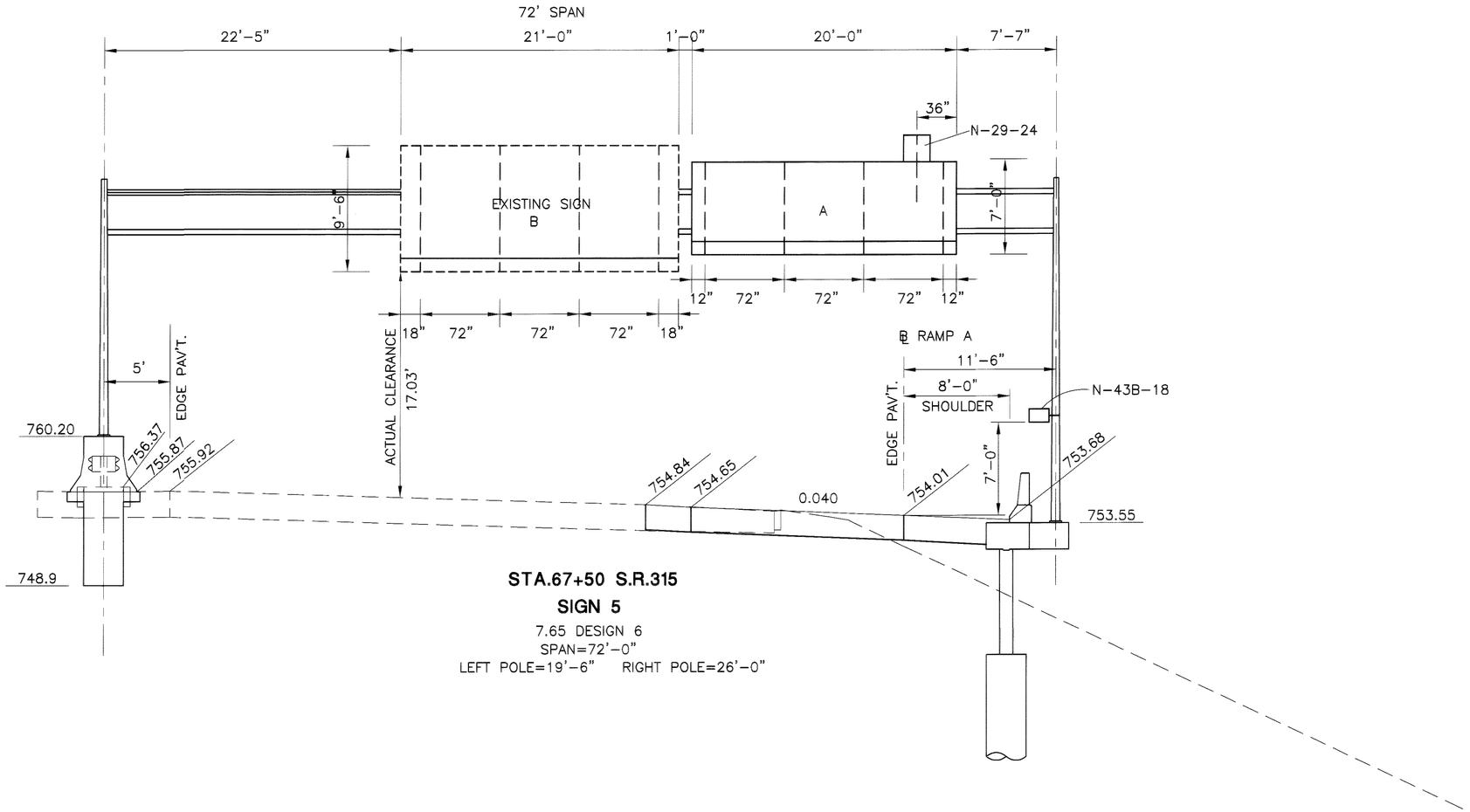

STA.67+50 S.R.315

SIGN 5

7.65 DESIGN 6
SPAN=72'-0"
LEFT POLE=19'-6" RIGHT POLE=26'-0"

REFERENCE NO.	SIGN LOCATION	SIDE	CODE	ACTUAL SIGN SIZE	SIZE (INCHES)	POST LOCATE OFFSET FROM EP	630						631					625
							SIGN FLAT SHEET TYPE G	TYPE G EXTRUSHEET SIGNS	RIGID OVERHEAD SIGN SUPPORT FOUNDATION	OVERHEAD SIGN SUPPORT TYPE TC-7.65 DESIGN 6	REMOVAL OF OVERHEAD MOUNTED SIGN AND REERECTION		SIGN SERVICE	SIGN WIRED	DISCONNECT SWITCH W/ENCLOSURE TYPE X	BALLAST, TYPE CMRI-175-480, INTEGRAL	MERCURY VAPOR LUMINAIRE, TYPE TC-31.21 W/175 WATT LAMP	GROUND ROD
							SQ. FT.	SQ. FT.	EACH	EACH	EACH		EACH	EACH	EACH	EACH	EACH	EACH
5	67+50 S.R.315	RT	GE	20' x 6.5'		11.5'		130	1	1			1	1	1	3	3	1
			N-29-24		24x24		4											
			EX. SIGN	21' x 9'							1		1	1		3	3	
			N-43B-18		18x12		1.5											
TOTALS							5.5	130	1	1	1		2	2	1	6	6	1
TOTALS CARRIED TO GENERAL SUMMARY SHEET NO.132							6	130	1	1	1		2	2	1	6	6	1

CALCULATED MJT 11/01
CHECKED WGY 11/01

SIGNING DETAILS

FRA-315-3.04

SIGNELEV3 07-18-02

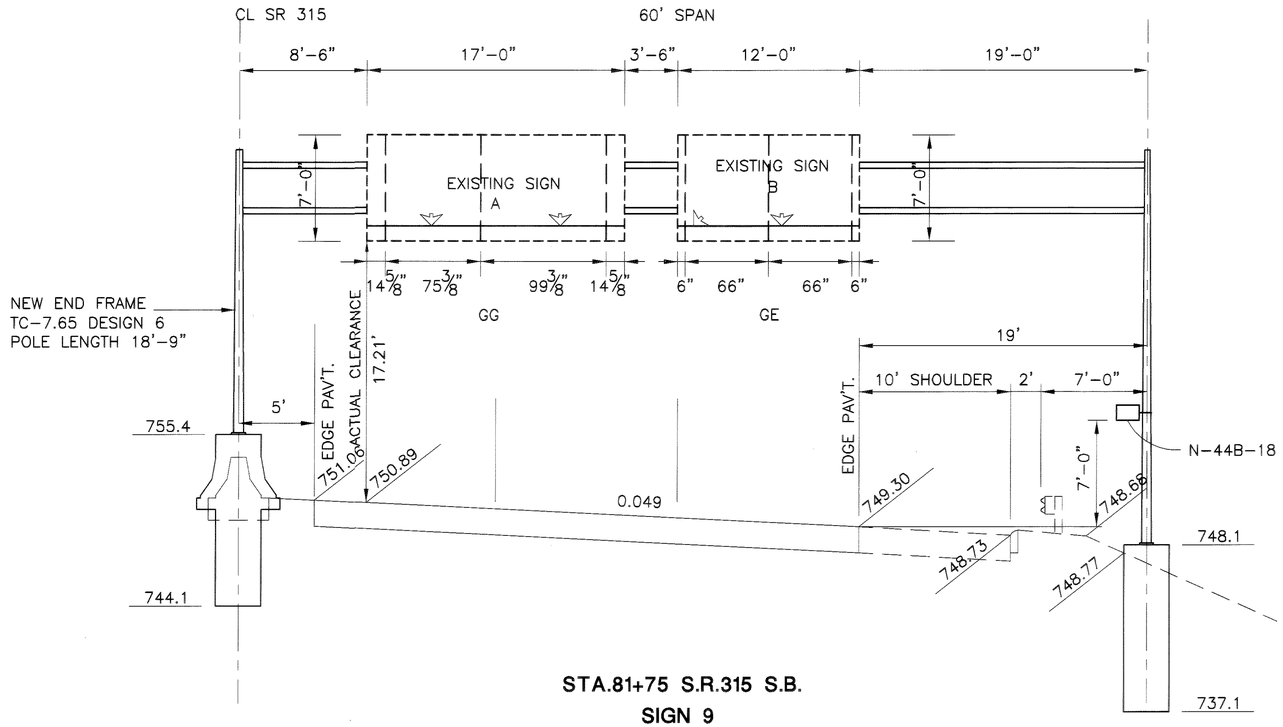

STA.81+75 S.R.315 S.B.

SIGN 9

7.65 DESIGN 6
SPAN=60'-0"
LEFT POLE=18'-9" RIGHT POLE=26'-0"

REFERENCE NO.	SIGN LOCATION	SIDE	CODE	ACTUAL SIGN SIZE	SIZE (INCHES)	POST LOCATE OFFSET FROM EP	630						631					625
							SIGN FLAT SHEET TYPE G	TYPE G EXTRUSHEET SIGNS	RIGID OVERHEAD SIGN SUPPORT FOUNDATION	REMOVAL OF OVERHEAD SIGN SUPPORT AND REERECTION	REMOVAL OF OVERHEAD MOUNTED SIGN AND REERECTION	OVERHEAD SIGN SUPPORT, MISC.: END FRAME TC-7.65 DESIGN 6	SIGN SERVICE	SIGN WIRED	DISCONNECT SWITCH W/ENCLOSURE TYPE X	BALLAST, TYPE CMRI-100-480, INTEGRAL	MERCURY VAPOR LUMINAIRE, TYPE TC-31.21 W/100 WATT LAMP	GROUND ROD
							SQ. FT.	SQ. FT.	EACH	EACH	EACH	EACH	EACH	EACH	EACH	EACH	EACH	EACH
9	81+75 S.R.315	LT	GG	17' x 6.5'		19'			2	1	1	1	1	1	1	2	2	1
			GE	12' x 6.5'							1		1	1		2	2	
			N-44B-18		18x12		1.5											
TOTALS							1.5		2	1	2	1	2	2	1	4	4	1
TOTALS CARRIED TO GENERAL SUMMARY SHEET NO.132							2		2	1	2	1	2	2	1	4	4	1

CALCULATED MJT 11/01
CHECKED WGY 11/01

SIGNING DETAILS

FRA-315-3.04

SIGNELEV4 05-28-02

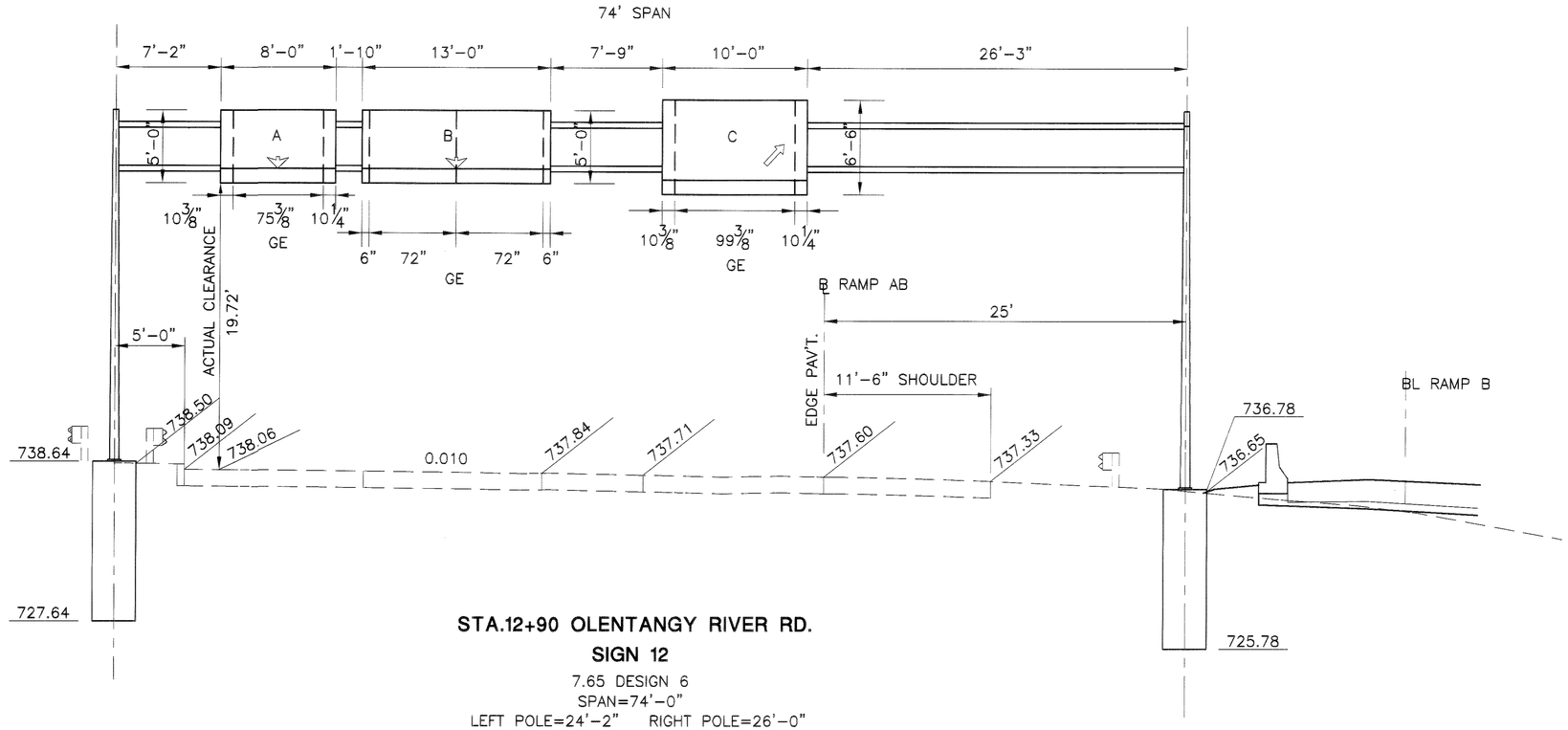

STA.12+90 OLENTANGY RIVER RD.

SIGN 12

7.65 DESIGN 6
SPAN=74'-0"
LEFT POLE=24'-2" RIGHT POLE=26'-0"

REFERENCE NO.	SIGN LOCATION	SIDE	CODE	ACTUAL SIGN SIZE	POST LOCATE OFFSET FROM EP	630					631					625
						TYPE G EXTRUSHEET SIGNS	RIGID OVERHEAD SIGN SUPPORT FOUNDATION	REMOVAL OF OVERHEAD SIGN SUPPORT AND DISPOSAL	REMOVAL OF OVERHEAD MOUNTED SIGN AND DISPOSAL	OVERHEAD SIGN SUPPORT TYPE TC-7.65 DESIGN 6	SIGN SERVICE	SIGN WIRED	DISCONNECT SWITCH W/ENCLOSURE TYPE X	BALLAST, TYPE CMRI-100-480, INTEGRAL	MERCURY VAPOR LUMINAIRE, TYPE TC-31.21 W/100 WATT LAMP	GROUND ROD
						SQ. FT.	EACH	EACH	EACH	EACH	EACH	EACH	EACH	EACH	EACH	EACH
12	12+90 O.R.R.	RT	GE	8' x 4.5'	25	36	2			1	1	1	1	1	1	1
			GE	13' x 4.5'		58.5					1	1		2	2	
			GE	10' x 6'		60					1	1		1	1	
	13+21.68 O.R.R.	RT						1	3							
TOTALS						154.5	2	1	3	1	3	3	1	4	4	1
TOTALS CARRIED TO GENERAL SUMMARY SHEET NO.132						155	2	1	3	1	3	3	1	4	4	1

CALCULATED MJT 11/01
CHECKED WGY 11/01

SIGNING DETAILS

FRA-315-3.04

147A
238

SIGNELEV5 11-27-01

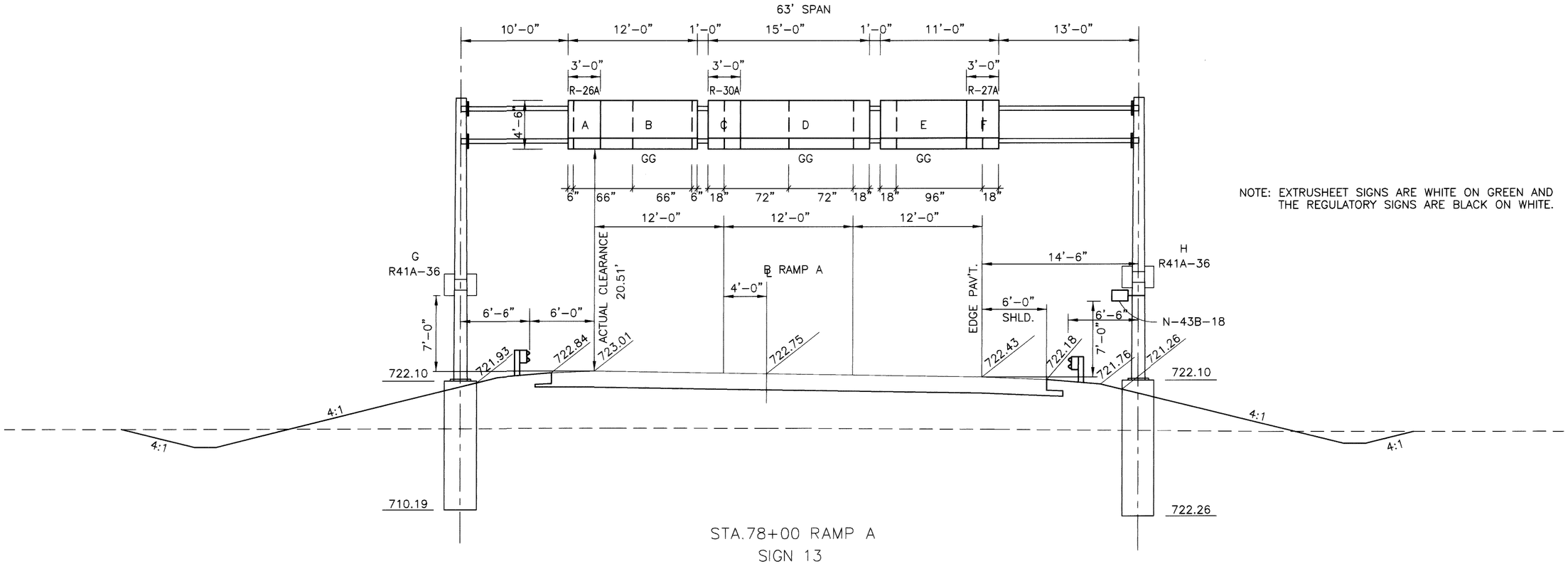

NOTE: EXTRUSHEET SIGNS ARE WHITE ON GREEN AND THE REGULATORY SIGNS ARE BLACK ON WHITE.

STA.78+00 RAMP A

SIGN 13

7.65 DESIGN 6
SPAN=63'-0"
LEFT POLE=26'-0" RIGHT POLE=26'-0"

REFERENCE NO.	SIGN LOCATION	SIDE	CODE	ACTUAL SIGN SIZE	SIZE (INCHES)	POST LOCATE OFFSET FROM EP	630						631					625
							SIGN FLAT SHEET TYPE G	TYPE G EXTRUSHEET SIGNS	RIGID OVERHEAD SIGN SUPPORT FOUNDATION	OVERHEAD SIGN SUPPORT TYPE TC-7.65 DESIGN 6	SIGN SUPPORT ASSEMBLY POLE MOUNTED		SIGN SERVICE	SIGN WIRED	DISCONNECT SWITCH W/ENCLOSURE TYPE X	BALLAST, TYPE CMRI-100-480, INTEGRAL	MERCURY VAPOR LUMINAIRE, TYPE TC-31.21 W/100 WATT LAMP	GROUND ROD
							SQ. FT.	SQ. FT.	EACH	EACH	EACH		EACH	EACH	EACH	EACH	EACH	EACH
13	78+00 RAMP A	RT	R-26A			14.5'			2	1			1	1	1	5	5	1
			GG	12' x 4'				48										
			R-30A															
			GG	15' x 4'				60										
			GG	11' x 4'				44										
			R-27A															
		RT	R41A-36		36x24		6				2							
		LT	R41A-36		36x24		6				2							
			N-44B-18		18x12		1.5											
TOTALS							13.5	152	2	1	4		1	1	1	5	5	1
TOTALS CARRIED TO GENERAL SUMMARY SHEET NO.132							14	152	2	1	4		1	1	1	5	5	1

CALCULATED MJT 11/01
CHECKED WGY 11/01

SIGNING DETAILS

FRA-315-3.04

147B
238

SIGNELEV6 11-27-01

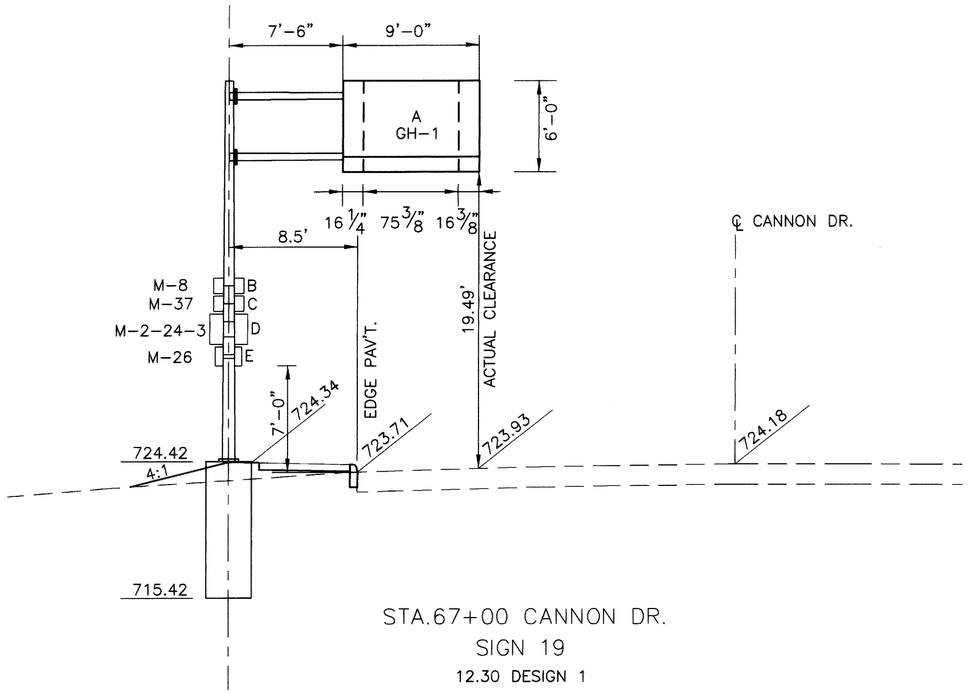

STA.67+00 CANNON DR.

SIGN 19

12.30 DESIGN 1

ARM = 16'-0"

POLE = 25'-0"

REFERENCE NO.	SIGN LOCATION	SIDE	CODE	ACTUAL SIGN SIZE	SIZE (INCHES)	POST LOCATE OFFSET FROM EP	630						631					625
							SIGN FLAT SHEET TYPE G	TYPE G EXTRUSHEET SIGNS	RIGID OVERHEAD SIGN SUPPORT FOUNDATION	OVERHEAD SIGN SUPPORT TYPE TC-12.30 DESIGN 1	SIGN SUPPORT ASSEMBLY POLE MOUNTED		SIGN SERVICE	SIGN WIRED	DISCONNECT SWITCH W/ENCLOSURE TYPE X	BALLAST, TYPE CMRI-100-480, INTEGRAL	MERCURY VAPOR LUMINAIRE, TYPE TC-31.21 W/100 WATT LAMP	GROUND ROD
							SQ. FT.	SQ. FT.	EACH	EACH	EACH		EACH	EACH	EACH	EACH	EACH	EACH
19	67+00 CANNON	LT	GH-1	9' x 5.5'		8.5'		49.5	1	1			1	1	1	1	1	1
			GH-1	9' x 5.5'				49.5					1	1		1	1	
			M-8		24x12		2				1							
			M-37		24x12		2				1							
			M-2-24-3		30x24		5				2							
			M-26		21x15		2.2				2							
TOTALS							11.2	99	1	1	6		2	2	1	2	2	1
TOTALS CARRIED TO GENERAL SUMMARY SHEET NO.132							12	99	1	1	6		2	2	1	2	2	1

CALCULATED MJT 11/01

CHECKED WCY 11/01

SIGNING DETAILS

FRA-315-3.04

147C
238

SIGNELEV7 11-27-01

ITEM		154	156	ITEM	ITEM EXT.	QUANTITY	UNIT	DESCRIPTION	SEE SHEET
								TRAFFIC SIGNALS	
									150
625		636	146	625	25403	782	LIN FT	CONDUIT, 2", 713.07, AS PER PLAN	150
625		130	85	625	25503	215	LIN FT	CONDUIT, 3", 713.07, AS PER PLAN	150
625		138	250	625	25910	388	LIN FT	CONDUIT, CLEANED AND CABLES REMOVED	
625		510	212	625	29001	722	LIN FT	TRENCH, AS PER PLAN	150
625		3	1	625	30701	4	EACH	PULL BOX, 713.08, 18", AS PER PLAN	150
625		3	2	625	30707	5	EACH	PULL BOX, 713.08, 24", AS PER PLAN	150
625		3	2	625	32001	5	EACH	GROUND ROD, AS PER PLAN	150
630			2	630	79000	2	EACH	SIGN HANGER ASSEMBLY, SPAN WIRE	
630			18	630	80102	18	SQ FT	SIGN, FLAT SHEET, TYPE G	
630			3	630	87100	3	EACH	REMOVAL OF OVERHEAD MOUNTED SIGN AND REERECTION	
632			1	632	00301	1	EACH	VEHICULAR SIGNAL HEAD, 3 SECTION, 12" LENS, 1-WAY, AS PER PLAN	150
632		1	1	632	00501	2	EACH	VEHICULAR SIGNAL HEAD, 5 SECTION, 12" LENS, 1-WAY, AS PER PLAN	150
632		8	8	632	25001	16	EACH	COVERING OF VEHICULAR SIGNAL HEAD, AS PER PLAN	151
632		8	8	632	25011	16	EACH	COVERING OF PEDESTRIAN SIGNAL HEAD, AS PER PLAN	151
632		8	8	632	26001	16	EACH	PEDESTRIAN PUSHBUTTON, AS PER PLAN	150
632		7	8	632	26501	15	EACH	DETECTOR LOOP, AS PER PLAN	150
632		6	6	632	27009	12	EACH	LOOP DETECTOR UNIT, DELAY AND EXTENSION TYPE, AS PER PLAN	151
632		401	406	632	30200	807	LIN FT	MESSENGER WIRE, 7 STRAND, 3/8" DIAMETER, WITH ACCESSORIES	
632		137	313	632	40500	450	LIN FT	SIGNAL CABLE, 5 CONDUCTOR, NO. 14 AWG	
632		365	566	632	40700	931	LIN FT	SIGNAL CABLE, 7 CONDUCTOR, NO. 14 AWG	
632		857	547	632	40900	1404	LIN FT	SIGNAL CABLE, 9 CONDUCTOR, NO. 14 AWG	
632		409	77	632	53202	486	LIN FT	INTERCONNECT CABLE, 6 PAIR, NO. 19 AWG, SOLID, REA (PE-39)	
632		1		632	64001	1	EACH	STRAIN POLE FOUNDATION, AS PER PLAN	151
632		1	1	632	64021	2	EACH	PEDESTAL FOUNDATION, AS PER PLAN	151
632		3470	2341	632	65200	5811	LIN FT	LOOP DETECTOR LEAD-IN CABLE	
632		270	22	632	67201	292	LIN FT	POWER CABLE, 2 CONDUCTOR, NO. 8 AWG, AS PER PLAN	151
632		1		632	82500	1	EACH	STRAIN POLE, TYPE TC-81.10, DESIGN 5	
632		1	1	632	89600	2	EACH	PEDESTAL, 8'	
632		1	1	632	90101	2	EACH	REMOVAL OF TRAFFIC SIGNAL INSTALLATION, AS PER PLAN	151
632		5	6	632	90200	11	EACH	REUSE OF VEHICULAR SIGNAL HEAD	
632		8	8	632	90400	16	EACH	SIGNALIZATION, MISC.: PEDESTRIAN SIGNAL HEAD, SYMBOLIC, AS PER PLAN	150
632		1		632	90400	1	EACH	SIGNALIZATION, MISC.: SLEEVE FOR SIGNAL FOUNDATION, AS PER PLAN	151
633		1	1	633	38001	2	EACH	CONTROLLER, ACTUATED, 8 PHASE, SOLID STATE DIGITAL MICROPROCESSOR, WITH CABINET, AS PER PLAN	151
633		1.85	1.85	633	70000	3.7	CU YD	CONCRETE FOR CABINET FOUNDATION	
633		12	12	633	70500	24	SQ FT	CONTROLLER WORK PAD	

CALCULATED HLM CHECKED SDS

TRAFFIC SIGNAL SUMMARY

FRA-315-3.04

DRAWING: P:\0023\05\Ramps\0023TC SUM.dwg
June 20, 2002, 1:21pm

PERMITS
ALL NECESSARY PERMITS SHALL BE OBTAINED PRIOR TO THE START OF CONSTRUCTION. ALL WORK SHALL BE PERFORMED IN ACCORDANCE WITH APPLICABLE FEDERAL, STATE AND LOCAL REQUIREMENTS.

EXTRA COMPENSATION
NO EXTRA COMPENSATION WILL BE PAID THE CONTRACTOR BY REASON OF COMPLIANCE WITH ANY OF THE REQUIRED ITEMS INDICATED ON THE PLANS, AS BID UPON, UNLESS OTHERWISE SPECIFICALLY PROVIDED.

ACCEPTANCE OF SIGNAL
THE SIGNALS MANAGEMENT ENGINEER FOR THE TRANSPORTATION DIVISION, CITY OF COLUMBUS SHALL BE THE SOLE PERSON TO ACCEPT ANY PROPOSED TRAFFIC SIGNAL EQUIPMENT INSTALLATION ON BEHALF OF THE CITY. (614-645-7790)

EXISTING UTILITIES
THE CITY OF COLUMBUS AND THE OHIO STATE UNIVERSITY ASSUME NO RESPONSIBILITY FOR THE ACCURACY OF THE LOCATION OR THE DEPTHS OF THE UNDERGROUND FACILITIES SHOWN ON THESE PLANS. SUPPORT, PROTECTION, AND RESTORATION OF ALL EXISTING UTILITIES AND APPURTENANCES SHALL BE THE CONTRACTOR'S RESPONSIBILITY. THE COST OF THIS WORK SHALL BE INCLUDED IN THE BID PRICE FOR THE VARIOUS ITEMS. IT SHALL BE THE CONTRACTOR'S RESPONSIBILITY TO NOTIFY THE OHIO UTILITIES PROTECTION SERVICE (OUPS) AND THE FOLLOWING CITY UTILITIES SO THEIR RESPECTIVE UTILITIES CAN BE MARKED. THE PROJECT ENGINEER SHALL NOT AUTHORIZE THE START OF ANY SIGNAL UNDERGROUND WORK UNTIL ALL UTILITIES HAVE BEEN MARKED.

SEWERS & DRAINS	645-7102	FAX 645-8893
ELECTRICITY	645-7627	FAX 645-7150
TRAFFIC ENGINEERING	645-7393	FAX 645-5967
WATER	645-7788	FAX 645-0220

PLAN AND SPECIFICATION COMPLIANCE
THE CONTRACTOR SHALL FURNISH AND INSTALL TRAFFIC SIGNAL DEVICES IN COMPLIANCE WITH THESE PLANS AND SPECIFICATIONS, THE 1997 ODOT CONSTRUCTION AND MATERIAL SPECIFICATIONS AND ITS SUPPLEMENTAL SPECIFICATIONS, OHIO MANUAL OF UNIFORM TRAFFIC CONTROL DEVICES FOR STREETS AND HIGHWAYS, AND THE "TC" STANDARD CONSTRUCTION DRAWINGS ISSUED BY THE ODOT OFFICE OF TRAFFIC ENGINEERING (SUPPLEMENTS THE PLAN SPECIFICATIONS). THESE SPECIFICATIONS SET FORTH THE DESIGN AND MINIMUM OPERATING REQUIREMENTS FOR TRAFFIC SIGNAL EQUIPMENT. THE SIGNALS MANAGEMENT ENGINEER, CITY OF COLUMBUS, TRANSPORTATION DIVISION, SHALL DETERMINE WHETHER THE SUPPLIED ITEMS MEET OR EXCEED THESE REQUIREMENTS.

TRAFFIC SIGNAL CONTROL EQUIPMENT SHALL MEET OR EXCEED THE STANDARDS SPECIFIED IN THE FOLLOWING DOCUMENTS.

(A) SPECIFICATIONS LISTED IN THIS PLAN

(B) NEMA STANDARDS PUBLICATION NO. TS2-1992 (OR CURRENT NEMA ISSUE) AND/OR TS1-1989: SECTIONS 1, 2, 5, 6, 8, 11, 13 AND 14

(C) 1997 ODOT CONSTRUCTION AND MATERIAL SPECIFICATIONS 625, 632, 633, 732 & 733; SUPPLEMENT 1063 "SIGNAL CONSTRUCTION PERSONNEL REQUIREMENTS"

IN CASE OF A CONFLICTING SPECIFICATION STATEMENT, THE SPECIFICATION DOCUMENT HIERARCHY SHALL BE IN THE ORDER LISTED FROM (A), HIGHEST, TO (C), LOWEST.

OSU HOME FOOTBALL GAMES
ALL LANES OF TRAFFIC SHALL BE OPEN AND ALL TRENCHES ETC. SHALL BE SECURELY COVERED OR FILLED FOR OSU HOME FOOTBALL GAMES UNLESS APPROVED BY THE PROJECT ENGINEER.

CONTRACTOR ACCESS TO EXISTING CONTROL CABINET
A REPRESENTATIVE FROM THE TRANSPORTATION DIVISION SHALL BE PRESENT ANYTIME THE CONTRACTOR REQUIRES ENTRY INTO AN EXISTING CONTROL CABINET TO PERFORM ANY CABINET WIRING CHANGE OR WIRING HOOKUP. THE CONTRACTOR SHALL CONTACT THE DIVISION'S ELECTRONIC SHOP SUPERVISOR AT (614) 645-7933 TO MAKE ARRANGEMENTS. A THREE (3) CITY WORKDAY NOTICE SHALL BE GIVEN. THE REPRESENTATIVE SHALL ACT IN A SUPERVISORY AND/OR INFORMATIONAL CAPACITY ONLY UNLESS OTHERWISE STATED IN THESE PLANS. EXISTING CABINET WIRING WHICH WAS PREVIOUSLY DISCONNECTED BY THIS DIVISION SHALL BE CONNECTED BY THIS DIVISION IF CONNECTION IS REQUIRED FOR PROPER OPERATION OF THE TRAFFIC SIGNAL. ALL CONTRACTOR INSTALLED CABLE SHALL BE CONNECTED BY THE CONTRACTOR BUT OVERSEEN BY THE DIVISION'S REPRESENTATIVE. THERE IS NO CHARGE FOR THIS REPRESENTATIVE BETWEEN THE HOURS OF 8 A.M. AND 3 P.M., MONDAY THROUGH FRIDAY. PRIOR TO OR AFTER THESE HOURS AND ON SATURDAYS THE HOURLY CHARGE IS $30 WITH A MINIMUM CHARGE OF $120 ON SATURDAY. SUNDAY HOURLY CHARGE IS $40 WITH A MINIMUM OF $160.

MATERIAL INFORMATION SUBMITTAL
THE CONTRACTOR SHALL SUBMIT FOR APPROVAL BY THE CHIEF TRAFFIC ENGINEER, (ATTN. SIGNALS MANAGEMENT ENGINEER), CITY OF COLUMBUS, TRANSPORTATION DIVISION, 109 NORTH FRONT STREET; COLUMBUS, OHIO 43215-9024, ONE (1) COMPLETE SET OF CATALOG CUTS, DIAGRAMS, SHOP DRAWINGS, BROCHURES OR OTHER DESCRIPTIVE MATERIAL FOR THE SIGNAL ITEMS THE CONTRACTOR INTENDS TO FURNISH THAT HAVE NOT BEEN SPECIFICALLY NAMED BY PRODUCT NUMBER. THE CONTRACTOR SHALL ALSO PROVIDE A DETAILED LIST OF ALL VARIANCES FROM ODOT SPECIFICATIONS AND FROM THE SPECIFICATIONS CONTAINED HEREIN FOR EACH NON-SPECIFIED ITEM THAT DOES NOT COMPLY 100% WITH THESE SPECIFICATIONS. UNLESS OTHERWISE STATED BY THE CONTRACTOR, THE SUPPLIED ITEMS WILL BE CONSIDERED AS BEING IN STRICT ACCORDANCE WITH ALL SPECIFICATIONS.

ONE (1) COMPLETE SET OF THE ABOVE ITEMS SHALL BE GIVEN TO THE OHIO STATE UNIVERSITY, OFFICE OF TRANSPORTATION AND PARKING SERVICES, 132/160 BEVIS HALL, 1080 CARMACK ROAD, COLUMBUS, OHIO 43210-1002 [(614) 292-5192] FOR THEIR RECORDS.

TEN DAY TEST REQUIREMENTS
THE CITY OF COLUMBUS, TRANSPORTATION DIVISION, REQUIRES A 10 DAY TEST TO START AFTER THE SIGNAL INSTALLATION IS 100% COMPLETE, WHICH INCLUDES ESTABLISHING DATA COMMUNICATION, IF PRESENT. NO PARTIAL TESTS WILL BE CONDUCTED. THE CONTRACTOR SHALL SUBMIT A WRITTEN REQUEST TO THE DIVISION'S SIGNALS MANAGEMENT SECTION AT 109 N. FRONT STREET, 2ND FLOOR; COLUMBUS, OH 43215-9024 STATING THAT THE SIGNAL INSTALLATION IS 100% COMPLETE AND A START DATE FOR THE TEN DAY TEST IS REQUESTED. THIS DIVISION SHALL MONITOR THE TEST AND SHALL BE THE SOLE DIVISION TO ACCEPT THE SIGNAL INSTALLATION ON BEHALF OF THE CITY. IF LESS THAN 100% COMPLETION IS DETECTED UPON INSPECTION BY THIS DIVISION OR ANY MALFUNCTION IS DETECTED, THEN THE TEN DAY TEST SHALL BE COMPLETELY RESTARTED. FAX TRANSMISSION IS ACCEPTABLE. FAX NUMBER IS (614) 645-7921.

INSTALLATION LAYOUT
THE TRAFFIC SIGNAL SUPPORT POLES AND ALL OTHER STATIONED SIGNAL ITEMS SHALL BE LOCATED AND MARKED BY A PROFESSIONAL SURVEYOR USING THE STATION NUMBERS AND OFFSETS PROVIDED IN THESE PLANS. COSTS INCURRED FOR THIS SERVICE SHALL BE INCIDENTAL TO THE COST OF THE PROJECT OR PROVIDED UNDER A CONSTRUCTION LAYOUT STAKES ITEM. THE SURVEYOR SHALL SET PROPER POLE AND CABINET FOUNDATION ELEVATIONS. THE TRANSPORTATION DIVISION, SIGNAL MANAGEMENT PERSONNEL SHALL APPROVE ALL POLE FOUNDATION LOCATIONS AND ELEVATIONS PRIOR TO THE CONTRACTOR INSTALLING ANY FOUNDATION. THE SURVEYOR SHALL STAKE ALL RADII SO BASES CAN BE ALIGNED PROPERLY. RIGHT-OF-WAY STAKES SHALL ALSO BE SET ANYTIME A STATIONED TRAFFIC SIGNAL ITEM IS WITHIN ONE FOOT OF THE RIGHT-OF-WAY. THE SIGNAL SUPPORT FOUNDATION ANCHOR BOLT LAYOUT ANGLES SHALL BE SURVEYED AND MARKED ACCORDING TO SIGNAL PLAN. THE CITY OF COLUMBUS TRANSPORTATION DIVISION MUST APPROVE THE FIELD LAYOUT BEFORE THE FOUNDATIONS ARE POURED AND ANCHOR BOLTS ARE SET.

MAINTENANCE OF TRAFFIC SIGNAL INSTALLATION:

A) PROPOSED TRAFFIC SIGNAL INSTALLATION
THE CONTRACTOR SHALL BE RESPONSIBLE FOR MAINTAINING ALL PROPOSED TRAFFIC SIGNAL DEVICES UNDER THE FOLLOWING CONDITIONS FROM THE TIME OF INSTALLATION UNTIL THE TRAFFIC SIGNAL INSTALLATION HAS BEEN ACCEPTED BY THE SIGNALS MANAGEMENT SECTION.

THE CONTRACTOR SHALL PROVIDE ONE OR MORE CONTACT PERSONS WHO CAN RECEIVE ALL DEVICE OUT-OF-SERVICE CALLS THAT FALL UNDER THE CONTRACTOR'S RESPONSIBILITY. THE CONTRACTOR SHALL DISPATCH MAINTENANCE PERSONNEL TO CORRECT THE PROBLEM. THE CONTRACTOR SHALL PROVIDE THE SIGNALS MANAGEMENT SECTION AND PROJECT ENGINEER WITH ADDRESSES AND PHONE NUMBERS OF THESE CONTACT PERSONS. MAINTENANCE PERSONNEL MAY BE USED TO PERFORM OTHER DUTIES AS LONG AS PROMPT ATTENTION IS GIVEN TO THESE CALLS AND A PERSON IS CONTINUOUSLY AVAILABLE TWENTY-FOUR (24) HOURS A DAY AND SEVEN (7) DAYS A WEEK. THE CONTRACTOR SHALL PROVIDE MAINTENANCE SERVICE ENTIRELY WITH HIS PERSONNEL.

THE CONTRACTOR SHALL CORRECT ALL BULB OUTAGES, DEVICE MALFUNCTIONS OF ANY TYPE, INTERNAL CABINET POWER LOSES, SPAN OR CABLE PROBLEMS AND MIS-ALIGNED OR DAMAGED VEHICULAR OR PEDESTRIAN SIGNAL HEADS WITHIN TWO (2) HOURS AFTER THE CONTRACTOR'S CONTACT PERSON HAS BEEN NOTIFIED OF ANY OF THE ABOVE. IN THE EVENT A NEW SIGNAL DEVICE IS DAMAGED PRIOR TO ACCEPTANCE, THE DAMAGED DEVICE EXCEPT POLES SHALL BE REPLACED OR REPAIRED BY THE CONTRACTOR TO THE SATISFACTION OF THE SIGNALS MANAGEMENT SECTION. ANY DAMAGED CABINET ASSEMBLY DEVICE IF REPAIRED SHALL BE TESTED ONCE AGAIN BY THE SIGNALS MANAGEMENT SECTION OF THE TRANSPORTATION DIVISION BEFORE THE DEVICE CAN BE INSTALLED.

IN THE EVENT OF A LOSS OF POWER TO THE SIGNAL INDICATIONS OTHER THAN AN ELECTRIC COMPANY GENERAL POWER OUTAGE, THE CONTRACTOR AT HIS EXPENSE SHALL IMMEDIATELY TAKE ACTION [WITHIN 30 MINUTES] TO PROPERLY ERECT TEMPORARY STOP SIGN(S) AND PROVIDE POLICE OFFICER(S) TO DIRECT TRAFFIC UNTIL THE SIGNAL IS BACK ON "FLASH" OR OPERATING PROPERLY.

IF A TRAFFIC STRAIN POLE IS DAMAGED AND THAT DAMAGE CAUSED POLE INSTABILITY, THEN THE CONTRACTOR SHALL TAKE IMMEDIATE ACTION (WITHIN 2 HOURS) TO STABILIZE THE POLE. THE CONTRACTOR SHALL STILL BE RESPONSIBLE FOR PROVIDING THE PROJECT WITH A NEW UNDAMAGED POLE.

WHERE OUT-OF-SERVICE CALLS ARE THE DIRECT RESULT OF A VEHICULAR ACCIDENT THE RESPONSE OF THE CONTRACTOR SHALL BE AS OUTLINED ABOVE. THE CONTRACTOR SHALL BE RESPONSIBLE FOR THE COLLECTION OF ANY COMPENSATION FROM THOSE PARTIES RESPONSIBLE FOR THE DAMAGE TO THE CONTRACTOR'S MATERIALS.

WHERE THE CONTRACTOR HAS FAILED TO RESPOND OR CANNOT RESPOND TO AN OUT-OF-SERVICE CALL WITHIN THE TIME PERIOD SPECIFIED ABOVE AT LOCATIONS UNDER HIS RESPONSIBILITY, THE TRANSPORTATION DIVISION MAY TAKE ACTION AS IT DEEMS NECESSARY TO CORRECT THE SITUATION. THIS ACTION MAY INCLUDE CONTROLLING THE INTERSECTION USING COLUMBUS POLICE OFFICERS, COMPLETELY REMOVING OR REPLACING ANY MALFUNCTIONING TRAFFIC CONTROL DEVICE, AND/OR INSTALLING ANY DEVICE(S) REQUIRED TO RETURN THE INTERSECTION TO REGULAR SIGNAL OPERATION. ALL COSTS ASSOCIATED WITH THESE ACTIONS SHALL BE BILLED DIRECTLY TO THE CONTRACTOR.

ANY NON-OPERATING VEHICULAR OR PEDESTRIAN SIGNAL HEAD OR PUSHBUTTON SHALL BE COVERED PER ODOT 632.24. ALL SIGNAL HEADS WHILE COVERED SHALL BE DARK EITHER BY REMOVING, UNSCREWING, OR DISCONNECTING THE POWER TO THE BULBS. NO COVERED HEAD SHALL BLOCK THE VIEW OF AN OPERATING HEAD. A MINIMUM OF TWO (2) VEHICULAR SIGNAL HEADS PER TRAVELED DIRECTION (SPACED A MINIMUM 8' APART AND A MAXIMUM 12' APART) SHALL BE OPERATING AT ALL TIMES. NO EXCEPTIONS!

ALL COSTS RESULTING FROM THE ABOVE REQUIREMENTS SHALL BE CONSIDERED TO BE INCLUDED IN THE LUMP SUM BID PRICE FOR ITEM 614 MAINTAINING TRAFFIC, AS PER PLAN.

N

0 10 20 40 HORIZONTAL SCALE IN FEET

CALCULATED HLM 03/02
CHECKED SG 03/02

TRAFFIC CONTROL GENERAL NOTES
CANNON DR. & 12TH. AVE./RAMP B, CANNON DR. & 9TH. AVE./RAMP A

FRA-315-3.04

149
238

DRAWING: P:\0021305\Ramps\00233gnote1.dwg
August 01, 2002, 8:27am

B) EXISTING TRAFFIC DEVICES

THE CITY OF COLUMBUS, TRANSPORTATION DIVISION (ELECTRONICS MAINTENANCE SHOP: (614) 645-7933), SHALL PERFORM ROUTINE MAINTENANCE ON ALL EXISTING CABINET ASSEMBLY ITEMS ONLY. THE GENERAL CONTRACTOR SHALL BE RESPONSIBLE FOR THE MAINTENANCE OF ALL OTHER EXISTING TRAFFIC SIGNAL DEVICES ONCE ANY PROJECT SIGNAL WORK HAS STARTED. IF, IN THE COURSE OF WORK, THE GENERAL CONTRACTOR OR ANY PROJECT SUBCONTRACTOR CAUSED DAMAGE TO ANY EXISTING TRAFFIC SIGNAL DEVICE OTHER THAN THE CABINET ASSEMBLY, THEN THE CONTRACTOR AT THE CONTRACTOR'S COST SHALL REPAIR AND/OR REPLACE THE DAMAGED DEVICE TO THE SATISFACTION OF THE TRANSPORTATION DIVISION. DAMAGE TO THE CABINET ASSEMBLY BY THE PROJECT CONTRACTOR SHALL BE REPAIRED BY THE TRANSPORTATION DIVISION AND BILLED TO THE GENERAL CONTRACTOR.

C) TEMPORARY CONTROLLER OR TRAFFIC SIGNALS

IN ADDITION TO ITEM 614.03(F), THE FOLLOWING SHALL APPLY.

IF THE CONTRACTOR IS REQUIRED TO ERECT AND/OR INSTALL ANY TEMPORARY TRAFFIC CONTROL DEVICE OR TEMPORARY TRAFFIC SIGNAL POLE THAT IS NOT SPECIFIED IN THESE PLANS, THEN THE CONTRACTOR SHALL SUBMIT THE SIGNAL DESIGN TO THE CITY OF COLUMBUS, TRANSPORTATION DIVISION, FOR APPROVAL PRIOR TO THE INSTALLATION OF THE SIGNAL. THE DIVISION ALSO RESERVES THE RIGHT TO MAKE OR HAVE THE CONTRACTOR MAKE CHANGES TO THE TRAFFIC SIGNAL OPERATION.

IF THE CONTRACTOR NEEDS TO INSTALL A TEMPORARY CONTROLLER AND/OR CABINET ASSEMBLY AT THIS INTERSECTION, THEN THE EQUIPMENT SHALL MEET NEMA STANDARDS TS1-1989 OR TS2-1992 (TYPE 2) AND SHALL BE APPROVED BY THE CITY OF COLUMBUS, TRANSPORTATION DIVISION.

ALL COSTS RESULTING FROM THE ABOVE REQUIREMENTS (A, B & C), EXCEPT AS NOTED, SHALL BE CONSIDERED TO BE INCLUDED IN THE LUMP SUM BID PRICE FOR ITEM 614 MAINTAINING TRAFFIC, AS PER PLAN.

614 MAINTAINING TRAFFIC, AS PER PLAN:

IN ADDITION TO THE REQUIREMENTS FOR MAINTAINING TRAFFIC AS INDICATED IN THE OHIO MANUAL OF UNIFORM TRAFFIC CONTROL DEVICES AND PERTINENT ITEMS OF THE SPECIFICATIONS, THE FOLLOWING REQUIREMENTS SHALL APPLY:

A MAINTENANCE OF TRAFFIC CONTROL PLAN (MTCP) SHALL BE SUBMITTED FOR APPROVAL TO THE CITY OF COLUMBUS, TRANSPORTATION DIVISION AND TO THE OHIO STATE UNIVERSITY OFFICE OF TRANSPORTATION AND PARKING SERVICES AT THE PRE-CONSTRUCTION MEETING OR A MINIMUM OF 10 WORKING DAYS PRIOR TO THE BEGINNING OF WORK.

BEFORE WORK IS STARTED ON THIS PROJECT, THE CONTRACTOR SHALL SUBMIT A SCHEDULE OF OPERATIONS, INCLUDING WHEN EQUIPMENT WILL NOT BE FUNCTIONING, IN WRITING FOR APPROVAL. THE SCHEDULE OF OPERATIONS SHALL BE IN ACCORDANCE WITH THE APPROVED CONSTRUCTION SEQUENCE. AFTER RECEIVING A COPY OF THE APPROVED SCHEDULE OF OPERATION, THE CONTRACTOR SHALL OBTAIN THE NECESSARY PERMIT FOR ANY CLOSURES. A COPY OF THE PERMIT SHALL BE RETAINED ON THE JOB AT ALL TIMES.

THE CONTRACTOR SHALL HAVE A UNIFORMED LAW ENFORCEMENT OFFICER WITH A PATROL CAR DIRECT TRAFFIC WHEN THE EXISTING VEHICULAR SIGNAL HEADS ARE REMOVED AND RELOCATED AND WHEN PROPOSED VEHICULAR SIGNAL HEADS ARE BEING INSTALLED. ANY INSTALLED VEHICULAR SIGNAL HEAD SHALL BE COVERED WHEN NOT IN USE. THE OFFICER SHALL DIRECT TRAFFIC DURING ANY INTERRUPTION IN SIGNAL OPERATION WHILE TRAFFIC SIGNAL CONSTRUCTION IS IN PROGRESS. (SEE ITEM 614 LAW ENFORCEMENT OFFICER WITH PATROL CAR) IF VEHICULAR SIGNAL HEAD INSTALLATION TAKES LONGER THAN ONE DAY, THE CONTRACTOR SHALL CONTROL THE INTERSECTION OVERNIGHT AS AN ALL-WAY STOP WITH TEMPORARY STOP SIGNS. PAYMENT FOR LAW ENFORCEMENT OFFICERS SHALL BE PER ITEM 614 LAW ENFORCEMENT OFFICER WITH PATROL CAR.

ALL MAINLINE TRAFFIC LANES SHALL BE FULLY OPEN TO TRAFFIC FROM 7:00 AM TO 9:00 AM AND 3:00 PM TO 6:00 PM MONDAY THROUGH FRIDAY ON CANNON DR. TWO-WAY TRAFFIC MUST BE MAINTAINED ON BOTH THE MAINLINE AND SIDE STREET DURING CONSTRUCTION OPERATIONS.

DRUMS SHALL BE PLACED AT 35 FOOT INTERVALS CENTER TO CENTER EXCEPT ON TAPERS AND AROUND TURNS. WHERE DRUMS ARE PLACED ON TAPERS, THE CENTER TO CENTER SPACING SHALL BE TWENTY FOOT INTERVALS. WHERE DRUMS ARE PLACED ON CORNER RADII, THEY SHALL BE SPACED AT 8 FOOT INTERVALS.

ALL COSTS RESULTING FROM THE ABOVE REQUIREMENTS, TEMPORARY STOP SIGNS, SHALL BE CONSIDERED TO BE INCLUDED IN THE LUMP SUM BID PRICE FOR ITEM 614 MAINTAINING TRAFFIC, AS PER PLAN.

ITEM 614 LAW ENFORCEMENT OFFICER WITH PATROL CAR:

COMPLETE TRAFFIC CONTROL SHALL BE MAINTAINED AT ALL TIMES BY THE CONTRACTOR. DURING ANY INTERRUPTION OF SIGNAL OPERATION THE CONTRACTOR SHALL PROVIDE LAW ENFORCEMENT OFFICER(S) WITH PATROL CAR TO CONTROL THE INTERSECTION.

AN ESTIMATED QUANTITY OF 16 HOURS OF ITEM 614 LAW ENFORCEMENT OFFICER WITH PATROL CAR IS INCLUDED IN THE GENERAL SUMMARY FOR THIS PURPOSE.

ITEM 625 CONDUIT (BY SIZE), 713.07, AS PER PLAN:

CONDUIT SHALL BE INSTALLED AT A MINIMUM DEPTH OF 24 INCHES, MEASURED FROM FINISH GRADE. CONDUIT SHALL BE DIRECT BURIAL.

ITEM 625 TRENCH, AS PER PLAN:

WHERE CONDUIT IS INSTALLED IN TRENCH, WARNING TAPE SHALL BE INSTALLED DIRECTLY ABOVE THE CONDUIT AT A DEPTH OF 12 INCHES BELOW FINISHED GRADE. THE PLASTIC WARNING TAPE SHALL BE ACID AND ALKALI RESISTANT POLYETHYLENE FILM, 3 INCHES WIDE WITH MINIMUM THICKNESS OF 0.004 INCHES. THE TAPE SHALL BE OF A TYPE SPECIFICALLY MANUFACTURED FOR MARKING AND LOCATING UNDERGROUND UTILITIES. TAPE COLOR SHALL BE ORANGE AND SHALL BEAR A CONTINUOUS PRINTED LABEL "CAUTION UNDERGROUND CABLE".

ITEM 625 GROUND ROD, AS PER PLAN

THE GROUND WIRE CABLE SHALL BE CROSS-LINKED POLYETHYLENE, #6 AWG COPPER, STRANDED, RHW INSULATED, 600 VOLT RATED AND EXOTHERMICALLY WELDED TO THE GROUND ROD WITH INSULATING VARNISH APPLIED TO THE WELD. THE COPPER USED IN THE GROUND WIRE SHALL BE HARD ENOUGH TO WITHSTAND THE EXOTHERMAL WELDING PROCESS BUT SOFT ENOUGH TO MELT AND FORM A SOLID BOND TO THE ROD. THE OHM READING AT THE END OF THE UNATTACHED GROUND WIRE THROUGH THE GROUND ROD SHALL BE 10 OHMS OR LESS FOR THE GROUNDING SYSTEM ATTACHED TO THE CONTROL CABINET AND 25 OHMS OR LESS FOR THE GROUNDING SYSTEM ATTACHED TO THE SIGNAL STRAIN POLE. THE CONTROLLER CABINET SHALL HAVE TWO (2) GROUND RODS INSTALLED ONE (1) FOOT APART. A GROUND WIRE JUMPER THAT IS WELDED TO EACH ROD SHALL CONNECT THE RODS. THE STRAIN POLE THAT HAS A POLE MOUNTED CABINET ATTACHED IT SHALL HAVE A SEPARATE POLE GROUND ROD AND WIRE. THE GROUND WIRE ATTACHED TO THE CABINET STRAIN POLE SHALL HAVE A SEPARATE "EMT" AND BE ON THE OPPOSITE SIDE OF THE FOUNDATION FROM THE CABINET GROUNDING SYSTEM.

PERSONNEL FROM THE CITY SIGNALS MANAGEMENT SECTION SHALL BE PRESENT WHEN ANY GROUND ROD READING IS TAKEN. THE CONTRACTOR SHALL HAVE ON SITE A TEST EQUIPMENT CALIBRATION CERTIFICATE ACCORDING TO ODOT 625.22 AND SHALL HAVE ON SITE THE OPERATING INSTRUCTION MANUAL FOR ALL TEST DEVICES SO SIGNALS PERSONNEL CAN FIELD VERIFY THE TEST PROCEDURE AND RESULTS. NO TEST SHALL BE CONDUCTED IF ANY TEST REQUIREMENT IS NOT MET.

ITEM 625 PULL BOX, 713.08, 18", AS PER PLAN

THE PULL BOX ASSEMBLY SHALL BE RATED AS MEDIUM TO HEAVY DUTY, SHALL BE RATED TO BE INSTALLED IN CONCRETE WALKS AND SHALL HAVE THE WORD "TRAFFIC" ON IT. THE COVER SHALL BE BOLTED TO THE BOX AND SHALL BE EITHER POLYMER CONCRETE OR STEEL PLATE. THE BOX DEPTH SHALL BE 15 INCHES MINIMUM TO 30 INCHES MAXIMUM. THE SUPPLIED ASSEMBLY SHALL BE A MODIFIED 18 " ODOT STANDARD PULL BOX, WHICH USES THE A GINGWAY PRODUCT FRAME, A CARSON-BROOKS HIGH PERFORMANCE SERIES MODEL 1419-15, OR CDR. SYSTEMS MODEL SA32-1015-18. CONDUIT ELLS MAY BE USED TO BRING THE CONDUIT UP INTO THE HOUSING. EXTENSIONS, IF AVAILABLE, CAN BE USED TO ELIMINATE THE NEED FOR CONDUIT ELLS.

ITEM 625 PULL BOX, 713.08, 24", AS PER PLAN

THE PULL BOX ASSEMBLY SHALL BE RATED AS MEDIUM TO HEAVY DUTY, SHALL BE RATED TO BE INSTALLED IN CONCRETE WALKS AND SHALL HAVE THE WORD "TRAFFIC" SECURELY ATTACHED TO THE GALVANIZED STEEL COVER (USE 3 RIVETS ON THE EMBOSSED TAG) AND SHALL HAVE STAINLESS STEEL PENTA OR HEX BOLTS FASTENING THE COVER TO THE GALVANIZED STEEL FRAME. THE FRAME SHALL BE MANUFACTURED BY GINGWAY PRODUCTS, INC. (CONTACT MEREDITH BROTHERS FOR SPECIFICATION DETAILS), NEENAH FOUNDRY CO. (MODEL #6660-KT), OR APPROVED EQUAL (BY CITY OF COLUMBUS TRANSPORTATION DIVISION.) THE KNOCK OUT (4 EACH) ON THE 24" PULL BOX SHALL BE A 12"x12" AREA STARTING AT THE PULL BOX BOTTOM AND BEING CENTERED IN THE SIDEWALK.

ITEM 632 VEHICULAR SIGNAL HEAD, 3 SECTION, 12" LENS, 1 WAY, AS PER PLAN

ITEM 632 VEHICULAR SIGNAL HEAD, 5 SECTION, 12" LENS, 1 WAY, AS PER PLAN

ALL VEHICULAR SIGNAL HEADS SHALL BE SUPPLIED WITH GLASS LENSES AND A FIVE PAIR (FOR 3 OR 4 SECTION HEADS) OR 6 PAIR (FOR 5 SECTION HEADS) BARRIER TYPE TERMINAL BLOCK (NO QUICK- DISCONNECT SLIP-ON CONNECTORS ACCEPTABLE), WHICH IS SCREW MOUNTED AT EACH END AND LOCATED IN THE RED SECTION. THE TERMINAL BLOCK SHALL MEET UL E62622, CSR LR15364, BE IEC COMPLIANT, CONTAIN #10-32 x ¼" (MIN) ZINC PLATED STEEL PHILSHOT SCREWS, WHICH ARE INSTALLED BETWEEN BARRIERS WHOSE WIDTH OPENING IS A NOMINAL 0.41" AND HEIGHT IS A NOMINAL 0.45" ABOVE THE TERMINAL PLATE, BE RATED FOR 30 AMPS, AND SHALL HAVE A BREAKDOWN VOLTAGE OF 7500V RMS (SIMILAR TO BUSSMAN CIRCUIT COMPONENT SERIES TB345). THE LAMP SOCKET SHALL BE MADE FROM A HEAT RESISTANT MATERIAL AND SHALL HAVE A BRASS LAMP SOCKET SHELL. THE ALZAK REFLECTOR SHALL BE HELD IN PLACE BY A METAL HOUSING. NO PLASTIC HOUSING IS PERMITTED. ALL BOLTS AND WASHERS FOR SECURING SECTIONS TOGETHER, ALL MOUNTING HARDWARE FOR THE LENS, AND ALL HINGE PINS SHALL BE STAINLESS STEEL. DOOR LATCHING BOLTS SHALL FIT THROUGH A SLOT IN THE DOOR PER CITY OF COLUMBUS TRANSPORTATION DIVISION, SPECIFICATIONS. CONTACT THE DIVISION'S SIGNAL MANAGEMENT SECTION FOR SPECIFICATION DETAILS.

AN ALUMINUM, WEATHERPROOF TRI-STUD SINGLE WIRE ENTRANCE WITH THREE (3) 5/16" x 1-7/16" STAINLESS STEEL STUDS, LOCK WASHERS, AND HEX NUTS SHALL BE PROVIDED WITH EACH SIGNAL HEAD. THE WEATHER HEAD ENTRANCE SHALL HAVE A MINIMUM INSIDE DIAMETER OPENING OF 1-½", INCLUDING ANY RUBBER OR PLASTIC GROMMET THAT MAY BE NECESSARY TO PROTECT THE CABLE. THE OPENING AT THE TRI-STUD END MAY BE IRREGULARLY SHAPED, BUT IT MUST HAVE A MINIMUM OPENING OF 1-½" AT ITS WIDEST POINT AND A MINIMUM OPENING OF 1 1/16" AT ITS NARROWEST POINT. THE TRI-STUD WASHER MUST HAVE THE SAME OPENING AT THE ENTRANCE. THE TOP OF THE ENTRANCE SHALL HAVE ONLY ONE (1) CLEVIS HOLE AND IT MUST ACCOMMODATE A 5/8" STAINLESS STEEL CLEVIS PIN. THE CLEVIS ATTACHMENT, MEASURED AT THE CENTER OF THE CLEVIS HOLE, SHALL BE NO GREATER THAN 5/8" THICK OR GREATER THAN 1-¾" IN WIDTH.

THE 1-1/2 VARIABLE LENGTH DROP PIPE SHALL NOT BE USED.

VEHICULAR 5 SECTION HEAD, 1-WAY TYPICAL DETAIL

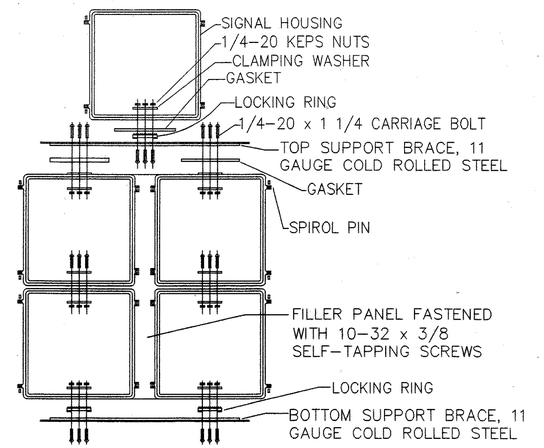

SIGNAL DOORS SHALL SWING OPEN TO OUTSIDE. FILLER PANEL SHALL BE MOUNTED BETWEEN TWO 2-SECTION SIGNALS USING BACKPLATE MOUNTING HOLES.

ITEM 632 SIGNALIZATION, MISC: PEDESTRIAN SIGNAL HEAD, SYMBOLIC, AS PER PLAN

PEDESTRIAN SIGNAL HEADS SHALL BE L.E.D. SYMBOLIC UNITS, MODEL #SSHM-16-WH, WHICH IS MADE BY NATIONAL SIGN (616-693-2817) OR MODEL #PS16CFL301 MADE BY ECOLUX, INC. (514-636-5566). HEADS SHALL BE BLACK AND SHALL BE MOUNTED ON BLACK, TWO-HINGED TYPE BRACKETS WHICH ARE BOLTED OR BANDED (2 BANDS PER BRACKET) TO THE POLE. THE HOUSING SHALL BE FIELD DRILLED AND REINFORCED (MANUFACTURER TO SUPPLY REINFORCEMENT) SO IT FITS TO THE HINGED BRACKET. WHEN TWO PEDESTRIAN HEADS ARE ATTACHED TO A SINGLE POLE, THE BOTTOM OF THE MAINLINE HEAD SHALL BE MOUNTED AT 8' ABOVE FOUNDATION LEVEL AND THE SECOND SIDE STREET HEAD MOUNTED ONE-HALF ITS HOUSING HEIGHT ABOVE THE FIRST. THE BRACKETS SHALL BE HINGED TO ALLOW THE PEDESTRIAN HEADS TO SWING AWAY FROM EACH OTHER.

ITEM 632 PEDESTRIAN PUSHBUTTON, AS PER PLAN

THE EXTERIOR PUSHBUTTON HOUSING COLOR SHALL BE YELLOW (POWDER-COATED, COLOR 13655, FEDERAL STD. 595) AND HAVE A CURVED BACK (SIMILAR TO PELCO SE-0596-P26). ACCEPTABLE PUSHBUTTONS SHALL BE A REES MODEL #04960-412, OR ADA COMPLIANT APPROVED EQUAL (BY CITY OF COLUMBUS TRANSPORTATION DIVISION.) THE PUSHBUTTON SHALL BE RATED FOR MEDIUM OR HEAVY DUTY USAGE AND HAVE A BARRIER TYPE OF LUG TERMINAL FOR ATTACHMENT OF THE FIELD CABLE. USE OF MICRO SWITCHES OR LEAF SWITCHES IS NOT ACCEPTABLE. A CLEAR BEAD OF SILICON SEALANT SHALL BE APPLIED TO THE TOP OF THE PUSHBUTTON HOUSING (1 INCH EACH SIDE OF TOP CENTER) AGAINST THE POLE TO PREVENT WATER FROM ENTERING THE BACK OF THE PUSHBUTTON HOUSING. ONE ALUMINUM SIGN SHALL BE SUPPLIED WITH EACH PUSHBUTTON. MOUNT THE CENTER OF THE PUSHBUTTON 36" ABOVE THE PEDESTRIAN PATHWAY. HOLES FROM PREVIOUS PUSHBUTTON INSTALLATIONS SHALL BE PLUGGED.

ITEM 632 DETECTOR LOOP, AS PER PLAN

IF AN EXISTING PAVED SHOULDER IS THREE (3) INCHES THICK OR MORE, THEN THE LOOP WIRE MAY BE INSTALLED IN A SAW SLOT CUT ACROSS THE SHOULDER. LOOP WIRE SHALL BE INSTALLED AS PER STANDARD DRAWING TC-82.10 WHERE SHOULDERS ARE LESS THAN THREE (3) INCHES THICK. THE SLOT DEPTH SHALL BE FOUR (4) INCHES. LOOP SEALANT SHALL BE FOSROC GOLD LABEL FLEX OR 3M BRAND. THE CONTRACTOR SHALL TAKE CARE IN THE PLACEMENT OF LOOP SEALANT SO THAT ALL SEALANT IS PLACED IN THE SAW SLOT. LOOP DETECTOR WIRE SHALL MEET IMSA 51-5 SPECIFICATIONS AND THE ENCASING TUBE SHALL BE POLYETHYLENE. THE LOOP WIRE SHALL BE TWISTED THREE (3) TO FIVE (5) TURNS PER FOOT FROM THE EXITING LOOP SPOT TO THE HOME RUN CABLE SPLICE. ONE ¾" TO 1" RIGID CONDUIT RACEWAY SHALL BE USED FOR EACH LOOP LEAD-IN. RACEWAYS AND LOOP LEAD-INS SHALL BE SPACED ONE (1) FOOT APART. ALL LOOP SPLICES AND LEAD-IN CONNECTOR TERMINAL CONNECTIONS SHALL BE SOLDERED.

N

HORIZONTAL SCALE IN FEET
0 10 20 40

CALCULATED HLM 03/02
CHECKED 03/02

TRAFFIC CONTROL GENERAL NOTES
CANNON DR. & 12TH. AVE./RAMP B, CANNON DR. & 9TH. AVE./RAMP A

FRA-315-3.04

150
238

DRAWING: P:\0023\03MR\ramps\0023gnotes2.dwg
August 01, 2002, 11:34am

ITEM 632 LOOP DETECTOR UNIT, DELAY AND EXTENSION TYPE, AS PER PLAN
THE UNIT SHALL MEET NEMA ENVIRONMENTAL REQUIREMENTS, SHALL BE SOLID STATE, SHALL BE SHELF MOUNTED, SHALL HAVE 2 SCANNING LOOP CHANNELS PER UNIT, SHALL HAVE A VEHICULAR COUNT OUTPUT PER CHANNEL, SHALL REMEMBER AND LOCK-IN AN INDICATION FOR AN INTERMITTENT AND/OR A FAILED LOOP ON A PER CHANNEL BASIS AND SHALL HAVE DELAY/EXTENSION TIMING. A PULSED COUNT OUTPUT SHALL BE INDEPENDENT OF THE LOCAL VEHICULAR DETECTION OUTPUT DELAY AND EXTENSION TIMING. THE UNIT SHALL RESET ITSELF AND OPERATE NORMALLY IF A FAILED OR INTERMITTENT PROBLEM NO LONGER EXISTS. THE UNIT SHALL HAVE, ON A PER CHANNEL BASIS, 9 SENSITIVITY SETTINGS, 3 LOOP FREQUENCY SETTINGS AND 3 OPERATIONAL MODES (PULSE, PRESENCE, AND COUNT). ON THE PRESENCE MODE SETTING THE COUNT AND LOCAL DETECTION OUTPUT SHALL BE A PRESENCE OUTPUT. ON THE PULSE MODE SETTING THE COUNT AND LOCAL DETECTION OUTPUT SHALL BE A PULSED OUTPUT. ON THE COUNT MODE SETTING THE COUNT OUTPUT SHALL BE PULSED AND THE LOCAL DETECTION OUTPUT SHALL BE PRESENCE. ALL SETTING SWITCHES SHALL BE GOLD CONTACT TYPE. THE UNIT SHALL SELF TUNE WITHIN 1 SECOND, SHALL AUTOMATICALLY ADJUST TO ENVIRONMENTAL CHANGES AND BE DESIGNED FOR LOW POWER CONSUMPTION. LOOP LEAD-INS SHALL BE ISOLATED VIA TRANSFORMER CIRCUITRY. THE UNIT SHALL OPERATE EVEN IF A LOOP HAS A SINGLE POINT-TO-GROUND FAULT. PAYMENT SHALL BE PER UNIT REGARDLESS OF THE NUMBER OF CHANNELS.

ITEM 632 SIGNALIZATION, MISC.: SLEEVE FOR SIGNAL FOUNDATION, AS PER PLAN
A GALVANIZED CORRUGATED PIPE OR A CARDBOARD-LIKE CONCRETE FORM WITH THE SAME DIAMETER AND DEPTH DIMENSIONS AS THE SPECIFIED FOUNDATION SHALL BE USED AT THE DISCRETION OF THE PROJECT ENGINEER. THE SLEEVE SHALL BE MEASURED AS A COMPLETE UNIT INSTALLED AND PROPERLY BACKFILLED. BACKFILL SHALL BE A COMPACTABLE GRANULAR MATERIAL THAT IS COMPACTED IN 4" LIFTS OR CONTROLLED DENSITY FILL RATED AT 150 PSI.

ITEM 632 POWER CABLE, 2 CONDUCTOR, #8 AWG, AS PER PLAN
POWER SHALL BE SUPPLIED BY MELP OR AMERICAN ELECTRIC POWER (AEP), SHALL BE 120-VAC, AND SHALL BE FROM THE LOCATION SHOWN ON THE SIGNAL PLAN. THE CONTRACTOR SHALL CONTACT THE APPROPRIATE ELECTRIC POWER SUPPLIER A MINIMUM OF FOUR (4) WORK WEEKS PRIOR TO THE NEED FOR POWER. TO MAKE ARRANGEMENTS FOR THE CONNECTION OF POWER TO THE CONTROLLER CABINET, CONTACT MELP AT (614) 645-7543 OR (614) 645-1502 AND CONTACT AEP AT (614-836-2570).

ITEM 632 COVERING OF VEHICULAR AND PEDESTRIAN SIGNAL HEAD, AS PER PLAN
ALL SIGNAL HEADS THAT ARE INSTALLED PRIOR TO BEING USED TO CONTROL TRAFFIC OR PEDESTRIANS SHALL BE COVERED. IF PLASTIC BAGS ARE USED, ONLY HEAVY DUTY PLASTIC BAGS SHALL BE PERMITTED. TWO BAGS PER HEAD SHALL BE USED. THE BAGS SHALL BE SECURELY LASHED DOWN SO THE WIND DOES NOT RIP THEM FROM THE SIGNAL HEAD. ALL SIGNAL HEADS WHILE COVERED SHALL BE DARK EITHER BY REMOVING, UNSCREWING, OR DISCONNECTING THE POWER TO THE BULBS. NO COVERED HEADS SHALL BLOCK THE VIEW OF OPERATING HEAD. ANY EXISTING VEHICULAR OR PEDESTRIAN HEAD THAT IS NOT FULLY FUNCTIONAL SHALL BE REMOVED IMMEDIATELY OR COVERED. PUSHBUTTONS SHALL BE COVERED TO INDICATE THAT THEY ARE NOT FUNCTIONING.

ITEM 632 STRAIN POLE FOUNDATION, AS PER PLAN
ITEM 632 PEDESTAL FOUNDATION, AS PER PLAN
THE ANCHOR BASE POLE FOUNDATION SIDES SHALL BE ORIENTATED PARALLEL TO THE SIDEWALK. THE TOP OF FOUNDATION SHALL BE FLUSH WITH ANY ADJACENT SIDEWALK OR CONCRETE AREA EXCEPT WHERE THE GROUND RISES STEEPLY BEHIND THE SIDEWALK OR CONCRETE AREA. THEN THE FOUNDATION SHALL MATCH THE BACKSIDE OF THE SLOPE AND THE STREET SIDE OF THE FOUNDATION SHALL BE ABOVE THE THE SIDEWALK OR CONCRETE AREA. A MINIMUM OF TWO 2" CONDUIT ELLS, USED OR UNUSED, SHALL BE INSTALLED IN EACH POLE FOUNDATION.

ITEM 632 REMOVAL OF TRAFFIC SIGNAL INSTALLATION, AS PER PLAN:
IN ADDITION TO THE ITEM 632 REMOVAL OF SIGNAL INSTALLATION, VEHICULAR SIGNAL HEADS, PEDESTRIAN SIGNAL HEADS, STRAIN POLES, CONTROLLERS, AND CABINETS SHALL BE SALVAGED AND REMAIN THE PROPERTY OF THE OHIO STATE UNIVERSITY. ITEMS FOR SALVAGE SHALL BE REMOVED AND TAKEN BY THE CONTRACTOR TO STORAGE AREAS AS DESIGNATED BY THE OSU OFFICE OF TRANSPORTATION AND PARKING SERVICES.

ITEM 633 CONTROLLER, ACTUATED, 8 PHASE, SOLID STATE DIGITAL MICROPROCESSOR, WTH CABINET, AS PER PLAN
IN ADDITION TO THE OTHER REQUIREMENTS OF ODOT 633 & 733, THE CONTROLLER (TS2, TYPE 2) SHALL BE ECONOLITE ASC/2S MODEL. CABINET ASSEMBLY SHALL BE COMPLETELY WIRED (INCLUDES ALL PANELS & HARNESSES) FOR 4 OR 8 PHASE OPERATION. THE COLUMBUS MUTCD FLASH CIRCUITRY SHALL BE INSTALLED AS A PANEL MOUNTED, CABINET ASSEMBLY ITEM. THE CABINET ASSEMBLY SHALL MEET ALL CITY STANDARDS AS SET FORTH BETWEEN THE SUPPLIERS AND THE DIVISION. CONTACT THE DIVISION'S ELECTRONIC SYSTEMS SUPERVISOR FOR DETAILS (614-645-7933)

IN ADDITION TO THE OTHER SPECIFICATION DOCUMENTS, THE CABINET ASSEMBLY SHALL MEET THE FOLLOWING SPECIFICATIONS.

(A) ALL LABELS SHALL BE PERMANENTLY SECURED TO THE CABINET. PLASTIC LABEL MAKER TAPE IS NOT CONSIDERED TO BE PERMANENT. CROY TYPE LABELS ARE ACCEPTABLE.

(B) TO ILLUMINATE THE BACK PANEL THE 120 VAC CONVENIENCE OUTLET/LAMP ASSEMBLY SHALL BE MOUNTED ON THE RIGHT SIDE OF THE CABINET BELOW THE BOTTOM SHELF NEAR THE UPPER PART OF THE BACK PANEL. THE OUTLET/LAMP ASSEMBLY SHALL NOT INTERFERE WITH THE REMOVAL OR INSTALLATION OF ANY EQUIPMENT. A DOOR MOUNTED FLEX LIGHT THAT ILLUMINATES THE ENTIRE BACK PANEL MAY BE USED IN LIEU OF A LAMP ASSEMBLY. (ALSO SEE ODOT 733.04(9))

(C) LOAD SWITCHES SHALL BE PERMANENTLY LABELED AS R, Y, G OR A, B, C. A LOAD SWITCH SHALL BE PROVIDED FOR EACH BACK PANEL LOAD SWITCH SOCKET POSITION WHETHER USED OR UNUSED. ALL LOAD SWITCHES SHALL REST IN A SUPPORT RACK. LOAD SWITCH POSITIONS 9-12 SHALL BE USED FOR EITHER A PEDESTRIAN OR OVERLAP LOAD SWITCH UNLESS SPECIFIED OTHERWISE. (ALSO SEE ODOT 733.04(2))

(D) LIGHTNING PROTECTION DEVICES SUCH AS ITT, SURRESTOR, GENERAL ELECTRIC, OR APPROVED EQUAL (AS DETERMINED BY THE CITY OF COLUMBUS TRANSPORTATION DIVISION) SHALL BE PROVIDED. (ALSO SEE ODOT 733.04(6))

(E) THE MAIN CABINET DOOR LOCK SHALL BE KEYED TO THE CITY OF COLUMBUS MASTER, CORBIN KEY NO. 2 (IR 6380) AND SHALL HAVE A KEYHOLE COVER. THE POLICE PANEL DOOR LOCK SHALL BE KEYED TO THE CITY OF COLUMBUS MASTER, BRASS CORBIN POLICE PANEL KEY NO. 0357SG AND SHALL HAVE A KEYHOLE COVER. (ALSO SEE ODOT 733.03 PARAGRAPH #8)

(F) APPROVED CABINET MANUFACTURERS FOR THE P44/P55 AND M36 CABINETS ARE ERPEL DESIGN CORPORATION, HENNESSEY, EAGLE, AND ECONOLITE. THE CABINET MATERIAL SHALL BE 5052 MARINE GRADE, 0.125 INCH THICK ALUMINUM SHEETING WITH A 32 HARDNESS IN ITS NATURAL COLOR AND SHALL BE PAINTED WHITE ON THE INSIDE. THE INSIDE OF THE CABINET SHALL BE TREATED WITH A THREE (3) STAGE IRON PHOSPHATE COATING AND A ZINC CHROMATE PRIMER COATING. A BAKED WHITE ALKALI ENAMEL FINISH SHALL THEN BE APPLIED. ALL COATINGS SHALL BE PROPERLY DRIED AND APPLIED SUCH THAT THE INSIDE WHITE PAINT WILL NOT PEEL FOR A GUARANTEED PERIOD OF TWO (2) YEARS. ALL EXTERIOR SEAMS SHALL BE EITHER CONTINUOUSLY WELDED, TACK WELDED, SEALED WITH A 15 TO 20 YEAR SILICONE SEALER, AND/OR OVERLAPPED SUCH THAT WATER DOES NOT ENTER THE CABINET. ALL CABINET EDGES SHALL BE SMOOTH (FREE OF ANY SHARP EDGES). THE CABINET DOOR SHALL BE HINGED USING A HEAVY GAUGE CONTINUOUS HINGE THAT HAS A STAINLESS STEEL HINGE PIN.

(F Cont.) THE HINGE SHALL BE BOLTED TO THE CABINET SO THE DOOR CAN BE REMOVED. THE BOLTS AND NUTS SHALL BE MADE OF STAINLESS STEEL AND SECURELY FASTENED TO PREVENT VIBRATIONS FROM LOOSENING THE NUTS. THE DOOR, SEALED WITH A NEOPRENE GASKET, SHALL BE EQUIPPED WITH A THREE (3) POINT LATCHING MECHANISM AND A HANDLE WHICH CAN BE PADLOCKED. THE DOOR SHALL BE DESIGNED SUCH THAT THE DOOR CAN BE LOCKED IN AN OPEN POSITION AT 90, 135, AND 180 DEGREES TO THE CABINET FACE (NOMINAL VALUES). (ALSO SEE ODOT 733.03 PARAGRAPH #3 AND #4)

(G) A THYRECTOR SURGE PROTECTOR WITH A RMS INPUT OF 150 VOLTS AND INPUT PEAK OF 210 VOLTS SHALL BE PROVIDED IN ADDITION TO ITEM D. THE THYRECTOR SHALL BE PLACED ACROSS THE INPUT AC POWER LINE.

(H) A 35 AMP LINE FILTER SHALL BE SUPPLIED AND SHALL BE MOUNTED ON THE POWER DISTRIBUTION PANEL. (ALSO SEE ODOT 733.04(8))

(I) TWO (2) CIRCUIT SOLID STATE FLASHER, EDI MODEL 810, RATED AT 15 AMPS PER CIRCUIT SHALL BE PROVIDED (NEMA TYPE III). CIRCUIT 1 SHALL CONTROL THE MAINLINE FLASHING SIGNAL INDICATIONS. CIRCUIT 2 SHALL CONTROL THE SIDE STREET FLASHING SIGNAL INDICATIONS. (ALSO SEE ODOT 733.04(4))

(J) ONE (1) 30 AMP CIRCUIT BREAKER, LABELED AS "MAIN", SHALL BE WIRED AS THE MAIN POWER DISTRIBUTION BREAKER. A SECOND CIRCUIT BREAKER, LABELED AS "PED" AND RATED AT 10 AMPS, SHALL BE SUPPLIED FOR THE PEDESTRIAN SIGNAL LOAD ONLY. THE PEDESTRIAN SIGNAL BREAKER SHALL BE WIRED IN SERIES WITH BUT AFTER THE MAIN POWER BREAKER. A THIRD CIRCUIT BREAKER, LABELED AS "AUX" AND RATED AT 15 AMPS, SHALL SUPPLY A SEPARATE BRANCH OF AC+ POWER TO THE VENTILATING FAN, CONVENIENCE 'GFI' OUTLET AND LIGHT SO THAT THEY MAY OPERATE INDEPENDENTLY OF THE MAIN POWER BREAKER. THE POWER TO THE FAN AND LIGHT SHALL ALSO BE INTERRUPTED BY THE 'GFI' OUTLET. ALL BREAKERS SHALL BE MOUNTED SIDE-BY-SIDE ON THE POWER DISTRIBUTION PANEL. (ALSO SEE ODOT 733.04(7))

(K) ALL CONTROLLER MS CONNECTOR HARNESSES SHALL HAVE A CONDUCTOR FOR EACH PLUG PIN EXCEPT THE REMOTE RESET FUNCTION FOR THE CONFLICT MONITOR. THE CONTROLLER AND CONFLICT MONITOR MS HARNESS CONDUCTORS SHALL BE CONNECTED TO A BACK PANEL TERMINAL STRIP WHICH IS ACCESSIBLE FROM THE FRONT OF THE PANEL. DETECTOR UNIT HARNESS CONDUCTORS SHALL BE CONNECTED TO A LEFT SIDE CABINET MOUNTED TERMINAL STRIP. OTHER EQUIPMENT SHALL BE CONNECTED AS APPROPRIATE. (ALSO SEE ODOT 733.04 (15))

(L) THE CABINET ASSEMBLY SHALL CONTAIN ALL PEDESTRIAN SIGNAL CIRCUITRY FOR EACH NEMA DEFINED THROUGH PHASE.

(M) A POLICE DOOR MOUNTED SIGNAL SHUTDOWN SWITCH WITH SWITCH POSITIONS LABELED AS "SIG ON" AND "SIG OFF" SHALL BE INSTALLED. (ALSO SEE ODOT 733.04 (11.a))

(N) A POLICE DOOR MOUNTED SIGNAL-FLASH SWITCH WITH SWITCH POSITIONS LABELED AS "ON SIG" AND "ON FLASH" SHALL NOT ONLY PLACE THE SIGNALS ON FLASH BUT ALSO STOP-TIME THE CONTROLLER UNIT. A RUN/STOP-TIME SWITCH WITH SWITCH POSITIONS LABELED AS "CONT. RUN" AND "STOP-TIME" SHALL BE INSTALLED ON THE INSIDE OF THE CABINET DOOR. THE RUN/STOP-TIME SWITCH SHALL ALLOW THE CONTROLLER UNIT TO TIME NORMALLY BUT KEEP THE SIGNALS ON FLASH. THE SIGNAL-FLASH SWITCH SHALL NOT RETURN THE SIGNALS TO NORMAL OPERATION UNLESS THE RUN/STOP-TIME SWITCH IS RESET TO THE STOP-TIME POSITION SO THE SIGNAL-FLASH SWITCH CAN AGAIN STOP-TIME THE CONTROLLER UNIT. THE SIGNAL-FLASH SWITCH SHALL NOT REMOVE POWER TO THE CONTROLLER UNIT OR ITS AUXILIARY EQUIPMENT. (ALSO SEE ODOT 733.04 (11.b AND 11.d))

(O) A POLICE DOOR MOUNTED AUTO-MANUAL TRANSFER SWITCH WITH SWITCH POSITIONS LABELED AS "AUTO" AND "MANUAL" SHALL BE INSTALLED. A MANUAL PUSHBUTTON CONTROL SHALL NOT BE INSTALLED, BUT WIRING FOR A PUSHBUTTON CONTROL SHALL BE PROVIDED UP TO THE POINT WHERE THE PUSHBUTTON WOULD HAVE BEEN CONNECTED. (ALSO SEE ODOT 733.04 (11c))

(P) A CONTROLLER SHUTDOWN SWITCH WITH SWITCH POSITIONS LABELED AS "CONT. ON" AND "CONT. OFF" AND A COORDINATED/FREE SWITCH WITH SWITCH POSITIONS LABELED AS "COORD" AND "FREE" SHALL BE INSTALLED INSIDE THE CABINET NEXT TO THE RUN/STOP-TIME SWITCH. A COORDINATED/FREE SWITCH SHALL NOT BE REQUIRED IF THE CONTROLLER HAS A BUILT-IN COORD/FREE SWITCH. (ALSO SEE ODOT 733.04 (11.e AND 11.f))

(Q) AFTER A NEMA DEFINED POWER INTERRUPTION THE MALFUNCTION MANAGEMENT UNIT SHALL CAUSE THE INTERSECTION SIGNALS TO FLASH AS PER PLAN FOR 10 SECONDS BEFORE THE INITIALIZED CONTROLLER UNIT TAKES CONTROL OF THE INTERSECTION SIGNALS. THE CONFLICT MONITORS SHALL BE EDI MODEL, SERIES SSM LE AND SHALL CONTAIN SUFFICIENT CHANNELS AS CALLED FOR IN THESE PLANS.

(R) THE MALFUNCTION MANAGEMENT UNIT SHALL BE CONNECTED DIRECTLY TO THE FIELD TERMINALS. USING JUMPERS OR LINKS ON THE BACK PANEL TO FORM A CIRCUIT FOR THE MALFUNCTION MANAGEMENT UNIT SHALL NOT BE ACCEPTABLE.

(S) THE MALFUNCTION MANAGEMENT UNIT SETTINGS FOR MINIMUM YELLOW TIMING ON ALL CHANNELS SHALL BE SET AT THREE AND ONE HALF (3.5) SECONDS.

(T) THE WATCH DOG TIMER SHALL CAUSE THE CONTROLLER TO GO INTO A FLASH OPERATION IF A MICROPROCESSOR FAILURE IS DETECTED.

(U) ALL BACK PANEL HARDWARE SHALL BE MOUNTED WITH SCREWS. ALL SCREWS SHALL BE COMPLETELY SCREWED DOWN. RIVETS OR OTHER NON-REMOVABLE FASTENERS ARE NOT ACCEPTABLE.

(V) WIRE CONNECTIONS ON THE BACK PANEL SHALL BE MADE WITH CRIMP TERMINALS AND THREADED FASTENERS. TELEPHONE TYPE KNIFE CONNECTORS (SOLDERED OR OTHERWISE) ARE NOT ACCEPTABLE.

(W) ALL WIRES FASTENED TO THE LOAD SWITCH AND FLASHER PLUGS SHALL BE SOLDERED IN PLACE.

(X) THE BACK PANEL AND POWER DISTRIBUTION PANEL SHALL HAVE SILK-SCREENED TERMINAL/SOCKET FUNCTION IDENTIFICATION LABELS SUCH AS AC COM, PHASE 3 GREEN, 115 VAC, SIGNAL BUS, ETC. REFERENCE NUMBERS SHALL NOT BE ACCEPTABLE IN LIEU OF FUNCTION LABELS BUT THEY CAN SUPPLEMENT THEM. ADDITIONAL TERMINAL BLOCKS AND AUXILIARY PANELS SHALL USE SILK SCREENED REFERENCE NUMBERS TO IDENTIFY TERMINAL CONNECTIONS.

(Y) ALL TERMINAL STRIPS IN CLOSE PROXIMITY OF SHELF MOUNTED CONTROL DEVICE EQUIPMENT SHALL BE COVERED WITH NON-CONDUCTIVE MATERIAL TO PREVENT ACCIDENTAL CONTACT WITH THE DEVICES. ALL TERMINAL STRIPS SHALL BE READILY ACCESSIBLE WITHOUT REMOVAL OF ANY EQUIPMENT.

(Z) THE CABINET SHALL HAVE TWO (2) NON-VENTED (SOLID) SHELVES SPACED AT LEAST 9" APART. BOTH SHELVES SHALL HAVE A WIDTH OF 13" AND THE BACK EDGE OF THE SHELF SHALL BE LIPPED WITH THE LIP POINTING UP. THE FRONT EDGE OF THE SHELF SHALL BE LIPPED WITH THE LIP POINTING DOWN. ALL LIP EDGES SHALL BE ROUNDED. THE SHELVES SHALL BE ATTACHED TO THE SIDE PANELS. THE SHELF ARRANGEMENT SHALL BE SUCH THAT ALL SHELF DEVICES FIT ON THE SHELVES.

(AA) THERE SHALL BE A MINIMUM OF ONE (1) INCH EMPTY SPACE BETWEEN ALL ITEMS ATTACHED TO THE DOOR AND ALL SHELF-MOUNTED DEVICES INCLUDING ITS CONNECTING HARNESS(ES), ALL LOAD SWITCHES, FLASHER AND ALL SIDE-PANEL-MOUNTED ITEMS.

(BB) FOR LARGER CABINETS 'P' & 'M', TWO VENTILATION FANS SHALL BE PROVIDED. THE THERMOSTAT CONTROLLING THE VENTILATING FAN CIRCUIT SHALL BE SET AT 95 DEGREES FAHRENHEIT. (ALSO SEE ODOT 733.04 (1))

(CC) ALL FLASH TRANSFER RELAYS SHALL BE WIRED FOR FAIL-SAFE OPERATION (ENERGIZED DURING NORMAL OPERATION) AND WIRED WITH A MAXIMUM OF TWO PHASES PER RELAY.

N

0 10 20 40 HORIZONTAL SCALE IN FEET

CALCULATED HLM 03/02
CHECKED SSG 03/02

TRAFFIC CONTROL GENERAL NOTES
CANNON DR. & 12TH. AVE./RAMP B, CANNON DR. & 9TH. AVE./RAMP A

FRA-315-3.04

DRAWING: P:\0023.3503\Ramps\0023signals3.dwg
August 07, 2002 12:51pm

(DD) THE CONTROLLER ASSEMBLY, WHEN PLACED IN OR COMING OUT OF AN AUTOMATIC FLASHING MODE, SHALL CONFORM TO THE AUTOMATIC FLASHING CRITERIA SET FORTH IN THE OHIO MANUAL OF UNIFORM TRAFFIC CONTROL DEVICES, SECTION 6B–18, INCLUDING THE FOLLOWING ADDITIONS.

1) A VEHICULAR CALL SHALL BE PLACED ON ALL PHASES IMMEDIATELY PRIOR TO ENTERING THE "FLASH" MODE SO THE CONTROLLER WILL CYCLE TO THE "FLASH" POINT. IT IS OPTIONAL TO HAVE ONE EXTERNAL VEHICULAR CALL PLACED IMMEDIATELY ON ALL PHASES WHEN THE "FLASH" MODE TERMINATES. THE CONTROLLER SHALL OPERATE NORMALLY ONCE THE "FLASH" MODE SEQUENCE IS TERMINATED.

2) THE CONTROLLER SHALL ENTER THE "FLASH" MODE AT THE END OF THE THROUGH SIDE STREET PHASE(S) YELLOW (OR DURING THE SIDE STREET PHASE(S) RED CLEARANCE INTERVAL) BUT JUST PRIOR TO ANY MAIN STREET GREEN.

THE FLASH TRANSFER LOGIC DEVICE SHALL TRIGGER THE "FLASH" OPERATION, SHALL BE SOLID STATE, SHALL BE EXTERNAL TO THE CONTROLLER (A CABINET ASSEMBLY DEVICE), AND SHALL FUNCTION WITH ANY NEMA CONTROLLER. THIS CIRCUITRY SHALL BE SUPPLIED IN ADDITION TO ANY INTERNAL CONTROLLER FLASH LOGIC PROVIDED BY THE CONTROLLER. (ALSO SEE ODOT 733.04(11.b))

(EE) THE POWER CABLE SHALL BE CONNECTED TO AN ACCESSIBLE TERMINAL STRIP WHICH SHALL BE LOCATED NEAR THE BOTTOM OF THE CABINET AND SHALL BE OF SUFFICIENT SIZE TO ACCEPT A SUPPLIED #8 WIRE LUG. THE TERMINAL STRIP SHALL BE COVERED OR SHIELDED TO MINIMIZE ACCIDENTAL CONTACT DURING NORMAL SERVICING OPERATIONS. THE COVER SHALL BE SNAPPED ON/OFF OR SECURED BY STANDARD SCREWS. THE POWER CABLE LUG TERMINAL CONNECTION SHALL BE LOCATED IMMEDIATELY BELOW THE MAIN POWER DISTRIBUTION BREAKER. POWER SHALL BE JUMPERED TO THE MAIN POWER DISTRIBUTION BREAKER. THE POWER DISTRIBUTION PANEL SHALL BE LOCATED IN THE BOTTOM RIGHT SIDE OF THE CABINET OR IT SHALL BE AN INTEGRAL PART OF THE RIGHT SIDE OF THE BACK PANEL. THERE SHALL BE A MINIMUM OF TWO (2) INCHES CLEARANCE BETWEEN THE POWER TERMINAL AND THE BOTTOM OF THE CABINET.

(FF) A #4 WIRE LUG SHALL BE PROVIDED FOR ATTACHING A GROUNDING WIRE FROM A GROUND ROD. THE GROUNDING WIRE LUG SHALL BE ATTACHED TO THE POWER DISTRIBUTION PANEL (LOWER LEFT CORNER), OR IF NONE, TO THE BACK PANEL (BOTTOM MIDDLE).

(GG) A SINGLE POLE MERCURY PLUNGER RELAY SHALL BE INSTALLED WHICH WILL ALLOW POWER TO BE REMOVED FROM THE VEHICULAR AND PEDESTRIAN POWER BUSES. THE MERCURY RELAY SHALL BE RATED AT 35 AMPS AND THE RELAY COIL WIRED WITH A NOISE SUPPRESSION DEVICE.

(HH) ALL EXTERNAL RELAY COILS SHALL HAVE NOISE SUPPRESSION DEVICES.

(II) THE DOOR FILTER (U.L. LISTED CLASS 2, STANDARD 900) SHALL CONSIST OF THREE DISTINCT LAYERS OF FILTERING MEDIA. THE FIRST AIR ENTERING LAYER SHALL BE COMPOSED OF A DUAL FIBER BLEND OF 100% NON–WOVEN POLYESTER TO TRAP LARGER SIZED PARTICLES. THE NEXT LAYER SHALL BE A DUAL PLY, DUAL DENIER, 100% NON–WOVEN POLYESTER OF SMALLER SIZE TO TRAP FINER PARTICLES PASSING THROUGH THE FIRST LAYER. A NON–TOXIC, NON–MIGRATORY, ODORLESS TACKIFIER SHALL BE APPLIED TO THESE LAYERS. ADHESIVES SPRAYED ON THE LAYERS ARE NOT ACCEPTABLE. THE ADHESIVE SHALL BE INCORPORATED INTO THE LAYER MEDIA DURING THE MANUFACTURING PROCESS OF THE RAW MATERIAL. A 10 GAUGE MESH SHALL BE INCORPORATED IN THE FILTER DESIGN FOR RIGIDITY. SUFFICIENT MEDIA OVERLAP SHALL BE PRESENT ABOUT THE WIRE PERIMETER TO INSURE POSITIVE SELF SEAL. THE DOOR FILTER HOLDER SHALL BE DESIGNED SO THE FILTER MAKES A POSITIVE CONTACT WITH THE CABINET DOOR AT ALL TIMES AND UNDER ALL CONDITIONS AND ALL SITUATIONS.

THE CONTROLLER UNIT SHALL BE SUPPLIED WITH AN INTERNAL SYSTEM INTERFACE TO PROVIDE COMMUNICATION OVER AN UNCONDITIONED VOICE GRADE PRIVATE LINE CHANNEL OR EQUIVALENT CABLE. THE COMMUNICATION INTERFACE SHALL BE FULLY COMPATIBLE WITH THE LATEST REVISION ECONOLITE SOFTWARE, AND MASTER COMMUNICATION PROCESSORS USE BY THE CITY OF COLUMBUS. THE CONTROLLER SHALL BE COMPLETELY COMPATIBLE AND CAPABLE OF INTERCONNECTION WITH THE OHIO STATE UNIVERSITY CLOSED LOOP SIGNAL SYSTEM. THE CONTROLLER SHALL BE FULLY EQUIPPED WITH ALL EXTERNAL AND INTERNAL EQUIPMENT TO ALLOW FOR INTERCONNECT INTO THE SYSTEM.

THE CONTRACTOR SHALL CONNECT THE CONTROLLER TO THE EXISTING SIGNAL SYSTEM TO PROVIDE ALL INTERCONNECTION FUNCTIONS.

FOUR (4) SETS OF CABINET WIRING SCHEMATICS, ONE (1) SERVICE MANUAL AND ONE (1) INSTRUCTIONAL MANUAL SHALL BE PROVIDED PER CABINET. DELIVERY OF THESE DIAGRAMS & MANUALS SHALL ACCOMPANY THE CABINET. THE CONTRACTOR SHALL CLEARLY NOTE ANY DEVIATIONS, CHANGES, ADDITIONS OR OTHER MODIFICATIONS ON THE DIAGRAMS AND MANUALS THAT ARE APPROPRIATE TO REFLECT THE EXACT EQUIPMENT TO BE PROVIDED. THE COST FOR THIS MATERIAL SHALL BE INCIDENTAL TO THE COST OF THE SIGNAL EQUIPMENT. THE COPIES OF DIAGRAMS AND MANUALS SHALL BE STORED IN A PLASTIC ENVELOPE MOUNTED HORIZONTALLY AND SECURELY FASTENED TO THE INSIDE OF THE MAIN CABINET DOOR. THE ENVELOPE OPENING SHALL BE TO THE RIGHT OR LEFT. THE ENVELOPE SHALL NOT BLOCK ANY PART OF THE AIR FILTER OR THE AIR INTAKE LOCATED IN THE DOOR.

SERVICE & INSTRUCTIONAL MANUALS SHALL INCLUDE SECTIONS COVERING THE GENERAL DESCRIPTION OF EQUIPMENT, EQUIPMENT INSTALLATION PROCEDURES, EQUIPMENT PROGRAMMING PROCEDURES, THEORY OF OPERATION WITH SYSTEM DESCRIPTION INCLUDING BLOCK DIAGRAMS AND DETAILED CIRCUIT DIAGRAMS, PREVENTIVE MAINTENANCE, FIELD TROUBLE ANALYSIS, BENCH TROUBLE ANALYSIS, TROUBLESHOOTING ANALYSIS CHART, WAVE FORMS, VOLTAGE MEASUREMENTS, VOLTAGE MEASUREMENT CHARTS, PARTS LIST, ELECTRICAL INTERCONNECTION DRAWINGS, SCHEMATIC AND LOGIC DIAGRAMS, ASSEMBLY DRAWINGS WITH PICTORIAL DIAGRAMS SHOWING PHYSICAL LOCATIONS AND IDENTIFICATION OF EACH COMPONENT.

N

0 10 20 40 HORIZONTAL SCALE IN FEET

CALCULATED H.M. 03/02

CHECKED DDS 03/02

TRAFFIC CONTROL GENERAL NOTES

CANNON DR. & 12TH. AVE./RAMP B, CANNON DR. & 9TH. AVE./RAMP A

FRA–315–3.04

152
238

DRAWING P:\00233\PSU\Ramps\00233gnotes4.dwg
June 20, 2002, 1:15pm

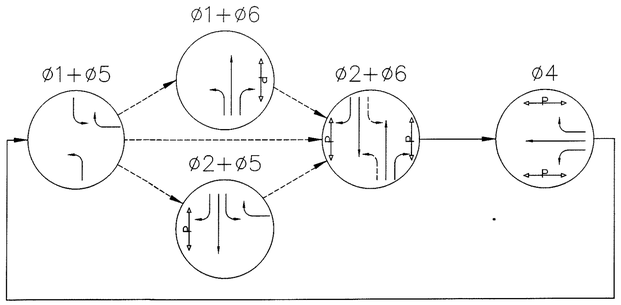

EXISTING 24" PULL BOX, STA. 70+10. SPLICE TO INTERCONNECT IN PULL BOX.

1–2" CONDUIT, 105', INTERCONNECT.

18" PULL BOX STA. 69+05, 45' LT.

2–2" CONDUIT, 83'.
1–2": 1–2c.
1–2": INTERCONNECT.

ABANDON EXISTING UNDERGROUND POWER.

1–2" CONDUIT, 76', 1–2c PWR.

18" PULL BOX STA. 68+22, 48' LT.

1–2" CONDUIT, 42'.
1–2": INTERCONNECT.

1–2" CONDUIT, 40', 2–2c

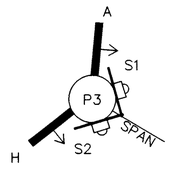

PROPOSED STRAIN POLE P3
STA. 67+84.4. 62.0' LT.
INSTALL 2 PROPOSED PEDESTRIAN SIGNAL HEADS "A" AND "H" & 2 PROPOSED PEDESTRIAN PUSHBUTTONS.

24" PULL BOX STA. 67+83, 66' LT.

REMOVE EXISTING PULL BOX.

INSTALL PROPOSED BULLRING AT THE EXISTING POLE LOCATION. REMOVE EXISTING STRAIN POLE.

EX. INTERFACE POLE

ONE WAY

RAMP B

2–3" CONDUIT, 72',
1–3": INTERCONNECT,
1–3": 1–2c PWR.

24" PULL BOX, STA. 67+15, 42' LT.

EXISTING STRAIN POLE

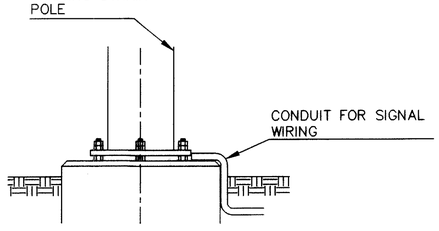

CONDUIT FOR SIGNAL WIRING

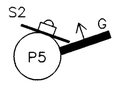

PROPOSED PEDESTAL P5, STA. 67+16, 45' LT.
WITH 1 PROPOSED PEDESTRIAN SIGNAL HEAD "G" AND 1 PROPOSED PEDESTRIAN PUSHBUTTON.

3–2" CONDUIT 46',
1–2": 1–2c, 1–5c.
1–2": 1–2c PWR.
1–2": INTERCONNECT.

EXISTING LOOPS TO BE REMOVED.

24" PULL BOX, STA. 66+72, 33' LT.

2–3" CONDUIT, 3'. RUN SIGNAL WIRING IN CONDUIT ELBOW OVER EXISTING FOUNDATION.
1–3": 9–2c, 1–5c.
1–3": 5–7c, 4–9c.

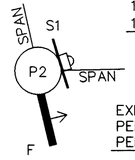

EXISTING PULL BOX TO BE REMOVED.

EXISTING STRAIN POLE P2 TO REMAIN. REMOVE EXISTING PEDESTRIAN SIGNALS AND INSTALL 1 PROPOSED PEDESTRIAN SIGNAL AND 1 PROPOSED PUSHBUTTON.

EXISTING GROUND MOUNTED CONTROLLER TO BE REMOVED.

EXISTING CONCRETE PULL BOX TO REMAIN.

2–3", 2–2" CONDUIT, 26'.
1–3": 13–2c, 2–5c.
1–3": 2–7c, 4–9c.
1–2": 1–2c PWR.
1–2": INTERCONNECT.

GROUND MOUNTED CONTROLLER STA. 66+45.1, 35' LT.

1–2" CONDUIT, 17': 1–2c.

18" PULL BOX, STA. 66+27, 34' LT.

EXISTING SIGNAL HEADS 3,4,5,6,8 TO BE REUSED AND REINSTALLED IN ORIGINAL POSITIONS.

LOOP L7: STA. 69+05, 3' LT.

EXISTING DETECTOR LOOP & PULL BOX TO BE REMOVED.

LOOP L1: STA. 67+93, 9' RT.

EXISTING DETECTOR LOOP TO BE REMOVED.

REMOVE EXISTING 3 SECTION SIGNAL HEAD; INSTALL 5 SECTION HEAD IN SAME LOCATION AS EXISTING.

CANNON DRIVE

EXISTING STRAIN POLE P4 TO REMAIN. REPLACE 2 EXISTING PEDESTRIANS SIGNALS WITH PROPOSED PEDESTRIAN SIGNALS. INSTALL 2 PROPOSED PUSHBUTTONS.

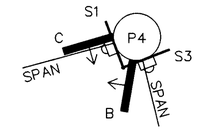

LOOP L3: STA. 67+21, 54' RT.

EXISTING 2" CONDUIT TO BE CLEANED AND REUSED.
30', 3–2c.

EXISTING PULL BOX TO REMAIN.

EXISTING DETECTOR LOOPS TO BE REMOVED.

12th AVE.

LOOP L5: STA. 66+96, 63' RT.

LOOP L4: STA. 67+06, 59' RT.

EXISTING HEADS 1, 2 TO BE REMOVED. UNLASH AND RELASH TO INSTALL SIGNAL CABLE.

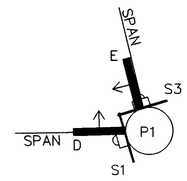

EXISTING STRAIN POLE P1 TO REMAIN. REPLACE 2 EXISTING PEDESTRIANS SIGNALS WITH PROPOSED PEDESTRIAN SIGNALS. INSTALL 2 PROPOSED PUSHBUTTONS.

LOOP L2: STA. 66+57, 3' RT.

EXISTING 2" CONDUIT TO BE CLEANED AND REUSED.
108', 1–2c.

LOOP L6: STA. 65+44, 8' RT.
REMOVE EXISTING LOOP, INSTALL L6 IN ORIGINAL LOCATION.

EXISTING PULL BOX TO REMAIN.

REMOVAL OF TRAFFIC SIGNAL INSTALLATION, AS PER PLAN
6–DETECTOR LOOPS
3–VEHICULAR SIGNAL HEADS
1–STRAIN POLE FOUNDATION
1–STRAIN POLE
8–PEDESTRIAN SIGNAL HEADS
4–PEDESTRIAN PUSH BUTTONS
1–CONTROLLER WITH CABINET, FOUNDATION, AND WORK PAD
4–PULL BOXES
MISC. MESSENGER WIRE AND SIGNAL CABLE

SIGNS

R–73A–9
S1

R–73A–9
S2

R–73A–9
S3

PEDESTRIAN PUSHBUTTON SIGNS ARE INCLUDED IN ITEM 632 PEDESTRIAN PUSHBUTTON, AS PER PLAN.

NTS

SIGNAL HEADS

A, B, C, D,
E, F, G, & H
(L.E.D. TYPE)

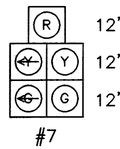

#7

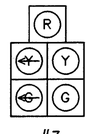

#3

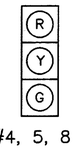

#4, 5, 8

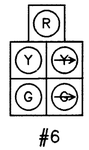

#6

(REUSE AND REINSTALL EXISTING)

NTS

N

0 10 20 40
HORIZONTAL SCALE IN FEET

CALCULATED HLM 03/02
CHECKED SSS 03/02

SIGNAL PLAN
CANNON DRIVE & 12TH. AVE./RAMP B

CANNON DRIVE

FRA–315–3.04

153
238

DRAWING: P:\1002.3505\Ramps\0023505d1.dwg
June 20, 2002, 1:17pm

WIRING DIAGRAM

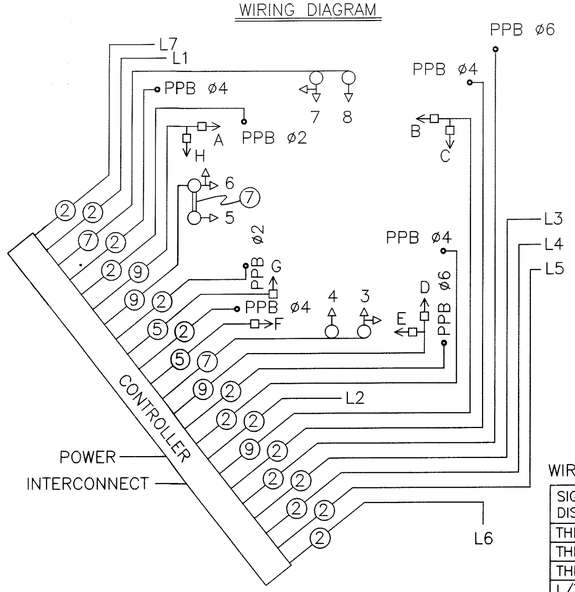

WHITE SHALL BE USED FOR THE COMMON. SPLICE ALL WIRES IN THE SIGNAL HEAD OR PED UNIT. USE #14 AWG 2 WIRE SPADE TERMINAL OR #14 AWG 1 WIRE SPADE TERMINAL TO CONNECT ALL WIRES TO FIELD TERMINALS. USE BUTT SPLICES ON ALL THROUGH WIRES. ALL UNUSED WIRES SHALL BE SPLICED THROUGH AND SHALL HAVE A DEAD–END TERMINAL AT THE END OF THE WIRE.

RUN 9c INTO RIGHT TURN 5 SECTION HEAD FIRST, THEN JUMPER BACK TO THE OTHER HEADS WITH 7c AS INDICATED. THIS WILL KEEP THE CONDUCTOR THE SAME FROM THE CABINET TO THE HEAD INDICATION.

POLE LOCATION & ORIENTATION

POLE NO.	POLE DESIGN NO. TC–81.10	POLE DESIGN NO. TC–85.10	POLE HEIGHT (FT)	FOUNDATION STATION	FOUNDATION OFFSET	FOUNDATION BASE ANGLE FOR FOUNDATION	SPAN ANGLE	BLIND COUPLING SIZE	BLIND COUPLING ANGLE	BLIND COUPLING FROM TOP	INDEX LINE ANGLE	PEDESTRIAN SIGNAL ANGLE	PEDESTRIAN PUSH BUTTON ANGLE	PUSH BUTTON SIGN ANGLE
P1	EXISTING										230°	140°/220°	130°/220°	130°/220°
P2	EXISTING										145°	310°	220°	220°
P3	5		30	67+84.4	62.0 LT.	ALIGN WITH SW	180°	2"	180°	1'	225°	65°/290°	135°/225°	135°/225°
P4	EXISTING										135°	160°/225°	135°/225°	135°/225°
P5		PED	8	67+16.0	45.0 LT.	ALIGN WITH SW					180°	180°	135°	135°

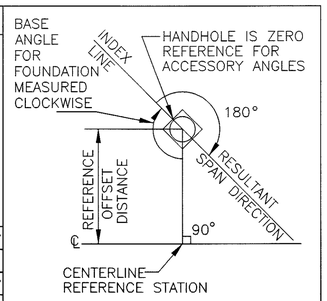

PEDESTAL INDEX LINE IS 180° FROM CENTERLINE REFERENCE LINE.

WIRING COLOR HOOKUP CHART

SIGNAL DISPLAY	WIRE COLOR PER APPROACH
THRU R	RED
THRU Y	ORANGE
THRU G	GREEN
L/T ↶Y	WHITE W/BLACK TRACER
L/T ↶G	BLUE

PED UNIT LOCATION	CROSSWALK DISPLAY	WIRE COLOR
WEST CROSSWALK	WALK	GREEN
	DON'T WALK	RED
SOUTH CROSSWALK	WALK	BLACK
	DON'T WALK	ORANGE
NORTH CROSSWALK	WALK	BLUE
	DON'T WALK	WHITE W/BLACK TRACER
EAST CROSSWALK	WALK	GREEN W/BLACK TRACER
	DON'T WALK	RED W/BLACK TRACER

INTERSECTION TIMING

PHASE	1 NBLT	2 SB		4 WB	5 SBLT	6 NB		
MIN GREEN	8	20		15	8	20		
WALK	–	5		7	–	5		
PED CLR	–	13		15	–	13		
VEH EXT	7.0	5.5		6.0	7.0	5.5		
MAX EXT	–	–		–	–	–		
MAX 1	15	30		25	15	30		
MAX 2	20	40		40	20	40		
MAX 3	–	–		–	–	–		
YELLOW	3.0	3.0		3.0	3.0	3.0		
RED CLR	1.5	1.5		1.5	1.5	1.5		
RED RVT	2.0	2.0		2.0	2.0	2.0		
ACT B4	–	–		–	–	–		
SEC ACT	–	–		–	–	–		
MAX INI	10	20		15	10	20		
TIME B4	–	–		–	–	–		
CARS WAITING	–	–		–	–	–		
TIME TO REDUCE	–	–		–	–	–		
MIN GAP	–	–		–	–	–		
COND. SERV. MIN G	–	–		–	–	–		

QUANTITY SUBSUMMARY

ITEM	EXT.	QUAN.	UNIT	DESCRIPTION
614	11001	LUMP		MAINTAINING TRAFFIC, AS PER PLAN
614	11100	8	HOUR	LAW ENFORCEMENT OFFICER WITH PATROL CAR
625	25402	636	LIN FT	CONDUIT, 2", 713.07, AS PER PLAN
625	25503	130	LIN FT	CONDUIT, 3", 713.07, AS PER PLAN
625	25910	138	LIN FT	CONDUIT, CLEANED AND CABLES REMOVED
625	29001	510	LIN FT	TRENCH, AS PER PLAN
625	30701	3	EACH	PULL BOX, 713.08, 18", AS PER PLAN
625	30707	3	EACH	PULL BOX, 713.08, 24", AS PER PLAN
625	32001	3	EACH	GROUND ROD, AS PER PLAN
632	00501	1	EACH	VEHICULAR SIGNAL HEAD, 5 SECTION, 12" LENS, 1 WAY, AS PER PLAN
632	25001	8	EACH	COVERING OF VEHICULAR SIGNAL HEAD, AS PER PLAN
632	25011	8	EACH	COVERING OF PEDESTRIAN SIGNAL HEAD, AS PER PLAN
632	26001	8	EACH	PEDESTRIAN PUSHBUTTON, AS PER PLAN
632	26501	7	EACH	DETECTOR LOOP, AS PER PLAN
632	27009	6	EACH	LOOP DETECTOR UNIT, DELAY AND EXTENSION TYPE, AS PER PLAN
632	30200	401	LIN FT	MESSENGER WIRE, 7 STRAND, 3/8" DIAMETER, WITH ACCESSORIES
632	40500	137	LIN FT	SIGNAL CABLE, 5 CONDUCTOR, NO. 14 AWG
632	40700	365	LIN FT	SIGNAL CABLE, 7 CONDUCTOR, NO. 14 AWG
632	40900	857	LIN FT	SIGNAL CABLE, 9 CONDUCTOR, NO. 14 AWG
632	53202	409	LIN FT	INTERCONNECT CABLE, 6 PAIR, NO. 19 AWG, SOLID, REA (PE–39)
632	64001	1	EACH	STRAIN POLE FOUNDATION, AS PER PLAN
632	64021	1	EACH	PEDESTAL FOUNDATION, AS PER PLAN
632	65200	3470	LIN FT	LOOP DETECTOR LEAD–IN CABLE
632	67201	270	LIN FT	POWER CABLE, 2 CONDUCTOR, NO. 8 AWG, AS PER PLAN
632	82500	1	EACH	STRAIN POLE, TYPE TC–81.10, DESIGN 5
632	89600	1	EACH	PEDESTAL, 8'
632	90101	1	EACH	REMOVAL OF TRAFFIC SIGNAL INSTALLATION, AS PER PLAN
632	90200	5	EACH	REUSE OF VEHICULAR SIGNAL HEAD
632	90400	8	EACH	SIGNALIZATION MISC.: PEDESTRIAN SIGNAL HEAD, SYMBOLIC, AS PER PLAN
632	90400	1	EACH	SIGNALIZATION, MISC.: SLEEVE FOR SIGNAL FOUNDATION, AS PER PLAN
633	38001	1	EACH	CONTROLLER, ACTUATED, 8 PHASE, SOLID STATE DIGITAL MICROPROCESSOR, WITH CABINET, AS PER PLAN
633	70000	1.85	CU YD	CONCRETE FOR CABINET FOUNDATION
633	70500	12	SQ FT	CONTROLLER WORK PAD
ALL QUANTITIES CARRIED TO THE TRAFFIC SIGNAL SUMMARY, SHEET # 148				

SPAN DIAGRAM

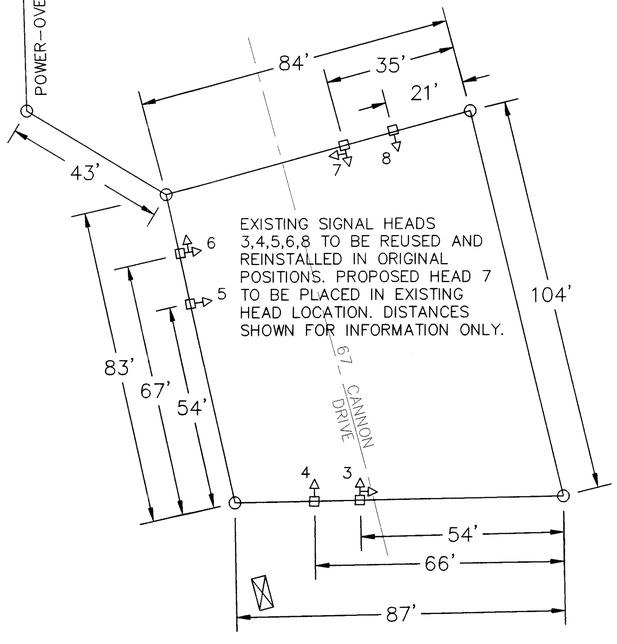

SIGNAL HEADS

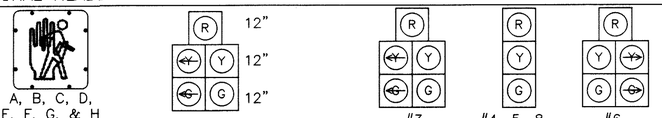

A, B, C, D, E, F, G, & H (L.E.D. TYPE)

#7

#3 (REUSE AND REINSTALL EXISTING)

#4, 5, 8 (REUSE AND REINSTALL EXISTING)

#6 (REUSE AND REINSTALL EXISTING)

NTS

FIELD WIRING HOOK–UP CHART

SIGNAL HEAD #	INDICATION	FIELD TERMINAL	FLASH	SIGNAL HEAD #	INDICATION	FIELD TERMINAL	FLASH
1 (EB)	REMOVED			6 (WB)	R	ø4 R	R
					Y	ø4 Y	
					G	ø4 G	
					↶Y	ø5 Y	
					↶G	ø5 G	
2 (EB)	REMOVED			7 (NB)	R	ø6 R	Y
					Y	ø6 Y	
					G	ø6 G	
3 (SB)	R	ø2 R	Y		↶Y	ø1 Y	
	Y	ø2 Y			↶G	ø1 G	
	G	ø2 G		8 (NB)	R	ø6 R	Y
	↶Y	ø5 Y			Y	ø6 Y	
	↶G	ø5 G			G	ø6 G	
4 (SB)	R	ø2 R	Y	AB (NORTH)	W	OLB G (ø4)	OUT
	Y	ø2 Y			DW	OLB R (ø4)	
	G	ø2 G		CD (EAST)	W	OLC G (ø6)	OUT
5 (WB)	R	ø4 R	R		DW	OLC R (ø6)	
	Y	ø4 Y		EF (SOUTH)	W	OLD G (ø4)	OUT
	G	ø4 G			DW	OLD R (ø4)	
				GH (WEST)	W	OLA G (ø2)	OUT
					DW	OLA R (ø2)	

DETECTOR DATA

LOOP	SIZE (FTxFT)	LOCATION FROM STOP	TURNS	AMP	CHANNEL	PHASE	EXT	DELAY	MODE	CABLE LABEL	REMARKS
L1	6x30	+4	3	1	1	ø5	––	––	PRES.	SBLT	
L2	6x30	+4	3	2	1	ø1	––	––	PRES.	NBLT	
L3	6x27	+13	3	3	1	ø4	––	5	PRES.	WBRT	
L4	6x27	+5	3	3	2	ø4	––	––	PRES.	WB	
L5	6x30	–1	3	4	1	ø4	––	––	PRES.	WBLT	
L6	18x6	–110	3	5	1	ø6	––	––	PRES.	FAR NB	
L7	18x6	–110	3	6	1	ø2	––	––	PRES.	FAR SB	

SIGNS

S1 R–73A–9

S2 R–73A–9

S3 R–73A–9

PEDESTRIAN PUSH BUTTON SIGNS ARE INCLUDED IN ITEM 632 PEDESTRIAN PUSH BUTTON, AS PER PLAN.

NTS

N

HORIZONTAL SCALE IN FEET: 0, 10, 20, 40

CALCULATED H.M 03/02

CHECKED S.S 03/02

SIGNAL DETAIL & SUBSUMMARY
CANNON DR. & 12TH. AVE./RAMP B

FRA–315–3.04

154
238

DRAWING: P:\0073.50\SURamps\0073.50E11.dwg
June 20, 2002, 1:19pm

REMOVAL OF TRAFFIC SIGNAL INSTALLATION, AS PER PLAN
5–DETECTOR LOOPS
4–PEDESTRIAN PUSH BUTTONS
8–PEDESTRIAN SIGNALS
1–CONTROLLER WITH CABINET, FOUNDATION, AND WORK PAD
1–PULL BOX
MISC. MESSENGER WIRE AND SIGNAL CABLE

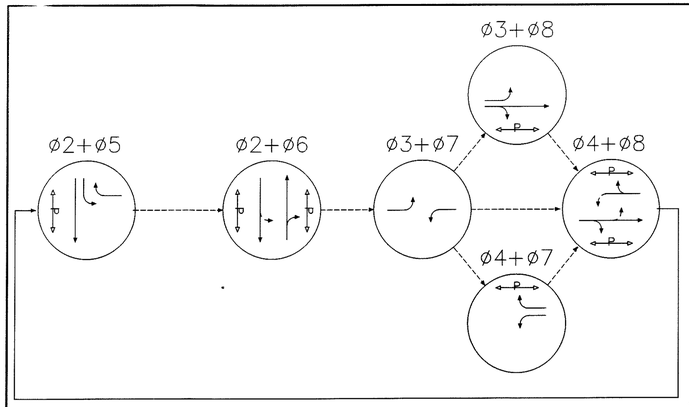

EXISTING PULL BOX TO REMAIN.

EXISTING 2" CONDUIT TO BE CLEANED AND REUSED. 99', 1–2c.

EXISTING STRAIN POLE P3 TO REMAIN. REPLACE 2 EXISTING PEDESTRIANS SIGNALS WITH PROPOSED PEDESTRIAN SIGNALS. INSTALL 2 PROPOSED PUSHBUTTONS.

EXISTING GROUND MOUNTED CONTROLLER & PULL BOX TO BE REMOVED.

GROUND MOUNTED CONTROLLER STA. 54+28, 47' LT.

2–3", CONDUIT, 7', RUN SIGNAL WIRING IN CONDUIT ELBOW OVER EXISTING FOUNDATION.
1–3": 3–7c, 3–9c.
1–3": 10–2c, 1–5c.

2–2" CONDUIT, 12',
1–2": 1–2c, 1–5c.
1–2": 1–2c PWR.

EXISTING POWER SERVICE TO REMAIN.

1–2" CONDUIT, 3',
1–2": 1–2c PWR.

24" PULL BOX STA. 54+14, 45' LT.

1–2" CONDUIT, 35', 3–2c.

18" PULL BOX STA. 54+15, 76' LT.

L7

LOOP L7: STA. 55+50, 9' LT.

24" PULL BOX STA. 54+97, 48' LT. SPLICE TO EXISTING INTERCONNECT.

1–2" CONDUIT, 67', INTERCONNECT.

18" PULL BOX STA. 54+51, 41' LT.

1–2" CONDUIT, 14', 1–2c.

LOOP L1: STA. 54+21, 2' RT.

SPAN, EXISTING SIGNAL HEADS, AND EXISTING SIGNS TO BE REUSED AND REINSTALLED IN ORIGINAL LOCATIONS.

EXISTING STRAIN POLE P4 TO REMAIN. REPLACE 2 EXISTING PEDESTRIANS SIGNALS WITH PROPOSED PEDESTRIAN SIGNALS. INSTALL 2 PROPOSED PUSHBUTTONS.

EXISTING CONDUIT TO BE CLEANED AND REUSED. 30', 2–2c.

EXISTING PULL BOX TO REMAIN.

EXISTING SIGNS TO BE REUSED AND REINSTALLED IN ORIGINAL LOCATIONS.

LOOP L6: STA. 53+96, 47' LT.

LOOP L5: STA. 53+84, 51' LT.

PROPOSED SPAN AND SIGNAL HEADS.

LOOP L3: STA. 53+58, 41' RT.

LOOP L2: STA. 53+84, 42' RT.

SPAN AND EXISTING SIGNAL HEADS TO BE REUSED AND REINSTALLED IN ORIGINAL LOCATIONS.

LOOP L4: STA. 53+67, 45' LT.

1–3" CONDUIT, 71', 1–2c, 1–5c.

24" PULL BOX STA. 54+00, 00' LT.

1–2" CONDUIT, 3', 1–2c, 1–5c.

PROPOSED PEDESTAL P5, STA. 53+37, 44' LT. WITH PROPOSED PEDESTRIAN SIGNAL HEAD "G" AND 1 PROPOSED PUSHBUTTON.

EXISTING STRAIN POLE P2 TO REMAIN. REPLACE EXISTING PEDESTRIAN SIGNAL "F" WITH PROPOSED PEDESTRIAN SIGNAL. INSTALL 1 PROPOSED PUSHBUTTON.

SPAN AND EXISTING SIGNAL HEADS TO BE REUSED AND REINSTALLED IN ORIGINAL LOCATIONS.

EXISTING STRAIN POLE P1 TO REMAIN. REPLACE 2 EXISTING PEDESTRIANS SIGNALS WITH PROPOSED PEDESTRIAN SIGNALS. INSTALL 2 PROPOSED PUSHBUTTONS.

EXISTING 2" CONDUIT TO BE CLEANED AND REUSED. 121', 1–2c.

EXISTING PULL BOX TO REMAIN.

LOOP L8: STA. 51+77, 10' RT.

EXISTING STRAIN POLE

CONDUIT FOR SIGNAL WIRING

RAMP "A"

CANNON DR.

9th AVE.

48"SAN

48"STM

68"x41"STM

30"SAN

36"STM

15"STM

8"STM

12"W

20"W

EX.MH

A77 A78 A79 A80

ONLY ONLY ONLY

SIGNAL HEADS

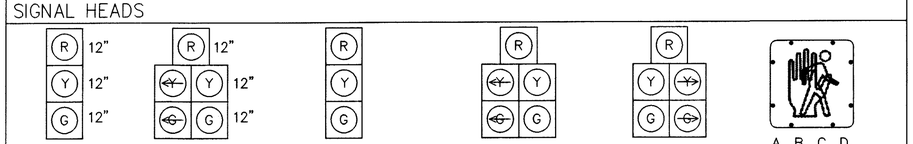

NTS

SIGNS

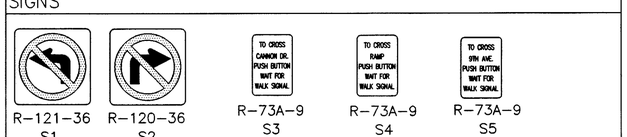

PEDESTRIAN PUSHBUTTON SIGNS ARE INCLUDED IN ITEM 632 PEDESTRIAN PUSHBUTTON, AS PER PLAN. NTS

N

HORIZONTAL SCALE IN FEET
0 10 20 40

CALCULATED HLM 03/02
CHECKED SSS 03/02

SIGNAL PLAN
CANNON DR. & 9TH. AVE./RAMP A

FRA–315–3.04

155
238

DRAWING: P:\2023305\Dtemps\D0233SG2.dwg
March 20, 2002, 1:19pm

WIRING DIAGRAM

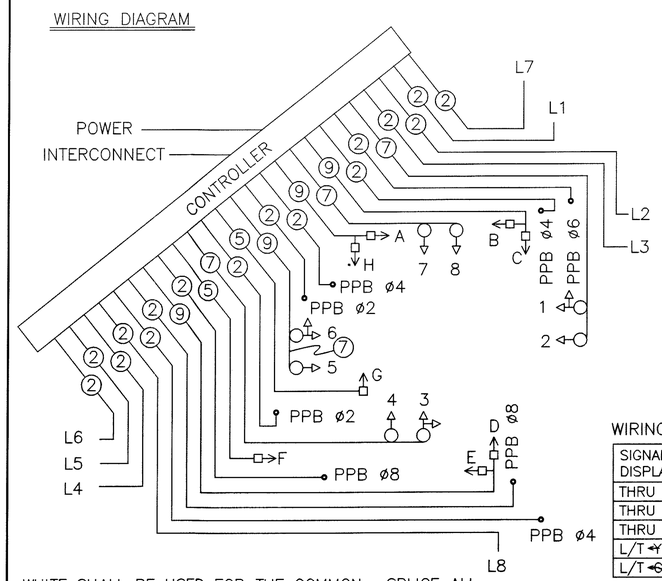

WIRING COLOR HOOKUP CHART

SIGNAL DISPLAY	WIRE COLOR PER APPROACH
THRU R	RED
THRU Y	ORANGE
THRU G	GREEN
L/T ↰Y	WHITE W/BLACK TRACER
L/T ↰G	BLUE

WHITE SHALL BE USED FOR THE COMMON. SPLICE ALL WIRES IN THE SIGNAL HEAD OR PED UNIT. USE #14 AWG 2 WIRE SPADE TERMINAL OR #14 AWG 1 WIRE SPADE TERMINAL TO CONNECT ALL WIRES TO FIELD TERMINALS. USE BUTT SPLICES ON ALL THROUGH WIRES. ALL UNUSED WIRES SHALL BE SPLICED THROUGH AND SHALL HAVE A DEAD-END TERMINAL AT THE END OF THE WIRE.

RUN 9c INTO RIGHT TURN 5 SECTION HEAD FIRST, THEN JUMPER BACK TO THE OTHER HEADS WITH 7c AS INDICATED. THIS WILL KEEP THE CONDUCTOR THE SAME FROM THE CABINET TO THE HEAD INDICATION.

PED UNIT LOCATION	CROSSWALK DISPLAY	WIRE COLOR
WEST CROSSWALK	WALK	GREEN
	DON'T WALK	RED
SOUTH CROSSWALK	WALK	BLACK
	DON'T WALK	ORANGE
NORTH CROSSWALK	WALK	BLUE
	DON'T WALK	WHITE W/BLACK TRACER
EAST CROSSWALK	WALK	GREEN W/BLACK TRACER
	DON'T WALK	RED W/BLACK TRACER

SPAN DIAGRAM

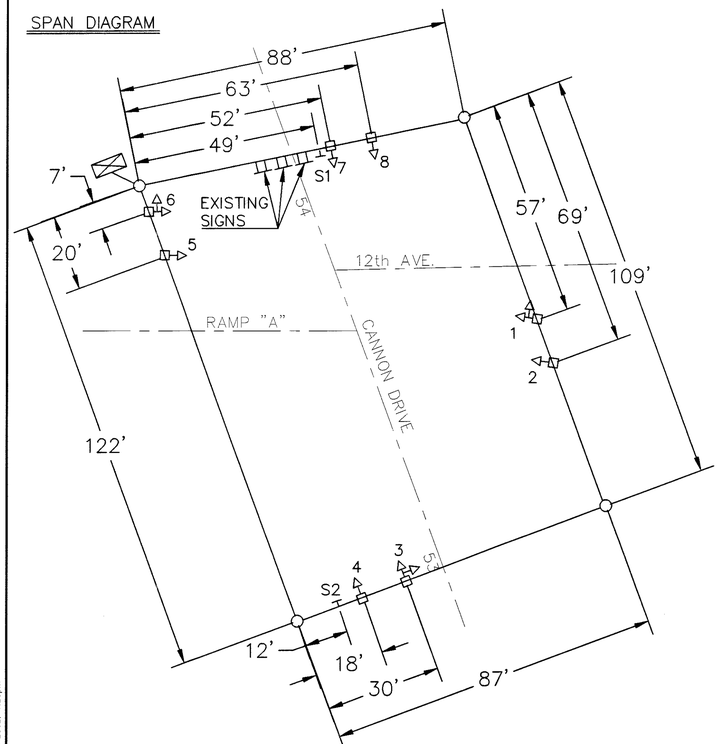

POLE LOCATION & ORIENTATION

POLE NO.	POLE DESIGN NO. TC-81.10	POLE DESIGN NO. TC-85.10	POLE HEIGHT (FT)	FOUNDATION STATION	FOUNDATION OFFSET	FOUNDATION BASE ANGLE FOR FOUNDATION	SPAN ANGLE	BLIND COUPLING SIZE	BLIND COUPLING ANGLE	BLIND COUPLING FROM TOP	INDEX LINE	PEDESTRIAN SIGNAL ANGLE	PEDESTRIAN PUSH BUTTON ANGLE	PUSH BUTTON SIGN ANGLE
P1	EXISTING										225°	135°/225°	135°/225°	135°/225°
P2	EXISTING										135°	315°	180°	180°
P3	EXISTING										230°	40°/310°	140°/230°	140°/230°
P4	EXISTING										140°	130°/220°	130°/220°	130°/220°
P5		PED	8	53+37	44' LT.	ALIGN WITH SW					180°	180°	135°	135°

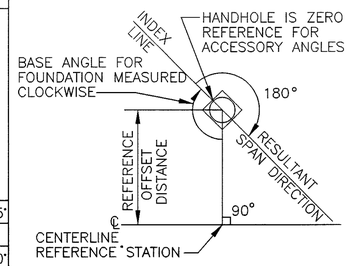

PEDESTAL INDEX LINE IS 180° FROM CENTERLINE REFERENCE LINE.

INTERSECTION TIMING

PHASE	1	2 SB	3 EBLT	4 WB	5 SBLT	6 NB	7 WBLT	8 EB
MIN GREEN		20	8	15	8	20	8	15
WALK		5	–	7	–	5	–	7
PED CLR		12	–	15	–	12	–	15
VEH EXT		5.5	6.0	6.0	6.0	5.5	6.0	6.0
MAX EXT		–	–	–	–	–	–	–
MAX 1		30	15	25	15	30	15	25
MAX 2		40	20	40	20	40	20	40
MAX 3		–	–	–	–	–	–	–
YELLOW		3.0	3.0	3.0	3.0	3.0	3.0	3.0
RED CLR		1.5	1.5	1.5	1.5	1.5	1.5	1.5
RED RVT		2.0	2.0	2.0	2.0	2.0	2.0	2.0
ACT B4		–	–	–	–	–	–	–
SEC ACT		–	–	–	–	–	–	–
MAX INI		20	10	15	10	20	10	15
TIME B4		–	–	–	–	–	–	–
CARS WAITING		–	–	–	–	–	–	–
TIME TO REDUCE		–	–	–	–	–	–	–
MIN GAP		–	–	–	–	–	–	–
COND. SERV. MIN G		–	–	–	–	–	–	–

FIELD WIRING HOOK-UP CHART

SIGNAL HEAD #	INDICATION	FIELD TERMINAL	FLASH	SIGNAL HEAD #	INDICATION	FIELD TERMINAL	FLASH
1 (EB)	R	ø8 R	R	6 (WB)	R	ø4 R	R
	Y	ø8 Y			Y	ø4 Y	
	G	ø8 G			G	ø4 G	
	↰Y	ø3 Y			↰Y	ø5 Y	
	↰G	ø3 G			↰G	ø5 G	
2 (EB)	R	ø8 R	R	7 (NB)	R	ø6 R	Y
	Y	ø8 Y			Y	ø6 Y	
	G	ø8 G			G	ø6 G	
3 (SB)	R	ø2 R	Y	8 (NB)	R	ø6 R	Y
	Y	ø2 Y			Y	ø6 Y	
	G	ø2 G			G	ø6 G	
	↰Y	ø5 Y		AB (NORTH)	W	OLB G (ø4)	OUT
	↰G	ø5 G			DW	OLB R (ø4)	
4 (SB)	R	ø2 R	Y	CD (EAST)	W	OLC G (ø6)	OUT
	Y	ø2 Y			DW	OLC R (ø6)	
	G	ø2 G		EF (SOUTH)	W	OLD G (ø8)	OUT
5 (WB)	R	ø4 R	R		DW	OLD R (ø8)	
	Y	ø4 Y		GH (WEST)	W	OLA G (ø2)	OUT
	G	ø4 G			DW	OLA R (ø2)	

SIGNAL HEADS

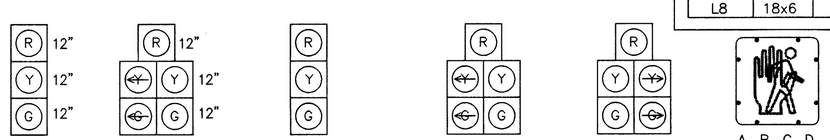

#2 (PROPOSED) #1 (PROPOSED) #4, 5, 7, 8 (REUSE AND REINSTALL EXISTING) #3 (REUSE AND REINSTALL EXISTING) #6 (REUSE AND REINSTALL EXISTING)

A, B, C, D, E, F, G, & H (L.E.D. TYPE) NTS

QUANTITY SUBSUMMARY

ITEM	EXT.	QUAN.	UNIT	DESCRIPTION
614	11001	LUMP		MAINTAINING TRAFFIC, AS PER PLAN
614	11100	8	HOUR	LAW ENFORCEMENT OFFICER WITH PATROL CAR
625	25402	146	LIN FT	CONDUIT, 2", 713.07, AS PER PLAN
625	25503	85	LIN FT	CONDUIT, 3", 713.07, AS PER PLAN
625	25910	250	LIN FT	CONDUIT, CLEANED AND CABLES REMOVED
625	29001	212	LIN FT	TRENCH, AS PER PLAN
625	30701	1	EACH	PULL BOX, 713.08, 18", AS PER PLAN
625	30707	2	EACH	PULL BOX, 713.08, 24", AS PER PLAN
625	32001	2	EACH	GROUND ROD, AS PER PLAN
630	79000	2	EACH	SIGN HANGER ASSEMBLY, SPAN WIRE
630	80102	18	SQ FT	SIGN, FLAT SHEET, TYPE G
630	87100	3	EACH	REMOVAL OF OVERHEAD MOUNTED SIGN AND REERECTION
632	00301	1	EACH	VEHICULAR SIGNAL HEAD, 3 SECTION, 12" LENS, 1 WAY, AS PER PLAN
632	00501	1	EACH	VEHICULAR SIGNAL HEAD, 5 SECTION, 12" LENS, 1 WAY, AS PER PLAN
632	25001	8	EACH	COVERING OF VEHICULAR SIGNAL HEAD, AS PER PLAN
632	25011	8	EACH	COVERING OF PEDESTRIAN SIGNAL HEAD, AS PER PLAN
632	26001	8	EACH	PEDESTRIAN PUSHBUTTON, AS PER PLAN
632	26501	8	EACH	DETECTOR LOOP, AS PER PLAN
632	27009	6	EACH	LOOP DETECTOR UNIT, DELAY AND EXTENSION TYPE, AS PER PLAN
632	30200	406	EACH	MESSENGER WIRE, 7 STRAND, 3/8 INCH DIAMETER, WITH ACCESSORIES
632	40500	313	LIN FT	SIGNAL CABLE, 5 CONDUCTOR, NO. 14 AWG
632	40700	566	LIN FT	SIGNAL CABLE, 7 CONDUCTOR, NO. 14 AWG
632	40900	547	LIN FT	SIGNAL CABLE, 9 CONDUCTOR, NO. 14 AWG
632	53202	77	LIN FT	INTERCONNECT CABLE, 6 PAIR, NO. 19 AWG, SOLID, REA (PE-39)
632	64021	1	EACH	PEDESTAL FOUNDATION, AS PER PLAN
632	65200	2341	LIN FT	LOOP DETECTOR LEAD-IN CABLE
632	67201	22	LIN FT	POWER CABLE, 2 CONDUCTOR, NO. 8 AWG, AS PER PLAN
632	89600	1	EACH	PEDESTAL, 8'
632	90101	1	EACH	REMOVAL OF TRAFFIC SIGNAL INSTALLATION, AS PER PLAN
632	90200	6	EACH	REUSE OF VEHICULAR SIGNAL HEAD
632	90400	8	EACH	SIGNALIZATION, MISC.: PEDESTRIAN SIGNAL HEAD, SYMBOLIC, AS PER PLAN
633	38001	1	EACH	CONTROLLER, ACTUATED, 8 PHASE, SOLID STATE DIGITAL MICROPROCESSOR,
				WITH CABINET, AS PER PLAN
633	70000	1.85	CU YD	CONCRETE FOR CABINET FOUNDATION
633	70500	12	SQ FT	CONTROLLER WORK PAD

ALL QUANTITIES CARRIED TO THE TRAFFIC SIGNAL SUMMARY, SHEET # 148

DETECTOR DATA

LOOP	SIZE (FTxFT)	LOCATION FROM STOP	TURNS	AMP	CHANNEL	PHASE	EXT	DELAY	MODE	CABLE LABEL	REMARKS
L1	6x30	+3	3	1	1	ø5	--	--	PRES.	SBLT	
L2	6x30	+6	3	2	1	ø4	--	--	PRES.	WBRT	
L3	6x30	+5	3	2	2	ø7	--	--	PRES.	WBLT	
L4	6x36	+15	3	3	1	ø8	--	--	PRES.	EBRT	
L5	6x25	+4	3	3	2	ø8	--	--	PRES.	EB	
L6	6x25	+4	3	4	1	ø8	--	--	PRES.	EBLT	
L7	18x6	-126	3	5	1	ø2	--	--	PRES.	FAR SB	
L8	18x6	-114	3	6	1	ø6	--	--	PRES.	FAR NB	

SIGNS

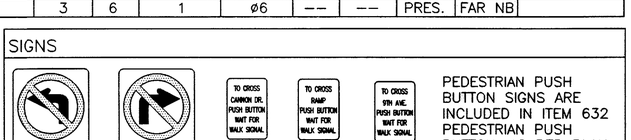

R-121-36 S1 | R-120-36 S2 | R-73A-9 S3 | R-73A-9 S4 | R-73A-9 S5

PEDESTRIAN PUSH BUTTON SIGNS ARE INCLUDED IN ITEM 632 PEDESTRIAN PUSH BUTTON, AS PER PLAN.

NTS

N

0 10 20 40 HORIZONTAL SCALE IN FEET

CALCULATED HLM 03/02
CHECKED SSS 03/02

SIGNAL DETAIL & SUBSUMMARY
CANNON DR. & 9TH. AVE./RAMP A

FRA-315-3.04

155A
238

DRAWING: P:\00233\PS&R\Ramps\00233DET2.dwg
Date: Apr 26, 2002, 1:09pm

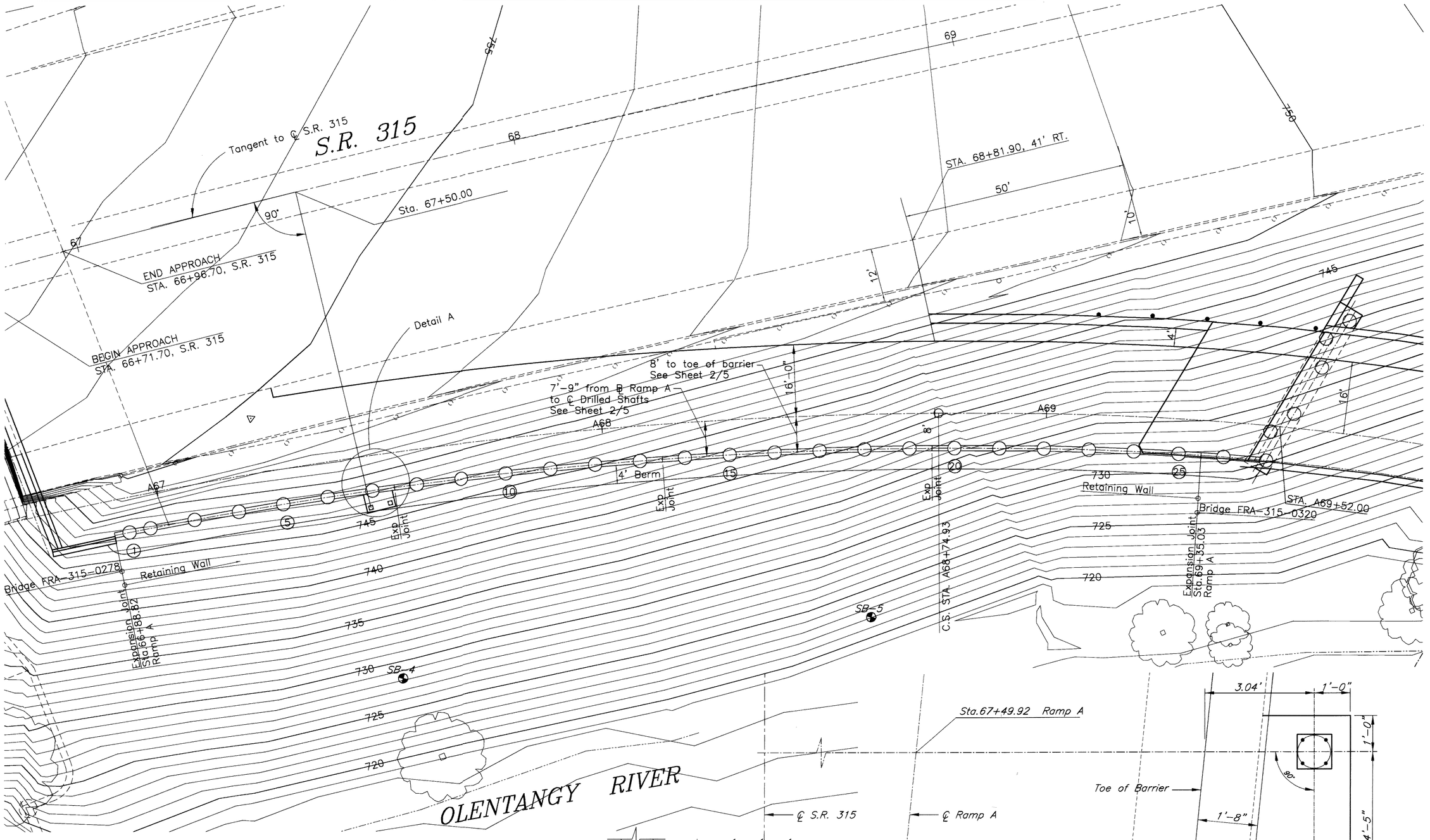

HORIZONTAL CURVE DATA

P.I. STA. A67+24.42	P.I. STA. A69+90.31
△ = 18°12'58"	△ = 21°00'00"
Dc = 06°00'00"	θs = 9°00'00"
Rc = 954.93'	Ls = 200'
Lc = 303.60'	T_1 = 115.38'
T = 153.09'	T_2 = 86.82'
Se = 0.060	

VERTICAL CURVE DATA

PVI STA. = A67+50	PVI STA. = A71+00
PVI ELEV. = 754.45	PVI ELEV. = 744.93
G_1 = -1.12	G_1 = -2.72
G_2 = -2.72	G_2 = -3.2
VC = 250'	VC = 400'

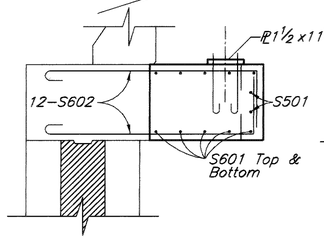

SECTION A-A

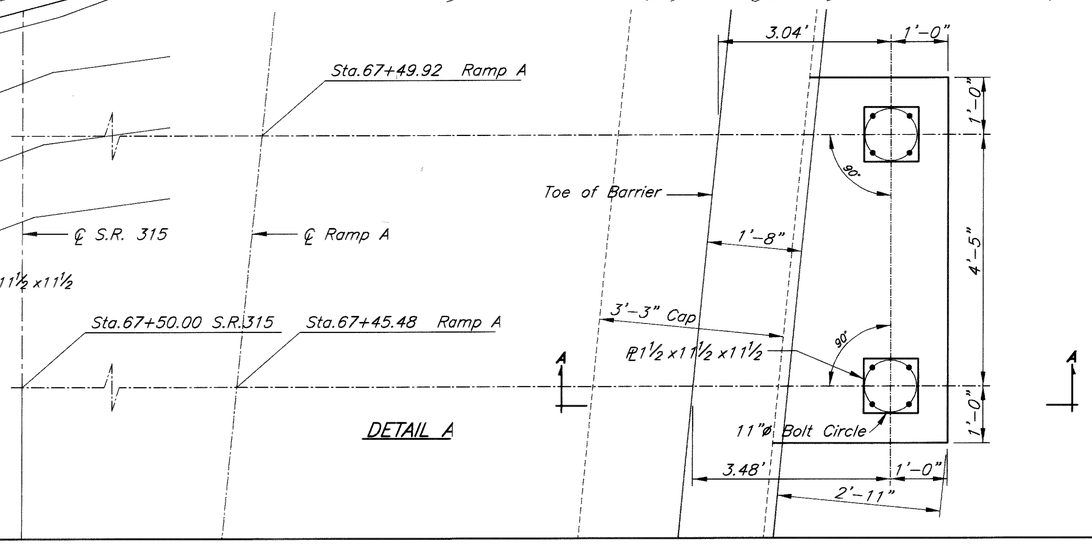

DETAIL A

DESIGN AGENCY
ERIKSSON ENGINEERING LTD.
1523 CHESAPEAKE AVENUE
COLUMBUS, OH 43212

DESIGNED	DRAWN	REVIEWED	DATE
DA	DA	CE	8.28.01
CHECKED	REVISED		

SITE PLAN
RETAINING WALL A
RAMP A OVER OLENTANGY RIVER

FRA-315-3.04

1 | 5

156
238

June 18, 2002 Q:\BRIDGE\3453\OSU\RAMPA\RetainingWall\3453astp.dwg

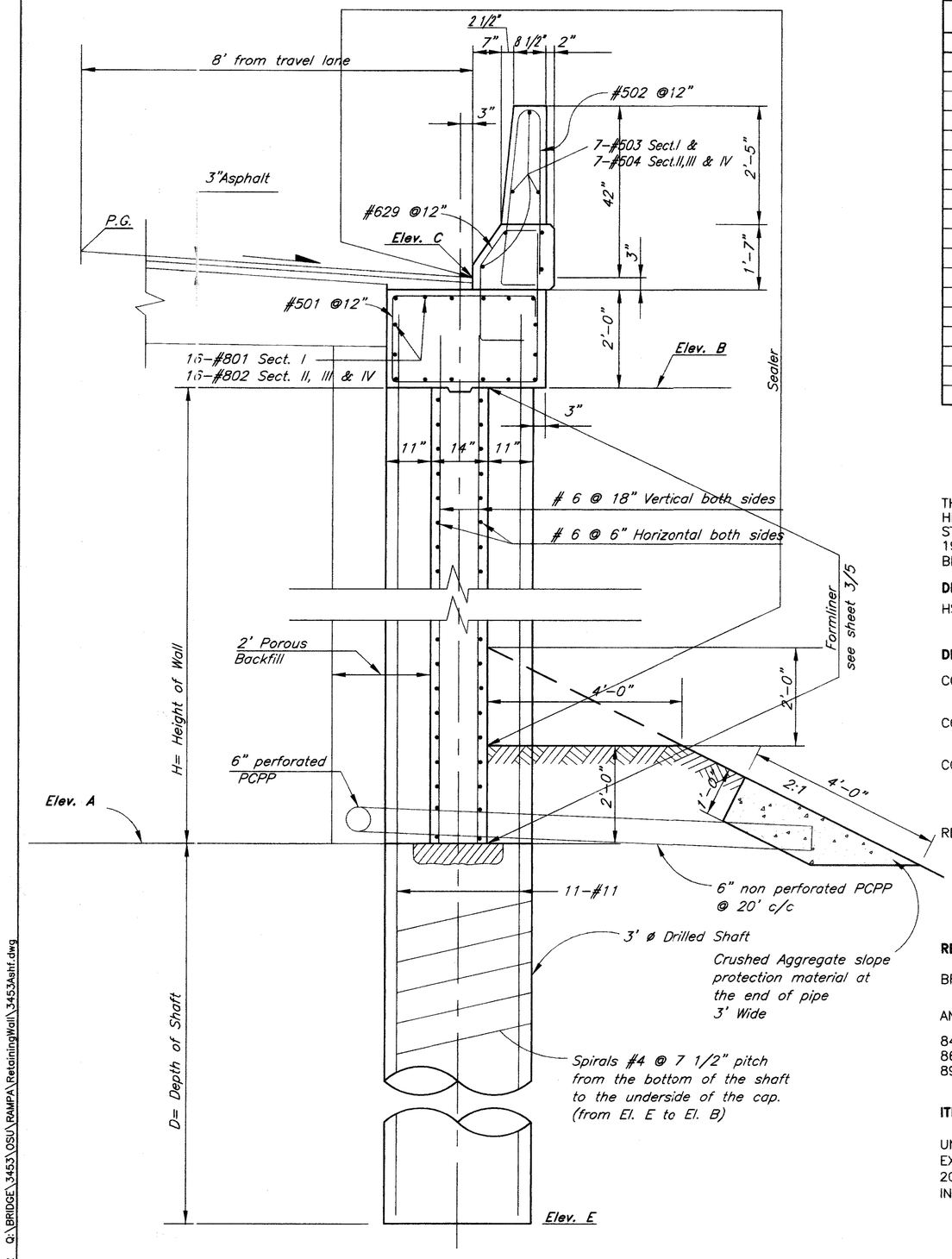

RETAINING WALL DETAIL

ESTIMATED QUANTITIES

ITEM	ITEM EXT.	TOTAL	UNIT	DESCRIPTION	SPEC. INSTRUCT.
503	21301	LUMP	LS	UNCLASSIFIED EXCAVATION, AS PER PLAN	SEE SHEET **157**
512	33000	13	SY	TYPE 2 WATERPROOFING	SEE SHEET **159**
516	13600	139	SF	1" PREFORMED EXPANSION JOINT FILLER	
518	21230	--	LUMP	POROUS BACKFILL WITH FILTER FABRIC	
518	40000	243	LF	6" PERFORATED CORRUGATED PLASTIC PIPE	
518	40010	132	LF	6" NON-PERFORATED CORRUGATED PLASTIC PIPE, INCLUDING SPECIALS	
524	94702	664	LF	DRILLED SHAFTS 36" DIAMETER, ABOVE BEDROCK	
842	34450	54	CY	CLASS S CONCRETE, MISC.: DEFLECTION BARRIER	
842	51100	146	CY	CLASS C CONCRETE, MISC.: CAP AND WALLS BETWEEN SHAFTS, AS PER PLAN	SEE SHEET **157, 158**
864	10100	578	SY	SEALING OF CONCRETE SURFACES (EPOXY-URETHANE)	
				Computed by: DA Date: 1.9.01	
				Checked by: CE Date: 6.26.01	

GENERAL NOTES

THIS STRUCTURE CONFORMS TO "STANDARD SPECIFICATIONS FOR HIGHWAY BRIDGES" ADOPTED BY THE AMERICAN ASSOCIATION OF STATE HIGHWAY AND TRANSPORTATION OFFICIALS, 1990, INCLUDING THE 1997, 1998 & 1999 INTERIM SPECIFICATION AND THE ODOT BRIDGE DESIGN MANUAL.

DESIGN LOADING

HS25-44 AND THE ALTERNATE MILITARY LOADING.

DESIGN DATA

CONCRETE CLASS S – COMPRESSIVE STRENGTH 4500 PSI (PARAPETS)

CONCRETE CLASS C – COMPRESSIVE STRENGTH 4000 PSI (CAP & WALLS BETWEEN SHAFTS)

CONCRETE S MODIFIED – COMPRESSIVE STRENGTH 4000 PSI (DRILLED SHAFT)

REINFORCING STEEL – ASTM A615, A616 OR A617 GRADE 60 MINIMUM YIELD STRENGTH 60,000 PSI SPIRAL REINFORCEMENT MAY BE PLAIN BARS, ASTM A82 OR A615

REFERENCE SHALL BE MADE TO STANDARD DRAWING:

BR-1 DATED 1-6-99

AND TO SUPPLEMENTAL SPECIFICATIONS :

842 DATED 1-6-99
864 DATED 7-11-00
899 DATED 10-21-98

ITEM 503, UNCLASSIFIED EXCAVATION, AS PER PLAN:

UNCLASSIFIED EXCAVATION SHALL BE IN ACCORDANCE WITH 503 EXCEPT THAT THE BACKFILL MATERIAL BEHIND THE WALLS SHALL BE 203 GRANULAR MATERIAL PLACED IN 6 INCH LIFTS AND COMPACTED IN ACCORDANCE WITH 304.04.

ITEM 864 SEALING OF CONCRETE SURFACES (EPOXY-URETHANE)

SEALING OF CONCRETE SURFACES (EPOXY-URETHANE) SHALL BE APPLIED TO ALL EXPOSED SURFACES OF THE CONCRETE BARRIER, FRONT, TOP AND BACK SIDE, AND TO ALL THE SURFACES OF THE WALL CAP, COLUMNS, AND WALLS BETWEEN COLUMNS DOWN TO THE FINISHED GROUND.

THE TOP COAT OF THE EPOXY-URETHANE SEALER SHALL BE FEDERAL COLOR STANDARD NO. 17778 (LIGHT NEUTRAL).

ITEM 524 DRILLED SHAFTS

THE LINEAR FEET OF DRILLED SHAFTS AS SHOWN IN THE ESTIMATED QUANTITIES INCLUDES THE DRILLING FOR THE SHAFTS, THE REMOVAL OF THE EXCAVATED MATERIAL, THE CONCRETE AND THE REINFORCING STEEL FOR THE SHAFT FROM THE TIP OF SHAFT TO THE BOTTOM OF THE CAP (ELEVATION B).

DESIGN AGENCY: ERIKSSON ENGINEERING LTD. 1523 CHESAPEAKE AVENUE COLUMBUS, OH 43212
DATE: 8.28.01
REVIEWED:
DRAWN: DA REVISED
DESIGNED: JHN CHECKED: CE

GENERAL NOTES, ESTIMATED QUANTITIES & CROSS SECTION FOR RETAINING WALL A
RAMP A OVER OLENTANGY RIVER

FRA-315-3.04

2 / 5

157
238

June 18, 2002 Q:\BRIDGE\3453\OSU\RAMPA\RetainingWall\3453ashf.dwg

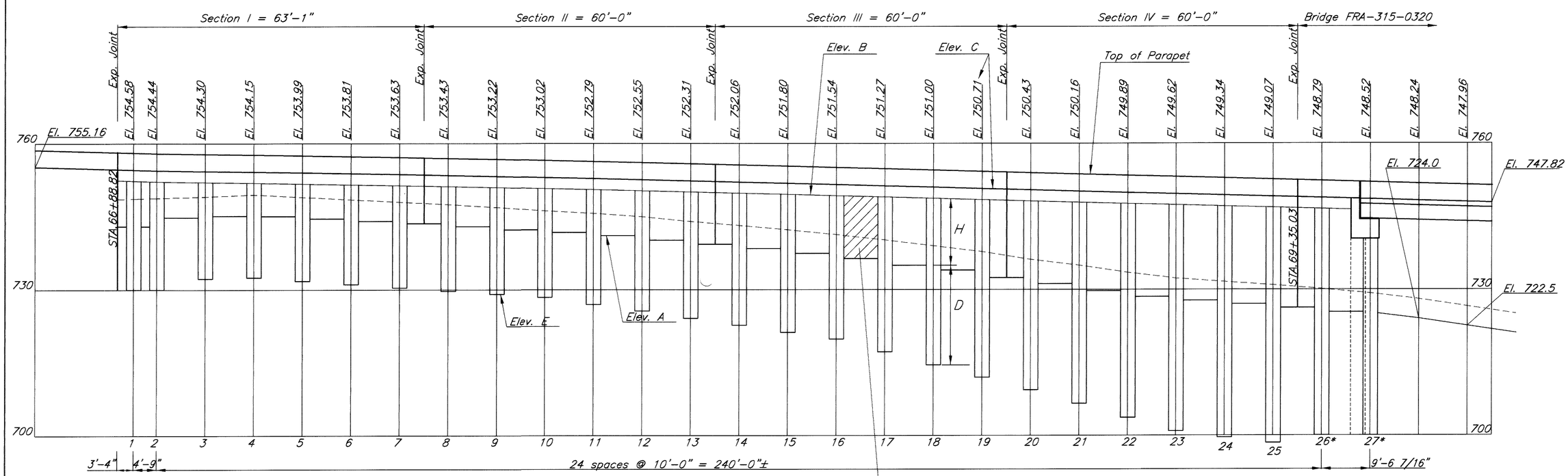

ELEVATION

The areas between the columns shall have form liners using :

- Fitzgerald Liner Pattern Number 16986
- Greenstreak Form Liner Pattern Number 379-B
- Or approved equal
- To be included with concrete for payment

* Drilled Shaft No. 26 & 27 are part of Bridge FRA-315-0320

SHAFT NO.	ELEV. A	ELEV. B	D ft.	B-A= H ft.	ELEV. E	SHAFT NO.	ELEV. A	ELEV. B	D ft.	B-A= H ft.	ELEV. E
1	743.00	752.33	13.0	9.33	730.0	14	738.50	749.81	15.8	11.31	722.7
2	743.00	752.19	13.0	9.19	730.0	15	737.75	749.55	16.5	11.80	721.2
3	745.30	752.05	13.0	6.75	732.3	16	737.00	749.29	17.2	12.29	719.8
4	745.50	751.90	13.0	6.40	732.5	17	735.75	749.02	18.6	13.27	717.2
5	744.81	751.74	13.0	6.93	731.8	18	734.50	748.75	20.0	14.25	714.5
6	744.13	751.56	13.0	7.43	731.1	19	733.25	748.46	21.3	15.21	712.0
7	743.44	751.38	13.0	7.94	730.4	20	732.00	748.18	22.7	16.18	709.4
8	742.75	751.18	13.0	8.43	729.7	21	730.67	747.91	24.1	17.24	706.6
9	742.06	750.97	13.0	8.91	729.1	22	729.34	747.64	25.6	18.30	703.7
10	741.38	750.77	13.0	9.39	728.4	23	728.00	747.37	27.1	19.37	700.9
11	740.69	750.54	13.8	9.85	726.9	24	727.33	747.09	27.7	19.76	699.6
12	740.00	750.30	14.4	10.30	725.6	25	726.66	746.82	28.2	20.16	698.5
13	739.25	750.06	15.1	10.81	724.1						

DESIGN AGENCY
ERIKSSON ENGINEERING LTD.
1523 CHESAPEAKE AVENUE
COLUMBUS, OH 43212

DESIGNED JHN
DRAWN DA
CHECKED CE
REVISED
DATE 8.28.01
REVIEWED CE

ELEVATION
RETAINING WALL A
RAMP A OVER OLENTANGY RIVER

FRA-315-3.04

June 18, 2002 Q:\BRIDGE\3453\OSU\RAMPA\RetainingWall\3453aelv.dwg

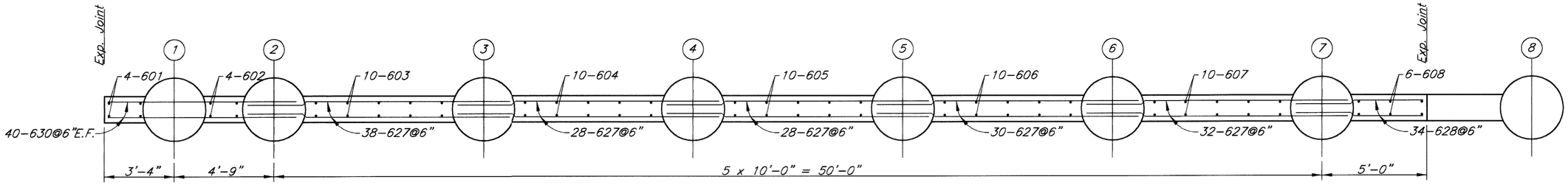

SECTION I

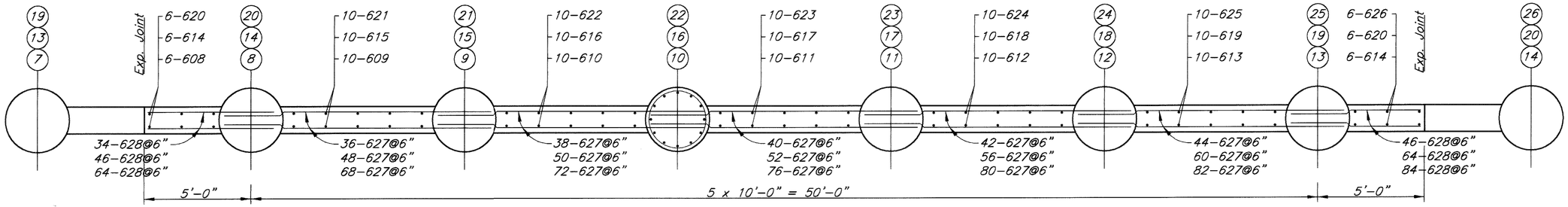

SECTION II, III & IV

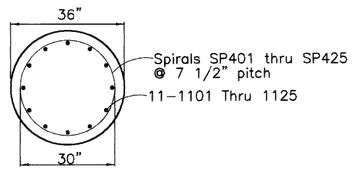

COLUMN SECTION

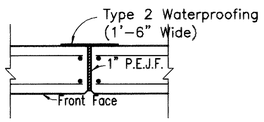

EXPANSION JOINT DETAIL

DESIGN AGENCY
ERIKSSON ENGINEERING LTD.
1523 CHESAPEAKE AVENUE
COLUMBUS, OH 43212

DESIGNED	DRAWN	REVIEWED	DATE
DA	DA	EE	8.28.01
CHECKED	REVISED		
CE			

LONGITUDINAL SECTION
RETAINING WALL A
RAMP A OVER OLENTANGY RIVER

FRA-315-3.04

4 / 5

159
238

June 18, 2002 Q:\BRIDGE\3453\OSU\RAMPA\RetainingWall\3453asct.dwg

REINFORCING STEEL LIST

MARK	NO.	LENGTH	WEIGHT	TYPE	A	B	C	D	E	REMARKS
		RETAINING WALL ALONG RAMP A								
501	250	10–4	2694	1						
502	250	7–4	1911	2						
503	14	32–7	476	STR						
504	42	31–7	1384	STR						
601	4	10–3	62	STR						
602	4	10–3	62	STR						
603	10	7–9	116	STR						
604	10	7–6	113	STR						
605	10	8–0	120	STR						
606	10	8–6	128	STR						
607	10	9–0	135	STR						
608	12	9–6	171	STR						
609	10	10–0	150	STR						
610	10	10–6	158	STR						
611	10	11–0	165	STR						
612	10	11–3	169	STR						
613	10	11–9	176	STR						
614	12	12–3	221	STR						
615	10	13–0	195	STR						
616	10	13–3	199	STR						
617	10	14–3	214	STR						
618	10	15–3	229	STR						
619	10	16–3	244	STR						
620	12	17–3	311	STR						
621	10	18–3	274	STR						
622	10	19–3	289	STR						
623	10	20–3	304	STR						
624	10	20–9	312	STR						
625	10	21–3	320	STR						
626	6	21–6	194	STR						
627	1000	12–6	18775	STR						
628	372	6–0	3352	STR						
629	250	3–8	1378	3						
630	40	9–3	556	STR						
801	32	33–3	2841	STR						
802	96	31–7	8095	STR						
		TOTAL	**46493**	**LBS.**						
			SIGN POLE BASE							
S501	2	8–11	19	4	5–8	1–9				
S601	10	5–8	85	STR						
S602	24	6–10	246	5	5–6	1–6				
		TOTAL	**350**	**LBS.**						

Dimensions shown are out to out.

MARK	NO.	LENGTH	WEIGHT	TYPE	A	B	C	D	REMARKS
		RETAINING WALL SHAFTS							
1101	12	23–6	1498	STR					
1102	12	23–3	1482	STR					
1103	12	20–9	1323	STR					
1104	12	20–6	1307	STR					
1105	12	21–0	1339	STR					
1106	12	21–6	1371	STR					
1107	12	22–0	1403	STR					
1108	12	22–6	1435	STR					
1109	12	23–0	1466	STR					
1110	12	23–6	1498	STR					
1111	12	24–6	1562	STR					
1112	12	25–9	1642	STR					
1113	12	27–0	1725	STR					
1114	12	28–3	1801	STR					
1115	12	29–3	1865	STR					
1116	12	30–6	1945	STR					
1117	12	33–0	2104	STR					
1118	12	35–3	2248	STR					
1119	12	37–6	2391	STR					
1120	12	40–0	2550	STR					
1121	12	42–3	2694	STR					
1122	12	45–0	2869	STR					
1123	12	47–6	3029	STR					
1124	12	48–6	3092	STR					
1125	12	49–3	3140	STR					
		TOTAL	**48,779**	**LBS.**		INCLUDED WITH DRILLED SHAFTS FOR PAYMENT			
			SPIRALS						
SP401	1	22–4	203	SPIRAL					
SP402	1	22–2	202	SPIRAL					
SP403	1	19–9	182	SPIRAL					
SP404	1	19–5	179	SPIRAL					
SP405	1	19–11	183	SPIRAL					
SP406	1	20–5	187	SPIRAL					
SP407	1	20–11	191	SPIRAL					
SP408	1	21–5	196	SPIRAL					
SP409	1	21–11	200	SPIRAL					
SP410	1	22–5	204	SPIRAL					
SP411	1	23–4	212	SPIRAL					
SP412	1	24–7	222	SPIRAL					
SP413	1	25–10	233	SPIRAL					
SP414	1	27–1	243	SPIRAL					
SP415	1	28–1	252	SPIRAL					
SP416	1	29–4	262	SPIRAL					
SP417	1	31–10	283	SPIRAL					
SP418	1	34–1	302	SPIRAL					
SP419	1	36–4	321	SPIRAL					
SP420	1	38–10	342	SPIRAL					
SP421	1	41–1	361	SPIRAL					
SP422	1	43–10	384	SPIRAL					
SP423	1	46–4	405	SPIRAL					
SP424	1	47–4	413	SPIRAL					
SP425	1	48–1	419	SPIRAL					
		TOTAL	**6,581**	**LBS.**		INCLUDED WITH DRILLED SHAFTS FOR PAYMENT			

ALL BARS SHALL BE EPOXY COATED

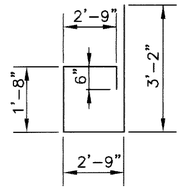

TYPE 1

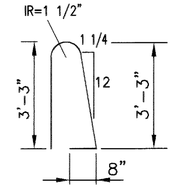

TYPE 2

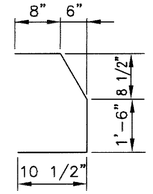

TYPE 3

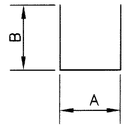

TYPE 4

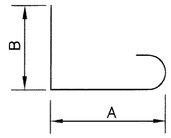

TYPE 5

DESIGN AGENCY
ERIKSSON ENGINEERING LTD.
1523 CHESAPEAKE AVENUE
COLUMBUS, OH 43212

DATE 8.28.01
REVIEWED DS
DRAWN DA REVISED
DESIGNED DA CHECKED CE

REINFORCING BAR LIST
RETAINING WALL A
RAMP A OVER OLENTANGY RIVER

FRA-315-3.04

5 / 5

160
238

June 18, 2002 Q:\BRIDGE\3453\OSU\RAMPA\RETAINING WALL\3453rbl.dwg

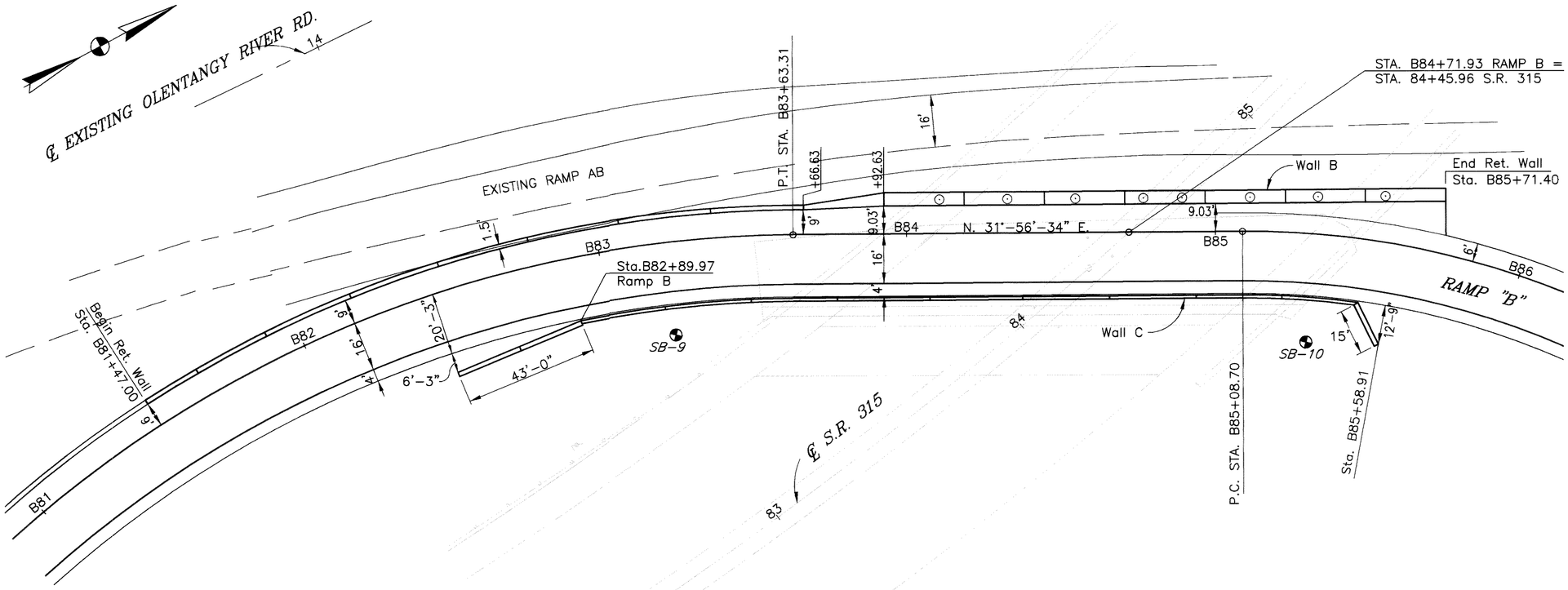

PLAN

HORIZONTAL CURVE DATA

P.I. STA. B82+31.35
△ = 41°30'08"
Dc = 15°00'00"
R = 381.97
L = 276.68'
T = 144.72'
Se = 0..060

P.I. STA. B87+57.56
△ = 84°44'12"
Dc = 21°00'00"
R = 272.84'
L = 403.51'
T = 248.86'
Se = 0..060

VERTICAL CURVE DATA

PVI STA. = B80+25.00
PVI ELEV. = 741.10
G_1 = -0.52
G_2 = -3.32
VC = 250'

PVI STA. = B83+00.00
PVI ELEV. = 731.97
G_1 = -3.32
G_2 = -0.28
VC = 200'

PVI STA. = B86+50.00
PVI ELEV. = 730.99
G_1 = -0.28
G_2 = +1.52
VC = 300'

DESIGN AGENCY
ERIKSSON ENGINEERING LTD.
1523 CHESAPEAKE AVENUE
COLUMBUS, OH 43212

DATE 8.28.01
REVIEWED
DRAWN GM
REVISED
DESIGNED WY
CHECKED DA

SITE PLAN - WALLS B & C
ALONG RAMP B
UNDER SR 315

FRA-315-3.04

1 / 8

161
238

June 18, 2002 Q:\BRIDGE\3453\OSU\RAMPAB\3453ABst.dwg

GENERAL NOTES

THIS STRUCTURE CONFORMS TO "STANDARD SPECIFICATIONS FOR HIGHWAY BRIDGES" ADOPTED BY THE AMERICAN ASSOCIATION OF STATE HIGHWAY AND TRANSPORTATION OFFICIALS, 1990, INCLUDING THE 1997, 1998 & 1999 INTERIM SPECIFICATION AND THE ODOT BRIDGE DESIGN MANUAL.

DESIGN DATA

CONCRETE CLASS C –	COMPRESSIVE STRENGTH 4000 PSI (WALLS)
CONCRETE CLASS C –	COMPRESSIVE STRENGTH 4000 PSI (FOOTINGS)
SHOTCRETE –	COMPRESSIVE STRENGTH 4000 PSI
NAIL GROUT –	COMPRESSIVE STRENGTH 3000 PSI
REINFORCING STEEL –	ASTM A615, A616 OR A617 GRADE 60 MINIMUM YIELD STRENGTH 60,000 PSI

REFERENCE SHALL BE MADE TO:

SUPPLEMENTAL SPECIFICATION 842 DATED 1-6-1999
SUPPLEMENTAL SPECIFICATION 864 DATED 7-11-2000
SPECIAL PROVISIONS FRA 3.15-3.04 FOR SOIL NAILS DATED 10-10-01
SPECIAL PROVISIONS FRA 3.15-3.04 FOR SHOTCRETE DATED 10-10-01

ITEM 503, UNCLASSIFIED EXCAVATION, AS PER PLAN:

UNCLASSIFIED EXCAVATION SHALL BE IN ACCORDANCE WITH 503 EXCEPT THAT THE BACKFILL MATERIAL BEHIND THE WALLS SHALL BE 203 GRANULAR MATERIAL PLACED IN 6 INCH LIFTS AND COMPACTED IN ACCORDANCE WITH 304.04.

ITEM 864 SEALING OF CONCRETE SURFACES (EPOXY-URETHANE)

AN EPOXY-URETHANE SEALER SHALL BE APPLIED TO ALL EXPOSED SURFACES OF THE RETAINING WALLS AND THE SOIL NAIL WALLS.

THE TOP COAT OF THE EPOXY-URETHANE SEALER SHALL BE FEDERAL COLOR STANDARD NO. 17778 (LIGHT NEUTRAL).

MAX DESIGNED SOIL PRESSURE FOR RETAINING WALLS IS 3000 LBS/SQ FT.

ESTIMATED QUANTITIES

ITEM	ITEM EXT.	TOTAL	UNIT	DESCRIPTION	LEFT WALL	RIGHT WALL	AS PER PLAN
				CONVENTIONAL WALLS			
503	21301	--	LUMP	UNCLASSIFIED EXCAVATION, AS PER PLAN	LUMP	LUMP	162
512	33000	89	SY	TYPE 2 WATERPROOFING	43	46	
516	13600	952	SF	1" PREFORMED EXPANSION JOINT FILLER	788	164	
518	21230	--	LUMP	POROUS BACKFILL WITH FILTER FABRIC	LUMP	LUMP	
518	40000	283	LF	6" PERFORATED CORRUGATED PLASTIC PIPE	225	58	
518	40010	59	LF	6" NON-PERFORATED CORRUGATED PLASTIC PIPE, INCLUDING SPECIALS	39	20	
842	46000	592	CY	CLASS C CONCRETE	571	21	RET WALL ABOVE FOOTING
842	46500	61	CY	CLASS C CONCRETE FOOTING	50	19	
864	10100	248	SY	SEALING OF CONCRETE SURFACES (EPOXY-URETHANE)	209	139	
				SOIL NAIL WALLS			
SPECIAL	**61050000**	173	EACH	**RETAINING WALL, MISC.:** SOIL NAILS		173	
SPECIAL	**61050000**	10	EACH	**RETAINING WALL, MISC.:** VERIFICATION TESTS		10	
SPECIAL	**61050000**	2	EACH	**RETAINING WALL, MISC.:** PROOF TESTS		2	
SPECIAL	**61050010**	3825	SF	**RETAINING WALL, MISC.:** SOIL NAIL WALL		3825	
				Computed by: CE Date: 10.30.01			
				Checked by : DA Date: 10.30.01			

SOIL NAIL WALL DESIGN PARAMETERS

THE SOIL NAIL WALL STRUCTURES HAVE BEEN DESIGNED IN ACCORDANCE WITH THE SLD (SERVICE LOAD DESIGN) PROCEDURES CONTAINED IN THE FHWA "MANUAL FOR DESIGN AND CONSTRUCTION MONITORING OF SOIL NAIL WALLS", REPORT NO. FHWA-SA-96-069. STRUCTURAL DESIGN OF ANY INDIVIDUAL WALL ELEMENTS NOT COVERED IN THE FHWA MANUAL HAVE BEEN DESIGNED IN ACCORDANCE WITH THE REQUIREMENTS OF THE 1994 AASHTO STANDARD SPECIFICATIONS FOR HIGHWAY BRIDGES

CLEARANCES TO REINFORCING STEEL

FRONT FACE OF CONCRETE : 2 IN
SHOTCRETE TO CONCRETE : 2 IN
SHOTCRETE TO SOIL : 3 IN

DESIGN SOIL PARAMETERS

SOIL TYPE :	SILTY SAND
ULTIMATE FRICTION ANGLE :	30°
ULTIMATE COHESION :	6 PSI
UNIT WEIGHT :	110 LBS/CUFT
ALLOWABLE PULLOUT RESISTANCE :	2500 LBS/FT

SOIL NAIL WALL DESIGN LOADS

ROW 1: DL 12 kips
ROW 2: DL 14 kips
ROW 3: DL 18 kips
ROW 4: DL 22 kips
THE TEST LOAD SHALL BE 1.25 x DL
LENGTH OF NAILS SHALL BE 18 FT MINIMUM
THE DIAMETER OF THE SOIL NAIL DRILL HOLE SHALL NOT BE LESS THAN 6 INCHES

SOIL NAIL WALL SHALL INCLUDE THE FOLLOWING ITEMS TO BE PAID PER SQUARE FEET OF WALL

* Steel Plates 8"x8"x3/4"
* 5 1/2" min. thick shotcrete with reinforcing steel
* 12" concrete facia wall including reinforcing steel
* Geocomposite drain strip system including drain pipes to the under drains
* 1/2" Preformed Expansion Joint Filler above the bottom of the existing abutment footing
* Concrete filler above the top of the existing abutment footing

UNLESS OTHERWISE SHOWN ON THE PLANS, ALL EXTERIOR CORNERS AND EDGES SHALL HAVE A 2 IN CHAMFER AND ALL INTERIOR CORNERS SHALL HAVE A 2 IN FILLET.

THE CONTRACTOR IS RESPONSIBLE FOR FIELD LOCATING ALL UTILITIES.

THE CONTRACTOR IS RESPONSIBLE FOR PROVIDING AND MAINTAINING STABLE SLOPES ABOVE AND BELOW THE SOIL NAIL WALLS.

NO GENERAL EXCAVATION OPEN CUTS STEEPER THAN 1H:1V SHALL BE MADE WITHIN 15 FT IN FRONT OF THE SOIL NAIL WALLS WITHOUT APPROVAL OF THE ENGINEER.

EXCAVATION IN THE VICINITY OF THE WALL FACE REQUIRES SPECIAL CARE AND EFFORT COMPARED TO GENERAL ROADWAY EXCAVATION.

THE DIAMETER OF THE NAIL IS ONE INCH.

THE HORIZONTAL AND VERTICAL SPACING OF THE NAILS IS FIVE FEET.

DESIGN AGENCY
ERIKSSON ENGINEERING LTD.
1523 CHESAPEAKE AVENUE
COLUMBUS, OH 43212

DATE 8.28.01
REVIEWED 6 6 6
DRAWN DM REVISED
DESIGNED CE CHECKED DA

GENERAL NOTES & ESTIMATED QUANTITIES
RETAINING WALLS B & C
UNDER SR 315

FRA-315-3.04

June 18, 2002 Q:\BRIDGE\3453\OSU\RAMP AB\3453Abt.dwg

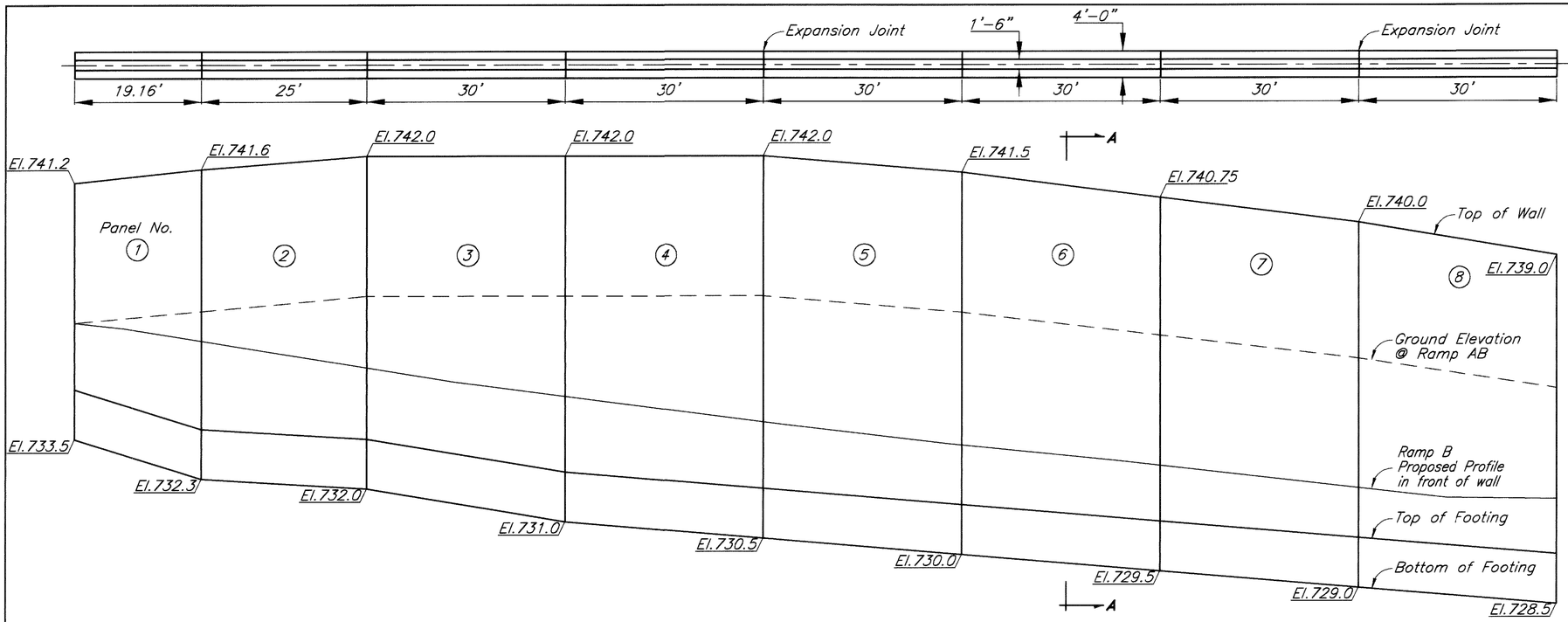

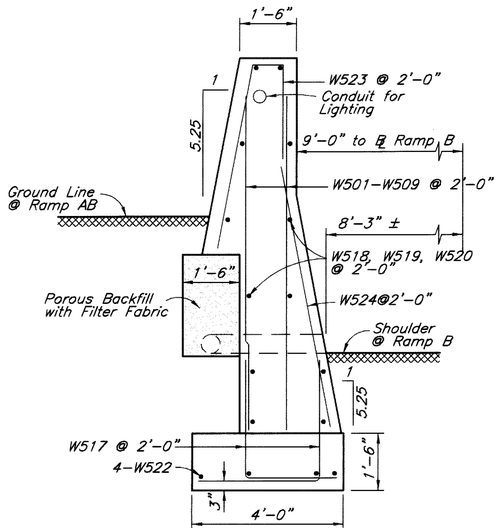

SECTION A-A
Panels 1 - 8

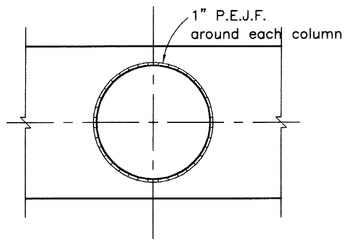

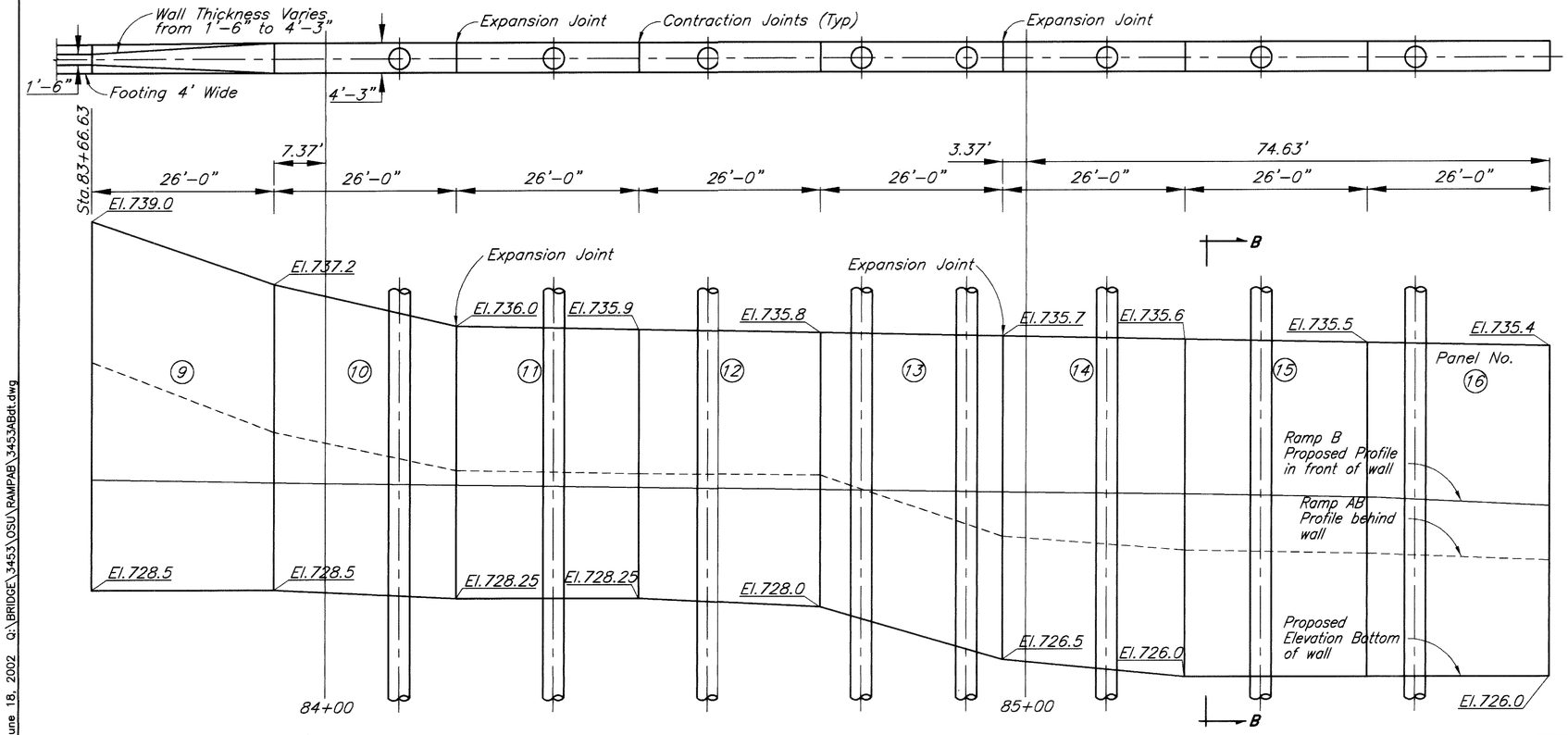

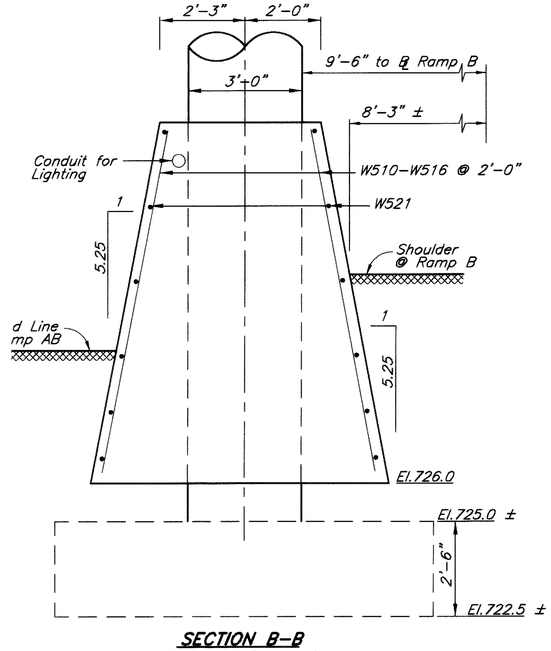

SECTION B-B
Panels 10 - 16

DESIGN AGENCY
ERIKSSON ENGINEERING LTD.
1523 CHESAPEAKE AVENUE
COLUMBUS, OH 43212

DATE 4.26.01
REVIEWED
DRAWN DA REVISED
DESIGNED DA CHECKED

RETAINING WALL B
ALONG RAMP B, LEFT
UNDER SR 315

FRA-315-3.04

3 | 8

163
238

June 18, 2002 Q:\BRIDGE\3453\OSU\RAMPAB\3453ABdt.dwg

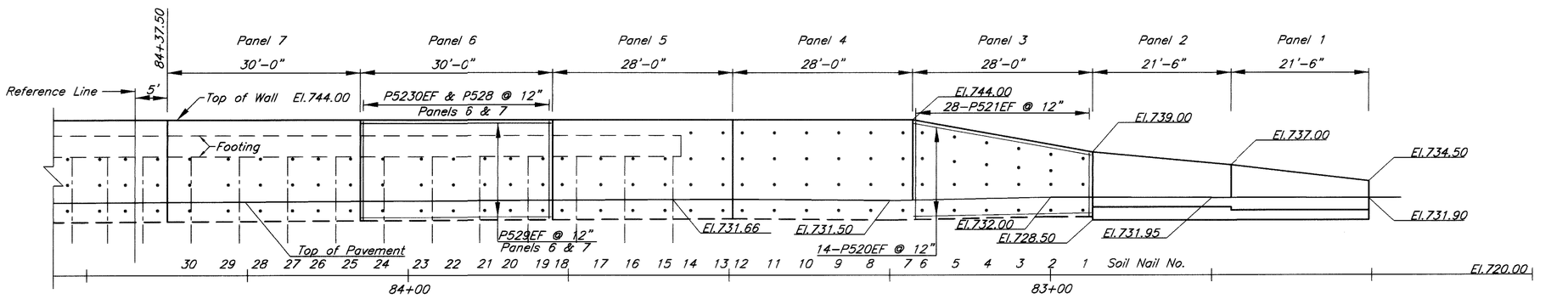

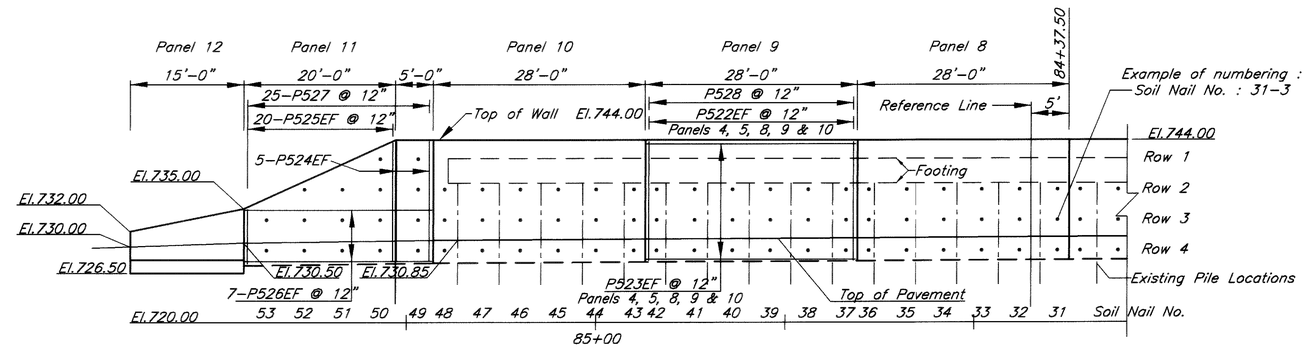

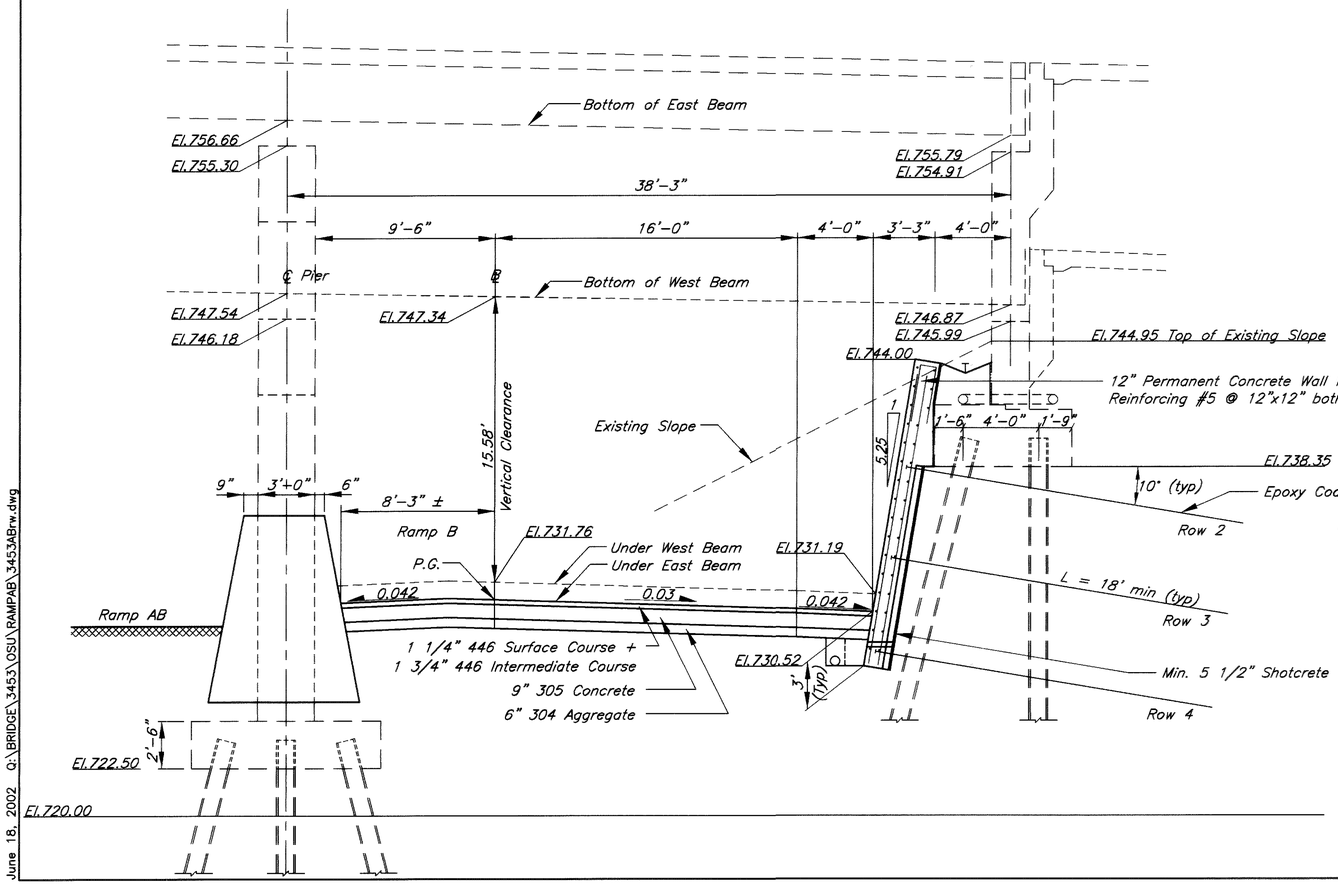

In front of the soil nail wall extend the under drain aggregate to the face of the wall

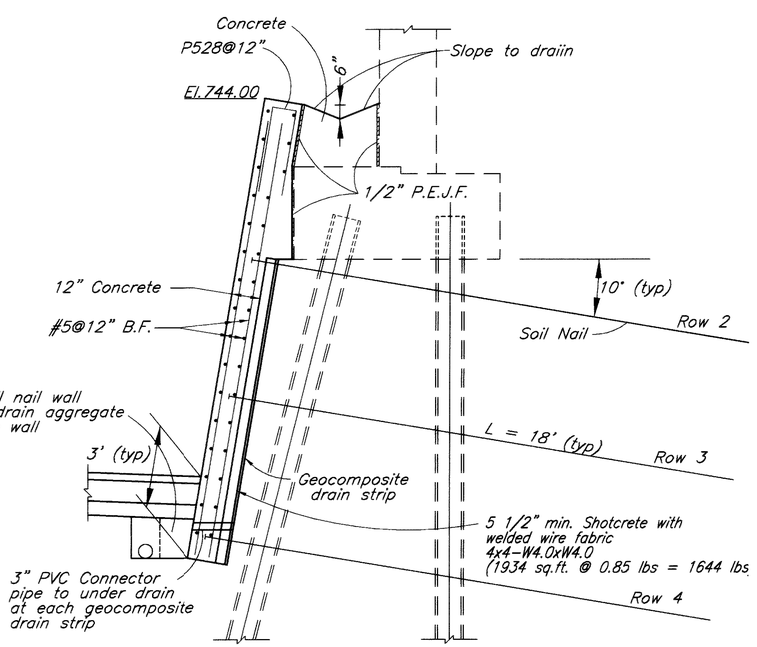

DESIGN AGENCY
ERIKSSON ENGINEERING LTD.
1523 CHESAPEAKE AVENUE
COLUMBUS, OH 43212

DATE 2.28.01
REVIEWED
DRAWN DA REVISED
DESIGNED JN CHECKED CE

RETAINING WALL C
ALONG RAMP B, RIGHT
UNDER SR 315

FRA-315-3.04

4 | 8

164
238

June 18, 2002 Q:\BRIDGE\3453\OSU\RAMPAB\3453ABrw.dwg

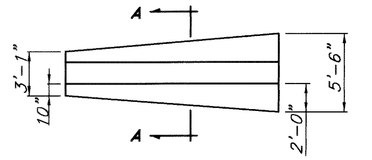

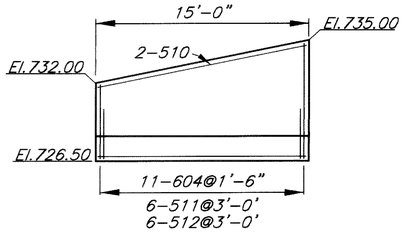

PANEL 12

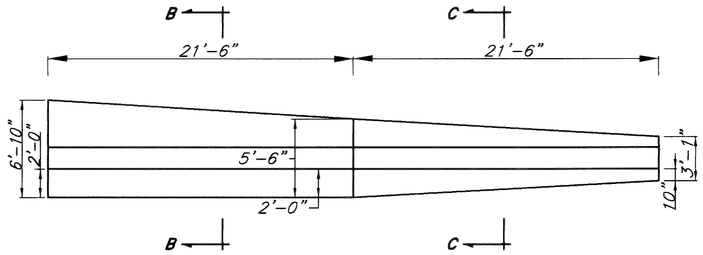

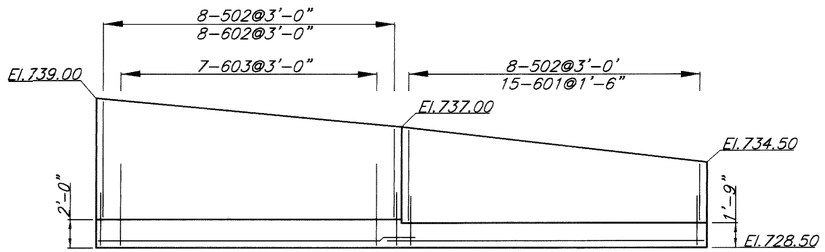

PANEL 2 **PANEL 1**

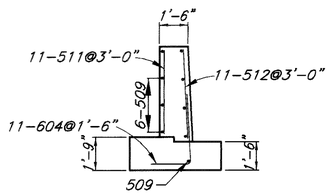

SECTION A-A

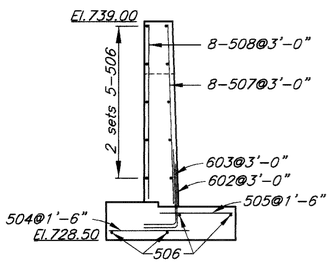

SECTION B-B

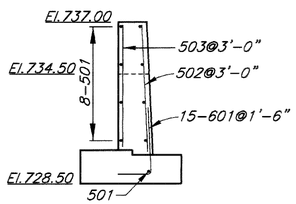

SECTION C-C

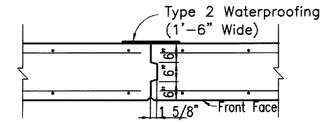

CONTRACTION JOINT DETAIL

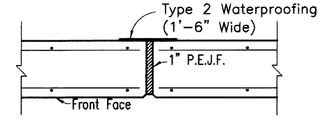

EXPANSION JOINT DETAIL

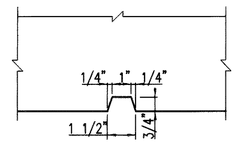

VERTICAL RUSTICATION GROOVE
4' c/c

DESIGN AGENCY
ERIKSSON ENGINEERING LTD.
1523 CHESAPEAKE AVENUE
COLUMBUS, OH 43212

DATE 8.28.01
REVIEWED CE
DRAWN DA REVISED
DESIGNED DA CHECKED CE

RETAINING WALL C
ALONG RAMP B, RIGHT
UNDER SR 315

FRA-315-3.04

June 18, 2002 Q:\BRIDGE\3453\OSU\RAMPAB\3453ABpn.dwg

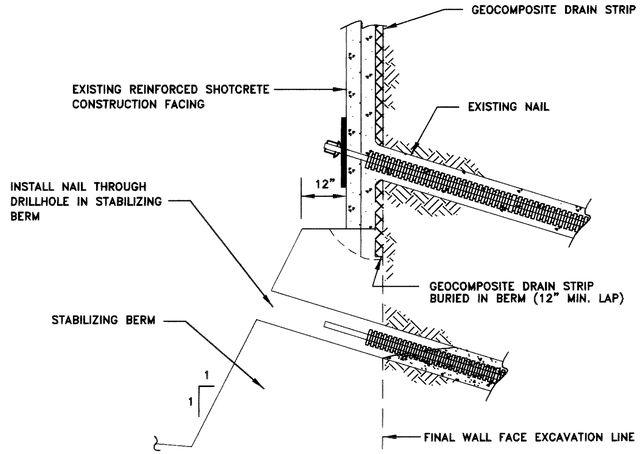

NAIL INSTALLATION THROUGH TEMPORARY STABILIZING BERM (CONTRACTOR OPTION)

NOT TO SCALE

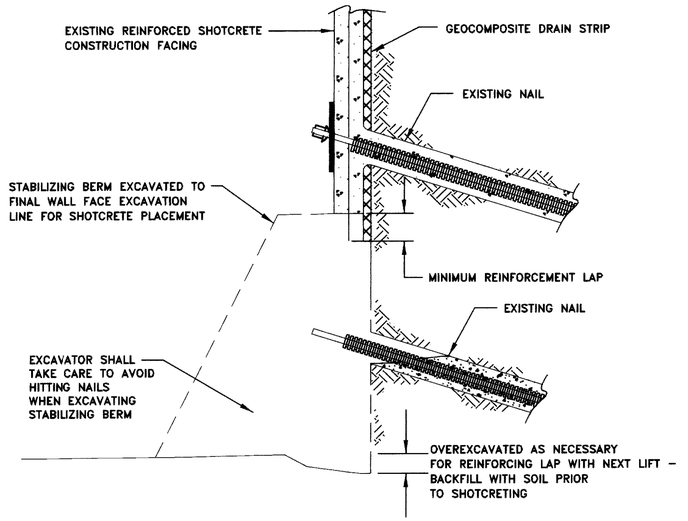

EXCAVATION OF TEMPORARY STABILIZING BERM FOR SHOTCRETE PLACEMENT (CONTRACTOR OPTION)

NOT TO SCALE

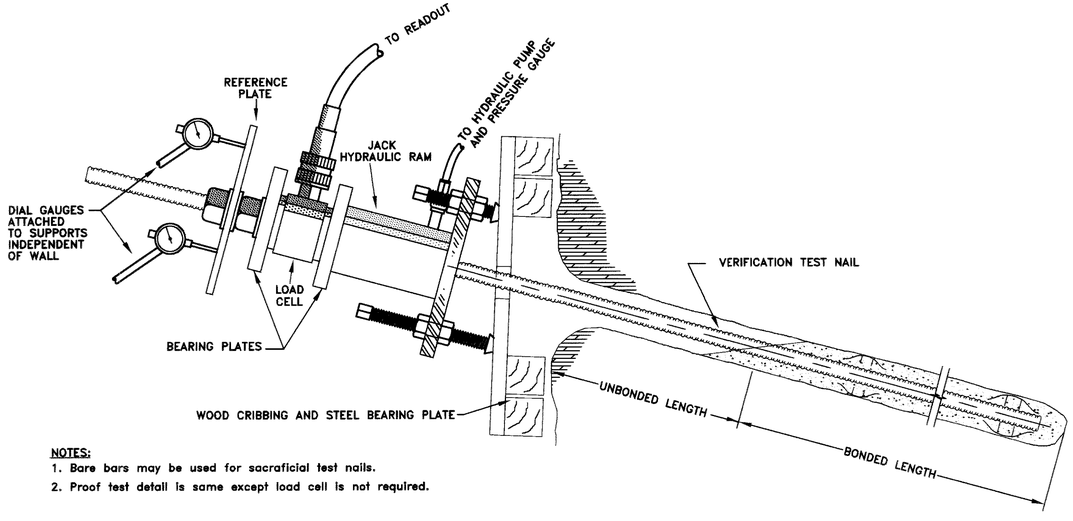

NOTES:
1. Bare bars may be used for sacraficial test nails.
2. Proof test detail is same except load cell is not required.

VERIFICATION TEST SOIL NAIL DETAIL

NOT TO SCALE

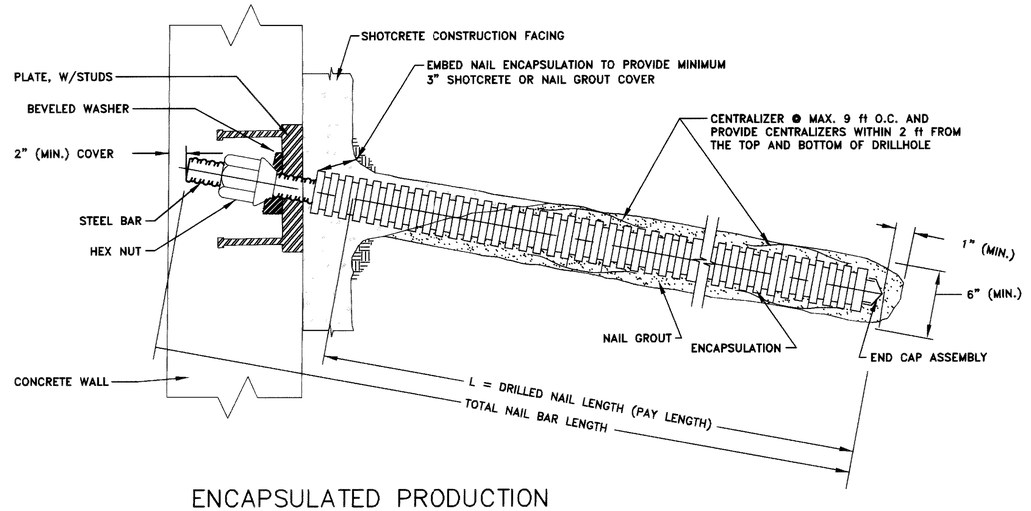

ENCAPSULATED PRODUCTION SOIL NAIL DETAIL

NOT TO SCALE

DESIGN AGENCY
ERIKSSON ENGINEERING LTD.
1523 CHESAPEAKE AVENUE
COLUMBUS, OH 43212

DESIGNED	DRAWN	REVIEWED	DATE
JN	NN	[illegible]	8.28.01
CHECKED	REVISED		
DA			

SOIL NAIL DETAILS RETAINING WALL C
ALONG RAMP B, RIGHT
UNDER SR 315

FRA-315-3.04

6 / 8

166 / 238

June 18, 2002 Q:\BRIDGE\3453\OSU\RAMPAB\SoilNailDet_1.dwg

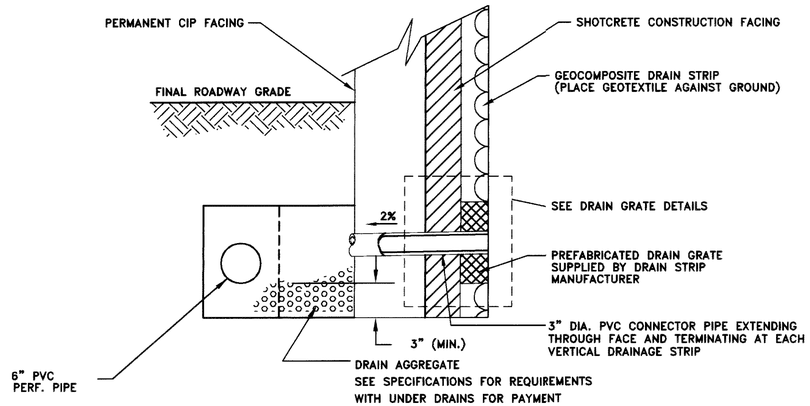

TYPICAL WALL TOE DRAIN

NOT TO SCALE

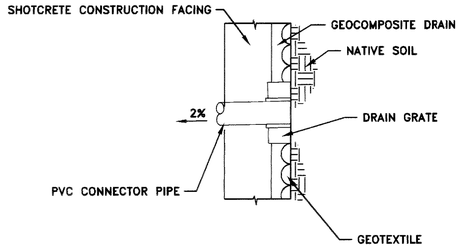

SECTIONAL VIEW

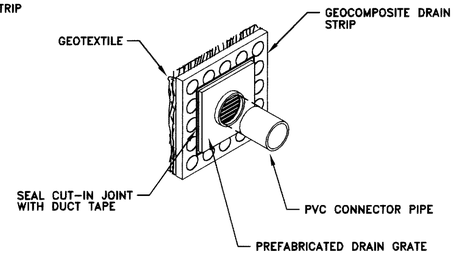

ISOMETRIC VIEW

NOTE: DRAIN GRATE INSTALLATION SHALL NOT DISRUPT GEOTEXTILE

DRAIN GRATE DETAILS

NOT TO SCALE

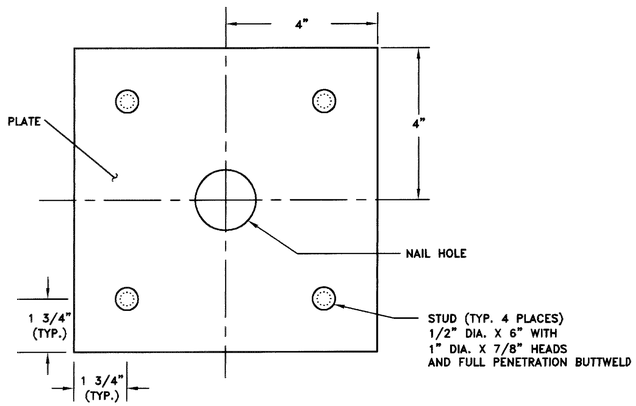

CONNECTOR PLATE WITH
STUD DETAIL

NOT TO SCALE

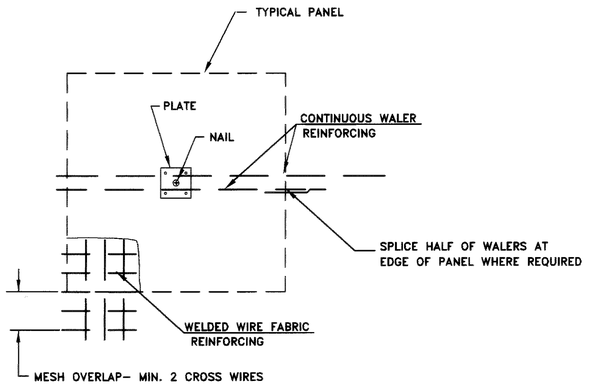

TYPICAL SHOTCRETE
PANEL STEEL

NOT TO SCALE

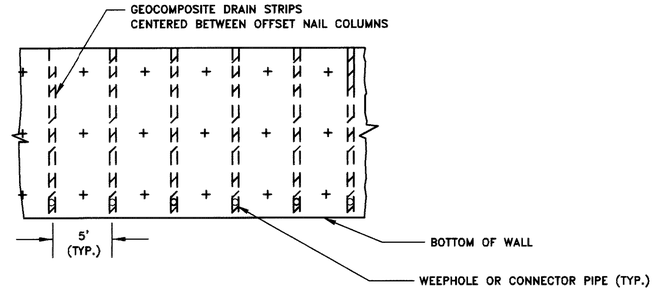

GEOCOMPOSITE
DRAINAGE STRIP DETAIL

NOT TO SCALE

DESIGN AGENCY
ERIKSSON ENGINEERING LTD.
1523 CHESAPEAKE AVENUE
COLUMBUS, OH 43212

DATE 8.29.01

REVIEWED

DRAWN NN REVISED

DESIGNED NN CHECKED DA

SOIL NAIL DETAILS RETAINING WALL C
ALONG RAMP B, RIGHT
UNDER SR 315

FRA-315-3.04

7 | 8

167
238

June 18, 2002 Q:\BRIDGE\3453\OSU\RAMPAB\SoilNailDet_2.dwg

REINFORCING STEEL LIST

MARK	NO.	LENGTH	WEIGHT	TYPE	A	B	C	D	REMARKS
			PANEL No. 1						
P501	9	21–2	199	STR					
P502	8	4–4	47	STR					VARY LENGTH BY 4 1/4"
		TO							
		6–10							
P503	8	4–1	45	STR					VARY LENGTH BY 4 1/4"
		TO							
		6–7							
P601	15	5–3	118	1	1–11	3–6			
			PANEL No. 2						
P504	15	4–3	66	STR					
P505	15	3–10	60	STR					
P506	14	21–2	309	STR					
P507	8	6–10	68	STR					VARY LENGTH BY 3 7/16"
		TO							
		9–7							
P508	8	6–4	61	STR					VARY LENGTH BY 3 7/16"
		TO							
		8–4							
P602	8	5–6	66	1	1–11	3–9			
P603	7	7–6	79	1	1–11	5–9			
			PANEL No. 12						
P509	7	14–8	107	STR					
P510	2	15–0	31	STR					
P511	6	3–10	33	STR					VARY LENGTH BY 7 1/8"
		TO							
		6–10							
P512	6	3–7	32	STR					VARY LENGTH BY 7 1/8"
		TO							
		6–7							
P604	11	5–3	87	1	1–11	3–6			
		TOTAL	1408	LBS.					

Dimensions shown are out to out.

MARK	NO.	LENGTH	WEIGHT	TYPE	A	B	C	D	REMARKS
			PANEL No. 3–11						
P520	28	27–8	808	STR					PANEL 3
P521	56	9–0	672	STR					2 SETS VARY FROM 9–0
		TO							TO 14–0
		14–0							
P522	290	15–3	4613	STR					
P523	160	27–8	4618	STR					
P524	10	16–0	167	STR					
P525	40	7–0	480	STR					2 SETS VARY FROM 7–0
		TO							TO 16–0
		16–0							
P526	14	24–8	360	STR					
P525	14	4–8	202	STR					2 SETS VARY FROM 4–8
		TO							TO 23–0
		23–0							
P527	91	6–6	617	2	0–8	3–0			
P528	168	6–8	1169	2	0–10	3–0			
P529	64	29–8	1981	S					
P530	124	15–3	1972	S					
		TOTAL	17,659	LBS.					
		WALL TO THE LEFT OF RAMP B							
W501	22	6–0	138	STR					
W502	26	7–0	190	STR					
W503	32	8–0	267	STR					
W504	32	9–0	300	STR					
W505	32	9–6	317	STR					
W506	32	9–6	317	STR					
W507	32	9–0	300	STR					
W508	32	9–0	300	STR					
W509	28	7–0	204	STR					
W510	28	7–6	219	STR					
W511	28	7–6	219	STR					
W512	28	7–6	219	STR					
W513	28	7–6	219	STR					
W514	28	8–9	256	STR					
W515	28	9–3	270	STR					
W516	28	9–0	263	STR					
W517	268	5–8	1584	1	7–6	3–3			
W518	10	18–9	196	STR					
W519	10	24–8	257	STR					
W520	70	29–8	2166	STR					
W521	90	25–8	2409	STR					
W522	32	30–0	1001	STR					
W523	134	9–2	1281	3	1–2	3–3	5–0		
W524	134	7–0	978	STR					
		TOTAL	13,870	LBS.					

ALL BARS SHALL BE EPOXY COATED

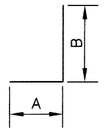

TYPE 1

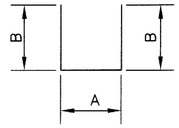

TYPE 2

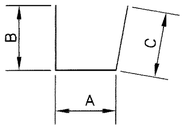

TYPE 3

DESIGN AGENCY
ERIKSSON ENGINEERING LTD.
1523 CHESAPEAKE AVENUE
COLUMBUS, OH 43212

DATE 8.28.01
REVIEWED
DRAWN DM REVISED
DESIGNED DA CHECKED CE

REINFORCING BAR LIST
WALLS B & C ALONG RAMP AB
UNDER SR 315

FRA–315–3.04

8 / 8

168
238

June 18, 2002 Q:\BRIDGE\3453\OSU\RAMPAB\3453ABbi.dwg

GENERAL NOTES

THIS STRUCTURE CONFORMS TO "STANDARD SPECIFICATIONS FOR HIGHWAY BRIDGES" ADOPTED BY THE AMERICAN ASSOCIATION OF STATE HIGHWAY AND TRANSPORTATION OFFICIALS, 1990, INCLUDING THE 1997, 1998 & 1999 INTERIM SPECIFICATION AND THE ODOT BRIDGE DESIGN MANUAL.

DESIGN LOADING

HS20-44 AND THE ALTERNATE MILITARY LOADING.

DESIGN DATA

CONCRETE CLASS S –	COMPRESSIVE STRENGTH 4500 PSI (HEADWALLS)
CONCRETE CLASS C –	COMPRESSIVE STRENGTH 4000 PSI (WALLS & WINGWALLS)
CONCRETE CLASS C –	COMPRESSIVE STRENGTH 4000 PSI (FOOTINGS)
REINFORCING STEEL –	ASTM A615, A616 OR A617 GRADE 60 MINIMUM YIELD STRENGTH 60,000 PSI

REFERENCE SHALL BE MADE TO:

SUPPLEMENT SPECIFICATIONS

842	DATED 1-6-99
864	DATED 7-11-00
899	DATED 10-21-98

ITEM 503, UNCLASSIFIED EXCAVATION, AS PER PLAN:

UNCLASSIFIED EXCAVATION SHALL BE IN ACCORDANCE WITH 503 EXCEPT THAT THE BACKFILL MATERIAL BEHIND THE WALLS SHALL BE 203 GRANULAR MATERIAL PLACED IN 6 INCH LIFTS AND COMPACTED IN ACCORDANCE WITH 304.04.

FOUNDATION BEARING PRESSURE

THE FOOTINGS, AS DESIGNED, PRODUCE A MAXIMUM BEARING PRESSURE OF 1.5 TONS PER SQUARE FOOT. THE ALLOWABLE BEARING PRESSURE IS 2.0 TONS PER SQUARE FOOT.

ITEM 864 SEALING OF CONCRETE SURFACES (EPOXY-URETHANE)

SEALING OF CONCRETE SURFACES (EPOXY-URETHANE) SHALL BE APPLIED TO ALL EXPOSED SURFACES OF THE CANTILEVER RETAINING WALLS AND ALL EXPOSED SURFACES OF THE CONCRETE CONDUIT.

THE TOP COAT OF THE EPOXY-URETHANE SEALER SHALL BE FEDERAL COLOR STANDARD NO. 17778 (LIGHT NEUTRAL).

ESTIMATED QUANTITIES

ITEM	ITEM EXT.	TOTAL	UNIT	DESCRIPTION	SPECIAL INSTRUCTIONS
448	47020	3.4	CU. YD.	ASHPHALT CONCRETE SURFACE COURSE, TYPE 1, PG64-22	
448	46050	3.4	CU. YD.	ASHPHALT CONCRETE INTERMEDIATE COURSE, TYPE 2, PG64-22	
503	21300	LUMP	LUMP	UNCLASSIFIED EXCAVATION	
512	33000	177	SQ. YD.	TYPE 2 WATERPROOFING	
518	21230	LUMP	LUMP	POROUS BACKFILL WITH FILTER FABRIC	
518	40000	176	LIN. FT.	6" PERFORATED CORRUGATED PLASTIC PIPE	
518	40010	42	LIN. FT.	6" NON-PERFORATED CORRUGATED PLASTIC PIPE, INCLUDING SPECIALS	
603	96201	42	LIN. FT.	12' X 10' CONDUIT, TYPE A, 706.05, AS PER PLAN	
842	34450	1	CU. YD.	CLASS S CONCRETE, MISCELLANEOUS	HEADWALL
842	46001	53	CU. YD.	CLASS C CONCRETE, AS PER PLANS	RETAINING WALL/WINGWALL
842	46500	43	CU. YD.	CLASS C CONCRETE, FOOTING	
842	71100	25	CU. YD.	CLASS C CONCRETE, MISCELLANEOUS	LEVELLING COURSE UNDER CULVERT ENDS
864	10100	256	SQ. YD.	SEALING OF CONCRETE SURFACES (EPOXY-URETHANE)	
				Computed by: DA Date: 6-12-01	
				Checked by : CE Date: 6-12-01	

DESIGN AGENCY
ERIKSSON ENGINEERING LTD.
1523 CHESAPEAKE AVENUE
COLUMBUS, OH 43212

DATE 8.28.01
REVIEWED DE
DRAWN DA
REVISED
DESIGNED DA
CHECKED CE

RAMP A UNDERPASS
GENERAL NOTES & ESTIMATED QUANTITIES
PEDESTRIAN UNDERPASS

FRA-315-3.04

1 / 4

169
238

June 18, 2002 Q:\BRIDGE\3453\OSU\RAMPA\UNDERPASS\3453gnq.dwg

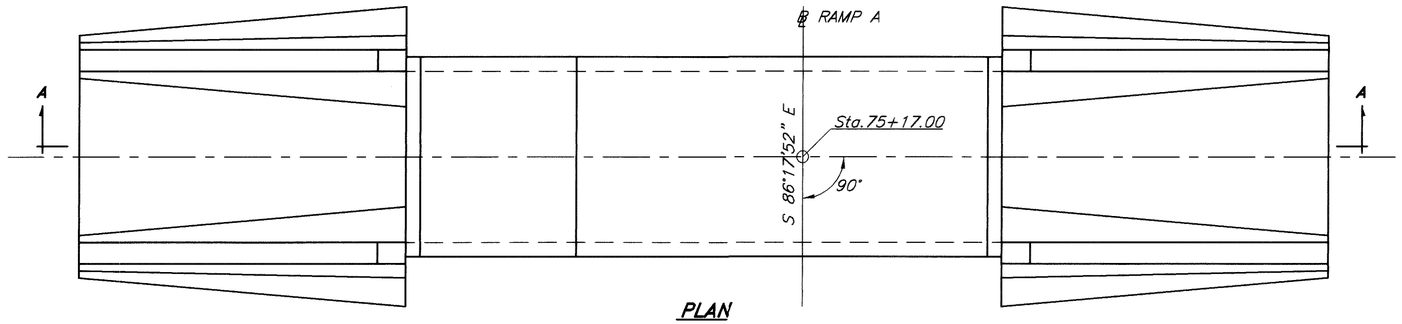

PLAN

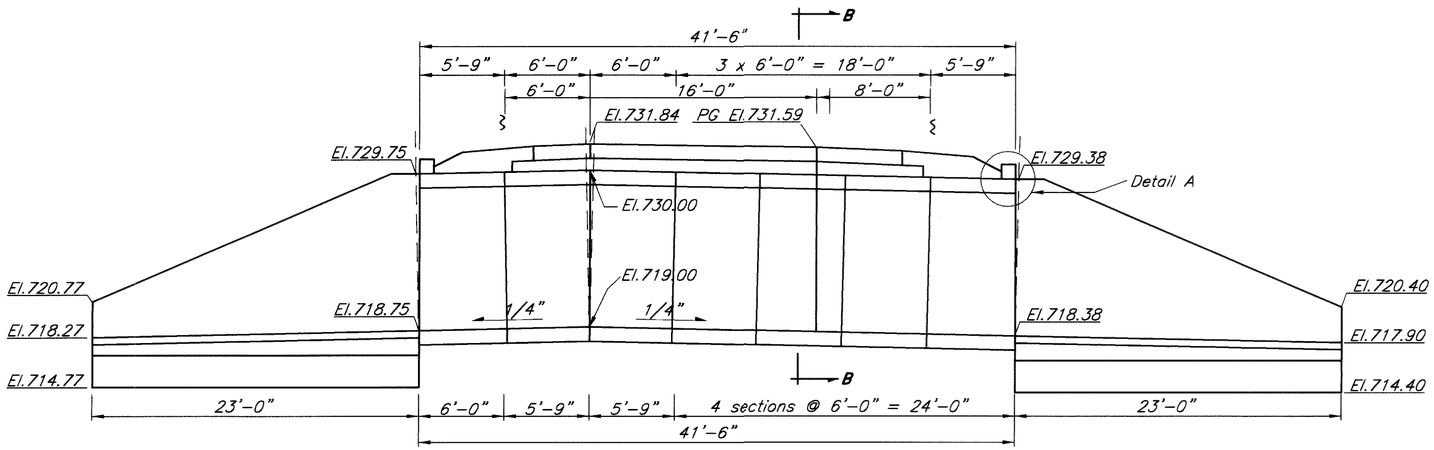

SECTION A–A

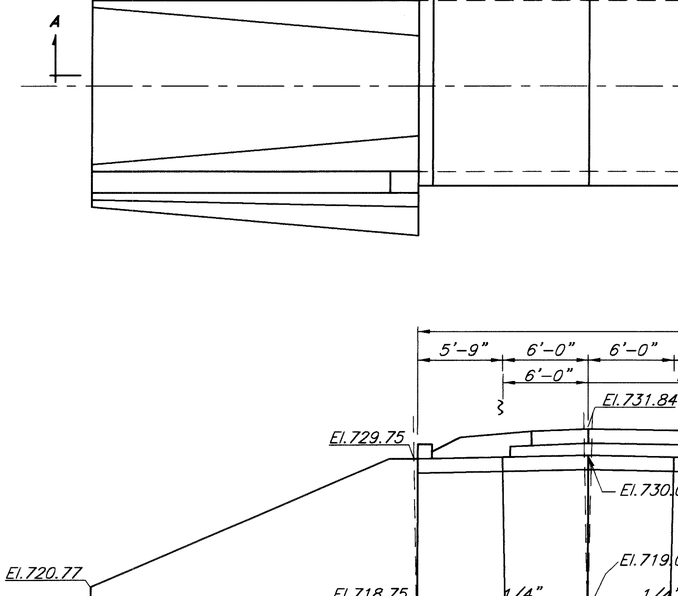

SECTION B–B

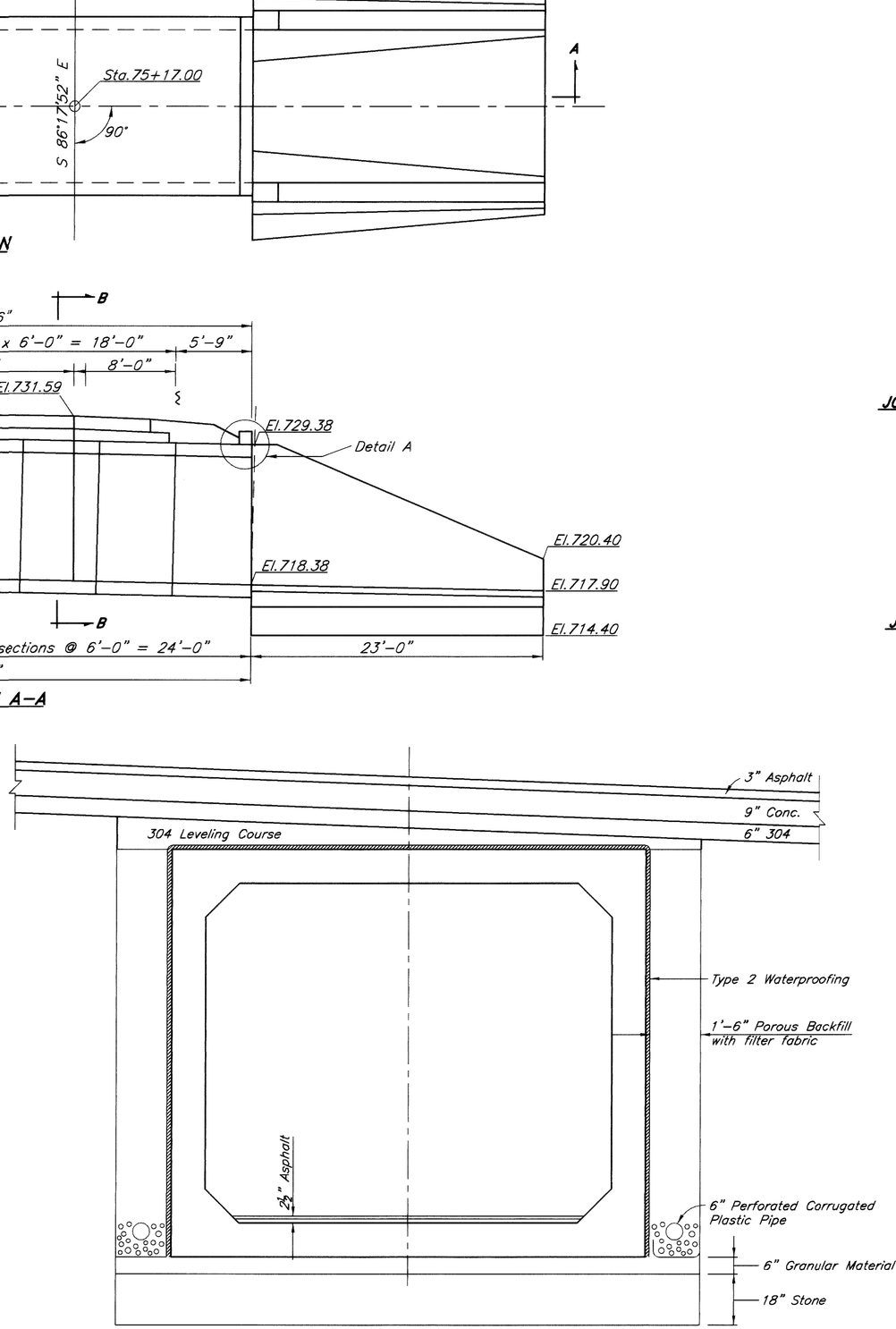

SECTION B–B

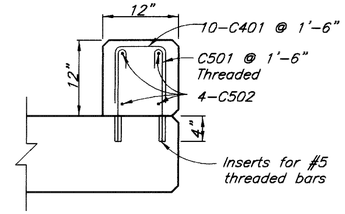

DETAIL A

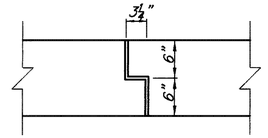

JOINTS BETWEEN CULVERT SECTIONS
ALL SIDES

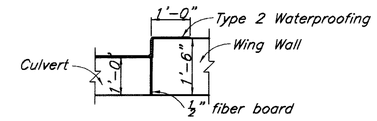

JOINT BETWEEN CULVERT SECTION
AND WING WALL

DESIGN AGENCY
ERIKSSON ENGINEERING LTD.
1523 CHESAPEAKE AVENUE
COLUMBUS, OH 43212

DESIGNED DA
DRAWN DA
CHECKED
REVISED
REVIEWED
DATE 8.22.01

RAMP A UNDERPASS
CONDUIT DETAIL
PEDESTRIAN UNDERPASS

FRA–315–3.04

2 / 4

170
238

June 18, 2002 Q:\BRIDGE\3453\OSU\RAMPA\UNDERPASS\3453Arev.dwg

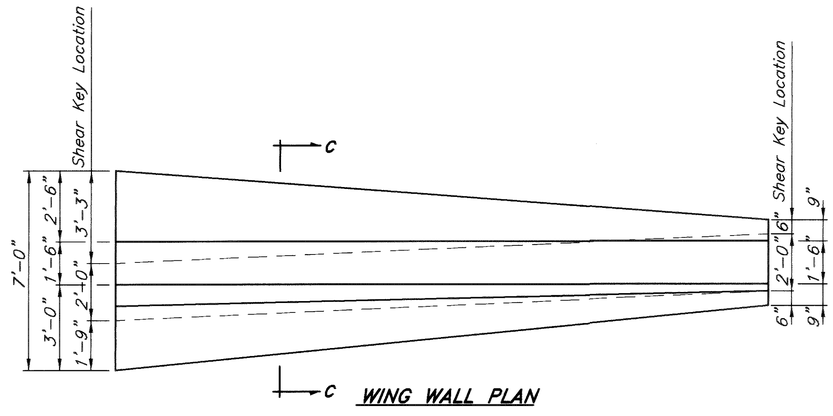

WING WALL PLAN

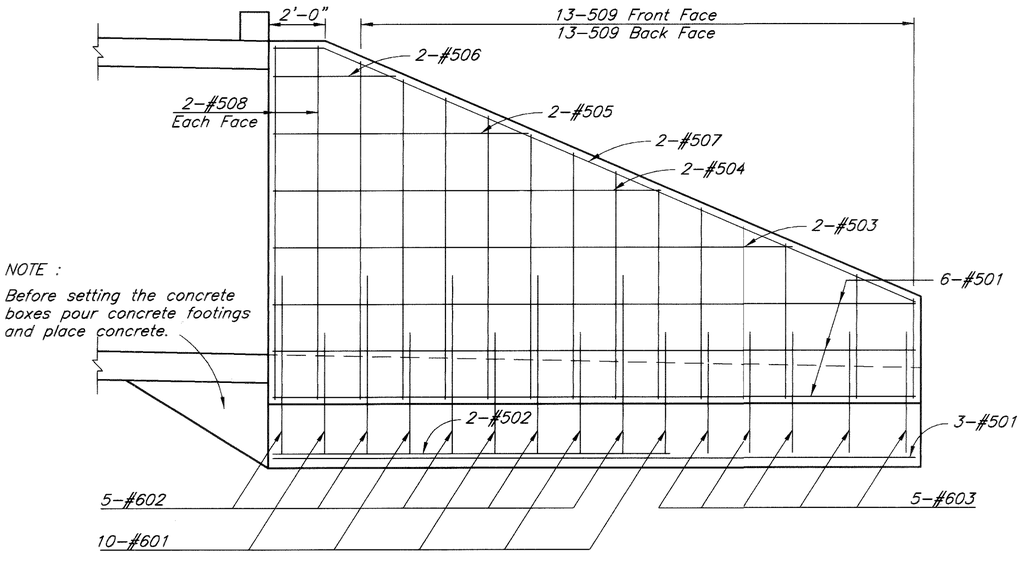

WING WALL ELEVATION
Typ. (One of Four)

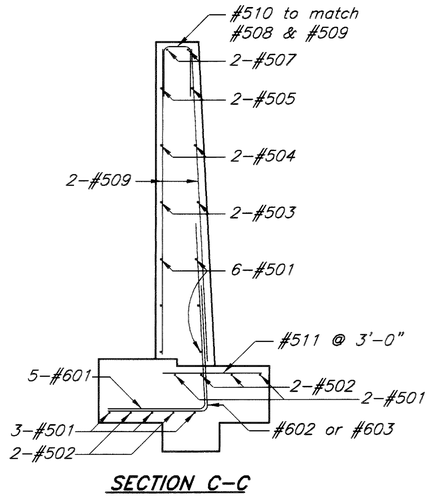

SECTION C-C

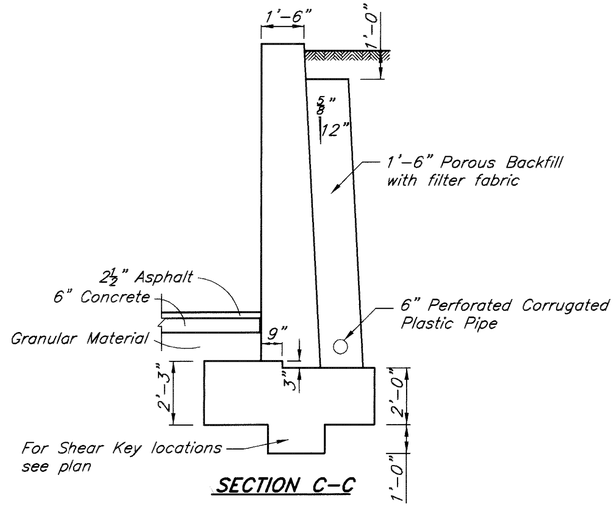

SECTION C-C

June 18, 2002 Q:\BRIDGE\3453\OSU\RAMPA\UNDERPASS\3453Aun2.dwg

DESIGN AGENCY
ERIKSSON ENGINEERING LTD.
1523 CHESAPEAKE AVENUE
COLUMBUS, OH 43212

DESIGNED	DRAWN	REVIEWED	DATE
DA	DA	[illegible]	8.28.01
CHECKED	REVISED		

RAMP A UNDERPASS
WING WALL DETAILS
PEDESTRIAN UNDERPASS

FRA-315-3.04

3 / 4

171
238

REINFORCING STEEL LIST

MARK	NO.	LENGTH	WEIGHT	TYPE	A	B	C	D	REMARKS
			HEADWALL						
C401	20	1–5	19	2	0–8	0–6	0–6		
C501	20	1–8	35	4					
C502	8	13–8	114	STR					
			WING WALLS						
U501	44	22–6	1033	STR					
U502	16	14–0	234	STR					
U503	8	17–11	150	STR					
U504	8	13–3	111	STR					
U505	8	8–7	72	STR					
U506	8	4–0	33	STR					
U507	8	24–6	204	3	22–9	1–9	0–9		
U508	16	12–3	204	STR					
U509	104	11–9	841	STR					2 SETS OF 13
		TO							VARY LENGTH BY 8"
		3–9							
U510	60	4–11	308	2	1–2	2–0	2–0		
U511	36	2–6	122	STR					VARY LENGTH BY 2"
		TO							
		4–0							
U601	40	7–1 1/2	458	1	4–3	3–0			VARY B BY
		TO				TO			
		8–1 1/2				4–0			
U602	20	9–4 1/2	297	1	6–6	3–0			VARY B BY
		TO				TO			
		10–4 1/2				4–0			
U603	20	6–1 1/2	195	1	4–3	2–0			VARY B BY
		TO				TO			
		6–10 1/2				2–9			

ALL BARS SHALL BE EPOXY COATED

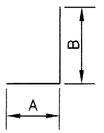

TYPE 1

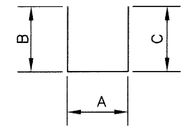

TYPE 2

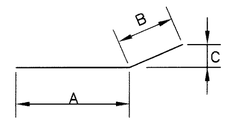

TYPE 3

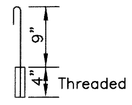

TYPE 4

DESIGN AGENCY
ERIKSSON ENGINEERING LTD.
1523 CHESAPEAKE AVENUE
COLUMBUS, OH 43212

DATE 8.28.01
REVIEWED
DRAWN DA REVISED
DESIGNED DA CHECKED

RAMP A UNDERPASS
REINFORCING BAR LIST
PEDESTRIAN UNDERPASS

FRA-315-3.04

4 / 4

172
238

June 18, 2002 Q:\BRIDGE\3453\OSU\RAMPA\UNDERPASS\3453AUbl.dwg

TR #3
STA A67+08.74, 2.85' LT
IRON PIN
ELEV. = 754.90

BM #4
STA 54+96.90 King Ave., 43.16' LT
Square on Steam Grate
ELEV. = 733.14

Indicate Boring Locations

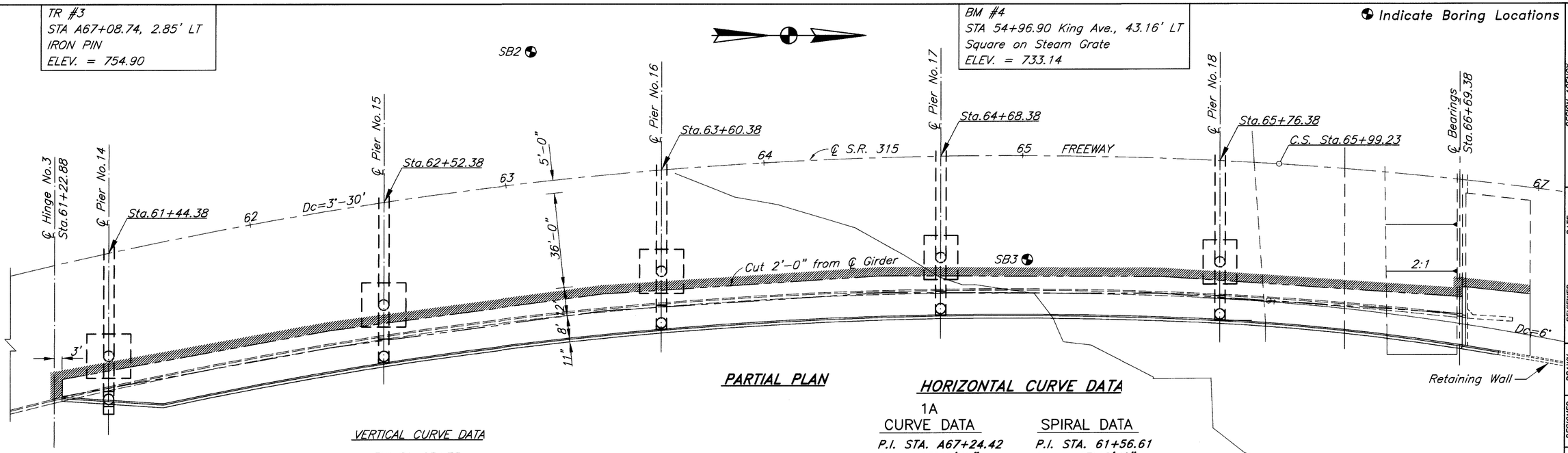

PARTIAL PLAN

HORIZONTAL CURVE DATA

1A

CURVE DATA	SPIRAL DATA
P.I. STA. A67+24.42	P.I. STA. 61+56.61
△ = 18°12'58"	△ = 43°48'46"
Dc = 6°-00'	Dc = 3°-30'
R = 954.93'	R = 1637.02'
L = 303.60'	L_s = 951.79'
T = 153.09'	T = 489.77

VERTICAL CURVE DATA

PVI Sta.65+75
V.C. = 600'
Elev. = 761.61
G_1 = +0.40%
G_2 = -3.00%

Work Limits = 548.82'

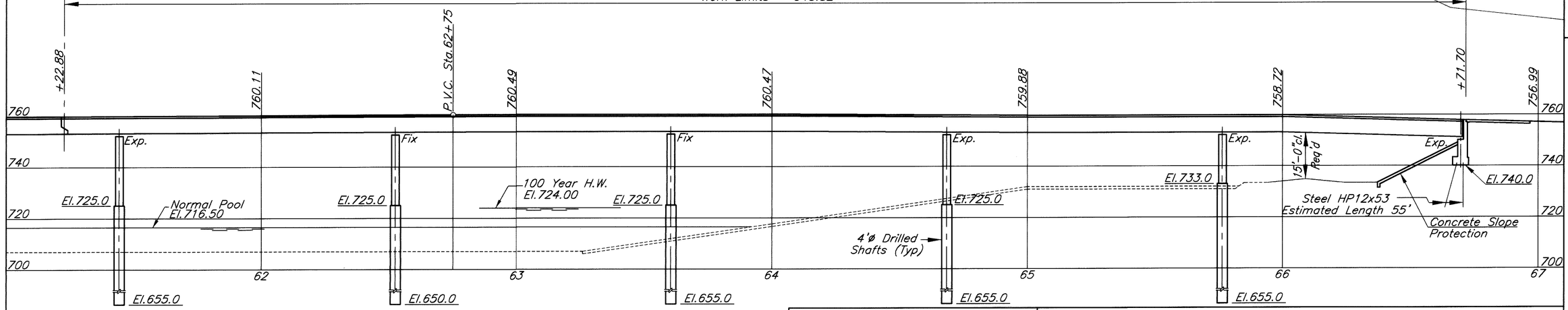

PROFILE ALONG ℄ OF EXIST. OLENTANGY FREEWAY

HYDRAULIC DATA

Frequency Year	Q ft³/sec	Velocity ft/sec	Proposed Elev.
100	17400	5.20	724.0
50	14000	5.90	720.5
10	6000	3.90	717.4

DESIGN TRAFFIC

2003	ADT	44570
2023	ADT	53230
	ADTT	2662

PROPOSED STRUCTURE

PROPOSED WORK: Remove curb, parapet, part of the forward abutment and part of the deck from hinge #3 to the forward abutment. Extend piers 14-18 and the abutment. Place one line of girders and build deck with safety curb. Complete approach slab according to Std Dwg AS-1-81.

EXISTING STRUCTURE

TYPE: Continuous Steel Girder with reinforced concrete deck & substructure

SPANS: 79', 5@99' c/c brgs. along Ref. Tangent "A" & 99', 11@108', 93' c/c brgs. along ℄ S.R.315

ROADWAY: Variable f/f concrete parapets with variable width 6" raised median to Sta.48+86.60(SB); 102' f/f concrete parapets with 4' wide 6" raised median from Sta.48+86.60 forward, concrete parapets & aluminum railing.

LOADING: CF 2000 (1957)

SKEW: 34°51'37" LT Fwd with respect to Ref. Tangent "A" & 8°57'09" RT Fwd with respect to Ref. Tanget "B"

WEARING SURFACE: 1" Monolithic concrete

ALIGNMENT: Spiral left, tangent and 3°30' curve right with transition spirals

APPROACH SLABS : 25'-0" long (AS-1-54)

SUPERELEVATION: NB Lanes - varies from 0.066 @ 44+75 to 0.06 @ 66+00 to none @ 69+00.
SB Lanes - varies from 0.066 @ 44+75 to 0.0134 @ 49+00 to 0.0156 @ 52+00 to 0.06 @ 57+00; 0.06 from 57+00 to 66+00; varies from 0.06 @ 66+00 to none @ 69+00

DESIGN AGENCY
ERIKSSON ENGINEERING LTD.
1523 CHESAPEAKE AVENUE
COLUMBUS, OH 43212

DATE 2.27.02
REVIEWED
SFN : 2515393
DRAWN CJ/DA
REVISED
DESIGNED VK
CHECKED CE

Sta.61+22.88
Sta.66+69.38
FRANKLIN CO.

SITE PLAN
Bridge No. FRA-315-0278
OVER OLENTANGY RIVER ROAD

FRA-315-3.04

1 | 13

173
238

Aug 7, 2002 Q:\BRIDGE\3453\OSU\3453site.dwg

GENERAL NOTES

THIS STRUCTURE CONFORMS TO "STANDARD SPECIFICATIONS FOR HIGHWAY BRIDGES" ADOPTED BY THE AMERICAN ASSOCIATION OF STATE HIGHWAY AND TRANSPORTATION OFFICIALS, 1996, INCLUDING THE 1997, 1998 & 1999 INTERIM SPECIFICATION AND THE ODOT BRIDGE DESIGN MANUAL.

DESIGN LOADING

HS20 CASE I AND THE ALTERNATE MILITARY LOADING.
60 P.S.F. FUTURE WEARING SURFACE.

REFERENCE SHALL BE MADE TO STANDARD DRAWINGS:

AS-1-81	REV	4-20-01	SHEET NO. 1. AND 2.
GSD-1-96	REV	4-20-01	
EXJ-4-87	REV	4-20-01	SHEET NO. 1, 2 & 4
BR-1	REV	1-6-99	SHEET NO. 2
BS-1-93	DATED	12-19-94	
RB-1-55	REV	2-2-59	
PCB-91	REV	7-6-99	

AND TO SUPPLEMENTAL SPECIFICATIONS :

816	DATED	4-21-97
842	DATED	1-6-99
844	DATED	1-6-99
846	DATED	9-9-97
863	DATED	10-12-99
864	DATED	7-11-00
899	DATED	10-21-98
954	DATED	9-9-97

DESIGN DATA

CONCRETE -	HIGH PERFORMANCE CONCRETE 4500 PSI (SUPERSTRUCTURE)
CONCRETE CLASS C -	COMPRESSIVE STRENGTH 4000 PSI (SUBSTRUCTURE)
CONCRETE S MODIFIED -	COMPRESSIVE STRENGTH 4000 PSI (DRILLED SHAFTS)
REINFORCING STEEL -	ASTM A615, A 616 OR A 617 GRADE 60, MINIMUM YIELD STRENGTH 60,000 PSI, SPIRAL REINFORCEMENT MAY BE PLAIN BARS ASTM A82 OR A615
STRUCTURAL STEEL -	ASTM A572, GRADE 50 - YIELD STRENGTH 50,000 PSI

DECK PROTECTION METHOD EPOXY COATED REINFORCING STEEL, TOP & BOTTOM MATS AND 2 1/2" CONCRETE COVER AND SEALING OF CONCRETE SURFACES AND HIGH PERFORMANCE CONCRETE.

MONOLITHIC WEARING SURFACE IS ASSUMED FOR DESIGN PURPOSES TO BE 1".

ITEM 503, UNCLASSIFIED EXCAVATION, AS PER PLAN

UNCLASSIFIED EXCAVATION SHALL BE IN ACCORDANCE WITH 503 EXCEPT THAT THE BACKFILL MATERIAL BEHIND THE ABUTMENTS SHALL BE 203 GRANULAR MATERIAL PLACED IN LIFTS NOT TO EXCEED A THICKNESS OF SIX (6) INCHES.

CAUSEWAYS

ACCORDING TO THE ENVIRONMENTAL DOCUMENT THE CONTRACTOR IS NOT ALLOWED TO BUILD CAUSEWAYS BY PLACING FILL MATERIAL IN THE RIVER. THE METHODS OF CONSTRUCTING THE PIERS AND DECK SHALL BE PROPOSED TO THE ENGINEER AND APPROVED BY THE ENGINEER.

MAINTENANCE OF TRAFFIC

SEE SHEET 13 OF 238

PORTIONS OF STRUCTURE REMOVED, AS PER PLAN

DESCRIPTION: THIS WORK SHALL CONSIST OF THE REMOVAL OF CONCRETE DECKS INCLUDING PARAPETS, RAILINGS, DECK JOINTS AND OTHER APPURTENANCES FROM STEEL SUPPORTING SYSTEMS (BEAMS, GIRDERS, CROSS FRAMES, ETC.) CARE SHALL BE TAKEN DURING DECK REMOVALS TO PROTECT PORTIONS OF SUCH SYSTEMS THAT ARE TO BE SALVAGED AND INCORPORATED INTO THE PROPOSED STRUCTURE. IN THIS RESPECT, THE USE OF EXPLOSIVES, HEADACHE BALLS AND/OR HOE RAM TYPE OF EQUIPMENT IS PROHIBITED.

PROTECTION OF TRAFFIC:

PRIOR TO DEMOLITION OF ANY PORTIONS OF THE EXISTING SUPER-STRUCTURE, THE CONTRACTOR SHALL SUBMIT HIS PLANS FOR THE PROTECTION OF TRAFFIC (VEHICULAR, PEDESTRIAN, BOAT, ETC.) ADJACENT TO AND/OR UNDER THE STRUCTURE TO THE DIRECTOR FOR APPROVAL. THESE PLANS SHALL INCLUDE PROVISIONS FOR ANY DEVICES AND STRUCTURES THAT MAY BE NECESSARY TO ENSURE SUCH PROTECTION. TEMPORARY VERTICAL CLEARANCES SPECIFIED ON THE PLANS OR IN THE PROPOSAL SHALL BE MAINTAINED AT ALL TIMES EXCEPT AS OTHERWISE APPROVED BY THE DIRECTOR.

PROTECTION OF STEEL SUPPORT SYSTEMS:

BEFORE DECK SLAB CUTTING IS PERMITTED, THE OUTLINE OF PRIMARY STEEL MEMBERS IN CONTACT WITH THE BOTTOM OF THE DECK SHALL BE DRAWN ON THE SURFACE OF DECK. SMALL DIAMETER PILOT HOLES SHALL BE DRILLED 2" OUTSIDE THESE LINES TO CONFIRM THE LOCATION OF FLANGE EDGES. DECK CUTS OVER OR WITHIN 2" OF FLANGE EDGES SHALL NOT EXTEND LOWER THAN THE BOTTOM LAYER OF DECK SLAB REINFORCING STEEL. CUTS MADE OUTSIDE 2" INCHES OF FLANGE EDGES MAY EXTEND THE FULL DEPTH OF THE DECK. DURING CUTTING OF THE DECK SLAB, CARE SHALL BE TAKEN NOT TO DAMAGE STEEL MEMBERS THAT ARE TO BE INCORPORATED INTO THE PROPOSED STRUCTURE.

REMOVAL METHODS:

CONCRETE MAY BE REMOVED BY CUTTING AND BY MEANS OF HAND OPERATED PNEUMATIC HAMMERS EMPLOYING POINTED OR BLUNTED CHISEL TYPE TOOLS. FOR REMOVALS ABOVE STEEL MEMBERS, A HAMMER HEAVIER THAN 35 LBS BUT NOT TO EXCEED 90 LBS MAY BE USED AT THE APPROVAL OF THE ENGINEER, TO ENSURE ADEQUATE DEPTH CONTROL AND TO PREVENT NICKING OR GOUGING THE PRIMARY STEEL MEMBERS.

DECK REMOVALS:

DUE TO THE POSSIBLE PRESENCE OF WELDED ATTACHMENTS TO EXISTING STRUCTURAL STEEL (FINISHING MACHINE, SCUPPER AND FORM SUPPORTS, ETC.) CARE SHALL BE TAKEN DURING DECK REMOVAL TO AVOID DAMAGING STRINGERS WHICH ARE TO REMAIN. STRINGERS DAMAGED BY THE CONTRACTOR'S REMOVAL OPERATIONS SHALL, AT NO COST TO THE PROJECT, BE REPLACED OR REPAIRED. PROPOSED REPAIRES, DEVELOPED BY A REGISTERED PROFESSIONAL ENGINEER, SHALL BE SUBMITTED IN WRITING FOR REVIEW AND APPROVAL BY THE DIRECTOR.

EXTRANEOUS MEMBERS:

EXISTING EXTRANEOUS MEMBERS, (i.e. FINISHING MACHINE AND FORM SUPPORTS, ETC., AND THE SUPPORT FOR SCUPPERS AND BULB ANGLES WHICH ARE TO BE REMOVED) ATTACHED BY WELDED CONNECTIONS TO PORTIONS OF THE TOP FLANGES DESIGNATED "TENSION" SHALL BE REMOVED AND THE FLANGE SURFACES GROUND SMOOTH. GRINDING SHALL BE CAREFULLY DONE AND PARALLEL TO THE FLANGES.

LOADING LIMITATIONS:

NO PART OF THE STRUCTURE SHALL BE SUBJECTED TO UNIT STRESSES THAT EXCEED 136.5% OF THE ALLOWABLE UNIT STRESSES GIVEN IN THE AASHTO STANDARD SPECIFICATIONS FOR HIGHWAY BRIDGES DUE EITHER TO DEMOLITION, ERECTION OR CONSTRUCTION METHODS, OR TO THE USE OR MOVEMENT OF DEMOLITION OR ERECTION EQUIPMENT ON OR ACROSS THE STRUCTURE. STRUCTURAL ANALYSIS COMPUTATIONS, BY AN OHIO REGISTERED PROFESSIONAL ENGINEER, SHOWING THE ALLOWABLE STRESSES AND THE MAXIMUM STRESSES PRODUCED BY THE CONRACTOR'S METHODS OR EQUIPMENT SHALL BE SUBMITTED TO THE DIRECTOR FOR REVIEW AND APPROVAL AT LEAST TWO WEEKS PRIOR TO THE START OF THE WORK.

CUT LINE CONSTRUCTION JOINT PREPARATION:

SAW CUT BOUNDARIES OF PROPOSED CONCRETE REMOVALS 1" DEEP. REMOVE CONCRETE TO A ROUGH SURFACE.
THE EXISTING REINFORCING STEEL, IF REQUIRED IN THE PLANS, SHALL BE LEFT IN PLACE. INSTALL DOWEL BARS IF SPECIFIED.
PRIOR TO CONCRETE PLACEMENT ABRASIVELY CLEAN JOINT SURFACES AND EXISTING EXPOSED REINFORCEMENT TO REMOVE LOOSE AND DISINTEGRATED CONCRETE AND LOOSE RUST. THE JOINT SURFACE AND EXPOSED REINFORCEMENT SHALL BE THOROUGHLY CLEANED OF ALL DIRT, RUST OR OTHER FOREIGN MATERIAL BY THE USE OF WATER, AIR UNDER PRESSURE, OR OTHER METHODS THAT PRODUCE SATISFACTORY RESULTS. EXISTING REINFORCING STEEL DOES NOT HAVE TO HAVE A BRIGHT STEEL FINISH BUT ALL PACK AND LOOSE RUST SHALL BE REMOVED. EXISTING CONCRETE SURFACES WHICH NEW CONCRETE WILL BE PLACED AGAINST SHALL BE WET, BUT WITHOUT FREE WATER, AT THE TIME OF CONCRETE PLACEMENT.

SUBSTRUCTURE CONCRETE REMOVAL:

SHALL BE BY MEANS OF APPROVED PNEUMATIC HAMMERS EMPLOYING POINTED AND BLUNT CHISEL TOOLS. HYDRAULIC HOE-RAM TYPE HAMMERS WILL NOT BE PERMITTED. THE WEIGHT OF THE HAMMER SHALL NOT BE MORE THAN 35 POUNDS FOR REMOVAL WITHIN 18" OF PORTIONS TO BE PRESERVED. OUTSIDE THE 18" LIMIT, HAMMERS NOT EXCEEDING 90 POUNDS MAY BE USED UPON THE APPROVAL OF THE ENGINEER.
PNEUMATIC HAMMERS SHALL NOT BE PLACED IN DIRECT CONTACT WITH REINFORCING STEEL THAT IS TO BE RETAINED IN THE REBUILT STRUCTURE.

PAYMENT:

THIS WORK WILL BE PAID FOR AT THE CONTRACT LUMP SUM PRICE BID, WHICH PRICE AND PAYMENT SHALL BE FULL COMPENSATION FOR ALL LABOR, EQUIPMENT, MATERIALS AND INCIDENTALS NECESSARY TO COMPLETE THE WORK IN CONFORMANCE WITH THESE REQUIREMENTS, WITH PERTINENT PROVISIONS OF 202, AND TO THE SATISFACTION OF THE ENGINEER.

PILE DRIVING CONSTRAINTS:

PRIOR TO DRIVING PILES, THE SPILL THROUGH SLOPES AND THE BRIDGE APPROACH EMBANKMENT BEHIND THE ABUTMENT SHALL BE CONSTRUCTED UP TO THE LEVEL OF THE SUBGRADE ELEVATION FOR A MINIMUM DISTANCE OF 75' BEHIND THE ABUTMENT. THE EXCAVATION FOR THE ABUTMENT FOOTINGS AND THE INSTALLATION OF THE ABUTMENT PILES SHALL NOT BEGIN UNTIL AFTER THE ABOVE REQUIRED EMBANKMENT HAS BEEN CONSTRUCTED.

PILE DESIGN LOADS (ULTIMATE BEARING VALUE)

THE ULTIMATE BEARING VALUE IS 113 TONS PER PILE FOR THE ABUTMENT PILES.

FORWARD ABUTMENT PILES: HP12X53
7 PILES 55 FEET LONG, ESTIMATED LENGTH
7 PILES OF ORDER LENGTH 60 FEET LONG

DRILLED SHAFTS:

THE DESIGN LOAD SUPPORTED BY THE DRILLED SHAFT AT PIERS 14, 16, 17 AND 18 IS 220 TONS AND AT PIER 15 229 TONS. THIS LOAD IS RESISTED BY SHAFT SIDE FRICTION WITHIN A PORTION OF THE SHAFT AND ALSO BY SHAFT END BEARING.

THE ULTIMATE SHAFT SIDE FRICTION IS 1.2 K PER SQ FT AND ASSUMED TO ACT ALONG THE BOTTOM 45 FEET OF THE SHAFT FOR PIERS 14, 16, 17 AND 18 AND ASSUMED TO ACT ALONG THE BOTTOM 50 FEET OF PIER 15. THE ULTIMATE END BEARING PRESSURE IS 60 K PER SQ FT.

PROPOSED WORK AND SEQUENCE OF CONSTRUCTION:

- THE BRIDGE IS TO BE WIDENED TO PROVIDE A TURN LANE FOR AN OFF RAMP TO THE OHIO STATE UNIVERSITY.
- CONSTRUCT THE EXTENDED PIERS NO.14 - 18
- WIDEN THE FORWARD ABUTMENT UP TO BEAM SEAT
- SET NEW LINE OF GIRDERS
- CLOSE LANE OF TRAFFIC AS PER MAINTENANCE OF TRAFFIC PLAN SEE SHEET 13 OF 238
- REMOVE PARAPET, CURB AND DECK TO 2 FEET OUTSIDE THE SECOND OUTSIDE GIRDER AND WINGWALL OF THE FORWARD ABUTMENT
- BUILD THE NEW DECK, ABUTMENT BACKWALL AND WINGWALL
- BACKFILL BEHIND ABUTMENT AND BUILD APPROACH SLAB

GENERAL NOTES CONTINUED ON SHEET 3/13

DESIGN AGENCY
ERIKSSON ENGINEERING LTD.
1523 CHESAPEAKE AVENUE
COLUMBUS, OH 43212

DESIGNED DA | DRAWN DM | CHECKED CE | REVISED | REVIEWED | DATE 2.27.02

SFN : 2515393

GENERAL NOTES
BRIDGE NO. FRA-315-0278
OVER OLENTANGY RIVER ROAD

FRA-315-3.04

2 / 13

174
238

Aug. 2, 2002 Q:\BRIDGE\3453\3453gn.dwg

ESTIMATED QUANTITIES

ITEM	ITEM EXT.	TOTAL	UNIT	DESCRIPTION	ABUT.	PIER	SUPER.	GEN.	SPEC. INSTR.
202	11201	LUMP		PORTIONS OF STRUCTURES REMOVED, AS PER PLAN				LUMP	SEE SHEET 174
503	11100	LUMP		COFFERDAMS, CRIBS AND SHEETING				LUMP	
503	21301	LUMP		UNCLASSIFIED EXCAVATION, AS PER PLAN	LUMP				SEE SHEET 174
505	11100	LUMP		PILE DRIVING EQUIPMENT MOBILIZATION				LUMP	
507	00200	420	LIN FT	STEEL PILES HP 12x53, FURNISHED	420				
507	00250	385	LIN FT	STEEL PILES HP 12x53, DRIVEN	385				
507	50500	3	EACH	STEEL PILE SPLICES	3				
507	93300	7	EACH	STEEL POINT (OR SHOE)	7				
509	20001	500	POUNDS	REINFORCING STEEL, REPLACEMENT OF EXISTING REINFORCING STEEL, AS PER PLAN				500	
516	11901	14	LIN FT	HORIZONTAL EXTENSION OF STRUCTURAL EXPANSION JOINT, AS PER PLAN			14		SEE SHEET 183
516	46001	2	EACH	BEARING DEVICE, BOLSTER, AS PER PLAN			2		B275 *
516	46201	2	EACH	BEARING DEVICE, ROCKER, AS PER PLAN			2		R275 *
516	46201	1	EACH	BEARING DEVICE, ROCKER, AS PER PLAN			1		R250 *
516	46201	1	EACH	BEARING DEVICE, ROCKER, AS PER PLAN			1		R150 *
518	12301	3	EACH	SCUPPER, INCLUDING SUPPORTS, AS PER PLAN			3		SEE SHEET 182
518	21231	LUMP		POROUS BACKFILL WITH FILTER FABRIC, AS PER PLAN	LUMP				SEE SHEET 177
518	40000	22	LIN FT	6" PERFORATED CORRUGATED PLASTIC PIPE	22				
518	40010	12	LIN FT	6" NON-PERFORATED CORRUGATED PLASTIC PIPE, INCLUDING SPECIALS	12				
524	94900	355	LIN FT	DRILLED SHAFTS 48" DIAMETER		355			
816	00600	LUMP		FIELD PAINTING OF NEW STEEL, INTERMEDIATE AND FINISH COAT, SYSTEM IZEU			LUMP		
842	43000	55	CU YD	CLASS C CONCRETE, PIER		55			
842	44100	34	CU YD	CLASS C CONCRETE, ABUTMENTS NOT INCLUDING FOOTING	34				
842	46500	19	CU YD	CLASS C CONCRETE, FOOTING	19				
844	48001	244	CU YD	HIGH PERFORMANCE CONCRETE SUPERSTRUCTURE (DECK), AS PER PLAN			244		SEE SHEET 174 & 177
844	48021	59	CU YD	HIGH PERFORMANCE CONCRETE SUPERSTRUCTURE (PARAPET), AS PER PLAN			59		SEE SHEET 174 & 177
844	49000	LUMP		HIGH PERFORMANCE CONCRETE TRIAL MIX			LUMP		
844	49010	LUMP		HIGH PERFORMANCE CONCRETE TESTING			LUMP		
							123		
863	10080	LUMP		STRUCTURAL STEEL MEMBERS, LEVEL FOUR FABRICATION			LUMP		
863	20000	810	EACH	WELDED STEEL SHEAR CONNECTORS			810		
864	10100	668	SQ YD	SEALING OF CONCRETE SURFACES (EPOXY-URETHANE)	58		610		
				Computed By : VK\DA Date :12.23.01					
				Checked By : CE Date :12.23.01					

* SEE SHEET **178** AND STD DWG BR-1

GENERAL NOTES

ITEM 509 REINFORCING STEEL, REPLACEMENT OF EXISTING REINFORCING STEEL, AS PER PLAN

ANY EXISTING REINFORCING BARS DEEMED BY THE ENGINEER TO BE UNUSABLE BECAUSE OF CORROSION SHALL BE REPLACED WITH NEW REINFORCING STEEL. ANY EXISTING REINFORCING STEEL BARS WHICH ARE TO BE INCORPORATED INTO THE NEW WORK AND ARE MADE UNUSABLE BY CONCRETE REMOVAL OPERATIONS SHALL BE REPLACED WITH NEW EPOXY COATED REINFORCING STEEL OF THE SAME SIZE AT THE CONTRACTOR'S COST. ALL WORK SHALL BE TO THE SATISFACTION OF THE ENGINEER.

THE NUMBER OF POUNDS OF REINFORCING STEEL PAID FOR AT CONTRACT PRICES SHALL BE THE ACTUAL POUNDS OF REPLACEMENT REINFORCING STEEL SPECIFIED BY THE ENGINEER DUE TO CORROSION AND SHALL INCLUDE PLACEMENT, DOWELING, BENDING, SUPPORTING, TIE WIRES AND TYING OF THAT SPECIFIED REINFORCING STEEL.

ITEM 864 SEALING OF CONCRETE SURFACES (EPOXY-URETHANE)

SEALING OF CONCRETE SURFACES (EPOXY-URETHANE) SHALL BE APPLIED ON A 9" WIDTH OF THE ROADWAY ALONG THE CURBLINE, TO ALL EXPOSED SURFACES OF THE CONCRETE BARRIER, FRONT TOP AND BACK SIDE, THE DECK FACIA AND A 6" WIDTH OF THE UNDERSIDE OF THE DECK.

SEALER SHALL ALSO BE APPLIED TO ALL EXPOSED SURFACES OF THE ABUTMENT AND WINGWALL TO OBTAIN A UNIFORM COLOR ON ALL CONCRETE.

THE TOP COAT OF THE EPOXY-URETHANE SEALER SHALL BE FEDERAL COLOR STANDARD NO. 17778 (LIGHT NEUTRAL).

ITEM 816 FIELD PAINTING OF NEW STEEL

THE URETHANE TOP COAT FOR THE IZEU PAINT SYSTEM SHALL BE OF A COLOR TO MATCH THE EXISTING STEEL.

AT THE OPTION OF THE CONTRACTOR, NEW STEEL MAY BE PAINTED USING SYSTEM OZEU FOR EASE OF CONSTRUCTION. IF OZEU IS CHOSEN AS AN ALTERNATE TO IZEU, THE BEAMS NEED NOT TO BE PRIMED WITH INORGANIC ZINC WHEN SHIPPED TO THE SITE. HOWEVER, DURING PAINTING OF THE EXISTING STEEL, THE NEW BEAMS WILL BE BLASTED AND PAINTED AS PER THE OZEU SPECIFICATIONS. THIS SHALL BE DONE AT NO EXTRA COST TO THE STATE.

UTILITY LINES:

ALL EXPENSES INVOLVED IN RELOCATION (INSTALLING) THE AFFECTED UTILITY LINES SHALL BE BORNE BY THE UTILITIES. THE CONTRACTOR AND UTILITIES ARE TO COOPERATE BY ARRANGING THEIR WORK IN SUCH A MANNER THAT INCONVENIENCE TO EITHER WILL BE HELD TO A MINIMUM.

EXISTING STRUCTURE VERIFICATION:

DETAILS AND DIMENSIONS SHOWN ON THESE PLANS PERTAINING TO THE EXISTING STRUCTURE HAVE BEEN OBTAINED FROM PLANS OF THE EXISTING STRUCTURE AND FROM FIELD OBSERVATIONS AND MEASUREMENTS. CONSEQUENTLY, THEY ARE INDICATIVE OF THE EXISTING STRUCTURE AND THE PROPOSED WORK BUT THEY SHALL BE CONSIDERED TENTATIVE AND APPROXIMATE. THE CONTRACTOR IS REFERRED TO CMS SECTIONS 102.05, 105.02 AND 863.07.

CONTRACT BID PRICES SHALL BE BASED UPON A RECOGNITION OF THE UNCERTAINTIES DESCRIBED ABOVE AND UPON A PREBID EXAMINATION OF THE EXISTING STRUCTURE BY THE CONTRACTOR. HOWEVER, ALL PROJECT WORK SHALL BE BASED UPON ACTUAL DETAILS AND DIMENSIONS WHICH HAVE BEEN VERIFIED BY THE CONTRACTOR IN THE FIELD.

DESIGN AGENCY
ERIKSSON ENGINEERING LTD.
1523 CHESAPEAKE AVENUE
COLUMBUS, OH 43212

DATE 2.27.02
REVIEWED CE
DRAWN DA
REVISED
DESIGNED VK/DA
CHECKED CE

ESTIMATED QUANTITIES
BRIDGE NO. FRA-315-0278
OVER OLENTANGY RIVER ROAD

FRA-315-3.04

3 / 13

175 / 238

Aug. 5, 2002 Q:\BRIDGE\3453\OSU\3150verKing\3453gnq.dwg

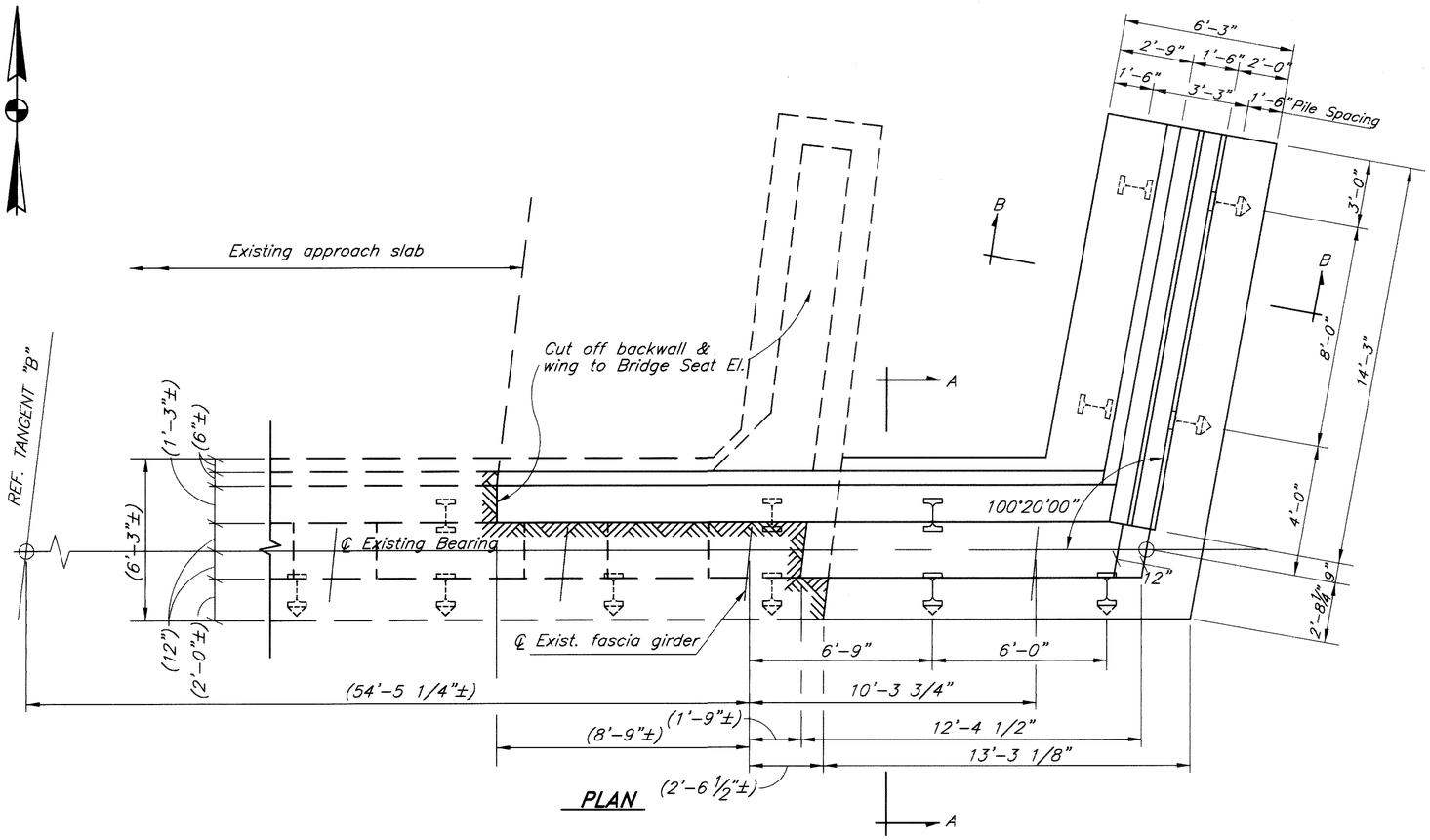

PLAN

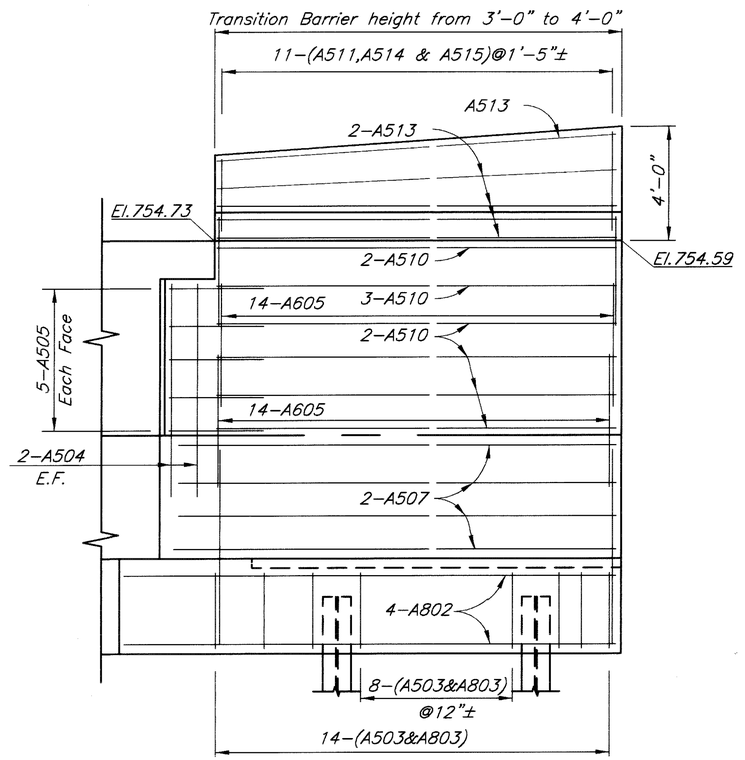

WING ELEVATION

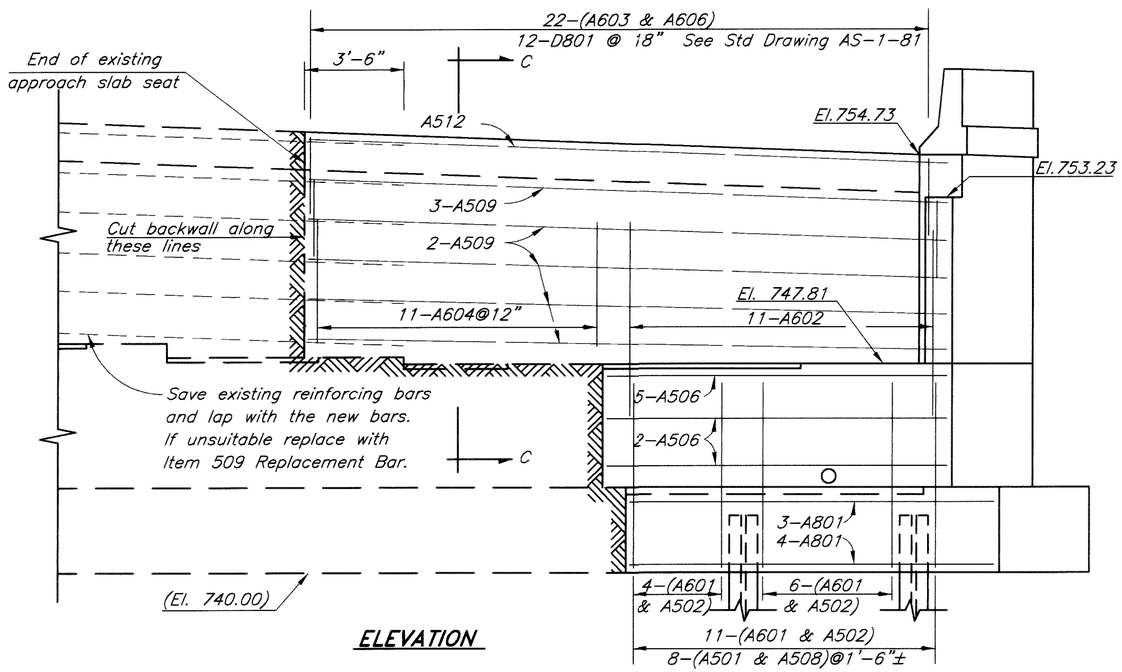

ELEVATION

NOTES:

Saw cut along the lines as shown on Plan and elevation. For further notes see sheet 2/13 "Cut Line Construction Joint Preparation".
Where reinforcing bars #A801, A602, A506 & A509 shall match up with existing bars and the existing bars are unsuitable, according to "Item 509, reinforcing Steel," see sheet 3/13, dowels shall be provided.

The dowels shall be 4' long and of the same size as existing bars set in 12" deep dowel holes and grouted with epoxy grout.

POROUS BACKFILL , 2'-0" thick along backwall and 2'-0" along the wing, shall extend up to the plane of the subgrade and laterally to the end of the wing wall.

Dimensions shown in ( ) have been obtained from plans of the existing structure and should be taken as ±.

DESIGN AGENCY
ERIKSSON ENGINEERING LTD.
1523 CHESAPEAKE AVENUE
COLUMBUS, OH 43212

DATE 2.27.02
REVIEWED CE
SFN : 2515393

DRAWN DA
REVISED
DESIGNED VK/DA
CHECKED CE

FORWARD ABUTMENT MODIFICATION DETAILS
Bridge No. FRA-315-0278
OVER OLENTANGY RIVER ROAD

FRA-315-3.04

4 | 13

176
238

June 7, 2002 Q:\BRIDGE\3453\OSU\3453elev.dwg

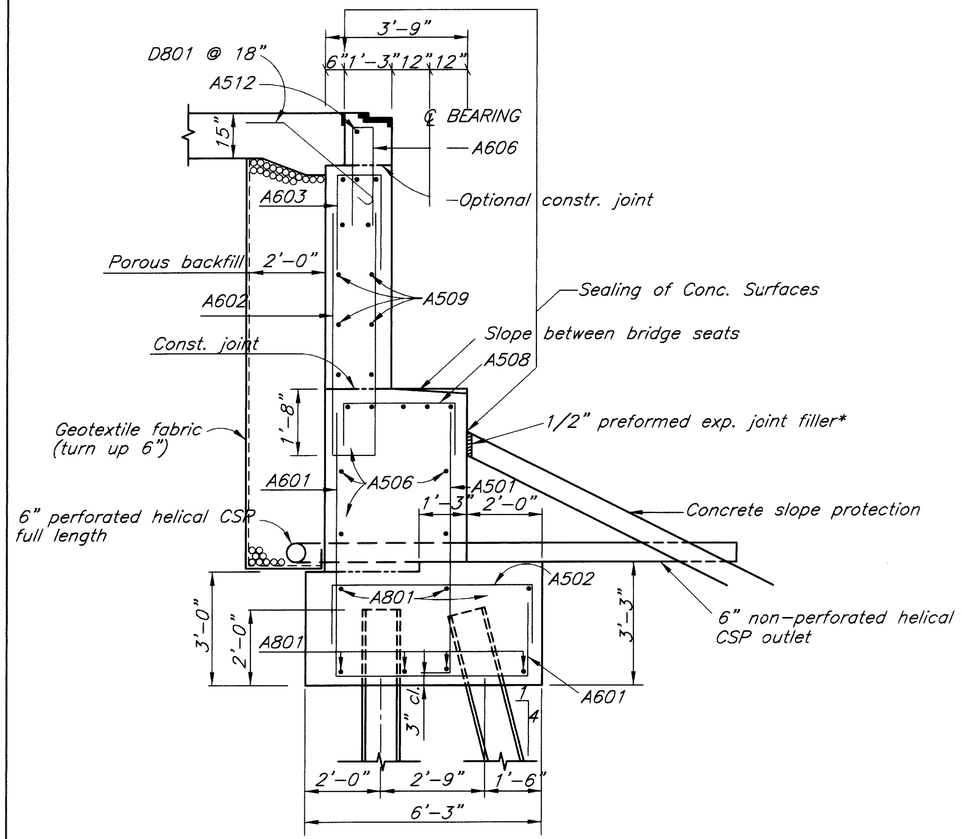

SECTION A-A

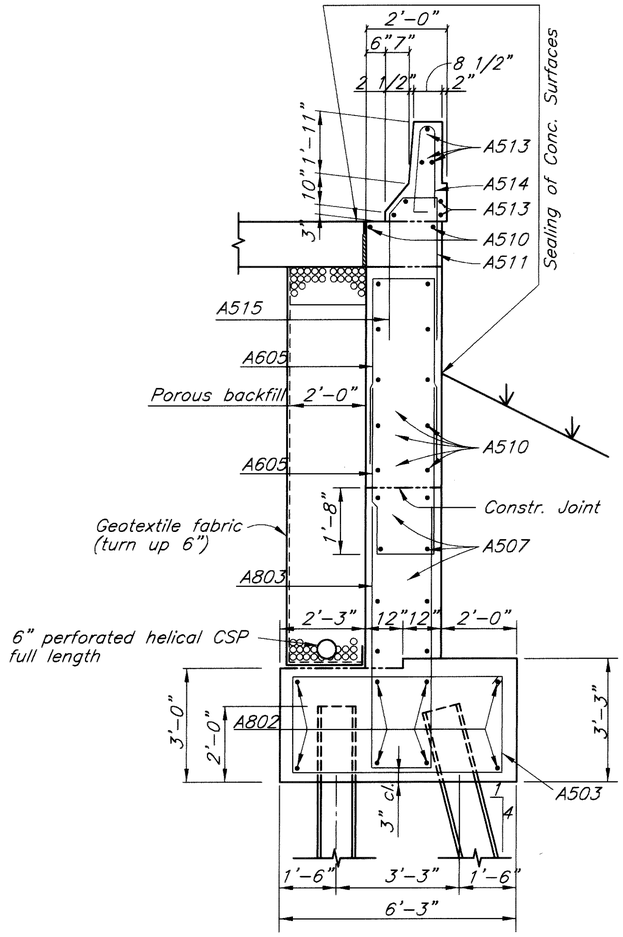

SECTION B-B

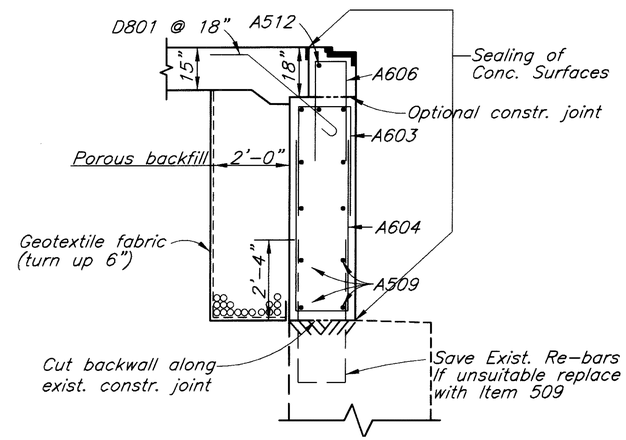

SECTION C-C

* Included with Item 601 for payment

BACKWALL CONCRETE: in addition to the provisions of 511.08, backwall concrete above the optional construction joint at the approach slab seat shall not be placed until after the deck concrete in the span adjacent to the abutment has been placed.

DESIGN AGENCY
ERIKSSON ENGINEERING LTD.
1523 CHESAPEAKE AVENUE
COLUMBUS, OH 43212

DESIGNED	DRAWN	REVIEWED	DATE
VK	DA	CE	2.27.02
CHECKED	REVISED	SFN : 2515393	
CE			

FORWARD ABUTMENT MODIFICATION DETAILS

Bridge No. FRA-315-0278
OVER OLENTANGY RIVER ROAD

FRA-315-3.04

5 | 13

177
238

Aug 1, 2002 Q:\BRIDGE\3453\OSU\3453scts.dwg

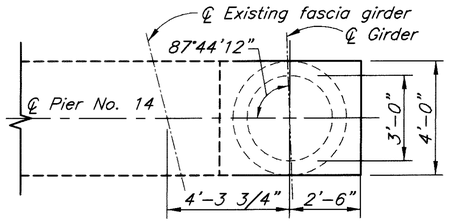

PLAN PIER NO. 14

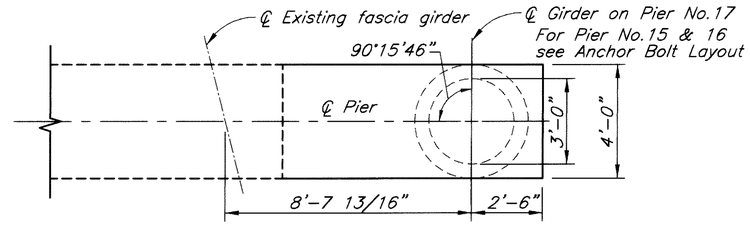

PLAN–TYPICAL PIERS
NO.15, NO.16 & NO.17

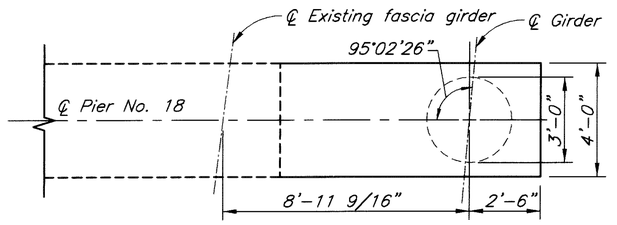

PLAN PIER NO. 18

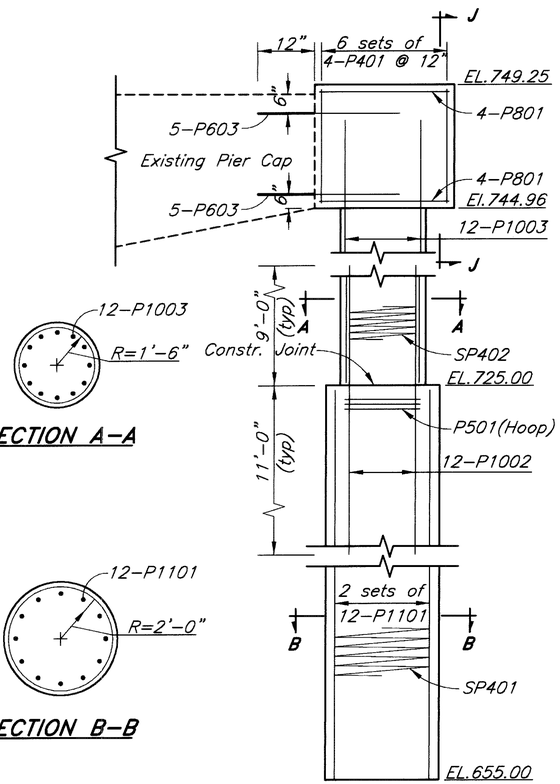

SECTION A–A

SECTION B–B

ELEVATION PIER NO. 14

SECTION D–D

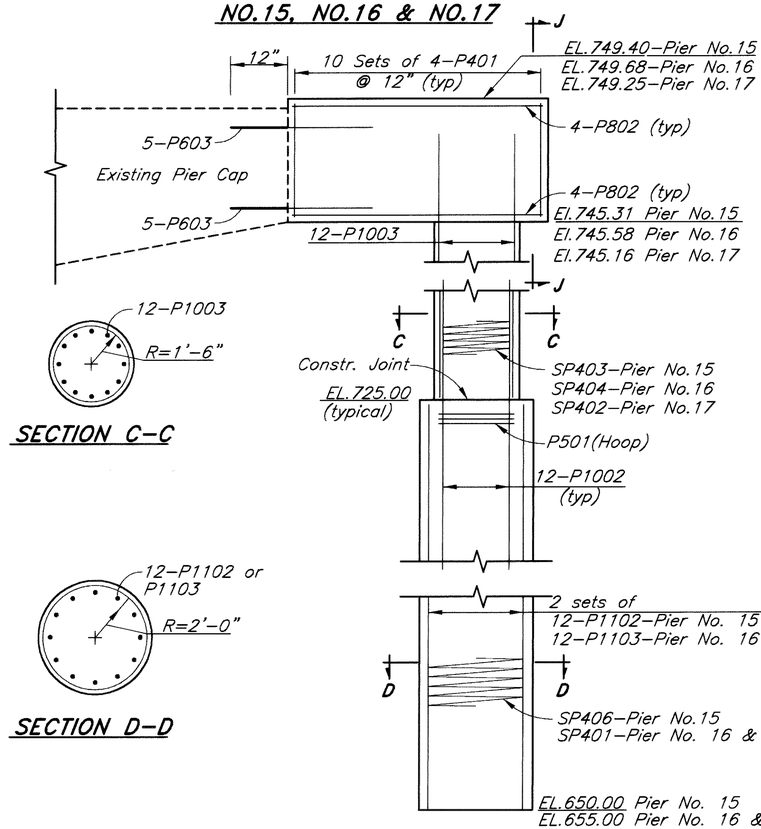

SECTION C–C

ELEVATION–TYPICAL PIERS
No.15, No.16 & No.17

SECTION J–J

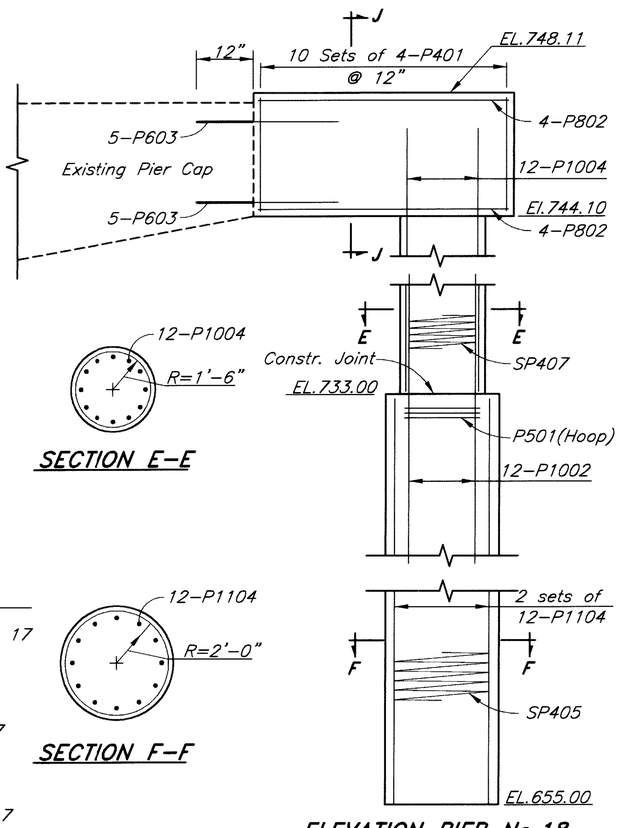

SECTION E–E

SECTION F–F

ELEVATION PIER No.18

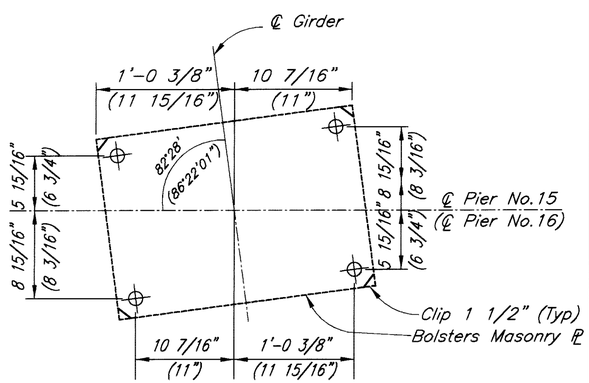

ANCHOR BOLT LAYOUT
AT PIER No.15

Note:
P603 shall be epoxy coated bars set in dowels holes 12" long with epoxy grout.

DESIGN AGENCY
ERIKSSON ENGINEERING LTD.
1523 CHESAPEAKE AVENUE
COLUMBUS, OH 43212

DATE 2.27.02
REVIEWED CE
SFN : 2515393

DRAWN DA
REVISED

DESIGNED VK
CHECKED CE

PIERS
Bridge No. FRA-315-0278
OVER OLENTANGY RIVER ROAD

FRA-315-3.04

6 | 13

178
238

Aug 1, 2002 Q:\BRIDGE\3453\OSU\3453pier.dwg

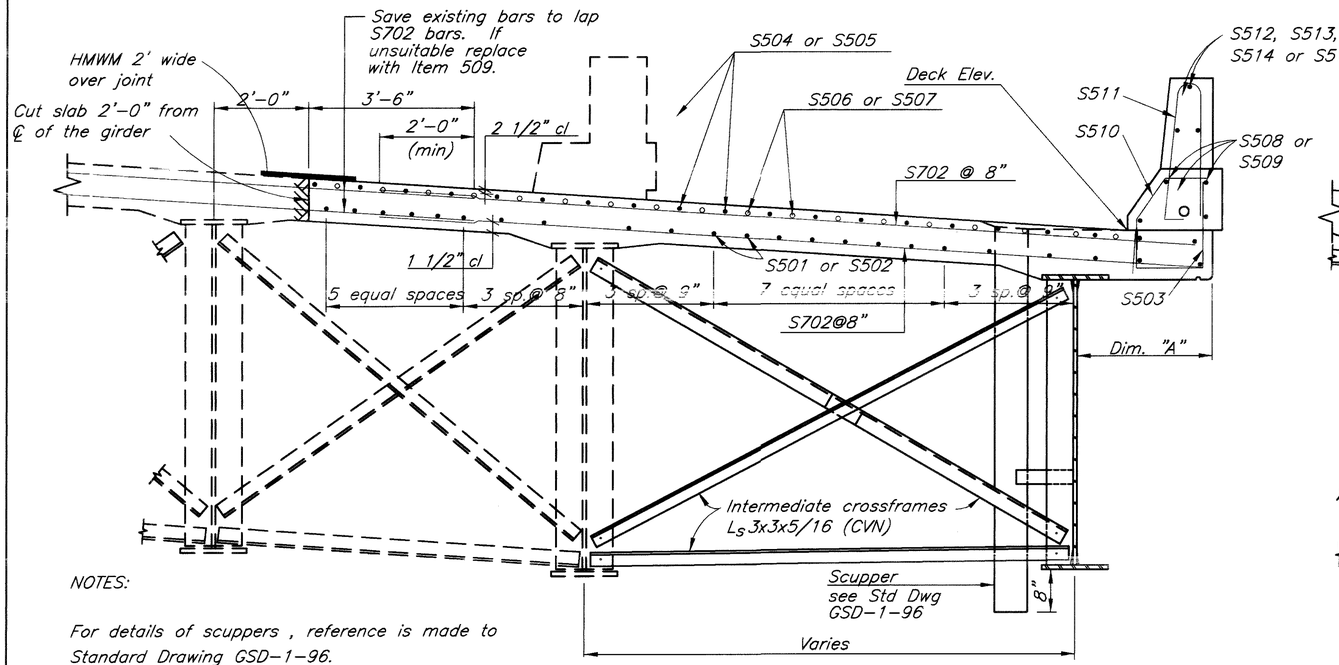

SECTION A-A

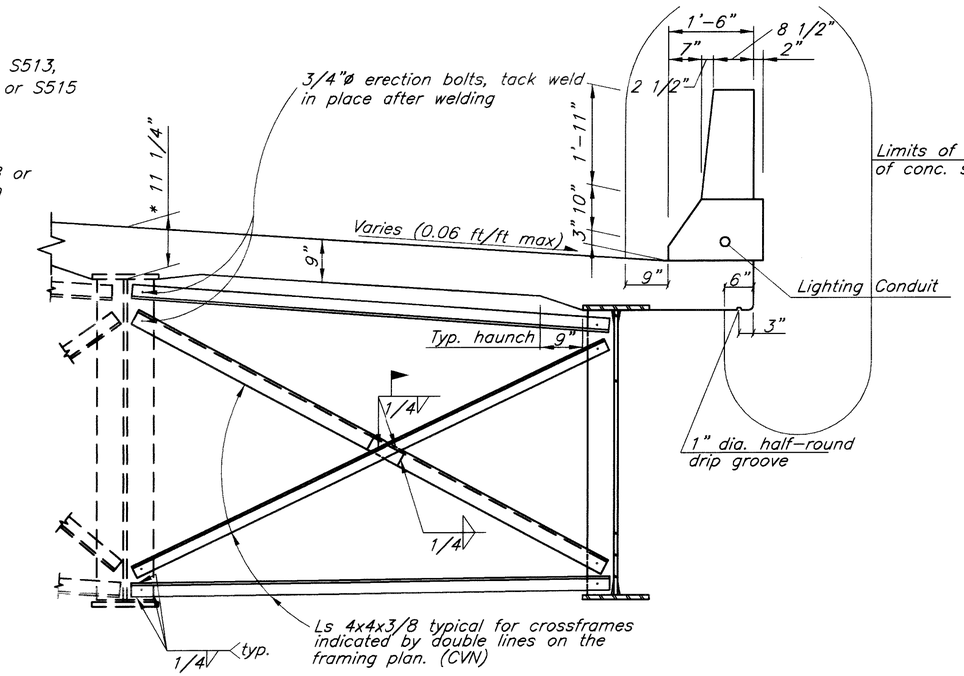

NOTES:

For details of scuppers , reference is made to Standard Drawing GSD-1-96.
The support angles and support bolts are included with scupper for payment.
Scuppers, including support angles, shall be galvanized in accordance with 711.02.

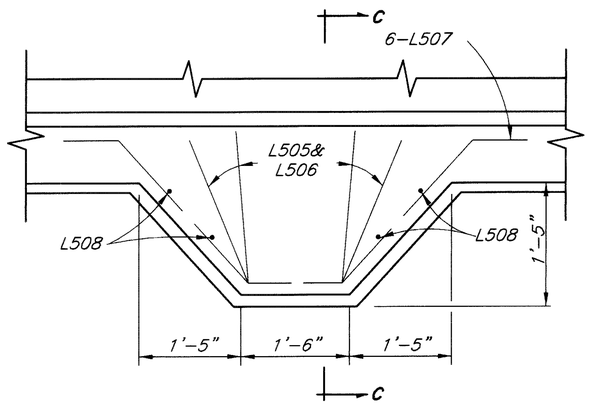

PLAN

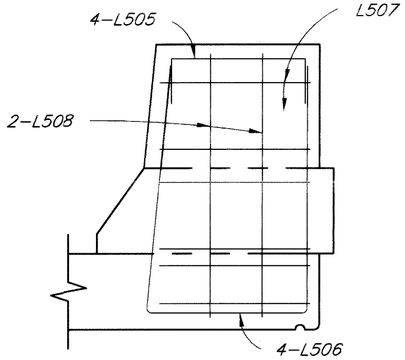

SECTION C-C

POINTS	STATION	PROFILE GRADE	DECK ELEV.	DIM "A"	POINTS	STATION	PROFILE GRADE	DECK ELEV.	DIM "A"
℄ Pier No.14	61+32.16	759.84	756.81	2'-1"	℄ Pier No.17	64+67.50	760.13	756.80	2'-8 1/4"
℄ Splice	+53.64	.93	.62	3'-5 1/4"	.2	+89.93	759.96	.66	2'-4 5/8"
.5	+87.52	760.06	.77	3'-1"	.4	65+12.37	.76	.49	2'-4 5/8"
℄ Splice	62+21.12	.19	.89	3'-4 5/8"	.6	+34.80	.54	.26	2'-8 1/8"
℄ Pier No.15	+43.34	.28	.96	2'-9 3/8"	℄ Splice	+57.23	.28	755.98	3'-3 1/4"
.2	+65.76	.37	757.07	2'-6"	℄ Pier No.18	+79.58	.00	.68	2'-4 3/8'
.4	+88.19	.46	.19	2'-6"	.25	66+03.72	758.66	.36	1'-8 5/8"
.6	63+10.68	.52	.24	2'-9 1/2"	.50	+27.88	.29	.27	1'-8 3/8"
℄ Splice	+33.20	.55	.25	3'-4 3/4"	.75	+52.05	757.89	.10	2'-5 1/4"
℄ Pier No.16	+55.44	.55	.22	2'-9 3/8"	℄ Abut.Brgs.	+76.20	.45	754.86	3'-11 3/8"
.2	+77.88	.52	.22	2'-5 1/2"					
.4	64+00.33	.45	.20	2'-5 1/4"					
.6	+22.76	.38	.11	2'-8 3/8"					
℄ Splice	+45.21	.27	756.97	3'-3 1/4"					
℄ Pier No.17	+67.50	.13	.80	2'-8 1/4"					

* This is the design dimension. The quantity of deck concrete to be paid for shall be based upon this dimension, even though deviation from it may be necessary because the top flange of the girder may not have the exact camber or conformation required to place it parallel to the finished grade. Deduction shall be made for volume of encased steel plates as per 842.

A HAUNCH WIDTH of 9" shall be used for computing quantity of concrete. However, the haunch width may vary between 6" and 12" (provided that the slope shall be not more than 1:4 for a haunch less than 9" width).

ERECTION BOLTS: Hole diameter in crossframes and girder stiffeners shall be respectively 1/16" and 1/4" larger than the diameter of the erection bolts. Unless replaced by permanent high strength bolts, erection bolts shall remain in place. Lock washers shall be furnished for other than fully torqued high strength erection bolts. Bolts shall be furnished as part of 863.

In lieu of erection bolts and at the option of the Contractor, alternative means of temporary bracing may be used subject to the approval of the Director (501.06).

For location of Section A-A, See Sheet 12/13

LIGHT POLE PILASTER DETAILS

Screed elevations shown are at the face of curb and are those elevations which are required before the concrete deck is placed. Proper allowance has been made for the dead load deflection due to the weight of the concrete.

DESIGN AGENCY: ERIKSSON ENGINEERING LTD.
1523 CHESAPEAKE AVENUE COLUMBUS, OH 43212
DESIGNED VK/DA DRAWN DA REVISED
CHECKED CE REVIEWED ℄℄ DATE 2.27.02
SFN : 2515393

DECK DETAILS
Bridge No. FRA-315-0278
OVER OLENTANGY RIVER ROAD

FRA-315-3.04

Aug 5, 2002 Q:\BRIDGE\3453\OSU\3453light.dwg

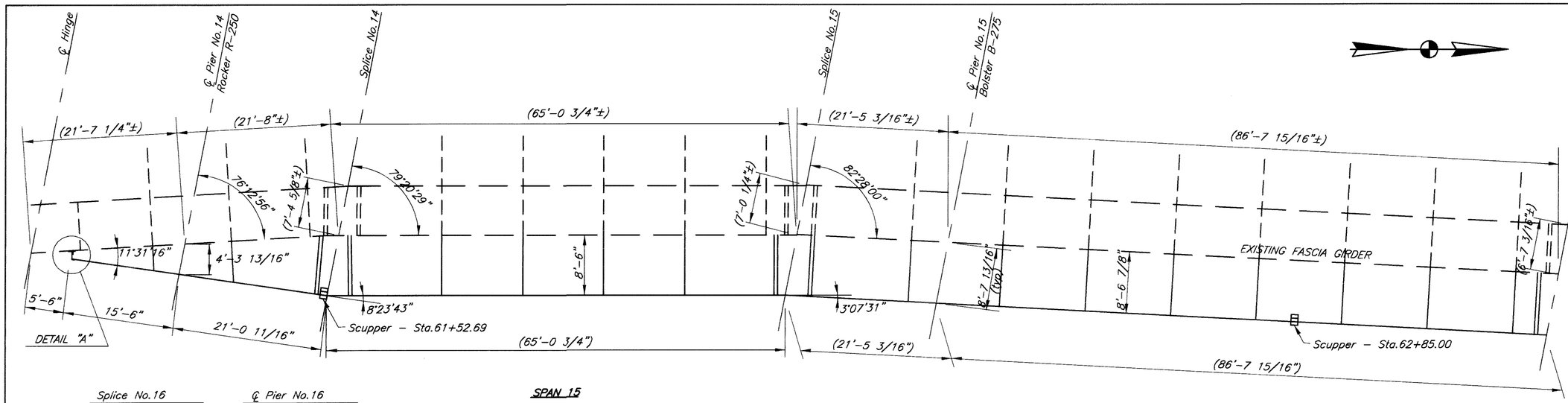

For Bearing Loads & details see sheet 10/13.

DESIGN AGENCY
ERIKSSON ENGINEERING LTD.
1523 CHESAPEAKE AVENUE
COLUMBUS, OH 43212

DESIGNED	DRAWN	REVIEWED	DATE
VK	DA		2.27.02
CHECKED	REVISED	STRUCTURE FILE NO.	
WY/CE		2515393	

FRAMING PLAN
Bridge No. FRA-315-0278
OVER OLENTANGY RIVER ROAD

FRA-315-3.04

8 | 13

180
238

June 5, 2002 Q:\BRIDGE\3453\OSU\3453frmg.dwg

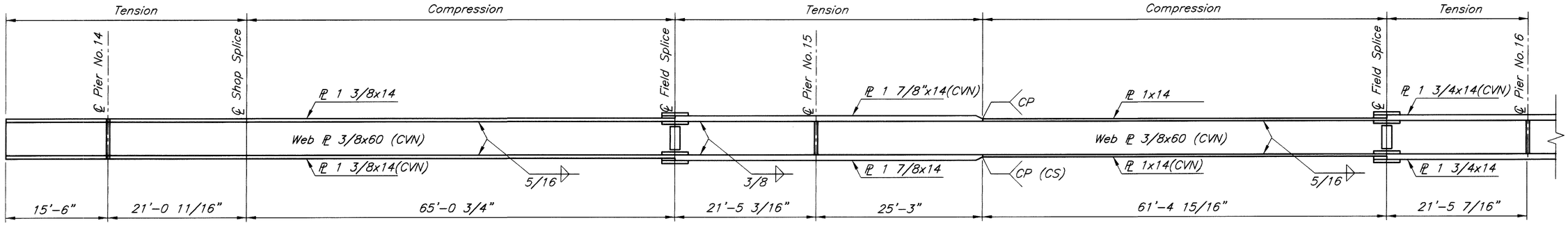

SPAN 15 **SPAN 16**

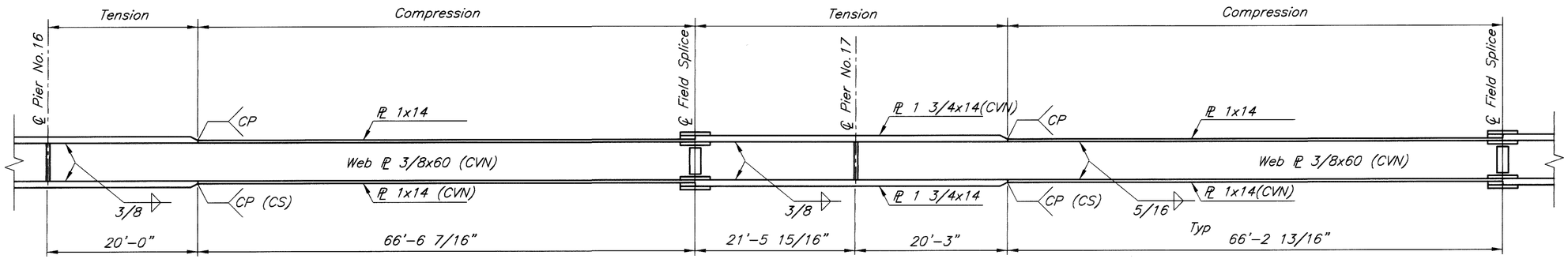

SPAN 17 **SPAN 18**

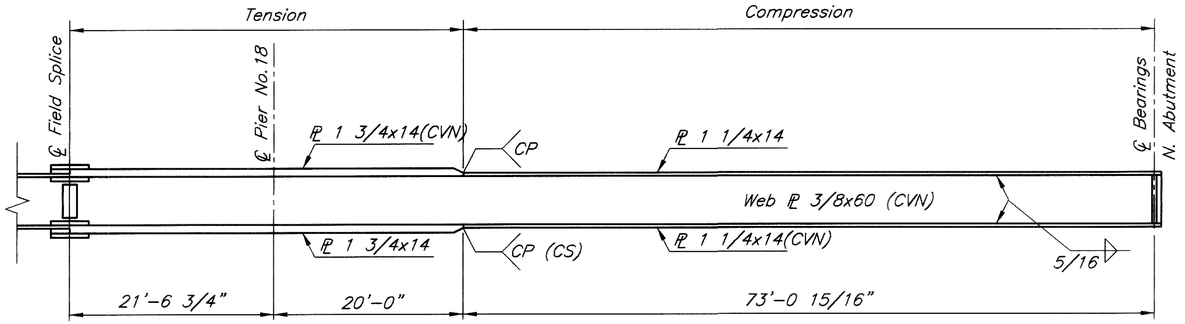

SPAN 19

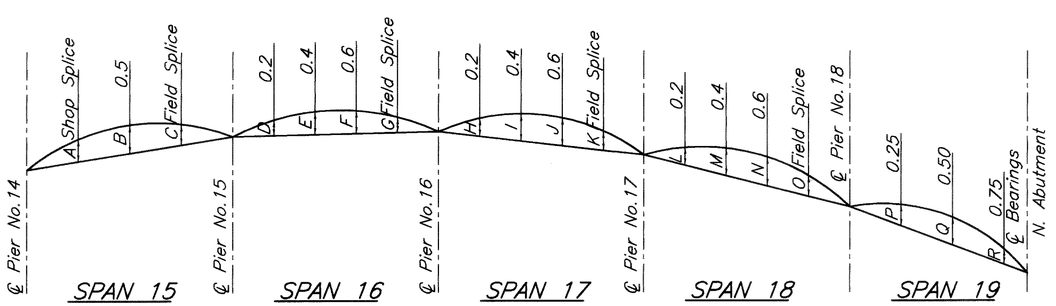

CAMBER DIAGRAM

NOTES:

Intermediate stiffeners shall not be used.

WELDED ATTACHMENT of supports for concrete deck finishing machine may be made to areas of the fascia stringer flanges designated "Compression." Attachments shall not be made to areas designated "Tension." Fillet welds to compression flanges shall be not closer than 1" from edge of flange, be not more than 2" long, and be not smaller than the minimum size required by AASHTO.

CHARPY V-NOTCH : Where a shape or plate is designated (CVN) the material shall meet specified minimum notch toughness requirements as specified in 711.01 of C.M.S.

CP = Compression Penetration weld
CS = Buttweld subject to compressive stresses only

POINTS	"A"	"B"	"C"	"D"	"E"	"F"	"G"	"H"	"I"
Deflection due to weight of steel.	1/16	1/8	1/16	1/16	3/16	3/16	1/16	1/16	3/16
Deflection due to remaining dead load.	3/16	7/16	3/16	5/16	5/8	5/8	5/16	5/16	5/8
Adjustment required for vert. & horiz. curves	-2	-1 5/16	3/16	1/4	5/8	7/8	1 1/16	1/2	13/16
Required shop camber	-1 3/4	-3/4	7/16	5/8	1 7/16	1 11/16	1 7/16	7/8	1 5/8
POINTS	"J"	"K"	"L"	"M"	"N"	"O"	"P"	"Q"	"R"
Deflection due to weight of steel.	3/16	1/16	1/16	3/16	3/16	1/16	1/16	1/8	1/8
Deflection due to remaining dead load.	5/8	5/16	5/16	9/16	9/16	1/4	1/4	7/16	3/8
Adjustment required for vert. & horiz. curves	1 1/8	1 1/8	1/2	7/8	1 1/8	1 3/16	-2 3/8	-1 3/8	-9/16
Required shop camber	1 15/16	1 1/2	7/8	1 5/8	1 7/8	1 1/2	-2 1/16	-13/16	-1/16

DESIGN AGENCY
ERIKSSON ENGINEERING LTD.
1523 CHESAPEAKE AVENUE
COLUMBUS, OH 43212

DATE 2.27.02
REVIEWED BGS
SFN : 2515393
DRAWN DA
REVISED
DESIGNED VK
CHECKED CE

GIRDER DETAILS
Bridge No. FRA-315-0278
OVER OLENTANGY RIVER ROAD

FRA-315-3.04

9 | 13

181
238

Aug. 5, 200 Q:\BRIDGE\3453\OSU\3453cmbr.dwg

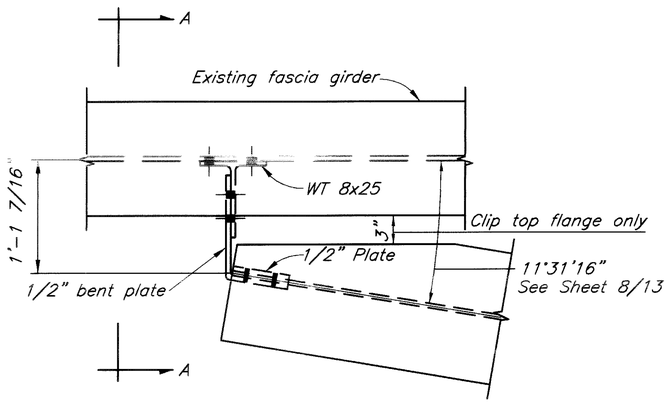

DETAIL "A"

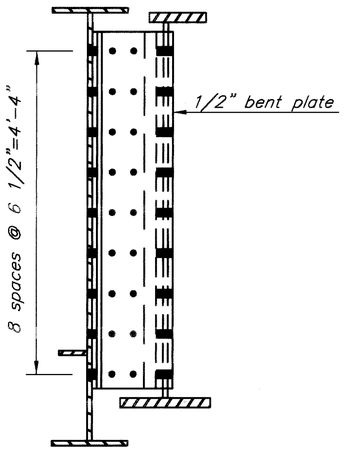

VIEW A-A

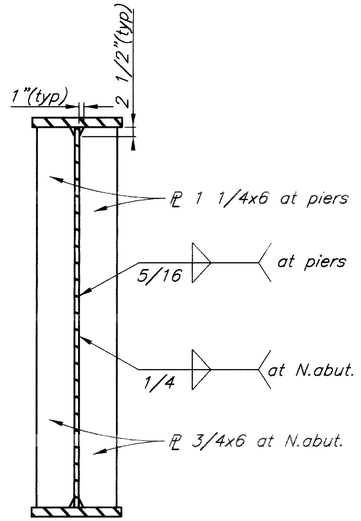

BEARING STIFFENER DETAIL

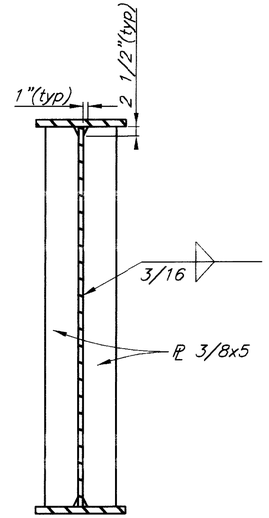

*TRANSVERSE INTER. STIFFENER DETAIL

* No intermediate stiffeners or outside stiffeners at crossframes for exterior beam.

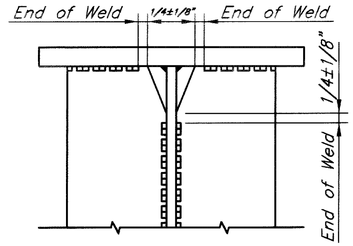

*STIFFENER DETAIL AT INTERIOR CROSSFRAME CONNECTIONS

(Top & Bottom)

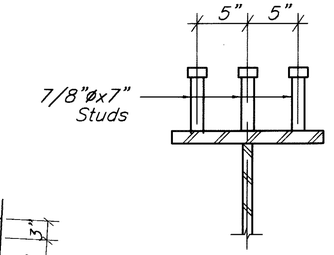

SHEAR CONNECTOR DETAIL

Shear Studs @ 24" c/c

	DL	LL	IMP.	DL+LL+I	*
Pier 14	61.8	53.9	11.6	127.3	R250
Pier 15	183.0	86.5	18.6	288.1	B275
Pier 16	153.1	84.0	18.1	255.2	B275
Pier 17	159.1	84.5	18.2	261.8	R275
Pier 18	166.3	85.3	18.9	270.5	R275
Abutment	51.3	55.5	12.7	119.5	R150

* Use Rocker and Bolster according to Std Dwg RB-1-55 Rev 2.2.59. These bearings match the bearings on the existing bridge.

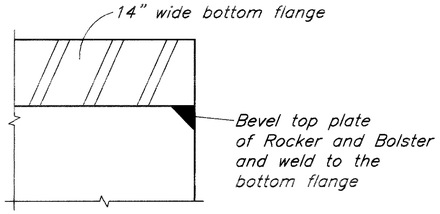

B275 and R275 are 14" wide, same as the bottom flange

TOP PLATE OF B275 AND R275 WELDED TO GIRDER BOTTOM FLANGE

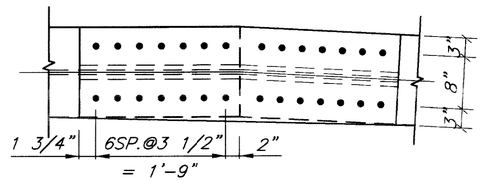

PLAN

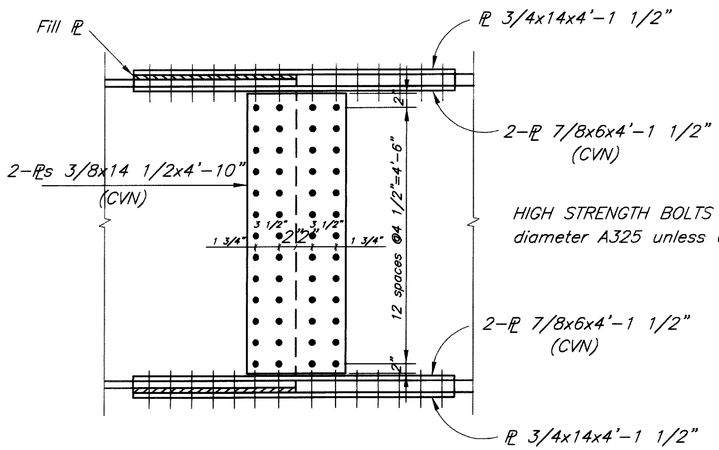

HIGH STRENGTH BOLTS shall be 1" diameter A325 unless otherwise noted.

ELEVATION

FIELD SPLICE DETAILS

DESIGN AGENCY
ERIKSSON ENGINEERING LTD.
1523 CHESAPEAKE AVENUE
COLUMBUS, OH 43212

DATE 2.27.02
REVIEWED
SFN : 2515393

DRAWN DA REVISED
DESIGNED VK/DA CHECKED CE

GIRDER DETAILS
Bridge No. FRA-315-0278
OVER OLENTANGY RIVER ROAD

FRA-315-3.04

10 | 13

182
238

Aug. 5, 2002 Q:\BRIDGE\3453\OSU\3453sfnr.dwg

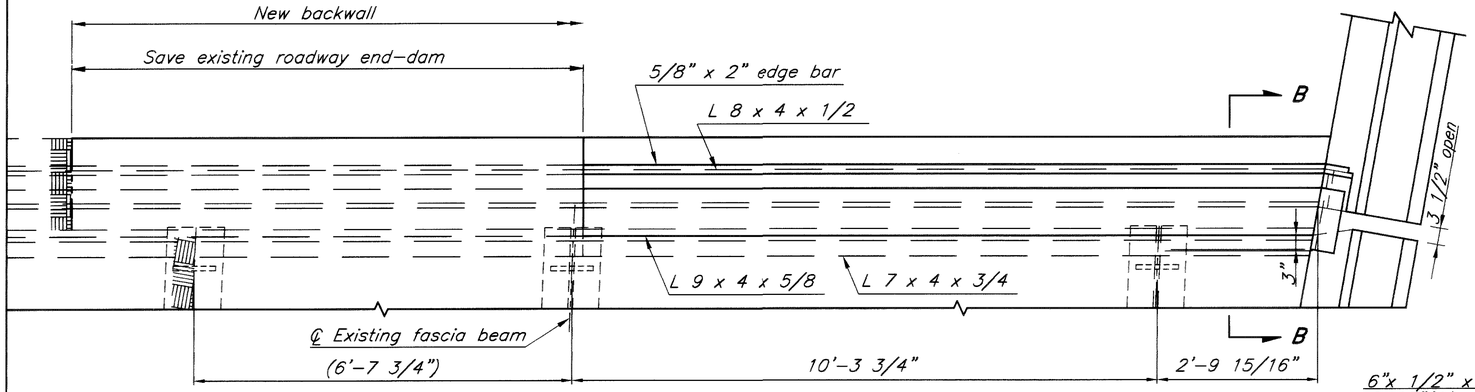

END DAM PLAN

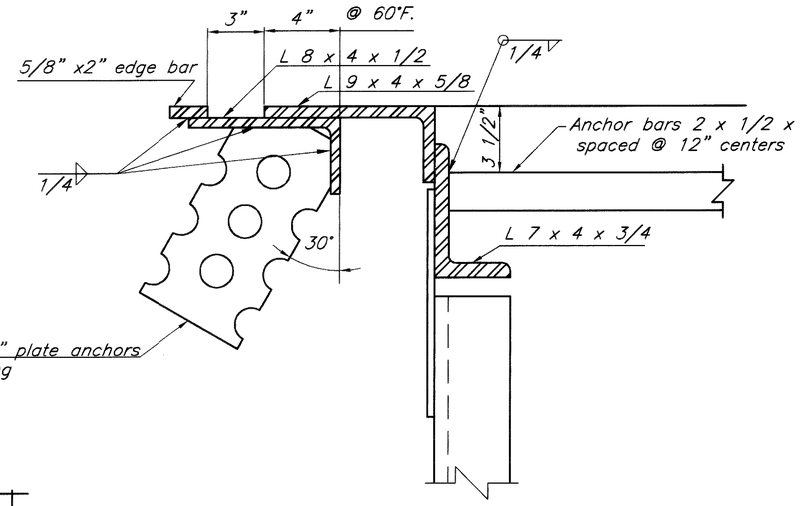

SECTION A–A

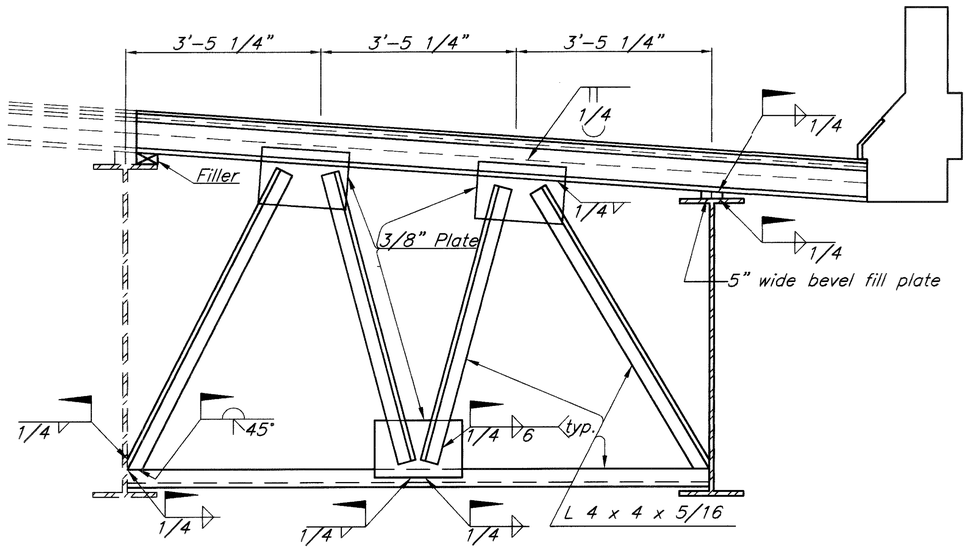

ELEVATION – END CROSSFRAME

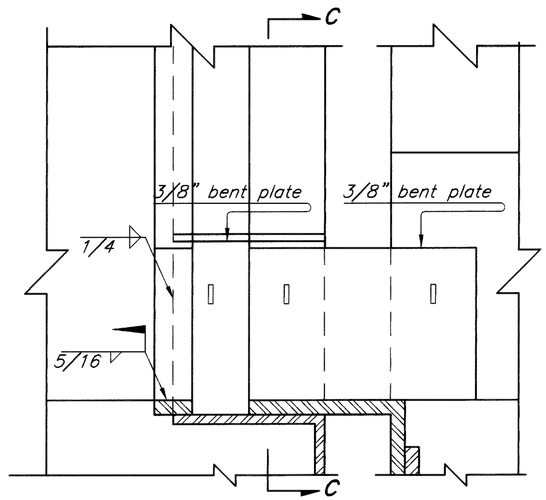

SECTION B–B

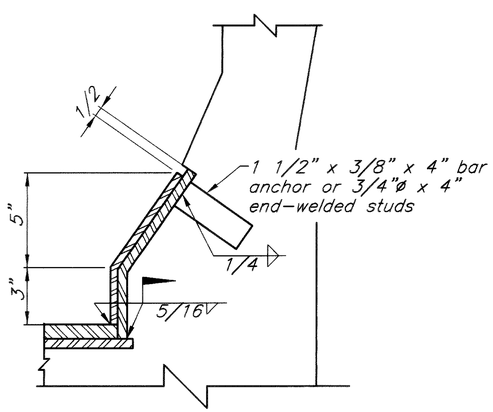

SECTION C–C

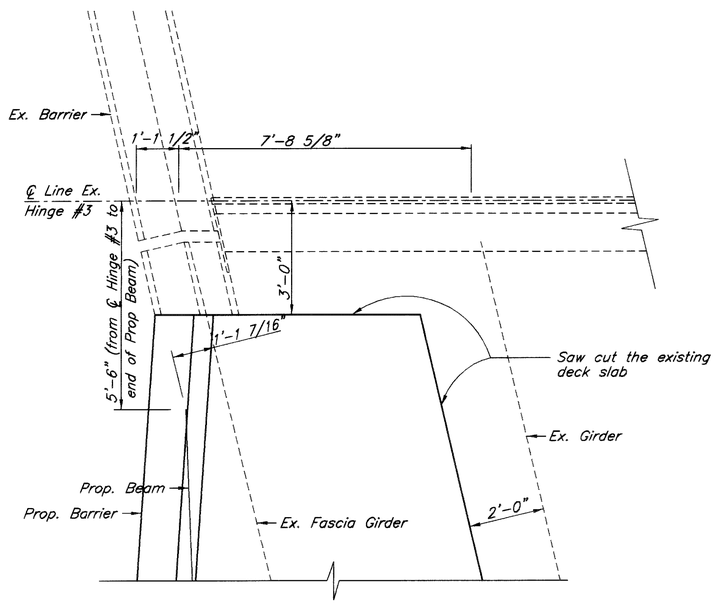

HINGE No. 3 DETAIL

For more details and notes reference is made to Standard Drawing GSD–1–96, Sheets No. 1 & No. 2.

DESIGN AGENCY	ERIKSSON ENGINEERING LTD. 1523 CHESAPEAKE AVENUE COLUMBUS, OH 43212
DATE	2.27.02
REVIEWED	
SFN : 2515393	
DRAWN	DA
REVISED	
DESIGNED	VK/DA
CHECKED	CE

END DAMS
BRIDGE NO. FRA–315–0278
OVER OLENTANGY RIVER ROAD

FRA–315–3.04

11 / 13

183
238

Aug. 5, 2002 Q:\BRIDGE\3453\OSU\3453dam.dwg

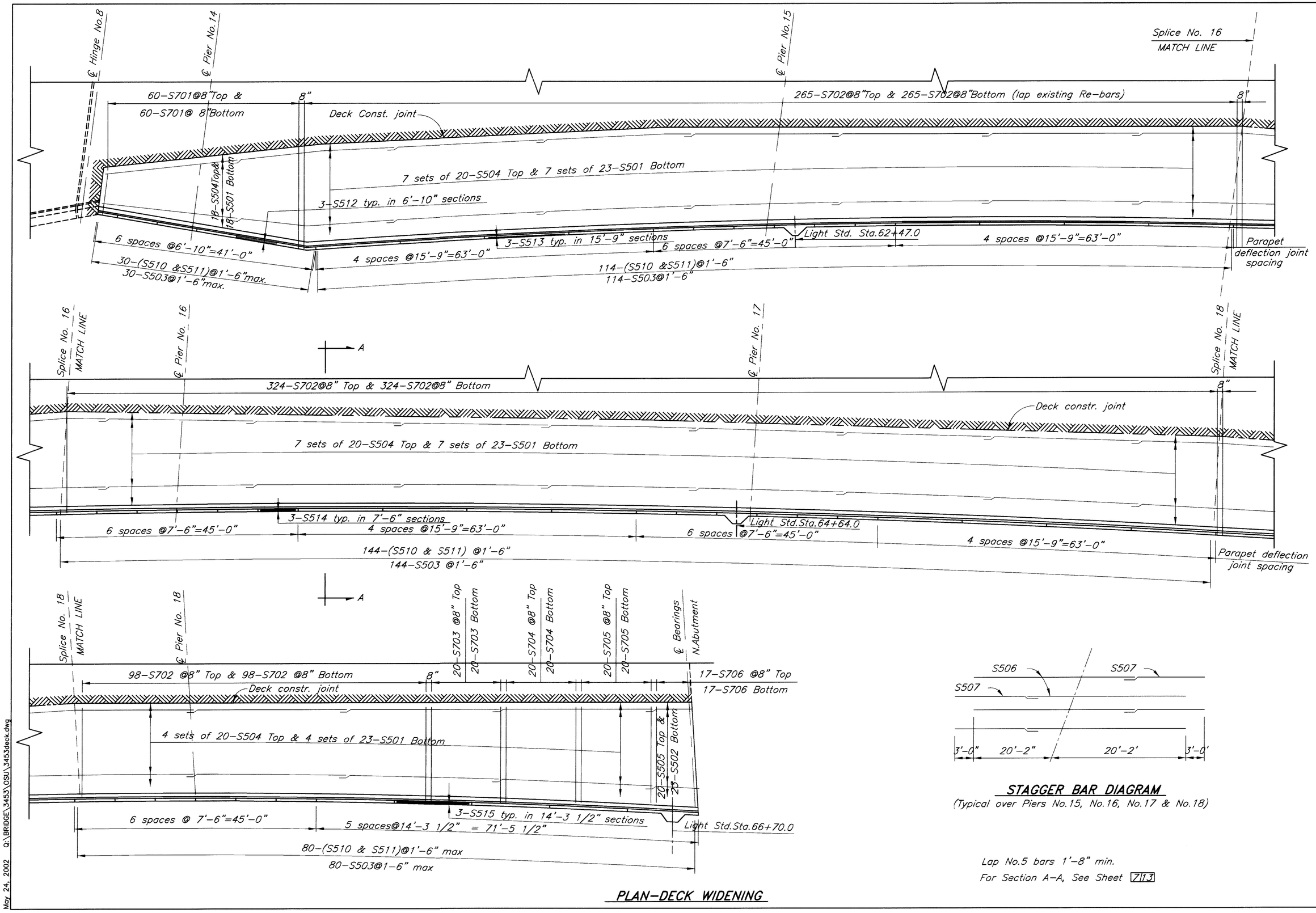

PLAN–DECK WIDENING

STAGGER BAR DIAGRAM

(Typical over Piers No.15, No.16, No.17 & No.18)

Lap No.5 bars 1'–8" min.

For Section A–A, See Sheet 7|13

DESIGN AGENCY
ERIKSSON ENGINEERING LTD.
1523 CHESAPEAKE AVENUE
COLUMBUS, OH 43212

DESIGNED	DRAWN	REVIEWED	DATE
VK/DA	DA		2.27.02
CHECKED	REVISED		SFN : 2515393
CE			

DECK PLAN
Bridge No. – FRA–315–0278
OVER OLENTANGY RIVER ROAD

FRA–315–3.04

12 | 13

184
238

May 24, 2002 Q:\BRIDGE\3453\OSU\3453deck.dwg

REINFORCING STEEL LIST

MARK	NO.	LENGTH	WEIGHT	TYPE	A	B	C	D	REMARKS
			SUPERSTRUCTURE						
S501	432	30–0	13,517	STR					
S502	23	15–0	360	STR					
S503	368	2–3	864	1	0–10 1/2	1–6			
S504	378	30–0	11,828	STR					
S505	20	15–0	313	STR					
S506	72	30–0	2253	STR					
S507	72	15–0	1126	STR					
S508	76	30–0	2378	STR					
S509	4	15–0	63	STR					
S510	368	3–2	1216	5					
S511	368	5–3	2015	6					
S512	18	6–6	122	STR					
S513	48	15–5	772	STR					
S514	72	7–2	538	STR					
S515	15	14–0	219	STR					
S701	120	6–7 to 14–9	2616	STR					30 sets of 4, vary by 7"
S702	1374	15–0	42,126	STR					
S703	40	15–3	1246	STR					
S704	40	15–9	1288	STR					
S705	40	16–6	1350	STR					
S706	34	17–6	1216	STR					
L505	12	2–10	35	2	1–10	0–7	0–7		
L506	12	8–5	105	7	2–4	3–2	3–2	0–6	
~~L507~~	18	7–3	136	8	1–10	1–4	1–10	0–9	
L508	12	3–2	40	STR					
		TOTAL	87,742	LBS.					
			PIER NO. 14						
P401	24	9–3	149	2	2–6	3–6	3–6		
P501	1	22–6	---	9					Include with drilled shafts
P603	10	5–0	75	STR					
P801	8	4–6	96	STR					
P1002	12	20–0	---	STR					Include with drilled shafts
P1003	12	23–6	1214	STR					
P1101	24	41–0	---	STR					Include with drilled shafts
SPIRALS			---						Include with drilled shafts
		TOTAL	1,534	LBS.					
			PIER NO. 15						
P401	40	9–3	248	2	2–6	3–6	3–6		
P501	1	22–6	---	9					Include with drilled shafts
P603	10	5–0	75	STR					
P802	8	8–10	189	STR					
P1002	12	20–0	---	STR					Include with drilled shafts
P1003	12	23–6	1214	STR					
P1102	24	43–6	---	STR					Include with drilled shafts
SPIRALS			---						Include with drilled shafts
		TOTAL	1,726	LBS.					
			PIER NO. 16						
P401	40	9–3	248	2	2–6	3–6	3–6		
P501	1	22–6	---	9					Include with drilled shafts
P603	10	5–0	75	STR					

Dimensions shown are out to out.

MARK	NO.	LENGTH	WEIGHT	TYPE	A	B	C	D	REMARKS
P802	8	8–10	189	STR					
P1002	12	20–0	---	STR					Include with drilled shafts
P1003	12	23–6	1214	STR					
P1103	24	41–0	---	STR					Include with drilled shafts
SPIRALS			---						Include with drilled shafts
		TOTAL	1,726	LBS.					
			PIER NO. 17						
P401	40	9–3	248	2	2–6	3–6	3–6		
P501	1	22–6	---	9					Include with drilled shafts
P603	10	5–0	75	STR					
P802	8	8–10	189	STR					
P1002	12	20–0	---	STR					Include with drilled shafts
P1003	12	23–6	1214	STR					
P1103	24	41–0	---	STR					Include with drilled shafts
SPIRALS			---						Include with drilled shafts
		TOTAL	1,726	LBS.					
			PIER NO. 18						
P401	40	9–3	248	2	2–6	3–6	3–6		
P501	1	22–6	---	9					Include with drilled shafts
P603	10	5–0	75	STR					
P803	8	9–2	189	STR					
P1002	12	20–0	---	STR					Include with drilled shafts
~~P1004~~	12	14–3	736	STR					
P1104	24	45–0	---	STR					Include with drilled shafts
SPIRALS			---						Include with drilled shafts
		TOTAL	7,872	LBS.					
			ABUTMENT						
A501	8	7–6	63	1	0–7 1/2	7–0			
A502	11	8–4	96	2	5–5	1–7	1–7		
A503	14	17–6	256	4	5–11	2–7			
A504	4	7–6	31	STR					
A505	10	4–0	42	STR					
A506	9	12–0	113	STR					
A507	8	15–8	131	STR					
A508	8	6–8	56	2	3–5	1–9	1–9		
A509	11	22–6	258	STR					
A510	13	13–11	189	STR					
A511	11	5–0	57	STR					
A512	1	22–6	23	STR					
A513	9	13–11	131	STR					
A514	11	5–3 to 7–9	75	10	2–2 to 3–5	2–5 to 3–8			Vary A & B by 1 1/2"
A515	11	4–8	54	3					
A601	11	14–4	237	2	5–5	6–11	2–3		
A602	11	13–10	229	2	1–5	6–4	6–4		
A603	22	7–4	242	2	1–5	3–0	3–0		
A604	11	10–6	174	1	1–5	4–8	4–8		
A605	28	10–11	460	2	1–8	4–9	4–9		
A606	22	5–8	187	2	0–11	2–6	2–6		
A801	7	13–0	243	STR					
A802	8	17–4	370	STR					
A803	14	15–5	567	2	1–8	7–0	7–0		
		TOTAL	4,284	LBS.					

ALL BARS SHALL BE EPOXY COATED

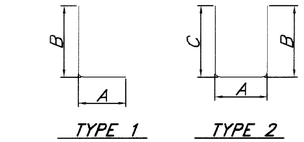

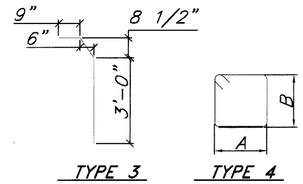

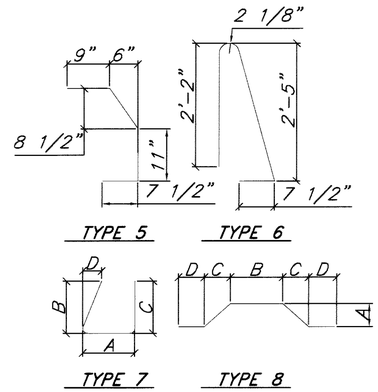

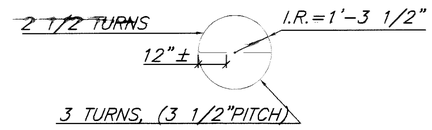

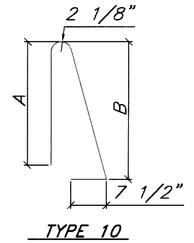

REFER TO C.M.S. SECTIONS 106.03, 700, 709.01 THROUGH 709.05 AND 709.09. SUFFICIENT ADDITIONAL REINFORCING STEEL SHALL BE PROVIDED FOR SAMPLING. RANDOM SAMPLES SHALL BE REPLACED IN THE STRUCTURES BY THE ADDITIONAL STEEL, SPLICED IN ACCORDANCE WITH 509.08.

MARK	NO.	LENGTH (HEIGHT)	CORE DIAM.	NO. OF SPACERS	WEIGHT	PITCH
SP401	6	34–10	42	4	2,556	7 1/2"
SP402	2	19–10	32	4	616	4 1/2"
SP403	1	20–0	32	4	313	4 1/2"
SP404	1	20–3	32	4	314	4 1/2"
SP405	2	38–11	44	4	954	7 1/2"
SP406	2	37–5	44	4	910	7 1/2"
SP407	1	10–8	32	4	175	4 1/2"

SPIRALS – DETAILS IN ACCORDANCE WITH C.R.S.I. STANDARD PRACTICE
* ESTIMATED LENGTH

DESIGN AGENCY
ERIKSSON ENGINEERING LTD.
1523 CHESAPEAKE AVENUE
COLUMBUS, OH 43212

DATE 2.27.02
REVIEWED
SFN : 2515393

DRAWN DA REVISED
DESIGNED VK CHECKED CE

REINFORCING STEEL LIST
BRIDGE NO. FRA-315-0278
OVER OLENTANGY RIVER ROAD

FRA-315-3.04

13 / 13

185
238

May 24, 2002 Q:\BRIDGE\3453\OSU\3453b11.dwg

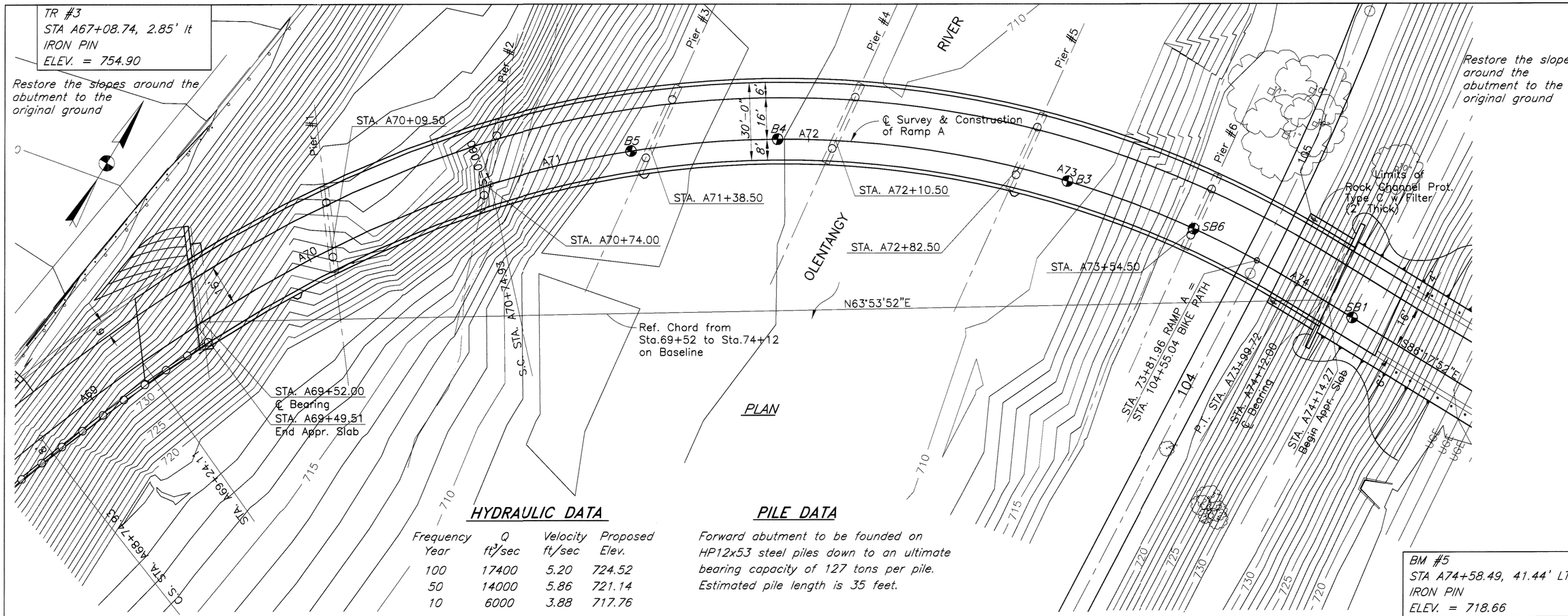

HYDRAULIC DATA

Frequency Year	Q ft³/sec	Velocity ft/sec	Proposed Elev.
100	17400	5.20	724.52
50	14000	5.86	721.14
10	6000	3.88	717.76

PILE DATA

Forward abutment to be founded on HP12x53 steel piles down to an ultimate bearing capacity of 127 tons per pile. Estimated pile length is 35 feet.

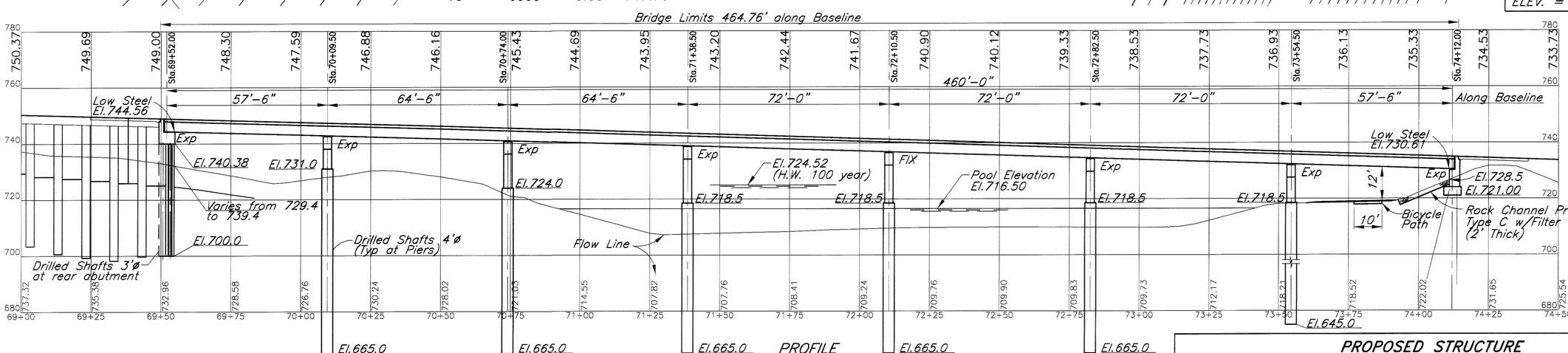

HORIZONTAL CURVE DATA

2A CURVE DATA	3A CURVE DATA
P.I. STA. A69+90.31	P.I. STA. A72+47.87
△ = 21°-00'	△ = 48°-43'-09"
θs = 9°-00'	Dc = 15°-00'
L_s = 200'	R = 381.97'
T_1 = 115.38'	L = 324.79'
T_2 = 86.82'	T = 172.94'

FOR THE LAYOUT OF THE CURVES SEE SHEET 2/238

VERTICAL CURVE DATA

P.I. STA. A71+00.00
Elev.= 744.93
G1= -2.72%
G2= -3.20%
V.C.= 400'

DESIGN TRAFFIC

2003	ADT	7130
2023	ADT	9090
ADTT	273	

PROPOSED STRUCTURE

TYPE: Continuous Steel Beam (A572, Painted) on Reinforced Concrete Substructure

SPANS: 57.5'+64.5'+64.5'+72'+72'+72'+57.5'(Along Baseline)

ROADWAY: 30'-0" toe to toe of barrier

LOADING: HS25 (Case II) And The Alternate Military Loading

WEARING SURFACE: Monolithic Concrete

APPROACH SLABS: 25' Long (Special)

ALIGNMENT: 6°-Spiral-15° Right

SKEW: Varies

SUPERELEVATION: Varies

LATITUDE: 39°-59'-30"

LONGITUDE: 83°-01'-30"

USGS Quadrangle: Southeast Columbus

DESIGN AGENCY
ERIKSSON ENGINEERING LTD.
1523 CHESAPEAKE AVENUE
COLUMBUS, OH 43212

DESIGNED	DRAWN	REVIEWED	DATE
VK	DA	[illegible]	11-28-01
CHECKED	REVISED	SFN : 2515415	
CE			

Sta.69+49.51
Sta.74+14.27
FRANKLIN CO.

SITE PLAN
Bridge No. FRA-315-0320
RAMP A OVER OLENTANGY RIVER

FRA-315-3.04

Aug 2, 2002 Q:\BRIDGE\3453\OSU\RAMPA\3453Aspl.dwg

GENERAL NOTES

THIS STRUCTURE CONFORMS TO "STANDARD SPECIFICATIONS FOR HIGHWAY BRIDGES" ADOPTED BY THE AMERICAN ASSOCIATION OF STATE HIGHWAY AND TRANSPORTATION OFFICIALS, 1996, INCLUDING THE 1997, 1998 & 1999 INTERIM SPECIFICATION AND THE ODOT BRIDGE DESIGN MANUAL.

REFERENCE

REFERENCE SHALL BE MADE TO STANDARD DRAWINGS:

AS-1-81	REV	4-20-01	SHEET NO. 1 AND 2
GSD-1-96	REV	4-20-01	
EXJ-4-87	REV	4-20-01	SHEET NO. 1, 2 & 4
BR-1	REV	1-6-99	SHEET NO. 2
BS-1-93	DATED	12-19-94	

AND TO SUPPLEMENTAL SPECIFICATIONS:

816	DATED 4-21-97
842	DATED 1-6-99
844	DATED 1-6-99
863	DATED 10-12-99
864	DATED 7-11-00
899	DATED 10-21-98

DESIGN LOADING

HS25 CASE II AND THE ALTERNATE MILITARY LOADING.
60 P.S.F. FUTURE WEARING SURFACE.

DESIGN DATA

CONCRETE -	HIGH PERFORMANCE CONCRETE 4500 PSI (SUPERSTRUCTURE)
CONCRETE CLASS C -	COMPRESSIVE STRENGTH 4000 PSI (SUBSTRUCTURE)
CONCRETE S MODIFIED	COMPRESSIVE STRENGTH 4000 PSI (DRILLED SHAFTS)
REINFORCING STEEL -	ASTM A615, A616 OR A617 GRADE 60, MINIMUM YIELD STRENGTH 60,000 PSI, SPIRAL REINFORCEMENT MAY BE PLAIN BARS ASTM A82 OR A615
STRUCTURAL STEEL -	ASTM A572, GRADE 50 - YIELD STRENGTH 50,000 PSI

DECK PROTECTION METHOD

DECK PROTECTION METHOD EPOXY COATED REINFORCING STEEL, 2 1/2" CONCRETE COVER, SEALING OF CONCRETE SURFACES, AND HIGH PERFORMANCE CONCRETE.

MONOLITHIC WEARING SURFACE

MONOLITHIC WEARING SURFACE IS ASSUMED FOR DESIGN PURPOSES TO BE 1".

WORK IN THE RIVER

ALL WORK IN THE RIVER SHALL BE DONE FROM BARGES. NO SOIL MATERIAL FOR CAUSEWAYS SHALL BE ALLOWED TO BE DEPOSITED IN THE RIVER.
THE ENVIRONMENTAL STATEMENT REQUIRES THAT THE BRIDGE BE BUILT FROM BARGES.

ITEM 503, UNCLASSIFIED EXCAVATION, AS PER PLAN

UNCLASSIFIED EXCAVATION SHALL BE IN ACCORDANCE WITH 503 EXCEPT THAT THE BACKFILL MATERIAL BEHIND THE ABUTMENTS SHALL BE 203 MATERIAL PLACED IN LIFTS NOT TO EXCEED A THICKNESS OF SIX (6) INCHES.

PILE DRIVING CONSTRAINTS:

PRIOR TO DRIVING PILES, THE SPILL THROUGH SLOPES AND THE BRIDGE APPROACH EMBANKMENT BEHIND THE ABUTMENTS SHALL BE CONSTRUCTED UP TO THE LEVEL OF THE SUBGRADE ELEVATION FOR A MINIMUM DISTANCE OF 75' BEHIND EACH ABUTMENT. THE EXCAVATION FOR THE ABUTMENT FOOTINGS AND THE INSTALLATION OF THE ABUTMENT PILES SHALL NOT BEGIN UNTIL AFTER THE ABOVE REQUIRED EMBANKMENT HAS BEEN CONSTRUCTED.

PILE DESIGN LOADS (ULTIMATE BEARING VALUE)

THE ULTIMATE BEARING VALUE IS 127 TONS PER PILE FOR THE FORWARD ABUTMENT PILES.

FORWARD ABUTMENT PILES: HP12X53
11 PILES 35 FEET LONG, ESTIMATED LENGTH
11 PILES OF ORDER LENGTH 40 FEET LONG

DRILLED SHAFTS

THE DESIGN LOAD TO BE SUPPORTED BY EACH DRILLED SHAFT AT THE PIERS IS 238 TONS. THIS LOAD IS RESISTED BY SHAFT ADHESION ALONG 35 FEET OF THE BOTTOM PORTION OF THE SHAFT AND BY END BEARING.

THE ULTIMATE ADHESION IS 1.8 K/SQ. FT. AND THE ULTIMATE END BEARING IS 60 K/SQ. FT.

THE DESIGN LOAD TO BE SUPPORTED BY EACH DRILLED SHAFT AT THE REAR ABUTMENT IS 91 TONS. THIS LOAD IS RESISTED BY SHAFT ADHESION ALONG 23 FEET OF THE BOTTOM PORTION OF THE SHAFT AND BY END BEARING.

THE ULTIMATE ADHESION IS 1.05 K/SQ. FT. AND THE ULTIMATE END BEARING IS 45 K/SQ. FT.

ITEM 864 SEALING OF CONCRETE SURFACES (EPOXY-URETHANE)

SEALING OF CONCRETE SURFACES (EPOXY-URETHANE) SHALL BE APPLIED ON A 9" WIDTH OF THE ROADWAY ALONG THE CURBLINE, TO ALL EXPOSED SURFACES OF THE CONCRETE BARRIER, FRONT TOP AND BACK SIDE, THE DECK FACIA AND A 6" WIDTH OF THE UNDERSIDE OF THE DECK.

SEALER SHALL ALSO BE APPLIED TO EXPOSED SURFACES OF THE PIERS AND ABUTMENTS AND WINGWALLS TO OBTAIN A UNIFORM COLOR ON ALL CONCRETE.

THE TOP COAT OF THE EPOXY-URETHANE SEALER SHALL BE FEDERAL COLOR STANDARD NO. 17778 (LIGHT NEUTRAL).

ITEM 816 FIELD PAINTING OF NEW STEEL

THE URETHANE TOP COAT FOR THE IZEU PAINT SYSTEM SHALL BE FEDERAL COLOR STANDARD NO. 10324 (DARK NEUTRAL).

DESIGN AGENCY
ERIKSSON ENGINEERING LTD.
1523 CHESAPEAKE AVENUE
COLUMBUS, OH 43212

DESIGNED DA | DRAWN DA | REVIEWED [illegible] | DATE 11.28.01

CHECKED CE | REVISED

SFN : 2515415

GENERAL NOTES
BRIDGE NO FRA-315-0320
RAMP A OVER OLENTANGY RIVER

FRA-315-3.04

June 18, 2002 Q:\BRIDGE\3453\OSU\RampA\34534gn.dwg

ESTIMATED QUANTITIES

ITEM	ITEM EXT.	TOTAL	UNIT	DESCRIPTION	ABUT.	SUPER.	PIERS	GEN.	SPECIAL INSTRUCTIONS
503	11100	LUMP		COFFERDAMS, CRIBS AND SHEETING				LUMP	
503	21301	LUMP		UNCLASSIFIED EXCAVATION, AS PER PLAN	LUMP				SEE SHEET **174**
505	11100	LUMP		PILE DRIVING EQUIPMENT MOBILIZATION				LUMP	
507	00200	440	LIN FT	STEEL PILES HP12x53, FURNISHED	440				
507	00250	385	LIN FT	STEEL PILES HP12x53, DRIVEN	385				
507	50500	6	EACH	STEEL PILE SPLICES	6				
507	93300	11	EACH	STEEL POINT (OR SHOE)	11				
516	11210	70	LIN FT	STRUCTURAL EXPANSION JOINT INCLUDING ELASTOMERIC STRIP SEAL	70				
516	43501	8	EACH	ELASTOMERIC BEARING 18"x24"x6" WITH INTERNAL LAMINATES ONLY (NEOPRENE), AS PER PLAN	8				SEE SHEET **200**
516	43501	4	EACH	ELASTOMERIC BEARING 17"x22"x5" WITH INTERNAL LAMINATES ONLY (NEOPRENE), AS PER PLAN			4		SEE SHEET **200**
516	43301	8	EACH	ELASTOMERIC BEARING 14"x22"x3 1/2" WITH INTERNAL LAMINATES ONLY (NEOPRENE), AS PER PLAN			8		SEE SHEET **200**
516	43201	8	EACH	ELASTOMERIC BEARING 14"x20"x2" WITH INTERNAL LAMINATES ONLY (NEOPRENE), AS PER PLAN			8		SEE SHEET **200**
516	43101	4	EACH	ELASTOMERIC BEARING 14"x20"x1 1/2" WITH INTERNAL LAMINATES ONLY (NEOPRENE), AS PER PLAN			4		SEE SHEET **200**
518	21231	LUMP		POROUS BACKFILL WITH FILTER FABRIC, AS PER PLAN	LUMP				SEE SHEET **190 & 192**
518	40000	110	LIN FT	6" PERFORATED CORRUGATED PLASTIC PIPE	110				
518	40010	50	LIN FT	6" NON-PERFORATED CORRUGATED PLASTIC PIPE, INCLUDING SPECIALS	50				
524	94700	289	LIN FT	DRILLED SHAFTS 36" DIAMETER	289				
524	94900	744	LIN FT	DRILLED SHAFTS 48" DIAMETER			744		
816	00600	LUMP		FIELD PAINTING OF NEW STEEL, INTERMEDIATE AND FINISH COAT, SYSTEM IZEU		LUMP			
842	41000	138	CU YD	CLASS C CONCRETE, PIER **ABOVE FOOTINGS**			138		CAP AND COLUMNS
842	44101	124	CU YD	CLASS C CONCRETE, ABUTMENT NOT INCLUDING FOOTING, AS PER PLAN	124				SEE SHEET **190, 191, & 192**
842	46500	31	CU YD	CLASS C CONCRETE, FOOTING	31				
844	48001	416	CU YD	HIGH PERFORMANCE CONCRETE SUPERSTRUCTURE (DECK), AS PER PLAN		416			SEE SHEET **187 & 196**
844	48020	120	CU YD	HIGH PERFORMANCE CONCRETE SUPERSTRUCTURE (PARAPET)		120			
844	49000	LUMP		HIGH PERFORMANCE CONCRETE, TRIAL MIX		LUMP			
844	49010	LUMP		HIGH PERFORMANCE CONCRETE, TESTING		LUMP			
863	10100	LUMP		STRUCTURAL STEEL MEMBERS, LEVEL FIVE FABRICATION		LUMP			
863	20000	5010	EACH	WELDED STEEL SHEAR CONNECTORS		5010			
864	10100	1552	SQ YD	SEALING OF CONCRETE SURFACES (EPOXY-URETHANE)	60	1082	410		
				Computed by: DA Date: 11.28.01					
				Checked by: CE Date: 11.28.01					

* SEE PROPOSAL NOTE

DESIGN AGENCY
ERIKSSON ENGINEERING LTD.
1523 CHESAPEAKE AVENUE
COLUMBUS, OH 43212

DESIGNED DA | DRAWN DA | CHECKED CE | REVISED

REVIEWED DATE 11.28.01

SFN : 2515415

ESTIMATED QUANTITIES
BRIDGE NO. FRA-315-0320
RAMP A OVER OLENTANGY RIVER

FRA-315-3.04

June 18, 2002 Q:\BRIDGE\3453\OSU\Ramp A\3453agnq.dwg

189 / 238	4 / 23	FRA-315-3.04	SUBSTRUCTURE LAYOUT Bridge No. FRA-315-0320 RAMP A OVER OLENTANGY RIVER	DESIGNED DA	DRAWN DA	REVIEWED [illegible]	DATE 11.28.01	DESIGN AGENCY ERIKSSON ENGINEERING LTD. 1523 CHESAPEAKE AVENUE COLUMBUS, OH 43212
				CHECKED WY	REVISED	SFN : 2515415		

POROUS BACKFILL WITH FILTER FABRIC, 2 feet thick shall extend up to the plane of the subgrade, to 1 foot below the embankment surface, and laterally to the ends of the wingwalls.

BRIDGE SEAT REINFORCING, SETTING ANCHORS:
Reinforcing steel in the vicinity of the bridge seat shall be accurately placed to avoid interference with the drilling of bearing anchor holes or the pre-setting of bearing anchors.

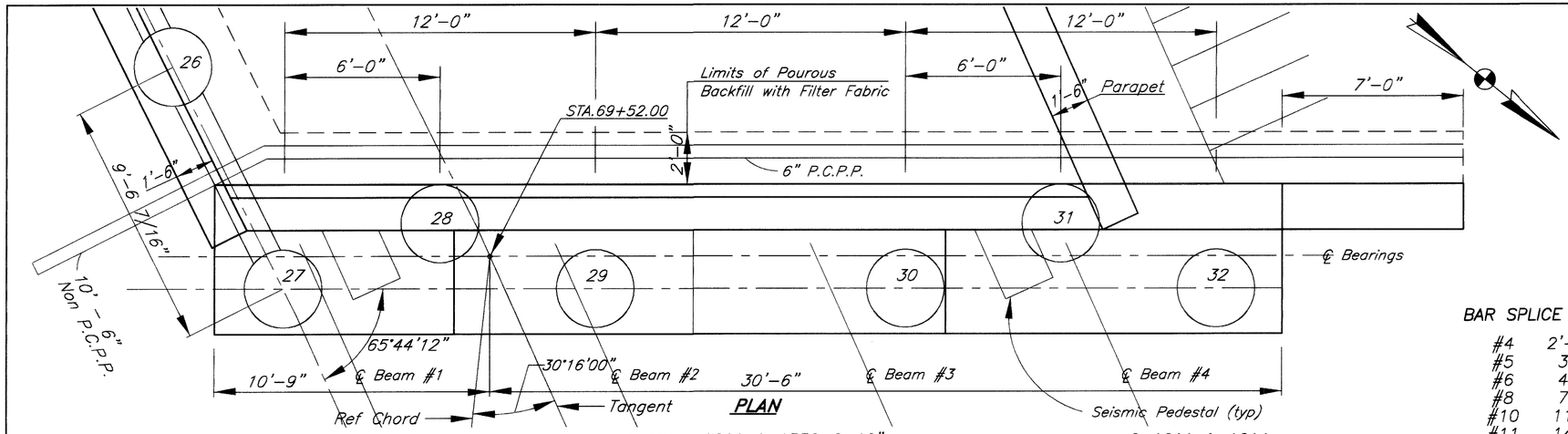

PLAN

BAR SPLICE LENGTH

#4	2'-11"
#5	3'-7"
#6	4'-4"
#8	7'-3"
#10	11'-7"
#11	14'-3"

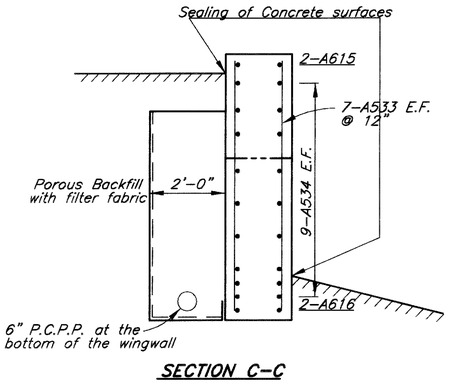

SECTION C-C

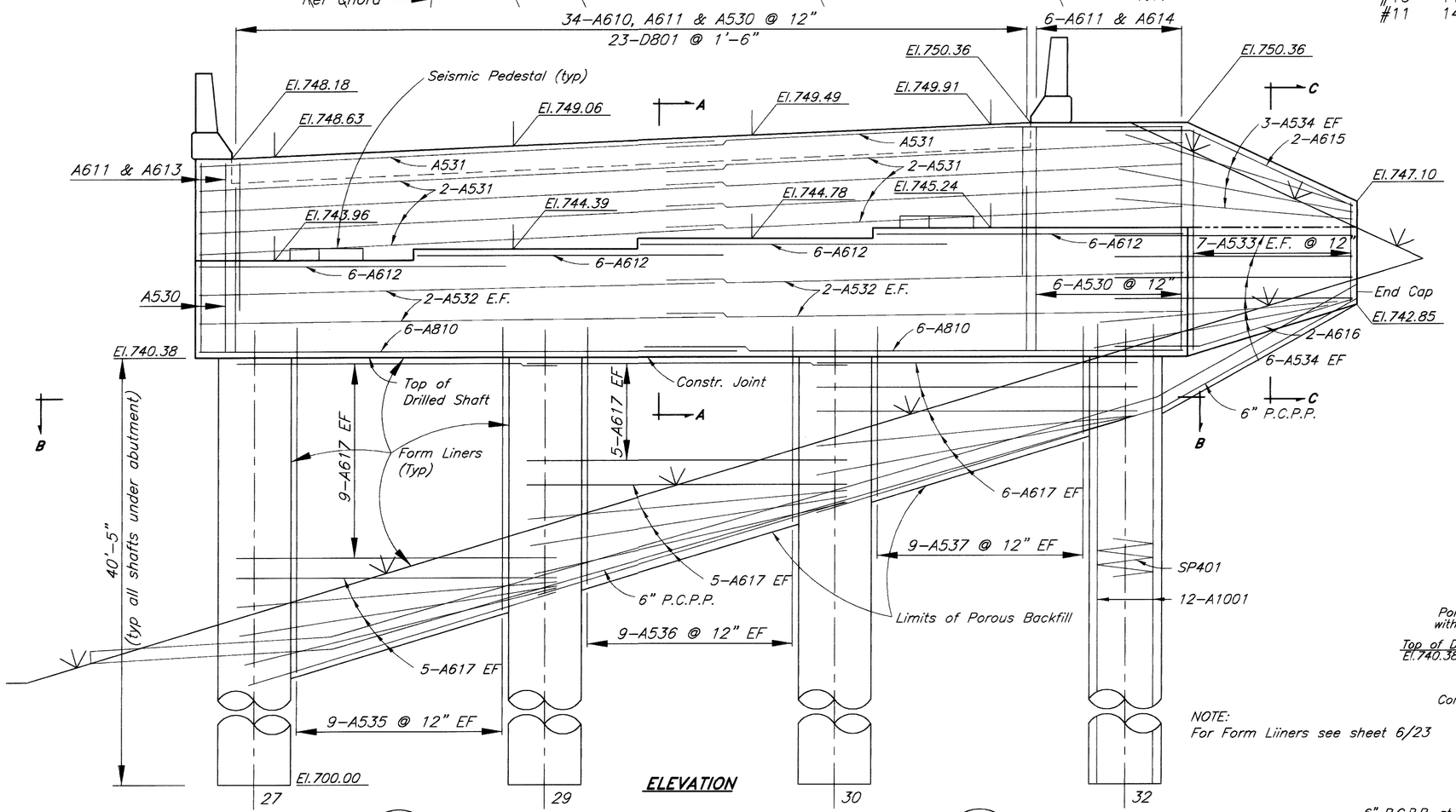

ELEVATION

NOTE:
For Form Liiners see sheet 6/23

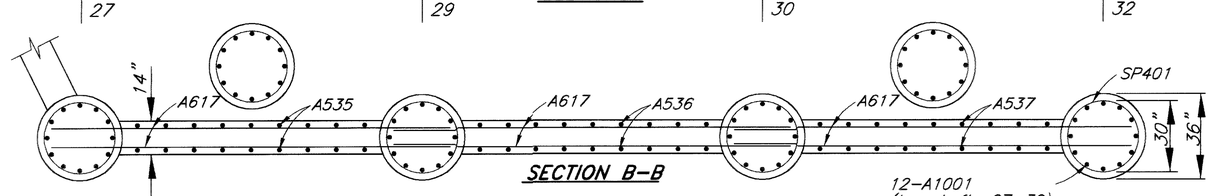

SECTION B-B

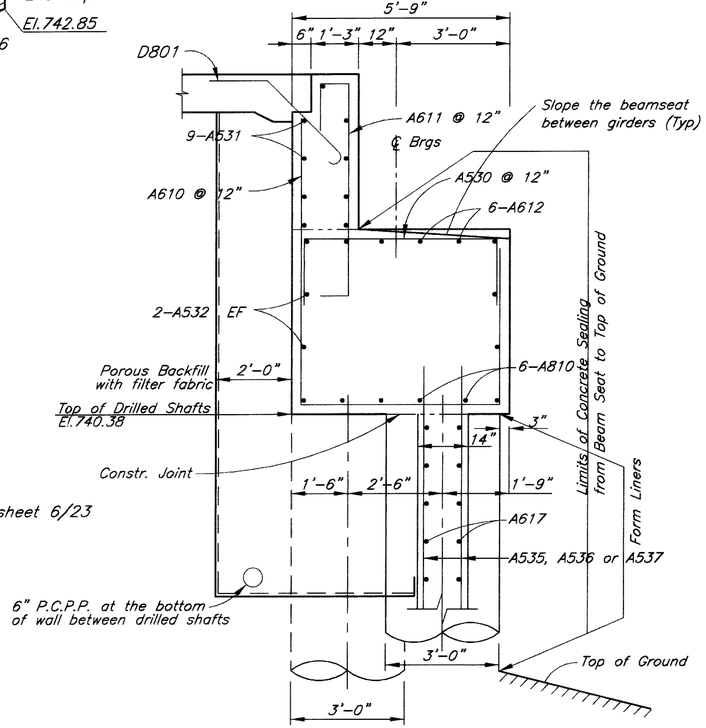

SECTION A-A

DESIGN AGENCY
ERIKSSON ENGINEERING LTD.
1523 CHESAPEAKE AVENUE
COLUMBUS, OH 43212

DESIGNED CE | CHECKED DA
DRAWN DA | REVISED
REVIEWED 6.2.2
DATE 11.28.01
SFN : 2515415

REAR ABUTMENT DETAILS
Bridge No. FRA-315-0320
RAMP A OVER OLENTANGY RIVER

FRA-315-3.04

5 | 23

190
238

Aug. 2, 2002 Q:\BRIDGE\3453\OSU\RAMPA\3453Ab1.dwg

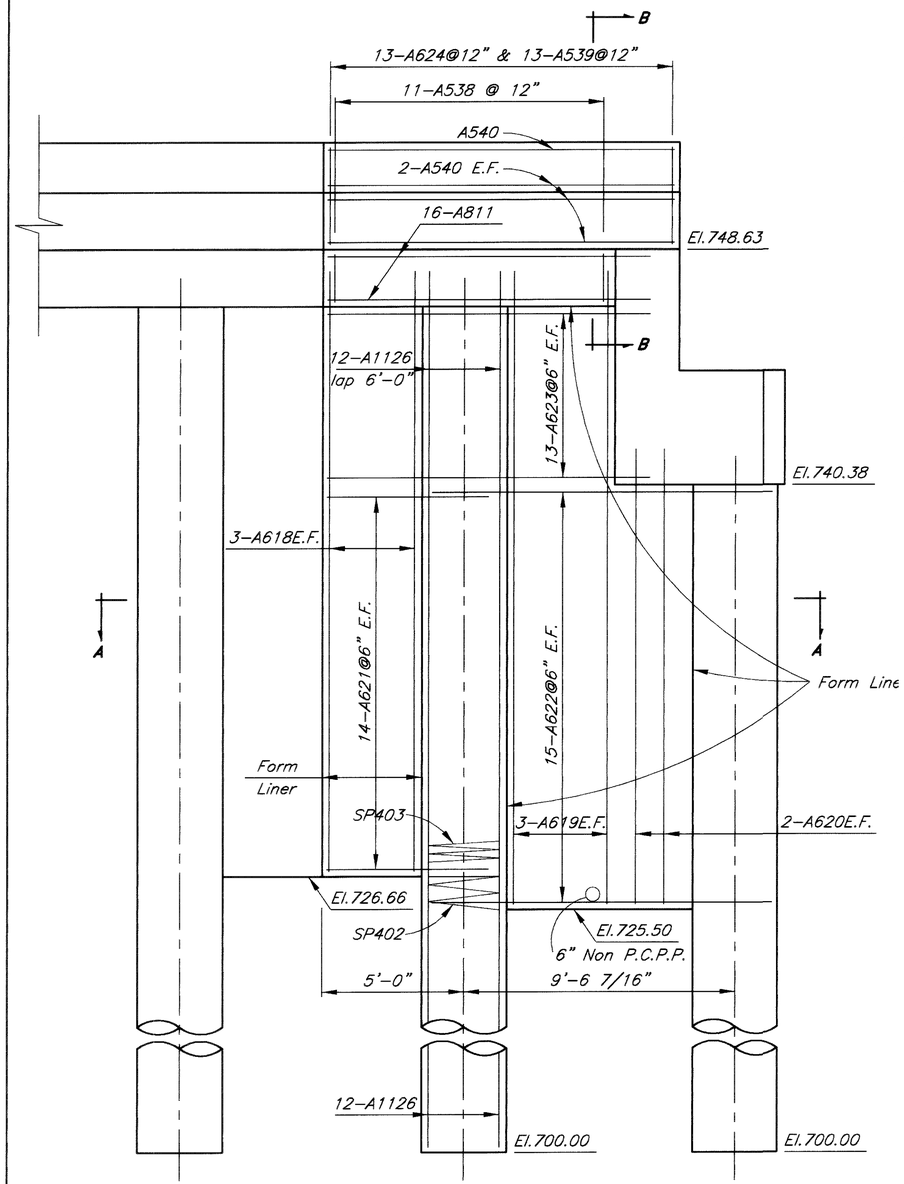

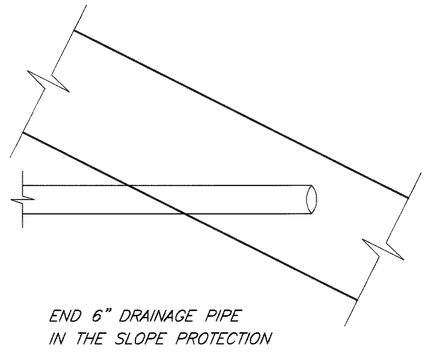

Form Liners as shown on sheets 5, 6 & 7 of 23 shall be:
Fitzgerald Form Liner Pattern No. 16986 or
Greenstreak Form Liner Pattern No. 379B or approved equal.
Included with concrete for payment.

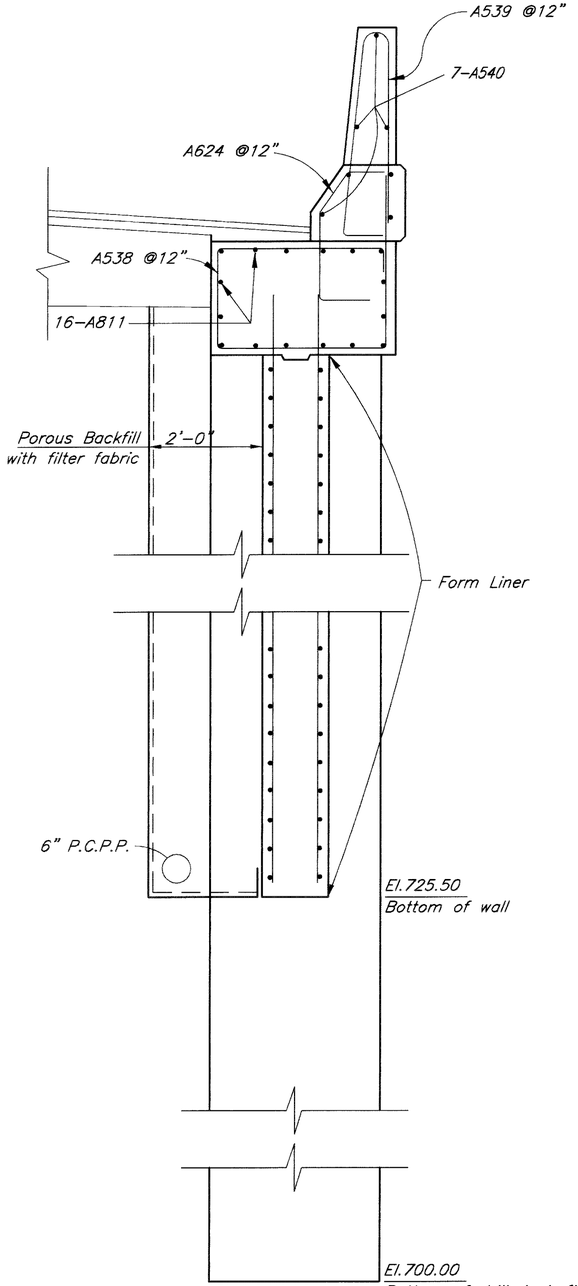

SECTION B–B

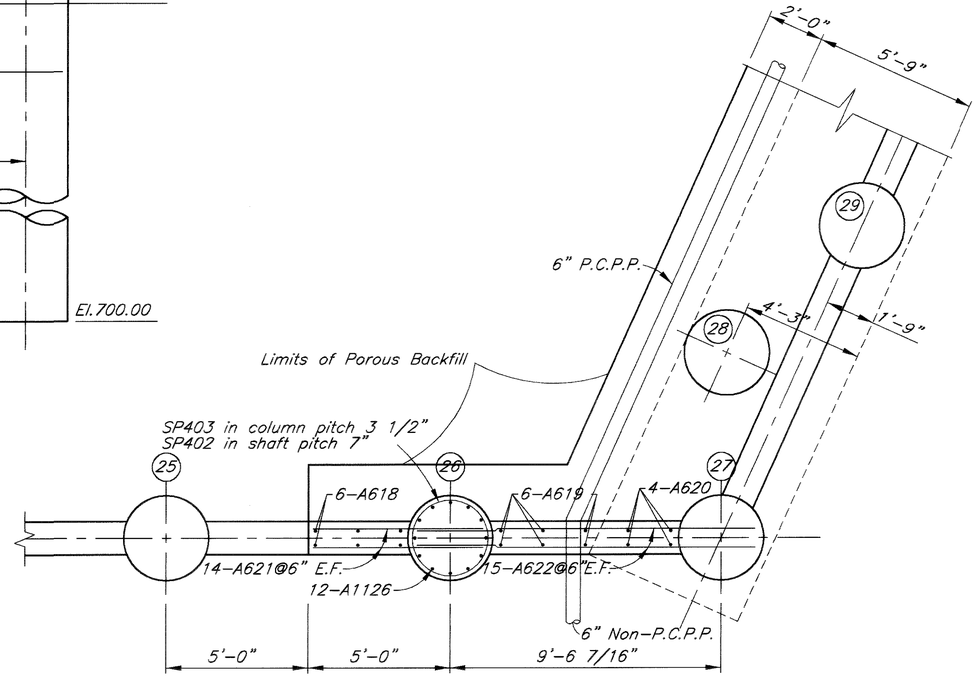

SECTION A–A

DESIGN AGENCY
ERIKSSON ENGINEERING LTD.
1523 CHESAPEAKE AVENUE
COLUMBUS, OH 43212

DESIGNED	DRAWN	REVIEWED	DATE
JHN	DA		11.28.01
CHECKED	REVISED		SFN : 2515415
DA			

REAR ABUTMENT DETAIL
Bridge No. FRA–315–0320
RAMP A OVER OLENTANGY RIVER

FRA–315–3.04

6 | 23

191
238

Aug. 2, 2002 Q:\BRIDGE\3453\OSU\RAMPA\3453Ara1.dwg

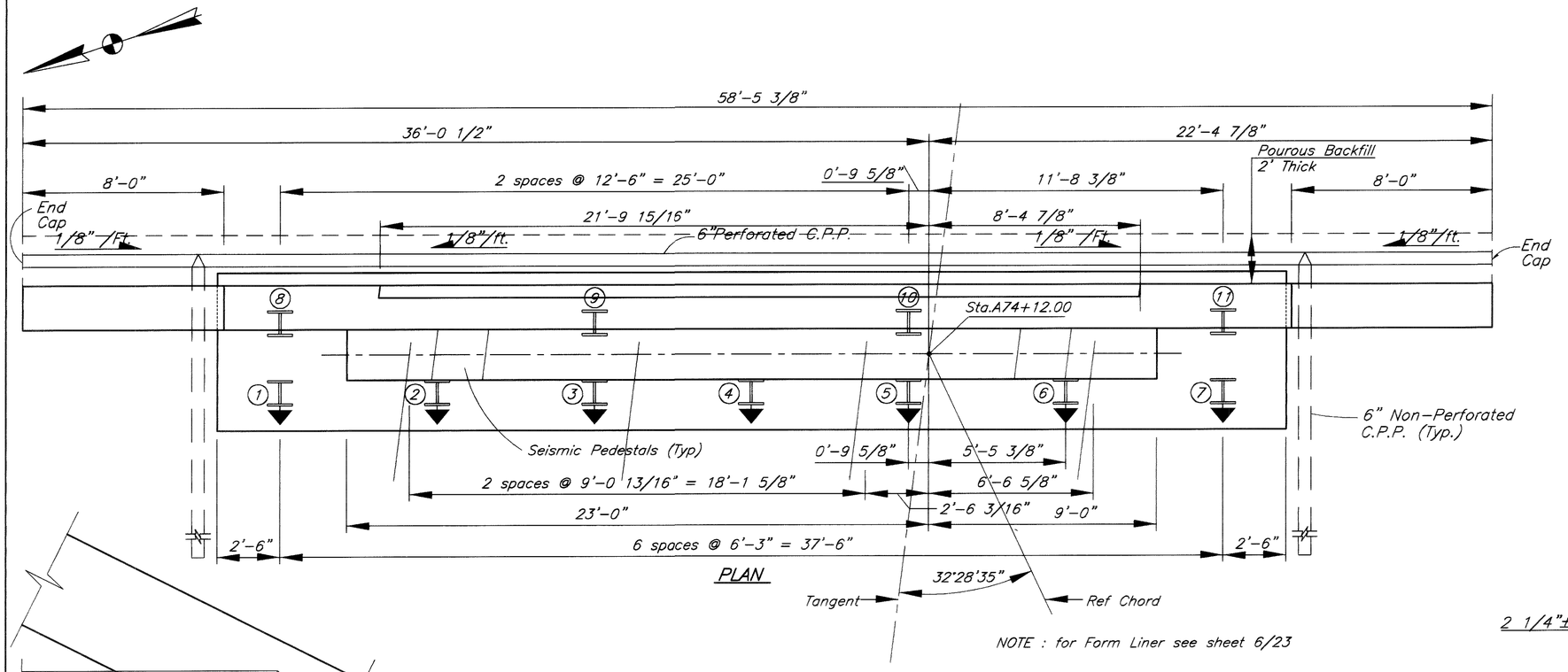

PLAN

NOTE : for Form Liner see sheet 6/23

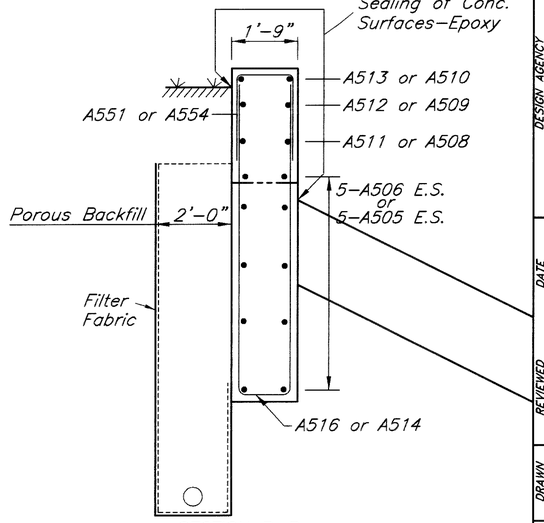

SECTION B-B

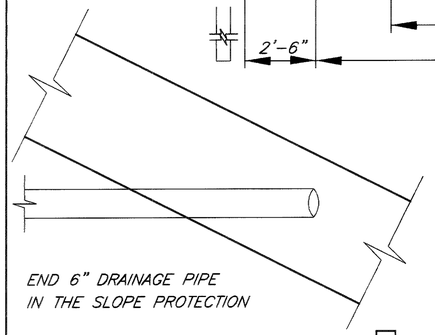

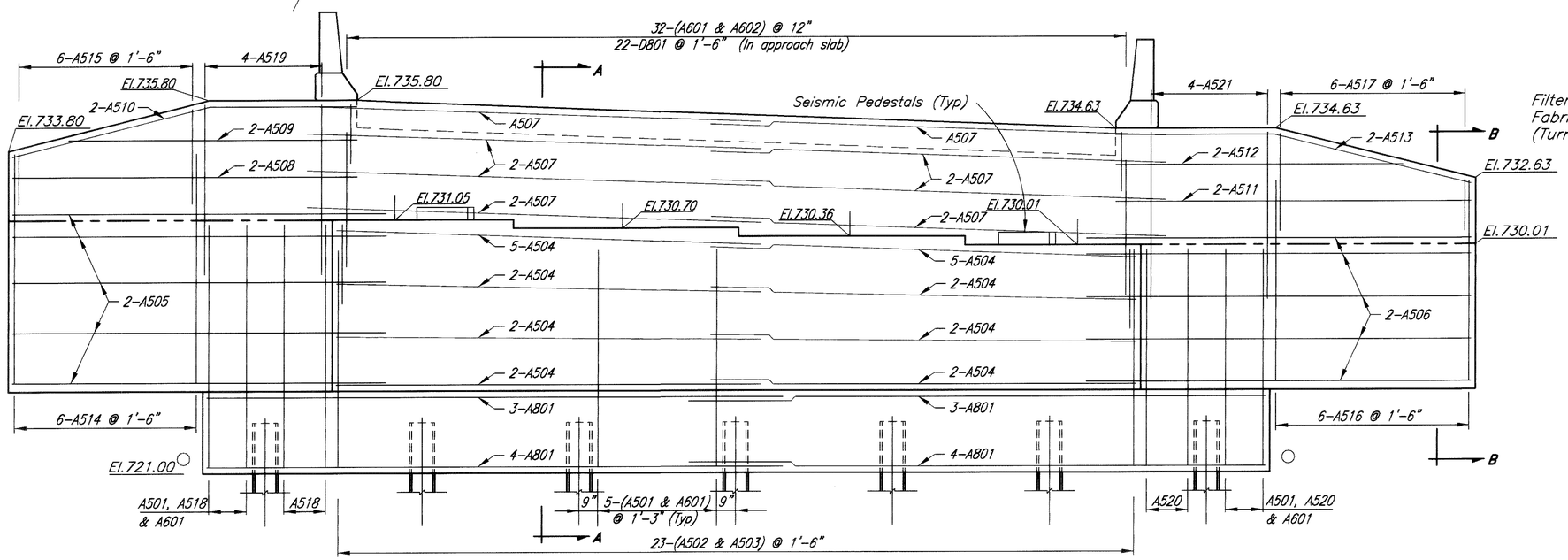

ELEVATION
FORWARD ABUTMENT

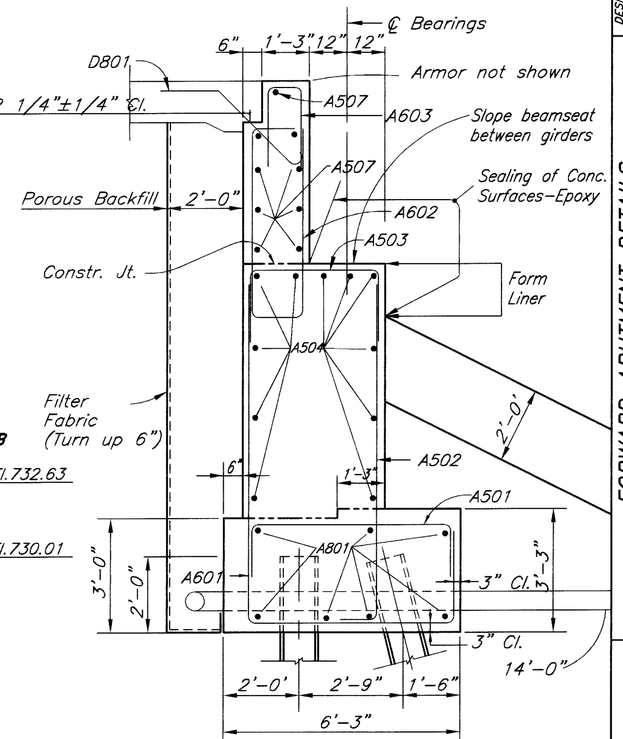

SECTION A-A

For notes on Porous Backfill with Filter Fabric and Bridge Seat Reinforcing, Setting Anchors see sheet 6/23

BAR SPLICE LENGTH

#5	3'-7"
#6	4'-4"
#8	7'-3"

DESIGN AGENCY
ERIKSSON ENGINEERING LTD.
1523 CHESAPEAKE AVENUE
COLUMBUS, OH 43212

DESIGNED CE CHECKED DA
DRAWN DA REVISED
REVIEWED
DATE 11.22.01
SFN : 2515415

FORWARD ABUTMENT DETAILS
Bridge No. FRA-315-0320
RAMP A OVER OLENTANGY RIVER

FRA-315-3.04

7 / 23

192 / 238

Aug. 2, 2002 Q:\BRIDGE\3453\OSU\RAMPA\3453adb2.dwg

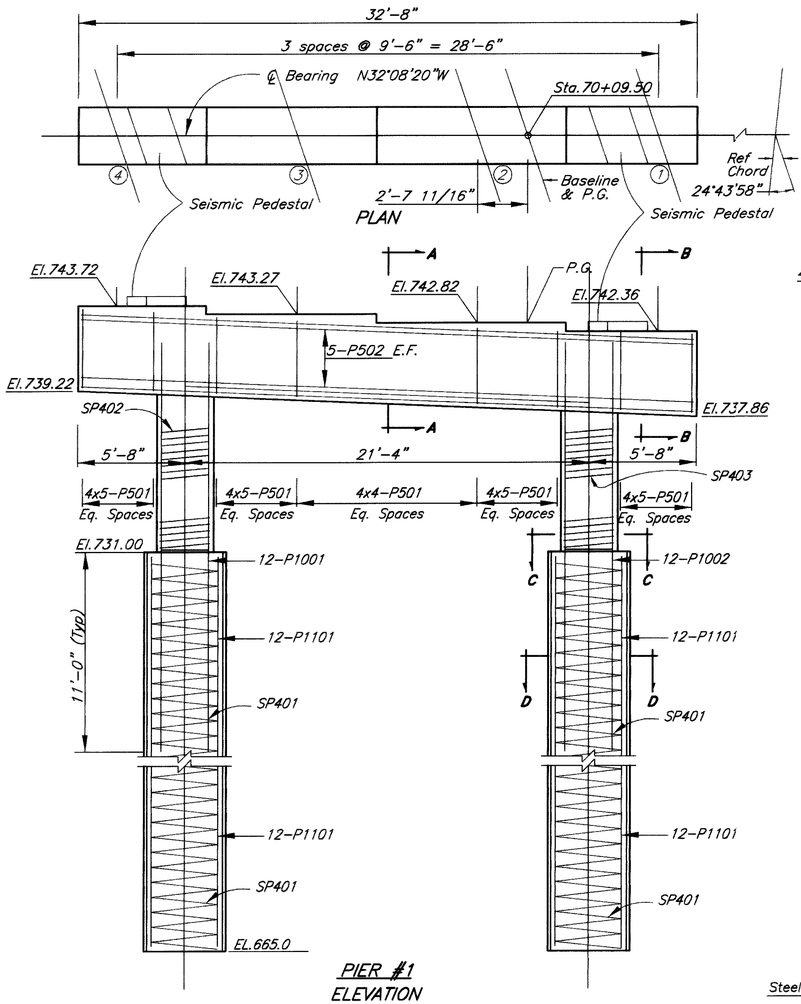

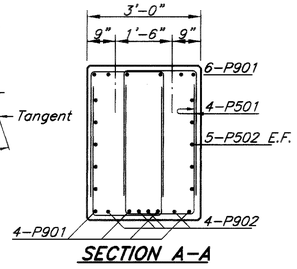

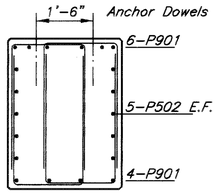

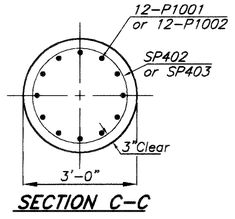

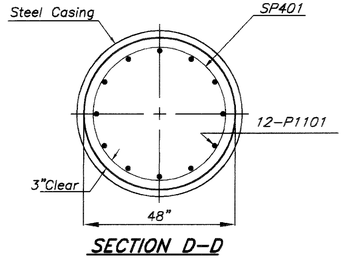

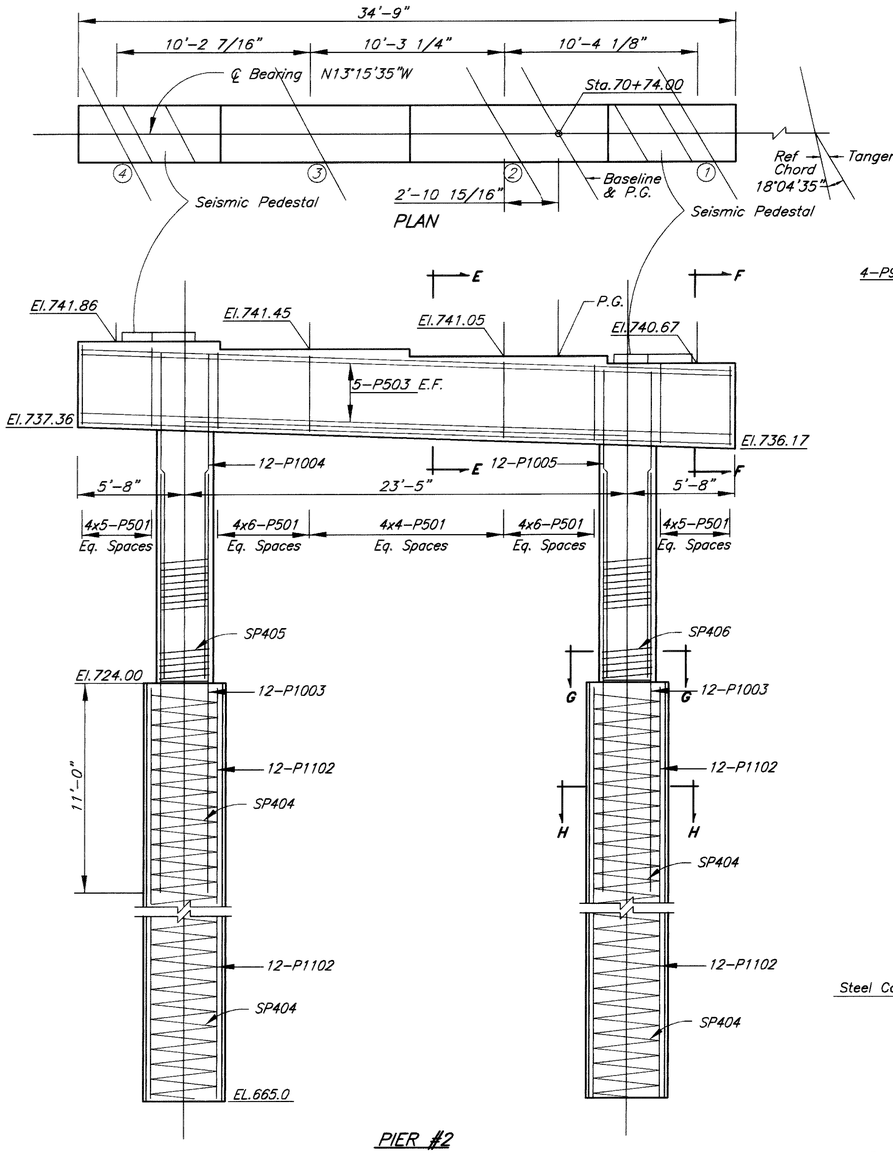

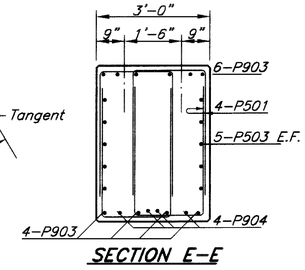

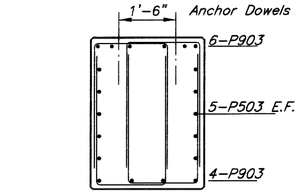

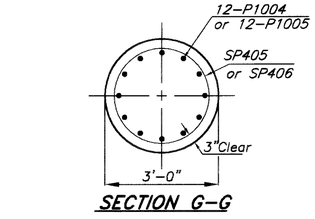

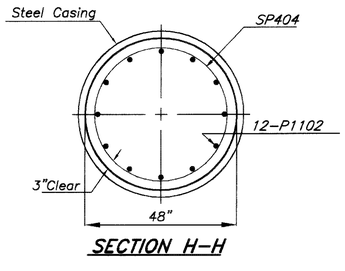

BRIDGE SEAT REINFORCING, SETTING ANCHORS:
Reinforcing steel in the vicinity of the bridge seat shall be accurately placed to avoid interference with the drilling of bearing anchor holes or the pre-setting of bearing anchors.

DESIGN AGENCY
ERIKSSON ENGINEERING LTD.
1523 CHESAPEAKE AVENUE
COLUMBUS, OH 43212

DESIGNED MDL
DRAWN DA
CHECKED JHN
REVISED
DATE 11.2.01
REVIEWED
SFN : 2515415

PIERS 1 & 2
Bridge No. FRA-315-0320
RAMP A OVER OLENTANGY RIVER

FRA-315-3.04

8 / 23

193 / 238

Aug 2, 2002 Q:\BRIDGE\3453\OSU\RAMPA\3453ap12.dwg

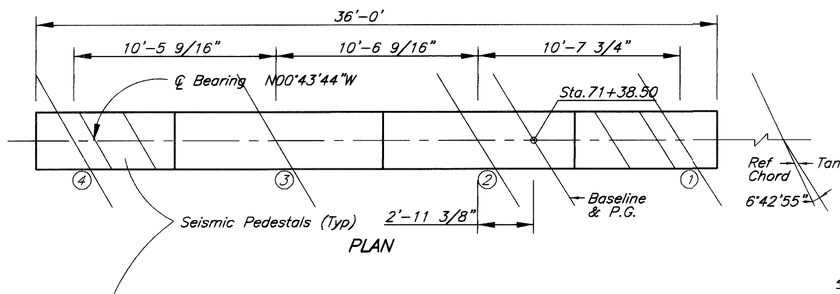

PLAN

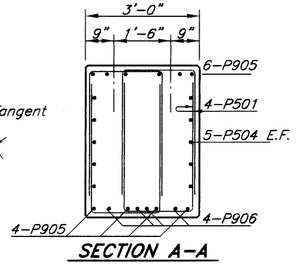

SECTION A-A

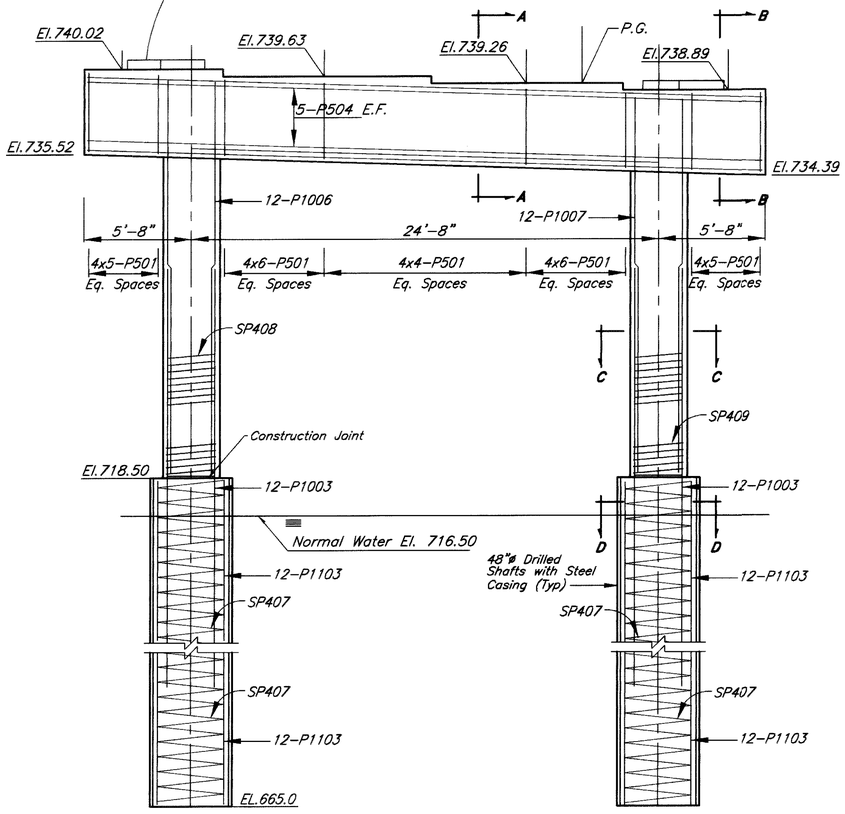

PIER #3
ELEVATION

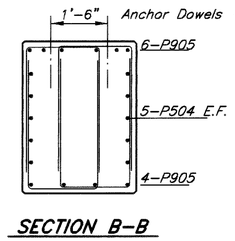

SECTION B-B

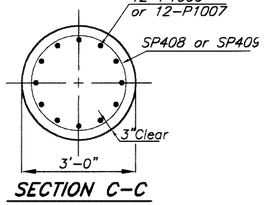

SECTION C-C

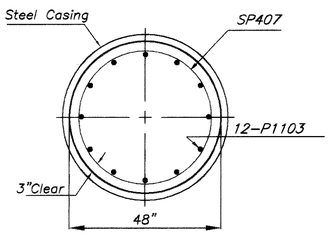

SECTION D-D

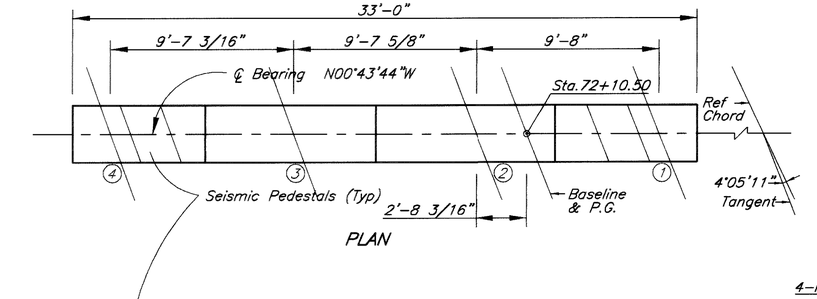

PLAN

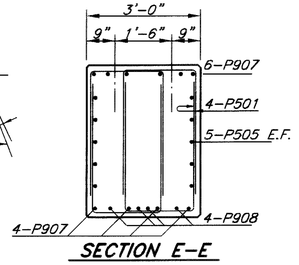

SECTION E-E

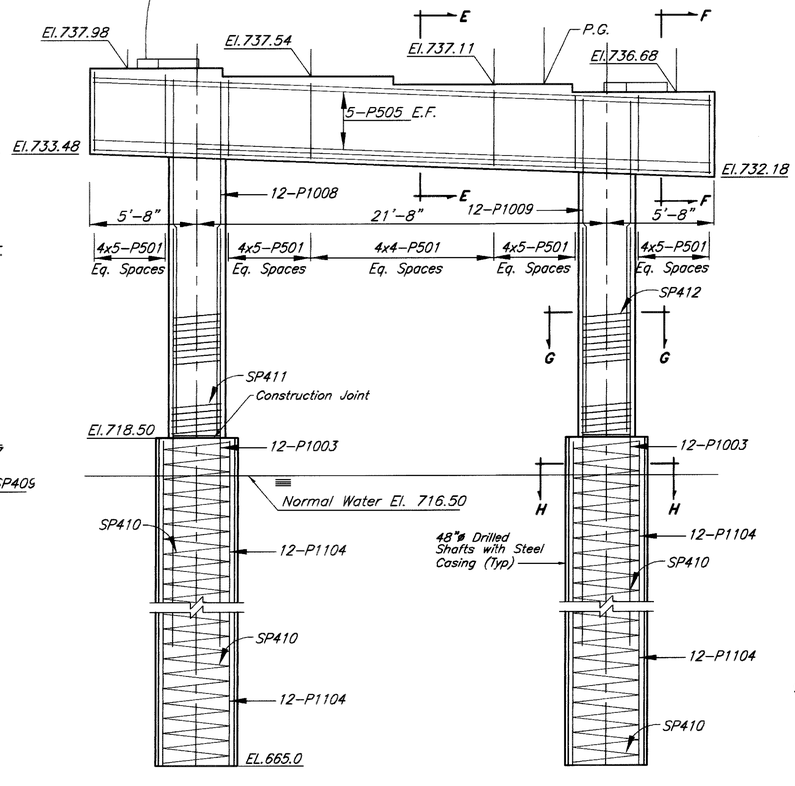

PIER #4
ELEVATION

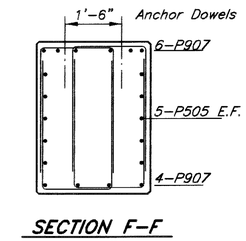

SECTION F-F

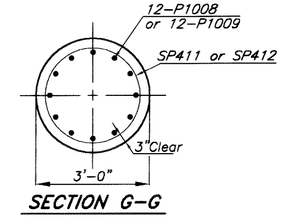

SECTION G-G

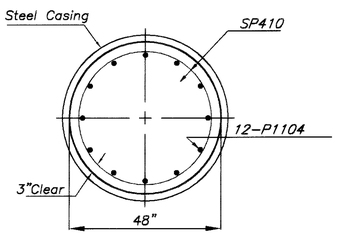

SECTION H-H

For notes on Bridge Seat Reinforcing, Setting of Anchors see sheet 8/23

DESIGN AGENCY
ERIKSSON ENGINEERING LTD.
1523 CHESAPEAKE AVENUE
COLUMBUS, OH 43212

DESIGNED MDL
DRAWN DA
CHECKED JHN
REVISED
DATE 1/25/01
REVISED 6/6/02
SFN : 2515415

PIERS 3 & 4
Bridge No. FRA-315-0320
RAMP A OVER OLENTANGY RIVER

FRA-315-3.04

9 / 23

194
238

Aug 2, 2002 Q:\BRIDGE\3453\OSU\RAMPA\3453ap34.dwg

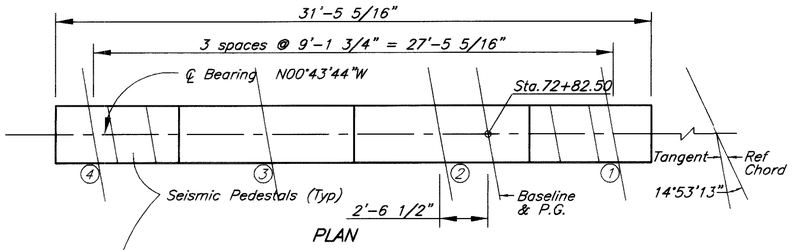

PLAN

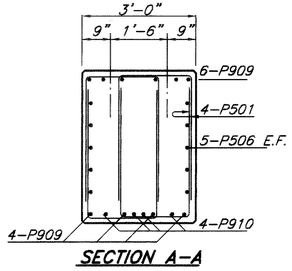

SECTION A-A

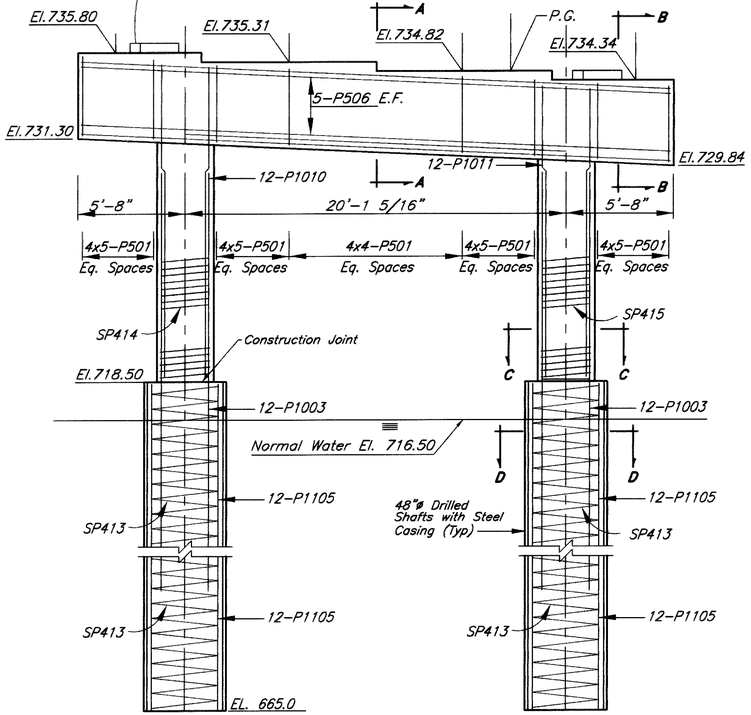

PIER #5
ELEVATION

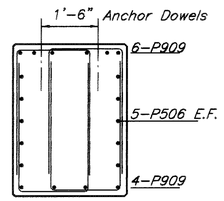

SECTION B-B

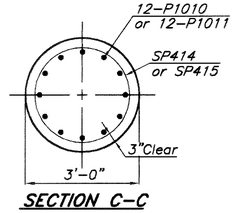

SECTION C-C

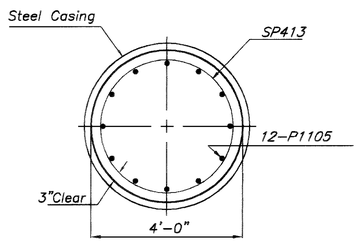

SECTION D-D

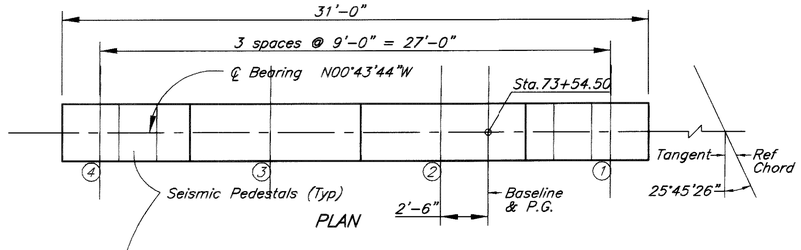

PLAN

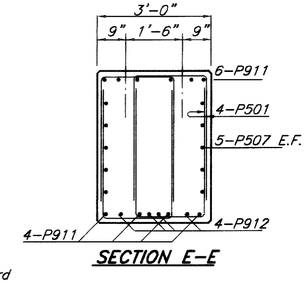

SECTION E-E

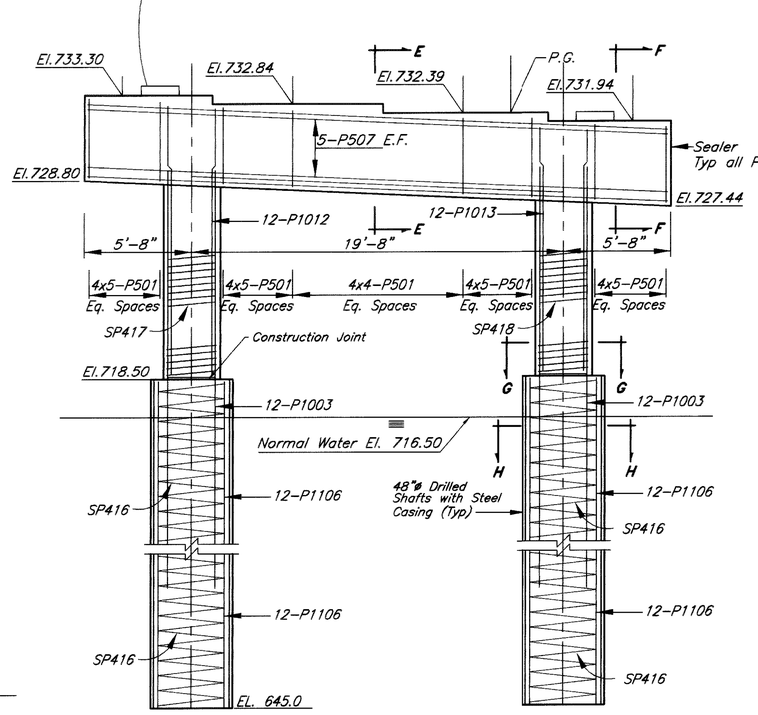

PIER #6
ELEVATION

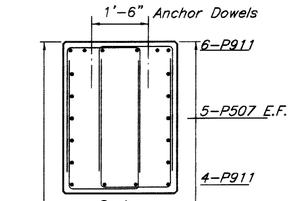

SECTION F-F

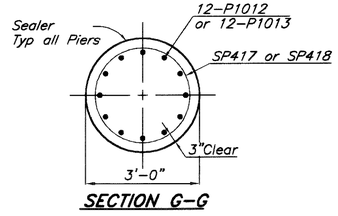

SECTION G-G

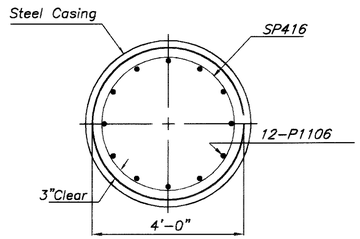

SECTION H-H

For notes on Bridge Seat Reinforcing, Setting of Anchors see sheet 8/23

DESIGN AGENCY
ERIKSSON ENGINEERING LTD.
1523 CHESAPEAKE AVENUE
COLUMBUS, OH 43212

DESIGNED MDL
DRAWN DA
CHECKED JHN
REVISED
DATE 11.28.01
REVIEWED
SFN : 2515415

PIERS 5 & 6
Bridge No. FRA-315-0320
RAMP A OVER OLENTANGY RIVER

FRA-315-3.04

Aug 2, 2002 Q:\BRIDGE\3453\OSU\RAMPA\3453ap56.dwg

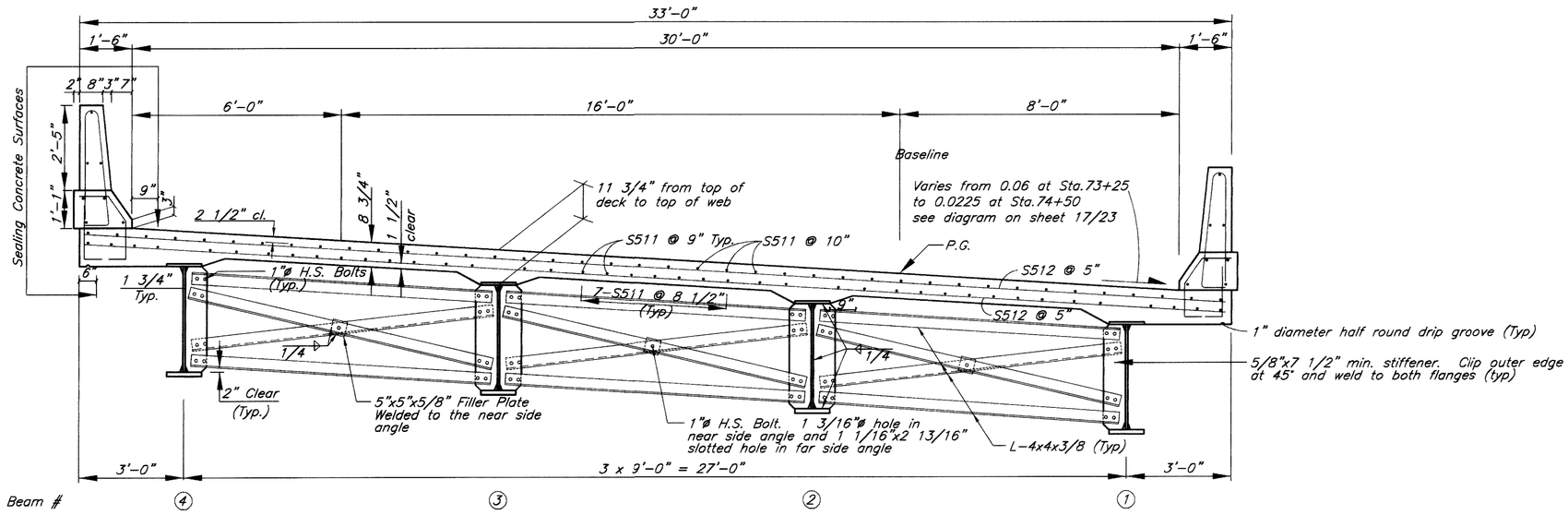

TRANSVERSE SECTION

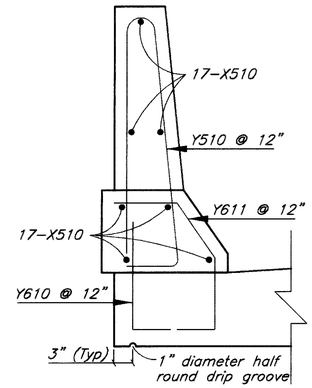

EACH PARAPET

CONTROL JOINT FOR CONCRETE PARAPETS:
shall be placed at a minimum of 6'-0" and a maximum of 10'-0" on centers. For details see notes on Std Dwg BR-1.

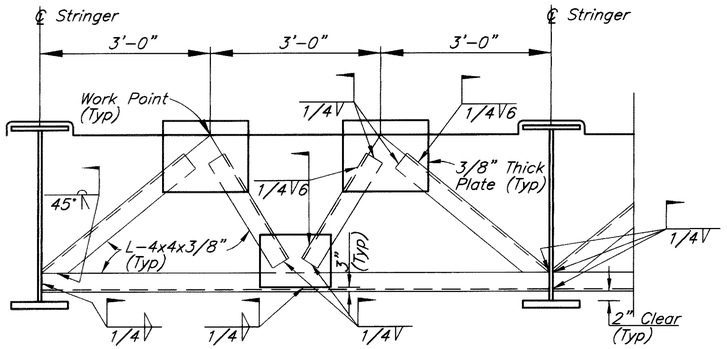

END CROSS FRAME

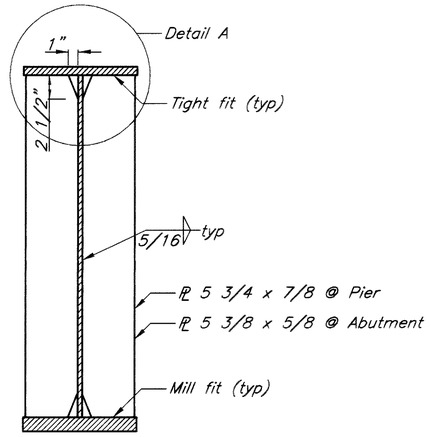

BEARING STIFFENERS

Stiffeners to which cross frames connect require fillet welds to both flanges

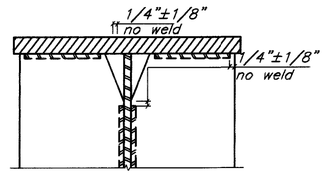

DETAIL "A" (Typ)

A HAUNCH WIDTH of 9 inches shall be used. However, the haunch width may vary between 6 inches and 12 inches.

DECK SLAB DEPTH FOR CONCRETE QUANTITY :
The dimension of 8 3/4 inches shown has been used for computing the deck concrete quantities. Concrete required to fill the haunches, including additional or less material required due to haunch construction tolerances, shall be considered as incidental and will not be included in the quantity calculations for payment.

DESIGN AGENCY
ERIKSSON ENGINEERING LTD.
1523 CHESAPEAKE AVENUE
COLUMBUS, OH 43212

DESIGNED MDL | DRAWN DA | CHECKED CE | REVISED | REVIEWED | DATE 11.26.01

SFN : 2515415

CROSS SECTION
Bridge No. FRA-315-0320
RAMP A OVER OLENTANGY RIVER

FRA-315-3.04

11 / 23

196
238

Aug 2, 2002 Q:\BRIDGE\3453\OSU\RAMPA\3453axs.dwg

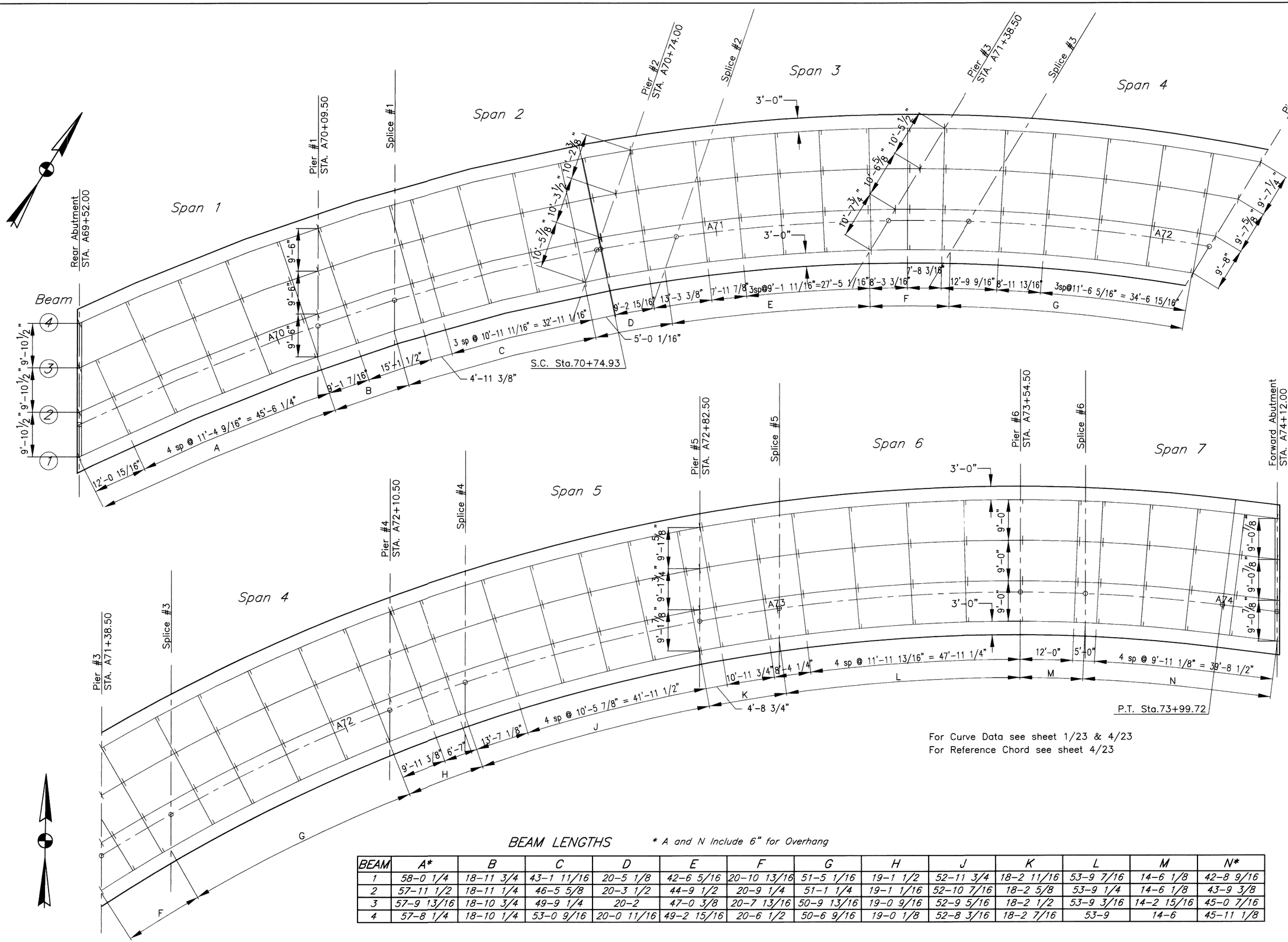

For Curve Data see sheet 1/23 & 4/23
For Reference Chord see sheet 4/23

BEAM LENGTHS

* A and N include 6" for Overhang

BEAM	A*	B	C	D	E	F	G	H	J	K	L	M	N*
1	58-0 1/4	18-11 3/4	43-1 11/16	20-5 1/8	42-6 5/16	20-10 13/16	51-5 1/16	19-1 1/2	52-11 3/4	18-2 11/16	53-9 7/16	14-6 1/8	42-8 9/16
2	57-11 1/2	18-11 1/4	46-5 5/8	20-3 1/2	44-9 1/2	20-9 1/4	51-1 1/4	19-1 1/16	52-10 7/16	18-2 5/8	53-9 1/4	14-6 1/8	43-9 3/8
3	57-9 13/16	18-10 3/4	49-9 1/4	20-2	47-0 3/8	20-7 13/16	50-9 13/16	19-0 9/16	52-9 5/16	18-2 1/2	53-9 3/16	14-2 15/16	45-0 7/16
4	57-8 1/4	18-10 1/4	53-0 9/16	20-0 11/16	49-2 15/16	20-6 1/2	50-6 9/16	19-0 1/8	52-8 3/16	18-2 7/16	53-9	14-6	45-11 1/8

DESIGN AGENCY
ERIKSSON ENGINEERING LTD.
1523 CHESAPEAKE AVENUE
COLUMBUS, OH 43212

DESIGNED WY | DRAWN DA | CHECKED DA | REVISED | REVIEWED | DATE 11.28.01

SFN : 2515415

FRAMING PLAN
Bridge No. FRA-315-0320
RAMP A OVER OLENTANGY RIVER

FRA-315-3.04

12 | 23

197
238

June 18, 2002 Q:\BRIDGE\3453\OSU\RAMPA\3453Afrm.dwg

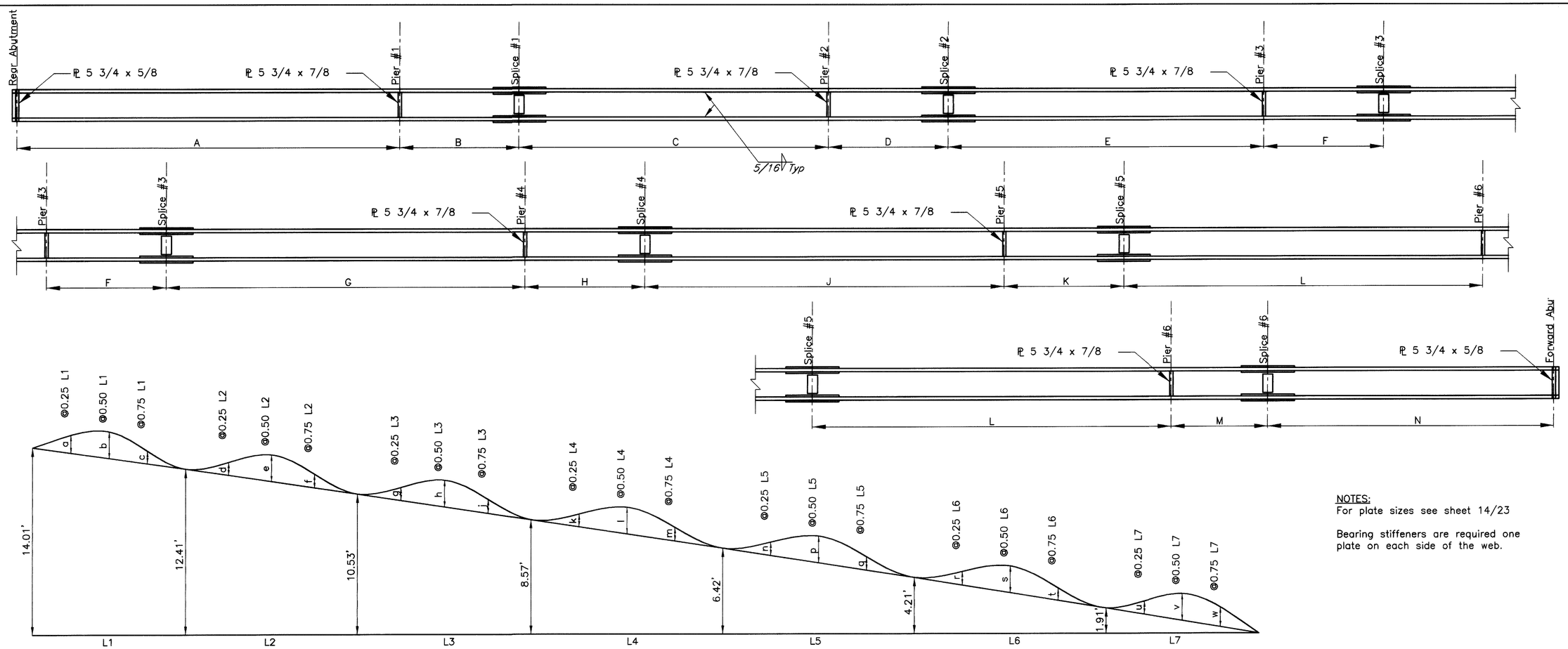

CAMBER DIAGRAM

NOTES:
For plate sizes see sheet 14/23

Bearing stiffeners are required one plate on each side of the web.

Girder 1	a	b	c	d	e	f	g	h	j	k	l	m	n	p	q	r	s	t	u	v	w
Defl. from Steel	0.004	0.005	0.002	0.001	0.003	0.002	0.002	0.003	0.001	0.004	0.006	0.003	0.003	0.005	0.003	0.003	0.006	0.003	0.002	0.004	0.003
Defl. from remaining DL	0.027	0.033	0.017	0.009	0.018	0.011	0.011	0.018	0.009	0.025	0.041	0.023	0.019	0.035	0.019	0.022	0.038	0.023	0.011	0.025	0.022
Adjustment for vert. & horiz. curves	0.003	0.005	−0.003	0.005	0.010	0.015	0.003	0.005	0.008	0.000	0.000	0.000	0.005	0.000	0.005	−0.018	−0.025	−0.023	−0.003	−0.005	−0.008
Required Shop Camber	0.033	0.043	0.017	0.015	0.031	0.028	0.015	0.026	0.018	0.028	0.047	0.027	0.027	0.040	0.027	0.007	0.019	0.003	0.011	0.025	0.018

Girder 2	a	b	c	d	e	f	g	h	j	k	l	m	n	p	q	r	s	t	u	v	w
Defl. from Steel	0.004	0.005	0.002	0.002	0.004	0.003	0.002	0.004	0.002	0.004	0.006	0.004	0.003	0.006	0.003	0.003	0.006	0.003	0.002	0.005	0.004
Defl. from remaining DL	0.028	0.034	0.017	0.015	0.030	0.018	0.015	0.025	0.013	0.027	0.045	0.025	0.022	0.039	0.022	0.024	0.043	0.025	0.015	0.032	0.027
Adjustment for vert. & horiz. curves	0.005	0.000	−0.005	0.010	0.010	0.010	0.010	0.010	0.010	0.013	0.005	0.007	0.002	0.005	0.007	0.007	0.015	0.013	0.008	0.005	0.003
Required Shop Camber	0.037	0.039	0.014	0.027	0.044	0.031	0.027	0.039	0.025	0.043	0.056	0.036	0.028	0.050	0.032	0.035	0.064	0.041	0.025	0.042	0.034

Girder 3	a	b	c	d	e	f	g	h	j	k	l	m	n	p	q	r	s	t	u	v	w
Defl. from Steel	0.004	0.005	0.002	0.003	0.005	0.003	0.002	0.004	0.002	0.004	0.006	0.003	0.003	0.006	0.003	0.003	0.006	0.003	0.003	0.006	0.005
Defl. from remaining DL	0.027	0.032	0.015	0.021	0.038	0.023	0.017	0.028	0.015	0.026	0.043	0.024	0.022	0.039	0.021	0.024	0.042	0.024	0.017	0.036	0.030
Adjustment for vert. & horiz. curves	0.008	0.005	0.002	0.012	0.015	0.008	0.005	0.010	0.005	0.010	0.010	0.010	0.008	0.005	0.012	0.032	0.055	0.038	−0.003	0.005	0.002
Required Shop Camber	0.039	0.042	0.020	0.036	0.059	0.033	0.024	0.043	0.022	0.040	0.059	0.037	0.033	0.050	0.037	0.060	0.103	0.065	0.017	0.047	0.037

Girder 4	a	b	c	d	e	f	g	h	j	k	l	m	n	p	q	r	s	t	u	v	w
Defl. from Steel	0.004	0.004	0.002	0.004	0.007	0.004	0.003	0.005	0.003	0.003	0.006	0.003	0.003	0.006	0.003	0.003	0.005	0.003	0.003	0.006	0.005
Defl. from remaining DL	0.024	0.028	0.012	0.026	0.046	0.027	0.016	0.030	0.016	0.023	0.039	0.022	0.020	0.036	0.020	0.022	0.039	0.021	0.019	0.038	0.032
Adjustment for vert. & horiz. curves	0.000	0.000	0.000	0.005	0.010	0.005	0.000	0.000	0.000	0.008	0.005	0.002	0.005	0.010	0.005	0.050	0.090	0.060	0.005	0.010	0.015
Required Shop Camber	0.028	0.032	0.014	0.035	0.063	0.036	0.019	0.035	0.019	0.034	0.050	0.028	0.028	0.052	0.028	0.075	0.134	0.084	0.027	0.054	0.052

DESIGN AGENCY
ERIKSSON ENGINEERING LTD.
1523 CHESAPEAKE AVENUE
COLUMBUS, OH 43212

DESIGNED MDL | DRAWN DA | CHECKED CE | REVISED

DATE 1/28.01 | REVIEWED

SFN : 2515415

GIRDER DETAILS
Bridge No. FRA-315-0320
RAMP A OVER OLENTANGY RIVER

FRA-315-3.04

13 | 23

198
238

Aug. 5, 2002 Q:\BRIDGE\3453\OSU\RAMPA\3453det.dwg

	BEAM 1	BEAM 2	BEAM 3	BEAM 4
SPAN & LENGTH ALONG BEAM				
SPAN 1	57–7 1/4	57–5 1/2	57–3 13/16	57–2 1/4
SPAN 2	62–1 7/16	65–4 7/8	68–8	71–10 13/16
SPAN 3	62–11 1/2	65–1 1/16	67–2 7/16	69–3 5/8
SPAN 4	72–3 7/8	71–10 1/2	71–5 5/8	71–1 1/16
SPAN 5	72–1 1/4	71–11 1/2	71–9 7/8	71–8 3/8
SPAN 6	72–0 1/8	71–11 7/8	71–11 11/16	71–11 1/2
SPAN 7	56–8 11/16	57–9 1/2	58–10 3/8	59–11 3/16
LENGTH OF : 3/8" X 36" (CVN) WEB PLATE				
AB	77–1 5/8	76–11 3/8	76–9 3/16	76–7 1/16
CD	63–6 13/16	66–9 3/16	69–11 5/16	73–1 1/4
EF	63–5 1/8	65–6 3/4	67–8 3/16	69–9 1/2
GH	70–6 9/16	70–2 5/16	69–10 3/8	69–6 3/4
JK	71–2 7/16	71–1 1/16	70–11 13/16	70–10 11/16
LM	68–3 9/16	68–3 3/8	68–0 1/8	68–3 1/16
N	42–8 5/8	43–9 7/16	45–1 3/8	45–11 1/8
LENGTH OF : 7/8" X 12" (CVN) TOP FLANGE PLATE				
AB	77–1 5/8	76–11 3/8	76–9 3/16	76–7 1/16
CD	63–6 13/16	66–9 3/16	69–11 5/16	73–1 1/4
EF	63–5 1/8	65–6 3/4	67–8 3/16	69–9 1/2
GH	70–6 9/16	70–2 5/16	69–10 3/8	69–6 3/4
JK	71–2 7/16	71–1 1/16	70–11 13/16	70–10 11/16
LM	68–3 9/16	68–3 3/8	68–0 1/8	68–3 1/16
N	42–8 5/8	43–9 7/16	45–1 3/8	45–11 1/8
SIZE & LENGTH OF : BOTTOM FLANGE PLATE (CVN)				
AB	1 1/4 X 12 X 77–1 5/8	1 1/4 X 12 X 76–11 3/8	1 1/4 X 12 X 76–9 3/16	1 1/4 X 12 X 76–7 1/16
CD	1 1/4 X 12 X 63–6 13/16	1 1/4 X 12 X 66–9 3/16	1 1/4 X 12 X 69–11 5/16	1 1/4 X 12 X 73–1 1/4
EF	1 3/8 X 12 X 63–5 1/8	1 3/8 X 12 X 65–6 3/4	1 3/8 X 12 X 67–8 3/16	1 3/8 X 12 X 69–9 1/2
GH	1 1/2 X 12 70–6 9/16	1 1/2 X 12 X 70–2 5/16	1 1/2 X 12 X 69–10 3/8	1 1/2 X 12 X 69–6 3/4
JK	1 1/2 X 12 X 71–2 7/16	1 1/2 X 12 X 71–1 1/16	1 1/2 X 12 X 70–11 13/16	1 1/2 X 12 X 70–10 11/16
LM	1 3/8 X 12 X 68–3 9/16	1 3/8 X 12 X 68–3 3/8	1 3/8 X 12 X 68–0 1/8	1 3/8 X 12 X 68–3 1/16
N	1 3/8 X 12 X 42–8 5/8	1 3/8 X 12 X 43–9 7/16	1 3/8 X 12 X 45–1 3/8	1 3/8 X 12 X 45–11 1/8

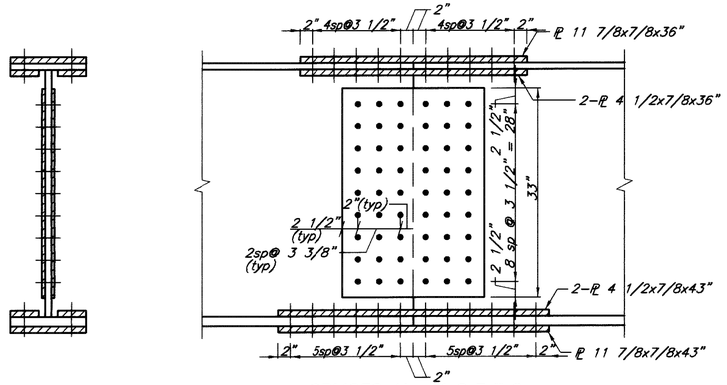

SPLICES No. 1,2,3,5,6

Splices No. 2, 3 & 5 requires 1/8" fill plate at the bottom flange

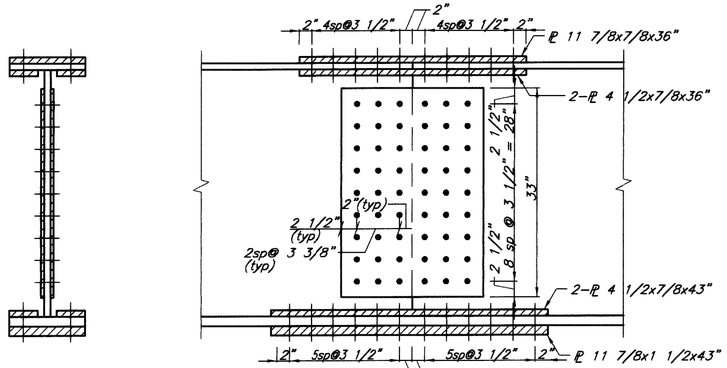

SPLICE No. 4

DESIGN AGENCY
ERIKSSON ENGINEERING LTD.
1523 CHESAPEAKE AVENUE
COLUMBUS, OH 43212

DESIGNED MDL | DRAWN DA | CHECKED CE | REVISED | REVIEWED | DATE 1/28/02

SFN : 2515415

GIRDER DETAILS
Bridge No. FRA-315-0320
RAMP A OVER OLENTANGY RIVER

FRA-315-3.04

June 18, 2002 Q:\BRIDGE\3453\OSU\RampA\3453Atbl.dwg

LOAD PLATE: THE STEEL LOAD PLATE SHALL BE THE SAME MATERIAL AS THE ATTACHED STRUCTURAL STEEL AND BE SIMILARLY CLEANED AND COATED. SURFACE PREPARATION AND PRIMING SHALL BE DONE IN THE SHOP AND BE INCLUDED IN THE PRICE BID FOR THE BEARINGS. FIELD COATS SHALL BE INCLUDED IN THE PRICE BID FOR PAINTING MAIN STRUCTURAL STEEL.

THE STEEL LOAD PLATE SHALL BE BONDED BY VULCANIZATION TO THE ELASTOMER DURING THE MOLDING PROCESS.

WELDING OF THE LOAD PLATE TO THE SUPERSTRUCTURE SHALL BE CONTROLLED SO THAT THE PLATE TEMPERATURE AT THE ELASTOMER BONDED SURFACE SHALL NOT EXCEED 300°F AS DETERMINED BY THE USE OF PYROMETRIC STICKS OR OTHER TEMPERATURE MONITORING DEVICES.

BASIS OF PAYMENT: THE UNIT BID PRICE SHALL INCLUDE ALL MATERIALS, LABOR AND INCIDENTALS NECESSARY TO FINISH AND INSTALL LAMINATED ELASTOMERIC BEARINGS, EITHER FIXED OR EXPANSION. PAYMENT WILL BE MADE AT THE CONTRACT PRICE FOR ITEM 516, EACH, LAMINATED ELASTOMERIC BEARINGS.

ELASTOMERIC BEARINGS: ELASTOMERIC BEARINGS SHALL COMPLY WITH ITEM 516 AND AASHTO STANDARD SPECIFICATION FOR HIGHWAY BRIDGES, SECTION 18, BEARING DEVICES, DIVISION II, CONSTRUCTION, ARTICLES 18.4.5.1 AND 18.5.6.2. BEARINGS SHALL BE GRADE 3, 50 DUROMETER ELASTOMER, AND SHALL BE SUBJECTED TO THE LOAD TESTING REQUIREMENTS DEFINED IN ARTICLE 18.7.4.5 OF THE AASHTO DOCUMENT LISTED ABOVE. BEARINGS WERE DESIGNED UNDER SECTION 14.6.5 OF SECTION 14, BEARINGS, DIVISION I, DESIGN. TESTING SHALL BE INCLUDED IN THE UNIT PRICE BID FOR THE BEARINGS, EACH.

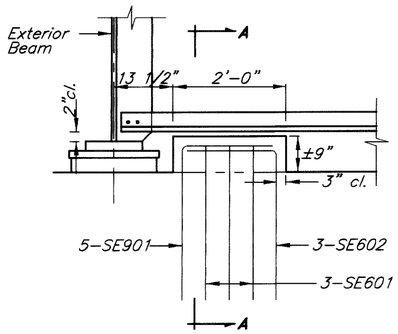

SEISMIC PEDESTAL
ON ABUTMENTS

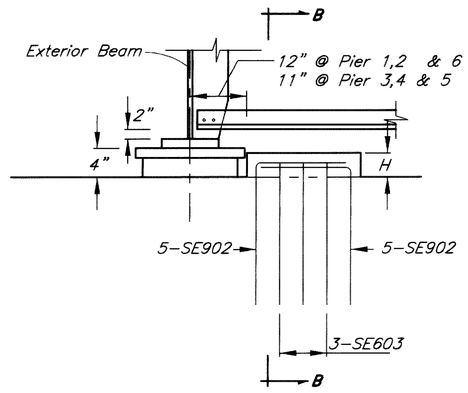

SEISMIC PEDESTALS
ON PIERS

LAMINATED ELASTOMERIC BEARINGS

LOCATION	DIMENSIONS (inches) W	L	t_i	t_e	T	N	STEEL LOAD PLATE	REACTIONS LL	DL	MAX. DESIGN LOAD	ROTATION RADIANS ACTUAL	ALLOWED
Abutment Expansion Bearings	24	18	0.50	0.35	7.5	10	1 1/2"x19"x25"	87 k	44 k	131 k	0.0100	0.0379
Pier 1 Expansion Bearings	22	17	0.28	0.15	7	14	2"x18"x23"	111 k	135 k	246 k	0.0100	0.0317
Pier 2,6 Expansion Bearings	22	14	0.30	0.20	5 1/2	9	2"x15"x23"	111 k	135 k	246 k	0.0100	0.0345
Pier 3,5 Expansion Bearings	20	14	0.40	0.25	4	4	2"x15"x21"	111 k	135 k	246 k	0.0100	0.0194
Pier 4 Fixed Bearings	20	14	0.39	0.248	4	4	2"x15"x27"	102 k	138 k	240 k	0.0100	0.0177

t_i = Thickness of Internal Layer
t_e = Thickness of External Layer
T = Total Thickness of Elastomeric Bearing
N = No. of Steel Laminates
Internal Steel Laminate Thickness = 0.0747 inch

SECTION A-A

SECTION B-B

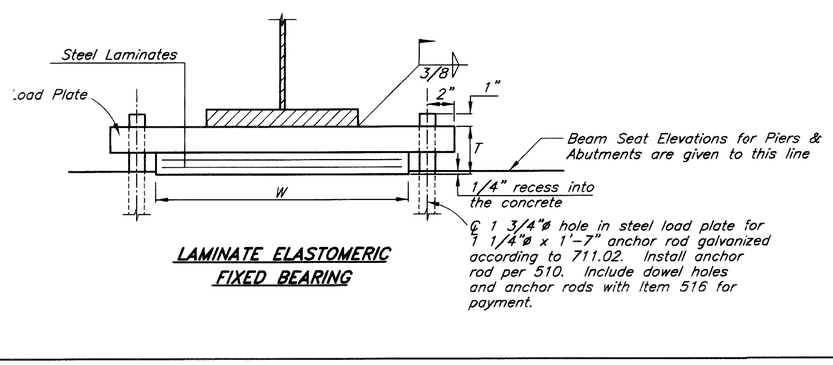

LAMINATE ELASTOMERIC
FIXED BEARING

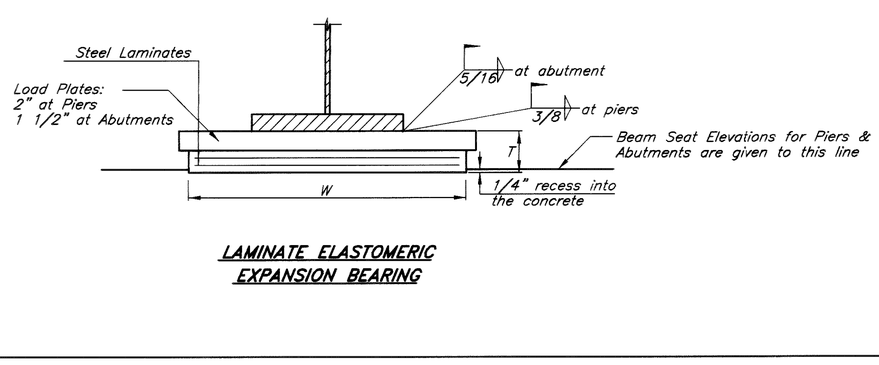

LAMINATE ELASTOMERIC
EXPANSION BEARING

DESIGN AGENCY
ERIKSSON ENGINEERING LTD.
1523 CHESAPEAKE AVENUE
COLUMBUS, OH 43212

DATE 11/28/01
REVIEWED
SFN : 2515415

DRAWN DA REVISED
DESIGNED MDL CHECKED CE

SUPERSTRUCTURE DETAILS - BEARINGS
BRIDGE NO FRA-315-0320
RAMP A OVER OLENTANGY RIVER

FRA-315-3.04

15 / 23

200
238

Aug 5, 2002 Q:\BRIDGE\3453\OSU\RampA\3453Abxdt.dwg

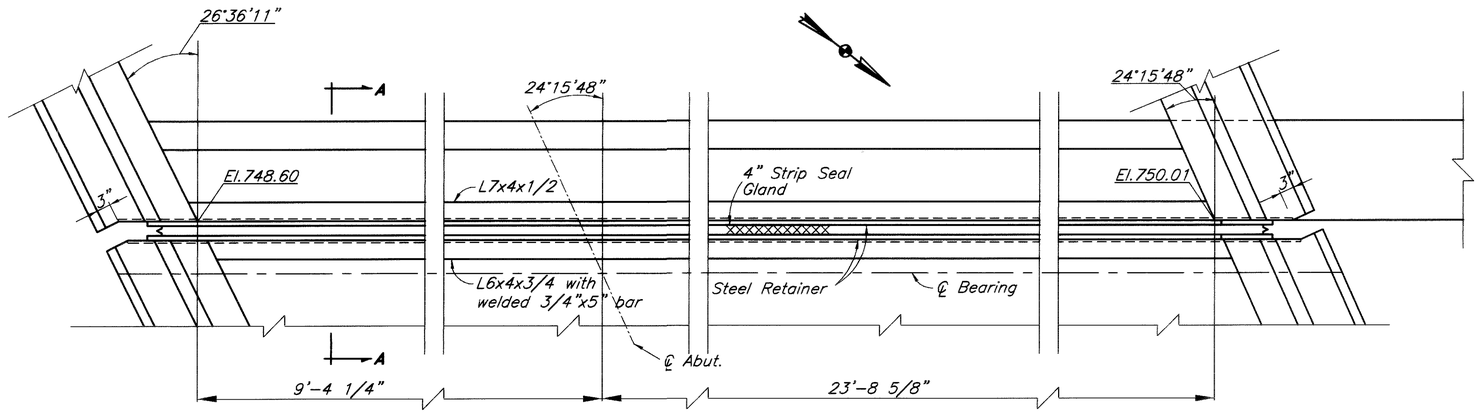

END DAM - REAR ABUTMENT

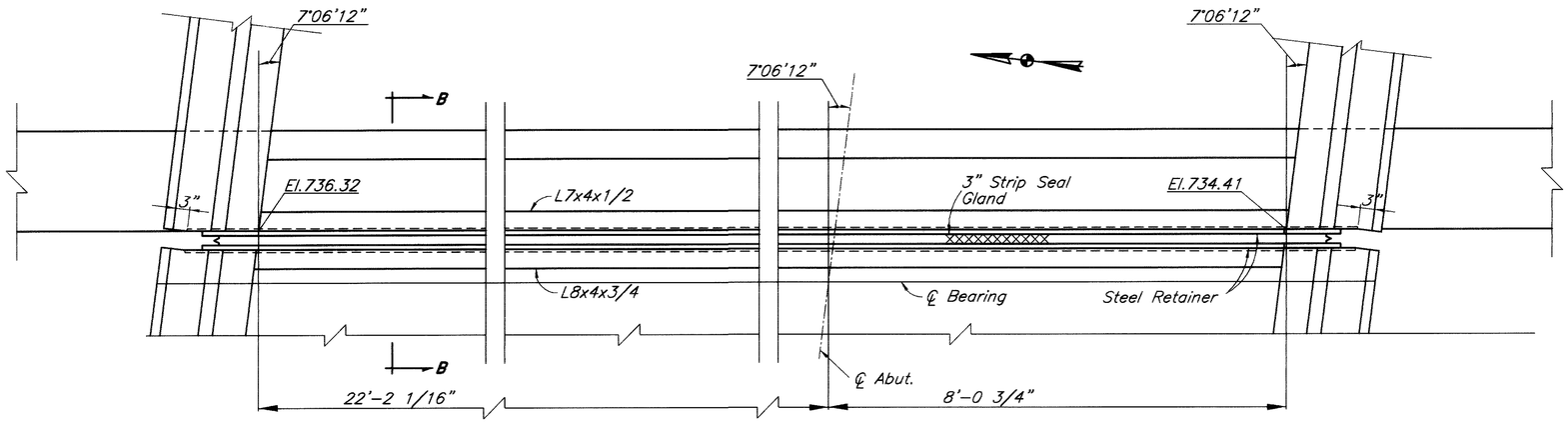

END DAM - FORWARD ABUTMENT

Dim "A*" (in.)

Temperature	Rear Abut.	Forward Abut.
30°F	2.6	2.00
40°F	2.4	1.80
50°F	2.2	1.65
60°F	2.0	1.50
70°F	1.8	1.35
80°F	1.6	1.20
90°F	1.4	1.05

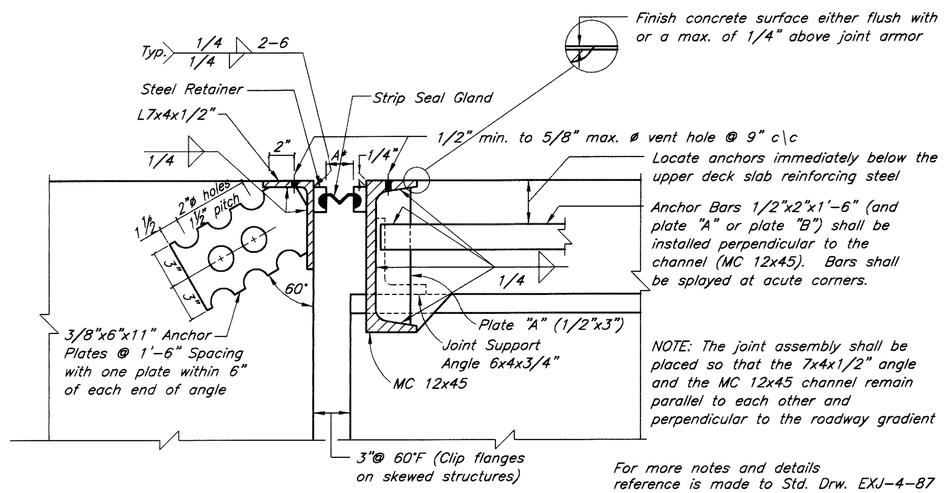

NOTE: The joint assembly shall be placed so that the 7x4x1/2" angle and the MC 12x45 channel remain parallel to each other and perpendicular to the roadway gradient

For more notes and details reference is made to Std. Drw. EXJ-4-87 sheet No. 2 of 5 & Std. Drw. GSD-1-69

SECTIONS B-B

DESIGN AGENCY
ERIKSSON ENGINEERING LTD.
1523 CHESAPEAKE AVENUE
COLUMBUS, OH 43212

DESIGNED	DRAWN	REVIEWED	DATE
VK	DA	[illegible]	11.28.01
CHECKED	REVISED	SFN : 2515415	
DA			

END DAM DETAILS
Bridge No. FRA-315-0320
RAMP A OVER OLENTANGY RIVER

FRA-315-3.04

June 18, 2002 Q:\BRIDGE\3453\OSU\RampA\3453Aedd.dwg

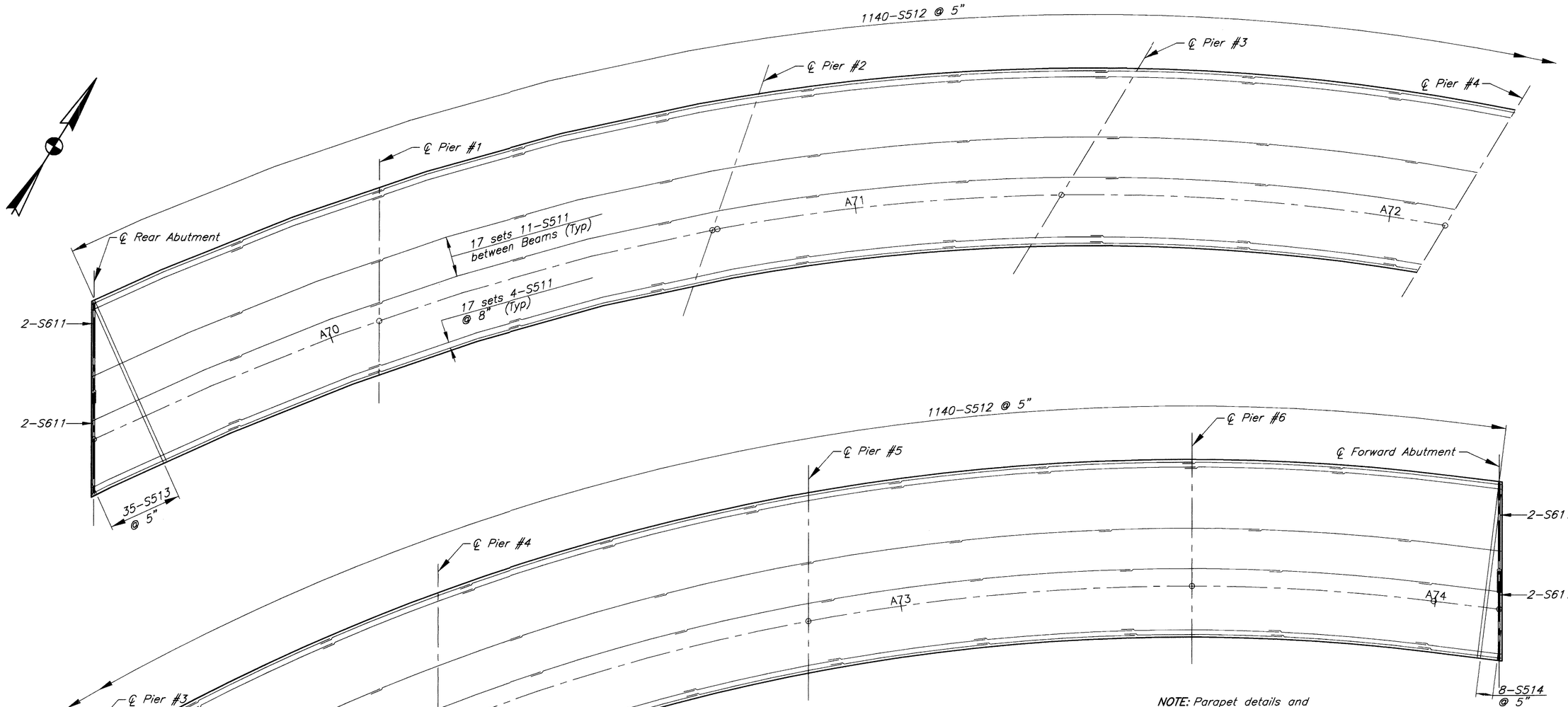

NOTE: Parapet details and reinforcing are shown on sheet 11/23.

BAR SPLICE LENGTH

#4	2'-11"
#5	3'-7"
#6	4'-4"

BOTTOM OF DECK

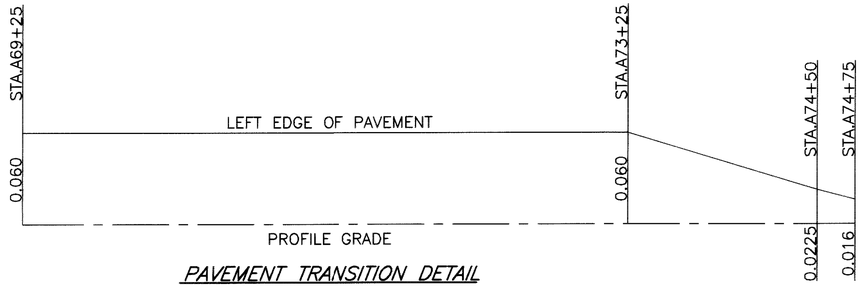

PAVEMENT TRANSITION DETAIL

DESIGN AGENCY
ERIKSSON ENGINEERING LTD.
1523 CHESAPEAKE AVENUE
COLUMBUS, OH 43212

DESIGNED MDL | DRAWN DA | REVIEWED | DATE 11-28-01
CHECKED DA | REVISED

SFN : 2515415

DECK PLAN
Bridge No. FRA-315-0320
RAMP A OVER OLENTANGY RIVER

FRA-315-3.04

17 / 23

202 / 238

June 18, 2002 Q:\BRIDGE\3453\OSU\RAMPA\3453Abr2.dwg

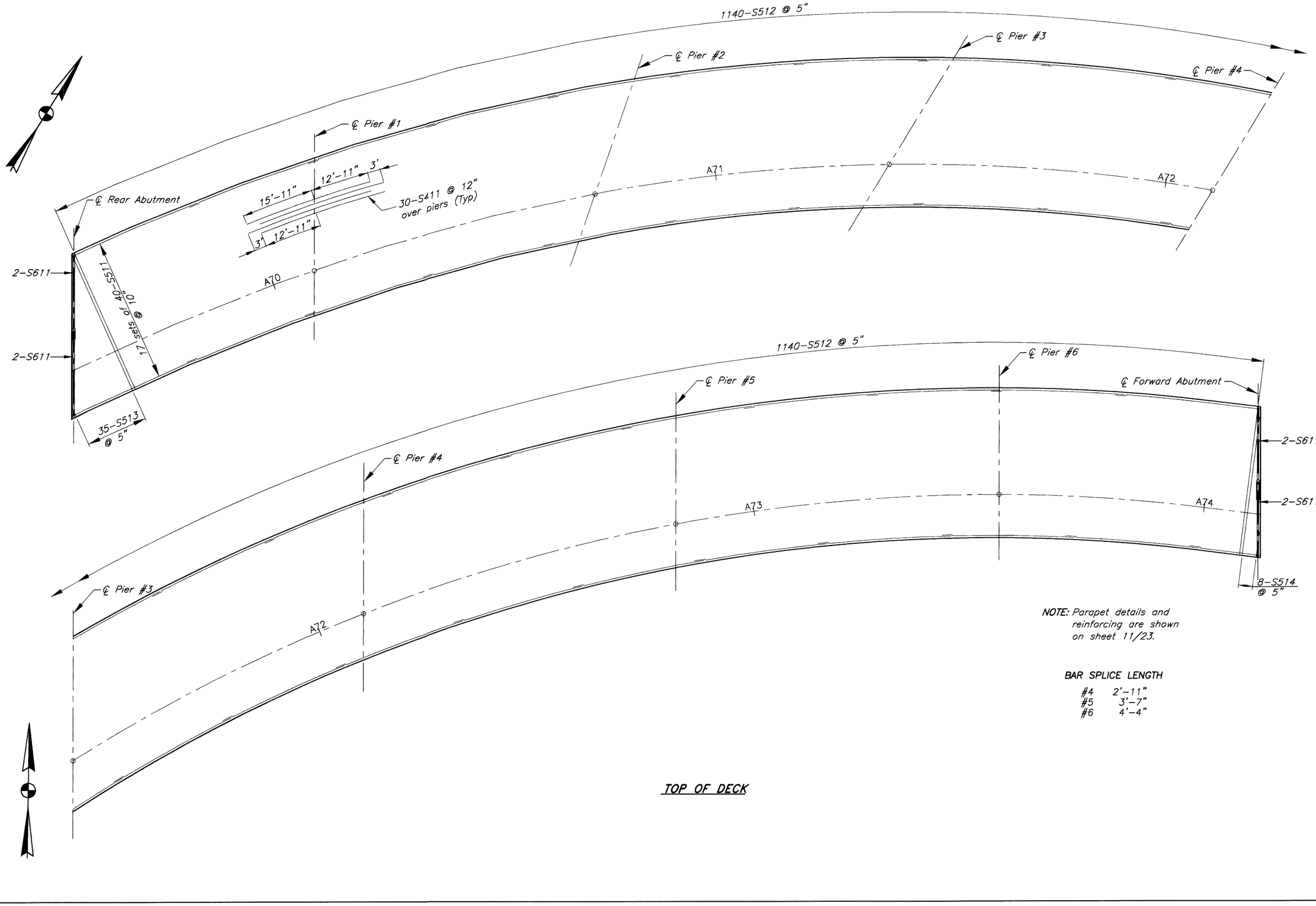

NOTE: Parapet details and reinforcing are shown on sheet 11/23.

BAR SPLICE LENGTH

#4	2'–11"
#5	3'–7"
#6	4'–4"

TOP OF DECK

DESIGN AGENCY
ERIKSSON ENGINEERING LTD.
1523 CHESAPEAKE AVENUE
COLUMBUS, OH 43212

DESIGNED	DRAWN	REVIEWED	DATE
MDL	DA	[illegible]	11.28.01
CHECKED	REVISED		
DA			

SFN : 2515415

DECK PLAN
Bridge No. FRA–315–0320
RAMP A OVER OLENTANGY RIVER

FRA–315–3.04

18 / 23

203 / 238

Aug. 5, 2002 Q:\BRIDGE\3453\OSU\RAMPA\3453Abr1.dwg

PROPOSED GIRDER SCREED ELEVATIONS

Beam #	Location	℄ Brng R.A.	1/4 Point	1/2 Point	3/4 Point	℄ Pier 1	℄ Splice 1	1/2 Point	3/4 Point	℄ Pier 2	℄ Splice 2	1/2 Point	3/4 Point	℄ Pier 3	℄ Splice 3
1	Station	69+49.07	69+63.47	69+77.87	69+92.57	70+07.29	70+25.32	70+38.68	70+54.59	70+70.10	70+88.66	71+01.78	71+18.06	71+34.34	71+52.76
	Final Top Deck El.	748.63	748.23	747.83	747.41	746.99	746.48	746.09	745.63	745.18	744.64	744.25	743.76	743.28	742.72
	Camber	0.00	0.03	0.04	0.02	0.00	0.01	0.03	0.03	0.00	0.01	0.02	0.02	0.00	0.02
	Deck Screed El.	748.63	748.26	747.87	747.43	746.99	746.49	746.12	745.66	745.18	744.65	744.27	743.78	743.28	742.74
2	Station	69+53.13	69+67.49	69+81.75	69+96.11	70+10.34	70+28.19	70+42.92	70+59.13	70+75.49	70+93.24	71+07.24	71+23.65	71+40.05	71+57.89
	Final Top Deck El.	749.06	748.66	748.26	747.85	747.45	746.94	746.51	746.04	745.56	745.04	744.63	744.14	743.65	743.11
	Camber	0.00	0.03	0.03	0.01	0.00	0.01	0.04	0.03	0.00	0.03	0.04	0.02	0.00	0.04
	Deck Screed El.	749.06	748.69	748.29	747.86	747.45	746.95	746.55	746.07	745.56	745.07	744.67	744.16	743.65	743.15
3	Station	69+57.18	69+71.52	69+85.32	69+99.66	70+13.39	70+30.69	70+46.42	70+63.60	70+80.28	70+97.58	71+12.38	71+28.92	71+45.46	71+62.76
	Final Top Deck El.	749.45	749.08	748.70	748.29	747.90	747.40	746.95	746.45	745.96	745.45	745.01	744.52	744.02	743.50
	Camber	0.00	0.04	0.04	0.02	0.00	0.03	0.05	0.03	0.00	0.02	0.04	0.02	0.00	0.04
	Deck Screed El.	749.45	749.12	748.74	748.31	747.90	747.43	747.00	746.48	745.96	745.47	745.05	744.54	744.02	743.54
4	Station	69+61.24	69+74.60	69+88.90	70+02.16	70+16.44	70+33.19	70+50.04	70+68.03	70+84.89	71+01.71	71+17.24	71+33.91	71+50.58	71+67.37
	Final Top Deck El.	749.91	749.54	749.14	748.76	748.35	747.87	747.38	746.86	746.37	745.87	745.41	744.91	744.41	743.90
	Camber	0.00	0.02	0.03	0.01	0.00	0.03	0.06	0.03	0.00	0.02	0.03	0.02	0.00	0.03
	Deck Screed El.	749.91	749.56	749.17	748.77	748.35	747.90	747.44	746.89	746.37	745.89	745.44	744.93	744.41	743.93

Beam #	Location	1/2 Point	3/4 Point	℄ Pier 4	℄ Splice 4	1/2 Point	3/4 Point	℄ Pier 5	℄ Splice 5	1/2 Point	3/4 Point	℄ Pier 4	℄ Splice 4	1/2 Point	3/4 Point	℄ Brng F.A.
1	Station	71+71.13	71+89.52	72+07.92	72+26.27	72+44.60	72+62.94	72+81.28	72+99.60	73+17.97	73+36.32	73+54.54	73+69.29	73+83.79	73+98.43	74+12.81
	Final Top Deck El.	742.16	741.60	741.04	740.47	739.89	739.32	738.74	738.15	737.57	737.01	736.46	735.99	735.54	735.11	734.69
	Camber	0.04	0.02	0.00	0.02	0.04	0.02	0.00	0.00	0.01	0.00	0.00	0.01	0.02	0.02	0.00
	Deck Screed El.	742.20	741.62	741.04	740.49	739.93	739.34	738.74	738.15	737.58	737.01	736.46	736.00	735.56	735.09	734.69
2	Station	71+75.76	71+93.61	72+11.47	72+29.33	72+47.21	72+65.09	72+82.96	73+00.84	73+18.72	73+36.60	73+54.49	73+68.89	73+83.05	73+97.31	74+11.69
	Final Top Deck El.	742.56	742.02	741.47	740.91	740.35	739.79	739.22	738.65	738.08	737.50	736.91	736.45	735.99	735.52	735.04
	Camber	0.05	0.03	0.00	0.03	0.04	0.03	0.00	0.03	0.06	0.04	0.00	0.02	0.04	0.03	0.00
	Deck Screed El.	742.61	742.05	741.47	740.94	740.39	739.82	739.22	738.68	738.14	737.54	736.91	736.47	736.03	735.55	735.04
3	Station	71+80.15	71+97.49	72+14.84	72+32.25	72+49.70	72+67.13	72+84.57	73+02.03	73+19.50	73+36.97	73+54.44	73+68.51	73+82.35	73+96.30	74+10.57
	Final Top Deck El.	742.97	742.44	741.90	741.36	740.81	740.27	739.71	739.16	738.60	737.98	737.36	736.91	736.44	735.92	735.38
	Camber	0.05	0.03	0.00	0.03	0.04	0.03	0.00	0.06	0.10	0.06	0.00	0.01	0.04	0.03	0.00
	Deck Screed El.	743.02	742.47	741.90	741.39	740.85	740.30	739.71	739.22	738.70	738.04	737.36	736.92	736.48	735.95	735.38
4	Station	71+84.31	72+01.18	72+18.05	72+35.02	72+52.07	72+69.09	72+86.10	73+03.16	73+20.25	73+37.32	73+54.39	73+68.15	73+81.67	73+95.31	74+09.45
	Final Top Deck El.	743.38	742.86	742.34	741.81	741.28	740.74	740.20	739.66	739.11	738.46	737.82	737.37	736.88	736.32	735.73
	Camber	0.05	0.03	0.00	0.03	0.05	0.03	0.00	0.07	0.13	0.08	0.00	0.02	0.05	0.05	0.00
	Deck Screed El.	743.43	742.89	742.34	741.84	741.33	740.77	740.20	739.73	739.24	738.54	737.82	737.39	736.93	736.27	735.73

Screed Elevations shown are for the deck slab surface prior to concrete placement. Allowance has been made for anticipated calculated dead load deflections.

DESIGN AGENCY
ERIKSSON ENGINEERING LTD.
1523 CHESAPEAKE AVENUE
COLUMBUS, OH 43212

DESIGNED MDL | DRAWN DA | CHECKED DA | REVISED

DATE 11 Apr 01

REVIEWED

SFN : 2515415

SCREED ELEVATIONS
Bridge No. FRA-315-0320
RAMP A OVER OLENTANGY RIVER

FRA-315-3.04

June 18, 2002 Q:\BRIDGE\3453\OSU\RAMPA\3453ase1.dwg

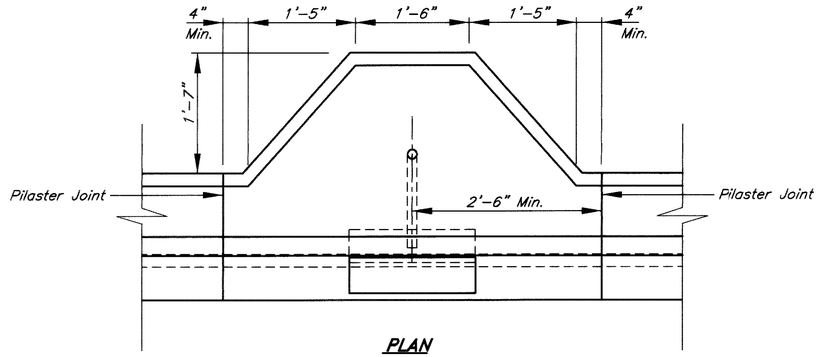

PLAN

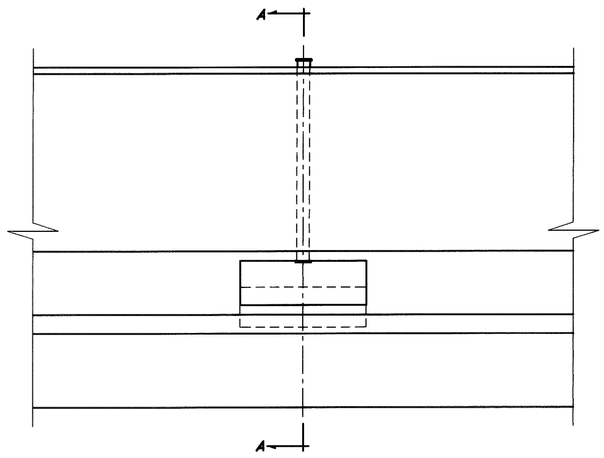

ELEVATION

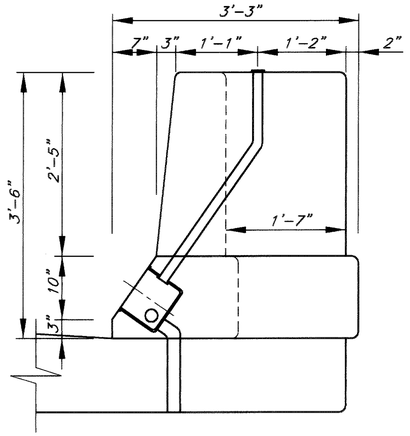

SECTION A-A

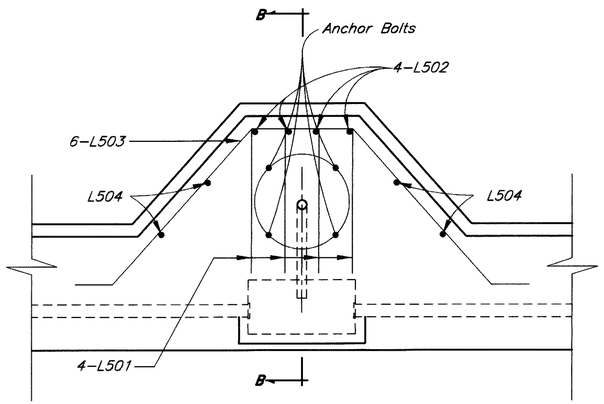

PLAN

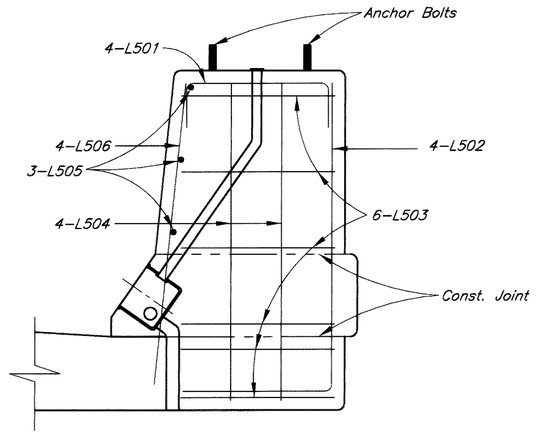

SECTION B-B

DESIGN AGENCY
ERIKSSON ENGINEERING LTD.
1523 CHESAPEAKE AVENUE
COLUMBUS, OH 43212

REVIEWED — DATE 11.28.01
SFN : 2515415

DESIGNED DA | DRAWN GM | REVISED
CHECKED CE

STRUCTURE LIGHTING
Bridge No. FRA-315-0320
RAMP A OVER OLENTANGY RIVER

FRA-315-3.04

20 / 23

205
238

June 18, 2002 Q:\BRIDGE\3453\OSU\RAMPA\3453Agt.dwg

REINFORCING STEEL LIST

MARK	NO.	LENGTH	WEIGHT	TYPE	A	B	C	D	REMARKS
			REAR ABUTMENT						
A530	42	11–10	518	2	5–5	3–4	3–4		
A531	18	21–6	404	STR					
A532	8	21–6	179	STR					
A533	14	4–1	96	STR					VARY LENGTH BY 10"
		TO							2 SETS OF 7
		9–1							
A534	18	9–6	178	STR					
A535	18	11–8	244	STR					VARY LENGTH BY 4"
		TO							
		14–4							
A536	18	8–1	177	STR					VARY LENGTH BY 4"
		TO							
		10–9							
A537	18	4–6	110	STR					VARY LENGTH BY 4"
		TO							
		7–2							
A538	11	10–4	119	9					
A539	13	7–4	99	6					
A540	7	12–0	88	STR					
A610	34	15–6	792	2	5–5	6–9	3–7		
A611	42	8–8	547	5	0–11	6–2	1–3	0–9	
A612	24	12–8	457	STR					
A613	2	16–6	50	2	5–5	7–9	3–7		
A614	6	17–11	162	2	5–5	9–2	3–7		
A615	2	10–11	33	3	3–6	7–5	1–6		
A616	2	10–2	31	3	3–6	6–8	1–6		
A617	60	14–6	1307	STR					
A618	6	21–0	189	STR					
A619	6	22–0	198	STR					
A620	4	16–0	96	STR					
A621	28	6–0	252	STR					
A622	30	12–0	541	STR					
A623	26	11–6	449	STR					
A624	13	3–8	72	10					
A810	12	22–3	713	STR					
A811	16	11–6	491	STR					
		TOTAL	8,592	LBS.					
A1001	72	42–6	---	STR					
A1126	24	27–0	---	STR					WITH DRILLED SHAFTS FOR PAYMENT
SP401	6	40–0	---	SPIRAL	Pitch 7"				
SP402	1	26–6	---	SPIRAL	Pitch 7"				
SP403	1	20–0	---	SPIRAL	Pitch 3 1/2"				

Dimensions shown are out to out.

MARK	NO.	LENGTH	WEIGHT	TYPE	A	B	C	D	REMARKS
			FORWARD ABUTMENT						
A501	34	9–1	322	2	5–4	2–0	2–0		
A502	23	9–0	216	1	0–7.5	8–6			
A503	23	9–8	232	2	3–5	3–3	3–3		
A504	22	17–0	390	STR					
A505	10	15–0	156	STR					
A506	10	15–5	161	STR					
A507	14	18–3	266	STR					
A508	2	13–9	29	STR					
A509	2	11–6	12	STR					
A510	2	13–11	29	3	8–1	5–10	1–5		
A511	2	14–3	30	S					
A512	2	11–6	24	S					
A513	2	14–5	30	3	8–1	6–4	1–6		
A514	6	21–4	134	2	1–5	10–1	10–1		
A515	6	5–8	46	2	1–5	2–3	2–3		VARY B & C BY 4"
		TO				TO	TO		
		9–0				3–11	3–11		
A516	6	17–0	106	2	1–5	7–11	7–11		
A517	6	5–8	46	2	1–5	2–3	2–3		VARY B & C BY 4"
		TO				TO	TO		
		9–0				3–11	3–11		
A518	4	11–4	47	1	0–10	10–7			
A519	4	14–8	61	2	1–5	6–9	6–9		
A520	4	9–3	39	1	0–10	8–6			
A521	4	14–8	61	2	1–5	6–9	6–9		
A601	34	16–0	817	2	5–3	8–6	2–6		
A602	32	13–3	637	5	1–5	5–6	5–6	1–3	
A603	32	5–6	264	2	0–11	2–5	2–5		
A801	14	23–0	860	STR					
A802	22	5–0	294	4	2–9	1–5			
		TOTAL	5,309	LBS.					
			SEISMIC PEDESTALS – ABUTMENTS						
SE601	3	10–8	48	11					
SE602	3	3–3 1/2	15	1	1–7	2–9			
SE901	5	3–3 1/2	56	1	1–7	2–9			
			SEISMIC PEDESTALS – PIERS						
SE603	3	3–3 1/2	15	1	1–7	2–9			
SE604	3	5–2 1/2	16	1	2–6	2–9			
SE902	5	3–3 1/2	56	1	1–7	2–9			
		TOTAL	206	LBS.					

ALL BARS SHALL BE EPOXY COATED

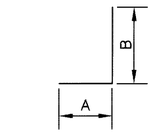

TYPE 1

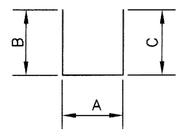

TYPE 2

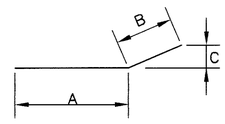

TYPE 3

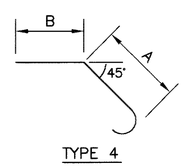

TYPE 4

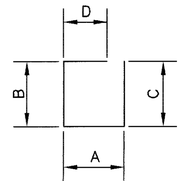

TYPE 5

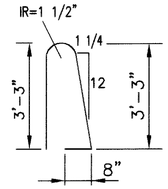

TYPE 6

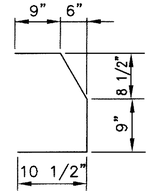

TYPE 7

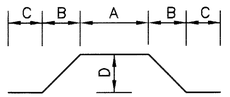

TYPE 8

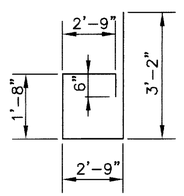

TYPE 9

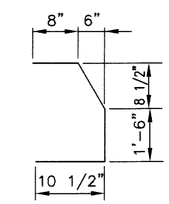

TYPE 10

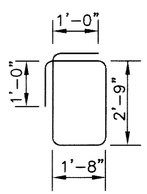

TYPE 11

DESIGN AGENCY
ERIKSSON ENGINEERING LTD.
1523 CHESAPEAKE AVENUE
COLUMBUS, OH 43212

DESIGNED MDL | DRAWN DM | CHECKED DA | REVIEWED [illegible] | DATE 11.28.01 | REVISED

SFN : 2515415

REINFORCING BAR LIST
BRIDGE NO. FRA-315-0320
RAMP A OVER OLENTANGY RIVER

FRA-315-3.04

21 / 23

206 / 238

June 18, 2002 Q:\BRIDGE\3453\OSU\RAMPA\3453Abl.dwg

REINFORCING STEEL LIST

MARK	NO.	LENGTH	WEIGHT	TYPE	A	B	C	D	REMARKS
			PIER No. 1						
P501	96	8–6	851	2	1–9	3–6	3–6		
P502	10	32–4	337	STR					
P901	10	32–4	1099	STR					
P902	4	21–4	290	STR					
P1001	12	22–0	1136	STR					
P1002	12	21–0	1084	STR					
P1101	48	39–0	---	STR					In shafts for payment
SP401	4	33–0	---	Spirals	42" ø o/o				In shafts for payment
SP402	1	8–3	136	Spirals	30" ø o/o				
SP403	1	7–3	115	Spirals	30" ø o/o				
		TOTAL	5048	LBS.					
			PIER No. 2						
P501	104	8–6	922	2	1–9	3–6	3–6		
P503	10	34–5	359	STR					
P903	10	34–5	1170	STR					
P904	4	23–5	318	STR					
P1003	24	20–0	2065	STR					
P1004	12	16–6	852	STR					
P1005	12	15–3	787	STR					
P1102	48	35–6	---	STR					In shafts for payment
SP404	4	29–6	---	Spirals	42" ø o/o				In shafts for payment
SP405	1	13–3	204	Spirals	30" ø o/o				
SP406	1	13–4	199	Spirals	30" ø o/o				
		TOTAL	6876	LBS.					
			PIER No. 3						
P501	104	8–6	922	2	1–9	3–6	3–6		
P504	10	35–8	372	STR					
P905	10	35–8	1213	STR					
P906	4	24–8	335	STR					
P1003	24	20	2065	STR					
P1006	12	20–0	1033	STR					
P1007	12	18–9	968	STR					
P1103	48	32–9	---	STR					In shafts for payment
SP407	4	26–9	---	Spirals	42" ø o/o				In shafts for payment
SP408	1	16–10	238	Spirals	30" ø o/o				
SP409	1	16–11	222	Spirals	30" ø o/o				
		TOTAL	7368	LBS.					

Dimensions shown are out to out.

MARK	NO.	LENGTH	WEIGHT	TYPE	A	B	C	D	REMARKS
			PIER No. 4						
P501	96	8–6	851	2	1–9	3–6	3–6		
P505	10	32–8	341	STR					
P907	10	32–8	1111	STR					
P908	4	21–8	295	STR					
P1003	24	20–0	2065	STR					
P1008	12	18–0	929	STR					
P1009	12	16–6	852	STR					
P1104	48	32–9	---	STR					In shafts for payment
SP410	4	26–9	---	Spirals	42" ø o/o				In shafts for payment
SP411	1	14–9	225	Spirals	30" ø o/o				
SP412	1	13–9	204	Spirals	30" ø o/o				
		TOTAL	6873	LBS.					
			PIER No. 5						
P501	96	8–6	851	2	1–9	3–6	3–6		
P506	10	31–1	324	STR					
P909	10	31–1	1057	STR					
P910	4	20–2	274	STR					
P1003	24	20–0	2065	STR					
P1010	12	15–9	813	STR					
P1011	12	14–3	736	STR					
P1105	48	32–9	---	STR					In shafts for payment
SP413	4	26–9	---	Spirals	42" ø o/o				In shafts for payment
SP414	1	12–8	194	Spirals	30" ø o/o				
SP415	1	11–5	173	Spirals	30" ø o/o				
		TOTAL	6487	LBS.					
			PIER No. 6						
P501	96	8–6	851	2	1–9	3–6	3–6		
P507	10	30–8	320	STR					
P911	10	30–8	1043	STR					
P912	4	19–8	267	STR					
P1003	24	20–0	2065	STR					
P1012	12	12–6	645	STR					
P1013	12	12–0	620	STR					
P1106	48	42–0	---	STR					In shafts for payment
SP416	4	36–9	---	Spirals	42" ø o/o				In shafts for payment
SP417	1	10–3	162	Spirals	30" ø o/o				
SP418	1	9–3	142	Spirals	30" ø o/o				
		TOTAL	6115	LBS.					

ALL BARS SHALL BE EPOXY COATED

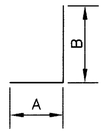

TYPE 1

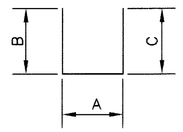

TYPE 2

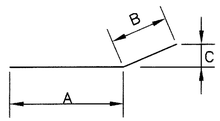

TYPE 3

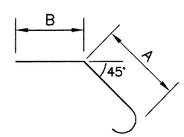

TYPE 4

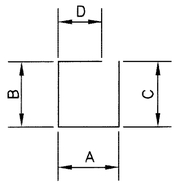

TYPE 5

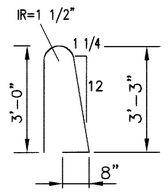

TYPE 6

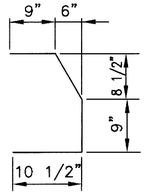

TYPE 7

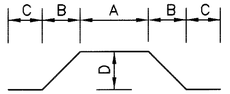

TYPE 8

DESIGN AGENCY
ERIKSSON ENGINEERING LTD.
1523 CHESAPEAKE AVENUE
COLUMBUS, OH 43212

DESIGNED MDL
DRAWN DM
CHECKED DA
REVIEWED
DATE 11.28.01
REVISED
SFN : 2515415

REINFORCING BAR LIST
BRIDGE NO. FRA-315-0320
RAMP A OVER OLENTANGY RIVER

FRA-315-3.04

22 / 23

207 / 238

June 18, 2002 Q:\BRIDGE\3453\OSU\RAMPA\3453Ab13.dwg

REINFORCING STEEL LIST

MARK	NO.	LENGTH	WEIGHT	TYPE	A	B	C	D	REMARKS
			TOP OF DECK						
S411	180	28–10	3467	STR					
S511	680	30–0	21277	STR					
S512	1140	32–8	38841	STR					
S513	35	32–6	634	STR					Vary Length by 10 3/4"
		TO							
		2–3							
S514	8	30–6	150	STR					Vary Length by 3'–7"
		TO							
		5–5							
S611	8	19–0	228	STR					
		TOTAL	**64,597**	**LBS.**					
			BOTTOM OF DECK						
S511	697	30–0	21809	STR					
S512	1140	32–8	38841	STR					
S513	35	32–6	634	STR					Vary Length by 10 3/4"
		TO							
		2–3							
S514	8	30–6	150	STR					Vary Length by 3'–7"
		TO							
		5–5							
S611	8	19–0	228	STR					
		TOTAL	**61,662**	**LBS.**					
			IN PARAPET						
X510	238	30–0	7447	STR					
Y510	935	7–1	6908	6					
Y610	935	2–11	4096	1	0–11	1–5			
Y611	935	2–2	3043	7					
		TOTAL	**21,494**	**LBS.**					

Dimensions shown are out to out.

MARK	NO.	LENGTH	WEIGHT	TYPE	A	B	C	D	REMARKS
			LIGHTING PEDESTAL						
L501	12	2–8	33	2	1–11	0–6	0–6		
L502	12	5–5	68	1	1–9	3–9			
L503	18	5–5	102	8	1–4	1–9	0–6	2–0	
L504	12	3–9	47	STR					
L505	12	8–0	101	STR					
L506	12	3–9	47	STR					
		TOTAL	**398**	**LBS.**					

ALL BARS SHALL BE EPOXY COATED

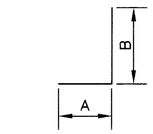

TYPE 1

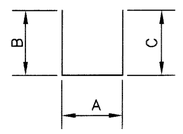

TYPE 2

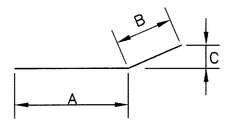

TYPE 3

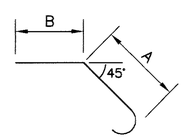

TYPE 4

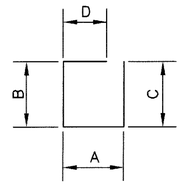

TYPE 5

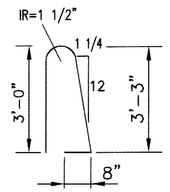

TYPE 6

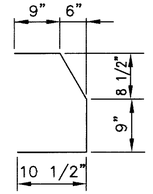

TYPE 7

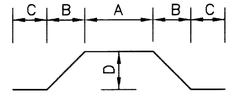

TYPE 8

DESIGN AGENCY
ERIKSSON ENGINEERING LTD.
1523 CHESAPEAKE AVENUE
COLUMBUS, OH 43212

DATE 11.2.01
REVIEWED
SFN : 2515415
DRAWN DM REVISED
DESIGNED MDL CHECKED DA

REINFORCING BAR LIST
BRIDGE NO. FRA-315-0320
RAMP A OVER OLENTANGY RIVER

FRA-315-3.04

23 / 23

208 / 238

June 18, 2001 Q:\BRIDGE\3453\OSU\RAMPA\3453Ab12.dwg

TR #101
STA B86+12.88, 44.20', LT
IRON PIN
ELEV. = 729.74

TR #103
STA B89.31.25, 117.39 LT
IRON PIN
ELEV. = 729.73

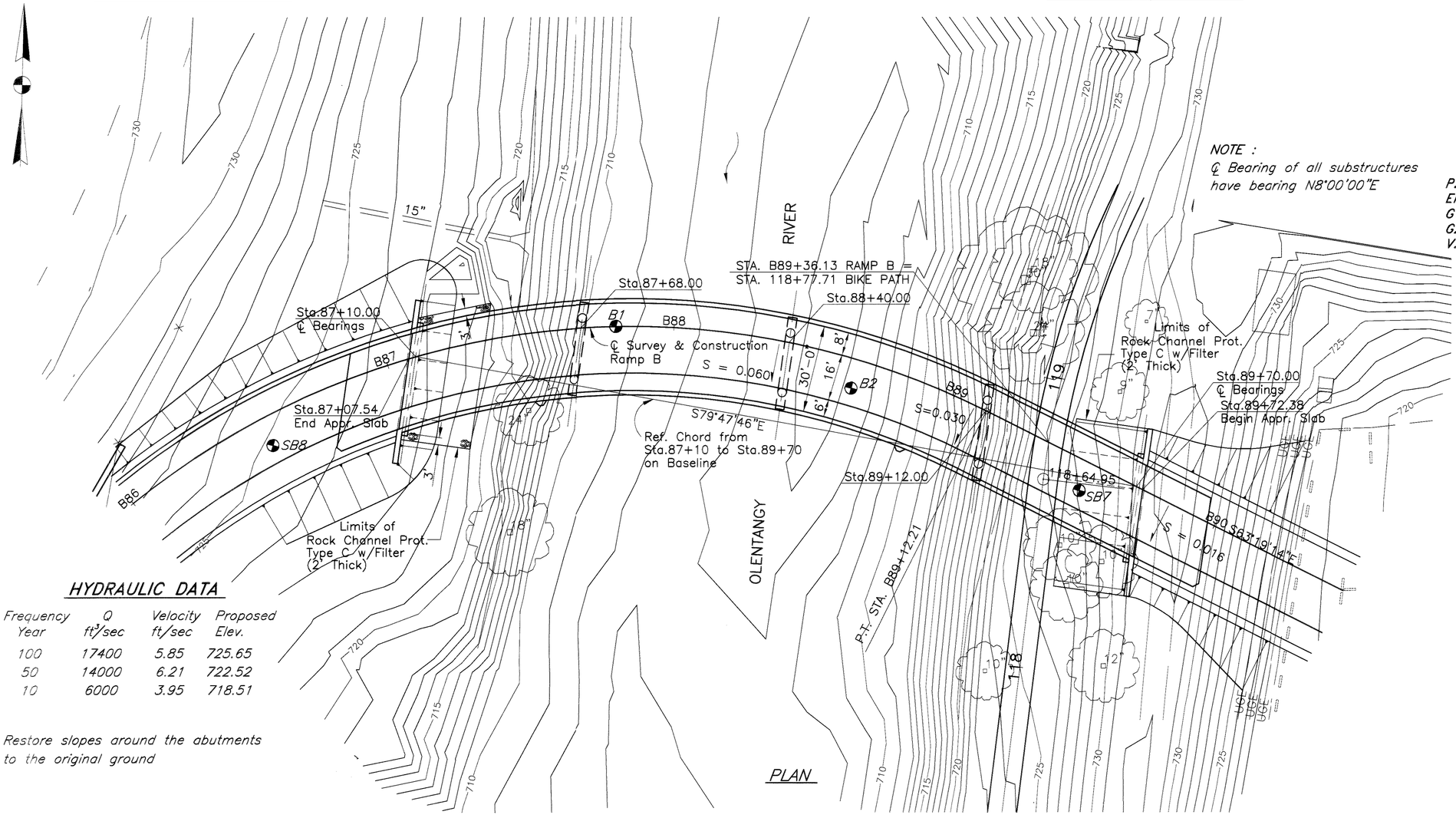

PLAN

HYDRAULIC DATA

Frequency Year	Q ft³/sec	Velocity ft/sec	Proposed Elev.
100	17400	5.85	725.65
50	14000	6.21	722.52
10	6000	3.95	718.51

Restore slopes around the abutments to the original ground

NOTE :
℄ Bearing of all substructures have bearing N8°00'00"E

HORIZONTAL CURVE DATA

3B
CURVE DATA

P.I. STA. B87+57.56
△ = 84°-44'-12"
Dc = 21°-00'
R = 272.84'
L = 403.51'
T = 248.86'

VERTICAL CURVE DATA

P.I. STA. B86+50.00
Elev.= 730.99
G1= -0.48%
G2= +1.52%
V.C.= 300'

P.I. STA. B90+00.00
Elev.= 736.31
G1= +1.52%
G2= -3.80%
V.C.= 250'

DESIGN TRAFFIC

2003	ADT	8790
2023	ADT	11710
ADTT	351	

PILE DATA

Abutments to be founded on HP10x42 steel piles driven to an ultimate bearing capacity of 90 tons per pile. Estimated pile length at the rear abutment is 32 feet and at the forward abutment is 35 feet.

EARTHWORK limits shown are approximate. Actual slopes shall conform to plan cross sections.

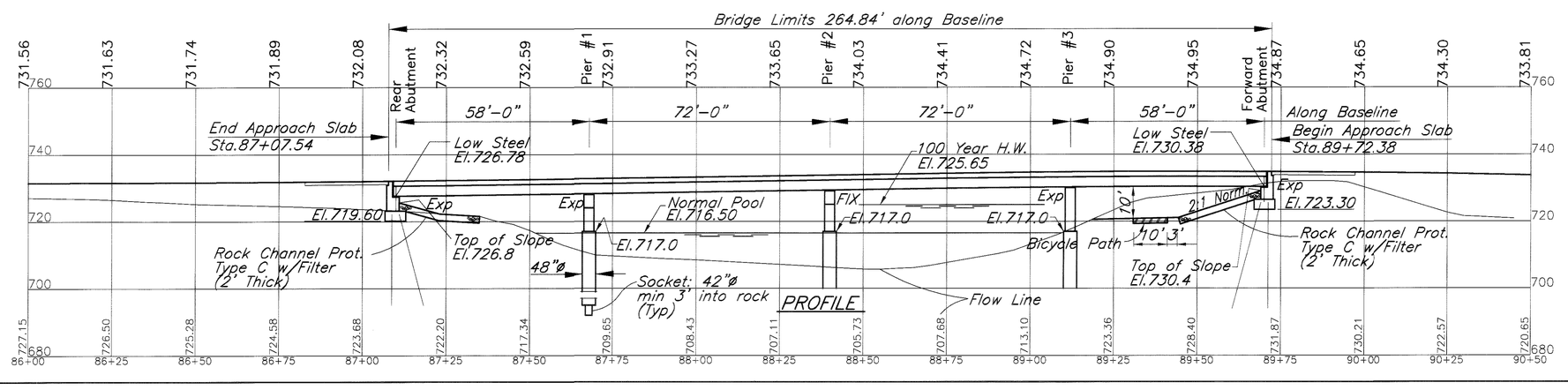

PROPOSED STRUCTURE

TYPE: Continuous Steel Beam (A572, Painted) on Reinforced Concrete Substructure

SPAN: 55'-2 1/4", 71'-8", 70'-6 1/8", 54'-11 7/8" (Along Ref. Chord)

ROADWAY: 30'-0" toe to toe of barrier

LOADING: HS25 (Case II) And The Alternate Military Loading

WEARING SURFACE: Monolithic Concrete

APPROACH SLABS: 25' Long (Special)

ALIGNMENT: 21°-0' Curve Right

SKEW: VARIES

SUPERELEVATION: Varies

LATITUDE : 39°-59'-50"

LONGITUDE : 83°-01'-30"

USGS Quadrangle: Southeast Columbus

DESIGN AGENCY
ERIKSSON ENGINEERING LTD.
1523 CHESAPEAKE AVENUE
COLUMBUS, OH 43212

DATE 5.18.02
REVIEWED
DRAWN DA
DESIGNED VK
CHECKED CE
REVISED
SFN : 2515431

Sta.87+07.54
Sta.89+72.38
FRANKLIN CO.

SITE PLAN
Bridge No. FRA-315-0354
RAMP B OVER OLENTANGY RIVER RD

FRA-315-3.04

1 / 19
209
238

Aug 2, 2002 Q:\BRIDGE\3453\OSU\RAMPB\3453Bsp1.dwg

GENERAL NOTES

THIS STRUCTURE CONFORMS TO "STANDARD SPECIFICATIONS FOR HIGHWAY BRIDGES" ADOPTED BY THE AMERICAN ASSOCIATION OF STATE HIGHWAY AND TRANSPORTATION OFFICIALS, 1996, INCLUDING THE 1997, 1998 & 1999 INTERIM SPECIFICATION AND THE ODOT BRIDGE DESIGN MANUAL.

REFERENCES

REFERENCE SHALL BE MADE TO STANDARD DRAWINGS:

AS-1-81	REV 4-20-01	SHEET NO. 1 AND 2
GSD-1-96	REV 4-20-01	
EXJ-4-87	REV 4-20-01	SHEET NO. 1, 2 & 4
BR-1	REV 1-6-99	SHEET NO. 2
BS-1-93	DATED 12-19-94	

AND TO SUPPLEMENTAL SPECIFICATIONS:

816	DATED 4-21-97
842	DATED 1-6-99
844	DATED 1-6-99
863	DATED 10-12-99
864	DATED 7-11-00
899	DATED 10-21-98

DESIGN LOADING

HS25 CASE I AND THE ALTERNATE MILITARY LOADING.
60 P.S.F. FUTURE WEARING SURFACE.

DESIGN DATA

CONCRETE -	HIGH PERFORMANCE CONCRETE 4500 PSI (SUPERSTRUCTURE)
CONCRETE CLASS C -	COMPRESSIVE STRENGTH 4000 PSI (SUBSTRUCTURE)
CONCRETE S MODIFIED	COMPRESSIVE STRENGTH 4000 PSI (DRILLED SHAFTS)
REINFORCING STEEL -	ASTM A615, A616 OR A617 GRADE 60, MINIMUM YIELD STRENGTH 60,000 PSI, SPIRAL REINFORCEMENT MAY BE PLAIN BARS ASTM A82 OR A615
STRUCTURAL STEEL -	ASTM A572, GRADE 50 - YIELD STRENGTH 50,000 PSI

DECK PROTECTION METHOD

DECK PROTECTION METHOD EPOXY COATED REINFORCING STEEL, 2 1/2" CONCRETE COVER, SEALING OF CONCRETE SURFACES AND HIGH PERFORMANCE CONCRETE

MONOLITHIC WEARING SURFACE

MONOLITHIC WEARING SURFACE IS ASSUMED FOR DESIGN PURPOSES TO BE 1".

WORK IN THE RIVER

ALL WORK IN THE RIVER SHALL BE DONE FROM BARGES. NO SOIL MATERIAL FOR CAUSEWAYS SHALL BE ALLOWED TO BE DEPOSITED IN THE RIVER.
THE ENVIRONMENTAL STATEMENT REQUIRES THAT THE BRIDGE BE BUILT FROM BARGES.

ITEM 503, UNCLASSIFIED EXCAVATION, AS PER PLAN

UNCLASSIFIED EXCAVATION SHALL BE IN ACCORDANCE WITH 503 EXCEPT THAT THE BACKFILL MATERIAL BEHIND THE ABUTMENTS SHALL BE 203 MATERIAL PLACED IN LIFTS NOT TO EXCEED A THICKNESS OF SIX (6) INCHES.

PILE DRIVING CONSTRAINTS:

PRIOR TO DRIVING PILES, THE SPILL THROUGH SLOPES AND THE BRIDGE APPROACH EMBANKMENT BEHIND THE ABUTMENTS SHALL BE CONSTRUCTED UP TO THE LEVEL OF THE SUBGRADE ELEVATION FOR A MINIMUM DISTANCE OF 200' BEHIND EACH ABUTMENT. THE EXCAVATION FOR THE ABUTMENT FOOTINGS AND THE INSTALLATION OF THE ABUTMENT PILES SHALL NOT BEGIN UNTIL AFTER THE ABOVE REQUIRED EMBANKMENT HAS BEEN CONSTRUCTED.

PILE DESIGN LOADS (ULTIMATE BEARING VALUE)

THE ULTIMATE BEARING VALUE IS 90 TONS PER PILE FOR THE REAR ABUTMENT PILES AND 90 TONS PER PILE FOR THE FORWARD ABUTMENT PILES.

REAR ABUTMENT PILES: 10HP-42
10 PILES 27 FEET LONG, ESTIMATED LENGTH
10 PILES OF ORDER LENGTH 32 FEET LONG

FORWARD ABUTMENT PILES: 10HP-42
10 PILES 32 FEET LONG, ESTIMATED LENGTH
10 PILES OF ORDER LENGTH 37 FEET LONG

DRILLED SHAFTS

THE DESIGN LOAD TO BE SUPPORTED BY EACH DRILLED SHAFT IS 245 TONS AT THE PIERS. THIS LOAD IS RESISTED BY SHAFT ADHESION WITHIN A PORTION OF THE BEDROCK SOCKET AND ALSO BY SHAFT END BEARING. THE ALLOWABLE BEDROCK SOCKET ADHESION IS 2 TONS, ASSUMED TO ACT ALONG THE BOTTOM 2 FEET OF THE BEDROCK SOCKET FOR THE PIERS. THE ALLOWABLE END BEARING PRESSURE IS 30 TONS PER SQUARE FOOT.

ITEM 864 SEALING OF CONCRETE SURFACES (EPOXY-URETHANE)

SEALING OF CONCRETE SURFACES (EPOXY-URETHANE) SHALL BE APPLIED ON A 9" WIDTH OF THE ROADWAY ALONG THE CURBLINE, TO ALL EXPOSED SURFACES OF THE CONCRETE BARRIER, FRONT TOP AND BACK SIDE, THE DECK FACIA AND A 6" WIDTH OF THE UNDERSIDE OF THE DECK.

SEALER SHALL ALSO BE APPLIED TO ALL EXPOSED SURFACES OF THE PIERS AND ABUTMENTS AND WINGWALLS TO OBTAIN A UNIFORM COLOR ON ALL CONCRETE.

THE TOP COAT OF THE EPOXY-URETHANE SEALER SHALL BE FEDERAL COLOR STANDARD NO. 17778 (LIGHT NEUTRAL).

ITEM 816 FIELD PAINTING OF NEW STEEL

THE URETHANE TOP COAT FOR THE IZEU PAINT SYSTEM SHALL BE FEDERAL COLOR STANDARD NO. 10324 (DARK NEUTRAL).

June 18, 2002 Q:\BRIDGE\3453\OSU\Rampb\3453Bgn.dwg

DESIGN AGENCY
ERIKSSON ENGINEERING LTD.
1523 CHESAPEAKE AVENUE
COLUMBUS, OH 43212

DESIGNED	DRAWN	REVIEWED	DATE
CE	DA		11.1.01
CHECKED	REVISED		
DA			

SFN : 2515431

GENERAL NOTES
BRIDGE NO FRA-315-0354
RAMP B OVER OLENTANGY RIVER

FRA-315-3.04

ESTIMATED QUANTITIES

ITEM	ITEM EXT.	TOTAL	UNIT	DESCRIPTION	ABUT.	SUPER.	PIERS	GEN.	SPECIAL INSTRUCTIONS
503	11100	LUMP		COFFERDAMS, CRIBS AND SHEETING				LUMP	
503	21301	LUMP		UNCLASSIFIED EXCAVATION, AS PER PLAN	LUMP				SEE SHEET **174**
505	11100	LUMP		PILE DRIVING EQUIPMENT MOBILIZATION				LUMP	
507	00100	847	LIN FT	STEEL PILES HP10x42, FURNISHED	847				
507	00150	737	LIN FT	STEEL PILES HP10x42, DRIVEN	737				
507	50500	11	EACH	STEEL PILE SPLICES	11				
507	93300	22	EACH	STEEL POINT (OR SHOE)	22				
516	11210	65	LIN FT	STRUCTURAL EXPANSION JOINT INCLUDING ELASTOMERIC STRIP SEAL	65				
516	43301	8	EACH	ELASTOMERIC BEARING 11"x18"x3 1/2" WITH INTERNAL LAMINATES ONLY (NEOPRENE), AS PER PLAN	8				SEE SHEET **221**
516	43201	8	EACH	ELASTOMERIC BEARING 14"x20"x2" WITH INTERNAL LAMINATES ONLY (NEOPRENE), AS PER PLAN			8		SEE SHEET **221**
516	43101	4	EACH	ELASTOMERIC BEARING 14"x20"x1 1/2" WITH INTERNAL LAMINATES ONLY (NEOPRENE), AS PER PLAN			4		SEE SHEET **221**
518	21231	LUMP		POROUS BACKFILL WITH FILTER FABRIC, AS PER PLAN	LUMP				
518	40000	118	LIN FT	6" PERFORATED CORRUGATED PLASTIC PIPE	118				
518	40010	56	LIN FT	6" NON-PERFORATED CORRUGATED PLASTIC PIPE, INCLUDING SPECIALS	56				
524	94804	18	LIN FT	DRILLED SHAFTS 42" DIAMETER, INTO BEDROCK			18		
524	94902	360	LIN FT	DRILLED SHAFTS 48" DIAMETER, ABOVE BEDROCK			360		
816	00600	LUMP		FIELD PAINTING OF NEW STEEL, INTERMEDIATE AND FINISH COAT, SYSTEM IZEU		LUMP			
842	41000	60	CU YD	CLASS C CONCRETE, PIER **ABOVE FOOTINGS**			60		CAP AND COLUMNS
842	44101	82	CU YD	CLASS C CONCRETE, ABUTMENT NOT INCLUDING FOOTING, AS PER PLAN	82				SEE SHEET **213 & 214**
842	46500	62	CU YD	CLASS C CONCRETE, FOOTING	62				
844	48001	234	CU YD	HIGH PERFORMANCE CONCRETE SUPERSTRUCTURE (DECK), AS PER PLAN		234			SEE SHEET **210 &217**
844	48020	68	CU YD	HIGH PERFORMANCE CONCRETE SUPERSTRUCTURE (PARAPET)		68			
844	49000	LUMP		HIGH PERFORMANCE CONCRETE, TRIAL MIX		LUMP			
844	49010	LUMP		HIGH PERFORMANCE CONCRETE, TESTING		LUMP			
863	10100	LUMP		STRUCTURAL STEEL MEMBERS, LEVEL FIVE FABRICATION		LUMP			
863	20000	2832	EACH	WELDED STEEL SHEAR CONNECTORS		2832			
864	10100	803	SQ YD	SEALING OF CONCRETE SURFACES (EPOXY-URETHANE)	24	600	179		
				Computed by: DA Date: 11.01.01					
				Checked by: CE Date: 11.01.01					

* SEE PROPOSAL NOTE

DESIGN AGENCY
ERIKSSON ENGINEERING LTD.
1523 CHESAPEAKE AVENUE
COLUMBUS, OH 43212

DESIGNED DA | DRAWN DA | CHECKED CE | REVISED

DATE 11.01.01

REVIEWED

SFN : 2515431

ESTIMATED QUANTITIES
BRIDGE NO. FRA-315-0354
RAMP B OVER OLENTANGY RIVER

FRA-315-3.04

3 / 19

211 / 238

June 18, 2002 Q:\BRIDGE\3453\OSU\Ramp B\3453Bgnq.dwg

PLAN

LAYOUT
OF SUBSTRUCTURES

HORIZONTAL CURVE DATA

3B
CURVE DATA

P.I. STA. B87+57.56
△ = 84°-44'-12"
Dc = 21°-00'
R = 272.84'
L = 403.51'
T = 248.86'

VERTICAL CURVE DATA

P.I. STA. B86+50.00
Elev.= 730.99
G1= -0.48%
G2= +1.52%
V.C.= 300'

P.I. STA. B90+00.00
Elev.= 736.31
G1= +1.52%
G2= -3.80%
V.C.= 250'

DESIGN AGENCY
ERIKSSON ENGINEERING LTD.
1523 CHESAPEAKE AVENUE
COLUMBUS, OH 43212

DESIGNED	DRAWN	REVIEWED	DATE
WY	DA	DA	11/01/01
CHECKED	REVISED		
DA			

SFN : 2515431

SUBSTRUCTURE LAYOUT
Bridge No. FRA-315-0354
RAMP B OVER OLENTANGY RIVER

FRA-315-3.04

4 | 19

212
238

June 18, 2002 Q:\BRIDGE\3453\OSU\RAMPB\3453Bref.dwg

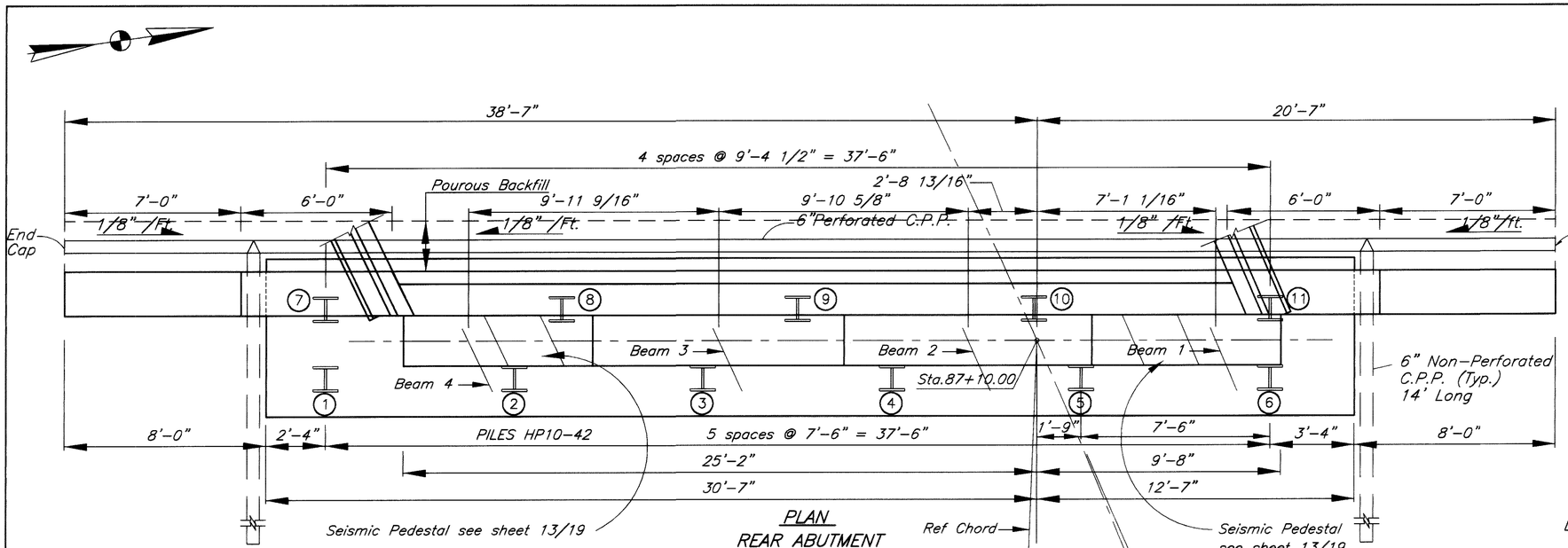

PLAN
REAR ABUTMENT

Form Liners as shown on Sections A-A and B-B shall be :
Fitzgerald Form Liner Pattern No. 16986
or Greenstreak Form Liner Pattern No. 379B
or approved equal.
Included with concrete for payment.

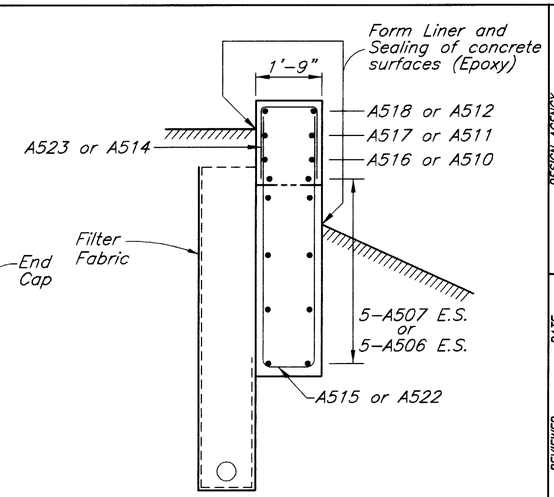

SECTION B-B

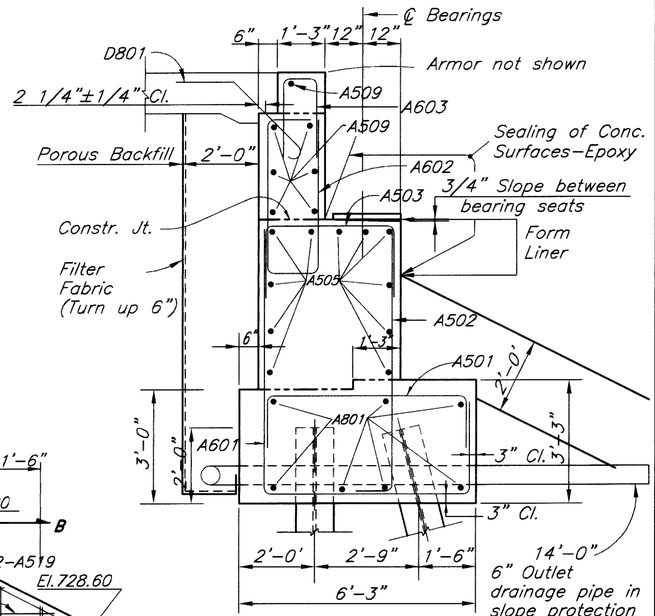

SECTION A-A

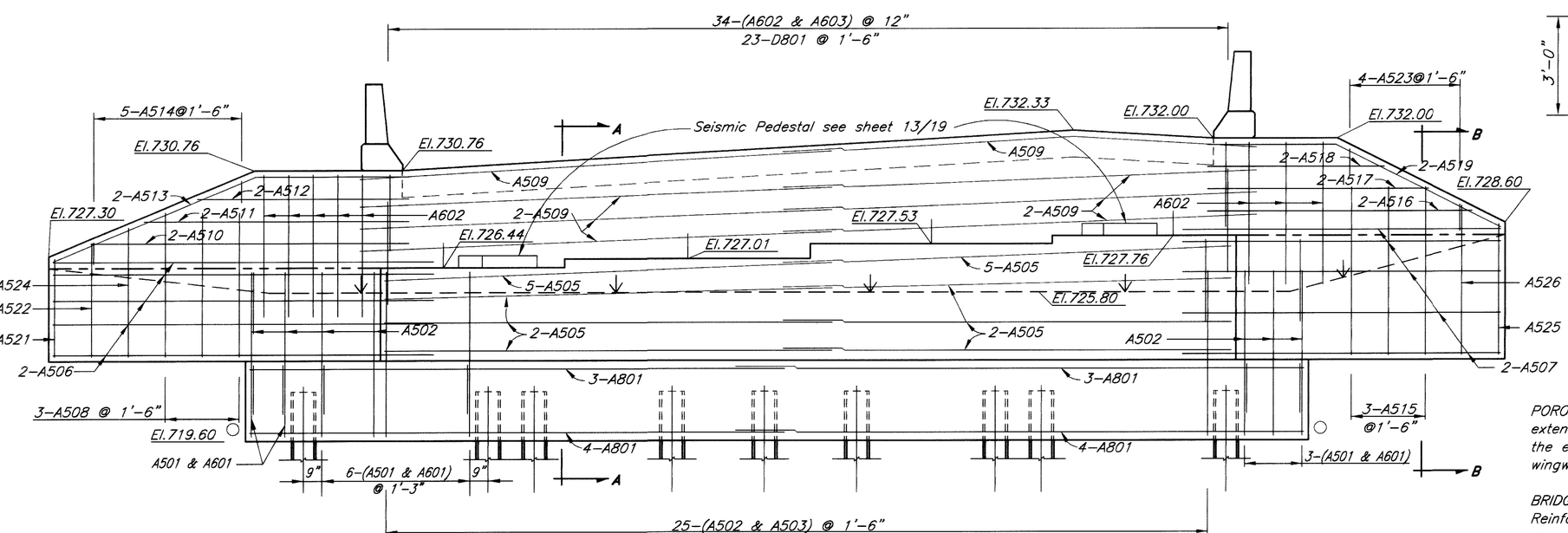

ELEVATION
REAR ABUTMENT

LAP NO. 5 BARS 2'-0" (min.)
LAP NO. 6 BARS 2'-4" (min.)
LAP NO. 8 BARS 3'-9" (min.)

POROUS BACKFILL WITH FILTER FABRIC, 2 feet thick shall extend up to the plane of the subgrade, to 1 foot below the embankment surface, and laterally to the ends of the wingwalls.

BRIDGE SEAT REINFORCING, SETTING ANCHORS:
Reinforcing steel in the vicinity of the bridge seat shall be accurately placed to avoid interference with the drilling of bearing anchor holes or the pre-setting of bearing anchors.

DESIGN AGENCY
ERIKSSON ENGINEERING LTD.
1523 CHESAPEAKE AVENUE
COLUMBUS, OH 43212

DESIGNED	DRAWN	REVIEWED	DATE
DA	DA	[illegible]	5.18.02
CHECKED	REVISED	SFN : 2515431	
CE			

REAR ABUTMENT DETAILS
Bridge No. FRA-315-0354
RAMP B OVER OLENTANGY RIVER

FRA-315-3.04

Aug 1, 2002 Q:\BRIDGE\3453\OSU\RAMPB\3453Bab1.dwg

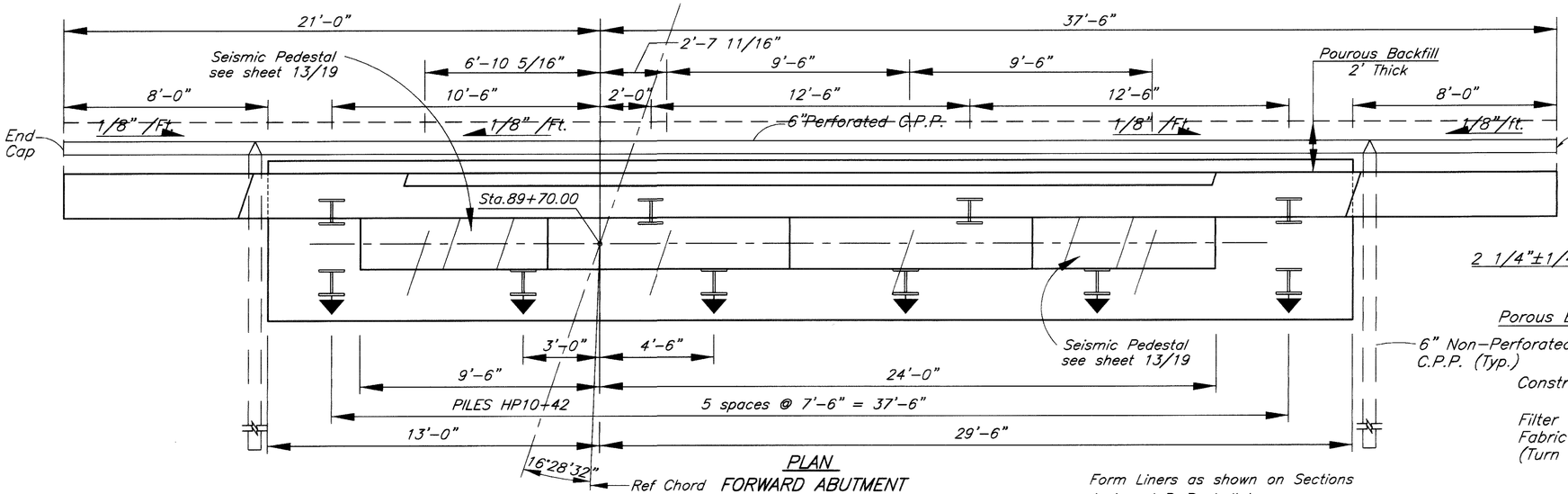

PLAN
FORWARD ABUTMENT

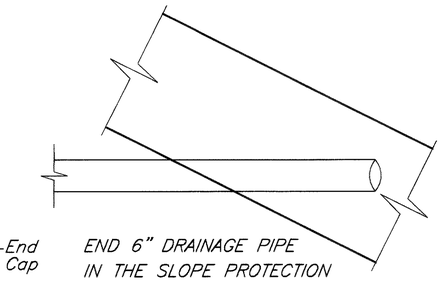

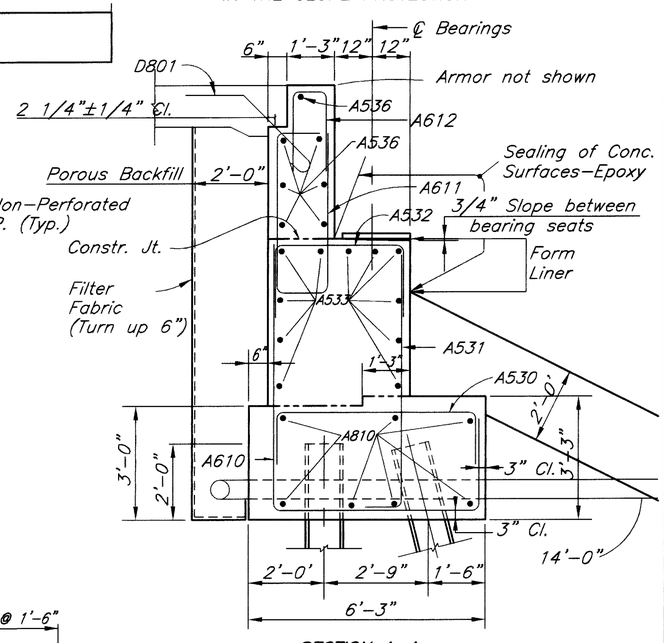

SECTION A-A

Form Liners as shown on Sections A-A and B-B shall be :
Fitzgerald Form Liner Pattern No. 16986
or Greenstreak Form Liner Pattern No. 379B
or approved equal.
Included with concrete for payment.

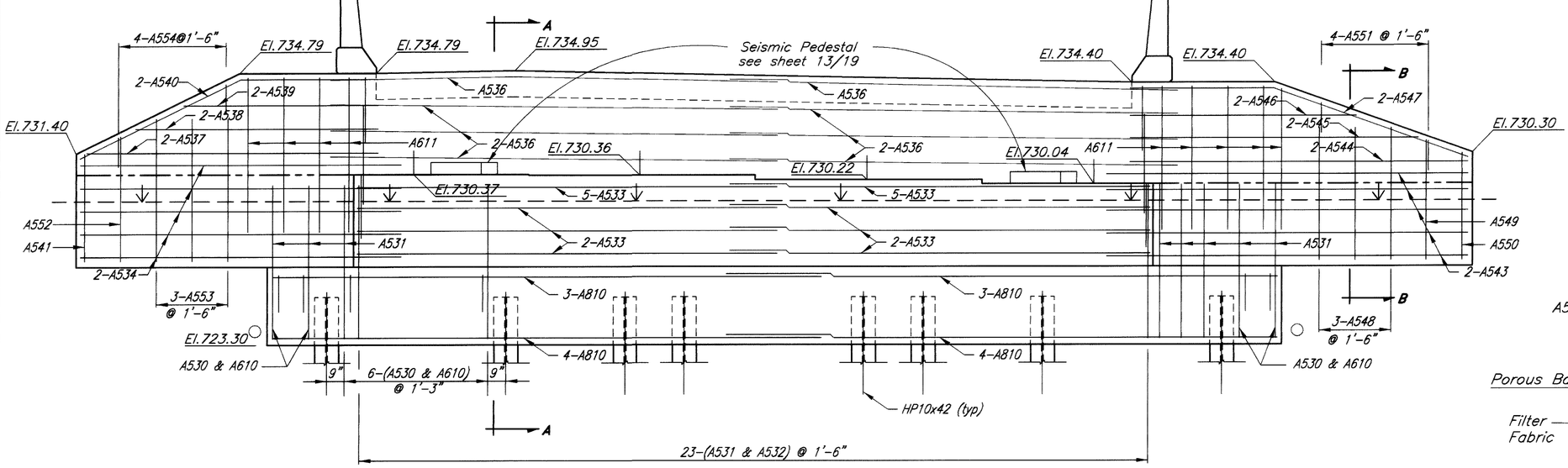

ELEVATION
FORWARD ABUTMENT

LAP NO. 5 BARS 2'-0" (min.)
LAP NO. 6 BARS 2'-4" (min.)
LAP NO. 8 BARS 3'-9" (min.)

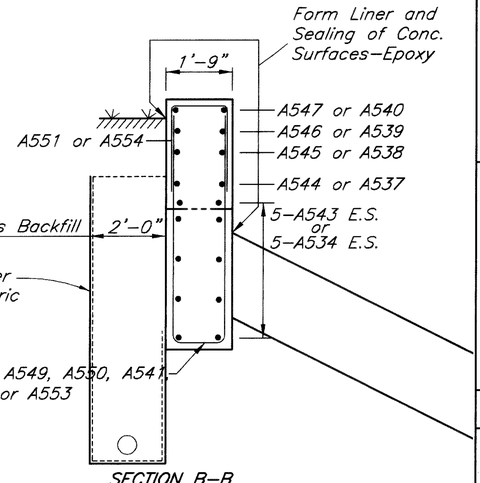

SECTION B-B

For notes on Porous Backfill with Filter Fabric and Bridge Seat Reinforcing, Setting Anchors see sheet 5/19

DESIGN AGENCY
ERIKSSON ENGINEERING LTD.
1523 CHESAPEAKE AVENUE
COLUMBUS, OH 43212

DATE 5.1.02
REVIEWED
SFN : 2515431
DRAWN DA REVISED
DESIGNED DA CHECKED CE

FORWARD ABUTMENT DETAILS
Bridge No. FRA-315-0354
RAMP B OVER OLENTANGY RIVER

FRA-315-3.04

6 / 19

214 / 238

Aug. 1, 2002 Q:\BRIDGE\3453\OSU\RAMPB\3453Bab2.dwg

BRIDGE SEAT REINFORCING, SETTING ANCHORS:
Reinforcing steel in the vicinity of the bridge seat shall be accurately placed to avoid interference with the drilling of bearing anchor holes or the pre-setting of bearing anchors.

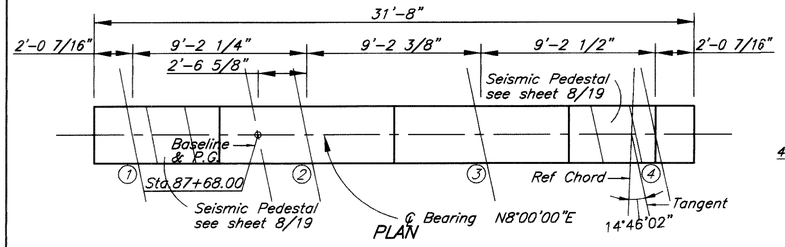

PLAN

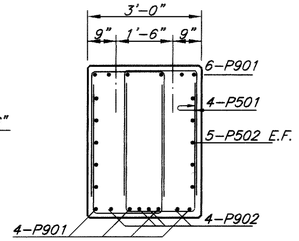

SECTION A-A

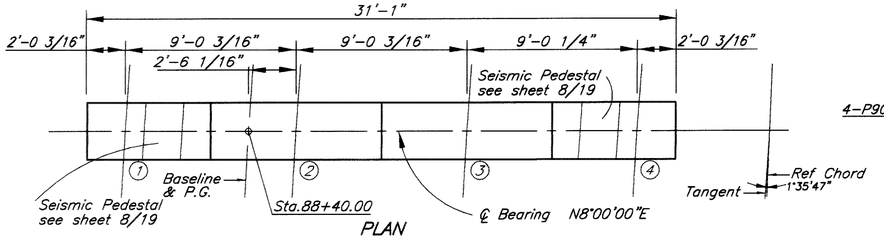

PLAN

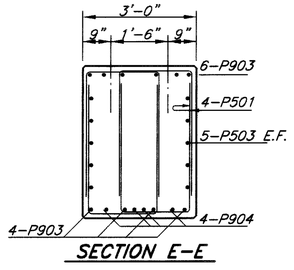

SECTION E-E

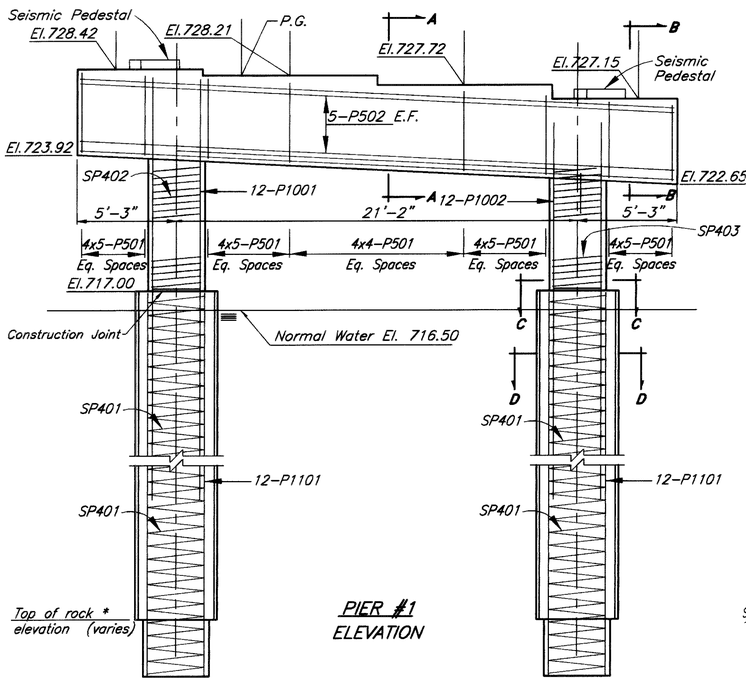

PIER #1
ELEVATION

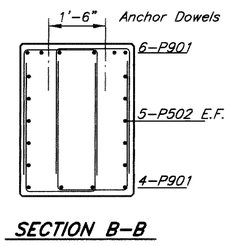

SECTION B-B

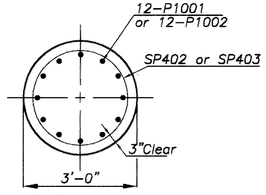

SECTION C-C

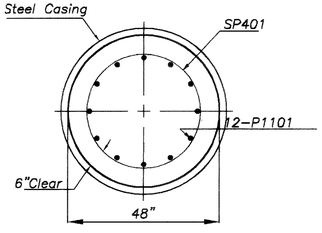

SECTION D-D

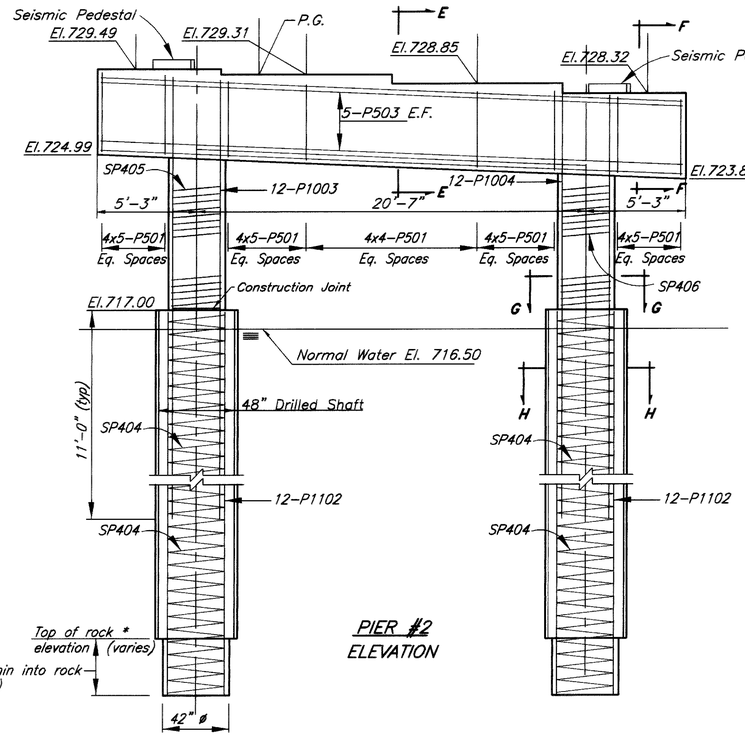

PIER #2
ELEVATION

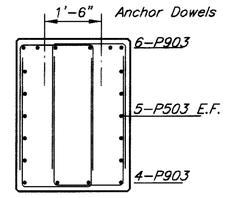

SECTION F-F

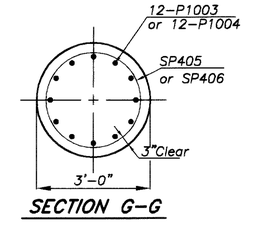

SECTION G-G

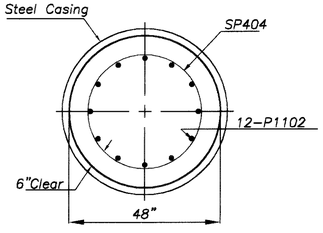

SECTION H-H

* CONTRACTOR TO ESTABLISH ROCK ELEVATION BY ROCK PROBE HOLES USING NX-ROCK CORE A MINIMUM DISTANCE OF 5 FT BELOW DRILLED SHAFTS BOTTOM (TYP).
CONTRACTOR SHALL ALSO ESTABLISH THE LENGTH OF P1101, P1102, P1103, SP401, SP404 AND SP407.

DESIGN AGENCY
ERIKSSON ENGINEERING LTD.
1523 CHESAPEAKE AVENUE
COLUMBUS, OH 43212

DESIGNED MDL
DRAWN DA
CHECKED JHN
REVISED
REVIEWED
DATE 5.1.02
SFN : 2515431

PIER NO.1 & NO.2 DETAILS
Bridge No. FRA-315-0354
RAMP B OVER OLENTANGY RIVER

FRA-315-3.04

7 / 19

215 / 238

Aug 2, 2002 Q:\BRIDGE\3453\OSU\RAMPB\3453Bp12.dwg

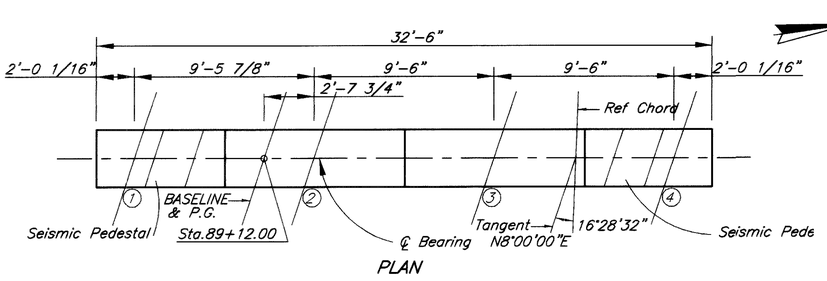

PLAN

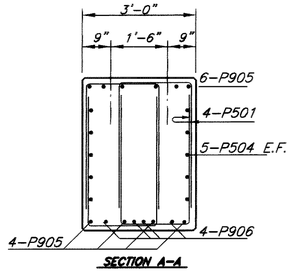

SECTION A-A

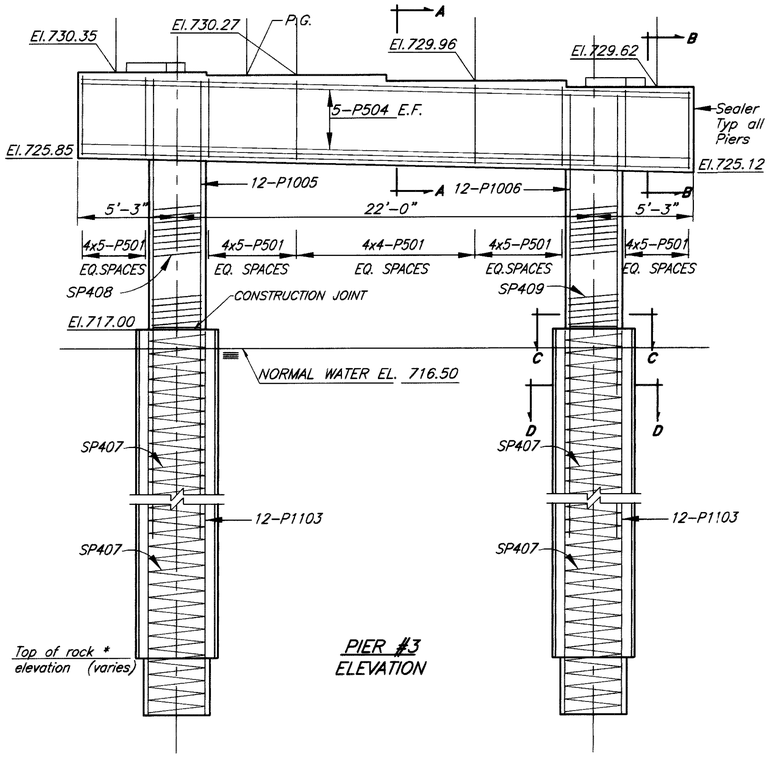

PIER #3
ELEVATION

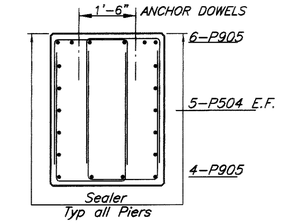

SECTION B-B

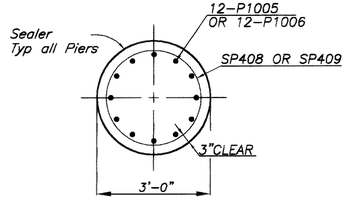

SECTION C-C

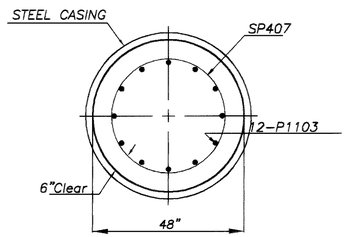

SECTION D-D

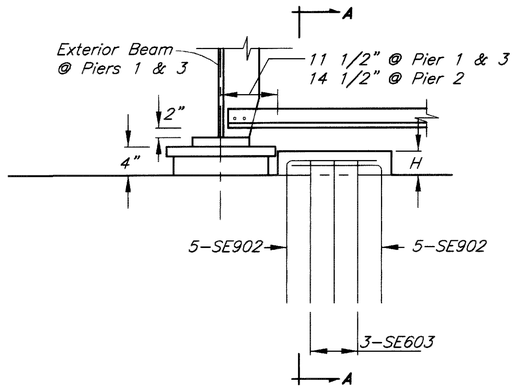

SEISMIC PEDESTALS
ON PIERS

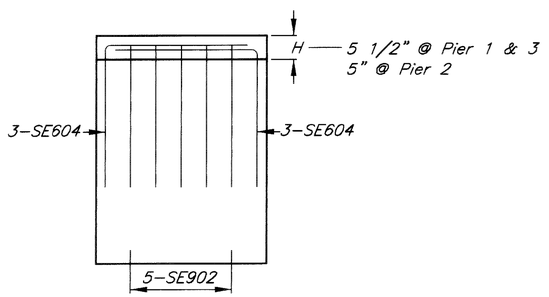

SECTION A-A

For notes on Bridge Seat Reinforcing, Setting of Anchors see sheet 7/19

Aug. 2, 2002 Q:\BRIDGE\3453\OSU\RAMPB\3453Bp3.dwg

DESIGN AGENCY
ERIKSSON ENGINEERING LTD.
1523 CHESAPEAKE AVENUE
COLUMBUS, OH 43212

REVIEWED — DATE 5.1.02
SFN : 2515431

DRAWN DA — REVISED
DESIGNED MDL — CHECKED JHN

PIER NO.3 DETAILS
Bridge No. FRA-315-0354
RAMP B OVER OLENTANGY RIVER

FRA-315-3.04

8 / 19

216
238

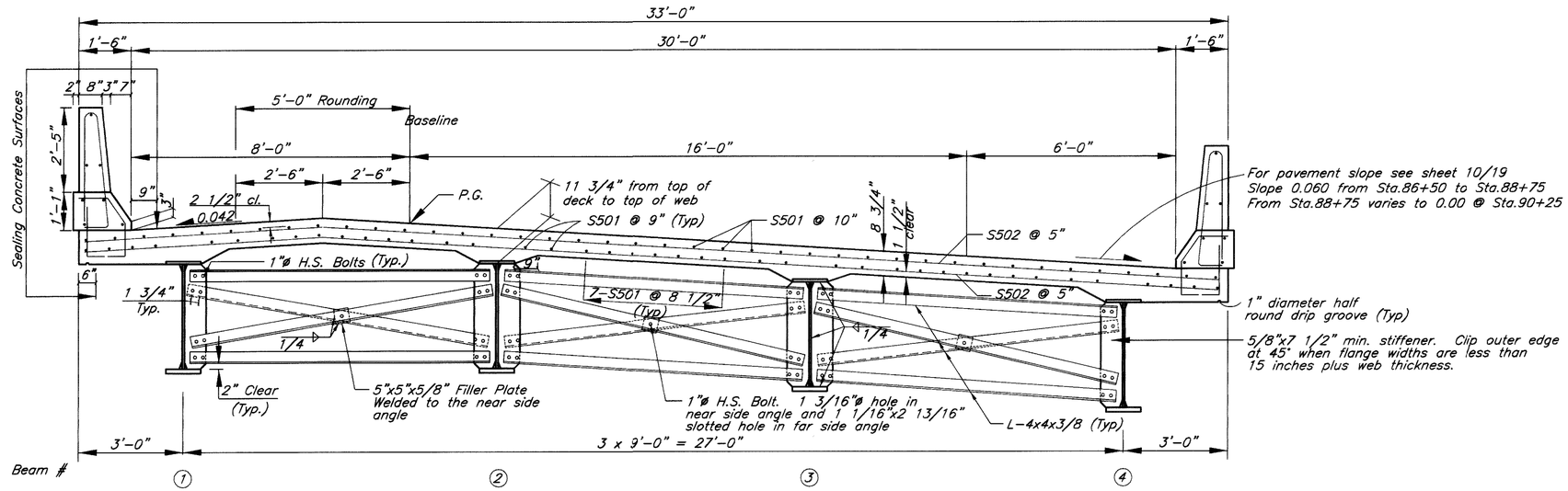

TRANSVERSE SECTION

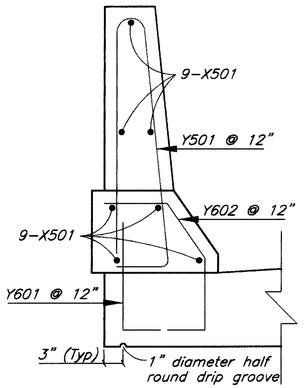

EACH PARAPET

CONTROL JOINT FOR CONCRETE PARAPETS:
shall be placed at a minimum of 6'-0" and a maximum of 10'-0" on centers. For details see notes on Std Dwg BR-1.

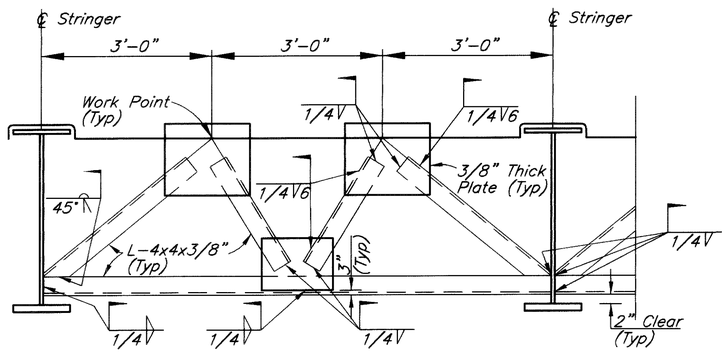

END CROSS FRAME

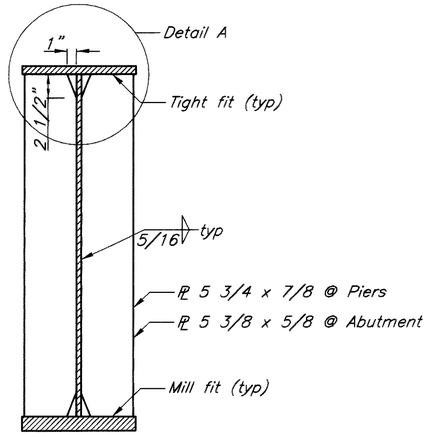

BEARING STIFFENERS

Stiffeners to which cross frames connect require fillet welds to both flanges

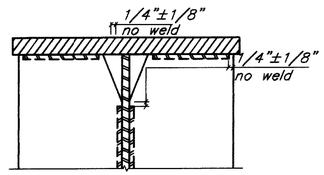

DETAIL "A" (Typ)
For Crossframes

A HAUNCH WIDTH of 9 inches shall be used. However, the haunch width may vary between 6 inches and 12 inches.

DECK SLAB DEPTH FOR CONCRETE QUANTITY :
The dimension of 8 3/4 inches shown as the thickness of the concrete slab has been used for computing the deck concrete quantities. Concrete required to fill the haunches, including additional or less material required due to haunch construction tolerances, shall be considered as incidental and will not be included in the quantity calculations for payment.

DESIGN AGENCY
ERIKSSON ENGINEERING LTD.
1523 CHESAPEAKE AVENUE
COLUMBUS, OH 43212

DESIGNED	DRAWN	REVIEWED	DATE
MDL	DA	[illegible]	5.18.02
CHECKED	REVISED	SFN : 2515431	
CE			

CROSS SECTION
Bridge No. FRA-315-0354
RAMP B OVER OLENTANGY RIVER

FRA-315-3.04

Aug 2, 2002 Q:\BRIDGE\3453\OSU\RAMPB\3453Bxs.dwg

BEAM LENGTHS & RADIUS

* A and G Do Not Include 6" for Overhang

BEAM	A*	B	C	D	E	F	G*	H	RADIUS
1	57-10 3/16	18-3	53-8 3/4	18-0 15/16	53-10 1/16	15-9 15/16	42-1 15/16	12-5 3/8	279.34
2	58-0 11/16	18-3 3/16	53-8 13/16	18-1	53-11 5/16	15-10	42-1 15/16	15-7 9/16	270.34
3	58-3 9/16	18-3 7/16	53-8 15/16	18-1 1/16	54-0 5/8	15-10	42-1 15/16	18-6 1/2	261.34
4	58-6 13/16	18-3 11/16	53-9 1/16	18-1 3/16	54-1 7/8	15-10	42-1 15/16	21-7	252.34

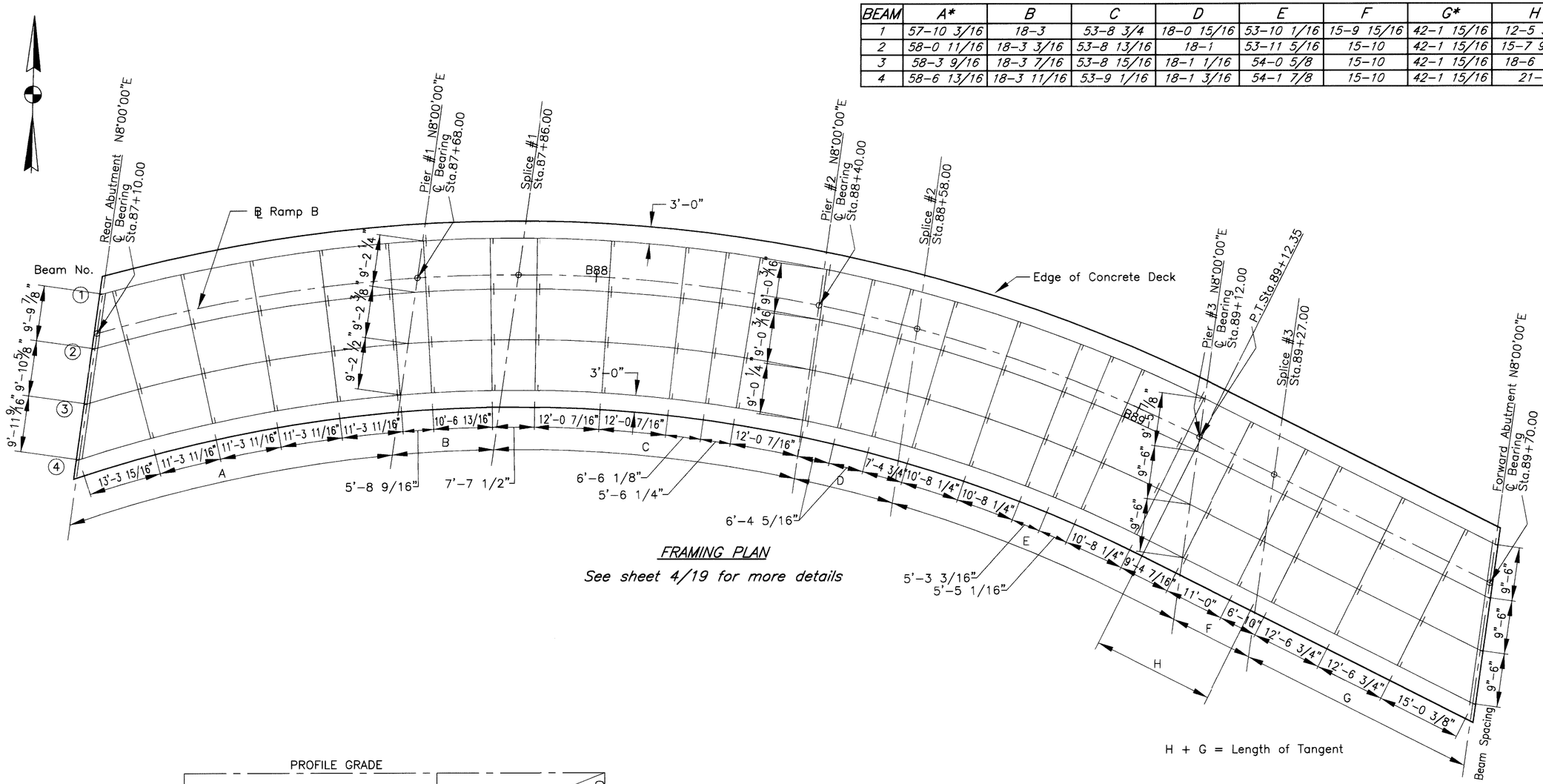

FRAMING PLAN

See sheet 4/19 for more details

H + G = Length of Tangent

For layout, reference chord and additional dimensions see sheet 4/19

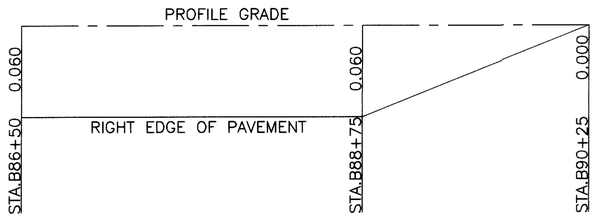

PAVEMENT TRANSITION DETAIL

June 18, 2002 Q:\BRIDGE\3453\OSU\RAMPB\3453Bfrm.dwg

DESIGN AGENCY
ERIKSSON ENGINEERING LTD.
1523 CHESAPEAKE AVENUE
COLUMBUS, OH 43212

DESIGNED WY | CHECKED DA | DRAWN DA | REVISED | REVIEWED | DATE 11.28.01

SFN : 2515431

FRAMING PLAN
Bridge No. FRA-315-0354
RAMP B OVER OLENTANGY RIVER

FRA-315-3.04

10 / 19

218 / 238

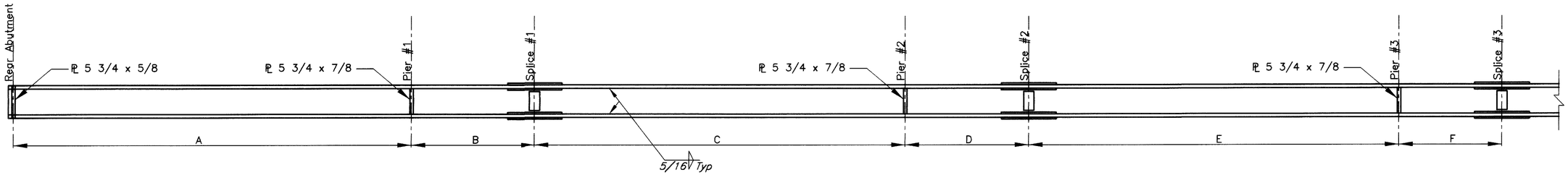

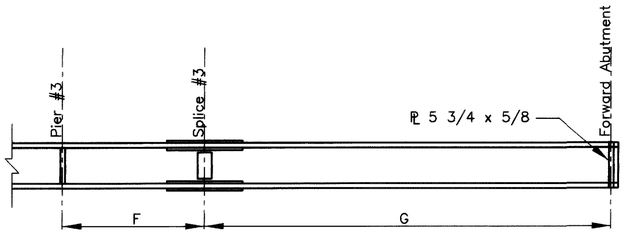

NOTE : Bearing stiffeners are required one on each side of the web

	BEAM 4	BEAM 3	BEAM 2	BEAM 1
	SPAN & LENGTH ALONG BEAMS			
SPAN 1	58-6 13/16	58-3 9/16	58-0 11/16	57-10 3/16
SPAN 2	72-0 13/16	72-0 7/16	72-0 1/16	71-11 3/4
SPAN 3	72-3 1/16	72-1 11/16	72-0 3/8	71-11
SPAN 4	57-11 15/16	57-11 15/16	57-11 15/16	57-11 15/16
	LENGTH OF : 3/8" X 36" WEB PLATE			
AB	77-5 3/16	77-1	76-9 15/16	76-7 3/16
CD	71-10 1/4	71-10 1/16	71-9 13/16	71-9 11/16
EF	69-11 7/8	69-10 5/8	69-9 5/16	69-8
G	42-8 5/16	42-8	42-8	42-7 15/16
	SIZE & LENGTH OF : TOP FLANGE PLATE			
AB	7/8 X 12 X 77-5 3/16	7/8 X 12 X 77-1	7/8 X 12 X 76-9 15/16	7/8 X 12 X 76-7 3/16
CD	7/8 X 12 X 71-10 1/4	7/8 X 12 X 71-10 1/16	7/8 X 12 X 71-9 13/16	7/8 X 12 X 71-9 11/16
EF	7/8 X 12 X 69-11 7/8	7/8 X 12 X 69-10 5/8	7/8 X 12 X 69-9 5/16	7/8 X 12 X 69-8
G	7/8 X 12 X 42-8 5/16	7/8 X 12 X 42-8	7/8 X 12 X 42-8	7/8 X 12 X 42-7 15/16
	SIZE & LENGTH OF : BOTTOM FLANGE PLATE			
AB	1 1/4 X 12 X 77-5 3/16	1 1/4 X 12 X 77-1	2 X 12 X 76-9 15/16	1 1/4 X 12 X 76-7 3/16
CD	1 3/8 X 12 X 71-10 1/4	1 3/8 X 12 X 71-10 1/16	2 X 12 X 71-9 13/16	1 3/8 X 12 X 71-9 11/16
EF	1 3/8 X 12 X 69-11 7/8	1 3/8 X 12 X 69-10 5/8	2 X 12 X 69-9 5/16	1 3/8 X 12 X 69-8
G	1 1/4 X 12 X 42-8 5/16	1 1/4 X 12 X 42-8	2 X 12 X 42-8	1 1/4 X 12 X 42-7 15/16

DESIGN AGENCY
ERIKSSON ENGINEERING LTD.
1523 CHESAPEAKE AVENUE
COLUMBUS, OH 43212

DESIGNED MDL | CHECKED CE | DRAWN DA | REVISED | REVIEWED | DATE 5/8/02

SFN : 2515431

GIRDER DETAILS
Bridge No. FRA-315-0354
RAMP B OVER OLENTANGY RIVER

FRA-315-3.04

Aug 2, 2002 Q:\BRIDGE\3453\OSU\RAMPB\3453Bdet.dwg

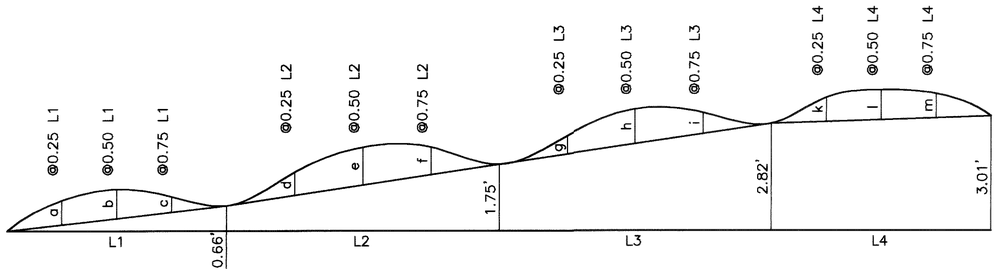

CAMBER DIAGRAM

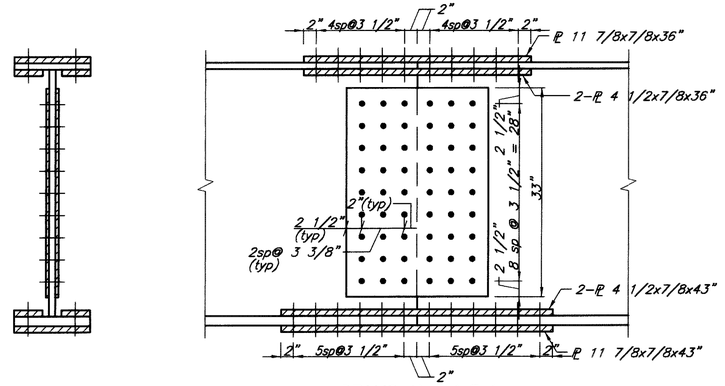

BEAMS No. 1.3.4

Splices No. 1 & 3 requires 1/8" fill plate at the bottom flange
All bolts are 7/8 High Strength

Girder 1	a	b	c	d	e	f	g	h	j	k	l	m
Defl. from Steel	0.005	0.006	0.003	0.003	0.006	0.003	0.004	0.007	0.004	0.002	0.004	0.003
Defl. from remaining DL	0.031	0.037	0.017	0.022	0.040	0.022	0.023	0.041	0.024	0.011	0.025	0.022
Adjustment for vert. & horiz. curves	−0.017	−0.025	−0.013	−0.010	−0.010	−0.010	0.058	0.115	0.092	0.058	0.075	0.053
Required Shop Camber	0.018	0.017	0.007	0.016	0.036	0.015	0.084	0.163	0.120	0.071	0.104	0.078

Girder 2	a	b	c	d	e	f	g	h	j	k	l	m
Defl. from Steel	0.005	0.005	0.003	0.003	0.006	0.003	0.004	0.007	0.004	0.002	0.004	0.004
Defl. from remaining DL	0.029	0.034	0.016	0.023	0.041	0.023	0.023	0.041	0.023	0.013	0.028	0.024
Adjustment for vert. & horiz. curves	−0.023	−0.025	−0.017	−0.018	−0.015	−0.012	0.033	0.055	0.067	0.070	0.090	0.060
Required Shop Camber	0.011	0.014	0.001	0.009	0.032	0.014	0.059	0.102	0.095	0.085	0.123	0.088

Girder 3	a	b	c	d	e	f	g	h	j	k	l	m
Defl. from Steel	0.005	0.006	0.003	0.004	0.006	0.003	0.004	0.007	0.004	0.002	0.004	0.004
Defl. from remaining DL	0.033	0.038	0.017	0.026	0.045	0.025	0.024	0.043	0.024	0.014	0.032	0.027
Adjustment for vert. & horiz. curves	−0.017	−0.035	−0.023	−0.025	−0.020	−0.015	0.002	0.015	0.048	0.067	0.085	0.063
Required Shop Camber	0.020	0.009	−0.003	0.004	0.032	0.014	0.030	0.065	0.075	0.084	0.121	0.093

Girder 4	a	b	c	d	e	f	g	h	j	k	l	m
Defl. from Steel	0.005	0.006	0.003	0.004	0.006	0.003	0.004	0.006	0.003	0.002	0.004	0.004
Defl. from remaining DL	0.034	0.040	0.018	0.025	0.045	0.025	0.024	0.042	0.023	0.015	0.032	0.027
Adjustment for vert. & horiz. curves	−0.020	−0.030	−0.020	−0.025	−0.020	−0.015	−0.032	−0.035	0.033	0.065	0.090	0.065
Required Shop Camber	0.019	0.016	0.001	0.004	0.031	0.014	−0.005	0.013	0.059	0.082	0.126	0.095

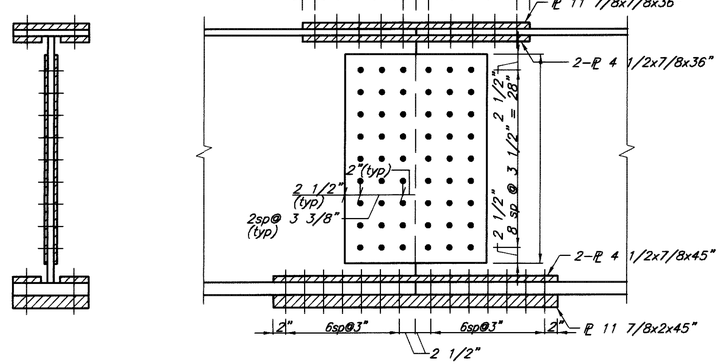

BEAM No. 2

DESIGN AGENCY
ERIKSSON ENGINEERING LTD.
1523 CHESAPEAKE AVENUE
COLUMBUS, OH 43212

DESIGNED MDL | DRAWN DA | REVIEWED [illegible] | DATE 11.25.01

CHECKED CE | REVISED

SFN : 2515431

GIRDER DETAILS
BRIDGE NO. FRA-315-0354
RAMP B OVER OLENTANGY RIVER

FRA-315-3.04

12 | 19

220
238

June 18, 2002 Q:\BRIDGE\3453\OSU\Ramp B\3453Btbl.dwg

LOAD PLATE: THE STEEL LOAD PLATE SHALL BE THE SAME MATERIAL AS THE ATTACHED STRUCTURAL STEEL AND BE SIMILARLY CLEANED AND COATED. SURFACE PREPARATION AND PRIMING SHALL BE DONE IN THE SHOP AND BE INCLUDED IN THE PRICE BID FOR THE BEARINGS. FIELD COATS SHALL BE INCLUDED IN THE PRICE BID FOR PAINTING MAIN STRUCTURAL STEEL.

THE STEEL LOAD PLATE SHALL BE BONDED BY VULCANIZATION TO THE ELASTOMER DURING THE MOLDING PROCESS.

WELDING OF THE LOAD PLATE TO THE SUPERSTRUCTURE SHALL BE CONTROLLED SO THAT THE PLATE TEMPERATURE AT THE ELASTOMER BONDED SURFACE SHALL NOT EXCEED 300°F AS DETERMINED BY THE USE OF PYROMETRIC STICKS OR OTHER TEMPERATURE MONITORING DEVICES.

BASIS OF PAYMENT: THE UNIT BID PRICE SHALL INCLUDE ALL MATERIALS, LABOR AND INCIDENTALS NECESSARY TO FINISH AND INSTALL LAMINATED ELASTOMERIC BEARINGS, EITHER FIXED OR EXPANSION. PAYMENT WILL BE MADE AT THE CONTRACT PRICE FOR ITEM 516, EACH, LAMINATED ELASTOMERIC BEARINGS.

ELASTOMERIC BEARINGS: ELASTOMERIC BEARINGS SHALL COMPLY WITH ITEM 516 AND AASHTO STANDARD SPECIFICATION FOR HIGHWAY BRIDGES, SECTION 18, BEARING DEVICES, DIVISION II, CONSTRUCTION, ARTICLES 18.4.5.1 AND 18.5.6.2. BEARINGS SHALL BE GRADE 3, 50 DUROMETER ELASTOMER, AND SHALL BE SUBJECTED TO THE LOAD TESTING REQUIREMENTS DEFINED IN ARTICLE 18.7.4.5 OF THE AASHTO DOCUMENT LISTED ABOVE. BEARINGS WERE DESIGNED UNDER SECTION 14.6.5 OF SECTION 14, BEARINGS, DIVISION I, DESIGN. TESTING SHALL BE INCLUDED IN THE UNIT PRICE BID FOR THE BEARINGS, EACH.

LAMINATED ELASTOMERIC BEARINGS										ROTATION RADIANS	
LOCATION	DIMENSIONS (inches)					N	STEEL LOAD PLATE	REACTIONS		MAX. DESIGN LOAD	ACTUAL	ALLOWED
	W	L	t_i	t_e	T			LL	DL			
Abutment Expansion Bearings	18	11	0.484	0.346	4 1/4	5	1 1/2"x12"x19"	79 k	48 k	127 k	0.0100	0.0799
Pier Expansion Bearings	20	14	0.40	0.25	4	4	2"x15"x21"	106 k	156 k	262 k	0.0100	0.0206
Pier Fixed Bearings	20	14	0.39	0.248	3 1/2	3	2"x15"x27"	110 k	158 k	268 k	0.0100	0.0116

t_i = Thickness of Internal Layer
t_e = Thickness of External Layer
T = Total Thickness of Elastomeric Bearing
N = No. of Steel Laminates
Internal Steel Laminate Thickness = 0.0747 inch

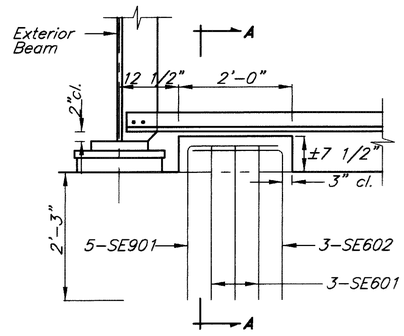

SEISMIC PEDESTAL
ON ABUTMENTS

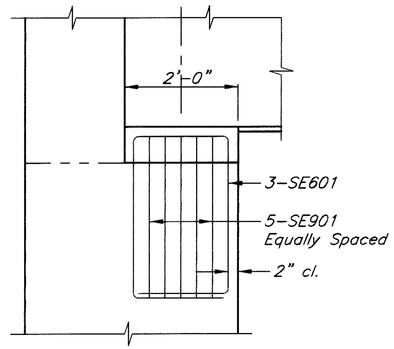

SECTION A–A

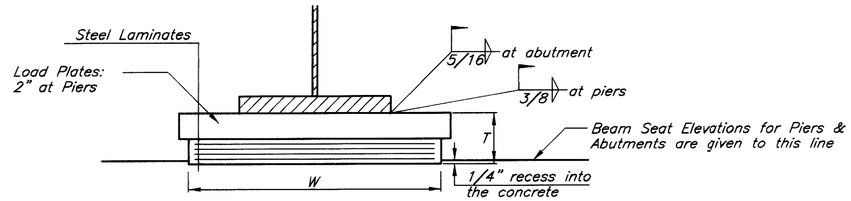

LAMINATE ELASTOMERIC
EXPANSION BEARING
PIER

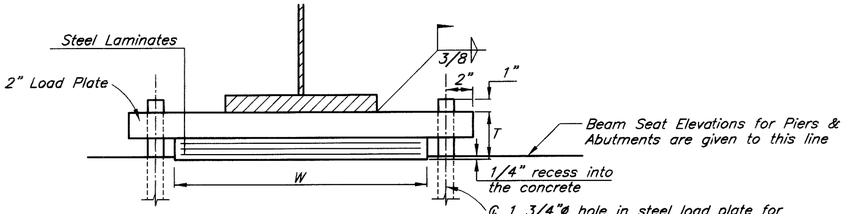

LAMINATE ELASTOMERIC
FIXED BEARING

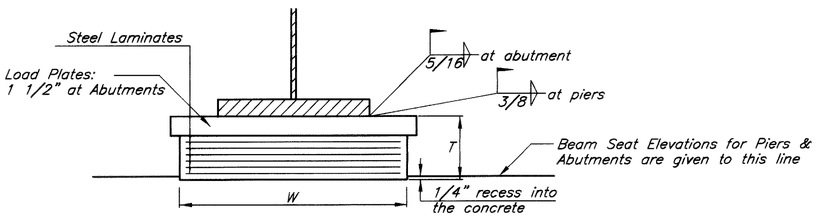

LAMINATE ELASTOMERIC
EXPANSION BEARING
ABUTMENT

DESIGN AGENCY
ERIKSSON ENGINEERING LTD.
1523 CHESAPEAKE AVENUE
COLUMBUS, OH 43212

REVIEWED MDL DATE 5.7.02
SFN : 2515431

DRAWN DA REVISED
DESIGNED MDL CHECKED CE

SUPERSTRUCTURE DETAILS - BEARINGS
BRIDGE NO FRA-315-0354
RAMP B OVER OLENTANGY RIVER

FRA-315-3.04

13 | 19

221
238

Aug. 2, 2002 Q:\BRIDGE\3453\OSU\RampB\3453Bbxdt.dwg

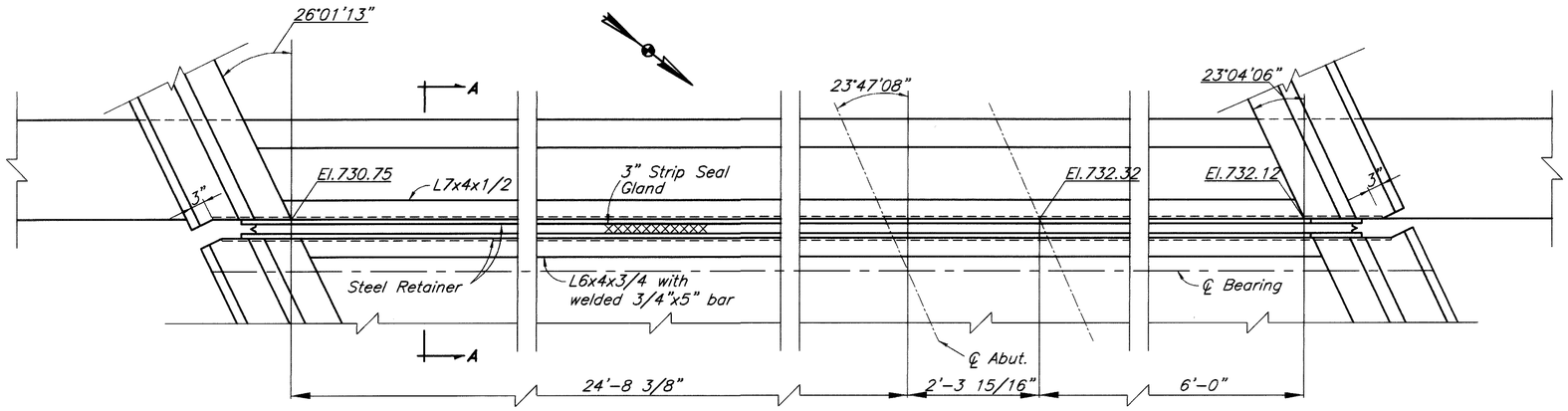

END DAM – REAR ABUTMENT

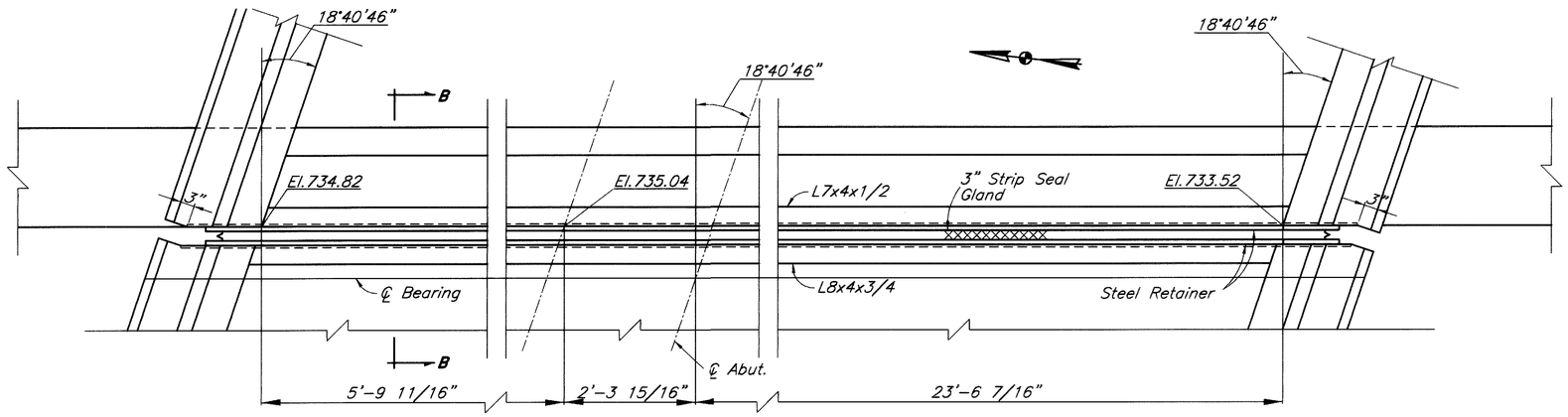

END DAM – FORWARD ABUTMENT

Temperature	Dim "A" (in.)
30°F	1.9
40°F	1.8
50°F	1.7
60°F	1.6
70°F	1.5
80°F	1.4
90°F	1.3

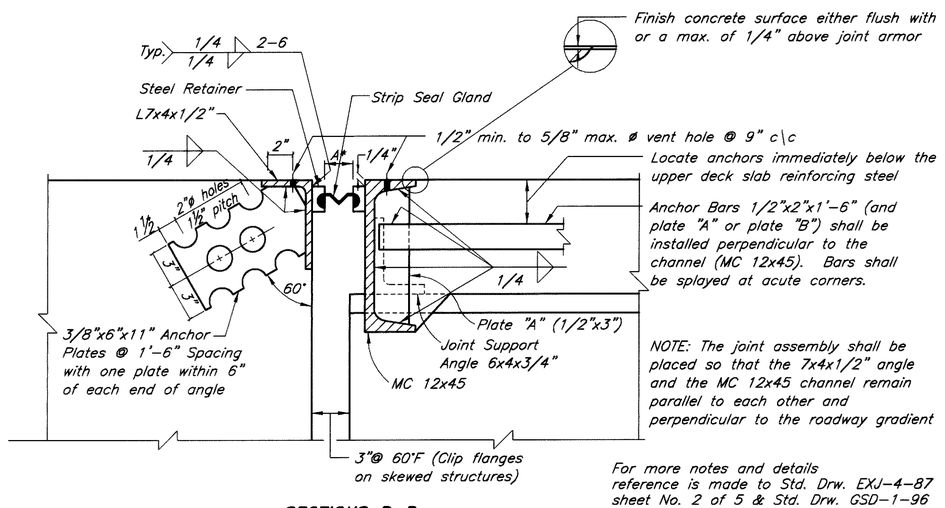

For more notes and details reference is made to Std. Drw. EXJ-4-87 sheet No. 2 of 5 & Std. Drw. GSD-1-96

SECTIONS B-B

DESIGN AGENCY
ERIKSSON ENGINEERING LTD.
1523 CHESAPEAKE AVENUE
COLUMBUS, OH 43212

DESIGNED	DRAWN	REVIEWED	DATE
VK	DA		1/28/01
CHECKED	REVISED		
DA			

SFN : 2515431

END DAM DETAILS

Bridge No. FRA-315-0354
RAMP B OVER OLENTANGY RIVER

FRA-315-3.04

14 | 19

222
238

June 18, 2002 Q:\BRIDGE\3453\OSU\RampB\3453bedd.dwg

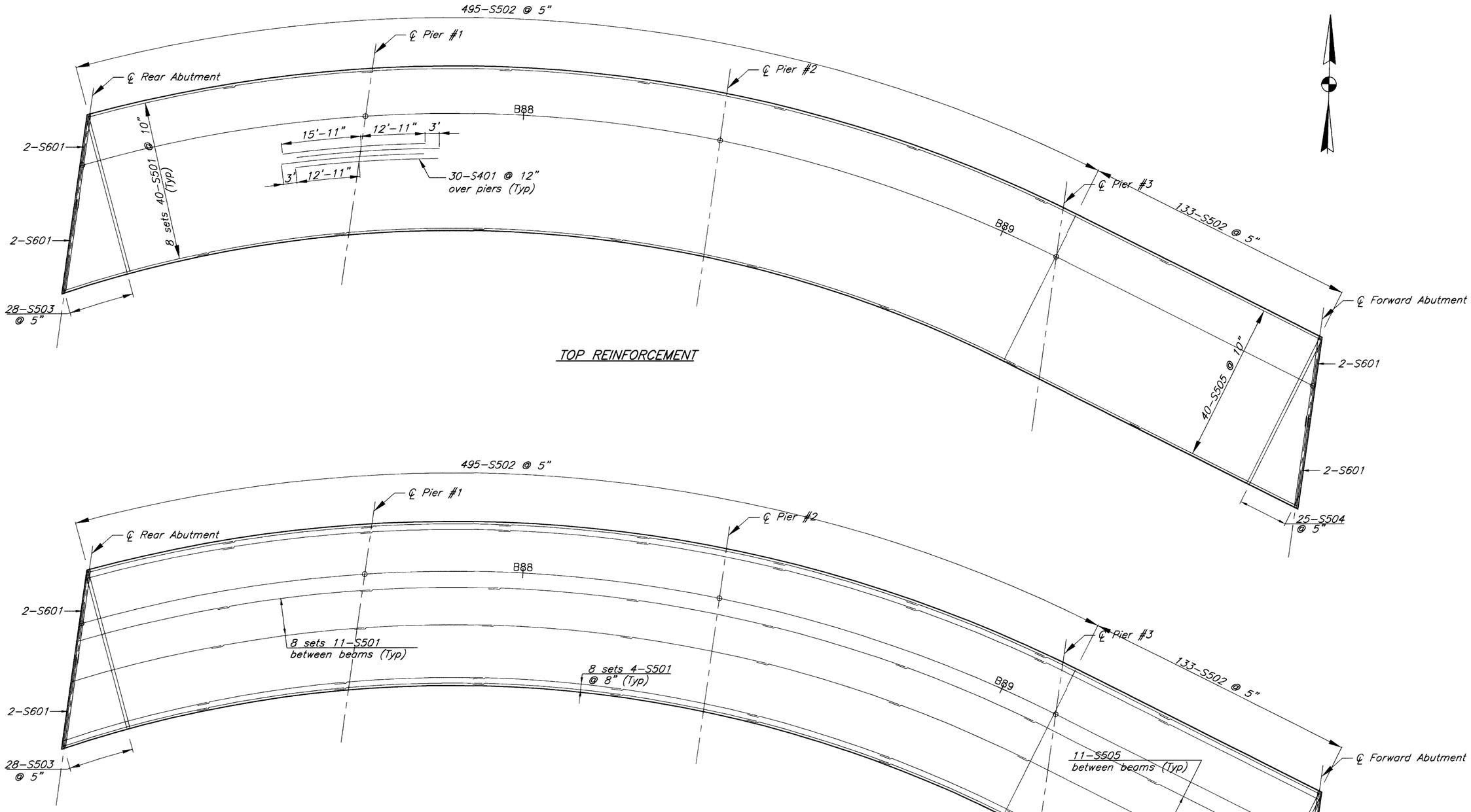

TOP REINFORCEMENT

BOTTOM REINFORCEMENT

NOTE: Parapet details and reinforcing are shown on sheet 9/19. See also Std Dwg BR–1

DESIGN AGENCY
ERIKSSON ENGINEERING LTD.
1523 CHESAPEAKE AVENUE
COLUMBUS, OH 43212

DESIGNED	DRAWN	REVIEWED	DATE
MDL	DA		11.2.01
CHECKED	REVISED		
DA			

SFN : 2515431

DECK PLAN
Bridge No. FRA–315–0354
RAMP B OVER OLENTANGY RIVER

FRA–315–3.04

15 | 19

223
238

June 18, 2002 Q:\BRIDGE\3453\OSU\RAMPB\3453Bar1.dwg

PROPOSED GIRDER SCREED ELEVATIONS

Beam #	Location	℄ Brng R.A.	1/4 Point	1/2 Point	3/4 Point	℄ Pier 1	℄ Splice 1	1/2 Point	3/4 Point	℄ Pier 2	℄ Splice 2	1/2 Point	3/4 Point	℄ Pier 3	℄ Splice 3
1	Station	87+12.79	87+26.92	87+41.05	87+55.18	87+69.30	87+86.87	88+04.45	88+22.03	88+39.61	88+57.19	88+74.74	88+92.30	89+09.86	89+24.80
	Final Top Deck El.	732.31	732.45	732.60	732.77	732.95	733.19	733.45	733.72	733.98	734.25	734.52	734.71	734.83	734.88
	Camber	0.00	0.01	0.01	0.00	0.00	0.01	0.03	0.01	0.00	0.08	0.16	0.12	0.00	0.07
	Deck Screed El.	732.31	732.46	732.61	732.77	732.95	733.20	733.48	733.73	733.98	734.33	734.68	734.83	734.83	734.95
2	Station	87+08.89	87+23.54	87+38.18	87+52.83	87+67.48	87+85.65	88+03.81	88+21.98	88+40.16	88+58.32	88+76.50	88+94.68	89+12.85	89+27.85
	Final Top Deck El.	732.01	732.15	732.31	732.48	732.66	732.91	733.18	733.45	733.73	734.01	734.42	734.54	734.72	734.82
	Camber	0.00	0.01	0.01	0.00	0.00	0.01	0.03	0.01	0.00	0.06	0.10	0.09	0.00	0.08
	Deck Screed El.	732.01	732.16	732.32	732.48	732.66	732.92	733.21	733.46	733.73	734.07	734.52	734.63	734.72	734.90
3	Station	87+04.69	87+19.90	87+35.11	87+50.32	87+65.53	87+84.35	88+03.13	88+21.93	88+40.74	88+59.54	88+78.39	88+97.22	89+15.89	89+30.89
	Final Top Deck El.	731.43	731.58	731.73	731.91	732.10	732.35	732.63	732.91	733.20	733.49	733.78	734.11	734.35	734.49
	Camber	0.00	0.02	0.00	−0.01	0.00	0.00	0.03	0.01	0.00	0.03	0.06	0.07	0.00	0.08
	Deck Screed El.	731.43	731.60	731.73	731.90	732.10	732.35	732.66	732.92	733.20	733.52	733.84	734.18	734.35	734.57
4	Station	87+00.15	87+15.97	87+31.79	87+47.62	87+63.44	87+82.95	88+02.40	88+21.88	88+41.36	88+60.84	88+80.42	88+99.95	89+18.93	89+33.93
	Final Top Deck El.	730.86	731.00	731.16	731.34	731.53	731.79	732.08	732.37	732.67	732.97	733.30	733.70	734.01	734.20
	Camber	0.00	0.01	0.01	0.00	0.00	0.00	0.03	0.01	0.00	−0.01	0.01	0.06	0.00	0.08
	Deck Screed El.	730.86	731.01	731.17	731.34	731.53	731.79	732.11	732.38	732.67	732.96	733.31	733.76	734.01	734.28

Beam #	Location	1/2 Point	3/4 Point	℄ Brng F.A.
1	Station	89+39.07	89+53.70	89+67.80
	Final Top Deck El.	734.89	734.86	734.79
	Camber	0.10	0.08	0.00
	Deck Screed El.	734.99	734.94	734.79
2	Station	89+42.11	89+56.74	89+70.85
	Final Top Deck El.	734.87	734.87	734.83
	Camber	0.12	0.08	0.00
	Deck Screed El.	734.99	734.95	734.83
3	Station	89+45.15	89+59.78	89+73.89
	Final Top Deck El.	734.59	734.64	734.64
	Camber	0.12	0.09	0.00
	Deck Screed El.	734.71	734.73	734.64
4	Station	89+48.19	89+62.83	89+76.93
	Final Top Deck El.	734.32	734.41	734.46
	Camber	0.12	0.09	0.00
	Deck Screed El.	734.44	734.50	734.46

SCREED ELEVATIONS : shown are for the deck slab surface prior to concrete placement. Allowance has been made for anticipated calculated dead load deflections.

DESIGN AGENCY
ERIKSSON ENGINEERING LTD.
1523 CHESAPEAKE AVENUE
COLUMBUS, OH 43212

DESIGNED MDL | DRAWN DA | CHECKED DA | REVISED | REVIEWED | DATE 11.2.01

SFN : 2515431

SCREED ELEVATIONS
Bridge No. FRA-315-0354
RAMP B OVER OLENTANGY RIVER

FRA-315-3.04

June 18, 2002. Q:\BRIDGE\3453\OSU\RAMPB\3453bse1.dwg

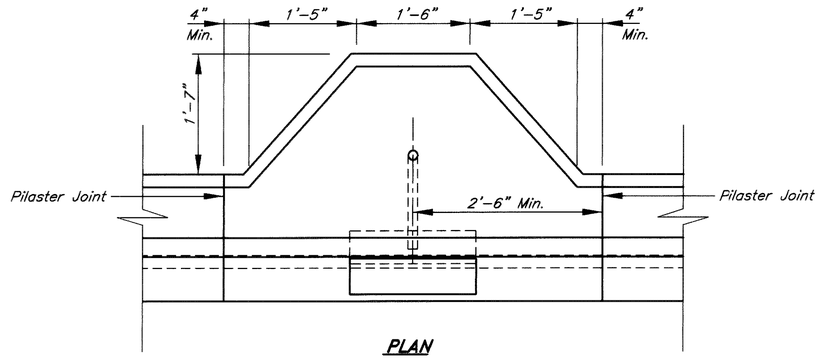

PLAN

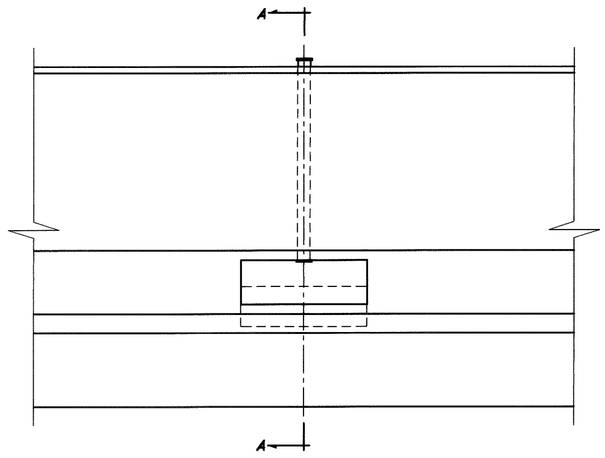

ELEVATION

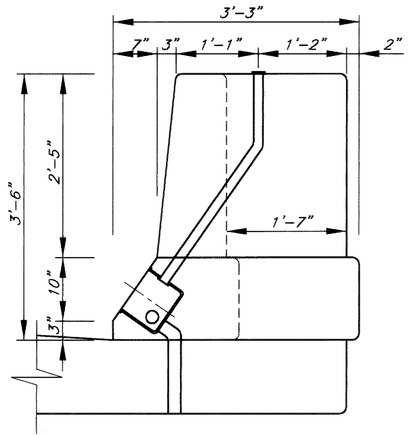

SECTION A-A

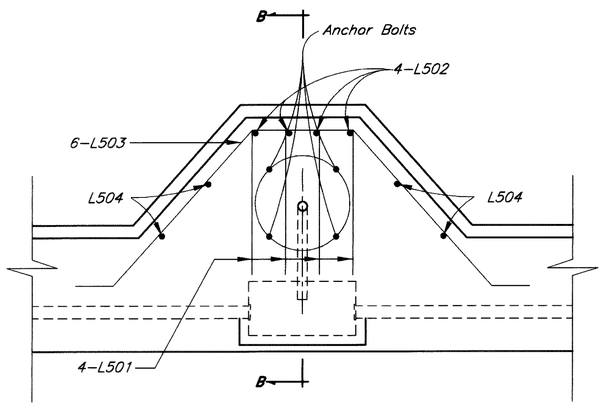

PLAN

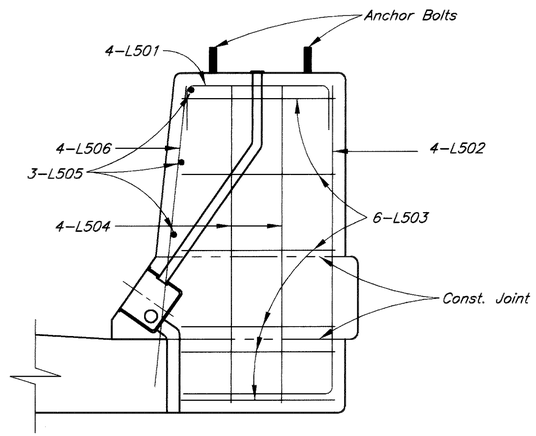

SECTION B-B

DESIGN AGENCY
ERIKSSON ENGINEERING LTD.
1523 CHESAPEAKE AVENUE
COLUMBUS, OH 43212

DESIGNED DA
DRAWN GM
CHECKED CE
REVISED
REVIEWED
DATE 11.22.01

SFN : 2515431

STRUCTURE LIGHTING
Bridge No. FRA-315-0354
RAMP B OVER OLENTANGY RIVER

FRA-315-3.04

June 18, 2002 Q:\BRIDGE\3453\OSU\RAMPB\3453lgt.dwg

REINFORCING STEEL LIST

MARK	NO.	LENGTH	WEIGHT	TYPE	A	B	C	D	REMARKS
			REAR ABUTMENT						
A501	35	9–1	332	2	5–4	2–0	2–0		
A502	32	6–2	206	1	0–7.5	6–7			
A503	25	8–2	213	2	3–5	3–5	3–5		
A505	22	18–6	425	STR					
A506	10	15–6	162	STR					
A507	10	13–0	136	STR					
A508	3	12–11	40	2	1–5	5–10	5–10		
A509	14	19–6	285	STR					
A510	2	13–0	27	STR					
A511	2	10–10	23	STR					
A512	2	8–8	18	STR					
A513	2	15–2	32	3	8–11	6–3	2–5		
A514	5	3–0	16	2	1–5	0–11	0–11		
A515	3	14–10	46	2	1–5	6–10	6–10		
A516	2	10–10	23	STR					
A517	2	9–0	19	STR					
A518	2	7–3	15	STR					
A519	2	12–9	27	3	7–6	5–3	2–4		
A521	1	9–2	10	2	1–5	4–0	4–0		
A522	1	10–4	11	2	1–5	4–7	4–7		
A523	4	3–4	14	2	1–5	1–1	1–1		
A524	1	11–8	12	2	1–5	5–3	5–3		
A525	1	12–10	13	2	1–5	5–4	5–4		
A526	1	13–4	14	2	1–5	6–1	6–1		
A601	35	14–1	740	2	5–3	6–7	2–6		
A602	42	10–9	678	5	1–5	4–3	4–3	1–3	
A603	34	7–6	383	2	0–11	3–5	3–5		
A801	14	23–6	878	STR					
D801	23	5–0	307	4	2–9	1–5			
		TOTAL	5105	LBS.					

Dimensions shown are out to out.

MARK	NO.	LENGTH	WEIGHT	TYPE	A	B	C	D	REMARKS
			FORWARD ABUTMENT						
A530	34	9–1	322	2	5–4	2–0	2–0		
A531	31	6–10	221	1	0–7.5	6–4			
A532	23	8–6	204	2	3–5	2–8	2–8		
A533	22	17–9	407	STR					
A534	10	13–9	143	STR					
A536	14	18–9	274	STR					
A537	2	12–3	26	STR					
A538	2	10–3	21	STR					
A539	2	8–3	17	STR					
A540	2	13–3	28	3	7–6	5–9	2–0		
A541	1	10–2	11	2	1–5	4–6	4–6		
A542	6	14–4	90	2	1–5	6–7	6–7		
A543	10	15–6	162	STR					
A544	2	14–3	30	STR					
A545	2	12–3	26	STR					
A546	2	9–6	20	STR					
A547	2	14–8	31	3	8–8	6–0	2–0		
A548	3	9–2	29	2	1–5	4–0	4–0		
A549	1	8–2	9	2	1–5	3–6	3–6		
A550	1	7–8	8	2	1–5	3–3	3–3		
A551	4	3–8	15	2	1–5	1–3	1–3		
A552	1	10–8	11	2	1–5	4–9	4–9		
A553	3	12–8	40	2	1–5	5–9	5–9		
A554	4	3–8	15	2	1–5	1–3	1–3		
A610	34	13–10	706	2	5–3	6–4	2–6		
A611	44	10–3	677	5	1–5	4–0	4–0	1–3	
A612	35	6–0	315	2	0–11	2–8.5	2–8.5		
A810	14	23–0	860	STR					
D801	23	5–0	307	4	2–9	1–5			
		TOTAL	5025	LBS.					
			SEISMIC PEDESTALS – ABUTMENTS						
SE601	3	10–8	48	9					
SE602	3	3–3 1/2	15	1	1–7	2–9			
SE901	5	3–3 1/2	56	1	1–7	2–9			
			SEISMIC PEDESTALS – PIERS						
SE603	3	3–3 1/2	15	1	1–7	2–9			
SE604	3	5–2 1/2	16	1	2–6	2–9			
SE902	5	3–3 1/2	56	1	1–7	2–9			
		TOTAL	206	LBS.					

ALL BARS SHALL BE EPOXY COATED

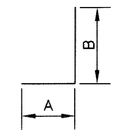

TYPE 1

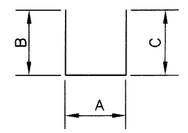

TYPE 2

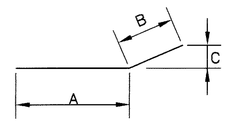

TYPE 3

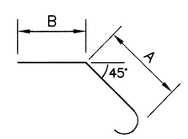

TYPE 4

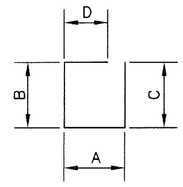

TYPE 5

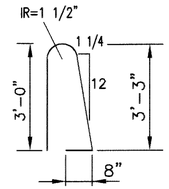

TYPE 6

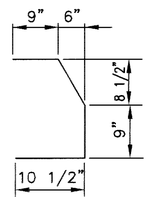

TYPE 7

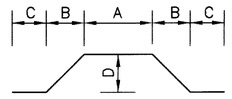

TYPE 8

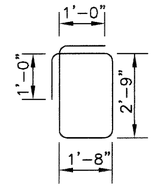

TYPE 9

DESIGN AGENCY
ERIKSSON ENGINEERING LTD.
1523 CHESAPEAKE AVENUE
COLUMBUS, OH 43212

DATE 11/28/01
REVIEWED
DRAWN DM REVISED
DESIGNED DA CHECKED CE

SFN : 2515431

REINFORCING BAR LIST
BRIDGE NO. FRA-315-0354
RAMP B OVER OLENTANGY RIVER

FRA-315-3.04

June 18, 2002 Q:\BRIDGE\3453\OSU\RAMPB\3453Bbl.dwg

REINFORCING STEEL LIST

MARK	NO.	LENGTH	WEIGHT	TYPE	A	B	C	D	REMARKS
			TOP OF DECK						
S401	90	28–10	1733	STR					
S501	320	30–0	10013	STR					
S502	628	32–8	21397	STR					
S503	28	32–3	482	STR					Vary Length by 1'–2"
		TO							
		0–9							
S504	25	32–0	443	STR					Vary Length by 1'–4"
		TO							
		2–0							
S505	40	38–0	1585	STR					
S601	8	19–0	228	STR					
		TOTAL	**36,253**	**LBS.**					
			BOTTOM OF DECK						
S501	328	30–0	10263	STR					
S502	628	32–8	21397	STR					
S503	28	32–3	482	STR					Vary Length by 1'–2"
		TO							
		0–9							
S504	25	32–0	443	STR					Vary Length by 1'–4"
		TO							
		2–0							
S505	41	38–0	1625	STR					
S601	8	19–0	228	STR					
		TOTAL	**34,810**	**LBS.**					
			IN PARAPETS						
X501	112	30–0	3504	STR					
X502	14	38–0	555	STR					
Y501	526	7–1	3886	6					
Y601	526	2–2	1712	1	0–11	1–5			
Y602	526	2–11	2304	7					
		TOTAL	**11,961**	**LBS.**					
			LIGHTING PEDESTAL						
L501	8	2–8	22	2	1–11	0–6	0–6		
L502	8	5–5	45	1	1–9	3–9			
L503	12	5–5	68	8	1–4	1–9	0–6	2–0	
L504	8	3–9	31	STR					
L505	8	8–0	67	STR					
L506	8	3–9	31	STR					
		TOTAL	**264**	**LBS.**					

Dimensions shown are out to out.

MARK	NO.	LENGTH	WEIGHT	TYPE	A	B	C	D	REMARKS
			PIER #1						
P501	96	8–6	851	2	1–9	3–6	3–6		
P502	10	31–4	327	STR					
P901	10	31–4	1065	STR					
P902	4	21–2	288	STR					
P1001	12	21–0	1084	STR					
P1002	12	20–0	1033	STR					
P1101	48			STR					WITH SHAFTS FOR PAYMENT
SP401	4			SPIRALS	42" ø o/o				WITH SHAFTS FOR PAYMENT
SP402	1	7–0	115	SPIRALS	30" ø o/o				
SP403	1	5–11	94	SPIRALS	30" ø o/o				
		TOTAL	**4857**	**LBS.**					
			PIER #2						
P501	96	8–6	851	2	1–9	3–6	3–6		
P502	10	30–9	321	STR					
P903	10	30–9	1046	STR					
P904	4	20–7	280	STR					
P1003	12	22–0	1136	STR					
P1004	12	21–0	1084	STR					
P1102	48			STR					WITH SHAFTS FOR PAYMENT
SP404	4			SPIRALS	42" ø o/o				WITH SHAFTS FOR PAYMENT
SP405	1	8–0	131	SPIRALS	30" ø o/o				
SP406	1	7–0	110	SPIRALS	30" ø o/o				
		TOTAL	**4959**	**LBS.**					
			PIER #3						
P501	96	8–6	851	2	1–9	3–6	3–6		
P502	10	32–2	335	STR					
P905	10	32–2	1094	STR					
P906	4	22–0	299	STR					
P1005	12	23–0	1188	STR					
P1006	12	22–0	1136	STR					
P1103	48			STR					WITH SHAFTS FOR PAYMENT
SP407	4			SPIRALS	42" ø o/o				WITH SHAFTS FOR PAYMENT
SP408	1	8–10	142	SPIRALS	30" ø o/o				
SP409	1	8–3	131	SPIRALS	30" ø o/o				
		TOTAL	**5176**	**LBS.**					

ALL BARS SHALL BE EPOXY COATED

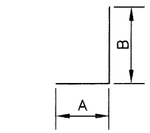

TYPE 1

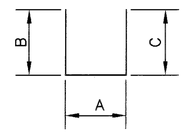

TYPE 2

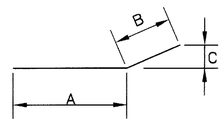

TYPE 3

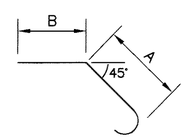

TYPE 4

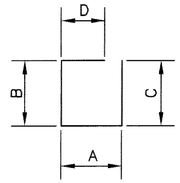

TYPE 5

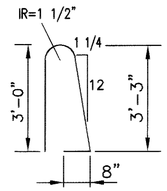

TYPE 6

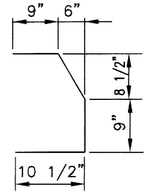

TYPE 7

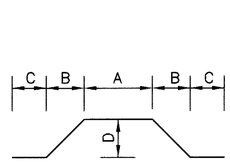

TYPE 8

DESIGN AGENCY
ERIKSSON ENGINEERING LTD.
1523 CHESAPEAKE AVENUE
COLUMBUS, OH 43212

DATE 11.28.01
REVIEWED
SFN : 2515431

DRAWN DM REVISED
DESIGNED DA CHECKED CE

REINFORCING BAR LIST
BRIDGE NO. FRA-315-0354
RAMP B OVER OLENTANGY RIVER

FRA-315-3.04

19 / 19

227
238

June 18, 2002 Q:\BRIDGE\3453\OSU\RAMPB\3453Bbl2.dwg

CAUTION

* EXISTING UNDERGROUND UTILITIES SHALL BE LOCATED PRIOR TO INSTALLING THE LINE POSTS.

FENCE LEGEND

- • EPA – END POST ASSEMBLY
- ○ ABC – ABUTMENT CONNECTION

ESTIMATED QUANTITIES

ITEM 607 – FENCE, TYPE CL	1397 L.F.
ITEM 607 – GATE, TYPE CL	1 EACH

N

HORIZONTAL SCALE IN FEET
0 10 20 40

CALCULATED MJT 12-01
CHECKED WGY 12-01

PID NO. 7930

FENCE PLAN RAMP A
STA. A74+00 TO STA. A81+00

FRA-315-3.04

228
238

3453AF1 06-19-02

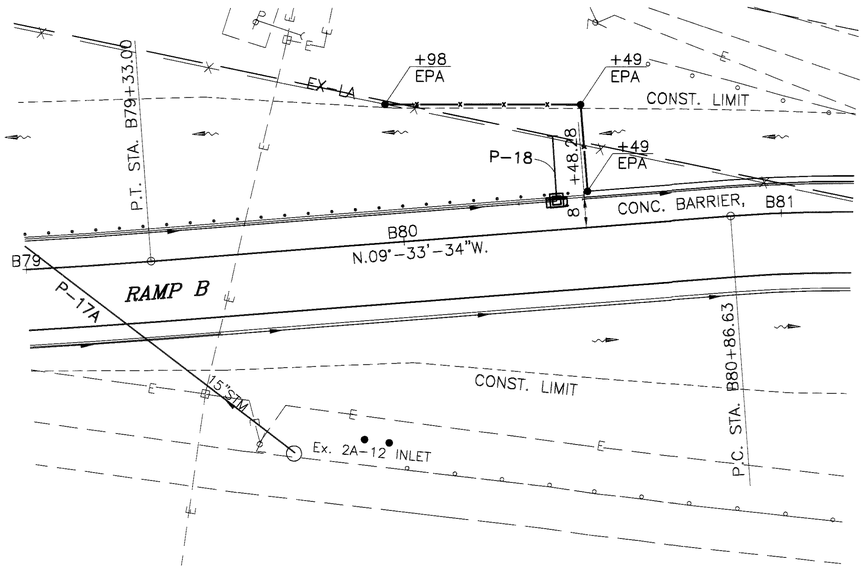

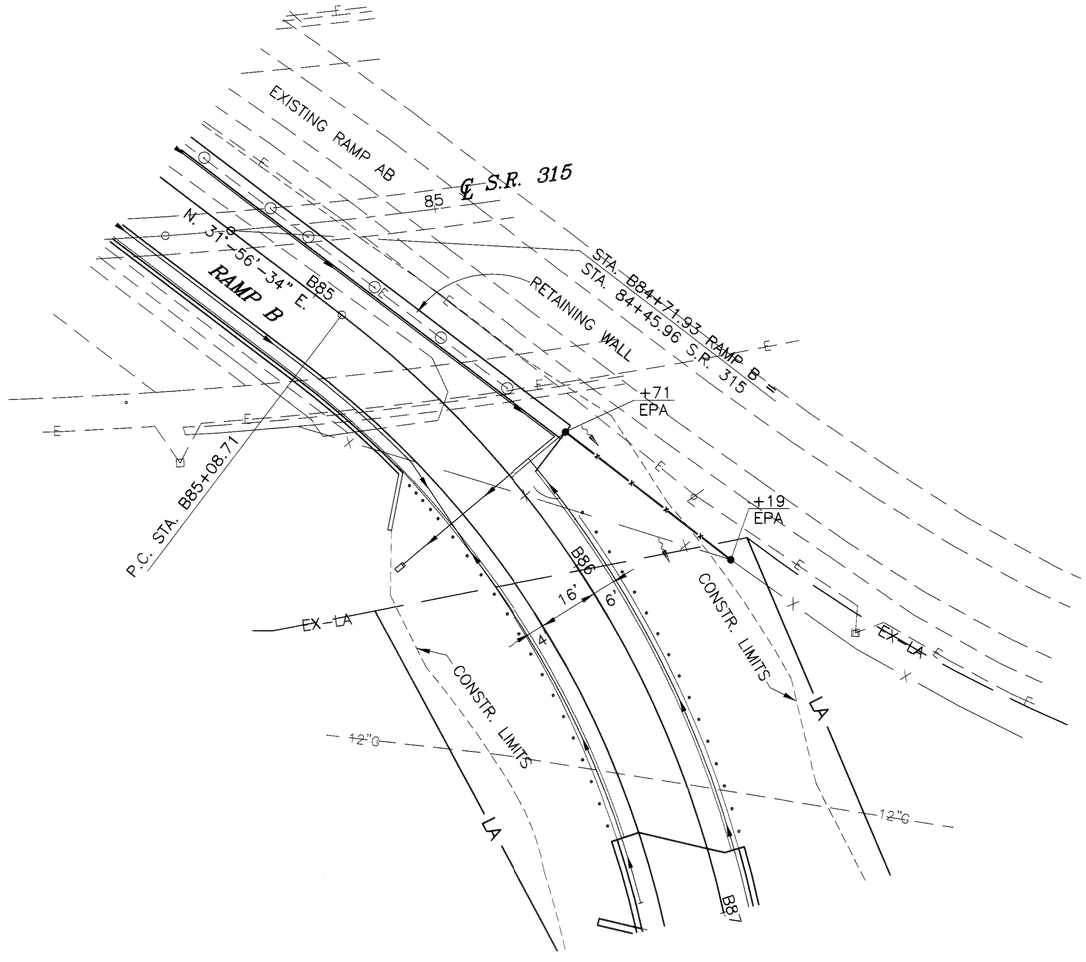

CAUTION

* EXISTING UNDERGROUND UTILITIES SHALL BE LOCATED PRIOR TO INSTALLING THE LINE POSTS.

FENCE LEGEND

- • EPA – END POST ASSEMBLY
- ○ ABC – ABUTMENT CONNECTION

ESTIMATED QUANTITIES

ITEM 607 – FENCE, TYPE CL	130	L.F.

FENCE PLAN RAMP B
STA. B79+00 TO STA. B87+00

CALCULATED MJT 12-01
CHECKED WGY 12-01

0 10 20 40
HORIZONTAL SCALE IN FEET

3453BF1 05-28-02

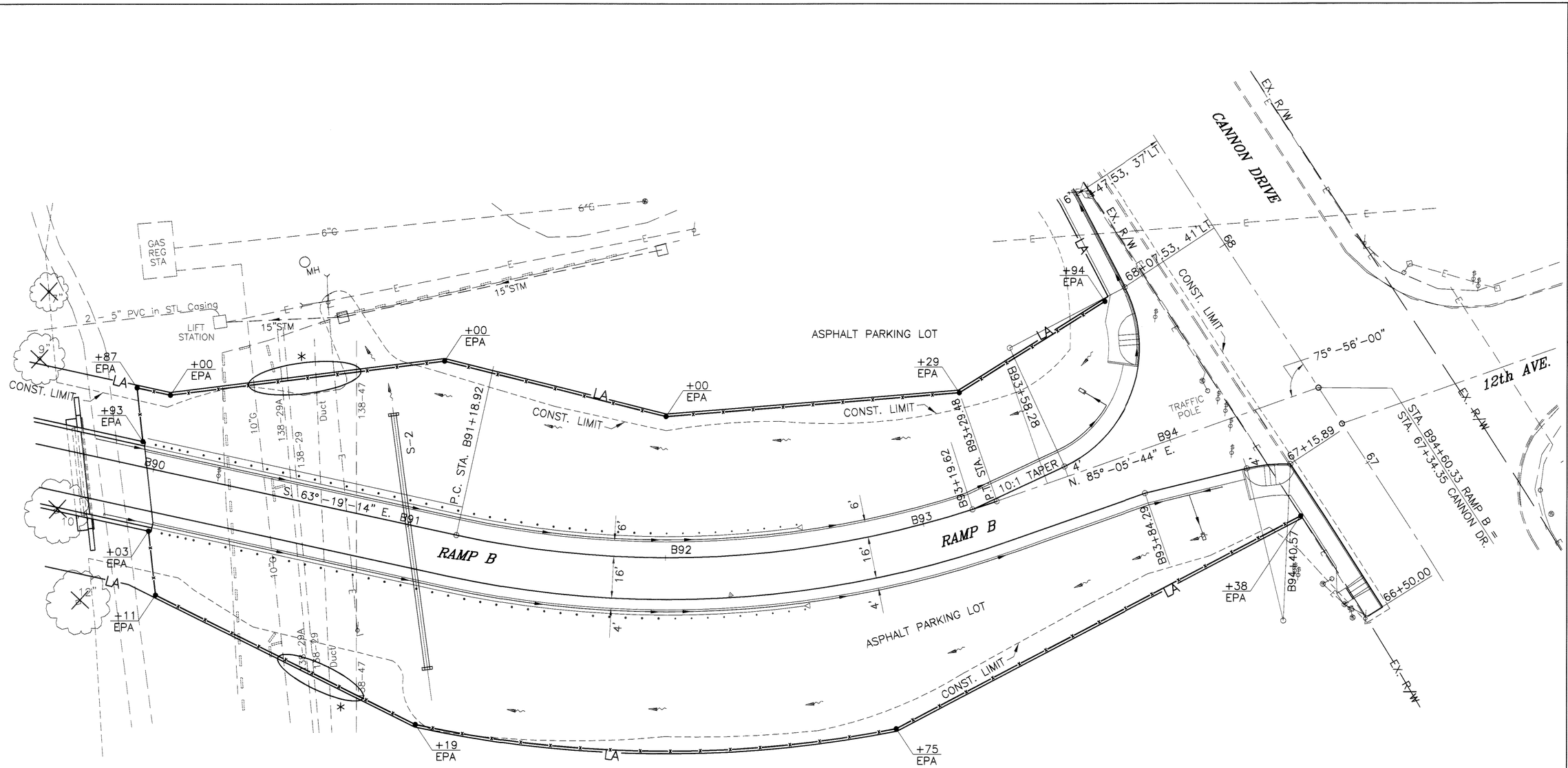

CAUTION

* EXISTING UNDERGROUND UTILITIES SHALL BE LOCATED PRIOR TO INSTALLING THE LINE POSTS.

FENCE LEGEND

- • EPA – END POST ASSEMBLY
- ○ ABC – ABUTMENT CONNECTION

ESTIMATED QUANTITIES

ITEM 607 – FENCE, TYPE CL 904 L.F.

34538F2 05-23-02

CALCULATED MJT 12-01
CHECKED WGY 12-01

HORIZONTAL SCALE IN FEET
0 10 20 40

PID NO. 7930

FENCE PLAN RAMP B
STA. B88+50 TO STA. B95+00

FRA-315-3.04

230
238

CITY OF COLUMBUS
3RD QUARTER, TOWNSHIP NO.1, RANGE 18
UNITED STATES MILITARY LANDS
CLINTON TOWNSHIP
FRANKLIN COUNTY

BEGIN PROJECT
STA.61+53.02
SLM 3.06
TE21-G020(422)

END PROJECT
STA.85+53.94
SLM 3.52
TE21-G020(422)

BEGIN WORK RAMP B
STA. 66+66.66 SR 315

BEGIN WORK RAMP A
STA. 61+10.99 SR 315

OLENTANGY RIVER ROAD

CITY OF COLUMBUS
DB 1019, P 496

CITY OF COLUMBUS
DB 1027 P 499

STATE OF OHIO
DB 2801, P 547

STATE OF OHIO
DB 673, P 259

STANLEY AND HELEN LOSCKO
VOL 2803, PG 630

20' ALLEY

STATE OF OHIO OSU

S.R.315

EXISTING RAMP AB85

RESUME ACQUISITION
STA. B85+75.67

BEGIN ACQUISITION
STA. A70+59.69

STATE OF OHIO
DB 959, P 186

STATE OF OHIO OSU
DB 2160, P 644

CITY OF COLUMBUS
DB 1571, P 251

OLENTANGY RIVER

STATE OF OHIO OSU
DB 103, P 547

50' EASEMENT TO COLUMBIA GAS
200001120008568

BIKEPATH

25' EASEMENT TO AEP
VOL 2973, PG 393

STATE OF OHIO OSU
DB 602, P 561

KING AVENUE

RAMP A

RAMP B

SUSPEND ACQUISITION
STA. A80+61.50

END ACQUISITION
STA. B94+38.10

CANNON DRIVE

12TH.ST.

19TH.ST.

END WORK RAMP A
STA. A80+47.39

STATE OF OHIO OSU
DB 602, P 562

END WORK RAMP B
STA. B94+34.28

R/W ON CANNON DR.
DEDICATED BY
PB 83, P 73

1 WA1 · 1 WA2 · 1 WA3 · 1 WA4 · 1 WA5 · 1 WA6 · 1 WA7 · 1 LA1 · 1 LA2

CONVENTIONAL SIGNS

FENCE LINE (EXISTING) (PROP.)
BASE LINE
TREES (TO BE REMOVED)
UTILITY SYMBOLS: TELEPHONE, POWER, MH
PROP. L/A
EXIST. L/A
EXIST. RIGHT-OF-WAY
PROPERTY LINE (IN EXISTING FENCE)
GUARDRAIL (EXIST.) (PROPOSED)
CONSTRUCTION LIMITS

UTILITIES

LISTED BELOW ARE THE UTILITIES LOCATED WITHIN THE PROJECT CONSTRUCTION LIMITS TOGETHER WITH THEIR RESPECTIVE OWNERS:

COLUMBIA GAS OF OHIO
920 WEST GOODALE BOULEVARD
COLUMBUS, OHIO 43212. PHONE: (614) 460-2238

AMERICAN ELECTRIC POWER
850 TECH CENTER DRIVE
GAHANNA, OHIO 43230. PHONE: (614) 883-6829

AMERITECH
150 EAST GAY STREET, ROOM 6C
COLUMBUS, OHIO 43215. PHONE: (614) 223-7162

WARNER CABLE
1266 DUBLIN ROAD, P.O. BOX 2553
COLUMBUS, OHIO 43216-2553. PHONE: (614) 481-5263

CITY OF COLUMBUS
DEPARTMENT OF PUBLIC UTILITIES
ELECTRICITY DIVISION
3500 INDIANOLA AVE.
COLUMBUS, OHIO 43214. PHONE: (614) 645-7627 (SWITHBOARD)

CITY OF COLUMBUS
DIVISION OF SEWERAGE & DRAINAGE
910 DUBLIN ROAD
COLUMBUS, OHIO 43215. PHONE: (614) 645-8156

CITY OF COLUMBUS
PUBLIC SERVICE DEPARTMENT
TRAFFIC ENGINEERING & PARKING DIVISION
109 N. FRONT STREET, 2ND FLOOR
COLUMBUS, OHIO 43215-9024. PHONE: (614) 645-7790

THE LOCATION OF THE UNDERGROUND UTILITIES SHOWN ON THE PLANS ARE AS OBTAINED FROM THE OWNERS AS REQUIRED BY SECTION 153.64 O.R.C.

PID NO. 7930
STATE PROJECT NO. 06693(0)
R/W DESIGNER W.G. YOUNG
R/W REVIEWER

PROPERTY MAP & RIGHT-OF-WAY SUMMARY

REV	DATE	DESCRIPTION
COMPLETION DATE		

FRA-315-3.04

1 / 8

231 / 238

SUMMARY OF ADDITIONAL RIGHT OF WAY

PARCEL	OWNER	AUDITORS PARCEL	SHEET NO.	OWNERS BOOK	OWNERS PAGE	RECORD AREA	TOTAL P.R.O.	GROSS TAKE	P.R.O. IN TAKE	NET TAKE	STRUC-TURE	NET RESIDUE LEFT	NET RESIDUE RIGHT	TYPE FUND	REMARKS AND PERSONALTY	AS ACQUIRED BOOK	AS ACQUIRED PAGE
1-LA1	STATE OF OHIO OSU	010-067017	2 THRU 4	602	561	324.26		2.528	0	2.528	NO						
1-LA2	STATE OF OHIO OSU	010-067007	5 THRU 8	103	547			1.714	0	1.714	NO						
		010-203981		2160	644	5.639		0.236	0	0.236	NO						
							TOTAL	1.950	0	1.950							
1-WA1			3							0.786							
1-WA2			3 & 6							2.488							
1-WA3			6							0.147							
1-WA4			6							0.043							
1-WA5			7							0.109							
1-WA6			3 & 4							1.048							
1-WA7			6							0.019							

P_MAP_34 05-23-02

BEGIN PROJECT
STA.61+53.02
SLM 3.06
TE21-G020(422)

CITY OF COLUMBUS
3RD QUARTER, TOWNSHIP NO.1, RANGE 18
UNITED STATES MILITARY LANDS
CLINTON TOWNSHIP
FRANKLIN COUNTY

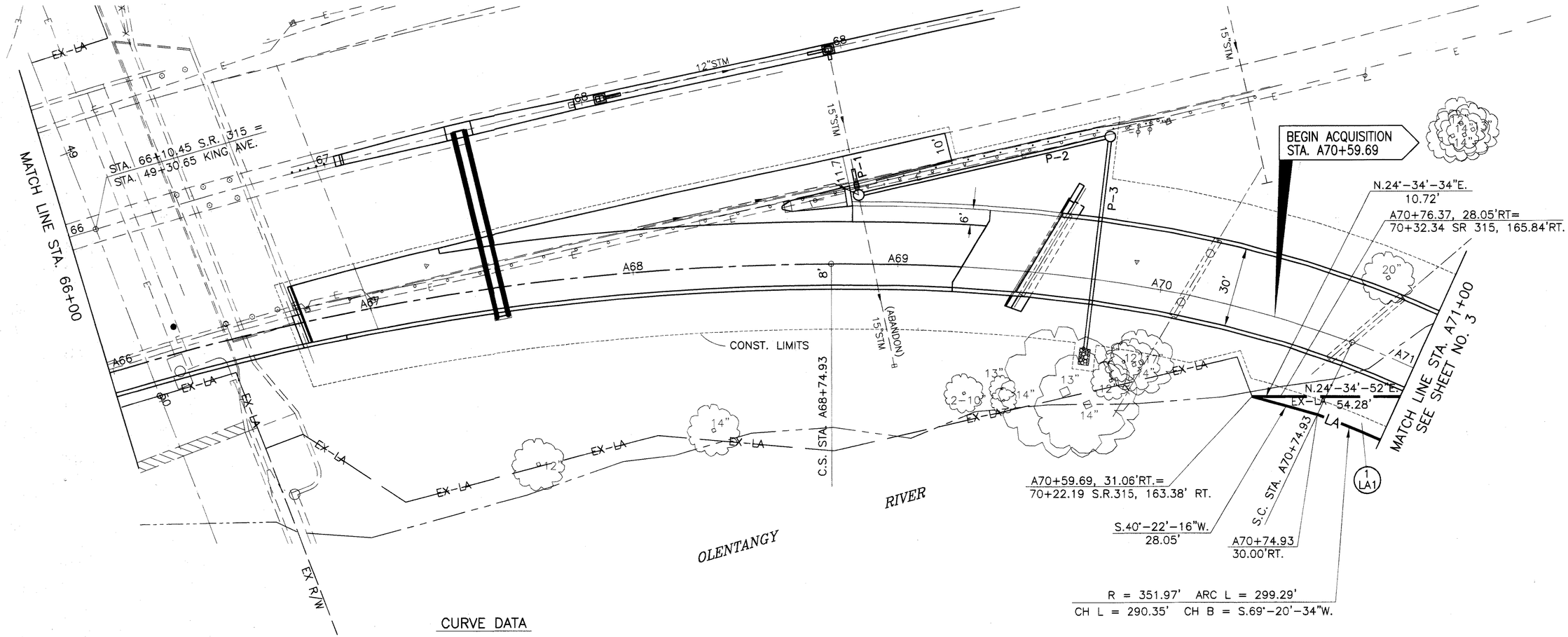

CURVE DATA

P.I. STA. A67+24.42
△ = 18°-12'-58"
Dc = 6°-00'
Rc = 954.93'
Lc = 303.60'
T = 153.09'
SE = 0.060

P.I. STA. A69+90.31
△ = 21°-00'
θs = 9°-00'
Ls = 200'
T_1 = 115.38'
T_2 = 86.82'

P.I. STA. A72+47.87
△ = 48°-43'-09"
Dc = 15°-00'
R = 381.97'
L = 324.79'
T = 172.94'
SE = 0.060

CALCULATED MJT 8-01
CHECKED WDO 8-01
HORIZONTAL SCALE IN FEET 0 10 20 40

PID NO. 7930

RIGHT-OF-WAY RAMP A
STA. A66+00 TO STA. A71+00

FRA-315-3.04

REV	DATE	DESCRIPTION
COMPLETION DATE		

2/8

232/238

3453ARW2 05-09-2002

CITY OF COLUMBUS

3RD QUARTER, TOWNSHIP NO.1, RANGE 18
UNITED STATES MILITARY LANDS
CLINTON TOWNSHIP
FRANKLIN COUNTY

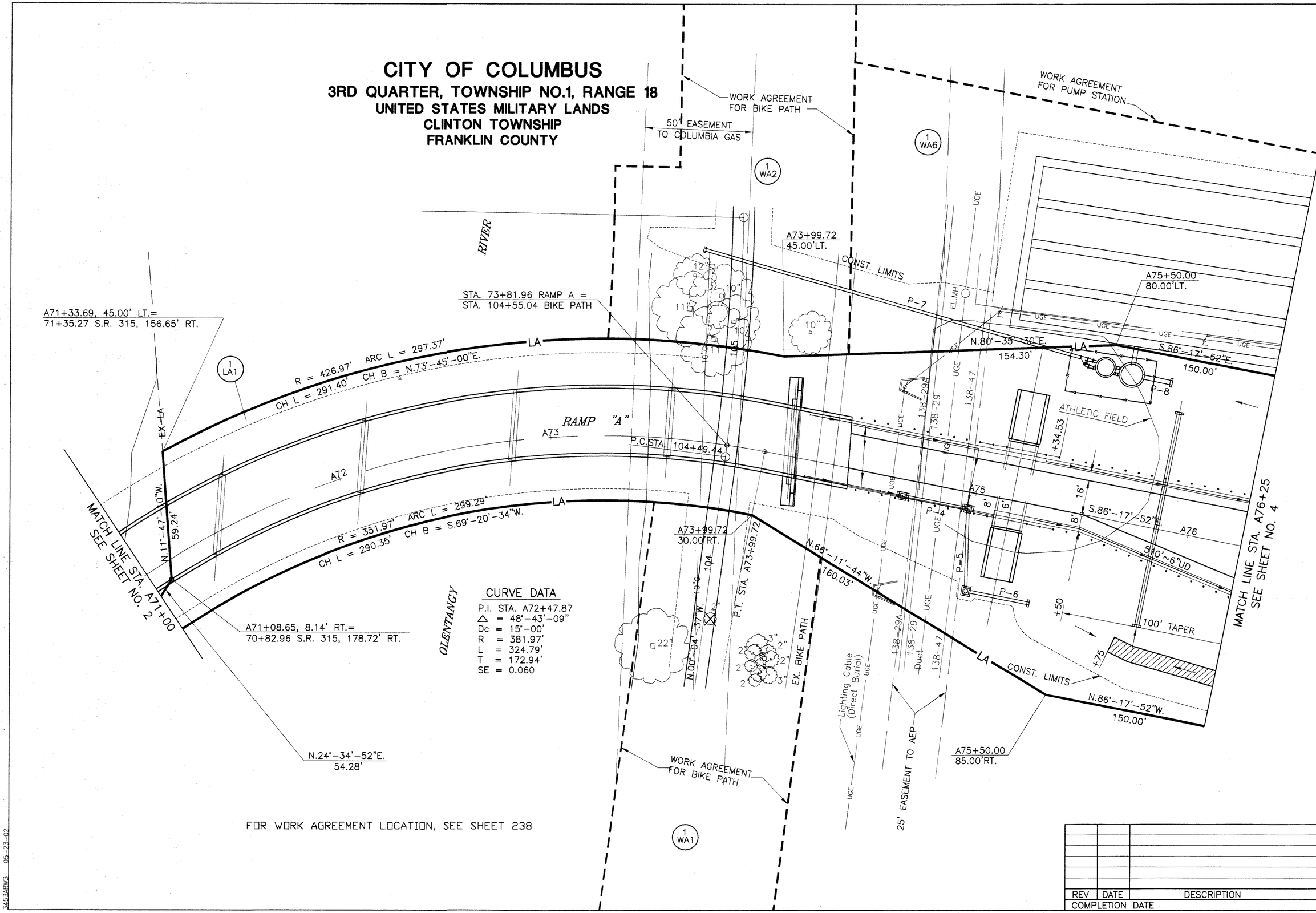

FOR WORK AGREEMENT LOCATION, SEE SHEET 238

REV	DATE	DESCRIPTION
COMPLETION DATE		

HORIZONTAL SCALE IN FEET 0 10 20 40

CALCULATED MJT 8-01
CHECKED WCY 8-01

PID NO. 7930

RIGHT-OF-WAY RAMP A
STA. A71+00 TO STA. A76+25

FRA-315-3.04

3/8

233/238

3453ARW3 05-23-02

CITY OF COLUMBUS

3RD QUARTER, TOWNSHIP NO.1, RANGE 18
UNITED STATES MILITARY LANDS
CLINTON TOWNSHIP
FRANKLIN COUNTY

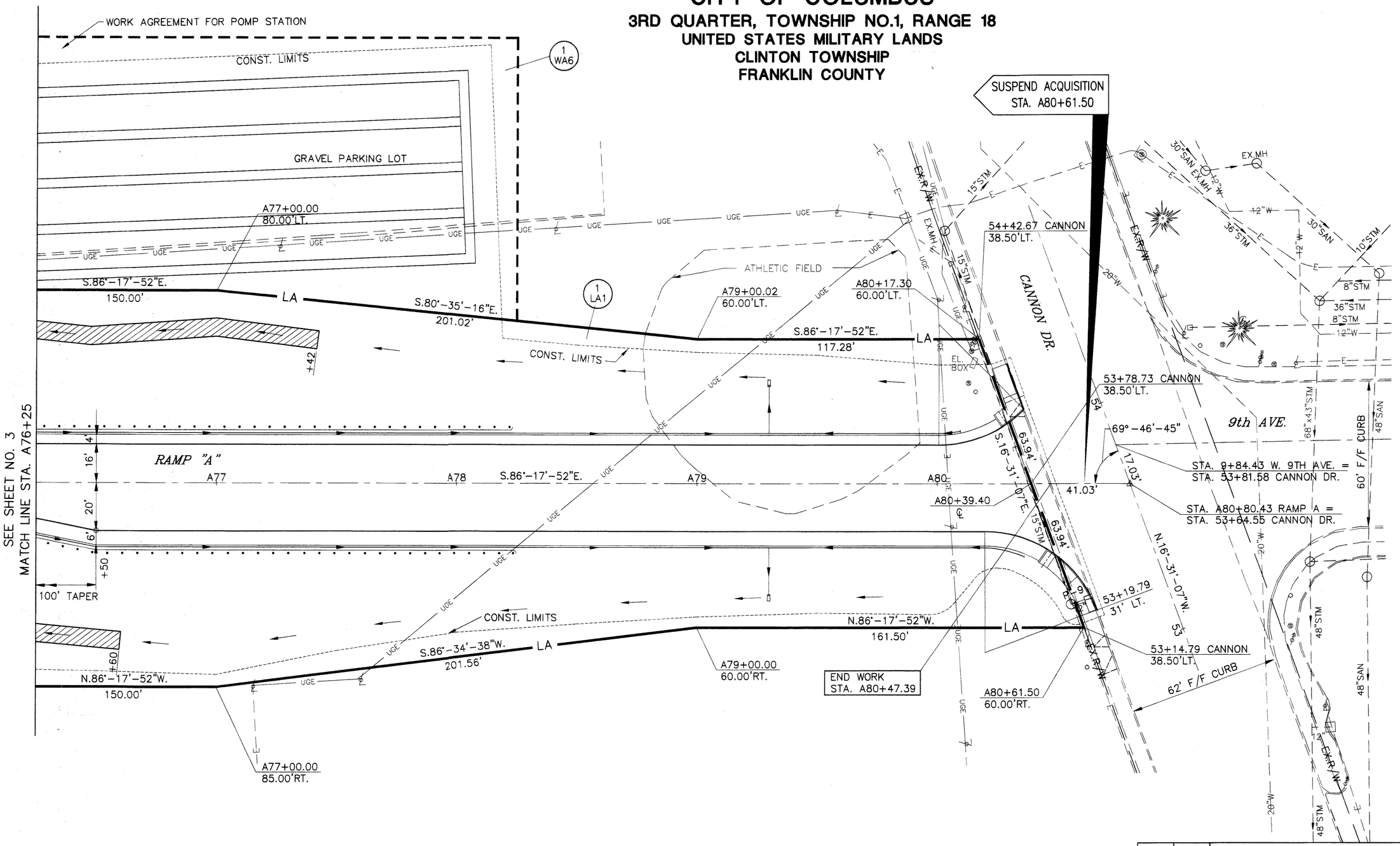

SEE SHEET NO. 3
MATCH LINE STA. A76+25

FOR WORK AGREEMENT LOCATION, SEE SHEET 238

RIGHT-OF-WAY RAMP A
STA. A76+25 TO STA. A81+00

PID NO. 7930

CALCULATED MJT 8-01
CHECKED WCV 8-01

HORIZONTAL SCALE IN FEET
0 10 20 40

FRA-315-3.04

4 / 8

234 / 238

REV	DATE	DESCRIPTION
COMPLETION DATE		

3453ARW4 04-24-2002

CITY OF COLUMBUS
3RD QUARTER, TOWNSHIP NO.1, RANGE 18
UNITED STATES MILITARY LANDS
CLINTON TOWNSHIP
FRANKLIN COUNTY

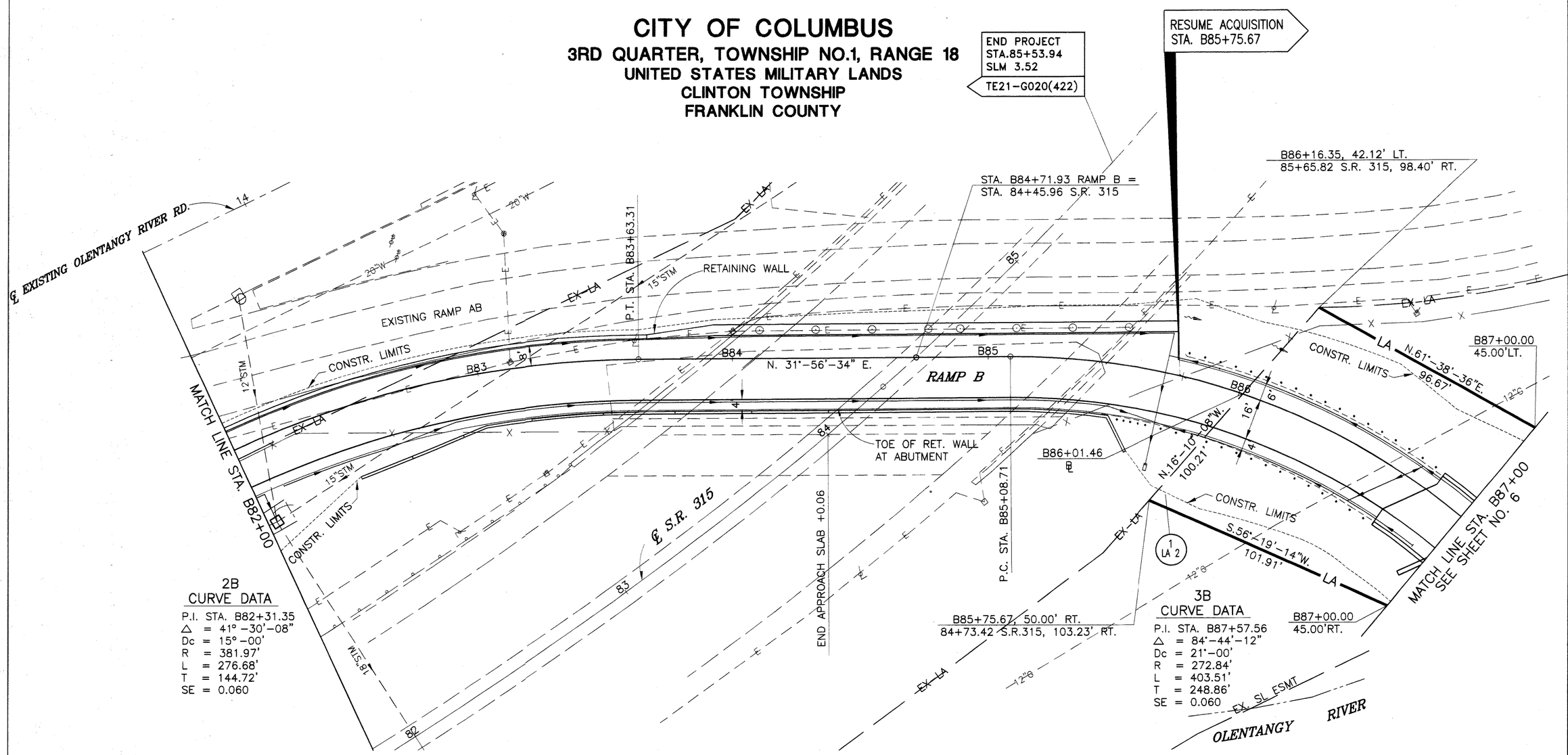

2B CURVE DATA
P.I. STA. B82+31.35
△ = 41°-30'-08"
Dc = 15°-00'
R = 381.97'
L = 276.68'
T = 144.72'
SE = 0.060

3B CURVE DATA
P.I. STA. B87+57.56
△ = 84°-44'-12"
Dc = 21°-00'
R = 272.84'
L = 403.51'
T = 248.86'
SE = 0.060

HORIZONTAL SCALE IN FEET
0 10 20 40

CALCULATED MJT 8-01
CHECKED WKC 8-01

PID NO. 7930

RIGHT-OF-WAY RAMP B
STA. B82+00 TO STA. B87+00

FRA-315-3.04

5 / 8

235
238

REV	DATE	DESCRIPTION
COMPLETION DATE		

3453BRW4 05-23-02

CITY OF COLUMBUS
3RD QUARTER, TOWNSHIP NO.1, RANGE 18
UNITED STATES MILITARY LANDS
CLINTON TOWNSHIP
FRANKLIN COUNTY

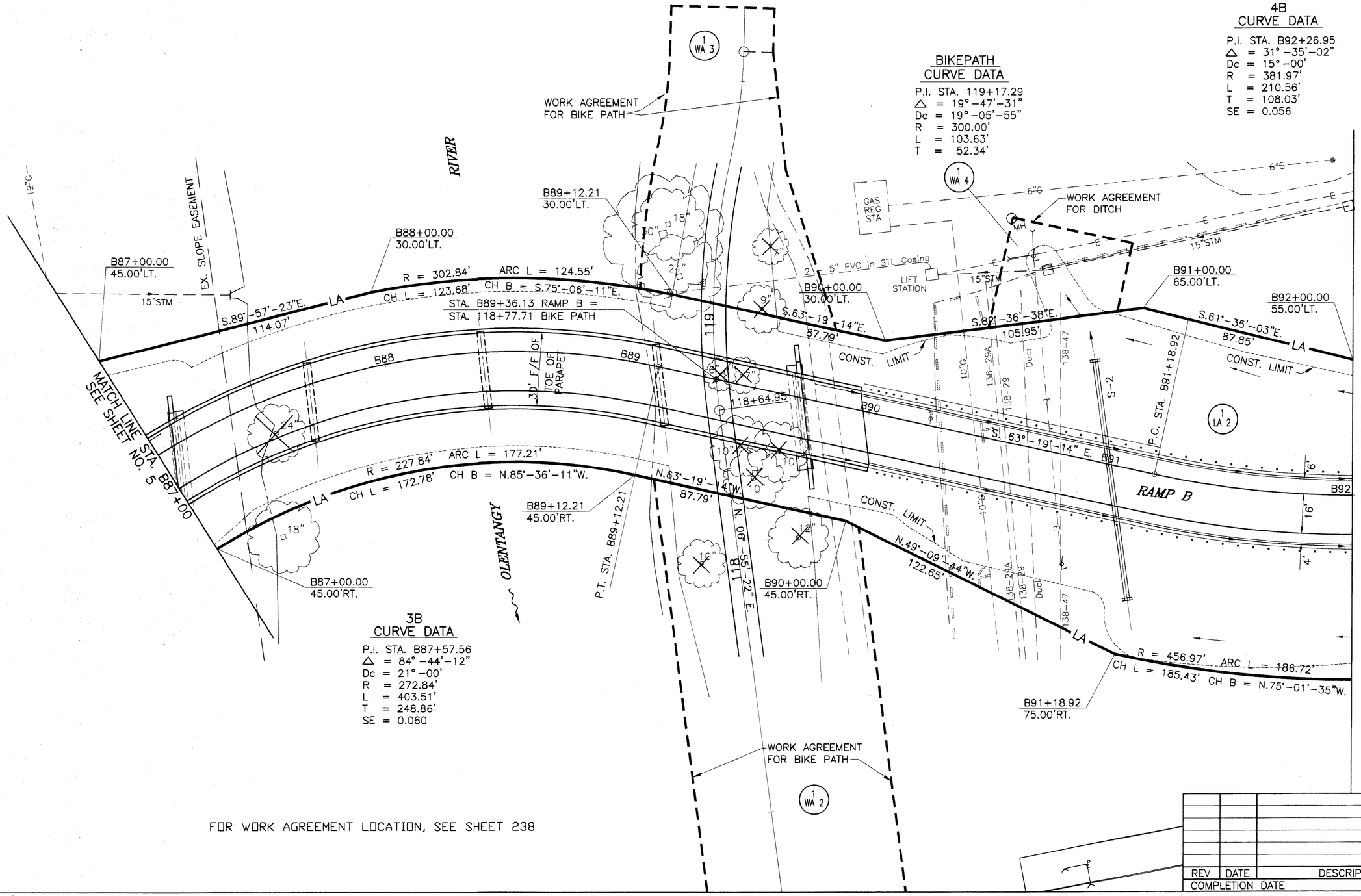

N

0 10 20 40 HORIZONTAL SCALE IN FEET

CALCULATED MJT 8-01
CHECKED WCY 8-01

PID NO. 7930

RIGHT-OF-WAY RAMP B
STA. B87+00 TO STA. B92+00

FRA-315-3.04

6 / 8

236
238

REV	DATE	DESCRIPTION
COMPLETION DATE		

3453BRW5 05-23-02

CITY OF COLUMBUS
3RD QUARTER, TOWNSHIP NO.1, RANGE 18
UNITED STATES MILITARY LANDS
CLINTON TOWNSHIP
FRANKLIN COUNTY

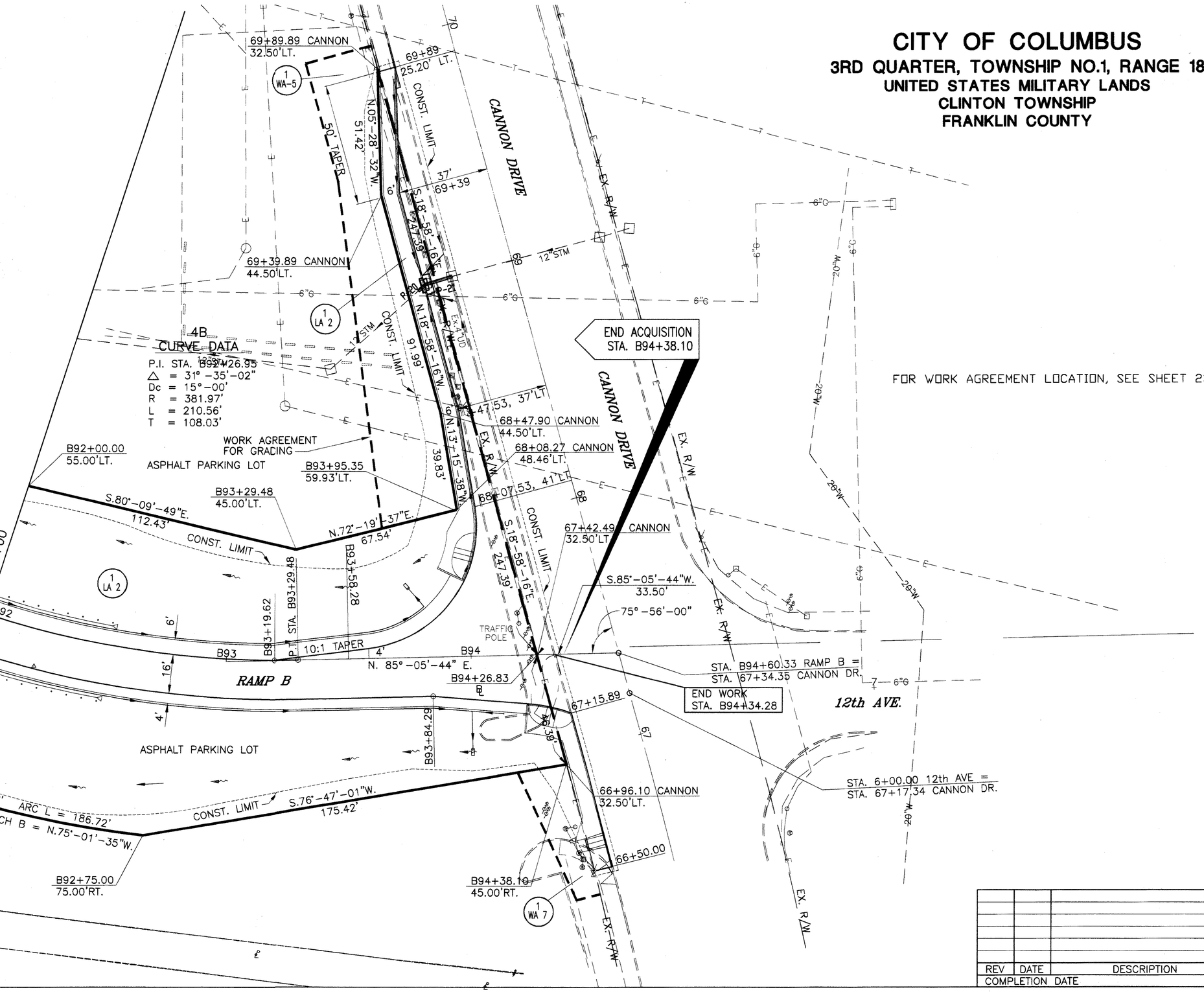

RIGHT-OF-WAY RAMP B
STA. B92+00 TO STA. B95+00

FRA-315-3.04

PID NO. 7930

CALCULATED MJD 8-01
CHECKED WGY 8-01

HORIZONTAL SCALE IN FEET
0 10 20 40

REV	DATE	DESCRIPTION
COMPLETION DATE		

7 / 8

237
238

3453BRW6 05-23-02

RIGHT-OF-WAY WORK AGREEMENT PLAN

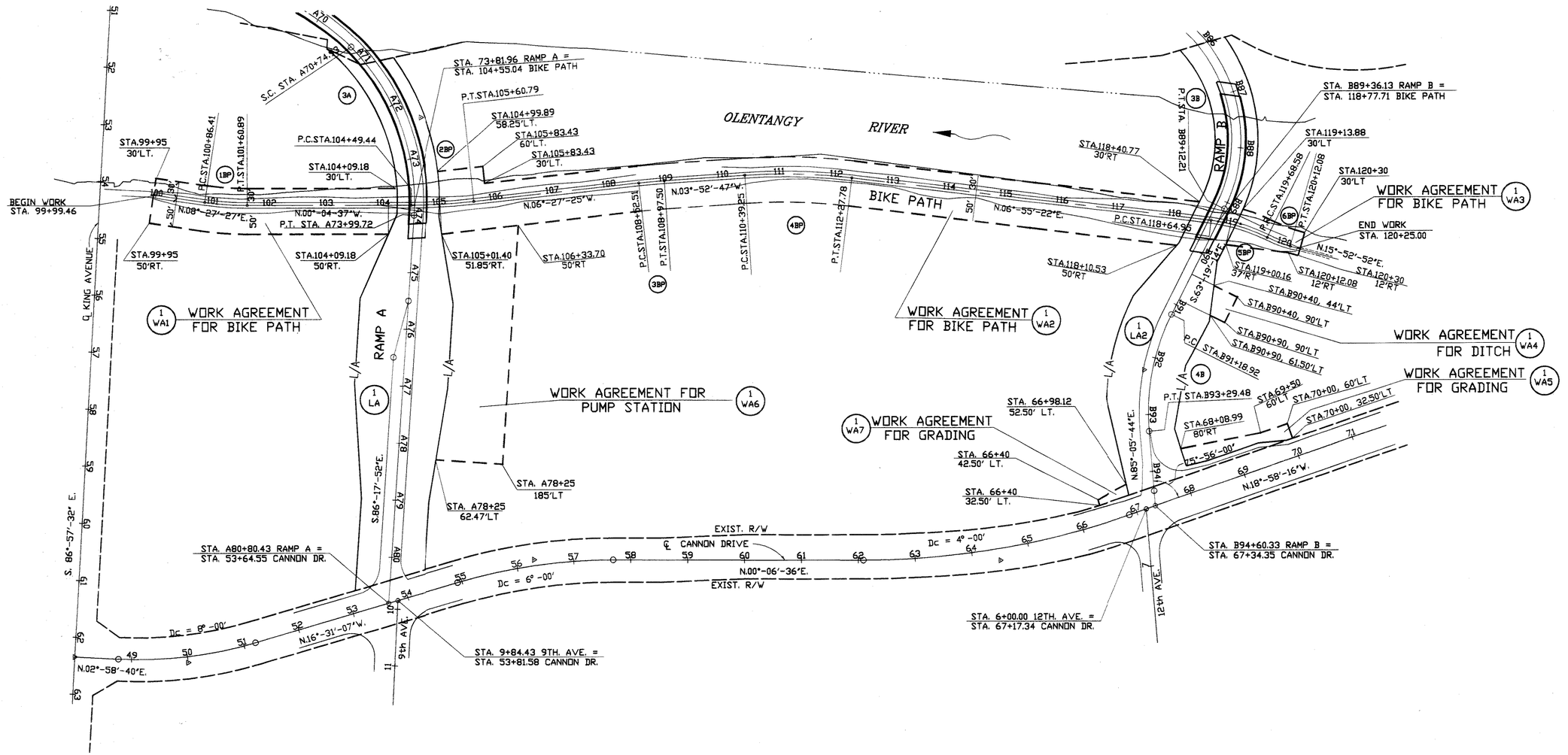

CURVE DATA								
RAMP A	RAMP B		BIKE PATH					
3A	3B	4B	1BP	2BP	3BP	4BP	5BP	6BP
P.I. STA. A72+47.87	P.I. STA. B87+57.56	P.I. STA. B92+26.95	P.I. STA. 101+23.72	P.I. STA. 105+05.17	P.I. STA. 108+75.01	P.I. STA. 111+33.80	P.I. STA. 119+17.29	P.I. STA. 119+90.39
△ = 48°-43'-09"	△ = 84°-44'-12"	△ = 31°-35'-02"	△ = 08°-32'-04"	△ = 06°-22'-48"	△ = 02°-34'-38"	△ = 10°-48'-08"	△ = 19°-47'-31"	△ = 10°-50'-01"
Dc = 15°-00'	Dc = 21°-00'	Dc = 15°-00'	R = 500.00'	R = 1000.00'	R = 1000.00'	R = 1000.00'	R = 300.00'	R = 230.00'
R = 381.97'	R = 272.84'	R = 381.97'	L = 74.48'	L = 111.35'	L = 44.98'	L = 188.54'	L = 103.63'	L = 43.49'
L = 324.79'	L = 403.51'	L = 210.56'	T = 37.31'	T = 55.73'	T = 22.50'	T = 94.55'	T = 52.34'	T = 21.81'
T = 172.94'	T = 248.86'	T = 108.03'	E = 1.39'	E = 1.55'	E = 0.25'	E = 4.46'	E = 4.53'	E = 1.03'
E = 37.33'	E = 96.45'	E = 14.98'						

CALCULATED
HORIZONTAL SCALE IN FEET
0 50 100 200

MJT 9/01
CHECKED WGY 9/01

RIGHT-OF-WAY WORK AGREEMENT PLAN

FRA-315-3.04

8/8

238/238

Q:\OSU_RAMP\WA.dwg 04-24-2002