FRA-IR 270-51.50/FRA-US 23-4.19 (PART 1 AND PART 2)
220245
PID - 92616
Dist 6
5/11/2023

X:\Projects\2013\1321\1010\FRA\92616\roadway\sheets\92616GT001.dgn 4/25/2023 6:01:45 AM cwong

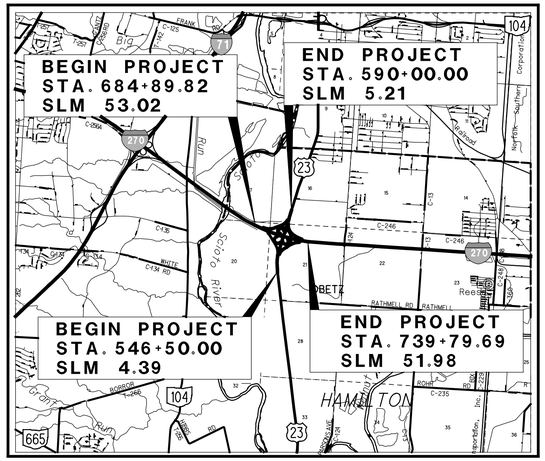

DESIGN DESIGNATION - IR 270EAST OF INTERCHANGE

CURRENT ADT (2016)	61240
DESIGN YEAR ADT (2036)	88470
DESIGN HOURLY VOLUME (2016)	8200
DIRECTIONAL DISTRIBUTION	50%
TRUCKS (24 HOUR B&C)	20%
DESIGN SPEED	70 MPH
LEGAL SPEED	65 MPH
DESIGN FUNCTIONAL CLASSIFICATION:	
URBAN INTERSTATE	
NHS PROJECT	YES

DESIGN EXCEPTIONS

NONE

DESIGN DESIGNATION - IR 270WEST OF INTERCHANGE

CURRENT ADT (2016)	83450
DESIGN YEAR ADT (2036)	115980
DESIGN HOURLY VOLUME (2016)	10310
DIRECTIONAL DISTRIBUTION	50%
TRUCKS (24 HOUR B&C)	18%
DESIGN SPEED	70 MPH
LEGAL SPEED	65 MPH
DESIGN FUNCTIONAL CLASSIFICATION:	
URBAN INTERSTATE	
NHS PROJECT	YES

DESIGN EXCEPTIONS

NONE

DESIGN DESIGNATION - US 23 NORTH OF INTERCHANGE

CURRENT ADT (2016)	23510
DESIGN YEAR ADT (2036)	30470
DESIGN HOURLY VOLUME (2016)	2390
DIRECTIONAL DISTRIBUTION	50%
TRUCKS (24 HOUR B&C)	4%
DESIGN SPEED	55 MPH
LEGAL SPEED	55 MPH
DESIGN FUNCTIONAL CLASSIFICATION:	
PRINCIPAL ARTERIAL	
NHS PROJECT	YES

DESIGN EXCEPTIONS

NONE

DESIGN DESIGNATION - US 23 SOUTH OF INTERCHANGE

CURRENT ADT (2022)	40930
DESIGN YEAR ADT (2042)	43500
DESIGN HOURLY VOLUME (2042)	4050
DIRECTIONAL DISTRIBUTION	68%
TRUCKS (24 HOUR B&C)	18%
DESIGN SPEED	55 MPH
LEGAL SPEED	50 MPH
DESIGN FUNCTIONAL CLASSIFICATION:	
PRINCIPAL ARTERIAL	
NHS PROJECT	YES

DESIGN EXCEPTIONS

NONE

DESIGN DESIGNATION - RAMP L

CURRENT ADT (2016)	11820
DESIGN YEAR ADT (2036)	15730
DESIGN HOURLY VOLUME (2016)	1570
DIRECTIONAL DISTRIBUTION	100%
TRUCKS (24 HOUR B&C)	18%
DESIGN SPEED	45 MPH
LEGAL SPEED	VARIES
DESIGN FUNCTIONAL CLASSIFICATION:	
URBAN INTERSTATE	
NHS PROJECT	YES

DESIGN EXCEPTIONS

HORIZONTAL STOPPING SIGHT DISTANCE	SHEET 203-204	APPROVAL 11/30/2016

DESIGN DESIGNATION - RAMP P1

CURRENT ADT (2016)	11130
DESIGN YEAR ADT (2036)	13180
DESIGN HOURLY VOLUME (2016)	1450
DIRECTIONAL DISTRIBUTION	100%
TRUCKS (24 HOUR B&C)	18%
DESIGN SPEED	50 MPH
LEGAL SPEED	VARIES
DESIGN FUNCTIONAL CLASSIFICATION:	
URBAN INTERSTATE	
NHS PROJECT	YES

DESIGN EXCEPTIONS

NONE

DESIGN DESIGNATION - RAMP P2

CURRENT ADT (2016)	5340
DESIGN YEAR ADT (2036)	7360
DESIGN HOURLY VOLUME (2016)	670
DIRECTIONAL DISTRIBUTION	100%
TRUCKS (24 HOUR B&C)	7%
DESIGN SPEED	25 MPH MINIMUM
LEGAL SPEED	VARIES
DESIGN FUNCTIONAL CLASSIFICATION:	
URBAN INTERSTATE	
NHS PROJECT	YES

DESIGN EXCEPTIONS

NONE

DESIGN DESIGNATION - RAMP R

CURRENT ADT (2016)	3770
DESIGN YEAR ADT (2036)	4490
DESIGN HOURLY VOLUME (2016)	490
DIRECTIONAL DISTRIBUTION	100%
TRUCKS (24 HOUR B&C)	14%
DESIGN SPEED	40 MPH TO 50 MPH
LEGAL SPEED	VARIES
DESIGN FUNCTIONAL CLASSIFICATION:	
URBAN INTERSTATE	
NHS PROJECT	YES

DESIGN EXCEPTIONS

NONE

DESIGN DESIGNATION - RAMP S

CURRENT ADT (2016)	6430
DESIGN YEAR ADT (2036)	9240
DESIGN HOURLY VOLUME (2016)	690
DIRECTIONAL DISTRIBUTION	100%
TRUCKS (24 HOUR B&C)	5%
DESIGN SPEED	35 MPH MINIMUM
LEGAL SPEED	VARIES
DESIGN FUNCTIONAL CLASSIFICATION:	
URBAN INTERSTATE	
NHS PROJECT	YES

DESIGN EXCEPTIONS

NONE

CALCULATED ACF
CHECKED CSR

TRAFFIC DATA

FRA-270-51.50

x:\Projects\2013\132\1010\FRA\92616\roadway\sheets\92616GT002.dgn 12/7/2022 2:52:51 PM cwong

PLAN SPLIT INFORMATION

SPLIT #	CATEGORY	GROUP	PLAN SPLIT CODE	DESCRIPTION
1	IMS	PAVEMENT	01/IMS/04	REMOVAL OF RAMPS N & Q. RECONFIGURE RAMPS P1 & S AND SIGNALIZE INTERSECTIONS AT US 23. ADD A DECELERATION LANE ON US 23. PAVEMENT REPLACEMENT ON RAMPS L, M, O, P1, & S
2	IMS	STURCTURE	02/IMS/14	WORK ON TWO STRUCTURES (FRA-270-5264 & FRA-23-0517)
3	NHS	UTILITY	03/NHS/43	RELOCATE CITY OF COLUMBUS DEPARTMENT OF POWER POLES IN BOTH PROJECT PARTS

IMS=INTERCHANGE MODIFICATION STUDY
NHS=NATIONAL HIGHWAY SYSTEM

HORIZONTAL SCALE IN FEET
0 100 200 400

CALCULATED ACF
CHECKED CSR

SCHEMATIC PLAN

FRA-270-51.50

3
554

NOTES:

1.CENTERLINE SHIFT AT THE SOUTH END OF THIS PROJECT.

2.THIS PROJECT IS ADJACENT TO THE PID 110380 PROJECT. THERE IS A CENTERLINE SHIFT AT THE LIMITS OF THE PID 110380 AND THE PID 92616 PROJECT. AT THIS CENTERLINE SHIFT STA. 546+50.00, 0.0' RT IN THE PID 92616 PROJECT EQUALS STA 546+45.91, 3.2' RT OF THE PID 110380 PROJECT. THE STATIONING FOR THE WORK NORTH OF THIS CENTERLINE SHIFT USES THE PID 62616 PROJECT. THE STATIONING FOR THE WORK SOUTH OF THIS CENTERLINE SHIFT USES THE PID 110380 PROJECT CENTERLINE

NOTE: THERE ARE NO LANDSCAPED AREAS WITHIN THE WORK LIMITS

X:\Projects\2013\1321\1010\FRA\92616\roadway\sheets\92616GB001A.dgn 3/7/2023 1:38:47 PM cwong

C1 — ℄ RAMP R - 1
P.I. STA. 263+44.63
Δ = 16° 23′ 08″ (RT)
Dc = 2° 30′ 00″
R = 2,291.83′
T = 329.97′
L = 655.43′
E = 23.63′
C = 653.20′
C.B. = N 8° 46′ 00″ E
e (max) = 0.035

C2 — ℄ RAMP R - 2
P.I. STA. 269+39.51
Δ = 38° 51′ 07″ (RT)
Dc = 7° 30′ 00″
R = 763.94′
T = 329.97
L = 269.42′
E = 46.11′
C = 508.16′
C.B. = N 36° 23′ 08″ E
e (max) = 0.054

C3 — ℄ RAMP R - 3
P.I. STA. 274+68.44
Δ = 2° 59′ 29″ (RT)
Dc = 1° 00′ 00″
R = 5,729.58′
T = 149.61′
L = 299.15′
E = 1.95′
C = 299.11′
C.B. = N 57° 18′ 26″
e (max) = 0.016

C4 — ℄ RAMP R - 4
P.I. STA. 281+80.94
Δ = 38° 25′ 16″ (RT)
Dc = 4° 00′ 00″
R = 1,432.39′
T = 499.11′
L = 960.52′
E = 84.46′
C = 942.63′
C.B. = N 78° 00′ 48″ E
e (max) = 0.052

C5 — ℄ RAMP P1 - 1
P.I. STA. 678+89.39
Δ = 7° 08′ 09″ (LT)
Dc = 1° 00′ 00″
R = 5729.58′
T = 375.25′
L = 713.58′
E = 11.13′
C = 713.12′
C.B. = S 61° 58′ 59″ E
e (max) = 0.047

C6 — ℄ RAMP P1 - 2
P.I. STA. 683+67.78
Δ = 1° 12′ 34″ (LT)
Dc = 0° 29′ 44″
R = 11,564.47′
T = 122.05′
L = 244.10′
E = 0.64′
C = 244.09′
C.B. = S 66° 09′ 20″ E
e (max) = 0.038

C7SB — ℄ RAMP P1 - 3SB
P.I. STA. 686+90.12
Ls = 300.00′
fs = 9° 45′ 00″
LT = 200.30′
ST = 100.28′
x = 299.13′
y = 16.98′
k = 149.86′
p = 4.25′
e (max) = 0.060

C7 — ℄ RAMP P1 - 3
P.I. Sta. 689+37.58
Δ= 37° 10′ 46″ (RT)
Dc = 6° 30′ 00″
R = 881.47′
Ls = 300.00′
θs = 9° 45′ 00″
LT = 200.30′
ST = 100.28′
x = 299.13′
y = 16.98′
k = 149.86′
p = 4.25′
Δc = 17° 40′ 46″ (RT)
Lc = 271.99′
Ts = 447.76′
E = 53.01′
C = 270.91′
C1 = C2 = 299.61′
C.B.1 = S 63° 30′ 40″ E
C.B. = S 48° 10′ 14″ E
C.B.2 = N 32° 49′ 48″ W
e (max) = 0.060

C7SA — ℄ RAMP P1 - 3SA
P.I. STA. 691+62.09
Ls = 300.00′
fs = 9° 45′ 00″
LT = 200.30′
ST = 100.28′
x = 299.13′
y = 16.98′
k = 149.86′
p = 4.25′
e (max) = 0.060

C8SB — ℄ RAMP P1 - 4SB
P.I. STA. 699+32.93
Ls = 250.00′
fs = 9° 22′ 30″
LT = 166.90′
ST = 83.55′
x = 249.33′
y = 13.61′
k = 124.89′
p = 3.41′
e (max) = 0.080

C8 — ℄ RAMP P1 - 4
P.I. STA. 701+58.85
Δ = 38° 29′ 44″ (RT)
Dc = 7° 30′ 00″
R = 763.94′
Ls = 250.00′
θs = 9° 22′ 30″
LT = 166.90′
ST = 83.55′
x = 249.33′
y = 13.61′
k = 124.89′
p = 3.41′
Δc = 19° 44′ 44″ (RT)
Lc = 263.27′
Ts = 392.83′
E = 48.84′
C = 261.97′
C1 = C2 = 249.70′
C.B.1 = S 26° 27′ 24″ E
C.B. = S 10° 19′ 59″ E
C.B. = S 5° 47′ 25″ E
e (max) = 0.080

C8SA — ℄ RAMP P1 - 4SA
P.I. STA. 703+62.85
Ls = 250.00′
fs = 9° 22′ 30″
LT = 166.90′
ST = 83.55′
x = 249.33′
y = 13.61′
k = 124.89′
p = 124.89′
e (max) = 0.080

C9 — ℄ RAMP P1 - 5
P.I. STA. 708+92.12
Δ = 9° 20′ 15″
Dc = 1° 27′ 24″
R = 3,933.45′
T = 321.23′
L = 641.03′
E = 13.09′
C = 640.33′
C.B. = S 4° 14′ 45″ W
e = OVERLAY EXISTING

C10 — ℄ RAMP P2 - 1
P.I. STA. 868+58.66
Δ = 19° 53′ 11″ (LT)
Dc = 5° 30′ 00″
R = 1,041.74′
T = 182.62′
L = 361.57′
E = 15.89′
C = 359.76′
C.B. = S 39° 31′ 27″ E
e (max) = 0.047

C11 — ℄ RAMP P2 - 2
P.I. STA. 871+39.34
Δ = 20° 08′ 11″ (LT)
Dc = 10° 00′ 00″
R = 572.96′
T = 101.73′
L = 201.36′
E = 8.96′
C = 200.33′
C.B. = S 59° 32′ 07″ E
e (max) = 0.038

C12 — ℄ US 23 ACCEL.
P.I. STA. 557+88.42
Δ = 7° 07′ 30″ (RT)
Dc = 1° 26′ 32″
R = 3,972.54′
T = 247.32′
L = 494.00′
E = 7.69′
C = 493.69′
C.B. = N 2° 45′ 55″ W
e (max) = 0.0223

C13 — US23 CURVE 1
P.I. STA. 563+85.32
Δ = 24° 14′ 00″ (RT)
Dc = 1° 27′ 24″
R = 3,933.54′
T = 844.47′
L = 1,663.69′
E = 89.63′
C = 1,651.32′
C.B. = S 5° 47′ 20″ E
e (max) = 0.035

C14 — ℄ US23 DECEL. LANE
P.I. STA. 557+75.60
Δ = 6° 54′ 24″ (RT)
Dc = 1° 28′ 16″
R = 3,894.54′
T = 235.01′
L = 469.45′
E = 7.08′
C = 469.17′
C.B. = N 2° 52′ 28″ W
e (max) = 0.0433

C15 — ℄ IR-270
P.I. STA. 492+53.27
Δ = 32° 28′ 08″ (LT)
Dc = 0° 30′ 00″
R = 11,459.16′
T = 3,336.66′
L = 6,493.78′
E = 475.90′
C = 6,407.23′
C.B. = S 70° 05′ 07″ E
e (max) = 0.019

C16SB — RAMP L - 1SB
P.I. STA. 574+58.44
Ls= 200.00′
θs = 7° 30′ 00″
LT = 133.45′
ST = 66.78′
x = 199.66′
y = 8.72′
k = 99.94′
p = 2.18′
e = OVERLAY EXISTING

C16 — RAMP L - 1
P.I. Sta. 608+74.26
Δ = 154° 59′ 28″ (LT)
Dc = 7° 30′ 00″
R = 763.94′
θs (AHEAD) = 00°00′ 00″
Δc = 147° 29′ 28″ (LT)
Lc = 1,966.55′
E = 2,769.44′
C = 1,466.81′
C.B.1 = N 53° 18′ 42″ E
C.B. = N 25° 26′ 03″ W
e = OVERLAY EXISTING

C17 — RAMP L - 2
P.I. Sta. 595+30.43
Δ = 7° 22′ 43″ (LT)
Dc = 9° 30′ 00″
R = 603.11′
T = 38.89′
L = 77.67′
E = 1.25′
C = 77.62′
C.B. = S 77° 07′ 52″ W
e = OVERLAY EXISTING

C18 — ℄ RAMP S - 1
P.I. STA. 800+25.19
Δ = 14° 23′ 15″ (RT)
Dc = 10° 00′ 00″
R = 572.96′
T = 72.32′
L = 143.88′
E = 4.55′
C = 143.50′
C.B. = S 46° 18′ 03″ E
e (max) = 0.053

C19 — ℄ RAMP S - 2
P.I. Sta. 806+53.61
Δ= 26° 42′ 50″ (LT)
Dc = 4° 00′ 00″
R = 1,432.39′
T = 340.11′
L = 667.85′
E = 39.82′
C = 661.81′
C.B. = S 52° 27′ 50″ E
e (max) = 0.04

C20 — ℄ RAMP S - 3
P.I. Sta. 813+60.31
Δ= 17° 07′ 01″ (LT)
Dc = 2° 16′ 31″
R = 2,518.06′
T = 378.95′
L = 752.26′
E = 28.36′
C = 749.47′
C.B. = S 74° 22′ 45″ E
e (max) = 0.0551

C21 — IR 270EB MERGE
P.I. STA. 717+69.38
Δ = 6° 27′ 15″ (LT)
Dc = 0° 29′ 50″
R = 111,525.16′
T = 649.82′
L = 1,298.26′
E = 18.30′
C = 1,297.57′
C.B. = S 83° 05′ 33″ E
e (max) = 0.016

C22 — IR 270CD COLLECTOR
P.I. STA. 817+70.45
Δ = 6° 27′ 15″ (LT)
Dc = 0° 29′ 50″
R = 111,544.16′
T = 650.89′
L = 1,300.40′
E = 18.31′
C = 1,299.71′
C.B. = S 83° 05′ 33″ E
e (max) = 0.016

C23SB — ℄ RAMP O - 1SB
P.I. STA. 0+67.89
Ls = 200.00′
fs = 24° 54′ 40″
LT = 134.68′
ST = 67.89′
x = 196.25′
y = 28.60′
k = 99.37′
p = 7.20′
e = OVERLAY EXISTING

C23 — ℄ RAMP O - 1
P.I. STA. 9+41.40
Δ = 219° 20′ 54″ (RT)
Dc = 24° 54′ 40″
R = 230.00′
T = 643.28′
L = 880.52′
E = 913.16′
C = 433.15′
C.B. = N 27° 30′ 06″ W
e = OVERLAY EXISTING

C23SA — ℄ RAMP O - 1SA
P.I. STA. 1+34.68
Ls = 200.00′
fs = 24° 54′ 40″
LT = 134.68′
ST = 67.89′
x = 196.25′
y = 28.60′
k = 99.37′
p = 7.20′
e = OVERLAY EXISTING

C24 — ℄ RAMP M
P.I. Sta. 6+67.75
Δ = 10° 36′ 38″ (RT)
Dc = 4° 00′ 00″
R = 1,432.39′
T = 133.01′
L = 265.26′
E = 6.16′
C = 264.89′
C.B. = S 23° 14′ 06″ W
e = OVERLAY EXISTING

C25SB — ℄ RAMP M
P.I. STA.8+72.42
Ls = 108.59′
fs = 4° 04′ 20″
LT = 72.41′
ST = 36.21′
x = 108.53′
y = 2.57′
k = 54.29′
p = 0.64′
e = OVERLAY EXISTING

C25 — ℄ RAMP M
P.I. Sta. 11+53.42
Δ = 42° 26′ 13″ (RT)
Dc = 7° 30′ 00″
R = 763.94′
Δc = 30° 51′ 54″ (RT)
Lc = 411.53′
Es = 57.07′
C = 406.57′
C.B. 1 = S 29° 53′ 51″ W
C.B. = S 48° 02′ 41″ W
C.B. 2 = N 68° 28′ 40″ E
e = OVERLAY EXISTING

C25SA — ℄ RAMP M
P.I. STA.13+86.90
Ls = 200.00′
fs = 7° 30′ 00″
LT = 133.45′
ST = 66.78′
x = 199.66′
y = 8.72′
k = 99.94′
p = 2.18′
e = OVERLAY EXISTING

C26SB — ℄ RAMP M
P.I. STA.19+86.28
Ls = 200.00′
fs = 6° 00′ 00″
LT = 133.41′
ST = 66.74′
x = 199.78′
y = 6.98′
k = 99.96′
p = 1.74′
e = OVERLAY EXISTING

C26 — ℄ RAMP M
P.I. Sta. 22+08.26
Δ = 30° 17′ 04″ (RT)
Dc = 6° 00′ 00″
R = 954.93′
θ (AHEAD) = 00°00′ 00″
Δc = 24° 17′ 04″ (RT)
Lc = 404.74′
Es = 35.26′
C = 401.72′
C.B. 1 = S 72° 58′ 38″ W
C.B. = S 89° 07′ 10″ W
e = OVERLAY EXISTING

CALCULATED ACF
CHECKED CSR

SCHEMATIC PLAN

FRA-270-51.50

x:\Projects\2013\132N\1010\FRA\92616\roadway\sheets\92616GB001B.dgn 12/7/2022 2:52:55 PM cwong

℄ CONST. IR270 HORIZONTAL CONTROL POINTS			
STATION	NORTH	EAST	REMARKS
316+02.00	692,827.2851	1,811,673.6996	PC, ℄ CONST. IR270
338+22.26	692,281.9488	1,813,825.9426	PI, ℄ CONST. IR270
359+88.17	690,972.2407	1,815,618.7634	PT, ℄ CONST. IR270
459+16.61	685,115.5505	1,823,635.8136	PC, ℄ CONST. IR270
492+53.27	683,147.2846	1,826,330.1146	PI, ℄ CONST. IR270
524+10.38	682,933.1048	1,829,659.8976	PT, ℄ CONST. IR270

℄ CONST. IR270 EASTBOUND HORIZONTAL CONTROL POINTS			
STATION	NORTH	EAST	REMARKS
459+16.77	685,082.4437	1,823,611.6281	PC, ℄ CONST. IR270 EASTBOUND
472+89.45	684,272.7117	1,824,720.0462	PI, ℄ CONST. IR270 EASTBOUND
486+49.21	683,746.6179	1,825,987.9111	PT, ℄ CONST. IR270 EASTBOUND
486+49.21	683,746.6179	1,825,987.9111	PC, ℄ CONST. IR270 EASTBOUND
491+47.23	683,549.7552	1,826,445.3743	PI, ℄ CONST. IR270 EASTBOUND
496+44.63	683,393.1563	1,826,918.1367	PT, ℄ CONST. IR270 EASTBOUND
496+44.63	683,393.1563	1,826,918.1367	PC, ℄ CONST. IR270 EASTBOUND
499+20.84	683,309.7325	1,827,181.4472	PI, ℄ CONST. IR270 EASTBOUND
501+96.95	683,239.0315	1,827,448.4553	PT, ℄ CONST. IR270 EASTBOUND

℄ CONST. IR270 WESTBOUND HORIZONTAL CONTROL POINTS			
STATION	NORTH	EAST	REMARKS
459+16.77	685,148.6573	1,823,659.9991	PC, ℄ CONST. IR270 WESTBOUND
472+74.86	684,347.5302	1,824,756.6382	PI, ℄ CONST. IR270 WESTBOUND
486+20.26	683,825.9874	1,826,010.5980	PT, ℄ CONST. IR270 WESTBOUND
486+20.26	683,825.9874	1,826,010.5980	PC, ℄ CONST. IR270 WESTBOUND
491+19.07	683,640.4897	1,826,473.6331	PI, ℄ CONST. IR270 WESTBOUND
496+17.25	683,496.0156	1,826,951.0618	PT, ℄ CONST. IR270 WESTBOUND
496+17.25	683,496.0156	1,826,951.0618	PC, ℄ CONST. IR270 WESTBOUND
498+89.11	683,413.9103	1,827,210.2362	PI, ℄ CONST. IR270 WESTBOUND
501+60.88	683,344.2473	1,827,473.0284	PT, ℄ CONST. IR270 WESTBOUND

℄ CONST. US 23 HORIZONTAL CONTROL POINTS			
STATION	NORTH	EAST	REMARKS
555+40.85	680,934.6264	1,826,796.8213	PC, ℄ CONST. US 23
563+85.32	681,773.9555	1,826,703.7470	PI, ℄ CONST. US 23
572+04.54	682,577.5269	1,826,963.3801	PT, ℄ CONST. US 23

℄ CONST. RAMP L HORIZONTAL CONTROL POINTS			
STATION	NORTH	EAST	REMARKS
°608+74.26	°684,552.8717	°1,830,260.7172	°PISCS, ℄ CONST. RAMP L
°	°	°	°
°	°	°	°
°	°	°	°
°	°	°	°
°	°	°	°
°	°	°	°
°	°	°	°
°	°	°	°
°	°	°	°
°	°	°	°

℄ CONST. RAMP P1 HORIZONTAL CONTROL POINTS					
STATION	OFFSET	NORTH	EAST	ELEVATION	REMARKS
675+32.14	℄	684,183.5719	1,824,958.1290	--	PC, ℄ CONST. RAMP P1
678+89.39	11.13' (RT)	683,996.4557	1,825,262.4609	--	PI, ℄ CONST. RAMP P1
682+45.72	℄	683,848.5937	1,825,587.6794	--	PT, ℄ CONST. RAMP P1
682+45.72	℄	683,848.5937	1,825,587.6794	--	PC, ℄ CONST. RAMP P1
683+67.78	0.64' (RT)	683,798.0780	1,825,698.7873	--	PI, ℄ CONST. RAMP P1
684+89.82	℄	683,749.9186	1,825,810.9365	--	PT, ℄ CONST. RAMP P1
687+89.82	℄	683,616.2831	1,826,079.0972	--	PC, ℄ CONST. RAMP P1
689+26.90	10.60' (LT)	683,541.6423	1,826,194.0789	--	PI, ℄ CONST. RAMP P1
690+61.81	℄	683,435.6080	1,826,280.9626	--	PT, ℄ CONST. RAMP P1
700+16.03	℄	682,608.7659	1,826,754.7882	--	PC, ℄ CONST. RAMP P1
701+48.98	11.48' (LT)	682,483.9926	1,826,800.1105	--	PI, ℄ CONST. RAMP P1
702+79.30	℄	682,351.0410	1,826,801.1787	--	PT, ℄ CONST. RAMP P1
705+70.89	℄	682,061.5244	1,826,769.5414	--	PC, ℄ CONST. RAMP P1
708+92.12	13.10' (RT)	681,744.1763	1,826,719.7627	--	PI, ℄ CONST. RAMP P1
712+11.93	℄	681,422.9565	1,826,722.1332	--	PT, ℄ CONST. RAMP P1

℄ CONST. RAMP P2 HORIZONTAL CONTROL POINTS					
STATION	OFFSET	NORTH	EAST	ELEVATION	REMARKS
866+76.04	℄	683,098.1774	1,826,519.6253	--	PC, ℄ CONST. RAMP P2
868+58.66	15.89' (RT)	682,939.3592	1,826,609.7767	--	PI, ℄ CONST. RAMP P2
870+37.61	℄	682,820.6767	1,826,748.5749	--	PT, ℄ CONST. RAMP P2
870+37.61	℄	682,820.6760	1,826,748.5758	--	PC, ℄ CONST. RAMP P2
871+39.34	8.96' (RT)	682,754.5626	1,826,825.8950	--	PI, ℄ CONST. RAMP P2
872+38.97	℄	682,719.1078	1,826,921.2480	--	PT, ℄ CONST. RAMP P2

℄ CONST. RAMP R HORIZONTAL CONTROL POINTS					
STATION	OFFSET	NORTH	EAST	ELEVATION	REMARKS
260+14.67	℄	681,407.0524	1,826,824.0517	--	PC, ℄ CONST. RAMP R
263+44.63	23.63' (LT)	681,737.0012	1,826,827.3568	--	PI, ℄ CONST. RAMP R
266+70.09	℄	682,052.6165	1,826,923.6066	--	PT, ℄ CONST. RAMP R
266+70.09	℄	682,052.6165	1,826,923.6066	--	PC, ℄ CONST. RAMP R
269+39.51	46.12' (LT)	682,310.3154	1,827,002.1942	--	PI, ℄ CONST. RAMP R
271+88.12	℄	682,461.7050	1,827,225.0526	--	PT, ℄ CONST. RAMP R
273+18.83	℄	682,535.1576	1,827,333.1811	--	PC, ℄ CONST. RAMP R
274+68.44	1.95' (LT)	682,619.2245	1,827,456.9347	--	PI, ℄ CONST. RAMP R
276+17.98	℄	686,696.7185	1,827,584.9068	--	PT, ℄ CONST. RAMP R
276+81.84	℄	682,729.7958	1,827,639.5302	--	PC, ℄ CONST. RAMP R
281+80.94	84.47' (LT)	682,988.3253	1,828,066.4611	--	PI, ℄ CONST. RAMP R
286+42.36	℄	682,925.5646	1,828,561.6061	--	PT, ℄ CONST. RAMP R

℄ CONST. RAMP S HORIZONTAL CONTROL POINTS					
STATION	OFFSET	NORTH	EAST	ELEVATION	REMARKS
799+52.87	℄	683,945.3272	1,827,509.0027	--	PC, ℄ CONST. RAMP S
800+25.19	4.55' (LT)	683,902.0423	1,827,567.4133	--	PI, ℄ CONST. RAMP S
800+54.53	℄	683,846.1885	1,827,612.7486	--	PT, ℄ CONST. RAMP S
803+13.51	℄	683,677.9863	1,827,749.4769	--	PC, ℄ CONST. RAMP S
806+85.23	47.45' (RT)	683,384.6471	1,827,990.6352	--	PI, ℄ CONST. RAMP S
810+40.91	℄	683,251.5154	1,828,329.0917	--	PT, ℄ CONST. RAMP S
810+40.91	℄	683,251.5454	1,828,329.0917	--	PC, ℄ CONST. RAMP S
814+18.98	24.84' (RT)	683,110.5888	1,828,682.2595	--	PI, ℄ CONST. RAMP S
817+92.71	℄	683,066.6179	1,829,055.5836	--	PT, ℄ CONST. RAMP S

℄ CONST. US 23 ACCELERATION LANE HORIZONTAL CONTROL POINTS					
STATION	OFFSET	NORTH	EAST	ELEVATION	REMARKS
555+41.10	℄	680,930.3279	1,826,758.0589	--	PC, ℄ CONST. US 23 ACCEL. LANE
557+88.42	7.69' (LT)	681,176.1424	1,826,730.8002	--	PI, ℄ CONST. US 23 ACCEL. LANE
560+35.11	℄	681,423.4397	1,826,734.2416	--	PT, ℄ CONST. US 23 ACCEL. LANE

℄ CONST. US 23 DECELERATION LANE HORIZONTAL CONTROL POINTS					
STATION	OFFSET	NORTH	EAST	ELEVATION	REMARKS
555+40.59	℄	680,938.9248	1,826,835.5837	--	PC, ℄ CONST. US 23 DECEL. LANE
557+75.60	7.08' (LT)	681,172.5046	1,826,809.6817	--	PI, ℄ CONST. US 23 DECEL. LANE
560+10.04	℄	681,407.5041	1,826,812.0557	--	PT, ℄ CONST. US 23 DECEL. LANE

℄ CONST. IR270 EASTBOUND MERGE LANE HORIZONTAL CONTROL POINTS					
STATION	OFFSET	NORTH	EAST	ELEVATION	REMARKS
711+19.56	℄	683,023.2932	1,828,367.5082	--	PC, ℄ CONST. IR270 EB MERGE
717+69.38	18.31' (RT)	682,908.9525	1,829,007.1854	--	PI, ℄ CONST. IR270 EB MERGE
724+17.82	℄	682,867.2409	1,829,655.6611	--	PT, ℄ CONST. IR270 EB MERGE

℄ CONST. IR270 CD LANE HORIZONTAL CONTROL POINTS					
STATION	OFFSET	NORTH	EAST	ELEVATION	REMARKS
811+19.56	℄	683,004.5896	1,828,364.1650	--	PC, ℄ CONST. IR270 CD LANE
817+70.45	18.34' (RT)	682,890.0604	1,829,004.8967	--	PI, ℄ CONST. IR270 CD LANE
824+19.96	℄	682,848.2801	1,829,654.4415	--	PT, ℄ CONST. IR270 CD LANE

CALCULATED ACF
CHECKED CSR

CONTROL POINTS

FRA-270-51.50

x:\Projects\2013\1321\1010\FRA\92616\roadway\sheets\92616GB002.dgn 12/7/2022 2:52:56 PM cwong

VERTICAL CONTROL POINTS					
STATION	OFFSET	NORTH	EAST	ELEVATION	REMARKS
872+07.79	17.0' RT	682,715.164	1,826,885.541	694.984	CONTROL POINT 4 CONCRETE MONUMENT DESC: CALC
532+44.52	52.5' RT	678,659.720	1,827,113.415	730.461	CONTROL POINT 11 CONCRETE MONUMENT DESC: CALC
541+76.77	60.0' LT	679,572.467	1,826,892.916	722.612	CONTROL POINT 11A CONCRETE MONUMENT
US 23 & SR 104		672,787.850	1,827,656.050		CONTROL POINT FRANK 17 (SOURCE BENCHMARK) STAINLESS STEEL ROD DESC: SOUTH OF RATHMELL ROAD IN THE MEDIAN STRIP, 182.1 FEET SOUTH OF THE SOUTH END OF A CONCRETE CULVERT PIPE, 20.9 FEET WEST OF THE WEST EDGE OF PAVEMENT OF THE NORTHBOUND LANE, 4.1 FEET EAST OF THE EAST EDGE OF PAVEMENT OF THE SOUTHBOUND LANE, ACCESS THROUGH ALUMINUM ACCESS COVER, 1 INCH BELOW GROUND. SEE "FRANK117" FOR AZIMUTH.STATION IS A STAINLESS STEEL ROD DRIVEN TO A DEPTH OF 56 FEET ON U.S. 23, 1.2 MILES
US 23 & RATHMELL RD		698,707.250	1,829,674.510		CONTROL POINT FRANK 134 (SOURCE BENCHMARK) ALUMINUM PLUG DESC: ALUMINUM PLUG IN CONCRETE MONUMENT AT THE SOUTHEAST CORNER OF SOUTH HIGH STREET AND S.R. 104 EXIT RAMP, 88 FEET EAST OF THE BACK OF CURB ON THE EAST SIDE OF SOUTH HIGH STREET, 50.6 FEET SOUTHWEST OF A "WRONG WAY" SIGN, 57.4 FEET NORTHWEST OF A LIGHT POLE ON THE SOUTH SIDE OF THE ENTRANCE RAMP TO S.R. 104, 20.3 FEET SOUTH OF THE BACK OF CURB ON THE SOUTH SIDE OF THE S.R. 104 EXIT RAMP, 4 INCHES BELOW THE GROUND. DISK IS STAMPED "FRANK 34 AZ MK 1987".

CALCULATED ACF
CHECKED CSR

CONTROL POINTS

FRA-270-51.50

x:\Projects\2013\132\1010\FRA\92616\roadway\sheets\92616GB003.dgn 12/7/2022 2:52:57 PM cwong

STANDARD ABBREVIATION LIST

AA -	ANCHOR ASSEMBLY
ATG -	ADJUST TO GRADE
ATGO -	ADJUST TO GRADE BY OTHERS
BL-	BASELINE
BM -	BENCHMARK
BOC -	BACK OF CURB
BTA -	BRIDGE TERMINAL ASSEMBLY
CI -	CURB INLET
CL CONST. -	CENTERLINE OF CONSTRUCTION
CL -	CENTERLINE
COMM -	COMMERCIAL
CONST. LIMITS -	CONSTRUCTION LIMITS
DIP -	DUCTILE IRON PIPE
DND -	DO NOT DISTURB
EB -	EASTBOUND
ELEC -	ELECTRIC
EL -	ELEVATION
EOP -	EDGE OF PAVEMENT
EOS -	EDGE OF SHOULDER
EX -	EXISTING
FC -	FACE OF CURB
FDO -	FOR DIRECTION ONLY
FF -	FILTER FABRIC
FH -	FIRE HYDRANT
FL -	FLOW LINE
GR -	GUARDRAIL
INV -	INVERT
LON -	LENGTH OF NEED
LT -	LEFT
MH -	MANHOLE
NB -	NORTHBOUND
OHE -	OVERHEAD ELECTRIC
PR -	PROPOSED
RCHP -	ROCK CHANNEL PROTECTION
RCP -	REINFORCED CONCRETE PIPE
RES -	RESIDENTIAL
RT -	RIGHT
RW -	RIGHT OF WAY
SAN -	SANITARY SEWER
SB -	SOUTHBOUND
SH -	STANDARD HIGHWAY EASEMENT
STA -	STATION
STM -	STORM
TBA -	TO BE ABANDONED
TBRL -	TO BE RELOCATED
TBRLO -	TO BE RELOCATED BY OTHERS
TBR -	TO BE REMOVED
TBRO -	TO BE REMOVED BY OTHERS
TCB -	TOP OF CURB
TC -	TOP OF CASTING
TELE -	TELEPHONE
TYP -	TYPICAL
UD -	UNDERDRAIN
UNK -	UNKNOWN MATERIAL
VCP -	VITRIFIED CLAY PIPE
WB -	WESTBOUND
WV -	WATER VALVE

CALCULATED ACF
CHECKED CSR

STANDARD ABBREVIATIONS

FRA-270-51.50

x:\Projects\2013\132\1010\FRA\92616\roadway\sheets\92616GB004.dgn 12/7/2022 2:52:58 PM cwong

(A) EXISTING ±2" ASPHALT CONCRETE SURFACE COURSE
(B) EXISTING ±2" ASPHALT CONCRETE INTERMEDIATE COURSE
(C) EXISTING ±12" ASPHALT CONCRETE BASE COURSE
(D) EXISTING ±6" AGGREGATE BASE
(1) ITEM 442 - 1.5" ASPHALT CONCRETE SURFACE COURSE, 12.5MM, TYPE A, (446), PG70-22M, AS PER PLAN (SEE NOTES 1 AND 2)
(2) ITEM 407 - NON-TRACKING TACK COAT
(3) ITEM 442 - 1.75" ASPHALT CONCRETE INTERMEDIATE COURSE, 12.5MM, TYPE A, (446)
(5) ITEM 302 - 8" ASPHALT CONCRETE BASE COURSE, PG64-22, (449) (PLACED IN TWO LIFTS)
(6) ITEM 304 - 6" AGGREGATE BASE
(7) ITEM 254 - PAVEMENT PLANING, 1 1/4"
(8) ITEM 605 - 4" BASE PIPE UNDERDRAINS
(9) ITEM 441 - 3" ASPHALT CONCRETE INTERMEDIATE COURSE, TYPE 1, UNDER GUARDRAIL, PG64-22, (AS PER PLAN)
(10) ITEM 209 - LINEAR GRADING, (AS PER PLAN)
(11) ITEM 606 - GUARDRAIL, TYPE MGS
(12) ITEM 605 - 4" SHALLOW PIPE UNDERDRAINS
(13) ITEM 442 - 1.5" ASPHALT CONCRETE SURFACE COURSE, 12.5MM, TYPE A (446)
(14) ITEM 442 - 1.75" ASPHALT CONCRETE INTERMEDIATE COURSE, 12.5MM, TYPE A (446)
(15) ITEM 452 - 11" NON-REINFORCED CONCRETE PAVEMENT
(16) ITEM 452 - 9" NON-REINFORCED CONCRETE PAVEMENT
(17) ITEM 204 - EXCAVATION OF SUBGRADE (16" TYPICAL)
(18) ITEM 204 - GRANULAR MATERIAL, TYPE B
(19) ITEM 204 - GEOGRID
(20) ITEM 204 - GEOTEXTILE FABRIC
(21) ITEM 302 - 11" ASPHALT CONCRETE BASE COURSE, PG64-22, (449) (PLACED IN TWO LIFTS)
(22) ITEM 302 - 9" ASPHALT CONCRETE BASE COURSE, PG64-22, (449) (PLACED IN TWO LIFTS)
(23) ITEM 206 - CEMENT STABILIZED SUBGRADE, 14 INCHES DEEP
(24) ITEM 622 - CONCRETE BARRIER, TYPE B1
(25) ITEM 204 - SUBGRADE COMPACTION
(26) ITEM 452 - 12" NON-REINFORCED CONCRETE PAVEMENT
(27) ITEM 452 - 13" NON-REINFORCED CONCRETE PAVEMENT
(28) ITEM 618 - RUMBLE STRIPS
(29) ITEM 441 - 1.25" ASPHALT CONCRETE SURFACE COURSE, TYPE 1, (448), PG-64-22
(30) ITEM 441 - 1.75" ASPHALT CONCRETE INTERMEDIATE COURSE, TYPE 2, (448), PG64-22
(31) ITEM 408 - PRIME COAT
(32) ITEM 304 - 8" AGGREGATE BASE
(33) ITEM 204 - PROOF ROLLING

NOTES

1. INCLUDE ITEM 875 LONGITUDINAL JOINT ADHESIVE
2. USE PG76-22 ON ALL RAMPS

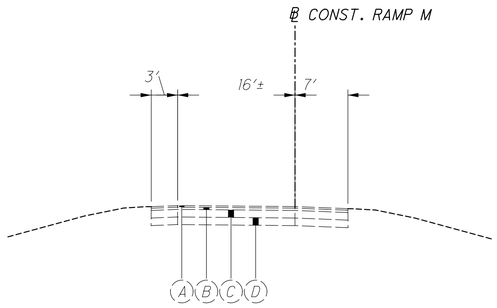

EXISTING SECTION - RAMP M
STA. 0+00.00 TO STA. 19+78.51

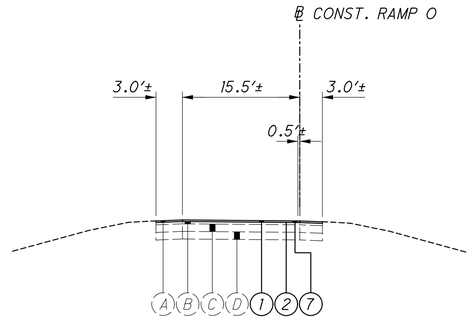

OVERLAY SECTION - RAMP O
STA. 0+98.12 TO STA. 11+78.64

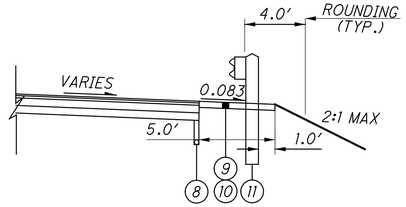

GUARDRAIL DETAIL

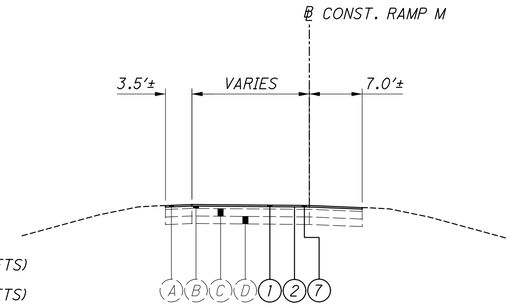

OVERLAY SECTION - RAMP M
STA. 0+00.00 TO STA. 19+78.39

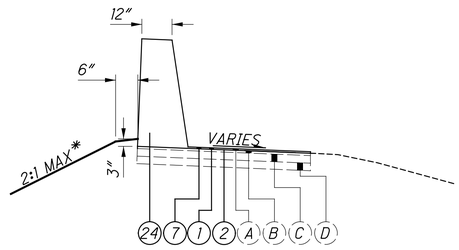

CONCRETE BARRIER - RAMP O
RAMP O - STA. 5+39.93 TO STA. 8+25.21

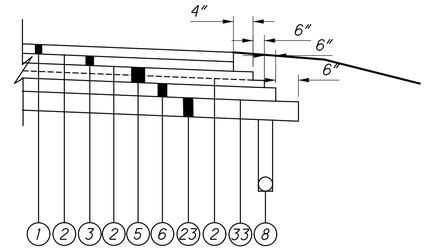

TYPICAL FLEXIBLE PAVEMENT EDGE DETAIL
NOT TO SCALE

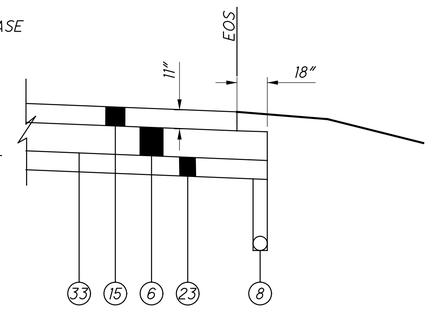

TYPICAL RIGID PAVEMENT EDGE DETAIL, RAMP S
NOT TO SCALE

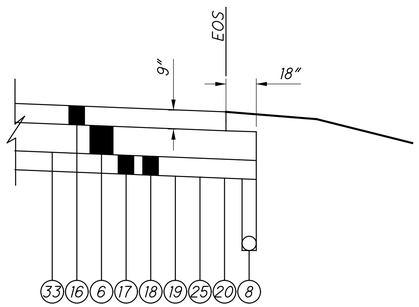

TYPICAL RIGID PAVEMENT EDGE DETAIL, RAMP P2
NOT TO SCALE

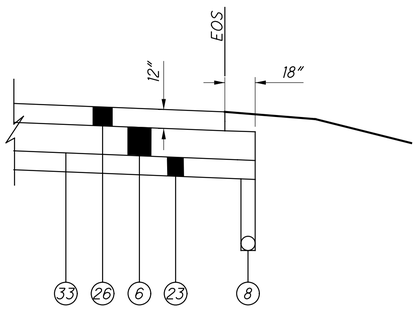

TYPICAL RIGID PAVEMENT EDGE DETAIL, RAMPS L AND R
NOT TO SCALE

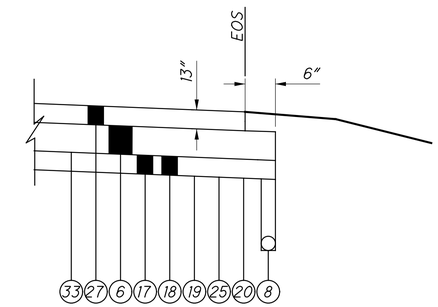

TYPICAL RIGID PAVEMENT EDGE DETAIL, RAMP P1
NOT TO SCALE

MATCH LANE CROSS SLOPE WHEN LANE CROSS SLOPE IS GREATER THAN 0.04
* OR AS NOTED IN CROSS SECTIONS
** OUTSIDE EDGE OF PAVEMENT

CALCULATED ACF
CHECKED CSR

TYPICAL SECTIONS

FRA-270-51.50

x:\Projects\2013\1321\1010\FRA\92616\roadway\sheets\92616GY001.dgn 12/28/2022 1:48:29 PM sbarnard

x:\Projects\2013\1321\1010\FRA\92616\roadway\sheets\92616GY001.dgn 12/7/2022 2:52:59 PM cwong

CALCULATED ACF
CHECKED CSR

TYPICAL SECTIONS

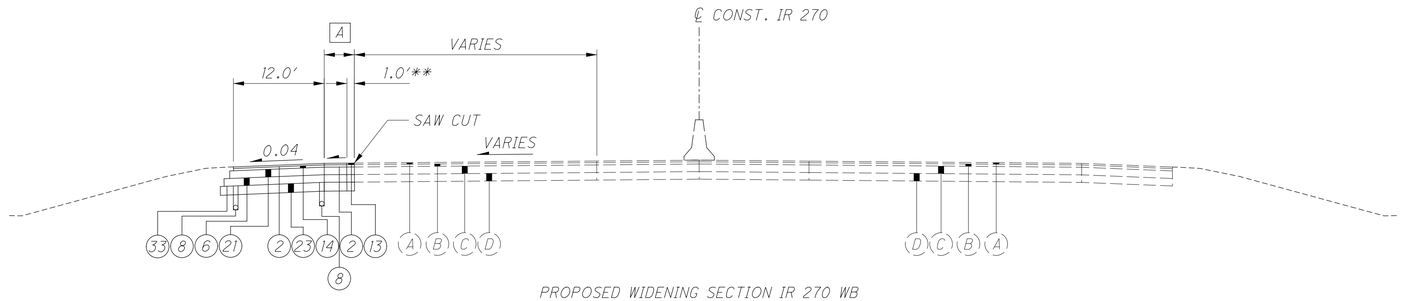

PROPOSED WIDENING SECTION IR 270 WB
STA 486+12.00 TO 489+00.00

A 0.0′ AT STA 486+12.00 TO 3.0′ AT STA. 489+00.00 MATCH EXISTING PAVEMENT SLOPE

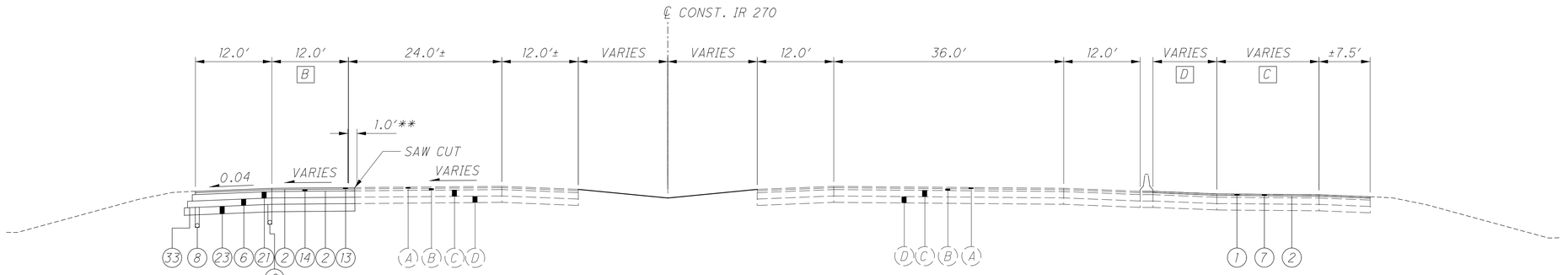

PROPOSED WIDENING SECTION IR 270 WB
STA 489+00.00 TO 512+96.84
SUSPEND WORK - STA 497+85.08 TO 500+79.25

B VARIES FROM 3.0′ AT STA. 489+00.00 TO 12.0′ AT STA. 497+85.66
12.0′ FROM STA. 500+80.73 TO STA. 512+96.84
MATCH EXISTING PAVEMENT SLOPE

PROPOSED OVERLAY SECTION IR 270 EB
STA 497+31.09 TO STA. 511+19.56

C VARIES FROM 19.4′ TO 16.0′ FROM STA. 497+313.09 TO STA. 504+48.76
16.0′ FROM STA. 504+48.76 TO STA. 511+19.56

D VARIES FROM 9.5′ TO 3.4′ FROM STA. 497+313.09 TO STA. 501+73.26
±3.5′ FROM STA. 501+73.26 TO STA. 511+19.56

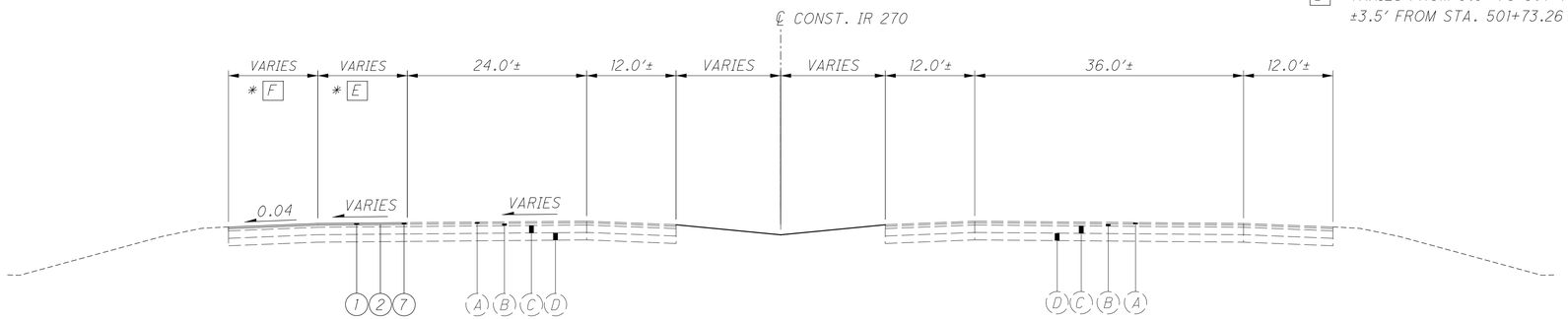

PROPOSED OVERLAY SECTION IR 270 WB
STA. 512+96.84 TO STA. 521+40.00

* THE OVERLAY SHALL MATCH EXISTING PAVEMENT WIDTHS. DIMENSIONS ARE SHOWN FOR PAVEMENT CALCULATION PURPOSES AT CRITICAL STATIONS. SEE SHEETS 107-108 FOR MORE DETAIL

** OUTSIDE EDGE OF PAVEMENT
EXISTING SHOULDER TO BE REMOVED

*E VARIES FROM 41.1′ AT STA. 512+96.84 TO 16.2′ AT STA. 515+79.64
VARIES FROM 16.2′ AT STA. 515+79.64 TO 12.6′ AT STA. 519+77.77
VARIES FROM 12.6′ AT STA. 519+77.77 TO 0.0′ AT STA. 521+40.00

*F VARIES FROM 6.1′ AT STA. 512+96.84 TO 8.0′ AT STA. 515+79.64
VARIES FROM 8.0′ AT STA. 515+79.64 TO 7.7′ AT STA. 519+77.77
VARIES FROM 7.7′ AT STA. 519+77.77 TO 10.5′ AT STA. 521+40.00

FRA-270-51.50

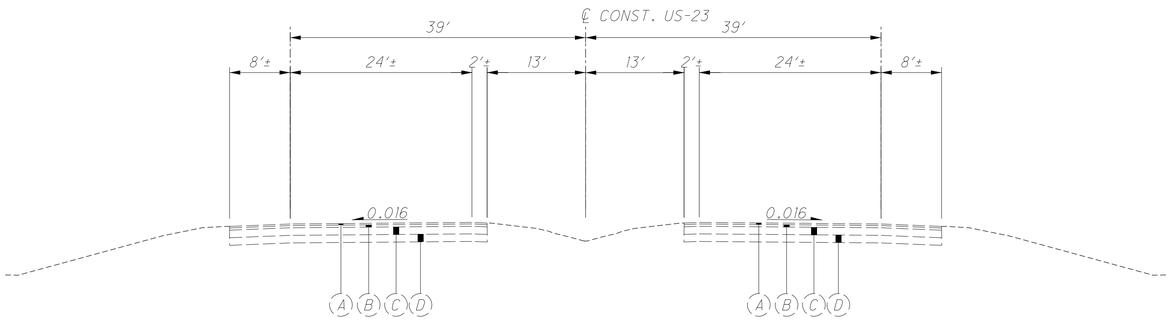

EXISTING SECTION US-23
STA 546+50.00

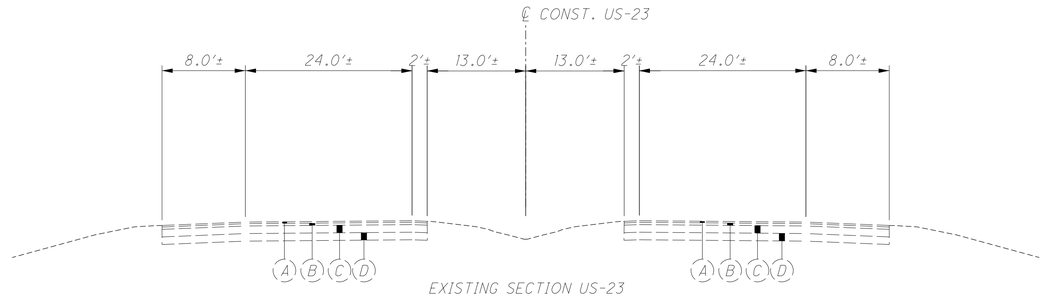

EXISTING SECTION US-23
STA. 546+50.00 TO STA. 572+90.67
STA. 574+43.49 TO STA. 585+87.72
STA. 587+41.07 TO STA. 590+00.00

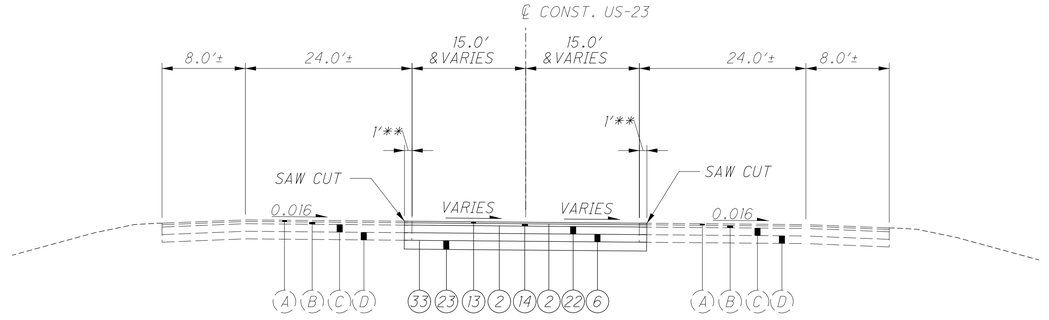

PROPOSED CROSSOVER SECTION US-23
STA. 572+80.57 TO STA. 574+47.73
STA. 585+88.35 TO STA. 587+41.07

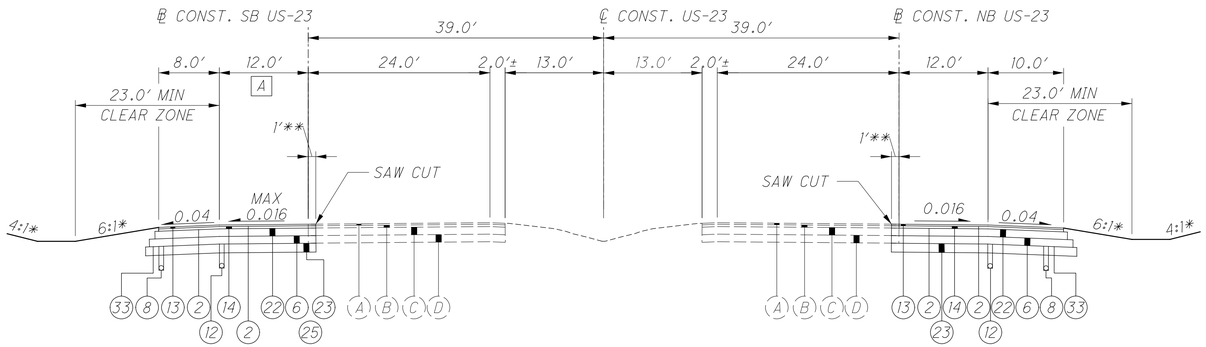

PROPOSED SUPERELEVATED SECTION SB US-23
STA 546+50.00 TO STA 553+50.00

PROPOSED NORMAL SECTION NB US-23
STA 546+50.00 TO STA 553+50.00

PROPOSED SUPERELEVATED/NORMAL SECTION US-23
STA 546+50.00 TO STA 553+50.00

[A] VARIES FROM 0.0′ AT STA. 546+50.00 TO 12.0′ AT STA. 552+50.00
12.0′ FROM STA. 552+50.00 TO STA. 553+50.00

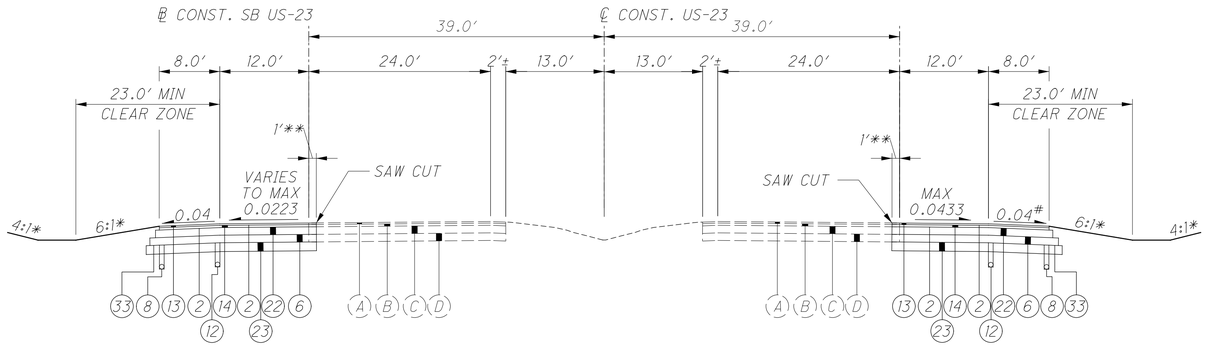

PROPOSED SUPERELEVATED SECTION SB US-23
STA 553+50.00 TO STA 560+35.11

PROPOSED SUPERELEVATED SECTION NB US-23
STA 553+50.00 TO STA 560+10.04

PROPOSED SUPERELEVATED SECTION US-23
STA 553+50.00 TO STA 560+30.00

MATCH LANE CROSS SLOPE WHEN LANE CROSS SLOPE IS GREATER THAN 0.04

* OR AS NOTED IN CROSS SECTIONS

** OUTSIDE EDGE OF PAVEMENT

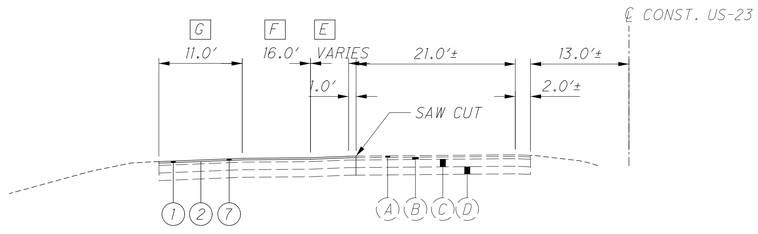

PROPOSED OVERLAY SECTION US-23
STA. 572+06.27 TO STA. 584+08.94

[E] 0.0′ FROM STA. 572+06.27 TO STA. 575+68.54
VARIES FROM 30.5′ AT STA. 575+68.54 TO 0.0′ AT STA. 576+87.29
0.0′ FROM STA. 575+68.54 TO STA. 584+08.94

[F] 0.0′ FROM STA. 572+06.27 TO STA. 575+68.54
16.0′ FROM STA. 575+68.54 TO 576+87.29
VARIES FROM 16.0′ AT STA. 576+87.29 TO 12.0′ AT STA. 580+21.51
12.0′ FROM STA. 580+21.51 TO STA. 582+50.00
VARIES FROM 12.0′ AT STA. 582+50.00 TO 0.0′ AT STA. 583+00.00
0.0′ FROM STA. 583+00.00 TO STA. 584+08.94

[G] VARIES FROM 14.4′ AT STA. 572+06.27 TO 11.7′ AT STA. 575+68.54
MATCH EXISTING SHOULDER WIDTH STA. 575+68.54 TO STA. 584+08.94

CALCULATED ACF
CHECKED CSR

TYPICAL SECTIONS

FRA-270-51.50

x:\Projects\2013\132\1010\FRA\92616\roadway\sheets\92616GY001.dgn 12/7/2022 2:52:59 PM cwong
cwong

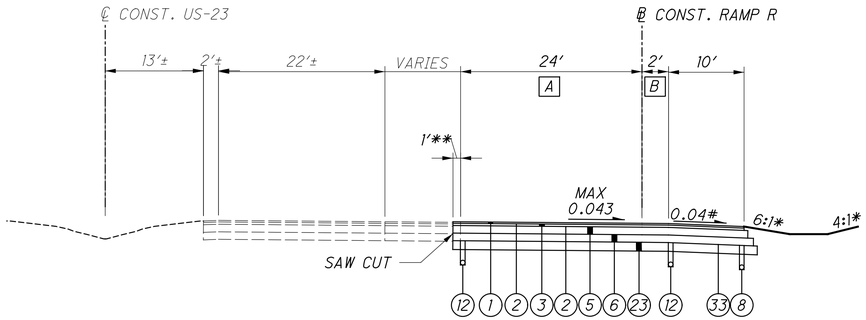

PROPOSED SUPERELEVATED SECTION RAMP R
STA 260+14.67 TO STA 266+48.50

A VARIES FROM 12.0' AT STA. 260+14.67 TO 24.0' AT STA. 264+09.72
24.0' FROM STA. 264+09.72 TO STA. 266+48.50

B 0.0' FROM STA. 260+14.67 TO 265+21.48
VARIES FROM 0.0' AT STA. 265+21.48 TO 2.0' AT STA. 266+48.50

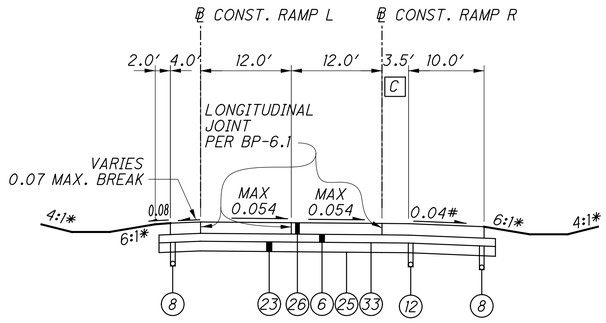

PROPOSED SUPERELEVATED SECTION RAMP R
STA 266+48.50 TO STA 272+70.68

C VARIES FROM 2.0' AT STA. 266+48.50 TO 3.5' AT STA. 267+44.39
3.5' FROM STA. 267+44.39 TO STA. 271+13.82
VARIES FROM 3.5' AT STA. 271+13.82 TO 1.0' AT STA. 272+70.68

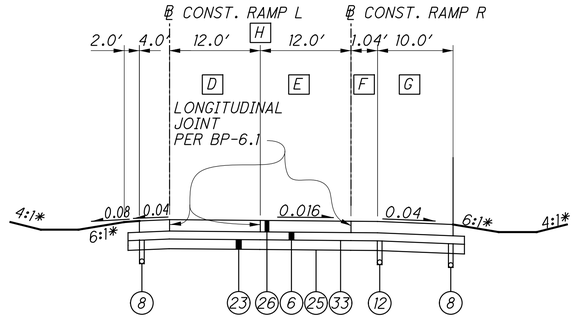

PROPOSED NORMAL SECTION RAMP R
STA 272+70.68 TO STA 276+30.51

D 12.0' SEE RAMP L

E 12.0' FROM STA. 272+70.68 TO STA. 274+23.44
VARIES FROM 12.0' AT STA. 274+23.44 TO 16.0' AT STA. 275+79.94
16.0' FROM STA. 275+79.94 TO STA. 276+30.51

F VARIES FROM 1.0' AT STA. 272+70.68 TO 0.0' AT STA. 273+36.73

G VARIES FROM 10.0' AT STA. 275+79.94 TO 6.0' AT STA. 276+29.94.
6.0' FROM STA. 276+29.94 TO STA. 276+30.51.

H SEE PAVEMENT DETAIL

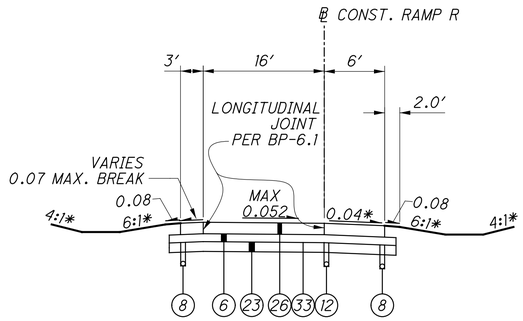

PROPOSED SUPERELEVATED SECTION RAMP R
STA 276+30.51 TO STA 285+19.83

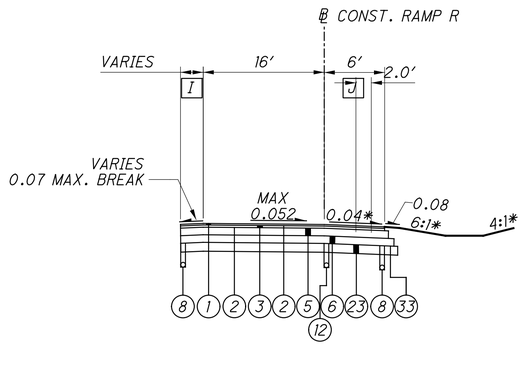

PROPOSED SUPERELEVATED SECTION RAMP R
STA STA 285+19.83 TO STA. 287+02.09

I SEE IR 270 CD LANE SECTION

J VARIES FROM 6.0' AT STA. 286+42.36 TO 8.0' AT STA. 286+92.92
8.0' FROM STA. 286+92.92 TO STA. 287+02.09

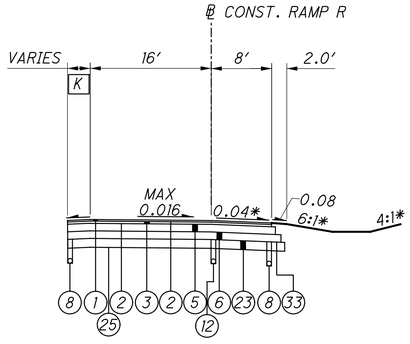

PROPOSED NORMAL SECTION RAMP R
STA. 287+02.09 TO STA. 287+90.80

K SEE IR 270 CD LANE SECTION

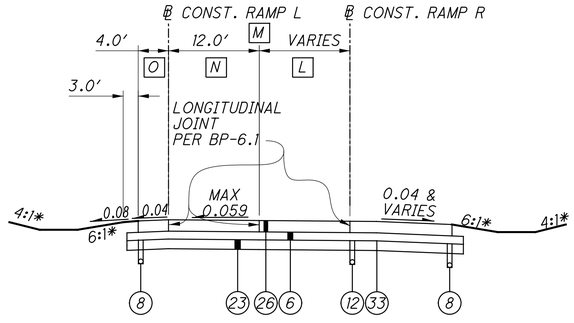

PROPOSED SUPERELEVATED SECTION RAMP L
STA 571+88.12 TO STA 578+67.54

L 12.0' SEE RAMP R

M SEE PAVEMENT DETAIL

N VARIES FROM 12.0' AT STA. 574+23.32 TO 16.0' AT STA. 575+79.41
16.0' FROM STA. 575+79.41 TO STA. 578+67.54

O VARIES FROM 4.0' AT STA. 575+86.90 TO 3.0' AT STA. 576+36.90
3.0' FROM 576+36.90 TO STA. 578+67.54

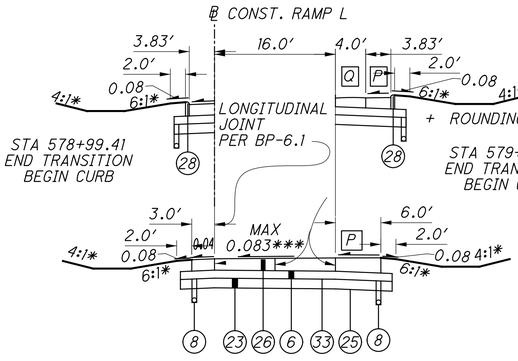

PROPOSED SUPERELEVATED SECTION RAMP L
STA 578+67.54 TO STA. 579+24.81

P VARIES FROM 0.011 FT./FT. AT STA. 578+67.54
TO 0.083 FT./FT. AT STA. 579+02.54.

Q MAINTAIN 4.0' OF ROUNDING AS NEEDED

*** 50' SLOPE TRANSITION FROM 0.059 TO 0.083
TO MATCH THE PROPOSED APPROACH SLAB SLOPE.
ALSO A 35' MINIMUM SHOULDER TAPER SHALL BE USED
FROM THE ROADWAY TO THE APPROACH SLAB.

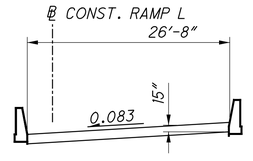

PROPOSED SUPERELEVATED RAMP L FORWARD AND REAR APPROACH SLAB (T=15")
STA 579+24.81 TO STA. 579+49.81
STA. 583+01.24 TO STA. 583+26.24

MATCH LANE CROSS SLOPE WHEN LANE CROSS SLOPE IS GREATER THAN 0.04

* OR AS NOTED IN CROSS SECTIONS

** OUTSIDE EDGE OF PAVEMENT

CALCULATED ACF
CHECKED CSR

TYPICAL SECTIONS

FRA-270-51.50

X:\Projects\2013\1321\1000\FRA\92616\roadway\sheets\92616GY001.dgn 3/7/2023 11:08:11 AM cwong

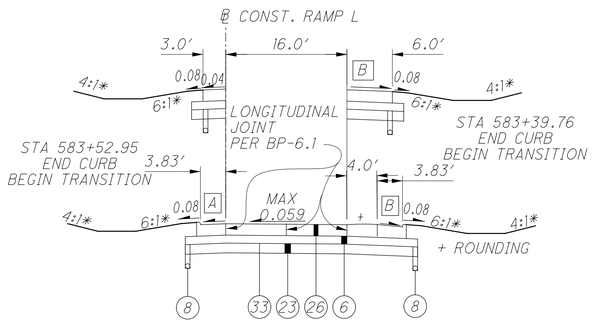

PROPOSED SUPERELEVATED SECTION RAMP L
STA 583+26.24 TO STA. 583+87.95

A MATCH SUPERELEVATION RATE IF GREATER THAN 0.040.

B VARIES FROM 0.042 FT./FT. AT STA. 583+39.76
TO 0.011 FT./FT. AT STA. 583+74.76.
0.011 FT./FT. FROM STA. 583+74.76 TO STA. 583+87.95.

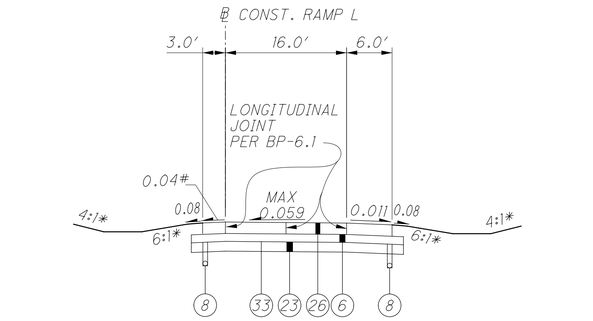

PROPOSED SUPERELEVATED SECTION RAMP L
STA 583+87.95 TO STA. 584+40.00

MATCH LANE CROSS SLOPE WHEN LANE
CROSS SLOPE IS GREATER THAN 0.04

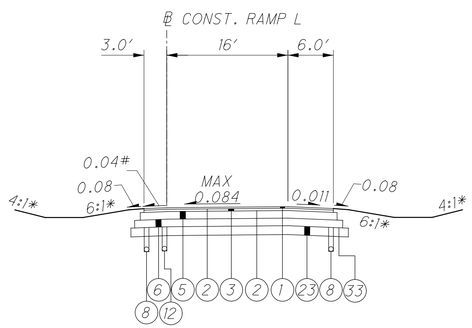

PROPOSED SUPERELEVATED SECTION RAMP L
STA STA 584+40.00 TO STA. 588+05.24

MATCH LANE CROSS SLOPE WHEN LANE
CROSS SLOPE IS GREATER THAN 0.04

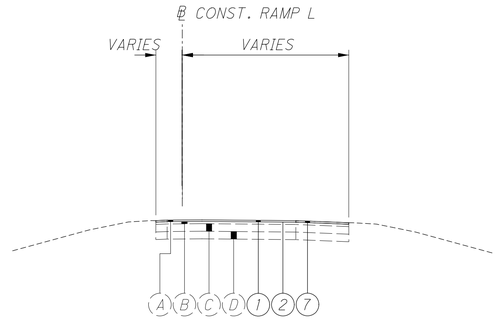

PORPOSED OVERLAY SECTION - RAMP L
STA. 590+62.51 TO STA. 594+77.69

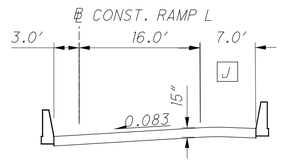

PROPOSED SUPERELEVATED RAMP L FORWARD AND REAR APPROACH SLAB (T=15″)
STA 588+05.24 TO STA. 588+30.24
STA. 590+37.51 TO STA. 590+62.51

J MAINTAIN 4.0′ OF ROUNDING

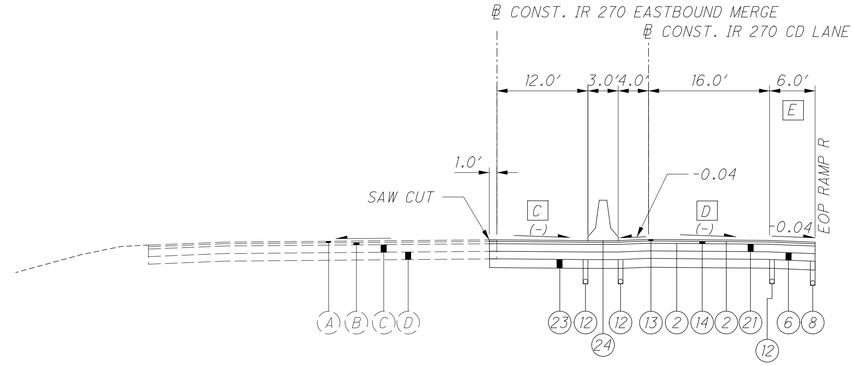

EXISTING NORMAL SECTION IR 270 EB
PROPOSED SUPERELEVATED SHOULDER IR 270 EB MERGE
STA 711+19.56 TO 714+74.28

PROPOSED SUPERELEVATED SECTION IR 270 CD LANE
STA 811+19.56 TO STA 814+74.86

C VARIES FROM +0.0017 AT STA. 711+19.56 TO -0.010 AT STA. 712+19.56
VARIES FROM -0.010 AT STA. 712+19.56 TO -0.012 AT STA. 714+74.28

D VARIES FROM +0.020 AT STA. 811+19.56 TO +0.016 AT STA. 811+32.31
+0.016 FROM STA. 811+32.31 TO STA. 813+03.17
VARIES FROM +0.016 AT STA. 813+03.17 TO -0.016 AT STA. 814+74.87

E 6′ FROM STA. 811+19.56 TO 812+03.03
VARIES FROM 23.0′ AT STA. 812+03.03 TO 9.0′ AT STA. 814+74.86

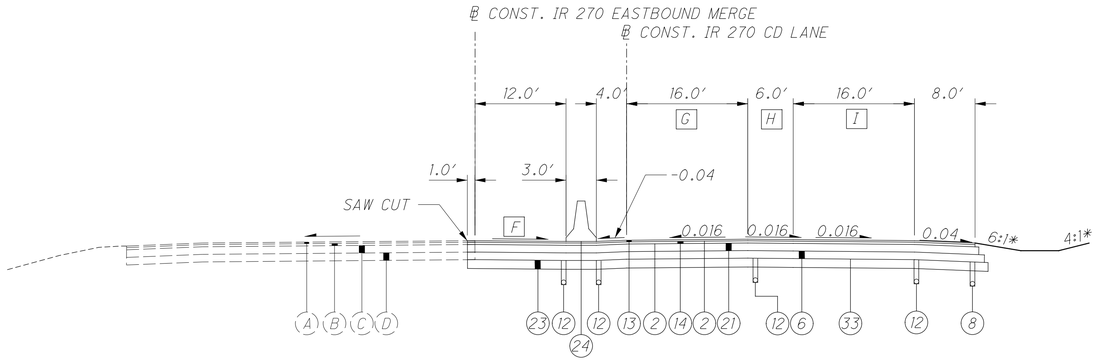

EXISTING NORMAL SECTION IR 270 EB
PROPOSED SUPERELEVATED SHOULDER IR 270 EB MERGE
STA 714+74.28 TO 720+08.53

PROPOSED SUPERELEVATED SECTION IR 270 CD LANE
STA 814+74.86 TO STA 820+10.00

F VARIES FROM -0.012 AT STA. 714+74.28 TO -0.016 AT STA. 719+07.34
-0.016 FROM STA. 719+07.34 TO STA. 720+07.34

G 16.0′ FROM STA. 814+74.86 TO STA. 818+27.28
VARIES FROM 34.0′ AT STA. 818+27.28 TO 32.0′ AT STA. 819+28.21
VARIES FROM 32.0′ AT STA. 819+28.21 TO 29.4′ AT STA. 820+10.00

H VARIES FROM 9.0′ AT STA. 814+74.86 TO 2.0′ AT STA. 818+27.28
0.0′ FROM STA. 818+27.28 TO STA. 820+10.00

I 16.0′ FROM STA. 814+74.86 TO STA. 818+27.28
0.0′ FROM STA. 818+27.28 TO STA. 820+10.00

* OR AS NOTED IN CROSS SECTIONS

CALCULATED ACF
CHECKED CSR

TYPICAL SECTIONS

FRA-270-51.50

x:\Projects\2013\1321\1010\FRA\92616\roadway\sheets\92616GY001.dgn 12/7/2022 2:53:00 PM cwong

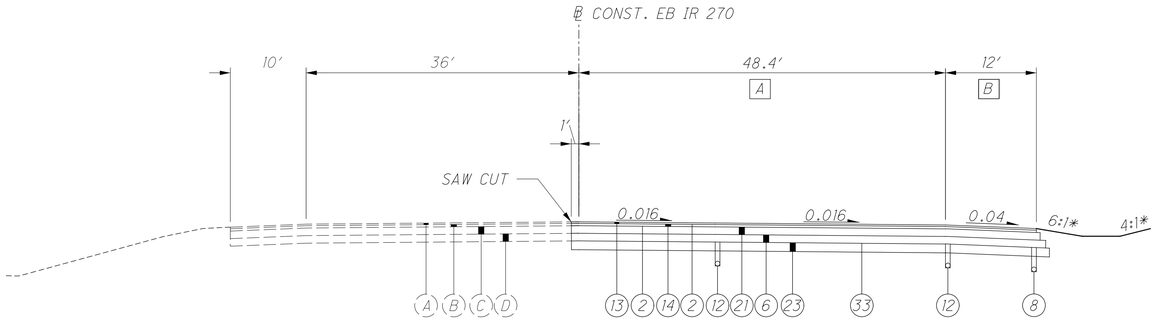

PROPOSED NORMAL SECTION IR 270 EB
STA 720+08.53 TO STA 739+79.69

A VARIES FROM 48.4′ AT STA. 720+08.53 TO 0.0′ AT STA. 739+79.69

B 8.0′ FROM STA. 720+08.53 TO STA. 737+79.69
VARIES FROM 8.0′ AT STA. 737+79.69 TO 12.0′ AT STA. 739+79.69

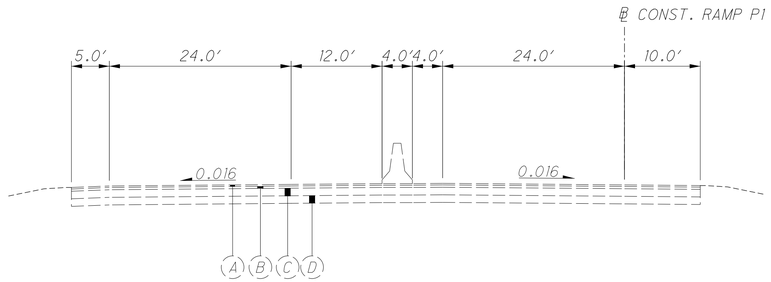

EXISTING SECTION RAMP P1
STA 684+89.82

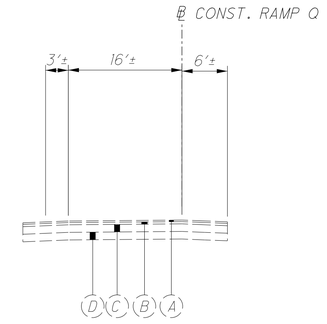

EXISTING SECTION RAMP Q
STA. 0+00.00 TO STA. 10+32.31
TO BE REMOVED

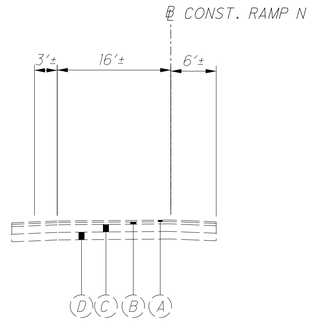

EXISTING SECTION RAMP N
STA. 3+81.21 TO STA. 15+70.02
TO BE REMOVED

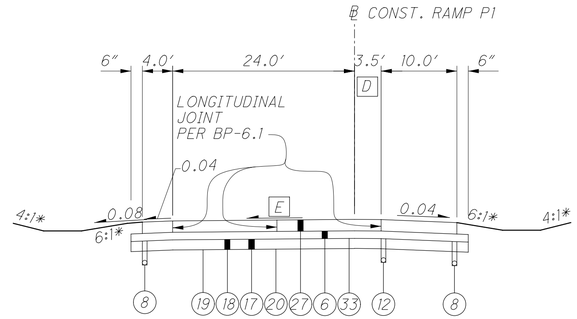

PROPOSED RAMP SECTION RAMP P1
STA. 684+89.82 TO STA 694+73.94

D VARIES FROM 0.0′ AT C.S. STA. 684+89.82 TO 3.5′ AT S.C. STA. 687+89.82
3.5′ FROM S.C. STA. 687+89.82 TO C.S. STA. 690+61.81
VARIES FROM 3.5′ AT C.S. STA. 690+61.81 TO 0.0′ AT S.T. STA. 693+61.81

E VARIES FROM EXISTING AT STA. 684+89.82 TO -0.42% AT STA. 685+72.97
VARIES FROM -0.42% AT STA. 685+72.97 TO +6.0% AT STA. 688+93.82
+6.0% FROM STA. 688+93.82 TO STA. 690+61.81
VARIES FROM +6.0% AT STA. 690+61.81 TO +1.60% AT STA. 692+81.81
+1.60% FROM STA. 692+81.81 TO STA. 694+73.94

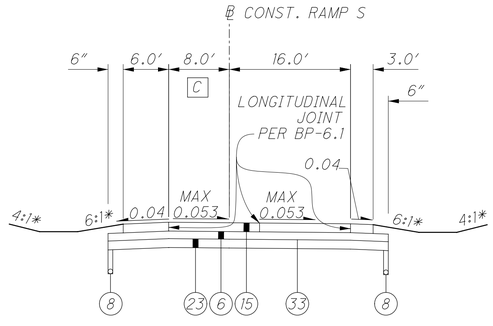

PROPOSED SUPERELEVATED SECTION RAMP S
STA 799+00.80 TO STA 813+02.09

C VARIES FROM 39.51′ AT STA. 799+00.80 TO 8.0′ AT STA. 799+52.87
8.0′ FROM STA. 799+52.87 TO STA. 805+50.00
VARIES FROM 8.0′ AT STA. 805+50.00 TO 0.0′ AT STA. 806+50.00

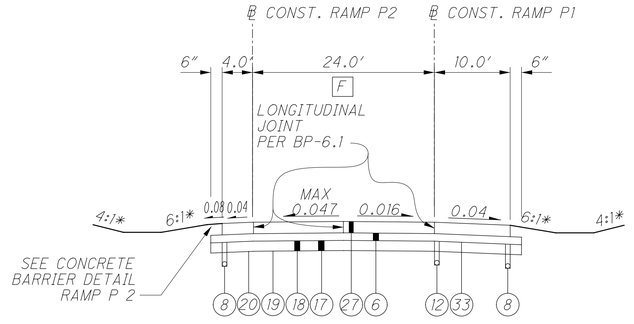

PROPOSED RAMP SECTION RAMP P1
STA. 694+73.94 TO STA. 696+97.99

F VARIES FROM 24.0′ AT STA. 694+73.94 TO 48.4′ AT STA. 696+97.99

* OR AS NOTED IN CROSS SECTIONS

CALCULATED ACF
CHECKED CSR

TYPICAL SECTIONS

FRA-270-51.50

x:\Projects\2013\132N1010\FRA\92616\roadway\sheets\92616GY001.dgn 12/7/2022 2:53:00 PM cwong

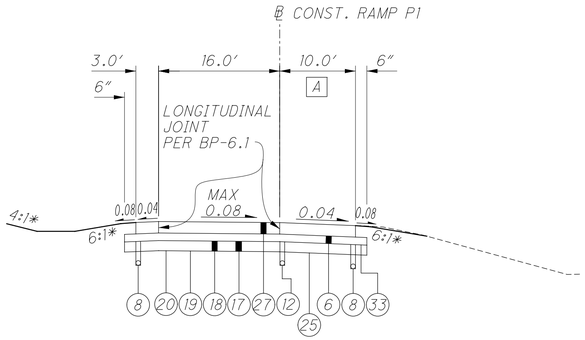

PROPOSED RAMP SECTION RAMP P1
STA. 696+97.99 TO STA. 703+70.80

A VARIES FROM 10.0′ AT STA. 696+97.99 TO 6.0′ AT STA. 697+97.99
6.0′ FROM STA. 697+97.99 TO STA. 703+70.80

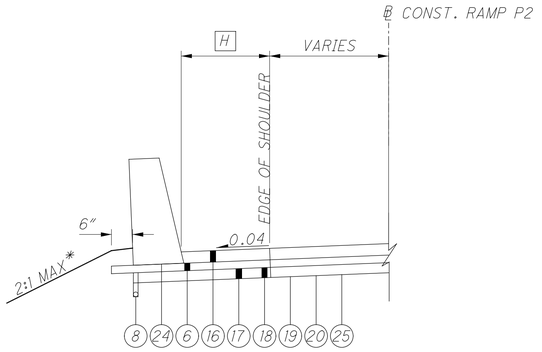

CONCRETE BARRIER SECTION RAMP P2
STA. 867+00.00 TO STA. 869+88.64

H VARIES FROM 2.1′ AT STA. 867+00.00 TO 0.0′ AT STA. 867+60.87
0.0′ FROM STA. STA. 867+60.87 TO STA. 869+81.00
VARIES FROM 0.0′ AT STA. 869+81.00 TO 1.0′ AT STA. 869+88.64

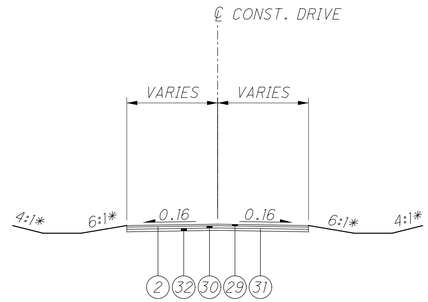

COMMERCIAL ASPHALT DRIVE
STA. 553+02.33 (US 23 DECEL. LANE)
STA. 553+17.73 (US 23 ACCEL. LANE)
STA. 554+33.36 (US 23 ACCEL. LANE)

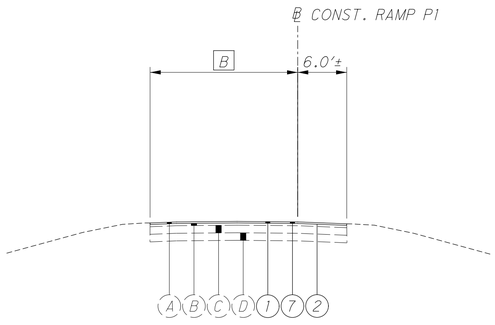

OVERLAY SECTION RAMP P1
STA. 703+70.80 TO STA. 712+11.92

B VARIES FROM 39.0′ AT STA. 703+70.80 TO 12.0′ AT STA. 712+11.92

NOTE: MATCH EXISTING CROSS SLOPE FOR PAVEMENT OVERLAY

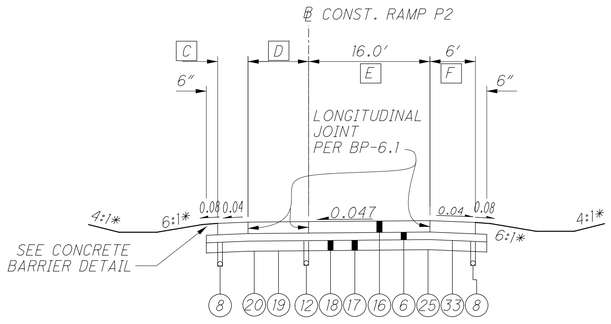

PROPOSED RAMP SECTION RAMP P2
STA. 867+40.17 TO STA. 872+71.00

C 4.0′ FROM STA. 867+40.17 TO STA. 869+41.00
VARIES FROM 4.0′ AT STA. 869+41.00 TO 3.0′ AT STA. 869+81.00
3.0′ FROM STA. 869+81.00 TO STA. 872+70.47

D 0.0′ FROM STA. 868+98.38 TO STA. 869+41.00
VARIES FROM 0.0′ AT STA. 869+41.00 TO 8.0′ AT STA. 869+81.00
8.0′ FROM STA. 869+81.00 TO STA. 872+70.47

E VARIES FROM 12.0′ AT STA. 867+40.17 TO 16.0′ AT STA. 868+98.38
16.0′ FROM STA. 868+98.38 TO STA. 872+29.77
VARIES FROM 16.0′ AT STA. 872+29.77 TO 42.0′ AT STA. 872+71.00

F 0.0′ FROM STA. 867+40.17 TO STA. 868+98.38
6.0′ FROM STA. STA. 868+98.38 TO STA. 872+29.77
VARIES FROM 6.0′ AT STA. 872+29.77 TO 23.2′ AT STA. 872+71.00

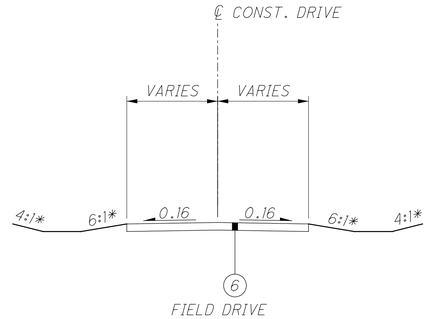

FIELD DRIVE
STA. 549+74.80 (US 23 ACCEL. LANE)

* OR AS NOTED IN CROSS SECTIONS

CALCULATED ACF
CHECKED CSR

TYPICAL SECTIONS

FRA-270-51.50

x:\Projects\2013\1321\1010\FRA\92616\roadway\sheets\92616GY001.dgn 12/7/2022 2:53:01 PM cwong

GENERAL NOTES

UTILITIES

LISTED BELOW ARE ALL UTILITIES LOCATED WITHIN THE PROJECT CONSTRUCTION LIMITS TOGETHER WITH THEIR RESPECTIVE OWNERS:

AEP-COLUMBUS SOUTHERN POWER
850 TECH CENTER DRIVE
GAHANNA, OH 43230
ATTN.: MR. PAUL PAXTON
PHONE: (614) 883-6831

AT&T OHIO
111 N. FOURTH ST.
COLUMBUS, OH 43215
ATTN.: MR. GARY VAN ALMSICK
PHONE: (614) 223-7276
E-MAIL: GV2758@ATT.COM

COLUMBIA GAS OF OHIO
3550 JOHNNY APPLESEED CT.
COLUMBUS, OH 43231
ATTN.: MR. BRYAN KOPACHY
PHONE: (614) 818-2133
E-MAIL: BKOPACHY@NISOURCE.COM

CITY OF COLUMBUS
DIVISION OF WATER
910 DUBLIN ROAD
COLUMBUS, OH 43215
PHONE: (614) 645-7788

CITY OF COLUMBUS, DPU
DIVISION OF POWER
3500 INDIANOLA AVE.
COLUMBUS, OH 43223
PHONE: (614) 645-7627

SOUTH CENTRAL POWER COMPANY
P.O. BOX 250
LANCASTER, OH 43130
ATTN.: MR. PHIL STRINGER

ODOT D-6 TRAFFIC (HIGHWAY LIGHTING)
400 E. WILLIAM ST.
DELAWARE, OH 43015
(740) 833-8024

WIDE OPEN WEST
3675 CORPORATE DRIVE
COLUMBUS, OH 43231
ATTN.: MR. JAYTEE NOVARIA
PHONE: (614) 948-4653
E-MAIL: JNOVARIA@WIDEOPENWEST.COM

CITY OF COLUMBUS
DEPARTMENT OF
SEWERAGE AND DRAINAGE
SEWER MAINTENANCE
OPERATIONS CENTER
1250 FAIRWOOD AVE
COLUMBUS, OH 43206
PHONE: (614) 645-7102
THIS OFFICE OPERATES 24/7

ODOT CENTRAL OFFICE ITS
1606 W. BROAD ST.
COLUMBUS, OH 43223
614-387-4113
CEN.ITS.LAB@DOT.OHIO.GOV

THE LOCATION OF THE UNDERGROUND UTILITIES SHOWN ON THE PLANS ARE AS OBTAINED FROM THE OWNERS AS REQUIRED BY SECTION 153.64 O.R.C.

THE FOLLOWING CITY OF COLUMBUS UTILITIES MAY BE LOCATED WITHIN THE WORK LIMITS OF THIS PROJECT:

CITY OF COLUMBUS
DEPARTMENT OF TECHNOLOGY
1355 MCKINLEY AVE.
BUILDING C
COLUMBUS, OH 43222
PHONE: (614) 645-7756

CITY OF COLUMBUS
DEPARTMENT OF PUBLIC SERVICE
TRAFFIC MAINTENANCE
1820 EAST 17TH AVENUE
COLUMBUS, OH 43219
PHONE: (614) 645-7393

CITY OF COLUMBUES
SUPPORT SERVICES DIVISION-COMMUNICATIONS
4211 GROVES ROAD
COLUMBUS, OH 43232
PHONE: (614) 724-7047
RADIO ROOM: (614) 724-4006

WORK LIMITS

THE WORK LIMITS SHOWN ON THESE PLANS ARE FOR PHYSICAL CONSTRUCTION ONLY. PROVIDE THE INSTALLATION AND OPERATION OF ALL WORK ZONE TRAFFIC CONTROL AND WORK ZONE TRAFFIC CONTROL DEVICES REQUIRED BY THESE PLANS WHETHER INSIDE OR OUTSIDE THESE WORK LIMITS.

CLEARING AND GRUBBING

ALTHOUGH THERE ARE NO TREES OR STUMPS SPECIFICALLY MARKED FOR REMOVAL WITHIN THE LIMITS OF THE PROJECT, A LUMP SUM QUANTITY IS INCLUDED IN THE GENERAL SUMMARY FOR ITEM 201, CLEARING AND GRUBBING. ALL PROVISIONS AS SET FORTH IN THE SPECIFICATIONS UNDER THIS ITEM ARE INCLUDED IN THE LUMP SUM PRICE BID FOR ITEM 201, CLEARING AND GRUBBING.

MONUMENT ASSEMBLIES

CONSTRUCT MONUMENT ASSEMBLIES IN ACCORDANCE WITH THE DETAILS SHOWN ON THE STANDARD CONSTRUCTION DRAWINGS AND AT THE LOCATIONS SHOWN IN THE RIGHT OF WAY PLANS.

SURVEY PARAMETERS

PRIMARY PROJECT CONTROL MONUMENTS GOVERN ALL POSITIONING ON ODOT PROJECTS. SEE SHEET 5-6 OF THE PLANS FOR A TABLE CONTAINING PROJECT CONTROL INFORMATION.

USE THE FOLLOWING PROJECT CONTROL, VERTICAL POSITIONING, AND HORIZONTAL POSITIONING PARAMETERS FOR ALL SURVEYING:

PROJECT CONTROL

POSITIONING METHOD: OHIO VRS
VERTICAL POSITIONING
ORTHOMETRIC HEIGHT DATUM: NAVD 88
GEOID: GEOID09
HORIZONTAL POSITIONING
REFERENCE FRAME: NAD 83 (CORS96)
ELLIPSOID: GRS80
MAP PROJECTION: LAMBERT CONFORMAL CONIC
COORDINATE SYSTEM: OHIO STATE PLANE, SOUTH ZONE
COMBINED SCALE FACTOR: 0.999943725167
ORIGIN OF COORDINATE SYSTEM: 0,0

USE THE POSITIONING METHODS AND MONUMENT TYPE USED IN THE ORIGINAL SURVEY TO RESTORE ALL MONUMENTS RELATED TO PRIMARY PROJECT CONTROL THAT ARE DAMAGED OR DESTROYED BY CONSTRUCTION ACTIVITIES. RESTORE THE DAMAGED OR DESTROYED MONUMENTS IN ACCORDANCE WITH C&MS 623.

UNITS ARE IN U.S. SURVEY FEET.

PROTECTION OF RIGHT-OF-WAY LANDSCAPING

PRIOR TO BEGINNING WORK, THE CONTRACTOR, THE PROJECT ENGINEER, AND A REPRESENTATIVE OF THE MAINTAINING AGENCY WILL REVIEW AND RECORD ALL LANDSCAPING ITEMS WITHIN THE RIGHT-OF-WAY (BOTH WITHIN AND OUTSIDE THE CONSTRUCTION LIMITS) A RECORD OF THIS REVIEW WILL BE KEPT IN THE PROJECT ENGINEER'S FILES. PRIOR TO FINAL ACCEPTANCE, A FINAL REVIEW OF LANDSCAPING ITEMS WILL BE MADE.

CONSTRICT ALL ACTIVITIES, EQUIPMENT STORAGE, AND STAGING TO WITHIN THE CONSTRUCTION LIMITS.

SUBMIT A WRITTEN REQUEST TO THE PROJECT ENGINEER TO USE ANY AREA OUTSIDE THESE LIMITS. THE DOCUMENT SUBMITTED MUST CLEARLY IDENTIFY THE AREA AND EXPLAIN THE PROPOSED USE AND RESTORATION OF THE AREA. USE OF THESE AREAS FOR DISPOSAL OF WASTE MATERIAL AND CONSTRUCTION DEBRIS, EXCAVATION OF BORROW MATERIAL AND PLACEMENT OF PORTABLE PLANTS IS PROHIBITED. THE REQUEST MUST BE APPROVED, IN WRITING, BEFORE THE CONTRACTOR HAS PERMISSION TO USE THE AREA.

ANY ITEMS DAMAGED BEYOND THE CONSTRUCTION LIMITS, AS DEFINED ABOVE, WILL BE REPLACED IN KIND OR AS APPROVED BY THE PROJECT ENGINEER.

PROOF ROLLING

THE FOLLOWING QUANTITY IS PROVIDED IN THE GENERAL SUMMARY TO ADDRESS LOCATIONS REQUIRING PROOF ROLLING. SEE PLAN SHEET NO 94 FOR ADDITIONAL INFORMATION.
ITEM 204 - PROOF ROLLING 7 HOUR.

ADDITIIONAL SOIL INFORMATION

THE SOIL PROFILE AND/OR STRUCTURE FOUNDATION INVESTIGATIONS SHEETS CONTAIN ALL AVAILABLE SOIL AND BEDROCK INFORMATION WHICH CAN BE CONVENIENTLY SHOWN. ADDITIONAL SUBSURFACE INVESTIGATION INFORMATION IS AVAILABLE FROM ODOT DISTRICT 6

FENCE LENGTHS

THE LENGTHS OF FENCE SHOWN IN THE PLANS ARE HORIZONTAL DIMENSIONS. MEASUREMENTS OF THE FINAL QUANTITIES WILL BE IN ACCORDANCE WITH ITEM 607.

PART-WIDTH CONSTRUCTION

BECAUSE OF THE NECESSITY TO BUILD THIS PROJECT UNDER TRAFFIC AND TO CONSTRUCT THE FULL PAVEMENT WIDTH IN STAGES, EXERCISE CARE TO PREVENT THE CONSTRUCTION OF A BUTT JOINT IN THE BASE COURSES. LAP LONGITUDINAL JOINTS AS SHOWN ON STANDARD CONSTRUCTION DRAWING BP-3.1.

ITEM 204 - PROOF ROLLING AND TEST ROLLING

THE GLOBAL STABILIZATION SHALL BE SUBJECT TO PROOF ROLLING OR TEST ROLLING AS FOLLOWS:

EXCAVATION OF SUBGRADE - RAMPS P1 AND P2

1. PROOF ROLL THE STABILIZED AREAS ACCORDING TO 204.06 TO VERIFY STABILITY.

2. FINE GRADE THE SUBGRADE TO THE SPECIFIED GRADE.

3. COMPACT THE SUBGRADE ACCORDING TO 204.03.

CEMENT STABILIZATION - RAMPS L, S, AND R, US-23 ACCEL. AND DECEL. LANES, IR 270 CD LANE, IR 270 EASTBOUND MERGE

1. STABILIZE SUBGRADE

2. PROOF ROLL THE STABILIZED AREAS ACCORDING TO 204.06 TO VERIFY STABILITY

THE QUANTITIES FOR EXCAVATING THE UNSTABLE SUBGRADE ARE PAID UNDER ITEM 204 EXCAVATION OF SUBGRADE.

CONTRACTION AND/OR EXPANSION JOINTS

ALTHOUGH SPECIFIC LOCATIONS OF CERTAIN CONTRACTION AND EXPANSION JOINTS HAVE BEEN DETAILED ON THIS PLAN, NO WAIVER OF THE SPECIFICATIONS IS INTENDED. IN ALL CASES, THE PROVISION OF EXPANSION JOINTS AT ALL MAJOR STRUCTURES INCLUDING THE MAXIMUM SPACING BETWEEN CONTRACTION JOINTS IS IN ACCORDANCE WITH STANDARD CONSTRUCTION DRAWING BP-2.2 AND THE SPECIFICATIONS.

CONNECTION BETWEEN EXISTING AND PROPOSED GUARDRAIL

WHEN IT IS NECESSARY TO SPLICE PROPOSED GUARDRAIL TO EXISTING GUARDRAIL, ONLY THE EXISTING GUARDRAIL SHALL BE CUT, DRILLED, OR PUNCHED. THE CONNECTION SHALL BE MADE USING A W-BEAM, BEAM SPLICE AS SHOWN IN AASHTO M 180-12, EXCEPT THE BEAM WASHERS ARE NOT TO BE USED. PAYMENT SHALL BE INCLUDED IN THE CONTRACT PRICE FOR THE RESPECTIVE GUARDRAIL ITEMS.

BENCHING OF FOUNDATION SLOPES

ALTHOUGH CROSS-SECTIONS INDICATE SPECIFIC DIMENSIONS FOR PROPOSED BENCHING OF THE EMBANKMENT FOUNDATIONS IN CERTAIN AREAS, NO WAIVER OF THE SPECIFICATIONS IS INTENDED. BENCH ALL OTHER SLOPED EMBANKMENT AREAS AS SET FORTH IN 203.05. NO ADDITIONAL PAYMENT WILL BE MADE FOR BENCHING REQUIRED UNDER THE PROVISIONS OF 203.05

ITEM 606 - ANCHOR ASSEMBLY, MGS TYPE E (MASH 2016)

THIS ITEM SHALL CONSIST OF FURNISHING AND INSTALLING ANY OF THE GUARDRAIL END TERMINALS FOR TYPE MGS GUARDRAIL AS LISTED ON ROADWAY ENGINEERING'S WEB PAGE UNDER ROADSIDE SAFETY DEVICES FOR APPROVED GUARDRAIL END TREATMENTS. INSTALLATION SHALL BE AT THE LOCATIONS SPECIFIED IN THE PLANS, IN ACCORDANCE WITH THE MANUFACTURER'S SPECIFICATIONS.

THE FACE OF THE TYPE E IMPACT HEAD SHALL BE COVERED WITH A SHEET OF TYPE J, ASTM D4956 TYPE XI REFLECTIVE SHEETING, PER C&MS 730.193.

REFER TO THE MANUFACTURER'S INSTRUCTIONS REGARDING THE INSTALLATION OF, AND THE GRADING AROUND THE FOUNDATION TUBES AND GROUND STRUT. THE TOP OF ANY FOUNDATION TUBE SHOULD BE LESS THAN 4 INCHES ABOVE THE GROUND. THE PLACEMENT OF THE FOUNDATION TUBES SHOULD BE AN APPROPRIATE DEPTH BELOW THE LEVEL LINE IN ORDER TO MAINTAIN THE FINISHED GUARDRAIL HEIGHT OF 31 INCHES FROM THE EDGE OF THE SHOULDER.

ON-SITE GRADING IS REQUIRED IF THE TOP OF THE FOUNDATION TUBES OR TOP OF THE GROUND STRUT DOES PROJECT MORE THAN 4 INCHES ABOVE THE GROUND LINE.

PAYMENT FOR THE ABOVE WORK SHALL BE MADE AT THE UNIT PRICE BID FOR ITEM 606, ANCHOR ASSEMBLY, MGS TYPE E, EACH, AND SHALL INCLUDE ALL LABOR, TOOLS, EQUIPMENT AND MATERIALS NECESSARY TO CONSTRUCT A COMPLETE AND FUNCTIONAL ANCHOR ASSEMBLY SYSTEM, INCLUDING ALL RELATED TRANSITIONS, REFLECTIVE SHEETING, HARDWARE, GRADING, EMBANKMENT AND EXCAVATION NOT SEPARATELY SPECIFIED, AS REQUIRED BY THE MANUFACTURER.

PAVING UNDER GUARDRAIL

THIS OPERATION SHALL INCLUDE PREPARATION OF THE GRADED SHOULDER USING ITEM 209, LINEAR GRADING, AS PER PLAN AND PAVING UNDER THE GUARDRAIL USING 441 ASPHALT CONCRETE INTERMEDIATE COURSE, TYPE 1, (448), UNDER GUARDRAIL, AS PER PLAN.

ITEM 209, LINEAR GRADING, AS PER PLAN SHALL CONSIST OF EXCAVATING TOPSOIL, AND PLACING GRANULAR MATERIAL.

ALL COLLECTED DEBRIS AND TOPSOIL, INCLUDING RHIZOMES, ROOTS AND OTHER VEGETATIVE PLANT MATERIAL SHALL BE REMOVED AND DISPOSED OF AS SPECIFIED IN 105.17.

THE REMOVED MATERIAL SHALL BE REPLACED WITH COMPACTABLE GRANULAR MATERIALCONFORMING TO 703.16 PLACED TO GRADE AS DETAILED ON THE TYPICAL SECTION OR AS APPROVED BY THE ENGINEER.

ALL EQUIPMENT, MATERIALS AND LABOR REQUIRED TO PERFORM THE WORK OUTLINED ABOVE SHALL BE INCLUDED FOR PAYMENT UNDER ITEM 209, LINEAR GRADING, AS PER PLAN.

PAVING UNDER GUARDRAIL SHALL CONSIST OF PLACING ITEM 441 TO THE DEPTH SPECIFIED USING ONE OF THE FOLLOWING METHODS:

METHOD A:

1. SET GUARDRAIL POSTS
2. PLACE ITEM 441

METHOD B:

1. PLACE ITEM 441
2. BORE ASPHALT AT POST LOCATIONS (MAY BE OMITTED IF STEEL POSTS ARE USED)
3. SET GUARDRAIL POSTS
4. PATCH AROUND POSTS. THE MATERIALS USED FOR PATCHING SHALL BE AN ASPHALT CONCRETE APPROVED BY THE ENGINEER. PATCHED AREAS SHALL BE COMPACTED USING EITHER HAND OR MECHANICAL METHODS. FINISHED SURFACES SHALL BE SMOOTH AND SLOPED TO DRAIN AWAY FROM THE POSTS.

ROUNDING

THE ROUNDING AT SLOPE BREAKPOINTS SHOWN ON THE TYPICAL SECTIONS APPLIES TO ALL CROSS-SECTIONS EVEN THOUGH OTHERWISE SHOWN.

PAVING UNDER GUARDRAIL (CONTINUED)

ALL EQUIPMENT, MATERIALS AND LABOR REQUIRED TO PERFORM THE WORK OUTLINED ABOVE, WITH THE EXCEPTION OF SETTING GUARDRAIL POSTS, SHALL BE INCLUDED FOR PAYMENT UNDER ITEM 441, ASPHALT CONCRETE, INTERMEDIATE COURSE, TYPE 1 (449), UNDER GUARDRAIL, AS PER PLAN. THE FOLLOWING QUANTITIES HAVE BEEN CARRIED TO THE GENERAL SUMMARY FOR THE ABOVE NOTED WORK:

ITEM 209, LINEAR GRADING, AS PER PLAN. 0.2 MILE

ITEM 441, ASPHALT CONCRETE,
INTERMEDIATE COURSE, TYPE 1
(449), UNDER GUARDRAIL, AS PER PLAN. 7 CU. YD.

IMPACT ATTENUATORS

THIS ITEM SHALL CONSIST OF FURNISHING AND INSTALLING ANY OF THE TYPE 2 IMPACT ATTENUATORS AS LISTED ON THE OFFICE OF ROADWAY ENGINEERING'S WEB PAGE (REFER TO THE POSTED SHOP DRAWINGS FOR THE MOST CURRENT APPROVED PRODUCT MODELS). WHEN BI-DIRECTIONAL DESIGNS ARE SPECIFIED, THE CONTRACTOR SHALL SUPPLY APPROPRIATE TRANSITIONS. THE FACE OF THE IMPACT HEAD SHALL BE COVERED WITH TYPE G REFLECTIVE SHEETING, PER C&MS 730.19.

PAYMENT FOR THE ABOVE WORK SHALL BE MADE AT THE UNIT PRICE BID FOR ITEM 606, IMPACT ATTENUATOR, TYPE 2, EACH, AND SHALL INCLUDE ALL LABOR, TOOLS, EQUIPMENT AND MATERIALS NECESSARY TO CONSTRUCT A COMPLETE AND FUNCTIONAL IMPACT ATTENUATOR SYSTEM, INCLUDING ALL RELATED BACKUPS/BACKSTOPS, TRANSITIONS, HARDWARE AND GRADING, NOT SEPARATELY SPECIFIED, AS REQUIRED BY THE MANUFACTURER. INSTALLATION SHALL BE AT THE LOCATIONS SPECIFIED IN THE PLANS, IN ACCORDANCE WITH THE MANUFACTURER'S SPECIFICATIONS.

X:\Projects\2013\1321\1010\FRA\92616\roadway\sheets\92616GN001.dgn 1/12/2023 10:10:13 AM cwong

CALCULATED ACF
CHECKED CSR

GENERAL NOTES

CROSSINGS AND CONNECTIONS TO EXISTING PIPES AND UTILITES

WHERE PLANS PROVIDE FOR A PROPOSED CONDUIT TO BE CONNECTED TO, OR CROSS OVER OR UNDER AN EXISTING SEWER OR UNDERGROUND UTILITY, THE CONTRACTOR SHALL LOCATE THE EXISTING PIPES OR UTILITIES BOTH AS TO LINE AND GRADE BEFORE STARTING TO LAY THE PROPOSED CONDUIT.

IF IT IS DETERMINED THAT THE ELEVATION OF THE EXISTING CONDUIT, OR EXISTING APPURTENANCE TO BE CONNECTED, DIFFERS FROM THE PLAN ELEVATION OR RESULTS IN A CHANGE IN THE PLAN CONDUIT SLOPE, THE ENGINEER SHALL BE NOTIFIED BEFORE STARTING CONSTRUCTION OF ANY PORTION OF THE PROPOSED CONDUIT WHICH WILL BE AFFECTED BY THE VARIANCE IN THE EXISTING ELEVATIONS.

IF IT IS DETERMINED THAT THE PROPOSED CONDUIT WILL INTERSECT AN EXISTING SEWER OR UNDERGROUND UTILITY IF CONSTRUCTED AS SHOWN ON THE PLAN, THE ENGINEER SHALL BE NOTIFIED BEFORE STARTING CONSTRUCTION OF ANY PORTION OF THE PROPOSED CONDUIT WHICH WOULD BE AFFECTED BY THE INTERFERENCE WITH AN EXISTING FACILITY. PAYMENT FOR ALL THE OPERATIONS DESCRIBED ABOVE SHALL BE INCLUDED IN THE CONTRACT PRICE FOR THE PERTINENT 611 CONDUIT ITEM.

PIPE CONNECTIONS TO CORRUGATED METAL STRUCTURES

CONNECTIONS OF PROPOSED LONGITUDINAL DRAINAGE TO CORRUGATED METAL STRUCTURES SHALL BE MADE BY MEANS OF A SHOP FABRICATED OR FIELD WELDED STUB ON THE STRUCTURE. THE STUB SHALL MEET THE REQUIREMENTS OF 707 AND HAVE A MINIMUM LENGTH OF 2 FEET AND A MINIMUM WALL THICKNESS OF 0.064 INCHES.

THE LOCATION AND ELEVATION OF THE STUB ARE TO BE CONSIDERED APPROXIMATE AND MAY BE ADJUSTED BY THE ENGINEER TO AVOID CUTTING THROUGH JOINTS IN THE STRUCTURE.

THE FIELD WELDED JOINT, IF USED, SHALL BE THOROUGHLY CLEANED AND REGALVANIZED OR OTHERWISE SUITABLY REPAIRED. WELDING SHALL MEET THE REQUIREMENTS OF 513.21.

A MASONRY COLLAR, AS PER STANDARD DRAWING DM-1.1, WILL BE REQUIRED TO CONNECT THE LONGITUDINAL DRAINAGE TO THE STUB, WHEN PIPE OTHER THAN CORRUGATED METAL IS PROVIDED FOR THE LONGITUDINAL DRAINAGE. PAYMENT FOR CUTTING INTO THE STRUCTURE AND PROVIDING THE CONNECTION DESCRIBED, SHALL BE INCLUDED IN THE CONTRACT PRICE FOR ITEM 611 OR 522.

FARM DRAINS

ALL FARM DRAINS, WHICH ARE ENCOUNTERED DURING CONSTRUCTION, SHALL BE PROVIDED WITH UNOBSTRUCTED OUTLETS. EXISTING COLLECTORS WHICH ARE LOCATED BELOW THE ROADWAY DITCH ELEVATIONS, AND WHICH CROSS THE ROADWAY, SHALL BE REPLACED WITHIN THE CONSTRUCTION LIMITS BY ITEM 611 CONDUIT, TYPE B, ONE COMMERCIAL SIZE LARGER THAN THE EXISTING CONDUIT.

EXISTING COLLECTORS AND ISOLATED FARM DRAINS, WHICH ARE ENCOUNTERED ABOVE THE ELEVATION OF ROADWAY DITCHES, SHALL BE OUTLETTED INTO THE ROADWAY DITCH BY 611 TYPE F CONDUIT. THE OPTIMUM OUTLET ELEVATION SHALL BE ONE FOOT ABOVE THE FLOWLINE ELEVATION OF THE DITCH. LATERAL FIELD TILES WHICH CROSS THE ROADWAY SHALL BE INTERCEPTED BY 611, TYPE E CONDUIT, AND CARRIED IN A LONGITUDINAL DIRECTION TO AN ADEQUATE OUTLET OR ROADWAY CROSSING.

THE LOCATION, TYPE, SIZE AND GRADE OF REPLACEMENTS SHALL BE DETERMINED BY THE ENGINEER AND PAYMENT SHALL BE MADE ON FINAL MEASUREMENTS.

EROSION CONTROL PADS AND ANIMAL GUARDS SHALL BE PROVIDED AT THE OUTLET END OF ALL FARM DRAINS AS PER STANDARD CONSTRUCTION DRAWING DM-1.1, EXCEPT WHEN THEY OUTLET INTO A DRAINAGE STRUCTURE. PAYMENT FOR THE EROSION CONTROL PADS AND ANIMAL GUARDS AND ANY NECESSARY BENDS OR BRANCHES SHALL BE INCLUDED FOR PAYMENT IN THE PERTINENT CONDUIT ITEMS. THE FOLLOWING ESTIMATED QUANTITIES HAVE BEEN INCLUDED IN THE GENERAL SUMMARY FOR THE WORK NOTED ABOVE:

611 6" CONDUIT, TYPE B	100 FT
611 6" CONDUIT, TYPE E	100 FT
611 6" CONDUIT, TYPE F	100 FT
601 ROCK CHANNEL PROTECTION TYPE C WITH FILTER	10 CU. YD

REVIEW OF DRAINAGE FACILITES

BEFORE ANY WORK IS STARTED ON THE PROJECT AND AGAIN BEFORE FINAL ACCEPTANCE BY THE STATE, REPRESENTATIVES OF THE STATE AND THE CONTRACTOR, ALONG WITH LOCAL REPRESENTATIVES, SHALL MAKE AN INSPECTION OF ALL EXISTING SEWERS WHICH ARE TO REMAIN IN SERVICE AND WHICH MAY BE AFFECTED BY THE WORK. THE CONDITION OF THE EXISTING CONDUITS AND THEIR APPURTENANCE SHALL BE DETERMINED FROM FIELD OBSERVATIONS. RECORDS OF THE INSPECTION SHALL BE KEPT IN WRITING BY THE STATE.

ALL NEW CONDUITS, INLETS, CATCH BASINS, AND MANHOLES CONSTRUCTED AS A PART OF THE PROJECT SHALL BE FREE OF ALL FOREIGN MATTER AND IN A CLEAN CONDITION BEFORE THE PROJECT WILL BE ACCEPTED BY THE STATE.

ALL EXISTING SEWERS INSPECTED INITIALLY BY THE ABOVE MENTIONED PARTIES SHALL BE MAINTAINED AND LEFT IN A CONDITION REASONABLY COMPARABLE TO THAT DETERMINED BY THE ORIGINAL INSPECTION. ANY CHANGE IN THE CONDITION RESULTING FROM THE CONTRACTOR'S OPERATIONS SHALL BE CORRECTED BY THE CONTRACTOR TO THE SATISFACTION OF THE ENGINEER.

PAYMENT FOR ALL OPERATIONS DESCRIBED ABOVE SHALL BE INCLUDED IN THE CONTRACT PRICE FOR THE PERTINENT 611 CONDUIT ITEMS.

UNRECORDED STORM WATER DRAINAGE

FURNISH A CONTINUANCE FOR ALL UNRECORDED STORM WATER DRAINAGE, SUCH AS ROOF DRAINS, FOOTER DRAINS, OR YARD DRAINS, DISTURBED BY THE WORK. FURNISH EITHER AN OPEN CONTINUANCE OR AN UNOBSTRUCTED CONTINUANCE BY CONNECTING A CONDUIT THROUGH THE CURB OR INTO A DRAINAGE STRUCTURE. THE LOCATION, TYPE, SIZE AND GRADE OF THE NEEDED CONDUIT TO REPLACE OR EXTEND AN EXISTING DRAIN WILL BE DETERMINED BY THE ENGINEER. ALL SUCH CONTINUANCE REQUIRES A RIGHT OF WAY USE PERMIT.

THE FOLLOWING ESTIMATED QUANTITIES HAVE BEEN INCLUDED IN THE GENERAL SUMMARY FOR USE AS DIRECTED BY THE ENGINEER FOR THE WORK NOTED ABOVE:

611, 6" CONDUIT, TYPE B, FOR DRAINAGE CONNECTION	100 FT.
611, 6" CONDUIT, TYPE C, FOR DRAINAGE CONNECTION	100 FT.
611, 6" CONDUIT, TYPE E, FOR DRAINAGE CONNECTION	100 FT.
611, 6" CONDUIT, TYPE F, FOR DRAINAGE CONNECTION	100 FT.

MANHOLES, CATCH BASINS AND INLETS REMOVED OR ABANDONED

PAYMENT FOR ALL OF THE ABOVE SHALL BE INCLUDED IN THE CONTRACT PRICE FOR THE PERTINENT 202 ITEM.

ITEM SPECIAL - PIPE CLEANOUT

THIS WORK SHALL CONSIST OF REMOVING SEDIMENT AND DEBRIS FROM THE EXISTING DRAINAGE CONDUITS SPECIFIED IN THE PLANS. ALL MATERIAL REMOVED SHALL BE DISPOSED OF AS PER 105.16 AND 105.17. ALL SEWERS SHALL BE CLEANED OUT TO THE SATISFACTION OF THE ENGINEER.

CLEANOUT OF THE PIPE SHALL BE PAID FOR AT THE UNIT PRICE BID FOR ITEM SPECIAL - PIPE CLEANOUT. THIS PRICE SHALL INCLUDE THE COST FOR MATERIAL, EQUIPMENT, LABOR, AND ALL INCIDENTALS REQUIRED TO COMPLETE THE CLEANOUT.

THE FOLLOWING ESTIMATED QUANTITIES HAVE BEEN INCLUDED IN THE GENERAL SUMMARY FOR THE ABOVE NOTED WORK:

SPECIAL, PIPE CLEANOUT, 24" AND UNDER	2600 FT.
SPECIAL, PIPE CLEANOUT, 27" TO 48"	250 FT.
SPECIAL, PIPE CLEANOUT, OVER 48"	1500 FT.

THE CONTRACTOR SHALL PROVIDE A VIDEO OF THE INSIDE OF THE PIPE AFTER CLEANING TO VERIFY PIPE HAS BEEN COMPLETELY CLEANED.

THE PIPES LABELED ON SHEETS 174, 175, 202, 206, 221, 224, 225, 226, 227, 229, 230, 257, 258, 269, 270, AND 302 SHALL BE CLEANED OUT PER ITEM SPECIAL - PIPE CLEANOUT.

EXISTING SUBSURFACE DRAINAGE

PROVIDE UNOBSTRUCTED OUTLETS FOR ALL EXISTING UNDERDRAINS OR AGGREGATE DRAINS ENCOUNTERED DURING CONSTRUCTION.

PROVIDE AN OUTLET PER STANDARD CONSTRUCTION DRAWING DM-1.1 FOR ALL UNDERDRAINS THAT OUTLET TO A SLOPE.

UNDERDRAINS THAT CAN BE CONNECTED TO THE NEW OR EXISTING UNDERDRAINS AT THE END OF THE PROJECT LIMITS AS WELL AS ALL NECESSARY BENDS OR BRANCHES REQUIRED FOR CONNECTION ARE INCLUDED IN THE BASIS OF PAYMENT FOR UNCLASSIFIED PIPE UNDERDRAINS.

THE FOLLOWING ESTIMATED QUANTITIES HAVE BEEN INCLUDED IN THE GENERAL SUMMARY FOR THE WORK NOTED ABOVE:

601, TIED CONCRETE BLOCK MAT, TYPE 1	10 SQ. YD.
605, AGGREGATE DRAINS	50 FT.
611 6" CONDUIT, TYPE F	100 FT.
611, PRECAST REINFORCED CONCRETE OUTLET	10 EACH
605 6" UNCLASSIFIED PIPE UNDERDRAINS	200 FT.

SEEDING AND MULCHING

THE FOLLOWING QUANTITIES ARE PROVIDED TO PROMOTE GROWTH AND CARE OF PERMANENT SEEDED AREAS:

659, SOIL ANALYSIS TEST	2 EACH
659, TOPSOIL	5574 CU. YD.
659, SEEDING AND MULCHING	50209 SQ. YD.
659, REPAIR SEEDING AND MULCHING	2511 SQ. YD.
659, INTER-SEEDING	2511 SQ. YD.
659, COMMERCIAL FERTILIZER	7.79 TON
659, LIME	10.38 ACRES
659, WATER	407 M. GAL.
659, MOWING	113 M. SQ. FT.

SEEDING AND MULCHING SHALL BE APPLIED TO ALL AREAS OF EXPOSED SOIL BETWEEN THE RIGHT-OF-WAY LINES, AND WITHIN THE CONSTRUCTION LIMITS FOR AREAS OUTSIDE THE RIGHT-OF-WAY LINES COVERED BY WORK AGREEMENT OR SLOPE EASEMENT. QUANTITY CALCULATIONS FOR SEEDING AND MULCHING ARE BASED ON THESE LIMITS.

CULVERT AND STORM SEWER EXTENSIONS

THE EXISTING CULVERT OR STORM SEWER SHOULD BE REMOVED BACK TO THE FIRST JOINT AT THE OUTLET END AND THE SECOND JOINT AT THE INLET END OF THE CULVERT, MEASURED IN THE FIELD AND PROVIDE A MASONRY COLLAR PER DM-1.1 AT CONNECTION. MATCH EXISTING MATERIAL FOR CULVERT EXTENSION. THE CONTRACTOR SHALL INSPECT EACH PIPE TO ENSURE PIPE IS IN GOOD CONDITION AND SHALL PROMPTLY INFORM THE ENGINEER IF ADDITIONAL PIPE REMOVAL AND REPLACEMENT IS REQUIRED.

PERMITS, WATERWAY PERMITS

A WATERWAYS PERMIT SHALL BE OBTAINED FOR THE PROJECT PRIOR TO PROJECT CONSTRUCTION. ONCE RECEIVED, THE SPECIAL PROVISIONS FOR THE PROJECT SHALL BE ATTACHED TO THE CONSTRUCTION PLANS. ALL CONDITIONS SHALL BE ADHERED TO DURING CONSTRUCTION. ALSO, A COPY OF THE PERMIT IS TO BE KEPT AT THE WORK SITE AT ALL TIMES.

ANTI-SEGREGATION

PROVIDE ANTI-SEGREGATION EQUIPMENT FOR ALL COURSES OF UNIFORM THICKNESS IN ACCORDANCE WITH C&MS 401.12

NON-RUBBER TIRE VEHICLES

NO NON-RUBBER TIRE VEHICLE SHALL BE MOVED ON STATE OR COUNTY ROADS. EXCEPTIONS MAY BE GRANTED BY AN AUTHORIZED STATE OR COUNTY OFFICIAL WHERE SHORT DISTANCES AND SPECIAL CIRCUMSTANCES ARE INVOLVED. GRANTING OF EXCEPTIONS MUST BE IN WRITING AND ANY RESULTING DAMAGE MUST BE REPAIRED FOR THE SATISFACTION OF THE STATE OR COUNTY

PAVEMENT REPAIRS

THE CONTRACTOR IS RESPONSIBLE FOR ALL PAVEMENT REPAIRS THAT ARE NEEDED FROM THE START OF CONSTRUCTION THRU COMPLETION OF THE PROJECT. ANY PAVEMENT REPAIRS SHALL BE INCLUDED IN THE BID COST FOR ITEM 614 MAINTENANCE OF TRAFFIC.

PAVEMENT FOR MAINTAINING TRAFFIC

A QUANTITY OF 50 CY OF ASPHALT FOR MAINTAIN TRAFFIC HAS BEEN TO BE USED AS DIRECTED BY THE ENGINEER TO LEVEL OUT ANY SETTLEMENT IN THE TEMPORARY PAVEMENT DURING CONSTRUCTION OPERATIONS.

ITEM 202 - PAVEMENT REMOVED AS PER PLAN

ALL EXISTING PAVEMENT TO BE REMOVED CONTAINING LAYERS OF CONCRETE, INCLUDING COMPOSITE ASPHALT OVER CONCRETE PAVEMENT, SHALL BE REMOVED UNDER ITEM 202 PAVEMENT REMOVED, AS PER PLAN. EXISTING PAVEMENT NOT CONTAINING CONCRETE SHALL BE REMOVED UNDER ITEM 202 PAVEMENT REMOVED, ASPHALT. SEE THE EXISTING TYPICAL SECTIONS FOR PAVEMENT BUILDUP. PAYMENT FOR THE OPERATION DESCRIBED ABOVE SHALL BE INCLUDED IN THE CONTRACT PRICE FOR THE PERTINENT 202 ITEMS.

DRAINAGE AND UTILITY SETTLEMENT

PIPES, DRAINAGE STRUCTURES, OR UTILITIES LOCATED IN FILL ALONG THE TOE OF EMBANKMENTS SHALL NOT BE CONSTRUCTED UNTIL AT LEAST 30 DAYS AFTER COMPLETION OF EMBANKMENT.

ITEM 203 EMBANKMENT, AS PER PLAN

AS SPECIFIED IN THE GEOTECHNICAL REPORT, DRAINAGE LAYERS SHOULD BE COMPOSED OF FINE AGGREGATE THAT MEETS THE GRADATION CRITERIA OF C&MS 703.02 OR 703.03, SHOULD BE GRADED TO DRAIN, AND SHOULD HAVE A MINIMUM OF 2 FEET COVER. SEE PLAN SHEET NO 324 FOR ADDITIONAL INFORMATION.

ITEM 203 GRANULAR MATERIAL, TYPE E, AS PER PLAN

IN THE AREA ALONG TEMPORARY RAMP L BETWEEN STA. 91+00 AND 93+00, GRANULAR MATERIAL, TYPE E, SIZES NO. 1 AND NO. 2 STONE MAY BE PLACED BY THE METHOD OF END DUMPING IF SOFT/WET FOUNDATION SOILS ARE PRESENT AT THE TIME OF CONSTRUCTION. END DUMPING METHODS MAY BE USED UP TO AN ELEVATION 12 INCHES ABOVE THE FOUNDATION SUBGRADE. ABOVE THIS ELEVATION, EMBANKMENT CONSTRUCTION METHODS WILL BE IN ACCORDANCE WITH 203.05 TO 203.07 INCLUSIVE. DURING NORMAL CLEARING AND GRUBBING WHERE END DUMPING IS PERMITTED, THE REQUIREMENTS OF 201.04 FOR SCALPING SHALL BE WAIVED.

TEST PITS CONSTRUCTED FOR TEMPORARY RAMP L SHALL BE PAID FOR AS PART OF THIS PAY ITEM

BENCHING OF FOUNDATION SLOPES

ALTHOUGH CROSS-SECTIONS INDICATE SPECIFIC DIMENSIONS FOR PROPOSED BENCHING OF THE EMBANKMENT FOUNDATIONS IN CERTAIN AREAS, NO WAIVER OF THE SPECIFICATIONS IS INTENDED. BENCH ALL OTHER SLOPED EMBANKMENT AREAS AS SET FORTH IN 203.05. NO ADDITIONAL PAYMENT WILL BE MADE FOR BENCHING REQUIRED UNDER THE PROVISIONS OF 203.05

TEMPORARY DRAINAGE ITEMS

TEMPORARY DRAINAGE ITEMS LABELED ON THE MAINTENANCE OF TRAFFIC PLAN ARE ITEMIZED ON THE MOT PLANS. PAYMENT FOR THE TEMPORARY DRAINAGE ITEMS ARE ITEMIZED AND CARRIED TO THE GENERAL SUMMARY.

FRA-270-51.50

X:\Projects\2013\1321\1010\FRA\92616\roadway\sheets\92616GN001.dgn 3/29/2023 11:04:05 AM cwong

CALCULATED ACF CHECKED CSR

GENERAL NOTES

TEMPORARY RAMP L

CONTRACTOR SHALL MAINTAIN TRAFFIC ALONG RAMP L DURING THE RECONSTRUCTION OF THE BRIDGES BY CONSTRUCTING A TEMPORARY RAMP AS SHOWN ON SHEETS 36-43. DUE TO THE POTENTIAL PRESENCE OF PEAT SOILS IN THIS AREA, THE CONTRACTOR SHALL DIG TEST PITS TO DETERMINE THE PRESENCE AND DEPTH EXTENT OF THE PEAT. TEST PITS SHALL BE LOCATED AT 50' ON-CENTER ALONG THE ALIGNMENT AND EXTEND TO A MINIMUM DEPTH OF 4.0' EACH. TEST PITS SHALL BE PAID FOR AS PART OF THE PAY ITEM, ITEM 203 - GRANULAR MATERIAL, TYPE E, AS PER PLAN.

CONDITION 1: WHERE PEAT IS NOT ENCOUNTERED WITHIN 4.0' BELOW THE SUBGRADE, A 2.0' THICK GEOGRID AND STONE WORK PLATFORM SHALL BE CONSTRUCTED AT THE FOUNDATION SUBGRADE. THE FOUNDATION SUBGRADE SHALL BE SCALPED IN ACCORDANCE WITH C&MS ITEM 201 PRIOR TO CONSTRUCTION OF THE WORK PLATFORM. THE WORK PLATFORM SHALL BE CONSTRUCTED USING ITEM 203 GRANULAR MATERIAL, TYPE E, SIZES NO. 1 AND NO. 2 STONE. TWO LAYERS OF GEOGRID SHALL BE INCORPORATED IN THE WORK PLATFORM. THE STONE MAY BE END DUMPED TO A DEPTH OF 12 INCHES.

CONDITION 2: PEAT WITH DEPTHS LESS THAN 4.0. REMOVE PEAT IN ITS ENTIRETY. CONSTRUCT 2.0' THICK GEOGRID AND STONE WORK PLATFORM AT BOTTOM OF EXCAVATION. THE WORK PLATFORM SHALL BE CONSTRUCTED USING ITEM 203 GRANULAR MATERIAL, TYPE E, AS PER PLAN, SIZES NO. 1 AND NO. 2 STONE WITH TWO LAYERS OF GEOGRID ONE AT THE BASE AND ANOTHER PLACED MID-HEIGHT. THE STONE MAY BE END DUMPED TO A DEPTH OF 12 INCHES.

CONDITION 3: PEAT IN EXCESS OF 4.0' SHALL BE REMOVED TO A DEPTH OF 4.0' AND REPLACED WITH ITEM 203 GRANULAR MATERIAL, TYPE E, AS PER PLAN SIZES NO.1 AND NO. 2 STONE WITH GEOGRID AT THE BASE AND ANOTHER LAYER OF GEOGRID PLACED MID-HEIGHT WITHIN THE BACKFILL.

THE FOLLOWING CONTINGENCY QUANTITIES HAVE BEEN CARRIED TO THE GENERAL SUMMARY FOR THE STABILIZATION OF TEMPORARY RAMP L.

ITEM 203 EXCAVATION,	504 CY
ITEM 203 GRANULAR MATERIAL, TYPE E, AS PER PLAN	504 CY
ITEM 204 GEOTEXTILE	2276 SY
ITEM 861 GEOGRID	756 SY

WATER

THE CITY OF COLUMBUS, CONSTRUCTION AND MATERIAL SPECIFICATIONS, 2018 EDITION AND ALL REVISIONS, INCLUDING ALL SUPPLEMENTS THERETO, SHALL GOVERN ALL CONSTRUCTION ITEMS THAT ARE A PART OF THIS PLAN, UNLESS OTHERWISE NOTED.

ALL WATER MAIN MATERIALS AND INSTALLATIONS SHALL BE IN ACCORDANCE WITH THE CURRENT RULES AND REGULATIONS OF THE CITY OF COLUMBUS, DIVISION OF WATER. ALL CITY OF COLUMBUS, DIVISION OF WATER STANDARD DRAWINGS SHALL APPLY TO THE PROJECT, UNLESS OTHERWISE NOTED.

FOR ANY EMERGENCIES INVOLVING THE WATER DISTRIBUTION SYSTEM, PLEASE CONTACT THE DIVISION OF WATER DISTRIBUTION MAINTENANCE OFFICE AT 614-645-7788.

ALL BRASS FITTINGS ASSOCIATED WITH WATER WORK, INCLUDING REPAIRS TO THE EXISTING SYSTEM, SHALL CONFORM TO THE REVISED ALLOWABLE LEAD EXTRACTION LIMIT PER THE UPDATED NSF/ANSI 61 STANDARD. THE DIVISION OF WATER'S APPROVED MATERIALS LIST HAS BEEN UPDATED TO REFLECT THIS REQUIREMENT.

NO PERSON SHALL BEGIN CONSTRUCTION OR INSTALLATION OF A PUBLIC WATER MAIN UNTIL PLANS HAVE BEEN APPROVED BY THE STATE OF OHIO ENVIRONMENTAL PROTECTION AGENCY (OEPA).

ALL WATER MAINS SHALL BE CLEANED AND FLUSHED, AND ANY WATER MAIN 12-INCH AND LARGER MUST BE PROPERLY PIGGED, IN ACCORDANCE WITH SECTION 801.15 OF THE CITY OF COLUMBUS, CONSTRUCTION AND MATERIAL SPECIFICATIONS.

IT SHALL BE UNLAWFUL FOR ANY PERSON TO PERFORM ANY WORK ON CITY OF COLUMBUS WATER MAIN SYSTEMS WITHOUT FIRST SECURING LICENSE TO ENGAGE IN SUCH WORK, AS INDICATED IN COLUMBUS CITY CODE SECTION 1103.02 AND 1103.06. THIS WORK INCLUDES ANY ATTACHMENTS, ADDITIONS TO OR ALTERATIONS IN ANY CITY SERVICE PIPE OR APPURTENANCES (INCLUDING WATER SERVICE LINES AND TAPS). THIS REQUIREMENT MAY BE MET BY UTILIZATION OF A SUBCONTRACTOR WHO HOLDS A CITY OF COLUMBUS WATER CONTRACTOR LICENSE OR A COMBINED WATER/SEWER CONTRACTOR LICENSE TO PERFORM THIS WORK. UTILIZATION OF A SUBCONTRACTOR MUST MEET THE LICENSING REQUIREMENTS OF CITY OF COLUMBUS BUILDING CODE, IN PARTICULAR SECTION 4114.119 AND 4114.529.

THE CONTRACTOR SHALL OBTAIN THE PROPER HYDRANT PERMIT(S), AND PAY ANY APPLICABLE FEES, FOR ANY APPROVED HYDRANT USAGE DEEMED NECESSARY FOR WORK UNDER THIS IMPROVEMENT. PERMITS MAY BE OBTAINED THROUGH THE DIVISION OF WATER PERMIT OFFICE (645-7330). THE CONTRACTOR SHALL ADHERE TO ALL RULES & REGULATIONS GOVERNING SAID PERMIT AND MUST HAVE THE ORIGINAL PERMIT ON SITE ANYTIME IN WHICH THE HYDRANT IS IN USE. PERMITS MAY BE OBTAINED BY ACCESSING HTTP://PORTAL.COLUMBUS.GOV/PERMITS/. COST TO BE INCLUDED IN THE VARIOUS BID ITEMS.

ALL WATER MAINS SHALL BE PRESSURE TESTED IN ACCORDANCE WITH SECTION 801.16 OF THE CITY OF COLUMBUS, CONSTRUCTION AND MATERIAL SPECIFICATIONS. THE CITY MAY NOT APPROVE ANY TEST LASTING LESS THAN TWO HOURS, REGARDLESS OF THE AMOUNT OF LEAKAGE.

ANY SECTION OF WATER MAIN THAT IS LONGER THAN 20 FEET IN LENGTH SHALL BE CHLORINATED. HAND SWABBING METHODS WILL ONLY BE PERMITTED FOR SECTIONS LESS THAN OR EQUAL TO 20 FEET IN LENGTH. USE UNSCENTED HOUSEHOLD BLEACH FOR HAND SWABBING OF PIPE AND FITTINGS. PLEASE NOTE THAT CUT-IN-TEES, SLEEVES, AND ANY OTHER REQUIRED FITTINGS OR PIPING SHALL BE TAKEN INTO ACCOUNT AND ARE INCLUDED IN THE TOTAL LENGTH OF THE SECTION (CUT TO CUT).

ONLY ONE CONNECTION TO AN EXISTING WATER MAIN IS PERMITTED BEFORE DISINFECTION OF A NEW WATER MAIN HAS BEEN COMPLETED. ALL OTHER CONNECTIONS MUST BE MADE AFTER THE MAIN HAS BEEN DISINFECTED.

ALL FIRE HYDRANTS TO BE INSTALLED IN THE CITY OF COLUMBUS SHALL BE PAINTED WITH THE COLOR "SAFETY ORANGE". THE FIRE HYDRANTS SHALL BE PROVIDED WITH TWO COATS IN A GLOSS ENAMEL OF THE "SAFETY ORANGE" COLOR FOR THE ENTIRE HYDRANT. THE TOPS OF THE FIRE HYDRANTS ARE NO LONGER REQUIRED TO BE PAINTED BLACK. AFTER INSTALLATION OF FIRE HYDRANTS, THE CONTRACTOR IS RESPONSIBLE TO APPLY TOUCH UP PAINT TO ANY DAMAGE TO THE FACTORY APPLIED HYDRANT PAINT. HYDRANTS WILL NOT BE ACCEPTED UNTIL ANY PAINT DAMAGE FROM SHIPPING OR INSTALLATION HAS BEEN REPAIRED. USE HYDRANT TOUCH UP PAINT IN ACCORDANCE WITH THE APPROVED MATERIALS LIST.

MAINTAIN EIGHTEEN (18) INCHES VERTICAL AND TEN (10) FEET HORIZONTAL SEPARATION BETWEEN ANY SANITARY OR STORM SEWER PIPING AND ALL PROPOSED WATER MAINS.

WHEN CROSSING THE EXISTING WATER MAIN, AND LOW STRENGTH MORTAR (ITEM 613) IS TO BE USED AS BACKFILL, THE CONTRACTOR SHALL PROVIDE SIZE NO. 57 CRUSHED CARBONATE STONE (CCS) 1 FOOT BELOW TO 1 FOOT ABOVE THE EXISTING WATER MAIN.

IF DURING EXCAVATION, THE POLYETHYLENE ENCASEMENT ON THE EXISTING WATER MAIN BECOMES DAMAGED, THE CONTRACTOR SHALL REPAIR THE POLYETHYLENE ENCASEMENT PER MANUFACTURER'S SPECIFICATIONS AND DOW STANDARD DRAWINGS L-1003 AND L-1004, AT THEIR OWN EXPENSE. ENSURE THAT THE ENTIRE EXPOSED AREA IS COVERED WITH NEW POLYETHYLENE ENCASEMENT AND SECURELY TAPED, PRIOR TO BACKFILLING.

CONTRACTOR SHALL ADHERE TO THE REQUIREMENTS OF THE OHIO ADMINISTRATIVE CODE CHAPTER 3745-83-02 WATER DISRUPTION OF SERVICE RULE. EXCAVATE PITS SUFFICIENTLY BELOW THE AREA TO BE CONNECTED TO IN ORDER TO MAINTAIN WATER LEVELS BELOW THE WATER MAIN. IF WATER FROM THE PIT ENTERS THE EXISTING MAIN, CONTACT DIVISION OF WATER IMMEDIATELY. ENSURE THAT SUFFICIENTLY SIZED PUMPS ARE UTILIZED TO REMOVE WATER FROM THE TRENCH AND BACKUP PUMPS ARE KEPT ON SITE FOR REDUNDANCY.

"ITEM SPECIAL SURVEY COORDINATES"SHALL INCLUDE ALL MATERIAL, EQUIPMENT, AND LABOR NECESSARY TO OBTAIN HORIZONTAL AND VERTICAL (NORTHING, EASTING, AND CENTERLINE OF PIPE ELEVATION) SURVEY COORDINATES FOR THE WATER MAIN IMPROVEMENTS. THE SURVEY COORDINATES SHALL BE OBTAINED FOR THE COMPLETED WATER MAIN CONSTRUCTION AND SHALL INCLUDE ALL VALVES, TEES, CROSSES, BENDS, HORIZONTAL DEFLECTIONS, PLUGS, REDUCERS, TAPPING SLEEVES, FIRE HYDRANTS, AIR RELEASES, CURB STOPS, TRACER WIRE BOXES, AND CASING PIPE TERMINI. ADDITIONAL SURVEY COORDINATES ARE REQUIRED ON THE WATER MAIN EVERY 200 FEET WHERE NO FITTING OR OTHER WATER MAIN STRUCTURE IS BEING INSTALLED WITHIN THAT LENGTH OF THE IMPROVEMENT.

ALL SURVEY COORDINATES SHALL BE REFERENCED TO THE APPLICABLE COUNTY ENGINEER'S MONUMENTS, AND SHALL BE BASED ON THE NORTH AMERICAN DATUM OF 1983 (NAD 83) WITH THE (NSRS2007) ADJUSTMENT, WITH FURTHER REFERENCE MADE TO THE OHIO STATE PLANE SOUTH COORDINATE SYSTEM, SOUTH ZONE, WITH ELEVATIONS BASED ON NAVD 88 DATUM. ALL COORDINATES (NORTHING, EASTING, CENTERLINE ELEVATION) SHALL BE REFERENCED TO THE NEAREST HUNDREDTH (N XXXXXX.XX, E XXXXXX.XX, C/L ELEV. XXX.XX). ALL SURVEY COORDINATES SHALL BE ACCURATE TO WITHIN 1.0 FOOT HORIZONTAL AND A TENTH OF A FOOT (0.10) OR LESS VERTICAL.

THE COORDINATES SHALL BE DOCUMENTED TO THE ENGINEER IN DIGITAL SPREADSHEET FORM AND SHALL INCLUDE THE APPLICABLE ITEM, STATION, NORTHING, EASTING, AND CENTERLINE ELEVATION. COORDINATES SHALL BE SUBMITTED TO THE ENGINEER ON A BI-WEEKLY BASIS. COORDINATES SHALL ALSO BE REQUIRED TO BE SUBMITTED TO THE DIVISION OF WATER AS PART OF THE REQUEST FOR CHLORINATION.

LUMP SUM PAYMENT IS FULL COMPENSATION FOR ALL WORK INVOLVED IN OBTAINING AND DOCUMENTING THE SURVEY COORDINATES AS DESCRIBED IN THIS SPECIFICATION.

ALL WATER MAIN VALVE BOXES, WATER TAP BOXES, TEST STATIONS, PITOMETER TAP STRUCTURES, METER PIT COVERS, AND OTHER SURFACE UTILITY STRUCTURES WITHIN THE DISTURBED AREA SHALL BE ADJUSTED TO GRADE. ANY OF THESE STRUCTURES LOCATED WITHIN PAVEMENT, DRIVEWAYS, OR OTHER TRAVELED AREAS, WHETHER EXISTING OR PROPOSED, SHALL BE EQUIPPED WITH A TRAFFIC RATED, HEAVY DUTY VALVE BOX AND/OR COVER IN ACCORDANCE WITH THE STANDARD DRAWINGS. EXISTING WATER TAP BOXES TO REMAIN THAT ARE ENCOUNTERED WITHIN THE PROJECT LIMITS SHALL BE CLEANED OUT, CENTERED OVER THE CURB STOP, AND ADJUSTED TO THE PROPOSED GRADE.

WHERE NEW CONDUIT IS PROPOSED TO CROSS AN EXISTING OR PROPOSED WATER MAIN OR WATER TAP/SERVICE LINE, A MINIMUM OF 12-INCHES OF VERTICAL CLEARANCE SHALL BE MAINTAINED BETWEEN THE CONDUIT AND THE WATER MAIN OR TAP/SERVICE LINE. A MINIMUM OF 3-FEET OF HORIZONTAL CLEARANCE (OUT TO OUT) IS REQUIRED AT LOCATIONS WHERE THE CONDUIT IS PARALLEL TO THE WATER MAIN AND AT LOCATIONS OF WATER MAIN THRUST BLOCKS.

A MINIMUM OF 3 FEET OF HORIZONTAL CLEARANCE (OUT TO OUT) SHALL BE MAINTAINED BETWEEN ALL EXISTING WATER MAINS AND FOUNDATIONS FOR POLES, PULL BOXES, PUSH BUTTON PEDESTALS, AND ANY OTHER MISCELLANEOUS ELECTRICAL STRUCTURE.

DURING CONSTRUCTION, THE CONTRACTOR SHALL USE EXTREME CAUTION NOT TO DAMAGE THE EXISTING WATER MAINS DUE TO MINIMAL COVER.

FIRE HYDRANT RELOCATIONS SHALL CONFORM TO APPLICABLE SECTIONS OF ITEM 809 OF THE CITY OF COLUMBUS CONSTRUCTION AND MATERIAL SPECIFICATIONS. WORK SHALL CONSIST OF REMOVING THE EXISTING HYDRANT, INSTALLING NEW 6" PIPE AND FITTING AS REQUIRED TO LOCATE THE FIRE HYDRANT 2 FEET FROM BACK OF PROPOSED CURB OR 8 FEET OFF EDGE OF PAVEMENT, RESETTING HYDRANT AND BLOCKING AS REQUIRED. ALL 6"PIPE SHALL BE INSTALLED AT 4"-0" MINIMUM COVER. HYDRANT EXTENSIONS SHALL BE PROVIDED PER ITEM 810, AS REQUIRED. RELOCATED FIRE HYDRANTS SHALL BE ADJUSTED TO PROPER GRADE AND FACED IN THE PROPER DIRECTION. WHEN A HYDRANT IS RELOCATED FIFTEEN (15) FEET OR MORE FROM THE "TYPICAL HYDRANT SETTING"VALVE LOCATION (SEE L-6409 & L-6637), AN ADDITIONAL VALVE SHALL BE INSTALLED, AND RESTRAINED, WITHIN TWO (2) FEET OF THE RELOCATED HYDRANT. PAYMENT IS TO BE INCLUDED UNDER ITEM 809, FIRE HYDRANT RELOCATED.

RELOCATED FIRE HYDRANTS SHALL BE PUT BACK IN SERVICE AS SOON AS POSSIBLE. THE CONTRACTOR SHALL NOTIFY THE DIVISION OF FIRE ALARM OFFICE, 221-3132, WHENEVER FIRE HYDRANTS ARE TAKEN OUT OF SERVICE AND PLACED BACK IN SERVICE. NO TWO (2) ADJACENT FIRE HYDRANTS SHALL BE TAKEN OUT OF SERVICE CONCURRENTLY.

THE CONTRACTOR SHALL COORDINATE HIS WORK SUCH THAT NO WATER CUSTOMER WILL HAVE THEIR SERVICE DISRUPTED MORE THAN TWO (2) TIMES THROUGHOUT THE DURATION OF THIS PROJECT.

IF A LEAD WATER TAP IS ENCOUNTERED AND IS NEITHER DAMAGED NOR PART OF A PLANNED RELOCATION/REPLACEMENT, THE CONTRACTOR SHALL REPORT THE PRESENCE OF THE LEAD TAP TO THE DIVISION OF WATER DISTRIBUTION MAINTENANCE GROUP AT 614-645-7788.

FRA-270-51.50

X:\Projects\2013\1321\1010\FRA\92616\roadway\sheets\92616GN001.dgn 2/10/2023 9:02:06 AM cwong

WATER (CONTINUED)

IF A LEAD TAP IS EITHER DAMAGED DURING CONSTRUCTION OR IS PART OF A PLANNED WATER TAP RELOCATION/REPLACEMENT, THE CONTRACTOR SHALL TAKE THE FOLLOWING STEPS:

1. IF DAMAGED, IMMEDIATELY CONTACT LEW FLEMISTER, DIVISION OF WATER, (614-645-7028), TO REQUEST THE SHUT OFF OF THE EXISTING CURB STOP. IF LEW CANNOT BE REACHED, CONTACT THE DIVISION OF WATER DISTRIBUTION ENGINEERING OFFICE AT 614-645-7677 TO REQUEST THE SHUT OFF.

2. CONTRACTOR SHALL EXPOSE THE OWNER'S SIDE OF THE WATER SERVICE TO CONFIRM THE MATERIAL. THE INSPECTOR SHALL BE PRESENT FOR THIS.

3. IF THE CUSTOMER'S PRIVATE SERVICE MATERIAL IS LEAD, STOP WORK AND NOTIFY THE DIVISION OF WATER DISTRIBUTION ENGINEERING OFFICE (614-645-7677) IMMEDIATELY. IF THE MATERIAL IS NOT LEAD, THE CONTRACTOR SHALL REPLACE THE LEAD TAP (FROM EXISTING CORPORATION STOP TO CURB STOP) AND REINSTATE SERVICE TO THE CUSTOMER. PARTIAL REPAIRS OF THE LEAD TAP ARE NOT PERMITTED.

4. REFER TO DIVISION OF WATER STANDARD DRAWINGS L-7102C AND L-9901 FOR INFORMATION ON WATER TAP RELOCATIONS, PLACING NEW CURB STOPS, AND RELOCATING CURB BOXES.

ITEM SPECIAL - FILL AND PLUG EXISTING CONDUIT

THIS ITEM CONSISTS OF THE CONSTRUCTION OF BULKHEADS IN AN EXISTING 15 INCH DIAMETER CONDUIT AND FILLING THE AREA SEALED OFF WITH ITEM 613, SAND OR OTHER MATERIAL APPROVED BY THE ENGINEER.

LOCATE THE BULKHEADS AT THE LIMITS OF THE AREA TO BE FILLED, AS INDICATED ON THE PLANS. THE BULKHEADS CONSIST OF BRICK OR CONCRETE MASONRY WITH A MINIMUM THICKNESS OF 12 INCHES.

PUMP THE FILL MATERIAL INTO PLACE OR BY OTHER MEANS APPROVED BY THE ENGINEER, SO THAT AFTER SETTLEMENT, AT LEAST 90 PERCENT OF THE CROSS- SECTIONAL AREA OF THE CONDUIT, FOR ITS ENTIRE LENGTH IS FILLED. THE LENGTH OF FILLED AND PLUGGED CONDUIT TO BE PAID FOR IS THE ACTUAL NUMBER OF FEET (MEASURED ALONG THE CENTERLINE OF EACH CONDUIT FROM OUTER FACE TO OUTER FACE OF BULKHEADS) FILLED AND PLUGGED AS DESCRIBED ABOVE.

IN LIEU OF FILLING AND PLUGGING THE EXISTING CONDUIT, THE PIPE MAY BE CRUSHED AND BACKFILLED PER 203, OR IT MAY BE REMOVED. THE LENGTH, MEASURED AS PROVIDED ABOVE, WILL BE PAID FOR AT THE CONTRACT PRICE PER FOOT FOR, ITEM SPECIAL, FILL AND PLUG EXISTING CONDUIT.

ITEM 618 - RUMBLE STRIPS, SHOULDER (ASPHALT CONCRETE), AS PER PLAN

THE CONTRACTOR SHALL MILL 2 INCHES BY 2 FEET WIDE OF THE EXISTING ASPHALT SHOULDER IN ORDER TO REMOVE THE EXISTING RUMBLE STRIPS WITHIN THE PROJECT LIMITS IN THE AREA WHERE TRAFFIC IS SHIFTED. THE CONTRACTOR SHALL THEN COAT ALL MILLED SURFACES HORIZONTAL AND VERTICAL WITH APPROVED AC LIQUID. NEXT THE CONTRACTOR SHALL PLACE 2 INCHES OF ITEM 448 ASPHALT CONCRETE SURFACE COURSE, TYPE 1, PG 64-28.

ONCE THE PROJECT IS COMPLETE, THE CONTRACTOR SHALL INSTALL NEW RUMBLE STRIPS AS PER THE CONSTRUCTION AND MATERIAL SPECIFICATIONS SECTION 618.

ALL COST ASSOCIATED WITH THE REMOVAL OF THE EXISTING PAVEMENT, PLACEMENT OF THE SURFACE COURSE AND INSTALLATION OF THE RUMBLE STRIPS SHALL BE INCLUDED IN UNIT PRICE BID PER FOOT OF ITEM 618 - RUMBLE STRIPS, SHOULDER (ASPHALT CONCRETE), AS PER PLAN.

AN ESTIMATED QUANTITY OF 9190 FEET HAS BEEN CARRIED TO THE MAINTENANCE OF TRAFFIC SUBSUMMARY.

COORDINATION BETWEEN CONTRACTORS

THE CONTRACTOR SHALL COORDINATE WORK ON THIS PROJECT WITH ADJACENT CONSTRUCTION PROJECTS, INCLUDING PID 105839 SPOT PAVE WORK, WHILE THIS PROJECT IS UNDER CONSTRUCTION.

PAVEMENT CUTTING, SAWING, AND EXCAVATION OPERATIONS NOTE:

ALL PUBLIC AGENCIES AND PRIVATE CONTRACTORS PERFORMING PAVEMENT-CUTTING OPERATIONS ON CITY OF COLUMBUS STREETS AND ROADWAYS SHALL PROTECT THE ENVIRONMENT FROM DISCHARGES CREATED BY THEIR PAVEMENT CUTTING OPERATIONS. NOTE THAT COLUMBUS CITY CODE 1145 PROHIBITS NON-STORM WATER DISCHARGE INTO THE CITY OF COLUMBUS SEWER SYSTEM, CURB INLETS AND ANY PART OF ITS MS4 (MUNICIPAL SEPARATE STORM SEWER SYSTEM).

THE REQUIREMENT INCLUDES BUT IS NOT LIMITED TO WET OR DRY SAW-CUTTING, JACK HAMMERING, EXCAVATION EQUIPMENT USE, ETC. THE PUBLIC AGENCY AND/OR PRIVATE CONTRACTOR WORK CREWS SHALL RECOVER AND DISPOSE OF DETRITUS, POLLUTED WATERS, OR OTHER SUCH DISCHARGES RESULTING FROM THEIR PAVEMENT CUTTING OPERATIONS AND PROTECT ALL STORM SEWER INLETS FROM RECEIVING ANY DISCHARGES FROM THE CONSTRUCTION OPERATIONS. THE AGENCY OR CONTRACTOR RESPONSIBLE FOR EACH PAVEMENT CUTTING ACTIVITY SHALL BE SOLELY LIABLE FOR NOTICE OF VIOLATIONS (NOV/S) AND FINES ISSUED BY CITY OF COLUMBUS AND/OR STATE OF OHIO AUTHORITIES.

EQUIPMENT, MATERIALS AND METHODS SHALL BE PROVIDED BY THE RESPONSIBLE PUBLIC AGENCY AND/OR PRIVATE CONTRACTOR TO WORK CREWS PERFORMING THE PAVEMENT CUTTING ACTIVITY AND MADE AVAILABLE TO WORK CREWS FOR USE IN CLEANING UP DISCHARGES RESULTING FROM SUCH CUTTING ACTIVITIES AND PREVENTING RUNOFF. ALL WORK CREWS SHALL BE TRAINED TO EXERCISE AND EMPLOY EQUIPMENT, MATERIALS, AND ENVIRONMENTAL PROTECTIVE MEASURES TO PREVENT POLLUTED DISCHARGES FROM ENTERING THE CITY OF COLUMBUS STORM SEWER SYSTEM AND WATERS OF THE STATE OF OHIO.

THE PUBLIC AGENCY AND/OR PRIVATE CONTRACTOR IS SOLELY RESPONSIBLE FOR ENSURING THAT THE INLET PROTECTION IS ADEQUATE. THE MOST STRINGENT PROJECT PLANS, NOTES AND/OR DRAWINGS INCLUDING STORMWATER POLLUTION PREVENTION PLAN (SWP3) OR SPILL PREVENTION/REMEDIATION PLAN SHALL APPLY TO ALL PAVEMENT CUTTING, SAWING OR EXCAVATION OPERATIONS.

NOTE TO SPECIFICATION WRITERS: IF SWP3 OR SPILL PREVENTION/REMEDIATION PLANS ARE INCLUDED IN CONTRACT DOCUMENTS, THEY SHOULD BE CITED IN THE LAST PARAGRAPH ABOVE BY VOLUME, PAGE OR SHEET NUMBERS; SO DIRECTING THE READER TO SUCH PLAN.

DELINEATION OF PORTABLE AND PERMANENT BARRIER

BARRIER REFLECTORS AND OBJECT MARKERS SHALL BE INSTALLED ON ALL PORTABLE BARRIER (PB) USED FOR TRAFFIC CONTROL AND ON PERMANENT CONCRETE BARRIER (INCLUDING BRIDGE PARAPETS) LOCATED WITHIN 5 FEET OF THE EDGE OF THE ADJACENT TRAVEL LANE.

BARRIER REFLECTORS SHALL CONFORM TO C&MS 626, EXCEPT THAT THE SPACING SHALL BE AS PER TRAFFIC SCD MT-101.70. OBJECT MARKERS AND THEIR INSTALLATION SHALL CONFORM TO C&MS 614.03 AND SCD MT-101.70. WHEN THE PB CONTAINS GLARE SCREEN, ONE SET OF THREE VERTICAL STRIPES OF SHEETING SHALL BE CONSIDERED EQUIVALENT TO AN OBJECT MARKER, ONE-WAY.

INCREASED BARRIER DELINEATION, AS SPECIFIED HEREIN, SHALL BE INSTALLED ON ALL PB AND CONCRETE PERMANENT BARRIER LOCATED WITHIN 5 FEET OF THE EDGE OF THE TRAVELED LANE.

THE INCREASED BARRIER DELINEATION SHALL CONSIST OF THE TRIPLE STACKING OF WORK ZONE BARRIER REFLECTORS.

TRIPLE-STACKED BARRIER REFLECTORS SHALL CONSIST OF ALIGNING THREE BARRIER REFLECTORS VERTICALLY, AT LOCATIONS WHERE A SINGLE BARRIER REFLECTOR WOULD BE OTHERWISE ATTACHED. THERE SHALL BE NO OPEN SPACE BETWEEN THE ADJACENT BARRIER REFLECTORS. THE TRIPLE-STACKED BARRIER REFLECTORS SHALL CONFORM TO C&MS 626, EXCEPT THAT THEY SHALL BE SPACED AND ALIGNED PER TRAFFIC SCD MT-101.70.

THE FOLLOWING ESTIMATED QUANTITIES HAVE BEEN INCLUDED IN THE PLANS AND CARRIED TO THE GENERAL SUMMARY:

ITEM 614, BARRIER REFLECTOR, TYPE B	739 EACH
ITEM 614, OBJECT MARKER, 1-WAY	329 EACH

PAYMENT SHALL BE FULL COMPENSATION FOR ALL MATERIAL, LABOR, INCIDENTALS AND EQUIPMENT NECESSARY FOR FURNISHING, INSTALLING, MAINTAINING AND REMOVING EACH OF THE ABOVE ITEMS

COORDINATION WITH ADJACENT PROJECTS

THE CONTRACTOR SHALL COORDINATE WORK WITH ODOT AND THE CONTRACTORS ON THE ADJACENT PROJECTS INCLUDING PID 110696. COORDINATION SHALL BE MADE TO PREVENT CONFLICTING ADVANCE WARNING SIGNS, CONFLICTING DETOUR ROUTES, OVERLAPING/CONFLICTING LANE CLOSURES, AND TO ENSURE THAT A MINIMUM DISTANCE OF 2 MILES BETWEEN ADJACENT LANE CLOSURES IS MAINTAINED. THIS IS NOT AN EXHAUSTIVE LIST OF COORDINATION ITEMS THAT MAY NEED TO BE RESOLVED BETWEEN PROJECTS. THE DEPARTMENT RESERVES THE RIGHT TO DECIDE WHICH PROJECT'S ACTIVITIES TAKE PRECEDENCE. PROJECTS THAT HAVE ACTIVITIES DELAYED DUE TO CONFLICTS WILL CONSIDER THIS AN EXCUSABLE, NON-COMPENSABLE DELAY PER 108.06.B. ON PROJECTS THAT HAVE ACTIVITIES DELAYED DUE TO CONFLICTS WHERE THE CONTRACTOR FAILED TO MEET THE NOTIFICATION REQUIREMENTS, THE DELAYS SHALL NOT BE CONSIDERED EXCUSABLE OR COMPENSABLE.
ATTENDANCE AT DEPARTMENT ORDERED TRAFFIC COORDINATION MEETINGS BETWEEN ADJACENT PROJECTS SHALL BE CONSIDERED MANDATORY FOR EACH PROJECT'S SUPERINTENDENT AND WORKSITE TRAFFIC SUPERVISOR (WTS)*, AND INCIDENTAL TO THE LUMP SUM MAINTENANCE OF TRAFFIC PAYMENT ITEM

*IF REQUIRED BY THE PROJECT

ITEM 611 - CONDUIT, BORED OR JACKED, TYPE B, 15"
ITEM 611 - CONDUIT, BORED OR JACKED, TYPE B, 18"

ITEM 611 - CONDUIT BORED OR JACKED WHERE IT IS SPECIFIED THAT A CONDUIT BE INSTALLED BY THE METHOD OF BORING OR JACKING, NO TRENCH EXCAVATION IS PERMITTED WITHIN 5 FEET OF THE (EDGE OF PAVEMENT) (NEAREST RAIL). PROVIDE A STEEL CASING PIPE CONFORMING TO 748.06. JOINTS WITH A CIRCUMFERENCIAL FULLY PENETRATING B[1]U4b WELD THAT IS PERFORMED BY A CERTIFIED WELDER FOR WELDING CODE AMERICAN WELDING SOCIETY (AWS) D1. 1 OR MACHINED INTERLOCKING JOINTS ARE PERMITTED. THE INSTALLED CASING PIPE IS THE STORM WATER CONVEYANCE CARRIER UNLESS OTHERWISE SPECIFIED IN THE PLANS. HYDROSTATIC TESTING IS NOT REQUIRED FOR THE CASING PIPE.

CALCULATED ACF
CHECKED CSR

GENERAL NOTES

FRA-270-51.50

18
554

X:\Projects\2013\1321\1010\FRA\92616\roadway\sheets\92616GN001.dgn 5/9/2023 5:43:37 AM cwong

ENDANGERED BAT HABITAT REMOVAL

THE PROJECT IS LOCATED WITHIN THE KNOWN HABITAT RANGES OF THE FEDERALLY LISTED AND PROTECTED INDIANA BAT AND NORTHERN LONG-EARED BAT. NO TREES SHALL BE REMOVED UNDER THIS PROJECT FROM APRIL 1 THROUGH SEPTEMBER 30. ALL NECESSARY TREE REMOVAL SHALL OCCUR FROM OCTOBER 1 THROUGH MARCH 31. THIS REQUIREMENT IS NECESSARY TO AVOID AND MINIMIZE IMPACTS TO THESE SPECIES AS REQUIRED BY THE ENDANGERED SPECIES ACT. FOR THE PURPOSES OF THIS NOTE, A TREE IS DEFINED AS A LIVE, DYING, OR DEAD WOODY PLANT, WITH A TRUNK THREE INCHES OR GREATER IN DIAMETER AT A HEIGHT OF 4.5 FEET ABOVE THE GROUND SURFACE, AND WITH A MINIMUM HEIGHT OF 13 FEET.

ECOLOGICAL ENVIRONMENTAL COMMITMENTS

2. STREAM CHANNEL EXCAVATION - THE CONTRACTOR SHALL TAKE ALL PRECAUTIONS NECESSARY TO PREVENT ANY INCIDENTAL DISCHARGES ASSOCIATED WITH THE EXCAVATION AND HAULING OF MATERIAL FROM THE STREAM CHANNEL. THIS PERTAINS TO ANY EXCAVATION OPERATION SUCH AS FOUNDATION, PIER OR ABUTMENT EXCAVATION, CHANNEL CLEAN- OUT, EXCAVATION FOR ROCK CHANNEL PROTECTION AND REMOVAL OF ANY TEMPORARY FILL ASSOCIATED WITH CONSTRUCTION OPERATIONS.

3. NO TOXIC OR HAZARDOUS MATERIALS SUCH AS SEALANTS, PAINT, SOLVENTS, CLEANING AGENTS, EARTHEN MATERIALS, WASTE-WATER FUELS OR DEBRIS OF ANY KIND SHALL BE DISCHARGED TO ANY STREAMS, DRAINAGE COURSES OR BODIES OF WATER. ALL ASPHALT OR CONCRETE GRINDINGS, EXCESS ASPHALT OR CONCRETE MATERIALS OR ANY OTHER DEBRIS GENERATED DURING RESURFACING OR OTHER SIMILAR ACTIVITIES SHALL NOT BE DISPOSED OF WITHIN A FLOODPLAIN BELOW THE 100-YEAR FLOOD ELEVATION. THE CONTRACTOR SHALL TAKE ALL PRECAUTIONS NECESSARY TO PREVENT LIQUIDS USED TO REPAIR, CLEAN, SEAL, OR TREAT ANY BRIDGE STRUCTURE (E.G. PAINT, SEALER, SOLVENT) FROM ENTERING STREAMS, WETLANDS OR OTHER "WATERS OF THE UNITED STATES" AND TAKE THE APPROPRIATE ACTIONS IN THE EVENT OF A RELEASE.

5. BEST MANAGEMENT PRACTICES (BMPS) SHOULD BE USED TO MINIMIZE SEDIMENTATION AND EROSION. RIPARIAN ZONE HABITAT SHOULD BE PRESERVED WHERE POSSIBLE. RIPARIAN AREAS SHOULD NOT BE MOWED.

6. TREE CLEARING - NO TREE CLEARING SHALL OCCUR UNTIL ALL NECESSARY PERMITS AND CONSULTATIONS HAVE BEEN COMPLETED.

ASBESTOS NOTIFICATION

AN ASBESTOS SURVEY OF THE BRIDGE STRUCTURES SCHEDULED FOR REHABILITATION WAS CONDUCTED BY A CERTIFIED ASBESTOS HAZARD EVALUATION SPECIALIST. THE SURVEY DETERMINED THAT NO ASBESTOS WAS PRESENT ON THE BRIDGE STRUCTURES.

A COPY OF THE OHIO ENVIRONMENTAL PROTECTION AGENCY (OEPA) NOTIFICATION OF DEMOLITION AND RENOVATION FORMS, PARTIALLY COMPLETED AND SIGNED BY THE BRIDGE OWNER, WILL BE PROVIDED TO THE SUCCESSFUL BIDDER. THE CONTRACTOR SHALL COMPLETE THE FORM AND SUBMIT IT TO THE ADDRESS BELOW AT LEAST TEN (10) WORKING DAYS PRIOR TO THE START OF ANY DEMOLITION AND/OR RENOVATION.

MR. RICK FOWLER (CENTRAL DISTRICT OFFICE)
OHIO EPA, CDO
PO BOX 1049
COLUMBUS, OHIO 43216

THE CONTRACTOR SHALL PROVIDE A COPY OF THE COMPLETED FORM TO THE ENGINEER. INFORMATION REQUIRED ON THE FORM WILL INCLUDE: 1) THE CONTRACTORS NAME AND ADDRESS, 2) THE SCHEDULED DATES FOR THE START AND COMPLETION OF THE BRIDGE REMOVAL AND 3) A DESCRIPTION OF THE PLANNED DEMOLITION WORK AND THE METHOD(S) TO BE USED. COPIES OF THE OEPA FORM AND BRIDGE INSPECTION REPORT ARE AVAILABLE FOR REVIEW AT THE ODOT DISTRICT 6 OFFICE, 400 EAST WILLIAM STREET, DELAWARE, OHIO 43065.

BASIS FOR PAYMENT THE CONTRACTOR SHALL FURNISH ALL FEES, LABOR, AND MATERIAL NECESSARY TO COMPLETE AND SUBMIT THE OEPA NOTIFICATION FORM. PAYMENT FOR THIS WORK SHALL BE INCLUDED IN ITEM 202 PORTIONS OF STRUCTURE REMOVED, AS PER PLAN.

WETLANDS AVOIDANCE

JURISDICTIONAL WETLANDS HAVE BEEN IDENTIFIED TO THE RIGHT OR LEFT OF APPROXIMATE STATION 270+00 TO STATION 280+00 (RAMP R,) STATION 580+00 TO STATION 585+00 (US 23), STATION 0+00 TO STATION 20+00 (RAMP M), STATION 0+00 TO STATION 20+00 (RAMP O), STATION 0+00 TO STATION 20+00 (RAMP Q), STATION 0+00 TO STATION 20+00 (RAMP N), STATION 800+00 TO STATION 810+00 (RAMP S), AND STATION 515+00 TO STATION 8540+00 (IR 270), AS SHOWN ON THE SCHEMATIC PLAN SHEET 3 .

DIVISION OF POWER

THE DIVISION OF POWER (DOP) MAY HAVE UNDERGROUND AND OVERHEAD PRIMARY, SECONDARY, AND STREET LIGHTING AT THIS WORK LOCATION. THE CONTRACTOR IS HEREBY REQUIRED TO CONTACT OUPS AT 811 OR 1-800-362-2764 FORTY-EIGHT HOURS PRIOR TO CONDUCTING ANY ACTIVITY WITHIN THE CONSTRUCTION AREA.

ANY REQUIRED RELOCATION, SUPPORT, PROTECTION, OR ANY OTHER ACTIVITY CONCERNED WITH THE CITY'S ELECTRICAL FACILITIES IN THE CONSTRUCTION AREA IS TO BE PERFORMED BY THE CONTRACTOR UNDER THE DIRECTION OF DOP PERSONNEL AND AT THE EXPENSE OF THE PROJECT. THE CONTRACTOR SHALL USE MATERIAL AND MAKE REPAIRS TO A CITY OF COLUMBUS STREET LIGHTING SYSTEM BY FOLLOWING DOP'S "MATERIAL AND INSTALLATION SPECIFICATIONS" (MIS) AND THE CITY OF COLUMBUS "CONSTRUCTION AND MATERIAL SPECIFICATIONS" (CMSC). ANY NEW OR RE-INSTALLED UNDERGROUND STREETLIGHT SYSTEM SHALL REQUIRE TESTING AS REFERRED TO IN SECTION 1000.18 OF THE CMSC MANUAL. THE CONTRACTOR SHALL CONFORM TO DOP'S EXISTING CONDUCTOR SAFETY POLICY AND HOLD CARD SYSTEM, MIS-95, COPIES OF WHICH ARE AVAILABLE FROM DOP.

IF ANY ELECTRIC FACILITY BELONGING TO DOP IS DAMAGED IN ANY MANNER BY THE CONTRACTOR, ITS AGENTS, SERVANTS, OR EMPLOYEES, AND REQUIRES EMERGENCY REPAIRS, THE DOP DISPATCH OFFICE SHOULD BE CONTACTED IMMEDIATELY AT (614) 645-7627. DOP SHALL MAKE ALL NECESSARY REPAIRS, AND THE EXPENSE OF SUCH REPAIRS AND OTHER RELATED COSTS SHALL BE PAID BY THE CONTRACTOR TO THE DIVISION OF POWER, CITY OF COLUMBUS, OHIO.

NOTICE FROM THE CITY OF COLUMBUS

THE PUMPING OR DIRECT DISCHARGE OF SEDIMENT LADEN (MUDDY) WATER TO THE CITY'S SEWER SYSTEM OR A RECEIVING STREAM IS A VIOLATION OF OHIO EPA AND CITY OF COLUMBUS REGULATIONS.

ALL INLETS RECEIVING FLOW FROM RUNOFF, PUMPING ACTIVITIES, OR OTHER DIRECT DISCHARGES SHALL BE FITTED WITH AN INLET PROTECTION DEVICE THAT IS PROPERLY SIZED AND SECURED TO REDUCE THE DISCHARGE OF SEDIMENT INTO THE STORM SYSTEM AND RECEIVING SYSTEM. INLET PROTECTION IS REQUIRED ON ALL INLETS RECEIVING DISCHARGE REGARDLESS OF WHETHER OR NOT THE INLET IS TRIBUTARY TO ANY DOWNSTREAM EROSION AND SEDIMENT CONTROLS.

DISCHARGE HOSES USED DURING PUMPING ACTIVITIES SHALL BE FITTED WITH SEDIMENT BAGS THAT ARE PROPERLY SIZED PER MANUFACTURER'S RECOMMENDATIONS REGARDLESS OF WHAT OTHER SEDIMENT CONTROLS ARE IN PLACE FURTHER DOWNSTREAM. SEDIMENT BAGS MUST BE PROPERLY SECURED TO THE DISCHARGE HOSE AND PLACED OVER VEGETATED AREAS, WHERE FEASIBLE, DURING DISCHARGE. SEE DETAIL BELOW FOR A TYPICAL SEDIMENT BAG INSTALLATION.

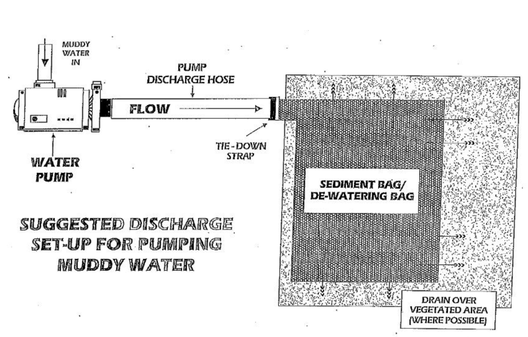

SUGGESTED DISCHARGE SET-UP FOR PUMPING MUDDY WATER

	WATER COORDINATES					
	STATE PLANE COORDINATES (OHIO SOUTH ZONE)					
				AS BUILT		
SHEET	DESCRIPTION	STATION	OFFSET	NORTHING	EASTING	CENTERLINE ELEVATION
177	FIRE HYDRANT (RELOCATED)	554+68.95	20.4' LT			
177	FIRE HYDRANT (RELOCATED)	554+69.46	28.0' LT			

CALCULATED ACF
CHECKED CSR

GENERAL NOTES

FRA-270-51.50

19
554

X:\Projects\2013\1321\1010\FRA\92616\roadway\sheets\92616GN001.dgn 3/7/2023 5:51:00 AM cwong

SEQUENCE OF CONSTRUCTION

PHASE 1

CONSTRUCT THE EARTHWORK, DRAINAGE AND PAVEMENT FOR TEMPORARY RAMP (TO BE USED IN PHASE 2 BY DETOURED RAMP L TRAFFIC) FROM US 23 TO RAMP M. CONSTRUCT TEMPORARY SIGNAL AT TEMPORARY RAMP. THIS WORK MAY CONTINUE THROUGH PHASE 1A. RAMP M MAY BE DETOURED FOR UP TO TWO WEEKS TO CONSTRUCT THE TIE IN TO TEMPORARY RAMP L.

MAINTAIN TRAFFIC ON RIGHT SIDE OF RAMP P1 WHILE CONSTRUCTING THE EARTHWORK, DRAINAGE AND FULL DEPTH PAVEMENT FOR RAMP P2 AND WIDENING LEFT ON RAMP P1. CONSTRUCT THE EARTHWORK AND PAVEMENT FOR MAINTAINING TRAFFIC FOR THE CONNECTION OF RAMP P2 TO RAMP O (TO BE USED IN PHASE 2 BY DIVERTED RAMP R TRAFFIC) FROM US 23 TO RAMP O. CONSTRUCT PERMANENT SIGNAL AT RAMP P2 AND MODIFY FOR USE IN PHASE 1A. THE CONTRACTOR CAN CLOSE RAMP O FOR UP TO TWO WEEKS TO CONSTRUCT THE PROPOSED STORM SEWER BETWEEN RAMP O AND RAMP P2.

USING PERMISSIBLE LANE CLOSURES, CONSTRUCT EARTHWORK, DRAINAGE, PERMANENT PAVEMENT AND PAVEMENT FOR MAINTAINING TRAFFIC IN US 23 MEDIAN TO ACCOMMODATE LEFT TURN LANES.

ON I-270 EB, SHIFT LANES LEFT AND CONSTRUCT EARTHWORK, DRAINAGE, AND PERMANENT PAVEMENT ON RIGHT SIDE OF I-270 EB FROM STA. 534+00 TO STA. 539+00.

PHASE 1A

PLACE WORKZONE CONTROL MARKINGS ON US 23 AND ACTIVATE SIGNAL.

MAINTAIN TRAFFIC (270 EB TO 23 SB) ON THE LEFT SIDE OF RAMP P1 AND RAMP P2 TO THE MODIFIED SIGNAL. CONSTRUCT THE EARTHWORK AND PAVEMENT FOR THE RIGHT SIDE OF RAMP P1. CONSTRUCT THE EARTHWORK AND PAVEMENT FOR THE ACCELERATION LANE FOR RAMP P1 TO US 23 SOUTH USING PERMISSABLE LANE CLOSURES AND ADHERING TO THE DROP OFF REQUIREMENTS OF SCD MT-101.90.

CONSTRUCT PERMANENT SIGNAL AT INTERSECTION OF RAMP P2 AND US 23 AND MODIFY FOR USE WITH ADDITIONAL US23 NB LEFT TURNING TRAFFIC REROUTED FROM RAMP R. (TO BE USED IN PHASE 2 BY DETOURED RAMP R TRAFFIC.)

PHASE 2

PLACE WORK ZONE CONTROL MARKINGS ON US 23 AND ACTIVATE SIGNAL TO MAINTAIN TRAFFIC (I 270 WB TO US 23 SB & NB AND US 23 NB TO I 270 EB) VIA RAMP P1, RAMP P2 AND RAMP O. CLOSE RAMP L AND RAMP R ROUTING TRAFFIC TO TEMPORARY RAMPS.

CONSTRUCT THE SUBSTRUCTURE REPAIRS ON RAMP L STRUCTURE OVER IR 270 AND THE SUBSTRUCTURE RAMP L STRUCTURE OVER US 23 USING PERMITTED LANE CLOSURES.

REMOVE THE EXISTING SUPERSTRUCTURE FOR RAMP L STRUCTURE OVER IR 270 USING PERMITTED LANE CLOSURES AND SHORT DURATION CLOSURES AT NIGHT FOR REMOVING EXISTING BEAMS.

CONSTRUCT RAMP L OVER IR 270 STRUCTURE WORK (ABUTMENT REHABILITATION, BEARINGS, BEAMS, DECK AND APPROACH SLAB REPLACEMENT) USING PERMITTED LANE CLOSURES AND SHORT DURATION CLOSURES AT NIGHT FOR PLACING BEAMS.*

CONSTRUCT THE SUPERSTRUCTURE REPAIRS AND OVERLAY ON RAMP L STRUCTURE OVER US 23.

PHASE 2 (CONT.)

CONSTRUCT THE EARTHWORK, DRAINAGE AND PAVEMENT FOR RAMP L. *

CONSTRUCT FULL DEPTH PAVEMENT ON RAMP P1 FROM STA. 684+89 TO STA. 688+00 DURING NON-PEAK HOURS USING LANE CLOSURES. THIS WORK SHOULD OCCUR DURING WEEKENDS BEGINNING NO EARLIER THAN 9 PM ON FRIDAY AND COMPLETED BY 6 AM ON MONDAY. SEE SHEET 52.

CONSTRUCT THE EARTHWORK, DRAINAGE AND PAVEMENT FOR RAMP R.

PLACE THE WORK ZONE CONTROL MARKINGS, DRUMS, AND TEMPORARY BARRIER TO MAINTAIN CD ROAD MERGE WITH I-270 AND CONSTRUCT THE EARTHWORK AND FULL DEPTH PAVEMENT ON THE CD ROAD/RAMP R ACCELERATION LANE TO THE RIGHT OF EXISTING PAVEMENT.

CONSTRUCT TEMPORARY PAVEMENT IN THE GORE AREA OF RAMP R AND THE CD ROAD.

DETOUR RAMP S AND CONSTRUCT EARTHWORK, DRAINAGE, FULL DEPTH PAVEMENT AND SIGNAL ON RAMP S.*

*THIS WORK MAY CONTINUE THROUGH PHASE 2A.

PHASE 2A

PLACE THE WORK ZONE CONTROL MARKINGS, DRUMS, AND TEMPORARY BARRIER TO MAINTAIN CD ROAD MERGE WITH I-270 VIA TEMPORARY PAVEMENT AND THE NEW PAVEMENT ON THE FAR RIGHT. CONSTRUCT THE EARTHWORK, DRAINAGE AND FULL DEPTH PAVEMENT ON THE CD ROAD/RAMP R ACCELERATION LANE BETWEEN I-270 EB AND THE NEW PAVEMENT WIDENING.

PHASE 3

MAINTAIN TRAFFIC ON I 270 WB BY SHIFTING 2 LANES LEFT AND MAKING RIGHT LANE EXIT ONLY TO US 23 ON RAMP S. CONSTRUCT THE EARTHWORK, DRAINAGE AND FULL DEPTH PAVEMENT ON THE RIGHT SIDE OF I 270 WB.

REMOVE PAVEMENT FOR MAINTAINING TRAFFIC BETWEEN RAMP P1 AND RAMP O AND PLACE REMAINING PAVEMENT ON RAMP P2 AT STA 867+00 TO 870+00.

MAINTAIN TRAFFIC USING BARRELS AND/OR FLAGGERS TO PLACE FINAL OVERLAY AND PAVEMENT MARKINGS, INCLUDING OVERLAY ON RAMP M AND RAMP O.

REMOVE TEMPORARY RAMP L, RAMP N, AND RAMP Q.

EARTHWORK FOR MAINTAINING TRAFFIC

WHEN UNDERCUTS ARE NECESSARY FOR PAVEMENT FOR MAINTAINING TRAFFIC OR EMBANKMENT CONSTRUCTION, EVALUATE THE NEED FOR TEMPORARY ROAD UNDERCUTS IF WITHIN A CLOSE PROXIMITY TO THE MAINLINE UNDERCUTS. A GEOTECHNICAL EVALUATION SHOULD BE CONSIDERED TO DETERMINE IF THE EXISTING SOIL CONDITIONS ARE ADEQUATE TO SUPPORT THE TEMPORARY ROAD. ADDITIONAL SOIL BORINGS ALONG THE TEMPORARY ROAD ARE NOT NORMALLY REQUIRED.

ITEM 614, MAINTAINING TRAFFIC (LANES OPEN DURING HOLIDAYS AND SPECIAL EVENTS)

NO WORK SHALL BE PERFORMED AND THE SAME NUMBER OF LANES AS WERE AVAILABLE AT THE START OF THE PROJECT SHALL BE OPEN TO TRAFFIC DURING THE FOLLOWING DESIGNATED HOLIDAYS OR SPECIAL EVENTS:

NEW YEAR'S (OBSERVED)	LABOR DAY
TOTAL SOLAR ECLIPSE (4/8/24)	GENERAL/REGULAR ELECTION DAY (NOV)
MEMORIAL DAY	THANKSGIVING
FOURTH OF JULY (OBSERVED)	CHIRSTMAS (OBSERVED)

THE PERIOD OF TIME THAT THE LANES ARE TO BE OPEN DEPENDS ON THE DAY OF THE WEEK ON WHICH THE HOLIDAY OR SPECIAL EVENT FALLS. THE FOLLOWING SCHEDULE SHALL BE USED TO DETERMINE THIS PERIOD:

DAY OF HOLIDAY OR SPECIAL EVENT	TIME ALL LANES MUST BE OPEN TO TRAFFIC
SUNDAY	12:00N FRIDAY THROUGH 6:00 AM MONDAY
MONDAY	12:00N FRIDAY THROUGH 6:00 AM TUESDAY
MONDAY (TOTAL SOLAR ECLIPSE)	12:00N FRIDAY THROUGH 6:00 AM TUESDAY
TUESDAY	12:00N MONDAY THROUGH 6:00 AM WEDNESDAY
TUESDAY (GEN./REG. ELECTION)	5:00 AM TUESDAY THROUGH 12:00 AM WEDNESDAY
WEDNESDAY	12:00N TUESDAY THROUGH 6:00 AM THURSDAY
THURSDAY	12:00N WEDNESDAY THROUGH 6:00 AM FRIDAY
THURSDAY (THANKSGIVING ONLY)	6:00 AM WEDNESDAY THROUGH 6:00 AM MONDAY
FRIDAY	12:00N THURSDAY THROUGH 6:00 AM MONDAY
SATURDAY	12:00N FRIDAY THROUGH 6:00 AM MONDAY

SPECIAL EVENTS

DURING THE SAME PERIODS, MAINTAIN PEDESTRIAN ACCESS IF PEDESTRIAN ACCESS WAS PRESENT PRIOR TO CONSTRUCTION.

NO EXTENSIONS OF TIME SHALL BE GRANTED FOR DELAYS IN MATERIAL DELIVERIES, UNLESS SUCH DELAYS ARE INDUSTRY WIDE, OR FOR LABOR STRIKES, UNLESS SUCH STRIKES ARE AREA WIDE.

SHOULD THE CONTRACTOR FAIL TO MEET ANY OF THESE REQUIREMENTS, THE CONTRACTOR SHALL BE ASSESSED A DISINCENTIVE PER THE LANE VALUE CONTRACT (PN 127).

TRENCH FOR WIDENING

TRENCH EXCAVATION FOR BASE WIDENING SHALL BE ONLY ON ONE SIDE OF THE PAVEMENT AT A TIME. THE OPEN TRENCH SHALL BE ADEQUATELY MAINTAINED AND PROTECTED WITH DRUMS OR BARRICADES AT ALL TIMES. PLACEMENT OF PROPOSED SUBBASE AND BASE MATERIAL SHALL FOLLOW AS CLOSELY AS POSSIBLE BEHIND EXCAVATION OPERATIONS. THE LENGTH OF WIDENING TRENCH WHICH IS OPEN AT ANY ONE TIME SHALL BE HELD TO A MINIMUM AND SHALL AT ALL TIMES BE SUBJECT TO APPROVAL OF THE ENGINEER.

MAINTAINING TRAFFIC (TIME LIMITATION ON A DETOUR)

RAMP R AND L SHALL BE FULLY OPEN AND MAINTAINED FOR ONE WAY TRAFFIC AT ALL TIMES, EXCEPT FOR A PERIOD NOT TO EXCEED 180 CONSECUTIVE CALENDAR DAYS, WHEN THROUGH TRAFFIC MAY BE DETOURED AS SHOWN ON SHEET 24. A DISINCENTIVE SHALL BE ASSESSED IN THE AMOUNT OF $12,000 PER DAY FOR EACH CALENDAR DAY THE ROADWAY REMAINS CLOSED TO TRAFFIC BEYOND THE SPECIFIED LIMIT.

CRITICAL WORK FOR TIME LIMITATION ON A DETOUR

ALL PROPOSED PLAN BID WORK ON RAMPS R AND L INCLUDING BUT NOT LIMITED TO ALL ROADWAY WORK AND STRUCTURE WORK ON RAMP L STRUCTURES OVER I-270 AND US-23 SHALL BE COMPLETE SUCH THAT THE RAMPS CAN BE OPEN TO TRAFFIC WITH ALL SAFETY ITEMS IN PLACE IN ACCORDANCE WITH C&MS 108.07.

CALCULATED MBE CHECKED RCH

MAINTENANCE OF TRAFFIC GENERAL NOTES

FRA-270-51.50

X:\Projects\2013\1321\1010\FRA\92616\mot\sheets\92616MN001.dgn 5/4/2023 2:20:06 PM cwong

ITEM 614, PORTABLE CHANGEABLE MESSAGE SIGNS, AS PER PLAN

THE CONTRACTOR SHALL FURNISH, INSTALL, MAINTAIN AND REMOVE, WHEN NO LONGER NEEDED, A CHANGEABLE MESSAGE SIGN. THE SIGN SHALL BE OF A TYPE SHOWN ON A LIST OF APPROVED PCMS UNITS AVAILABLE ON THE OFFICE OF MATERIALS MANAGEMENT WEB PAGE. THE LIST CONTAINS CLASS A AND B UNITS WITH MINIMUM LEGIBILITY DISTANCES OF 800 FEET AND 650 FEET, RESPECTIVELY.

EACH SIGN SHALL BE TRAILER-MOUNTED AND EQUIPPED WITH A FUNCTIONAL DIMMING MECHANISM, TO DIM THE SIGN DURING DARKNESS, AND A TAMPER AND VANDAL PROOF ENCLOSURE. EACH SIGN SHALL BE PROVIDED WITH APPROPRIATE TRAINING AND OPERATION INSTRUCTIONS TO ENABLE ON-SITE PERSONNEL TO OPERATE AND TROUBLESHOOT THE UNIT. THE SIGN SHALL ALSO BE CAPABLE OF BEING POWERED BY AN ELECTRICAL SERVICE DROP FROM A LOCAL UTILITY COMPANY. THE PCMS SHALL BE DELINEATED IN ACCORDANCE WITH C&MS 614.03.

THE PROBABLE PCMS LOCATIONS AND WORK LIMITS FOR THOSE LOCATIONS ARE SHOWN ON SHEET(S) OF THE PLAN. PLACEMENT, OPERATION, MAINTENANCE AND ALL ACTIVATION OF THE SIGNS BY THE CONTRACTOR SHALL BE AS DIRECTED BY THE ENGINEER. THE PCMS SHALL BE LOCATED IN A HIGHLY VISIBLE POSITION YET PROTECTED FROM TRAFFIC. THE CONTRACTOR SHALL, AT THE DIRECTION OF THE ENGINEER, RELOCATE THE PCMS TO IMPROVE VISIBILITY OR ACCOMMODATE CHANGED CONDITIONS. WHEN NOT IN USE, THE PCMS SHALL BE TURNED OFF. ADDITIONALLY, WHEN NOT IN USE FOR EXTENDED PERIODS OF TIME, THE PCMS SHALL BE TURNED AWAY FROM ALL TRAFFIC.

THE ENGINEER SHALL BE PROVIDED ACCESS TO EACH SIGN UNIT AND SHALL BE PROVIDED WITH APPROPRIATE TRAINING AND OPERATION INSTRUCTIONS TO ENABLE ODOT PERSONNEL TO OPERATE AND TROUBLESHOOT THE UNIT, AND TO REVISE SIGN MESSAGES, IF NECESSARY.

(THE CONTRACTOR SHALL IMPLEMENT A SYSTEM WHEREBY CHANGEABLE MESSAGES WILL BE IMPLEMENTED WITHIN HOURS FOLLOWING TELEPHONE NOTIFICATION FROM THE PROJECT ENGINEER TO A DESIGNATED PHONE.)

ALL MESSAGES TO BE DISPLAYED ON THE SIGN WILL BE PROVIDED BY THE ENGINEER. A LIST OF ALL REQUIRED PRE-PROGRAMMED MESSAGES WILL BE GIVEN TO THE CONTRACTOR AT THE PROJECT PRECONSTRUCTION CONFERENCE. THE SIGN SHALL HAVE THE CAPABILITY TO STORE UP TO 99 MESSAGES. MESSAGE MEMORY OR PRE-PROGRAMMED DISPLAYS SHALL NOT BE LOST AS A RESULT OF POWER FAILURES TO THE ON-BOARD COMPUTER. THE SIGN LEGEND SHALL BE CAPABLE OF BEING CHANGED IN THE FIELD. THREE-LINE PRESENTATION FORMATS WITH UP TO SIX MESSAGE PHASES SHALL BE SUPPORTED. PCMS FORMAT SHALL PERMIT THE COMPLETE MESSAGE FOR EACH PHASE TO BE READ AT LEAST TWICE.

THE PCMS SHALL CONTAIN AN ACCURATE CLOCK AND PROGRAMMING LOGIC WHICH WILL ALLOW THE SIGN TO BE ACTIVATED, DEACTIVATED OR MESSAGES CHANGED AUTOMATICALLY AT DIFFERENT TIMES OF THE DAY FOR DIFFERENT DAYS OF THE WEEK.

ITEM 614, PORTABLE CHANGEABLE MESSAGE SIGNS, AS PER PLAN (CONTINUED)

(THE PCMS SHALL CONTAIN A CELLULAR TELEPHONE DATA LINK WHICH WILL (IN ACTIVE CELLULAR PHONE AREAS) ALLOW REMOTE SIGN ACTIVATION, MESSAGE CHANGES, MESSAGE ADDITIONS AND REVISIONS TO TIME OF DAY PROGRAMS. THE SYSTEM SHALL ALSO PERMIT VERIFICATION OF CURRENT AND PROGRAMMED MESSAGES. ONE REMOTE DATA INPUT DEVICE (LAPTOP COMPUTER PLUS MODEM OR EQUIVALENT) SHALL BE FURNISHED FOR USE BY THE DISTRICT TRAFFIC ENGINEER, OR EQUIVALENT, AND SHALL BE INSURED AGAINST THEFT.)THE PCMS UNIT SHALL BE MAINTAINED IN GOOD WORKING ORDER BY THE CONTRACTOR IN ACCORDANCE WITH THE PROVISIONS OF C&MS 614.07. THE CONTRACTOR SHALL, PRIOR TO ACTIVATING THE UNIT, MAKE ARRANGEMENTS, WITH AN AUTHORIZED SERVICE AGENT FOR THE PCMS, TO ASSURE PROMPT SERVICE IN THE EVENT OF FAILURE. ANY FAILURE SHALL NOT RESULT IN THE SIGN BEING OUT OF SERVICE FOR MORE THAN 12 HOURS, INCLUDING WEEKENDS. FAILURE TO COMPLY MAY RESULT IN AN ORDER TO STOP WORK AND OPEN ALL TRAFFIC LANES AND/OR IN THE DEPARTMENT TAKING APPROPRIATE ACTION TO SAFELY CONTROL TRAFFIC. THE ENTIRE COST TO CONTROL TRAFFIC, ACCRUED BY THE DEPARTMENT DUE TO THE CONTRACTOR'S NONCOMPLIANCE, WILL BE DEDUCTED FROM MONEYS DUE, OR TO BECOME DUE THE CONTRACTOR ON HIS CONTRACT.

THE CONTRACTOR SHALL BE RESPONSIBLE FOR 24-HOUR-PER-DAY OPERATION AND MAINTENANCE OF THESE SIGNS ON THE PROJECT FOR THE DURATION OF THE PHASES WHEN THE PLAN REQUIRES THEIR USE.

PAYMENT FOR THE ABOVE DESCRIBED ITEM SHALL BE AT THE CONTRACT UNIT PRICE. PAYMENT SHALL INCLUDE ALL LABOR, MATERIALS, EQUIPMENT, FUELS, LUBRICATING OILS, SOFTWARE, HARDWARE AND INCIDENTALS TO PERFORM THE ABOVE DESCRIBED WORK.

ITEM 614, PORTABLE CHANGEABLE MESSAGE SIGN, AS PER PLAN ASSUMING 3 PCMS SIGN(S) FOR 24 MONTH(S) 72 SIGN MONTH

NOTIFICATION OF CONSTRUCTION INITIATION

AT LEAST FOURTEEN DAYS PRIOR TO STARTING INITIAL CONSTRUCTION ACTIVITIES, THE CONTRACTOR SHALL ADVISE THE DISTRICT OFFICE OF COMMUNICATIONS VIA EMAIL AT D06.PIO@DOT.OHIO.GOV, THE DISTRICT WORK ZONE TRAFFIC MANAGER VIA EMAIL AT D06.MOT@DOT.OHIO.GOV AND THE CENTRAL OFFICE SPECIAL HAUL PERMITS SECTION VIA EMAIL AT HAULING.PERMITS@DOT.OHIO.GOV OF THE ANTICIPATED START DATE OF ANY CONSTRUCTION ACTIVITIES INCLUDING BUT NOT LIMITED TO THE PLACING OF WORK ZONE SIGNS. THE NOTIFICATION SHALL ALSO INCLUDE THE PROJECT NUMBER, PID, NAME AND PHONE NUMBER OF THE CONTRACTOR, A POINT OF CONTACT AND THE ANTICIPATED IMPACT ON TRAFFIC. THE CONTRACTOR WILL IMMEDIATELY INFORM THE DISTRICT OFFICE OF COMMUNICATIONS AND THE DISTRICT WORK ZONE TRAFFIC MANAGER OF ANY AND ALL DELAYS AND/OR CHANGES REGARDING THE CONSTRUCTION INITIATION DATE.

INGRESS/EGRESS

WORKSITE INGRESS AND EGRESS MEETING THE DESCRIPTIONS BELOW SHALL NOT OCCUR DURING PEAK HOURS. PEAK HOURS ARE CONSIDERED TO BE 5AM-9AM AND 3PM-6PM MONDAY-FRIDAY.

- ENTERING THE WORKSITE FROM RAMPS, INTERSTATE SHOULDERS OR INTERSTATE LANES

- EXITING THE WORKSITE ONTO OR ALONGSIDE RAMPS, INTERSTATE SHOULDERS OR INTERSTATE LANES

PUBLIC OUTREACH AND NOTIFICATION (ROAD CLOSURE)

THE CONTRACTOR SHALL BE RESPONSIBLE FOR CONTACTING THE DISTRICT 6 PUBLIC INFORMATION OFFICE VIA EMAIL AT D06.PIO@DOT.OHIO.GOV TO COORDINATE EFFORTS TO NOTIFY ALL LOCAL COUNTY, STATE AND FEDERAL EMERGENCY SERVICES, SCHOOL DISTRICTS AND ADJACENT RESIDENTS AND BUSINESSES OF THE UPCOMING CLOSURE. ADVANCE NOTIFICATION SHALL OCCUR NO LATER THAN FOURTEEN (14) DAYS PRIOR TO CLOSING THE ROAD. IF, SUBSEQUENT TO THE ADVANCE NOTIFICATION, THE START DATE IS CHANGED, THEN A NEW SEVEN (7) DAY NOTIFICATION WILL BE REQUIRED. THE ROAD CANNOT BE CLOSED UNLESS PRIOR NOTIFICATION HAS BEEN ACCOMPLISHED. THE SAME PARTIES SHALL BE NOTIFIED WHEN THE CLOSURE HAS CONCLUDED AND THE ROAD IS BACK OPEN TO TRAFFIC. ALL NOTIFICATIONS SHALL BE MADE UTILIZING THE TEMPLATE PROVIDED BY THE DISTRICT 6 PUBLIC INFORMATION OFFICE.

PERMITTED LANE CLOSURES

THE EXISTING NUMBER OF LANES IN EACH DIRECTION SHALL BE MAINTAINED AT ALL TIMES EXCEPT DURING PERIODS OF WORK AT WHICH TIME LANES MAY BE CLOSED IN ACCORDANCE WITH THE UNAUTHORIZED LANE USE TABLE FOR EACH LOCATION UNLESS OTHERWISE SHOWN IN THE PLANS.

LENGTH AND DURATION OF LANE CLOSURES AND RESTRICTIONS SHALL BE AT THE APPROVAL OF THE ENGINEER. IT IS THE INTENT TO MINIMIZE THE IMPACT TO THE TRAVELING PUBLIC. LANE CLOSURES OR RESTRICTIONS OVER SEGMENTS OF THE PROJECT IN WHICH NO WORK IS ANTICIPATED WITHIN A REASONABLE TIME FRAME, AS DETERMINED BY THE ENGINEER, SHALL NOT BE PERMITTED. THE LEVEL OF UTILIZATION OF MAINTENANCE OF TRAFFIC DEVICES SHALL BE COMMENSURATE WITH THE WORK IN PROGRESS.

ALL WORK AND TRAFFIC CONTROL DEVICES SHALL BE IN ACCORDANCE WITH C&MS 614 AND OTHER APPLICABLE PORTIONS OF THE SPECIFICATIONS, AS WELL AS THE OHIO MANUAL OF UNIFORM TRAFFIC CONTROL DEVICES.

PAYMENT FOR ALL LABOR, EQUIPMENT AND MATERIALS SHALL BE INCLUDED IN THE LUMP SUM CONTRACT PRICE FOR ITME 614, MAINTAINING TRAFFIC, UNLESS SEPARATELY ITEMIZED IN THE PLAN.

FLOODLIGHTING

FLOODLIGHTING OF THE WORK SITE FOR OPERATIONS CONDUCTED DURING NIGHTTIME PERIODS SHALL BE ACCOMPLISHED SO THAT THE LIGHTS DO NOT CAUSE GLARE TO THE DRIVERS ON THE ROADWAY. TO ENSURE THE ADEQUACY OF THE FLOODLIGHT PLACEMENT, THE CONTRACTOR AND THE ENGINEER SHALL DRIVE THROUGH THE WORK SITE EACH NIGHT WHEN THE LIGHTING IS IN PLACE AND OPERATIVE PRIOR TO COMMENCING ANY WORK. IF GLARE IS DETECTED, THE LIGHT PLACEMENT AND SHIELDING SHALL BE ADJUSTED TO THE SATISFACTION OF THE ENGINEER BEFORE WORK PROCEEDS.

PAYMENT FOR ALL LABOR, EQUIPMENT AND MATERIALS SHALL BE INCLUDED IN THE LUMP SUM CONTRACT PRICE FOR ITEM 614, MAINTAINING TRAFFIC.

ITEM 614, REPLACEMENT SIGN

FLATSHEET SIGNS FURNISHED BY THE CONTRACTOR IN ACCORDANCE WITH THE REQUIREMENTS OF THE PLANS, SPECIFICATIONS AND PROPOSAL WHICH BECOME DAMAGED BY TRAFFIC FOR REASONS BEYOND THE CONTROL OF THE CONTRACTOR SHALL BE REPLACED IN KIND WHEN ORDERED BY THE ENGINEER. REPLACEMENT SIGNS SHALL BE NEW. OTHER MATERIALS MAY BE IN USED, BUT GOOD, CONDITION SUBJECT TO APPROVAL BY THE ENGINEER.

PAYMENT FOR THE NEW SIGNS SHALL BE MADE AT THE CONTRACT PRICE PER EACH FOR ITEM 614, REPLACEMENT SIGN, AND SHALL INCLUDE THE COST OF REMOVING AND DISPOSING OF DAMAGED SIGNS, HARDWARE AND SUPPORTS, AND PROVIDING THE NECESSARY REPLACEMENT HARDWARE, SUPPORTS, ETC.

AN ESTIMATED QUANTITY OF 10 EACH HAS BEEN PROVIDED IN THE GENERAL SUMMARY.

ITEM 614, REPLACEMENT DRUM

DRUMS FURNISHED BY THE CONTRACTOR IN ACCORDANCE WITH THE REQUIREMENTS OF THE PLANS, SPECIFICATIONS AND PROPOSAL WHICH BECOME DAMAGED BY TRAFFIC FOR REASONS BEYOND THE CONTROL OF THE CONTRACTOR SHALL BE REPLACED IN KIND WHEN ORDERED BY THE ENGINEER. REPLACEMENT DRUMS SHALL BE NEW.

PAYMENT FOR THE NEW DRUMS SHALL BE MADE AT THE CONTRACT PRICE PER EACH FOR ITEM 614, REPLACEMENT DRUM, AND SHALL INCLUDE THE COST OF REMOVING AND DISPOSING OF THE DAMAGED DRUM, AND PROVIDING AND MAINTAINING THE REPLACEMENT DRUM IN ACCORDANCE WITH THE CONTRACT REQUIREMENTS FOR THE ORIGINAL DRUM.

AN ESTIMATED QUANTITY OF 100 EACH HAS BEEN PROVIDED IN THE GENERAL SUMMARY.

DETOUR SIGNING

THIS ITEM SHALL BE IN ACCORDANCE WITH CM&S 614.06 B. CONTRACTOR DETOUR SIGNING PAYMENT IN FULL FOR ALL DETOURS AND DIVERSIONS WITHIN THESE PLANS OR AS NECESSARY FOR MAINTAINING TRAFFIC THROUGHOUT THE CONSTRUCTION PERIOD. THE FOLLOWING PAY ITEM SHALL BE PAYMENT IN FULL FOR THE ABOVE DESCRIBED WORK AND INCLUDE ALL MATERIALS, SUPPORTS, HARDWARE AND INCIDENTALS NECESSARY FOR THIS WORK.

ITEM 614 DETOUR SIGNING LUMP SUM

CALCULATED MBE CHECKED RCH

MAINTENANCE OF TRAFFIC GENERAL NOTES

FRA-270-51.50

X:\Projects\2013\1321\1010\FRA\92616\mot\sheets\92616MN002.dgn 5/1/2023 5:51:21 AM cwong

ITEM 614 - LAW ENFORCEMENT OFFICER (WITH PATROL CAR) FOR ASSISTANCE DURING CONSTRUCTION OPERATIONS

USE OF LAW ENFORCEMENT OFFICERS (LEOS) BY CONTRACTORS OTHER THAN THE USES SPECIFIED BELOW WILL NOT BE PERMITTED AT PROJECT COST. LEOS SHOULD NOT BE USED WHERE THE OMUTCD INTENDS THAT FLAGGERS BE USED.

IN ADDITION TO THE REQUIREMENTS OF C&MS 614 AND THE OMUTCD, A UNIFORMED LEO WITH AN OFFICIAL PATROL CAR (CAR WITH TOP-MOUNTED EMERGENCY FLASHING LIGHTS AND COMPLETE MARKINGS OF THE APPROPRIATE LAW ENFORCEMENT AGENCY) SHALL BE PROVIDED FOR THE FOLLOWING TRAFFIC CONTROL TASKS:

DURING THE ENTIRE ADVANCE PREPARATION AND CLOSURE SEQUENCE WHERE COMPLETE BLOCKAGE OF TRAFFIC IS REQUIRED. DURING A TRAFFIC SIGNAL INSTALLATION WHEN IMPACTING THE NORMAL FUNCTION OF THE SIGNAL OR THE FLOW OF TRAFFIC, OR WHEN TRAFFIC NEEDS TO BE DIRECTED THROUGH AN ENERGIZED TRAFFIC SIGNAL CONTRARY TO THE SIGNAL DISPLAY (E.G., DIRECTING MOTORISTS THROUGH A RED LIGHT). IN ADDITION TO THE REQUIREMENT OF C&MS 614 AND THE OMUTCD, A UNIFORMED LEO WITH AN OFFICIAL PATROL CAR (CAR WITH TOP-MOUNTED EMERGENCY FLASHING LIGHTS AND COMPLETE MARKINGS OF THE APPROPRIATE LAW ENFORCEMENT AGENCY) SHOULD BE PROVIDED FOR THE FOLLOWING TRAFFIC CONTROL TASKS AS APPROVED BY THE ENGINEER:

FOR LANE CLOSURES: DURING INITIAL SET-UP PERIODS, TEAR DOWN PERIODS, SUBSTANTIAL SHIFTS OF A CLOSURE POINT OR WHEN NEW LANE CLOSURE ARRANGEMENTS ARE INITIATED FOR LONG-TERM LANE CLOSURES/SHIFTS (FOR THE FIRST AND LAST DAY OF MAJOR CHANGES IN TRAFFIC CONTROL SETUP). FOR OPERATIONS WITHOUT POSITIVE PROTECTION OCCURRING WITHIN 10 FEET OF AN OPEN TRAVELED LANE THAT MEET ALL OF THE FOLLOWING CRITERIA:
ON A MULTI-LANE DIVIDED INTERSTATE, OTHER FREEWAY OR EXPRESSWAY; AND AN AUTHORIZED SPEED LIMIT OF 45 MPH OR GREATER THAT IS IN EFFECT AT THE TIME OF THE OPERATION; AND, AADT OF 50,000 (OR AADT OF 30,000 WITH 25% OR HIGHER PERCENT TRUCKS) "WITHOUT POSITIVE PROTECTION" MEANS USE OF DRUMS, CONES, SHADOW VEHICLE, ETC, WITHOUT PROTECTION FROM PORTABLE BARRIER OR OTHER RIGID BARRIER ALONG THE WORK AREA. THIS PHRASE DOES NOT APPLY TO CASES WHERE POSITIVE PROTECTION IS REQUIRED. MOBILE OPERATIONS ARE REGARDED AS "WITHOUT POSITIVE PROTECTION". FOR WORK ZONES USING A COMBINATION OF BARRIER AND TEMPORARY TRAFFIC CONTROL DEVICES (CONES, DRUMS, ETC), THE DESIGNATION SHALL BE BASED UPON THE TYPE OF DEVICES USED IN THE AREA THAT WORKERS ARE LOCATED.

IF MULTIPLE ACTIVE LOCALIZED QUALIFYING WORK AREAS OCCUR WITHOUT POSITIVE PROTECTION, PER MAINLINE TRAFFIC DIRECTION, PROVIDE A UNIFORMED LEO AND OFFICIAL PATROL CAR IN ADVANCE OF:

THE FIRST ACTIVE WORK AREA THAT DRIVERS WILL ENCOUNTER; OR THE ACTIVE WORK AREA LATERALLY CLOSEST TO THE OPEN TRAVELED LANE; OR OTHER LOCATION AS APPROVED BY THE ENGINEER. THE UNIFORMED LEO AND OFFICIAL PATROL CAR MAY RELOCATE AMONG THE LISTED LOCATIONS AS APPROPRIATE AS THE OPERATIONS PROCEED IN THE LOCALIZED QUALIFYING WORK AREAS.

IN GENERAL, LEOS SHOULD BE POSITIONED IN ADVANCE OF AND ON THE SAME SIDE AS THE LANE RESTRICTION (OR AT THE POINT OF ROAD CLOSURE), AND TO MANUALLY CONTROL TRAFFIC MOVEMENTS THROUGH SIGNALIZED INTERSECTIONS IN WORK ZONES.

LEOS SHOULD NOT FORGO THEIR TRAFFIC CONTROL RESPONSIBILITIES TO APPREHEND MOTORISTS FOR ROUTINE TRAFFIC VIOLATIONS. HOWEVER, IF A MOTORIST'S ACTIONS ARE CONSIDERED TO BE RECKLESS, THEN PURSUIT OF THE MOTORIST IS APPROPRIATE.

THE LEOS WORK AT THE DIRECTION OF THE CONTRACTOR. THE CONTRACTOR IS RESPONSIBLE FOR SECURING THE SERVICES OF THE LEOS WITH THE APPROPRIATE AGENCIES AND COMMUNICATING THE INTENTIONS OF THE PLANS WITH RESPECT TO DUTIES OF THE LEOS. THE ENGINEER SHALL HAVE FINAL CONTROL OVER THE LEOS' DUTIES AND PLACEMENT, AND WILL RESOLVE ANY ISSUES THAT MAY ARISE BETWEEN THE TWO PARTIES.

ENSURE PROVIDED LEOS HAVE BEEN TRAINED APPROPRIATE TO THE JOB DECISIONS THEY ARE REQUIRED TO MAKE WHILE ON THE PROJECT, IN ACCORDANCE WITH C&MS 614.03.

THE LEO SHALL REPORT IN TO THE CONTRACTOR PRIOR TO THE START OF THE SHIFT, IN ORDER TO RECEIVE INSTRUCTIONS REGARDING SPECIFIC WORK ASSIGNMENTS DURING HIS/HER SHIFT. THE LEO IS EXPECTED TO STAY AT THE PROJECT SITE FOR THE ENTIRE DURATION OF HIS/HER SHIFT. THE LEO SHALL REPORT TO THE CONTRACTOR AT THE END OF HIS/HER SHIFT. SHOULD IT BE NECESSARY TO LEAVE THE PROJECT SITE, THE LEO SHALL NOTIFY THE ENGINEER. THE CONTRACTOR SHALL PROVIDE THE LEO WITH A TWO-WAY COMMUNICATION DEVICE THAT SHALL BE RETURNED TO THE CONTRACTOR AT THE END OF HIS/HER SHIFT.

LEOS (WITH PATROL CAR) REQUIRED BY THE TRAFFIC MAINTENANCE TASKS ABOVE SHALL BE PAID FOR ON A UNIT PRICE (HOURLY) BASIS UNDER ITEM 614, LAW ENFORCEMENT OFFICER (WITH PATROL CAR) FOR ASSISTANCE. THE FOLLOWING ESTIMATED QUANTITIES HAVE BEEN CARRIED TO THE GENERAL SUMMARY.

ITEM 614, LAW ENFORCEMENT OFFICER WITH PATROL CAR FOR ASSISTANCE 400 HOURS

THE HOURS PAID SHALL INCLUDE ANY MINIMUM SHOW-UP TIME REQUIRED BY THE LAW ENFORCEMENT AGENCY INVOLVED.

ANY ADDITIONAL COSTS (ADMINISTRATIVE OR OTHERWISE) INCURRED BY THE CONTRACTOR TO OBTAIN THE SERVICES OF AN LEO ARE INCLUDED WITH THE BID UNIT PRICE FOR ITEM 614, LAW ENFORCEMENT OFFICER WITH PATROL CAR FOR ASSISTANCE.

ITEM 614 - MAINTENANCE OF TRAFFIC

A MINIMUM OF ONE LANE OF TRAFFIC IN EACH DIRECTION SHALL BE MAINTAINED AT ALL TIMES ON RAMP L, EXCEPT FOR A PERIOD NOT TO EXCEED 90 CONSECUTIVE CALENDAR DAYS WHEN THE BRIDGE WORK ON FRA-270-52.60 AND FRA-23-05.17 IS PERFORMED.

OVERNIGHT TRENCH CLOSING

THE BASE WIDENING SHALL BE COMPLETED TO A DEPTH OF NO MORE THAN 2 INCHES BELOW THE EXISTING PAVEMENT BY THE END OF EACH WORK DAY. NO TRENCH SHALL BE LEFT OPEN OVERNIGHT EXCEPT FOR A SHORT LENGTH (25 FEET OR LESS) OF A WORK SECTION AT THE END OF THE TRENCH. IN CASE WORK MUST BE SUSPENDED BECAUSE OF INCLEMENT WEATHER OR OTHER REASONS, THE TRENCH FOR THE UN-COMPLETED BASE WIDENING SHALL BE BACKFILLED AT THE DIRECTION OF THE ENGINEER.

DRUM REQUIREMENTS

IN ADDITION TO THE REQUIREMENTS OF THE PLANS, SPECIFICATION AND PROPOSAL, DRUMS FURNISHED BY THE CONTRACTOR SHALL BE NEW AND UNUSED AT THE TIME OF ARRIVAL ON THE PROJECT. ANY DRUMS BROUGHT ON THE PROJECT, WHICH HAVE PREVIOUSLY BEEN USED ELSEWHERE, WILL NOT BE ACCEPTED.

PAYMENT FOR DRUMS SHALL BE INCLUDED IN THE LUMP SUM PRICE BID FOR MAINTAINING TRAFFIC UNLESS SEPARATELY ITEMIZED.

DESIGNATED DETOUR ROUTE ON LOCAL ROADS

A LOCAL ROUTE HAS BEEN DESIGNATED TO BE THE DETOUR ROUTE. THIS ROUTE IS SHOWN ON SHEET NO. 25. DURING THE TIME THAT TRAFFIC IS DETOURED, THE CONTRACTOR SHALL MAINTAIN THIS ROUTE IN A CONDITION WHICH IS REASONABLY SMOOTH AND FREE FROM HOLES, RUTS, RIDGES, BUMPS, DUST, AND STANDING WATER. ONCE THE DETOUR IS REMOVED AND TRAFFIC IS RETURNED TO ITS NORMAL PATTERN, THE DESIGNATED DETOUR ROUTE ON A LOCAL ROAD SHALL BE RESTORED TO A CONDITION THAT IS EQUIVALENT TO THAT WHICH EXISTED PRIOR TO ITS USE FOR THIS PURPOSE. ALL SUCH WORK SHALL BE PREFORMED WHEN AND AS DETERMINED BY THE ENGINEER.

THE FOLLOWING ESTIMATED QUANTITIES ARE PROVIDED AS DETERMINED BY THE ENGINEER TO MAINTAIN AND SUBSEQUENTLY RESTORE THE DESIGNATED DETOUR ROUTE ON LOCAL ROADS.

ITEM 254, PAVEMENT PLANING, ASPHALT CONCRETE	14,400 SQ YDS
ITEM 407, NON-TRACKING TACK COAT	720 GAL
ITEM 442, 1.25" ASPHALT CONCRETE SURFACE COURSE, 12.5 MM TYPE A (446)	500 CU YDS

NOTIFICATION OF TRAFFIC RESTRICTIONS

THROUGHOUT THE DURATION OF THE PROJECT, THE CONTRACTOR SHALL NOTIFY THE PROJECT ENGINEER IN WRITING OF ALL TRAFFIC RESTRICTIONS AND UPCOMING MAINTENANCE OF TRAFFIC CHANGES. THE CONTRACTOR SHALL ENSURE THE WRITTEN NOTIFICATION IS SUBMITTED IN A TIMELY MANNER TO ALLOW THE PROJECT ENGINEER TO MEET THE REQUIRED TIME FRAMES SET FORTH IN THE TABLE BELOW TO INFORM SPECIAL HAULING PERMITS SECTION (HAULING.PERMITS@DOT.OHIO.GOV) AND THE DISTRICT PUBLIC INFORMATION OFFICE PIO (D06.PIO@DOT.OHIO.GOV). THIS NOTIFICATION SHALL BE RECEIVED BY THE PROJECT ENGINEER PRIOR TO THE PHYSICAL SETUP OF ANY APPLICABLE SIGNS OR MESSAGE BOARDS.

INFORMATION SHOULD INCLUDE BUT IS NOT LIMITED TO ALL CONSTRUCTION ACTIVITIES THAT IMPACT OR INTERFERE WITH TRAFFIC AND SHALL LIST THE SPECIFIC LOCATION, TYPE OF WORK, ROAD STATUS, DATE AND TIME OF RESTRICTION, DURATION OF RESTRICTION, NUMBER OF LANES MAINTAINED, NUMBER OF LANES CLOSED, MINIMUM VERTICAL CLEARANCE, MINIMUM WIDTH OF DRIVABLE PAVEMENT, DETOUR ROUTES IF APPLICABLE, AND ANY OTHER INFORMATION REQUESTED BY THE PROJECT ENGINEER.

ITEM	DURATION OF CLOSURE	NOTIFICATION DUE TO DISTRICT 6 COMMUNICATIONS OFFICE	SIGN DISPLAYED TO PUBLIC
RAMP & ROAD CLOSURES	>= 2 WEEKS	21 CALENDAR DAYS PRIOR TO CLOSURE	14 CALENDAR DAYS PRIOR TO CLOSURE
	> 12 HOURS & < 2 WEEKS	14 CALENDAR DAYS PRIOR TO CLOSURE	7 CALENDAR DAYS PRIOR TO CLOSURE
	<= 12 HOURS	4 BUSINESS DAYS PRIOR TO CLOSURE	2 BUSINESS DAYS PRIOR TO CLOSURE
LANE CLOSURES & RESTRICTIONS	>= 2 WEEKS	14 CALENDAR DAYS PRIOR TO CLOSURE	
	< 2 WEEKS	5 BUSINESS DAYS PRIOR TO CLOSURE	
START OF CONSTRUCTION & TRAFFIC PATTERN CHANGES	N/A	14 CALENDAR DAYS PRIOR TO IMPLEMENTATION	

ANY UNFORESEEN CONDITIONS NOT SPECIFIED IN THE PLANS REQUIRING TRAFFIC RESTRICTIONS SHALL ALSO BE REPORTED TO THE PROJECT ENGINEER USING THE NOTIFICATION TIME FRAME TABLE.

SHORT DURATION RAMP CLOSURES

FOR THE PURPOSE OF PERFORMING THE REQUIRED WORK OR WHEN REQUIRED BY THE INTERSTATE ENTRANCE RAMP CLOSURE NOTE, RAMPS MAY BE CLOSED FOR SHORT DURATIONS AND DETOURED IN ACCORDANCE WITH THE RAMP CLOSURE TABLE IF APPROVED BY THE ENGINEER. RAMP CLOSURES ARE SUBJECT TO DISINCENTIVES.

FOR ALL SERVICE RAMP CLOSURES LASTING MORE THAN 12 HOURS BUT LESS THAN 60 HOURS AND/OR,
FOR ALL SYSTEM RAMP CLOSURES LASTING MORE THAN 12 HOURS BUT LESS THAN 24 HOURS

THE CONTRACTOR SHALL PROVIDE THE FOLLOWING:

- A MINIMUM OF TWO PORTABLE CHANGEABLE MESSAGE SIGNS (PCMS) PLACED, AS DIRECTED BY THE ENGINEER, TO WARN DRIVERS OF THE CLOSURE AND TO PROVIDE THE DESIGNATED DETOUR ROUTE.
- POSITIVE GUIDANCE ALONG THE DETOUR ROUTE WITH DETOUR SIGNS (M4-9 SERIES) IN ACCORDANCE WITH THE DETOUR SIGNS NOTE.

FOR ALL RAMP CLOSURES LASTING LESS THAN 12 HOURS, THE CONTRACTOR SHALL PROVIDE THE FOLLOWING:

- A MINIMUM OF TWO PORTABLE CHANGEABLE MESSAGE SIGNS (PCMS) PLACED, AS DIRECTED BY THE ENGINEER, TO WARN DRIVERS OF THE CLOSURE AND TO PROVIDE THE DESIGNATED DETOUR ROUTE.

WHEN CLOSING ENTRANCE RAMPS, CORRESPONDING LEAD-IN LANES AND TURN LANES SHALL ALSO BE CLOSED.

IF A DESIGNATED DETOUR ROUTE IS NOT PROVIDED IN THE PLANS, TRAFFIC SHALL BE DIRECTED TO THE NEXT INTERCHANGE, IF AVAILABLE, TO TURN AROUND. IF THE USE OF THE NEXT INTERCHANGE IS NOT POSSIBLE, AN ALTERNATIVE DETOUR ROUTE SHALL BE PROVIDED BY THE ENGINEER.

SERVICE RAMP: INTERCHANGE RAMPS BETWEEN FREEWAYS (OR EXPRESSWAYS) AND NON-FREEWAYS (OR NONEXPRESSWAYS). THESE RAMPS PROVIDE ACCESS (CONNECTIONS) BETWEEN FREEWAYS/EXPRESSWAYS AND OTHER PRINCIPAL/MINOR ARTERIALS, COLLECTORS OR LOCAL ROADS.

SYSTEM RAMP: INTERCHANGE RAMPS (OR CONNECTORS) BETWEEN FREEWAYS (OR EXPRESSWAYS) AND FREEWAYS (OR EXPRESSWAYS).

CALCULATED MBE CHECKED RCH

MAINTENANCE OF TRAFFIC GENERAL NOTES

FRA-270-51.50

X:\Projects\2013\1321\1010\FRA\92616\mot\sheets\92616MN003.dgn 12/8/2022 7:05:45 AM cwong

WEEKLY MAINTENANCE OF TRAFFIC MEETING

AFTER THE INITIAL PRE-MAINTENANCE OF TRAFFIC MEETING, THE CONTRACTOR SHALL MEET WITH THE PROJECT ENGINEER ON A WEEKLY BASIS TO GO OVER A DETAILED MAINTENANCE OF TRAFFIC REPORT OF AT LEAST 7 CALENDAR DAYS. THIS MEETING SHOULD BE HELD ON THE SAME DAY AND TIME OF EACH WEEK.

THE CONTRACTOR WILL PROVIDE TO THE PROJECT ENGINEER A WRITTEN DETAIL OF THE INFORMATION REQUIRED BY THE NOTIFICATION OF TRAFFIC RESTRICTIONS NOTE PRIOR TO THE MEETING.

IN ADDITION TO THE DETAILED MAINTENANCE OF TRAFFIC REPORT THE CONTRACTOR SHALL GIVE A GENERAL LOOK AHEAD OF AN ADDITIONAL 2 WEEKS OF UPCOMING WORK ACTIVITES. THIS WILL INCLUDE ANY NOTIFICATION REQUIREMENTS FOR RESTRICTIONS THAT HAVE A DURATION GREATER THAN 12 HOURS.

PRE-MAINTENANCE OF TRAFFIC MEETING

A PRE-MAINTENANCE OF TRAFFIC MEETING SHALL BE HELD (MINIMUM 14 WORK DAYS) PRIOR TO WORK BEGINNING OR ANY CHANGE OF PHASING. THIS MEETING SHALL INCLUDE THE DISTRICT WORK ZONE TRAFFIC MANAGER (D06.MOT@DOT.OHIO.GOV) AS WELL AS THE CONTRACTOR AND ANY OF HIS SUB-CONTRACTORS INVOLVED WITH TEMPORARY TRAFFIC CONTROL. FOR COLUMBUS SECTIONS OF ROADWAY, ALSO INCLUDE THE TEMPORARY CONTROL COORDINATOR (614-645-6269 OR 614-645-5845) FROM THE CITY OF COLUMBUS TRANSPORTATION DIVISION.

DUST CONTROL

THE CONTRACTOR SHALL FURNISH AND APPLY WATER FOR DUST CONTROL AS DIRECTED BY THE ENGINEER. THE FOLLOWING ESTIMATED QUANTITIES HAVE BEEN INCLUDED FOR DUST CONTROL PURPOSES:

ITEM 616, WATER 40 M. GAL.

ITEM 614, WORK ZONE RAISED PAVEMENT MARKER, AS PER PLAN

WORK ZONE RAISED PAVEMENT MARKERS, AS PER PLAN, AND THEIR INSTALLATION SHALL CONFORM TO C&MS 614 OR C&MS 621 AS SPECIFIED HEREIN.

RAISED PAVEMENT MARKERS IN USE DURING THE SNOW-PLOWING SEASON SHALL CONFORM TO 621. RAISED PAVEMENT MARKERS IN USE DURING THE NON-SNOW-PLOW SEASON SHALL CONFORM TO EITHER 614 OR TO 621.

THE SNOW-PLOWING SEASON SHALL RUN FROM NOVEMBER THROUGH APRIL.

IF PROJECT DELAYS, NOT THE FAULT OF ODOT, CAUSE THE WORK TO EXTEND INTO THE SNOW-PLOWING SEASON, THE CONTRACTOR SHALL BE RESPONSIBLE FOR REPLACING WORK ZONE RAISED PAVEMENT MARKERS (WZRPMS) CONFORMING TO C&MS 614, WITH RAISED PAVEMENT MARKERS CONFORMING TO 621, AS DETERMINED BY THE ENGINEER, AT THE CONTRACTOR'S EXPENSE.

THIS ITEM SHALL INCLUDE PURCHASE, INSTALLATION AND REMOVAL OF ITEM 614 WORK ZONE RAISED PAVEMENT MARKER, AS PER PLAN, INCLUDING FILLING OF ANY DEPRESSIONS CREATED IN THE PAVEMENT AS PER C&MS 621.08.

RESURFACING OF THE TRANSITION AREAS SHALL BE PERFORMED AT THE TIME THAT THE SURFACE COURSE IS BEING APPLIED TO THE ENTIRE PROJECT. PRIOR TO APPLICATION OF THE SURFACE COURSE ON THE PROJECT, THE EXISTING PAVEMENT WITHIN THE TRANSITION AREA SHALL BE REMOVED TO A DEPTH NECESSARY TO REACH THE LEVEL OF THE INTERMEDIATE COURSE OF THE PAVEMENT, AS DETERMINED BY THE ENGINEER.

THE FOLLOWING BID ITEMS SHOULD BE INCLUDED IN THE PLANS:

ITEM 254 PAVEMENT PLANING, ASPHALT CONCRETE 3200 SY

ITEM 614 WORK ZONE RAISED PAVEMENT MARKER, AS PER PLAN 500 EACH

PAYMENT FOR RESURFACING WITHIN THE TRANSITION AREA SHALL BE PAID FOR UNDER THE APPROPRIATE BID ITEMS FOR THE WORK REQUIRED, AS PROVIDED FOR IN THE PLANS.

ITEM 614, WORK ZONE IMPACT ATTENUATOR FOR 24" WIDE HAZARDS (BIDIRECTIONAL)

THIS ITEM SHALL CONSIST OF FURNISHING AND INSTALLING A NON-GATING IMPACT ATTENUATOR. FURNISH AN IMPACT ATTENUATOR FROM THE OFFICE OF ROADWAY ENGINEERING'S APPROVED LIST FOR WORK ZONE IMPACT ATTENUATORS, FROM THE ROADWAY STANDARDS APPROVED PRODUCTS WEB PAGE.

INSTALLATION SHALL BE AT THE LOCATIONS SPECIFIED IN THE PLANS IN ACCORDANCE WITH THE MANUFACTURER'S SPECIFICATIONS.

THE CONTRACTOR SHALL REPAIR OR REPLACE A DAMAGED UNIT WITHIN 24 HOURS OF A DAMAGING IMPACT.

WHEN BIDIRECTIONAL DESIGNS ARE SPECIFIED, THE CONTRACTOR SHALL SUPPLY APPROPRIATE TRANSITIONS.

WHEN GATING IMPACT ATTENUATORS ARE DESIRED, THE CONTRACTOR SHALL SUBMIT DOCUMENTATION TO THE ENGINEER FOR ACCEPTANCE.

THE COST FOR THE ADDITIONAL BARRIER REQUIRED FOR A GATING IMPACT ATTENUATOR SHALL BE INCLUDED IN THE COST OF THE GATING IMPACT ATTENUATOR.

PAYMENT FOR THE ABOVE WORK SHALL BE MADE AT THE UNIT PRICE BID AND SHALL INCLUDE ALL LABOR, TOOLS, EQUIPMENT AND MATERIALS NECESSARY TO CONSTRUCT AND MAINTAIN A COMPLETE AND FUNCTIONAL IMPACT ATTENUATOR SYSTEM, INCLUDING ALL RELATED BACKUPS, TRANSITIONS, LEVELING PADS, HARDWARE AND GRADING, NOT SEPARATELY SPECIFIED, AS REQUIRED BY THE MANUFACTURER.

TRANSVERSE DRAINAGE CROSSINGS OF IR 270 AND US 23

BEFORE ANY ROADWAY CONSTRUCTION BEGINS THE CONTRACTOR SHALL CONSTRUCT THE TRANSVERSE DRAINAGE CROSSINGS. IT SHALL BE THE CONTRACTOR'S RESPONSIBILITY TO MAINTAIN ADEQUATE DRAINAGE THROUGHOUT ALL PHASES OF CONSTRUCTION. THIS MAY REQUIRE CONSTRUCTION OF TEMPORARY CONDUITS AND/OR TEMPORARY DITCHING. TRAFFIC CONTROL DURING THIS OPERATION SHALL BE AS PER STANDARD DRAWING MT-97.10. ANY LANE RESTRICTIONS CAUSED BY THE TRANSVERSE DRAINAGE CROSSING WORK SHALL BE LIMITED TO BETWEEN THE HOURS OF 9:30 AM TO 3:30 PM TO MINIMIZE THE IMPACT ON TRAFFIC.

ALL LABOR, MATERIALS, AND EQUIPMENT NECESSARY TO COMPLETE THE ABOVE WORK SHALL BE INCLUDED IN THE LUMP SUM BID FOR ITEM 614 UNLESS OTHERWISE NOTED IN THE PLANS.

PAVEMENT RESTORATION FOR PIPE INSTALLATIONS

THE FOLLOWING QUANTITY HAS BEEN PROVIDED FOR PAVEMENT RESTORATION FOLLOWING REMOVAL AND INSTALLATION OF PIPES UNDER ITEMS 203 AND 603.

ITEM 301 ASPHALT CONCRETE BASE, PG64-22 150 CY

THE ABOVE QUANTITY IS BASED ON A 301 THICKNESS OF 9 INCHES AND A PAVEMENT RESTORATION WIDTH THAT INCLUDES THE TRENCH WIDTH PLUS TWO FEET ON EACH SIDE OF THE TRENCH. THE TRENCH WIDTH IS ASSUMED TO EQUAL THE SPAN TIMES 1.25 PLUS ONE FOOT.

PROVIDE ANY MATERIALS USED OUTSIDE THE LIMITED STATED ABOVE AT NO ADDITIONAL COST.

TRAFFIC INCIDENT MANAGEMENT (TIM) DURING MOT

OHIO TIM IS OHIO'S TRAFFIC INCIDENT MANAGEMENT PROGRAM WHICH IS COMMITTED TO MAINTAINING THE SAFE AND EFFECTIVE FLOW OF TRAFFIC DURING EMERGENCIES AS TO PREVENT FURTHER DAMAGE, INJURY OR UNDUE DELAY OF THE MOTORING PUBLIC. IN ADDITION TO COMPLYING WITH THE PROVISION OF OMUTCD CHAPTER 6I, CONTROL OF TRAFFIC THROUGH TRAFFIC INCIDENT MANAGEMENT AREAS, THE CONTRACTOR SHALL ACTIVELY PARTICIPATE IN TIM PLANNING AND IMPLEMENTATION AS OUTLINED BELOW.

1. SUPERINTENDENT SHALL IDENTIFY THE INDIVIDUAL PERSONS ON THE PROJECT WHO WILL, OR MAY NEED TO, PERFORM THE DUTIES HEREIN. AT A MINIMUM, INCLUDE THE SUPERINTENDENT, FOREMEN AND SUPERVISORS (OR EQUIVALENT) AS WELL AS THE WORKSITE TRAFFIC SUPERVISOR (WTS; IF APPLICABLE TO THE PROJECT). THESE INDIVIDUALLY IDENTIFIED PERSONS SHALL COLLECTIVELY BE KNOWN AS CONTRACTOR TRAFFIC INCIDENT MANAGEMENT (TIM) CONTACTS. NOTIFY THE PROJECT ENGINEER OF THE CONTRACTOR TIM CONTACTS (ALONG WITH CONTACT INFORMATION FOR EACH) AT OR BEFORE THE PRECONSTRUCTION MEETING.

2. SUPERINTENDENT SHALL NOTIFY THE ENGINEER IMMEDIATELY IF ANY CONTRACTOR TIM CONTACT IS ADDED, REMOVED OR THE CONTACT INFORMATION CHANGES OVER THE COURSE OF THE PROJECT.

3. PRIOR THE FIRST DAY OF WORK IN THE FIELD, EACH CONTRACTOR TIM CONTACT ON THE PROJECT SHALL HAVE ATTENDED AND SUCCESSFULLY COMPLETED OHIO TIM TRAINING PROVIDED BY THE DEPARTMENT OR DESIGNEE. TRAINING INFORMATION CAN BE FOUND ONLINE.

4. SUPERINTENDENT, AT A MINIMUM, SHALL ATTEND AND ACTIVELY PARTICIPATE IN A DEPARTMENT SCHEDULED TIM MEETING BEFORE CONSTRUCTION WORK BEGINS AND BEFORE EACH PHASE CHANGE. THESE MEETINGS WILL RESULT IN A DEPARTMENT ISSUED PROJECT SPECIFIC TRAFFIC INCIDENT MANAGEMENT PLAN (TIMP). AT THE TIM MEETINGS THE ATTENDING CONTRACTOR TIM CONTACTS SHALL:

A. COLLABORATE WITH ODOT AND SAFETY FORCES;

B. SHARE PROJECT SPECIFIC DETAILS THAT IMPACT TIM RESPONDERS; AND

C. RECOMMEND WAYS TO INCORPORATE NECESSARY EMERGENCY ACCESS AND OTHER TIM ELEMENTS FOR TIM RESPONDERS GIVEN PROJECT SPECIFIC WORK BEING COMPLETED AND PROJECT SPECIFIC PHASING.

5. CONTRACTOR TIM CONTACTS SHALL IMPLEMENT COMPONENTS OF THE RESULTING TIMP (SUCH AS APPROVED EMERGENCY INGRESS/EGRESS POINTS, ETC), AS DIRECTED BY THE ENGINEER IN ACCORDANCE WITH 109.05.

6. CONTRACTOR TIM CONTACTS SHALL PERFORM, AT A MINIMUM, THE FOLLOWING FUNCTIONS WHEN AN INCIDENT/CRASH OCCURS:

A. IF OBSERVED OR PRESENT WHEN OCCURS, CALL 911 AND THEN NOTIFY THE TRAFFIC MANAGEMENT CENTER (TMC) TO PROVIDE THE FOLLOWING:

I. LOCATION, INCLUDING MILEPOST NUMBER AND DIRECTION OF TRAVEL
II. NUMBER AND TYPE OF VEHICLES INVOLVED, IF KNOWN
III. ESTIMATED EXTENT OF DAMAGE OR INJURY, IF KNOWN
IV. ESTIMATED NUMBER OF PATIENTS INVOLVED, IF KNOWN
V. ANY POTENTIAL HAZARDOUS CONDITIONS, IF KNOWN
VI.THE PLACARD NUMBER ON ANY HAZARDOUS MATERIALS PLACARD FROM A SAFE DISTANCE, IF APPLICABLE AND VISIBLE

B. FOLLOWING AN INCIDENT/CRASH:

I. INITIATE TRAFFIC MANAGEMENT/PROVIDE TEMPORARY TRAFFIC CONTROL AS INDICATED IN THE TIMP, AS DIRECTED BY THE ENGINEER IN ACCORDANCE WITH 109.05.
II. RECOMMEND ROADWAY REPAIR NEEDS.
III. PROVIDE REPAIR RESOURCES AND INITIATE REPAIRS, AS DIRECTED BY THE ENGINEER IN ACCORDANCE WITH 109.05.
IV. ATTEND AND PARTICIPATE IN AN AFTER ACTION REVIEW (AAR).

ALL COSTS, UNLESS OTHERWISE SPECIFIED, RESULTING FROM THE ABOVE REQUIREMENTS SHALL BE CONSIDERED TO BE INCLUDED IN THE LUMP SUM PRICE FOR ITEM 614, MAINTAINING TRAFFIC. FAILURE TO PERFORM THE REQUIREMENTS OF THIS PLAN NOTE WILL RESULT IN A DAILY FINE OF 2% OF ITEM 614, MAINTAINING TRAFFIC AND MAY RESULT IN ONE OR MORE CONTRACTOR TIM CONTACTS BEING REMOVED FROM THE LIST OF OHIO TIM TRAINED INDIVIDUALS (AT THE SOLE DISCRETION OF THE OHIO TIM EXECUTIVE COMMITTEE). IN THE EVENT AN INDIVIDUAL IS REMOVED FROM THE OHIO TIM TRAINED LIST, THE INDIVIDUAL WILL BE REMOVED FROM CONTRACTOR TIM CONTACT RESPONSIBILITIES ON ALL PROJECTS.

DELINEATION OF TEMPORARY AND PERMANENT GUARDRAIL

BARRIER REFLECTORS SHALL BE INSTALLED ON ALL TEMPORARY GUARDRAIL USED FOR TRAFFIC CONTROL; AND, ON ALL PERMANENT GUARDRAIL LOCATED WITHIN 5 FEET OF THE EDGE OF THE ADJACENT TRAVEL LANE. BARRIER REFLECTORS SHALL CONFORM TO C&MS 626 AND THE SPACING SHALL BE APPROXIMATELY 50 FEET.

THE FOLLOWING ESTIMATED QUANTITIES HAVE BEEN INCLUDED IN THE PLANS AND CARRIED TO THE GENERAL SUMMARY:

ITEM 614, BARRIER REFLECTOR, TYPE (2, 3, 4, OR 5) (ONE-WAY OR BI-DIRECTIONAL) 1 EACH

PAYMENT SHALL BE FULL COMPENSATION FOR ALL MATERIAL, LABOR, INCIDENTALS AND EQUIPMENT NECESSARY FOR FURNISHING, INSTALLING, MAINTAINING AND REMOVING THE ABOVE ITEM(S).

CALCULATED MBE CHECKED RCH

MAINTENANCE OF TRAFFIC GENERAL NOTES

FRA-270-51.50

22A
554

X:\Projects\2013\1321\1010\FRA\92616\mot\sheets\92616MN004.dgn 5/8/2023 11:50:43 PM cwong

RAMP CLOSURE RESTRICTIONS					
INTERSTATE ROUTE 270 IN FRANKLIN COUNTY					
SECONDARY ROUTE: US ROUTE 23				SLM ALONG 270: 52.64	(SOUTH SIDE)
RAMP	MOVEMENT	NO CLOSURES ALLOWED		DETOUR ROUTES	
		MON TO FRI	SAT TO SUN	PRIMARY ROUTE	SECONDARY ROUTE
L	US 23 NB TO I-270 WB	5AM-10PM	8AM-8PM	RAMP R (23N TO 270 E) TO ALUM CREEK DRIVE N TO 270 W	23 N TO U-TURN* TO RAMP M (23 S TO 270 W)
M	US 23 SB TO I-270 WB	5AM-7PM	NO RESTRICTION	RAMP O (23S TO 270 E) TO ALUM CREEK DRIVE N TO 270 W	NONE
N	I-270 WB TO US 23 SB	6AM-7PM	NO RESTRICTION	270 W TO 71 S TO STRINGTOWN RD E TO 71 N TO 270 E TO RAMP P (270 E TO 23 S)	270 W TO 62 S TO 270 E TO RAMP P (270 E TO 23 S)
O	US 23 SB TO I-270 EB	3PM-6PM	NO RESTRICTION	270 W TO 71 S TO STRINGTOWN RD E TO 71 N TO 270 E	270 W TO 62 S TO 270 E
P	I-270 EB TO US 23 SB	5AM-10PM	8AM-8PM	270 E TO ALUM CREEK DR E TO 270 W TO RAMP N (270 W TO 23 S)	NONE
Q	I-270 EB TO US 23 NB	6AM-7PM	NO RESTRICTION	270 E TO ALUM CREEK DR E TO 270 W TO RAMP S (270 W TO 23 N)	NONE
R	US 23 NB TO I-270 EB	6AM-6PM	NO RESTRICTION	RAMP L (23 N TO 270 W) TO 62 S TO 270 E	23 N TO U-TURN* TO RAMP O (23 S TO 270 E)
S	I-270 WB TO US 23 NB	6AM-6PM	NO RESTRICTION	RAMP N (270 W TO 23 S) TO RAMP O (23 S TO 270 E) TO RAMP Q (270 E TO 23 N)	270 W TO 62 S TO 270 E TO RAMP Q (270 E TO 23 N)

LANE VALUE CONTRACT TABLE						
SECTION (SLM)	EXISTING NUMBER OF LANES PER DIRECTION	LANE CLOSURES ARE NOT PERMITTED				DISINCENTIVE AMOUNTS PER MINUTE PER LANE
		LANE REDUCTION	MON TO FRI	SAT	SUN	
FRA-23						
PICKAWAY COUNTY LINE (0.00) TO RATHMELL ROAD (4.18) NORTHBOUND	2	2 TO 1	5AM-10AM	NO RESTRICTION	NO RESTRICTION	$175
PICKAWAY COUNTY LINE (0.00) TO RATHMELL ROAD (4.18) SOUTHBOUND	2	2 TO 1	3PM-7PM	NO RESTRICTION	NO RESTRICTION	$175
RATHMELL ROAD (4.18) TO GREENLAWN AVENUE (9.60)	2	2 TO 1	6AM-9AM & 3PM-7PM	NO RESTRICTION	NO RESTRICTION	$185
SHORT TERM SHOULDER CLOSURES ARE NOT PERMITTED 6AM-9AM AND 3PM-6PM MONDAY-FRIDAY						

LANE VALUE CONTRACT TABLE						
SECTION (SLM)	EXISTING NUMBER OF LANES PER DIRECTION	LANE CLOSURES ARE NOT PERMITTED				DISINCENTIVE AMOUNTS PER MINUTE PER LANE
		LANE REDUCTION	MON TO FRI	SAT	SUN	
FRA-270						
I-71 SOUTHBOUND (0.00) TO 1/2 MILE WEST OF I-71 (0.60)	2	2 TO 1	5AM-9PM	6AM-7PM	6AM-7PM	$ 310.00
1/2 MILE WEST OF I-71 (0.60) TO US 40 - BROAD STREET (7.04)	3	3 TO 2	5AM-9PM & 3PM-6PM	NO RESTRICTION	NO RESTRICTION	$ 205.00
		3 TO 1	5AM-9PM	6AM-7PM	6AM-7PM	$ 205.00
WILLIAMS ROAD (47.42) TO US 23 INTERCHANGE (52.30)	3	3 TO 2	5AM-9PM & 3PM-7PM	NO RESTRICTION	NO RESTRICTION	$ 205.00
		3 TO 1	5AM-8PM	6AM-7PM	6AM-7PM	$ 205.00
THRU US 23 INTERCHANGE EASTBOUND (52.30) TO (53.20)	3	3 TO 2	5AM-9PM & 3PM-7PM	NO RESTRICTION	NO RESTRICTION	$ 205.00
		3 TO 1	5AM-8PM	6AM-7PM	6AM-7PM	$ 205.00
THRU US 23 INTERCHANGE WESTBOUND (52.30) TO (53.20)	2	2 TO 1	5AM-8PM	6AM-7PM	6AM-7PM	$ 310.00
US 23 INTERCHANGE (53.20) TO I-71 INTERCHANGE (54.44) MAINLINE EASTBOUND	3	3 TO 2	5AM-9PM & 3PM-7PM	NO RESTRICTION	NO RESTRICTION	$ 255.00
		3 TO 1	5AM-8PM	6AM-7PM	6AM-7PM	$ 255.00
US 23 INTERCHANGE (53.20) TO I-71 INTERCHANGE (54.44) AUXILLARY LANE EASTBOUND	1	MON TO FRI: 5A-9A & 3P-7P, SAT & SUN NO RESTRICTION WHEN MAINTAINING 3 LANES MAINLINE. MON TO FRI: 5A-10P, SAT & SUN 8A-8P WHEN CLOSING ADJACENT MAINLINE LANE				$ 255.00
US 23 INTERCHANGE (53.20) TO I-71 INTERCHANGE (54.44) MAINLINE WESTBOUND	2	2 TO 1	5AM-9PM & 3PM-7PM	6AM-7PM	6AM-7PM	$ 310.00
US 23 INTERCHANGE (53.20) TO I-71 INTERCHANGE (54.44) AUXILLARY LANES WESTBOUND	2	2 TO 1	5AM-9PM & 3PM-7PM	NO RESTRICTION	NO RESTRICTION	$ 310.00
		2 TO 0	MON TO FRI: 5A-10P, SAT & SUN 8A-8P WHEN CLOSING ADJACENT MAINLINE LANE			$ 310.00
THRU I-71 INTERCHANGE SOUTH SIDE (54.44) TO (0.00)	2	2 TO 1	5AM-9PM	6AM-7PM	6AM-7PM	$ 310.00
I-71 SOUTHBOUND (0.00) TO 1/2 MILE WEST OF I-71 (0.60)	2	2 TO 1	5AM-9PM	6AM-7PM	6AM-7PM	$ 310.00
SHORT TERM SHOULDER CLOSURES ARE NOT PERMITTED 5AM-9AM AND 3PM-7PM MONDAY-FRIDAY						

CALCULATED MBE
CHECKED RCH

MAINTENANCE OF TRAFFIC GENERAL NOTES

FRA-270-51.50

22B
554

X:\Projects\2013\1321\1010\FRA\92616\mot\sheets\92616MN005.dgn 2/7/2023 11:38:42 AM cwong

SHEET NO.	PHASE	202 GUARDRAIL REMOVED FT	411 STABILIZED CRUSHED AGGREGATE CY		606 GUARDRAIL, TYPE MGS FT	606 ANCHOR ASSEMBLY, TYPE E EACH	606 ANCHOR ASSEMBLY, TYPE T EACH	611 CATCH BASIN, NO. 2-2B EACH	611 12" CONDUIT, TYPE B FT	614 WORK ZONE IMPACT ATTENUATOR, 24" WIDE HAZARDS, (BIDIRECTIONAL) EACH	614 WORK ZONE RAISED PAVEMENT MARKER(YELLOW/YELLOW) EACH	614 WORK ZONE RAISED PAVEMENT MARKER(YELLOW) EACH	614 WORK ZONE RAISED PAVEMENT MARKER(WHITE) EACH	614 BARRIER REFLECTOR, TYPE 1, ONE WAY EACH	614 OBJECT MARKER, ONE WAY EACH	614 WORK ZONE LANE LINE, CLASS I MILE	614 WORK ZONE EDGE LINE, CLASS I (YELLOW) MILE	614 WORK ZONE EDGE LINE, CLASS I(WHITE) MILE	614 WORK ZONE CHANNELIZING LINE, CLASS I FT	614 WORK ZONE DOTTED LINE, CLASS I FT	614 WORK ZONE TRANSVERSE/DIAGONAL LINE, CLASS I FT	614 WORK ZONE STOP LINE, CLASS I FT	614 WORK ZONE ARROW, CLASS I EACH	614 WORK ZONE WORD ON PAVEMENT, 96", CLASS I EACH	615 PAVEMENT FOR MAINTAINING TRAFFIC, CLASS A SY	622 PORTABLE BARRIER, UNANCHORED
IR 270	1	25			25	1	1			1		330	665	47	22		1.25	1.5	13300							287	1010
US 23	1							2	122																	6884	
TEMP L	1																									13567	
RAMP O	1											34		64	13		0.13									957	640
RAMP P1	1									1		150	150	68	47		0.6	0.6	3220								2360
US23	1A		98							3		42	5	44	15		0.16	0.25	100								730
RAMP P1	1A									1		48	11				0.18	0.25	210								
RAMP P2	1A											32					0.12	0.12									
IR 270	2									1		330	665	165	44		1.25	1.5	13300								2220
US 23	2		49							5		240	265	58	41	0.06	0.91	0.82	5304	700	189	82	12	7			2050
TEMP L	2									2		32		58	12	0.02	0.12	0.11		579							580
RAMP O	2									1		34		61	12		0.13			524							610
RAMP P2	2										24	24		28	6		0.09	0.16		57	65	30	2	1			280
IR 270	2A									1		494	665	71	51		1.87	1.96	13300	680							2550
IR 270	3									1		206	317	75	58		0.78	0.68	6348								2900
TOTALS CARRIED TO GENERAL SUMMARY		25	148		25	1	1	2	122	17	24	1996	2743	739	321	0.08	7.59	7.95	55082	2540	254	112	14	8	21695	15930

CALCULATED MBE
CHECKED RCH

MAINTENANCE OF TRAFFIC SUBSUMMARY

FRA-270-51.50

X:\Projects\2013\1321\1010\FRA\92616\mot\sheets\92616MS001.dgn 4/28/2023 11:39:41 AM cwong

DIVERSION PLAN NOTES

1. IT IS THE INTENTION TO PERFORM ALL REQUIRED WORK WITH THE LEAST INCONVENIENCE TO AND THE MAXIMUM SAFETY OF THE CONTRACTOR AND TRAVELING PUBLIC. ANY VARIANCES FROM THE MAINTENANCE OF TRAFFIC NOTES NEED TO BE APPROVED BY ODOT.
2. ALL WORK AND TRAFFIC CONTROL DEVICES SHALL BE IN ACCORDANCE WITH ITEM 614 OF THE 2019 ODOT CONSTRUCTION AND MATERIAL SPECIFICATIONS, OTHER APPLICABLE PORTIONS OF THE 2019 ODOT SPECIFICATIONS, AND THE OHIO MANUAL OF UNIFORM TRAFFIC CONTROL DEVICES. PAYMENT FOR ALL LABOR, EQUIPMENT AND MATERIALS SHALL BE INCLUDED IN THE LUMP SUM CONTRACT PRICE FOR ITEM 614, MAINTAINING TRAFFIC, UNLESS ITEMIZED SEPARATELY IN THE PLAN.
3. BEFORE WORK BEGINS, THE CONTRACTOR SHALL PROVIDE THE ENGINEER THE NAME(S) AND TELEPHONE NUMBER(S) OF RESPONSIBLE PERSON(S) WHO CAN BE CONTACTED AT ANY TIME, 24 HOURS A DAY, BY THE ENGINEER. THESE PERSON(S) SHALL BE RESPONSIBLE FOR PLACING OR REPLACING NECESSARY TRAFFIC CONTROL DEVICES TO MAINTAIN TRAFFIC.
4. THE WORK LIMITS SHOWN ARE FOR PHYSICAL CONSTRUCTION ONLY. THE INSTALLATION AND OPERATION OF ALL TRAFFIC CONTROL DEVICES REQUIRED BY THE OHIO MANUAL OF UNIFORM TRAFFIC CONTROL DEVICES SHALL BE PROVIDED BY THE CONTRACTOR WHETHER INSIDE OR OUTSIDE THESE LIMITS. ALL TRAFFIC CONTROL ITEMS OR DEVICES SHALL BE INSTALLED OR LOCATED WITHIN THE EXISTING RIGHT-OF-WAY.
5. AT ANY POINT DURING CONSTRUCTION, ANY EXISTING, TEMPORARY OR PROPOSED SIGNING IN PLACE WHICH CONFLICTS WITH PRESENT TRAFFIC SHALL BE REMOVED FROM VIEW BY REMOVAL, OVERLAY, OR OTHER APPROVED METHOD.
6. AN "EXIT CLOSED" PLAQUE (W20-H15), 108 X 18 INCHES, SHALL BE PLACED HORIZONTALLY AT THE BOTTOM ACROSS ALL EXTRUSHEET GUIDE SIGNS PERTAINING TO THE CLOSED EXIT UNTIL THE EXIT IS READY TO BE RE-OPENED.
7. RAMP L & RAMP R SHALL NOT BE OPENED TO TRAFFIC UNTIL FINAL SIGNING AND PAVEMENT MARKINGS ARE INSTALLED.
8. SEE SHEET 20 FOR MAINTENANCE OF TRAFFIC NOTES.

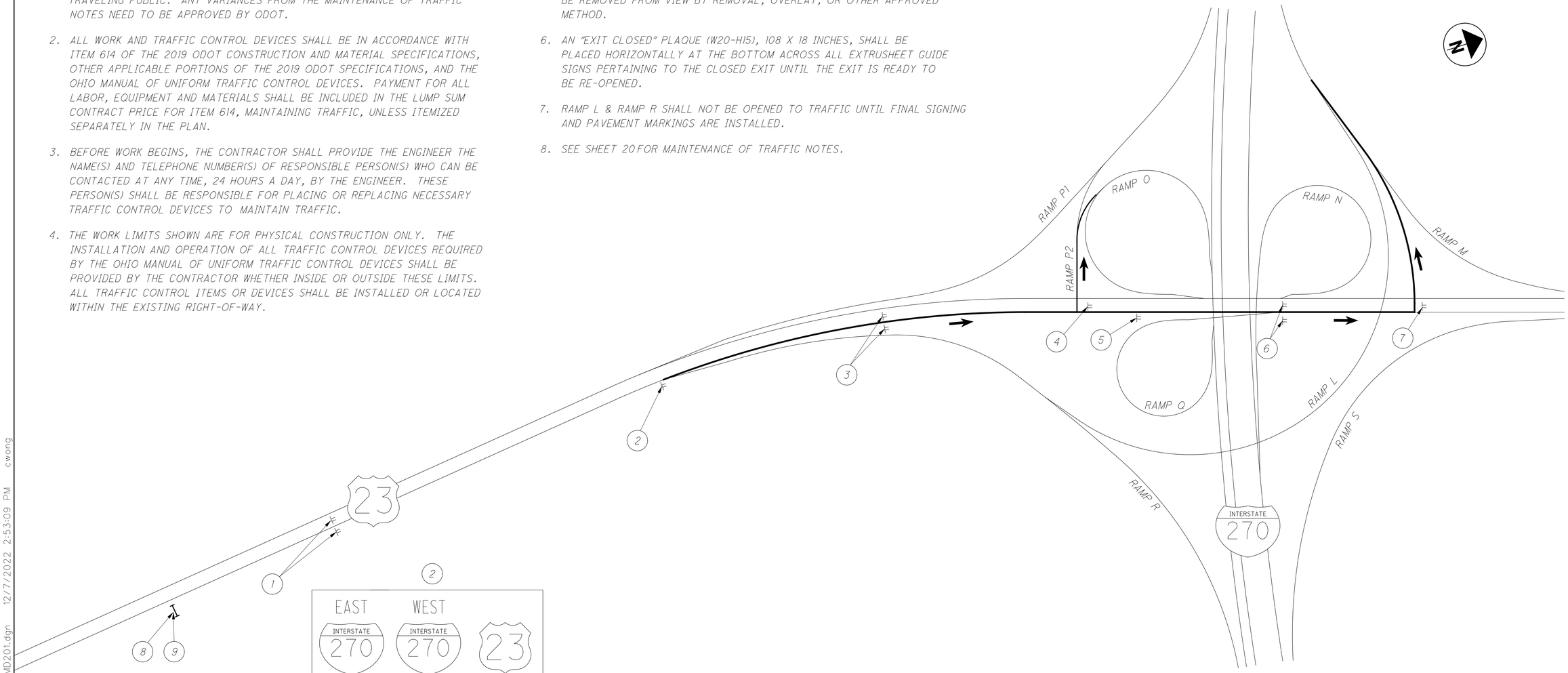

(1)

LEVEL 3
EXISTING 7' X 7'
STA. 545+33
GROUND MOUNTED

SPECIAL 7' X 1.5'
MOUNT ON
EXIST SIGN

(2)

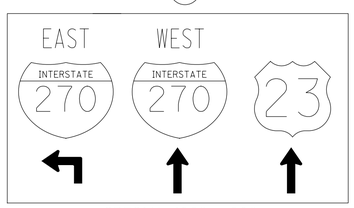

SPECIAL 108" x 60"
MOUNT ON EXISTING SIGN

EXISTING 144" X 84"

(3)

SPECIAL 36" x 48"

M5-1-21

(4)

SPECIAL 36" x 48"

M6-1-21

(5)

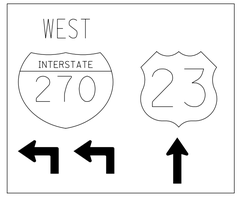

SPECIAL 72" x 60"

(6)

SPECIAL 36" x 48"

M5-1-21

(7)

SPECIAL 36" x 48"

M6-1-21

(8)

PORTABLE CHANGEABLE
MESSAGE SIGN

1 WEEK BEFORE
NEW RAMP OPENING

(9)

PORTABLE CHANGEABLE
MESSAGE SIGN

FIRST WEEK OPEN

CALCULATED MEE
CHECKED RCH

MAINTENANCE OF TRAFFIC
TEMPORARY RAMP L & RAMP R

FRA-270-51.50

x:\Projects\2013\1321\1010\FRA-92616\mot\sheets\92616MD201.dgn 12/7/2022 2:53:09 PM cwong

DETOUR PLAN NOTES

SEE NOTES 1-4 SHEET 27

5. AT ANY POINT DURING CONSTRUCTION, ANY EXISTING, TEMPORARY OR PROPOSED SIGNING IN PLACE WHICH CONFLICTS WITH PRESENT TRAFFIC SHALL BE REMOVED FROM VIEW BY REMOVAL, OVERLAY, OR OTHER APPROVED METHOD.
6. AN "EXIT CLOSED" PLAQUE (W20-H15), 108 X 18 INCHES, SHALL BE PLACED HORIZONTALLY ACROSS ALL EXTRUSHEET GUIDE SIGNS PERTAINING TO THE CLOSED EXIT UNTIL THE EXIT IS READY TO BE RE-OPENED.
7. RAMP O SHALL NOT BE OPENED TO TRAFFIC UNTIL FINAL SIGNING AND PAVEMENT MARKINGS ARE INSTALLED. RAMP O AND RAMP M SHALL NOT BE CLOSED AT THE SAME TIME.
8. SIGN 4 SHALL BE MOUNTED ON TYPE 3 BARRICADES AND SHALL HAVE FLASHING BARRICADE WARNING LIGHTS PLACED ABOVE IT AS PER SCD MT-101.60.
9. SIGNS 1 AND 2 SHALL BE GROUND MOUNTED WITH TYPE A WARNING LIGHTS PLACED ABOVE THEM AS PER SCD MT-98.29.
10. SIGN 5 & 6 SHALL HAVE A BLACK LEGEND ON A REFLECTIVE ORANGE BACKGROUND.
11. SEE SHEET 20 FOR MAINTENANCE OF TRAFFIC NOTES.

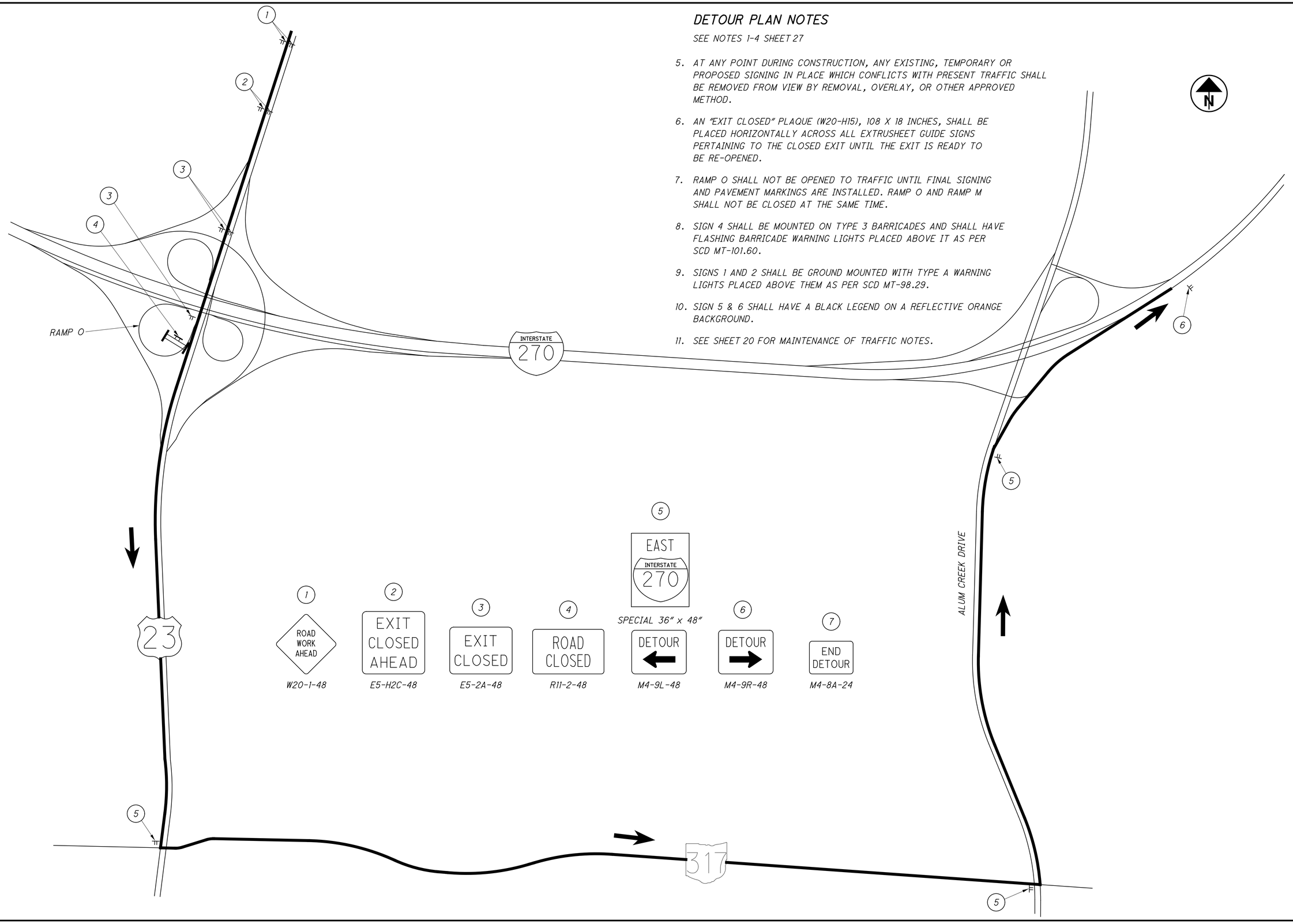

1 ROAD WORK AHEAD — W20-1-48

2 EXIT CLOSED AHEAD — E5-H2C-48

3 EXIT CLOSED — E5-2A-48

4 ROAD CLOSED — R11-2-48

5 EAST INTERSTATE 270 — SPECIAL 36" x 48"

5 DETOUR ← — M4-9L-48

6 DETOUR → — M4-9R-48

7 END DETOUR — M4-8A-24

CALCULATED MBE CHECKED RCH

MAINTENANCE OF TRAFFIC DETOUR MAP - RAMP O

FRA-270-51.50

26
554

X:\Projects\2013\1321\1010\FRA\92616\mot\sheets\92616MD401.dgn 4/25/2023 5:47:37 AM cwong

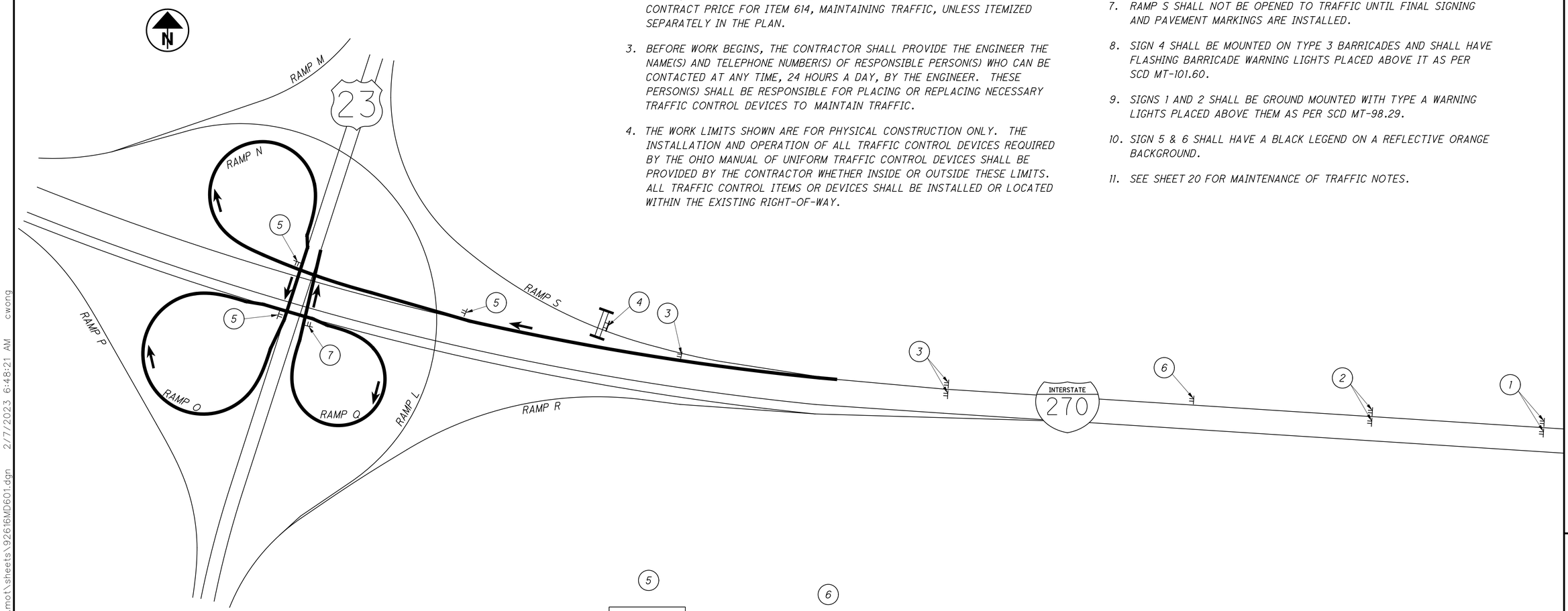

DETOUR PLAN NOTES

1. IT IS THE INTENTION TO PERFORM ALL REQUIRED WORK WITH THE LEAST INCONVENIENCE TO AND THE MAXIMUM SAFETY OF THE CONTRACTOR AND TRAVELING PUBLIC. ANY VARIANCES FROM THE MAINTENANCE OF TRAFFIC NOTES NEED TO BE APPROVED BY ODOT.
2. ALL WORK AND TRAFFIC CONTROL DEVICES SHALL BE IN ACCORDANCE WITH ITEM 614 OF THE 2019 ODOT CONSTRUCTION AND MATERIAL SPECIFICATIONS, OTHER APPLICABLE PORTIONS OF THE 2019 ODOT SPECIFICATIONS, AND THE OHIO MANUAL OF UNIFORM TRAFFIC CONTROL DEVICES. PAYMENT FOR ALL LABOR, EQUIPMENT AND MATERIALS SHALL BE INCLUDED IN THE LUMP SUM CONTRACT PRICE FOR ITEM 614, MAINTAINING TRAFFIC, UNLESS ITEMIZED SEPARATELY IN THE PLAN.
3. BEFORE WORK BEGINS, THE CONTRACTOR SHALL PROVIDE THE ENGINEER THE NAME(S) AND TELEPHONE NUMBER(S) OF RESPONSIBLE PERSON(S) WHO CAN BE CONTACTED AT ANY TIME, 24 HOURS A DAY, BY THE ENGINEER. THESE PERSON(S) SHALL BE RESPONSIBLE FOR PLACING OR REPLACING NECESSARY TRAFFIC CONTROL DEVICES TO MAINTAIN TRAFFIC.
4. THE WORK LIMITS SHOWN ARE FOR PHYSICAL CONSTRUCTION ONLY. THE INSTALLATION AND OPERATION OF ALL TRAFFIC CONTROL DEVICES REQUIRED BY THE OHIO MANUAL OF UNIFORM TRAFFIC CONTROL DEVICES SHALL BE PROVIDED BY THE CONTRACTOR WHETHER INSIDE OR OUTSIDE THESE LIMITS. ALL TRAFFIC CONTROL ITEMS OR DEVICES SHALL BE INSTALLED OR LOCATED WITHIN THE EXISTING RIGHT-OF-WAY.
5. AT ANY POINT DURING CONSTRUCTION, ANY EXISTING, TEMPORARY OR PROPOSED SIGNING IN PLACE WHICH CONFLICTS WITH PRESENT TRAFFIC SHALL BE REMOVED FROM VIEW BY REMOVAL, OVERLAY, OR OTHER APPROVED METHOD.
6. AN "EXIT CLOSED" PLAQUE (W20-H15), 108 X 18 INCHES, SHALL BE PLACED HORIZONTALLY ACROSS ALL EXTRUSHEET GUIDE SIGNS PERTAINING TO THE CLOSED EXIT UNTIL THE EXIT IS READY TO BE RE-OPENED.
7. RAMP S SHALL NOT BE OPENED TO TRAFFIC UNTIL FINAL SIGNING AND PAVEMENT MARKINGS ARE INSTALLED.
8. SIGN 4 SHALL BE MOUNTED ON TYPE 3 BARRICADES AND SHALL HAVE FLASHING BARRICADE WARNING LIGHTS PLACED ABOVE IT AS PER SCD MT-101.60.
9. SIGNS 1 AND 2 SHALL BE GROUND MOUNTED WITH TYPE A WARNING LIGHTS PLACED ABOVE THEM AS PER SCD MT-98.29.
10. SIGN 5 & 6 SHALL HAVE A BLACK LEGEND ON A REFLECTIVE ORANGE BACKGROUND.
11. SEE SHEET 20 FOR MAINTENANCE OF TRAFFIC NOTES.

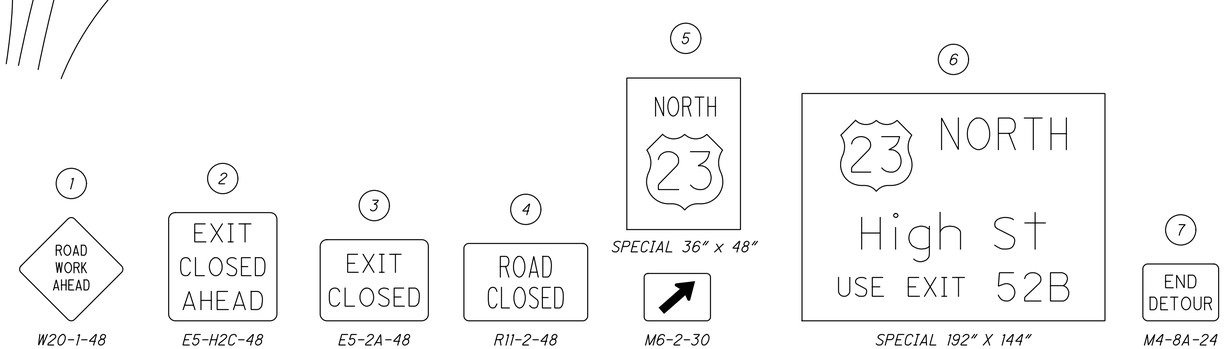

CALCULATED DJR
CHECKED RCH

MAINTENANCE OF TRAFFIC DETOUR MAP - RAMP S

FRA-270-51.50

X:\Projects\2013\1321\1010\FRA\92616\mot\sheets\92616MD601.dgn 2/7/2023 6:48:21 AM cwong

X:\Projects\2013\1321\1010\FRA\92616\mot\sheets\92616MP011.dgn 2/7/2023 7:07:24 AM cwong

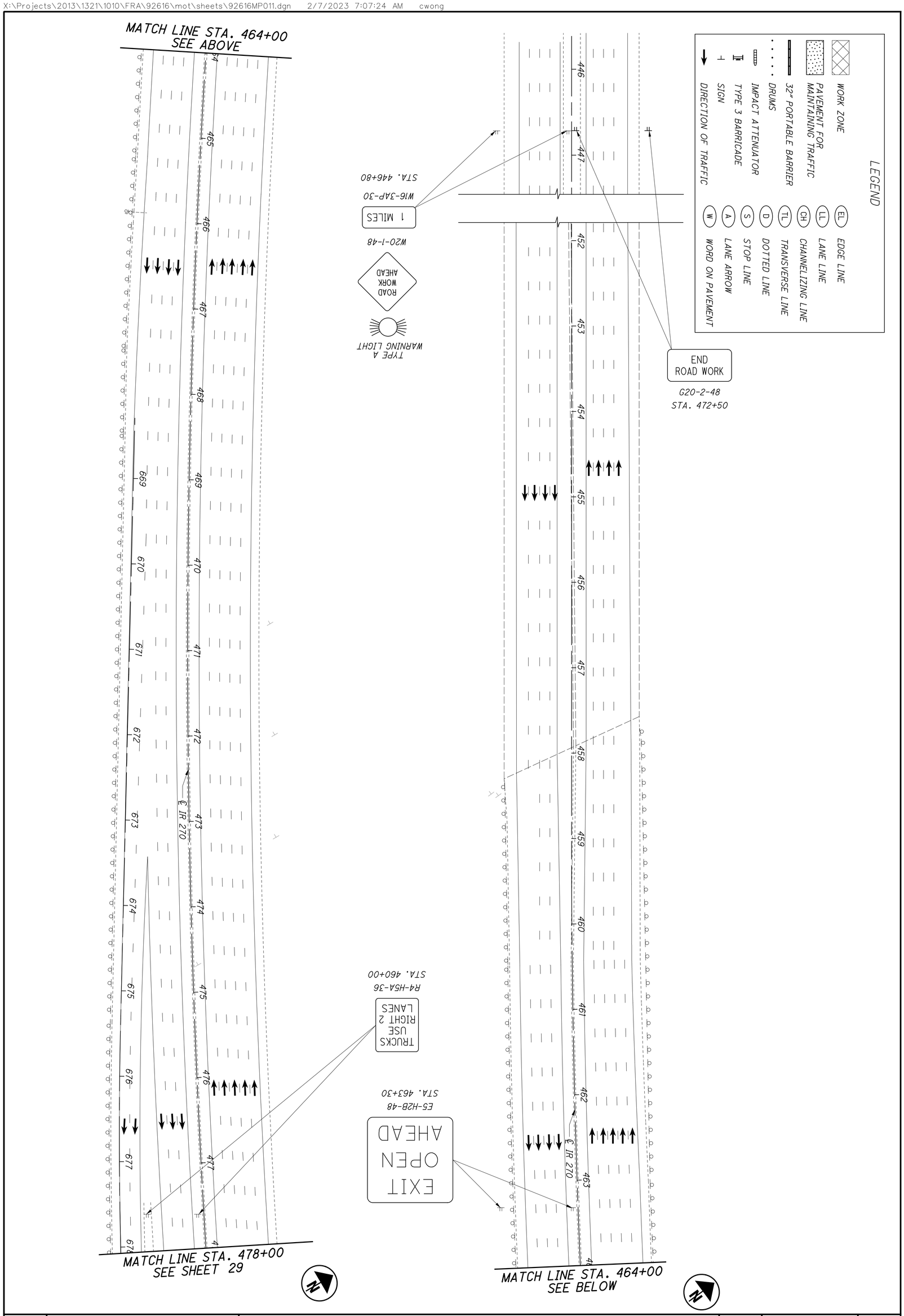

28 554	FRA-270-51.50	MAINTENANCE OF TRAFFIC - PHASE 1 I-270 STA. 450+00 TO STA. 478+00	CALCULATED DJR CHECKED RCH 0 50 25 100 HORIZONTAL SCALE IN FEET

X:\Projects\2013\1321\1010\FRA\92616\mot\sheets\92616MP012.dgn 2/7/2023 7:29:31 AM cwong

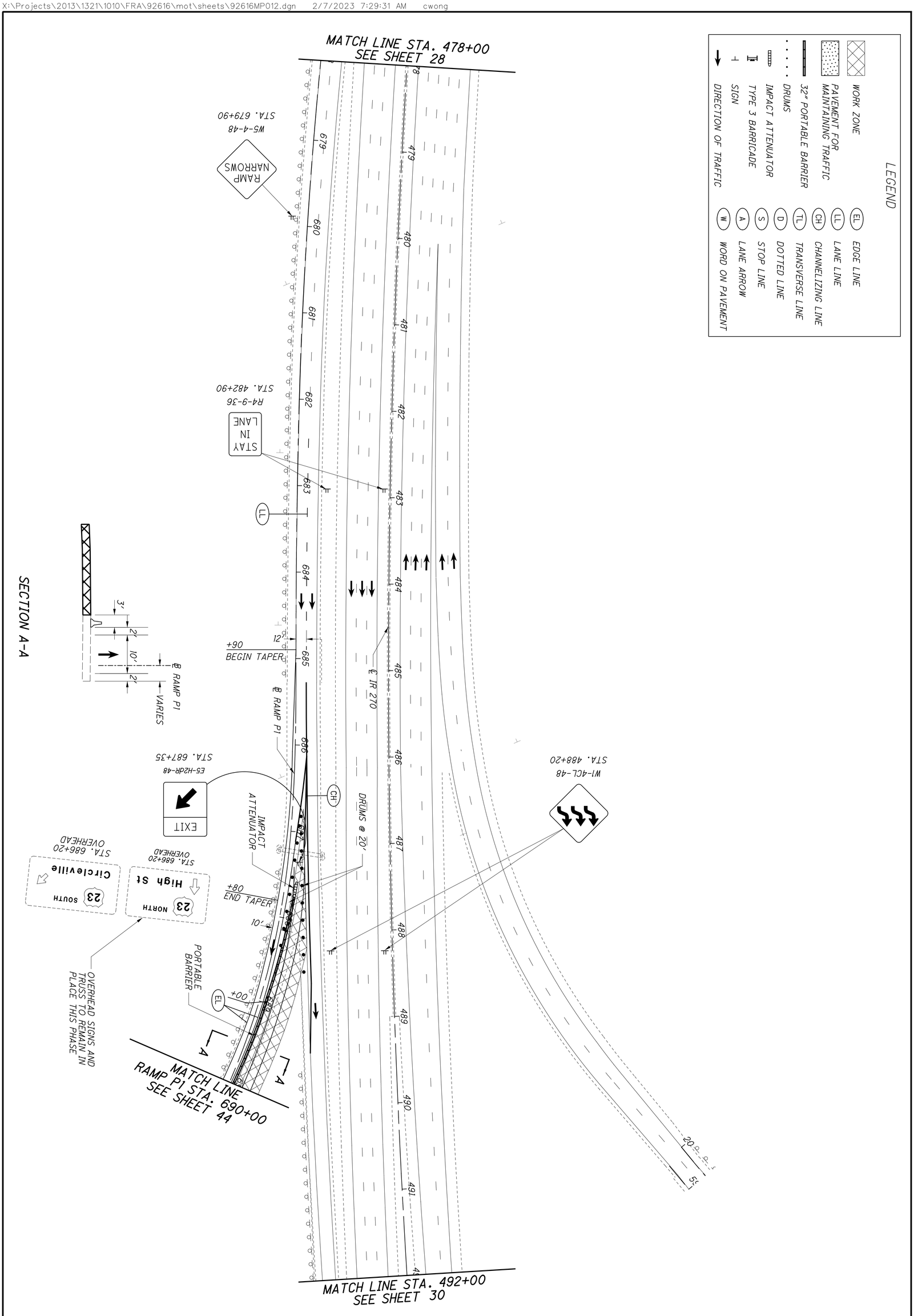

29 / 554	FRA-270-51.50	MAINTENANCE OF TRAFFIC - PHASE 1 I-270 STA. 478+00 TO STA. 492+00	CALCULATED DJR CHECKED RCH	0 50 25 100 HORIZONTAL SCALE IN FEET

LEGEND

- WORK ZONE
- PAVEMENT FOR MAINTAINING TRAFFIC
- 32" PORTABLE BARRIER
- DRUMS
- IMPACT ATTENUATOR
- TYPE 3 BARRICADE
- SIGN
- DIRECTION OF TRAFFIC
- (EL) EDGE LINE
- (LL) LANE LINE
- (CH) CHANNELIZING LINE
- (TL) TRANSVERSE LINE
- (D) DOTTED LINE
- (S) STOP LINE
- (A) LANE ARROW
- (W) WORD ON PAVEMENT

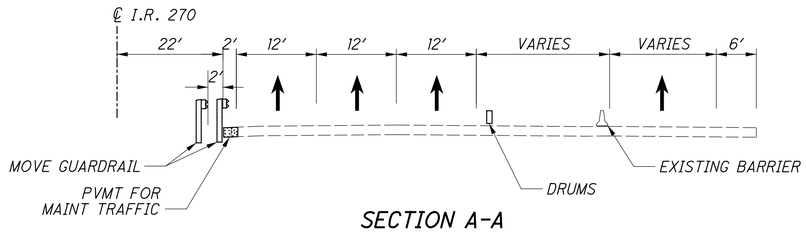

SECTION A-A

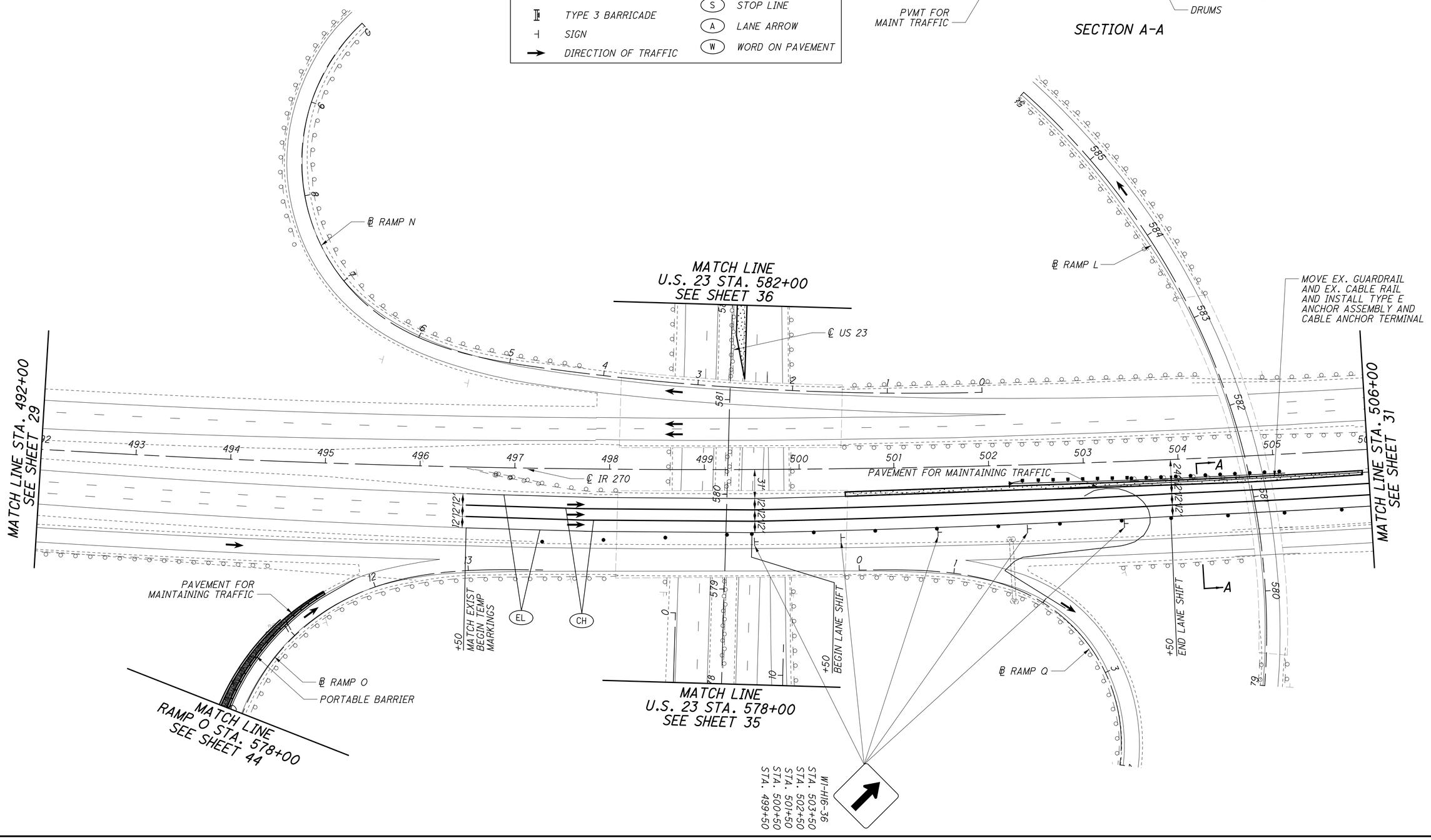

HORIZONTAL SCALE IN FEET
0 25 50 100

CALCULATED DJR
CHECKED RCH

MAINTENANCE OF TRAFFIC - PHASE 1
I-270 STA. 492+00 TO STA. 506+00

FRA-270-51.50

30
554

X:\Projects\2013\1321\1010\FRA\92616\mot\sheets\92616MP013.dgn 5/9/2023 8:49:21 AM cwong

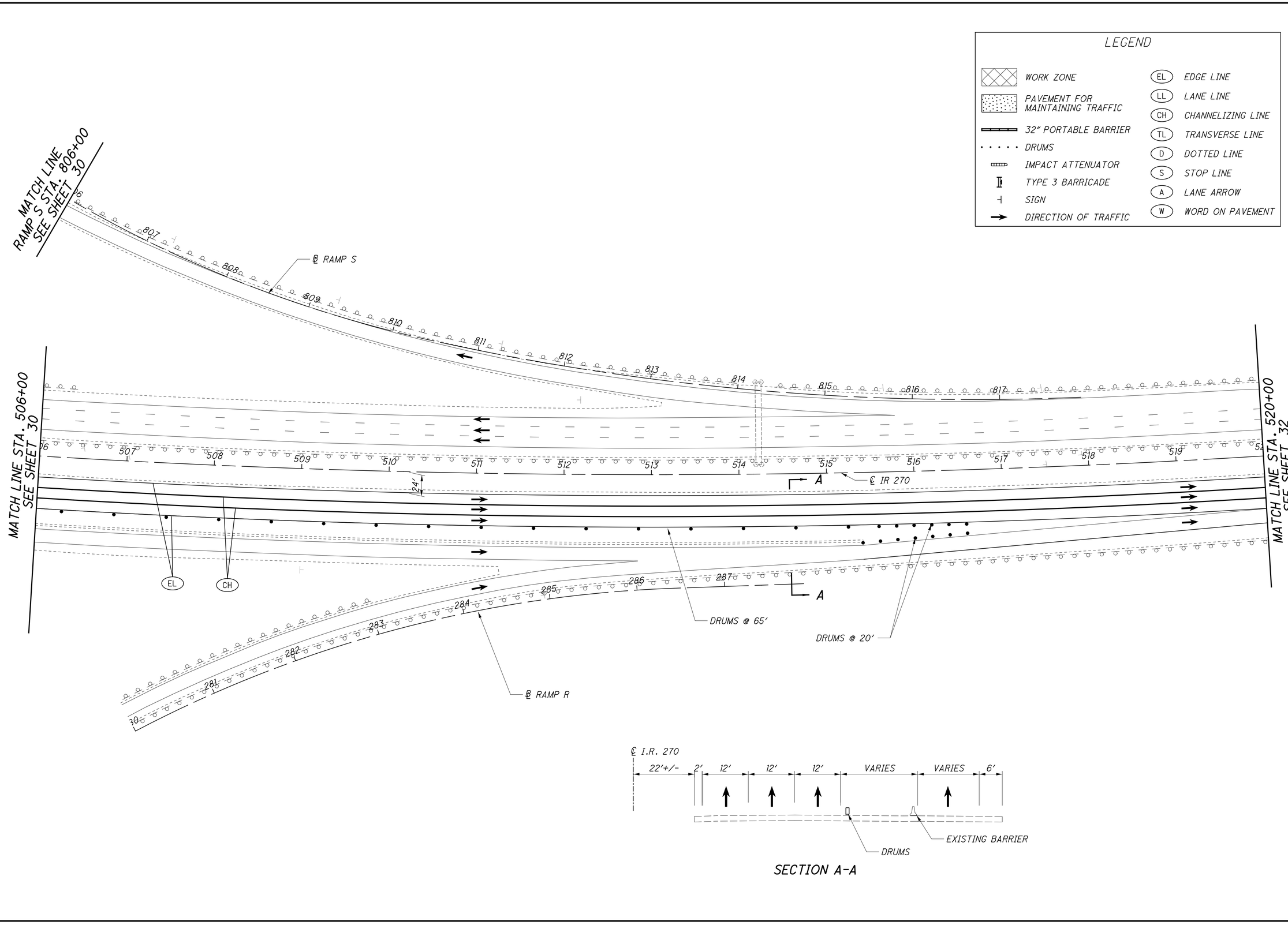

HORIZONTAL SCALE IN FEET
0 25 50 100

CALCULATED DJR
CHECKED RCH

MAINTENANCE OF TRAFFIC - PHASE 1
I-270 STA. 506+00 TO STA. 520+00

FRA-270-51.50

X:\Projects\2013\1321\1010\FRA\92616\mot\sheets\92616MP014.dgn 2/7/2023 7:50:14 AM cwong

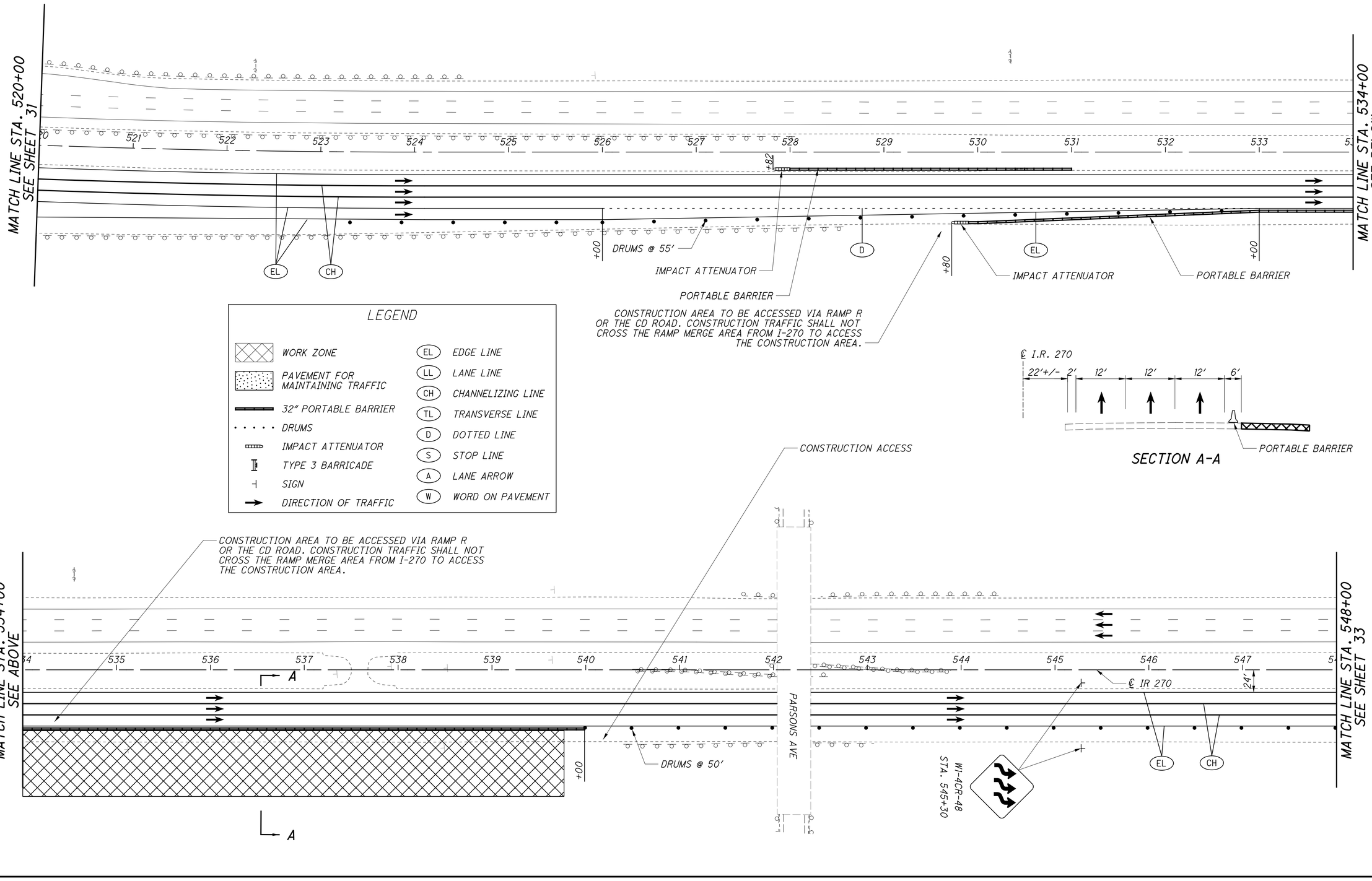

MAINTENANCE OF TRAFFIC - PHASE 1
I-270 STA. 520+00 TO STA. 548+00

HORIZONTAL SCALE IN FEET
0 25 50 100

CALCULATED DJR
CHECKED RCH

FRA-270-51.50

32
554

X:\Projects\2013\1321\1010\FRA\92616\mot\sheets\92616MP015.dgn 3/28/2023 6:55:45 AM cwong

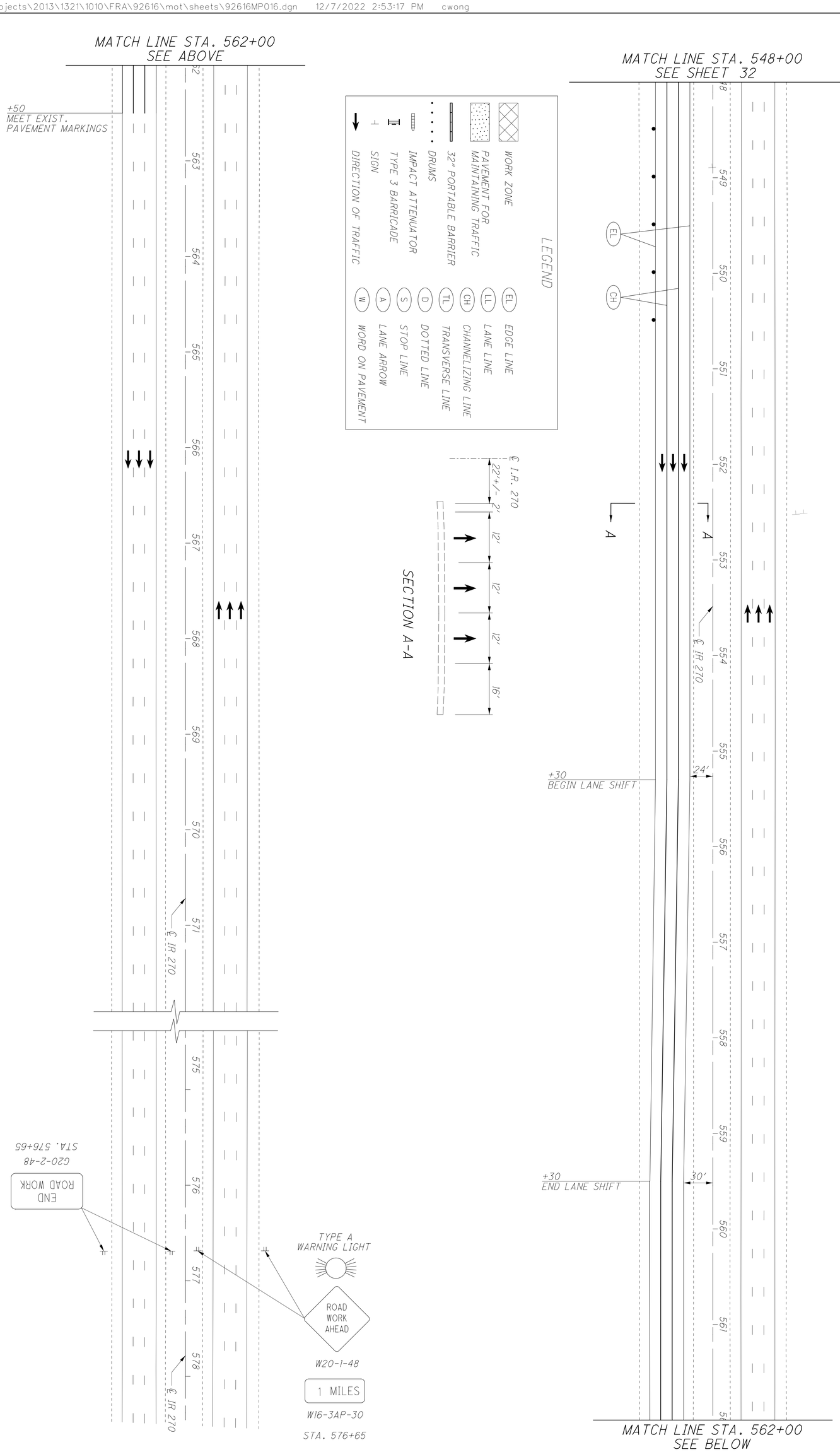

33 / 554	FRA-270-51.50	MAINTENANCE OF TRAFFIC - PHASE 1 I-270 STA. 548+00 TO STA. 576+00	CALCULATED DJR CHECKED RCH 0 50 25 100 HORIZONTAL SCALE IN FEET N

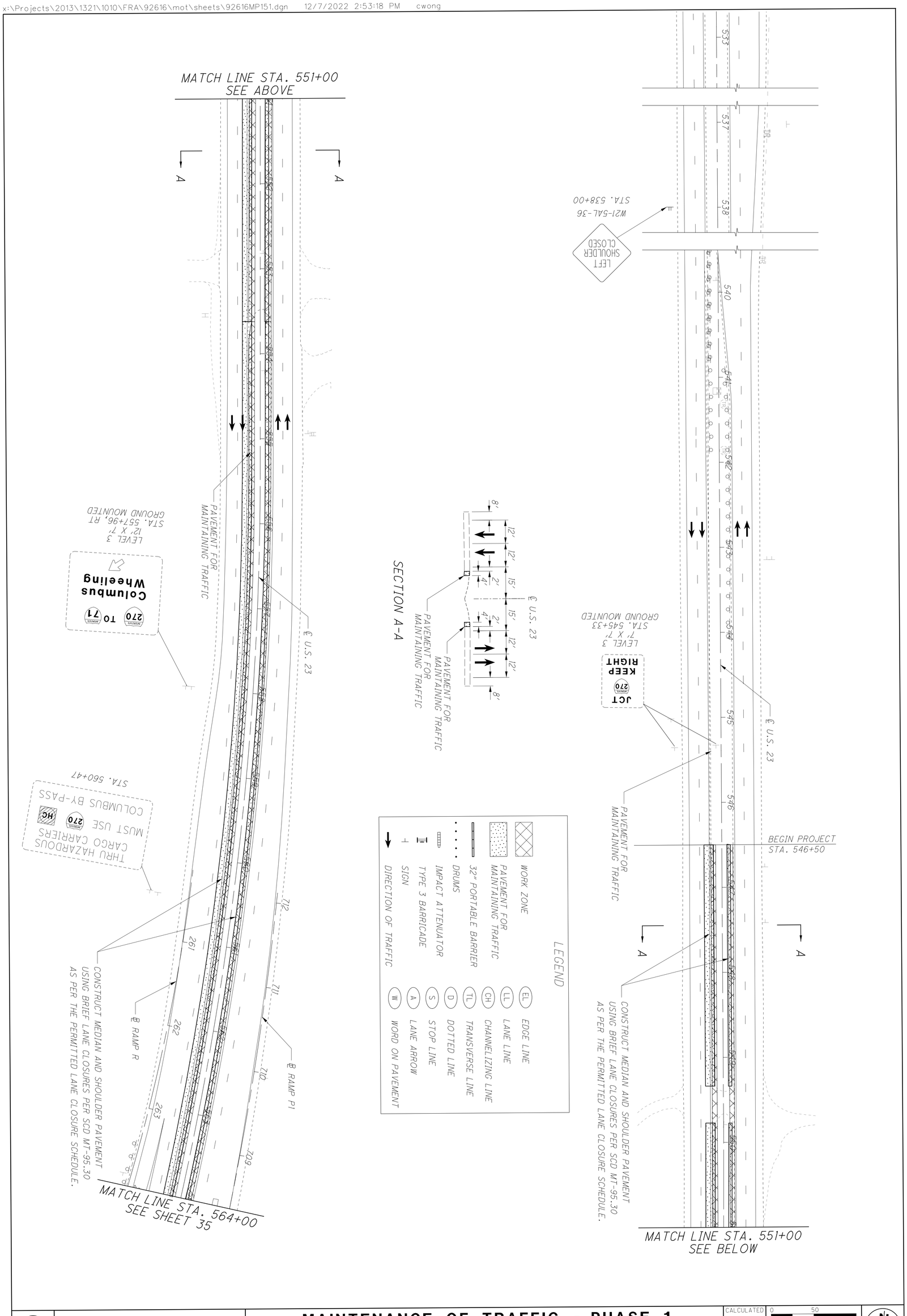

34 / 554	FRA-270-51.50	MAINTENANCE OF TRAFFIC - PHASE 1 U.S. 23 STA. 533+00 TO STA. 564+00	CALCULATED DJR CHECKED RCH 0 50 25 100 HORIZONTAL SCALE IN FEET N

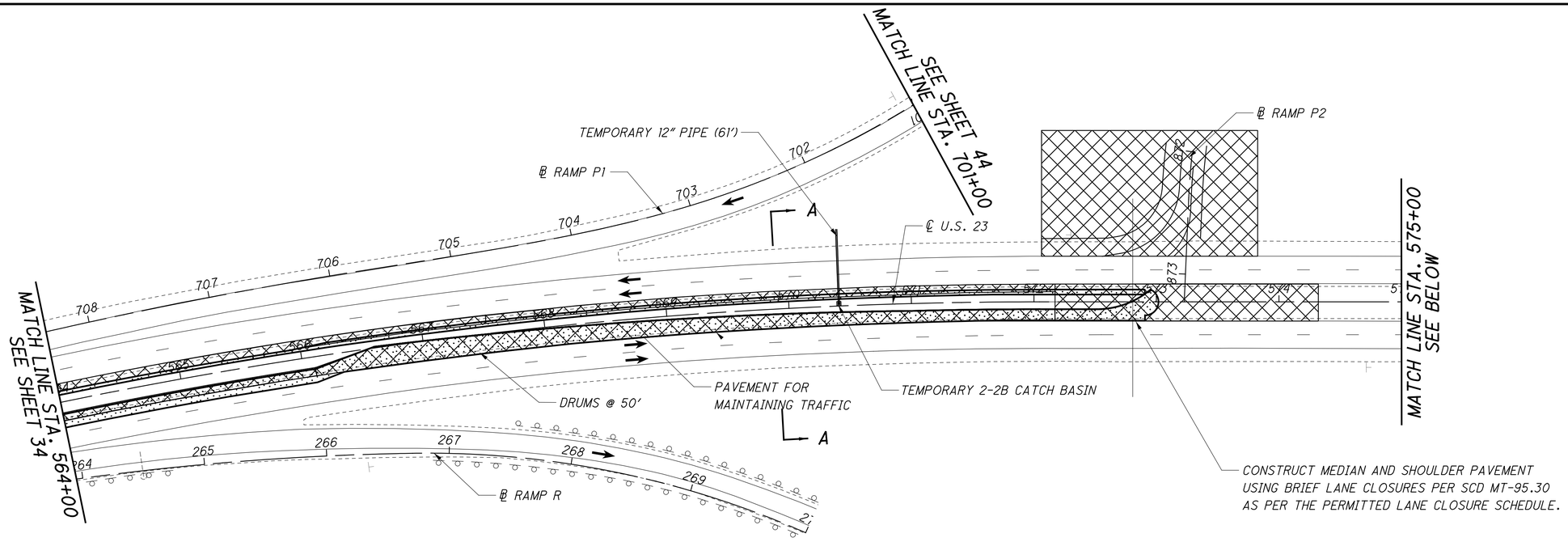

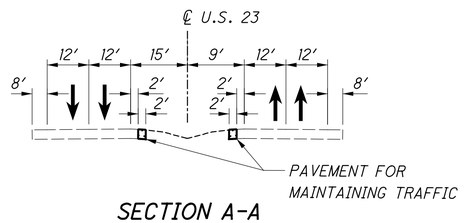

SECTION A-A

LEGEND

WORK ZONE	EL EDGE LINE
PAVEMENT FOR MAINTAINING TRAFFIC	LL LANE LINE
32" PORTABLE BARRIER	CH CHANNELIZING LINE
DRUMS	TL TRANSVERSE LINE
IMPACT ATTENUATOR	D DOTTED LINE
TYPE 3 BARRICADE	S STOP LINE
SIGN	A LANE ARROW
DIRECTION OF TRAFFIC	W WORD ON PAVEMENT

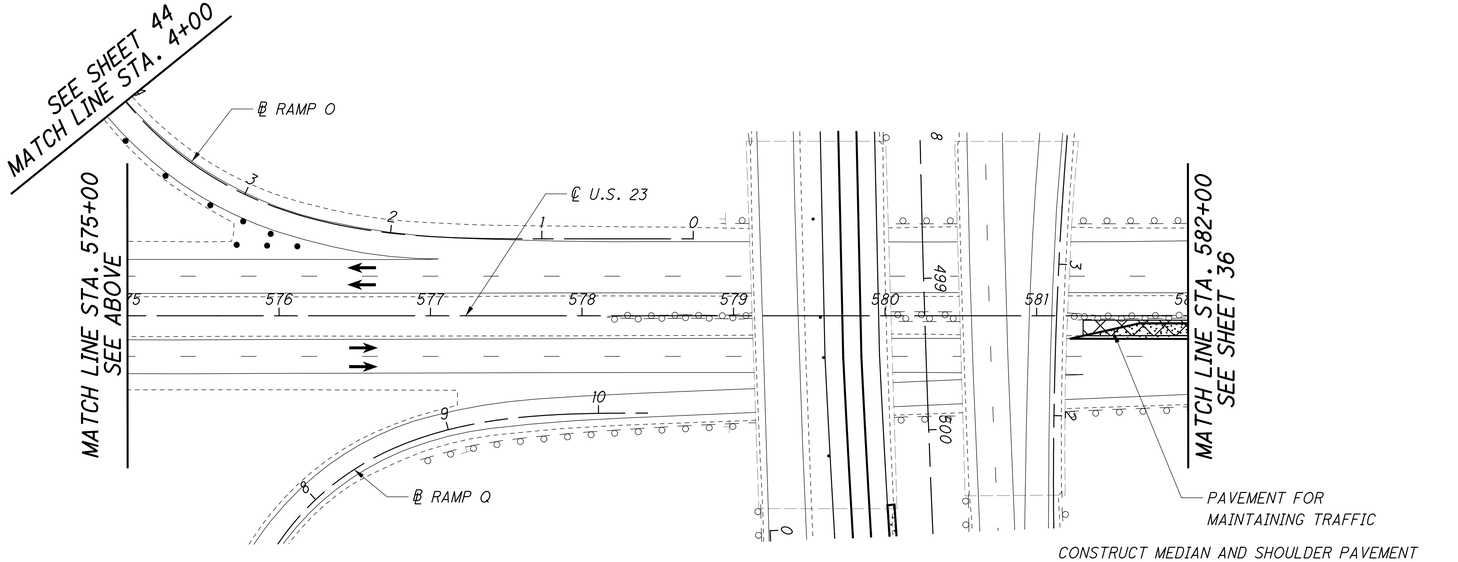

HORIZONTAL SCALE IN FEET
0 25 50 100

CALCULATED DJR
CHECKED RCH

MAINTENANCE OF TRAFFIC - PHASE 1
U.S. 23 STA. 564+00 TO STA. 582+00

FRA-270-51.50

35
554

X:\Projects\2013\1321\1010\FRA\92616\mot\sheets\92616MP152.dgn 4/21/2023 6:59:37 PM cwong

X:\Projects\2013\1321\1010\FRA\92616\mot\sheets\92616MP153.dgn 4/24/2023 6:29:30 AM cwong

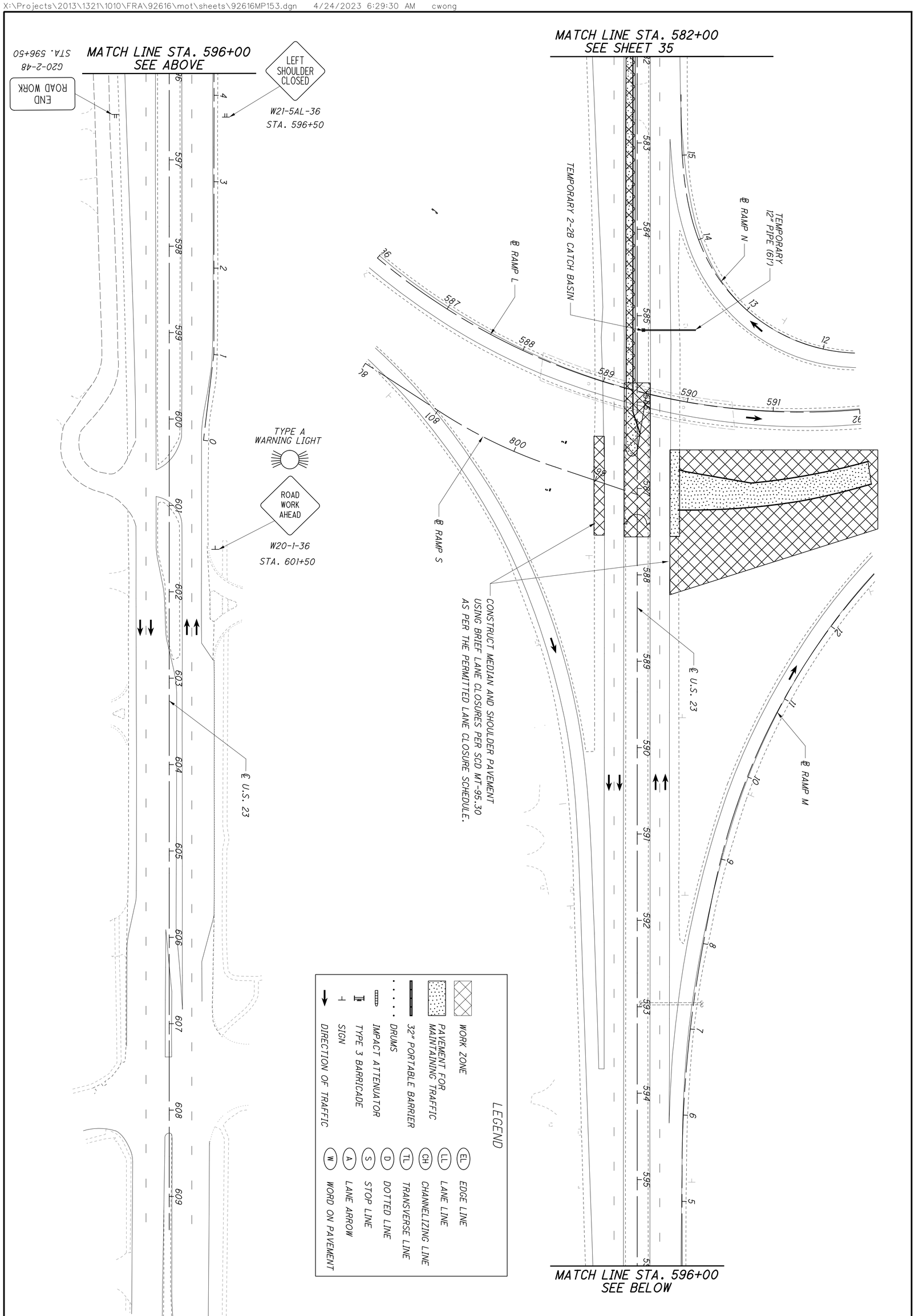

36 / 554	FRA-270-51.50	MAINTENANCE OF TRAFFIC - PHASE 1 U.S. 23 STA. 582+00 TO STA. 609+00	CALCULATED DJR CHECKED RCH	0 50 25 100 HORIZONTAL SCALE IN FEET

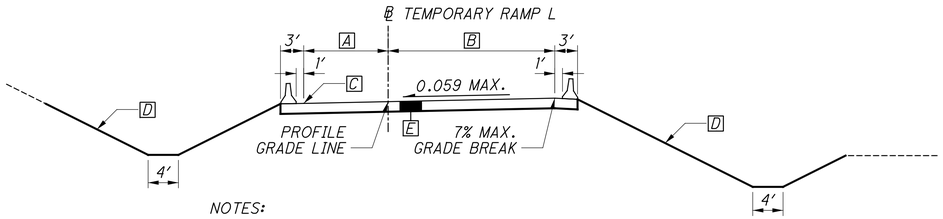

NOTES:

A VARIES 22.59′ - 0′ FROM STA. 89+53.58 TO STA. 90+47.11.
0′ FROM STA. 90+47.11 TO STA. 94+80.60.

B 22′ FROM STA. 89+53.58 TO STA. 91+00.00.
VARIES 22′ - 13.69′ FROM STA. 91+00.00 TO STA. 94+80.60.

C LEFT SHOULDER CROSS SLOPE EQUALS PAVEMENT SLOPE.

D SEE SHEETS 39 - 42 FOR FORESLOPE AND BACKSLOPE GRADES.

E ITEM 615 - PAVEMENT FOR MAINTAINING TRAFFIC, CLASS A - QUANTITIES FOR THIS ITEM ARE INCLUDED IN THE SUBSUMMARY ON SHEET 23.

TYPICAL SECTION TEMPORARY RAMP L

STA. 89+53.58 TO STA. 94+80.60

SUPERELEVATION TABLE

LEFT EDGE OF SHOULDER				LEFT EDGE OF PAVEMENT				BASELINE CONTROL		RIGHT EDGE OF PAVEMENT				RIGHT EDGE OF SHOULDER			
EDGE ELEVATION	CORRECTION FACTOR	CROSS SLOPE	WIDTH	EDGE ELEVATION	CORRECTION FACTOR	CROSS SLOPE	WIDTH	STATION	PGL ELEVATION	WIDTH	CROSS SLOPE	CORRECTION FACTOR	EDGE ELEVATION	WIDTH	CROSS SLOPE	CORRECTION FACTOR	EDGE ELEVATION
						EXIST.		89+53.58	700.23		EXIST.						
699.85	-0.04	-0.013	3.00	699.89	-0.20	-0.013	15.80	89+75.00	700.09	22.00	0.013	0.28	700.37	3.00	-0.057	-0.17	700.20
699.74	-0.06	-0.021	3.00	699.80	-0.23	-0.021	11.15	90+00.00	700.03	22.00	0.021	0.45	700.48	3.00	-0.049	-0.15	700.34
699.85	-0.09	-0.029	3.00	699.94	-0.16	-0.029	5.63	90+25.00	700.10	22.00	0.029	0.63	700.73	3.00	-0.042	-0.12	700.60
700.18	-0.11	-0.036	3.00	700.29	0.00	-0.036	0.00	90+50.00	700.29	22.00	0.036	0.80	701.09	3.00	-0.034	-0.10	700.99
700.48	-0.13	-0.044	3.00	700.61	0.00	-0.044	0.00	90+75.00	700.61	22.00	0.044	0.97	701.58	3.00	-0.026	-0.08	701.51
700.89	-0.16	-0.052	3.00	701.05	0.00	-0.052	0.00	91+00.00	701.05	22.00	0.052	1.15	702.20	3.00	-0.018	-0.05	702.15
701.36	-0.18	-0.059	3.00	701.54	0.00	-0.059	0.00	91+21.58	701.54	21.53	0.059	1.27	702.81	3.00	-0.011	-0.03	702.78
701.45	-0.18	-0.059	3.00	701.63	0.00	-0.059	0.00	91+25.00	701.63	21.45	0.059	1.27	702.90	3.00	-0.011	-0.03	702.86
702.14	-0.18	-0.059	3.00	702.32	0.00	-0.059	0.00	91+50.00	702.32	20.90	0.059	1.23	703.55	3.00	-0.011	-0.03	703.52
702.87	-0.18	-0.059	3.00	703.05	0.00	-0.059	0.00	91+75.00	703.05	20.35	0.059	1.20	704.25	3.00	-0.011	-0.03	704.22
703.59	-0.18	-0.059	3.00	703.77	0.00	-0.059	0.00	92+00.00	703.77	19.80	0.059	1.17	704.94	3.00	-0.011	-0.03	704.91
704.32	-0.18	-0.059	3.00	704.50	0.00	-0.059	0.00	92+25.00	704.50	19.25	0.059	1.14	705.64	3.00	-0.011	-0.03	705.60
705.04	-0.18	-0.059	3.00	705.22	0.00	-0.059	0.00	92+50.00	705.22	18.70	0.059	1.10	706.32	3.00	-0.011	-0.03	706.29
705.77	-0.18	-0.059	3.00	705.95	0.00	-0.059	0.00	92+75.00	705.95	18.15	0.059	1.07	707.02	3.00	-0.011	-0.03	706.99
706.39	-0.18	-0.059	3.00	706.57	0.00	-0.059	0.00	93+00.00	706.57	17.60	0.059	1.04	707.61	3.00	-0.011	-0.03	707.58
706.82	-0.18	-0.059	3.00	707.00	0.00	-0.059	0.00	93+25.00	707.00	17.05	0.059	1.01	708.01	3.00	-0.011	-0.03	707.97
707.04	-0.18	-0.059	3.00	707.22	0.00	-0.059	0.00	93+50.00	707.22	16.50	0.059	0.97	708.19	3.00	-0.011	-0.03	708.16
707.08	-0.18	-0.059	3.00	707.26	0.00	-0.059	0.00	93+60.00	707.26	16.28	0.059	0.96	708.22	3.00	-0.011	-0.03	708.19
707.08	-0.17	-0.057	3.00	707.25	0.00	-0.057	0.00	93+75.00	707.25	15.95	0.057	0.91	708.16	3.00	-0.013	-0.04	708.12
706.91	-0.16	-0.054	3.00	707.07	0.00	-0.054	0.00	94+00.00	707.07	15.40	0.054	0.83	707.90	3.00	-0.016	-0.05	707.85
706.53	-0.17	-0.057	3.00	706.70	0.00	-0.057	0.00	94+25.00	706.70	14.85	0.057	0.85	707.55	3.00	-0.013	-0.04	707.51
						EXIST.		94+50.00	706.07	14.30	0.048	0.68	706.75	3.00	-0.023	-0.07	706.68
						EXIST.		94+80.60	705.59		EXIST.						

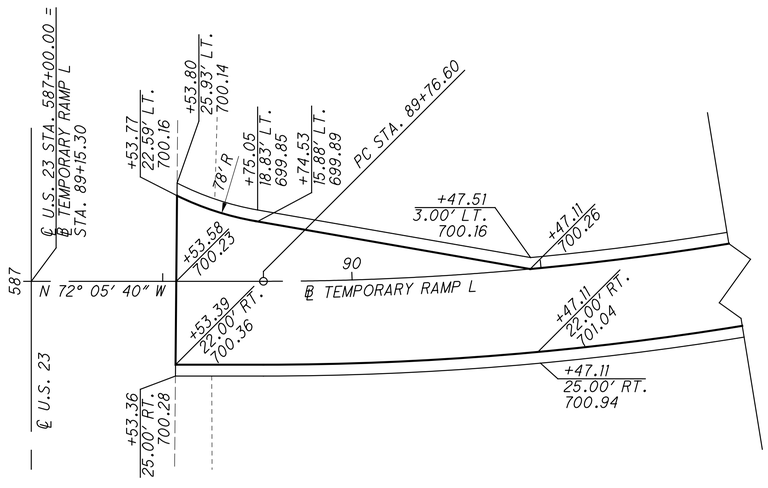

INTERSECTION DETAIL TEMPORARY RAMP L AT U.S. 23

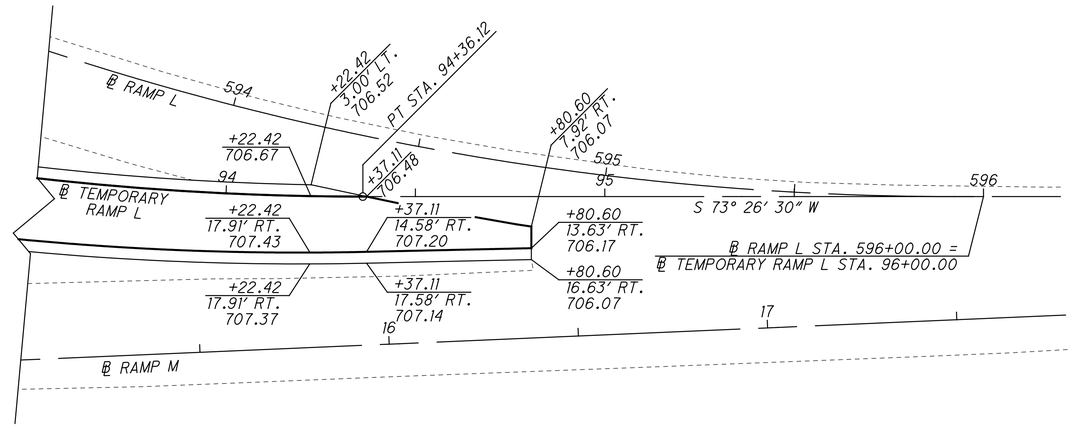

INTERSECTION DETAIL TEMPORARY RAMP L AT RAMP L

TYPICAL SECTIONS AND ELEVATIONS TEMPORARY RAMP L

FRA-270-51.50

X:\Projects\2013\1321\1010\FRA\92616\mot\sheets\92616MY201.dgn 4/28/2023 11:36:05 AM cwong

TEMPORARY RAMP L
CURVE DATA
P.I. STA. 92+13.55
Δ = 34° 27′ 50″ (LT)
Dc = 7° 30′ 00″
R = 763.94′
T = 236.95′
L = 459.52′
E = 35.90′
C = 452.62′
C.B. = N 89° 19′ 35″ W

REMOVE 50 LF OF EXISTING GUARDRAIL FROM ℄ RAMP M STA. 15+50.00 TO STA. 15+96.00 AND SPLICE PROPOSED TEMPORARY GUARDRAIL INTO EXISTING GUARDRAIL

REMOVE 150 LF OF EXISTING GUARDRAIL FROM ℄ RAMP L STA. 593+00.00 TO STA. 594+47.00

END TAPER/ MEET EXISTING STA. 94+80.60

PT STA. 94+36.12

MEET EXISTING STA. 94+37.11

S 73° 26′ 30″ W

37.63′

℄ RAMP L

℄ U.S. 23 STA. 587+00.00 = ℄ TEMP. RAMP L STA. 89+15.30

BEGIN TAPER STA. 89+74.53

+53.17 22.59′ LT.

78′ R

PC STA. 89+76.60

HW 2.2

90°00′

15.88′

N 72° 05′ 40″ W

+53.39 22.00′ RT.

18″ A

STA. 89+53.58 MEET EXISTING

HW 2.2

18″ RCP

END TAPER STA. 90+47.11

BEGIN TAPER STA. 91+00.00

DND LIGHT TOWER

CB 2-3

CONST. LIMITS

℄ TEMPORARY RAMP L

22.00′

3.00′ TYP.

15″ B

HW 2.2

HW 2.2

CONST. LIMITS

REMOVE 20 LF OF 18″ PIPE

18″ C

MH 3

℄ RAMP M

18″ RCP

QUANTITIES ARE FOR INFORMATION ONLY. THE FOLLOWING ITEMS ARE TO BE INCLUDED IN THE BID PRICE FOR ITEM 615 - ROADS FOR MAINTAINING TRAFFIC

ESTIMATED QUANTITIES	
PIPE REMOVED	20 FT
SEEDING AND MULCHING	2267 SY
ROCK CHANNEL PROTECTION, TYPE C WITH FILTER	18 CY
CONCRETE MASONRY	0.86 CY
15″ CONDUIT, TYPE B	60 FT
18″ CONDUIT, TYPE A	62 FT
18″ CONDUIT, TYPE C	104 FT
CATCH BASIN, NO. 2-3	1 EACH
MANHOLE, NO. 3	1 EACH
EXCAVATION	140 CY
EMBANKMENT	4676 CY
GUARDRAIL, TYPE MGS	582 FT
ANCHOR ASSEMBLY, TYPE E	2 EACH
ANCHOR ASSEMBLY, TYPE T	1 EACH

700.09 700.03 700.10 700.29 700.61 701.05 701.63 702.32 703.05 703.77 704.50 705.22 705.95 706.57 707.00 707.22 707.25 707.07 706.70

P.V.I. STA 93+50.00 ELEV = 708.12′ K = 31.31
150.00′ VC

MEET EXISTING STA. 94+37.11 ELEV. 706.47

MEET EXISTING STA. 89+53.58 ELEV. 700.23

BEGIN SEED DITCH PROTECTION STA. 91+14, 9′ LT.

PROPOSED PROFILE GRADE

BEGIN ROCK CHANNEL PROTECTION, TYPE C STA. 91+19, 53′ LT.

-0.65 %

+2.90 %

+2.90 %

-1.89 %

END SEED DITCH PROTECTION STA. 93+50, 6′ LT.

END SEED DITCH PROTECTION STA. 93+00, 30′ RT.

ELECTRIC CONDUIT

18″ CONDUIT, TYPE A

12″ WATER

ELECTRIC CONDUIT

15″ CONDUIT, TYPE B

EXISTING PROFILE GRADE

P.V.I. STA 90+55.00 ELEV = 699.57′ K = 49.27
175.00′ VC

END ROCK CHANNEL PROTECTION, TYPE C
BEGIN SEED DITCH PROTECTION
STA. 92+00, 43′ RT.

700.19 694.96 696.10 697.39 695.47 693.94 696.16 702.50 706.97 707.00 706.07

710 705 700 695 690 685

90+00 91+00 92+00 93+00 94+00

HORIZONTAL SCALE IN FEET
0 10 20 40

CALCULATED DJR
CHECKED RCH

PLAN AND PROFILE TEMPORARY RAMP L
STA. 89+15.30 TO STA. 95+00.00

FRA-270-51.50

38
554

X:\Projects\2013\132\1010\FRA\92616\mot\sheets\92616MP201.dgn 4/28/2023 2:50:34 PM cwong

SEEDING	
END WIDTH	SQ. YDS.

END AREA	
CUT	FILL
6	286
0	243
6	490

VOLUME	
CUT	FILL
6	490

CALCULATED DJR
CHECKED RCH

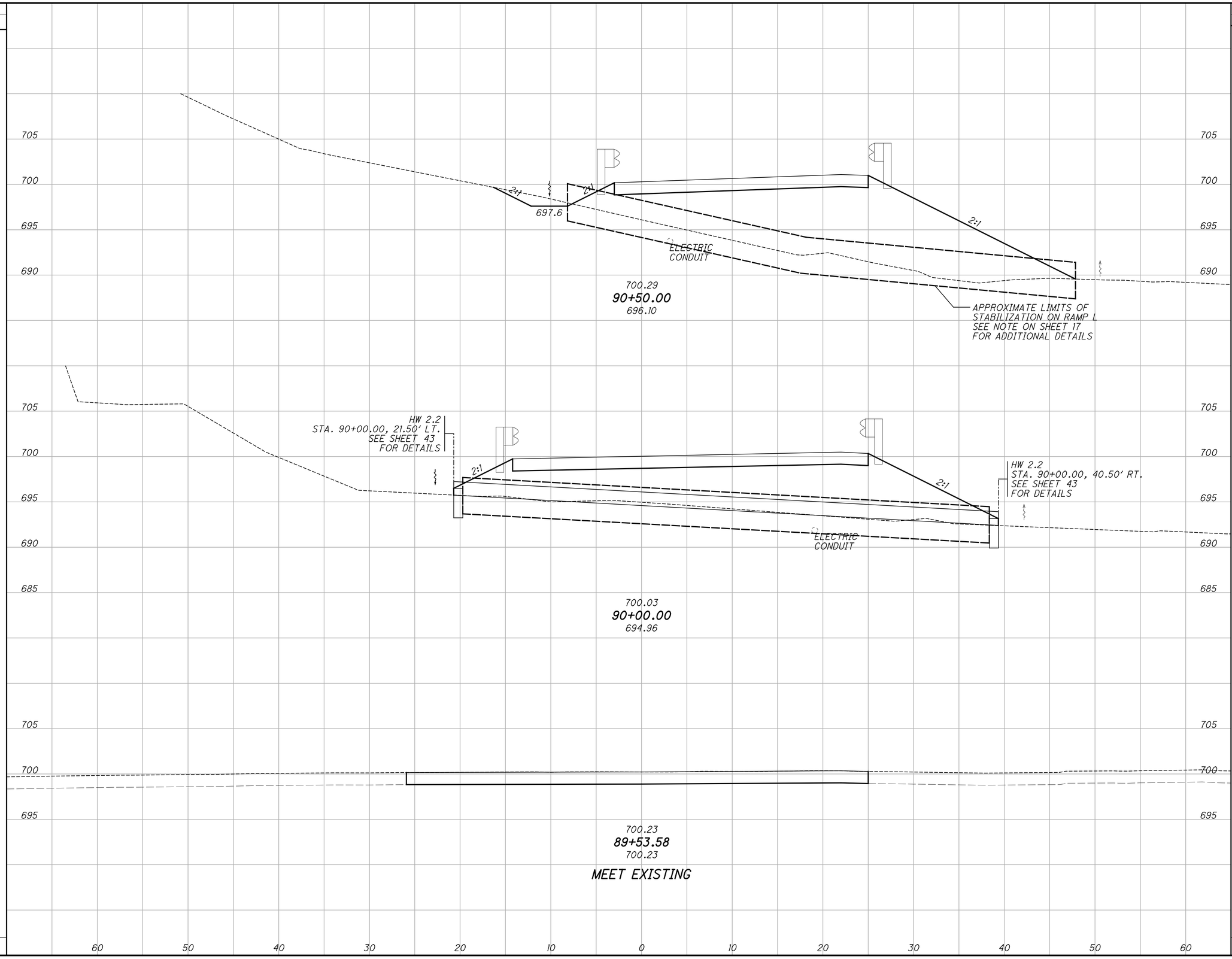

CROSS SECTIONS TEMPORARY RAMP L
STA. 89+53.58 TO STA. 90+50.00

FRA-270-51.50

x:\Projects\2013\1321\1010\FRA\92616\mot\sheets\92616XM201.dgn 3/7/2023 6:47:25 AM cwong

x:\Projects\2013\1321\1010\FRA\92616\mot\sheets\92616XM201.dgn 3/7/2023 6:47:25 AM cwong

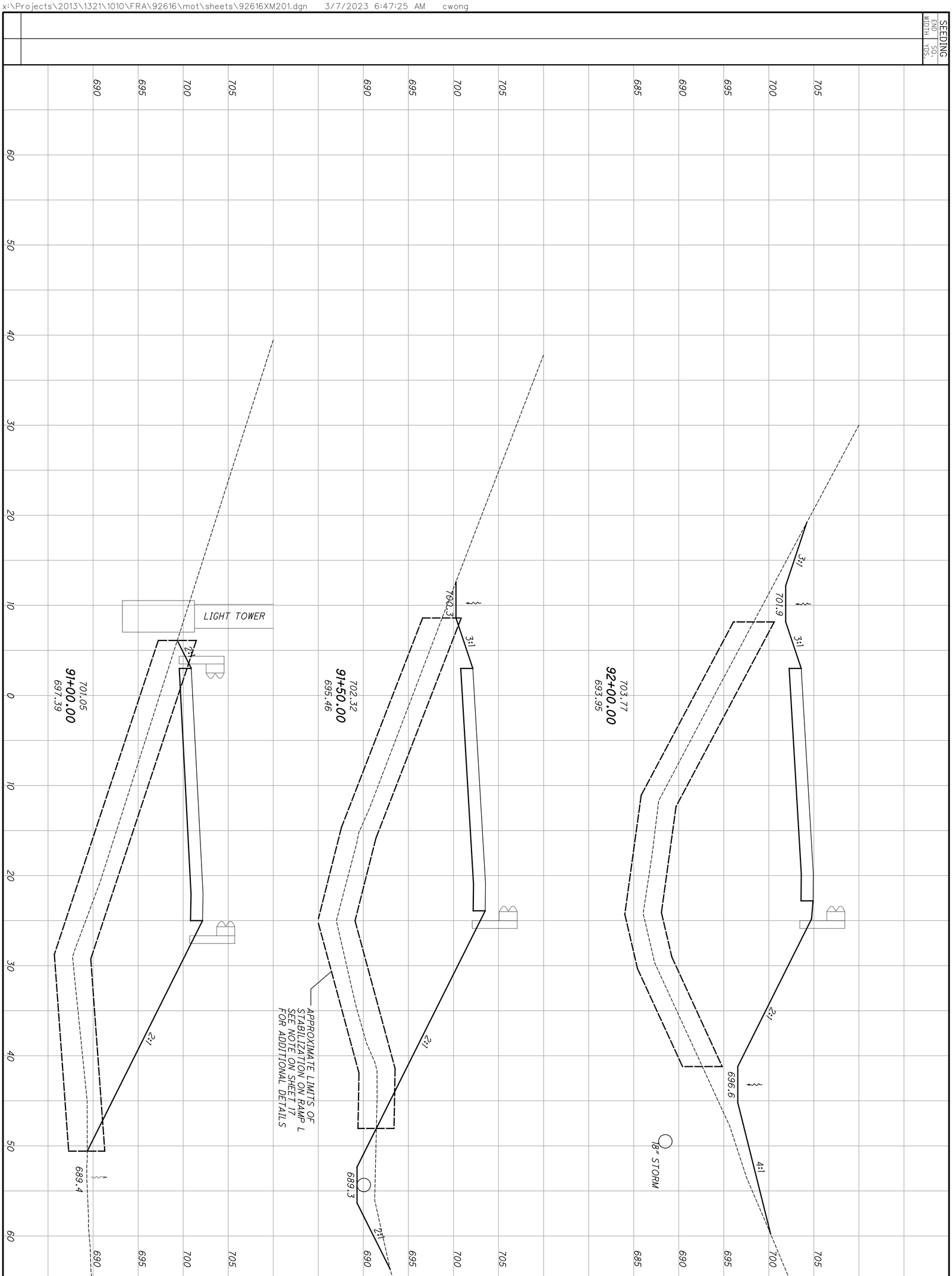

40 / 554	FRA-270-51.50	CROSS SECTIONS TEMPORARY RAMP L STA. 91+00.00 TO STA. 92+00.00

CALCULATED DJR
CHECKED RCH

SEEDING	
END WIDTH	SQ. YDS.

END AREA	
CUT	FILL
11	28
25	167
0	418

VOLUME	
CUT	FILL
34	181
24	542
0	985
58	1708

CALCULATED DJR
CHECKED RCH

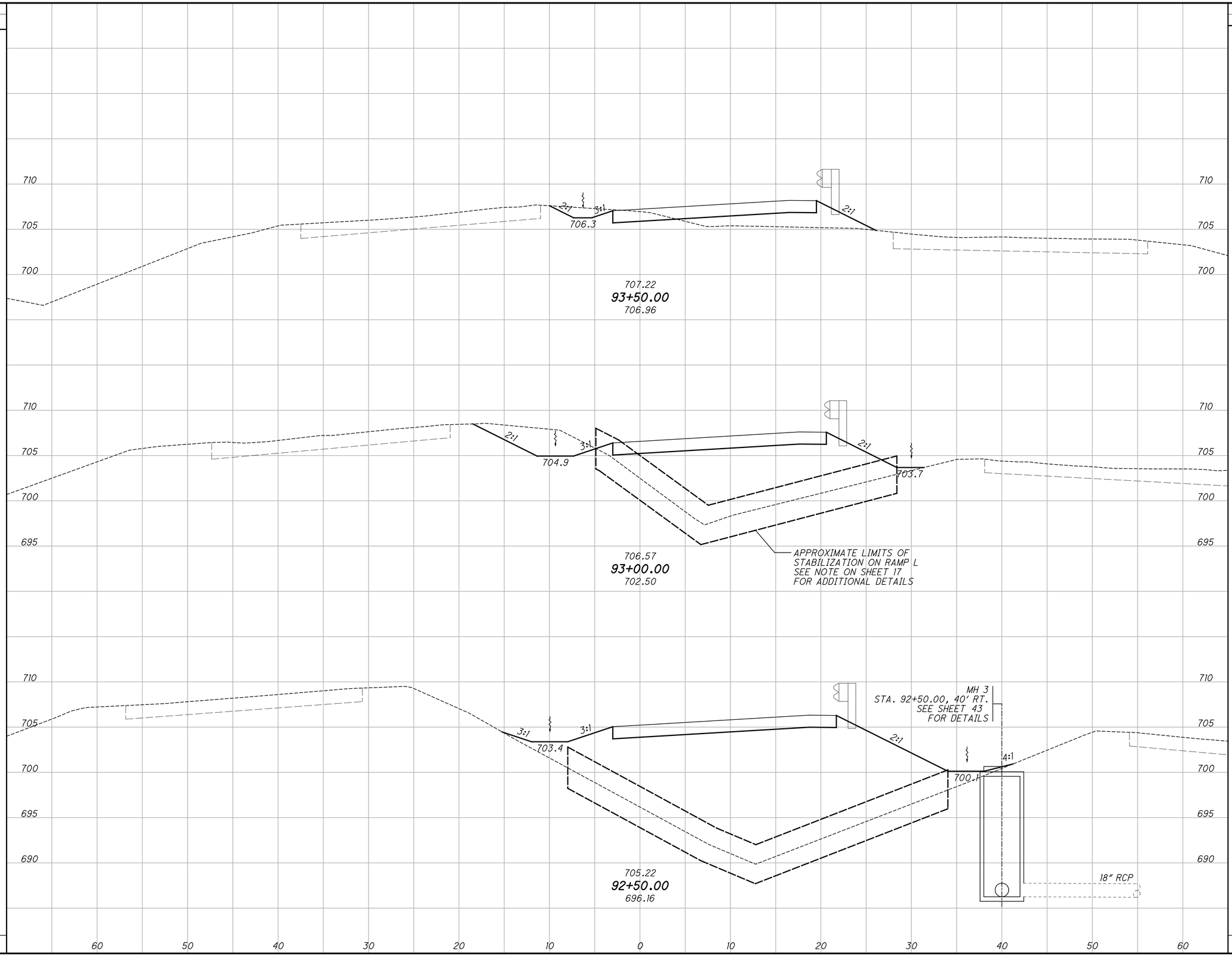

CROSS SECTIONS TEMPORARY RAMP L
STA. 92+50.00 TO STA. 93+50.00

FRA-270-51.50

41
554

x:\Projects\2013\1321\1010\FRA\92616\mot\sheets\92616XM201.dgn 3/7/2023 6:47:26 AM cwong

x:\Projects\2013\1321\1010\FRA\92616\mot\sheets\92616XM201.dgn 3/7/2023 6:47:26 AM cwong

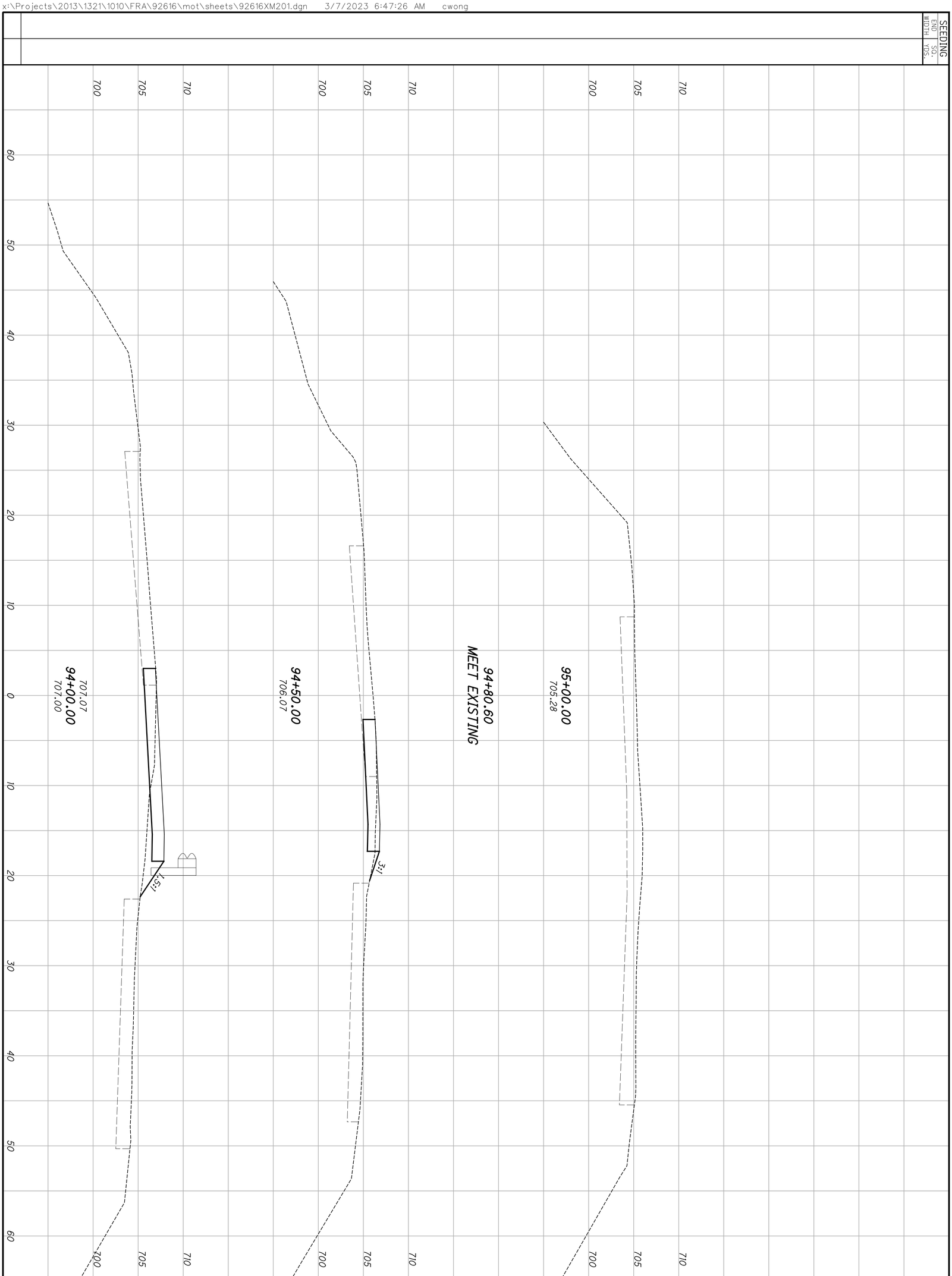

END AREA	
CUT	FILL
13	0
8	4

VOLUME	
CUT	FILL
36	13
46	12
23	
34	

42
554

FRA-270-51.50

CROSS SECTIONS TEMPORARY RAMP L
STA. 94+00.00 TO STA. 95+00.00

CALCULATED DJR
CHECKED RCH

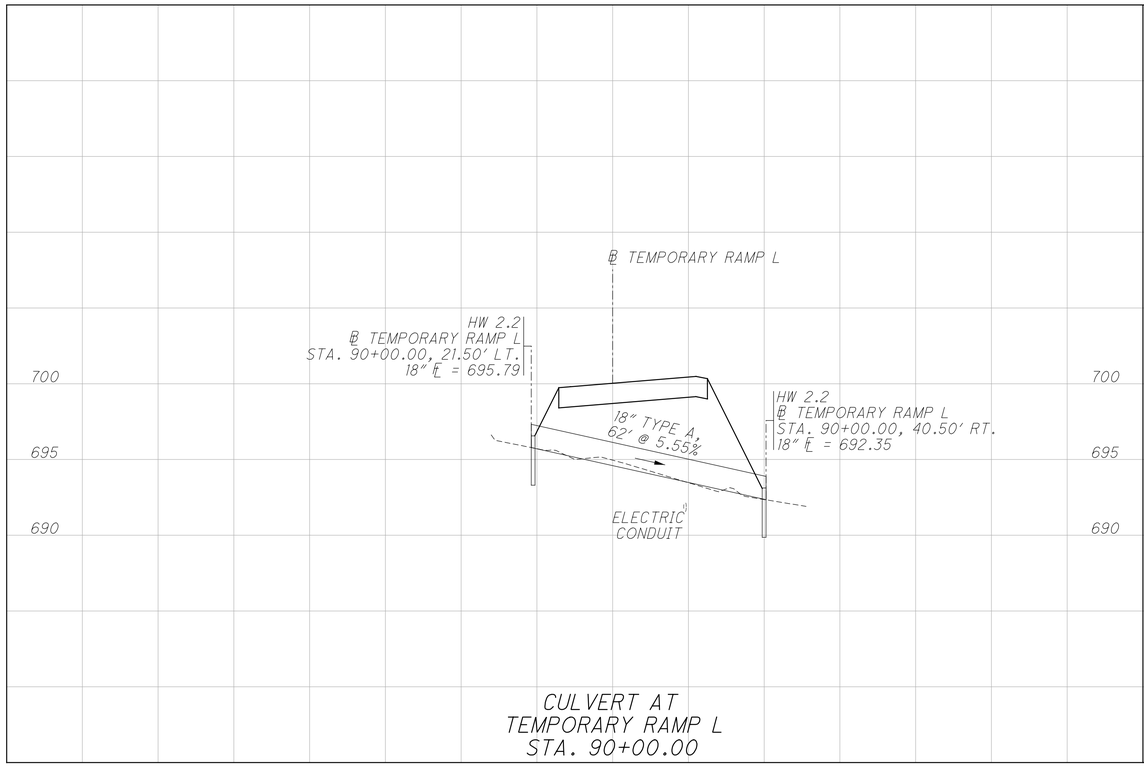

CULVERT AT
TEMPORARY RAMP L
STA. 90+00.00

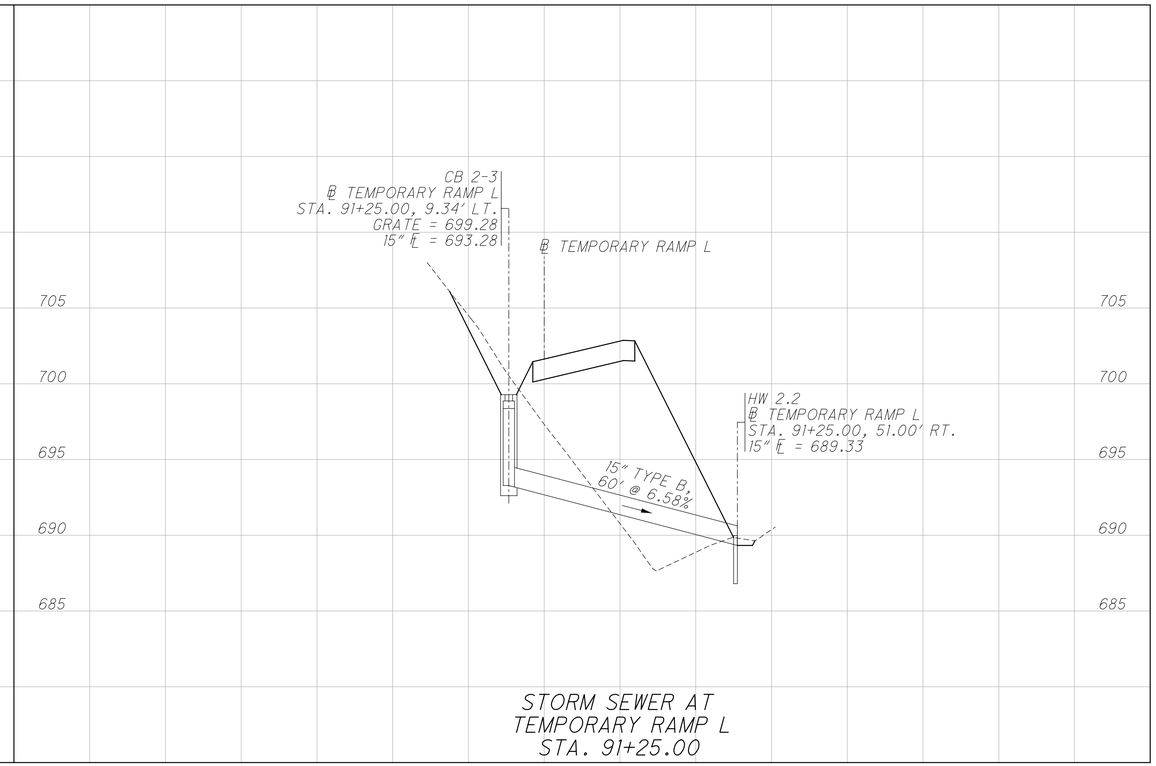

STORM SEWER AT
TEMPORARY RAMP L
STA. 91+25.00

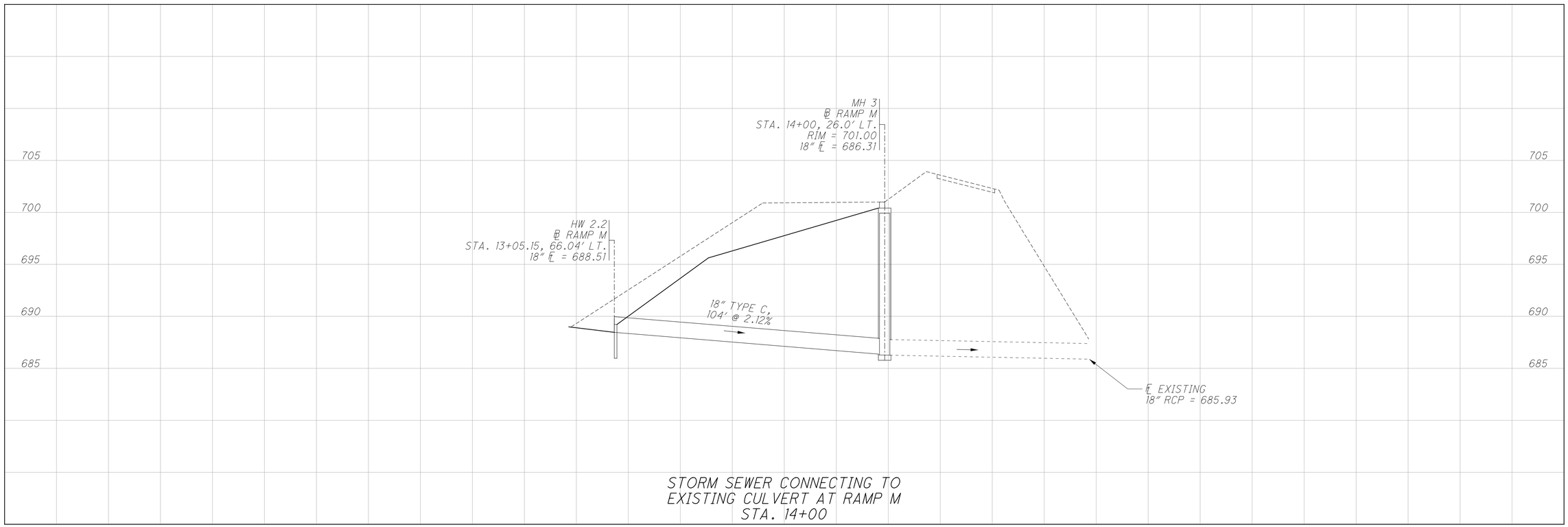

STORM SEWER CONNECTING TO
EXISTING CULVERT AT RAMP M
STA. 14+00

CALCULATED DJR
CHECKED RCH

TEMPORARY RAMP L
DRAINAGE DETAILS

FRA-270-51.50

x:\Projects\2013\1321\1010\FRA\92616\mot\sheets\92616MP202.dgn 12/7/2022 2:53:25 PM cwong

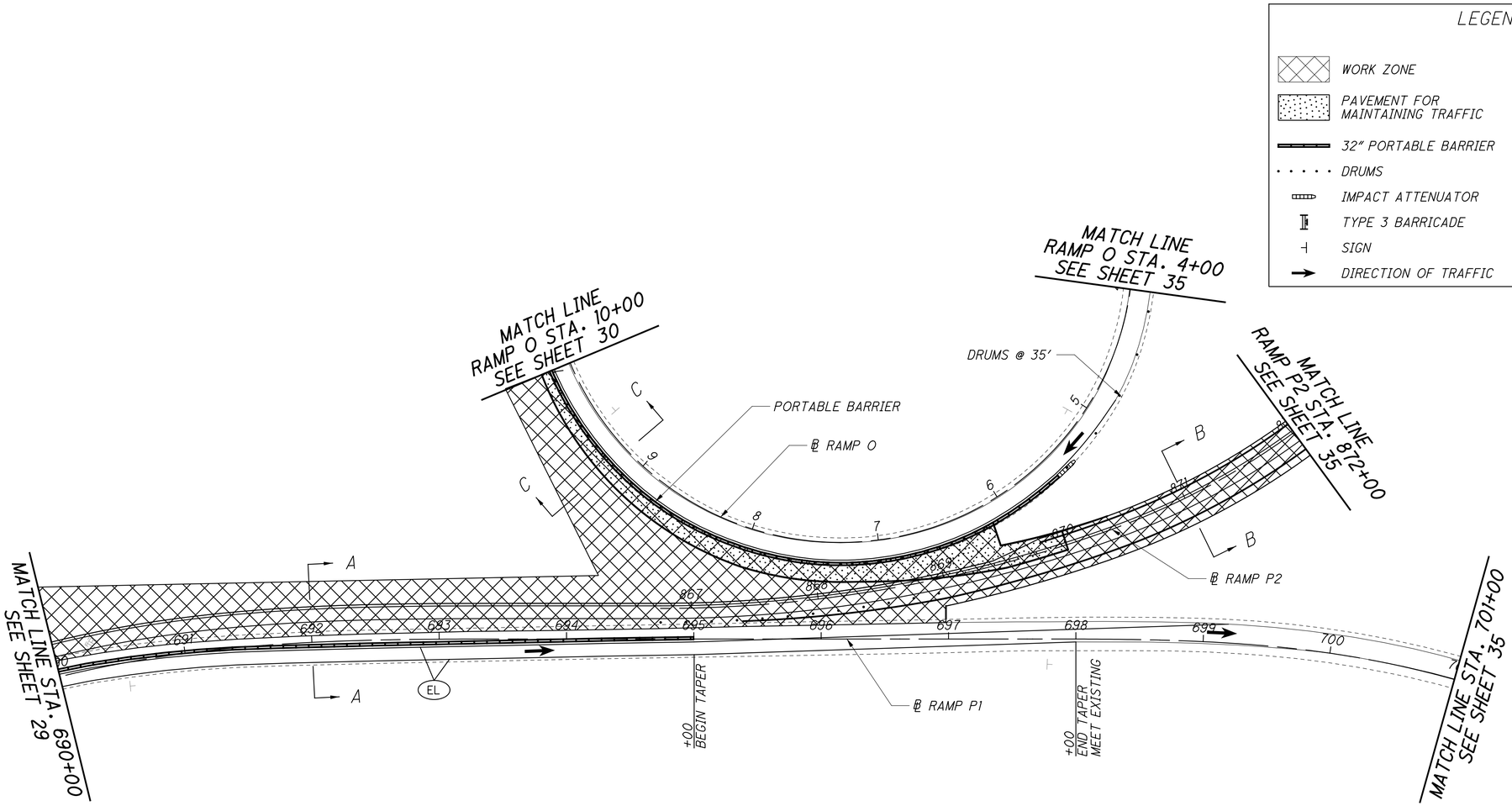

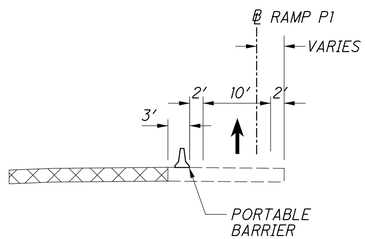

SECTION A-A

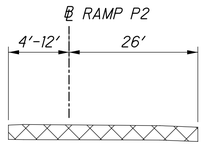

SECTION B-B

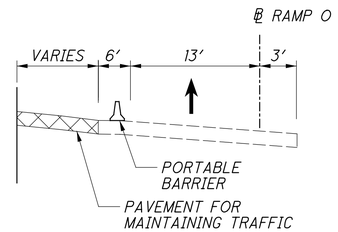

SECTION C-C

HORIZONTAL SCALE IN FEET
0 25 50 100

CALCULATED DJR
CHECKED RCH

MAINTENANCE OF TRAFFIC - PHASE 1
RAMP P1 STA. 690+00 TO STA. 701+00

FRA-270-51.50

X:\Projects\2013\1321\1010\FRA\92616\mot\sheets\92616MP401.dgn 4/21/2023 4:35:17 PM cwong

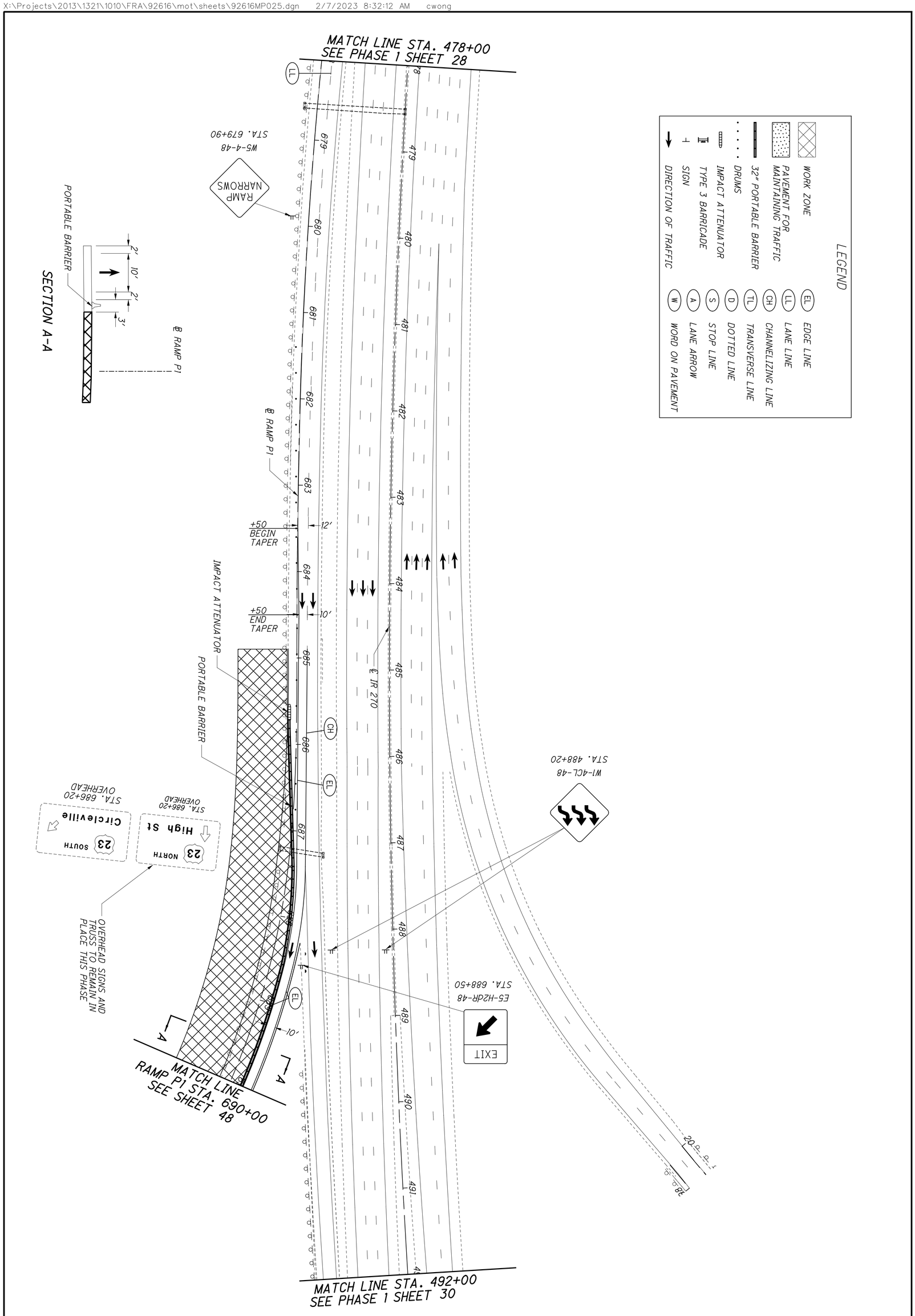

45 554	FRA-270-51.50	MAINTENANCE OF TRAFFIC - PHASE 1A I-270 STA. 478+00 TO STA. 492+00	CALCULATED DJR CHECKED RCH 0 50 25 100 HORIZONTAL SCALE IN FEET

X:\Projects\2013\1321\1010\FRA\92616\mot\sheets\92616MP157.dgn 3/7/2023 2:10:56 PM cwong

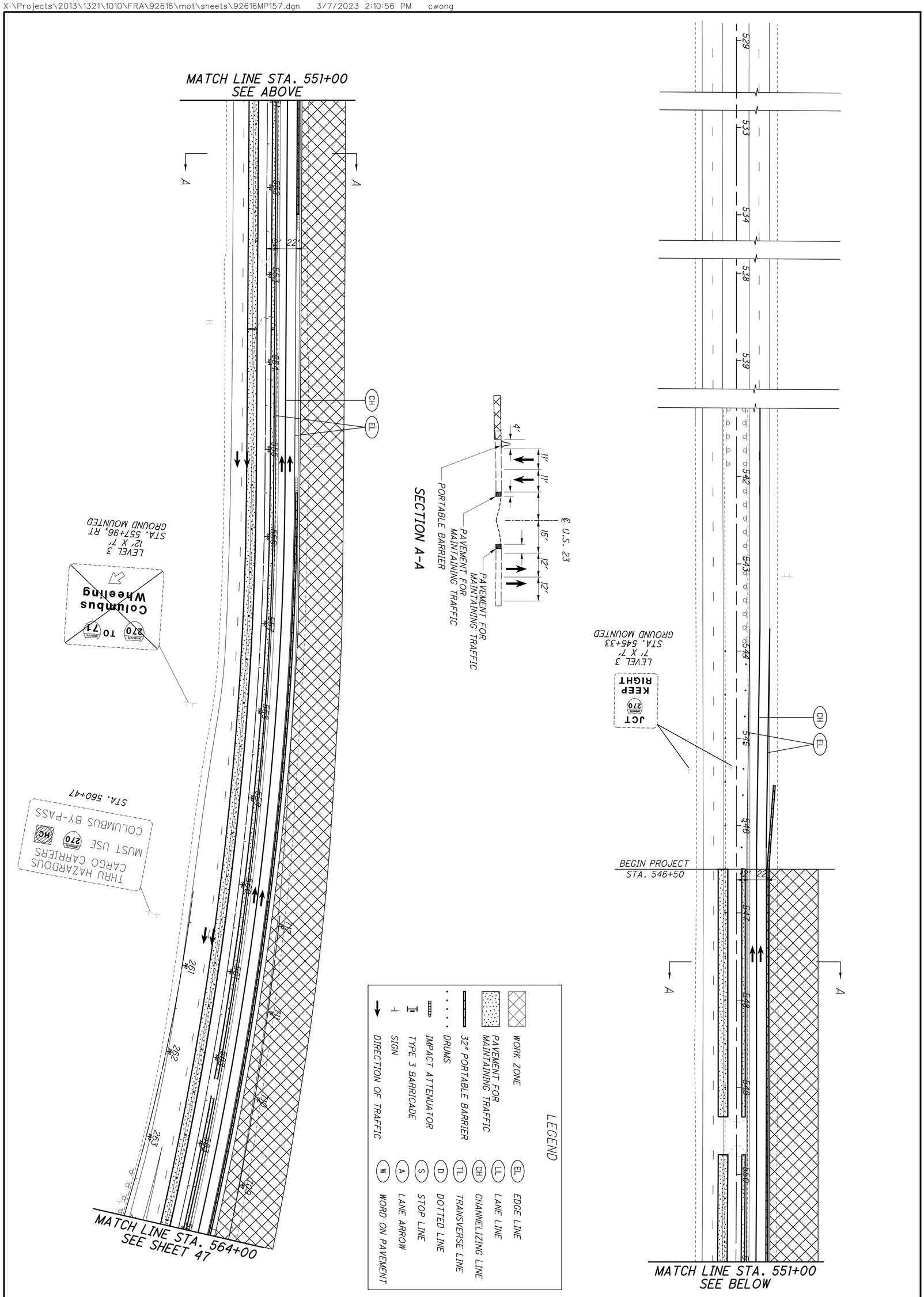

FRA-270-51.50

MAINTENANCE OF TRAFFIC - PHASE 1A
U.S. 23 STA. 537+00 TO STA. 564+00

CALCULATED DJR
CHECKED RCH

0 50
25 100
HORIZONTAL SCALE IN FEET

N

SECTION A-A

LEGEND

WORK ZONE	EDGE LINE (EL)
PAVEMENT FOR MAINTAINING TRAFFIC	LANE LINE (LL)
32″ PORTABLE BARRIER	CHANNELIZING LINE (CH)
DRUMS	TRANSVERSE LINE (TL)
IMPACT ATTENUATOR	DOTTED LINE (D)
TYPE 3 BARRICADE	STOP LINE (S)
SIGN	LANE ARROW (A)
DIRECTION OF TRAFFIC	WORD ON PAVEMENT (W)

HORIZONTAL SCALE IN FEET
0 25 50 100

CALCULATED DJR
CHECKED RCH

MAINTENANCE OF TRAFFIC - PHASE 1A
U.S. 23 STA. 564+00 TO STA. 578+00

FRA-270-51.50

x:\Projects\2013\1321\1010\FRA\92616\mot\sheets\92616MP158.dgn 12/7/2022 2:53:29 PM cwong

LEGEND

WORK ZONE	EL EDGE LINE
PAVEMENT FOR MAINTAINING TRAFFIC	LL LANE LINE
32" PORTABLE BARRIER	CH CHANNELIZING LINE
DRUMS	TL TRANSVERSE LINE
IMPACT ATTENUATOR	D DOTTED LINE
TYPE 3 BARRICADE	S STOP LINE
SIGN	A LANE ARROW
DIRECTION OF TRAFFIC	W WORD ON PAVEMENT

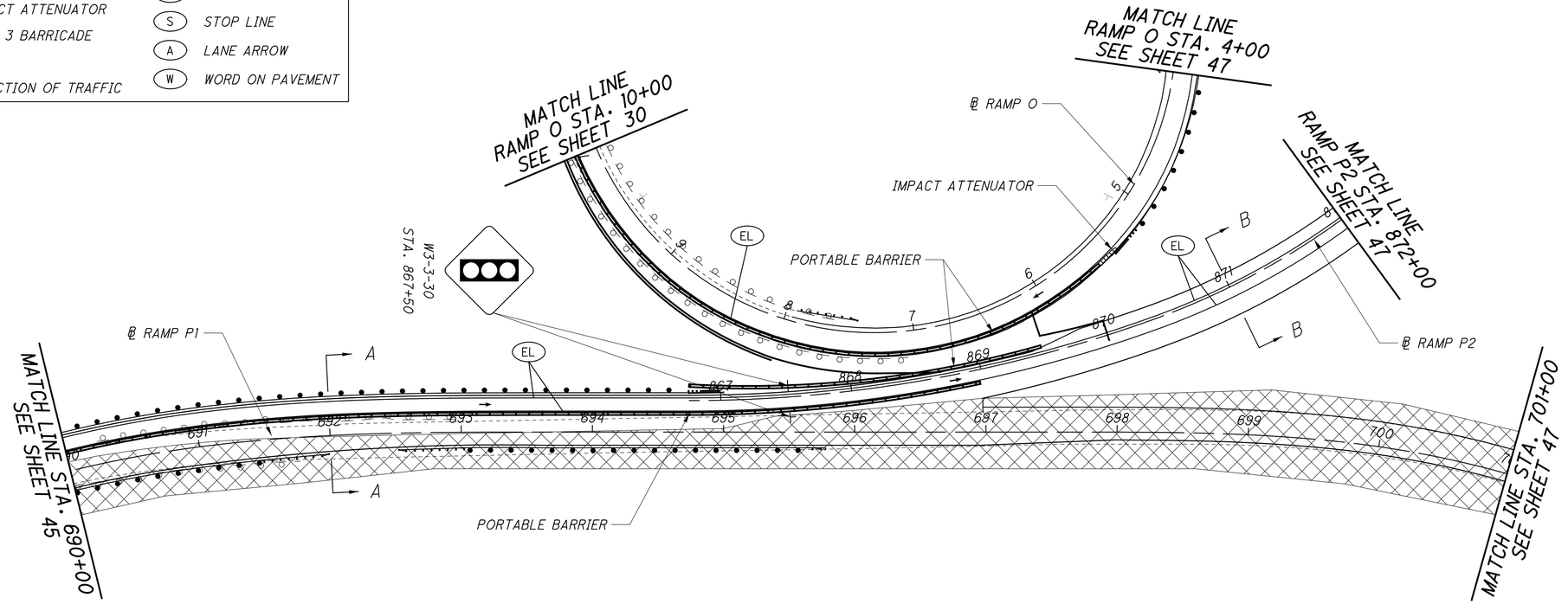

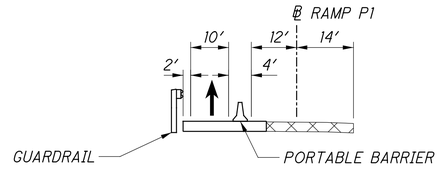

SECTION A-A

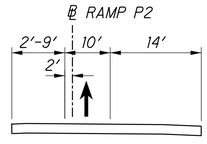

SECTION B-B

RAMP P1 STA. 690+00 TO STA. 701+00
RAMP P2 STA. 867+00 TO STA. 872+00
RAMP O STA. 4+00 TO STA. 10+00

HORIZONTAL SCALE IN FEET
0 25 50 100

CALCULATED MBE
CHECKED RCH

MAINTENANCE OF TRAFFIC - PHASE 1A
RAMPS P1, P2 & O

FRA-270-51.50

48
554

X:\Projects\2013\1321\1010\FRA\92616\mot\sheets\92616MP402.dgn 3/28/2023 8:39:22 AM cwong

NOTE:
ALL STATIONS AND OFFSETS ARE MEASURED FROM THE ℄ OF U.S. 23 UNLESS NOTED OTHERWISE.

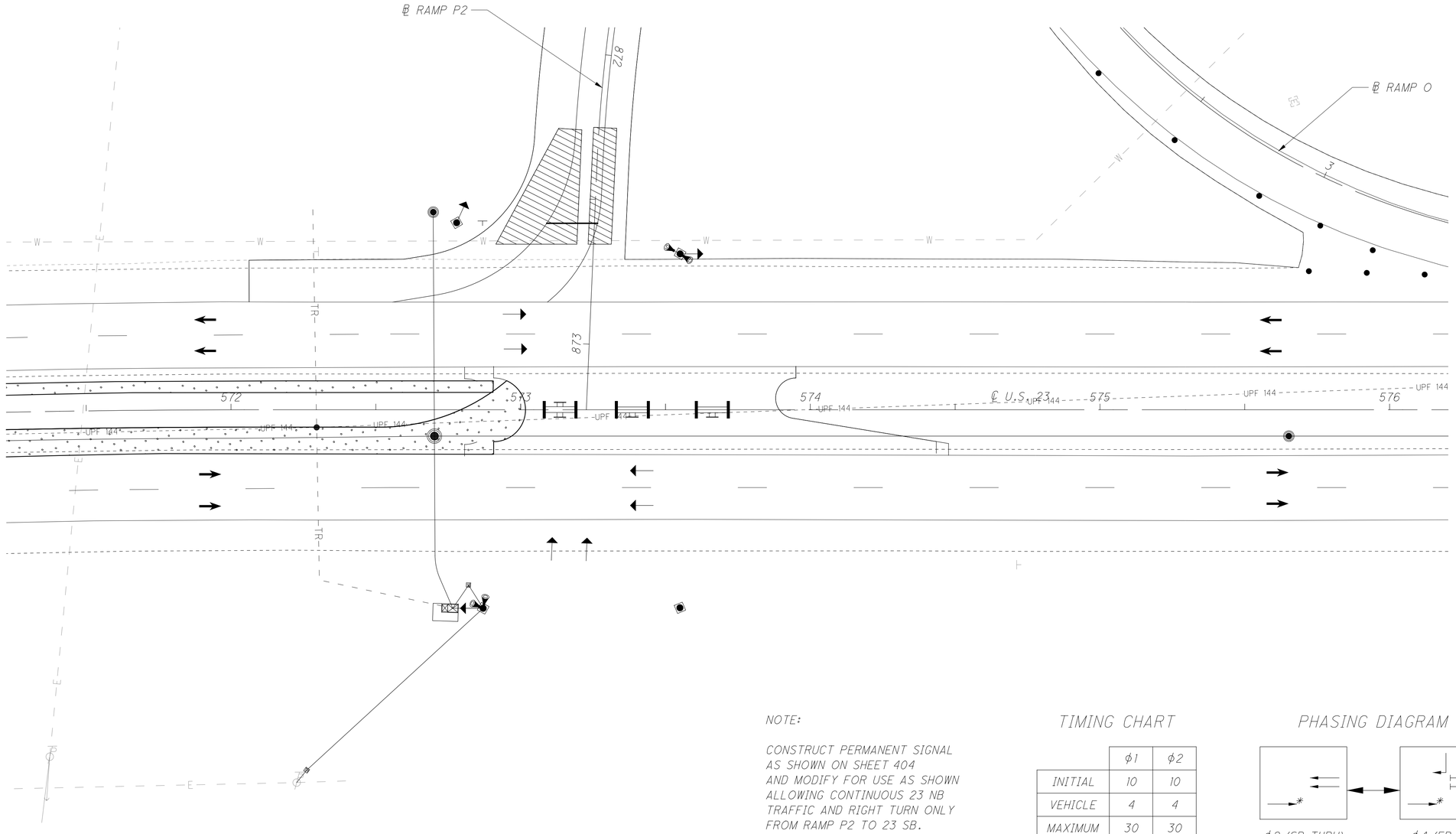

NOTE:

CONSTRUCT PERMANENT SIGNAL AS SHOWN ON SHEET 404 AND MODIFY FOR USE AS SHOWN ALLOWING CONTINUOUS 23 NB TRAFFIC AND RIGHT TURN ONLY FROM RAMP P2 TO 23 SB.

TIMING CHART

	ϕ1	ϕ2
INITIAL	10	10
VEHICLE	4	4
MAXIMUM	30	30
YELLOW	3.5	3.5
ALL RED	3	3
RECALL	OFF	ON

PHASING DIAGRAM

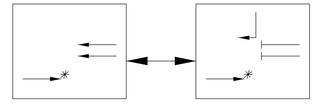

ϕ2 (SB THRU) RECALL

ϕ4 (EB RT) ACTUATED

* NB THRU OPERATES ON A CONTINUOUS GREEN

HORIZONTAL SCALE IN FEET
0 10 20 40

CALCULATED DJR
CHECKED RCH

MAINTENANCE OF TRAFFIC
US23 & RAMP P2 TEMPORARY SIGNAL PHASE 1A

FRA-270-51.50

49
554

x:\Projects\2013\1321\1010\FRA\92616\mot\sheets\92616MH152.dgn 12/7/2022 2:53:31 PM cwong

NOTES:

[A] 15' FROM STA. 7+00 TO STA. 8+00
VARIES 15' TO 3' FROM STA. 8+00 TO STA. 11+50

[B] VARIES: FROM .02 FT/FT AT STA. 7+00
TO .06 FT/FT AT STA. 7+50
MATCH EXISTING .08± FT/FT STA. 8+00 TO 11+50

[C] PAVEMENT FOR MAINTAINING TRAFFIC, CLASS A

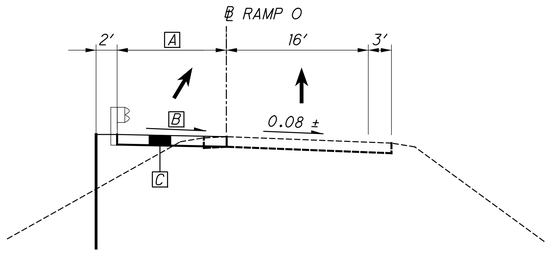

PHASE 2

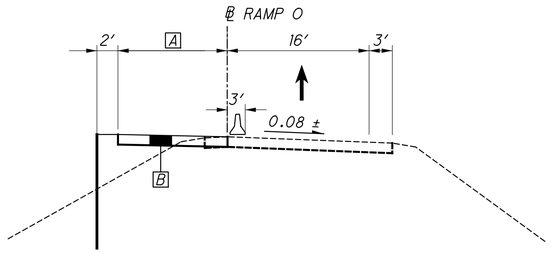

PHASE 1

TYPICAL SECTION TEMPORARY WIDENING RAMP O

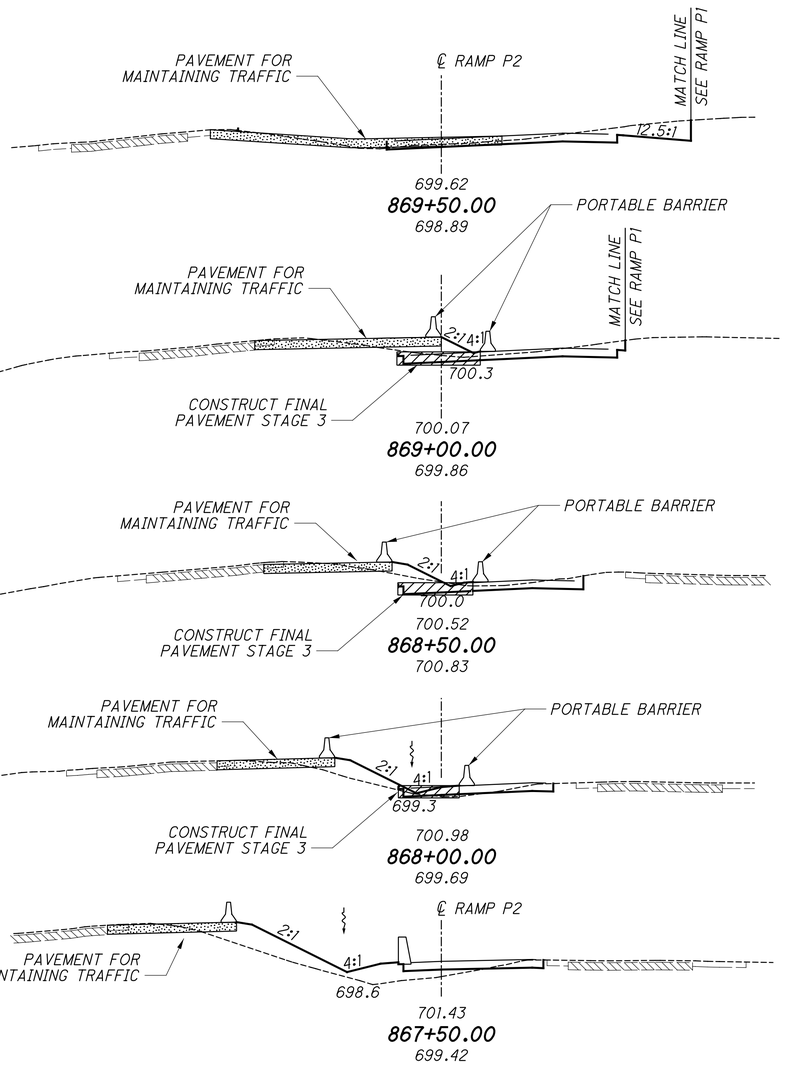

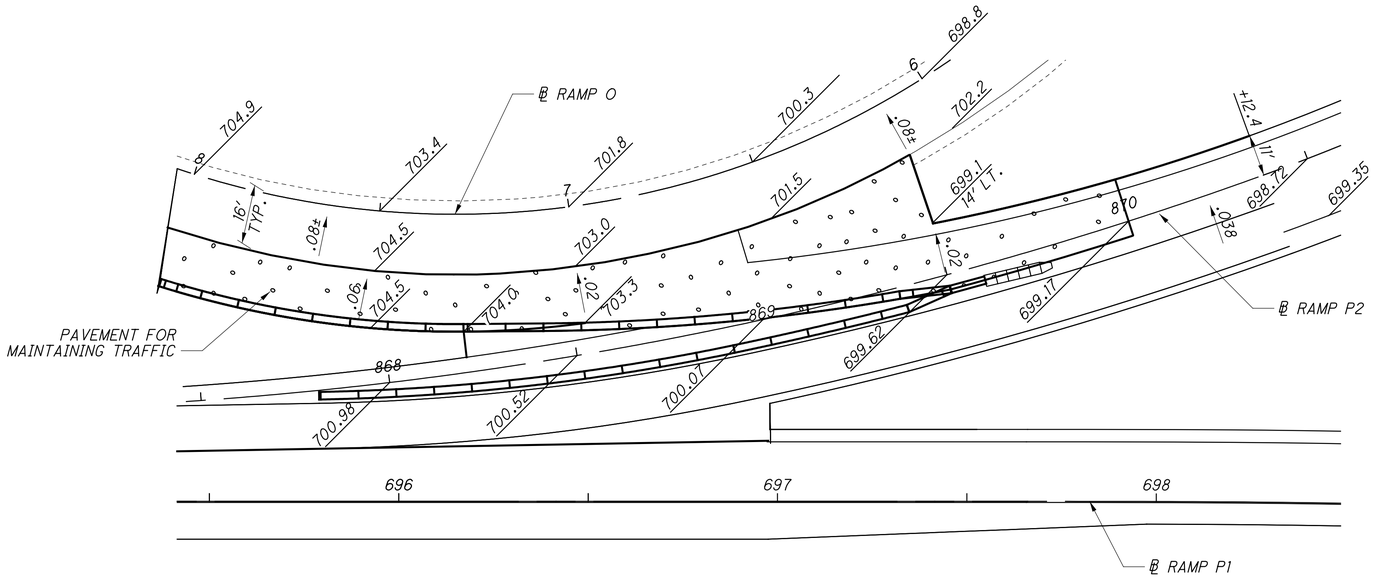

PAVEMENT FOR MAINTAINING TRAFFIC DETAILS
TEMPORARY CONNECTION RAMP P2 TO RAMP O

RAMP O TEMPORARY CONNECTION & TYPICAL SECTION

FRA-270-51.50

X:\Projects\2013\1321\1010\FRA\92616\mot\sheets\92616MY202.dgn 4/21/2023 7:21:53 PM cwong

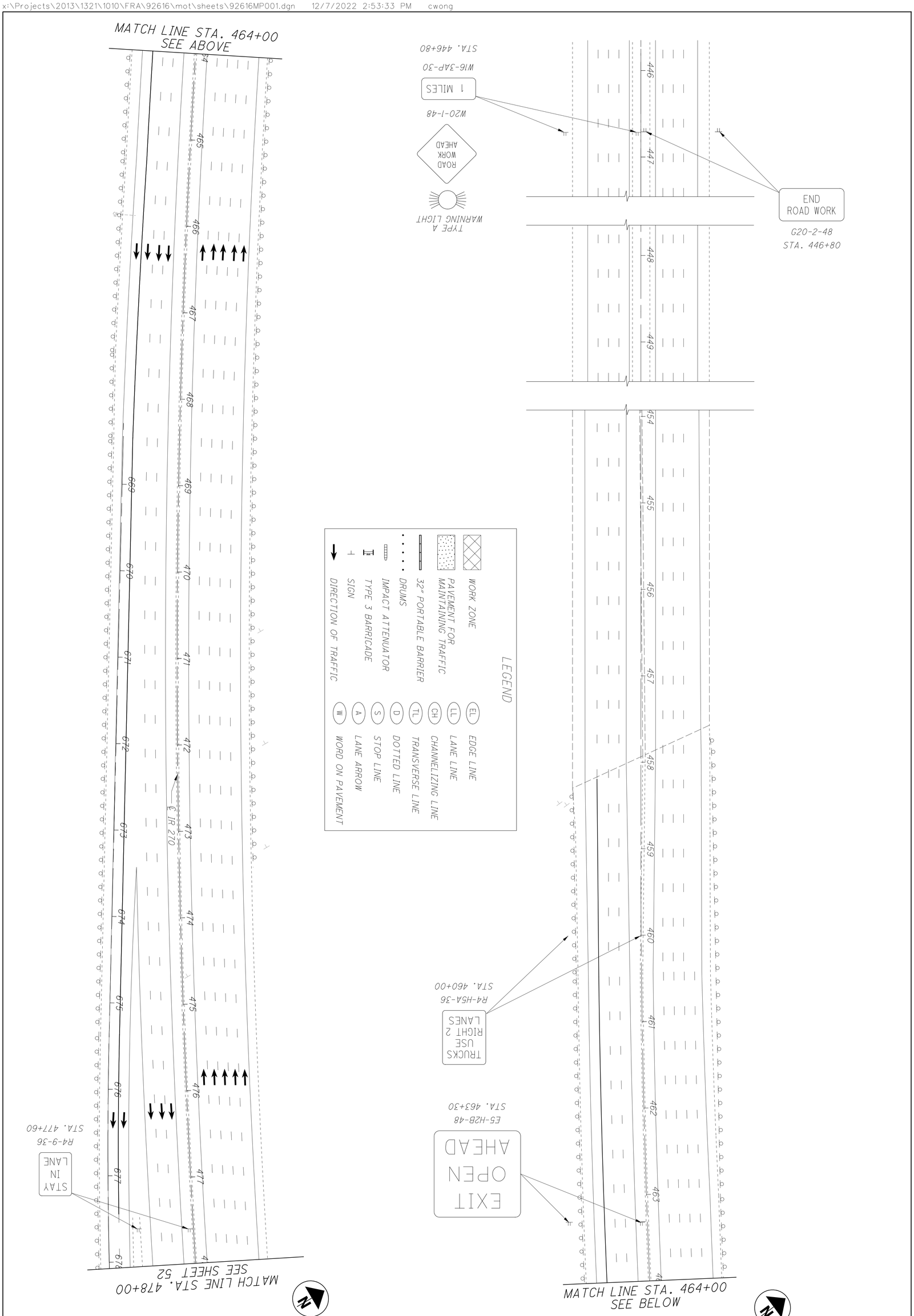

51 / 554	FRA-270-51.50	MAINTENANCE OF TRAFFIC - PHASE 2 I-270 STA. 450+00 TO STA. 478+00	CALCULATED DJR CHECKED RCH 0 25 50 100 HORIZONTAL SCALE IN FEET

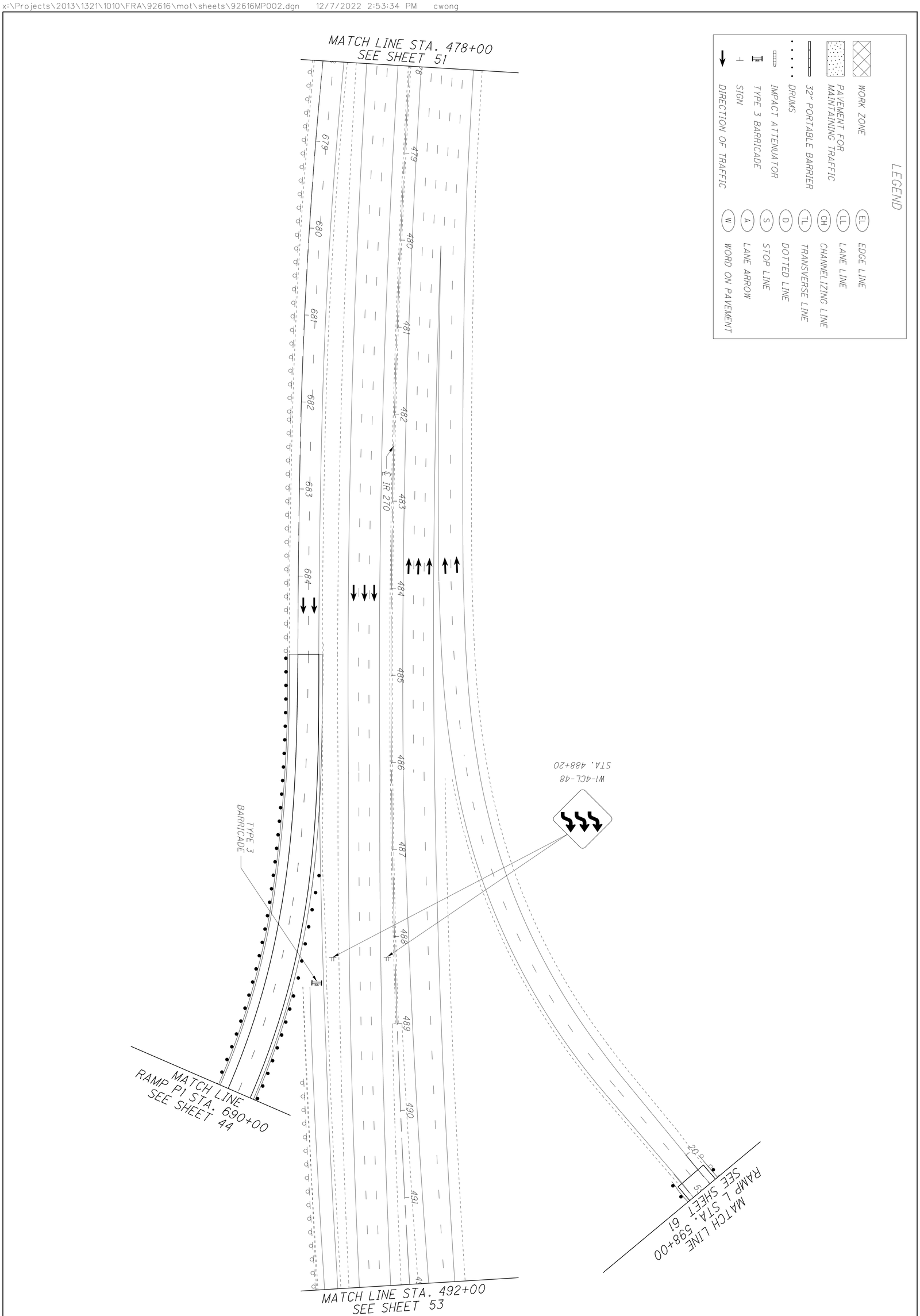

FRA-270-51.50

MAINTENANCE OF TRAFFIC - PHASE 2
I-270 STA. 478+00 TO STA. 492+00

CALCULATED DJR
CHECKED RCH

0 25 50 100
HORIZONTAL SCALE IN FEET

X:\Projects\2013\1321\1010\FRA\92616\mot\sheets\92616MP003.dgn 4/21/2023 4:40:57 PM cwong

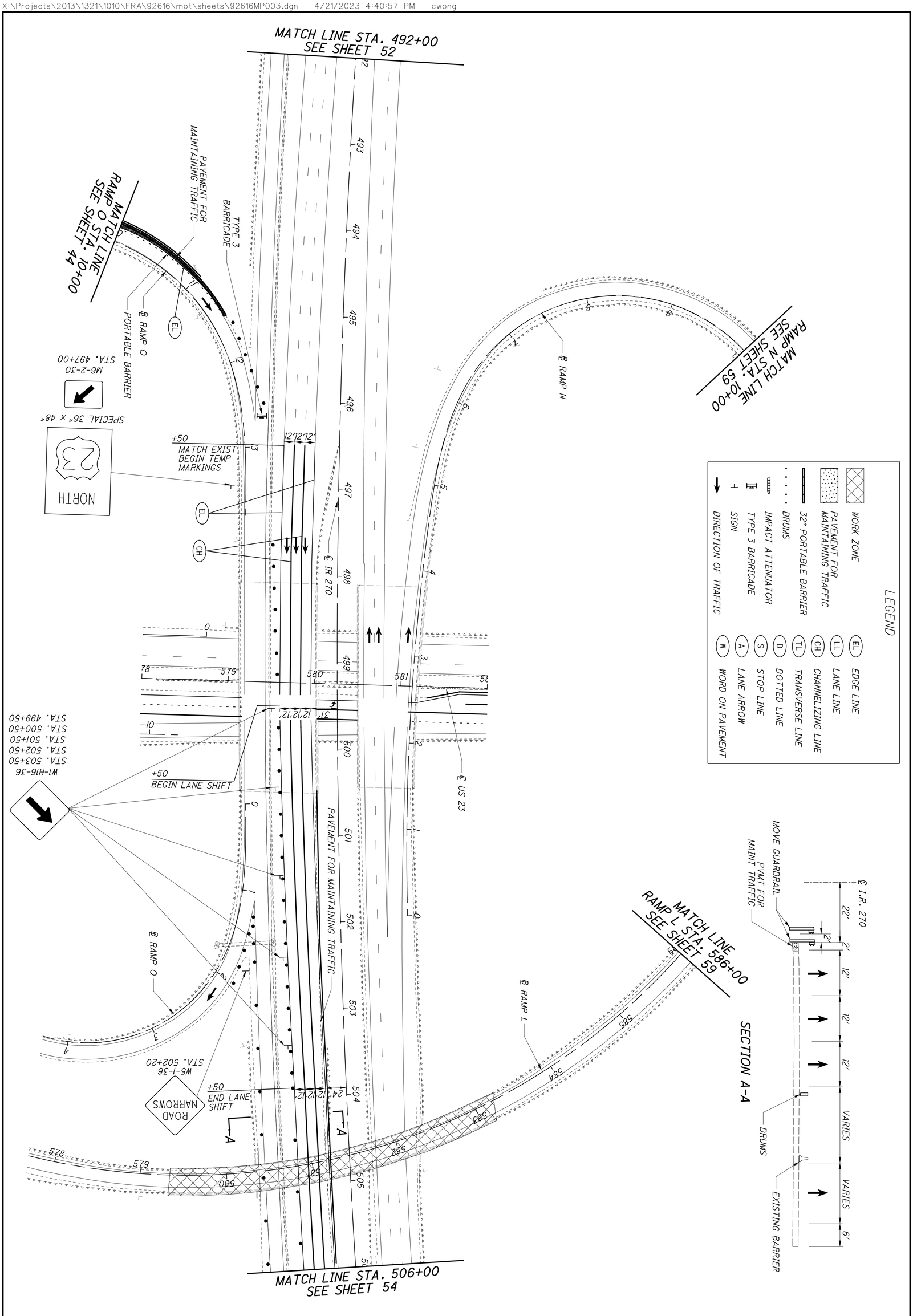

53 / 554	FRA-270-51.50	MAINTENANCE OF TRAFFIC - PHASE 2 I-270 STA. 492+00 TO STA. 506+00	CALCULATED DJR CHECKED RCH	0 50 25 100 HORIZONTAL SCALE IN FEET

x:\Projects\2013\1321\1010\FRA\92616\mot\sheets\92616MP004.dgn 12/7/2022 2:53:36 PM cwong

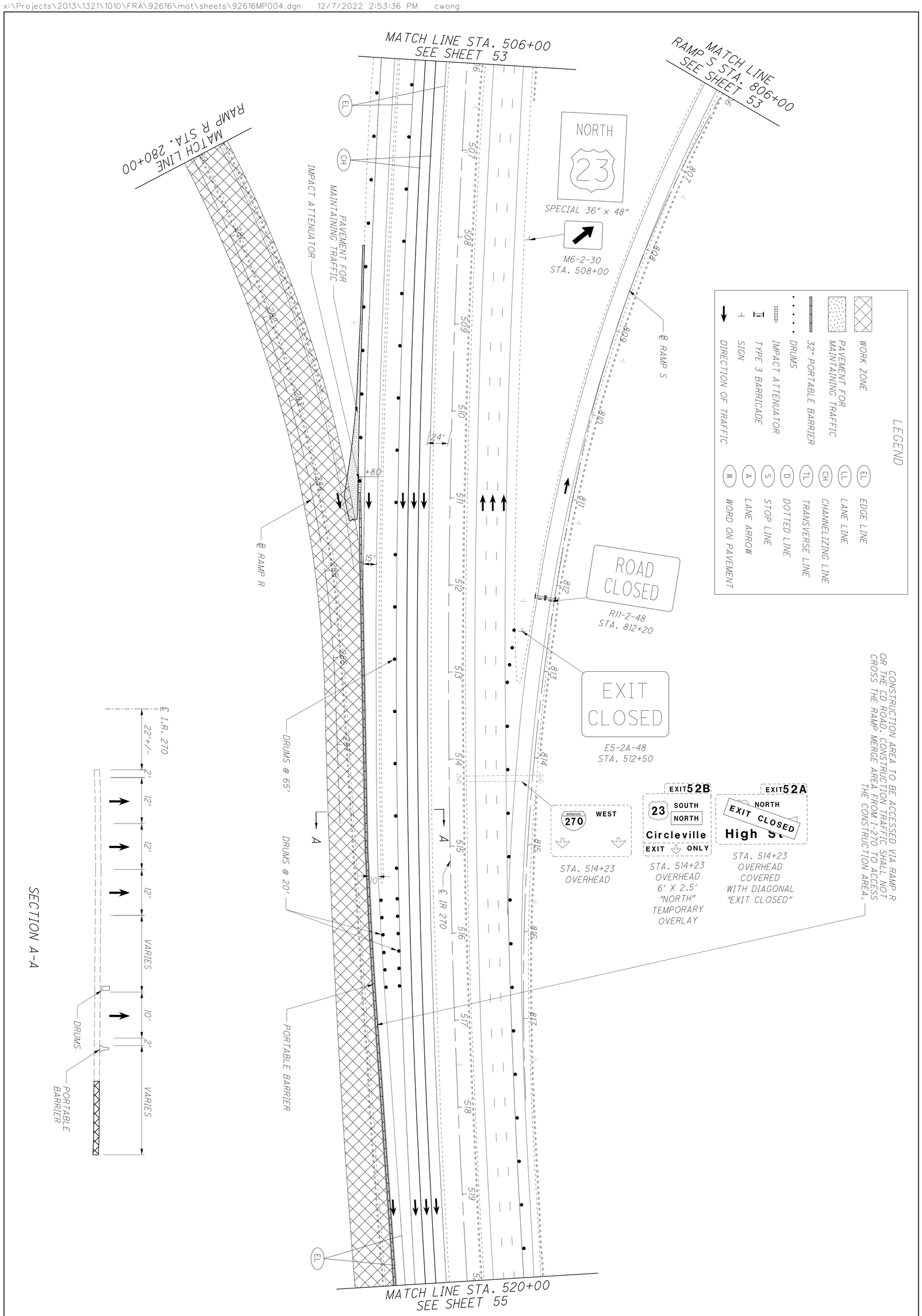

SECTION A-A

54 / 554	FRA-270-51.50	MAINTENANCE OF TRAFFIC - PHASE 2 I-270 STA. 506+00 TO STA. 520+00	CALCULATED DJR CHECKED RCH 0 50 100 25 HORIZONTAL SCALE IN FEET

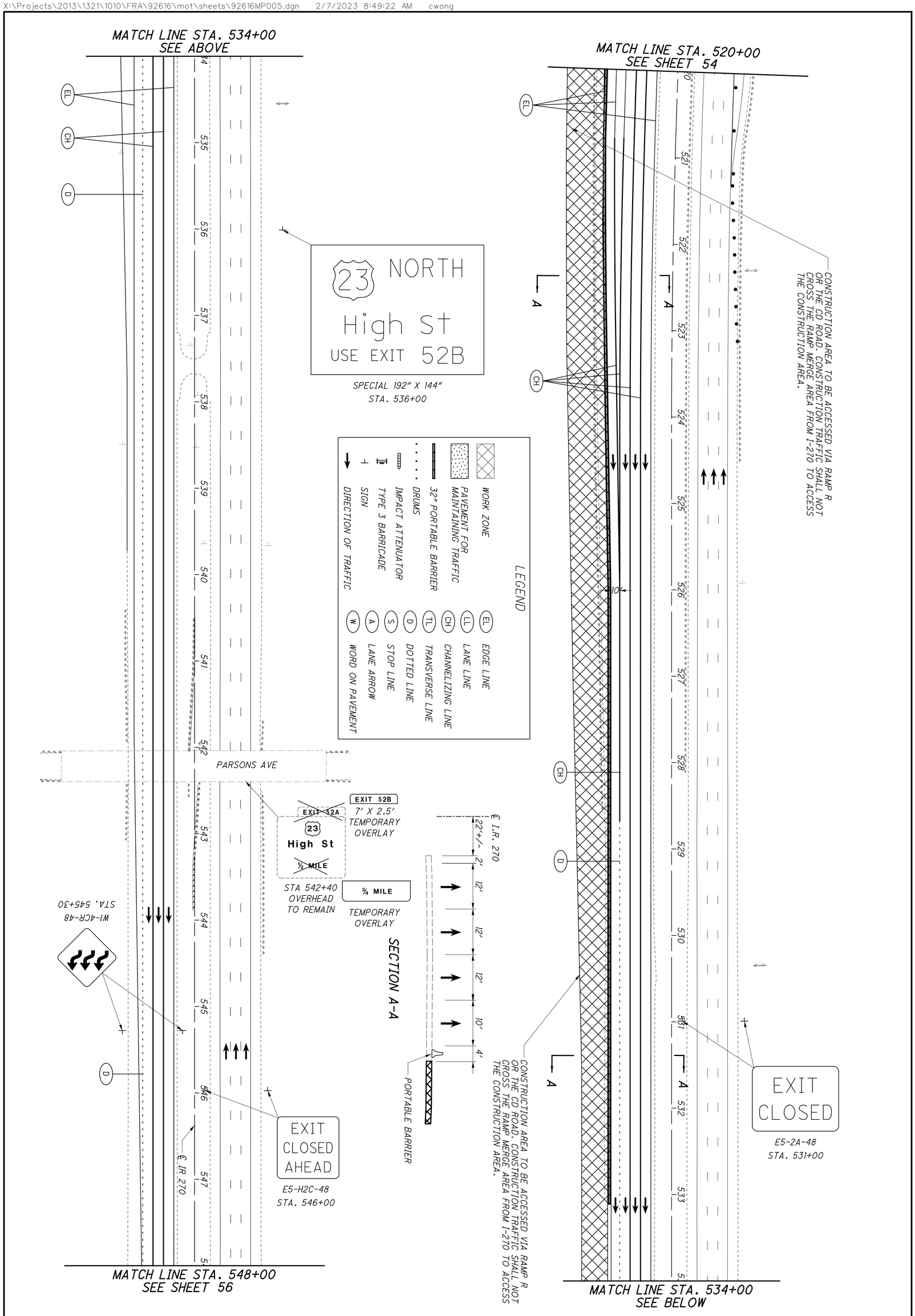

FRA-270-51.50

MAINTENANCE OF TRAFFIC - PHASE 2
I-270 STA. 520+00 TO STA. 548+00

CALCULATED DJR
CHECKED RCH

0 50
25 100
HORIZONTAL SCALE IN FEET

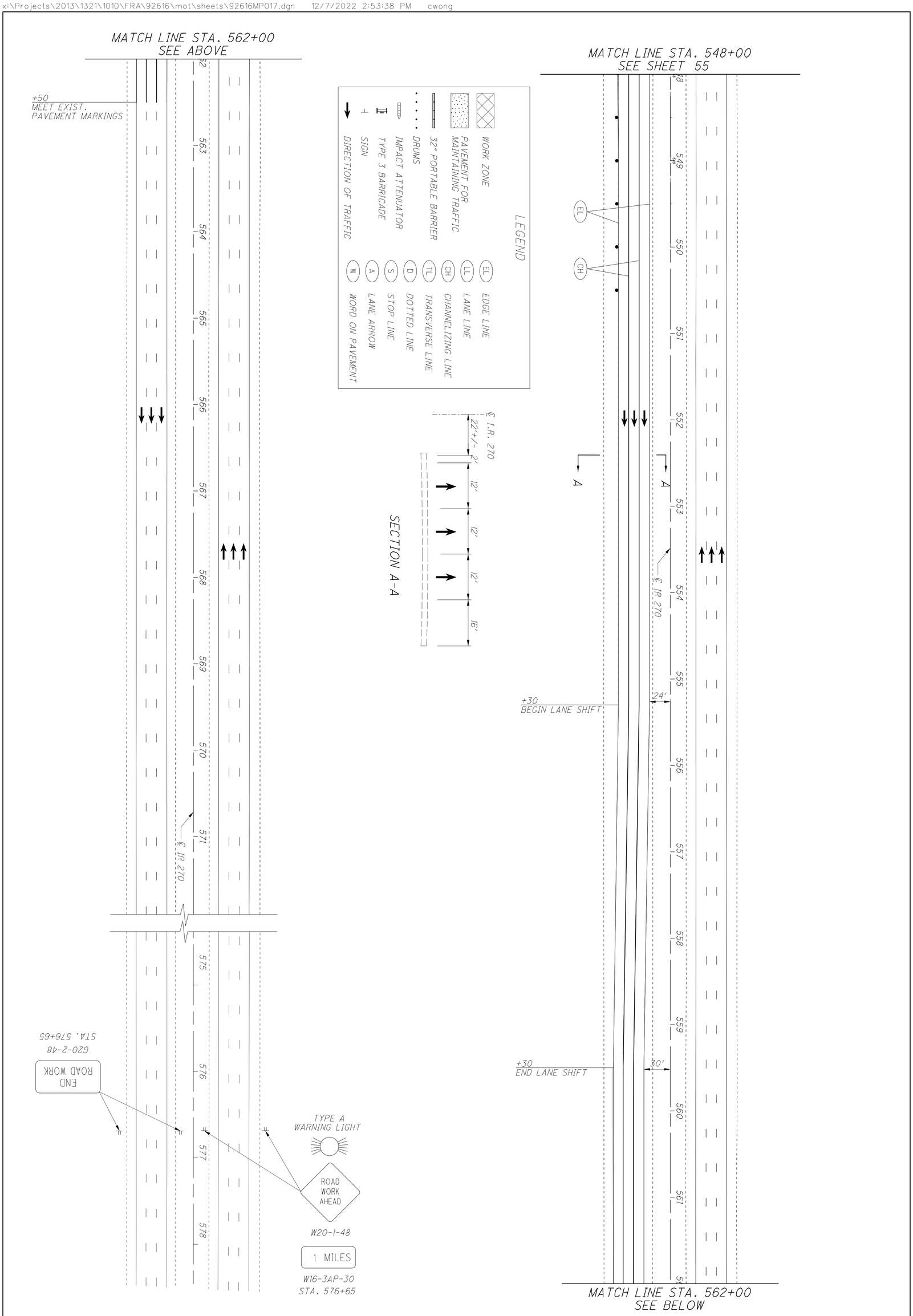

FRA-270-51.50

MAINTENANCE OF TRAFFIC - PHASE 2
I-270 STA. 548+00 TO STA. 576+00

CALCULATED DJR
CHECKED RCH

0 50
25 100
HORIZONTAL SCALE IN FEET

N

X:\Projects\2013\1321\1010\FRA\92616\mot\sheets\92616MP154.dgn 2/7/2023 8:56:59 AM cwong

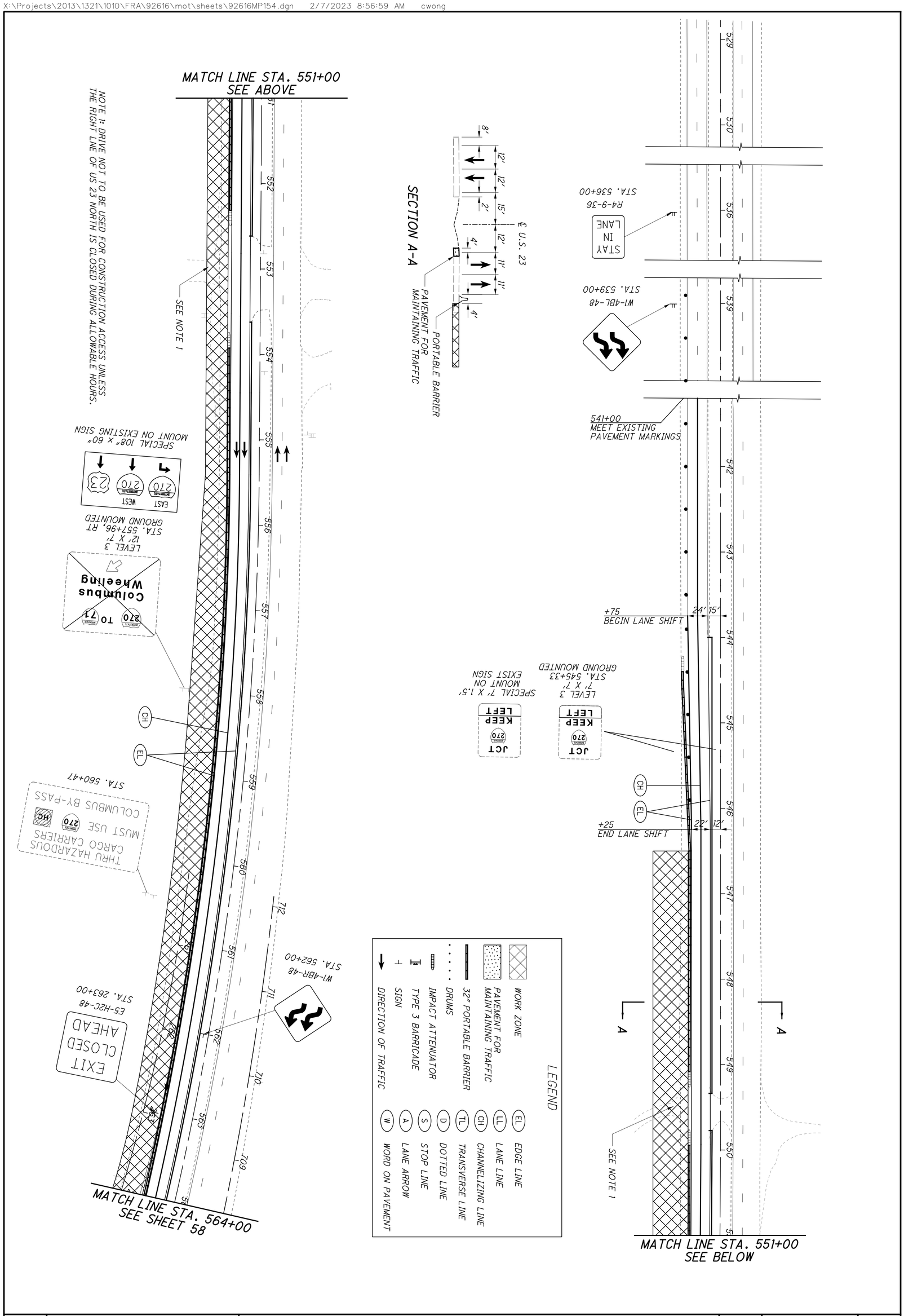

57 / 554	FRA-270-51.50	MAINTENANCE OF TRAFFIC - PHASE 2 U.S. 23 STA. 529+00 TO STA. 564+00	CALCULATED DJR CHECKED RCH	0 50 25 100 HORIZONTAL SCALE IN FEET

x:\Projects\2013\1321\1010\FRA\92616\mot\sheets\92616MP155.dgn 12/7/2022 2:53:40 PM cwong

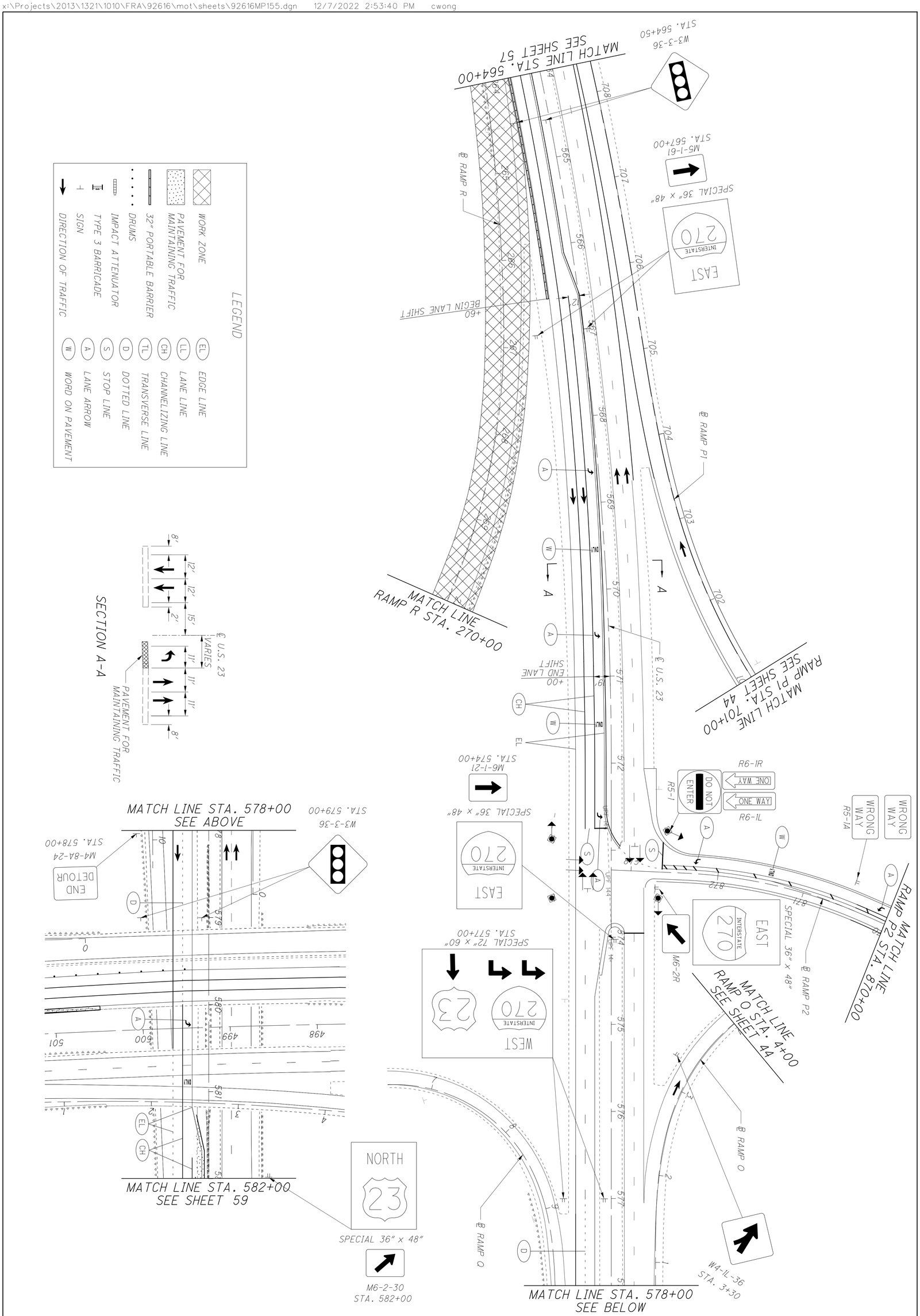

58 554	FRA-270-51.50	MAINTENANCE OF TRAFFIC - PHASE 2 U.S. 23 STA. 564+00 TO STA. 582+00	CALCULATED DJR CHECKED RCH 0 50 25 100 HORIZONTAL SCALE IN FEET

NOTE:
SEE SHEET 60 FOR ADDITIONAL SIGNAGE.

MATCH LINE
RAMP N STA. 10+00
SEE SHEETS 53 & 66

MATCH LINE
RAMP L STA. 591+00
SEE SHEET 61

MATCH LINE
RAMP M STA. 11+00
SEE SHEET 61

MATCH LINE STA. 582+00
SEE SHEETS 53 & 66

MATCH LINE STA. 596+00
SEE BELOW

MATCH LINE STA. 599+00
SEE ABOVE

MATCH LINE
RAMP L STA. 587+00
SEE SHEETS 53 & 66

MATCH LINE
RAMP S STA. 801+00
SEE SHEETS 53 & 66

℄ RAMP N

℄ RAMP M

℄ RAMP L

℄ RELOCATED RAMP S

℄ U.S. 23

WEST
INTERSTATE 270
SPECIAL 36" x 48"
M6-1-21
STA. 587+50

14'-0"
W12-2-48
STA. 588+00

14'-0"
W12-2-48
STA. 584+00

NOTE: PLACE 1 ADDITIONAL W-12-2-48 SIGN SOUTH OF RATHMELL RD

W3-3-36
STA. 597+00

TYPE A WARNING LIGHT

ROAD WORK AHEAD
W20-1-36
STA. 601+50

END ROAD WORK
G20-2-48
STA. 596+50

+00
BEGIN TAPER

+65
END TAPER
MEET EXISTING PAVEMENT MARKINGS

LEGEND

- WORK ZONE
- PAVEMENT FOR MAINTAINING TRAFFIC
- 32" PORTABLE BARRIER
- DRUMS
- IMPACT ATTENUATOR
- TYPE 3 BARRICADE
- SIGN
- DIRECTION OF TRAFFIC
- EL EDGE LINE
- LL LANE LINE
- CH CHANNELIZING LINE
- TL TRANSVERSE LINE
- D DOTTED LINE
- S STOP LINE
- A LANE ARROW
- W WORD ON PAVEMENT

℄ U.S. 23
12′ 12′ 15′ 13′ 11′ 11′ 11′ VARIES
8′ 2′ 2′
PAVEMENT FOR MAINTAINING TRAFFIC

SECTION A-A

HORIZONTAL SCALE IN FEET
0 25 50 100

CALCULATED DJR
CHECKED RCH

MAINTENANCE OF TRAFFIC - PHASE 2
U.S. 23 STA. 582+00 TO STA. 609+00

FRA-270-51.50

59
554

X:\Projects\2013\1321\1010\FRA\92616\mot\sheets\92616MP156.dgn 3/28/2023 8:09:22 AM cwong

NOTE:
ALL STATIONS AND OFFSETS ARE MEASURED FROM THE ℄ OF U.S. 23 UNLESS NOTED OTHERWISE.

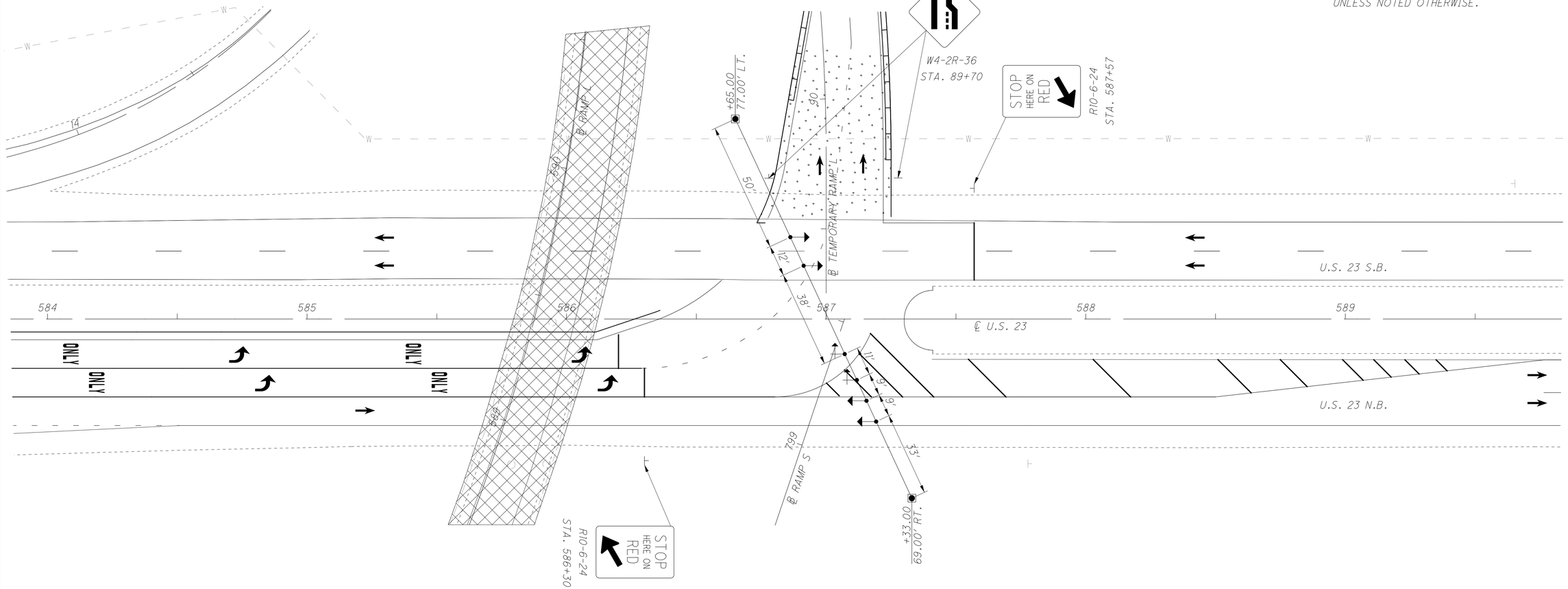

LEGEND

WORK ZONE	EDGE LINE (EL)
PAVEMENT FOR MAINTAINING TRAFFIC	LANE LINE (LL)
32" PORTABLE BARRIER	CHANNELIZING LINE (CH)
DRUMS	TRANSVERSE LINE (TL)
IMPACT ATTENUATOR	DOTTED LINE (D)
TYPE 3 BARRICADE	STOP LINE (S)
SIGN	LANE ARROW (A)
DIRECTION OF TRAFFIC	WORD ON PAVEMENT (W)

END

PHASING DIAGRAM

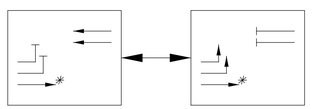

ϕ2 (SB THRU) RECALL

ϕ1 (NB LT) ACTUATED

* NB THRU OPERATES ON A CONTINUOUS GREEN

TIMING CHART

	ϕ1	ϕ2
INITIAL	7	10
VEHICLE	4	4
MAXIMUM	11	30
YELLOW	5	5
ALL RED	3	2
RECALL	OFF	ON

HORIZONTAL SCALE IN FEET
0 10 20 40

CALCULATED DJR
CHECKED RCH

MAINTENANCE OF TRAFFIC
U.S. 23 TEMPORARY SIGNAL DETAILS

FRA-270-51.50

x:\Projects\2013\1321\1010\FRA\92616\mot\sheets\92616MH151.dgn 12/7/2022 2:53:43 PM cwong

X:\Projects\2013\1321\1010\FRA\92616\mot\sheets\92616MP203.dgn 3/28/2023 9:06:49 AM cwong

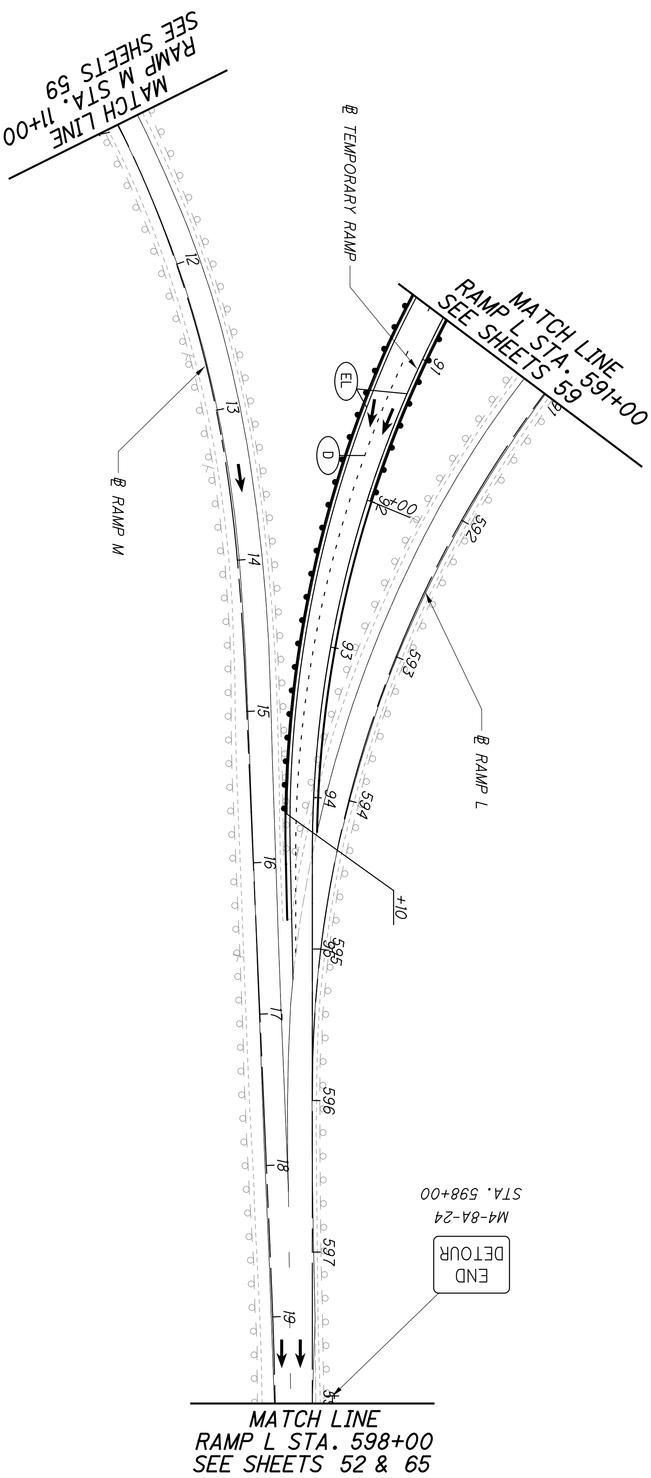

LEGEND

- WORK ZONE
- PAVEMENT FOR MAINTAINING TRAFFIC
- 32" PORTABLE BARRIER
- DRUMS
- IMPACT ATTENUATOR
- TYPE 3 BARRICADE
- SIGN
- DIRECTION OF TRAFFIC
- (EL) EDGE LINE
- (LL) LANE LINE
- (CH) CHANNELIZING LINE
- (TL) TRANSVERSE LINE
- (D) DOTTED LINE
- (S) STOP LINE
- (A) LANE ARROW
- (W) WORD ON PAVEMENT

61 / 554	FRA-270-51.50	MAINTENANCE OF TRAFFIC - PHASES 2 RAMP L STA. 591+00 TO STA. 598+00	CALCULATED DJR CHECKED RCH 0 50 25 100 HORIZONTAL SCALE IN FEET

LEGEND

WORK ZONE	DD DOUBLE YELLOW ℄
PAVEMENT FOR MAINTAINING TRAFFIC	EL EDGE LINE
32" PORTABLE BARRIER	LL LANE LINE
DRUMS	CH CHANNELIZING LINE
IMPACT ATTENUATOR	TL TRANSVERSE LINE
TYPE 3 BARRICADE	D DOTTED LINE
SIGN	S STOP LINE
DIRECTION OF TRAFFIC	A LANE ARROW
	W WORD ON PAVEMENT

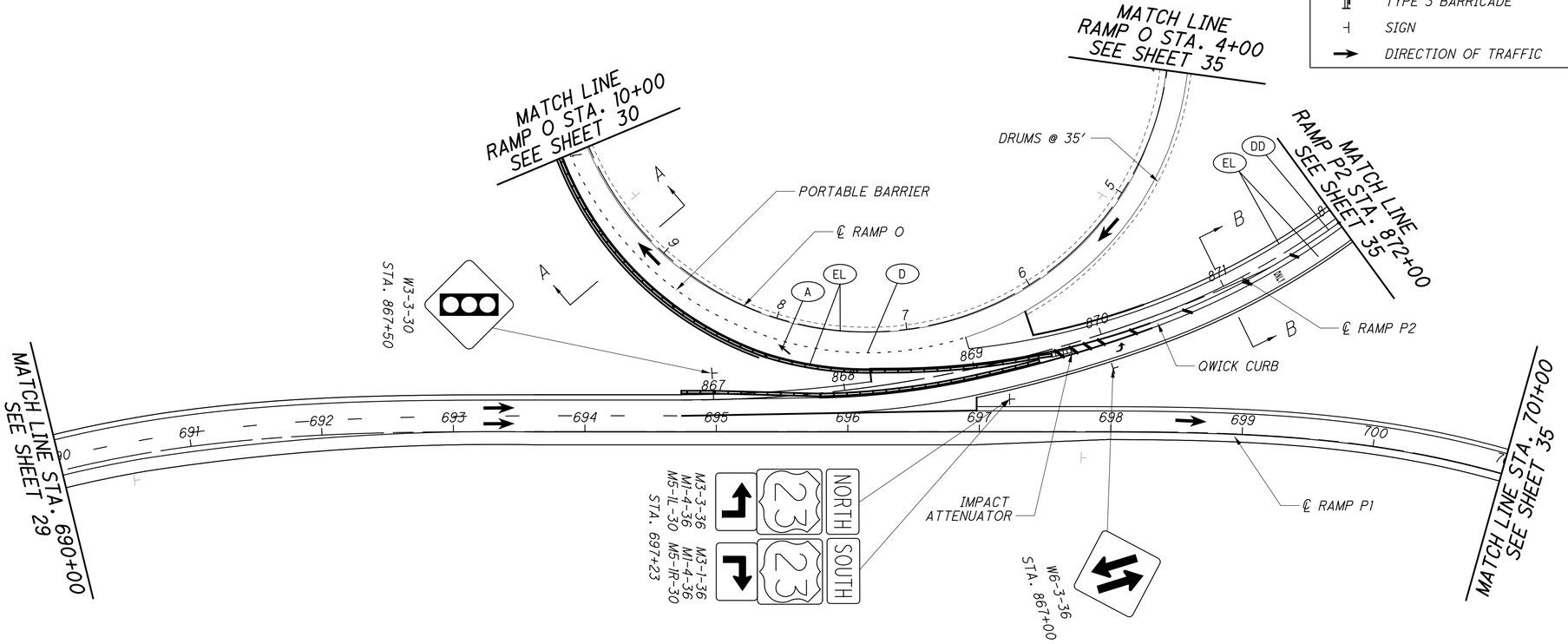

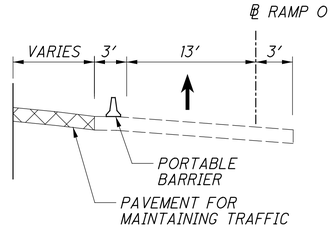

SECTION A-A

SEE SHEET 50 FOR ADDITIONAL DETAIL

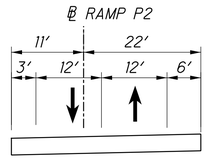

SECTION B-B

RAMP P1 STA. 690+00 TO STA. 701+00
RAMP P2 STA. 867+00 TO STA. 872+00
RAMP O STA. 4+00 TO STA. 10+00

MAINTENANCE OF TRAFFIC - PHASE 2 RAMPS P1, P2, & O

HORIZONTAL SCALE IN FEET
0 25 50 100

CALCULATED DJR
CHECKED RCH

FRA-270-51.50

62
554

X:\Projects\2013\1321\1010\FRA\92616\mot\sheets\92616MP403.dgn 4/21/2023 4:44:08 PM cwong

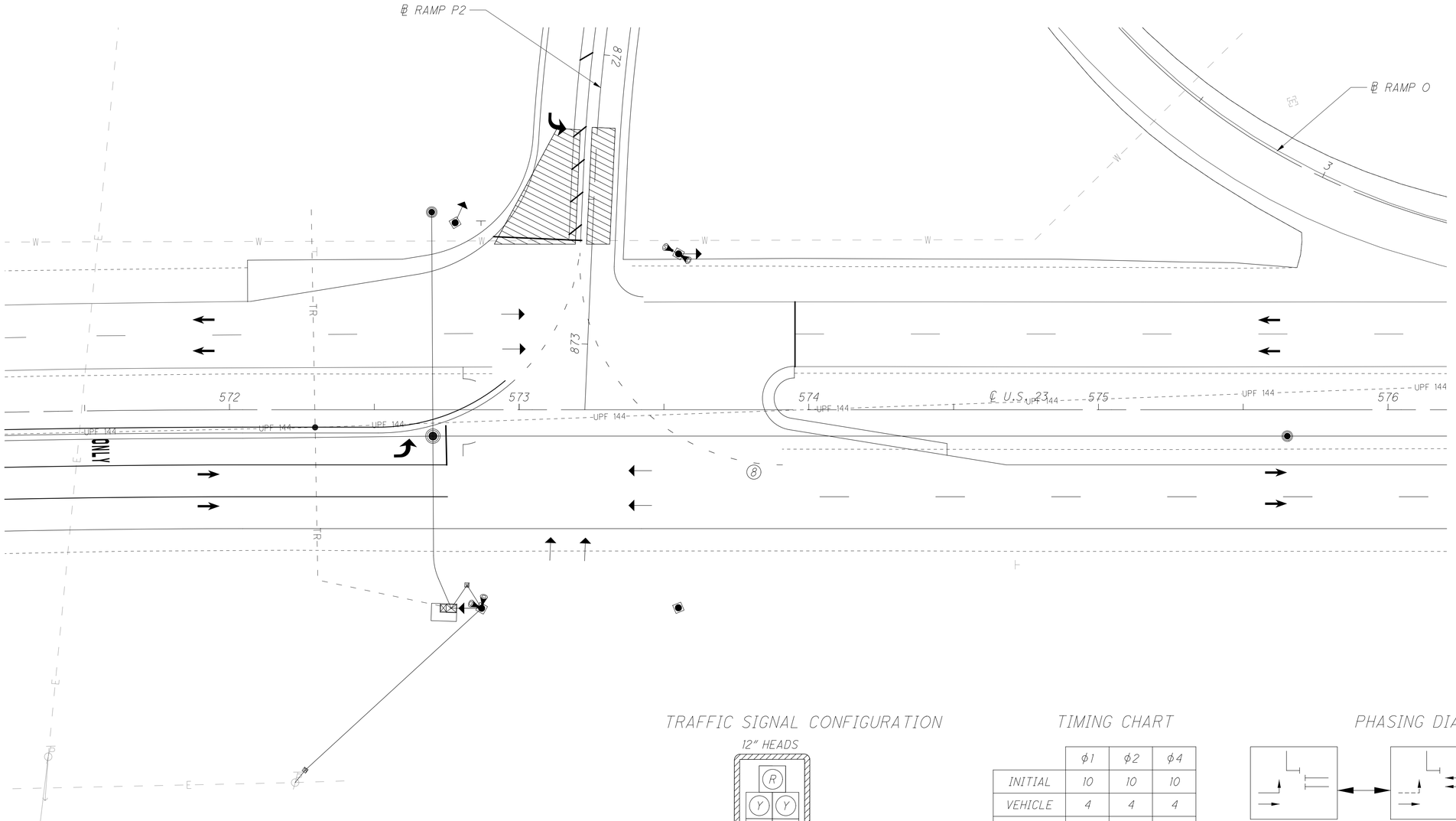

TRAFFIC SIGNAL CONFIGURATION

12" HEADS

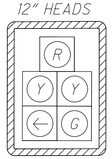

HEAD 8

BACKPLATES IN ACCORDANCE WITH ODOT CMS 732.22

TIMING CHART

	ϕ1	ϕ2	ϕ4
INITIAL	10	10	10
VEHICLE	4	4	4
MAXIMUM	40	40	40
YELLOW	4	4	4
ALL RED	3	3	3
RECALL	ON	OFF	ON

PHASING DIAGRAM

ϕ1 (NB LT & THRU) ACTUATED

ϕ2 (NB/SB THRU) RECALL

ϕ4 (EB LT) ACTUATED

NOTE:

CONSTRUCT PERMANENT SIGNAL AS SHOWN ON SHEET 404 AND MODIFY FOR USE ALLOWING LEFT TURN ONLY FROM 23 NB TO RAMP P2.

ALL SIGNAL HEADS SHALL BE AS PER THE PERMANENT SIGNAL EXCEPT (8) THAT SHALL BE AS SHOWN ABOVE.

HORIZONTAL SCALE IN FEET
0 10 20 40

CALCULATED MBE
CHECKED RCH

MAINTENANCE OF TRAFFIC
US 23 & RAMP P2 TEMPORARY SIGNAL PHASE 2

FRA-270-51.50

63
554

x:\Projects\2013\1321\1010\FRA\92616\mot\sheets\92616MH153.dgn 12/7/2022 2:53:46 PM cwong

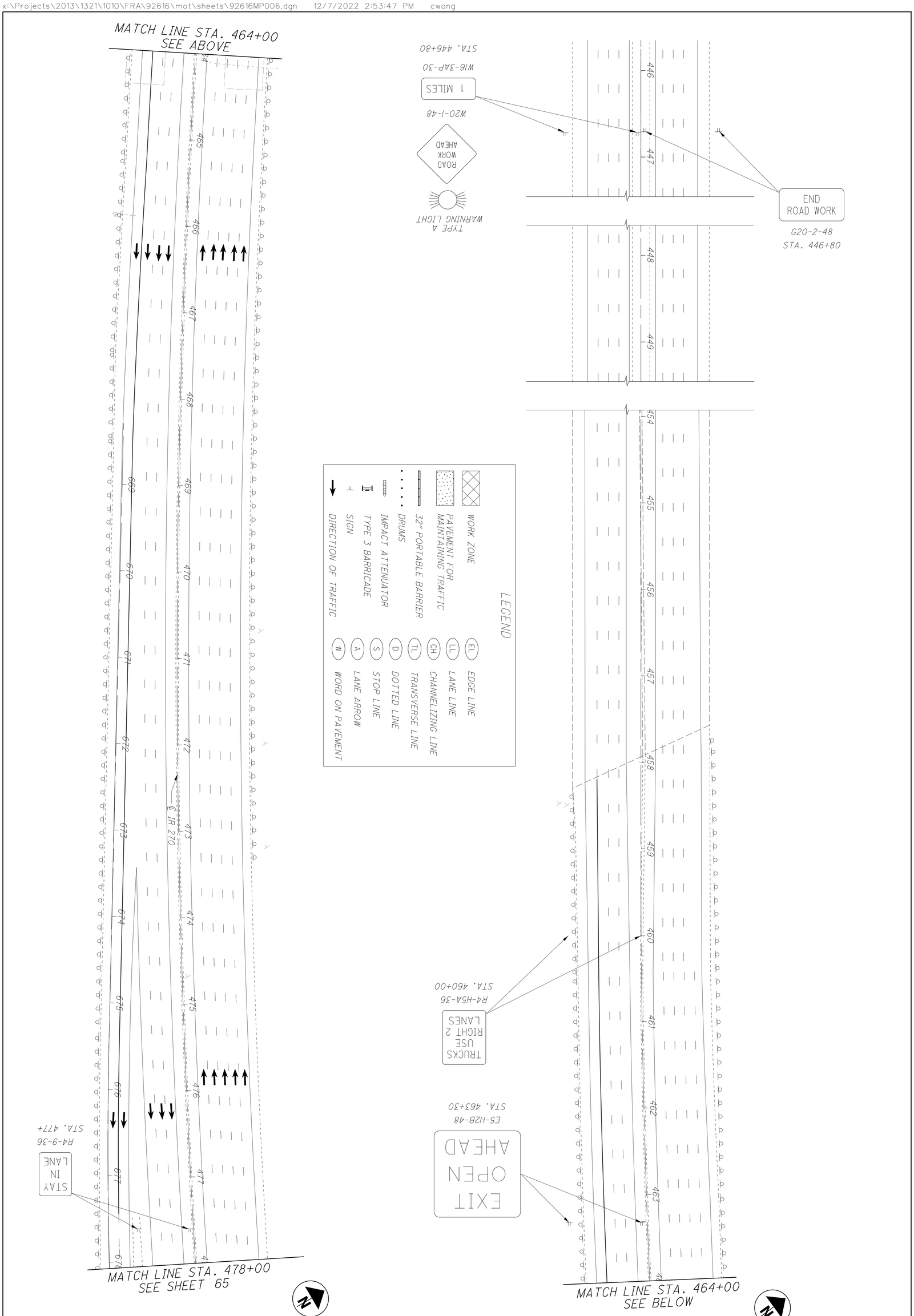

FRA-270-51.50

MAINTENANCE OF TRAFFIC - PHASE 2A
I-270 STA. 450+00 TO STA. 478+00

CALCULATED DJR
CHECKED RCH

0 25 50 100
HORIZONTAL SCALE IN FEET

X:\Projects\2013\1321\1010\FRA\92616\mot\sheets\92616MP007.dgn 2/7/2023 2:04:39 PM cwong

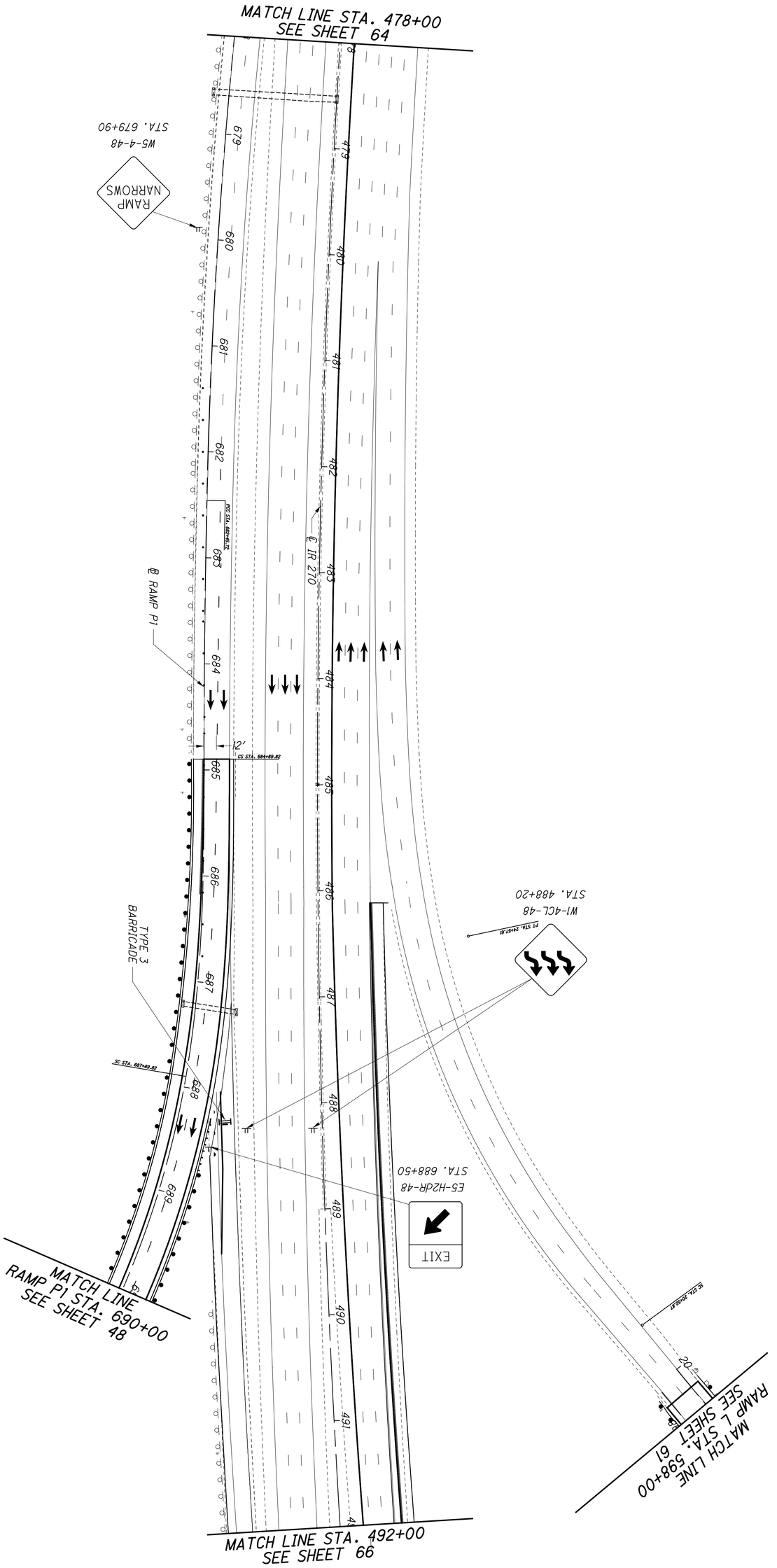

65 / 554	FRA-270-51.50	MAINTENANCE OF TRAFFIC - PHASE 2A I-270 STA. 478+00 TO STA. 492+00	CALCULATED DJR CHECKED RCH	0 50 25 100 HORIZONTAL SCALE IN FEET

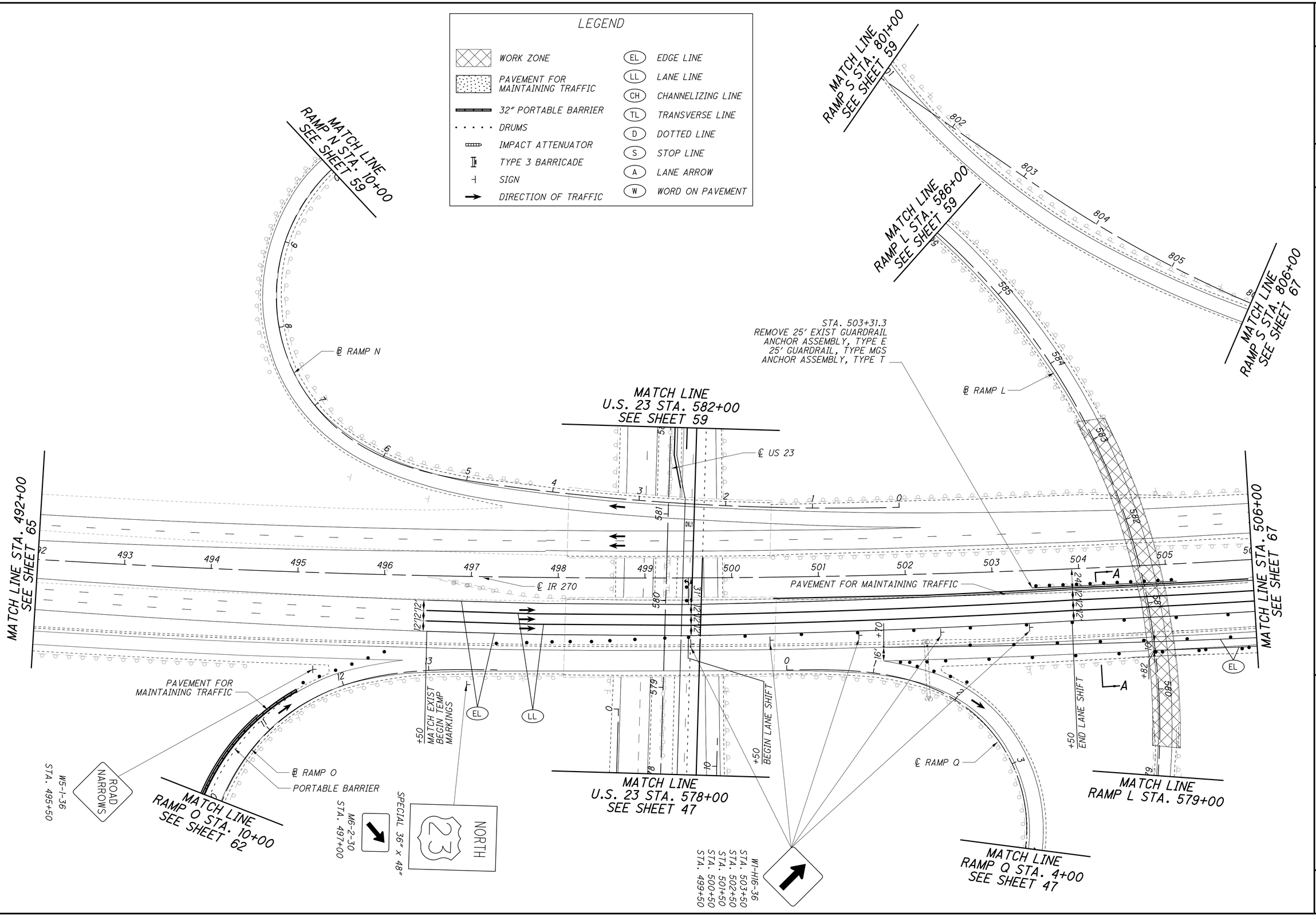

HORIZONTAL SCALE IN FEET
0 25 50 100

CALCULATED DJR
CHECKED RCH

MAINTENANCE OF TRAFFIC - PHASE 2A
I-270 STA. 492+00 TO STA. 506+00

FRA-270-51.50

X:\Projects\2013\1321\1010\FRA\92616\mot\sheets\92616MP008.dgn 4/21/2023 4:45:45 PM cwong

X:\Projects\2013\1321\1010\FRA\92616\mot\sheets\92616MP009.dgn 2/7/2023 3:33:27 PM cwong

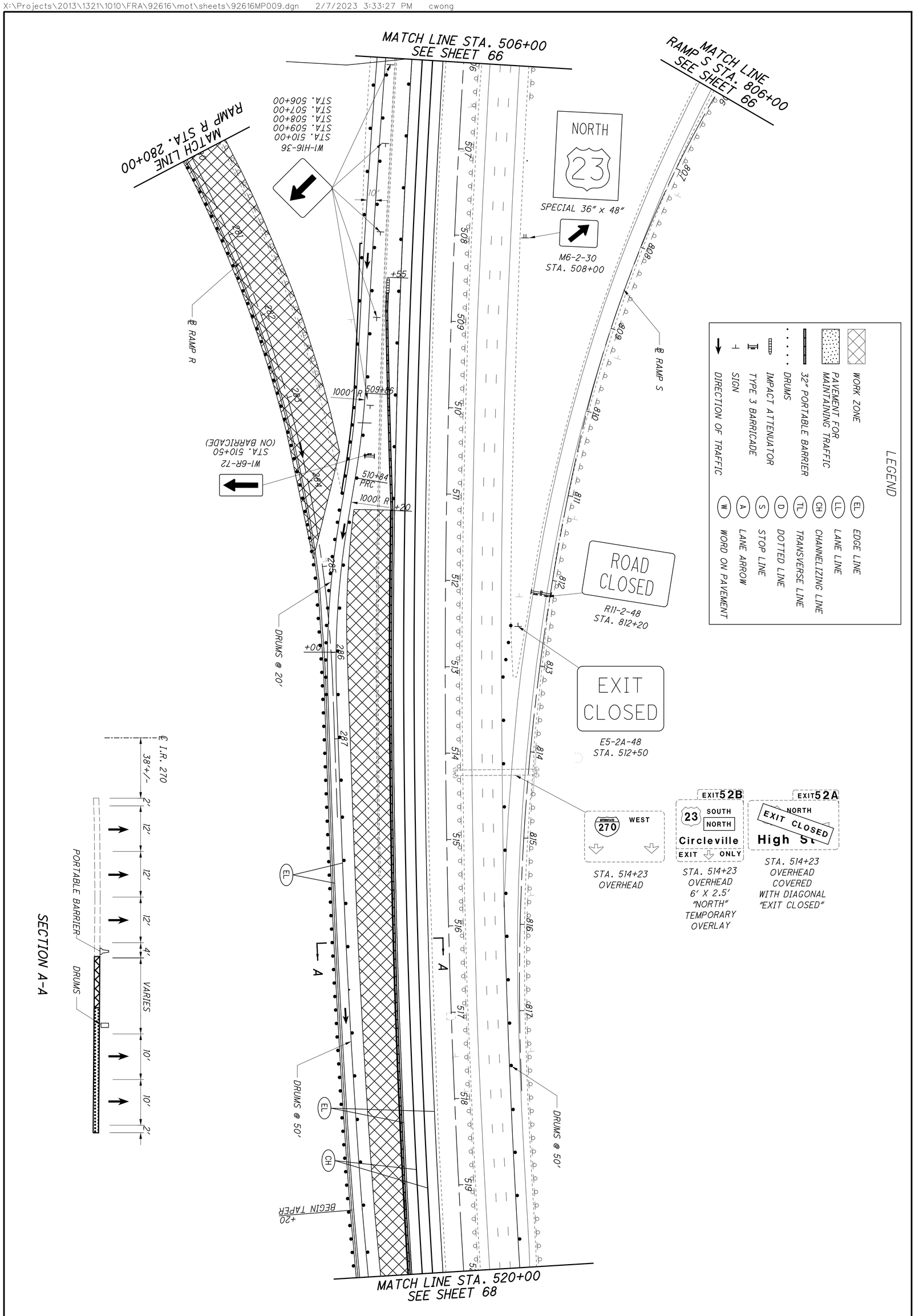

67 554	FRA-270-51.50	MAINTENANCE OF TRAFFIC - PHASE 2A I-270 STA. 506+00 TO STA. 520+00	CALCULATED DJR CHECKED RCH 0 50 25 100 HORIZONTAL SCALE IN FEET

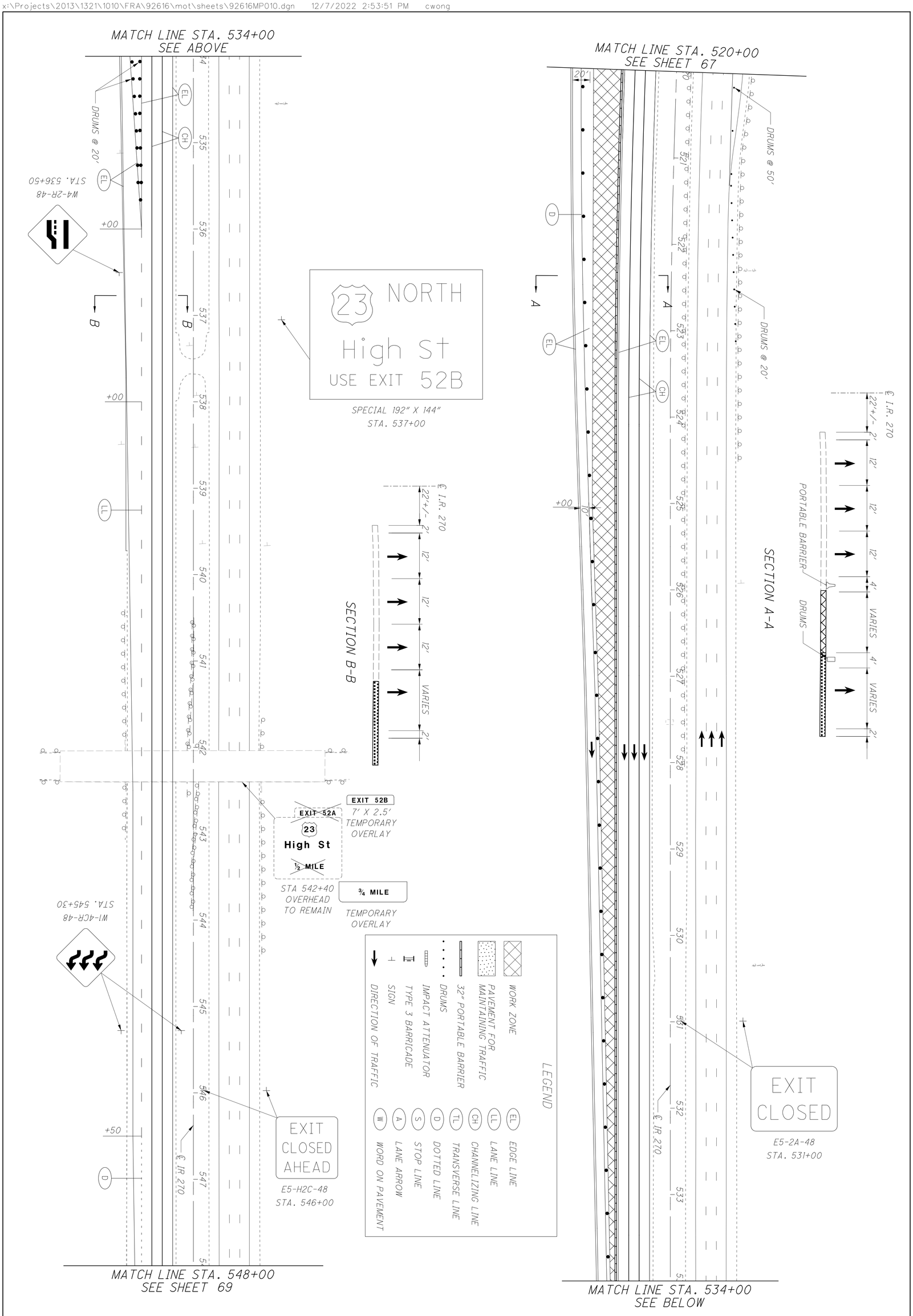

FRA-270-51.50

MAINTENANCE OF TRAFFIC - PHASE 2A
I-270 STA. 520+00 TO STA. 548+00

CALCULATED DJR
CHECKED RCH

0 25 50 100
HORIZONTAL SCALE IN FEET

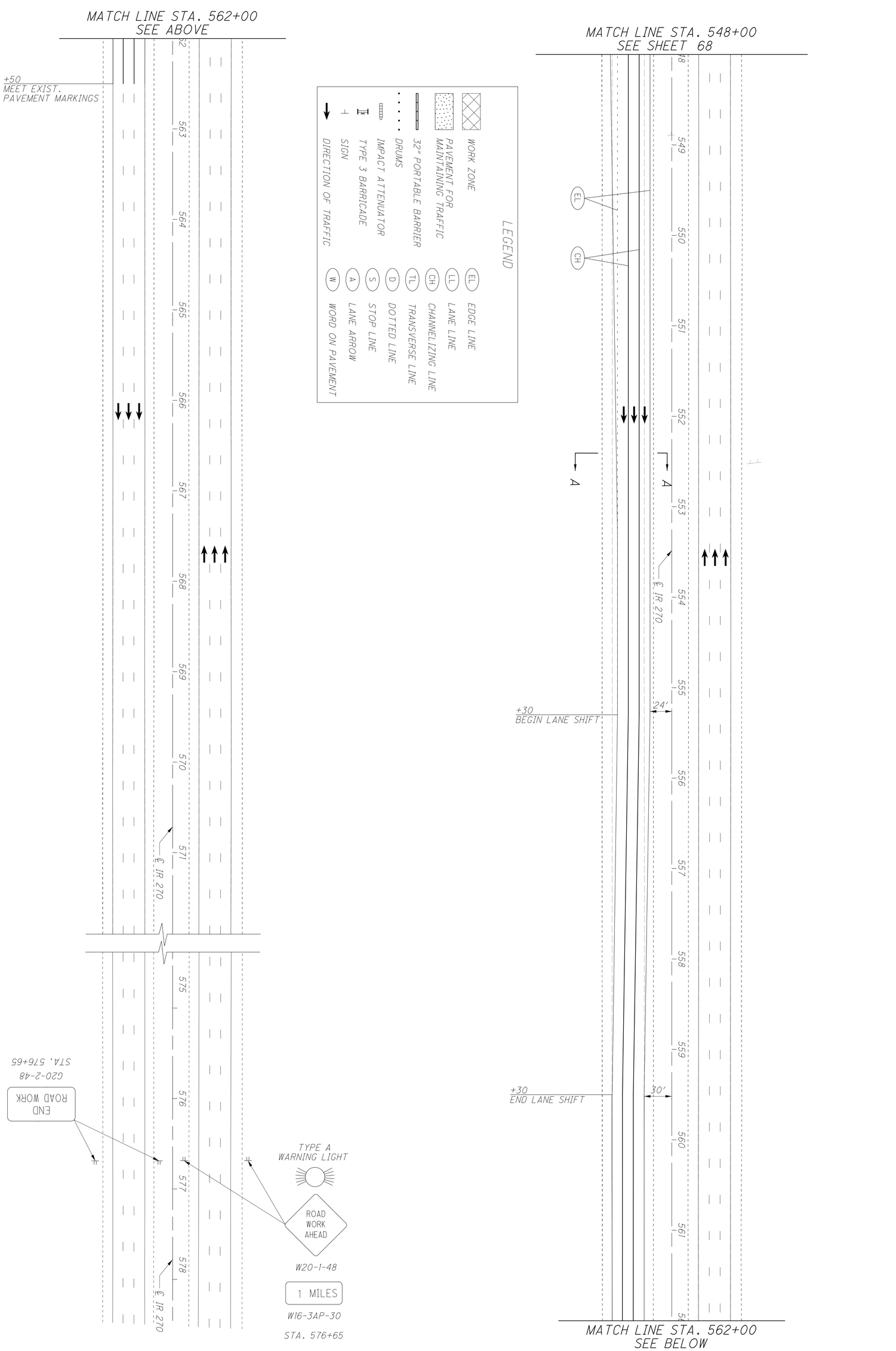

FRA-270-51.50

MAINTENANCE OF TRAFFIC - PHASE 2A
I-270 STA. 548+00 TO STA. 576+00

CALCULATED DJR
CHECKED RCH

0 25 50 100
HORIZONTAL SCALE IN FEET

N

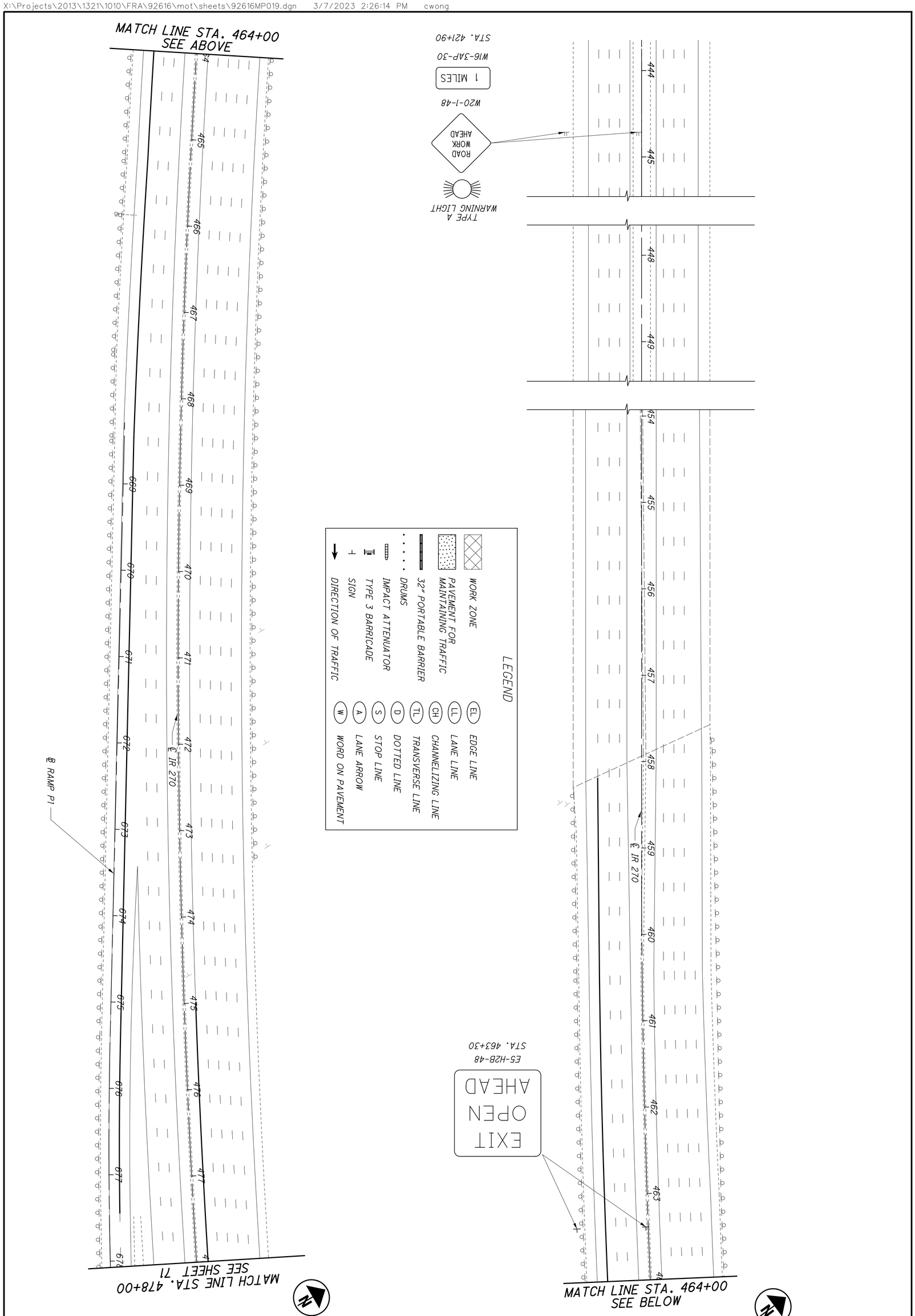

70 554	FRA-270-51.50	MAINTENANCE OF TRAFFIC - PHASE 3 I-270 STA. 450+00 TO STA. 478+00	CALCULATED DJR CHECKED RCH 0 50 25 100 HORIZONTAL SCALE IN FEET

LEGEND

- WORK ZONE
- PAVEMENT FOR MAINTAINING TRAFFIC
- 32" PORTABLE BARRIER
- DRUMS
- IMPACT ATTENUATOR
- TYPE 3 BARRICADE
- SIGN
- DIRECTION OF TRAFFIC
- (EL) EDGE LINE
- (LL) LANE LINE
- (CH) CHANNELIZING LINE
- (TL) TRANSVERSE LINE
- (D) DOTTED LINE
- (S) STOP LINE
- (A) LANE ARROW
- (W) WORD ON PAVEMENT

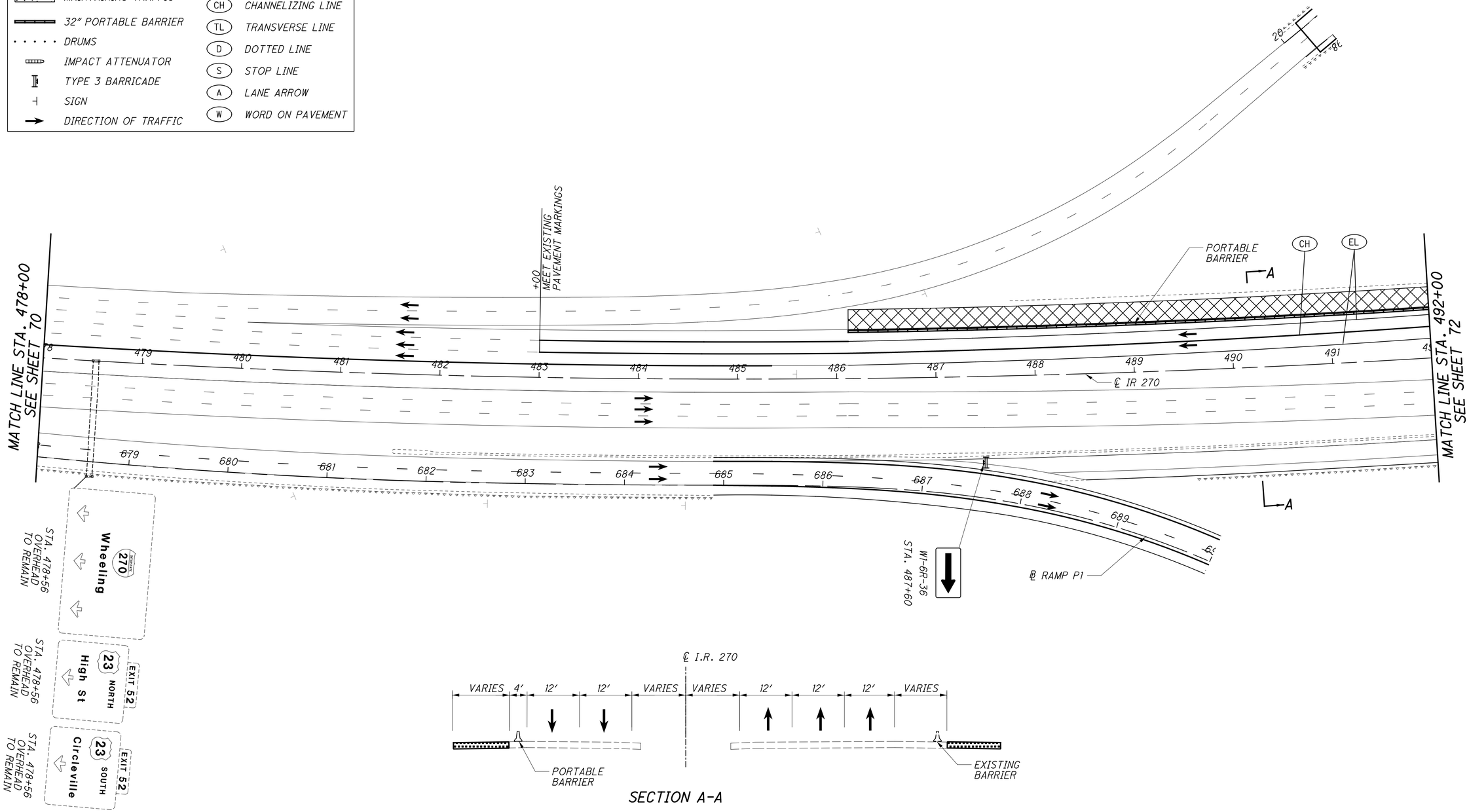

SECTION A-A

HORIZONTAL SCALE IN FEET
0 25 50 100

CALCULATED MBE
CHECKED RCH

MAINTENANCE OF TRAFFIC - PHASE 3
I-270 STA. 478+00 TO STA. 492+00

FRA-270-51.50

71
554

X:\Projects\2013\1321\1010\FRA\92616\mot\sheets\92616MP020.dgn 3/7/2023 2:28:51 PM cwong

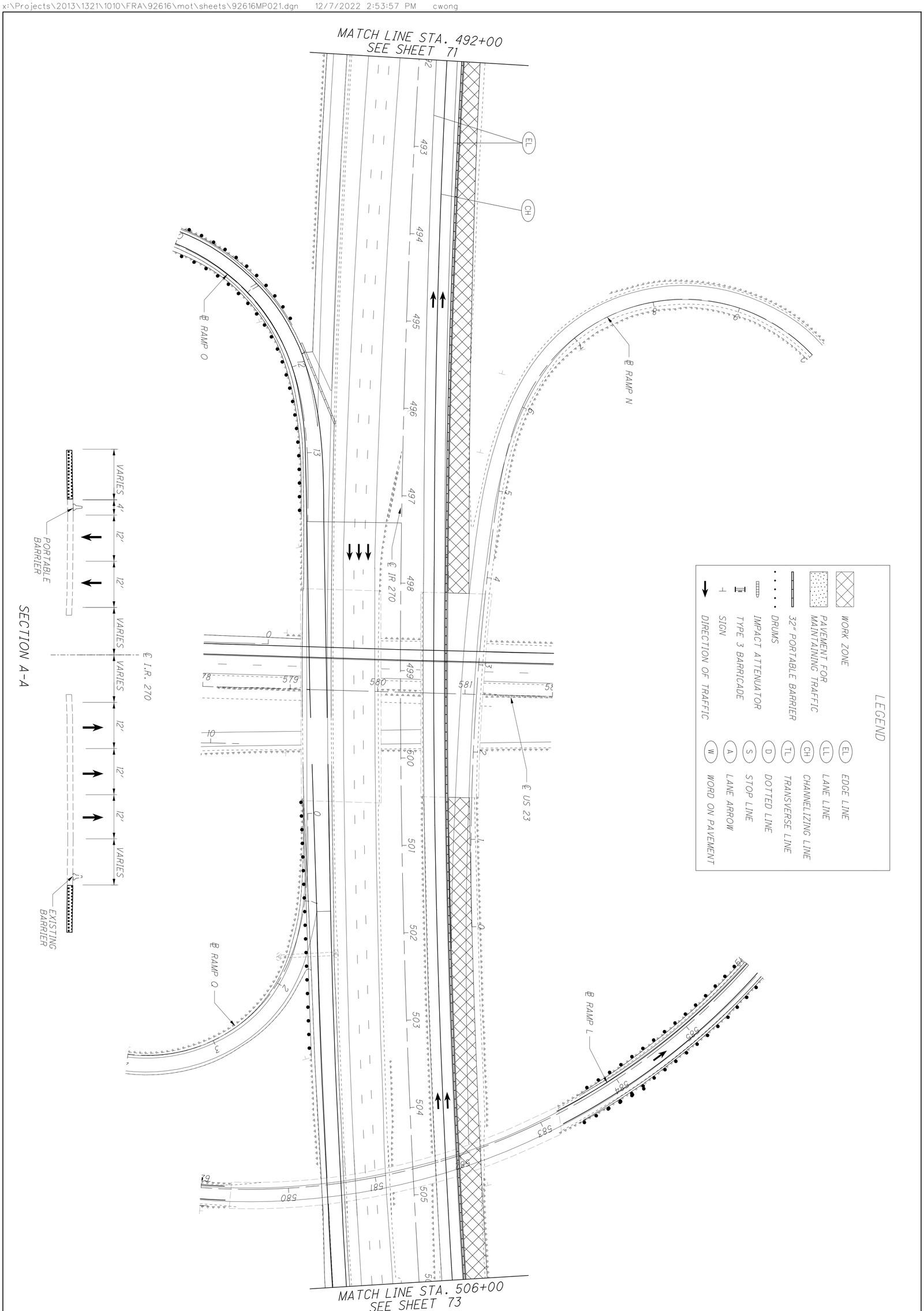

SECTION A-A

FRA-270-51.50

MAINTENANCE OF TRAFFIC - PHASE 3
I-270 STA. 492+00 TO STA. 506+00

CALCULATED MBE
CHECKED RCH

0 50
25 100
HORIZONTAL SCALE IN FEET

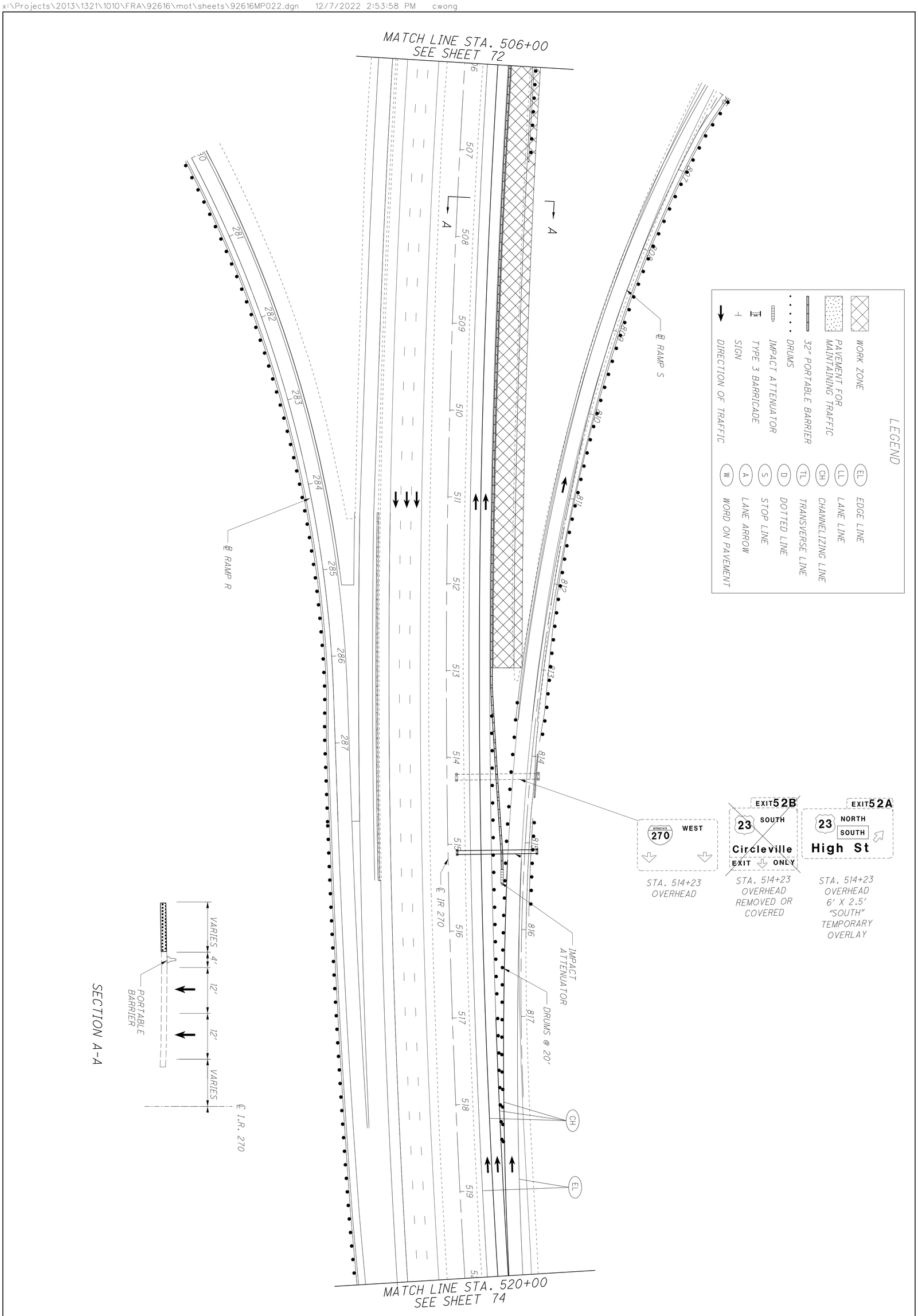

73 / 554	FRA-270-51.50	MAINTENANCE OF TRAFFIC - PHASE 3 I-270 STA. 506+00 TO STA. 520+00	CALCULATED MBE CHECKED RCH 0 50 25 100 HORIZONTAL SCALE IN FEET

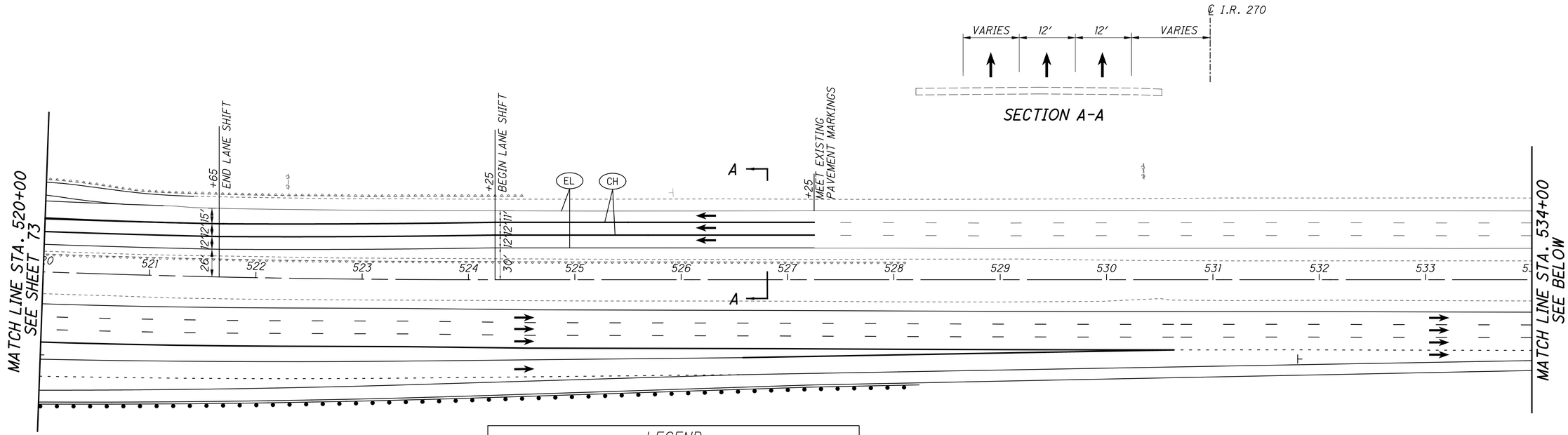

LEGEND

- WORK ZONE
- PAVEMENT FOR MAINTAINING TRAFFIC
- 32″ PORTABLE BARRIER
- DRUMS
- IMPACT ATTENUATOR
- TYPE 3 BARRICADE
- SIGN
- DIRECTION OF TRAFFIC
- (EL) EDGE LINE
- (LL) LANE LINE
- (CH) CHANNELIZING LINE
- (TL) TRANSVERSE LINE
- (D) DOTTED LINE
- (S) STOP LINE
- (A) LANE ARROW
- (W) WORD ON PAVEMENT

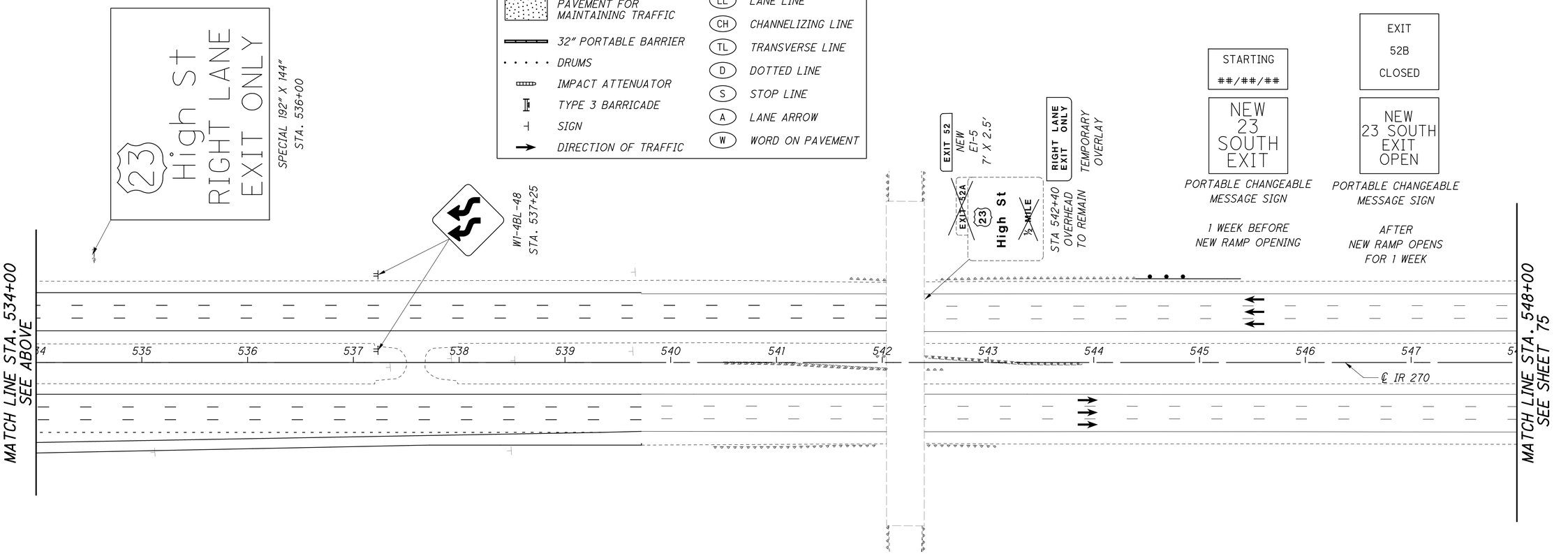

HORIZONTAL SCALE IN FEET
0 25 50 100

CALCULATED MBE
CHECKED RCH

MAINTENANCE OF TRAFFIC - PHASE 3
I-270 STA. 520+00 TO STA. 548+00

FRA-270-51.50

X:\Projects\2013\1321\1010\FRA\92616\mot\sheets\92616MP023.dgn 2/8/2023 9:06:29 AM cwong

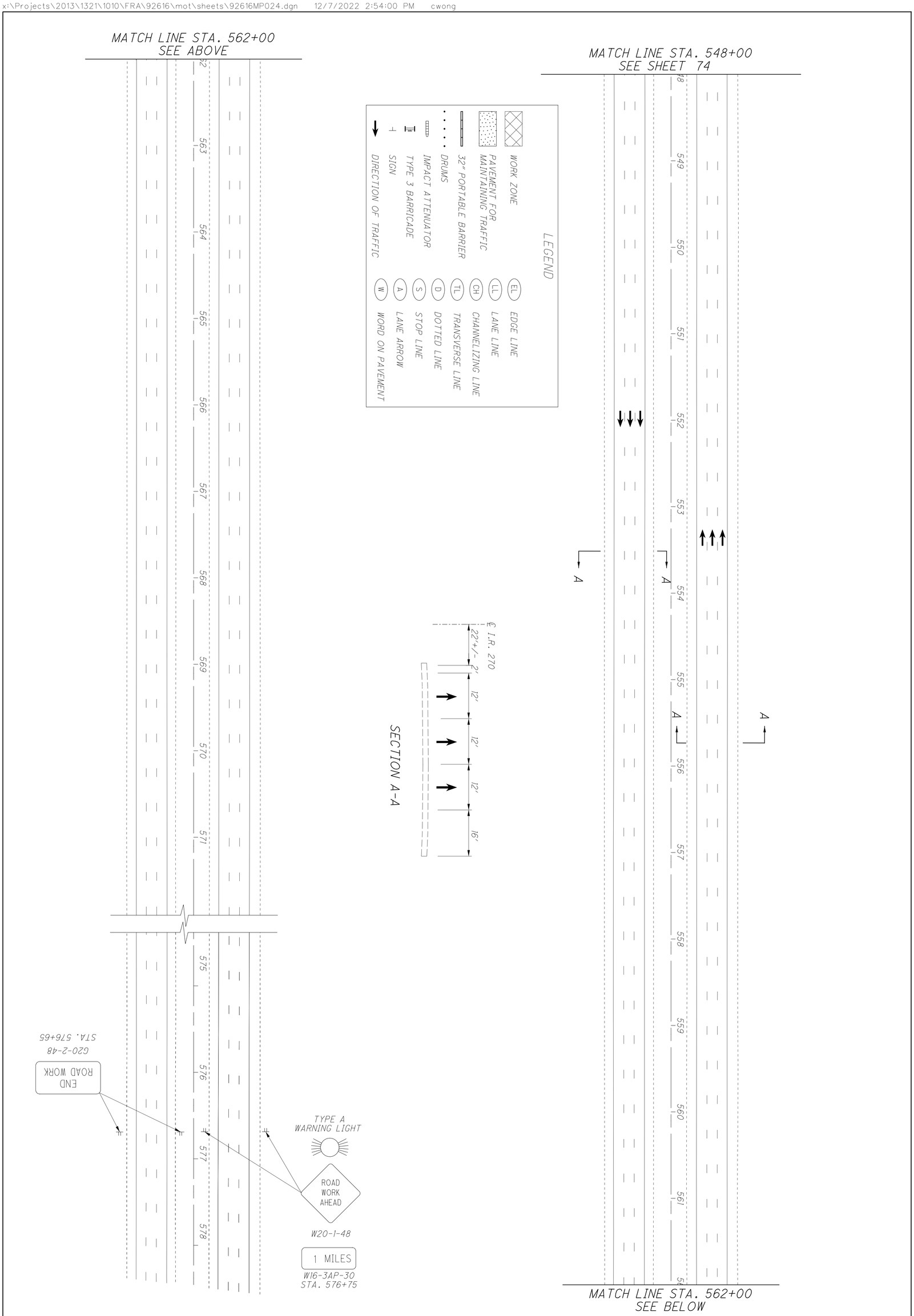

75 / 554	FRA-270-51.50	MAINTENANCE OF TRAFFIC - PHASE 3 I-270 STA. 548+00 TO STA. 576+00	CALCULATED MBE CHECKED RCH	0 25 50 100 HORIZONTAL SCALE IN FEET

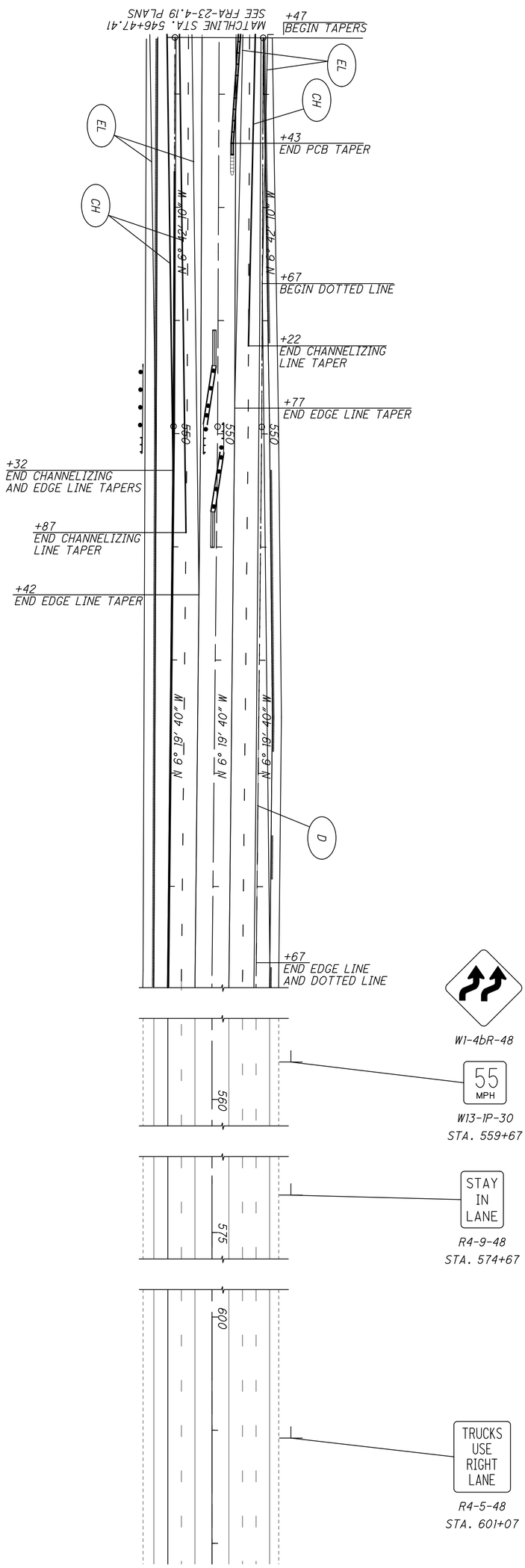

LEGEND

EL	EDGE LINE
LL	LANE LINE
CH	CHANNELIZING LINE
TL	TRANSVERSE LINE
D	DOTTED LINE
S	STOP LINE
A	LANE ARROW
W	WORD ON PAVEMENT
	WORK ZONE
	PAVEMENT FOR MAINTAINING TRAFFIC
	32" PORTABLE BARRIER
	DRUMS
	IMPACT ATTENUATOR
	TYPE 3 BARRICADE
	SIGN
	DIRECTION OF TRAFFIC

76 554	FRA-270-51.50	MAINTENANCE OF TRAFFIC LANE TAPER FOR FRA-23-4.19	CALCULATED SDB CHECKED CSR 0 50 25 100 HORIZONTAL SCALE IN FEET

SHEET NUM.																PART.			ITEM	ITEM EXT	GRAND TOTAL	UNIT	DESCRIPTION	SEE SHEET NO.
15	16	17	23	38	85	86	87	88	89	90	91	94	324	487	OFFICE CALCS.	01/IMS/04	02/IMS/14	03/NHS/43						
																							ROADWAY	
LUMP																LUMP			201	11000	LS		CLEARING AND GRUBBING	
					5	6										11			202	20010	11	EACH	HEADWALL REMOVED	
					5,723	2,446										8,169			202	23000	8,169	SY	PAVEMENT REMOVED	
					96	97										193			202	30700	193	FT	CONCRETE BARRIER REMOVED	
					224	133	135									492			202	35100	492	FT	PIPE REMOVED, 24" AND UNDER	
					88	31										119			202	35200	119	FT	PIPE REMOVED, OVER 24"	
			25		8,501	5,186	1,395									15,107			202	38000	15,107	FT	GUARDRAIL REMOVED	
						1	2									3			202	58100	3	EACH	CATCH BASIN REMOVED	
					130											130			SPECIAL	20270000	130	FT	FILL AND PLUG EXISTING CONDUIT	18
	2,600															2,600			SPECIAL	20270110	2,600	FT	PIPE CLEANOUT, 24" AND UNDER	16
	250															250			SPECIAL	20270120	250	FT	PIPE CLEANOUT, 27" TO 48"	16
	1,500															1,500			SPECIAL	20270130	1,500	FT	PIPE CLEANOUT OVER 48"	16
						489	147									636			202	75000	636	FT	FENCE REMOVED	
							1									1			202	75610	1	EACH	VALVE BOX REMOVED	
							2									2			202	98100	2	EACH	REMOVAL MISC.:WOOD POST	
							40									40			202	98200	40	FT	REMOVAL MISC.:CABLE GATE	
		504								212			86,772			87,488			203	10000	87,488	CY	EXCAVATION	
													72,440			72,440			203	20000	72,440	CY	EMBANKMENT	
													1,986			1,986			203	20001	1,986	CY	EMBANKMENT, AS PER PLAN	18
		504														504			203	35141	504	CY	GRANULAR MATERIAL, TYPE E, AS PER PLAN	17
												8,736				8,736			204	10000	8,736	SY	SUBGRADE COMPACTION	
												3,885				3,885			204	13000	3,885	CY	EXCAVATION OF SUBGRADE	
												3,883		9		3,883	9		204	30010	3,892	CY	GRANULAR MATERIAL, TYPE B	
7												25				32			204	45000	32	HOUR	PROOF ROLLING	
		2,276										8,736		2,471		11,012	2,471		204	50000	13,483	SY	GEOTEXTILE FABRIC	
		756										8,736				9,492			204	51000	9,492	SY	GEOGRID	
															1,192	1,192			206	10500	1,192	TON	CEMENT	
												39,480				39,480			206	11000	39,480	SY	CURING COAT	
												39,480				39,480			206	15020	39,480	SY	CEMENT STABILIZED SUBGRADE, 14 INCHES DEEP	
																LUMP			206	30000	LS		MIXTURE DESIGN FOR CHEMICALLY STABILIZED SOILS	
	0.2															0.2			209	60501	0.2	MILE	LINEAR GRADING, AS PER PLAN	16
			25					15,523								15,548			606	15050	15,548	FT	GUARDRAIL, TYPE MGS	
								100								100			606	15550	100	FT	GUARDRAIL, BARRIER DESIGN, TYPE MGS	
			1					13								14			606	26150	14	EACH	ANCHOR ASSEMBLY, MGS TYPE E (MASH 2016)	
			1					9								10			606	26550	10	EACH	ANCHOR ASSEMBLY, MGS TYPE T	
								13								13			606	35102	13	EACH	MGS BRIDGE TERMINAL ASSEMBLY, TYPE 2	
								2								2			606	60012	2	EACH	IMPACT ATTENUATOR, TYPE 1 (BIDIRECTIONAL)	
								2								2			606	60028	2	EACH	IMPACT ATTENUATOR, TYPE 2 (BIDIRECTIONAL), 55 MPH (36")	
						302	528									830			607	23000	830	FT	FENCE, TYPE CLT	
								1								1			607	98000	1	FT	FENCE, MISC.:GATE	
								1,337								1,337			622	10060	1,337	FT	CONCRETE BARRIER, SINGLE SLOPE, TYPE B	
								1								1			622	10200	1	EACH	BARRIER TRANSITION	
								12								12			626	00110	12	EACH	BARRIER REFLECTOR, TYPE 2 (ONE-WAY)	
																LUMP			878	25000	LS		INSPECTION AND COMPACTION TESTING OF UNBOUND MATERIALS	
																							EROSION CONTROL	
									18	19						37			601	11000	37	SY	RIPRAP, TYPE D	
	10															10			601	21050	10	SY	TIED CONCRETE BLOCK MAT, TYPE 1	
									322							322			601	21060	322	SY	TIED CONCRETE BLOCK MAT, TYPE 2	
									78	71						149			601	32000	149	CY	ROCK CHANNEL PROTECTION, TYPE A WITH FILTER	
	10								6	6	5					27			601	32200	27	CY	ROCK CHANNEL PROTECTION, TYPE C WITH FILTER	
	2															2			659	00100	2	EACH	SOIL ANALYSIS TEST	
	5,574															5,574			659	00300	5,574	CY	TOPSOIL	
	50,209															50,209			659	10000	50,209	SY	SEEDING AND MULCHING	
	2,511															2,511			659	14000	2,511	SY	REPAIR SEEDING AND MULCHING	
	2,511															2,511			659	15000	2,511	SY	INTER-SEEDING	

CALCULATED ACF
CHECKED CSR

GENERAL SUMMARY

FRA-270-51.50

X:\Projects\2013\1321\1010\FRA\92616\roadway\sheets\92616GG001.dgn 5/9/2023 8:25:51 AM cwong

SHEET NUM.												PART.			ITEM	ITEM EXT	GRAND TOTAL	UNIT	DESCRIPTION	SEE SHEET NO.
15	16	21	22	38	85	86	87	89	90	91	324	01/IMS/04	02/IMS/14	03/NHS/43						
																			EROSION CONTROL	
	7.79											7.79			659	20000	7.79	TON	COMMERCIAL FERTILIZER	
	10.38											10.38			659	31000	10.38	ACRE	LIME	
	407											407			659	35000	407	MGAL	WATER	
	113											113			659	40000	113	MSF	MOWING	
												2,242			670	00700	2,242	SY	DITCH EROSION PROTECTION	
											47,045	47,045			670	00500	47,045	SY	SLOPE EROSION PROTECTION	
												LUMP			832	15000	LS		STORM WATER POLLUTION PREVENTION PLAN	
												LUMP			832	15002	LS		STORM WATER POLLUTION PREVENTION INSPECTIONS	
												LUMP			832	15010	LS		STORM WATER POLLUTION PREVENTION INSPECTION SOFTWARE	
												758,114			832	30000	758,114	EACH	EROSION CONTROL	
												1,850			836	10000	1,850	SY	SEEDING AND EROSION CONTROL WITH TURF REINFORCING MAT, TYPE 1	
												245			836	10020	245	SY	SEEDING AND EROSION CONTROL WITH TURF REINFORCING MAT, TYPE 2	
																			DRAINAGE	
								73	12	2		87			602	20000	87	CY	CONCRETE MASONRY	
								300				300			605	05200	300	FT	4" UNCLASSIFIED PIPE UNDERDRAINS	
								11,235	7,566	13,893		32,694			605	06000	32,694	FT	4" BASE PIPE UNDERDRAINS	
	200											200			605	13300	200	FT	6" UNCLASSIFIED PIPE UNDERDRAINS	
	50											50			605	31100	50	FT	AGGREGATE DRAINS	
								90	55	134		279			611	00100	279	FT	4" CONDUIT, TYPE B	
								243	2,995	268		3,506			611	00510	3,506	FT	6" CONDUIT, TYPE F FOR UNDERDRAIN OUTLETS	
	200							36	34	165		435			611	00900	435	FT	6" CONDUIT, TYPE B	
	100											100			611	01100	100	FT	6" CONDUIT, TYPE C	
	200								56	36		292			611	01400	292	FT	6" CONDUIT, TYPE E	
	300								18			318			611	01500	318	FT	6" CONDUIT, TYPE F	
										89		89			611	04400	89	FT	12" CONDUIT, TYPE B, 706.02	
									60			60			611	05700	60	FT	15" CONDUIT, TYPE A 706.02, 707.01 ALUMINIZED, 707.04, 707.33 CPE SMOOTH LINED	
								95		170		265			611	05900	265	FT	15" CONDUIT, TYPE B	
								24				24			611	05901	24	FT	15" CONDUIT, TYPE B, AS PER PLAN, 707.13	
										80		80			611	06400	80	FT	15" CONDUIT, TYPE D	
								81				81			611	06700	81	FT	15" CONDUIT, TYPE F, 707.05 TYPE C, 707.21, OR 707.33	
									64			64			611	07200	64	FT	18" CONDUIT, TYPE A, 706.02	
								16				16			611	07400	16	FT	18" CONDUIT, TYPE B	
								95				95			611	13200	95	FT	30" CONDUIT, TYPE A 706.02, 707.01 ALUMINIZED, 707.04, 707.33 CPE SMOOTH LINED	
									250			250			611	22200	250	FT	54" CONDUIT, TYPE A , 707.02(0.109) ALUMINIZED, 707.04 (0.064 POLYMERIC), 706.02	
								70				70			611	26000	70	FT	72" CONDUIT, TYPE A, 706.02	
									31			31			611	30001	31	FT	96" CONDUIT, TYPE A, AS PER PLAN, 707.03 (0.249)	
								287				287			611	96600	287	FT	CONDUIT, BORED OR JACKED, TYPE B, 18"	
								122				122			611	96600	122	FT	CONDUIT, BORED OR JACKED, TYPE B, 15"	
								1				1			611	98180	1	EACH	CATCH BASIN, NO. 3A	
										2		2			611	98370	2	EACH	CATCH BASIN, NO. 6	
								1				1			611	98410	1	EACH	CATCH BASIN, NO. 8	
										1		1			611	98470	1	EACH	CATCH BASIN, NO. 2-2B	
								1				1			611	98630	1	EACH	CATCH BASIN ADJUSTED TO GRADE	
										1		1			611	99094	1	EACH	INLET, NO. 3 FOR SINGLE SLOPE BARRIER, TYPE B	
								3				3			611	99574	3	EACH	MANHOLE, NO. 3	
								3				3			611	99654	3	EACH	MANHOLE ADJUSTED TO GRADE	
	10							15	13	13		51			611	99710	51	EACH	PRECAST REINFORCED CONCRETE OUTLET	
					2							2			611	99900	2	EACH	DRAINAGE STRUCTURE, MISC.: FLAP GATE REMOVED	
								2				2			611	99900	2	EACH	DRAINAGE STRUCTURE, MISC.: FLAP GATE, 72"	
									212			212			613	41200	212	CY	LOW STRENGTH MORTAR BACKFILL	
										200		200			839	29000	200	FT	TRENCH DRAIN, TYPE A, WITH STANDARD GRATE	

CALCULATED ACF
CHECKED CSR

GENERAL SUMMARY

FRA-270-51.50

78
554

X:\Projects\2013\1321\1010\FRA\92616\roadway\sheets\92616GG001.dgn 5/9/2023 6:05:23 AM cwong

SHEET NUM.													PART.			ITEM	ITEM EXT	GRAND TOTAL	UNIT	DESCRIPTION
16	22	22A	85	86	87	90	94	432	433	434	435	436	01/IMS/04	02/IMS/14	03/NHS/43					
																				PAVEMENT
			2,578	2,079	4,281								8,938			252	01500	8,938	FT	FULL DEPTH PAVEMENT SAWING
	14,400	3,200					17,967						35,567			254	01000	35,567	SY	PAVEMENT PLANING, ASPHALT CONCRETE, 1.25"
							6,700						6,700			302	56000	6,700	CY	ASPHALT CONCRETE BASE, PG64-22, (449)
							7,966						7,966			304	20000	7,966	CY	AGGREGATE BASE
	720						4,323						5,043			407	20000	5,043	GAL	NON-TRACKING TACK COAT
							14						14			441	50000	14	CY	ASPHALT CONCRETE SURFACE COURSE, TYPE 1, (448), PG64-22
							17						17			441	50300	17	CY	ASPHALT CONCRETE INTERMEDIATE COURSE, TYPE 2, (448)
7													7			441	70801	7	CY	ASPHALT CONCRETE INTERMEDIATE COURSE, TYPE 1, (449), (UNDER GUARDRAIL), AS PER PLAN
							2,731						2,731			442	00100	2,731	CY	ANTI-SEGREGATION EQUIPMENT
	500												500			442	10000	500	CY	ASPHALT CONCRETE SURFACE COURSE, 12.5 MM, TYPE A (446)
							1,237						1,237			442	10000	1,237	CY	ASPHALT CONCRETE SURFACE COURSE, 12.5 MM, TYPE A (446), 1.5"
							211						211			442	10001	211	CY	ASPHALT CONCRETE SURFACE COURSE, 12.5 MM, TYPE A (446), AS PER PLAN, 1.5", PG70-22M
							703						703			442	10001	703	CY	ASPHALT CONCRETE SURFACE COURSE, 12.5 MM, TYPE A (446), AS PER PLAN, 1.5", PG76-22
							1,527						1,527			442	10080	1,527	CY	ASPHALT CONCRETE INTERMEDIATE COURSE, 12.5 MM, TYPE A (446), 1.75"
							1,434						1,434			452	13020	1,434	SY	9" NON-REINFORCED CONCRETE PAVEMENT, CLASS QC1 WITH QC/QA
							4,606						4,606			452	14120	4,606	SY	11" NON-REINFORCED CONCRETE PAVEMENT, CLASS QC1 WITH QC/QA
							8,280						8,280			452	15020	8,280	SY	12" NON-REINFORCED CONCRETE PAVEMENT, CLASS QC1 WITH QC/QA
							6,676						6,676			452	16020	6,676	SY	13" NON-REINFORCED CONCRETE PAVEMENT, CLASS QC1 WITH QC/QA
							100						100			609	26000	100	FT	CURB, TYPE 6
			3,240	1,952	3,998								9,190			618	40101	9,190	FT	RUMBLE STRIPS, SHOULDER (ASPHALT CONCRETE), AS PER PLAN
			128	182									310			618	40200	310	FT	RUMBLE STRIPS, SHOULDER (CONCRETE)
							1,935						1,935			875	10000	1,935	LB	LONGITUDINAL JOINT ADHESIVE
																				WATER WORK
				134									134			638	00600	134	FT	6" WATER MAIN DUCTILE IRON PIPE ANSI CLASS 52,
																				PUSH-ON JOINTS AND FITTINGS (COC CMS ITEM 801)
				1									1			638	07800	1	EACH	6" GATE VALVE AND VALVE BOX (COC CMS ITEM 802)
				2									2			638	10200	2	EACH	6" FIRE HYDRANT (COC CMS ITEM 809)
				2	1								3			638	10700	3	EACH	FIRE HYDRANT REMOVED AND DISPOSED OF (COC CMS ITEM 809)
				4									4			638	10800	4	EACH	VALVE BOX ADJUSTED TO GRADE (COC CMS ITEM 807)
				1									1			638	11300	1	EACH	1" AIR RELEASE VALVE ADJUSTED TO GRADE (COC CMS ITEM 807)
				18									18			SPECIAL	63820788	18	FT	LOWER WATER SERVICE CONNECTION, 1"
													LUMP			SPECIAL		LUMP	LS	SURVEY COORDINATES
																				LIGHTING
											6		6			625	00450	6	EACH	CONNECTION, FUSED PULL APART
								30	57	30			117			625	00460	117	EACH	CONNECTION, UNFUSED PULL APART
											3		3			625	10494	3	EACH	LIGHT POLE, LOW MAST, DESIGN ATLM50
								1		1			2			625	11200	2	EACH	LIGHT TOWER, BB100
								1	1	1			3			625	13200	3	EACH	LIGHT TOWER, BBBB100
								1	1	1			3			625	13204	3	EACH	LIGHT TOWER, BBBB110
								10	10	7			27			625	13500	27	EACH	LIGHT TOWER, MISC.: REFURBISH EXISTING LIGHT TOWER
											3		3			625	14200	3	EACH	LIGHT POLE FOUNDATION, 24" X 10' DEEP
								7	5	5			17			625	15300	17	EACH	LIGHT TOWER FOUNDATION, 36" X 30' DEEP
								867	1,953	1,338			4,158			625	23200	4,158	FT	NO. 4 AWG 2400 VOLT DISTRIBUTION CABLE
											450		450			625	23400	450	FT	NO. 10 AWG POLE AND BRACKET CABLE
								6,464	6,986	6,199	625		20,274			625	24320	20,274	FT	1-1/2" DUCT CABLE WITH THREE NO. 4 AWG 2400 VOLT CABLES
								200	247	176			623			625	25500	623	FT	CONDUIT, 3", 725.04
									118	110			228			625	25902	228	FT	CONDUIT, JACKED OR DRILLED, 725.04, 3"
												291	291			625	25910	291	FT	CONDUIT CLEANED AND CABLES REMOVED, 3"
								16	26	22			64			625	26263	64	EACH	LUMINAIRE, HIGH MAST, SOLID STATE (LED), AS PER PLAN, SYM 38000-44000 LUMEN, 480 V

CALCULATED ACF
CHECKED CSR

GENERAL SUMMARY

FRA-270-51.50

X:\Projects\2013\1321\1010\FRA\92616\roadway\sheets\92616GG001.dgn 5/9/2023 12:06:36 AM cwong

SHEET NUM.														PART.			ITEM	ITEM EXT	GRAND TOTAL	UNIT	DESCRIPTION	SEE SHEET NO.
86	432	433	434	435	436	473	95	96	97	99	100	406	409	01/IMS/04	02/IMS/14	03/NHS/43						
																					LIGHTING	
	2		2	4										8			625	26263	8	EACH	LUMINAIRE, HIGH MAST, SOLID STATE (LED), AS PER PLAN, ASYM 28000-36000 LUMEN, 480V	429
	18	14	10											42			625	26263	42	EACH	LUMINAIRE, HIGH MAST, SOLID STATE (LED), AS PER PLAN, ASYM., 60000-69300LM, 480V	429
				3										3			625	26273	3	EACH	LUMINAIRE, LOW MAST, SOLID STATE (LED), AS PER PLAN, SYM, 59300-71987LM, 480V	429
	18													18			625	27503	18	EACH	LUMINAIRE, UNDERPASS, SOLID STATE (LED), AS PER PLAN, TYPE III, 480V, 3150-5000LM	429
	6,468	6,686	5,672	595										19,421			625	29000	19,421	FT	TRENCH	
	7	7	6											20			625	30700	20	EACH	PULL BOX, 725.08, 18"	
	2	6	3											11			625	30706	11	EACH	PULL BOX, 725.08, 24"	
1					10									11			625	31510	11	EACH	PULL BOX REMOVED	
	14	10	10	3										37			625	32000	37	EACH	GROUND ROD	
		1	1											2			625	34001	2	EACH	POWER SERVICE, AS PER PLAN	429
	4	3	2											9			625	35021	9	EACH	RE-ERECT EXISTING LIGHT TOWER, AS PER PLAN	429
	6,468	6,686	5,672	595										19,421			625	36010	19,421	FT	UNDERGROUND WARNING/MARKING TAPE	
	2													2			625	37100	2	EACH	SERVICE TO UNDERPASS LIGHTING	
														LUMP			SPECIAL	62540000	LS		MAINTAIN EXISTING LIGHTING	429
					5									5			625	75351	5	EACH	LIGHT TOWER REMOVED, AS PER PLAN	429
					9									9			625	75361	9	EACH	LIGHT TOWER REMOVED FOR STORAGE, AS PER PLAN	429
3														3			625	75400	3	EACH	LIGHT POLE REMOVED	
					158									158			625	75506	158	EACH	LUMINAIRE REMOVED	
					2									2			625	75510	2	EACH	POWER SERVICE REMOVED	
					14									14			625	75541	14	EACH	LIGHT TOWER FOUNDATION REMOVED, AS PER PLAN	430
					37									37			625	75801	37	EACH	DISCONNECT CIRCUIT, AS PER PLAN	429
		1	1											2			625	76000	2	EACH	ARC FLASH CALCULATIONS AND LABEL, POWER SERVICES B & C	430
					330									330			625	98100	330	FT	LIGHTING, MISC.:, CONDUIT REMOVED	430
														LUMP			625	98200	LS		LIGHTING, MISC.:MIS-901: EXISTING OVERHEAD SYSTEM REMOVAL	430
														LUMP			625	98200	LS		LIGHTING, MISC.:MIS-902: EXISTING UNDERGROUND SYSTEM REMOVAL	430
																					ELECTRICAL	
						1										1	SPECIAL	69098000	1	EACH	MISC.: WOOD POLE, 70' CLASS H4	470
						12										12	SPECIAL	69098000	12	EACH	MISC.: WOOD POLE, 70' CLASS 1	470
						33										33	SPECIAL	69098000	33	EACH	MISC.: MODULAR 69KV HORIZONTAL POST INSULATOR	471
						6										6	SPECIAL	69098000	6	EACH	MISC.: 69KV DOUBLE DEAD-END	470
						11										11	SPECIAL	69098000	11	EACH	MISC.: 24" SPACER CABLE TANGENT BRACKET	470
						2										2	SPECIAL	69098000	2	EACH	MISC.: SPACER CABLE TO SPACER CABLE DOUBLE DEAD-END	470
						4										4	SPECIAL	69098000	4	EACH	MISC.: DOUBLE DOWN GUY	470
						13										13	SPECIAL	69098000	13	EACH	MISC.: STATIC WIRE GROUNDING ASSEMBLY	470
						13										13	SPECIAL	69098000	13	EACH	MISC.: GROUNDING ASSEMBLY	471
						3,512										3,512	SPECIAL	69098100	3,512	FT	MISC.: (3) 336 KCMIL SPACER CABLE W/ 1/2" MESSENGER	470
						3,512										3,512	SPECIAL	69098100	3,512	FT	MISC.: (3) #4/0 AWG COPPER W/ 3/8" STATIC LINE	470
						1										1	SPECIAL	69098000	1	EACH	MISC.: OVERHEAD TRANSFORMER INSTALLATION, 1PH DELTA	470
						27,392										27,392	SPECIAL	69098100	27,392	FT	MISC.: CONDUCTORS REMOVED	471
						13										13	SPECIAL	69098000	13	EACH	MISC.: POLE REMOVED	471
						1										1	SPECIAL	69098000	1	EACH	MISC.: TRANSFORMER REMOVED	470
																					TRAFFIC CONTROL	
							187	190	205					582			621	00100	582	EACH	RPM	
							137	129	133					399			621	54000	399	EACH	RAISED PAVEMENT MARKER REMOVED	
										69	75.5			144.5			630	02100	144.5	FT	GROUND MOUNTED SUPPORT, NO. 2 POST	
										418	371.5			789.5			630	03100	789.5	FT	GROUND MOUNTED SUPPORT, NO. 3 POST	
										130	31			161			630	04100	161	FT	GROUND MOUNTED SUPPORT, NO. 4 POST	
										61				61			630	06400	61	FT	GROUND MOUNTED STRUCTURAL BEAM SUPPORT, S4X7.7	
											92.5			92.5			630	07000	92.5	FT	GROUND MOUNTED STRUCTURAL BEAM SUPPORT, W8X18	
										45				45			630	07600	45	FT	GROUND MOUNTED STRUCTURAL BEAM SUPPORT, W10X12	
											122			122			630	08004	122	FT	ONE WAY SUPPORT, NO. 3 POST	
										10	3			13			630	08600	13	EACH	SIGN POST REFLECTOR	
										6	4			10			630	09000	10	EACH	BREAKAWAY STRUCTURAL BEAM CONNECTION	
										2				2			630	21200	2	EACH	OVERHEAD SIGN SUPPORT, TYPE TC-12.30, DESIGN 12	
										1	3			4			630	66500	4	EACH	OVERHEAD SIGN SUPPORT, TYPE TC-15.115, DESIGN 1	
										1				1			630	66500	1	EACH	OVERHEAD SIGN SUPPORT, TYPE TC-15.115, DESIGN 2	
										2				2			630	75000	2	EACH	SIGN ATTACHMENT ASSEMBLY	
										1		4	4	9			630	79500	9	EACH	SIGN SUPPORT ASSEMBLY, POLE MOUNTED	

CALCULATED ACF
CHECKED CSR

GENERAL SUMMARY

FRA-270-51.50

80
554

X:\Projects\2013\1321\1010\FRA\92616\roadway\sheets\92616GG001.dgn 1/17/2023 4:41:20 PM cwong

SHEET NUM.										PART.			ITEM	ITEM EXT	GRAND TOTAL	UNIT	DESCRIPTION	SEE SHEET NO.
379	95	96	97	98	99	100	406	409	415	01/IMS/04	02/IMS/14	03/NHS/43						
																	TRAFFIC CONTROL	
					390	399	43	43		875			630	80100	875	SF	SIGN, FLAT SHEET	
					125	376				501			630	80200	501	SF	SIGN, GROUND MOUNTED EXTRUSHEET	
					890	161				1,051			630	80224	1,051	SF	SIGN, OVERHEAD EXTRUSHEET	
					2.5					2.5			630	80400	2.5	SF	SIGN, PERMANENT OVERLAY	
					6	4				10			630	84500	10	EACH	GROUND MOUNTED STRUCTURAL BEAM SUPPORT FOUNDATION	
					6	6				12			630	84510	12	EACH	RIGID OVERHEAD SIGN SUPPORT FOUNDATION	
				62						62			630	84900	62	EACH	REMOVAL OF GROUND MOUNTED SIGN AND DISPOSAL	
				5						5			630	85100	5	EACH	REMOVAL OF GROUND MOUNTED SIGN AND REERECTION	
				4						4			630	85400	4	EACH	REMOVAL OF GROUND MOUNTED MAJOR SIGN AND DISPOSAL	
				68						68			630	86002	68	EACH	REMOVAL OF GROUND MOUNTED POST SUPPORT AND DISPOSAL	
				5						5			630	86102	5	EACH	REMOVAL OF GROUND MOUNTED STRUCTURAL BEAM SUPPORT AND DISPOSAL	
				1						1			630	86274	1	EACH	REMOVAL OF GROUND MOUNTED PIPE SUPPORT AND REERECTION	
				3						3			630	86310	3	EACH	REMOVAL OF STRUCTURE MOUNTED SIGN AND DISPOSAL	
				6						6			630	87100	6	EACH	REMOVAL OF OVERHEAD MOUNTED SIGN AND REERECTION	
				15						15			630	87400	15	EACH	REMOVAL OF OVERHEAD MOUNTED SIGN AND DISPOSAL	
				2						2			630	89706	2	EACH	REMOVAL OF OVERHEAD SIGN SUPPORT AND DISPOSAL, TYPE TC-12.30	
				5						5			630	89802	5	EACH	REMOVAL OF OVERHEAD SIGN SUPPORT AND DISPOSAL, TYPE TC-7.65	
				10						10			631	94250	10	EACH	REMOVAL OF LUMINAIRE	
				2						2			631	94350	2	EACH	REMOVAL OF DISCONNECT SWITCH	
				3						3			631	94450	3	EACH	REMOVAL OF BALLAST	
				5						5			631	94470	5	EACH	REMOVAL OF SIGN SERVICE	
				3						3			631	94490	3	EACH	REMOVAL, MISC.: REMOVAL OF LOOP WARNING SIGN AND FLASHERS	
1	4.21	3.69	1.56							10.46			644	00104	10.46	MILE	EDGE LINE, 6"	
2	1.56	1.77	0.54							5.87			644	00204	5.87	MILE	LANE LINE, 6"	
			0.02							0.02			644	00300	0.02	MILE	CENTER LINE	
	430	5,081	4,276							9,787			644	00404	9,787	FT	CHANNELIZING LINE, 12"	
			177							177			644	00500	177	FT	STOP LINE	
		43	201							244			644	00720	244	FT	CHEVRON MARKING	
			8							8			644	01300	8	EACH	LANE ARROW	
			4							4			644	01360	4	EACH	WRONG WAY ARROW	
	614	2,118	899							3,631			644	01510	3,631	FT	DOTTED LINE, 6"	
		900								900			644	01511	900	FT	DOTTED LINE, 6", AS PER PLAN	379
		3,327	1,268							4,595			644	30000	4,595	FT	REMOVAL OF PAVEMENT MARKING	
	3.21	3.63	0.82							7.66			644	30030	7.66	MILE	REMOVAL OF PAVEMENT MARKING	
	0.32		0.08							0.4			646	10010	0.4	MILE	EDGE LINE, 6"	
	0.08									0.08			646	10110	0.08	MILE	LANE LINE, 6"	
	0.22		0.08							0.3			646	50300	0.3	MILE	REMOVAL OF PAVEMENT MARKING	
																	TRAFFIC SIGNALS	
							100	54		154			625	25400	154	FT	CONDUIT, 2", 725.04	
							32	11		43			625	25600	43	FT	CONDUIT, 4", 725.04	
									401	401			625	25600	401	FT	CONDUIT, 4", 725.04 JACK OR DRILLED	
									161	161			625	25602	161	FT	CONDUIT, 4", 725.05 4" MULTICELL, SCHEDULE 80, 725.20	
									124	124			625	25920	124	FT	CONDUIT, MISC.:CONDUIT, 4", MULTICELL, 725.20, EPC-80, CITY OF COLUMBUS	411
									382	382			625	25920	382	FT	CONDUIT, MISC.:CONDUIT, 4" MULTICELL, SCHEDULE 80, 725.20, JACK OR DRILLED	413
									6,023	6,023			625	25920	6,023	FT	CONDUIT, MISC.:ENCASED INTERCONNECT CONDUIT BANK, TC2, SCH 40, (4)-3" & (1)-1.5", CITY OF COLUMBUS	411
							132	65		197			625	29000	197	FT	TRENCH	
									6,911	6,911			625	29001	6,911	FT	TRENCH, AS PER PLAN	411
									407	407			625	29401	407	FT	TRENCH IN PAVED AREAS, AS PER PLAN	411
							1	1		2			625	30706	2	EACH	PULL BOX, 725.08, 24"	
									2	2			625	30711	2	EACH	PULL BOX, 725.08, 32", AS PER PLAN	414
									14	14			625	31600	14	EACH	PULL BOX, MISC.:, PULL BOX, CONCRETE 32" (725.08) CITY OF COLUMBUS	411
									3	3			625	31600	3	EACH	PULL BOX, MISC.:, PULL BOX, CONCRETE 48" (725.08) CITY OF COLUMBUS	411
							6	6		12			625	32000	12	EACH	GROUND ROD	
							4	4		8			625	76000	8	EACH	ARC FLASH CALCULATIONS AND LABEL, POLES P1-P4 ON EB OFF RAMP AND WB OFF RAMP	

CALCULATED ACF
CHECKED CSR

GENERAL SUMMARY

FRA-270-51.50

X:\Projects\2013\1321\1010\FRA\92616\roadway\sheets\92616GG001.dgn 5/2/2023 6:15:56 AM cwong

SHEET NUM.											PART.			ITEM	ITEM EXT	GRAND TOTAL	UNIT	DESCRIPTION	SEE SHEET NO.
406	409	415	487	509							01/IMS/04	02/IMS/14	03/NHS/43						
																		TRAFFIC SIGNALS	
2	2										4			630	79000	4	EACH	SIGN HANGER ASSEMBLY, SPAN WIRE	
7	7										14			632	04910	14	EACH	VEHICULAR SIGNAL HEAD, (LED), 3-SECTION, 12" LENS, 1-WAY, ALUMINUM, WITH BACK PLATE	
2	2										4			632	05060	4	EACH	VEHICULAR SIGNAL HEAD, (LED), 4-SECTION, 12" LENS, 1-WAY, ALUMINUM, WITH BACK PLATE	
9	9										18			632	25000	18	EACH	COVERING OF VEHICULAR SIGNAL HEAD	
402	561	27									990			632	30400	990	FT	MESSENGER WIRE, 7 STRAND, 1/2" DIAMETER WITH ACCESSORIES	
402	561										963			632	30600	963	FT	TETHER WIRE, WITH ACCESSORIES	
1,279	1,389										2,668			632	40700	2,668	FT	SIGNAL CABLE, 7 CONDUCTOR, NO. 14 AWG	
		6,217									6,217			632	62810	6,217	FT	INTERCONNECT CABLE, MISC.:, FIBER OPTIC CABLE, 144 STRAND (COC SS1620)	412
		3									3			632	62820	3	EACH	INTERCONNECT, MISC.:FIBER OPTIC SPLICE ENCLOSURE, CLAMSHELL, 288 SPLICE (COC SS1620)	412
		240									240			632	62820	240	EACH	INTERCONNECT, MISC.:, FIBER OPTIC FUSION SPLICE (COC SS1620)	412
		3									3			632	62820	3	EACH	INTERCONNECT, MISC.:, TERMINATION PANEL, 24 FIBER, WITH 200 FT DROP CABLE	412
4	4										8			632	64000	8	EACH	STRAIN POLE FOUNDATION	
525	387										912			632	68100	912	FT	POWER CABLE, 1 CONDUCTOR, NO. 6 AWG	
		1,000									1,000			632	69300	1,000	FT	POWER CABLE, 3 CONDUCTOR, NO. 4 AWG	
1	1										2			632	70000	2	EACH	POWER SERVICE	
1	1	1									3			632	70400	3	EACH	CONDUIT RISER, 2" DIAMETER	
4	4										8			632	83000	8	EACH	STRAIN POLE, TYPE TC-81.10, DESIGN 10	
		1									1			632	89300	1	EACH	WOOD POLE	
1	1										2			633	65511	2	EACH	CABINET, TYPE TS-2, AS PER PLAN	400
1	1										2			633	67101	2	EACH	CABINET FOUNDATION, AS PER PLAN	400
1	1										2			633	67201	2	EACH	CONTROLLER WORK PAD, AS PER PLAN	400
1	1										2			633	75001	2	EACH	UNINTERRUPTIBLE POWER SUPPLY (UPS), 1000 WATT, AS PER PLAN	400
		6									6			633	99000	6	EACH	CONTROLLER ITEM, MISC.:, FIBER OPTIC ETHERNET TRANSCEIVER, SHORT RANGE	413
		3									3			633	99000	3	EACH	CONTROLLER ITEM, MISC.:, LAYER 2 ETHERNET SWITCH	413
		2									2			633	99000	2	EACH	CONTROLLER ITEM, MISC.:, TERMINAL PORT SERVER	412
1	1										2			633	99000	2	EACH	CONTROLLER ITEM, MISC.:UNMANAGED ETHERNET SWITCH	400
		3									3			804	30010	3	EACH	FAN-OUT KIT, 12 FIBER	
		3									3			804	34012	3	EACH	FIBER TERMINATION PANEL, 12 FIBER	
		2									2			804	37000	2	EACH	SPLICE ENCLOSURE, BUTT STYLE	
3	3										6			809	69001	6	EACH	ADVANCE RADAR DETECTION, AS PER PLAN	400
1	1										2			809	69101	2	EACH	STOP LINE RADAR DETECTION, AS PER PLAN	400
1	1										2			809	69122	2	EACH	ATC V6.24 CONTROLLER, AS PER PLAN	
																		STRUCTURE REPAIR (FRA-023-0517 SFN 2513447)	
												LUMP		202	11203	LS		PORTIONS OF STRUCTURE REMOVED, OVER 20 FOOT SPAN, AS PER PLAN	485
			166									166		202	22900	166	SY	APPROACH SLAB REMOVED	
			143									143		202	23500	143	SY	WEARING COURSE REMOVED	
			436									436		503	21100	436	CY	UNCLASSIFIED EXCAVATION	
			40,400									40,400		509	10000	40,400	LB	EPOXY COATED REINFORCING STEEL	
			110									110		509	30020	110	FT	NO. 4 DEFORMED GFRP REINFORCEMENT	
			208									208		510	10000	208	EACH	DOWEL HOLES WITH NONSHRINK, NONMETALLIC GROUT	
			88									88		511	34447	88	CY	CLASS QC2 CONCRETE WITH QC/QA, BRIDGE DECK, AS PER PLAN	485
			63									63		511	34451	63	CY	CLASS QC2 CONCRETE WITH QC/QA, BRIDGE DECK (PARAPET), AS PER PLAN	485
			41									41		511	45711	41	CY	CLASS QC1 CONCRETE, ABUTMENT, AS PER PLAN	
			172									172		511	81300	172	EACH	CONCRETE, MISC.: EMBEDDED GALVANIC ANODE (EGA)	485

CALCULATED ACF
CHECKED CSR

GENERAL SUMMARY

FRA-270-51.50

X:\Projects\2013\1321\1010\FRA\92616\roadway\sheets\92616GG001.dgn 4/26/2023 3:25:32 PM cwong

SHEET NUM.											PART.			ITEM	ITEM EXT	GRAND TOTAL	UNIT	DESCRIPTION	SEE SHEET NO.
487	509										01/IMS/04	02/IMS/14	03/NHS/43						
																		STRUCTURE REPAIR (FRA-023-0517 SFN 2513447)	
738												738		512	10100	738	SY	SEALING OF CONCRETE SURFACES (EPOXY-URETHANE)	485
51												51		512	10300	51	SY	SEALING CONCRETE BRIDGE DECKS WITH HMWM RESIN	
4												4		512	10600	4	FT	CONCRETE REPAIR BY EPOXY INJECTION	
35												35		512	33000	35	SY	TYPE 2 WATERPROOFING	
187												187		SPECIAL	51271500	187	SY	URETHANE TOP COAT SEALER	485
16												16		516	13600	16	SF	1" PREFORMED EXPANSION JOINT FILLER	
41												41		516	13900	41	SF	2" PREFORMED EXPANSION JOINT FILLER	
61												61		516	14020	61	FT	SEMI-INTEGRAL ABUTMENT EXPANSION JOINT SEAL	
61												61		516	42600	61	FT	ELASTOMERIC BEARING PAD, MISC.: 8" WIDE X 1" THICK ELASTOMERIC BEARING STRIP	
												LUMP		516	47001	LS		JACKING AND TEMPORARY SUPPORT OF SUPERSTRUCTURE, AS PER PLAN	485
8												8		518	21200	8	CY	POROUS BACKFILL WITH GEOTEXTILE FABRIC	
63												63		518	40000	63	FT	6" PERFORATED CORRUGATED PLASTIC PIPE	
246												246		518	40011	246	FT	6" NON-PERFORATED CORRUGATED PLASTIC PIPE, INCLUDING SPECIALS, AS PER PLAN	485
1,682												1,682		SPECIAL	51900100	1,682	SF	COMPOSITE FIBER WRAP SYSTEM	
41												41		519	11101	41	SF	PATCHING CONCRETE STRUCTURE, AS PER PLAN	485
161												161		526	25011	161	SY	REINFORCED CONCRETE APPROACH SLABS WITH QC/QA (T=15"), AS PER PLAN	486
57												57		526	90030	57	FT	TYPE C INSTALLATION	
136												136		840	23000	136	CY	SELECT GRANULAR BACKFILL	
599												599		848	10000	599	SY	MICRO SILICA MODIFIED CONCRETE OVERLAY USING HYDRODEMOLITION, 2 1/2" THICK	
599												599		848	20000	599	SY	SURFACE PREPARATION USING HYDRODEMOLITION	
9												9		848	30000	9	CY	MICRO SILICA MODIFIED CONCRETE OVERLAY (VARIABLE THICKNESS), MATERIAL ONLY	
1												1		848	50000	1	SY	HAND CHIPPING	
LUMP												LUMP		848	50100	LS		TEST SLAB	
599												599		848	50320	599	SY	EXISTING CONCRETE OVERLAY REMOVED, 1 1/2" THICK	
631												631		863	00100	631	SY	GEOGRID, TYPE P1	
																		STRUCTURE REPAIR (FRA-270-5264, SFN 2513536)	
												LUMP		202	11203	LS		PORTIONS OF STRUCTURE REMOVED, OVER 20 FOOT SPAN, AS PER PLAN	507
	89											89		202	22900	89	SY	APPROACH SLAB REMOVED	
	89											89		202	23500	89	SY	WEARING COURSE REMOVED	
	206											206		503	21100	206	CY	UNCLASSIFIED EXCAVATION	
	122,504											122,504		509	10000	122,504	LB	EPOXY COATED REINFORCING STEEL	
	117											117		509	30020	117	FT	NO. 4 GFRP DEFORMED BARS	
	495											495		510	10000	495	EACH	DOWEL HOLES WITH NONSHRINK, NONMETALLIC GROUT	
	326											326		511	34412	326	CY	CLASS QC2 CONCRETE WITH QC/QA, SUPERSTRUCTURE	
	106											106		511	34450	106	CY	CLASS QC2 CONCRETE WITH QC/QA, BRIDGE DECK (PARAPET)	
	14											14		511	41010	14	CY	CLASS QC1 CONCRETE, PIER ABOVE FOOTINGS	
	72											72		511	45710	72	CY	CLASS QC1 CONCRETE, ABUTMENT	
	1,250											1,250		512	10100	1,250	SY	SEALING OF CONCRETE SURFACES (EPOXY-URETHANE)	
	34											34		512	33000	34	SY	TYPE 2 WATERPROOFING	
	372,900											372,900		513	10280	372,900	LB	STRUCTURAL STEEL MEMBERS, LEVEL 4	
	4,701											4,701		513	20000	4,701	EACH	WELDED STUD SHEAR CONNECTORS	
	24,100											24,100		514	00060	24,100	SF	FIELD PAINTING STRUCTURAL STEEL, INTERMEDIATE COAT	
	24,100											24,100		514	00066	24,100	SF	FIELD PAINTING STRUCTURAL STEEL, FINISH COAT	
	15											15		514	10000	15	EACH	FINAL INSPECTION REPAIR	
	61											61		516	11210	61	FT	STRUCTURAL EXPANSION JOINT INCLUDING ELASTOMERIC STRIP SEAL	
	18											18		516	13900	18	SF	2" PREFORMED EXPANSION JOINT FILLER	

CALCULATED ACF CHECKED CSR

GENERAL SUMMARY

FRA-270-51.50

X:\Projects\2013\1321\1010\FRA\92616\roadway\sheets\92616GG001.dgn 5/5/2023 1:39:43 PM cwong

SHEET NUM.											PART.			ITEM	ITEM EXT	GRAND TOTAL	UNIT	DESCRIPTION
21	22	22A	23	38	509					OFFICE CALCS.	01/IMS/04	02/IMS/14	03/NHS/43					
																		STRUCTURE REPAIR (FRA-270-5264, SFN 2513536)
					8							8		516	44101	8	EACH	ELASTOMERIC BEARING WITH INTERNAL LAMINATES AND LOAD PLATE (NEOPRENE), AS PER PLAN
																		(LOAD PLATE 20" X 16" X 1.50", NEOPRENE 15" DIA. X 2.950")
					4							4		516	44101	4	EACH	ELASTOMERIC BEARING WITH INTERNAL LAMINATES AND LOAD PLATE (NEOPRENE), AS PER PLAN
																		(LOAD PLATE 28" X 19" X 1.50", NEOPRENE 20" X 18" X 3.850")
					8							8		516	44101	8	EACH	ELASTOMERIC BEARING WITH INTERNAL LAMINATES AND LOAD PLATE (NEOPRENE), AS PER PLAN
																		(LOAD PLATE 25" X 25" X 1.50", NEOPRENE 24" DIA. X 4.975")
					48							48		518	21200	48	CY	POROUS BACKFILL WITH GEOTEXTILE FABRIC
					456							456		SPECIAL	51900100	456	SF	COMPOSITE FIBER WRAP SYSTEM
					98							98		519	11100	98	SF	PATCHING CONCRETE STRUCTURE
					148							148		526	25010	148	SY	REINFORCED CONCRETE APPROACH SLABS WITH QC/QA (T=15")
					58							58		526	90030	58	FT	TYPE C INSTALLATION
																		MAINTENANCE OF TRAFFIC
		150									150			301	46000	150	CY	ASPHALT CONCRETE BASE, PG64-22
			122								122			611	04400	122	FT	12" CONDUIT, TYPE B
			2								2			611	98470	2	EACH	CATCH BASIN, NO. 2-2B
	400										400			614	11110	400	HOUR	LAW ENFORCEMENT OFFICER WITH PATROL CAR FOR ASSISTANCE
			17								15	2		614	12384	17	EACH	WORK ZONE IMPACT ATTENUATOR, 24" WIDE HAZARDS, (BIDIRECTIONAL)
LUMP											LUMP			614	12420	LS		DETOUR SIGNING
10											10			614	12500	10	EACH	REPLACEMENT SIGN
100											100			614	12600	100	EACH	REPLACEMENT DRUM
		500	4,763								5,231	32		614	12800	5,263	EACH	WORK ZONE RAISED PAVEMENT MARKER
			739								681	58		614	13310	739	EACH	BARRIER REFLECTOR, TYPE 1, ONE-WAY
			321								309	12		614	13350	321	EACH	OBJECT MARKER, ONE WAY
72											72			614	18601	72	SNMT	PORTABLE CHANGEABLE MESSAGE SIGN, AS PER PLAN
										3.53	3.53			614	20560	3.53	MILE	WORK ZONE LANE LINE, CLASS III, 6", 642 PAINT
			0.08								0.06	0.02		614	20000	0.08	MILE	WORK ZONE LANE LINE, CLASS I, 4"
			15.54								15.31	0.23		614	22000	15.54	MILE	WORK ZONE EDGE LINE, CLASS I, 4"
			55,082								55,082			614	23000	55,082	FT	WORK ZONE CHANNELIZING LINE, CLASS I, 8"
			2,540								1,961	579		614	24000	2,540	FT	WORK ZONE DOTTED LINE, CLASS I
			254								254			614	25000	254	FT	WORK ZONE TRANSVERSE/DIAGONAL LINE, CLASS I
										1.67	1.67			614	22360	1.67	MILE	WORK ZONE EDGE LINE, CLASS III, 6", 642 PAINT
			112								112			614	26000	112	FT	WORK ZONE STOP LINE, CLASS I
			14								14			614	30000	14	EACH	WORK ZONE ARROW, CLASS I
			8								8			614	31640	8	EACH	WORK ZONE WORD ON PAVEMENT, 96", CLASS I
				LUMP							LUMP			615	10000	LS		ROADS FOR MAINTAINING TRAFFIC
			21,695								21,695			615	20000	21,695	SY	PAVEMENT FOR MAINTAINING TRAFFIC, CLASS A
		50									50			616	10000	50	MGAL	WATER
			15,930								15,350	580		622	41100	15,930	FT	PORTABLE BARRIER, UNANCHORED
																		INCIDENTALS
											LUMP			108	10000	LS		CPM PROGRESS SCHEDULE
											LUMP			614	11000	LS		MAINTAINING TRAFFIC
											24			619	16020	24	MNTH	FIELD OFFICE, TYPE C
											LUMP			623	10000	LS		CONSTRUCTION LAYOUT STAKES AND SURVEYING
											LUMP			624	10000	LS		MOBILIZATION

CALCULATED ACF
CHECKED CSR

GENERAL SUMMARY

FRA-270-51.50

X:\Projects\2013\1321\1010\FRA\92616\roadway\sheets\92616GG001.dgn 5/9/2023 11:24:01 AM cwong

REF NO.	SHEET NO.	STATION TO STATION					202 HEADWALL REMOVED EACH	202 PAVEMENT REMOVED SY	202 CONCRETE BARRIER REMOVED FT	202 PIPE REMOVED, 24" AND UNDER FT	202 PIPE REMOVED, OVER 24" FT	SPECIAL FILL AND PLUG EXISTING CONDUIT FT	202 GUARDRAIL REMOVED FT	252 FULL DEPTH PAVEMENT SAWING FT	611 DRAINAGE STRUCTURE, MISC.: FLAP GATE REMOVED EACH	618 RUMBLE STRIPS, SHOULDER (ASPHALT CONCRETE), AS PER PLAN FT	618 RUMBLE STRIPS, SHOULDER (CONCRETE) FT
			TO														
I-270 EASTBOUND																	
R1	102	489+59.30			494+44.96	RT							488				
P1	102	487+03.75			495+81.90	RT		2038						16			
P1	103	501+73.26			501+73.26	RT								16			
I-270 WESTBOUND																	
P1	105	486+12.07			496+00.00	LT								1001			
P2	105	486+12.07			496+00.00	LT										988	
P1	106	496+00.00			498+10.74	LT								210			
P2	106	500+45.63			506+00.00	LT								552			
P3	106	496+00.00			498+11.00	LT										209	
P4	106	500+49.05			506+00.00	LT										551	
P1	107	506+00.00			512+96.84	LT								718			
P2	107	506+00.00			512+96.84	LT										693	
P1	108	516+00.00			521+40.00	LT										537	
US-23																	
P1	174	578+43.19			584+77.90	RT		747									
R1	175	586+12.71			587+41.96	LT&RT							130				
R2	175	586+11.09			587+41.98	RT							131				
RAMP L																	
R1	202	571+88.12			576+00.00	LT							410				
R1	203	576+00.00			579+10.18	LT			48				286				
R2	203	577+37.74			579+08.33	RT							201				
R1	204	583+25.93			586+00.00	LT							271				
R2	204	583+13.10			586+00.00	RT							295				
R1	205	586+00.00			587+98.26	LT							220				
R2	205	586+00.00			588+07.52	RT							238				
R3	205	590+76.08			591+00.00	LT							49				
R4	205	590+81.17			591+00.00	RT							43				
R1	206	591+00.00			596+00.00	LT							496				
R2	206	591+00.00			594+46.57	RT							358				
R1	207	596+00.00			598+24.65	LT							225				
RAMP M																	
R1	221	10+00.00			15+97.14	LT							608				
R2	221	10+00.00			19+78.39	RT							973				
RAMP N																	
P1	223	03+81.21			06+13.41	LT&RT		2938									
R1	223	04+22.19			10+00.00	RT							558				
R2	223	07+55.20			10+00.00	LT							270				
R3	223	09+38.36			09+37.76	LT&RT	2				88						
R1	224	10+00.00			11+11.35	LT							123				
R2	224	10+00.00			11+19.77	RT							115				
R3	224	12+88.98			12+89.68	LT&RT	2			94							
R4	224	13+27.11			15+70.02	RT							236				
RAMP O																	
R1	226	07+06.18			10+00.00	LT							319				
R1	227	10+00.00			10+86.77	LT							94				
R2	227	10+00.00			498+09.95	RT							450				
RAMP P1																	
P1	228	684+89.82			684+89.82	LT&RT								39			
P2	228	684+89.82			686+17.29	RT											128
R1	228	684+89.82			688+00.00	RT			48				264				
R1	229	688+00.00			691+75.98	RT						130	371				
R2	229	690+20.45			692+95.59	LT							279				
R3	229	689+90.71			690+23.11	RT									2		
R4	229	691+40.54			691+68.26	LT	1										
P1	232	703+70.79			703+70.79	LT&RT								26			
P1	233	709+50.00			712+11.92	RT										262	
TOTALS CARRIED TO GENERAL SUMMARY							5	5723	96	94	88	130	8501	2578	2	3240	128

CALCULATED ACF
CHECKED CSR

ROADWAY ESTIMATED QUANTITIES

FRA-270-51.50

X:\Projects\2013\1321\1010\FRA-92616\roadway\sheets\92616GS001.dgn 3/28/2023 12:14:18 PM cwong

REF NO.	SHEET NO.	STATION TO STATION					202 HEADWALL REMOVED EACH	202 PAVEMENT REMOVED SY	202 CONCRETE BARRIER REMOVED FT	202 PIPE REMOVED, 24" AND UNDER FT	202 PIPE REMOVED, OVER 24" FT	202 GUARDRAIL REMOVED FT	202 CATCH BASIN REMOVED EACH	202 FENCE REMOVED FT	202 VALVE BOX REMOVED EACH	252 FULL DEPTH PAVEMENT SAWING FT	607 FENCE, TYPE CLT FT	618 RUMBLE STRIPS, SHOULDER (ASPHALT CONCRETE), AS PER PLAN FT	618 RUMBLE STRIPS, SHOULDER (CONCRETE) FT	625 LIGHT POLE REMOVED EACH	625 PULL BOX REMOVED EACH	638 6" WATER MAIN DUCTILE IRON PIPE ANSI CLASS 52, PUSH-ON JOINTS AND FITTINGS FT	638 6" GATE VALVE AND VALVE BOX EACH	638 FIRE HYDRANT REMOVED AND DISPOSED OF EACH	638 6" FIRE HYDRANT EACH	638 VALVE BOX ADJUSTED TO GRADE EACH	638 1" AIR RELEASE VALVEADJUSTED TO GRADE EACH	SPECIAL LOWER WATER SERVICE CONNECTION, 1" FT
			TO																									
RAMP Q																												
P1	265	00+00.00			10+32.31	LT&RT		2446																				
R1	265	500+44.77			04+15.80	RT						422																
R2	265	07+99.35			08+01.24	LT&RT	2			82																		
R1	267	263+39.81			264+80.45	RT						141																
RAMP R																												
P1	267	260+14.67			265+00.00	LT										490												
P2	267	260+14.67			265+00.00	RT												486										
P1	268	265+00.00			266+46.89	LT										160												
P2	268	265+00.00			265+52.69	RT												53										
P3	268	265+49.00			266+45.96	LT												100										
R1	268	267+53.16			270+00.00	RT						254																
R2	268	266+86.94			270+00.00	LT						311																
R1	269	270+00.00			275+00.00	RT						499																
R2	269	270+00.00			271+88.12	LT						195																
R3	269	273+11.96			273+27.87	RT	1				31																	
R1	270	277+27.38			280+00.00	LT						280																
R2	270	275+00.00			280+00.00	RT			47			458																
R3	270	279+13.15			279+22.12	RT	1																					
R1	271	280+00.00			283+01.54	LT						310																
R2	271	280+00.00			285+00.00	RT						503																
P1	272	286+18.48			287+90.80	RT												172										
R1	272	285+00.00			287+90.80	LT						292																
RAMP S																												
R1	301	800+29.29			803+00.00	LT						288																
R2	301	802+45.09			802+70.17	RT	1																					
R1	302	803+00.00			808+00.00	LT&RT						501																
R2	302	804+85.58			804+98.77	LT	1																					
R1	303	808+00.00			813+00.00	LT						498																
P1	304	813+02.09			813+02.09	LT&RT										25												
P2	304	813+99.05			816+00.00	LT												19	182									
R1	304	813+00.00			815+80.00	LT			50			234																
US-23 ACCELERATION LANE																												
F1	176	546+50.00			546+46.49	LT											302											
P1	176	546+50.00			551+00.00	RT										460												
P2	176	546+50.00			551+00.00	LT												339										
R1	176	546+50.00			549+21.47	LT								277														
R2	176	549+42.78			549+44.60	LT								27														
W1	176	546+68.85			546+68.85	LT																				1		
W2	176	550+68.75			550+68.75	LT																				1		
P1	177	551+00.00			556+00.00	RT										500		348										
P2	177	551+00.00			556+00.00	LT																						
R1	177	553+43.05			553+93.88	LT				51			1															
R2	177	554+58.70			556+00.00	LT								143														
R3	177	552+97.99			552+97.99	LT														1								
R4	177	553+92.60			553+92.60	LT														1	1							
R5	177	554+37.64			554+37.64	LT														1								
W1	177	554+69.46			554+69.46	LT																10	1	1	1	1		
W2	177	552+52.85			552+52.85	LT																124		1	1	1		
W3	177	552+89.30			552+89.30	LT																						18
P1	178	556+00.00			560+35.52	LT&RT										444												
P2	178	556+00.00			560+35.11	LT												435										
R1	178	556+00.00			557+28.47	LT								42														
W1	178	558+47.01			558+47.01	LT																					1	
TOTALS CARRIED TO GENERAL SUMMARY							6	2446	97	133	31	5186	1	489		2079	302	1952	182	3	1	134	1	2	2	4	1	18

CALCULATED ACF
CHECKED CSR

ROADWAY ESTIMATED QUANTITIES

FRA-270-51.50

X:\Projects\2013\1321\1010\FRA\92616\roadway\sheets\92616GS001.dgn 3/27/2023 7:33:14 AM cwong

REF NO.	SHEET NO.	STATION TO STATION					202 PIPE REMOVED, 24" AND UNDER (FT)	202 FENCE REMOVED (FT)	202 VALVE BOX REMOVED (EACH)	202 GUARDRAIL REMOVED (FT)	202 CATCH BASIN REMOVED (EACH)	202 REMOVAL MISC.:WOOD POST (EACH)	202 REMOVAL MISC.:CABLE GATE (EACH)	252 RUMBLE STRIPS, SHOULDER (ASPHALT CONCRETE), AS PER PLAN (FT)	607 FENCE, TYPE CLT (FT)	618 RUMBLE STRIPS, (ASPHALT CONCRETE), AS PER PLAN (FT)	638 FIRE HYDRANT REMOVED AND DISPOSED OF (EACH)
				TO													
US-23 DECELERATION LANE																	
P1	189	546+50.00			551+00.00	LT								458			
P2	189	546+50.00			551+00.00	RT										450	
R1	189	549+33.05			549+72.92	RT						2	40				
F1	190	554+48.11			559+84.28	LT&RT									528		
P1	190	551+00.00			556+00.00	LT								500			
P2	190	551+00.00			556+00.00	RT										444	
R1	190	554+53.38			556+00.00	LT		147									
W1	190	552+52.32			552+52.32	RT			1								1
P1	191	556+00.00			560+10.04	LT								410			
P2	191	556+00.00			560+09.71	RT										409	
I-270 EASTBOUND MERGE																	
P1	138	711+19.56			716+00.00	LT&RT								522			
P2	138	711+19.56			713+03.00	RT										184	
P3	138	714+74.27			716+00.00	RT										127	
R1	138	713+02.72			713+03.71	RT	73				1						
R2	138	715+48.84			715+49.46	RT	62				1						
R3	138	714+74.27			716+00.00	RT				127							
P1	139	716+00.00			721+00.00	LT								500			
P2	139	716+00.00			721+00.00	RT										502	
R1	139	716+00.00			721+00.00	RT				502							
P1	140	271+00.00			726+00.00	LT								500			
P2	140	721+00.00			726+00.00	RT										502	
R1	140	271+00.00			726+00.00	RT				501							
P1	141	726+00.00			731+00.00	LT								500			
P2	141	726+00.00			731+00.00	RT										500	
R1	141	726+00.00			728+65.35	RT				265							
P1	142	731+00.00			736+00.00	LT								500			
P2	142	731+00.00			736+00.00	RT										500	
P1	143	736+00.00			739+79.69	LT								391			
P2	143	736+00.00			739+79.69	RT										380	
TOTALS CARRIED TO GENERAL SUMMARY							135	147	1	1395	2	2	40	4281	528	3998	1

CALCULATED ACF
CHECKED CSR

ROADWAY ESTIMATED QUANTITIES

FRA-270-51.50

X:\Projects\2013\1321\1010\FRA\92616\roadway\sheets\92616GS001.dgn 1/12/2023 10:17:40 AM cwong

REF NO.	SHEET NO.	STATION TO STATION					606 GUARDRAIL, TYPE MGS	606 GUARDRAIL, BARRIER DESIGN, TYPE MGS	606 ANCHOR ASSEMBLY, MGS TYPE E	606 ANCHOR ASSEMBLY, MGS TYPE T	606 MGS BRIDGE TERMINAL ASSEMBLY, TYPE 2	606 IMPACT ATTENUATOR, TYPE 1 (BIDIRECTIONAL)	606 IMPACT ATTENUATOR, TYPE 2 (BIDIRECTIONAL), 55 MPH (36")	607 FENCE, MISC.:GATE	622 CONCRETE BARRIER, SINGLE SLOPE, TYPE B	622 BARRIER TRANSITION	626 BARRIER REFLECTOR, TYPE 2 (ONE-WAY)
			TO				FT	FT	EACH	EACH	EACH	EACH	EACH	FT	FT	EACH	EACH
I-270 EASTBOUND																	
G1	103	500+44.77			503+38.84	RT	295										
I-270 WESTBOUND																	
G2	106	500+70.78			504+25.05	LT	352										
G3	106	504+82.15			506+00.00	LT	225		1								
US-23																	
G4	175	582+44.24			586+65.17	LT	325										
G5	175	586+10.41			586+55.44	LT&RT	25						1				
RAMP L																	
G6	203	576+90.47			579+33.44	RT	175		1		1						
G7	204	576+20.16			588+20.20	LT	442				2						
G8	204	583+09.74			588+28.58	LT	484				2						
G9	205	590+53.42			598+29.31	RT	750				1						
G10	205	590+49.58			594+38.86	LT	375		1								
RAMP M																	
G11	220	00+00.00			19+82.58	RT	1975										
G12	220	09+09.45			15+83.47	LT	688		1	1							
RAMP O																	
G13	225	02+64.49			05+39.98	LT	275			1	1		1				
G14	226	08+25.21			11+79.36	LT	338				2						
B1	226	05+39.98			08+25.21	LT									309		
G15	226	07+95.17			13+72.93	RT	563		1								
RAMP P1																	
G16	228	684+89.82			695+74.46	RT	650.0		1								
F1	229	692+00.45			692+00.68	RT								1			
G17	229	693+02.12			695+64.70	RT	262.5		1	1							
G18	229	688+00.00			694+73.37	LT	612.5		1		1						
RAMP P2																	
B1	257	867+00.00			869+88.72	LT									288		
RAMP R																	
G19	268	267+95.79			579+35.50	LT	1125		1		1						
G20	268	268+53.45			728+31.26	RT	3287.5		1	1							
RAMP S																	
G21	301	798+76.29			813+97.52	LT	1537.5			1	1						
G22	301	799+25.63			803+62.50	RT	487.5		1								
B1	304	813+97.52			814+47.71	LT									50		
G23	304	814+47.72			815+80.00	LT	112.5				1						
I-270 EASTBOUND MERGE																	
B1	138	711+19.56			718+08.53	RT									690	1	
US-23 DECELERATION LANE																	
G-24	189	549+08.41			550+17.63	RT	12.5	50		1		1					6
G-25	189	549+90.66			551+00.00	RT/LT	12.5	50		1		1					6
G-26	189	548+91.18			550+18.57	RT	62.5		1	1							
G-27	191	559+42.42			560+21.82	RT	75		1	1							
TOTALS CARRIED TO GENERAL SUMMARY							15523	100	13	9	13	2	2	1	1337	1	12

CALCULATED ACF
CHECKED CSR

GUARDRAIL ESTIMATED QUANTITIES

FRA-270-51.50

X:\Projects\2013\1321\1010\FRA\92616\roadway\sheets\92616GS002.dgn 5/9/2023 8:21:52 AM cwong

REF NO.	SHEET NO.	STATION TO STATION					601 RIPRAP, TYPE D SY	601 TIED CONCRETE BLOCK MAT, TYPE 2 SY	601 ROCK CHANNEL PROTECTION, TYPE A WITH FILTER CY	601 ROCK CHANNEL PROTECTION, TYPE C WITH FILTER CY	602 CONCRETE MASONRY CY	605 4" UNCLASSIFIED PIPE UNDERDRAINS FT	605 4" BASE PIPE UNDERDRAINS FT	611 4" CONDUIT, TYPE B FT	611 6" CONDUIT, TYPE F FOR UNDERDRAIN OUTLETS FT	611 6" CONDUIT, TYPE B FT	611 15" CONDUIT, TYPE B FT	611 15" CONDUIT, TYPE B, AS PER PLAN, 707.13 FT	611 15" CONDUIT, TYPE F, 707.05 TYPE C, 707.21, OR 707.33 FT	611 18" CONDUIT, TYPE B FT	611 30" CONDUIT, TYPE A FT	611 72" CONDUIT, TYPE A, 706.02 FT	611 CONDUIT, BORED OR JACKED, TYPE B, 15" FT	611 CONDUIT, BORED OR JACKED, TYPE B, 18" FT	611 CATCH BASIN, NO. 3A EACH	611 CATCH BASIN, NO. 8 EACH	611 CATCH BASIN ADJUSTED TO GRADE EACH	611 MANHOLE, NO. 3 EACH	611 MANHOLE ADJUSTED TO GRADE EACH	611 PRECAST REINFORCED CONCRETE OUTLET EACH	611 DRAINAGE STRUCTURE, MISC.: FLAP GATE, 72" EACH
			TO																												
I-270 WESTBOUND																															
U1	105	486+11.99			496+00.00	LT							983		53															2	
U2	105	486+11.99			496+00.00	LT							983			25															
U1	106	496+00.00			498+11.27	LT							210																		
U2	106	496+00.00			498+11.27	LT							210																	2	
U3	106	500+46.49			506+00.00	LT							550		30															2	
U4	106	500+46.49			506+00.00	LT							550	25																1	
U1	107	506+00.00			512+96.84	LT							691		22															1	
U2	107	506+00.00			512+96.84	LT							691	12																1	
US-23																															
D1	174	572+88.00			573+44.15	LT&RT											95										1				
D2	174	573+78.19			573+78.19	LT																							1		
RAMP L																															
U1	202	571+88.12			574+27.40	LT							239																		
D1	203	578+91.37			579+00.41	LT		82																							
D2	203	578+94.78			579+03.51	RT		80																							
D1	204	583+45.00			583+45.00	LT				2	1								81						1						
D2	204	583+51.95			583+61.00	LT		80																							
D3	204	583+38.79			583+47.52	RT		80																							
RAMP P1																															
U1	228	684+89.82			687+75.75	LT							315	30																	
U2	228	684+89.82			687+74.90	LT&RT							310	11																	
U3	228	684+89.82			687+74.62	RT							308		12															1	
U1	229	688+00.00			693+00.00	RT							499	12																	
U2	229	688+00.00			693+00.00	RT							494		22															1	
U3	229	688+00.00			693+00.00	LT							513		8															1	
D1	229	689+68.39			691+77.29	LT&RT	8		78		69.0											70									2
D2	229	689+99.56			689+48.63	LT&RT				2	0.3							24					122						1		
U1	230	693+00.00			698+00.00	RT						150	350		27																
U2	230	693+00.00			698+00.00	LT&RT						150	350			11															
U3	230	693+00.00			694+73.94	LT							174																		
U4	230	697+00.00			698+00.00	LT							100		24																
D1	230	694+36.09			694+36.09	RT																							1		
D2	230	866+76.04			866+82.28	LT					1									8									1		
D3	230	866+82.28			868+67.15	LT																		287							
D4	230	869+75.62			869+83.78	LT					1									8									1		
U1	231	698+00.00			700+16.50	LT							510																		
U2	231	698+00.00			700+16.50	LT&RT							500																		
U3	231	698+00.00			700+16.50	RT							497																		
U1	232	703+00.00			703+70.79	LT							73																		
U2	232	703+00.00			703+70.79	LT&RT							71																		
U3	232	703+00.00			703+70.79	RT							71																		
RAMP P2																															
U1	257	866+76.04			871+00.00	LT							421		13															1	
U2	257	868+96.68			871+00.00	RT							209																		
D1	257	867+48.52			867+48.52	RT																							1		
D2	257	869+10.95			869+10.95	RT																							1		
U1	258	871+00.00			872+72.48	LT							170		18															1	
U2	258	871+00.00			872+70.98	RT							193		14															1	
D1	258	872+16.23			872+29.91	LT&RT	10			2	1.1											95									
TOTALS CARRIED TO GENERAL SUMMARY							18	322	78	6	73	300	11235	90	243	36	95	24	81	16	95	70	122	287	1	1	1	3	3	15	2

CALCULATED ACF
CHECKED CSR

DRAINAGE ESTIMATED QUANTITES

FRA-270-51.50

89
554

X:\Projects\2013\1321\1010\FRA\92616\roadway\sheets\92616GS003.dgn 5/9/2023 12:58:24 AM cwong

REF NO.	SHEET NO.	STATION TO STATION					203 EXCAVATION	601 RIPRAP, TYPE D	601 ROCK CHANNEL PROTECTION, TYPE A WITH FILTER	601 ROCK CHANNEL PROTECTION, TYPE C WITH FILTER	602 CONCRETE MASONRY	605 4" BASE PIPE UNDERDRAINS	611 4" CONDUIT, TYPE B	611 6" CONDUIT, TYPE F FOR UNDERDRAIN OUTLETS	611 6" CONDUIT, TYPE B	611 6" CONDUIT, TYPE E	611 6" CONDUIT, TYPE F	611 15" CONDUIT, TYPE A	611 18" CONDUIT, TYPE A, 706.02	611 54" CONDUIT, TYPE A	611 96" CONDUIT, TYPE A, 707.02 (0.249)	611 PRECAST REINFORCED CONCRETE OUTLET	613 LOW STRENGTH MORTAR BACKFILL				
			TO				CY	SY	CY	CY	CY	FT	FT	FT	FT	FT	FT	FT	FT	FT	FT	EACH	CY				
		RAMP R																										
U1	267	260+14.67			265+00.00	LT						489	24															
U2	267	260+14.67			265+00.00	LT&RT						500	9															
U3	267	260+14.67			265+00.00	RT						495		16								1						
U1	268	265+00.00			270+00.00	LT						514		20								2						
U2	268	265+00.00			270+00.00	LT&RT						499	11															
U3	268	265+00.00			270+00.00	RT						493		16								1						
U1	269	270+00.00			275+00.00	LT&RT						499	11															
U2	269	270+00.00			275+00.00	RT						496		9								1						
U3	269	270+00.00			271+88.12	LT						195											146					
D1	269	273+20.11			273+18.42	LT&RT	146	12			8																	
U1	270	275+00.00			280+00.00	LT&RT			71					500								31						
U2	270	275+00.00			280+00.00	RT								498														
U3	270	275+89.89			280+00.00	LT								415				18				1						
D1	270	279+16.51			279+20.62	RT	66			2	0.3									24			66					
U1	271	280+00.00			285+00.00	LT&RT								500	7													
U2	271	280+00.00			284+50.00	LT								459	27	37						1						
U3	271	280+00.00			285+00.00	RT								498		19						2						
U1	272	285+00.00			287+90.80	LT&RT						291																
U2	272	285+00.00			287+90.80	RT						290																
		RAMP S																										
U1	301	799+27.09			803+00.00	LT						414		10								1						
U2	301	799+27.80			803+00.00	RT						384		10								1						
D1	301	799+20.43			799+26.23	LT&RT		2		2	0.5								60									
D2	301	802+57.57			802+61.26	LT		5			2.2																	
U1	302	803+00.00			808+00.00	RT						507		36							250	1						
U2	302	803+00.00			808+00.00	LT						496		8								1						
D1	302	804+88.56			804+89.92	LT				2	0.3																	
U1	303	808+00.00			813+00.00	LT						505								40								
U2	303	808+00.00			813+00.00	RT						499																
TOTALS CARRIED TO GENERAL SUMMARY							212	19	71	6	12	7566	55	2995	34	56	18	60	64	250	31	13	212					

CALCULATED ACF CHECKED CSR

DRAINAGE ESTIMATED QUANTITIES

FRA-270-51.50

X:\Projects\2013\132I\1010\FRA\92616\roadway\sheets\92616GS003.dgn 4/13/2023 5:53:36 AM cwong

REF NO.	SHEET NO.	STATION TO STATION					601 RIPRAP, TYPE D	601 ROCK CHANNEL PROTECTION, TYPE C WITH FILTER	602 CONCRETE MASONRY	605 4" BASE PIPE UNDERDRAINS	611 4" CONDUIT, TYPE B	611 6" CONDUIT, TYPE F FOR UNDERDRAIN OUTLETS	611 6" CONDUIT, TYPE B	611 6" CONDUIT, TYPE E	611 12" CONDUIT, TYPE B, 706.02	611 15" CONDUIT, TYPE B	611 15" CONDUIT, TYPE D	611 CATCH BASIN, NO. 2-2B	611 CATCH BASIN, NO. 6	611 INLET, NO. 3 FOR SINGLE SLOPE BARRIER, TYPE B	611 PRECAST REINFORCED CONCRETE OUTLET	839 TRENCH DRAIN, TYPE A, WITH STANDARD GRATE
			TO				SY	CY	CY	FT	FT	FT	FT	FT	FT	FT	FT	EACH	EACH	EACH	EACH	FT
I-270 EASTBOUND MERGE																						
U1	138	711+19.56			716+00.00	RT				481			3									
U2	138	711+19.56			716+00.00	RT				481			93								1	
U3	138	714+73.78			716+00.00	RT				127			25									
U4	138	714+73.78			716+00.00	RT				126			9									
U5	138	714+73.78			716+00.00	RT				126		9									1	
D1	138	713+02.87			713+03.16	RT		1	0.25							85				1		
D2	138	715+49.51			715+50.00	RT		1	0.25							85			1			
U1	139	716+00.00			721+00.00	RT				502	9											
U2	139	716+00.00			720+07.53	RT				409	21											
U3	139	716+00.00			721+00.00	RT				503		9									1	
U4	139	716+00.00			721+00.00	RT				501	20											
U5	139	716+00.00			720+08.53	RT				409	3.0											
D1	139	718+08.53			720+08.53	RT													1			200
U1	140	271+00.00			726+00.00	RT				501				9								
U2	140	271+00.00			726+00.00	RT				501				27								
U3	140	271+00.00			726+00.00	RT				502		10									1	
U1	141	726+00.00			731+00.00	RT				500			9									
U2	141	726+00.00			731+00.00	RT				500		10									1	
U3	141	726+00.00			730+70.11	RT				471			17									
U1	142	731+00.00			736+00.00	RT				500			9									
U2	142	731+00.00			736+00.00	RT				500		20									1	
U1	143	736+00.00			739+79.69	RT				380	9											
U2	143	736+00.00			739+79.69	RT				380		20									1	
US-23 ACCELERATION LANE																						
U1	176	546+50.00			551+00.00	LT				450		58									2	
U2	176	546+50.00			551+00.00	LT				450	18											
D1	176	549+40.06			550+04.76	LT		1									60					
U1	177	551+00.00			556+00.00	LT				500	8											
U2	177	551+00.00			556+00.00	LT				500	8											
D1	177	552+73.54			553+67.16	LT		1	0.2						89			1				
U1	178	556+00.00			560+35.52	LT				437		30									1	
U2	178	556+00.00			560+35.52	LT				436	9											
US-23 DECELERATION LANE																						
U1	189	546+50.00			551+00.00	RT				450	20											
U2	189	546+50.00			551+00.00	RT				450		70									2	
U1	190	551+00.00			556+00.00	RT				500												
U2	190	551+00.00			556+00.00	RT				500												
D1	190	555+12.00			555+33.00	RT		1	0.4								20					
U1	191	556+00.00			560+10.04	RT				410		32									1	
U2	191	556+00.00			560+10.04	RT				410	9											
TOTALS CARRIED TO GENERAL SUMMARY								5	2	13893	134	268	165	36	89	170	80	1	2	1	13	200

CALCULATED ACF
CHECKED CSR

DRAINAGE ESTIMATED QUANTITIES

FRA-270-51.50

X:\Projects\2013\1321\1010\FRA\92616\roadway\sheets\92616GS003.dgn 3/9/2023 11:30:30 AM cwong

STATION FROM	STATION TO	DESCRIPTION	SIDE	LENGTH, L	AVERAGE WIDTH, W	SURFACE AREA, A A=L×W	CADD GENERATED AREAS	204 SUBGRADE COMPACTION	204 PROOF ROLLING	204 EXCAVATION OF SUBGRADE (16" TYPICAL)	204 GRANULAR MATERIAL, TYPE B	204 GEOTEXTILE FABRIC	254 1.25" PAVEMENT PLANING, ASPHALT CONCRETE	206 CEMENT STABILIZED SUBGRADE 14" DEEP	206 CURING COAT	204 GEOGRID	302 8" ASPHALT CONCRETE BASE, PG 64-22, (449)	302 9" ASPHALT CONCRETE BASE, PG 64-22, (449)	302 11" ASPHALT CONCRETE BASE, PG 64-22, (449)	304 6" AGGREGATE BASE	304 8" AGGREGATE BASE	407 NON-TRACKING TACK COAT (APPLIED @ 0.05 GAL./S.Y.)	407 NON-TRACKING TACK COAT (FOR INTERMEDIATE COURSE APPLIED @ 0.08 GAL./S.Y.)	441 1.25" ASPHALT CONCRETE SURFACE COURSE, TYPE I, (448), PG64-22	441 1.75" ASPHALT CONCRETE INTERMEDIATE COURSE, TYPE 2, (448), PG64-22	442 1.5" ASPHALT CONCRETE SURFACE COURSE, TYPE A, (446), PG70-22M, AS PER PLAN	442 1.5" ASPHALT CONCRETE SURFACE COURSE, TYPE A, (446), PG76-22, AS PER PLAN	442 1.75" ASPHALT CONCRETE INTERMEDIATE COURSE, 12.5MM, TYPE A, (446)	442 ANTI-SEGREGATION EQUIPMENT	442 1.5" ASPHALT CONCRETE SURFACE COURSE, 12.5MM, TYPE A, (446)	442 1.75" ASPHALT CONCRETE INTERMEDIATE COURSE, 12.5MM, TYPE A, (446)	452 9" NON-REINFORCED CONCRETE PAVEMENT	452 11" NON-REINFORCED CONCRETE PAVEMENT	452 12" NON-REINFORCED CONCRETE PAVEMENT	452 13" NON-REINFORCED CONCRETE PAVEMENT	609 CURB, TYPE 6	SS875 LONGITUDINAL JOINT ADHESIVE
								SQ YD	HOUR	CU YD	CU YD	SQ YD	SQ YD	SQ YD	SQ YD	SQ YD	CU YD	CU YD	CU YD	CU YD	CU YD	GAL	GAL	CU YD	CU YD	CU YD	CU YD	CU YD	CU YD	CU YD	CU YD	CU YD	SQ YD	SQ YD	SQ YD	SQ YD	FT	LB
486+12.00	489+00.00	I-270 WB	LT	288.00	14.50	4176.00																46.40							7.22	19.33	22.56						57.60
486+12.00	489+00.00	I-270 WB	LT	288.00	14.83	4271.04													145.00																		
486+12.00	489+00.00	I-270 WB	LT	288.00	15.50	4464.00														82.67																	
486+12.00	489+00.00	I-270 WB	LT	288.00	16.00	4608.00			0.26					512.00	512.00																						
489+00.00	497+85.66	I-270 WB	LT	885.66	20.50	18156.03																201.73							75.51	84.06	98.06						177.14
489+00.00	497+85.66	I-270 WB	LT	885.66	20.83	18450.95													626.42																		
489+00.00	497+85.66	I-270 WB	LT	885.66	21.50	19041.69														352.62																	
489+00.00	497+85.66	I-270 WB	LT	885.66	22.00	19484.52			1.08					2164.95	2164.95																						
500+80.73	512+96.84	I-270 WB	LT	1216.11	25.00	30402.75																337.81							158.58	140.75	164.21						243.23
500+80.73	512+96.84	I-270 WB	LT	1216.11	25.33	30807.71													1045.94																		
500+80.73	512+96.84	I-270 WB	LT	1216.11	26.00	31618.86														585.53																	
500+80.73	512+96.84	I-270 WB	LT	1216.11	26.50	32226.91			1.79					3580.77	3580.77																						
512+96.84	515+79.64	I-270 WB	LT	282.80	35.70	10095.96							1121.77										84.13			46.74			81.27							56.57
515+79.64	519+77.77	I-270 WB	LT	398.13	22.35	8898.21							988.69										74.15			41.20			57.91							79.63
519+77.77	521+40.00	I-270 WB	LT	162.23	15.50	2514.57							279.40										20.95			11.64			10.41							32.45
546+50.00	547+50.00	US23	RT	100.00	23.00	2300.00																25.56							14.04	10.65	12.42						20.00
546+50.00	547+50.00	US23	RT	100.00	23.33	2333.00												64.81																		
546+50.00	547+50.00	US23	RT	100.00	24.00	2400.00														44.44																	
546+50.00	547+50.00	US23	RT	100.00	24.50	2450.00			0.14					272.22	272.22																						
547+50.00	553+50.00	US23	RT	600.00	23.00	13800.00																153.33							78.24	63.89	74.54						120.00
547+50.00	553+50.00	US23	RT	600.00	23.33	13998.00												388.83																		
547+50.00	553+50.00	US23	RT	600.00	24.00	14400.00														266.67																	
547+50.00	553+50.00	US23	RT	600.00	24.50	14700.00			0.82					1633.33	1633.33																						
546+50.00	552+50.00	US23	LT	600.00	15.00	9000.00																100.00							42.13	41.67	48.61						120.00
546+50.00	552+50.00	US23	LT	600.00	15.33	9198.00												255.50																		
546+50.00	552+50.00	US23	LT	600.00	16.00	9600.00														177.78																	
546+50.00	552+50.00	US23	LT	600.00	16.50	9900.00			0.55					1100.00	1100.00																						
552+50.00	553+50.00	US23	LT	100.00	21.00	2100.00																23.33							13.04	9.72	11.34						20.00
552+50.00	553+50.00	US23	LT	100.00	21.33	2133.00												59.25																		
552+50.00	553+50.00	US23	LT	100.00	22.00	2200.00														40.74																	
552+50.00	553+50.00	US23	LT	100.00	22.50	2250.00			0.13					250.00	250.00																						
553+50.00	560+35.11	US23	LT	685.11	21.00	14387.31																159.86							89.34	66.61	77.71						137.03
553+50.00	560+35.11	US23	LT	685.11	21.33	14613.40												405.93																		
553+50.00	560+35.11	US23	LT	685.11	22.00	15072.42														279.12																	
553+50.00	560+35.11	US23	LT	685.11	22.50	15414.98			0.86					1712.78	1712.78																						
553+50.00	560+10.04	US23	RT	660.04	23.00	15180.92																168.68							99.31	70.28	82.00						132.01
553+50.00	560+10.04	US23	RT	660.04	23.33	15398.73												427.74																		
553+50.00	560+10.04	US23	RT	660.04	24.00	15840.96														293.35																	
553+50.00	560+10.04	US23	RT	660.04	24.50	16170.98			0.90					1796.78	1796.78																						
560+10.04	572+80.65	US23	LT	1270.61			4764.47																							22.06							
560+10.04	572+80.65	US23	RT	1270.61			15121.41																							70.01							
572+80.65	574+47.73	US23	LT&RT	167.08			3682.07		0.20					409.12	409.12			102.28		68.19		40.91							36.93	17.05	19.89						33.42
585+87.72	587+41.07	US23	LT&RT	153.35			3013.03		0.17					334.78	334.78			83.70		55.80		33.48							30.22	13.95	16.27						30.67
572+06.27	575+68.54	US23	LT	362.27	13.00	4709.51							523.28										39.25			21.80										72.46
575+68.54	576+87.29	US23	LT	118.75	38.85	4613.44							512.60										38.45			21.36			46.28							23.75
576+87.29	580+21.51	US23	LT	334.22	23.20	7753.90							861.54										64.62			35.90			77.78							66.85
580+21.51	582+50.00	US23	LT	228.49	21.05	4809.71							534.41										40.08			22.27			48.25							45.70
582+50.00	583+00.00	US23	LT	50.00	16.10	805.00							89.44										6.71			3.73			8.07							10.00
583+00.00	584+08.94	US23	LT	108.94	11.70	1274.60							141.62										10.62			5.90										21.79
260+14.67	264+09.72	RAMP R	LT	395.05	19.00	7505.95			0.42					833.99	833.99		185.33			139.00		125.10							34.75	40.54	75.29						
264+09.72	266+48.50	RAMP R	LT	238.78	25.00	5969.50			0.33					663.28	663.28		147.40			110.55		99.49							27.64	32.24	59.88						
260+14.67	265+21.48	RAMP R	RT	506.81	10.00	5068.10																56.31							23.46	27.37							
260+14.67	265+21.48	RAMP R	RT	506.81	10.33	5236.87														96.98																	
260+14.67	265+21.48	RAMP R	RT	506.81	11.00	5574.91											137.65					92.92															
260+14.67	265+21.48	RAMP R	RT	506.81	11.50	5828.32			0.32					647.59	647.59																						
265+21.48	266+48.50	RAMP R	RT	127.02	11.00	1397.22																15.52							6.47	7.55	1.27						
265+21.48	266+48.50	RAMP R	RT	127.02	11.33	1439.52														26.66																	
265+21.48	266+48.50	RAMP R	RT	127.02	12.00	1524.24											37.64					25.40															
265+21.48	266+48.50	RAMP R	RT	127.02	12.50	1587.75			0.09					176.42	176.42																						
266+48.50	267+44.39	RAMP R	LT&RT	95.89	40.75	3907.52																													434.17		
266+48.50	267+44.39	RAMP R	LT&RT	95.89	43.75	4195.19			0.23					466.13	466.13					77.69																	
267+44.39	271+13.82	RAMP R	LT&RT	369.43	41.50	15331.35																													1703.48		
267+44.39	271+13.82	RAMP R	LT&RT	369.43	44.50	16439.64			0.91					1826.63	1826.63					304.44																	
271+13.82	272+70.68	RAMP R	LT&RT	156.86	40.25	6313.62																													701.51		
271+13.82	272+70.68	RAMP R	LT&RT	156.86	43.25	6784.20			0.38					753.80	753.80					125.63																	
272+70.68	273+36.73	RAMP R	LT&RT	66.05	22.50	1486.12																													165.12		
272+70.68	273+36.73	RAMP R	LT&RT	66.05	25.50	1684.27			0.09					187.14	187.14					31.19																	
273+36.73	274+23.44	RAMP R	LT&RT	86.71	22.00	1907.62																													211.96		
273+36.73	274+23.44	RAMP R	LT&RT	86.71	25.00	2167.75			0.12					240.86	240.86					40.14																	
TOTALS CARRIED TO SHEET 94								0	10	0	0	0	5053	19563	19563	0	509	1789	1818	3200	0	1706	379	0	0	211	93	108	1111	631	628	0	0	3217	0	0	1501

CALCULATED ACF
CHECKED CSR

PAVEMENT SUBSUMMARY

FRA-270-51.50

92
554

X:\Projects\2013\1321\1010\FRA\92616\roadway\sheets\92616GS004.dgn 3/29/2023 2:19:12 PM cwong

STATION FROM	STATION TO	DESCRIPTION	SIDE	LENGTH, L	AVERAGE WIDTH, W	SURFACE AREA, A A=L×W	CADD GENERATED AREAS	204 SUBGRADE COMPACTION	204 PROOF ROLLING	204 EXCAVATION OF SUBGRADE (18" TYPICAL)	204 GRANULAR MATERIAL, TYPE B	204 GEOTEXTILE FABRIC	254 1.25" PAVEMENT PLANING, ASPHALT CONCRETE	206 CEMENT STABILIZED SUBGRADE 14" DEEP	206 CURING COAT	204 GEOGRID	302 8" ASPHALT CONCRETE BASE, PG 64-22, (449)	302 9" ASPHALT CONCRETE BASE, PG 64-22, (449)	302 11" ASPHALT CONCRETE BASE, PG 64-22, (449)	304 6" AGGREGATE BASE	304 8" AGGREGATE BASE	407 NON-TRACKING TACK COAT (APPLIED @ 0.05 GAL./S.Y.)	407 NON-TRACKING TACK COAT (FOR INTERMEDIATE COURSE APPLIED @ 0.08 GAL./S.Y.)	441 1.25" ASPHALT CONCRETE SURFACE COURSE, TYPE I, (448), PG64-22	441 1.75" ASPHALT CONCRETE INTERMEDIATE COURSE, TYPE 2, (448), PG64-22	442 1.5" ASPHALT CONCRETE SURFACE COURSE, TYPE A, (446), PG70-22M, AS PER PLAN	442 1.5" ASPHALT CONCRETE SURFACE COURSE, TYPE A, (446), PG76-22, AS PER PLAN	442 1.75" ASPHALT CONCRETE INTERMEDIATE COURSE, 12.5MM, TYPE A, (446)	442 ANTI-SEGREGATION EQUIPMENT	442 1.5" ASPHALT CONCRETE SURFACE COURSE, 12.5MM, TYPE A, (446)	442 1.75" ASPHALT CONCRETE INTERMEDIATE COURSE, 12.5MM, TYPE A, (446)	452 9" NON-REINFORCED CONCRETE PAVEMENT	452 11" NON-REINFORCED CONCRETE PAVEMENT	452 12" NON-REINFORCED CONCRETE PAVEMENT	452 13" NON-REINFORCED CONCRETE PAVEMENT	609 CURB, TYPE 6	SS875 LONGITUDINAL JOINT ADHESIVE
								SQ YD	HOUR	CU YD	CU YD	SQ YD	SQ YD	SQ YD	SQ YD	SQ YD	CU YD	CU YD	CU YD	CU YD	CU YD	GAL	GAL	CU YD	CU YD	CU YD	CU YD	CU YD	CU YD	CU YD	CU YD	SQ YD	SQ YD	SQ YD	SQ YD	FT	LB
274+23.44	275+79.94	RAMP R	LT&RT	156.50	24.00	3756.00																												417.33			
274+23.44	275+79.94	RAMP R	LT&RT	156.50	27.00	4225.50			0.23					469.50	469.50					78.25																	
275+79.94	276+29.94	RAMP R	LT&RT	50.00	27.00	1350.00																												150.00			
275+79.94	276+29.94	RAMP R	LT&RT	50.00	30.00	1500.00			0.08					166.67	166.67					27.78																	
276+29.94	276+30.51	RAMP R	LT&RT	0.57	25.00	14.25																												1.58			
276+29.94	276+30.51	RAMP R	LT&RT	0.57	25.00	14.25			0.00					1.58	1.58					0.26																	
276+30.51	285+19.83	RAMP R	LT&RT	889.32	25.00	22233.00																												2470.33			
276+30.51	285+19.83	RAMP R	LT&RT	889.32	26.00	23122.32			1.28					2569.15	2569.15					428.19																	
285+19.83	286+42.36	RAMP R	LT&RT	122.53	22.00	2695.66																29.95						12.48	14.56	19.67						24.51
285+19.83	286+42.36	RAMP R	LT&RT	122.53	22.33	2736.09														50.67																	
285+19.83	286+42.36	RAMP R	LT&RT	122.53	23.00	2818.19											69.58					46.97															
285+19.83	286+42.36	RAMP R	LT&RT	122.53	23.50	2879.45			0.16					319.94	319.94							12.78						5.32	6.21	8.02						10.00
286+42.36	286+92.36	RAMP R	LT&RT	50.00	23.00	1150.00														21.60																	
286+42.36	286+92.36	RAMP R	LT&RT	50.00	23.33	1166.65											29.63					20.00															
286+42.36	286+92.36	RAMP R	LT&RT	50.00	24.00	1200.00			0.07					136.11	136.11																						
286+92.92	287+02.09	RAMP R	LT&RT	9.17	24.00	220.08																2.45						1.02	1.19	1.84						1.84
286+92.92	287+02.09	RAMP R	LT&RT	9.17	24.33	223.14														4.13																	
286+92.92	287+02.09	RAMP R	LT&RT	9.17	25.00	229.25											5.66					3.82															
286+92.92	287+02.09	RAMP R	LT&RT	9.17	25.50	233.84			0.01					25.98	25.98																						
287+02.09	287+90.80	RAMP R	LT&RT	88.71	24.00	2129.04																23.66						9.86	11.50	17.80						17.75
287+02.09	287+90.80	RAMP R	LT&RT	88.71	24.33	2158.58														39.97																	
287+02.09	287+90.80	RAMP R	LT&RT	88.71	25.00	2217.75											54.76					36.96															
287+02.09	287+90.80	RAMP R	LT&RT	88.71	25.50	2262.10			0.13					251.34	251.34																						
811+19.56	812+03.03	IR270 CD	LT&RT	83.47	42.00	3505.74			0.19					389.53	389.53				119.02	64.92		38.95								30.14	16.23	18.94						16.70
812+03.03	814+74.86	IR270 CD	LT&RT	271.83	52.00	14135.16			0.79					1570.57	1570.57				479.90	261.76		157.06								141.63	65.44	76.35						54.37
814+74.86	818+27.28	IR270 CD	LT&RT	352.42	65.50	23083.51																256.48								231.43	106.87	124.68						70.49
814+74.86	818+27.28	IR270 CD	LT&RT	352.42	65.83	23199.81													787.65																		
814+74.86	818+27.28	IR270 CD	LT&RT	352.42	66.50	23435.93														434.00																	
814+74.86	818+27.28	IR270 CD	LT&RT	352.42	67.00	23612.14			1.31					2623.57	2623.57																						
818+27.28	819+28.21	IR270 CD	LT&RT	100.93	41.00	4138.13																45.98								41.51	19.16	22.35						20.19
818+27.28	819+28.21	IR270 CD	LT&RT	100.93	41.33	4171.44													141.62																		
818+27.28	819+28.21	IR270 CD	LT&RT	100.93	42.00	4239.06														78.50																	
818+27.28	819+28.21	IR270 CD	LT&RT	100.93	42.50	4289.53			0.24					476.61	476.61																						
819+28.21	820+10.00	IR270 CD	LT&RT	81.79	38.70	3165.27																35.17								31.63	14.65	17.10						16.36
819+28.21	820+10.00	IR270 CD	LT&RT	81.79	39.03	3192.26													108.38																		
819+28.21	820+10.00	IR270 CD	LT&RT	81.79	39.70	3247.06														60.13																	
819+28.21	820+10.00	IR270 CD	LT&RT	81.79	40.20	3287.96			0.18					365.33	365.33																						
720+07.34	739+79.69	EB IR270	RT	1972.35	25.20	49703.22																552.26								498.57	230.11	268.46						394.48
720+08.53	737+79.69	EB IR270	RT	1771.16	8.00	14169.28													481.06													65.60	76.53					
720+08.53	737+79.69	EB IR270	RT	1771.16	8.33	14753.76														273.22																	
720+08.53	737+79.69	EB IR270	RT	1771.16	9.00	15940.44			0.89					1771.16	1771.16																						
720+08.53	737+79.69	EB IR270	RT	1771.16	9.50	16826.02																186.96								168.78	77.90	90.88						354.24
737+79.69	739+79.69	EB IR270	RT	200.00	10.00	2000.00													67.90													9.26	10.80					
737+79.69	739+79.69	EB IR270	RT	200.00	10.33	2066.00														38.26																	
737+79.69	739+79.69	EB IR270	RT	200.00	11.00	2200.00			0.12					244.44	244.44																						
737+79.69	739+79.69	EB IR270	RT	200.00	11.50	2300.00																															
799+00.80	799+52.87	RAMP S	LT&RT	52.07	48.76	2538.67																												282.07			
799+00.80	799+52.87	RAMP S	LT&RT	52.07	51.76	2695.14			0.15					299.46	299.46					49.91																	
799+52.87	805+50.00	RAMP S	LT&RT	597.13	33.00	19705.29																												2189.48			
799+52.87	805+50.00	RAMP S	LT&RT	597.13	36.00	21496.68			1.19					2388.52	2388.52					398.09																	
805+50.00	806+50.00	RAMP S	LT&RT	100.00	29.00	2900.00																												322.22			
805+50.00	806+50.00	RAMP S	LT&RT	100.00	32.00	3200.00			0.18					355.56	355.56					59.26																	
806+50.00	813+02.09	RAMP S	LT&RT	652.09	25.00	16302.25																												1811.36			
806+50.00	813+02.09	RAMP S	LT&RT	652.09	28.00	18258.52			1.01					2028.72	2028.72					338.12																	
684+89.82	687+89.82	RAMP P1	LT	300.00	28.00	8400.00																													933.33		
684+89.82	687+89.82	RAMP P1	LT	300.00	29.50	8850.00		983.33	0.49	437.04	437.04	983.33				983.33				163.89																	
684+89.82	687+89.82	RAMP P1	RT	300.00	11.75	3525.00																												391.67			
684+89.82	687+89.82	RAMP P1	RT	300.00	13.25	3975.00		441.67	0.22	196.30	196.30	441.67				441.67				73.61																	
687+89.82	690+61.81	RAMP P1	LT&RT	271.99	41.50	11287.58																												1254.18			
687+89.82	690+61.81	RAMP P1	LT&RT	271.99	44.50	12103.55		1344.84	0.67	597.71	597.71	1344.84				1344.84				224.14																	
690+61.81	693+61.81	RAMP P1	LT	300.00	28.00	8400.00																												933.33			
690+61.81	693+61.81	RAMP P1	LT	300.00	29.50	8850.00		983.33	0.49	437.04	437.04	983.33				983.33				163.89																	
690+61.81	693+61.81	RAMP P1	RT	300.00	11.75	3525.00																												391.67			
690+61.81	693+61.81	RAMP P1	RT	300.00	13.25	3975.00		441.67	0.22	196.30	196.30	441.67				441.67				73.61																	
693+61.81	694+73.94	RAMP P1	LT	112.13	28.00	3139.64																												348.85			
693+61.81	694+73.94	RAMP P1	LT	112.13	29.50	3307.84		367.54	0.18	163.35	163.35	367.54				367.54				61.26																	
TOTALS CARRIED TO SHEET 94								4563	12	2028	2028	4563	0	16454	16454	4563	160	0	2186	3468	0	1450	0	0	0	0	29	34	1192	606	707	0	4606	3040	4254	0	981

CALCULATED ACF
CHECKED CSR

PAVEMENT SUBSUMMARY

FRA-270-51.50

93
554

X:\Projects\2013\1321\1010\FRA\92616\roadway\sheets\92616GS004.dgn 12/28/2022 2:00:21 PM sbarnard

PAVEMENT SUBSUMMARY

CALCULATED ACF
CHECKED CSR

STATION FROM	STATION TO	DESCRIPTION	SIDE	LENGTH, L	AVERAGE WIDTH, W	SURFACE AREA, A A=L×W	CADD GENERATED AREAS	204 SUBGRADE COMPACTION	204 PROOF ROLLING	204 EXCAVATION OF SUBGRADE (16" TYPICAL)	204 GRANULAR MATERIAL, TYPE B	204 GEOTEXTILE FABRIC	254 1.25" PAVEMENT PLANING, ASPHALT CONCRETE	206 CEMENT STABILIZED SUBGRADE 14" DEEP	206 CURING COAT	204 GEOGRID	302 8" ASPHALT CONCRETE BASE, PG 64-22, (449)	302 9" ASPHALT CONCRETE BASE, PG 64-22, (449)	302 11" ASPHALT CONCRETE BASE, PG 64-22, (449)	304 6" AGGREGATE BASE	304 8" AGGREGATE BASE	407 NON-TRACKING TACK COAT (APPLIED @ 0.05 GAL./S.Y.)	407 NON-TRACKING TACK COAT (APPLIED @ 0.08 GAL./S.Y.)	441 1.25" ASPHALT CONCRETE SURFACE COURSE, TYPE I, (448), PG64-22	441 1.75" ASPHALT CONCRETE INTERMEDIATE COURSE, TYPE 2, (448), PG64-22	442 1.5" ASPHALT CONCRETE SURFACE COURSE, TYPE A, (446), PG70-22M, AS PER PLAN	442 1.5" ASPHALT CONCRETE SURFACE COURSE, TYPE A, (446), PG76-22, AS PER PLAN	442 1.75" ASPHALT CONCRETE INTERMEDIATE COURSE, 12.5MM, TYPE A, (446)	442 ANTI-SEGREGATION EQUIPMENT	442 1.5" ASPHALT CONCRETE SURFACE COURSE, 12.5MM, TYPE A, (446)	442 1.75" ASPHALT CONCRETE INTERMEDIATE COURSE, 12.5MM, TYPE A, (446)	452 9" NON-REINFORCED CONCRETE PAVEMENT	452 11" NON-REINFORCED CONCRETE PAVEMENT	452 12" NON-REINFORCED CONCRETE PAVEMENT	452 13" NON-REINFORCED CONCRETE PAVEMENT	609 CURB, TYPE 6	SS875 LONGITUDINAL JOINT ADHESIVE
								SQ YD	HOUR	CU YD	CU YD	SQ YD	SQ YD	SQ YD	SQ YD	SQ YD	CU YD	CU YD	CU YD	CU YD	CU YD	GAL	GAL	CU YD	CU YD	CU YD	CU YD	CU YD	CU YD	CU YD	SQ YD	SQ YD	SQ YD	SQ YD	FT	LB
694+73.94	696+97.99	RAMP P1	LT	224.05	40.20	9006.81																												1000.76		
694+73.94	696+97.99	RAMP P1	LT	224.05	41.70	9342.89		1038.10	0.52	461.38	461.38	1038.10				1038.10				173.02																
696+97.99	703+70.80	RAMP P1	LT	672.81	19.00	12783.39																												1420.38		
696+97.99	703+70.80	RAMP P1	LT	672.81	20.50	13792.61		1532.51	0.77	681.12	681.12	1532.51				1532.51				255.42																
703+70.80	712+11.92	RAMP P1	RT	841.12	31.60	26579.39							2953.27										221.49					123.05		88.01					168.23
868+98.38	869+41.00	RAMP P2	LT	42.62	4.00	170.48																										18.94				
868+98.38	869+41.00	RAMP P2	LT	42.62	5.50	234.41		26.05	0.01	11.58	11.58	26.05				26.05				4.34																
869+41.00	869+81.00	RAMP P2	LT	40.00	7.50	300.00																										33.33				
869+41.00	869+81.00	RAMP P2	LT	40.00	9.00	360.00		40.00	0.02	17.78	17.78	40.00				40.00				6.67																
869+81.00	872+70.47	RAMP P2	LT	289.47	11.00	3184.17																										353.80				
869+81.00	872+70.47	RAMP P2	LT	289.47	12.50	3618.38		402.04	0.20	178.69	178.69	402.04				402.04				67.01																
868+98.38	872+29.77	RAMP P2	RT	331.39	22.00	7290.58																										810.06				
868+98.38	872+29.77	RAMP P2	RT	331.39	23.50	7787.66		865.30	0.43	384.58	384.58	865.30				865.30				144.22																
872+29.77	872+71.00	RAMP P2	RT	41.23			1323.00																									147.00				
872+29.77	872+71.00	RAMP P2	RT	41.23			1357.00	150.78	0.08	67.01	67.01	150.78				150.78				25.13																
867+00.00	867+60.87	RAMP P2	LT	60.87	3.05	185.65																										20.63				
867+00.00	867+60.87	RAMP P2	LT	60.87	4.55	276.96		30.77	0.02	13.68	13.68	30.77				30.77				5.13																
867+60.87	869+81.00	RAMP P2	LT	220.13	2.00	440.26																										48.92				
867+60.87	869+81.00	RAMP P2	LT	220.13	3.50	770.46	BARRIER	85.61	0.04	38.05	38.05	85.61				85.61				14.27																
869+81.00	869+88.64	RAMP P2	LT	7.64	0.50	3.82																										0.42				
869+81.00	869+88.64	RAMP P2	LT	7.64	2.00	15.28		1.70	0.00	0.75	0.75	1.70				1.70				0.28																
571+88.12	574+23.32	RAMP L	LT&RT	235.20	16.00	3763.20																											418.13			
571+88.12	574+23.32	RAMP L	LT&RT	235.20	19.00	4468.80				0.25				496.53	496.53					82.76																
574+23.32	575+79.41	RAMP L	LT&RT	156.09	18.00	2809.62																											312.18			
574+23.32	575+79.41	RAMP L	LT&RT	156.09	21.00	3277.89				0.18				364.21	364.21					60.70																
575+79.41	575+86.90	RAMP L	LT&RT	7.49	26.00	194.74																											21.64			
575+79.41	575+86.90	RAMP L	LT&RT	7.49	29.00	217.21				0.01				24.13	24.13					4.02																
575+86.90	576+36.90	RAMP L	LT&RT	50.00	25.50	1275.00																											141.67			
575+86.90	576+36.90	RAMP L	LT&RT	50.00	29.50	1475.00				0.08				163.89	163.89					27.31																
576+36.90	578+67.54	RAMP L	LT&RT	230.64	25.00	5766.00																											640.67			
576+36.90	578+67.54	RAMP L	LT&RT	230.64	28.00	6457.92				0.36				717.55	717.55					119.59																
578+67.54	578+99.41	RAMP L	LT	31.87	3.42	108.88																											12.10			
578+67.54	578+99.41	RAMP L	LT	31.87	4.92	156.80				0.01				17.42	17.42					2.90																
578+99.41	579+24.81	RAMP L	LT	25.40	3.33	84.58																											9.40			
578+99.41	579+24.81	RAMP L	LT	25.40	4.83	122.68				0.01				13.63	13.63					2.27															25.00	
578+67.54	579+02.54	RAMP L	RT	35.00	22.77	796.83																											88.54			
578+67.54	579+02.54	RAMP L	RT	35.00	24.27	849.45				0.05				94.38	94.38					15.73																
579+02.54	579+24.81	RAMP L	RT	22.27	23.33	519.56																											57.73			
579+02.54	579+24.81	RAMP L	RT	22.27	24.83	552.96				0.03				61.44	61.44					10.24															25.00	
583+26.24	583+52.95	RAMP L	LT	26.71	3.33	88.94																											9.88			
583+26.24	583+52.95	RAMP L	LT	26.71	4.83	129.01				0.01				14.33	14.33					2.39															25.00	
583+52.95	583+87.95	RAMP L	LT	35.00	3.42	119.58																											13.29			
583+52.95	583+87.95	RAMP L	LT	35.00	4.92	172.20				0.01				19.13	19.13					3.19																
583+26.24	583+39.76	RAMP L	RT	13.52	23.33	315.42																											35.05			
583+26.24	583+39.76	RAMP L	RT	13.52	24.83	335.70				0.02				37.30	37.30					6.22															25.00	
583+39.76	583+87.95	RAMP L	RT	48.19	22.00	1060.18																											117.80			
583+39.76	583+87.95	RAMP L	RT	48.19	23.50	1132.46				0.06				125.83	125.83					20.97																
583+87.95	584+40.00	RAMP L	LT&RT	52.05	25.00	1301.25																											144.58			
583+87.95	584+40.00	RAMP L	LT&RT	52.05	28.00	1457.40				0.08				161.93	161.93					26.99																
584+40.00	588+10.00	RAMP L	LT&RT	370.00	25.00	9250.00																102.78						42.82	49.96	59.38					74.00
584+40.00	588+10.00	RAMP L	LT&RT	370.00	25.67	9496.42														175.86																
584+40.00	588+10.00	RAMP L	LT&RT	370.00	26.00	9620.00											237.53					160.33														
584+40.00	588+10.00	RAMP L	LT&RT	370.00	28.00	10360.00				0.58				1151.11	1151.11																					
588+10.00	594+77.69	RAMP L	LT&RT	667.69			18632.12						2070.24										155.27					86.26		76.99					133.54
+.00	16+38.07	RAMP M	LT&RT	1638.07	27.05		39357.00						4373.00										327.98					182.21		106.37					327.62
16+38.07	19+78.51	RAMP M	LT&RT	340.44	48.00	8472.17							941.35										70.60					39.22		23.46					68.09
2+98.50	11+89.82	RAMP O	LT&RT	891.32	25.45	22684.16							2520.46										189.03					105.02		72.01					178.27
11+89.82	13+78.64	RAMP O	LT&RT	21.25	23.40	497.25							55.25										4.14					2.30		1.52					4.25
553+02.33	US-23 Decel. Commercial Drive						482.81															2.68		2.24	2.61										
549+74.80	US-23 Accel. Field Drive						1654.92														40.86														
553+17.22	US-23 Accel. Commercial Drive						1166.24															6.48		5.40	6.30										
554+32.85	US-23 Accel. Commercial Drive						1372.64															7.63		6.35	7.41										
TOTALS THIS SHEET								4173	3	1857	1855	4173	12914	3463	3463	4173	238	0	0	1257	41	280	969	14	17	0	581	50	428	0	0	1434	0	2023	2422	100	954
TOTALS SHEET - 92								0	10	0	0	0	5053	19563	19563	0	509	1789	1818	3200	0	1706	379	0	0	211	93	108	1111	631	628	0	0	3217	0	0	0
TOTALS SHEET - 93								4563	12	2028	2028	4563	0	16454	16454	4563	160	0	2186	3468	0	1450	0	0	0	0	29	34	1192	606	707	0	4606	3040	4254	0	981
TOTALS CARRIED TO GENERAL SUMMARY								8736	25	3885	3883	8736	17967	39480	39480	8736	907	1789	4004	7925	41	3436	1348	14	17	211	703	192	2731	1237	1335	1434	4606	8280	6676	100	1935

FRA-270-51.50

94
554

X:\Projects\2013\132\1010\FRA\92616\roadway\sheets\92616GS004.dgn 3/29/2023 2:23:52 PM cwong

SHEET NO.	REFERENCE NO.	LOCATION	STATION FROM	STATION TO	SIDE	621 RPM (1-WAY WHITE) EACH	621 RPM (2-WAY WHITE/RED) EACH	621 RPM (2-WAY YELLOW/RED) EACH	621 RPM (2-WAY YELLOW/YELLOW) EACH	621 RAISED PAVEMENT MARKER REMVED EACH	644 EDGE LINE, 6" MILE	644 LANE LINE, 6" MILE	644 CHANNELIZING LINE, 12" FEET	644 DOTTED LINE, 6" FEET	644 REMOVAL OF PAVEMENT MARKING MILE	646 EDGE LINE, 6" MILE	646 LANE LINE, 6" MILE	646 REMOVAL OF PAVEMENT MARKING MILE
381	ELW1	I-270 WB	486+12	489+00	LT						0.05				0.05			
	ELW2	RAMP P1	684+90	689+25	RT						0.08							
	ELY1	I-270 WB	486+12	489+00	LT						0.05				0.05			
	ELY2	RAMP P1	684+90	689+25	LT						0.08							
	LL1	I-270 WB	486+12	489+00	LT							0.05			0.05			
	LL2	I-270 WB	486+12	489+00	LT			8		8		0.05			0.05			
	LL3	RAMP P1	684+90	689+25	LT		8					0.08						
382	ELW1	RAMP M	19+51	19+78	RT						0.01							
	ELW2	I-270 WB	489+00	498+11	LT						0.17							
	ELW2	I-270 WB	498+11	500+46	LT											0.04		
	ELW2	I-270 WB	500+46	503+60	LT						0.06							
	ELW3	I-270 EB	497+31	498+07	RT						0.01				0.01			
	ELW3	I-270 EB	498+07	500+48	RT											0.05		0.05
	ELW3	I-270 EB	500+48	503+60	RT						0.06				0.06			
	ELW4	RAMP P1	689+26	696+00	CT						0.13							
	ELW5	US-23 SB	578+73	583+90	LT						0.10				0.1			
	ELW6	US-23 NB	575+40	583+90	RT	9					0.16				0.16			
	ELW7	RAMP O	0+00	13+79	CT						0.24							
	ELW8	US-23 SB	575+40	575+78	LT						0.01				0.01			
	ELY1	RAMP M	19+51	19+78	LT						0.01							
	ELY2	I-270 WB	489+00	498+10	LT						0.17				0.17			
	ELY2	I-270 WB	498+10	500+45	LT											0.04		0.04
	ELY2	I-270 WB	500+45	503+60	LT						0.06				0.06			
	ELY3	I-270 EB	497+31	498+08	RT						0.01				0.01			
	ELY3	I-270 EB	498+08	500+49	RT											0.05		0.05
	ELY3	I-270 EB	500+49	503+60	RT						0.06				0.06			
	ELY4	RAMP P1	689+16	694+74	LT						0.11							
	ELY4	RAMP P2	866+76	868+02	CT			9	2	11	0.02							
	ELY5	US-23 SB	575+40	583+90	LT				8		0.16				0.16			
	ELY6	US-23 NB	575+40	583+90	RT				7		0.16				0.16			
	ELY7	RAMP O	2+92	13+79	LT			34		34	0.22							
	LL1	RAMP M	19+51	19+78	LT							0.01						
	LL2	I-270 WB	489+00	498+11	LT							0.17			0.17			
	LL2	I-270 WB	498+11	500+46	LT												0.04	0.04
	LL2	I-270 WB	500+46	503+60	LT							0.06			0.06			
	LL3	I-270 WB	489+00	498+10	LT							0.17			0.17			
	LL3	I-270 WB	498+10	500+45	LT												0.04	0.04
	LL3	I-270 WB	500+45	503+60	LT		11			11		0.06			0.06			
	LL4	RAMP P1	689+21	694+74	LT		8			8		0.11						
	LL5	US-23 SB	575+40	583+90	LT		8			8		0.16			0.16			
	LL6	US-23 NB	575+40	583+90	RT		7			7		0.16			0.16			
	CH1	RAMP P1	694+74	696+00	LT		7						253					
	CH2	US-23 SB	575+78	576+65	LT		6						177					
	DL1	US-23 SB	576+87	583+00	LT									613				
383	ELW1	I-270 WB	503+60	512+95	LT						0.18			1				
	ELW2	I-270 EB	511+19	516+50	RT						0.1				0.1			
	ELW3	I-270 EB	503+60	511+93	RT						0.16				0.16			
	ELW4	RAMP L	575+90	579+33	RT						0.07							
	ELW4	RAMP L	579+33	583+18	RT											0.07		
	ELW4	RAMP L	583+18	585+10	RT						0.04							
	ELW5	RAMP S	803+78	806+50	LT		5				0.24							
	ELW6	RAMP R	275+50	287+91	CT						0.23							
	ELW7	I-270 EB	514+72	516+50	RT						0.03				0.03			
	ELY1	I-270 WB	503+60	516+50	LT						0.25				0.25			
	ELY2	I-270 EB	503+60	516+50	RT			12		12	0.25				0.25			
	ELY3	RAMP L	575+52	579+34	LT			15		15	0.07							
	ELY3	RAMP L	579+34	583+24	LT											0.07		
	ELY3	RAMP L	583+24	585+11	LT						0.04							
	ELY4	RAMP S	803+78	813+16	RT			6	6	12	0.18							
	ELY5	RAMP R	275+90	285+20	LT			11		11	0.18							
	LL1	I-270 WB	503+60	516+50	LT							0.24			0.24			
	LL2	I-270 WB	503+60	516+50	LT							0.24			0.24			
TOTALS CARRIED TO GENERAL SUMMARY						9	60	95	23	137	4.21	1.56	430	614	3.21	0.32	0.08	0.22

CALCULATED DKA
CHECKED DCB

PAVEMENT MARKING SUBSUMMARY

FRA-270-51.50

X:\Projects\2013\1321\1010\FRA\92616\traffic\sheets\92616TS001.dgn 12/7/2022 2:54:15 PM cwong

SHEET NO.	REFERENCE NO.	LOCATION	STATION FROM	STATION TO	SIDE	621 RPM (1-WAY WHITE) EACH	621 RPM (2-WAY WHITE/RED) EACH	621 RPM (2-WAY YELLOW/RED) EACH	621 RPM (2-WAY YELLOW/YELLOW) EACH	621 RAISED PAVEMENT MARKER REMVED EACH	644 EDGE LINE, 6" MILE	644 LANE LINE, 6" MILE	644 CHANNELIZING LINE, 12" FEET	644 CHEVRON MARKING FEET	644 DOTTED LINE, 6" FEET	644 DOTTED LINE, 4", AS PER PLAN FEET	644 REMOVAL OF PAVEMENT MARKING FEET	644 REMOVAL OF PAVEMENT MARKING MILE					
383	LL1	I-270 WB	503+60	516+50	LT		12			12		0.24						0.24					
	LL2	I-270 WB	503+60	516+50	LT							0.24						0.24					
	CH1	RAMP R	275+50	275+90	LT		4			4			81										
	CH2	RAMP S	803+78	805+50	RT		2						174										
	CH3	RAMP S	813+16	815+81	LT		7			7			267										
	CH4	I-270 WB	513+95	515+80	LT		6			6			267				267						
	CH5	I-270 EB	511+93	516+50	RT								461				461						
	CH6	RAMP R	285+20	289+71	LT		12			12			451										
	CM 1	RAMP R	275+50	275+90	LT									22									
	DL1	I-270 WB	515+80	516+50	LT										70								
384	ELW1	I-270 WB	516+50	521+75	LT						0.10							0.1					
	ELW2	I-270 EB	516+50	520+02	RT						0.07							0.07					
	ELW3	I-270 EB	516+50	530+70	RT						0.27							0.27					
	ELY1	I-270 WB	516+50	521+75	LT						0.10							0.1					
	ELY2	I-270 EB	516+50	520+02	RT			4			0.07							0.07					
	LL1	I-270 WB	516+50	521+75	LT							0.10						0.1					
	LL2	I-270 WB	516+50	521+75	LT							0.10						0.1					
	CH1	I-270 EB	516+50	518+22	RT		4			4			344				344						
	CH2	I-270 EB	520+02	530+70	RT								1070				1070						
	CH3	I-270 EB	520+02	530+70	RT		27			27			1071				1071						
	DL1	I-270 WB	516+50	521+63	LT										513								
	DL2	I-270 EB	518+22	527+22	RT											900							
385	ELW1	I-270 EB	530+70	539+72	RT						0.17							0.17					
	CH1	I-270 EB	530+70	531+27	RT		2			2			114				114						
	DL1	I-270 EB	531+27	539+43	RT										816								
387	ELW1	US-23 SB	546+50	548+80	LT						0.04												
	ELW2	US-23 NB	546+50	548+80	RT						0.04												
	ELY1	US-23 SB	546+50	548+80	LT						0.04							0.04					
	ELY2	US-23 NB	546+50	548+80	RT						0.04							0.04					
	LL1	US-23 SB	546+50	548+80	LT							0.04						0.04					
	LL2	US-23 NB	546+50	548+80	RT							0.04						0.04					
	CH1	US-23 NB	547+69	548+80	RT		2						111										
	DL1	US-23 SB	546+50	548+80	LT										230								
	DL2	US-23 NB	546+50	547+69	RT										119								
388	ELW1	US-23 SB	548+80	562+60	LT						0.26												
	ELW2	US-23 NB	548+80	562+60	RT						0.26												
	ELY1	US-23 SB	548+80	562+60	LT						0.26							0.26					
	ELY2	US-23 NB	548+80	562+60	RT						0.26							0.26					
	LL1	US-23 SB	548+80	562+60	LT		12			12		0.26						0.26					
	LL2	US-23 SB	552+50	562+14	LT							0.25											
	LL3	US-23 NB	548+80	562+60	RT							0.26						0.26					
	CH1	US-23 NB	548+80	562+60	RT		13						92										
	CH2	RAMP R	560+14	562+60	RT		9						486										
	CH3	US-23 SB	562+14	562+60	LT		1						92										
	DL1	US-23 SB	548+80	552+50	LT										370								
	CM1	RAMP R	560+14	562+60	RT									21									
389	ELW1	RAMP P1	696+00	709+78	CT						0.26												
	ELW2	RAMP R	262+57	275+50	RT						0.24												
	ELW3	US-23 NB	566+60	575+40	RT	16					0.17							0.17					
	ELW4	US-23 SB	568+78	572+17	LT						0.06							0.06					
	ELW6	RAMP P2	868+98	872+88	RT	9					0.08												
	ELW5	US-23 SB	573+43	575+40	LT	5					0.04							0.04					
	ELY1	US-23 SB	562+60	573+06	LT						0.2							0.2					
	ELY2	US-23 NB	562+60	573+06	RT						0.2							0.2					
	ELY3	RAMP R	266+49	271+88	LT						0.11												
	ELY3	RAMP L	571+88	575+52	LT			15		15	0.07												
	ELY4	RAMP P1	696+98	703+53	LT			10		10	0.13												
	ELY5	US-23 SB	573+84	575+40	LT				3	3	0.03							0.03					
	ELY6	US-23 NB	573+84	575+40	RT				6	6	0.03							0.03					
	ELY7	RAMP P2	868+02	872+83	LT			6		6	0.09												
	LL1	US-23 SB	562+60	575+40	LT		3			3		0.24						0.24					
TOTALS CARRIED TO GENERAL SUMMARY						30	116	35	9	129	3.69	1.77	5081	43	2118	900	3327	3.63					

CALCULATED DKA
CHECKED DCB

PAVEMENT MARKING SUBSUMMARY

FRA-270-51.50

X:\Projects\2013\1321\1010\FRA\92616\traffic\sheets\92616TS002.dgn 12/7/2022 2:54:16 PM cwong

SHEET NO.	REFERENCE NO.	LOCATION	STATION FROM	STATION TO	SIDE	621 RPM (1-WAY WHITE) EACH	621 RPM (2-WAY WHITE/RED) EACH	621 RPM (2-WAY YELLOW/RED) EACH	621 RPM (2-WAY YELLOW/YELLOW) EACH	621 RAISED PAVEMENT MARKER REMVED EACH	644 EDGE LINE, 6" MILE	644 LANE LINE, 6" MILE	644 CENTERLINE MILE	644 CHANNELIZING LINE, 12" FEET	644 CHEVRON MARKING FEET	644 STOP LINE FEET	644 LANE ARROW EACH	644 WRONG WAY ARROW EACH	644 DOTTED LINE, 6" FEET	644 REMOVAL OF PAVEMENT MARKING FEET	644 REMOVAL OF PAVEMENT MARKING MILE	646 EDGE LINE, 6" MILE	646 REMOVAL OF PAVEMENT MARKING MILE	
389	LL2	US-23 NB	562+60	575+40	RT		8			8		0.24									0.24			
	LL3	RAMP R	266+00	273+19	LT		12					0.14												
	CH1	RAMP P1	703+53	709+78	LT		16			16				626										
	CH2	US-23 SB	562+60	568+78	LT									605						605				
	CH3	RAMP R	262+56	264+00	LT		11			11				144										
	CH4	US-23 NB	562+60	566+60	RT		11			11				400						400				
	CH5	RAMP R	264+00	266+49	LT									249										
	CH6	RAMP R	273+19	275+50	LT		6			6				232										
	CH7	RAMP L	573+19	519+52	RT		5			5				232										
	CH8	RAMP P1	696+00	696+98	LT									98										
	CH9	RAMP P2	868+01	868+98	RT									98										
	CH10	RAMP P2	870+00	872+65	RT		7			7				267										
	CM1	RAMP R	262+56	266+49	LT										161									
	CM2	RAMP R	273+19	275+50	LT										33									
	SL1	US-23 NB	572+81	572+81	RT											24								
	SL2	RAMP P2	872+54	872+54	RT											42								
	SL3	US-23 SB	573+60	573+60	LT											24								
	DY1	US-23 SB	573+60	573+95	LT								0.01											
	DY2	US-23 SB	573+60	573+93	LT/RT								0.01											
	A1	RAMP P2	872+56	872+56	RT												2							
	A2	RAMP P2	871+24	871+24	RT												2							
	A3	RAMP P2	870+37	870+37	LT													1						
	A4	RAMP P2	870+37	870+37	RT													1						
	DL1	US-23 NB	573+21	573+88	LT/RT														110					
	DL2	RAMP R	264+00	266+00	LT														200					
390	ELW1	RAMP M	6+45	19+51	RT						0.25													
	ELW2	RAMP L	585+10	588+25	RT						0.06													
	ELW2	RAMP L	588+25	590+53	RT																	0.04	0.04	
	ELW2	RAMP L	590+53	594+44	RT						0.08													
	ELW3	US-23 SB	583+90	587+41	LT						0.07										0.07			
	ELW4	US-23 NB	583+90	594+80	RT	7					0.19										0.19			
	ELW5	RAMP S	798+51	803+78	LT	12					0.11													
	ELY1	RAMP M	7+97	16+01	LT			15		15	0.15													
	ELY2	RAMP L	585+10	588+25	LT						0.06													
	ELY2	RAMP L	588+25	590+53	LT																	0.04	0.04	
	ELY2	RAMP L	590+53	597+93	LT			23		23	0.14													
	ELY3	US-23 SB	583+90	586+65	LT						0.05										0.05			
	ELY4	US-23 NB	583+90	586+65	RT				4	4	0.05										0.05			
	ELY5	US-23 NB	587+26	588+14	RT						0.02										0.02			
	ELY6	RAMP S	798+99	803+78	RT			3	3	6	0.09													
	LL1	RAMP L	596+60	597+93	RT							0.03												
	LL2	US-23 SB	583+90	586+45	LT							0.05									0.03			
	LL3	US-23 NB	583+90	588+14	RT		4					0.08									0.05			
	CH1	RAMP M	16+01	18+18	LT		4							217										
	CH2	RAMP L	594+44	596+60	RT		5							219										
	CH3	RAMP S	799+04	803+78	LT	12								471										
	CH4	US-23 SB	592+27	594+80	LT		4			4				153						153				
	CH5	RAMP M	6+45	7+97	LT		4			4				155										
	SL1	US-23 NB	586+57	586+57	RT											24								
	SL2	US-23 SB	587+41	587+41	LT											23								
	SL3	RAMP S	799+04	799+04	CT											40								
	A1	RAMP S	799+15	799+15	CT												2							
	A2	RAMP S	800+47	800+47	CT												2							
	A3	RAMP S	801+35	801+35	LT													1						
	A4	RAMP S	801+35	801+35	RT													1						
	DL1	US-23 SB	586+45	586+85	RT/LT														120					
	-	US-23 SB	587+41	593+80	LT	14	2		2	2														
391	ELW1	US-23 NB	594+80	600+25	RT						0.12										0.12			
	ELW2	RAMP M	0+00	6+45	CT						0.12													
	CH1	US-23 SB	594+80	594+35	LT									110						110				
	CM1	US-23 SB	594+80	594+35	LT										7									
	DL1	RAMP M	594+35	599+04	LT														469					
	-	US-23 SB	593+80	599+66	LT		3		8	11														
TOTALS CARRIED TO GENERAL SUMMARY						45	102	41	17	133	1.56	0.54	0.02	4276	201	177	8	4	899	1268	0.82	0.08	0.08	

CALCULATED DKA
CHECKED DCB

PAVEMENT MARKING SUBSUMMARY

FRA-270-51.50

97
554

X:\Projects\2013\132\1010\FRA\92616\traffic\sheets\92616TS003.dgn 12/7/2022 2:54:17 PM cwong

SHEET NO.	REFERENCE NO.	LOCATION	STATION	SIDE	CODE	630 REMOVAL OF GROUND MOUNTED SIGN AND DISPOSAL EACH	630 REMOVAL OF GROUND MOUNTED MAJOR SIGN AND DISPOSAL EACH	630 REMOVAL OF GROUND MOUNTED POST SUPPORT AND DISPOSAL EACH	630 REMOVAL OF GROUND MOUNTED STRUCTURAL BEAM SUPPORT AND DISPOSAL EACH	630 REMOVAL OF STRUCTURE MOUNTED SIGN AND DISPOSAL EACH	630 REMOVAL OF OVERHEAD MOUNTED SIGN AND DISPOSAL EACH	630 REMOVAL OF OVERHEAD MOUNTED SIGN AND REERECTION EACH	630 REMOVAL OF GROUND MOUNTED SIGN AND REERECTION EACH	630 REMOVAL OF GROUND MOUNTED PIPE SUPPORT AND REERECTION EACH	630 REMOVAL OF OVERHEAD SIGN SUPPORT AND DISPOSAL, TYPE TC-12.30 EACH	630 REMOVAL OF OVERHEAD MOUNTED SIGN SUPPORT AND DISPOSAL, TYPE TC-7.65 EACH	631 REMOVAL OF LUMINAIRE EACH	631 REMOVAL OF DISCONNECT SWITCH EACH	631 REMOVAL OF BALLAST EACH	631 REMOVAL OF SIGN SERVICE EACH	631 REMOVAL, MISC.: REMOVAL OF LOOP WARNING SIGN AND FLASHERS EACH
381	R1	RAMP P1	686+20	-							2					1					
382	R2	RAMP P1	689+20	LT			1		1												
	R3	RAMP P1	690+53	RT		1		1													
	R4	RAMP O	0+83	RT		1		1													
	R5	RAMP O	5+09	RT	D10-H5A	1		1													
	R6	RAMP O	9+48	RT	D10-H5A	1		1													
	R7	RAMP O	11+36	RT	R1-2	1		1													
	R8	I-270 EB	491+24	RT	W4-1R	1		1													
	R9	I-270 EB	497+58	RT		1		1													
	R10	I-270 EB	502+23	RT							2					1				1	1
	R11	I-270 EB	503+40	RT	W1-6R	1		1													
	R12	RAMP Q	1+13	RT	W13-3	1		1													
	R13	RAMP Q	6+94	RT	D10-H5A	1		1													
	R14	RAMP Q	9+09	RT	R1-2	1		1												1	1
	R15	RAMP N	4+06	RT	W13-2	1		1													
	R16	RAMP N	4+16	RT							2				1					1	1
	R17	RAMP N	5+38	LT	E5-H1A		1		1												
	R18	RAMP N	6+22	LT	W1-6R	1		1													
	R19	RAMP N	6+98	RT	D10-H5A	1		1													
	R20	US 23 SB	583+67	LT	R1-2	1		1													
383	R21	RAMP L	577+37	RT	W13-3	1		2													
	R22	RAMP L	579+00	RT	D10-H5A	1		1													
	R23	RAMP R	279+20	LT	D10-H5A	1		1													
	R24	RAMP R	284+94	LT	R1-2	1		1													
	R25	I-270 WB	504+80	LT						3							4	1	2	1	
	R26	I-270 WB	504+94	LT		1		2													
	R27	I-270 WB	507+02	LT	D10-5	2		1													
	R28	I-27 EB	514+23	RT							5					1	6	1	1	1	
	R29	RAMP S	805+61	LT	D10-H5A	1		1													
	R30	RAMP S	815+66	LT	W13-3	1		2													
	OH-2	RAMP R	276+44	LT								2				1					
	R57	RAMP R	276+49	LT	M2-H3	2		2													
384	R31	I-270	517+52	CT	D10-5	2		1													
385	R32	I-270 EB	535+13	RT		2		1													
	R33	I-270 EB	537+33	RT		2		1													
	R34	I-270 EB	538+51	RT	D10-2	1		1													
	R35	I-270 WB	538+51	CT	D10-5	2		1													
	R36	I-270 WB	538+51	LT	D10-2	1		1													
	R37	I-270 WB	542+40	LT	E1-5						1										
	R58	I-270 WB	534+55	LT	-	2		2													
386	R38	I-270 WB	-	LT	E1-5						1										
	R59	I-270 WB	552+52	LT	-	2		2													
387	R39	US-23 NB	545+33	RT	-	1			2												
	R60	US-23 SB	542+47	LT	-								1								
	R61	US-23 SB	542+47	LT	W3-3	1		1													
388	R40	US-23 NB	557+96	RT	-		2		1												
	R62	US-23 SB	554+96	LT	R2-1	1		2													
	S51	US-23 SB	554+94	LT	-			2					3								
389	R41	US-23 NB	563+18	RT	-						2				1						
	R42	RAMP R	263+80	RT	W13-2	1		2													
	R43	RAMP R	266+34	RT	R5-H10D	1		1													
	R44	RAMP R	271+60	RT	D10-H5A	1		1													
	R45	RAMP P1	697+77	RT	D10-H5A	1		1													
	R46	RAMP P1	701+10	RT	W3-5	1		2													
	R47	RAMP P1	705+02	RT	R1-2	1		2													
	R48	US-23 SB	572+30	RT	W4-1R	1		2													
390	R49	RAMP N	11+41	RT	D10-H5A	1		1													
	R50	RAMP S	801+58	RT	D10-H5A	1		1													
	R51	RAMP M	12+60	RT	D10-H5A	1		1													
	R52	US-23 NB	587+78	RT	W4-1R	1		2													
	R53	US-23 NB	591+83	RT	R1-2	1		2													
	R54	US-23 SB	587+73	LT	W4-1R	2		2													
	R55	US-23 SB	589+65	LT	-	2		1													
	OH-7	US-23 SB	592+98	LT	-							4				1					
391	R56	US-23 SB	595+03	LT	W13-3	1		2													
	R57	US-23 NB	601+56	RT	M3-3	2		1													
	R58	RAMP R	266+50	LT	-			1					1	1							
TOTALS CARRIED TO GENERAL SUMMARY						62	4	68	5	3	15	6	5	1	2	5	10	2	3	5	3

CALCULATED DKA
CHECKED DCB

SIGNING SUBSUMMARY

FRA-270-51.50

X:\Projects\2013\132\1010\FRA 92616\traffic\sheets\92616TS004.dgn 12/7/2022 2:54:18 PM cwong

SHEET NO.	REFERENCE NO.	LOCATION	STATION	SIDE	CODE	SIZE (FEET)	630 GROUND MOUNTED SUPPORT, NO. 2 POST FEET	630 GROUND MOUNTED SUPPORT, NO. 3 POST FEET	630 GROUND MOUNTED SUPPORT, NO. 4 POST FEET	630 GROUND MOUNTED STRUCTURAL BEAM SUPPORT, S4X7.7 FT	630 GROUND MOUNTED STRUCTURAL BEAM SUPPORT, W10X12 FT	630 SIGN POST REFLECTOR EACH	630 BREAKAWAY STRUCTURAL BEAM CONNECTION EACH	630 OVERHEAD SIGN SUPPORT, TYPE TC-12.31, DESIGN 12 EACH	630 OVERHEAD SIGN SUPPORT, TYPE TC-15.116, DESIGN 1 EACH	630 OVERHEAD SIGN SUPPORT, TYPE TC-15.116, DESIGN 2 EACH	630 SIGN ATTACHMENT ASSEMBLY EACH	630 SIGN SUPPORT ASSEMBLY, POLE MOUNTED SQ. FT.	630 SIGN, FLAT SHEET SQ. FT.	630 SIGN, GROUND MOUNTED EXTUSHEET SQ. FT.	630 SIGN, OVERHEAD EXTRUSHEET SQ. FT.	630 SIGN, PERMANENT OVERLAY SF	630 GROUND MOUNTED STRUCTURAL BEAM SUPPORT FOUNDATION EACH	630 RIGID OVERHEAD SIGN SUPPORT FOUNDATION EACH	
380	GM-1	I-270 EB	460+00	RT	-	10X5					45		2							50				2		
					-	6X2														12						
382	S1	RAMP P1	690+53	RT	D10-5HA-30	2.5X2.5		13											6.25						
	S2	RAMP O	5+09	RT	D10-5HA-30	2.5X2.5		13											6.25						
	S3	RAMP O	9+48	RT	D10-5HA-30	2.5X2.5		13											6.25						
	OH-1	RAMP P1	695+40	-	-	15X8									1						120			2	
					-	18X8															144				
383	S4	RAMP L	577+37	RT	W13-3-48	4X5			31			2							20						
	S5	RAMP L	579+00	RT	D10-H5A-30	2.5X2.5		13											6.25						
	S6	RAMP R	279+20	RT	D10-H5A-30	2.5X2.5		13											6.25						
	S8	I-270	507+02	CT	D10-5-18	1.5X5		15.5											7.5						
					D10-5-18	1.5X5													7.5						
	S9	RAMP S	805+61	LT	R3-H8BQ-36	3X3			34										9						
					D10-H5A-30	2.5X2.5													6.25						
					R5-1A-42	3.5X2.5													8.75						
					R5-1A-42	3.5X2.5													8.75						
	S10	RAMP S	805+61	RT	R3-H8BQ-36	3X3			34										9						
					R5-1A-42	3.5X2.5													8.75						
					R5-1A-42	3.5X2.5													8.75						
	S11	RAMP S	809+00	LT	W3-3-36	3X3		13.5											9						
	S12	RAMP S	809+00	RT	W3-3-36	3X3		13.5											9						
	S13	RAMP S	815+66	LT	W13-3-48	4X5			31			2							20						
	S47	RAMP R	275+90	LT	M2-H3-48	4X5	14	20				2							20						
					M2-H3-48	4X5	14	20				2							20						
	S48	RAMP S	812+25	LT	E5-H1C	1.5X1.5																	2.5		
	GM5	RAMP S	804+00	LT	-	12x3				37			2							36				2		
	OH-3	I-270 WB	515+10	RT	-	12x5										1					60			2	
					E1-H5P	14X12															148				
					-	18x10															180				
					E1-H5P	8X2.5															20				
					E1-H5P	8X2.5															20				
	S58	RAMP S	806+50	RT	R4-5-36	3X4		30											12						
384	S14	I-270	517+52	CT	D10-5-18	1.5X5		15.5											7.5						
					D10-5-18	1.5X5													7.5						
385	S16	I-270 EB	535+13	RT	M1-1-36	3X3		33											9						
					M3-2-36	3X1.5													9						
	S17	I-270 EB	537+33	RT	R3-4-36	3X3		13.5				1							9						
					R5-H11-24	2X2.5													5						
	S18	I-270 EB	538+51	RT	D10-2-12	1X3	13.5												3						
	S20	I-270 WB	537+93	LT	R3-4-36	3X3		13.5				1							9						
					R5-H11-24	2X2.5													5						
	S21	I-270 WB	538+51	LT	D10-5-18	1.5X5		15.5											7.5						
					D10-5-18	1.5X5													7.5						
	S22	I-270 WB	538+51	LT	D10-2-12	1X3	13.5												3						
	S23	I-270 WB	542+40	LT	E1-5	8X2.5											1				20				
	GM-4	I-270 WB	534+50	LT	-	9X3				24			2							27				2		
386	S24	I-270 WB	-	LT	E1-5	8X2.5											1				20				
387	S25	US-23 NB	536+00	RT	M2-H3-48	4X6	14	20											24						
	S49	US-23 SB	546+76	LT	W3-3-36	3X3		15											9						
	R60	US-23 SB	547+42	LT	-	-		15																	
	OH-4	US-23 NB	547+80	RT	-	10X9								1							90			1	
					E1-H5P	8X2.5															20				
388	OH-5	US-23 NB	560+00	RT	-	6X8								1							48			1	
					W13-3-48	4X5												1	20						
	S50	US-23 SB	554+94	LT	R2-1-36	3X3		13.5											9						
	S51	US-23 SB	554+94	LT	-	-		33																	
389	S27	RAMP R	266+34	RT	R5-H10d-36	3X3		13.5											9						
	S28	RAMP R	271+60	RT	D10-5HA-30	2.5X2.5		13											6.25						
	S29	RAMP P	869+15	RT	W3-3-36	3X3		13.5											9						
	S30	RAMP P1	697+77	RT	D10-H5A-30	2.5X2.5		13											6.25						
TOTALS CARRIED TO GENERAL SUMMARY							69	418	130	61	45	10	6	2	1	1	2	1	390	125	890	2.5	6	6	

CALCULATED DKA
CHECKED DCB

SIGNING SUBSUMMARY

FRA-270-51.50

X:\Projects\2013\1321\1010\FRA\92616\traffic\sheets\92616TS005.dgn 12/7/2022 2:54:19 PM cwong

SHEET NO.	REFERENCE NO.	LOCATION	STATION	SIDE	CODE	SIZE (FEET)	630 GROUND MOUNTED SUPPORT, NO. 2 POST FEET	630 GROUND MOUNTED SUPPORT, NO. 3 POST FEET	630 GROUND MOUNTED SUPPORT, NO. 4 POST FEET	630 ONE WAY SUPPORT, NO. 3 POST FEET	630 GROUND MOUNTED STRUCTURAL BEAM SUPPORT, W8X18 FEET	630 SIGN POST REFLECTOR EACH	630 BREAKAWAY STRUCTURAL BEAM CONNECTION EACH	630 OVERHEAD SIGN SUPPORT, TYPE TC-15.116, DESIGN 1 EACH	630 SIGN, FLAT SHEET SQ. FT.	630 SIGN, GROUND MOUNTED EXTUSHEET SQ. FT.	630 SIGN, OVERHEAD EXTRUSHEET SQ. FT.	630 GROUND MOUNTED STRUCTURAL BEAM SUPPORT FOUNDATION EACH	630 RIGID OVERHEAD SIGN SUPPORT FOUNDATION EACH
389	S31	RAMP P1	701+10	RT	W3-5-48	4X4	32								16				
	S33	RAMP P	869+15	RT	W3-3-36	3X3		13.5							9				
	S34	RAMP P	870+00	RT	R3-H8BQ-36	3X3		34							9				
					R5-1A-42	3.5X2.5									8.75				
					R5-1A-42	3.5X2.5									8.75				
	S35	RAMP P	870+00	LT	R3-H8BQ-36	3X3		34							9				
					R5-1A-42	3.5X2.5									8.75				
					R5-1A-42	3.5X2.5									8.75				
	S36	RAMP P	872+50	RT	R3-H8BQ-36	3X3				34					9				
					R5-1A-36	3X2									6				
					R6-1L-54	4.5X1.5									6.75				
					R6-1R-54	4.5X1.5									6.75				
	S52	US-23 NB	569+56	RT	W3-3-36	3X3		13.5							9				
					W3-3-36	3X3		13.5							9				
	S37	RAMP P	872+50	LT	R3-H8BQ-36	3X3				34					9				
					R5-1A-36	3X3									9				
					R6-1L-54	4.5X1.5									6.75				
					R6-1R-54	4.5X1.5									6.75				
	S38	US-23 SB	569+50	LT	W4-1R-36	3X3	30					1			9				
	S39	US-23 NB	573+35	RT	M3-3-36	3X1.5		33.5							4.5				
					M1-4-36	3X3									9				
					M6-1-30	2.5X1.75									4.375				
					M3-1-36	3X1.5		33.5							4.5				
					M1-4-36	3X3									9				
					M6-1-30	2.5X1.75									4.375				
	S52	US-23 NB	569+56	RT	W3-3-36	3X3		13.5							9				
					W3-3-36	3X3		13.5							9				
	GM-2	RAMP P2	871+04	RT	D3-H3A	12X8					46.9		2			96		2	
	OH-2	RAMP L	274+26	CT	-	14X7								1			98		2
					-	9X7											63		
	OH-6	RAMP R	268+50	CT	-	12x10								1		120			2
						6x9										64			
390	S40	RAMP S	801+58	LT	D10-H5A-30	2.5X2.5		13							6.25				
	S41	RAMP S	799+20	LT	R3-H8BQ-36	3X3				27					9				
					R5-1A-36	3X3									9				
					R6-1L-36	3X1									3				
					R6-1R-36	3X1									3				
	S42	RAMP S	799+20	RT	R3-H8BQ-36	3X3				27					9				
					R5-1A-36	3X3									9				
					R6-1L-36	3X1									3				
					R6-1R-36	3X1									3				
	S43	RAMP M	12+60	RT	D10-H5A-30	2.5X2.5		13							6.25				
	S44	US-23 SB	587+15	LT	M3-3-36	3X1.5		33.5							4.5				
					M1-4-36	3X3									9				
					M6-1-30	2.5X1.75									4.375				
					M3-1-36	3X1.5		33.5							4.5				
					M1-4-36	3X3									9				
					M6-1-30	2.5X1.75									4.375				
	S45	US-23 SB	585+50	LT	M3-3-24	2X1	13.5								2				
					M1-4-24	2X2									4				
	S54	US-23 SB	590+66	RT	W3-3-36	3X3		13.5							9				
					W3-3-36	3X3		13.5							9				
	GM3	RAMP S		LT	M2-H4	12X8					45.6		2			96		2	
	S55	RAMP S	800+75	LT	R3-H8BQ-36	3X3		34							9				
					R5-1A-42	3.5X2.5									8.75				
					R5-1A-42	3.5X2.5									8.75				
	S57	US-23 NB		RT	M3-1-36	3X1.5		15							4.5				
					M1-4-36	3X3									9				
391	S46	US-23 SB	595+03	LT	W13-3-48	4X5			31			2			20				
	OH-7	US-23 SB	593+86	LT	-									1					2
TOTALS CARRIED TO GENERAL SUMMARY							75.5	371.5	31	122	92.5	3	4	3	399	376	161	4	6

0

CALCULATED DKA
CHECKED DCB

SIGNING SUBSUMMARY

FRA-270-51.50

100
554

X:\Projects\2013\1321\1010\FRA\92616\traffic\sheets\92616TS006.dgn 12/7/2022 2:54:20 PM cwong

LEGEND

- CATCH BASIN 2-2B
- INLET, NO. 3 FOR SINGLE SLOPE BARRIER, TYPE B
- MANHOLE, NO. 1

VEGTATED FILTER STRIP								
ROUTE	STATION		SIDE	TREATED AREA (AC.)	FROM		TO	
	FROM	TO			NORTHING	EASTING	NORTHING	EASTING
IR 270	463+99	471+93	CT	2	684411.009	1824687.46	1824095.8	684798.703
IR 270	471+93	481+88	CT	3.03	683954.668	1825571.32	684402.84	1824704.11
IR 270	505+75	510+48	CT	1.45	683100.64	1828308.15	683190.68	1827872.37
IR 270	510+48	516+80	CT	1.56	683002.05	1828928.92	683100.64	1828308.15
IR 270	520+22	527+40	CT	1.59	68291.76	1829975.07	682964.64	1829272.34
IR 270	527+39	537+41	CT	1.77	682845.29	1830970.30	682909.86	1830004.62
US 23	546+50	549+45	LT	0.42	680041.06	1826825.73	680366.65	1826779.45
US 23	549+00	548+86	RT	0.32	680109.75	1826981.89	680295.68	1826963.51
US 23	548+87	552+70	RT	0.68	680295.68	1826963.51	680656.11	1826922.28
US 23	550+00	552+80	LT	0.46	680858.68	1826720.73	681256.28	1826690.42
US 23	554+50	558+70	LT	0.38	680366.65	1826779.45	680660.66	1826742.11
US 23	553+95	560+12	RT	1.12	680754.66	1826903.30	681407.48	1826859.06
US 23	558+70	560+35	LT	0.17	681256.28	1826690.42	681423.16	1826689.23
RAMP R	260+42	265+74	RT	1.04	681407.48	1826859.06	681942.58	1826932.47

MATCH LINE STA. 559+00 US-23 - SEE BELOW

MATCH LINE STA. 559+00 US-23 - SEE ABOVE

LATITUDE: 39° 52′ 30″
LONGITUDE: 83° 00′ 14″
USGS QUADRANGLES: SOUTHWEST COLUMBUS
COMMERCIAL POINT
SOUTH EAST COLUMBUS
LOCKBOURNE

* LATITUDE AND LONGITUDE TO APPROXIMATE CENTER OF PROJECT

PROJECT DESCRIPTION

THIS PROJECT CONSISTS OF THE REMOVAL OF RAMP N (IR 270WEST TO US 23 SOUTH) AND RAMP Q (IR 270EAST TO US23 NORTH). WORK INCLUDES THE RECONFIGURATION OF RAMP P1 (IR 270EAST) AND RAMP S (IR 270WEST) AND THE CONSTRUCTION OF TWO SIGNALIZED INTERSECTIONS TO PROVIDE ACCESS TO US 23 NORTH AND SOUTH. WORK ALSO INCLUDES A PAVEMENT OVERLAY ON RAMPS L, M, P, AND S

PROJECT DATA			
TOTAL AREA (RIGHT-OF-WAY)	112.8 AC	RUNOFF COEFFICIENT FOR PRE-CONSTRUCTION SITE	0.61
PROJECT EARTH DISTURBED AREA	78.0 AC	RUNOFF COEFFICIENT FOR POST-CONSTRUCTION SITE	0.62
ESTIMATED CONTRACTOR EARTH DISTURBED AREA	9.22 AC	POST CONSTRUCTION BMP:	VEGETATED FILTER STRIP
NOTICE OF INTENT EARTH DISTURBED AREA	87.2 AC	IMMEDIATE RECEIVING WATERS	SCIOTO RIVER
IMPERVIOUS (PAVED) AREA FOR PRE-CONSTRUCTION SITE	18.5 AC	SUBSEQUENT RECEIVING WATERS	OHIO RIVER
IMPERVIOUS (PAVED) AREA FOR POST-CONSTRUCTION SITE	21.7 AC	TOTAL AREA WITH ODOT R/W TREATED	15.98 AC
		TREATMENT REQUIREMENTS	15.77 AC

HORIZONTAL SCALE IN FEET
0 100 200 400

CALCULATED ACF
CHECKED CSR

PROJECT SITE PLAN

FRA-270-51.50

101
554

X:\Projects\2013\1321\1010\FRA\92616\drainage\sheets\92616DE001.dgn 2/10/2023 8:18:36 AM cwong

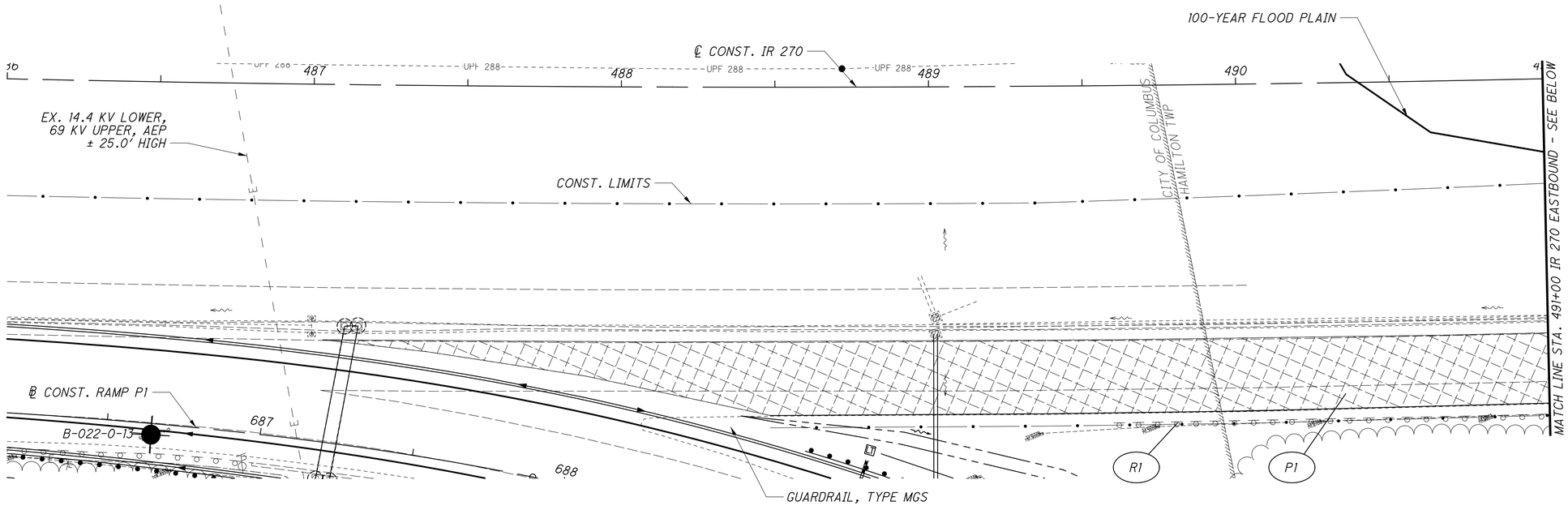

C16

℄ IR 270
P.I. STA. 492+53.27
Δ = 32° 28' 08" (LT)
Dc = 0° 30' 00"
R = 11,459.16'
T = 3,336.66'
L = 6,493.78'
E = 475.90'
C = 6,407.23'
C.B. = S 70° 05' 07" E
e (max) = 0.019

ITEM 202 - PAVEMENT REMOVED

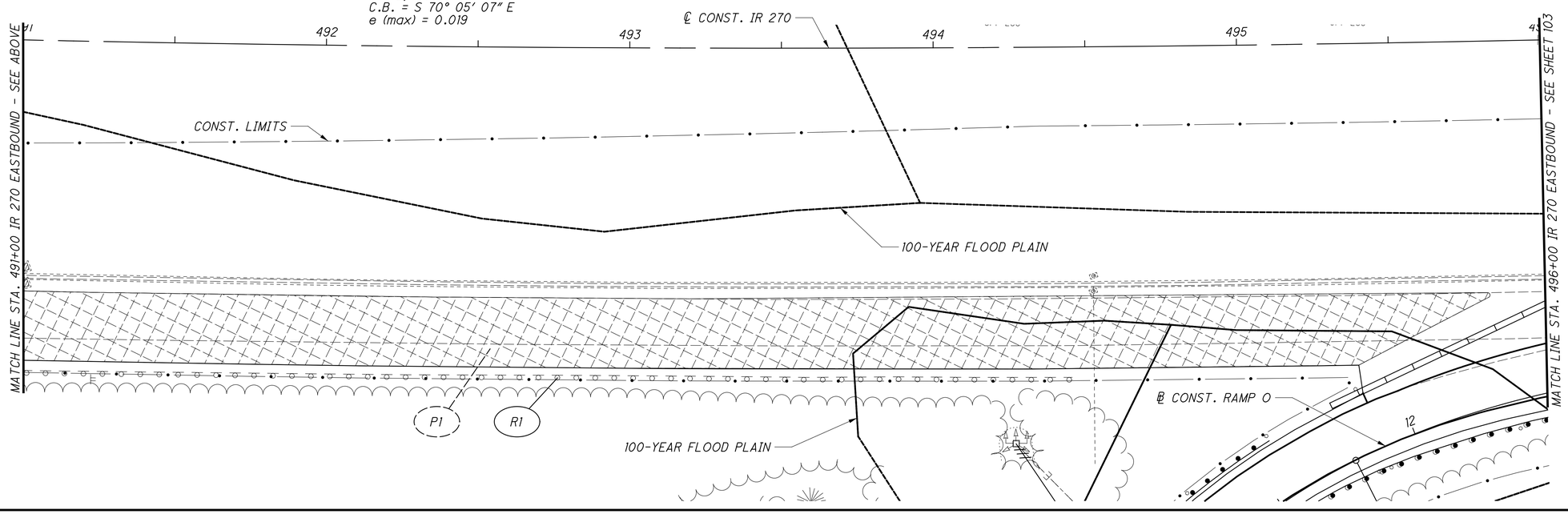

CALCULATED ACF
CHECKED CSR

HORIZONTAL SCALE IN FEET
0 10 20 40

PLAN - IR 270 EASTBOUND
STA. 486+00 TO STA. 496+00

FRA-270-51.50

102
554

X:\Projects\2013\1321\1010\FRA\92616\roadway\sheets\92616GP051.dgn 2/9/2023 10:29:15 AM cwong

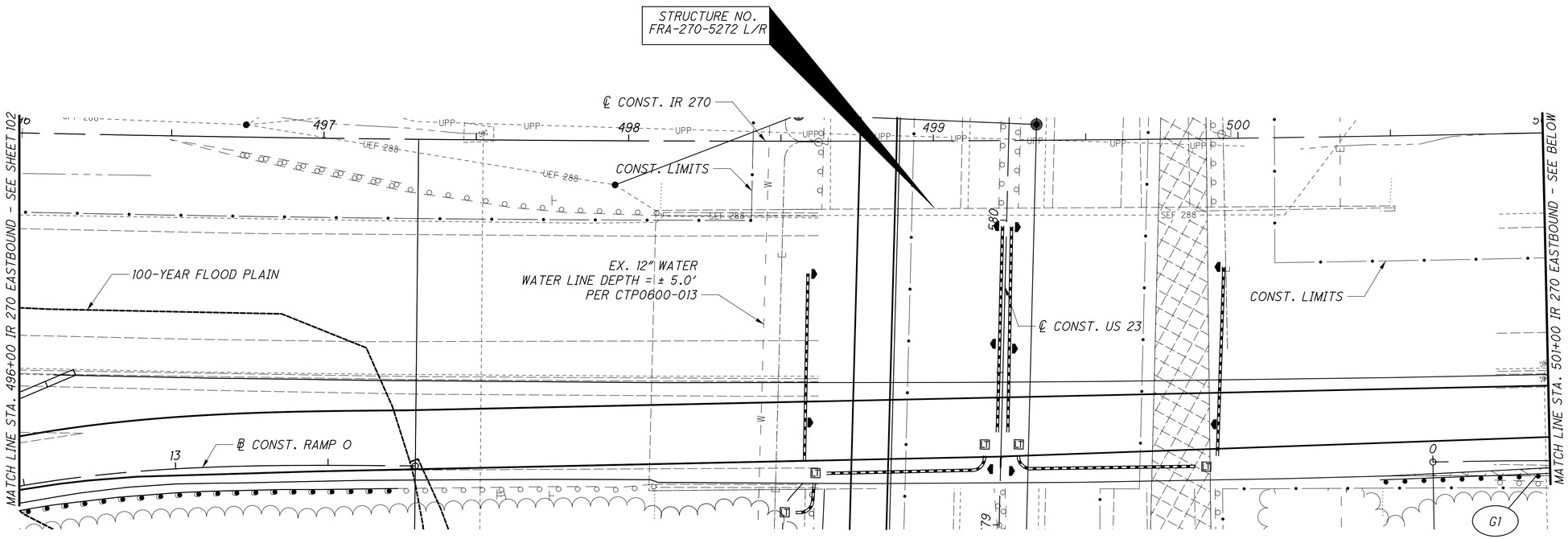

HORIZONTAL SCALE IN FEET
0 10 20 40

CALCULATED ACF
CHECKED CSR

PLAN - IR 270 EASTBOUND
STA. 496+00 TO STA. 506+00

FRA-270-51.50

103
554

X:\Projects\2013\1321\1010\FRA\92616\roadway\sheets\92616GP052.dgn 5/4/2023 6:29:54 AM cwong

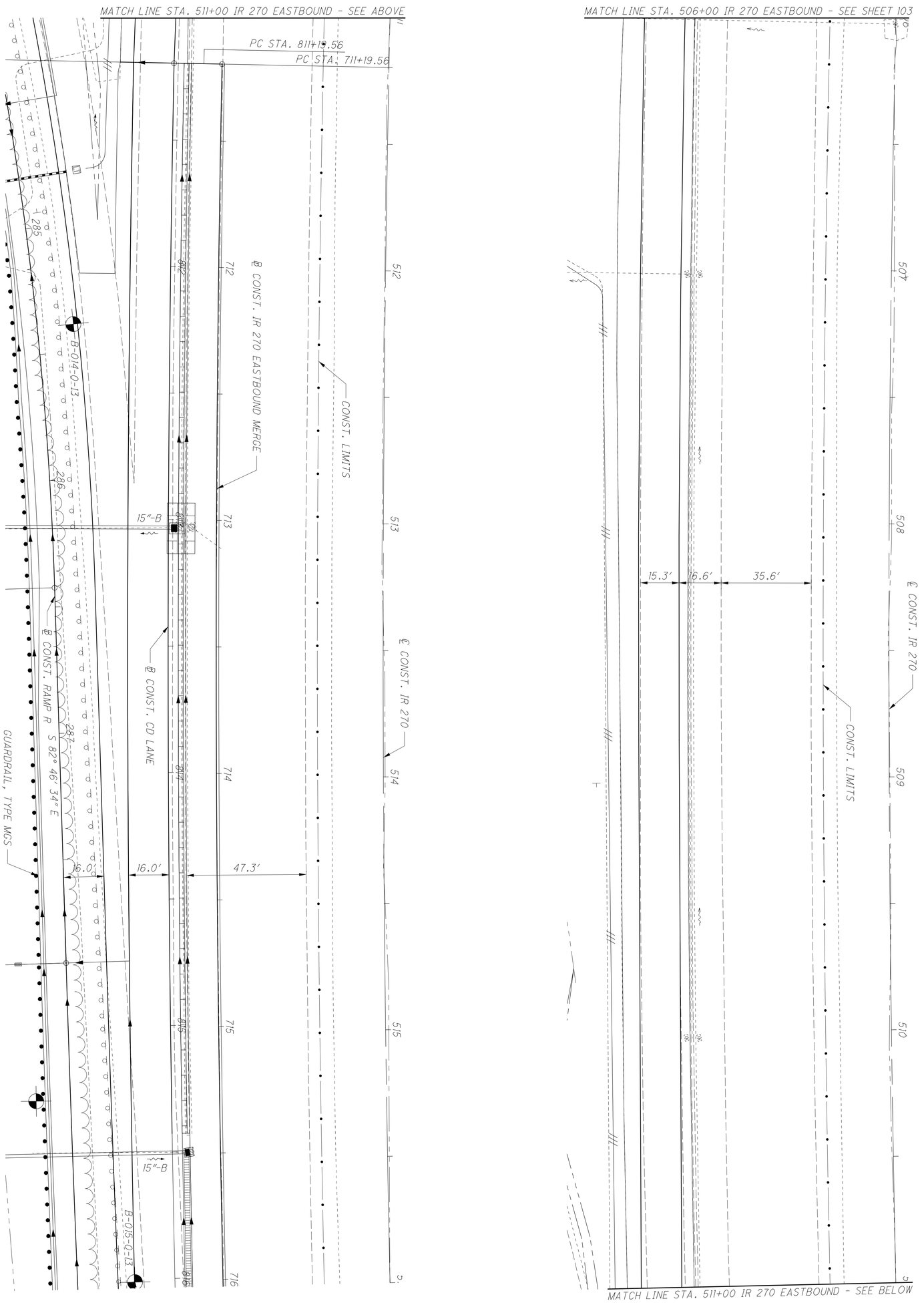

104 / 554	FRA-270-51.50	PLAN - IR 270 EASTBOUND STA. 506+00 TO STA. 516+00	CALCULATED ACF CHECKED CSR	0 20 10 40 HORIZONTAL SCALE IN FEET

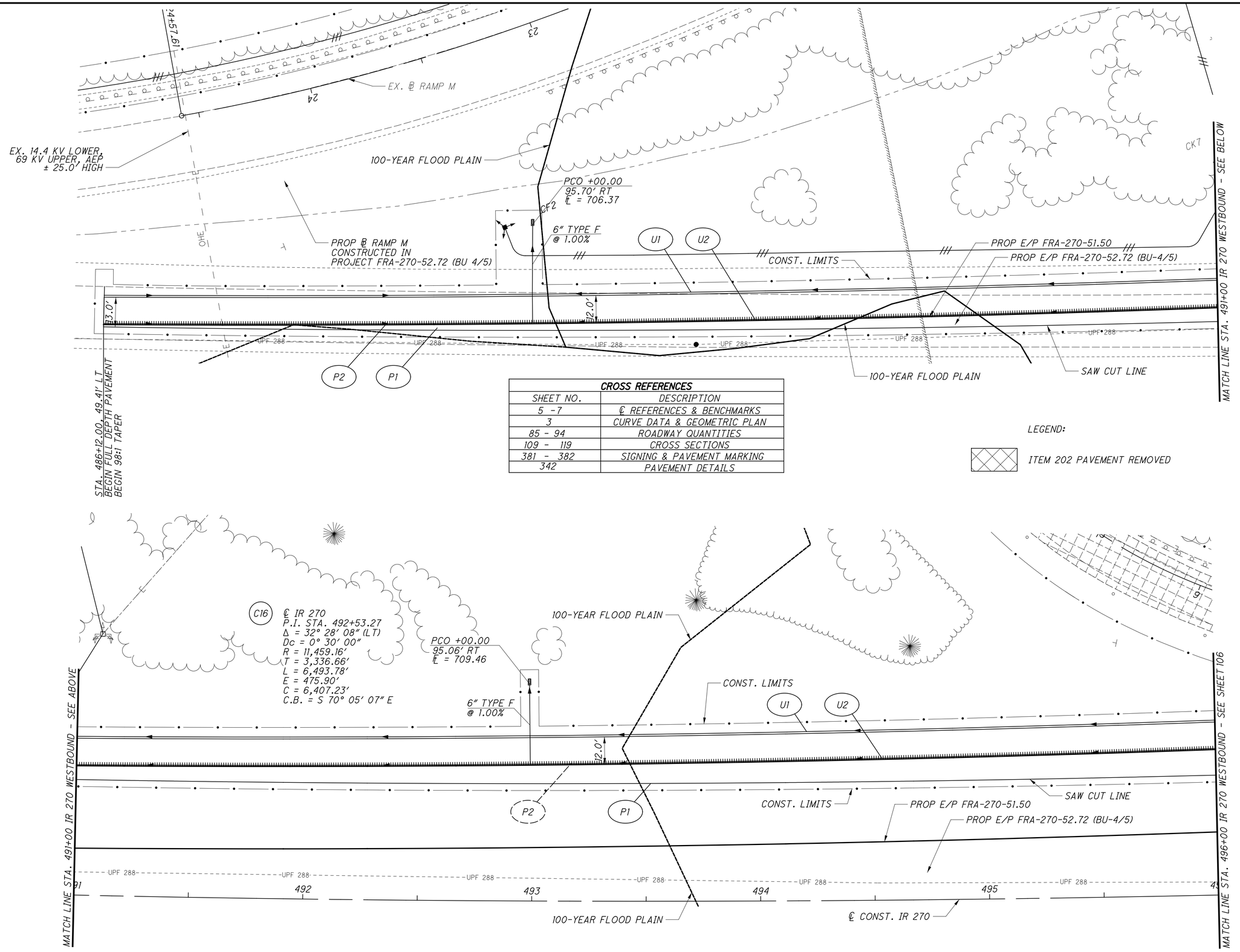

CROSS REFERENCES	
SHEET NO.	DESCRIPTION
5 -7	℄ REFERENCES & BENCHMARKS
3	CURVE DATA & GEOMETRIC PLAN
85 - 94	ROADWAY QUANTITIES
109 - 119	CROSS SECTIONS
381 - 382	SIGNING & PAVEMENT MARKING
342	PAVEMENT DETAILS

LEGEND:

ITEM 202 PAVEMENT REMOVED

HORIZONTAL SCALE IN FEET
0 10 20 40

CALCULATED ACF
CHECKED CSR

PLAN - IR 270 WESTBOUND
STA. 486+00 TO STA. 496+00

FRA-270-51.50

105
554

X:\Projects\2013\1321\1010\FRA\92616\roadway\sheets\92616GP101.dgn 2/9/2023 10:44:00 AM cwong

CROSS REFERENCES	
SHEET NO.	DESCRIPTION
5 -7	℄ REFERENCES & BENCHMARKS
3	CURVE DATA & GEOMETRIC PLAN
85 - 94	ROADWAY QUANTITIES
119 - 129	CROSS SECTIONS
382 - 383	SIGNING & PAVEMENT MARKING
343	PAVEMENT DETAILS

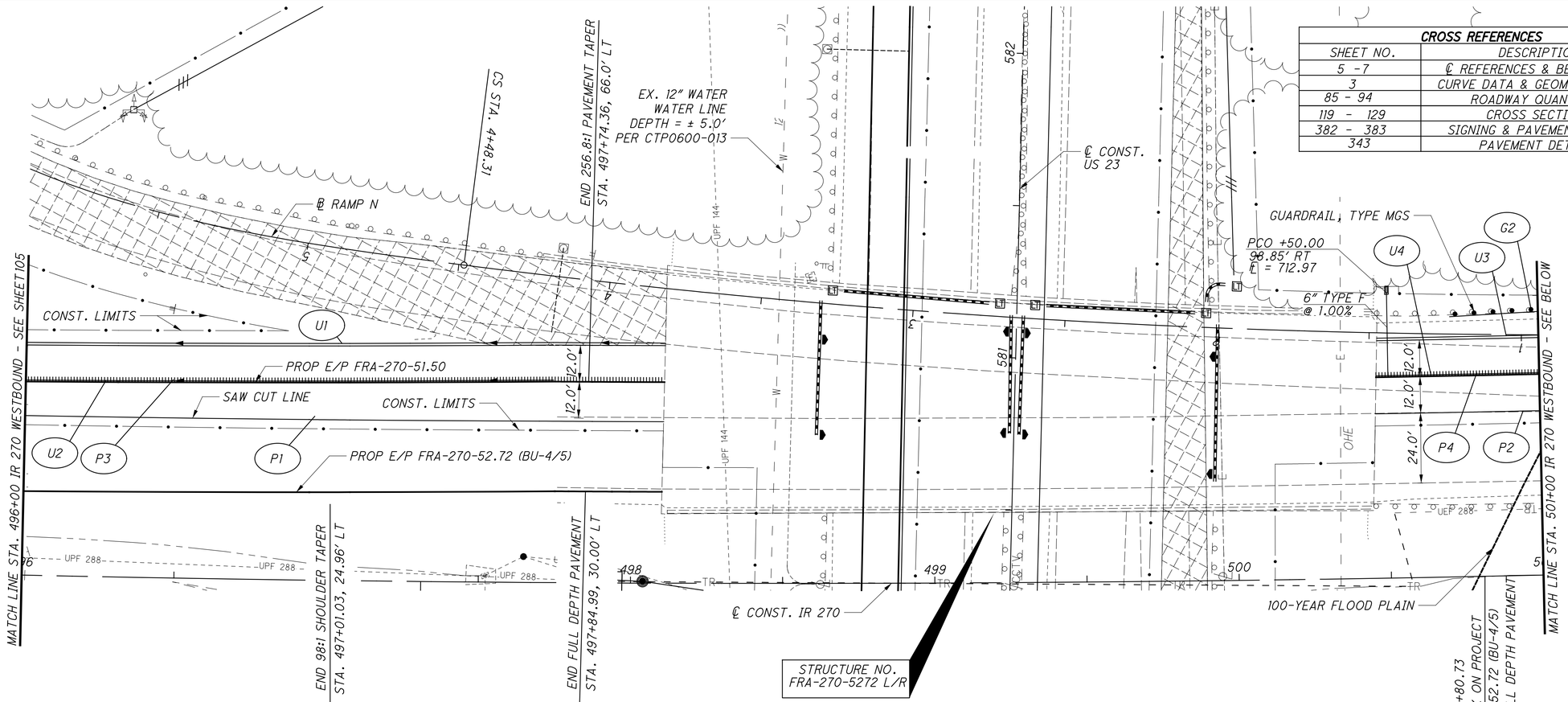

LEGEND:

ITEM 202 PAVEMENT REMOVED

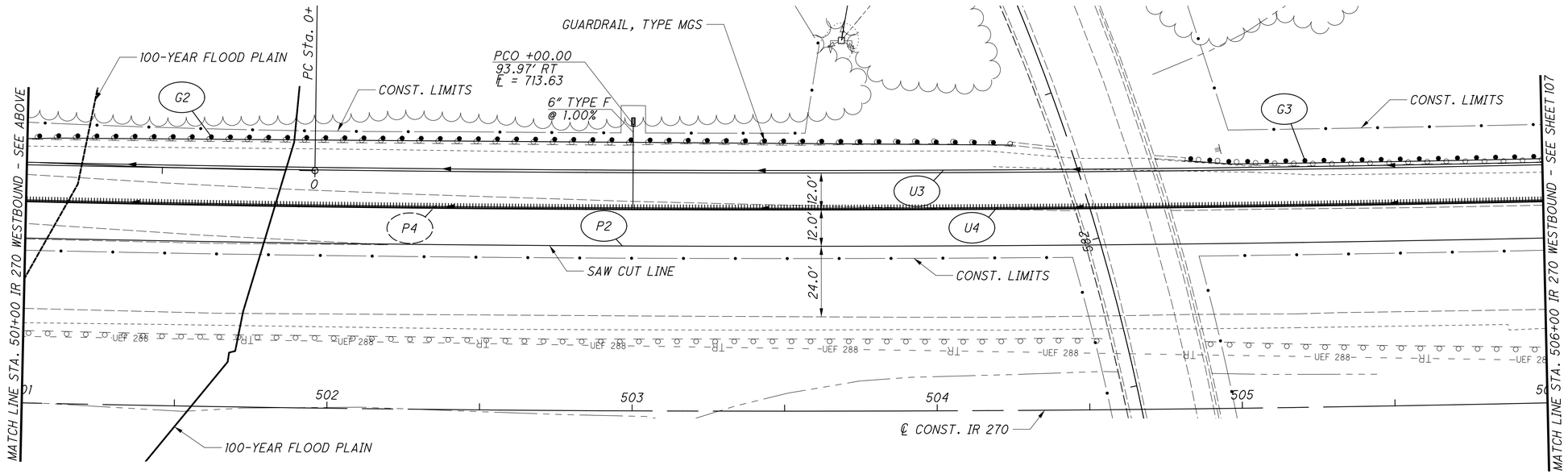

PLAN - IR 270 WESTBOUND
STA. 496+00 TO STA. 506+00

FRA-270-51.50

106
554

HORIZONTAL SCALE IN FEET
0 10 20 40

CALCULATED ACF CHECKED CSR

X:\Projects\2013\1321\1010\FRA\92616\roadway\sheets\92616GP102.dgn 2/9/2023 10:48:23 AM cwong

CROSS REFERENCES	
SHEET NO.	DESCRIPTION
5 -7	℄ REFERENCES & BENCHMARKS
3	CURVE DATA & GEOMETRIC PLAN
85 - 94	ROADWAY QUANTITIES
129 - 137	CROSS SECTIONS
383	SIGNING & PAVEMENT MARKING
344	PAVEMENT DETAILS

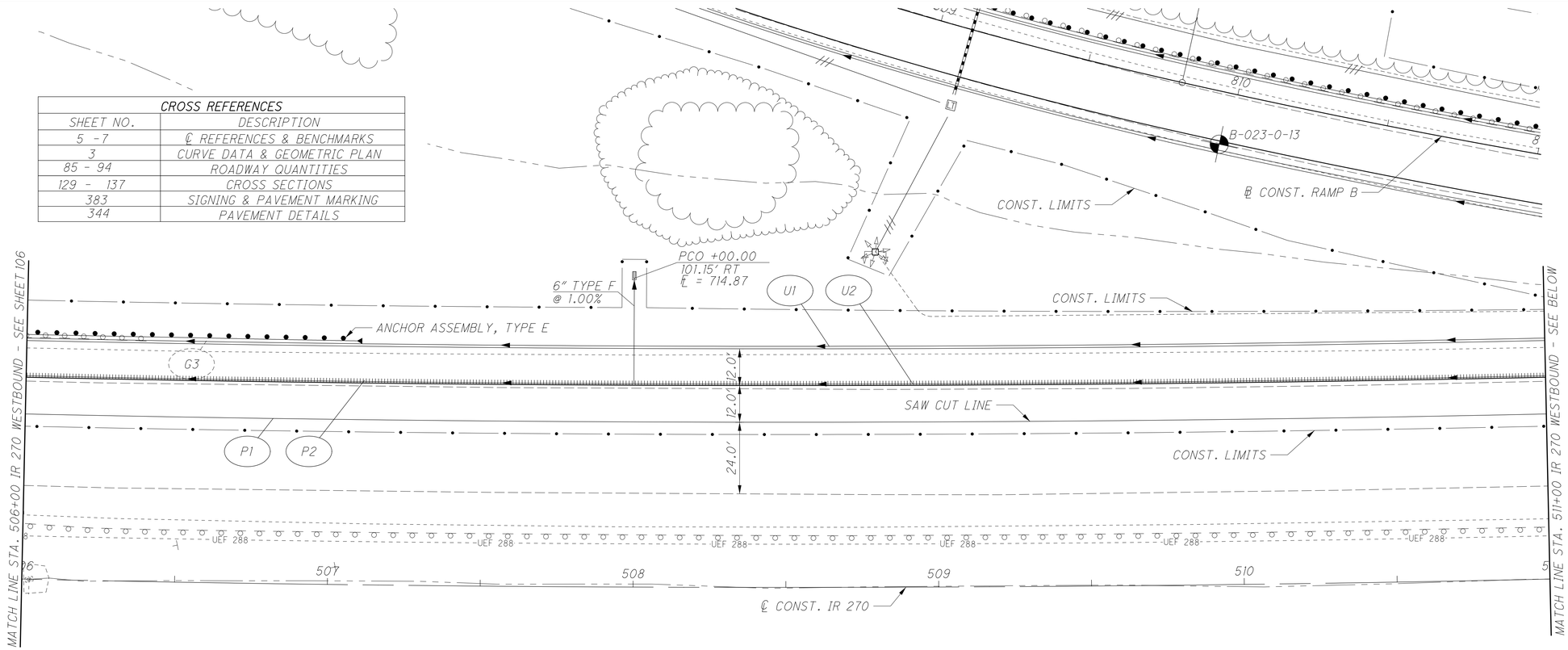

HORIZONTAL SCALE IN FEET
0 10 20 40

CALCULATED ACF
CHECKED CSR

PLAN - IR 270 WESTBOUND
STA. 506+00 TO STA. 516+00

FRA-270-51.50

x:\Projects\2013\1321\1010\FRA\92616\roadway\sheets\92616GP103.dgn 12/7/2022 2:54:45 PM cwong
cwong

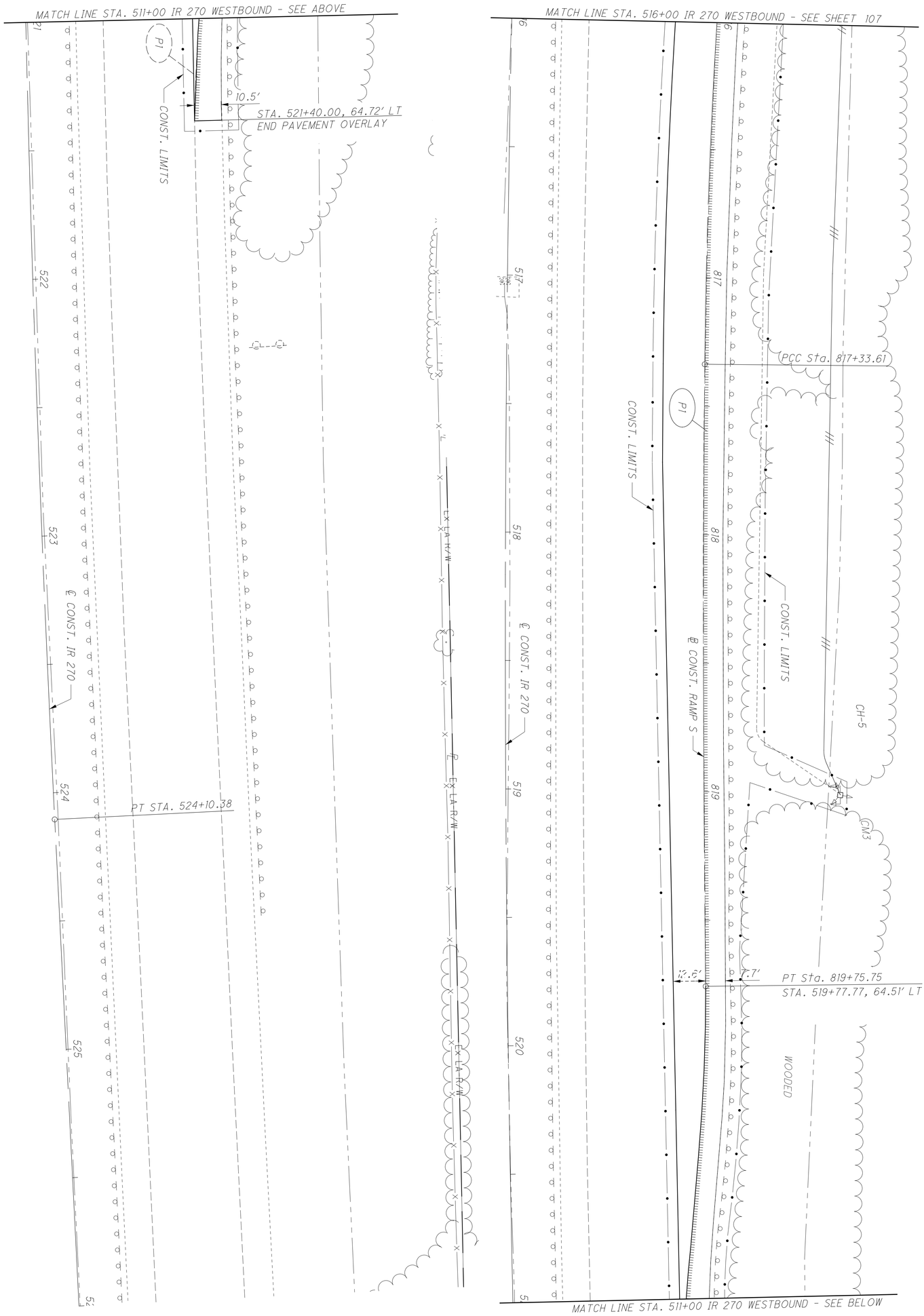

CROSS REFERENCES	
DESCRIPTION	SHEET NO.
℄ REFERENCES & BENCHMARKS	5 - 7
CURVE DATA & GEOMETRIC PLAN	3
ROADWAY QUANTITIES	85 - 94
SIGNING & PAVEMENT MARKING	384

108 554	FRA-270-51.50	PLAN - IR 270 WESTBOUND STA. 516+00 TO STA. 526+00	CALCULATED ACF / CHECKED CSR	0 20 / 10 40 HORIZONTAL SCALE IN FEET	N

SEEDING	
END WIDTH	SQ. YDS.

END AREA	
CUT	FILL

VOLUME	
CUT	FILL

CALCULATED JGB

CHECKED CSR

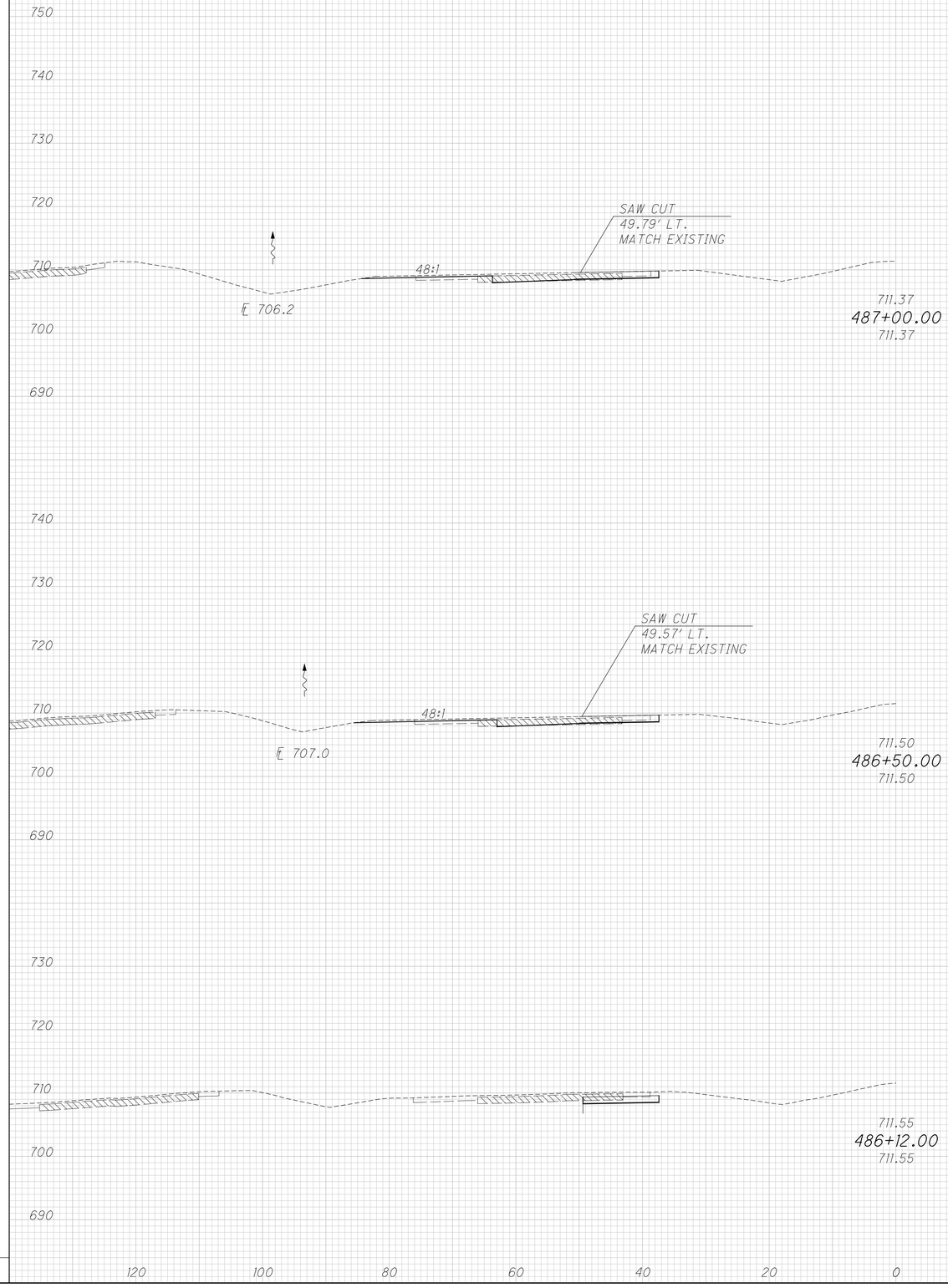

CROSS SECTIONS IR-270
STA. 486+12.00 TO STA. 487+00.00

FRA-270-51.50

x:\Projects\2013\132\1010\FRA\92616\roadway\sheets\92616XS800.dgn 12/7/2022 2:54:49 PM cwong

SEEDING	
END WIDTH	SQ. YDS.

END AREA	
CUT	FILL

VOLUME	
CUT	FILL

CALCULATED JGB

CHECKED CSR

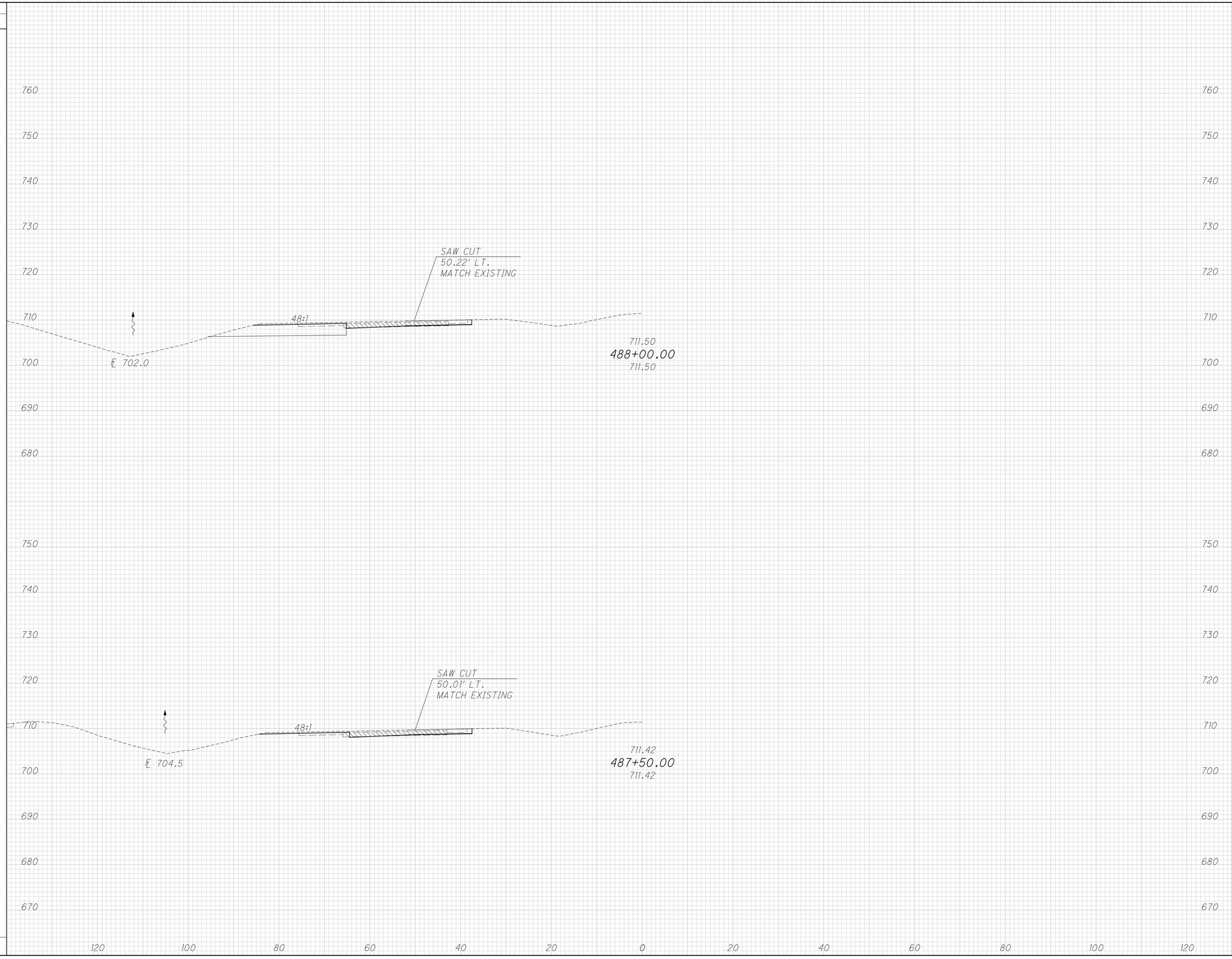

CROSS SECTIONS IR-270
STA. 487+50.00 TO STA. 488+00.00

FRA-270-51.50

x:\Projects\2013\1321\1010\FRA 92616\roadway\sheets\92616XS800.dgn 12/7/2022 2:54:50 PM cwong

SEEDING	
END WIDTH	SQ. YDS.

END AREA	
CUT	FILL

VOLUME	
CUT	FILL

CALCULATED JGB

CHECKED CSR

760
750
740
730
720
710
700
690
680

SAW CUT
50.64' LT.
MATCH EXISTING

℄ 698.4

712.34
489+00.00
712.34

760
750
740
730
720
710
700
690
680

SAW CUT
50.43' LT.
MATCH EXISTING

℄ 699.7

712.05
488+50.00
712.05

670

120 100 80 60 40 20 0 20 40 60 80 100 120

CROSS SECTIONS IR-270
STA. 488+50.00 TO STA. 489+00.00

FRA-270-51.50

x:\Projects\2013\1321\1010\FRA 92616\roadway\sheets\92616XS800.dgn 12/7/2022 2:54:50 PM cwong

SEEDING	
END WIDTH	SQ. YDS.

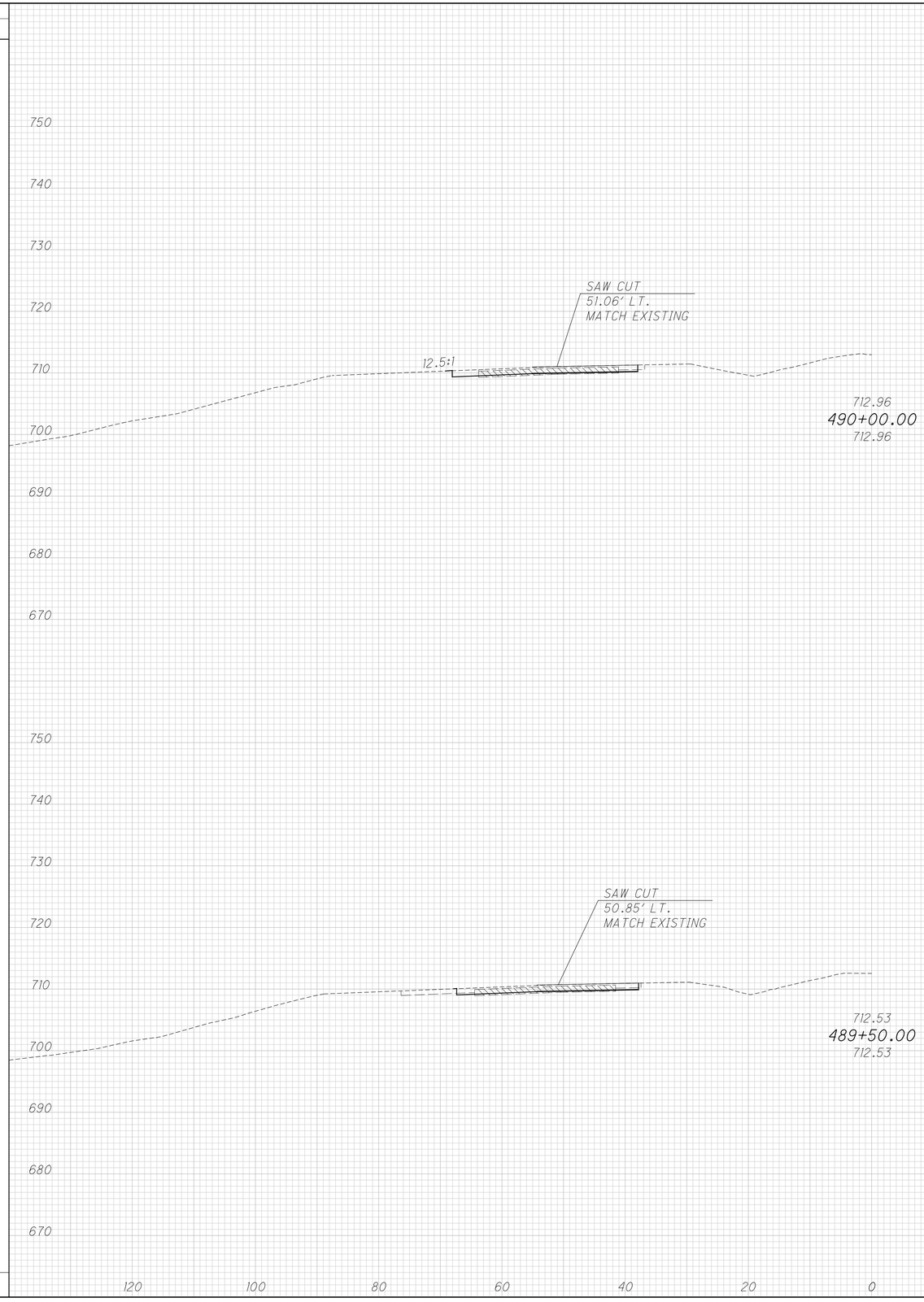

END AREA		VOLUME	
CUT	FILL	CUT	FILL

CALCULATED JGB

CHECKED CSR

CROSS SECTIONS IR-270
STA. 489+50.00 TO STA. 490+00.00

FRA-270-51.50

x:\Projects\2013\1321\1010\FRA\92616\roadway\sheets\92616XS800.dgn 12/7/2022 2:54:51 PM cwong

SEEDING	
END WIDTH	SQ. YDS.

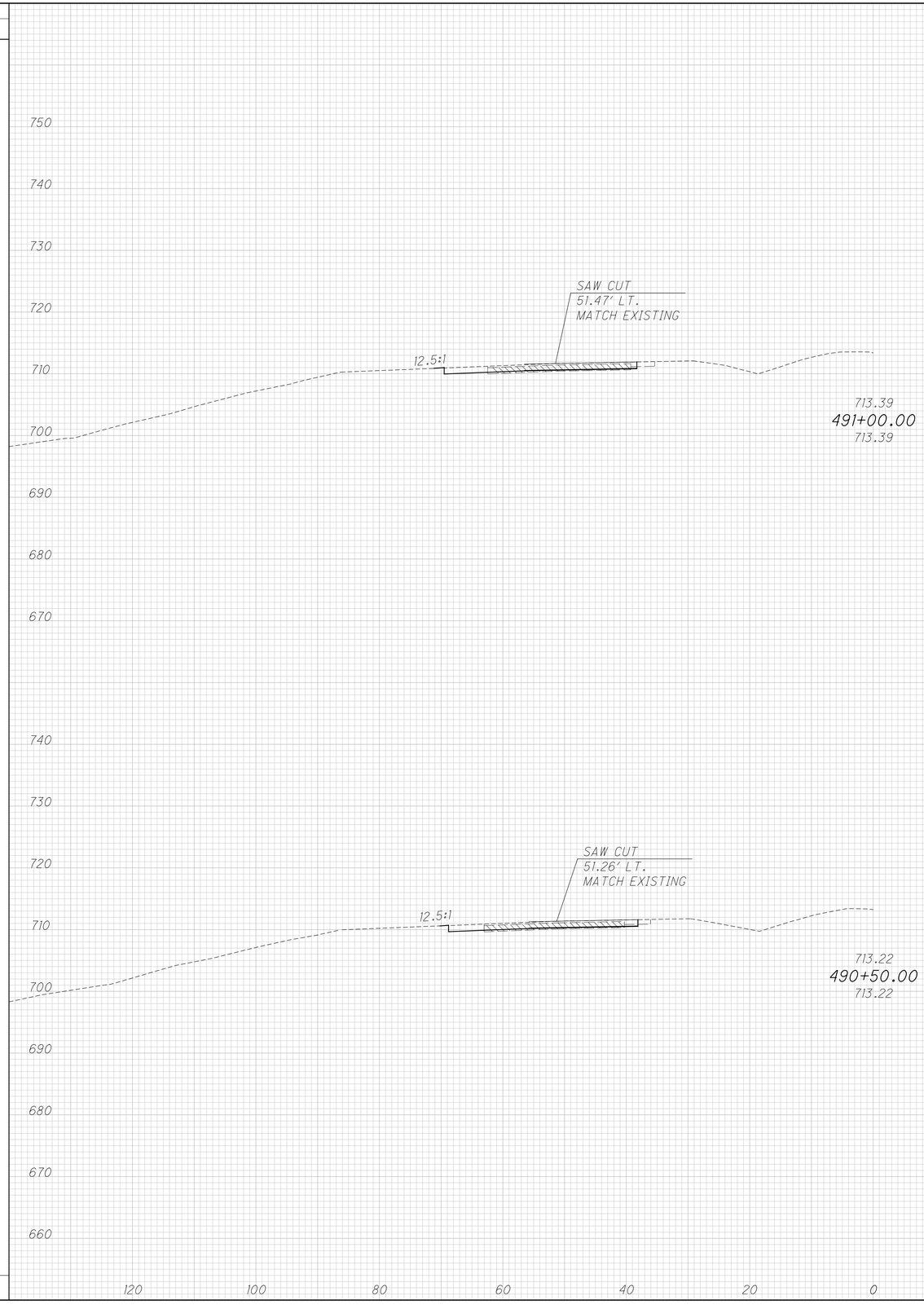

END AREA		VOLUME	
CUT	FILL	CUT	FILL

CALCULATED	CHECKED
JGB	CSR

CROSS SECTIONS IR-270
STA. 490+50.00 TO STA. 491+00.00

FRA-270-51.50

x:\Projects\2013\1321\1010\FRA\92616\roadway\sheets\92616XS800.dgn 12/7/2022 2:54:52 PM cwong

x:\Projects\2013\1321\1010\FRA\92616\roadway\sheets\92616XS800.dgn 12/7/2022 2:54:52 PM cwong

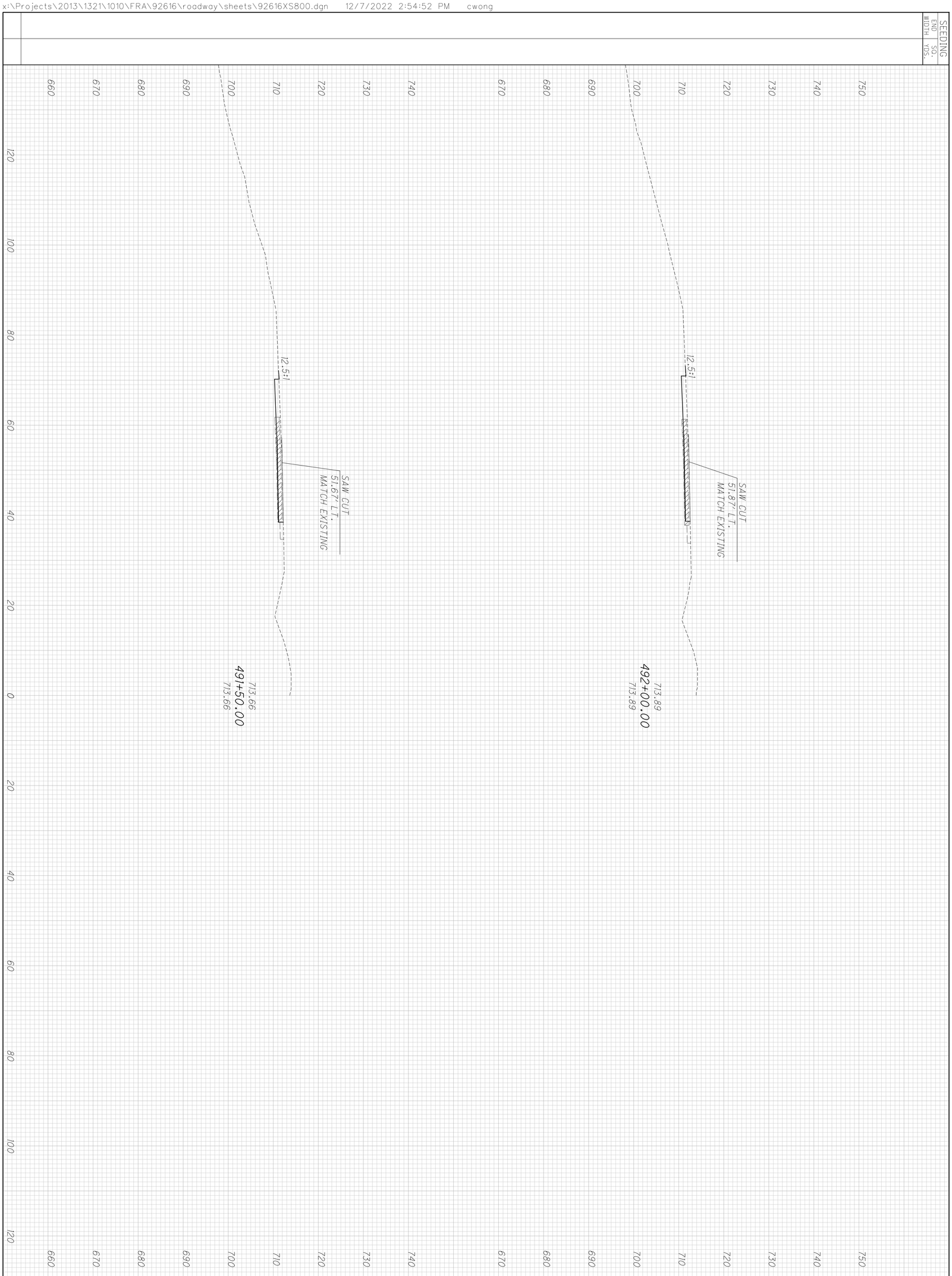

1114 / 554	**FRA-270-51.50**	**CROSS SECTIONS IR-270** **STA. 491+50.00 TO STA. 492+00.00**
		CALCULATED JGB CHECKED CSR

SEEDING	
END WIDTH	SQ. YDS.

END AREA	
CUT	FILL

VOLUME	
CUT	FILL

CALCULATED JGB

CHECKED CSR

760
750
740
730
720
710
700
690
680
670

SAW CUT
52.26' LT.
MATCH EXISTING

12.5:1

714.03
493+00.00
714.03

740
730
720
710
700
690
680
670
660

SAW CUT
52.06' LT.
MATCH EXISTING

12.5:1

713.94
492+50.00
713.94

120 100 80 60 40 20 0 20 40 60 80 100 120

CROSS SECTIONS IR-270
STA. 492+50.00 TO STA. 493+00.00

FRA-270-51.50

x:\Projects\2013\1321\1010\FRA\92616\roadway\sheets\92616XS800.dgn 12/7/2022 2:54:53 PM cwong

SEEDING	
END WIDTH	SQ. YDS.

END AREA	
CUT	FILL

VOLUME	
CUT	FILL

CALCULATED JGB

CHECKED CSR

760
750
740
730
720
710
700
690
680
670
660

SAW CUT
52.45' LT.
MATCH EXISTING

12.5:1

714.45
493+50.00
714.45

120 100 80 60 40 20 0 20 40 60 80 100 120

CROSS SECTIONS IR-270

STA. 493+50.00

FRA-270-51.50

x:\Projects\2013\1321\1010\FRA\92616\roadway\sheets\92616XS800.dgn 12/7/2022 2:54:54 PM cwong

SEEDING	
END WIDTH	SQ. YDS.

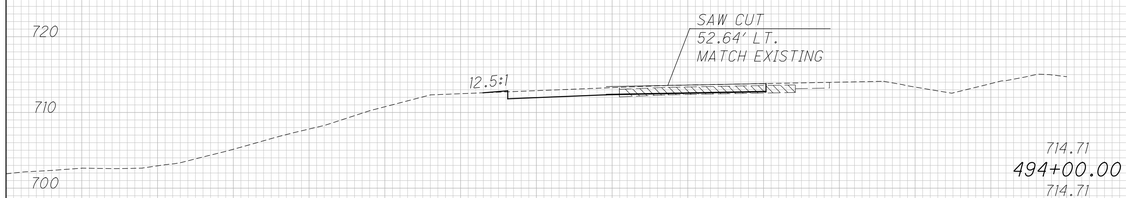

END AREA		VOLUME	
CUT	FILL	CUT	FILL

CALCULATED JGB
CHECKED CSR

CROSS SECTIONS IR-270
STA. 494+00.00 TO STA. 494+50.00

FRA-270-51.50

x:\Projects\2013\1321\1010\FRA\92616\roadway\sheets\92616XS800.dgn 12/7/2022 2:54:54 PM cwong

SEEDING	
END WIDTH	SQ. YDS.

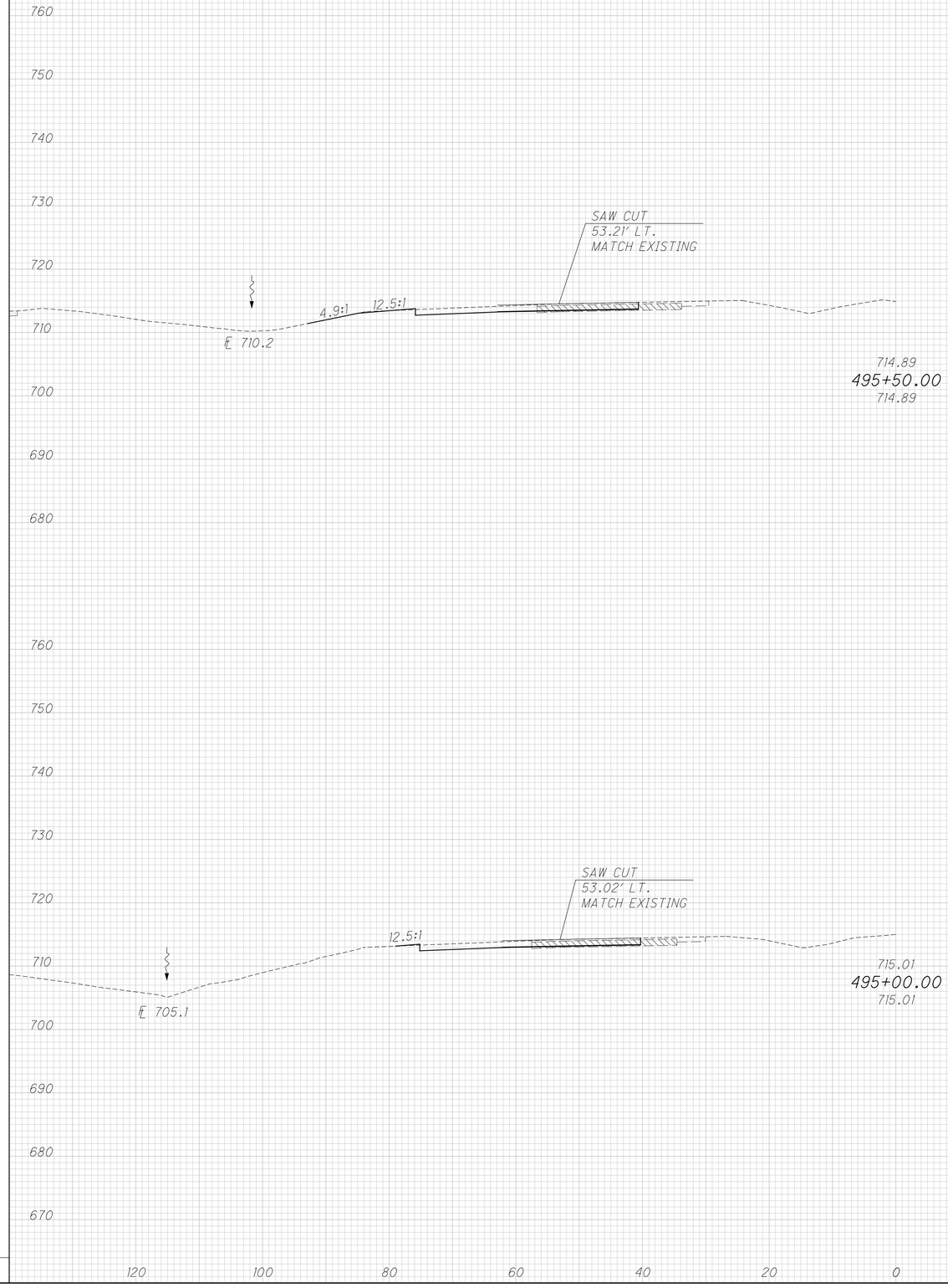

END AREA		VOLUME	
CUT	FILL	CUT	FILL

CALCULATED	CHECKED
JGB	CSR

CROSS SECTIONS IR-270
STA. 495+00.00 TO STA. 495+50.00

FRA-270-51.50

x:\Projects\2013\1321\1010\FRA\92616\roadway\sheets\92616XS800.dgn 12/7/2022 2:54:55 PM cwong

SEEDING	
END WIDTH	SQ. YDS.

END AREA	
CUT	FILL

VOLUME	
CUT	FILL

CALCULATED JGB

CHECKED CSR

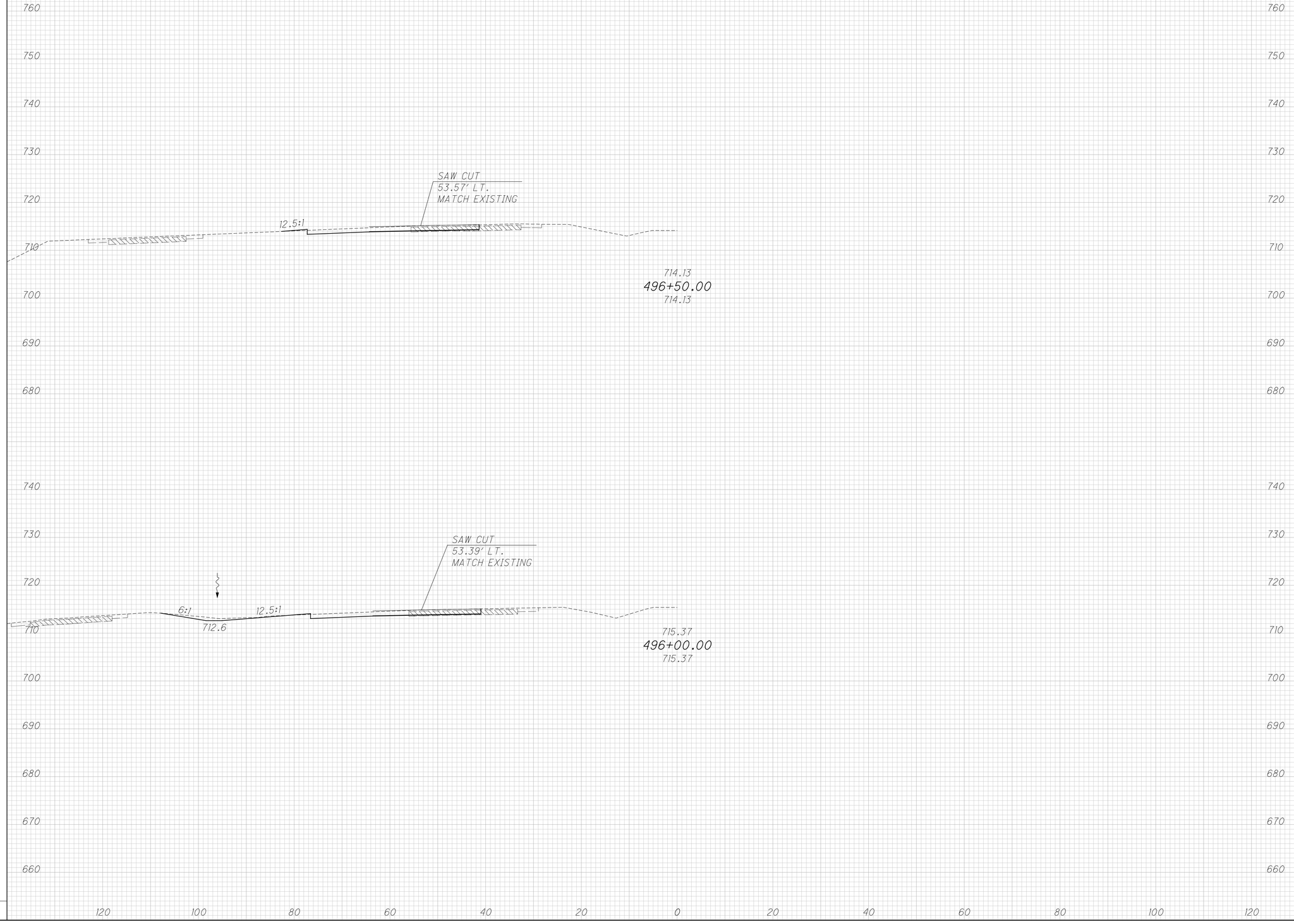

CROSS SECTIONS IR-270
STA. 496+00.00 TO STA. 496+50.00

FRA-270-51.50

x:\Projects\2013\1321\1010\FRA\92616\roadway\sheets\92616XS800.dgn 12/7/2022 2:54:56 PM cwong

SEEDING
END WIDTH | SQ. YDS.

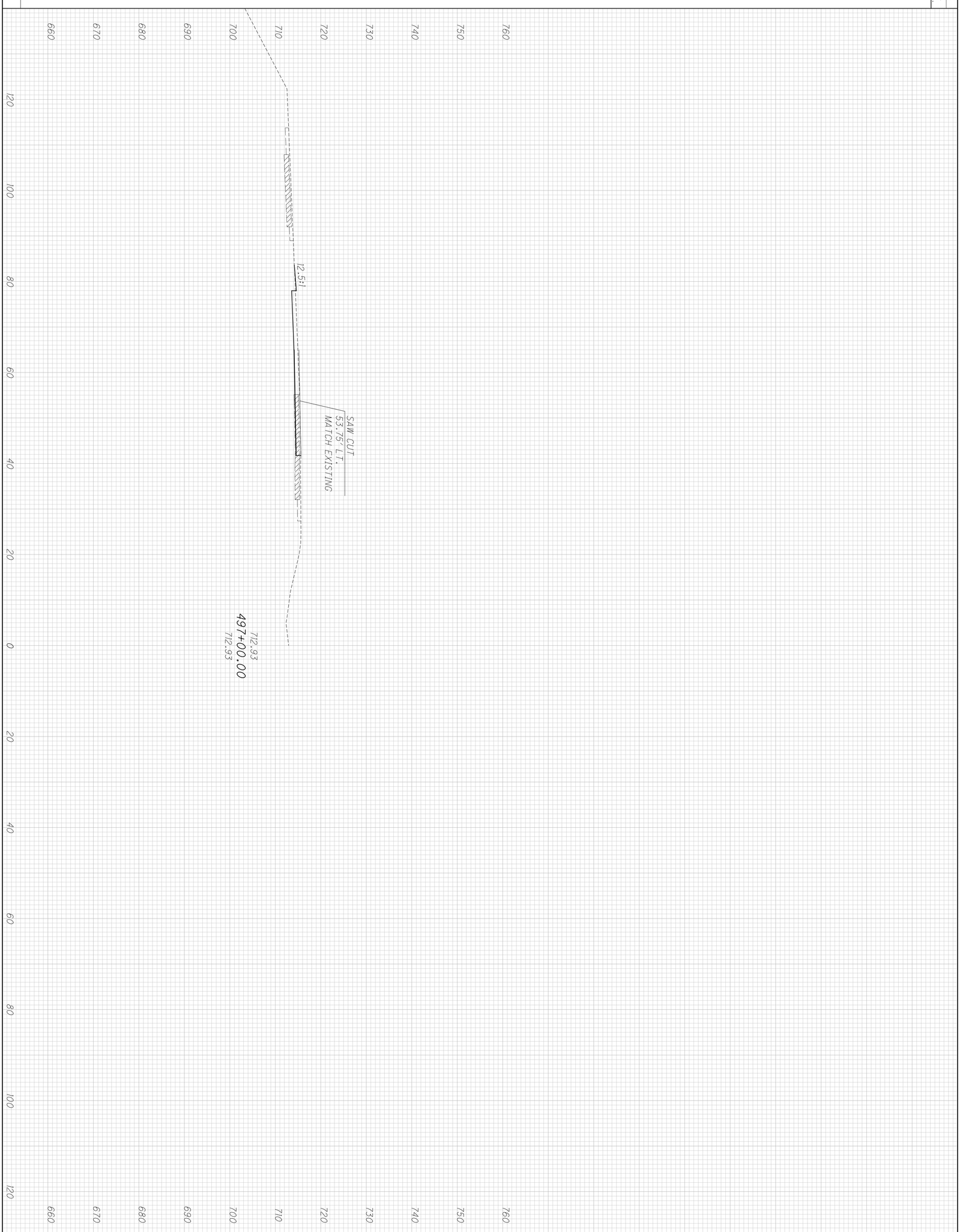

END AREA
CUT | FILL

VOLUME
CUT | FILL

554 | 120

FRA-270-51.50

CROSS SECTIONS IR-270
STA. 497+00.00

CALCULATED JGB
CHECKED CSR

x:\Projects\2013\1321\1010\FRA\92616\roadway\sheets\92616XS800.dgn 12/7/2022 2:54:57 PM cwong

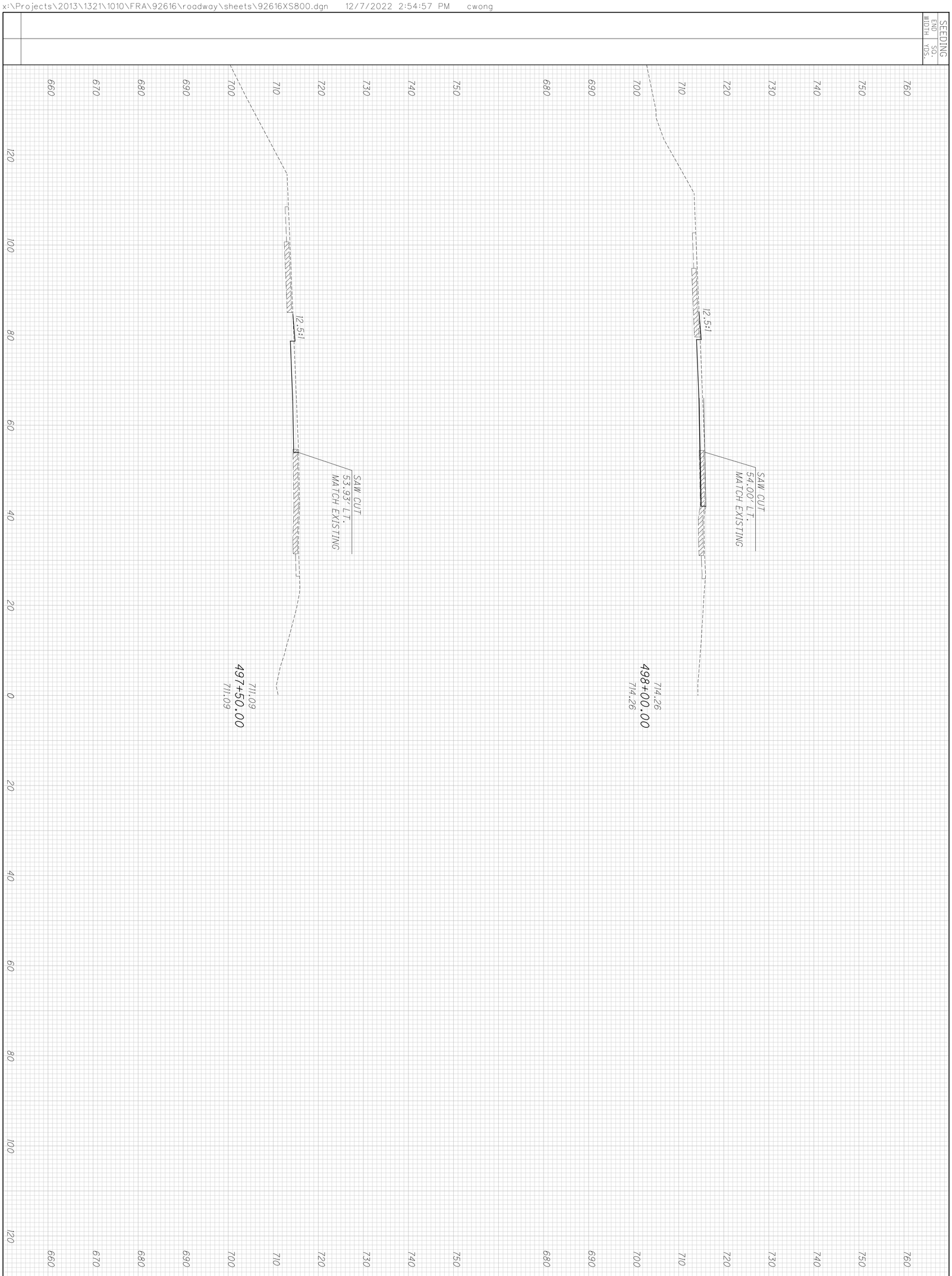

121
554

FRA-270-51.50

CROSS SECTIONS IR-270
STA. 497+50.00 TO STA. 498+00.00

CALCULATED JGB
CHECKED CSR

SEEDING	
END WIDTH	SQ. YDS.

END AREA		VOLUME	
CUT	FILL	CUT	FILL

CALCULATED JGB

CHECKED CSR

CROSS SECTIONS IR-270

STA. 500+50.00 TO STA. 501+00.00

FRA-270-51.50

x:\Projects\2013\1321\1010\FRA\92616\roadway\sheets\92616XS800.dgn 12/7/2022 2:54:57 PM cwong

SEEDING	
END WIDTH	SQ. YDS.

END AREA	
CUT	FILL

VOLUME	
CUT	FILL

CALCULATED JGB

CHECKED CSR

760
750
740
730
720
710
700
690
680

SAW CUT
54.00' LT.
MATCH EXISTING

12.5:1

712.65
502+00.00
712.65

760
750
740
730
720
710
700
690
680

SAW CUT
54.00' LT.
MATCH EXISTING

12.5:1

712.48
501+50.00
712.48

680
670
660

120 100 80 60 40 20 0 20 40 60 80 100 120

CROSS SECTIONS IR-270
STA. 501+50.00 TO STA. 502+00.00

FRA-270-51.50

x:\Projects\2013\1321\1010\FRA 92616\roadway\sheets\92616XS800.dgn 12/7/2022 2:54:58 PM cwong

SEEDING	
END WIDTH	SQ. YDS.

END AREA	
CUT	FILL

VOLUME	
CUT	FILL

CALCULATED JGB

CHECKED CSR

760
750
740
730
720
710
700
690
680
670
660

SAW CUT
54.00' LT.
MATCH EXISTING

712.97
502+50.00
712.97

120 100 80 60 40 20 0 20 40 60 80 100 120

CROSS SECTIONS IR-270
STA. 502+50.00

FRA-270-51.50

x:\Projects\2013\1321\1010\FRA\92616\roadway\sheets\92616XS800.dgn 12/7/2022 2:54:58 PM cwong

x:\Projects\2013\1321\1010\FRA\92616\roadway\sheets\92616XS800.dgn 12/7/2022 2:54:59 PM cwong

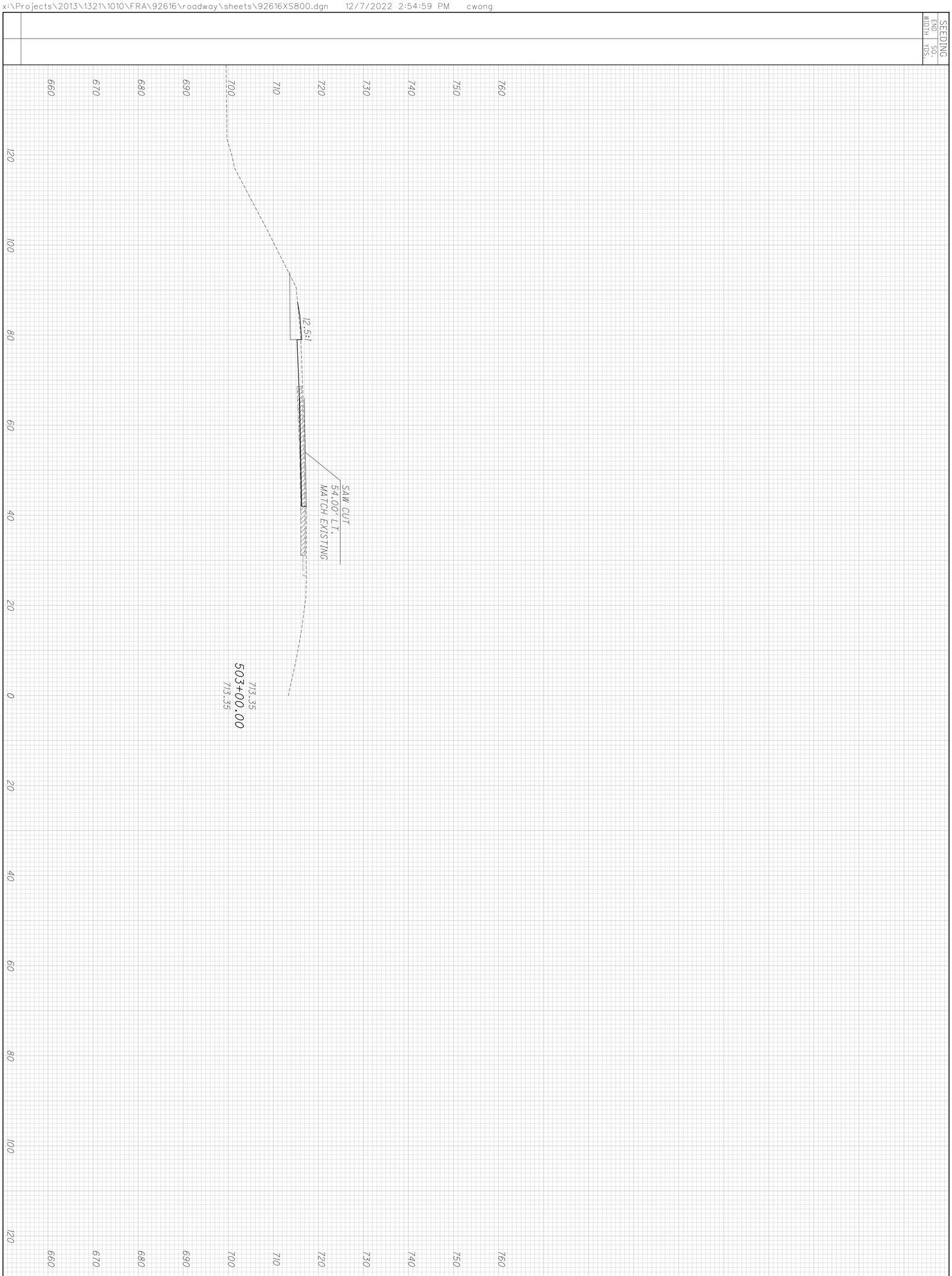

125
554

FRA-270-51.50

CROSS SECTIONS IR-270
STA. 503+00.00

CALCULATED JGB
CHECKED CSR

SEEDING	
END WIDTH	SQ. YDS.

END AREA	
CUT	FILL

VOLUME	
CUT	FILL

CALCULATED JGB

CHECKED CSR

770
760
750
740
730
720
710
700
690
680
670

SAW CUT
54.00' LT.
MATCH EXISTING

12.5:1

714.56
503+50.00
714.56

120 100 80 60 40 20 0 20 40 60 80 100 120

CROSS SECTIONS IR-270
STA. 503+50.00

FRA-270-51.50

126
554

x:\Projects\2013\1321\1010\FRA\92616\roadway\sheets\92616XS800.dgn 12/7/2022 2:54:59 PM cwong

SEEDING	
END WIDTH	SQ. YDS.

END AREA		VOLUME	
CUT	FILL	CUT	FILL

CALCULATED JGB
CHECKED CSR

CROSS SECTIONS IR-270
STA. 504+00.00 TO STA. 504+50.00

FRA-270-51.50

x:\Projects\2013\1321\1010\FRA\92616\roadway\sheets\92616XS800.dgn 12/7/2022 2:55:00 PM cwong

SEEDING	
END WIDTH	SQ. YDS.

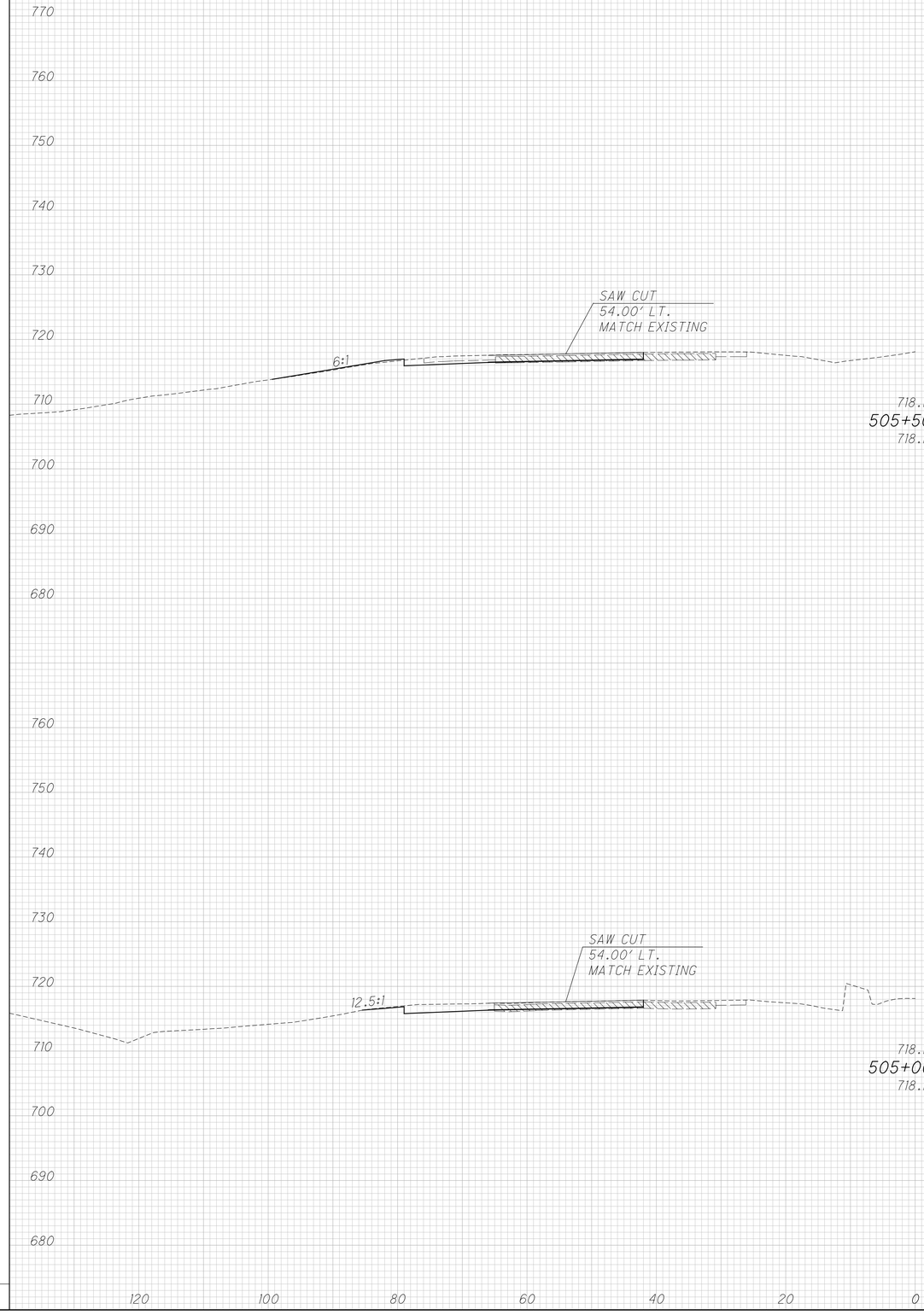

END AREA		VOLUME	
CUT	FILL	CUT	FILL

CALCULATED JGB
CHECKED CSR

CROSS SECTIONS IR-270
STA. 505+00.00 TO STA. 505+50.00

FRA-270-51.50

128
554

x:\Projects\2013\1321\1010\FRA 92616\roadway\sheets\92616XS800.dgn 12/7/2022 2:55:00 PM cwong

SEEDING	
END WIDTH	SQ. YDS.

END AREA	
CUT	FILL

VOLUME	
CUT	FILL

CALCULATED JGB

CHECKED CSR

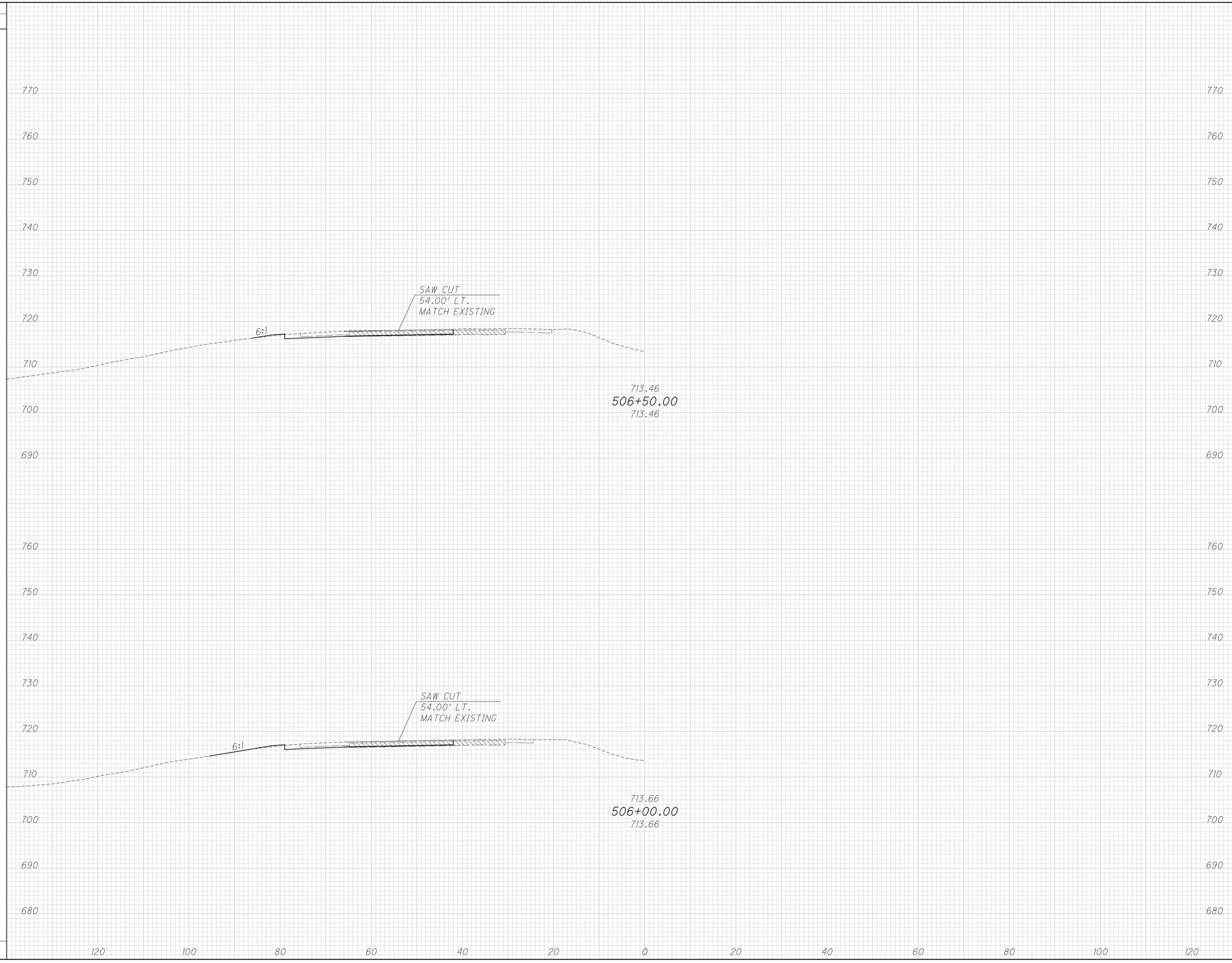

CROSS SECTIONS IR-270
STA. 506+00.00 TO STA. 506+50.00

FRA-270-51.50

x:\Projects\2013\1321\1010\FRA 92616\roadway\sheets\92616XS800.dgn 12/7/2022 2:55:01 PM cwong

SEEDING	
END WIDTH	SQ. YDS.

END AREA	
CUT	FILL

VOLUME	
CUT	FILL

CALCULATED JGB

CHECKED CSR

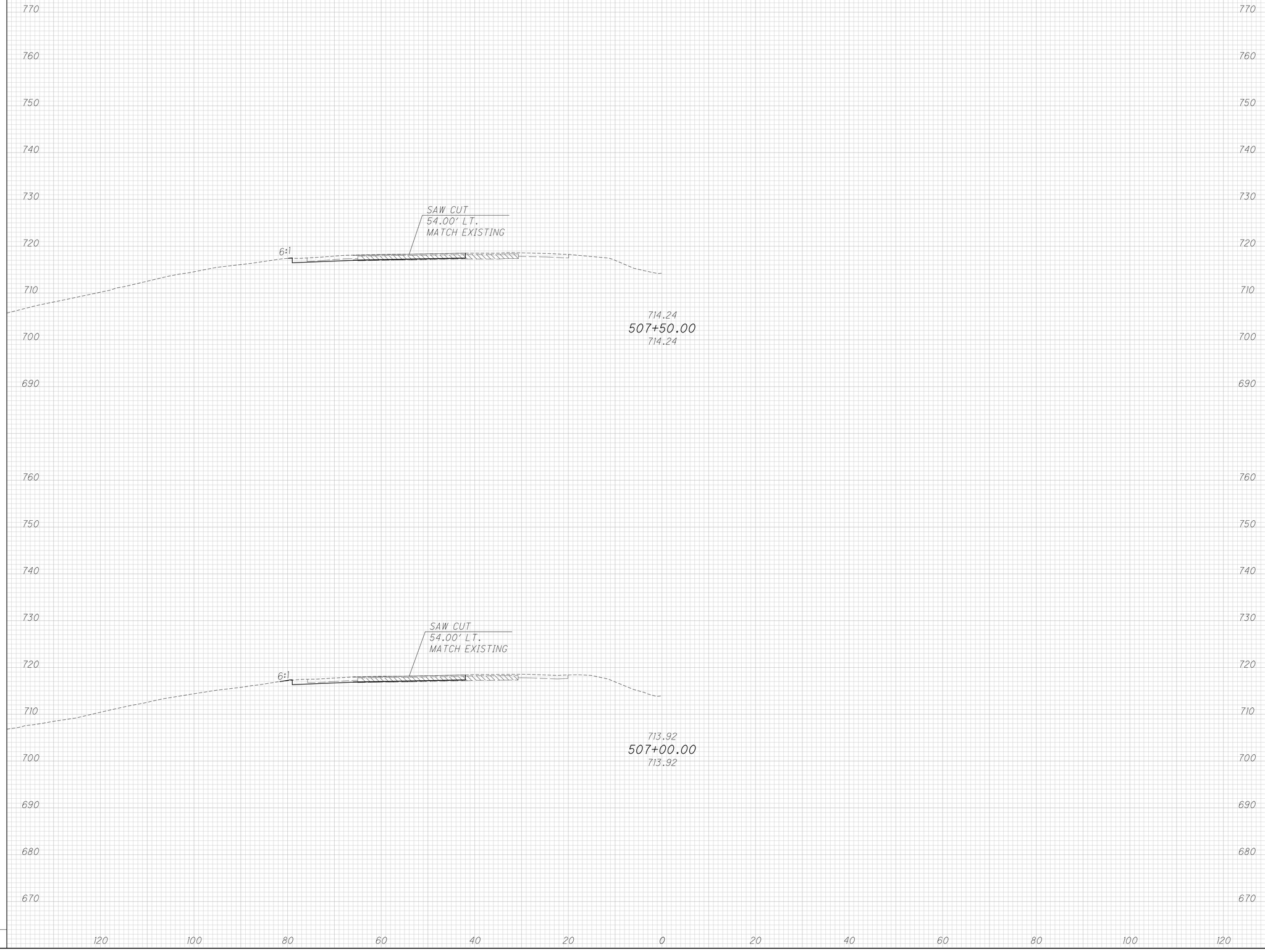

CROSS SECTIONS IR-270
STA. 507+00.00 TO STA. 507+50.00

FRA-270-51.50

x:\Projects\2013\1321\1010\FRA 92616\roadway\sheets\92616XS800.dgn 12/7/2022 2:55:01 PM cwong

SEEDING	
END WIDTH	SQ. YDS.

END AREA	
CUT	FILL

VOLUME	
CUT	FILL

CALCULATED JGB

CHECKED CSR

770
760
750
740
730
720
710
700
690
680
670

SAW CUT
54.00' LT.
MATCH EXISTING

6:1

714.37
508+00.00
714.37

120 100 80 60 40 20 0 20 40 60 80 100 120

CROSS SECTIONS IR-270
STA. 508+00.00

FRA-270-51.50

131
554

x:\Projects\2013\1321\1010\FRA\92616\roadway\sheets\92616XS800.dgn 12/7/2022 2:55:01 PM cwong

x:\Projects\2013\1321\1010\FRA\92616\roadway\sheets\92616XS800.dgn 12/7/2022 2:55:02 PM cwong

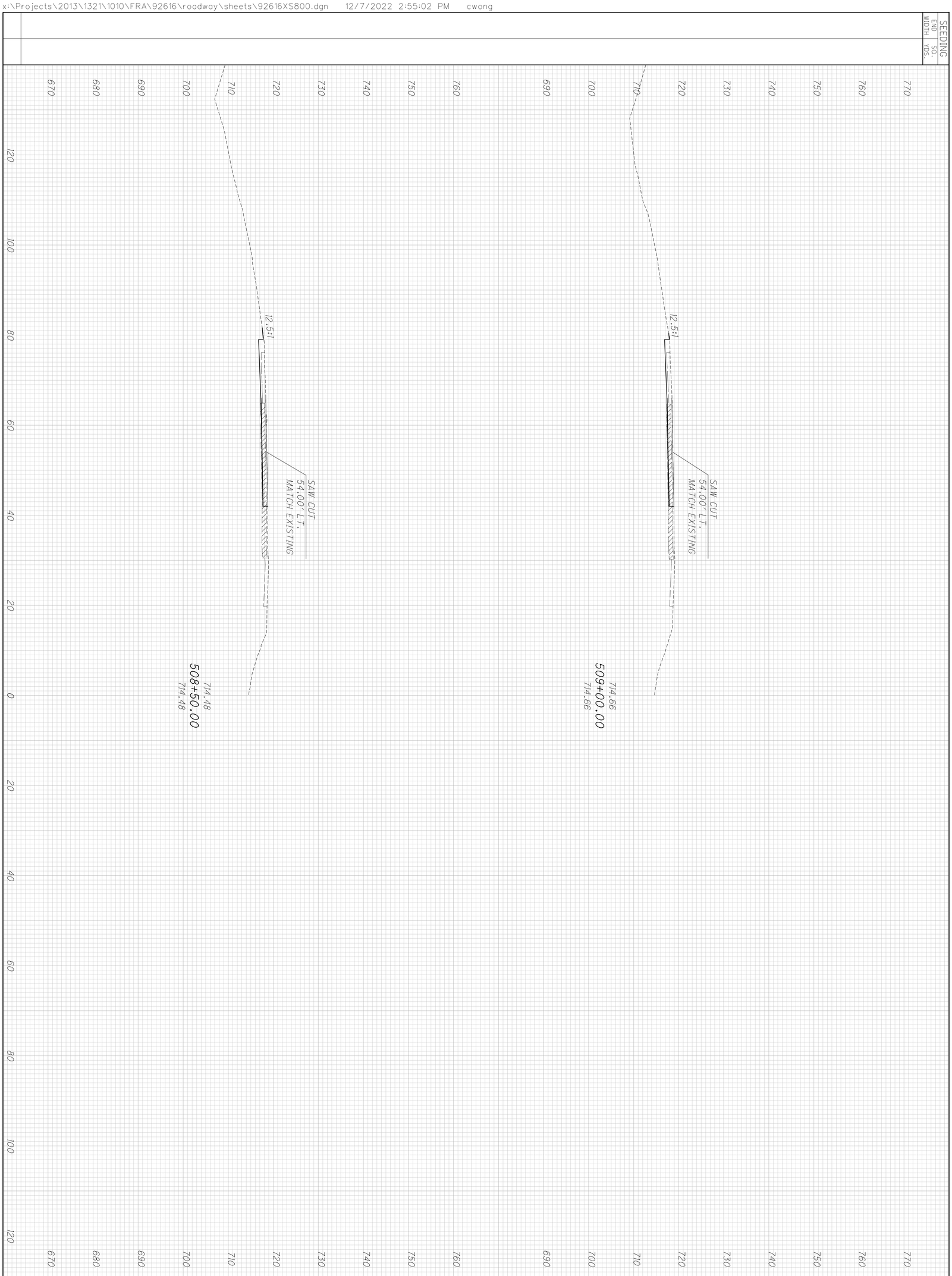

END AREA CUT FILL
VOLUME CUT FILL

132
554

FRA-270-51.50

CROSS SECTIONS IR-270
STA. 508+50.00 TO STA. 509+00.00

CALCULATED JGB
CHECKED CSR

SEEDING	
END WIDTH	SQ. YDS.

END AREA		VOLUME	
CUT	FILL	CUT	FILL

CALCULATED JGB

CHECKED CSR

CROSS SECTIONS IR-270

STA. 509+50.00 TO STA. 510+00.00

FRA-270-51.50

133
554

x:\Projects\2013\1321\1010\FRA\92616\roadway\sheets\92616XS800.dgn 12/7/2022 2:55:03 PM cwong

SEEDING	
END WIDTH	SQ. YDS.

END AREA	
CUT	FILL

VOLUME	
CUT	FILL

CALCULATED JGB

CHECKED CSR

770
760
750
740
730
720
710
700
690
680
670

SAW CUT
54.00' LT.
MATCH EXISTING

12.5:1

℄ 714.1

715.41
510+50.00
715.41

120 100 80 60 40 20 0 20 40 60 80 100 120

CROSS SECTIONS IR-270
STA. 510+50.00

FRA-270-51.50

x:\Projects\2013\1321\1010\FRA\92616\roadway\sheets\92616XS800.dgn 12/7/2022 2:55:03 PM cwong

SEEDING	
END WIDTH	SQ. YDS.

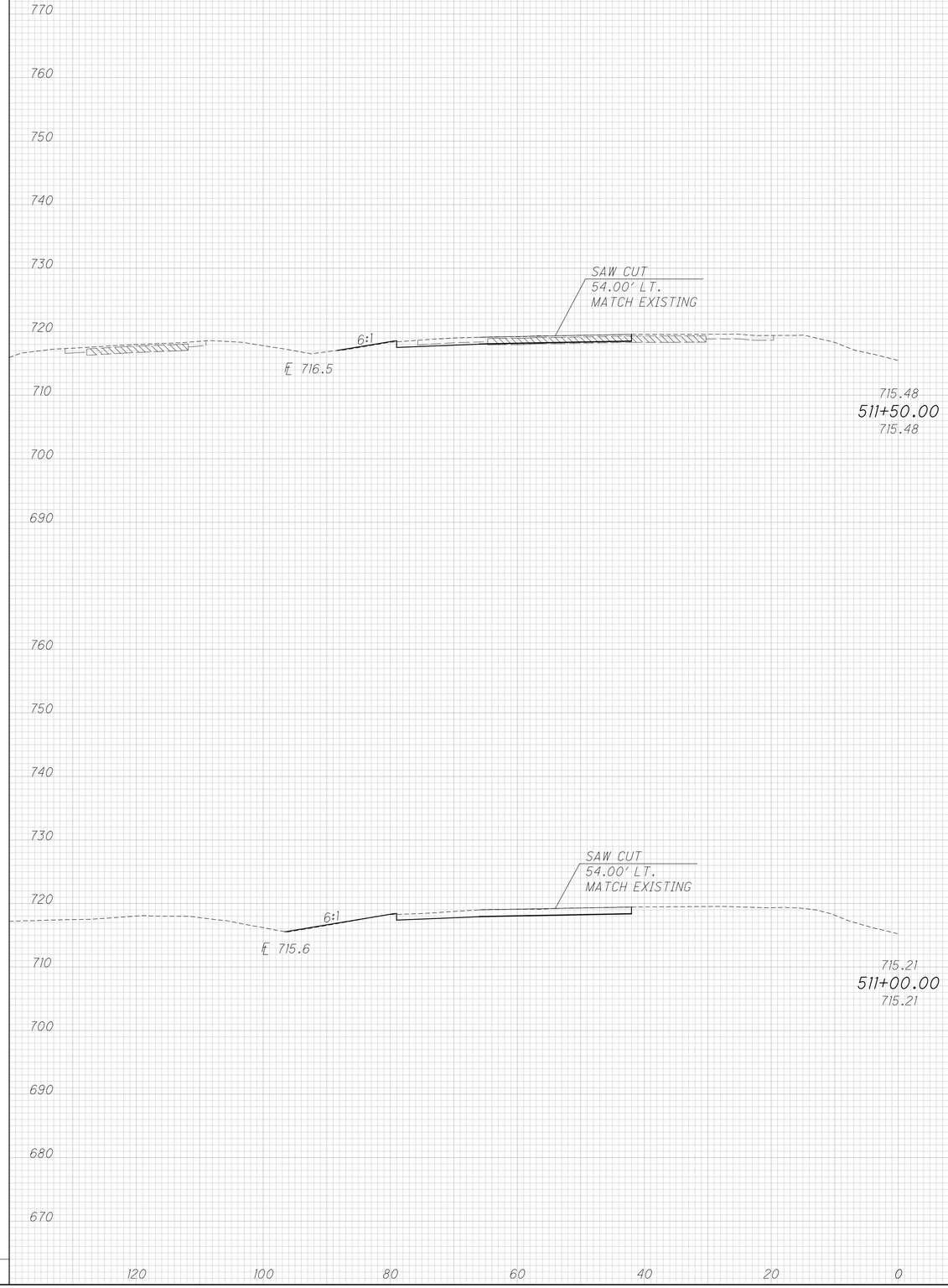

END AREA		VOLUME	
CUT	FILL	CUT	FILL

CALCULATED	CHECKED
JGB	CSR

CROSS SECTIONS IR-270
STA. 511+00.00 TO STA. 511+50.00

FRA-270-51.50

x:\Projects\2013\1321\1010\FRA\92616\roadway\sheets\92616XS800.dgn 12/7/2022 2:55:04 PM cwong

x:\Projects\2013\1321\1010\FRA\92616\roadway\sheets\92616XS800.dgn 12/7/2022 2:55:05 PM cwong

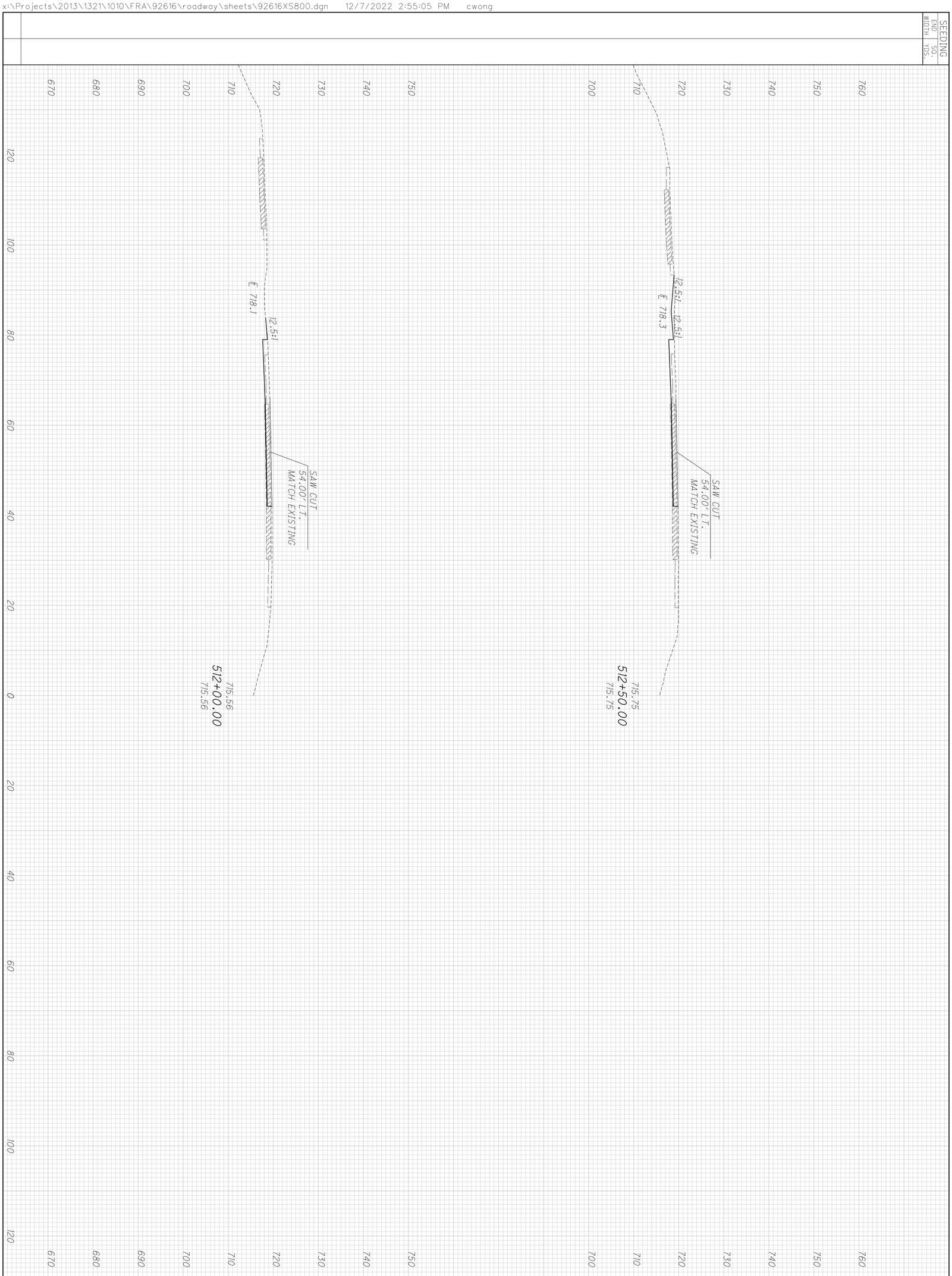

136
554

FRA-270-51.50

CROSS SECTIONS IR-270
STA. 512+00.00 TO STA. 512+50.00

CALCULATED JGB
CHECKED CSR

x:\Projects\2013\1321\1010\FRA\92616\roadway\sheets\92616XS800.dgn 12/7/2022 2:55:05 PM cwong

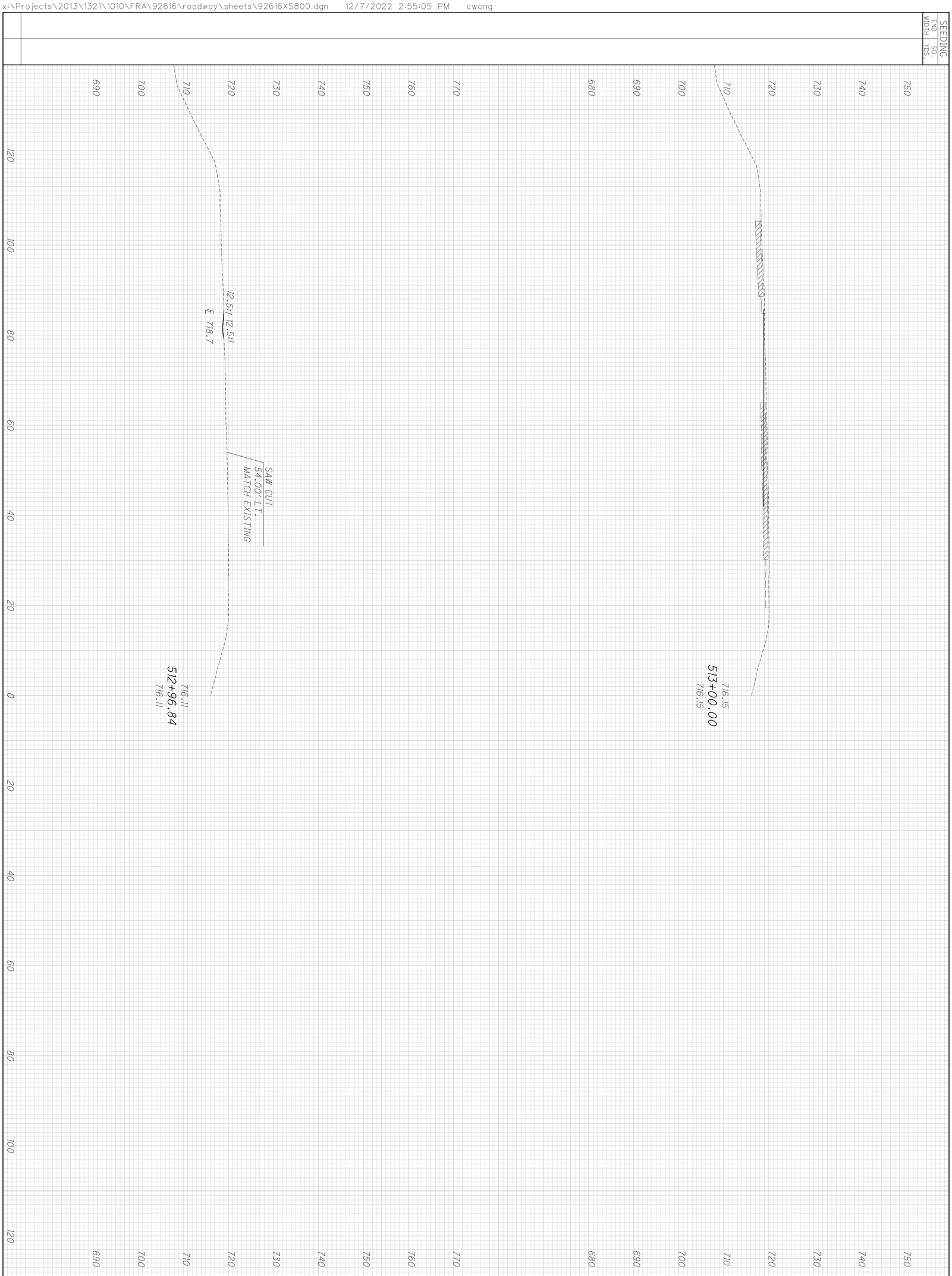

END AREA CUT | FILL
VOLUME CUT | FILL

137
554

FRA-270-51.50

CROSS SECTIONS IR-270
STA. 512+96.84 TO STA. 513+00.00

CALCULATED JGB
CHECKED CSR

ITEM 670 - DITCH EROSION CONTROL PROTECTION MAT

ITEM 836 - TURF REINFORCING MAT, TYPE 1

ITEM 836 - TURF REINFORCING MAT, TYPE 2

CROSS REFERENCES	
SHEET NO.	DESCRIPTION
5 -7	℄ REFERENCES & BENCHMARKS
3	CURVE DATA & GEOMETRIC PLAN
85 -94	ROADWAY QUANTITIES
144 -147	CROSS SECTIONS
383	SIGNING & PAVEMENT MARKING
339	PAVEMENT DETAILS
360-361	STORM SEWER PROFILES
227	PLAN - RAMP O
272	PLAN AND PROFILE - RAMP R

HORIZONTAL SCALE IN FEET 0 10 20 40

CALCULATED ACF CHECKED CSR

C21 IR 270EB MERGE
P.I. STA. 717+69.38
Δ = 6° 27′ 15″ (LT)
Dc = 0° 29′ 50″
R = 111,525.16′
T = 649.82′
L = 1,298.26′
E = 18.30′
C = 1,297.57′
C.B. = S 83° 05′ 33″ E
e (max) = 0.016

C22 IR 270CD MERGE
P.I. STA. 817+70.45
Δ = 6° 27′ 15″ (LT)
Dc = 0° 29′ 50″
R = 111,544.16′
T = 650.89′
L = 1,300.40′
E = 18.31′
C = 1,299.71′
C.B. = S 83° 05′ 33″ E
e (max) = 0.016

℄ CONST. IR 270

CONST. LIMITS

PC STA. 811+19.56
PC Sta. 711+19.56
BEGIN FULL DEPTH PAVEMENT
BEGIN CONCRETE BARRIER 14.00′ RT
℄ STA. 711+19.56

℄ CONST. IR 270 EASTBOUND MERGE

SAW CUT LINE

END CONCRETE BARRIER
STA. 715+42.02, 14.00′ RT

6″ TYPE F @ 1.00%

℄ CONST. CD LANE

℄ CONST. RAMP R

B-014-0-13

GUARDRAIL, TYPE MGS

END RAMP R
POT STA. 287+90.80 =
STA. 714+74.27 IR 270 EASTBOUND MERGE =
STA. 814+74.87 IR 270 CD LANE
BEGIN 35.7:1 TAPER

PCO +20.00
107.90′ RT.
℄ 712.87

PCO +74.67
78.06′ RT.
℄ 715.16

MATCH LINE STA. 716+00 IR 270 EASTBOUND MERGE - SEE SHEET 139

EX. GROUND

PR. PROFILE
IR 270 EASTBOUND MERGE

+0.25 %

EX ELEC.

PR. LTG CONDUIT

PR. LTG CONDUIT

SEE SHEET - 360
FOR CROSSING

SEE SHEET - 361
FOR CROSSING

712+00 713+00 714+00 715+00 716+00

PLAN AND PROFILE IR 270 EASTBOUND MERGE
STA. 711+19.56 TO STA. 716+00

FRA-270-51.50

138
554

x:\Projects\2013\1321\1010\FRA-92616\roadway\sheets\92616GP751.dgn 12/29/2022 1:57:21 PM sbarnard

C21 IR 270EB MERGE
P.I. STA. 717+69.38
Δ = 6° 27′ 15″ (LT)
Dc = 0° 29′ 50″
R = 111,525.16′
T = 649.82′
L = 1,298.26′
E = 18.30′
C = 1,297.57′
C.B. = S 83° 05′ 33″ E
e (max) = 0.016

C22 IR 270CD MERGE
P.I. STA. 817+70.45
Δ = 6° 27′ 15″ (LT)
Dc = 0° 29′ 50″
R = 111,544.16′
T = 650.89′
L = 1,300.40′
E = 18.31′
C = 1,299.71′
C.B. = S 83° 05′ 33″ E
e (max) = 0.016

CROSS REFERENCES	
SHEET NO.	DESCRIPTION
5 -7	℄ REFERENCES & BENCHMARKS
3	CURVE DATA & GEOMETRIC PLAN
85 -94	ROADWAY QUANTITIES
148 -152	CROSS SECTIONS
383-384	SIGNING & PAVEMENT MARKING
339	PAVEMENT DETAILS

℄ CONST. IR 270
℄ CONST. IR 270 EASTBOUND MERGE
℄ CONST. CD LANE
CONST. LIMITS
SAW CUT LINE
MATCH LINE STA. 716+00 IR 270 EASTBOUND MERGE - SEE SHEET 138
MATCH LINE STA. 721+00 IR 270 EASTBOUND MERGE - SEE SHEET 140
B1
D1
U1
U2
U3
U4
U5
P1
P2
R1
G20
B-015-0-13
B-016-0-13
6" TYPE F @ 1.00%
12.0'
6.0'
8.0'
+25.00
PT STA 820+10.00
GUARDRAIL, TYPE MGS
PCO +75.17
74.11' RT.
℄ 715.62
ITEM 670 - DITCH EROSION CONTROL PROTECTION MAT
ITEM 836 - TURF REINFORCING MAT, TYPE 1
ITEM 836 - TURF REINFORCING MAT, TYPE 2
CONST. LIMITS
5'x CHAIN LINK FENCE
Ex. LA R/W
Ex. R/W
EOWE

P.V.I. STA 718+50.00
ELEV = 720.08′
Δ = 0.01%, NO CURVE
PR. PROFILE IR 270 EASTBOUND MERGE
EX. GROUND
+0.25 %
+0.26 %
EX ELEC.
PR. LTG CONDUIT

719.46 719.52 719.59 719.65 719.71 719.77 719.83 719.90 719.96 720.02 720.08 720.15 720.21 720.27 720.34 720.40 720.46 720.53 720.59 720.65 720.72
719.58 719.70 719.81 719.95 720.06 720.16 720.27 720.22 720.37 720.44 720.66
735 730 725 720 715 710 705 700
716+00 717+00 718+00 719+00 720+00 721+00

HORIZONTAL SCALE IN FEET
0 10 20 40
CALCULATED ACF
CHECKED CSR

PLAN AND PROFILE IR 270 EASTBOUND MERGE STA. 716+00 TO STA. 721+00

FRA-270-51.50

139
554

X:\Projects\2013\132\1010\FRA\92616\roadway\sheets\92616GP752.dgn 3/9/2023 2:23:42 PM cwong

ITEM 670 - DITCH EROSION CONTROL PROTECTION MAT

ITEM 836 - TURF REINFORCING MAT, TYPE 1

ITEM 836 - TURF REINFORCING MAT, TYPE 2

C21 IR 270EB MERGE
P.I. STA. 717+69.38
Δ = 6° 27′ 15″ (LT)
Dc = 0° 29′ 50″
R = 111,525.16′
T = 649.82′
L = 1,298.26′
E = 18.30′
C = 1,297.57′
C.B. = S 83° 05′ 33″ E
e (max) = 0.016

C22 IR 270CD MERGE
P.I. STA. 817+70.45
Δ = 6° 27′ 15″ (LT)
Dc = 0° 29′ 50″
R = 111,544.16′
T = 650.89′
L = 1,300.40′
E = 18.31′
C = 1,299.71′
C.B. = S 83° 05′ 33″ E
e (max) = 0.016

CROSS REFERENCES	
SHEET NO.	DESCRIPTION
5 -7	℄ REFERENCES & BENCHMARKS
3	CURVE DATA & GEOMETRIC PLAN
85 -94	ROADWAY QUANTITIES
152 -157	CROSS SECTIONS
384	SIGNING & PAVEMENT MARKING
340	PAVEMENT DETAILS

MATCH LINE STA. 721+00 IR 270 EASTBOUND MERGE - SEE SHEET 139

MATCH LINE STA. 726+00 IR 270 EASTBOUND MERGE - SEE SHEET 141

PT STA. 522

PT STA. 724+17.82

℄ CONST. IR 270

CONST. LIMITS

℄ CONST. IR 270 EASTBOUND MERGE

SAW CUT LINE

P1

U2

13.9′

23.8′

6" TYPE F @ 1.00%

U1

R1

8.0′

P2

G21

U3

+85.00

PCO +76.97
61.40′ RT.
℄ 716.95

GUARDRAIL, TYPE MGS

CONST. LIMITS

Ex LA R/W

OHE

MARY IRENE YOUNKIN
495-283048
IN 199903040054791

721 722 723 724 725 726

735 730 725 720 715 710 705 700

720.72 720.78 720.85 720.91 720.97 721.03 721.09 721.13 721.17 721.21 721.23 721.25 721.27 721.28 721.29 721.31 721.33 721.36 721.40 721.45 721.50

P.V.I. STA 723+00.00 ELEV 721.23′
210.00′ VC
K = 982

STA 721+95.00
ELEV 720.96

STA 724+05.00
ELEV 721.27

PR. PROFILE
IR 270 EASTBOUND MERGE

+0.25 %

+0.04 %

EXISTING GROUND

+0.04 %

+0.30 %

STA 724+45.00
ELEV 721.29

P.V.I. STA 725+50.00 ELEV 721.33′
210.00′ VC
K = 802

E

EX ELEC.

PR. LTG CONDUIT

720.66 720.84 721.00 721.13 721.19 721.29 721.34 721.38 721.36 721.33 721.51

721+00 722+00 723+00 724+00 725+00 726+00

HORIZONTAL SCALE IN FEET
0 10 20 40

CALCULATED ACF
CHECKED CSR

PLAN AND PROFILE IR 270 EASTBOUND MERGE STA. 721+00 TO STA. 726+00

FRA-270-51.50

140
554

x:\Projects\2013\1321\1010\FRA 92616\roadway\sheets\92616GP753.dgn 12/7/2022 2:55:11 PM cwong

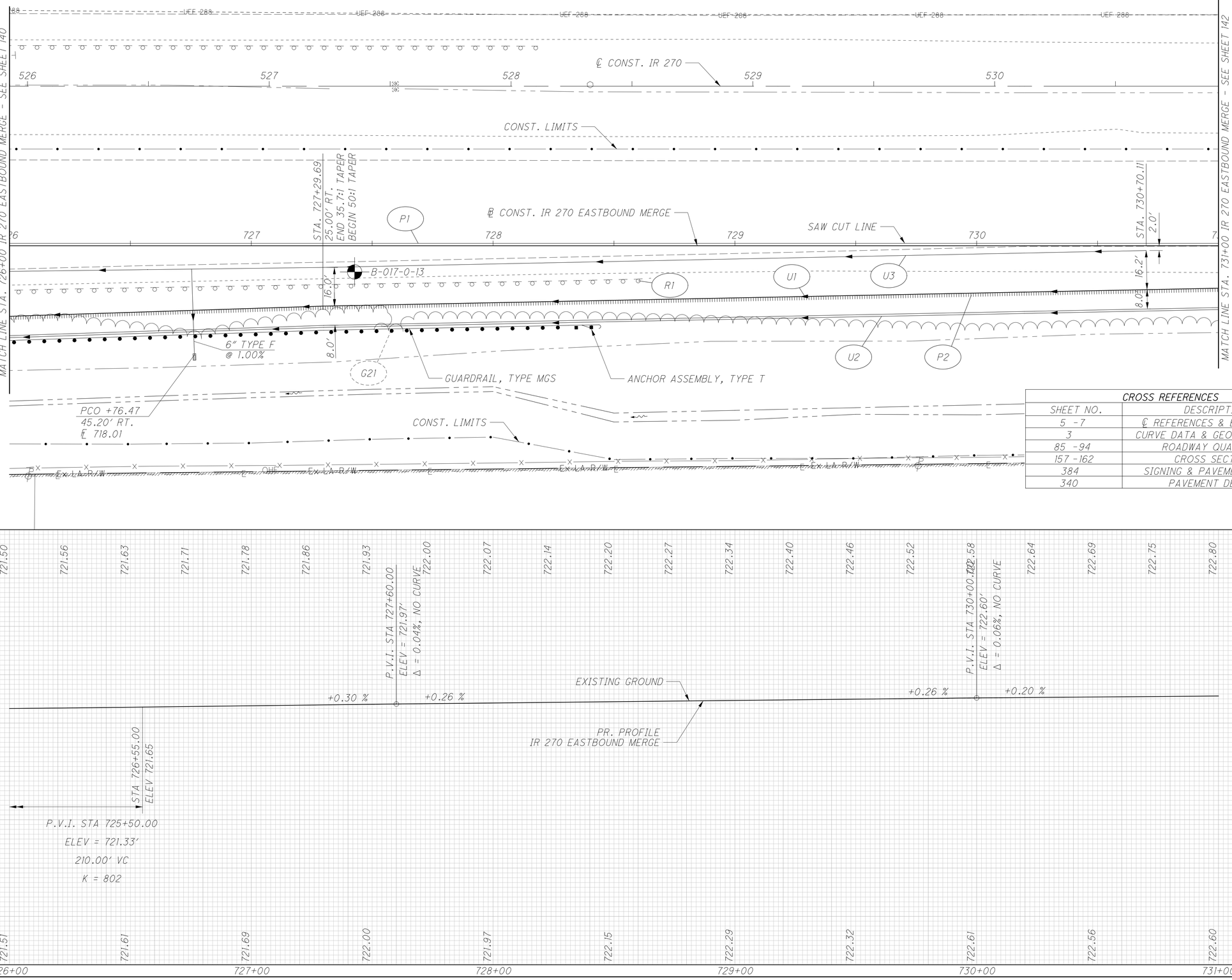

CROSS REFERENCES	
SHEET NO.	DESCRIPTION
5 -7	℄ REFERENCES & BENCHMARKS
3	CURVE DATA & GEOMETRIC PLAN
85 -94	ROADWAY QUANTITIES
157 -162	CROSS SECTIONS
384	SIGNING & PAVEMENT MARKING
340	PAVEMENT DETAILS

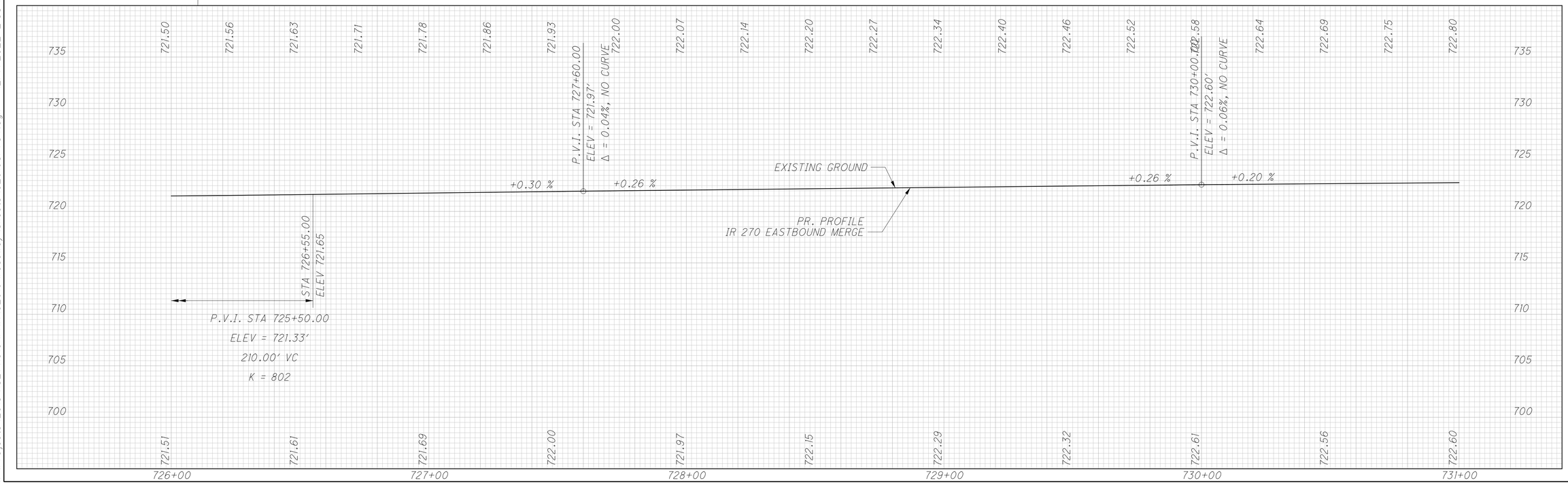

HORIZONTAL SCALE IN FEET
0 10 20 40

CALCULATED ACF
CHECKED CSR

PLAN AND PROFILE IR 270 EASTBOUND MERGE
STA. 726+00 TO STA. 731+00

FRA-270-51.50

141
554

x:\Projects\2013\1321\1010\FRA\92616\roadway\sheets\92616GP754.dgn 12/7/2022 2:55:13 PM cwong

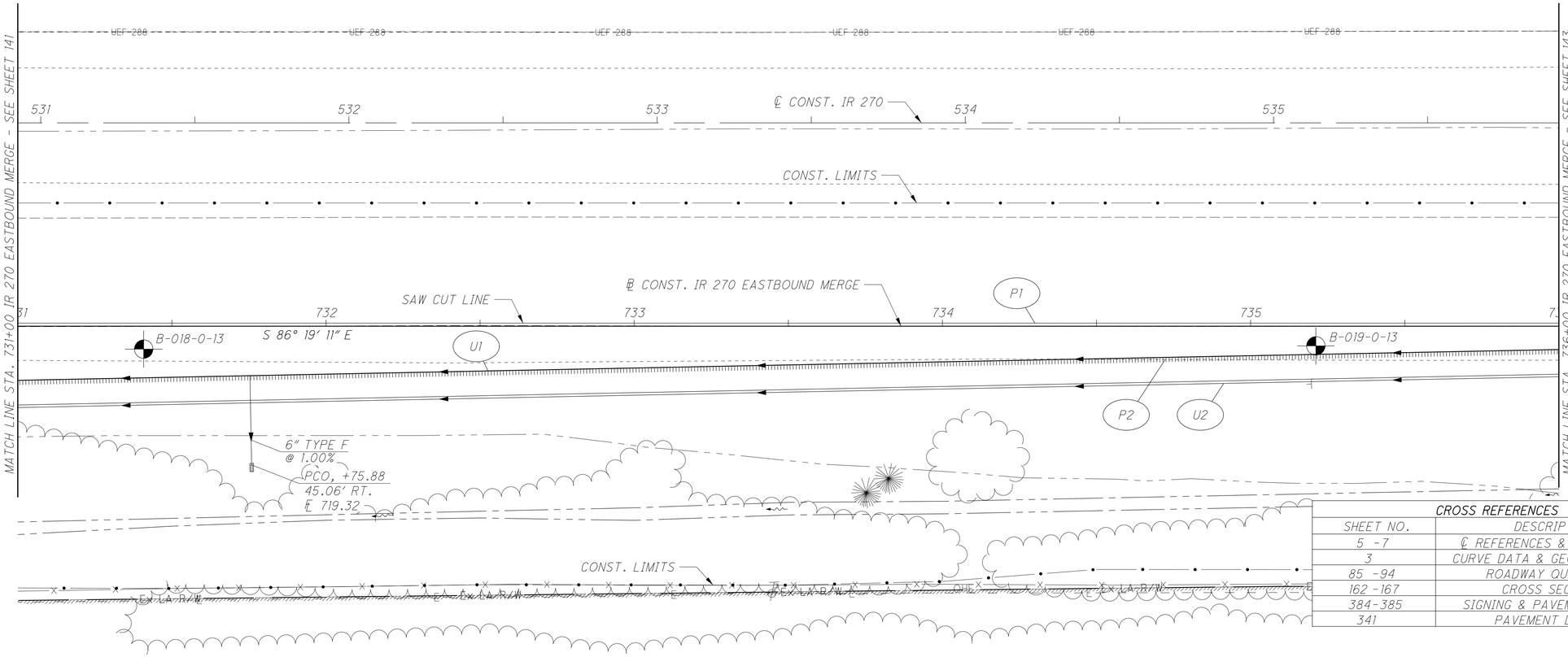

CROSS REFERENCES	
SHEET NO.	DESCRIPTION
5 -7	℄ REFERENCES & BENCHMARKS
3	CURVE DATA & GEOMETRIC PLAN
85 -94	ROADWAY QUANTITIES
162 -167	CROSS SECTIONS
384-385	SIGNING & PAVEMENT MARKING
341	PAVEMENT DETAILS

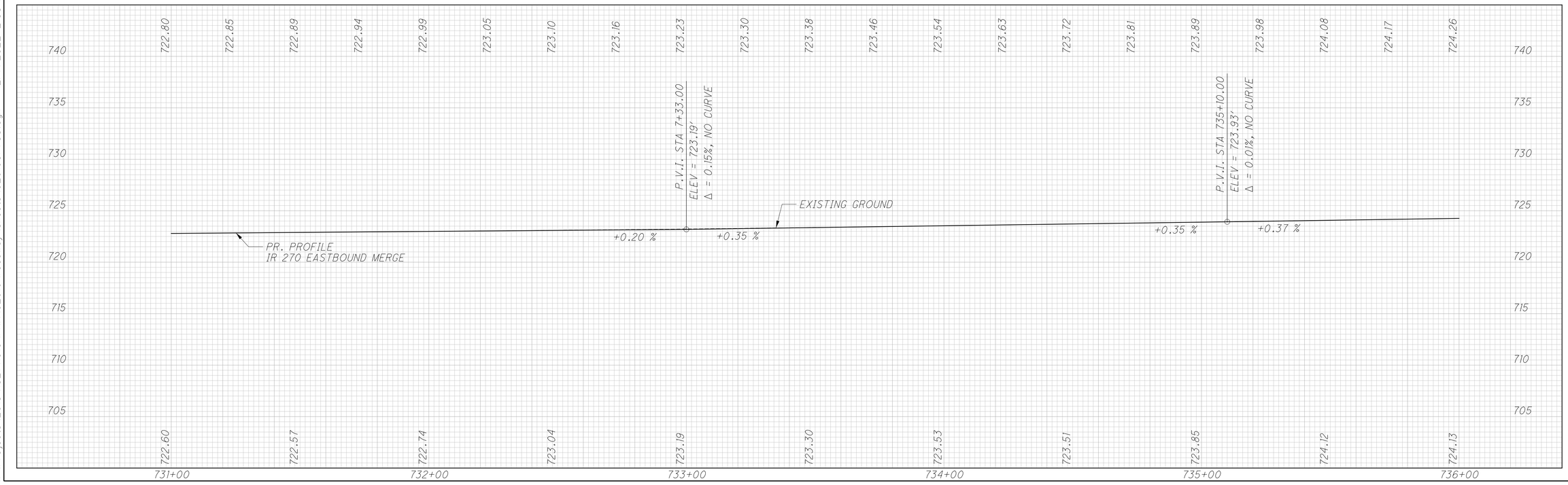

HORIZONTAL SCALE IN FEET
0 10 20 40

CALCULATED ACF
CHECKED CSR

PLAN AND PROFILE IR 270 EASTBOUND MERGE STA. 731+00 TO STA. 736+00

FRA-270-51.50

142
554

x:\Projects\2013\1321\1010\FRA\92616\roadway\sheets\92616GP755.dgn 12/7/2022 2:55:15 PM cwong

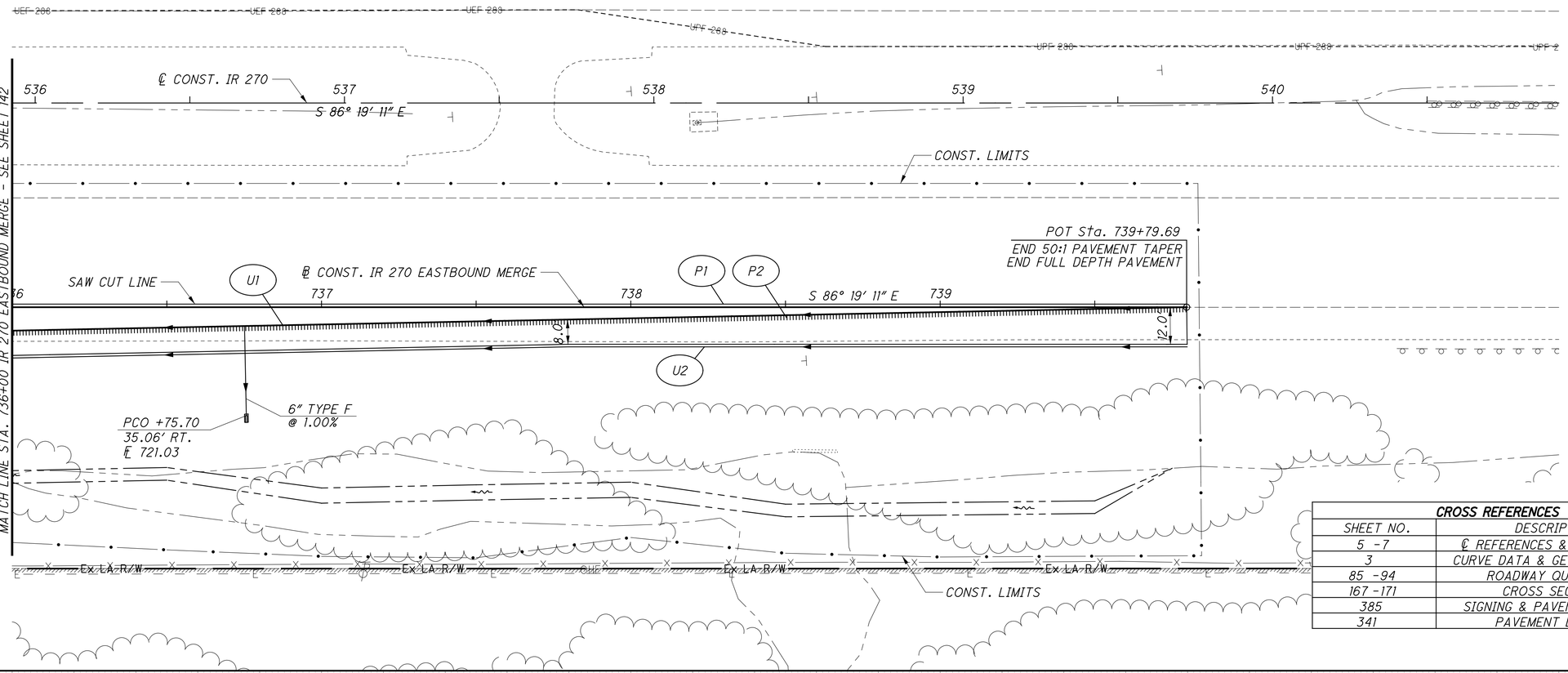

CROSS REFERENCES	
SHEET NO.	DESCRIPTION
5 -7	℄ REFERENCES & BENCHMARKS
3	CURVE DATA & GEOMETRIC PLAN
85 -94	ROADWAY QUANTITIES
167 -171	CROSS SECTIONS
385	SIGNING & PAVEMENT MARKING
341	PAVEMENT DETAILS

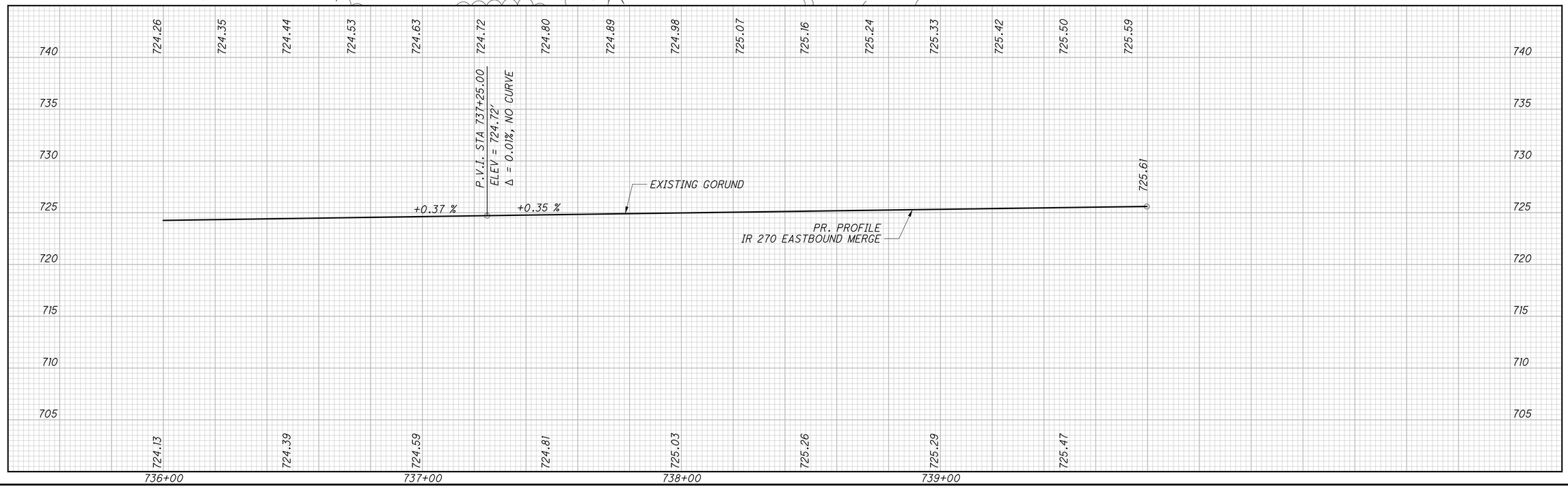

PLAN AND PROFILE IR 270 EASTBOUND MERGE STA. 736+00 TO STA. 739+79.69

HORIZONTAL SCALE IN FEET
0 10 20 40

CALCULATED ACF
CHECKED CSR

FRA-270-51.50

143
554

X:\Projects\2013\132I\1010\FRA\92616\roadway\sheets\92616GP756.dgn 1/27/2023 1:46:20 PM cwong

SEEDING	
END WIDTH	SQ. YDS.

END AREA	
CUT	FILL

VOLUME	
CUT	FILL

CALCULATED ACF

CHECKED CSR

EX. PAVEMENT

ITEM 670 - SLOPE EROSION PROTECTION

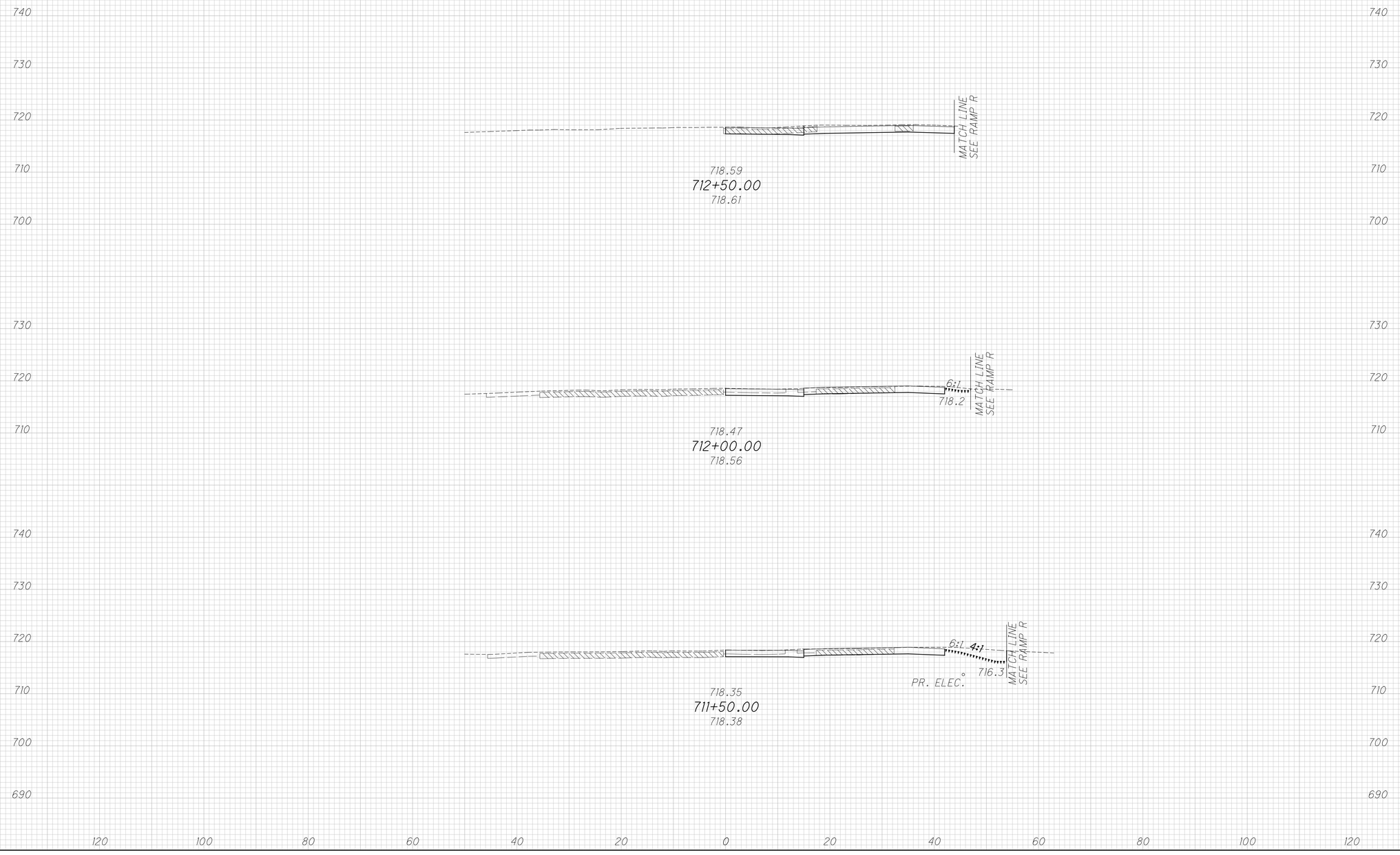

CROSS SECTIONS IR 270 EASTBOUND MERGE STA. 711+50.00 TO STA. 712+50.00

FRA-270-51.50

x:\Projects\2013\1321\1010\FRA\92616\roadway\sheets\92616XS750.dgn 12/8/2022 7:13:44 AM cwong

SEEDING	
END WIDTH	SQ. YDS.

END AREA	
CUT	FILL

VOLUME	
CUT	FILL

CALCULATED ACF

CHECKED CSR

EX. PAVEMENT

ITEM 670 - SLOPE EROSION PROTECTION

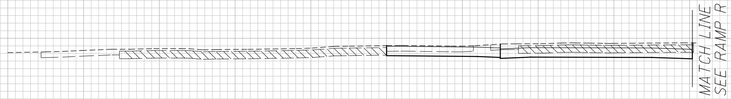

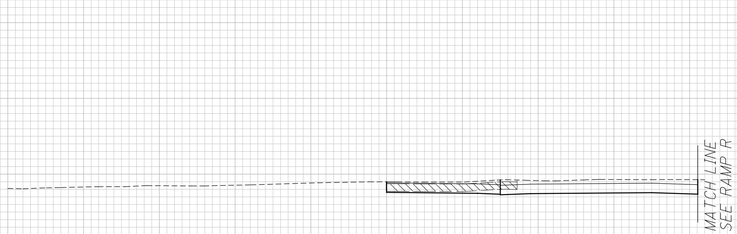

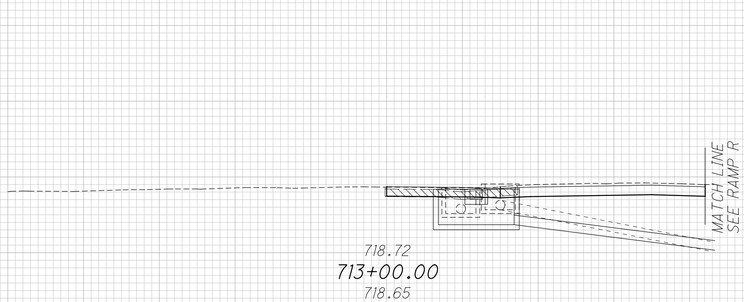

CROSS SECTIONS IR 270 EASTBOUND MERGE
STA. 713+00.00 TO STA. 714+00.00

FRA-270-51.50

x:\Projects\2013\1321\1010\FRA\92616\roadway\sheets\92616XS750.dgn 12/8/2022 7:13:45 AM cwong

SEEDING	
END WIDTH	SQ. YDS.

EX. PAVEMENT

ITEM 670 - SLOPE EROSION PROTECTION

END AREA		VOLUME	
CUT	FILL	CUT	FILL

CALCULATED ACF

CHECKED CSR

CROSS SECTIONS IR 270 EASTBOUND MERGE STA. 714+50.00 TO STA. 715+00.00

FRA-270-51.50

x:\Projects\2013\1321\1010\FRA\92616\roadway\sheets\92616XS750.dgn 12/8/2022 7:13:46 AM cwong

x:\Projects\2013\1321\1010\FRA\92616\roadway\sheets\92616XS750.dgn 12/8/2022 7:13:46 AM cwong

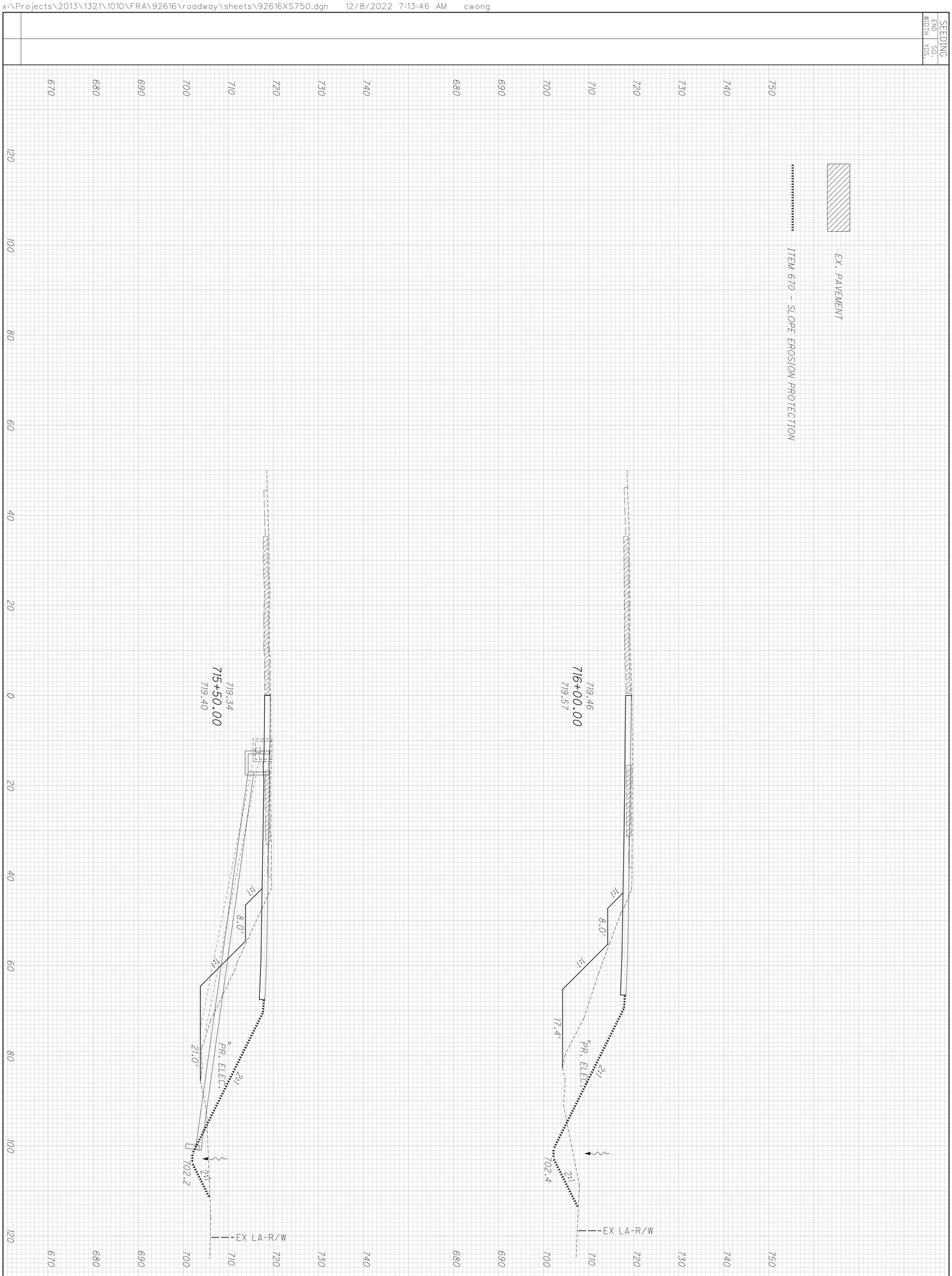

END AREA CUT | FILL
VOLUME CUT | FILL

147
554

FRA-270-51.50

CROSS SECTIONS IR 270 EASTBOUND MERGE
STA. 715+50.00 TO STA. 716+00.00

CALCULATED ACF
CHECKED CSR

SEEDING	
END WIDTH	SQ. YDS.

EX. PAVEMENT

ITEM 670 - SLOPE EROSION PROTECTION

END AREA		VOLUME	
CUT	FILL	CUT	FILL

CALCULATED ACF

CHECKED CSR

CROSS SECTIONS IR 270 EASTBOUND MERGE
STA. 716+50.00 TO STA. 717+00.00

FRA-270-51.50

x:\Projects\2013\1321\1010\FRA\92616\roadway\sheets\92616XS750.dgn 12/8/2022 7:13:47 AM cwong

x:\Projects\2013\1321\1010\FRA\92616\roadway\sheets\92616XS750.dgn 12/8/2022 7:13:48 AM cwong

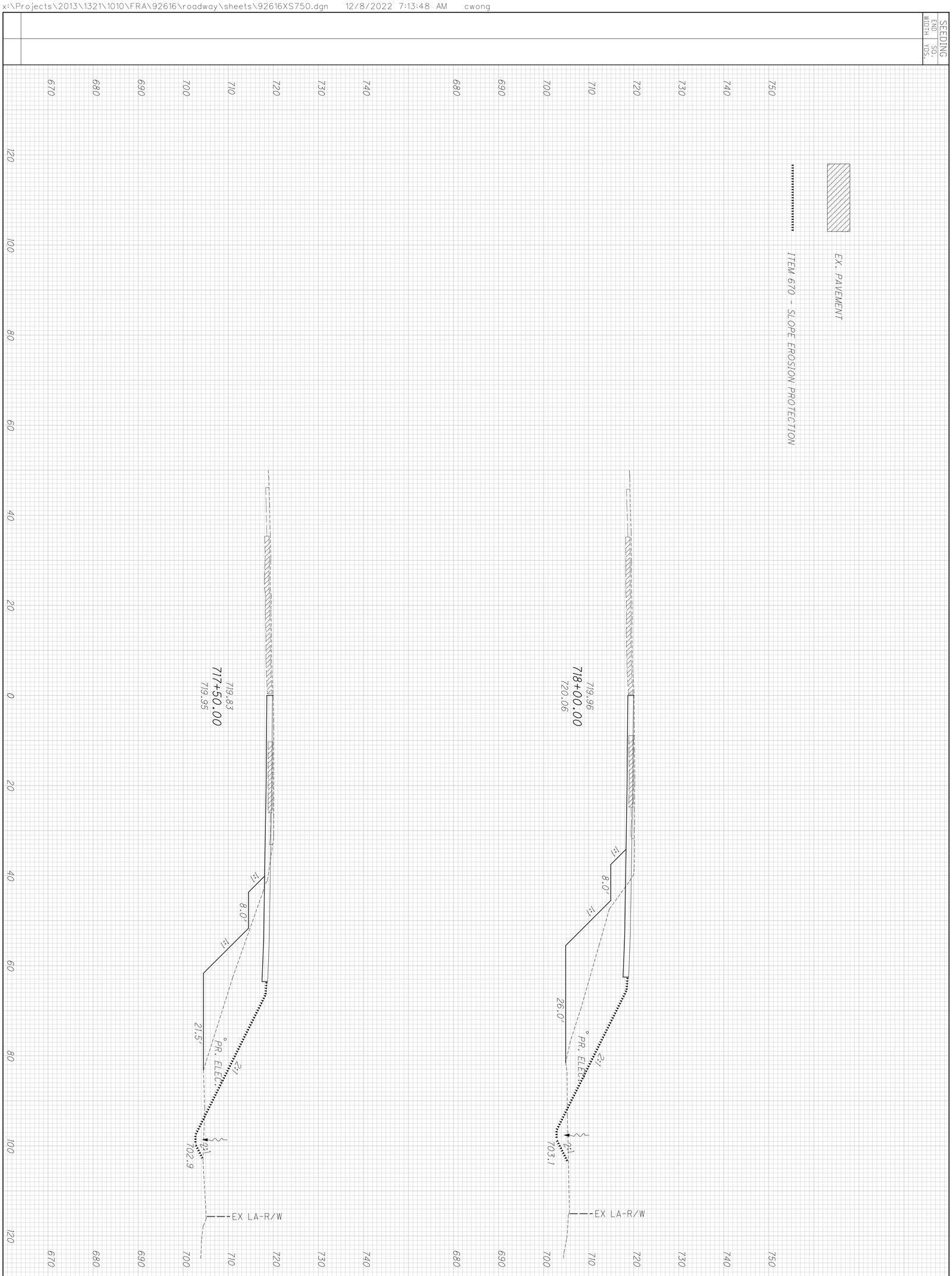

END AREA CUT | END AREA FILL | VOLUME CUT | VOLUME FILL

149
554

FRA-270-51.50

CROSS SECTIONS IR 270 EASTBOUND MERGE
STA. 717+50.00 TO STA. 718+00.00

CALCULATED ACF
CHECKED CSR

SEEDING	
END WIDTH	SQ. YDS.

EX. PAVEMENT

ITEM 670 - SLOPE EROSION PROTECTION

END AREA		VOLUME	
CUT	FILL	CUT	FILL

CALCULATED ACF

CHECKED CSR

CROSS SECTIONS IR 270 EASTBOUND MERGE
STA. 718+50.00 TO STA. 719+00.00

FRA-270-51.50

x:\Projects\2013\1321\1010\FRA\92616\roadway\sheets\92616XS750.dgn 12/8/2022 7:13:48 AM cwong

x:\Projects\2013\1321\1010\FRA\92616\roadway\sheets\92616XS750.dgn 12/8/2022 7:13:49 AM cwong

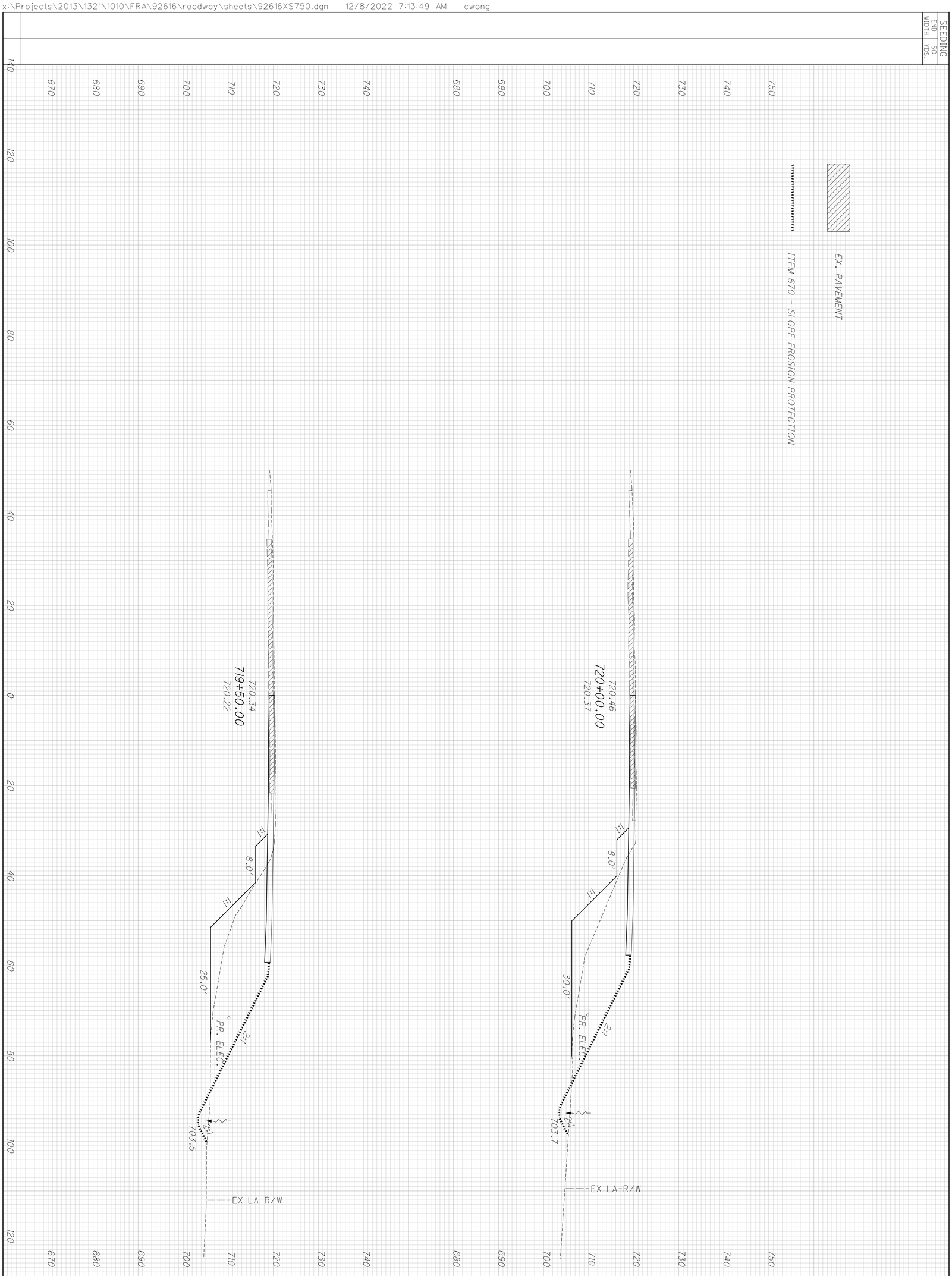

END AREA CUT | FILL
VOLUME CUT | FILL

151 / 554	**FRA-270-51.50**	**CROSS SECTIONS IR 270 EASTBOUND MERGE STA. 719+50.00 TO STA. 720+00.00**

CALCULATED ACF
CHECKED CSR

SEEDING	
END WIDTH	SQ. YDS.

EX. PAVEMENT

ITEM 670 - SLOPE EROSION PROTECTION

END AREA		VOLUME	
CUT	FILL	CUT	FILL

CALCULATED	CHECKED
ACF	CSR

CROSS SECTIONS IR 270 EASTBOUND MERGE
STA. 720+50.00 TO STA. 721+00.00

FRA-270-51.50

x:\Projects\2013\1321\1010\FRA\92616\roadway\sheets\92616XS750.dgn 12/8/2022 7:13:49 AM cwong

SEEDING	
END WIDTH	SQ. YDS.

EX. PAVEMENT

ITEM 670 - SLOPE EROSION PROTECTION

END AREA		VOLUME	
CUT	FILL	CUT	FILL

CALCULATED	CHECKED
ACF	CSR

CROSS SECTIONS IR 270 EASTBOUND MERGE
STA. 721+50.00 TO STA. 722+00.00

FRA-270-51.50

153
554

x:\Projects\2013\1321\1010\FRA\92616\roadway\sheets\92616XS750.dgn 12/8/2022 7:13:50 AM cwong

SEEDING	
END WIDTH	SQ. YDS.

EX. PAVEMENT

ITEM 670 - SLOPE EROSION PROTECTION

END AREA		VOLUME	
CUT	FILL	CUT	FILL

CALCULATED ACF

CHECKED CSR

CROSS SECTIONS IR 270 EASTBOUND MERGE
STA. 722+50.00 TO STA. 723+00.00

FRA-270-51.50

x:\Projects\2013\1321\1010\FRA\92616\roadway\sheets\92616XS750.dgn 12/8/2022 7:13:51 AM cwong

SEEDING	
END WIDTH	SQ. YDS.

EX. PAVEMENT

ITEM 670 - SLOPE EROSION PROTECTION

END AREA		VOLUME	
CUT	FILL	CUT	FILL

CALCULATED	CHECKED
ACF	CSR

CROSS SECTIONS IR 270 EASTBOUND MERGE
STA. 723+50.00 TO STA. 724+00.00

FRA-270-51.50

155
554

x:\Projects\2013\1321\1010\FRA\92616\roadway\sheets\92616XS750.dgn 12/8/2022 7:13:52 AM cwong

x:\Projects\2013\1321\1010\FRA\92616\roadway\sheets\92616XS750.dgn 12/8/2022 7:13:53 AM cwong

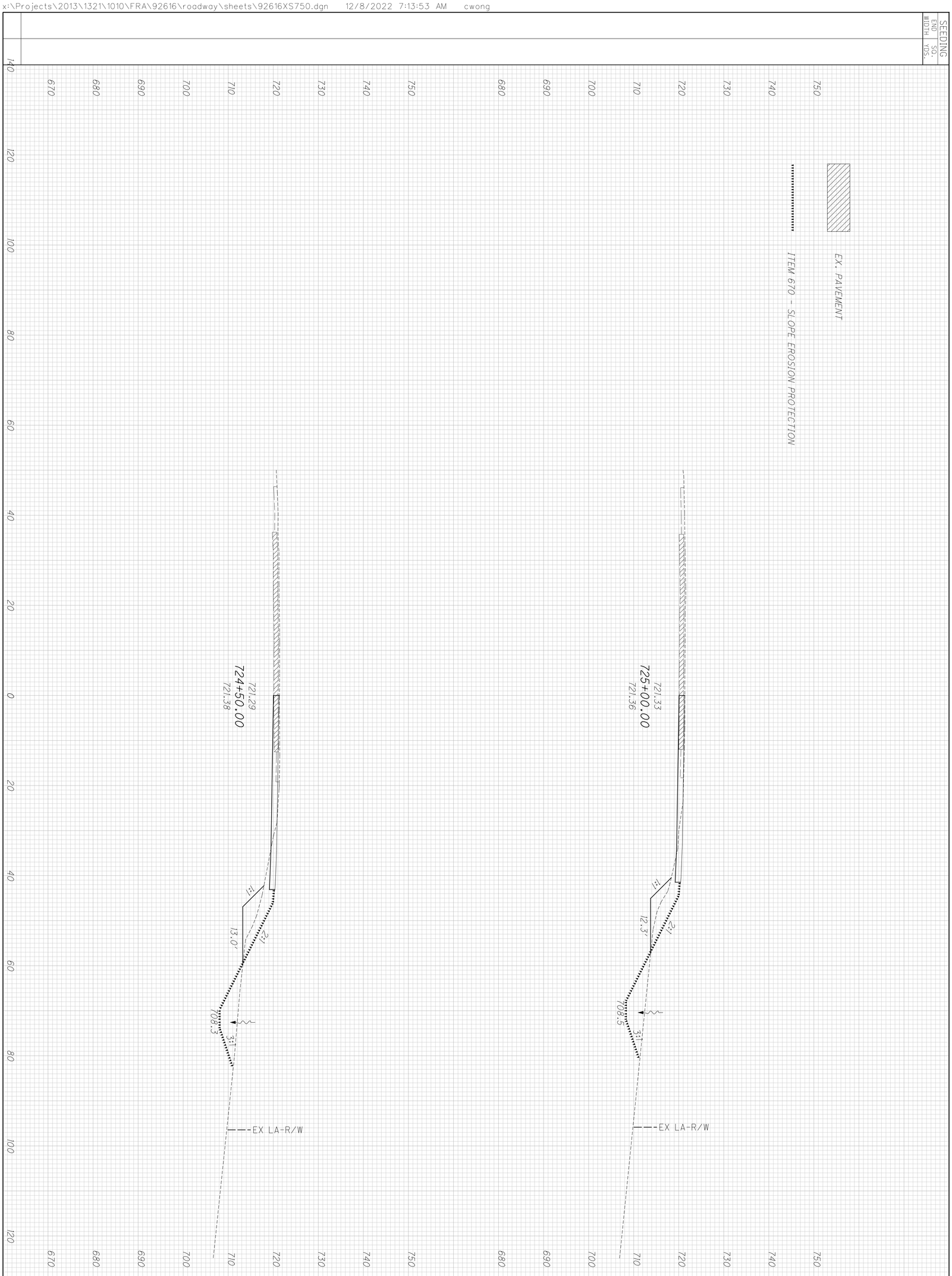

END AREA CUT | FILL

VOLUME CUT | FILL

156 / 554	**FRA-270-51.50**	**CROSS SECTIONS IR 270 EASTBOUND MERGE** **STA. 724+50.00 TO STA. 725+00.00**

CALCULATED ACF

CHECKED CSR

x:\Projects\2013\1321\1010\FRA\92616\roadway\sheets\92616XS750.dgn 12/8/2022 7:13:54 AM cwong

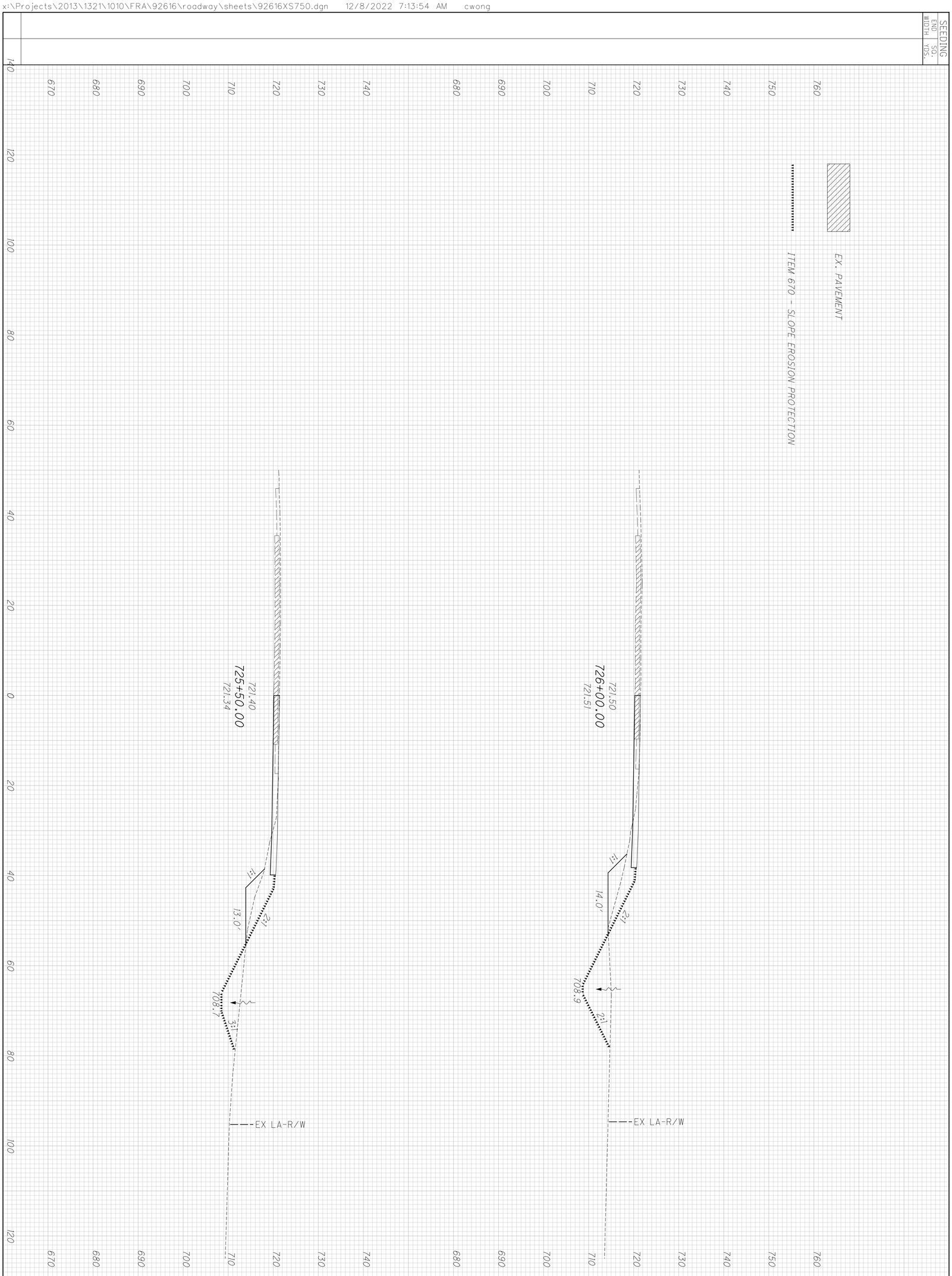

END AREA CUT | FILL
VOLUME CUT | FILL

157
554

FRA-270-51.50

CROSS SECTIONS IR 270 EASTBOUND MERGE
STA. 725+50.00 TO STA. 726+00.00

CALCULATED ACF
CHECKED CSR

SEEDING	
END WIDTH	SQ. YDS.

END AREA		VOLUME	
CUT	FILL	CUT	FILL

CALCULATED ACF

CHECKED CSR

EX. PAVEMENT

ITEM 670 - SLOPE EROSION PROTECTION

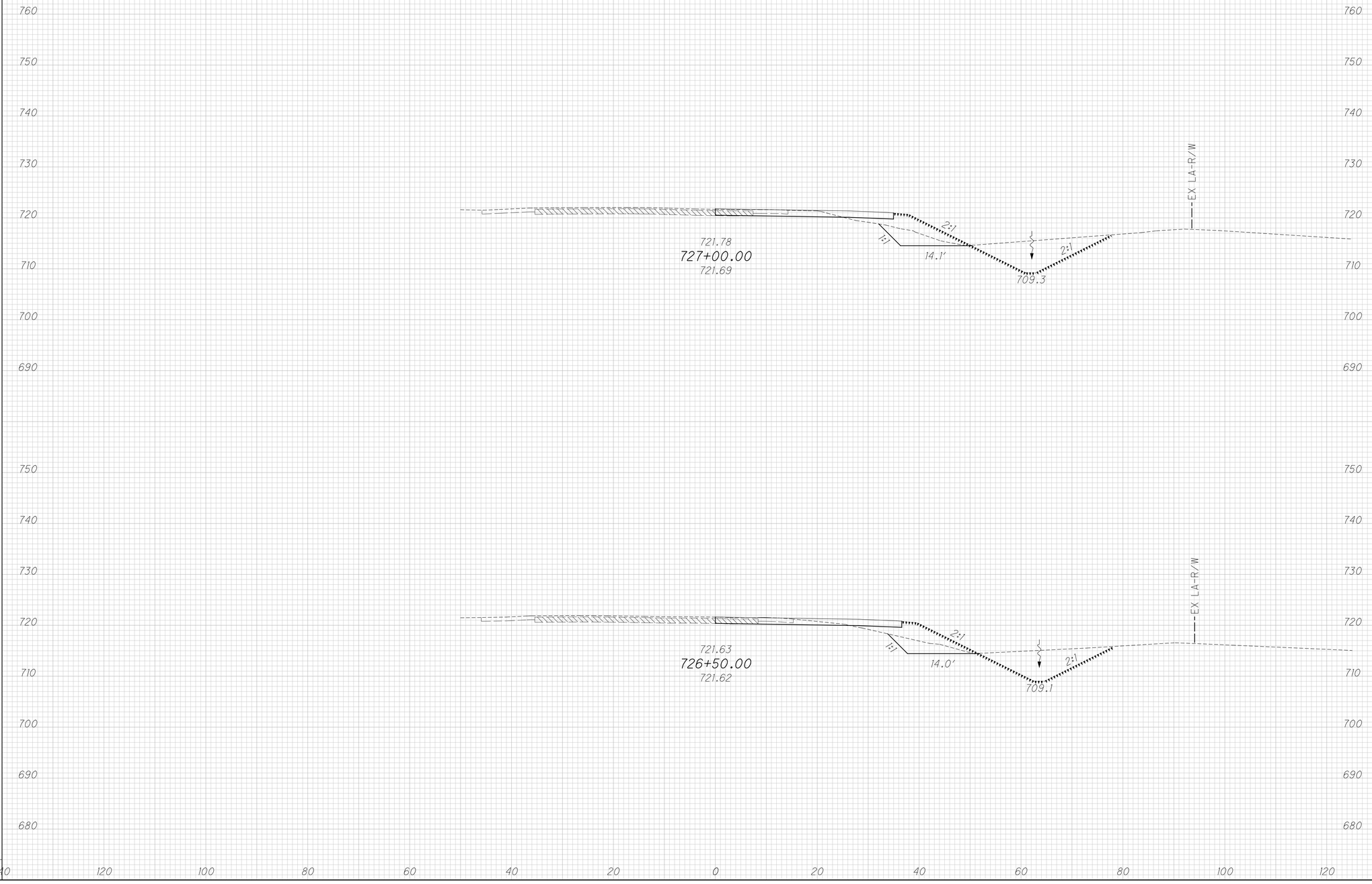

CROSS SECTIONS IR 270 EASTBOUND MERGE
STA. 726+50.00 TO STA. 727+00.00

FRA-270-51.50

x:\Projects\2013\1321\1010\FRA\92616\roadway\sheets\92616XS750.dgn 12/8/2022 7:13:55 AM cwong

SEEDING	
END WIDTH	SQ. YDS.

EX. PAVEMENT

ITEM 670 - SLOPE EROSION PROTECTION

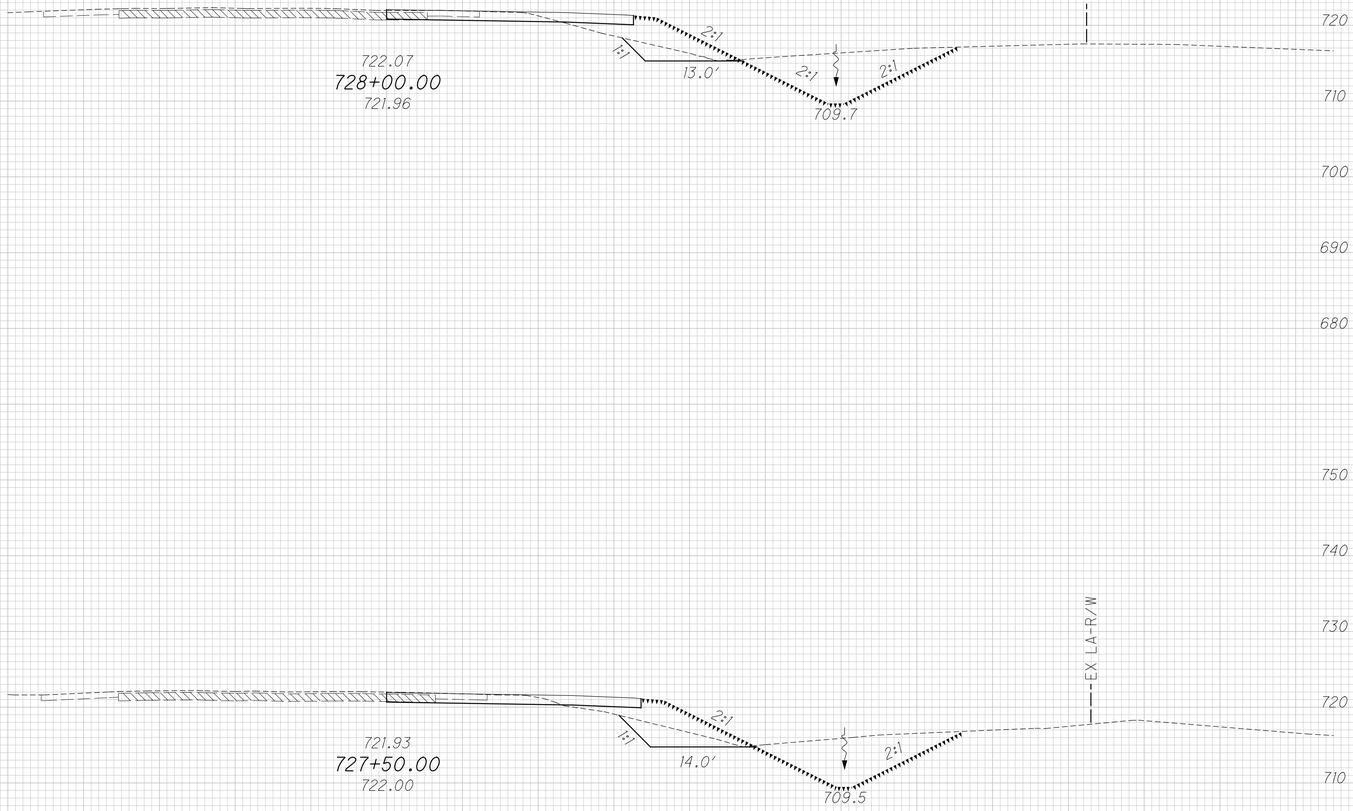

END AREA		VOLUME	
CUT	FILL	CUT	FILL

CALCULATED	CHECKED
ACF	CSR

CROSS SECTIONS IR 270 EASTBOUND MERGE
STA. 727+50.00 TO STA. 728+00.00

FRA-270-51.50

x:\Projects\2013\1321\1010\FRA\92616\roadway\sheets\92616XS750.dgn 12/8/2022 7:13:55 AM cwong

SEEDING	
END WIDTH	SQ. YDS.

EX. PAVEMENT

ITEM 670 - SLOPE EROSION PROTECTION

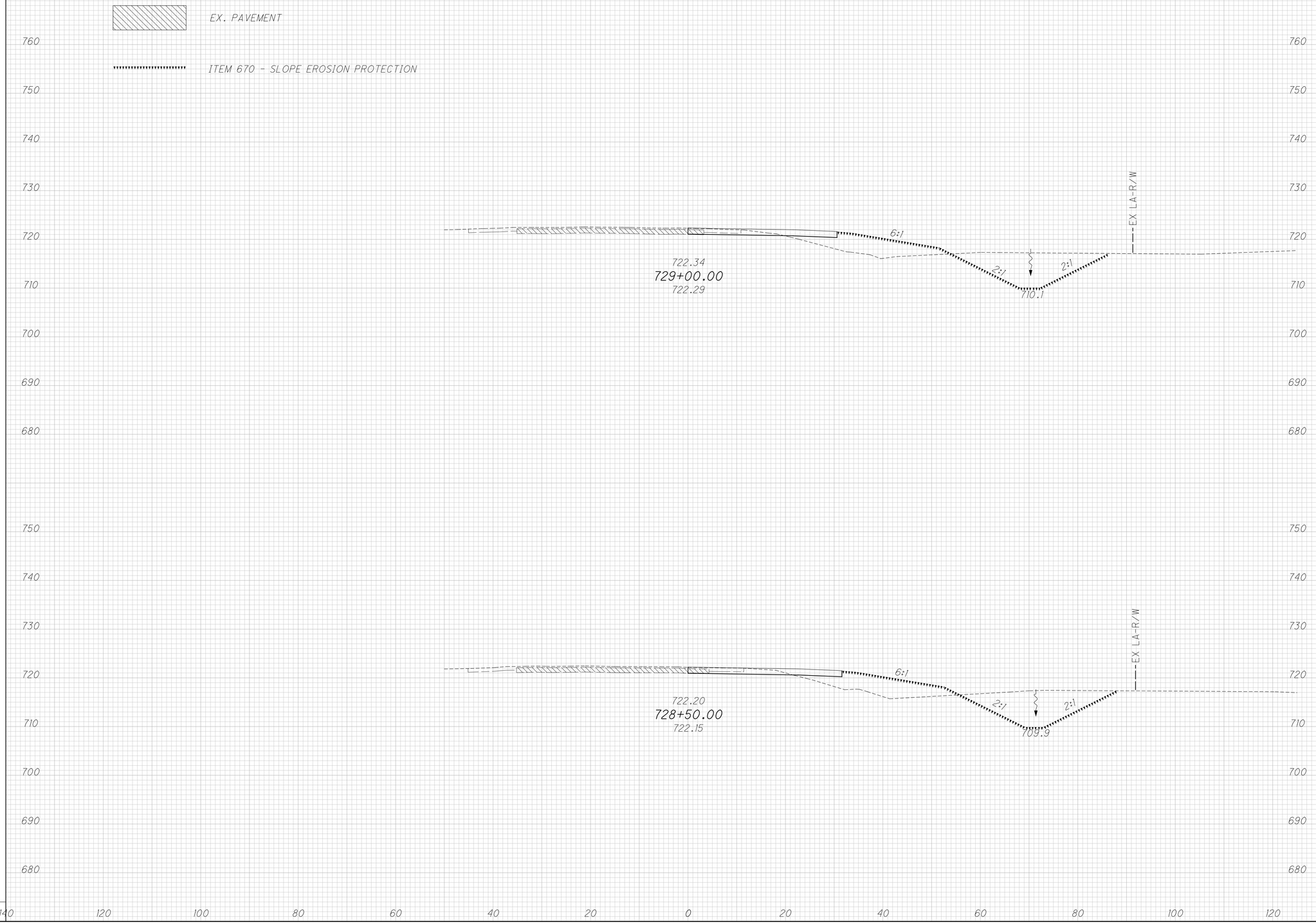

END AREA		VOLUME	
CUT	FILL	CUT	FILL

CALCULATED	CHECKED
ACF	CSR

CROSS SECTIONS IR 270 EASTBOUND MERGE
STA. 728+50.00 TO STA. 729+00.00

FRA-270-51.50

160
554

x:\Projects\2013\1321\1010\FRA\92616\roadway\sheets\92616XS750.dgn 12/8/2022 7:13:56 AM cwong

SEEDING	
END WIDTH	SQ. YDS.

EX. PAVEMENT

ITEM 670 - SLOPE EROSION PROTECTION

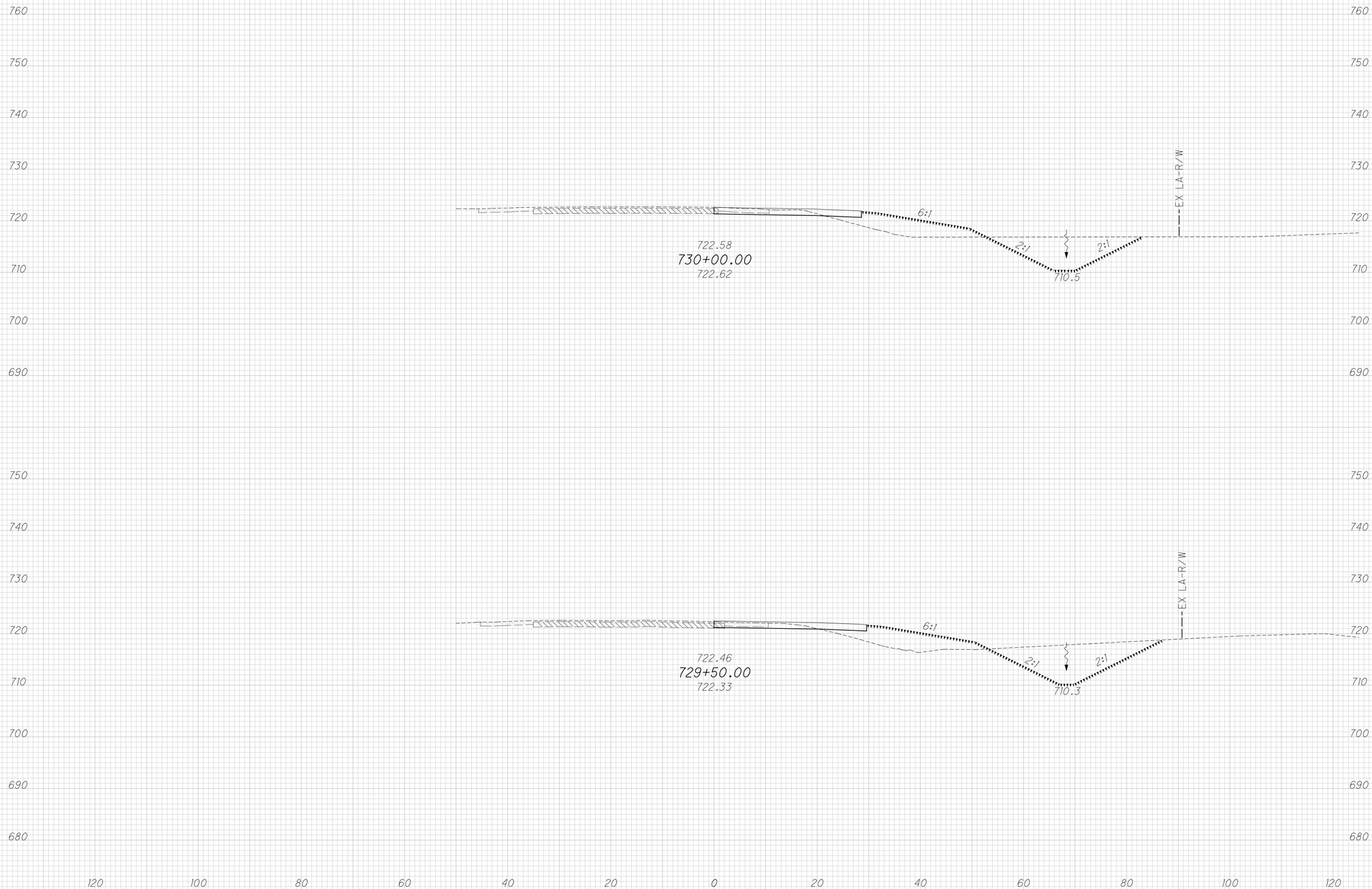

END AREA		VOLUME	
CUT	FILL	CUT	FILL

CALCULATED ACF

CHECKED CSR

CROSS SECTIONS IR 270 EASTBOUND MERGE
STA. 729+50.00 TO STA. 730+00.00

FRA-270-51.50

x:\Projects\2013\1321\1010\FRA\92616\roadway\sheets\92616XS750.dgn 12/8/2022 7:13:57 AM cwong

SEEDING	
END WIDTH	SQ. YDS.

END AREA	
CUT	FILL

VOLUME	
CUT	FILL

CALCULATED ACF

CHECKED CSR

EX. PAVEMENT

ITEM 670 - SLOPE EROSION PROTECTION

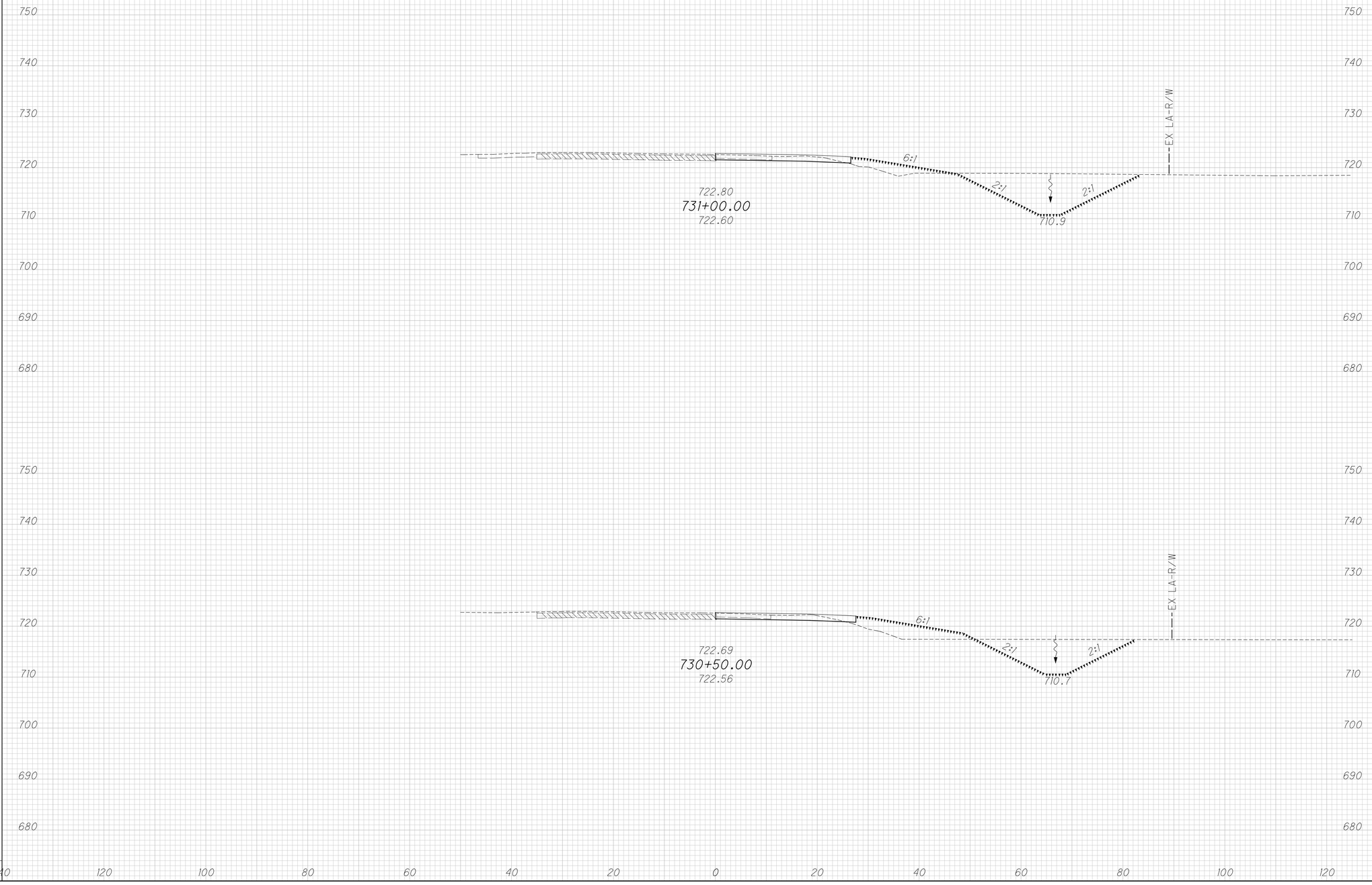

CROSS SECTIONS IR 270 EASTBOUND MERGE
STA. 730+50.00 TO STA. 731+00.00

FRA-270-51.50

x:\Projects\2013\1321\1010\FRA\92616\roadway\sheets\92616XS750.dgn 12/8/2022 7:13:57 AM cwong

SEEDING	
END WIDTH	SQ. YDS.

END AREA		VOLUME	
CUT	FILL	CUT	FILL

CALCULATED ACF
CHECKED CSR

EX. PAVEMENT

ITEM 670 - SLOPE EROSION PROTECTION

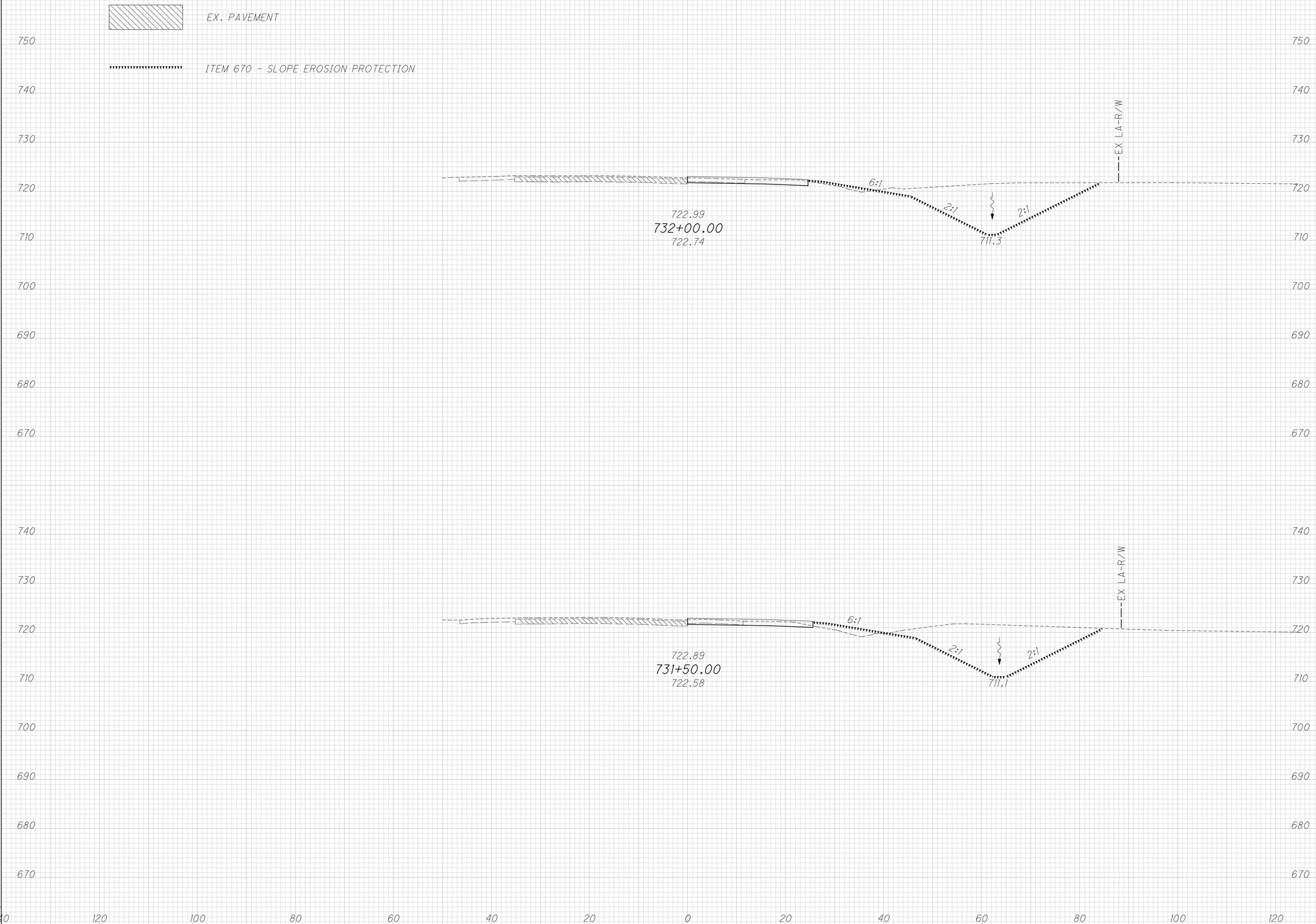

CROSS SECTIONS IR 270 EASTBOUND MERGE STA. 731+50.00 TO STA. 732+00.00

FRA-270-51.50

x:\Projects\2013\1321\1010\FRA\92616\roadway\sheets\92616XS750.dgn 12/8/2022 7:13:58 AM cwong

x:\Projects\2013\1321\1010\FRA\92616\roadway\sheets\92616XS750.dgn 12/8/2022 7:13:58 AM cwong

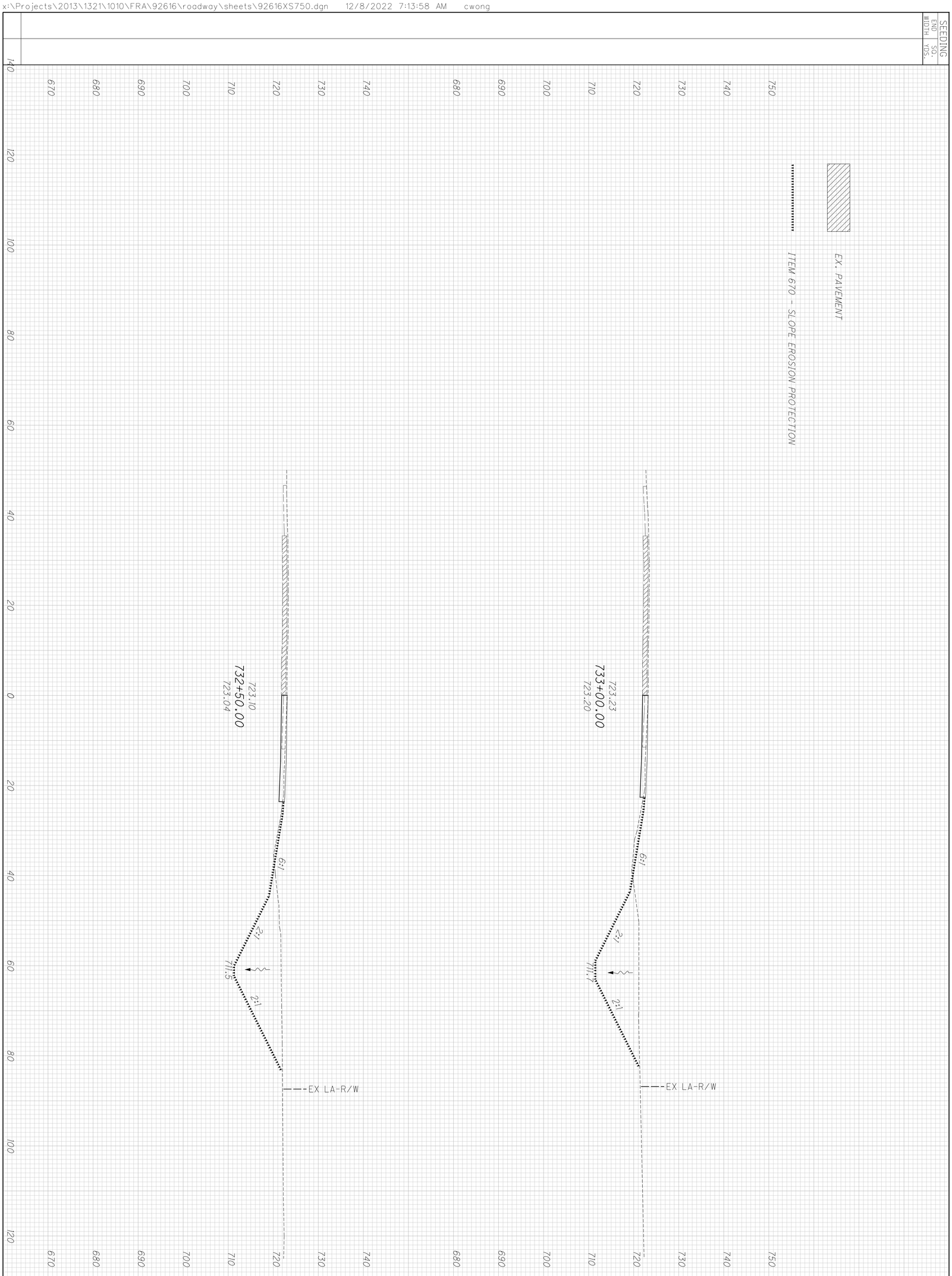

END AREA CUT FILL | VOLUME CUT FILL

164
554

FRA-270-51.50

CROSS SECTIONS IR 270 EASTBOUND MERGE
STA. 732+50.00 TO STA. 733+00.00

CALCULATED ACF
CHECKED CSR

x:\Projects\2013\1321\1010\FRA\92616\roadway\sheets\92616XS750.dgn 12/8/2022 7:13:59 AM cwong

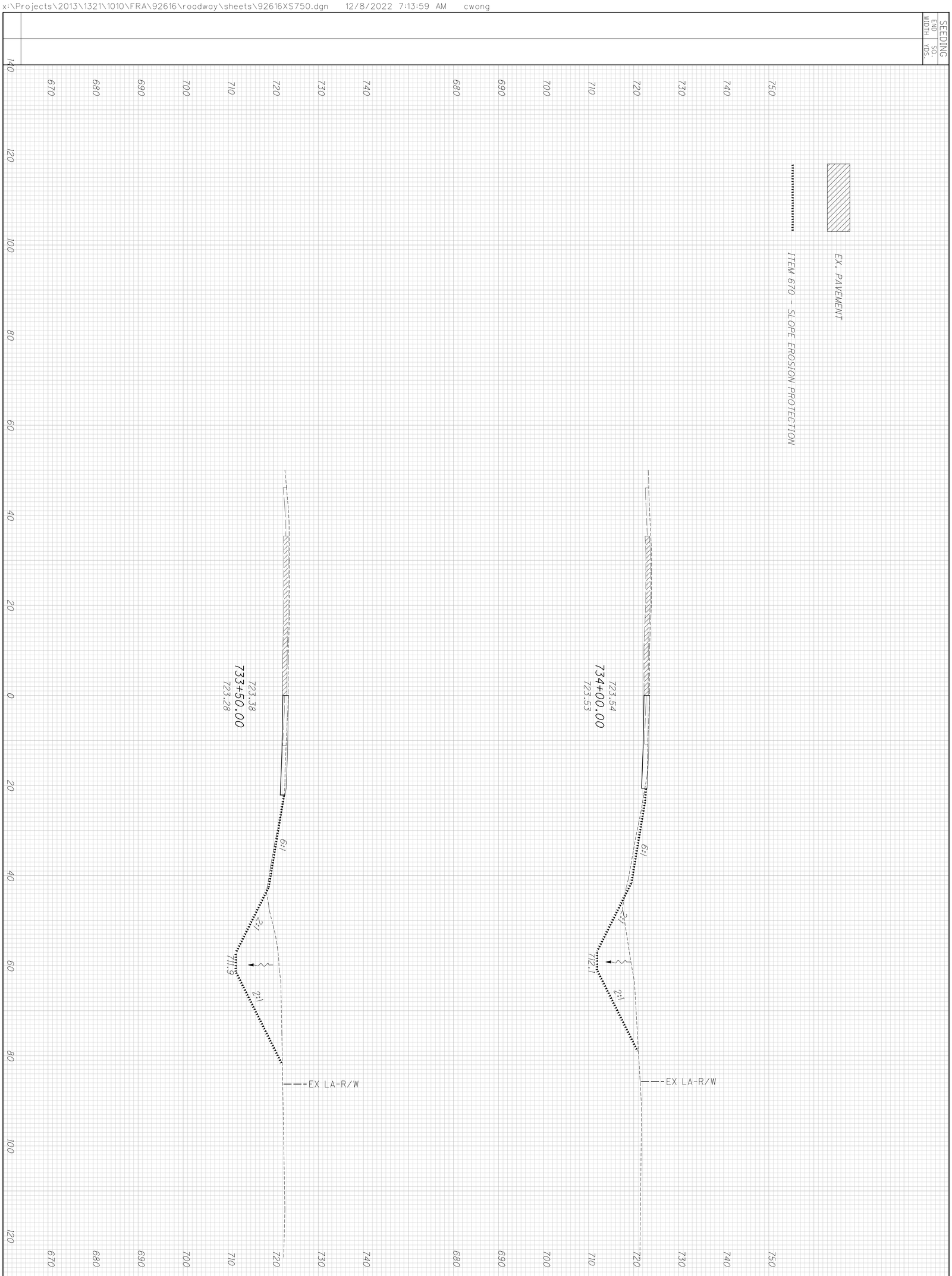

END AREA CUT | FILL
VOLUME CUT | FILL

165
554

FRA-270-51.50

CROSS SECTIONS IR 270 EASTBOUND MERGE
STA. 733+50.00 TO STA. 734+00.00

CALCULATED ACF
CHECKED CSR

SEEDING	
END WIDTH	SQ. YDS.

EX. PAVEMENT

ITEM 670 - SLOPE EROSION PROTECTION

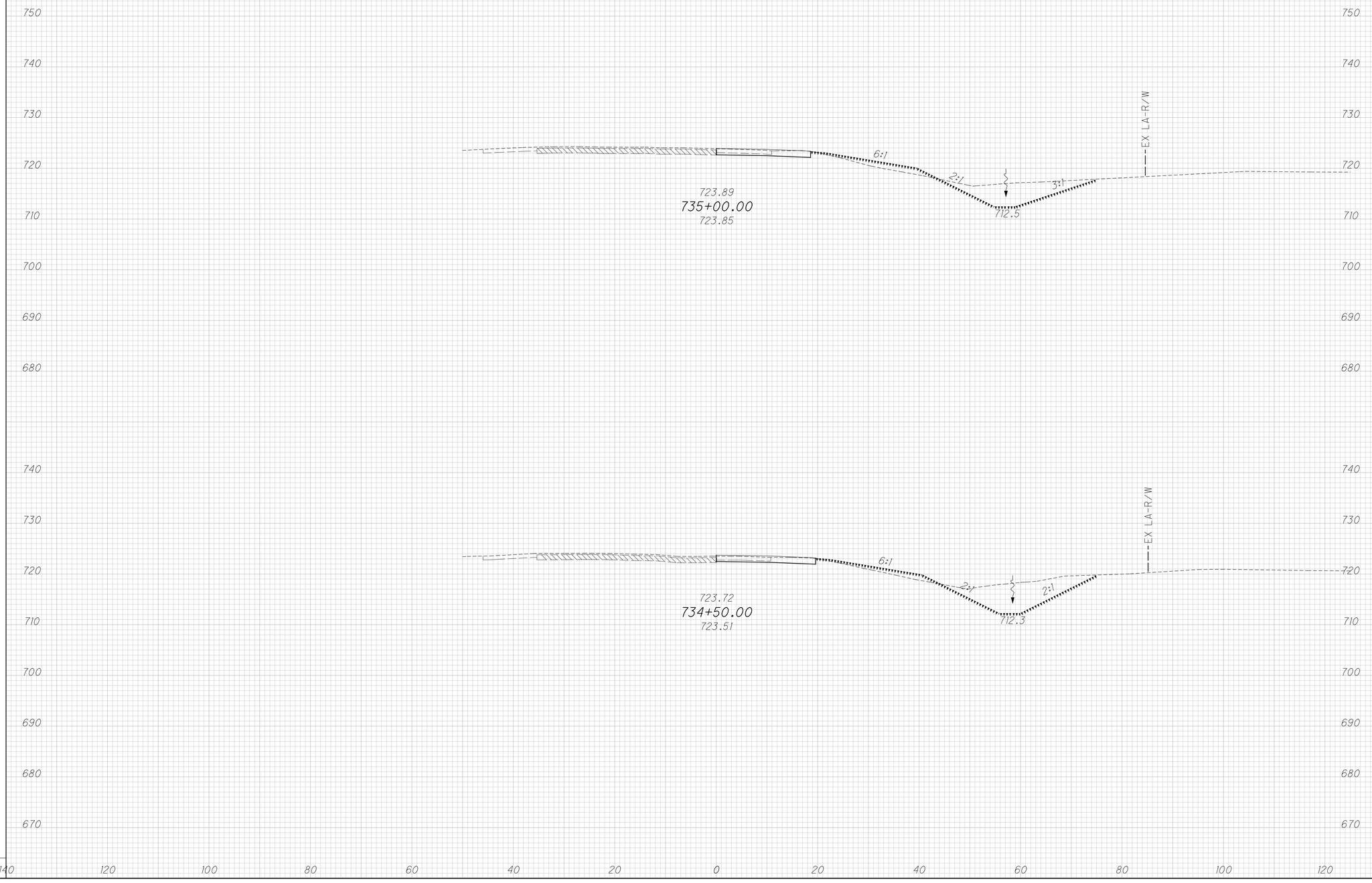

END AREA		VOLUME	
CUT	FILL	CUT	FILL

CALCULATED	CHECKED
ACF	CSR

CROSS SECTIONS IR 270 EASTBOUND MERGE
STA. 734+50.00 TO STA. 735+00.00

FRA-270-51.50

x:\Projects\2013\1321\1010\FRA\92616\roadway\sheets\92616XS750.dgn 12/8/2022 7:13:59 AM cwong

x:\Projects\2013\1321\1010\FRA\92616\roadway\sheets\92616XS750.dgn 12/8/2022 7:14:00 AM cwong

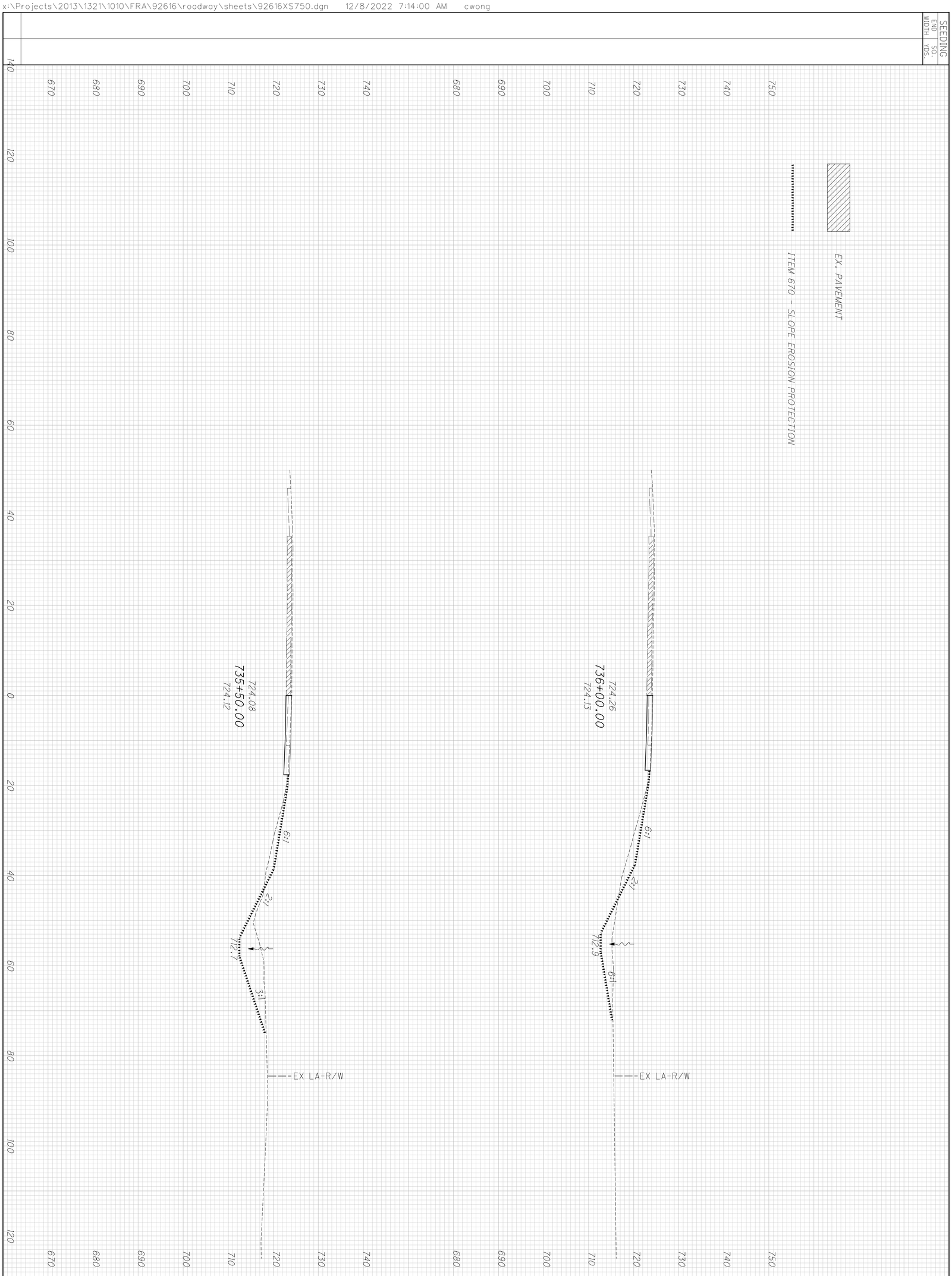

END AREA CUT FILL
VOLUME CUT FILL

167 / 554	FRA-270-51.50	CROSS SECTIONS IR 270 EASTBOUND MERGE STA. 735+50.00 TO STA. 736+00.00

CALCULATED ACF
CHECKED CSR

SEEDING	
END WIDTH	SQ. YDS.

EX. PAVEMENT

ITEM 670 - SLOPE EROSION PROTECTION

END AREA		VOLUME	
CUT	FILL	CUT	FILL

CALCULATED ACF

CHECKED CSR

CROSS SECTIONS IR 270 EASTBOUND MERGE
STA. 736+50.00 TO STA. 737+00.00

FRA-270-51.50

x:\Projects\2013\1321\1010\FRA\92616\roadway\sheets\92616XS750.dgn 12/8/2022 7:14:01 AM cwong

x:\Projects\2013\1321\1010\FRA\92616\roadway\sheets\92616XS750.dgn 12/8/2022 7:14:01 AM cwong

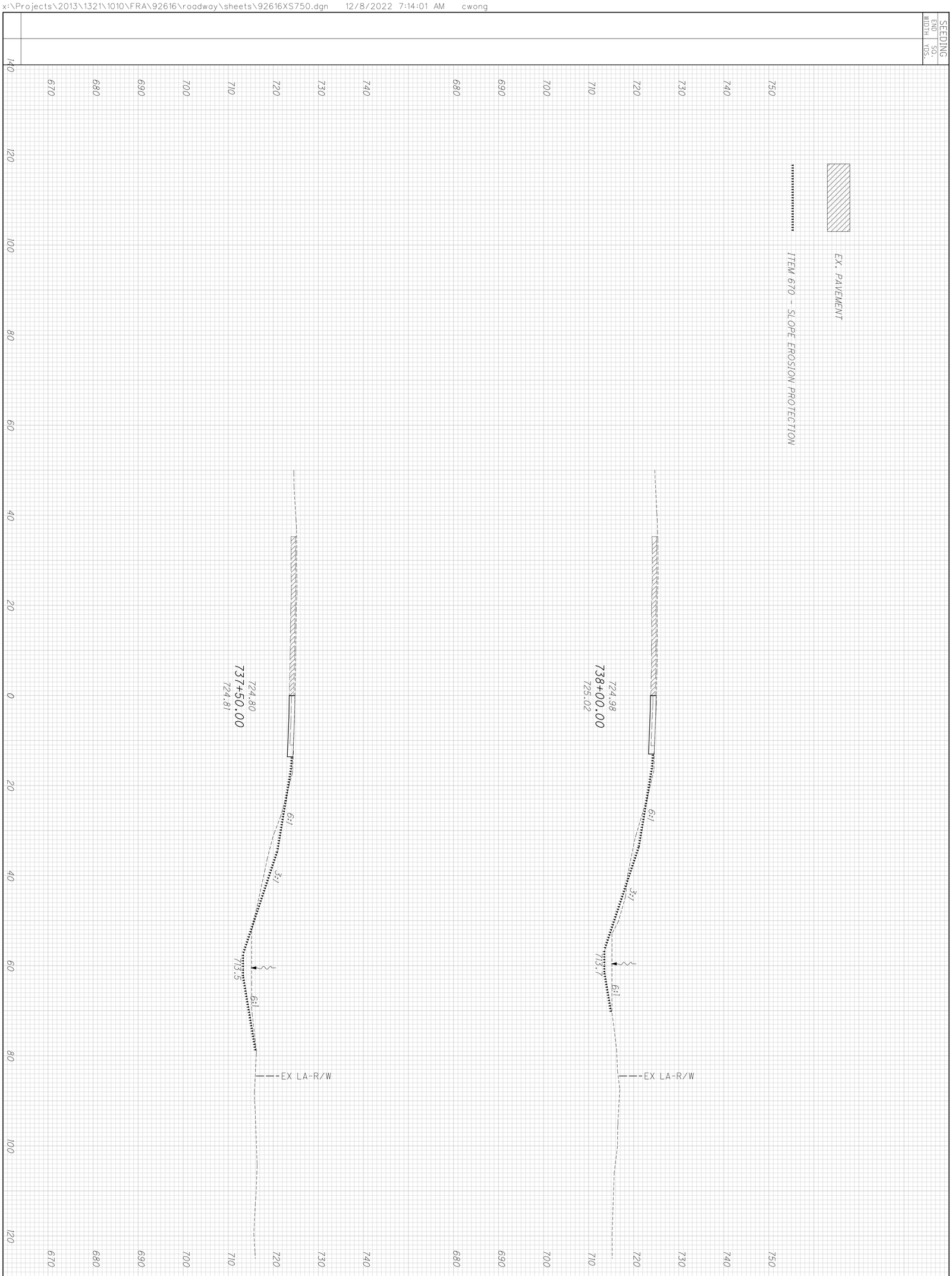

169 / 554	**FRA-270-51.50**	**CROSS SECTIONS IR 270 EASTBOUND MERGE** **STA. 737+50.00 TO STA. 738+00.00**
		CALCULATED ACF CHECKED CSR

SEEDING	
END WIDTH	SQ. YDS.

EX. PAVEMENT

ITEM 670 - SLOPE EROSION PROTECTION

END AREA		VOLUME	
CUT	FILL	CUT	FILL

CALCULATED ACF

CHECKED CSR

CROSS SECTIONS IR 270 EASTBOUND MERGE
STA. 738+50.00 TO STA. 739+00.00

FRA-270-51.50

170
554

x:\Projects\2013\1321\1010\FRA\92616\roadway\sheets\92616XS750.dgn 12/8/2022 7:14:02 AM cwong

SEEDING	
END WIDTH	SQ. YDS.

END AREA		VOLUME	
CUT	FILL	CUT	FILL

CALCULATED ACF

CHECKED CSR

EX. PAVEMENT

ITEM 670 - SLOPE EROSION PROTECTION

CROSS SECTIONS IR 270 EASTBOUND MERGE STA. 739+50.00

FRA-270-51.50

x:\Projects\2013\1321\1010\FRA\92616\roadway\sheets\92616XS750.dgn 12/8/2022 7:14:02 AM cwong

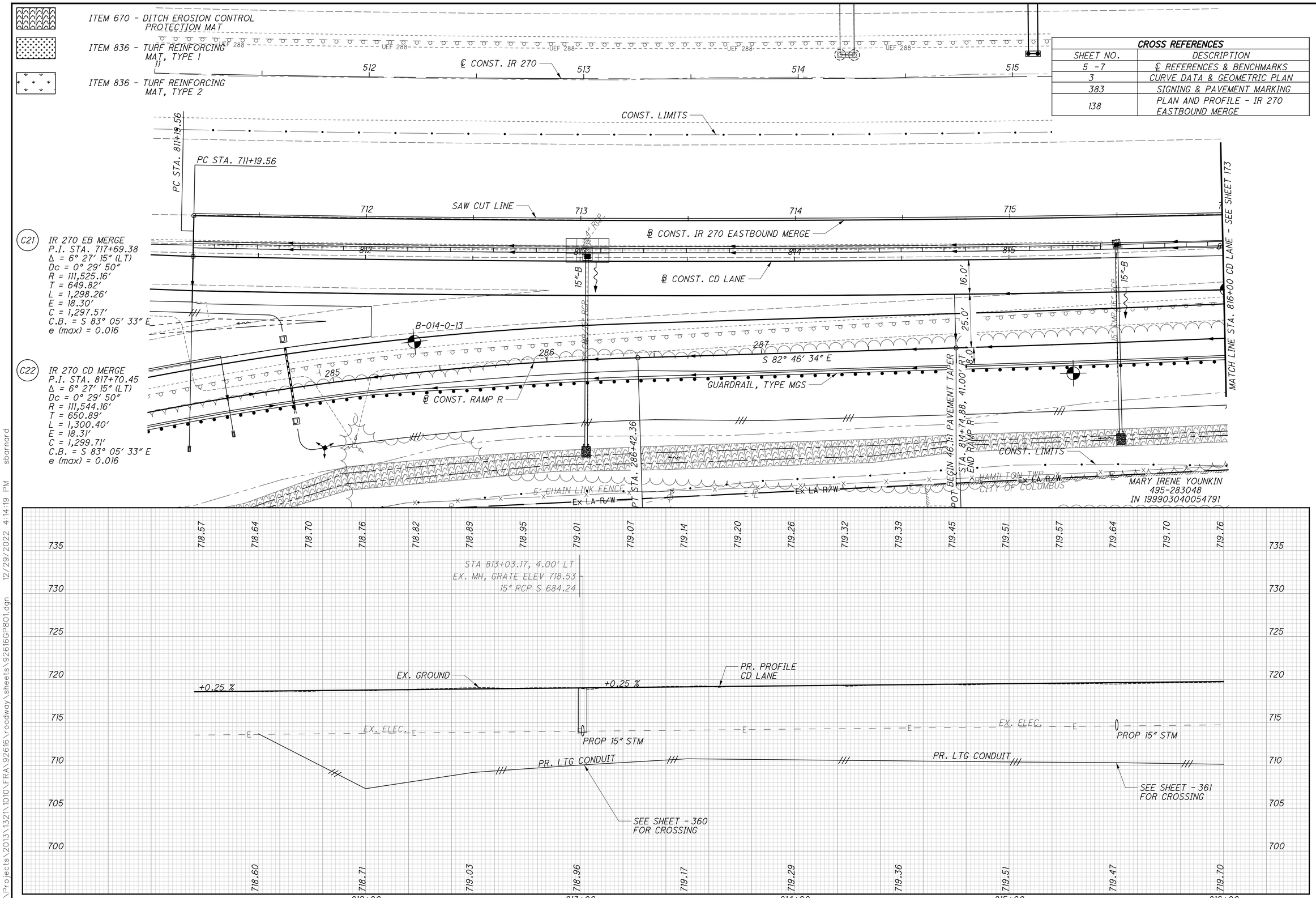

CROSS REFERENCES	
SHEET NO.	DESCRIPTION
5 -7	℄ REFERENCES & BENCHMARKS
3	CURVE DATA & GEOMETRIC PLAN
383	SIGNING & PAVEMENT MARKING
138	PLAN AND PROFILE - IR 270 EASTBOUND MERGE

HORIZONTAL SCALE IN FEET 0 10 20 40

CALCULATED ACF
CHECKED CSR

PLAN AND PROFILE - CD LANE
STA. 811+19.56 TO STA. 816+00

FRA-270-51.50

x:\Projects\2013\1321\1010\FRA\92616\roadway\sheets\92616GP801.dgn 12/29/2022 4:14:19 PM sbarnard

ITEM 670 - DITCH EROSION CONTROL PROTECTION MAT

ITEM 836 - TURF REINFORCING MAT, TYPE 1

ITEM 836 - TURF REINFORCING MAT, TYPE 2

C21 IR 270 EB MERGE
P.I. STA. 717+69.38
Δ = 6° 27′ 15″ (LT)
Dc = 0° 29′ 50″
R = 111,525.16′
T = 649.82′
L = 1,298.26′
E = 18.30′
C = 1,297.57′
C.B. = S 83° 05′ 33″ E
e (max) = 0.016

C22 IR 270 CD MERGE
P.I. STA. 817+70.45
Δ = 6° 27′ 15″ (LT)
Dc = 0° 29′ 50″
R = 111,544.16′
T = 650.89′
L = 1,300.40′
E = 18.31′
C = 1,299.71′
C.B. = S 83° 05′ 33″ E
e (max) = 0.016

UEF 288

℄ CONST. IR 270

CONST. LIMITS

MATCH LINE STA. 816+00 CD LANE - SEE SHEET 172

SAW CUT LINE

℄ CONST. IR 270 EASTBOUND MERGE

PT STA 820+10.00

18.0′

30.41′

℄ CONST. CD LANE

B-015-0-13

B-016-0-13

GUARDRAIL, TYPE MGS

END FULL DEPTH PAVEMENT STA. 820+10.00, 29.40′ RT

8.0′

END CD LANE
END 46.1:1 PAVEMENT TAPER
STA. 820+08.80, 29.42′ RT

CONST. LIMITS

Ex. LA. R/W

HAMILTON TWP.

CITY OF COLUMBUS

MARY IRENE YOUNKIN
495-283048
IN 199903040054791

CROSS REFERENCES	
SHEET NO.	DESCRIPTION
5 -7	℄ REFERENCES & BENCHMARKS
3	CURVE DATA & GEOMETRIC PLAN
383 - 384	SIGNING & PAVEMENT MARKING
138	PLAN AND PROFILE IR 270 EASTBOUND MERGE

PR. PROFILE CD LANE

+0.25 %

EX. GROUND

EX. ELEC.

PR. LTG CONDUIT

719.76 719.82 719.89 719.95 720.01 720.07 720.14 720.20 720.26 720.32 720.39 720.45 720.51 720.57 720.64 720.70 720.76 720.79

719.70 719.89 719.88 720.10 720.27 720.19 720.36 720.36 720.59

735 730 725 720 715 710 705 700

816+00 817+00 818+00 819+00 820+00 821+00

N

0 10 20 40 HORIZONTAL SCALE IN FEET

CALCULATED ACF CHECKED CSR

PLAN AND PROFILE - CD LANE
STA. 816+00 TO STA. 820+10

FRA-270-51.50

173
554

12/29/2022 2:52:33 PM sbarnard

x:\Projects\2013\132\1010\FRA\92616\roadway\sheets\92616GP802.dgn

X:\Projects\2013\1321\1010\FRA\92616\roadway\sheets\92616GP151.dgn 3/29/2023 7:58:59 AM cwong

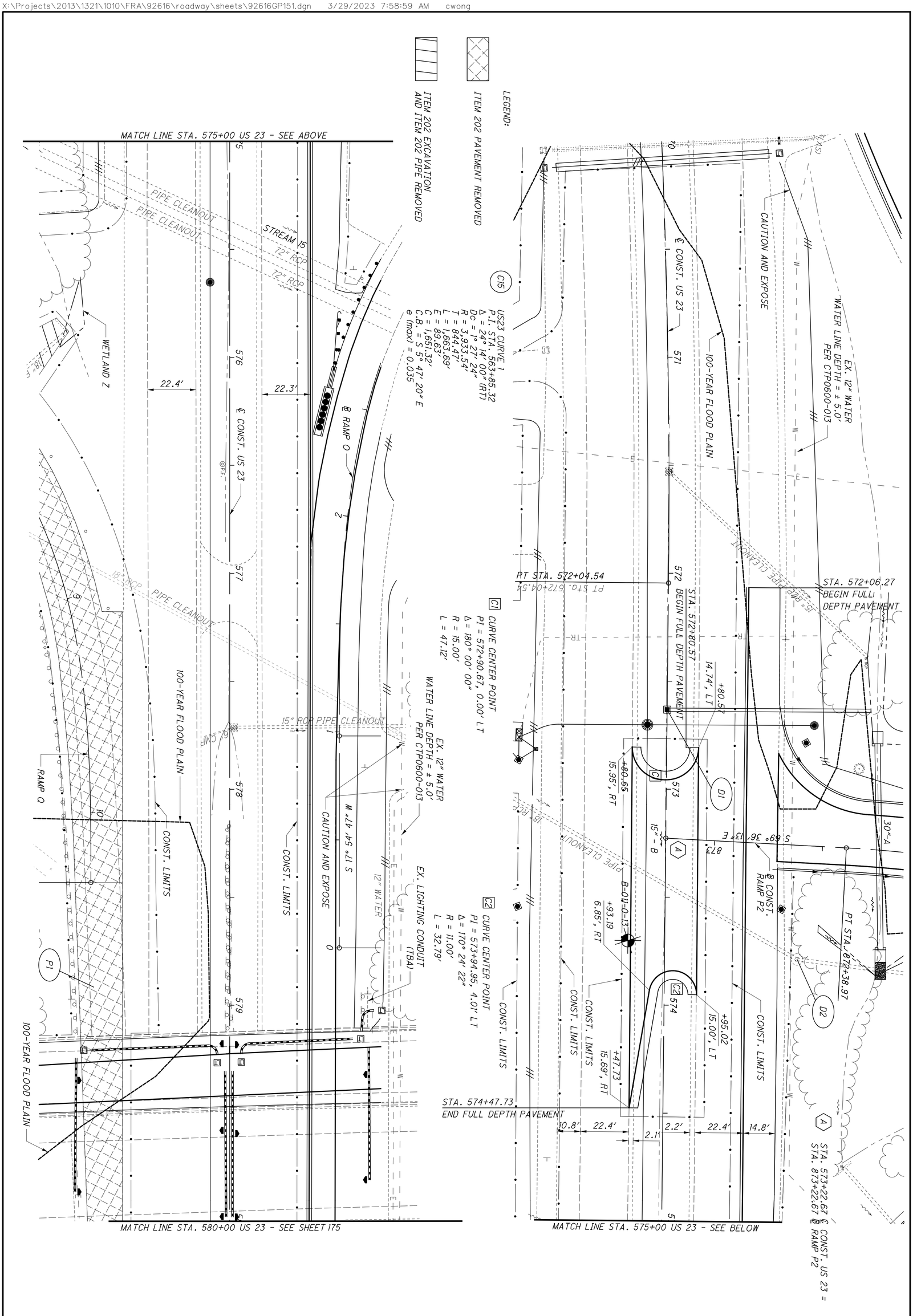

174 / 554	FRA-270-51.50	PLAN - US 23 STA. 570+00 TO STA. 580+00	CALCULATED ACF CHECKED CSR	0 10 20 40 HORIZONTAL SCALE IN FEET

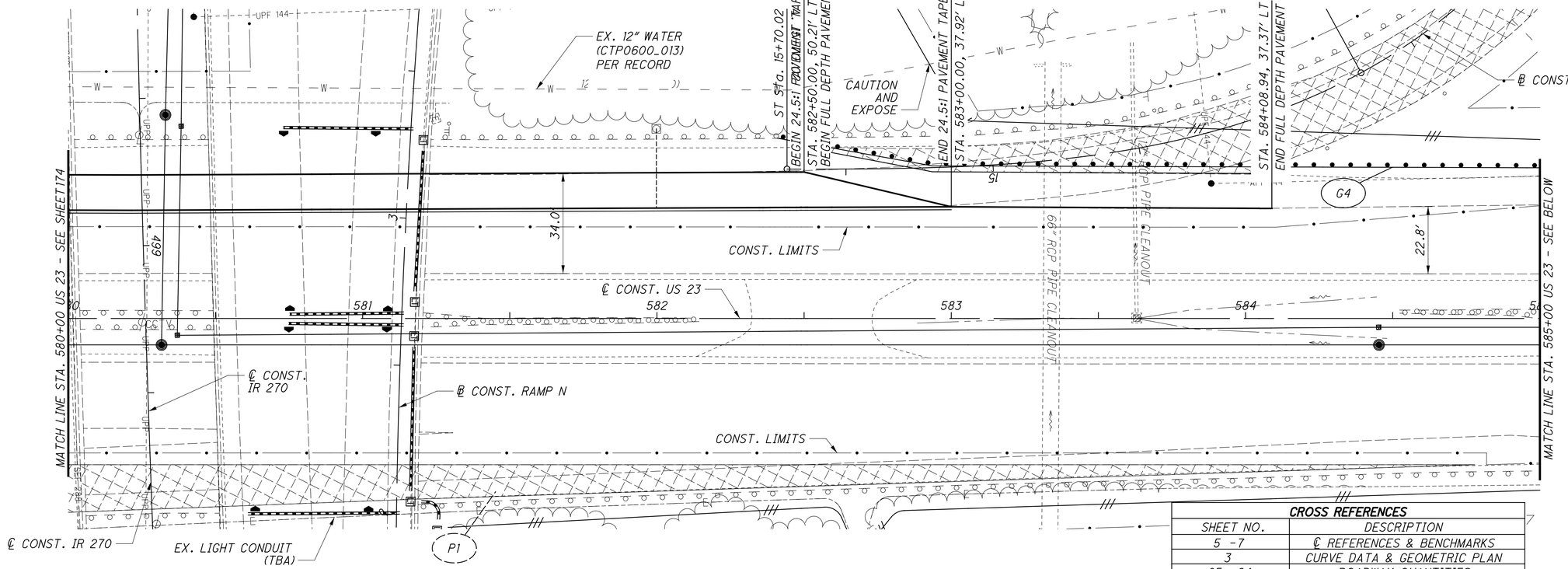

CROSS REFERENCES	
SHEET NO.	DESCRIPTION
5 -7	℄ REFERENCES & BENCHMARKS
3	CURVE DATA & GEOMETRIC PLAN
85 -94	ROADWAY QUANTITIES
273-290	CROSS SECTIONS
390	SIGNING & PAVEMENT MARKING
334	INTERSECTION DETAILS

HORIZONTAL SCALE IN FEET
0 10 20 40
CALCULATED ACF
CHECKED CSR

PLAN - US 23
STA. 580+00 TO STA. 590+00

FRA-270-51.50

175
554

X:\Projects\2013\1321\1010\FRA\92616\roadway\sheets\92616GP152.dgn 3/29/2023 8:06:14 AM cwong

MEDIAN ACCESS REMOVED

PFK COMPANY I, LLC AND
TAMARACK ENTERPRISES I, L.P.
510-181564
4755 S HIGH ST

EVIDENCE OF BURIED
TELEPHONE IN AREA
(NOT MARKED)

CROSS REFERENCES	
SHEET NO.	DESCRIPTION
5 -7	℄ REFERENCES & BENCHMARKS
3	CURVE DATA & GEOMETRIC PLAN
85-94	ROADWAY QUANTITIES
377	CULVERT DETAILS
179 -188	CROSS SECTIONS
387-388	SIGNING & PAVEMENT MARKING
345-346	PAVEMENT DETAILS

HORIZONTAL SCALE IN FEET
0 10 20 40

CALCULATED ACF
CHECKED CSR

PLAN AND PROFILE ACCELERATION LANE US 23
STA. 546+50 TO STA. 551+00

FRA-270-51.50

176
554

X:\Projects\2013\132I\1010\FRA\92616\roadway\sheets\92616GP651.dgn 2/13/2023 10:13:21 AM cwong

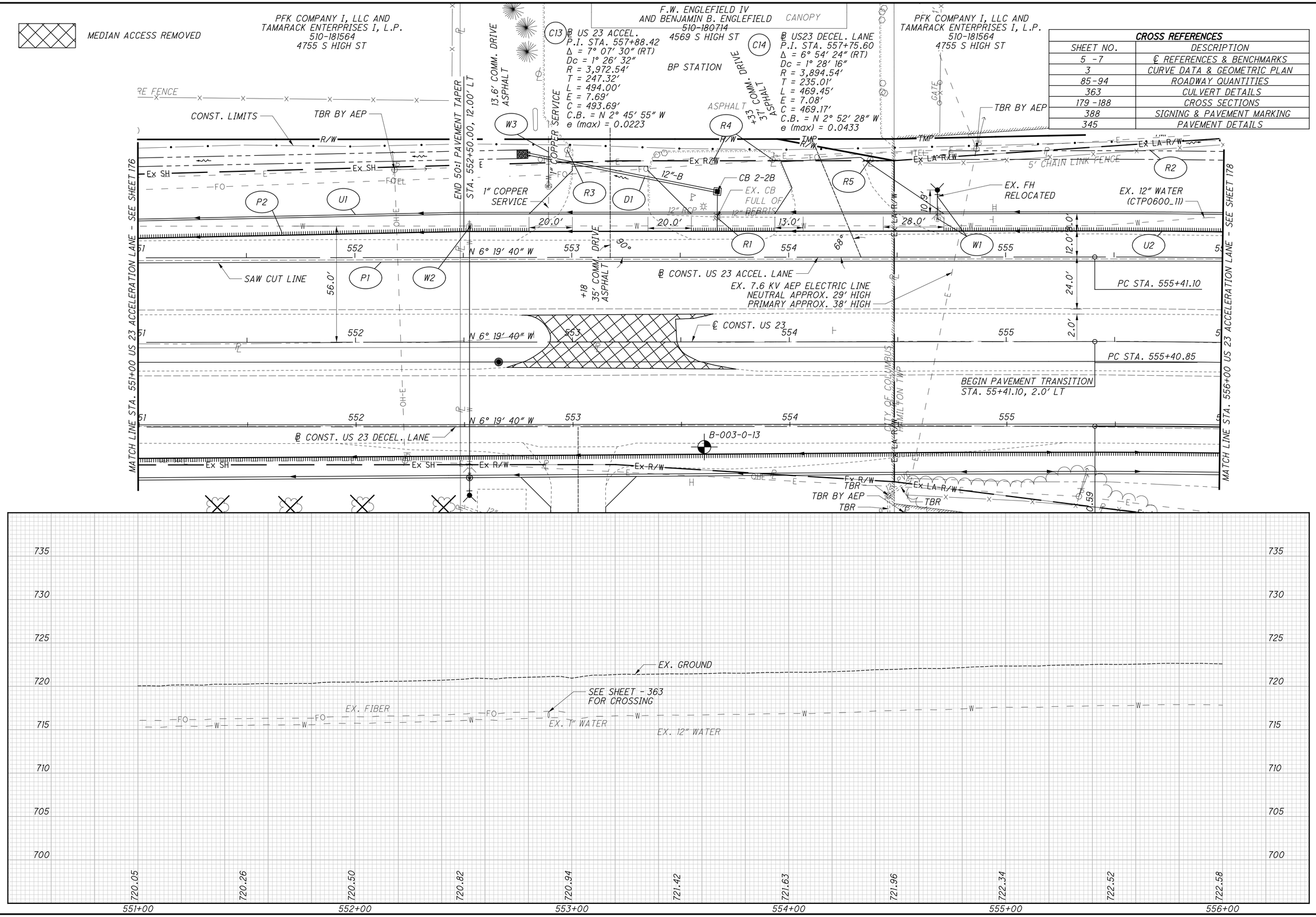

CROSS REFERENCES	
SHEET NO.	DESCRIPTION
5 -7	℄ REFERENCES & BENCHMARKS
3	CURVE DATA & GEOMETRIC PLAN
85-94	ROADWAY QUANTITIES
363	CULVERT DETAILS
179 -188	CROSS SECTIONS
388	SIGNING & PAVEMENT MARKING
345	PAVEMENT DETAILS

HORIZONTAL SCALE IN FEET 0 10 20 40

CALCULATED ACF
CHECKED CSR

PLAN AND PROFILE US 23 ACCELERATION LANE
STA. 551+00 TO STA. 556+00

FRA-270-51.50

X:\Projects\2013\1321\1010\FRA\92616\roadway\sheets\92616GP652.dgn 3/27/2023 7:20:45 AM cwong

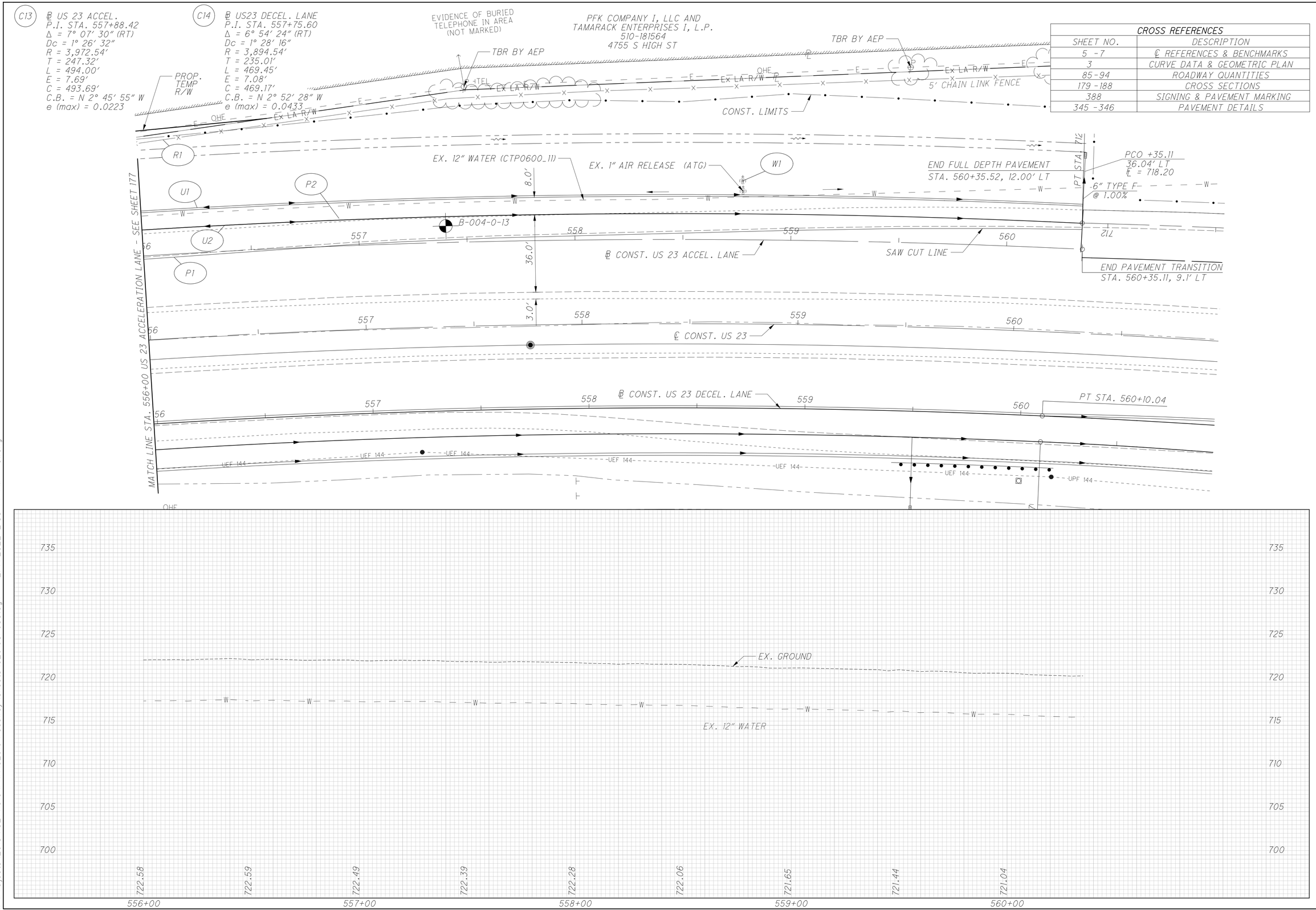

CROSS REFERENCES	
SHEET NO.	DESCRIPTION
5 -7	℄ REFERENCES & BENCHMARKS
3	CURVE DATA & GEOMETRIC PLAN
85-94	ROADWAY QUANTITIES
179 -188	CROSS SECTIONS
388	SIGNING & PAVEMENT MARKING
345 -346	PAVEMENT DETAILS

HORIZONTAL SCALE IN FEET 0 10 20 40

CALCULATED ACF
CHECKED CSR

PLAN AND PROFILE US 23 ACCELERATION LANE
STA. 556+00 TO STA. 560+35.11

FRA-270-51.50

x:\Projects\2013\1321\1010\FRA\92616\roadway\sheets\92616GP653.dgn 12/7/2022 2:55:44 PM cwong

SEEDING	
END WIDTH	SQ. YDS.

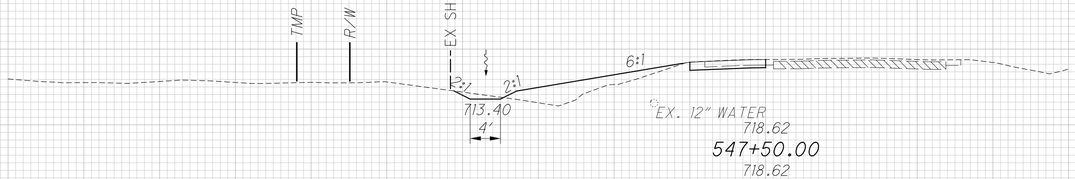

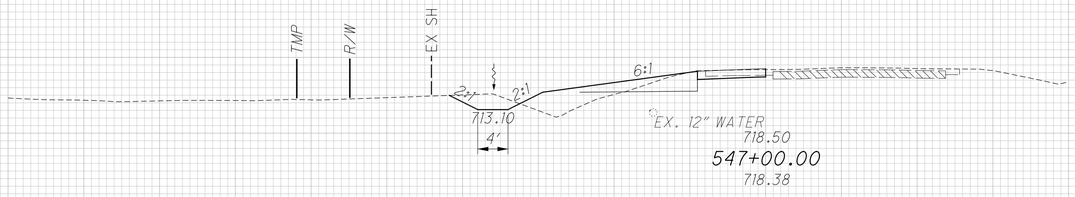

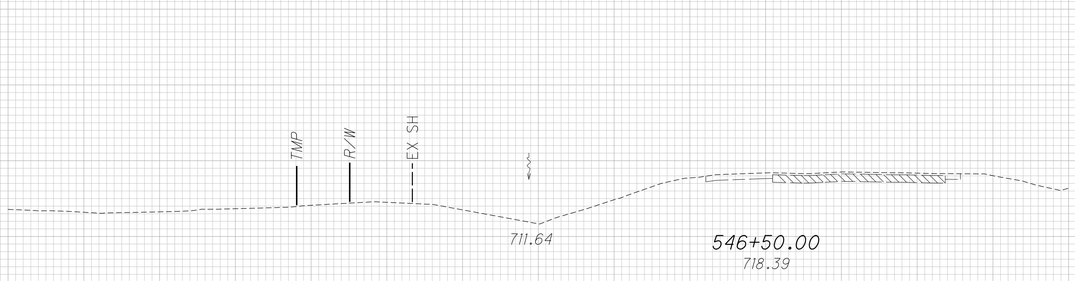

740 730 720 710 700

120 100 80 60 40 20 0 20 40 60 80 100 120

END AREA		VOLUME	
CUT	FILL	CUT	FILL

CALCULATED JGB
CHECKED CSR

CROSS SECTIONS - US 23 ACCELERATION LANE
STA. 546+50.00 TO STA. 547+50.00

FRA-270-51.50

x:\Projects\2013\1321\1010\FRA\92616\roadway\sheets\92616XS650.dgn 12/7/2022 2:55:45 PM cwong

SEEDING	
END WIDTH	SQ. YDS.

END AREA		VOLUME	
CUT	FILL	CUT	FILL

CALCULATED JGB
CHECKED CSR

CROSS SECTIONS - US 23 ACCELERATION LANE
STA. 548+00.00 TO STA. 549+00.00

FRA-270-51.50

x:\Projects\2013\1321\1010\FRA\92616\roadway\sheets\92616XS650.dgn 12/7/2022 2:55:46 PM cwong

SEEDING	
END WIDTH	SQ. YDS.

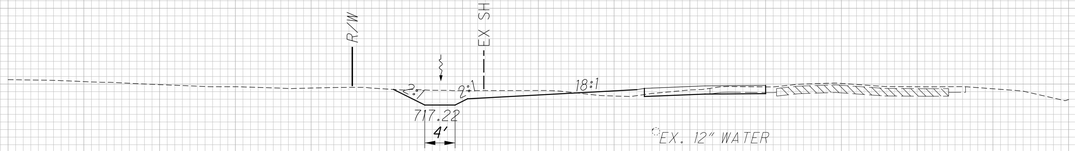

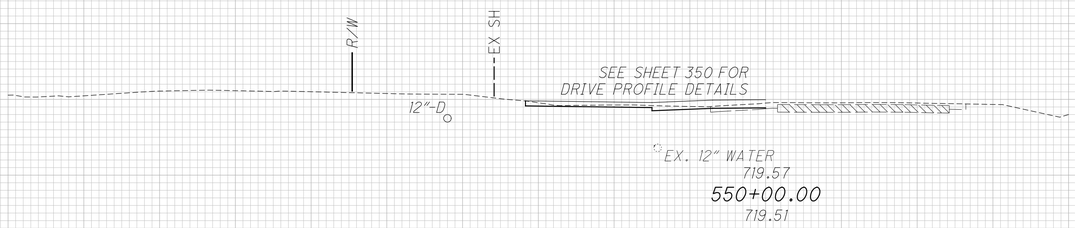

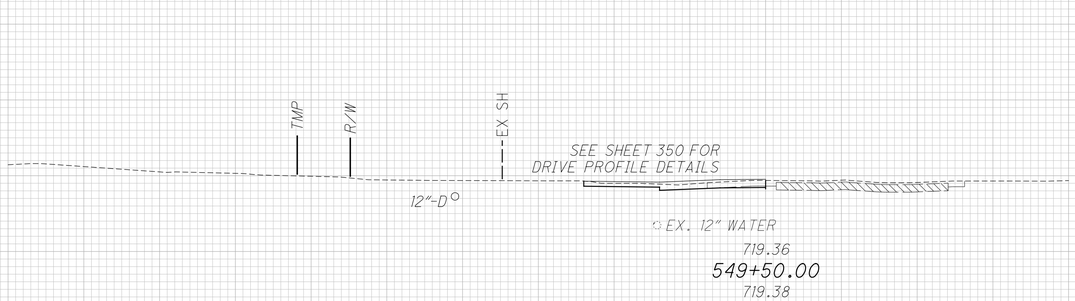

END AREA		VOLUME	
CUT	FILL	CUT	FILL

CALCULATED	CHECKED
JGB	CSR

CROSS SECTIONS - US 23 ACCELERATION LANE
STA. 549+50.00 TO STA. 550+50.00

FRA-270-51.50

x:\Projects\2013\1321\1010\FRA\92616\roadway\sheets\92616XS650.dgn 12/7/2022 2:55:46 PM cwong

x:\Projects\2013\1321\1010\FRA\92616\roadway\sheets\92616XS650.dgn 12/7/2022 2:55:47 PM cwong

SEEDING
END WIDTH | SQ. YDS.

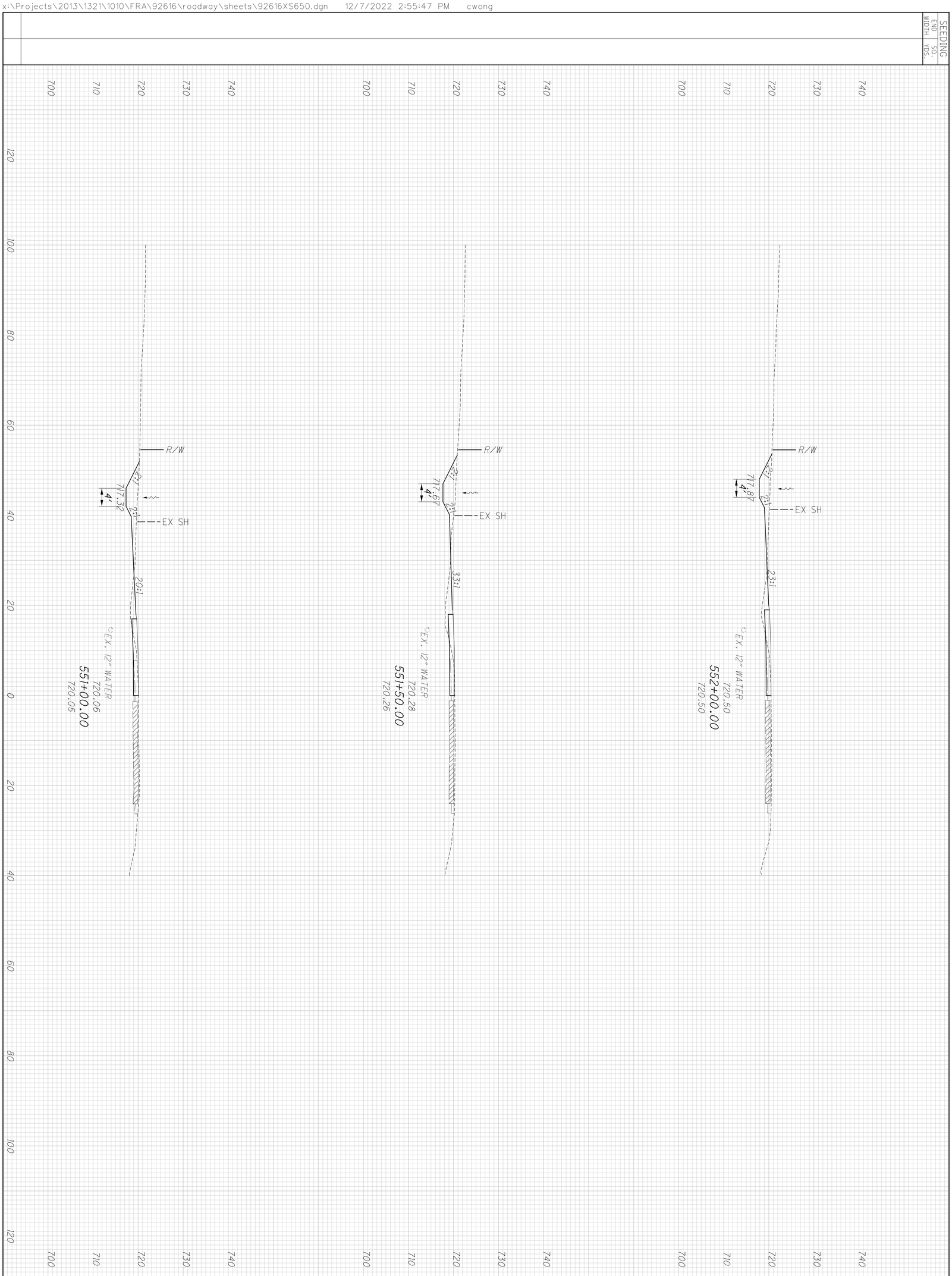

END AREA | CUT | FILL
VOLUME | CUT | FILL

182
554

FRA-270-51.50

CROSS SECTIONS - US 23 ACCELERATION LANE
STA. 551+00.00 TO STA. 552+00.00

CALCULATED JGB
CHECKED CSR

SEEDING	
END WIDTH	SQ. YDS.

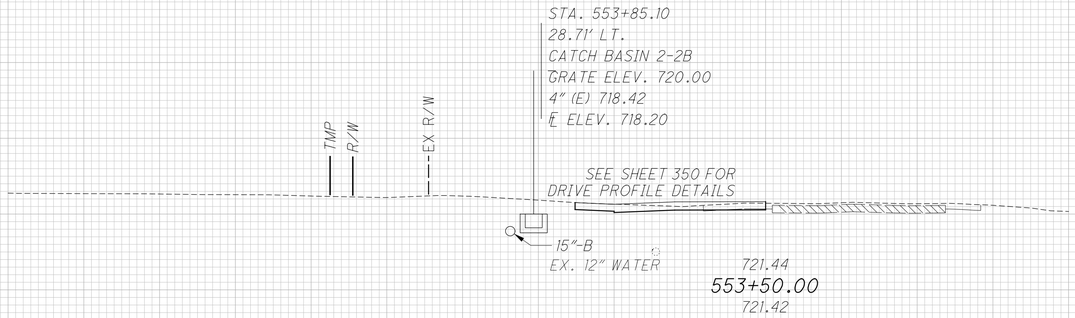

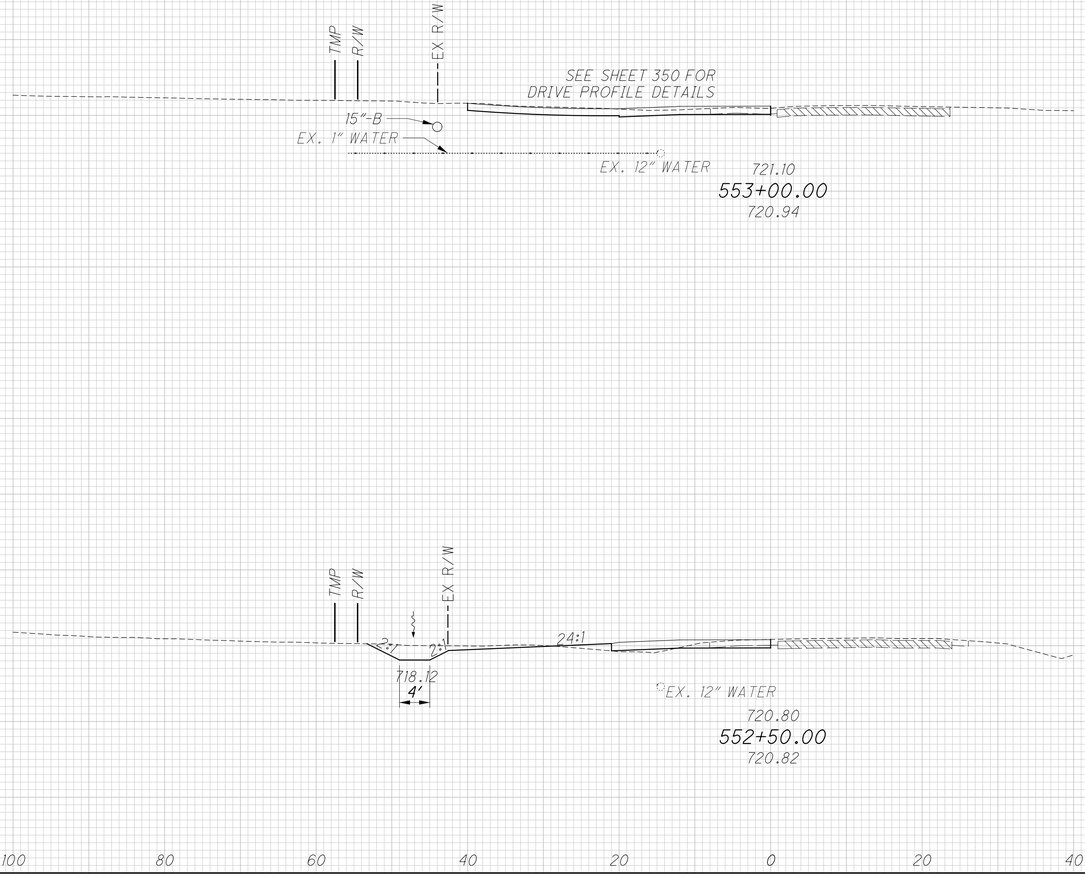

END AREA		VOLUME	
CUT	FILL	CUT	FILL

CALCULATED	CHECKED
JGB	CSR

CROSS SECTIONS - US 23 ACCELERATION LANE
STA. 552+50.00 TO STA. 553+50.00

FRA-270-51.50

183
554

120 100 80 60 40 20 0 20 40 60 80 100 120

x:\Projects\2013\1321\1010\FRA\92616\roadway\sheets\92616XS650.dgn 12/7/2022 2:55:47 PM cwong

SEEDING	
END WIDTH	SQ. YDS.

END AREA		VOLUME	
CUT	FILL	CUT	FILL

CALCULATED JGB

CHECKED CSR

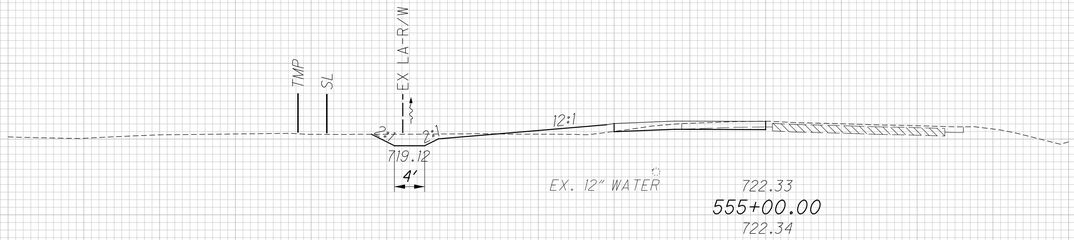

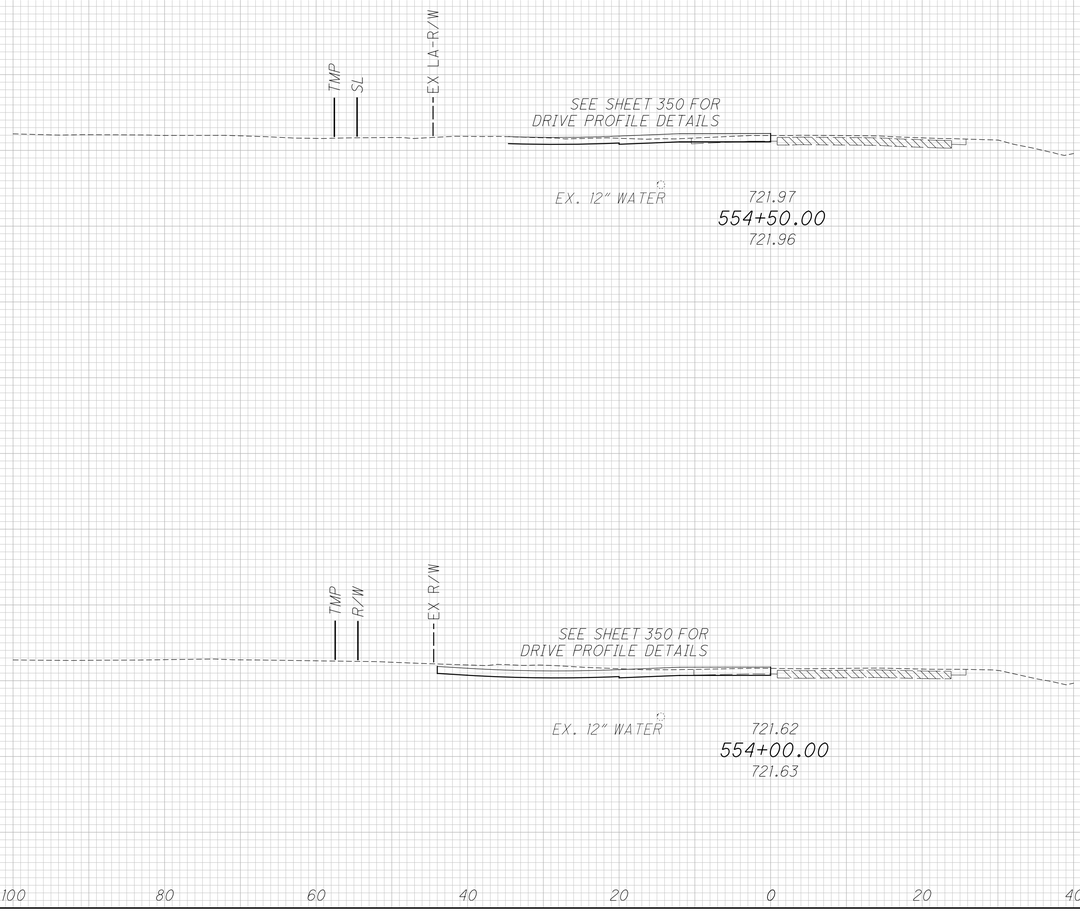

CROSS SECTIONS - US 23 ACCELERATION LANE
STA. 554+00.00 TO STA. 555+00.00

FRA-270-51.50

x:\Projects\2013\1321\1010\FRA\92616\roadway\sheets\92616XS650.dgn 12/7/2022 2:55:48 PM cwong

x:\Projects\2013\1321\1010\FRA\92616\roadway\sheets\92616XS650.dgn 12/7/2022 2:55:48 PM cwong

SEEDING
END WIDTH | SQ. YDS.

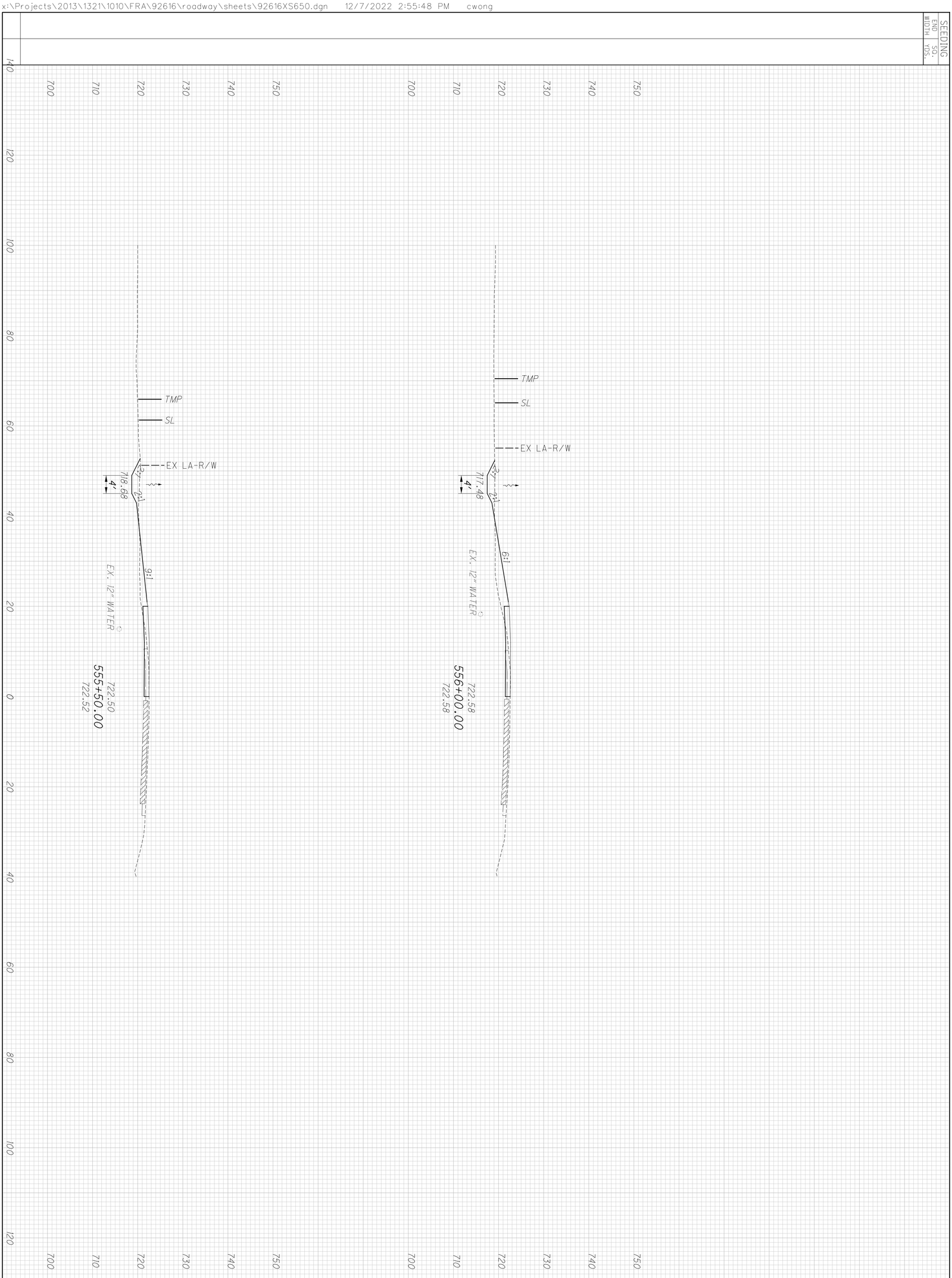

END AREA
CUT | FILL

VOLUME
CUT | FILL

185
554

FRA-270-51.50

CROSS SECTIONS - US 23 ACCELERATION LANE
STA. 555+50.00 TO STA. 556+00.00

CALCULATED JGB
CHECKED CSR

x:\Projects\2013\1321\1010\FRA\92616\roadway\sheets\92616XS650.dgn 12/7/2022 2:55:48 PM cwong

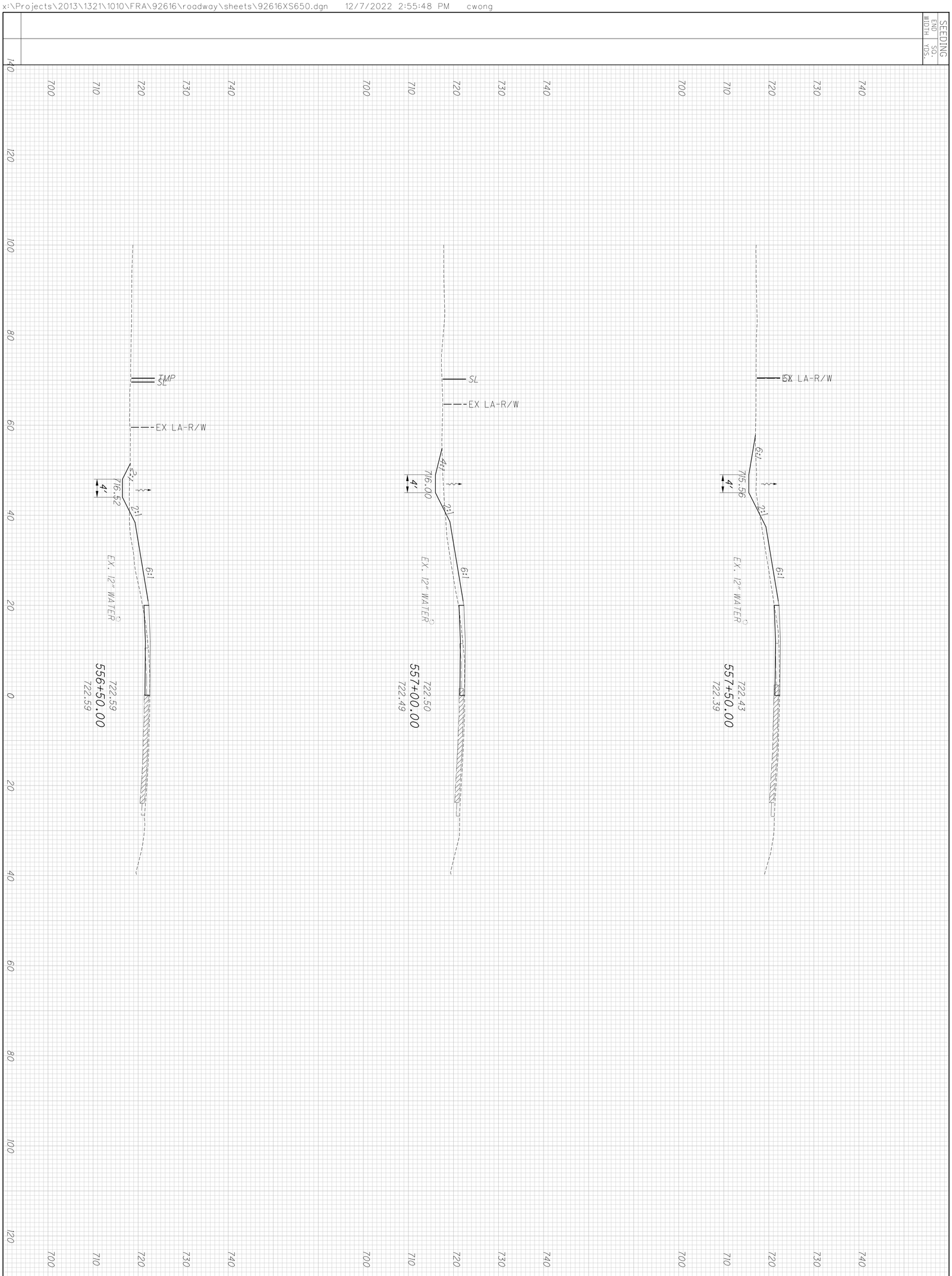

END AREA CUT FILL

VOLUME CUT FILL

186
554

FRA-270-51.50

CROSS SECTIONS - US 23 ACCELERATION LANE
STA. 556+50.00 TO STA. 557+50.00

CALCULATED JGB
CHECKED CSR

x:\Projects\2013\1321\1010\FRA\92616\roadway\sheets\92616XS650.dgn 12/7/2022 2:55:49 PM cwong

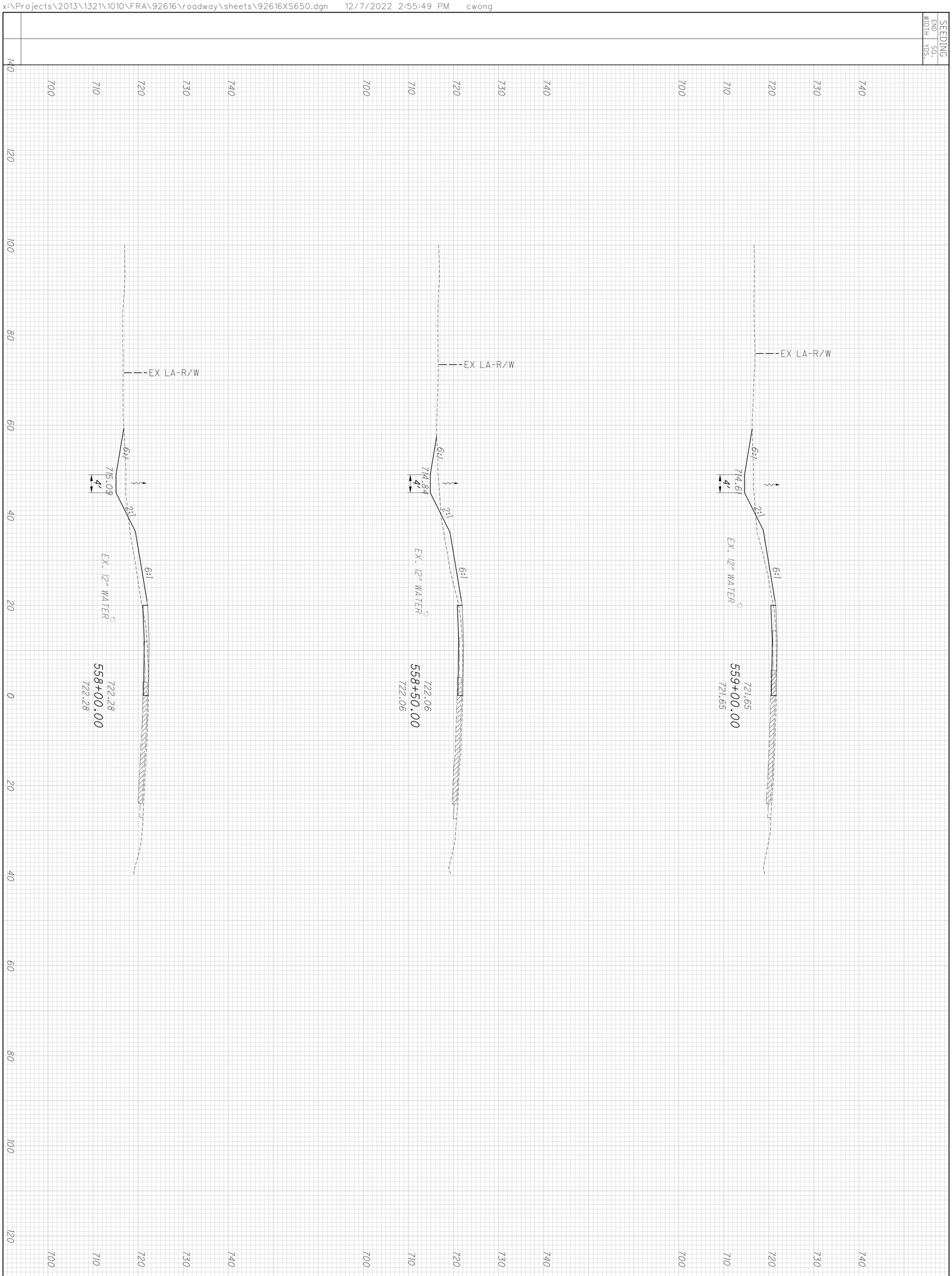

187 / 554	**FRA-270-51.50**	**CROSS SECTIONS - US 23 ACCELERATION LANE** **STA. 558+00.00 TO STA. 559+00.00**
		CALCULATED JGB CHECKED CSR

x:\Projects\2013\1321\1010\FRA\92616\roadway\sheets\92616XS650.dgn 12/7/2022 2:55:49 PM cwong

SEEDING
END WIDTH | SQ. YDS.

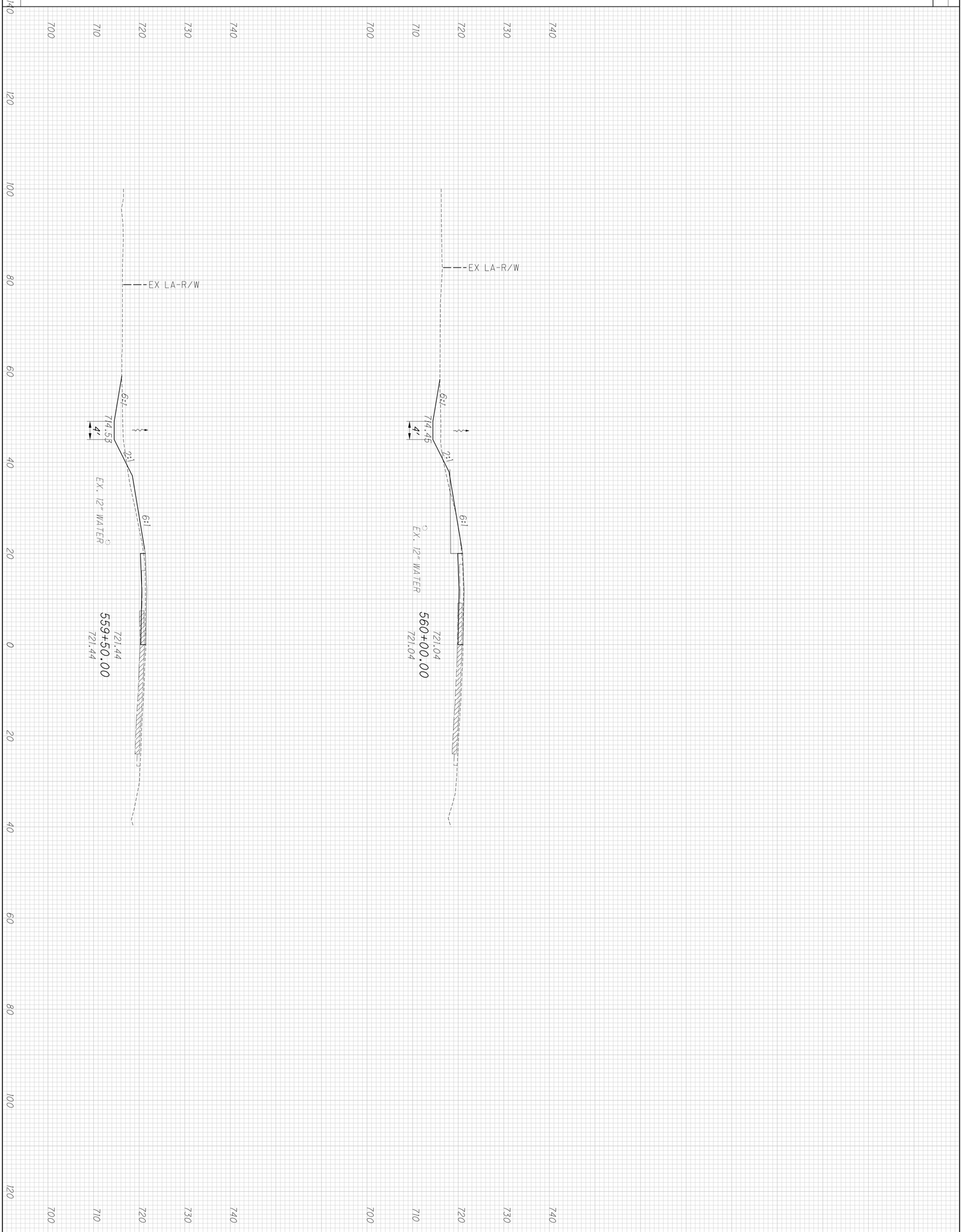

END AREA
CUT | FILL

VOLUME
CUT | FILL

188
554

FRA-270-51.50

CROSS SECTIONS - US 23 ACCELERATION LANE
STA. 559+50.00 TO STA. 560+00.00

CALCULATED JGB
CHECKED CSR

CROSS REFERENCES	
SHEET NO.	DESCRIPTION
5 -7	℄ REFERENCES & BENCHMARKS
3	CURVE DATA & GEOMETRIC PLAN
85-94	ROADWAY QUANTITIES
192-201	CROSS SECTIONS
387388	SIGNING & PAVEMENT MARKING
347	PAVEMENT DETAILS

HORIZONTAL SCALE IN FEET
0 10 20 40

CALCULATED ACF
CHECKED CSR

PLAN AND PROFILE US 23 DECELERATION LANE
STA. 546+50 TO STA. 551+00

FRA-270-51.50

189
554

BRUSH
TBR BY AEP
B-002-0-13
B-001-0-13
BEGIN WORK STA. 546+50.00 (FRA-270-51.50)
END WORK STA. 546+45.92 (FRA-23-4.19)
℄ CONST. US 23 ACCEL. LANE
℄ CONST. US 23 (FRA-270-51.50) PID 92616
℄ CONST. US 23 (FRA-23-4.19) PID 110380
STA. 546+50.00, 0.0' RT (FRA-270-51.50) PID 92616 =
STA. 546+45.92, 3.2' RT (FRA-23-4.19) PID 110380
℄ CONST. US 23 DECEL. LANE
N 6° 42' 10" W
SAW CUT LINE
PI STA. 549+93.68
PI STA. 549+93.55
G25
G24
G26
P1
P2
U1
U2
R1
39.2'
10.0'
3.2'
PCO +00.00
34.2' RT
℄ = 715.20
PCO +90.00
39.85' RT
℄ = 716.14
6" TYPE F
@ 1.00%
EVIDENCE OF BURIED
GAS IN AREA
(NOT MARKED)
WOOD POST TBR
CABLE GATE TBR
WOOD POST TBR
GRAVEL DRIVE
CONST. LIMITS
POT STA. 546+50.00
MATCH LINE STA. 551+00 US 23 DECELERATION LANE - SEE SHEET 190
10 WD
11 WD
11 T1
PFK COMPANY II, LLC AND
TAMARACK ENTERPRISES II, L.P.
510-181566
S HIGH ST
MEDIAN ACCESS REMOVED
CULTIVATED
R/W
TMP
E
W
O
U
Ex SH
QHE
547
548
549
550

EX. GROUND
EX. 12" WATER
EX. 6" OIL
EX. 6" OIL

735
730
725
720
715
710
705
700

718.25
718.51
718.83
719.07
719.24
719.58
719.73
719.59
719.87
719.83

547+00
548+00
549+00
550+00
551+00

X:\Projects\2013\1321\1010\FRA\92616\roadway\sheets\92616GP701.dgn 2/13/2023 11:53:16 AM cwong

MEDIAN ACCESS REMOVED

CROSS REFERENCES	
SHEET NO.	DESCRIPTION
5 -7	℄ REFERENCES & BENCHMARKS
3	CURVE DATA & GEOMETRIC PLAN
85-94	ROADWAY QUANTITIES
192-201	CROSS SECTIONS
388	SIGNING & PAVEMENT MARKING
347	PAVEMENT DETAILS

HORIZONTAL SCALE IN FEET
0 10 20 40

CALCULATED ACF
CHECKED CSR

PLAN AND PROFILE US 23 DECELERATION LANE
STA. 551+00 TO STA. 556+00

FRA-270-51.50

190
554

MATCH LINE STA. 551+00 US 23 DECELERATION LANE - SEE SHEET 189

MATCH LINE STA. 556+00 US 23 DECELERATION LANE - SEE SHEET 191

℄ CONST. US 23 ACCEL. LANE

℄ CONST. US 23

℄ CONST. US 23 DECEL. LANE

N 6° 19′ 40″ W

PC STA. 555+40.85

25′ COMM. DRIVE ASPHALT

90°

B-003-0-13

P1 P2 U1 U2 W1 R1 D1 F1

Ex SH Ex R/W Ex LA-R/W

EX. FH TBR PER COC SCD L-6637A

TBR (20′) 12″ PVC

CONST. LIMITS R/W

CUT EX. 12″ PIPE TO THE PROP. DITCH

DND ASPHALT 12″ RCP TBR TMP LA-R/W

PLUG EX. PIPE AT THE R/W LINE

HAMILTON TOWNSHIP CITY OF COLUMBUS

STA. 555+40.59 ℄ ELEV = 717.97′

STA. 555+12, 49.1′ RT ℄ ELEV = 717.97′

STA. 555+33, 49.0′ RT ℄ ELEV = 717.91′

24.0′ 12.0′ 36.0′ 10.0′

C13 ℄ US 23 ACCEL.
P.I. STA. 557+88.42
Δ = 7° 07′ 30″ (RT)
Dc = 1° 26′ 32″
R = 3,972.54′
T = 247.32′
L = 494.00′
E = 7.69′
C = 493.69′
C.B. = N 2° 45′ 55″ W
e (max) = 0.0223

C14 ℄ US23 DECEL. LANE
P.I. STA. 557+75.60
Δ = 6° 54′ 24″ (RT)
Dc = 1° 28′ 16″
R = 3,894.54′
T = 235.01′
L = 469.45′
E = 7.08′
C = 469.17′
C.B. = N 2° 52′ 28″ W
e (max) = 0.0433

PFK COMPANY II, LLC AND TAMARACK ENTERPRISES II, L.P. 510-181566 S HIGH ST

PFK COMPANY II, LLC A DELAWARE LIMITED LIABILITY COMPANY AND TAMARACK ENTERPRISES II, LLP, A DELAWARE LIMITED PARTNERSHIP 510-180712 IN 200611270236041

PFK COMPANY II, LLC AND TAMARACK ENTERPRISES II, L.P. 510-181566 S HIGH ST

EX. GROUND

EX. 12″ WATER

735	730	725	720	715	710	705	700

551+00	552+00	553+00	554+00	555+00	556+00
719.83	719.99	720.09	720.27	720.49	720.59	720.67	721.08	721.11	721.15	721.07

X:\Projects\2013\132\1010\FRA\92616\roadway\sheets\92616GP702.dgn 2/13/2023 11:55:23 AM cwong

CROSS REFERENCES	
SHEET NO.	DESCRIPTION
5 -7	℄ REFERENCES & BENCHMARKS
3	CURVE DATA & GEOMETRIC PLAN
85-94	ROADWAY QUANTITIES
192-201	CROSS SECTIONS
388	SIGNING & PAVEMENT MARKING
347 -348	PAVEMENT DETAILS

PER PLAN

PER ATLAS

B-004-0-14

℄ CONST. US 23 ACCEL. LANE

MATCH LINE STA. 556+00 US 23 DECELERATION LANE - SEE SHEET 190

℄ CONST. US 23

℄ CONST. US 23 DECEL. LANE

SAW CUT LINE

PT STA. 560+10.04

24.0'

36.0'

12.0'

10.0'

P1

P2

U1

U2

G27

PCO +50.00
37.86' RT
℄ = 715.90

6" TYPE F
@ 1.00%

PC Sta. 560+14.67
END FULL DEPTH PAVEMENT

TIE INTO
EX. FENCE

5' CHAIN LINK FENCE

Ex LA R/W

F1

CONST. LIMITS

TMP

C13

℄ US 23 ACCEL.
P.I. STA. 557+88.42
Δ = 7° 07' 30" (RT)
Dc = 1° 26' 32"
R = 3,972.54'
T = 247.32'
L = 494.00'
E = 7.69'
C = 493.69'
C.B. = N 2° 45' 55" W
e (max) = 0.0223

C14

℄ US23 DECEL. LANE
P.I. STA. 557+75.60
Δ = 6° 54' 24" (RT)
Dc = 1° 28' 16"
R = 3,894.54'
T = 235.01'
L = 469.45'
E = 7.08'
C = 469.17'
C.B. = N 2° 52' 28" W
e (max) = 0.0433

PFK COMPANY II, LLC AND
TAMARACK ENTERPRISES II, L.P.
510-181566
S HIGH ST

HAMILTON TOWNSHIP
CITY OF COLUMBUS

EX. GROUND

EX. 12" WATER

721.07 721.08 720.87 720.69 720.45 720.38 720.07 719.66 719.27

735 730 725 720 715 710 705 700

556+00 557+00 558+00 559+00 560+00

HORIZONTAL SCALE IN FEET
0 10 20 40

CALCULATED ACF
CHECKED CSR

PLAN AND PROFILE US 23 DECELERATION LANE STA. 556+00 TO STA. 560+10.04

FRA-270-51.50

191
554

x:\Projects\2013\1321\1010\FRA\92616\roadway\sheets\92616GP703.dgn 12/7/2022 2:56:17 PM cwong

x:\Projects\2013\1321\1010\FRA\92616\roadway\sheets\92616XS700.dgn 12/7/2022 2:56:18 PM cwong

SEEDING
END WIDTH | SQ. YDS.

546+50.00
718.28
718.25
EX. OIL
EX SH
R/W

547+00.00
718.58
718.51
EX. OIL
EX SH
1H:1
2%
713.7
4.0'
2%
R/W

END AREA
CUT | FILL

VOLUME
CUT | FILL

192
554

FRA-270-51.50

CROSS SECTIONS - US 23 DECELERATION LANE
STA. 546+50.00 TO STA. 547+00.00

CALCULATED JGB
CHECKED CSR

x:\Projects\2013\1321\1010\FRA\92616\roadway\sheets\92616XS700.dgn 12/7/2022 2:56:18 PM cwong

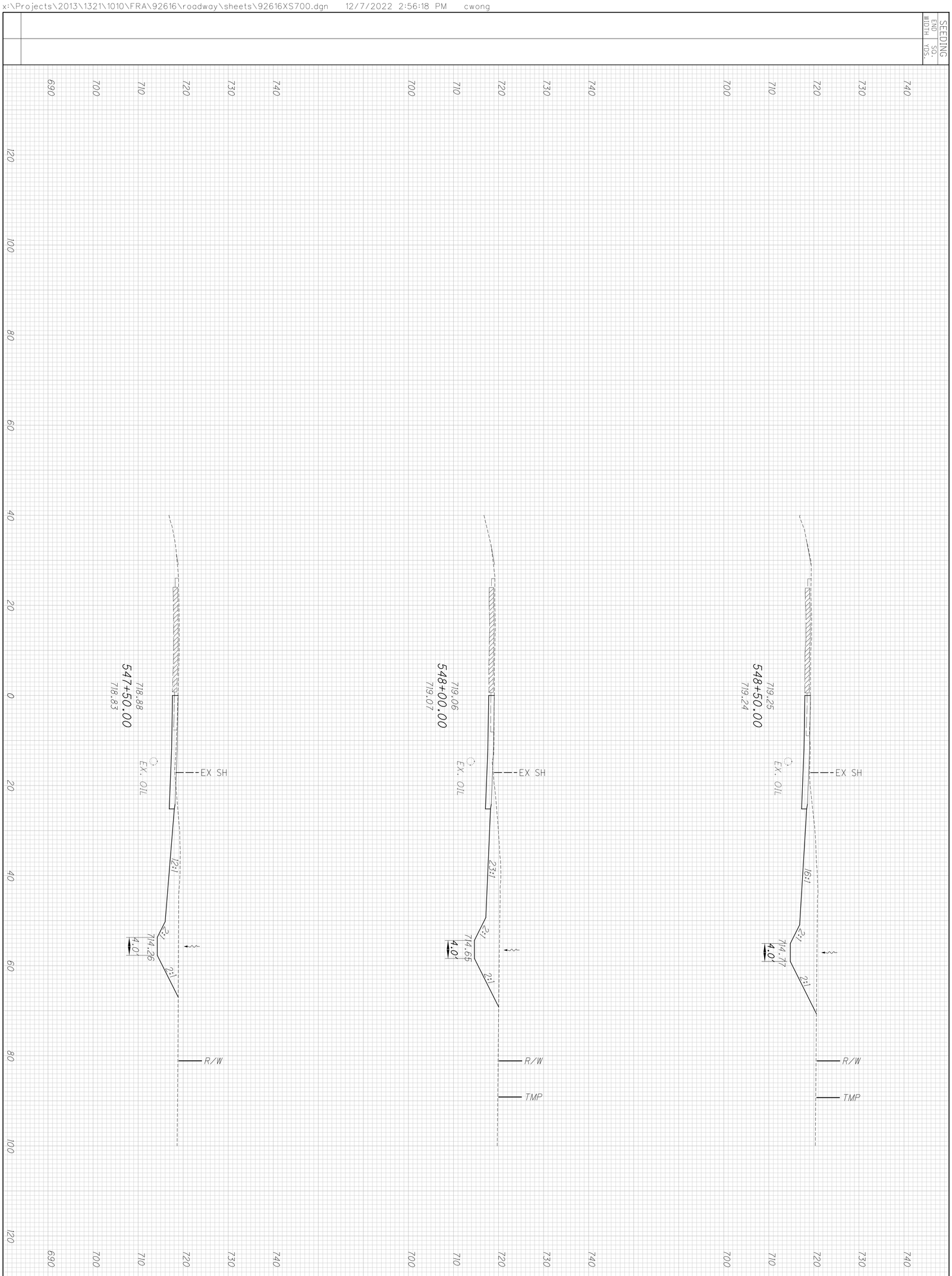

193
554

FRA-270-51.50

CROSS SECTIONS - US 23 DECELERATION LANE
STA. 547+50.00 TO STA. 548+50.00

CALCULATED JGB
CHECKED CSR

x:\Projects\2013\1321\1010\FRA\92616\roadway\sheets\92616XS700.dgn 12/7/2022 2:56:19 PM cwong

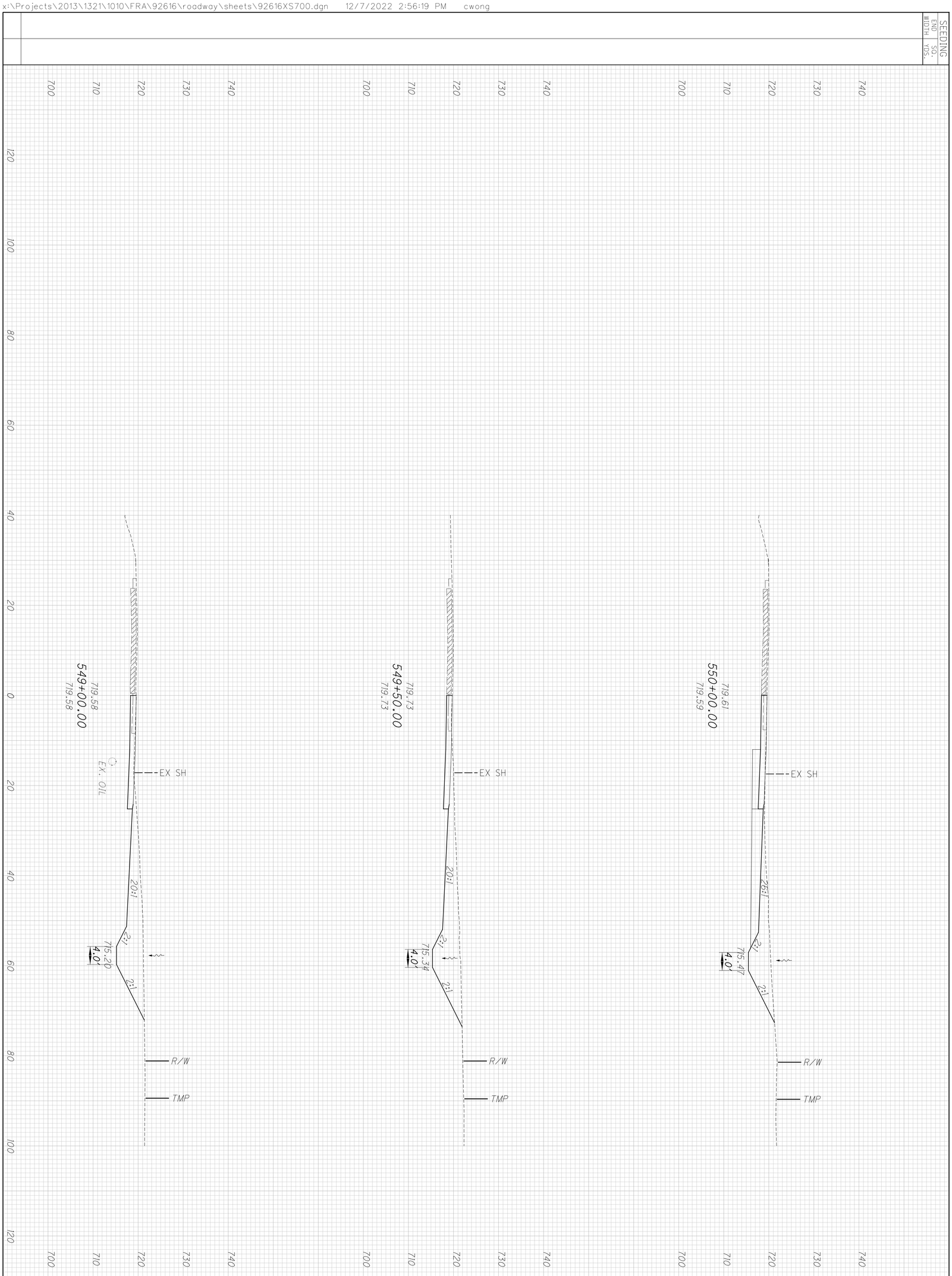

END AREA CUT | FILL
VOLUME CUT | FILL

194
554

FRA-270-51.50

CROSS SECTIONS - US 23 DECELERATION LANE
STA. 549+00.00 TO STA. 550+00.00

CALCULATED JGB
CHECKED CSR

x:\Projects\2013\1321\1010\FRA\92616\roadway\sheets\92616XS700.dgn 12/7/2022 2:56:19 PM cwong

SEEDING
END WIDTH | SQ. YDS.

550+50.00
719.89
719.87
EX SH
15:1
2:1
715.60
4.0'
2:1
R/W
TMP

551+00.00
719.86
719.83
EX SH
19:1
2:1
715.90
4.0'
2:1
R/W

551+50.00
719.99
719.99
EX SH
17:1
2:1
716.20
4.0'
2:1
R/W

END AREA
CUT | FILL

VOLUME
CUT | FILL

195
554

FRA-270-51.50

CROSS SECTIONS - US 23 DECELERATION LANE
STA. 550+50.00 TO STA. 551+50.00

CALCULATED JGB
CHECKED CSR

SEEDING	
END WIDTH	SQ. YDS.

END AREA		VOLUME	
CUT	FILL	CUT	FILL

CALCULATED JGB
CHECKED CSR

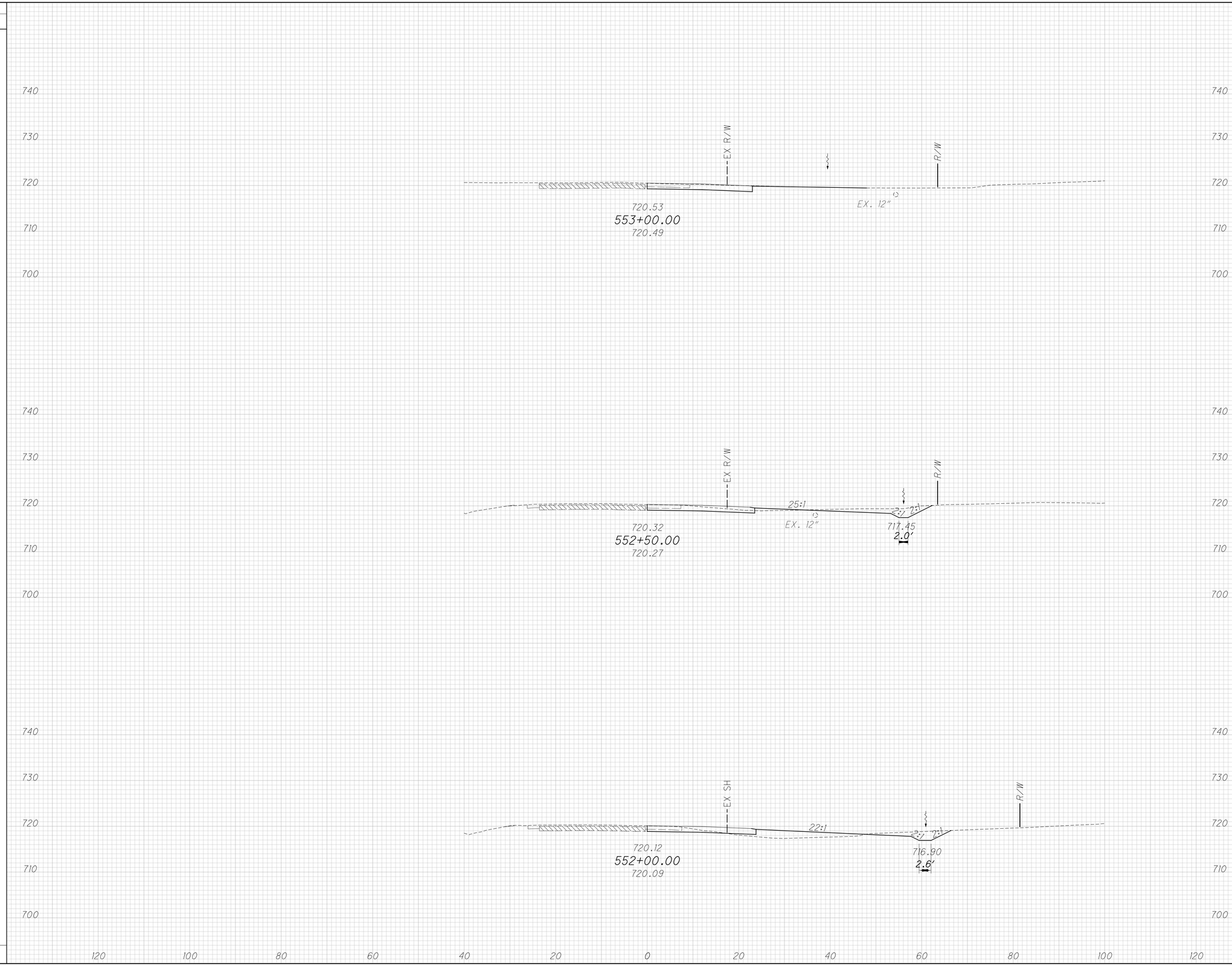

CROSS SECTIONS - US 23 DECELERATION LANE
STA. 552+00.00 TO STA. 553+00.00

FRA-270-51.50

x:\Projects\2013\1321\1010\FRA\92616\roadway\sheets\92616XS700.dgn 12/7/2022 2:56:19 PM cwong

SEEDING	
END WIDTH	SQ. YDS.

END AREA		VOLUME	
CUT	FILL	CUT	FILL

CALCULATED JGB

CHECKED CSR

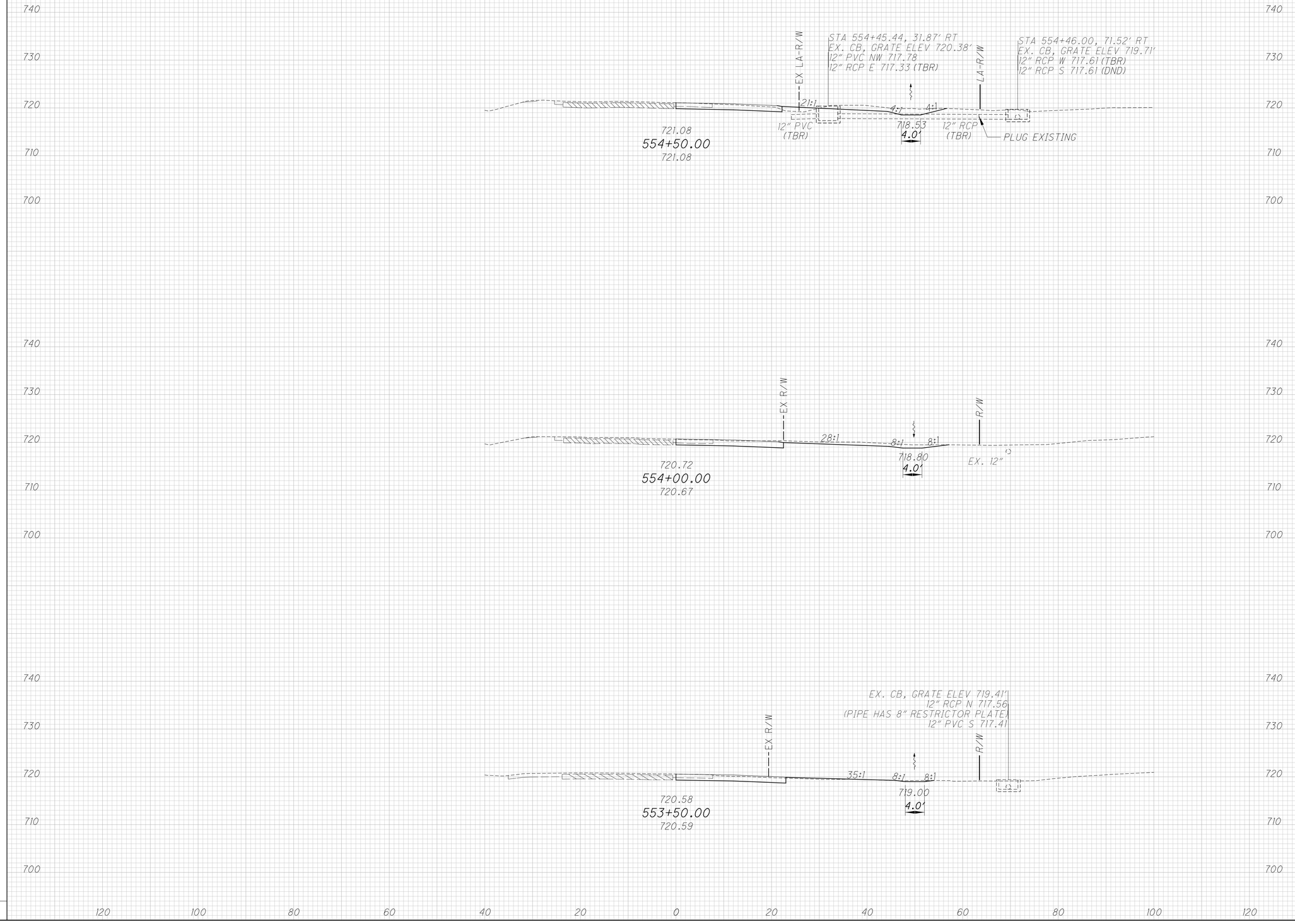

CROSS SECTIONS - US 23 DECELERATION LANE
STA. 553+50.00 TO STA. 554+50.00

FRA-270-51.50

x:\Projects\2013\1321\1010\FRA\92616\roadway\sheets\92616XS700.dgn 12/7/2022 2:56:20 PM cwong

x:\Projects\2013\1321\1010\FRA\92616\roadway\sheets\92616XS700.dgn 12/7/2022 2:56:20 PM cwong

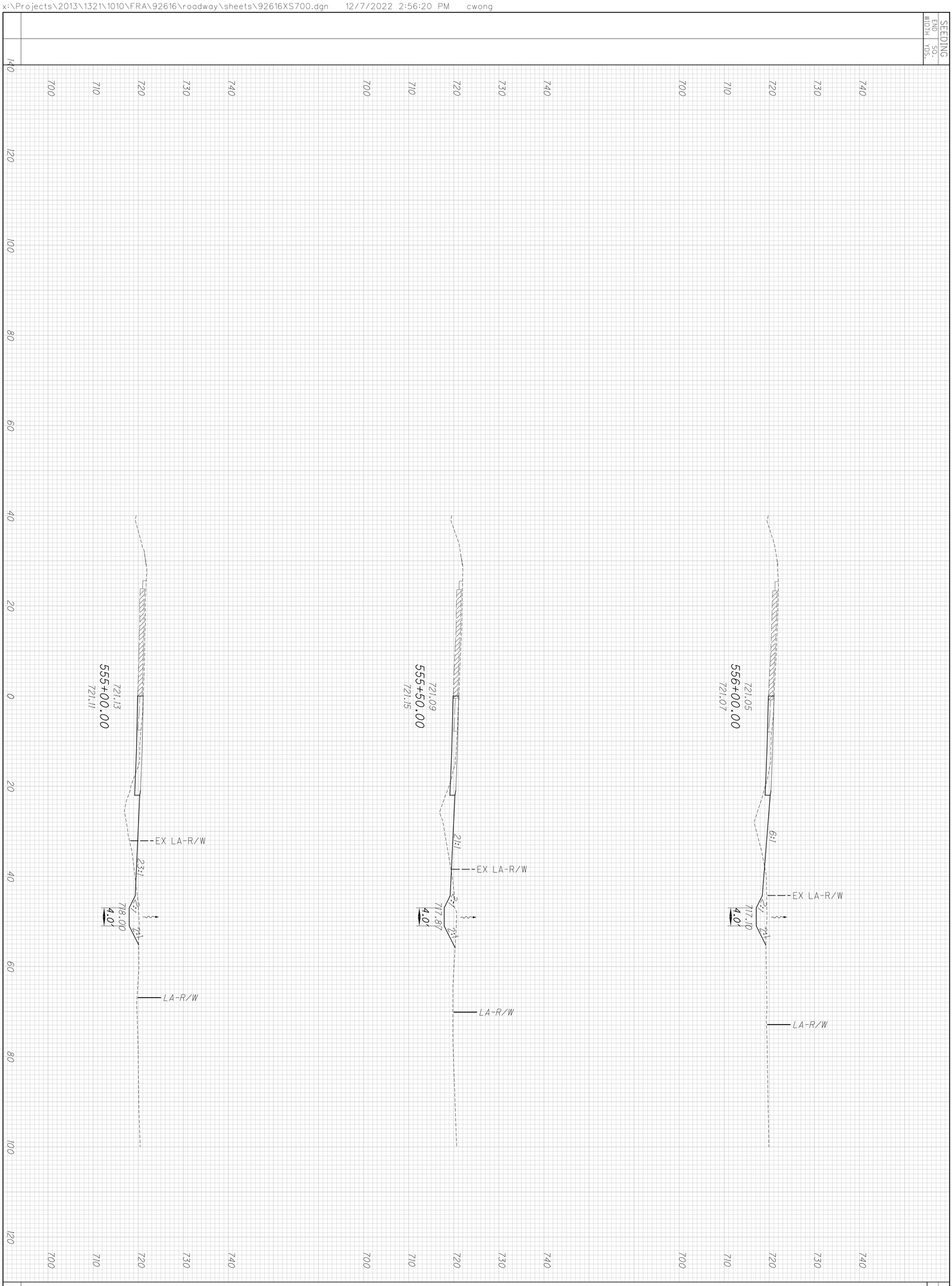

198 / 554	FRA-270-51.50	CROSS SECTIONS - US 23 DECELERATION LANE STA. 555+00.00 TO STA. 556+00.00

CALCULATED JGB
CHECKED CSR

SEEDING	
END WIDTH	SQ. YDS.

END AREA		VOLUME	
CUT	FILL	CUT	FILL

CALCULATED JGB
CHECKED CSR

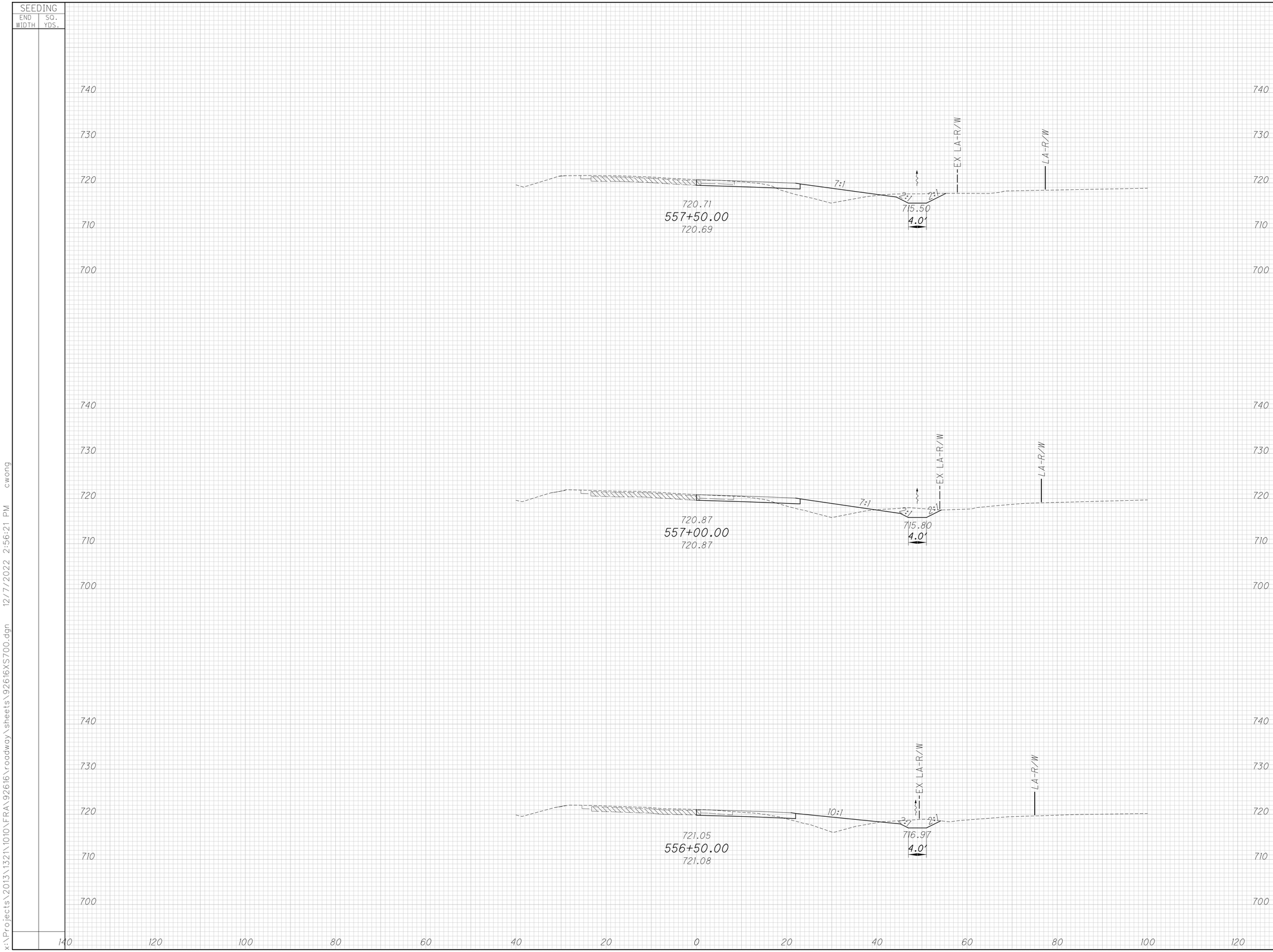

CROSS SECTIONS - US 23 DECELERATION LANE
STA. 556+50.00 TO STA. 557+50.00

FRA-270-51.50

x:\Projects\2013\1321\1010\FRA\92616\roadway\sheets\92616XS700.dgn 12/7/2022 2:56:21 PM cwong

x:\Projects\2013\1321\1010\FRA\92616\roadway\sheets\92616XS700.dgn 12/7/2022 2:56:21 PM cwong

SEEDING
END WIDTH | SQ. YDS.

558+00.00
720.47
720.45
714.90
4.0
6:1
2:1
2:1
EX LA-R/W
LA-R/W

558+50.00
720.38
720.38
714.55
4.0
6:1
2:1
2:1
EX LA-R/W
LA-R/W

559+00.00
720.09
720.07
714.25
4.0
6:1
2:1
2:1
EX LA-R/W
LA-R/W

END AREA
CUT | FILL

VOLUME
CUT | FILL

200
554

FRA-270-51.50

CROSS SECTIONS - US 23 DECELERATION LANE
STA. 558+00.00 TO STA. 559+00.00

CALCULATED JGB
CHECKED CSR

x:\Projects\2013\1321\1010\FRA\92616\roadway\sheets\92616XS700.dgn 12/7/2022 2:56:22 PM cwong

SEEDING
END WIDTH | SQ. YDS.

559+50.00
719.68
719.66
713.95
4.0'
6:1
2:1
2:1
EX LA-R/W
LA-R/W

560+00.00
719.21
719.27
713.65
3.0'
6:1
2:1
2:1
EX LA-R/W

560+10.04
719.12
719.12
713.50
2.0'
6:1
2:1
2:1
EX LA-R/W

END AREA
CUT | FILL

VOLUME
CUT | FILL

201
554

FRA-270-51.50

CROSS SECTIONS - US 23 DECELERATION LANE
STA. 559+50.00 TO STA. 560+10.04

CALCULATED JGB
CHECKED CSR

CROSS REFERENCES	
SHEET NO.	DESCRIPTION
5 -7	℄ REFERENCES & BENCHMARKS
3	CURVE DATA & GEOMETRIC PLAN
85-94	ROADWAY QUANTITIES
372	CULVERT DETAILS
208- 219	CROSS SECTIONS
389	SIGNING & PAVEMENT MARKING
338	GORE DETAILS

HORIZONTAL SCALE IN FEET
0 10 20 40

CALCULATED ACF
CHECKED CSR

PLAN AND PROFILE - RAMP L
STA. 571+88.12 TO STA. 576+00

FRA-270-51.50

202
554

C2 ℄ RAMP R - 2
P.I. Sta. 269+39.51
Δ = 38° 51′ 07″ (RT)
Dc = 7° 30′ 00″
R = 763.94′
T = 269.42′
L = 518.02′
E = 46.11′
C = 508.16′
C.B. = N 36° 23′ 08″ E
e (max) = 0.054

C3 ℄ RAMP R - 3
P.I. Sta. 274+68.44
Δ = 2° 59′ 29″ (RT)
Dc = 1° 00′ 00″
R = 5,729.58′
T = 149.61′
L = 299.15′
E = 1.95′
C = 299.11′
C.B. = N 57° 18′ 26″ E
e (max) = 0.016

C17 ℄ RAMP L - 1
P.I. STA. 623+53.55
Δ = 162° 22′ 11″ (LT)
Dc = 7° 30′ 00″
R = 763.94′
T = 4,926.16′
L = 2,164.93′
E = 4,221.10′
C = 1,509.84′
C.B. = N 25° 22′ 24″ W
e = OVERLAY EXISTING

WETLAND AA (DND)
WETLAND AB (DND)
100-YEAR FLOOD PLAIN
E-OHE
POT Sta. 571+88.12
PT STA. 271+88.12
PC STA. 273+18.83
18" RCP
PIPE CLEANOUT
STREAM 15
96"-A
GUARDRAIL, TYPE MGS
STA. 573+19.15
TS Sta. 572+74.99
96" CMP
STA. 574+23.32
BEGIN FULL DEPTH PAVEMENT
CONST. LIMITS
SC Sta. 575+24.99
℄ CONST. RAMP L
℄ CONST. RAMP R
B-008-0-13
B-008-0-14
U1
N 55° 48′ 41″ E
G18
R1
PR. OVERHEAD SIGN
MATCH LINE STA. 576+00 RAMP L - SEE SHEET 203
16.0′
2.0′
PR. PROFILE RAMP L
EX. GROUND
EX ELEC.
PR. LTG CONDUIT
P.V.I. STA 573+24.99 ELEV = 723.07′ NO CURVE
P.V.I. STA 573+50.00 ELEV = 724.00′ NO CURVE
P.V.I. STA 573+75.00 ELEV = 724.96′ NO CURVE
P.V.I. STA 574+00.00 ELEV = 725.86′ NO CURVE
P.V.I. STA 574+50.00 ELEV = 727.55′ NO CURVE
P.V.I. STA 575+00.00 ELEV = 728.98′ NO CURVE
P.V.I. STA 575+75.00 ELEV = 731.32′ NO CURVE
+3.75 %
+3.82 %
+3.59 %
+3.39 %
+2.85 %
+3.12 %
+3.63
723.07
724.00
724.96
725.86
726.71
727.55
728.26
729.76
730.54
732.23
724.41
726.25
728.12
729.71
731.68
733.27
740
735
730
725
720
715
710
705
572+00
573+00
574+00
575+00
576+00

X:\Projects\2013\1321\1010\FRA\92616\roadway\sheets\92616GP201.dgn 2/9/2023 11:10:57 AM cwong

LEGEND:

ITEM 202 PAVEMENT REMOVED

CROSS REFERENCES	
SHEET NO.	DESCRIPTION
5 -7	℄ REFERENCES & BENCHMARKS
3	CURVE DATA & GEOMETRIC PLAN
85-94	ROADWAY QUANTITIES
208- 219	CROSS SECTIONS
390	SIGNING & PAVEMENT MARKING
505- 545	BRIDGE PLANS

DESIGN EXCEPTION

HSSD = 264' (260' MIN)
ACTUAL DESIGN SPEED = 36 MPH

℄ CONST. RAMP Q

CONST. LIMITS

15" RCP

15" STM

CONST. LIMITS

MATCH LINE STA. 576+00 RAMP L - SEE SHEET 202

CONC. WALL

GUARDRAIL, TYPE MGS

C17

℄ RAMP L - 1
P.I. STA. 623+53.55
Δ = 162° 22' 11" (LT)
Dc = 7° 30' 00"
R = 763.94'
T = 4,926.16'
L = 2,164.93'
E = 4,221.10'
C = 1,509.84'
C.B. = N 25° 22' 24" W
e = OVERLAY EXISTING

G18

D1

BEGIN APPROACH SLAB
STA. 579+24.81

END APPROACH SLAB
STA. 579+49.81

MATCH LINE STA. 581+00 RAMP L - SEE SHEET 204

578

3.5'

16.0'

R1

℄ CONST. RAMP L

ANCHOR ASSEMBLY TYPE E

6.0'

30.0'

B-029-0-14

STRUCTURE NO. FRA-270-52.64

IR-270

R2

G6

GUARDRAIL, TYPE MGS

D2

℄ CONST. RAMP R

GUARDRAIL, TYPE MGS

N 58° 48' 10" E

27.7'

B-010-0-13

100-YEAR FLOOD PLAIN

84

732.23 733.13 734.04 734.95 735.83 736.64 737.38 738.04 738.62 739.13 739.56 739.92 740.21 740.42 740.57 740.66 740.69 740.67 740.59 740.45 740.31

750 745 740 735 730 725 720 715

+3.63 %

+0.75 %

+0.75 %

-0.57 %

EX. GROUND

PR. PROFILE RAMP L

BOTTOM OF BEAM

EX ELEC

PR. LTG CONDUIT

P.V.C. STA. 576+80.00
ELEV 735.13

P.V.I. STA 578+00.00 ELEV = 739.48'
240.00' VC
K = 83

P.C.V.C. STA. 579+20.00
ELEV 740.38

P.V.I. STA 579+92.50 ELEV = 740.93'
145.00' VC
K = 110

580+58.44
MIN. VERTICAL CLEARANCE
18.17'

P.V.T. STA. 580+65.00
ELEV 740.51

IR 270

733.27 734.56 735.82 736.87 737.67 738.37 738.95 739.02 738.84 738.67 738.49

576+00 577+00 578+00 579+00 580+00 581+00

HORIZONTAL SCALE IN FEET
0 10 20 40

CALCULATED ACF
CHECKED CSR

PLAN AND PROFILE - RAMP L
STA. 576+00 TO STA. 581+00

FRA-270-51.50

203
554

X:\Projects\2013\1321\1010\FRA\92616\roadway\sheets\92616GP202.dgn 2/9/2023 11:13:43 AM cwong

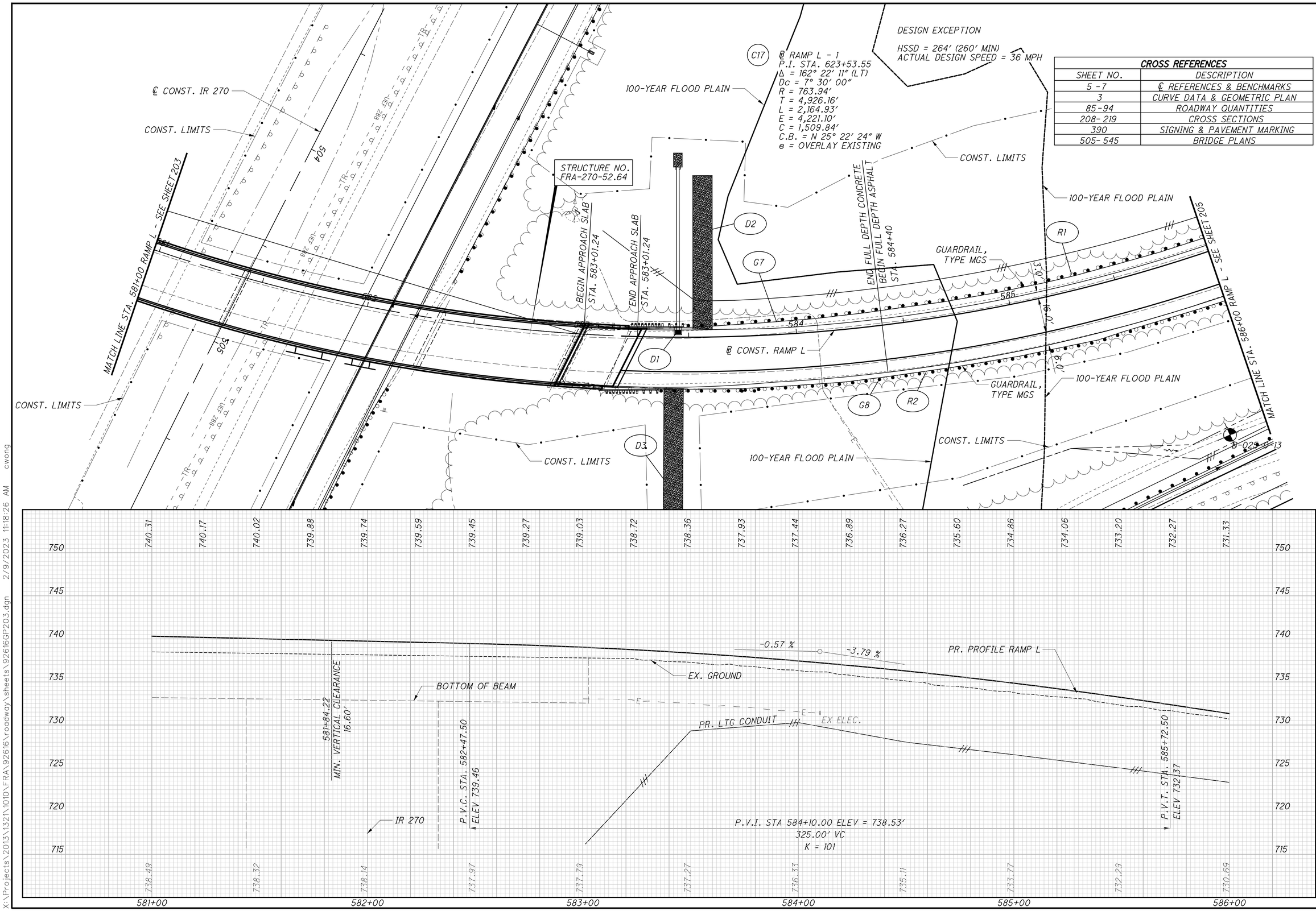

CROSS REFERENCES	
SHEET NO.	DESCRIPTION
5 -7	℄ REFERENCES & BENCHMARKS
3	CURVE DATA & GEOMETRIC PLAN
85-94	ROADWAY QUANTITIES
208- 219	CROSS SECTIONS
390	SIGNING & PAVEMENT MARKING
505- 545	BRIDGE PLANS

HORIZONTAL SCALE IN FEET
0 10 20 40

CALCULATED ACF
CHECKED CSR

PLAN AND PROFILE - RAMP L
STA. 581+00 TO STA. 586+00

FRA-270-51.50

X:\Projects\2013\1321\1010\FRA\92616\roadway\sheets\92616GP203.dgn 2/9/2023 11:18:26 AM cwong

C17

℄ RAMP L - 1
P.I. STA. 623+53.55
Δ = 162° 22′ 11″ (LT)
Dc = 7° 30′ 00″
R = 763.94′
T = 4,926.16′
L = 2,164.93′
E = 4,221.10′
C = 1,509.84′
C.B. = N 25° 22′ 24″ W
e = OVERLAY EXISTING

CROSS REFERENCES	
SHEET NO.	DESCRIPTION
5 -7	℄ REFERENCES & BENCHMARKS
3	CURVE DATA & GEOMETRIC PLAN
85-94	ROADWAY QUANTITIES
208- 219	CROSS SECTIONS
390	SIGNING & PAVEMENT MARKING
483-504	BRIDGE PLANS

HORIZONTAL SCALE IN FEET
0 10 20 40

CALCULATED ACF
CHECKED CSR

PLAN AND PROFILE - RAMP L
STA. 586+00 TO STA. 591+00

FRA-270-51.50

205
554

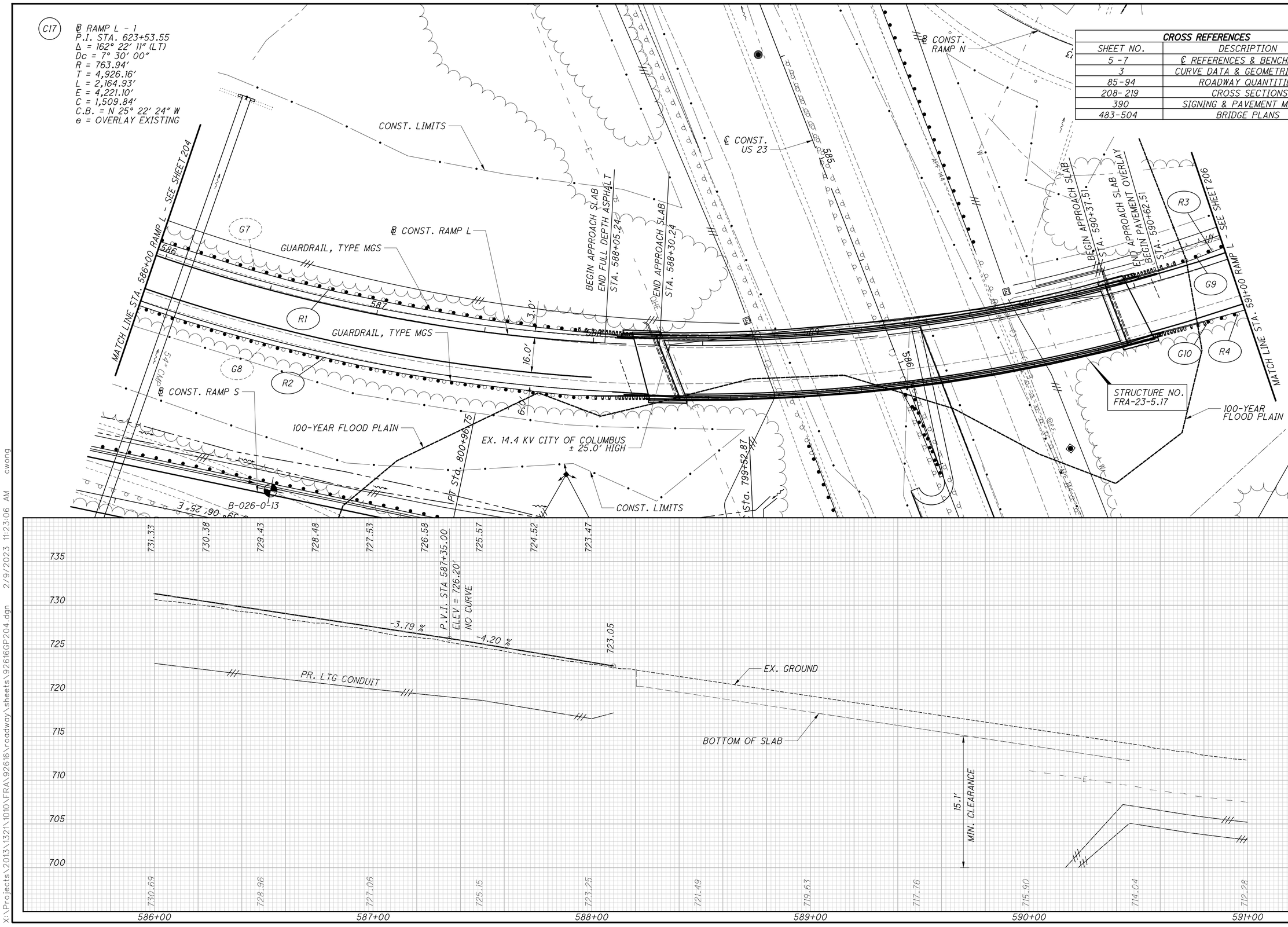

X:\Projects\2013\132\1010\FRA\92616\roadway\sheets\92616GP204.dgn 2/9/2023 11:23:06 AM cwong

LEGEND:

ITEM 202 PAVEMENT REMOVED

ITEM 202 EXCAVATION AND ITEM 202 PIPE REMOVED

CROSS REFERENCES	
SHEET NO.	DESCRIPTION
3	CURVE DATA & GEOMETRIC PLAN
5 - 7	℄ REFERENCES & BENCHMARKS
221	PLAN - RAMP M
85-94	ROADWAY QUANTITIES
208- 219	CROSS SECTIONS
391	SIGNING & PAVEMENT MARKING

℄ RAMP L - 1
P.I. STA. 623+53.55
Δ = 162° 22′ 11″ (LT)
Dc = 7° 30′ 00″
R = 763.94′
T = 4,926.16′
L = 2,164.93′
E = 4,221.10′
C = 1,509.84′
C.B. = N 25° 22′ 24″ W
e = OVERLAY EXISTING

C17

100-YEAR FLOOD PLAIN

WETLAND W (DND)

℄ CONST. RAMP N

MATCH LINE STA. 591+00 RAMP L - SEE SHEET 205

CONST. LIMITS

G9

R1

GUARDRAIL, TYPE MGS

℄ CONST. RAMP L

G10

R2

GUARDRAIL, TYPE MGS

100-YEAR FLOOD PLAIN

STA. 596+77.69
END PAVEMENT OVERLAY
RAMP L PCC

PT Sta. 594+91.54

PT Sta. 596+69.21

WETLAND V (DND)

100-YEAR FLOOD PLAIN

MATCH LINE STA. 596+00 RAMP L - SEE SHEET 207

TREE CLEANOUT 66" RCP

ANCHOR ASSEMBLY, TYPE E

S 70° 58′ 38″ W

CONST. LIMITS

WETLAND U (DND)

GUARDRAIL, TYPE MGS

℄ CONST. RAMP M

EX. GROUND

PR. PROFILE RAMP L

EX ELEC.

PR. LTG CONDUIT

PR. LTG CONDUIT

EX 66" STM

591+00 592+00 593+00 594+00 595+00 596+00

725 720 715 710 705 700 695 690

CALCULATED ACF CHECKED CSR

HORIZONTAL SCALE IN FEET 0 10 20 40

PLAN AND PROFILE - RAMP L
STA. 591+00 TO STA. 596+00

FRA-270-51.50

206
554

X:\Projects\2013\1321\1010\FRA\92616\roadway\sheets\92616GP205.dgn 2/9/2023 11:28:13 AM cwong

CROSS REFERENCES	
SHEET NO.	DESCRIPTION
5 -7	℄ REFERENCES & BENCHMARKS
3	CURVE DATA & GEOMETRIC PLAN
85-94	ROADWAY QUANTITIES
208- 219	CROSS SECTIONS
391	SIGNING & PAVEMENT MARKING
221 222	PLAN - RAMP M

C17
℄ RAMP L - 1
P.I. STA. 623+53.55
Δ = 162° 22′ 11″ (LT)
Dc = 7° 30′ 00″
R = 763.94′
T = 4,926.16′
L = 2,164.93′
E = 4,221.10′
C = 1,509.84′
C.B. = N 25° 22′ 24″ W
e = OVERLAY EXISTING

STA. 598+24.65
END WORK ON PROJECT FRA-270-51.50
BEGIN WORK ON PROJECT FRA-270-52.72
END PAVEMENT OVERLAY

POT Sta. 598+29.31
GUARDRAIL INSTALLED IN PROJECT FRA-270-52.72 (BU-4/5)

MATCH LINE STA. 596+00 RAMP L - SEE SHEET 206

100-YEAR FLOOD PLAIN

GUARDRAIL, TYPE MGS

596

S 73° 26′ 30″ W

598

℄ CONST. RAMP L

G9

R1

℄ CONST. RAMP M

18

19

20

21

22

CONST. LIMITS

GUARDRAIL, TYPE MGS

18+52.87
TS STA.

20+52.87
SC STA.

CONST. LIMITS

HAMILTON TOWNSHIP
CITY OF COLUMBUS

100-YEAR FLOOD PLAIN

WETLAND U (DND)

725
720
715
710
705
700
695
690

PR. PROFILE RAMP L

EX. GROUND

EX ELEC.

EX ELEC.

PR. LTC CONDUIT

596+00
597+00
598+00

N

0 10 20 40
HORIZONTAL SCALE IN FEET

CALCULATED ACF
CHECKED CSR

PLAN AND PROFILE - RAMP L
STA. 596+00 TO STA. 598+34.78

FRA-270-51.50

207
554

X:\Projects\2013\1321\1010\FRA\92616\roadway\sheets\92616GP206.dgn 2/9/2023 11:30:58 AM cwong

x:\Projects\2013\1321\1010\FRA\92616\roadway\sheets\92616XS850.dgn 12/7/2022 2:56:43 PM cwong

SEEDING
END AREA
VOLUME

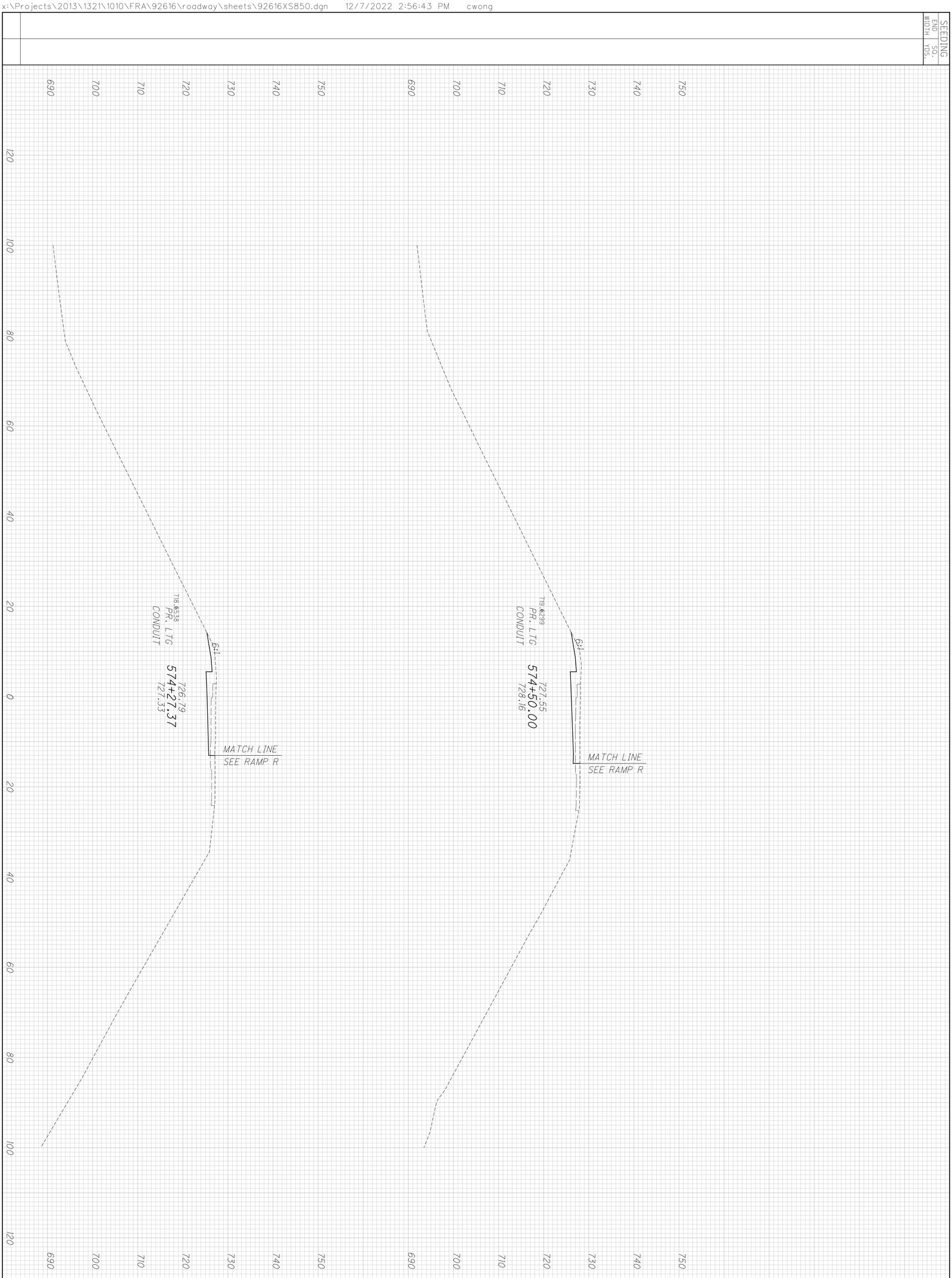

CUT FILL
CUT FILL

208
554

FRA-270-51.50

CROSS SECTIONS RAMP L
STA. 574+27.37 TO STA. 574+50.00

CALCULATED ACF
CHECKED CSR

x:\Projects\2013\1321\1010\FRA\92616\roadway\sheets\92616XS850.dgn 12/7/2022 2:56:43 PM cwong

SEEDING
END WIDTH
SQ. YDS.

690 700 710 720 730 740 750 690 700 710 720 730 740 750 760

120 100 80 60 40 20 0 20 40 60 80 100 120

722.84
PR. LTG CONDUIT
728.98
575+00.00
729.70

6H

MATCH LINE
SEE RAMP R

723.87
PR. LTG CONDUIT
730.54
575+50.00
731.68

4H

MATCH LINE
SEE RAMP R

690 700 710 720 730 740 750 690 700 710 720 730 740 750 760

END AREA
CUT
FILL

VOLUME
CUT
FILL

209
554

FRA-270-51.50

CROSS SECTIONS RAMP L
STA. 575+00.00 TO STA. 575+50.00

CALCULATED
ACF
CHECKED
CSR

SEEDING	
END WIDTH	SQ. YDS.

END AREA		VOLUME	
CUT	FILL	CUT	FILL

CALCULATED	CHECKED
ACF	CSR

760
750
740
730
720
710
700

MATCH LINE
SEE RAMP R

4:1

2:1

1:1

725+1108

734.04
PR. LTG 576+50.00
CONDUIT 734.54

760
750
740
730
720
710
700

MATCH LINE
SEE RAMP R

4:1

2:1

1:1

723+6527

732.23
PR. LTG 576+00.00
CONDUIT 733.34

760
750
740
730
720
710
700

120 100 80 60 40 20 0 20 40 60 80 100 120

CROSS SECTIONS RAMP L
STA. 576+00.00 TO STA. 576+50.00

FRA-270-51.50

x:\Projects\2013\1321\1010\FRA\92616\roadway\sheets\92616XS850.dgn 12/7/2022 2:56:43 PM cwong

x:\Projects\2013\1321\1010\FRA\92616\roadway\sheets\92616XS850.dgn 12/7/2022 2:56:44 PM cwong

SEEDING
END AREA
VOLUME

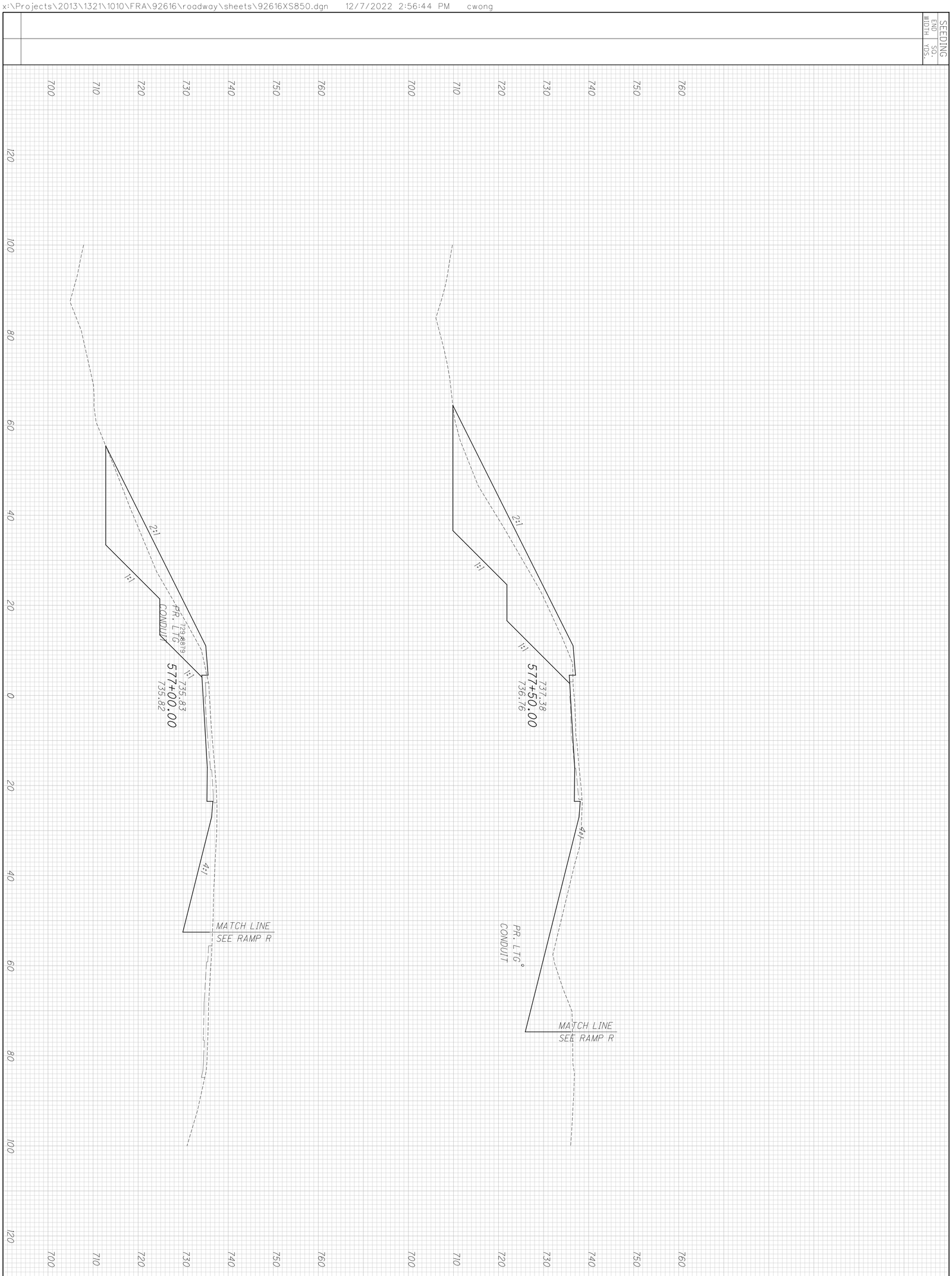

211 / 554	FRA-270-51.50	CROSS SECTIONS RAMP L STA. 577+00.00 TO STA. 577+50.00

CALCULATED ACF
CHECKED CSR

SEEDING	
END WIDTH	SQ. YDS.

END AREA	
CUT	FILL

VOLUME	
CUT	FILL

CALCULATED ACF

CHECKED CSR

CROSS SECTIONS RAMP L
STA. 578+00.00 TO STA. 578+50.00

FRA-270-51.50

x:\Projects\2013\1321\1010\FRA\92616\roadway\sheets\92616XS850.dgn 12/7/2022 2:56:44 PM cwong

x:\Projects\2013\1321\1010\FRA\92616\roadway\sheets\92616XS850.dgn 12/7/2022 2:56:45 PM cwong

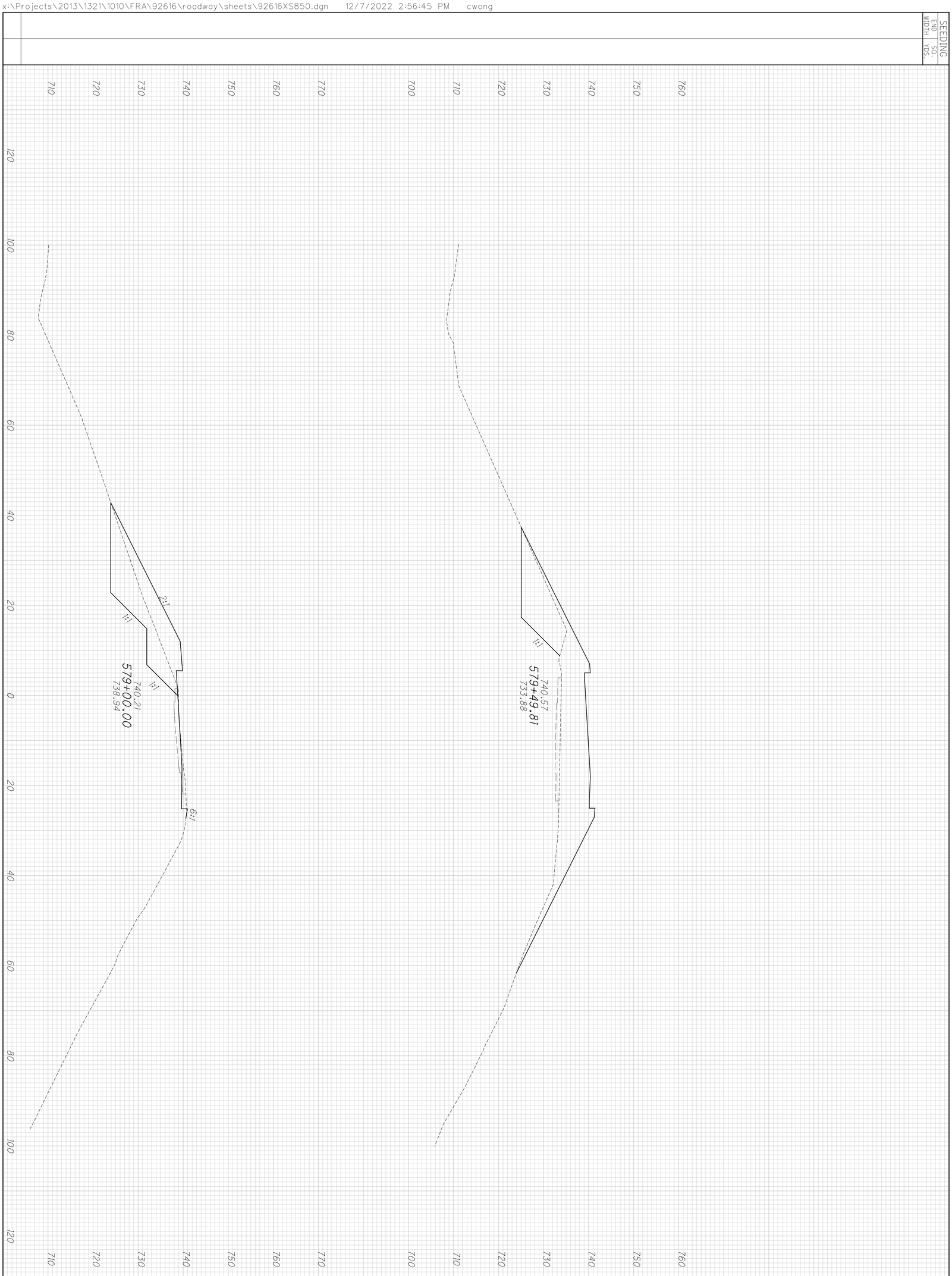

213
554

FRA-270-51.50

CROSS SECTIONS RAMP L
STA. 579+00.00 TO STA. 579+49.81

CALCULATED ACF
CHECKED CSR

SEEDING	
END WIDTH	SQ. YDS.

END AREA	
CUT	FILL

VOLUME	
CUT	FILL

CALCULATED ACF

CHECKED CSR

CROSS SECTIONS RAMP L
STA. 583+01.24 TO STA. 583+50.00

FRA-270-51.50

x:\Projects\2013\1321\1010\FRA\92616\roadway\sheets\92616XS850.dgn 12/7/2022 2:56:45 PM cwong

x:\Projects\2013\1321\1010\FRA\92616\roadway\sheets\92616XS850.dgn 12/7/2022 2:56:46 PM cwong

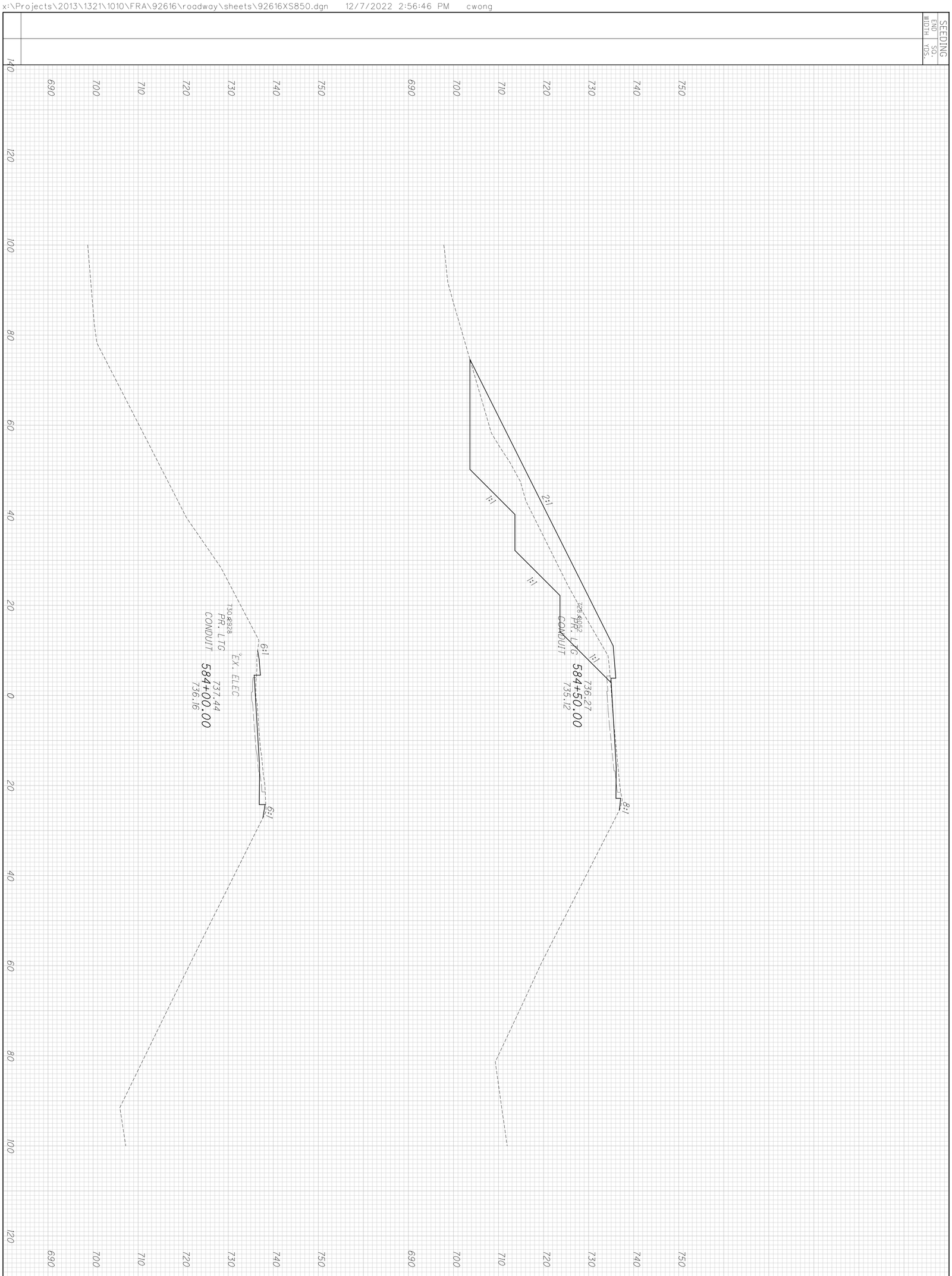

215
554

FRA-270-51.50

CROSS SECTIONS RAMP L
STA. 584+00.00 TO STA. 584+50.00

CALCULATED ACF
CHECKED CSR

SEEDING	
END WIDTH	SQ. YDS.

END AREA	
CUT	FILL

VOLUME	
CUT	FILL

CALCULATED ACF

CHECKED CSR

CROSS SECTIONS RAMP L
STA. 585+00.00 TO STA. 585+50.00

FRA-270-51.50

x:\Projects\2013\1321\1010\FRA\92616\roadway\sheets\92616XS850.dgn 12/7/2022 2:56:46 PM cwong

x:\Projects\2013\1321\1010\FRA\92616\roadway\sheets\92616XS850.dgn 12/7/2022 2:56:46 PM cwong

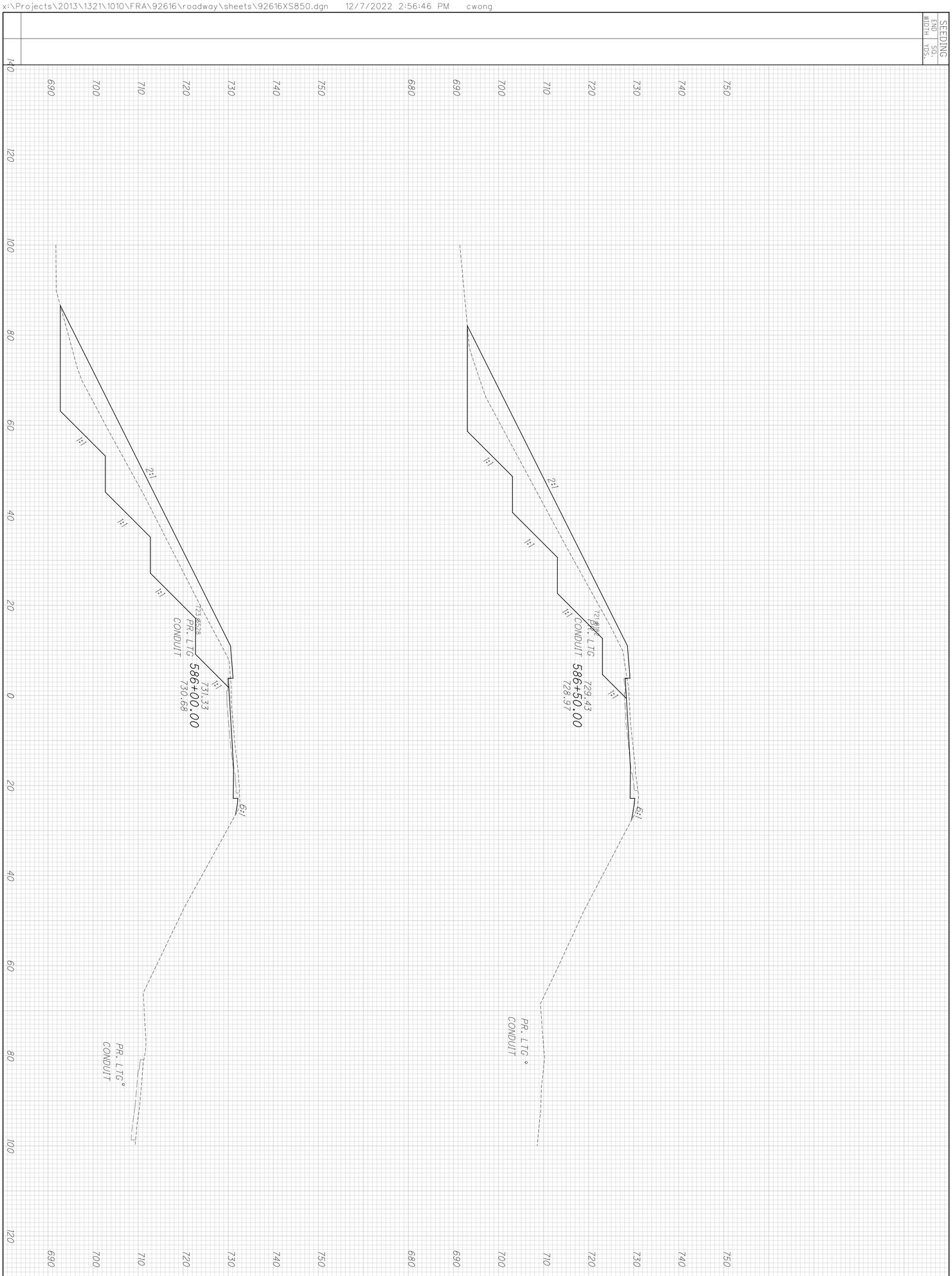

END AREA CUT FILL VOLUME CUT FILL

217
554

FRA-270-51.50

CROSS SECTIONS RAMP L
STA. 586+00.00 TO STA. 586+50.00

CALCULATED ACF
CHECKED CSR

SEEDING	
END WIDTH	SQ. YDS.

END AREA		VOLUME	
CUT	FILL	CUT	FILL

CALCULATED ACF

CHECKED CSR

CROSS SECTIONS RAMP L

STA. 587+00.00 TO STA. 587+50.00

FRA-270-51.50

x:\Projects\2013\1321\1010\FRA\92616\roadway\sheets\92616XS850.dgn 12/7/2022 2:56:47 PM cwong

SEEDING	
END WIDTH	SQ. YDS.

END AREA	
CUT	FILL

VOLUME	
CUT	FILL

CALCULATED ACF

CHECKED CSR

CROSS SECTIONS RAMP L
STA. 588+00.00 TO STA. 588+10.00

FRA-270-51.50

x:\Projects\2013\1321\1010\FRA\92616\roadway\sheets\92616XS850.dgn 12/7/2022 2:56:47 PM cwong

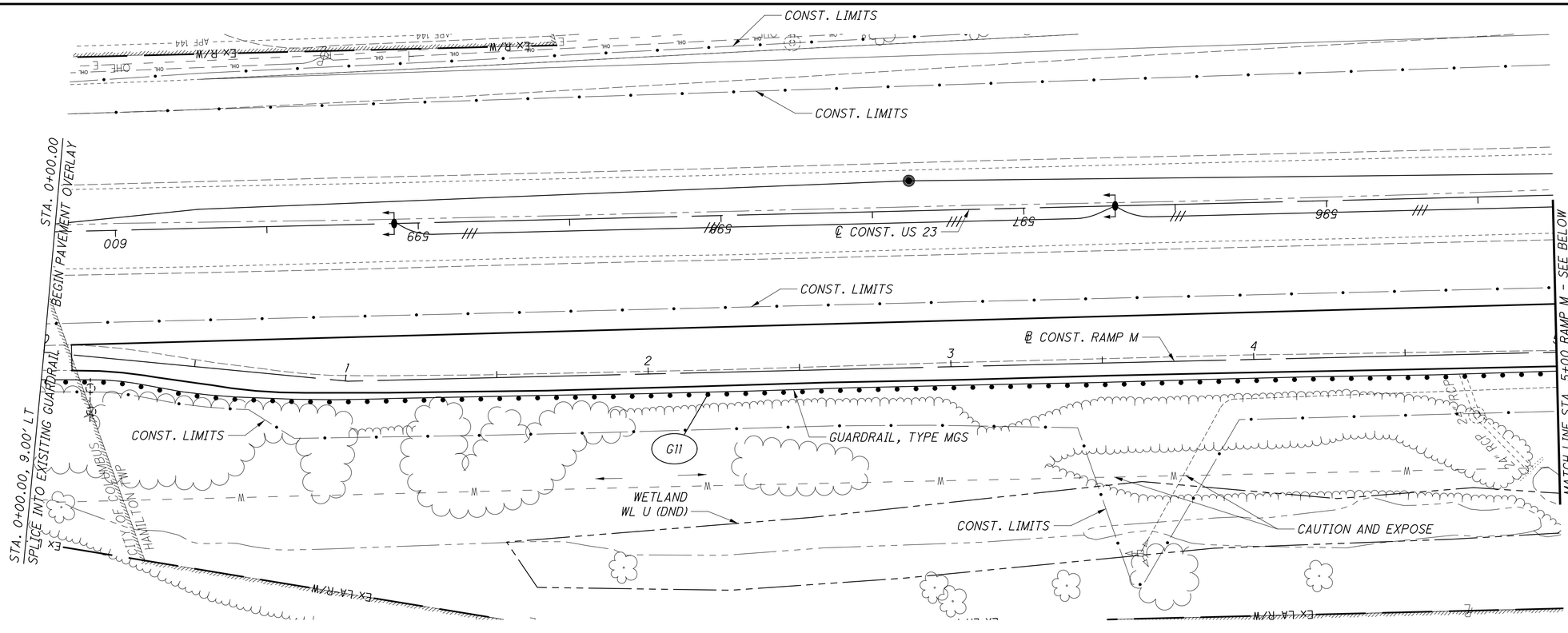

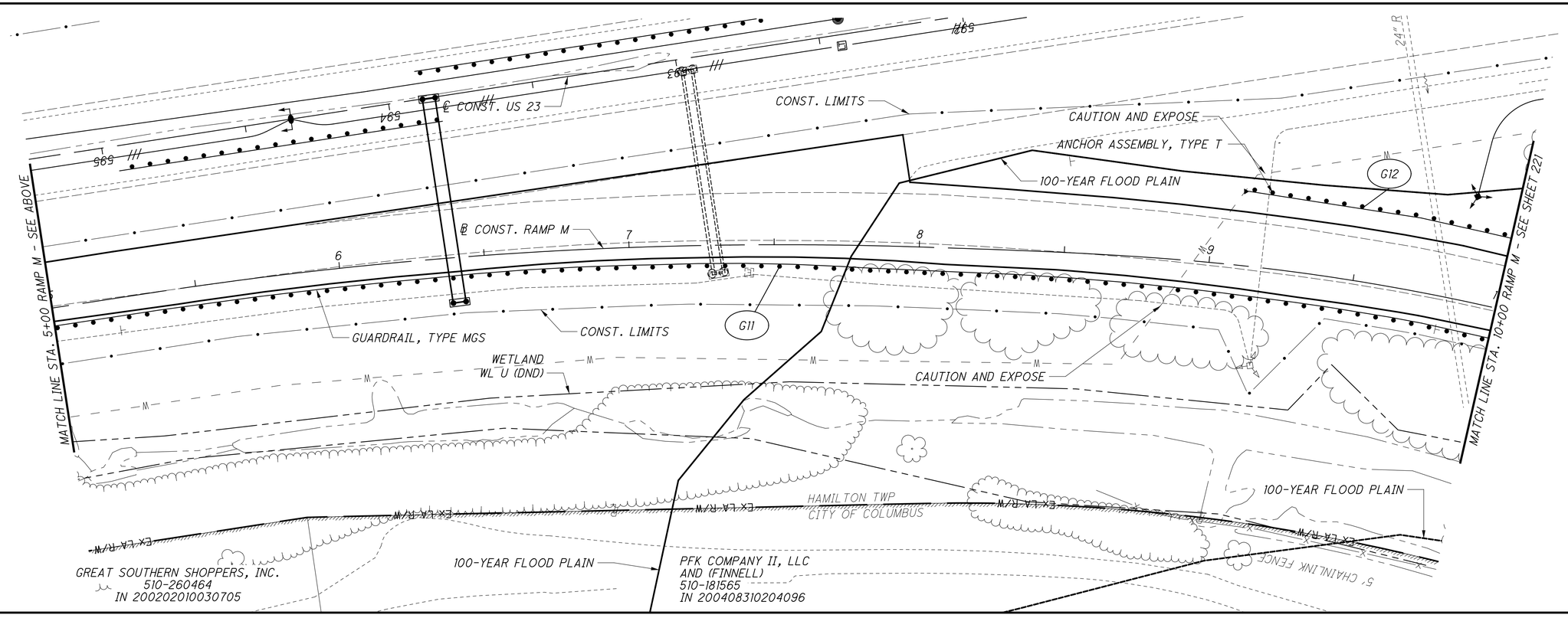

HORIZONTAL SCALE IN FEET
0 10 20 40

CALCULATED ACF
CHECKED CSR

PLAN - RAMP M
STA. 0+00.00 TO STA. 10+00.00

FRA-270-51.50

220
554

X:\Projects\2013\1321\1010\FRA\92616\roadway\sheets\92616GP251.dgn 2/9/2023 11:37:13 AM cwong

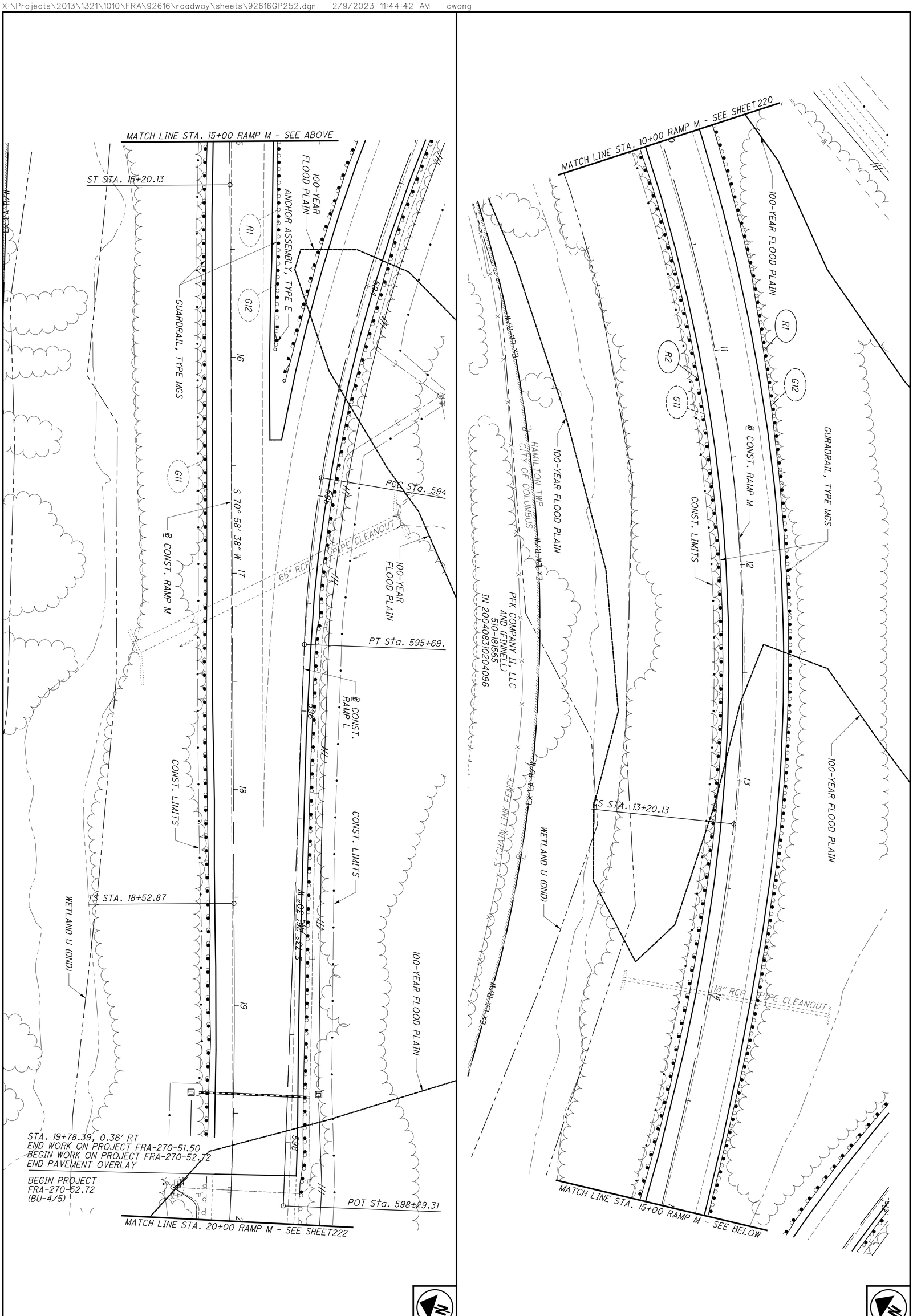

221 / 554	FRA-270-51.50	PLAN - RAMP M STA. 10+00.00 TO STA. 20+00.00	CALCULATED ACF CHECKED CSR	0 20 10 40 HORIZONTAL SCALE IN FEET

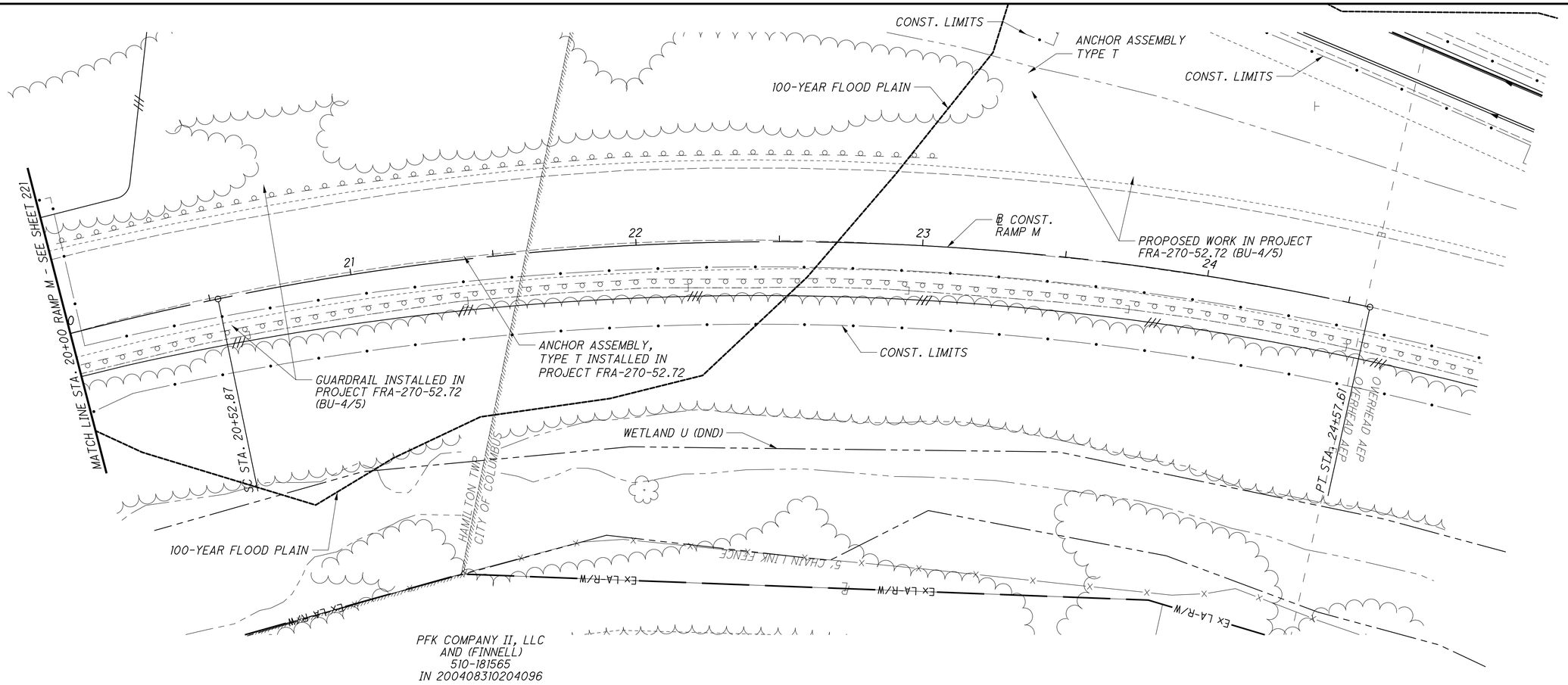

N

HORIZONTAL SCALE IN FEET
0 10 20 40

CALCULATED ACF
CHECKED CSR

PLAN - RAMP M
STA. 20+00.00 TO STA. 24+57.61

FRA-270-51.50

222
554

X:\Projects\2013\1321\1010\FRA\92616\roadway\sheets\92616GP253.dgn 2/9/2023 11:50:37 AM cwong

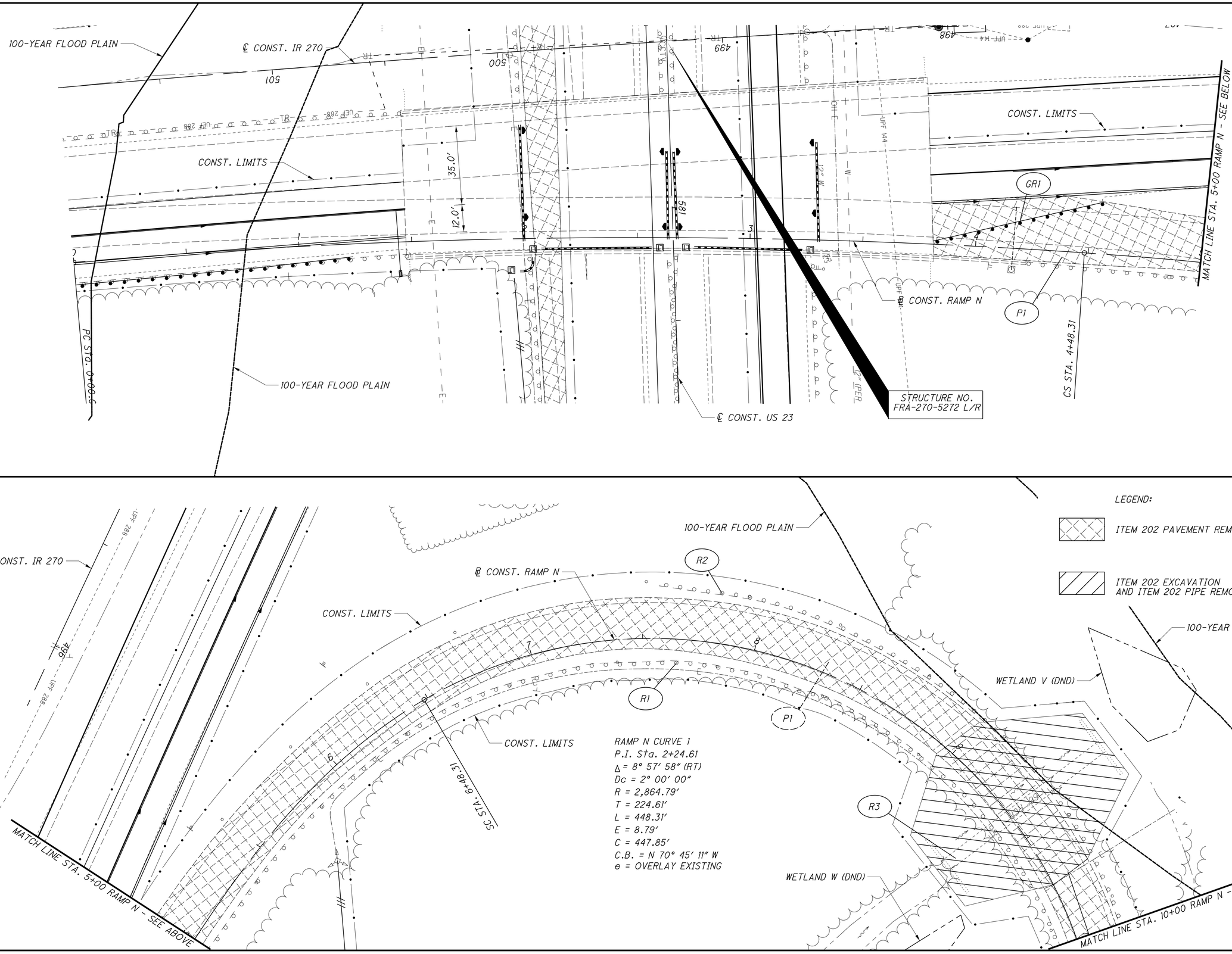
100-YEAR FLOOD PLAIN
℄ CONST. IR 270
CONST. LIMITS
35.0'
12.0'
185'
CONST. LIMITS
100-YEAR FLOOD PLAIN
PC STA. 0+00.6
℄ CONST. US 23
STRUCTURE NO. FRA-270-5272 L/R
℄ CONST. RAMP N
GR1
P1
CS STA. 4+48.31
MATCH LINE STA. 5+00 RAMP N - SEE BELOW
CONST. LIMITS
℄ CONST. IR 270
℄ CONST. RAMP N
R2
R1
P1
R3
CONST. LIMITS
SC STA. 6+48.31
MATCH LINE STA. 5+00 RAMP N - SEE ABOVE
100-YEAR FLOOD PLAIN
WETLAND V (DND)
WETLAND W (DND)
MATCH LINE STA. 10+00 RAMP N - SEE SHEET 224
LEGEND:
ITEM 202 PAVEMENT REMOVED
ITEM 202 EXCAVATION AND ITEM 202 PIPE REMOVED
RAMP N CURVE 1
P.I. Sta. 2+24.61
Δ = 8° 57′ 58″ (RT)
Dc = 2° 00′ 00″
R = 2,864.79′
T = 224.61′
L = 448.31′
E = 8.79′
C = 447.85′
C.B. = N 70° 45′ 11″ W
e = OVERLAY EXISTING
N
0 10 20 40
HORIZONTAL SCALE IN FEET
CALCULATED ACF
CHECKED CSR
PLAN
STA. 0+00 TO STA. 10+00
FRA-270-51.50
223
554
X:\Projects\2013\1321\1010\FRA\92616\roadway\sheets\92616GP301.dgn 2/9/2023 11:58:38 AM cwong

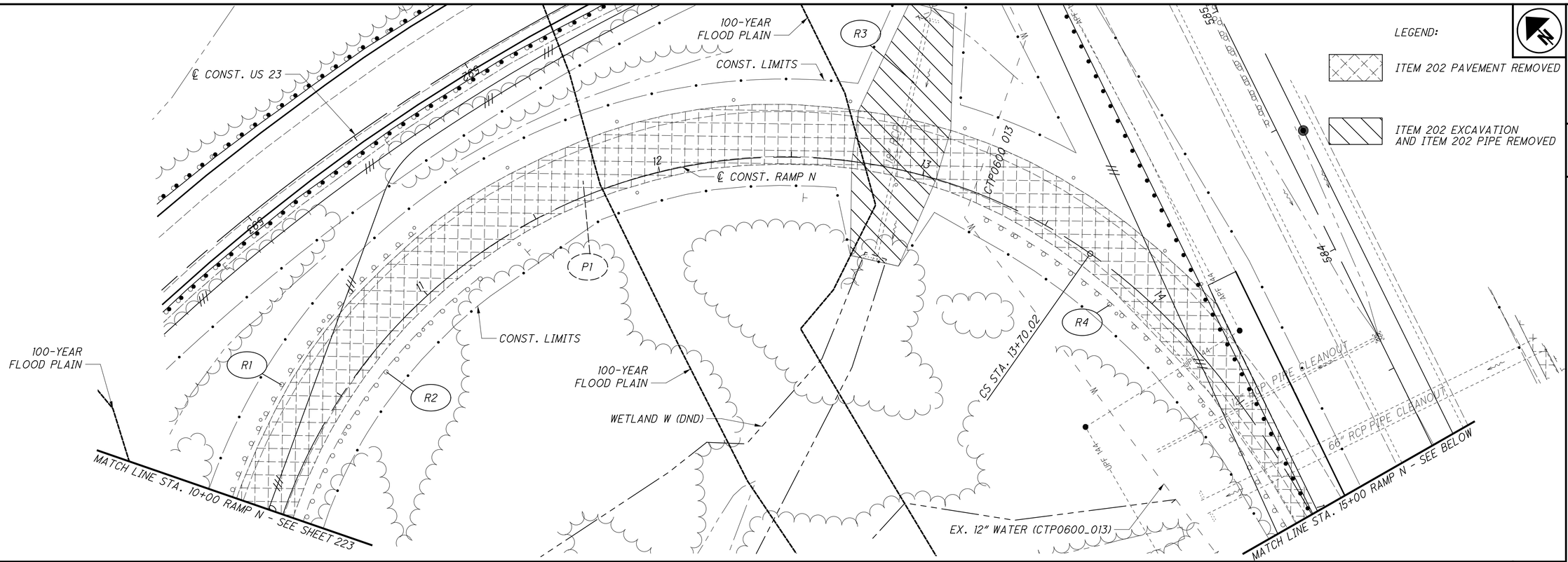

X:\Projects\2013\1321\1010\FRA\92616\roadway\sheets\92616GP302.dgn 2/9/2023 12:15:55 PM cwong

X:\Projects\2013\1321\1010\FRA\92616\roadway\sheets\92616GP351.dgn 2/9/2023 12:24:47 PM cwong

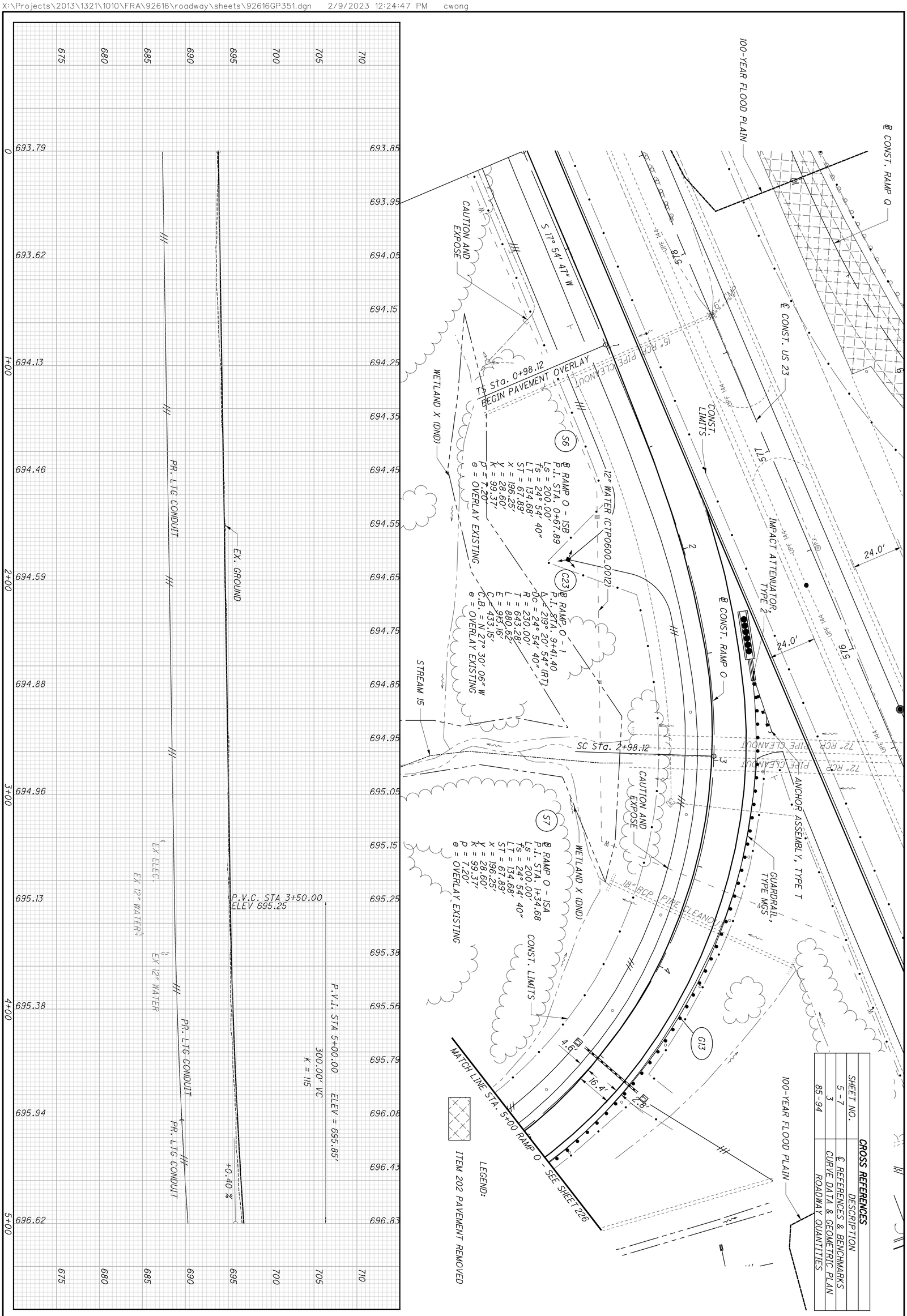

225 / 554	FRA-270-51.50	PLAN AND PROFILE - RAMP O STA. 0+00 TO STA. 5+00	CALCULATED ACF CHECKED CSR HORIZONTAL SCALE IN FEET

CROSS REFERENCES	
SHEET NO.	DESCRIPTION
5 - 7	℄ REFERENCES & BENCHMARKS
3	CURVE DATA & GEOMETRIC PLAN
85 - 94	ROADWAY QUANTITIES

HORIZONTAL SCALE IN FEET
0 10 20 40

CALCULATED ACF
CHECKED CSR

PLAN AND PROFILE - RAMP O
STA. 5+00 TO STA. 10+00

FRA-270-51.50

226
554

℄ CONST. RAMP P1
℄ CONST. RAMP P2
℄ CONST. RAMP O
B-012-0-13
TS STA. 697+66.03
S 29° 34' 51" E
CONCRETE BARRIER, TYPE B
100-YEAR FLOOD PLAIN
GUARDRAIL, TYPE MGS
PC STA. 866+76.04
+25.21
BTA, TYPE 2
ANCHOR ASSEMBLY, TYPE E
CONCRETE BARRIER TYPE B
PCC STA. 870+19
+39.93
BTA, TYPE 2
GUARDRAIL, TYPE MGS
CONST. LIMITS
STREAM 15
18" RCP
PIPE CLEANOUT
WETLAND X (DND)
MATCH LINE STA. 5+00 RAMP O - SEE SHEET 225
MATCH LINE STA. 10+00 RAMP O - SEE SHEET 227
B1
G13
G14
G15
R1
15.5'
12.0'

S6 ℄ RAMP O - 1SB
P.I. STA. 0+67.89
Ls = 200.00'
fs = 24° 54' 40"
LT = 134.68'
ST = 67.89'
x = 196.25'
y = 28.60'
k = 99.37'
p = 7.20'
e = OVERLAY EXISTING

C23 ℄ RAMP O - 1
P.I. STA. 9+41.40
Δ = 219° 20' 54" (RT)
Dc = 24° 54' 40"
R = 230.00'
T = 643.28'
L = 880.52'
E = 913.16'
C = 433.15'
C.B. = N 27° 30' 06" W
e = OVERLAY EXISTING

S7 ℄ RAMP O - 1SA
P.I. STA. 1+34.68
Ls = 200.00'
fs = 24° 54' 40"
LT = 134.68'
ST = 67.89'
x = 196.25'
y = 28.60'
k = 99.37'
p = 7.20'
e = OVERLAY EXISTING

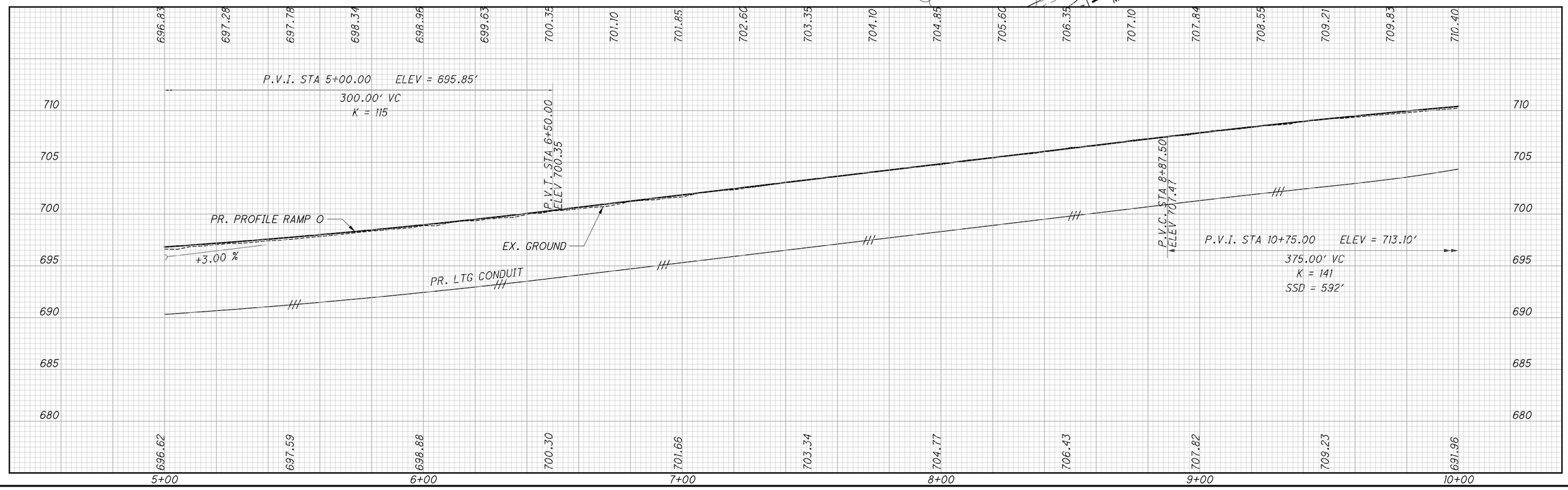

X:\Projects\2013\132\1010\FRA\92616\roadway\sheets\92616GP352.dgn 3/28/2023 11:19:40 AM cwong

100-YEAR FLOOD PLAIN

℄ CONST. IR 270

35.0'

CONST. LIMITS

UPF 144

UPF 288

198

TR

PIPE CLEANOUT

15" STM

G2

100-YEAR FLOOD PLAIN

℄ CONST. RAMP O

12

15.5'

GUARDRAIL, TYPE MGS

13

18.0'

6.0'

R1

G1

CS STA. 11+78.64

GUARDRAIL, TYPE MGS

CONST. LIMITS

R2

MATCH LINE STA. 10+00 RAMP O - SEE SHEET 226

100-YEAR FLOOD PLAIN

100-YEAR FLOOD PLAIN

ST Sta. 13+78.64 END PAVEMENT OVERLAY

15" STM

SPLICE INTO EX. GUARDRAIL

S6

℄ RAMP O - 1SB
P.I. STA. 0+67.89
Ls = 200.00'
Ts = 24° 54' 40"
LT = 134.68'
ST = 67.89'
x = 196.25'
y = 28.60'
K = 99.37'
p = 7.20'
e = OVERLAY EXISTING

C23

℄ RAMP O - 1
P.I. STA. 9+41.40
Δ = 219° 20' 54" (RT)
Dc = 24° 54' 40"
R = 230.00'
T = 643.28'
L = 880.52'
E = 913.16'
C = 433.15'
C.B. = N 27° 30' 06" W
e = OVERLAY EXISTING

S7

℄ RAMP O - 1SA
P.I. STA. 1+34.68
Ls = 200.00'
Ts = 24° 54' 40"
LT = 134.68'
ST = 67.89'
x = 196.25'
y = 28.60'
K = 99.37'
p = 7.20'
e = OVERLAY EXISTING

WETLAND X (DND)

STREAM 15

ITEM 202 PAVEMENT REMOVED

CROSS REFERENCES	
SHEET NO.	DESCRIPTION
5 7	℄ REFERENCES & BENCHMARKS
3	CURVE DATA & GEOMETRIC PLAN
85-94	ROADWAY QUANTITIES

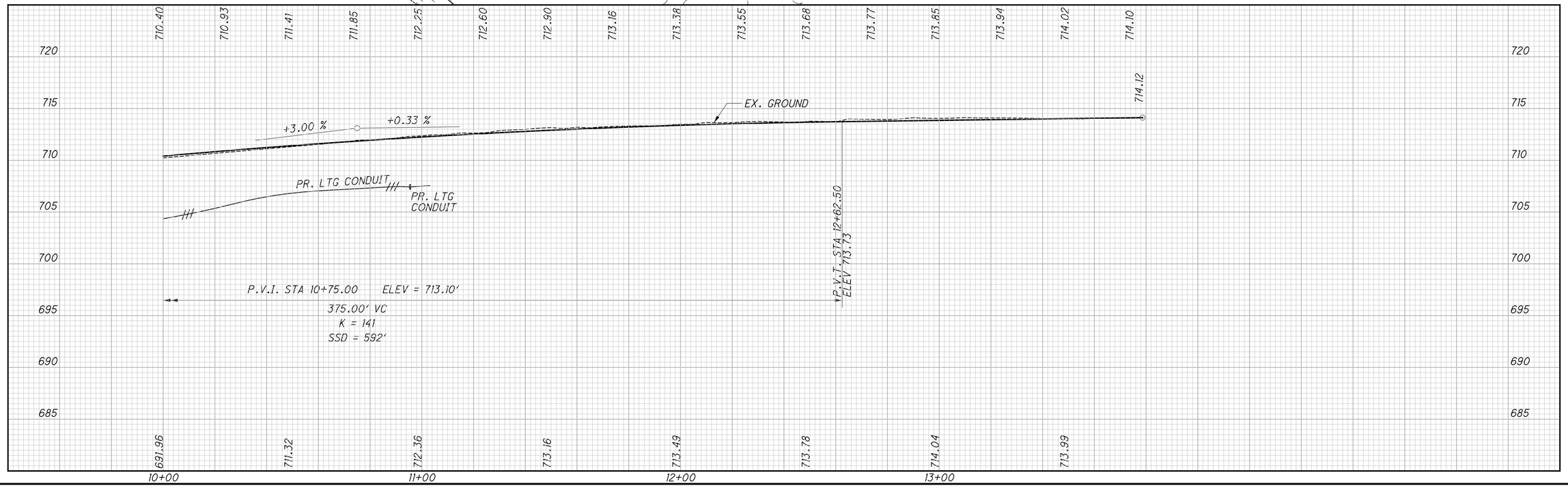

HORIZONTAL SCALE IN FEET
0 10 20 40

CALCULATED ACF
CHECKED CSR

PLAN AND PROFILE - RAMP O
STA. 10+00 TO STA. 13+78.64

FRA-270-51.50

227
554

X:\Projects\2013\1321\1010\FRA\92616\roadway\sheets\92616GP353.dgn 2/9/2023 12:44:37 PM cwong

CROSS REFERENCES	
SHEET NO.	DESCRIPTION
5 -7	℄ REFERENCES & BENCHMARKS
3	CURVE DATA & GEOMETRIC PLAN
85-94	ROADWAY QUANTITIES
335	GORE DETAILS
234- 256	CROSS SECTIONS
382	SIGNING & PAVEMENT MARKING

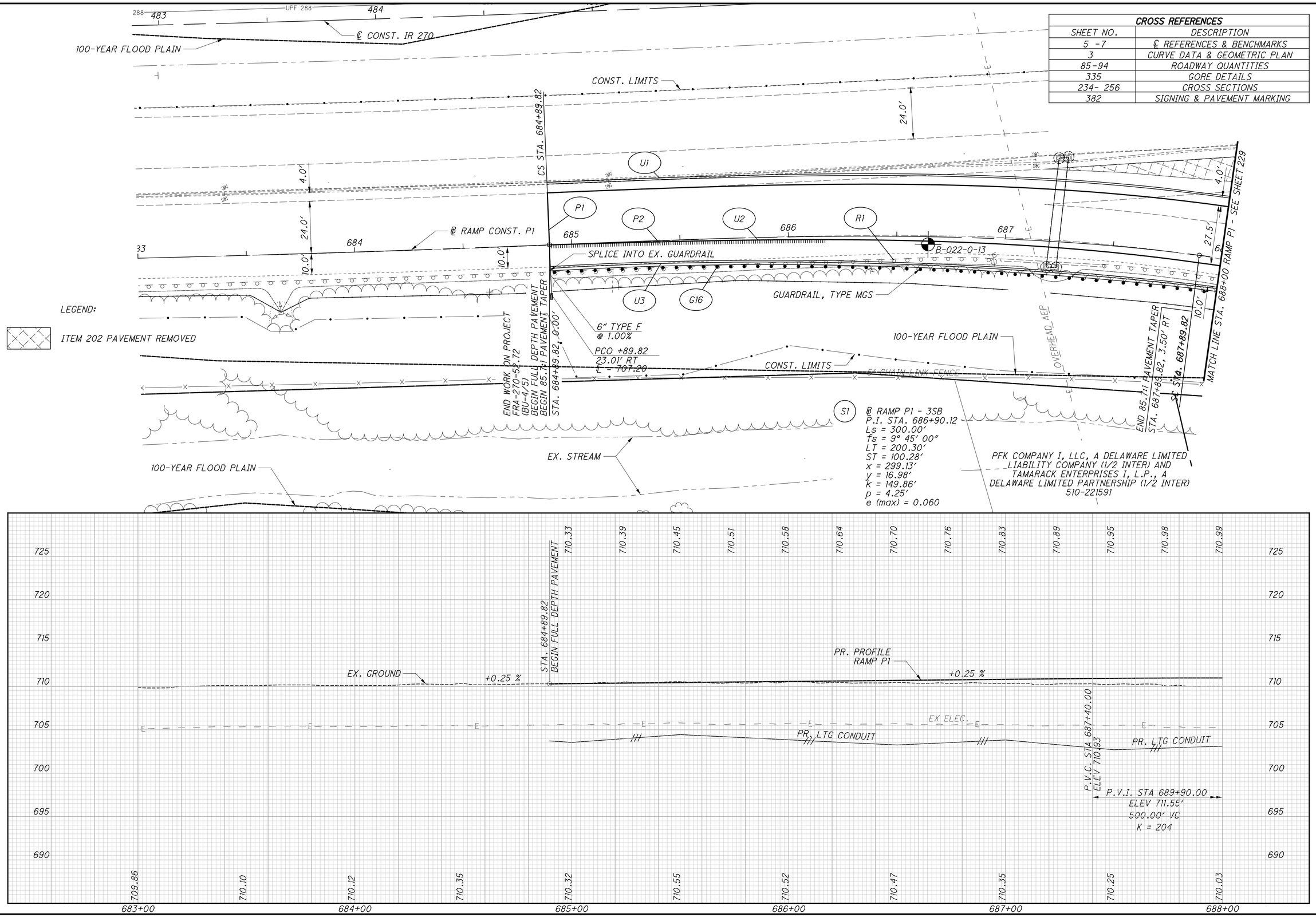

HORIZONTAL SCALE IN FEET
0 10 20 40

CALCULATED ACF
CHECKED CSR

PLAN AND PROFILE - RAMP P1
STA. 683+00 TO STA. 688+00

FRA-270-51.50

X:\Projects\2013\1321\1010\FRA\92616\roadway\sheets\92616GP404.dgn 2/9/2023 12:50:28 PM cwong

CROSS REFERENCES	
SHEET NO.	DESCRIPTION
5 -7	℄ REFERENCES & BENCHMARKS
3	CURVE DATA & GEOMETRIC PLAN
85-94	ROADWAY QUANTITIES
369	CULVERT DETAILS
234-256	CROSS SECTIONS
335-336	GORE DETAILS
378	FLAP GATE DETAILS
320	ACCESS ROAD PLAN
364	STORM SEWER PROFILE

ANCHOR ASSEMBLY TYPE E
GUARDRAIL, TYPE MGS
MATCH LINE STA. 688+00 RAMP P1 - SEE SHEET 228
℄ CONST. RAMP P1
15"-B
ACCESS DRIVE S 44° 58' 25" E
100-YEAR FLOOD PLAIN
CONST. LIMITS
EX. STREAM LIMITS
STREAM 15
PFK COMPANY I, LLC, A DELAWARE LIMITED LIABILITY COMPANY (1/2 INTER) AND TAMARACK ENTERPRISES I, L.P., A DELAWARE LIMITED PARTNERSHIP (1/2 INTER)
CHANNEL EASEMENT 109-BX FROM FRA. 200-9.46S DB 2498, PG 368
PCO +00.00 37.14' LT ℄ = 707.19
6" TYPE F @ 1.00%
B-021-1-13
B-021-0-14
℄ CONST. ACCESS ROAD
33° 28' 16" E
6" TYPE B @ 1.00%
PCO +00.00 36.18' RT ℄ = 704.59
ANCHOR ASSEMBLY, TYPE E
PR. GATE
FULL HEIGHT HEADWALL
72"-A
8" STM PIPE CLEANOUT
72" RCP PIPE CLEANOUT
72" RCP
CS STA. 690+61.81
BEGIN 85.7:1 PAVEMENT TAPER STA. 690+61.81, 3.50' RT
PT STA. 691+62.60
FLAP GATE
RCHP TYPE A WITH FILTER
℄ RAMP P1 - 3
P.I. STA. 689+26.90
Δ = 6° 30' 00" (RT)
Dc = 6° 30' 00"
R = 881.47'
T = 137.08'
L = 271.99'
E = 10.60'
C = 270.91'
C.B. = S 48° 10' 14" E
e (max) = 0.060
5' CHAIN LINK FENCE
Ex LA-R/W
Ex CH
OHE
MATCH LINE STA. 693+00 RAMP P1 - SEE SHEET 230
℄ RAMP P1 - 3SA
P.I. STA. 691+62.09
Ls = 300.00'
fs = 9° 45' 00"
LT = 200.30'
ST = 100.28'
x = 299.13'
y = 16.98'
k = 149.86'
p = 4.25'
e (max) = 0.060

NOTE: INSTALL THE 15"-B UNDER RAMP P1 BY BORING AND JACKING. THE 15"-B CONDUIT UNDER IR270 CAN BE INSTALLED BY OPEN CUT METHODS.

LEGEND:

ITEM 202 PAVEMENT REMOVED

PFK COMPANY I, LLC, A DELAWARE LIMITED LIABILITY COMPANY (1/2 INTER) AND TAMARACK ENTERPRISES I, L.P., A DELAWARE LIMITED PARTNERSHIP (1/2 INTER)
510-181564
4755 S HIGH ST

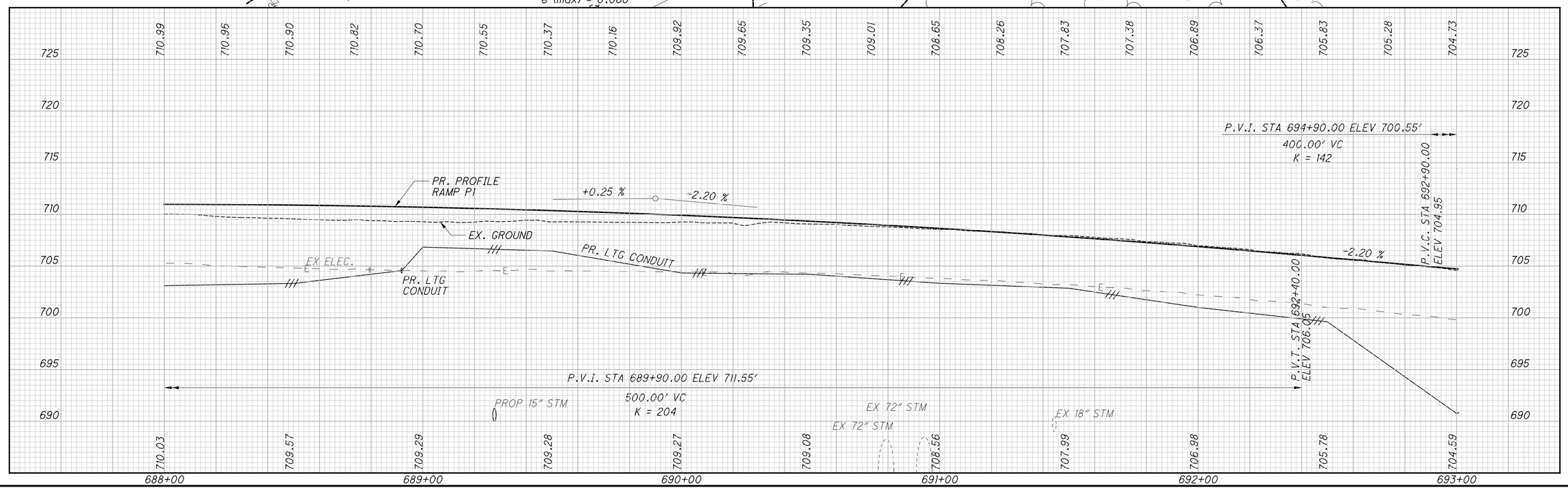

PLAN AND PROFILE - RAMP P1
STA. 688+00 TO STA. 693+00

FRA-270-51.50

229
554

HORIZONTAL SCALE IN FEET
0 10 20 40

CALCULATED ACF
CHECKED CSR

X:\Projects\2013\1321\1010\FRA\92616\roadway\sheets\92616GP405.dgn 4/25/2023 9:27:42 AM cwong

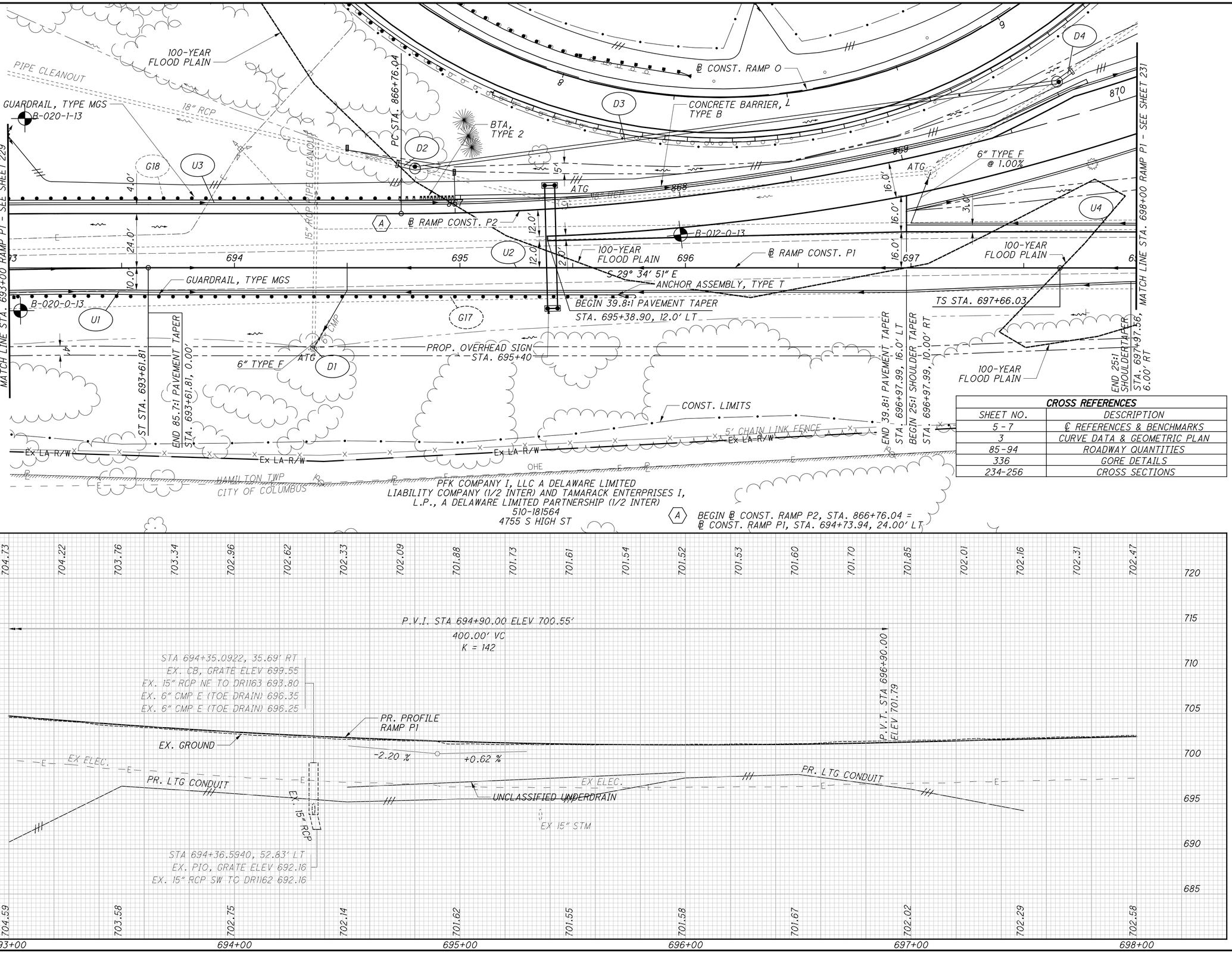

CROSS REFERENCES	
SHEET NO.	DESCRIPTION
5 - 7	℄ REFERENCES & BENCHMARKS
3	CURVE DATA & GEOMETRIC PLAN
85 - 94	ROADWAY QUANTITIES
336	GORE DETAILS
234-256	CROSS SECTIONS

HORIZONTAL SCALE IN FEET
0 10 20 40

CALCULATED ACF
CHECKED CSR

PLAN AND PROFILE - RAMP P1
STA. 693+00 TO STA. 698+00

FRA-270-51.50

230
554

X:\Projects\2013\1321\1010\FRA\92616\roadway\sheets\92616GP406.dgn 3/28/2023 11:20:53 AM cwong

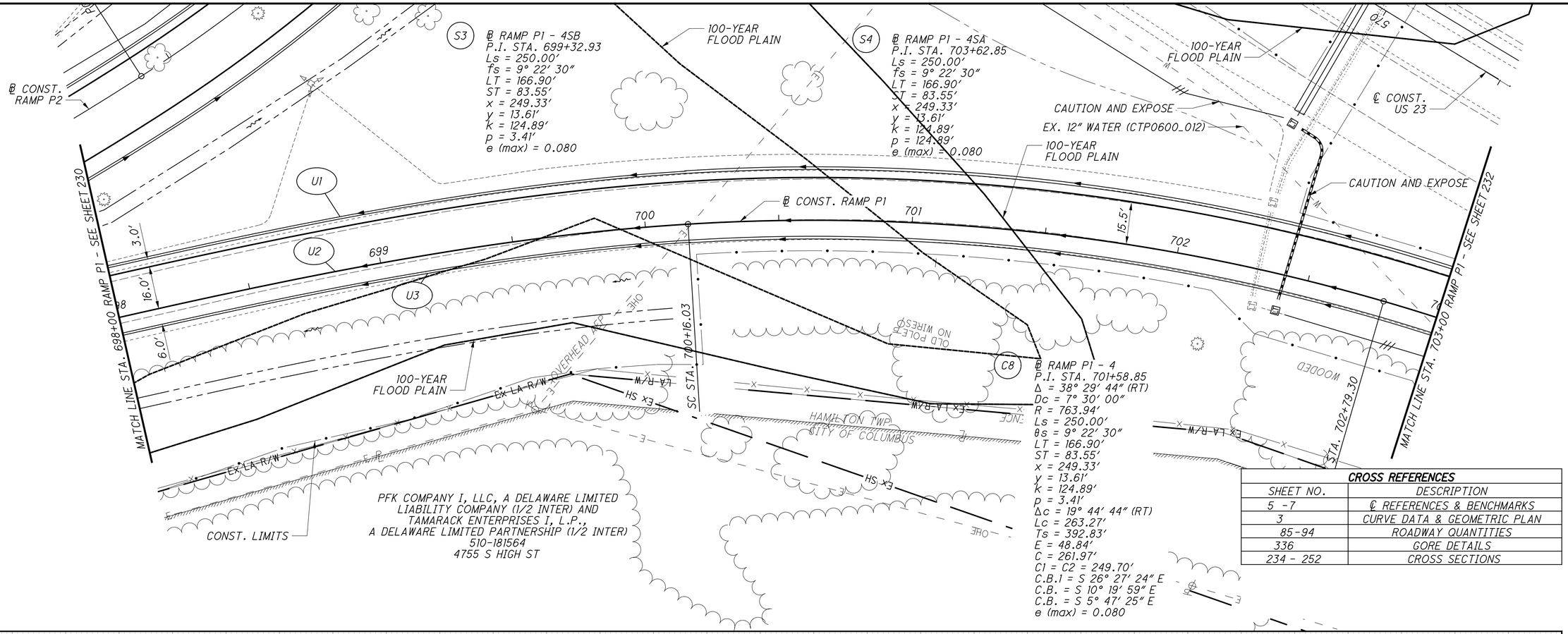

CROSS REFERENCES	
SHEET NO.	DESCRIPTION
5 -7	℄ REFERENCES & BENCHMARKS
3	CURVE DATA & GEOMETRIC PLAN
85-94	ROADWAY QUANTITIES
336	GORE DETAILS
234 - 252	CROSS SECTIONS

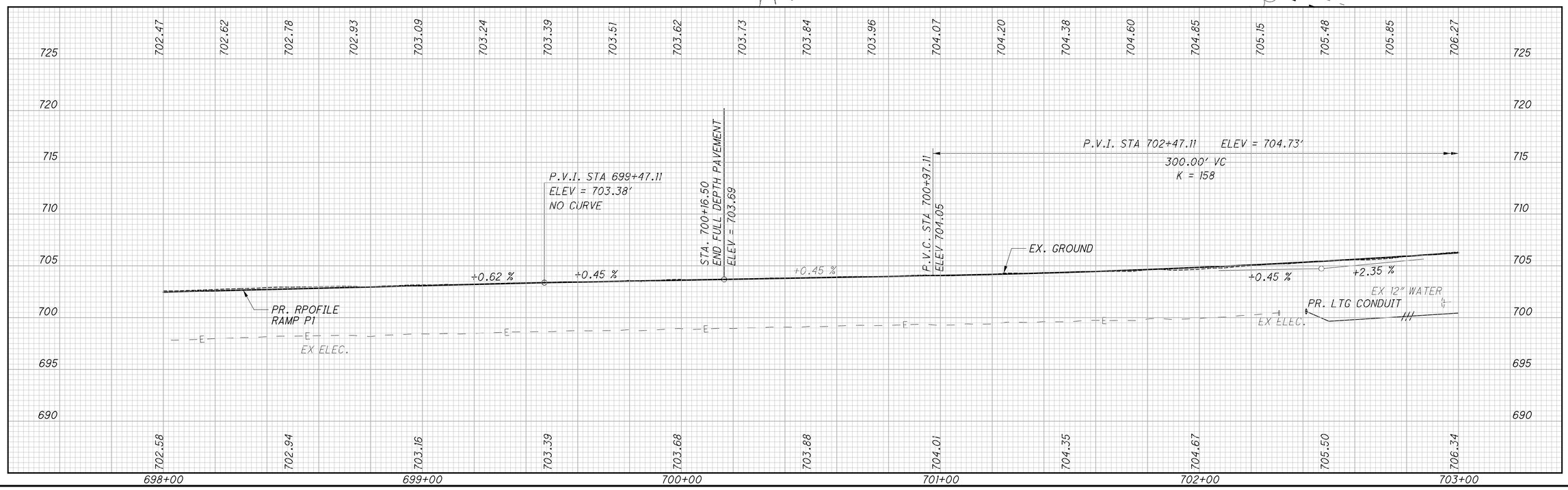

HORIZONTAL SCALE IN FEET
0 10 20 40
CALCULATED ACF
CHECKED CSR

PLAN AND PROFILE - RAMP P1
STA. 698+00 TO STA. 703+00

FRA-270-51.50

231
554

X:\Projects\2013\132\1010\FRA\92616\roadway\sheets\92616GP407.dgn 2/9/2023 1:11:42 PM cwong

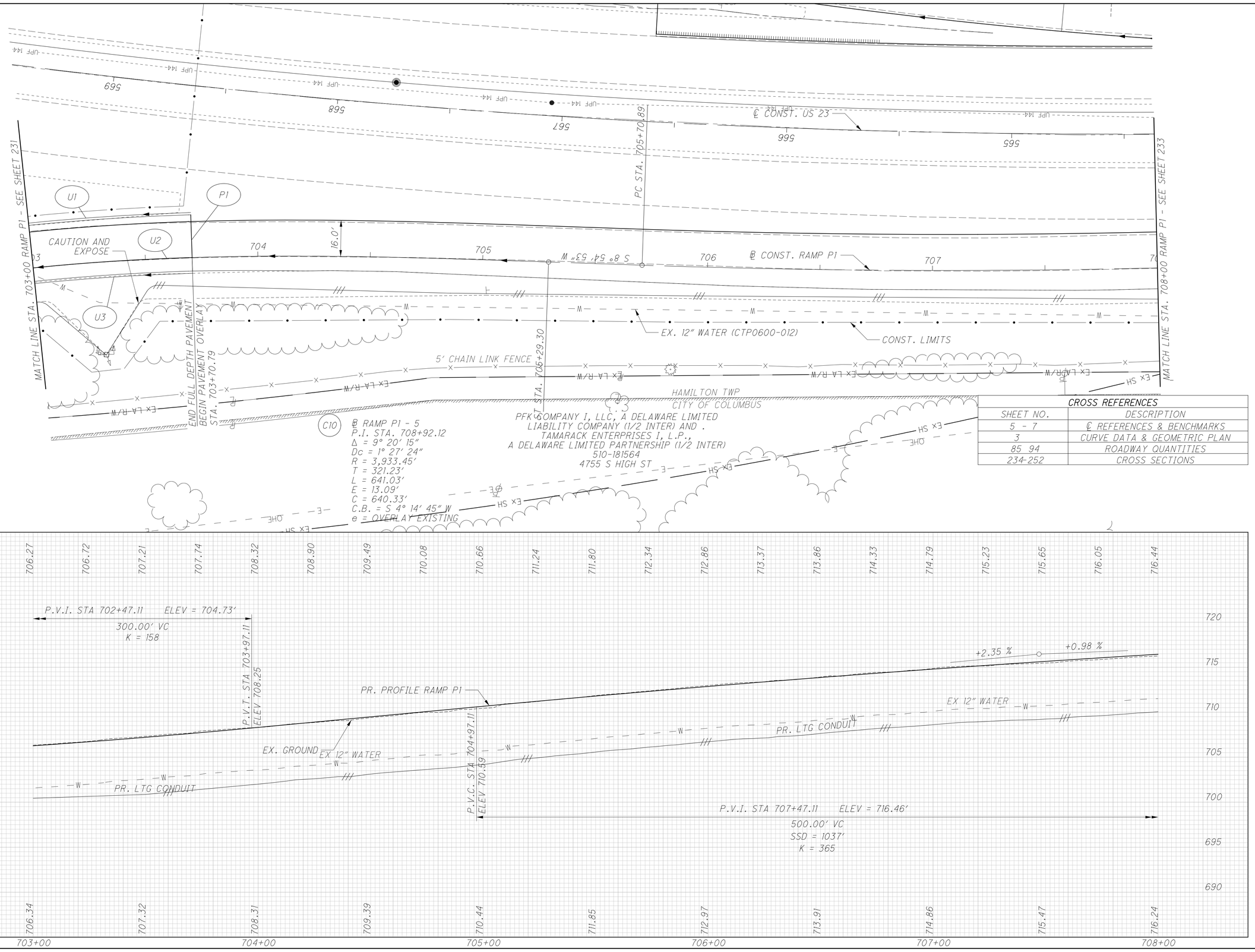

CROSS REFERENCES	
SHEET NO.	DESCRIPTION
5 - 7	℄ REFERENCES & BENCHMARKS
3	CURVE DATA & GEOMETRIC PLAN
85 94	ROADWAY QUANTITIES
234-252	CROSS SECTIONS

HORIZONTAL SCALE IN FEET 0 10 20 40

CALCULATED ACF
CHECKED CSR

PLAN AND PROFILE - RAMP P1
STA. 703+00 TO STA. 708+00

FRA-270-51.50

x:\Projects\2013\1321\1010\FRA\92616\roadway\sheets\92616GP408.dgn 12/7/2022 2:57:11 PM cwong

℄ US 23 DECEL. LANE

B-005-0-13

SAW CUT LINE

PT STA. 560+10.04

℄ CONST. US 23

PT STA. 560+35.11

SAW CUT LINE

℄ CONST. RAMP P1

P1

MATCH LINE STA. 708+00 RAMP P1 - SEE SHEET 232

CAUTION AND ESPOSE

CONST. LIMITS

EX. 12" WATER (CTP0600-011 & CTP0600-012)

5' CHAIN LINK FENCE

Ex LA R/W

C15

US23 CURVE 1
P.I. STA. 563+85.32
Δ = 24° 14' 00" (RT)
Dc = 1° 27' 24"
R = 3,933.54'
T = 844.47'
L = 1,663.69'
E = 89.63'
C = 1,651.32'
C.B. = S 5° 47' 20" E
e (max) = 0.035

PT Sta. 712+11.92
END OVERLAY
BEGIN FULL DEPTH PAVEMENT

36.0'

8.0'

2.6'

PFK COMPANY I, LLC, A DELAWARE LIMITED LIABILITY COMPANY (1/2 INTER) AND TAMARACK ENTERPRISES I, L.P., A DELAWARE LIMITED PARTNERSHIP (1/2 INTER)
510-181564
4755 S HIGH ST

CROSS REFERENCES	
SHEET NO.	DESCRIPTION
5 -7	℄ REFERENCES & BENCHMARKS
3	CURVE DATA & GEOMETRIC PLAN
85-94	ROADWAY QUANTITIES
234- 252	CROSS SECTIONS

PR. PROFILE RAMP P1

EX. GROUND

PR. LTG CONDUIT

EX 12" WATER

P.V.I. STA 707+47.11 ELEV = 716.46'
500.00' VC
SSD = 1037'
K = 365

P.V.T. STA 709+97.11
ELEV 718.90

708+00 709+00 710+00 711+00 712+00

HORIZONTAL SCALE IN FEET

CALCULATED ACF CHECKED CSR

PLAN AND PROFILE - RAMP P1
STA. 708+00 TO STA. 712+11.92

FRA-270-51.50

233
554

x:\Projects\2013\1321\1010\FRA\92616\roadway\sheets\92616GP409.dgn 12/7/2022 2:57:12 PM cwong

SEEDING	
END WIDTH	SQ. YDS.

END AREA	
CUT	FILL

VOLUME	
CUT	FILL

CALCULATED ACF

CHECKED CSR

EX. PAVEMENT

SUBGRADE STABILIZATION

ITEM 671 - EROSION CONTROL MAT

760 750 740 730 720 710 700 690 680 670

710.33
685+00.00
710.32

EX. ELEC.

PR. LTG CONDUIT

6:1
2:1
1:1
1:1
8.0'
18.0'

EX LA-R/W

682.7

730 720 710 700 690 680 670 660 650

684+89.82
710.30

EX. ELEC.

PR. LTG CONDUIT

682.7

120 100 80 60 40 20 0 20 40 60 80 100 120

CROSS SECTIONS RAMP P1
STA. 684+50.00 TO STA. 685+00.00

FRA-270-51.50

x:\Projects\2013\1321\1010\FRA\92616\roadway\sheets\92616XS400.dgn 12/7/2022 2:57:16 PM cwong

SEEDING	
END WIDTH	SQ. YDS.

END AREA		VOLUME	
CUT	FILL	CUT	FILL

CALCULATED ACF
CHECKED CSR

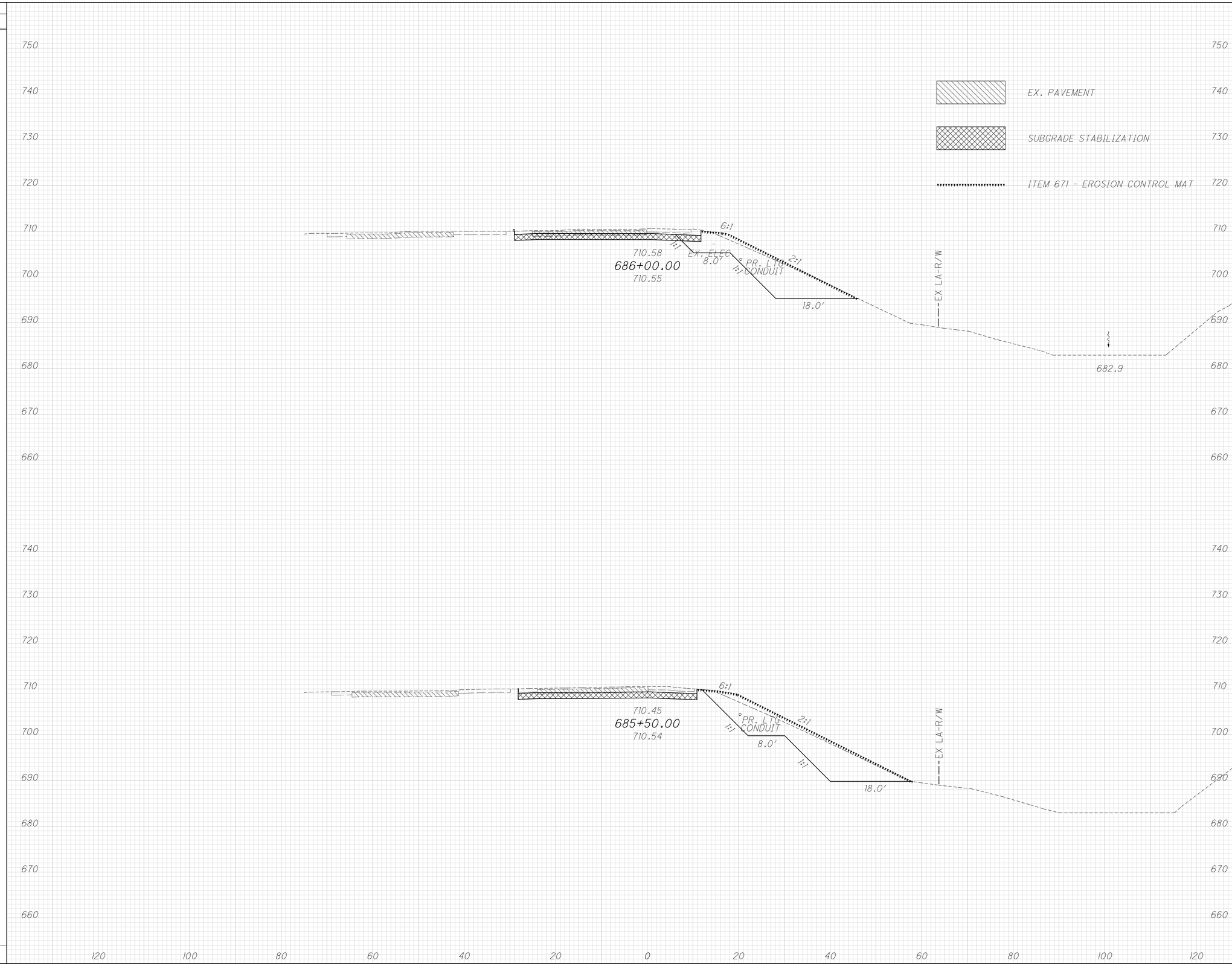

CROSS SECTIONS RAMP P1
STA. 685+50.00 TO STA. 686+00.00

FRA-270-51.50

x:\Projects\2013\1321\1010\FRA\92616\roadway\sheets\92616XS400.dgn 12/7/2022 2:57:20 PM cwong

SEEDING	
END WIDTH	SQ. YDS.

END AREA	
CUT	FILL

VOLUME	
CUT	FILL

CALCULATED ACF

CHECKED CSR

EX. PAVEMENT

SUBGRADE STABILIZATION

ITEM 671 - EROSION CONTROL MAT

750 740 730 720 710 700 690 680 670 660

710.83
687+00.00
710.36

EX. ELEC.
PROP. TG
CONDUIT
1:1
8.0'
2:1
1:1
18.0'
EX LA-R/W
682.9

710.70
686+50.00
710.48

EX. ELEC.
PROP. TG
CONDUIT
1:1
8.0'
2:1
1:1
18.0'
EX LA-R/W
682.9

120 100 80 60 40 20 0 20 40 60 80 100 120

CROSS SECTIONS RAMP P1
STA. 686+50.00 TO STA. 687+00.00

FRA-270-51.50

236
554

x:\Projects\2013\1321\1010\FRA\92616\roadway\sheets\92616XS400.dgn 12/7/2022 2:57:23 PM cwong

x:\Projects\2013\1321\1010\FRA\92616\roadway\sheets\92616XS400.dgn 12/7/2022 2:57:26 PM cwong

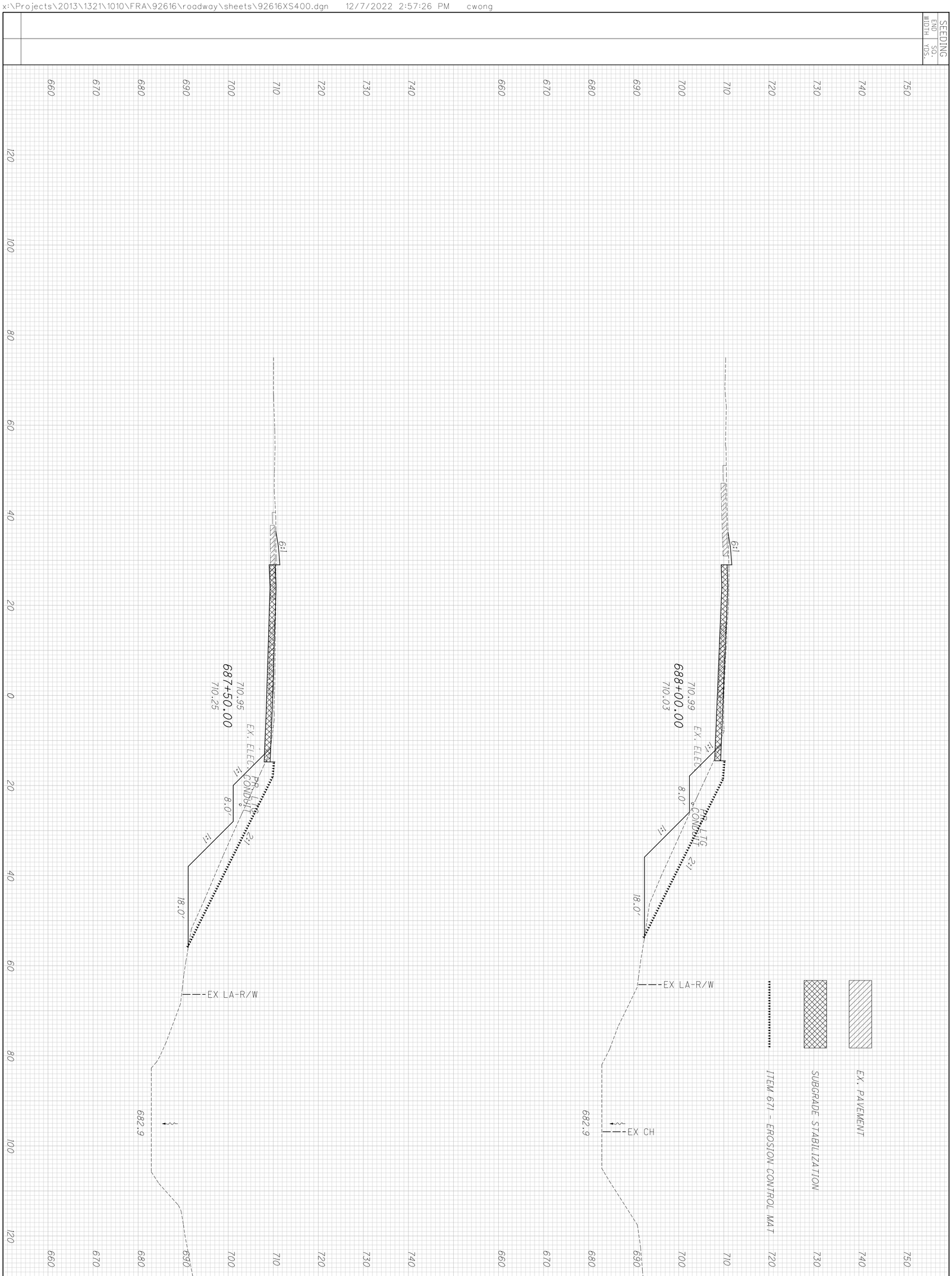

FRA-270-51.50

CROSS SECTIONS RAMP P1
STA. 687+50.00 TO STA. 688+00.00

CALCULATED ACF
CHECKED CSR

SEEDING	
END WIDTH	SQ. YDS.

END AREA	
CUT	FILL

VOLUME	
CUT	FILL

CALCULATED ACF

CHECKED CSR

EX. PAVEMENT

SUBGRADE STABILIZATION

ITEM 671 - EROSION CONTROL MAT

750 740 730 720 710 700 690 680 670 660

4:1 6:1 710.2 PR. LTG CONDUIT EX. ELEC. 1:1 710.70 689+00.00 709.30 8.0' 2:1 1:1 18.0' EX LA-R/W 682.9

12.5:1 710.90 688+50.00 709.56 1:1 EX. ELEC CONDUIT PR. LTG 8.0' 2:1 1:1 18.0' EX LA-R/W 682.9

120 100 80 60 40 20 0 20 40 60 80 100 120

CROSS SECTIONS RAMP P1

STA. 688+50.00 TO STA. 689+00.00

FRA-270-51.50

x:\Projects\2013\1321\1010\FRA\92616\roadway\sheets\92616XS400.dgn 12/7/2022 2:57:29 PM cwong

SEEDING	
END WIDTH	SQ. YDS.

END AREA	
CUT	FILL

VOLUME	
CUT	FILL

CALCULATED ACF

CHECKED CSR

EX. PAVEMENT

SUBGRADE STABILIZATION

ITEM 671 - EROSION CONTROL MAT

PR. LTG CONDUIT

EX. ELEC.

EX LA-R/W

EX CH

702.8

709.92
690+00.00
709.27

STA 690+15.74, 65.34' RT
EX. 72" RCP E (HAS FLAPGATE) 682.07

STA 690+08.98, 57.12' RT
EX. 72" RCP E (HAS FLAPGATE) 682.02

708.8

710.37
689+50.00
709.27

STA 689+43.14, 42.57' RT
EX. 15" CMP ELEV 690.25'

682.9

CROSS SECTIONS RAMP P1
STA. 689+50.00 TO STA. 690+00.00

FRA-270-51.50

x:\Projects\2013\1321\1010\FRA\92616\roadway\sheets\92616XS400.dgn 12/7/2022 2:57:33 PM cwong

x:\Projects\2013\1321\1010\FRA\92616\roadway\sheets\92616XS400.dgn 12/7/2022 2:57:36 PM cwong

240
554

FRA-270-51.50

CROSS SECTIONS RAMP P1
STA. 690+50.00 TO STA. 691+00.00

CALCULATED ACF
CHECKED CSR

SEEDING	
END WIDTH	SQ. YDS.

END AREA	
CUT	FILL

VOLUME	
CUT	FILL

CALCULATED ACF

CHECKED CSR

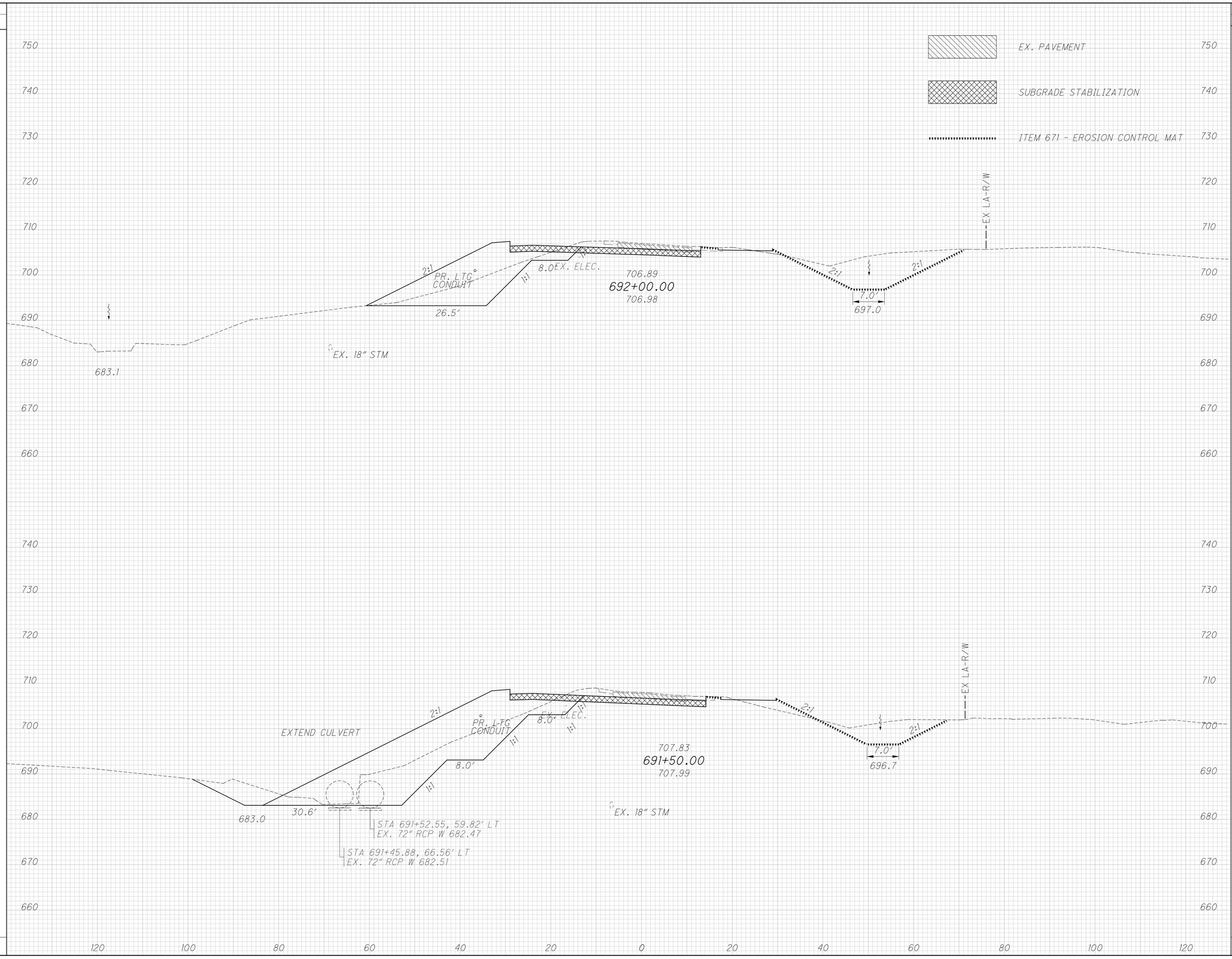

CROSS SECTIONS RAMP P1
STA. 691+50.00 TO STA. 692+00.00

FRA-270-51.50

241
554

x:\Projects\2013\1321\1010\FRA\92616\roadway\sheets\92616XS400.dgn 12/7/2022 2:57:39 PM cwong

SEEDING	
END WIDTH	SQ. YDS.

END AREA	
CUT	FILL

VOLUME	
CUT	FILL

CALCULATED ACF

CHECKED CSR

EX. PAVEMENT

SUBGRADE STABILIZATION

ITEM 671 - EROSION CONTROL MAT

750 740 730 720 710 700 690 680 670 660

688.9

EX. 18" STM

PR. LTG CONDUIT

12.0'

2:1

1:1

EX. ELEC.

704.73

693+00.00

704.58

6:1

2:1

7.0'

697.6

2.5:1

EX LA-R/W

STA 692+28.15, 105.47' LT
EX. MH, GRATE ELEV 689.32'
18" RCP W 682.68
18" RCP S 683.22
(DEPTH READING IS APPROXIMATE)

EX. 18" STM

PR. LTG CONDUIT

12.0'

2:1

1:1

EX. ELEC.

705.83

692+50.00

705.76

2:1

7.0'

697.3

2.5:1

EX LA-R/W

120 100 80 60 40 20 0 20 40 60 80 100 120

CROSS SECTIONS RAMP P1
STA. 692+50.00 TO STA. 693+00.00

FRA-270-51.50

242
554

x:\Projects\2013\1321\1010\FRA\92616\roadway\sheets\92616XS400.dgn 12/7/2022 2:57:42 PM cwong

SEEDING	
END WIDTH	SQ. YDS.

EX. PAVEMENT

SUBGRADE STABILIZATION

ITEM 671 - EROSION CONTROL MAT

EX LA-R/W

691.0

EX. ELEC.

EX. 18" STM

12.0' PR. LTG CONDUIT

2:1

1:1

702.96

694+00.00

702.76

6:1

2:1

7.0'

698.2

2.5:1

690.0

EX. 18" STM

EX. ELEC.

12.0' PR. LTG CONDUIT

2:1

1:1

703.76

693+50.00

703.58

6:1

2:1

7.0'

697.9

2.5:1

EX LA-R/W

750 740 730 720 710 700 690 680 670 660

120 100 80 60 40 20 0 20 40 60 80 100 120

END AREA		VOLUME	
CUT	FILL	CUT	FILL

CALCULATED ACF

CHECKED CSR

CROSS SECTIONS RAMP P1

STA. 693+50.00 TO STA. 694+00.00

FRA-270-51.50

x:\Projects\2013\1321\1010\FRA\92616\roadway\sheets\92616XS400.dgn 12/7/2022 2:57:46 PM cwong

SEEDING	
END WIDTH	SQ. YDS.

EX. PAVEMENT

SUBGRADE STABILIZATION

ITEM 671 - EROSION CONTROL MAT

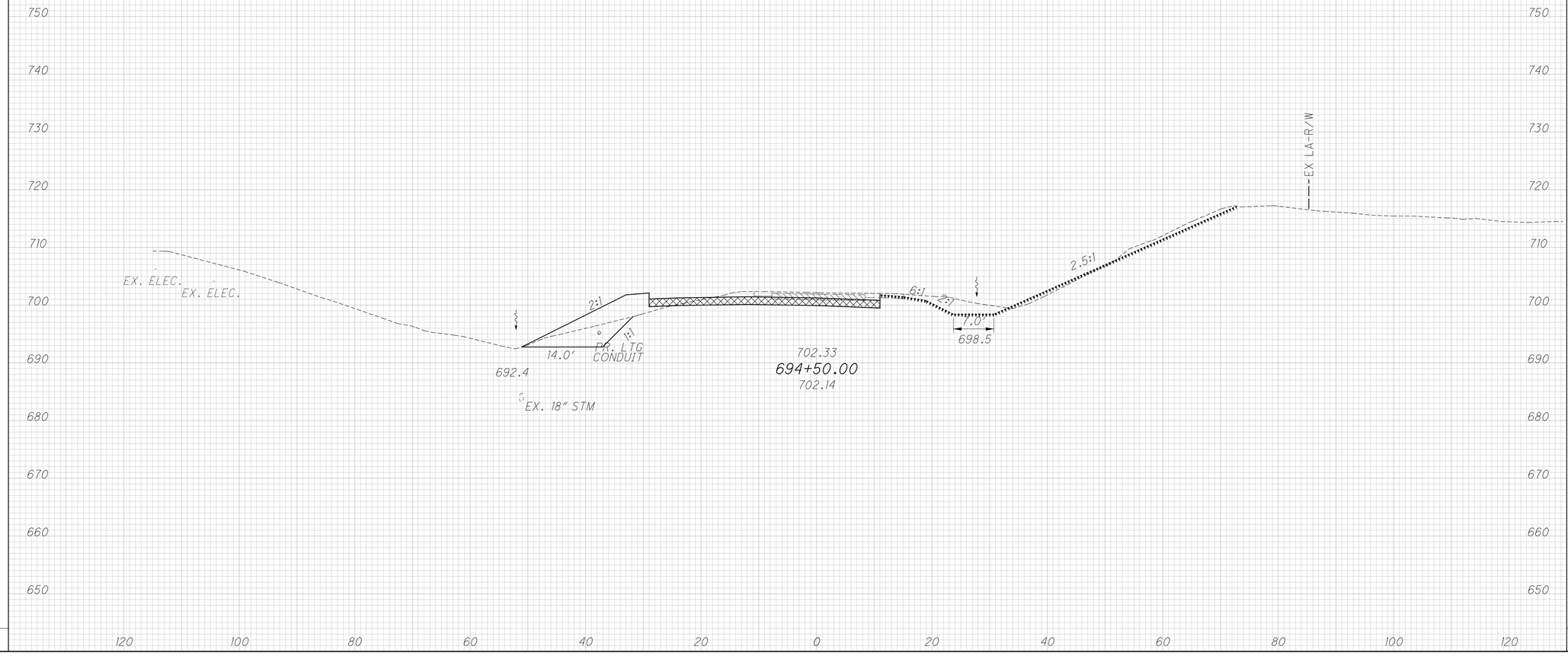

END AREA		VOLUME	
CUT	FILL	CUT	FILL

CALCULATED	CHECKED
ACF	CSR

CROSS SECTIONS RAMP P1
STA. 694+50.00

FRA-270-51.50

x:\Projects\2013\1321\1010\FRA\92616\roadway\sheets\92616XS400.dgn 12/7/2022 2:57:49 PM cwong

SEEDING	
END WIDTH	SQ. YDS.

END AREA	
CUT	FILL

VOLUME	
CUT	FILL

CALCULATED	CHECKED
ACF	CSR

EX. PAVEMENT

SUBGRADE STABILIZATION

ITEM 671 - EROSION CONTROL MAT

CROSS SECTIONS RAMP P1

STA. 695+00.00

FRA-270-51.50

x:\Projects\2013\1321\1010\FRA\92616\roadway\sheets\92616XS400.dgn 12/7/2022 2:57:52 PM cwong

SEEDING	
END WIDTH	SQ. YDS.

END AREA	
CUT	FILL

VOLUME	
CUT	FILL

CALCULATED ACF

CHECKED CSR

EX. PAVEMENT

SUBGRADE STABILIZATION

ITEM 671 - EROSION CONTROL MAT

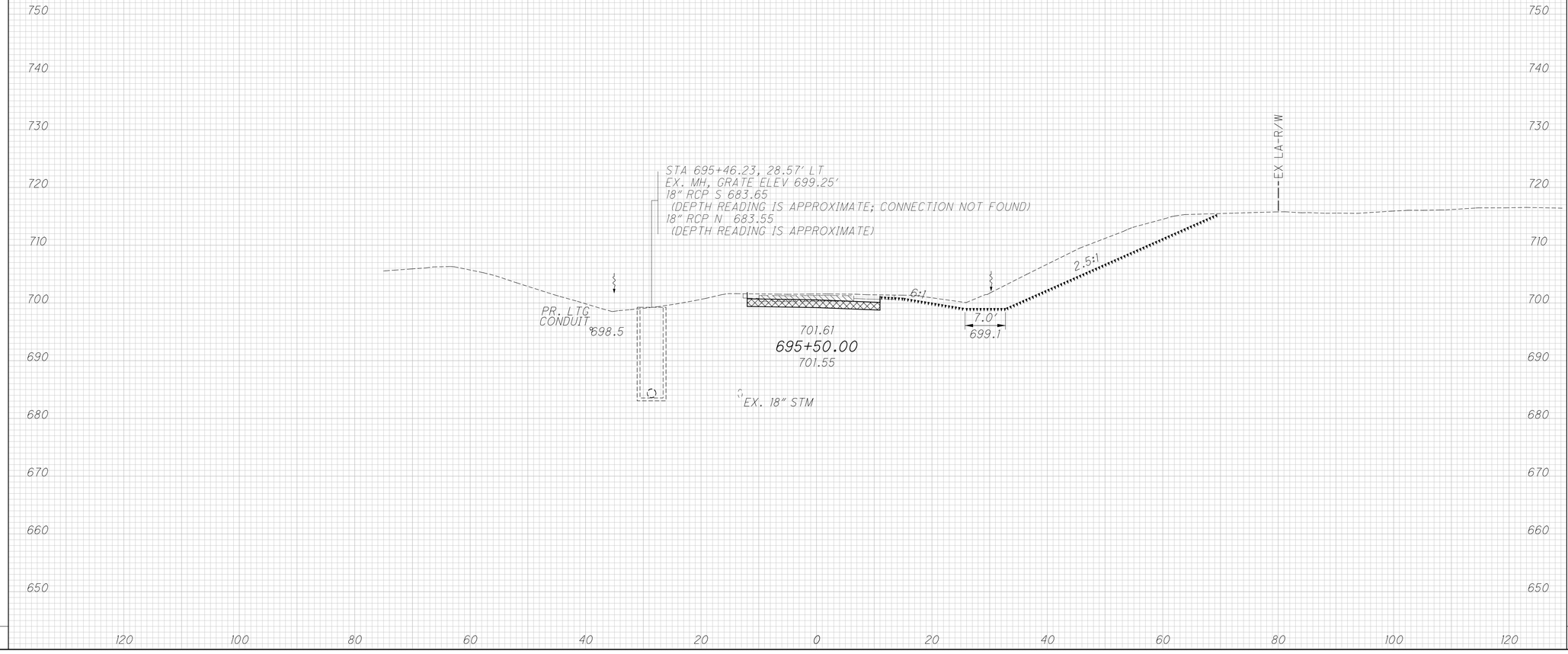

CROSS SECTIONS RAMP P1
STA. 695+50.00

FRA-270-51.50

x:\Projects\2013\1321\1010\FRA\92616\roadway\sheets\92616XS400.dgn 12/7/2022 2:57:55 PM cwong

SEEDING	
END WIDTH	SQ. YDS.

END AREA	
CUT	FILL

VOLUME	
CUT	FILL

CALCULATED ACF

CHECKED CSR

EX. PAVEMENT

SUBGRADE STABILIZATION

ITEM 671 - EROSION CONTROL MAT

CROSS SECTIONS RAMP P1

STA. 696+00.00

FRA-270-51.50

x:\Projects\2013\1321\1010\FRA\92616\roadway\sheets\92616XS400.dgn 12/7/2022 2:57:58 PM cwong

SEEDING	
END WIDTH	SQ. YDS.

EX. PAVEMENT

SUBGRADE STABILIZATION

ITEM 671 - EROSION CONTROL MAT

END AREA	
CUT	FILL

VOLUME	
CUT	FILL

CALCULATED ACF

CHECKED CSR

750
740
730
720
710
700
690
680
670
660
650

PR. LTG CONDUIT
700.3
EX. 18" STM
701.60
696+50.00
701.67
6:1
7.0'
699.7
2.5:1
EX LA-R/W

120 100 80 60 40 20 0 20 40 60 80 100 120

CROSS SECTIONS RAMP P1
STA. 696+50.00

FRA-270-51.50

x:\Projects\2013\1321\1010\FRA\92616\roadway\sheets\92616XS400.dgn 12/7/2022 2:58:02 PM cwong

x:\Projects\2013\1321\1010\FRA\92616\roadway\sheets\92616XS400.dgn 12/7/2022 2:58:05 PM cwong

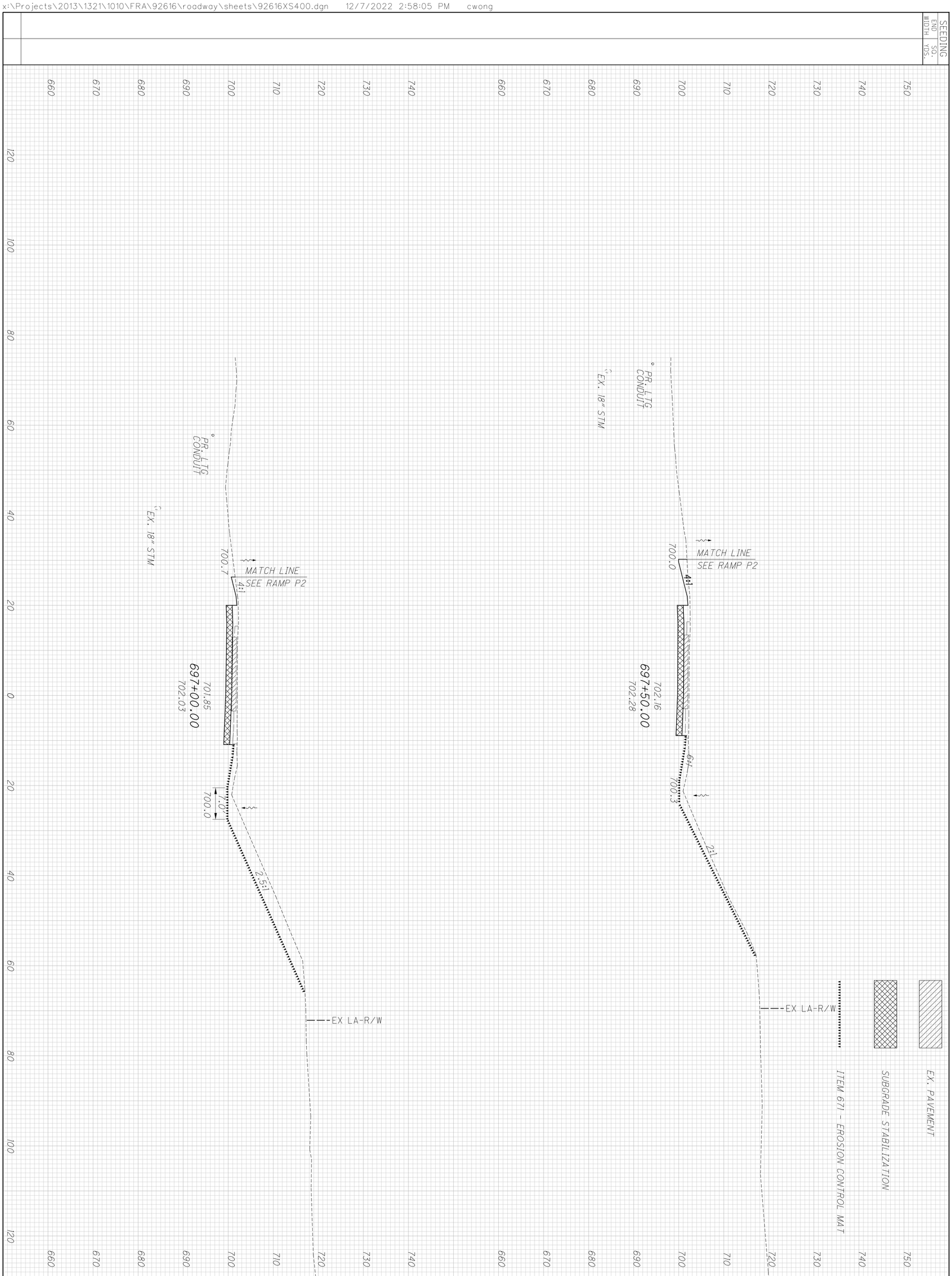

249 / 554	FRA-270-51.50	CROSS SECTIONS RAMP P1 STA. 697+00.00 TO STA. 697+50.00	CALCULATED ACF CHECKED CSR

x:\Projects\2013\1321\1010\FRA\92616\roadway\sheets\92616XS400.dgn 12/7/2022 2:58:08 PM cwong

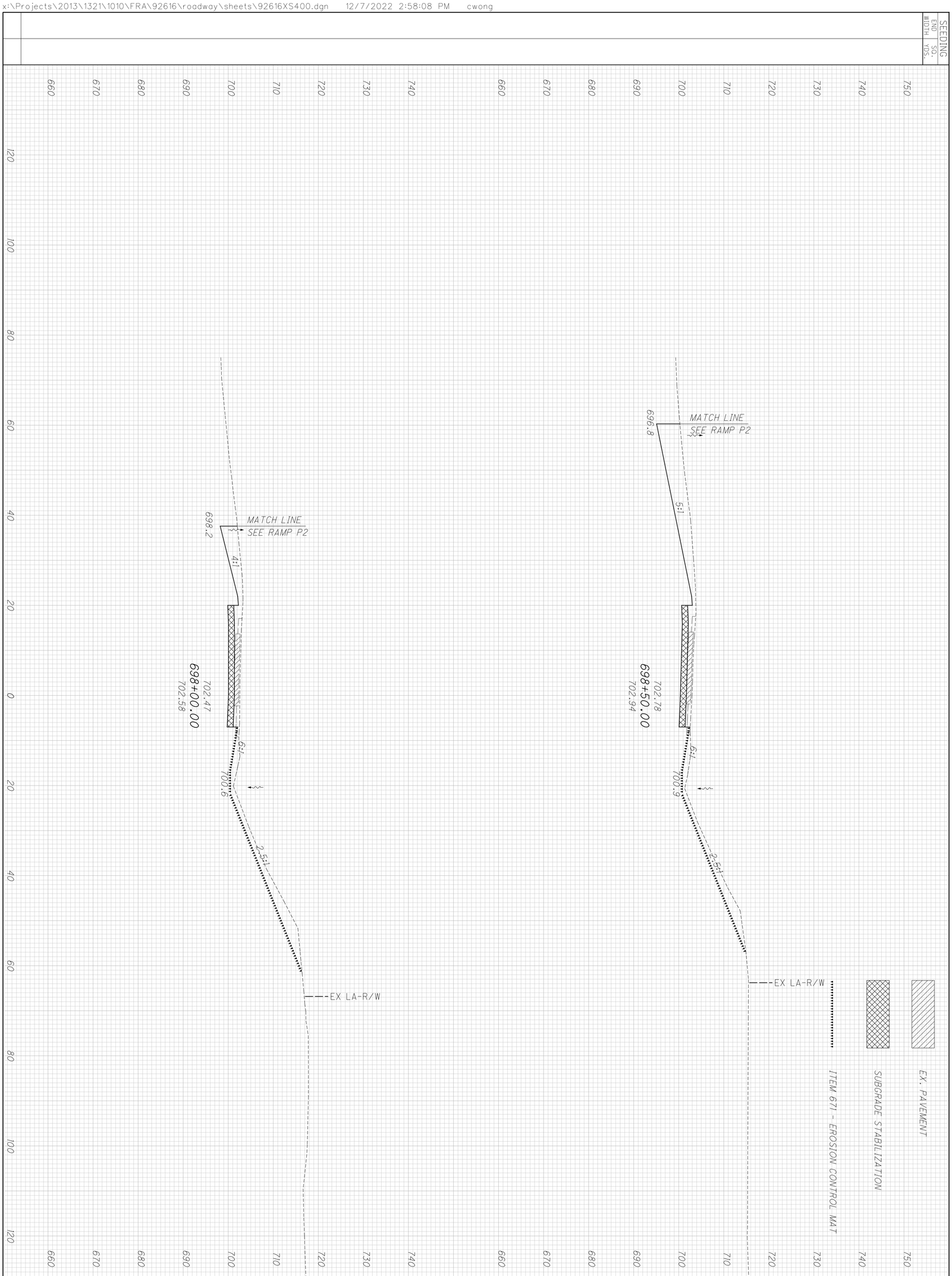

250 / 554	**FRA-270-51.50**	**CROSS SECTIONS RAMP P1** **STA. 698+00.00 TO STA. 698+50.00**

CALCULATED ACF
CHECKED CSR

SEEDING	
END WIDTH	SQ. YDS.

END AREA	
CUT	FILL

VOLUME	
CUT	FILL

CALCULATED ACF

CHECKED CSR

EX. PAVEMENT

SUBGRADE STABILIZATION

ITEM 671 - EROSION CONTROL MAT

CROSS SECTIONS RAMP P1
STA. 699+00.00 TO STA. 699+50.00

FRA-270-51.50

x:\Projects\2013\1321\1010\FRA\92616\roadway\sheets\92616XS400.dgn 12/7/2022 2:58:11 PM cwong

x:\Projects\2013\1321\1010\FRA\92616\roadway\sheets\92616XS400.dgn 12/7/2022 2:58:14 PM cwong

SEEDING
END AREA
VOLUME

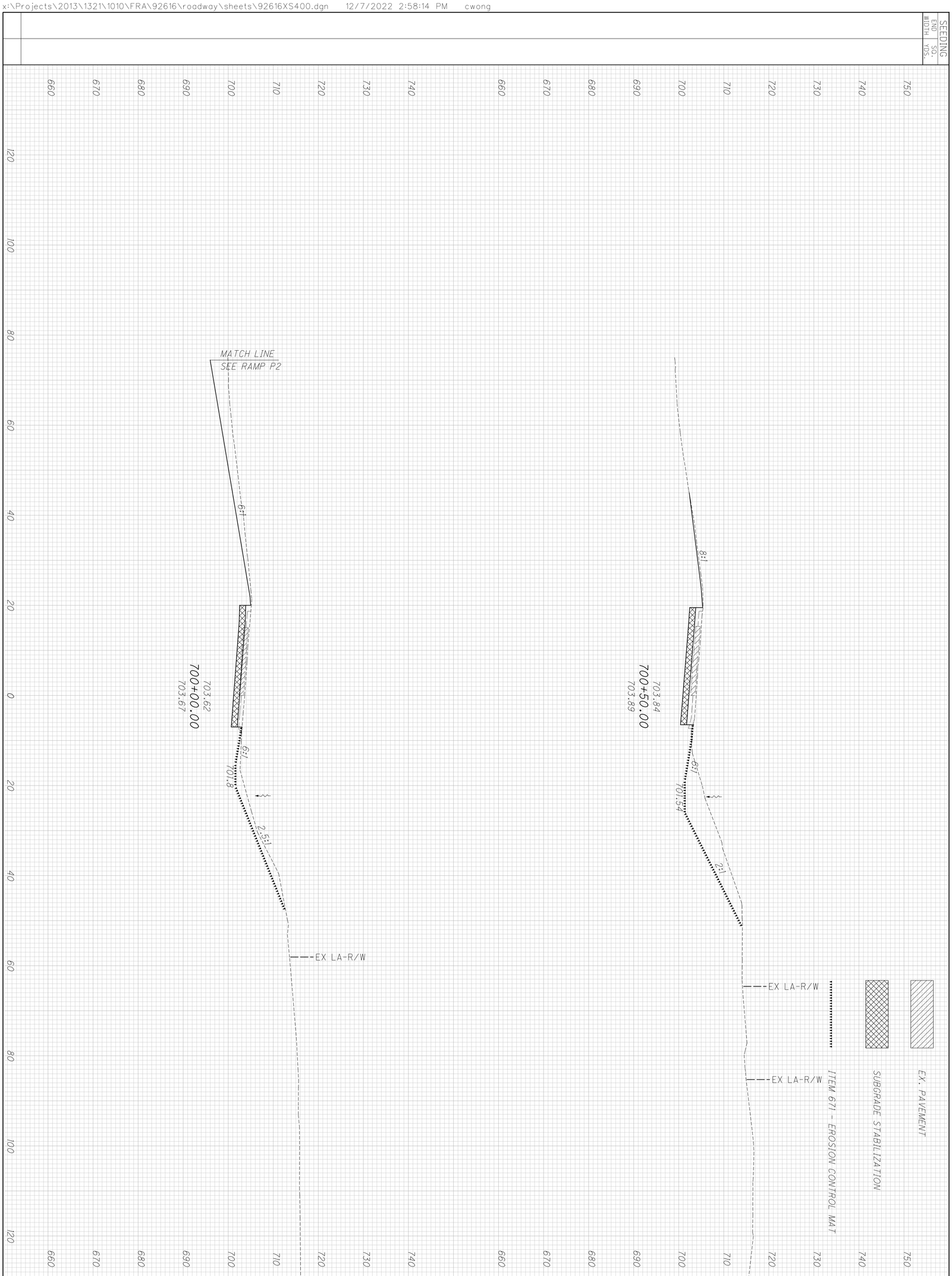

252 / 554	FRA-270-51.50	CROSS SECTIONS RAMP P1 STA. 700+00.00 TO STA. 700+50.00	CALCULATED ACF CHECKED CSR

SEEDING	
END WIDTH	SQ. YDS.

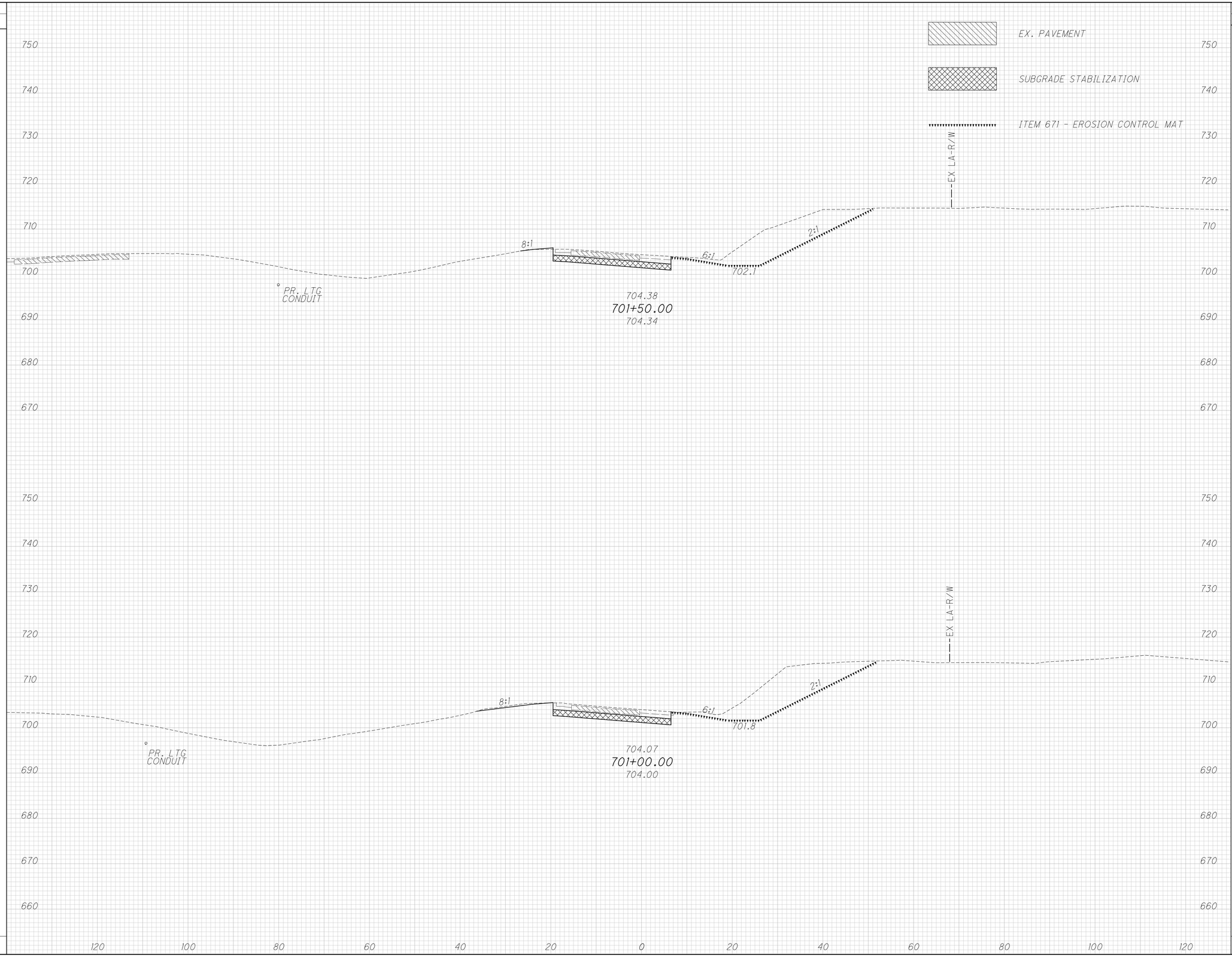

END AREA		VOLUME	
CUT	FILL	CUT	FILL

CALCULATED ACF

CHECKED CSR

CROSS SECTIONS RAMP P1

STA. 701+00.00 TO STA. 701+50.00

FRA-270-51.50

253
554

x:\Projects\2013\1321\1010\FRA\92616\roadway\sheets\92616XS400.dgn 12/7/2022 2:58:17 PM cwong

SEEDING	
END WIDTH	SQ. YDS.

EX. PAVEMENT

SUBGRADE STABILIZATION

ITEM 671 - EROSION CONTROL MAT

EX LA-R/W

6:1

6:1

704.9

PR. LTG CONDUIT

705.48

702+50.00

705.50

6:1

2:1

702.9

PR. LTG CONDUIT

8:1

704.85

702+00.00

704.66

6:1

2:1

702.6

EX LA-R/W

750 740 730 720 710 700 690 680 670 660

120 100 80 60 40 20 0 20 40 60 80 100 120

END AREA		VOLUME	
CUT	FILL	CUT	FILL

CALCULATED ACF

CHECKED CSR

CROSS SECTIONS RAMP P1
STA. 702+00.00 TO STA. 702+50.00

FRA-270-51.50

254
554

x:\Projects\2013\1321\1010\FRA\92616\roadway\sheets\92616XS400.dgn 12/7/2022 2:58:21 PM cwong

x:\Projects\2013\1321\1010\FRA\92616\roadway\sheets\92616XS400.dgn 12/7/2022 2:58:24 PM cwong

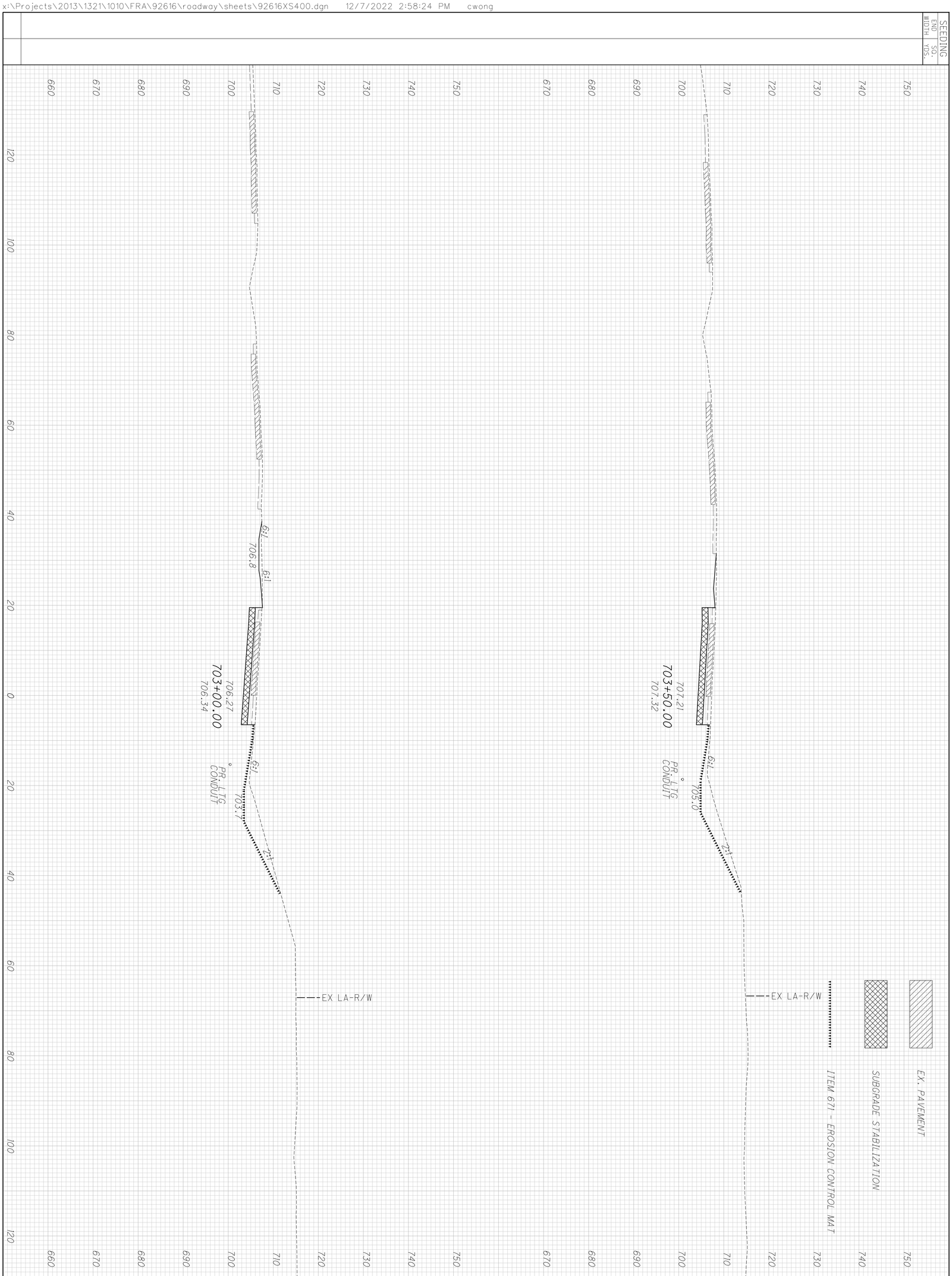

255 / 554	**FRA-270-51.50**	**CROSS SECTIONS RAMP P1** **STA. 703+00.00 TO STA. 703+50.00**
		CALCULATED ACF CHECKED CSR

SEEDING	
END WIDTH	SQ. YDS.

EX. PAVEMENT

SUBGRADE STABILIZATION

ITEM 671 - EROSION CONTROL MAT

END AREA	
CUT	FILL

VOLUME	
CUT	FILL

CALCULATED ACF

CHECKED CSR

760
750
740
730
720
710
700
690
680
670
660

EX. LA-R/W

2:1

6:1

705.5

PR. LTG CONDUIT

708.32
704+00.00
707.31

120 100 80 60 40 20 0 20 40 60 80 100 120

CROSS SECTIONS RAMP P1
STA. 704+00.00

FRA-270-51.50

x:\Projects\2013\1321\1010\FRA\92616\roadway\sheets\92616XS400.dgn 12/7/2022 2:58:27 PM cwong

X:\Projects\2013\1321\1010\FRA\92616\roadway\sheets\92616GP451.dgn 3/29/2023 10:50:10 AM cwong

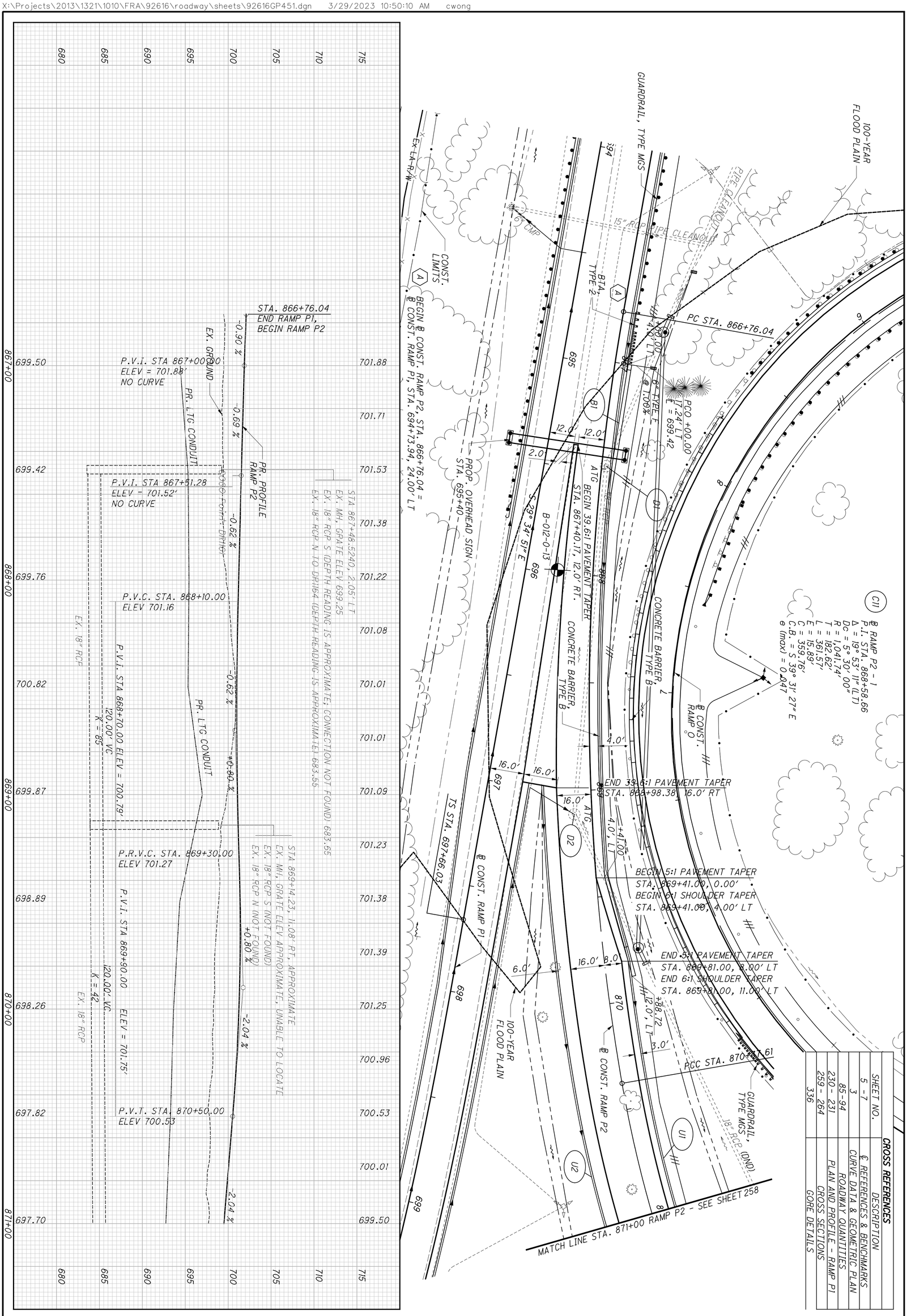

CROSS REFERENCES	
SHEET NO.	DESCRIPTION
5 - 7	℄ REFERENCES & BENCHMARKS
3	CURVE DATA & GEOMETRIC PLAN
85 - 94	ROADWAY QUANTITIES
230 - 231	PLAN AND PROFILE - RAMP P1
259 - 264	CROSS SECTIONS
336	GORE DETAILS

257
554

FRA-270-51.50

PLAN AND PROFILE - RAMP P2
STA. 866+76.04 TO STA. 871+00

CALCULATED ACF
CHECKED CSR

0 10 20 40
HORIZONTAL SCALE IN FEET

CROSS REFERENCES	
SHEET NO.	DESCRIPTION
5 -7	℄ REFERENCES & BENCHMARKS
3	CURVE DATA & GEOMETRIC PLAN
85-94	ROADWAY QUANTITIES
370	CULVERT DETAILS
259 - 264	CROSS SECTIONS
333	INTERSECTION DETAILS
404	TRAFFIC SIGNAL PLANS

HORIZONTAL SCALE IN FEET
0 10 20 40

CALCULATED ACF CHECKED CSR

GUARDRAIL, TYPE MGS
PCO +50.00
29.56' LT
℄ = 694.79
PIPE CLEANOUT
6" TYPE F @ 1.00%
3.0'
8.0'
U1
℄ CONST. RAMP P2
MATCH LINE STA. 871+00 RAMP P2 - SEE SHEET257
16.0'
6.0'
U2
6" TYPE F @ 1.00%
PCO +50.00
37.21' RT
℄ = 695.67
100-YEAR FLOOD PLAIN
EX. 12" WATER (CTP0800_012)
PT STA. 872+38.97
STA 872+71.00 END FULL DEPTH PAVEMENT
872
873
S 89° 36' 13" E
B-009-0-13
30"-A
D1
574
573
15"-B
B-011-0-13
CONST. LIMITS
18" RCP
PIPE CLEANOUT
℄ CONST. US 23
CONST. LIMITS
CONST. LIMITS
CONST. LIMITS
WETLAND AB (DND)
A STA. 573+22.67 ℄ CONST. US 23 = STA. 873+22.67 ℄ RAMP P2
100-YEAR FLOOD PLAIN
100-YEAR FLOOD PLAIN
C11 ℄ RAMP P2 - 1
P.I. STA. 868+53.66
Δ = 19° 53' 11" (LT)
Dc = 5° 30' 00"
R = 1,041.74'
T = 182.62'
L = 361.57'
E = 15.89'
C = 359.76'
C.B. = S 39° 31' 27" E
e (max) = 0.047
C12 ℄ RAMP P2 - 2
P.I. STA. 871+39.34
Δ = 20° 08' 11" (LT)
Dc = 10° 00' 00"
R = 572.96'
T = 101.73'
L = 201.36'
E = 8.96'
C = 200.33'
C.B. = S 59° 32' 07" E
e (max) = 0.038
CONST. LIMITS
PIPE CLEANOUT
POT STA. 871+88.12
18" RCP

P.V.I. STA 871+75.00 ELEV = 697.97'
100.00' VC
K = 23
P.V.C. STA. 871+25.00
ELEV 698.99
P.V.T. STA. 872+25.00
ELEV 699.13
PR. PROFILE RAMP P2
-2.04 %
+2.33 %
EX. GROUND
PR. LTG CONDUIT
PR. LTG CONDUIT
30"-A
ELEV = 697.97'
STA 872+58.9573, 52.80' LT
EX. MH, GRATE ELEV 698.13
EX. 18" RCP SE TO DR1020 684.48
EX. 18" RCP W (CONNECTION NOT FOUND) 684.38
EX ELEC
EX 12" WATER
P.V.I. STA 872+65.49
ELEV = 700.54'
MATCH EXISTING PAVEMENT
699.50 698.99 698.62 698.52 698.69 699.13 699.71 700.30
697.70 697.10 696.06 697.18 700.50
715 710 705 700 695 690 685 680
871+00 872+00 873+00

PLAN AND PROFILE - RAMP P2
STA. 871+00 TO STA. 873+22.67

FRA-270-51.50

258
554

X:\Projects\2013\132\1010\FRA\92616\roadway\sheets\92616GP452.dgn 3/29/2023 10:52:44 AM cwong

SEEDING	
END WIDTH	SQ. YDS.

EX. PAVEMENT

SUBGRADE STABILIZATION

720
710
700
690
680

2:1
2:1
696.4
PR. LTG CONDUIT
701.88
867+00.00
699.53
699.9

120 100 80 60 40 20 0 20 40 60 80 100 120

END AREA		VOLUME	
CUT	FILL	CUT	FILL

CALCULATED ACF
CHECKED CSR

CROSS SECTIONS - RAMP P2
STA. 866+76.04 TO STA. 867+00.00

FRA-270-51.50

259
554

X:\Projects\2013\132\1\1010\FRA\92616\roadway\sheets\92616XS451.dgn 12/7/2022 2:58:31 PM cwong

SEEDING	
END WIDTH	SQ. YDS.

EX. PAVEMENT

SUBGRADE STABILIZATION

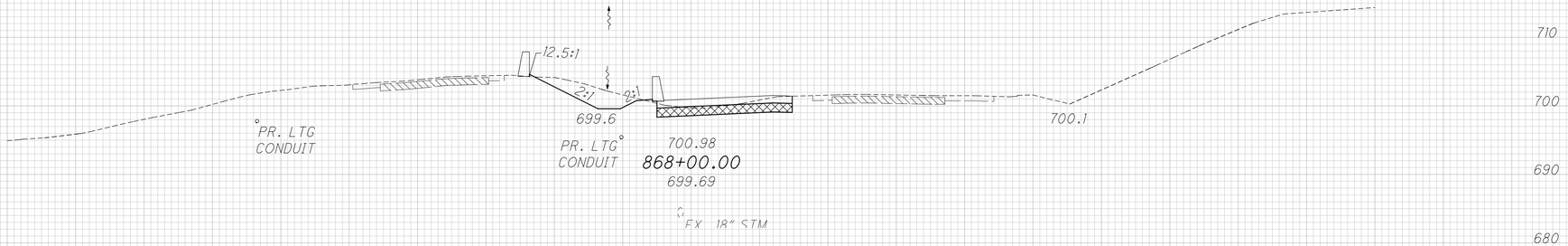

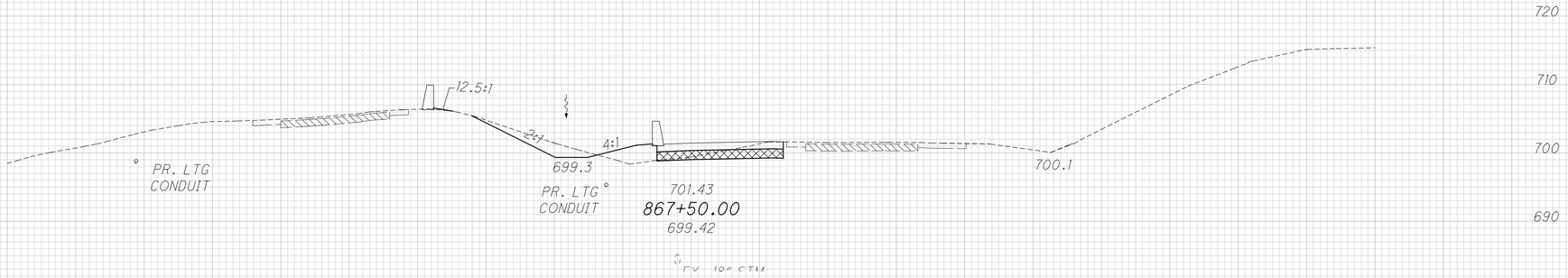

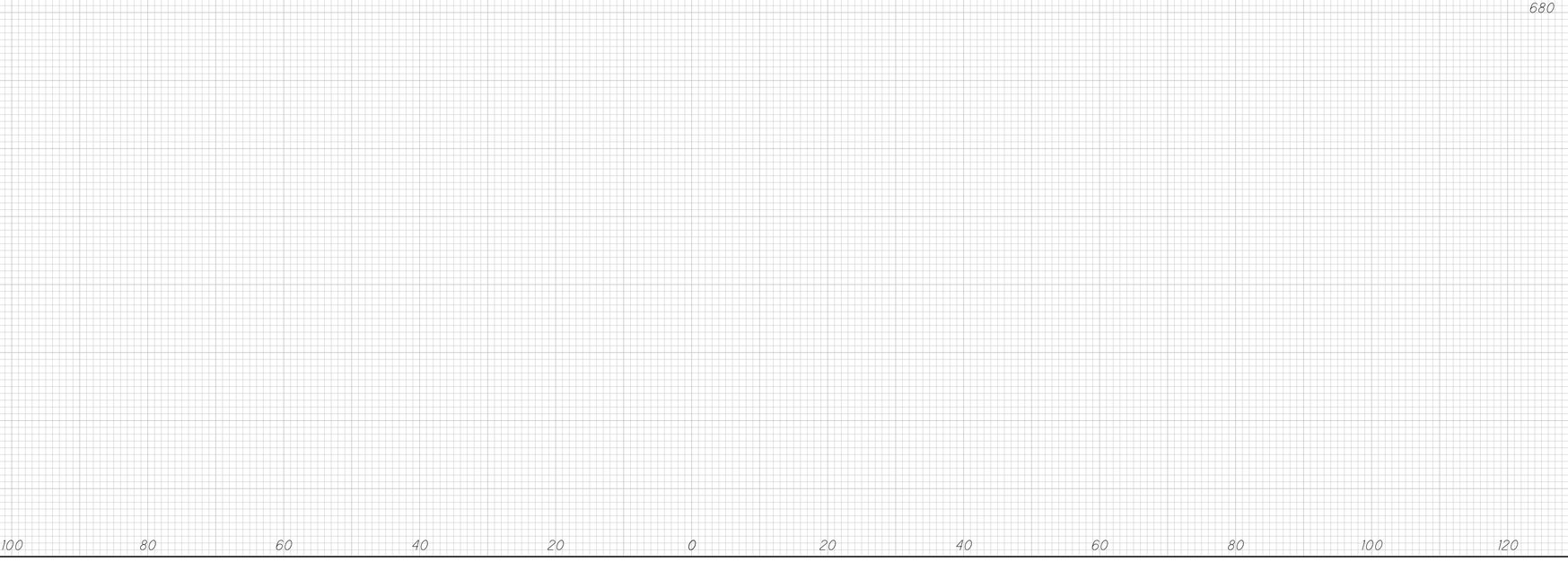

END AREA		VOLUME	
CUT	FILL	CUT	FILL

CALCULATED JGB

CHECKED CSR

CROSS SECTIONS - RAMP P2

STA. 867+50.00 TO STA. 868+00.00

FRA-270-51.50

x:\Projects\2013\132\1010\FRA\92616\roadway\sheets\92616XS451.dgn 12/7/2022 2:58:31 PM cwong

SEEDING	
END WIDTH	SQ. YDS.

END AREA		VOLUME	
CUT	FILL	CUT	FILL

CALCULATED JGB

CHECKED CSR

EX. PAVEMENT

SUBGRADE STABILIZATION

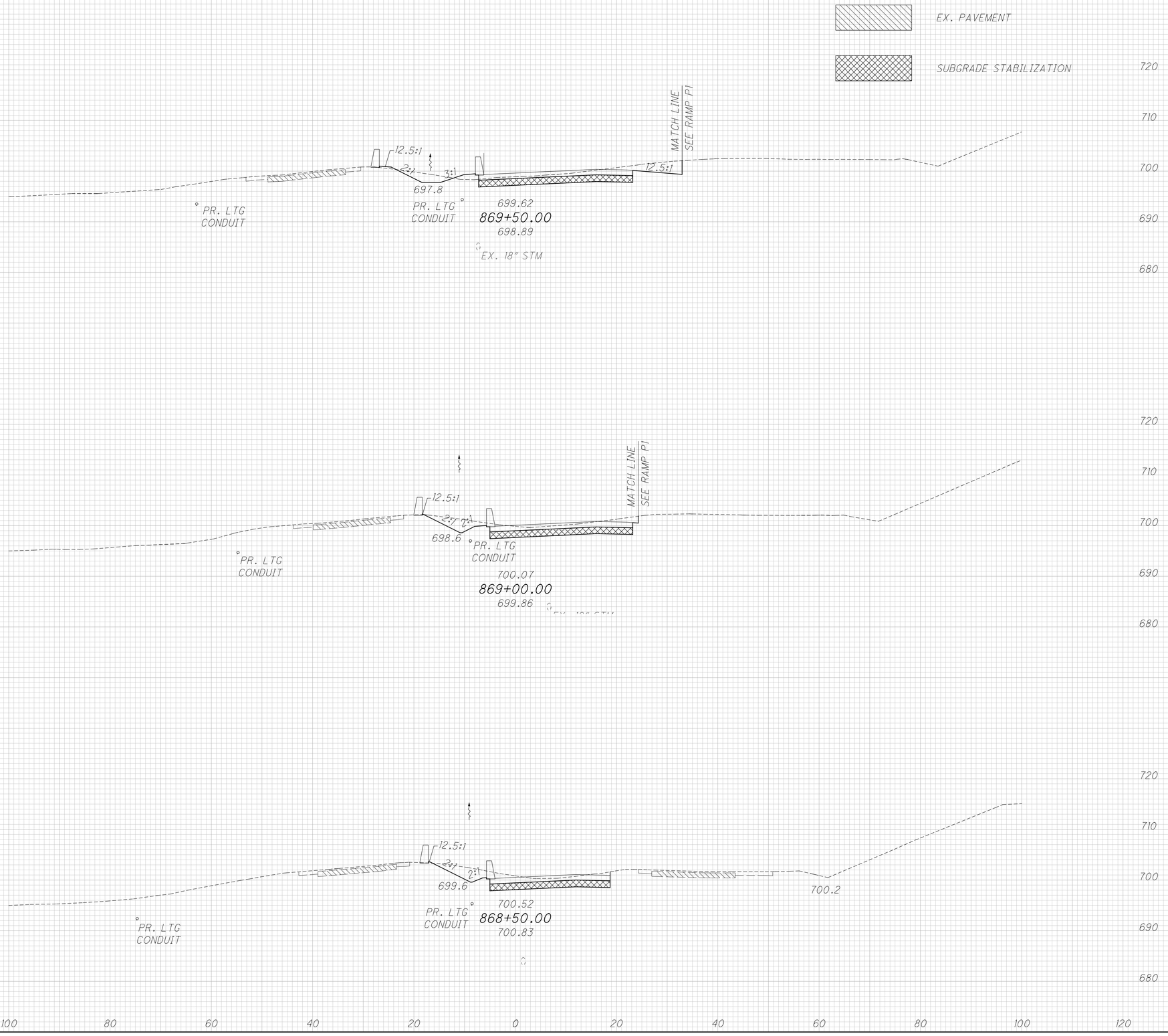

CROSS SECTIONS - RAMP P2

STA. 868+50.00 TO STA. 869+50.00

FRA-270-51.50

x:\Projects\2013\1321\1010\FRA\92616\roadway\sheets\92616XS451.dgn 12/7/2022 2:58:32 PM cwong

SEEDING	
END WIDTH	SQ. YDS.

EX. PAVEMENT

SUBGRADE STABILIZATION

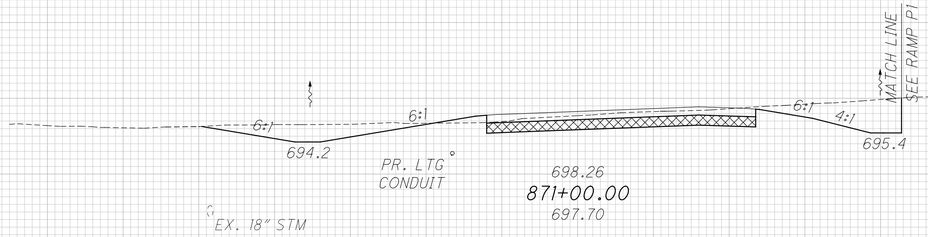

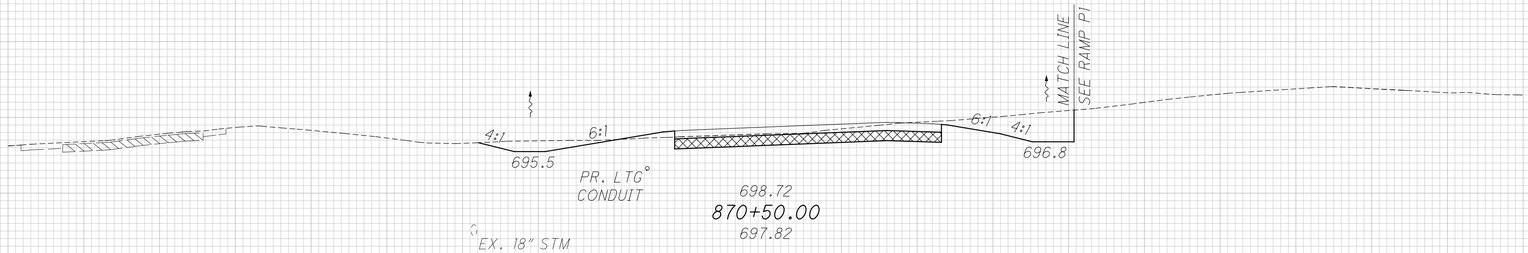

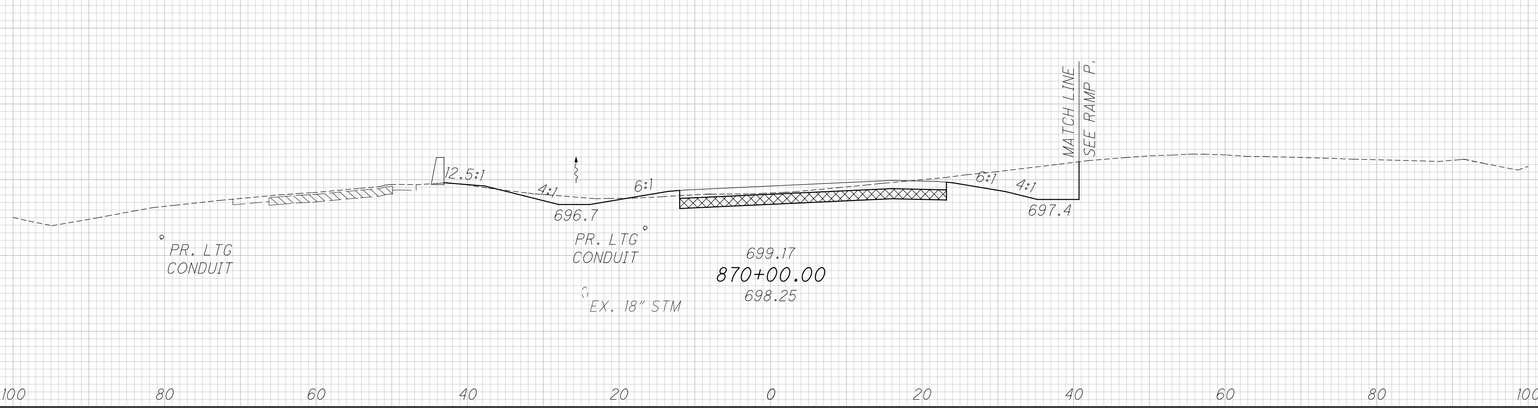

120 100 80 60 40 20 0 20 40 60 80 100 120

END AREA		VOLUME	
CUT	FILL	CUT	FILL

CALCULATED JGB

CHECKED CSR

CROSS SECTIONS - RAMP P2
STA. 870+00.00 TO STA. 871+00.00

FRA-270-51.50

x:\Projects\2013\1321\1010\FRA\92616\roadway\sheets\92616XS451.dgn 12/7/2022 2:58:32 PM cwong

SEEDING	
END WIDTH	SQ. YDS.

END AREA	
CUT	FILL

VOLUME	
CUT	FILL

CALCULATED JGB

CHECKED CSR

EX. PAVEMENT

SUBGRADE STABILIZATION

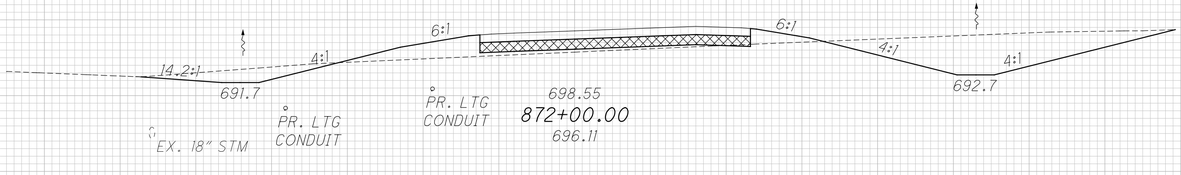

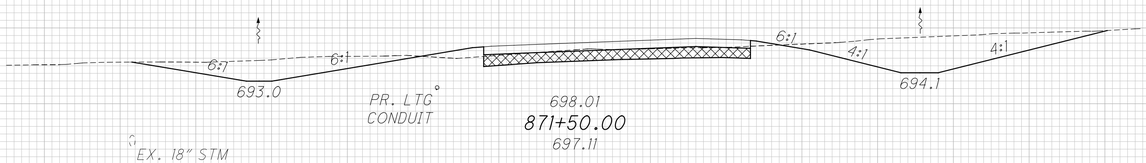

720 710 700 690 680 670

120 100 80 60 40 20 0 20 40 60 80 100 120

CROSS SECTIONS - RAMP P2

STA. 871+50.00 TO STA. 872+00.00

FRA-270-51.50

x:\Projects\2013\1321\1010\FRA\92616\roadway\sheets\92616XS451.dgn 12/7/2022 2:58:33 PM cwong

SEEDING	
END WIDTH	SQ. YDS.

EX. PAVEMENT

SUBGRADE STABILIZATION

END AREA	
CUT	FILL

VOLUME	
CUT	FILL

CALCULATED JGB

CHECKED CSR

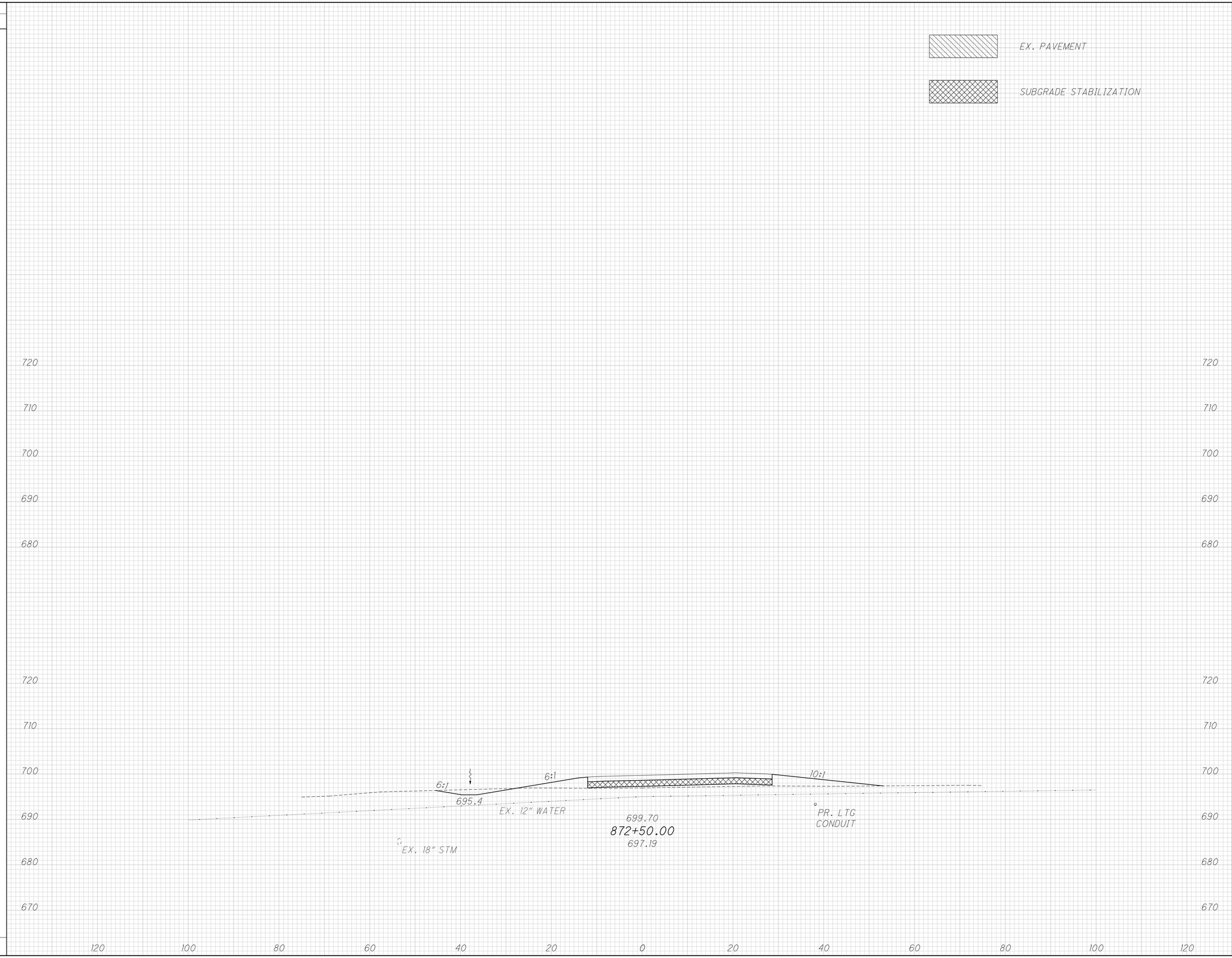

CROSS SECTIONS - RAMP P2
STA. 872+50.00 TO STA. 872+85.49

FRA-270-51.50

x:\Projects\2013\1321\1010\FRA\92616\roadway\sheets\92616XS451.dgn 12/7/2022 2:58:33 PM cwong

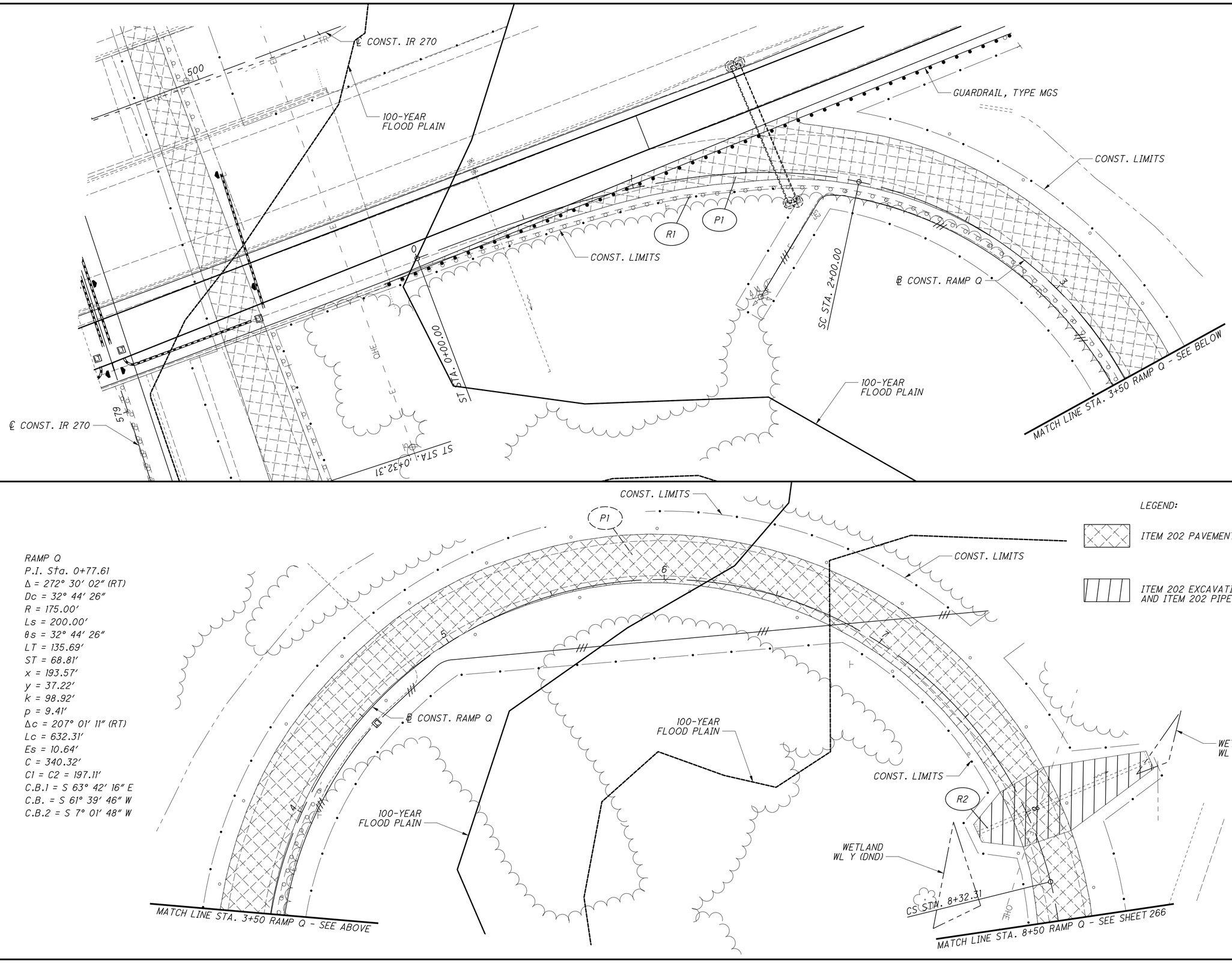

HORIZONTAL SCALE IN FEET
0 10 20 40

CALCULATED ACF
CHECKED CSR

PLAN - RAMP Q
STA. 0+00 TO STA. 8+50

FRA-270-51.50

265
554

X:\Projects\2013\1321\1010\FRA\92616\roadway\sheets\92616GP501.dgn 2/9/2023 1:26:32 PM cwong

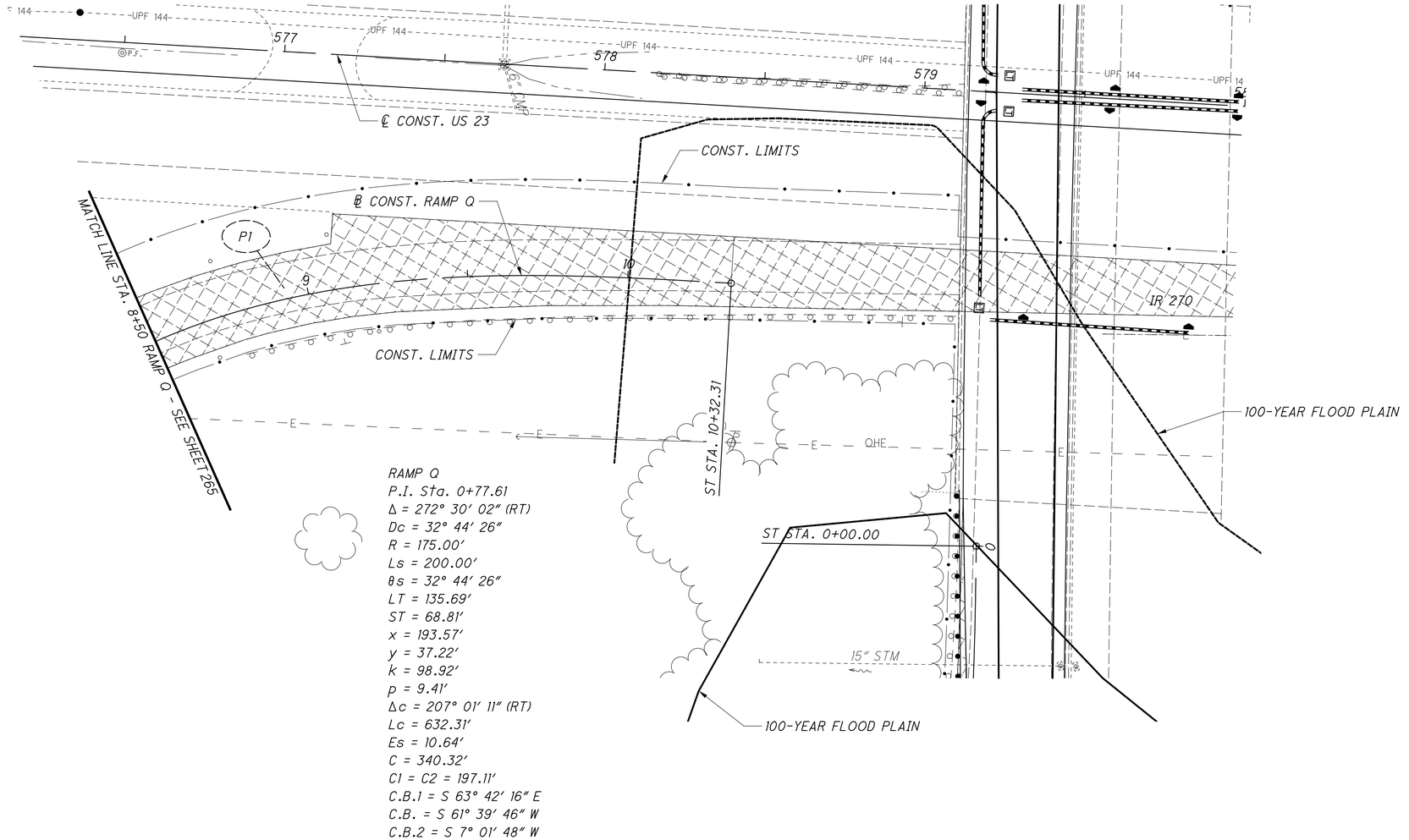

RAMP Q
P.I. Sta. 0+77.61
Δ = 272° 30′ 02″ (RT)
Dc = 32° 44′ 26″
R = 175.00′
Ls = 200.00′
θs = 32° 44′ 26″
LT = 135.69′
ST = 68.81′
x = 193.57′
y = 37.22′
k = 98.92′
p = 9.41′
Δc = 207° 01′ 11″ (RT)
Lc = 632.31′
Es = 10.64′
C = 340.32′
C1 = C2 = 197.11′
C.B.1 = S 63° 42′ 16″ E
C.B. = S 61° 39′ 46″ W
C.B.2 = S 7° 01′ 48″ W

LEGEND:

ITEM 202 PAVEMENT REMOVED

CROSS REFERENCES	
SHEET NO.	DESCRIPTION
174	PLAN - US 23

HORIZONTAL SCALE IN FEET
0 10 20 40

CALCULATED ACF
CHECKED CSR

PLAN - RAMP Q
STA. 8+50 TO STA. 10+32.31

FRA-270-51.50

266
554

X:\Projects\2013\1321\1010\FRA\92616\roadway\sheets\92616GP502.dgn 2/9/2023 1:30:26 PM cwong

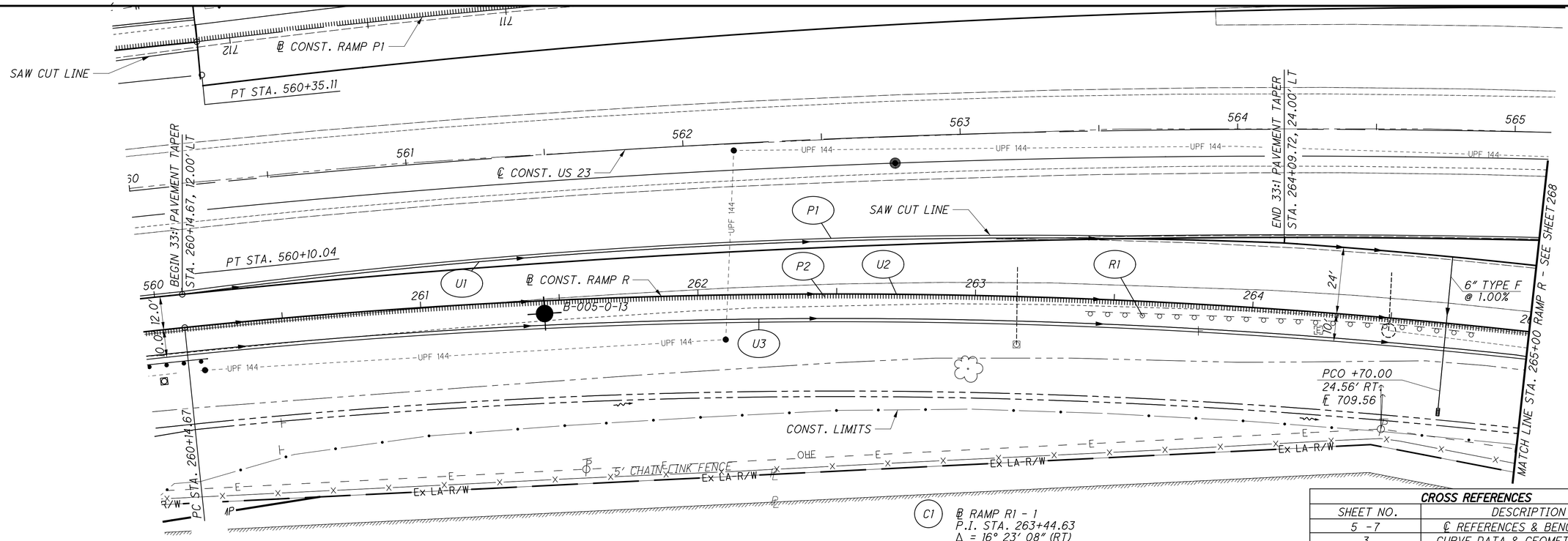

PFK COMPANY II, LLC, A DELAWARE LIMITED LIBAILITY COMPANY (1/2 INTER) AND TAMARACK ENTERPRISES II, L.P., A DELAWARE LIMITED PARTNERSHIP (1/2 INTER)
510-181566
S HIGH ST

C1
℄ RAMP R1 - 1
P.I. STA. 263+44.63
Δ = 16° 23' 08" (RT)
Dc = 2° 30' 00"
R = 2,291.83'
T = 329.97'
L = 655.43'
E = 23.63'
C = 653.20'
C.B. = N 8° 46' 00" E
e (max) = 0.035

CROSS REFERENCES	
SHEET NO.	DESCRIPTION
5 -7	℄ REFERENCES & BENCHMARKS
3	CURVE DATA & GEOMETRIC PLAN
85-94	ROADWAY QUANTITIES
273-300	CROSS SECTIONS
337	GORE DETAILS
174	PLAN - US 23

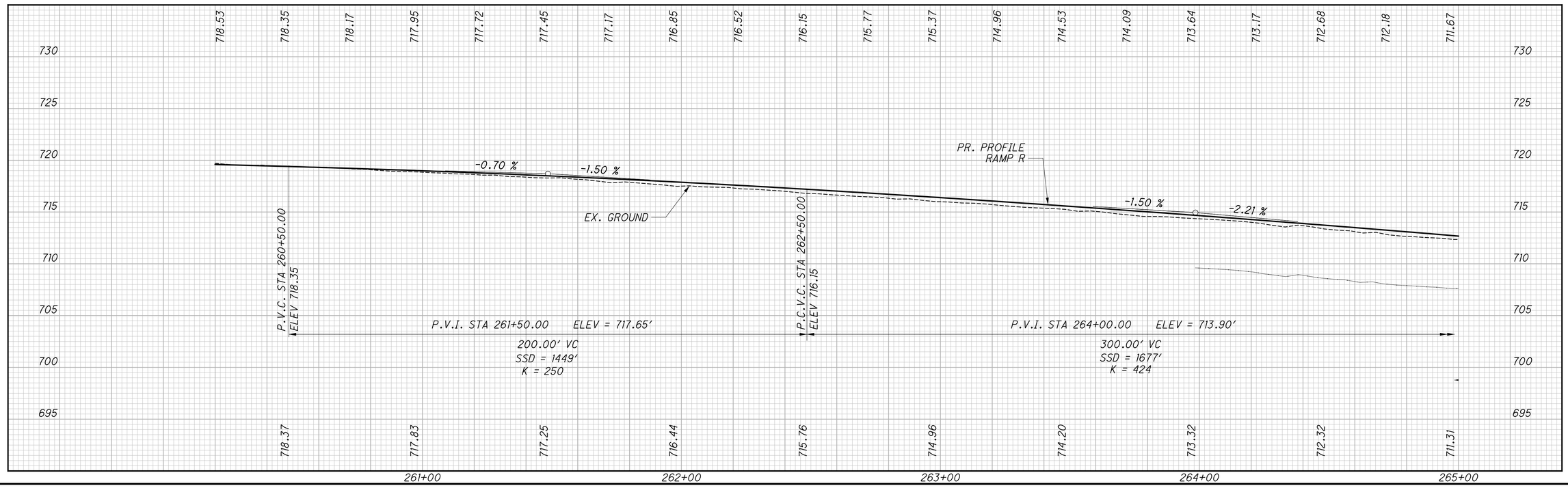

PLAN AND PROFILE - RAMP R
STA. 260+14.67 TO STA. 265+00

FRA-270-51.50

267
554

HORIZONTAL SCALE IN FEET
0 10 20 40

CALCULATED ACF
CHECKED CSR

x:\Projects\2013\1321\1010\FRA\92616\roadway\sheets\92616GP551.dgn 12/29/2022 8:32:07 AM sbarnard

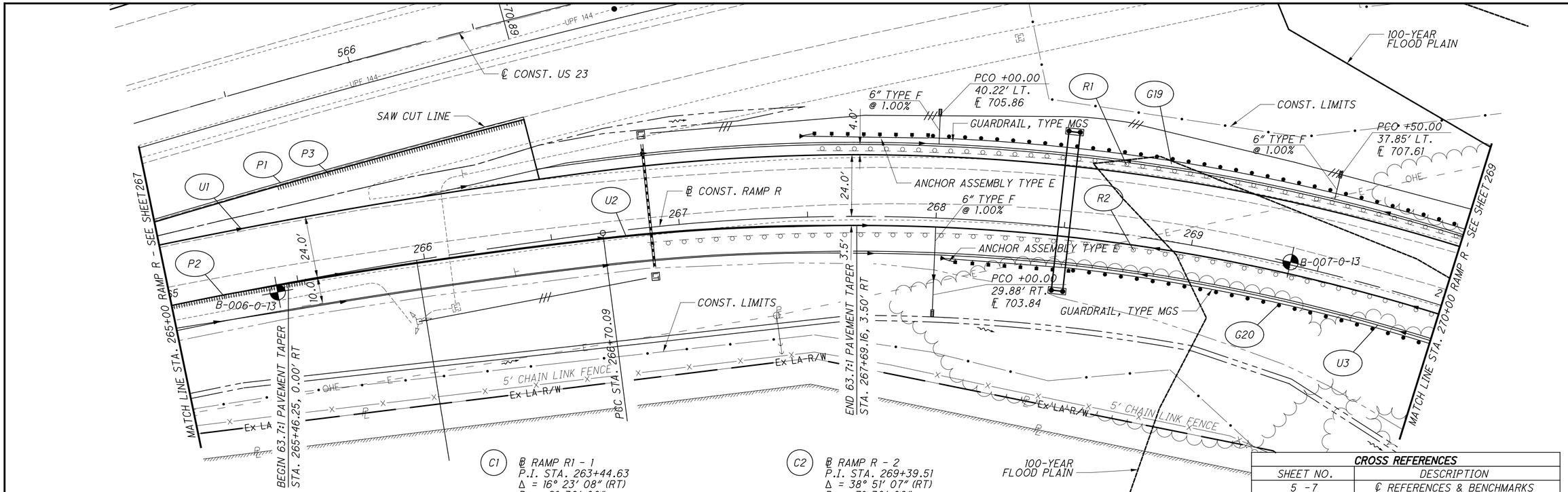

ITEM 670 - DITCH EROSION CONTROL PROTECTION MAT

ITEM 836 - TURF REINFORCING MAT, TYPE 1

ITEM 836 - TURF REINFORCING MAT, TYPE 2

C1
℄ RAMP R1 - 1
P.I. STA. 263+44.63
Δ = 16° 23' 08" (RT)
Dc = 2° 30' 00"
R = 2,291.83'
T = 329.97'
L = 655.43'
E = 23.63'
C = 653.20'
C.B. = N 8° 46' 00" E
e (max) = 0.035

C2
℄ RAMP R - 2
P.I. STA. 269+39.51
Δ = 38° 51' 07" (RT)
Dc = 7° 30' 00"
R = 763.94'
T = 329.97
L = 269.42'
E = 46.11'
C = 508.16'
C.B. = N 36° 23' 08" E
e (max) = 0.054

100-YEAR FLOOD PLAIN

PFK COMPANY II, LLC, A DELAWARE LIMITED LIABILITY COMPANY (1/2 INTER) AND TAMARACK ENTERPRISES II, L.P., A DELAWARE LIMITED PARTNERSHIP (1/2 INTER)
510-181566
S HIGH ST

CROSS REFERENCES

SHEET NO.	DESCRIPTION
5 -7	℄ REFERENCES & BENCHMARKS
3	CURVE DATA & GEOMETRIC PLAN
85-94	ROADWAY QUANTITIES
273-300	CROSS SECTIONS
337-338	GORE DETAILS

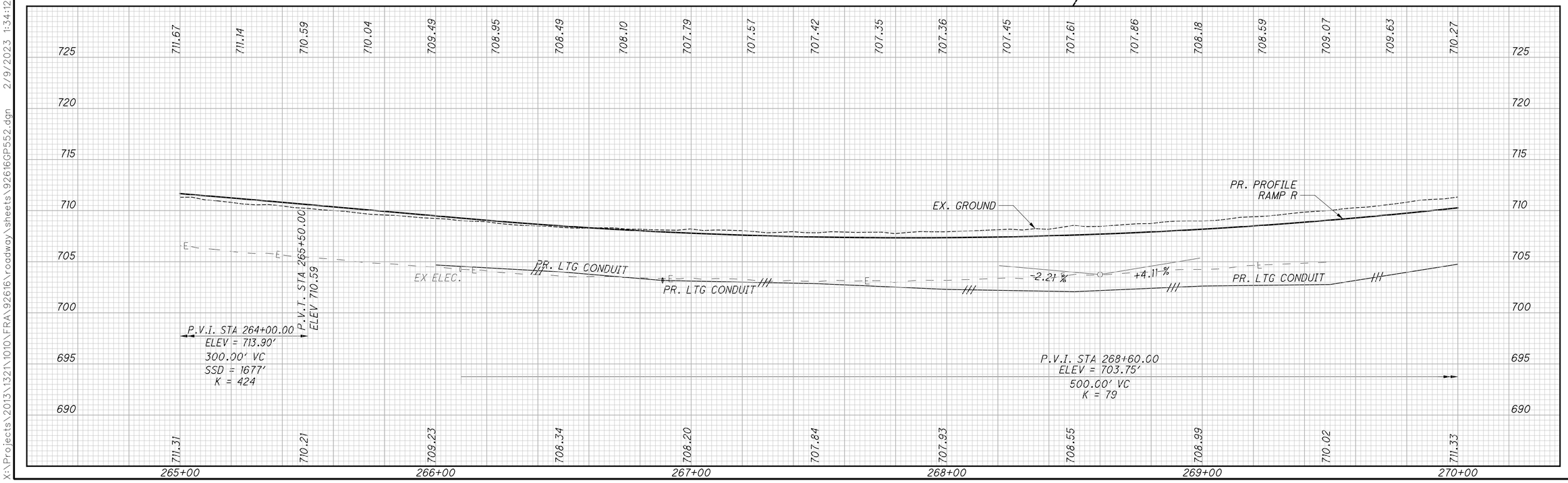

HORIZONTAL SCALE IN FEET
0 10 20 40

CALCULATED ACF
CHECKED CSR

PLAN AND PROFILE - RAMP R
STA. 265+00 TO STA. 270+00

FRA-270-51.50

268
554

X:\Projects\2013\1321\1010\FRA\92616\roadway\sheets\92616GP552.dgn 2/9/2023 1:34:12 PM cwong

CROSS REFERENCES	
SHEET NO.	DESCRIPTION
5 -7	℄ REFERENCES & BENCHMARKS
3	CURVE DATA & GEOMETRIC PLAN
85-94	ROADWAY QUANTITIES
372	CULVERT DETAILS
273-300	CROSS SECTIONS
338	GORE DETAILS

ITEM 670 - DITCH EROSION CONTROL PROTECTION MAT

ITEM 836 - TURF REINFORCING MAT, TYPE 1

ITEM 836 - TURF REINFORCING MAT, TYPE 2

WETLAND AB (DND)

STREAM 15

CONST. LIMITS

WOODED

BRUSH & TREES

GUARDRAIL, TYPE MGS

POT Sta. 271+88.12
BEGIN ℄ CONST. RAMP L
STA. 271+88.12, 25.02' LT
℄ CONST. RAMP R

TS Sta. 272+74.99
96" CMP

PROP. OVERHEAD SIGN
STA. 274+53

N 55° 48' 41" E

℄ CONST. RAMP R

℄ CONST. RAMP L

6" TYPE F
@ 1.00%

B-008-0-13

MATCH LINE STA. 270+00 RAMP R - SEE SHEET 268

MATCH LINE STA. 275+00 RAMP R - SEE SHEET 270

100-YEAR FLOOD PLAIN

BEGIN 63.7:1 PAVEMENT TAPER
STA. 271+13.83, 3.50' RT

PT STA. 271+88.12

18" RCP PIPE CLEANOUT

PCO +00.00
20.69' RT.
℄ 718.72

PC STA. 273+18.83

PIPE CLEANOUT

END 63.7:1 PAVEMENT TAPER
STA. 273+36.73, 0.00'

END 67.0:1 PAVEMENT TAPER
STA. 274+52.87, 14.0' LT

96" CMP

R1 R2 R3 U1 U2 U3 G20 D1 C3

℄ RAMP R1 - 3
P.I. STA. 274+68.44
Δ = 2° 59' 29" (RT)
Dc = 1° 00' 00"
R = 5,729.58'
T = 149.61'
L = 299.15'
E = 1.95'
C = 299.11'
C.B. = N 57° 18' 26" E
e (max) = 0.016

Ex LA R/W

5' CHAIN LINK FENCE

HAMILTON TWP
CITY OF COLUMBUS

B-007-1-13

18" RCP

15" RCP

12" RCP

6" RCP

VCP

15" CPP

RELOCATE STREAM

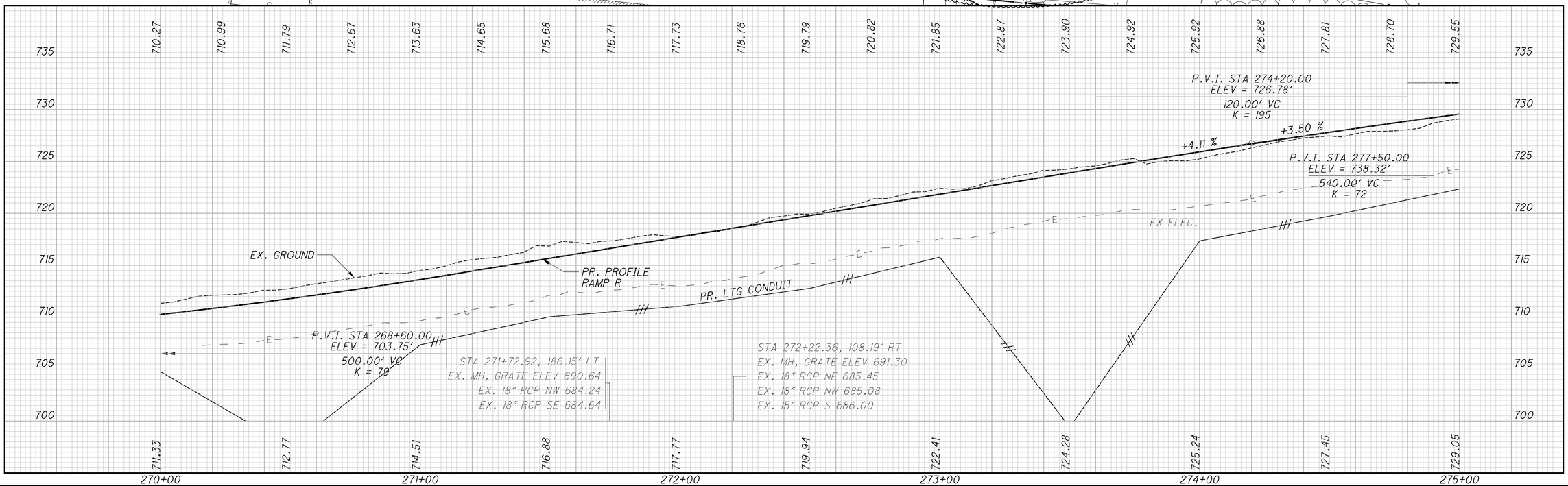

HORIZONTAL SCALE IN FEET
0 10 20 40

CALCULATED ACF
CHECKED CSR

PLAN AND PROFILE - RAMP R
STA. 270+00 TO STA. 275+00

FRA-270-51.50

269
554

X:\Projects\2013\1321\1010\FRA\92616\roadway\sheets\92616GP553.dgn 3/29/2023 10:54:54 AM cwong

CROSS REFERENCES	
SHEET NO.	DESCRIPTION
5 -7	℄ REFERENCES & BENCHMARKS
3	CURVE DATA & GEOMETRIC PLAN
85-94	ROADWAY QUANTITIES
373	CULVERT DETAILS
273-300	CROSS SECTIONS
338	GORE DETAILS
202-207	PLAN - RAMP L

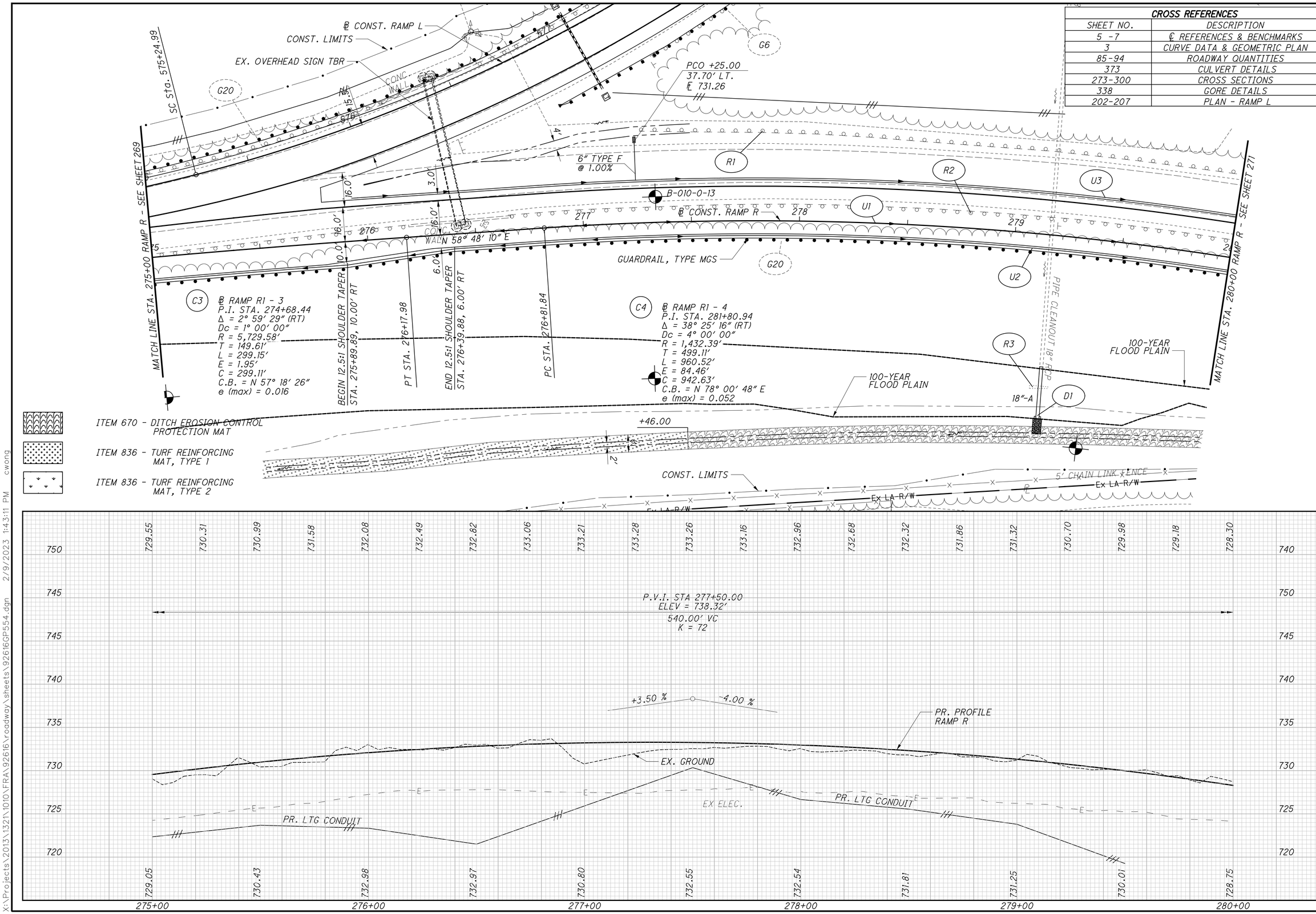

HORIZONTAL SCALE IN FEET 0 10 20 40

CALCULATED ACF
CHECKED CSR

PLAN AND PROFILE - RAMP R
STA. 275+00 TO STA. 280+00

FRA-270-51.50

X:\Projects\2013\1321\1010\FRA\92616\roadway\sheets\92616GP554.dgn 2/9/2023 1:43:11 PM cwong

CROSS REFERENCES	
SHEET NO.	DESCRIPTION
5 -7	℄ REFERENCES & BENCHMARKS
3	CURVE DATA & GEOMETRIC PLAN
85-94	ROADWAY QUANTITIES
273-300	CROSS SECTIONS

ITEM 670 - DITCH EROSION CONTROL PROTECTION MAT

ITEM 836 - TURF REINFORCING MAT, TYPE 1

ITEM 836 - TURF REINFORCING MAT, TYPE 2

MATCH LINE STA. 280+00 RAMP R - SEE SHEET 270

MATCH LINE STA. 285+00 RAMP R - SEE SHEET 272

PC STA. 711+19.56

℄ CONST. IR 270 MERGE

℄ CONST. CD LANE

PCO +50.00
56.52' LT.
℄ 717.76

6" TYPE F
@ 1.00%

R1

U2

R2

U1

U3

G20

3.0'

16.0'

6.0'

3'

B-013-0-13

281

282

283

284

℄ CONST. RAMP R

GUARDRAIL, TYPE MGS

6" TYPE F
@ 1.00%

PCO +50.00
16.14' RT.
℄ 716.91

6" TYPE F
@ 1.00%

PCO +50.00
16.14' RT.
℄ 714.48

100-YEAR FLOOD PLAIN

C4

℄ RAMP R1 - 4
P.I. STA. 281+80.94
Δ = 38° 25' 16" (RT)
Dc = 4° 00' 00"
R = 1,432.39'
T = 499.11'
L = 960.52'
E = 84.46'
C = 942.63'
C.B. = N 78° 00' 48" E
e (max) = 0.052

Ex LA-R/W

CONST. LIMITS

GRAVEL

96" RCP (APPROX. LOCATION)

OHE

PFK COMPANY II, LLC, A DELAWARE LIMITED LIABILITY COMPANY (1/2 INTER) AND TAMARACK ENTERPRISES II, L.P., A DELAWARE LIMITED PARTNERSHIP (1/2 INTER)
510-181566
S HIGH ST

MARY IRENE YOUNKIN
150-000042
IN 199903040054791

HAMILTON TWP
CITY OF COLUMBUS

728.30 727.32 726.32 725.33 724.37 723.48 722.65 721.88 721.17 720.53 719.95 719.43 718.97 718.57 718.24 717.97 717.76 717.61 717.52 717.50 717.53

728.75 727.54 724.77 721.75 720.12 717.51 715.69 714.91 713.90 715.29 714.40

740 735 730 725 720 715 710 705

280+00 281+00 282+00 283+00 284+00 285+00

-4.00 %

P.V.T. STA 280+20.00
ELEV 727.52

P.V.I. STA 277+50.00
ELEV = 738.32'
540.00' VC
SSD = 394'
K = 72

-4.00 %

+0.26 %

PR. LTG CONDUIT

PR. PROFILE RAMP R

EX. GROUND

EX ELEC.

PR. LTG CONDUIT

P.V.I. STA 282+84.00
ELEV = 716.96'
430.00' VC
K = 101

HORIZONTAL SCALE IN FEET
0 10 20 40

CALCULATED ACF
CHECKED CSR

PLAN AND PROFILE - RAMP R
STA. 280+00 TO STA. 285+00

FRA-270-51.50

271
554

X:\Projects\2013\132\1010\FRA\92616\roadway\sheets\92616GP555.dgn 2/9/2023 1:46:41 PM cwong

CROSS REFERENCES	
SHEET NO.	DESCRIPTION
5 -7	℄ REFERENCES & BENCHMARKS
3	CURVE DATA & GEOMETRIC PLAN
85-94	ROADWAY QUANTITIES
202- 203	PLAN AND PROFILE - RAMP L
273- 300	CROSS SECTIONS

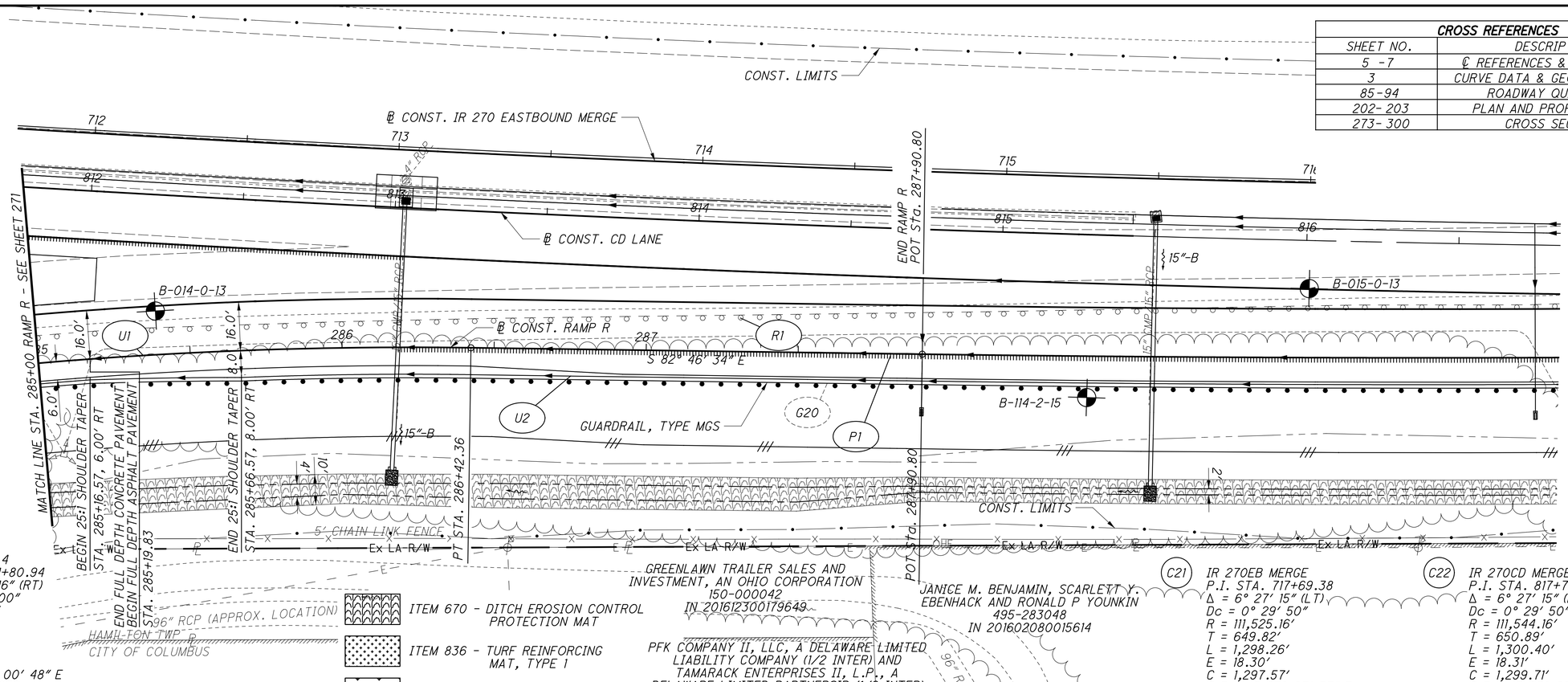

C4 ℄ RAMP R1 - 4
P.I. STA. 281+80.94
Δ = 38° 25' 16" (RT)
Dc = 4° 00' 00"
R = 1,432.39'
T = 499.11'
L = 960.52'
E = 84.46'
C = 942.63'
C.B. = N 78° 00' 48" E
e (max) = 0.052

ITEM 670 - DITCH EROSION CONTROL PROTECTION MAT

ITEM 836 - TURF REINFORCING MAT, TYPE 1

ITEM 836 - TURF REINFORCING MAT, TYPE 2

C21 IR 270EB MERGE
P.I. STA. 717+69.38
Δ = 6° 27' 15" (LT)
Dc = 0° 29' 50"
R = 111,525.16'
T = 649.82'
L = 1,298.26'
E = 18.30'
C = 1,297.57'
C.B. = S 83° 05' 33" E
e (max) = 0.016

C22 IR 270CD MERGE
P.I. STA. 817+70.45
Δ = 6° 27' 15" (LT)
Dc = 0° 29' 50"
R = 111,544.16'
T = 650.89'
L = 1,300.40'
E = 18.31'
C = 1,299.71'
C.B. = S 83° 05' 33" E
e (max) = 0.016

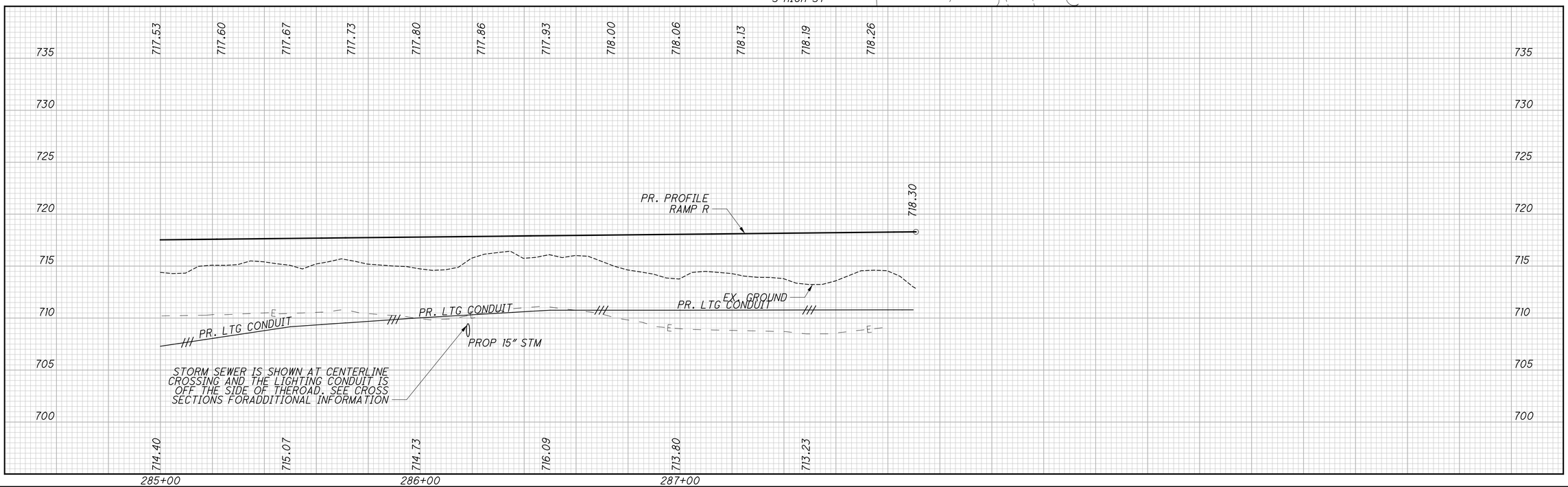

HORIZONTAL SCALE IN FEET
0 10 20 40

CALCULATED ACF
CHECKED CSR

PLAN AND PROFILE - RAMP R
STA. 285+00 TO STA. 287+90.80

FRA-270-51.50

272
554

x:\Projects\2013\1321\1010\FRA\92616\roadway\sheets\92616GP556.dgn 12/29/2022 9:07:16 AM sbarnard

SEEDING	
END WIDTH	SQ. YDS.

ITEM 203 - EMBANKMENT, AS PER PLAN

EX. PAVEMENT

ITEM 671 - EROSION CONTROL MAT

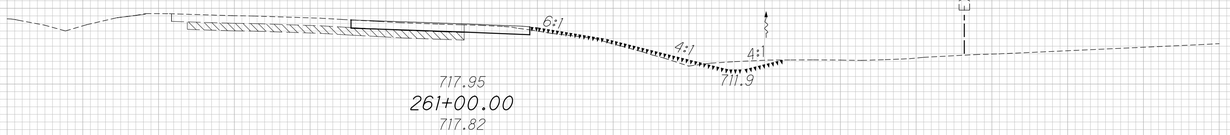

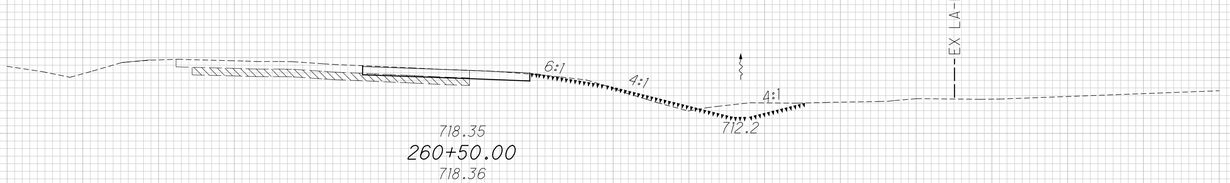

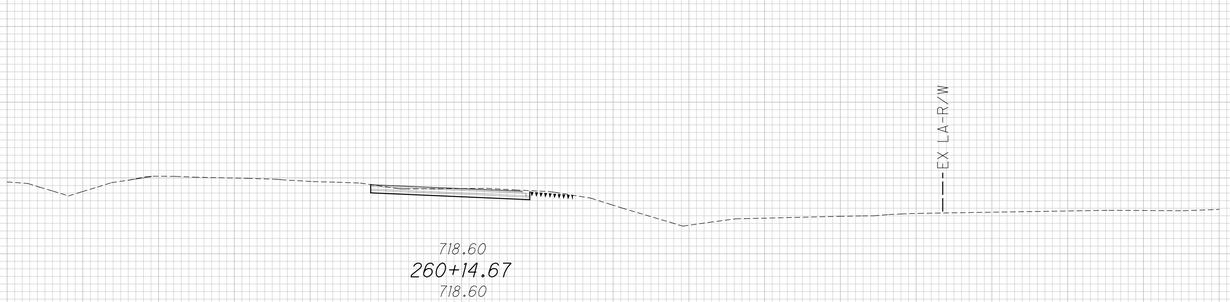

END AREA		VOLUME	
CUT	FILL	CUT	FILL

CALCULATED JGB

CHECKED CSR

CROSS SECTIONS - RAMP R

STA. 260+14.67 TO STA. 261+00.00

FRA-270-51.50

273
554

x:\Projects\2013\1321\1010\FRA\92616\roadway\sheets\92616XS550.dgn 12/7/2022 2:58:48 PM cwong

SEEDING	
END WIDTH	SQ. YDS.

ITEM 203 - EMBANKMENT, AS PER PLAN

EX. PAVEMENT

ITEM 671 - EROSION CONTROL MAT

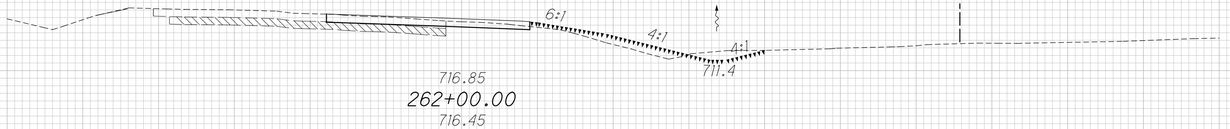

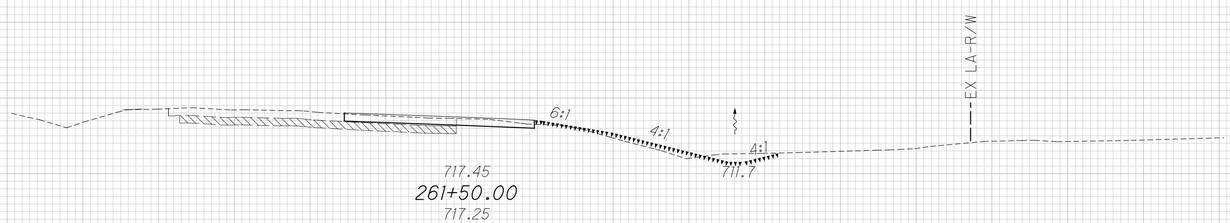

740 730 720 710 700 690

120 100 80 60 40 20 0 20 40 60 80 100 120

END AREA		VOLUME	
CUT	FILL	CUT	FILL

CALCULATED JGB

CHECKED CSR

CROSS SECTIONS - RAMP R

STA. 261+50.00 TO STA. 262+00.00

FRA-270-51.50

274
554

x:\Projects\2013\1321\1010\FRA\92616\roadway\sheets\92616XS550.dgn 12/7/2022 2:58:49 PM cwong

SEEDING	
END WIDTH	SQ. YDS.

ITEM 203 - EMBANKMENT, AS PER PLAN

EX. PAVEMENT

ITEM 671 - EROSION CONTROL MAT

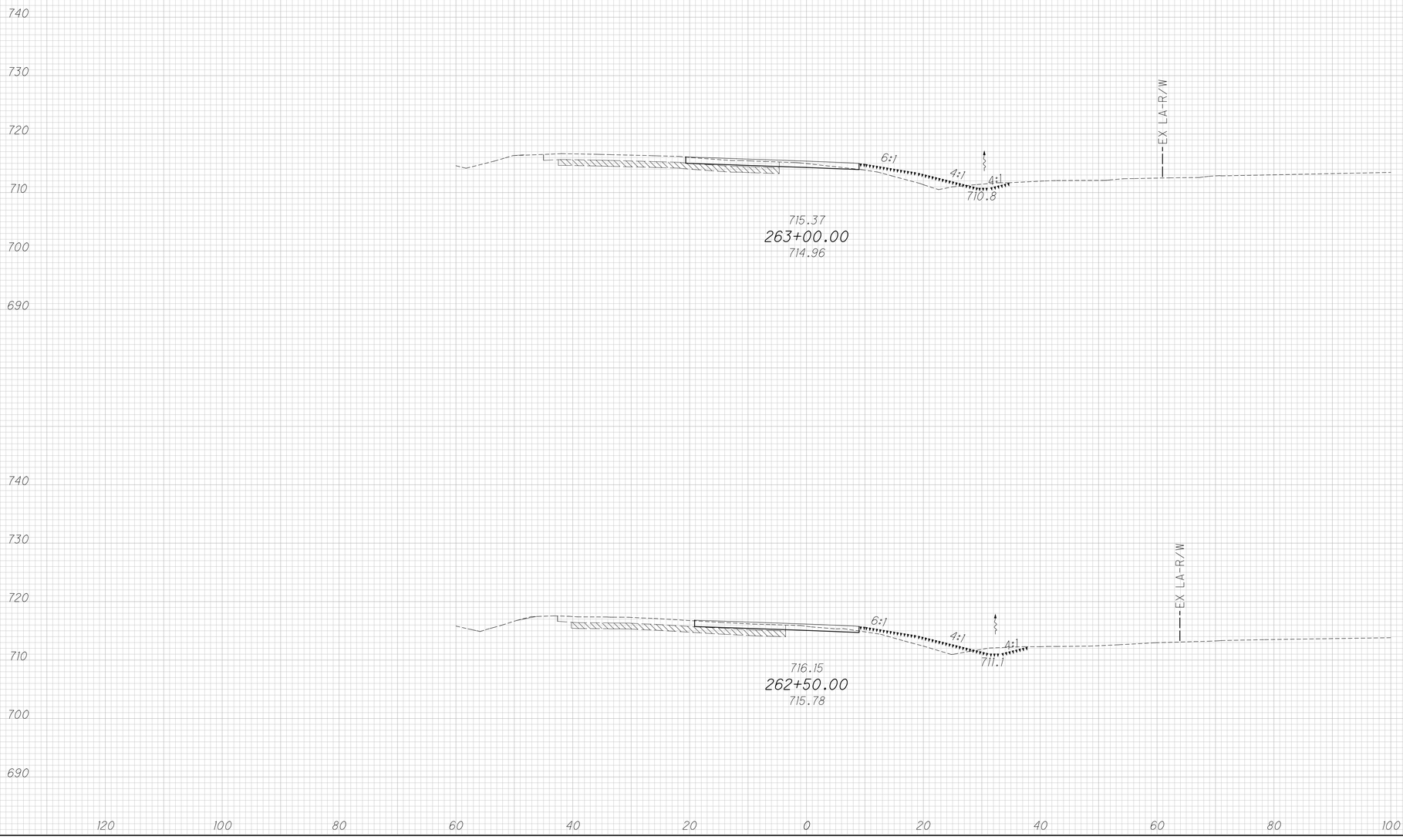

END AREA		VOLUME	
CUT	FILL	CUT	FILL

CALCULATED	CHECKED
JGB	CSR

CROSS SECTIONS - RAMP R
STA. 262+50.00 TO STA. 263+00.00

FRA-270-51.50

275
554

x:\Projects\2013\1321\1010\FRA\92616\roadway\sheets\92616XS550.dgn 12/7/2022 2:58:49 PM cwong

SEEDING	
END WIDTH	SQ. YDS.

ITEM 203 - EMBANKMENT, AS PER PLAN

EX. PAVEMENT

ITEM 671 - EROSION CONTROL MAT

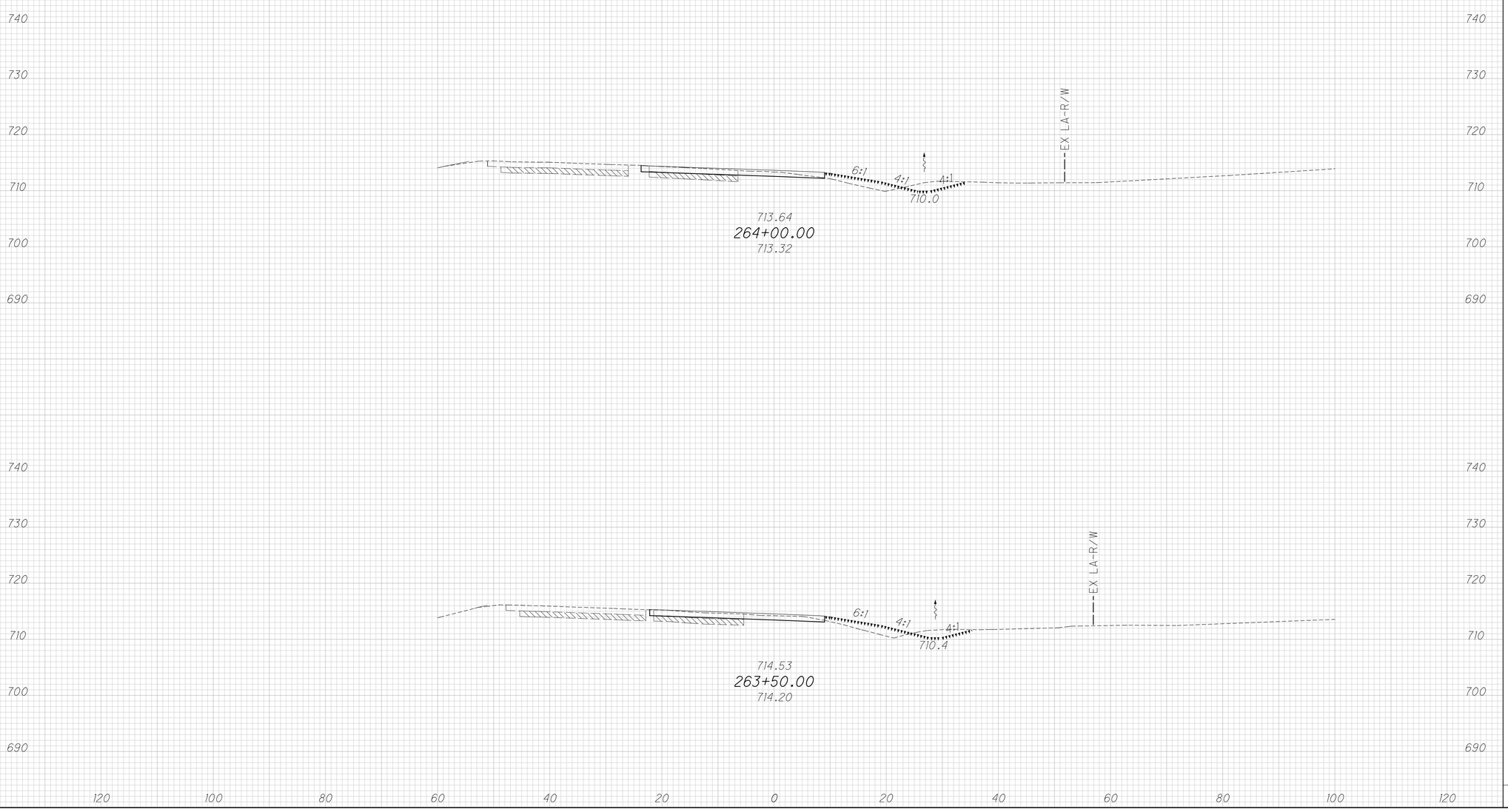

END AREA		VOLUME	
CUT	FILL	CUT	FILL

CALCULATED JGB

CHECKED CSR

CROSS SECTIONS - RAMP R

STA. 263+50.00 TO STA. 264+00.00

FRA-270-51.50

276
554

x:\Projects\2013\1321\1010\FRA\92616\roadway\sheets\92616XS550.dgn 12/7/2022 2:58:50 PM cwong

SEEDING	
END WIDTH	SQ. YDS.

ITEM 203 - EMBANKMENT, AS PER PLAN

EX. PAVEMENT

ITEM 671 - EROSION CONTROL MAT

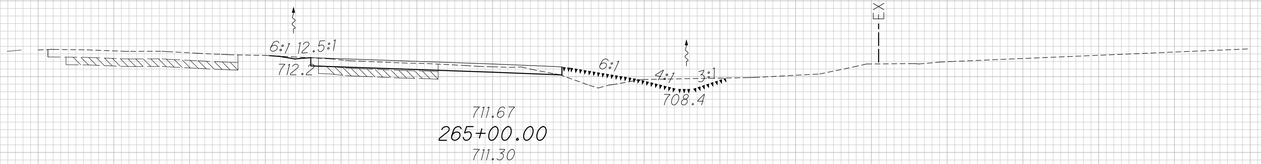

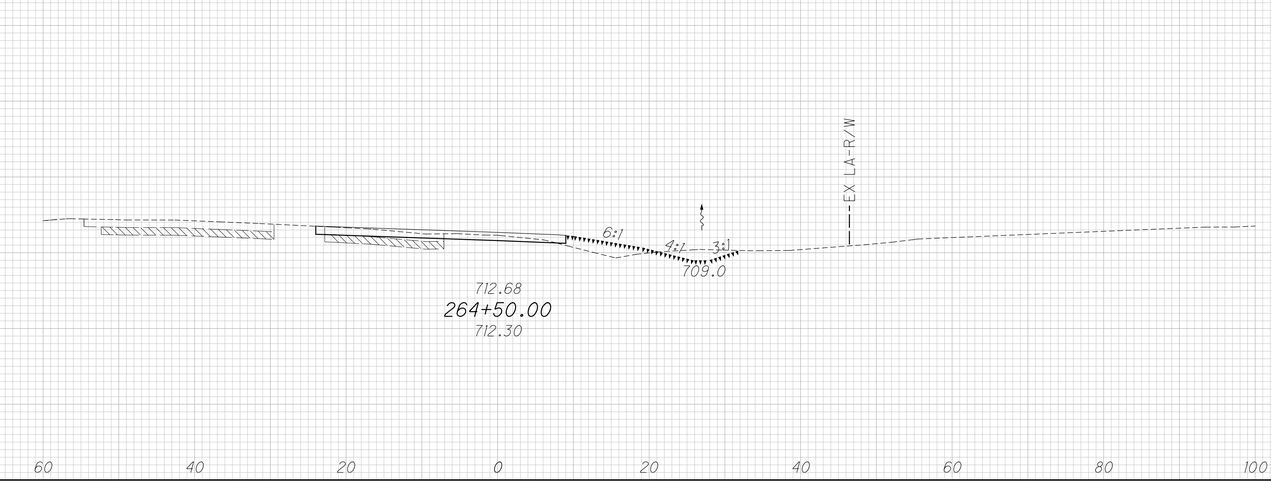

END AREA		VOLUME	
CUT	FILL	CUT	FILL

CALCULATED	CHECKED
JGB	CSR

CROSS SECTIONS - RAMP R
STA. 264+50.00 TO STA. 265+00.00

FRA-270-51.50

277
554

x:\Projects\2013\1321\1010\FRA\92616\roadway\sheets\92616XS550.dgn 12/7/2022 2:58:50 PM cwong

SEEDING	
END WIDTH	SQ. YDS.

ITEM 203 - EMBANKMENT, AS PER PLAN

EX. PAVEMENT

ITEM 671 - EROSION CONTROL MAT

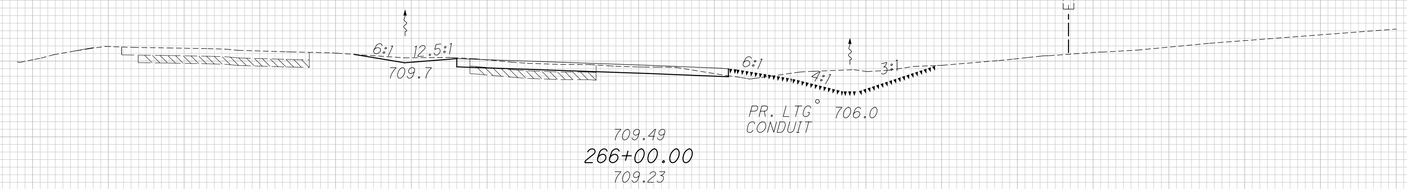

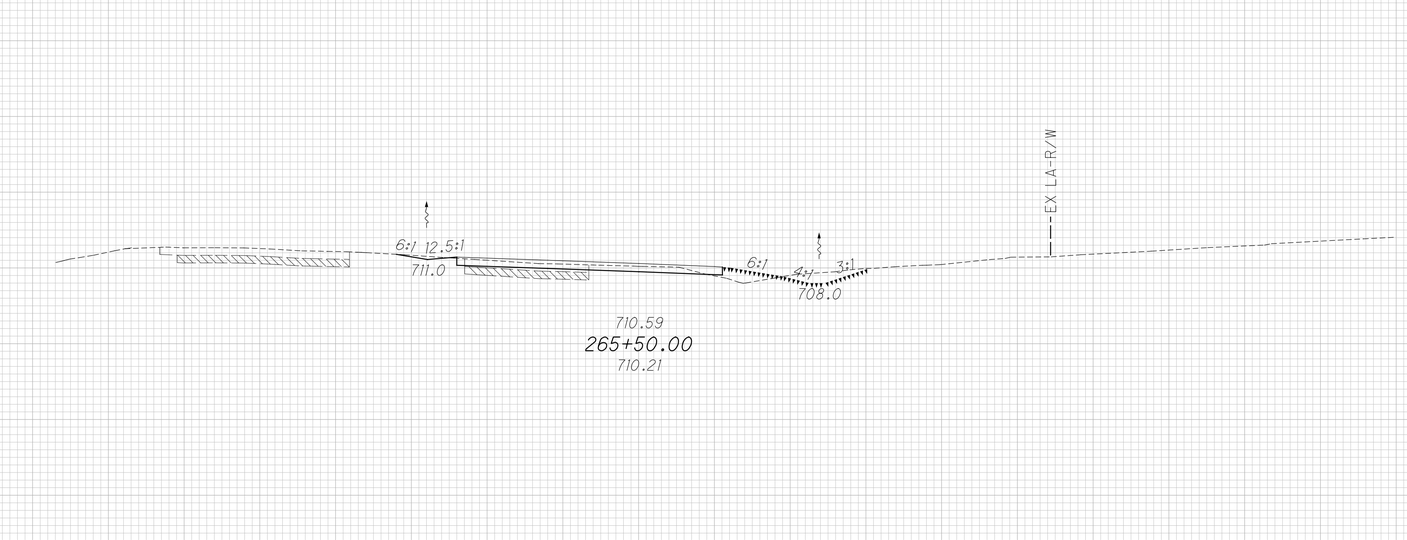

END AREA		VOLUME	
CUT	FILL	CUT	FILL

CALCULATED	CHECKED
JGB	CSR

CROSS SECTIONS - RAMP R
STA. 265+50.00 TO STA. 266+00.00

FRA-270-51.50

278
554

x:\Projects\2013\1321\1010\FRA\92616\roadway\sheets\92616XS550.dgn 12/7/2022 2:58:51 PM cwong

SEEDING	
END WIDTH	SQ. YDS.

ITEM 203 - EMBANKMENT, AS PER PLAN

EX. PAVEMENT

ITEM 671 - EROSION CONTROL MAT

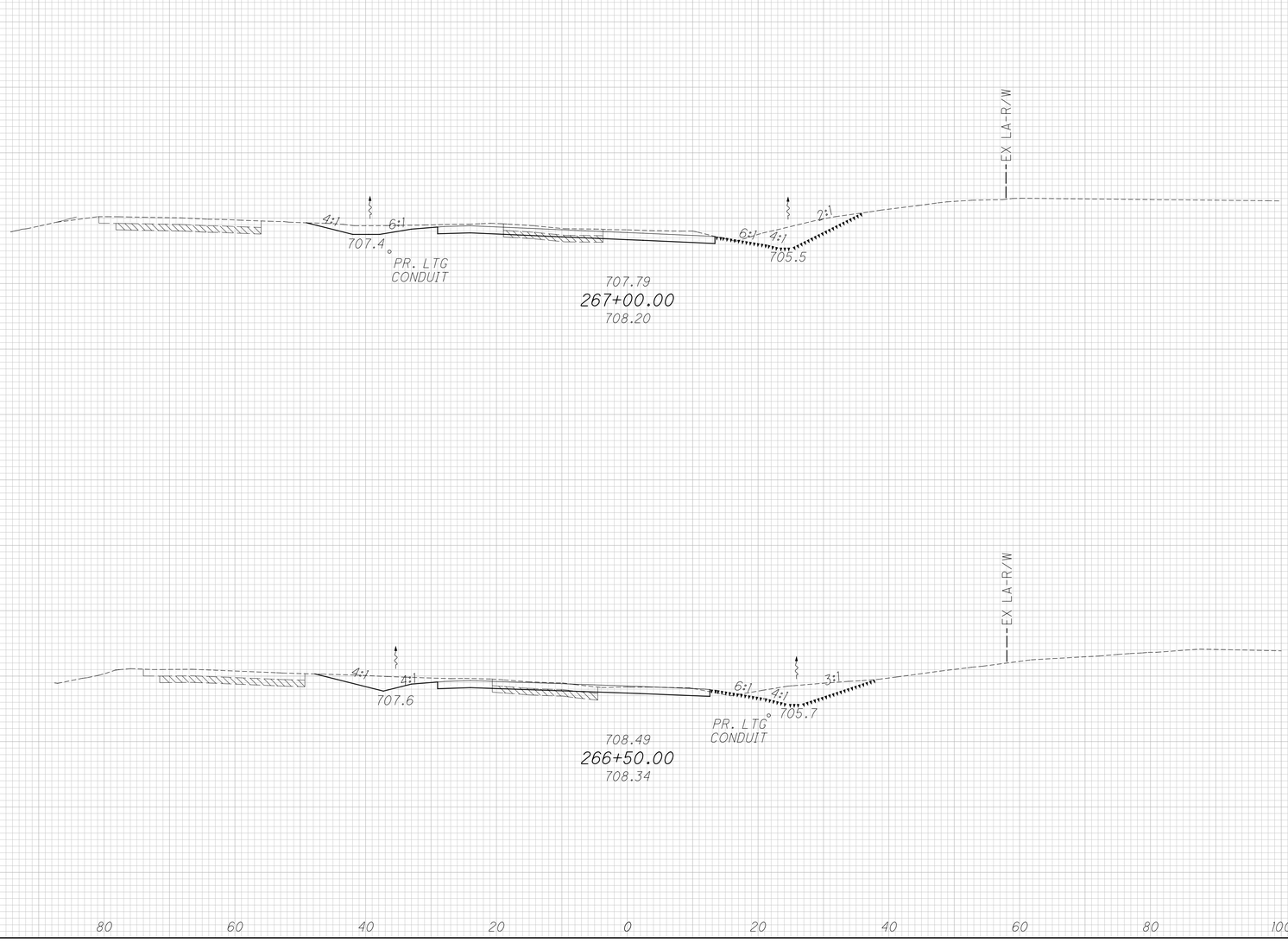

END AREA		VOLUME	
CUT	FILL	CUT	FILL

CALCULATED JGB

CHECKED CSR

CROSS SECTIONS - RAMP R
STA. 266+50.00 TO STA. 267+00.00

FRA-270-51.50

x:\Projects\2013\1321\1010\FRA\92616\roadway\sheets\92616XS550.dgn 12/7/2022 2:58:52 PM cwong

SEEDING	
END WIDTH	SQ. YDS.

ITEM 203 - EMBANKMENT, AS PER PLAN

EX. PAVEMENT

ITEM 671 - EROSION CONTROL MAT

END AREA		VOLUME	
CUT	FILL	CUT	FILL

CALCULATED JGB

CHECKED CSR

CROSS SECTIONS - RAMP R
STA. 267+50.00 TO STA. 268+00.00

FRA-270-51.50

x:\Projects\2013\1321\1010\FRA\92616\roadway\sheets\92616XS550.dgn 12/7/2022 2:58:52 PM cwong

SEEDING	
END WIDTH	SQ. YDS.

ITEM 203 - EMBANKMENT, AS PER PLAN

EX. PAVEMENT

ITEM 671 - EROSION CONTROL MAT

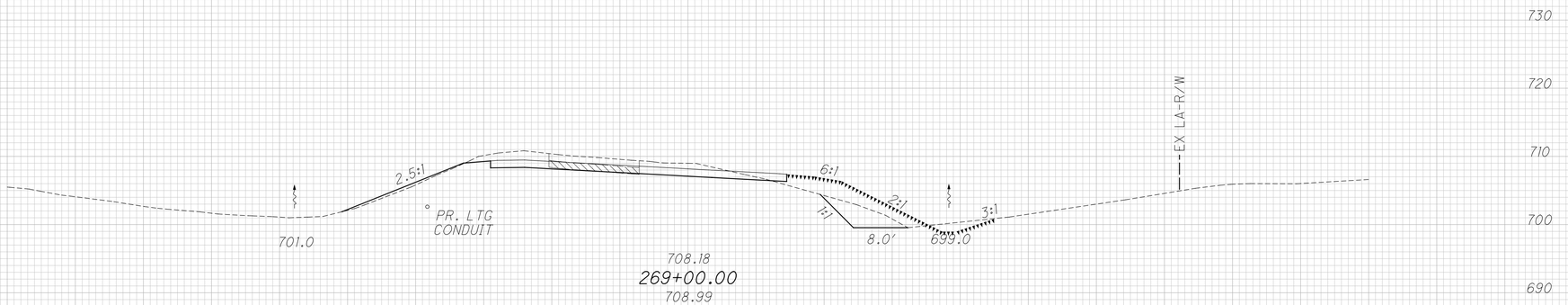

END AREA		VOLUME	
CUT	FILL	CUT	FILL

CALCULATED	CHECKED
JGB	CSR

CROSS SECTIONS - RAMP R
STA. 268+50.00 TO STA. 269+00.00

FRA-270-51.50

281
554

x:\Projects\2013\1321\1010\FRA\92616\roadway\sheets\92616XS550.dgn 12/7/2022 2:58:53 PM cwong

SEEDING	
END WIDTH	SQ. YDS.

END AREA	
CUT	FILL

VOLUME	
CUT	FILL

CALCULATED JGB

CHECKED CSR

ITEM 203 - EMBANKMENT, AS PER PLAN

EX. PAVEMENT

ITEM 671 - EROSION CONTROL MAT

730
720
710
700
690
680

PR. LTG CONDUIT

710.27
270+00.00
711.34

6:1
1:1
8.0'
2:1
1:1
19.8'
2:1
2.5:1
695.8
EX LA-R/W

730
720
710
700
690
680

PR. LTG CONDUIT

699.9

2.5:1
709.07
269+50.00
710.02

6:1
1:1
8.0'
2:1
1:1
8.0'
2:1
697.0
EX LA-R/W

730
720
710
700
690
680

140 120 100 80 60 40 20 0 20 40 60 80 100 120

CROSS SECTIONS - RAMP R
STA. 269+50.00 TO STA. 270+00.00

FRA-270-51.50

x:\Projects\2013\1321\1010\FRA\92616\roadway\sheets\92616XS550.dgn 12/7/2022 2:58:53 PM cwong

SEEDING	
END WIDTH	SQ. YDS.

ITEM 203 - EMBANKMENT, AS PER PLAN

EX. PAVEMENT

ITEM 671 - EROSION CONTROL MAT

END AREA		VOLUME	
CUT	FILL	CUT	FILL

CALCULATED JGB

CHECKED CSR

CROSS SECTIONS - RAMP R
STA. 270+50.00 TO STA. 271+00.00

FRA-270-51.50

x:\Projects\2013\1321\1010\FRA\92616\roadway\sheets\92616XS550.dgn 12/7/2022 2:58:54 PM cwong

SEEDING	
END WIDTH	SQ. YDS.

ITEM 203 - EMBANKMENT, AS PER PLAN

EX. PAVEMENT

ITEM 671 - EROSION CONTROL MAT

END AREA		VOLUME	
CUT	FILL	CUT	FILL

CALCULATED JGB

CHECKED CSR

CROSS SECTIONS - RAMP R
STA. 271+50.00 TO STA. 272+00.00

FRA-270-51.50

x:\Projects\2013\1321\1010\FRA\92616\roadway\sheets\92616XS550.dgn 12/7/2022 2:58:54 PM cwoung

SEEDING	
END WIDTH	SQ. YDS.

END AREA		VOLUME	
CUT	FILL	CUT	FILL

CALCULATED JGB
CHECKED CSR

ITEM 203 - EMBANKMENT, AS PER PLAN

EX. PAVEMENT

ITEM 671 - EROSION CONTROL MAT

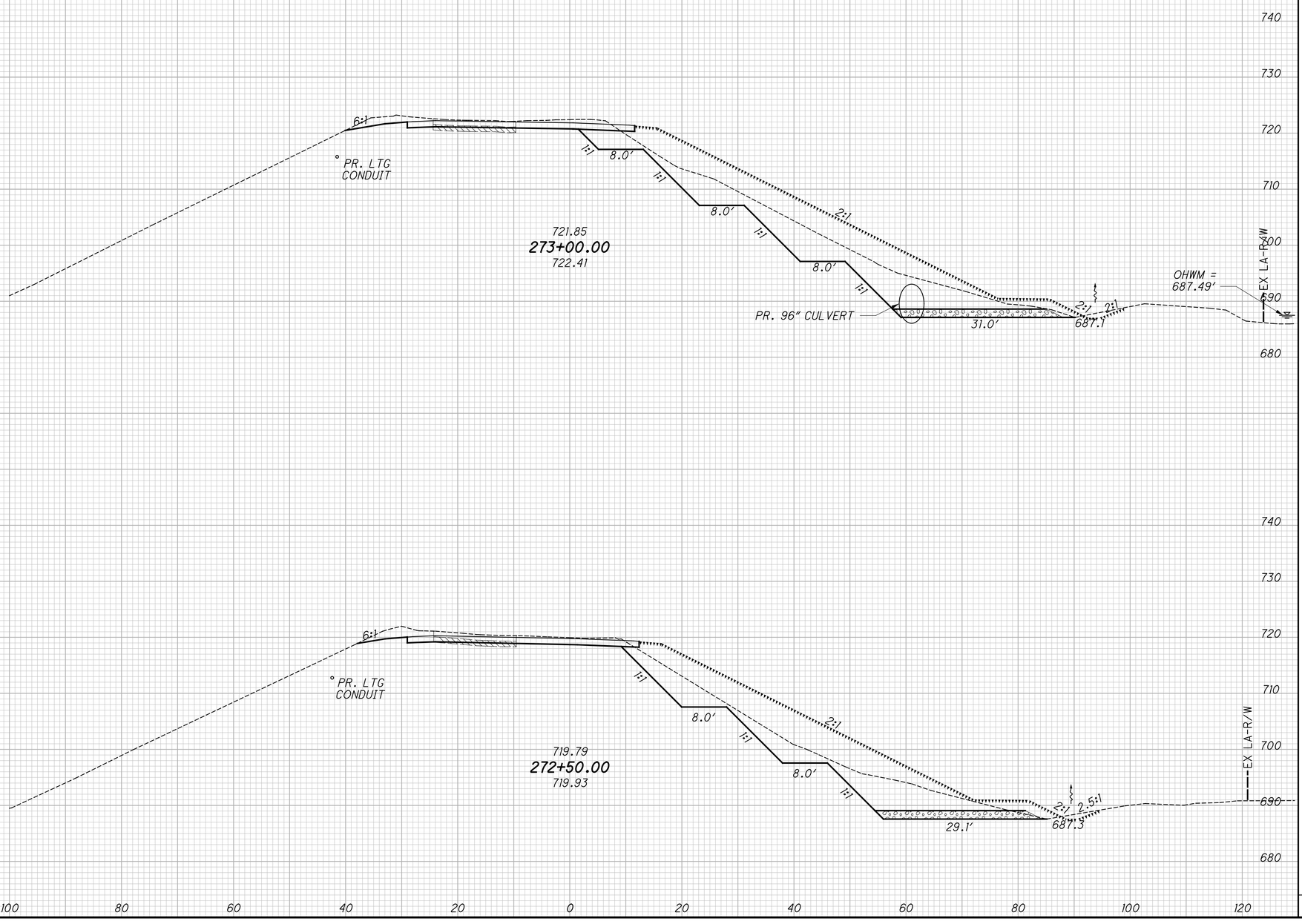

CROSS_SECTIONS_-_RAMP_R
STA._272+50.00_TO_STA._273+00.00

FRA-270-51.50

285
554

X:\Projects\2013\132\1010\FRA\92616\roadway\sheets\92616XS550.dgn 2/1/2023 12:23:29 PM cwong

SEEDING	
END WIDTH	SQ. YDS.

ITEM 203 - EMBANKMENT, AS PER PLAN

EX. PAVEMENT

ITEM 671 - EROSION CONTROL MAT

END AREA		VOLUME	
CUT	FILL	CUT	FILL

CALCULATED JGB

CHECKED CSR

CROSS SECTIONS - RAMP R
STA. 273+50.00 TO STA. 274+00.00

FRA-270-51.50

x:\Projects\2013\1321\1010\FRA\92616\roadway\sheets\92616XS550.dgn 12/7/2022 2:58:56 PM cwong

SEEDING	
END WIDTH	SQ. YDS.

ITEM 203 - EMBANKMENT, AS PER PLAN

EX. PAVEMENT

ITEM 671 - EROSION CONTROL MAT

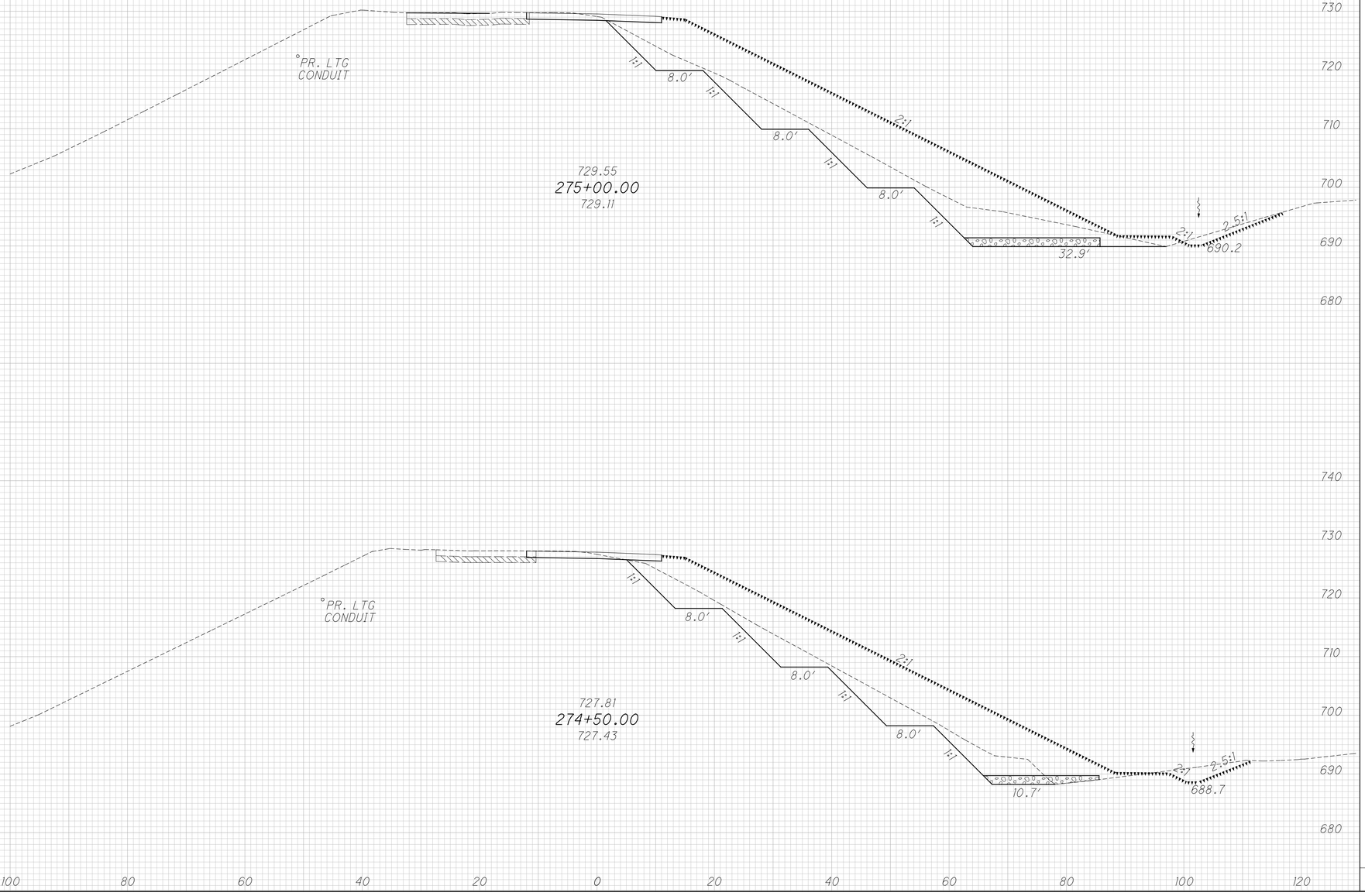

END AREA		VOLUME	
CUT	FILL	CUT	FILL

CALCULATED	CHECKED
JGB	CSR

CROSS SECTIONS - RAMP R
STA. 274+50.00 TO STA. 275+00.00

FRA-270-51.50

x:\Projects\2013\1321\1010\FRA\92616\roadway\sheets\92616XS550.dgn 12/7/2022 2:58:56 PM cwong

SEEDING	
END WIDTH	SQ. YDS.

ITEM 203 - EMBANKMENT, AS PER PLAN

EX. PAVEMENT

ITEM 671 - EROSION CONTROL MAT

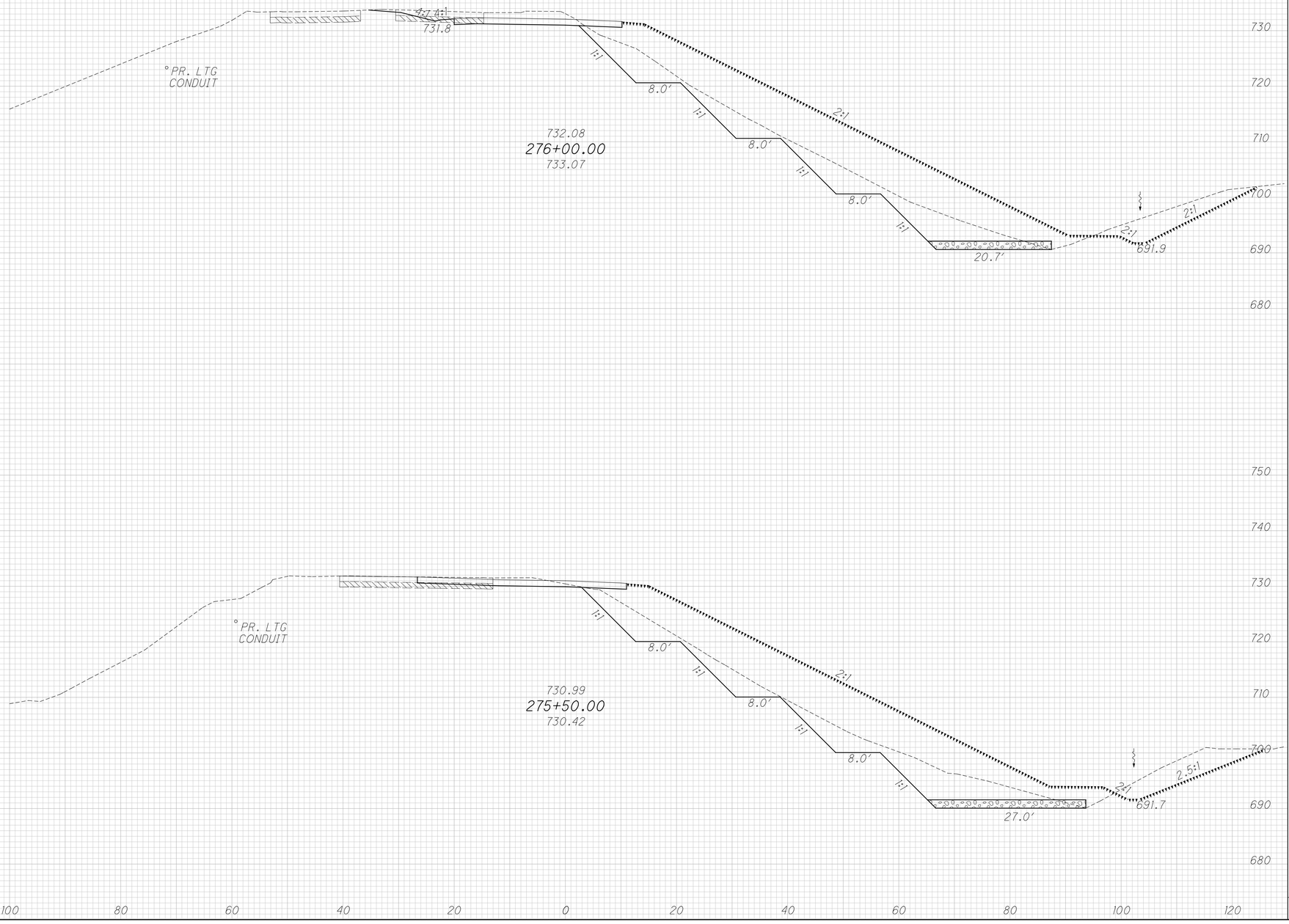

END AREA		VOLUME	
CUT	FILL	CUT	FILL

CALCULATED	CHECKED
JGB	CSR

CROSS SECTIONS - RAMP R
STA. 275+50.00 TO STA. 276+00.00

FRA-270-51.50

x:\Projects\2013\1321\1010\FRA\92616\roadway\sheets\92616XS550.dgn 12/7/2022 2:58:57 PM cwong

SEEDING	
END WIDTH	SQ. YDS.

ITEM 203 - EMBANKMENT, AS PER PLAN

EX. PAVEMENT

ITEM 671 - EROSION CONTROL MAT

750 740 730 720 710 700 690 680

4:1 6' 731.4 1:1 8.0' 1:1 8.0' 1:1 8.0' 1:1 2:1 2.5:1 24.1' 692.2

733.21
277+00.00
730.80

750 740 730 720 710 700 690 680

4:1 6' 731.6 1:1 8.0' 1:1 8.0' 1:1 8.0' 1:1 2:1 2.5:1 21.2' 692.0

PR. LTG CONDUIT

733.22
276+50.00
732.97

140 120 100 80 60 40 20 0 20 40 60 80 100 120

END AREA		VOLUME	
CUT	FILL	CUT	FILL

CALCULATED JGB
CHECKED CSR

CROSS SECTIONS - RAMP R
STA. 276+50.00 TO STA. 277+00.00

FRA-270-51.50

289
554

x:\Projects\2013\1321\1010\FRA\92616\roadway\sheets\92616XS550.dgn 12/7/2022 2:58:58 PM cwong

SEEDING	
END WIDTH	SQ. YDS.

ITEM 203 - EMBANKMENT, AS PER PLAN

EX. PAVEMENT

ITEM 671 - EROSION CONTROL MAT

12.5:1
PR. LTG CONDUIT
1:1
8.0'
1:1
8.0'
1:1
8.0'
1:1
2:1
732.96
278+00.00
732.53
26.8'
2:1
2:1
693.1

750 740 730 720 710 700 690 680

4:1
730.7
PR. LTG CONDUIT
6:1
1:1
8.0'
1:1
8.0'
1:1
8.0'
1:1
2:1
733.26
277+50.00
732.57
26.2'
2:1
2:1
692.5

750 740 730 720 710 700 690 680

140 120 100 80 60 40 20 0 20 40 60 80 100 120

END AREA		VOLUME	
CUT	FILL	CUT	FILL

CALCULATED JGB
CHECKED CSR

CROSS SECTIONS - RAMP R
STA. 277+50.00 TO STA. 278+00.00

FRA-270-51.50

290
554

x:\Projects\2013\1321\1010\FRA\92616\roadway\sheets\92616XS550.dgn 12/7/2022 2:58:58 PM cwong

SEEDING	
END WIDTH	SQ. YDS.

ITEM 203 - EMBANKMENT, AS PER PLAN

EX. PAVEMENT

ITEM 671 - EROSION CONTROL MAT

END AREA		VOLUME	
CUT	FILL	CUT	FILL

CALCULATED JGB

CHECKED CSR

CROSS SECTIONS - RAMP R
STA. 278+50.00 TO STA. 279+00.00

FRA-270-51.50

x:\Projects\2013\1321\1010\FRA\92616\roadway\sheets\92616XS550.dgn 12/7/2022 2:58:59 PM cwong

SEEDING	
END WIDTH	SQ. YDS.

ITEM 203 - EMBANKMENT, AS PER PLAN

EX. PAVEMENT

ITEM 671 - EROSION CONTROL MAT

END AREA		VOLUME	
CUT	FILL	CUT	FILL

CALCULATED JGB

CHECKED CSR

CROSS SECTIONS - RAMP R
STA. 279+50.00 TO STA. 280+00.00

FRA-270-51.50

292
554

x:\Projects\2013\1321\1010\FRA\92616\roadway\sheets\92616XS550.dgn 12/7/2022 2:58:59 PM cwong

SEEDING	
END WIDTH	SQ. YDS.

ITEM 203 - EMBANKMENT, AS PER PLAN

EX. PAVEMENT

ITEM 671 - EROSION CONTROL MAT

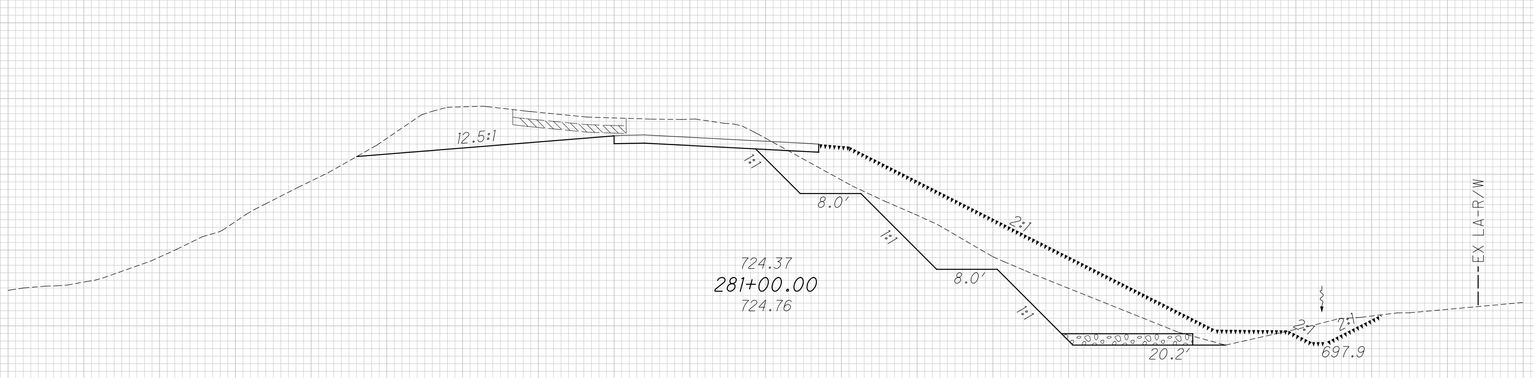

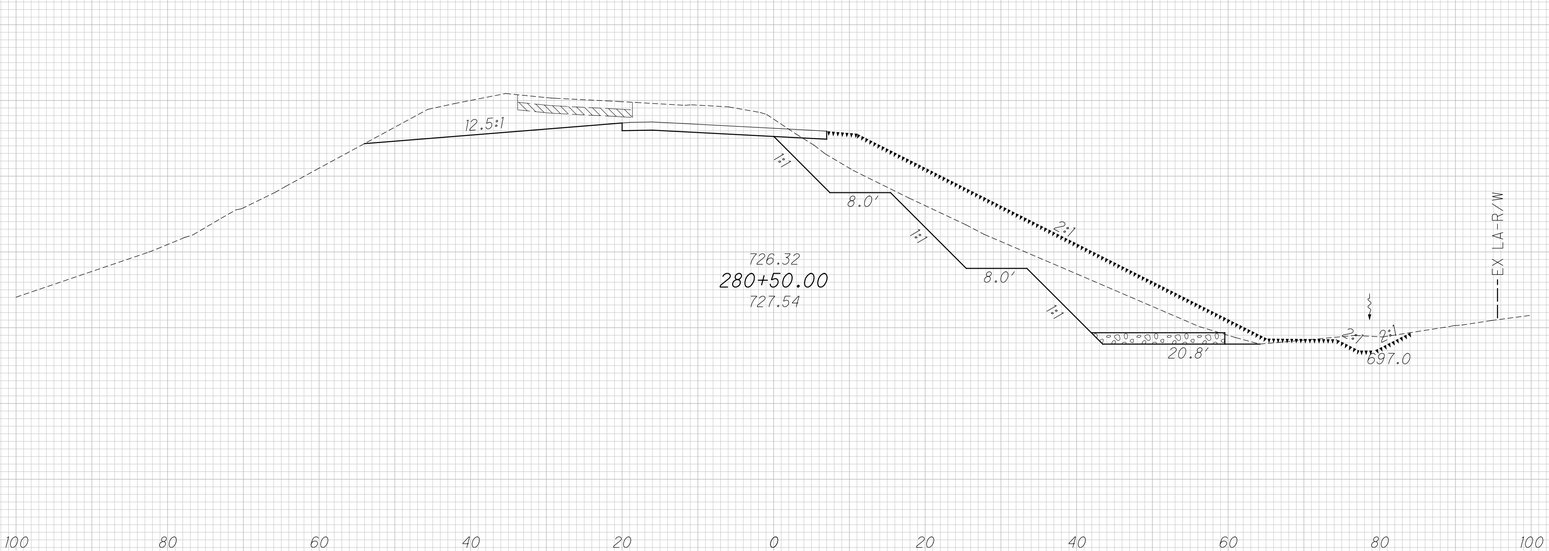

END AREA		VOLUME	
CUT	FILL	CUT	FILL

CALCULATED JGB

CHECKED CSR

CROSS SECTIONS - RAMP R
STA. 280+50.00 TO STA. 281+00.00

FRA-270-51.50

x:\Projects\2013\1321\1010\FRA\92616\roadway\sheets\92616XS550.dgn 12/7/2022 2:59:00 PM cwong

SEEDING	
END WIDTH	SQ. YDS.

ITEM 203 - EMBANKMENT, AS PER PLAN

EX. PAVEMENT

ITEM 671 - EROSION CONTROL MAT

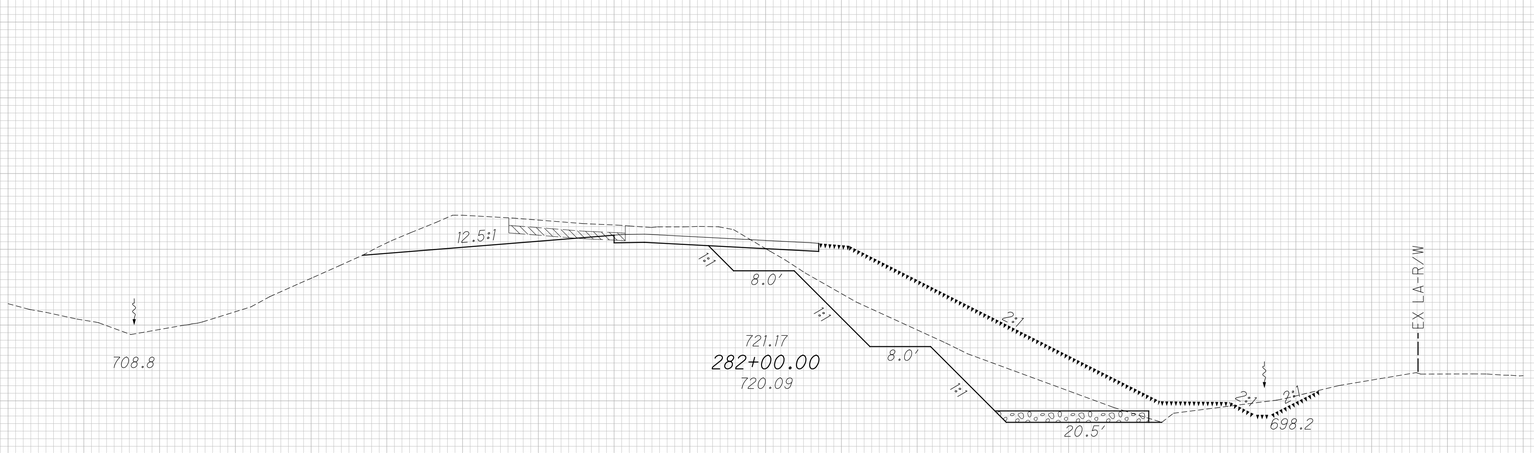

END AREA		VOLUME	
CUT	FILL	CUT	FILL

CALCULATED JGB

CHECKED CSR

CROSS SECTIONS - RAMP R
STA. 281+50.00 TO STA. 282+00.00

FRA-270-51.50

x:\Projects\2013\1321\1010\FRA\92616\roadway\sheets\92616XS550.dgn 12/7/2022 2:59:01 PM cwong

SEEDING	
END WIDTH	SQ. YDS.

ITEM 203 - EMBANKMENT, AS PER PLAN

EX. PAVEMENT

ITEM 671 - EROSION CONTROL MAT

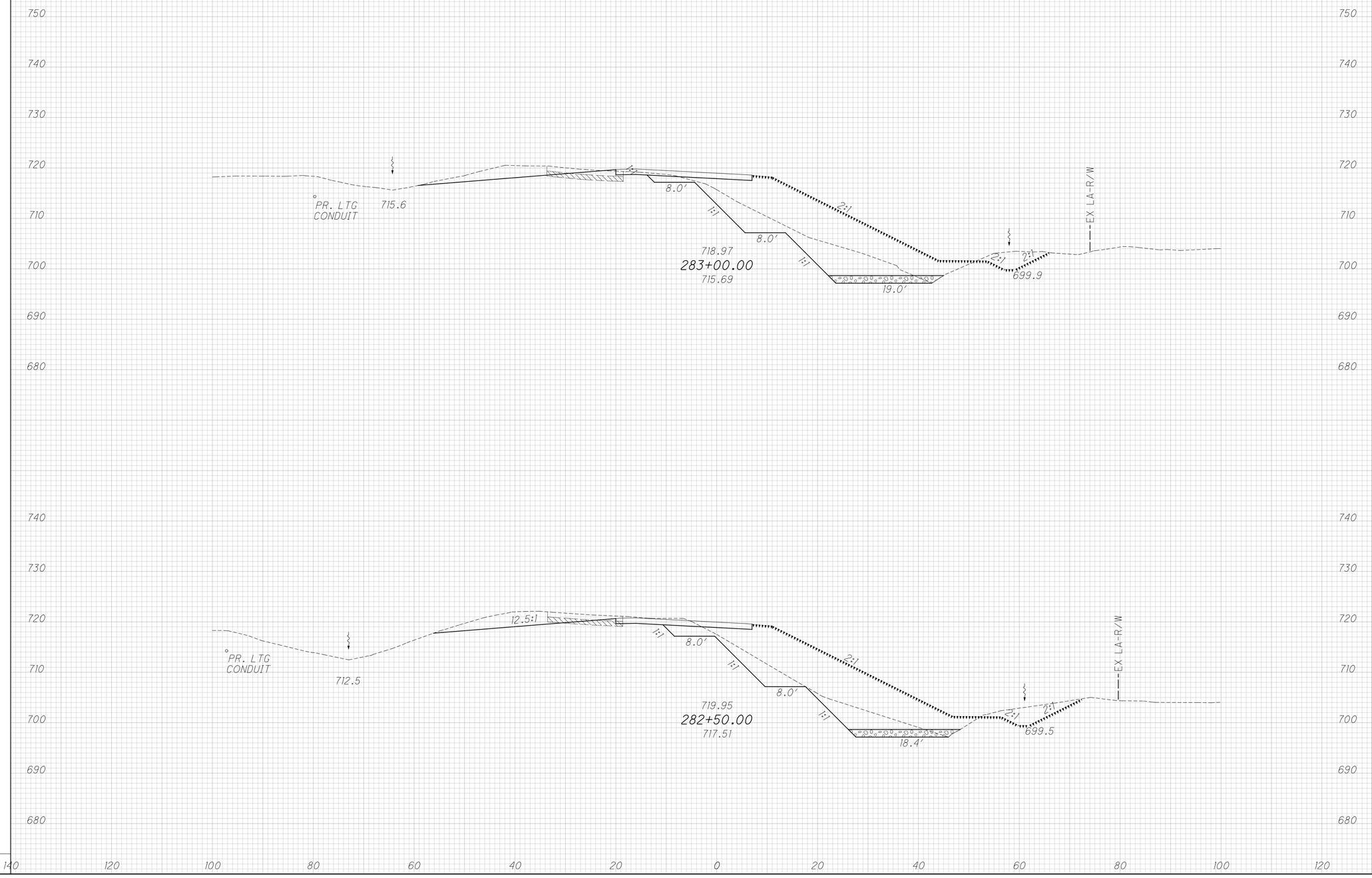

END AREA		VOLUME	
CUT	FILL	CUT	FILL

CALCULATED	CHECKED
JGB	CSR

CROSS SECTIONS - RAMP R
STA. 282+50.00 TO STA. 283+00.00

FRA-270-51.50

x:\Projects\2013\1321\1010\FRA\92616\roadway\sheets\92616XS550.dgn 12/7/2022 2:59:01 PM cwong

SEEDING	
END WIDTH	SQ. YDS.

ITEM 203 - EMBANKMENT, AS PER PLAN

EX. PAVEMENT

ITEM 671 - EROSION CONTROL MAT

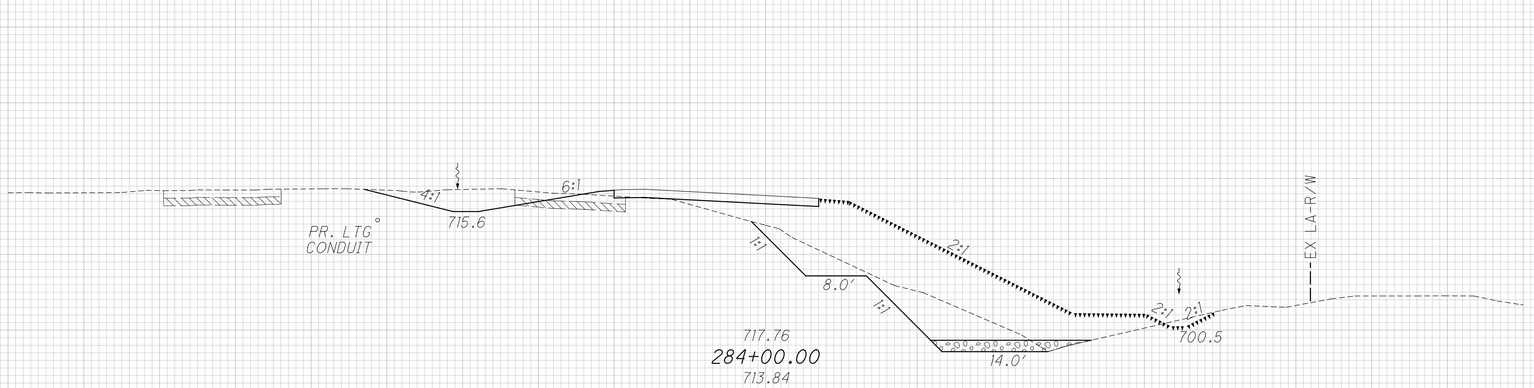

END AREA		VOLUME	
CUT	FILL	CUT	FILL

CALCULATED JGB

CHECKED CSR

CROSS SECTIONS - RAMP R
STA. 283+50.00 TO STA. 284+00.00

FRA-270-51.50

296
554

x:\Projects\2013\1321\1010\FRA\92616\roadway\sheets\92616XS550.dgn 12/7/2022 2:59:02 PM cwang

SEEDING	
END WIDTH	SQ. YDS.

ITEM 203 - EMBANKMENT, AS PER PLAN

EX. PAVEMENT

ITEM 671 - EROSION CONTROL MAT

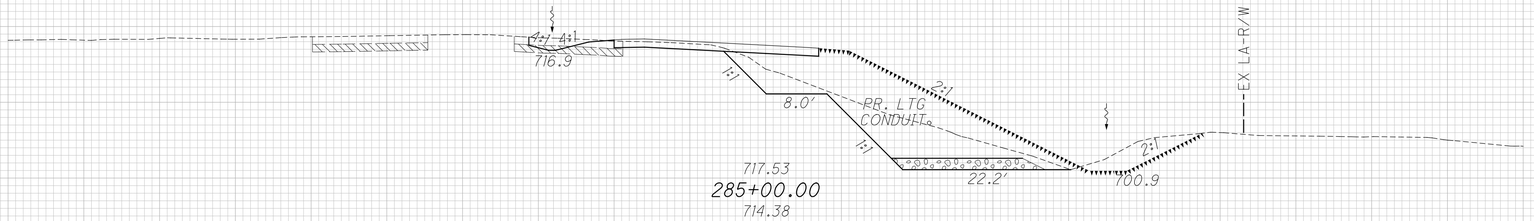

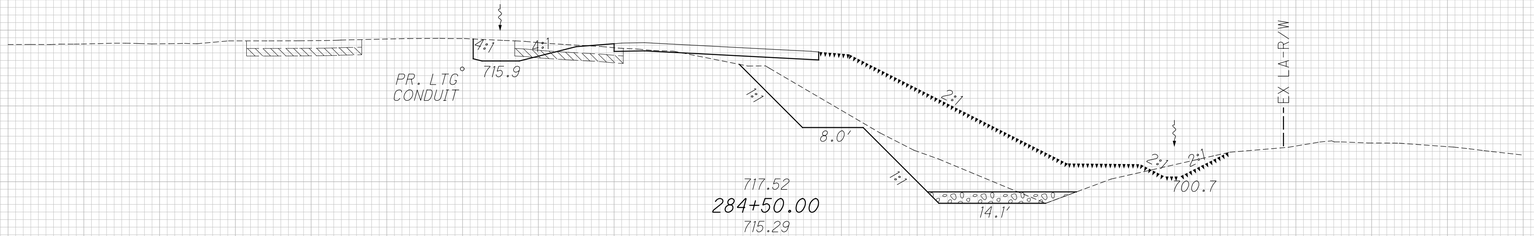

END AREA		VOLUME	
CUT	FILL	CUT	FILL

CALCULATED JGB

CHECKED CSR

CROSS SECTIONS - RAMP R
STA. 284+50.00 TO STA. 285+00.00

FRA-270-51.50

297
554

x:\Projects\2013\1321\1010\FRA\92616\roadway\sheets\92616XS550.dgn 12/7/2022 2:59:02 PM cwang

SEEDING	
END WIDTH	SQ. YDS.

ITEM 203 - EMBANKMENT, AS PER PLAN

EX. PAVEMENT

ITEM 671 - EROSION CONTROL MAT

END AREA		VOLUME	
CUT	FILL	CUT	FILL

CALCULATED JGB

CHECKED CSR

CROSS SECTIONS - RAMP R
STA. 285+50.00 TO STA. 286+00.00

FRA-270-51.50

298
554

x:\Projects\2013\1321\1010\FRA\92616\roadway\sheets\92616XS550.dgn 12/7/2022 2:59:03 PM cwang

SEEDING	
END WIDTH	SQ. YDS.

ITEM 203 - EMBANKMENT, AS PER PLAN

EX. PAVEMENT

ITEM 671 - EROSION CONTROL MAT

END AREA		VOLUME	
CUT	FILL	CUT	FILL

CALCULATED JGB

CHECKED CSR

CROSS SECTIONS - RAMP R
STA. 286+50.00 TO STA. 287+00.00

FRA-270-51.50

299
554

x:\Projects\2013\1321\1010\FRA\92616\roadway\sheets\92616XS550.dgn 12/7/2022 2:59:03 PM cwong

SEEDING	
END WIDTH	SQ. YDS.

ITEM 203 - EMBANKMENT, AS PER PLAN

EX. PAVEMENT

ITEM 671 - EROSION CONTROL MAT

END AREA		VOLUME	
CUT	FILL	CUT	FILL

CALCULATED JGB

CHECKED CSR

CROSS SECTIONS - RAMP R
STA. 287+50.00 TO STA. 287+90.80.00

FRA-270-51.50

x:\Projects\2013\1321\1010\FRA\92616\roadway\sheets\92616XS550.dgn 12/7/2022 2:59:04 PM cwong

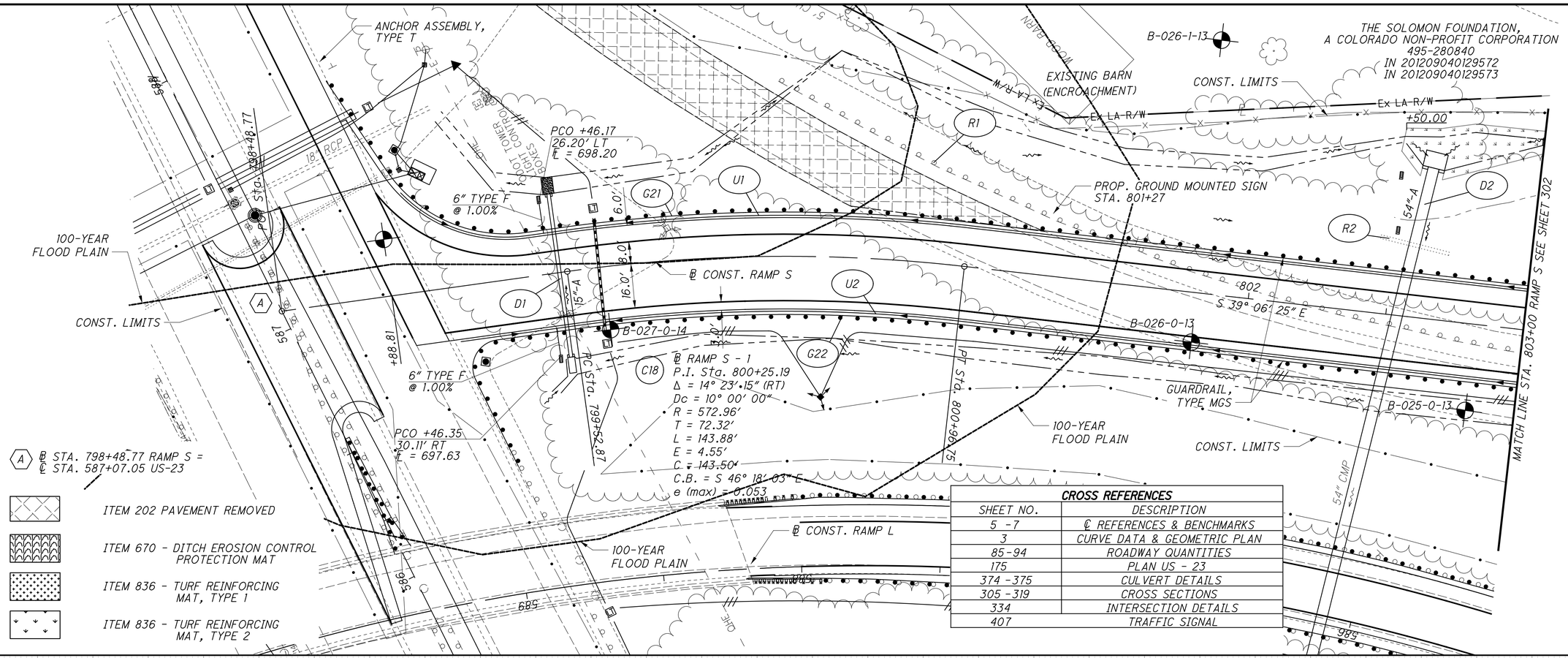

CROSS REFERENCES	
SHEET NO.	DESCRIPTION
5 -7	℄ REFERENCES & BENCHMARKS
3	CURVE DATA & GEOMETRIC PLAN
85-94	ROADWAY QUANTITIES
175	PLAN US - 23
374 -375	CULVERT DETAILS
305 -319	CROSS SECTIONS
334	INTERSECTION DETAILS
407	TRAFFIC SIGNAL

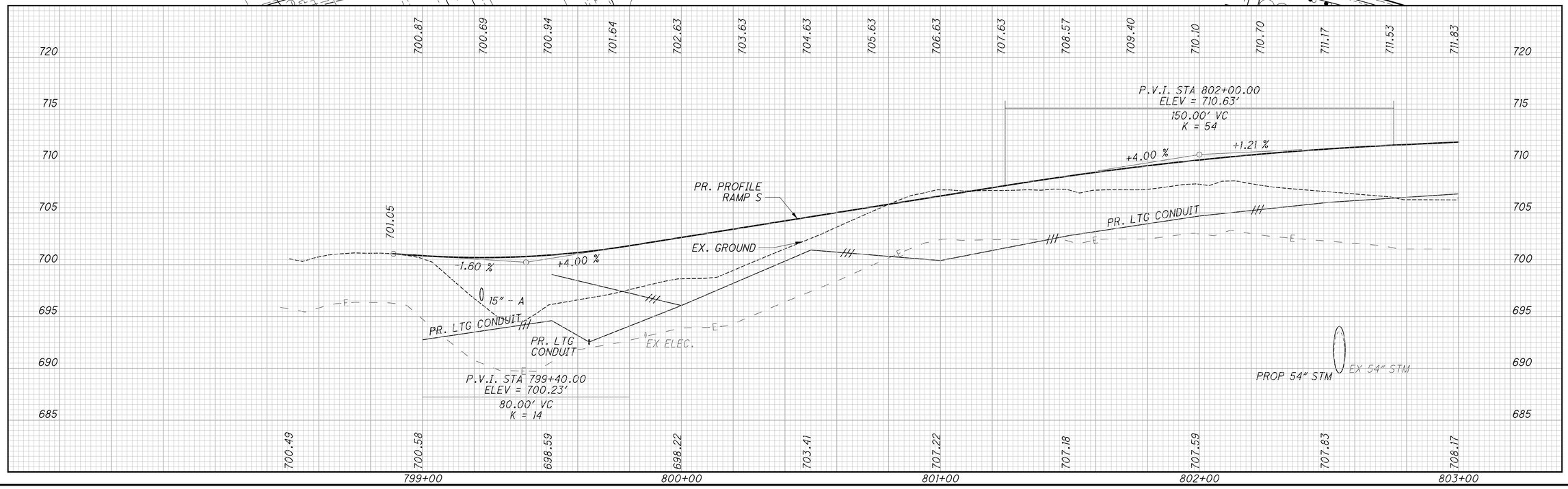

HORIZONTAL SCALE IN FEET
0 20 40
CALCULATED JGB
CHECKED CSR

PLAN AND PROFILE RAMP S
STA. 798+48.77 TO STA. 803+00.00

FRA-270-51.50

301
554

X:\Projects\2013\1321\1010\FRA\92616\roadway\sheets\92616GP601.dgn 2/9/2023 1:54:15 PM cwong

C-19 ℄ RAMP S - 2
P.I. Sta. 806+85.23
Δ = 29° 05′ 45″ (LT)
Dc = 4° 00′ 00″
R = 1,432.39′
T = 371.72′
L = 727.40′
E = 47.45′
C = 719.61′
C.B. = S 53° 39′ 18″ E
e (max) = 0.040

CROSS REFERENCES	
SHEET NO.	DESCRIPTION
5 -7	℄ REFERENCES & BENCHMARKS
3	CURVE DATA & GEOMETRIC PLAN
85-94	ROADWAY QUANTITIES
305-319	CROSS SECTIONS
335-336	GORE DETAILS

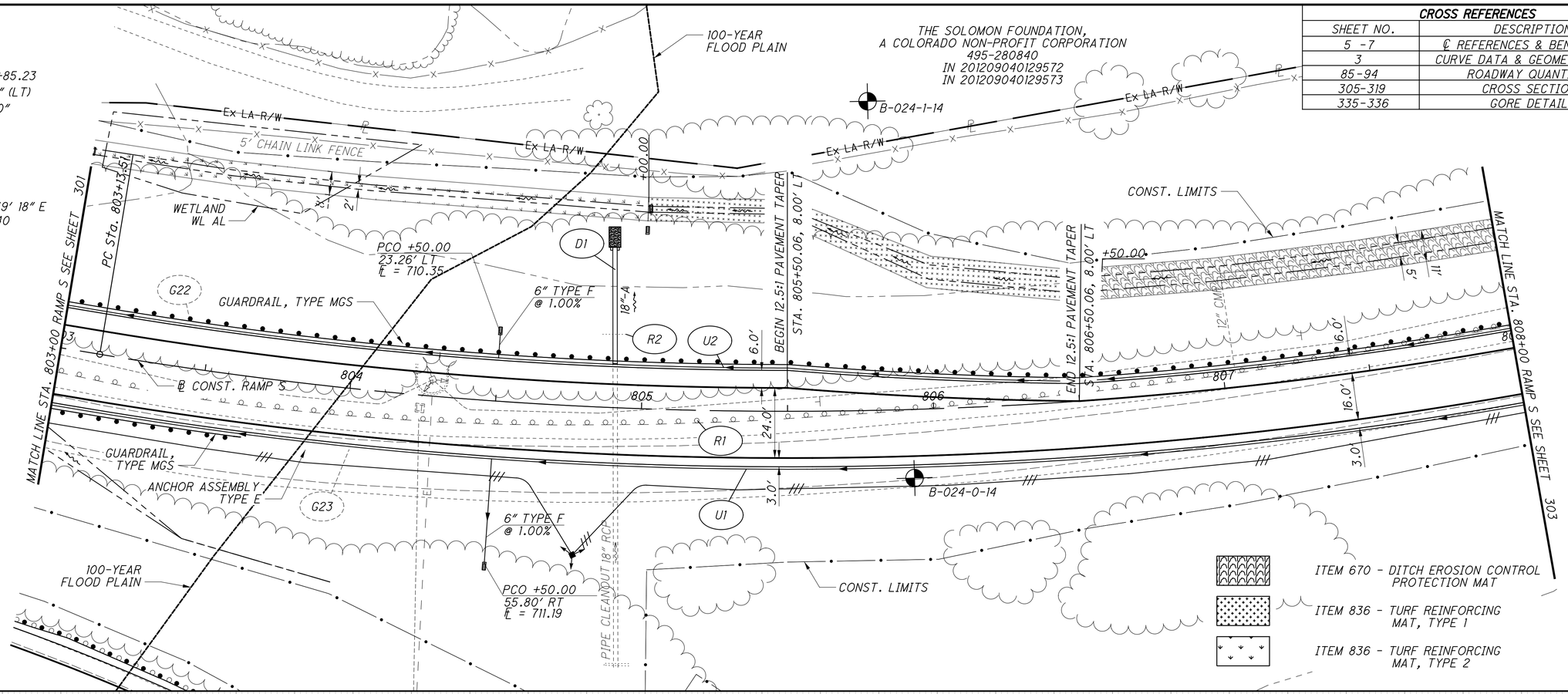

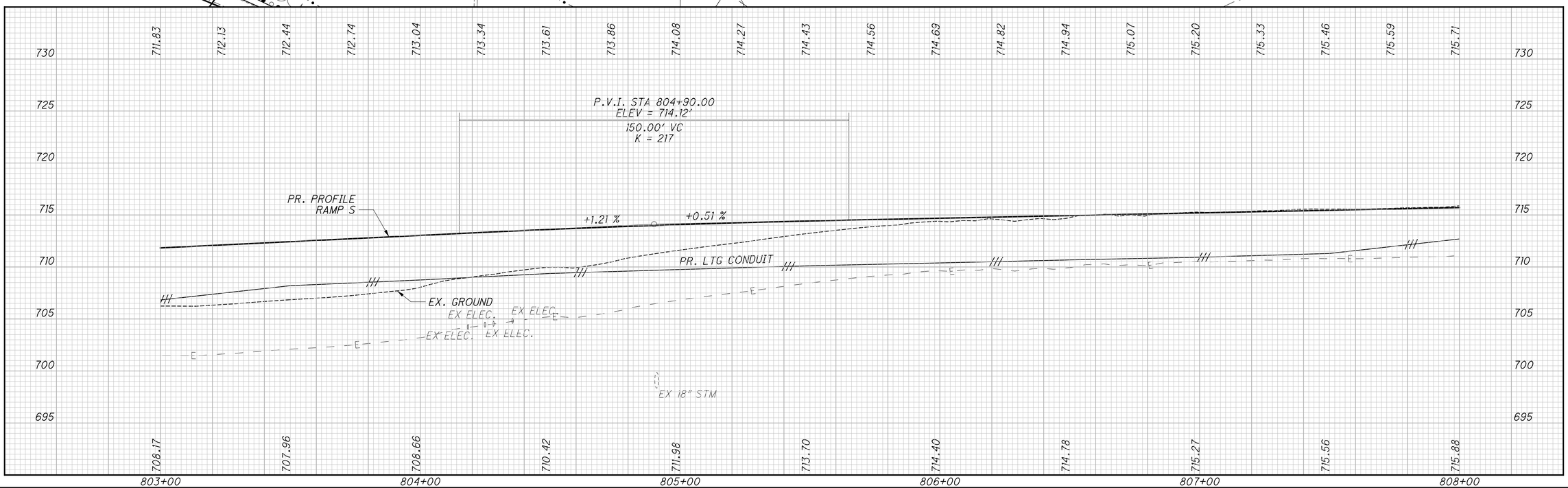

PLAN AND PROFILE RAMP S
STA. 803+00.00 TO STA. 808+00.00

FRA-270-51.50

302
554

HORIZONTAL SCALE IN FEET
0 20 40

CALCULATED JGB
CHECKED CSR

X:\Projects\2013\1321\1010\FRA\92616\roadway\sheets\92616GP602.dgn 3/29/2023 10:58:11 AM cwong

CROSS REFERENCES	
SHEET NO.	DESCRIPTION
5 - 7	℄ REFERENCES & BENCHMARKS
3	CURVE DATA & GEOMETRIC PLAN
85 - 94	ROADWAY QUANTITIES
305 - 319	CROSS SECTIONS

C-20 ℄ RAMP S - 3
P.I. Sta. 814+18.98
Δ = 15° 02′ 10″ (LT)
Dc = 2° 00′ 00″
R = 2,864.79′
T = 378.08′
L = 751.81′
E = 24.84′
C = 749.65′
C.B. = S 75° 43′ 15″ E
e = OVERLAY EXISTING

THE SOLOMON FOUNDATION,
A COLORADO NON-PROFIT CORPORATION
495-280840
IN 201209040129572
IN 201209040129573

Ex LA R/W
5' CHAIN LINK FENCE
Ex LA R/W
Ex LA R/W

MATCH LINE STA. 808+00 RAMP S SEE SHEET 302
MATCH LINE STA. 813+00 RAMP S SEE SHEET 304
PCC Sta. 809+81.35
+50.00
CONST. LIMITS
11'
5'
U1
6.0'
16.0'
3.0'
U2
809
810
811
812
℄ CONST. RAMP S
R1
G22
B-023-0-14
CONST. LIMITS
℄ CONST. IR-270
UEF 288

ITEM 670 - DITCH EROSION CONTROL PROTECTION MAT
ITEM 836 - TURF REINFORCING MAT, TYPE 1
ITEM 836 - TURF REINFORCING MAT, TYPE 2

730 725 720 715 710 705 700 695

715.71 715.84 715.97 716.10 716.23 716.36 716.48 716.61 716.74 716.87 717.00 717.13 717.25 717.38 717.51 717.64 717.77 717.90 718.02 718.15 718.28

715.88 716.09 716.25 716.50 716.68 716.93 717.20 717.33 717.59 718.02 718.21

PR. LTG CONDUIT
PR. PROFILE RAMP S
EX. GROUND
PR. LTG CONDUIT
PR. LTG CONDUIT
PR. LTG CONDUIT
EX ELEC.

808+00 809+00 810+00 811+00 812+00 813+00

HORIZONTAL SCALE IN FEET
0 20 40

CALCULATED JGB
CHECKED CSR

PLAN AND PROFILE RAMP S
STA. 808+00.00 TO STA. 813+00.00

FRA-270-51.50

303
554

x:\Projects\2013\132I\1010\FRA\92616\roadway\sheets\92616GP603.dgn 12/7/2022 2:59:17 PM cwong

CROSS REFERENCES	
SHEET NO.	DESCRIPTION
5 -7	℄ REFERENCES & BENCHMARKS
3	CURVE DATA & GEOMETRIC PLAN
85 -94	ROADWAY QUANTITIES
305 -319	CROSS SECTIONS

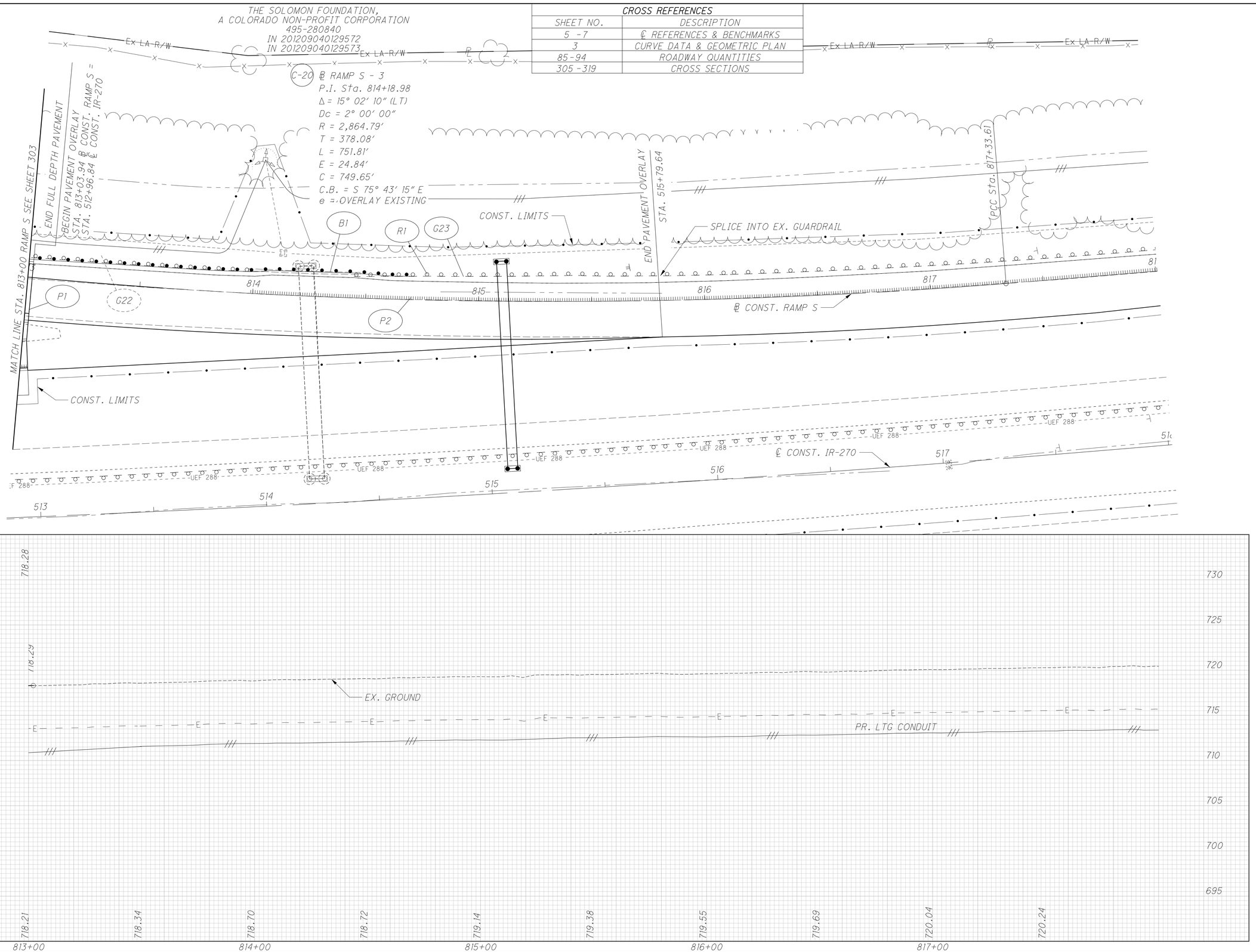

PLAN AND PROFILE RAMP S
STA. 813+00.00 TO STA. 817+93.00

FRA-270-51.50

304
554

CALCULATED JGB
CHECKED CSR

HORIZONTAL SCALE IN FEET
0 20 40

x:\Projects\2013\1321\1010\FRA\92616\roadway\sheets\92616GP604.dgn 12/7/2022 2:59:18 PM cwong

SEEDING	
END WIDTH	SQ. YDS.

END AREA	
CUT	FILL

VOLUME	
CUT	FILL

CALCULATED	CHECKED
ACF	CSR

SPECIAL BENCHING SLOPE DRAINS

EX. PAVEMENT

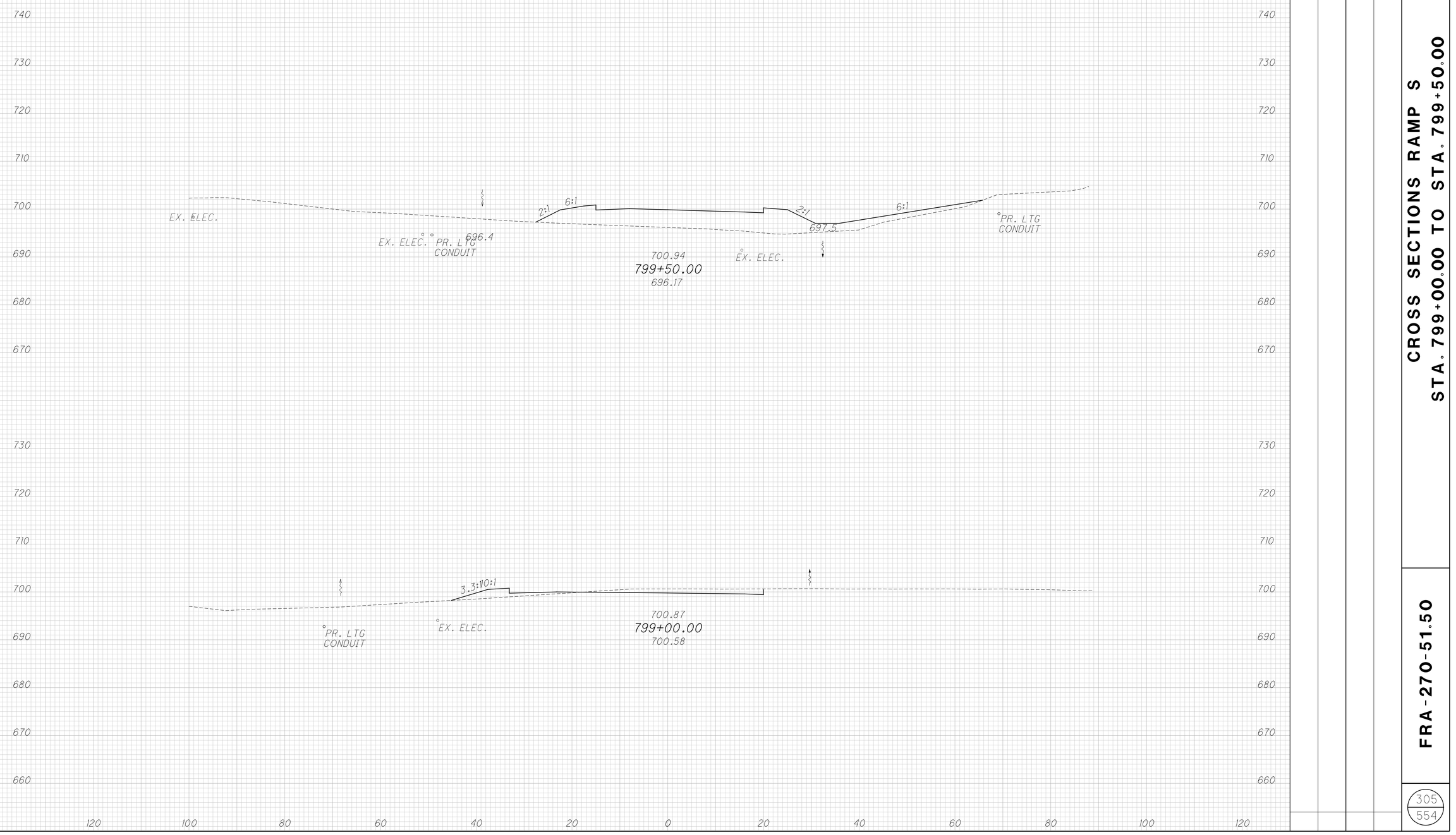

CROSS SECTIONS RAMP S
STA. 799+00.00 TO STA. 799+50.00

FRA-270-51.50

x:\Projects\2013\1321\1010\FRA\92616\roadway\sheets\92616XS600.dgn 12/7/2022 2:59:19 PM cwong

SEEDING	
END WIDTH	SQ. YDS.

END AREA	
CUT	FILL

VOLUME	
CUT	FILL

CALCULATED ACF

CHECKED CSR

SPECIAL BENCHING SLOPE DRAINS

EX. PAVEMENT

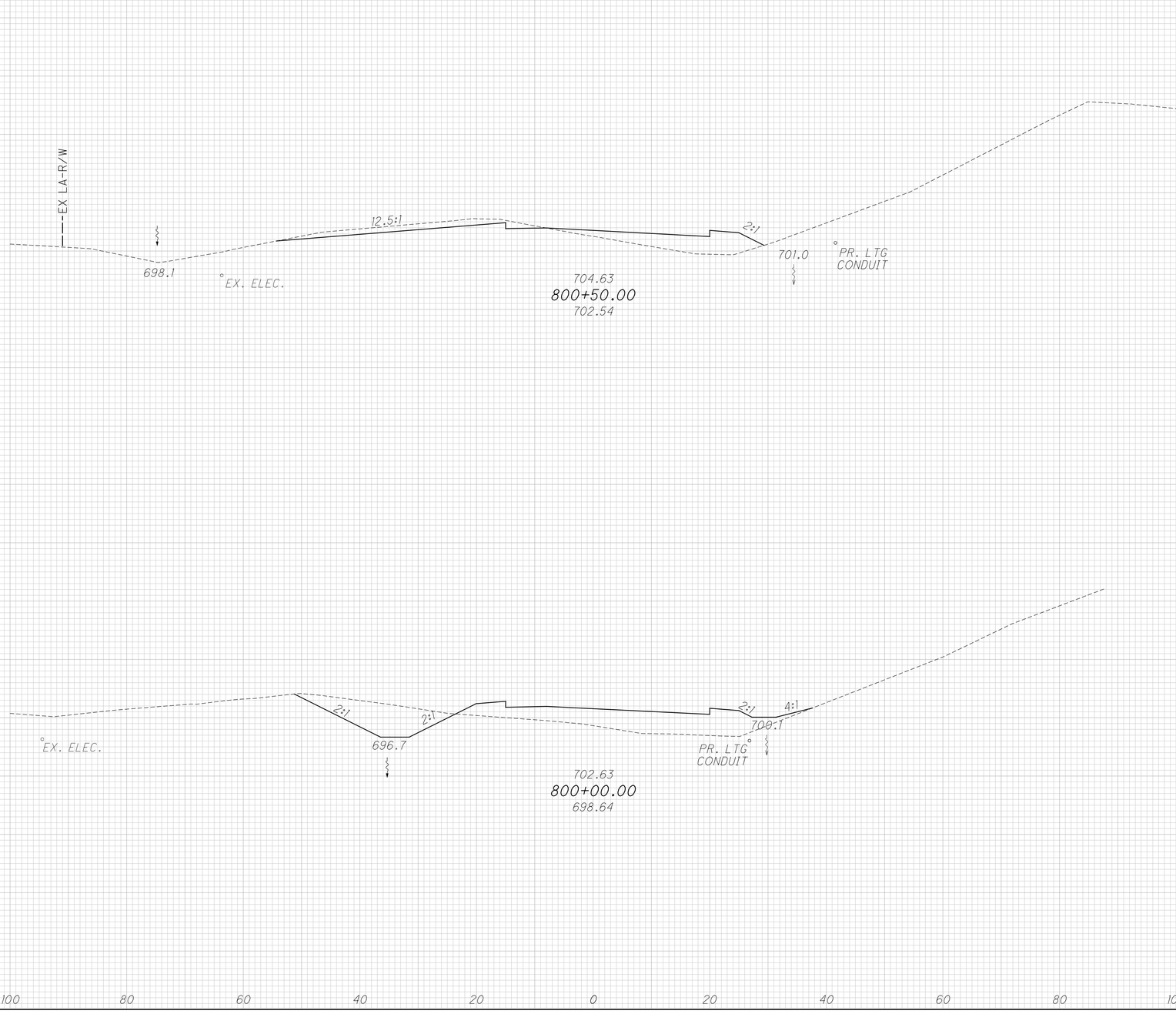

CROSS SECTIONS RAMP S
STA. 800+00.00 TO STA. 800+50.00

FRA-270-51.50

x:\Projects\2013\1321\1010\FRA\92616\roadway\sheets\92616XS600.dgn 12/7/2022 2:59:20 PM cwong

SEEDING	
END WIDTH	SQ. YDS.

END AREA		VOLUME	
CUT	FILL	CUT	FILL

CALCULATED ACF

CHECKED CSR

SPECIAL BENCHING SLOPE DRAINS

EX. PAVEMENT

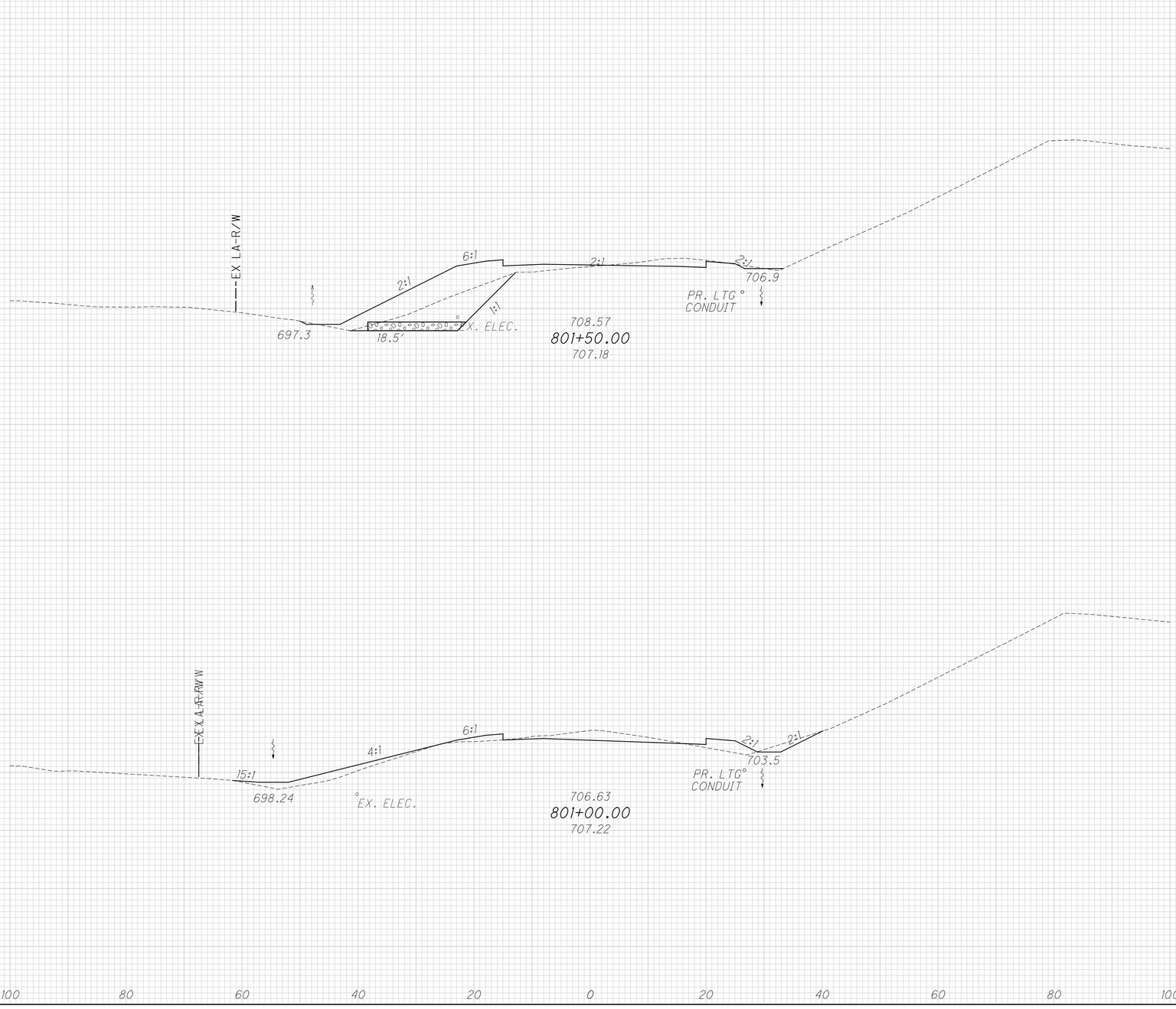

CROSS SECTIONS RAMP S
STA. 801+00.00 TO STA. 801+50.00

FRA-270-51.50

x:\Projects\2013\1321\1010\FRA\92616\roadway\sheets\92616XS600.dgn 12/7/2022 2:59:20 PM cwong

SEEDING	
END WIDTH	SQ. YDS.

END AREA		VOLUME	
CUT	FILL	CUT	FILL

CALCULATED ACF | CHECKED CSR

SPECIAL BENCHING SLOPE DRAINS

EX. PAVEMENT

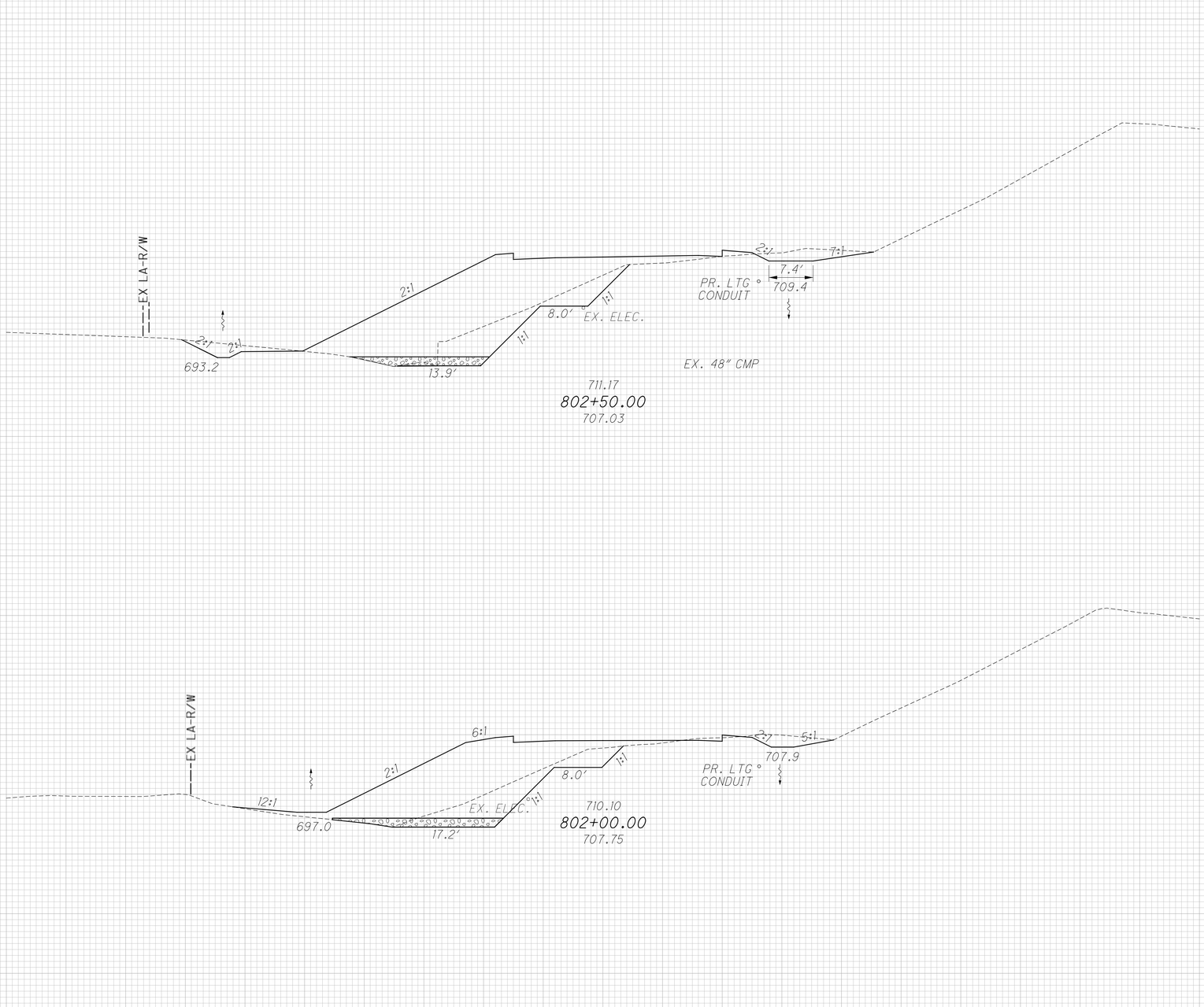

CROSS SECTIONS RAMP S
STA. 802+00.00 TO STA. 802+50.00

FRA-270-51.50

x:\Projects\2013\1321\1010\FRA\92616\roadway\sheets\92616XS600.dgn 12/7/2022 2:59:21 PM cwong

SEEDING	
END WIDTH	SQ. YDS.

SPECIAL BENCHING SLOPE DRAINS

EX. PAVEMENT

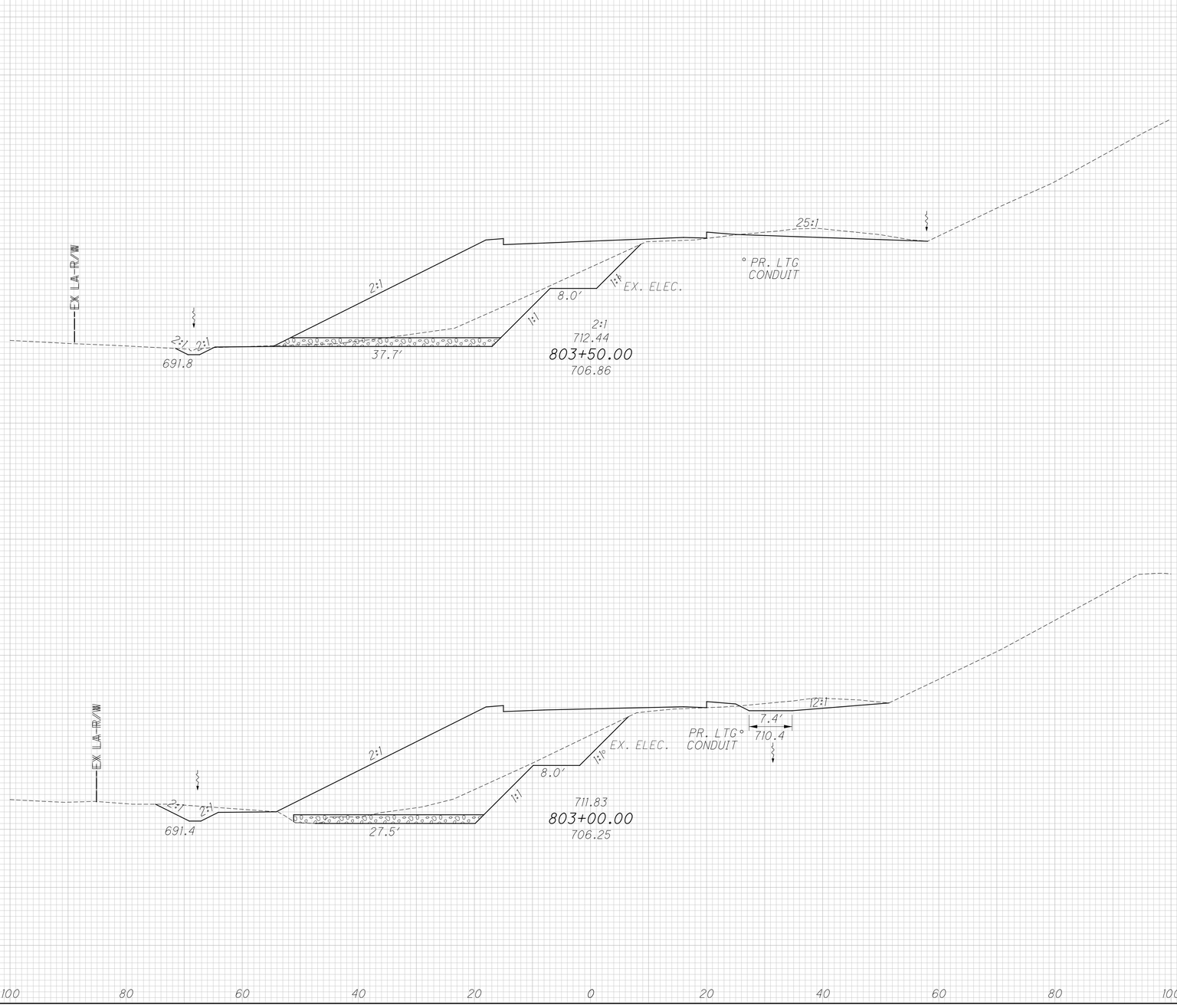

END AREA		VOLUME	
CUT	FILL	CUT	FILL

CALCULATED ACF

CHECKED CSR

CROSS SECTIONS RAMP S

STA. 803+00.00 TO STA. 803+50.00

FRA-270-51.50

309
554

x:\Projects\2013\1321\1010\FRA\92616\roadway\sheets\92616XS600.dgn 12/7/2022 2:59:21 PM cwong

SEEDING	
END WIDTH	SQ. YDS.

END AREA		VOLUME	
CUT	FILL	CUT	FILL

CALCULATED ACF

CHECKED CSR

SPECIAL BENCHING SLOPE DRAINS

EX. PAVEMENT

EX LA-R/W

2:1

2:1

2:1

692.3

40.0'

1:1

8.0'

713.61

804+50.00

709.97

1:1 EX. ELEC.

PR. LTG CONDUIT

12.5:1

708.0

EX LA-R/W

2:1

2:1

2:1

692.0

46.4'

1:1

8.0'

713.04

804+00.00

708.05

1:1 EX. ELEC.

PR. LTG CONDUIT

14:1

711.7

750 740 730 720 710 700 690 680 670

120 100 80 60 40 20 0 20 40 60 80 100 120

CROSS SECTIONS RAMP S
STA. 804+00.00 TO STA. 804+50.00

FRA-270-51.50

310
554

x:\Projects\2013\1321\1010\FRA\92616\roadway\sheets\92616XS600.dgn 12/7/2022 2:59:22 PM cwong

SEEDING	
END WIDTH	SQ. YDS.

END AREA	
CUT	FILL

VOLUME	
CUT	FILL

CALCULATED ACF

CHECKED CSR

SPECIAL BENCHING SLOPE DRAINS

EX. PAVEMENT

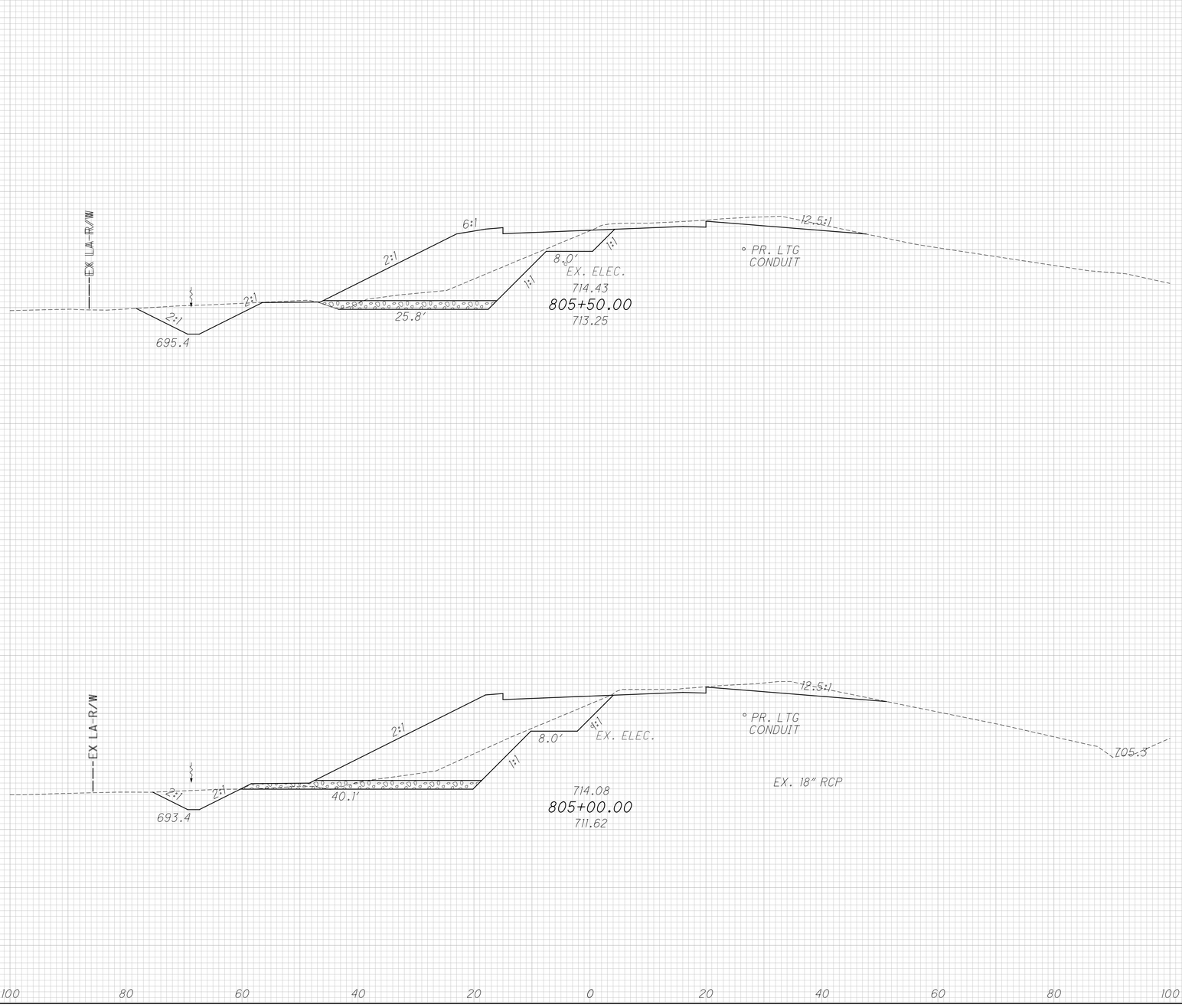

CROSS SECTIONS RAMP S
STA. 805+00.00 TO STA. 805+50.00

FRA-270-51.50

x:\Projects\2013\1321\1010\FRA\92616\roadway\sheets\92616XS600.dgn 12/7/2022 2:59:22 PM cwong

SEEDING	
END WIDTH	SQ. YDS.

END AREA	
CUT	FILL

VOLUME	
CUT	FILL

CALCULATED ACF

CHECKED CSR

SPECIAL BENCHING SLOPE DRAINS

EX. PAVEMENT

CROSS SECTIONS RAMP S
STA. 806+00.00 TO STA. 806+50.00

FRA-270-51.50

x:\Projects\2013\1321\1010\FRA\92616\roadway\sheets\92616XS600.dgn 12/7/2022 2:59:22 PM cwong

SEEDING	
END WIDTH	SQ. YDS.

SPECIAL BENCHING SLOPE DRAINS

EX. PAVEMENT

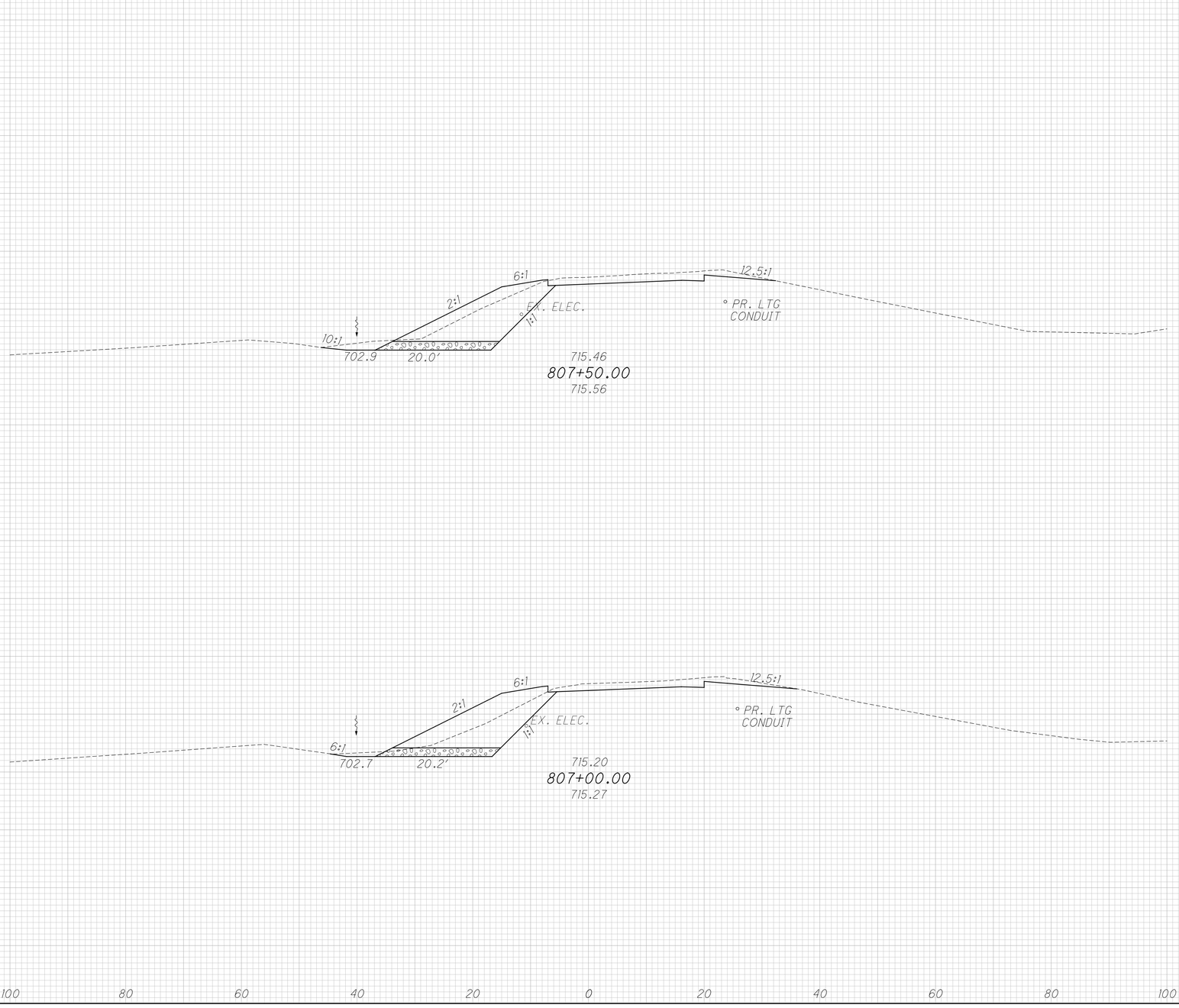

END AREA		VOLUME	
CUT	FILL	CUT	FILL

CALCULATED	CHECKED
ACF	CSR

CROSS SECTIONS RAMP S
STA. 807+00.00 TO STA. 807+50.00

FRA-270-51.50

313
554

x:\Projects\2013\1321\1010\FRA\92616\roadway\sheets\92616XS600.dgn 12/7/2022 2:59:23 PM cwong

SEEDING	
END WIDTH	SQ. YDS.

END AREA		VOLUME	
CUT	FILL	CUT	FILL

CALCULATED ACF

CHECKED CSR

SPECIAL BENCHING SLOPE DRAINS

EX. PAVEMENT

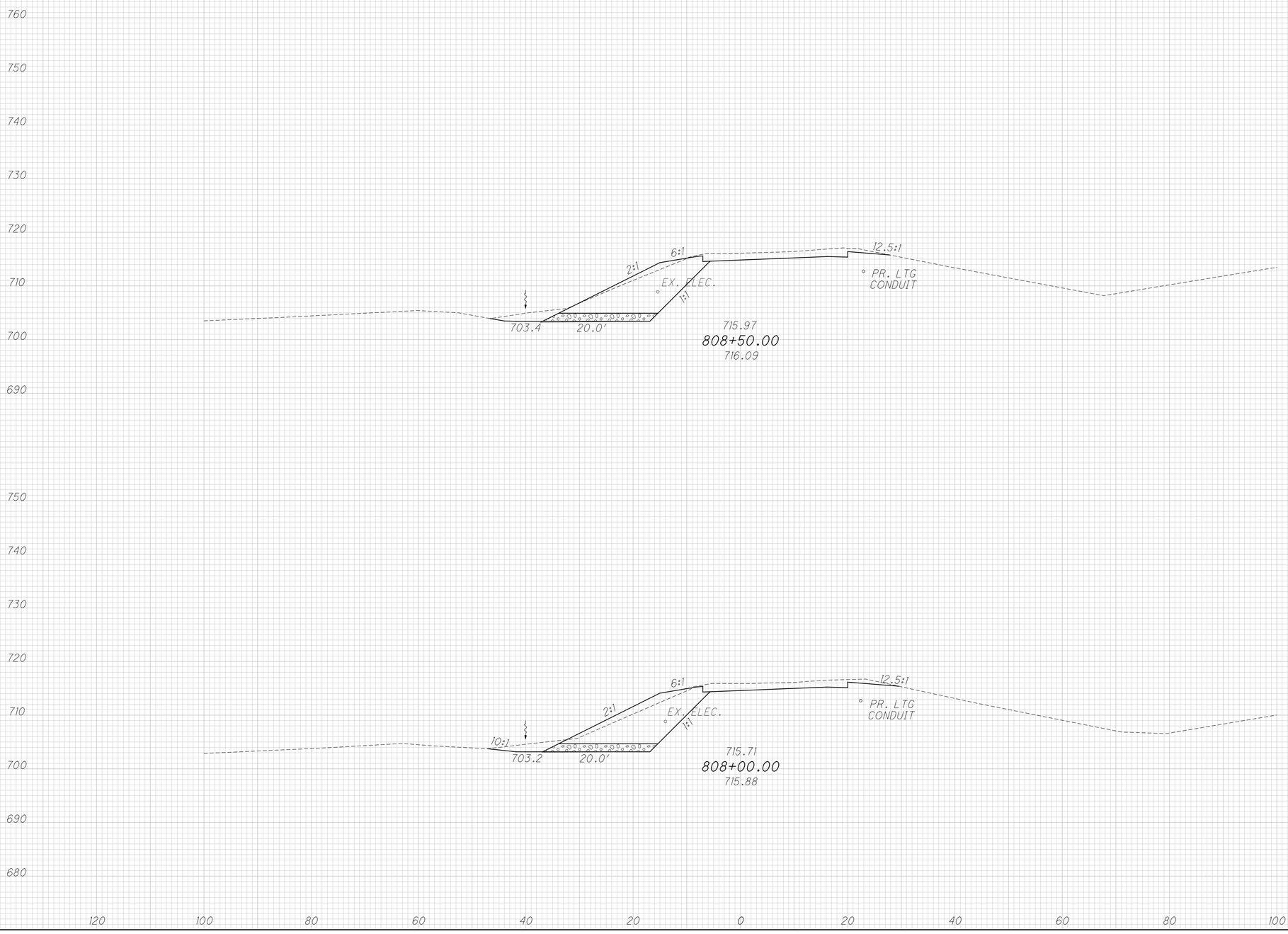

CROSS SECTIONS RAMP S
STA. 808+00.00 TO STA. 808+50.00

FRA-270-51.50

x:\Projects\2013\1321\1010\FRA\92616\roadway\sheets\92616XS600.dgn 12/7/2022 2:59:23 PM cwong

SEEDING	
END WIDTH	SQ. YDS.

END AREA		VOLUME	
CUT	FILL	CUT	FILL

CALCULATED ACF

CHECKED CSR

SPECIAL BENCHING SLOPE DRAINS

EX. PAVEMENT

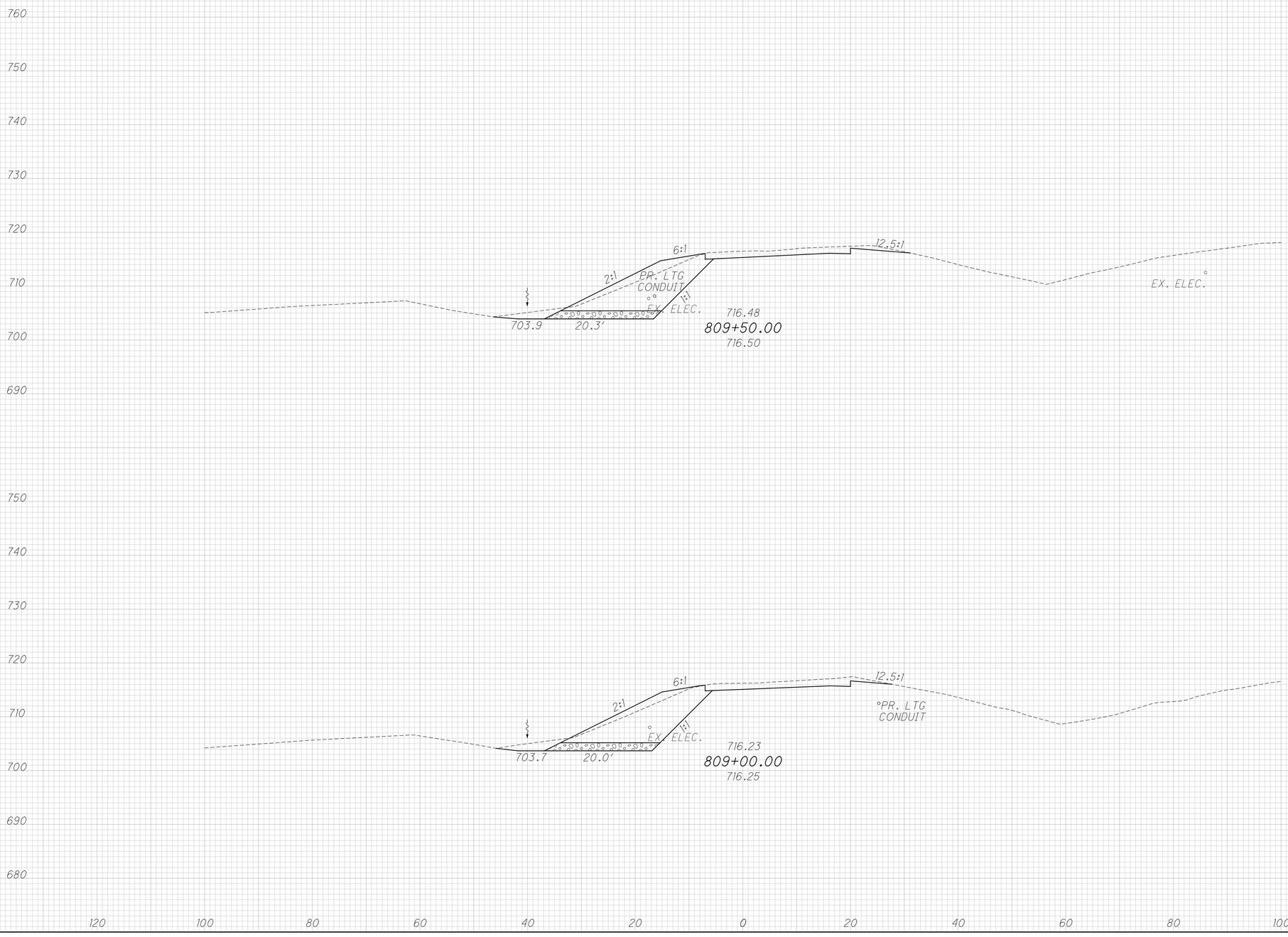

CROSS SECTIONS RAMP S
STA. 809+00.00 TO STA. 809+50.00

FRA-270-51.50

x:\Projects\2013\1321\1010\FRA\92616\roadway\sheets\92616XS600.dgn 12/7/2022 2:59:24 PM cwong

SEEDING	
END WIDTH	SQ. YDS.

SPECIAL BENCHING SLOPE DRAINS

EX. PAVEMENT

760
750
740
730
720
710
700
690

EX LA-R/W

2:1

PR. LTG CONDUIT

EX. ELEC.

1:1

717.00

810+50.00

716.98

704.4

19.3'

12.5:1

EX. ELEC.

760
750
740
730
720
710
700
690

EX LA-R/W

2:1

PR. LTG CONDUIT

EX. ELEC.

1:1

716.74

810+00.00

716.68

704.1

19.3'

12.5:1

EX. ELEC.

760
750
740
730
720
710
700
690
680

120 100 80 60 40 20 0 20 40 60 80 100 120

END AREA		VOLUME	
CUT	FILL	CUT	FILL

CALCULATED	CHECKED
ACF	CSR

CROSS SECTIONS RAMP S
STA. 810+00.00 TO STA. 810+50.00

FRA-270-51.50

x:\Projects\2013\1321\1010\FRA\92616\roadway\sheets\92616XS600.dgn 12/7/2022 2:59:24 PM cwong

SEEDING	
END WIDTH	SQ. YDS.

SPECIAL BENCHING SLOPE DRAINS

EX. PAVEMENT

760
750
740
730
720
710
700
690

EX LA-R/W

2:1

PR. LTG CONDUIT

EX. ELEC.

1:1

717.51

811+50.00

717.45

705.0

19.2'

6:1

716.4

EX. ELEC.

EX LA-R/W

2:1

PR. LTG CONDUIT

EX. ELEC.

1:1

717.25

811+00.00

717.23

704.7

19.2'

6:1

715.3

EX. ELEC.

760
750
740
730
720
710
700
690
680

120 100 80 60 40 20 0 20 40 60 80 100 120

END AREA		VOLUME	
CUT	FILL	CUT	FILL

CALCULATED	CHECKED
ACF	CSR

CROSS SECTIONS RAMP S
STA. 811+00.00 TO STA. 811+50.00

FRA-270-51.50

317
554

x:\Projects\2013\1321\1010\FRA\92616\roadway\sheets\92616XS600.dgn 12/7/2022 2:59:25 PM cwong

x:\Projects\2013\1321\1010\FRA\92616\roadway\sheets\92616XS600.dgn 12/7/2022 2:59:25 PM cwong

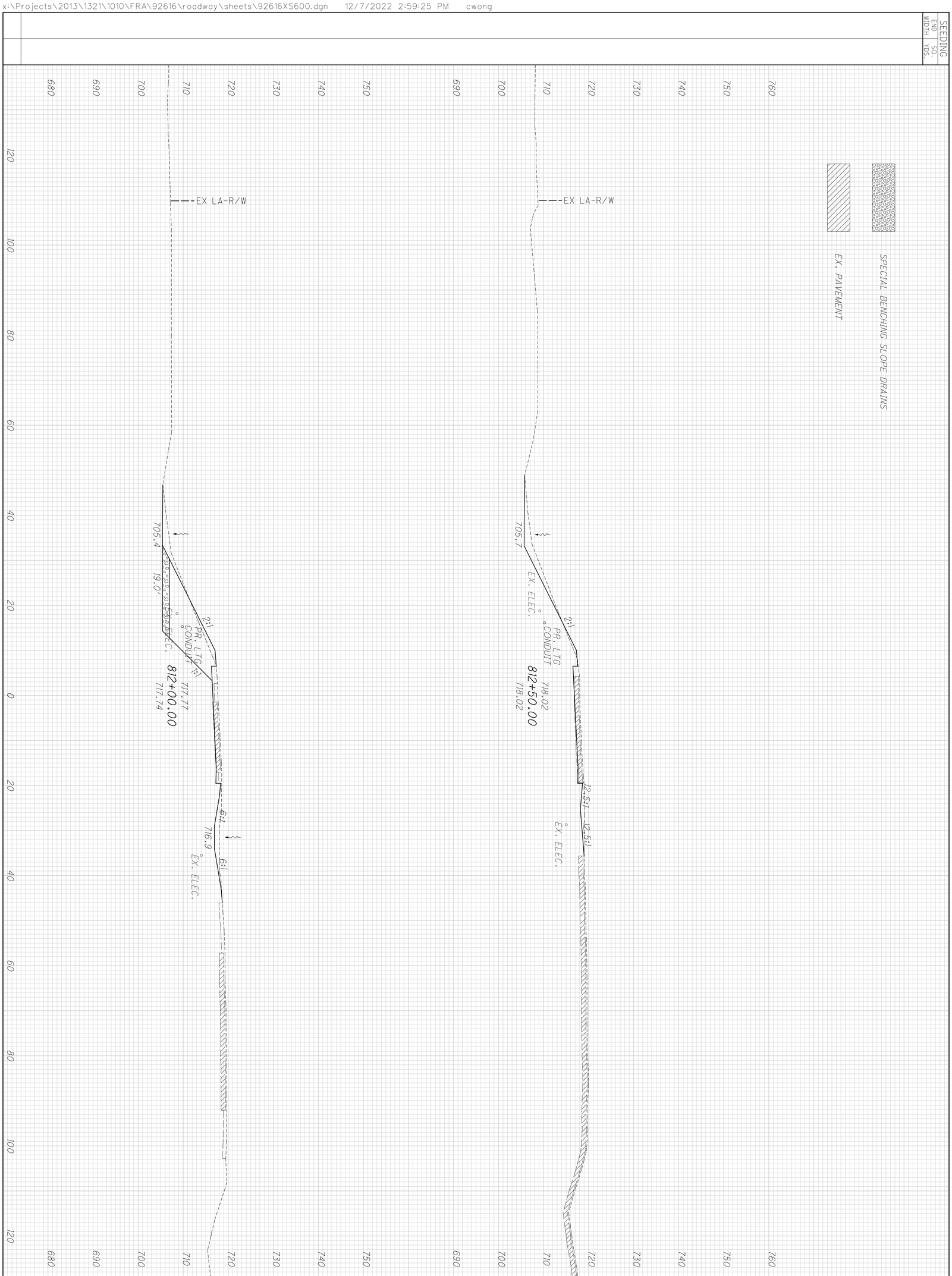

318
554

FRA-270-51.50

CROSS SECTIONS RAMP S
STA. 812+00.00 TO STA. 812+50.00

CALCULATED ACF
CHECKED CSR

SEEDING	
END WIDTH	SQ. YDS.

SPECIAL BENCHING SLOPE DRAINS

EX. PAVEMENT

760
750
740
730
720
710
700
690

EX LA-R/W

PR. LTG
CONDUIT

EX. ELEC.

813+50.00
718.57

2:1

12.5:1 12.5:1

706.0

718.28

813+00.00
718.30

120 100 80 60 40 20 0 20 40 60 80 100 120

END AREA		VOLUME	
CUT	FILL	CUT	FILL

CALCULATED	CHECKED
ACF	CSR

CROSS SECTIONS RAMP S
STA. 813+00.00 TO STA. 813+50.00

FRA-270-51.50

x:\Projects\2013\1321\1010\FRA\92616\roadway\sheets\92616XS600.dgn 12/7/2022 2:59:25 PM cwong

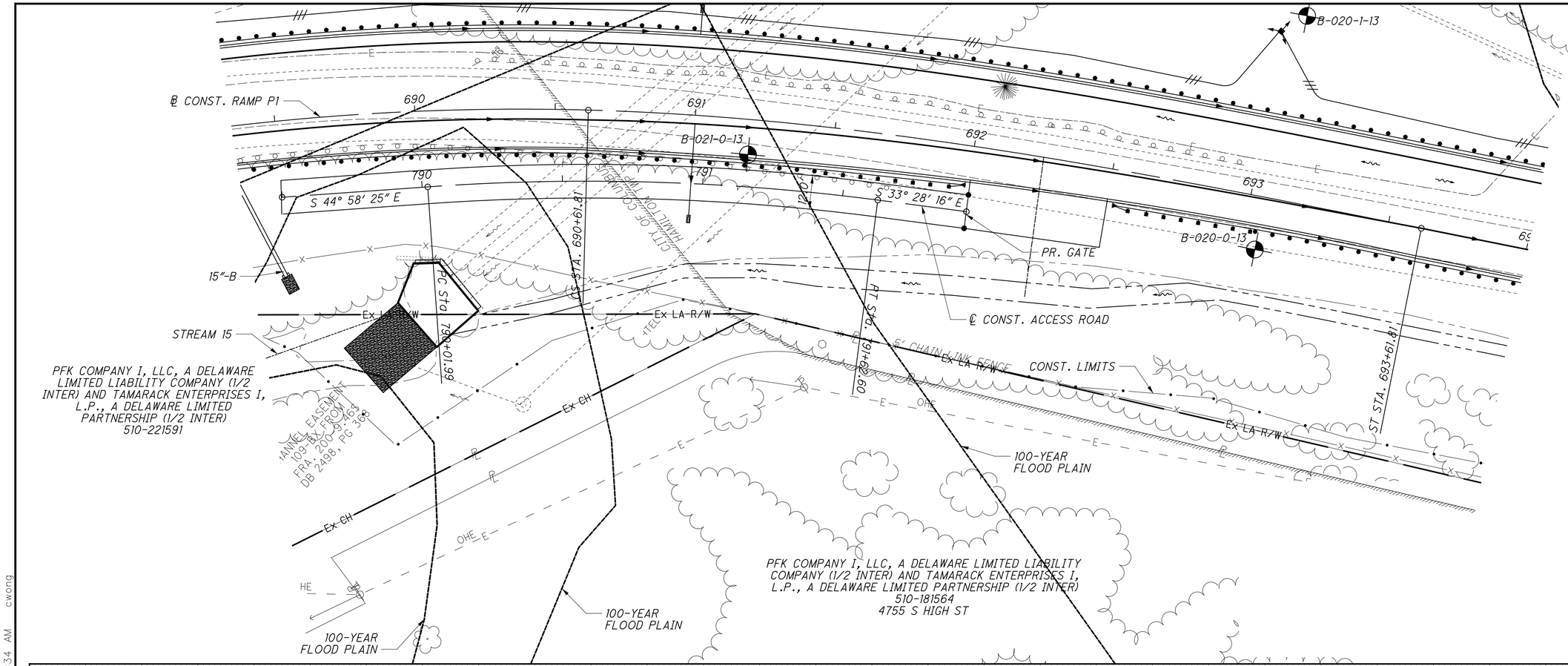

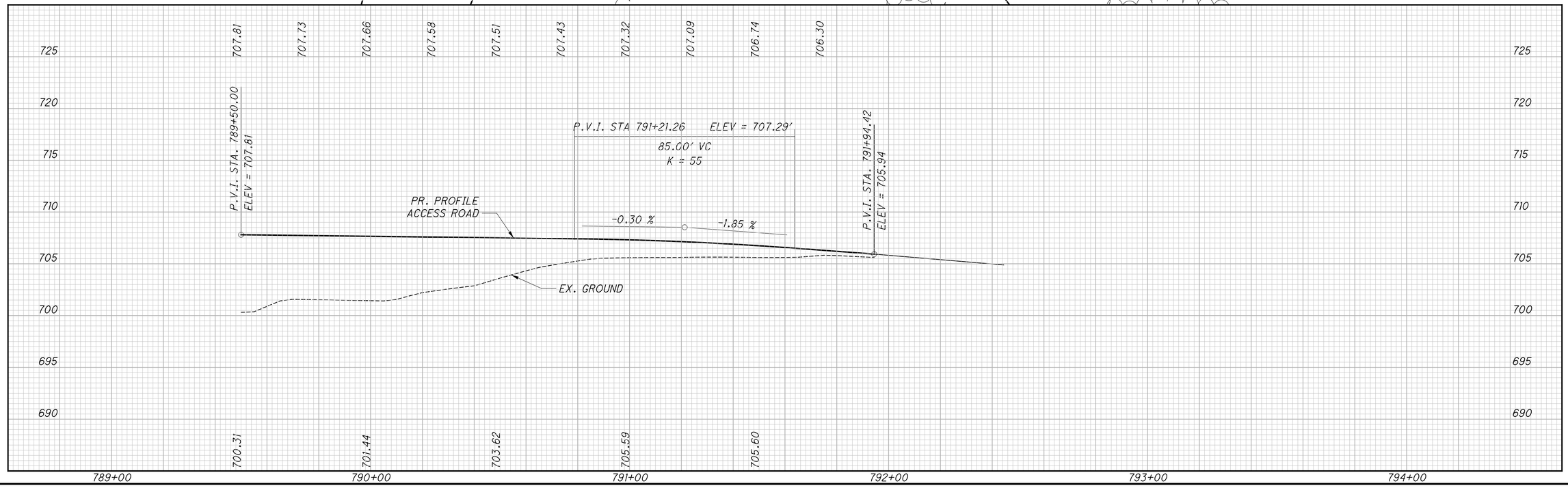

HORIZONTAL SCALE IN FEET
0 10 20 40
CALCULATED ACF
CHECKED CSR

PLAN AND PROFILE ACCESS ROAD

FRA-270-51.50

320
554

X:\Projects\2013\1321\1010\FRA\92616\roadway\sheets\92616GP901.dgn 2/10/2023 7:46:34 AM cwong

STATION	SEEDING				EARTHWORK					
	659	659	670	670	203	203	203	203	203	203
	SEEDING AND MULCHING	SEEDING AND MULCHING	SLOPE EROSION PROTECTION	SLOPE EROSION PROTECTION	EXCAVATION	EXCAVATION	EMBANKMENT	EMBANKMENT	EMBANKMENT, AS PER PLAN	EMBANKMENT, AS PER PLAN
	FT	SY	FT	SY	SF	CY	SF	CY	SF	CY
I-270 WESTBOUND										
486+50.00	24	0			36	0	0	0		
487+00.00	22	128			35	66	0	0		
487+50.00	21	119			36	66	0	0		
488+00.00	22	119			37	68	0	0		
488+50.00	2	67			30	62	0	0		
489+00.00	2	11			31	56	0	0		
489+50.00	2	11			31	57	0	0		
490+00.00	3	14			31	57	0	0		
490+50.00	3	17			31	57	0	0		
491+00.00	3	17			32	58	0	0		
491+50.00	3	17			32	59	0	0		
492+00.00	4	19			33	60	0	0		
492+50.00	4	22			33	61	0	0		
493+00.00	4	22			33	61	0	0		
493+50.00	4	22			33	61	0	0		
494+00.00	4	22			34	62	0	0		
494+50.00	5	25			35	64	0	0		
495+00.00	5	28			34	64	0	0		
495+50.00	19	67			35	64	0	0		
496+00.00	33	144			42	71	0	0		
496+50.00	7	111			34	70	1	1		
497+00.00	7	39			35	64	1	2		
497+50.00	7	39			22	53	1	2		
498+00.00	8	42			35	53	1	2		
500+50.00	7	42			35	324	1	9		
501+00.00	7	39			36	66	1	2		
501+50.00	7	39			36	67	1	2		
502+00.00	7	39			35	66	1	2		
502+50.00	7	39			36	66	1	2		
503+00.00	10	47			36	67	1	2		
503+50.00	8	50			35	66	1	2		
504+00.00	8	44			35	65	1	2		
504+50.00	8	44			36	66	1	2		
505+00.00	8	44			41	71	0	1		
505+50.00	22	83			40	75	3	3		
506+00.00	18	111			40	74	1	4		
506+50.00	9	75			41	75	1	2		
507+00.00	4	36			40	75	0	1		
507+50.00	2	17			39	73	0	0		
508+00.00	7	25			39	72	1	1		
508+50.00	4	31			41	74	0	1		
509+00.00	3	19			40	75	0	0		
509+50.00	3	17			39	73	0	0		
510+00.00	3	17			40	73	0	0		
510+50.00	3	17			39	73	0	0		
511+00.00	19	61			38	71	1	1		
511+50.00	11	83			40	72	1	2		

STATION	SEEDING				EARTHWORK					
	659	659	670	670	203	203	203	203	203	203
	SEEDING AND MULCHING	SEEDING AND MULCHING	SLOPE EROSION PROTECTION	SLOPE EROSION PROTECTION	EXCAVATION	EXCAVATION	EMBANKMENT	EMBANKMENT	EMBANKMENT, AS PER PLAN	EMBANKMENT, AS PER PLAN
	FT	SY	FT	SY	SF	CY	SF	CY	SF	CY
I-270 WESTBOUND										
512+00.00	6	47			40	0	74	1		
512+50.00	16	61			48	0	81	0		
512+96.84	10	72			1	0	43	0		
RAMP L										
574+27.37	10	0			48	0	9	0		
574+50.00	10	26			51	41	8	7		
575+00.00	12	62			48	92	10	17		
575+50.00	12	67			47	88	14	22		
576+00.00	34	128			155	95	174	82		
576+50.00	73	298			251	376	344	480		
577+00.00	88	448			385	589	393	683		
577+50.00	121	581			564	879	540	864		
578+00.00	82	564			375	870	528	989		
578+50.00	62	400			195	528	299	766		
579+00.00	46	300			173	341	221	482		
579+49.81	77	341			156	304	506	671		
583+01.24	96	3378			277	2818	619	7322		
583+50.00	95	518			444	652	586	1089		
584+00.00	10	292			29	438	15	557		
584+50.00	81	253			386	385	560	533		
585+00.00	90	475			369	700	594	1069		
585+50.00	97	520			382	696	597	1103		
586+00.00	97	539			445	766	616	1124		
586+50.00	94	531			413	795	579	1107		
587+00.00	86	500			390	744	504	1003		
587+50.00	84	473			438	767	497	927		
588+00.00	53	381			294	678	318	755		
588+10.00	57	62			305	111	367	127		
RAMP P1										
685+00.00	0	0	53	0	293	0	240	0		
685+50.00	0	295	53	295	296	546	239	444		
686+00.00	0	256	39	256	256	512	183	391		
686+50.00	1	234	45	234	267	485	222	375		
687+00.00	1	259	48	259	249	478	236	425		
687+50.00	9	264	47	264	202	418	232	434		
688+00.00	9	256	45	256	160	336	221	420		
688+50.00	12	242	42	242	140	278	209	399		
689+00.00	23	231	41	231	162	280	209	388		
689+50.00	33	292	64	292	231	364	714	855		
690+00.00	21	356	64	356	308	500	766	1371		
690+50.00	88	339	58	339	522	769	532	1202		
691+00.00	75	270	39	270	229	696	301	772		
691+50.00	79	237	46	237	460	638	607	841		
692+00.00	36	270	51	270	344	745	275	817		
692+50.00	32	298	56	298	305	601	124	370		
693+00.00	24	337	65	337	254	518	81	190		
693+50.00	21	375	70	375	271	487	69	139		
TOTALS CARRIED TO SHEET - 324		18269		4811		25697		31661		

CALCULATED ACF
CHECKED CSR

EARTHWORK SUBSUMMARY

FRA-270-51.50

x:\Projects\2013\1321\1010\FRA\92616\roadway\sheets\92616GS006.dgn 12/7/2022 5:31:39 PM cwong

STATION	SEEDING				EARTHWORK					
	659	659	670	670	203	203	203	203	203	203
	SEEDING AND MULCHING	SEEDING AND MULCHING	SLOPE EROSION PROTECTION	SLOPE EROSION PROTECTION	EXCAVATION	EXCAVATION	EMBANKMENT	EMBANKMENT	EMBANKMENT, AS PER PLAN	EMBANKMENT, AS PER PLAN
	FT	SY	FT	SY	SF	CY	SF	CY	SF	CY
RAMP P1										
694 00.00	20	114	69	387	216	451	39	82		
694 50.00	26	128	68	381	149	338	62	94		
695 00.00	18	123	68	378	202	325	59	113		
695 50.00	0	50	64	367	215	387	0	55		
696 00.00	0	0	56	334	184	370	0	0		
696 50.00	0	0	55	309	166	325	0	0		
697 00.00	8	23	60	320	336	465	0	0		
697 50.00	12	56	54	317	189	487	0	0		
698 00.00	19	87	59	314	190	351	0	0		
698 50.00	42	170	54	314	253	411	0	0		
699 00.00	51	259	51	292	254	470	0	0		
699 50.00	57	300	44	264	221	440	0	0		
700 00.00	57	317	44	245	205	395	0	0		
700 50.00	27	234	49	259	211	386	1	1		
701 00.00	18	125	50	275	251	428	0	1		
701 50.00	9	75	49	275	229	445	1	1		
702 00.00	14	64	47	267	174	374	0	1		
702 50.00	33	131	46	259	177	325	1	1		
703 00.00	21	150	41	242	135	289	0	1		
703 50.00	13	95	41	228	142	257	0	0		
704 00.00	0	37	45	239	158	278	0	0		
RAMP P2										
867 00.00	21	0			5	0	55	0		
867 50.00	32	147			78	77	78	123		
868 00.00	21	147			87	153	55	123		
868 50.00	14	97			86	160	41	89		
869 00.00	17	86			71	145	24	60		
869 50.00	32	136			77	137	30	50		
870 00.00	54	239			109	172	30	56		
870 50.00	48	283			77	172	4	31		
871 00.00	63	308			112	175	4	7		
871 50.00	98	447			173	264	10	13		
872 00.00	106	567			163	311	100	102		
872 50.00	61	464			12	162	122	206		
RAMP R										
260 50.00	0	0	46	0	55	0	6	0		
261 00.00	0	0	42	245	56	103	11	16		
261 50.00	0	0	43	237	27.5	78	20	29		
262 00.00	0	0	41	234	29	53	27	44		
262 50.00	0	0	72	314	26.5	52	34	57		
263 00.00	0	0	37	303	24	47	36	65		
263 50.00	0	0	37	206	34.8	55	27.5	59		
264 00.00	0	0	34	198	37	67	26	50		
264 50.00	0	0	33	187	32	64	30.35	53		
265 00.00	5	14	33	184	34.57	62	24.4	51		
265 50.00	8	37	31	178	33.4	63	24.7	46		
266 00.00	13	59	41	200	66.7	93	13.59	36		

STATION	SEEDING				EARTHWORK					
	659	659	670	670	203	203	203	203	203	203
	SEEDING AND MULCHING	SEEDING AND MULCHING	SLOPE EROSION PROTECTION	SLOPE EROSION PROTECTION	EXCAVATION	EXCAVATION	EMBANKMENT	EMBANKMENT	EMBANKMENT, AS PER PLAN	EMBANKMENT, AS PER PLAN
	FT	SY	FT	SY	SF	CY	SF	CY	SF	CY
RAMP R										
266 50.00	20	92	41	228	101.1	156	4.1	17		
267 00.00	22	117	36	214	113.1	199	1	5		
267 50.00	12	95	36	200	86.7	185	2.89	4		
268 00.00	16	78	45	225	103.2	176	18.7	20		
268 50.00	20	100	55	278	103	191	43.7	58		
269 00.00	24	123	49	289	106.5	194	53.5	90		
269 50.00	18	117	59	300	154.7	242	63.6	109		
270 00.00	5	64	68	353	209.7	338	72.6	127		
270 50.00	9	39	84	423	313.6	485	82.1	144		
271 00.00	9	50	87	475	401.9	663	59.7	132		
271 50.00	10	53	90	492	308.1	658	163.2	207	28	0
272 00.00	10	56	97	520	263.5	530	224.4	359	43	66
272 50.00	10	56	103	556	322.2	543	279.7	467	48	85
273 00.00	12	62	106	581	384.54	655	280.6	519	49	90
273 50.00	12	67	113	609	289.4	625	366.6	600	0	46
274 00.00	15	75	112	625	328.1	572	425	733	25	24
274 50.00	0	42	112	623	247.7	534	455.1	815	26	48
275 00.00	14	39	117	637	335.3	540	524.9	908	34	56
275 50.00	0	39	127	678	404.7	686	560.7	1006	42	71
276 00.00	17	48	127	706	405.2	750	576.8	1054	33	70
276 50.00	28	125	131	717	477.2	818	501.1	999	31	60
277 00.00	45	203	128	720	517.8	922	472.5	902	31	58
277 50.00	42	242	129	714	590.3	1027	438.8	844	39	65
278 00.00	36	217	126	709	621.5	1123	386.6	765	40	74
278 50.00	46	228	123	692	583.2	1116	336.9	670	38	73
279 00.00	33	220	111	650	511.6	1014	310.7	600	36	69
279 50.00	34	187	106	603	569	1001	224.2	496	35	66
280 00.00	36	195	98	567	461.3	954	257.9	447	34	64
280 50.00	35	198	86	512	431.3	827	237.14	459	26	56
281 00.00	36	198	82	467	415.8	785	234.8	437	25	48
281 50.00	34	195	82	456	389.2	746	246.7	446	28	50
282 00.00	34	189	74	434	329.9	666	336.1	540	30	54
282 50.00	37	198	73	409	263.5	550	436	715	31	57
283 00.00	41	217	65	384	268.7	493	324.9	705	32	59
283 50.00	31	200	59	345	176.7	413	359.3	634	30	58
284 00.00	35	184	58	325	171.1	323	340.9	649	27	53
284 50.00	20	153	60	328	158.8	306	326.4	618	26	50
285 00.00	12	89	57	325	188.2	322	178.5	468	35	57
285 50.00	0	34	58	320	168.9	331	196.3	348	35	65
286 00.00	0	0	53	309	182.9	326	235	400	39	69
286 50.00	0	0	57	306	162.5	320	253.5	453	37	71
287 00.00	0	0	52	303	154.2	294	288.7	503	43	75
287 50.00	0	0	51	287	168.9	300	274.6	522	42	79
TOTALS CARRIED TO SHEET - 324		10453		28646		34561		22710		1986

CALCULATED ACF
CHECKED CSR

EARTHWORK SUBSUMMARY

FRA-270-51.50

322
554

X:\Projects\2013\1321\1010\FRA\92616\roadway\sheets\92616G006.dgn 5/1/2023 10:34:12 AM cwong

STATION	SEEDING				EARTHWORK					
	659	659	670	670	203	203	203	203	203	203
	SEEDING AND MULCHING	SEEDING AND MULCHING	SLOPE EROSION PROTECTION	SLOPE EROSION PROTECTION	EXCAVATION	EXCAVATION	EMBANKMENT	EMBANKMENT	EMBANKMENT, AS PER PLAN	EMBANKMENT, AS PER PLAN
	FT	SY	FT	SY	SF	CY	SF	CY	SF	CY
RAMP S										
799 00.00	32	0			29.6	0	22	0		
799 50.00	66	272			0	28	253	255		
800 00.00	60	350			92	86	163	386		
800 50.00	52	311			38	121	75	221		
801 00.00	72	344			34.3	67	48.9	115		
801 50.00	53	347			78.5	105	120.73	158		
802 00.00	72	347			127.7	191	305.3	395		
802 50.00	99	475			149.9	258	417.1	669		
803 00.00	99	550			189.3	315	503.4	853		
803 50.00	102	558			165.8	329	456.5	889		
804 00.00	112	594			205.5	344	418.9	811		
804 50.00	106	606			204	380	374.5	735		
805 00.00	99	569			197.1	372	285.9	612		
805 50.00	99	550			236	402	228.3	477		
806 00.00	79	494			184.6	390	134.6	337		
806 50.00	61	389			128.8	291	73.9	194		
807 00.00	59	333			137.7	247	73.9	137		
807 50.00	57	322			176.9	292	42.1	108		
808 00.00	55	311			193.7	344	25.3	63		
808 50.00	53	300			207	372	12.9	36		
809 00.00	52	292			193.4	371	21.2	32		
809 50.00	56	300			185.7	352	29.5	47		
810 00.00	62	328			211.4	368	10	37		
810 50.00	64	350			198.1	380	17	25		
811 00.00	68	367			208.5	377	17	32		
811 50.00	62	361			204.6	383	13	28		
812 00.00	71	369			209.9	384	8	20		
812 50.00	63	372			66.7	257	2	10		
813 00.00	58	336			71	128	0	2		
US-23 ACCEL LANE										
547 00.00	34	0			21.9	0	35.5	0		
547 50.00	32	183			13.8	34	34	66		
548 00.00	35	186			26.7	38	23.9	55		
548 50.00	38	203			46.7	69	16.8	38		
549 00.00	37	208			47.7	89	12.1	27		
549 50.00	0	103			15.7	60	6	17		
550 00.00	0	0			11	25	16	21		
550 50.00	34	94			35.3	44	11	26		
551 00.00	36	194			41.9	73	14.7	24		
551 50.00	37	203			38.5	76	23	36		
552 00.00	36	203			37.8	72	19.8	40		
552 50.00	33	192			30.1	64	18.5	36		
553 00.00	0	92			34	61	6	23		
553 50.00	0	0			19.5	51	7	12		
554 00.00	0	0			40	56	4	10		
554 50.00	0	0			24.2	61	11	14		

STATION	SEEDING				EARTHWORK					
	659	659	670	670	203	203	203	203	203	203
	SEEDING AND MULCHING	SEEDING AND MULCHING	SLOPE EROSION PROTECTION	SLOPE EROSION PROTECTION	EXCAVATION	EXCAVATION	EMBANKMENT	EMBANKMENT	EMBANKMENT, AS PER PLAN	EMBANKMENT, AS PER PLAN
	FT	SY	FT	SY	SF	CY	SF	CY	SF	CY
US-23 ACCEL LANE										
555 00.00	33	92			27.6	49	17.2	27		
555 50.00	34	186			26.5	51	22.8	38		
556 00.00	33	186			25.2	49	35.7	55		
556 50.00	33	183			24	46	39	71		
557 00.00	36	192			28.7	50	32.5	68		
557 50.00	39	208			32.1	57	25.6	55		
558 00.00	41	222			40.1	68	30	53		
558 50.00	39	222			37.3	73	27.4	54		
559 00.00	41	222			41.5	74	20	45		
559 50.00	40	225			36	73	14.7	33		
560 00.00	40	222			38.5	70	6.7	20		
US-23 DECEL LANE										
547 00.00	40	0			47.6	0	21.7	0		
547 50.00	45	236			136.6	174	4	24		
548 00.00	47	256			171.9	291	0	4		
548 50.00	49	267			190.6	342	0	0		
549 00.00	50	275			175.6	346	2	2		
549 50.00	52	283			196.9	352	0.5	2		
550 00.00	51	286			132.9	311	0	0		
550 50.00	51	283			84.5	205	17	16		
551 00.00	52	286			76	152	20.8	36		
551 50.00	48	278			44.4	114	31.8	50		
552 00.00	44	256			30.8	71	46.6	74		
552 50.00	41	236			45.2	72	11	54		
553 00.00	26	186			26.9	68	2	12		
553 50.00	32	161			26.6	51	5.7	7		
554 00.00	36	189			44.8	67	2	7		
554 50.00	36	200			46.9	87	9.6	11		
555 00.00	35	197			32.4	75	50.7	57		
555 50.00	36	197			42.6	71	39.7	85		
556 00.00	35	197			40.1	78	39.3	75		
556 50.00	34	192			31.4	68	48	82		
557 00.00	33	186			34.9	63	48.4	91		
557 50.00	34	186			35.6	67	52.6	95		
558 00.00	35	192			40	71	38.4	86		
558 50.00	33	189			36.1	72	26.4	61		
559 00.00	33	183			35.8	68	16.6	41		
559 50.00	33	183			39.8	71	9.34	24		
560 00.00	32	181			40.3	76	3	12		
560 09.71	30	172			34.2	70	9	11		
TOTALS CARRIED TO SHEET - 324		21051		0		13020		9667		

CALCULATED ACF
CHECKED CSR

EARTHWORK SUBSUMMARY

FRA-270-51.50

X:\Projects\2013\1321\1010\FRA\92616\roadway\sheets\92616G006.dgn 5/1/2023 10:42:01 AM cwong

STATION	SEEDING				EARTHWORK						
	659	659	670	670	203	203	203	203	203	203	
	SEEDING AND MULCHING	SEEDING AND MULCHING	SLOPE EROSION PROTECTION	SLOPE EROSION PROTECTION	EXCAVATION	EXCAVATION	EMBANKMENT	EMBANKMENT	EMBANKMENT, AS PER PLAN	EMBANKMENT, AS PER PLAN	
	FT	SY	FT	SY	SF	CY	SF	CY	SF	CY	
I-270 MER E											
711 50.00	13	0	13	0	70	0	0	0			
712 00.00	5	50	5	50	55	116	0	0			
712 50.00	0	14	0	14	63	110	0	0			
713 00.00	0	0	0	0	60	114	0	0			
713 50.00	0	0	0	0	69	120	0	0			
714 00.00	0	0	0	0	69	128	0	0			
714 50.00	0	0	0	0	69	128	0	0			
715 00.00	0	0	48	134	238	285	357	331			
715 50.00	0	0	50	273	202	408	387	689			
716 00.00	0	0	53	287	240	410	355	688			
716 50.00	0	0	53	295	220	426	410	709			
717 00.00	0	0	48	281	177	368	412	762			
717 50.00	0	0	45	259	203	352	377	731			
718 00.00	0	0	47	256	246	416	429	747			
718 50.00	0	0	48	264	228	439	426	792			
719 00.00	0	0	49	270	232	426	401	766			
719 50.00	0	0	45	262	153	357	401	743			
720 00.00	0	0	45	250	179	308	396	738			
720 50.00	0	0	48	259	236	385	347	688			
721 00.00	0	0	50	273	239	440	297	597			
721 50.00	0	0	49	275	186	394	140	405			
722 00.00	0	0	50	275	190	349	211	325			
722 50.00	0	0	41	253	162	326	188	370			
723 00.00	0	0	42	231	144	284	122	288			
723 50.00	0	0	43	237	100	226	78	186			
724 00.00	0	0	42	237	112	197	82	149			
724 50.00	0	0	44	239	123	218	68	139			
725 00.00	0	0	44	245	111	217	59	118			
725 50.00	0	0	44	245	108	203	65	115			
726 00.00	0	0	45	248	139	229	67	123			
726 50.00	0	0	47	256	137	256	69	126			
727 00.00	0	0	49	267	146	263	68	127			
727 50.00	0	0	48	270	149	274	67	125			
728 00.00	0	0	48	267	143	271	61	119			
728 50.00	0	0	62	306	156	277	88	138			
729 00.00	0	0	61	342	149	283	84	160			
729 50.00	0	0	63	345	154	281	78	150			
730 00.00	0	0	59	339	128	262	74	141			
730 50.00	0	0	60	331	142	250	53	118			
731 00.00	0	0	62	339	181	300	30	77			
731 50.00	0	0	65	353	259	408	18	45			
732 00.00	0	0	65	362	248	470	9	25			
732 50.00	0	0	66	364	256	467	8	16			
733 00.00	0	0	66	367	237	457	14	21			
733 50.00	0	0	65	364	220	424	9	22			
734 00.00	0	0	64	359	161	353	21	28			
734 50.00	0	0	61	348	120	261	18	37			

STATION	SEEDING				EARTHWORK						
	659	659	670	670	203	203	203	203	203	203	
	SEEDING AND MULCHING	SEEDING AND MULCHING	SLOPE EROSION PROTECTION	SLOPE EROSION PROTECTION	EXCAVATION	EXCAVATION	EMBANKMENT	EMBANKMENT	EMBANKMENT, AS PER PLAN	EMBANKMENT, AS PER PLAN	
	FT	SY	FT	SY	SF	CY	SF	CY	SF	CY	
I-270 MER E											
735 00.00	0	0	61	339	96	200	22	38			
735 50.00	0	0	62	342	95	177	27	46			
736 00.00	0	0	59	337	57	141	35	58			
736 50.00	0	0	63	339	53	102	32	63			
737 00.00	0	0	65	356	44	90	42	69			
737 50.00	0	0	69	373	41	79	32	69			
738 00.00	0	0	61	362	41	76	17	46			
738 50.00	0	0	65	350	32	68	59	71			
739 00.00	0	0	67	367	31	59	17	71			
739 50.00	0	0	66	370	33	60	24	38			

TOTALS THIS SHEET	64		13588		13493		13135		0	
TOTALS SHEET - 321	18269		4811		25698		26928		0	
TOTALS SHEET - 322	10453		28646		34561		22710		1986	
TOTALS SHEET - 323	21051		0		13020		9667		0	
TOTALS CARRIED TO GENERAL SUMMARY	49837		47045		86772		72440		1986	

CALCULATED ACF
CHECKED CSR

EARTHWORK SUBSUMMARY

FRA-270-51.50

X:\Projects\2013\1321\1010\FRA\92616\roadway\sheets\92616G006.dgn 5/1/2023 10:45:39 AM cwong

SUPERELEVATION TABLE

P.I. Station 557+75.60 | DC=1°28'16"

LEFT SIDE					CENTERLINE CONTROL		RIGHT SIDE					REMARKS
EDGE ELEVATION	TRANSITION RATE	ELEVATION CORRECTION	CROSS SLOPE	WIDTH	STATION	PROFILE GRADE	WIDTH	CROSS SLOPE	ELEVATION CORRECTON	TRANSITION RATE	EDGE ELEVATION	
					546+50.0000	718.28	12.00	-0.016	-0.19		718.09	
					546+75.0000	718.43	12.00	-0.016	-0.19		718.24	
					547+00.0000	718.58	12.00	-0.016	-0.19		718.39	
					547+25.0000	718.73	12.00	-0.016	-0.19		718.54	
					547+50.0000	718.88	12.00	-0.016	-0.19		718.69	
					547+75.0000	718.97	12.00	-0.016	-0.19		718.78	
					548+00.0000	719.06	12.00	-0.016	-0.19		718.87	
					548+25.0000	719.16	12.00	-0.016	-0.19		718.97	
					548+50.0000	719.25	12.00	-0.016	-0.19		719.06	
					548+75.0000	719.40	12.00	-0.016	-0.19		719.21	
					549+00.0000	719.58	12.00	-0.016	-0.19		719.38	
					549+25.0000	719.65	12.00	-0.016	-0.19		719.46	
					549+50.0000	719.66	12.00	-0.016	-0.19		719.47	
					549+75.0000	719.71	12.00	-0.016	-0.19		719.52	
					550+00.0000	719.79	12.00	-0.016	-0.19		719.60	
					550+25.0000	719.87	12.00	-0.016	-0.19		719.68	
					550+50.0000	719.89	12.00	-0.016	-0.19		719.70	
					550+75.0000	719.91	12.00	-0.016	-0.19		719.72	
					551+00.0000	719.86	12.00	-0.016	-0.19		719.67	
	213				551+25.0000	719.93	12.00	-0.016	-0.19		719.73	
					551+50.0000	719.99	12.00	-0.016	-0.19		719.80	
					551+75.0000	720.06	12.00	-0.016	-0.19		719.86	
					552+00.0000	720.12	12.00	-0.016	-0.19		719.93	
					552+25.0000	720.22	12.00	-0.016	-0.19		720.03	
					552+50.0000	720.33	12.00	-0.016	-0.19		720.13	
					552+75.0000	720.43	12.00	-0.016	-0.19		720.24	
					553+00.0000	720.53	12.00	-0.016	-0.19		720.34	
					553+25.0000	720.55	12.00	-0.016	-0.19		720.36	
					553+50.0000	720.58	12.00	-0.016	-0.19		720.38	
					553+75.0000	720.60	12.00	-0.0170	-0.20	1270	720.40	
					554+00.0000	720.72	12.00	-0.0181	-0.22	1270	720.50	
					554+25.0000	720.95	12.00	-0.0191	-0.23	1270	720.72	
					554+50.0000	721.08	12.00	-0.0201	-0.24	1270	720.84	
					554+75.0000	721.14	12.00	-0.0212	-0.25	1270	720.89	
					555+00.0000	721.13	12.00	-0.0222	-0.27	1270	720.86	
					555+25.0000	721.11	12.00	-0.0232	-0.28	1270	720.83	
					555+50.0000	721.09	12.00	-0.0243	-0.29	1270	720.80	
					555+75.0000	721.07	12.00	-0.0253	-0.30	1270	720.77	
					556+00.0000	721.05	12.00	-0.0263	-0.32	1270	720.73	
					556+25.0000	721.05	12.00	-0.0274	-0.33	1270	720.72	
					556+50.0000	721.05	12.00	-0.0284	-0.34	1270	720.71	
					556+75.0000	720.96	12.00	-0.0294	-0.35	1270	720.61	
					557+00.0000	720.87	12.00	-0.0305	-0.37	1270	720.50	
					557+25.0000	720.79	12.00	-0.0315	-0.38	1270	720.41	
					557+50.0000	720.71	12.00	-0.0325	-0.39	1270	720.32	
					557+75.0000	720.59	12.00	-0.0336	-0.40	1270	720.19	
					558+00.0000	720.47	12.00	-0.0346	-0.42	1270	720.05	
					558+25.0000	720.43	12.00	-0.0356	-0.43	1270	720.00	
					558+50.0000	720.38	12.00	-0.0367	-0.44	1270	719.94	
					558+75.0000	720.24	12.00	-0.0377	-0.45	1270	719.78	
					559+00.0000	720.09	12.00	-0.0387	-0.46	1270	719.63	
					559+25.0000	719.89	12.00	-0.0398	-0.48	1270	719.41	
					559+50.0000	719.68	12.00	-0.0408	-0.49	1270	719.19	
					559+75.0000	719.45	12.00	-0.0419	-0.50	1270	718.94	
					560+00.0000	719.21	12.00	-0.0429	-0.51	1270	718.70	
					560+10.0436	719.12	12.00	-0.0433	-0.52	1270	718.60	

SUPERELEVATION TABLE

P.I. Station | NONE

LEFT SIDE					CENTERLINE CONTROL		RIGHT SIDE					REMARKS
EDGE ELEVATION	TRANSITION RATE	ELEVATION CORRECTION	CROSS SLOPE	WIDTH	STATION	PROFILE GRADE	WIDTH	CROSS SLOPE	ELEVATION CORRECTON	TRANSITION RATE	EDGE ELEVATION	

CALCULATED JGB | CHECKED CSR

SUPERELEVATION TABLE
US-23 NB DECELERATION LANE

FRA-270-51.50

x:\Projects\2013\1321\1010\FRA\92616\roadway\sheets\92616GE001.dgn 12/7/2022 2:59:30 PM cwong

SUPERELEVATION TABLE

P.I. Station 549+93.81 | NO CURVE

LEFT SIDE					CENTERLINE CONTROL		RIGHT SIDE					REMARKS
EDGE ELEVATION	TRANSITION RATE	ELEVATION CORRECTION	CROSS SLOPE	WIDTH	STATION	PROFILE GRADE	WIDTH	CROSS SLOPE	ELEVATION CORRECTION	TRANSITION RATE	EDGE ELEVATION	
718.38		0.00	-0.016	0.00	546+50.0000	718.38						
718.43		-0.01	-0.016	0.49	546+75.0000	718.44						
718.48		-0.02	-0.0155	0.99	547+00.0000	718.50						
718.54		-0.02	-0.0149	1.49	547+25.0000	718.56						
718.59		-0.03	-0.0144	1.99	547+50.0000	718.62						
718.70		-0.03	-0.0139	2.49	547+75.0000	718.74						
718.81		-0.04	-0.0133	2.99	548+00.0000	718.85						
718.88		-0.04	-0.0128	3.49	548+25.0000	718.92						
718.95		-0.05	-0.0123	3.99	548+50.0000	719.00						
719.01		-0.05	-0.0117	4.49	548+75.0000	719.07						
719.08		-0.06	-0.0112	4.99	549+00.0000	719.14						
719.19		-0.06	-0.0107	5.49	549+25.0000	719.25						
719.29		-0.06	-0.0101	5.99	549+50.0000	719.36						
719.40		-0.06	-0.0096	6.49	549+75.0000	719.46						
719.51		-0.06	-0.0091	6.99	550+00.0000	719.57						
719.63		-0.06	-0.0085	7.49	550+25.0000	719.69						
719.75		-0.06	-0.0080	7.99	550+50.0000	719.82						
719.87		-0.06	-0.0075	8.49	550+75.0000	719.94						
720.00		-0.06	-0.0069	8.99	551+00.0000	720.06						
720.11	222	-0.06	-0.0064	9.49	551+25.0000	720.17						
720.22		-0.06	-0.0059	9.99	551+50.0000	720.28						
720.33		-0.06	-0.0053	10.49	551+75.0000	720.39						
720.45		-0.05	-0.0048	10.99	552+00.0000	720.50						
720.60		-0.05	-0.0043	11.49	552+25.0000	720.65						
720.76		-0.04	-0.0037	11.99	552+50.0000	720.80						
720.91		-0.04	-0.0032	12.00	552+75.0000	720.95						
721.07		-0.03	-0.0027	12.00	553+00.0000	721.10						
721.32		-0.03	-0.0021	12.00	553+25.0000	721.35						
721.42		-0.02	-0.0016	12.00	553+50.0000	721.44						
721.52		-0.01	-0.0011	12.00	553+75.0000	721.53						
721.62		0.00	0.0000	12.00	554+00.0000	721.62						
721.81		0.01	0.0009	12.00	554+25.0000	721.80						
722.00		0.02	0.0018	12.00	554+50.0000	721.98						
722.18		0.03	0.0026	12.00	554+75.0000	722.15						
722.37		0.04	0.0035	12.00	555+00.0000	722.33						
722.47		0.05	0.0044	12.00	555+25.0000	722.42						

SUPERELEVATION TABLE

P.I. Station 557+88.42 | Dc = 1°26′ 32″

LEFT SIDE					CENTERLINE CONTROL		RIGHT SIDE					REMARKS
EDGE ELEVATION	TRANSITION RATE	ELEVATION CORRECTION	CROSS SLOPE	WIDTH	STATION	PROFILE GRADE	WIDTH	CROSS SLOPE	ELEVATION CORRECTION	TRANSITION RATE	EDGE ELEVATION	
722.53		0.06	0.0050	12.00	555+41.10	722.47						
722.56		0.06	0.0053	12.00	555+50.00	722.50						
722.72		0.07	0.0062	12.00	555+75.00	722.65						
722.66		0.08	0.0070	12.00	556+00.00	722.58						
722.73		0.09	0.0079	12.00	556+25.00	722.64						
722.70		0.11	0.0088	12.00	556+50.00	722.59						
722.66		0.12	0.0097	12.00	556+75.00	722.55						
722.63		0.13	0.0105	12.00	557+00.00	722.50						
722.65		0.14	0.0114	12.00	557+25.00	722.51						
722.58		0.15	0.0123	12.00	557+50.00	722.43						
722.51		0.16	0.0132	12.00	557+75.00	722.36						
722.45	222	0.17	0.0141	12.00	558+00.00	722.28						
722.35		0.18	0.0149	12.00	558+25.00	722.17						
722.25		0.19	0.0158	12.00	558+50.00	722.06						
722.06		0.20	0.0167	12.00	558+75.00	721.86						
721.86		0.21	0.0176	12.00	559+00.00	721.65						
721.77		0.22	0.0185	12.00	559+25.00	721.55						
721.67		0.23	0.0193	12.00	559+50.00	721.44						
721.48		0.24	0.0202	12.00	559+75.00	721.24						
721.29		0.25	0.0211	12.00	560+00.00	721.04						
721.08		0.26	0.0220	12.00	560+25.00	720.82						
721.00		0.27	0.0223	12.00	560+34.46	720.73						

CALCULATED JGB | CHECKED CSR

SUPERELEVATION TABLE
US-23 SB ACCELERATION LANE

FRA-270-51.50

x:\Projects\2013\1321\1010\FRA\92616\roadway\sheets\92616CE002.dgn 12/7/2022 2:59:31 PM cwong

SUPERELEVATION TABLE

P.I. Station 263+44.63 | Dc = 2°30′ 00″

LEFT SIDE					CENTERLINE CONTROL		RIGHT SIDE					REMARKS
EDGE ELEVATION	TRANSITION RATE	ELEVATION CORRECTION	CROSS SLOPE	WIDTH	STATION	PROFILE GRADE	WIDTH	CROSS SLOPE	ELEVATION CORRECTION	TRANSITION RATE	EDGE ELEVATION	
719.12	172	0.52	0.0433	12.00	260+14.67	718.60						
719.03	172	0.50	0.0410	12.31	260+25.00	718.53						
718.81	172	0.46	0.0353	13.07	260+50.00	718.35						
718.80		0.46	0.0350	13.10	260+51.52	718.34						BEG FULL SE
718.65		0.48	0.0350	13.83	260+75.00	718.17						
718.46		0.51	0.0350	14.59	261+00.00	717.95						
718.25		0.54	0.0350	15.35	261+25.00	717.72						
718.02		0.56	0.0350	16.11	261+50.00	717.45						
717.76		0.59	0.0350	16.87	261+75.00	717.17						
717.47		0.62	0.0350	17.63	262+00.00	716.85						
717.16		0.64	0.0350	18.39	262+25.00	716.52						
716.82		0.67	0.0350	19.15	262+50.00	716.15						
716.47		0.70	0.0350	19.91	262+75.00	715.77						
716.10		0.72	0.0350	20.67	263+00.00	715.37						
715.71		0.75	0.0350	21.43	263+25.00	714.96						
715.31		0.78	0.0350	22.19	263+50.00	714.53						
714.90		0.80	0.0350	22.95	263+75.00	714.09						
714.47		0.83	0.0350	23.70	264+00.00	713.64						
714.01		0.84	0.0350	24.00	264+25.00	713.17						
713.52		0.84	0.0350	24.00	264+50.00	712.68						
713.02		0.84	0.0350	24.00	264+75.00	712.18						
712.51		0.84	0.0350	24.00	265+00.00	711.67						
712.05		0.84	0.0350	24.00	265+21.48	711.21	0.00	-0.0350	0.00		711.21	
711.98		0.84	0.0350	24.00	265+25.00	711.14	0.06	-0.0350	0.00		711.13	
711.43		0.84	0.0350	24.00	265+50.00	710.59	0.45	-0.0350	-0.02		710.58	
710.88		0.84	0.0350	24.00	265+75.00	710.04	0.84	-0.0350	-0.03		710.01	
710.33		0.84	0.0350	24.00	266+00.00	709.49	1.23	-0.0350	-0.04		709.45	
709.79		0.84	0.0350	24.00	266+25.00	708.95	1.63	-0.0350	-0.06		708.89	
709.33		0.84	0.0350	24.00	266+50.00	708.49	2.02	-0.0350	-0.07		708.42	
709.08		0.84	0.0350	24.00	266+65.65	708.24	2.26	-0.0350	-0.08		708.16	END FULL SE
709.03	172	0.86	0.0360	24.00	266+70.09	708.17	2.33	-0.0360	-0.08	172	708.09	PCC 67%

SUPERELEVATION TABLE

P.I. Station 269+39.51 | Dc = 7°30′ 00″

LEFT SIDE					CENTERLINE CONTROL		RIGHT SIDE					REMARKS
EDGE ELEVATION	TRANSITION RATE	ELEVATION CORRECTION	CROSS SLOPE	WIDTH	STATION	PROFILE GRADE	WIDTH	CROSS SLOPE	ELEVATION CORRECTION	TRANSITION RATE	EDGE ELEVATION	
709.03	172	0.86	0.0360	24.00	266+70.09	708.17	2.33	-0.0360	-0.08	172	708.09	
708.99	172	0.89	0.0372	24.00	266+75.00	708.10	2.41	-0.0372	-0.09	172	708.01	
708.83	172	1.04	0.0432	24.00	267+00.00	707.79	2.80	-0.0432	-0.12	172	707.67	
708.75	172	1.18	0.0493	24.00	267+25.00	707.57	3.20	-0.0493	-0.16	172	707.41	
708.74		1.30	0.0540	24.00	267+44.40	707.44	3.50	-0.0540	-0.19		707.26	BEG FULL SE
708.71		1.30	0.0540	24.00	267+50.00	707.42	3.50	-0.0540	-0.19		707.23	
708.64		1.30	0.0540	24.00	267+75.00	707.35	3.50	-0.0540	-0.19		707.16	
708.65		1.30	0.0540	24.00	268+00.00	707.36	3.50	-0.0540	-0.19		707.17	
708.74		1.30	0.0540	24.00	268+25.00	707.45	3.50	-0.0540	-0.19		707.26	
708.91		1.30	0.0540	24.00	268+50.00	707.61	3.50	-0.0540	-0.19		707.42	
709.15		1.30	0.0540	24.00	268+75.00	707.86	3.50	-0.0540	-0.19		707.67	
709.48		1.30	0.0540	24.00	269+00.00	708.18	3.50	-0.0540	-0.19		707.99	
709.88		1.30	0.0540	24.00	269+25.00	708.59	3.50	-0.0540	-0.19		708.40	
710.37		1.30	0.0540	24.00	269+50.00	709.07	3.50	-0.0540	-0.19		708.88	
710.93		1.30	0.0540	24.00	269+75.00	709.63	3.50	-0.0540	-0.19		709.44	
711.57		1.30	0.0540	24.00	270+00.00	710.27	3.50	-0.0540	-0.19		710.08	
712.29		1.30	0.0540	24.00	270+25.00	710.99	3.50	-0.0540	-0.19		710.80	
713.09		1.30	0.0540	24.00	270+50.00	711.79	3.50	-0.0540	-0.19		711.60	
713.97		1.30	0.0540	24.00	270+75.00	712.67	3.50	-0.0540	-0.19		712.48	
714.92		1.30	0.0540	24.00	271+00.00	713.63	3.50	-0.0540	-0.19		713.44	
715.49		1.30	0.0540	24.00	271+13.82	714.19	3.50	-0.0540	-0.19		714.00	END FULL SE
715.88	172	1.23	0.0513	24.00	271+25.00	714.65	3.32	-0.0513	-0.17	172	714.48	
716.76	↑	1.09	0.0452	24.00	271+50.00	715.68	2.93	-0.0452	-0.13	↑	715.54	
717.65	|	0.94	0.0392	24.00	271+75.00	716.71	2.54	-0.0392	-0.10	|	716.61	
718.11		0.86	0.0360	24.00	271+88.12	717.24	2.33	-0.0360	-0.08		717.16	PT 67%
718.53	172	0.79	0.0331	24.00	272+00.00	717.73	2.15	-0.0331	-0.07	172	717.66	
719.41	|	0.65	0.0271	24.00	272+25.00	718.76	1.75	-0.0271	-0.05	|	718.71	
720.29	|	0.50	0.0210	24.00	272+50.00	719.79	1.36	-0.0210	-0.03	|	719.76	
721.02	↓	0.38	0.0160	24.00	272+70.68	720.64	1.04	-0.0160	-0.02	|	720.62	
					272+75.00	720.82	0.97	-0.0160	-0.02	|	720.80	
					273+00.00	721.85	0.58	-0.0160	-0.01	↓	721.84	

SUPERELEVATION TABLE

P.I. Station 274+68.44 | Dc = 1°00′ 00″

					273+18.83	722.62	0.28	-0.0160	0.00		722.62	PC
					273+25.00	722.87	0.18	-0.0160	0.00		722.87	
					273+36.73	723.36	0.00	-0.0160	0.00		723.36	

CALCULATED JGB | CHECKED CSR

SUPERELEVATION TABLE
RAMP R

FRA-270-51.50

x:\Projects\2013\1321\1010\FRA\92616\roadway\sheets\92616GE003.dgn 12/7/2022 2:59:32 PM cwong

SUPERELEVATION TABLE

P.I. Station 281+80.94 | Dc = 4°00′ 00″

LEFT SIDE					CENTERLINE CONTROL		RIGHT SIDE					REMARKS
EDGE ELEVATION	TRANSITION RATE	ELEVATION CORRECTION	CROSS SLOPE	WIDTH	STATION	PROFILE GRADE	WIDTH	CROSS SLOPE	ELEVATION CORRECTON	TRANSITION RATE	EDGE ELEVATION	
732.83	172	0.26	0.0160	16.00	276+30.51	732.57						
733.18	172	0.36	0.0223	16.00	276+50.00	732.82						
733.55	172	0.49	0.0304	16.00	276+75.00	733.06						
733.63	172	0.52	0.0327	16.00	276+81.84	733.11						
733.83	172	0.62	0.0386	16.00	277+00.00	733.21						
734.03	172	0.75	0.0467	16.00	277+25.00	733.28						
734.07	172	0.78	0.0490	16.00	277+32.15	733.29						
734.11	172	0.83	0.0520	16.00	277+41.39	733.28						
734.09		0.83	0.0520	16.00	277+50.00	733.26						
733.99		0.83	0.0520	16.00	277+75.00	733.16						
733.80		0.83	0.0520	16.00	278+00.00	732.96						
733.52		0.83	0.0520	16.00	278+25.00	732.68						
733.15		0.83	0.0520	16.00	278+50.00	732.32						
732.70		0.83	0.0520	16.00	278+75.00	731.86						
732.16		0.83	0.0520	16.00	279+00.00	731.32						
731.53		0.83	0.0520	16.00	279+25.00	730.70						
730.82		0.83	0.0520	16.00	279+50.00	729.98						
730.01		0.83	0.0520	16.00	279+75.00	729.18						
729.13		0.83	0.0520	16.00	280+00.00	728.30						
728.16		0.83	0.0520	16.00	280+25.00	727.32						
727.16		0.83	0.0520	16.00	280+50.00	726.32						
726.16		0.83	0.0520	16.00	280+75.00	725.33						
725.20		0.83	0.0520	16.00	281+00.00	724.37						
724.31		0.83	0.0520	16.00	281+25.00	723.48						
723.48		0.83	0.0520	16.00	281+50.00	722.65						
722.71		0.83	0.0520	16.00	281+75.00	721.88						
722.01		0.83	0.0520	16.00	282+00.00	721.17						
721.36		0.83	0.0520	16.00	282+25.00	720.53						
720.78		0.83	0.0520	16.00	282+50.00	719.95						
720.26		0.83	0.0520	16.00	282+75.00	719.43						
719.80		0.83	0.0520	16.00	283+00.00	718.97						
719.40		0.83	0.0520	16.00	283+25.00	718.57						
719.07		0.83	0.0520	16.00	283+50.00	718.24						
718.80		0.83	0.0520	16.00	283+75.00	717.97						
718.59		0.83	0.0520	16.00	284+00.00	717.76						
718.44		0.83	0.0520	16.00	284+25.00	717.61						
718.35		0.83	0.0520	16.00	284+50.00	717.52						
718.33		0.83	0.0520	16.00	284+75.00	717.50						
718.37		0.83	0.0520	16.00	285+00.00	717.53						
718.43		0.83	0.0520	16.00	285+25.00	717.60						
718.50		0.83	0.0520	16.00	285+50.00	717.67						
718.56		0.83	0.0520	16.00	285+75.00	717.73						
718.60	200	0.83	0.0520	16.00	285+86.89	717.76						
718.56	200	0.77	0.0479	16.00	286+00.00	717.80						
718.51	200	0.64	0.0401	16.00	286+25.00	717.86						
718.46	200	0.55	0.0347	16.00	286+42.36	717.91						
718.45	200	0.52	0.0323	16.00	286+50.00	717.93						
718.39	200	0.39	0.0245	16.00	286+75.00	718.00						
718.33	200	0.27	0.0167	16.00	287+00.00	718.06						
718.32	200	0.26	0.0160	16.00	287+02.09	718.07						

SUPERELEVATION TABLE

LEFT SIDE					CENTERLINE CONTROL		RIGHT SIDE					REMARKS
EDGE ELEVATION	TRANSITION RATE	ELEVATION CORRECTION	CROSS SLOPE	WIDTH	STATION	PROFILE GRADE	WIDTH	CROSS SLOPE	ELEVATION CORRECTON	TRANSITION RATE	EDGE ELEVATION	

CALCULATED JGB | CHECKED CSR

SUPERELEVATION TABLE
RAMP R

FRA-270-51.50

x:\Projects\2013\1321\1010\FRA\92616\roadway\sheets\92616GE003.dgn 12/7/2022 2:59:32 PM cwong

SUPERELEVATION TABLE

P.I. Station 803+25.19 | Dc = 10°00′ 00″

LEFT SIDE					CENTERLINE CONTROL		RIGHT SIDE					REMARKS
EDGE ELEVATION	TRANSITION RATE	ELEVATION CORRECTION	CROSS SLOPE	WIDTH	STATION	PROFILE GRADE	WIDTH	CROSS SLOPE	ELEVATION CORRECTION	TRANSITION RATE	EDGE ELEVATION	
700.99	↑	0.20	0.0255	8.00	799+39.90	700.787	16.00	-0.0255	-0.41	↑	700.38	
701.18		0.24	0.0294	8.00	799+50.00	700.943	16.00	-0.0294	-0.47		700.47	
701.24		0.24	0.0305	8.00	799+52.87	701.001	16.00	-0.0305	-0.49		700.51	P.C. 58%
701.95		0.31	0.0390	8.00	799+75.00	701.637	16.00	-0.0390	-0.62		701.01	
703.02		0.39	0.0487	8.00	800+00.00	702.628	16.00	-0.0487	-0.78		701.85	
703.50		0.42	0.0530	8.00	800+11.08	703.072	16.00	-0.0530	-0.85		702.22	BEG FULL SE
704.05		0.42	0.0530	8.00	800+25.00	703.628	16.00	-0.0530	-0.85		702.78	
705.05		0.42	0.0530	8.00	800+50.00	704.628	16.00	-0.0530	-0.85		703.78	
705.28	161	0.42	0.0530	8.00	800+55.65	704.854	16.00	-0.0530	-0.85	161	704.01	END FULL SE
705.99		0.36	0.0455	8.00	800+75.00	705.628	16.00	-0.0455	-0.73		704.90	
706.80		0.30	0.0371	8.00	800+96.75	706.498	16.00	-0.0371	-0.59		705.90	P.T. 70%
706.92		0.29	0.0358	8.00	801+00.00	706.628	16.00	-0.0358	-0.57		706.05	
707.84		0.21	0.0262	8.00	801+25.00	707.628	16.00	-0.0262	-0.42		707.21	
708.70		0.13	0.0165	8.00	801+50.00	708.570	16.00	-0.0165	-0.26		708.31	
708.74		0.13	0.0160	8.00	801+51.29	708.616	16.00	-0.0160	-0.26		708.36	R.C.
709.45		0.05	0.0068	8.00	801+75.00	709.396	16.00	-0.0068	-0.11		709.29	
709.91	↓	0.00	0.0000	8.00	801+92.65	709.908	16.00	0.0000	0.00	↓	709.91	END RUNOFF

SUPERELEVATION TABLE

P.I. STATION 806+53.61 | Dc = 4°00′ 00″

LEFT SIDE					CENTERLINE CONTROL		RIGHT SIDE					REMARKS
EDGE ELEVATION	TRANSITION RATE	ELEVATION CORRECTION	CROSS SLOPE	WIDTH	STATION	PROFILE GRADE	WIDTH	CROSS SLOPE	ELEVATION CORRECTION	TRANSITION RATE	EDGE ELEVATION	
709.91	↑	0.00	0.0000	8.00	801+92.65	709.91	16.00	0.0000	0.00	↑	709.91	BEG RUNOFF
710.08		-0.02	-0.0028	8.00	802+00.00	710.10	16.00	0.0028	0.05		710.15	
710.60	161	-0.10	-0.0125	8.00	802+25.00	710.70	16.00	0.0125	0.20	161	710.90	
710.75		-0.13	-0.0160	8.00	802+34.01	710.88	16.00	0.0160	0.26		711.14	BEG NC
711.04		-0.13	-0.0160	8.00	802+50.00	711.17	16.00	0.0160	0.26		711.43	
711.40		-0.13	-0.0160	8.00	802+75.00	711.53	16.00	0.0160	0.26		711.79	
711.47		-0.13	-0.0160	8.00	802+80.21	711.60	16.00	0.0160	0.26		711.85	END NC
711.65		-0.19	-0.0231	8.00	803+00.00	711.83	16.00	0.0231	0.37		712.20	
711.77		-0.22	-0.0280	8.00	803+13.51	712.00	16.00	0.0280	0.45		712.44	PC 70%
711.88		-0.26	-0.0321	8.00	803+25.00	712.13	16.00	0.0321	0.51		712.65	
712.08		-0.32	-0.0400	8.00	803+46.81	712.40	16.00	0.0400	0.64		713.04	BEG FULL SE
712.12		-0.32	-0.0400	8.00	803+50.00	712.44	16.00	0.0400	0.64		713.08	
712.42	172	-0.32	-0.0400	8.00	803+75.00	712.74	16.00	0.0400	0.64		713.38	
712.72		-0.32	-0.0400	8.00	804+00.00	713.04	16.00	0.0400	0.64		713.68	
713.02		-0.32	-0.0400	8.00	804+25.00	713.34	16.00	0.0400	0.64		713.98	
713.29		-0.32	-0.0400	8.00	804+50.00	713.61	16.00	0.0400	0.64		714.25	
713.54		-0.32	-0.0400	8.00	804+75.00	713.86	16.00	0.0400	0.64		714.50	
713.75		-0.32	-0.0400	8.00	805+00.00	714.07	16.00	0.0400	0.64		714.71	
713.94		-0.32	-0.0400	8.00	805+25.00	714.26	16.00	0.0400	0.64	172	714.90	
714.10		-0.32	-0.0400	8.00	805+50.00	714.42	16.00	0.0400	0.64		715.06	
714.31		-0.24	-0.0400	6.00	805+75.00	714.55	16.00	0.0400	0.64		715.19	
714.51		-0.16	-0.0400	4.00	806+00.00	714.67	16.00	0.0400	0.64		715.31	
714.72		-0.08	-0.0400	2.00	806+25.00	714.80	16.00	0.0400	0.64		715.44	
714.92	↓	0.00	-0.0400	0.00	806+50.00	714.92	16.00	0.0400	0.64		715.56	
					806+75.00	715.05	16.00	0.0400	0.64		715.69	
					807+00.00	715.17	16.00	0.0400	0.64		715.81	
					807+25.00	715.30	16.00	0.0400	0.64		715.94	
					807+50.00	715.42	16.00	0.0400	0.64		716.06	
					807+75.00	715.55	16.00	0.0400	0.64		716.19	
					808+00.00	715.67	16.00	0.0400	0.64		716.31	
					808+25.00	715.80	16.00	0.0400	0.64		716.44	
					808+50.00	715.92	16.00	0.0400	0.64		716.56	
					808+75.00	716.05	16.00	0.0400	0.64		716.69	
					809+00.00	716.17	16.00	0.0400	0.64		716.81	
					809+25.00	716.30	16.00	0.0400	0.64		716.94	
					809+48.05	716.41	16.00	0.0400	0.64		717.05	END FULL SE
					809+50.00	716.42	16.00	0.0393	0.63		717.05	
					809+75.00	716.55	16.00	0.0303	0.48		717.03	
					809+81.35	716.58	16.00	0.0280	0.45		717.03	PCC 70%

CALCULATED JGB | CHECKED CSR

SUPERELEVATION TABLE
RAMP S

FRA-270-51.50

x:\Projects\2013\1321\1010\FRA\92616\roadway\sheets\92616GE004.dgn 12/7/2022 2:59:33 PM cwong

SUPERELEVATION TABLE

P.I. Sta. 689+26.90 | Dc = 6° 30′ 00″

CALCULATED JGB | CHECKED CSR

LEFT SIDE						LEFT SIDE						BASELINE CONTROL		RIGHT SIDE					
EDGE ELEVATION	TRANSITION RATE	ELEVATION CORRECTION	CROSS SLOPE	OFFSET	REMARKS	EDGE ELEVATION	TRANSITION RATE	ELEVATION CORRECTION	CROSS SLOPE	OFFSET	REMARKS	STATION	PROFILE GRADE	OFFSET	CROSS SLOPE	ELEVATION CORRECTON	TRANSITION RATE	EDGE ELEVATION	REMARKS
710.00		-0.05	-0.0042	24.00	CROWN	710.05		-0.25	-0.0208	12.00		684+89.82	710.30	0.00	0.0208	0.00		710.30	MATCH EXIST.
710.05		-0.05	-0.0042	24.00	CROWN	710.10		-0.22	-0.0188	11.94		685+00.00	710.33	0.12	0.0188	0.00		710.33	
710.17		-0.05	-0.0042	24.00	CROWN	710.23		-0.16	-0.0138	11.79		685+25.00	710.39	0.41	0.0138	0.01		710.39	
710.30		-0.05	-0.0042	24.00	CROWN	710.35		-0.10	-0.0088	11.65		685+50.00	710.45	0.70	0.0088	0.01		710.46	
710.41		-0.05	-0.0042	24.00	RC	710.46		-0.05	-0.0042	11.51		685+72.97	710.51	0.97	0.0042	0.00		710.51	RC
710.42		-0.05	-0.0038	24.00		710.47		-0.04	-0.0038	11.50		685+75.00	710.51	0.99	0.0038	0.00		710.52	
710.56		0.00	0.0000	24.00		710.56		0.00	0.0000	11.39		685+93.82	710.56	1.21	0.0000	0.00		710.56	BEG RUNOFF
710.61		0.02	0.0012	24.00		710.59		0.01	0.0012	11.36		686+00.00	710.58	1.29	-0.0012	0.00		710.57	
710.79		0.08	0.0062	24.00		710.71		0.07	0.0062	11.21		686+25.00	710.64	1.58	-0.0062	-0.01		710.63	
710.97		0.15	0.0112	24.00		710.82		0.12	0.0112	11.07		686+50.00	710.70	1.87	-0.0112	-0.02		710.68	
711.15		0.21	0.0162	24.00		710.94		0.18	0.0162	10.92		686+75.00	710.76	2.16	-0.0162	-0.04		710.73	
711.34		0.28	0.0212	24.00		711.05		0.23	0.0212	10.77		687+00.00	710.83	2.45	-0.0212	-0.05		710.77	
711.52		0.35	0.0262	24.00		711.17		0.28	0.0262	10.63		687+25.00	710.89	2.74	-0.0262	-0.07		710.82	
711.70		0.42	0.0312	24.00		711.28		0.33	0.0312	10.48		687+50.00	710.95	3.04	-0.0312	-0.09		710.85	
711.85		0.50	0.0362	24.00		711.36		0.37	0.0362	10.34		687+75.00	710.98	3.33	-0.0362	-0.12		710.86	
711.93		0.54	0.0392	24.00		711.39		0.40	0.0392	10.25		687+89.82	710.99	3.50	-0.0392	-0.14		710.85	SC
711.98		0.57	0.0412	24.00		711.41		0.42	0.0412	10.25		688+00.00	710.99	3.50	-0.0412	-0.14		710.84	
712.07		0.64	0.0462	24.00		711.43		0.47	0.0462	10.25		688+25.00	710.96	3.50	-0.0462	-0.16		710.80	
712.13		0.70	0.0512	24.00		711.43		0.53	0.0512	10.25		688+50.00	710.90	3.50	-0.0512	-0.18		710.72	
712.17		0.77	0.0562	24.00		711.39		0.58	0.0562	10.25		688+75.00	710.82	3.50	-0.0562	-0.20		710.62	
712.17		0.83	0.0600	24.00		711.35		0.62	0.0600	10.25		688+93.82	710.73	3.50	-0.0600	-0.21		710.52	BEG FULL SE
712.14		0.83	0.0600	24.00		711.31		0.62	0.0600	10.25		689+00.00	710.70	3.50	-0.0600	-0.21		710.49	
711.99		0.83	0.0600	24.00		711.16		0.62	0.0600	10.25		689+25.00	710.55	3.50	-0.0600	-0.21		710.34	
711.81		0.83	0.0600	24.00		710.99		0.62	0.0600	10.25		689+50.00	710.37	3.50	-0.0600	-0.21		710.16	
711.60		0.83	0.0600	24.00		710.77		0.62	0.0600	10.25		689+75.00	710.16	3.50	-0.0600	-0.21		709.95	
711.36	200	0.83	0.0600	24.00		710.53	200	0.62	0.0600	10.25		690+00.00	709.92	3.50	-0.0600	-0.21	200	709.71	
711.09		0.83	0.0600	24.00		710.26		0.62	0.0600	10.25		690+25.00	709.65	3.50	-0.0600	-0.21		709.44	
710.79		0.83	0.0600	24.00		709.96		0.62	0.0600	10.25		690+50.00	709.35	3.50	-0.0600	-0.21		709.14	
710.63		0.83	0.0600	24.00		709.81		0.62	0.0600	10.25		690+61.81	709.19	3.50	-0.0600	-0.21		708.98	END FULL SE
710.39		0.78	0.0574	24.00		709.61		0.59	0.0574	10.33		690+75.00	709.01	3.35	-0.0574	-0.19		708.82	
709.91		0.71	0.0524	24.00		709.20		0.55	0.0524	10.47		691+00.00	708.65	3.05	-0.0524	-0.16		708.49	
709.39		0.63	0.0474	24.00		708.76		0.50	0.0474	10.62		691+25.00	708.26	2.76	-0.0474	-0.13		708.13	
708.85		0.56	0.0424	24.00		708.29		0.46	0.0424	10.76		691+50.00	707.83	2.47	-0.0424	-0.10		707.73	
708.27		0.49	0.0374	24.00		707.78		0.41	0.0374	10.91		691+75.00	707.38	2.18	-0.0374	-0.08		707.30	
707.67		0.42	0.0324	24.00		707.25		0.36	0.0324	11.06		692+00.00	706.89	1.89	-0.0324	-0.06		706.83	
707.03		0.35	0.0274	24.00		706.68		0.31	0.0274	11.20		692+25.00	706.37	1.60	-0.0274	-0.04		706.33	
706.37		0.28	0.0224	24.00		706.08		0.25	0.0224	11.35		692+50.00	705.83	1.30	-0.0224	-0.03		705.80	
705.70		0.22	0.0174	24.00		705.48		0.20	0.0174	11.49		692+75.00	705.28	1.01	-0.0174	-0.02		705.26	
705.51		0.20	0.0160	24.00		705.32		0.18	0.0160	11.53		692+81.81	705.13	0.93	-0.0160	-0.01		705.12	RC
705.07		0.15	0.0124	24.00		704.92		0.19	0.0160	11.64		693+00.00	704.73	0.72	-0.0160	-0.01		704.72	
704.50		0.09	0.0074	24.00		704.41		0.19	0.0160	11.79		693+25.00	704.22	0.43	-0.0160	-0.01		704.22	
703.98		0.03	0.0024	24.00		703.95		0.19	0.0160	11.93		693+50.00	703.76	0.14	-0.0160	0.00		703.76	
703.74		0.00	0.0000	24.00		703.74		0.19	0.0160	12.00		693+61.81	703.55	0.00	-0.0160	0.00		703.55	END RUNOFF
703.50		-0.03	-0.0026	24.00		703.53		0.19	0.0160	12.00		693+75.00	703.34						
703.06		-0.09	-0.0076	24.00		703.15		0.19	0.0160	12.00		694+00.00	702.96						
702.66		-0.15	-0.0126	24.00		702.81		0.19	0.0160	12.00		694+25.00	702.62						
702.42		-0.19	-0.0160	24.00		702.61		0.19	0.0160	12.00		694+41.81	702.42						
702.33		-0.19	-0.0160	24.00		702.52		0.19	0.0160	12.00		694+50.00	702.33						
702.10		-0.19	-0.0160	24.00		702.29		0.19	0.0160	12.00		694+73.94	702.10						BEG NC

SUPERELEVATION TABLE
RAMP P1

FRA-270-51.50

x:\Projects\2013\1321\1010\FRA\92616\roadway\sheets\92616GE005.dgn 12/7/2022 2:59:34 PM cwong

SUPERELEVATION TABLE

P.I. Sta. 701+58.85 | Dc = 7° 30′ 00″

LEFT SIDE					CENTERLINE CONTROL		RIGHT SIDE					REMARKS
EDGE ELEVATION	TRANSITION RATE	ELEVATION CORRECTION	CROSS SLOPE	WIDTH	STATION	PROFILE GRADE	WIDTH	CROSS SLOPE	ELEVATION CORRECTON	TRANSITION RATE	EDGE ELEVATION	
702.21		0.26	0.0160	16.00	697+16.03	701.9496						
702.26		0.26	0.0160	16.00	697+25.00	702.0051						
702.42		0.26	0.0160	16.00	697+50.00	702.1599						
702.52		0.26	0.0160	16.00	697+66.03	702.2591						TS
702.57		0.26	0.0160	16.00	697+75.00	702.3146						
702.73		0.26	0.0160	16.00	698+00.00	702.4694						
702.82		0.26	0.0160	16.00	698+16.03	702.5686						END NC
702.93	↑	0.30	0.0189	16.00	698+25.00	702.6241						
703.21	↑	0.43	0.0269	16.00	698+50.00	702.7789						
703.49	↑	0.56	0.0349	16.00	698+75.00	702.9336						
703.77	200	0.69	0.0429	16.00	699+00.00	703.0884						
704.06	↓	0.81	0.0509	16.00	699+25.00	703.2431						
704.33	↓	0.94	0.0589	16.00	699+50.00	703.3930						
704.58	↓	1.07	0.0669	16.00	699+75.00	703.5054						
704.82	↓	1.20	0.0749	16.00	700+00.00	703.6179						
704.97	↓	1.28	0.0800	16.00	700+16.03	703.6900						SC
705.01		1.28	0.0800	16.00	700+25.00	703.7303						
705.12		1.28	0.0800	16.00	700+50.00	703.8428						
705.24		1.28	0.0800	16.00	700+75.00	703.9552						
705.35		1.28	0.0800	16.00	701+00.00	704.0680						
705.48		1.28	0.0800	16.00	701+25.00	704.2047						
705.66		1.28	0.0800	16.00	701+50.00	704.3810						
705.88		1.28	0.0800	16.00	701+75.00	704.5967						
706.13		1.28	0.0800	16.00	702+00.00	704.8520						
706.43		1.28	0.0800	16.00	702+25.00	705.1468						
706.76		1.28	0.0800	16.00	702+50.00	705.4810						
707.13		1.28	0.0800	16.00	702+75.00	705.8548						
707.20		1.28	0.0800	16.00	702+79.30	705.9230						CS
707.44	200	1.17	0.0734	16.00	703+00.00	706.2680						
707.77	200	1.05	0.0654	16.00	703+25.00	706.7208						
708.13	200	0.92	0.0574	16.00	703+50.00	707.2130						
708.38	200	0.84	0.0524	16.00	703+65.64	707.5410						
708.49		0.83	0.0521	16.00	703+70.80	707.6530						
708.58	>200	0.83	0.0519	16.00	703+75.00	707.7448						
709.13	>200	0.81	0.0506	16.00	704+00.00	708.3158						MATCH EXIST.

SUPERELEVATION TABLE

LEFT SIDE					CENTERLINE CONTROL		RIGHT SIDE					REMARKS
EDGE ELEVATION	TRANSITION RATE	ELEVATION CORRECTION	CROSS SLOPE	WIDTH	STATION	PROFILE GRADE	WIDTH	CROSS SLOPE	ELEVATION CORRECTON	TRANSITION RATE	EDGE ELEVATION	

CALCULATED JGB | CHECKED CSR

SUPERELEVATION TABLE
RAMP P1

FRA-270-51.50

331
554

x:\Projects\2013\1321\1010\FRA\92616\roadway\sheets\92616GE005.dgn 12/7/2022 2:59:35 PM cwong

SUPERELEVATION TABLE

P.I. Sta. 868+58.66 | Dc = 5° 30′ 00″

LEFT SIDE					CENTERLINE CONTROL		RIGHT SIDE					REMARKS
EDGE ELEVATION	TRANSITION RATE	ELEVATION CORRECTION	CROSS SLOPE	WIDTH	STATION	PROFILE GRADE	WIDTH	CROSS SLOPE	ELEVATION CORRECTION	TRANSITION RATE	EDGE ELEVATION	
					866+76.04	702.10	12.00	0.0160	0.19	172	702.29	PC
					867+00.00	701.88	12.00	0.0160	0.19	172	702.07	
					867+25.00	701.71	12.00	0.0160	0.19	172	701.90	
					867+40.17	701.60	12.00	0.0160	0.19	172	701.79	END NC
					867+50.00	701.53	12.25	0.0196	0.24	172	701.77	
					867+75.00	701.38	12.88	0.0287	0.37	172	701.75	
					868+00.00	701.22	13.51	0.0377	0.51	172	701.73	
					868+25.00	701.08	14.14	0.0468	0.66	172	701.75	
					868+25.48	701.08	14.16	0.0470	0.67	172	701.75	BEG FULL SE
					868+50.00	701.01	14.78	0.0470	0.69	172	701.70	
					868+75.00	701.01	15.41	0.0470	0.72	172	701.73	
					868+98.38	701.08	16.00	0.0470	0.75	172	701.83	
					869+00.00	701.09	16.00	0.0470	0.75	172	701.84	
					869+25.00	701.23	16.00	0.0470	0.75	172	701.99	
					869+41.00	701.35	16.00	0.0470	0.75	172	702.10	BEG TRANS.
701.30	172	-0.08	-0.0470	1.80	869+50.00	701.38	16.00	0.0470	0.75	172	702.14	
701.07	172	-0.32	-0.0470	6.80	869+75.00	701.39	16.00	0.0470	0.75	172	702.14	
701.00	172	-0.38	-0.0470	8.00	869+81.00	701.37	16.00	0.0470	0.75	172	702.12	END TRANS.
700.88	172	-0.38	-0.0470	8.00	870+00.00	701.25	16.00	0.0470	0.75	172	702.00	
700.75	172	-0.38	-0.0470	8.00	870+12.84	701.12	16.00	0.0470	0.75	172	701.87	END FULL SE
700.62	172	-0.34	-0.0426	8.00	870+25.00	700.96	16.00	0.0426	0.68	172	701.64	
700.46	172	-0.30	-0.0380	8.00	870+37.61	700.76	16.00	0.0380	0.61	172	701.37	PCC

SUPERELEVATION TABLE

P.I. Sta. 871+39.34 | Dc = 10° 00′ 00″

LEFT SIDE					CENTERLINE CONTROL		RIGHT SIDE					REMARKS
EDGE ELEVATION	TRANSITION RATE	ELEVATION CORRECTION	CROSS SLOPE	WIDTH	STATION	PROFILE GRADE	WIDTH	CROSS SLOPE	ELEVATION CORRECTION	TRANSITION RATE	EDGE ELEVATION	
700.46	143	-0.30	-0.0380	8.00	870+37.61	700.76	16.00	0.0380	0.61	143	701.37	PCC
700.22	143	-0.30	-0.0380	8.00	870+50.00	700.53	16.00	0.0380	0.61	143	701.13	
699.71	143	-0.30	-0.0380	8.00	870+75.00	700.01	16.00	0.0380	0.61	143	700.62	
699.20	143	-0.30	-0.0380	8.00	871+00.00	699.50	16.00	0.0380	0.61	143	700.11	
698.69	143	-0.30	-0.0380	8.00	871+25.00	698.99	16.00	0.0380	0.61	143	699.60	
698.31	143	-0.30	-0.0380	8.00	871+50.00	698.62	16.00	0.0380	0.61	143	699.23	
698.21	143	-0.30	-0.0380	8.00	871+75.00	698.52	16.00	0.0380	0.61	143	699.12	
698.38	143	-0.30	-0.0380	8.00	872+00.00	698.69	16.00	0.0380	0.61	143	699.30	
698.53	143	-0.30	-0.0380	8.00	872+09.99	698.83	16.00	0.0380	0.61	143	699.44	END FULL SE
698.88	143	-0.25	-0.0314	8.00	872+25.00	699.13	16.00	0.0314	0.50	143	699.64	
699.26	143	-0.20	-0.0253	8.00	872+38.97	699.46	16.98	0.0253	0.43	143	699.89	PT

CALCULATED JGB | CHECKED CSR

SUPERELEVATION TABLE
RAMP P2

FRA-270-51.50

332
554

x:\Projects\2013\1321\1010\FRA\92616\roadway\sheets\92616GE006.dgn 12/7/2022 2:59:36 PM cwong

(A) STA. 573+22.67 ℄ CONST. US 23 =
STA. 873+22.67 ℄ RAMP P2
Δ = 88°30′ 33″

(B) STA. 572+80.65 ℄ CONST. US 23 =
0.26′ RT.

(C) STA. 572+80.65 ℄ CONST. US 23 =
0.95′ RT.

(D) STA. 573+95.02 ℄ CONST. US 23 =
4.00′ LT.

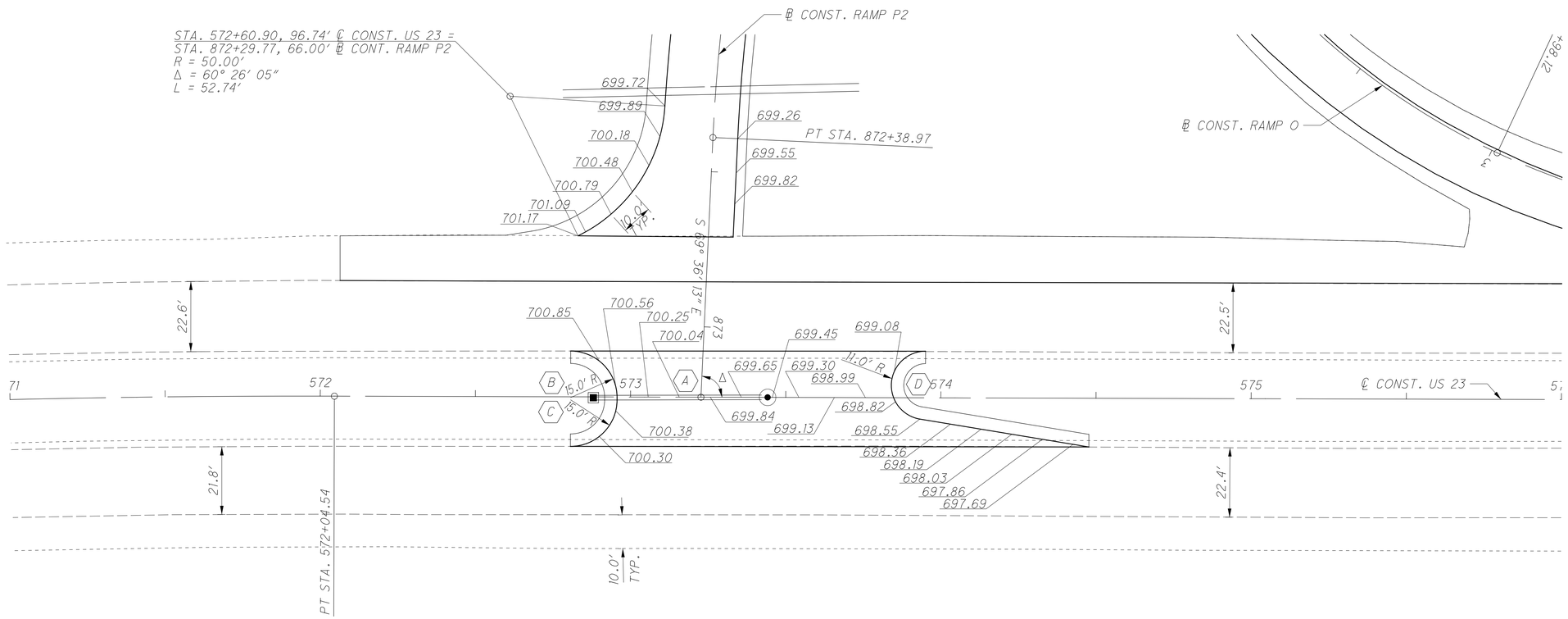

x:\Projects\2013\1321\1010\FRA\92616\roadway\sheets\92616GI51.dgn 12/7/2022 2:59:37 PM cwong

HORIZONTAL SCALE IN FEET
0 10 20 40

CALCULATED ACF
CHECKED CSR

INTERSECTION DETAILS US23 AND RAMP P2

FRA-270-51.50

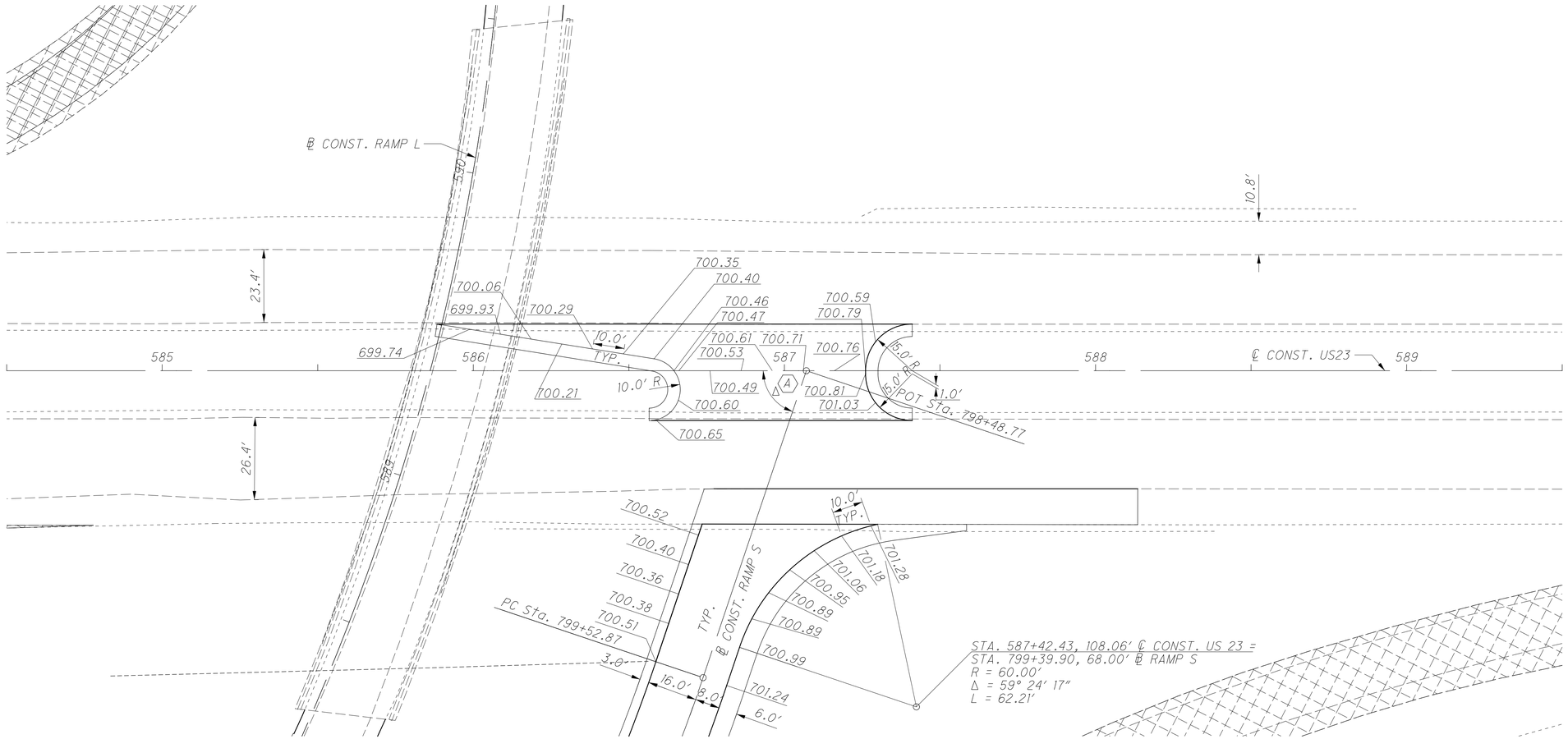

HORIZONTAL SCALE IN FEET
0 10 20 40

CALCULATED ACF
CHECKED CSR

INTERSECTION DETAIL US23 AND RAMP S

FRA-270-51.50

334
554

x:\Projects\2013\1321\1010\FRA\92616\roadway\sheets\92616GI152.dgn 12/7/2022 2:59:38 PM cwong

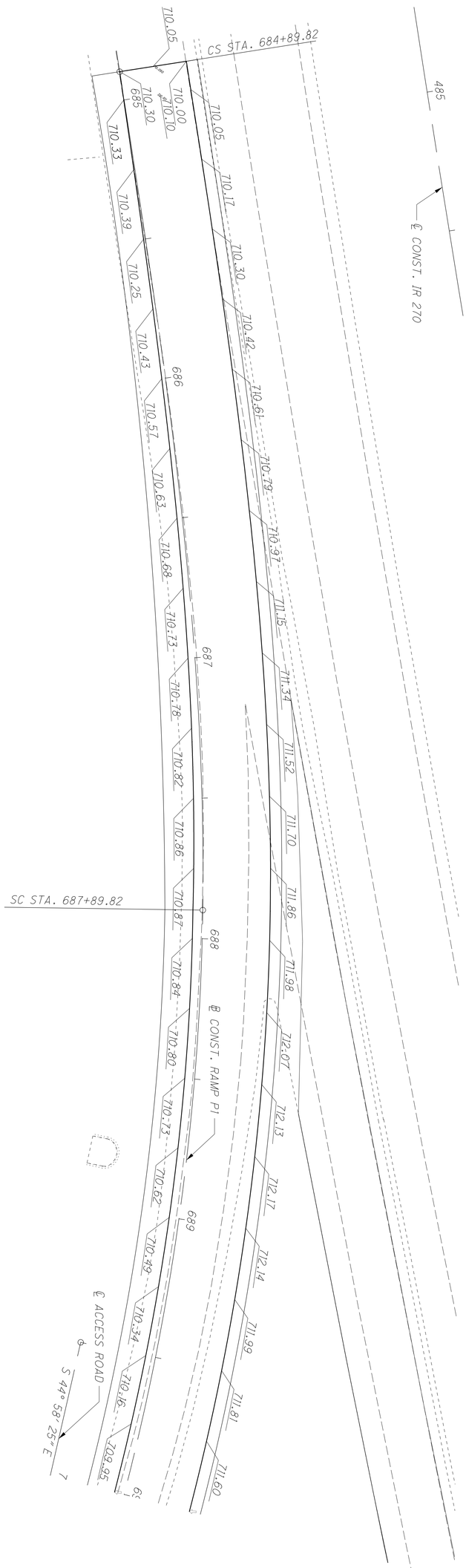

335 554	**FRA-270-51.50**	**GORE DETAILS - RAMP P1** **STA. 684+89.82 TO STA. 690+00**	CALCULATED ACF CHECKED CSR	0 10 20 40 HORIZONTAL SCALE IN FEET

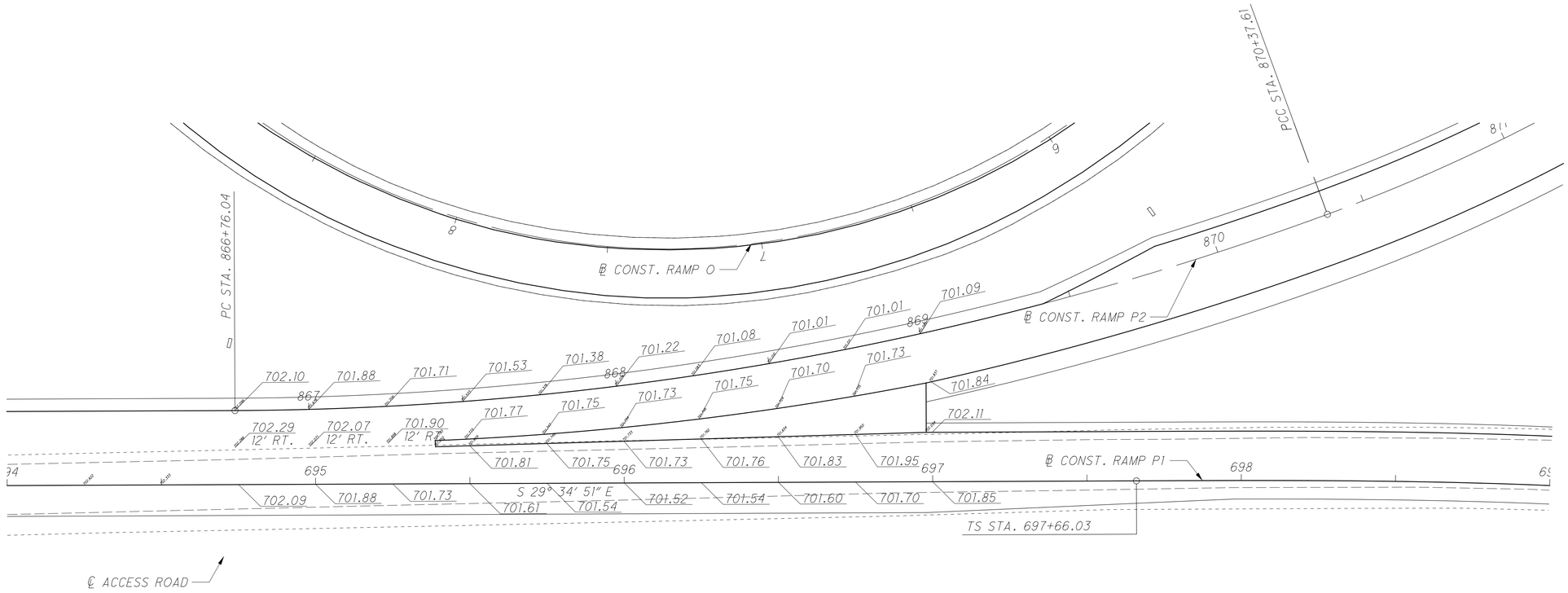

GORE DETAILS - RAMP P1
STA. 694+00 TO STA. 699+00

HORIZONTAL SCALE IN FEET
0 10 20 40

CALCULATED ACF
CHECKED CSR

FRA-270-51.50

336
554

x:\Projects\2013\1321\1010\FRA\92616\roadway\sheets\92616GA404.dgn 12/7/2022 2:59:41 PM cwang

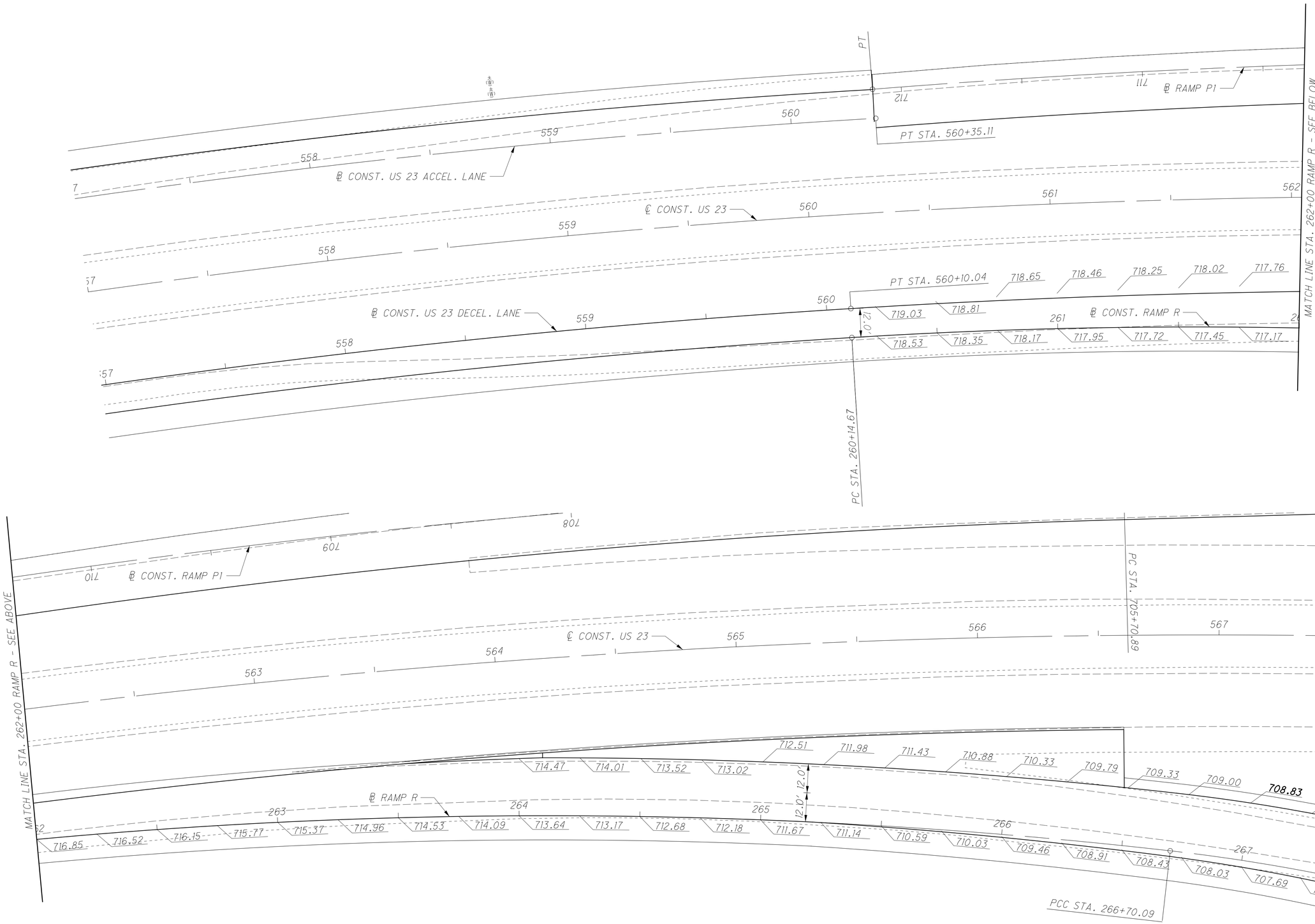

HORIZONTAL SCALE IN FEET
0 10 20 40

CALCULATED ACF
CHECKED CSR

PAVEMENT DETAILS - RAMP R AND US 23
STA. 262+00 TO STA. 267+50

FRA-270-51.50

337
554

x:\Projects\2013\1321\1010\FRA\92616\roadway\sheets\92616GA551.dgn 12/7/2022 2:59:43 PM cwong

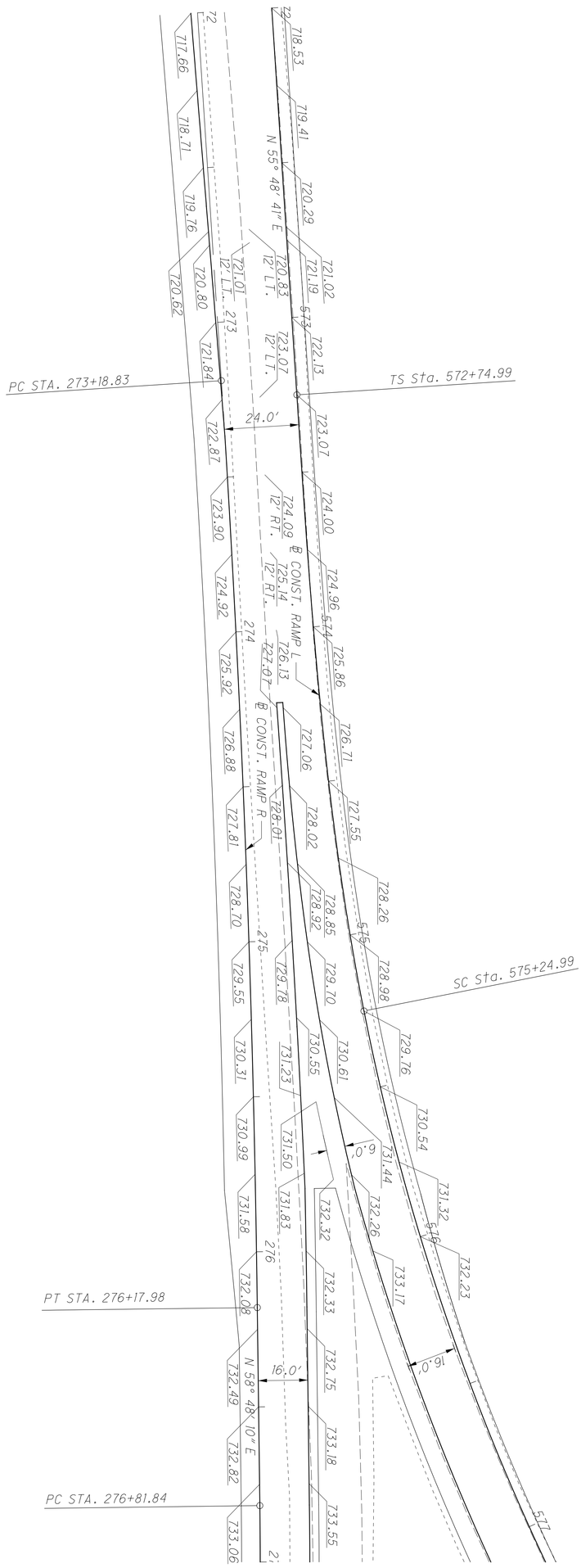

338 / 554	FRA-270-51.50	GORE DETAILS - RAMP R STA. 272+00 TO STA. 277+00 RAMP L STA. 572+00 TO STA. 576+00	CALCULATED JGB CHECKED CSR	0 10 20 40 HORIZONTAL SCALE IN FEET

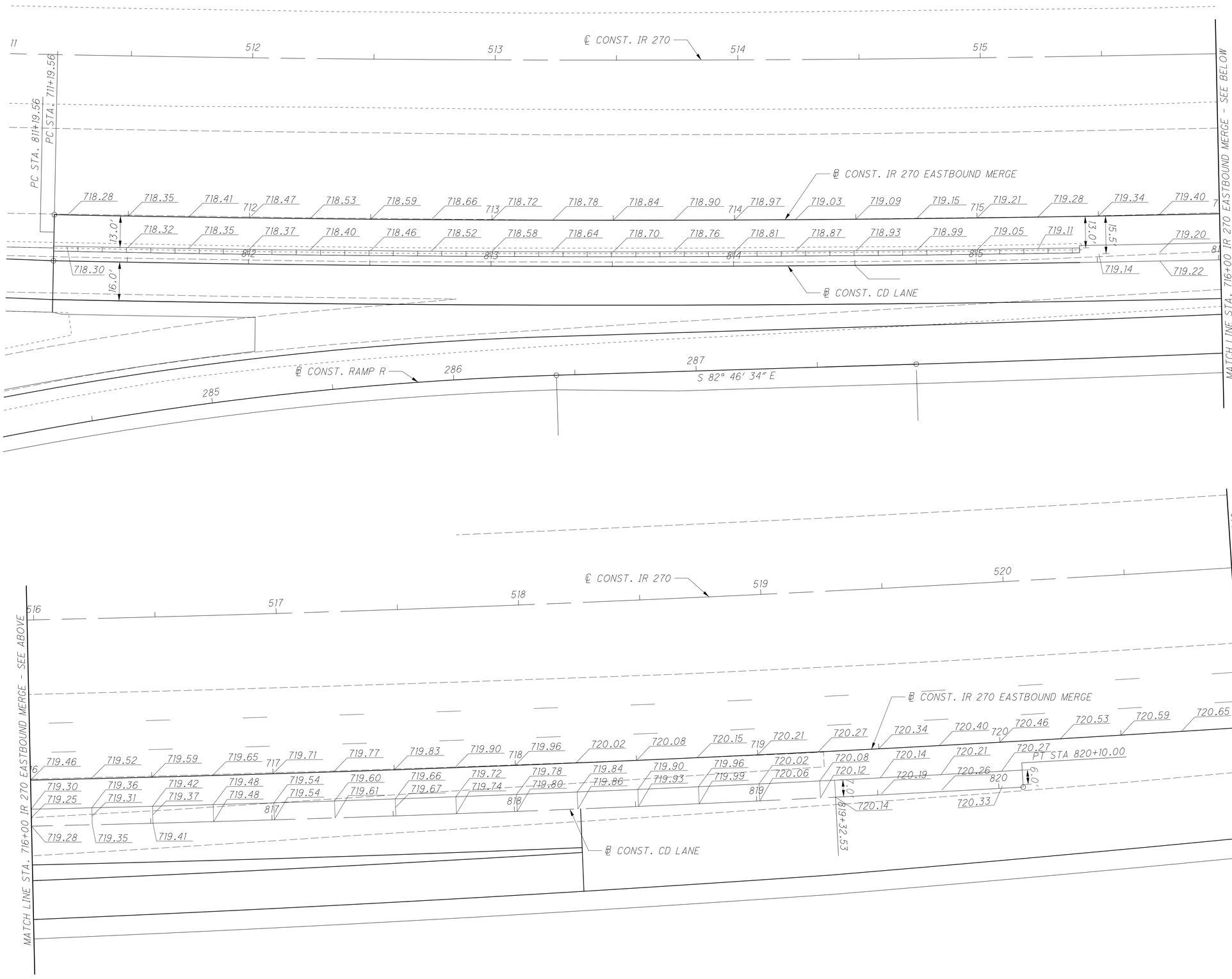

PAVEMENT DETAILS - IR 270EASTBOUND —MERGE
STA. 711+19.56 TO STA. 721+00

FRA-270-51.50

339
554

HORIZONTAL SCALE IN FEET
0 10 20 40

CALCULATED ACF
CHECKED CSR

N

x:\Projects\2013\1321\1010\FRA\92616\roadway\sheets\92616GA751.dgn 12/7/2022 2:59:45 PM cwong

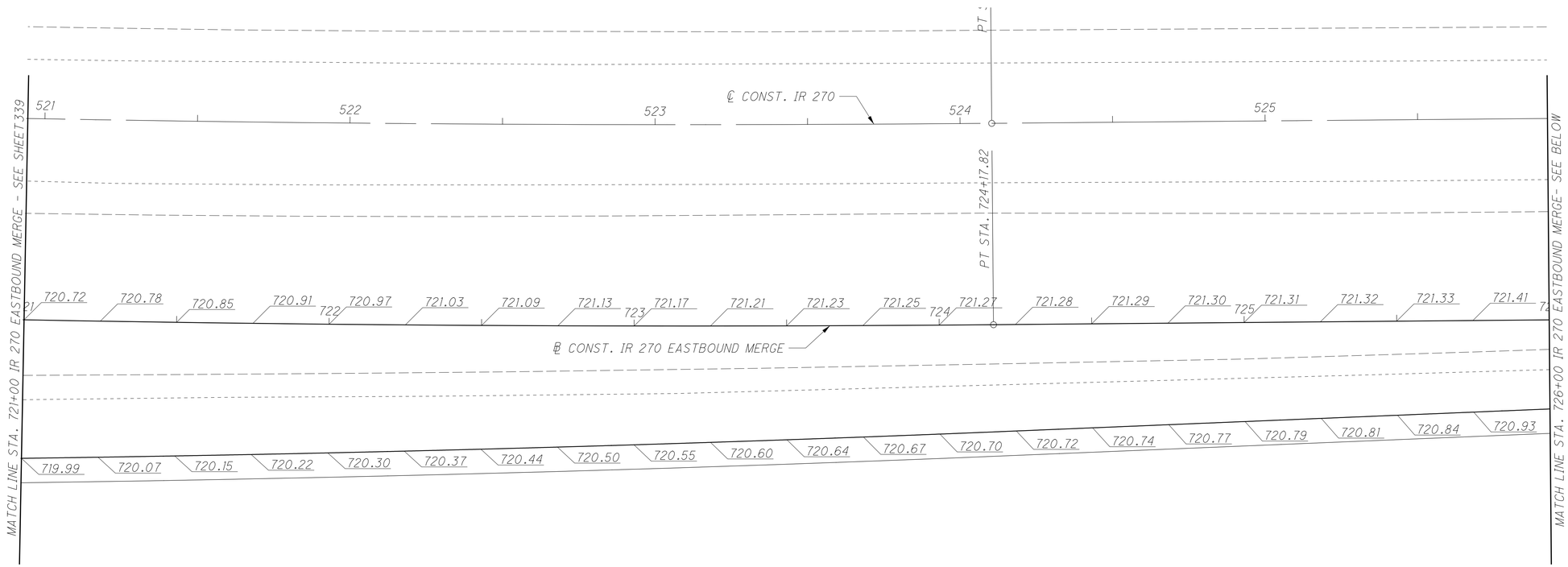

HORIZONTAL SCALE IN FEET
0 10 20 40

CALCULATED ACF
CHECKED CSR

PAVEMENT DETAILS - IR 270EASTBOUND MERGE
STA. 721+00 TO STA. 731+00

FRA-270-51.50

340
554

x:\Projects\2013\1321\1010\FRA\92616\roadway\sheets\92616GA752.dgn 12/7/2022 2:59:47 PM cwong

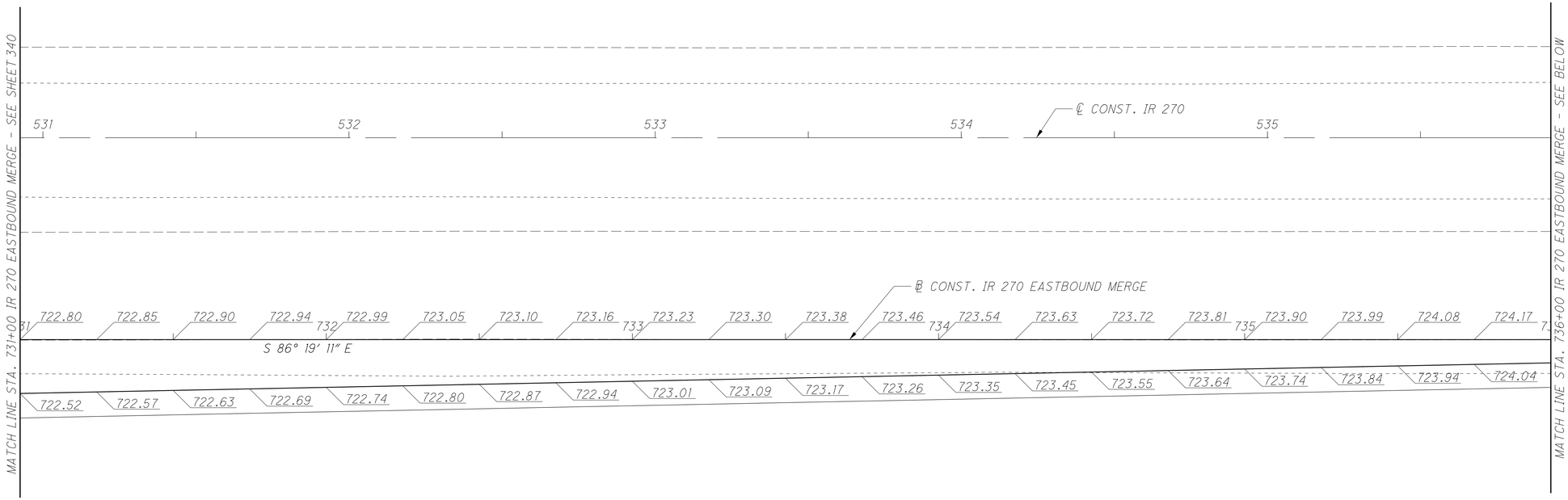

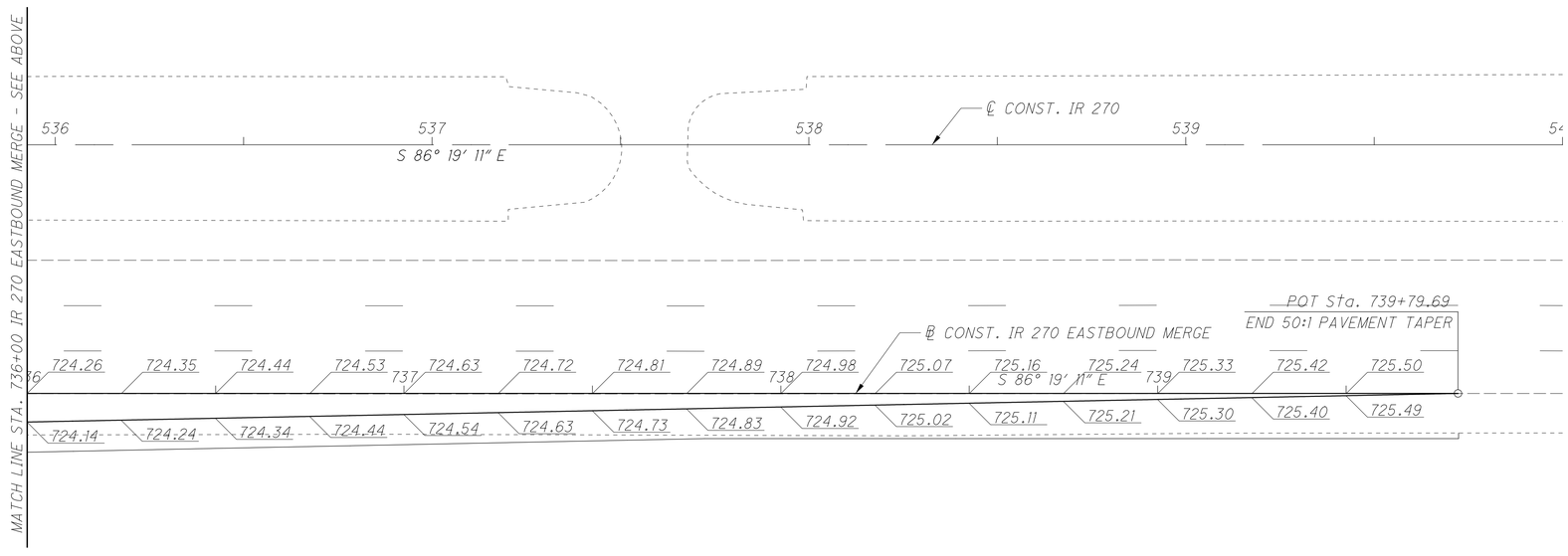

HORIZONTAL SCALE IN FEET
0 10 20 40

CALCULATED ACF
CHECKED CSR

PAVEMENT DETAILS - IR 270EASTBOUND MERGE
STA. 731+00 TO STA. 739+79.69

FRA-270-51.50

341
554

x:\Projects\2013\1321\1010\FRA\92616\roadway\sheets\92616GA753.dgn 12/7/2022 2:59:48 PM cwong

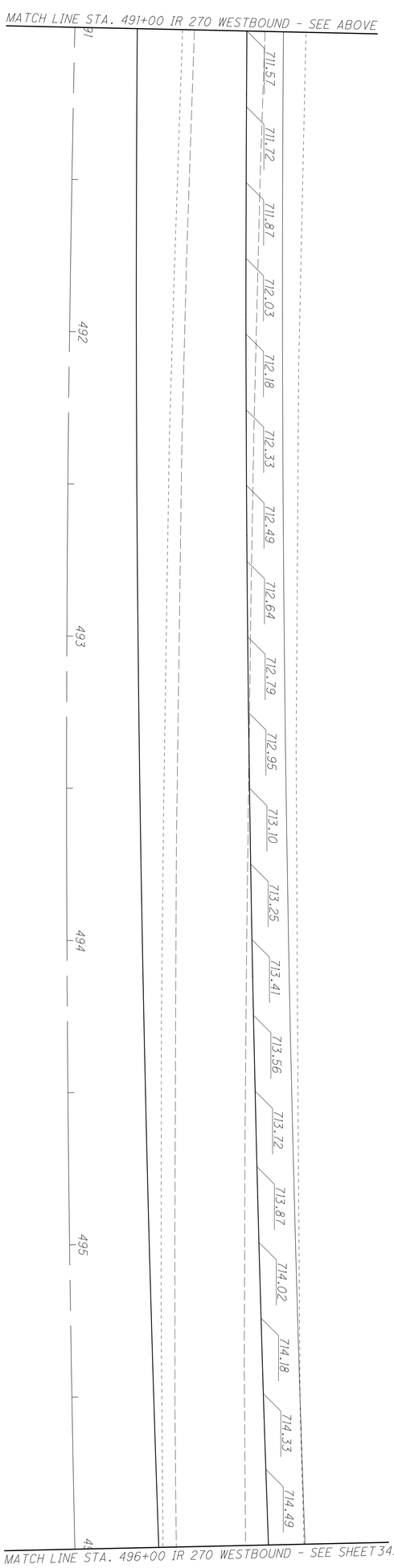

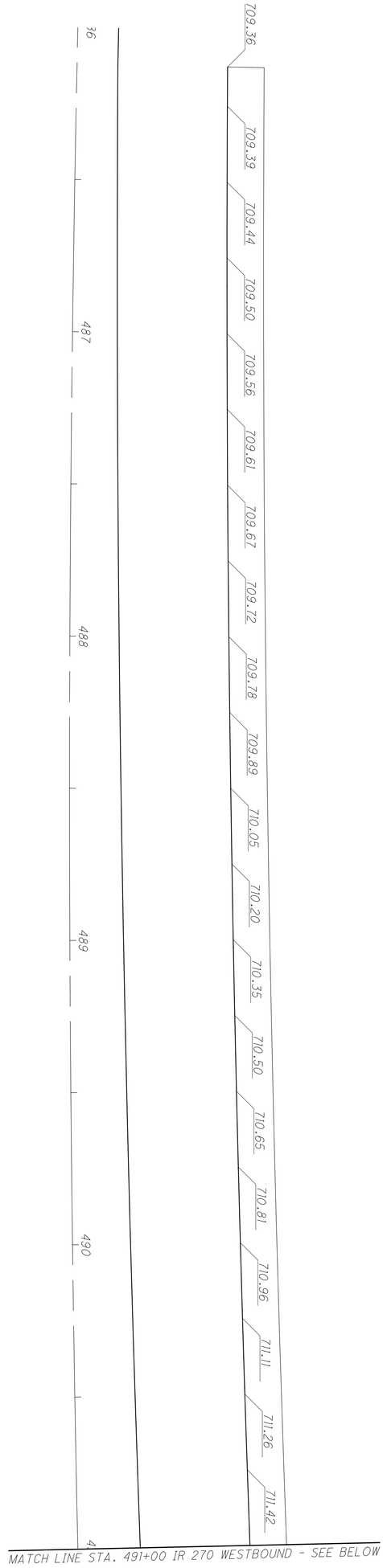

FRA-270-51.50

PAVEMENT DETAILS - IR 270 WESTBOUND
STA. 486+00 TO STA. 496+00

CALCULATED ACF
CHECKED CSR

0 10 20 40
HORIZONTAL SCALE IN FEET

N

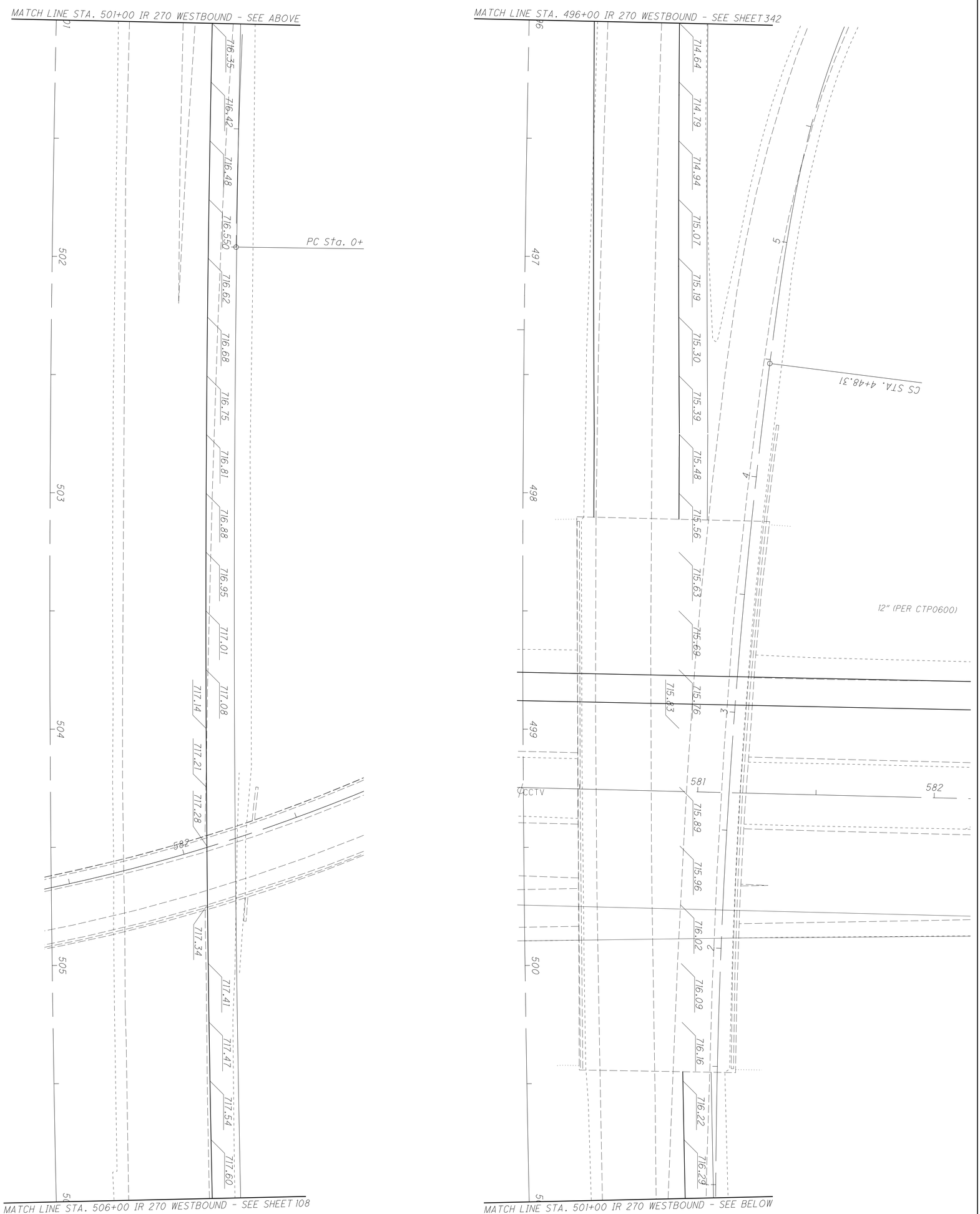

343 / 554	FRA-270-51.50	PAVEMENT DETAILS - IR 270 WESTBOUND STA. 496+00 TO STA. 506+00	CALCULATED ACF / CHECKED CSR	0 10 20 40 HORIZONTAL SCALE IN FEET

FRA-270-51.50

PAVEMENT DETAILS - IR 270 WESTBOUND
STA. 506+00 TO STA. 516+00

CALCULATED ACF
CHECKED CSR

0 10 20 40
HORIZONTAL SCALE IN FEET

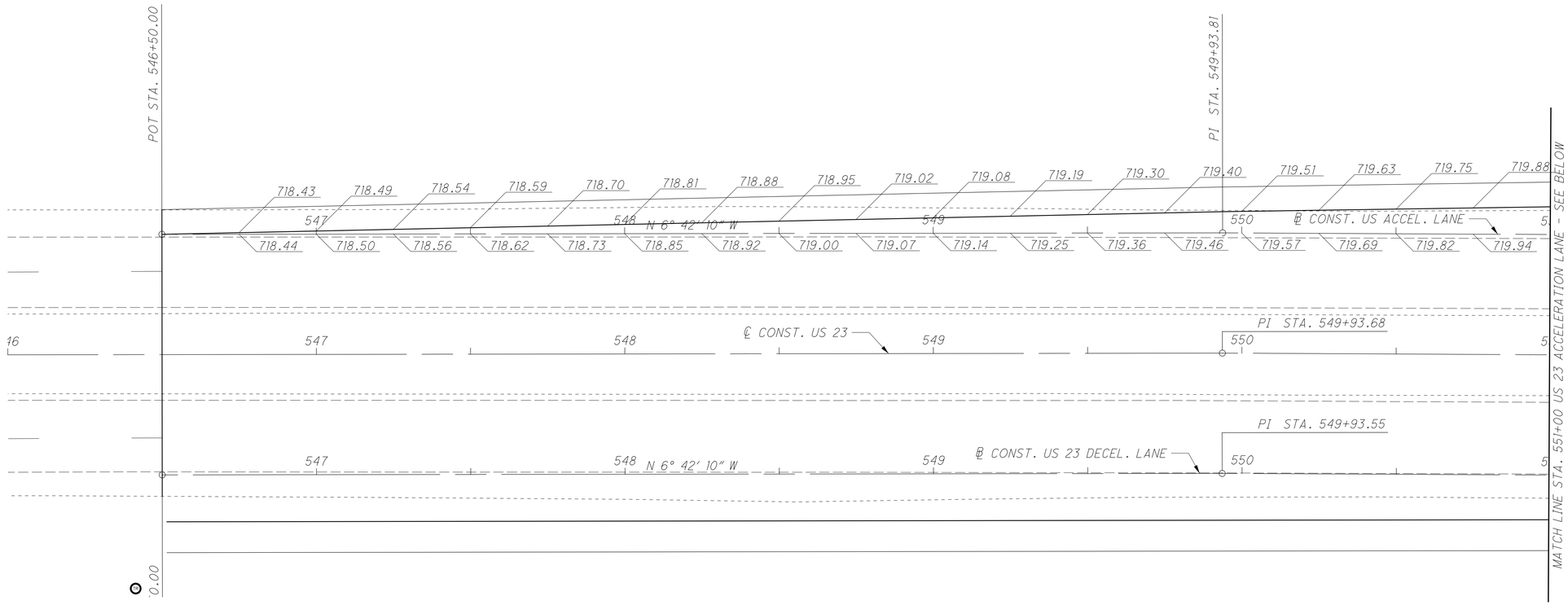

HORIZONTAL SCALE IN FEET
0 10 20 40

CALCULATED ACF
CHECKED CSR

PAVEMENT DETAILS US 23 ACCELERATION LANE STA. 546+50 TO STA. 556+00

FRA-270-51.50

345
554

x:\Projects\2013\1321\1010\FRA\92616\roadway\sheets\92616GA651.dgn 12/7/2022 2:59:54 PM cwong

℄ CONST. LIMITS

℄

PT STA. 712+11.92

722.66 722.74 722.70 722.66 722.63 722.65 722.58 722.51 722.45 722.35 722.25 722.06 721.86 721.77 721.67 721.48 721.29 721.08

℄ CONST. RAMP P1

712

℄ CONST. US 23 ACCEL. LANE

556 557 558 559 560

722.58 722.64 722.59 722.55 722.50 722.51 722.43 722.36 722.28 722.17 722.06 721.86 721.65 721.55 721.44 721.24 721.04 720.82

PT STA. 560+35.11

MATCH LINE STA. 556+00 US 23 ACCELERATION LANE - SEE SHEET 345

℄ CONST. US 23

556 557 558 559 560

℄ CONST. US 23 DECEL. LANE

556 557 558 559 560

PT STA. 560+10.04

℄ CONST. RAMP R

7

PAVEMENT DETAILS US 23 ACCELERATION LANE
STA. 556+00 TO STA. 560+35.11

HORIZONTAL SCALE IN FEET
0 10 20 40

CALCULATED ACF
CHECKED CSR

FRA-270-51.50

346
554

x:\Projects\2013\1321\1010\FRA\92616\roadway\sheets\92616GA652.dgn 12/7/2022 2:59:55 PM cwong

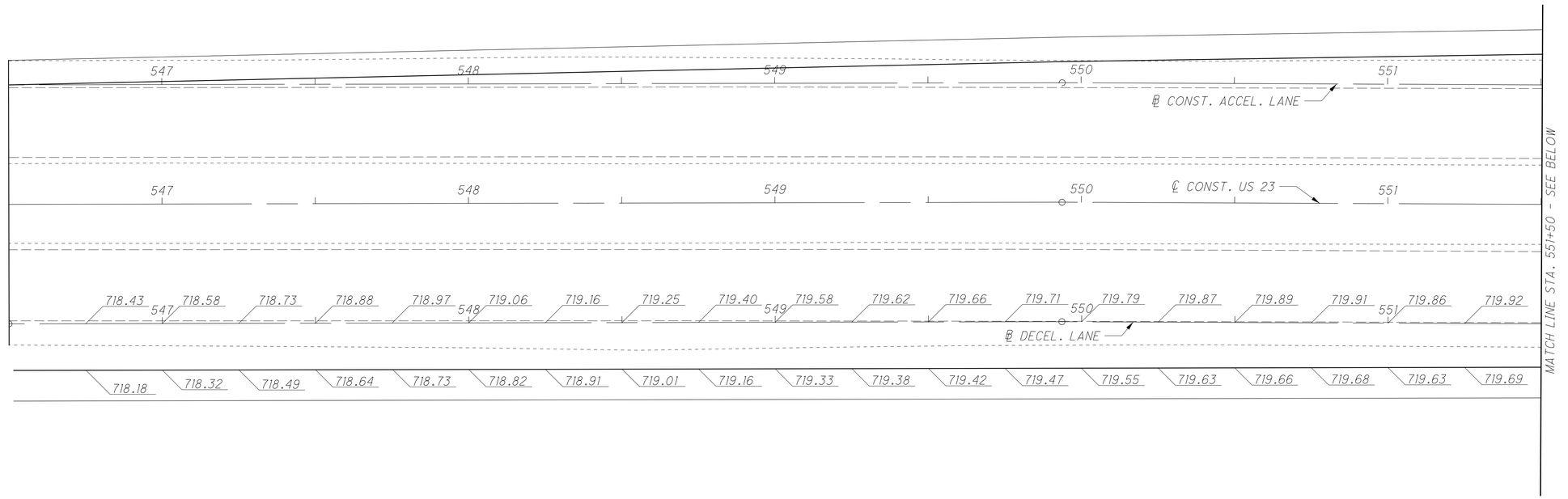

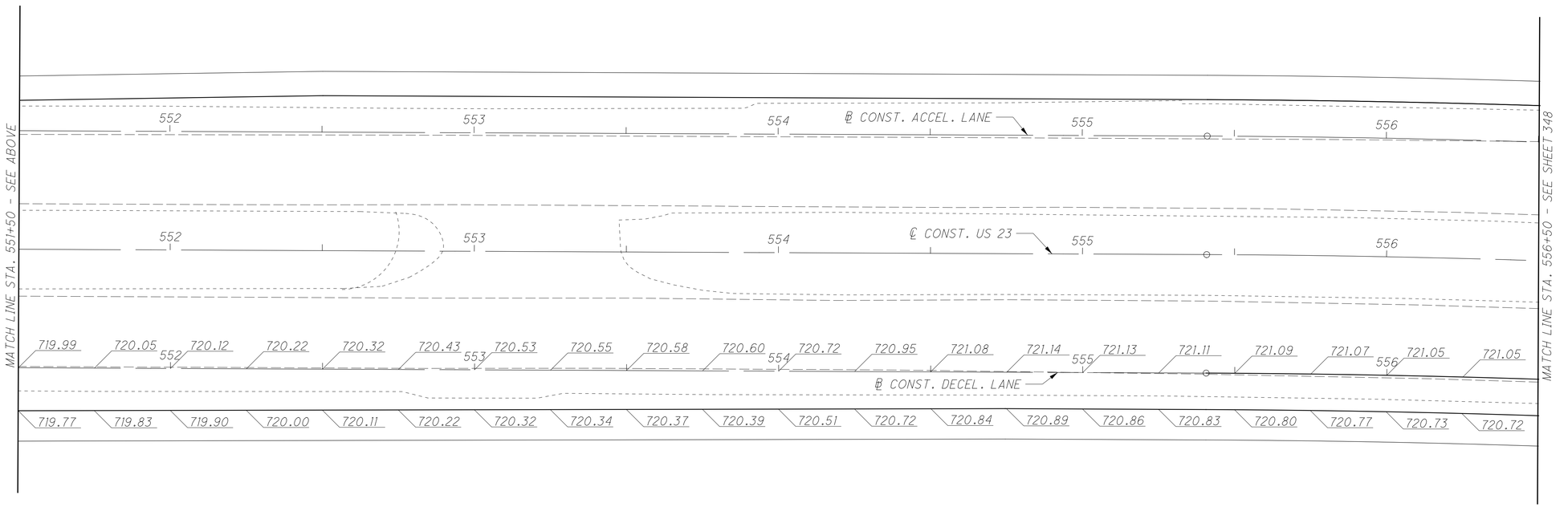

N

HORIZONTAL SCALE IN FEET
0 10 20 40

CALCULATED ACF
CHECKED CSR

PAVEMENT DETAILS US 23 DECELERATION LANE STA. 546+50 TO STA. 556+50

FRA-270-51.50

347
554

x:\Projects\2013\1321\1010\FRA\92616\roadway\sheets\92616GA701.dgn 12/7/2022 2:59:57 PM cwong

N

0 10 20 40
HORIZONTAL SCALE IN FEET

CALCULATED ACF
CHECKED CSR

PAVEMENT DETAILS US 23 DECELERATION LANE
STA. 556+50.00 TO STA. 560+10.04

FRA-270-51.50

348
554

x:\Projects\2013\1321\1010\FRA\92616\roadway\sheets\92616GA702.dgn 12/7/2022 2:59:58 PM cwong

SEEDING	
END WIDTH	SQ. YDS.

END AREA	
CUT	FILL

VOLUME	
CUT	FILL

CALCULATED ACF

CHECKED CSR

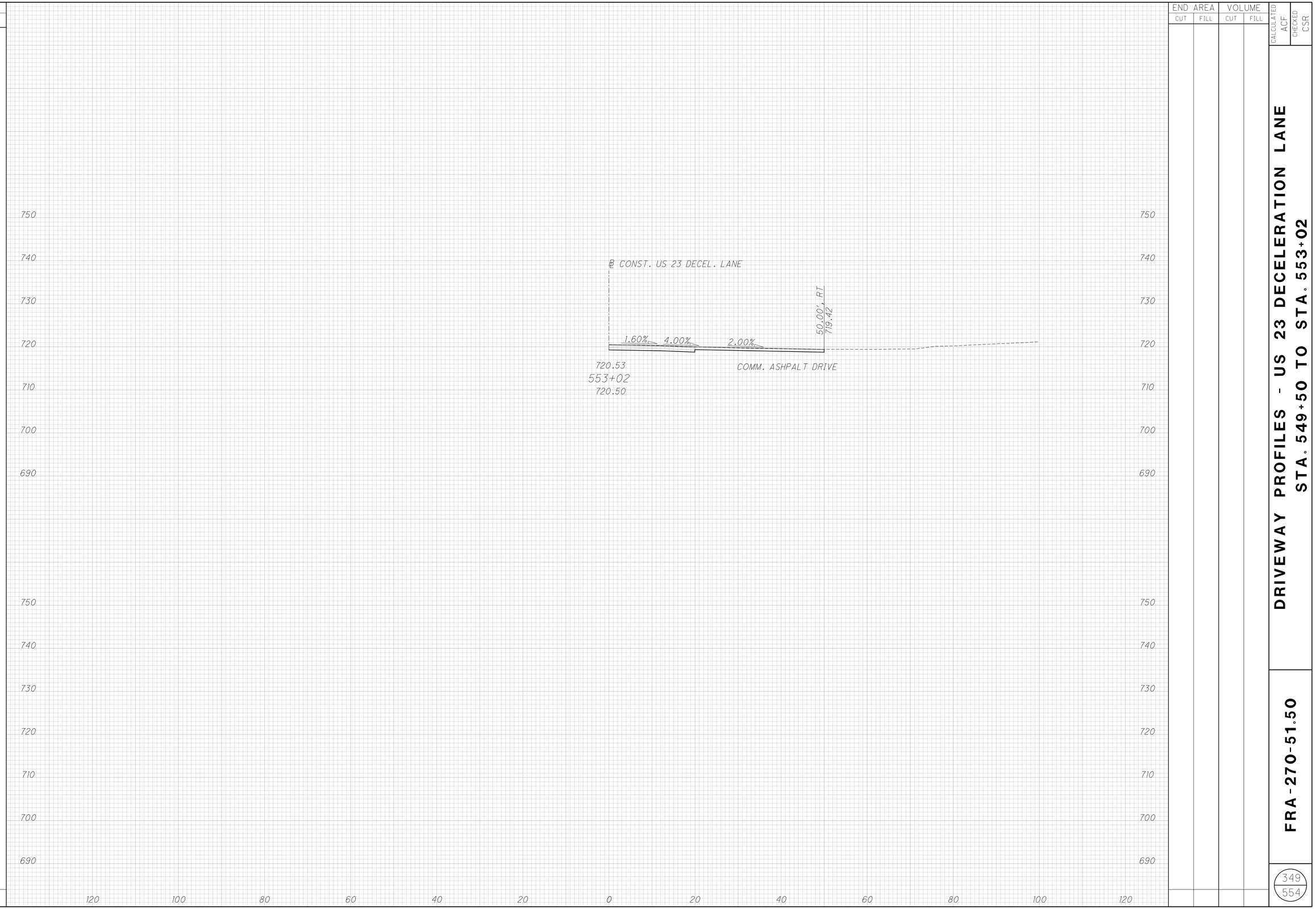

DRIVEWAY PROFILES - US 23 DECELERATION LANE
STA. 549+50 TO STA. 553+02

FRA-270-51.50

x:\Projects\2013\1321\1010\FRA\92616\roadway\sheets\92616CD001.dgn 12/7/2022 2:59:59 PM cwong

SEEDING	
END WIDTH	SQ. YDS.

END AREA		VOLUME	
CUT	FILL	CUT	FILL

CALCULATED ACF
CHECKED CSR

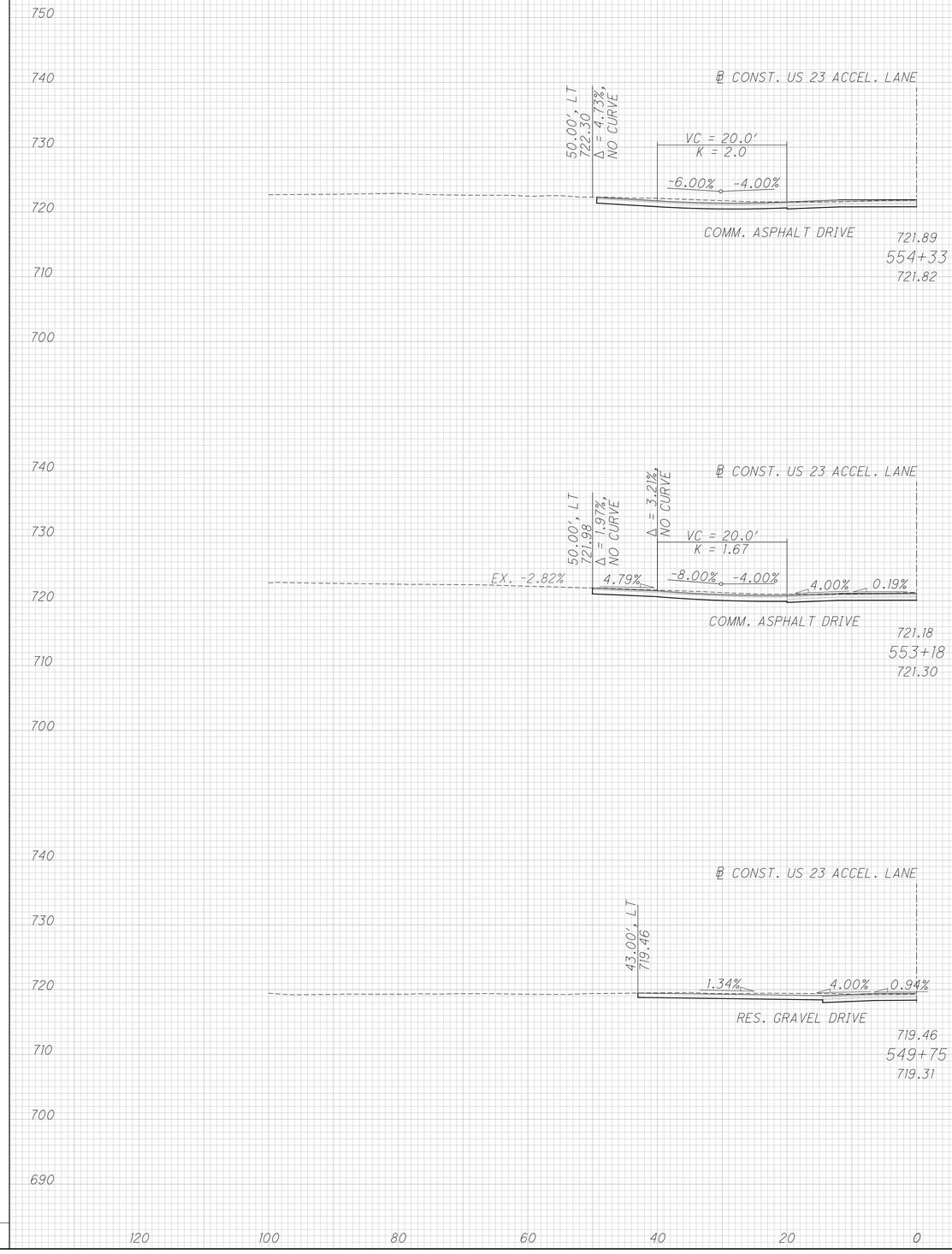

DRIVEWAY PROFILES - US 23 ACCELERATION LANE
STA. 549+75 TO STA. 554+33

FRA-270-51.50

x:\Projects\2013\1321\1010\FRA\92616\roadway\sheets\92616GD001.dgn 12/7/2022 2:59:59 PM cwong

CONCRETE JOINT DETAIL - RAMP L
STA. 571+88.12 TO STA. 582+00

HORIZONTAL SCALE IN FEET
0 10 20 40

CALCULATED ACF
CHECKED CSR

LEGEND

- (C) STANDARD CONTRACTION JOINT, SCD BP-2.2
- (L) STANDARD LONGITUDINAL JOINT, SCD BP-2.1
- (S) STANDARD LONGITUDINAL JOINT, SCD BP-2.1 WITHOUT TIE BARS
- (T) STANDARD TRANSVERSE JOINT, SCD BP-2.2
- (Y) BUTT JOINT BETWEEN ASPHALT AND CONCRETE, SCD BP-3.1

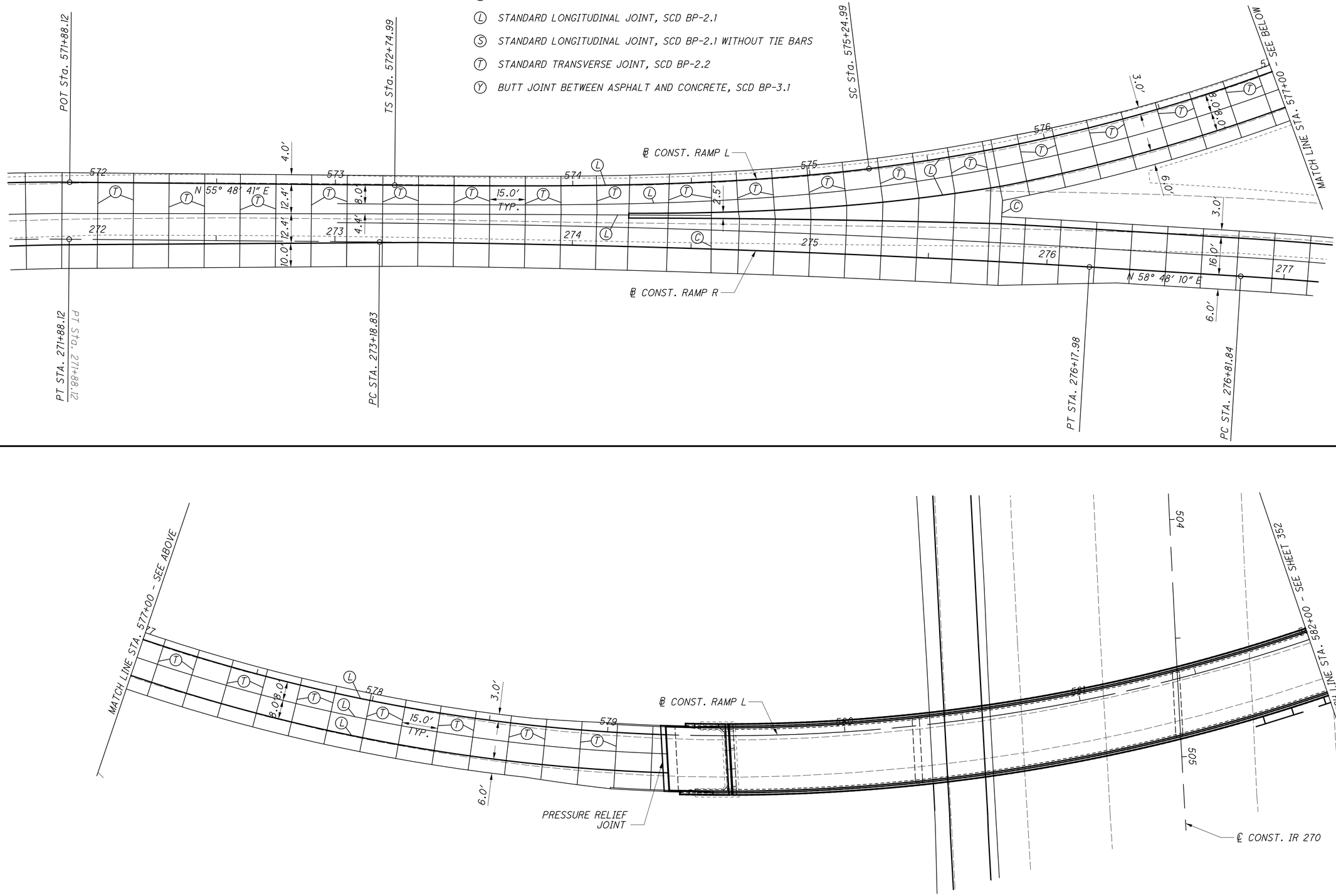

FRA-270-51.50

351
554

x:\Projects\2013\1321\1010\FRA\92616\roadway\sheets\92616GA851.dgn 12/29/2022 2:00:32 PM sbarnard

LEGEND

- (C) STANDARD CONTRACTION JOINT, SCD BP-2.2
- (L) STANDARD LONGITUDINAL JOINT, SCD BP-2.1
- (S) STANDARD LONGITUDINAL JOINT, SCD BP-2.1 WITHOUT TIE BARS
- (T) STANDARD TRANSVERSE JOINT, SCD BP-2.2
- (Y) BUTT JOINT BETWEEN ASPHALT AND CONCRETE, SCD BP-3.1

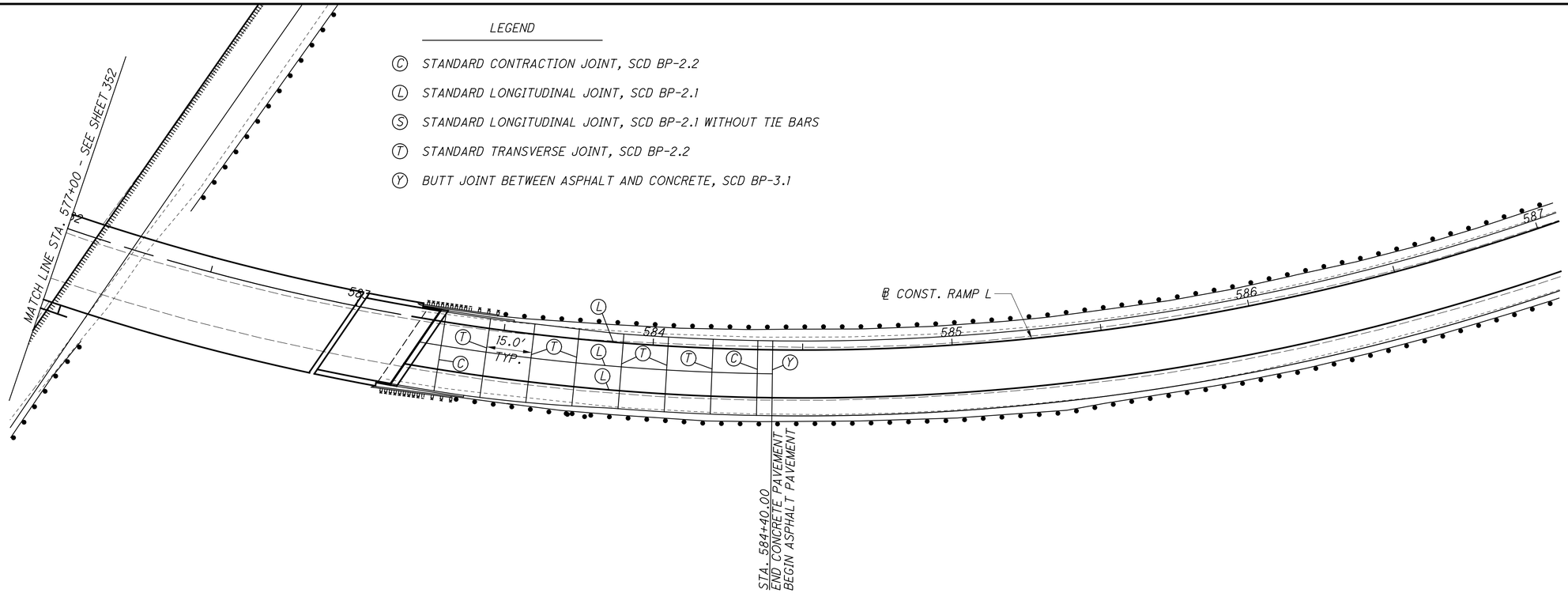

HORIZONTAL SCALE IN FEET
0 10 20 40

CALCULATED ACF
CHECKED CSR

CONCRETE JOINT DETAIL - RAMP L
STA. 577+00 TO STA. 584+40

FRA-270-51.50

352
554

x:\Projects\2013\1321\1010\FRA\92616\roadway\sheets\92616GA852.dgn 12/28/2022 4:41:38 PM sbarnard

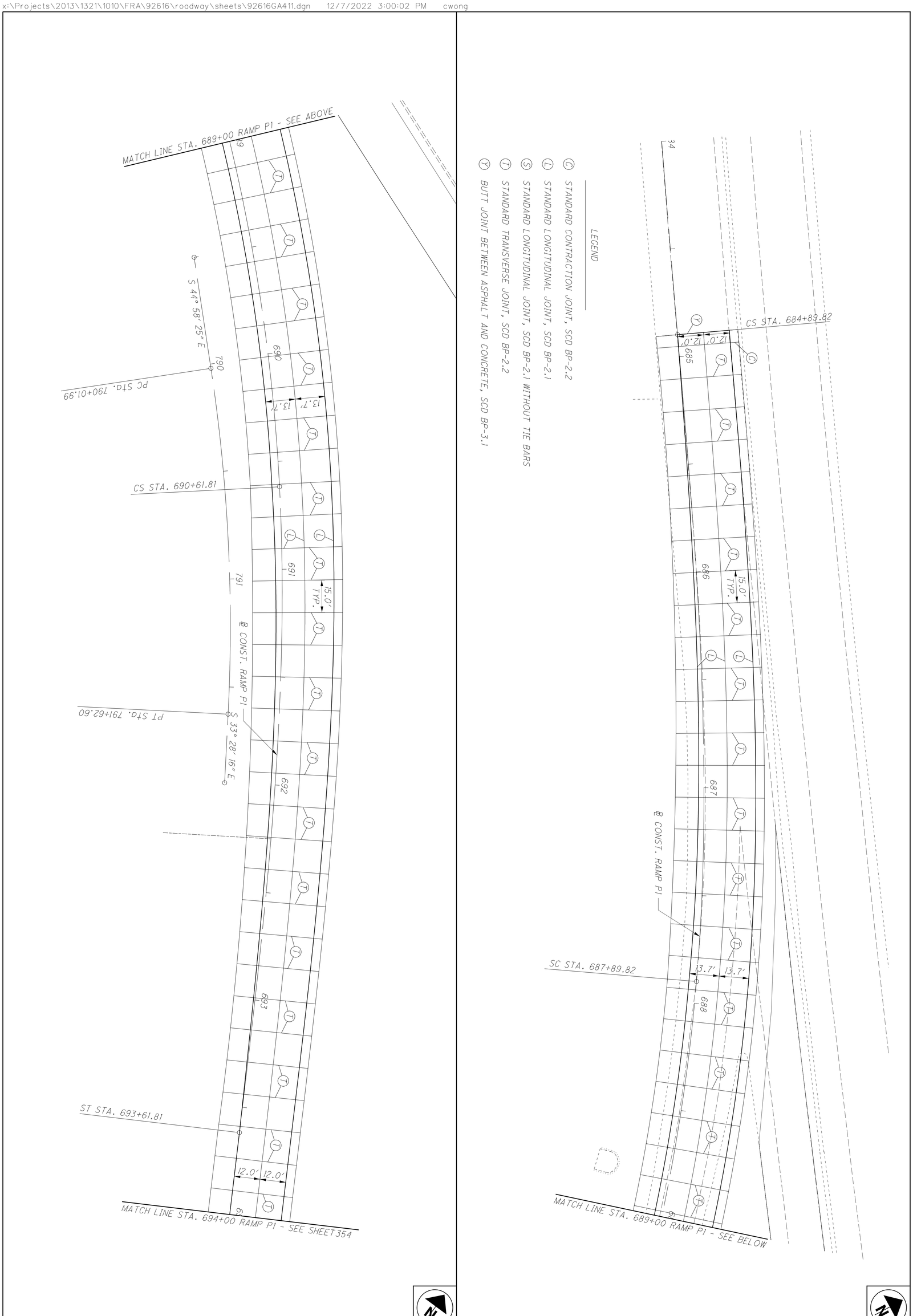

FRA-270-51.50

CONCRETE JOINT DETAIL - RAMP P1
STA. 684+00.00 TO STA. 694+00.00

CALCULATED ACF
CHECKED CSR

0 10 20 40
HORIZONTAL SCALE IN FEET

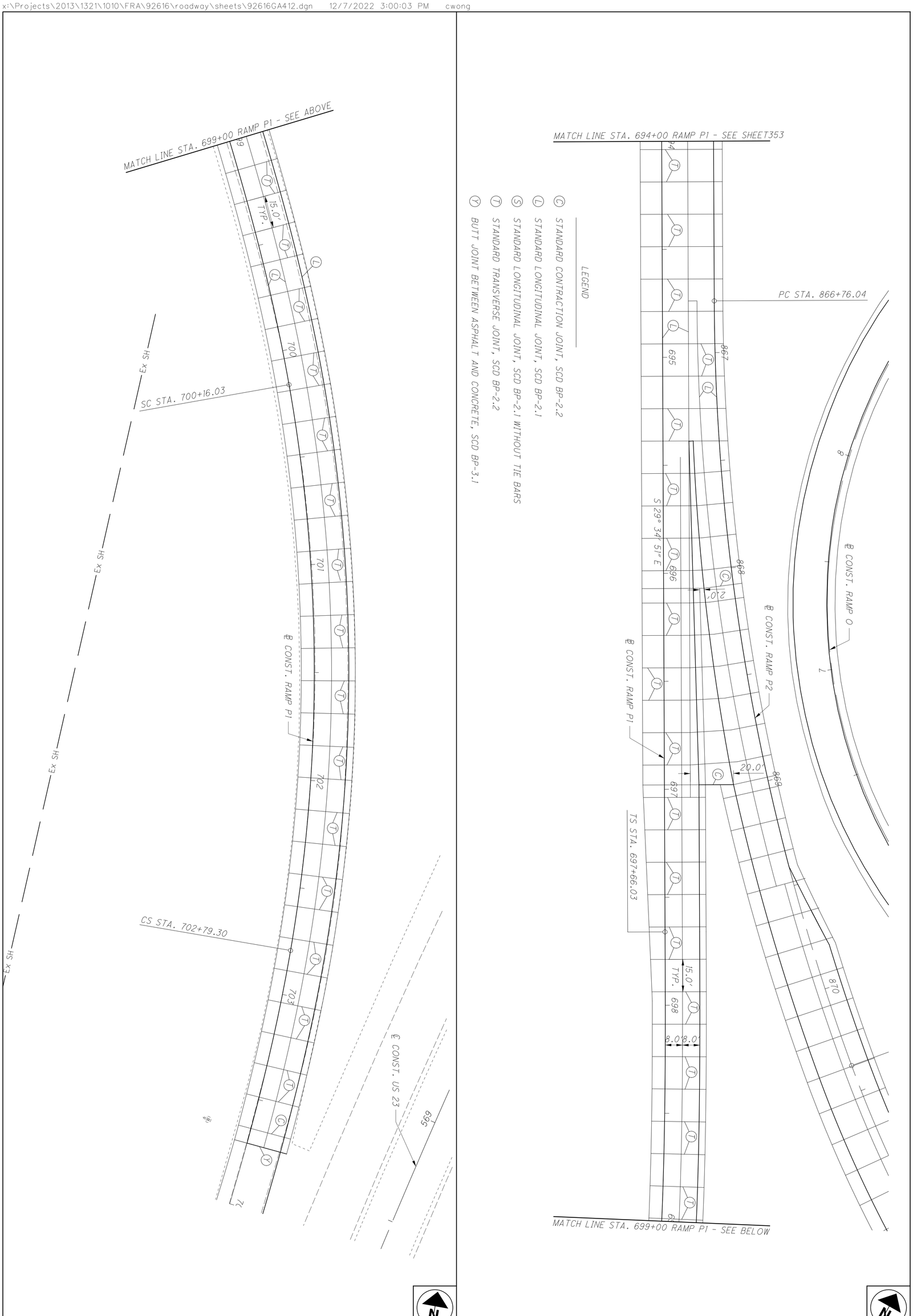

354 / 554	FRA-270-51.50	CONCRETE JOINT DETAIL - RAMP P1 STA. 694+00.00 TO STA. 700+16.03	CALCULATED ACF CHECKED CSR 0 10 20 40 HORIZONTAL SCALE IN FEET

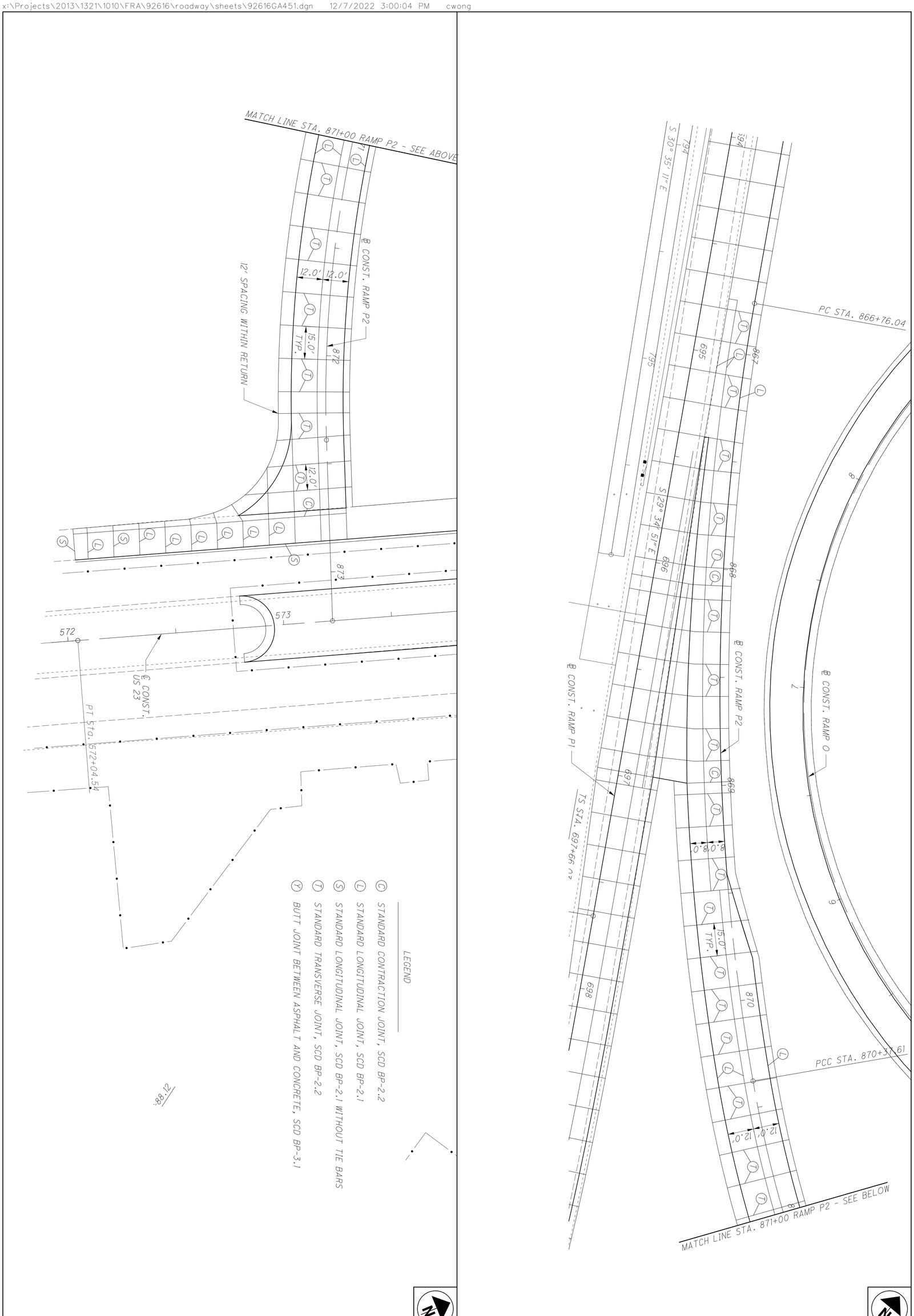

355 554	FRA-270-51.50	CONCRETE JOINT DETAIL - RAMP P2 STA. 866+76.04 TO STA. 873+22.67	CALCULATED ACF CHECKED CSR 0 10 20 40 HORIZONTAL SCALE IN FEET

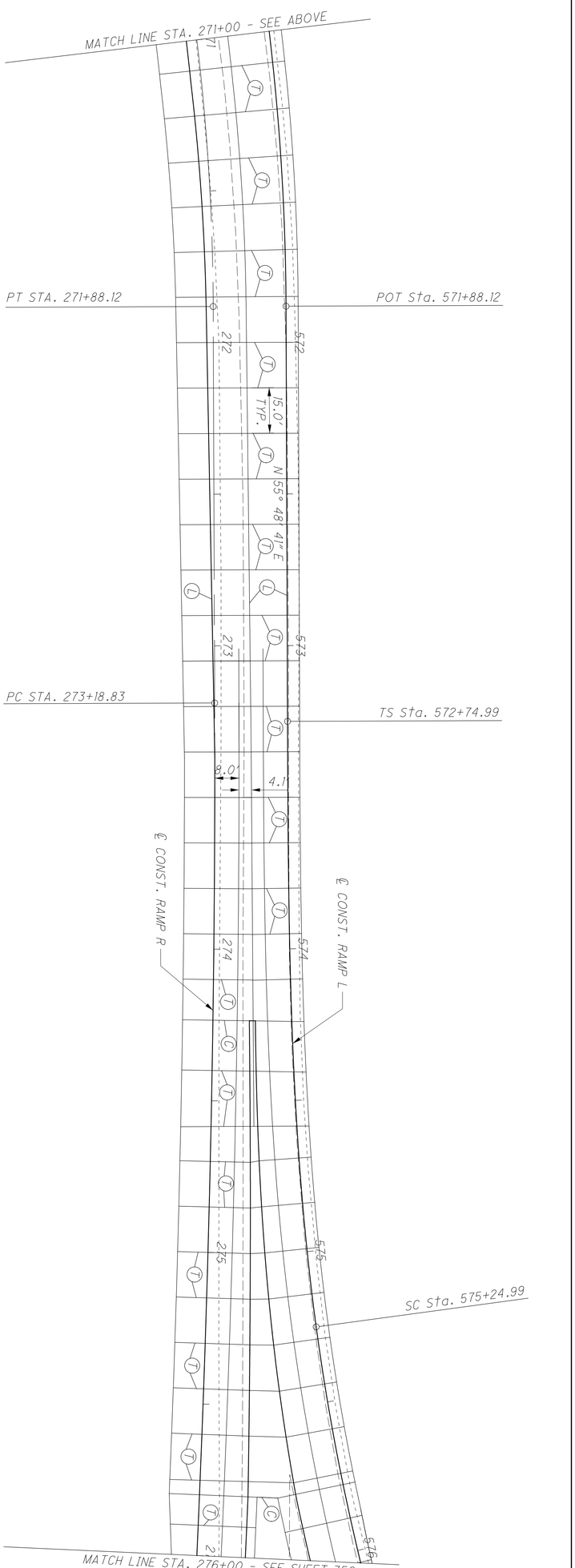

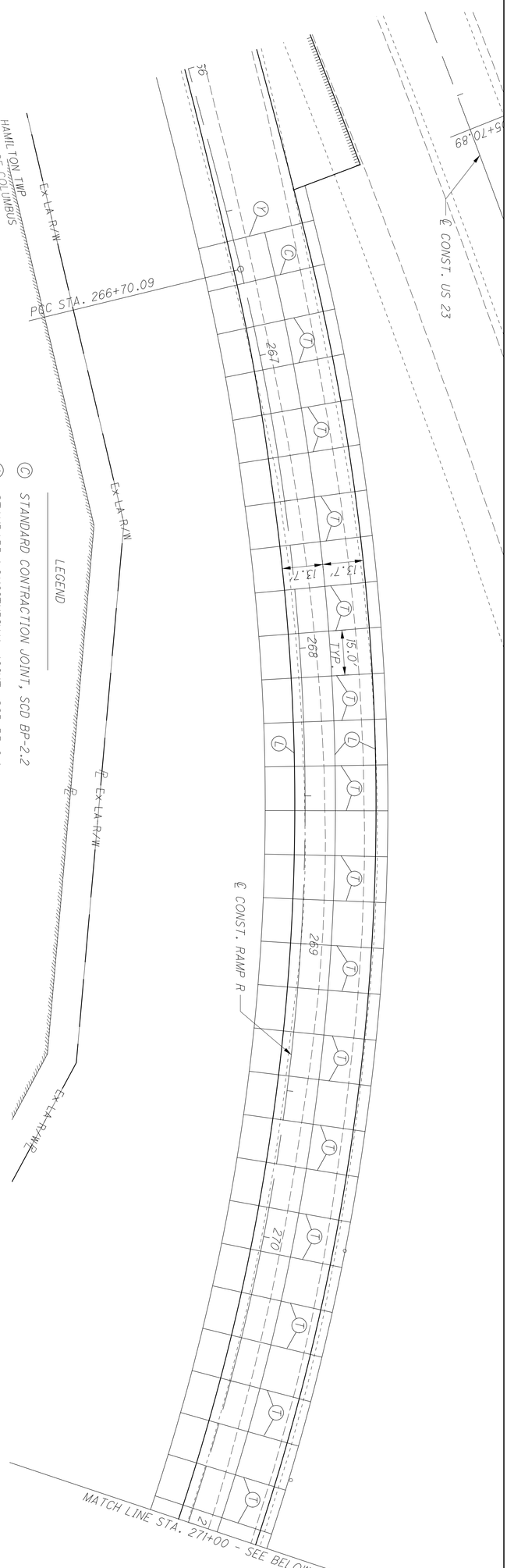

LEGEND

- (C) STANDARD CONTRACTION JOINT, SCD BP-2.2
- (L) STANDARD LONGITUDINAL JOINT, SCD BP-2.1
- (S) STANDARD LONGITUDINAL JOINT, SCD BP-2.1 WITHOUT TIE BARS
- (T) STANDARD TRANSVERSE JOINT, SCD BP-2.2
- (Y) BUTT JOINT BETWEEN ASPHALT AND CONCRETE, SCD BP-3.1

FRA-270+51.50

CONCRETE JOINT DETAIL - RAMP R
STA. 266+00 TO STA. 271+00

CALCULATED ACF
CHECKED CSR

0 10 20 40
HORIZONTAL SCALE IN FEET

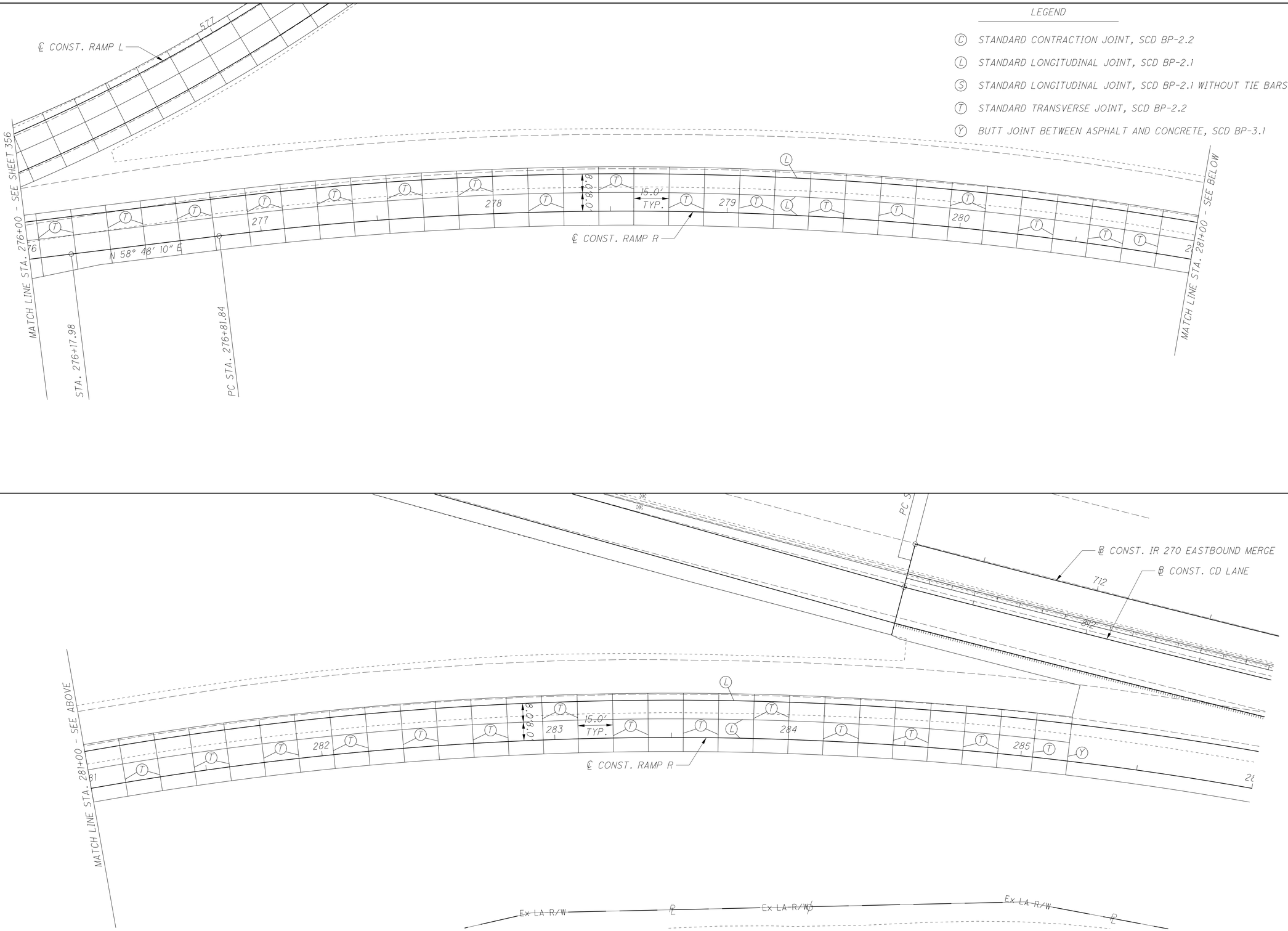

CONCRETE JOINT DETAIL - RAMP R
STA. 276+00 TO STA. 286+00

FRA-270+51.50

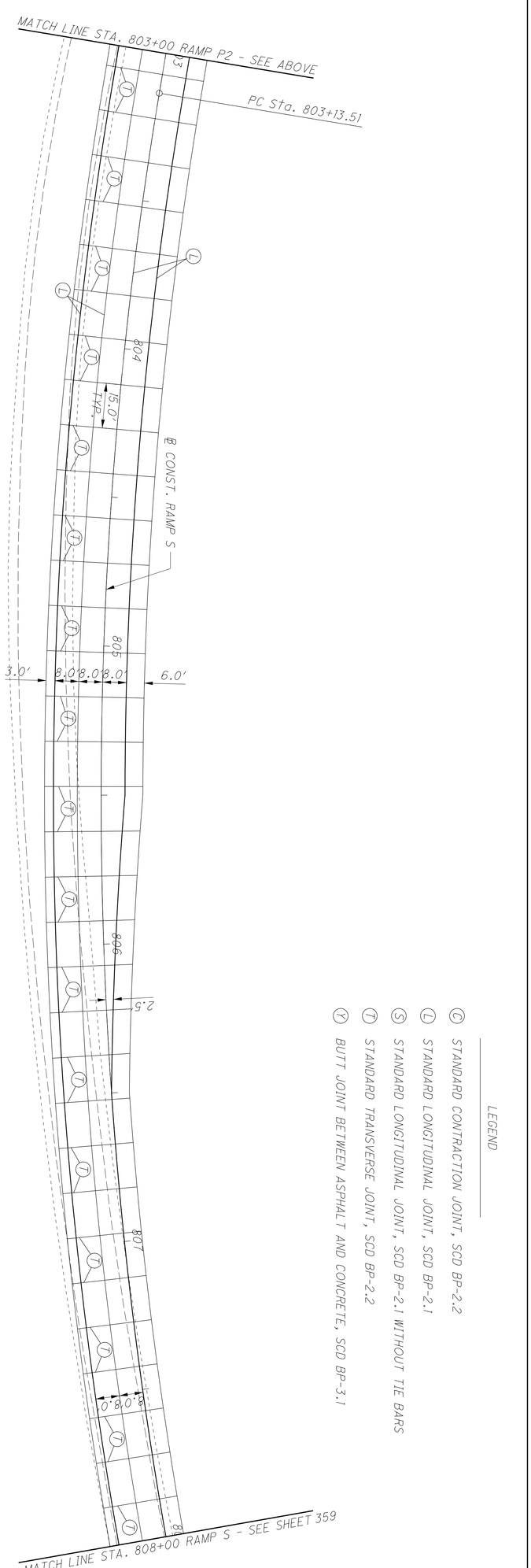

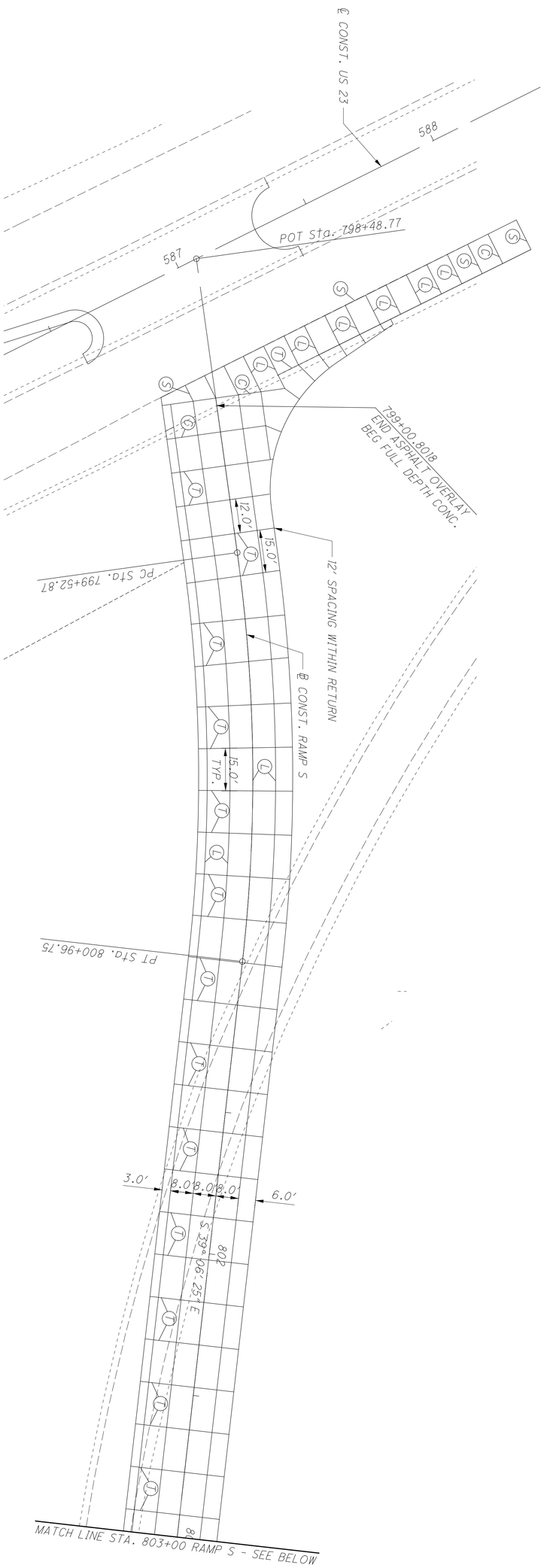

LEGEND

- (C) STANDARD CONTRACTION JOINT, SCD BP-2.2
- (L) STANDARD LONGITUDINAL JOINT, SCD BP-2.1
- (S) STANDARD LONGITUDINAL JOINT, SCD BP-2.1 WITHOUT TIE BARS
- (T) STANDARD TRANSVERSE JOINT, SCD BP-2.2
- (Y) BUTT JOINT BETWEEN ASPHALT AND CONCRETE, SCD BP-3.1

FRA-270-51.50

CONCRETE JOINT DETAIL - RAMP S
STA. 798+00.00 TO STA. 808+00.00

CALCULATED ACF
CHECKED CSR

0 10 20 40
HORIZONTAL SCALE IN FEET

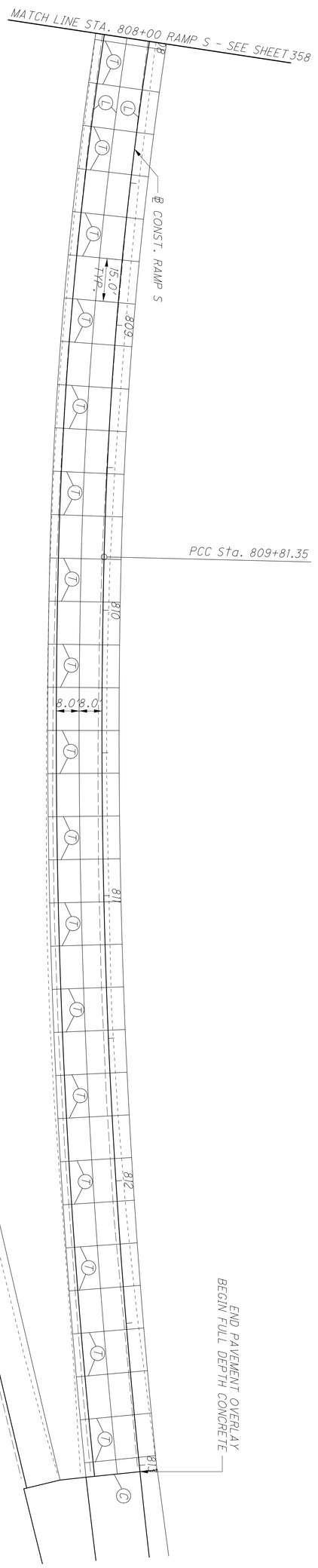

LEGEND

- (C) STANDARD CONTRACTION JOINT, SCD BP-2.2
- (L) STANDARD LONGITUDINAL JOINT, SCD BP-2.1
- (S) STANDARD LONGITUDINAL JOINT, SCD BP-2.1 WITHOUT TIE BARS
- (T) STANDARD TRANSVERSE JOINT, SCD BP-2.2
- (Y) BUTT JOINT BETWEEN ASPHALT AND CONCRETE, SCD BP-3.1

359
554

FRA-270-51.50

CONCRETE JOINT DETAIL - RAMP S
STA. 808+00.00 TO STA. 809+50.00

CALCULATED ACF
CHECKED CSR

0 10 20 40
HORIZONTAL SCALE IN FEET

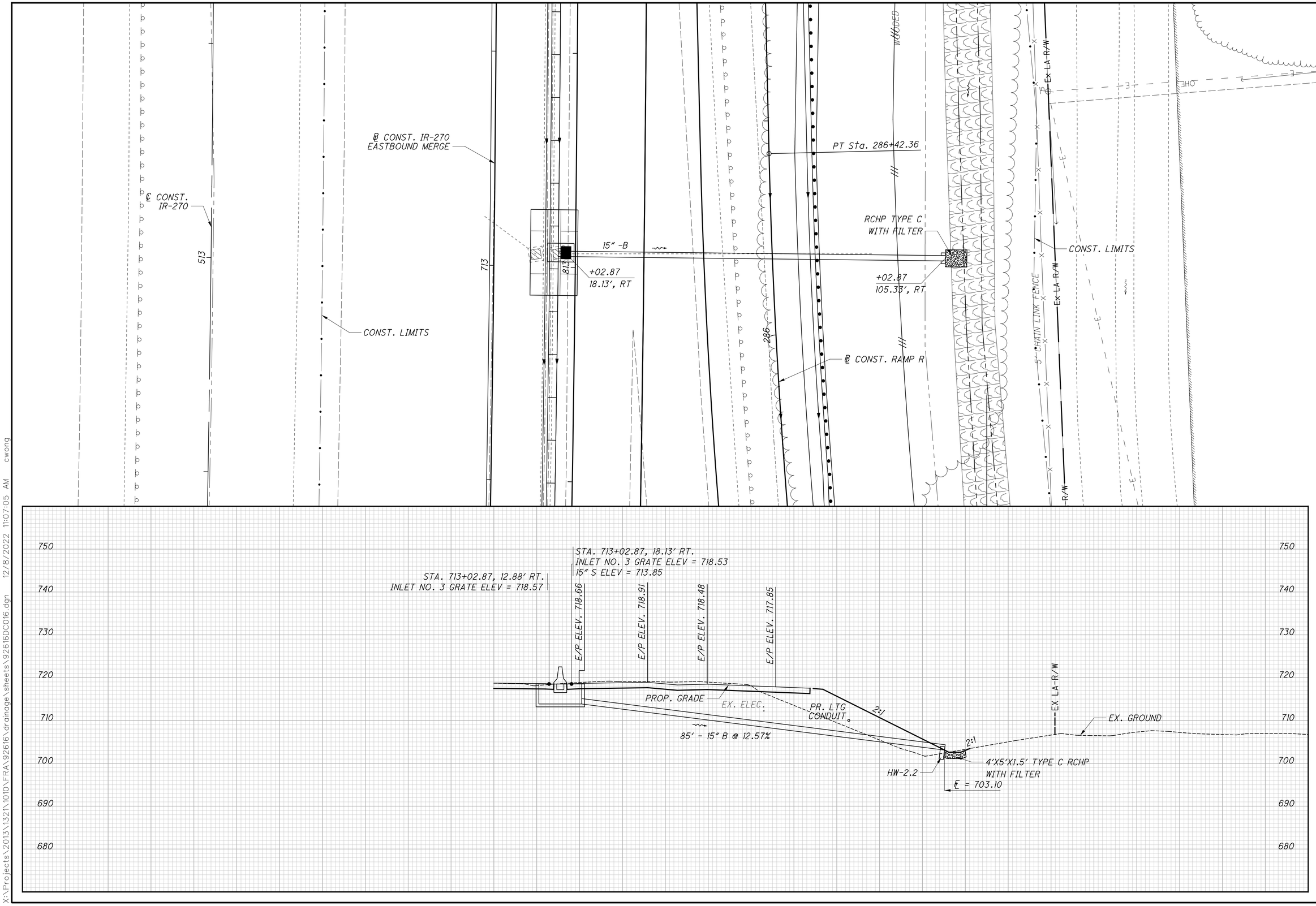

X:\Projects\2013\1321\1010\FRA 92616\drainage\sheets\92616DC016.dgn 12/8/2022 11:07:05 AM cwong

HORIZONTAL SCALE IN FEET
0 5 10 20

CALCULATED ACF
CHECKED CSR

STORM SEWER PROFILE - IR-270 EASTBOUND MERGE STA. 713+02

FRA-270-51.50

X:\Projects\2013\1321\1010\FRA\92616\drainage\sheets\92616DC017.dgn 12/8/2022 11:08:48 AM cwong

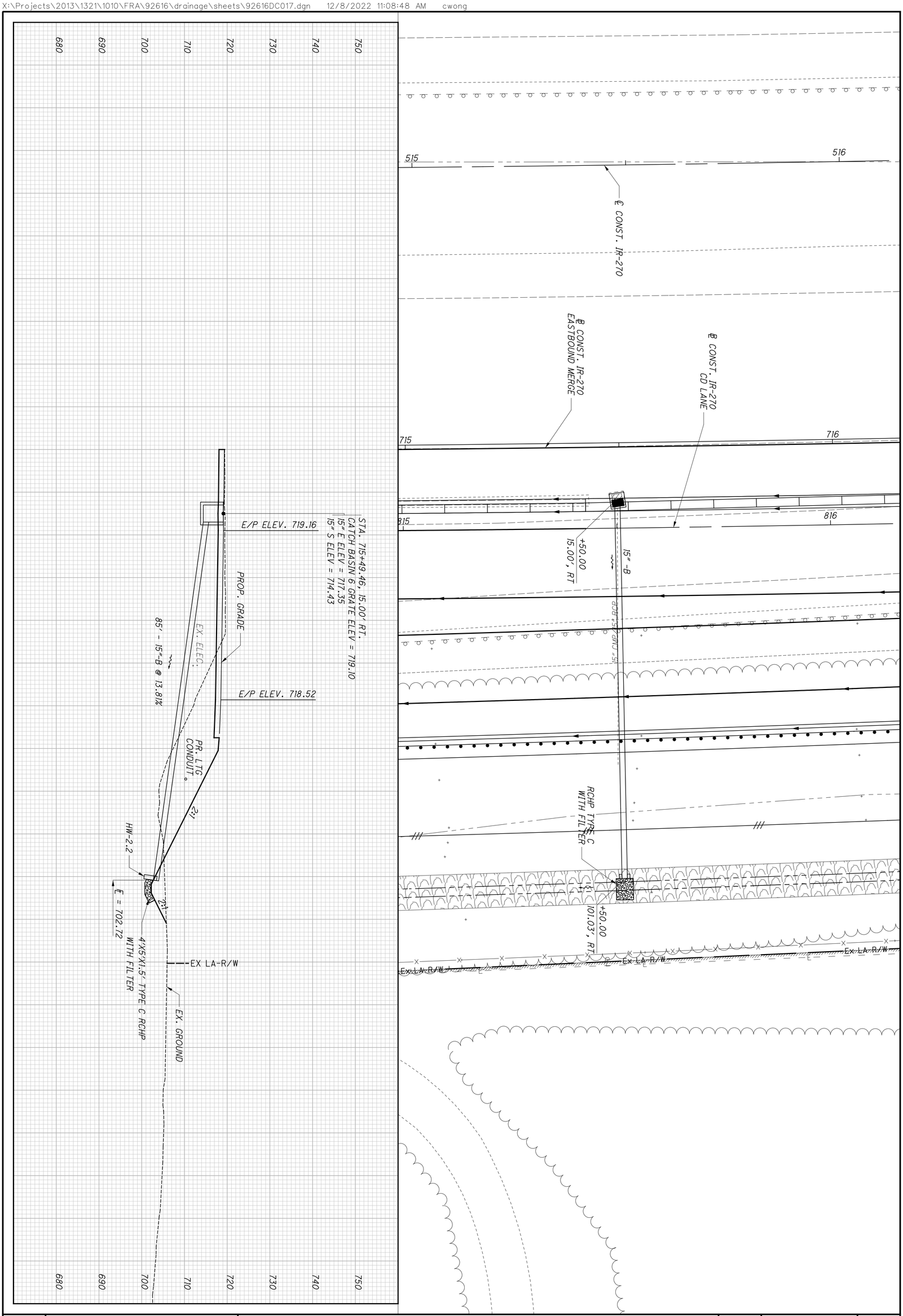

361 / 554	FRA-270-51.50	STORM SEWER PROFILE - IR-270 EASTBOUND MERGE - STA. 715+50.00	CALCULATED ACF / CHECKED CSR	0 5 10 20 HORIZONTAL SCALE IN FEET

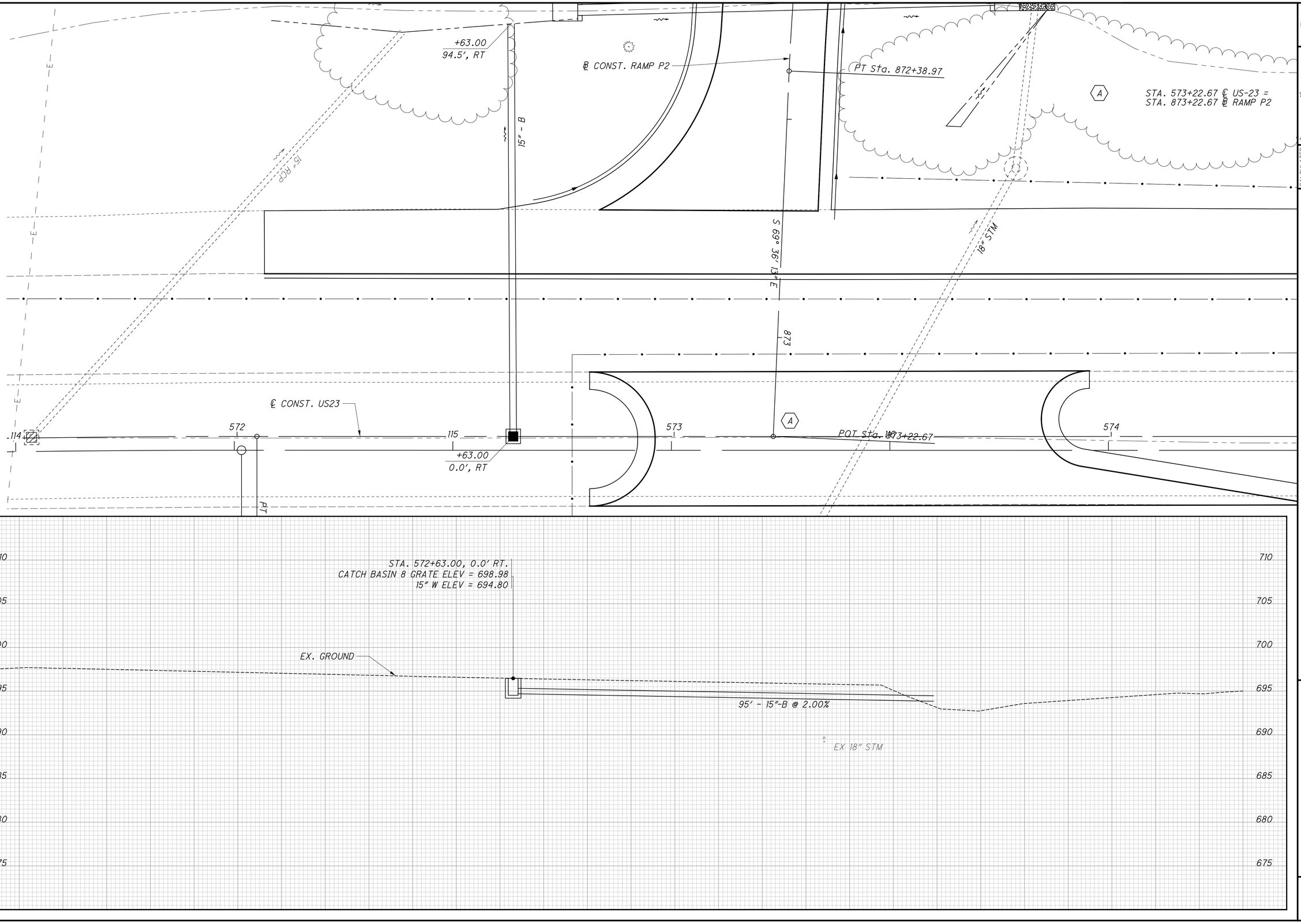

HORIZONTAL SCALE IN FEET

CALCULATED ACF
CHECKED CSR

STORM SEWER PROFILE - US 23
STA. 572+63.00

FRA-270-51.50

X:\Projects\2013\1321\1010\FRA\92616\drainage\sheets\92616DC006.dgn 3/10/2023 8:45:01 AM cwong

ASPHALT

CONST. LIMITS

+96.63
36.58' LT

RCHP TYPE C
WITH FILTER

4.0'

5.0'

Ex SH

Ex R/W

PROP. 1" WATER
SERVICE LOWERING

12"-B

10%

+85.10
28.71' LT

12" RCP

Ex LA R/W

℄ CONSTR US-23 SB ACCEL LANE

552

553

554

N 6° 19' 40" W

STA. 552+96.63
36.58' LT.
HW-2.2
4'X5'X1.5' TYPE C RCHP
WITH FILTER

2:1

3.3'

6:1

E/P ELEV. 720.75

E/P ELEV. 721.28

20:1

STA. 553+85.10
28.71' LT.
CATCH BASIN 2-2B
GRATE ELEV. 720.00
4" (E) 718.42
℄ ELEV. 718.20

EX. FIBER

℄ = 717.76

EX. 1" WATER
(TO BE LOWERED)

0.75'
MIN. COVER

87' - 12"-B @ 0.50%

1.05'
MAX. COVER

℄ = 718.20

PROP 1" LOWERED
WATER SERVICE

750
740
730
720
710
700
690
680

HORIZONTAL
SCALE IN FEET
0 5 10 20

CALCULATED JGB
CHECKED CSR

STORM SEWER PROFILE US 23 ACCEL. LANE
STA. 553+85

FRA-270-51.50

363
554

X:\Projects\2013\1321\1010\FRA\92616\drainage\sheets\92616DC012.dgn 2/13/2023 11:32:56 AM cwong

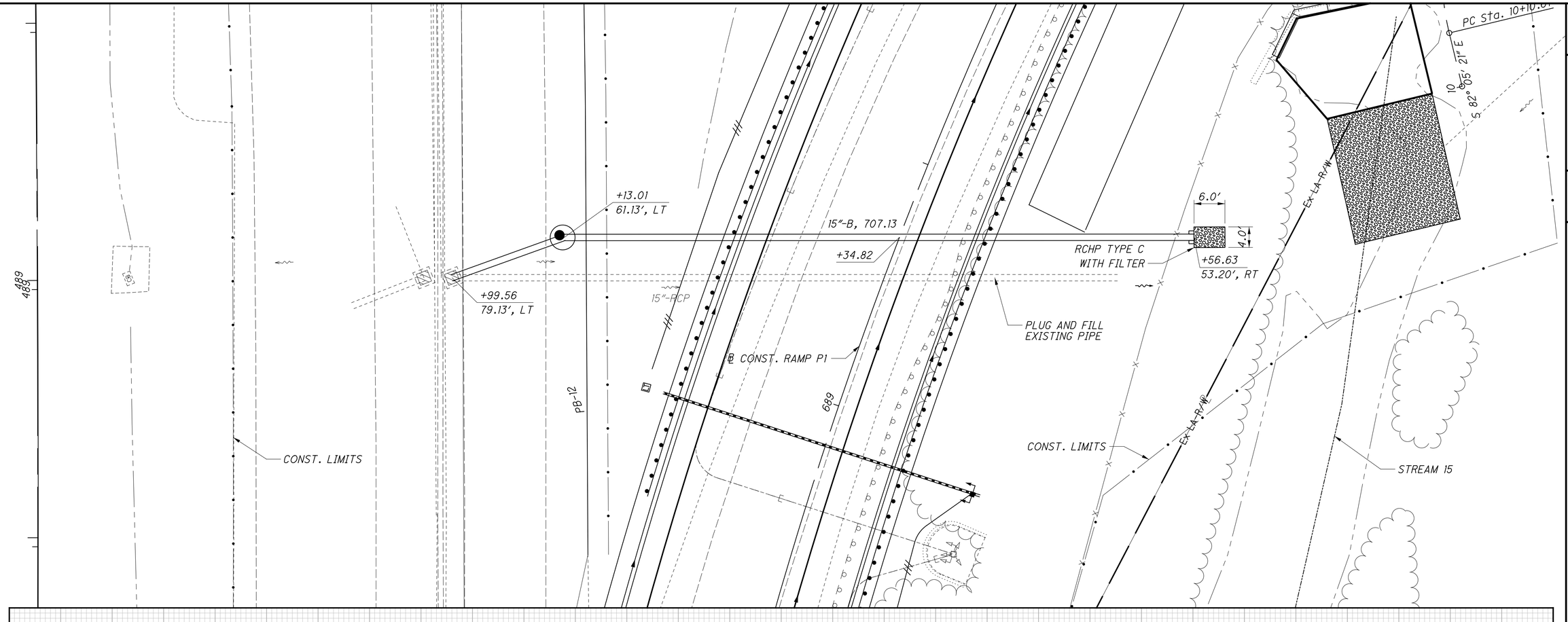

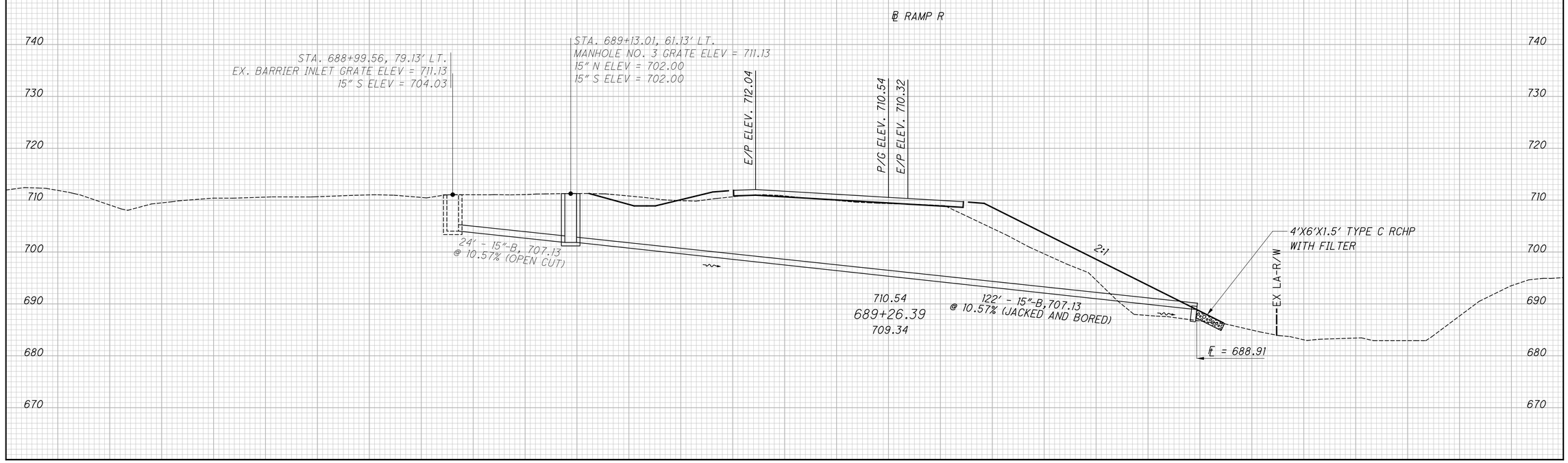

N

HORIZONTAL SCALE IN FEET
0 5 10 20

CALCULATED ACF
CHECKED CSR

STORM SEWER PROFILE - RAMP P1
STA. 689+26

FRA-270-51.50

364
554

X:\Projects\2013\132I\1010\FRA\92616\drainage\sheets\92616DC018.dgn 5/9/2023 12:54:46 AM cwong

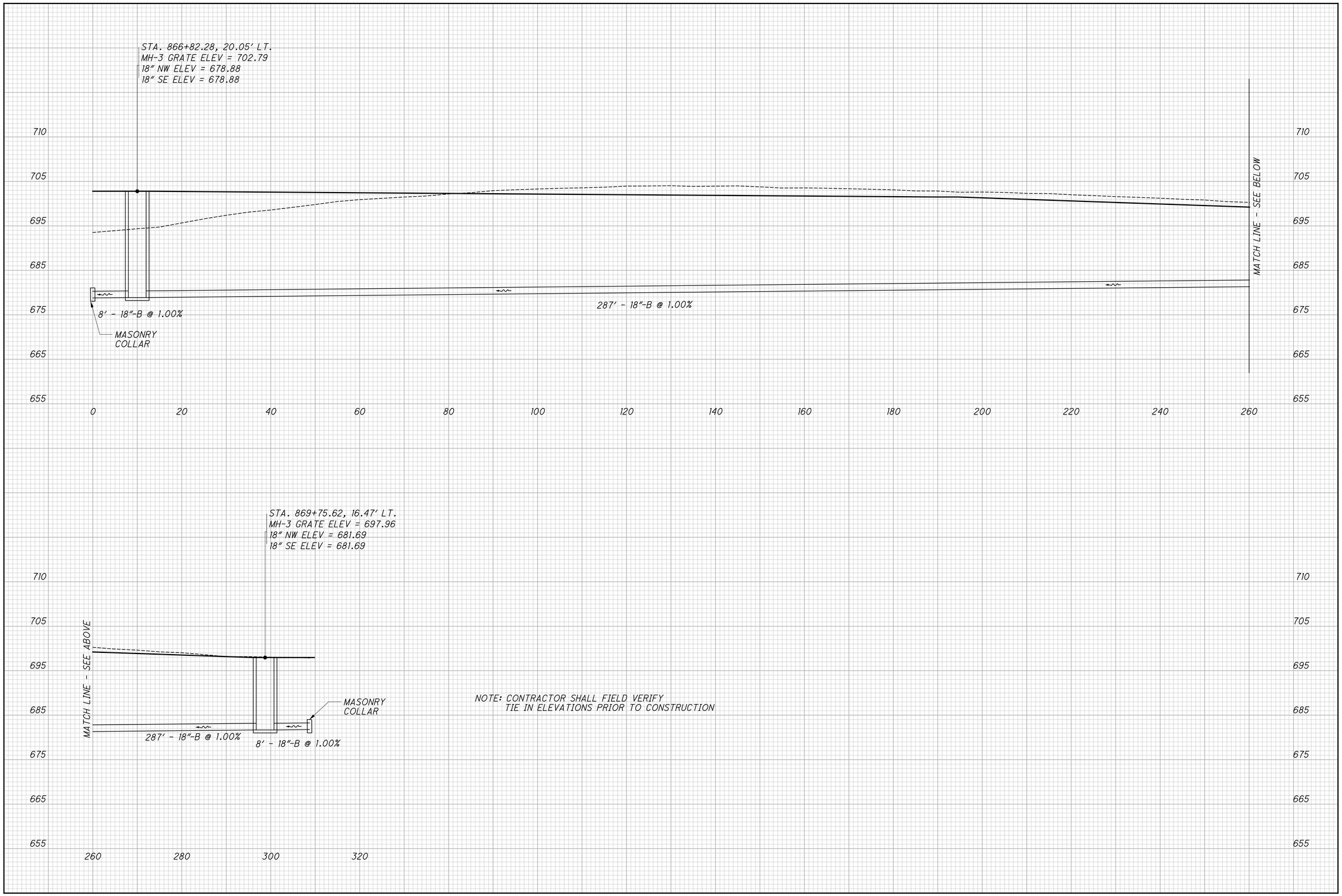

NOTE: CONTRACTOR SHALL FIELD VERIFY TIE IN ELEVATIONS PRIOR TO CONSTRUCTION

CALCULATED ACF
CHECKED CSR

STORM SEWER PROFILE

FRA-270-51.50

X:\Projects\2013\1321\1010\FRA\92616\drainage\sheets\92616DF001.dgn 3/28/2023 11:27:50 AM cwong

CONST. LIMITS

RCHP TYPE C
WITH FILTER

+44.64
79.00', LT

15"-F, 707.05 TYPE C,
707.21, OR 707.33

+45.00
3.33', LT

583

CONST. LIMITS

CONST. LIMITS

℄ CONST. RAMP L

583

STA. 583+45, 3.33' LT.
CATCH BASIN 3A GRATE ELEV = 738.23
15" SW ELEV = 733.56

770
760
750
740
730
720
710
700

PROP. GRADE
PROP. GROUND
206°
7.3'
EX. GROUND
18" MIN. COVER
2:1
81' - 15"-F
PR. LTG
CONDUIT
8'X4'X1.5' TYPE C RCHP
WITH FILTER
5.5'
206°

HORIZONTAL
SCALE IN FEET
0 5 10 20

CALCULATED ACF
CHECKED CSR

STORM SEWER PROFILE - RAMP L
STA. 583+45.00

FRA-270-51.50

366
554

X:\Projects\2013\132\1010\FRA\92616\drainage\sheets\92616DC019.dgn 3/9/2023 2:40:14 PM cwong

LEGEND:

ITEM 202 PAVEMENT REMOVED

ITEM 202 EXCAVATION AND ITEM 202 PIPE REMOVED

HORIZONTAL SCALE IN FEET
0 5 10 20

CALCULATED ACF
CHECKED CSR

EX. CONCRETE HEADWALL TO BE REMOVED

EX. CULVERT TO BE REMOVED AND AREA GRADED TO FLOW

CONST. LIMITS

90°

9

10

℄ CONST. RAMP N

EX. 66" RCP TO BE REMOVED

EX. CONCRETE HEADWALL TO BE REMOVED

WETLAND W (DND)

8

CONST. LIMITS

710
700
690
680

2:1

2:1

EX. 66"-RCP TO BE REMOVED

686.33
9+38
703.78

CULVERT DETAILS - RAMP N STA. 9+38

FRA-270-51.50

367
554

X:\Projects\2013\132I\1010\FRA\92616\drainage\sheets\92616DC010.dgn 2/1/2023 2:54:16 PM cwong

LEGEND:

ITEM 202 PAVEMENT REMOVED

ITEM 202 EXCAVATION AND ITEM 202 PIPE REMOVED

HORIZONTAL SCALE IN FEET
0 10 20 40

CALCULATED ACF
CHECKED CSR

WOODED

℄ CONST. RAMP L

℄ CONST. RAMP N

EX. 18" RCP TO BE REMOVED

EX. CONCRETE HEADWALL TO BE REMOVED

CONST. LIMITS

18" RCP

90°

13

12

14

C5 STA. 13+70.02

WETLAND W (DND)

EX. CONCRETE HEADWALL TO BE REMOVED

2:1

2:1

EX. 18"-RCP TO BE REMOVED

695.71

12+89

687.96

140 120 100 80 60 40 20 0 20 40 60 80 100 120 140

740 730 720 710 700 690 680 670

CULVERT DETAIL - RAMP N STA. 12+89

FRA-270-51.50

368
554

X:\Projects\2013\1321\1010\FRA\92616\drainage\sheets\92616DC013.dgn 2/10/2023 5:44:03 AM cwong

EXISTING STRUCTURE DATA			
CFN:	1869032 1869031	DESIGN SERVICE LIFE:	50 YEARS
SIZE:	72″	STREAM pH:	7.6
TYPE:	RCP	ABBRASIVENESS:	N/A
LENGTH:	176′	HEADWALL:	FULL HEIGHT
DATE CONSTRUCTED:	1964		

ESTIMATED QUANTITIES			
ITEM	QUANTITY	UNIT	DESCRIPTION
601	8	SY	RIPRAP, TYPE D
601	78	CY	ROCK CHANNEL PROTECTION, TYPE C WITH FILTER
602	69	CY	CONCRETE MASONRY
611	70	FT	72″ CONDUIT, TYPE A,706.02
611	2	EACH	DRAINAGE STRUCTURE, MISC.: FLAP GATE 72″

HYDRAULIC DATA	
DRAINAGE AREA: 2703.55 ACRES	
Q_{50} = 1067 CFS	Q_{100} = 1224 CFS
V_{50} = 18.9 FPS	V_{100} = 21.7 FPS
Hw_{50} = 697.36	Hw_{100} = 700.51

HORIZONTAL SCALE IN FEET (0, 5, 10, 20)

CALCULATED ACF CHECKED CSR

CULVERT DETAILS RAMP P1 STA. 690+87

FRA-270-51.50

369
554

X:\Projects\2013\1321\1010\FRA\92616\drainage\sheets\92616DC002.dgn 2/10/2023 5:53:31 AM cwong

ESTIMATED QUANTITIES			
ITEM	QUANTITY	UNIT	DESCRIPTION
601	10	SY	RIPRAP, TYPE D
601	2	CY	ROCK CHANNEL PROTECTION, TYPE C WITH FILTER
602	1.1	CY	CONCRETE MASONRY
611	95	FT	30" CONDUIT, TYPE A 706.02, 707.01 ALUMINIZED, 707.04, 707.33 CPE SMOOTH LINED

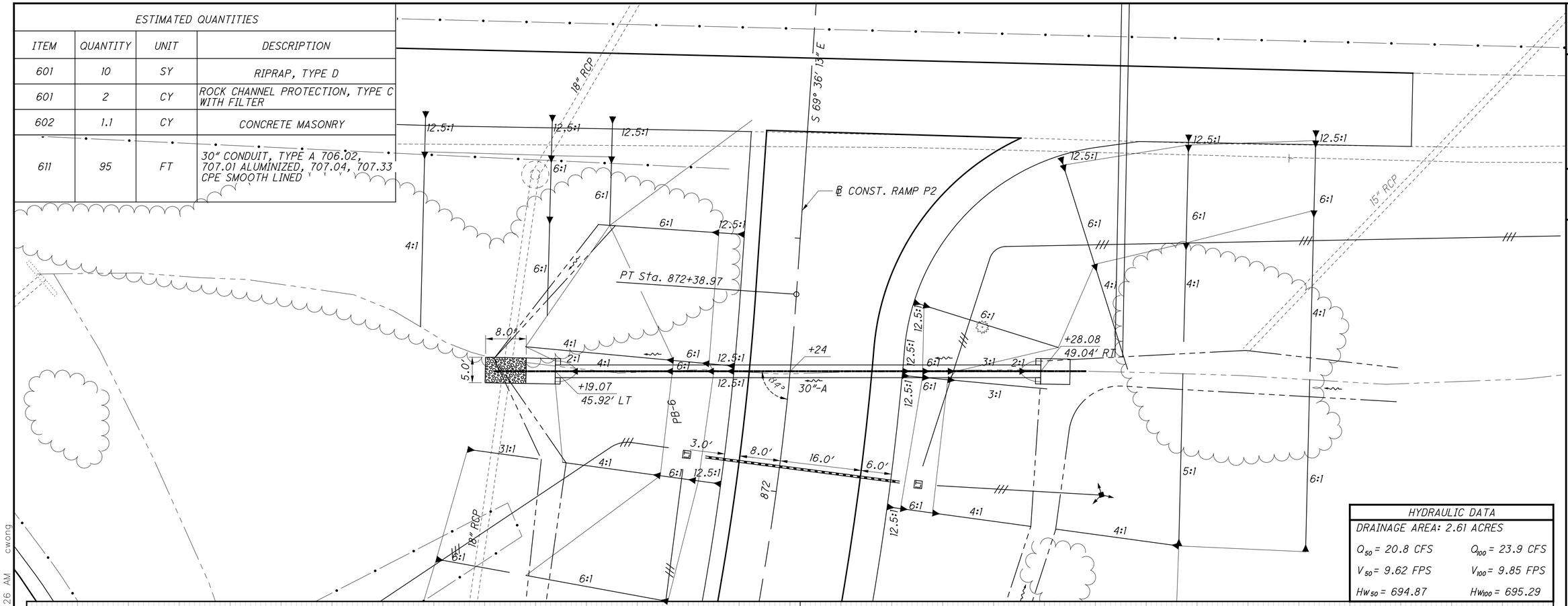

HYDRAULIC DATA	
DRAINAGE AREA: 2.61 ACRES	
Q_{50} = 20.8 CFS	Q_{100} = 23.9 CFS
V_{50} = 9.62 FPS	V_{100} = 9.85 FPS
Hw_{50} = 694.87	Hw_{100} = 695.29

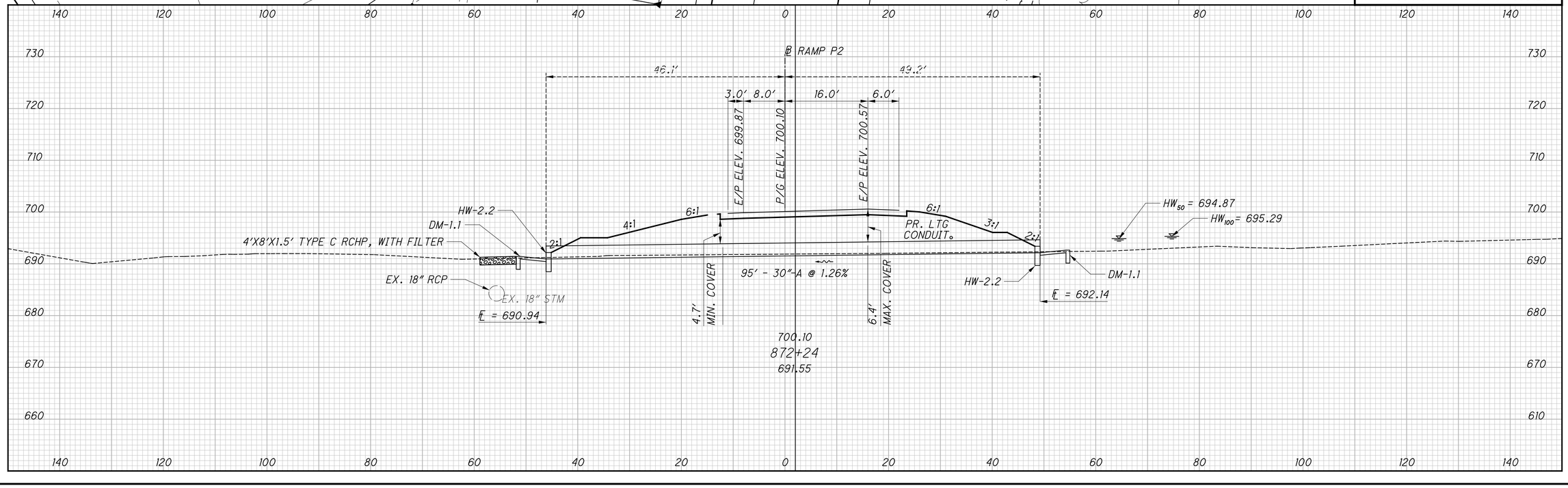

HORIZONTAL SCALE IN FEET
0 5 10 20

CALCULATED ACF
CHECKED CSR

CULVERT DETAILS - RAMP P2
STA. 872+24

FRA-270-51.50

370
554

X:\Projects\2013\132\1010\FRA\92616\drainage\sheets\92616DC001.dgn 5/5/2023 8:27:26 AM cwong

LEGEND:

ITEM 202 PAVEMENT REMOVED

ITEM 202 EXCAVATION AND ITEM 202 PIPE REMOVED

WETLAND Z

EX. CONCRETE HEADWALL TO BE REMOVED

EX. 18" RCP TO BE REMOVED

ELEV. 731.75

CONST. LIMITS

℄ CONST. US 23

OHE ELEV. ±732.0'
CLEARANCE ±37.0'

℄ CONST. RAMP Q

CONST. LIMITS

EX. CONCRETE HEADWALL TO BE REMOVED

WETLAND Y (DND)

ELEV. 732.97

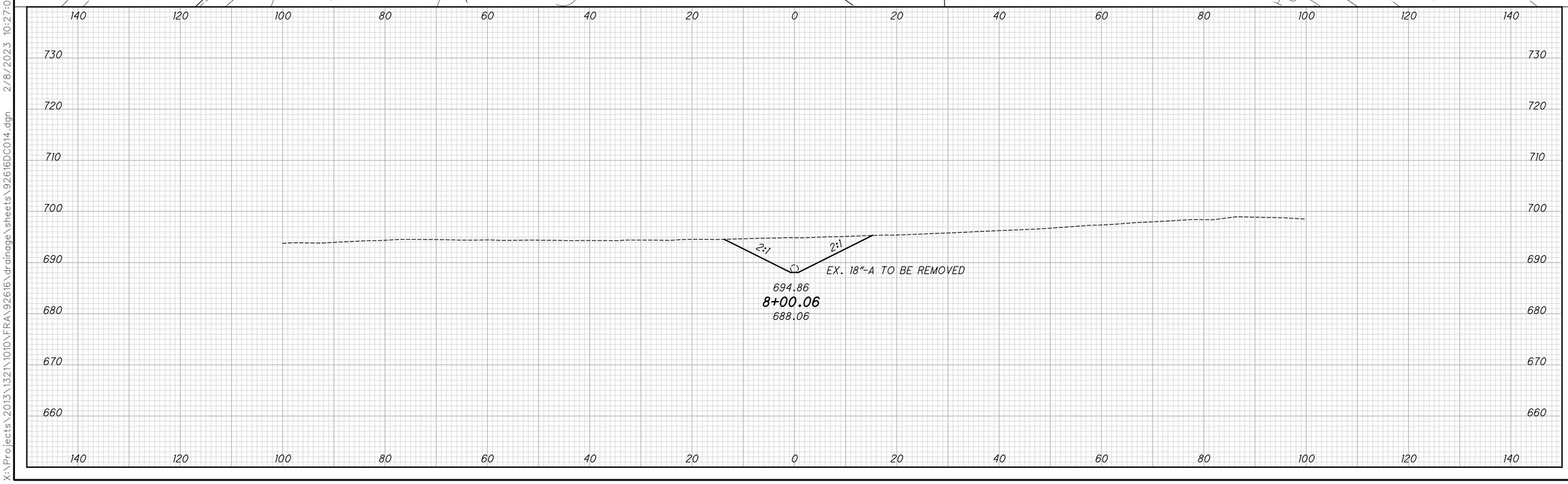

HORIZONTAL SCALE IN FEET

CALCULATED ACF
CHECKED CSR

CULVERT DETAIL - RAMP Q
STA. 8+00.00

FRA-270-51.50

371
554

X:\Projects\2013\1321\1010\FRA\92616\drainage\streets\92616DC014.dgn 2/8/2023 10:27:03 AM cwong

EXISTING STRUCTURE DATA			
CFN:	1869019	DESIGN SERVICE LIFE:	75 YEARS
SIZE:	96"	STREAM pH:	7.0
TYPE:	CORRUGATED METAL	ABBRASIVENESS:	N/A
LENGTH:	126'	HEADWALL:	HALF HEIGHT
DATE CONSTRUCTED:	1963		

HYDRAULIC DATA	
DRAINAGE AREA: 4.22 SQ. MI.	
Q_{50} = 994 CFS	Q_{100} = 1140 CFS
V_{50} = 19.8 FPS	V_{100} = 22.7 FPS
Hw_{50} = 703.36	Hw_{100} = 706.89

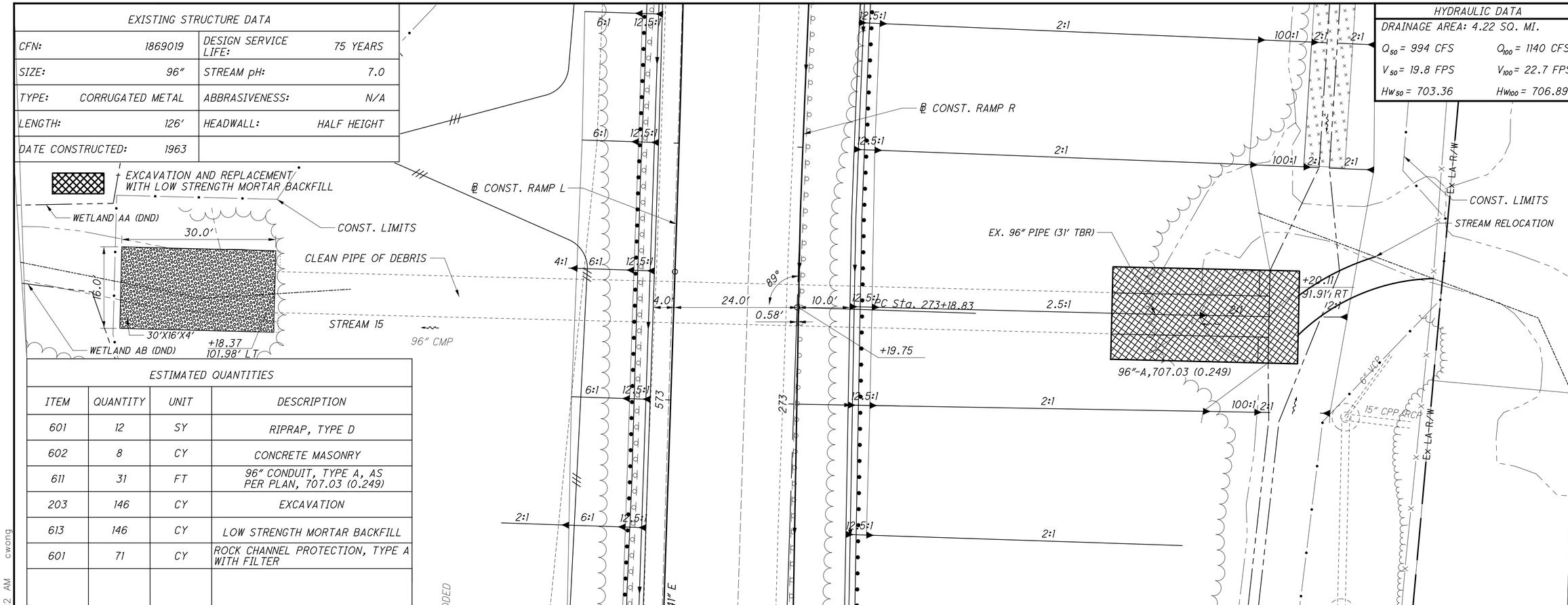

ESTIMATED QUANTITIES			
ITEM	QUANTITY	UNIT	DESCRIPTION
601	12	SY	RIPRAP, TYPE D
602	8	CY	CONCRETE MASONRY
611	31	FT	96" CONDUIT, TYPE A, AS PER PLAN, 707.03 (0.249)
203	146	CY	EXCAVATION
613	146	CY	LOW STRENGTH MORTAR BACKFILL
601	71	CY	ROCK CHANNEL PROTECTION, TYPE A WITH FILTER

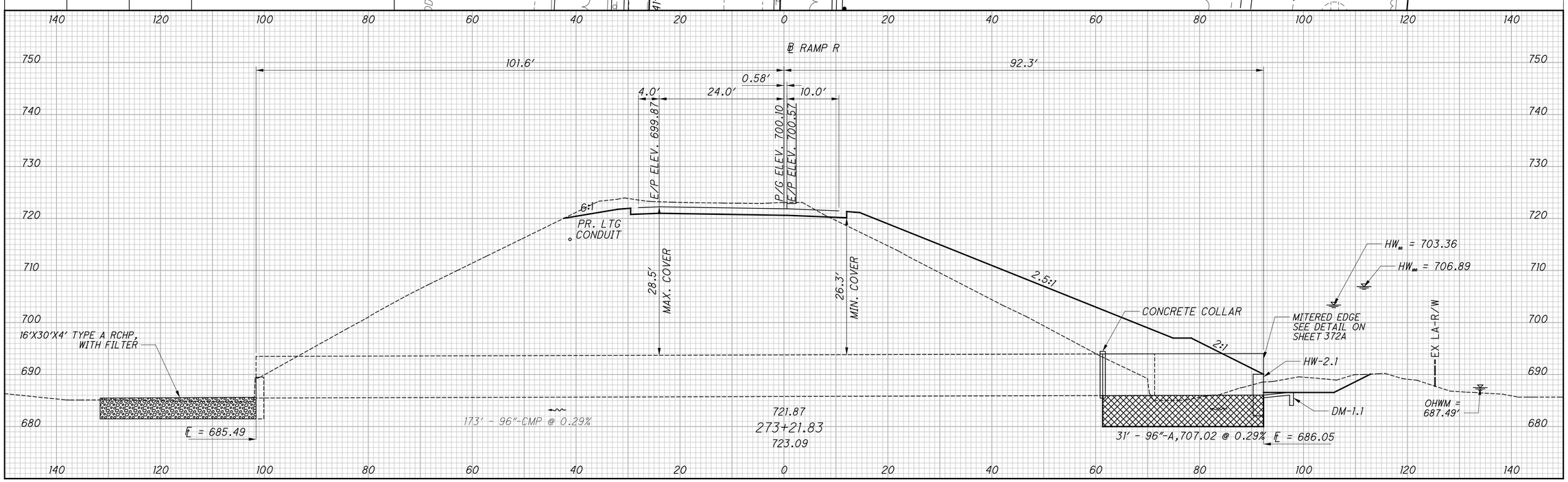

HORIZONTAL SCALE IN FEET

CALCULATED ACF
CHECKED CSR

CULVERT DETAIL - RAMP R
STA. 273+22.00

FRA-270-51.50

X:\Projects\2013\1321\1010\FRA\92616\drainage\sheets\92616DC005.dgn 5/9/2023 5:54:12 AM cwong

DETAIL A

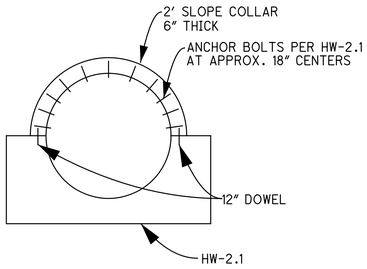

ELEVATION

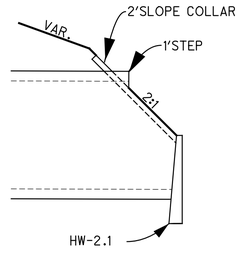

PROFILE

ITEM 611 96" CONDUIT, TYPE A, AS PER PLAN 707.03(0.249)

THE ABOVE CONDUIT SHALL BE MITER-CUT(STEP-BEVEL) TO FIT THE EMBANKMENT SLOPE. FOR THE DETAILS AND QUANTITIES FOR THE MITER-CUT(STEP-BEVEL) END SECTIONS, SEE SHEETS 78 AND 372, RESPECTIVELY.

THE MATERIAL USED FOR THE BEDDING AND BACKFILL IS LIMITED TO ITEM 603 GRANULAR MATERIAL TYPE 1. IT SHALL BE COMPACTED PER 603.081 METHOD A.

THE CONTRACTOR SHALL PROVIDE A MANUFACTURER'S REPRESENTATIVE WHO SHALL BE RESPONSIBLE FOR THE ERECTION OF THE CULVERT.

THE STRUCTURE SHALL BE EXTERNALLY COATED PER AASHTO M243.

THE CONTRACTOR SHALL PROVIDE A MANUFACTURER'S REPRESENTATIVE WHO SHALL THROUGH THE ENGINEER, INSPECT, TEST, REJECT, OR APPROVE THE FILL MATERIAL AND ITS PLACEMENT. THE REPRESENTATIVE SHALL ALSO MONITOR THE CONDUIT DURING ITS ASSEMBLY AND ERECTION TO MAKE CERTAIN THE STRUCTURE IS SYMMETRICAL AND PROPERLY SHAPED. THE REPRESENTATIVE SHALL ALSO MONITOR THE SHAPE FOR ANY DISTORTION OF THE THE CONDUIT DURING THE PLACING OF FILL TO ENSURE ANY MOVEMENT OR DISTORTION IS WITHIN THE MANUFACTURER'S TOLERANCE RANGE.

THE REPRESENTATIVE SHALL PROVIDE THE ENGINEER A WRITTEN INSPECTION REPORT, SIGNED BY A REGISTERED PROFESSIONAL ENGINEER, OF ALL TESTS, MEASUREMENTS, AND FINDINGS.

CALCULATED ACF
CHECKED CSR

CULVERT DETAIL SHEET
96" PIPE WITH MITERED EDGE

FRA-270-51.50

372A
554

X:\Projects\2013\132\1010\FRA\92616\drainage\sheets\92616DC00A.dgn 5/9/2023 6:12:59 AM cwong

EXISTING STRUCTURE DATA			
CFN:	1869020	DESIGN SERVICE LIFE:	75 YEARS
SIZE:	18″	STREAM pH:	8.4
TYPE:	CORRUGATED METAL	ABBRASIVENESS:	N/A
LENGTH:	182′	HEADWALL:	FULL HEIGHT
DATE CONSTRUCTED:	1963		

- EXCAVATION AND REPLACEMENT WITH LOW STRENGTH MORTAR BACKFILL

HYDRAULIC DATA	
DRAINAGE AREA: 2.43 ACRES	
Q_{50} = 8.72 CFS	Q_{100} = 10.02 CFS
V_{50} = 8.40 FPS	V_{100} = 8.77 FPS
Hw_{50} = 698.22	Hw_{100} = 698.60

HORIZONTAL SCALE IN FEET (0, 5, 10, 20)

CALCULATED ACF
CHECKED CSR

CLEAN PIPE OF DEBRIS
+14.75
113.42′ LT
18″-CMP
12.5:1
3.0′
16.0′
6.0′
89°
279
+16.77
18″-RCP
2:1
100:1
18″-A,706.02
7.0′
4.0′
+18.43
82.26′ RT
RCHP TYPE C WITH FILTER
CONST. LIMITS
EX LA-R/W
℄ CONST. RAMP R

ESTIMATED QUANTITIES			
ITEM	QUANTITY	UNIT	DESCRIPTION
203	80	CY	EXCAVATION
601	2	CY	ROCK CHANNEL PROTECTION, TYPE C WITH FILTER
602	0.3	CY	CONCRETE MASONRY
611	24	FT	18″ CONDUIT, TYPE A,706.02
613	80	CY	LOW STRENGTH MORTAR BACKFILL

℄ RAMP R
113.4′
85.2′
3.0′
16.0′
6.0′
E/P ELEV. 731.91
P/G ELEV. 731.17
PR. LTG CONDUIT
34.7′ MAX. COVER
34.1′ MIN. COVER
731.17
279+16.77
730.88
HW-2.2
EX LA-R/W
HW_{50} = 698.22
HW_{100} = 698.60
℄ = 696.43
185′ - 18″-RCP @ 0.78%
693.38
4′X7′X1.5′ TYPE C RCHP WITH FILTER
24′ - 18″-A,706.02 @ 0.78%
℄ = 694.89

X:\Projects\2013\1321\1010\FRA\92616\drainage\sheets\92616DC007.dgn 12/8/2022 8:07:30 AM cwong

CULVERT DETAILS - RAMP R STA. 279+17.00

FRA-270-51.50

373
554

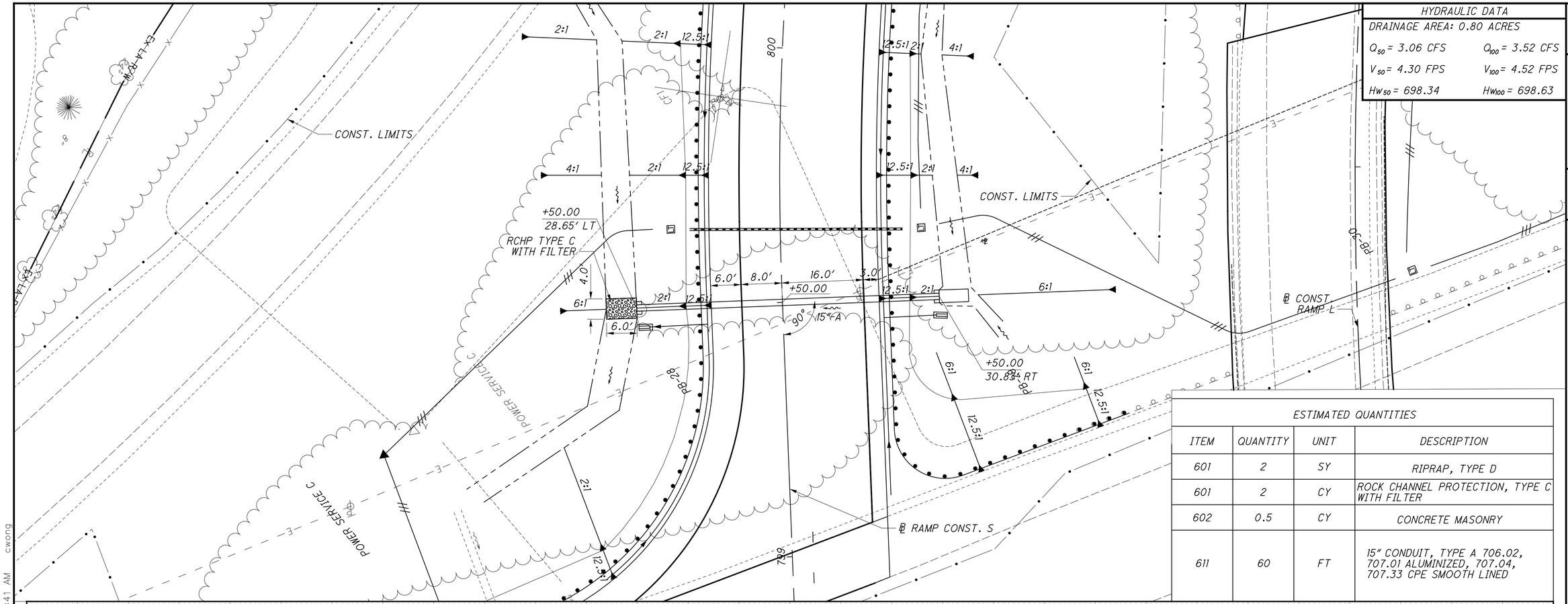

HYDRAULIC DATA	
DRAINAGE AREA: 0.80 ACRES	
Q_{50} = 3.06 CFS	Q_{100} = 3.52 CFS
V_{50} = 4.30 FPS	V_{100} = 4.52 FPS
Hw_{50} = 698.34	Hw_{100} = 698.63

HORIZONTAL SCALE IN FEET
0 5 10 20

CALCULATED ACF
CHECKED CSR

ESTIMATED QUANTITIES			
ITEM	QUANTITY	UNIT	DESCRIPTION
601	2	SY	RIPRAP, TYPE D
601	2	CY	ROCK CHANNEL PROTECTION, TYPE C WITH FILTER
602	0.5	CY	CONCRETE MASONRY
611	60	FT	15" CONDUIT, TYPE A 706.02, 707.01 ALUMINIZED, 707.04, 707.33 CPE SMOOTH LINED

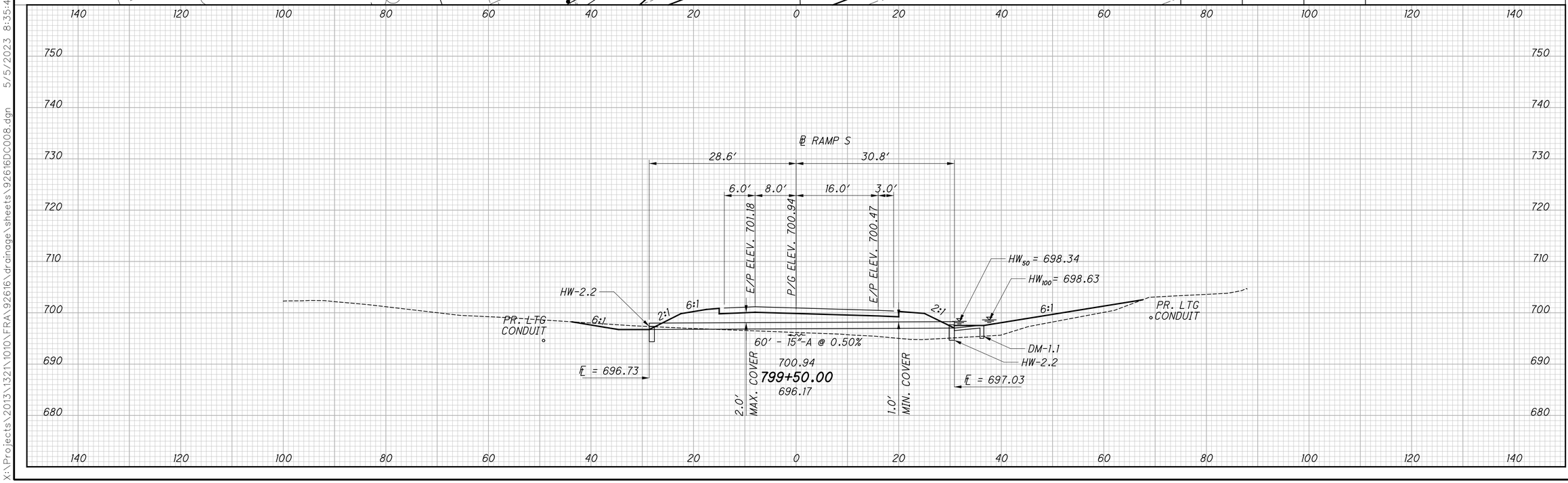

CULVERT DETAILS - RAMP S STA. 799+23.00

FRA-270-51.50

374
554

X:\Projects\2013\1321\1010\FRA\92616\drainage\sheets\92616DC008.dgn 5/5/2023 8:35:41 AM cwong

EXISTING STRUCTURE DATA			
CFN:	1869026	DESIGN SERVICE LIFE:	75 YEARS
SIZE:	54"	STREAM pH:	6.8
TYPE:	CORRUGATED METAL	ABBRASIVENESS:	N/A
LENGTH:	204'	HEADWALL:	FULL HEIGHT
DATE CONSTRUCTED:	1963		

HYDRAULIC DATA	
DRAINAGE AREA: 9.06 ACRES	
Q_{50} = 52.88 CFS	Q_{100} = 65.29 CFS
V_{50} = 7.75 FPS	V_{100} = 8.18 FPS
Hw_{50} = 693.31	Hw_{100} = 693.69

HORIZONTAL SCALE IN FEET
0 5 10 20

CALCULATED ACF
CHECKED CSR

2:1
12.5'
803
℄ CONST. RAMP S
EX LA-R/W
+61.26
54.38' LT
+50.28
82°
54"-A, 707.02(0.109) ALUMINIZED, 707.04(0.064 POLYMERIC), 706.02
+28.57
191.83' RT
6.1'
8.1'
16.1'
3.0'
CONST. LIMITS
℄ CONST. RAMP L
985
NOTE: EX ROCK CHANNEL PROTECTION TO REMAIN IN PLACE
802
CONST. LIMITS

ESTIMATED QUANTITIES			
ITEM	QUANTITY	UNIT	DESCRIPTION
601	5	SY	RIPRAP, TYPE D
602	2.2	CY	CONCRETE MASONRY
611	250	FT	54"-A, 707.02(0.109) ALUMINIZED, 707.04(0.064 POLYMERIC), 706.02

29.7' 26.9' 193.6'
℄ CONST. RAMP S
6.1' 8.1' 16.1' 3.0'
E/P ELEV. 711.15
P/G ELEV. 711.24
E/P ELEV. 711.29
HEADWALL PER HW-2.2
EX LA-R/W
2:1
4:1
3:1
709.5
15.1'
15.7'
PR. LTG CONDUIT
HW_{50} = 693.31
HW_{100} = 693.69
DM-1.1
℄ 690.27
250' - 54"-4 @ 0.37%
711.24
802+54.04
708.05
℄ 689.34
740 730 720 710 700 690 680 670

CULVERT DETAIL - RAMP S STA. 802+54.00

FRA-270-51.50

375
554

X:\Projects\2013\1321\1010\FRA\92616\drainage\sheets\92616DC009.dgn 5/9/2023 12:27:22 AM cwong

HYDRAULIC DATA	
DRAINAGE AREA: 3.61 ACRES	
Q_{50} = 13.59 CFS	Q_{100} = 15.62 CFS
V_{50} = 13.6 FPS	V_{100} = 14.0 FPS
Hw_{50} = 705.03	Hw_{100} = 705.59

HORIZONTAL SCALE IN FEET
0 5 10 20

CALCULATED ACF
CHECKED CSR

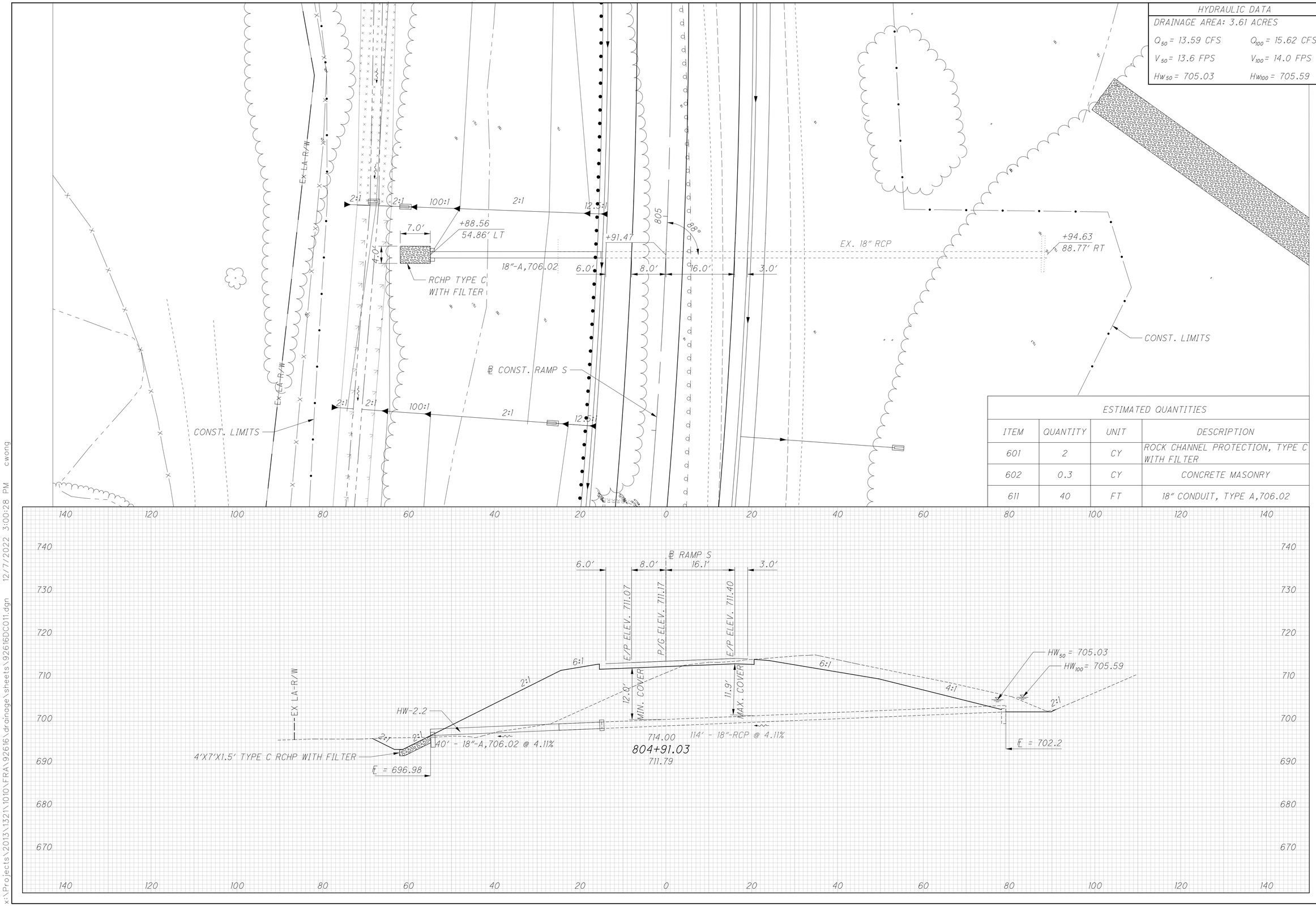

ESTIMATED QUANTITIES			
ITEM	QUANTITY	UNIT	DESCRIPTION
601	2	CY	ROCK CHANNEL PROTECTION, TYPE C WITH FILTER
602	0.3	CY	CONCRETE MASONRY
611	40	FT	18" CONDUIT, TYPE A,706.02

CULVERT DETAILS - RAMP S STA. 804+91.00

FRA-270-51.50

376
554

x:\Projects\2013\132\1010\FRA\92616\drainage\sheets\92616DC011.dgn 12/7/2022 3:00:28 PM cwong

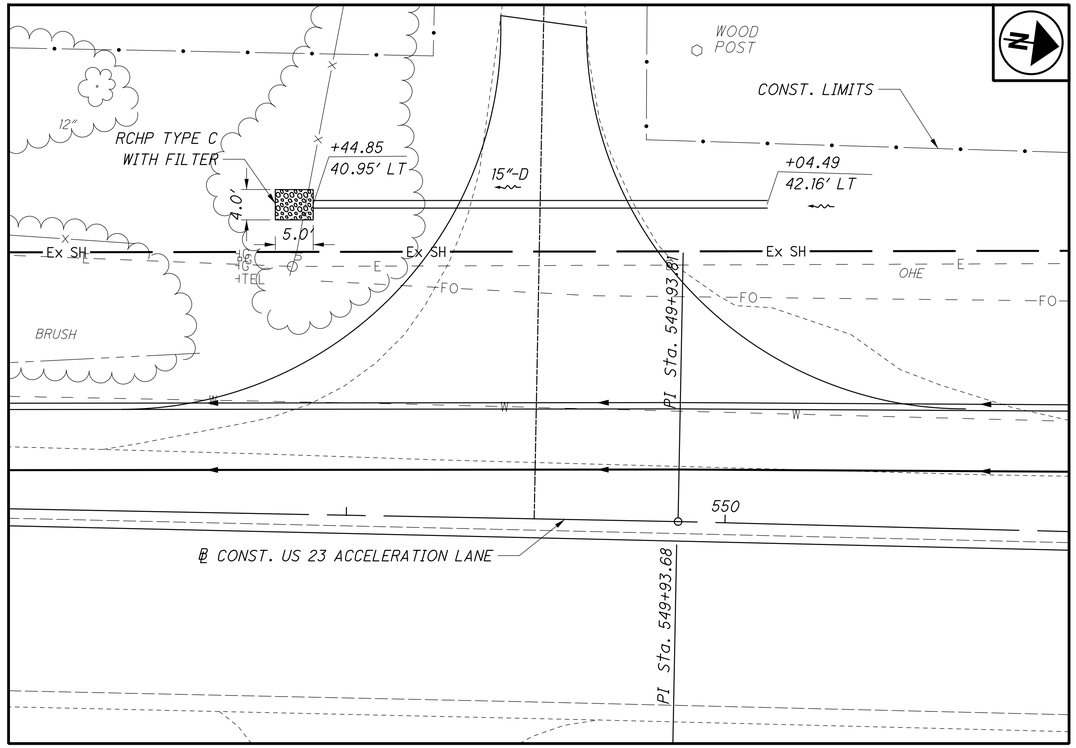

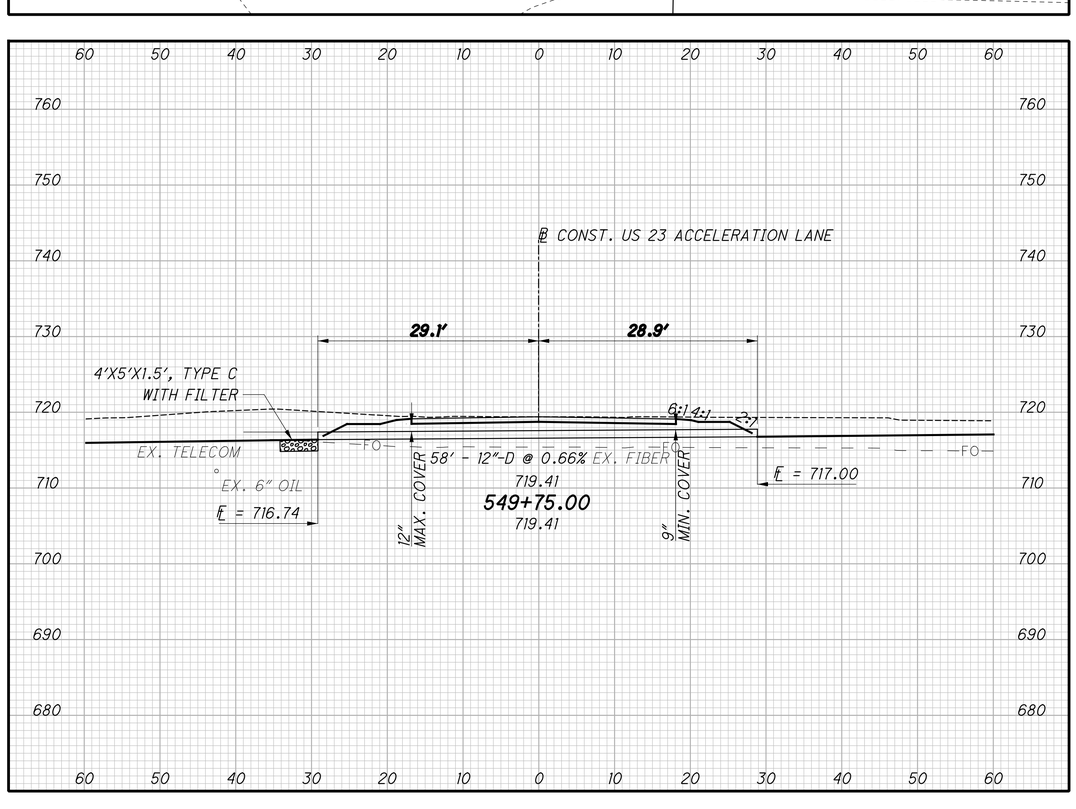

HORIZONTAL SCALE IN FEET
0 5 10 20

CALCULATED ACF
CHECKED CSR

CULVERT DETAILS - US 23 ACCELERATION LANE STA. 549+75

FRA-270-51.50

377
554

X:\Projects\2013\1321\1010\FRA\92616\drainage\sheets\92616DC015.dgn 2/13/2023 11:17:07 AM cwong

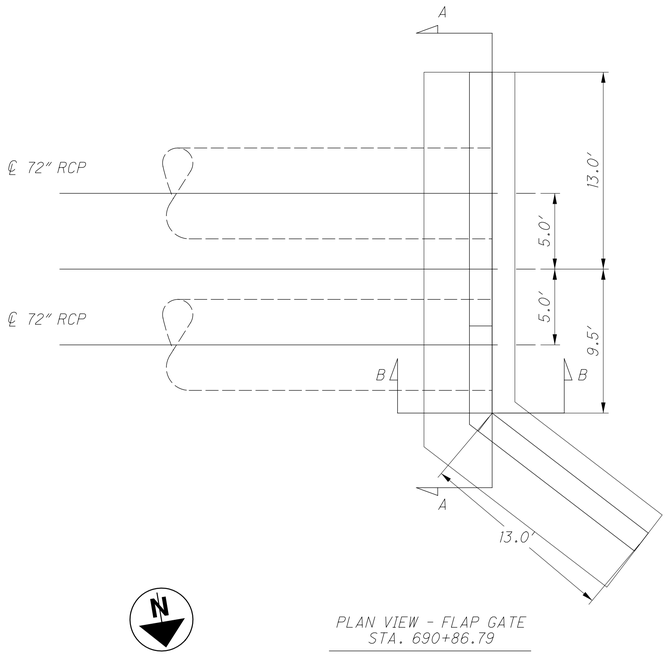

PLAN VIEW - FLAP GATE
STA. 690+86.79

NOTES

THE PROPOSED FLAP GATE SHALL BE (2) 72" RODNEY HUNT FLAP VALVE SERIES FV-AC OR APPROVED EQUAL

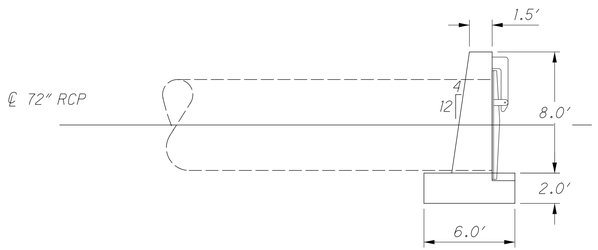

FLAP GATE - SECTION B

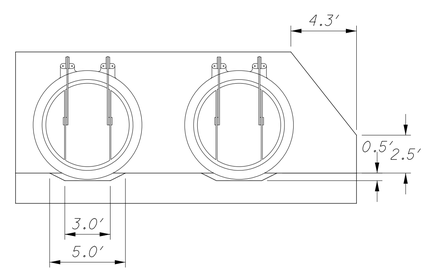

FLAP GATE - SECTION A

CALCULATED ACF
CHECKED CSR

FLAP GATE DETAILS - RAMP P1 STA. 690+87.00

FRA-270-51.50

x:\Projects\2013\1321\1010\FRA\92616\drainage\sheets\92616DD001.dgn 12/7/2022 3:00:30 PM cwong

ITEM 621 - RPM (BY COLOR)

THIS ITEM SHALL FOLLOW ODOT CMS 621, AND ODOT STANDARD DRAWINGS TC-65.10 AND TC-65.11.

ITEM 644 - DOTTED LINE, 6", AS PER PLAN

THIS ITEM SHALL CONFORM TO THE OHIO MANUAL OF UNIFORM TRAFFIC CONTROL DEVICES (OMUTCD) SECTION 3A.06. THE DOTTED LINE SHALL CONSIST OF A 2' LINE SEGMENT WITH 6' GAPS.

ITEM 644 - LANE LINE
ITEM 644 - EDGE LINE

AS PER PROJECT ENGINEER'S DISCRETION, REPLACE EXISTING LANE LINES AND EDGE LINES ALONG EB AND WB IR-270 LANES AND ALONG US-23 NB AND SB FROM "MATCH EXISTING MARKINGS" STATIONING AS SHOWN ON THE PLAN SHEETS TO THE BEGINNING OF MOT PAVEMENT MARKINGS. A QUANTITY OF 2 MILES OF LANE LINE AND 1 MILE OF EDGE LINE HAS BEEN CARRIED OVER TO THE GENERAL SUMMARY.

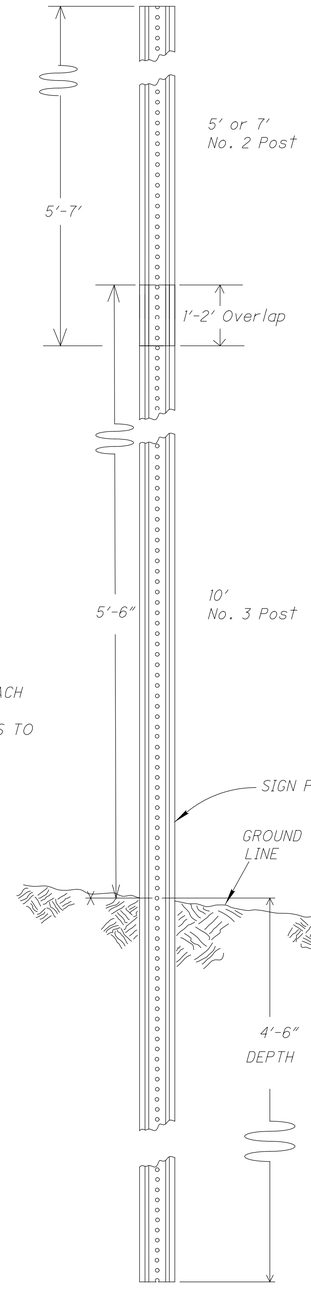

USE ALUMINUM BOLTS TO ATTACH SIGN TO NO. 2 POST.
USE 2 STAINLESS STEEL BOLTS TO SPLICE NO. 2 TO NO. 3 POST.

TYPICAL NO. 2
AND NO. 3 U - CHANNEL SPLICE
WITH 10' DRIVEN SECTION INSTALLATION

CALCULATED DKA
CHECKED DWB

SIGNING AND PAVEMENT MARKING NOTES

FRA-270-51.50

379
554

x:\Projects\2013\1321\1010\FRA\92616\traffic\sheets\92616TN001.dgn 12/7/2022 3:00:31 PM cwong

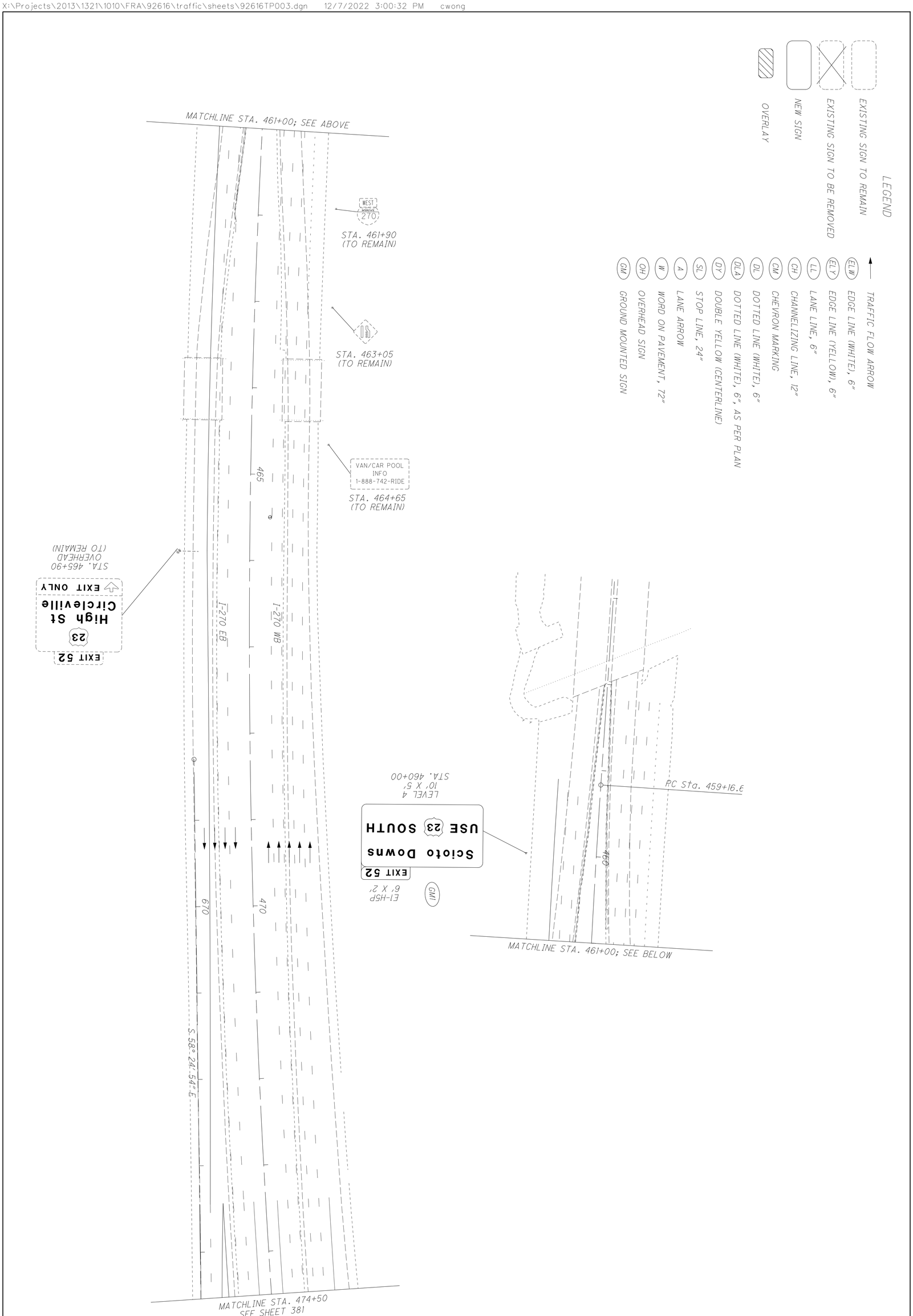

FRA-270-51.50

SIGNING AND PAVEMENT MARKING PLAN
STA. 460+10 TO STA. 474+50

CALCULATED DKA
CHECKED DWB

0 50
25 100
HORIZONTAL SCALE IN FEET

X:\Projects\2013\1321\1010\FRA\92616\traffic\sheets\92616TP004.dgn 12/7/2022 3:00:33 PM cwong

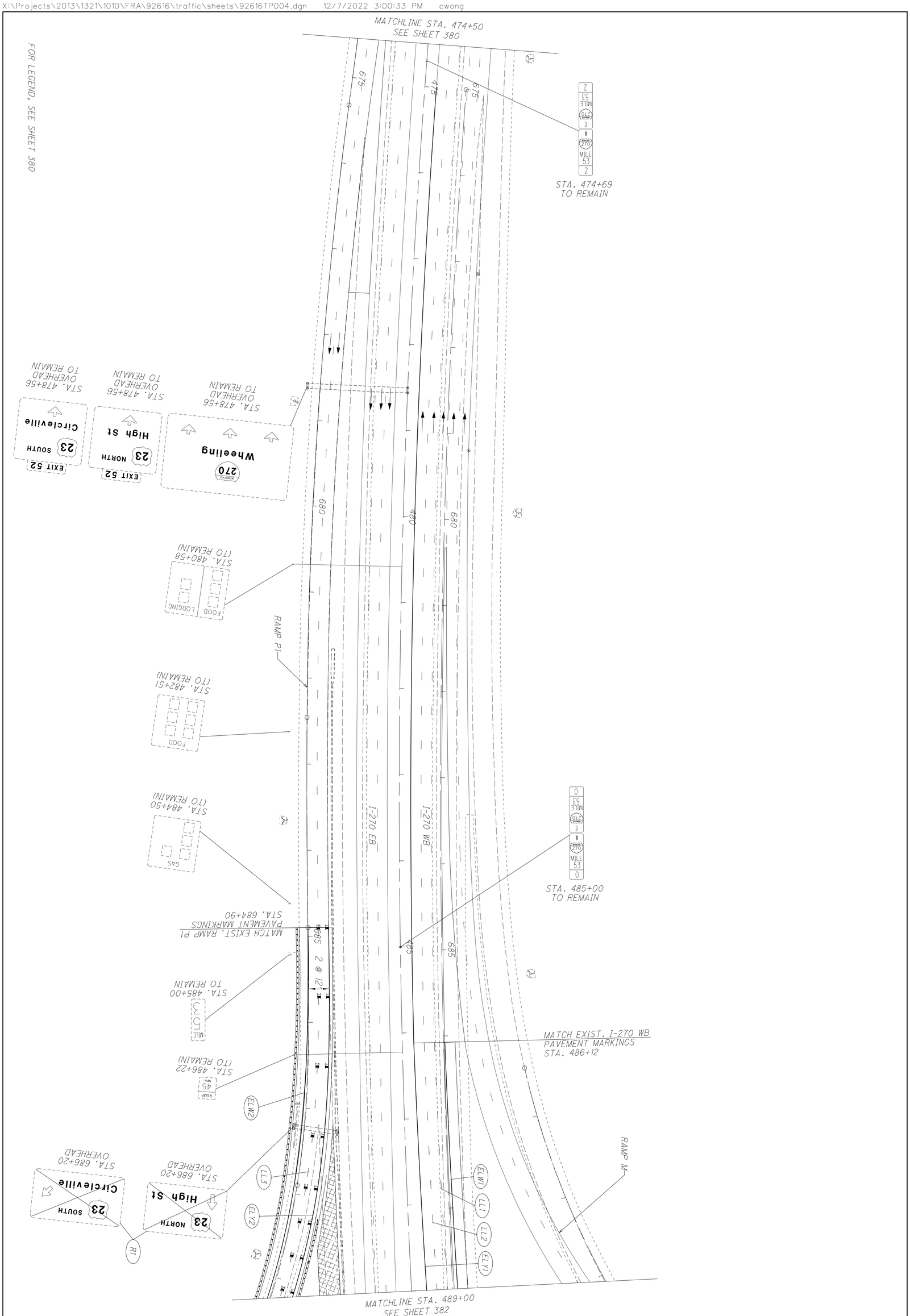

381 / 554	FRA-270-51.50	SIGNING AND PAVEMENT MARKING PLAN STA. 474+50 TO STA. 489+00	CALCULATED DKA CHECKED DWB	0 50 25 100 HORIZONTAL SCALE IN FEET

X:\Projects\2013\1321\1010\FRA\92616\traffic\sheets\92616TP005.dgn 12/7/2022 3:00:34 PM cwong

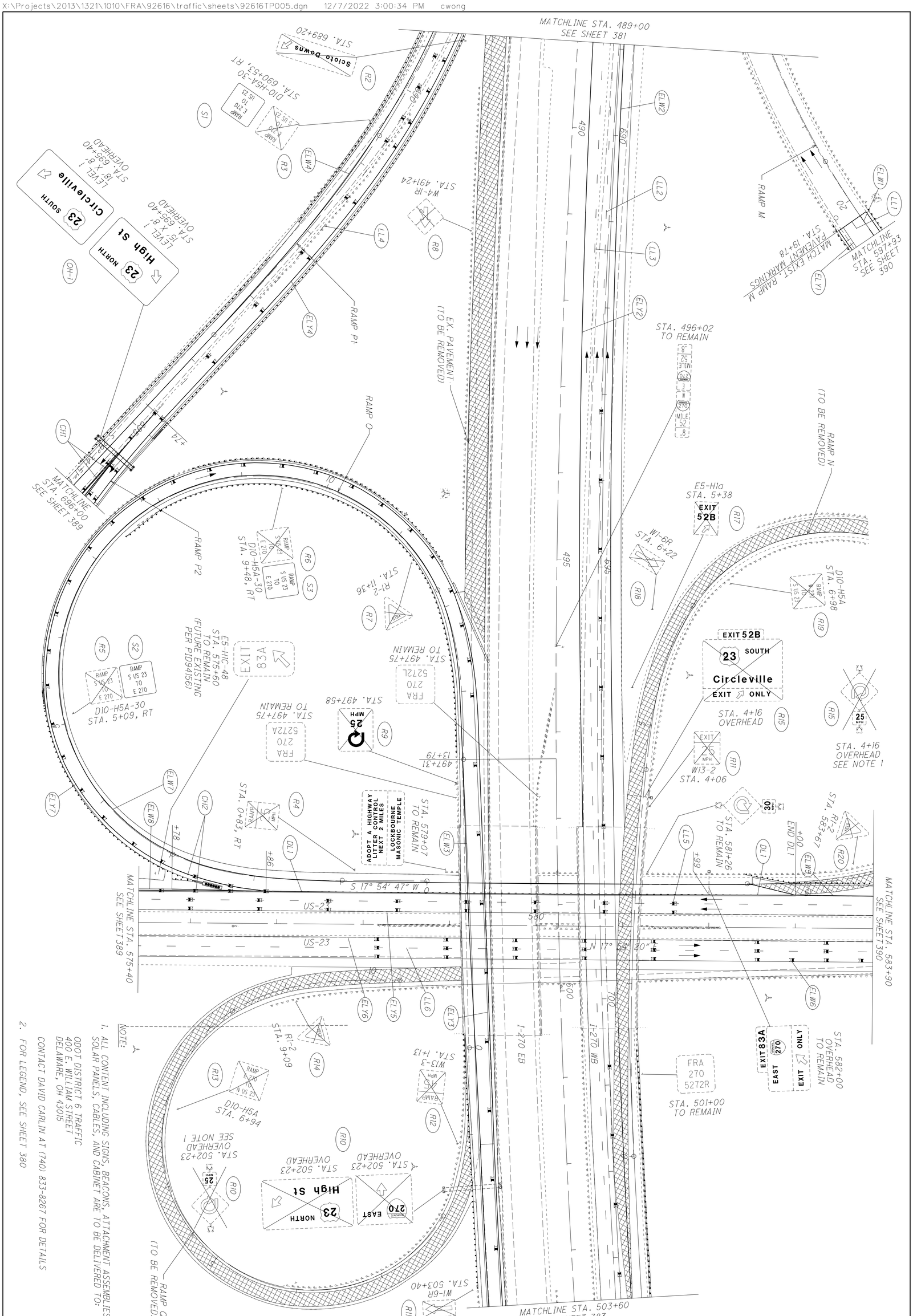

NOTE:

1. ALL CONTENT INCLUDING SIGNS, BEACONS, ATTACHMENT ASSEMBLIES, SOLAR PANELS, CABLES, AND CABINET ARE TO BE DELIVERED TO:
ODOT DISTRICT 6 TRAFFIC
400 E. WILLIAM STREET
DELAWARE, OH 43015
CONTACT DAVID CARLIN AT (740) 833-8267 FOR DETAILS

2. FOR LEGEND, SEE SHEET 380

382
554

FRA-270-51.50

SIGNING AND PAVEMENT MARKING PLAN
STA. 489+00 TO STA. 503+60

CALCULATED DKA
CHECKED DWB

0 50
25 100
HORIZONTAL SCALE IN FEET

N

X:\Projects\2013\1321\1010\FRA\92616\traffic\sheets\92616TP006.dgn 12/7/2022 3:00:35 PM cwong

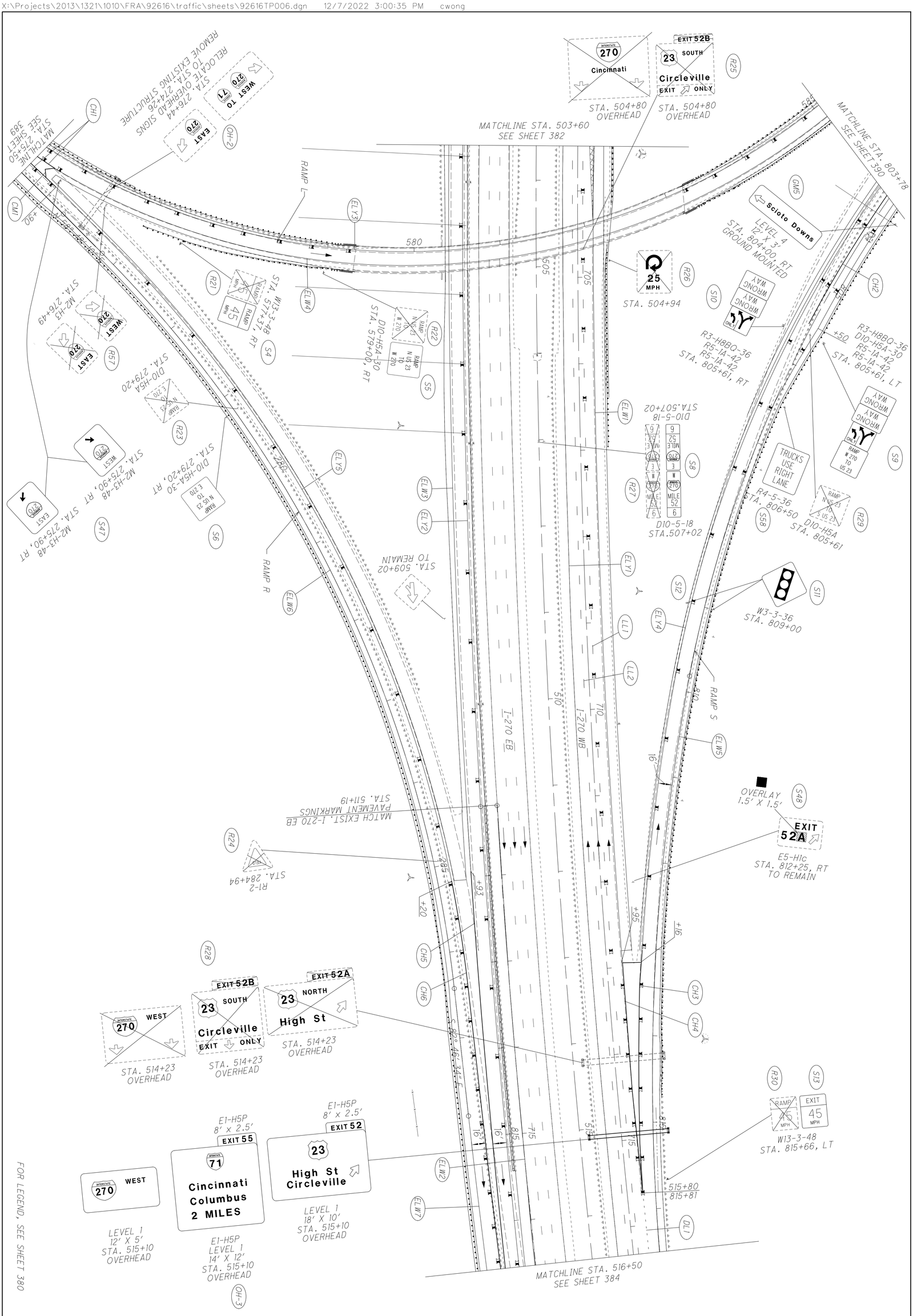

383 / 554	FRA-270-51.50	SIGNING AND PAVEMENT MARKING PLAN STA. 503+60 TO STA. 516+50	CALCULATED DKA CHECKED DCB	0 50 100 HORIZONTAL SCALE IN FEET

X:\Projects\2013\1321\1010\FRA\92616\traffic\sheets\92616TP007.dgn 12/7/2022 3:00:37 PM cwong

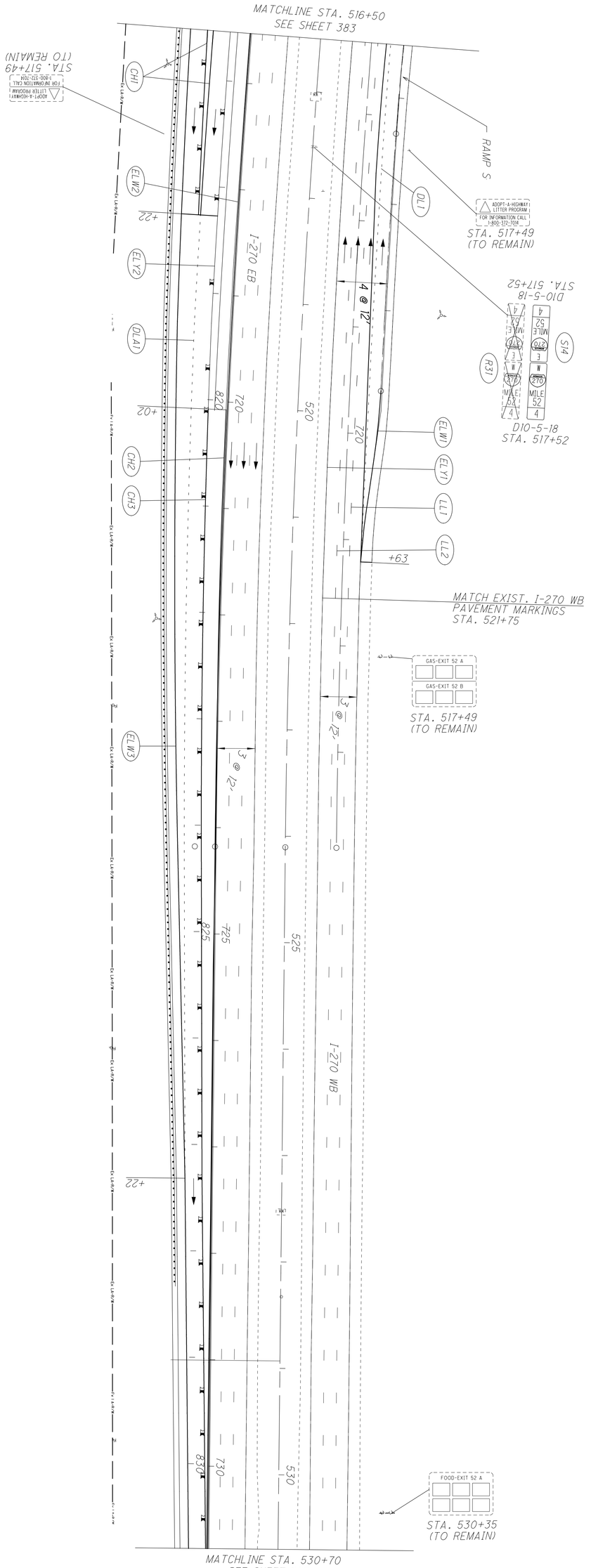

FOR LEGEND, SEE SHEET 380

384 / 554	FRA-270-51.50	SIGNING AND PAVEMENT MARKING PLAN STA. 516+50 TO STA. 530+70	CALCULATED DKA / CHECKED DWB	0 25 50 100 HORIZONTAL SCALE IN FEET

X:\Projects\2013\1321\1010\FRA\92616\traffic\sheets\92616TP008.dgn 12/7/2022 3:00:38 PM cwong

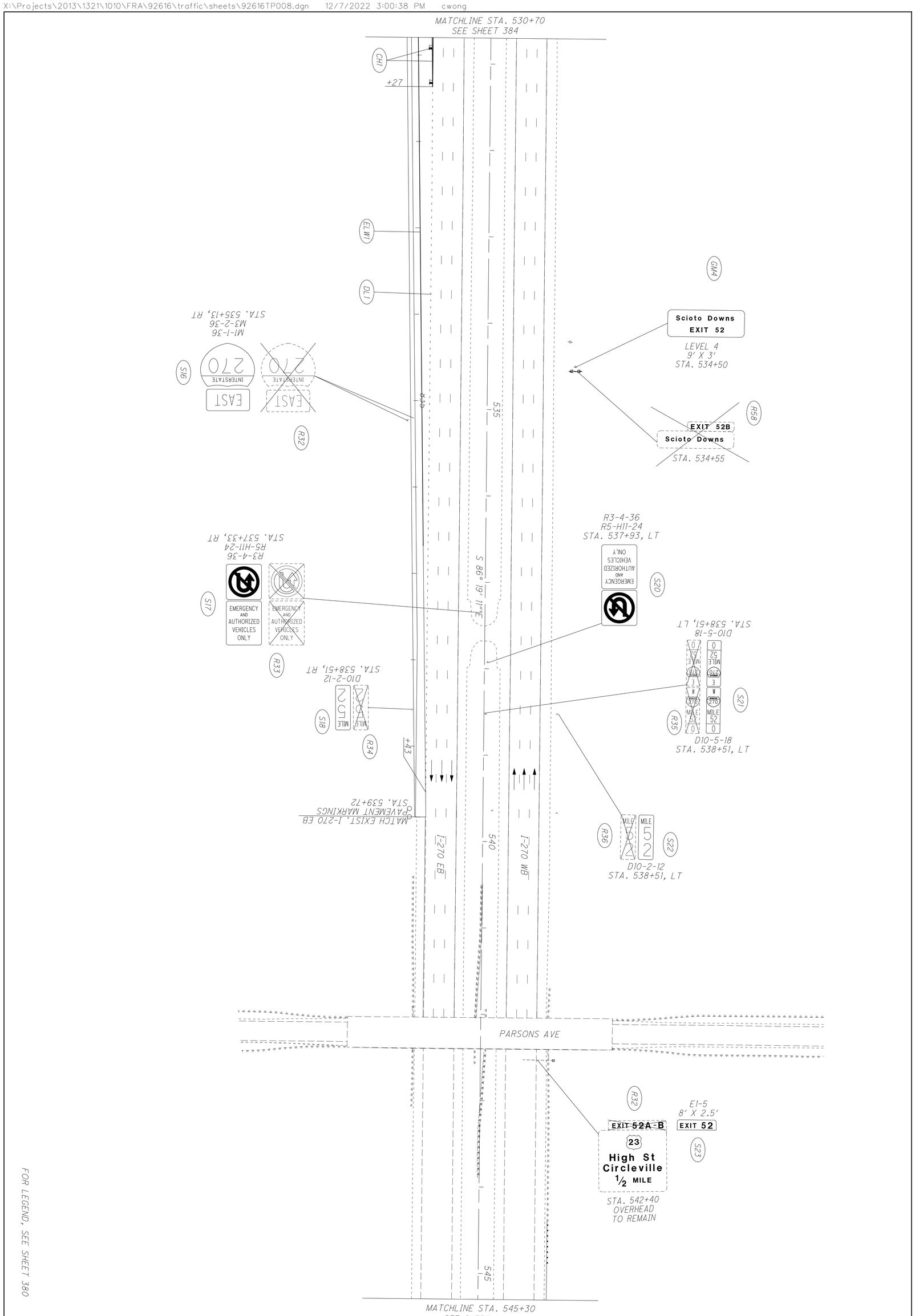

FOR LEGEND, SEE SHEET 380

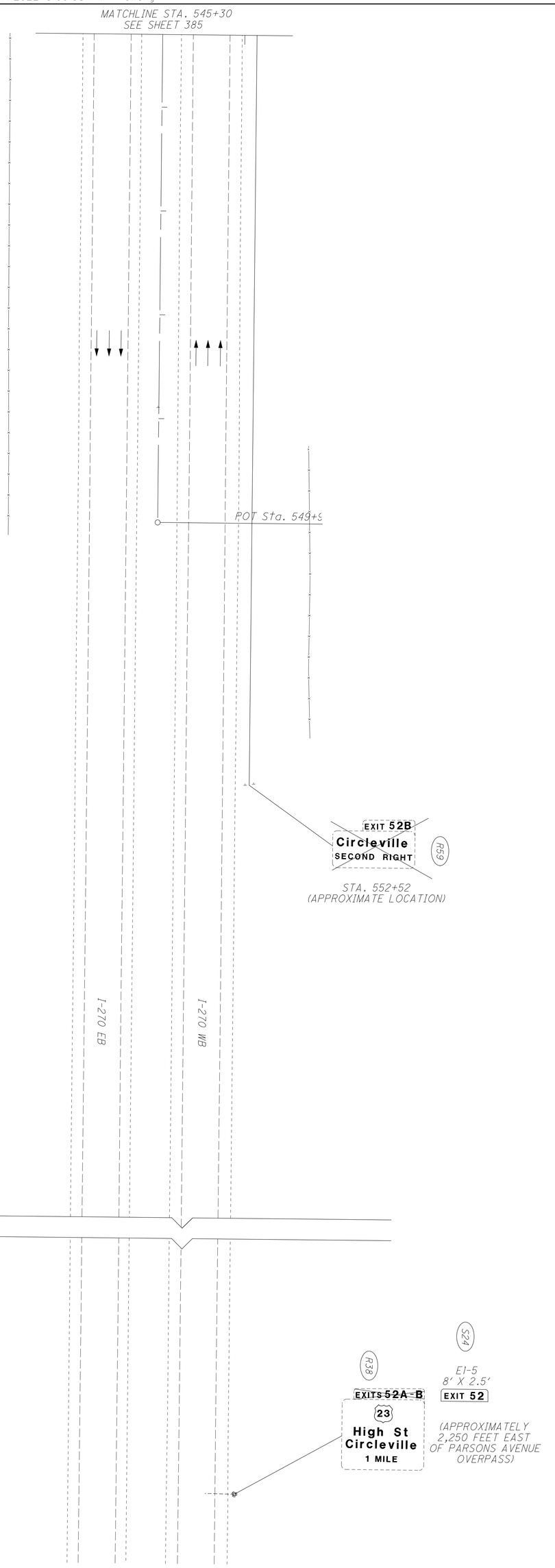

FOR LEGEND, SEE SHEET 380

X:\Projects\2013\1321\1010\FRA\92616\traffic\sheets\92616TP010.dgn 12/7/2022 3:00:40 PM cwong

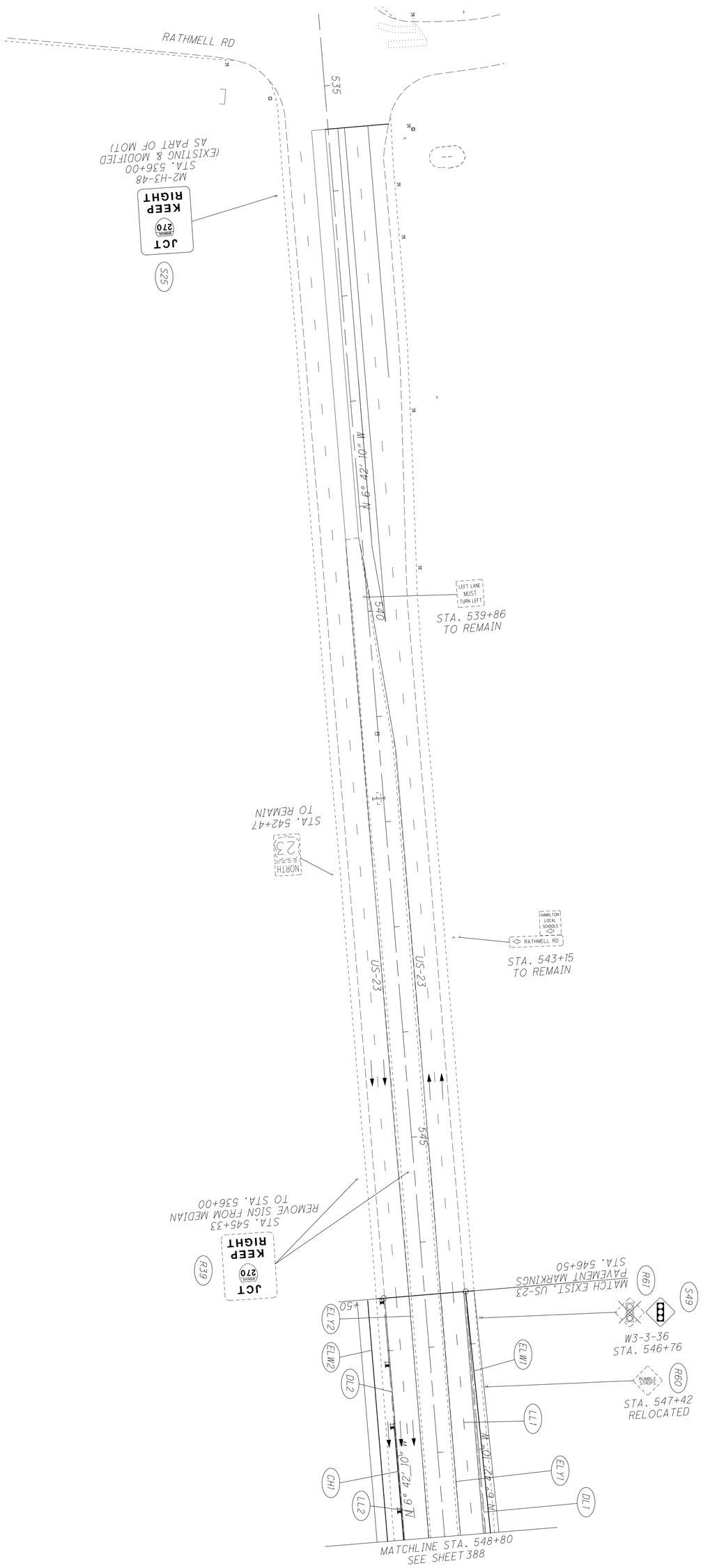

FOR LEGEND, SEE SHEET 380

387 / 554	FRA-270-51.50	SIGNING AND PAVEMENT MARKING PLAN STA. 534+30 TO STA. 548+80	CALCULATED DKA CHECKED DWB	0 50 25 100 HORIZONTAL SCALE IN FEET

X:\Projects\2013\1321\1010\FRA\92616\traffic\sheets\92616TP011.dgn 12/7/2022 3:00:41 PM cwong

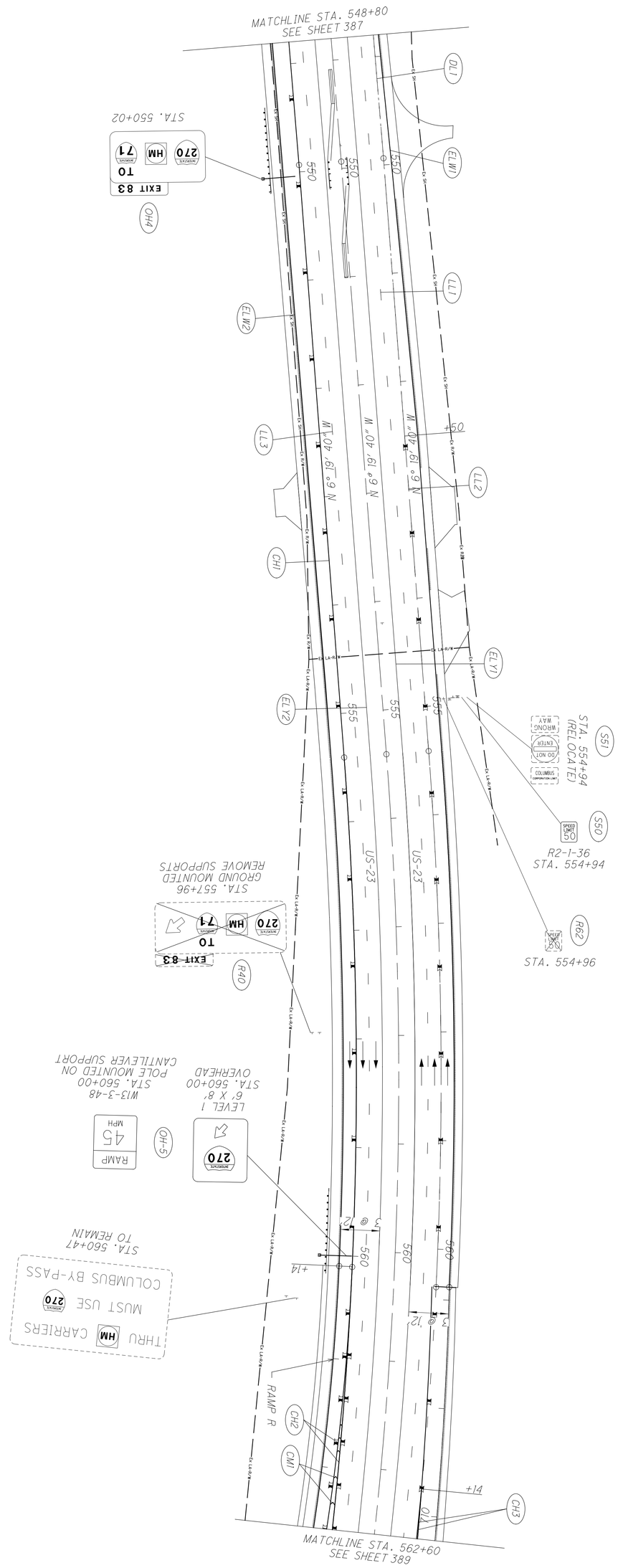

FOR LEGEND, SEE SHEET 380

388 / 554	FRA-270-51.50	SIGNING AND PAVEMENT MARKING PLAN STA. 548+80 TO STA. 562+60	CALCULATED DKA CHECKED DWB	0 50 / 25 100 HORIZONTAL SCALE IN FEET

X:\Projects\2013\1321\1010\FRA\92616\traffic\sheets\92616TP012.dgn 12/7/2022 3:00:42 PM cwong

NOTE:
1. SEE SHEET 404 FOR INTERSECTION TRAFFIC CONTROL PLAN
2. FOR LEGEND, SEE SHEET 380

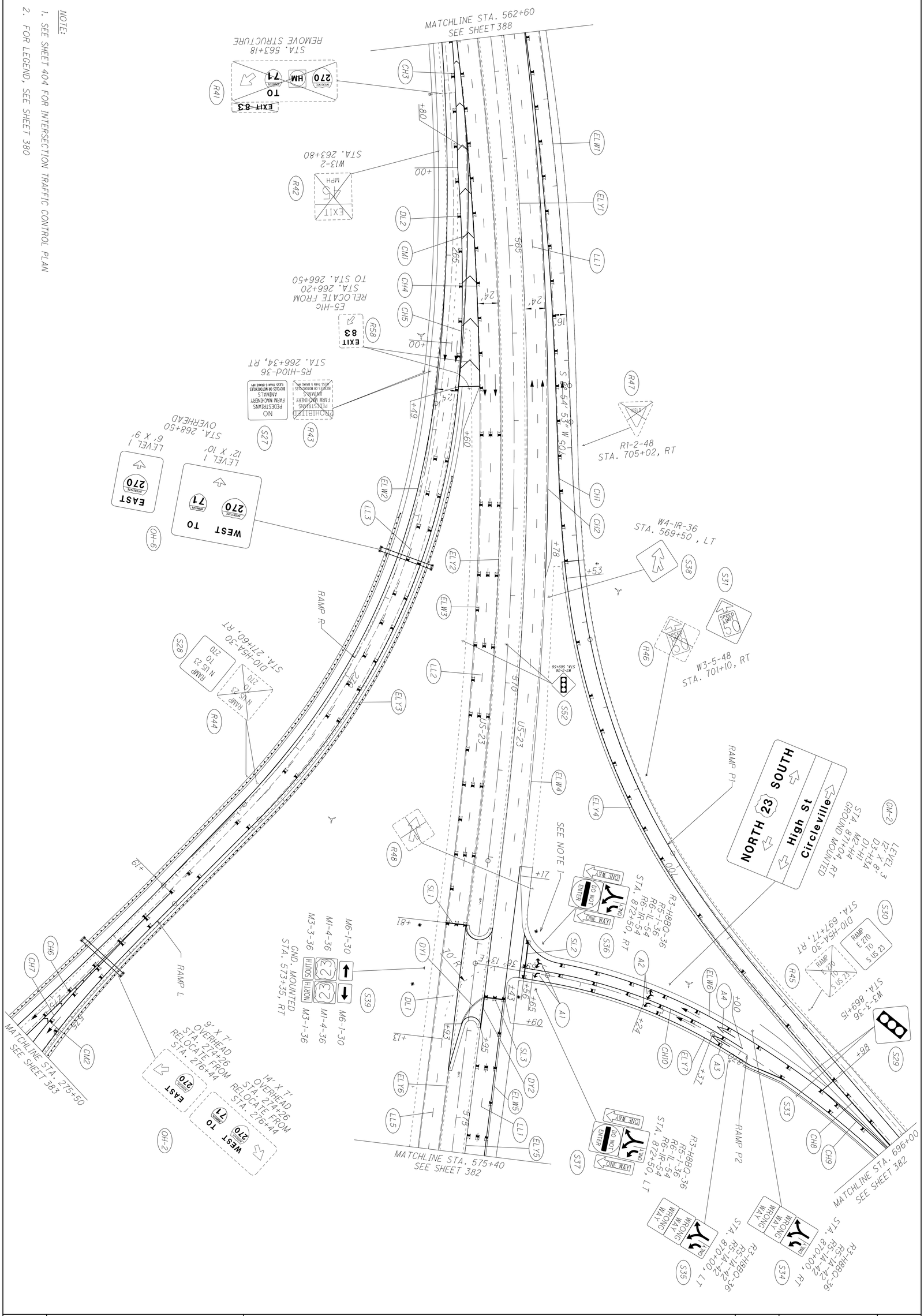

389 / 554	FRA-270-51.50	SIGNING AND PAVEMENT MARKING PLAN STA. 562+60 TO STA. 575+40	CALCULATED DKA CHECKED DWB	0 50 25 100 HORIZONTAL SCALE IN FEET

X:\Projects\2013\1321\1010\FRA\92616\traffic\sheets\92616TP013.dgn 12/7/2022 3:00:43 PM cwong

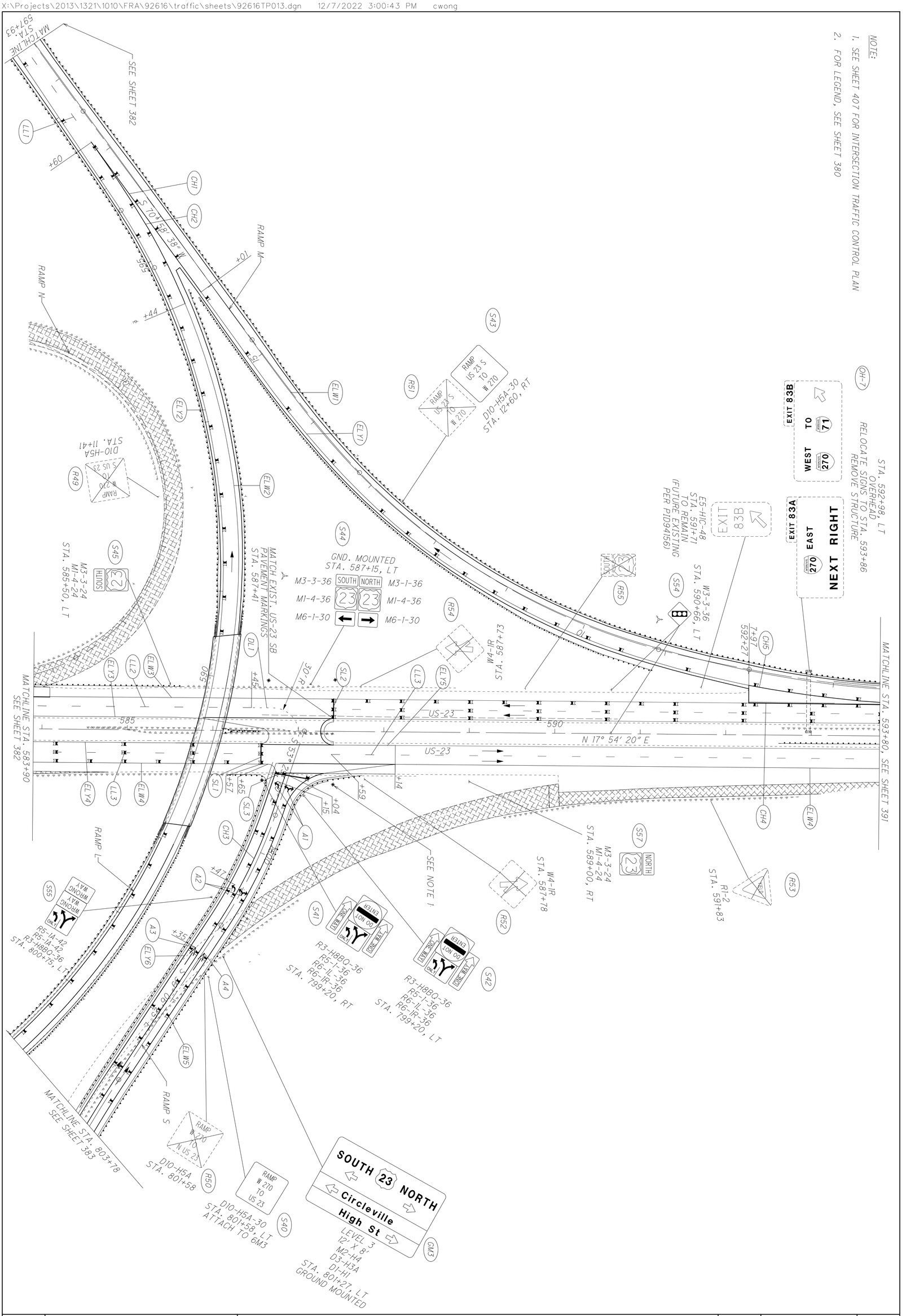

390 / 554	FRA-270-51.50	SIGNING AND PAVEMENT MARKING PLAN STA. 583+90 TO STA. 594+80	CALCULATED DKA CHECKED DWB	0 50 100 HORIZONTAL SCALE IN FEET

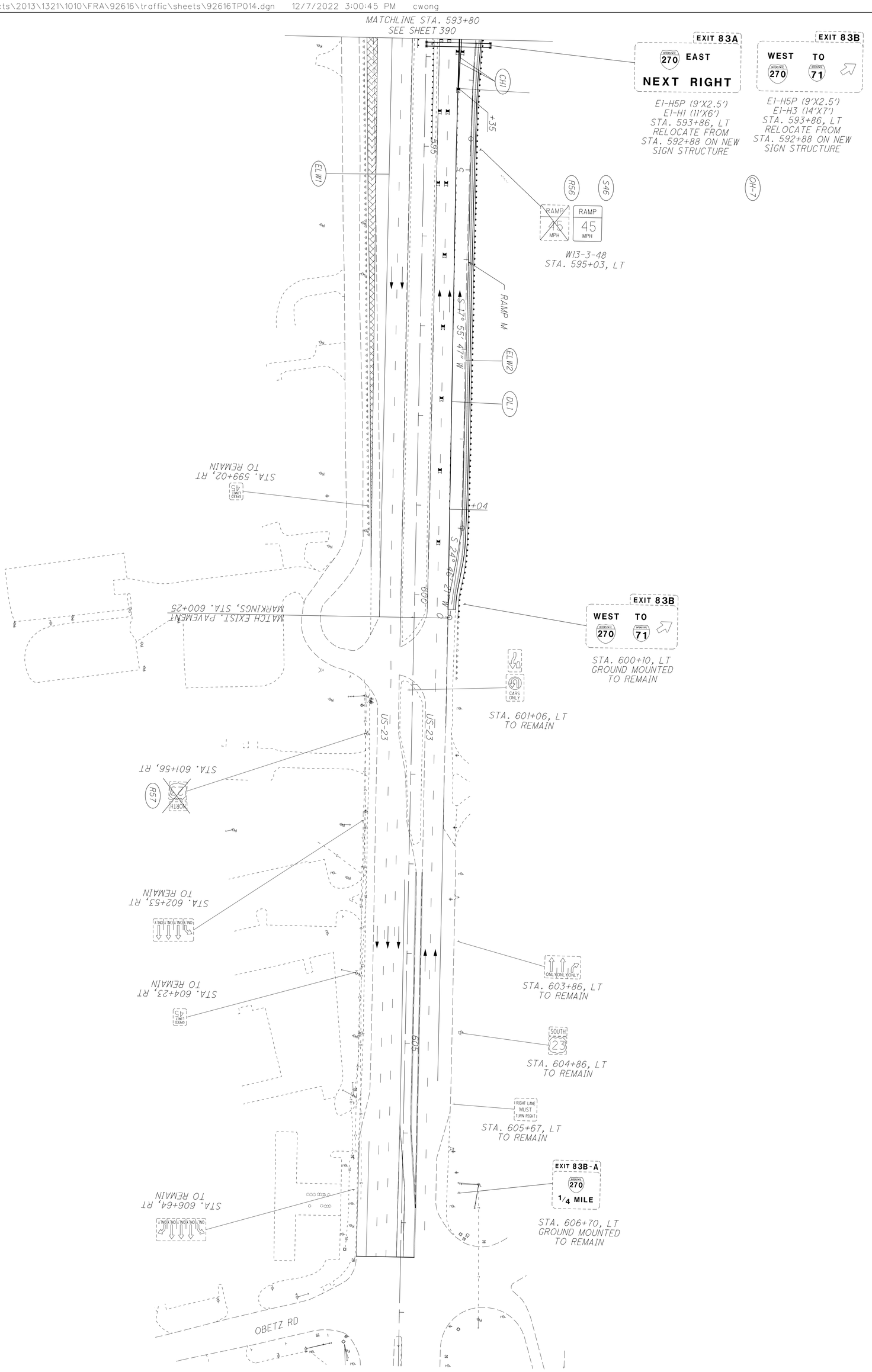

FOR LEGEND, SEE SHEET 380

391
554

FRA-270-51.50

SIGNING AND PAVEMENT MARKING PLAN
STA. 594+80 TO STA. 608+60

CALCULATED DKA
CHECKED DWB

0 50
25 100
HORIZONTAL SCALE IN FEET

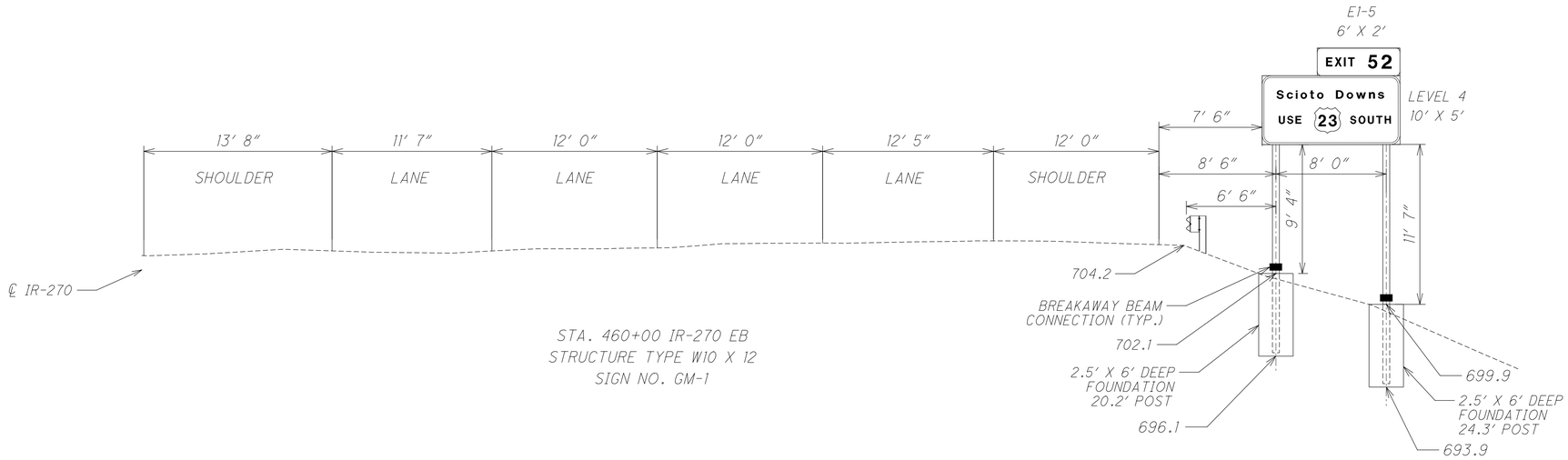

STA. 460+00 IR-270 EB
STRUCTURE TYPE W10 X 12
SIGN NO. GM-1

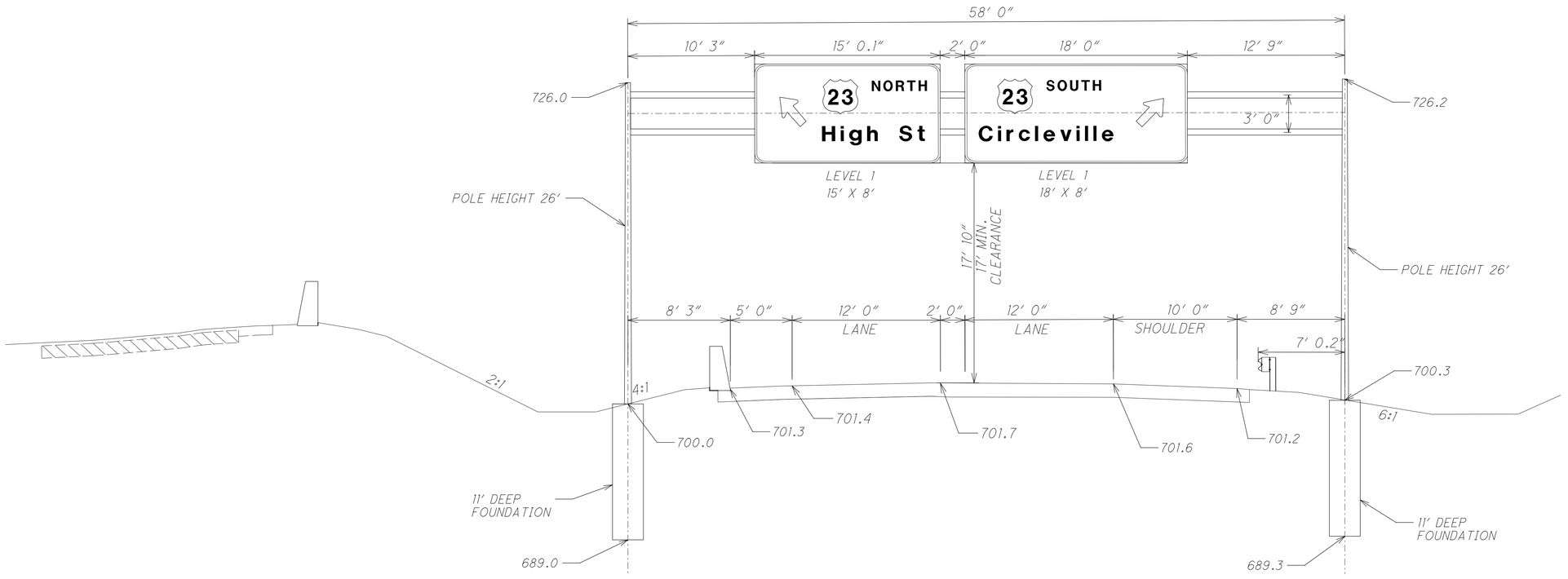

STA. 695+40 RAMP P1
STRUCTURE TYPE TC-15.116, DESIGN 1
SIGN NO. OH-1

HORIZONTAL SCALE IN FEET
0 2.5 5 10

CALCULATED DKA
CHECKED DWB

SIGNING ELEVATION DETAIL

FRA-270-51.50

392
554

x:\Projects\2013\1321\1010\FRA\92616\traffic\sheets\92616TE001.dgn 12/7/2022 3:00:45 PM cwong

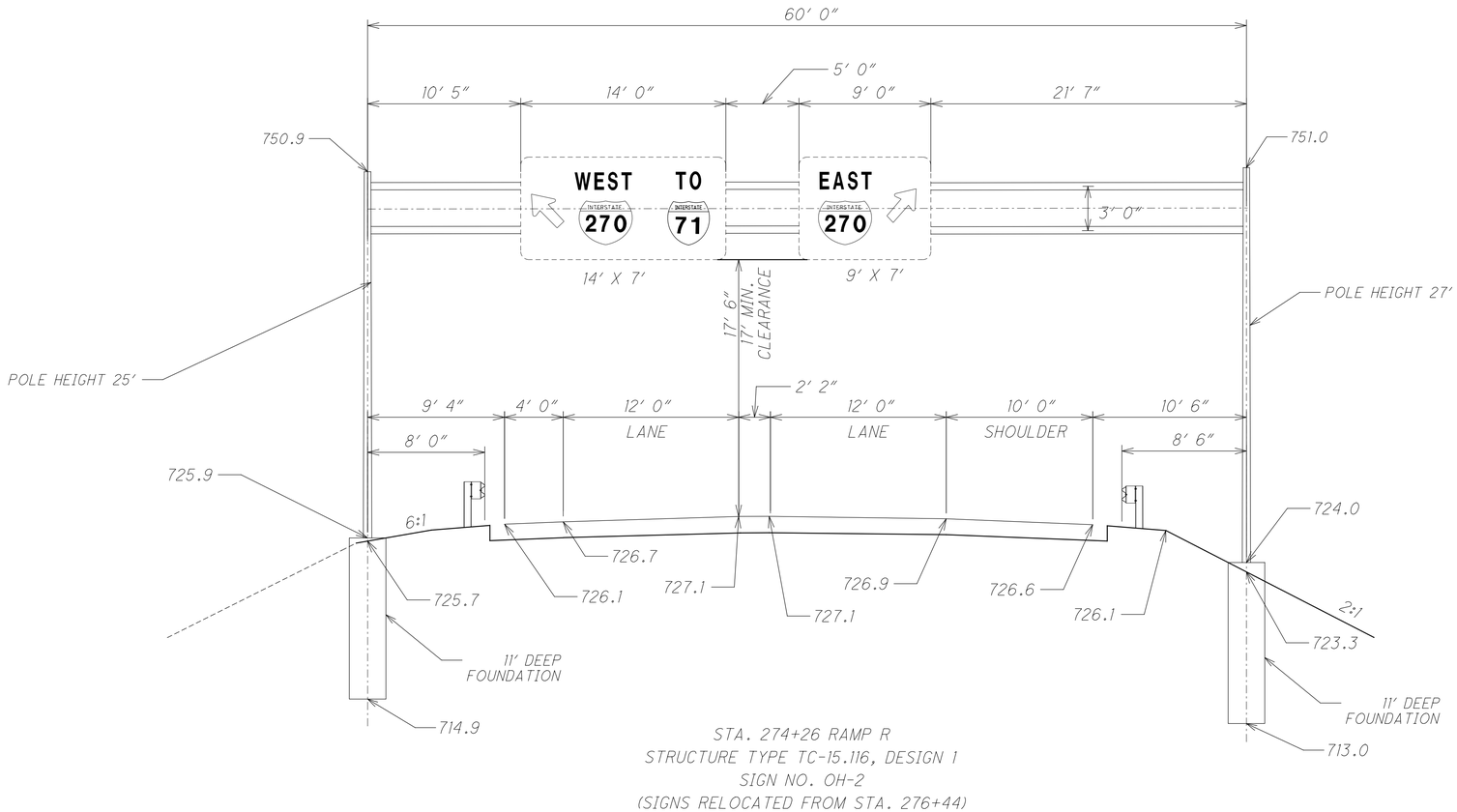

STA. 274+26 RAMP R
STRUCTURE TYPE TC-15.116, DESIGN 1
SIGN NO. OH-2
(SIGNS RELOCATED FROM STA. 276+44)

HORIZONTAL SCALE IN FEET
0 2.5 5 10

CALCULATED DKA
CHECKED DWB

SIGNING ELEVATION DETAIL

FRA-270-51.50

393
554

x:\Projects\2013\1321\1010\FRA\92616\traffic\sheets\92616TE005.dgn 12/7/2022 3:00:46 PM cwong

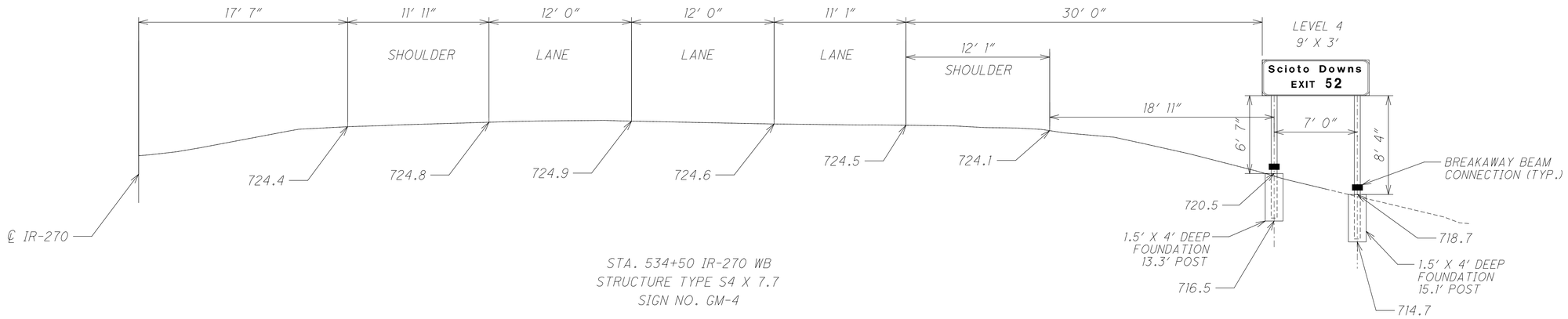

STA. 534+50 IR-270 WB
STRUCTURE TYPE S4 X 7.7
SIGN NO. GM-4

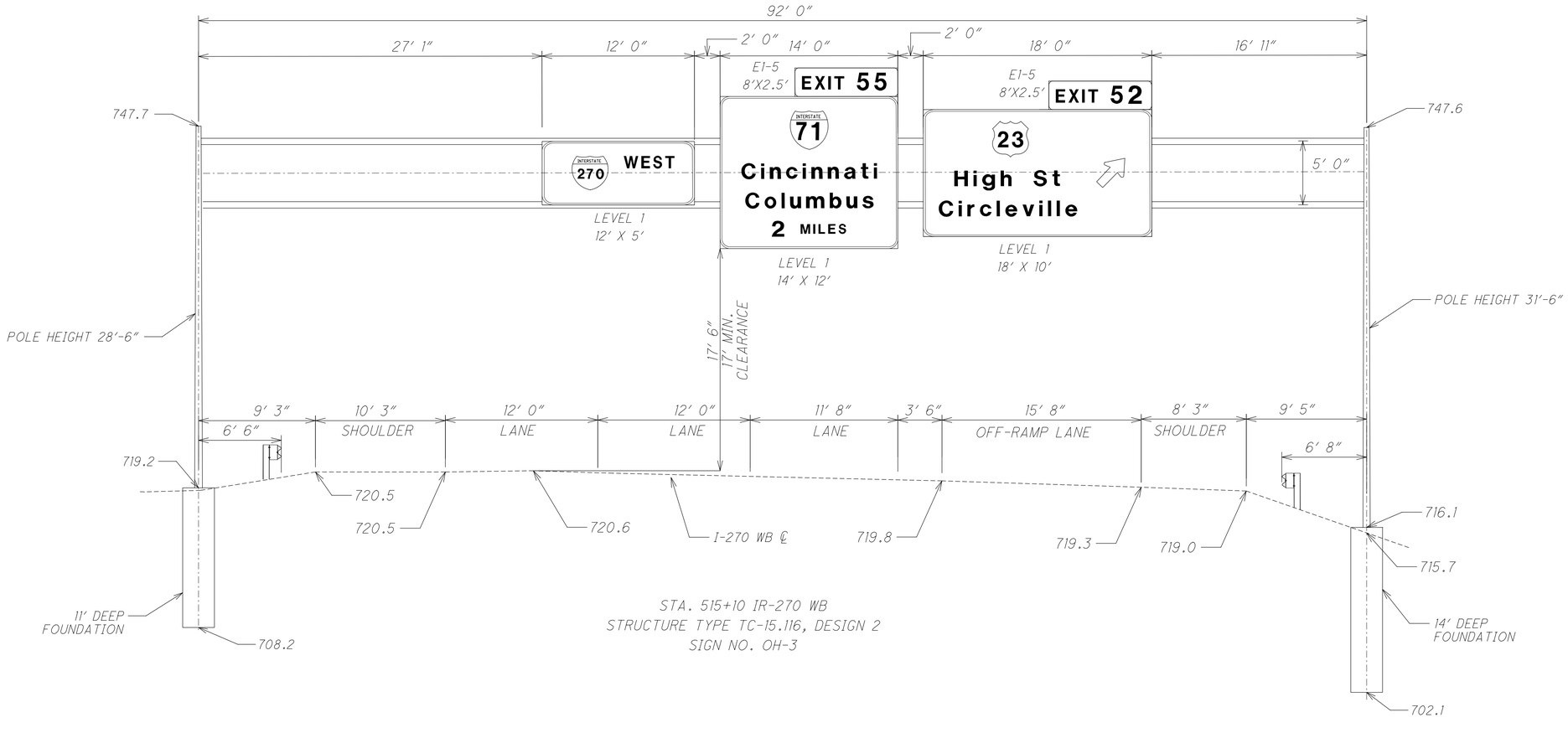

STA. 515+10 IR-270 WB
STRUCTURE TYPE TC-15.116, DESIGN 2
SIGN NO. OH-3

HORIZONTAL SCALE IN FEET
0 2.5 5 10

CALCULATED DKA
CHECKED DWB

SIGNING ELEVATION DETAIL

FRA-270-51.50

394
554

x:\Projects\2013\1321\1010\FRA\92616\traffic\sheets\92616TE002.dgn 12/7/2022 3:00:47 PM cwong

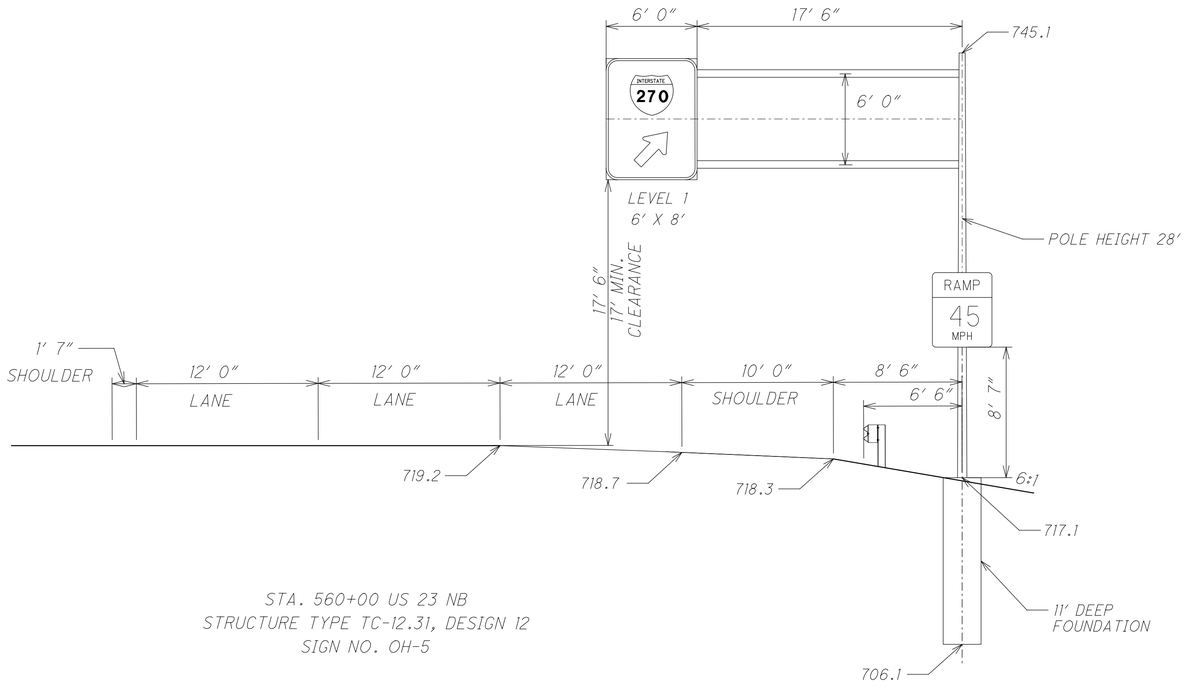

STA. 560+00 US 23 NB
STRUCTURE TYPE TC-12.31, DESIGN 12
SIGN NO. OH-5

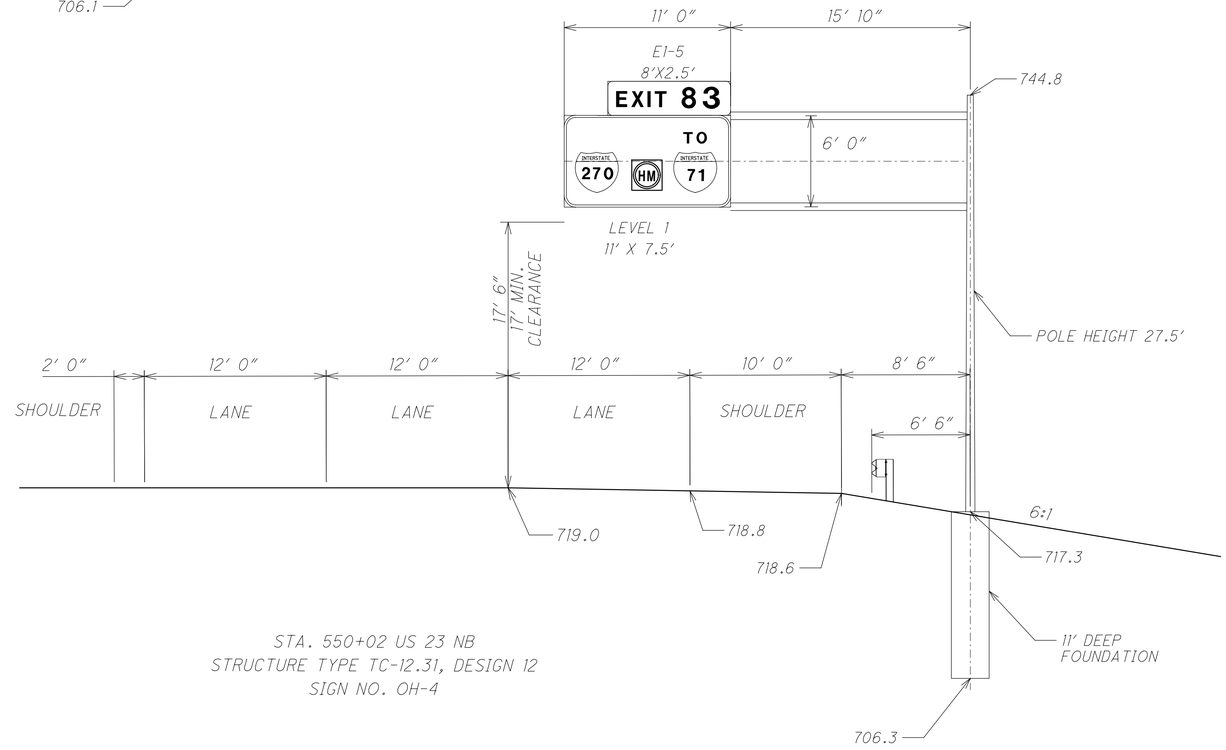

STA. 550+02 US 23 NB
STRUCTURE TYPE TC-12.31, DESIGN 12
SIGN NO. OH-4

HORIZONTAL SCALE IN FEET
0 2.5 5 10

CALCULATED DKA
CHECKED DWB

SIGNING ELEVATION DETAIL

FRA-270-51.50

x:\Projects\2013\1321\1010\FRA\92616\traffic\sheets\92616TE003.dgn 12/7/2022 3:00:47 PM cwong

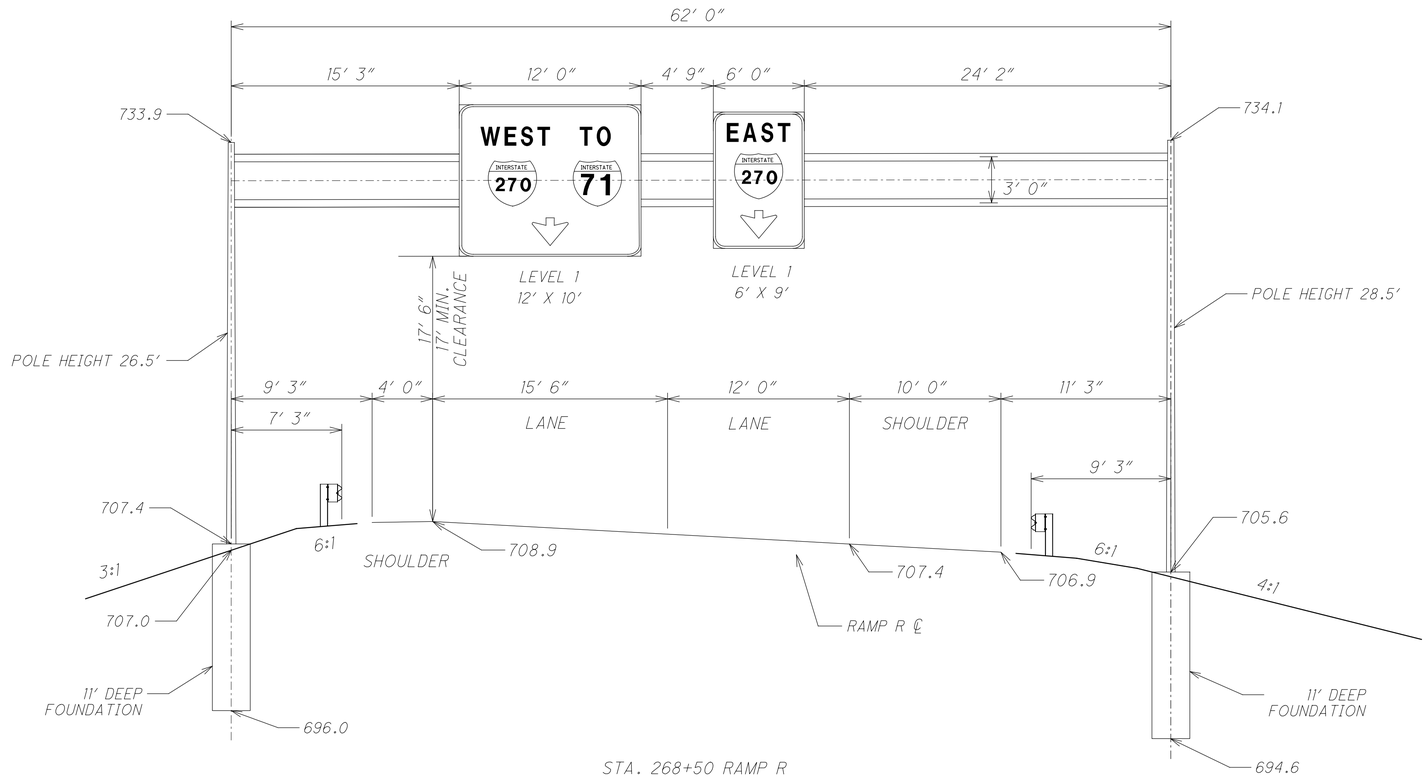

STA. 268+50 RAMP R
STRUCTURE TYPE TC-15.116, DESIGN 1
SIGN NO. OH-6

CALCULATED DKA
CHECKED DWB

0 2.5 5 10
HORIZONTAL SCALE IN FEET

SIGNING ELEVATION DETAIL

FRA-270-51.50

396
554

x:\Projects\2013\1321\1010\FRA\92616\traffic\sheets\92616TE004.dgn 12/7/2022 3:00:48 PM cwong

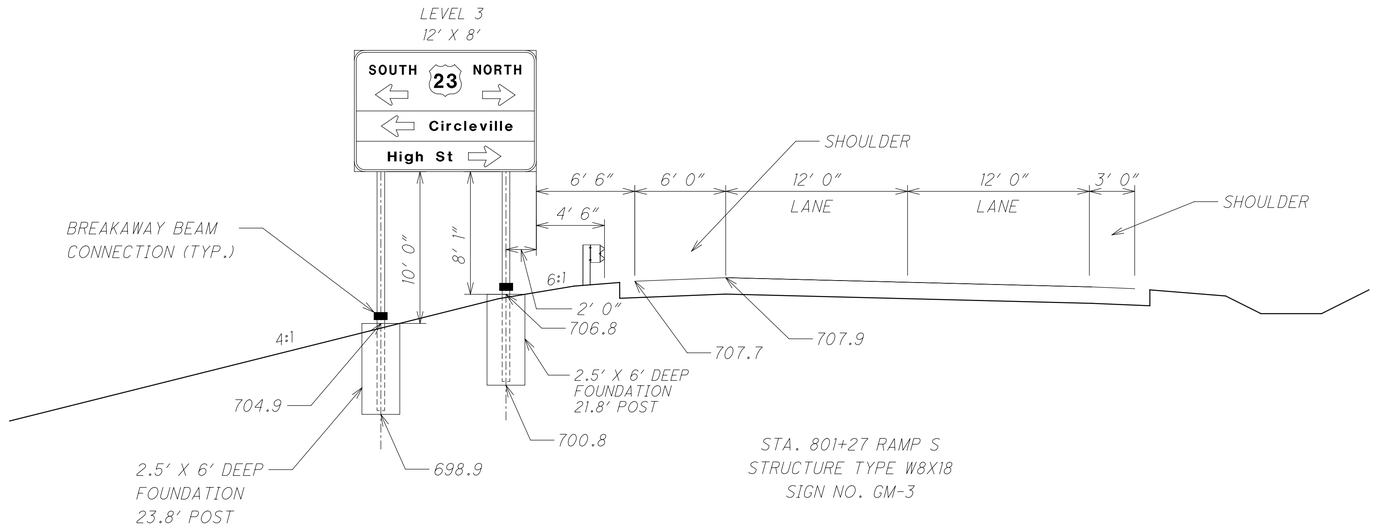

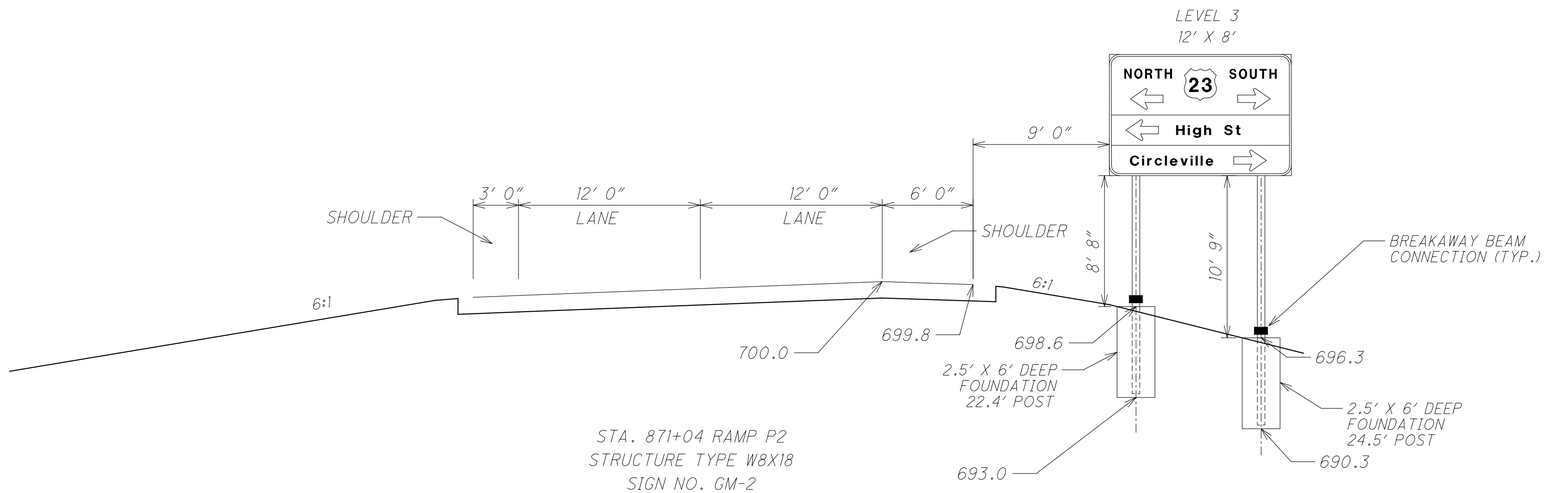

HORIZONTAL SCALE IN FEET
0 2.5 5 10

CALCULATED DKA
CHECKED DWB

SIGNING ELEVATION DETAIL

FRA-270-51.50

x:\Projects\2013\1321\1010\FRA\92616\traffic\sheets\92616TE006.dgn 12/7/2022 3:00:48 PM cwong

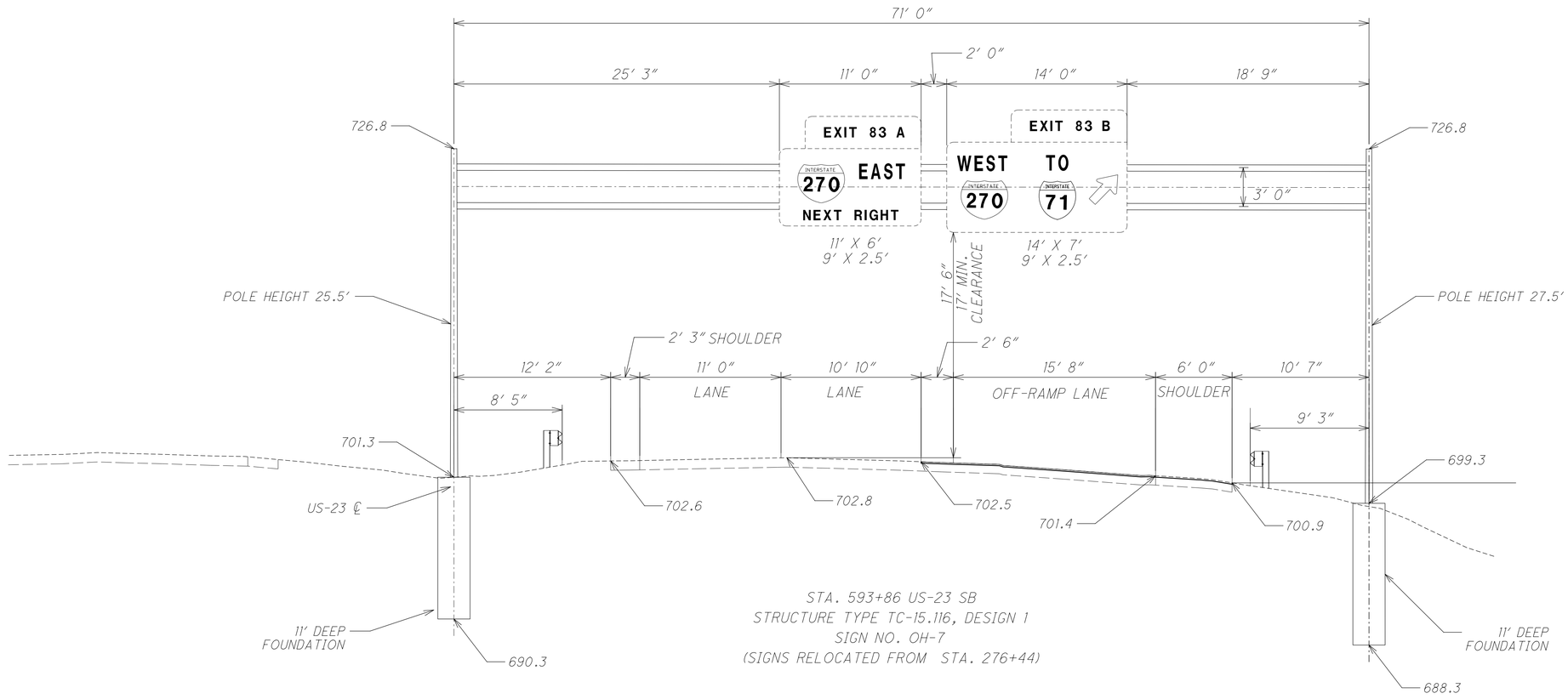

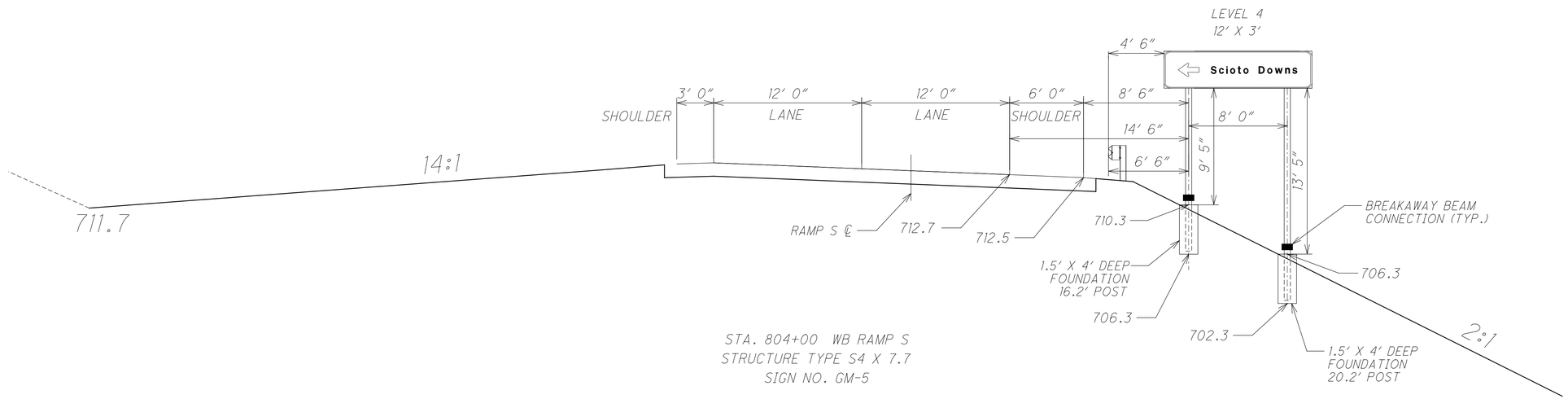

CALCULATED DKA
CHECKED DWB

SIGNING ELEVATION DETAIL

FRA-270-51.50

x:\Projects\2013\132I\1010\FRA\92616\traffic\sheets\92616TE007.dgn 12/7/2022 3:00:49 PM cwong

SIGNAL ACTIVATION

PRIOR TO ACTIVATING THE NEW TRAFFIC SIGNAL TO STOP-AND-GO MODE AND/OR REMOVING THE EXISTING TRAFFIC SIGNAL FROM SERVICE, ALL ITEMS IN THE PROPOSED SIGNAL PLAN SHALL BE FULLY COMPLETED, (I.E., VEHICLE DETECTION, PEDESTRIAN SIGNAL HEADS, ETC.). IF THERE ARE CONSTRUCTABILITY ISSUES (I.E., ROADWAY WIDENING, ETC.) THAT PREVENT THE SIGNAL FROM BEING COMPLETED PRIOR TO ACTIVATION, IT SHALL BE BROUGHT TO THE ATTENTION OF THE PROJECT ENGINEER AND DISTRICT TRAFFIC ENGINEER. THE DISTRICT TRAFFIC ENGINEER WILL THEN REVIEW, APPROVE OR REJECT PROPOSALS TO ACTIVATE THE TRAFFIC SIGNAL PRIOR TO COMPLETION.

THE CONTRACTOR SHALL NOTIFY THE PROJECT ENGINEER AND DISTRICT TRAFFIC ENGINEER AT LEAST 10 WORKING DAYS PRIOR TO SCHEDULING THE FINAL INSPECTION OF THE SIGNAL INSTALLATION. FINAL INSPECTION IS NOT CONSIDERED COMPLETE UNTIL DESIGNATED DISTRICT TRAFFIC PERSONNEL INSPECT THE TRAFFIC SIGNAL AND ISSUE WRITTEN APPROVAL. IF ISSUES ARE FOUND DURING THE FINAL INSPECTION THAT EFFECT THE SAFETY OF THE TRAVELING PUBLIC AND/OR THE EFFICIENCY OF THE INTERSECTION, THE SIGNAL SHALL NOT BE ACTIVATED ON THE PROPOSED DATE. ANY PUNCH LIST ITEMS THAT ARE FOUND SHALL BE CORRECTED AND REINSPECTED BY DISTRICT TRAFFIC PERSONNEL PRIOR TO FINAL ACCEPTANCE. ODOT FORCES SHALL ONLY ASSUME DAY TO DAY MAINTENANCE OF THE TRAFFIC SIGNAL AFTER FINAL WRITTEN ACCEPTANCE HAS BEEN ISSUED.

MAINTENANCE OF TRAFFIC SIGNAL INSTALLATION

THE CONTRACTOR SHALL BE RESPONSIBLE FOR MAINTAINING TRAFFIC SIGNAL/FLASHER INSTALLATIONS WITHIN THE PROJECT UNDER THE FOLLOWING CONDITIONS:

EXISTING SIGNAL/FLASHER INSTALLATIONS WHICH THE PLANS REQUIRE THE CONTRACTOR TO ADJUST, MODIFY, ADD ONTO OR REMOVE, OR WHICH THE CONTRACTOR ACTUALLY ADJUSTS, MODIFIES OR OTHERWISE DISTURBS. THE CONTRACTOR SHALL BE RESPONSIBLE FOR THE ENTIRE INSTALLATION (AT AN INTERSECTION) FROM THE TIME HIS OPERATIONS FIRST DISTURB THE INSTALLATION UNTIL THE INSTALLATION HAS BEEN SUBSEQUENTLY REMOVED OR MODIFIED AND THE WORK IS ACCEPTED.
NEW OR REUSED SIGNAL/FLASHER INSTALLATIONS OR DEVICES, INSTALLED BY THE CONTRACTOR. THE CONTRACTOR SHALL BE RESPONSIBLE FOR MAINTENANCE OF THESE FROM THE TIME OF INSTALLATION UNTIL THE WORK IS ACCEPTED.
THE CONTRACTOR SHALL CORRECT AS QUICKLY AS POSSIBLE ALL OUTAGES OR MALFUNCTIONS. HE SHALL PROVIDE THE MAINTAINING AGENCY AND THE ENGINEER SUCH ADDRESSES AND PHONE NUMBERS WHERE HIS MAINTENANCE FORCES CAN BE CONTACTED. THE CONTRACTOR SHALL PROVIDE ONE OR MORE PERSONS TO RECEIVE ALL CALLS AND DISPATCH THE NECESSARY MAINTENANCE FORCES TO CORRECT OUTAGES. SUCH A PERSON OR PERSONS MAY BE USED TO PERFORM OTHER DUTIES AS LONG AS PROMPT ATTENTION IS GIVEN TO THESE CALLS AND A PERSON IS READILY AVAILABLE CONTINUOUSLY 24 HOURS A DAY, 7 DAYS A WEEK. ALL LAMP OUTAGES, CABLE OUTAGES, ELECTRICAL FAILURES, EQUIPMENT MALFUNCTIONS AND MISALIGNED SIGNAL HEADS SHALL BE CORRECTED TO THE SATISFACTION OF THE ENGINEER WITH THE SIGNAL BACK TO SERVICE WITHIN FOUR HOURS AFTER THE CONTRACTOR HAS BEEN NOTIFIED OF THE OUTAGE.

IN THE EVENT NEW SIGNALS ARE DAMAGED PRIOR TO ACCEPTANCE, ALL DAMAGED EQUIPMENT EXCEPT POLES AND CONTROL EQUIPMENT SHALL BE REPLACED BY THE CONTRACTOR TO THE SATISFACTION OF THE ENGINEER WITH THE SIGNAL BACK IN SERVICE WITHIN 8 HOURS AFTER THE CONTRACTOR'S NOTIFICATION OF THE OUTAGE. THE CONTRACTOR SHALL ARRANGE FOR FULL TRAFFIC CONTROL UNTIL THE SIGNAL IS BACK IN OPERATION.

IF POLES AND/OR CONTROL EQUIPMENT ARE DAMAGED AND MUST BE REPLACED, THE CONTRACTOR SHALL MAKE TEMPORARY REPAIRS AS NECESSARY TO BRING THE SIGNAL BACK INTO FULL OPERATION WITHIN THE ALLOWED 8-HOUR PERIOD, AND SHALL MAKE PERMANENT REPAIRS OR REPLACEMENT AS SOON THEREAFTER AS POSSIBLE.

NONE OF THE ABOVE SHALL BE CONSTRUED AS COLLECTIVE OR CONSECUTIVE OUTAGE TIME PERIODS AT ANY ONE LOCATION. THAT IS, WHERE MORE THAN ONE OUTAGE OCCURS AT ANY ONE LOCATION THEN THE ALLOTTED TIME LIMIT SHALL BE FOR THE WORST SINGLE OUTAGE.

WHERE OUTAGES ARE THE DIRECT RESULT OF A VEHICLE ACCIDENT THE RESPONSE OF THE CONTRACTOR SHALL BE AS OUTLINED ABOVE. THE CONTRACTOR SHALL BE RESPONSIBLE FOR COLLECTION OF ANY COMPENSATION FOR THIS WORK FROM THOSE PARTIES RESPONSIBLE FOR THE DAMAGE.

WHERE THE CONTRACTOR HAS FAILED TO, OR CANNOT RESPOND TO, AN OUTAGE OR SIGNAL EQUIPMENT MALFUNCTION, AT THESE LOCATIONS WITHIN HIS RESPONSIBILITY, WITHIN PERIODS AS SPECIFIED ABOVE, THE ENGINEER MAY INVOKE THE PROVISIONS OF SECTION 105.15 AND ANY SUBSEQUENT BILLINGS TO THE STATE OR THE CITY OF COLUMBUS FOR POLICE SERVICES AND MAINTENANCE SERVICES BY CITY FORCES SHALL BE DEDUCTED FROM MONIES DUE OR TO BECOME DUE THE CONTRACTOR IN ACCORDANCE WITH PROVISIONS OF SECTION 105.15.

THE CONTRACTOR SHALL PROVIDE THE MAINTENANCE SERVICE ENTIRELY WITH HIS FORCES OR HE MAY CHOOSE TO ENTER INTO A COOPERATIVE UNDERSTANDING WITH THE LOCAL MAINTAINING AGENCY TO PROVIDE THE MAINTENANCE. THE CONTRACTOR SHALL INFORM THE ENGINEER, IN WRITING, OF THE MAINTENANCE METHOD SELECTED.

THE CONTRACTOR SHALL BE RESPONSIBLE FOR ANY DAMAGE TO ANY TRAFFIC SIGNAL COMPONENTS REQUIRED TO BE HANDLED DURING THE RELOCATION OF POLES AND REVISIONS TO THE SIGNAL SYSTEM. WHEN A TRAFFIC SIGNAL MUST BE TAKEN OUT OF SERVICE BY THE CONTRACTOR, DUE TO CONSTRUCTION PROCEDURES, THIS OUTAGE SHALL NOT EXCEED 8 HOURS AND SHALL NOT INCLUDE THE HOURS OF 8AM TO 4PM. ANY SIGNALIZED INTERSECTION, WHERE THE SIGNAL IS OUT OF SERVICE DUE TO CONSTRUCTION PROCEDURES, OR DUE TO AN OUTAGE OR MALFUNCTION OF EQUIPMENT AS DESCRIBED ABOVE, SHALL BE PROTECTED, BY THE CONTRACTOR, BY THE INSTALLATION OF TEMPORARY "STOP" SIGNS.

ANY VEHICULAR TRAFFIC SIGNAL HEAD, EITHER NEW OR EXISTING WHICH WILL BE OUT OF OPERATION SHALL BE COVERED IN THE MANNER DESCRIBED IN 632.25.

THE CONTRACTOR SHALL MAINTAIN COMPLETE RECORDS OF MALFUNCTIONS INCLUDING:

1. TIME OF NOTIFICATION OF MALFUNCTION;

2. TIME OF WORK CREWS ARRIVAL TO CORRECT THE MALFUNCTION;

3. ACTIONS TAKEN TO CORRECT THE MALFUNCTION, INCLUDING A LIST OF PARTS REPAIRED OR REPLACED;

4. A DIAGNOSIS OF REASON FOR THE MALFUNCTION AND PROBABILITY OF REOCCURRENCE;

5. TIME OF COMPLETION OF THE REPAIR AND SYSTEM RESTORED TO FULL SERVICE.

A COPY OF THESE RECORDS SHALL BE PROVIDED TO THE ENGINEER WITHIN THREE (3) WORKING DAYS FOLLOWING COMPLETION OF EACH REPAIR.

ALL COSTS RESULTING FROM THE ABOVE REQUIREMENTS SHALL BE CONSIDERED TO BE INCLUDED IN THE LUMP SUM PRICE BID FOR ITEM 614, MAINTAINING TRAFFIC.

GROUNDING AND BONDING

THE REQUIREMENTS OF THE CONSTRUCTION AND MATERIAL SPECIFICATIONS (C&MS) AND THE TC SERIES OF STANDARD CONSTRUCTION DRAWINGS ARE MODIFIED AS FOLLOWS:

A. ALL METALLIC PARTS CONTAINING ELECTRICAL CONDUCTORS SHALL BE PERMANENTLY JOINED TO FORM AN EFFECTIVE GROUND FAULT CURRENT PATH BACK TO THE GROUNDED CONDUCTOR IN THE POWER SERVICE DISCONNECT SWITCH. PROVIDE AN EQUIPMENT GROUNDING CONDUCTOR IN METALLIC CONDUITS (725.04) IN ADDITION TO THE CONDUCTORS SPECIFIED AND BOND THE CONDUIT TO THIS GROUNDING CONDUCTOR.

B. WHEN AN EQUIPMENT GROUNDING CONDUCTOR IS REQUIRED IN PLASTIC CONDUIT (725.05), THE INSTALLATION SHALL INCLUDE A SEPARATE EQUIPMENT GROUNDING CONDUCTOR IN ADDITION TO THE CONDUCTORS SPECIFIED.

C. METALLIC CONDUIT CARRYING THE LOOP WIRES FROM IN THE PAVEMENT TO THE PULL BOX SPLICE LOCATION WILL ONLY BE BONDED AT THE PULL BOX END, AND WILL NOT CONTAIN AN EQUIPMENT GROUNDING CONDUCTOR.

D. IF MULTIPLE CONDUIT RUNS BEGIN AND END AT THE SAME POINTS, ONLY ONE EQUIPMENT GROUNDING CONDUCTOR IS REQUIRED.

E. IF AN EQUIPMENT GROUNDING CONDUCTOR IS NEEDED IN CONDUIT BETWEEN SIGNALIZED INTERSECTIONS FOR UNDERGROUND INTERCONNECT CABLE, THE GROUNDING SYSTEM FOR EACH SIGNALIZED INTERSECTION WILL BE SEPARATED ABOUT MIDWAY BETWEEN THE INTERSECTIONS.

F. THE MESSENGER WIRE AT SIGNALIZED INTERSECTIONS WILL BE USED AS THE CONDUCTIVE PATH FROM CORNER TO CORNER IF CONDUIT IS NOT PROVIDED UNDER THE ROADWAY. WHEN CONDUIT CONNECTS THE CORNERS OF AN INTERSECTION, AN EQUIPMENT GROUNDING CONDUCTOR SHALL BE USED IN THE CONDUIT.

2. CONDUITS.

A. THE 725.04 CONDUIT SHALL HAVE GROUNDING BUSHINGS INSTALLED AT ALL TERMINATION POINTS. THE BUSHING MATERIAL SHALL BE COMPATIBLE WITH GALVANIZED STEEL CONDUIT AND THE GROUNDING LUG MATERIAL SHALL BE COMPATIBLE FOR USE WITH COPPER WIRE. THREADED OR COMPRESSION TYPE BUSHINGS MAY BE USED.

B. THE 725.05 CONDUIT SHALL HAVE THE INSIDE AND OUTSIDE DIAMETERS OF THE CONDUIT DEBURRED AT ALL TERMINATION POINTS.

C. BOTH ENDS OF METALLIC CONDUIT SHALL BE BONDED TO THE EQUIPMENT GROUNDING CONDUCTOR.

D. METALLIC CONDUIT MAY BE BONDED TO METALLIC BOXES THROUGH THE USE OF CONDUIT FITTINGS UL APPROVED FOR THIS TYPE OF CONNECTION, WITH THE BOX BONDED TO THE EQUIPMENT GROUNDING CONDUCTOR.

3. WIRE FOR GROUNDING AND BONDING.

A. USE INSULATED, COPPER WIRE FOR THE EQUIPMENT GROUNDING CONDUCTOR. BONDING JUMPERS IN BOXES AND ENCLOSURES MAY BE BARE OR INSULATED COPPER WIRE. WIRE SIZE SHALL BE AS FOLLOWS:

I. USE 4 AWG BETWEEN THE POWER SERVICE AND SUPPORTS, POLES, PEDESTALS, CONTROLLER OR FLASHER CABINETS.

II. USE A MINIMUM 8 AWG BETWEEN LOOP DETECTOR PULL BOXES AND THE FIRST CONDUIT THAT REQUIRES A LARGER SIZE AS SPECIFIED IN 3.A.I ABOVE.

III. USE A MINIMUM 8 AWG BETWEEN THE "PREPARE TO STOP WHEN FLASHING" INSTALLATION (INCLUDING SUPPORT) AND THE FIRST CONDUIT THAT REQUIRES A LARGER SIZE AS SPECIFIED IN 3.A.I ABOVE.

IV. THE INSULATION SHALL BE GREEN OR GREEN WITH YELLOW STRIPE(S). FOR 4 AWG OR LARGER, INSULATION MAY ALSO BE BLACK WITH GREEN TAPE/LABELS INSTALLED AT ALL ACCESS POINTS.

B. IN A HIGHWAY LIGHTING SYSTEM, THE EQUIPMENT GROUNDING CONDUCTOR SHALL BE THE SAME WIRE SIZE AS THE DUCT CABLE OR DISTRIBUTION CABLE CIRCUIT CONDUCTORS, WITH THE MINIMUM CONDUCTOR SIZE OF 4 AWG. BONDING JUMPERS WILL BE MINIMUM SIZE 4 AWG.

4. GROUND ROD.

A. A 3/4-INCH SCHEDULE 40 PVC CONDUIT WILL BE USED IN FOUNDATIONS AND CONCRETE WALLS FOR THE GROUNDING CONDUCTOR (GROUND WIRE) RACEWAY TO THE GROUND ROD. SHOULD METALLIC CONDUIT BE USED, BOTH ENDS OF THE CONDUIT SHALL BE BONDED TO THE GROUNDING CONDUCTOR.

B. THE TYPICAL GROUNDING CONDUCTOR (GROUND WIRE) SHALL BE 4 AWG INSULATED, COPPER.

5. THE GREEN CONDUCTOR IN SIGNAL CABLES (CONDUCTOR #4) SHALL NOT BE USED TO SUPPLY POWER TO A SIGNAL INDICATION. IT WILL BE CONNECTED TO THE SIGNAL BODY AS AN EQUIPMENT GROUND IN ALUMINUM HEADS AND IT WILL BE UNUSED IN PLASTIC HEADS. UNUSED CONDUCTORS SHALL BE GROUNDED IN THE CABINET. TYPICAL USE OF CONDUCTORS IS AS FOLLOWS:

COND. NO	COLOR	VEHICLE SIGNAL	PEDESTRIAN SIGNAL
1	BLACK	GREEN BALL	#1 WALK
2	WHITE	AC NEUTRAL	AC NEUTRAL
3	RED	RED BALL	#1 DW/FDW
4	GREEN	EQUIP. GROUND	EQUIP. GROUND
5	ORANGE	YELLOW BALL	#2 DW/FDW
6	BLUE	GREEN ARROW	#2 WALK
7	WHITE/BLACK STRIPE	YELLOW ARROW	NOT USED

6. POWER SERVICE AND DISCONNECT SWITCH.

A. AT THE POWER SERVICE LOCATION, THE GROUNDING CONDUCTOR (GROUND WIRE) FROM THE DISCONNECT SWITCH NEUTRAL (AC-) BAR TO THE GROUND ROD SHALL BE A CONTINUOUS, UNSPLICED CONDUCTOR. IF SPLICED, IT SHALL BE AN EXOTHERMIC WELD BUTT SPLICE.

B. THE SERVICE NEUTRAL (AC-) SHALL ONLY BE CONNECTED TO GROUND AT THE PRIMARY POWER SERVICE DISCONNECT SWITCH.

I. NEMA CONTROLLER CABINETS: IF A POWER SERVICE DISCONNECT SWITCH IS LOCATED BEFORE THE CONTROLLER CABINET, THE NEUTRAL (AC-) AND THE GROUNDING BARS IN THE CONTROLLER CABINET SHALL NOT BE CONNECTED TOGETHER AS SHOWN IN NEMA TS-2, FIGURE 5-4.

II. IF SECONDARY DISCONNECT SWITCHES ARE CONNECTED AFTER THE PRIMARY DISCONNECT SWITCH, THE NEUTRAL (AC-) SHALL ONLY BE GROUNDED AT THE PRIMARY SWITCH. EQUIPMENT GROUNDING CONDUCTORS SHALL BE BROUGHT TO THE PRIMARY SWITCH, BUT SHALL BE GROUNDED AT BOTH SECONDARY AND PRIMARY SWITCHES.

7. PAYMENT - ALL MATERIALS AND WORK REQUIRED TO COMPLETE THE EFFECTIVE GROUND FAULT CURRENT PATH SYSTEM ARE INCIDENTAL TO THE CONDUCTORS INSTALLED BY CONTRACT.

DETECTION MAINTENANCE

IF THE LOSS OF VEHICLE DETECTION IS KNOWN PRIOR TO THE START OF CONSTRUCTION, IT SHALL BE DISCUSSED AT THE PRECONSTRUCTION MEETING. AT SUCH TIME, THE DISTRICT TRAFFIC ENGINEER SHALL ADVISE THE PROJECT ENGINEER AND CONTRACTOR ON THE APPROPRIATE ACTION TO RECTIFY ANY LOSS OF VEHICLE DETECTION. THIS MAY INCLUDE PLACING THE TRAFFIC SIGNAL ON MINIMUM OR MAXIMUM RECALL, MODIFYING THE MINIMUM GREEN TIMES, AND REMOVING THE MALFUNCTIONING DETECTION FROM SERVICE. WHERE NON-INTRUSIVE DETECTION (I.E. VIDEO, RADAR) ALREADY EXISTS, THE CONTRACTOR SHALL INSURE THAT DETECTION IS OPERATING AND MAINTAINED BY RECONFIGURING THE DETECTION UNITS ACCORDINGLY DURING ALL CONSTRUCTION PHASES. THIS IS TO AVOID THE SIGNAL FROM MAXING OUT THE EFFECTED SIGNAL PHASE AND CREATING UNNECESSARY DELAYS.

LOCATIONS WHERE NON-INTRUSIVE DETECTION IS PROPOSED AND THE EXISTING VEHICLE DETECTION IS TO BE ABANDON, THE NON-INTRUSIVE VEHICLE DETECTION SHALL BE INSTALLED, CONFIGURED AND MADE FULLY FUNCTIONAL PRIOR TO THE EXISTING DETECTION BEING DISABLED. THE CONTRACTOR SHALL CONTINUE TO MAINTAIN AND MODIFY THE DETECTION UNTIL FINAL ACCEPTANCE OF THE TRAFFIC SIGNAL. THIS IS TO ENSURE VEHICLE DETECTION REMAINS FULLY FUNCTIONAL THROUGHOUT CONSTRUCTION. IF VEHICLE DETECTION BECOMES UNEXPECTEDLY DISABLED, REQUIRES MODIFICATION, OR IS SCHEDULED TO BE TEMPORARILY REMOVED DURING THE CONSTRUCTION PROJECT, THE CONTRACTOR SHALL IMMEDIATELY NOTIFY THE PROJECT ENGINEER AND DISTRICT TRAFFIC ENGINEER.

WORK INSPECTION

THE CONTRACTOR SHALL PROVIDE THE PROJECT ENGINEER AND DISTRICT TRAFFIC ENGINEER WITH 72-HOUR NOTICE OF ANY SIGNAL WORK TO BE PERFORMED AT THE INTERSECTION SITE(S) SO THAT INSPECTION SERVICES CAN BE SUPPLIED.

CALCULATED CCW CHECKED JRS

TRAFFIC SIGNAL NOTES

FRA-270-51.50

399
554

x:\Projects\2013\1321\1010\FRA\92616\signals\sheets\92616CN001.dgn 12/7/2022 3:00:50 PM cwong

GUARANTEE

THE CONTRACTOR SHALL GUARANTEE THAT THE TRAFFIC CONTROL SYSTEM INSTALLED AS PART OF THIS CONTRACT SHALL OPERATE SATISFACTORILY FOR A PERIOD OF 120 DAYS FOLLOWING COMPLETION OF THE 10-DAY PERFORMANCE TEST. IN THE EVENT OF UNSATISFACTORY OPERATION, THE CONTRACTOR SHALL CORRECT FAULTY INSTALLATIONS, MAKE REPAIRS AND REPLACE DEFECTIVE PARTS WITH NEW PARTS OF EQUAL OR BETTER QUALITY.

EQUIPMENT, MATERIAL AND LABOR COSTS INCURRED IN CORRECTING AN UNSATISFACTORY OPERATION SHALL BE BORNE BY THE CONTRACTOR.

THE GUARANTEE SHALL COVER THE FOLLOWING ITEMS OF THE TRAFFIC CONTROL SYSTEM: CONTROLLER, CABINET, UNINTERRUPTIBLE POWER SUPPLY, VEHICLE DETECTION EQUIPMENT, LED LAMP UNITS, NETWORK AND COMMUNICATION/INTERCONNECT EQUIPMENT.

CUSTOMARY MANUFACTURER'S GUARANTEES FOR THE FOREGOING ITEMS SHALL BE TURNED OVER TO THE STATE OR THE MAINTAINING AGENCY FOLLOWING ACCEPTANCE OF THE EQUIPMENT.

THE COST OF GUARANTEEING THE TRAFFIC CONTROL SYSTEM WILL BE INCIDENTAL TO AND INCLUDED IN THE CONTRACT UNIT PRICE OF THE VARIOUS ITEMS MAKING UP THE SYSTEM.

ITEM 633 - CABINET, TYPE TS2, AS PER PLAN:

THE CABINET SHALL BE FURNISHED AND INSTALLED ACCORDING TO CMS 633 AND 733, BE LISTED ON THE TRAFFIC AUTHORIZED PRODUCTS LIST (TAP). THE EQUIPMENT PROVIDED AS PART OF THIS CONTRACT SHALL BE THE LATEST MODEL, CURRENTLY UNDER PRODUCTION AND NEW. THE CATALOG NUMBER FOR THE GROUND MOUNTED P CABINET SHALL BE EL 720 SIZE 7 (SIZE R) WITH A MINIMUM OF THREE SHELVES. THE CABINET SHALL BE ALUMINUM WITH THE NATURAL ALUMINUM FINISH INSIDE AND OUTSIDE. THE LOAD BAY SHALL BE THE TF5016 OR NEWER, WITH 16 LOAD SWITCH POSITIONS.PROVIDE ONLY THE EXACT NUMBER OF LOAD SWITCHES REQUIRED. EACH LOAD SWITCH SHALL HAVE LIGHT EMITTING DIODES (LEDS) FOR THE CONTROLLER OUTPUT AND LOAD SWITCH OUTPUT. ALSO PROVIDE 8 FLASH RELAY POSITIONS (BUT ONLY SUPPLY THE EXACT NUMBER OF RELAYS NEEDED FOR EACH SPECIFIC INTERSECTION), 1 NEMA 2-CIRCUIT FLASHER, AND AN MMU MONITOR. EACH CABINET SHALL COME EQUIPPED WITH TWO 16-CHANNEL CABINET DETECTOR RACKS (CDR) INCLUDING BUS INTERFACE UNITS (BIU). THE LOOP DETECTOR TERMINATION PANEL FOR THE SECOND DETECTOR RACK SHALL BE OMITTED. WHERE LOOP DETECTORS ARE SPECIFIED, THE CABINET SHALL INCLUDE THE EXACT NUMBER OF FOUR CHANNEL DETECTOR CARDS WITH SOFTWARE REQUIRED FOR EACH INTERSECTION. THE CABINET SHALL BE EQUIPPED WITH A CABINET POWER SUPPLY (CPS). THE CABINET SHALL BE WIRED TO ALLOW THE USE OF EVP CONFIRMATION LIGHTS. THE POLICE PANEL ON THE OUTSIDE OF THE CABINET DOOR SHALL HAVE A FLASH SWITCH, A SWITCH FOR AUTOMATIC/MANUAL OPERATION, SIGNAL ON/OFF SWITCH AND A MANUAL PUSHBUTTON WITH A MINIMUM CORD LENGTH OF 10 FEET. THE TECHNICIAN PANEL ON THE INSIDE OF THE CABINET DOOR SHALL INCLUDE A FLASH SWITCH, A STOP TIME SWITCH, AND AN EQUIPMENT ON/OFF SWITCH. A CABINET DOOR OPEN SWITCH AND A CABINET LIGHT ON / OFF SWITCH SHALL ALSO BE SUPPLIED.

THE CONTROLLER CABINET SHALL ALSO INCLUDE:
A.SLIDE-OUT LAPTOP SHELF
B.INTERIOR, UNDERSHELF LED CABINET LIGHTING, INCLUDING A MINIMUM OF 2 PANELS OF 6 HIGH-INTENSITY LED$^{5}/_{32}$S EACH AND A DOOR-ACTIVATED SWITCH. THE LED PANELS SHALL BE MOUNTED IN LOCATIONS TO MAXIMIZE LIGHT ON THE CABINET EQUIPMENT.
C.A GOOSENECK/ADJUSTABLE LIGHT FIXTURE WITH AN LED LAMP. THE ADJUSTABLE LIGHT FIXTURE SHALL BE MOUNTED ON THE LOWER RIGHT SIDE OF THE CONTROLLER CABINET.
D.A MINIMUM OF TWO (2) GFCI PROTECTED RECEPTACLES
E.A MINIMUM OF SIX (6) SURGE PROTECTED (NON-GFCI)RECEPTACLES

CONTROLLER CABINET LABELING TO IDENTIFY THE WIRING AND FUNCTION
DETECTOR LEAD-IN CABLE:
PHASE NUMBER SERVICE, DIRECTION, MOVEMENT TYPE, AND LOOP PLAN NUMBER.

SIGNAL HEAD FIELD WIRING:
PHASE NUMBER, DIRECTION, MOVEMENT TYPE, AND COLOR (RED, YELLOW, GREEN, YELLOW ARROW, GREEN ARROW) OR PEDESTRIAN MOVEMENT.

THE MALFUNCTION MANAGEMENT UNIT SHALL BE MANUFACTURED BY EDI AND HAVE A RJ-45 PORT FOR PC/NETWORK COMMUNICATIONS.

EACH CONDUIT ENTRANCE TO THE CABINET SHALL BE SEALED WITH A RUBBER PIPE/CONDUIT SEAL GASKET.THE SEAL SHALL BE OF A MATERIAL AND TYPE TIGHTLY FITTING AND ABLE TO SEAL OUT WATER, INSECTS, RODENTS, AND DIRT.THE SEAL SHALL BE EASILY REMOVED FOR SERVICE INSTALLATIONS OR CABLE REPLACEMENTS.

THE CONTRACTOR SHALL PROVIDE THE CABINET WIRING DIAGRAM/PLANS IN .PDF FORMAT TO ODOT DISTRICT 6 TRAFFIC.

PAYMENT FOR ITEM 633 13#32 CABINET, TYPE TS2, AS PER PLAN, WILL BE AT THE CONTRACT BID PRICE COMPLETE AND IN PLACE AND CONNECTIONS TESTED AND ACCEPTED.

(DESIGNER NOTE: ITEM 633E65511)

ITEM 633 - CONTROLLER ITEM, MISC.: UNMANAGED ETHERNET SWITCH

THIS ITEM SHALL INCLUDE THE FURNISHING OF A COMTROL ROCKETLINX ES8105 ETHERNET SWITCH WITH ALL POWER SUPPLIES NECESSARY TO FUNCTION.

ITEM 633 UNINTERRUPTIBLE POWER SUPPLY (UPS), 1000 WATT, AS PER PLAN

IN ADDITION TO THE REQUIREMENTS OF C&MS 633 AND 733, POLE ATTACHMENT HARDWARE WILL BE INCLUDED FOR POLE-MOUNTED CABINETS, AND A CABINET RISER (8-INCH MINIMUM) AND ANCHOR BOLTS WILL BE PROVIDED FOR BASE-MOUNTED CABINETS. BEFORE PERFORMING THE WORK, THE CONTRACTOR, THE DISTRICT TRAFFIC ENGINEER AND THE PROJECT ENGINEER WILL PERFORM A SITE INSPECTION TO ESTABLISH THE LOCATION OF THE UPS CABINET AND FOUNDATION. THE UPS CABINET SHALL INCLUDE A GENERATOR POWER PANEL WITH A HEAVY-DUTY POWER RELAY VERSUS THE LINE VOLTAGE GENERATOR SWITCH. THE GENERATOR INLET SHALL BE A RECESSED PANEL WITH A DOOR THAT IS FLUSH WITH THE EXTERNAL SIDE OF THE UPS CABINET. IT SHALL INCLUDE A RECESSED PLUG, AUTOMATIC TRANSFER SWITCH AND A DOOR THAT SECURELY CLOSES OVER THE POWER CORD.

THE CABINET SHALL HAVE A DOOR STOP MECHANISM AND THERMOSTATICALLY CONTROLLED FAN.

THE CABINET SHALL INCLUDE A BATTERY BALANCING DEVICE THAT REGULATES THE BATTERIES AND OPTIMIZES PERFORMANCE.

AFTER FOUR (4) HOURS OF BATTERY RUNTIME, THE SYSTEM SHALL BE PROGRAMMED TO SWITCH THE INTERSECTION FROM FULL OPERATION TO CONTROLLER AUTOMATIC FLASH OPERATION THROUGH THE MONITOR. THE CONTROLLER SHALL BE PROGRAMMED SO THAT FLASH OPERATION SHALL BEGIN ONCE THE INTERSECTION RUNS MINOR STREET GREEN (TYP. PH. 4 &8), ALL-RED CLEARANCE, AND THEN FLASH OPERATION.

THE UPS OUTPUT NOTIFICATIONS FOR ON BATTERY, BATTERY 2-HOUR TIMER, AND LOW BATTERY SHALL BE WIRED INTO THE TRAFFIC SIGNAL CABINET BACK PANEL OR THROUGH THE CONTROLLER WITH A C11 TO PROVIDE SPECIAL STATUS ALARMS FOR EACH OUTPUT INTO THE SIGNAL CONTROLLER.

THIS ITEM SHALL INCLUDE A RED LED STATUS INDICATOR LAMP TO ALLOW MAINTENANCE PERSONNEL AND LAW ENFORCEMENT TO QUICKLY ASSESS WHETHER A TRAFFIC SIGNAL CABINET IS BEING POWERED BY A UPS. THE LED HOUSING SHALL BE NEMA 4X, IP65 OR IP66, RATED FOR OUTDOOR USE AND BE TAMPER/ SHATTER RESISTANT. IT SHALL BE A DOMED ENCLOSURE CONTAINING A RED LENS WITH LED THAT IS VISIBLE FROM 100 FOOT MINIMUM. THE ENCLOSURE AND LED MODULE SHOULD BE PLACED ON THE SIDE OF THE UPS CABINET FACING TOWARDS THE MAINLINE ROADWAY AND SEALED FROM WATER INTRUSION. IT SHOULD BE WIRED USING MINIMUM 20GA STRANDED, INSULATED HOOKUP WIRE TO THE STATUS RELAY OUTPUTS OF THE UPS. THE WIRES SHALL BE TERMINATED BY LUGS AT THE DISPLAY END AND PERMANENTLY LABELED "BACKUP POWER STATUS DISPLAY," WITH WIRE POLARITY INDICATED. THE RED LED SHALL ONLY ILLUMINATE TO INDICATE THE CABINET IS OPERATING UNDER UPS BACKUP POWER (THE "BACKUP" OPERATING CONDITION). THIS ITEM INCLUDES PROGRAMMING THE UPS STATUS RELAY OUTPUTS TO PRODUCE THE LAMP STATUS DISPLAYS. THESE STATUS DISPLAYS WILL BE SOLID 100% DUTY CYCLE (NOT FLASHING) DISPLAYS. THE OPERATING VOLTAGE OF THE LED LAMP SHALL BE 120V AC UNLESS OTHERWISE INDICATED.

ITEM 809 ADVANCE RADAR DETECTION, AS PER PLAN

THIS ITEM OF WORK SHALL CONSIST OF FURNISHING AND INSTALLING A WAVETRONIX SMARTSENSOR ADVANCE DETECTION UNIT (MODEL SS-200E). THE DETECTION UNIT SHALL INCLUDE THE FOLLOWING:

1. POWER SHALL BE PROVIDED FROM THE TRAFFIC CABINET.

2. ALL REQUIRED INPUTS CARDS SHALL BE INCLUDED IN THE TRAFFIC CABINET AND SHALL BE COMPATIBLE WITH CALTRANS, NEMA TSI AND NEMA TS2 DETECTOR RACKS. THE CARDS SHALL PROVIDE TRUE PRESENCE DETECTOR CALLS OR CONTACT CLOSURE TO THE TRAFFIC CONTROLLER.

3. THE UNIT SHALL BE MOUNTED DIRECTLY TO A POLE OR MAST ARM, AS RECOMMENDED BY THE MANUFACTURER. CABLE(S) SHALL BE PROVIDED AS REQUIRED AND RECOMMENDED BY THE MANUFACTURER.

4. SURGE PROTECTION DEVICES, AS RECOMMENDED BY THE MANUFACTURER SHALL BE INCLUDED BOTH AT THE POLE WHERE THE UNIT IS LOCATED TO PROTECT THE UNIT AND IN THE TRAFFIC CABINET TO PROTECT THE CABINET ELECTRONICS.

5. THE MANUFACTURER'S REPRESENTATIVE SHALL BE ON SITE DURING INSTALLATION AND TESTING AND SHALL PROVIDE ONSITE TRAINING ON THE SETUP, OPERATION AND MAINTENANCE OF THE UNIT.

6. A SERIAL TO ETHERNET COMMUNICATIONS MODULE AND ETHERNET CABLE (MINIMUM 7 FEET).

7. THE POWER SUPPLY AND COMMUNICATION MODULES SHALL BE SECURED TO A SINGLE PANEL THAT CAN BE MOUNTED INTERIOR TO THE TRAFFIC CABINET. THE PANEL SHALL INCLUDE MODULAR-PLUG STYLE CONNECTIONS FOR UP TO FOUR (4) SENSOR CABLES. ADDITIONAL SENSORS MAY BE HARD-WIRED TO THE COMMUNICATION MODULES, AS NECESSARY.

8. THE CONTRACTOR SHALL INSTALL THE RADAR DETECTION PRIOR TO MILLING/DISABLING EXISTING LOOPS.

9. THE INSTALLATION SHALL INCLUDE ALL CONTROLLER PROGRAMMING FOR COMPLETE INSTALLATION, WHICH INCLUDES MODIFICATIONS FOR REMOVAL OF EXISTING DETECTION.

PAYMENT FOR ITEM 809 ADVANCE RADAR DETECTION, AS PER PLAN SHALL BE MADE AT THE CONTRACT UNIT PRICE FOR EACH UNIT, COMPLETE AND IN PLACE INCLUDING ALL REQUIRED CABINET HARDWARE, MOUNTING BRACKETS, CABLES, CONDUIT, CONNECTIONS TESTED AND ACCEPTED, AND ANY OTHER NECESSARY HARDWARE TO ESTABLISH A FULLY FUNCTIONAL DETECTION SYSTEM.

ITEM 809 STOP-LINE RADAR DETECTION, AS PER PLAN

THIS ITEM OF WORK SHALL CONSIST OF FURNISHING AND INSTALLING A WAVETRONIX SMARTSENSOR MATRIX DETECTION UNIT. THE DETECTION UNIT SHALL INCLUDE THE FOLLOWING:

1. POWER SHALL BE PROVIDED FROM THE TRAFFIC CABINET.

2. ALL REQUIRED INPUTS CARDS SHALL BE INCLUDED IN THE TRAFFIC CABINET AND SHALL BE COMPATIBLE WITH CALTRANS, NEMA TSI AND NEMA TS2 DETECTOR RACKS. THE CARDS SHALL PROVIDE TRUE PRESENCE DETECTOR CALLS OR CONTACT CLOSURE TO THE TRAFFIC CONTROLLER.

3. THE UNIT SHALL BE MOUNTED DIRECTLY TO A POLE OR MAST ARM, AS RECOMMENDED BY THE MANUFACTURER. CABLE(S) SHALL BE PROVIDED AS REQUIRED AND RECOMMENDED BY THE MANUFACTURER.

4. SURGE PROTECTION DEVICES, AS RECOMMENDED BY THE MANUFACTURER SHALL BE INCLUDED BOTH AT THE POLE WHERE THE UNIT IS LOCATED TO PROTECT THE UNIT AND IN THE TRAFFIC CABINET TO PROTECT THE CABINET ELECTRONICS.

5. THE MANUFACTURER'S REPRESENTATIVE SHALL BE ON SITE DURING INSTALLATION AND TESTING AND SHALL PROVIDE ONSITE TRAINING ON THE SETUP, OPERATION AND MAINTENANCE OF THE UNIT.

6. A SERIAL TO ETHERNET COMMUNICATIONS MODULE AND ETHERNET CABLE (MINIMUM 7 FEET).

7. THE POWER SUPPLY AND COMMUNICATION MODULES SHALL BE SECURED TO A SINGLE PANEL THAT CAN BE MOUNTED INTERIOR TO THE TRAFFIC CABINET. THE PANEL SHALL INCLUDE MODULAR-PLUG STYLE CONNECTIONS FOR UP TO FOUR (4) SENSOR CABLES. ADDITIONAL SENSORS MAY BE HARD-WIRED TO THE COMMUNICATION MODULES, AS NECESSARY.

8. THE CONTRACTOR SHALL INSTALL THE RADAR DETECTION PRIOR TO MILLING/DISABLING EXISTING LOOPS.

9. THE INSTALLATION SHALL INCLUDE ALL CONTROLLER PROGRAMMING FOR COMPLETE INSTALLATION, WHICH INCLUDES MODIFICATIONS FOR REMOVAL OF EXISTING DETECTION.

PAYMENT FOR ITEM 809 STOP-LINE RADAR DETECTION, AS PER PLAN SHALL BE MADE AT THE CONTRACT UNIT PRICE FOR EACH UNIT, COMPLETE AND IN PLACE INCLUDING ALL REQUIRED CABINET HARDWARE, MOUNTING BRACKETS, CABLES, CONDUIT AND CONNECTIONS TESTED AND ACCEPTED.

ITEM 633 - CONTROLLER WORKPAD, AS PER PLAN
ITEM 633 - CABINET FOUNDATION, AS PER PLAN

CABINET & WORK PAD DETAIL

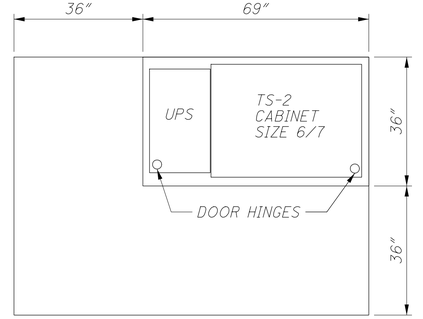

PLAN VIEW

CABINET FOUNDATION DETAIL

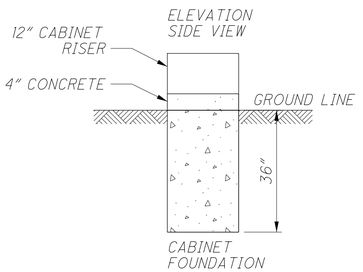

NOTES:

1) THE SIZE OF THE UPS FOUNDATION MAY VARY BASED ON THE CABINET SIZE PROVIDED.

2) UPS FOUNDATION ELEVATION SHOULD MATCH CABINET FOUNDATION ELEVATION.

3) THE UPS CABINET SHALL BE MOUNTED FLUSH UP AGAINST THE SIGNAL CABINET AND SEALED.

4) CONDUIT AND WIRING FROM THE SIGNAL CABINET TO THE UPS SHALL BE INSTALLED THROUGH THE CABINET RISER.

CALCULATED CCW CHECKED JRS

TRAFFIC SIGNAL NOTES

FRA-270-51.50

x:\Projects\2013\1321\1010\FRA\92616\signals\sheets\92616CN002.dgn 12/7/2022 3:00:51 PM cwong

ITEM 625 ARC FLASH CALCULATIONS AND LABEL

THE CONTRACTOR SHALL SATISFY THE REQUIREMENTS OF ODOT SUPPLEMENTAL SPECIFICATION 825 FOR EACH OF THE NEW LIGHTING CONTROL CENTER INDICATED IN THE PLANS. THE CONTRACTOR MAY BE ABLE TO OBTAIN LABELS FOR ODOT MAINTAINED INSTALLATIONS FROM THE ODOT SIGN SHOP, 1606 WEST BROAD STREET, COLUMBUS, OH 43223. FOR NON-ODOT MAINTAINED INSTALLATIONS, THE CONTRACTOR IS RESPONSIBLE FOR OBTAINING THE LABEL, MADE FROM "ENGINEER GRADE" SIGN SHEETING OR AN EQUIVALENT COMMERCIAL LABEL MATERIAL. THE ODOT OFFICE OF ROADWAY ENGINEERING HAS AN EXCEL SPREADSHEET, AVAILABLE UPON REQUEST, TO ASSIST WITH MAKING AND DOCUMENTING THE REQUIRED CALCULATIONS. METHOD OF MEASUREMENT SHALL BE PER 825.06.

ITEM 632 - POWER SERVICE

THE CONTRACTOR SHALL CONTACT THE METER SECTION OF AEP FOR INFORMATION REGARDING THE METER BASE INSTALLATION PRIOR TO ORDERING POLES. THE CONTRACTOR WILL BE RESPONSIBLE FOR REQUESTING AND SCHEDULING ANY INSPECTIONS THE POWER COMPANY MAY REQUIRE FOR THE POWER SERVICE HOOK UP. THE CONTRACTOR SHALL BE RESPONSIBLE TO CONTACT THE POWER COMPANY FOR THE ELECTRICAL SERVICE CONNECTION. UNDER NO CIRCUMSTANCES SHALL THE CONTRACTROR SPLICE POWER CABLE INTO THE POWER COMPANY'S CIRCUITS.

THE VOLTAGE SUPPLIED SHALL BE NOMINALLY 120/240 VOLTS. THE CONTRACTOR IS RESPONSIBLE FOR OBTAINING ANY NECESSARY PERMITS AND THE PAYING OF ALL FEES WITH THE EXCEPTION OF NORMAL MONTHLY ENERGY CHARGES. WHERE THERE IS AN EXISTING TRAFFIC SIGNAL THAT IS BEING REPLACED, THE CONTRACTOR SHALL COORDINATE WITH THE POWER COMPANY TO CONTINUE BILLING ON THE EXISTING DISTRICT 6 ACCOUNT. WHERE A NEW SIGNAL IS BEING INSTALLED, THE CONTRACTOR SHALL ESTABLISH THE ACCOUNT IN THE DISTRICT'S NAME FROM THE ONSET.

ITEM 809 - ATC V6.24 CONTROLLER, AS PER PLAN:

THE CONTROLLER UNIT SHALL BE FURNISHED AND INSTALLED PER SS 809 AND BE LISTED ON THE TRAFFIC AUTHORIZED PRODUCTS (TAP) LIST.

THE CONTROLLER SHALL BE AN ECONOLITE COBALT AND COMPATIBLE WITH THE CABINET TYPE BEING INSTALLED.

CALCULATED CCW
CHECKED JRS

TRAFFIC SIGNAL NOTES

FRA-270-51.50

401
554

X:\Projects\2013\1321\1010\FRA\92616\signals\sheets\92616CN002A.dgn 12/29/2022 2:58:10 PM sbarnard

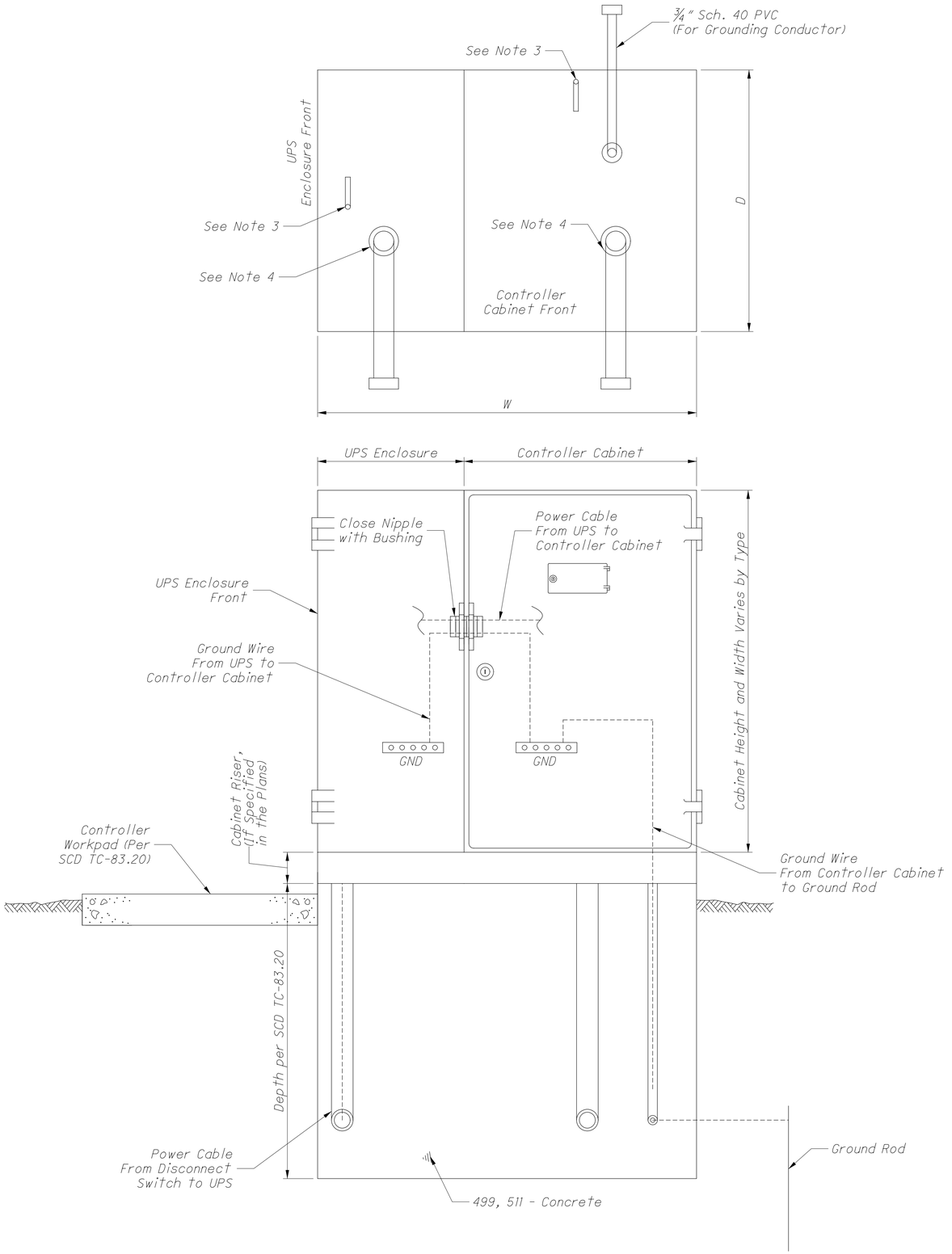

NOTES:

1. The Uninterruptible Power Supply (UPS) enclosure shall be mounted flush up against the traffic signal cabinet and sealed with silicone. The Contractor shall be responsible for providing the necessary power cable between the UPS unit and signal cabinet.
2. The UPS should be placed on the opposite side of the pull box on a 332/336 cabinet (per Standard Construction Drawing (SCD) TC-83.20). The UPS placement for a NEMA cabinet varies, placement should provide adequate access with respect to slope, guardrail spacing, etc.
3. The size, number, and location of anchor bolts shall be in accordance with the manufacturer's recommendations.
4. The size, number, and orientation of conduit ells shall be as shown in the plan, except that a ¾" schedule 40 PVC shall be installed in each foundation.
5. 1/2" preformed joint filler as per CMS 705.03 shall be used between foundations and adjacent paved areas.
6. See SCD TC-83.20 for further details.

TYPE	W (IN.)	D (IN.)	FOUNDATION CONCRETE (CU. YD.)
TS-1	60	24	1.23
TS-2	70	36	2.16
2070/170	50	36	1.54

OFFICE OF ROADWAY ENGINEERING

DESIGNED XXX REVIEWED XXX

REVISION DATE 07-18-2014 CHECKED CHECKED

PLAN INSERT SHEET

UNINTERRUPTIBLE POWER SUPPLY (UPS) AND CONTROLLER CABINET FOUNDATION

PIS 208320

1 / 1

402
554

403 554	1 / 1	PIS 208340	PLAN INSERT SHEET BREAKAWAY TRANSFORMER BASE CONNECTOR DESIGN	REVISION DATE 01-16-2015 CHECKED CHECKED	DESIGNED XXX REVIEWED XXX	OFFICE OF ROADWAY ENGINEERING

TRAFFIC SIGNAL CONFIGURATION

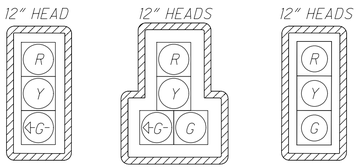

BACKPLATES IN ACCORDANCE WITH ODOT CMS 732.22

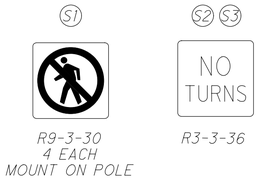

LEGEND:

- = EXISTING UTILITY POLE
- = EXISTING LIGHT POLE
- = EXISTING MANHOLE
- = EXISTING WATER VALVE
- = EXISTING GAS VALVE
- = PROPOSED CATCH BASIN
- = EXISTING SIGNAL POLE FOUNDATION
- = PROPOSED SIGNAL POLE FOUNDATION
- = PROPOSED TRAFFIC PULL BOX
- = EXISTING OR PROPOSED SIGN
- = PROPOSED CONTROLLER & UPS WITH WORKPAD
- = PROPOSED TRAFFIC SIGNAL HEAD
- = PROPOSED DILEMMA ZONE RADAR DETECTION UNIT
- = PROPOSED STOP BAR RADAR DETECTION UNIT
- = PROPOSED DETECTION ZONE
- = PROPOSED DETECTOR COUNT

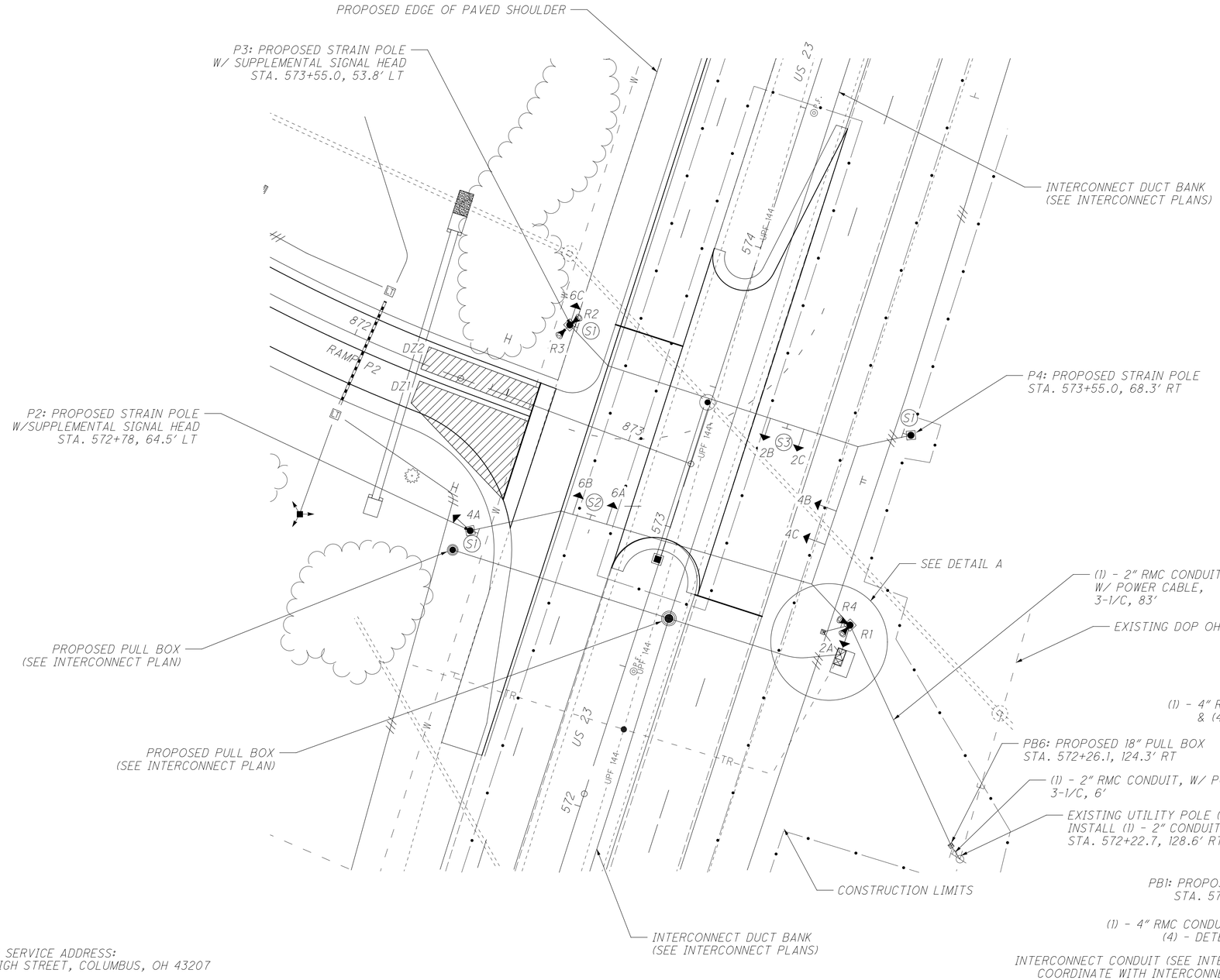

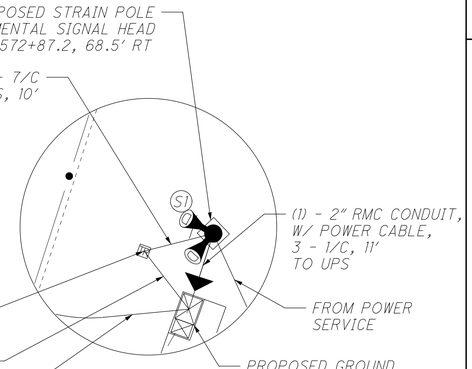

POWER SERVICE ADDRESS:
4312 HIGH STREET, COLUMBUS, OH 43207

HORIZONTAL SCALE IN FEET
0 10 20 40

CALCULATED CCW
CHECKED JRS

TRAFFIC SIGNAL PLAN
US 23 AT IR-270 EASTBOUND OFF-RAMP

FRA-270-51.50

404
554

X:\Projects\2013\1321\1010\FRA\92616\signals\sheets\92616CP001.dgn 12/7/2022 3:01:02 PM cwong

FIELD WIRING HOOK-UP CHART

SIGNAL HEAD #	INDICATION	FIELD TERMINAL	FLASH
2A, 2B, & 2C (NB)	R	ϕ2 R	R
	Y	ϕ2 Y	
	G	ϕ2 G	
4A (EB)	R	ϕ4 R	R
	Y	ϕ4 Y	
	~~G~~	ϕ4 G	
4B, 4C (EB)	R	ϕ4 R	R
	Y	ϕ4 Y	
	G	ϕ4 G	
	~~G~~	ϕ4 G	
6A, 6B, & 6C (SB)	R	ϕ6 R	R
	Y	ϕ6 Y	
	G	ϕ6 G	

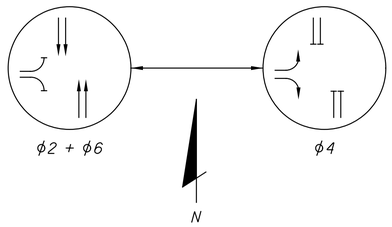

PHASING DIAGRAM

MAINTENANCE/OWNER:

ODOT WILL OWN AND MAINTAIN THIS SIGNAL.

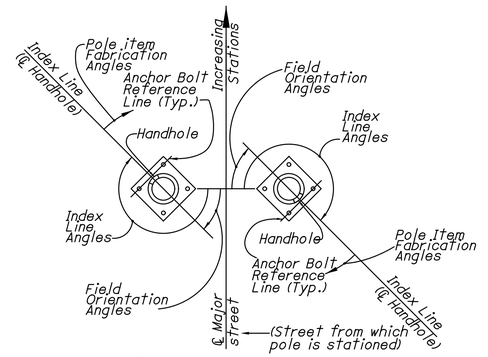

NOTES:
All angles measured clockwise.
Index line goes through the center of the handhole.

TYPICAL STRAIN POLE ORIENTATION DETAIL
NOT TO SCALE

INTERSECTION TIMING								
	1	2	3	4	5	6	7	8
DIRECTION	-	NB	-	EB	-	SB	-	-
MIN GREEN	-	20	-	10	-	20	-	-
PASSAGE	-	1.0*	-	3.0*	-	1.0*	-	-
MAX 1	-	45	-	40	-	45	-	-
MAX 2	-	45	-	40	-	45	-	-
YELLOW	-	5.5	-	3.0	-	5.5	-	-
ALL RED	-	1.0	-	2.0	-	1.0	-	-
WALK	-	-	-	-	-	-	-	-
PED CLEAR	-	-	-	-	-	-	-	-
INITIALIZE	-	G	-	-	-	G	-	-
LOCKING MEMORY	OFF	ON	OFF	OFF	OFF	ON	OFF	OFF
VEH RECALL	OFF	ON	OFF	OFF	OFF	ON	OFF	OFF
PED RECALL	OFF	OFF	OFF	OFF	OFF	OFF	OFF	OFF

* PROGRAM PER RADAR ADVANCED DETECTOR MANUFACTURER'S RECOMMENDATIONS

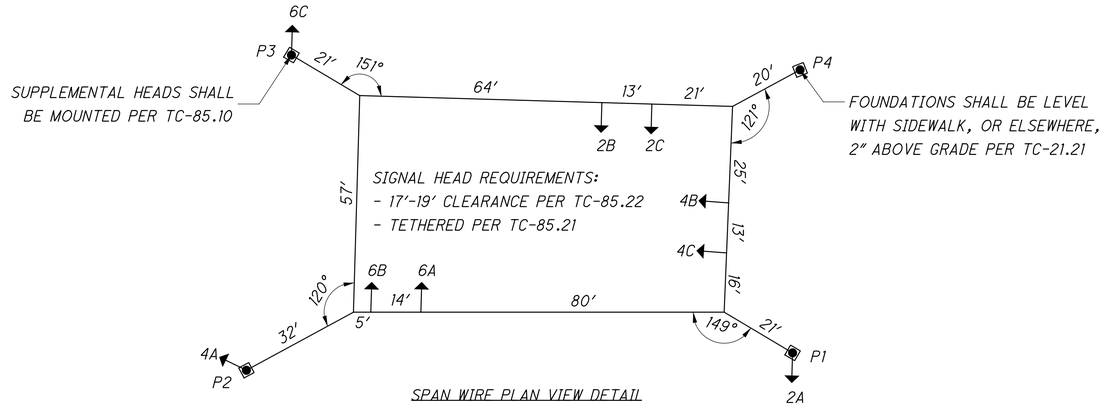

SPAN WIRE PLAN VIEW DETAIL

RADAR DETECTION CHART							
DETECTOR	DETECTOR TYPE	MOVEMENT	DETECTION ZONE	RADAR UNIT	MODE	DELAY	ASSOCIATED CONTROLLER PHASE
R1	RADAR	NB	-	ADVANCE	PRESENCE	-	ϕ2
R2	RADAR	SB	-	ADVANCE	PRESENCE	-	ϕ6
R3	RADAR	EB	DZ1	STOP BAR	PRESENCE	8	ϕ4
			DZ2	STOP BAR	PRESENCE	0	ϕ4
R4	RADAR	EB	-	ADVANCE	PRESENCE	-	ϕ4

WIRING DIAGRAM

NOT TO SCALE

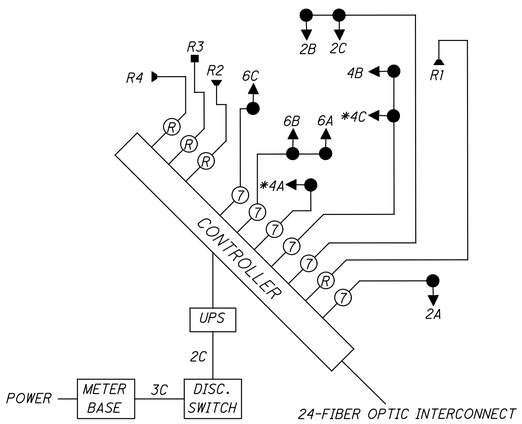

WIRING DIAGRAM LEGEND

- →X — 3-SECTION VEHICULAR SIGNAL HEAD
- →*X — 4-SECTION VEHICULAR SIGNAL HEAD
- ⓍX — SIGNAL CABLE, # OF CONDUCTORS
- —◂ — PROPOSED RADAR ADVANCED DETECTOR
- —■ — PROPOSED RADAR STOP BAR DETECTOR
- ⓇR — RADAR DETECTOR CABLE

POLE SIZES & ATTACHMENT HEIGHTS								ANGLES (DEG.) FROM INDEX LINE			
POLE NO.	DESIGN NO.	POLE HEIGHT (FT.)	FOUNDATION			SPAN ATTACHMENT HEIGHT	RADAR DETECTOR ATTACHMENT HEIGHT	SUPPLEMENTAL SIGNAL HEAD	HANDHOLE	POWER SERVICE	SPARE 2" CONDUIT (CAPPED)
			STATION	OFFSET	ELEVATION						
P1	10	35'	572+87	68.5' RT.	694.22	32'	18'	61°	90°	90°	0°
P2	10	32'	572+79	62.4' LT.	700.08	28'	18'	54°	90°	-	270°
P3	10	30'	573+55	53.8' LT.	699.58	26'	-	61°	90°	-	270°
P4	10	37'	573+55	68.3' RT.	693.19	34'	-	-	90°	-	90°

CALCULATED CCW CHECKED JRS

TRAFFIC SIGNAL DETAILS
US 23 AT IR-270 EASTBOUND OFF-RAMP

FRA-270-51.50

x:\Projects\2013\1321\1010\FRA\92616\signals\sheets\92616CD001.dgn 12/29/2022 2:01:28 PM sbarnard

TRAFFIC SIGNAL SUB-SUMMARY			
ITEM	QTY	UNIT	ITEM DESCRIPTION
625	100	FT	CONDUIT, 2", 725.04
625	32	FT	CONDUIT, 4", 725.04
625	132	FT	TRENCH
625	1	EACH	PULL BOX, 725.08, 24"
625	6	EACH	GROUND ROD
625	4	EACH	ARC FLASH CALCULATIONS AND LABEL
630	2	EACH	SIGN HANGER ASSEMBLY, SPAN WIRE
630	4	EACH	SIGN SUPPORT ASSEMBLY, POLE MOUNTED
630	43	SF	SIGN, FLAT SHEET
632	7	EACH	VEHICULAR SIGNAL HEAD, (LED) BLACK, 3-SECTION, 12" LENS, 1-WAY, WITH BACKPLATE, AS PER PLAN
632	2	EACH	VEHICULAR SIGNAL HEAD, (LED) BLACK, 4-SECTION, 12" LENS, 1-WAY, WITH BACKPLATE, AS PER PLAN
632	9	EACH	COVERING OF VEHICULAR SIGNAL HEAD
632	402	FT	MESSENGER WIRE, 7 STRAND, 1/2" DIAMETER WITH ACCESSORIES
632	402	FT	TETHER WIRE, WITH ACCESSORIES
632	1279	FT	SIGNAL CABLE, 7 CONDUCTOR, NO. 14 AWG
632	4	EACH	STRAIN POLE FOUNDATION
632	525	FT	POWER CABLE, 1 CONDUCTOR, NO. 6 AWG
632	1	EACH	POWER SERVICE
632	1	EACH	CONDUIT RISER, 2" DIAMETER
632	4	EACH	STRAIN POLE, TYPE TC-81.11, DESIGN 10
633	1	EACH	CABINET, TYPE TS2, AS PER PLAN
633	1	EACH	CABINET FOUNDATION, AS PER PLAN
633	1	EACH	CONTROLLER WORK PAD, AS PER PLAN
633	1	EACH	UNINTERRUPTIBLE POWER SUPPLY (UPS), 1000 WATT, AS PER PLAN
633	1	EACH	CONTROLLER MISC.: UNMANAGED ETHERNET SWITCH
809	3	EACH	ADVANCE RADAR DETECTION, AS PER PLAN
809	1	EACH	STOP BAR RADAR DETECTION, AS PER PLAN
809	1	EACH	ATC V6.24 CONTROLLER, AS PER PLAN

CALCULATED CCW
CHECKED JRS

TRAFFIC SIGNAL DETAILS
US 23 AT IR-270 EASTBOUND OFF-RAMP

FRA-270-51.50

x:\Projects\2013\1321\1010\FRA\92616\signals\sheets\92616CD002.dgn 12/7/2022 3:01:03 PM cwong

TRAFFIC SIGNAL CONFIGURATION

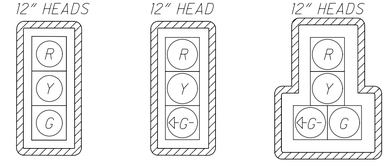

BACKPLATES IN ACCORDANCE WITH ODOT CMS 732.22

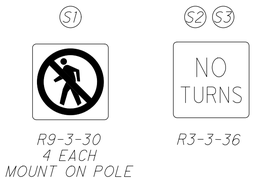

LEGEND:

- = EXISTING UTILITY POLE
- = EXISTING LIGHT POLE
- = EXISTING MANHOLE
- = EXISTING WATER VALVE
- = EXISTING GAS VALVE
- = PROPOSED CATCH BASIN
- = EXISTING SIGNAL POLE FOUNDATION
- = PROPOSED SIGNAL POLE FOUNDATION
- = PROPOSED TRAFFIC PULL BOX
- = EXISTING OR PROPOSED SIGN
- = PROPOSED CONTROLLER & UPS WITH WORKPAD
- = PROPOSED TRAFFIC SIGNAL HEAD
- = PROPOSED DILEMMA ZONE RADAR DETECTION UNIT
- = PROPOSED STOP BAR RADAR DETECTION UNIT
- = PROPOSED DETECTION ZONE
- = PROPOSED DETECTOR COUNT

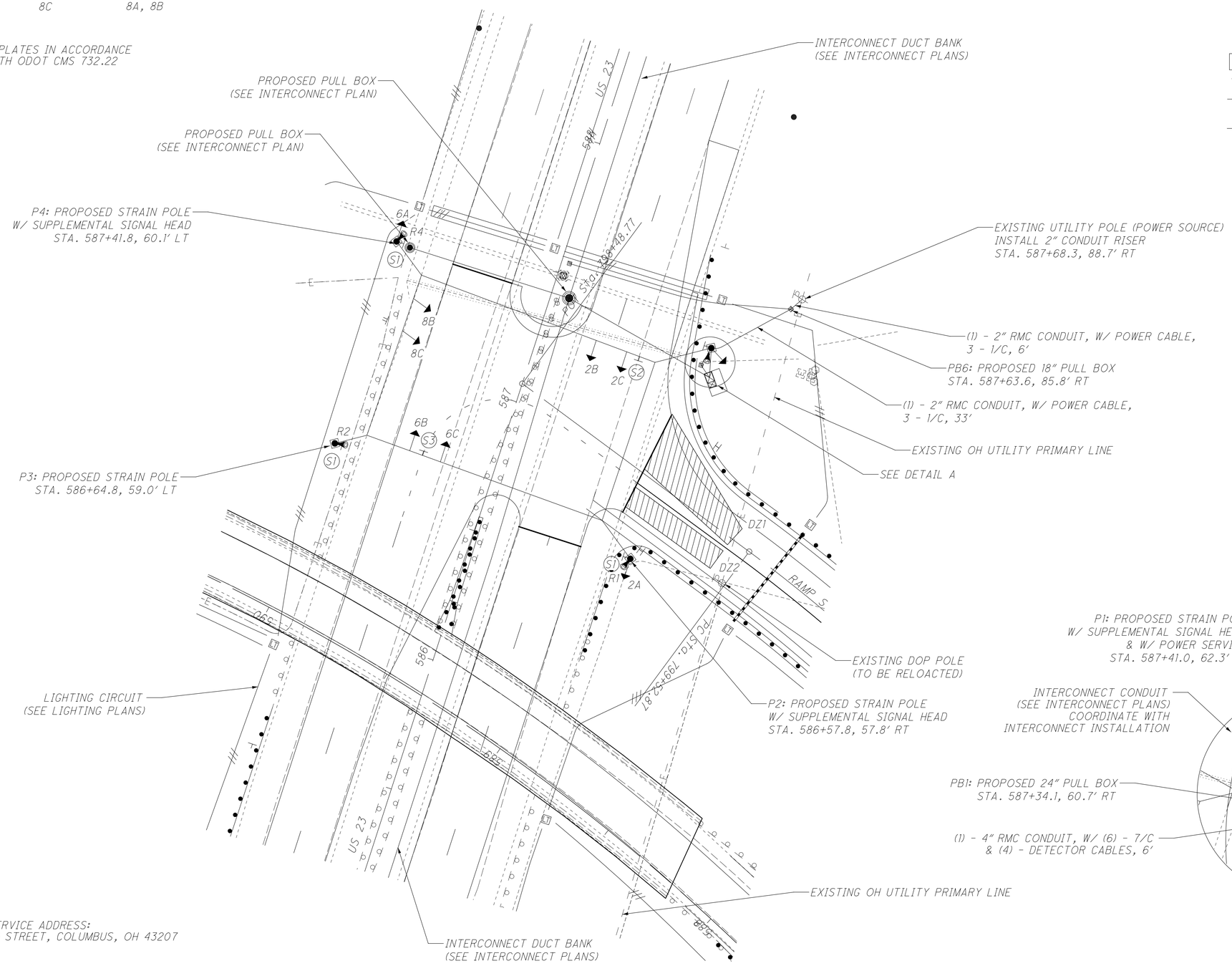

POWER SERVICE ADDRESS:
4136 HIGH STREET, COLUMBUS, OH 43207

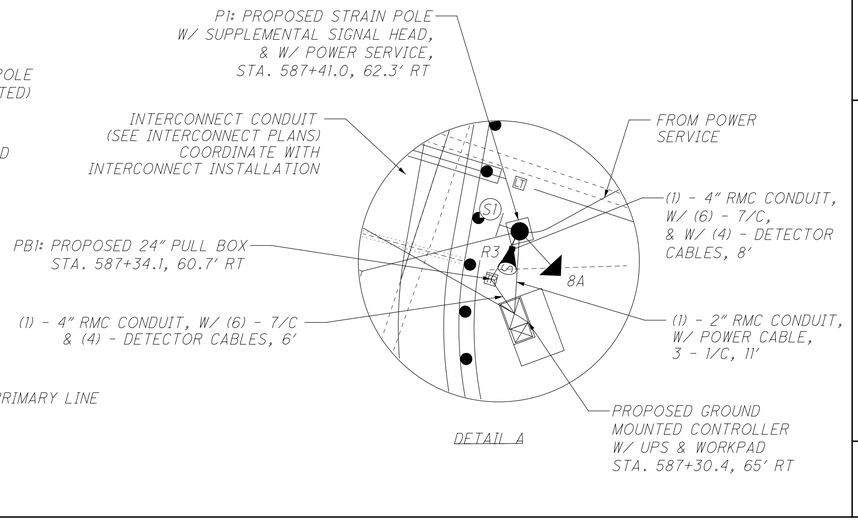

DETAIL A

HORIZONTAL SCALE IN FEET
0 10 20 40

CALCULATED CCW
CHECKED JRS

TRAFFIC SIGNAL PLAN
US 23 AT IR-270 WESTBOUND OFF-RAMP
FRA-270-51.50

407
554

x:\Projects\2013\1321\1010\FRA\92616\signals\sheets\92616CP002.dgn 12/7/2022 3:01:04 PM cwong

FIELD WIRING HOOK-UP CHART

SIGNAL HEAD #	INDICATION	FIELD TERMINAL	FLASH
1-2, 4 (NB)	R	ϕ2 R	R
	Y	ϕ2 Y	
	G	ϕ2 G	
7 (WB)	R	ϕ8 R	R
	Y	ϕ8 Y	
	~~G~~	ϕ8 G	
3 & 8 (WB)	R	ϕ8 R	R
	Y	ϕ8 Y	
	G	ϕ8 G	
	~~G~~	ϕ8 G	
5-6, 9 (SB)	R	ϕ6 R	R
	Y	ϕ6 Y	
	G	ϕ6 G	

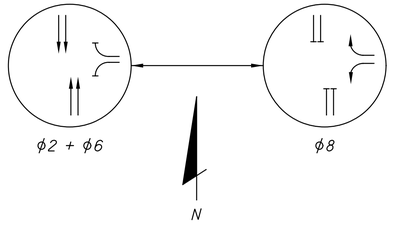

PHASING DIAGRAM

MAINTENANCE/OWNER:

ODOT WILL OWN AND MAINTAIN THIS SIGNAL.

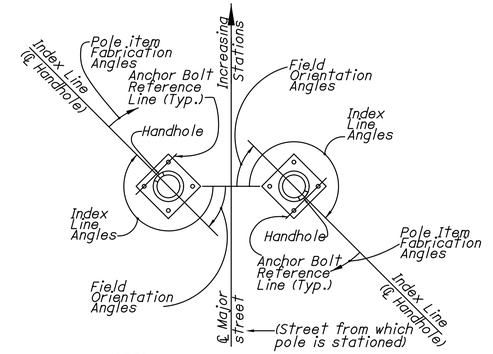

NOTES:
All angles measured clockwise.
Index line goes through the center of the handhole.

INTERSECTION TIMING								
	1	2	3	4	5	6	7	8
DIRECTION	-	NB	-	-	-	SB	-	WB
MIN GREEN	-	20	-	-	-	20	-	10
PASSAGE	-	1.0*	-	-	-	1.0*	-	3.0*
MAX 1	-	45	-	-	-	45	-	40
MAX 2	-	45	-	-	-	45	-	40
YELLOW	-	5.0	-	-	-	5.0	-	4.0
ALL RED	-	1.0	-	-	-	1.0	-	2.0
WALK	-	-	-	-	-	-	-	-
PED CLEAR	-	-	-	-	-	-	-	-
INITIALIZE	-	G	-	-	-	G	-	-
LOCKING MEMORY	OFF	ON	OFF	OFF	OFF	ON	OFF	OFF
VEH RECALL	OFF	ON	OFF	OFF	OFF	ON	OFF	OFF
PED RECALL	OFF	OFF	OFF	OFF	OFF	OFF	OFF	OFF

* PROGRAM PER RADAR ADVANCED DETECTOR MANUFACTURER'S RECOMMENDATIONS

DETECTION CHART							
DETECTOR	DETECTOR TYPE	MOVEMENT	DETECTION ZONE	RADAR UNIT	MODE	DELAY	ASSOCIATED CONTROLLER PHASE
R1	RADAR	NB	-	ADVANCE	PRESENCE	-	ϕ2
R2	RADAR	WB	-	ADVANCE	PRESENCE	-	ϕ8
R3	RADAR	WB	DZ1	STOP BAR	PRESENCE	8	ϕ8
			DZ2	STOP BAR	PRESENCE	0	ϕ8
R4	RADAR	SB	-	ADVANCE	PRESENCE	-	ϕ6

WIRING DIAGRAM

NOT TO SCALE

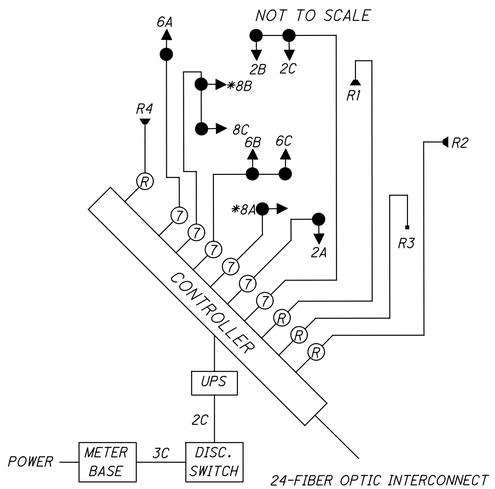

WIRING DIAGRAM LEGEND

- →X — 3-SECTION VEHICULAR SIGNAL HEAD
- →*X — 4-SECTION VEHICULAR SIGNAL HEAD
- —(X)— SIGNAL CABLE, # OF CONDUCTORS
- —◄ — PROPOSED RADAR ADVANCED DETECTOR
- —■ — PROPOSED RADAR STOP BAR DETECTOR
- —(R)— PROPOSED RADAR DETECTOR CABLE

TYPICAL STRAIN POLE ORIENTATION DETAIL
NOT TO SCALE

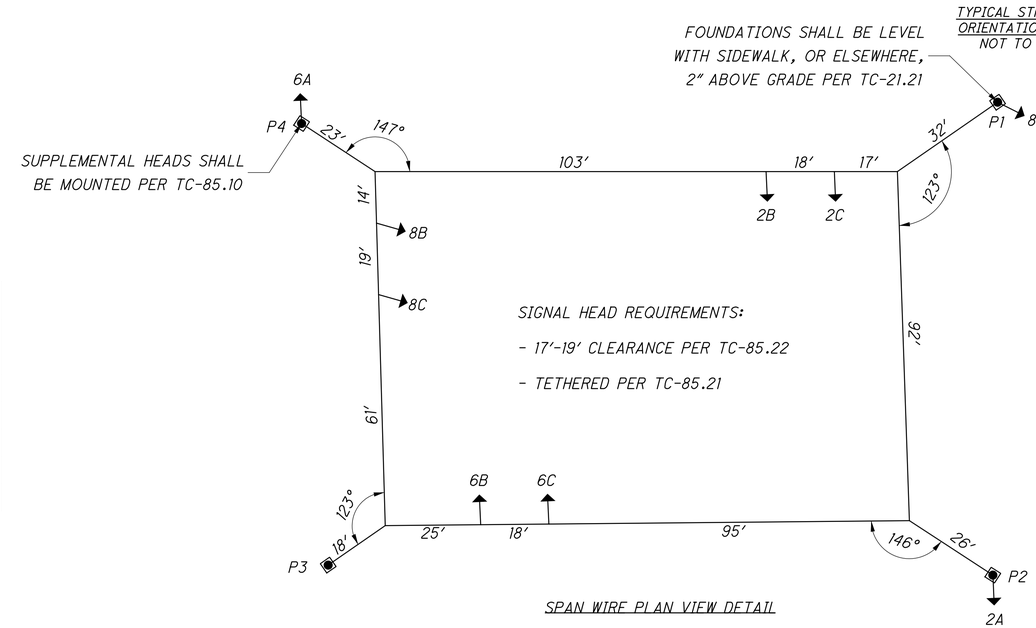

SPAN WIRE PLAN VIEW DETAIL

POLE SIZES & ATTACHMENT HEIGHTS								ANGLES (DEG.) FROM INDEX LINE			
			FOUNDATION								
POLE NO.	DESIGN NO.	POLE HEIGHT (FT.)	STATION	OFFSET	ELEVATION	SPAN ATTACHMENT HEIGHT	RADAR DETECTOR ATTACHMENT HEIGHT	SUPPLEMENTAL SIGNAL HEAD	HANDHOLE	POWER SERVICE	SPARE 2" CONDUIT (CAPPED)
P1	10	33'	587+41.0	62.3' RT	698.48	30'	18'	61°	180°	90°	90°
P2	10	31'	586+57.8	57.8' RT	698.82	28'	18'	54°	180°	-	270°
P3	10	32'	586+64.8	59.0' LT	698.26	29'	-	-	180°	-	90°
P4	10	32'	587+41.8	60.1' LT	698.33	29'	-	54°	180°	-	180°

CALCULATED CCW CHECKED JRS

TRAFFIC SIGNAL DETAILS
US 23 AT IR-270 WESTBOUND OFF-RAMP

FRA-270-51.50

408
554

X:\Projects\2013\1321\1010.FRA\92616\signals\sheets\92616CD003.dgn 3/7/2023 7:59:07 AM cwong

TRAFFIC SIGNAL SUB-SUMMARY			
ITEM	QTY	UNIT	ITEM DESCRIPTION
625	54	FT	CONDUIT, 2", 725.04
625	11	FT	CONDUIT, 4", 725.04
625	65	FT	TRENCH
625	1	EACH	PULL BOX, 725.08, 24"
625	6	EACH	GROUND ROD
625	4	EACH	ARC FLASH CALCULATIONS AND LABEL
630	2	EACH	SIGN HANGER ASSEMBLY, SPAN WIRE
630	4	EACH	SIGN SUPPORT ASSEMBLY, POLE MOUNTED
630	43	SF	SIGN, FLAT SHEET
632	7	EACH	VEHICULAR SIGNAL HEAD, (LED) BLACK, 3-SECTION, 12" LENS, 1-WAY, WITH BACKPLATE, AS PER PLAN
632	2	EACH	VEHICULAR SIGNAL HEAD, (LED) BLACK, 4-SECTION, 12" LENS, 1-WAY, WITH BACKPLATE, AS PER PLAN
632	9	EACH	COVERING OF VEHICULAR SIGNAL HEAD
632	561	FT	MESSENGER WIRE, 7 STRAND, 1/2" DIAMETER WITH ACCESSORIES
632	561	FT	TETHER WIRE, WITH ACCESSORIES
632	1389	FT	SIGNAL CABLE, 7 CONDUCTOR, NO. 14 AWG
632	4	EACH	STRAIN POLE FOUNDATION
632	387	FT	POWER CABLE, 1 CONDUCTOR, NO. 6 AWG
632	1	EACH	POWER SERVICE
632	1	EACH	CONDUIT RISER, 2" DIAMETER
632	4	EACH	STRAIN POLE, TYPE TC-81.11, DESIGN 10
633	1	EACH	CABINET, TYPE TS2, AS PER PLAN
633	1	EACH	CABINET FOUNDATION, AS PER PLAN
633	1	EACH	CONTROLLER WORK PAD, AS PER PLAN
633	1	EACH	UNINTERRUPTIBLE POWER SUPPLY (UPS), 1000 WATT, AS PER PLAN
633	1	EACH	CONTROLLER MISC.: UNMANAGED ETHERNET SWITCH
809	3	EACH	ADVANCE RADAR DETECTION, AS PER PLAN
809	1	EACH	STOP BAR RADAR DETECTION, AS PER PLAN
809	1	EACH	ATC V6.24 CONTROLLER, AS PER PLAN

CALCULATED CCW
CHECKED JRS

TRAFFIC SIGNAL DETAILS
US 23 AT IR-270 WESTBOUND OFF-RAMP

FRA-270-51.50

409
554

x:\Projects\2013\1321\1010\FRA\92616\signals\sheets\92616CD004.dgn 12/7/2022 3:01:06 PM cwong

COORDINATION TIMING CHART (TEM FORM 496-5)

	SPLITS (G+Y+AR) IN SECONDS								OFFSET 1 (SEC)	OFFSET 2 (SEC)
PHASE	1	2	3	4	5	6	7	8		
DIRECTION	-	NB	-	EB	-	SB	-	-		
PLAN NO.	US-23 & IR-270 EB OFF-RAMP									
2	-	63	-	37	-	63	-	-	60	-
3	-	63	-	47	-	63	-	-	37	-
4	-	68	-	52	-	68	-	-	50	-
-	-	-	-	-	-	-	-	-	-	-
-	-	-	-	-	-	-	-	-	-	-

	SPLITS (G+Y+AR) IN SECONDS								OFFSET 1 (SEC)	OFFSET 2 (SEC)
PHASE	1	2	3	4	5	6	7	8		
DIRECTION	-	NB	-	-	-	SB	-	WB		
PLAN NO.	US-23 & IR-270 WB OFF-RAMP									
2	-	51	-	-	-	51	-	49	76	-
3	-	60	-	-	-	60	-	50	42	-
4	-	60	-	-	-	60	-	60	60	-
-	-	-	-	-	-	-	-	-	-	-
-	-	-	-	-	-	-	-	-	-	-

NOTES:

- NO TIMING PARAMETER CHANGES PROPOSED AT US-23 & OBETZ ROAD/GREAT SOUTHERN BLVD.

CORRIDOR LAYOUT

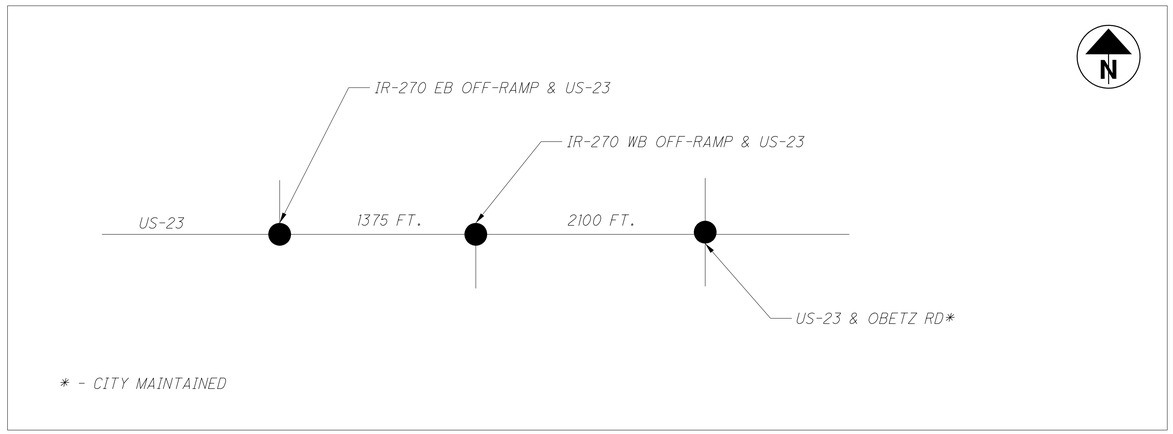

* - CITY MAINTAINED

COORDINATION TIMING PLANS

DAY(S) OF WEEK	PLAN NAME	HOURS	CYCLE/SPLIT/OFFSET	CYCLE LENGTH (SEC)
M-F	PATTERN 2	0830-1100, 2000-2200	1/1/1	100
M-F	PATTERN 3	0630-0830, 1100-1530, 1830-2000	2/1/1	110
M-F	PATTERN 4	1530-1830	3/1/1	120
M-F	-	2200-0630	UNCOORDINATED	(FREE)
S-S	PATTERN 2	0800-1000, 2000-2200	2/1/1	100
S-S	PATTERN 3	1000-2000	3/1/1	110
S-S	-	2200-0800	UNCOORDINATED	(FREE)
-	-	-	-	-
-	-	-	-	-
-	-	-	-	-

NOTES:

- OFFSETS ARE MEASURED FROM REFERENCE PHASE(S) NUMBERED 2/6 "BEGIN OF GREEN"

CALCULATED DKA
CHECKED DCB

TRAFFIC SIGNAL COORDINATION PLAN

FRA-270-51.50

x:\Projects\2013\1321\1010\FRA\92616\signals\sheets\92616CD005.dgn 12/7/2022 3:01:06 PM cwong

CITY OF COLUMBUS INTERCONNECT NOTES

CONTRACTOR QUALIFICATIONS

SEE THE CITY OF COLUMBUS SUPPLEMENTAL SPECIFICATION 1620 FOR DETAILS.

CABLE WRAPS

SEE THE CITY OF COLUMBUS SUPPLEMENTAL SPECIFICATION 1620 FOR DETAILS.

FIBER OPTIC CABLE TESTING

SEE THE CITY OF COLUMBUS SUPPLEMENTAL SPECIFICATION 1620 FOR DETAILS.

PROTECTION OF CITY/ODOT TRAFFIC SIGNALS AND INTERCONNECT INFRASTRUCTURE

SEE THE CITY OF COLUMBUS SUPPLEMENTAL SPECIFICATION 1620 FOR DETAILS.

TRAFFIC CONDUIT DAMAGE

SEE THE CITY OF COLUMBUS SUPPLEMENTAL SPECIFICATION 1620 FOR DETAILS.

ITEM 625 - CONDUIT, MISC.: ENCASED INTERCONNECT CONDUIT BANK, TC-2, SCH-40,(4)-3" & (1)-1.5" CITY OF COLUMBUS
ITEM 625 - CONDUIT, MISC.: ENCASED INTERCONNECT CONDUIT BANK, TC-2, SCH-40,(4)-3", (2)-2", & (1)-1.5" CITY OF COLUMBUS

IN ADDITION TO THE REQUIREMENTS OF CITY OF COLUMBUS CMS 625.12, ANY CONDUIT WITHOUT A SPACER ABOVE IT (I.E. ANY TOP ROW CONDUIT) SHALL BE WIRE-WRAPPED TO THE SPACER BENEATH IT IN ORDER TO BE HELD IN PLACE.A NUMBER 10 GAUGE, STRANDED COPPER, POLYESTER OR CROSS LINKED POLYETHYLENE (XLPE) INSULATED TRACING WIRE SHALL BE INSTALLED IN THE 1-1/2" CONDUIT. THE WIRE INSULATION SHALL BE RESISTANT TO MOISTURE ABSORPTION AND ABRASIVE ACTIONS. THE TRACING WIRE JACKET SHALL BE ORANGE; NO OTHER JACKET COLOR IS ALLOWED. THE TRACING WIRE SHALL ENTER A PULLBOX THROUGH THE 1-1/2" CONDUIT AND SHALL BE ROUTED AROUND THE INSIDE PERIMETER OF THE PULLBOX TO THE OTHER SIDE AND THEN EXIT THE OPPOSING 1-1/2" CONDUIT. THE TRACING WIRE SHALL BE CONTINUOUSLY RUN BETWEEN PULLBOXES (ABSOLUTELY NO SPLICES EXCEPT IN A PULLBOX). CONDUIT THAT BRANCHES OFF THE MAIN CONDUIT RUN SHALL HAVE ITS TRACING WIRE TERMINATED IN A PULLBOX OR CONTROLLER CABINET. THE WIRE SHALL BE TAGGED AS "TRACING WIRE", COILED (3 FEET IN LENGTH) AND LEFT DISCONNECTED AT EACH END (OPEN CIRCUIT).

ENCASED CONDUIT BANK SHALL BE ORIENTED AS REPRESENTED IN THE PLANS AND INSTALLED AS SHOWN IN CITY OF COLUMBUS STANDARD DRAWING 4001.

THE COST FOR THE TRACING WIRE AND ITS INSTALLATION SHALL BE INCIDENTAL TO THE COST OF THIS PAY ITEM. (5/17/2016)

TRACING WIRE

TRACING WIRE SHALL BE NO SMALLER THAN #10 AWG WIRE. THE WIRE SHALL BE INSULATED, ORANGE IN COLOR, AND CONSTRUCTED OF COPPER CLAD STEEL (STRANDED). TRACING WIRE JACKET SHALL BE HDPE OR HMWPE. TRACING WIRE SHALL BE INSTALLED THROUGH ALL CONDUITS AND DUCT BANKS WHICH CONTAIN FIBER OPTIC CABLE BUT ARE NON-METALLIC AND CONTAIN NO METALLIC OR OTHERWISE "TRACEABLE" COMPONENTS.

TRACING WIRE SHALL BE INSTALLED ALONG WITH FIBER OPTIC CABLE IN THE FOLLOWING LOCATIONS:

1. THROUGH A 1-1/2 INCH CONDUIT WITHIN IN A DUCT BANK

2. THROUGH A SINGLE NEWLY INSTALLED COMMUNICATIONS CONDUIT, GIVEN CONDUIT IS NOT PART OF A DUCT BANK AND IS 3" OR GREATER DIAMETER

3. THROUGH EXISTING CONDUIT PATH WHERE NEW FIBER IS BEING INSTALLED AS PART OF THIS PROJECT, EXCLUDING LOCATIONS WITH EXISTING FUNCTIONAL TRACING WIRE AS DETERMINED BY THE ENGINEER.

APPROXIMATELY 10 FT. OF SLACK OF THE TRACING WIRE SHALL BE LEFT INSIDE THE ADJACENT PULL-BOXES CONNECTING THE CONDUIT RUNS.

IN SITUATIONS WHERE A TYPE 2 FIBER OPTIC CABLE MARKER IS TO BE INSTALLED IN CONJUNCTION WITH THE TRACING WIRE, THE TRACING WIRE SHALL BE RUN THROUGH THE MARKER AND CONNECTED TO TERMINALS AT THE TOP OF THE MARKER.

LABEL AND TERMINATE TRACING WIRE TO TERMINAL BLOCKS IN PULL BOXES APPROXIMATELY EVERY 1000 FT. (MAX). MOISTURE DISPLACEMENT CONNECTORS SHALL BE USED AT ALL CONNECTION POINTS. 3M DBR CONNECTORS, COPPERHEAD SNAKEBITE CONNECTORS, OR APPROVED EQUAL SHALL BE USED. AFTER ALL CONNECTIONS ARE COMPLETED THE CONTRACTOR SHALL CONTACT THE ENGINEER FOR A LOCATE OR CONDUCTIVITY TEST.

THE TRACING WIRE SHALL ENTER A PULL BOX ON ONE SIDE AND BE ROUTED AROUND THE INSIDE PERIMETER OF THE PULL BOX TO THE OTHER SIDE AND THEN EXIT THE OPPOSING SIDE. THE TRACING WIRE SHALL BE CONTINUOUSLY RUN BETWEEN PULL BOXES (ABSOLUTELY NO SPLICES EXCEPT IN A PULL BOX). CONDUIT THAT BRANCHES OFF THE MAIN CONDUIT RUN SHALL HAVE ITS TRACING WIRE TERMINATED IN A PULL BOX OR CONTROLLER CABINET. THE WIRE SHALL BE TAGGED AS "TRACING WIRE", COILED (10 FEET IN LENGTH) AND LEFT DISCONNECTED AT EACH END (OPEN CIRCUIT).

IF RIGID GALVANIZED STEEL CONDUIT IS USED TO JACK UNDER A ROADWAY, TRACING WIRE SHALL BE CONNECTED TO EACH END OF THE CONDUIT USING A HEAVY DUTY WIRE LUG BUSHING APPROVED BY ENGINEER SO THE CONDUIT WILL ACT AS A CONDUCTOR COMPLETING THE TRACING WIRE CIRCUIT.

THE COST FOR THE TRACING WIRE AND ITS INSTALLATION SHALL BE INCIDENTAL TO THE COST OF THIS PAY ITEM. (9/1/2015)

ITEM 625 - CONDUIT, MISC.: INTERCONNECT CONDUIT BANK, TC-2, SCH-80, CONDUIT BORED, CITY OF COLUMBUS

IN ADDITION TO THE REQUIREMENTS OF 625.12, CONDUIT PLACED UNDER EXISTING PAVEMENT OR PAVED SHOULDER SHALL BE INSTALLED BY HORIZONTAL BORING.

CONDUIT CROSSING UNDER ROADWAYS SHALL BE EPEC-80-HDPE CONDUIT.

TRACING WIRE SHALL BE INSTALLED IN ALL NEW CONDUIT THAT WILL CONTAIN FIBER OPTIC CABLE AND IS CONSIDERED INCIDENTAL TO THIS BID ITEM.

ADDITIONALLY, THE CONTRACTOR SHALL INSTALL NON-ORGANIC FIBERGLASS PULL TAPE WITH A MINIMUM 1800 FT./LBS. TENSION STRENGTH IN ALL CONDUIT. THE PULL TAPE AND ITS INSTALLATION SHALL BE INCIDENTAL TO THE COST OF THIS PAY ITEM.

THE BORE SHALL NOT EXCEED THE CONDUIT DIAMETER BY MORE THAN 5 PERCENT. THE CONDUIT SHALL BE PLACED WITH A MINIMUM OF DISTURBANCE TO THE ROADWAY.

THE WORK AS DESCRIBED WILL BE MEASURED AS THE ACTUAL NUMBER OF LINEAR FEET OF CONDUIT FURNISHED AND INSTALLED, MEASURED IN PLACE, AS ACCEPTED BY THE ENGINEER, AND INCLUDING EXCAVATION, CONDUIT, HORIZONTAL BORING, AND RESTORATION.

BORED CONDUIT WILL BE PAID FOR PER LINEAR FOOT, AND WILL INCLUDE FURNISHING ALL MATERIALS, EQUIPMENT, LABOR AND INCIDENTALS NECESSARY TO COMPLETE THE WORK SPECIFIED.
10/23/15

ITEM 625 - TRENCH, AS PER PLAN
ITEM 625 - TRENCH IN PAVED AREAS, AS PER PLAN

THESE ITEMS SHALL COMPLY WITH ODOT CMS 625 WITH THE EXCEPTION THAT THE TRENCHING SHALL ALSO CONFORM TO THE SPECIFICATIONS LISTED IN CITY OF COLUMBUS STANDARD DRAWING 4001.

ITEM 625 - CONDUIT, MISC.: CONDUIT, 4", MULTICELL, 725.20, EPC-80, CITY OF COLUMBUS

IN ADDITION TO THE REQUIREMENTS OF 725.20, THIS ITEM SHALL ALSO FOLLOW THE APPLICABLE REQUIREMENTS OF THE CITY OF COLUMBUS CMS FOR 725.20

CALCULATED CCW
CHECKED JRS

TRAFFIC SIGNAL INTERCONNECT NOTES

FRA-270-51.50

X:\Projects\2013\1321\1010\FRA\92616\signals\sheets\92616CN003.dgn 1/17/2023 4:23:08 PM cwong

ODOT INTERCONNECT NOTES

ITEM 632 - INTERCONNECT, MISC.: FIBER OPTIC SPLICE ENCLOSURE, CLAMSHELL, 288 SPLICE

FIBER OPTIC CABLE SPLICES SHALL BE PERFORMED IN SPLICE ENCLOSURES AS SHOWN ON THE PLANS. THE SPLICE ENCLOSURES SHALL BE CORROSION RESISTANT, RODENT PROOF, RE-ENTERABLE, AND MANUFACTURER CERTIFIED FOR UNDERGROUND INSTALLATION.

288 CLAMSHELL SPLICE ENCLOSURES ARE TO BE INSTALLED IN 32", 36", OR 48"PULL BOXES OR MOUNTED AERIALLY AS DIRECTED IN THE PLANS. CONTRACTOR SHALL ADVISE THE ENGINEER IN THE EVENT THAT CABLES CANNOT ENTER SPLICE ENCLOSURE PERPENDICULARLY TO CABLE PORT ENTRY PLATE, OR IF CABLE BENDS EXCEED MINIMUM INSTALLATION BEND RADIUS RATING AT THE ENCLOSURE ENTRY DUE TO EXISTING FIELD CONDITIONS SUCH AS INADEQUATE SPACE IN PULL BOX OR OTHER OBSTRUCTIONS. ADDITIONALLY, CONTRACTOR SHALL ADVISE THE ENGINEER PRIOR TO BEGINNING SPLICING IF PLANNED NUMBER OF SPLICES CANNOT BE NEATLY AND SECURELY CONTAINED IN THE TYPE OF SPLICE ENCLOSURE CALLED OUT IN THE PLANS.

FOR UNDERGROUND INSTALLATION, SPLICE ENCLOSURE AND SLACK CABLE MUST FIT WITHIN PULL BOX TO AVOID DAMAGE TO THE ENCLOSURE OR CABLE UPON CLOSING THE PULL BOX LID.

FOR AERIAL INSTALLATION, EXTENDED STRENGTH BRACKET SHALL BE INSTALLED WITH THE SPLICE ENCLOSURE TO ENSURE CABLE ENTRIES REMAIN PERPENDICULAR AND SECURELY FASTENED TO THE PORT ENTRY PLATE. AERIAL MOUNTED SLACK STORAGE RACKS ARE TO BE USED FOR ALL INSTALLATIONS WHERE CABLES ARE LOOPED OR BENT 180O. THE COST OF THE STRAIN RELIEF HARDWARE, STRENGTH BRACKETS, TIES OR OTHER INSTALLATION HARDWARE IS CONSIDERED INCIDENTAL TO THIS PAY ITEM.

THE SPLICE ENCLOSURE SHALL BE WEATHERPROOF, WATERPROOF, CORROSION RESISTANT, RODENT PROOF, RE-ENTERABLE, AND CRUSH RESISTANT. CLAMSHELL ENCLOSURES SHALL HAVE UPPER AND LOWER PIECES WITH CABLE ENTRY PLATE THAT ARE TIGHTENED DOWN AND SEALED USING SCREWS / BOLTS. DOME ENCLOSURES SHALL BE SINGLE TUBE WITH CABLE ENTRY PLATE. THE SPLICE ENCLOSURE SHALL EASILY FIT INTO PULL BOXES ALONG WITH LOOPS OF SLACK CABLE IN BOX (APPROX. 150 FT) THE SPLICE ENCLOSURE SHALL BE A COMPLETE KIT INCLUDING ALL COMPONENTS AND HARDWARE FOR INSTALLATION. THE SPLICE ENCLOSURE SHALL BE SUITABLE FOR APPLICATION IN THE TEMPERATURE RANGE OF -40 C TO +70 C. THE SPLICE ENCLOSURE SHALL PROVIDE SPACE, ALLOWING ENTRY OF FIBER OPTIC CABLE WITHOUT EXCEEDING THE MINIMUM BEND RADIUS OF THE CABLE. THE ENCLOSURE SHALL HAVE PROVISIONS FOR CABLE AND PIGTAIL STRAIN-RELIEF, AND SHALL BE EQUIPPED WITH STRAIN-RELIEF HARDWARE. THE SPLICE ENCLOSURE SHALL BE EQUIPPED WITH ELASTOMERIC SPLICE BLOCKS ENCLOSED WITHIN MANUFACTURER SPLICE TRAYS AND SHALL PERMIT SELECTIVE FIBER SPLICING (LOOPING A BACKBONE CABLE IN AND OUT WHILE ONLY CUTTING INTO THE DESIRED FIBERS ALL BUFFER TUBES NOT SHOWN AS BEING SPLICED IN THE PLANS ARE TO BE SECURELY COILED WITHIN THE SPLICE ENCLOSURE). THE SIZE OF THE CLOSURE SHALL ALLOW ALL THE FIBERS OF THE LARGEST OPTICAL FIBER TRUNK CABLE TO BE FUSION SPLICED TO A SECOND CABLE OF THE SAME SIZE, PLUS ADDITIONAL PIGTAILS. THE SPLICE ENCLOSURE SHALL ALLOW SPLICING OF ALL FIBERS UP TO THE MAXIMUM NUMBER SPECIFIED ON THE CONTRACT DRAWINGS.
FIBER OPTIC CABLE SPLICE ENCLOSURES SHALL HAVE A THREE-SECTION, 4, 6, OR 8 PORT END PLATE WITH 7/8" DIAMETER PORTS. PLUG KITS AND BRACKETS SHALL BE INCIDENTAL TO PAY ITEM. ANY PROPOSED EQUIVALENT MUST BE APPROVED BY THE ENGINEER PRIOR TO INSTALLATION. FIBER OPTIC CABLE SPLICE ENCLOSURES MUST MEET THE REQUIREMENTS LISTED UNDER BELLCORE TESTING REQUIREMENT GR-771-CORE AND UL 1863.

THE WORK AS DESCRIBED WILL BE MEASURED AS ONE UNIT FOR EACH OF THE INSTALLATIONS SPECIFIED, AND SHALL INCLUDE ALL MATERIALS, EQUIPMENT AND INCIDENTALS, COMPLETE IN PLACE. TERMINATIONS, CONNECTIONS, AND OTHER MISCELLANEOUS ITEMS AND MATERIALS SHALL BE INCIDENTAL TO THIS WORK AND NO SEPARATE PAYMENT WILL BE MADE. (12/2/15)

ITEM 632 - INTERCONNECT, MISC.: TERMINATION PANEL, 24 FIBER, WITH 200 FT DROP CABLE

THE TERMINATION PANEL SHALL BE FURNISHED AND INSTALLED IN THE TRAFFIC SIGNAL CONTROLLER CABINET AT LOCATIONS SHOWN ON THE PLANS. THE TERMINATION PANEL DROP CABLE SHALL BE FIBER CONNECTIONS "GATORPATCH" MODEL FCP6684-61-0 (200 FT).

THE OPTICAL TERMINATION PANEL SHALL HOUSE AND PROTECT THE LC CONNECTORS ON EACH TERMINATION PANEL DROP CABLE AND FIBER OPTIC TERMINATION CORD. THE FACTORY TERMINATED TERMINATION PANEL SHALL UTILIZE DUPLEX LC (UPC) CONNECTORS FOR THE EQUIPMENT SIDE TO THE PRE-CONNECTORIZED 24-STRAND OR 12-STRAND FIBER OPTIC TERMINATION PANEL DROP CABLE THAT LEADS TO THE SPLICE ENCLOSURE.

A PRE-TERMINATED 24-STRAND OR 12-STRAND FIBER OPTIC DROP CABLE SHALL BE INCLUDED AND SHALL BE CONSIDERED INCIDENTAL TO THE TERMINATION PANEL. THE CONTRACTOR SHALL PROVIDE SINGLE MODE FIBER OPTIC DROP CABLES WITH COLOR CODED BUFFER TUBES. FIBER OPTIC CABLE USED FOR TERMINATION PANEL DROP CABLES SHALL BE OF THE TIGHT BUFFERED TYPE PROTECTED BY ARAMID FIBERS. SINGLE-MODE DROP CABLES SHALL BE PROVIDED WITH FACTORY PRE-CONNECTORIZED SINGLE-MODE CONNECTORS. CONNECTORS SHALL HAVE A MAXIMUM LOSS OF 0.5 DB THROUGH EACH MATED PAIR OF SINGLE-MODE FIBERS. EACH CONNECTOR SHALL BE CAPABLE OF 100 REPEATED MATINGS WITH MAXIMUM INCREASE IN SPLICE LOSS LIMITED TO 0.2 DB. THE DROP CABLE SLACK SHALL BE NEATLY COILED AND SECURED IN A MANNER THAT DOES NOT EXCEED THE MINIMUM OPERATIONAL BENDING RADIUS OF THE DROP CABLE, AS SPECIFIED BY THE MANUFACTURER. SIX (6) FEET OF FIBER OPTIC CABLE SHALL BE NEATLY COILED INSIDE THE CONTROLLER CABINET.

ALL TERMINATION CORDS OF APPROPRIATE LENGTHS TO CONNECT TO THE ETHERNET SWITCH SHALL BE INCLUDED AND SHALL BE CONSIDERED INCIDENTAL TO THE TERMINATION PANEL. THE OPTICAL TERMINATION CORDS FURNISHED SHALL CONSIST OF A SECTION OF JACKETED, SINGLE-MODE FIBER CABLE EQUIPPED WITH FACTORY ASSEMBLED OPTICAL CONNECTORS AT BOTH ENDS. EACH TERMINATION CORD SHALL HAVE UNIQUE IDENTIFICATION LABELS ON EACH END.

THE SHEATH SHALL BE FLAME RETARDANT AND CODED NFR IN ACCORDANCE WITH THE NATIONAL ELECTRIC CODE. THE OPTICAL CONNECTORS ON THE ETHERNET SWITCH END OF THESE TERMINATION CORDS SHALL BE COMPATIBLE WITH THE CONNECTORS FURNISHED ON THE OPTICAL DEVICE TRANSMIT AND RECEIVE CARDS.

THIS ITEM INCLUDES ALL MATERIALS, EQUIPMENT AND INCIDENTALS COMPLETE IN PLACE. TERMINATIONS, CONNECTIONS, AND OTHER MISCELLANEOUS ITEMS AND MATERIALS SHALL BE INCIDENTAL TO THIS WORK AND NO SEPARATE PAYMENT WILL BE MADE.

CONTACT TRAFFIC MANAGEMENT AT 614-645-7393 FOURTEEN (14) DAYS IN ADVANCE OF FINAL TESTING. PRIOR TO FINAL TESTING OF A SEGMENT OF INSTALLED FIBER OPTIC CABLE USING THE TERMINATION PANEL AND DROP CABLE ASSEMBLY, THE PATCH PANEL MUST BE INSTALLED IN ITS FINAL POSITION WITHIN THE CONTROLLER CABINET AND/OR EQUIPMENT RACK AS INDICATED IN THE PLANS, AND THE DROP CABLE PATH MUST BE INSTALLED IN ITS FINAL POSITION FROM THE CONTROLLER CABINET TO THE SPLICE ENCLOSURE. FAILURE TO TEST THE CABLE SYSTEM AND ITS COMPONENTS IN THEIR FINAL INSTALLED PLACEMENT WILL RESULT IN NULLIFICATION OF TEST RESULTS AND WILL REQUIRE THE RETESTING OF THOSE CABLE SEGMENTS.

THE WORK AS DESCRIBED WILL BE MEASURED AS ONE UNIT FOR EACH INSTALLATION SPECIFIED, AND SHALL INCLUDE ALL MATERIALS, EQUIPMENT, TESTING, AND INCIDENTALS, COMPLETE IN PLACE. TERMINATIONS, CONNECTIONS, AND OTHER MISCELLANEOUS ITEMS AND MATERIALS SHALL BE INCIDENTAL TO THIS WORK AND NO SEPARATE PAYMENT WILL BE MADE.

ITEM 633 - CONTROLLER ITEM, MISC.: TERMINAL PORT SERVER

THIS WORK IS THE FURNISHING AND INSTALLATION OF A TERMINAL PORT SERVER TO PROVIDE COMMUNICATION BETWEEN SERIAL DEVICES AND ETHERNET SWITCH. THE TERMINAL PORT SERVER SHALL BE DIGI MODEL PORTSERVER TS 2 H MEI.

PROVIDE CONNECTOR CABLE FROM TERMINAL SERVER TO SIGNAL CONTROLLER. ALL D-SUB CONNECTORS SHALL BE OF HEAVY DUTY METAL CONSTRUCTION AND MANUFACTURED BY AMP, L-COM, OR EQUIVALENT. PROVIDE CAT 5E CABLE FROM PORT SERVER TO THE ETHERNET SWITCH.

TRAFFIC MAINTENANCE SHALL BE CONTACTED AT 645-7393 ONE (1) WEEK PRIOR TO INSTALLATION TO PROGRAM THE TERMINAL PORT SERVER. THE CONTRACTOR SHALL INSTALL THE TERMINAL PORT SERVER IN THE CABINET BUT SHALL NOT MAKE ANY CONNECTIONS TO THE TERMINAL PORT SERVER.

TESTING OF THE TERMINAL PORT SERVER WILL BE THE RESPONSIBILITY OF THE CONTRACTOR. THE CONTRACTOR SHALL BE RESPONSIBLE FOR PROVIDING A COMPLETE, FUNCTIONAL SYSTEM INCLUDING ALL NECESSARY CABLES AND CONNECTORS IN ACCORDANCE TO THE SPECIFICATIONS AND AS SPECIFIED ON THE PLANS.

CITY OF COLUMBUS INTERCONNECT NOTES

ITEM 1620 - INTERCONNECT, MISC.: FIBER OPTIC CABLE, 144 STRAND

IN ADDITION TO THE REQUIREMENTS OF SUPPLEMENTAL SPECIFICATION 1620, THE CONTRACTOR SHALL PROVIDE ALL MATERIALS REQUIRED FOR THE INSTALLATION, CONNECTORIZATION, AND SPLICING OF THE SPECIFIED COMMUNICATIONS CABLES. THE 144-STRAND CABLE SHALL BE CORNING PART NUMBER 144EU4-T4701D20. (4/22/19)

CALCULATED DKA CHECKED SGJ

TRAFFIC SIGNAL INTERCONNECT NOTES

FRA-270-51.50

X:\Projects\2013\1321\1010\FRA\92616\signals\sheets\92616CN004.dgn 2/10/2023 11:12:19 AM cwong

INTERCONNECT NOTES

ITEM 633 - CONTROLLER ITEM, MISC.: TERMINAL PORT SERVER (CONTINUED)

ALL CABLES SHALL MEET THE PROPOSED EQUIPMENT SPECIFICATION REQUIREMENTS AND SHALL MEET EIA/TIA TELECOMMUNICATIONS STANDARDS.

THE WORK AS DESCRIBED WILL BE MEASURED AS ONE UNIT FOR EACH OF THE INSTALLATIONS SPECIFIED, AND SHALL INCLUDE ALL MATERIALS, EQUIPMENT AND INCIDENTALS, COMPLETE IN PLACE. TERMINATIONS, CABLES, CONNECTORS, AND OTHER MISCELLANEOUS ITEMS AND MATERIALS SHALL BE INCIDENTAL TO THIS WORK AND NO SEPARATE PAYMENT WILL BE MADE. (5/24/2016)

ITEM 633 - CONTROLLER ITEM, MISC.: FIBER OPTIC ETHERNET TRANSCEIVER, SHORT RANGE

THE CONTRACTOR SHALL FURNISH AND INSTALL SINGLE MODE FIBER (SMF), SMALL FORM FACTOR PLUGGABLE (SFP) GIGABIT INTERFACE CONNECTOR (GBIC) MODULES AT LOCATIONS AS SHOWN ON THE PLANS.

THE GBIC TRANSCEIVER SHALL BE 1000BASE LX/LH SFP-LC TRANSCEIVER (CISCO PART #GLC-LX-SM-RGD).

THE CONTRACTOR SHALL INSTALL THE SFP MODULE IN THE ETHERNET SWITCH SLOT AND CONFIGURE AS NECESSARY.

THE CONTRACTOR SHALL BE RESPONSIBLE FOR PROVIDING A COMPLETE, FUNCTIONAL SYSTEM INCLUDING ALL NECESSARY CABLES AND CONNECTORS IN ACCORDANCE TO THE SPECIFICATIONS AND AS SPECIFIED ON THE PLANS. ALL MISCELLANEOUS PATCH AND INTERCONNECT CABLES SHALL MEET THE PROPOSED EQUIPMENT SPECIFICATION REQUIREMENTS AND SHALL MEET EIA/TIA TELECOMMUNICATIONS STANDARDS. THE WORK AS DESCRIBED WILL BE MEASURED AS ONE UNIT FOR EACH OF THE INSTALLATIONS SPECIFIED, AND SHALL INCLUDE ALL MATERIALS, EQUIPMENT AND INCIDENTALS, COMPLETE IN PLACE. PATCH CABLES, TERMINATIONS, CONNECTIONS, AND OTHER MISCELLANEOUS ITEMS AND MATERIALS SHALL BE CONSIDERED INCIDENTAL TO THIS WORK AND NO SEPARATE PAYMENT WILL BE MADE. (12/2/2015)

ITEM 633 - CONTROLLER ITEM, MISC.: LAYER 2 ETHERNET SWITCH

THE CONTRACTOR SHALL PURCHASE AND INSTALL ENVIRONMENTALLY HARDENED LAYER 2 ETHERNET SWITCHES AS SHOWN ON THE PLANS. LAYER 2 ETHERNET SWITCHES SHALL BE COMNET MODEL CNGE11FX3TX8MS THIS WORK IS THE FURNISHING AND INSTALLATION OF A LAYER 2 SWITCH WITH THREE 100/1000BASE-FX SFP PORTS AND EIGHT SWITCHED 10/100/1000BASE-TX RJ45 PORTS.

ALL EQUIPMENT SHALL BE NEW AND IN STRICT ACCORDANCE WITH THE DETAILS SHOWN ON THE PLANS AND THE SPECIFICATIONS.
TRAFFIC MAINTENANCE SHALL BE CONTACTED AT 645-7393 14 CALENDAR DAYS PRIOR TO INSTALLATION TO PROGRAM THE SWITCH. THE CONTRACTOR SHALL INSTALL THE SWITCH IN THE CABINET BUT SHALL NOT MAKE ANY CONNECTIONS TO THE SWITCH.

THE TRAFFIC MAINTENANCE MANAGER SHALL INSPECT THE CONDITION OF ALL COMPONENTS UPON INSTALLATION. NO DAMAGED COMPONENT WILL BE ACCEPTED, AND NO COMPONENT SHALL BE CONSIDERED INSTALLED UNTIL THE TRAFFIC MAINTENANCE MANAGER APPROVES OF THE SWITCH INSTALLATION. LAYER 2 ETHERNET SWITCHES SHALL SUPPORT DIRECT CONNECTIVITY TO PROPOSED AND EXISTING NETWORKS CONFIGURED IN RING AND MESH FAULT TOLERANT TOPOLOGIES ENABLING APPLICATIONS TO OPERATE RELIABLY, AND WITH LOW LATENCY.

ALL EQUIPMENT SHALL INCLUDE LICENSES, WHERE REQUIRED, FOR ANY SOFTWARE OR HARDWARE IN THE SYSTEM.

LAYER 2 ETHERNET SWITCHES SHALL SUPPORT DIRECT CONNECTIVITY TO PROPOSED AND EXISTING NETWORKS CONFIGURED IN RING AND MESH FAULT TOLERANT TOPOLOGIES ENABLING APPLICATIONS TO OPERATE RELIABLY, AND WITH LOW LATENCY.

1. INSTALL POWER ADAPTER, POWER CABLES, CATEGORY 5E OR CATEGORY 6 PATCH CORDS, AND SINGLE MODE PATCH CABLES AS REQUIRED AND DEPICTED ON COMMUNICATIONS DIAGRAMS.

2. SECURELY MOUNT THE SWITCH AND POWER SUPPLY IN THE CABINET.

3. MAKE POWER CONNECTION TO AN AVAILABLE OUTLET ON THE INSTALLED SURGE SUPPRESSOR.

4. MAKE THE COMMUNICATION CONNECTIONS.

5. ESTABLISH AND VERIFY COMMUNICATIONS TO THE NETWORK PRIOR TO TRANSITIONING SIGNAL CONTROLLER TO NEW SYSTEM.

THE CONTRACTOR SHALL BE RESPONSIBLE FOR PROVIDING A COMPLETE, FUNCTIONAL SYSTEM INCLUDING ALL NECESSARY CABLES AND CONNECTORS IN ACCORDANCE TO THE SPECIFICATIONS AND AS SPECIFIED ON THE PLANS. ALL MISCELLANEOUS PATCH AND INTERCONNECT CABLES SHALL MEET THE PROPOSED EQUIPMENT SPECIFICATION REQUIREMENTS AND SHALL MEET EIA/TIA TELECOMMUNICATIONS STANDARDS. ADDITIONALLY, FIBER OPTIC PATCH CABLES SHALL CONFORM TO THE PLAN REQUIREMENTS FOR PATCH CABLES. (5/12/20)

ITEM 625 - CONDUIT, MISC.: 4", MULTICELL, 725.20 , EPC-80, CITY OF COLUMBUS

THIS ITEM SHALL FOLLOW CITY OF COLUMBUS CMS 625 AND 725.20, AND SHALL BE DIRECTIONALLY BORED AS INDICATED IN THE PLANS.

CONDUIT MISC.: ENCASED INTERCONNECT CONDUIT BANK, TC2, SCH 40, (4)-3" & (1)-1.5", CITY OF COLUMBUS
CROSS SECTION (TYPICAL)

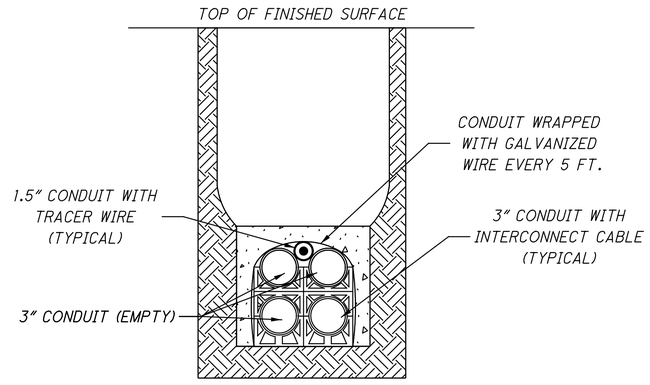

APPLIES TO:
STA. 546+50 TO STA. 580+32 LOOKING NORTH
STA. 546+50, 11.0' RT TO STA. 546+50, 75.7' RT LOOKING EAST
STA. 580+32 TO STA. 602+64 LOOKING NORTH
STA. 602+64, 9.0' LT TO STA. 602+64, 71.0' LT LOOKING WEST
STA. 602+64 TO STA. 606+90 LOOKING NORTH

CTSS D EXISTING CONDUIT AND PROPOSED CONDUIT CROSS SECTION

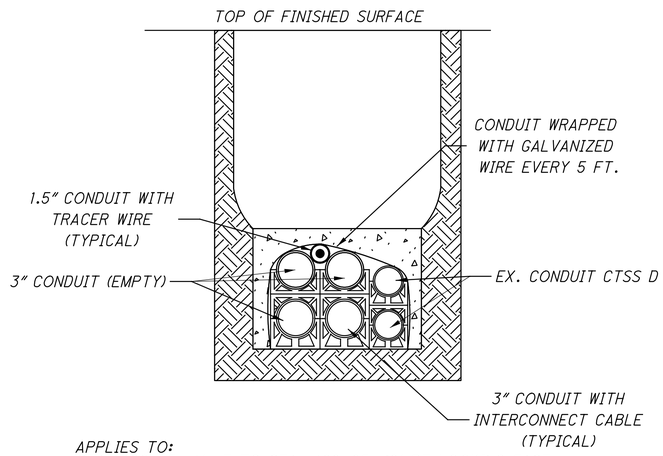

APPLIES TO:
STA. 496+75, 4' LT TO STA. 498+05, 19' RT LOOKING EAST

CALCULATED DKA
CHECKED SGJ

TRAFFIC SIGNAL INTERCONNECT NOTES

FRA-270-51.50

X:\Projects\2013\1321\1010\FRA\92616\signals\sheets\92616GN005.dgn 4/28/2023 2:56:19 PM cwong

ODOT INTERCONNECT NOTES

ITEM 625 - PULL BOX, 725.08, 32", AS PER PLAN

THIS ITEM SHALL CONFORM TO ODOT CMS 625.11 AND 725.08, INCLUDING A CONCRETE WORK PAD PER ODOT ITS STANDARD DRAWING ITS-14.11.

ITEM 625 - CONDUIT, MISC.: CONDUIT 4" MULTI-CELL SCHEDULE 40 & SCHEDULE 80, 725.20

DESCRIPTION

THIS CONDUIT IS INTENDED FOR THE USE IN UNDERGROUND SITUATIONS REQUIRING MORE THAN ONE SINGLE CONDUIT. THIS INCLUDES THE MAIN CONDUIT RACEWAY ALONG THE FREEWAY, CONNECTION FROM PULL BOXES TO THE ROAD SIDE CABINETS AND FOR RUNS OF CONDUIT FOR MULTIPLE PURPOSES, E.G., AT RAMP METER INSTALLATIONS, FOR LOOP LEAD-IN CABLE, SIGNALS CABLE FOR RAMP METER DISPLAYS, SIGNAL CABLE FOR RAMP METER SIGNING FLASHERS & ILLUMINATION AND POWER. THE CONTRACTOR SHALL PLUG ALL UNUSED CELLS WITH CONDUIT CAPS TO ASSURE AIR AND WATER INTEGRITY OF EACH INDIVIDUAL INNERDUCT.

MATERIALS

THE TRAFFIC SURVEILLANCE RACEWAY SHALL CONSIST OF A FACTORY-ASSEMBLED SYSTEM OF FOUR (4) INNERDUCTS ASSEMBLED WITHIN A PROTECTIVE OUTER DUCT. THE INNERDUCTS SHALL BE NOMINAL 1.25 INCH INSIDE DIAMETER, TYPE DB PVC PER NEMA TC-8 WITH A BELL INSERTION DEPTH OF 1.75 INCHES MINIMUM. THE OUTER DUCT SHALL BE NOMINAL 4 INCH (INSIDE DIAMETER), SCHEDULE 40 PVC. CARLON TYPE SCHEDULE 40 AND 80 OR APPROVED EQUIVALENT.

THE COUPLING SHALL BE DESIGNED IN A MANNER TO PERMIT EASY FIELD ASSEMBLY. THE COUPLING SHALL BE MARKED OR KEYED IN A MANNER TO ENSURE THE INNERDUCTS ARE PROPERLY ALIGNED, ANY COLOR CODES ARE CONTINUED AND THE ADJOINING SECTION IS INSERTED TO THE PROPER DEPTH IN THE BELL. ALL KEYS AND/OR MARKINGS SHALL BE VISIBLE AFTER ASSEMBLY TO ALLOW THE INSPECTION OF EACH JOINT FOR PROPER ASSEMBLY BEFORE BURIAL. THE SEALING SYSTEM SHALL BE DESIGNED TO ASSURE AIR INTEGRITY OF EACH INDIVIDUAL INNERDUCT AND WATER INTEGRITY OF THE ENTIRE SYSTEM.

WHERE INNERDUCT(S) WITHIN A MULTI-CELL DUCT ARE TO REMAIN EMPTY, ONE *-INCH NYLON ROPE SHALL BE INSTALLED IN EACH OF THE OPEN INNERDUCTS, THE ROPE WILL REMAIN TO BE USED FOR A FUTURE CABLE INSTALLATION. ALSO, EACH INNERDUCT SHALL BE PLUGGED TO MAINTAIN THE AIR AND WATER INTEGRITY. IN ADDITION, THE OUTER DUCT SHALL BE CAPPED TO MAINTAIN THE AIR AND WATER INTEGRITY OF THE ENTIRE SYSTEM.

INSTALLED IN TRENCH

INSTALLATION WILL BE IN 30-INCH DEEP TRENCH, EXCEPT AS NOTED ON THE PLANS.

ALL JOINTS WILL BE JOINED ACCORDING TO THE MANUFACTURER'S RECOMMENDATIONS, IN ORDER TO PROVIDE AN AIR-TIGHT ENCLOSURE OF THE INTERIOR DUCTS AND A WATER-TIGHT ENCLOSURE OF THE OUTER DUCT. ALL MULTI-CELL CONDUIT INSTALLED OUTSIDE OF THE ROADWAY IN TRENCH SHALL BE SCHEDULE 40 UNLESS DIRECTED BY THE ODOT ENGINEER TO USE SCHEDULE 80 FOR USE IN WELL-TRAVELED VEHICULAR AREAS.

INSTALLED UNDER ROADWAY

INSTALLATION WILL BE AT LEAST 30 INCHES DEEP JACKED OR DRILLED UNDER PAVEMENT, EXCEPT AS NOTED ON THE PLANS.

ALL JOINTS WILL BE JOINED ACCORDING TO THE MANUFACTURER'S RECOMMENDATIONS, IN ORDER TO PROVIDE AN AIR-TIGHT ENCLOSURE OF THE INTERIOR DUCTS AND A WATER-TIGHT ENCLOSURE OF THE OUTER DUCT. ALL MULTI-CELL CONDUIT INSTALLED UNDER THE ROADWAY SHALL BE SCHEDULE 80.

METHOD OF MEASUREMENT

THE CONDUIT WILL BE MEASURED BY THE AMOUNT OF CONDUIT IN FEET FURNISHED AND INSTALLED OF EACH TYPE SCHEDULE 40 OR 80 MEASURED FROM CENTER-TO-CENTER OF PULL BOXES, FOUNDATION, ETC., AND WILL INCLUDE ALL FITTINGS AND APPURTENANCES, JOINTS, BENDS, GROUNDS AND CONCRETE ENCASEMENT WHERE SPECIFIED.

THE TRENCH WILL BE MEASURED BY THE NUMBER OF FEET OF TRENCH COMPLETED AS PER C&MS 625.21.

BASIS OF PAYMENT

THE PAYMENT FOR THESE ITEMS WILL BE MADE FOR THE ACCEPTED LINER FOOT QUANTITIES AT THE CONTRACT BID PRICE.

TRACER WIRE

TRACER WIRE SHALL BE INSTALLED IN ONE OF THE MULTI-CELL INNERDUCTS IN ALL CONDUIT RUNS. TRACER WIRE SHALL BE NO SMALLER THAN #12 AWG WIRE. THE WIRE SHALL BE HDPE INSULATED, ORANGE IN COLOR, AND CONSTRUCTED OF COPPER CLAD STEEL. APPROXIMATELY 10 FEET OF SLACK OF THE TRACER WIRE SHALL BE LEFT INSIDE THE ADJACENT PULL BOXES CONNECTING THE CONDUIT RUNS. IN SITUATIONS WHERE A TYPE 2 FIBER OPTIC CABLE MARKER IS TO BE INSTALLED IN CONJUNCTION WITH THE TRACER WIRE, THE TRACER WIRE SHALL BE RUN THROUGH THE MARKER AND CONNECTED TO TERMINALS AT THE TOP OF THE MARKER. PAYMENT FOR ALL TRACER WIRE SHALL BE INCLUDED IN THE BID ITEM FOR THE FIBER OPTIC CABLE PAY ITEM.

ITS DEVICE DOWNTIME

CONTRACTOR SHALL FOLLOW ODOT DD 809.14 REGARDING ITS DEVICE DOWNTIME SCHEDULES.

FIBER OPTIC CABLE MARKER

FIBER OPTIC CABLE MARKERS SHALL BE INSTALLED AS DIRECTED BY THE ODOT ENGINEER AND/OR AT EVERY PULL BOX CONTAINING FIBER OPTIC CABLE AND SHALL BE ONE OF TWO TYPES:

TYPE 1 COTTMARK 511, FRICK FLEXPOST, OR CARSONITE CURV-FLEX MARKER
TYPE 2 COTT BIGFINK, FRICK TESTPOST, OR RHINODOME TEST STATION

THE FIBER OPTIC CABLE MARKERS SHALL BE 6 FEET IN LENGTH AND SHALL BE SECURELY PLACED IN THE GROUND AT A DEPTH OF 2 FEET. CARE SHALL BE TAKEN DURING INSTALLATION NOT TO DAMAGE ANY UNDERGROUND CONDUIT IN THE VICINITY. THE CONTRACTOR SHALL USE A TYPE 2 MARKER WHEN THE PATH OF THE FIBER CROSSES UNDERNEATH A ROADWAY AND WHEN CAPABLE SHALL PLACE A MARKER ON BOTH SIDES OF THE ROADWAY AT CROSSING. THE CONTRACTOR SHALL CONNECT TRACER WIRE TO TERMINAL AT TOP OF TYPE 2 MARKER. TYPE 1 MARKERS SHALL ONLY BE PLACED ON STRAIGHT FIBER RUNS BETWEEN PULL BOXES IN THE SHOULDER, AND THE CONTRACTOR SHALL BE LIMITED TO THE USE OF TYPE 1 MARKERS SO THAT A TYPE 2 MARKER SHALL BE PLACED BETWEEN ANY TWO TYPE 1 MARKERS. TYPE 1 MARKERS SHALL NOT BE PLACED IN SUCCESSION DOWN A FIBER PATH. THE MARKERS SHALL BE ORANGE IN COLOR AND SHALL HAVE THE FOLLOWING INFORMATION LOCATED ON THE UPPER PORTION OF THE MARKER IN A READABLE FORMAT:

WARNING

CONTACT OUPS 48 HRS BEFORE DIGGING.

PAYMENT FOR ALL FIBER OPTIC CABLE MARKERS SHALL BE INCLUDED IN THE BID ITEM FOR THE FIBER OPTIC CABLE PAY ITEM.

ITEM 809 - ITS DEVICE, MISC.: RELOCATE EXISTING CCTV CAMERA POLE

THIS ITEM INCLUDES RELOCATING THE EXISTING ODOT ITS CCTV CAMERA POLE TO THE NEW FOUNDATION AS INDICATED IN THE PLANS. THE EXISTING POLE MOUNTED CABINET, CONDUIT ELS, SHALL BE REMOVED AND DELIVERED TO ODOT. CONTACT ODOT OFFICE OF TRAFFIC OPERATIONS PER SS 809.14 TO COORDINATE DELIVERY. THE CONTRACTOR SHALL REPAIR ANY HOLES IN THE CAMERA POLE USING RUBBER STOPPERS OR GROMENTS. THE STOPPERS OR GROMENTS SHALL BE FLUSH WITH THE POLE, PAINTED TO MATCH THE EXISTING POLE COLOR.

THE CONTRACTOR SHALL TAKE PRECAUTION TO NOT DAMAGE THE POLE WHILE RELOCATION WORK TAKES PLACE. ANY DAMAGE TO THE POLE SHALL BE THE SOLE RESPONSIBILITY OF THE CONTRACTOR, WHICH INCLUDED REPLACING THE DAMAGED POLE AT THE DISCRETION OF THE ENGINEER. THIS PAY ITEM INCLUDES ALL PARTS, EQUIPMENT, LABOR, MATERIALS, AND INCIDENTALS TO PERFORM THIS WORK, COMPLETE AND IN PLACE.

ITEM 809 - CCTV LOWERING UNIT

THIS ITEM SHALL CONFORM TO ODOT SS 809.06. 100 FEET OF CCTV CAMERA CABLE SHALL BE INCIDENTAL TO THE COST OF THE LOWER UNIT.

CALCULATED DKA
CHECKED SGJ

TRAFFIC SIGNAL INTERCONNECT NOTES

FRA-270-51.50

x:\Projects\2013\1321\1010\FRA\92616\signals\sheets\92616CN006.dgn 12/7/2022 3:01:09 PM cwong

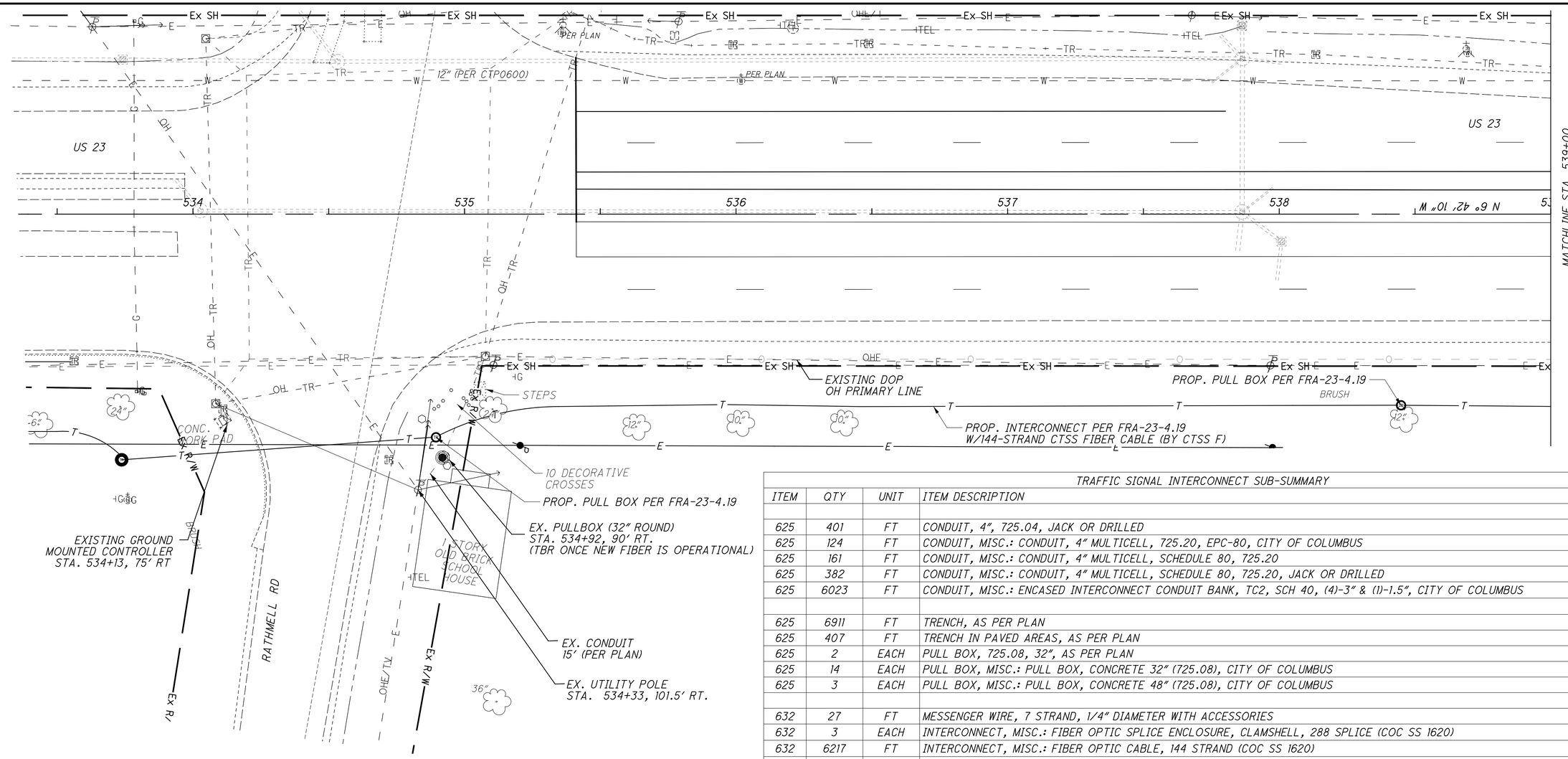

LEGEND:

- = EXISTING UTILITY POLE
- = EXISTING LIGHT POLE
- = EXISTING MANHOLE
- = EXISTING WATER VALVE
- = EXISTING GAS VALVE
- = EXISTING SIGNAL POLE FOUNDATION
- = EXISTING TRAFFIC SIGNAL PULLBOX
- = PROPOSED SIGNAL POLE FOUNDATION
- = PROPOSED TRAFFIC PULL BOX (48")
- = PROPOSED TRAFFIC PULL BOX (32")

TRAFFIC SIGNAL INTERCONNECT SUB-SUMMARY

ITEM	QTY	UNIT	ITEM DESCRIPTION
625	401	FT	CONDUIT, 4", 725.04, JACK OR DRILLED
625	124	FT	CONDUIT, MISC.: CONDUIT, 4" MULTICELL, 725.20, EPC-80, CITY OF COLUMBUS
625	161	FT	CONDUIT, MISC.: CONDUIT, 4" MULTICELL, SCHEDULE 80, 725.20
625	382	FT	CONDUIT, MISC.: CONDUIT, 4" MULTICELL, SCHEDULE 80, 725.20, JACK OR DRILLED
625	6023	FT	CONDUIT, MISC.: ENCASED INTERCONNECT CONDUIT BANK, TC2, SCH 40, (4)-3" & (1)-1.5", CITY OF COLUMBUS
625	6911	FT	TRENCH, AS PER PLAN
625	407	FT	TRENCH IN PAVED AREAS, AS PER PLAN
625	2	EACH	PULL BOX, 725.08, 32", AS PER PLAN
625	14	EACH	PULL BOX, MISC.: PULL BOX, CONCRETE 32" (725.08), CITY OF COLUMBUS
625	3	EACH	PULL BOX, MISC.: PULL BOX, CONCRETE 48" (725.08), CITY OF COLUMBUS
632	27	FT	MESSENGER WIRE, 7 STRAND, 1/4" DIAMETER WITH ACCESSORIES
632	3	EACH	INTERCONNECT, MISC.: FIBER OPTIC SPLICE ENCLOSURE, CLAMSHELL, 288 SPLICE (COC SS 1620)
632	6217	FT	INTERCONNECT, MISC.: FIBER OPTIC CABLE, 144 STRAND (COC SS 1620)
632	3	EACH	INTERCONNECT, MISC.: TERMINATION PANEL, 24 FIBER, WITH 200 FT DROP CABLE
632	240	EACH	INTERCONNECT CABLE, MISC.: FIBER OPTIC FUSION SPLICE (COC SS 1620)
632	1000	FT	POWER CABLE, 3 CONDUCTOR, NO. 4 AWG
632	1	EACH	CONDUIT RISER, 2" DIAMETER
632	1	EACH	WOOD POLE
633	3	EACH	CONTROLLER ITEM, MISC.: LAYER 2 ETHERNET SWITCH
633	6	EACH	CONTROLLER ITEM, MISC.: FIBER OPTIC ETHERNET TRANSCEIVER, SHORT RANGE
633	2	EACH	CONTROLLER ITEM, MISC.: TERMINAL PORT SERVER
804	3	EACH	FAN-OUT KIT, 12 FIBER
804	3	EACH	FIBER TERMINATION PANEL, 12 FIBER
804	2	EACH	SPLICE ENCLOSURE

HORIZONTAL SCALE IN FEET
0 10 20 40

CALCULATED DKA
CHECKED SGJ

TRAFFIC SIGNAL INTERCONNECT PLAN
U.S. 23 STA. 533+50 TO STA. 539+00

FRA-270-51.50

415
554

X:\Projects\2013\1321\1010\FRA\92616\signals\sheets\92616CP003-IC.dgn 4/26/2023 3:13:43 PM cwong

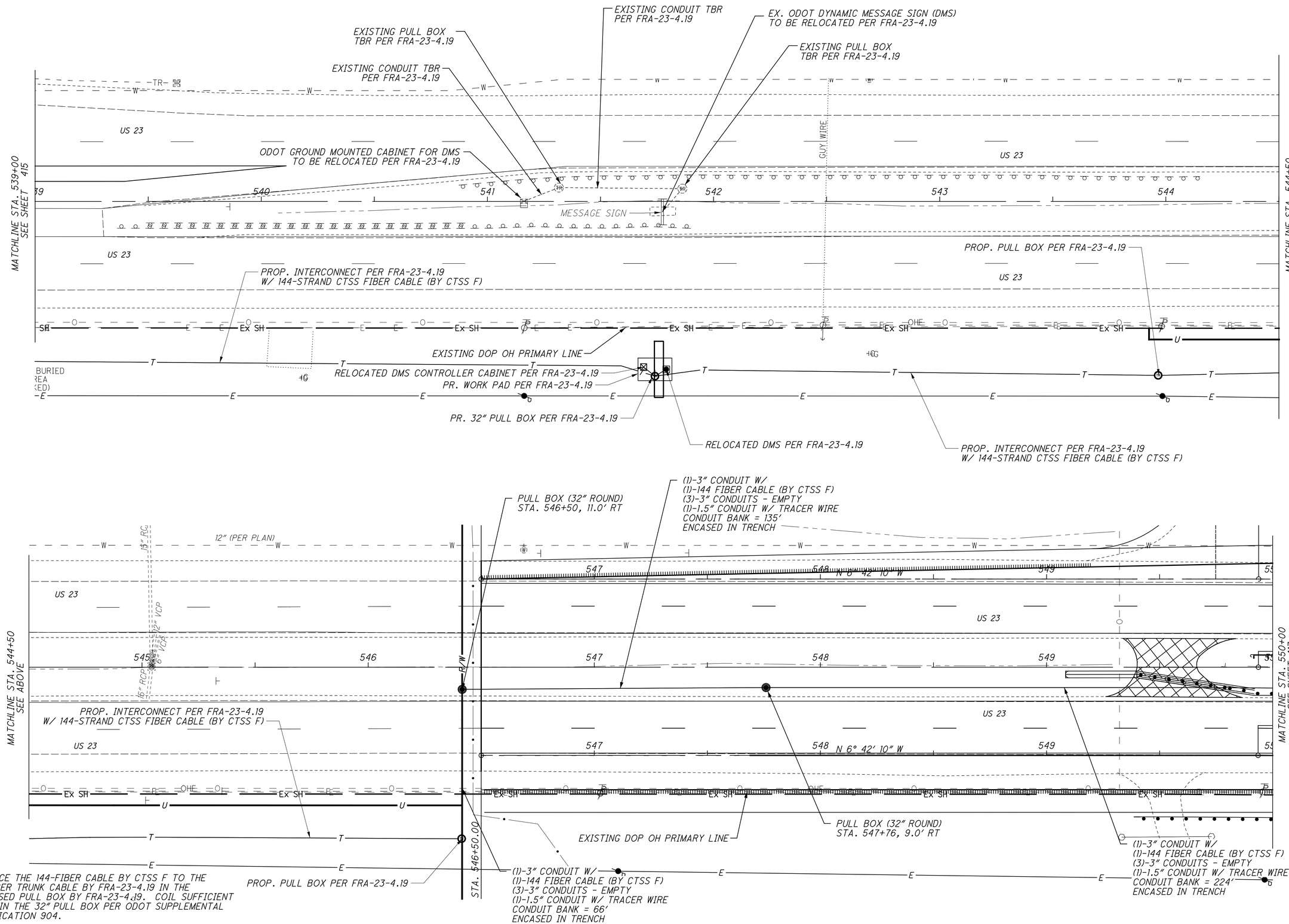

NOTES:

1. SPLICE THE 144-FIBER CABLE BY CTSS F TO THE 144-FIBER TRUNK CABLE BY FRA-23-4.19 IN THE PROPOSED PULL BOX BY FRA-23-4.19. COIL SUFFICIENT SLACK IN THE 32" PULL BOX PER ODOT SUPPLEMENTAL SPECIFICATION 904.

HORIZONTAL SCALE IN FEET
0 10 20 40

CALCULATED DKA
CHECKED SGJ

TRAFFIC SIGNAL INTERCONNECT PLAN
U.S. 23 STA. 539+00 TO STA. 550+00

FRA-270-51.50

416
554

X:\Projects\2013\1321\1010\FRA\92616\signals\sheets\92616CP004-IC.dgn 4/26/2023 5:58:26 AM cwong

(1)-3" CONDUIT W/
(1)-144 FIBER CABLE (BY CTSS F)
(3)-3" CONDUITS - EMPTY
(1)-1.5" CONDUIT W/ TRACER WIRE
CONDUIT BANK = 266'
ENCASED IN TRENCH

PULL BOX (32" ROUND)
STA. 552+66, 9.2' RT

(1)-3" CONDUIT W/
(1)-144 FIBER CABLE (BY CTSS F)
(3)-3" CONDUITS - EMPTY
(1)-1.5" CONDUIT W/ TRACER WIRE
CONDUIT BANK = 274'
ENCASED IN TRENCH

MATCHLINE STA. 550+00
SEE SHEET 416

MATCHLINE STA. 555+50
SEE BELOW

12" (PER PLAN)

PI STA. 549+93.68

PI STA. 549+93.55

US 23

N 6° 19' 40" W

THE CITY OF COLUMBUS, OHIO
NO PID

Ex R/W

Ex LA-R/W

EXISTING DOP OH PRIMARY LINE

(1)-3" CONDUIT W/
(1)-144 FIBER CABLE (BY CTSS F)
(3)-3" CONDUITS - EMPTY
(1)-1.5" CONDUIT W/ TRACER WIRE
CONDUIT BANK = 226'
ENCASED IN TRENCH

PULL BOX (32" ROUND)
STA. 557+76, 9.3' RT

(1)-3" CONDUIT W/
(1)-144 FIBER CABLE (BY CTSS F)
(3)-3" CONDUITS - EMPTY
(1)-1.5" CONDUIT W/ TRACER WIRE
CONDUIT BANK = 324'
ENCASED IN TRENCH

MATCHLINE STA. 555+50
SEE ABOVE

MATCHLINE STA. 561+00
SEE SHEET 418

PC STA. 555+41.10

PC STA. 555+40.85

PC STA. 555+40.59

PT STA. 560+35.11

PT STA. 560+10.04

PC 260+14.67

14.67

TRAFFIC SIGNAL INTERCONNECT PLAN
U.S. 23 STA. 550+00 TO STA. 561+00

FRA-270-51.50

417
554

HORIZONTAL SCALE IN FEET
0 10 20 40

CALCULATED DKA
CHECKED SGJ

X:\Projects\2013\132\1010\FRA\92616\signals\sheets\92616CP005-IC.dgn 2/16/2023 6:28:13 AM cwong

X:\Projects\2013\1321\1010\FRA\92616\signals\sheets\92616CP006-IC.dgn 2/16/2023 6:44:25 AM cwong

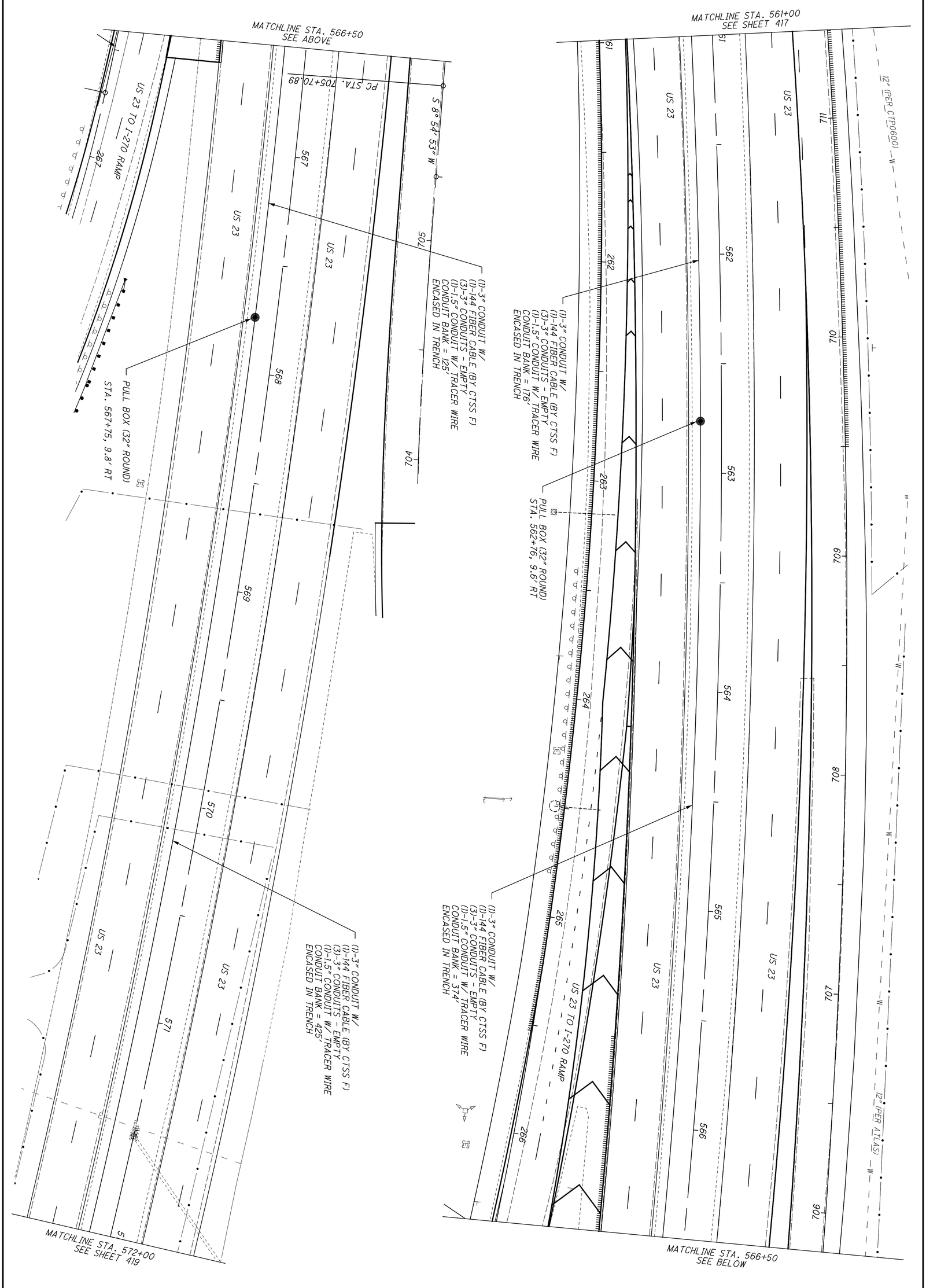

418 / 554	FRA-270-51.50	TRAFFIC SIGNAL INTERCONNECT PLAN U.S. 23 STA. 561+00 TO STA. 572+00	CALCULATED DKA CHECKED SGJ	0 10 20 40 HORIZONTAL SCALE IN FEET

NOTE

COIL SUFFICIENT 24-FIBER DROP CABLE IN THE PROPOSED 48" PULL BOX (STATION 572+76) AND THE PROPOSED CONTROLLER CABINET (STATION 572+76.5) PER ODOT SUPPLEMENTAL SPECIFICATION 804.

(2) - 4" CONDUITS (MULTICELL) JACK OR DRILLED, 77' (EMPTY)

(1)-3" CONDUIT W/ (1)-144 FIBER CABLE (BY CTSS F) (3)-3" CONDUITS - EMPTY (1)-1.5" CONDUIT W/ TRACER WIRE CONDUIT BANK = 76' ENCASED IN TRENCH

PULL BOX (32" ROUND) STA. 572+76, 77.0' LT

RAMP P2

30"-A

PB 6

PT STA. 572+38.97

EX. 12" WATER (CTP0600-013)

(1)-3" CONDUIT W/ (1)-144 FIBER CABLE (BY CTSS F) (3)-3" CONDUITS - EMPTY (1)-1.5" CONDUIT W/ TRACER WIRE CONDUIT BANK = 185' ENCASED IN TRENCH

C STA. 2+98.12

72" RCP

72" RCP

18" RCP

US 23

MATCHLINE STA. 572+00 SEE SHEET 418

MATCHLINE STA. 577+50 SEE SHEET 420

572 573 574 575 576 577

PT STA. 574.54

PULL BOX (48" ROUND) TYPE 1 STA. 572+76, 9.0' RT W/ SPLICE ENCLOSURE

(SPLICE 144-FIBER TO 24-FIBER DROP CABLE)

(2)-4" CONDUITS (MULTICELL) W/ (1) - 24-FIBER DROP CABLE, JACK OR DRILLED, 55'

PROPOSED GROUND MOUNTED CONTROLLER STA. 572+76.5, 61.4' RT INSTALL (2)-GBIC MODULES INSTALL (1)-LAYER 2 SWITCH

CONDUIT TO PROPOSED POWER LOCATION

(1)-3" CONDUIT W/ (1)-144 FIBER CABLE (BY CTSS F) (3)-3" CONDUITS - EMPTY (1)-1.5" CONDUIT W/ TRACER WIRE CONDUIT BANK = 295' ENCASED IN TRENCH

PULL BOX (32" ROUND) STA. 575+65, 9.1' RT

HORIZONTAL SCALE IN FEET

0 10 20 40

CALCULATED DKA CHECKED SGJ

TRAFFIC SIGNAL INTERCONNECT PLAN
U.S. 23 STA. 572+00 TO STA. 577+50

FRA-270-51.50

419
554

X:\Projects\2013\1321\1010\FRA\92616\signals\sheets\92616CP007-IC.dgn 3/7/2023 7:27:19 AM cwong

NOTES

COIL SUFFICIENT 12-FIBER DROP CABLE IN THE PROPOSED PTZ CAMERA CONTROL BOX (STATION 580+17) AND THE PROPOSED 32" PULL BOX (STATION 580+17) PER ODOT SUPPLEMENTAL SPECIFICATION 804.

COIL SUFFICIENT 24-FIBER DROP CABLE IN THE PROPOSED CONTROLLER CABINET (STATION 587+29.7) AND THE PROPOSED 48" PULL BOX (STATION 587+37) PER ODOT SUPPLEMENTAL SPECIFICATION 804.

EX. TR CONDUIT (TBA) W/EX. CTSS 144-STRAND FOC (TBR)

MATCH LINE STA. 498+00 - SEE SHEET 420A

EX. POWER FOR NODE CABINET PER CTSS D (DND)

EX. CONDUIT ATTACHED TO BRIDGE W/EX. 288-STRAND CTSS FOC (DND)

EX. PULL BOX PER CTSS E (TBR)

(1)-3" CONDUIT W/ (1)-144 FIBER CABLE (3)-3" CONDUITS - EMPTY (1)-1.5" CONDUIT W/ TRACER WIRE CONDUIT BANK = 268' ENCASED IN TRENCH

EX. TR CONDUIT (TBA) W/EX. CTSS 144-STRAND FOC (TBR)

(1)-4" MULTICELL CONDUIT W/ 12-FIBER DROP CABLE, 65'

EX. 18" ELECTRIC PB PER CTSS D (DND)

PULL BOX (32" ROUND) STA. 580+33, 69.1' LT

(1)-4" MULTICELL CONDUIT W/ 12-FIBER DROP CABLE, JACK OR DRILLED, 78'

EX. POWER FOR NODE CABINET PER CTSS D (DND)

MATCHLINE STA. 577+50 SEE SHEET 419

MATCHLINE STA. 583+00 SEE BELOW

US 23

I-270 EB

I-270 WB

(1)-3" CONDUIT W/ (1)-144 FIBER CABLE (BY CTSS F) (3)-3" CONDUITS - EMPTY (1)-1.5" CONDUIT W/ TRACER WIRE CONDUIT BANK = 125' ENCASED IN TRENCH

EX. PULL BOX PER CTSS E (TBR)

PULL BOX (18") STA. 580+37, 5.8' RT

(2) - 4" CONDUITS (MULTICELL) (EMPTY), 62'

(1)-3" CONDUIT W/ (1)-144 FIBER CABLE (3)-3" CONDUITS - EMPTY (1)-1.5" CONDUIT W/ TRACER WIRE CONDUIT BANK = 113' ENCASED IN TRENCH

WOODED

EX. TR CONDUIT (TBA) W/EX. CTSS 144-STRAND FOC (TBR)

PULL BOX (32" ROUND) STA. 587+42, 54.8' LT

PULL BOX (48" ROUND) TYPE 1 STA. 587+42, 6.8' RT W/ SPLICE ENCLOSURE COIL 300' 144-FIBER TRUNK CABLE (SPLICE 144-FIBER TUNK CABLE TO 24-FIBER DROP CABLE)

EX. PULL BOX PER CTSS E (TBR)

EX. PULL BOX PER CTSS E (TBR)

PULL BOX (32" ROUND) STA. 580+32, 9.0' RT. W/ SPLICE ENCLOSURE COIL 150' 144 FIBER TRUNK CABLE (SPLICE 144-FIBER TRUNK CABLE TO 12-FIBER DROP CABLE)

EX. TR CONDUIT (TBA) W/EX. CTSS 144-STRAND FOC (TBR)

MATCHLINE STA. 583+00 SEE ABOVE

MATCHLINE STA. 588+50 SEE SHEET 421

US 23

US 23

PULL BOX (32" ROUND) STA. 584+45, 9.0' RT COIL 150' SLACK OF 144-FIBER CABLE

(1)-3" CONDUIT W/ (1)-144 FIBER CABLE (3)-3" CONDUITS - EMPTY (1)-1.5" CONDUIT W/ TRACER WIRE CONDUIT BANK = 297' ENCASED IN TRENCH

(1)-3" CONDUIT W/ (1)-144 FIBER CABLE (3)-3" CONDUITS - EMPTY (1)-1.5" CONDUIT W/ TRACER WIRE CONDUIT BANK = 145' ENCASED IN TRENCH

US 23 TO I-270 WB RAMP

RAMP S

P.C. Sta. 798+48.77

P.C. STA. 799+52.87

(2) - 4" CONDUITS (MULTICELL) W/ (1) - 24-FIBER DROP CABLE, JACK OR DRILLED, 59'

PULL BOX (18") (SEE SIGNAL PLANS)

(1) - 2" CONDUIT W/ POWER CABLE (SIGNAL)

(1) - 2" CONDUIT W/ POWER CABLE (CCTV CAMERA), 6' (CONDUIT QUANTITY IN SIGNAL PLANS)

EX. PULL BOX PER CTSS E (TBR)

EX. 144-STRAND CTSS FOC AND MESSENGER WIRE (TBR)

EX. RISER (TBR)

SEE DETAIL A

(1) - 4" CONDUIT (MULTICELL) W/ (1) - 24-FIBER DROP CABLE

PROPOSED GROUND MOUNTED CONTROLLER STA. 587+29.7, 63.9' RT INSTALL (1)-LAYER 2 SWITCH INSTALL (2)-GBIC MODULES

(1) - 3" CONDUIT W/ SIGNAL CABLES (SEE SIGNAL PLANS)

CONDUIT TO PROP. POWER LOCATION

PULL BOX (32") (SEE SIGNAL PLANS)

CONDUIT W/ POWER CABLE

DETAIL A
SCALE 1:10

EX. TR CONDUIT (TBA) W/EX. CTSS 144-STRAND FOC (TBR)

ST STA. 15+70.02

12" (PER CTP0600)

12" (PER ATLAS)

12" WATER

12" W

S 17° 54' 47" W

HORIZONTAL SCALE IN FEET

CALCULATED DKA

CHECKED SGJ

TRAFFIC SIGNAL INTERCONNECT PLAN
U.S. 23 STA. 577+50 TO STA. 588+50

FRA-270-51.50

420
554

X:\Projects\2013\1321\1010\FRA\92616\signals\sheets\92616CP008-IC.dgn 5/1/2023 6:06:07 AM cwong

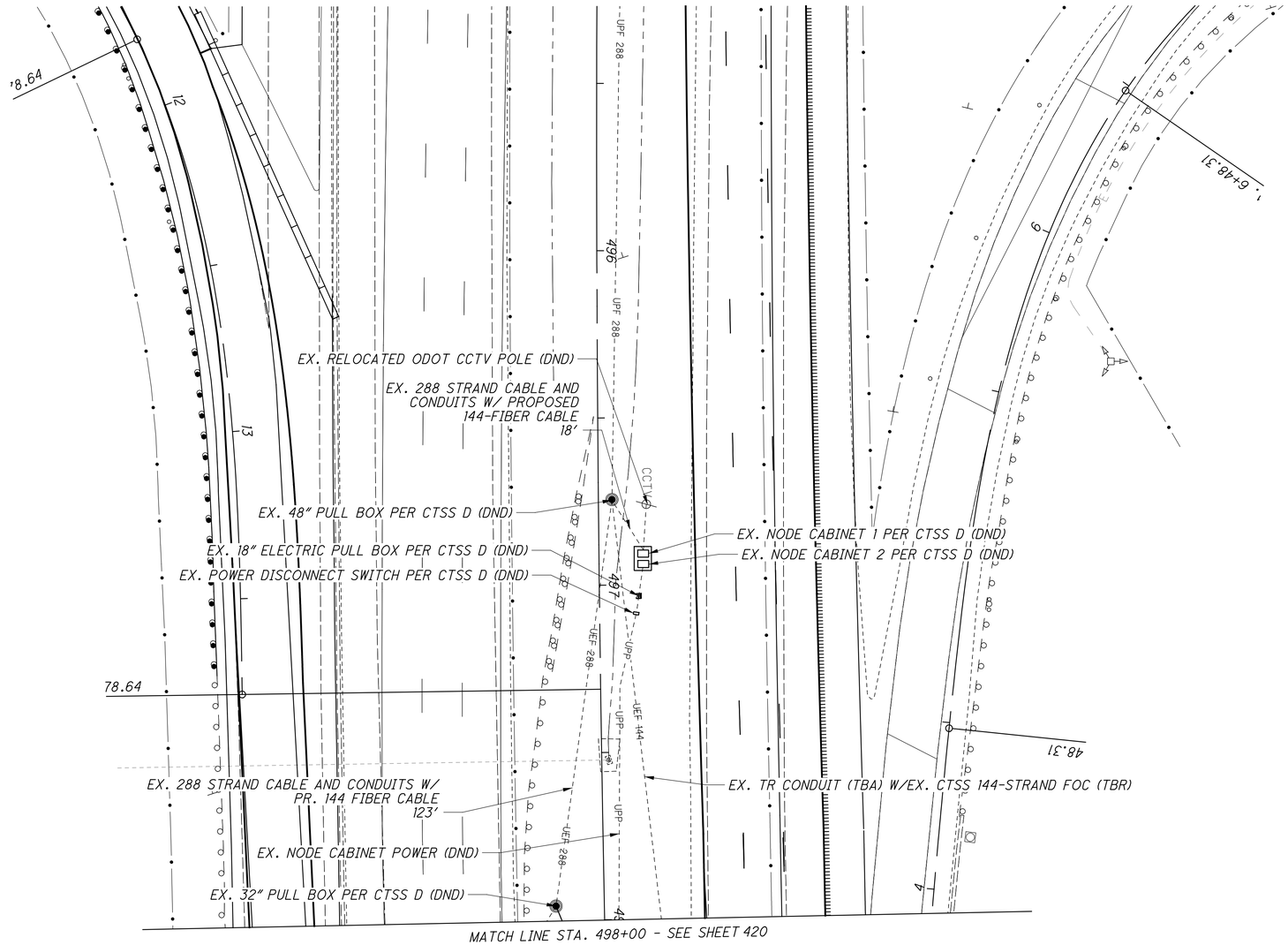

HORIZONTAL SCALE IN FEET
0 10 20 40

CALCULATED DKA
CHECKED SGJ

TRAFFIC SIGNAL INTERCONNECT PLAN
U.S. 23 STA. 577+50 TO STA. 588+50

FRA-270-51.50

420A
554

X:\Projects\2013\1321\1010\FRA\92616\signals\sheets\92616CP008A-IC.dgn 4/26/2023 12:35:07 PM cwong
cwong

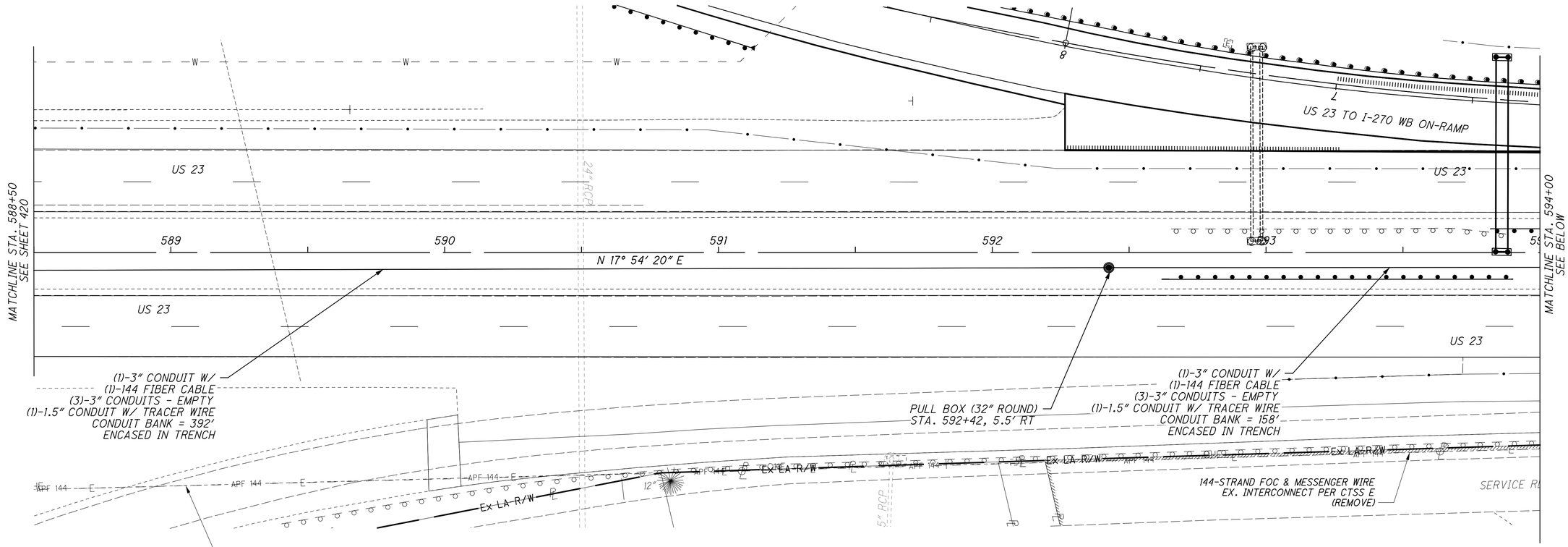

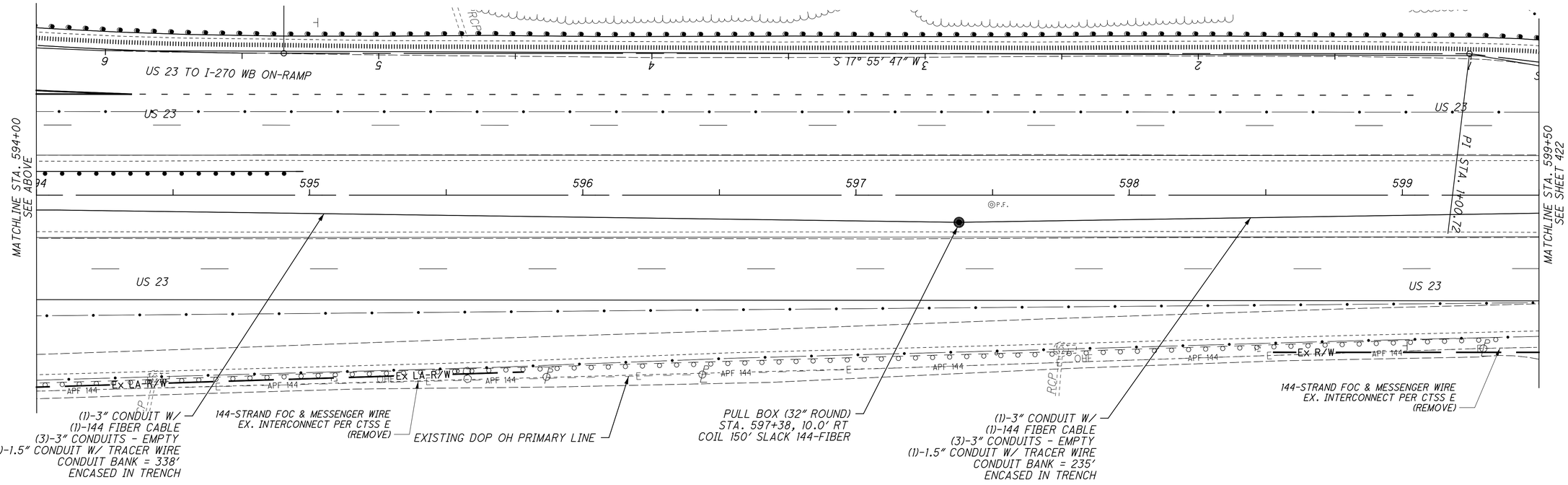

HORIZONTAL SCALE IN FEET
0 10 20 40

CALCULATED DKA
CHECKED SGJ

TRAFFIC SIGNAL INTERCONNECT PLAN
U.S. 23 STA. 588+50 TO STA. 599+50

FRA-270-51.50

421
554

X:\Projects\2013\1321\1010\FRA\92616\signals\sheets\92616CP009-IC.dgn 5/1/2023 6:37:09 AM cwong

PULL BOX (32" ROUND)
STA. 602+64, 71.0' LT
COIL 150' SLACK 144-FIBER CABLE

EX. 10" SERVICE LINE
P3250

(1)-3" CONDUIT W/
(1)-144 FIBER CABLE
(3)-3" CONDUITS - EMPTY,
(1)-1.5" CONDUIT W/ TRACER WIRE
ENCASED IN TRENCH, 63'

(1)-3" CONDUIT W/
(1)-144 FIBER CABLE
(3)-3" CONDUITS - EMPTY
(1)-1.5" CONDUIT W/ TRACER WIRE
CONDUIT BANK = 236'
ENCASED IN TRENCH

(1)-3" CONDUIT W/
(1)-144 FIBER CABLE
(3)-3" CONDUITS - EMPTY
(1)-1.5" CONDUIT W/ TRACER WIRE
CONDUIT BANK = 292'
ENCASED IN TRENCH

PULL BOX (32" ROUND)
COIL 100' 144-FIBER TRUNK CABLE
STA. 602+64, 9.0' LT

EXPOSE

24° 46' 21" W

MATCHLINE STA. 599+50
SEE SHEET 421

POT STA. 0+00.00

US 23

600 601 602 603 US 23 604

MATCHLINE STA. 605+00
SEE BELOW

EX. 12" WATER
(CTP236 009)
PER PLANS

EXISTING DOP OH PRIMARY LINE

144-STRAND FOC & MESSENGER WIRE
EX. INTERCONNECT PER CTSS E
(REMOVE)

PROP. 0.25" MESSENGER WIRE
W/(1)-144-STRAND CTSS FOC

144-STRAND FOC & MESSENGER WIRE
EX. INTERCONNECT PER CTSS E
(REMOVE)

(1)-3" CONDUIT W/
(1)-144 FIBER CABLE
(3)-3" CONDUITS - EMPTY
(1)-1.5" CONDUIT W/ TRACER WIRE
CONDUIT BANK = 190'
ENCASED IN TRENCH (TYP)

PROP. WOOD POLE W/(1)-2"
MODIFIED CONDUIT RISER, 725.04
STA. 606+87, 79.2' LT

(1)-2" CONDUIT W/(1)-144-STRAND
CTSS FOC AND TRACING WIRE
ENCASED IN TRENCH, 9'

EXISTING GROUND MOUNTED CONTROLLER
STA. 607+09, 70.4' LT
INSTALL (2)-GBIC MODULES
INSTALL (1)-LAYER 2 SWITCH

EXISTING CONDUITS W/SIGNAL CABLES

EXISTING TRAFFIC PULL BOX (24" SQUARE)
STA. 607+16.8, 70.3' LT

CONC. WORK PAD

12" (PER PLAN)

EX. 8" WATER
(WL2002-22_002)
PER PLANS

PULL BOX (48" ROUND) TYPE I
STA. 606+90, 70.4' LT
W/ 200' SLACK

OBETZ RD

POT Sta. 609+38.46

24-STRAND FOC DROP CABLE (DND)
PROP. 144-STRAND CTSS FOC CABLE
(LASH WITH EXISTING DROP CABLE)

MATCHLINE STA. 605+00
SEE ABOVE

US 23

606 607 608 609

EXISTING TRAFFIC SIGNAL POLE
STA. 607+11.3, 66.3' LT

144-STRAND FOC
EX. INTERCONNECT PER CTSS E
(REMAIN)

144-STRAND FOC & EX.
INTERCONNECT PER CTSS E (REMOVE)
EX. MESSENGER WIRE (TO REMAIN)

EX. CTSS SPLICE
ENCLOSURE (REMAIN)

PROP. 144-STRAND CTSS
FOC (LASH WITH EXISTING
TRUNK AND DROP CABLES)

HORIZONTAL
SCALE IN FEET
0 10 20 40

CALCULATED DKA
CHECKED SGJ

TRAFFIC SIGNAL INTERCONNECT PLAN
U.S. 23 STA. 599+50 TO STA. 608+81

FRA-270-51.50

422
554

X:\Projects\2013\1321\1010\FRA\92616\signals\sheets\92616CP010-IC.dgn 5/1/2023 6:51:07 AM cwong

LEGEND

144-FIBER OPTIC TRUNK CABLE (UNDERGROUND)

EX. 144-FIBER OPTIC TRUNK CABLE

24-FIBER OPTIC DROP CABLE (UNDERGROUND)

12-FIBER OPTIC DROP CABLE (UNDERGROUND)

PROPOSED CONTROLLER CABINET — CONT. CAB.

EXISTING CONTROLLER CABINET — EXIST. CONT. CAB.

48" PULL BOX

32" PULL BOX

EX. 48" PULL BOX

EX. UTILITY POLE

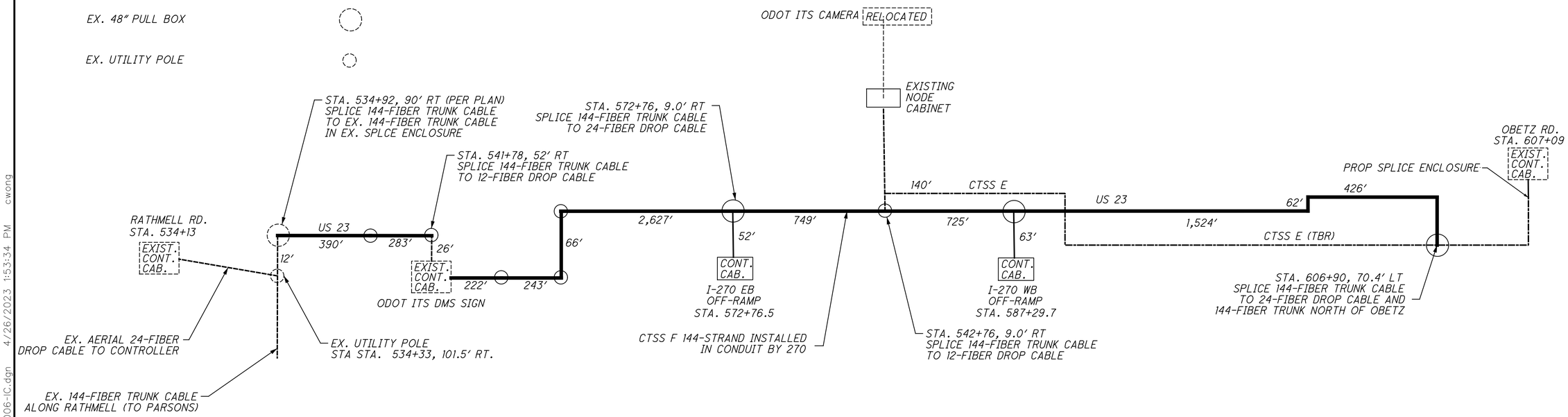

NOTE: FOR CROSS-SECTION OF CONDUIT BANK, SEE CITY OF COLUMBUS STANDARD DRAWING 4001 (TRAFFIC SIGNAL CONDUIT BANK STANDARDS).

CALCULATED DKA
CHECKED SGJ

TRAFFIC SIGNAL INTERCONNECT PLAN SCHEMATIC - US 23

FRA-270-51.50

X:\Projects\2013\1321\1010\FRA\92616\signals\sheets\92616CD006-IC.dgn 4/26/2023 1:53:34 PM cwong

424
554

FRA-270-51.50

TRAFFIC SIGNAL INTERCONNECT COMMUNICATIONS PLAN

CALCULATED DKA
CHECKED SGJ

TRAFFIC SIGNAL CABINET ASSEMBLY

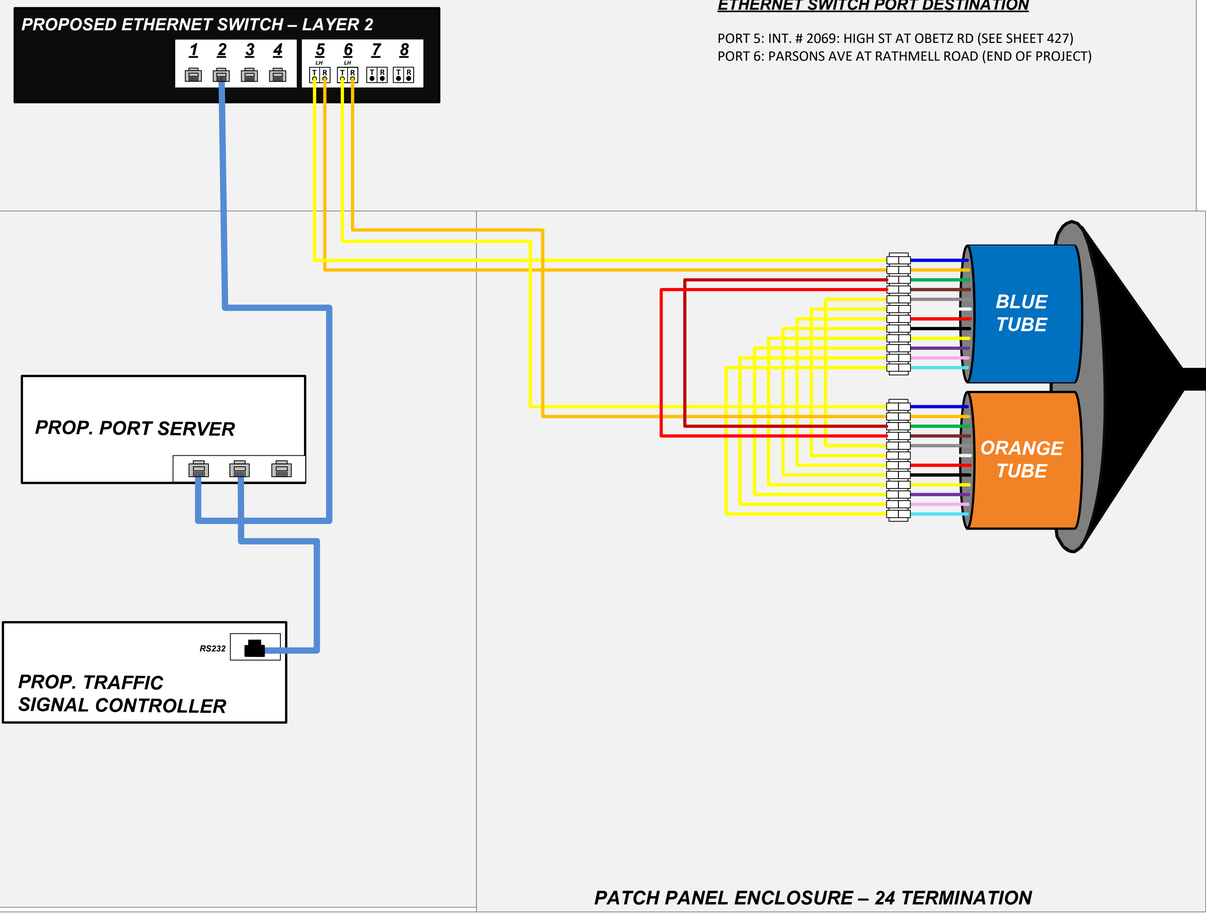

ETHERNET SWITCH PORT DESTINATION

PORT 5: INT. # 2069: HIGH ST AT OBETZ RD (SEE SHEET 427)
PORT 6: PARSONS AVE AT RATHMELL ROAD (END OF PROJECT)

LEGEND

- FIBER PATCH CABLE TX/RX STANDARD
- FIBER PATCH CABLE RX/TX CROSSOVER
- CAT 5E CABLE
- PATCH PANEL
- EXISTING/PROPOSED FIBER OR BUFFER TUBE LEFT COILED IN SPLICE ENCLOSURE
- FUSION SPLICE – SINGLE FIBER
- FIBER BUFFER TUBE SPLICE PR / EX
- LH/ZX GBIC OPTICAL TRANSCEIVER LH – LED ZX – LASER
- 8P8C CONNECTOR
- COLUMBUS - CTSS

LOCATION MAP

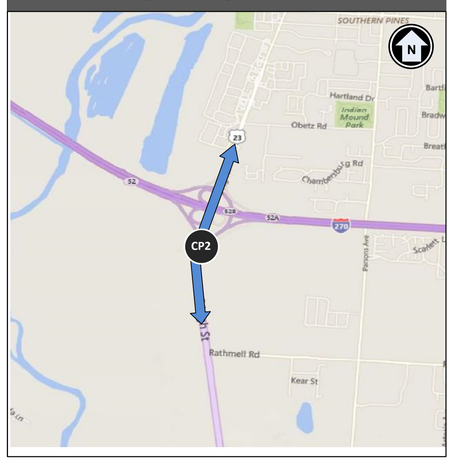

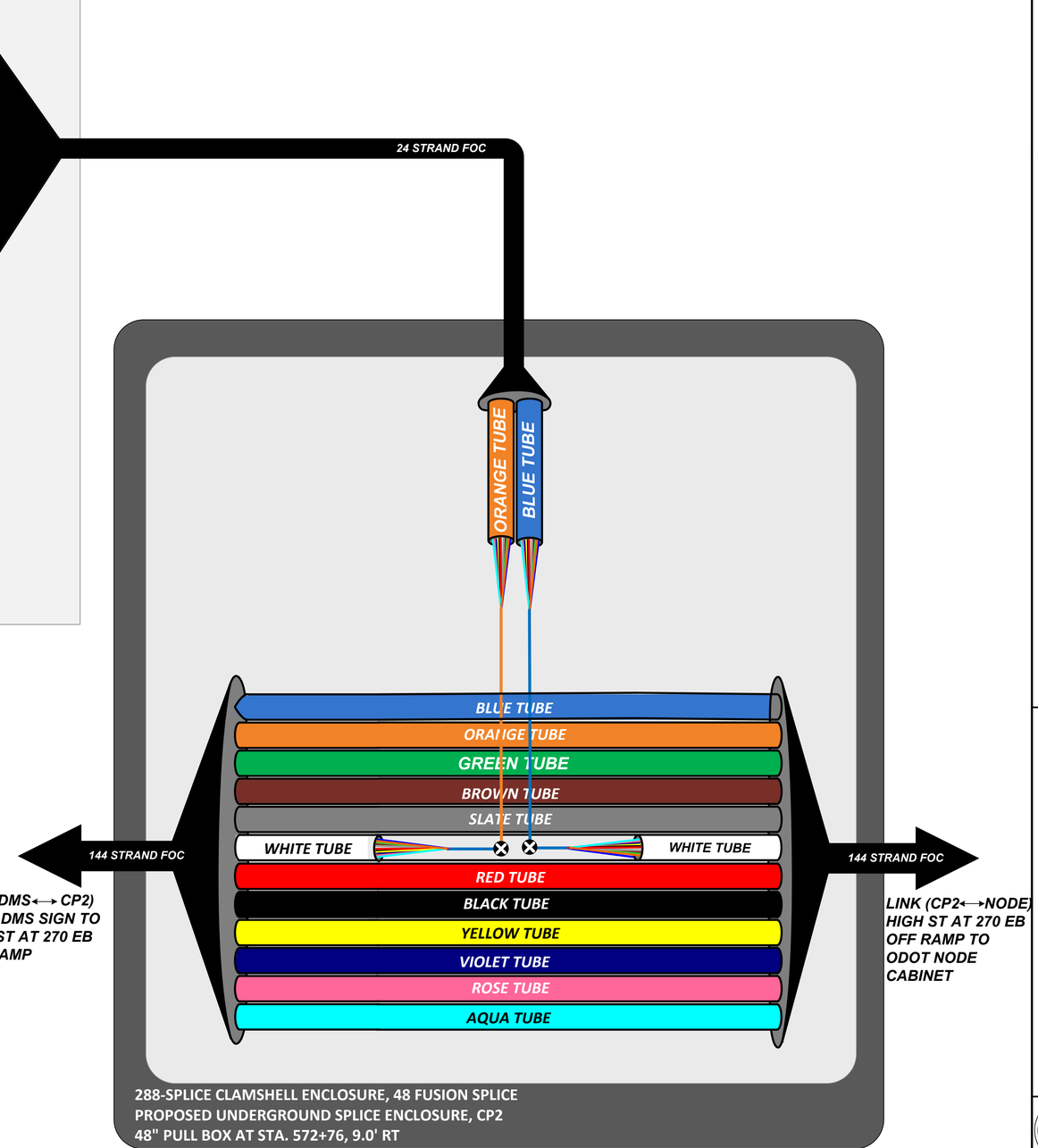

CREATED DKA
CHECKED SGJ

FIBER OPTIC SLICING DIAGRAM
RAMP P2 (I-270 EB OFF-RAMP AT US 23)

FRA-270-51.50

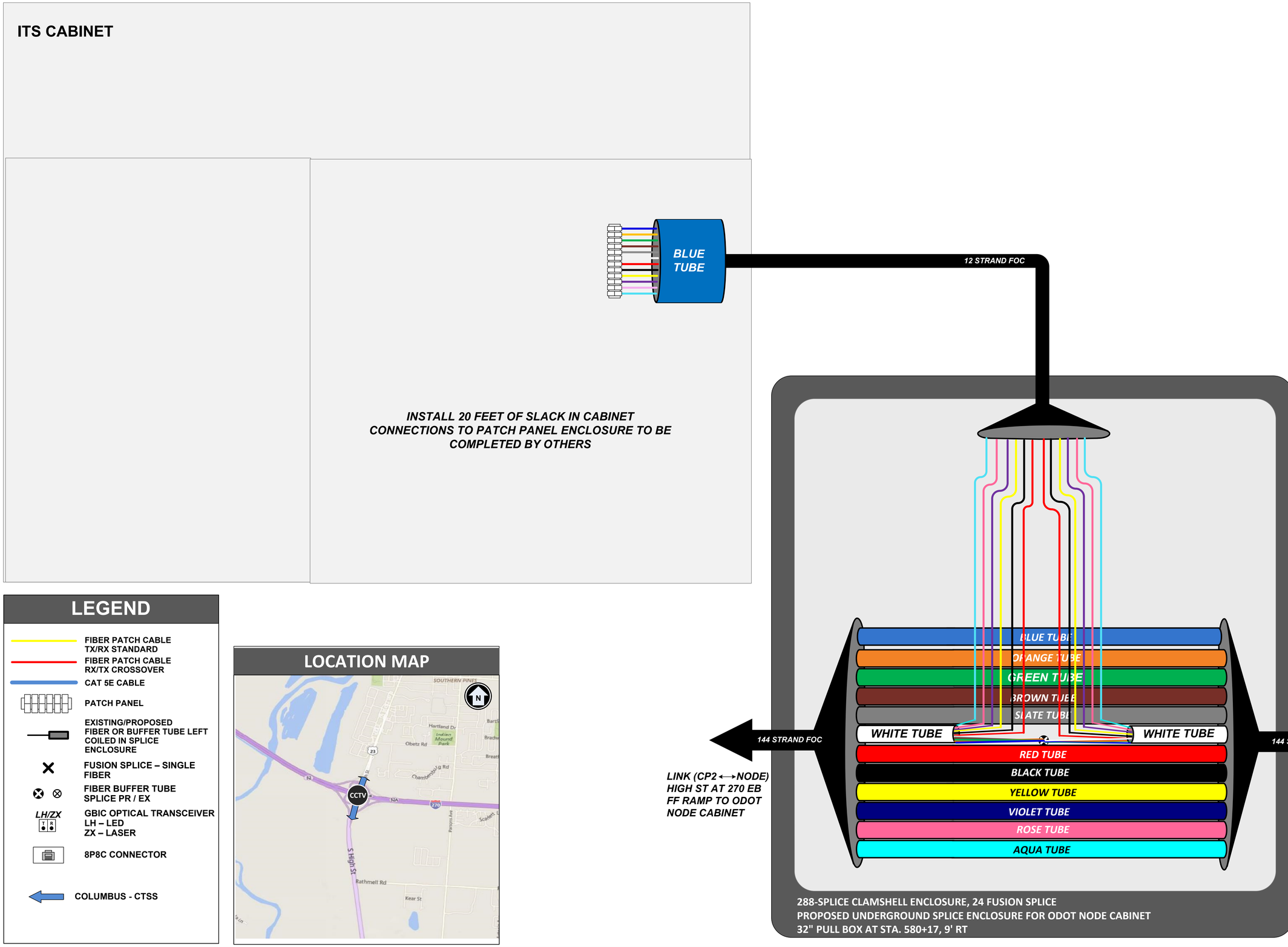

CREATED DKA
CHECKED SGJ

FIBER OPTIC SLICING DIAGRAM
ODOT NODE CABINET: STA. 496+92

FRA-270-51.50

TRAFFIC SIGNAL CABINET ASSEMBLY

PROPOSED ETHERNET SWITCH – LAYER 2

1 2 3 4 5 6 7 8

ETHERNET SWITCH PORT DESTINATION

PORT 5: INT. # 2182: HIGH ST AT RATHMELL RD (SEE SHEET 422)
PORT 6: INT # 2069: HIGH ST AT OBETZ RD (SEE SHEET 427)

PROP. PORT SERVER

RS232

PROP. TRAFFIC SIGNAL CONTROLLER

BLUE TUBE

ORANGE TUBE

24 STRAND FOC

PATCH PANEL ENCLOSURE – 24 TERMINATION

LEGEND

- FIBER PATCH CABLE TX/RX STANDARD
- FIBER PATCH CABLE RX/TX CROSSOVER
- CAT 5E CABLE
- PATCH PANEL
- EXISTING/PROPOSED FIBER OR BUFFER TUBE LEFT COILED IN SPLICE ENCLOSURE
- FUSION SPLICE – SINGLE FIBER
- FIBER BUFFER TUBE SPLICE PR / EX
- LH/ZX GBIC OPTICAL TRANSCEIVER LH – LED ZX – LASER
- 8P8C CONNECTOR
- COLUMBUS - CTSS

LOCATION MAP

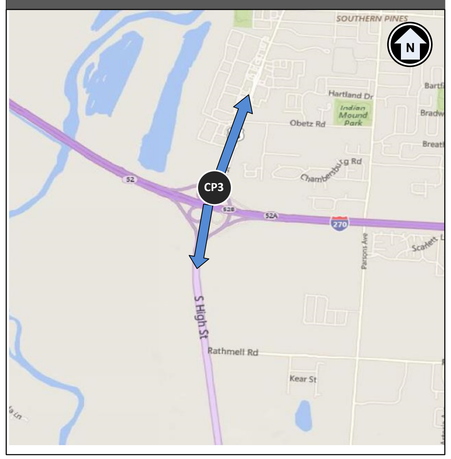

144 STRAND FOC

LINK (NODE ⟷ CP3) ODOT NODE CABINET TO HIGH ST AT 270 WB OFF RAMP

ORANGE TUBE
BLUE TUBE

BLUE TUBE
ORANGE TUBE
GREEN TUBE
BROWN TUBE
SLATE TUBE
WHITE TUBE
WHITE TUBE
RED TUBE
BLACK TUBE
YELLOW TUBE
VIOLET TUBE
ROSE TUBE
AQUA TUBE

144 STRAND FOC

LINK (CP3 ⟷ CP4) HIGH ST AT 270 WB OFF RAMP TO HIGH ST AT OBETZ RD

288-SPLICE CLAMSHELL ENCLOSURE, 24 FUSION SPLICE
PROPOSED UNDERGROUND SPLICE ENCLOSURE, CP3
48" PULL BOX AT STA. 587+42, 6.8' RT

CREATED DKA
CHECKED SGJ

FIBER OPTIC SLICING DIAGRAM
RAMP S (I-270 WB OFF-RAMP AT US 23)

FRA-270-51.50

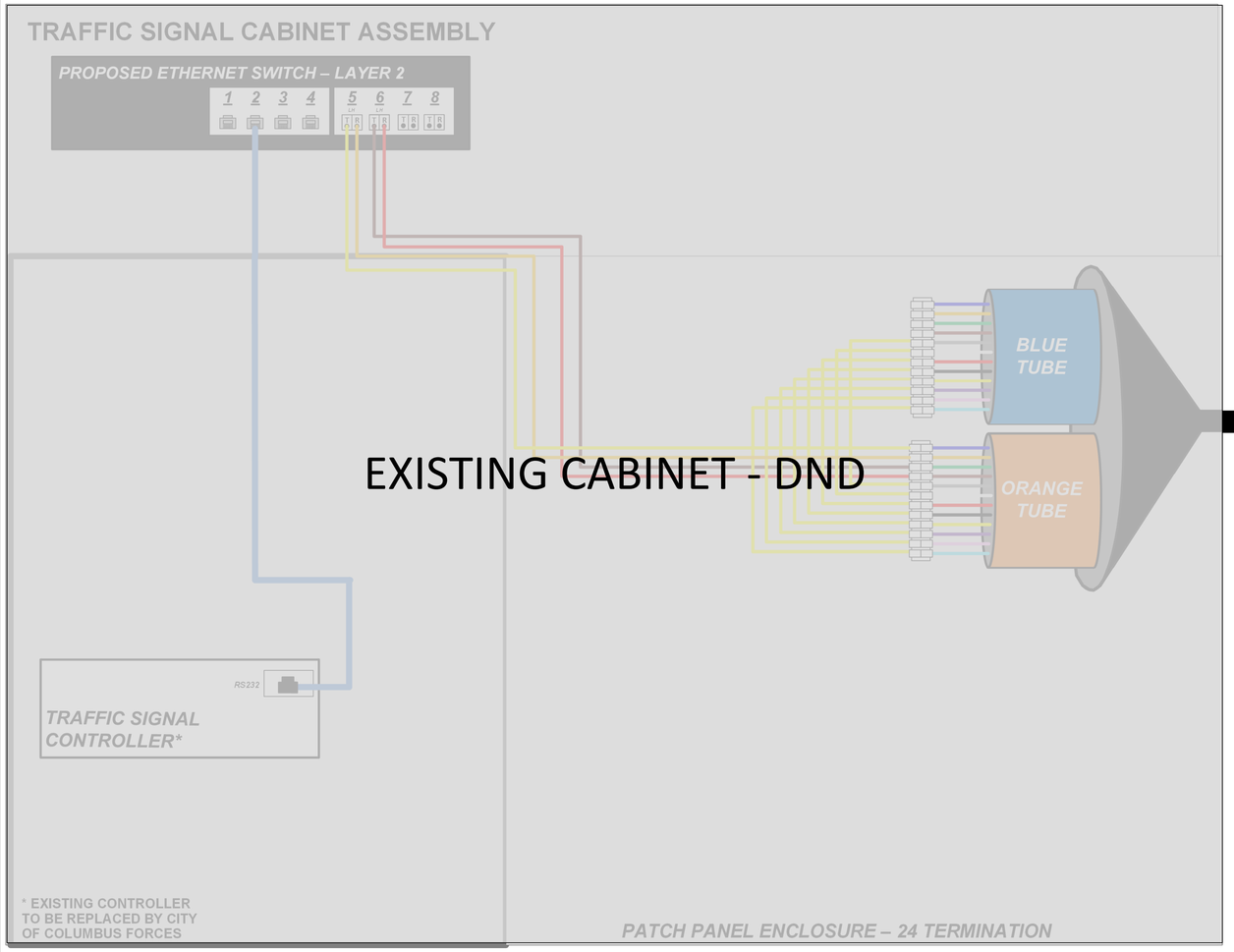

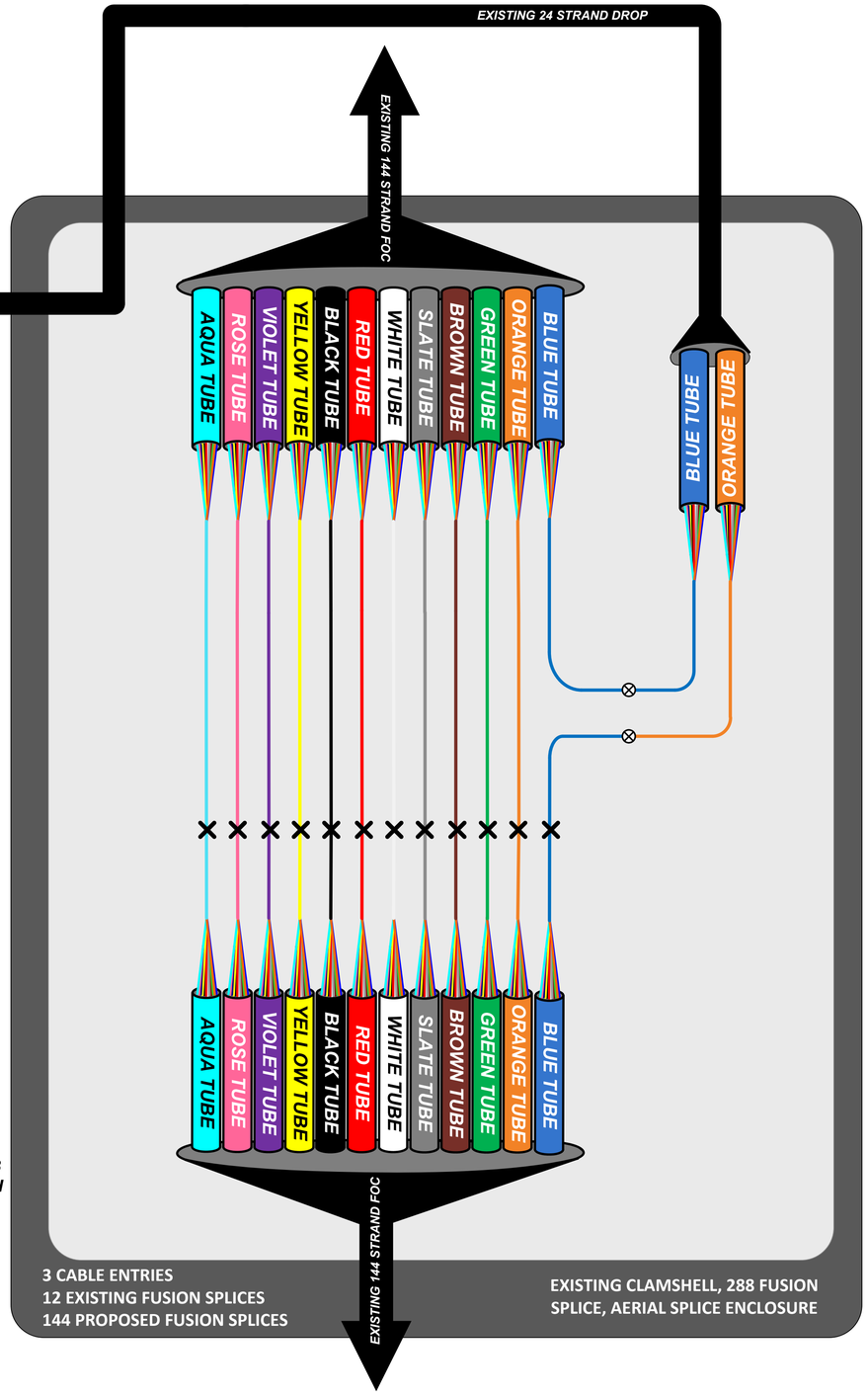

LEGEND

- FIBER PATCH CABLE TX/RX STANDARD
- FIBER PATCH CABLE RX/TX CROSSOVER
- CAT 5E CABLE
- PATCH PANEL
- EXISTING/PROPOSED FIBER OR BUFFER TUBE LEFT COILED IN SPLICE ENCLOSURE
- FUSION SPLICE – SINGLE FIBER
- FIBER BUFFER TUBE SPLICE PR / EX
- LH/ZX GBIC OPTICAL TRANSCEIVER LH – LED ZX – LASER
- 8P8C CONNECTOR
- COLUMBUS - CTSS

LOCATION MAP

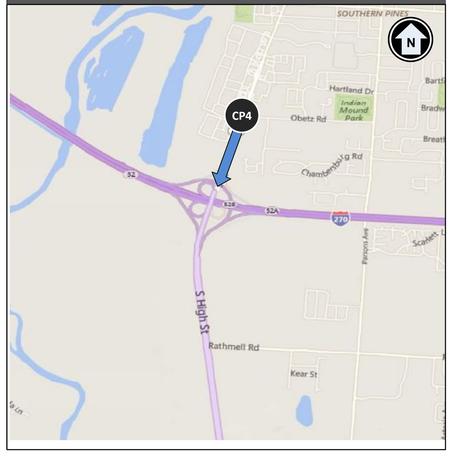

LINK (CP3 ⟷ CP4)
HIGH ST AT 270 WB OFF RAMP TO HIGH ST AT OBETZ RD

CREATED DKA
CHECKED SGJ

FIBER OPTIC SLICING DIAGRAM
US 23 AT OBETZ ROAD

FRA-270-51.50

CONDUIT EXPANSION AND DEFLECTION

EXPANSION FITTINGS SHALL BE OZ TYPE AX, CROUSE HINDS TYPE XJG, OR EQUAL APPROVED BY THE ENGINEER. EACH EXPANSION FITTING SHALL PROVIDE EITHER 4 OR 8 INCHES TOTAL MOVEMENT AS SPECIFIED BY THE PLAN DETAILS AND SHALL HAVE AN EXTERNAL COPPER BONDING JUMPER, UNLESS SPECIFIED OTHERWISE BY THE PLAN DETAILS.

DEFLECTION COUPLINGS SHALL BE OZ TYPE DX, CROUSE HINDS TYPE XD, OR EQUAL APPROVED BY THE ENGINEER. EACH DEFLECTION COUPLING SHALL HAVE AN EXTERNAL COPPER BONDING JUMPER, UNLESS SPECIFIED OTHERWISE BY THE PLAN DETAILS. MINIMUM DEFLECTION CAPABILITY: 25°.

EXPANSION AND DEFLECTION FITTINGS FULLY OR PARTIALLY EMBEDDED IN CONCRETE, SOIL, OR SIMILAR MATERIAL SHALL BE COMPLETELY WRAPPED IN A NEOPRENE SLEEVE OR SHEET OF 1/2-INCH MINIMUM THICKNESS.

ITEM 625 - LUMINAIRE, BY TYPE

LUMINAIRES - HIGH MAST, SOLID STATE (LED), AS PER PLAN

THE LUMINAIRES FOR HIGH-MAST LIGHTING SHALL MEET THE FOLLOWING REQUIREMENTS:

LUMINAIRES FOR HIGH MAST LIGHTING UNITS WITH SYMMETRIC DISTRIBUTION SHALL HAVE A LUMEN OUTPUT BETWEEN 38000 LUMENS TO 44000 LUMENS. LUMINAIRES WITH SYMMETRIC DISTRIBUTION SHALL BE
HOLOPHANE "HMLED4", 295W, MODEL # HMLED4-P2-30K-HVOLT-HGR-AW
COOPER "CELESTEON", 230W, MODEL # CST-CA8-230-730-8-T5R-AP
GE "EVOLVE HM", 244W MODEL #ERHM03-5-40-VW-7-30-N-D-GREY

LUMINAIRES FOR HIGH MAST LIGHTING UNITS WITH ASYMMETRIC DISTRIBUTION AND A LUMEN OUTPUT BETWEEN 28000 LUMENS TO 36000 LUMENS SHALL BE
HOLOPHANE "HMLED4", 199W, MODEL # HMLED4-P1-30K-HVOLT-HGR-MAS
COOPER "CELESTEON", 230W, MODEL # CST-CA8-230-730-8-T3-AP
GE "EVOLVE HM", 195W MODEL #ERHM03-5-30-C6-7-30-N-D-GREY

IN ADDITION, OTHER LUMINAIRES WILL BE CONSIDERED IF THE DESIGNED INTENSITY AND UNIFORMITY ARE PROVIDED USING THE DESIGNED POLE LOCATIONS AND THE DESIGNED NUMBER AND TYPE OF FIXTURES PER POLE.

LUMINAIRES FOR HIGH MAST LIGHTING UNITS WITH ASYMMETRIC DISTRIBUTION AND A LUMEN OUTPUT BETWEEN 60,000 LUMENS TO 69,300 LUMENS SHALL BE
HOLOPHANE "HMLED4", 429W, MODEL # HMLED4-P3-30K-HVOLT-HGR-MAS
COOPER "CELESTEON", 480W, MODEL # CST-CA8-480-730-8-T3-AP
GE "EVOLVE HM", 447W MODEL #ERHM03-5-60-C6-7-30-N-D-GREY

IN ADDITION, OTHER LUMINAIRES WILL BE CONSIDERED IF THE DESIGNED INTENSITY AND UNIFORMITY ARE PROVIDED USING THE DESIGNED POLE LOCATIONS AND THE DESIGNED NUMBER AND TYPE OF FIXTURES PER POLE.

LUMINAIRES, UNDERPASS, SOLID STATE (LED), AS PER PLAN

LUMINAIRES FOR UNDERPASS LIGHTING UNITS SHALL HAVE A LUMEN OUTPUT BETWEEN 3,150 TO 5000 LUMENS AND SHALL BE COOPER GWC, 34W, MODEL # GWC-AF-01-LED-E1-T3-7030-600, HOLOPHANE WALLPACK LED, 39W, MODEL # W4GLED-10C-1000-30K-T3M-480-SPD-GYSDP, GE EWAS. 38W, MODEL # EWAS01_5_B4AF730-D-GRAY

OR EQUAL AS APPROVED BY THE ENGINEER.

LUMINAIRES - LOW MAST, SOLID STATE (LED), AS PER PLAN

THE LUMINAIRES FOR LOW-MAST LIGHTING SHALL MEET THE FOLLOWING REQUIREMENTS:

LUMINAIRES FOR LOW MAST LIGHTING UNITS WITH SYMMETRIC DISTRIBUTION SHALL HAVE A LUMEN OUTPUT BETWEEN 59300 LUMENS TO 71987 LUMENS. LUMINAIRES WITH SYMMETRIC DISTRIBUTION SHALL BE
HOLOPHANE "HMLED4", 429W, MODEL # HMLED4-P3-30K-HVOLT-HGR-AW
COOPER "CELESTEON", 480W, MODEL # CST-CA8-480-730-U-T5-AP
GE "EVOLVE HM", 368W MODEL #ERHM03-5-60-VW-7-30-N-D-GREY

IN ADDITION, OTHER LUMINAIRES WILL BE CONSIDERED IF THE DESIGNED INTENSITY AND UNIFORMITY ARE PROVIDED USING THE DESIGNED POLE LOCATIONS AND THE DESIGNED NUMBER AND TYPE OF FIXTURES PER POLE.

ITEM 625 - POWER SERVICE, AS PER PLAN

IN ADDITION TO THE REQUIREMENTS OF THE SPECIFICATIONS, THE FOLLOWING IS ADDED:

THE POWER SUPPLYING AGENCIES FOR THIS PROJECT ARE:

AMERICAN ELECTRIC POWER (AEP)
850 TECH CENTER DR.
GAHANNA, OH 43230
CONTACT: MR. GREG ZORICH
TELEPHONE NO. (614) 578-3047

CITY OF COLUMBUS DIVISION OF POWER
3500 INDIANOLA RD.
COLUMBUS, OH 43214
CONTACT: MR. DAN CLARK
TELEPHONE NO. (614) 645-7543

THE POWER SERVICE SHALL BE METERED. THE ENGINEER SHALL ENSURE THAT EACH POWER ELECTRICAL ENERGY ACCOUNT IS IN THE NAME OF AND THAT THE BILLING ADDRESS IS TO THE MAINTAINING AGENCY NOTED IN THE PLANS. THIS SHALL BE DONE NOT ONLY FOR EACH NEW POWER SERVICE ESTABLISHED BY THIS PROJECT BUT ALSO FOR EACH EXISTING POWER SERVICE, SINCE THERE MAY BE A RE-ASSIGNMENT OF THE RESPONSIBILITY FOR AN EXISTING SERVICE AS A RESULT OF THE WORK PERFORMED BY THIS PROJECT.

THE CONTRACTOR IS RESPONSIBLE TO OBTAIN THE RESPONSIBLE UTILITY OWNER'S SPECIFICATIONS AS IT RELATES TO AN ACCEPTED POWER SERVICE. IN ADDITION TO THE ITEMS INCLUDED UNDER ITEM 625, "POWER SERVICE", THE CONTRACTOR WILL BE RESPONSIBLE TO SUPPLY AND INSTALL ALL APPURTENANCES REQUIRED BY THE POWER COMPANY, INCLUDING BUT NOT LIMITED TO A SECOND DISCONNECT SWITCH. THE CONTRACTOR WILL BE RESPONSIBLE FOR ALL AID TO CONSTRUCTION COSTS FOR THE POWER COMPANY TO PROVIDE ELECTRICAL SERVICE TO THE PROPOSED POWER SERVICE.

THE ELECTRIC COMPANY WILL SUPPLY 240/480 VOLT SINGLE PHASE, 3 WIRE GROUNDED NEUTRAL POWER SERVICES AS INDICATED BY THE PLAN.

THE CONTRACTOR SHALL MAINTAIN ALL NEW OR MODIFIED STREET CIRCUITS, INCLUDING POWER BILLS, FOR THE ENTIRETY OF THE PROJECT, WITH THE RESPONSIBILITY TURNED OVER TO ODOT ONLY WHEN THE ENTIRE PROJECT HAS BEEN COMPLETED AND ACCEPTED IN FULL BY ODOT.

POWER SERVICES WILL BE LOCATED AT THE FOLLOWING LOCATIONS:

POWER SERVICE 'B', DESIGNATION 'L117':
4338 HIGH ST.
COLUMBUS, OH 43207
ELECTRIC PROVIDER: AEP

POWER SERVICE 'C', DESIGNATION 'L040':
4110 HIGH ST.
COLUMBUS, OH 43207
ELECTRIC PROVIDER: CITY OF COLUMBUS DIVISION OF POWER

PAYMENT WILL BE MADE AT THE UNIT BID PRICE FOR EACH CMS ITEM 625, "POWER SERVICE, AS PER PLAN" WHICH SHALL BE FULL COMPENSATION FOR ALL LABOR, MATERIALS AND INCIDENTALS REQUIRED TO COMPLETE THIS ITEM IN A SATISFACTORY AND WORKMANLIKE MANNER.

ITEM 625 SPECIAL - MAINTAIN EXISTING LIGHTING

EXISTING ROADWAYS WHICH ARE TO REMAIN OPEN TO TRAFFIC DURING CONSTRUCTION OF THIS PROJECT AND WHICH ARE LIGHTED SHALL HAVE THE LIGHTING MAINTAINED AS DESCRIBED HEREIN.

BEFORE ANY WORK IS STARTED IN THE IMMEDIATE VICINITY OF THE EXISTING LIGHTING CIRCUITS, REPRESENTATIVES OF ODOT, THE MAINTAINING AGENCY AND THE CONTRACTOR SHALL MAKE A VISUAL INSPECTION OF THE EXISTING ROADWAY LIGHTING CIRCUITS TO BE MAINTAINED. DURING THIS INSPECTION, A WRITTEN RECORD OF THE CONDITION OF EXISTING LIGHTING SHALL BE MADE BY ODOT'S REPRESENTATIVE. THIS WRITTEN REPORT SHALL NOTE INDIVIDUAL LUMINAIRES WHICH ARE NOT IN WORKING ORDER, INDIVIDUAL POLES WHICH ARE NOT STANDING, AND INDIVIDUAL CIRCUITS WHICH ARE NOT IN WORKING ORDER. THE COMPLETED REPORT SHALL BE SIGNED BY THE REPRESENTATIVES OF ODOT, THE MAINTAINING AGENCY AND THE CONTRACTOR. CONTACT THE DISTRICT TRAFFIC OPERATIONS ENGINEER AT 740-833-8198 TO SCHEDULE THE INSPECTION OF ODOT LIGHTING FACILITIES.

IF, AS A RESULT OF THIS INSPECTION, IT IS DETERMINED THAT THE CONDITION OF THE EXISTING SYSTEM IS BELOW THAT REQUIRED FOR THE SAFETY OF THE TRAVELING PUBLIC, THEN THE MAINTAINING AGENCY SHALL MAKE THE REPAIRS NECESSARY TO RETURN THE SYSTEM TO AN ACCEPTABLE CONDITION. FOLLOWING THESE REPAIRS, THE SYSTEM SHALL AGAIN BE INSPECTED AND A REPORT SHALL BE MADE AND SIGNED AS OUTLINED HEREIN.

WHEN THE EXISTING SYSTEM IS IN AN ACCEPTABLE CONDITION, IT SHALL BE TURNED OVER TO THE CONTRACTOR WHO SHALL THEN BE REQUIRED TO MAINTAIN THE EXISTING LIGHTING TO THE CONDITION OUTLINED IN THIS REPORT WITH THE EXCEPTION OF KNOCKDOWNS DUE TO TRAFFIC ACCIDENTS.

REPLACEMENT OF KNOCKED DOWNED UNITS SHALL BE DONE ONLY WHEN THE ENGINEER HAS DETERMINED THAT THE REPLACEMENT OF THE KNOCKED DOWN UNIT IS NECESSARY AND SHALL BE PAID SEPARATELY ON A UNIT BASIS.

BETTERMENTS SHALL BE COVERED IN ITEMS OF WORK PERTAINING TO THE CONSTRUCTION OF PERMANENT IMPROVEMENT.

WHEN THE SEQUENCE OF CONSTRUCTION ACTIVITIES REQUIRES, OR SHOULD THE CONTRACTOR DESIRE, THE REMOVAL OF THE EXISTING LIGHTING BEFORE THE NEW LIGHTING IS OPERATIONAL, THE CONTRACTOR SHALL BE RESPONSIBLE FOR PROVIDING TEMPORARY LIGHTING OF THIS PORTION OF THE ROADWAY.

PRIOR TO INSTALLING SUCH LIGHTING, THE CONTRACTOR SHALL PREPARE AND SUBMIT FOUR SETS OF THE TEMPORARY LIGHTING PLAN TO THE ENGINEER FOR REVIEW AND APPROVAL.

THIS PLAN SHALL SHOW LOCATIONS OF POLES, LENGTHS OF BRACKET ARMS, STYLES OF LUMINAIRES, MOUNTING HEIGHTS, WIRING METHODS AND OTHER PERTINENT INFORMATION. THE TEMPORARY LIGHTING SHALL PROVIDE AN AVERAGE INITIAL INTENSITY OF 1.2 FOOTCANDLES WITH AN AVERAGE TO MINIMUM UNIFORMITY NOT TO EXCEED 3:1. MOUNTING HEIGHT OF TEMPORARY LUMINAIRES SHALL NOT BE LESS THAN 30 FEET, AND THE MINIMUM OVERHEAD CONDUCTOR CLEARANCE SHALL BE 20 FEET. TEMPORARY OVERHEAD CONSTRUCTION SHALL NOT BE LESS THAN GRADE "A" FOR STRENGTH REQUIREMENTS AS DEFINED BY THE NATIONAL ELECTRIC SAFETY CODE. WOOD POLES WITH OVERHEAD WIRING MAY BE USED. HOWEVER, TEMPORARY LIGHTING SHALL MEET FEDERAL AND STATE SAFETY CRITERIA. IF BREAKAWAY POLES ARE USED TO MEET THESE CRITERIA, THEN UNDERGROUND WIRING SHALL BE USED. RECONDITIONED OR USED MATERIALS MAY BE FURNISHED FOR TEMPORARY LIGHTING.

ALL MATERIALS NECESSARY TO COMPLETE THE TEMPORARY LIGHTING SHALL BE FURNISHED AND INSTALLED BY THE CONTRACTOR. WHEN NO LONGER NEEDED, THE TEMPORARY LIGHTING INSTALLATION SHALL BE REMOVED AND PROPERLY DISPOSED OF BY THE CONTRACTOR.

THE MAINTAINING AGENCY WILL PAY FOR ELECTRICAL ENERGY CONSUMED BY EXISTING POWER SERVICES AND BY PROPOSED PERMANENT POWER SERVICES AFTER ACCEPTANCE OF THE LIGHTING WORK. THE CONTRACTOR WILL PAY FOR ELECTRICAL ENERGY, INSTALLATION, REMOVAL AND MAINTENANCE OF ANY TEMPORARY POWER SERVICES.

WHEN THE PROJECT BEGINS, THE HIGHWAY LIGHTING WITHIN THE PROJECT'S WORK LIMITS SHALL BE MARKED ONCE BY ODOT PERSONNEL OR AN ODOT REPRESENTATIVE. THE CONTRACTOR SHALL TAKE CARE TO NOTE WHERE THE INFRASTRUCTURE IS LOCATED. AFTER THIS INITIAL MARKING HAS OCCURRED, IT SHALL BE THE RESPONSIBILITY OF THE CONTRACTOR TO PERFORM ANY REMARKING OF THE HIGHWAY LIGHTING INFRASTRUCTURE WHEN NEEDED. LOCATING BY THE CONTRACTOR WILL BE DONE AT A MINIMUM EVERY 14 DAYS.

THE LUMP SUM PRICE BID FOR ITEM SPECIAL "MAINTAIN EXISTING LIGHTING" SHALL INCLUDE PAYMENT FOR ALL LABOR, EQUIPMENT, MATERIALS AND INCIDENTALS NECESSARY TO MAINTAIN THE EXISTING LIGHTING AS SPECIFIED
HEREIN.

THE UNIT PRICE BID FOR ITEM SPECIAL "REERECTION OF EXISTING LIGHTING UNIT" SHALL BE FULL PAYMENT FOR THE REERECTION OF AN EXISTING LIGHTING UNIT WHICH HAS BEEN KNOCKED DOWN AFTER THE AFOREMENTIONED INSPECTION AND SHALL INCLUDE ALL LABOR, EQUIPMENT, MATERIALS AND INCIDENTALS NECESSARY TO REERECT SUCH UNIT.

ITEM 625 - DISCONNECT CIRCUIT, AS PER PLAN

THIS ITEM OF WORK SHALL CONSIST OF THE DISCONNECTION OF AN EXISTING LIGHT CIRCUIT AT A PULL BOX, LIGHT TOWER OR TRANSFORMER BASE.

DISCONNECTION AT A PULL BOX SHALL INVOLVE CUTTING THE EXISTING CIRCUIT AND REMOVING ALL SPLICE KITS. ANY CABLE THAT IS TO BE ABANDONED SHALL BE TERMINATED FROM THE PULL BOX SO THAT NO CABLE IS LEFT IN THE BOX.

DISCONNECTION AT A TRANSFORMER BASE OR LIGHT TOWER SHALL INVOLVE CUTTING THE EXISTING CIRCUIT AND REMOVING ALL CONNECTOR KITS. ALL DUCT-CABLE NOT TO BE REUSED SHALL BE REMOVED FROM THE TRANSFORMER BASE AND THE EXISTING CONDUIT IN THE FOUNDATION SHALL BE CLEANED OF ALL CABLE AND DEBRIS SO THAT THE NEW DUCT-CABLE CAN BE INSTALLED. ALL EXISTING CABLE TO REMAIN ACTIVE SHALL BE CUT IN A MANNER SO THAT THERE IS SUFFICIENT CABLE LEFT FOR RE-CONNECTION. THOSE WIRES THAT ARE TO REMAIN ON ACTIVE CIRCUITS SHALL HAVE A WATER-RESISTANT SEAL AT THE CUT END. THE WATER-RESISTANT SEAL SHALL BE ACCOMPLISHED BY PLUGGING THE DEACTIVATED PORT OF AN EXISTING CONNECTOR KIT OR BY INSTALLING A CABLE SPLICE KIT ON THE CUT END OF THE CABLE.

PAYMENT SHALL BE MADE AT THE UNIT BID PRICE UNDER CMS ITEM 625, "DISCONNECT CIRCUIT, AS PER PLAN" AT EACH LOCATION WHERE DISCONNECTION IS REQUIRED WHICH SHALL BE FULL COMPENSATION FOR ALL LABOR, MATERIALS AND INCIDENTALS REQUIRED TO COMPLETE THIS ITEM IN A SATISFACTORY AND WORKMANLIKE MANNER.

PADLOCKS AND KEYS

PADLOCKS FURNISHED SHALL BE EITHER BRASS OR BRONZE, EQUAL TO MASTER NO. 4BKA OR WILSON BOHANNAN 660A, AND SHALL BE KEYED IN ACCORDANCE WITH CMS 631.06. PAYMENT SHALL BE INCLUDED IN THE BID FOR THE ITEM(S) BEING LOCKED.

ITEM 625 - LIGHT TOWER REMOVED, AS PER PLAN

THIS ITEM OF WORK SHALL CONSIST OF REMOVING AN EXISTING LIGHT TOWER, INCLUDING LOWERING DEVICE, LUMINAIRE RING AND ALL OTHER APPURTENANCES THAT MAKE UP THE COMPLETE TOWER ASSEMBLY.

ODOT DISTRICT 6 TRAFFIC SHALL HAVE THE RIGHT TO ACCEPT REMOVED TOWERS AS SALVAGE. THE CONTRACTOR SHALL CONTACT THE DISTRICT TRAFFIC OPERATIONS ENGINEER AT 740-833-8196 TO COORDINATE STORAGE OF THE REMOVED LIGHT POLES UNTIL THE DISTRIC TAKES POSESSION.

PAYMENT SHALL BE MADE AT THE UNIT PRICE BID UNDER ITEM 625 LIGHT TOWER REMOVED, AS PER PLAN FOR EACH LIGHT TOWER REMOVED AND SHALL BE FULL COMPENSATION FOR MATERIAL, LABOR, EQUIPMENT AND INCIDENTALS NECESSARY TO COMPLETE THIS ITEM IN A SATISFACTORY AND WORKMANLIKE MANNER.

ITEM 625 - LIGHT TOWER REMOVED FOR STORAGE, AS PER PLAN

THIS ITEM OF WORK SHALL CONSIST OF REMOVING AN EXISTING LIGHT TOWER, INCLUDING LOWERING DEVICE AND PROPERLY STORING IT ON THE PROJECT SITE FOR RE-ERECTION.

THE TOWER SHALL BE PROPERLY SUPPORTED TO PREVENT BENDING OF THE POLE OR DAMAGE TO THE LOWERING DEVICE DURING STORAGE ON THE PROJECT SITE.

PAYMENT WILL BE MADE AT THE UNIT PRICE BID UNDER CMS ITEM 625, "LIGHT TOWER REMOVED FOR STORAGE" FOR EACH TOWER REMOVED AND STORED AND SHALL BE FULL COMPENSATION FOR ALL LABOR, MATERIALS AND INCIDENTALS REQUIRED TO COMPLETE THIS ITEM IN A SATISFACTORY AND WORKMANLIKE MANNER.

ITEM 625 - RE-ERECT EXISTING LIGHT POWER, AS PER PLAN

THIS ITEM OF WORK SHALL CONSIST OF INSTALLING AN EXISTING LIGHT TOWER PREVIOUSLY REMOVED AND STORED BY THIS PROJECT.

WHEN REQUIRED, ADDITIONAL LUMINAIRE BRACKET ARMS SHALL BE ADDED TO THE EXISTING LUMINAIRE BRACKETS RELOCATED ALONG WITH THE NECESSARY ADJUSTMENTS AND ADDITIONS TO THE LUMINAIRE WIRING TO ENABLE THE LUMINAIRES TO BE MOUNTED SYMMETRICALLY AROUND THE LUMINAIRE MOUNTING RING.

WHERE THE TOWER WILL BE INSTALLED ON A NEW FOUNDATION, NEW ANCHOR BOLTS SHALL BE FURNISHED.

THE TOWER AND LOWERING MECHANISM SHALL BE CLEANED AND LUBRICATED. THE CONTRACTOR SHALL INSPECT THE LOWERING DEVICES AND BRING ANY DEFICIENCIES TO THE ATTENTION OF THE PROJECT ENGINEER.

ANY REPAIRS AND ADJUSTMENTS NECESSARY TO RETURN THE TOWER AND MECHANISM TO GOOD OPERATING CONDITION SHALL BE MADE.

THE EXISTING LIGHT TOWER IDENTIFICATION DECAL SHALL BE REMOVED, AND A NEW DECAL FOR THE NEW IDENTIFICATION NUMBER FURNISHED AND INSTALLED

PAYMENT SHALL BE MADE AT THE UNIT PRICE BID UNDER CMS ITEM 625, "RE-ERECT EXISTING LIGHT TOWER, AS PER PLAN" FOR EACH TOWER RE-ERECTED WHICH SHALL INCLUDE ALL LABOR, MATERIALS AND INCIDENTALS REQUIRED TO COMPLETE THIS ITEM IN A SATISFACTORY AND WORKMANLIKE MANNER.

CALCULATED JCS CHECKED LH

LIGHTING GENERAL NOTES

FRA-270-51.50

Z:\2014 proj\14-003-08 FRA-270 51.51\CAD\Projects\FRA\92616\Lighting\sheets\92616LN001.dgn 07-DEC-2022 12:24PM Jordan.Steele

ODOT LIGHTING GENERAL NOTES (CONTINUED)

ITEM 625 - LIGHT TOWER MISC.: REFURBISH EXISTING LIGHT TOWER, AS PER PLAN

THIS ITEM OF WORK SHALL CONSIST OF REPAIRING AND MAINTAINING AN EXISTING LIGHT TOWER TO BE REUSED IN PLACE.

THE TOWER AND LOWERING MECHANISM SHALL BE CLEANED AND LUBRICATED. ALL LUMINAIRES SHALL BE FITTED WITH NEW LAMPS.

THE CONTRACTOR SHALL INSPECT THE LOWERING DEVICES AND BRING ANY DEFICIENCIES TO THE ATTENTION OF THE PROJECT ENGINEER. ANY REPAIRS AND ADJUSTMENTS NECESSARY TO RETURN THE TOWER AND MECHANISM TO GOOD OPERATING CONDITION SHALL BE MADE.

THE EXISTING LIGHT TOWER IDENTIFICATION DECAL SHALL BE REMOVED, AND A NEW DECAL FOR THE NEW IDENTIFICATION NUMBER FURNISHED AND INSTALLED.

PAYMENT SHALL BE MADE AT THE UNIT PRICE BID UNDER CMS ITEM 625, "LIGHTING MISC.: REFURBISH EXISTING LIGHT TOWER, AS PER PLAN" FOR EACH TOWER REFURBISHED WHICH SHALL INCLUDE ALL LABOR, MATERIALS AND INCIDENTALS REQUIRED TO COMPLETE THIS ITEM IN A SATISFACTORY AND WORKMANLIKE MANNER.

ITEM 625 - LIGHT TOWER FOUNDATION REMOVED, AS PER PLAN

THIS ITEM OF WORK SHALL CONSIST OF REMOVING AN EXISTING LIGHT TOWER FOUNDATION TO A MINIMUM OF 2 FEET BELOW FINISHED GRADE, OR REMOVING THE FOUNDATION COMPLETELY, BACKFILLING THE RESULTANT DEPRESSION WITH COMPACTED SOIL AND RESTORING THE DISTURBED AREA.

PAYMENT SHALL BE MADE AT THE UNIT PRICE BID UNDER CMS ITEM 625, "LIGHT TOWER FOUNDATION REMOVED, AS PER PLAN" FOR EACH FOUNDATION REMOVED WHICH SHALL BE FULL COMPENSATION FOR ALL LABOR, MATERIALS AND INCIDENTALS REQUIRED TO COMPLETE THIS ITEM IN A SATISFACTORY AND WORKMANLIKE MANNER.

ITEM 625, CONDUIT CLEANED AND CABLES REMOVED

THIS ITEM SHALL CONSIST OF CLEANING AN EXISTING CONDUIT BY REMOVING EXISTING CABLES, MUD AND DEBRIS SO THAT NEW CABLE CAN BE INSTALLED. INCIDENTAL TO THE CLEANING IS THE INSTALLATION OF BUSHINGS AND/OR COUPLINGS ON THE ENDS OF EXISTING CONDUIT AS REQUIRED. MATERIALS REMOVED SHALL BECOME THE PROPERTY OF THE CONTRACTOR FOR PROPER DISPOSAL OFF OF THE PROJECT SITE. DISTURBED AREAS SHALL BE PROPERLY RESTORED.

PAYMENT WILL BE MADE AT THE UNIT PRICE BID UNDER C&MS ITEM 625, "CONDUIT CLEANED AND CABLES REMOVED" PER FOOT OF CONDUIT CLEANED WHICH SHALL BE FULL COMPENSATION FOR ALL LABOR, MATERIALS AND INCIDENTALS REQUIRED TO COMPLETE THIS ITEM IN A SATISFACTORY AND WORKMANLIKE MANNER.

ITEM 625, ARC-FLASH HARZARD CALCULATIONS AND LABEL

THIS ITEM CONSISTS OF CALCULATING THE ARC FLASH HAZARD FOR ALL INSTALLED NEW ELECTRICAL POWER SERVICE ENCLOSURES, PROVIDING DOCUMENTATION OF THE CALCULATIONS, AND APPLYING THE APPROPRIATE EXTERNAL ARC FLASH HAZARD EQUIPMENT LABEL TO MEET ESTABLISHED INDUSTRY STANDARDS BY CONTRACTOR.

THE CONTRACTOR SHALL COORDINATE WITH ODOT TO OBTAIN STANDARD LABELS FOR ODOT MAINTAINED INSTALLATIONS FROM ODOT SIGN SHOP, 1606 WEST BROAD ST. COLUMBUS, OH 43223, FOR NON-ODOT MAINTAINED INSTALLATIONS, THE CONTRACTOR IS RESPONSIBLE FOR OBTAINING THE LABEL MADE FROM "ENGINEER GRADE" SIGN SHEETING OR AN EQUIVALENT LABEL MATERIAL.

METHOD OF MEASUREMENT SHALL BE AS PER 825.06.

ITEM 625, LIGHTING MISC.: CONDUIT REMOVED

LIGHTING MISC.: CONDUIT REMOVED SHALL CONSIST OF ALL LABOR AND EQUIPMENT REQUIRED FOR THE REMOVAL OF CONDUIT AS SPECIFIED ON THE PLAN SHEETS. THIS PAY ITEM WILL INCLUDE REMOVAL OF ALL SUPPORT BRACKETS AND OTHER HARDWARE ASSOCIATED WITH THE CONDUIT TO BE REMOVED, AND REPAIR OF SURFACES FOLLOWING REMOVAL. ANY CONDUCTORS IN THE CONDUIT SHALL BE REMOVED AS PART OF THIS PAY ITEM.

PAYMENT SHALL BE FOR EACH FOOT OF CONDUIT REMOVED, AND SHALL BE FULL COMPENSATION FOR ALL LABOR, EQUIPMENT, AND MATERIAL NECESSARY TO COMPLETE THE ITEM IN A SATISFACTORY AND WORKMANLIKE MANNER.

CITY OF COLUMBUS GENERAL NOTES - APPLIES TO SHEET 446 ONLY.

1. THE CITY OF COLUMBUS, DIVISION OF POWER (DOP) MAY ALSO BE REFERRED TO AS "MELP" (MUNICIPAL ELECTRIC LIGHT AND POWER) ON SOME DOCUMENTS, POLE TAGS AND STANDARDS. THE TERMS DOP AND MELP HAVE THE SAME MEANING WHEREVER USED.

2. ANY REQUIRED RELOCATION, SUPPORT, PROTECTION, OR ANY OTHER ACTIVITY CONCERNED WITH THE CITY'S ELECTRICAL FACILITIES IN THE CONSTRUCTION AREA IS TO BE PERFORMED BY THE CONTRACTOR UNDER THE DIRECTION OF DOP PERSONNEL AND AT THE EXPENSE OF THE PROJECT. DOP SHALL MAKE ALL FINAL CONNECTIONS TO DOP'S EXISTING ELECTRICAL SYSTEM AT THE EXPENSE OF THE PROJECT. THE CONTRACTOR SHALL USE MATERIAL AND MAKE REPAIRS ACCORDING TO CITY OF COLUMBUS DIVISION OF POWER MATERIALS AND INSTALLATION SPECIFICATIONS, SECTION 1001 (MIS) AND THE CITY OF COLUMBUS "CONSTRUCTION AND MATERIAL SPECIFICATION" (CMS). ANY NEW OR REINSTALLED UNDERGROUND STREETLIGHT SYSTEM SHALL REQUIRE TESTING AS REFERRED TO IN SECTION 1001.18 OF THE CMS MANUAL. THE CONTRACTOR SHALL CONFORM TO DOP'S STREETLIGHT LOCKOUT/TAGOUT REQUIREMENTS, MIS-1, COPIES OF WHICH ARE AVAILABLE FROM https://www.columbus.gov/Templates/Detail.aspx?id=2147503308.

3. IF ANY ELECTRIC FACILITY BELONGING TO DOP IS DAMAGED IN ANY MANNER BY THE CONTRACTOR, ITS AGENTS, SERVANTS, OR EMPLOYEES, AND REQUIRES EMERGENCY REPAIRS, DOP SHALL MAKE ALL NECESSARY REPAIRS, AND THE EXPENSE OF SUCH REPAIRS AND OTHER RELATED COSTS SHALL BE PAID BY THE CONTRACTOR TO THE DIVISION OF POWER, CITY OF COLUMBUS, OHIO.

4. THE STREET LIGHTING SHALL BE CONSTRUCTED IN ACCORDANCE WITH THE CURRENT CITY OF COLUMBUS, OHIO "CONSTRUCTION AND MATERIAL SPECIFICATIONS"(CMS), (2018 EDITION, STREET LIGHTING), INCLUDING ALL SUPPLEMENTS THERETO, IN FORCE ON THE DATE OF THE CONTRACT. CMS SHALL GOVERN ALL MATERIALS AND WORKMANSHIP INVOLVED IN THE IMPROVEMENTS SHOWN ON THESE PLANS, EXCEPT AS SUCH SPECIFICATIONS ARE MODIFIED BY THE FOLLOWING OR BY THE SPECIFICATION DETAILS SET FORTH HEREIN.

5. THE CONTRACTOR IS RESPONSIBLE TO COMPLY WITH ALL LOCAL CODES AND ORDINANCES PERTINENT TO THE PROGRESSION ON THE WORK DESCRIBED WITHIN THE PROJECT PLANS. ANY REQUIRED PERMIT SHALL BE OBTAINED AND PAID FOR BY THE CONTRACTOR. THE CONTRACTOR AND SUB-CONTRACTOR SHALL BE RESPONSIBLE FOR COMPLYING WITH ALL FEDERAL, STATE AND LOCAL SAFETY REQUIREMENTS, TOGETHER WITH EXERCISING PRECAUTIONS AT ALL TIMES FOR THE PROTECTION OF PERSONS (INCLUDING EMPLOYEES) AND PROPERTY. IT IS ALSO THE SOLE RESPONSIBILITY OF THE CONTRACTOR AND SUB-CONTRACTOR TO INITIATE, MAINTAIN AND SUPERVISE ALL SAFETY REQUIREMENTS, PRECAUTIONS AND PROGRAMS IN CONNECTION WITH THE WORK.

6. CIRCUIT VOLTAGE, FOR ALL STREET LIGHTING LUMINAIRES, SHALL BE 480 VOLT UNLESS NOTED OTHERWISE.

7. NO SPLICES SHALL BE MADE TO CIRCUIT CABLES EXCEPT AT NOTED LOCATIONS WHEN PERMITTED.

8. AS BUILD RECORD - THE CONTRACTOR SHALL MAINTAIN A SET OF PROJECT RECORD DOCUMENTS. THESE DOCUMENTS SHALL INCLUDE REVIEWED SHOP DRAWINGS, CHANGE ORDERS, EQUIPMENT OPERATING INSTRUCTIONS, FIELD TEST RECORDS, AND AS BUILT DRAWINGS. THE AS BUILT DRAWING SHALL BE MARKED LEGIBLY IN RED, THE ACTUAL LOCATION EQUIPMENT AND CONDUITS AS CONSTRUCTED.

9. THE LOCATION OF UTILITIES AND STRUCTURES, BOTH SURFACE AND SUBSURFACE AS SHOWN THROUGHOUT THE PROJECT PLANS, ARE COMPILED FROM DATA AVAILABLE AT THE TIME OF SURVEY AND ARE NOT NECESSARILY COMPLETE OR CORRECT. OBTAINING THE EXACT LOCATION AND PROTECTION OF UTILITIES AND OF STRUCTURES ARE THE RESPONSIBILITY OF THE CONTRACTOR. THE CONTRACTOR SHALL USE DUE DILIGENCE IN PROTECTING FROM DAMAGE ALL EXISTING UTILITIES AND STRUCTURES WHETHER SHOWN ON THE PROJECT PLANS OR NOT. THE CONTRACTOR SHALL COORDINATE WITH AND NOTIFY ALL UTILITIES A MINIMUM OF TWO (2) WORKING DAYS PRIOR TO ANY WORK DONE IN AN AREA FOR THE EXACT LOCATIONS OF THEIR MAIN LINES, SERVICE LINES OR ANY OTHER EQUIPMENT WORK IN AREAS UNMARKED BY UTILITIES. IF DAMAGE IS CAUSED, THE CONTRACTOR IS RESPONSIBLE TO IMMEDIATELY NOTIFY THE RESPECTIVE UTILITY AND PROPERTY OWNER OF INTERRUPTED SERVICE, HAVE IT SHUT OFF, REPAIRED AND RESTORED TO SERVICE TO THE SATISFACTION OF THE CITY AND FOR ANY RESULTING CONTINGENT DAMAGE AT THE CONTRACTORS EXPENSE.

10. THE CONTRACTOR SHALL PROTECT ANY PROPOSED OR EXISTING UTILITY POLE TO REMAIN IN PLACE DURING THE DURATION OF A CONFLICTING CONSTRUCTION OPERATION. THE CONTRACTOR WILL PROVIDE ALL TEMPORARAY SUPPORTS, GUYS AND ANCHORS NECESSARY TO SUPPORT POLES AS REQUIRED DURING CONSTRUCTION. UTILITY POLES WITHIN THE INFLUENCE OF A WATER LINE, SANITARY SEWER, STORM SEWER OR EARTHWORK OPERATIONS SHALL BE REINFORCED BY THE CONTRACTOR PRIOR TO THESE CONSTRUCTION ACTIVITIES. NOTIFICATION TO THE UTILITY COMPANY, PRIOR TO CONSTRUCTION, SHALL BE THE RESPONSIBILTITY OF THE CONTRACTOR. ALL COSTS INCURRED FOR THE TEMPORARY SUPPORT OF UTILTIY POLES SHALL BE INCLUDED WITHIN THE TOTAL BID COST OF THE PROJECT. NO REIMBURSEMENT OR SEPARATE PAYMENT SHALL BE MADE. PAYMENT FROM THE OWNER WILL NOT BE PROVIDED.

11. THE LOCATION OF UTILITIES AND STRUCTURES, BOTH SURFACE AND SUBSURFACE AS SHOWN THROUGHOUT THE PROJECT PLANS, ARE COMPILED FROM DATA AVAILABLE AT THE TIME OF SURVEY AND ARE NOT NECESSARILY COMPLETE OR CORRECT. OBTAINING THE EXACT LOCATION AND PROTECTION OF UTILITIES AND OF STRUCTURES ARE THE RESPONSIBILITY OF THE CONTRACTOR. THE CONTRACTOR SHALL USE DUE DILIGENCE IN PROTECTING FROM DAMAGE ALL EXISTING UTILITIES AND STRUCTURES WHETHER SHOWN ON THE PROJECT PLANS OR NOT. THE CONTRACTOR SHALL COORDINATE WITH AND NOTIFY ALL UTILITIES A MINIMUM OF TWO (2) WORKING DAYS PRIOR TO ANY WORK DONE IN AN AREA FOR THE EXACT LOCATIONS OF THEIR MAIN LINES, SERVICE LINES OR ANY OTHER EQUIPMENT WORK IN AREAS UNMARKED BY UTILITIES. IF DAMAGE IS CAUSED, THE CONTRACTOR IS RESPONSIBLE TO IMMEDIATELY NOTIFY THE RESPECTIVE UTILITY AND PROPERTY OWNER OF INTERRUPTED SERVICE, HAVE IT SHUT OFF, REPAIRED AND RESTORED TO SERVICE TO THE SATISFACTION OF THE CITY AND FOR ANY RESULTING CONTINGENT DAMAGE AT THE CONTRACTORS EXPENSE.

12. THE CONTRACTOR SHALL PERFORM ANY EXPLORATORY EXCAVATIONS NECESSARY TO LOCATE UNDERGROUND UTILITIES PRIOR TO DIGGING. WHERE PROJECT WORK IS LOCATED CLOSE TO EXISTING UTILITY LINES AND WHERE THIS SET OF PLANS SHOW POTENTIAL LOCATION CONFLICTS, EXCAVATIONS SHALL BE ACCOMPLISHED UTILIZING HAND DIGGING OR VACUUM BORING. THE COST OF THE WORK SHALL BE INCLUDED IN THE VARIOUS ITEMS BID.

ESTIMATE OF QUANTITIES

ITEM #	MIS #	ITEM DESCRIPTION	UNIT	EST. QTY.
1	901	EXISTING OVERHEAD SYSTEM REMOVAL	LS	LS
2	902	EXISTING UNDERGROUND SYSTEM REMOVAL	LS	LS

NON-PAYMENT MIS SPECIFICATIONS

MIS #	ITEM DESCRIPTION
1	GUIDELINES AND POLICIES - SAFETY POLICIES - NO PAY ITEM
2	GUIDELINES AND POLICIES - ACCEPTANCE/INSPECTION GUIDELINES - NO PAY ITEM
3	MATERIALS FOR APPROVAL - SUBMITTED PACKAGE - NO PAY ITEM
4	INSPECTION FORMS - NO PAY ITEM
58	MINIMUM CLEARANCE FOR DOWNTOWN, URBAN AND RURAL AREAS - NO PAY ITEM

CALCULATED JCS CHECKED LH

LIGHTING GENERAL NOTES

FRA-270-51.50

430
554

Z:\2014 proj\14-003-08 FRA-270 51.51\CAD\Projects\FRA\92616\lighting\sheets\92616LN002.dgn 07-DEC-2022 12:24PM Jordan.Steele

SHEET NUM.													PART.		ITEM	ITEM EXT	GRAND TOTAL	UNIT	DESCRIPTION	SEE SHEET NO.
432	433	434	435	436									01/ODOT							
																			LIGHTING	
			6										6		625	00450	6	EACH	CONNECTION, FUSED PULL APART	
30	57	30											117		625	00460	117	EACH	CONNECTION, UNFUSED PULL APART	
			3										3		625	10494	3	EACH	LIGHT POLE, LOW MAST, DESIGN ATLM50	
1		1											2		625	11200	2	EACH	LIGHT TOWER, BB100	
1	1	1											3		625	13200	3	EACH	LIGHT TOWER, BBBB100	
1	1	1											3		625	13204	3	EACH	LIGHT TOWER, BBBB110	
10	10	7											27		625	13500	27	EACH	LIGHT TOWER, MISC.:, REFURBISH EXISTING LIGHT TOWER	429
			3										3		625	14200	3	EACH	LIGHT POLE FOUNDATION, 24" X 10' DEEP	
7	5	5											17		625	15300	17	EACH	LIGHT TOWER FOUNDATION, 36" X 30' DEEP	
867	1,953	1,338											4,158		625	23200	4,158	FT	NO. 4 AWG 2400 VOLT DISTRIBUTION CABLE	
			450										450		625	23400	450	FT	NO. 10 AWG POLE AND BRACKET CABLE	
6,464	6,986	6,199	625										20,274		625	24320	20,274	FT	1-1/2" DUCT CABLE WITH THREE NO. 4 AWG 2400 VOLT CABLES	
200	247	176											623		625	25500	623	FT	CONDUIT, 3", 725.04	
	118	110											228		625	25902	228	FT	CONDUIT, JACKED OR DRILLED, 725.04, 3"	
				291									291		625	25910	291	FT	CONDUIT CLEANED AND CABLES REMOVED, 3"	
16	26	22											64		625	26263	64	EACH	LUMINAIRE, HIGH MAST, SOLID STATE (LED), AS PER PLAN, SYM 38000-44000 LUMEN, 480V	429
2		2	4										8		625	26263	8	EACH	LUMINAIRE, HIGH MAST, SOLID STATE (LED), AS PER PLAN, ASYM 28000-36000 LUMEN, 480V	429
18	14	10											42		625	26263	42	EACH	LUMINAIRE, HIGH MAST, SOLID STATE (LED), AS PER PLAN, ASYM. 60000-69300LM, 480V	429
			3										3		625	26273	3	EACH	LUMINAIRE, LOW MAST, SOLID STATE (LED), AS PER PLAN, SYM. 59300-71987 LM., 480V	429
18													18		625	27503	18	EACH	LUMINAIRE, UNDERPASS, SOLID STATE (LED), AS PER PLAN, TYPE III, 480V, 3150-5000LM	429
6,468	6,686	5,672	595										19,421		625	29000	19,421	FT	TRENCH	
7	7	6											20		625	30700	20	EACH	PULL BOX, 725.08, 18"	
2	6	3											11		625	30706	11	EACH	PULL BOX, 725.08, 24"	
				10									10		625	31510	10	EACH	PULL BOX REMOVED	
14	10	10	3										37		625	32000	37	EACH	GROUND ROD	
	1	1											2		625	34001	2	EACH	POWER SERVICE, AS PER PLAN	429
4	3	2											9		625	35001	9	EACH	REERECT EXISTING LIGHT POLE, AS PER PLAN	429
6,468	6,686	5,672	595										19,421		625	36010	19,421	FT	UNDERGROUND WARNING/MARKING TAPE	
2													2		625	37100	2	EACH	SERVICE TO UNDERPASS LIGHTING	
													LS		SPECIAL	62540000	LS		MAINTAIN EXISTING LIGHTING	429
				5									5		625	75351	5	EACH	LIGHT TOWER REMOVED, AS PER PLAN	429
				9									9		625	75361	9	EACH	LIGHT TOWER REMOVED FOR STORAGE, AS PER PLAN	429
				158									158		625	75506	158	EACH	LUMINAIRE REMOVED	
				2									2		625	75510	2	EACH	POWER SERVICE REMOVED	
				14									14		625	75541	14	EACH	LIGHT TOWER FOUNDATION REMOVED, AS PER PLAN	429
				37									37		625	75801	37	EACH	DISCONNECT CIRCUIT, AS PER PLAN	429
	1	1											2		625	76000	2	EACH	ARC FLASH CALCULATIONS AND LABEL, POWER SERVICES B & C	
				330									330		625	98100	330	FT	LIGHTING, MISC.:,UNDERPASS CONDUIT REMOVED	429
													LS		625	98200	LS		LIGHTING, MISC.:: MIS-901: EXISTING OVERHEAD SYSTEM REMOVAL	430
													LS		625	98200	LS		LIGHTING, MISC.:: MIS-902: EXISTING UNDERGROUND SYSTEM REMOVAL	430

CALCULATED JCS CHECKED LH

LIGHTING GENERAL SUMMARY

FRA-270-51.50

Z:\2014 pro\14-003-08 FRA-270 51.51\CAD\Projects\FRA\92616\Lighting\sheets\92616LG001.dgn 17-JAN-2023 3:41PM Jordan.Steele

LIGHTING SUBSUMMARY

CALCULATED JCS CHECKED LH

SHEET NO.	SIDE	ROADWAY	STATION TO STATION	CIRCUIT NODES	625 CONNECTION, UNFUSED, PERMANENT	625 LIGHT TOWER BB100	625 LIGHT TOWER BBBB100	625 LIGHT TOWER BBBB110	625 LIGHT TOWER FOUNDATION, 36"X30'	625 NO. 4 AWG 2400 VOLT DISTRIBUTION CABLE	625 1-1/2" DUCT CABLE WITH THREE NO. 4 AWG 2400 VOLT CABLES	625 CONDUIT, 3", 725.04	625 LUMINAIRE, UDP, SS TYPE III (LED) 480V, 3150-5000LM, APP	625 LUMINAIRE, HIGH MAST, SS (LED), SYMM., 38000-44000LM, 480V, APP	625 LUMINAIRE, HIGH MAST, SS (LED), ASYM., 28000-36000LM, 480V, LUMINAIRE, HIGH MAST, SS (LED), ASYM., 60000-69300LM, 480V, APP	625 TRENCH	625 PULL BOX, 725.08, 18"	625 PULL BOX, 725.08, 24"	625 GROUND ROD	625 UNDERGROUND WARNING / MARKING TAPE	625 SERVICE TO UNDERPASS LIGHTING, AS PER PLAN	625 LIGHT TOWER, MISC.: REFURBISH EXISTING LIGHT TOWER	625 RE-ERECT EXISTING LIGHT TOWER, AS PER PLAN
				* = MATCH LINE	EACH	EACH	EACH	EACH	EACH	FT	FT	FT	EACH	EACH	EACH	EACH	FT	EACH	EACH	EACH	FT	EACH	EACH	EACH
447	LT	CONST. IR 270	STA. 474+58.7	CF-6												2						1	
447	LT	CONST. IR 270	STA. 474+58.7 TO STA. 479+91.8	CF-6 TO CF-5							548						538				538		
447	LT	CONST. IR 270	STA. 479+91.8	CF-5												2						1	
447	LT	CONST. IR 270	STA. 479+91.8 TO STA. 484+52.9	CF-5 TO CF-4							476						466				466		
447	LT	CONST. IR 270	STA. 484+52.9	CF-4					1							2				2		1	1
447	LT	CONST. IR 270	STA. 484+52.9 TO STA. 24+00	CF-4 TO *							253						248				248		
447	RT	RAMP P1	STA. 674+0.00	BA-5		1			1						2					2			
447	RT	RAMP P1	STA. 674+0.00 TO STA. 678+79.9	BA-5 TO BA-4							504						494				494		
447	RT	RAMP P1	STA. 678+79.9	BA-4												2						1	
447	RT	RAMP P1	STA. 678+79.9 TO STA. 683+65.2	BA-4 TO BA-3							503						493				493		
447	RT	RAMP P1	STA. 683+65.2	BA-3												2						1	
447	RT	RAMP P1	STA. 683+65.2 TO STA. 487+00	BA-3 TO *							356						351				351		
448	RT	RAMP P1	STA. 487+00 TO STA. 688+91.8	* TO BA-2							184						174				174		
448	RT	RAMP P1	STA. 688+91.8	BA-2					1							2				2		1	1
448	RT/LT	RAMP P1	STA. 688+91.8 TO STA. 688+91.8	BA-2 TO PB-12						231		67					67				67		
448	LT	RAMP P1	STA. 688+91.8	PB-12	3													1					
448	LT	RAMP P1	STA. 688+91.8 TO STA. 692+99.5	PB-12 TO BA-1							444						434				434		
448	LT	RAMP P1	STA. 692+99.5	BA-1				1	1					4						2			
448	LT	RAMP P1	STA. 692+99.5 TO STA. 872+05.0	BA-1 TO PB-6							715						705				705		
448	LT	RAMP P2	STA. 872+05.0	PB-6	6														1				
448	RT/LT	RAMP P2	STA. 872+05.0 TO STA. 4+52.4	PB-6 TO PB-7							126						117				117		
448	LT	RAMP O	STA. 4+52.4	PB-7	3													1					
448	RT/LT	RAMP O	STA. 4+52.4 TO STA. 4+51.8	PB-7 TO PB-8						153		41					41				41		
448	RT	RAMP O	STA. 4+51.8	PB-8	3													1					
448	RT	RAMP O	STA. 4+51.8 TO STA. 7+10.9	PB-8 TO BB-5							269						259				259		
448	RT	RAMP O	STA. 7+10.9	BB-5			1		1					4						2			
448	RT	RAMP O	STA. 7+10.9 TO STA. 10+95.4	BB-5 TO PB-10							380						370				370		
448	RT	RAMP O	STA. 10+95.4	PB-10	3													1					
448	RT/LT	RAMP O	STA. 10+95.4 TO STA. 10+95.4	PB-10 TO PB-11						147							39				39		
448	LT	RAMP O	STA. 10+95.4	PB-11	3													1					
448	LT	RAMP O	STA. 10+95.4 TO STA. 494+26.5	PB-11 TO BB-6							58						48				48		
448	RT	CONST. IR 270	STA. 494+26.5	BB-6												2						1	
448	RT	RAMP O	STA. 4+51.8 TO STA. 4+00	PB-8 TO *							55						50				50		
448	RT/LT	RAMP P2	STA. 872+05.0 TO STA. 872+05.0	PB-6 TO PB-5						336		92					46				46		
448	RT	RAMP P2	STA. 872+05.0	PB-5	6														1				
448	RT	RAMP P2	STA. 872+05.0 TO STA.872+07.2	PB-5 TO BB-3							47						37				37		
448	RT	RAMP P2	STA. 872+07.2	BB-3					1					4						2		1	1
448	RT	RAMP P2	STA. 872+05.0 TO STA. 872+50	PB-5 TO *							54						49				49		
449	LT	RAMP O	STA. 4+00 TO STA. 577+89.0	* TO BB-4							237						237				237		
449	LT	CONST. US 23	STA. 577+89.0	BB-4					1					4						2			1
449	LT	CONST. US 23	STA. 577+89.0 TO STA. 579+02.4	BB-4 TO PB-9							235						235				235		
449	LT	CONST. US 23	STA. 579+02.4	PB-9	3													1					
449	LT	CONST. US 23	STA. 579+02.4 TO UNDERPASS	PB-9 TO UNDRPASS									10									1	
449	RT	CONST. US 23	STA. 574+00 TO STA. 575+37.4	* TO BC-3							229						219				219		
449	RT	CONST. US 23	STA. 575+37.4	BC-3												2						1	
449	RT/LT	CONST. US 23	STA. 575+37.4 TO STA. 7+33.0	BC-3 TO PB-16							77						67				67		
449	LT	CONST. US 23	STA. 7+33.0	PB-16														1					
449	RT	US 23/IR270	STA. 7+33.0 TO STA. 501+95.2	PB-16 TO BC-4							548						538				538		
449	RT	CONST. IR 270	STA. 501+95.2	BC-4												2						1	
449	RT	CONST. US 23	STA. 581+50 TO STA. 581+25.3	* TO PB-31							35						25				25		
449	RT	CONST. US 23	STA. 581+25.3 TO UNDERPASS	PB-31 TO UNDRPASS							131		8				121				121	1	
TOTALS CARRIED TO GENERAL SUMMARY					30	1	1	1	7	867	6464	200	18	16	2	18	6468	7	2	14	6468	2	10	4

FRA-270-51.50

07-DEC-2022 12:24PM Jordan.Steele
Z:\2014 proj\14-003-08 FRA-270 51.51\CAD\Projects\FRA\92616\lighting\sheets\92616LS001.dgn

SHEET NO.	SIDE	ROADWAY	STATION TO STATION	CIRCUIT NODES	625	625	625	625	625	625	625	625	625	625	625	625	625	625	625	625	625								
					CONNECTION, UNFUSED, PERMANENT	LIGHT TOWER BBBB100	LIGHT TOWER BBBB110	LIGHT TOWER FOUNDATION, 36"X30'	NO. 4 AWG 2400 VOLT DISTRIBUTION CABLE	1-1/2" DUCT CABLE WITH THREE NO. 4 AWG 2400 VOLT CABLES	CONDUIT, 3", 725.04	CONDUIT, 3", JACKED OR DRILLED, 725.04	POWER SERVICE, AS PER PLAN	LUMINAIRE, HIGH MAST, SS (LED), SYMM., 38000 -44000LM, 480V	LUMINAIRE, HIGH MAST, SS (LED), ASYM., 60000-69300LM, 480V	TRENCH	PULL BOX, 725.08, 18"	PULL BOX, 725.08, 24"	GROUND ROD	UNDERGROUND WARNING / MARKING TAPE	LIGHT TOWER, MISC.: REFURBISH EXISTING LIGHT TOWER	RE-ERECT EXISTING LIGHT TOWER, AS PER PLAN	ARC FLASH CALCULATIONS AND LABEL								
				* = MATCH LINE	EACH	EACH	EACH	EACH	FT	FT	FT	FT	EACH	EACH	EACH	FT	EACH	EACH	EACH	FT	EACH	EACH	EACH								
449	LT	RAMP L	STA. 274+00 TO STA. 576+70.0	* TO BD-2						267						262				262									
449	LT	RAMP L	STA. 576+70.0	BD-2										4							1								
449	LT	RAMP L	STA. 576+70.0 TO STA. 577+10.9	BD-2 TO PB-17						35						25				25									
449	LT	RAMP L	STA. 577+10.9	PB-17	3												1												
449	RT/LT	RAMP L	STA. 577+10.9 TO STA. 577+10.9	PB-17 TO PB-18					177		49					49				49									
449	RT	RAMP L	STA. 577+10.9	PB-18	3												1												
449	RT	RAMP L	STA. 577+10.9 TO STA. 506+79.8	PB-18 TO BD-3						384						374				374									
449	RT	CONST. IR 270	STA. 506+79.8	BD-3										4							1								
449	RT	CONST. IR 270	STA. 506+79.8 TO STA. 510+00	BD-3 TO *						353						348				348									
450	LT	CONST. IR 270	STA. 810+00 TO STA. 514+07.4	* TO CH-4						385						380				380									
450	LT	CONST. IR 270	STA. 514+07.4	CH-4											2						1								
450	LT	CONST. IR 270	STA. 514+07.4 TO STA. 519+03.4	CH-4 TO CH-5						555						545				545									
450	LT	CONST. IR 270	STA. 519+03.4	CH-5											2						1								
450	LT	RAMP R	STA. 510+00 TO STA. 284+79.7	* TO PB-19						177						172				172									
450	LT	RAMP R	STA. 284+79.7	PB-19	3												1												
450	RT/LT	RAMP R	STA. 284+79.7 TO STA. 284+79.7	PB-19 TO PB-20					147		39					39				39									
450	RT	RAMP R	STA. 284+79.7	PB-20	3												1												
450	RT	RAMP R	STA. 284+79.7 TO STA. 284+97.8	PB-20 TO BD-4						33						23				23									
450	RT	RAMP R	STA. 284+97.8	BD-4			1	1						4					2										
450	RT	RAMP R	STA. 284+97.8 TO STA. 716+88.3	BD-4 TO BD-5						529						519				519									
450	RT	IR270 E MERGE	STA. 716+88.3	BD-5				1							2				2		1	1							
450	RT	IR270 E MERGE	STA. 716+88.3 TO STA. 722+05.9	BD-5 TO BD-6						533						523				523									
450	RT	IR270 E MERGE	STA. 722+05.9	BD-6				1							2				2		1	1							
451	RT	RAMP M	STA. 24+00 TO STA. 19+85.8	* TO CF-3						418						413				413									
451	RT	RAMP M	STA. 19+85.8	CF-3											2						1								
451	RT	RAMP M	STA. 19+85.8 TO STA. 19+40.6	CF-3 TO PB-27						58						48				48									
451	RT	RAMP M	STA. 19+40.6	PB-27	3												1												
451	RT/LT	RAMP M	STA. 19+40.6 TO STA. 597+82.7	PB-27 TO PB-26					207		59					59				59									
451	LT	RAMP L	STA. 597+82.7	PB-26	3												1												
451	LT	RAMP L	STA. 597+82.7 TO STA. 20+75.6	PB-26 TO CF-1						266						256				256									
451	LT	RAMP M	STA. 20+75.6	CF-1											2						1								
451	LT	RAMP M	STA. 20+75.6 TO STA. 23+37.2	CF-1 TO CF-2						355						345				345									
451	LT	RAMP M	STA. 23+37.2	CF-2		1		1						4					2										
451	LT	RAMP L	STA. 597+82.7 TO STA. 585+87.4	PB-26 TO PB-25						786						776				776									
451	LT	CONST. US 23	STA. 585+87.4	PB-25	3													1											
451	LT	US 23/RAMPL	STA. 585+87.4 TO STA. 594+01.5	PB-25 TO CE-6						400						400				400									
451	LT	RAMP L	STA. 595+47.2	CE-6				1						6					2			1							
451	LT	CONST. US 23	STA. 585+87.4 TO STA. 581+74.4	PB-25 TO CE-5						552						542				542									
451	LT	CONST. US 23	STA. 581+74.4	CE-5											2						1								
451	LT	CONST. US 23	STA. 585+87.4 TO STA. 587+57.5	PB-25 TO PB-24						366						173				173									
451	LT	CONST. US 23	STA. 587+57.5	PB-24	9													1											
451	LT	CONST. US 23	STA. 587+57.5 TO STA. 591+25.0	PB-24 TO CE-1						162						152				152									
451	RT	RAMP L	STA. 591+25.0	CE-1										4							1								
451	RT/LT	CONST. US 23	STA. 587+57.5 TO STA. 587+58.1	PB-24 TO PB-22					381			59																	
451	LT	CONST. US 23	STA. 587+58.1	PB-22	6													1											
451	LT/RT	CONST. US 23	STA.587+58.1 TO STA.587+59.1	PB-22 TO PB-21					381			59																	
451	RT	CONST. US 23	STA.587+59.1	PB-21	6													1											
451	RT	CONST. US 23	STA. 587+59.1 TO STA. 587+58.6	PB-21 TO P.S. 'C'						90						35				35									
451	RT	CONST. US 23	STA. 587+58.6	POWER SERVICE 'C'									1										1						
451	RT	CONST. US 23	STA. 587+58.6 TO STA. 799+64.2	P.S. 'C' TO PB-28						168						74				74									
451	LT	RAMP S	STA. 799+64.2	PB-28	6													1											
451	RT/LT	RAMP S	STA. 799+64.2 TO STA. 799+64.2	PB-28 TO PB-29					660		100					50				50									
451	RT	RAMP S	STA. 799+64.2	PB-29	6													1											
451	RT	RAMP S	STA. 799+64.2 TO STA. 585+56.8	PB-29 TO PB-30						114						104				104									
451	RT	CONST. US 23	STA. 585+56.8	PB-30	3												1												
TOTALS CARRIED TO GENERAL SUMMARY					57	1	1	5	1953	6986	247	118	1	26	14	6686	7	6	10	6686	10	3	1							

CALCULATED JCS
CHECKED LH

LIGHTING SUBSUMMARY

FRA-270-51.50

433
554

Z:\2014 proj\14-003-08 FRA-270 51.51\CAD\Projects\FRA\92616\Lighting\sheets\92616LS002.dgn 07-DEC-2022 12:24PM Jordan.Steele

SHEET NO.	SIDE	ROADWAY	STATION TO STATION	CIRCUIT NODES	625E11200	625	625	625	625	625	625	625	625	625	625	625	625	625	625	625	625	625	625	625					
				* = MATCH LINE	CONNECTION, UNFUSED, PERMANENT	LIGHT TOWER BB100	LIGHT TOWER BBBB100	LIGHT TOWER BBBB110	LIGHT TOWER FOUNDATION, 36"X30'	NO. 4 AWG 2400 VOLT DISTRIBUTION CABLE	1-1/2" DUCT CABLE WITH THREE NO. 4 AWG 2400 VOLT CABLES	CONDUIT, 3", 725.04	CONDUIT, 3", JACKED OR DRILLED, 725.04	POWER SERVICE, AS PER PLAN	LUMINAIRE, HIGH MAST, SS (LED), SYMM., 38000 -44000LM, 480V, APP	LUMINAIRE, HIGH MAST, SS (LED), ASYM., 28000-36000LM, 480V	LUMINAIRE, HIGH MAST, SS (LED), ASYM., 60000-69300LM, 480V	TRENCH	PULL BOX, 725.08, 18"	PULL BOX, 725.08, 24"	GROUND ROD	UNDERGROUND WARNING / MARKING TAPE	LIGHT TOWER, MISC.: REFURBISH EXISTING LIGHT TOWER	RE-ERECT EXISTING LIGHT TOWER, AS PER PLAN	ARC FLASH CALCULATIONS AND LABEL					
					EACH	EACH	EACH	EACH	EACH	FT	FT	FT	FT	EACH	EACH	EACH	EACH	FT	EACH	EACH	EACH	FT	EACH	EACH	EACH					
451	RT	CONST. US 23	STA. 585+56.8 TO STA. 582+68.6	PB-30 TO CG-1							306							296				296							
451	RT	CONST. US 23	STA. 582+68.6	CG-1													2						1						
451	RT	CONST. US 23	STA. 582+68.6 TO STA. 581+50	CG-1 TO *							140							130				130							
451	RT	RAMP S	STA. 799+64.2 TO STA. 800+00	PB-29 TO *							45							35				35							
451	RT	US23 / RAMP L	STA. 585+56.8 TO STA. 588+50	PB-30 TO *							36							26				26							
452	LT	RAMP L	STA. 588+50 TO STA. 582+96.5	* TO CG-2							562							552				552							
452	LT	RAMP L	STA. 582+96.5	CG-2													2						1						
452	RT	RAMP S	STA. 800+00 TO STA. 800+45.9	* TO CH-1							66							56				56							
452	RT	RAMP S	STA. 800+45.9	CH-1			1		1						4						2								
452	RT	RAMP S	STA. 800+45.9 TO STA. 804+78.8	CH-1 TO CH-2							471							461				461							
452	RT	RAMP S	STA. 804+78.8	CH-2					1						4						2		1	1					
452	RT	RAMP S	STA. 804+78.8 TO STA. 809+10.8	CH-2 TO PB-33							461							451				451							
452	RT	RAMP S	STA. 809+10.8	PB-33	3														1										
452	RT	RAMP S	STA. 809+10.8 TO STA. 809+00	PB-33 TO CH-3							64							54				54							
452	RT	RAMP S	STA. 809+00	CH-3											4								1						
452	RT/LT	RAMP S	STA. 809+10.8 TO STA. 809+10.8	PB-33 TO PB-32						156		42						42				42							
452	LT	RAMP S	STA. 809+10.8	PB-32	3														1										
452	LT	RAMP S	STA. 809+10.8 TO STA. 810+50	PB-32 TO *							191							181				181							
453	RT	RAMP P1	STA. 708+94.1	BB-2													2						1						
453	RT	RAMP P1	STA. 708+94.1 TO STA. 703+29.5	BB-2 TO BB-1							597							587				587							
453	RT	RAMP P1	STA. 703+29.5	BB-1													2						1						
453	RT	RAMP P1	STA. 703+29.5 TO STA. 702+40.6	BB-1 TO PB-4							117							107				107							
453	RT	RAMP P1	STA. 702+40.6	PB-4	3														1										
453	RT/LT	RAMP P1/US23	STA. 702+40.6 TO STA. 570+07.6	PB-4 TO PB-3						264		78						78				78							
453	LT	CONST. US 23	STA. 570+07.6	PB-3	3															1									
453	LT	US23/RAMP P1	STA. 570+07.6 TO STA. 872+50	PB-3 TO *							584							287				287							
453	RT/LT	CONST. US 23	STA. 570+07.6 TO STA. 570+10.2	PB-3 TO PB-2						720			110																
453	RT	CONST. US 23	STA. 570+10.2	PB-2	6															1									
453	RT	CONST. US 23	STA. 570+10.2 TO STA. 571+11.8	PB-2 TO P.S. 'B'							338							159				159							
453	RT	CONST. US 23	STA. 571+11.8	POWER SERVICE 'B'										1											1				
453	RT	CONST. US 23	STA. 571+11.8 TO STA. 571+23.4	P.S. 'B' TO PB-1							44							12				12							
453	RT	CONST. US 23	STA. 571+23.4	PB-1	3															1									
453	RT	CONST. US 23	STA. 571+23.4 TO STA. 574+00	PB-1 TO *							352							342				342							
453	RT	CONST. US 23	STA. 571+23.4 TO STA. 273+46.0	PB-1 TO BD-1							367							357				357							
453	LT	RAMP R	STA. 273+46.0	BD-1		1			1							2					2								
453	LT	RAMP R	STA. 273+46.0 TO STA. 274+00	BD-1 TO *							93							83				83							
453	LT	RAMP R	STA. 571+23.4 TO STA. 270+56.1	PB-1 TO BC-1							66							56				56							
453	LT	RAMP R	STA. 270+56.1	BC-1				1	1						4						2								
453	LT	RAMP R	STA. 270+56.1 TO STA. 266+88.8	BC-1 TO PB-13							403							393				393							
453	LT	RAMP R	STA. 266+88.8	PB-13	3														1										
453	RT/LT	RAMP R	STA. 266+88.8 TO STA. 266+88.8	PB-13 TO PB-14						198		56						56				56							
453	RT	RAMP R	STA. 266+88.8	PB-14	3														1										
453	RT	RAMP R	STA. 266+88.8 TO STA. 265+93.5	PB-14 TO BC-2							104							94				94							
453	RT	RAMP R	STA. 265+93.5	BC-2													2						1						
451	LT	US 23/ RAMP M	STA. 587+57.5 TO STA. 589+00	PB-24 TO *							150							145				145							
454	LT	US 23/ RAMP M	STA. 589+00 TO STA. 09+86.0	* TO CE-2							145							145				145							
454	RT	RAMP M	STA. 09+86.0	CE-2					1						6						2			1					
454																													
451	LT	US 23	STA. 587+58.1 TO STA. 589+00	PB-22 TO *							150							145				145							
454	LT	US 23	STA. 589+00 TO STA. 592+42.5	* TO PB-23							347							342				342							
454	LT	US 23	STA. 592+42.5	PB-23	3														1										
TOTALS CARRIED TO GENERAL SUMMARY					30	1	1	1	5	1338	6199	176	110	1	22	2	10	5672	6	3	10	5672	7	2	1					

CALCULATED JCS
CHECKED LH

LIGHTING SUBSUMMARY

FRA-270-51.50

Z:\2014 pro\14-003-08 FRA-270 51.51\CAD\Projects\FRA\92616\Lighting\sheets\92616LS003.dgn 07-DEC-2022 12:24PM Jordan.Steele

SHEET NO.	SIDE	ROADWAY	STATION TO STATION	CIRCUIT NODES * = MATCH LINE	625 CONNECTION, FUSED PULL-APART EACH	625 LIGHT POLE, LOW MAST, DESIGN, ATLM50 EACH	625 LIGHT POLE FOUNDATION, DESIGN 24"X10' EACH	625 1-1/2" DUCT CABLE WITH THREE NO. 4 AWG 2400 VOLT CABLES FT	625 NO.10 AWG POLE AND BRACKET CABLE FT	625 LUMINAIRE, LOW MAST, SS (LED), SYM., 59300-71987LM, 480V EACH	625 TRENCH FT	625 GROUND ROD EACH	625 UNDERGROUND WARNING / MARKING TAPE FT
454	LT	US-23	STA. 592+42.5 TO STA. 594+34.0	PB-23 TO CE-3				210			200		200
454	LT	US-23	STA. 594+34.0	CE-3	2	1	1		150	1		1	
454	LT	US-23	STA. 594+34.0 TO STA. 596+70.0	CE-3 TO CE-4				205			195		195
454	LT	US-23	STA. 593+70.0	CE-4	2	1	1		150	1		1	
454	LT	US-23	STA. 596+70.0 TO 599+08.0	CE-4 TO CE-5				210			200		200
454	LT	US-24	599+08.0	CE-5	2	1	1		150	1		1	
TOTALS CARRIED TO GENERAL SUMMARY					6	3	3	625	450	3	595	3	595

CALCULATED JCS
CHECKED LH

LIGHTING SUBSUMMARY

FRA-270-51.50

Z:\2014 pro\14-003-08 FRA-270 51.51\CAD\Projects\FRA\92616\Lighting\sheets\92616LS004.dgn 07-DEC-2022 12:24PM Jordan.Steele

SHEET NO.	SIDE	ROADWAY	CIRCUIT NODES / REMOVAL REFERENCE * = MATCH LINE	625 CONDUIT CLEANED AND CABLES REMOVED FT	625 LIGHT TOWER REMOVED, AS PER PLAN EACH	625 LIGHT TOWER REMOVED FOR STORAGE, AS PER PLAN EACH	625 LUMINAIRE REMOVED EACH	625 LIGHT TOWER FOUNDATION REMOVED, AS PER PLAN EACH	625 DISCONNECT CIRCUIT, AS PER PLAN EACH	625 LIGHTING MISC.: CONDUIT REMOVED FT	625 PULL BOX REMOVED EACH	625 POWER SERVICE REMOVED EACH
438	LT	IR 270	CK-5				4		1			
438	LT	IR 270	CK-4				4		1			
438	LT	IR 270	CK-3			1	4	1	1			
438	RT	RAMP P1	BA-5				4		1			
438	RT	RAMP P1	BA-4				4		1			
439	RT	RAMP P1	BA-3			1	4	1	1			
439	RT	RAMP P1	BA-2		1		4	1	1			
439	RT	IR 270	BA-6				4		1			
440	LT	US 23	BE-3			1	4	1	1			
440	RT	IR 270	BB-2				4		1			
440	RT	US 23	BC-2				4		1			
440	LT	RAMP L	BB-1				4		1			
440	RT	IR 270	BB-3				4		1			
440	RT	US 23	R-1				5			110		
440	LT	US 23	R-2				7			220		
441	LT	RAMP S	R-3								1	
441	LT	RAMP S	R-4								1	
441	LT	RAMP S	CM-2				4		1			
441	LT	IR 270	CM-3				4		1			
441	RT	RAMP R	BB-4		1		4	1	1			
441	RT	IR 270 EB MERGE	BB-5			1	4	1	1			
441	RT	IR 270 EB MERGE	BB-6			1	4	1	1			
442	RT	RAMP M	CK-2				4		1			
442	LT	RAMP M	CK-7				4		1			
442	RT	RAMP N	CK-6				4		1			
442	LT	RAMP L	CK-1			1	6	1	1			
442	RT	US 23	CF-2				4		1			
442	RT	RAMP L	CH-1				4		1			
442	LT	US 23	R-5								1	
442	LT/RT	US 23	R-5 TO R-6	112								
442	RT	US 23	R-6								1	
442	RT	US 23	POWER SERVICE 'C'						2			1
442	RT	US 23	CF-1		1		6	1				
443	LT	RAMP S	CM-1			1	4	1	1			
443	LT	RAMP S	R-7								1	
443	LT	RAMP L	CM-5				4		1			
443	RT	RAMP S	CM-4				4		1			
444	RT	RAMP P1	BE-2				4		1			
444	RT	RAMP P1	BE-1				4		1			
444	RT	RAMP P1	R-8						1		1	
444	RT/LT	RAMP P1	R-8 TO R-9	40								
444	LT	RAMP P1	R-9						1		1	
444	LT/RT	RAMP P1 / US 23	R-9 TO R-10	139								
444	RT	US 23	R-10						1		1	
444	RT	US 23	R-11								1	
444	LT	RAMP P1	BA-1			1	6	1				
444	RT	US 23	POWER SERVICE 'B'									1
444	RT	US 23	BC-1		1		4	1				
444	RT	RAMP R	BC-3				4		1			
444	RT	RAMP R	R-12								1	
445	RT	RAMP M	CH-2			1	8	1	1			
445	RT	RAMP M	CH-3		1			1	1			
TOTALS CARRIED TO GENERAL SUMMARY				291	5	9	158	14	37	330	10	2

CALCULATED JCS
CHECKED LH

LIGHTING SUBSUMMARY

FRA-270-51.50

436
554

Z:\2014 pro\14-003-08 FRA-270 51.51\CAD\Projects\FRA\92616\Lighting\sheets\92616LS005.dgn 07-DEC-2022 12:24PM Jordan.Steele

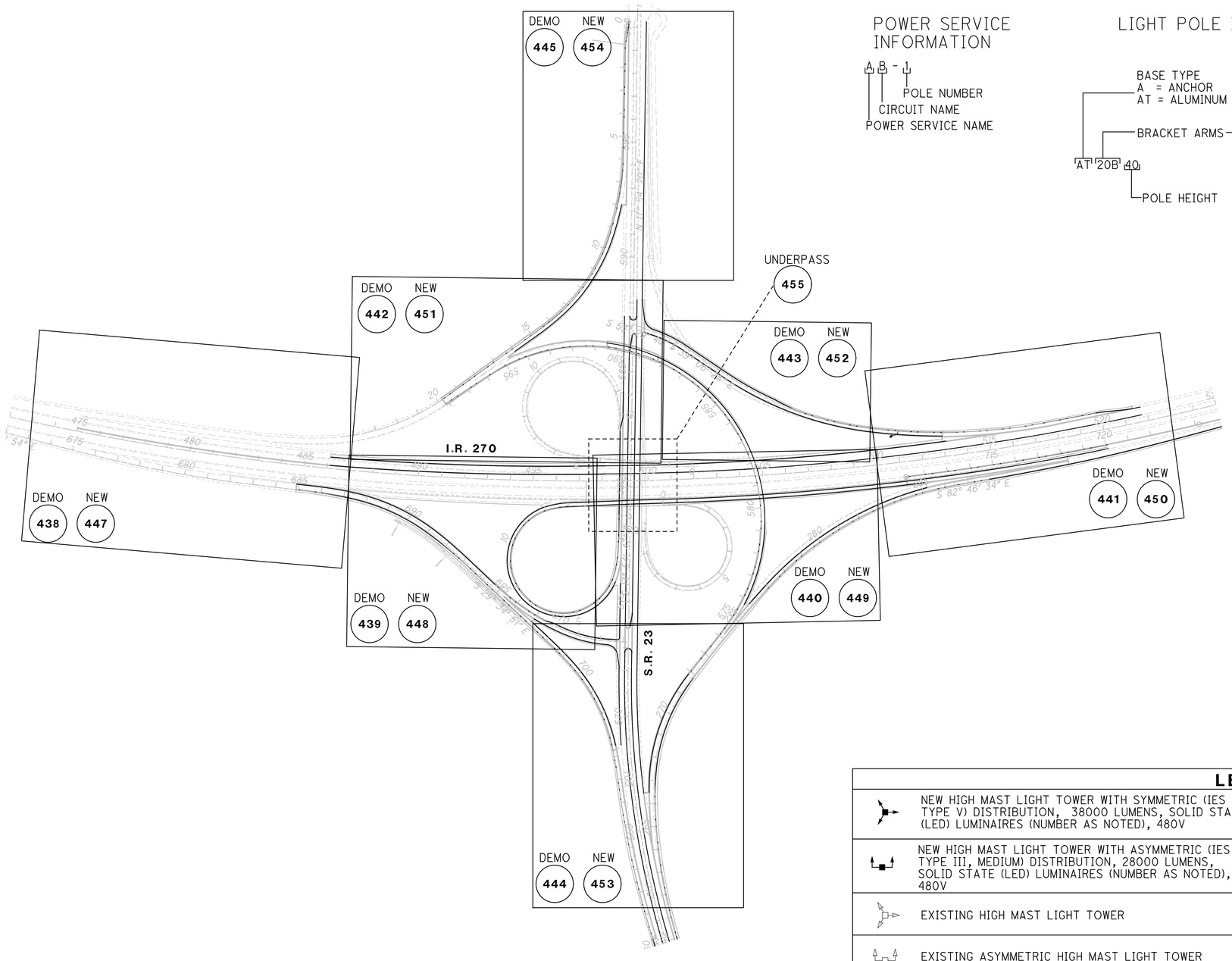

POWER SERVICE INFORMATION

AB - 1
- POLE NUMBER
- CIRCUIT NAME
- POWER SERVICE NAME

LIGHT POLE INFORMATION

AT 20B 40
- BASE TYPE: A = ANCHOR; AT = ALUMINUM TRANSFORMER
- BRACKET ARMS: 'B' = SINGLE ARM; 'BB' = DOUBLE ARM (IF UNEQUAL ARMS, EX. 10B15B); 'LM' = LOW MAST; 'ON' = POST TOP
- POLE HEIGHT

LIGHT TOWER INFORMATION

BBBB 100
- NUMBER OF LUMINAIRES (BBBB = 4)
- TOWER HEIGHT

HORIZONTAL SCALE IN FEET: 0, 125, 250, 500

CALCULATED JCS | CHECKED LH

LEGEND

NEW HIGH MAST LIGHT TOWER WITH SYMMETRIC (IES TYPE V) DISTRIBUTION, 38000 LUMENS, SOLID STATE (LED) LUMINAIRES (NUMBER AS NOTED), 480V	AB-1 TOWER/POLE IDENTIFICATION NUMBER (NEW OR RE-ERECTED WITH NEW FOUNDATION)
NEW HIGH MAST LIGHT TOWER WITH ASYMMETRIC (IES TYPE III, MEDIUM) DISTRIBUTION, 28000 LUMENS, SOLID STATE (LED) LUMINAIRES (NUMBER AS NOTED), 480V	AB-1 TOWER/POLE IDENTIFICATION NUMBER (EXISTING)
EXISTING HIGH MAST LIGHT TOWER	R-1 REMOVAL REFERENCE NUMBER
EXISTING ASYMMETRIC HIGH MAST LIGHT TOWER	PB-1 EXISTING LIGHTING PULL BOX OR JUNCTION BOX WITH IDENTIFICATION NUMBER (PB=PULL BOX, MJB=MEDIAN JUNCTION BOX
NEW 50' LOW MAST LIGHT POLE, WITH SYMMETRIC (IES TYPE V) DISTRIBUTION, 59300 LUMENS, SOLID STATE (LED) LUMINAIRE, 480V. (GROUND MOUNTED)	LT PB-1 NEW LIGHTING PULL BOX OR JUNCTION BOX WITH IDENTIFICATION NUMBER (PB=PULL BOX, MJB=MEDIAN JUNCTION BOX
CITY OF COLUMBUS EXISTING CONVENTIONAL LIGHT POLE (HPS)	EXISTING LIGHTING CIRCUIT
NEW UNDERPASS LUMINAIRE, TYPE III MEDIUM , 3150 LUMENS,SOLID STATE (LED),	EXISTING CONDUIT
EXISTING UNDERPASS LUMINAIRE	BA No. 4 NEW LIGHTING CIRCUIT, NUMBER OF CONDUCTORS (HASHES), CIRCUIT NAME AND CONDUCTOR SIZE
NEW POWER SERVICE, SERVICE REQUIREMENTS AS NOTED ON PLAN	1-1/2" DUCT CABLE IN 24" DEEP TRENCH
EXISTING POWER SERVICE, TYPE AS NOTED ON PLAN	PROPOSED LIGHTING CONDUIT, 3", 725.04, (UNLESS NOTED OTHERWISE) WITH (3) LIGHTING CIRCUIT CONDUCTORS
	3" CONDUIT (725.04) JACKED OR DRILLED UNDER ROADWAY WITH NEW LIGHTING CIRCUIT CONDUCTORS

LIGHTING SCHEMATIC PLAN
I.R. 270 AND U.S. 23 INTERCHANGE

FRA-270-51.50

437
554

07-DEC-2022 12:24PM Jordan.Steele

Z:\2014 proj\14-003-08 FRA-270 51.51\CAD\Projects\FRA\92616\Lighting\sheets\92616LB001.dgn 07-

STA. 474+58.7, 118.7' LT
℄ CONST. IR 270
CK-5
EXISTING LIGHT TOWER
TO REMAIN
REMOVE (4) LUMINAIRES
SEE NOTE 1

STA. 479+91.8, 132.8' LT
℄ CONST. IR 270
CK-4
EXISTING LIGHT TOWER
TO REMAIN
REMOVE (4) LUMINAIRES
SEE NOTE 1

STA. 485+33.8, 150.7' LT
℄ CONST. IR 270
CK-3
REMOVE EXISTING TOWER
FOR RE-ERECTION
REMOVE (4) LUMINAIRES
SEE NOTE 2

EXISTING CIRCUIT 'CK' TO BE ABANDONED

EXISTING CIRCUIT 'CK' TO BE ABANDONED

EXISTING CIRCUIT 'CK'
TO BE ABANDONED

℄ CONST. RAMP M

MATCH LINE
STA. 24+00
SEE SHEET 442

MATCH LINE, STA. 487+00
SEE SHEET 439

℄ CONST. IR 270

℄ CONST. RAMP P1

EXISTING CIRCUIT 'BA' TO BE ABANDONED

EXISTING CIRCUIT 'BA' TO BE ABANDONED

Ex LA-R/W

675
475
680
480
685
485

STA. 678+79.9, 28.4' RT
℄ CONST. RAMP P1
BA-5
EXISTING LIGHT TOWER
TO REMAIN
REMOVE (4) LUMINAIRES
SEE NOTE 1

STA. 683+65.2, 26.7' RT
℄ CONST. RAMP P1
BA-4
EXISTING LIGHT TOWER
TO REMAIN
REMOVE (4) LUMINAIRES
SEE NOTE 1

NOTES:
1. EXISTING LIGHT TOWER TO REMAIN. REMOVE EXISTING LUMINAIRES. DISCONNECT CIRCUIT TO TOWER AND REMOVE CONDUCTORS FROM BASE OF POLE TO 5 FEET FROM POLE FOUNDATION. REMOVE EXISTING TOWER LABEL.

2. REMOVE EXISTING LIGHT TOWER FOR RE-ERECTION DURING NEW WORK AS TOWER 'CF-4'. REMOVE LUMINAIRES AND STORE TOWER, AND ALL TOWER APPURTENANCES UNTIL RE-ERECTION. DEMOLISH EXISTING FOUNDATION TO 24" BELOW GRADE.

HORIZONTAL SCALE IN FEET
0 25 50 100

CALCULATED JCS
CHECKED LH

LIGHTING DEMOLITION PLAN - I.R. 270
STA. 473+00 TO STA. 487+00

FRA-270-51.50

438
554

Z:\2014 proj\14-003-08 FRA-270 51.51\CAD\Projects\FRA\92616\Lighting\sheets\92616LX001.dgn 07-DEC-2022 12:24PM Jordan.Steele

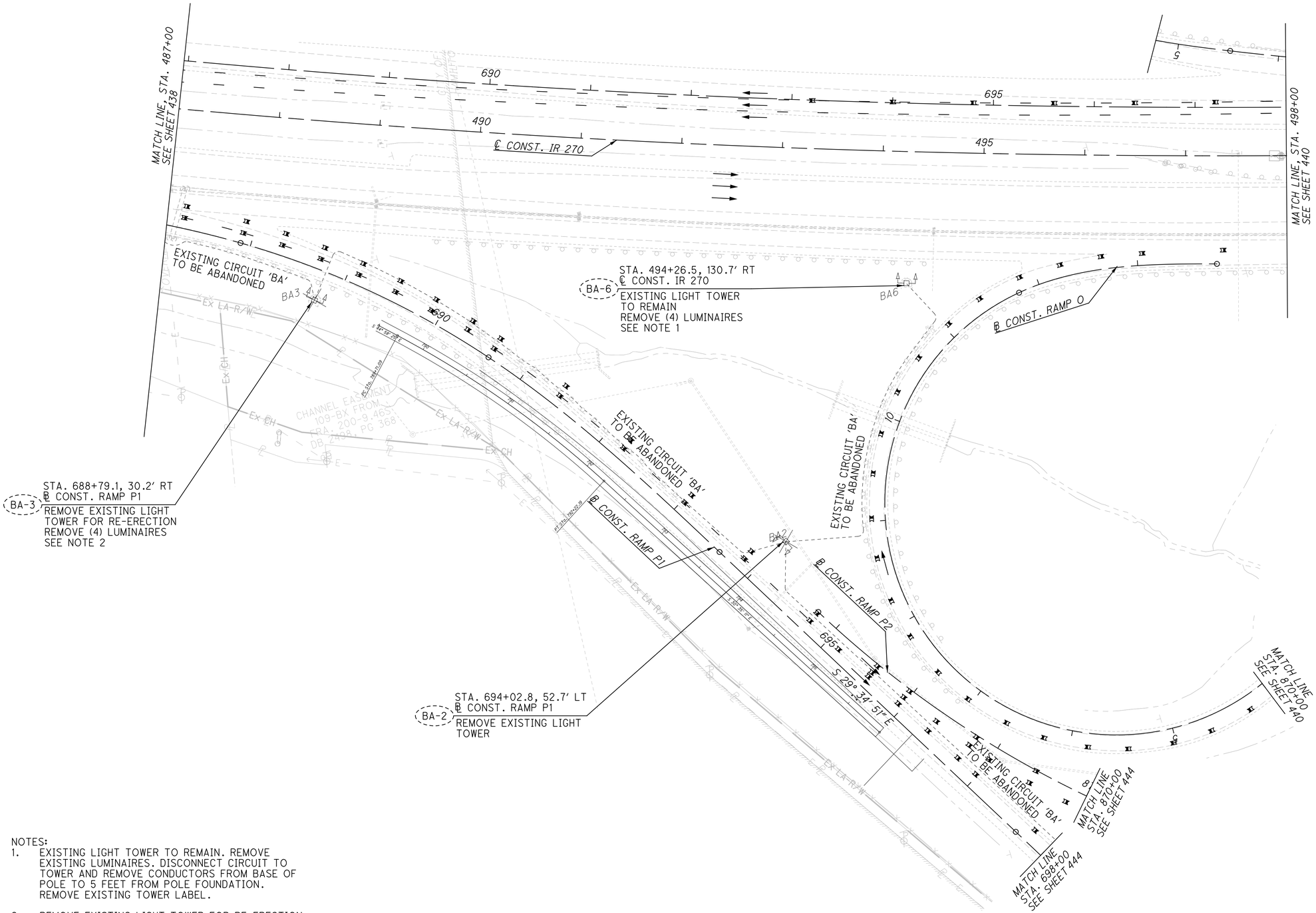

NOTES:

1. EXISTING LIGHT TOWER TO REMAIN. REMOVE EXISTING LUMINAIRES. DISCONNECT CIRCUIT TO TOWER AND REMOVE CONDUCTORS FROM BASE OF POLE TO 5 FEET FROM POLE FOUNDATION. REMOVE EXISTING TOWER LABEL.

2. REMOVE EXISTING LIGHT TOWER FOR RE-ERECTION DURING NEW WORK. REMOVE LUMINAIRES AND STORE TOWER, LUMINAIRES AND ALL TOWER APPURTENANCES UNTIL RE-ERECTION. TOWER TO BE RE-ERECTED AS TOWER 'BA-2'. DEMOLISH EXISTING FOUNDATION TO 24" BELOW GRADE.

HORIZONTAL SCALE IN FEET
0 25 50 100

CALCULATED JCS
CHECKED LH

LIGHTING DEMOLITION PLAN - I.R. 270
STA. 487+00 TO STA. 498+00

FRA-270-51.50

439
554

Z:\2014 pro\14-003-08 FRA-270 51.51\CAD\Projects\FRA\92616\Lighting\sheets\92616LX002.dgn 07-DEC-2022 12:24PM Jordan.Steele

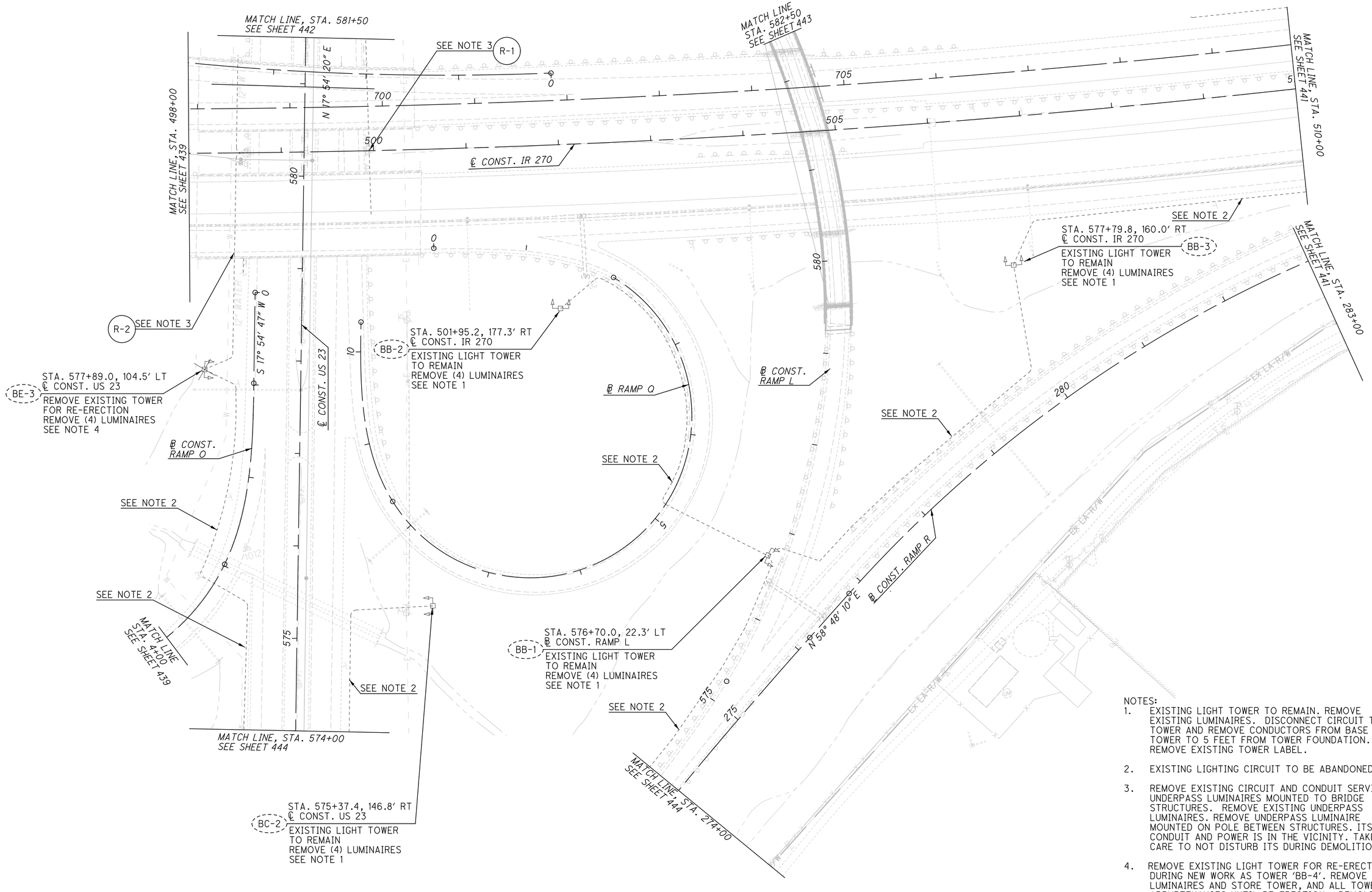

NOTES:

1. EXISTING LIGHT TOWER TO REMAIN. REMOVE EXISTING LUMINAIRES. DISCONNECT CIRCUIT TO TOWER AND REMOVE CONDUCTORS FROM BASE OF TOWER TO 5 FEET FROM TOWER FOUNDATION. REMOVE EXISTING TOWER LABEL.
2. EXISTING LIGHTING CIRCUIT TO BE ABANDONED.
3. REMOVE EXISTING CIRCUIT AND CONDUIT SERVING UNDERPASS LUMINAIRES MOUNTED TO BRIDGE STRUCTURES. REMOVE EXISTING UNDERPASS LUMINAIRES. REMOVE UNDERPASS LUMINAIRE MOUNTED ON POLE BETWEEN STRUCTURES. ITS CONDUIT AND POWER IS IN THE VICINITY. TAKE CARE TO NOT DISTURB ITS DURING DEMOLITION.
4. REMOVE EXISTING LIGHT TOWER FOR RE-ERECTION DURING NEW WORK AS TOWER 'BB-4'. REMOVE LUMINAIRES AND STORE TOWER, AND ALL TOWER APPURTENANCES UNTIL RE-ERECTION. DEMOLISH EXISTING FOUNDATION TO 24" BELOW GRADE

HORIZONTAL SCALE IN FEET
0 25 50 100

CALCULATED JCS
CHECKED LH

LIGHTING DEMOLITION PLAN - I.R. 270
STA. 498+00 TO STA. 510+00

FRA-270-51.50

440
554

Z:\2014 proj\14-003-08 FRA-270 51.51\CAD\Projects\FRA\92616\Lighting\sheets\92616LX003.dgn 07-DEC-2022 12:24PM Jordan.Steele

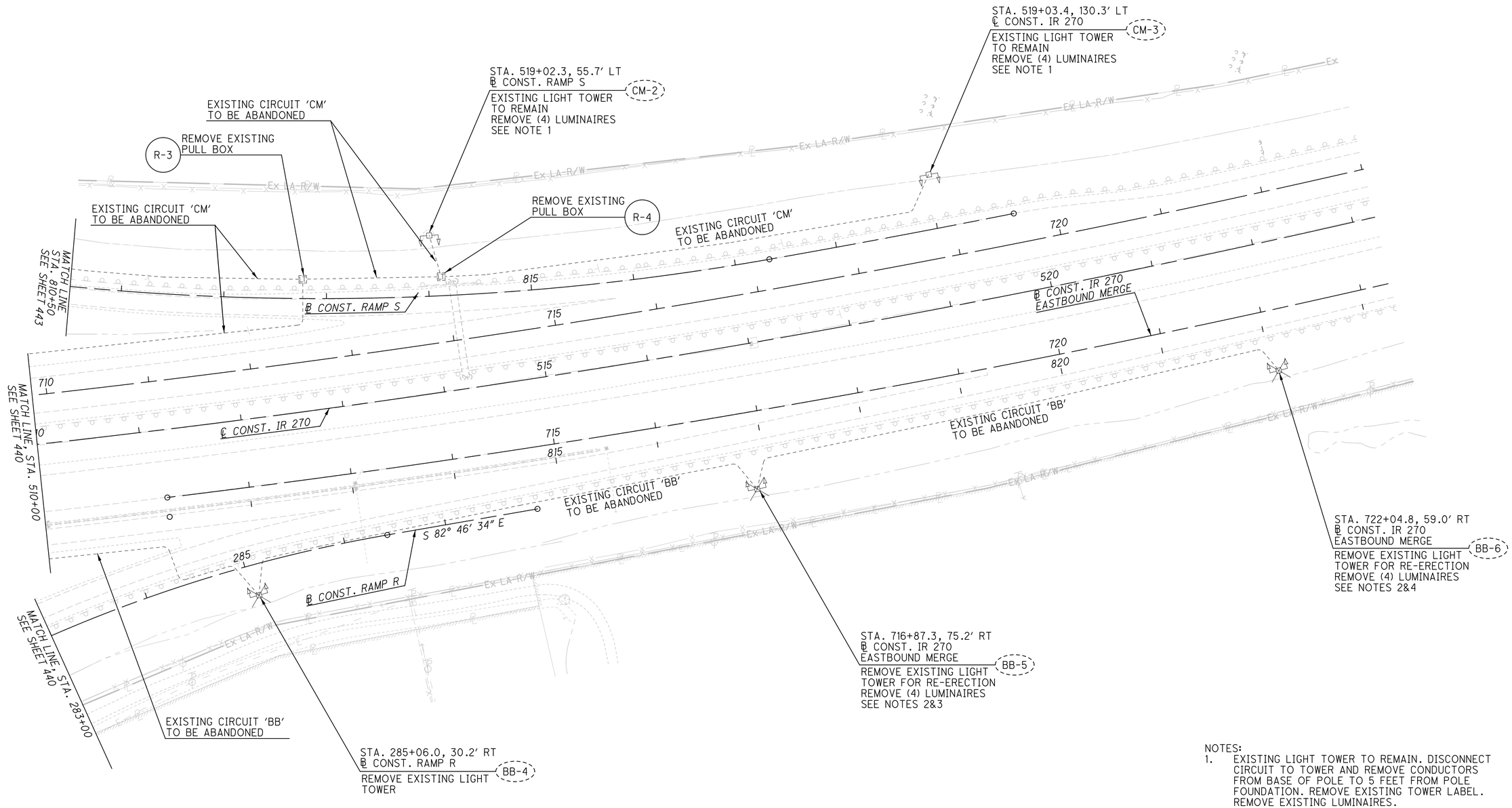

NOTES:

1. EXISTING LIGHT TOWER TO REMAIN. DISCONNECT CIRCUIT TO TOWER AND REMOVE CONDUCTORS FROM BASE OF POLE TO 5 FEET FROM POLE FOUNDATION. REMOVE EXISTING TOWER LABEL. REMOVE EXISTING LUMINAIRES.
2. REMOVE EXISTING LIGHT TOWER FOR RE-ERECTION DURING NEW WORK. REMOVE LUMINAIRES AND STORE TOWER, LUMINAIRES AND ALL TOWER APPURTENANCES UNTIL RE-ERECTION. DEMOLISH EXISTING FOUNDATION TO 24" BELOW GRADE.
3. TOWER TO BE RE-ERECTED AS TOWER 'BD-5' DURING NEW WORK.
4. TOWER TO BE RE-ERECTED AS TOWER 'BD-6' DURING NEW WORK.

HORIZONTAL SCALE IN FEET
0 25 50 100

CALCULATED JCS
CHECKED LH

LIGHTING DEMOLITION PLAN - I.R. 270
STA. 510+00 TO STA. 523+00

FRA-270-51.50

Z:\2014 proj\14-003-08 FRA-270 51.51\CAD\Projects\FRA\92616\Lighting\sheets\92616LX004.dgn 07-DEC-2022 12:24PM Jordan.Steele

NOTES:
1. EXISTING LIGHT TOWER TO REMAIN. DISCONNECT CIRCUIT TO TOWER AND REMOVE CONDUCTORS FROM BASE OF TOWER TO 5 FEET FROM TOWER FOUNDATION. REMOVE EXISTING TOWER LABEL. REMOVE EXISTING LUMINAIRES.

2. REMOVE EXISTING POWER SERVICE. EXISTING TRANSFORMER TO REMAIN FOR CONNECTION TO NEW POWER SERVICE.

3. EXISTING CIRCUIT TO BE ABANDONED.

4. EXISTING CIRCUIT CONDUCTORS TO BE REMOVED FROM CONDUIT AND CONDUIT CLEANED AND SEALED AT EACH END.

CF-1 STA. 586+72.0, 138.1' RT
℄ CONST. US 23
REMOVE EXISTING LIGHT TOWER

STA. 587+51.6, 98.1' RT
℄ CONST. US 23
REMOVE POWER SERVICE 'C'
SEE NOTE 2

MATCH LINE, STA. 589+00
SEE SHEET 445

MATCH LINE, STA. 11+50
SEE SHEET 445

CH-1 STA. 591+25.0, 70.0' RT
℄ CONST. RAMP L
EXISTING LIGHT TOWER TO REMAIN
REMOVE (4) LUMINAIRES
SEE NOTE 1

SEE NOTE 3

R-6 REMOVE EXISTING PULL BOX

R-5 REMOVE EXISTING PULL BOX

POWER SERVICE 'C'

SEE NOTE 3

CH1

SEE NOTE 3

SEE NOTE 4

S 53° 29' 40" E

MATCH LINE STA. 800+00
SEE SHEET 443

SEE NOTE 3

069

MATCH LINE
STA. 588+50
SEE SHEET 443

585

SEE NOTE 3

CK-2 STA. 19+85.8, 27.1' RT
℄ CONST. RAMP M
EXISTING LIGHT TOWER TO REMAIN
REMOVE (4) LUMINAIRES
SEE NOTE 1

S 70° 58' 38" W

595

CK1

℄ CONST. RAMP L

CK2

Ex LA R/W

SEE NOTE 3

SEE NOTE 3

℄ CONST. RAMP M

MATCH LINE
STA. 24+00
SEE SHEET 438

CK-1 STA. 595+47.2, 45.6' LT
℄ CONST. RAMP L
EXISTING LIGHT TOWER TO REMAIN
REMOVE (6) LUMINAIRES
SEE NOTE 1

SEE NOTE 3

CK7

CK-7 STA. 20+75.6, 198.0' LT
℄ CONST. RAMP M
EXISTING LIGHT TOWER TO REMAIN
REMOVE (4) LUMINAIRES
SEE NOTE 1

SEE NOTE 3

℄ RAMP N

CK6

CK-6 STA. 5+68.2, 30.1' RT
℄ RAMP N
EXISTING LIGHT TOWER TO REMAIN
REMOVE (4) LUMINAIRES
SEE NOTE 1

MATCH LINE
SEE SHEET 439

SEE NOTE 3

℄ CONST. US 23

CF2

CF-2 STA. 582+68.6, 90.0' RT
℄ CONST. US 23
EXISTING LIGHT TOWER TO REMAIN
REMOVE (4) LUMINAIRES
SEE NOTE 1

SEE NOTE 3

MATCH LINE, STA. 581+50
SEE SHEET 440

HORIZONTAL SCALE IN FEET
0 25 50 100

CALCULATED JCS
CHECKED LH

LIGHTING DEMOLITION PLAN - RAMPS M&L
STA. 24+00 TO STA. 588+50

FRA-270-51.50

442
554

Z:\2014 proj\14-003-08 FRA-270 51.51\CAD\Projects\FRA\92616\Lighting\sheets\92616LX005.dgn 07-DEC-2022 12:24PM Jordan.Steele

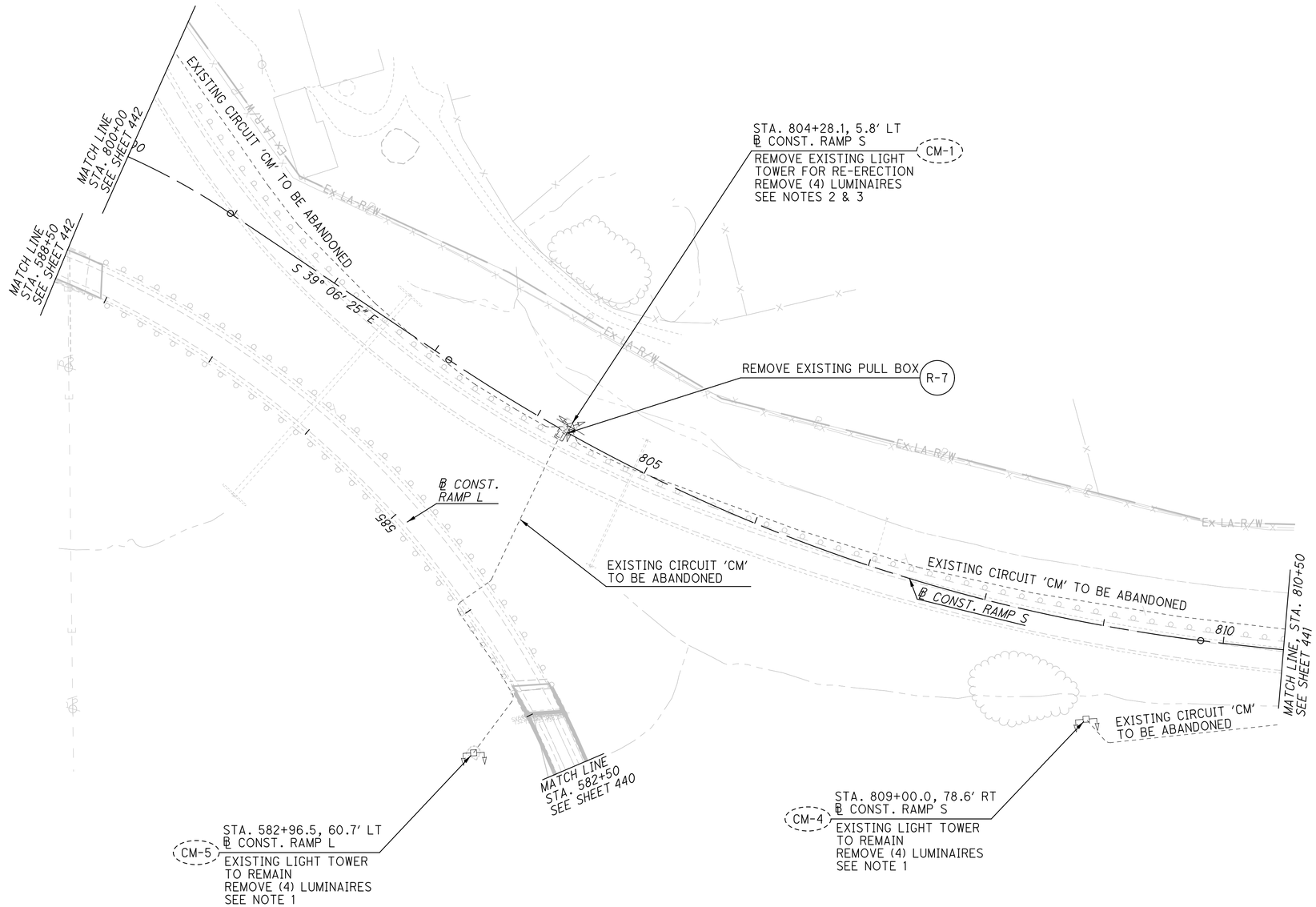

NOTES:

1. EXISTING LIGHT TOWER TO REMAIN. DISCONNECT CIRCUIT TO TOWER AND REMOVE CONDUCTORS FROM BASE OF TOWER TO 5 FEET FROM TOWER FOUNDATION. REMOVE EXISTING TOWER LABEL. REMOVE ALL LUMINAIRES.
2. REMOVE EXISTING LIGHT TOWER FOR RE-ERECTION DURING NEW WORK. REMOVE LUMINAIRES AND STORE TOWER AND ALL TOWER APPURTENANCES UNTIL RE-ERECTION. DEMOLISH EXISTING FOUDNATION TO 24" BELOW GRADE.
3. TOWER TO BE RE-ERECTED AS TOWER 'CH-2' DURING NEW WORK.

HORIZONTAL SCALE IN FEET
0 25 50 100

CALCULATED JCS
CHECKED LH

LIGHTING DEMOLITION PLAN - RAMP S
STA. 800+00 TO STA. 810+50

FRA-270-51.50

443
554

Z:\2014 pro\14-003-08 FRA-270 51.51\CAD\Projects\FRA\92616\Lighting\sheets\92616LX006.dgn 07-DEC-2022 12:24PM Jordan.Steele

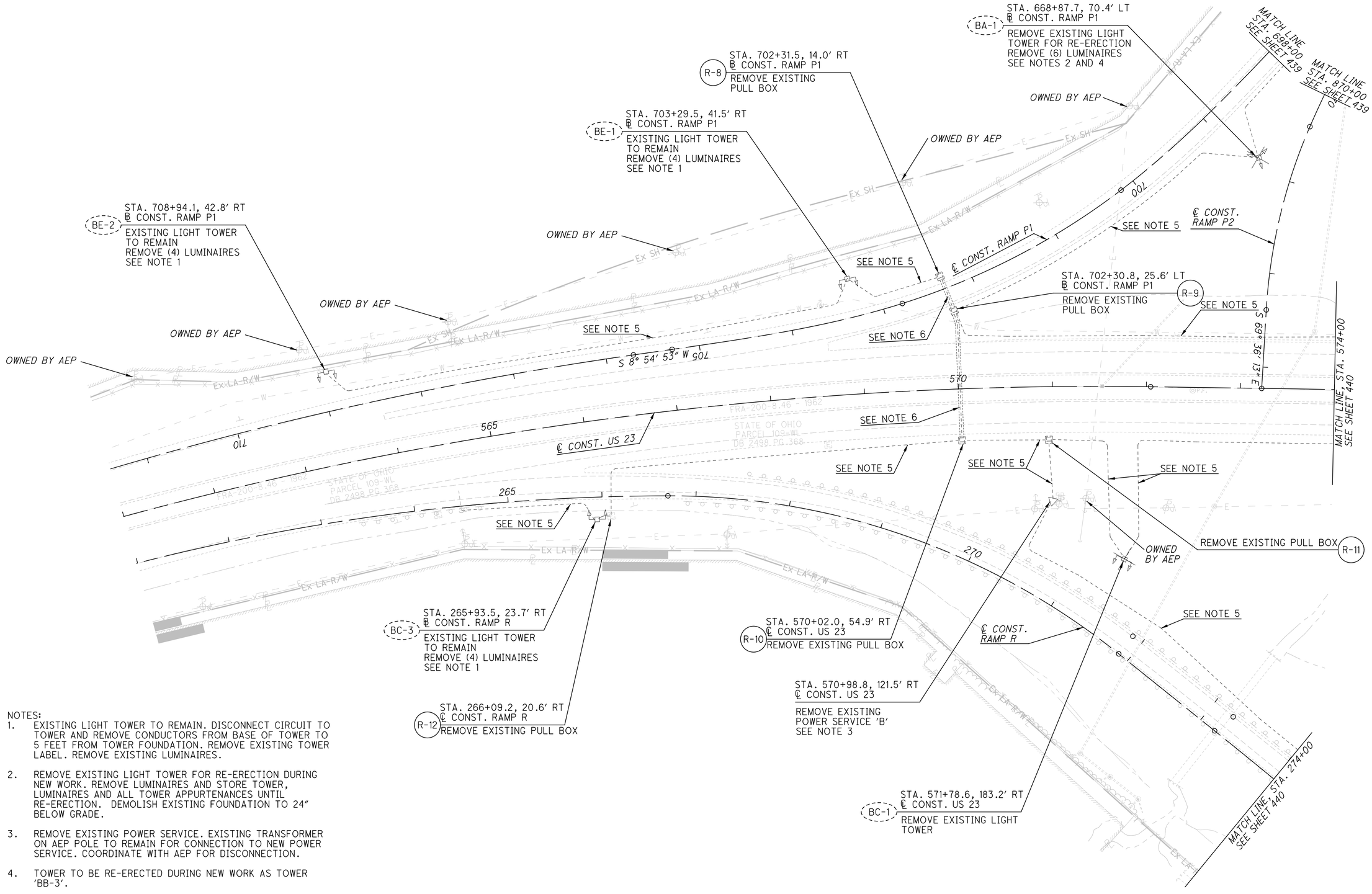

NOTES:

1. EXISTING LIGHT TOWER TO REMAIN. DISCONNECT CIRCUIT TO TOWER AND REMOVE CONDUCTORS FROM BASE OF TOWER TO 5 FEET FROM TOWER FOUNDATION. REMOVE EXISTING TOWER LABEL. REMOVE EXISTING LUMINAIRES.
2. REMOVE EXISTING LIGHT TOWER FOR RE-ERECTION DURING NEW WORK. REMOVE LUMINAIRES AND STORE TOWER, LUMINAIRES AND ALL TOWER APPURTENANCES UNTIL RE-ERECTION. DEMOLISH EXISTING FOUNDATION TO 24" BELOW GRADE.
3. REMOVE EXISTING POWER SERVICE. EXISTING TRANSFORMER ON AEP POLE TO REMAIN FOR CONNECTION TO NEW POWER SERVICE. COORDINATE WITH AEP FOR DISCONNECTION.
4. TOWER TO BE RE-ERECTED DURING NEW WORK AS TOWER 'BB-3'.
5. EXISTING CIRCUIT TO BE ABANDONED.
6. EXISTING CIRCUIT CONDUCTORS TO BE REMOVED FROM CONDUIT AND CONDUIT CLEANED AND SEALED AT EACH END.

HORIZONTAL SCALE IN FEET 0 25 50 100

CALCULATED JCS
CHECKED LH

LIGHTING DEMOLITION PLAN - U.S. 23
STA. 561+00 TO STA. 574+00

FRA-270-51.50

Z:\2014 proj\14-003-08 FRA-270 51.51\CAD\Projects\FRA\92616\Lighting\sheets\92616LX007.dgn 07-DEC-2022 12:24PM Jordan.Steele

STA. 9+18.1, 33.9' RT
℄ CONST. RAMP M — CH-2
REMOVE EXISTING TOWER
FOR RE-ERECTION
REMOVE (8) LUMINAIRES
SEE NOTE 1

STA. 3+61.1, 63.1' RT
℄ CONST. RAMP M — CH-3
REMOVE EXISTING TOWER

MATCH LINE, STA. 11+50
SEE SHEET 442

EXISTING CIRCUIT 'CH'
TO BE ABANDONED

EXISTING CIRCUIT 'CH'
TO BE ABANDONED

℄ CONST. RAMP M

S 17° 55' 47" W

S 24° 46' 21" W

N 17° 54' 20" E

℄ CONST. US 23

SERVICE RD

CITY OF COLUMBUS
HAMILTON TWP

EX L.A. R/W

EX R/W

Ex SH

SEE SHEET 446 FOR CITY OF
COLUMBUS STREET LIGHTING WORK

MATCH LINE, STA. 589+00
SEE SHEET 442

590 595 600

NOTES:
1. REMOVE EXISTING LIGHT TOWER FOR RE-ERECTION DURING NEW WORK AS TOWER 'CE-2'. REMOVE LUMINAIRES AND STORE TOWER, AND ALL TOWER APPURTENANCES UNTIL RE-ERECTION. DEMOLISH EXISTING FOUNDATION TO 24" BELOW GRADE.

HORIZONTAL SCALE IN FEET
0 25 50 100

CALCULATED JCS
CHECKED LH

LIGHTING DEMOLITION PLAN - U.S. 23
STA. 589+00 TO STA. 602+25

FRA-270-51.50

445
554

Z:\2014 pro\14-003-08 FRA-270 51.51\CAD\Projects\FRA\92616\Lighting\sheets\92616LX008.dgn 07-DEC-2022 12:25PM Jordan.Steele

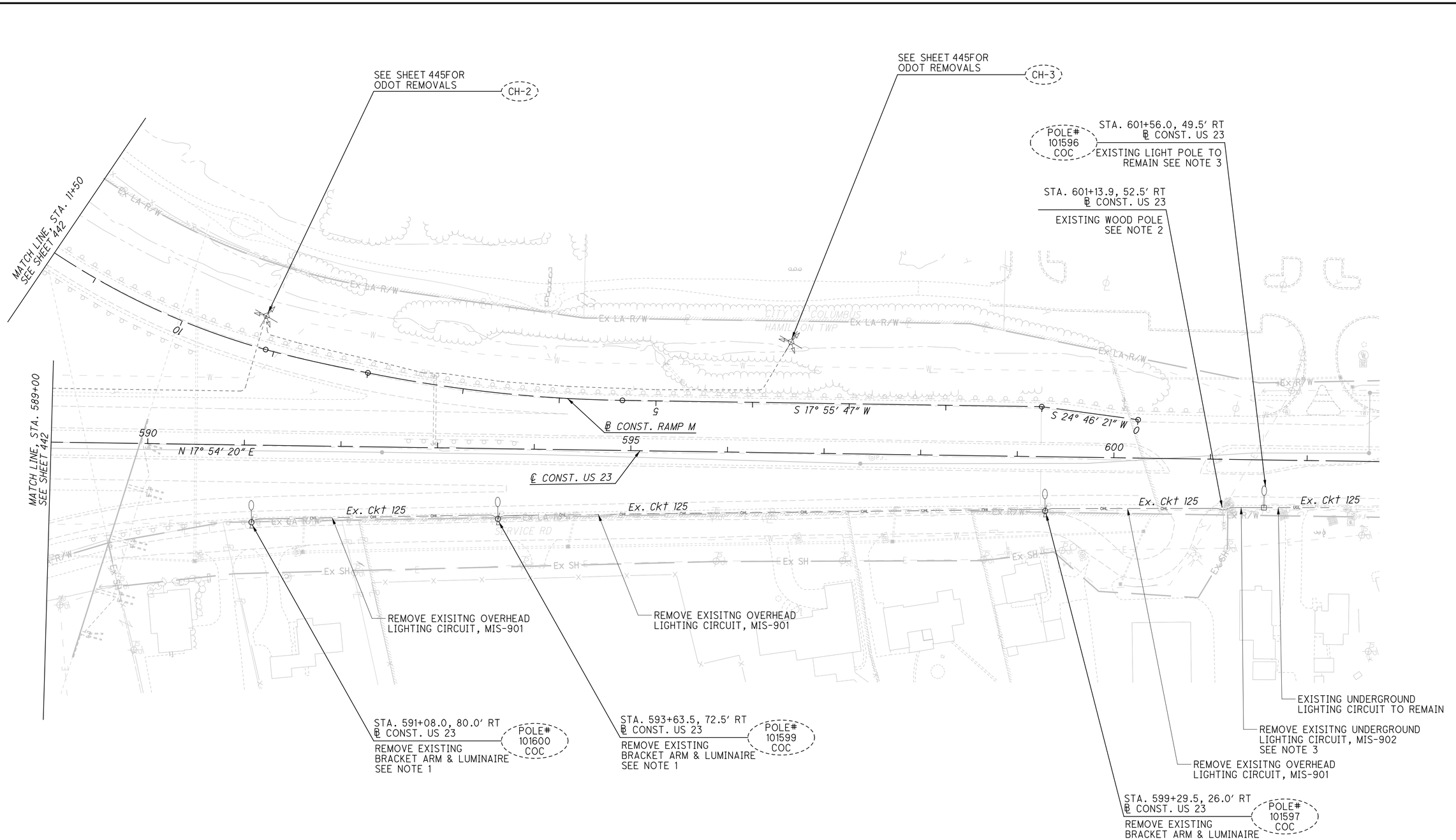

NOTES:

1. REMOVE EXISTING BRACKET ARM AND LUMINAIRE IN ACCORDANCE WITH MIS-901, OVERHEAD SYSTEM REMOVAL.
2. REMOVE EXISTING STREET LIGHT CIRCUIT RISER FROM EXISTING WOOD UTILITY POLE. AND TERMINATE BELOW GRADE. REMOVE CONDUCTORS FROM RISER TO ADJACENT PULL BOX. EXISTING PULL BOX ADJACENT TO POLE TO REMAIN.
3. REMOVE EXISTING UNDERGROUND LIGHTING CIRCUIT BETWEEN RISER PULL BOX AND POLE #101596. DISCONNECT CIRCUIT SOUTH IN POLE BASE. MAINTAIN CIRCUIT AT POLE #101596 AND NORTH OF POLE.

0 25 50 100
HORIZONTAL SCALE IN FEET

CALCULATED JCS
CHECKED LH

LIGHTING DEMOLITION PLAN - U.S. 23
STA. 589+00 TO STA. 602+25

FRA-270-51.50

Z:\2014 proj\14-003-08 FRA-270 51.51\CAD\Projects\FRA\92616\Lighting\sheets\92616LX009.dgn 07-DEC-2022 12:25PM Jordan.Steele

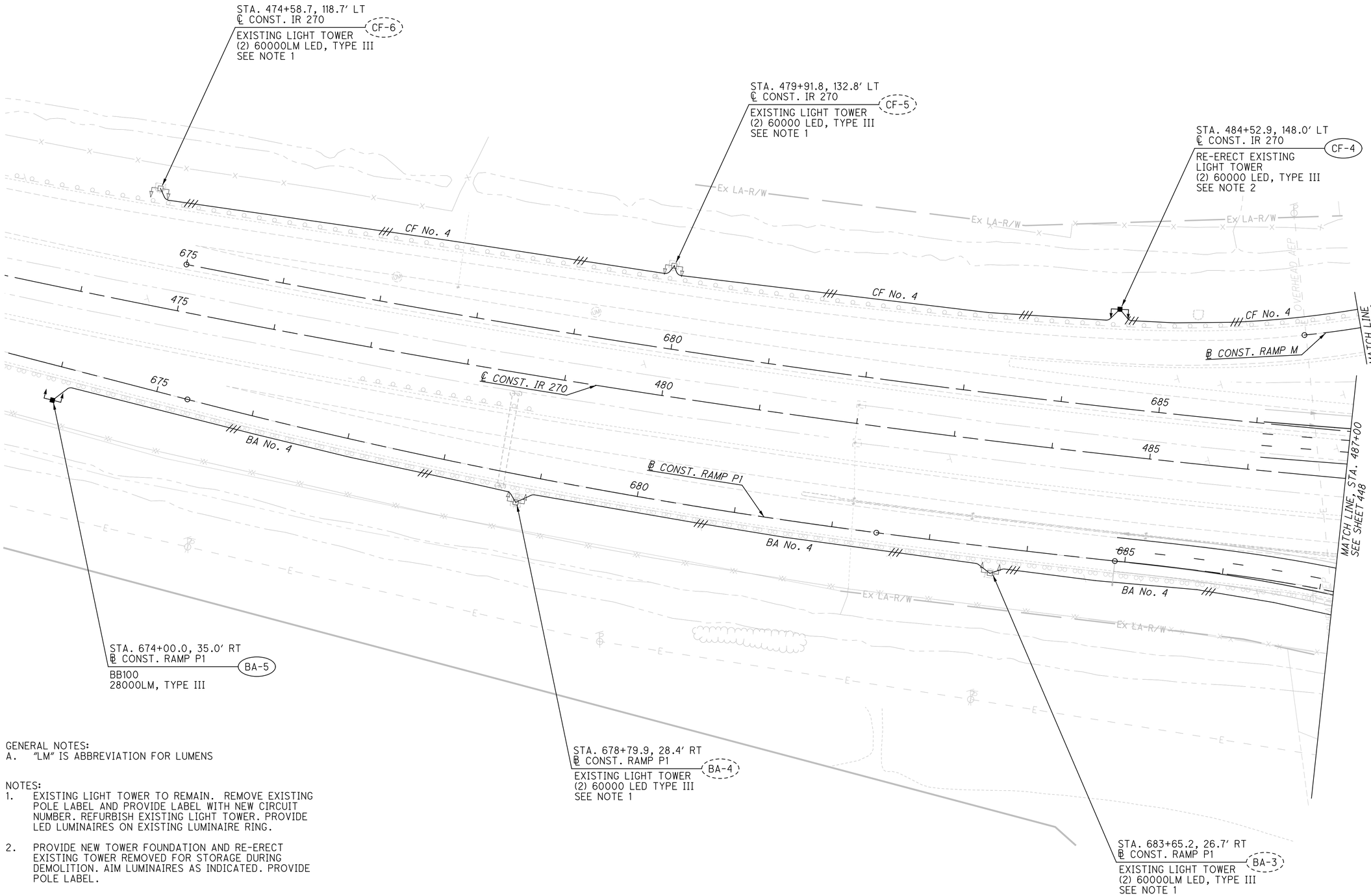

GENERAL NOTES:
A. "LM" IS ABBREVIATION FOR LUMENS

NOTES:
1. EXISTING LIGHT TOWER TO REMAIN. REMOVE EXISTING POLE LABEL AND PROVIDE LABEL WITH NEW CIRCUIT NUMBER. REFURBISH EXISTING LIGHT TOWER. PROVIDE LED LUMINAIRES ON EXISTING LUMINAIRE RING.

2. PROVIDE NEW TOWER FOUNDATION AND RE-ERECT EXISTING TOWER REMOVED FOR STORAGE DURING DEMOLITION. AIM LUMINAIRES AS INDICATED. PROVIDE POLE LABEL.

HORIZONTAL SCALE IN FEET
0 25 50 100

CALCULATED JCS
CHECKED LH

LIGHTING PLAN - I.R. 270
STA. 473+00 TO STA. 487+00

FRA-270-51.50

447
554

Z:\2014 pro\14-003-08 FRA-270 51.51\CAD\Projects\FRA\92616\Lighting\sheets\92616LP001.dgn 07-DEC-2022 12:25PM Jordan.Steele

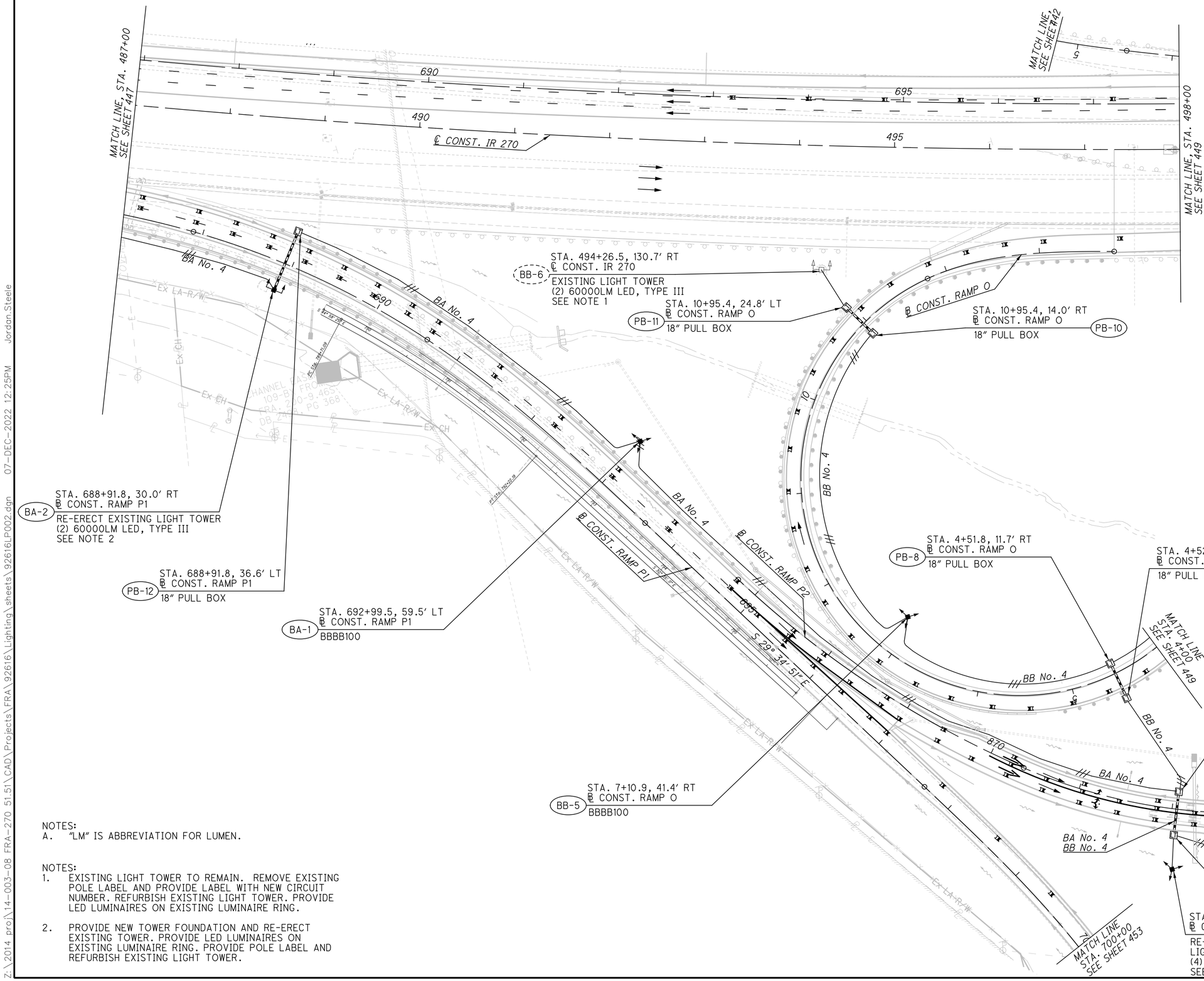

NOTES:
A. "LM" IS ABBREVIATION FOR LUMEN.

NOTES:
1. EXISTING LIGHT TOWER TO REMAIN. REMOVE EXISTING POLE LABEL AND PROVIDE LABEL WITH NEW CIRCUIT NUMBER. REFURBISH EXISTING LIGHT TOWER. PROVIDE LED LUMINAIRES ON EXISTING LUMINAIRE RING.

2. PROVIDE NEW TOWER FOUNDATION AND RE-ERECT EXISTING TOWER. PROVIDE LED LUMINAIRES ON EXISTING LUMINAIRE RING. PROVIDE POLE LABEL AND REFURBISH EXISTING LIGHT TOWER.

HORIZONTAL SCALE IN FEET
0 25 50 100

CALCULATED JCS
CHECKED LH

LIGHTING PLAN - I.R. 270
STA. 487+00 TO STA. 498+00

FRA-270-51.50

448
554

Z:\2014 pro\14-003-08 FRA-270 51.51\CAD\Projects\FRA\92616\Lighting\sheets\92616LP002.dgn 07-DEC-2022 12:25PM Jordan.Steele

CG No. 4

STA. 581+25.3, 72.1' RT
℄ CONST. US 23
PB-31
18" PULL BOX
TO UNDERPASS LIGHTING
SEE NOTE 3

MATCH LINE, STA. 581+50
SEE SHEET 451

MATCH LINE
STA. 582+50
SEE SHEET 452

MATCH LINE, STA. 510+00
SEE SHEET 450

MATCH LINE, STA. 498+00
SEE SHEET 448

℄ CONST. IR 270

BD No. 4

STA. 506+79.8, 160.0' RT
℄ CONST. IR 270
BD-3
EXISTING LIGHT TOWER
(4) 38000LM LED, TYPE V
SEE NOTE 2

MATCH LINE, STA. 283+00
SEE SHEET 450

STA. 579+02.4, 70.5' LT
℄ CONST. US 23
PB-9
18" PULL BOX
TO UNDERPASS LIGHTING
SEE NOTE 3

BB No. 4

S 17° 54' 47" W

℄ CONST. US 23

STA. 501+95.2, 177.3' RT
℄ CONST. IR 270
BC-4
EXISTING LIGHT TOWER
(2) 60000LM LED, TYPE III
SEE NOTE 1

℄ RAMP Q
TO BE REMOVED

℄ CONST.
RAMP L

℄ CONST.
RAMP O

STA. 575+96.8, 177.1' RT
℄ CONST. US 23
PB-16
18" PULL BOX

STA. 576+90.0, 106.0' LT
℄ CONST. US 23
BB-4
RE-ERECT EXISTING
LIGHT TOWER
(4) 38000 LED, TYPE V
SEE NOTE 4

BB No. 4

BC No. 4

MATCH LINE
STA. 4+00
SEE SHEET 448

MATCH LINE, STA. 574+00
SEE SHEET 453

STA. 577+10.9, 15.3' LT
℄ CONST. RAMP L
PB-17
18" PULL BOX

STA. 576+70.0, 22.3' LT
℄ CONST. RAMP L
BD-2
EXISTING LIGHT TOWER
(4) 38000LM LED, TYPE V
SEE NOTE 2

BD No. 4

N 58° 48' 10" E

℄ CONST. RAMP R

EX LA-R/W

STA. 577+10.9, 32.9' RT
℄ CONST. RAMP L
PB-18
18" PULL BOX

MATCH LINE
SEE SHEET 453
STA. 274+00

STA. 575+37.4, 146.8' RT
℄ CONST. US 23
BC-3
EXISTING LIGHT TOWER
(2) 60000 LED, TYPE III
SEE NOTE 1

GENERAL NOTES:
A. "LM" IS ABBREVIATION FOR LUMEN.

NOTES:
1. EXISTING LIGHT TOWER TO REMAIN. REMOVE EXISTING POLE LABEL AND PROVIDE NEW LABEL WITH NEW CIRCUIT NUMBER. REFURBISH EXISTING LIGHT TOWER. PROVIDE LED LUMINAIRES ON EXISTING LUMINAIRE RING.
2. PROVIDE NEW SYMMETRIC (TYPE V) DISTRIBUTION, 38000LM LED HIGH MAST LUMINAIRES ON EXISTING LIGHT TOWER.
3. SEE SHEET 455 FOR UNDERPASS LIGHTING PLAN.
4. PROVIDE NEW SYMMETRIC (TYPE V) DISTRIBUTION, 38000LM LED HIGH MAST LUMINAIRES ON NEW ERECTED LIGHT TOWER.

HORIZONTAL SCALE IN FEET
0 25 50 100

CALCULATED JCS
CHECKED LH

LIGHTING PLAN - I.R. 270
STA. 498+00 TO STA. 510+00

FRA-270-51.50

449
554

Z:\2014 pro\14-003-08 FRA-270 51.51\CAD\Projects\FRA\92616\Lighting\sheets\92616LP003.dgn 07-DEC-2022 12:25PM Jordan.Steele

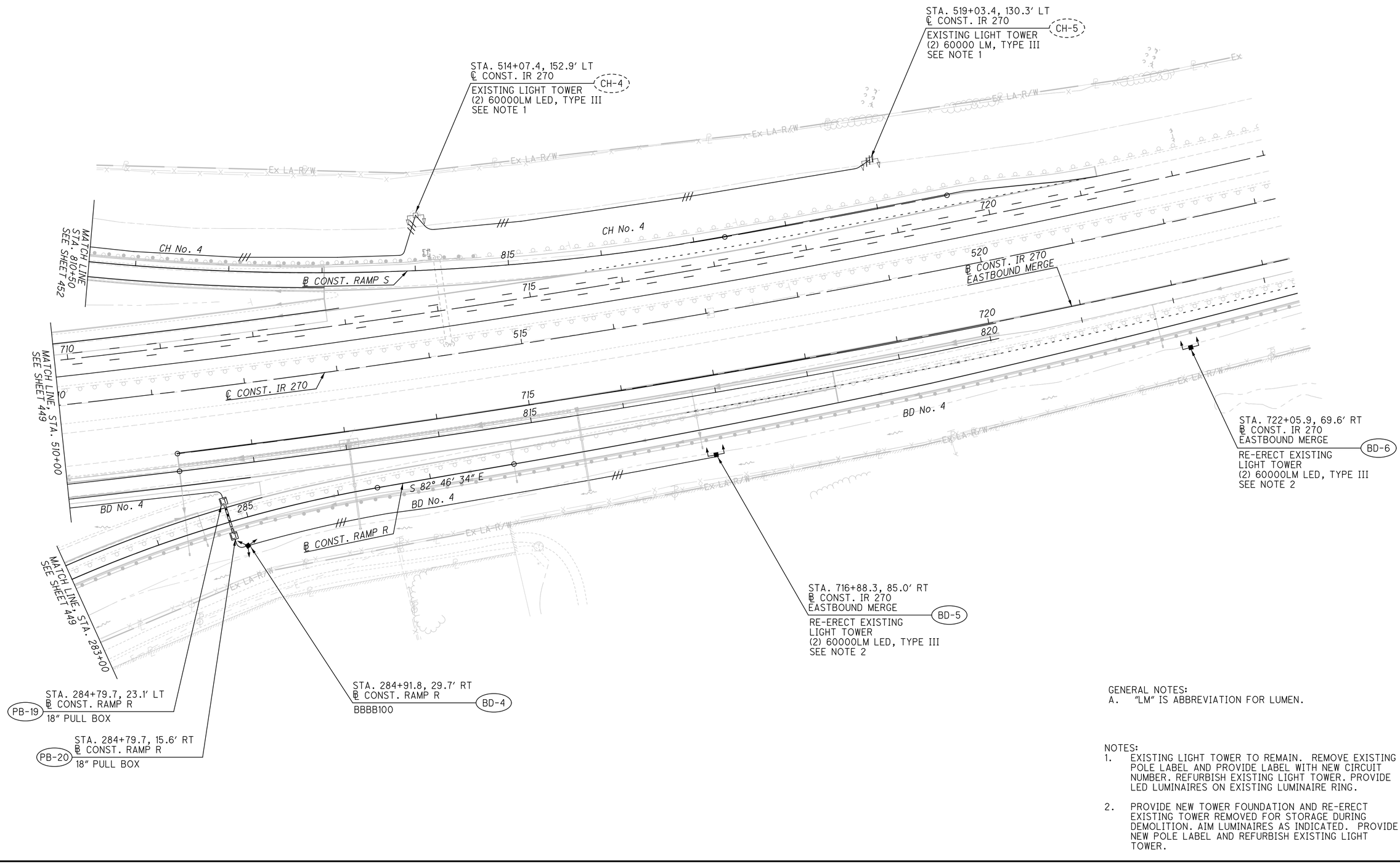

GENERAL NOTES:
A. "LM" IS ABBREVIATION FOR LUMEN.

NOTES:
1. EXISTING LIGHT TOWER TO REMAIN. REMOVE EXISTING POLE LABEL AND PROVIDE LABEL WITH NEW CIRCUIT NUMBER. REFURBISH EXISTING LIGHT TOWER. PROVIDE LED LUMINAIRES ON EXISTING LUMINAIRE RING.

2. PROVIDE NEW TOWER FOUNDATION AND RE-ERECT EXISTING TOWER REMOVED FOR STORAGE DURING DEMOLITION. AIM LUMINAIRES AS INDICATED. PROVIDE NEW POLE LABEL AND REFURBISH EXISTING LIGHT TOWER.

HORIZONTAL SCALE IN FEET
0 25 50 100

CALCULATED JCS
CHECKED LH

LIGHTING PLAN - I.R. 270
STA. 510+00 TO STA. 523+00

FRA-270-51.50

450
554

Z:\2014 proj\14-003-08 FRA-270 51.51\CAD\Projects\FRA\92616\lighting\sheets\92616LP004.dgn 07-DEC-2022 12:25PM Jordan.Steele

GENERAL NOTES:
A. "LM" IS ABBREVIATION FOR LUMEN.

NOTES:
1. EXISTING LIGHT TOWER TO REMAIN. REMOVE EXISTING POLE LABEL AND PROVIDE LABEL WITH NEW CIRCUIT NUMBER. REFURBISH EXISTING LIGHT TOWER. PROVIDE LED LUMINAIRES ON EXISTING LUMINAIRE RING.

2. PROVIDE NEW GROUND MOUNTED POWER SERVICE, 240/480V, 1PH, 3 WIRE. ADDRESS: 4110 HIGH ST., COLUMBUS, OH 43207. UTILIZE EXISTING 480V 1PH TRANSFORMER ON ADJACENT POWER POLE. FIELD COORDINATE.

PB-22 STA. 587+58.1, 3.0' LT ℄ CONST. US 23 24" PULL BOX

PB-28 STA. 799+64.2, 21.5' LT ℄ CONST. RAMP S 24" PULL BOX

STA. 587+58.6, 95.8' RT ℄ CONST. US 23 POWER SERVICE 'C' 240/480V, 1PH, 3W SEE NOTE 2

PB-24 STA. 587+57.5, 56.0' LT ℄ CONST. US 23 24" PULL BOX

CE-1 STA. 591+25.0, 70.0' RT ℄ CONST. RAMP L EXISTING LIGHT TOWER (4) 38000LM LED, TYPE V SEE NOTE 1

MATCH LINE, STA. 11+50 SEE SHEET 454

MATCH LINE, STA. 589+00 SEE SHEET 454

PB-27 STA. 19+40.6, 19.7' RT ℄ CONST. RAMP M 18" PULL BOX

CF-3 STA. 19+85.8, 27.1' RT ℄ CONST. RAMP M EXISTING LIGHT TOWER (2) 60000LM LED, TYPE III SEE NOTE 1

PB-21 STA. 587+59.1, 60.6' RT ℄ CONST. US 23 24" PULL BOX

PB-25 STA. 585+87.4, 57.7' LT ℄ CONST. US 23 24" PULL BOX

PB-29 STA. 799+64.2, 27.7' RT ℄ CONST. RAMP S 24" PULL BOX

STA. 585+56.8, 57.8' RT ℄ CONST. US 23 18" PULL BOX PB-30

CE-6 STA. 594+01.5, 96.6' LT ℄ CONST. RAMP L EXISTING LIGHT TOWER (6) 38000LM LED, TYPE V SEE NOTE 1

PB-26 STA. 597+82.7, 14.4' LT ℄ CONST. RAMP L 18" PULL BOX

CG-1 STA. 582+68.6, 90.0' RT ℄ CONST. US 23 EXISTING LIGHT TOWER (2) 60000LM LED, TYPE III SEE NOTE 1

CF-2 STA. 23+37.2, 81.2' LT ℄ CONST. RAMP M BBBB100 TYPE V

CF-1 STA. 20+75.6, 198.0' LT ℄ CONST. RAMP M EXISTING LIGHT TOWER (2) 60000LM LED, TYPE III SEE NOTE 1

CE-5 STA. 581+74.4, 291.6' LT ℄ CONST. US 23 EXISTING LIGHT TOWER (2) 60000LM LED, TYPE III SEE NOTE 1

MATCH LINE STA. 24+00 SEE SHEET 447

MATCH LINE SEE SHEET 448

MATCH LINE STA. 588+50 SEE SHEET 452

MATCH LINE STA. 800+00 SEE SHEET 452

MATCH LINE, STA. 581+50 SEE SHEET 449

CE No. 4 CF No. 4 CG No. 4 CH No. 4

℄ CONST. RAMP M ℄ CONST. RAMP L ℄ CONST. RAMP S ℄ CONST. US 23

Ex LA R/W

S 70° 58' 38" W

S 53° 29' 40" E

585 L T

15

20

10

HORIZONTAL SCALE IN FEET 0 25 50 100

CALCULATED JCS CHECKED LH

LIGHTING PLAN - RAMPS M AND L STA. 24+00 TO STA. 588+50

FRA-270-51.50

451 554

Z:\2014 pro\14-003-08 FRA-270 51.51\CAD\Projects\FRA\92616\Lighting\sheets\92616LP005.dgn 07-DEC-2022 12:25PM Jordan.Steele

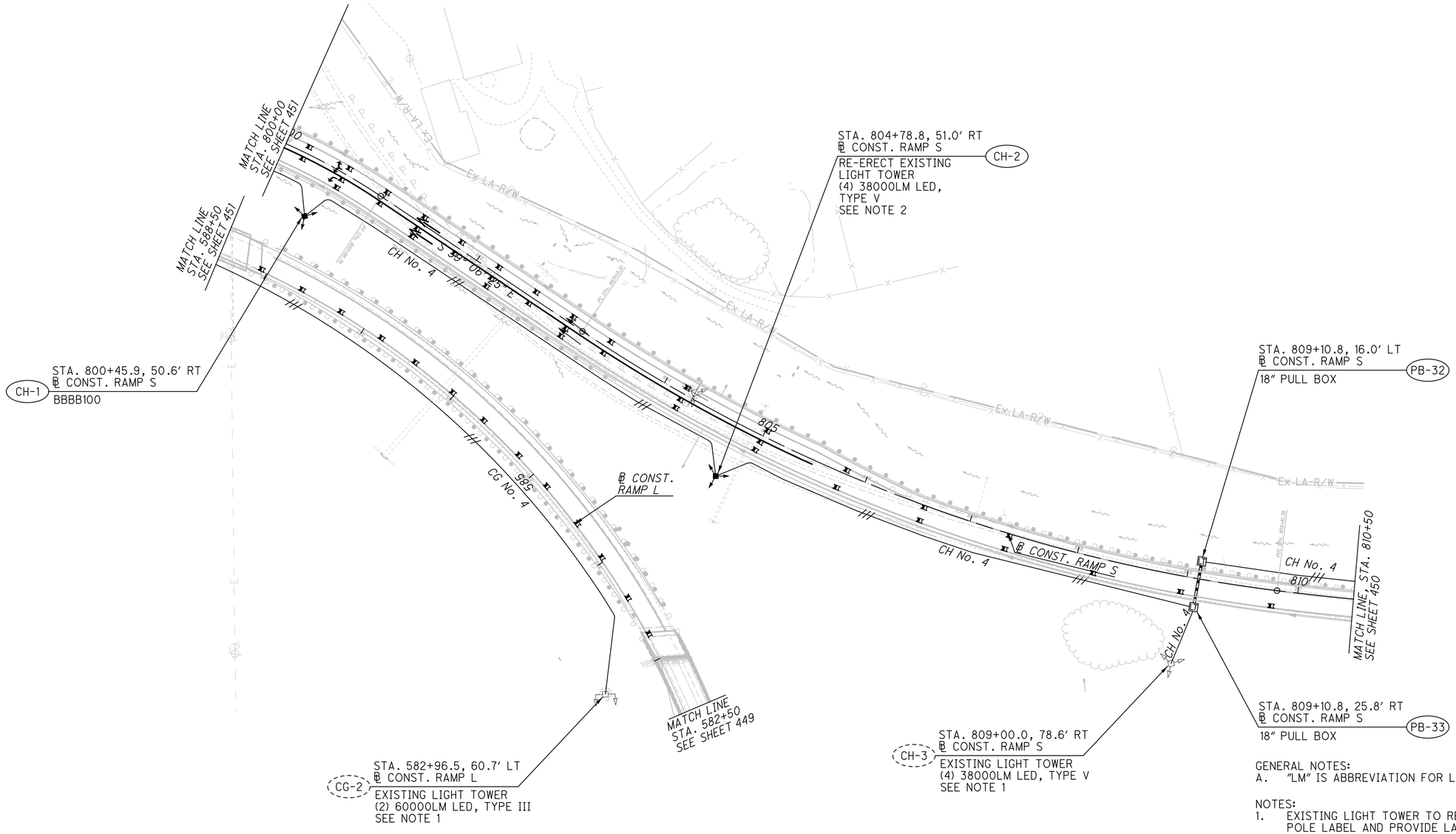

GENERAL NOTES:
A. "LM" IS ABBREVIATION FOR LUMEN.

NOTES:
1. EXISTING LIGHT TOWER TO REMAIN. REMOVE EXISTING POLE LABEL AND PROVIDE LABEL WITH NEW CIRCUIT NUMBER. REFURBISH EXISTING LIGHT TOWER. PROVIDE LED LUMINAIRES ON LUMINAIRE RING.

2. PROVIDE NEW TOWER FOUNDATION AND RE-ERECT EXISTING TOWER REMOVED FOR STORAGE DURING DEMOLITION. PROVIDE NEW POLE LABEL AND REFURBISH EXISTING LIGHT TOWER.

HORIZONTAL SCALE IN FEET
0 25 50 100

CALCULATED JCS
CHECKED LH

LIGHTING PLAN - RAMP S
STA. 800+00 TO STA. 810+50

FRA-270-51.50

452
554

Z:\2014 proj\14-003-08 FRA-270 51.51\CAD\Projects\FRA\92616\lighting\sheets\92616LP006.dgn 07-DEC-2022 12:25PM Jordan.Steele

PB-4
STA. 702+40.6, 13.7' RT
℄ CONST. RAMP P1
18" PULL BOX

BB-1
STA. 703+29.5, 41.5' RT
℄ CONST. RAMP P1
EXISTING LIGHT TOWER
(2) 60000 LED, TYPE III
SEE NOTE 1

BB-2
STA. 708+94.1, 42.8' RT
℄ CONST. RAMP P1
EXISTING LIGHT TOWER
(2) 60000LM LED, TYPE III
SEE NOTE 1

BC-2
STA. 265+93.5, 23.7' RT
℄ CONST. RAMP R
EXISTING LIGHT TOWER
(2) 60000LM LED, TYPE III
SEE NOTE 1

PB-14
STA. 266+88.8, 19.2' RT
℄ CONST. RAMP R
18" PULL BOX

PB-13
STA. 266+88.8, 36.1' LT
℄ CONST. RAMP R
18" PULL BOX

BC-1
STA. 270+56.1, 61.4' LT
℄ CONST. RAMP R
BBB100

PB-2
STA. 570+10.2, 54.9' RT
℄ CONST. US 23
24" PULL BOX

PB-3
STA. 570+07.6, 54.3'LT
℄ CONST. US 23
24" PULL BOX

PB-1
STA. 571+23.4, 123.2' RT
℄ CONST. US 23
24" PULL BOX

BD-1
STA. 273+46.0, 87.7' LT
℄ CONST. RAMP R
BB100
28000LM, TYPE III

STA. 571+11.8, 124.5' RT
℄ CONST. US 23
POWER SERVICE 'B'
240/480V, 1PH, 3W
SEE NOTE 3

OWNED BY AEP

MATCH LINE
STA. 700+00
SEE SHEET 448

MATCH LINE
STA. 872+50
SEE SHEET 448

MATCH LINE, STA. 574+00
SEE SHEET 449

MATCH LINE, STA. 274+00
SEE SHEET 449

℄ CONST. US 23

℄ CONST. RAMP P1

℄ CONST. RAMP R

BB No. 4

BA No. 4
BB No. 4

BC No. 4

BD No. 4

S 88° 54' 53" W 904'

565

570

265

270

GENERAL NOTES:
A. "LM" IS ABBREVIATION FOR LUMEN.

NOTES:
1. EXISTING LIGHT TOWER TO REMAIN. REMOVE EXISTING POLE LABEL AND PROVIDE LABEL WITH NEW CIRCUIT NUMBER. REFURBISH EXISTING LIGHT TOWER. PROVIDE LED LUMINAIRES ON EXISTING LUMINAIRE RING.

2. PROVIDE NEW TOWER FOUNDATION AND RE-ERECT EXISTING TOWER REMOVED FOR STORAGE DURING DEMOLITION. PROVIDE POLE LABEL AND REFURBISH EXISTING LIGHT TOWER.

3. PROVIDE NEW GROUND MOUNTED POWER SERVICE, 240/480V, 1 PHASE, 3 WIRE. ADDRESS: 4338 HIGH ST., COLUMBUS, OH 43207. UTILIZE EXISTING 480V POLE MOUNTED TRANSFORMER ON ADJACENT AEP POWER POLE. FIELD COORDINATE.

HORIZONTAL SCALE IN FEET
0 25 50 100

CALCULATED JCS
CHECKED LH

LIGHTING PLAN - U.S. 23
STA. 561+00 TO STA. 574+00

FRA-270-51.50

453
554

Z:\2014 proj\14-003-08 FRA-270 51.51\CAD\Projects\FRA\92616\Lighting\sheets\92616LP007.dgn 07-DEC-2022 12:25PM Jordan.Steele

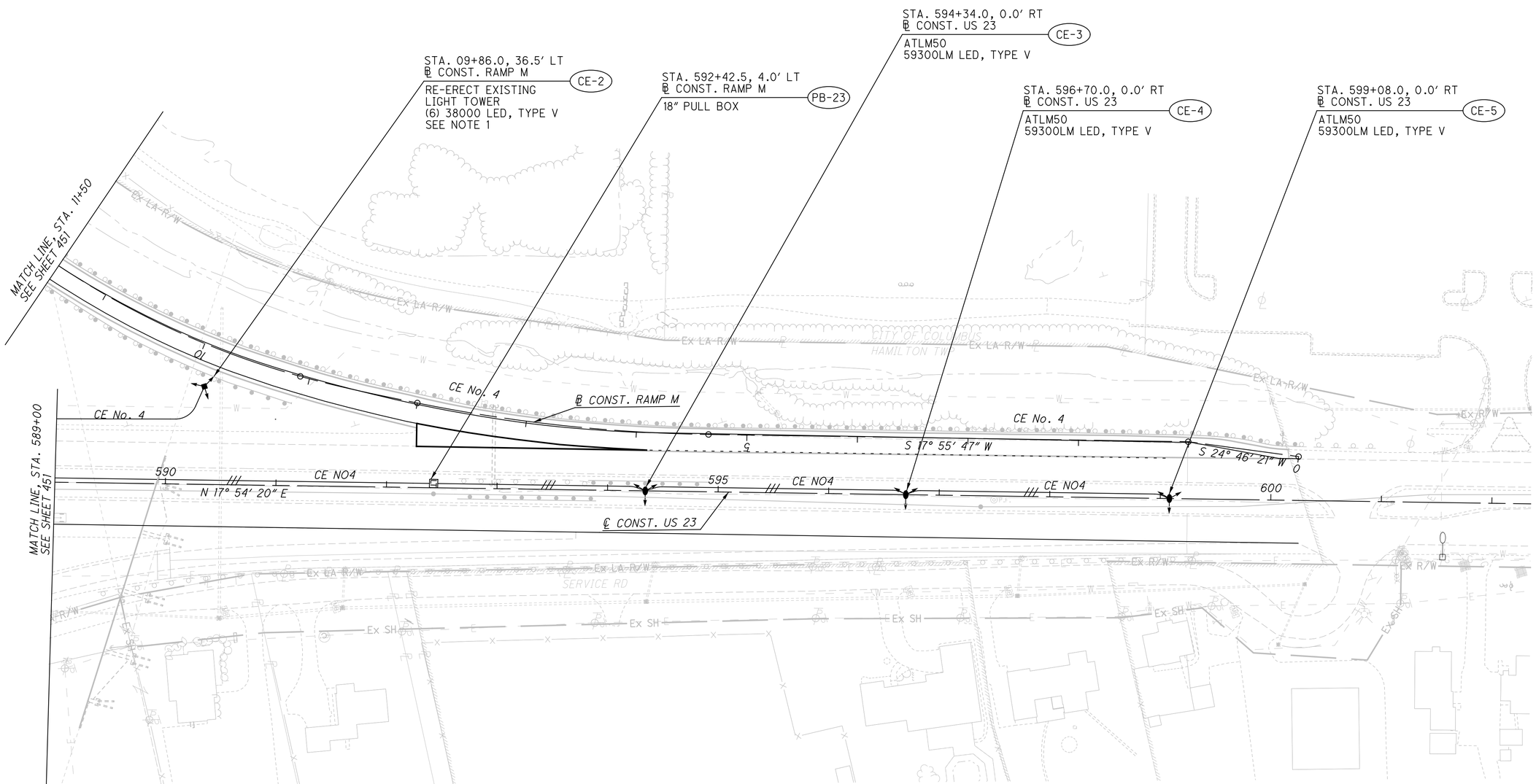

GENERAL NOTES:
A. "LM" IS ABBREVIATION FOR LUMENS.

NOTES:
1. PROVIDE NEW SYMMETRIC (TYPE V) DISTRIBUTION, 38000LM LED HIGH MAST LUMINAIRES ON NEW ERECTED LIGHT TOWER.REMOVE EXISTING LABEL AND PROVIDE NEW CIRCUIT NUMBER.

HORIZONTAL SCALE IN FEET
0 25 50 100

CALCULATED JCS
CHECKED LH

LIGHTING PLAN - U.S. 23
STA. 589+00 TO STA. 602+25

FRA-270-51.50

454
554

07-DEC-2022 12:25PM Jordan.Steele

Z:\2014 pro\14-003-08 FRA-270 51.51\CAD\Projects\FRA\92616\Lighting\sheets\92616LP008.dgn

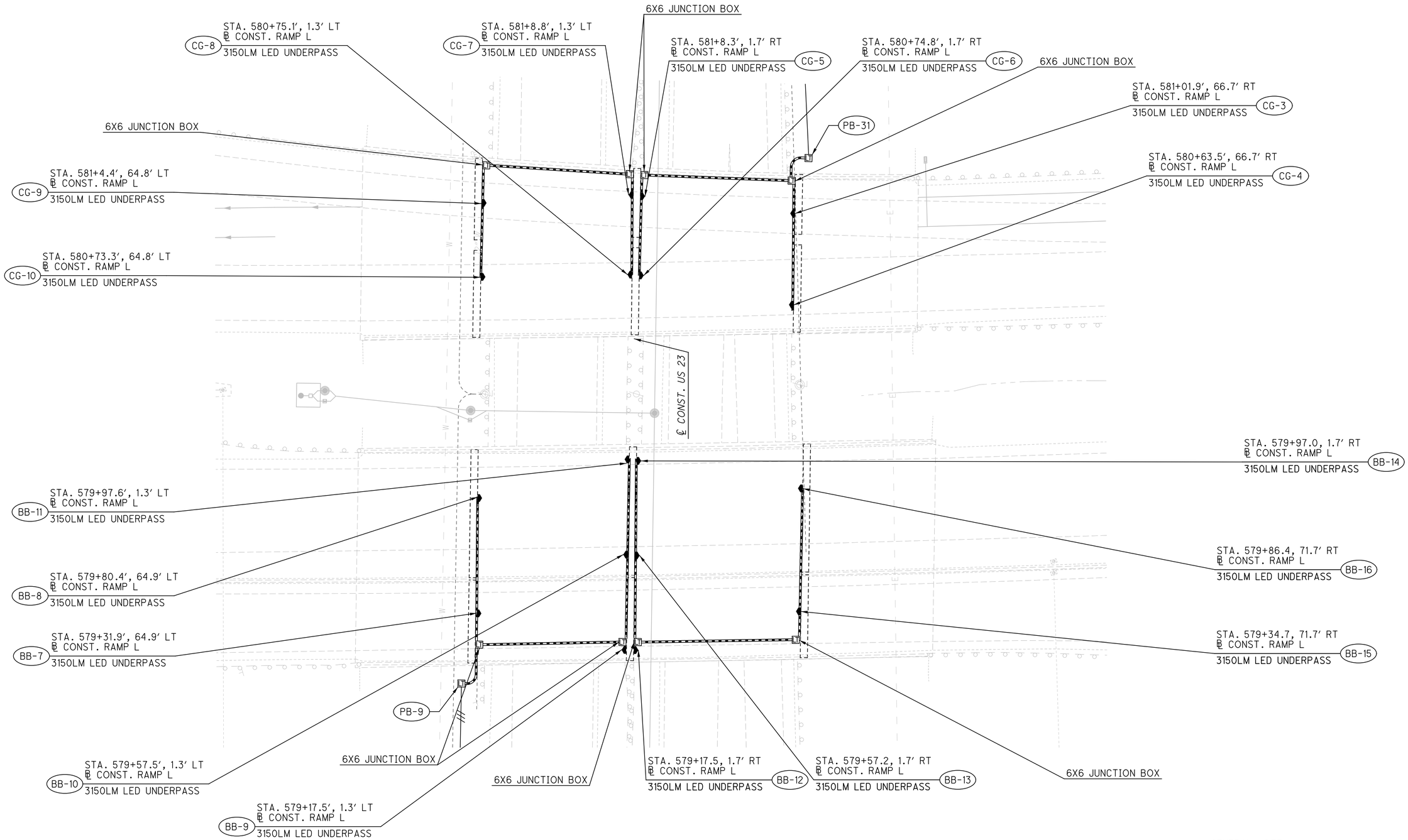

GENERAL NOTE:
A. "LM" IS ABBREVIATION OF LUMEN.

NOTE:
1. SEE SHEETS 466 TO 469 FOR UNDERPASS ELEVATIONS.

HORIZONTAL SCALE IN FEET
0 10 20 40

CALCULATED JCS
CHECKED LH

LIGHTING PLAN - I.R. 270
STA. 498+00 TO STA. 510+00

FRA-270-51.50

455
554

Z:\2014 proj\14-003-08 FRA-270 51.51\CAD\Projects\FRA\92616\Lighting\sheets\92616LP009.dgn 07-DEC-2022 12:25PM Jordan.Steele

POWER SERVICE DATA										
POWER SERVICE/ CONTROL CENTER	PERMANENT DESIGNATION	LINE VOLTAGE, PHASE	CONNECTED LOAD (KVA)	ENCLOSURE RATING (AMPS)	ENTRANCE CONDUCTOR SIZE (AWG)	CIRCUIT NAME	CIRCUIT LOAD (AMPS)	CIRCUIT FUSE SIZE (AMPS)	CIRCUIT CABLE SIZE (AWG)*	MAINTAINING AGENCY
PROPOSED 'B'	L117	240/480V 1 PHASE 3 WIRE	23.64 KVA	100A	#1/0AWG	A	9.8 A	20 A	#4 AWG	ODOT
						B	15.1 A	30 A	#4 AWG	ODOT
						C	7.4 A	20 A	#4 AWG	ODOT
						D	11.0 A	20 A	#4 AWG	ODOT
PROPOSED 'C'	L040	240/480V 1 PHASE 3 WIRE	22.3KVA	100A	#1/0 AWG	E	15.2 A	30 A	#4 AWG	ODOT
						F	12.2 A	20 A	#4 AWG	ODOT
						G	3.4 A	20 A	#4 AWG	ODOT
						H	9.8 A	20 A	#4 AWG	ODOT

*CIRCUIT CABLE SIZE DENOTES SIZE OF CABLING AT THE POWER SERVICE. CIRCUIT SIZE MAY CHANGE AS NOTED ON DIAGRAM
*USE MAXIUM VOLTAGE 295W SYMETRIC TYPEV AND 230W ASSYMETRIC TYPE III AS BASIC VALUE FOR CALCULATION

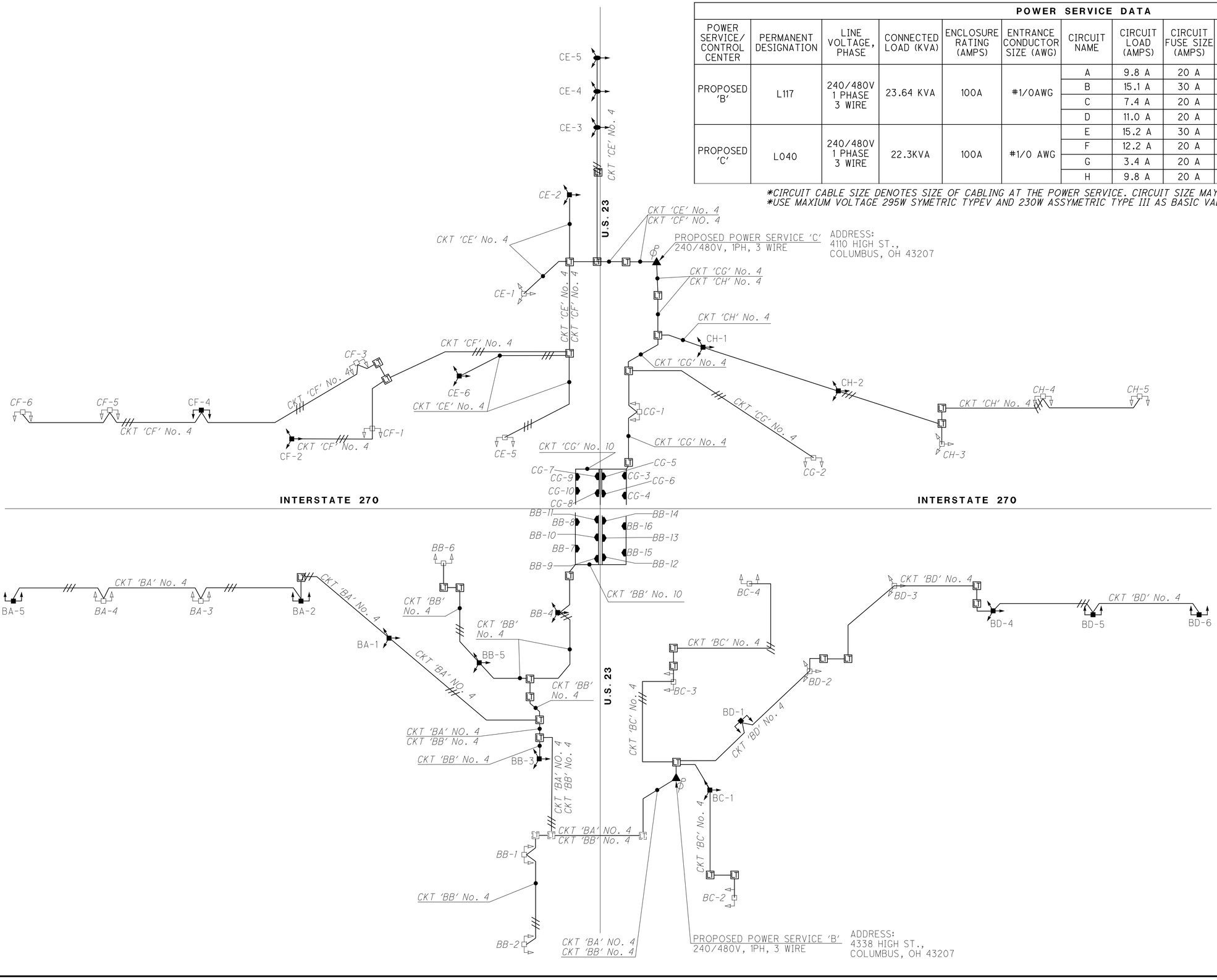

CALCULATED JCS
CHECKED LH

LIGHTING CIRCUIT DIAGRAM

FRA-270-51.50

456
554

Z:\2014 proj\14-003-08 FRA-270 51.51\CAD\Projects\FRA\92616\Lighting\sheets\92616LC001.dgn 07-DEC-2022 12:25PM Jordan.Steele

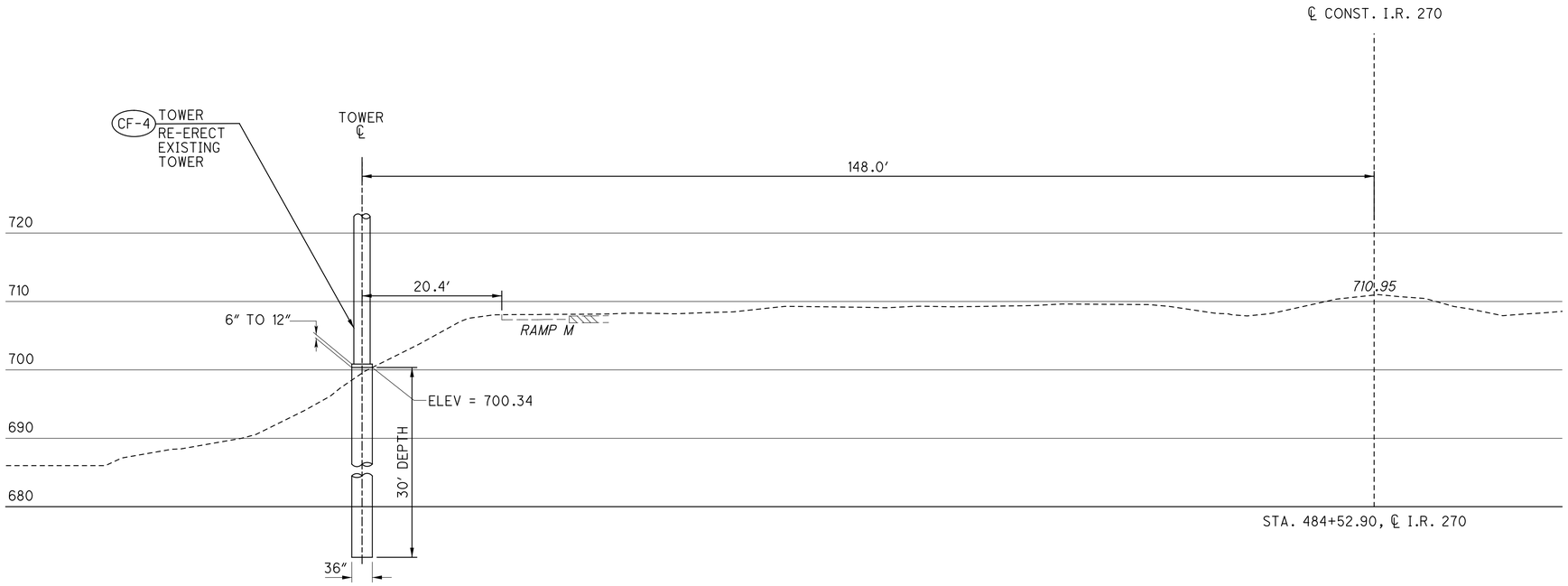

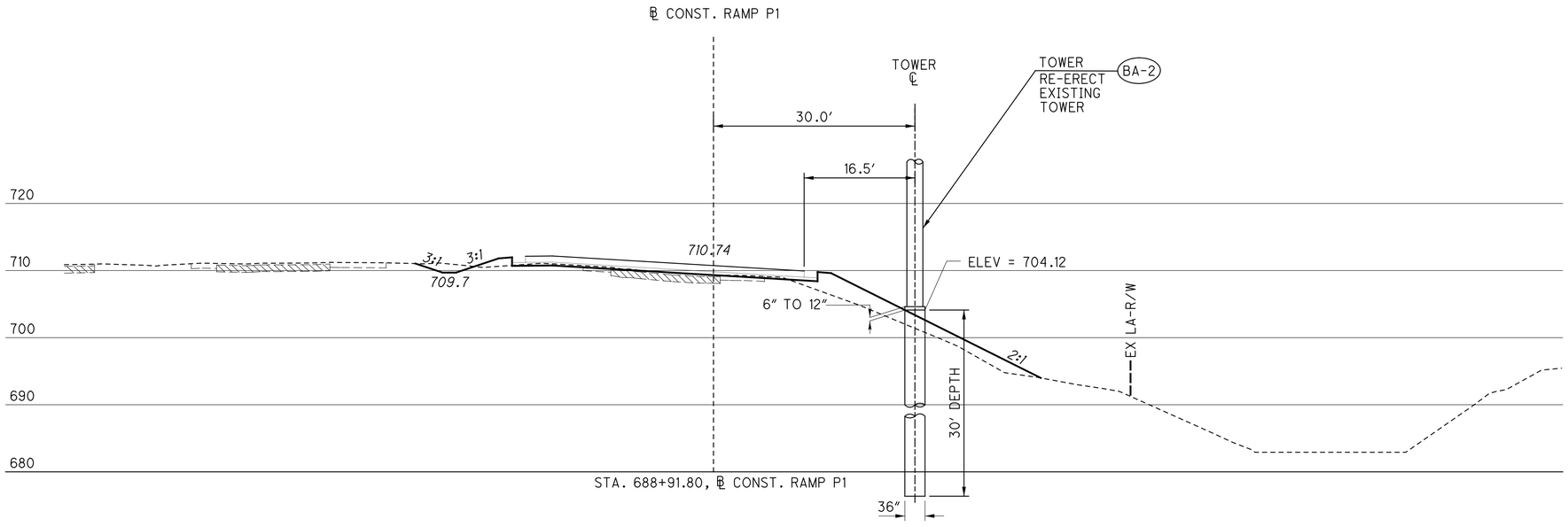

CALCULATED JCS
CHECKED LH

LIGHT TOWER ELEVATIONS

FRA-270-51.50

Z:\2014 proj\14-003-08 FRA-270 51.51\CAD\Projects\FRA\92616\Lighting\sheets\92616LE001.dgn 07-DEC-2022 12:25PM Jordan.Steele

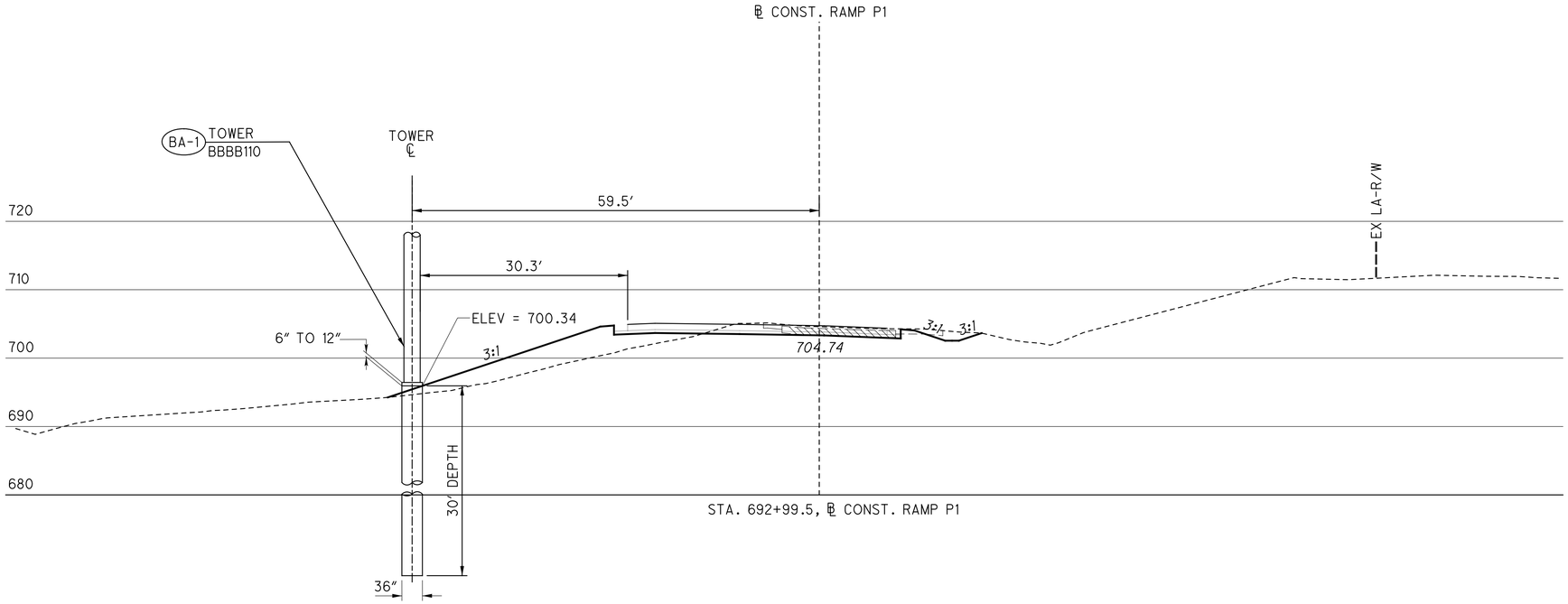

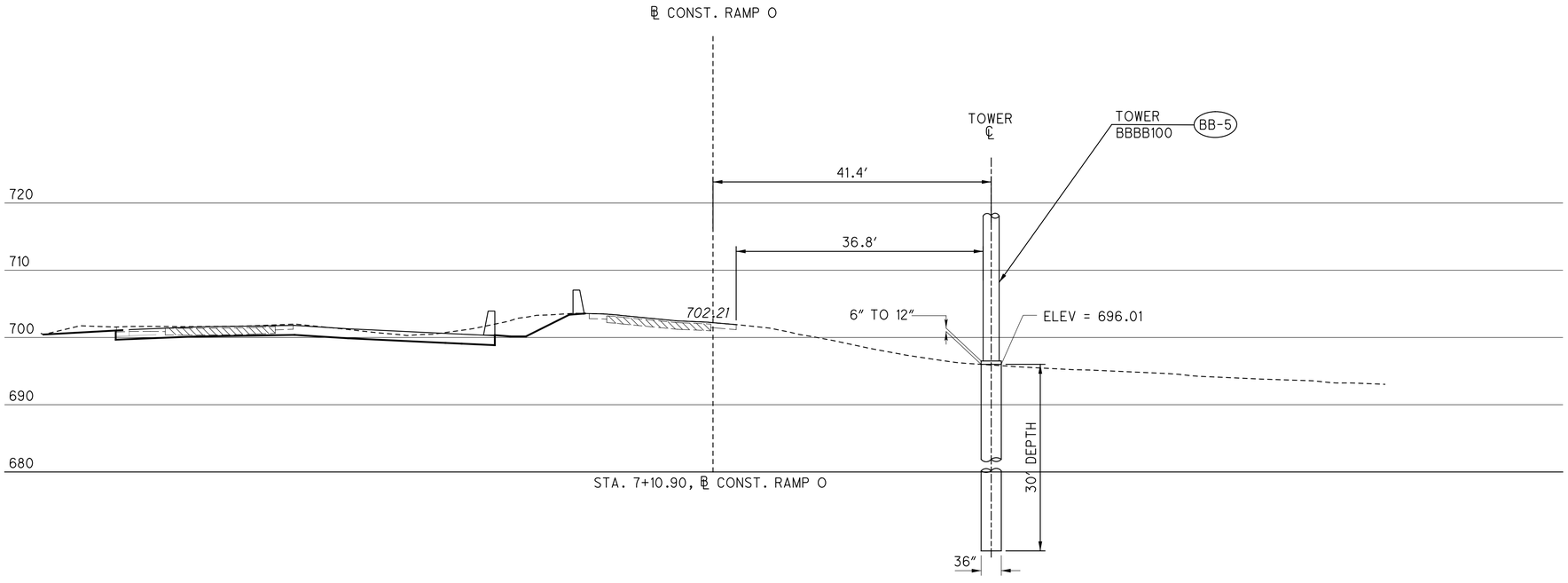

CALCULATED JCS
CHECKED LH

LIGHT TOWER ELEVATIONS

FRA-270-51.50

458
554

Z:\2014 proj\14-003-08 FRA-270 51.51\CAD\Projects\FRA\92616\Lighting\sheets\92616LE002.dgn 07-DEC-2022 12:25PM Jordan.Steele

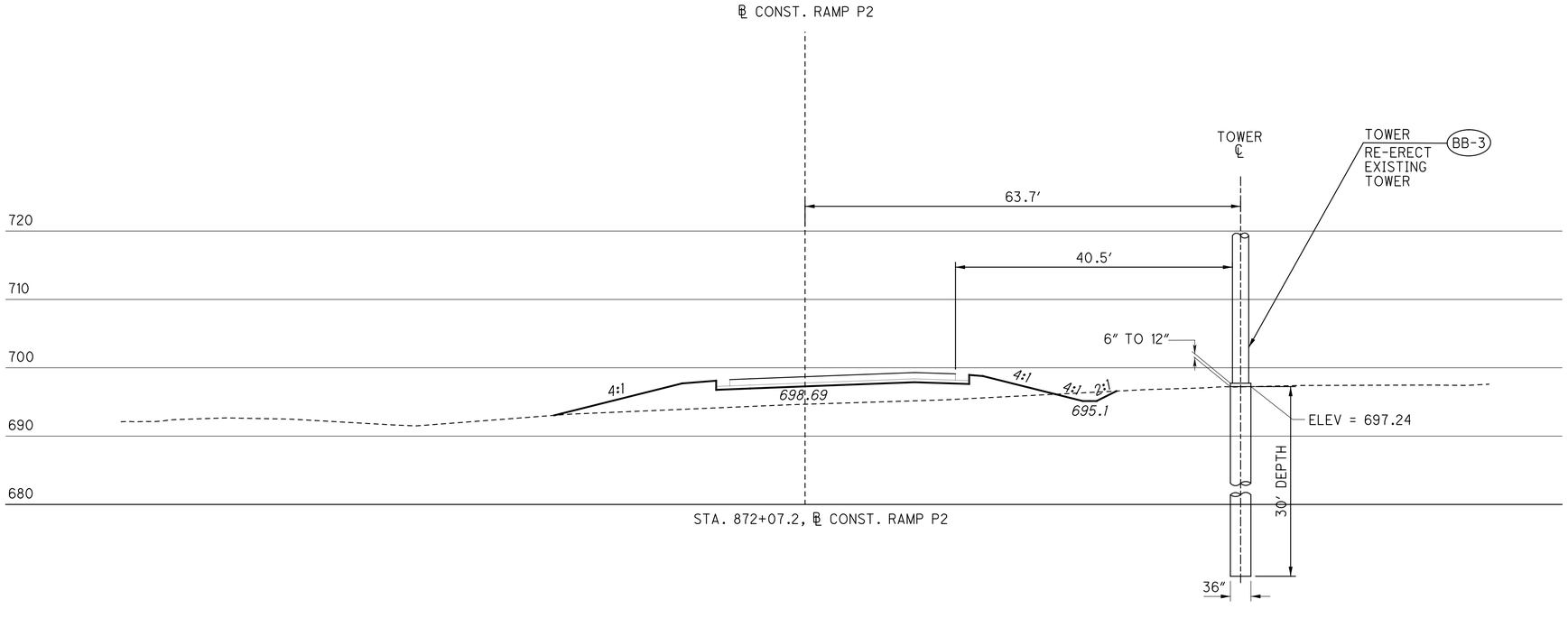

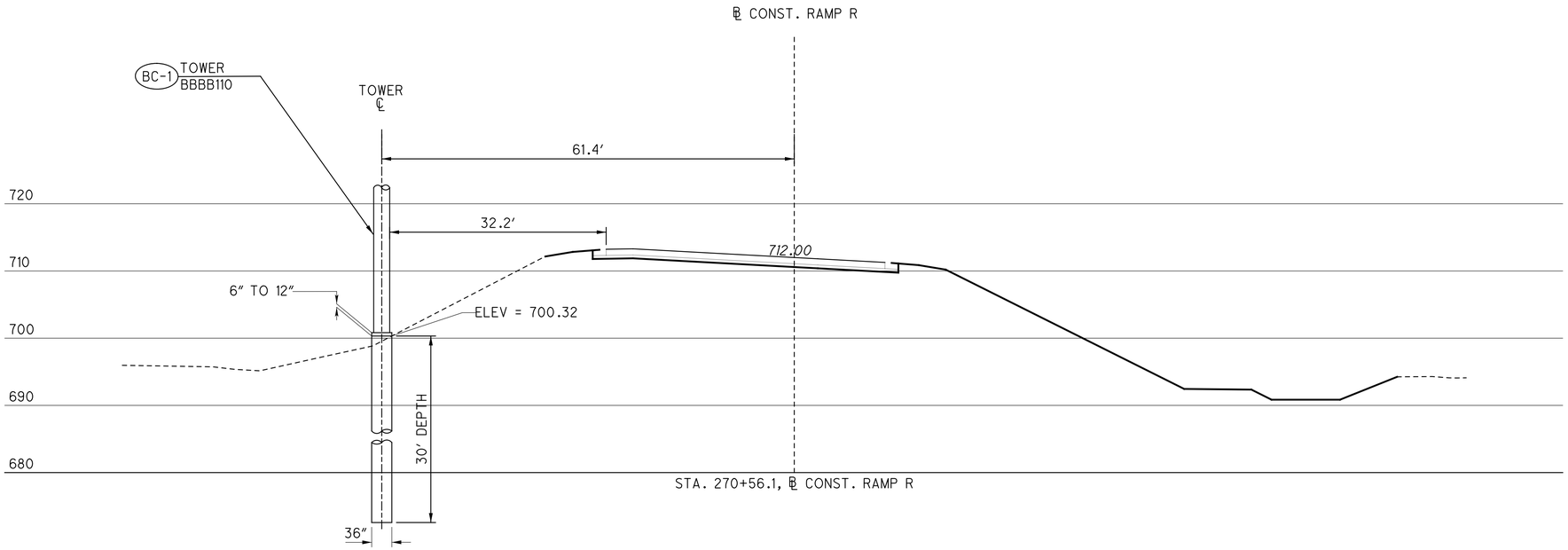

CALCULATED JCS
CHECKED LH

LIGHT TOWER ELEVATIONS

FRA-270-51.50

459
554

Z:\2014 proj\14-003-08 FRA-270 51.51\CAD\Projects\FRA\92616\Lighting\sheets\92616LE003.dgn 07-DEC-2022 12:25PM Jordan.Steele

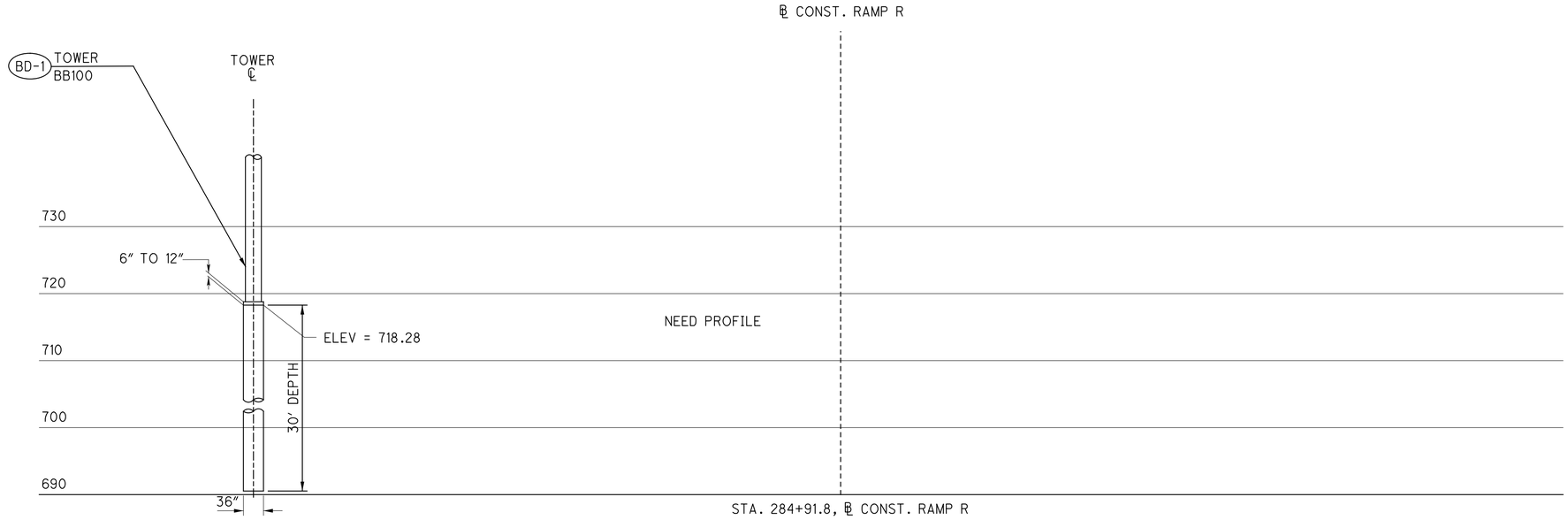

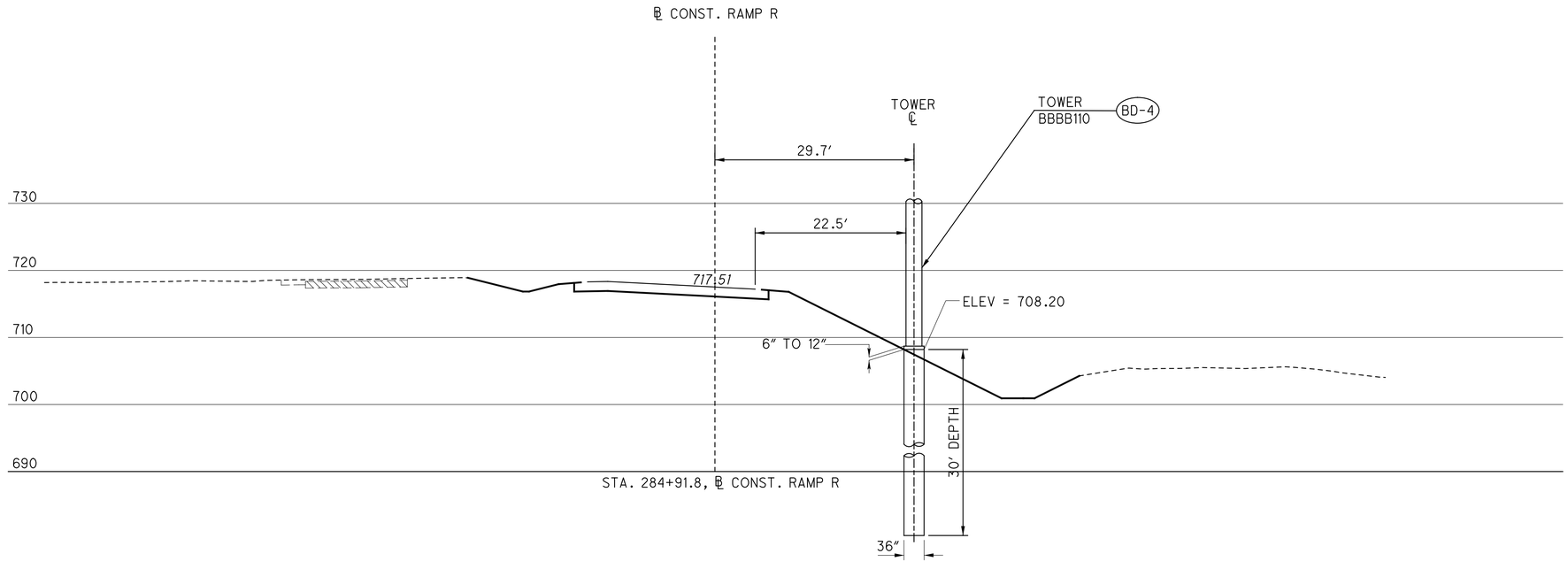

CALCULATED JCS
CHECKED LH

LIGHT TOWER ELEVATIONS

FRA-270-51.50

460
554

Z:\2014 proj\14-003-08 FRA-270 51.51\CAD\Projects\FRA\92616\Lighting\sheets\92616LE004.dgn 07-DEC-2022 12:25PM Jordan.Steele

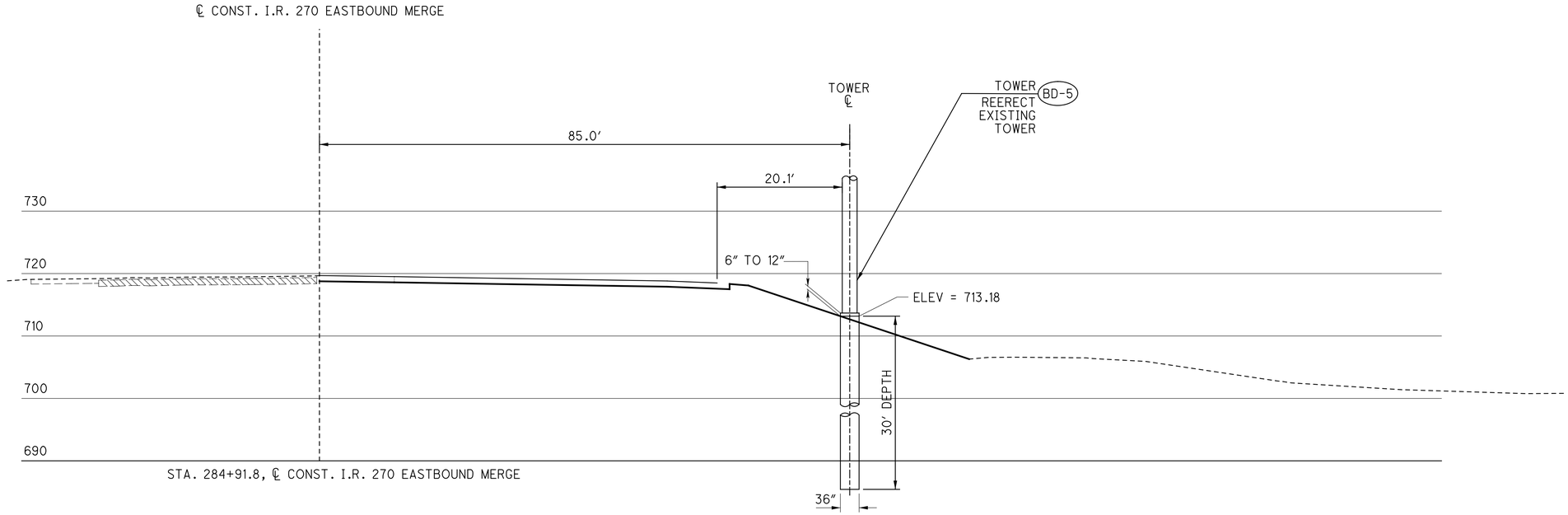

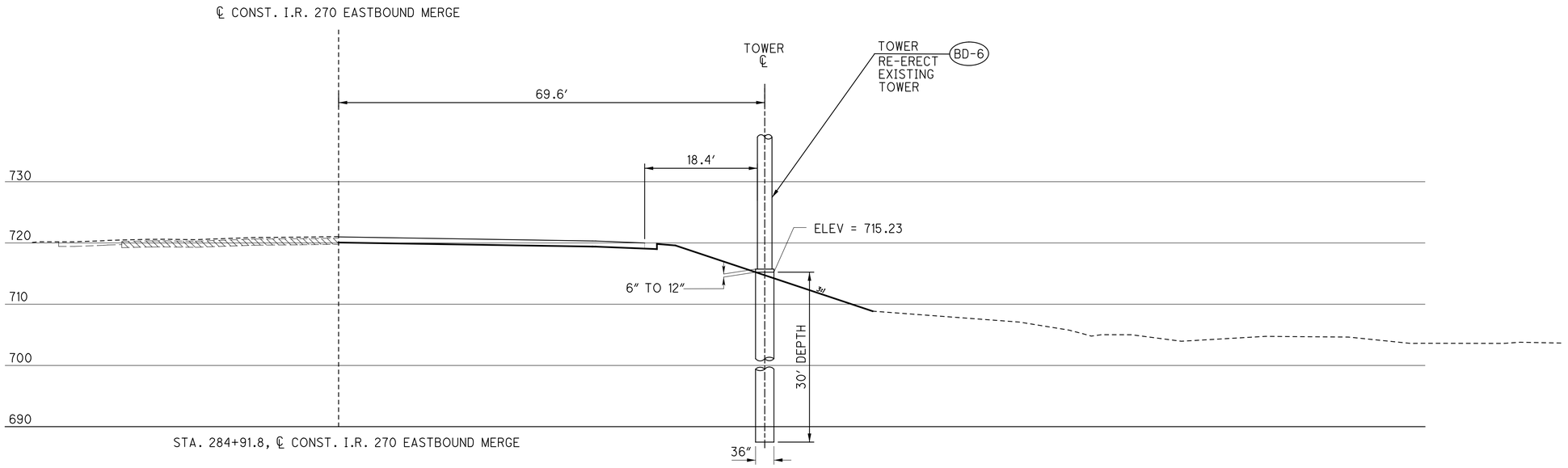

CALCULATED JCS
CHECKED LH

LIGHT TOWER ELEVATIONS

FRA-270-51.50

Z:\2014 proj\14-003-08 FRA-270 51.51\CAD\Projects\FRA\92616\Lighting\sheets\92616LE005.dgn 07-DEC-2022 12:25PM Jordan.Steele

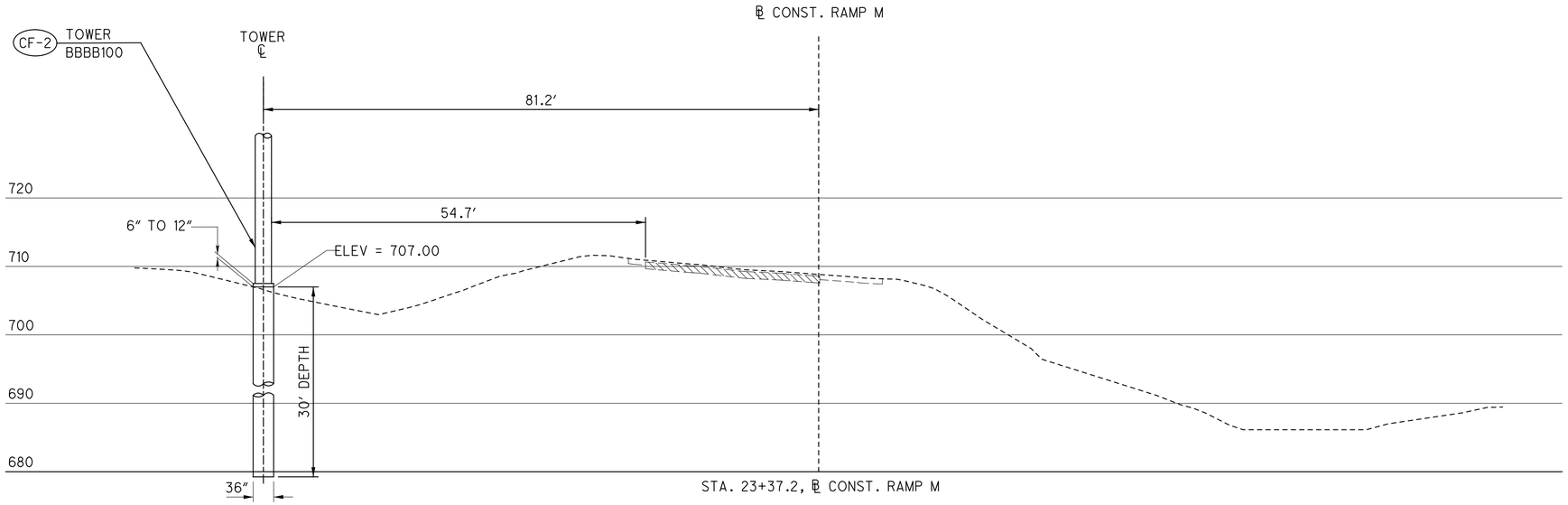

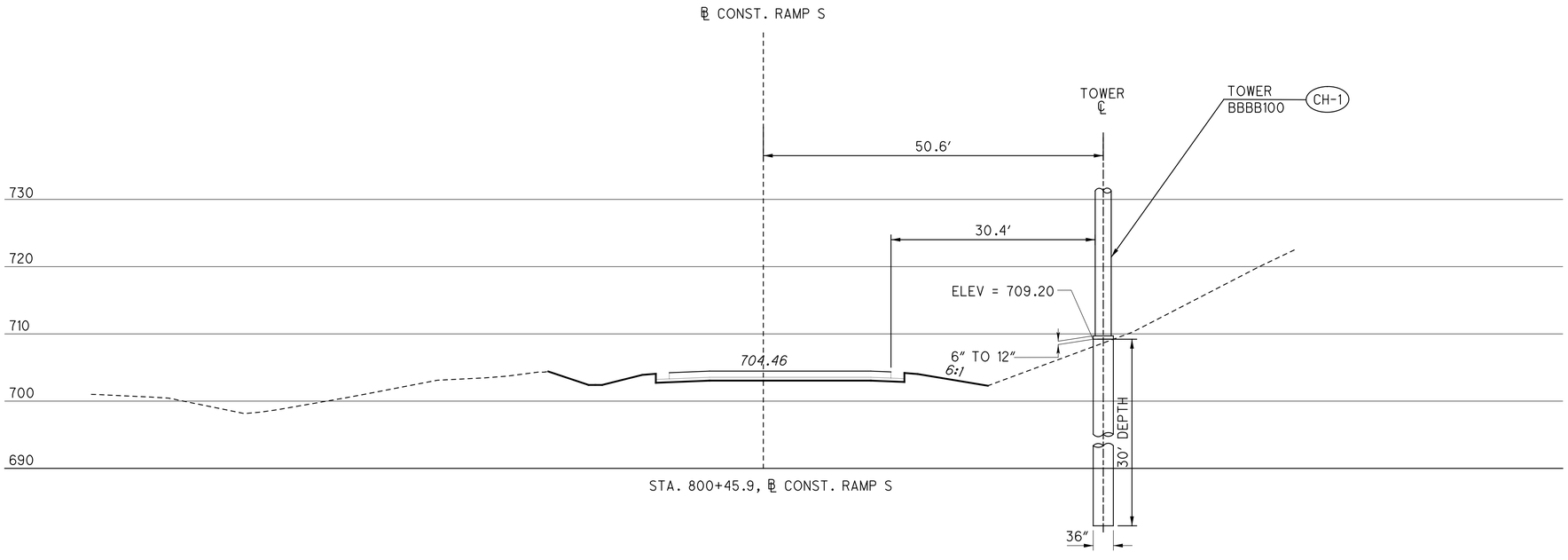

CALCULATED JCS
CHECKED LH

LIGHT TOWER ELEVATIONS

FRA-270-51.50

462
554

Z:\2014 proj\14-003-08 FRA-270 51.51\CAD\Projects\FRA\92616\Lighting\sheets\92616LE006.dgn 07-DEC-2022 12:25PM Jordan.Steele

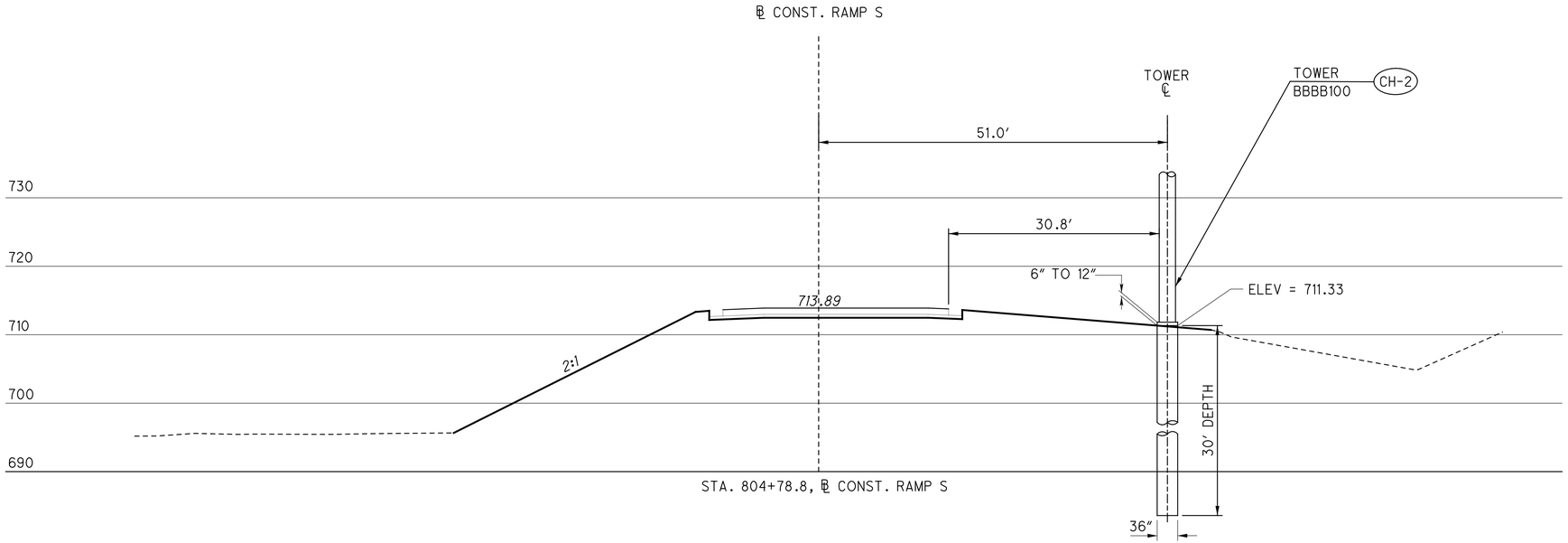

CALCULATED JCS CHECKED LH

LIGHT TOWER ELEVATIONS

FRA-270-51.50

463
554

Z:\2014 proj\14-003-08 FRA-270 51.51\CAD\Projects\FRA\92616\Lighting\sheets\92616LE007.dgn 07-DEC-2022 12:25PM Jordan.Steele

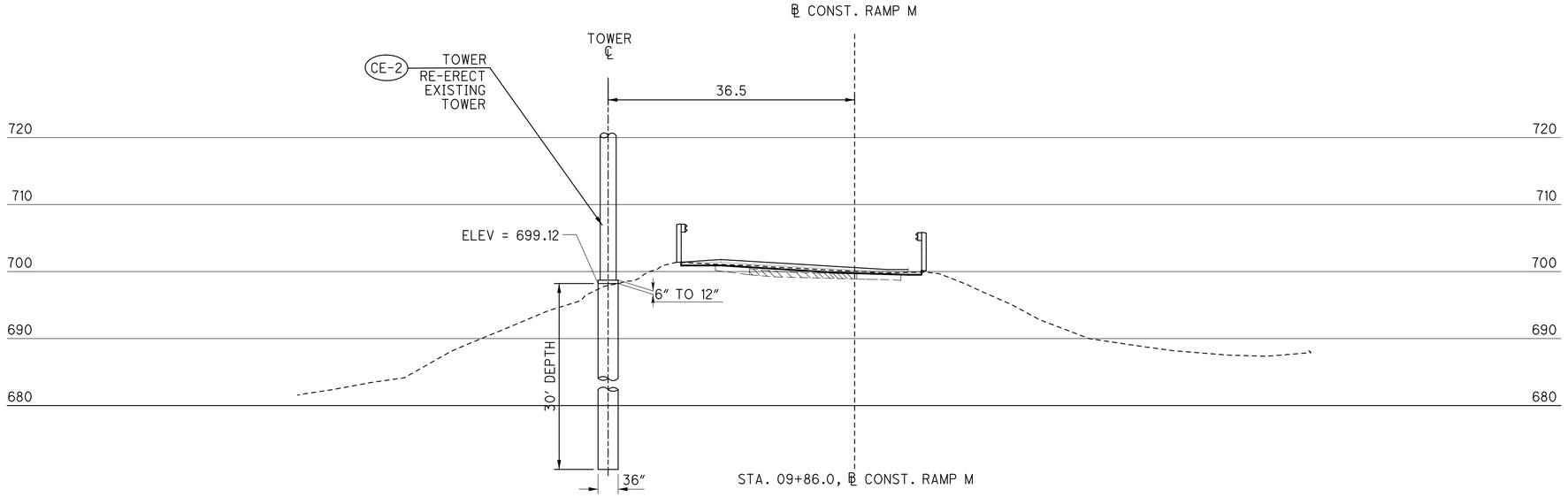

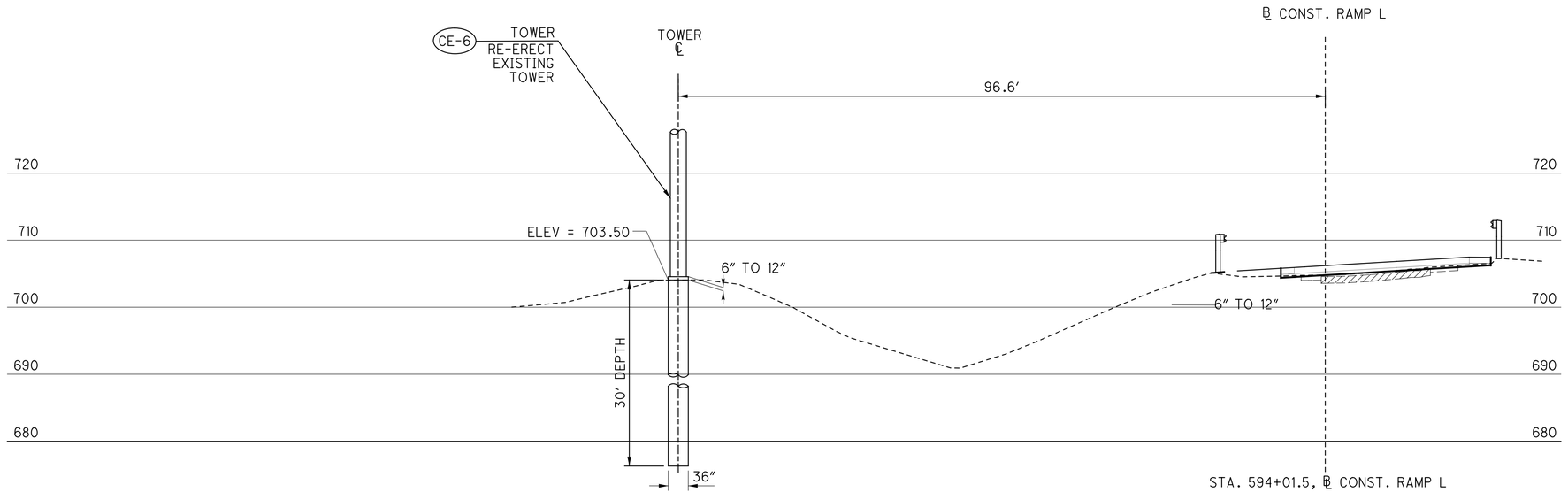

CALCULATED WH
CHECKED JCS

LIGHT TOWER ELEVATIONS

FRA-270-51.50

Z:\2014 proj\14-003-08 FRA-270 51.51\CAD\Projects\FRA\92616\Lighting\sheets\92616LE008.dgn 07-DEC-2022 12:25PM Jordan.Steele

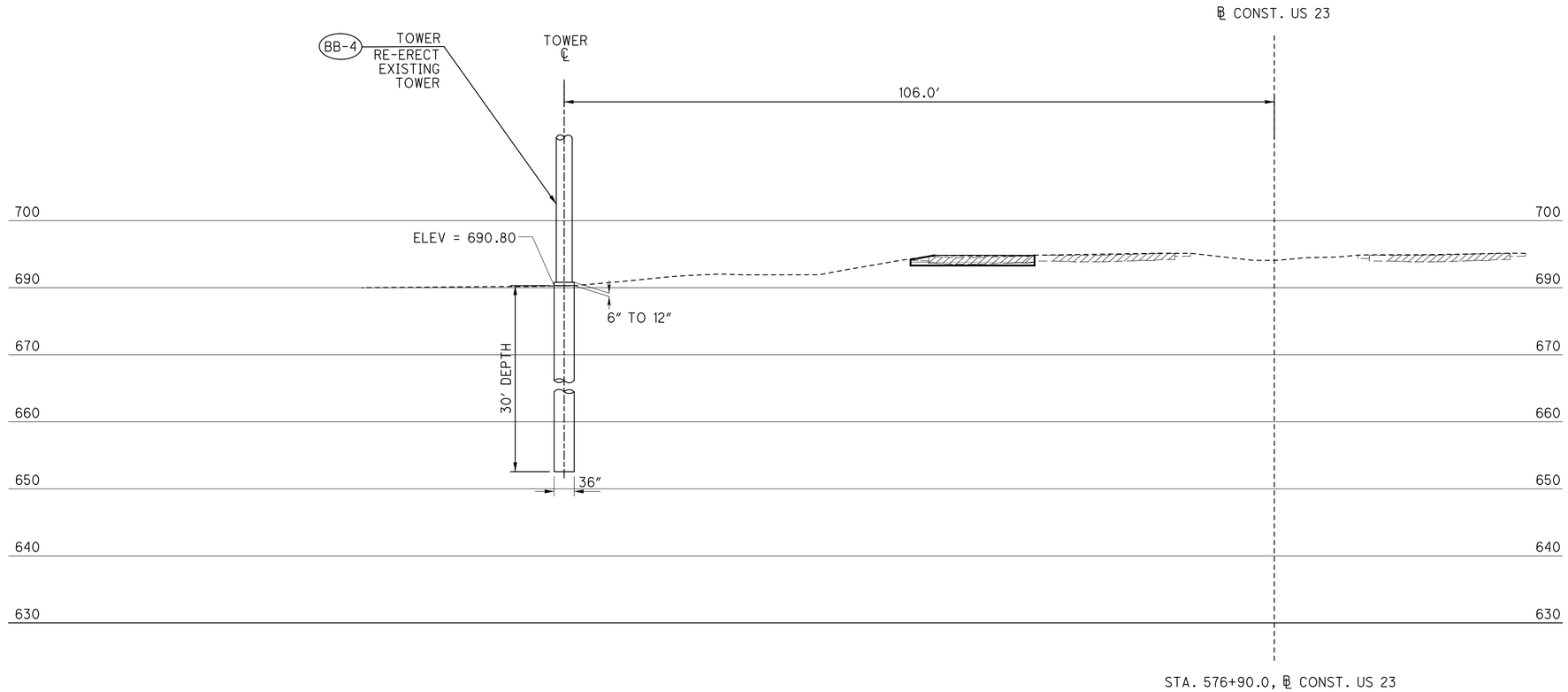

CALCULATED WH
CHECKED JCS

LIGHT TOWER ELEVATIONS

FRA-270-51.50

Z:\2014 proj\14-003-08 FRA-270 51.51\CAD\Projects\FRA\92616\Lighting\sheets\92616LE009.dgn 07-DEC-2022 12:25PM Jordan.Steele

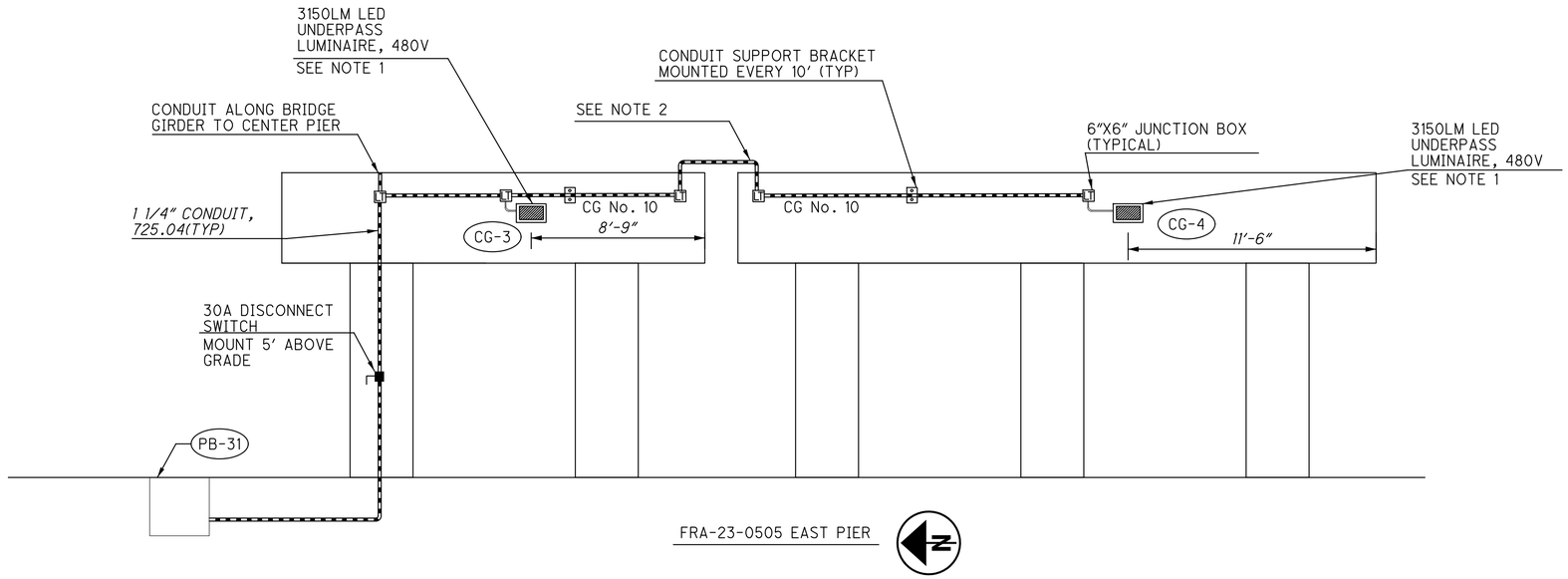

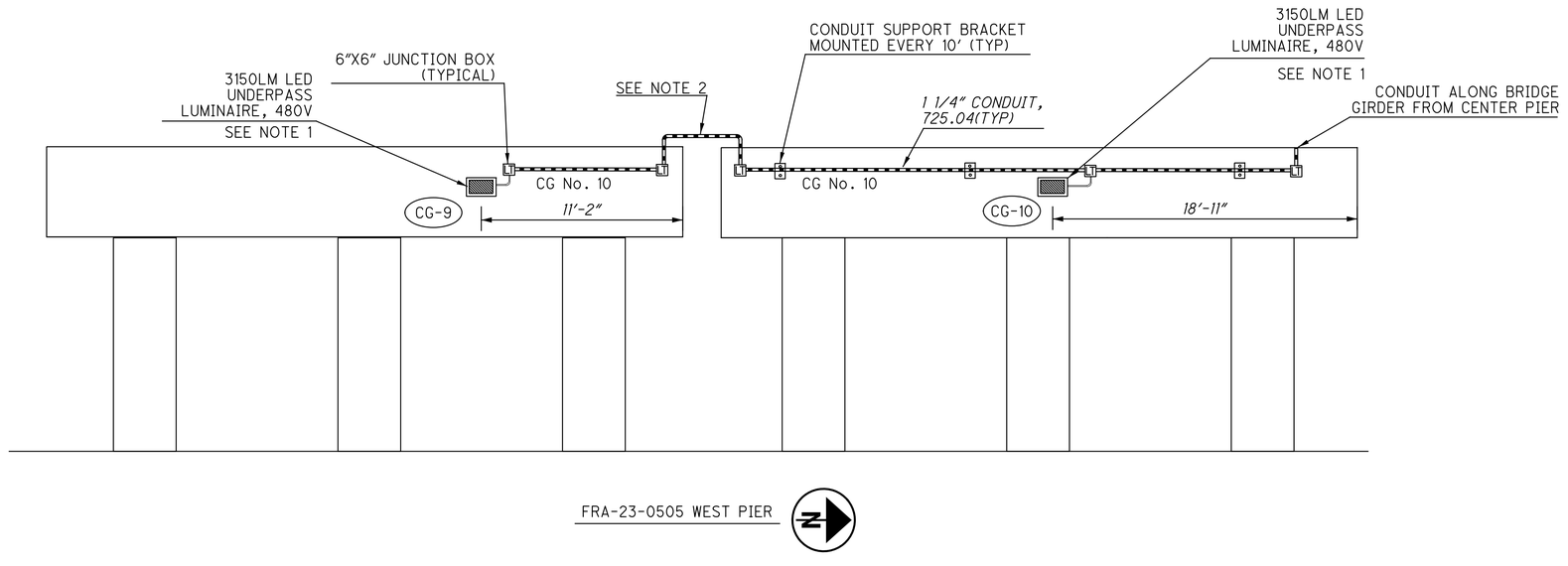

NOTES:
1. MOUNT LUMINAIRE CENTERED VERTICALLY ON PIER CAP.
2. PROVIDE LIQUID TIGHT FLEXIBLE METAL CONDUIT, 1 1/4" BETWEEN PIERS. CONDUIT SHALL BE OIL AND SUNLIGHT RESISTANT.
3. SECURE CONDUIT TO BRIDGE STEEL WITH CLAMP ON HANGERS AND CROSS TO OPPOSITE PIER. FIELD COORDINATE EXACT LOCATION TO ALIGN WITH STEEL GIRDER.

DRAWING IS SCHEMATIC IN NATURE AND NOT TO SCALE.

CALCULATED JCS
CHECKED LH

UNDERPASS LIGHTING ELEVATIONS

FRA-270-51.50

Z:\2014 proj\14-003-08 FRA-270 51.51\CAD\Projects\FRA\92616\Lighting\sheets\92616LE010.dgn 07-DEC-2022 12:25PM Jordan.Steele

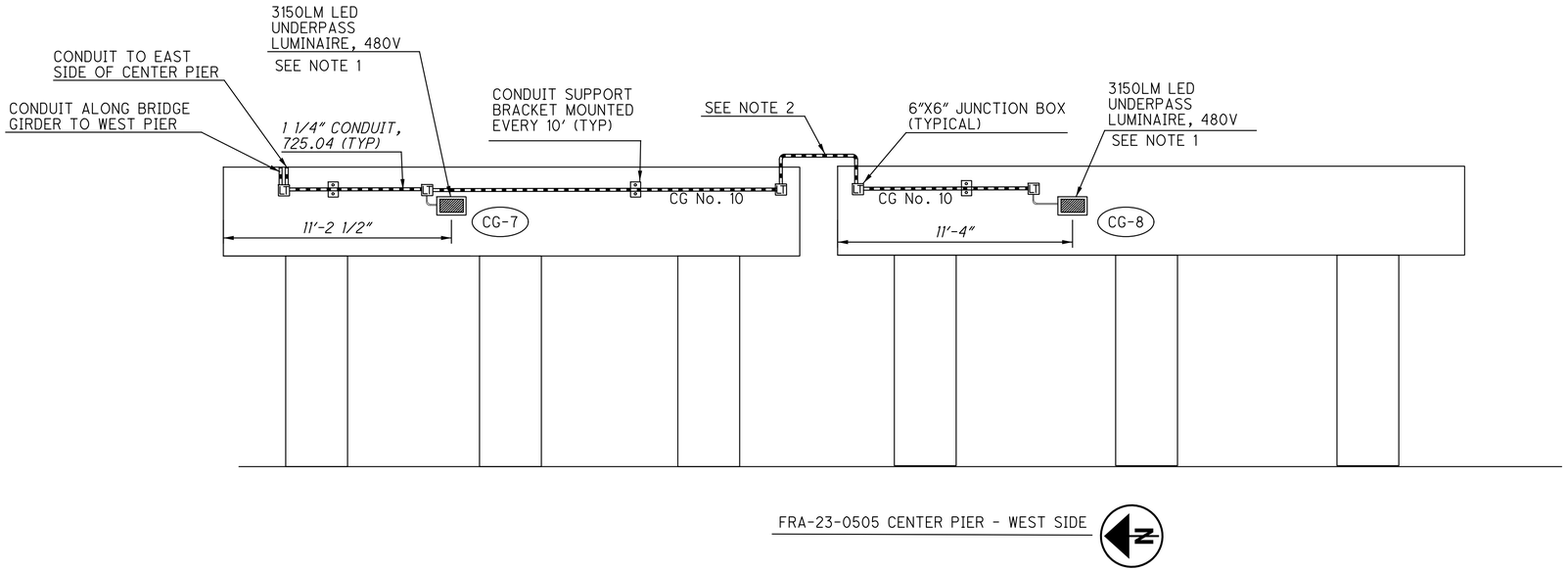

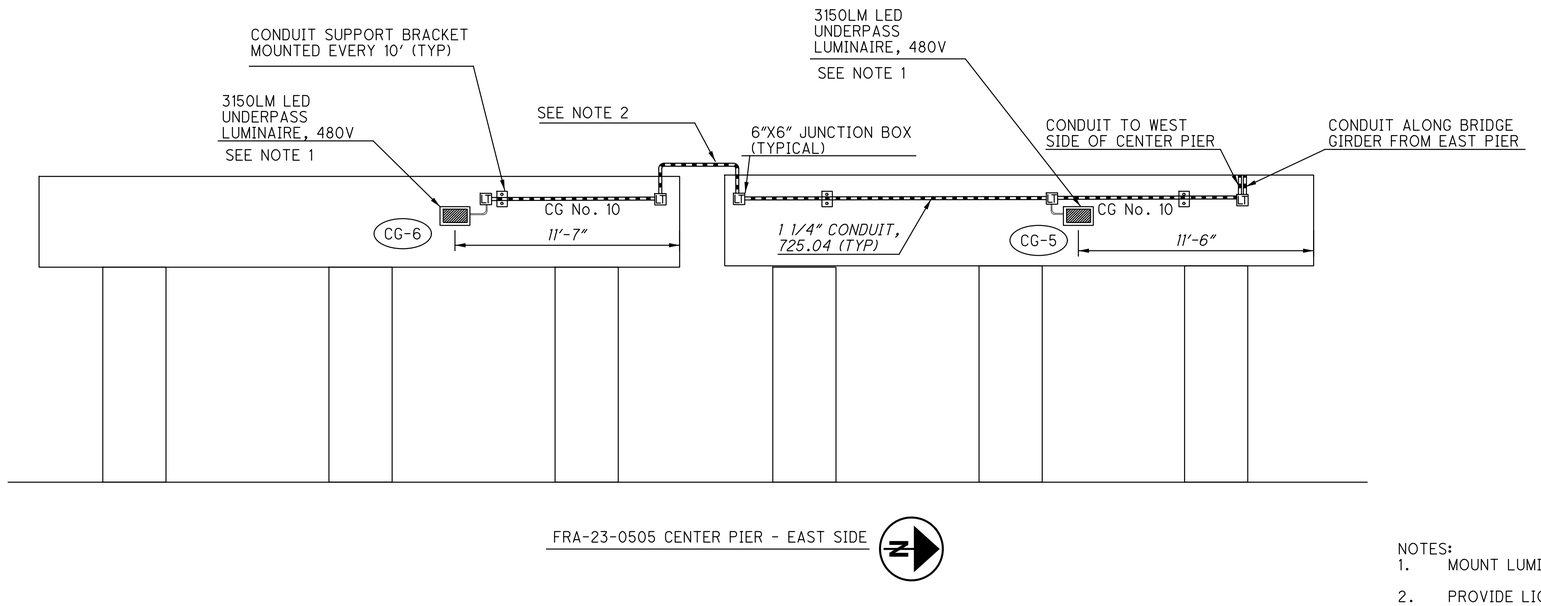

NOTES:
1. MOUNT LUMINAIRE CENTERED VERTICALLY ON PIER CAP.
2. PROVIDE LIQUID TIGHT FLEXIBLE METAL CONDUIT, 1 1/4" BETWEEN PIERS. CONDUIT SHALL BE OIL AND SUNLIGHT RESISTANT.
3. SECURE CONDUIT TO BRIDGE STEEL WITH CLAMP ON HANGERS AND CROSS TO OPPOSITE PIER. FIELD COORDINATE EXACT LOCATION TO ALIGN WITH STEEL GIRDER.

DRAWING IS SCHEMATIC IN NATURE AND NOT TO SCALE.

CALCULATED JCS CHECKED LH

UNDERPASS LIGHTING ELEVATIONS

FRA-270-51.50

Z:\2014 proj\14-003-08 FRA-270 51.51\CAD\Projects\FRA\92616\Lighting\sheets\92616LE011.dgn 07-DEC-2022 12:25PM Jordan.Steele

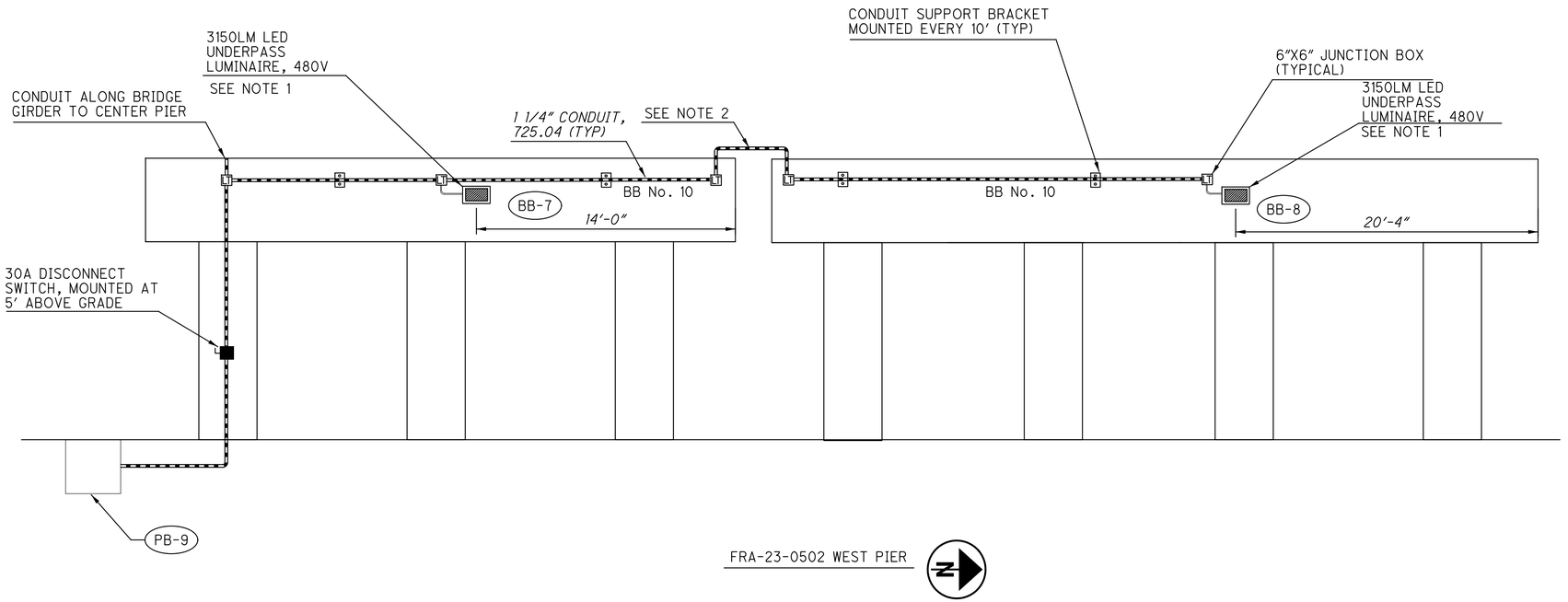

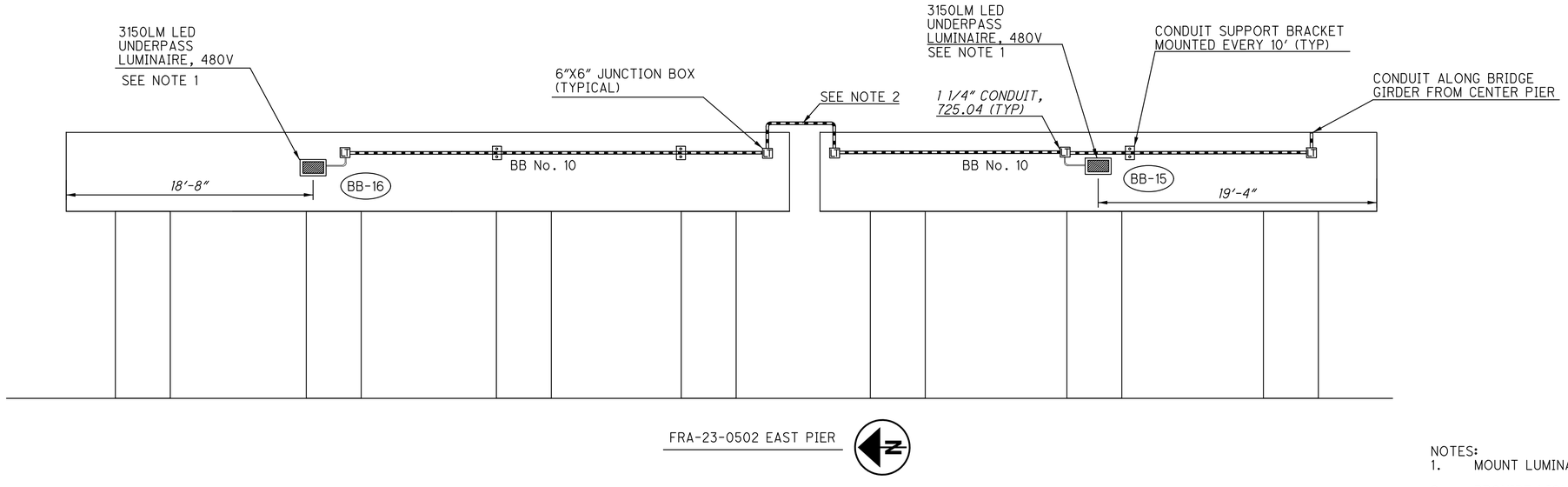

NOTES:
1. MOUNT LUMINAIRE CENTERED VERTICALLY ON PIER CAP.
2. PROVIDE LIQUID TIGHT FLEXIBLE METAL CONDUIT, 1 1/4" BETWEEN PIERS. CONDUIT SHALL BE OIL AND SUNLIGHT RESISTANT.
3. SECURE CONDUIT TO BRIDGE STEEL WITH CLAMP ON HANGERS AND CROSS TO OPPOSITE PIER. FIELD COORDINATE EXACT LOCATION TO ALIGN WITH STEEL GIRDER.

DRAWING IS SCHEMATIC IN NATURE AND NOT TO SCALE.

CALCULATED JCS CHECKED LH

UNDERPASS LIGHTING ELEVATIONS

FRA-270-51.50

Z:\2014 proj\14-003-08 FRA-270 51.51\CAD\Projects\FRA\92616\Lighting\sheets\92616LE012.dgn 07-DEC-2022 12:25PM Jordan.Steele

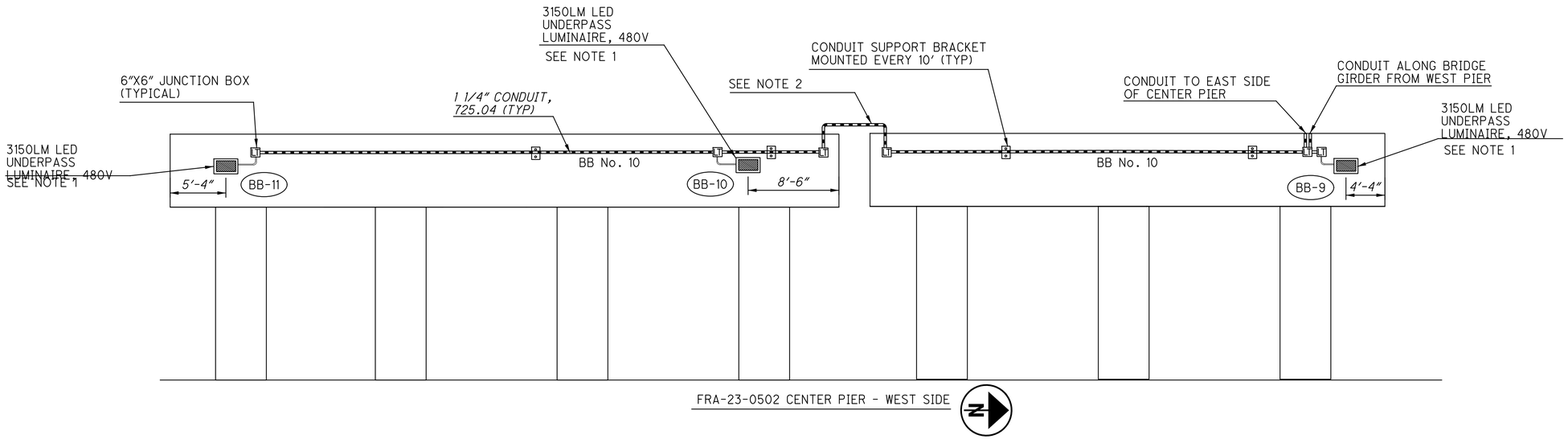

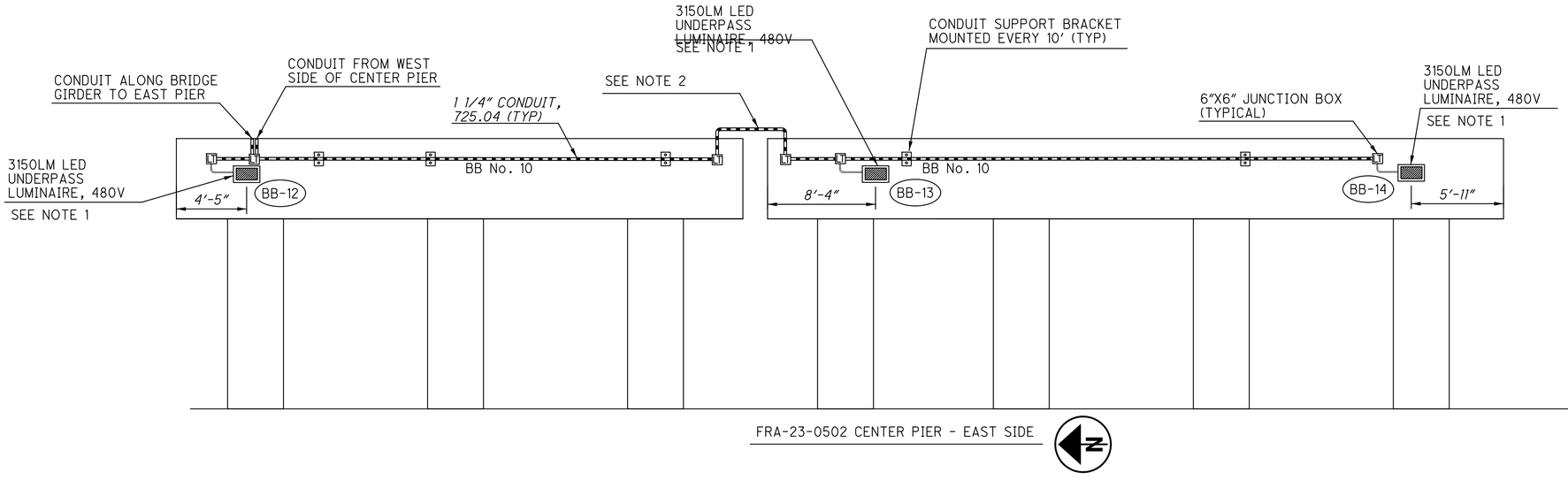

NOTES:
1. MOUNT LUMINAIRE CENTERED VERTICALLY ON PIER CAP.
2. PROVIDE LIQUID TIGHT FLEXIBLE METAL CONDUIT, 1 1/4" BETWEEN PIERS. CONDUIT SHALL BE OIL AND SUNLIGHT RESISTANT.
3. SECURE CONDUIT TO BRIDGE STEEL WITH CLAMP ON HANGERS AND CROSS TO OPPOSITE PIER. FIELD COORDINATE EXACT LOCATION TO ALIGN WITH STEEL GIRDER.

DRAWING IS SCHEMATIC IN NATURE AND NOT TO SCALE.

CALCULATED JCS
CHECKED LH

UNDERPASS LIGHTING ELEVATIONS

FRA-270-51.50

Z:\2014 proj\14-003-08 FRA-270 51.51\CAD\Projects\FRA\92616\Lighting\sheets\92616LE013.dgn 07-DEC-2022 12:25PM Jordan.Steele

CALCULATED JCS CHECKED SB

DOP ELECTRIC GENERAL NOTES

CITY OF COLUMBUS DIVISION OF POWER NOTES

1. THE CITY OF COLUMBUS, DIVISION OF POWER (DOP) MAY ALSO BE REFERRED TO AS "MELP" (MUNICIPAL ELECTRIC LIGHT AND POWER) ON SOME DOCUMENTS, POLE TAGS AND STANDARDS. THE TERMS DOP AND MELP HAS THE SAME MEANING WHEREVER USED.

2. THE DOP REQUIRES THREE WEEKS PRIOR NOTICE FROM THE CONTRACTOR TO SCHEDULE ANY MAJOR WORK BY THE DOP. ANY SIGNIFICANT DELAY BY THE CONTRACTOR WILL REQUIRE AN ADDITIONAL THREE (3) WEEKS NOTICE TO RESCHEDULE THE WORK.

3. OUTAGES PROHIBITED: THE CONTRACTOR SHALL INCLUDE IN HIS BID ALL COSTS ASSOCIATED WITH TEMPORARY LINES. RIGGING AND HOT LINE WORK SHALL BE PERFORMED SO THAT THE CONSTRUCTION MAY BE ACCOMPLISHED WITHOUT AN OUTAGE. IF OUTAGES ARE REQUIRED AND APPROVED. THE CONTRACTOR SHALL PROVIDE, CONNECT AND MONITOR ELECTRIC GENERATORS AS REQUIRED TO MAINTAIN SERVICE TO CUSTOMERS.

4. THE CONTRACTOR IS RESPONSIBLE FOR COMPLYING WITH ALL LOCAL CODES AND ORDINANCES PERTINENT TO THE PROGRESSION OF THE WORK DESCRIBED WITHIN THE PROJECT PLANS. ANY REQUIRED PERMIT SHALL BE OBTAINED AND PAID FOR BY THE CONTRACTOR. THE CONTRACTOR AND SUB-CONTRACTOR SHALL BE RESPONSIBLE FOR COMPLYING WITH ALL FEDERAL, STATE AND LOCAL SAFETY REQUIREMENTS, TOGETHER WITH EXERCISING SAFETY PRECAUTIONS AT ALL TIMES FO THE PROTECTION OF PERSON (INCLUDING EMPLOYEES) AND PROPERTY. IT IS ALSO THE SOLE RESPONSIBIILITY OF THE CONTRACTOR AND SUB-CONTRACTOR TO INITIATE, MAINTAIN AND SUPERVISE ALL SAFETY REQUIREMENTS, PRECAUTIONS AND PROGRAMS IN CONNECTION WITH THE WORK. THE CONTRACTOR SHALL RESTORE ALL DISTURBED AREAS TO AN EQUAL OR BETTER CONDITION THAN EXISTED PRIOR TO CONSTRUCTION.

5. CONTRACTOR WILL COORDINATE CUSTOMER OUTAGES WITH DOP APPROVAL.

6. ALL WORK SHALL BE IN CONFORMANCE WITH THE NATIONAL ELECTRIC SAFETY CODE, 2017 OR LATEST EDITION.

7. THE CONTRACTOR SHALL FOLLOW ALL OSHA REQUIREMENTS WHEN WORKING ON DOP FACILITIES INCLUDING CLOTHING, HARNESSES, ETC.

8. CONTRACTOR SHALL CONFORM TO THE DOP "HOLD CARD SYSTEM" (SEE SUPPLEMENTAL ELECTRICAL SPECIFICATIONS)

9. CONTRACTOR SHALL CONFORM TO THE DOP "CONDUCTOR SAFETY POLICY" (SEE SUPPLEMENTAL ELECTRICAL SPECIFICATIONS).

10. THE PLAN DETAILS SHALL BE CONSIDERED SUPPLEMENTAL TO THE TDMIS SPECIFICATIONS.

11. ALL ITEMS CALLED FOR ON THE PLANS, FOR WHICH NO SPECIFIC METHOD OF PAYMENT IS PROVIDED, SHALL BE INCLUDED IN THE UNIT PRICES BID FOR THE VARIOUS RELATED ITEMS. THIS INCLUDES, BUT IS NOT LIMITED TO, SUCH INCIDENTAL ITEMS SUCH AS RELOCATION OF MAILBOXES, SAW CUTTING, REMOVAL AND OR RELOCATION OF SIGNS, RAILROAD TIES, SPRINKLERS, RELOCATION OF ROOF OR SUMP DRAINS AROUND POLES, HAND DIGGING AROUND UNDERGROUND UTILITIES, REPAIR OF ALL PAVEMENT SURFACES (ASPHALT, CONCRETE OR BRICK) DISTURBED, OR OTHER MISCELLANEOUS ITEMS.

12. CLEAN UP: THE PROJECT CONSTRUCTION SITE SHALL BE MAINTAINED IN A CLEAN HEALTHY STATE AT ALL TIMES. DIRT PILES FROM EXCAVATION SHALL BE REMOVED FROM THE SITE OR PROPERLY PLACED BACK IN HOLES OR PITS DAILY. AT EACH WORK DAY'S END, THE PROJECT SITE SHALL HAVE ALL DEBRIS REMOVED AND SIDEWALKS, CURBS, GUTTERS AND STREET SURFACES BROOM SWEPT. DIRT LAYING ON UNDISTURBED SOD AREAS MAY CAUSE DAMAGE TO THE HEALTH OF GRASS AND IS NOT PERMITTED. COST FOR THIS WORK SHALL BE INCLUDED IN THE VARIOUS BID ITEMS.

13. OUPS: THE CONTRACTOR SHALL CAUSE NOTICE TO BE GIVEN TO THE OHIO UTILITY PROTECTION SERVICE (OUPS) PHONE: 1-800-362-2764 TOLL FREE, AND THE OWNERS OF UNDERGROUND FACILITIES LOCATED WITHING THE PROJECT AREA WHO ARE NOT MEMBERS OF THE REGISTERED UNDERGROUND PROTECTION SERVICE IN ACCORDANCE WITH SECTION 153.64 OF THE OHIO REVISED CODE. THE ABOVE-MENTIONED NOTICE SHALL BE GIVEN AT LEAST TWO WORKING DAYS PRIOR TO THE START OF CONSTRUCTION. ALL EXISTING UNDERGORUND UTILITIES MAY OR MAY NOT BE SHOWN ON THE PLANS. INDIVIDUAL SERVICE LINES MAY OR MAY NOT BE SHOWN AND SHOULD BE LOCATED BY THE CONTRACTOR PRIOR TO COMMENCING ANY WORK. FIELD VERIFICATION MAY BE NECESSARY AND THE CONTRACTOR SHOULD INCLUDE HIS COST FOR THIS WORK IN THE VARIOUS UNIT PRICES. LOCATION, SUPPORT, PROTECTION AND RESTORATION OF ALL UTILITY LINES, SERVICES AND APPURTENANCES ARE THE RESPONSIBILITY OF THE CONTRACTOR. IT IS HIS RESPONSIBILITY TO PROVIDE THE REPAIRS OR OVERSEE THE REPAIR BY THE APPROPRIATE UTILITY AT THE CONTRACTOR'S EXPENSE.

14. REMOVAL AND DISPOSAL OF ELECTRIC LINE MATERIALS: ALL UNUSABLE MATERIALS SHALL BE REMOVED AND DISPOSED BY THE CONTRACTOR UNLESS OTHERWISE DIRECTED BY THE PLANS OR THE ENGINEER. TRANSFORMERS SHALL BE DISASSEMBLED AND RETURNED TO THE DOP, 3500 INDIANOLA AVE. PRIOR ARRANGEMENTS SHALL BE MADE BEFORE RETURNING MATERIAL.

15. THE CONTRACTOR SHALL PROTECT ANY PROPOSED OR EXISTING UTILITY POLE TO REMAIN IN PLACE DURING THE DURATION OF A CONFLICTING CONSTRUCTION OPERATION. THE CONTRACTOR WILL PROVIDE ALL TEMPORARAY SUPPORTS, GUYS AND ANCHORS NECESSARY TO SUPPORT POLES AS REQUIRED DURING CONSTRUCTION. UTILITY POLES WITHIN THE INFLUENCE OF A WATER LINE, SANITARY SEWER, STORM SEWER OR EARTHWORK OPERATIONS SHALL BE REINFORCED BY THE CONTRACTOR PRIOR TO THESE CONSTRUCTION ACTIVITIES. NOTIFICATION TO THE UTILITY COMPANY, PRIOR TO CONSTRUCTION, SHALL BE THE RESPONSIBILTIY OF THE CONTRACTOR. ALL COSTS INCURRED FOR THE TEMPORARY SUPPORT OF UTILTIY POLES SHALL BE INCLUDED WITHIN THE TOTAL BID COST OF THE PROJECT. NO REIMBURSEMENT OR SEPARATE PAYMENT SHALL BE MADE. PAYMENT FROM THE OWNER WILL NOT BE PROVIDED.

16. THE LOCATION OF UTILITIES AND STRUCTURES, BOTH SURFACE AND SUBSURFACE AS SHOWN THROUGHOUT THE PROJECT PLANS, ARE COMPILED FROM DATA AVAILABLE AT THE TIME OF SURVEY AND ARE NOT NECESSARILY COMPLETE OR CORRECT. OBTAINING THE EXACT LOCATION AND PROTECTION OF UTILITIES AND OF STRUCTURES ARE THE RESPONSIBILITY OF THE CONTRACTOR. THE CONTRACTOR SHALL USE DUE DILIGENCE IN PROTECTING FROM DAMAGE ALL EXISTING UTILITIES AND STRUCTURES WHETHER SHOWN ON THE PROJECT PLANS OR NOT. THE CONTRACTOR SHALL COORDINATE WITH AND NOTIFY ALL UTILITIES A MINIMUM OF TWO (2) WORKING DAYS PRIOR TO ANY WORK DONE IN AN AREA FOR THE EXACT LOCATIONS OF THEIR MAIN LINES, SERVICE LINES OR ANY OTHER EQUIPMENT WORK IN AREAS UNMARKED BY UTILITIES. IF DAMAGE IS CAUSED, THE CONTRACTOR IS RESPONSIBLE TO IMMEDIATELY NOTIFY THE RESPECTIVE UTILITY AND PROPERTY OWNER OF INTERRUPTED SERVICE, HAVE IT SHUT OFF, REPAIRED AND RESTORED TO SERVICE TO THE SATISFACTION OF THE CITY AND FOR ANY RESULTING CONTINGENT DAMAGE AT THE CONTRACTORS EXPENSE.

17. THE CONTRACTOR SHALL PERFORM ANY EXPLORATORY EXCAVATIONS NECESSARY TO LOCATE UNDERGROUND UTILITIES PRIOR TO DIGGING. WHERE PROJECT WORK IS LOCATED CLOSE TO EXISTING UTILITY LINES AND WHERE THIS SET OF PLANS SHOW POTENTIAL LOCATION CONFLICTS, EXCAVATIONS SHALL BE ACCOMPLISHED UTILIZING HAND DIGGING OR VACUUM BORING. THE COST OF THE WORK SHALL BE INCLUDED IN THE VARIOUS ITEMS BID.

18. SUBMITTALS: SHOP DRAWINGS SHALL BE SUBMITTED FOR ALL CONTRACTOR SUPPLIED ITEMS OF EQUIPMENT AND MATERIAL USED ON THIS PROJECT SUCH AS POLES, CROSSARMS, POLE HARDWARE, PULLBOXES, CONDUIT, CABLE AND ACCESSORIES, SWITCHES, TRANSFORMERS, ETC. SHOP DRAWINGS WILL INCLUDE DETAIL DRAWINGS, PHOTOGRAPHS, CERTIFICATIONS, APPROVAL AND INSTALLATION DATA.

19. AS-BUILT RECORD: THE CONTRACTOR SHALL MAINTAIN A SET OF PROJECT RECORD DOCUMENTS. THESE DOCUMENTS SHALL INCLUDE REVIEWED SHOP DRAWINGS, CHANGE ORDERS, FIELD TEST RECORDS AND AS-BUILT DRAWINGS. THE AS-BUILT DRAWINGS SHALL BE MARKED LEGIBLY IN RED, THE ACTUAL LOCATION OF EQUIPMENT, CONDUITS, ETC. AS CONSTRUCTED. ALL EQUIPMENT AND CONDUITS INSTALLED SHALL HAVE LOCATIONS MARKED IN DISTANCES OFF A LANDMARK AT LEAST EVERY 25 FEET AND AS NECESARY AT BENDS FOR LOCATING AT A LATER DATE.

20. SYSTEM REMOVAL: THIS ITEM SHALL BE ACCOMPLISHED ACCORDING TO ALL OTHER DOP OWNED SECONDARY AND PRIMARY CONDUCTORS, POLE HARDWARE AND/OR DESIGNATED ON PLANS FOR REMOVAL.

21. REFERENCE STANDARDS: WORK SHALL BE PERFORMED IN ACCORDANCE WITH THE BEST PRACTICE OF THE TRADE. EQUIPMENT SHALL BE CONSTRUCTED AND WORK SHALL BE PERFORMED IN ACCORDANCE WITH THE LATEST ISSUE OF THE FOLLOWING CODES, PERFORMED IN ACCORDANCE WITH THE LATEST ISSUE OF THE FOLLOWING CODES, STANDARDS AND REGULATIONS WHEREIN THEY APPLY:

A. CITY OF COLUMBUS, DIVISION OF POWER, MINIMUM ELECTRICAL STANDARDS.
B. NATIONAL BOARD OF UNDERWRITERS- PAMPHLET NO. 70
C. NATIONAL ELECTRIC CODE
D. NATIONAL ELECTRIC MANUFACTURERS ASSOCIATION (NEMA)
E. INSTITUTE OF ELECTRICAL AND ELECTRONIC ENGINEERS (IEEE)
F. AMERICAN NATIONAL STANDARDS INSTITUTE (ANSI)
G. INSULATED POWER CABLE ENGINEER'S ASSOCIATION (IPCEA)
H. NATIONAL ELECTRICAL SAFETY CODE, NATIONAL BUREAU OF STANDARDS NO. H-30
I. OCCUPATIONAL SAFETY AND HEALTH ACT (OSHA)
J. AMERICAN SOCIETY FOR TESTING AND MATERIAL (ASTM)
K. AMERICAN WOOD PRESERVERS' ASSOCIATION (AWPA)
L. EDISON ELECTRIC INSTITUTE (EEI)
M. NATIONAL FIRE PROTECTION ASSOCIATION (NFPA)
N. CITY OF COLUMBUS MATERIALS AND CONSTRUCTION (CMS 2012 OR LATEST EDITION)

22. ALL PERSONS WORKING ON THE STREET LIGHT FACILITIES MUST TAKE THE CONDUCTOR SAFETY COURSE AND DISTRIBUTION SHALL FOLLOW THE DIVISION OF POWER CONDUCTOR SAFETY POLICY.

23. ALL DISTRIBUTION LINE INSULATING MATERIAL SHALL BE 15KV, NOMINAL.

24. WHERE EXISTING CONDUCTOR IS BEING REPLACED THE NEW CONDUCTOR SHALL MATCH THE AMPACITY OR EXCEED IN SIZE THE EXISTING CONDUCTOR AND MEET THE DOP MINIMUM STANDARDS.

25. ALL EXISTING POLES BEING REPLACED SHALL BE REMOVED OR TOPPED DOWN TO THE NEXT UTILITY ATTACHED TO THE POLE.

26. INSTALL A DRIVEN GROUND ROD AT ALL NEW POLE LOCATIONS. TEST RESISTANCE, 25 OHMS MINIMUM.

27. BOND ALL DOWN GUYS TO THE POLE GROUND. POLE GROUND SHALL EXTEND 6" ABOVE THE TOP OF POLE

28. INSTALL A FIBERGLASS STRAIN INSULATOR(S) (DOP #20241) IN ALL DOWN GUYS AT THE POLE TO EXTEND BELOW ENERGIZED CONDUCTORS.

29. TREE TRIMMMING AND BRUSH CLEARING SHALL BE RESPONSIBILITY OF THE CONTRACTOR.

30. PRIOR TO INSTALLING ANY TRANSFORMERS, THE CONTRACTOR SHALL GIVE AT LEAST ONE (1) WEEK NOTICE TO THE ENGINEER TO ALLOW FOR DOP PERSONNEL TO TEST AND ASSIGN CASE NUMBERS TO ALL NEW TRANSFORMERS.

31. ALL MATERIAL, WHETHER INSTALLED BY THE CONTRACTOR OR DOP, SHALL BE SUPPLIED BY THE CONTRACTOR, WITH THE EXCEPTION OF TRANSFORMERS.

32. ALL LABOR, EQUIPMENT AND MATERIAL DESCRIBED IN THE PLAN DOCUMENTS SHALL BE PERFORMED BY THE CONTRACTOR, UNLESS SPECIFIED OTHERWISE.

33. ALL LABOR, EQUIPMENT AND MATERIAL REQUIRED, BUT NOT SHOWN OR DESCRIBED, WHICH IS NECESSARY TO COMPLETE THE RELOCATION OF DOP FACILITIES ON THIS PROJECT AS SHOWN IN THESE PLANS AND SPECIFICATIONS AND FOLLOWING GENERAL PRACTICES OF THE ELECTRIC UTILITY INDUSTRY, SHALL BE PROVIDED BY THE CONTRACTOR AT NO ADDITIONAL COST TO THE CITY OF COLUMBUS.

EXISTING SYSTEM REMOVAL

EXISTING SYSTEM REMOVAL SHALL BE BID AS A LUMP SUM ITEM FOR ALL WORK AND EQUIPMENT REQUIRED FOR SYSTEM REMOVAL AS INDICATED IN THE PROJECT DRAWINGS. SYSTEM REMOVAL SHALL BE PERFORMED IN ACCORDANCE WITH CITY OF COLUMBUS TRANSMISSION AND DISTRIBUTION MATERIAL AND INSTALLATION SPECIFICATION TDMIS-1600 - EXISTING OVERHEAD TRANSMISSION AND DISTRIBUTION SYSTEM REMOVAL.

SPECIFICATIONS

CONSTRUCTION SHALL CONFORM TO THE LATEST CITY OF COLUMBUS TRANSMISSION AND DISTRIBUTION MATERIAL AND INSTALLATION SPECIFICATIONS (TDMIS). THE TDMIS SPECIFICATIONS APPLICABLE TO THE CONSTRUCTION OF THIS PROJECT INCLUDE, BUT ARE NOT LIMITED TO:

TDMIS-1	WOOD POLES
TDMIS-7	OVERHEAD DISTRIBUTION CIRCUIT GROUNDING
TDMIS-10	WOOD CROSSARM
TDMIS-20	PIN AND PIN INSULATOR
TDMIS-22	MISCELLANEOUS LINE HARDWARE
TDMIS-23	BOLTED CONNECTOR ASSEMBLIES
TDMIS-24	COPPER CONDUCTOR HAND-MADE INSULATOR TIES
TDMIS-26	DISTRIBUTION CUTOUTS
TDMIS-27	DISTRIBUTION ARRESTOR APPLICATIONS
TDMIS-28	HOT LINE CLAMP AND RISER ASSEMBLY
TDMIS-100	SINGLE DOWN GUY AND ANCHOR WITH INSULATOR
TDMIS-101	DOUBLE DOWN GUY AND ANCHOR WITH INSULATOR
TDMIS-104	SPAN GUY
TDMIS-301	24 INCH SPACER CABLE TANGENT BRACKET, TANGENT 5 DEGREES OR LESS
TDMIS-303	24 INCH SPACER CABLE TANGENT BRACKET WITH ANTI-SWAY BRACKET, TANGENT 5 DEGREES OR LESS
TDMIS-310	SPACER CABLE SPACERS
TDMIS-500	SECONDARY, NEUTRAL AND MESSENGER CONDUCTOR SUPPORT ASSEMBLIES
TDMIS-502	SECONDARY AND NEUTRAL DEADEND ASSEMBLIES
TDMIS-503	SERVICE DROP ATTACHMENTS AT BUILDING
TDMIS-802	SECONDARY TRANSFORMER CONNECTIONS
TDMIS-804D	OVERHEAD TRANSFORMER INSTALLATION - SINGLE PHASE DELTA
TDMIS-805D	OVERHEAD TRANSFORMER INSTALLATION - THREE PHASE DELTA
TDMIS-1600	EXISTING OVERHEAD TRANSMISSION AND DISTRIBUTION SYSTEM REMOVAL
TDMIS-1603	CONDUCTOR SAFETY POLICY
TDMIS-1604	HOLD CARD SYSTEM
TDMIS-1605	HIGH POTENTIAL CABLE TEST
TDMIS-1606	CABLE CONTINUITY TEST
TDMIS-1607	GROUND ROD TEST
TDMIS-2300	CONDUCTORS
TDMIS-2700	PROTECTION
TDMIS-2736	THREE-PHASE PRIMARY SECTIONALIZING
TDMIS-8000	MATERIALS CATALOG
TDMIS-9011	SERVICE AND SECONDARY CONDUCTOR
TDMIS-9061	CONDUCTORS - PRIMARY DISTRIBUTION ALUMINUM BARE
TDMIS-9064	CONDUCTORS - METERING AND CONTROL WIRE
TDMIS-9070	TRANSFORMERS - OVERHEAD

CONDUCTORS

OVERHEAD CONDUCTORS SHALL CONFORM TO TDMIS-2300, AS SPECIFIED.

TRANSFORMERS

TRANSFORMERS SHALL CONFORM TO THE "SPECIFICATIONS FOR THE CITY OF COLUMBUS, DIVISION OF POWER, TRANSFORMERS." SPECIFICATION IS ATTACHED AS PART OF THE CONTRACT DOCUMENTS.

DIVISION OF POWER CONTACTS:

ENGINEERING:
JAMES M. GROSS II, P.E.
614-645-6528, JMGROSS@COLUMBUS.GOV

ITEM SPECIAL - 2'x2' PULL BOX

2'x2' PULL BOX SHALL BE A POLYMER CONCRETE PULL BOX, NOMINAL DIMENSIONS 24"x24"x24" DEEP, OPEN BOTTOM, ANSI TIER 22. COVER SHALL BE ANSI TIER 22 WITH TWO PENTAHEAD BOLTS AND "ELECTRIC" LOGO. BOX SHALL BE QUAZITE PG2424BA24 WITH PG2424HH00 COVER, OR EQUAL APPROVED BY THE ENGINEER.

FRA-270-51.50

Z:\2014 proj\14-003-08 FRA-270 51.51\CAD\Projects\FRA\92616\Utilities\Sheets\92616UN101.dgn 21-DEC-2022 9:46AM Jordan.Steele

OVERHEAD TRANSMISSION CIRCUIT GROUNDING, 3'-0" INSULATOR SPACING

I. QUANTITY

THE BASE BID SHALL INCLUDE THE INDICATED NUMBER OF OVERHEAD CIRCUIT GROUND UNITS FURNISHED AND INSTALLED AS HEREINAFTER SPECIFIED.

II. MATERIALS

A. GROUND ROD - THE GROUND ROD SHALL BE 1/2" DIAMETER X 10' LONG COPPERWELD, ERICO, JOSLYN, CHANCE OR APPROVED EQUAL.

B. GROUND ROD CONNECTORS - THE GROUND ROD CONNECTORS SHALL BE ERICO #CC12F COMPRESSION COUPLING OR APPROVED EQUAL FOR CONNECTION BETWEEN GROUND RODS AND SHALL BE TYPE GR EXOTHERMIC WELDING FOR CONNECTION BETWEEN GROUND WIRE AND GROUND ROD.

C. GROUND WIRE MOLDING - THE GROUND WIRE MOLDING SHALL BE TREATED WOOD, 8' LONG, 1" WIDE, JOSLYN #EE-1/2 OR APPROVED EQUAL.

D. STAPLES - THE STAPLES USED TO SECURE THE MOLDING AND GROUND WIRE TO THE POLE SHALL BE ROLLED DIAMOND POINT COPPER COATED.

E. GROUND WIRE - REFER TO DRAWING M69GND3.

F. CONNECTOR - REFER TO DRAWING M69GND3.

III. INSTALLATION

A. THE INSTALLATION SHALL BE AS SHOWN ON DRAWING M69GND3.

B. THE GROUND WIRE SHALL BE CONNECTED TO THE STATIC WIRE, AND DOWN GUY WIRE USING COMPRESSION CONNECTOR AND #4 MINIMUM SOFT DRAWN STRANDED COPPER.

C. THE GROUND WIRE SHALL BE CONNECTED TO THE GROUND ROD, FASTENED TO THE POLE WITH STAPLES AND EXTEND 6" ABOVE THE TOP OF POLE.

D. GROUNDING ELECTRODES - REFER TO M69GND3 AND TDMIS-1607.

E. THE TOP OF THE GROUND ROD SHALL BE INSTALLED NOT LESS THAN 12" BELOW GRADE AND 36" MINIMUM FROM WALL OF EXCAVATION IN UNDISTURBED SOIL.

F. THE STAPLES SHALL BE SPACED 2' APART EXCEPT FROM THE GROUND LINE TO A DISTANCE OF 8' ABOVE THE GROUND LINE AND 4' TO THE POLE TOP WHERE THE STAPLES SHALL BE SPACED 6" APART.

G. THE MOLDING SHALL BE INSTALLED OVER THE GROUND WIRE, FLUSH WITH THE GRADE.

H. ALL EQUIPMENT MOUNTED ON POLE SHALL BE CONNECTED TO POLE GROUND WIRE.

IV. METHOD OF MEASUREMENT

SHALL INCLUDE ALL CONDUCTOR, HARDWARE, ELECTRODE, WELDS, LABOR, TESTING (TDMIS-1607) AND DOCUMENTATION.

V. BASIS OF PAYMENT

ITEMS	UNIT	DESCRIPTION
69KV GROUNDING ASSEMBLY, 3' VERTICAL PHASE SPACING	EACH	COMPLETE GROUNDING SYSTEM

OVERHEAD TRANSMISSION CIRCUIT GROUNDING, 6'-0" INSULATOR SPACING

I. QUANTITY

THE BASE BID SHALL INCLUDE THE INDICATED NUMBER OF OVERHEAD CIRCUIT GROUND UNITS FURNISHED AND INSTALLED AS HEREINAFTER SPECIFIED.

II. MATERIALS

A. GROUND ROD - THE GROUND ROD SHALL BE 1/2" DIAMETER X 10' LONG COPPERWELD, ERICO, JOSLYN, CHANCE OR APPROVED EQUAL.

B. GROUND ROD CONNECTORS - THE GROUND ROD CONNECTORS SHALL BE AN ERICO #CC12F COMPRESSION COUPLING OR APPROVED EQUAL FOR CONNECTION BETWEEN GROUND RODS AND SHALL BE EXOTHERMIC WELDING FOR CONNECTION BETWEEN GROUND WIRE AND GROUND ROD.

C. GROUND WIRE MOLDING - THE GROUND WIRE MOLDING SHALL BE TREATED WOOD, 8' LONG, 1" WIDE, JOSLYN #EE-1/2 OR APPROVED EQUAL.

D. GROUND WIRE - REFER TO DRAWING M69GND6.

E. STAPLES - THE STAPLES USED TO SECURE THE MOLDING AND GROUND WIRE TO THE POLE SHALL BE ROLLED DIAMOND POINT COPPER COATED.

F. CONNECTOR - REFER TO DRAWING M69GND6.

III. INSTALLATION

A. THE INSTALLATION SHALL BE AS SHOWN ON DRAWING M69GND6.

B. THE GROUND WIRE SHALL BE CONNECTED TO THE STATIC WIRE, AND DOWN GUY WIRE USING A COMPRESSION CONNECTOR, AND #4 MINIMUM SOFT DRAWN STRANDED COPPER.

C. GROUND ELECTRODES - REFER TO M69GND6 AND TDMIS-1607.

D. THE GROUND WIRE SHALL BE CONNECTED TO THE GROUND ROD, FASTENED TO THE POLE WITH STAPLES AND EXTEND 6" ABOVE THE TOP OF POLE.

E. THE TOP OF THE GROUND ROD SHALL BE INSTALLED NOT LESS THAN 12" BELOW GRADE. AND 36" MINIMUM FROM WALL OF EXCAVATION IN UNDISTURBED SOIL.

F. THE STAPLES SHALL BE SPACED 2' APART EXCEPT FROM THE GROUND LINE TO A DISTANCE OF 8' ABOVE THE GROUND LINE AND 4' TO THE POLE TOP WHERE THE STAPLES SHALL BE SPACED 6" APART.

G. THE MOLDING SHALL BE INSTALLED OVER THE GROUND WIRE, FLUSH WITH THE GRADE.

H. ALL EQUIPMENT MOUNTED ON POLE SHALL BE CONNECTED TO POLE GROUND WIRE.

IV. METHOD OF MEASUREMENT

SHALL INCLUDE ALL CONDUCTOR, HARDWARE, ELECTRODE, WELDS, LABOR, TESTING (TDMIS-1607) AND DOCUMENTATION.

V. BASIS OF PAYMENT

ITEMS	UNIT	DESCRIPTION
69KV GROUNDING ASSEMBLY, 6' VERTICAL PHASE SPACING	EACH	COMPLETE GROUNDING SYSTEM

ITEM MISC.: MODULAR 69KV HORIZONTAL POST INSULATOR

69KV HORIZONTAL POST INSULATORS SHALL CONFORM TO DRAWING M69HPI.

BASIS OF PAYMENT:
MODULAR 69KV HORIZONTAL POST INSULATOR EACH

ITEM MISC.: 69KV DOUBLE DEAD-END

69KV DOUBLE DEADEND SHALL CONSIST OF TWO 69KV CLASS DEADEND INSULATORS, ONE 69KV HORIZONTAL LINE POST, AND ASSOCIATED ATTACHMENT HARDWARE. DEADEND INSULATORS SHALL BE 69KV VOLTAGE CLASS AND SHALL COMPLY WITH ANSI/NEMA C29.13, LATEST VERSION. DEADEND SHALL HAVE A MINIMUM SPECIFIED MECHANICAL STRENGTH, SML OF 70 kN. HORIZONTAL LINE POSTS SHALL CONFORM TO DRAWING M69HPI.

BASIS OF PAYMENT:
EACH 69KV DOUBLE DEAD-END ASSEMBLY SHALL INCLUDE TWO ROD SUSPENSION INSULATORS, ONE 69KV HORIZONTAL LINE POST, AND ALL CONDUCTORS AND HARDWARE REQUIRED TO INSTALL INSULATORS AND LINE POSTS IN ACCORDANCE WITH THE NESC AND THE DETAILS ON SHEET 478.

69KV DEAD-END DOUBLE DEAD-END EACH

ITEM MISC.: CONDUCTORS REMOVED

CONDUCTORS REMOVED SHALL CONSIST OF REMOVING 69KV CONDUCTORS, 15KV SPACER CABLE CONDUCTORS, STATIC LINES AND SPACER CABLE MESSENGER. CONDUCTORS SHALL BE REMOVED IN ACCORDANCE WITH CITY OF COLUMBUS TDMIS-1600, EXISTING OVERHEAD TRANSMISSION AND DISTRIBUTION SYSTEM REMOVAL.

BASIS OF PAYMENT:
CONDUCTORS REMOVED SHALL INCLUDE THE REMOVAL OF ALL CONDUCTORS, 69KV AND 15KV CLASS, STATIC LINES AND MESSENGERS, PER LINEAR FOOT OF CONDUCTOR.

CONDUCTORS REMOVED FEET

ITEM MISC.: POLE REMOVED

POLE REMOVED SHALL CONSIST OF THE REMOVAL OF WOOD UTILITY POLES, FOLLOWING THE DISCONNECTION AND REMOVAL OF ATTACHED CONDUCTORS. POLES SHALL BE REMOVED IN ACCORDANCE WITH CITY OF COLUMBUS TDMIS-1600, EXISTING OVERHEAD TRANSMISSION AND DISTRIBUTION SYSTEM REMOVAL.

BASIS OF PAYMENT:
POLE REMOVED SHALL BE PAID FOR FOR EACH POLE REMOVED, AND SHALL INCLUDE ALL WORK AS REQUIRED PER TDMIS-1600.

POLE REMOVED EACH

LEGEND	
	NEW WOOD POLE
	EXISTING WOOD POLE
T	NEW POLE-MOUNTED TRANSFORMER
T	EXISTING OR RELOCATED POLE-MOUNTED TRANSFORMER
——E——	NEW OVERHEAD CONDUCTORS, AS NOTED
— — —E—	EXISTING OVERHEAD CONDUCTORS, AS NOTED

CALCULATED JCS CHECKED SB

DOP ELECTRIC GENERAL NOTES

FRA-270-51.50

Z:\2014 proj\14-003-08 FRA-270 51.51\CAD\Projects\FRA\92616\Utilities\Sheets\92616UN102.dgn 21-DEC-2022 9:46AM Jordan.Steele

SHEET NUM.											PART.			ITEM	ITEM EXT	GRAND TOTAL	UNIT	DESCRIPTION	SEE SHEET NO.
473											01/ODOT								
																		ELECTRICAL	
1											1			SPECIAL	69098000	1	EACH	MISC.: WOOD POLE, 70' CLASS H4	470
12											12			SPECIAL	69098000	12	EACH	MISC.: WOOD POLE, 70' CLASS 1	470
33											33			SPECIAL	69098000	33	EACH	MISC.: MODULAR 69KV HORIZONTAL POST INSULATOR	471
6											6			SPECIAL	69098000	6	EACH	MISC.: 69KV DOUBLE DEAD-END	470
11											11			SPECIAL	69098000	11	EACH	MISC.: 24" SPACER CABLE TANGENT BRACKET	470
2											2			SPECIAL	69098000	2	EACH	MISC.: SPACER CABLE TO SPACER CABLE DOUBLE DEAD-END	470
4											4			SPECIAL	69098000	4	EACH	MISC.: DOUBLE DOWN GUY	470
13											13			SPECIAL	69098000	13	EACH	MISC.: STATIC WIRE GROUNDING ASSEMBLY	470
13											13			SPECIAL	69098000	13	EACH	MISC.: GROUNDING ASSEMBLY	471
3,512											3,512			SPECIAL	69098100	3,512	FT	MISC.: (3) 336 KCMIL SPACER CABLE W/ 1/2" MESSENGER	470
3,512											3,512			SPECIAL	69098100	3,512	FT	MISC.: (3) #4/0 AWG COPPER W/ 3/8" STATIC LINE	470
1											1			SPECIAL	69098000	1	EACH	MISC.: OVERHEAD TRANSFORMER INSTALLATION, 1PH DELTA	470
27,392											27,392			SPECIAL	69098100	27,392	FT	MISC.: CONDUCTORS REMOVED	471
13											13			SPECIAL	69098000	13	EACH	MISC.: POLE REMOVED	471
1											1			SPECIAL	69098000	1	EACH	MISC.: TRANSFORMER REMOVED	470

CALCULATED JCS
CHECKED SB

DOP ELECTRIC GENERAL SUMMARY

FRA-270-51.50

Z:\2014 proj\14-003-08 FRA-270 51.51\CAD\Projects\FRA\92616\Utilities\Sheets\92616UG101.dgn 21-DEC-2022 9:46AM Jordan.Steele

SHEET NO.	SIDE	ROADWAY	STATION TO STATION	CIRCUIT NODES	SPEC MISC.: WOOD POLE, 70', CLASS H4	SPEC MISC.: WOOD POLE, 70', CLASS 1	SPEC MISC.: MODULAR 69KV HORIZONTAL POST INSULATOR	SPEC MISC. 69KV DOUBLE DEAD-END	SPEC MISC.: 24" SPACER CABLE TANGENT BRACKET	SPEC MISC.: SPACER CABLE TO SPACER CABLE DOUBLE DEAD-END	SPEC MISC.: DOUBLE DOWN GUY	SPEC MISC.: STATIC WIRE GROUNDING ASSEMBLY	SPEC MISC.: GROUNDING ASSEMBLY	SPEC CONDUCTORS REMOVED	SPEC POLE REMOVED	SPEC TRANSFORMER REMOVED	SPEC MISC.: (3) 336 KCMIL SPACER CABLE W/ 1/2" MESSENGER	SPEC MISC.: (3) #4/0 AWG COPPER W/ 3/8" STATIC LINE	SPEC MISC.: OVERHEAD TRASNFORMER INSTALLATION, 1PH D
				* = MATCH LINE	EACH	EACH	EACH	EACH	EACH	EACH	EACH	EACH	EACH	FT	EACH	EACH	FT	FT	EACH
474	RT	U.S. 23	STA. 524+25.2	POLE P1	1			3		1		1	1						
474	RT	U.S. 23	STA. 524+25.2 TO STA. 527+06.0	POLE P1 TO POLE P2													292	292	
474	RT	U.S. 23	STA. 527+06.0	POLE P2		1	3		1		2	1	1						
474	RT	U.S. 23	STA. 527+06.0 TO STA. 529+92.5	POLE P2 TO POLE P3													296	296	
474	RT	U.S. 23	STA. 529+92.5	POLE P3		1	3		1			1	1						
474	RT	U.S. 23	STA. 529+92.5 TO STA. 532+77.9	POLE P3 TO POLE P4													295	295	
474	RT	U.S. 23	STA. 532+77.9	POLE P4		1	3		1			1	1						1
474	RT	U.S. 23	STA. 532+77.9 TO STA. 535+16.4	POLE P4 TO POLE P5													249	249	
474	RT	U.S. 23	STA. 535+16.4	POLE P5		1	3		1			1	1						
474	RT	U.S. 23	STA. 535+16.4 TO STA. 536+00	POLE P5 TO *													90	90	
474	RT	U.S. 23	STA. 524+10.5	R1											1				
474	RT	U.S. 23	STA. 524+10.5 TO STA. 527+09.6	R1 TO R2										2368					
474	RT	U.S. 23	STA. 527+09.6	R2											1				
474	RT	U.S. 23	STA. 527+09.6 TO STA. 530+29.4	R2 TO R3										2584					
474	RT	U.S. 23	STA. 530+29.4	R3											1				
474	RT	U.S. 23	STA. 530+29.4 TO STA. 533+12.6	R3 TO R4										2264					
474	RT	U.S. 23	STA. 533+12.6	R4											1	1			
474	RT	U.S. 23	STA. 533+12.6 TO STA. 535+07.7	R4 TO R5										1568					
474	RT	U.S. 23	STA. 535+07.7	R5											1				
474	RT	U.S. 23	STA. 535+07.7 TO STA. 536+00	R5 TO *										744					
475	RT	U.S. 23	STA. 536+00 TO STA. 537+93.4	* TO POLE P6													199	199	
475	RT	U.S. 23	STA. 537+93.4	POLE P6		1	3		1			1	1						
475	RT	U.S. 23	STA. 537+93.4 TO STA. 541+12.2	POLE P6 TO POLE P7													329	329	
475	RT	U.S. 23	STA. 541+12.2	POLE P7		1	3		1			1	1						
475	RT	U.S. 23	STA. 541+12.2 TO STA. 543+94.4	POLE P7 TO POLE P8													292	292	
475	RT	U.S. 23	STA. 543+94.4	POLE P8		1	3		1			1	1						
475	RT	U.S. 23	STA. 543+94.4 TO STA. 547+10.6	POLE P8 TO POLE P9													322	322	
475	RT	U.S. 23	STA. 547+10.6	POLE P9		1	3		1			1	1						
475	RT	U.S. 23	STA. 547+10.6 TO STA. 548+00	POLE P9 TO *													94	94	
475	RT	U.S. 23	STA. 536+00 TO STA. 537+92.6	* TO R6										1544					
475	RT	U.S. 23	STA. 537+92.6	R6											1				
475	RT	U.S. 23	STA. 537+92.6 TO STA. 541+14.2	R6 TO R7										2560					
475	RT	U.S. 23	STA. 541+14.2	R7											1				
475	RT	U.S. 23	STA. 541+14.2 TO STA. 543+94.0	R7 TO R8										2256					
475	RT	U.S. 23	STA. 543+94.0	R8											1				
475	RT	U.S. 23	STA. 543+94.0 TO STA. 547+02.7	R8 TO R9										2440					
475	RT	U.S. 23	STA. 547+02.7	R9											1				
475	RT	U.S. 23	STA. 547+02.7 TO STA. 548+00	R9 TO *										776					
476	RT	U.S. 23	STA. 548+00 TO STA. 549+97.0	* TO POLE P10													202	202	
476	RT	U.S. 23	STA. 549+97.0	POLE P10		1	3		1			1	1						
476	RT	U.S. 23	STA. 549+97.0 TO STA. 552+23.0	POLE P10 TO POLE P11													236	236	
476	RT	U.S. 23	STA. 552+23.0	POLE P11		1	3		1			1	1						
476	RT	U.S. 23	STA. 552+23.0 TO STA. 555+33.0	POLE P11 TO POLE P12													321	321	
476	RT	U.S. 23	STA. 555+33.0	POLE P12		1	3		1		1	1	1						
476	RT	U.S. 23	STA. 555+33.0 TO STA. 558+24.5	POLE P12 TO POLE P13													295	295	
476	RT	U.S. 23	STA. 558+24.5	POLE P13		1		3		1	1	1	1						
476	RT	U.S. 23	STA. 548+00 TO STA. 549+95.8	* TO R10										1568					
476	RT	U.S. 23	STA. 549+95.8	R10											1				
476	RT	U.S. 23	STA. 549+95.8 TO STA. 552+22.8	R10 TO R11										1816					
476	RT	U.S. 23	STA. 552+22.8	R11											1				
476	RT	U.S. 23	STA. 552+22.8 TO STA. 555+33.4	R11 TO R12										2496					
476	RT	U.S. 23	STA. 555+33.4	R12											1				
476	RT	U.S. 23	STA.555+33.4 TO STA. 558+39.8	R12 TO R13										2408					
476	RT	U.S. 23	STA. 558+39.8	R13											1				
TOTALS CARRIED TO GENERAL SUMMARY					1	12	33	6	11	2	4	13	13	27392	13	1	3512	3512	1

CALCULATED JCS
CHECKED SB

DOP ELECTRIC SUBSUMMARY

FRA-270-51.50

Z:\2014 proj\14-003-08 FRA-270 51.51\CAD\Projects\FRA\92616\Utilities\Sheets\92616USI01.dgn 21-DEC-2022 9:46AM Jordan.Steele

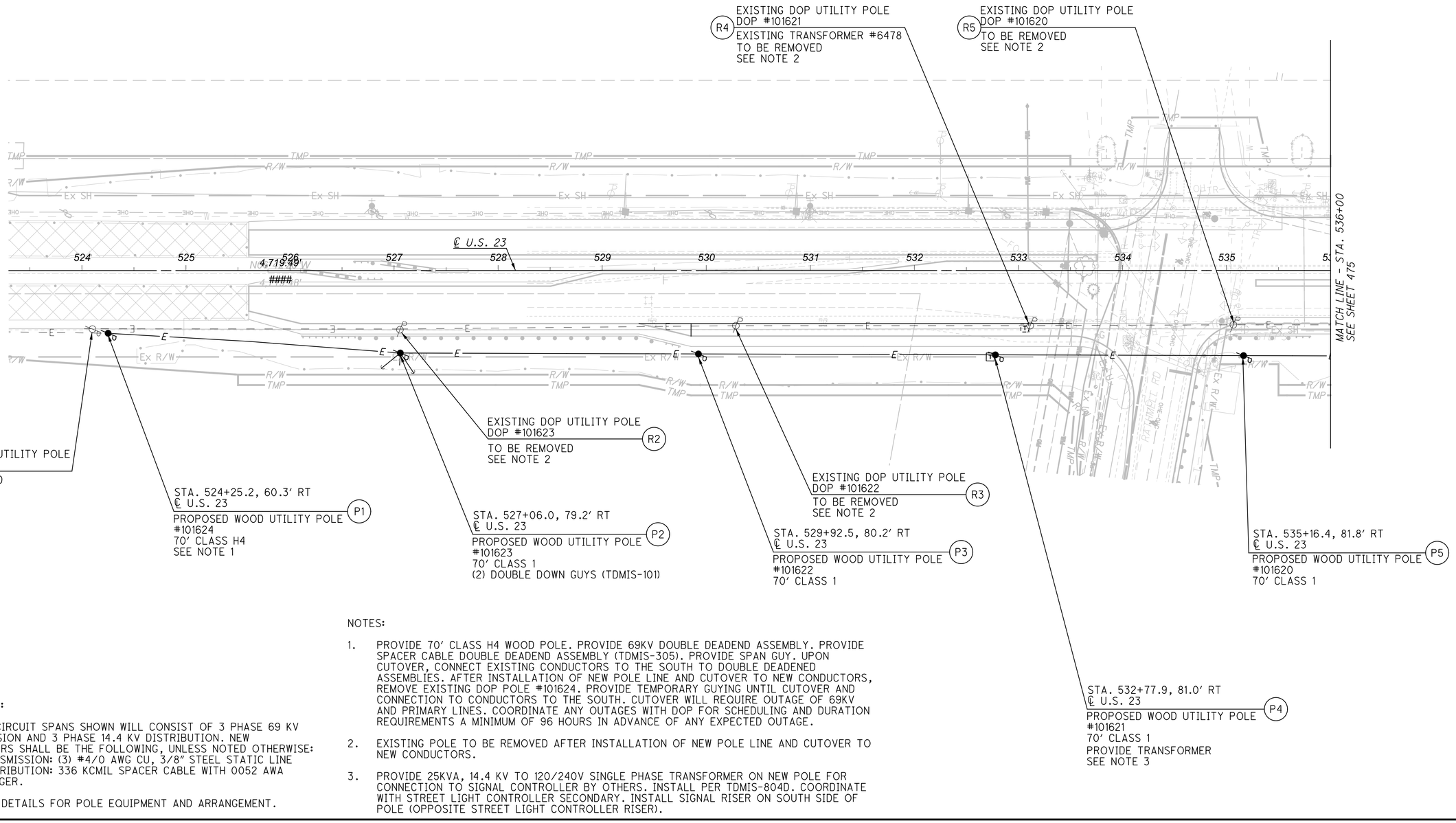

GENERAL NOTES:

A. ALL NEW CIRCUIT SPANS SHOWN WILL CONSIST OF 3 PHASE 69 KV TRANSMISSION AND 3 PHASE 14.4 KV DISTRIBUTION. NEW CONDUCTORS SHALL BE THE FOLLOWING, UNLESS NOTED OTHERWISE:
   1. TRANSMISSION: (3) #4/0 AWG CU, 3/8" STEEL STATIC LINE
   2. DISTRIBUTION: 336 KCMIL SPACER CABLE WITH 0052 AWA MESSENGER.

B. SEE POLE DETAILS FOR POLE EQUIPMENT AND ARRANGEMENT.

NOTES:

1. PROVIDE 70' CLASS H4 WOOD POLE. PROVIDE 69KV DOUBLE DEADEND ASSEMBLY. PROVIDE SPACER CABLE DOUBLE DEADEND ASSEMBLY (TDMIS-305). PROVIDE SPAN GUY. UPON CUTOVER, CONNECT EXISTING CONDUCTORS TO THE SOUTH TO DOUBLE DEADENED ASSEMBLIES. AFTER INSTALLATION OF NEW POLE LINE AND CUTOVER TO NEW CONDUCTORS, REMOVE EXISTING DOP POLE #101624. PROVIDE TEMPORARY GUYING UNTIL CUTOVER AND CONNECTION TO CONDUCTORS TO THE SOUTH. CUTOVER WILL REQUIRE OUTAGE OF 69KV AND PRIMARY LINES. COORDINATE ANY OUTAGES WITH DOP FOR SCHEDULING AND DURATION REQUIREMENTS A MINIMUM OF 96 HOURS IN ADVANCE OF ANY EXPECTED OUTAGE.

2. EXISTING POLE TO BE REMOVED AFTER INSTALLATION OF NEW POLE LINE AND CUTOVER TO NEW CONDUCTORS.

3. PROVIDE 25KVA, 14.4 KV TO 120/240V SINGLE PHASE TRANSFORMER ON NEW POLE FOR CONNECTION TO SIGNAL CONTROLLER BY OTHERS. INSTALL PER TDMIS-804D. COORDINATE WITH STREET LIGHT CONTROLLER SECONDARY. INSTALL SIGNAL RISER ON SOUTH SIDE OF POLE (OPPOSITE STREET LIGHT CONTROLLER RISER).

HORIZONTAL SCALE IN FEET
0 50 100

CALCULATED JCS
CHECKED SB

DOP ELECTRIC RELOCATION PLAN
STA. 523+15 TO STA. 536+00

FRA-270-51.50

474
554

21-DEC-2022 9:47AM Jordan.Steele

Z:\2014 proj\14-003-08 FRA-270 51.51\CAD\Projects\FRA\92616\Utilities\Sheets\92616UP101.dgn 21-

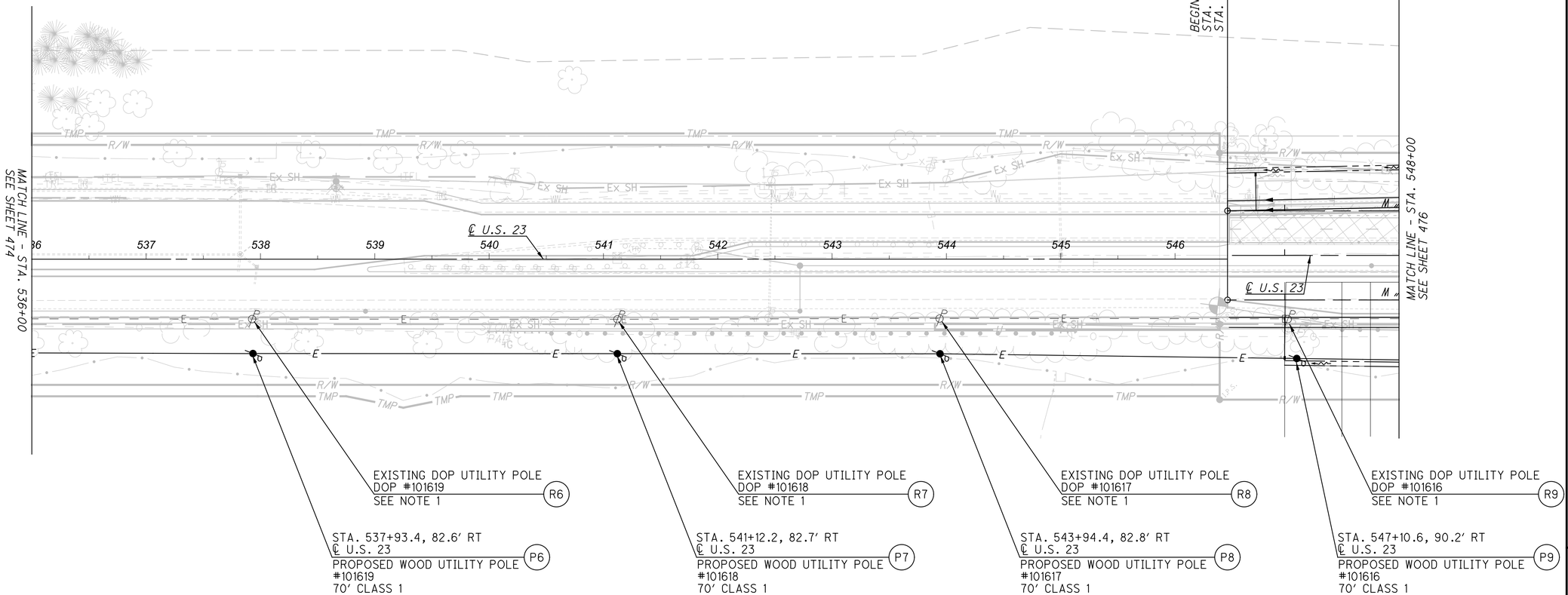

GENERAL NOTES:

A. ALL NEW CIRCUIT SPANS SHOWN WILL CONSIST OF 3 PHASE 69 KV TRANSMISSION AND 3 PHASE 14.4 KV DISTRIBUTION. NEW CONDUCTORS SHALL BE THE FOLLOWING, UNLESS NOTED OTHERWISE:
   1. TRANSMISSION: (3) #4/0 AWG CU, 3/8" STEEL STATIC LINE
   2. DISTRIBUTION: 336 KCMIL SPACER CABLE WITH 0052 AWA MESSENGER.

B. SEE POLE DETAILS FOR POLE EQUIPMENT AND ARRANGEMENT.

NOTES:
1. REMOVE EXISTING WOOD POLE AFTER INSTALLATION AND CUTOVER TO ADJACENT POLE LINE CONDUCTORS.

HORIZONTAL SCALE IN FEET
0 50 100

CALCULATED JCS
CHECKED SB

DOP ELECTRIC RELOCATION PLAN
STA. 536+00 TO STA. 548+00

FRA-270-51.50

475
554

Z:\2014 proj\14-003-08 FRA-270 51.51\CAD\Projects\FRA\92616\Utilities\Sheets\92616UP102.dgn 21-DEC-2022 9:47AM Jordan.Steele

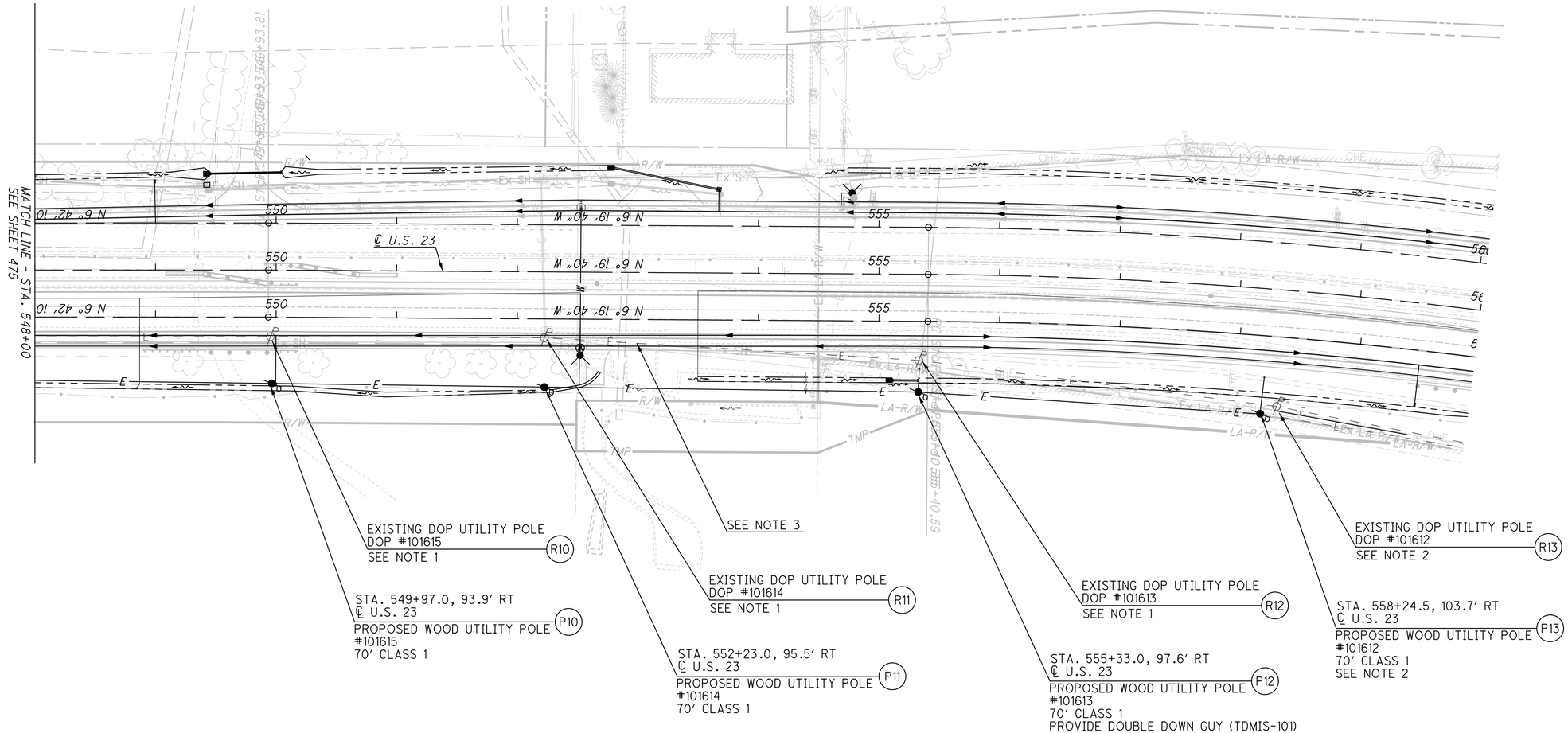

GENERAL NOTES:

A. ALL NEW CIRCUIT SPANS SHOWN WILL CONSIST OF 3 PHASE 69 KV TRANSMISSION AND 3 PHASE 14.4 KV DISTRIBUTION. NEW CONDUCTORS SHALL BE THE FOLLOWING, UNLESS NOTED OTHERWISE:
   1. TRANSMISSION: (3) #4/0 AWG CU, 3/8" STEEL STATIC LINE
   2. DISTRIBUTION: 336 KCMIL SPACER CABLE WITH 0052 AWA MESSENGER.

B. SEE POLE DETAILS FOR POLE EQUIPMENT AND ARRANGEMENT.

NOTES:

1. REMOVE EXISTING WOOD POLE AFTER INSTALLATION AND CUTOVER TO ADJACENT POLE LINE CONDUCTORS.

2. PROVIDE 70' CLASS 1 WOOD POLE. PROVIDE 69KV DOUBLE DEADEND ASSEMBLY. PROVIDE SPACER CABLE DOUBLE DEADEND ASSEMBLY (TDMIS-305). PROVIDE SPAN GUY. UPON CUTOVER, CONNECT EXISTING CONDUCTORS TO THE NORTH TO DOUBLE DEADENED ASSEMBLIES. AFTER INSTALLATION OF NEW POLE LINE AND CUTOVER TO NEW CONDUCTORS, REMOVE EXISTING DOP POLE #101613. PROVIDE TEMPORARY GUYING UNTIL CUTOVER AND CONNECTION TO CONDUCTORS TO THE NORTH. CUTOVER WILL REQUIRE OUTAGE OF 69KV AND PRIMARY LINES. COORDINATE ANY OUTAGES WITH DOP FOR SCHEDULING AND DURATION REQUIREMENTS A MINIMUM OF 96 HOURS IN ADVANCE OF ANY EXPECTED OUTAGE.

3. COORDINATE WITH COMMUNICATIONS COMPANIES FOR RELOCATION OF COMMUNICATIONS SPAN TO NEW POLE LINE PRIOR TO REMOVING EXISTING POLES.

HORIZONTAL SCALE IN FEET
0 50 100

CALCULATED JCS
CHECKED SB

DOP ELECTRIC RELOCATION PLAN
STA. 548+00 TO STA. 560+00

FRA-270-51.50

476
554

Z:\2014 pro\14-003-08 FRA-270 51.51\CAD\Projects\FRA\92616\Utilities\Sheets\92616UP103.dgn 21-DEC-2022 9:47AM Jordan.Steele

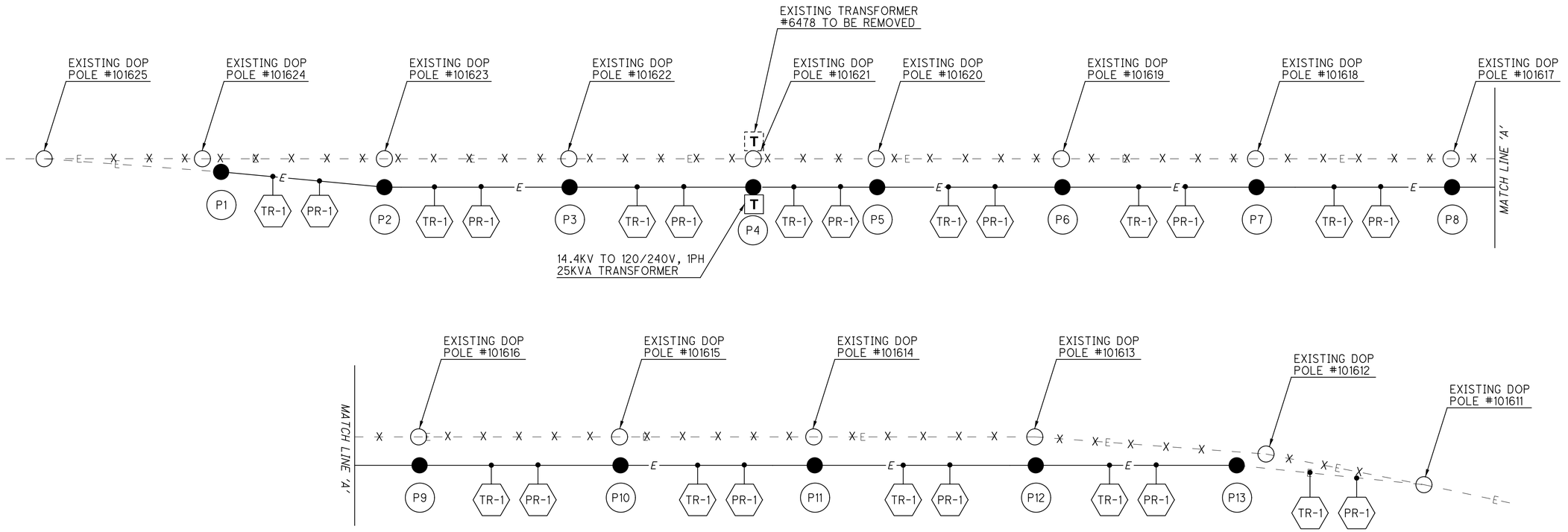

SINGLE LINE LEGEND	
●	NEW WOOD POLE
○	EXISTING WOOD POLE
T	NEW POLE-MOUNTED TRANSFORMER
T	EXISTING OR RELOCATED POLE-MOUNTED TRANSFORMER
——E——	NEW OVERHEAD CONDUCTORS, AS NOTED
— — — —E—	EXISTING OVERHEAD CONDUCTORS, AS NOTED
-X — X — EX-	EXISTING OVERHEAD CONDUCTORS TO BE REMOVED
P1	NODE DESIGNATION - P# = POLE REFERENCE NUMBER
PR-1	CONDUCTOR DESIGNATION: 'PR'=PRIMARY CONDUCTORS; 'TR'=TRANSMISSION CONDUCTORS; SEE LEGEND AT RIGHT FOR CONDUCTOR LEGEND.

CONDUCTOR LEGEND	
DESIGNATION	**CONDUCTORS**
PR-1	(3) 336 KCMIL 15KV SPACER CABLE W/ 0052 AWA MESSENGER
TR-1	(3) #4/0 AWG CU W/ 3/8" STEEL STATIC LINE

CALCULATED JCS CHECKED SB

DOP ELECTRIC ONE LINE DIAGRAM

FRA-270-51.50

Z:\2014 pro\14-003-08 FRA-270 51.51\CAD\Projects\FRA\92616\Utilities\Sheets\92616UC101.dgn 21-DEC-2022 9:47AM Jordan.Steele

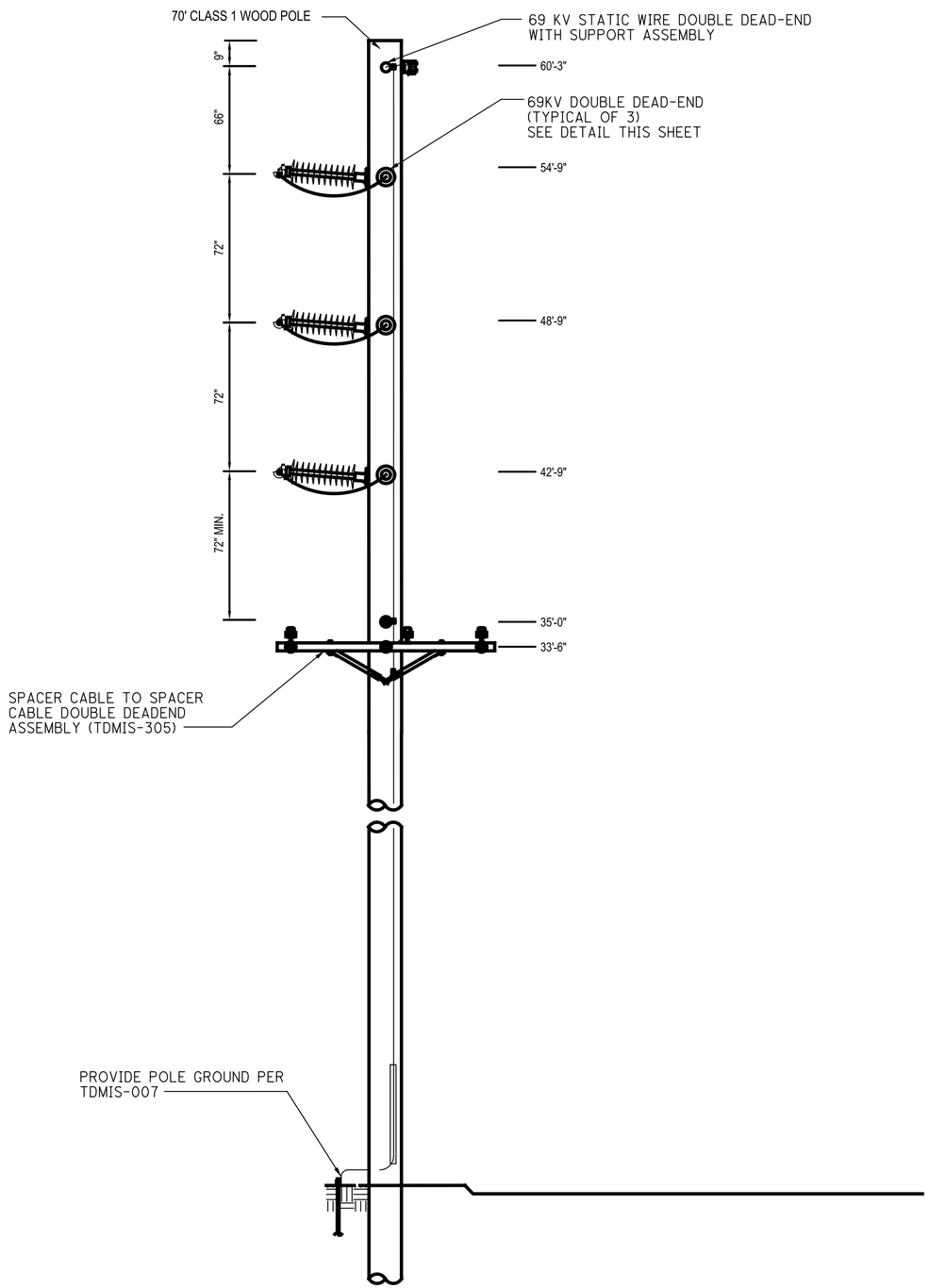

P1 **POLE DETAIL - POLE #101624**
FACING SOUTH - NTS

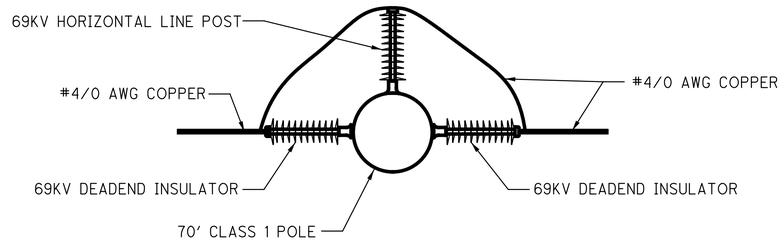

69KV DOUBLE DEADEND
TOP VIEW - NTS

CALCULATED JCS
CHECKED SB

DOP ELECTRIC POLE DETAILS

FRA-270-51.50

Z:\2014 pro\14-003-08 FRA-270 51.51\CAD\Projects\FRA\92616\Utilities\Sheets\92616UD101.dgn 21-DEC-2022 9:48AM Jordan.Steele

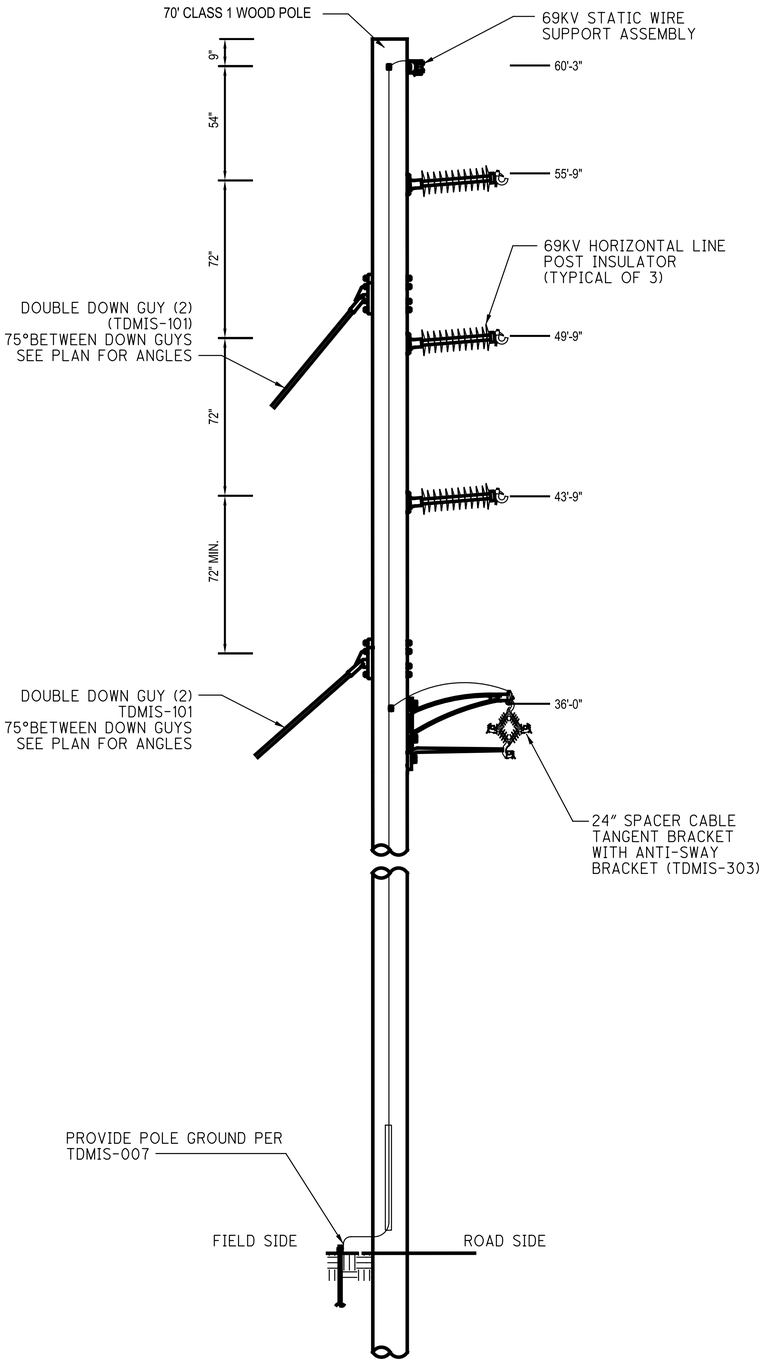

P2 **POLE DETAIL - POLE #101623**
FACING SOUTH - NTS

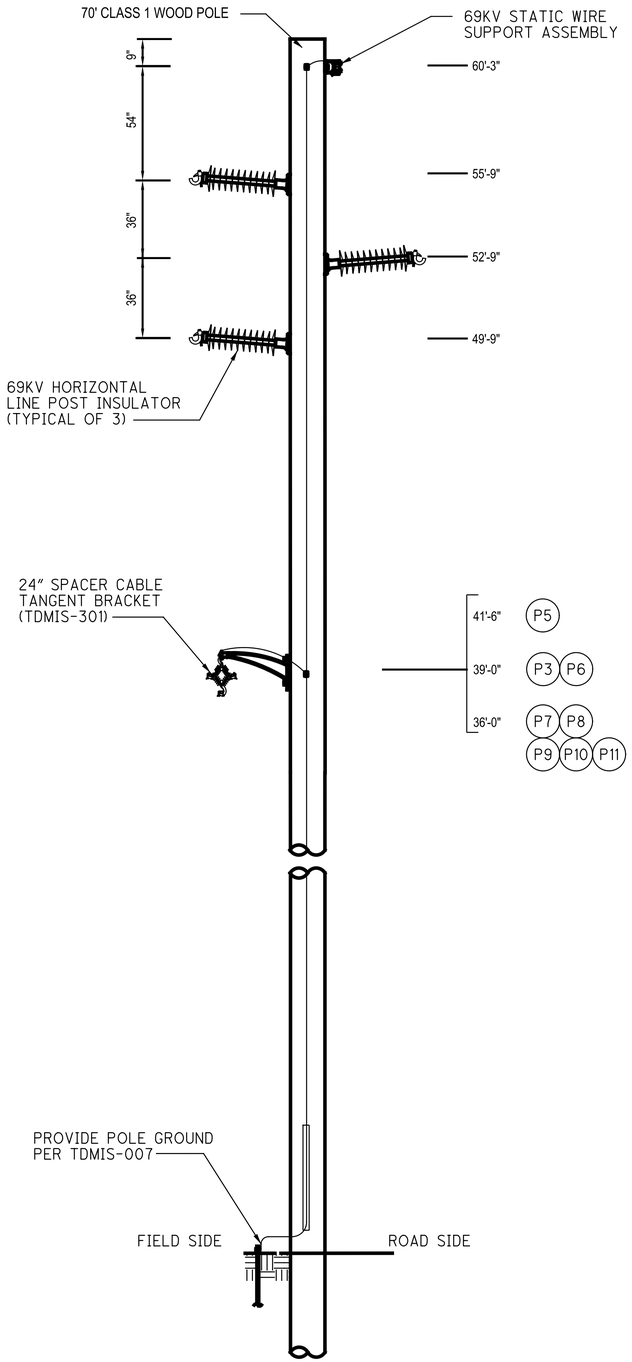

P3 P5 P6 P7 P8 P9 P10 P11

POLE DETAIL - TYPICAL LINE POLE
FACING SOUTH - NTS
APPLICABLE FOR POLES: #101622, 101620, 101619, 101618, 101617, 101616, 101615, 101614
*TANGENT BRACKET MOUNTING HEIGHTS VARY PER POLE - SEE DETAIL ABOVE FOR MOUNTING HEIGHTS

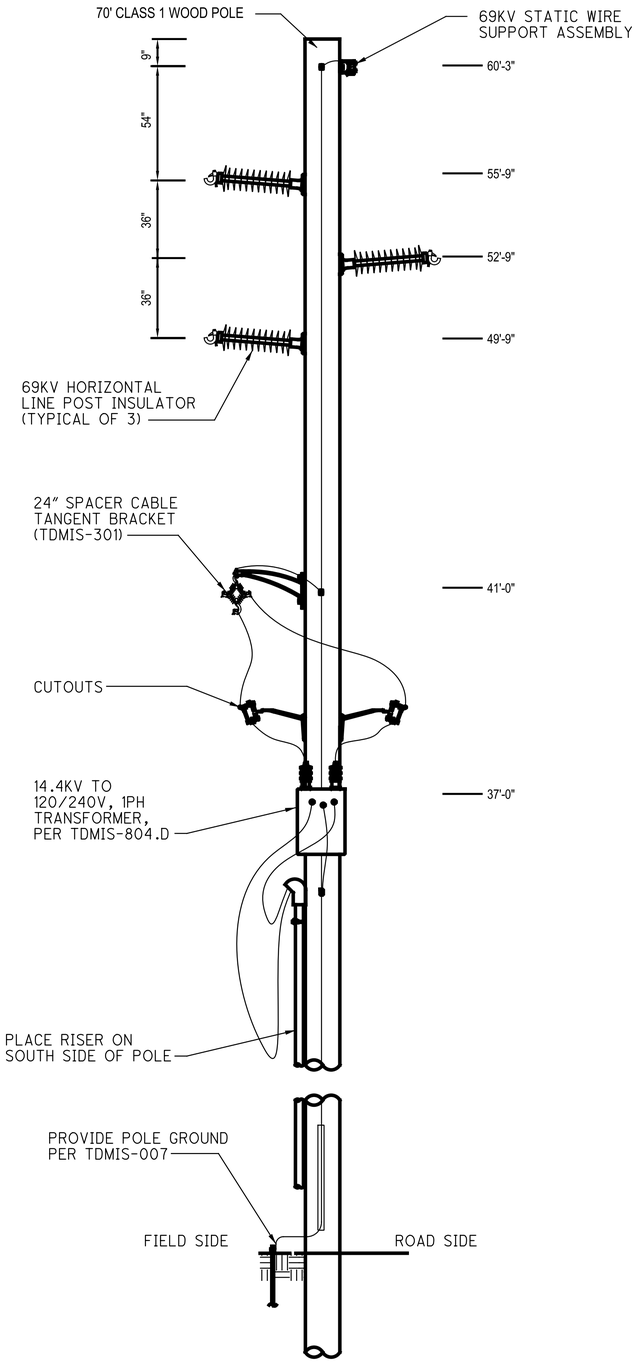

P4 **POLE DETAIL - POLE #101621**
FACING SOUTH - NTS

CALCULATED JCS
CHECKED SB

DOP ELECTRIC POLE DETAILS

FRA-270-51.50

Z:\2014 pro\14-003-08 FRA-270 51.51\CAD\Projects\FRA\92616\Utilities\Sheets\92616UD102.dgn 21-DEC-2022 9:48AM Jordan.Steele

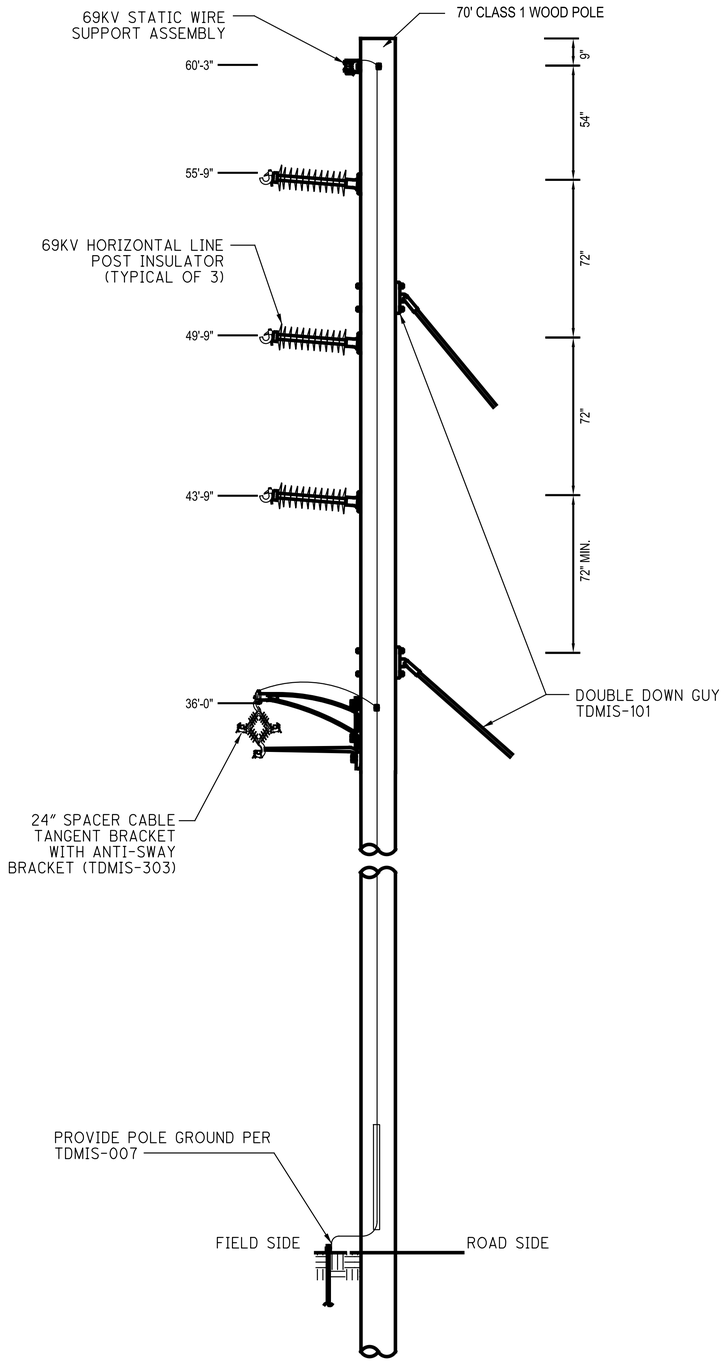

P12 **POLE DETAIL - POLE #101613**
FACING SOUTH - NTS

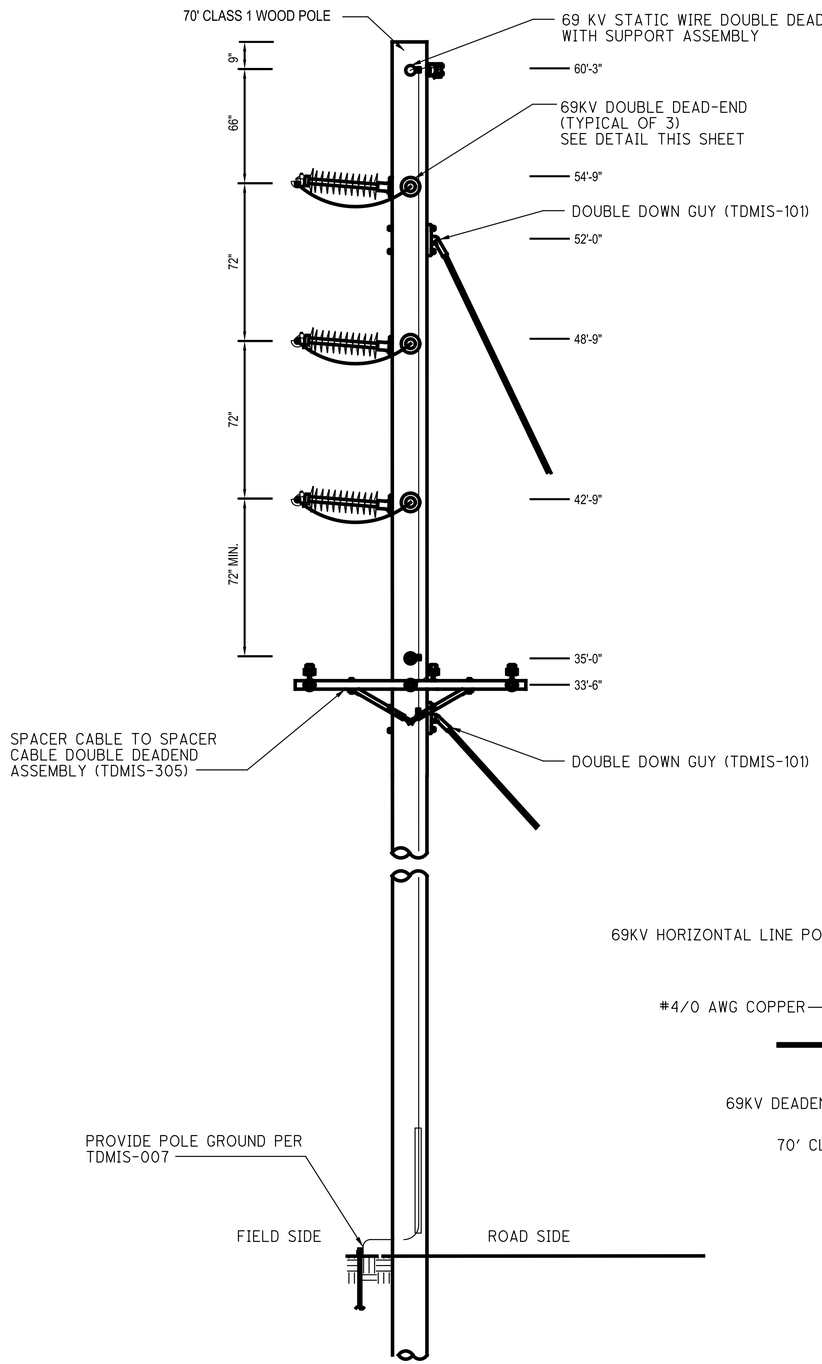

P13 **POLE DETAIL - POLE #101612**
FACING SOUTH - NTS

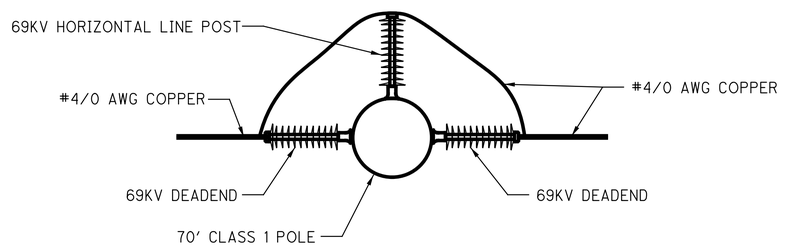

69KV DOUBLE DEADEND
TOP VIEW - NTS

CALCULATED JCS
CHECKED SB

DOP ELECTRIC POLE DETAILS

FRA-270-51.50

Z:\2014 pro\14-003-08 FRA-270 51.51\CAD\Projects\FRA\92616\Utilities\Sheets\92616UD103.dgn 21-DEC-2022 9:48AM Jordan.Steele

Created 7-11

M69SW

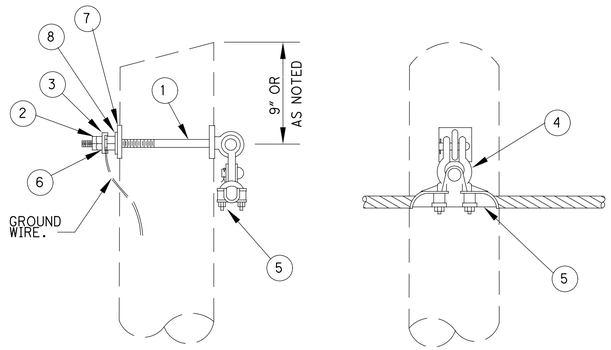

ITEM	DESCRIPTION	PART#	#REQ
10			
9			
8	WASHER, LOCK, SPRING, 13/16" O HOLE	18894	1
7	WASHER, CURVED, 4"X4"X1/4", 13/16" O HOLE	50046	1
6	NUT, 3/4"	-	2
5	CLAMP, SUSPENSION	59884	1
4	SHACKLE, SUSPENSION	20261	1
3	CLIP, BONDING	19219	1
2	NUT, LOCK, 3/4"	62248	1
1	BOLT, EYE, 3/4" X 12"	62250	1

MODULE, 69KV, STATIC WIRE SUPPORT ASSEMBLY
WITH EYE BOLT

MEL&P — MUNICIPAL ELECTRIC LIGHT & POWER SYSTEM
CITY OF COLUMBUS, OHIO
DEPT. OF PUBLIC UTILITIES DIV. OF POWER AND WATER — M69SW

DETAIL 1 - MELP DWG. M69SW

Created 7-11

M69GND3

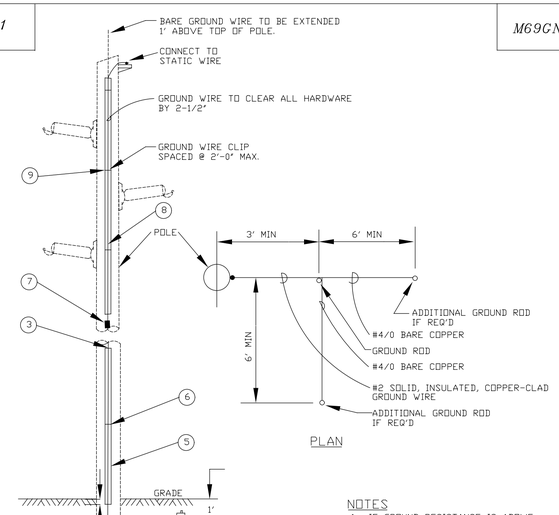

NOTES
1. IF GROUND RESISTANCE IS ABOVE 25Ω, THEN ADDITIONAL GROUND RODS ARE TO BE ADDED AS DETAILED.

ITEM	*DESCRIPTION*	*PART#*	*#REQ*
9	CLAMP, INSULATED GROUND WIRE, 3/4"	21111	12
8	WIRE, GROUND, INSULATED, #4 SOLID COPPER	20329	1
7	CONNECTOR, COMPRESSION	20104	1
6	STAPLE	20342	5
5	MOLDING, WOOD	20441	1
4	STAPLE, GROUND WIRE	20343	15
3	WIRE, GROUND, #2 AWG COPPER-CLAD STEEL, SOLID, INSULATED	XXXXX	70
2	CLAMP, GROUND, ROD, 1/2"	20431	1
1	ROD, GROUND, 1/2" X 10'	20341	1

MODULE, 69KV, GROUNDING ASSEMBLY
3 FOOT VERTICAL PHASE SPACING

MEL&P — *MUNICIPAL ELECTRIC LIGHT & POWER SYSTEM*
CITY OF COLUMBUS, OHIO
DEPT. OF PUBLIC UTILITIES DIV. OF POWER AND WATER — *M69GND3*

DETAIL 2 - MELP DWG. M69GND3

Created 7-11

M69GND6

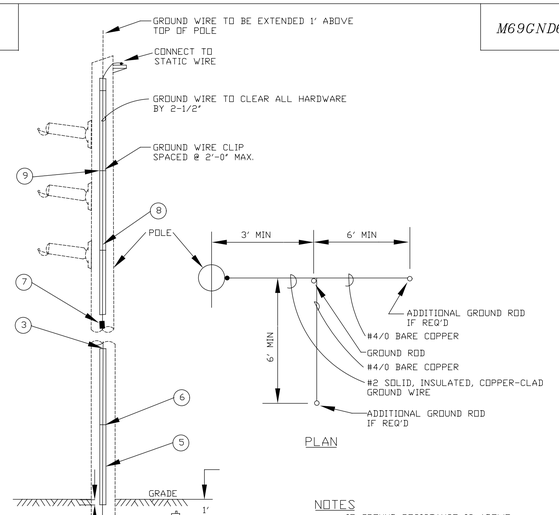

NOTES
IF GROUND RESISTANCE IS ABOVE 25Ω, THEN ADDITIONAL GROUND RODS ARE TO BE ADDED AS DETAILED.

ITEM	*DESCRIPTION*	*PART#*	*#REQ*
9	CLAMP, INSULATED GROUND WIRE, 3/4"	21111	14
8	WIRE, GROUND, INSULATED, #4 SOLID COPPER	59883	1
7	CONNECTOR, COMPRESSION	20104	1
6	STAPLE, MOLDING	20342	5
5	MOLDING, WOOD	20441	1
4	STAPLE, GROUND WIRE	20343	15
3	WIRE, GROUND, #2 AWG COPPER-CLAD STEEL, SOLID, INSULATED	59882	70
2	CLAMP, GROUND, ROD, 1/2"	20431	1
1	ROD, GROUND, 1/2" X 10'	20341	1

MODULE, 69KV, GROUNDING ASSEMBLY
6 FOOT VERTICAL PHASE SPACING

MEL&P — *MUNICIPAL ELECTRIC LIGHT & POWER SYSTEM*
CITY OF COLUMBUS, OHIO
DEPT. OF PUBLIC UTILITIES DIV. OF POWER AND WATER — *M69GND6*

DETAIL 3 - MELP DWG. M69GND6

CALCULATED JCS
CHECKED SB

DOP ELECTRIC POLE DETAILS

DOP

FRA-270-51.50

Z:\2014 proj\14-003-08 FRA-270 51.51\CAD\Projects\FRA\92616\Utilities\Sheets\92616UD104.dgn 21-DEC-2022 9:48AM Jordan.Steele

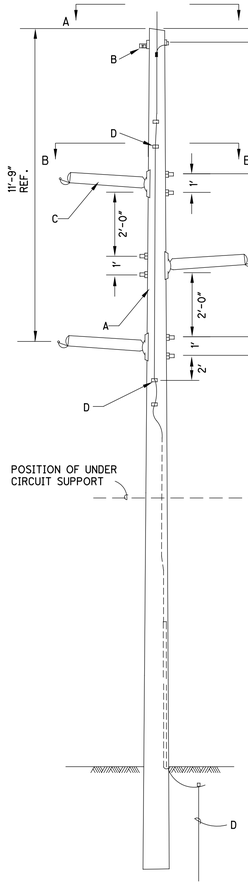

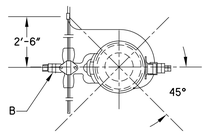

DETAIL A

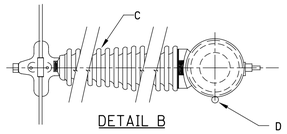

DETAIL B

MK. NO.	ASSEMBLY	ASSY. CODE	DESCRIPTION	NO. REQ'D
A	69.201		WOOD POLE	1
B	69.403		STATIC SUPPORT W/TRUNNION CLAMP 3/8 IN 7 STR EHS STL	1
		A	0.25"-0.56"Wl CLAMP W/3/4"X 12" LG STUD F/CLASS 1,2,H1 POLE	
		B	0.25"-0.56"Wl CLAMP W/3/4"X 16" LG STUD F/CLASS H2,H3,H4 POLE	
C	69.300		HORIZONTAL POST INSULATOR ASSEMBLY W/ARMOR ROD	3
		A	1.00"-1.50" AL CLAMP F/336.4(30/7)ACSR	
		B	1.00"-1.50" AL CLAMP 556.5(24/7)ACSR	
		C	1.50"-2.00" AL CLAMP F/795(26/7)ACSR	
D	69.400		STANDARD #2 BARE SD CU GROUND ASSEMBLY, DRIVEN W/MOLDING	1

CONSTRUCTION NOTES:

1) SEE PLAN DRAWINGS FOR STRUCTURE LOCATION AS WELL AS POLE HEIGHT AND CLASS

2) REFERENCE DIMENSIONS (REF) SHOULD NOT BE USED FOR FRAMING

ENGINEERING NOTES:

A). STRUCTURE BIL-800KV(POSITIVE IMPULSE FLASHOVER).
B). MAXIMUM SHIELD ANGLE AT THE STRUCTURE-30°
C). EQUIVALENT CONDUCTOR SPACING.
D). MAXIMUM RECOMMENDED LINE ANGLE 0°-1°.
E). MAXIMUM COMBINED ULTIMATE LOADS FOR INSULATORS
TRANSVERSE-4000lbs. W/2200lbs. VERTICAL.
LONGITUDINAL- 1700lbs. W/2200lbs. VERTICAL.

HORIZONTAL POST-TANGENT STRUCTURE
69KV SPACING AND INSULATION

DRAWN BA
DATE 11/95
APPROVED
DATE

MELP — MUNICIPAL ELECTRIC LIGHT & POWER SYSTEMS
CITY OF COLUMBUS, OHIO
DEPT. OF PUBLIC UTILITIES, DIVISION OF ELECTRICITY

69.101

DETAIL 4 - MELP DWG. 69.101

Created 7-11

M69HPI

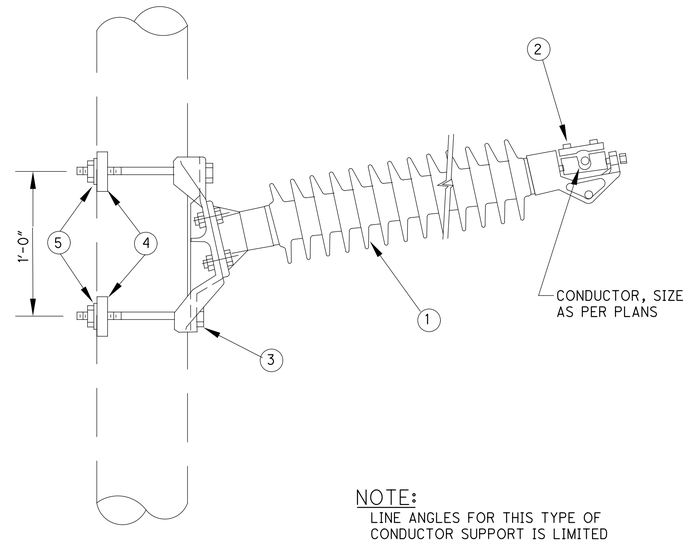

NOTE:
LINE ANGLES FOR THIS TYPE OF CONDUCTOR SUPPORT IS LIMITED TO 15 DEGREES.

ITEM	DESCRIPTION	PART#	#REQ
10			
9			
8			
7			
6			
5	WASHER, LOCK, DOUBLE COIL SPRING, 13/16" O/HOLE	18894	2
4	WASHER, CURVED, SQUIRED, 4"X4"X1/4", 13/16" O/BOLT HOLE	50046	2
3	BOLT, MACHINE, 3/4"X 16", W/NUT	18949	2
2	CLAMP, TRUNNION, LINE POST	20221	1
1	INSULATOR, HORIZONTAL, POLYMER	59880	1

MODULE, 69KV, HORIZONTAL POST INSULATOR
MOUNTING ASSEMBLY SINGLE PHASE
0 TO 15 DEGREE LINE ANGLE CONSTRUCTION

MELP — MUNICIPAL ELECTRIC LIGHT & POWER SYSTEM
CITY OF COLUMBUS, OHIO
DEPT. OF PUBLIC UTILITIES DIV. OF POWER AND WATER

M69HPI

DETAIL 5 - MELP DWG. M69HPI

CALCULATED JCS
CHECKED SB

DOP ELECTRIC POLE DETAILS

FRA-270-51.50

Z:\2014 pro\14-003-08 FRA-270 51.51\CAD\Projects\FRA\92616\Utilities\Sheets\92616UD105.dgn 21-DEC-2022 9:48AM Jordan.Steele

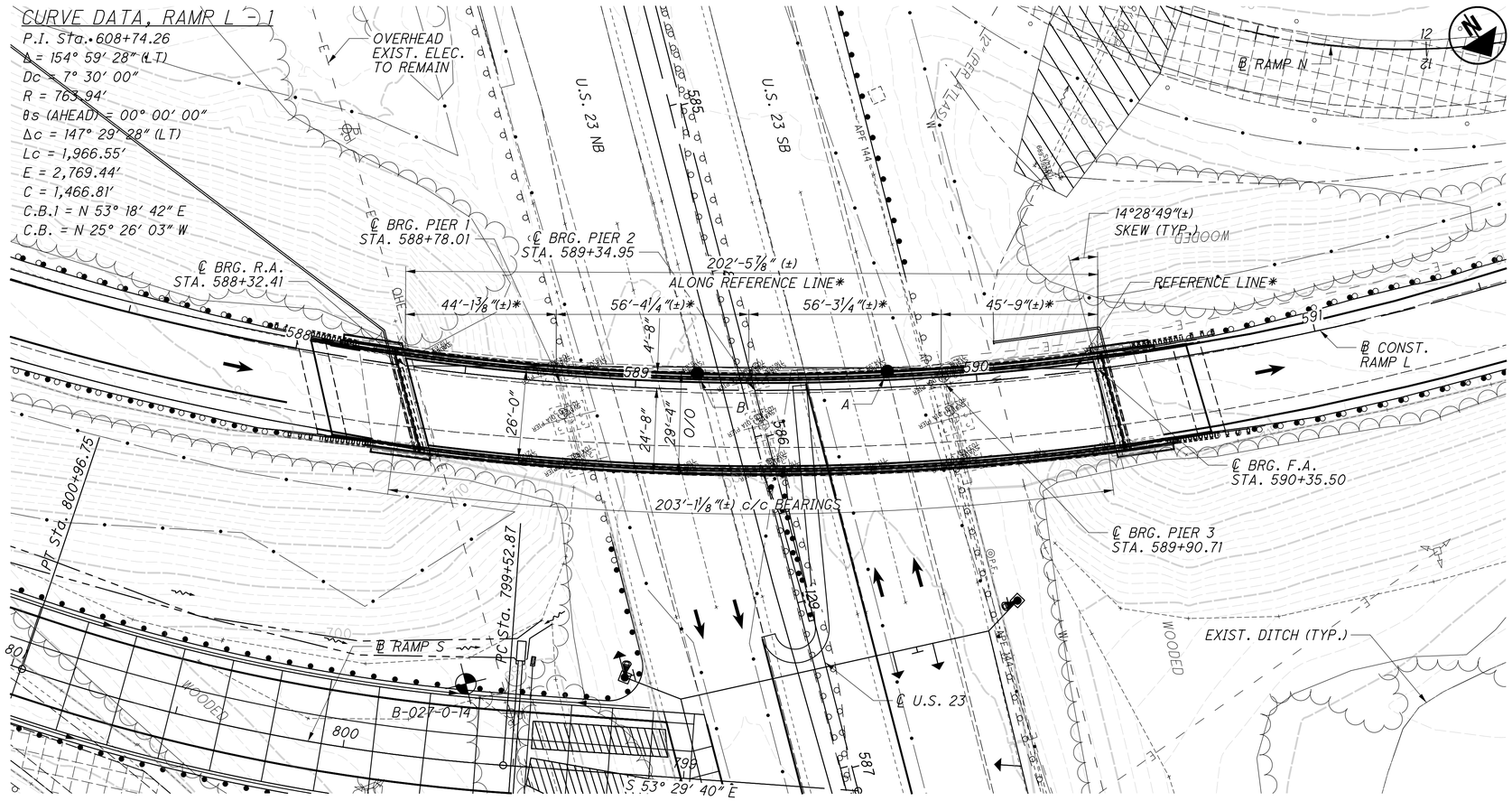

PLAN

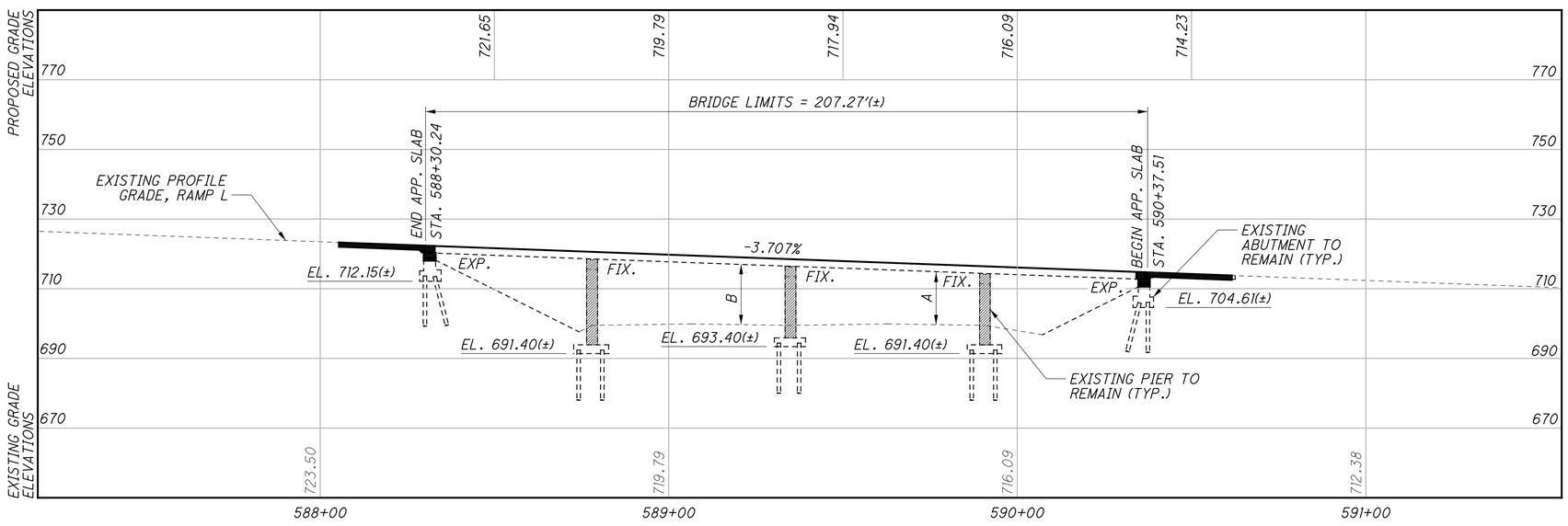

PROFILE ALONG ℄ RAMP L

NOTES

1. EARTHWORK LIMITS SHOWN ARE APPROXIMATE. ACTUAL SLOPES SHALL CONFORM TO PLAN CROSS SECTIONS.
2. FOR BENCHMARK INFORMATION, SEE ROADWAY PLANS.
3. ALL EXISTING OVERHEAD AND UNDERGROUND UTILITIES ARE TO REMAIN UNLESS NOTED OTHERWISE.

LEGEND

- PROJECT BORING LOCATION

VERTICAL CLEARANCES

POINT	EXISTING	PROPOSED	REQUIRED
A	15.10′	15.10′	14.50′
B	15.90′	15.90′	14.50′

* THE REFERENCE LINE IS A CHORD THAT EXTENDS FROM THE INTERSECTION OF ℄ CONST. RAMP L AND ℄ BRG. R.A. TO ℄ CONST. RAMP L AND ℄ BRG. F.A.

TRAFFIC DATA

CURRENT ADT (2016) = 11,820 DESIGN ADT (2036) = 15,730
CURRENT ADTT (2016) = 2,128 DESIGN ADTT (2036) = 2,831
DIRECTIONAL DISTRIBUTION = 100%

EXISTING STRUCTURE

TYPE: CONTINUOUS REINFORCED CONCRETE SLAB AND REINFORCED CONCRETE SUBSTRUCTURE

SPANS: 45′-7″(±), 56′-11″(±), 55′-10″(±), 44′-9″(±) ALONG ℄

ROADWAY: 25′-8″(±) TOE/TOE PARAPETS

LOADING: CF-2000 (57) ADEQUATE FOR AASHTO ALTERNATE LOADING

SKEW: 14°28′49″(±) RIGHT FORWARD WITH RESPECT TO REFERENCE LINE

APPROACH SLABS: AS-1-54 (25′-0″(±) LONG)

ALIGNMENT: 7°30′00″ CURVE LEFT

SUPERELEVATION: 0.083(±) FT/FT

STRUCTURAL FILE NUMBER: 2513447

DATE BUILT: 1962

PROPOSED STRUCTURE

PROPOSED WORK: FULL REMOVAL OF EXISTING OVERLAY AND REPLACEMENT WITH 2½″ MICROSILICA OVERLAY AND REPLACEMENT OF BOTH EDGES OF DECK AND PARAPETS. ALSO CONVERTING BOTH ABUTMENTS TO SEMI-INTEGRAL ABUTMENTS.

TYPE: CONTINUOUS REINFORCED CONCRETE SLAB AND REINFORCED CONCRETE SUBSTRUCTURE

SPANS: 44′-1⅜″(±), 56′-4¼″(±), 56′-3¼″(±), 45′-9″(±) ALONG REF. LINE

ROADWAY: 26′-0″(±) TOE/TOE PARAPETS

LOADING: HL-93

FUTURE WEARING SURFACE: 0.060 KSF

SKEW: EXISTING

APPROACH SLABS: 25′-0″ LONG, 15″ THICK (AS-1-15 & AS-2-15, TYPE A INSTALLATION)

ALIGNMENT: EXISTING

SUPERELEVATION: 0.083(±) FT/FT

DECK AREA: 5,384 SF

COORDINATES: LATITUDE: 39°52′35.53″ N
LONGITUDE: 83°00′11.41″ W

DLZ
6121 HUNTLEY ROAD • COLUMBUS, OHIO 43229

DESIGNED IMF/MHK | DRAWN IMF/MHK | REVIEWED DOR/CJS | DATE 12/6/22
CHECKED JN/MJL | REVISED | STRUCTURE FILE NUMBER 2513447

FRANKLIN COUNTY
STA. 588+30.24
STA. 590+37.51

SITE PLAN
BRIDGE NO. FRA-023-0517
RAMP L OVER U.S. 23

FRA-270-51.50
PID No. 92616

1 / 22

483
554

x:\Projects\2013\1321\1010\FRA\92616\structures\FRA23_0517\sheets\023_0517SP001.dgn 12/8/2022 8:05:32 PM cwong

CURVE DATA, RAMP L - 1

P.I. Sta. 608+74.26
Δ = 154° 59′ 28″ (LT)
Dc = 7° 30′ 00″
R = 763.94′
θs (AHEAD) = 00° 00′ 00″
Δc = 147° 29′ 28″ (LT)
Lc = 1,966.55′
E = 2,769.44′
C = 1,466.81′
C.B.1 = N 53° 18′ 42″ E
C.B. = N 25° 26′ 03″ W

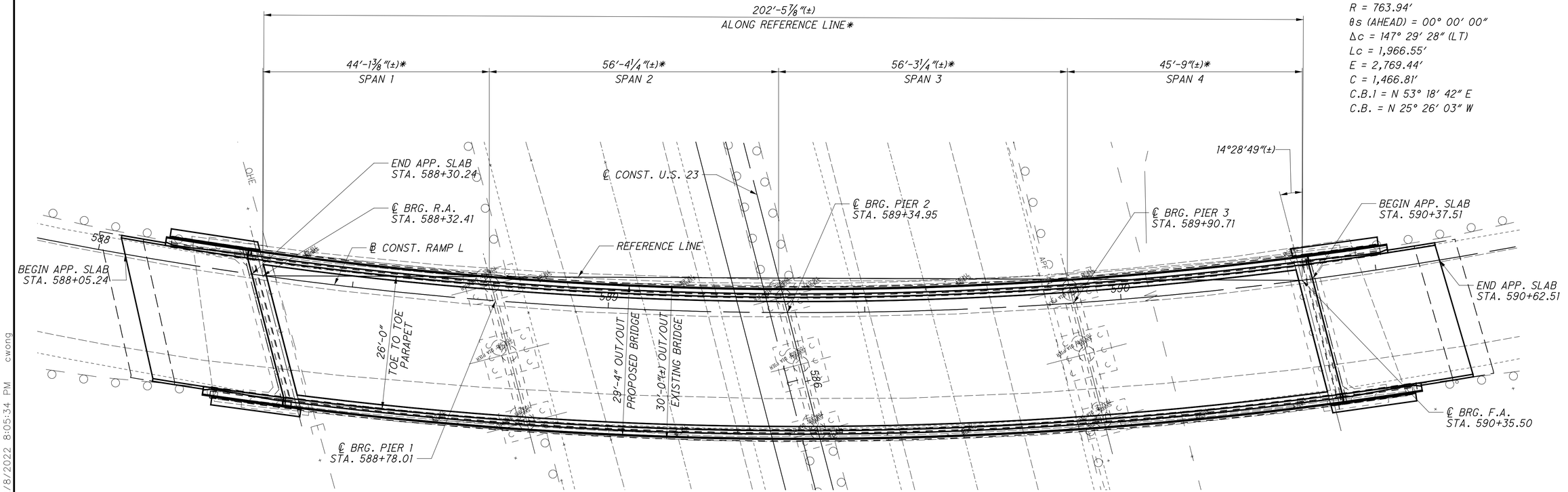

PLAN

LEGEND

* THE REFERENCE LINE IS A CHORD THAT EXTENDS FROM THE INTERSECTION OF ℄ CONST. RAMP L AND ℄ BRG. R.A. TO ℄ CONST. RAMP L AND ℄ BRG. F.A.

DLZ
4121 HUNTLEY ROAD • COLUMBUS, OHIO 43228

DESIGNED	DRAWN	REVIEWED	DATE
EMW/MHK	EMW/MHK	DOR/CJS	12/6/22
CHECKED	REVISED	STRUCTURE FILE NUMBER	
PAT/MJL		2513447	

GENERAL PLAN
BRIDGE NO. FRA-023-0517
RAMP L OVER U.S. 23

FRA-270-51.50
PID No. 92616

2 / 22

484
554

x:\Projects\2013\1321\1010\FRA\92616\structures\FRA23_0517\sheets\023_0517GP001.dgn 12/8/2022 8:05:34 PM cwong

REFER TO THE FOLLOWING STANDARD BRIDGE DRAWINGS:

AS-1-15	DATED (REVISED)	07/17/15
AS-2-15	DATED (REVISED)	01/18/19
BP-5.1	DATED (REVISED)	01/18/19
SBR-1-20	DATED (REVISED)	07/17/20

AND TO THE FOLLOWING SUPPLEMENTAL SPECIFICATIONS:

800	DATED	07/19/24
844	DATED	04/20/18

DESIGN SPECIFICATIONS:

THIS STRUCTURE CONFORMS TO THE 9TH EDITION OF THE "LRFD BRIDGE DESIGN SPECIFICATIONS" ADOPTED BY THE AMERICAN ASSOCIATION OF STATE HIGHWAY AND TRANSPORTATION OFFICIALS, 2020, AND THE ODOT BRIDGE DESIGN MANUAL, 2020.

OPERATIONAL IMPORTANCE:

A LOAD MODIFIER OF 1.00 HAS BEEN ASSUMED FOR THE DESIGN OF THIS STRUCTURE IN ACCORDANCE WITH THE AASHTO LRFD BRIDGE DESIGN SPECIFICATIONS, ARTICLE 1.3.5 AND THE ODOT BRIDGE DESIGN MANUAL.

DESIGN LOADING INCLUDES:

VEHICULAR LIVE LOAD: HL-93
FUTURE WEARING SURFACE (FWS) OF 0.060 KSF

DESIGN DATA:

CONCRETE CLASS QC2 - COMPRESSIVE STRENGTH 4.5 KSI (SUPERSTRUCTURE)
CONCRETE CLASS QC1 - COMPRESSIVE STRENGTH 4.0 KSI (SUBSTRUCTURE)
REINFORCING STEEL - MINIMUM YIELD STRENGTH 60 KSI (ALL REINFORCING STEEL SHALL BE EPOXY COATED)

MONOLITHIC WEARING SURFACE:

MONOLITHIC WEARING SURFACE IS ASSUMED, FOR DESIGN PURPOSES, TO BE 1 INCH THICK.

MAINTENANCE OF TRAFFIC:

MAINTENANCE OF TRAFFIC FOR THE STRUCTURE WORK SHALL BE COORDINATED WITH THE OVERALL PROJECT. REFER TO THE MAINTENANCE OF TRAFFIC NOTES AND DETAILS ELSEWHERE IN THE PLANS.

EXISTING STRUCTURE VERIFICATION:

DETAILS AND DIMENSIONS SHOWN ON THESE PLANS PERTAINING TO THE EXISTING STRUCTURE HAVE BEEN OBTAINED FROM PLANS OF THE EXISTING STRUCTURE AND FROM FIELD OBSERVATIONS AND MEASUREMENTS. CONSEQUENTLY, THEY ARE INDICATIVE OF THE EXISTING STRUCTURE AND THE PROPOSED WORK BUT THEY SHALL BE CONSIDERED TENTATIVE AND APPROXIMATE. THE CONTRACTOR IS REFERRED TO C&MS SECTIONS 102.05, 105.02, AND 513.04.

BASE CONTRACT BID PRICES UPON A RECOGNITION OF THE UNCERTAINTIES DESCRIBED ABOVE AND UPON A PREBID EXAMINATION OF THE EXISTING STRUCTURE. HOWEVER, THE DEPARTMENT WILL PAY FOR ALL PROJECT WORK BASED UPON ACTUAL DETAILS AND DIMENSIONS THAT HAVE BEEN VERIFIED IN THE FIELD.

ITEM 202 - PORTIONS OF STRUCTURE REMOVED, AS PER PLAN:

THIS ITEM SHALL INCLUDE THE ELEMENTS INDICATED IN THE PLANS AND GENERAL NOTES AND THAT ARE NOT SEPARATELY LISTED FOR PAYMENT, EXCEPT FOR WEARING COURSE REMOVAL. ITEMS TO BE REMOVED INCLUDE ALL EXISTING MATERIALS BEING REPLACED BY NEW CONSTRUCTION AND MISCELLANEOUS ITEMS THAT ARE NOT SHOWN TO BE INCORPORATED INTO THE FINAL CONSTRUCTION AND ARE DIRECTED TO BE REMOVED BY THE ENGINEER. THE USE OF EXPLOSIVES, HEADACHE BALLS AND/OR HOE-RAMS WILL NOT BE PERMITTED. THE METHOD OF REMOVAL AND THE WEIGHT OF HAMMER SHALL BE APPROVED BY THE ENGINEER. PERFORM ALL WORK IN A MANNER THAT WILL NOT CUT, ELONGATE OR DAMAGE THE EXISTING REINFORCING STEEL TO BE PRESERVED. CHIPPING HAMMERS SHALL NOT BE HEAVIER THAN THE NOMINAL 90-POUND [41 KILOGRAM] CLASS. PNEUMATIC HAMMERS SHALL NOT BE PLACED IN DIRECT CONTACT WITH REINFORCING STEEL THAT IS TO BE RETAINED IN THE REBUILT STRUCTURE. SUBMIT CONSTRUCTION PLANS ACCORDING TO CMS 501.05.

ITEM 202 - PORTIONS OF STRUCTURE REMOVED, AS PER PLAN: (CONT.):

REMOVAL METHODS: THE CONTRACTOR MAY REMOVE CONCRETE BY CUTTING AND BY MEANS OF HAND OPERATED PNEUMATIC HAMMERS EMPLOYING POINTED PR BLUNTED CHISEL TYPE TOOLS.

CUT LINE CONSTRUCTION JOINT PREPARATION: SAW CUT BOUNDARIES OF PROPOSED CONCRETE REMOVALS 1 INCH [25 MM] DEEP. REMOVE CONCRETE TO A ROUGH SURFACE. LEAVE THE EXISTING REINFORCING STEEL, IF REQUIRED IN THE PLANS, IN PLACE. INSTALL DOWEL BARS IF SPECIFIED. PRIOR TO CONCRETE PLACEMENT ABRASIVELY CLEAN JOINT SURFACES AND EXISTING EXPOSED REINFORCEMENT TO REMOVE LOOSE AND DISINTEGRATED CONCRETE AND LOOSE RUST. THOROUGHLY CLEAN THE JOINT SURFACE AND EXPOSED REINFORCEMENT OF ALL DIRT, DUST, RUST OR OTHER FOREIGN MATERIAL BY THE USE OF WATER, AIR UNDER PRESSURE, OR OTHER METHODS THAT PRODUCE SATISFACTORY RESULTS. EXISTING REINFORCING STEEL DOES NOT HAVE TO HAVE A BRIGHT STEEL FINISH, BUT REMOVE ALL PACK AND LOOSE RUST. THOROUGHLY DRENCH EXISTING CONCRETE SURFACES WITH CLEAN WATER AND ALLOW TO DRY TO A DAMP CONDITION BEFORE PLACING CONCRETE.

SUBSTRUCTURE CONCRETE REMOVAL: REMOVE CONCRETE BY MEANS OF APPROVED PNEUMATIC HAMMERS EMPLOYING POINTED AND BLUNT CHISEL TOOLS. HYDRAULIC HOERAM TYPE HAMMERS WILL NOT BE PERMITTED. THE WEIGHT OF THE HAMMER SHALL NOT BE MORE THAN 35 POUNDS FOR REMOVAL WITHIN 18 INCHES OF PORTIONS TO BE PRESERVED. OUTSIDE THE 18 INCH LIMIT, THE CONTRACTOR MAY USE HAMMERS NOT EXCEEDING 90 POUNDS UPON THE APPROVAL OF THE ENGINEER. DO NOT PLACE PNEUMATIC HAMMERS IN DIRECT CONTACT WITHH REINFORCING STEEL THAT IS TO BE RETAINED IN THE REBUILT STRUCTURE.

MEASUREMENT & PAYMENT: THE DEPARTMENT WILL MEASURE THE QUANTITY OF REMOVALS ON A LUMP SUM BASIS. THE DEPARTMENT WILL PAY FOR THE ACCEPTED QUANTITIES OF REMOVALS AT THE CONTRACT PRICE FOR ITEM 202 - PORTIONS OF STRUCTURE REMOVED, AS PER PLAN.

ITEM 511 - CONCRETE, MISC.: EMBEDDED GALVANIC ANODE (EGA):

THIS PAY ITEM SHALL INCLUDE ALL LABOR, MATERIALS, EQUIPMENT, TOOLS, SERVICES, AND INCIDENTALS TO PROPERLY INSTALL EMBEDDED GALVANIC ANODES AND PROPOSED CONCRETE IN THE PROPOSED ABUTMENT BACKWALLS. SUPPLY AND INSTALL ANODES ACCORDING TO ODOT SUPPLEMENTAL SPECIFICATION 844.

GALVANIC ANODES SHALL BE INSTALLED AT THE LOCATIONS AND SPACING AS SPECIFIED IN THE PLANS. IN NO CASE, SHALL THE SPACING EXCEED 18 INCHES.

THE CONTRACTOR SHALL PERFORM THIS WORK AS TO NOT DAMAGE THE EMBEDDED ANODES NOR CREATE ANY AIR VOIDS AROUND THE EMBEDDED ANODES WHILE SETTING FORMWORK AND PLACING CONCRETE.

THE PRICE FOR ALL MATERIAL AND LABOR NECESSARY FOR THE IMPROVEMENTS DESCRIBED ABOVE TO BE INCLUDED IN THE EACH UNIT BID FOR ITEM 511 - CONCRETE MISC.: EMBEDDED GALVANIC ANODE (EGA), FOR PAYMENT.

ITEM 511 - CLASS QC2 CONCRETE WITH QC/QA, BRIDGE DECK, AS PER PLAN:

THE CONTRACTOR MAY REDUCE THE VERTICAL CLEARANCE UNDER THE FRA-23-0517 BRIDGE TO NO LOWER THAN 14'-0" FOR THE BRIDGE DECK REPAIR ON THE SOUTH SIDE OF THE BRIDGE. SIGNS SHALL BE PROVIDED ON THE BRIDGE AND DISPLAYED ON PORTABLE MESSAGE SIGNS IN ADVANCE OF THE BRIDGE. SEE ITEM 614, PORTABLE CHANGEABLE MESSAGE SIGN, AS PER PLAN. THE CONTRACTOR SHALL NOTIFY TIM PEDDICORD, DISTRICT BRIDGE ENGINEER AT TIM.PEDDICORD@DOT.OHIO.GOV OR 740-833-8082 TWO WEEKS IN ADVANCE OF THE RESTRICTION SO THAT THE OFFICE OF PERMITS ARE AWARE OF THE RESTRICTION.

ITEM 511 - CLASS QC2 CONCRETE WITH QC/QA, BRIDGE DECK (PARAPET), AS PER PLAN:

CONCRETE QUANTITIES FOR THE RAILING ARE INCLUDED WITH THIS ITEM FOR PAYMENT.

NO SLIP FORM OF RAILING WILL BE PERMITTED. ODOT STANDARD DRAWING SBR-1-20 IS APPLICABLE.

ITEM 512 - SEALING OF CONCRETE SURFACES (EPOXY-URETHANE):

THE COLOR OF THE FINISH COAT FOR ALL SURFACES SHALL BE FEDERAL COLOR NUMBER 595B-27778 (LIGHT, NEUTRAL, SEMIGLOSS), UNLESS NOTED OTHERWISE.

INCLUDE THE COST OF REMOVAL OF EXISTING SEALER ON EXISTING ABUTMENTS IN THE UNIT PRICE BID FOR THIS ITEM.

ITEM SPECIAL - URETHANE TOP COAT SEALER

THE URETHANE TOP COAT SEALER SHALL BE AS PER ITEM 512. THE COLOR OF THE URETHANE TOP COAT SEALER SHALL BE FEDERAL COLOR NUMBER 595B-27778 (LIGHT NEUTRAL, SEMIGLOSS). THE URETHANE TOP COAT SEALER SHALL BE APPLIED OVER THE FIBER WRAP EPOXY COATING PER PROPOSAL NOTE 519.

PAYMENT FOR ALL THE ABOVE SHALL BE AT THE UNIT PRICE BID PER SQUARE YARD FOR ITEM SPECIAL - URETHANE TOP COAT SEALER, WHICH SHALL INCLUDE ALL LABOR, EQUIPMENT, MATERIALS, AND INCIDENTALS NECESSARY TO COMPLETE THE ABOVE WORK.

ITEM 516 - JACKING AND TEMPORARY SUPPORT OF SUPERSTRUCTURE, AS PER PLAN:

THIS WORK CONSISTS OF JACKING OPERATIONS REQUIRED TO RAISE THE EXISTING SLAB VERTICALLY TO REPLACE THE EXISTING ABUTMENT BEARINGS AS SHOWN IN THE PLANS.

THE MAXIMUM DIFFERENTIAL JACKING HEIGHT ALONG THE GRADE BETWEEN ADJACENT SUBSTRUCTURES SHALL BE 1 INCH OR LESS. THIS HEIGHT MAY BE MODIFIED IF CALCULATIONS, BY THE CONTRACTOR'S OHIO REGISTERED PROFESSIONAL ENGINEER, SHOW THE SUPERSTRUCTURE COMPONENTS WILL NOT BE TEMPORARILY STRESSED BEYOND ALLOWABLE STRESSES FOR THOSE COMPONENTS AND THAT NO PERMANENT STRESSES WILL BE INDUCED IN THE COMPONENTS AFTER THEY OBTAIN THEIR FINAL POSITION.

SUBMIT CONSTRUCTION PLANS IN ACCORDANCE WITH CMS 501.05.

IF, DURING THE JACKING OPERATIONS, DAMAGE TO THE STRUCTURE IS VISUALLY OBSERVED, IMMEDIATELY CEASE THE JACKING OPERATION AND INSTALL SUPPORTS TO THE SATISFACTION OF THE ENGINEER. ANALYZE THE DAMAGE AND SUBMIT A METHOD OF CORRECTION TO THE ENGINEER FOR APPROVAL. THE DEPARTMENT WILL NOT PAY FOR THE COST OF ANY REQUIRED REPAIRS. THE BRIDGE BEARINGS SHALL BE FULLY SEATED AT ALL CONTACT AREAS. IF FULL SEATING IS NOT ATTAINED, SUMBIT A REPAIR PLAN TO THE ENGINEER, THE DEPARTMENT WILL NOT PAY FOR THE REPAIR COSTS TO ENSURE FULL SEATING ON BEARINGS.

THIS ITEM WILL ALSO INCLUDE ANY CONCRETE SLOPE PROTECTION REMOVAL AND/OR REPAIR/REPLACEMENT NECESSARY EITHER AS A REQUIREMENT FOR (OR RESULT OF) THE JACKING OPERATION.

THE DEPARTMENT WILL MEASURE THIS WORK ON A LUMP SUM BASIS.

THE DEPARTMENT WILL PAY FOR THE ACCEPTED QUANTITIES AT THE CONTRACT PRICE FOR ITEM 516, JACKING AND TEMPORARY SUPPORT OF SUPERSTRUCTURE, AS PER PLAN.

ITEM 518 - 6" NON-PERFORATED CORRUGATED PLASTIC PIPE, INCLUDING SPECIALS, AS PER PLAN:

PAYMENT FOR THE FOLLOWING ITEMS ARE INCLUDED WITH ITEM 518, 6" NON-PERFORATED CORRUGATED PLASTIC PIPE, INCLUDING
SPECIALS, AS PER PLAN:

- ITEM 611, PRECAST REINFORCED CONCRETE OUTLET, SEE STD. ROADYWAY CONSTRUCTION DRAWING DM-1.1 FOR ADDITIONAL NOTES AND DETAILS.

- 4'X4' TIED CONCRETE BLOCK MAT, TYPE 1 GROUTED PER CMS 601.1.11. TOP TO BE FLUSH WITH SURFACE OF SLOPE.

- ANIMAL GUARD

ITEM SPECIAL - STRUCTURE, MISC.: COMPOSITE FIBER WRAP SYSTEM:

COMPOSITE FIBER WRAP SYSTEM SHALL BE PER PROPOSAL NOTE 519.

ITEM 519 - PATCHING CONCRETE STRUCTURE, AS PER PLAN:

PRIOR TO THE SURFACE CLEANING SPECIFIED IN C&MS 519.04 AND WITHIN 24 HOURS OF PLACING PATCHING MATERIAL, BLAST CLEAN ALL SURFACES TO BE PATCHED INCLUDING THE EXPOSED REINFORCING STEEL. ACCEPTABLE METHODS INCLUDE HIGH PRESSURE WATER BLASTING WITH OR WITHOUT ABRASIVES IN THE WATER, ABRASIVE BLASTING WITH CONTAINMENT, OR VACUUM ABRASIVE BLASTING.

DLZ
6121 HUNTLEY ROAD • COLUMBUS, OHIO 43229

DESIGNED EMW/MHK
DRAWN EMW/MHK
CHECKED PAT/MJL
REVIEWED DOR/CJS
DATE 12/6/22
STRUCTURE FILE NUMBER 2513447
REVISED

STRUCTURE GENERAL NOTES - 1
BRIDGE NO. FRA-023-0517
RAMP L OVER U.S. 23

FRA-270-51.50
PID No. 92616

x:\Projects\2013\1321\1010\FRA\92616\structures\FRA23_0517\sheets\023_0517GN001.dgn 5/5/2023 1:02:57 PM jmiller

ITEM 526 - REINFORCED CONCRETE APPROACH SLABS WITH QC/QA (T=15"), AS PER PLAN:

THIS ITEM SHALL CONSIST OF CONSTRUCTING REINFORCED CONCRETE APPROACH SLABS WITH RAILINGS AND TYPE 4-A CURBS IN ACCORDANCE WITH THE DETAILS IN THE STRUCTURE PLANS AND ODOT STANDARD DRAWINGS AS-1-15, AS-2-15, SBR-1-20, AND ODOT CMS 526.

APPROACH SLAB CONCRETE SHALL BE PLACED SEPRATELY FROM THE SUPERSTRUCTURE CONCRETE. THIS ITEM SHALL INCLUDE APPROACH SLAB, CURB, SIDEWALK AND RAILING CONCRETE, THE COST OF ALL REINFORCING STEEL FOR THE APPOACH SLABS, AND THE COSTS ASSOCIATED WITH THE HOT APPLIED JOINT SEALER PLACED BETWEEN THE APPROACH SLAB AND BARRIER ATOP THE TURNBACK WALLS, THE PERFORMED EXPANSION JOINT FILLER (PEJF) PLACED BETWEEN THE APPROACH SLAB AND BARRIER ATOP THE TURNBACK WALLS WILL BE PAID FOR SEPRATELY UNDER ITEM 516 - 1" PERFORMED EXPANSION JOINT FILLER, AND ITEM 516 - 2" PERFORMED EXPANSION JOINT FILLER.

BASIS OF PAYMENT: ACCEPTED QUANTITIES WILL BE PAID FOR AT THE CONTRACT UNIT PRICE BID PER SQUARE YARD, COMPLETED IN PLACE. PAYMENT SHALL BE MADE UNDER ITEM 526 - REINFORCED CONCRETE APPROACH SLABS WITH QC/QA (T=15"), AS PER PLAN.

DECK PLACEMENT DESIGN ASSUMPTIONS:

THE FOLLOWING ASSUMPTIONS OF CONSTRUCTION MEANS AND METHODS WERE MADE FOR THE ANALYSIS AND DESIGN OF THE SUPERSTRUCTURE. THE CONTRACTOR IS RESPONSIBLE FOR THE DESIGN OF THE FALSEWORK SUPPORT SYSTEM WITHIN THESE PARAMETERS AND WILL ASSUME RESPONSIBILITY FOR SUPERSTRUCTURE ANALYSIS FOR DEVIATION FROM THESE DESIGN ASSUMPTIONS.

AN EIGHT WHEEL FINISHING MACHINE WITH A MAXIMUM WHEEL LOAD OF 2.26 KIPS.

A MINIMUM OUT-TO-OUT WHEEL SPACING AT EACH END OF THE MACHINE OF 103 INCHES.

A MAXIMUM SPACING OF OVERHANG FALSEWORK BRACKETS OF 48 INCHES.

A MAXIMUM DISTANCE FROM THE CENTERLINE OF THE FASCIA GIRDER TO THE FACE OF THE SAFETY HANDRAIL OF 65 INCHES.

ENVIRONMENTAL COMMITMENTS:

1. THE CONTRACTOR MUST SUBMIT THE OEPA DEMOLITION/RENOVATION FORM ONLINE TO THE OEPA WITHIN 10 BUSINESS DAYS PRIOR TO DEMOLITION.

SUMMARY OF PROPOSED REHABILITATION WORK:

THE FOLLOWING LIST CONTAINS THE MAJOR ITEMS OF WORK INCLUDED IN THESE PLANS FOR THE REHABILITATION OF THIS STRUCTURE:

1. REMOVAL OF EXISTING ASPHALT OVERLAY AND 1" MONOLITHIC CONCRETE WEARING SURFACE FROM DECK SLAB AND APPROACH SLABS.
2. REMOVAL OF PORTIONS OF EXISTING RAILINGS AND EXISTING EXPANSION JOINTS INCLUDING JOINT ARMOR.
3. REMOVAL OF EXISTING SUPERSTRUCTURE DECK SLAB ENDS AND EDGES, RAILING AND BEARINGS.
4. REMOVAL OF EXISTING APPROACH SLABS.
5. REMOVAL OF EXISTING ABUTMENT BACKWALLS AND PORTIONS OF EXISTING WINGWALLS WITH RAILING.
6. CONSTRUCTION OF NEW ABUTMENT SEATS AND WINGWALLS.
7. PATCHING OF THE SUBSTRUCTURES.
8. SEALING OF ALL CONCRETE SURFACES, INCLUDING RAILING, DECK EDGES, AND EXPOSED SURFACES OF THE ABUTMENT AND PIERS.
9. PIER COLUMN FIBER WRAPPING.
10. GEOWALL CONSTRUCTION BEHIND NEW SEMI-INTEGRAL ABUTMENTS.
11. CONSTRUCTION OF NEW PORTIONS OF SUPERSTRUCTURE DECK SLAB, INCLUDING SEMI-INTEGRAL DIAPHRAGMS AND RAILING.
12. CONSTRUCTION OF NEW APPROACH SLABS, INCLUDING RAILING, SLEEPER SLABS, AND CURBS.
13. PLACE NEW 2½" MICRO SILICA MODIFIED CONCRETE OVERLAY ON DECK SLAB AND APPROACH SLABS.

PLAN ABBREVIATIONS:

@	=	AT
ABUT.	=	ABUTMENT
ADT	=	AVERAGE DAILY TRAFFIC
ADTT	=	AVERAGE DAILY TRUCK TRAFFIC
APP.	=	APPROACH
BOT.	=	BOTTOM
BRG.	=	BEARING
c/c	=	CENTER-TO-CENTER
℄, CL	=	CENTERLINE
CALC.	=	CALCULATED
CHKD.	=	CHECKED
C.J.	=	CONSTRUCTION JOINT
CLR.	=	CLEARANCE
CMS	=	CONSTRUCTION AND MATERIAL SPECIFICATIONS
CONC.	=	CONCRETE
CONST.	=	CONSTRUCTION
C.P.	=	CLOSURE POUR
DIA.	=	DIAMETER
DWG.	=	DRAWING
E.F.	=	EACH FACE
EL.	=	ELEVATION
EXIST.	=	EXISTING
EXP.	=	EXPANSION
F.A.	=	FORWARD ABUTMENT
F.F.	=	FAR FACE
F.S.	=	FIELD SPLICE
FWD.	=	FORWARD
FWS	=	FUTURE WEARING SURFACE
GFRP	=	GLASS FIBER REINFORCED POLYMER
INC.	=	INCREMENT
LT.	=	LEFT
MAX.	=	MAXIMUM
MIN.	=	MINIMUM
MISC.	=	MISCELLANEOUS
N.F.	=	NEAR FACE
NO.	=	NUMBER
P.C.P.P.	=	PERFORATED CORRUGATED PLASTIC PIPE
PEJF	=	PREFORMED EXPANSION JOINT FILLER
PROP.	=	PROPOSED
P.V.I.	=	POINT OF VERTICAL INTERSECTION
R.A.	=	REAR ABUTMENT
REF.	=	REFERENCE
REINF.	=	REINFORCED
RT.	=	RIGHT
SER.	=	SERIES
SPA.	=	SPACED
STA.	=	STATION
STD.	=	STANDARD
T/S	=	TOP OF SLOPE
TYP.	=	TYPICAL
V.C.	=	VERTICAL CURVE

X:\Projects\2013\1321\1010\FRA\92616\structures\FRA23_0517\sheets\023_0517GN002.dgn 12/8/2022 8:05:35 PM cwong

DLZ
6121 HUNTLEY ROAD • COLUMBUS, OHIO 43229

DESIGNED EMW/MHK
DRAWN EMW/PDP
CHECKED PAT/MJL
REVIEWED DDR/CJS
DATE 12/6/22
REVISED
STRUCTURE FILE NUMBER 2513447

STRUCTURE GENERAL NOTES - 2
BRIDGE NO. FRA-023-0517
RAMP L OVER U.S. 23

FRA-270-51.50
PID No. 92616

ESTIMATED QUANTITIES

CALC. BY: MHK DATE: 8/24/22
CHKD. BY: JDA DATE: 9/1/22

FUNDING 02/IMS/BR	ITEM	ITEM EXTENSION	TOTAL	UNIT	DESCRIPTION	REAR ABUTMENT	FORWARD ABUTMENT	PIERS	SUPER-STRUCTURE	GENERAL	REF. SHEET NO.
	202	11203	LS		PORTIONS OF STRUCTURE REMOVED, OVER 20 FOOT SPAN, AS PER PLAN					LS	3
166	202	22900	166	SY	APPROACH SLAB REMOVED					166	
143	202	23500	143	SY	WEARING COURSE REMOVED					143	
9	204	30010	9	CY	GRANULAR MATERIAL, TYPE B					9	18
2,471	204	50000	2,471	SY	GEOTEXTILE FABRIC					2,471	18
436	503	21100	436	CY	UNCLASSIFIED EXCAVATION	218	218				
40,400	509	10000	40,400	LB	EPOXY COATED STEEL REINFORCEMENT	3,608	3,608		33,185		
110	509	30020	110	FT	NO. 4 GFRP DEFORMED BARS				110		
208	510	10000	208	EACH	DOWEL HOLES WITH NONSHRINK, NONMETALLIC GROUT	105	103				
88	511	34447	88	CY	CLASS QC2 CONCRETE WITH QC/QA, BRIDGE DECK, AS PER PLAN				88		3
63	511	34451	63	CY	CLASS QC2 CONCRETE WITH QC/QA, BRIDGE DECK (PARAPET), AS PER PLAN				63		3
41	511	45711	41	CY	CLASS QC1 CONCRETE, ABUTMENT, AS PER PLAN	21	20				12
172	511	81300	172	EACH	CONCRETE, MISC.: EMBEDDED GALVANIC ANODE (EGA)	88	84				3
738	512	10100	738	SY	SEALING OF CONCRETE SURFACES (EPOXY-URETHANE)	55	51	86	488	58	
51	512	10300	51	SY	SEALING CONCRETE BRIDGE DECKS WITH HMWM RESIN				51		
4	512	10600	4	FT	CONCRETE REPAIR BY EPOXY INJECTION	0	4				
35	512	33000	35	SY	TYPE 2 WATERPROOFING	18	17				
187	512	71500	187	SY	SPECIAL - URETHANE TOP COAT SEALER			187			3
16	516	13600	16	SF	1" PREFORMED EXPANSION JOINT FILLER				16		
41	516	13900	41	SF	2" PREFORMED EXPANSION JOINT FILLER	28	13				
61	516	14020	61	FT	SEMI-INTEGRAL ABUTMENT EXPANSION JOINT SEAL	32	30				
61	516	42600	61	FT	ELASTOMERIC BEARING PAD, MISC.: 8" WIDE x 1" THICK ELASTOMERIC BEARING STRIP	32	30				
LS	516	47001	LS		JACKING AND TEMPORARY SUPPORT OF SUPERSTRUCTURE, AS PER PLAN					LS	3, 8
8	518	21200	8	CY	POROUS BACKFILL WITH GEOTEXTILE FABRIC	4	4				
63	518	40000	63	FT	6" PERFORATED CORRUGATED PLASTIC PIPE	33	30				
246	518	40011	246	FT	6" NON-PERFORATED CORRUGATED PLASTIC PIPE, INCLUDING SPECIALS, AS PER PLAN	208	38				3
1,682	SPECIAL	51900100	1,682	SF	SPECIAL - COMPOSITE FIBER WRAP SYSTEM			1,682			
41	519	11101	41	SF	PATCHING CONCRETE STRUCTURE, AS PER PLAN	34		7			3
161	526	25011	161	SY	REINFORCED CONCRETE APPROACH SLABS WITH QC/QA (T=15"), AS PER PLAN					161	3, 19
57	526	90030	57	FT	TYPE C INSTALLATION					57	
136	840	23000	136	CY	SELECT GRANULAR BACKFILL	68	68				18
599	848	10000	599	SY	MICRO SILICA MODIFIED CONCRETE OVERLAY USING HYDRODEMOLITION (2 1/2" THICK)				599		
599	848	20000	599	SY	SURFACE PREPARATION USING HYDRODEMOLITION				599		
9	848	30000	9	CY	MICRO SILICA MODIFIED CONCRETE OVERLAY (VARIABLE THICKNESS), MATERIAL ONLY				9		
1	848	50000	1	SY	HAND CHIPPING				1		
LS	848	50100	LS		TEST SLAB					LS	
599	848	50320	599	SY	EXISTING CONCRETE OVERLAY REMOVED (1 1/2" THICK)				599		
631	863	00100	631	SY	GEOGRID, TYPE P1	314	317				18

DLZ
6121 HUNTLEY ROAD • COLUMBUS, OHIO 43229

DESIGNED EMW/MHK
DRAWN EMW/MHK
CHECKED PAT/JDA
REVISED
REVIEWED DOR/CJS DATE 12/6/22
STRUCTURE FILE NUMBER 2513447

ESTIMATED QUANTITIES
BRIDGE NO. FRA-023-0517
RAMP L OVER U.S. 23

FRA-270-51.50
PID No. 92616

5 / 22

487
554

x:\Projects\2013\1321\1010\FRA\92616\structures\FRA23_0517\sheets\023_0517EQ001.dgn 5/5/2023 1:02:58 PM jmiller

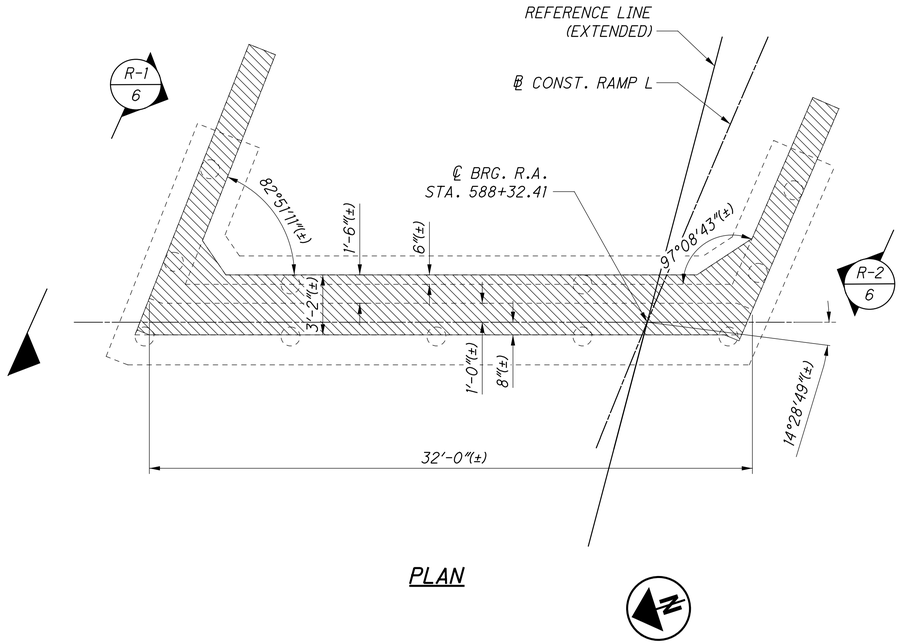

PLAN

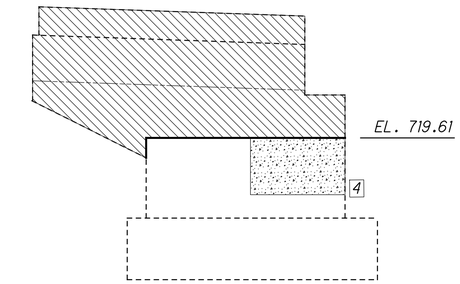

SECTION R-1 / 6

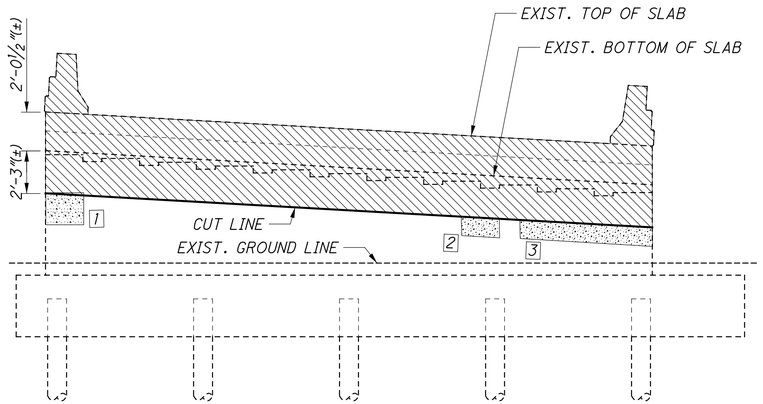

ELEVATION

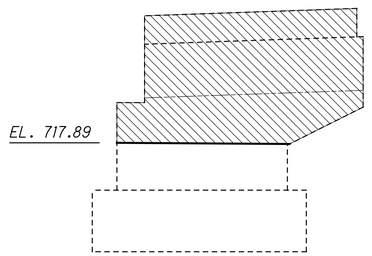

SECTION R-2 / 6

ESTIMATED PATCHING QUANTITIES		
LOCATION	WIDTH X HEIGHT	AREA (SF)
1	2'-5" x 0'-8"	1.61
2	2'-0" x 1'-0"	2.00
3	7'-0" x 1'-0"	7.00
4	5'-0" x 3'-0"	15.00
TOTAL AREA MEASURED		25.61
TOTAL AREA ESTIMATED		33.29*

* SEE NOTE 3

LEGEND

AREA OF DELAMINATION TO BE REPAIRED PER ITEM 519 - PATCHING CONCRETE STRUCTURE

AREAS TO BE REMOVED PER ITEM 202 - PORTIONS OF STRUCTURE REMOVED, OVER 20 FOOT SPAN, AS PER PLAN

NOTES

1. SEAL THE ENTIRE EXPOSED CONCRETE SURFACE OF THE EXISTING ABUTMENTS, AS DIRECTED BY THE REQUIREMENTS OF CMS 512.03.
2. PHYSICAL INVENTORY OF MEASURED QUANTITIES OF DETERIORATION WAS PERFORMED IN MARCH 2022. THE EXACT DIMENSIONS AND LOCATIONS OF PATCHES SHALL BE DETERMINED BY THE ENGINEER IN THE FIELD FOR FINAL PAY QUANTITY.
3. ESTIMATED PATCHING QUANTITIES HAVE BEEN INCREASED BY 30% OVER MEASURED QUANTITIES TO ALLOW FOR ADDITIONAL DETERIORATION.

DLZ
6121 HUNTLEY ROAD • COLUMBUS, OHIO 43229

DESIGNED	DRAWN	REVIEWED	DATE
MHK	PDP	CJS	12/6/22
CHECKED	REVISED	STRUCTURE FILE NUMBER	
MJL		2513447	

REAR ABUTMENT REMOVAL AND REPAIR DETAILS

BRIDGE NO. FRA-023-0517
RAMP L OVER U.S. 23

FRA-270-51.50
PID No. 92616

X:\Projects\2013\1321\1010\FRA 92616\structures\FRA23_0517\sheets\023_0517SV001.dgn 12/8/2022 8:05:36 PM cwong

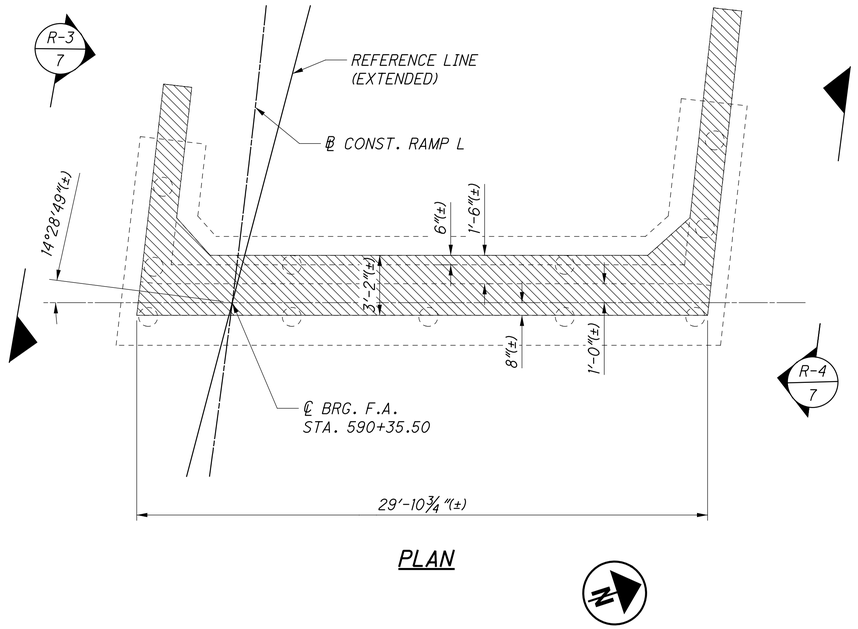

PLAN

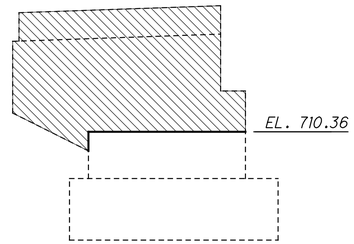

SECTION R-3 / 7

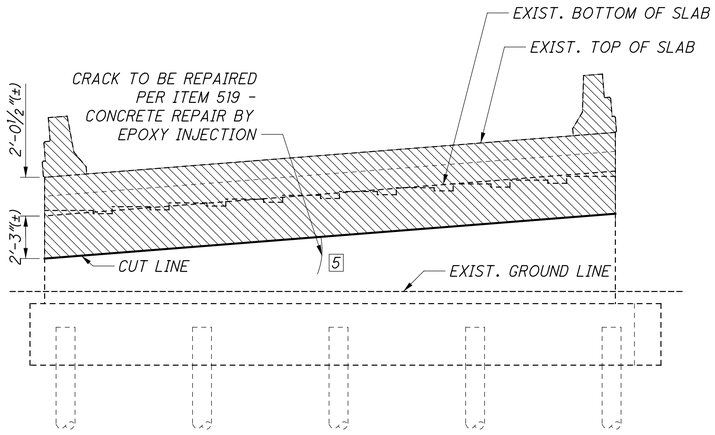

ELEVATION

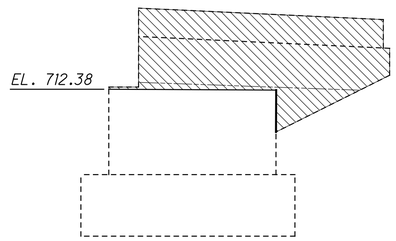

SECTION R-4 / 7

ESTIMATED CRACK REPAIR QUANTITIES		
LOCATION		LENGTH (LF)
5		2.77
TOTAL AREA MEASURED		2.77
TOTAL AREA ESTIMATED		3.61

* SEE NOTE 3

LEGEND

AREA OF DELAMINATION TO BE REPAIRED PER ITEM 519 - PATCHING CONCRETE STRUCTURE

AREAS TO BE REMOVED PER ITEM 202 - PORTIONS OF STRUCTURE REMOVED, OVER 20 FOOT SPAN, AS PER PLAN

NOTES

1. SEAL THE ENTIRE EXPOSED CONCRETE SURFACE OF THE EXISTING ABUTMENTS, AS DIRECTED BY THE REQUIREMENTS OF CMS 512.03.
2. PHYSICAL INVENTORY OF MEASURED QUANTITIES OF DETERIORATION WAS PERFORMED IN MARCH 2022. THE EXACT DIMENSIONS AND LOCATIONS OF PATCHES SHALL BE DETERMINED BY THE ENGINEER IN THE FIELD FOR FINAL PAY QUANTITY.
3. ESTIMATED PATCHING QUANTITIES HAVE BEEN INCREASED BY 30% OVER MEASURED QUANTITIES TO ALLOW FOR ADDITIONAL DETERIORATION.

DLZ
6121 HUNTLEY ROAD • COLUMBUS, OHIO 43229

DESIGNED EMW/MHK
DRAWN EMW/PDP
CHECKED PAT/MJL
REVIEWED DOR/CJS
DATE 12/6/22
REVISED
STRUCTURE FILE NUMBER 2513447

FORWARD ABUTMENT REMOVAL AND REPAIR DETAILS

BRIDGE NO. FRA-023-0517
RAMP L OVER U.S. 23

FRA-270-51.50
PID No. 92616

7 / 22

489 / 554

X:\Projects\2013\1321\1010\FRA\92616\structures\FRA23_0517\sheets\023_0517SV002.dgn 12/8/2022 8:05:36 PM cwong

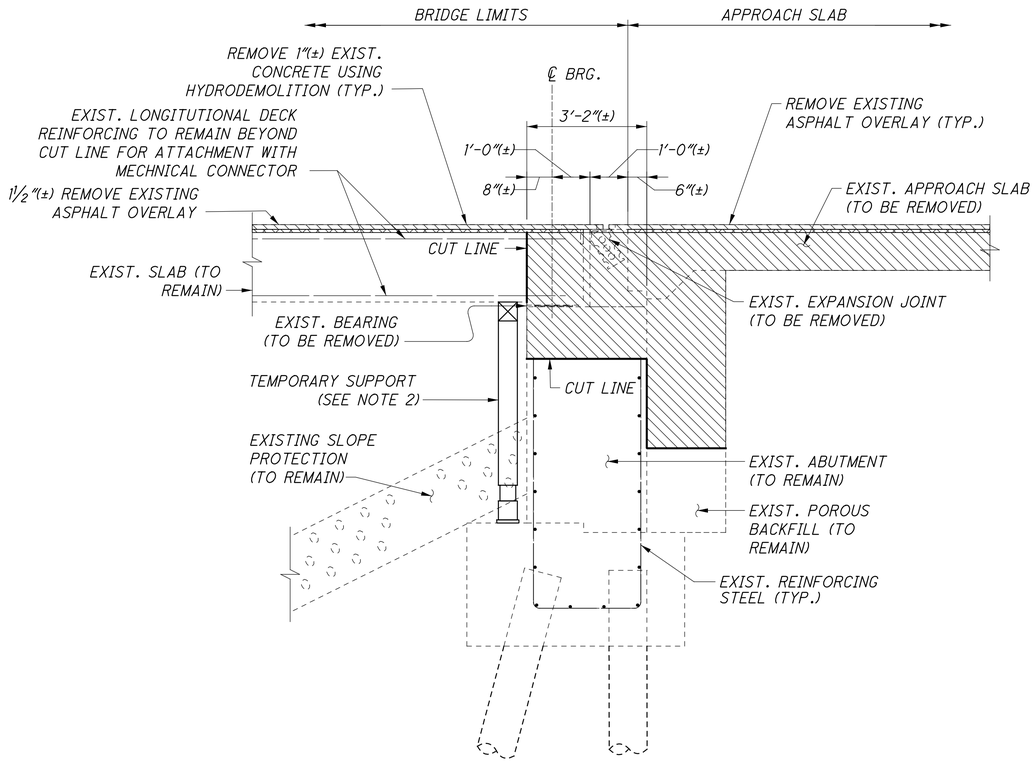

TYPICAL EXISTING ABUTMENT SECTION

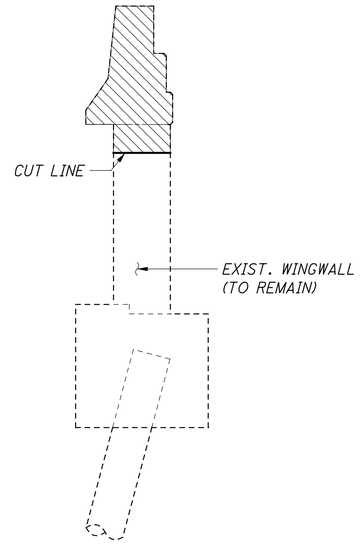

TYPICAL EXISTING WINGWALL SECTION

LEGEND

AREAS TO BE REMOVED PER ITEM 202 - PORTIONS OF STRUCTURE REMOVED, OVER 20 FOOT SPAN, AS PER PLAN

PORTIONS OF EXISTING CONCRETE TO BE REMOVED UNDER ITEM 848.

NOTES

1. REMOVAL OF EXISTING EXPANSION JOINT ARMOR IS INCLUDED UNDER ITEM 202 - PORTIONS OF STRUCTURE REMOVED, AS PER PLAN.
2. FOR PAYMENT OF THIS ITEM WITH ITEM 516 - JACKING AND TEMPORARY SUPPORT OF SUPERSTRUCTURE, AS PER PLAN, SEE SHEET 3/22. EXISTING SLOPE PROTECTION IS TO BE REMOVED ENOUGH TO PLACE HYDRAULIC JACK ONTO THE TOP OF FOOTING FOR TEMPORARY JACKING. SLOPE PROTECTION IS TO BE REPLACED ONCE SUBSTRUCTURE CONSTRUCTION IS COMPLETE.

DLZ
6121 HUNTLEY ROAD • COLUMBUS, OHIO 43229

DESIGNED EMW/MHK
DRAWN EMW/MHK
REVIEWED DOR/CJS
DATE 12/6/22
CHECKED PAT/MJL
REVISED
STRUCTURE FILE NUMBER 2513447

ABUTMENT REMOVAL DETAILS
BRIDGE NO. FRA-023-0517
RAMP L OVER U.S. 23

FRA-270-51.50
PID No. 92616

8 / 22

490
554

X:\Projects\2013\1321\1010\FRA\92616\structures\FRA23_0517\sheets\023_0517SV003.dgn 12/8/2022 8:05:37 PM cwong

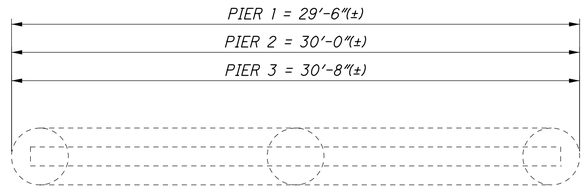

PLAN

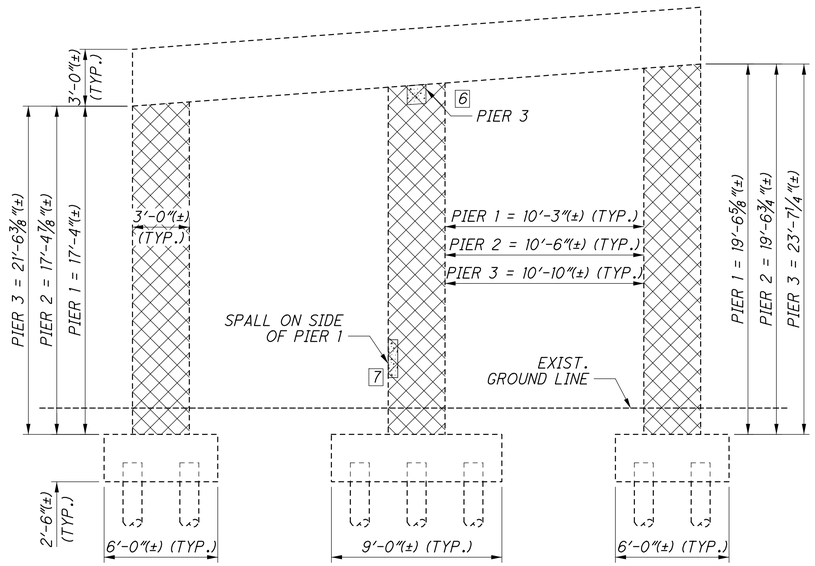

ELEVATION

EAST FACES SHOWN

ESTIMATED PATCHING QUANTITIES		
LOCATION	WIDTH X HEIGHT	AREA (SF)
6	1'-0" x 1-0"	1.00
7	2'-0" x 2'-0"	4.00
TOTAL AREA MEASURED		5.00
TOTAL AREA ESTIMATED		6.50*

* SEE NOTE 3

LEGEND

AREA OF DELAMINATION TO BE REPAIRED PER ITEM 519 - PATCHING CONCRETE STRUCTURE

FIBER WRAP TO BE INSTALLED ON ALL EXISTING PIER COLUMNS PER ITEM 519 - COMPOSITE FIBER WRAP SYSTEM

NOTES

1. SEAL THE ENTIRE EXPOSED CONCRETE SURFACE OF THE EXISTING PIERS, AS DIRECTED BY THE REQUIREMENTS OF CMS 512.03.
2. PHYSICAL INVENTORY OF MEASURED QUANTITIES OF DETERIORATION WAS PERFORMED IN MARCH 2022. THE EXACT DIMENSIONS AND LOCATIONS OF PATCHES SHALL BE DETERMINED BY THE ENGINEER IN THE FIELD FOR FINAL PAY QUANTITY.
3. ESTIMATED PATCHING QUANTITIES HAVE BEEN INCREASED BY 30% OVER MEASURED QUANTITIES TO ALLOW FOR ADDITIONAL DETERIORATION.

DLZ
6121 HUNTLEY ROAD • COLUMBUS, OHIO 43229

DESIGNED	DRAWN	REVIEWED	DATE
MHK	PDP	CJS	12/6/22
CHECKED	REVISED	STRUCTURE FILE NUMBER	
MJL		2513447	

PIER PATCHING AND WRAPPING DETAILS

BRIDGE NO. FRA-023-0517
RAMP L OVER U.S. 23

FRA-270-51.50
PID No. 92616

9 / 22

491
554

X:\Projects\2013\1321\1010\FRA\92616\structures\FRA23_0517\sheets\023_0517SI001.dgn 12/8/2022 8:05:38 PM cwong

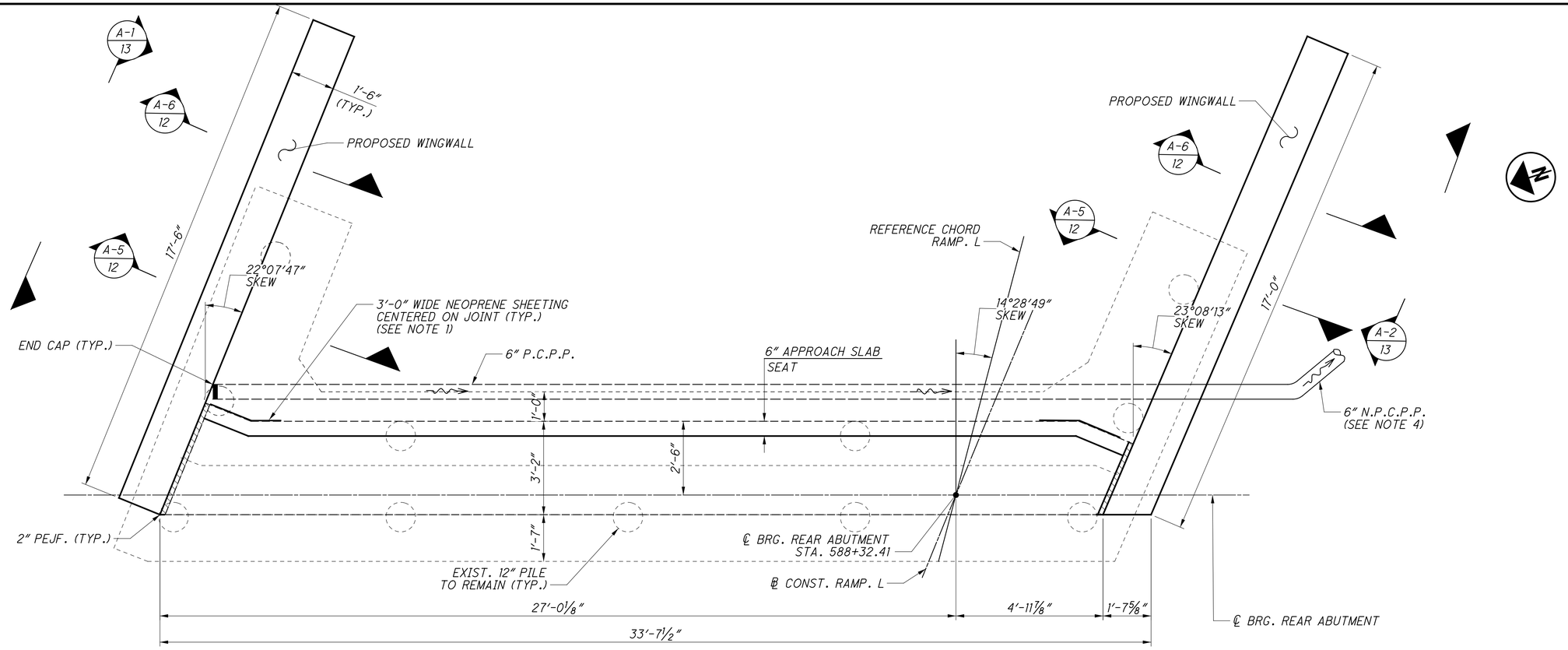

REAR ABUTMENT PLAN

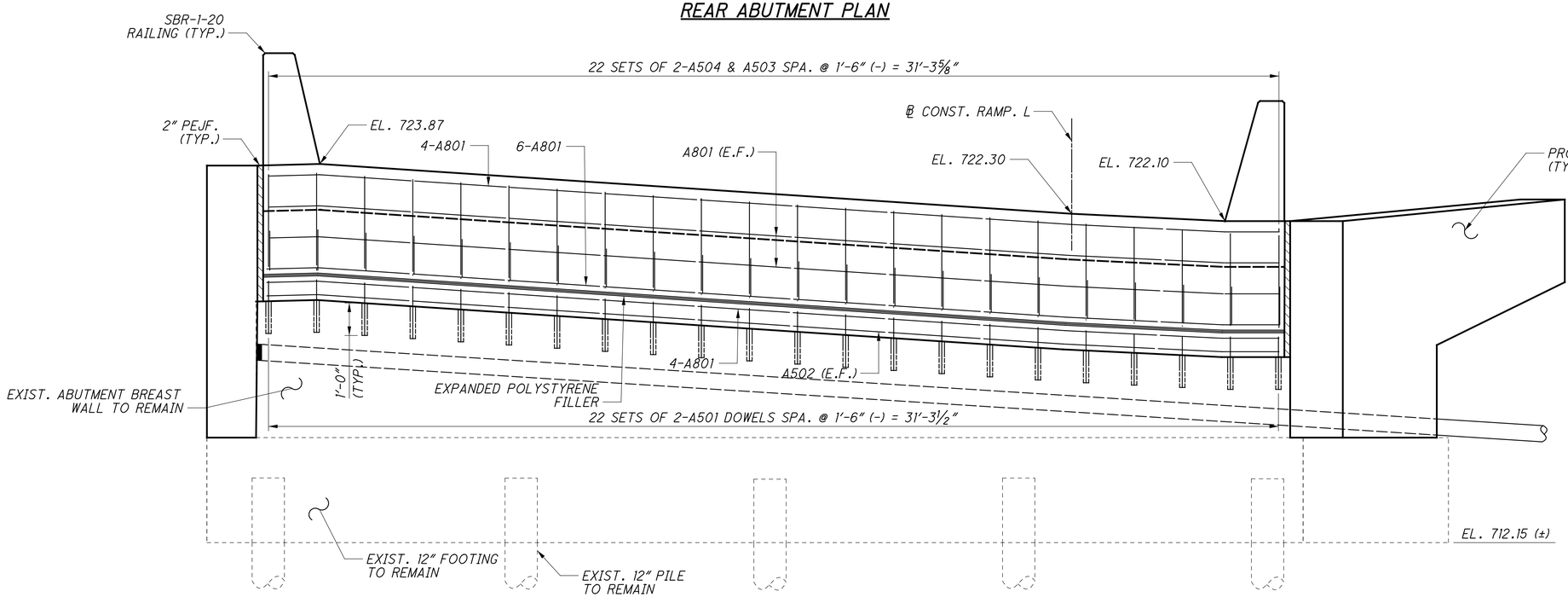

REAR ABUTMENT ELEVATION

TOP OF DECK ELEVATIONS GIVEN AT ℄ BEARING

NOTES:

1. 3'-0" WIDE NEOPRENE SHEETING SHALL BE BENT HORIZONTALLY AND EXTEND FROM THE BOTTOM OF APPROACH SLAB TO THE BOTTOM OF PROPOSED POROUS BACKFILL ELEVATION.
2. FOR ABUTMENT SECTION WITH REINFORCING STEEL, SEE SHEET 12/22.
3. FOR GEOWALL DETAIL, SEE SHEET 18/22.
4. 6" NON-PERFORATED PIPE IS TO TIE IN WITH HEADWALL AT SE CORNER OF BRIDGE. FOR ADDITIONAL DETAILS, SEE SHEET 201/546.

DLZ
6121 HUNTLEY ROAD • COLUMBUS, OHIO 43229

DESIGNED	DRAWN	REVIEWED	DATE
MHK	PDP	CJS	12/6/22
CHECKED	REVISED	STRUCTURE FILE NUMBER	
MJL		2513447	

REAR ABUTMENT PLAN AND ELEVATION

BRIDGE NO. FRA-023-0517
RAMP L OVER U.S. 23

FRA-270-51.50
PID No. 92616

10 / 22

492
554

X:\Projects\2013\1321\1010\FRA\92616\structures\FRA23_0517\sheets\023_0517SR001.dgn 12/8/2022 8:05:38 PM cwong

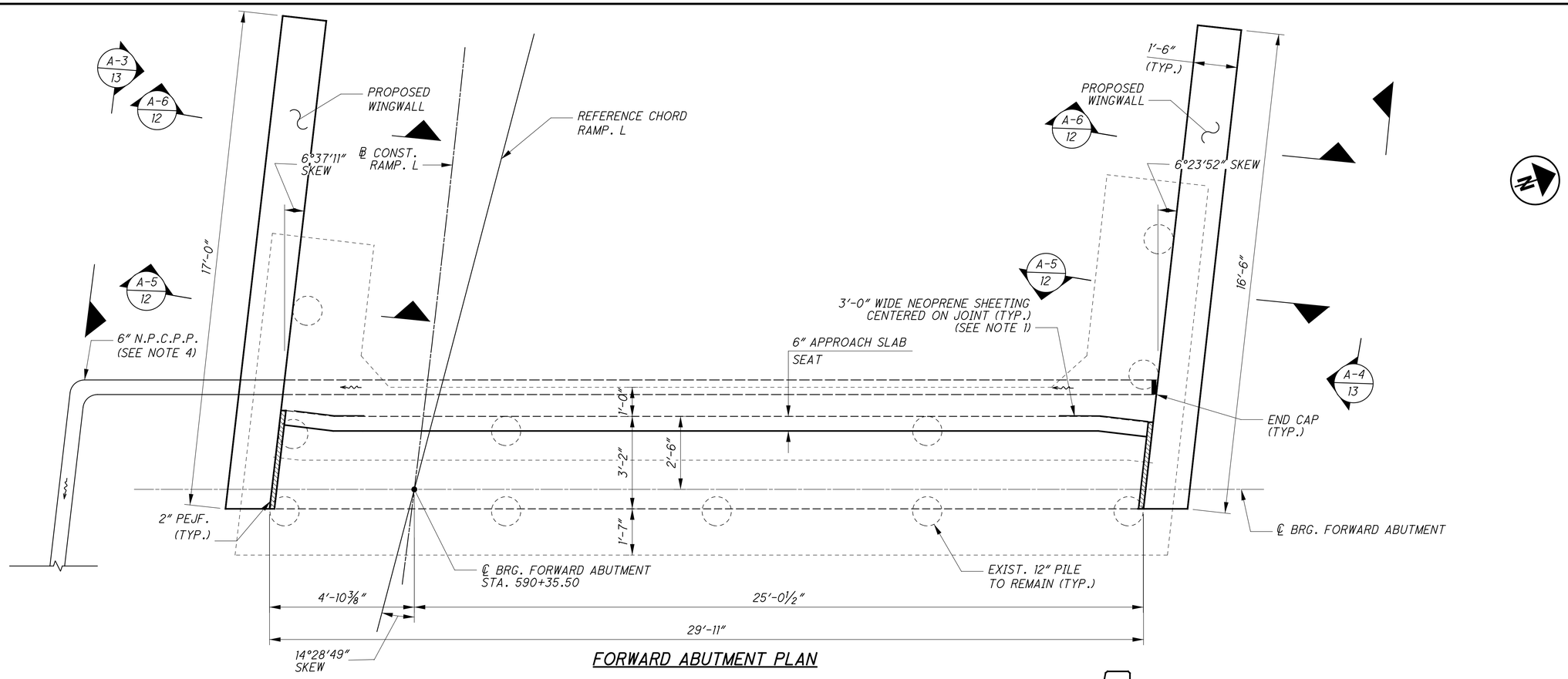

FORWARD ABUTMENT PLAN

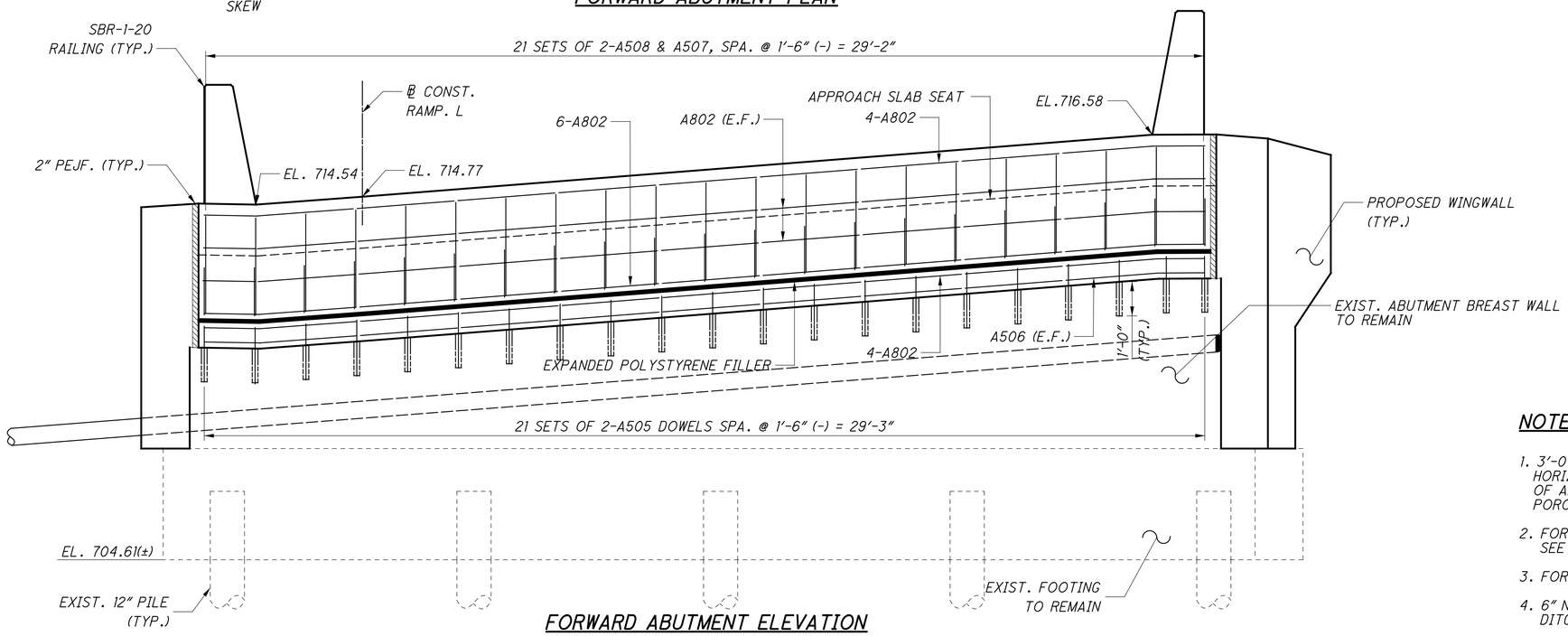

FORWARD ABUTMENT ELEVATION

TOP OF DECK ELEVATIONS GIVEN AT ℄ BEARING

NOTES:

1. 3'-0" WIDE NEOPRENE SHEETING SHALL BE BENT HORIZONTALLY AND EXTEND FROM THE BOTTOM OF APPROACH SLAB TO THE BOTTOM OF PROPOSED POROUS BACKFILL ELEVATION.
2. FOR ABUTMENT SECTION WITH REINFORCING STEEL, SEE SHEET 12/22.
3. FOR GEOWALL DETAIL, SEE SHEET 18/22.
4. 6" NON-PERFORATED PIPE TO OUTLET INTO THE DITCH AT THE SW CORNER OF THE BRIDGE.

DLZ
6121 HUNTLEY ROAD • COLUMBUS, OHIO 43229

DESIGNED	DRAWN	REVIEWED	DATE
MHK	PDP	CJS	12/6/22
CHECKED	REVISED	STRUCTURE FILE NUMBER	
MJL		2513447	

FORWARD ABUTMENT PLAN AND ELEVATION

BRIDGE NO. FRA-023-0517
RAMP L OVER U.S. 23

FRA-270-51.50
PID No. 92616

X:\Projects\2013\1321\1010\FRA\92616\structures\FRA23_0517\sheets\023_0517SF001.dgn 12/8/2022 8:05:39 PM cwong

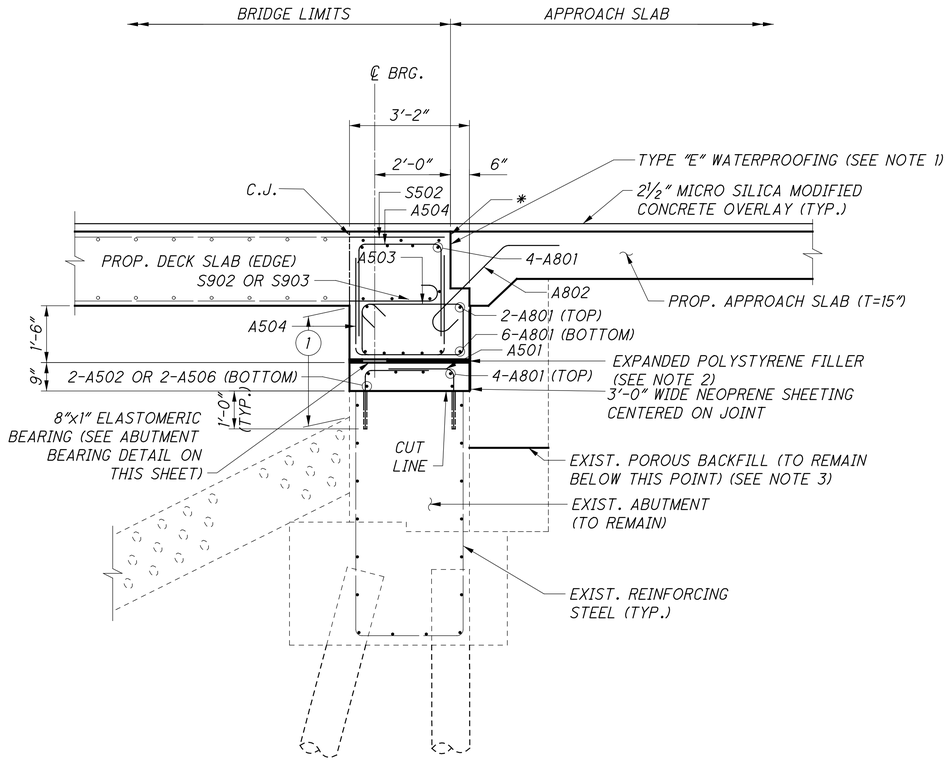

TYPICAL PROPOSED ABUTMENT SECTION

GEOWALL DETAILS NOT SHOWN FOR CLARITY
SECTION TAKEN AT EDGE OF ROADWAY

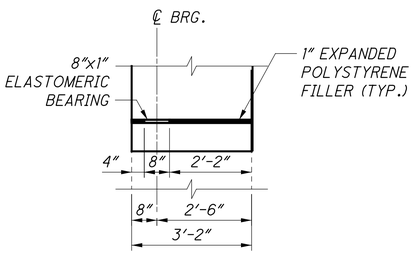

ABUTMENT BEARING DETAIL

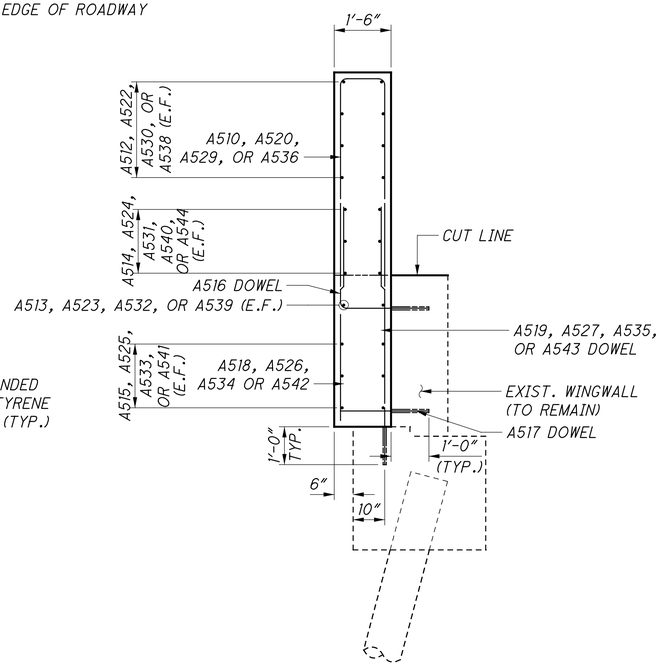

SECTION A-5 10 / A-5 11

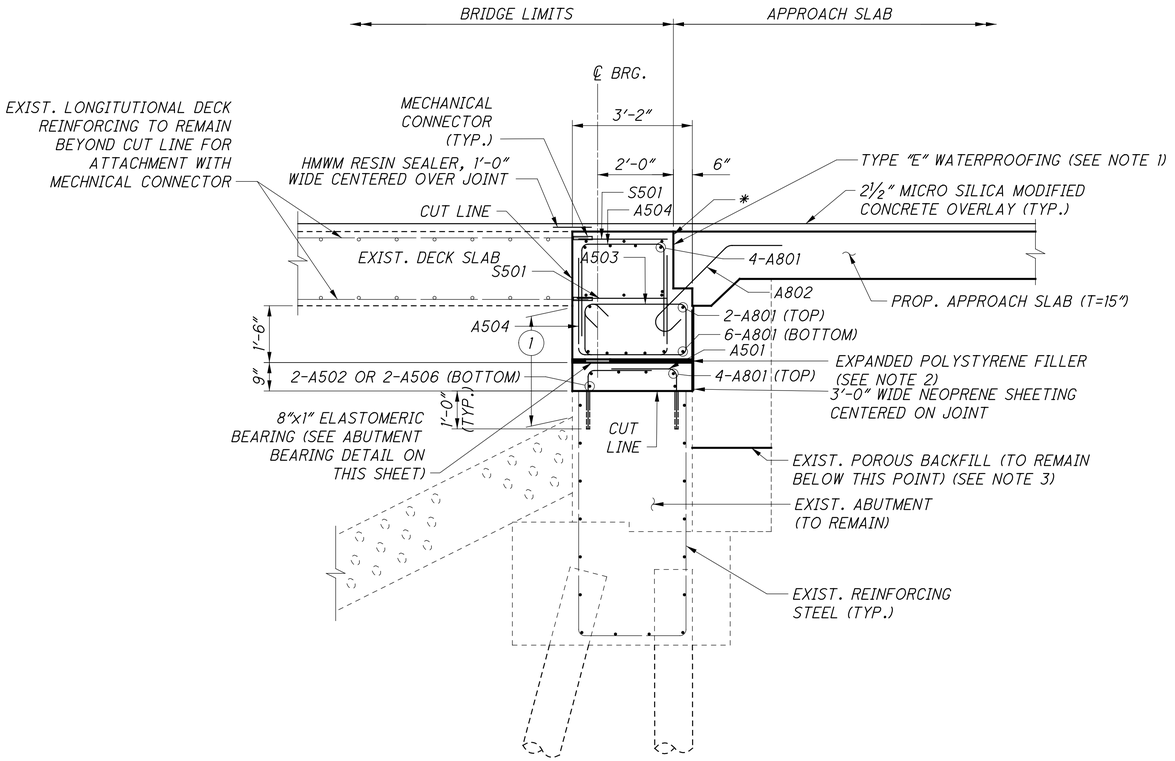

TYPICAL PROPOSED ABUTMENT SECTION

GEOWALL DETAILS NOT SHOWN FOR CLARITY
SECTION TAKEN AT ℄ OF RAMP

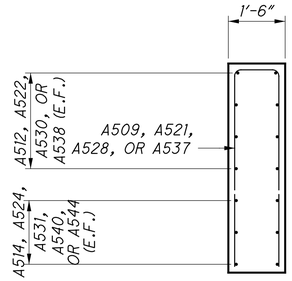

SECTION A-6 13

LEGEND

(1) LIMITS OF SEALING OF CONCRETE SURFACES (EPOXY-URETHANE)

* PREFORMED ELASTOMERIC COMPRESSION JOINT SEAL. 705.11 (1¼" WIDE FOR ½" WIDE GROOVE PLACED IN ½" GROOVE. SEE NOTE 1.

NOTES

1. NOTED ITEMS INCIDENTAL TO ITEM 526 - REINFORCED CONCRETE APPROACH SLABS (T=15"), AS PER PLAN.
2. POLYSTYRENE FILLER TO BE INCLUDED WITH ITEM 511 - CLASS QC1 CONCRETE, ABUTMENT, AS PER PLAN.
3. GEOWALL TO BE PLACED ABOVE CALLED OUT LINE. FOR GEOWALL DETAILS, SEE SHEET 18/22.

DLZ
6121 HUNTLEY ROAD • COLUMBUS, OHIO 43229

DESIGNED	DRAWN	REVIEWED	DATE
EMW/MHK	EMW/MHK	DOR/CJS	12/6/22
CHECKED	REVISED	STRUCTURE FILE NUMBER	
PAT/MJL		2513447	

ABUTMENT SECTIONS
BRIDGE NO. FRA-023-0517
RAMP L OVER U.S. 23

FRA-270-51.50
PID No. 92616

12 / 22

494
554

X:\Projects\2013\1321\1010\FRA\92616\structures\FRA23_0517\sheets\023_0517SF002.dgn 12/8/2022 8:05:40 PM cwong

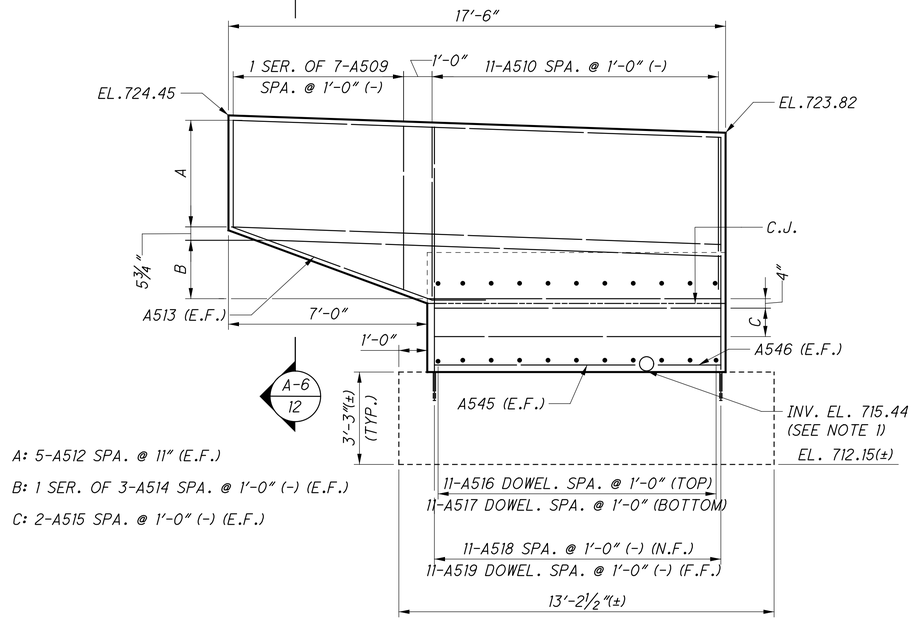

SECTION A-1 / 10

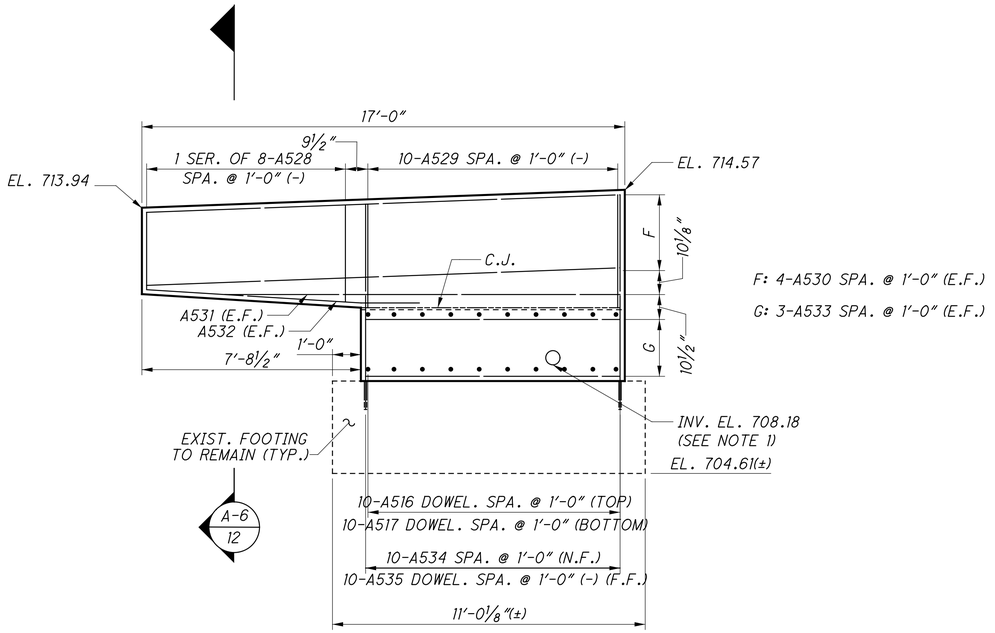

SECTION A-3 / 11

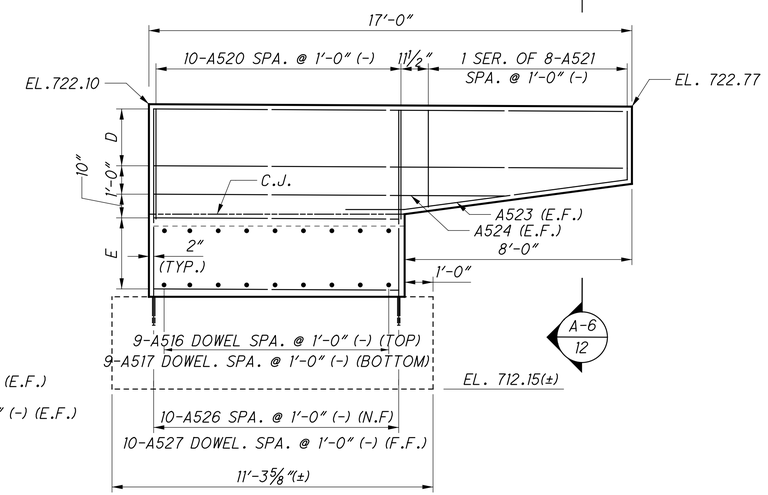

SECTION A-2 / 10

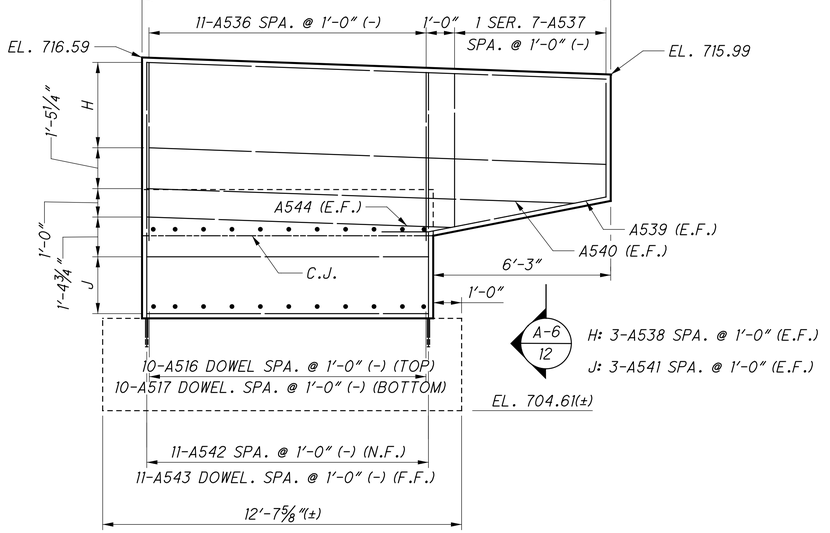

SECTION A-4 / 11

NOTES

1. CORE THROUGH EXISTING AND PROPOSED WINGWALLS TO FACILITATE INSTALLATION OF 6" NON-PERFORATED CORRUGATED PIPE. THIS WORK SHALL BE PAID FOR UNDER ITEM 518 - 6" NON-PERFORATED CORRUGATED PIPE, INCLUDING SPECIALS, AS PER PLAN.

DLZ
6121 HUNTLEY ROAD • COLUMBUS, OHIO 43229

DESIGNED	DRAWN	REVIEWED	DATE
JDA	JG	DOR/CJS	12/6/22
CHECKED	REVISED	STRUCTURE FILE NUMBER	
MJL		2513447	

WINGWALL ELEVATIONS
BRIDGE NO. FRA-023-0517
RAMP L OVER U.S. 23

FRA-270-51.50
PID No. 92616

X:\Projects\2013\132\1010\FRA\92616\structures\FRA23_0517\sheets\023_0517SF003.dgn 12/8/2022 8:05:40 PM cwong

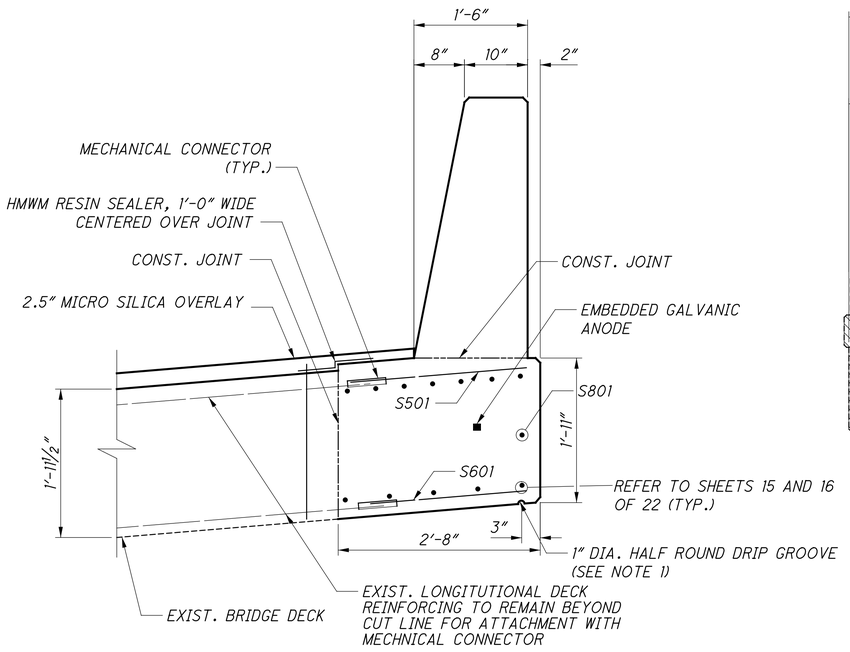

DECK EDGE PROPOSED DETAIL

RIGHT DECK EDGE SHOWN,
LEFT DECK EDGE SIMILAR
(RALING REINFORCING NOT SHOWN FOR CLARITY)

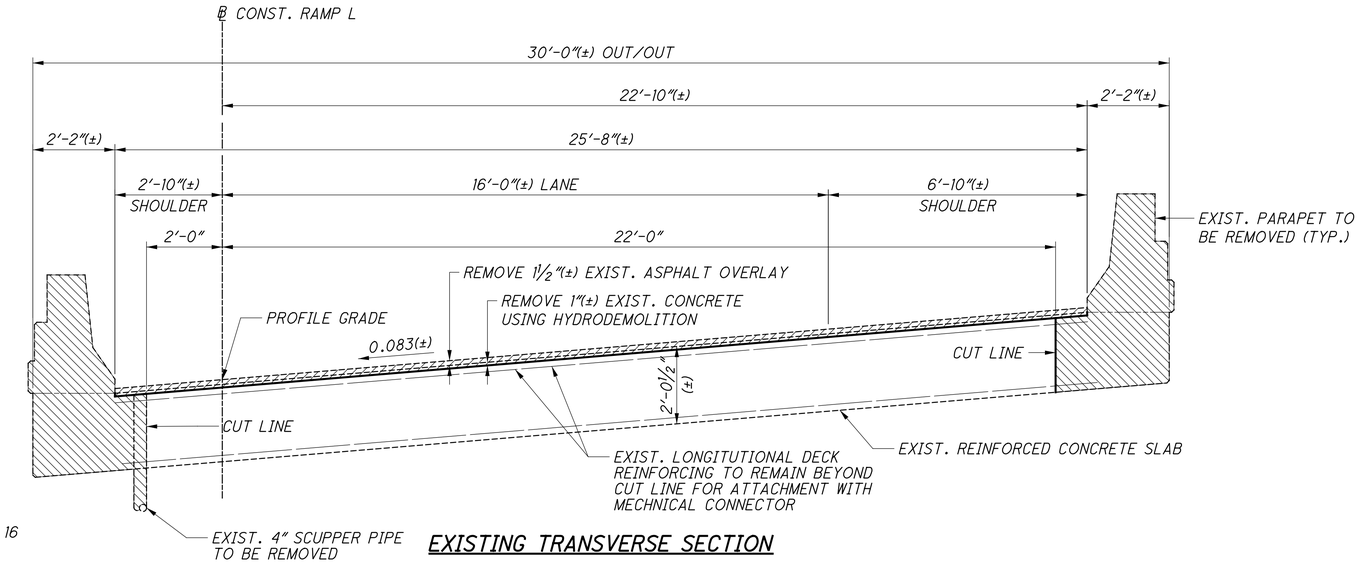

EXISTING TRANSVERSE SECTION

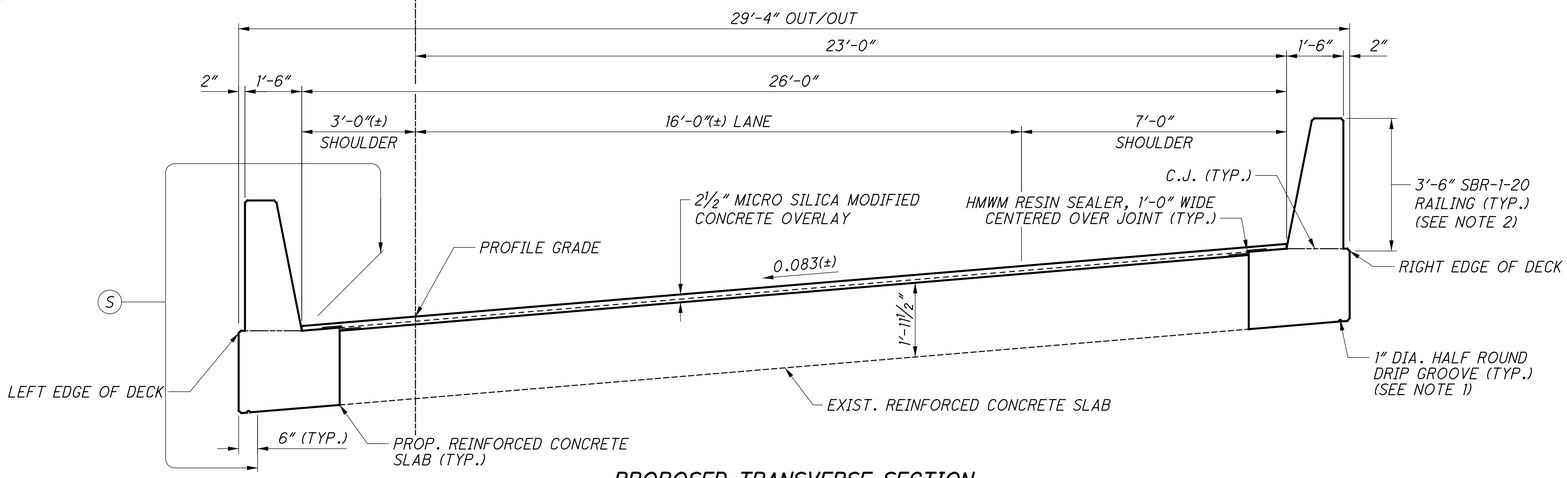

PROPOSED TRANSVERSE SECTION

LEGEND

AREA TO BE REMOVED PER ITEM 202 - PORTIONS OF STRUCTURE REMOVED, AS PER PLAN

Ⓢ LIMIT OF SEALING OF CONCRETE SURFACES (EPOXY-URETHANE) (TYP.)

NOTES

1. DRIP GROOVES SHALL TERMINATE 2'-0" FROM THE FACE OF THE ABUTMENT.
2. RAILING DETAILS AND REINFORCING NOT SHOWN FOR CLARITY. FOR RAILING DETAILS AND REINFORCING, SEE SHEET 17 OF 22. FOR ADDITIONAL DETAILS ON RAILING, SEE ODOT STANDARD DRAWING SBR-1-20.

DLZ
6121 HUNTLEY ROAD • COLUMBUS, OHIO 43229

DESIGNED	DRAWN	REVIEWED	DATE
PDP	PDP	CJS	12/6/22
CHECKED	REVISED	STRUCTURE FILE NUMBER	
MJL		2513447	

TRANSVERSE SECTION
BRIDGE NO. FRA-023-0517
RAMP L OVER U.S. 23

FRA-270-51.50
PID No. 92616

14 / 22

496
554

X:\Projects\2013\1321\1010\FRA\92616\structures\FRA23_0517\sheets\023_0517ST001.dgn 12/6/2022 8:05:41 PM cwong

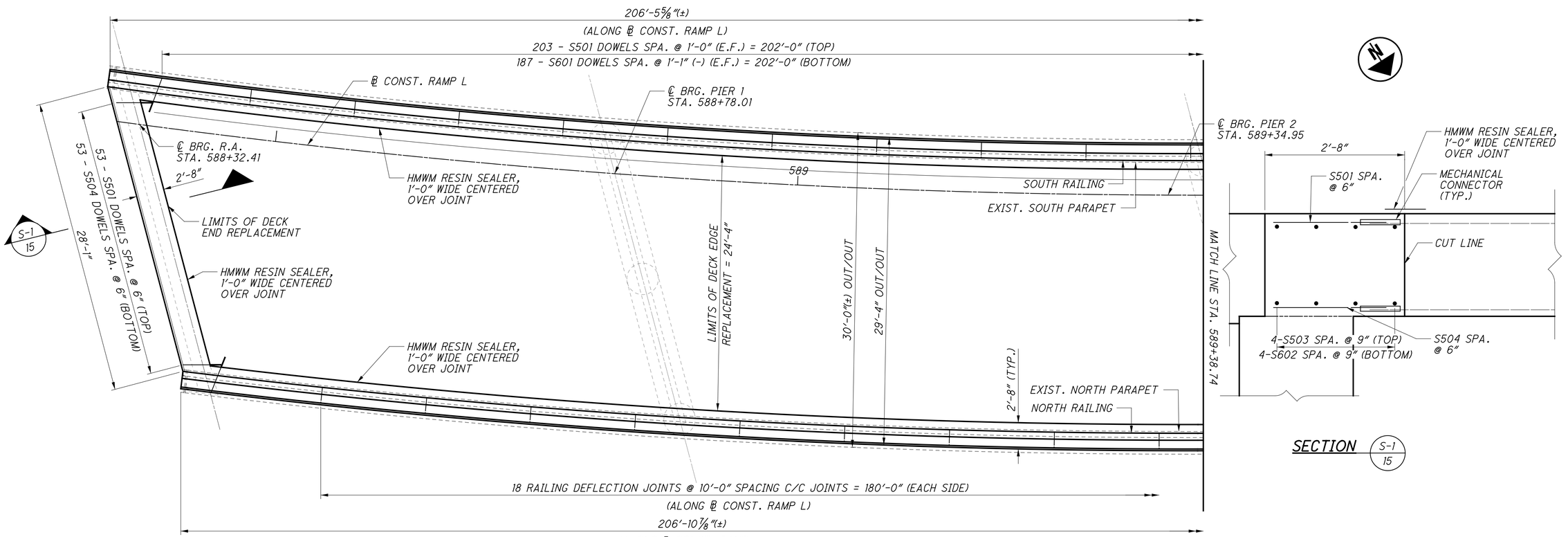

DECK PLAN

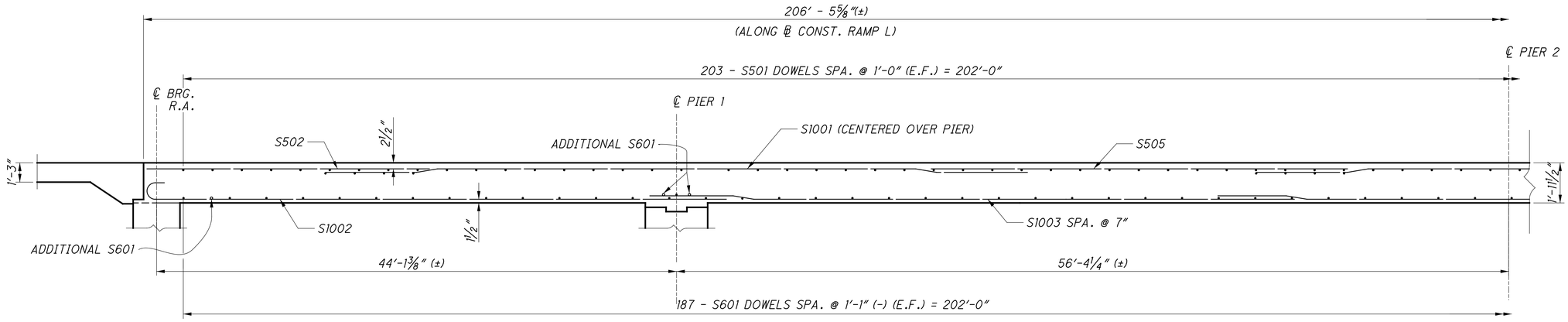

SLAB ELEVATION

FOR FULL LENGTH TRANSVERSE REBAR NOT SHOWN AT DECK END, SEE SECTION S-1 THIS SHEET

NOTES

1. GUARDRAIL OFF BRIDGE NOT SHOWN FOR CLARITY.

DLZ
601 HUNTLEY ROAD • COLUMBUS, OHIO 43229

DESIGNED	DRAWN	REVIEWED	DATE
MHK	PDP	CJS	12/6/22
CHECKED	REVISED	STRUCTURE FILE NUMBER	
MJL		2513447	

DECK PLAN - 1
BRIDGE NO. FRA-023-0517
RAMP L OVER U.S. 23

FRA-270-51.50
PID No. 92616

15 / 22

497
554

X:\Projects\2013\1321\1010\FRA\92616\structures\FRA23_0517\sheets\023_0517SD001.dgn 12/8/2022 8:05:41 PM cwong

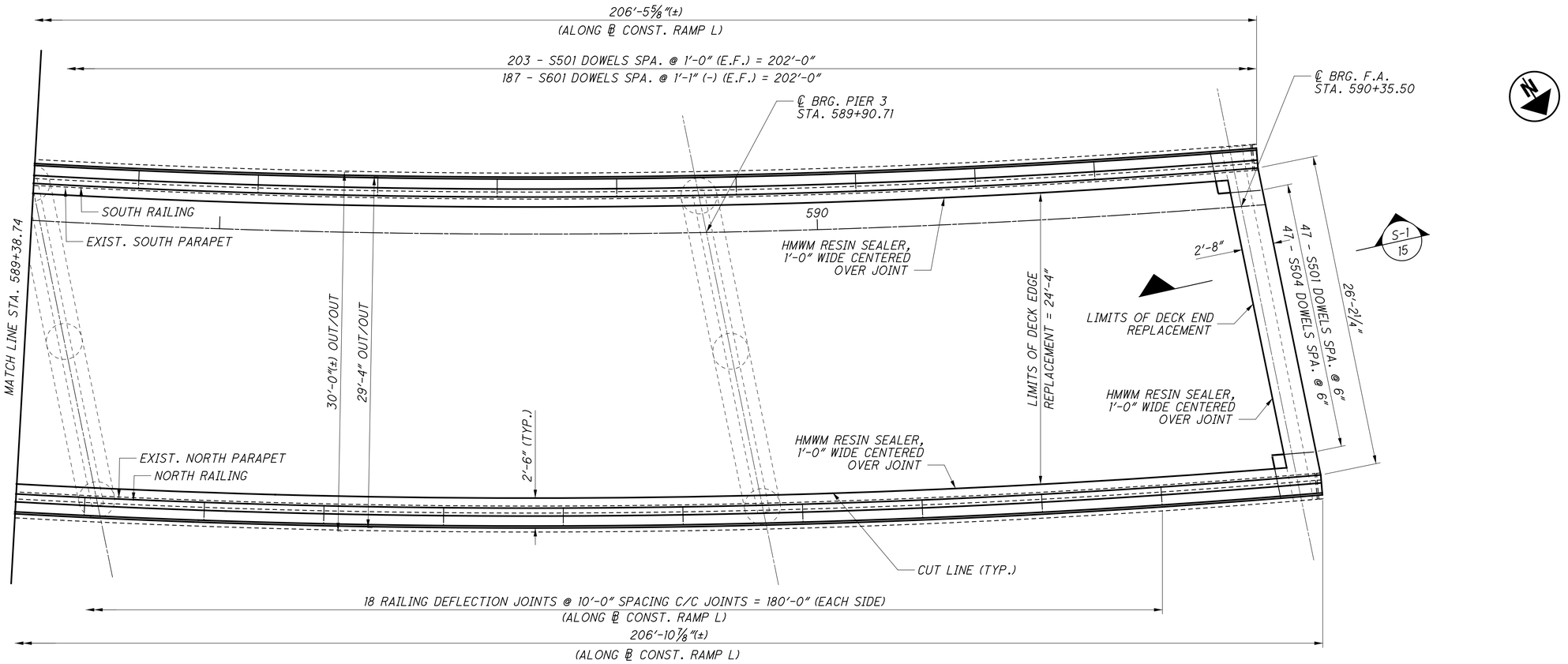

DECK PLAN

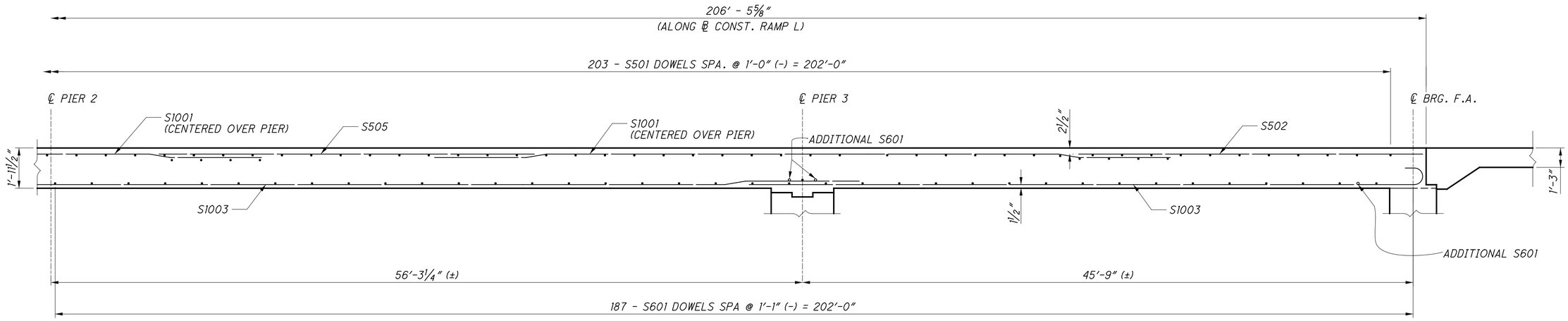

SLAB ELEVATION

FOR FULL LENGTH TRANSVERSE REBAR NOT SHOWN AT DECK END, SEE SECTION S-1 ON SHEET 15 OF 22

NOTES:

1. GUARDRAIL OFF BRIDGE NOT SHOWN FOR CLARITY.

DLZ
601 HUNTER ROAD • COLUMBUS, OHIO 43229

DESIGNED	DRAWN	REVIEWED	DATE
MHK	PDP	CJS	12/6/22
CHECKED	REVISED	STRUCTURE FILE NUMBER	
MJL		2513447	

DECK PLAN - 2
BRIDGE NO. FRA-023-0517
RAMP L OVER U.S. 23

FRA-270-51.50
PID No. 92616

16 / 22

498
554

X:\Projects\2013\1321\1010\FRA\92616\structures\FRA23_0517\sheets\023_0517SD002.dgn 12/8/2022 8:05:42 PM cwong

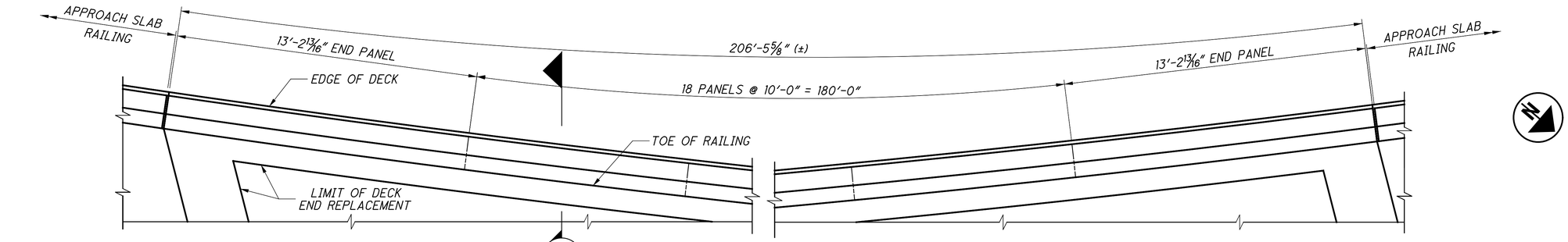

DECK RAILING PLAN (LEFT)

S-3
17

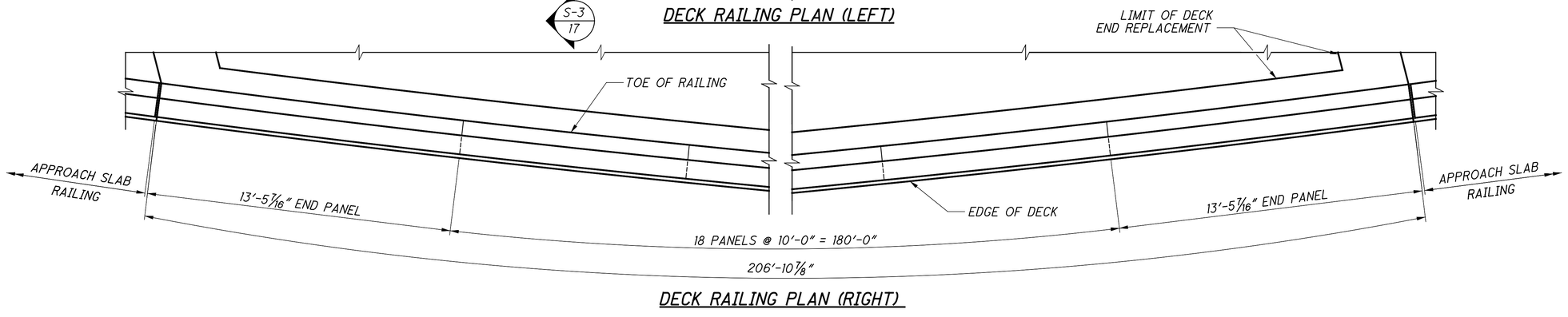

DECK RAILING PLAN (RIGHT)

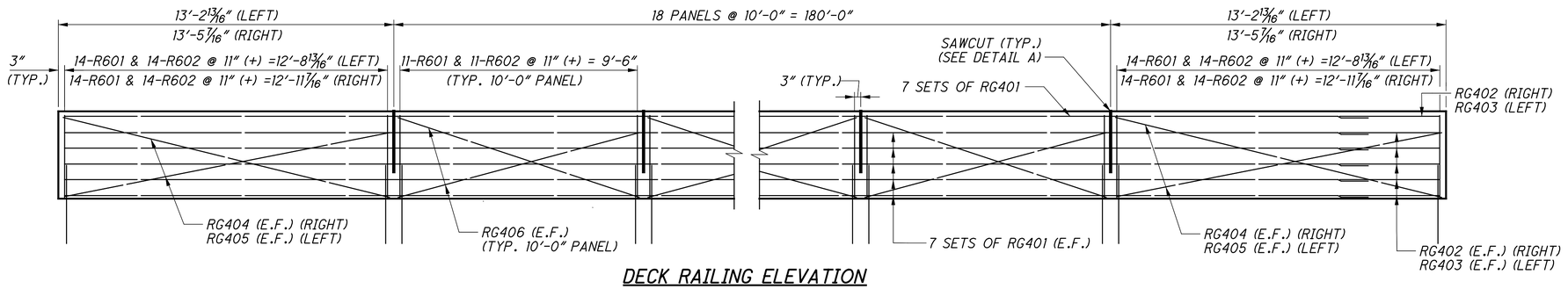

DECK RAILING ELEVATION

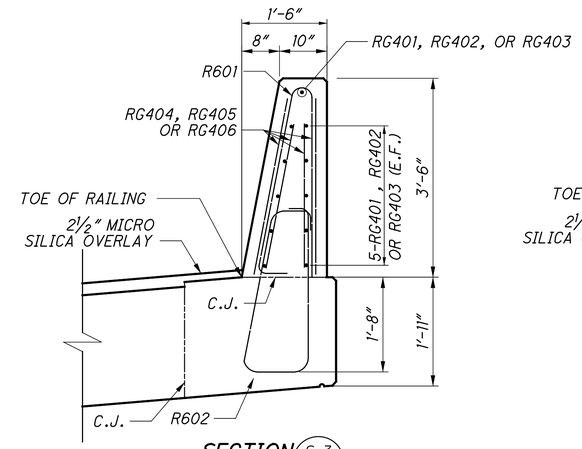

SECTION

S-3
17

DECK REINFORCING NOT SHOWN

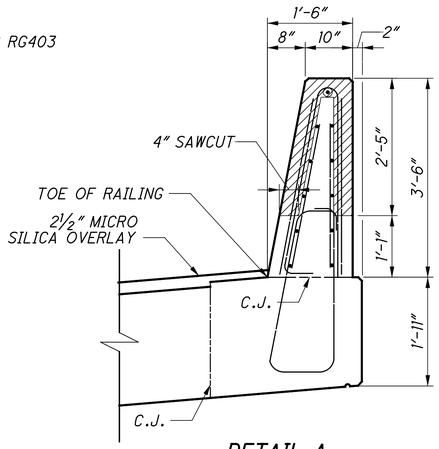

DETAIL A

LAP LENGTH : NO.4 BAR = 1'-11"

NOTES

1. DIMENSIONS IN ELEVATION VIEW ARE MEASURED ALONG TOE OF RAILING.
2. FOR RAILING SEALING LIMITS, SEE SHEET 14/22.
3. FOR ADDITIONAL DETAILS, SEE STANDARD DRAWING SBR-1-20.

DLZ
6121 HUNTLEY ROAD • COLUMBUS, OHIO 43229

DESIGNED	DRAWN	REVIEWED	DATE
MHK	JG	CJS	12/6/22
CHECKED	REVISED	STRUCTURE FILE NUMBER	
MJL		2513447	

RAILING DETAILS
BRIDGE NO. FRA-023-0517
RAMP L OVER U.S. 23

FRA-270-51.50
PID No. 92616

X:\Projects\2013\1321\1010\FRA\92616\structures\FRA23_0517\sheets\023_0517SA001.dgn 12/8/2022 8:05:43 PM cwong

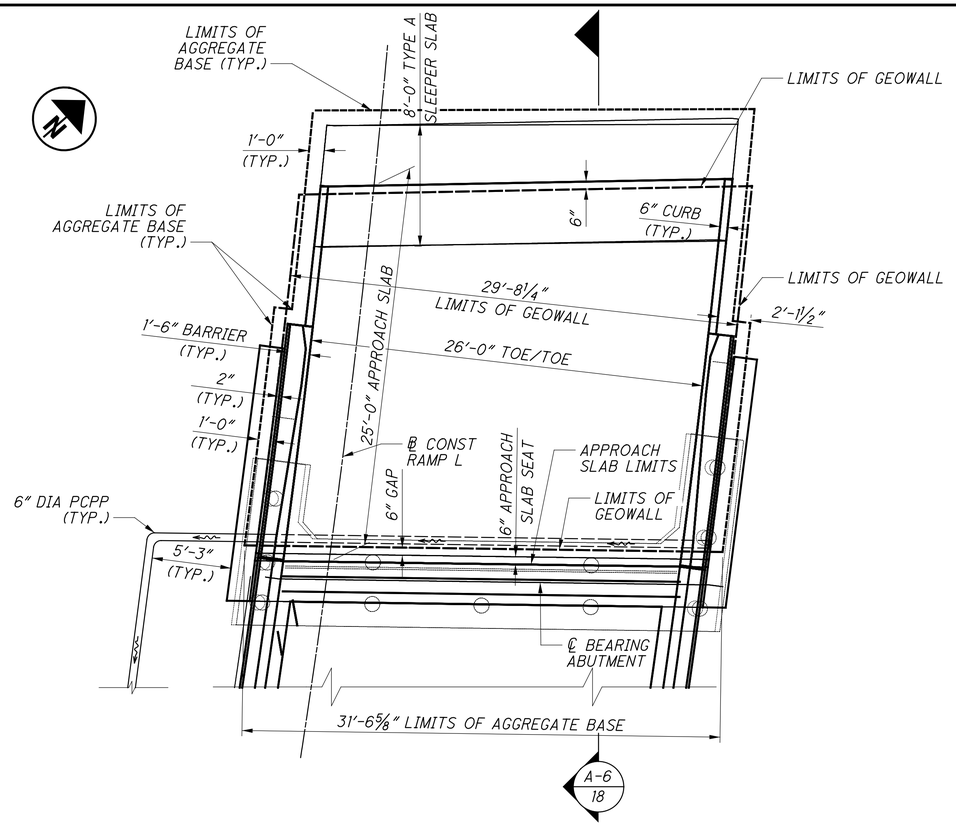

PLAN - FORWARD ABUTMENT

POROUS BACKFILL NOT SHOWN FOR CLARITY

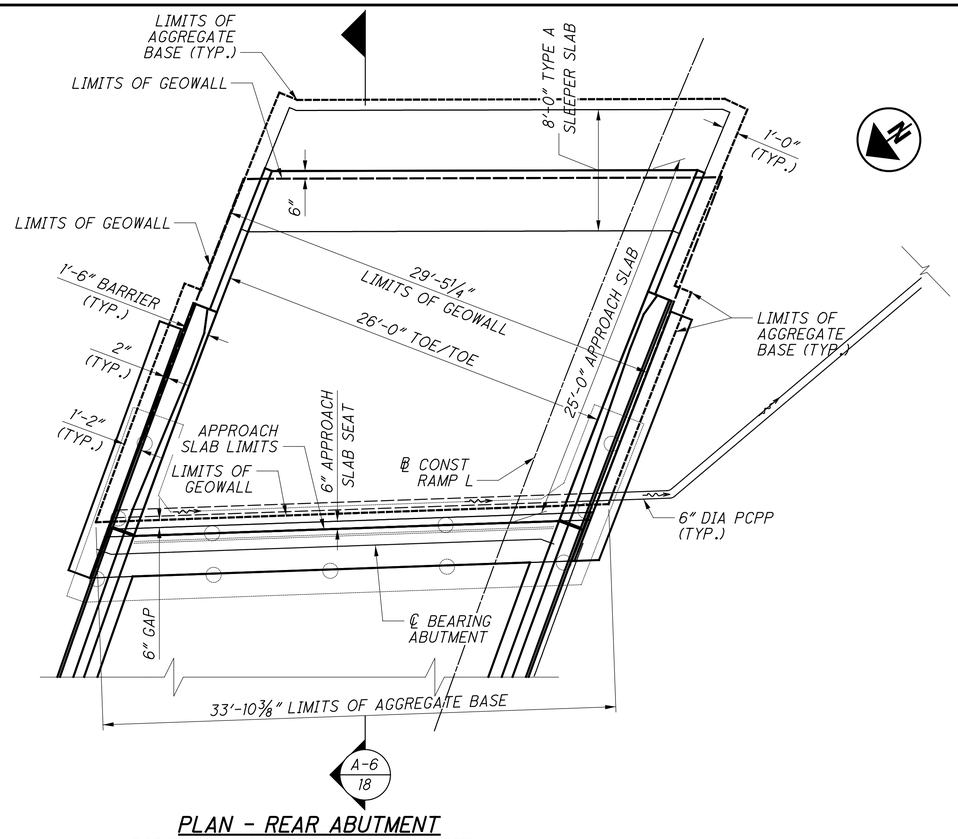

PLAN - REAR ABUTMENT

POROUS BACKFILL NOT SHOWN FOR CLARITY

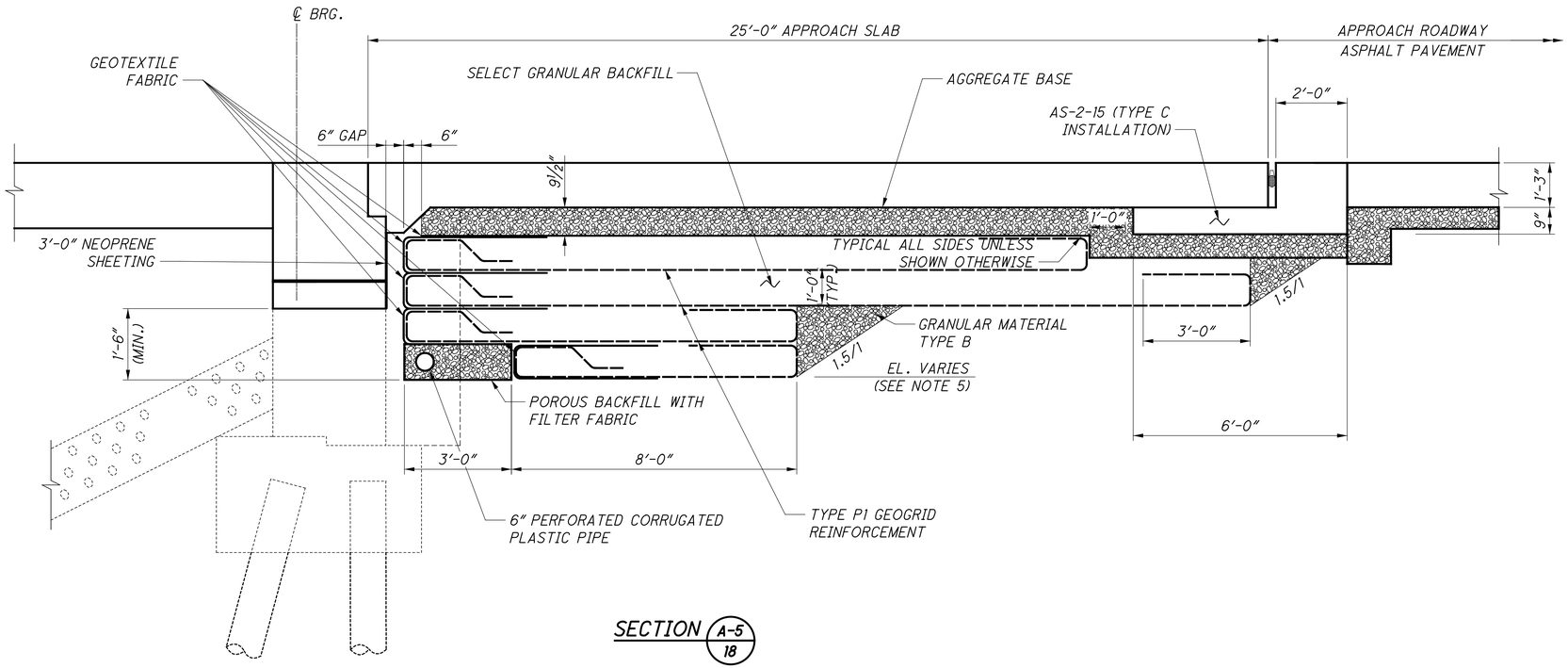

SECTION A-5 / 18

NOTES

1. GEOGRID REINFORCEMENT TYPE P1 SHALL CONFORM TO SUPPLEMENTAL SPECIFICATION 863.
2. SELECT GRANULAR BACKFILL SHALL CONFORM TO SUPPLEMENTAL SPECIFICATION 840.
3. TYPE B GRANULAR MATERIAL AND GEOTEXTILE FABRIC SHALL CONFORM TO C&MS 204.
4. FOR ADDITIONAL DETAILS, REFER TO ODOT STANDARD DRAWING AS-2-15.
5. REAR ABUTMENT LOWEST POINT ELEVATION IS 716.16. FORWARD ABUTMENT LOWEST POINT ELEVATION IS 708.44. EVERY LAYER OF GEOWALL IS TO BE PARALLEL TO BOTH THE VERTICAL GRADE AND THE CROSS SLOPE TO MATCH THE SUPERELEVATION.

DLZ
6121 HUNTLEY ROAD • COLUMBUS, OHIO 43229

DESIGNED	DRAWN	REVIEWED	DATE
MHK	PDP	CJS	12/6/22
CHECKED	REVISED	STRUCTURE FILE NUMBER	
MJL		2513447	

GEOWALL DETAILS
BRIDGE NO. FRA-023-0517
RAMP L OVER U.S. 23

FRA-270-51.50
PID No. 92616

18 / 22

500 / 554

X:\Projects\2013\1321\1010\FRA\92616\structures\FRA23_0517\sheets\023_0517SM001.dgn 12/8/2022 8:05:44 PM cwong

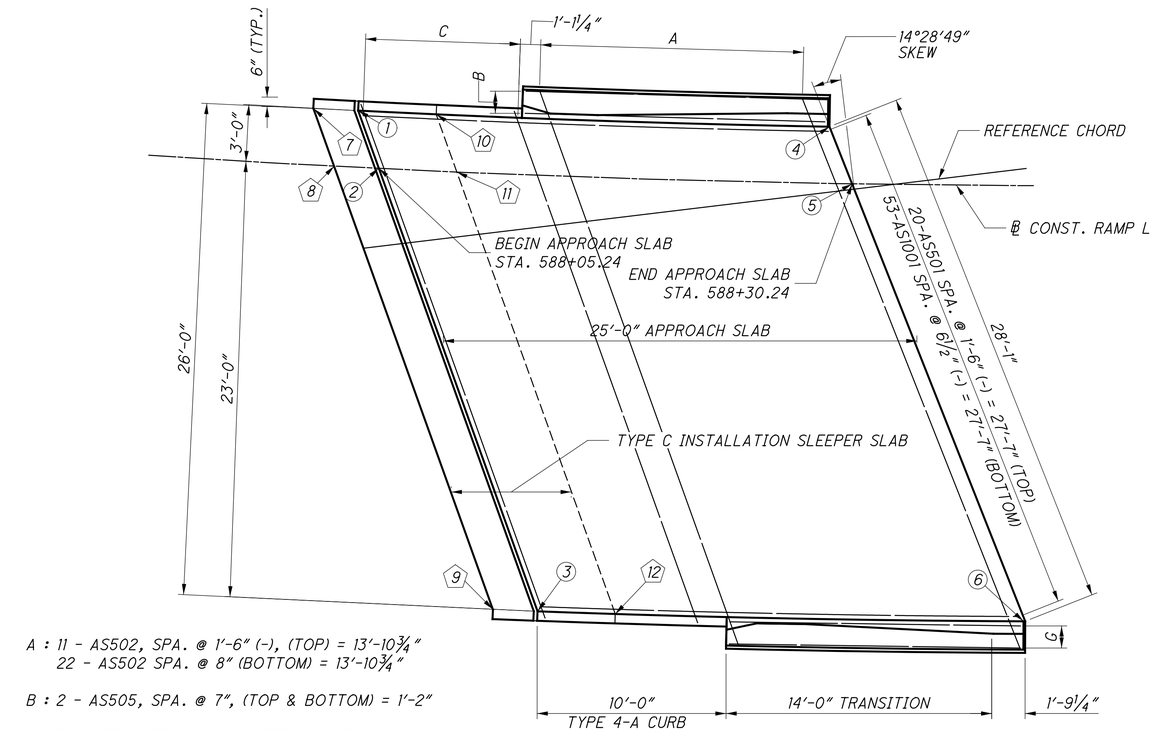

A : 11 - AS502, SPA. @ 1'-6" (-), (TOP) = 13'-10¾"
22 - AS502 SPA. @ 8" (BOTTOM) = 13'-10¾"

B : 2 - AS505, SPA. @ 7", (TOP & BOTTOM) = 1'-2"

C : 7 - AS504, SPA. @ 1'-4" (TOP) = 8'-2"
14- AS504, SPA. @ 8" (BOTTOM) = 8'-2"

G : 2 - AS508, SPA. @ 7", (TOP & BOTTOM) = 1'-2"

REAR APPROACH SLAB PLAN

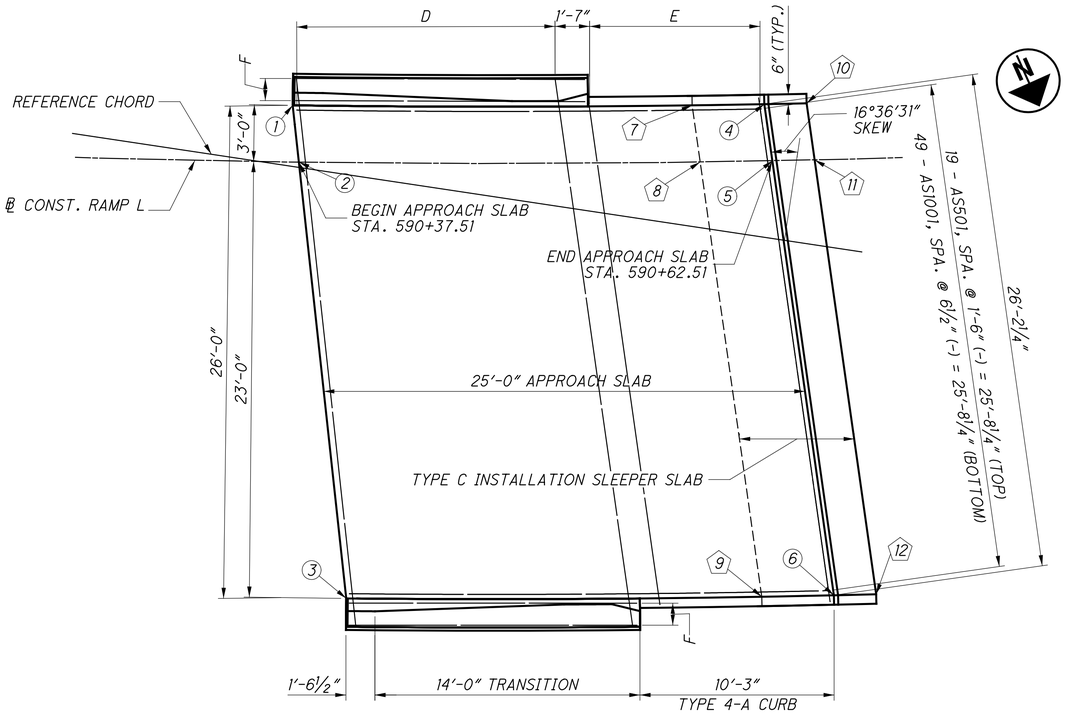

FORWARD APPROACH SLAB PLAN

D : 11 - AS503, SPA. @ 1'-5" (-), (TOP) = 13'-7¾"
22 - AS503 SPA. @ 8" (BOTTOM) = 13'-7¾"

E : 7 - AS506, SPA. @ 1'-6" (TOP) = 9'-0"
15- AS506, SPA. @ 7" (-) (BOTTOM) = 9'-0"

F : 2 - AS507, SPA. @ 7", (TOP & BOTTOM) = 1'-2"

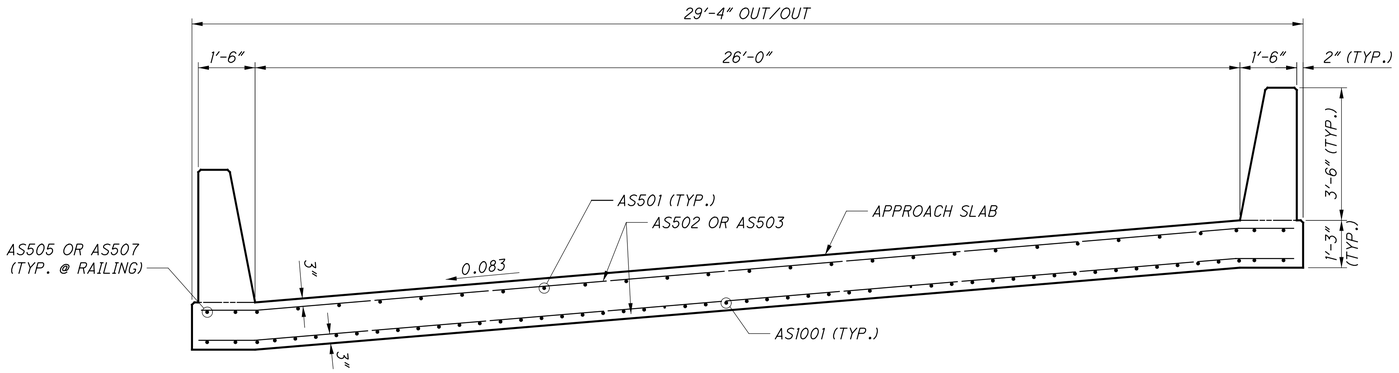

TYPICAL APPROACH SLAB SECTION WITH RAILING

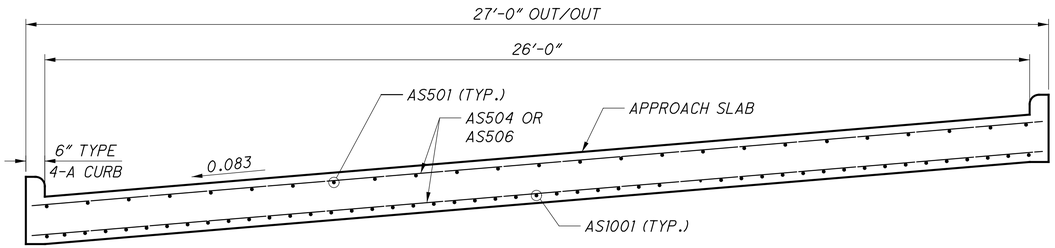

TYPICAL APPROACH SLAB SECTION WITH CURB

APPROACH SLAB SURFACE ELEVATIONS						
LOCATION	①	②	③	④	⑤	⑥
REAR	723.10	723.31	724.87	722.18	722.38	723.95
FORWARD	714.46	714.70	716.50	713.53	713.77	715.58

SLEEPER SLAB SURFACE ELEVATIONS						
LOCATION	⑦	⑧	⑨	⑩	⑪	⑫
REAR	723.20	723.40	724.96	721.73	721.93	723.49
FORWARD	712.42	712.66	714.47	713.45	713.69	715.50

NOTES

1. THIS DRAWING PROVIDES DETAILS TO SUPPLEMENT THE STANDARD DRAWING. FOR APPROACH SLAB REINFORCING STEEL AND DETAILS NOT SHOWN, REFER TO STANDARD DRAWING AS-1-15 AND AS-2-15.

2. TYPE 4-A CURB INTEGRAL WITH APPROACH SLABS. FOR TYPE 4-A CURB DETAILS, SEE STANDARD DRAWING BP-5.1.

DLZ
6121 HUNTLEY ROAD • COLUMBUS, OHIO 43229

DESIGNED MHK | DRAWN PDP | CHECKED MJL | REVIEWED CJS | DATE 12/6/22 | REVISED | STRUCTURE FILE NUMBER 2513447

APPROACH SLAB DETAILS
BRIDGE NO. FRA-023-0517
RAMP L OVER U.S. 23

FRA-270-51.50
PID No. 92616

19 / 22

501
554

X:\Projects\2013\1321\1010\FRA\92616\structures\FRA23_0517\sheets\023_0517SM002.dgn 12/8/2022 8:05:45 PM cwong

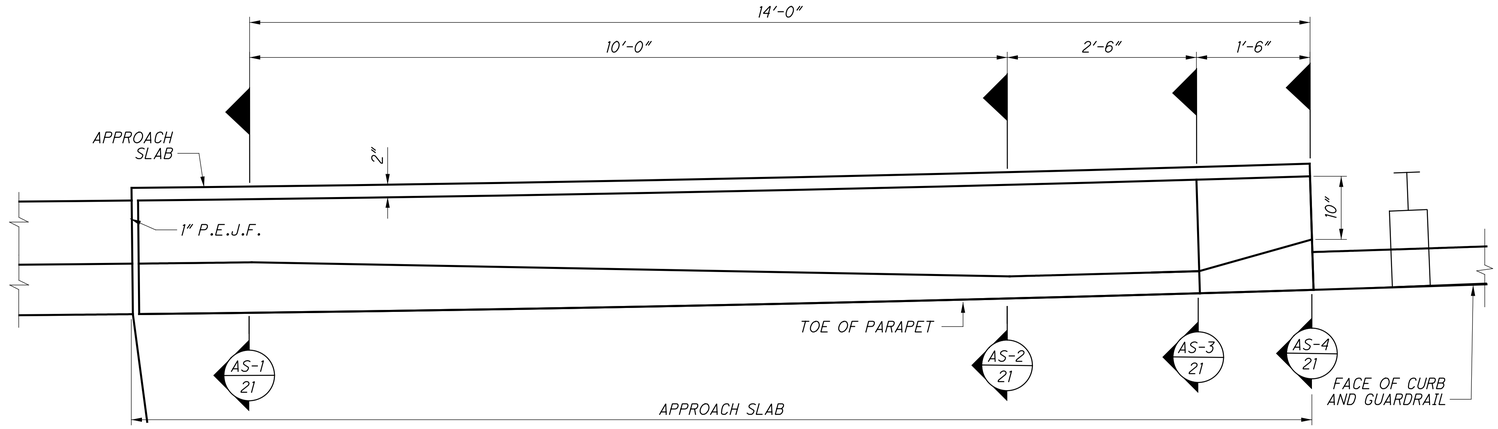

APPROACH SLAB BARRIER TRANSITION PLAN

FORWARD, NORTH BARRIER SHOWN, OTHER SIMILAR

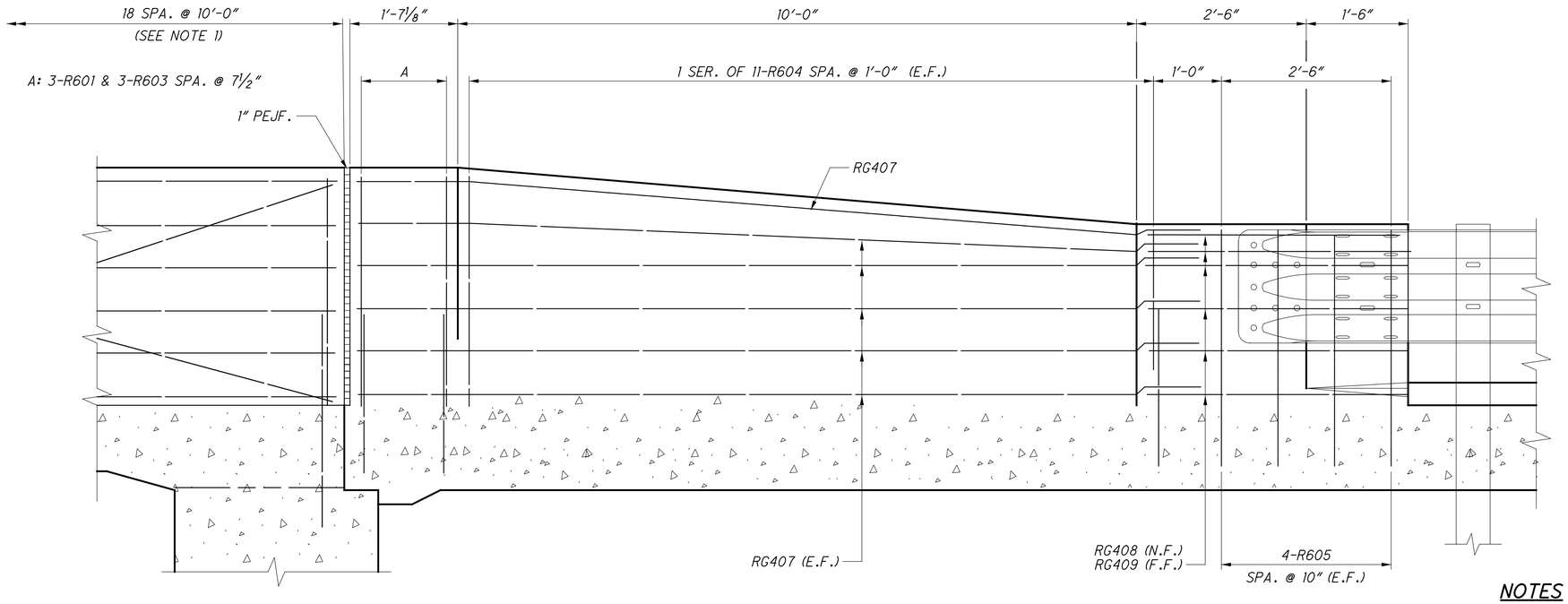

APPROACH SLAB BARRIER TRANSITION ELEVATION

FORWARD, NORTH BARRIER SHOWN, OTHER SIMILAR

NOTES

1. SEAL NEW PARAPET CONCRETE PER ITEM 512 - SEALING OF CONCRETE SURFACES (EPOXY URETHANE).
2. REFER TO ODOT STANDARD DRAWING SBR-1-20 FOR ADDITIONAL DETAILS.
3. FOR DECK RAILING DETAIL, SEE SHEET 17/22.

DLZ
6121 HUNTLEY ROAD • COLUMBUS, OHIO 43229

DESIGNED	DRAWN	REVIEWED	DATE
PDP	PDP	CJS	12/6/22
CHECKED	REVISED	STRUCTURE FILE NUMBER	
MJL		2513447	

APPROACH SLAB BARRIER TRANSITION DETAILS

BRIDGE NO. FRA-023-0517
RAMP L OVER U.S. 23

FRA-270-51.50
PID No. 92616

X:\Projects\2013\1321\1010\FRA\92616\structures\FRA23_0517\sheets\023_0517SA002.dgn 12/8/2022 8:05:46 PM cwong

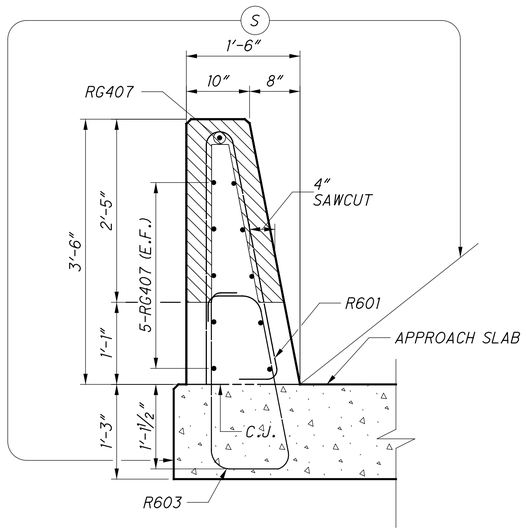

SECTION AS-1 / 20

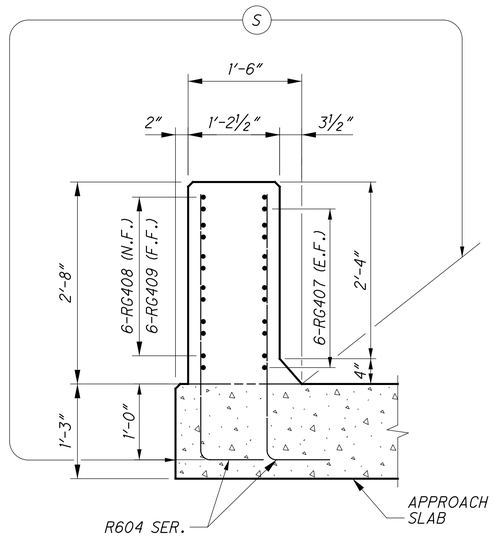

SECTION AS-2 / 20

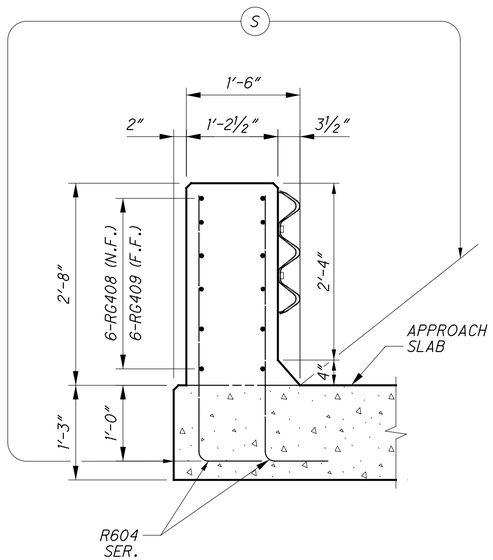

SECTION AS-3 / 20

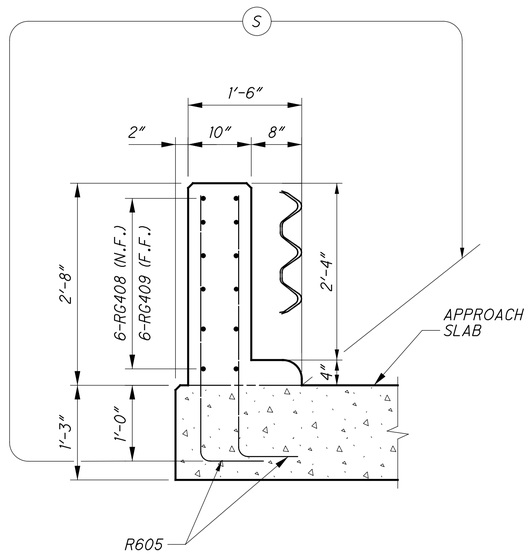

SECTION AS-4 / 20

LEGEND

(S) LIMITS OF SEALING OF CONCRETE SURFACES (EPOXY-URETHANE)

NOTES

1. SEAL NEW PARAPET CONCRETE PER ITEM 512 - SEALING OF CONCRETE SURFACES (EPOXY-URETHANE). LIMITS SHOWN ON SECTIONS ON THIS SHEET.
2. REFER TO ODOT STANDARD DRAWING SBR-1-20 FOR ADDITIONAL DETAILS.

DLZ
6121 HUNTLEY ROAD • COLUMBUS, OHIO 43229

DESIGNED	DRAWN	REVIEWED	DATE
PDP	PDP	CJS	12/6/22
CHECKED	REVISED	STRUCTURE FILE NUMBER	
MJL		2513447	

APPROACH SLAB BARRIER TRANSITION SECTIONS

BRIDGE NO. FRA-023-0517
RAMP L OVER U.S. 23

FRA-270-51.50
PID No. 92616

21 / 22

503
554

X:\Projects\2013\1321\1010\FRA\92616\structures\FRA23_0517\sheets\023_0517SA003.dgn 12/8/2022 8:05:47 PM cwong

REINFORCING STEEL LIST

MARK	NO.	LENGTH	WEIGHT	TYPE	DIMENSIONS A	B	C	D	E	SERIES INC.
ABUTMENTS										
A501	44	3'-1"	142	1	1'-8"	1'-7"				
A502	2	31'-3"	65	STR						
A503	22	8'-0"	184	3	2'-6"	1'-3"				
A504	44	6'-11"	317	2	2'-6"	2'-2"	2'-6"			
A505	42	3'-2"	139	1	1'-8"	1'-8"				
A506	2	29'-4"	61	STR						
A507	21	8'-4"	183	3	2'-6"	1'-5"				
A508	42	6'-11"	303	2	2'-6"	2'-2"	2'-6"			
	1	8'-5"	9	2	3'-9"	1'-2"	3'-9"			
A509	SER OF	TO	77	2	2'-4"	1'-2"	2'-4"			4"
	7	12'-5"	91	2	5'-9"	1'-2"	5'-9"			
A510	11	12'-9"	146	2	5'-11"	1'-2"	5'-11"			
A512	10	17'-3"	180	STR						
A513	2	9'-3"	19	19	2'-0"	6'-10"	2'-6"			
	2	10'-4"	22	STR						
A514	SER OF	TO	116	STR						34"
	3	16'-0"	50	STR						
A515	4	10'-2"	42	STR						
A516	40	4'-7"	191	1	2'-3"	2'-6"				
A517	40	2'-4"	97	STR						
A518	11	2'-2"	25	STR						
A519	11	6'-2"	71	STR						
A520	10	8'-7"	90	2	3'-10"	1'-2"	3'-10"			
	1	5'-9"	6	2	2'-5"	1'-2"	2'-5"			
A521	SER	TO	57	2						1.7"
	8	7'-9"	65	2	3'-5"	1'-2"	3'-5"			
A522	6	16'-8"	104	STR						
A523	2	10'-0"	21	19	2'-1"	7'-11"	1'-1"			
A524	2	12'-5"	26	STR						
A525	6	8'-8"	54	STR						
A526	10	2'-10"	30	STR						
A527	10	6'-10"	71	STR						
	1	6'-5"	7	2	2'-9"	1'-2"	2'-9"			
A528	SER	TO	61							1.1"
	8	7'-9"	65	2	3'-5"	1'-2"	3'-5"			
A529	10	8'-7"	90	2	3'-10"	1'-2"	3'-10"			
A530	8	16'-9"	140	STR						
A531	2	13'-11"	29	STR						
A532	2	9'-8"	20	19	2'-1"	7'-7"	0'-6"			
A533	6	9'-1"	57	STR						
A534	10	2'-4"	24	STR						
A535	10	6'-4"	66	STR						
A536	11	13'-3"	152	2	6'-2"	1'-2"	6'-2"			
	1	9'-3"	10	2	4'-2"	1'-2"	4'-2"			
A537	SER	TO	78							2.5"
	7	11'-9"	86	2	5'-5"	1'-2"	5'-5"			
A538	6	16'-2"	101	STR						
A539	2	8'-4"	17	19	2'-0"	6'-3"	1'-3"			
A540	2	15'-1"	31	STR						
A541	6	10'-0"	63	STR						
A542	11	2'-10"	33	STR						
A543	11	6'-10"	78	STR						
A544	2	10'-9"	22	STR						
A545	2	7'-1"	15	STR						
A546	2	2'-3"	5	STR						
A801	18	31'-3"	1,502	STR						
A802	18	29'-4"	1,410	STR						
		TOTAL:	7,215	LBS						

REINFORCING STEEL LIST

MARK	NO.	LENGTH	WEIGHT	TYPE	DIMENSIONS A	B	C	D	E	SERIES INC.
SUPERSTRUCTURE										
S501*	506	2'-5"	1,275	STR						
S502	28	27'-11"	815	STR						
S503	8	27'-9"	232	STR						
S504	100	5'-3"	548	STR						
S505	28	20'-8"	604	STR						
S601*	374	2'-5"	1,358	STR						
S602	8	27'-9"	333	STR						
S801	8	53'-9"	1,148	STR						
S1001	28	43'-10"	5,281	STR						
S1002	20	49'-4"	4,246	16	47'-11"					
S1003	40	31'-10"	5,479	STR						
		TOTAL:	21,319	LBS						
APPROACH SLABS										
AS501	39	24'-8"	1,003	STR						
AS502	33	31'-3"	1,076	STR						
AS503	33	29'-2"	1,004	STR						
AS504	21	27'-9"	608	STR						
AS505	4	15'-11"	66	STR						
AS506	22	26'-2"	600	STR						
AS507	8	15'-2"	127	STR						
AS1001	102	26'-1"	11,448	16						
		TOTAL:	15,932	LBS						
RAILINGS										
R601	464	7'-0"	4,878	23	0'-6"	3'-2"	3'-2"			
R602	452	9'-5"	6393	37	1'-9.5"					
R603	12	8'-9"	158	37	1'-1.5"					
	4	2'-11"	18	1	2'-1"	1'-0"				
R604	SER OF	TO	243	1						1.7"
	11	4'-4"	72	1	3'-6"	1'-0"				
R605	16	4'-4"	104	1	3'-6"	1'-0"				
		TOTAL:	11,866	LBS						
GFRP BARS										
RG401	154	30'-0"	3,086	STR						
RG402	22	9'-11"	146	STR						
RG403	22	10'-4"	152	STR						
RG404	16	13'-9"	147	STR						
RG405	16	14'-2"	151	STR						
RG406	144	10'-2"	978	STR						
RG407	44	12'-4"	363	STR						
RG408	24	4'-10"	77	STR						
RG409	24	3'-8"	59	STR						
		TOTAL:	5,159	LBS						

BENDING DIAGRAMS

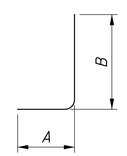

TYPE-1

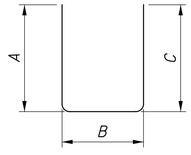

TYPE-2

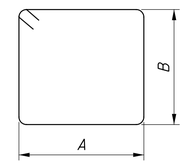

TYPE-3

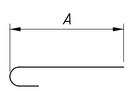

TYPE-16

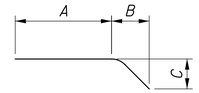

TYPE-19

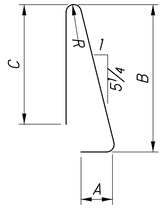

TYPE-23

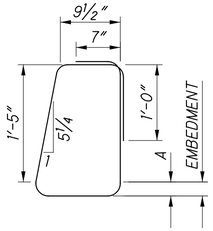

TYPE-37

*: DENOTES MECHNICAL CONNCETOR.

**: APPROACH SLAB REINFORCING STEEL LISTED ABOVE IS SHOWN FOR INFORMATION ONLY. REINFORCING STEEL FOR APPROACH SLABS IS INCLUDED FOR PAYMENT UNDER ITEM 526 - REINFORCED CONCRETE APPROACH SLABS WITH QC/QA (T=15"), AS PER PLAN.

REINFORCING STEEL NOTES

1. SERIES BARS - EACH BAR VARIES BY TABULATED AMOUNT.
2. ALL DIMENSIONS ARE OUT-TO-OUT.
3. TYPE 'STR' INCICATES A STRAIGHT BAR.
4. THE BAR SIZE NUMBER IS INDICATED IN THE 'MARK' COLUMN. THE FIRST ONE OR TWO DIGITS OF EACH MARK INDICATES THE BAR SIZE NUMBER. FOR EXAMPLE, A501 IS A #5 BAR SIZE AND P1101 IS A #11 BAR SIZE.
5. ALL REINFORCING STEEL SHALL BE EPOXY COATED.

DLZ

DESIGNED JG | DRAWN MHK | CHECKED JDA | REVIEWED CJS | DATE 12/6/22 | REVISED | STRUCTURE FILE NUMBER 2513447

REINFORCING STEEL LIST
BRIDGE NO. FRA-023-0517
RAMP L OVER U.S. 23

FRA-270-51.50
PID No. 92616

22 / 22

504
554

X:\Projects\2013\1321\1010\FRA\92616\structures\FRA23_0517\sheets\023_0517SL001.dgn 12/8/2022 8:05:47 PM cwong

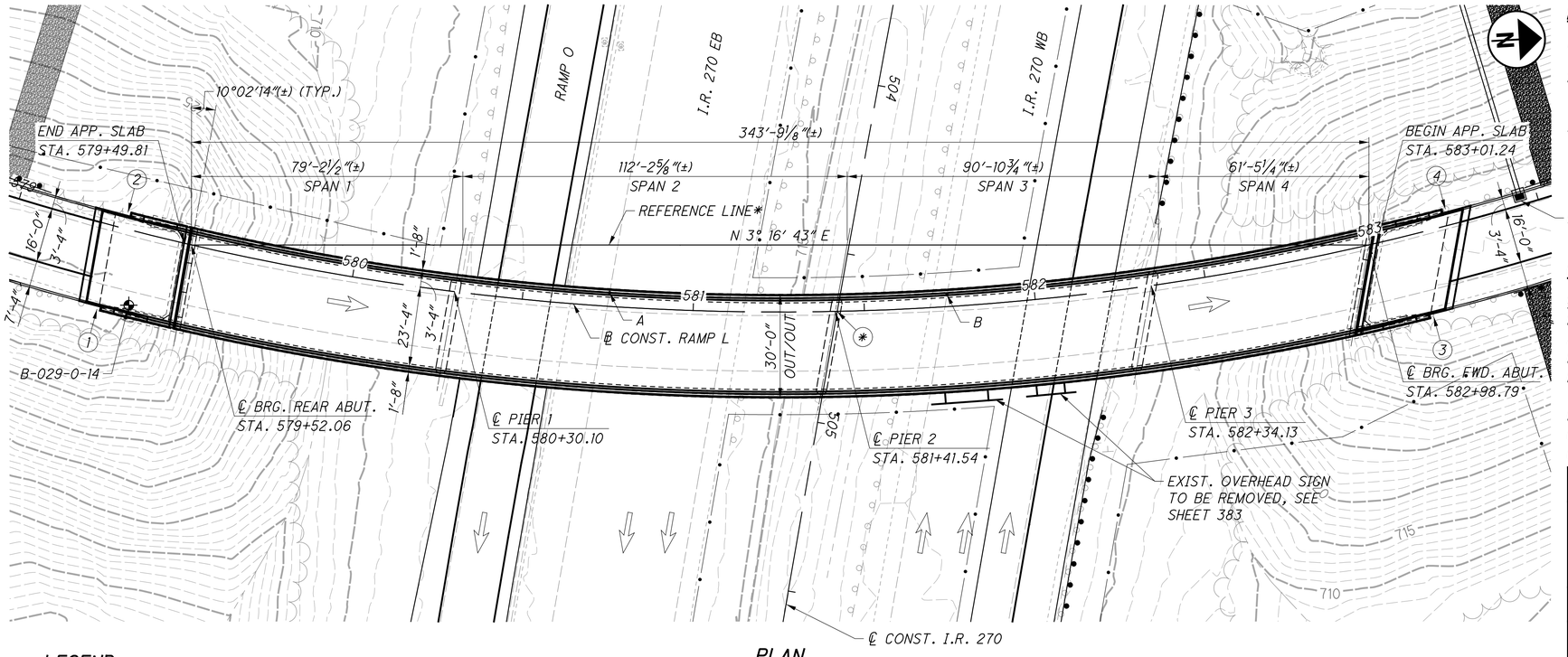

PLAN

LEGEND

① MGS BRIDGE TERMINAL ASSEMBLY, TYPE 1
FIRST POST OFF BRIDGE STA. 579+30.10 RT

② MGS BRIDGE TERMINAL ASSEMBLY, TYPE 1
FIRST POST OFF BRIDGE STA. 579+31.73 LT

③ MGS BRIDGE TERMINAL ASSEMBLY, TYPE 2
FIRST POST OFF BRIDGE STA. 583+12.08 RT

④ MGS BRIDGE TERMINAL ASSEMBLY, TYPE 2
FIRST POST OFF BRIDGE STA. 583+23.04 LT

✱ STA. 504+67.07 ℄ CONST. I.R. 270 =
STA. 581+42.07 ℄ CONST. RAMP L

⌖ - PROJECT BORING LOCATION

✱ THE REFERENCE LINE IS A CHORD FROM THE INTERSECTIONS OF THE REAR AND FORWARD ABUTMENT CENTERLINES OF BEARING WITH THE ℄ CONST. RAMP L

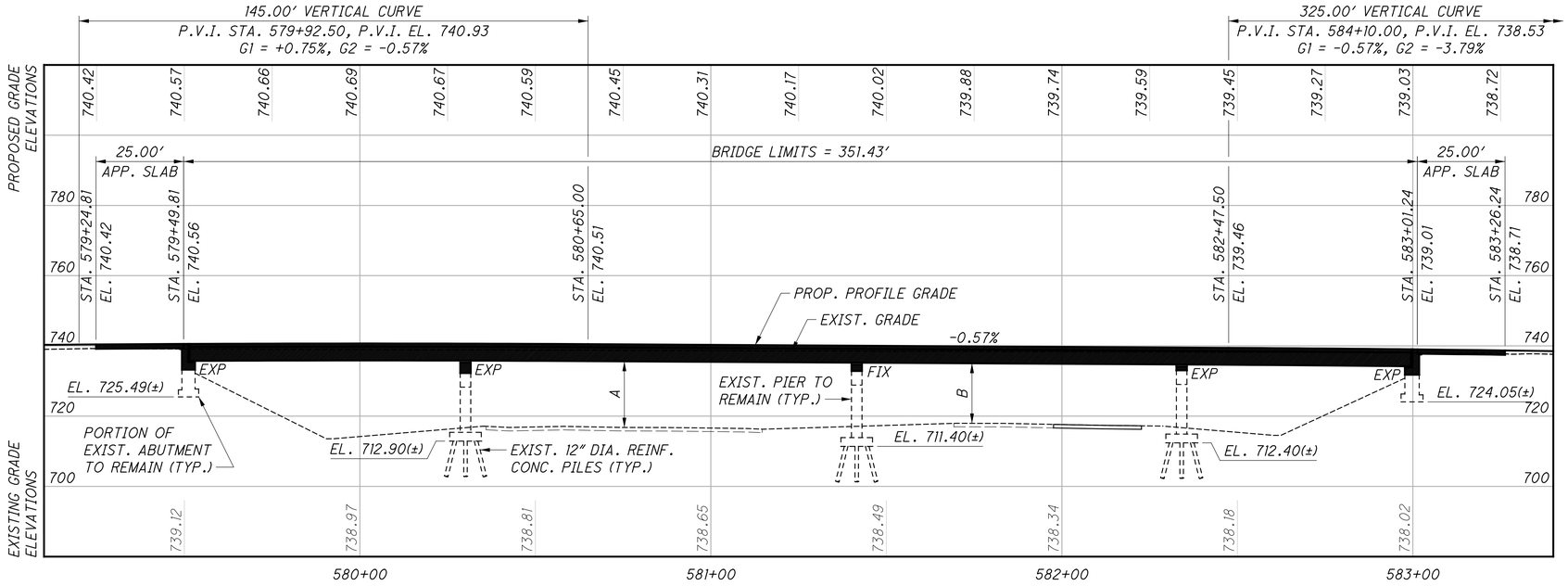

PROFILE ALONG ℄ CONSTRUCTION RAMP L

NOTES

1. EXISTING UTILITIES ARE TO REMAIN UNLESS NOTED OTHERWISE.
2. EARTHWORK LIMITS SHOWN ARE APPROXIMATE. ACTUAL SLOPES SHALL CONFORM TO PLAN CROSS SECTIONS.
3. FOR BENCHMARK INFORMATION, SEE ROADWAY PLANS.

CURVE DATA

℄ RAMP L
P.I. STA. 601+45.20
Δ = 147° 29' 28" (LT)
Dc = 7° 30' 00"
R = 763.94'
T = 2,620.21'
L = 1,966.55'
C = 1,466.81'
C.B. = N 25° 26' 03" W

VERTICAL CLEARANCES

POINT	EXIST.	PROP.	REQ'D
A	17.31'	18.70'	16.50'
B	16.05'	16.89'	16.50'

TRAFFIC DATA

CURRENT ADT (2016) = 11,820 DESIGN ADT (2036) = 15,730
CURRENT ADTT (2016) = 2128 DESIGN ADTT (2036) = 2831
DIRECTIONAL DISTRIBUTION = 1.00

EXISTING STRUCTURE

TYPE: CONTINUOUS STEEL GIRDER WITH REINFORCED CONCRETE DECK AND REINFORCED CONCRETE SUBSTRUCTURE
SPANS: 79'-2½"(±), 112'-2⅝"(±), 90'-10¾"(±), 61'-5¼"(±) c/c BEARINGS, MEASURED ALONG REFERENCE LINE
ROADWAY: 25'-8"(±) TOE/TOE OF PARAPETS
LOADING: CF-2000 (57)
SKEW: 10°02'14"(±) LF WITH RESPECT TO REFERENCE LINE
WEARING SURFACE: 1½"(±) ASPHALT CONCRETE
APPROACH SLABS: AS-1-54 (25'-0"(±) LONG)
ALIGNMENT: 7°30'00"(±) CURVE LEFT
SUPERELEVATION: 0.083(±) FT/FT
DATE BUILT: 1962
STRUCTURE FILE NUMBER: 2513536

PROPOSED STRUCTURE

PROPOSED WORK: SUPERSTRUCTURE REPLACEMENT AND SUBSTRUCTURE REHABILITATION. NEW ABUTMENT AND PIER SEATS, ABUTMENT BACKWALLS, EXPANSION JOINTS, ELASTOMERIC BEARINGS, AND APPROACH SLABS.
TYPE: CONTINUOUS STEEL GIRDER COMPOSITE WITH REINFORCED CONCRETE DECK, REINFORCED CONCRETE SUBSTRUCTURE
SPANS: 79'-2½"(±), 112'-2⅝"(±), 90'-10¾"(±), 61'-5¼"(±) c/c BEARINGS, MEASURED ALONG REFERENCE LINE
ROADWAY: 26'-8" TOE/TOE OF PARAPETS, 30'-0" OUT/OUT
LOADING: HL-93
FUTURE WEARING SURFACE: 60 PSF
SKEW: 10°02'14"(±) LF WITH RESPECT TO REFERENCE LINE
WEARING SURFACE: 1" MONOLITHIC CONCRETE
APPROACH SLABS: AS-1-15 (25'-0" LONG)
ALIGNMENT: 7°30'00" CURVE LEFT
SUPERELEVATION: 0.059 FT/FT
DECK AREA: 10,432 SF
COORDINATES: LATITUDE 39°52'28.83" N
LONGITUDE 83°00'06.81" W

DLZ
6121 HUNTLEY ROAD • COLUMBUS, OHIO 43229

DATE 12/6/22
REVIEWED MJL
STRUCTURE FILE NUMBER 2513536
DRAWN PAT/PDP
REVISED
DESIGNED PAT/MHK
CHECKED JN/CJS

FRANKLIN COUNTY
STA. 579+49.81
STA. 583+01.24

SITE PLAN
BRIDGE NO. FRA-270-5264
RAMP L OVER I.R. 270

FRA-270-51.50
PID No. 92616

1 / 41
505
554

x:\Projects\2013\1321\1010\FRA\92616\structures\FRA270_5264\sheets\270_5264SP001.dgn 12/8/2022 8:05:49 PM cwong

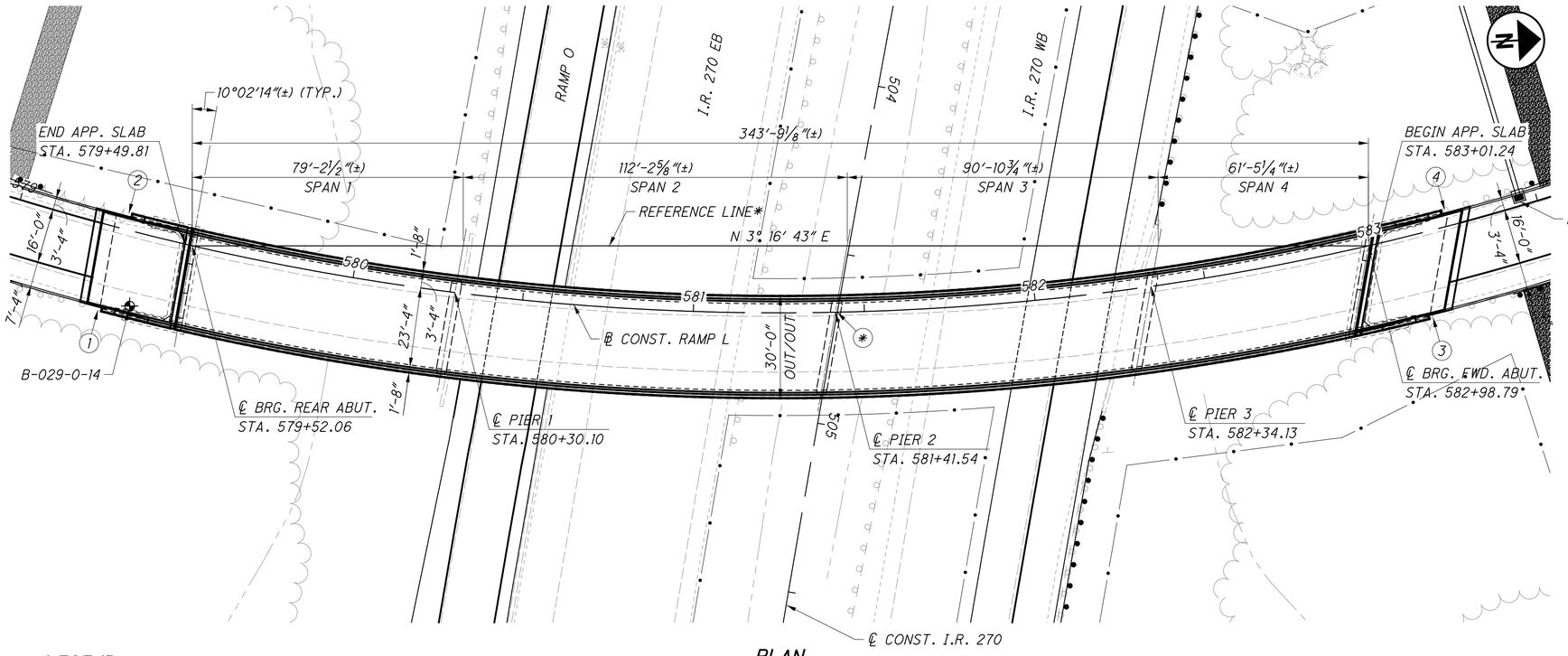

PLAN

LEGEND

1. MGS BRIDGE TERMINAL ASSEMBLY, TYPE 1
   FIRST POST OFF BRIDGE STA. 579+30.10 RT
2. MGS BRIDGE TERMINAL ASSEMBLY, TYPE 1
   FIRST POST OFF BRIDGE STA. 579+31.73 LT
3. MGS BRIDGE TERMINAL ASSEMBLY, TYPE 2
   FIRST POST OFF BRIDGE STA. 583+12.08 RT
4. MGS BRIDGE TERMINAL ASSEMBLY, TYPE 2
   FIRST POST OFF BRIDGE STA. 583+23.04 LT

(*) STA. 504+67.07 ℄ CONST. I.R. 270 =
STA. 581+42.07 ℄ CONST. RAMP L

⌖ - PROJECT BORING LOCATION

* THE REFERENCE LINE IS A CHORD FROM THE INTERSECTIONS OF THE REAR AND FORWARD ABUTMENT CENTERLINES OF BEARING WITH THE ℄ CONST. RAMP L

CURVE DATA

℄ RAMP L
P.I. STA. 601+45.20
Δ = 147° 29' 28" (LT)
Dc = 7° 30' 00"
R = 763.94'
T = 2,620.21'
L = 1,966.55'
C = 1,466.81'
C.B. = N 25° 26' 03" W

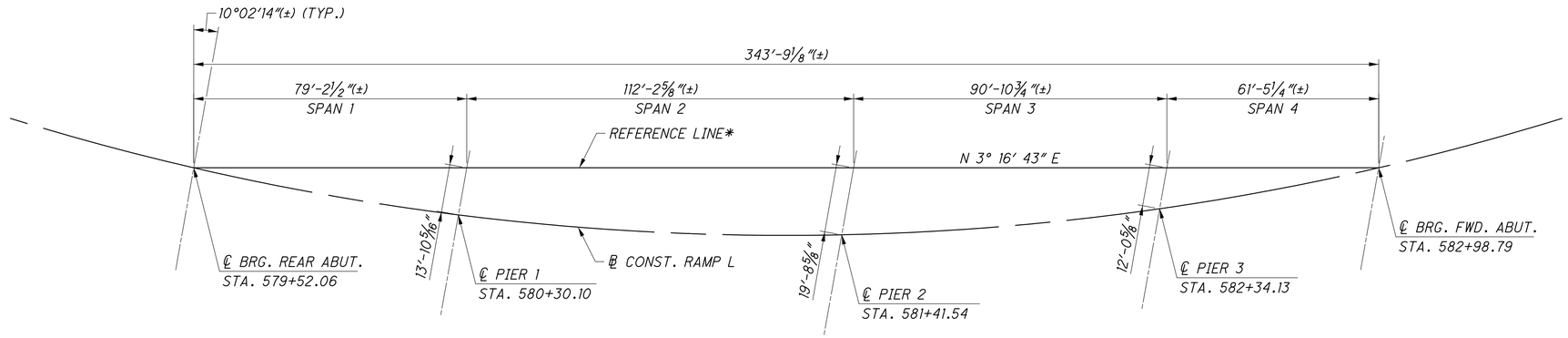

REFERENCE LINE DIAGRAM

DESIGNED PAT
DRAWN PAT
CHECKED JN
REVIEWED MJL
DATE 12/6/22
STRUCTURE FILE NUMBER 2513536
REVISED

GENERAL PLAN
BRIDGE NO. FRA-270-5264
RAMP L OVER I.R. 270

FRA-270-51.50
PID No. 92616

2 / 41

506
554

x:\Projects\2013\1321\1010\FRA\92616\structures\FRA270_5264\sheets\270_5264GP001.dgn 12/8/2022 8:05:51 PM cwong

REFER TO THE FOLLOWING STANDARD BRIDGE DRAWINGS:

A-1-20	REVISED	01-21-22
AS-1-15	REVISED	07-17-15
AS-2-15	REVISED	01-18-19
EXJ-4-87	REVISED	07-15-22
GSD-1-19	REVISED	01-15-21
SBR-1-20	REVISED	07-17-20

AND TO THE FOLLOWING SUPPLEMENTAL SPECIFICATION:

800 DATED 10-21-22

DESIGN SPECIFICATIONS:

THIS STRUCTURE CONFORMS TO THE 9TH EDITION LRFD BRIDGE DESIGN SPECIFICATIONS ADOPTED BY THE AMERICAN ASSOCIATION OF STATE HIGHWAY AND TRANSPORTATION OFFICIALS, 2020, AND THE ODOT BRIDGE DESIGN MANUAL, 2020.

SPECIAL DESIGN SPECIFICATIONS:

THIS BRIDGE REQUIRED THE USE OF A THREE-DIMENSIONAL MODEL USING THE FINITE ELEMENT METHOD TO ANALYZE THE SUPERSTRUCTURE. THE COMPUTER PROGRAM USED FOR STRUCTURAL ANALYSIS WAS OPENBRIDGE DESIGNER CE 2021 RELEASE 2. THE BRIDGE COMPONENTS DESIGNED BY THIS METHOD WERE THE GIRDERS, PIER AND ABUTMENT CROSSFRAMES, AND INTERMEDIATE CROSSFRAMES. THE THREE-DIMENSIONAL MODEL WAS USED TO:

1. DETERMINE GIRDER AND CROSSFRAME MEMBER FORCES AND MOMENTS.
2. DETERMINE DEAD AND LIVE LOAD REACTIONS FOR ELASTOMERIC BEARING DESIGN.
3. DETERMINE ANTICIPATED DEAD LOAD DEFLECTIONS FOR EACH GIRDER DUE TO THE PLACEMENT OF THE DECK SLAB AND PARAPETS FOR PURPOSES OF CALCULATING GIRDER CAMBER AND DECK SCREED ELEVATIONS.
4. DETERMINE ANTICIPATED MOVEMENT DUE TO TEMPERATURE EFFECTS FOR SIZING OF STRIP SEAL EXPANSION JOINTS.

REFINED ANALYSIS WAS REQUIRED BECAUSE OF THE UNUSUAL GEOMETRY OF THE FRAMING PLAN, WHICH WAS DESIGNED TO CLOSELY MATCH THE EXISTING FRAMING PLAN WITH THE GIRDER BEND POINTS LOCATED AT THE EXISTING PIERS, SO AS TO ALLOW REUSE OF THE EXISTING SUBSTRUCTURE.

DEAD LOAD DISTRIBUTION: DEAD LOADS WERE APPLIED IN THE THREE-DIMENSIONAL MODEL BASED ON THE ACTUAL SELF-WEIGHT OF MEMBERS AND PLATES (GIRDERS, CROSSFRAMES, AND DECK SLAB) WITH THE SUPERIMPOSED DEAD LOADS APPLIED AS UNIFORM AREA LOADS ON THE DECK SLAB.

LIVE LOAD DISTRIBUTION FACTORS:

EXTERIOR MEMBERS - 1.676 FOR WHEEL (OR AXLE) LOAD AND 0.838 FOR LANE LOAD MOMENTS.
- 1.676 FOR WHEEL (OR AXLE) LOAD AND 0.838 FOR LANE LOAD SHEAR.

INTERIOR MEMBERS - 1.396 FOR WHEEL (OR AXLE) LOAD AND 0.698 FOR LANE LOAD MOMENTS.
- 1.784 FOR WHEEL (OR AXLE) LOAD AND 0.892 FOR LANE LOAD SHEAR.

DESIGN LOADING:

OPERATIONAL IMPORTANCE: A LOAD MODIFIER OF 1.00 HAS BEEN ASSUMED FOR THE DESIGN OF THIS STRUCTURE IN ACCORDANCE WITH THE AASHTO LRFD BRIDGE DESIGN SPECIFICATIONS, ARTICLE 1.3.5 AND THE ODOT BRIDGE DESIGN MANUAL.

DESIGN DATA:

DESIGN LOADING:

VEHICULAR LIVE LOAD: HL-93
FUTURE WEARING SURFACE (FWS) OF 60 PSF

DESIGN DATA:

QC/QA CONCRETE CLASS QC2 - COMPRESSIVE STRENGTH 4500 PSI (SUPERSTRUCTURE)

CONCRETE CLASS QC1 - COMPRESSIVE STRENGTH 4000 PSI (SUBSTRUCTURE)

REINFORCING STEEL - MINIMUM YIELD STRENGTH 60,000 PSI

STRUCTURAL STEEL - ASTM A709 GRADE 50, YIELD STRENGTH 50 KSI

MONOLITHIC WEARING SURFACE:

MONOLITHIC WEARING SURFACE IS ASSUMED, FOR DESIGN PURPOSES, TO BE 1 INCH THICK.

EXISTING STRUCTURE VERIFICATION:

DETAILS AND DIMENSIONS SHOWN ON THESE PLANS PERTAINING TO THE EXISTING STRUCTURE HAVE BEEN OBTAINED FROM PLANS OF THE EXISTING STRUCTURE AND FROM FIELD OBSERVATIONS AND MEASUREMENTS. CONSEQUENTLY, THEY ARE INDICATIVE OF THE EXISTING STRUCTURE AND THE PROPOSED WORK BUT THEY SHALL BE CONSIDERED TENTATIVE AND APPROXIMATE. THE CONTRACTOR IS REFERRED TO CMS SECTIONS 102.05, 105.02, AND 513.04.

BASE CONTRACT BID PRICES UPON A RECOGNITION OF THE UNCERTAINTIES DESCRIBED ABOVE AND UPON A PREBID EXAMINATION OF THE EXISTING STRUCTURE. HOWEVER, THE DEPARTMENT WILL PAY FOR ALL PROJECT WORK BASED UPON ACTUAL DETAILS AND DIMENSIONS THAT HAVE BEEN VERIFIED IN THE FIELD.

EXISTING STRUCTURE PLANS:

THE FOLLOWING EXISTING PLANS MAY BE EXAMINED BY THE PROSPECTIVE BIDDERS AT THE OHIO DEPARTMENT OF TRANSPORTATION, DISTRICT 6, 400 E. WILLIAM STREET, DELAWARE, OH 43015, TEL 740-833-8000:

1. ORIGINAL CONSTRUCTION, FRA-200-9.46 (1961)

MAINTENANCE OF TRAFFIC:

MAINTENANCE OF TRAFFIC FOR THE STRUCTURE WORK SHALL BE COORDINATED WITH THE OVERALL PROJECT. REFER TO MAINTENANCE OF TRAFFIC NOTES AND DETAILS ELSEWHERE IN THE PLANS.

ITEM 202 - PORTIONS OF STRUCTURE REMOVED, OVER 20 FOOT SPAN, AS PER PLAN:

THIS ITEM SHALL INCLUDE THE ELEMENTS INDICATED IN THE PLANS AND GENERAL NOTES AND THAT ARE NOT SEPARATELY LISTED FOR PAYMENT, EXCEPT FOR WEARING COURSE REMOVAL. ITEMS TO BE REMOVED INCLUDE ALL EXISTING MATERIALS BEING REPLACED BY NEW CONSTRUCTION AND MISCELLANEOUS ITEM THAT ARE NOT SHOWN TO BE INCORPORATED INTO THE FINAL CONSTRUCTION AND ARE DIRECTED TO BE REMOVED BY THE ENGINEER. THE DEPARTMENT WILL NOT PERMIT THE USE OF EXPLOSIVES, HEADACHE BALLS AND/PR HOE-RAMS WILL NOT BE PERMITTED. DO NOT BEGIN WORK UNTIL THE ENGINEER ACCEPTS THE METHOD OF REMOVAL AND THE WEIGHT OF HAMMER SHALL BE APPROVED BY THE ENGINEER. PERFORM ALL WORK IN A MANNER THAT WILL NOT CUT, ELONGATE OR DAMAGE THE EXISTING REINFORCING STEEL TO BE PRESERVED. CHIPPING HAMMERS SHALL NOT BE HEAVIER THAN THE NOMINAL 90-POUNDS CLASS. PNEUMATIC HAMMERS SHALL NOT BE PLACED IN DIRECT CONTACT WITH CONCRETE REINFORCEMENT THAT IS TO BE RETAINED IN THE REBUILT STRUCTURE. SUBMIT CONSTRUCTION PLANS ACCORDING TO C&MS 501.05.

CUT LINE CONSTRUCTION JOINT PREPARATION: SAW CUT BOUNDARIES OF PROPOSED CONCRETE REMOVALS 1 INCH DEEP. REMOVE CONCRETE TO A ROUGH SURFACE. LEAVE THE EXISTING REINFORCING STEEL, IF REQUIRED IN THE PLANS, IN PLACE. INSTALL DOWEL BARS IF SPECIFIED. PRIOR TO CONCRETE PLACEMENT, ABRASIVELY CLEAN JOINT SURFACES AND EXISTING EXPOSED REINFORCEMENT TO REMOVE LOOSE AND DISINTEGRATED CONCRETE AND LOOSE RUST. THOROUGHLY CLEAN THE JOINT SURFACE AND EXPOSED REINFORCEMENT OF ALL DIRT, DUST, RUST, OR OTHER FOREIGN MATERIAL BY THE USE OF WATER, AIR UNDER PRESSURE, OR OTHER METHODS THAT PRODUCE SATISFACTORY RESULTS. EXISTING REINFORCING STEEL DOES NOT HAVE TO HAVE A BRIGHT STEEL FINISH, BUT REMOVE ALL PACK AND LOOSE RUST. THOROUGHLY DRENCH EXISTING CONCRETE SURFACES WITH CLEAN WATER AND ALLOW TO DRY TO A DAMP CONDITION BEFORE PLACING CONCRETE.

SUBSTRUCTURE CONCRETE REMOVAL: REMOVE CONCRETE BY MEANS OF APPROVED PNEUMATIC HAMMERS EMPLOYING POINTED AND BLUNT CHISEL TOOLS. HYDRAULIC HOE-RAM TYPE HAMMERS WILL NOT BE PERMITTED. THE WEIGHT OF THE HAMMER SHALL NOT BE MORE THAN 35 POUNDS FOR REMOVAL WITHIN 18 INCHES OF PORTIONS TO BE PRESERVED. OUTSIDE THE 18 INCH LIMIT, THE CONTRACTOR MAY USE HAMMERS NOT EXCEEDING 90 POUNDS UPON THE APPROVAL OF THE ENGINEER. DO NOT PLACE PNEUMATIC HAMMERS IN DIRECT CONTACT WITH REINFORCING STEEL THAT IS TO BE RETAINED IN THE REBUILT STRUCTURE.

MEASUREMENT & PAYMENT: THE DEPARTMENT WILL MEASURE THE QUANTITY OF REMOVALS ON A LUMP SUM BASIS. THE DEPARTMENT WILL PAY FOR THE ACCEPTED QUANTITIES OF REMOVALS AT THE CONTRACT PRICE FOR ITEM 202, PORTIONS OF STRUCTURE REMOVED, AS PER PLAN.

ITEM 512 - SEALING OF CONCRETE SURFACES (EPOXY-URETHANE):

COLOR OF THE SEALER SHALL BE LIGHT NEUTRAL, FEDERAL COLOR NO. 17778.

ITEM 514 - FIELD PAINTING OF STRUCTURAL STEEL:

COLOR OF THE FINISH COAT SHALL BE GREEN, FEDERAL COLOR NO. 14277.

ITEM SPECIAL - STRUCTURE, MISC.: COMPOSITE FIBER WRAP SYSTEM:

COMPOSITE FIBER WRAP SYSTEM SHALL BE PER PROPOSAL NOTE 519.

DECK PLACEMENT DESIGN ASSUMPTIONS:

THE FOLLOWING ASSUMPTIONS OF CONSTRUCTION MEANS AND METHODS WERE MADE FOR THE ANALYSIS AND DESIGN OF THE SUPERSTRUCTURE. THE CONTRACTOR IS RESPONSIBLE FOR THE DESIGN OF THE FALSEWORK SUPPORT SYSTEM WITHIN THESE PARAMETERS AND WILL ASSUME RESPONSIBILITY FOR SUPERSTRUCTURE ANALYSIS FOR DEVIATION FROM THESE DESIGN ASSUMPTIONS.

AN EIGHT WHEEL FINISHING MACHINE WITH A MAXIMUM WHEEL LOAD OF 2.2 KIPS.

A MINIMUM OUT-TO-OUT WHEEL SPACING AT EACH END OF THE MACHINE OF 103".

A MAXIMUM SPACING OF OVERHANG FALSEWORK BRACKETS OF 48".

A MAXIMUM DISTANCE FROM THE CENTERLINE OF THE FASCIA GIRDER TO THE FACE OF THE SAFETY HANDRAIL OF 65".

DLZ
6121 HUNTLEY ROAD • COLUMBUS, OHIO 43229

DESIGNED PAT/CJS | DRAWN PAT/JG | REVIEWED MJL | DATE 12/6/22
CHECKED JN/MHK | REVISED | STRUCTURE FILE NUMBER 2513536

GENERAL NOTES - 1
BRIDGE NO. FRA-270-5264
RAMP L OVER I.R. 270

FRA-270-51.50
PID No. 92616

x:\Projects\2013\1321\1010\FRA\92616\structures\FRA270_5264\sheets\270_5264GN001.dgn 5/5/2023 1:02:58 PM jmiller

SUMMARY OF PROPOSED REHABILITATION WORK:

THE FOLLOWING LIST CONTAINS THE MAJOR ITEMS OF WORK INCLUDED IN THESE PLANS FOR THE REHABILITATION OF THIS STRUCTURE:

1. *REMOVAL OF THE EXISTING SUPERSTRUCTURE, INCLUDING CONCRETE DECK SLAB, STEEL GIRDERS, AND BEARINGS.*
2. *REMOVAL OF EXISTING APPROACH SLABS.*
3. *REMOVAL OF EXISTING ABUTMENT BACKWALLS AND PORTIONS OF EXISTING ABUTMENT WINGWALLS ABOVE THE EXISTING BEAM SEATS.*
4. *CONSTRUCTION OF NEW BEAM SEATS ON EXISTING PIER CAPS.*
5. *CONSTRUCTION OF NEW BEAM SEATS, BACKWALLS, WINGWALLS, AND PARAPETS ON EXISTING ABUTMENTS.*
6. *PATCHING OF THE EXISTING PIERS AND THE REMAINING PORTIONS OF THE EXISTING ABUTMENTS.*
7. *CONSTRUCTION OF NEW SUPERSTRUCTURE, INCLUDING ELASTOMERIC BEARINGS, STEEL GIRDERS, STRIP SEAL EXPANSION JOINTS, CONCRETE DECK SLAB, AND PARAPETS.*
8. *CONSTRUCTION OF NEW APPROACH SLABS.*
9. *SEALING OF THE PARAPETS, DECK EDGES, ABUTMENTS, AND PIERS.*
10. *PAINTING OF NEW STRUCTURAL STEEL.*

PLAN ABBREVIATIONS:

ABUT.	*= ABUTMENT*
APP.	*= APPROACH*
BRG.	*= BEARING*
c/c	*= CENTER TO CENTER*
CL.	*= CLEAR COVER*
CONC.	*= CONCRETE*
CONST.	*= CONSTRUCTION*
C.J.	*= CONSTRUCTION JOINT*
CMP	*= CORRUGATED METAL PIPE*
DIA.	*= DIAMETER*
E.F.	*= EACH FACE*
EL.	*= ELEVATION*
EQ.	*= EQUAL*
EXIST.	*= EXISTING*
F.F.	*= FAR FACE*
F.S.	*= FIELD SPLICE*
FWD.	*= FORWARD*
F.A.	*= FORWARD ABUTMENT*
HMWM	*= HIGH MOLECULAR WEIGHT METHACRYLATE*
INV.	*= INVERT*
MAX.	*= MAXIMUM*
MIN.	*= MINIMUM*
OPT.	*= OPTIONAL*
N.F.	*= NEAR FACE*
N.P.C.P.P.	*= NON-PERFORATED CORRUGATED PLASTIC PIPE*
P.C.P.P.	*= PERFORATED CORRUGATED PLASTIC PIPE*
PEJF	*= PREFORMED EXPANSION JOINT FILLER*
PROP.	*= PROPOSED*
R.A.	*= REAR ABUTMENT*
REINF.	*= REINFORCED, REINFORCING*
SPA.	*= SPACE, SPACED, SPACES*
TYP.	*= TYPICAL*
U.N.O.	*= UNLESS NOTED OTHERWISE*

x:\Projects\2013\1321\1010\FRA\92616\structures\FRA270_5264\sheets\270_5264GN002.dgn 12/8/2022 8:05:53 PM cwong

DLZ
6121 HUNTLEY ROAD • COLUMBUS, OHIO 43229

DESIGNED	DRAWN	REVIEWED	DATE
PAT	PAT	MJL	12/6/22
CHECKED	REVISED	STRUCTURE FILE NUMBER	
JN		2513536	

GENERAL NOTES - 2
BRIDGE NO. FRA-270-5264
RAMP L OVER I.R. 270

FRA-270-51.50
PID No. 92616

FUNDING	ESTIMATED QUANTITIES											CALC. BY: PAT/MHK DATE: 9/13/22 CHKD. BY: BPS/JDA DATE: 9/14/22
02/IMS/BR	ITEM	ITEM EXTENSION	TOTAL	UNIT	DESCRIPTION	REAR ABUTMENT	FORWARD ABUTMENT	PIERS	SUPER-STRUCTURE	GENERAL	REF. SHEET NO.
	202	11203	LS		PORTIONS OF STRUCTURE REMOVED, OVER 20 FOOT SPAN, AS PER PLAN					LS	3
89	202	22900	89	SY	APPROACH SLAB REMOVED					89	
89	202	23500	89	SY	WEARING COURSE REMOVED					89	
206	503	21100	206	CY	UNCLASSIFIED EXCAVATION	94	112				
122,504	509	10000	122,504	LB	EPOXY COATED STEEL REINFORCEMENT	4,254	4,654	2,318	111,278	0	
117	509	30020	117	FT	NO. 4 GFRP DEFORMED BARS				117		
495	510	10000	495	EACH	DOWEL HOLES WITH NONSHRINK, NONMETALLIC GROUT	138	149	208			
326	511	34412	326	CY	CLASS QC2 CONCRETE WITH QC/QA, SUPERSTRUCTURE				326		
106	511	34450	106	CY	CLASS QC2 CONCRETE WITH QC/QA, BRIDGE DECK (PARAPET)				106		
14	511	41010	14	CY	CLASS QC1 CONCRETE, PIER ABOVE FOOTINGS			14			
72	511	45710	72	CY	CLASS QC1 CONCRETE, ABUTMENT	36	37				
1,250	512	10100	1,250	SY	SEALING OF CONCRETE SURFACES (EPOXY-URETHANE)	66	79	252	853		
34	512	33000	34	SY	TYPE 2 WATERPROOFING	16	18				
372,900	513	10280	372,900	LB	STRUCTURAL STEEL MEMBERS, LEVEL 4				372,900		
4,701	513	20000	4,701	EACH	WELDED STUD SHEAR CONNECTORS				4,701		
24,100	514	00060	24,100	SF	FIELD PAINTING STRUCTURAL STEEL, INTERMEDIATE COAT				24,100		
24,100	514	00066	24,100	SF	FIELD PAINTING STRUCTURAL STEEL, FINISH COAT				24,100		
15	514	10000	15	EACH	FINAL INSPECTION REPAIR				15		
61	516	11210	61	FT	STRUCTURAL EXPANSION JOINT INCLUDING ELASTOMERIC STRIP SEAL				61		
18	516	13900	18	SF	2" PREFORMED EXPANSION JOINT FILLER	9	9				
8	516	44101	8	EACH	ELASTOMERIC BEARING WITH INTERNAL LAMINATES AND LOAD PLATE (NEOPRENE), AS PER PLAN	4	4				18
					(LOAD PLATE 20" x 16" x 1.50", NEOPRENE 15" DIA. x 2.950")						
4	516	44101	4	EACH	ELASTOMERIC BEARING WITH INTERNAL LAMINATES AND LOAD PLATE (NEOPRENE), AS PER PLAN			4			20
					(LOAD PLATE 28" x 19" x 1.50", NEOPRENE 20" x 18"x 3.850")						
8	516	44101	8	EACH	ELASTOMERIC BEARING WITH INTERNAL LAMINATES AND LOAD PLATE (NEOPRENE), AS PER PLAN			8			19
					(LOAD PLATE 25" x 25" x 1.50", NEOPRENE 24" DIA. x 4.975")						
48	518	21200	48	CY	POROUS BACKFILL WITH GEOTEXTILE FABRIC	23	25				
456	SPECIAL	51900100	456	SF	SPECIAL - COMPOSITE FIBER WRAP SYSTEM			456			
98	519	11100	98	SF	PATCHING CONCRETE STRUCTURE	4	81	13			
148	526	25010	148	SY	REINFORCED CONCRETE APPROACH SLABS WITH QC/QA (T=15")					148	
58	526	90030	58	FT	TYPE C INSTALLATION					58	

DLZ
6121 HUNTLEY ROAD • COLUMBUS, OHIO 43229

DESIGNED PAT/MHK
DRAWN PAT/MHK
CHECKED JN/JDA
REVIEWED MJL
DATE 12/6/22
REVISED
STRUCTURE FILE NUMBER 2513536

ESTIMATED QUANTITIES
BRIDGE NO. FRA-270-5264
RAMP L OVER I.R. 270

FRA-270-51.50
PID No. 92616

5 / 41

509
554

x:\Projects\2013\1321\1010\FRA\92616\structures\FRA270_5264\sheets\270_5264EQ001.dgn 5/5/2023 1:02:59 PM jmiller

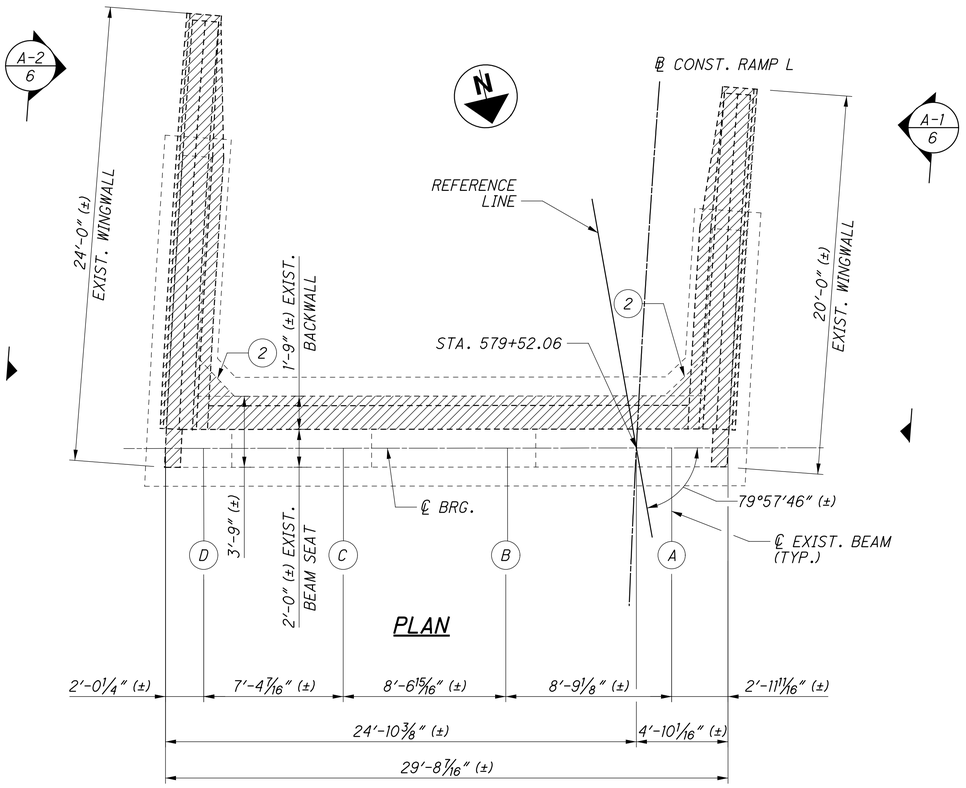

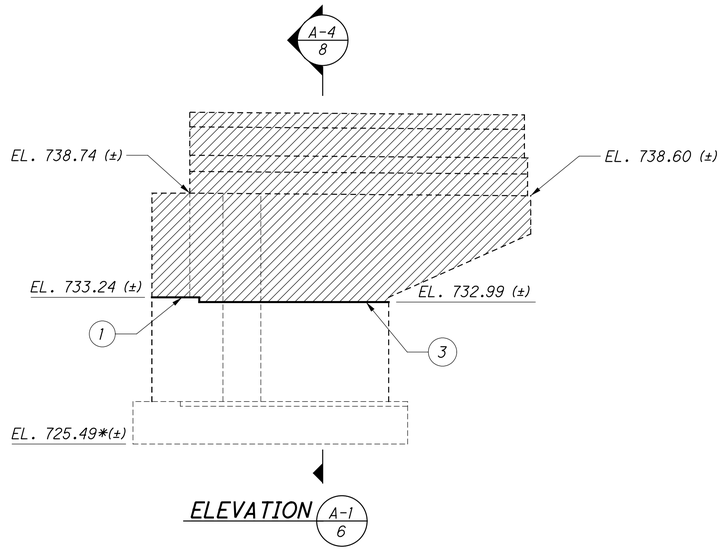

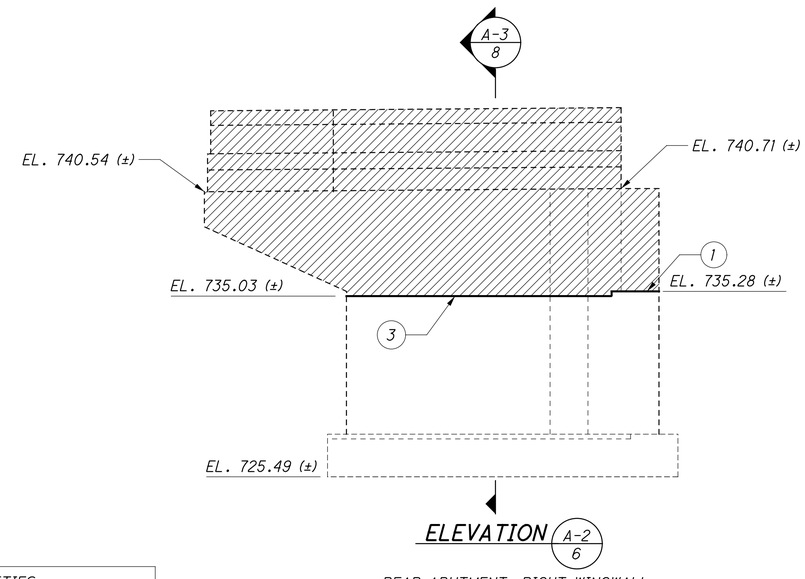

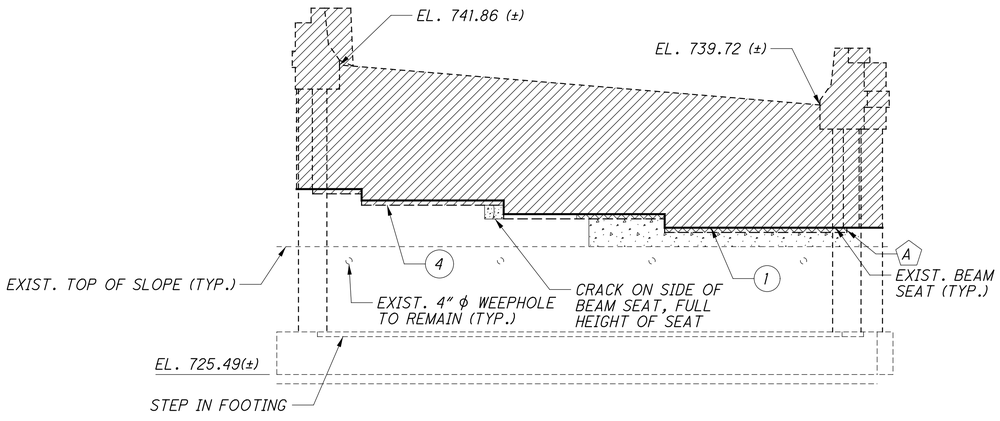

ESTIMATED PATCHING QUANTITIES		
LOCATION	WIDTH X HEIGHT	AREA (SF)
(A)	13'-6" X 3"	3.375
TOTAL AREA MEASURED		3.375
TOTAL AREA ESTIMATED *		4.388 *

* : SEE NOTE 1

NOTE

1. ESTIMATED PATCHING QUANTITIES HAVE BEEN INCREASED BY 30% OVER MEASURED QUANTITIES TO ALLOW FOR ADDTIONAL DETERIORATION.

LEGEND

- (1) FULL DEPTH SAW CUT AT BEAM SEAT
- (2) REMOVE EXISTING CHAMFER TO BEAM SEAT
- (3) FULL DEPTH SAWCUT THROUGH WINGWALL
- (4) REMOVE ADDITIONAL CONCRETE TO LIMITS OF EXISTING CONSTRUCTION JOINT
- (X) BEAM LINE DESIGNATION
- PORTIONS OF EXISTING STRUCTURE TO BE REMOVED PER ITEM 202.
- AREA OF DELAMINATION TO BE REPAIRED PER ITEM 519 - PATCHING CONCRETE STRUCTURE

DLZ
6121 HUNTLEY ROAD • COLUMBUS, OHIO 43229

DESIGNED	DRAWN	REVIEWED	DATE
MSC	MSC	MJL	12/6/22
CHECKED	REVISED	STRUCTURE FILE NUMBER	
ASP		2513536	

REAR ABUTMENT REMOVAL PLAN & ELEVATION
BRIDGE NO. FRA-270-5264
RAMP L OVER I.R. 270

FRA-270-51.50
PID No. 92616

6 / 41

510
554

x:\Projects\2013\1321\1010\FRA\92616\structures\FRA270_5264\sheets\270_5264AR001.dgn 12/8/2022 8:05:54 PM cwong

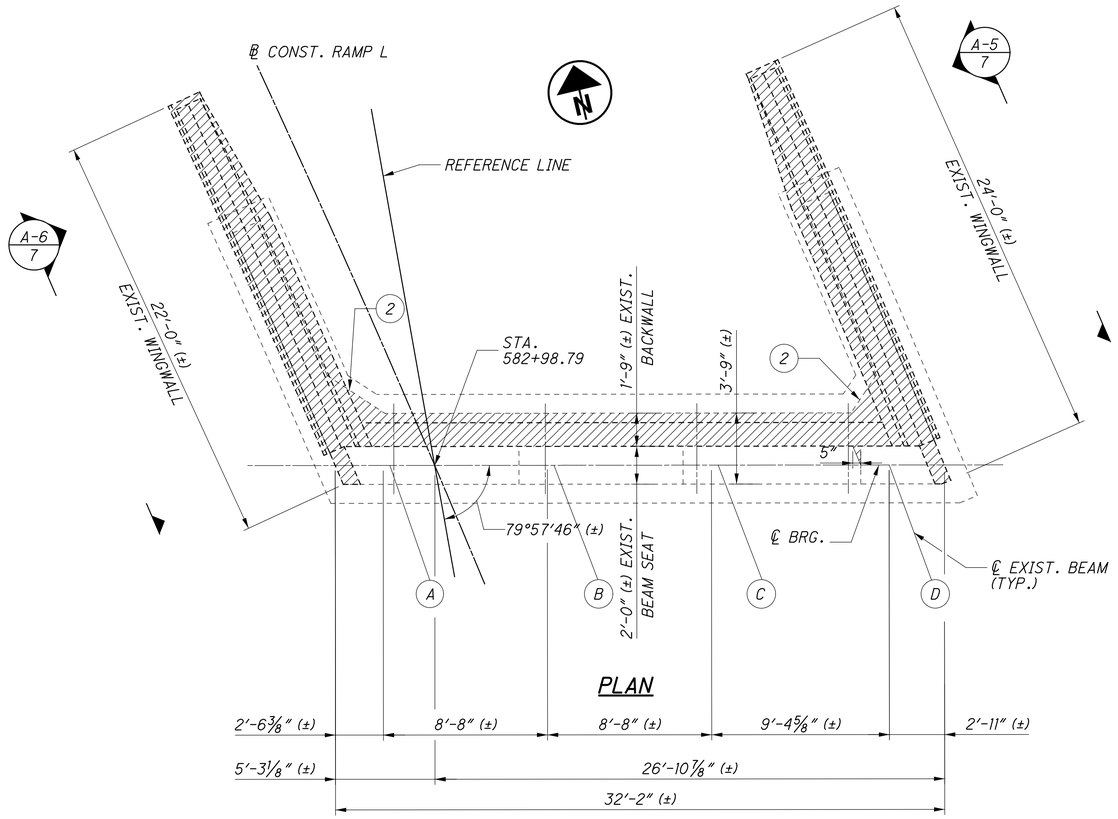

PLAN

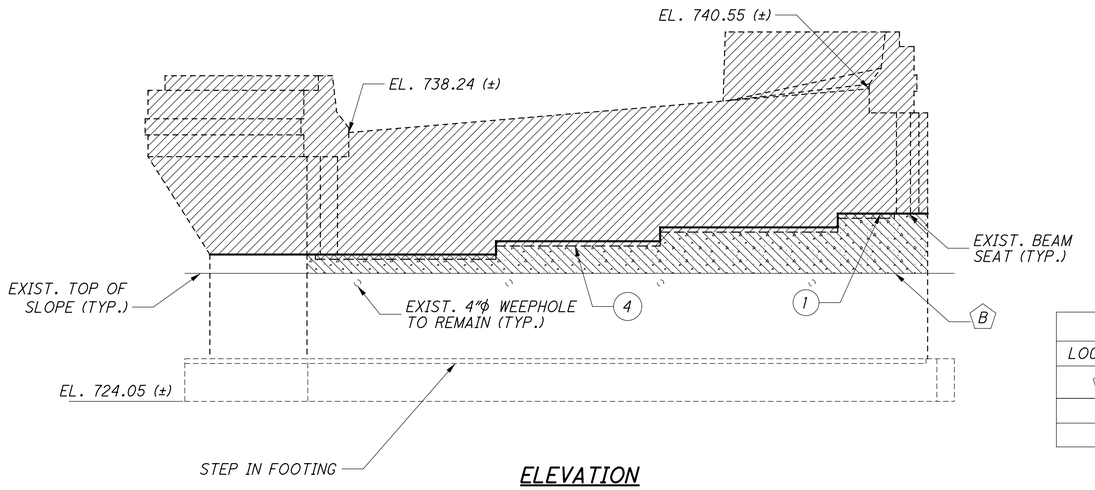

ELEVATION

ESTIMATED PATCHING QUANTITIES		
LOCATION	WIDTH X HEIGHT	AREA (SF)
(B)	32'-9" X 1'-11"	62.45
TOTAL AREA MEASURED		62.45
TOTAL AREA ESTIMATED *		81.185 *

* : SEE NOTE 1

NOTE

1. ESTIMATED PATCHING QUANTITIES HAVE BEEN INCREASED BY 30% OVER MEASURED QUANTITIES TO ALLOW FOR ADDTIONAL DETERIORATION.

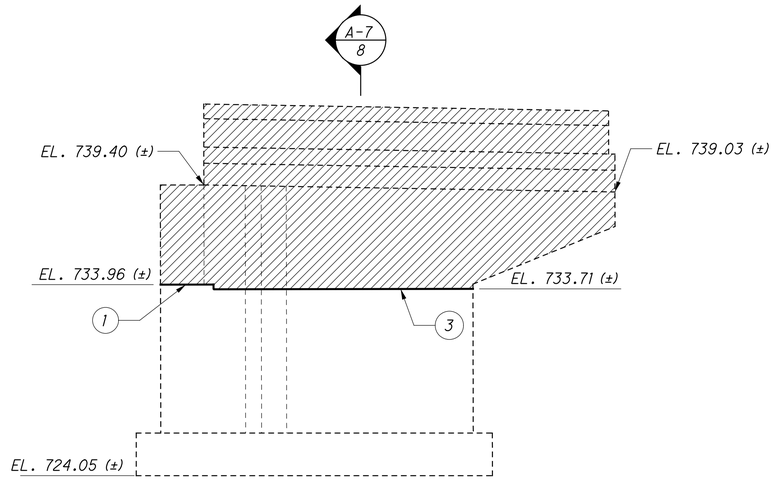

ELEVATION A-5 7

FORWARD ABUTMENT, RIGHT WINGWALL

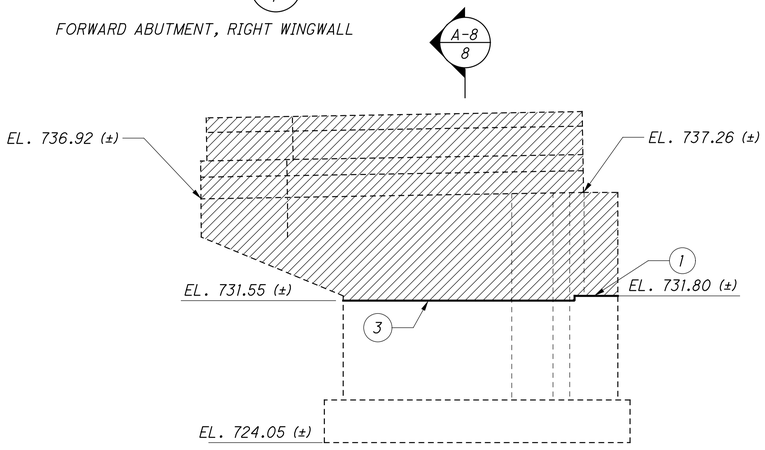

ELEVATION A-6 7

FORWARD ABUTMENT, LEFT WINGWALL

LEGEND

- (1) FULL DEPTH SAW CUT AT BEAM SEAT
- (2) REMOVE EXISTING CHAMFER TO BEAM SEAT
- (3) FULL DEPTH SAWCUT THROUGH WINGWALL
- (4) REMOVE ADDITIONAL CONCRETE TO LIMITS OF EXISTING CONSTRUCTION JOINT
- (X) BEAM LINE DESIGNATION
- PORTIONS OF EXISTING STRUCTURE TO BE REMOVED PER ITEM 202.
- AREA OF DELAMINATION TO BE REPAIRED PER ITEM 519 - PATCHING CONCRETE STRUCTURE

DLZ
4121 HUNTLEY ROAD • COLUMBUS, OHIO 43228

DESIGNED	DRAWN	REVIEWED	DATE
MSC	MSC	MJL	12/6/22
CHECKED	REVISED	STRUCTURE FILE NUMBER	
ASP		2513536	

FORWARD ABUTMENT REMOVAL PLAN & ELEVATION
BRIDGE NO. FRA-270-5264
RAMP L OVER I.R. 270

FRA-270-51.50
PID No. 92616

7 / 41

511
554

x:\Projects\2013\1321\1010\FRA\92616\structures\FRA270_5264\sheets\270_5264AF001.dgn 12/8/2022 8:05:55 PM cwong

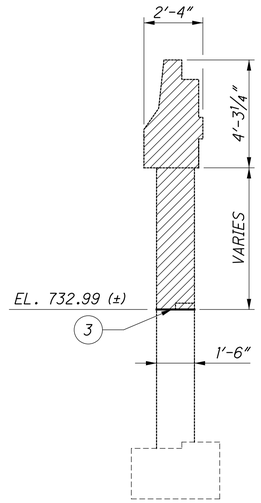

SECTION A-4 / 6

REAR ABUTMENT, LEFT WING

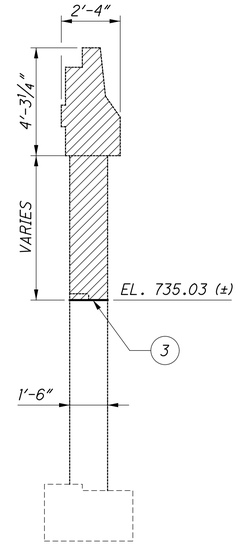

SECTION A-3 / 6

REAR ABUTMENT, RIGHT WING

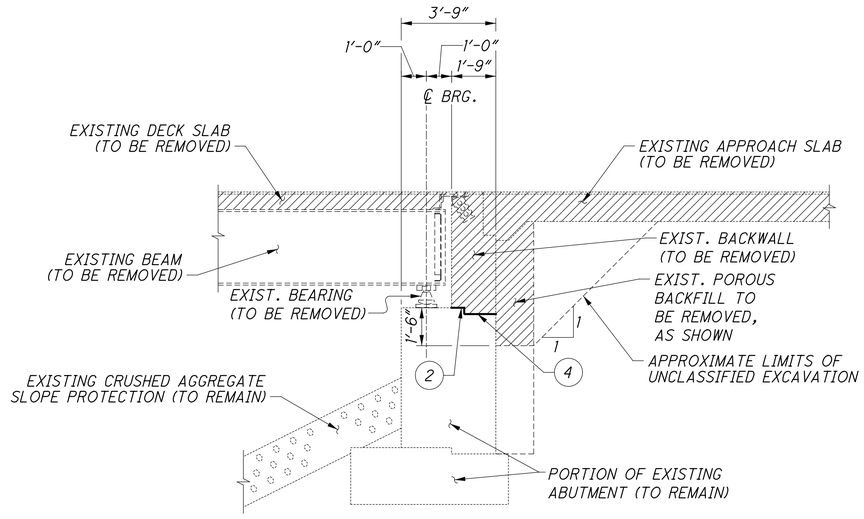

TYPICAL EXISTING ABUTMENT SECTION

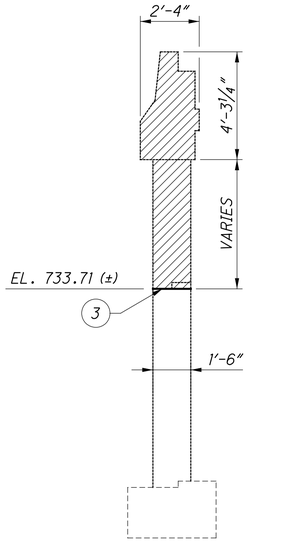

SECTION A-7 / 7

FORWARD ABUTMENT, RIGHT WING

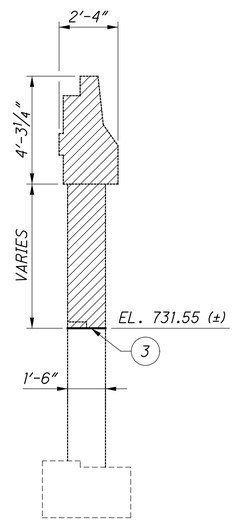

SECTION A-8 / 7

FORWARD ABUTMENT, LEFT WING

NOTES

1. REMOVAL AT ABUTMENTS INCLUDES THE EXISTING EXPANSION JOINT ARMOR (END DAM, BEVEL FILLS, AND ⅜" CONNECTION PLATES).

LEGEND

- (2) FULL DEPTH SAW CUT THROUGH BACKWALL
- (3) FULL DEPTH SAW CUT THROUGH WINGWALL
- (4) REMOVE ADDITIONAL CONCRETE TO LIMITS OF EXIST. CONSTRUCTION JOINT
- PORTIONS OF EXISTING STRUCTURE TO BE REMOVED UNDER ITEM 202

DLZ
6121 HUNTLEY ROAD • COLUMBUS, OHIO 43229

DESIGNED MSC | DRAWN MSC | REVIEWED MJL | DATE 12/6/22
CHECKED ASP | REVISED | STRUCTURE FILE NUMBER 2513536

ABUTMENT REMOVAL DETAILS
BRIDGE NO. FRA-270-5264
RAMP L OVER I.R. 270

FRA-270-51.50
PID No. 92616

8 / 41

512
554

x:\Projects\2013\1321\1010\FRA\92616\structures\FRA270_5264\sheets\270_5264AR002.dgn 12/8/2022 8:05:55 PM cwong

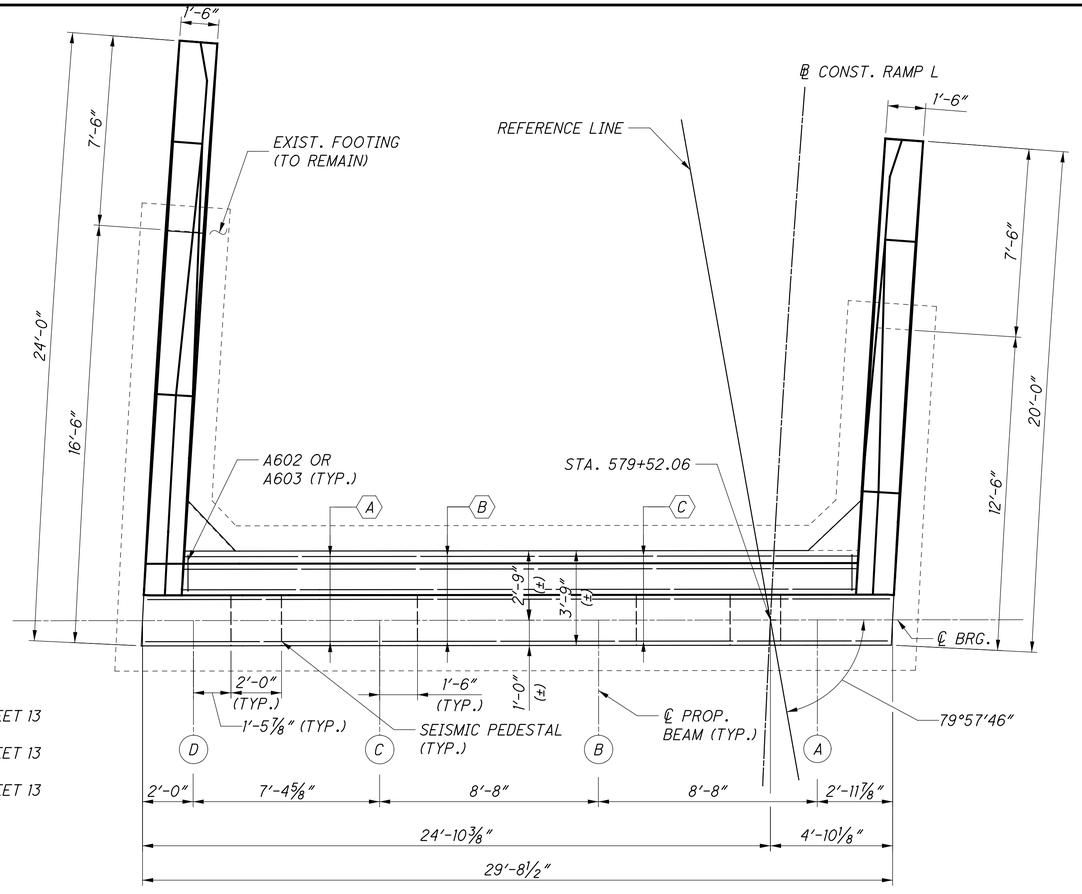

PLAN

Ⓐ 5-A506 BARS, SPA. AS SHOWN IN SECTION A-9, SHEET 13

Ⓑ 5-A507 BARS, SPA. AS SHOWN IN SECTION A-9, SHEET 13

Ⓒ 5-A508 BARS, SPA. AS SHOWN IN SECTION A-9, SHEET 13

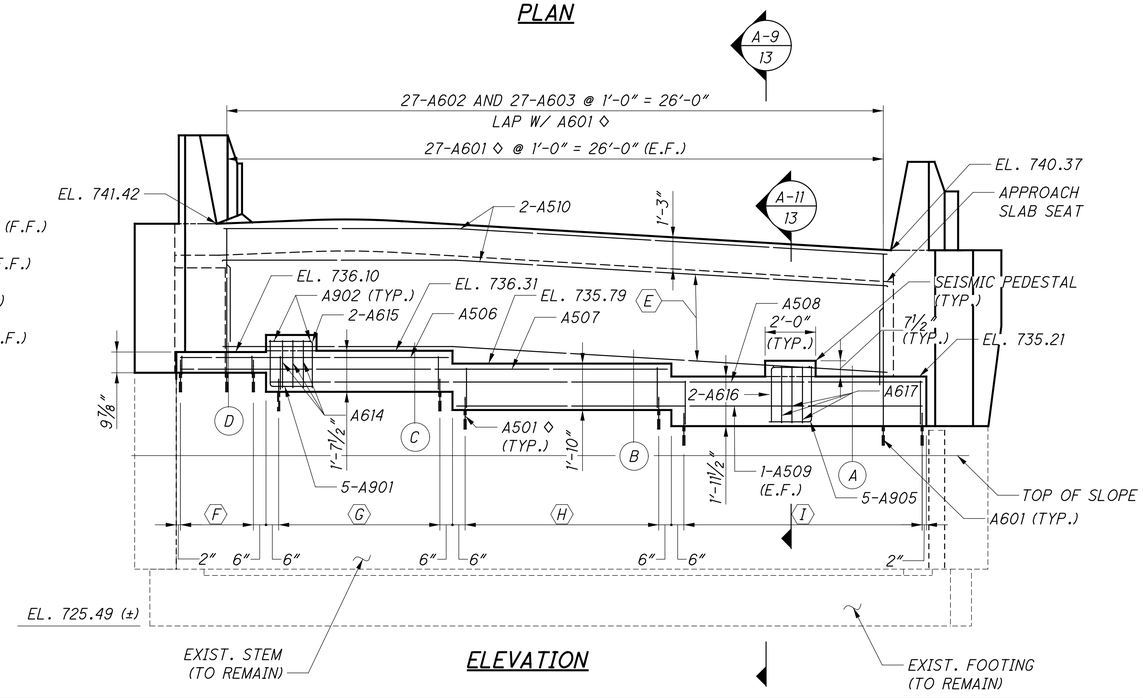

ELEVATION

Ⓔ 5-A510 @ 10¼" = 3'-5" (E.F.)

Ⓕ 4-A501 ◊ AND 4-A502, 3 SPA. @ 1'-0"(-) = 2'-10½" (F.F.)

Ⓖ 8-A501 ◊ AND 8-A503, 7 SPA. @ 11" (-) = 6'-4⅝" (F.F.)

Ⓗ 9-A501 ◊ AND 9-A504, 8 SPA. @ 11½" = 7'-8" (F.F.)

Ⓘ 11-A501 ◊ AND 11-A505, 10 SPA. @ 11¼" = 9'-5¼" (F.F.)

LEGEND

◇ DOWEL BAR, TO BE DRILLED AND GROUTED 9" AND 10" INTO EXISTING BEAM SEAT FOR #5 AND #6 BARS RESPECTIVELY, SEE NOTE 3

(X) BEAM LINE DESIGNATION

NOTES

1. FOR THE ABUTMENT AND BACKWALL REINFORCEMENT, MINIMUM LAP LENGTH FOR #5 AND #6 BARS IS 3'-1" AND 4'-0" RESPECTIVELY.
2. SEE EXISTING PLANS FOR LOCATION OF EXISTING STEEL REINFORCEMENT IN ABUTMENT STEM.
3. DOWEL HOLES HAVE BEEN LOCATED TO AVOID INTERFERENCE WITH THE EXISTING REINFORCING STEEL BASED ON INFORMATION OBTAINED FROM THE RECORD PLANS. IF EXISTING REINFORCING STEEL IS ENCOUNTERED WHILE DRILLING DOWEL HOLES, THE HOLE LOCATION MAY BE ADJUSTED BY UP TO 3" LEFT OR RIGHT TO ELIMINATE THE CONFLICT. FOR DETAILS OF EXISTING REINFORCING STEEL NOT SHOWN, REFER TO THE RECORD PLANS.
4. SEAL THE ENTIRE EXPOSED CONCRETE SURFACE OF THE EXISTING ABUTMENT, BACKWALL, AND PROPOSED STEM ADDITION, EXCEPT THE TOP OF BEAM SEAT AS DIRECTED BY THE REQUIREMENTS OF CMS 512.03.

x:\Projects\2013\1321\1010\FRA\92616\structures\FRA270_5264\sheets\270_5264AR003.dgn 12/8/2022 8:05:56 PM cwong

DLZ
6121 HUNTLEY ROAD • COLUMBUS, OHIO 43229

DESIGNED	DRAWN	REVIEWED	DATE
ASP/CJS	MSC/JG	MJL	12/6/22
CHECKED	REVISED	STRUCTURE FILE NUMBER	
ASP		2513536	

REAR ABUTMENT REPAIR PLAN & ELEVATION
BRIDGE NO. FRA-270-5264
RAMP L OVER I.R. 270

FRA-270-51.50
PID No. 92616

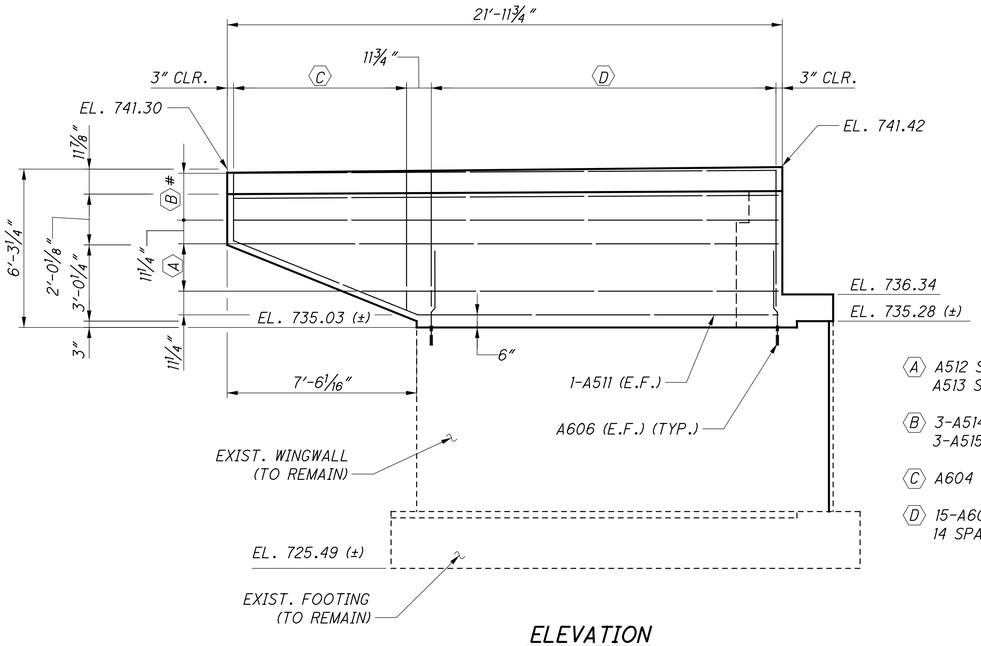

A 512 SER., 2 SPA. @ 11¼" = 1'-10½" (F.F.)
A 513 SER., 2 SPA. @ 11¼" = 1'-10½" (B.F.)

B 3-A514 @ 11¼" = 1'-10½"(F.F.)
3-A515 @ 11¼" = 1'-10½" (B.F.)

C A604 SER., 7 SPA. @ 11⅝" (+) = 6'-9½" (E.F.)

D 15-A605 W/ 15-A606 ◇ (E.F.),
14 SPA. @ 11¾" = 13'-8½"

ELEVATION

REAR ABUTMENT, RIGHT WINGWALL

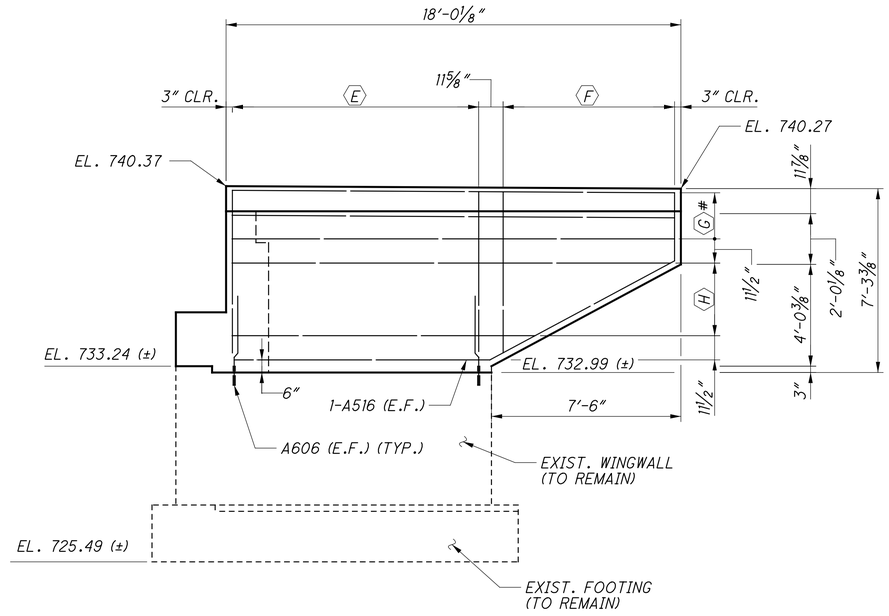

ELEVATION

REAR ABUTMENT, LEFT WINGWALL

E 11-A607 W/ 11-A606 ◇ (E.F.),
10 SPA. @ 11⅝" = 9'-8¼"

F A608 SER., 7 SPA. @ 11¾" = 6'-10¼" (E.F.)

G 3-A519, 2 SPA. @ 11½" = 1'-11" (F.F.)
3-A520, 2 SPA. @ 11½" = 1'-11" (B.F.)

H A517 SER., 3 SPA. @ 11½" = 2'-10½" (F.F.)
A518 SER., 3 SPA. @ 11½" = 2'-10½" (B.F.)

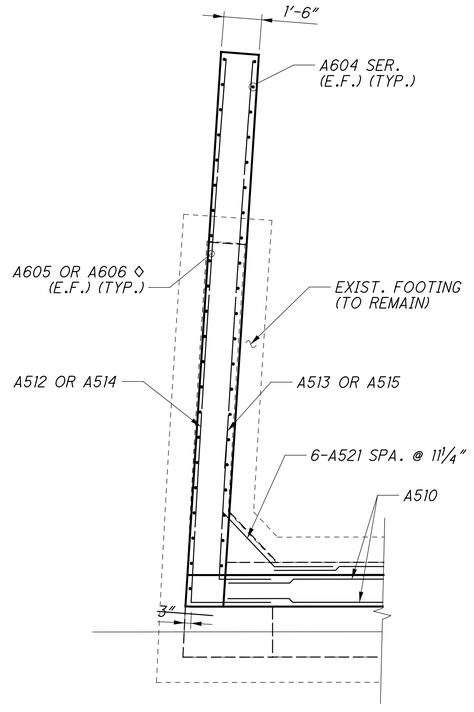

PLAN

REAR ABUTMENT, RIGHT WINGWALL
PARAPET NOT SHOWN FOR CLARITY

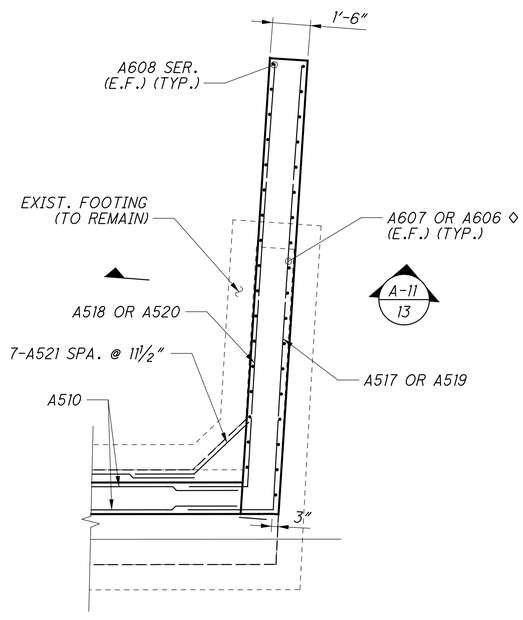

PLAN

REAR ABUTMENT, LEFT WINGWALL
PARAPET NOT SHOWN FOR CLARITY

LEGEND

◇ DOWEL BAR, TO BE DRILLED AND GROUTED 9" AND 10" INTO EXISTING BEAM SEAT FOR #5 AND #6 BARS, RESPECTIVELY.

\# FLARE BARS AS SHOWN

NOTES

1. FOR DIMENSIONS AND REINFORCEMENT NOT SHOWN IN PARAPET TRANSITION, REFER TO STANDARD DRAWING SBR-1-20.

DLZ
6121 HUNTLEY ROAD • COLUMBUS, OHIO 43229

DESIGNED MSC | DRAWN MSC | REVIEWED MJL | DATE 12/6/22
CHECKED ASP | REVISED | STRUCTURE FILE NUMBER 2513536

REAR ABUTMENT REPAIR DETAILS
BRIDGE NO. FRA-270-5264
RAMP L OVER I.R. 270

FRA-270-51.50
PID No. 92616

10 / 41

514
554

x:\Projects\2013\1321\1010\FRA\92616\structures\FRA270_5264\sheets\270_5264AR004.dgn 12/8/2022 8:05:57 PM cwong

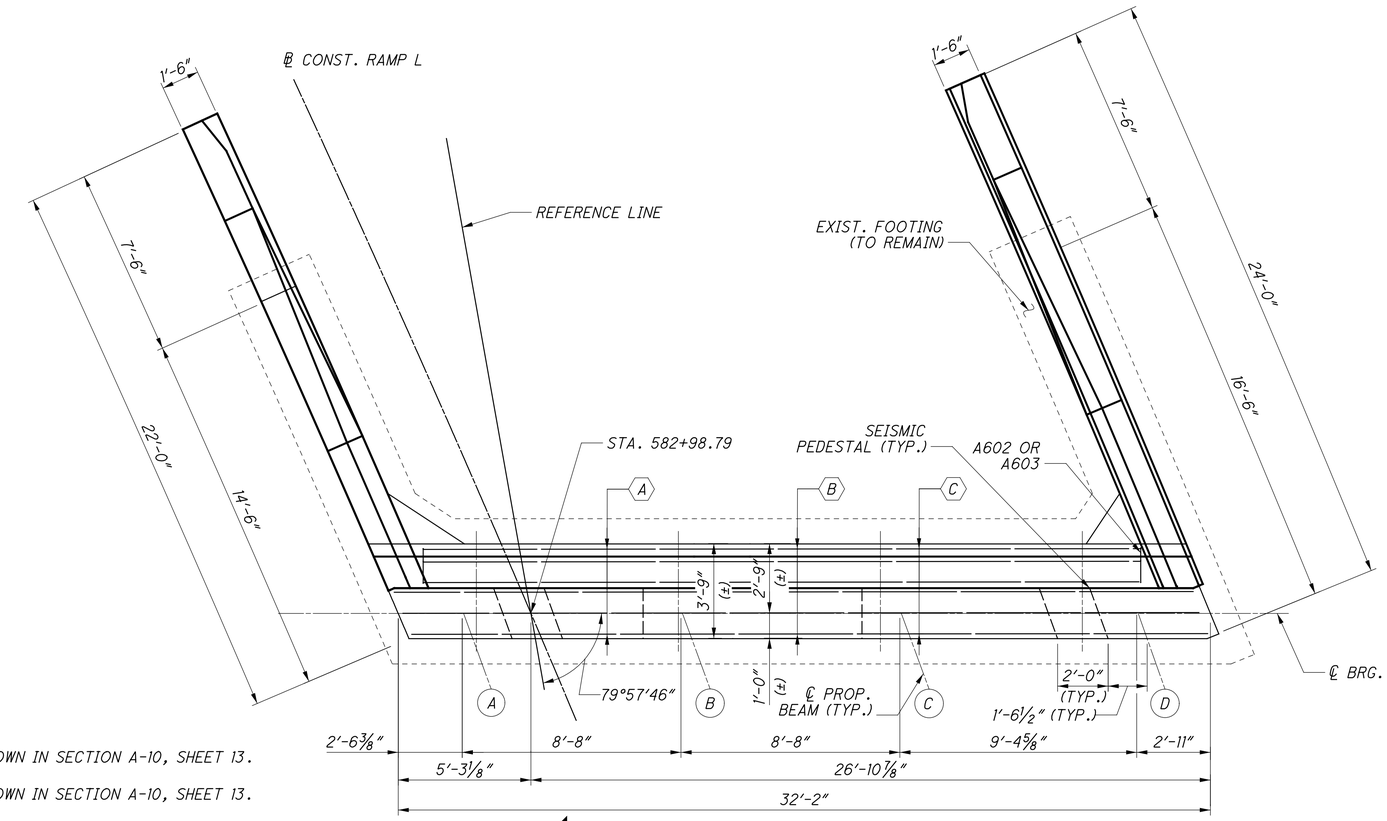

PLAN

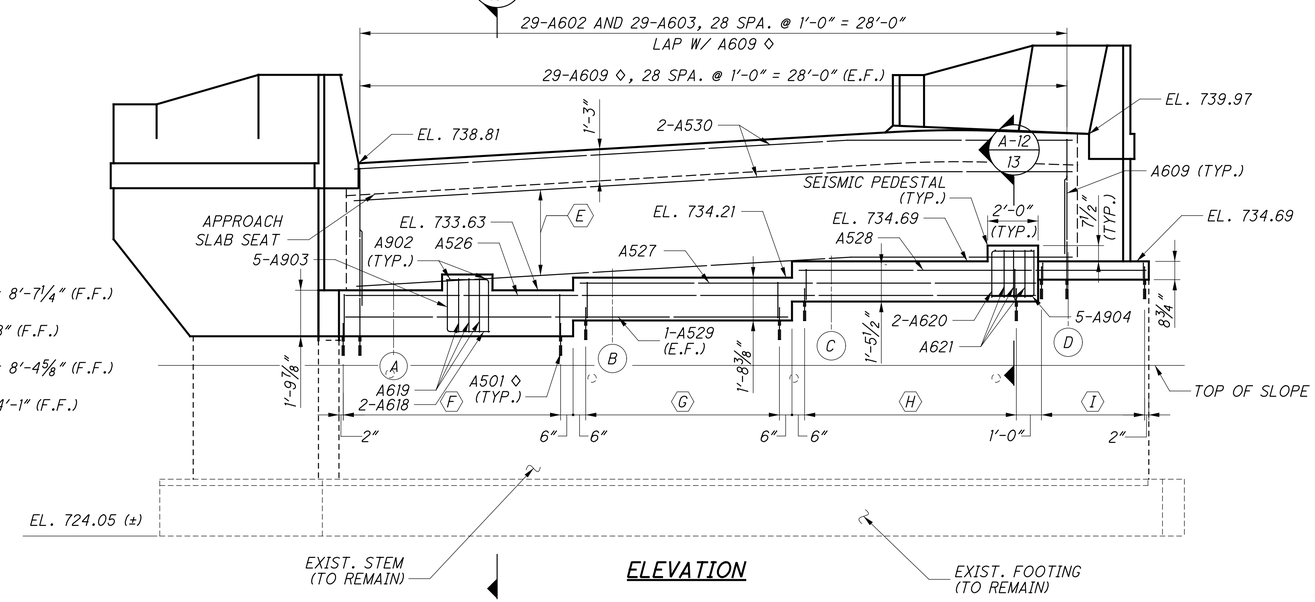

ELEVATION

Ⓐ 5-A526 BARS, SPA. AS SHOWN IN SECTION A-10, SHEET 13.

Ⓑ 5-A527 BARS, SPA. AS SHOWN IN SECTION A-10, SHEET 13.

Ⓒ 5-A528 BARS, SPA. AS SHOWN IN SECTION A-10, SHEET 13.

Ⓔ 5-A530, 4 SPA. @ 10" = 3'-4" (E.F.)

Ⓕ 10-A501 ◊ AND 10-A522, 9 SPA. @ 11½" (–) = 8'-7¼" (F.F.)

Ⓖ 9-A501 ◊ AND 9-A523, 8 SPA. @ 11½" = 7'-8" (F.F.)

Ⓗ 10-A501 ◊ AND 10-A524, 9 SPA. @ 11¼" (–) = 8'-4⅝" (F.F.)

Ⓘ 6-A501 ◊ AND 6-A525, 5 SPA. @ 9¾" (+) = 4'-1" (F.F.)

LEGEND

◊ DOWEL BAR, TO BE DRILLED AND GROUTED 9" AND 10" INTO EXISTING BEAM SEAT FOR #5 AND #6 BARS, RESPECTIVELY. SEE NOTE 3

(X) BEAM LINE DESIGNATION

NOTES

1. FOR THE ABUTMENT AND BACKWALL REINFORCEMENT, MINIMUM LAP LENGTH FOR #5 AND #6 BARS IS 3'-1" AND 4'-0" RESPECTIVELY.
2. SEE EXISTING PLANS FOR LOCATION OF EXISTING STEEL REINFORCEMENT IN ABUTMENT STEM.
3. DOWEL HOLES HAVE BEEN LOCATED TO AVOID INTERFERENCE WITH THE EXISTING REINFORCING STEEL BASED ON INFORMATION OBTAINED FROM THE RECORD PLANS. IF EXISTING REINFORCING STEEL IS ENCOUNTERED WHILE DRILLING DOWEL HOLES, THE HOLE LOCATION MAY BE ADJUSTED BY UP TO 3" LEFT OR RIGHT TO ELIMINATE THE CONFLICT. FOR DETAILS OF EXISTING REINFORCING STEEL NOT SHOWN, REFER TO THE RECORD PLANS.
4. SEAL THE ENTIRE EXPOSED CONCRETE SURFACE OF THE EXISTING ABUTMENT, BACKWALL, AND PROPOSED STEM ADDITION, EXCEPT THE TOP OF BEAM SEAT AS DIRECTED BY THE REQUIREMENTS OF CMS 512.03.

DLZ
6121 HUNTLEY ROAD • COLUMBUS, OHIO 43229

DESIGNED ASP/CJS | DRAWN MSC/JG | REVIEWED MJL | DATE 12/6/22
CHECKED ASP | REVISED | STRUCTURE FILE NUMBER 2513536

FORWARD ABUTMENT REPAIR PLAN & ELEVATION

BRIDGE NO. FRA-270-5264
RAMP L OVER I.R. 270

FRA-270-51.50
PID No. 92616

x:\Projects\2013\1321\1010\FRA\92616\structures\FRA270_5264\sheets\270_5264AF002.dgn 12/8/2022 8:05:57 PM cwong

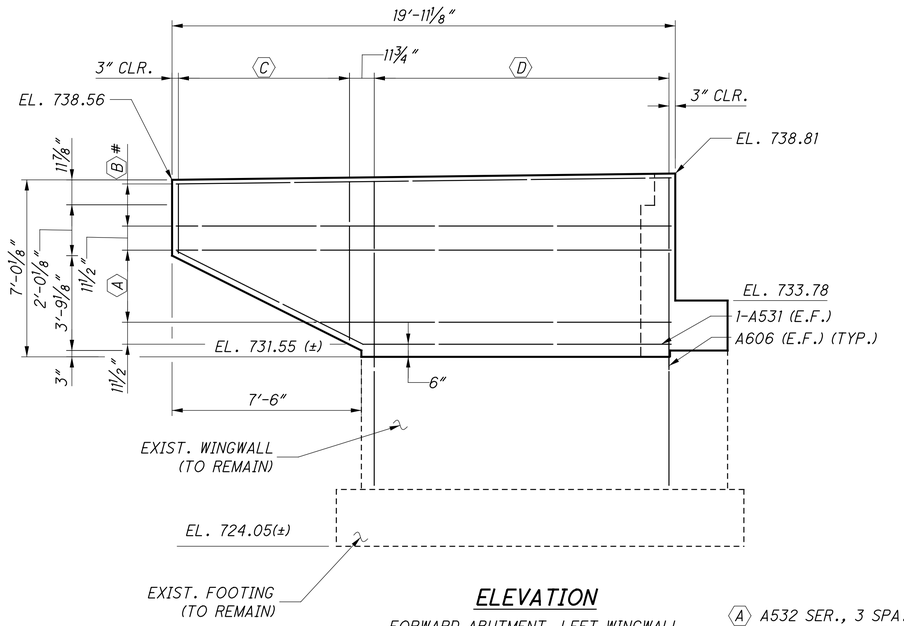

ELEVATION

FORWARD ABUTMENT, LEFT WINGWALL

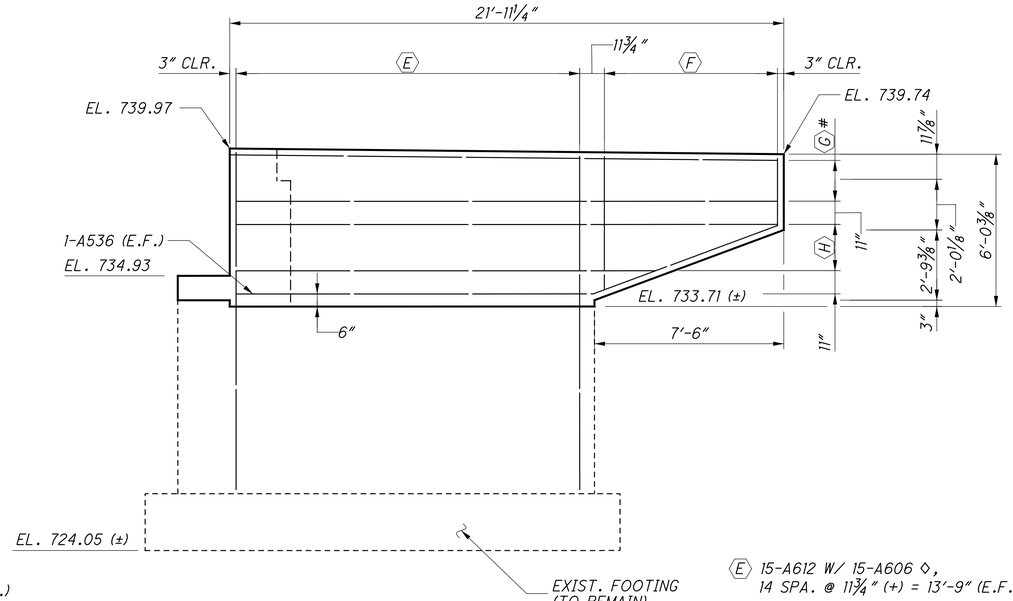

ELEVATION

FORWARD ABUTMENT, RIGHT WINGWALL

Ⓐ A532 SER., 3 SPA. @ 11½" = 2'-10½" (F.F.)
A533 SER., 3 SPA. @ 11½" = 2'-10½" (B.F.)

Ⓑ 3-A534 @ 8¾" (+) = 1'-5⅝" (F.F.)
3-A535 @ 8¾" (+) = 1'-5⅝" (B.F.)

Ⓒ A610 SER., 7 SPA. @ 11½" (-) = 6'-8⅜" (E.F.)

Ⓓ 13-A611 W/ 13-A606 ◇,
12 SPA. @ 11¾" = 11'-9" (E.F.)

Ⓔ 15-A612 W/ 15-A606 ◇,
14 SPA. @ 11¾" (+) = 13'-9" (E.F.)

Ⓕ A613 SER., 7 SPA. @ 11½" = 6'-8½" (E.F.)

Ⓖ 3-A539, 2 SPA. @ 9⅝" (+) = 1'-7⅜" (F.F.)
3-A540, 2 SPA. @ 9⅝" (+) = 1'-7⅜" (B.F.)

Ⓗ A537 SER., 2 SPA. @ 11" = 1'-10" (F.F.)
A538 SER., 2 SPA. @ 11" = 1'-10" (B.F.)

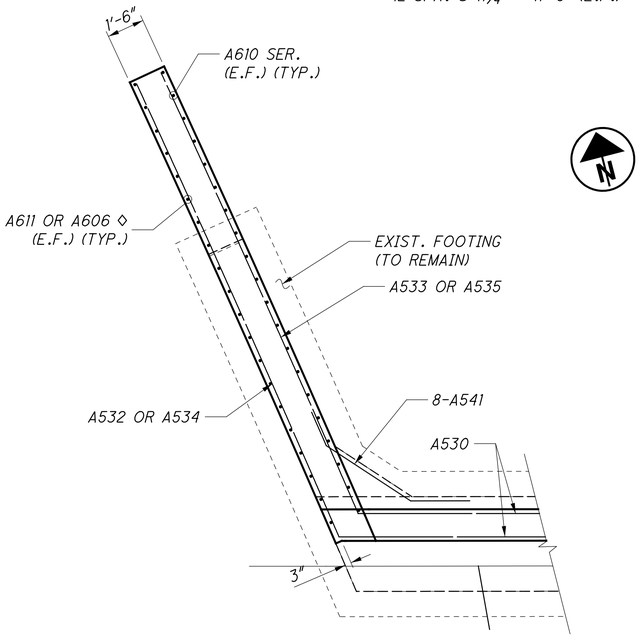

PLAN

FORWARD ABUTMENT, LEFT WINGWALL
PARAPETS NOT SHOWN FOR CLARITY

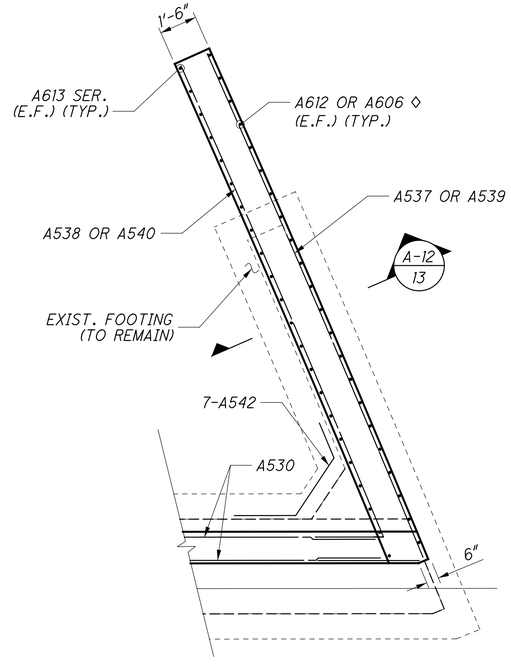

PLAN

FORWARD ABUTMENT, RIGHT WINGWALL
PARAPETS NOT SHOWN FOR CLARITY

LEGEND

◇ DOWEL BAR, TO BE DRILLED AND GROUTED 9" AND 10" INTO EXISTING BEAM SEAT FOR #5 AND #6 BARS, RESPECTIVELY.

\# FLARE BARS AS SHOWN

NOTES

1. FOR DIMENSIONS AND REINFORCEMENT NOT SHOWN IN PARAPET TRANSITION, REFER TO STANDARD DRAWING SBR-1-20.

DLZ
4121 HUNTLEY ROAD • COLUMBUS, OHIO 43228

DESIGNED MSC | DRAWN MSC | REVIEWED MJL | DATE 12/6/22
CHECKED ASP | REVISED | STRUCTURE FILE NUMBER 2513536

FORWARD ABUTMENT REPAIR DETAILS
BRIDGE NO. FRA-270-5264
RAMP L OVER I.R. 270

FRA-270-51.50
PID No. 92616

12 / 41

516
554

x:\Projects\2013\1321\1010\FRA\92616\structures\FRA270_5264\sheets\270_5264AF003.dgn 12/8/2022 8:05:58 PM cwong

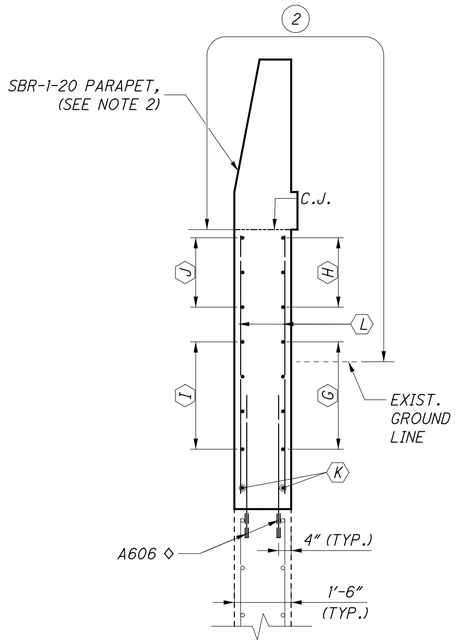

SECTION A-11/10 A-12/12

TYPICAL PROPOSED WORK AT WINGS

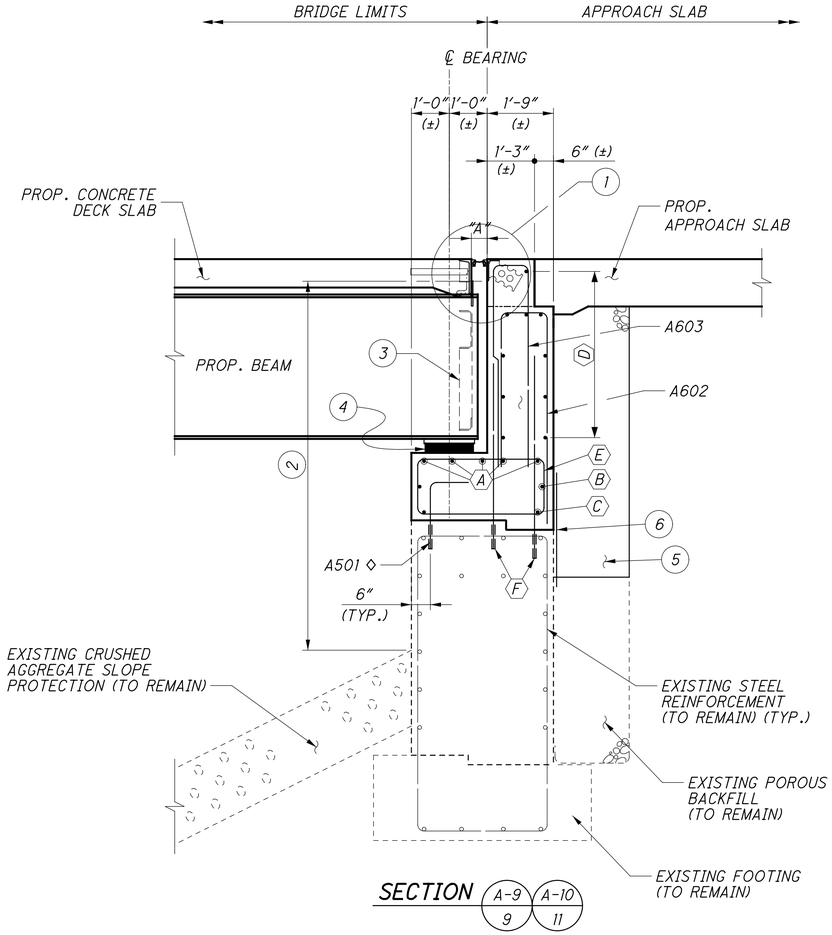

SECTION A-9/9 A-10/11

TYPICAL PROPOSED WORK AT ABUTMENTS

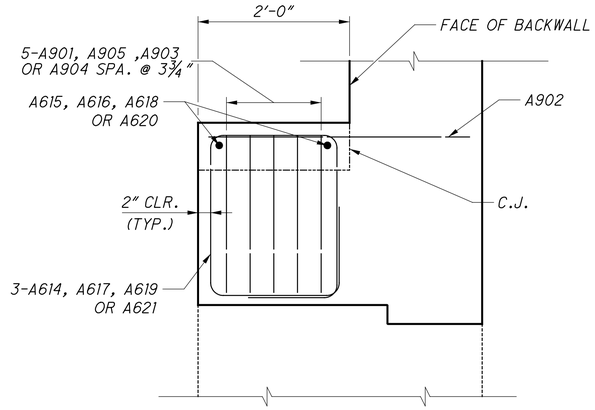

SECTION A-11/9 A-12/11

SEISMIC PEDESTAL AT ABUTMENTS

- (G) A512 OR A517 (R.A.)
  A532 OR A537 (F.A.)
- (H) A514 OR A519 (R.A.)
  A534 OR A539 (F.A.)
- (I) A513 OR A518 (R.A.)
  A533 OR A538 (F.A.)
- (J) A515 OR A520 (R.A.)
  A535 OR A540 (F.A.)
- (K) A511 OR A516 (R.A.)
  A531 OR A536 (F.A.)
- (L) A604, A605, A607, OR A608 (R.A.)
  A610, A611, A612, OR A613 (F.A.)

- (A) A506, A507, OR A508 (R.A.)
  A526, A527, OR A528 (F.A.)
- (B) A507, A508, OR A509 (R.A.)
  A526, A527, OR A529 (F.A.)
- (C) A508 OR A509 (R.A.)
  A526 OR A529 (F.A.)
- (D) A510 (R.A.)
  A530 (F.A.)
- (E) A502, A503, A504, OR A505 (R.A.)
  A522, A523, A524, OR A525 (F.A.)
- (F) A601 ◊ (R.A.)
  A609 ◊ (F.A.)

LEGEND

1. STRIP SEAL EXPANSION JOINT AS PER STANDARD DRAWING EXJ-4-87. FOR DIMENSION "A" SEE TABLES ON SHEET 30 & 32/41.
2. LIMITS OF SEALING CONCRETE SURFACES (EPOXY URETHANE)
3. PROPOSED END CROSSFRAME, FOR DETAILS SEE STANDARD DRAWING GSD-1-19.
4. PROPOSED ELASTOMERIC BEARING, FOR DETAILS SEE SHEET 18/41.
5. POROUS BACKFILL WITH FILTER FABRIC
6. TYPE 2 WATERPROOFING, 3'-0" WIDE, CENTERED ON PROPOSED HORIZONTAL C.J.

◊ DOWEL BAR, TO BE DRILLED AND GROUTED 9" AND 10" INTO EXISTING BEAM SEAT FOR #5 AND #6 BARS, RESPECTIVELY

NOTES

1. FOR DIMENSIONS AND REINFORCEMENT NOT SHOWN IN PARAPET TRANSITION, REFER TO STANDARD DRAWING SBR-1-20.
1. FOR WINGWALL PARAPET REINFORCING, SEE SHEET 14/41.

DLZ
6121 HUNTLEY ROAD • COLUMBUS, OHIO 43229

DESIGNED	DRAWN	REVIEWED	DATE
MSC	MSC	MJL	12/6/22
CHECKED	REVISED	STRUCTURE FILE NUMBER	
ASP		2513536	

ABUTMENT REPAIR SECTIONS
BRIDGE NO. FRA-270-5264
RAMP L OVER I.R. 270

FRA-270-51.50
PID No. 92616

13 / 41

517
554

x:\Projects\2013\1321\1010\FRA\92616\structures\FRA270_5264\sheets\270_5264AF004.dgn 12/8/2022 8:05:59 PM cwong

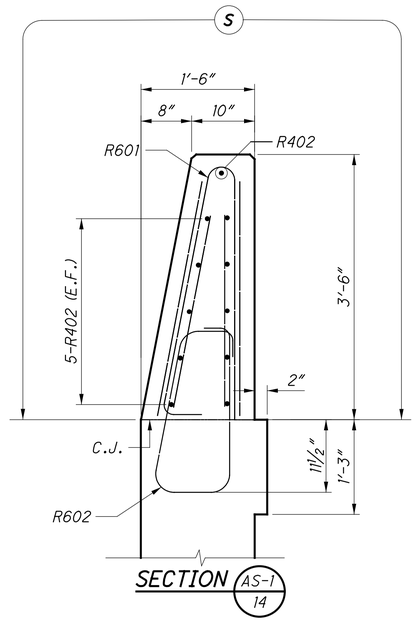

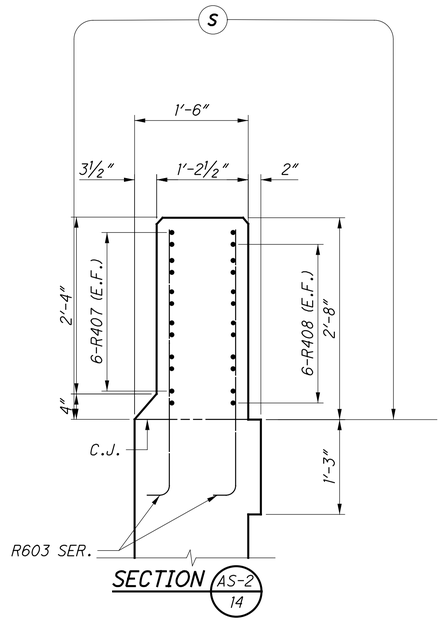

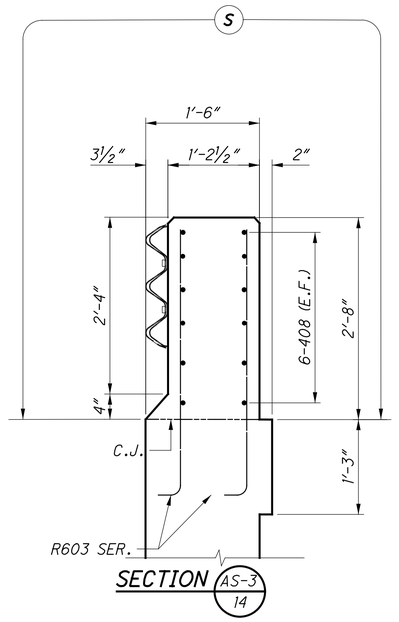

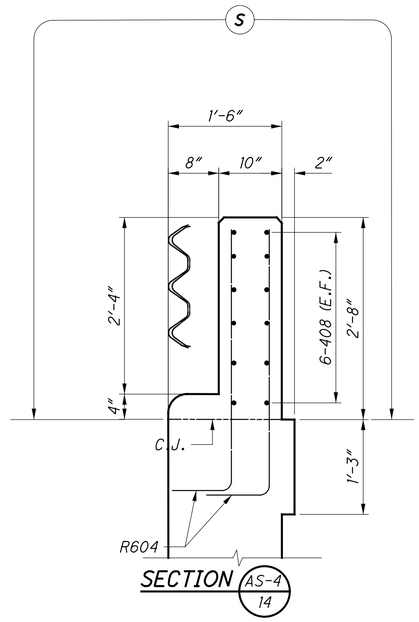

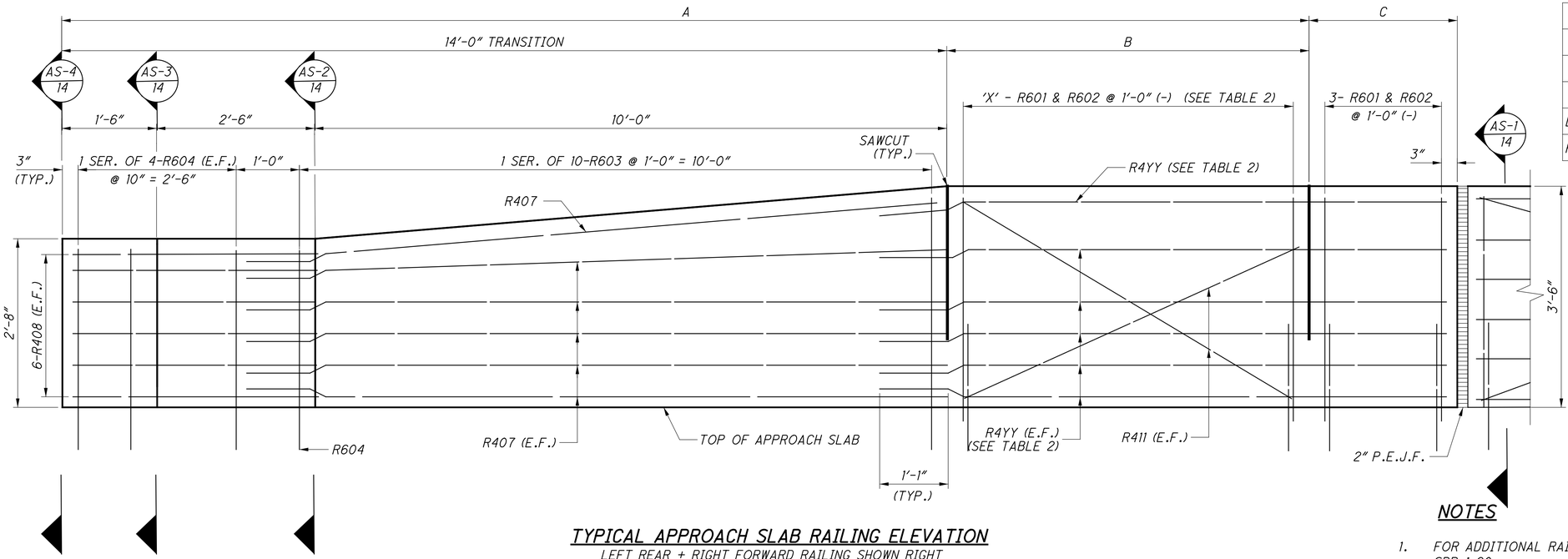

TYPICAL APPROACH SLAB RAILING ELEVATION

LEFT REAR + RIGHT FORWARD RAILING SHOWN RIGHT REAR + LEFT FORWARD RAILING OPPOSITE SHOWN

RAILING DIMENSIONS			
RAILING	A	B	C
LEFT REAR	18'-0 3/8"	4'-0 3/8"	1'-11 7/8"
RIGHT REAR	22'-4 3/4"	8-4 3/4"	1'-7 1/8"
LEFT FORWARD	20'-5 3/4"	6'-5 3/4"	1'-7 3/8"
RIGHT FORWARD	22'-5 1/8"	8'-5 1/8"	1'-7 1/4"

TABLE 1

	X	Y
LEFT REAR	4	07
RIGHT REAR	9	08
LEFT FORWARD	6	09
RIGHT FORWARD	8	10

TABLE 2

NOTES

1. FOR ADDITIONAL RAILING DETAILS, SEE STANDARD DRAWING SBR-1-20.
2. ALL DIMENSIONS ARE MEASURED ALONG THE INSIDE FACE OF THE RAILING.
3. FOR BRIDGE TERMINAL ASSEMBLY CONNECTION, SEE STANDARD DRAWING MGS-3.1 AND ROADWAY PLANS FOR PAYMENT.

LEGEND

(S) LIMITS OF SEALING OF CONCRETE SURFACES (EPOXY-URETHANE)

DLZ
6121 HUNTLEY ROAD • COLUMBUS, OHIO 43229

DESIGNED	DRAWN	REVIEWED	DATE
JAM	JG	MJL	12/6/22
CHECKED	REVISED	STRUCTURE FILE NUMBER	
MHK		2513536	

APPROACH SLAB DETAILS
BRIDGE NO. FRA-270-5264
RAMP L OVER I.R. 270

FRA-270-51.50
PID No. 92616

14 / 41

518
554

X:\Projects\2013\1321\1010\FRA\92616\structures\FRA270_5264\sheets\270_5264MD002.dgn 12/8/2022 8:05:59 PM cwong

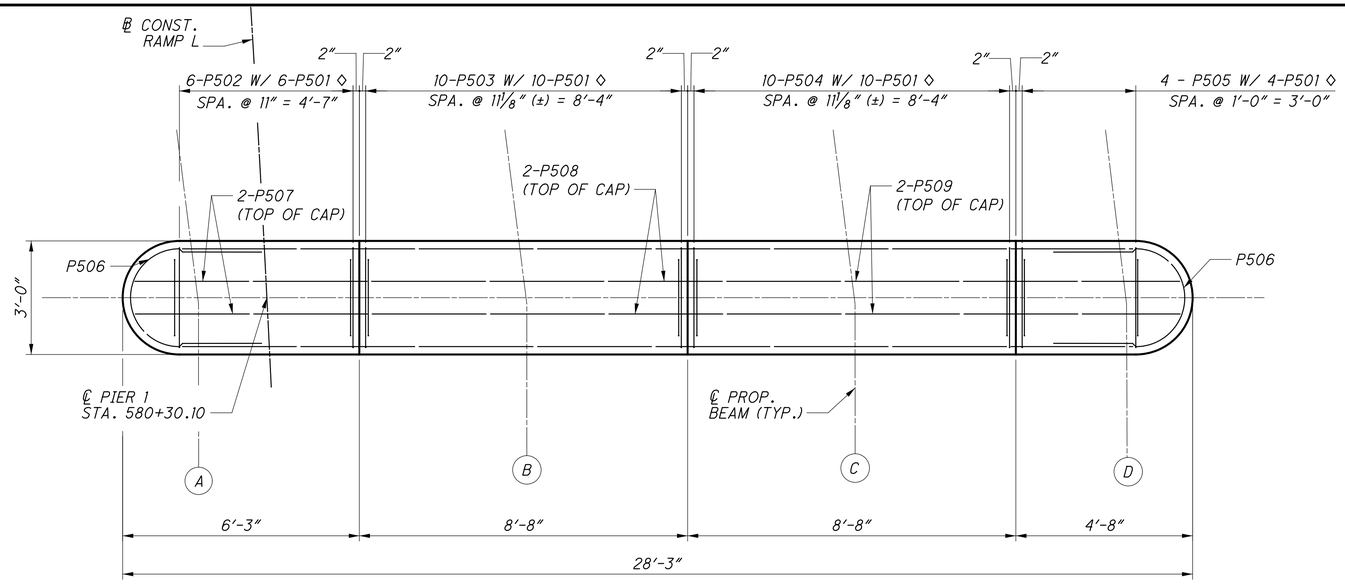

PIER 1 - PLAN

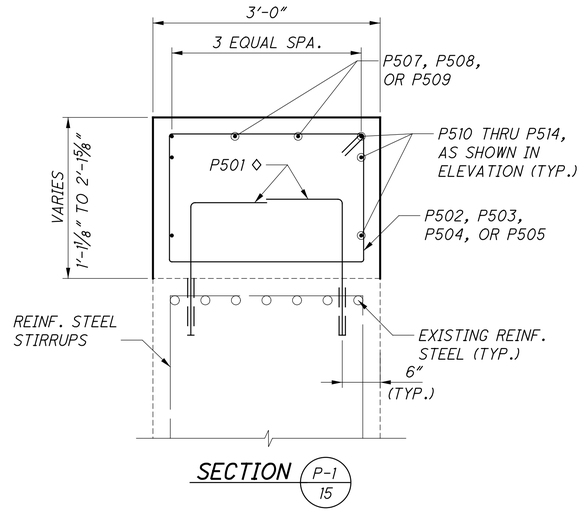

SECTION P-1 / 15

ESTIMATED PATCHING QUANTITIES		
LOCATION	WIDTH X HEIGHT	AREA (SF)
C	2′-0″ x 2′-5″	4.83
D	1′-0″ x 1′-0″	1
E	1′-0″ x 1′-0″	1
TOTAL AREA MEASURED		6.83
TOTAL AREA ESTIMATED *		8.88 *

SEE NOTE 5 *

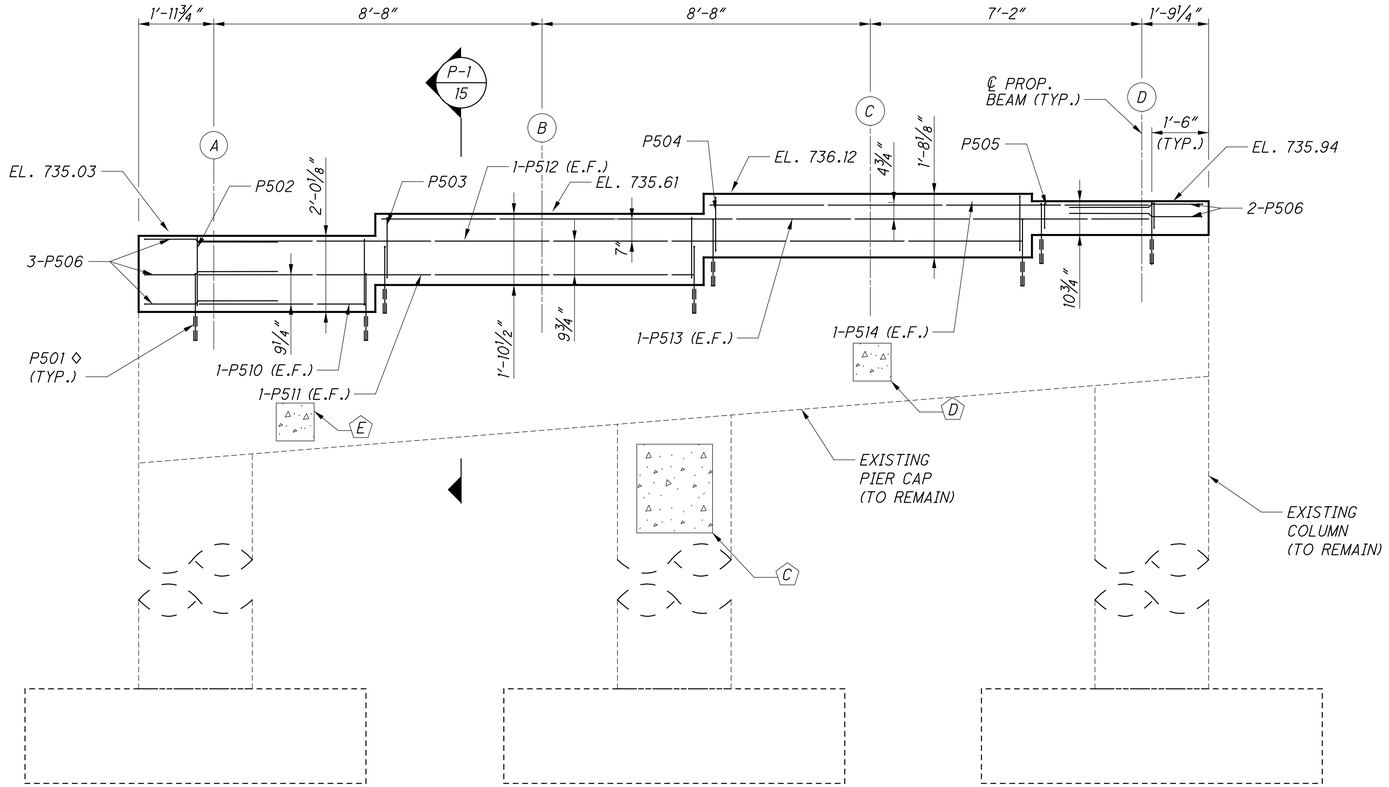

PIER 1 - ELEVATION

PILES NOT SHOWN FOR CLARITY

LEGEND

◊ - DOWEL BAR (E.F.) TO BE DRILLED AND GROUTED 9″ INTO EXISTING PIER, SEE NOTE 3

(X) - BEAM LINE DESIGNATION

NOTES

1. FOR THE PIER REINFORCEMENT, MINIMUM LAP LENGTH FOR #5 BARS IS 3′-1″.
2. SEE EXISTING PLANS FOR LOCATION OF EXISTING STEEL REINFORCEMENT IN PIER CAP.
3. DOWEL HOLES HAVE BEEN LOCATED TO AVOID INTERFERENCE WITH THE EXISTING REINFORCING STEEL BASED ON INFORMATION OBTAINED FROM THE RECORD PLANS. IF EXISTING REINFORCING STEEL IS ENCOUNTERED WHILE DRILLING DOWEL HOLES, THE HOLE LOCATION MAY BE ADJUSTED BY UP TO 3″ LEFT OR RIGHT TO ELIMINATE THE CONFLICT. FOR DETAILS OF EXISTING REINFORCING STEEL NOT SHOWN, REFER TO THE RECORD PLANS.
4. SEAL THE ENTIRE EXPOSED CONCRETE SURFACE OF THE EXISTING PIERS AND THE PROPOSED CAP ADDITION, EXCEPT THE TOP OF CAP, AS DIRECTED BY THE REQUIREMENTS OF CMS 512.03.
5. ESTIMATED PATCHING QUANTITIES HAVE BEEN INCREASED BY 30% OVER MEASURED QUANTITIES TO ALLOW FOR ADDTIONAL DETERIORATION.

DLZ
6121 HUNTLEY ROAD • COLUMBUS, OHIO 43229

DESIGNED MSC | DRAWN MSC | CHECKED ASP | REVIEWED MJL | DATE 12/6/22 | REVISED | STRUCTURE FILE NUMBER 2513536

PIER REPAIR DETAILS - 1
BRIDGE NO. FRA-270-5264
RAMP L OVER I.R. 270

FRA-270-51.50
PID No. 92616

15 / 41

519
554

x:\Projects\2013\1321\1010\FRA\92616\structures\FRA270_5264\sheets\270_5264PI001.dgn 12/8/2022 8:06:00 PM cwong

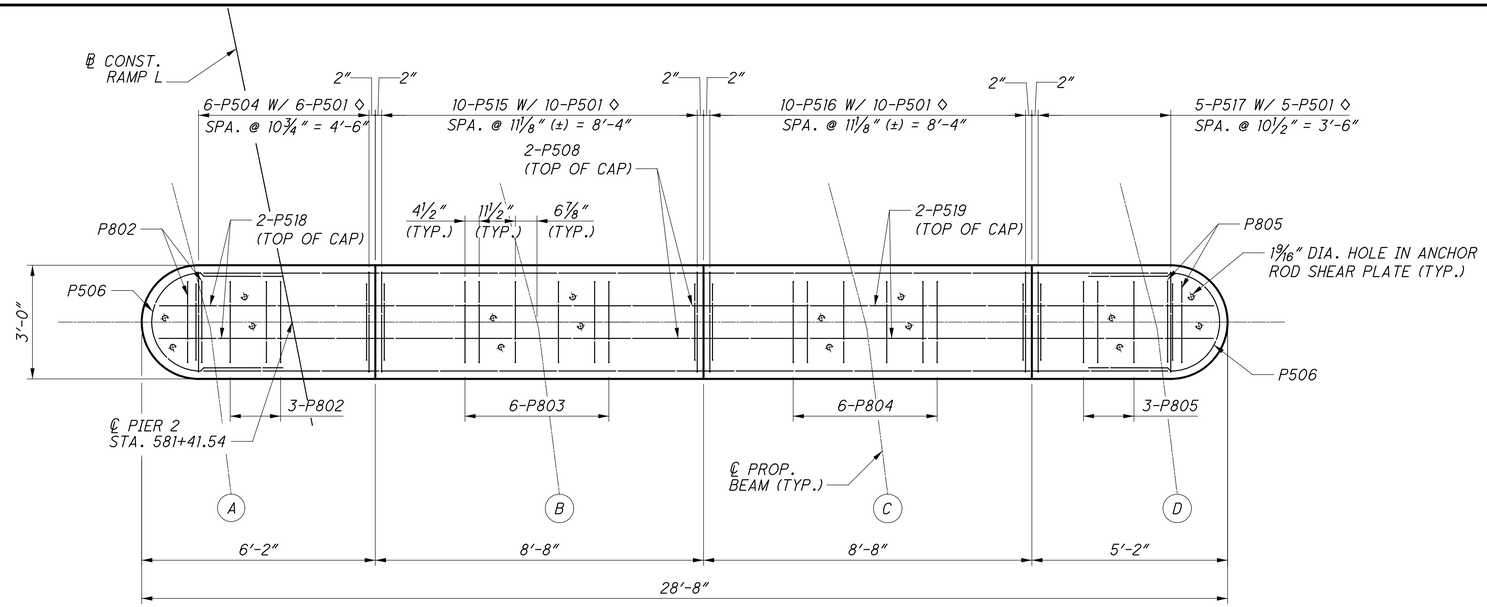

PIER 2 - PLAN

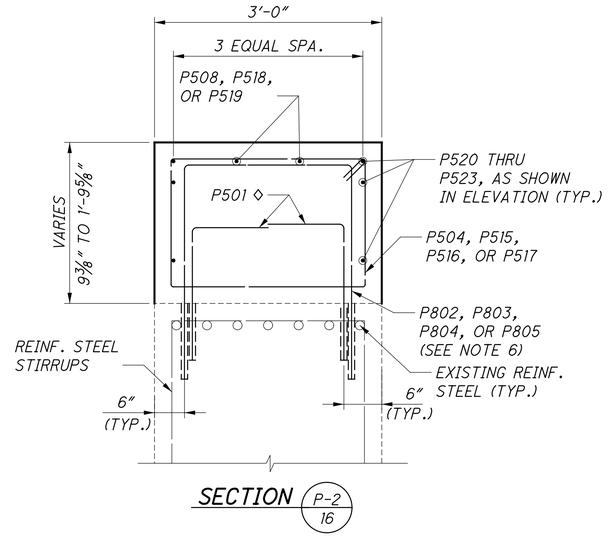

SECTION P-2 / 16

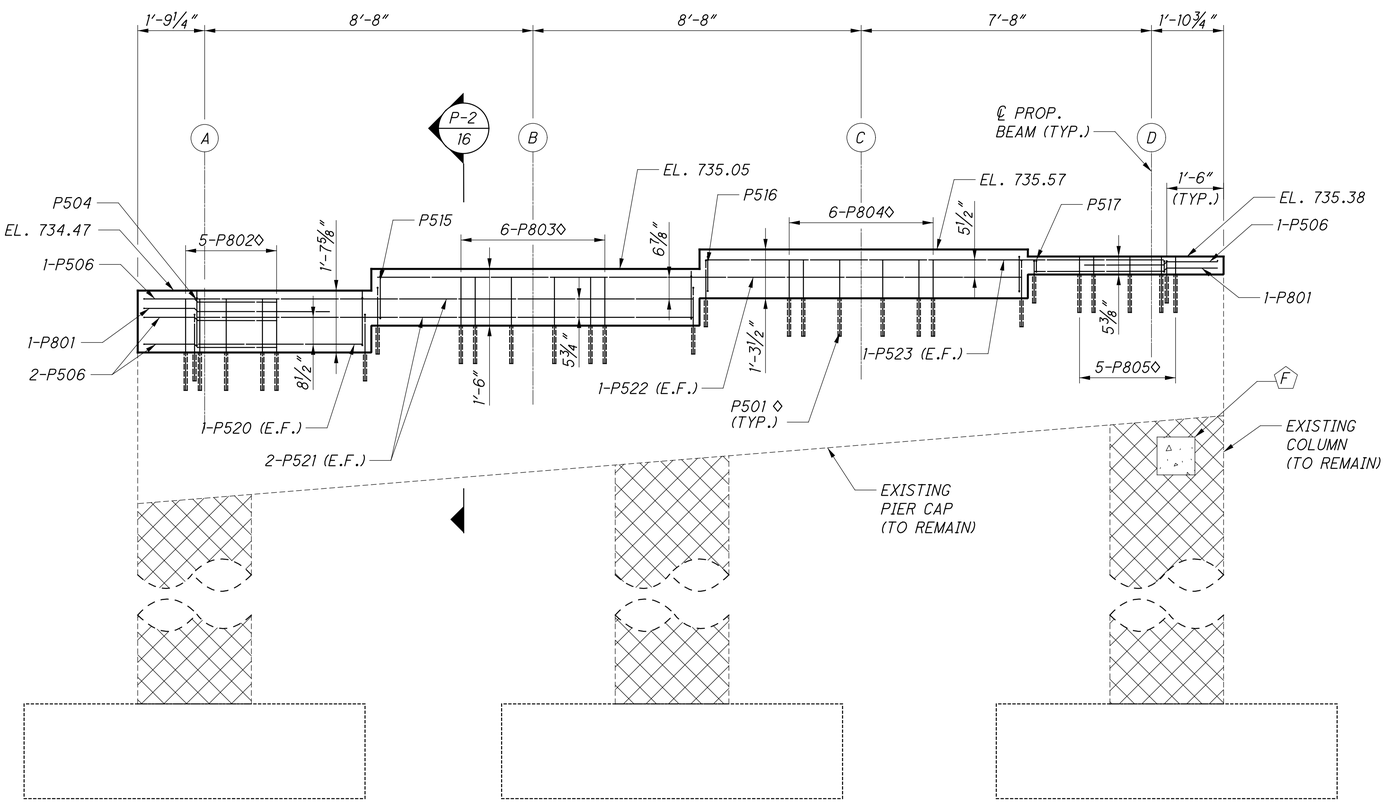

PIER 2 - ELEVATION

PILES NOT SHOWN FOR CLARITY

ESTIMATED PATCHING QUANTITIES		
LOCATION	WIDTH X HEIGHT	AREA (SF)
(F)	1'-0" x 1'-0"	1
TOTAL AREA MEASURED		1
TOTAL AREA ESTIMATED *		1.3

SEE NOTE 5 *

LEGEND

◊ - DOWEL BAR TO BE DRILLED AND GROUTED 9", 10", AND 1'-0" INTO EXISTING PIER FOR #5, #6 BARS AND #8 (OR #9) BARS, RESPECTIVELY, SEE NOTE 3

(X) - BEAM LINE DESIGNATION

- ITEM 519 - SPECIAL - COMPOSITE FIBER WRAP SYSTEM TO BE WRAPPED AROUNF ENTIRETY OF PIER COLUMN

NOTES

1. FOR THE PIER REINFORCEMENT, MINIMUM LAP LENGTH FOR #5 BARS IS 3'-1".
2. SEE EXISTING PLANS FOR LOCATION OF EXISTING STEEL REINFORCEMENT IN PIER CAP.
3. DOWEL HOLES HAVE BEEN LOCATED TO AVOID INTERFERENCE WITH THE EXISTING REINFORCING STEEL BASED ON INFORMATION OBTAINED FROM THE RECORD PLANS. IF EXISTING REINFORCING STEEL IS ENCOUNTERED WHILE DRILLING DOWEL HOLES, THE HOLE LOCATION MAY BE ADJUSTED BY UP TO 3" LEFT OR RIGHT TO ELIMINATE THE CONFLICT. FOR DETAILS OF EXISTING REINFORCING STEEL NOT SHOWN, REFER TO THE RECORD PLANS.
4. SEAL THE ENTIRE EXPOSED CONCRETE SURFACE OF THE EXISTING PIERS AND THE PROPSED CAP ADDITION, EXCEPT THE TOP OF CAP, AS DIRECTED BY THE REQUIREMENTS OF CMS 512.03.
5. ESTIMATED PATCHING QUANTITIES HAVE BEEN INCREASED BY 30% OVER MEASURED QUANTITIES TO ALLOW FOR ADDTIONAL DETERIORATION.
6. CONTRACTOR SHALL ADJUST THE LOCATION OF #8 DOWEL BARS IN THE FIELD TO AVOID WITH P501 DOWEL BARS.

DLZ
6121 HUNTLEY ROAD • COLUMBUS, OHIO 43229

DESIGNED MSC | DRAWN MSC | CHECKED ASP | REVIEWED MJL | DATE 12/6/22 | REVISED | STRUCTURE FILE NUMBER 2513536

PIER REPAIR DETAILS - 2
BRIDGE NO. FRA-270-5264
RAMP L OVER I.R. 270

FRA-270-51.50
PID No. 92616

16 / 41

520 / 554

x:\Projects\2013\1321\1010\FRA\92616\structures\FRA270_5264\sheets\270_5264P1002.dgn 12/8/2022 8:06:01 PM cwong

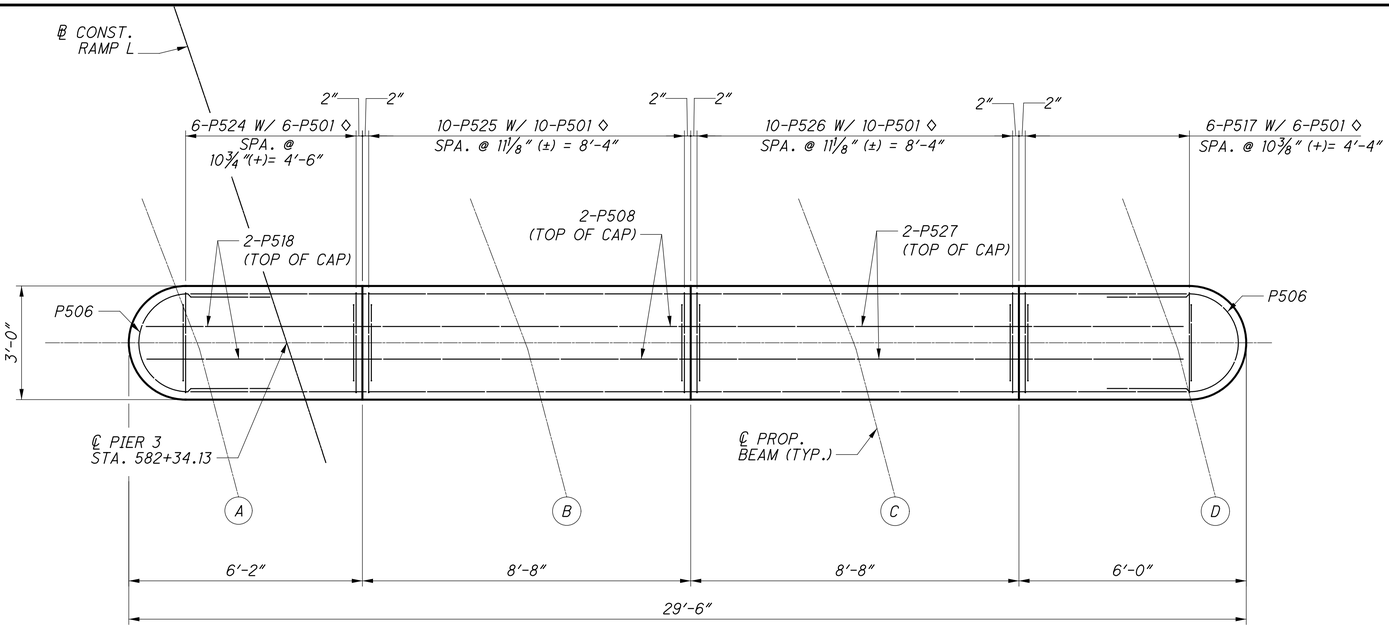

PIER 3 - PLAN

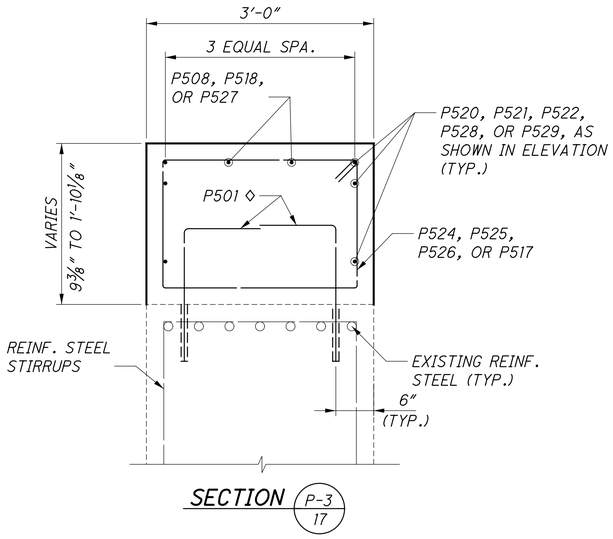

SECTION P-3 / 17

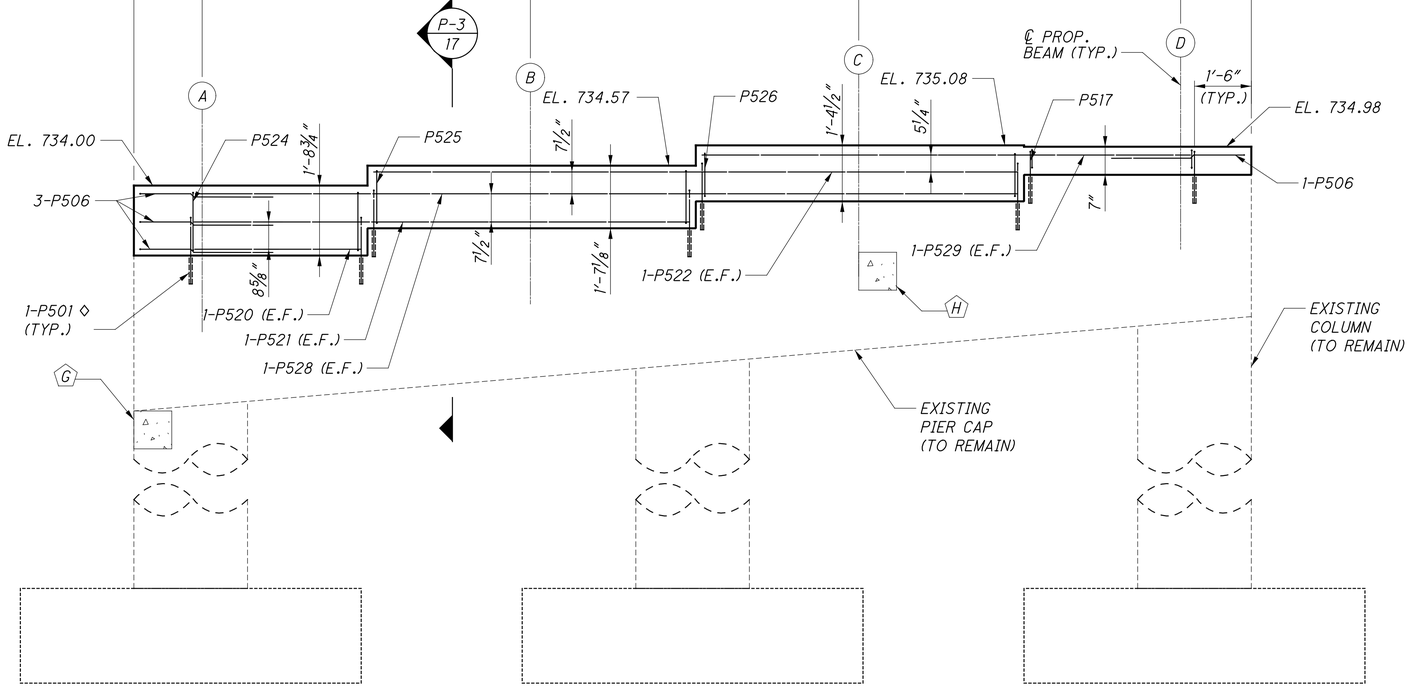

PIER 3 - ELEVATION

PILES NOT SHOWN FOR CLARITY

ESTIMATED PATCHING QUANTITIES		
LOCATION	WIDTH X HEIGHT	AREA (SF)
⬠G	1'-0" x 1'-0"	1
⬠H	1'-0" x 1'-0"	1
TOTAL AREA MEASURED		2
TOTAL AREA ESTIMATED *		2.6

SEE NOTE 5 *

LEGEND

◊ - DOWEL BAR (E.F.) TO BE DRILLED AND GROUTED 9" INTO EXISTING PIER, SEE NOTE 3

(X) - BEAM LINE DESIGNATION

NOTES

1. FOR THE PIER REINFORCEMENT, MINIMUM LAP LENGTH FOR #5 BARS IS 3'-1".
2. SEE EXISTING PLANS FOR LOCATION OF EXISTING STEEL REINFORCEMENT IN PIER CAP.
3. DOWEL HOLES HAVE BEEN LOCATED TO AVOID INTERFERENCE WITH THE EXISTING REINFORCING STEEL BASED ON INFORMATION OBTAINED FROM THE RECORD PLANS. IF EXISTING REINFORCING STEEL IS ENCOUNTERED WHILE DRILLING DOWEL HOLES, THE HOLE LOCATION MAY BE ADJUSTED BY UP TO 3" LEFT OR RIGHT TO ELIMINATE THE CONFLICT. FOR DETAILS OF EXISTING REINFORCING STEEL NOT SHOWN, REFER TO THE RECORD PLANS.
4. SEAL THE ENTIRE EXPOSED CONCRETE SURFACE OF THE EXISTING PIERS AND THE PROPOSED CAP ADDITION, EXCEPT THE TOP OF CAP, AS DIRECTED BY THE REQUIREMENTS OF CMS 512.03.
5. ESTIMATED PATCHING QUANTITIES HAVE BEEN INCREASED BY 30% OVER MEASURED QUANTITIES TO ALLOW FOR ADDTIONAL DETERIORATION.

DLZ
6121 HUNTLEY ROAD • COLUMBUS, OHIO 43229

DESIGNED MSC | DRAWN MSC | REVIEWED MJL | DATE 12/6/22
CHECKED ASP | REVISED | STRUCTURE FILE NUMBER 2513536

PIER REPAIR DETAILS - 3
BRIDGE NO. FRA-270-5264
RAMP L OVER I.R. 270

FRA-270-51.50
PID No. 92616

17 / 41

521 / 554

x:\Projects\2013\1321\1010\FRA\92616\structures\FRA270_5264\sheets\270_5264PI003.dgn 12/8/2022 8:06:01 PM cwong

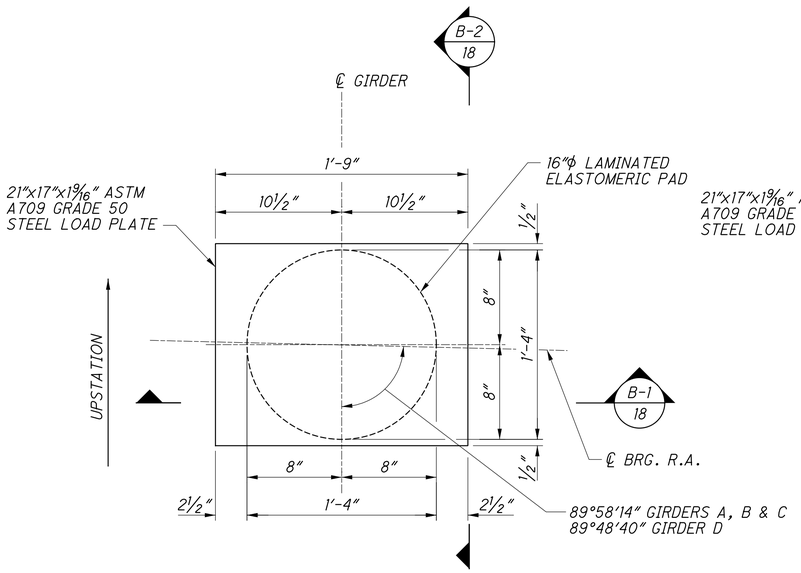

PLAN - REAR ABUTMENT

(GIRDER NOT SHOWN)

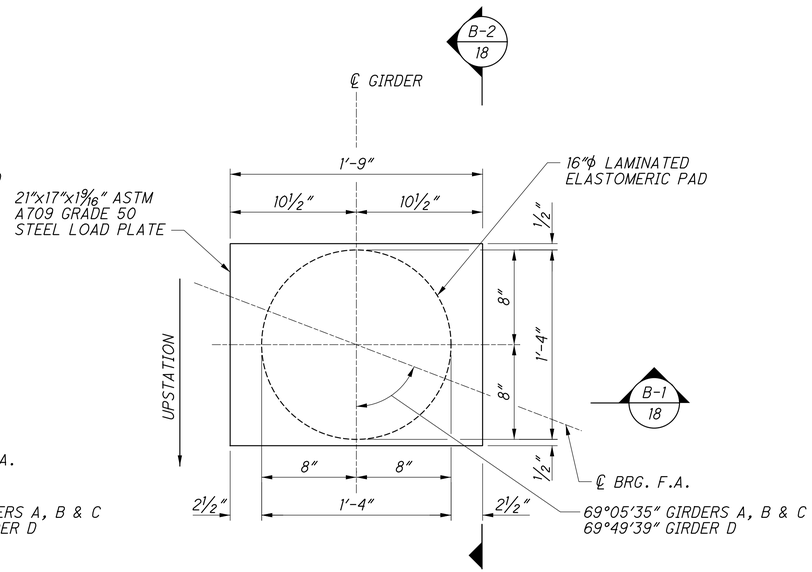

PLAN - FORWARD ABUTMENT

(GIRDER NOT SHOWN)

NOTES

1. BEARING DESIGN LOADS: EXPANSION BEARING (ABUTMENTS)

DEAD LOADS	53.61 K
LIVE LOADS	76.95 K
TOTAL DESIGN LOAD	130.56 K

2. ASTM A709 GRADE 50 STEEL LOAD PLATES SHALL BE USED FOR ALL BEARINGS. THE LOAD PLATE SHALL BE VULCANIZED BONDED TO THE LAMINATED ELASTOMERIC PAD DURING THE MOLDING PROCESS.

3. THE ELASTOMER SHALL HAVE A HARDNESS OF 50 DUROMETER. THE BEARINGS WERE DESIGNED IN ACCORFANCE WITH SECTION 14.7.6 (METHOD A) OF THE AASHTO LRFD BRIDGE DESIGN SPECIFICATIONS. THE LONG-TERM COMPRESSION PROOF LOAD TEST (AASHTO STANDARD SPECIFICATIONS FOR HIGHWAY BRIDGES, DIVISION II, SECTION 18.7.2.6) IS NOT REQUIRED.

4. ALL BEARINGS SHALL BE MARKED PRIOR TO SHIPPING. THE MARKS SHALL INCLUDE THE BEARING LOCATION ON THE BRIDGE, AND A DIRECTION ARROW THAT POINTS UP-STATION. ALL MARKS SHALL BE PERMANENT AND BE VISIBLE AFTER THE BEARING IS INSTALLED.

5. BASIS OF PAYMENT: THE UNIT PRICE BID SHALL INCLUDE ALL MATERIALS, LABOR, AND INCIDENTALS NECESSARY TO FURNISH AND INSTALL THE LAMINATED ELASTOMERIC BEARINGS AND STEEL LOAD PLATES. PAYMENT WILL BE MADE AT THE CONTRACT PRICE FOR ITEM 516 - ELASTOMERIC BEARING WITH INTERNAL LAMINATES AND LOAD PLATE (NEOPRENE), AS PER PLAN.

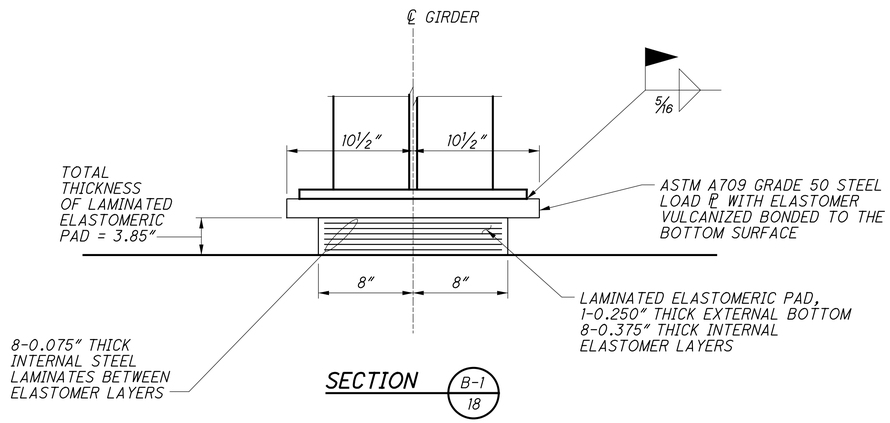

SECTION B-1 / 18

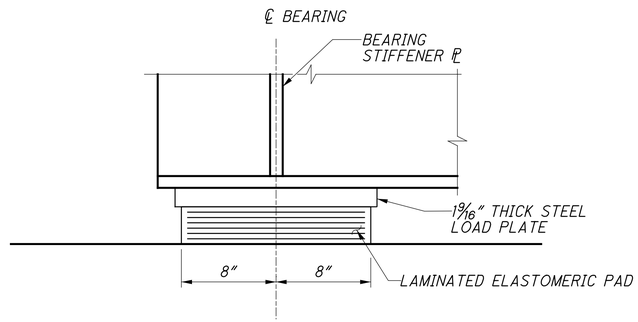

SECTION B-2 / 18

EXPANSION BEARING

(ABUTMENTS, 8 REQUIRED)

DLZ
6121 HUNTLEY ROAD • COLUMBUS, OHIO 43229

DESIGNED	DRAWN	REVIEWED	DATE
JN/JD	DAF/JG	MJL	12/6/22
CHECKED	REVISED	STRUCTURE FILE NUMBER	
PAT/MHK		2513536	

EXPANSION BEARING DETAILS - ABUTMENTS
BRIDGE NO. FRA-270-5264
RAMP L OVER I.R. 270

FRA-270-51.50
PID No. 92616

18 / 41

522
554

x:\Projects\2013\1321\1010\FRA\92616\structures\FRA270_5264\sheets\270_5264BR001.dgn 12/8/2022 8:06:02 PM cwong

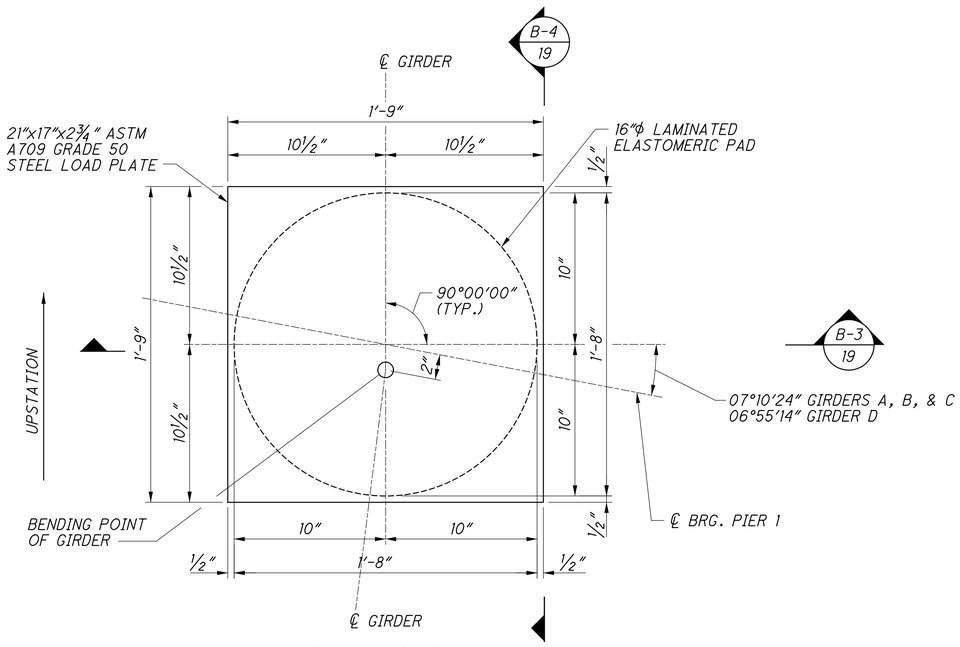

PLAN - PIER 1

(GIRDER NOT SHOWN)

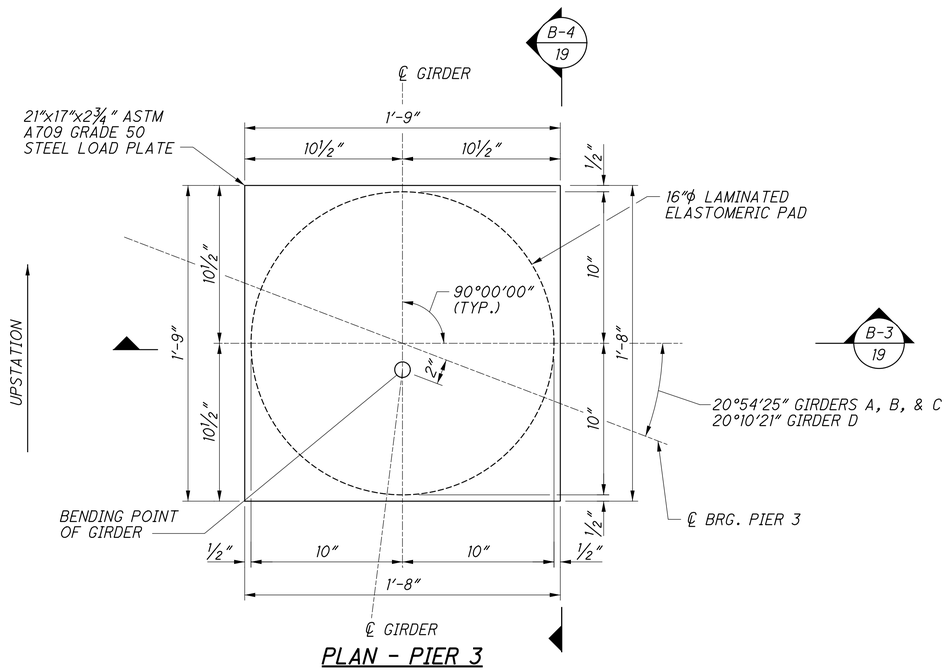

PLAN - PIER 3

(GIRDER NOT SHOWN)

EXPANSION BEARING

(PIERS 1 & 3, 8 REQUIRED)

NOTES

1. BEARING DESIGN LOADS: EXPANSION BEARING (PIERS 1 & 3)

DEAD LOADS	238.13 K
LIVE LOADS	145.69 K
TOTAL DESIGN LOAD	383.82 K

2. SEE SHEET 18/41 FOR ADDITIONAL NOTES.

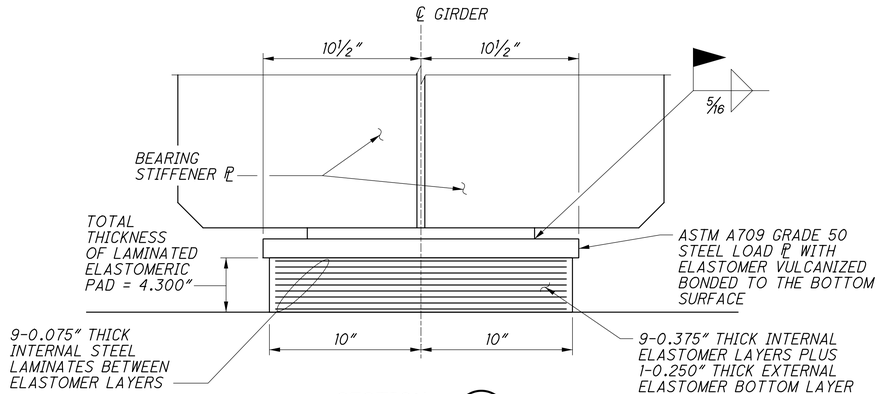

SECTION B-3 / 19

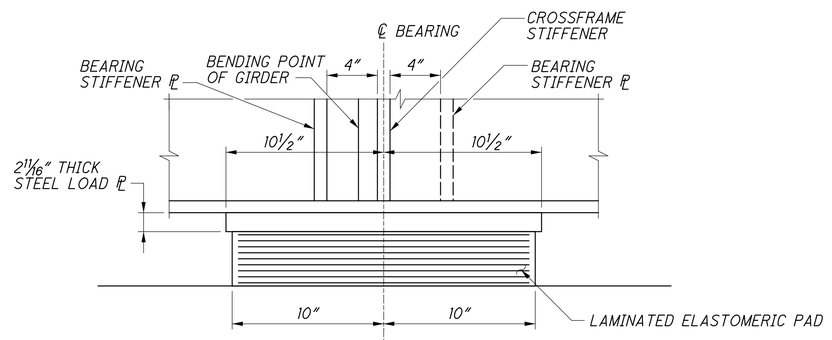

SECTION B-4 / 19

DLZ
6121 HUNTLEY ROAD • COLUMBUS, OHIO 43229

DESIGNED	DRAWN	REVIEWED	DATE
JN/JD	DAF/JG	MJL	12/6/22
CHECKED	REVISED	STRUCTURE FILE NUMBER	
PAT/MHK		2513536	

EXPANSION BEARING DETAILS - PIER 1 & PIER 3

BRIDGE NO. FRA-270-5264
RAMP L OVER I.R. 270

FRA-270-51.50
PID No. 92616

19 / 41

523
554

x:\Projects\2013\1321\1010\FRA\92616\structures\FRA270_5264\sheets\270_5264BR002.dgn 12/8/2022 8:06:03 PM cwong

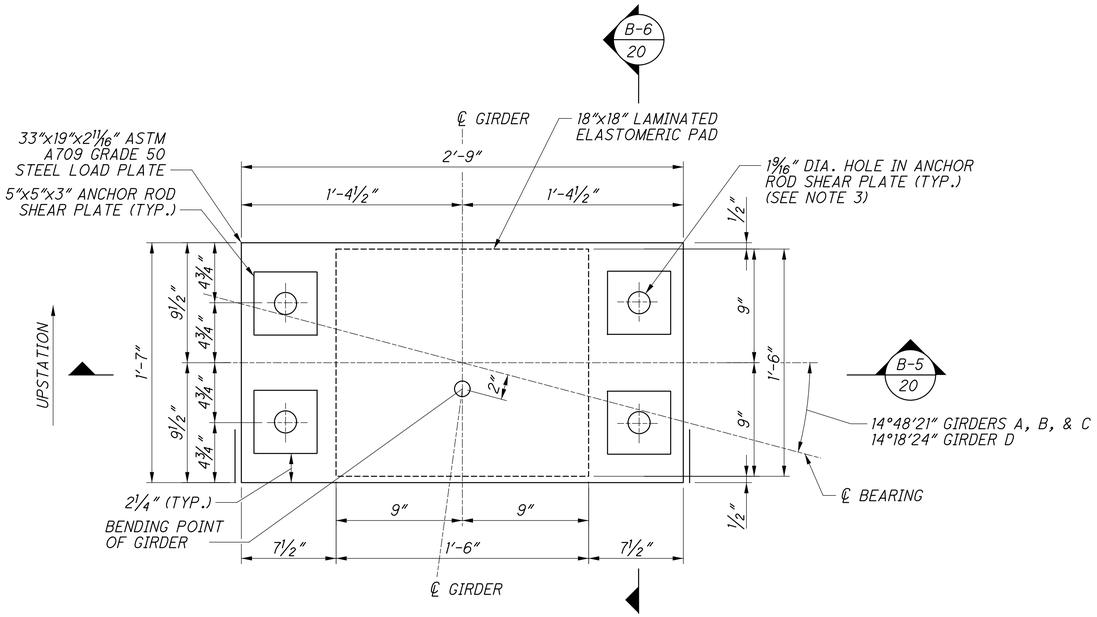

PLAN - PIER 2
(GIRDER NOT SHOWN)

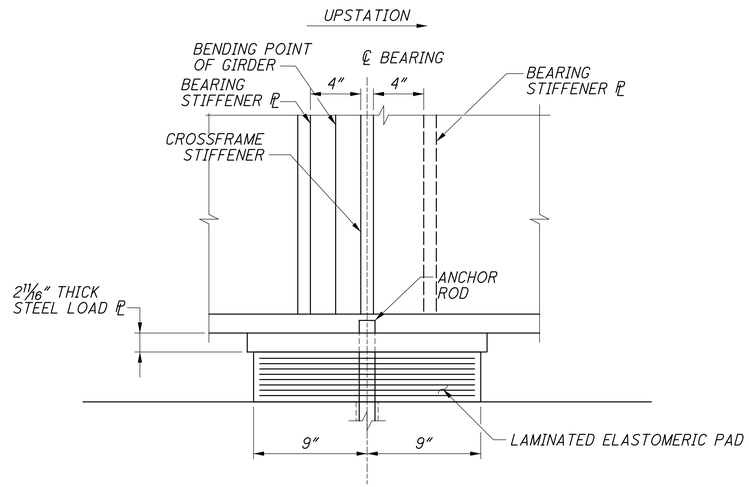

SECTION B-6 / 20

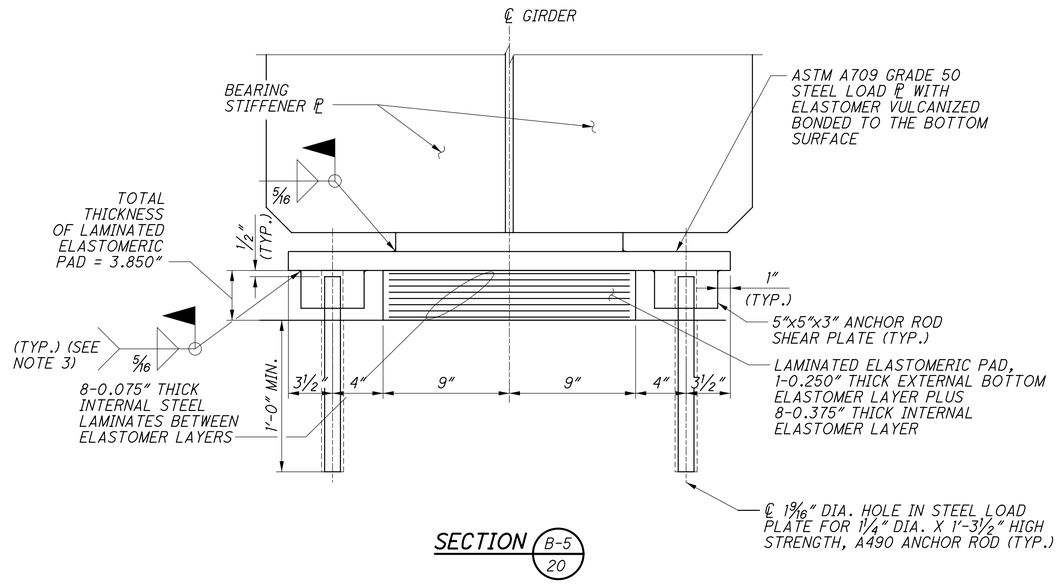

SECTION B-5 / 20

FIXED BEARING
(PIER 2 REQUIRED)

NOTES

1. BEARING DESIGN LOADS: FIXED BEARING (PIER 2)

DEAD LOADS	235.75 K
LIVE LOADS	144.27 K
TOTAL DESIGN LOAD	380.02 K

2. SEE SHEET 18/41 FOR ADDITIONAL NOTES.
3. TOTAL 5/16" WELD LENGTH FOR THE ANCHOR ROD SHEAR PLATE TO THE STEEL LOAD PLATE SHALL BE A MINIMUM OF 15". THE SIDE OF THE SHEAR PLATE ADJACENT TO THE ELASTOMERIC BEARING SHALL NOT BE WELDED.

DLZ
4121 HUNTLEY ROAD • COLUMBUS, OHIO 43228

DESIGNED	DRAWN	REVIEWED	DATE
JN/JD	DAF/JG	MJL	12/6/22
CHECKED	REVISED	STRUCTURE FILE NUMBER	
PAT/MHK		2513536	

FIXED BEARING DETAILS - PIER 2
BRIDGE NO. FRA-270-5264
RAMP L OVER I.R. 270

FRA-270-51.50
PID No. 92616

20 / 41

524
554

x:\Projects\2013\1321\1010\FRA\92616\structures\FRA270_5264\sheets\270_5264BR003.dgn 12/8/2022 8:06:03 PM cwong

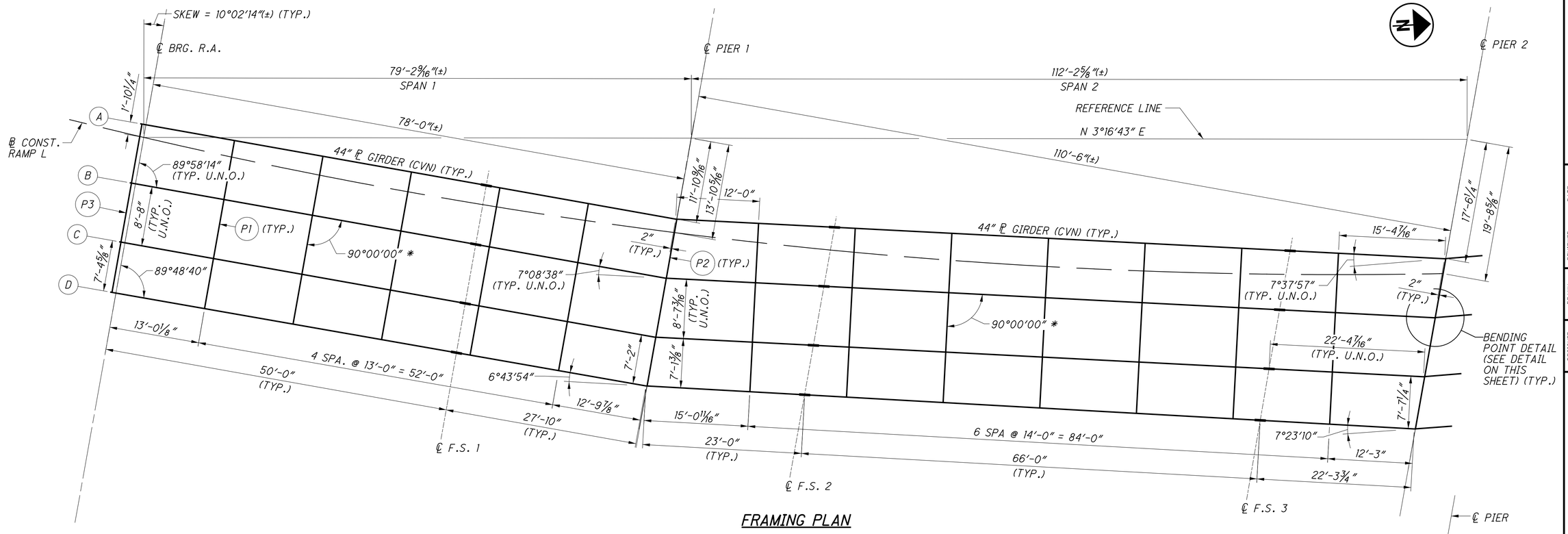

FRAMING PLAN

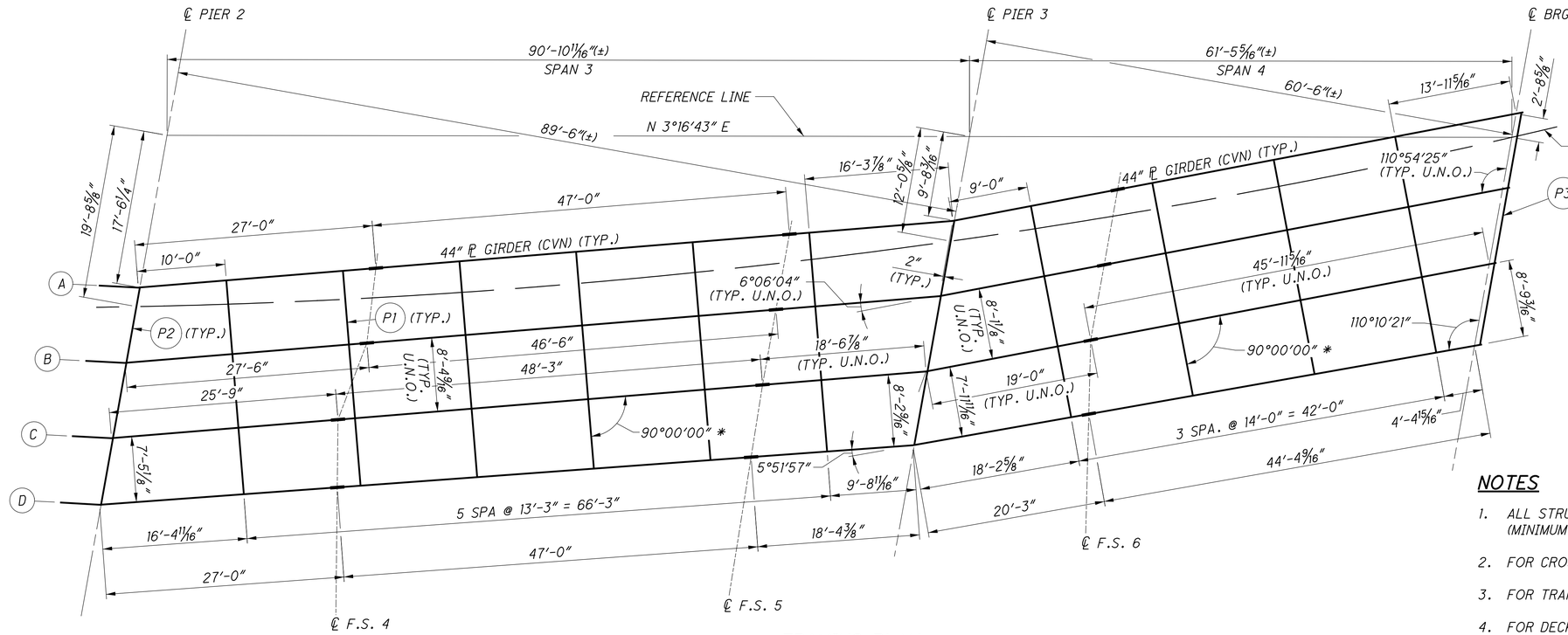

FRAMING PLAN

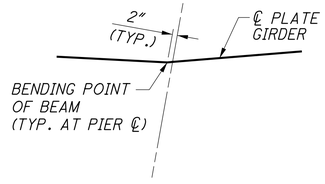

BENDING POINT DETAIL

(TYP. AT PIERS)

LEGEND

- (#) GIRDER LINE DESIGNATION
- (P1) INTERMEDIATE CROSSFRAME, SEE NOTE 2
- (P2) PIER CROSSFRAME, SEE NOTE 2
- (P3) END CROSSFRAME PER STD. DWG. GSD-1-19 (TYP.)
- * TYPICAL FOR GIRDERS A, B, & C ONLY

NOTES

1. ALL STRUCTURAL STEEL SHALL BE ASTM A709 GRADE 50 (MINIMUM YIELD STRENGTH 50 KSI).
2. FOR CROSSFRAME DETAILS, SEE SHEET 27/41 .
3. FOR TRANSVERSE SECTION, SEE SHEET 29/41 .
4. FOR DECK SLAB PLAN, SEE SHEETS 30, 31, AND 32/41.
5. FOR GIRDER ELEVATIONS, SEE SHEETS 22, 23, 24 AND 25/41 .

DLZ
6121 HUNTLEY ROAD • COLUMBUS, OHIO 43229

DESIGNED JN/JAM
DRAWN DAF/JAM
CHECKED PAT/MHK
REVIEWED MJL
DATE 12/6/22
REVISED
STRUCTURE FILE NUMBER 2513536

FRAMING PLAN
BRIDGE NO. FRA-270-5264
RAMP L OVER I.R. 270

FRA-270-51.50
PID No. 92616

21 / 41

525
554

X:\Projects\2013\1321\1010\FRA\92616\structures\FRA270_5264\sheets\270_5264SD001.dgn 12/29/2022 2:47:51 PM jmiller

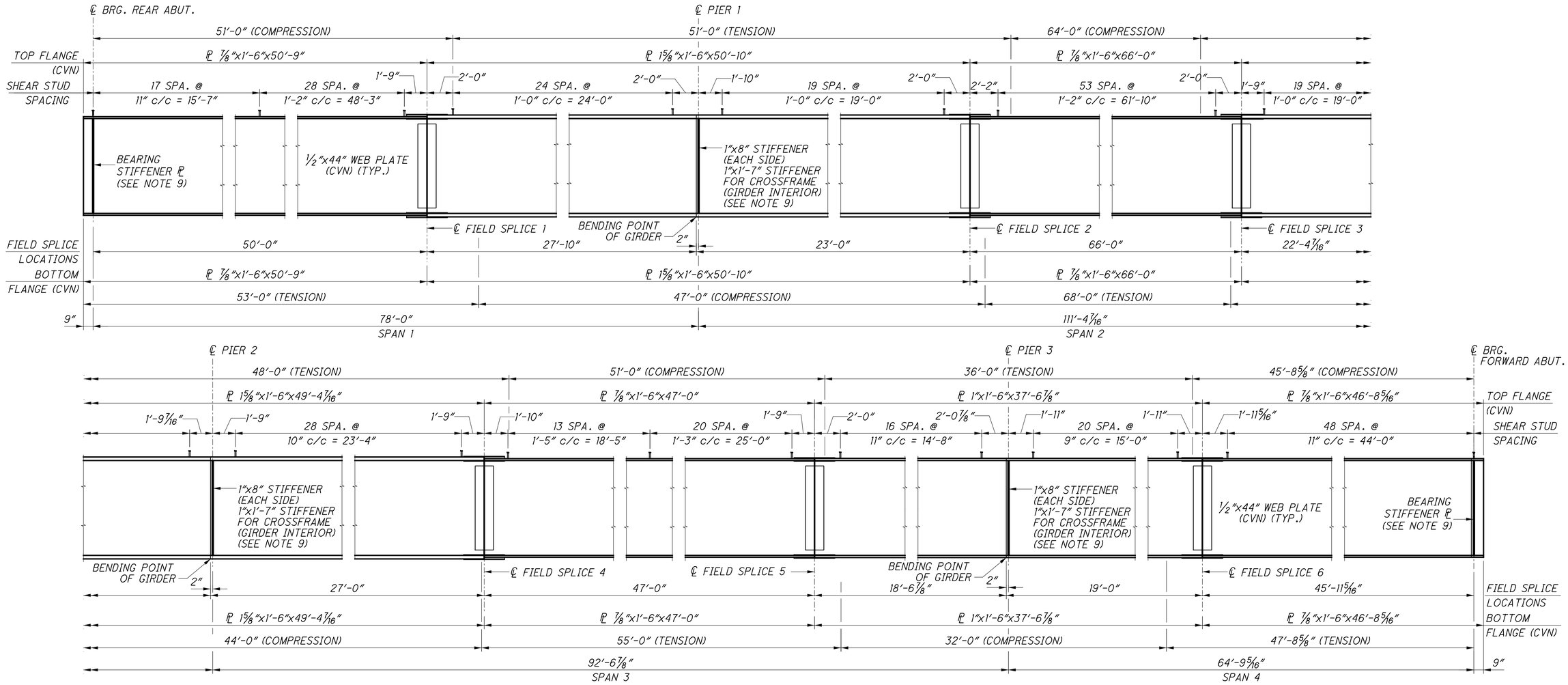

GIRDER A ELEVATION

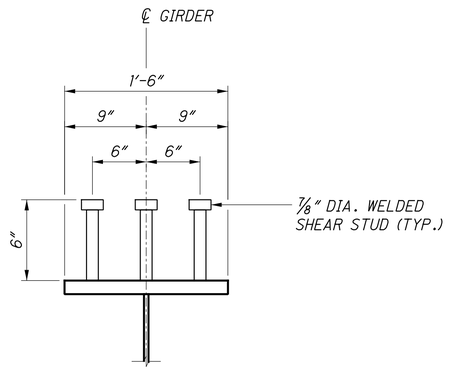

WELDED SHEAR STUD DETAIL

NOTES

1. ALL STRUCTURAL STEEL SHALL BE ASTM A709 GRADE 50 (MINIMUM YIELD STRENGTH 50 KSI).
2. CVN: WHERE A SHAPE OR PLATE IS DESIGNATED (CVN), FURNISH MATERIAL THAT MEETS THE MINIMUM NOTCH TOUGHNESS REQUIREMENTS AS SPECIFIED IN CMS 711.01.
3. WELD ATTACHMENT OF SUPPORTS FOR CONCRETE DECK FINISHING MACHINE TO AREAS OF THE FASCIA GIRDER FLANGES DESIGNATED "COMPRESSION". DO NOT WELD ATTACHMENTS TO AREAS DESIGNATED "TENSION". FILLET WELDS TO COMPRESSION FLANGES SHALL BE AT LEAST 1" FROM THE EDGE OF FLANGE, BE NO MORE THAN 2" LONG, AND BE AT LEAST 1/4" FOR THICKNESSES UP TO 3/4" OR 5/16" FOR GREATER THAN 3/4" THICK.
4. PAINT ALL GIRDERS, INTERMEDIATE CROSSFRAMES, AND BEARING DEVICES.
5. FOR SPLICE DETAILS, SEE SHEET 26/41.
6. FOR FRAMING PLAN, SEE SHEET 21/41 .
7. ALL DIMENSIONS ARE MEASURED ALONG ℄ GIRDERS UNLESS NOTED OTHERWISE.
8. STIFFENERS FOR INTERMEDIATE CROSSFRAMES NOT SHOWN.
9. FOR EXACT LOCATIONS OF BEARING STIFFENERS, SEE SHEETS 18 TO 20 OF 41.

DLZ
4121 HUNTLEY ROAD • COLUMBUS, OHIO 43228

DESIGNED JN/JD | DRAWN DAF/JG | CHECKED PAT/MHK | REVIEWED MJL | DATE 12/6/22 | REVISED | STRUCTURE FILE NUMBER 2513536

GIRDER A ELEVATION
BRIDGE NO. FRA-270-5264
RAMP L OVER I.R. 270

FRA-270-51.50
PID No. 92616

22 / 41

526 / 554

x:\Projects\2013\1321\1010\FRA\92616\structures\FRA270_5264\sheets\270_5264SD008.dgn 12/8/2022 8:06:04 PM cwong

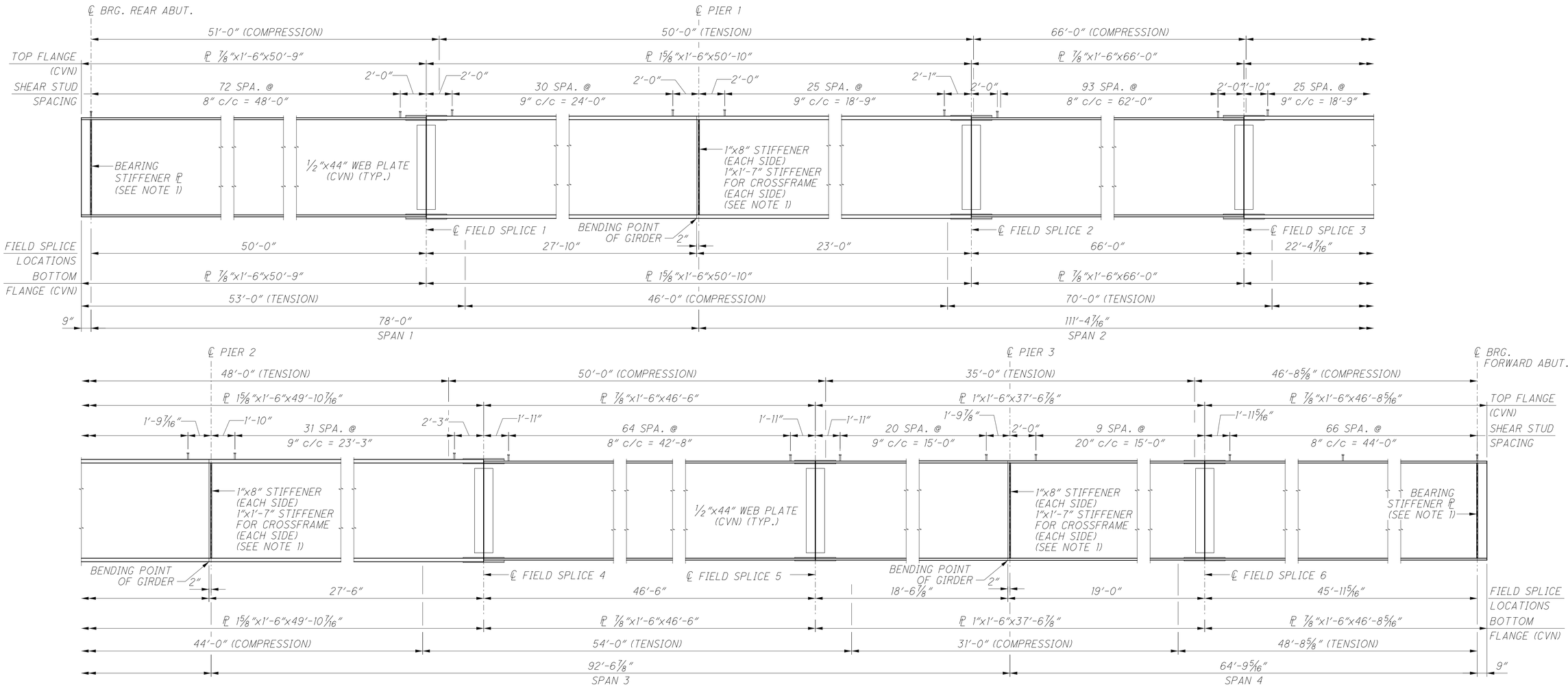

GIRDER B ELEVATION

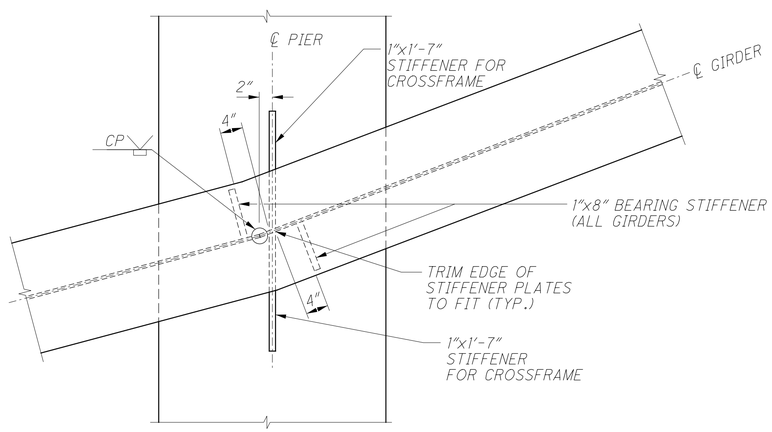

TYPICAL INTERIOR GIRDER BENDING POINT DETAIL

(FOR BENDING ANGLE, SEE FRAMING PLAN ON SHEET 21/41)

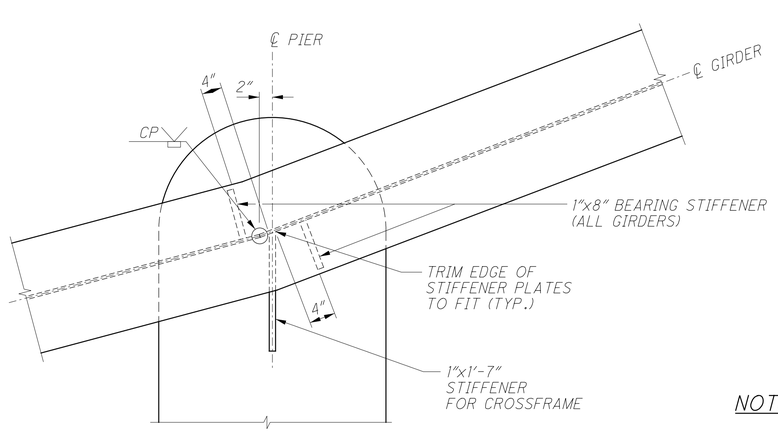

TYPICAL EXTERIOR GIRDER BENDING POINT DETAIL

(FOR BENDING ANGLE, SEE FRAMING PLAN ON SHEET 21/41)

NOTES

1. FOR GIRDER NOTES AND DETAILS, SEE SHEET 22/41.

DLZ
6121 HUNTLEY ROAD • COLUMBUS, OHIO 43229

DESIGNED JN/JD
DRAWN DAF/JG
CHECKED PAT/MHK
REVIEWED MJL
DATE 12/6/22
STRUCTURE FILE NUMBER 2513536
REVISED

GIRDER B ELEVATION
BRIDGE NO. FRA-270-5264
RAMP L OVER I.R. 270

FRA-270-51.50
PID No. 92616

23 / 41

527
554

x:\Projects\2013\1321\1010\FRA\92616\structures\FRA270_5264\sheets\270_5264SD009.dgn 5/5/2023 12:31:52 PM jogler

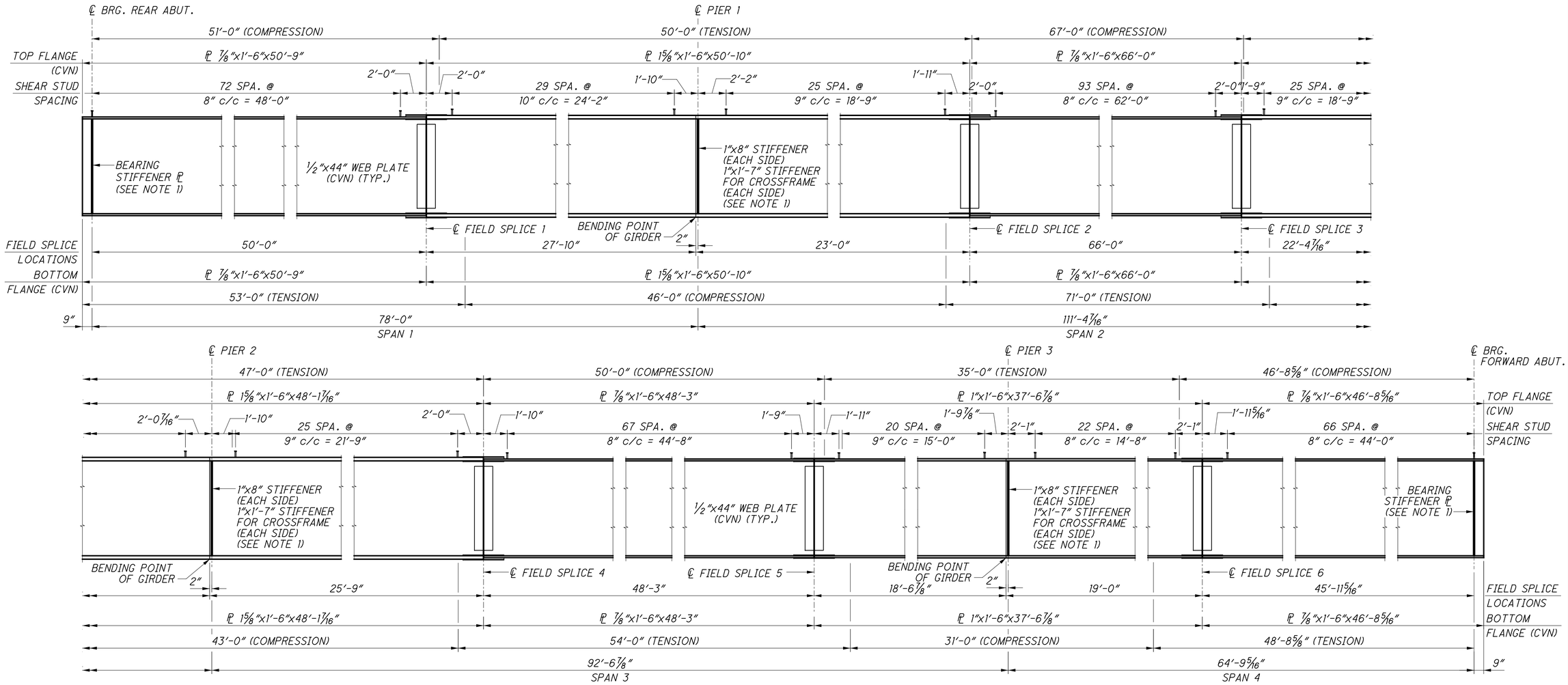

GIRDER C ELEVATION

NOTES

1. FOR GIRDER NOTES AND DETAILS, SEE SHEET 22/41.

DLZ
4121 HUNTLEY ROAD • COLUMBUS, OHIO 43228

DESIGNED JN/JD
DRAWN DAF/JG
CHECKED PAT/MHK
REVIEWED MJL
DATE 12/6/22
REVISED
STRUCTURE FILE NUMBER 2513536

GIRDER C ELEVATION
BRIDGE NO. FRA-270-5264
RAMP L OVER I.R. 270

FRA-270-51.50
PID No. 92616

24 / 41

528
554

x:\Projects\2013\1321\1010\FRA\92616\structures\FRA270_5264\sheets\270_5264SD010.dgn 12/8/2022 8:06:06 PM cwong

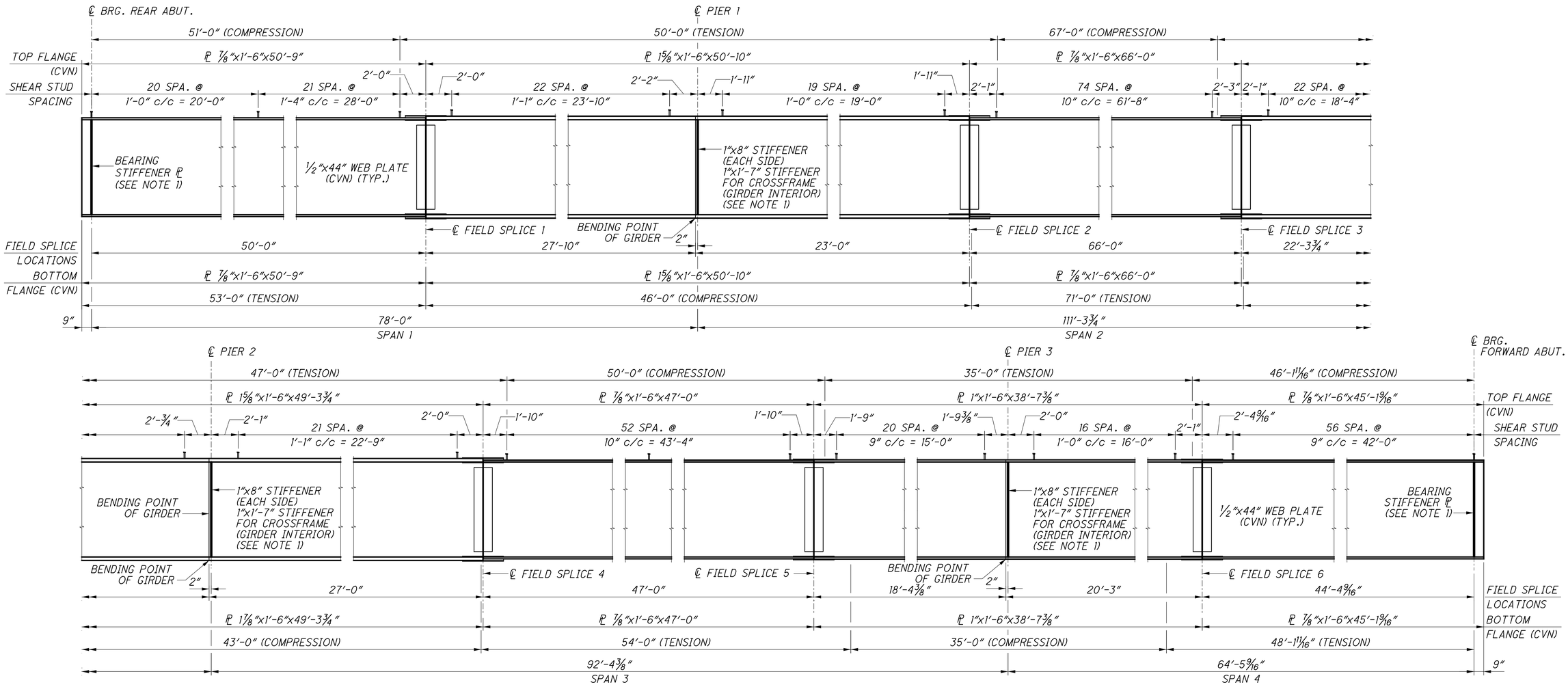

GIRDER D ELEVATION

NOTES

1. FOR GIRDER NOTES AND DETAILS, SEE SHEET 22/41.

x:\Projects\2013\1321\1010\FRA\92616\structures\FRA270_5264\sheets\270_5264SD011.dgn 12/8/2022 8:06:06 PM cwong

DLZ
6121 HUNTLEY ROAD • COLUMBUS, OHIO 43229

DESIGNED JN/JD
DRAWN DAF/JG
CHECKED PAT/MHK
REVIEWED MJL
DATE 12/6/22
REVISED
STRUCTURE FILE NUMBER 2513536

GIRDER D ELEVATION
BRIDGE NO. FRA-270-5264
RAMP L OVER I.R. 270

FRA-270-51.50
PID No. 92616

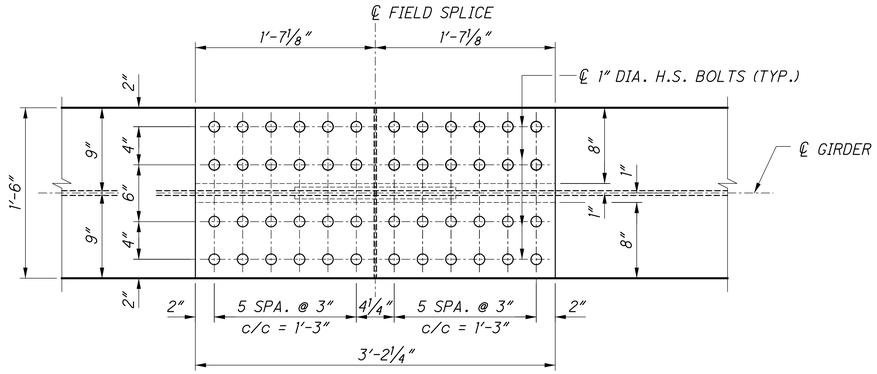

PLAN VIEW

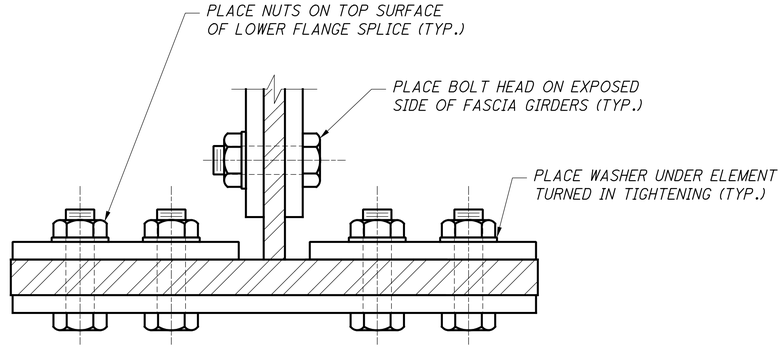

PARTIAL SECTION

(NOT TO SCALE)

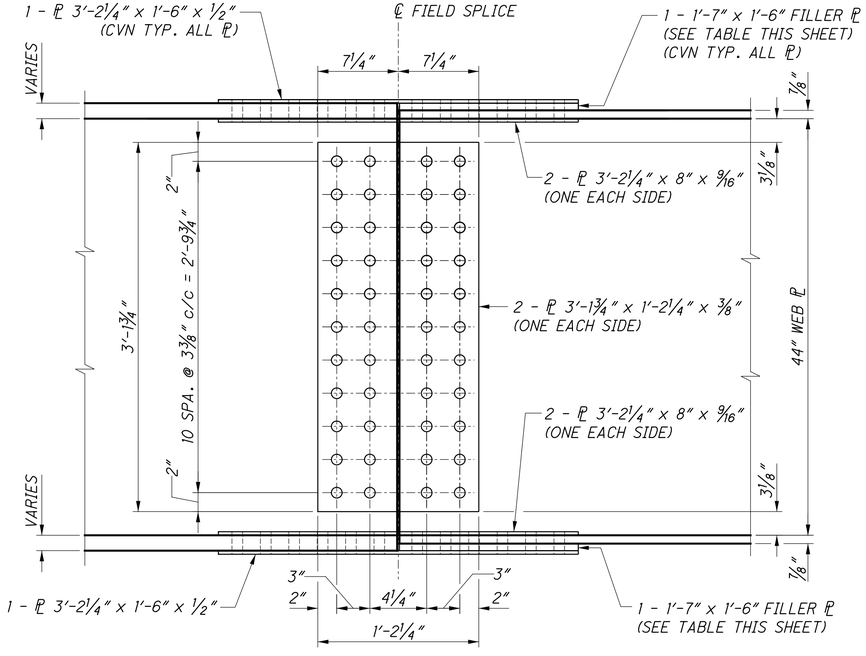

ELEVATION

FILLER ℙ THICKNESS						
GIRDER	F.S. 1	F.S. 2	F.S. 3	F.S. 4	F.S. 5	F.S. 6
A	3/4"	3/4"	3/4"	3/4"	1/8"	1/8"
B	3/4"	3/4"	3/4"	3/4"	1/8"	1/8"
C	3/4"	3/4"	3/4"	3/4"	1/8"	1/8"
D-T*	3/4"	3/4"	3/4"	3/4"	1/8"	1/8"
D-B*	3/4"	3/4"	1"	1"	1/8"	1/8"

D-T* - GIRDER D, TOP FLANGE

D-B* - GIRDER D, BOTTOM FLANGE

NOTES

1. ALL STRUCTURAL STEEL SHALL BE ASTM A709 GRADE 50, MINIMUM YIELD STRENGTH 50,000 PSI.
2. ALL STRUCTURAL STEEL FOR SPLICE PLATES SHALL HAVE CVN DESIGNATION AND MEET SPECIFIED MINIMUM (CVN) NOTCH TOUGHNESS REQUIREMENTS AS SPECIFIED IN 711.01.
3. HIGH STRENGTH BOLTS FOR FIELD SPLICES SHALL BE 1" DIAMETER A325 GALVANIZED, TYPE I BOLTS. HOLES FOR HIGH STRENGTH BOLTS FOR FIELD SPLICES SHALL BE 1⅛" DIAMETER STANDARD HOLE SIZE.
4. BEAM ENDS AT SPLICES SHALL BE CUT AND FIT AS PER PLAN. THE OPENING BETWEEN BEAM ENDS AFTER ASSEMBLY SHALL NOT EXCEED ¼"
5. FOR LOCATION OF FIELD SPLICES, SEE FRAMING PLAN SHEET 21/41 .
6. ALL SPLICE MATERIALS, INCLUDING PLATES AND BOLT ASSEMBLIES, SHALL BE INCLUDED FOR PAYMENT UNDER ITEM 513 - STRUCTURAL STEEL MEMBERS, LEVEL 4.

DLZ
6121 HUNTLEY ROAD • COLUMBUS, OHIO 43229

DESIGNED JN/JD
DRAWN DAF/JG
CHECKED PAT/MHK
REVIEWED MJL
DATE 12/6/22
REVISED
STRUCTURE FILE NUMBER 2513536

SPLICE DETAILS
BRIDGE NO. FRA-270-5264
RAMP L OVER I.R. 270

FRA-270-51.50
PID No. 92616

26 / 41

530
554

x:\Projects\2013\1321\1010\FRA\92616\structures\FRA270_5264\sheets\270_5264SD007.dgn 12/8/2022 8:06:07 PM cwong

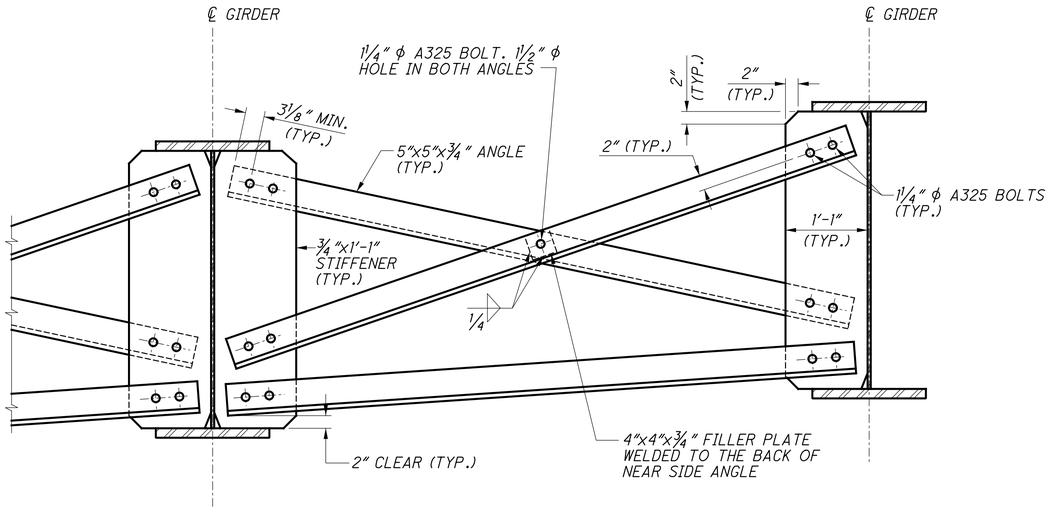

TYPICAL INTERMEDIATE BOLTED CROSSFRAME DETAIL

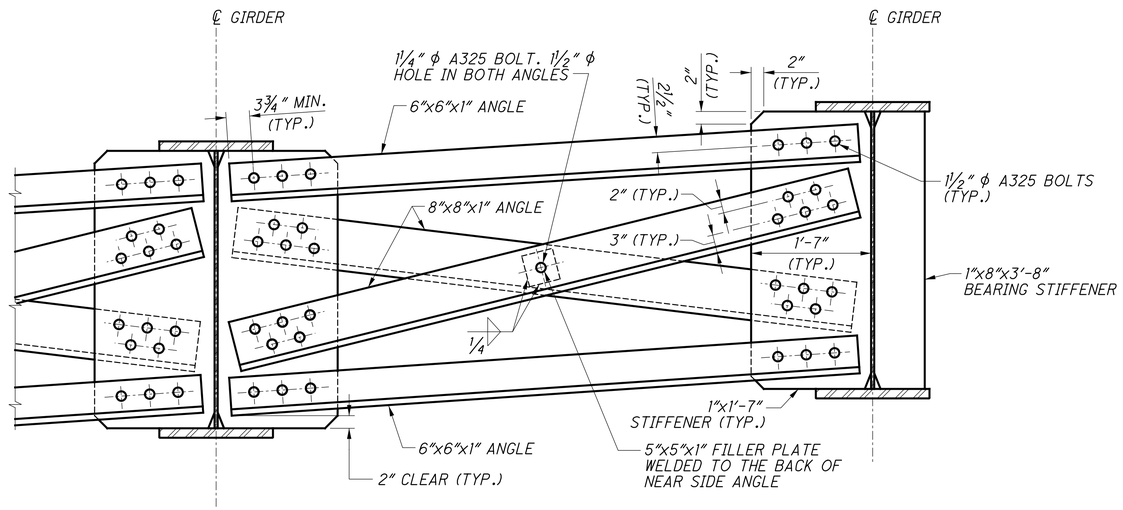

TYPICAL PIER BOLTED CROSSFRAME DETAIL

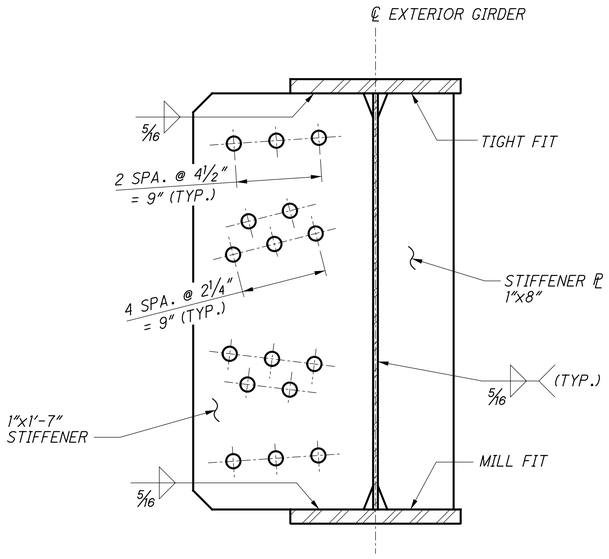

PIER STIFFENER DETAIL

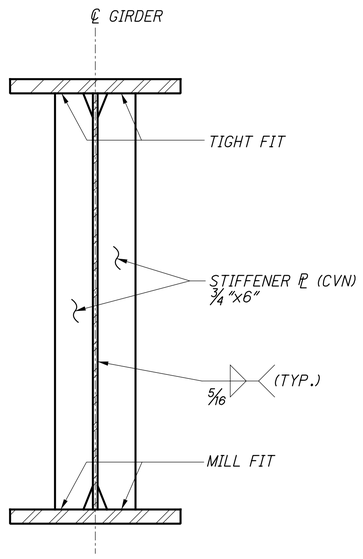

ABUTMENT BEARING PL STIFFENER DETAIL

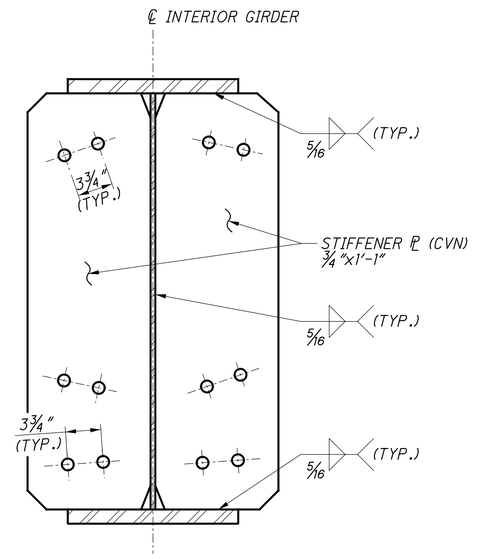

INTERMEDIATE CROSSFRAME PL STIFFENER DETAIL

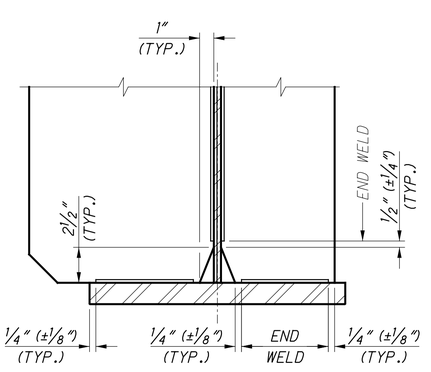

STIFFENER CLIP & WELD TERMINATION DETAIL

NOTES

1. SEE STANDARD BRIDGE DRAWING GSD-1-19 FOR ADDITIONAL NOTES AND DETAILS.

DLZ
1621 HUNTLEY ROAD • COLUMBUS, OHIO 43229

DESIGNED	DRAWN	REVIEWED	DATE
JN/JD	DAF/JG	MJL	12/6/22
CHECKED	REVISED	STRUCTURE FILE NUMBER	
PAT/CJS		2513536	

CROSSFRAME AND STIFFENER DETAILS
BRIDGE NO. FRA-270-5264
RAMP L OVER I.R. 270

FRA-270-51.50
PID No. 92616

27 / 41

531
554

x:\Projects\2013\1321\1000\FRA\92616\structures\FRA270_5264\sheets\270_5264SD006.dgn 12/8/2022 8:06:08 PM cwong

CAMBER AND DEFLECTIONS

GIRDER LINE	CAMBER DESCRIPTION	SPAN 1					SPAN 2								SPAN 3							SPAN 4					
		℄ BRG. R.A.	1/4	1/2	F.S. 1	3/4	℄ PIER 1	1/6	F.S. 2	1/3	1/2	2/3	F.S. 3	5/6	℄ PIER 2	1/4	F.S. 4	1/2	3/4	F.S. 5	℄ PIER 3	1/4	F.S. 6	1/2	3/4	℄ BRG. F.A.
(A)	DEFLECTION DUE TO WEIGHT OF STEEL	0″	1/8″	1/8″	1/16″	1/16″	0″	3/16″	1/4″	3/8″	1/2″	7/16″	1/4″	1/4″	0″	1/8″	3/16″	1/4″	1/8″	1/8″	0″	1/16″	1/16″	1/16″	1/16″	0″
	DEFLECTION DUE TO REMAINING DEAD LOAD	0″	7/16″	1/2″	3/8″	3/16″	0″	11/16″	15/16″	1 1/2″	1 13/16″	1 9/16″	1″	13/16″	0″	1/2″	9/16″	7/8″	9/16″	7/16″	0″	3/16″	3/16″	5/16″	1/4″	0″
	ADJUSTMENT FOR HORIZ. AND VERTICAL CURVES	0″	1/8″	1/8″	1/8″	1/8″	0″	-3/8″	-1/2″	-1/2″	-9/16″	-5/8″	-3/4″	-11/16″	0″	-3/4″	-13/16″	-13/16″	-3/4″	-5/8″	0″	1/16″	1/16″	1/16″	1/16″	0″
	REQUIRED SHOP CAMBER	0″	5/8″	3/4″	9/16″	3/8″	0″	1/2″	11/16″	1 3/8″	1 3/4″	1 5/16″	9/16″	3/8″	0″	-1/8″	-1/16″	1/4″	0″	-1/16″	0″	1/4″	5/16″	1/2″	3/8″	0″
(B)	DEFLECTION DUE TO WEIGHT OF STEEL	0″	1/8″	1/8″	1/16″	1/16″	0″	3/16″	1/8″	1/4″	5/16″	1/4″	3/16″	1/8″	0″	1/8″	3/16″	1/4″	3/16″	1/8″	0″	1/16″	1/16″	1/16″	1/16″	0″
	DEFLECTION DUE TO REMAINING DEAD LOAD	0″	3/8″	7/16″	1/4″	1/8″	0″	13/16″	1 1/16″	1 3/4″	2 1/8″	1 13/16″	1 1/8″	15/16″	0″	7/16″	9/16″	13/16″	9/16″	7/16″	0″	-3/16″	-3/16″	-5/16″	-1/4″	0″
	ADJUSTMENT FOR HORIZ. AND VERTICAL CURVES	0″	1/16″	1/8″	1/8″	1/8″	0″	-3/8″	-7/16″	-13/16″	-1 1/16″	-1″	-3/4″	-11/16″	0″	-3/4″	-13/16″	-1″	-3/4″	-5/8″	0″	0″	0″	1/16″	1/16″	0″
	REQUIRED SHOP CAMBER	0″	5/8″	11/16″	1/2″	5/16″	0″	11/16″	3/4″	1 3/16″	1 3/8″	1 1/16″	9/16″	3/8″	0″	-1/8″	-1/16″	1/16″	0″	-1/16″	0″	-1/8″	-1/8″	-3/16″	-1/8″	0″
(C)	DEFLECTION DUE TO WEIGHT OF STEEL	0″	1/8″	1/8″	1/16″	1/16″	0″	3/16″	1/4″	7/16″	1/2″	7/16″	1/4″	1/4″	0″	1/8″	3/16″	1/4″	3/16″	1/8″	0″	1/16″	1/16″	1/16″	1/16″	0″
	DEFLECTION DUE TO REMAINING DEAD LOAD	0″	3/8″	7/16″	1/4″	1/8″	0″	13/16″	1 1/16″	1 3/4″	2 1/8″	1 13/16″	1 1/8″	15/16″	0″	7/16″	1/2″	13/16″	9/16″	7/16″	0″	3/16″	3/16″	5/16″	1/4″	0″
	ADJUSTMENT FOR HORIZ. AND VERTICAL CURVES	0″	1/16″	1/8″	1/8″	1/16″	0″	-3/8″	-7/16″	-3/4″	-1 1/16″	-1″	-3/4″	-5/8″	0″	-3/4″	-3/4″	-15/16″	-3/4″	-5/8″	0″	-1/16″	-1/16″	0″	1/16″	0″
	REQUIRED SHOP CAMBER	0″	9/16″	11/16″	1/2″	5/16″	0″	11/16″	7/8″	1 3/8″	1 9/16″	1 1/4″	11/16″	1/2″	0″	-1/8″	-1/16″	1/8″	0″	0″	0″	1/8″	3/16″	7/16″	3/8″	0″
(D)	DEFLECTION DUE TO WEIGHT OF STEEL	0″	1/8″	1/8″	1/16″	1/16″	0″	3/16″	1/4″	3/8″	7/16″	3/8″	1/4″	3/16″	0″	1/8″	1/8″	3/16″	1/8″	1/8″	0″	0″	1/16″	1/16″	1/16″	0″
	DEFLECTION DUE TO REMAINING DEAD LOAD	0″	3/8″	3/8″	1/4″	1/8″	0″	7/8″	1 1/8″	1 13/16″	2 1/4″	1 7/8″	1 3/16″	15/16″	0″	7/16″	1/2″	13/16″	9/16″	7/16″	0″	3/16″	3/16″	5/16″	5/16″	0″
	ADJUSTMENT FOR HORIZ. AND VERTICAL CURVES	0″	15/16″	1 1/4″	1 3/16″	15/16″	0″	15/16″	1 1/8″	1 3/8″	1 5/16″	1 1/8″	3/4″	5/8″	0″	1/2″	9/16″	11/16″	1/2″	7/16″	0″	1/2″	5/8″	13/16″	5/8″	0″
	REQUIRED SHOP CAMBER	0″	1 7/16″	1 3/4″	1 7/16″	1 1/16″	0″	2 1/16″	2 7/16″	3 9/16″	4 1/16″	3 7/16″	2 3/16″	1 13/16″	0″	1 1/16″	1 3/16″	1 11/16″	1 3/16″	1″	0″	11/16″	7/8″	1 3/16″	15/16″	0″

NOTE: POSITIVE DIMENSIONS INDICATE DOWNWARD DEFLECTION AND UPWARD CAMBER

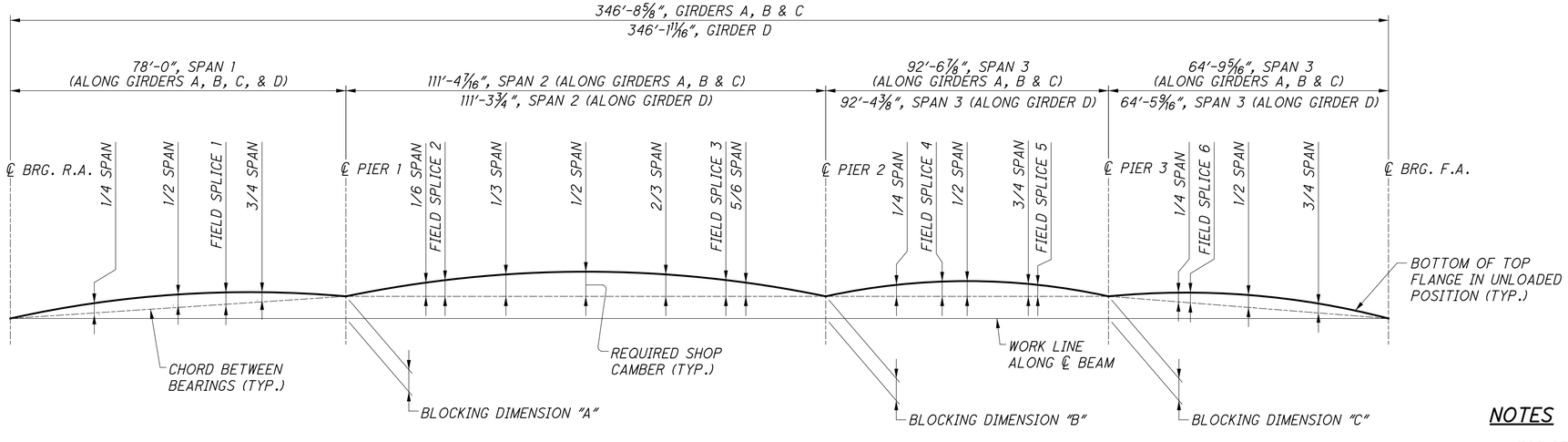

CAMBER AND BLOCKING DIAGRAM

BLOCKING DIMENSIONS			
GIRDER LINE	DIM. "A"	DIM. "B"	DIM. "C"
(A)	5 3/16″	4 1/8″	2 3/4″
(B)	5 3/16″	4 1/8″	2 5/8″
(C)	5 3/16″	4 1/8″	2 9/16″
(D)	4 15/16″	3 3/4″	2 1/8″

NOTE: POSITIVE DIMENSIONS ARE ABOVE THE WORK LINE

NOTES

1. FOR DECK SCREED ELEVATION TABLES, SEE SHEETS 34 AND 35/41.
2. FOR BEARING DETAILS, SEE SHEETS 18, 19 AND 20/41.
3. FOR TABLE OF BLOCKING DIMENSIONS, SEE THIS SHEET.

DLZ
1621 HUNTLEY ROAD • COLUMBUS, OHIO 43229

DATE 12/6/22
REVIEWED MJL
STRUCTURE FILE NUMBER 2513536
DRAWN DAF/MHK
REVISED
DESIGNED JN/JD
CHECKED PAT/CJS

CAMBER AND DEFLECTIONS
BRIDGE NO. FRA-270-5264
RAMP L OVER I.R. 270

FRA-270-51.50
PID No. 92616

28 / 41

532
554

12/8/2022 8:06:08 PM cwong
x:\Projects\2013\1321\1010\FRA\92616\structures\FRA270_5264\sheets\270_5264SD012.dgn

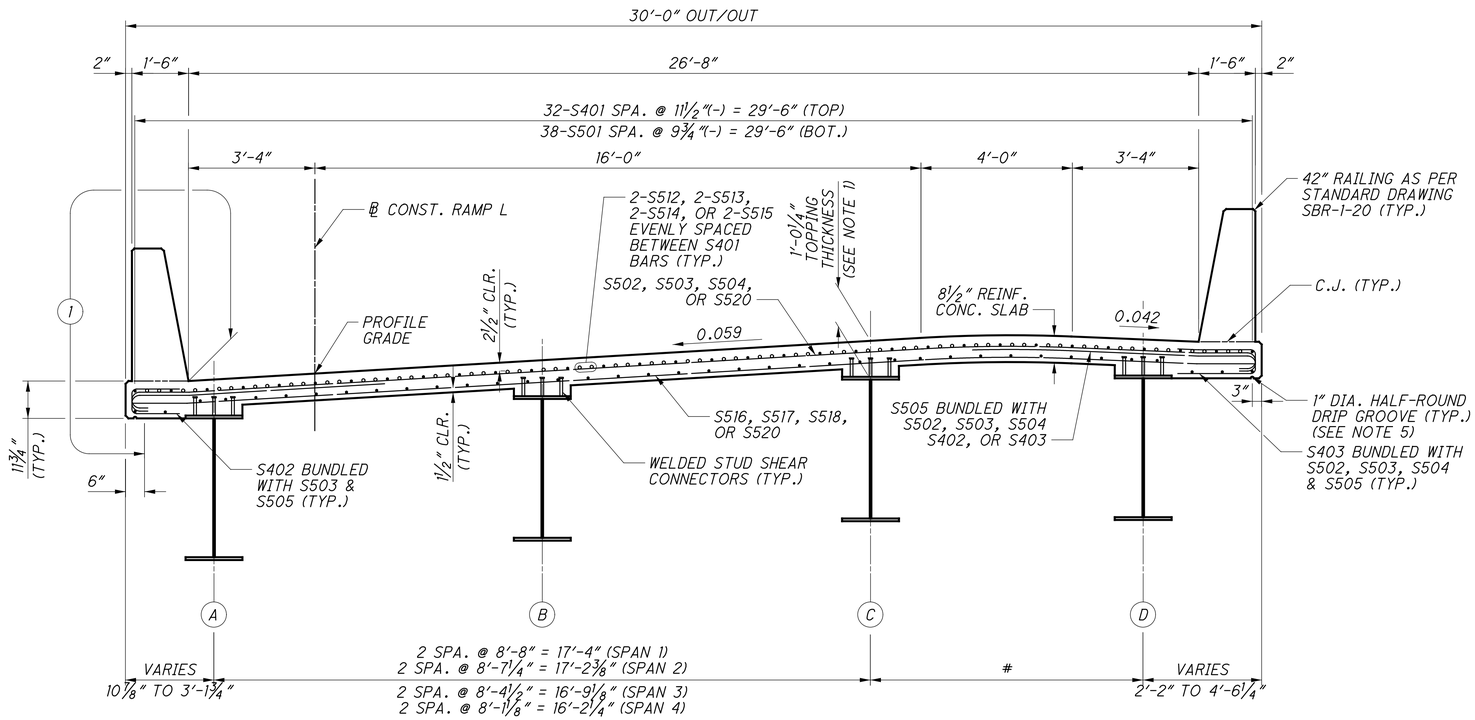

TRANSVERSE SECTION

LEGEND

(1) LIMITS OF SEALING OF CONCRETE SURFACES (EPOXY-URETHANE) (TYP.)

(X) GIRDER LINE DESIGNATION

\# VARIES 7'-4⅝" TO 7'-2" (SPAN 1)
VARIES 7'-1⅜" TO 7'-7¼" (SPAN 2)
VARIES 7'-5⅛" TO 8'-2½" (SPAN 3)
VARIES 7'-11¾" TO 8'-9⅛" (SPAN 4)

NOTES

1. DECK SLAB CONCRETE QUANTITY: THE ESTIMATED QUANTITY OF DECK SLAB CONCRETE IS BASED ON THE CONSTANT DECK SLAB THICKNESS, AS SHOWN, PLUS THE QUANTITY OF CONCRETE THAT FORMS EACH GIRDER HAUNCH. THE ESTIMATE ASSUMES A CONSTANT HAUNCH THICKNESS OF 2½ INCHES AND A HAUNCH WIDTH EQUAL TO THE TOP FLANGE WIDTH. DEVIATE FROM THIS HAUNCH THICKNESS AS NECESSARY TO PLACE THE DECK SURFACE AT THE FINISHED GRADE.

   THE HAUNCH THICKNESS WAS MEASURED AT THE CENTERLINE OF THE GIRDER, FROM THE SURFACE OF THE DECK TO THE BOTTOM OF THE TOP FLANGE, MINUS THE DECK SLAB THICKNESS. THE AREA OF ALL EMBEDDED STEEL PLATES HAS BEEN DEDUCTED FROM THE HAUNCH QUANTITY IN ACCORDANCE WITH 511.23.

2. RAILING REINFORCING NOT SHOWN FOR CLARITY. FOR RAILING DETAILS, SEE SHEETS 36/41 & 37/41.
3. FOR FRAMING PLAN, SEE SHEET 21/41 .
4. FOR DECK SLAB PLAN, SEE SHEETS 30/41, 31/41 , AND 32/41.
5. DRIP GROOVES SHALL TERMINATE 2'-0" FROM THE FACE OF THE ABUTMENT.
6. CROSSFRAMES NOT SHOWN FOR CLARITY. FOR CROSSFRAME DETAILS, SEE SHEET 27/41.

DLZ
6121 HUNTLEY ROAD • COLUMBUS, OHIO 43229

DESIGNED MSC/JAM
DRAWN MSC/JAM
CHECKED ASP/JD
REVIEWED MJL
DATE 12/6/22
REVISED
STRUCTURE FILE NUMBER 2513536

TRANSVERSE SECTION
BRIDGE NO. FRA-270-5264
RAMP L OVER I.R. 270

FRA-270-51.50
PID No. 92616

29 / 41

533
554

x:\Projects\2013\132\1010\FRA\92616\structures\FRA270_5264\sheets\270_5264TS001.dgn 12/8/2022 8:06:09 PM cwong

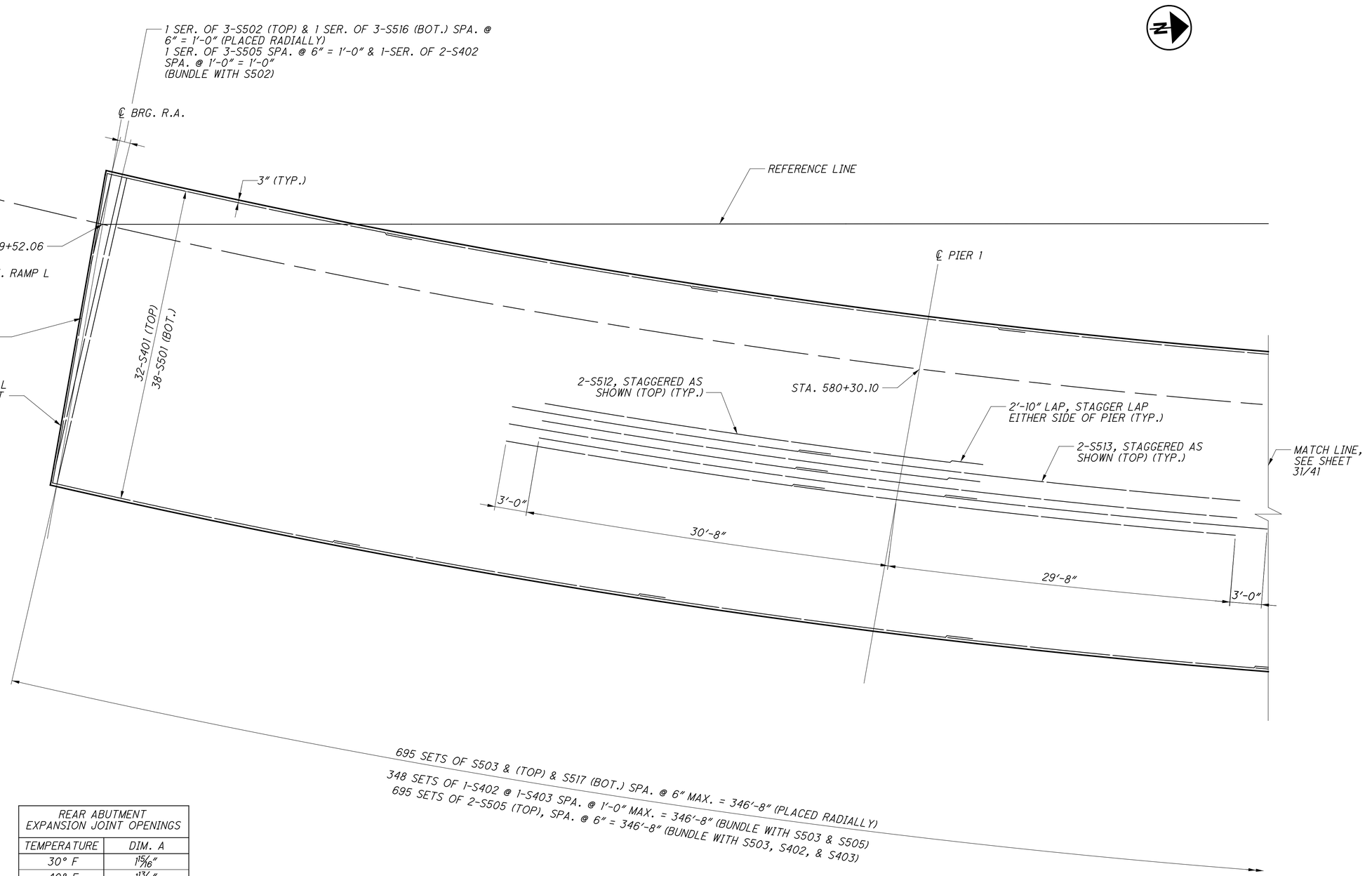

REAR ABUTMENT EXPANSION JOINT OPENINGS	
TEMPERATURE	DIM. A
30° F	1 15/16"
40° F	1 13/16"
50° F	1 5/8"
60° F	1 1/2"
70° F	1 3/8"
80° F	1 3/16"
90° F	1 1/16"

SEE STD. DWG. EXJ-4-87
FOR LOCATION OF DIM. A

DECK SLAB PLAN

NOTES

1. FOR THE DECK REINFORCEMENT, THE MIN. LAP LENGTHS ARE AS FOLLOWS: #4 BARS = 2'-4"; #5 BARS = 3'-1".
2. FOR TRANSVERSE SECTION, SEE SHEET 29/41.
3. FOR DECK SCREED ELEVATIONS, SEE SHEETS 34/41 AND 35/41.
4. FOR RAILING DETAILS, SEE SHEETS 36/41 AND 37/41.

DLZ
6121 HUNTLEY ROAD • COLUMBUS, OHIO 43229

DESIGNED	DRAWN	REVIEWED	DATE
MSC/JD	PDP	MJL	12/6/22
CHECKED	REVISED	STRUCTURE FILE NUMBER	
ASP/CJS		2513536	

DECK SLAB PLAN - 1
BRIDGE NO. FRA-270-5264
RAMP L OVER I.R. 270

FRA-270-51.50
PID No. 92616

30 / 41

534
554

x:\Projects\2013\1321\1010\FRA\92616\structures\FRA270_5264\sheets\270_5264DP001.dgn 12/8/2022 8:06:10 PM cwong

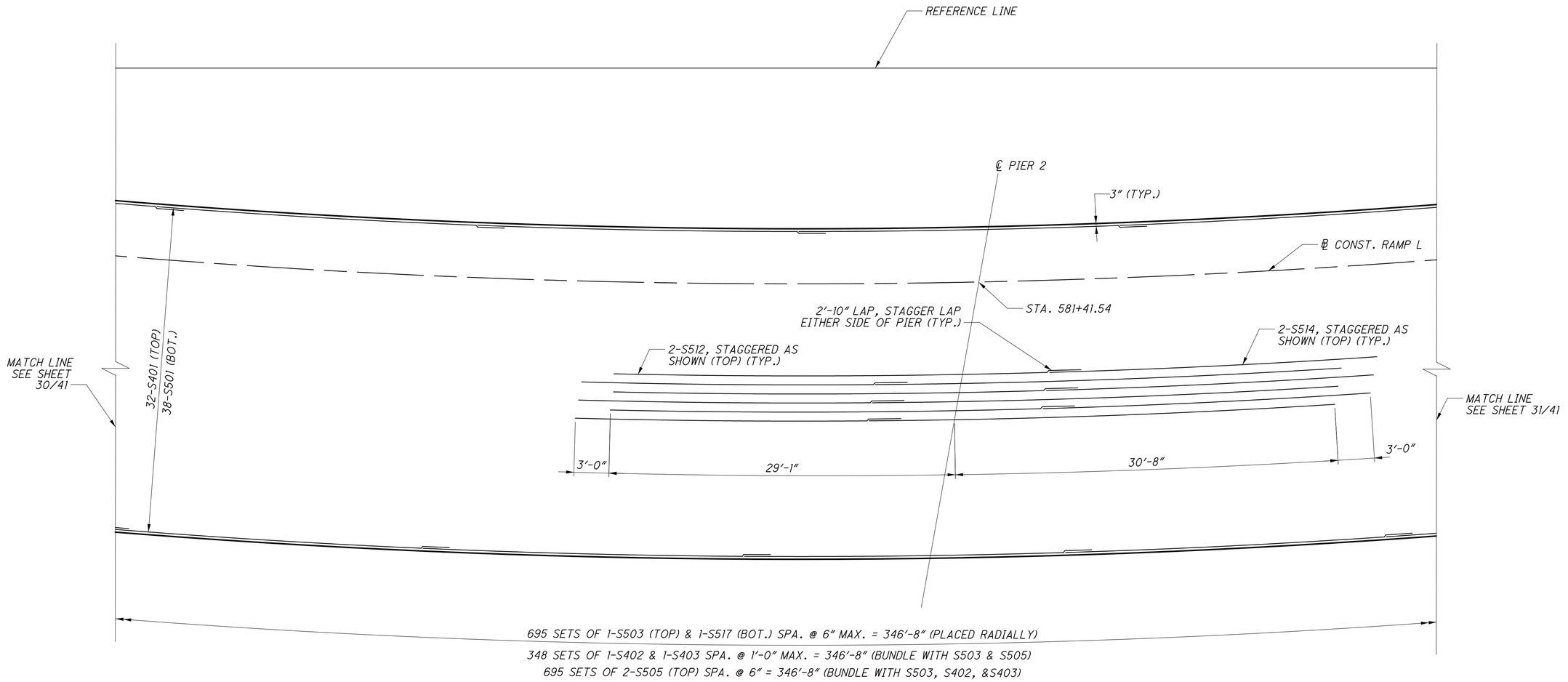

DECK SLAB PLAN

NOTES

1. FOR THE DECK REINFORCEMENT, THE MIN. LAP LENGTHS ARE AS FOLLOWS: #4 BARS = 2'-4"; #5 BARS = 3'-1".
2. FOR TRANSVERSE SECTION, SEE SHEET 29/41.
3. FOR DECK SCREED ELEVATIONS, SEE SHEETS 34/41 AND 35/41.
4. FOR RAILING DETAILS, SEE SHEETS 36/41 AND 37/41.

DLZ
6121 HUNTLEY ROAD • COLUMBUS, OHIO 43229

DESIGNED	DRAWN	REVIEWED	DATE
MSC/JD	PDP	MJL	12/6/22
CHECKED	REVISED	STRUCTURE FILE NUMBER	
ASP/CJS		2513536	

DECK SLAB PLAN - 2
BRIDGE NO. FRA-270-5264
RAMP L OVER I.R. 270

FRA-270-51.50
PID No. 92616

x:\Projects\2013\1321\1010\FRA\92616\structures\FRA270_5264\sheets\270_5264DP002.dgn 12/8/2022 8:06:10 PM cwong

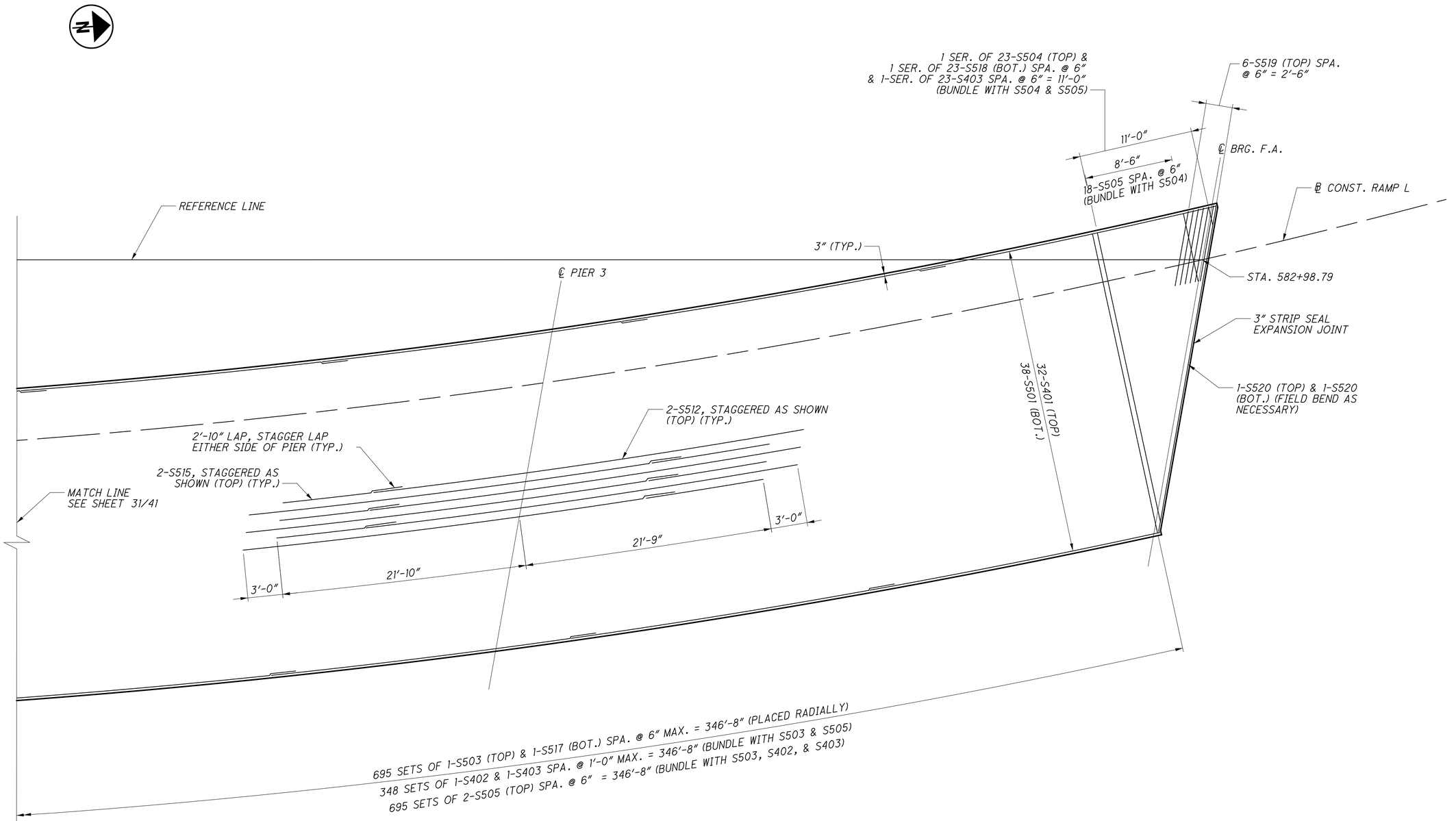

DECK SLAB PLAN

FORWARD ABUTMENT EXPANSION JOINT OPENINGS	
TEMPERATURE	DIM. A
30° F	1 15/16"
40° F	1 13/16"
50° F	1 11/16"
60° F	1 9/16"
70° F	1 7/16"
80° F	1 5/16"
90° F	1 3/16"

SEE STD. DWG. EXJ-4-87
FOR LOCATION OF DIM. A

NOTES

1. FOR THE DECK REINFORCEMENT, THE MIN. LAP LENGTHS ARE AS FOLLOWS: #4 BARS = 2'-4"; #5 BARS = 3'-1".
2. FOR TRANSVERSE SECTION, SEE SHEET 29 OF 41.
3. FOR DECK SCREED ELEVATIONS, SEE SHEETS 34/41 AND 35/41.
4. FOR RAILING DETAILS, SEE SHEETS 36/41 AND 37/41.

DLZ
6121 HUNTLEY ROAD • COLUMBUS, OHIO 43229

DESIGNED MSC/JD
DRAWN MSC/JG
CHECKED ASP/CJS
REVIEWED MJL
DATE 12/6/22
REVISED
STRUCTURE FILE NUMBER 2513536

DECK SLAB PLAN - 3
BRIDGE NO. FRA-270-5264
RAMP L OVER I.R. 270

FRA-270-51.50
PID No. 92616

32 / 41

536
554

x:\Projects\2013\1321\1010\FRA\92616\structures\FRA270_5264\sheets\270_5264DP003.dgn 12/8/2022 8:06:11 PM cwong

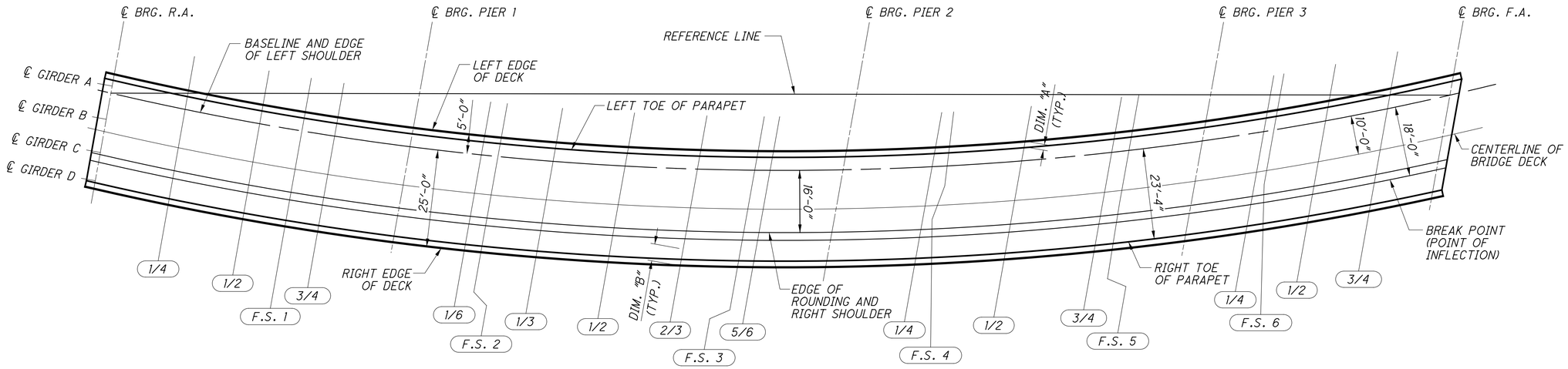

SCREED LINE LOCATION DIAGRAM

DECK SLAB OVERHANG DIMENSIONS MEASURED ALONG SCREED LINES

LOCATION	SPAN 1						SPAN 2								SPAN 3							SPAN 4					
	℄ BRG. R.A.	1/4	1/2	F.S. 1	3/4	℄ PIER 1	1/6	F.S. 2	1/3	1/2	2/3	F.S. 3	5/6	℄ PIER 2	1/4	F.S. 4	1/2	3/4	F.S. 5	℄ PIER 3	1/4	F.S. 6	1/2	3/4	℄ BRG. F.A.
DIMENSION "A" - LEFT EDGE OF DECK	3'-1⅞"	2'-4½"	2'-1¼"	2'-2"	2'-4"	3'-0½"	1'-10½"	1'-8⅛"	1'-2"	0'-11"	1'-1½"	1'-7¼"	1'-9½"	2'-10¾"	1'-9¾"	1'-8¼"	1'-5⅜"	1'-9⅝"	1'-11½"	2'-10¾"	2'-3⅝"	2'-2⅞"	2'-0⅞"	2'-2½"	2'-8⅝"
DIMENSION "B" - RIGHT EDGE OF DECK	2'-2"	2'-11⅝"	3'-3½"	3'-3"	3'-1½"	2'-6"	3'-7⅜"	3'-9¾"	4'-3⅝"	4'-6⅝"	4'-4⅜"	3'-10⅞"	3'-8⅞"	2'-8⅛"	3'-8⅞"	3'-9⅛"	4'-1½"	3'-9¾"	3'-7¾"	2'-9⅝"	3'-4¾"	3'-4¼"	3'-7¾"	3'-6⅝"	3'-1⅛"

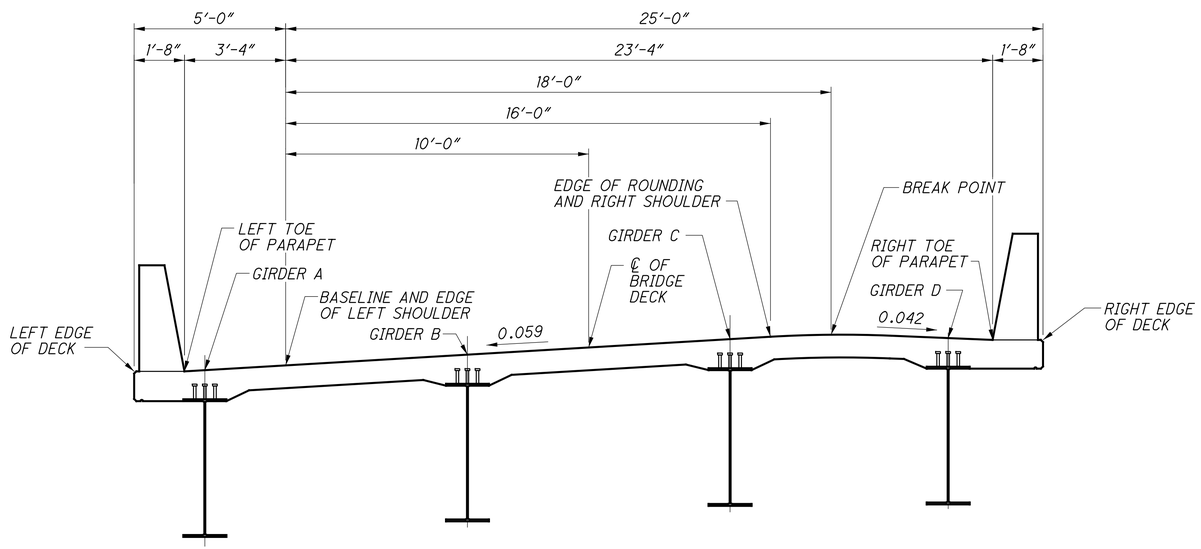

SCREED LINE LOCATION SECTION

x:\Projects\2013\1321\1010\FRA\92616\structures\FRA270_5264\sheets\270_5264SD003.dgn 12/8/2022 8:06:12 PM cwong

DLZ
6121 HUNTLEY ROAD • COLUMBUS, OHIO 43229

DESIGNED	DRAWN	REVIEWED	DATE
JN	DAF	MJL	12/6/22
CHECKED	REVISED	STRUCTURE FILE NUMBER	
PAT		2513536	

SCREED LINE LOCATION DIAGRAM
BRIDGE NO. FRA-270-5264
RAMP L OVER I.R. 270

FRA-270-51.50
PID No. 92616

TOP OF HAUNCH AND DECK SCREED ELEVATION TABLE - SPAN 1 & 2

ELEVATION LOCATION		SPAN 1					SPAN 2								
		℄ BRG. R.A.	1/4	1/2	F.S. 1	3/4	℄ PIER 1	1/6	F.S. 2	1/3	1/2	2/3	F.S. 3	5/6	℄ PIER 2
LEFT EDGE OF DECK	STATION	579+51.80	579+71.45	579+91.08	580+02.15	580+10.71	580+30.35	580+48.93	580+53.20	580+67.54	580+86.19	581+04.90	581+19.65	581+23.68	581+42.54
	OFFSET	-5.00	-5.00	-5.00	-5.00	-5.00	-5.00	-5.00	-5.00	-5.00	-5.00	-5.00	-5.00	-5.00	-5.00
	FINAL TOP OF DECK EL.	740.38	740.45	740.49	740.49	740.49	740.46	740.39	740.38	740.30	740.19	740.09	740.00	739.98	739.87
	DECK SCREED EL.	740.38	740.49	740.53	740.52	740.51	740.46	740.45	740.45	740.42	740.35	740.22	740.08	740.05	739.87
LEFT TOE OF PARAPET	STATION	579+51.89	579+71.49	579+91.08	580+02.13	580+10.67	580+30.27	580+48.80	580+53.07	580+67.37	580+85.98	581+04.65	581+19.37	581+23.39	581+42.21
	OFFSET	-3.33	-3.33	-3.33	-3.33	-3.33	-3.33	-3.33	-3.33	-3.33	-3.33	-3.33	-3.33	-3.33	-3.33
	FINAL TOP OF DECK EL.	740.38	740.45	740.49	740.49	740.49	740.46	740.39	740.38	740.30	740.19	740.09	740.00	739.98	739.87
	DECK SCREED EL.	740.38	740.49	740.53	740.52	740.51	740.46	740.45	740.45	740.42	740.35	740.22	740.09	740.05	739.87
GIRDER A	STATION	579+51.97	579+71.51	579+91.08	580+02.12	580+10.65	580+30.20	580+48.78	580+53.07	580+67.42	580+86.08	581+04.73	581+19.38	581+23.37	581+41.97
	OFFSET	-1.85	-2.62	-2.90	-2.83	-2.67	-1.97	-3.13	-3.33	-3.83	-4.09	-3.89	-3.42	-3.24	-2.16
	FINAL TOP OF DECK EL.	740.46	740.49	740.51	740.52	740.53	740.54	740.41	740.38	740.30	740.19	740.09	740.00	739.99	739.94
	TOP OF HAUNCH EL.	739.76	739.82	739.85	739.84	739.84	739.83	739.76	739.74	739.72	739.64	739.51	739.38	739.35	739.24
BASELINE AND EDGE OF LEFT SHOULDER	STATION	579+52.06	579+71.58	579+91.08	580+02.08	580+10.58	580+30.10	580+48.55	580+52.80	580+67.04	580+85.57	581+04.15	581+18.80	581+22.81	581+41.54
	OFFSET	0.00	0.00	0.00	0.00	0.00	0.00	0.00	0.00	0.00	0.00	0.00	0.00	0.00	0.00
	FINAL TOP OF DECK EL.	740.57	740.65	740.68	740.69	740.69	740.65	740.59	740.57	740.50	740.39	740.29	740.20	740.18	740.07
	DECK SCREED EL.	740.58	740.68	740.72	740.72	740.70	740.65	740.66	740.65	740.63	740.56	740.43	740.29	740.25	740.07
GIRDER B	STATION	579+52.41	579+71.74	579+91.09	580+02.00	580+10.43	580+29.76	580+48.14	580+52.38	580+66.57	580+85.01	581+03.46	581+17.95	581+21.90	581+40.29
	OFFSET	6.80	6.04	5.77	5.83	5.99	6.69	5.52	5.31	4.79	4.51	4.68	5.13	5.30	6.34
	FINAL TOP OF DECK EL.	740.98	741.00	741.01	741.02	741.03	741.05	740.95	740.93	740.85	740.75	740.65	740.57	740.55	740.45
	TOP OF HAUNCH EL.	740.27	740.33	740.35	740.35	740.34	740.34	740.28	740.27	740.22	740.13	740.01	739.90	739.87	739.75
CENTERLINE OF BRIDGE DECK	STATION	579+52.57	579+71.84	579+91.09	580+01.95	580+10.34	580+29.60	580+47.81	580+52.01	580+66.06	580+84.35	581+02.69	581+17.15	581+21.10	581+39.58
	OFFSET	10.00	10.00	10.00	10.00	10.00	10.00	10.00	10.00	10.00	10.00	10.00	10.00	10.00	10.00
	FINAL TOP OF DECK EL.	741.17	741.24	741.27	741.28	741.28	741.25	741.19	741.17	741.09	740.99	740.88	740.80	740.78	740.67
	DECK SCREED EL.	741.17	741.27	741.31	741.30	741.29	741.25	741.26	741.26	741.24	741.17	741.03	740.90	740.86	740.67
GIRDER C	STATION	579+52.85	579+71.96	579+91.09	580+01.89	580+10.23	580+29.34	580+47.51	580+51.70	580+65.73	580+83.97	581+02.22	581+16.55	581+20.45	581+38.65
	OFFSET	15.46	14.70	14.44	14.50	14.66	15.35	14.16	13.95	13.42	13.11	13.26	13.68	13.84	14.85
	FINAL TOP OF DECK EL.	741.49	741.52	741.54	741.55	741.55	741.56	741.43	741.40	741.30	741.18	741.08	741.02	741.01	740.96
	TOP OF HAUNCH EL.	740.78	740.84	740.86	740.86	740.86	740.85	740.79	740.78	740.73	740.64	740.52	740.41	740.38	740.26
EDGE OF ROUNDING AND RIGHT SHOULDER	STATION	579+52.87	579+71.99	579+91.09	580+01.87	580+10.19	580+29.31	580+47.38	580+51.54	580+65.48	580+83.63	581+01.83	581+16.19	581+20.09	581+38.43
	OFFSET	16.00	16.00	16.00	16.00	16.00	16.00	16.00	16.00	16.00	16.00	16.00	16.00	16.00	16.00
	FINAL TOP OF DECK EL.	741.52	741.59	741.63	741.63	741.63	741.60	741.54	741.52	741.45	741.35	741.24	741.16	741.14	741.03
	DECK SCREED EL.	741.52	741.62	741.66	741.66	741.64	741.60	741.61	741.61	741.60	741.53	741.40	741.26	741.22	741.04
BREAK POINT	STATION	579+52.97	579+72.04	579+91.09	580+01.84	580+10.15	580+29.21	580+47.24	580+51.39	580+65.29	580+83.39	581+01.54	581+15.88	581+19.76	581+38.05
	OFFSET	18.00	18.00	18.00	18.00	18.00	18.00	18.00	18.00	18.00	18.00	18.00	18.00	18.00	18.00
	FINAL TOP OF DECK EL.	741.66	741.70	741.70	741.70	741.67	741.61	741.59	741.52	741.42	741.31	741.23	741.21	741.10	740.98
	DECK SCREED EL.	741.66	741.73	741.73	741.72	741.68	741.61	741.66	741.61	741.57	741.50	741.39	741.31	741.18	740.98
GIRDER D	STATION	579+53.21	579+72.14	579+91.10	580+01.79	580+10.05	580+28.99	580+47.00	580+51.16	580+65.04	580+83.10	581+01.17	581+15.40	581+19.21	581+37.22
	OFFSET	22.83	22.03	21.71	21.75	21.88	22.51	21.39	21.20	20.72	20.48	20.68	21.15	21.32	22.37
	FINAL TOP OF DECK EL.	741.44	741.54	741.59	741.60	741.59	741.53	741.52	741.51	741.46	741.37	741.25	741.15	741.12	740.98
	TOP OF HAUNCH EL.	740.73	740.87	740.91	740.91	740.89	740.82	740.88	740.89	740.90	740.85	740.70	740.54	740.50	740.27
RIGHT TOE OF PARAPET	STATION	579+53.24	579+72.17	579+91.10	580+01.77	580+10.02	580+28.96	580+46.86	580+51.00	580+64.79	580+82.77	581+00.80	581+15.06	581+18.88	581+37.04
	OFFSET	23.33	23.33	23.33	23.33	23.33	23.33	23.33	23.33	23.33	23.33	23.33	23.33	23.33	23.33
	FINAL TOP OF DECK EL.	741.42	741.49	741.52	741.53	741.53	741.50	741.44	741.42	741.35	741.25	741.15	741.06	741.04	740.94
	DECK SCREED EL.	741.42	741.52	741.56	741.55	741.54	741.50	741.51	741.51	741.50	741.44	741.30	741.16	741.12	740.94
RIGHT EDGE OF DECK	STATION	579+53.32	579+72.21	579+91.10	580+01.75	580+09.98	580+28.88	580+46.74	580+50.87	580+64.64	580+82.58	581+00.56	581+14.81	581+18.61	581+36.73
	OFFSET	25.00	25.00	25.00	25.00	25.00	25.00	25.00	25.00	25.00	25.00	25.00	25.00	25.00	25.00
	FINAL TOP OF DECK EL.	741.42	741.49	741.52	741.53	741.53	741.50	741.44	741.42	741.35	741.25	741.15	741.07	741.04	740.94
	DECK SCREED EL.	741.42	741.52	741.56	741.55	741.54	741.50	741.51	741.52	741.51	741.44	741.31	741.16	741.12	740.94

LEGEND

BRG. - BEARING
F.A. - FORWARD ABUTMENT
R.A. - REAR ABUTMENT
F.S. - FIELD SPLICE
ELEV. - ELEVATION

NOTES

1. FINAL DECK SURFACE ELEVATIONS SHOWN REPRESENT THE DECK SURFACE LOCATION AFTER ALL ANTICIPATED DEAD LOAD DEFLECTIONS HAVE OCCURRED.
2. TOP OF HAUNCH ELEVATIONS SHOWN REPRESENT THE THEORETICAL LOCATION OF THE BOTTOM OF THE DECK ABOVE THE GIRDER HAUNCH PRIOR TO DEFLECTIONS CAUSED BY DECK PLACEMENT AND OTHER ANTICIPATED DEAD LOADS.
3. SCREED ELEVATIONS SHOWN REPRESENT THEORETICAL DECK SURFACE LOCATION PRIOR TO DEFLECTIONS CAUSED BY DECK PLACEMENT AND OTHER ANTICIPATED DEAD LOADS.
4. ELEVATIONS AT SHOULDER BREAK POINT (CENTER OF ROUNDING) INCLUDE AN ADJUSTMENT OF -0.05' FOR THE ROUNDING.
5. NEGATIVE OFFSETS ARE TO THE LEFT OF CENTERLINE, POSITIVE OFFSETS ARE TO THE RIGHT.
6. FOR TRANSVERSE SECTIONS AND ADDITIONAL NOTES, SEE SHEET 29/41.

DLZ
6121 HUNTLEY ROAD • COLUMBUS, OHIO 43229

DESIGNED JN | DRAWN DAF | CHECKED PAT | REVIEWED MJL | DATE 12/6/22 | REVISED | STRUCTURE FILE NUMBER 2513536

DECK SCREED ELEVATIONS - SPAN 1 & 2
BRIDGE NO. FRA-270-5264
RAMP L OVER I.R. 270

FRA-270-51.50
PID No. 92616

x:\Projects\2013\1321\1010\FRA\92616\structures\FRA270_5264\sheets\270_5264SD004.dgn 12/8/2022 8:06:12 PM cwong

TOP OF HAUNCH AND DECK SCREED ELEVATION TABLE - SPAN 3 & 4

ELEVATION LOCATION		SPAN 3						SPAN 4					
		℄ PIER 2	1/4	F.S. 4	1/2	3/4	F.S. 5	℄ PIER 3	1/4	F.S. 6	1/2	3/4	℄ BRG. F.A.
LEFT EDGE OF DECK	STATION	581+42.54	581+65.58	581+69.17	581+88.79	582+12.18	582+16.65	582+35.79	582+51.88	582+54.51	582+68.10	582+84.45	583+00.93
	OFFSET	-5.00	-5.00	-5.00	-5.00	-5.00	-5.00	-5.00	-5.00	-5.00	-5.00	-5.00	-5.00
	FINAL TOP OF DECK EL.	739.87	739.74	739.72	739.60	739.47	739.44	739.34	739.24	739.23	739.13	738.99	738.82
	DECK SCREED EL.	739.87	739.78	739.77	739.68	739.52	739.48	739.34	739.26	739.24	739.16	739.01	738.82
LEFT TOE OF PARAPET	STATION	581+42.21	581+65.20	581+68.87	581+88.35	582+11.68	582+16.14	582+35.23	582+51.29	582+53.91	582+67.46	582+83.77	583+00.22
	OFFSET	-3.33	-3.33	-3.33	-3.33	-3.33	-3.33	-3.33	-3.33	-3.33	-3.33	-3.33	-3.33
	FINAL TOP OF DECK EL.	739.87	739.74	739.72	739.61	739.47	739.45	739.34	739.25	739.23	739.13	739.00	738.83
	DECK SCREED EL.	739.87	739.78	739.77	739.68	739.52	739.49	739.34	739.26	739.25	739.16	739.02	738.83
GIRDER A	STATION	581+41.97	581+65.17	581+68.87	581+88.42	582+11.67	582+16.08	582+34.88	582+51.11	582+53.75	582+67.36	582+83.62	582+99.86
	OFFSET	-2.16	-3.23	-3.34	-3.60	-3.27	-3.13	-2.25	-2.83	-2.89	-3.07	-2.96	-2.50
	FINAL TOP OF DECK EL.	739.94	739.75	739.72	739.61	739.48	739.46	739.40	739.28	739.26	739.15	739.02	738.88
	TOP OF HAUNCH EL.	739.24	739.08	739.06	738.97	738.82	738.79	738.70	738.58	738.56	738.47	738.33	738.17
BASELINE AND EDGE OF LEFT SHOULDER	STATION	581+41.54	581+64.43	581+68.28	581+87.47	582+10.70	582+15.13	582+34.13	582+50.11	582+52.72	582+66.21	582+82.43	582+98.79
	OFFSET	0.00	0.00	0.00	0.00	0.00	0.00	0.00	0.00	0.00	0.00	0.00	0.00
	FINAL TOP OF DECK EL.	740.07	739.94	739.92	739.81	739.68	739.65	739.54	739.45	739.43	739.34	739.20	739.04
	DECK SCREED EL.	740.07	739.98	739.97	739.88	739.72	739.69	739.54	739.45	739.44	739.35	739.21	739.04
GIRDER B	STATION	581+40.29	581+63.23	581+67.39	581+86.22	582+09.22	582+13.59	582+32.18	582+48.24	582+50.85	582+64.32	582+80.41	582+96.48
	OFFSET	6.34	5.21	5.08	4.78	5.05	5.17	5.99	5.35	5.28	5.05	5.09	5.48
	FINAL TOP OF DECK EL.	740.45	740.32	740.29	740.18	740.04	740.02	739.91	739.78	739.76	739.65	739.52	739.39
	TOP OF HAUNCH EL.	739.75	739.59	739.56	739.46	739.32	739.29	739.20	739.05	739.03	738.92	738.79	738.68
CENTERLINE OF BRIDGE DECK	STATION	581+39.58	581+62.15	581+65.26	581+84.88	582+07.79	582+12.16	582+30.89	582+46.64	582+49.21	582+62.50	582+78.48	582+94.60
	OFFSET	10.00	10.00	10.00	10.00	10.00	10.00	10.00	10.00	10.00	10.00	10.00	10.00
	FINAL TOP OF DECK EL.	740.67	740.54	740.53	740.41	740.28	740.26	740.15	740.06	740.04	739.96	739.83	739.67
	DECK SCREED EL.	740.67	740.58	740.57	740.48	740.33	740.30	740.15	740.06	740.05	739.96	739.83	739.68
GIRDER C	STATION	581+38.65	581+61.34	581+63.73	581+84.08	582+06.83	582+11.15	582+29.55	582+45.44	582+48.02	582+61.34	582+77.26	582+93.17
	OFFSET	14.85	13.67	13.58	13.17	13.37	13.48	14.23	13.54	13.45	13.18	13.15	13.47
	FINAL TOP OF DECK EL.	740.96	740.76	740.75	740.61	740.49	740.47	740.41	740.28	740.26	740.15	740.03	739.89
	TOP OF HAUNCH EL.	740.26	740.10	740.08	739.97	739.83	739.80	739.70	739.58	739.56	739.47	739.34	739.19
EDGE OF ROUNDING AND RIGHT SHOULDER	STATION	581+38.43	581+60.82	581+63.59	581+83.36	582+06.08	582+10.47	582+28.99	582+44.60	582+47.55	582+60.33	582+76.17	582+92.14
	OFFSET	16.00	16.00	16.00	16.00	16.00	16.00	16.00	16.00	16.00	16.00	16.00	16.00
	FINAL TOP OF DECK EL.	741.03	740.91	740.89	740.78	740.65	740.62	740.51	740.43	740.41	740.33	740.20	740.05
	DECK SCREED EL.	741.04	740.94	740.93	740.84	740.69	740.66	740.52	740.44	740.43	740.35	740.23	740.05
BREAK POINT	STATION	581+38.05	581+60.38	581+63.47	581+82.86	582+05.52	582+09.93	582+28.36	582+43.93	582+47.19	582+59.61	582+75.40	582+91.33
	OFFSET	18.00	18.00	18.00	18.00	18.00	18.00	18.00	18.00	18.00	18.00	18.00	18.00
	FINAL TOP OF DECK EL.	740.98	740.96	740.85	740.72	740.69	740.59	740.50	740.48	740.40	740.28	740.13	58289.14
	DECK SCREED EL.	740.98	740.99	740.89	740.78	740.74	740.62	740.50	740.49	740.42	740.31	740.15	58289.14
GIRDER D	STATION	581+37.22	581+59.65	581+63.28	581+82.12	582+04.58	582+09.01	582+27.02	582+42.67	582+46.52	582+58.34	582+74.01	582+89.67
	OFFSET	22.37	21.35	21.24	21.00	21.33	21.48	22.32	21.78	21.70	21.57	21.69	22.14
	FINAL TOP OF DECK EL.	740.98	740.89	740.87	740.78	740.63	740.60	740.46	740.40	740.38	740.31	740.19	740.02
	TOP OF HAUNCH EL.	740.27	740.22	740.21	740.13	739.97	739.93	739.76	739.70	739.69	739.63	739.50	739.32
RIGHT TOE OF PARAPET	STATION	581+37.04	581+59.22	581+63.16	581+81.54	582+04.03	582+08.52	582+26.71	582+42.16	582+46.23	582+57.72	582+73.39	582+89.19
	OFFSET	23.33	23.33	23.33	23.33	23.33	23.33	23.33	23.33	23.33	23.33	23.33	23.33
	FINAL TOP OF DECK EL.	740.94	740.81	740.79	740.68	740.55	740.53	740.42	740.34	740.31	740.24	740.12	739.98
	DECK SCREED EL.	740.94	740.84	740.83	740.75	740.60	740.57	740.42	740.35	740.33	740.27	740.15	739.98
RIGHT EDGE OF DECK	STATION	581+36.73	581+58.86	581+63.07	581+81.13	582+03.57	582+08.09	582+26.02	582+41.61	582+45.93	582+57.13	582+72.77	582+88.53
	OFFSET	25.00	25.00	25.00	25.00	25.00	25.00	25.00	25.00	25.00	25.00	25.00	25.00
	FINAL TOP OF DECK EL.	740.94	740.81	740.79	740.68	740.56	740.53	740.43	740.34	740.31	740.24	740.13	739.99
	DECK SCREED EL.	740.94	740.85	740.83	740.75	740.60	740.57	740.43	740.35	740.33	740.27	740.15	739.99

LEGEND

BRG. - BEARING
F.A. - FORWARD ABUTMENT
R.A. - REAR ABUTMENT
F.S. - FIELD SPLICE
ELEV. - ELEVATION

NOTES

1. FINAL DECK SURFACE ELEVATIONS SHOWN REPRESENT THE DECK SURFACE LOCATION AFTER ALL ANTICIPATED DEAD LOAD DEFLECTIONS HAVE OCCURRED.
2. TOP OF HAUNCH ELEVATIONS SHOWN REPRESENT THE THEORETICAL LOCATION OF THE BOTTOM OF THE DECK ABOVE THE GIRDER HAUNCH PRIOR TO DEFLECTIONS CAUSED BY DECK PLACEMENT AND OTHER ANTICIPATED DEAD LOADS.
3. SCREED ELEVATIONS SHOWN REPRESENT THEORETICAL DECK SURFACE LOCATION PRIOR TO DEFLECTIONS CAUSED BY DECK PLACEMENT AND OTHER ANTICIPATED DEAD LOADS.
4. ELEVATIONS AT SHOULDER BREAK POINT (CENTER OF ROUNDING) INCLUDE AN ADJUSTMENT OF -0.05' FOR THE ROUNDING.
5. NEGATIVE OFFSETS ARE TO THE LEFT OF CENTERLINE, POSITIVE OFFSETS ARE TO THE RIGHT.
6. FOR TRANSVERSE SECTIONS AND ADDITIONAL NOTES, SEE SHEET 29/41.

DLZ
6121 HUNTLEY ROAD • COLUMBUS, OHIO 43229

DESIGNED JN | DRAWN DAF | CHECKED PAT | REVIEWED MJL | DATE 12/6/22 | REVISED | STRUCTURE FILE NUMBER 2513536

DECK SCREED ELEVATIONS - SPAN 3 & 4
BRIDGE NO. FRA-270-5264
RAMP L OVER I.R. 270

FRA-270-51.50
PID No. 92616

x:\Projects\2013\1321\1010\FRA\92616\structures\FRA270_5264\sheets\270_5264SD005.dgn 12/8/2022 8:06:13 PM cwong

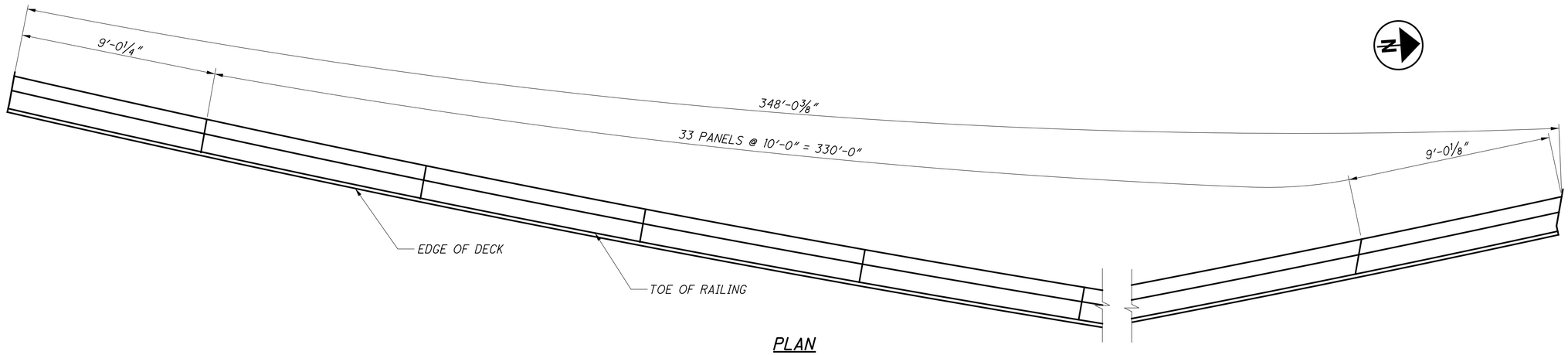

PLAN

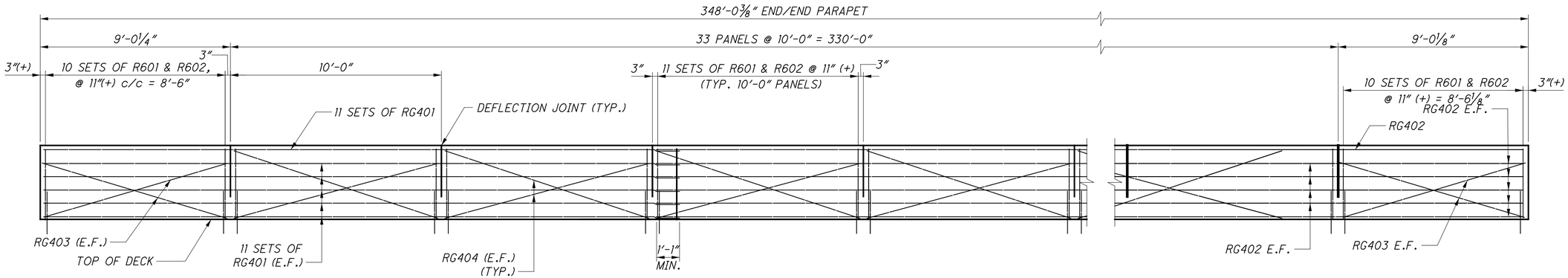

UP STATION ►

DEVELOPED ELEVATION

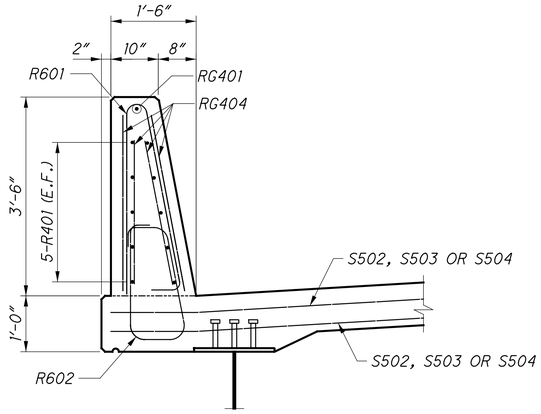

TYPICAL PARAPET DETAIL

NOTES

1. DIMENSIONS IN DEVELOPED ELEVATIONS ARE MEASURED ALONG TOE OF PARAPET.
2. FOR PARAPET SEALING LIMITS, SEE TRANSVERSE SECTION, SHEET 29/41.
3. FOR ADDITIONAL DETAILS, SEE STANDARD DRAWING SBR-1-20.

DLZ
6121 HUNTLEY ROAD • COLUMBUS, OHIO 43229

DESIGNED	DRAWN	REVIEWED	DATE
PAT/JG	PAT/JG	MJL	12/6/22
CHECKED	REVISED	STRUCTURE FILE NUMBER	
JAM/CJS		2513536	

LEFT PARAPET DETAILS
BRIDGE NO. FRA-270-5264
RAMP L OVER I.R. 270

FRA-270-51.50
PID No. 92616

36 / 41

540
554

x:\Projects\2013\1321\1010\FRA\92616\structures\FRA270_5264\sheets\270_5264SD002.dgn 12/8/2022 8:06:13 PM cwong

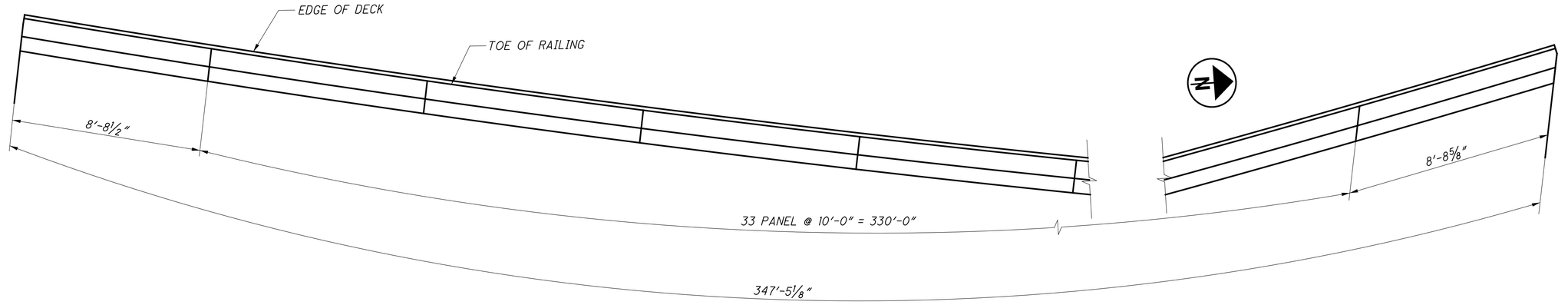

PLAN

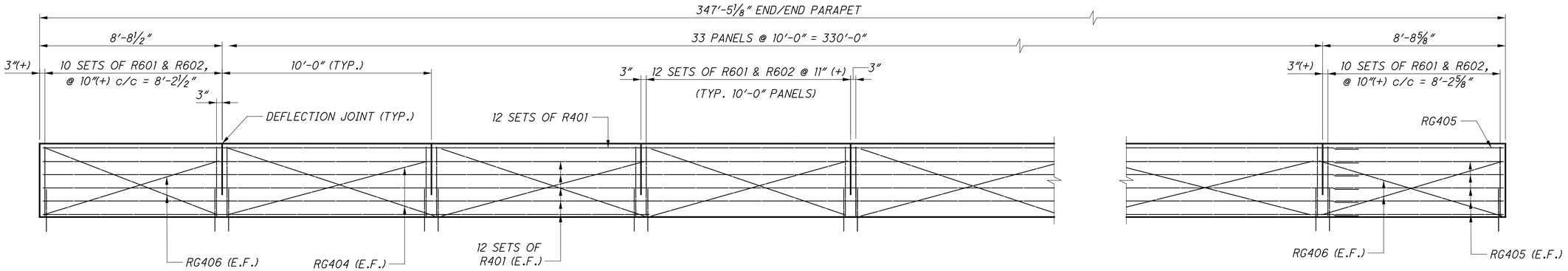

DEVELOPED ELEVATION

NOTES

1. DIMENSIONS IN DEVELOPED ELEVATIONS ARE MEASURED ALONG TOE OF PARAPET.
2. FOR PARAPET SEALING LIMITS, SEE TRANSVERSE SECTION, SHEET 29/41.
3. FOR ADDITIONAL DETAILS, SEE STANDARD DRAWING SBR-1-20.
4. FOR TYPICAL PARAPET DETAIL, SEE SHEET 35/41.

DLZ
6121 HUNTLEY ROAD • COLUMBUS, OHIO 43229

DESIGNED	DRAWN	REVIEWED	DATE
PAT/JG	PAT/JG	MJL	12/6/22
CHECKED	REVISED	STRUCTURE FILE NUMBER	
JAM/CJS		2513536	

RIGHT PARAPET DETAILS
BRIDGE NO. FRA-270-5264
RAMP L OVER I.R. 270

FRA-270-51.50
PID No. 92616

X:\Projects\2013\1321\1010\FRA\92616\structures\FRA270_5264\sheets\270_5264SD013.dgn 12/6/2022 8:06:14 PM cwong

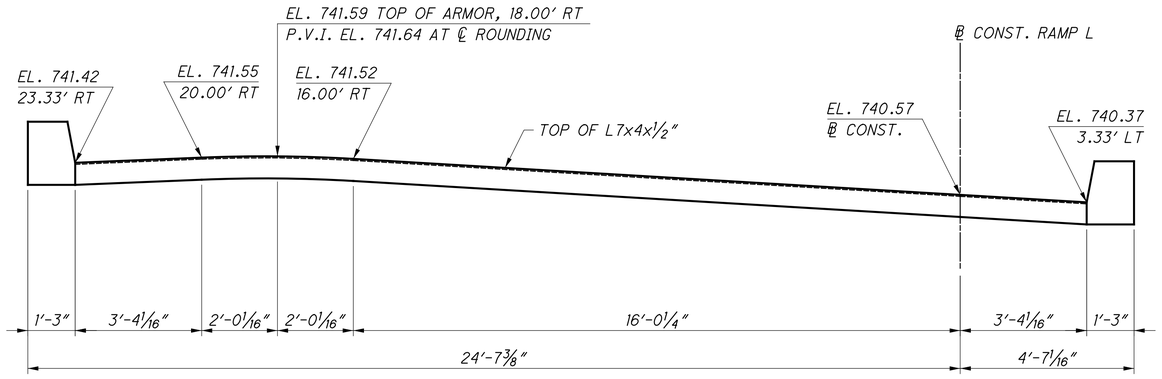

REAR EXPANSION JOINT ARMOR PROFILE

LOOKING AT FACE OF REAR ABUTMENT (DOWN-STATION)

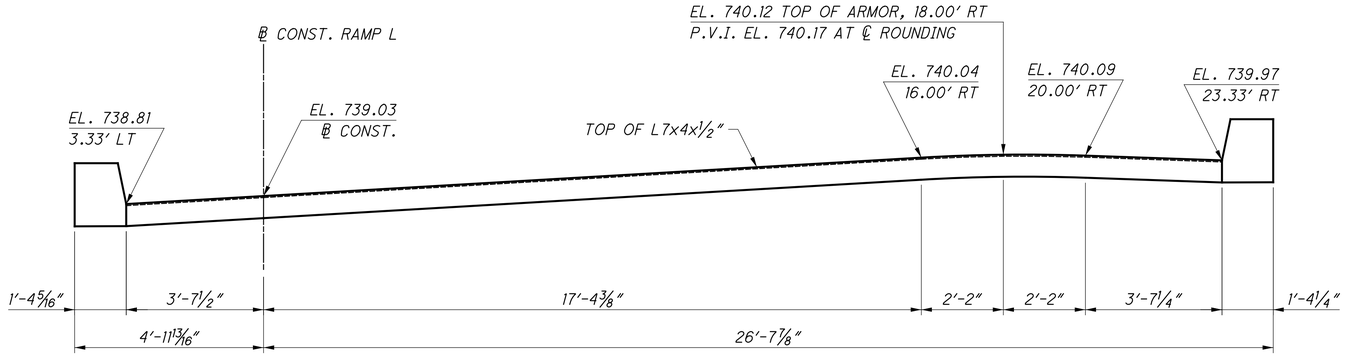

FORWARD EXPANSION JOINT ARMOR PROFILE

LOOKING AT FACE OF FORWARD ABUTMENT (UP-STATION)

NOTES

1. STRIP SEAL GLAND SIZE SHALL BE 3" FOR BOTH JOINTS. INSTALL STRIP SEAL GLAND AT EACH BRIDGE JOINT IN ONE CONTINUOUS PIECE.
2. FOR EXPANSION JOINT DETAILS NOT SHOWN, REFER TO ODOT STANDARD DRAWING EXJ-4-87.
3. FOR TABLE OF EXPANSION JOINT OPENINGS, SEE SHEET 30/41 & 32/41 .
4. ALL MATERIALS, EQUIPMENT AND LABOR REQUIRED TO FABRICATE AND INSTALL STRIP SEAL EXPANSION JOINTS SHALL BE INCLUDED FOR PAYMENT WITH ITEM 516 - STRUCTURAL EXPANSION JOINT INCLUDING ELASTOMERIC STRIP SEAL.

DLZ
6121 HUNTLEY ROAD • COLUMBUS, OHIO 43229

DESIGNED PAT | DRAWN PAT | REVIEWED MJL | DATE 12/6/22
CHECKED JN | REVISED | STRUCTURE FILE NUMBER 2513536

EXPANSION JOINT PROFILES
BRIDGE NO. FRA-270-5264
RAMP L OVER I.R. 270

FRA-270-51.50
PID No. 92616

x:\Projects\2013\1321\1010\FRA\92616\structures\FRA270_5264\sheets\270_5264EX001.dgn 12/8/2022 8:06:14 PM cwong

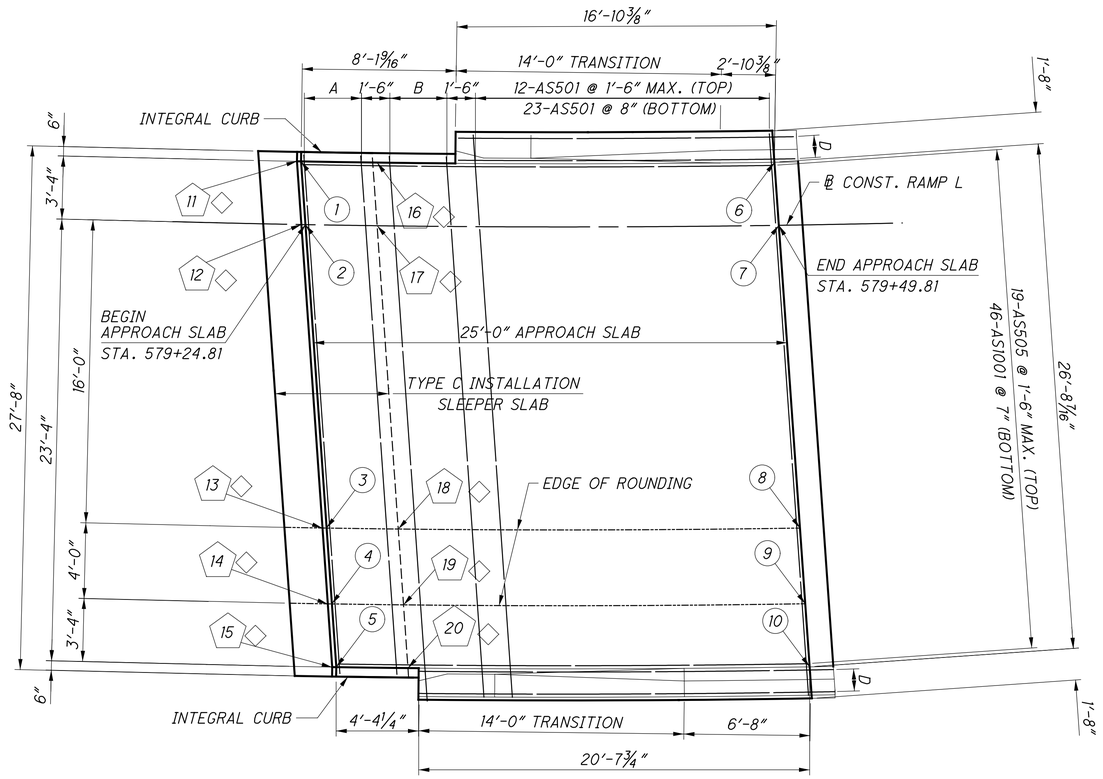

REAR APPROACH SLAB PLAN

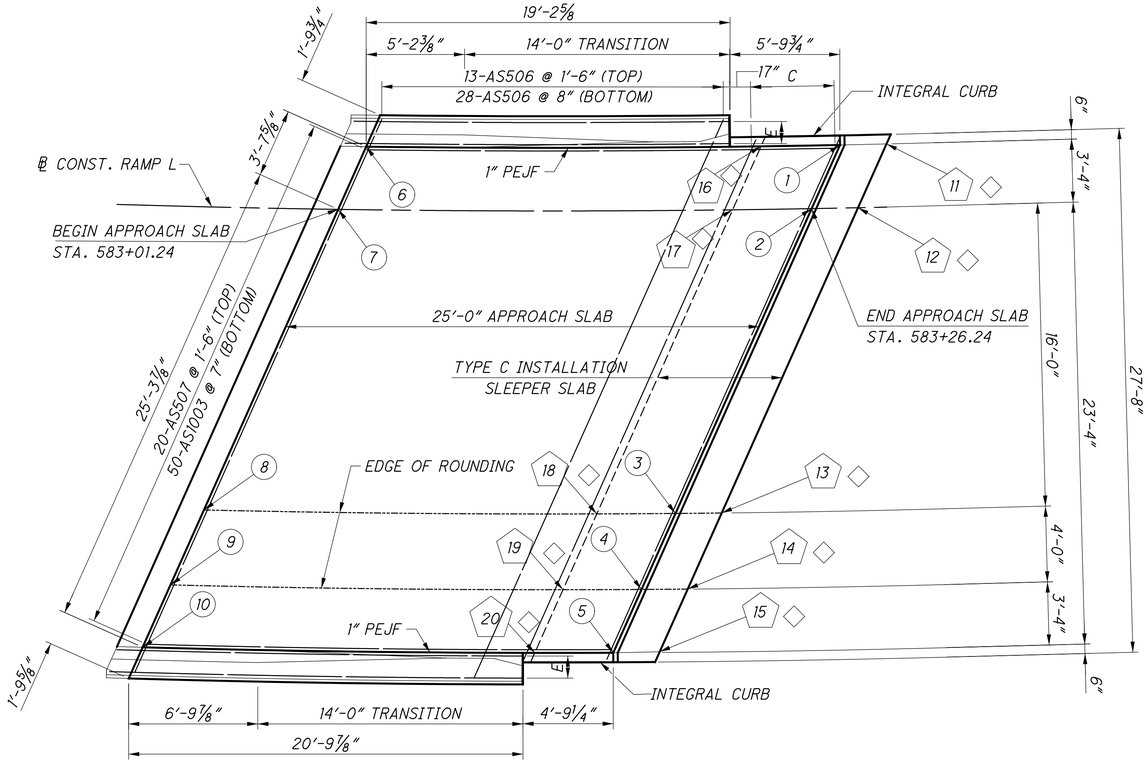

FORWARD APPROACH SLAB PLAN

A : 3-AS502 @ 1'-6" (TOP), 7-AS502 @ 6" (BOTTOM).

B : 3-AS503 @ 1'-6" (TOP), 7-AS503 @ 6" (BOTTOM).

C : 4-AS508 @ 1'-6" (TOP), 10-AS508 @ 6" (BOTTOM).

D : 2-AS504 @ 1'-6" (TOP), 4-AS1002 @ 7" (BOTTOM).

E : 2-AS509 @ 1'-6" (TOP), 4-AS1004 @ 7" (BOTTOM).

APPROACH SLAB SURFACE ELEVATIONS		
LOCATION	REAR	FORWARD
1	740.22	738.49
2	740.42	738.70
3	741.37	739.74
4	741.41	739.80
5	741.27	739.68
6	740.37	738.80
7	740.57	739.01
8	741.51	740.03
9	741.55	740.08
10	741.41	739.95

SLEEPER SLAB SURFACE ELEVATIONS		
LOCATION	REAR	FORWARD
11	740.20	738.45
12	740.40	738.67
13	741.36	739.71
14	741.39	739.77
15	741.26	739.65
16	738.99	737.28
17	739.19	737.50
18	740.15	738.54
19	740.18	738.60
20	740.05	738.47

LEGEND

◇ ELEVATIONS LISTED FOR THESE POINTS ARE LOCATED AT THE TOP SURFACE OF THE SLEEPER SLAB BELOW THE APPROACH SLAB OR PAVEMENT

NOTES

1. FOR APPROACH SLAB DETAILS NOT SHOWN, SEE STANDARD DRAWINGS AS-1-15 AND AS-2-15.
2. FOR RAILING DETAILS ON WINGWALLS , SEE SHEET 14/41.

DLZ
6121 HUNTLEY ROAD • COLUMBUS, OHIO 43229

DESIGNED	DRAWN	REVIEWED	DATE
IMF/JAM	IMF/PDP	MJL	12/6/22
CHECKED	REVISED	STRUCTURE FILE NUMBER	
PAT/MHK		2513536	

APPROACH SLAB PLAN
BRIDGE NO. FRA-270-5264
RAMP L OVER I.R. 270

FRA-270-51.50
PID No. 92616

x:\Projects\2013\1321\1010\FRA\92616\structures\FRA270_5264\sheets\270_5264MD001.dgn 12/8/2022 8:06:15 PM cwong

REINFORCING STEEL LIST

MARK	NO.	LENGTH	WEIGHT	TYPE	DIMENSIONS A	B	C	D	E	SERIES INC.
REAR ABUTMENT										
A501	32	2'-5"	81	1	1'-0"	1'-7"				
A502	4	8'-2"	34	3	3'-5"	0'-5"				
A503	8	9'-10"	82	3	3'-5"	1'-3"				
A504	9	10'-4"	97	3	3'-5"	1'-6"				
A505	11	10'-6"	120	3	3'-5"	1'-7"				
A506	5	10'-5"	54	STR						
A507	5	19'-1"	100	STR						
A508	5	25'-9"	134	STR						
A509	2	18'-5"	38	STR						
A510	10	26'-7"	277	19	17'-8"	8'-11"	0'-7"			
A511	2	22'-0"	46	19	14'-2"	7'-3"	3'-1"			
	1	19'-7"		11			16'-5"			
A512	SER OF	TO	69	11	0'-2"	3'-2"	TO			28.5"
	3	24'-4"		11			21'-2"			
	1	17'-5"		11			15'-5"			
A513	SER OF	TO	62	11	0'-1"	2'-0"	TO			28.5"
	3	22'-2"		11			20'-2"			
A514	3	24'-8"	77	11	0'-2"	3'-2"	21'-6"			
A515	3	22'-6"	70	11	0'-1"	2'-0"	20'-6"			
A516	2	18'-6"	39	19	10'-4"	7'-3"	3'-11"			
	1	15'-4"		19	12'-0"					
A517	SER OF	TO	56	19	TO	3'-4"	0'-2"			32"
	3	20'-8"		19	17'-4"					
	1	13'-7"		19	11'-4"					
A518	SER OF	TO	51	19	TO	2'-3"	0'-2"			32"
	3	18'-11"		19	16'-8"					
A519	3	20'-10"	65	19	17'-6"	3'-4"	0'-2"			
A520	3	19'-1"	60	19	16'-10"	2'-3"	0'-2"			
A521	13	7'-11"	107	13	2'-5"	2'-3"	2'-3"	2'-5"		
A601	54	5'-8"	460	STR						
A602	27	9'-9"	395	2	4'-3"	1'-5"	4'-5"			
A603	27	11'-7"	470	2	5'-6"	0'-11"	5'-6"			
	2	2'-9"		STR						
A604	SER OF	TO	99	STR						4.7"
	8	5'-6"		STR						
A605	30	5'-11"	267	STR						
A606	52	4'-0"	312	STR						
A607	22	6'-11"	229	STR						
	2	2'-8"		STR						
A608	SER OF	TO	108	STR						6.3"
	8	6'-4"		STR						
A614	3	8'-0"	36	33	1'-8"	1'-11"				
A615	2	3'-2"	10	1	1'-8"	1'-8"				
A616	2	3'-2"	10	1	1'-8"	1'-8"				
A617	3	8'-8"	39	33	1'-8"	2'-3"				
A901	5	3'-2"	54	1	1'-7"	1'-11"				
A902	4	3'-5"	46	STR						
A905	5	3'-6"	60	1	1'-7"	2'-3"				
		TOTAL	4,254	LBS						

REINFORCING STEEL LIST

MARK	NO.	LENGTH	WEIGHT	TYPE	DIMENSIONS A	B	C	D	E	SERIES INC.
FORWARD ABUTMENT										
A501	35	2'-5"	88	1	1'-0"	1'-7"				
A522	10	10'-2"	106	3	3'-5"	1'-5"				
A523	9	10'-0"	94	3	3'-5"	1'-4"				
A524	10	9'-6"	99	3	3'-5"	1'-1"				
A525	6	8'-0"	50	3	3'-5"	0'-4"				
A526	5	27'-0"	141	STR						
A527	5	17'-8"	92	STR						
A528	5	13'-1"	68	STR						
A529	2	17'-8"	37	STR						
A530	12	28'-9"	360	19	20'-0"	8'-9"	0'-6"			
A531	2	20'-3"	42	19	12'-1"	7'-4"	3'-9"			
	1	17'-7"		19	14'-1"					
A532	SER OF	TO	85	19	TO	1'-4"	3'-3"			21.7"
	4	23'-0"		19	19'-6"					
	1	15'-10"		19	13'-7"					
A533	SER OF	TO	78	19	TO	0'-11"	2'-1"			22"
	4	21'-4"		19	19'-1"					
A534	3	23'-0"	72	19	19'-6"	1'-4"	3'-3"			
A535	3	21'-4"	67	19	19'-1"	0'-11"	2'-1"			
A536	2	21'-11"	46	19	14'-2"	7'-3"	2'-9"			
	1	20'-4"		11			16'-11"			
A537	SER OF	TO	71	11	1'-4"	3'-2"	TO			28"
	3	25'-0"		11			21'-7"			
	1	17'-9"		11			15'-6"			
A538	SER OF	TO	63	11	0'-10"	2'-2"	TO			28"
	3	22'-5"		11			20'-2"			
A539	3	25'-0"	78	11	1'-4"	3'-2"	21'-7"			
A540	3	22'-5"	70	11	0'-10"	2'-2"	20'-2"			
A541	8	8'-9"	73	20	1'-4"	2'-0"	4'-0"	2'-1"		
A602	29	9'-9"	425	2	4'-3"	1'-5"	4'-5"			
A603	29	11'-7"	505	2	5'-6"	0'-11"	5'-6"			
A606	56	4'-0"	336	STR						
A609	58	5'-6"	479	STR						
	2	2'-8"		STR						
A610	SER OF	TO	107	STR						6.1"
	8	6'-3"		STR						
A611	26	6'-8"	260	STR						
A612	30	5'-9"	259	STR						
	2	2'-8"		STR						
A613	SER OF	TO	96	STR						4.6"
	8	5'-4"		STR						
A618	2	2'-8"	73	1	1'-9"	1'-7"				
A619	3	8'-6"	38	33	1'-9"	2'-1"				
A620	2	3'-5"	10	1	1'-9"	1'-10"				
A621	3	7'-10"	35	33	1'-9"	1'-9"				
A902	4	3'-5"	46	STR						
A903	5	3'-0"	51	1	1'-9"	1'-7"				
A904	5	3'-2"	54	1	1'-9"	1'-9"				
		TOTAL	4,654	LBS						

BENDING DIAGRAMS

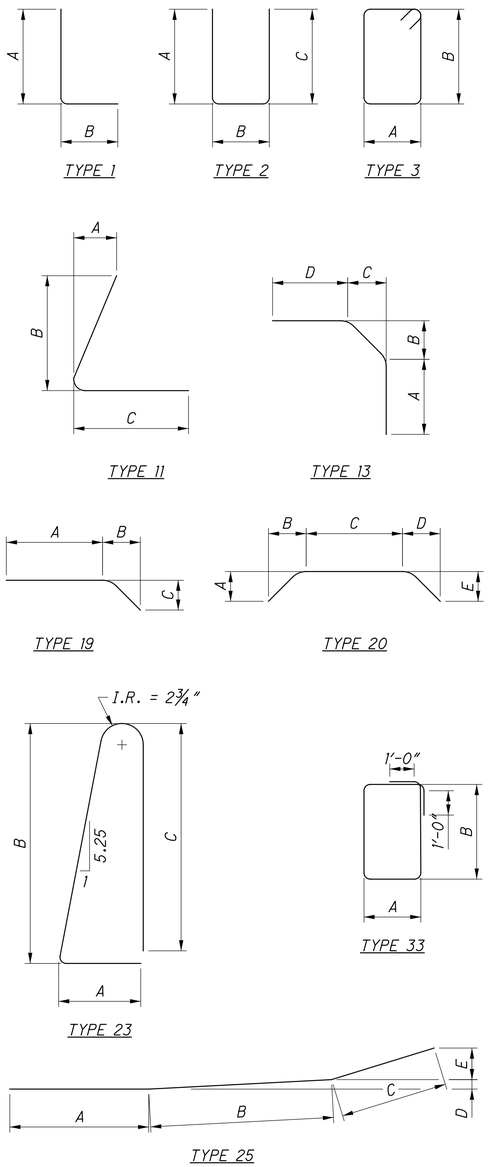

REINFORCING STEEL NOTES

1. SERIES BARS - EACH BAR VARIES BY TABULATED AMOUNT.
2. ALL DIMENSIONS ARE OUT TO OUT.
3. TYPE 'STR' INDICATES A STRAIGHT BAR.
4. THE BAR SIZE NUMBER IS INDICATED IN THE 'MARK' COLUMN. THE FIRST DIGIT OF EACH MARK INDICATES THE BAR SIZE NUMBER. FOR EXAMPLE, A501 IS A #5 BAR SIZE.
5. ALL REINFORCING STEEL SHALL BE EPOXY COATED.

DLZ
4121 HUNTLEY ROAD • COLUMBUS, OHIO 43229

DESIGNED JAM | DRAWN JAM | REVIEWED MJL | DATE 12/6/22
CHECKED | REVISED | STRUCTURE FILE NUMBER 2513536

REINFORCING STEEL LIST - 1
BRIDGE NO. FRA-270-5264
RAMP L OVER I.R. 270

FRA-270-51.50
PID No. 92616

x:\Projects\2013\1321\1010\FRA\92616\structures\FRA270_5264\sheets\270_5264RL001.dgn 12/8/2022 8:06:15 PM cwong

REINFORCING STEEL LIST

MARK	NO.	LENGTH	WEIGHT	TYPE	DIMENSIONS A	B	C	D	E	SERIES INC.
PIERS										
P501	186	2′-3″	436	1	1′-0″	1′-5″				
P502	6	9′-0″	56	3	2′-8″	1′-7″				
P503	10	8′-10″	92	3	2′-8″	1′-6″				
P504	16	8′-4″	139	3	2′-8″	1′-3″				
P505	4	7′-0″	29	3	2′-8″	0′-7″				
P506	13	9′-0″	122	24	2′-8″	2′-5″				
P507	2	7′-10″	16	STR						
P508	6	10′-3″	64	STR						
P509	2	12′-10″	27	STR						
P510	2	4′-7″	10	STR						
P511	2	13′-3″	28	STR						
P512	2	21′-11″	46	STR						
P513	2	20′-4″	42	STR						
P514	2	11′-8″	24	STR						
P515	10	8′-0″	83	3	2′-8″	1′-1″				
P516	10	7′-8″	80	3	2′-8″	0′-11″				
P517	11	6′-2″	71	3	2′-8″	0′-2″				
P518	4	7′-9″	32	STR						
P519	2	13′-4″	28	STR						
P520	4	4′-6″	19	STR						
P521	6	13′-2″	82	STR						
P522	4	17′-0″	71	STR						
P523	2	12′-2″	25	STR						
P524	6	8′-6″	53	3	2′-8″	1′-4″				
P525	10	8′-2″	85	3	2′-8″	1′-2″				
P526	10	7′-10″	82	3	2′-8″	1′-0″				
P527	2	14′-2″	30	STR						
P528	2	21′-10″	46	STR						
P529	2	13′-0″	27	STR						
P801	2	12′-5″	66	24	2′-8″	4′-1″				
P802	4	6′-6″	69	2	2′-5″	2′-1″	2′-5″			
P803	6	6′-2″	99	2	2′-3″	2′-1″	2′-3″			
P804	6	5′-10″	93	2	2′-1″	2′-1″	2′-1″			
P805	4	4′-4″	46	2	1′-4″	2′-1″	1′-4″			
		TOTAL	2,318	LBS						
RAILINGS										
R601	805	7′-0″	8,464	23	0′-6″	3′-2″	3′-2″			
R602	805	9′-5″	11,386	37	1′-9.5″					
	4	2′-11″	18	1	2′-1″	1′-0″				
R603	SER OF	TO	243	1						1.7″
	11	4′-4″	72	1	3′-6″	1′-0″				
R604	16	2′-11″	70	1	2′-1″	1′-0″				
		TOTAL:	20,253	LBS						
GFRP BARS										
RG401	264	30′-0″	5,291	STR						
RG402	22	8′-1″	119	STR						
RG403	8	9′-8″	52	STR						
RG404	264	10′-2″	1,793	STR						
RG405	22	7′-7″	111	STR						
RG406	8	9′-2″	49	STR						
RG407	4	15′-6″	41	STR						
RG408	9	9′-7″	58	STR						
RG409	6	7′-8″	31	STR						
RG410	8	9′-6″	51	STR						
	TOTAL	113′-47″								

REINFORCING STEEL LIST

MARK	NO.	LENGTH	WEIGHT	TYPE	DIMENSIONS A	B	C	D	E	SERIES INC.
SUPERSTRUCTURE										
S401	384	31′-6″	8,080	STR						
S402	348	4′-10″	1,124	2						
S403	362	7′-8″	1,854	2						
S501	456	32′-9″	15,576	STR						
	1	9′-9″		5	8′-7″					
S502	SER OF	TO	61	5						117.5″
	3	29′-4″		5	28′-2″					
S503	696	29′-8″	21,536	5						
	1	2′-9″		5	1′-7″					
S504	SER OF	TO	389	5						14.7″
	23	29′-8″		5	28′-6″					
S505	1411	7′-9″	11,405	16	7′-2″		3′-0″			
S506	740	7′-4″	5,660	23	0′-11″	3′-3″				
S507	96	31′-5″	3,146	STR						
S508	180	7′-2″	1,345	STR						
S509	2	9′-7″	20	STR						
S510	2	10′-2″	21	STR						
S511	2	31′-11″	67	STR						
S512	192	40′-0″	8,010	STR						
S513	64	26′-2″	1,747	STR						
S514	64	25′-7″	1,708	STR						
S515	64	9′-5″	629	STR						
S516	3	29′-8″	93	STR						
	1	8′-7″								
S517	SER OF	TO	57	STR						117.5″
	3	28′-2″								
	1	1′-7″								
S518	SER OF	TO	361	STR						14.7″
	23	28′-6″								
S519	6	8′-1″	51	16	7′-6″					
S520	2	32′-0″	67	STR						
S601	Not used									
S602	Not used									
S603	Not used									
S604	Not used									
S605	740	2′-5″	2,686	1	1′-0″	1′-7″	0′-11″			
S606	740	3′-0″	3,334	28	1′-7″	1′-0″				
S607	180	7′-2″	1,938	STR						
S608	2	9′-7″	29	STR						
S609	2	10′-2″	31	STR						
		TOTAL:	91,025	LBS						
APPROACH SLABS*										
AS501	35	29′-9″	1,086	STR						
AS502	10	27′-5″	286	STR						
AS503	10	28′-10″	301	STR						
AS504	4	21′-6″	90	STR						
AS505	19	24′-9″	490	STR						
AS506	41	31′-11″	1,365	STR						
AS507	20	24′-10″	518	STR						
AS508	14	30′-1″	439	STR						
AS509	4	19′-9″	82	STR						
AS1001	46	26′-1″	5,163	16	24′-8″					
AS1002	8	21′-6″	740	STR						
AS1003	50	26′-2″	5,630	16	24′-9″					
AS1004	8	19′-9″	680	STR						
		TOTAL	16,870	LBS						

BENDING DIAGRAMS

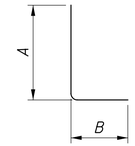

TYPE 1

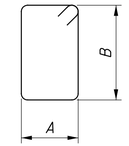

TYPE 3

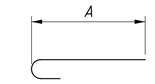

TYPE 16

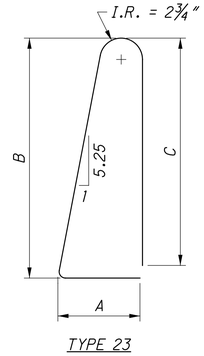

TYPE 23

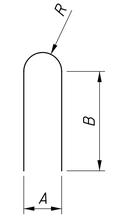

TYPE 24

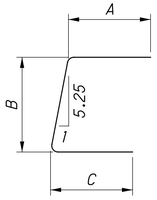

TYPE 28

*: APPROACH SLAB REINFORCING STEEL LISTED ABOVE IS SHOWN FOR INFORMATION ONLY. REINFORCING STEEL FOR APPROACH SLABS IS INCLUDED FOR PAYMENT UNDER ITEM 526 - REINFORCED CONCRETE APPROACH SLABS WITH QC/QA (T=15"), AS PER PLAN.

REINFORCING STEEL NOTES

1. SERIES BARS - EACH BAR VARIES BY TABULATED AMOUNT.
2. ALL DIMENSIONS ARE OUT TO OUT.
3. TYPE 'STR' INDICATES A STRAIGHT BAR.
4. THE BAR SIZE NUMBER IS INDICATED IN THE 'MARK' COLUMN. THE FIRST DIGIT OF EACH MARK INDICATES THE BAR SIZE NUMBER. FOR EXAMPLE, A501 IS A #5 BAR SIZE.
5. ALL REINFORCING STEEL SHALL BE EPOXY COATED.

DLZ
6121 HUNTLEY ROAD • COLUMBUS, OHIO 43229

DESIGNED JAM | DRAWN JAM | REVIEWED MJL | DATE 12/6/22
CHECKED | REVISED | STRUCTURE FILE NUMBER 2513536

REINFORCING STEEL LIST - 2
BRIDGE NO. FRA-270-5264
RAMP L OVER I.R. 270

FRA-270-51.50
PID No. 92616

x:\Projects\2013\1321\1010\FRA\92616\structures\FRA270_5264\sheets\270_5264RL002.dgn 12/8/2022 8:06:16 PM cwong

RIGHT OF WAY LEGEND SHEET FRA-270-51.50

FRANKLIN COUNTY
HAMILTON TOWNSHIP
CITY OF COLUMBUS
SEC. 21, T-4-N, R-22-W

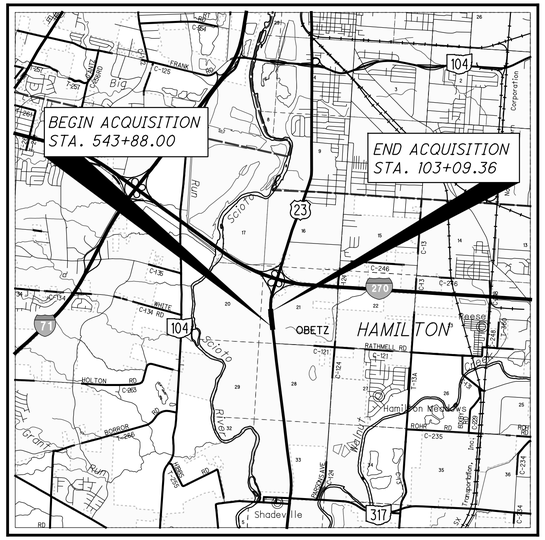

LOCATION MAP

LATITUDE: 39° 52′ 30″ N LONGITUDE: 83° 00′ 14″ W

SCALE IN MILES

0 1 2 3 4

N

UTILITY OWNERS

AEP - COLUMBUS
SOUTHERN POWER
850 TECH CENTER DR
GAHANNA, OH 43230
ATTN: MR. PAUL PAXTON
614-883-6831

AT&T OHIO
111 N. FOURTH ST.
COLUMBUS, OH 43215
ATTN: MR. GARY VAN ALMSICK
614-223-7276

COLUMBIA GAS OF OHIO
3550 JOHNNY APPLESEED CT
COLUMBUS, OH 43231
ATTN: MR. BRYAN KOPACHY
614-818-2133

SOUTH CENTRAL POWER COMPANY
P.O. BOX 250
LANCASTER, OH 43130
ATTN: MR. PHIL STRINGER

WIDE OPEN WEST
3675 CORPORATE DR
COLUMBUS, OH 43231
ATTN: MR. JAYTEE NOVARIA
614-948-4653

NOTES: THE LOCATION OF THE UNDERGROUND UTILITIES SHOWN ON THE PLANS ARE OBTAINED FROM THE OWNER OF THE UTILITIES AS REQUIRED BY SECTION 153.64 O.R.C.

CONVENTIONAL SYMBOLS

County Line
Township Line
Section Line
Corporation Line or
Fence Line (Ex) (Pr)
Center Line
Right of Way (Ex) Ex R/W
Standard Highway Ease. (Ex) Ex SH
Right of Way (Pr) R/W
Right of Way w/Limited Access (Ex) Ex LA-R/W
Right of Way w/Limited Access (Pr) LA-R/W
Temporary Right of Way TMP
Slope Ease. (Pr) SL
Railroad or
Guardrail (Ex) (Pr)
Construction Limits
Edge of Pavement (Ex)
Edge of Pavement (Pr)
Edge of Shoulder (Ex)
Edge of Shoulder (Pr)
Ditch / Creek (Ex)
Ditch / Creek (Pr)
Tree Line (Ex)
Ownership Hook Symbol , Example
Property Line Symbol , Example
Break Line Symbol , Example
Tree (Pr) , Tree (Ex) , Shrub (Ex)
Tree (Remove) , Shrub (Remove)
Evergreen (Ex) , Stump
Evergreen (Remove) , Stump (Remove)
Wetland (Pr) , Grass (Pr) , Aerial Target
Post (Ex) , Mailbox (Ex) MB , Mailbox (Pr) MB
Light (Ex) , Telephone Marker (Ex) TEL
Fire Hydrant (Ex) , Water Meter (Ex) WM
Water Valve (Ex) , Utility Valve Unknown (Ex.)
Telephone Pole (Ex) , Power Pole (Ex)
Light Pole (Ex)

MONUMENT LEGEND

○ I.P.F. IRON PIN FOUND
◎ P.F. IRON PIPE FOUND
⊗ NAIL NAIL FOUND
● I.P.S. IRON PIN SET W/ ID CAP
• M.N.S. MAG NAIL SET

STRUCTURE KEY

COMMERCIAL
OUT-BUILDING

INDEX OF SHEETS:

LEGEND SHEET	1
PROPERTY MAP	2
SUMMARY OF ADDITIONAL R/W	3
R/W DETAIL SHEETS	4-9

PROJECT DESCRIPTION

THIS PROJECT CONSISTS OF THE REMOVAL OF RAMP N (IR 270WEST TO US 23 SOUTH) AND RAMP Q (IR 270 EAST TO US23 NORTH). WORK INCLUDES THE RECONFIGURATION OF RAMP P1 (IR 270 EAST) AND RAMP S (IR 270 WEST), THE CONSTRUCTION OF A SINGLE LEFT TURN LANE AT RAMP S AND US 23, AND THE CONSTRUCTION OF TWO SIGNALIZED INTERSECTIONS TO PROVIDE ACCESS TO US 23 NORTH AND SOUTH. WORK ALSO INCLUDES FULL DEPTH PAVEMENT AND PAVEMENT OVERLAY ON RAMPS L, M, O, P1, AND S.

BASIS OF EXISTING ℄ OF R/W AND R/W WIDTH:

THE EXISTING RIGHT OF WAY WIDTHS AND LOCATIONS WERE DETERMINED USING EXISTING MONUMENTATION, THE RECORDS OF FRANKLIN COUNTY, AND OHIO DEPARTMENT OF TRANSPORTATION RIGHT OF WAY PLANS KNOWN AS FRA-23-(0.00-5.37), FRA-270-9.46S AND FRA-270-10.71S.

BASIS FOR BEARINGS:

BEARINGS ARE BASED ON THE OHIO STATE PLANE COORDINATE SYSTEM, SOUTH ZONE, AND REFERENCE THE NORTH AMERICAN DATUM OF 1983 AND THE CORS96 ADJUSTMENT (NAD83 (CORS96)).

PROJECT CONTROL

STATE PLANE GRID, SOUTH ZONE
NAD 83(CORS96)
COMBINED SCALE FACTOR: 0.999943725167

TYPES OF TITLE LEGEND:
WL = FEE SIMPLE WITH LIMITATION OF ACCESS
WD = WARRANTY DEED
T = TEMPORARY EASEMENT
U = UTILITY EASEMENT
V = CITY OF COLUMBUS, OHIO

SETTING OF ALL MONUMENTS SHALL BE PERFORMED BY A SURVEYOR REGISTERED IN THE STATE OF OHIO. THE MONUMENT ASSEMBLIES AND REFERENCE MONUMENTS WILL BE INSTALLED BY THE CONTRACTOR AT THE TIME OF CONSTRUCTION. THE IRON PIN AND CAP (WHEN REQUIRED) ARE TO BE INSTALLED BY THE CONTRACTOR'S SURVEYOR.

CHANGES OR ALTERATIONS TO THE LOCATION OF ANY MONUMENTS SHOWN IN THIS TABLE, REQUIRE PRIOR APPROVAL FROM THE DISTRICT REAL ESTATE ADMINISTRATOR OF THE OHIO DEPARTMENT OF TRANSPORTATION. IN THE EVENT THAT CHANGES OR ALTERATIONS ARE APPROVED, A REVISED CENTERLINE PLAT WITH THE NEW LOCATIONS SHALL BE RECORDED IN THE APPLICABLE COUNTY RECORDS AND THE OHIO DEPARTMENT OF TRANSPORTATION. SPECIFICATIONS FOR MONUMENT ASSEMBLIES, REFERENCE MONUMENTS AND RIGHT OF WAY MONUMENTS ARE SHOWN ON STANDARD CONSTRUCTION DRAWING RM-1.1.

PLANS PREPARED BY:

FIRM NAME : DLZ OHIO, INC.
R/W DESIGNER: RAYLEEN LEE
R/W REVIEWER: RUSSELL KOENIG
FIELD REVIEWER: NATE STAUGH/RUSSELL KOENIG
PRELIMINARY FIELD REVIEW DATE: 11/17/14
TRACINGS FIELD REVIEW DATE: 1/23/17
OWNERSHIP UPDATED BY: ANDREW JORDAN
DATE COMPLETED: 1/20/17
PLAN COMPLETION DATE: 1/30/17

I, RUSSELL KOENIG, P.S., HAVE CONDUCTED A SURVEY OF THE EXISTING CONDITIONS FOR THE OHIO DEPARTMENT OF TRANSPORTATION IN 2014 AND 2015. THE RESULTS OF THAT SURVEY ARE CONTAINED HEREIN.

THE HORIZONTAL COORDINATES EXPRESSED HEREIN ARE GRID VALUES BASED ON THE OHIO STATE PLANE COORDINATE SYSTEM, SOUTH ZONE, THE NORTH AMERICAN DATUM OF 1983 AND THE ODOT CORS ADJUSTMENT.

AS A PART OF THIS PROJECT I HAVE REESTABLISHED THE LOCATIONS OF THE EXISTING BOUNDARY AND RIGHT OF WAY LINES FOR PROPERTY TAKES CONTAINED HEREIN. I HAVE ESTABLISHED THE PROPOSED BOUNDARY LINES, CALCULATED THE GROSS TAKE, PRESENT ROADWAY OCCUPIED (PRO), NET TAKE, AND NET RESIDUE. I HAVE ALSO PREPARED THE LEGAL DESCRIPTIONS NECESSARY TO ACQUIRE THE PARCELS AS SHOWN HEREIN.

WHERE SHOWN, IRON PINS SET ARE 3/4" REBAR, 30" LONG, AND BEAR A 2" ALUMINUM CAP INSCRIBED "ODOT R/W, S-8358, DLZ OHIO, INC".

ALL OF MY WORK CONTAINED HEREIN WAS CONDUCTED IN ACCORDANCE WITH OHIO ADMINISTRATIVE CODE 4733-37 COMMONLY KNOWN AS "A MINIMUM STANDARDS FOR BOUNDARY SURVEYS IN THE STATE OF OHIO" UNLESS NOTED.

THE WORDS "I" AND "MY" AS USED HEREIN ARE TO MEAN EITHER MYSELF OR SOMEONE WORKING UNDER MY DIRECT SUPERVISION.

_____
RUSSELL KOENIG, OHIO REGISTERED PROFESSIONAL SURVEYOR, S-8358 DATE:

SURVEYOR'S SEAL

FEDERAL PROJECT NO. E131486
PID NO. 92616
CALCULATED RKL CHECKED RAK
RIGHT OF WAY LEGEND SHEET
FRA-270-51.50
1 / 9
546 554

X:\Projects\2013\1321\1010\FRA 92616\row\sheets\92616RL001.dgn 12/8/2022 10:18:32 AM jkoontz

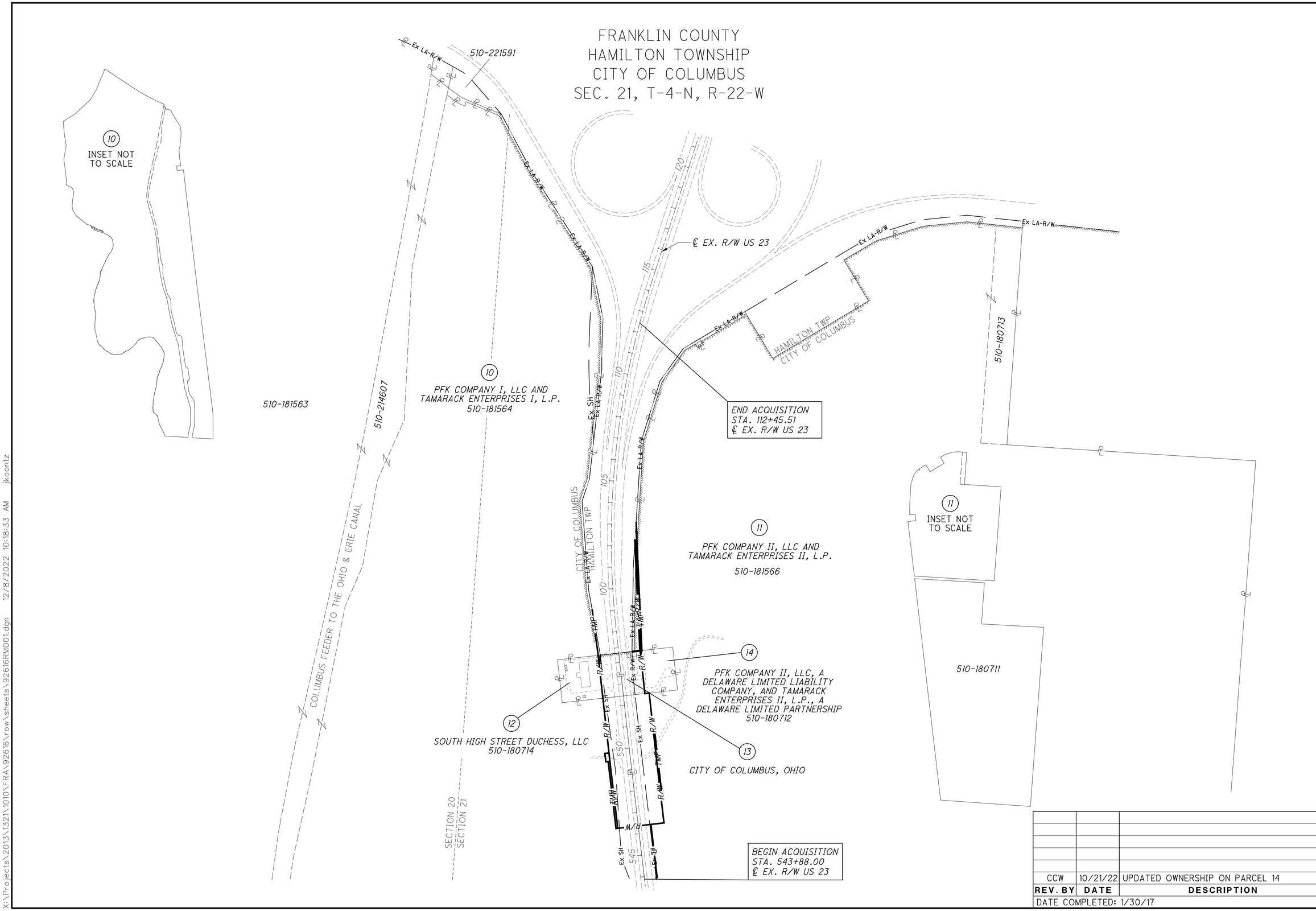

REV. BY	DATE	DESCRIPTION
CCW	10/21/22	UPDATED OWNERSHIP ON PARCEL 14

DATE COMPLETED: 1/30/17

PID NO. 92616

R/W DESIGNER RKL
R/W REVIEWER RAK

PROPERTY MAP

FRA-270-51.50

2 / 9

547 / 554

X:\Projects\2013\1321\1010\FRA\92616\row\sheets\92616RM001.dgn 12/8/2022 10:18:33 AM jkoontz

TOTAL NUMBER OF :

5 OWNERSHIPS
14 PARCELS
1 TOTAL TAKES
0 OWNERSHIPS W/ STRUCTURES INVOLVED

NET RESIDUE = RECORD AREA - TOTAL PRO - NET TAKE

ALL AREAS IN ACRES

GRANTEE:

ALL RIGHT OF WAY ACQUIRED IN THE NAME OF THE STATE OF OHIO DEPARTMENT OF TRANSPORTATION UNLESS OTHERWISE SHOWN.

PARCEL NO.	OWNER	SHEET NO.	OWNER'S RECORD	AUDITOR'S PARCEL	RECORD AREA	TOTAL P.R.O.	GROSS TAKE	P.R.O. IN TAKE	NET TAKE	STRUCTURE	NET RESIDUE LEFT	NET RESIDUE RIGHT	TYPE FUND	REMARKS	AS ACQUIRED INSTRUMENT NO.
1-9	NOT ASSIGNED												STATE		
10-WD	PFK COMPANY I, LLC AND	5,6	IN 200403030046558	510-181564	247.244	21.140	1.338	1.119	0.219		225.885			+297' OF FENCE, 1 TREE	
	TAMARACK ENTERPRISES I, L.P.		IN 200108080182906	510-214607	14.943	0.000	0.000	0.000	0.000		14.943				
			IN 200107230166574	510-181563	1018.556	0.000	0.000	0.000	0.000		1018.556				
			IN 200107230166573	510-221591	0.422	0.000	0.000	0.000	0.000		0.422				
			IN 200107230166572	TOTAL:	1281.165	21.140	1.338	1.119	0.219		1259.806				
			IN 200107230166571												
			IN 200107230166570												
10-T		5		510-181564			0.074	0.000	0.074					TO COMPLETE GRADING AND CONSTRUCT DRIVE APPROACH	
														+7' OF FENCE	
11-WL	PFK COMPANY II, LLC (1/2 INT) AND	6,7	IN 200403030046559	510-181566	209.506	2.153	0.144	0.000	0.144						
	TAMARACK ENTERPRISES II, L.P. (1/2 INT)		IN 200107230167042												
11-WD		5,6	IN 200107230167043	510-181566	209.506	2.153	1.670	0.752	0.918					+8 TREES, +CABLE GATE, +2 WOOD POSTS	
			IN 200107230167044												
	TOTAL PERMANENT TAKES FROM 510-181566		IN 200107230167045	510-181566	209.506	2.153	1.814	0.752	1.062			206.291			
			IN 200107230167046	510-180713	3.000	0.000	0.000	0.000	0.000			3.000			
			IN 200108080182912	510-180711	503.819	8.772	0.000	0.000	0.000			495.047			
				TOTAL:	716.325	10.925	1.814	0.752	1.062			704.338			
11-UV		4,5					0.029	0.000	0.029					CITY OF COLUMBUS, OHIO	
11-T1		5		510-181566			0.037	0.000	0.037					TO COMPLETE GRADING	
11-T2		6,7		510-181566			0.087	0.000	0.087					TO COMPLETE GRADING	
12-WD	SOUTH HIGH STREET DUCHESS, LLC	6	IN 201603040026280	510-180714	2.028	0.390	0.435	0.393	0.042		1.596			*YARD LIGHT, *FLAG POLE, +4 LIGHT POLES, +1 ELEC. BOX	
12-T		6,7					0.031	0.000	0.031					TO COMPLETE GRADING AND CONSTRUCT DRIVE APPROACH	
13-WD	CITY OF COLUMBUS, OHIO	6	OR 17674, PG C19	NONE	0.260 (c)	0.260	0.260	0.260	0.000			0.000		TOTAL TAKE	
14-WL	PFK COMPANY II, LLC, A DELAWARE LIMITED	6,7	IN 201810300147990	510-180712	0.909	0.000	0.109	0.000	0.109						
	LIABILITY COMPANY, AND TAMARACK														
14-WD	ENTERPRISES II, L.P., A DELAWARE LIMITED	6		510-180712	0.909	0.000	0.199	0.000	0.199					+SIGN, +90' OF FENCE	
	PARTNERSHIP														
	TOTAL PERMANENT TAKES FROM 510-180712				0.909	0.000	0.308	0.000	0.308			0.601			
14-T1		6					0.002	0.000	0.002					TO COMPLETE GRADING	
14-T2		7					0.018	0.000	0.018					TO COMPLETE GRADING	

NOTE: UNDER NO CIRCUMSTANCES ARE TEMPORARY EASEMENTS TO BE USED FOR STORAGE OF MATERIAL OR EQUIPMENT BY THE CONTRACTOR UNLESS NOTED OTHERWISE.

NOTE: ALL TEMPORARY PARCELS TO BE OF 24 MONTH DURATION.

TYPES OF TITLE LEGEND:
WL = FEE SIMPLE WITH LIMITATION OF ACCESS
WD = WARRANTY DEED
T = TEMPORARY EASEMENT
U = UTILITY EASEMENT
V = CITY OF COLUMBUS, OHIO

(c) = CALCULATED AREA

DB = DEED BOOK
OR = OFFICIAL RECORD
IN = INSTRUMENT NUMBER

* DENOTES RIGHT OF WAY ENCROACHMENT
+ DENOTES REMOVAL ITEMS

REV. BY	DATE	DESCRIPTION
CCW	10/21/22	UPDATED OWNERSHIP ON PARCEL 14
RKL	3/8/18	REMOVED 14E AND REVISED 11UV
FIELD REVIEW BY RUSSELL KOENIG		DATE: 1/23/17
OWNERSHIP VERIFIED BY ANDREW JORDAN		DATE: 1/20/17
DATE COMPLETED: 1/30/17		

FEDERAL PROJECT NO. E131486
PID NO. 92616
STATE JOB NO. 467159
R/W DESIGNER RKL
R/W REVIEWER RAK

SUMMARY OF ADDITIONAL RIGHT OF WAY

FRA-270-51.50

X:\Projects\2013\132\1010\FRA\92616\row\sheets\92616RS001.dgn 12/8/2022 10:18:33 AM jkoontz

FRANKLIN COUNTY
HAMILTON TOWNSHIP
CITY OF COLUMBUS
SEC. 21, T-4-N, R-22-W

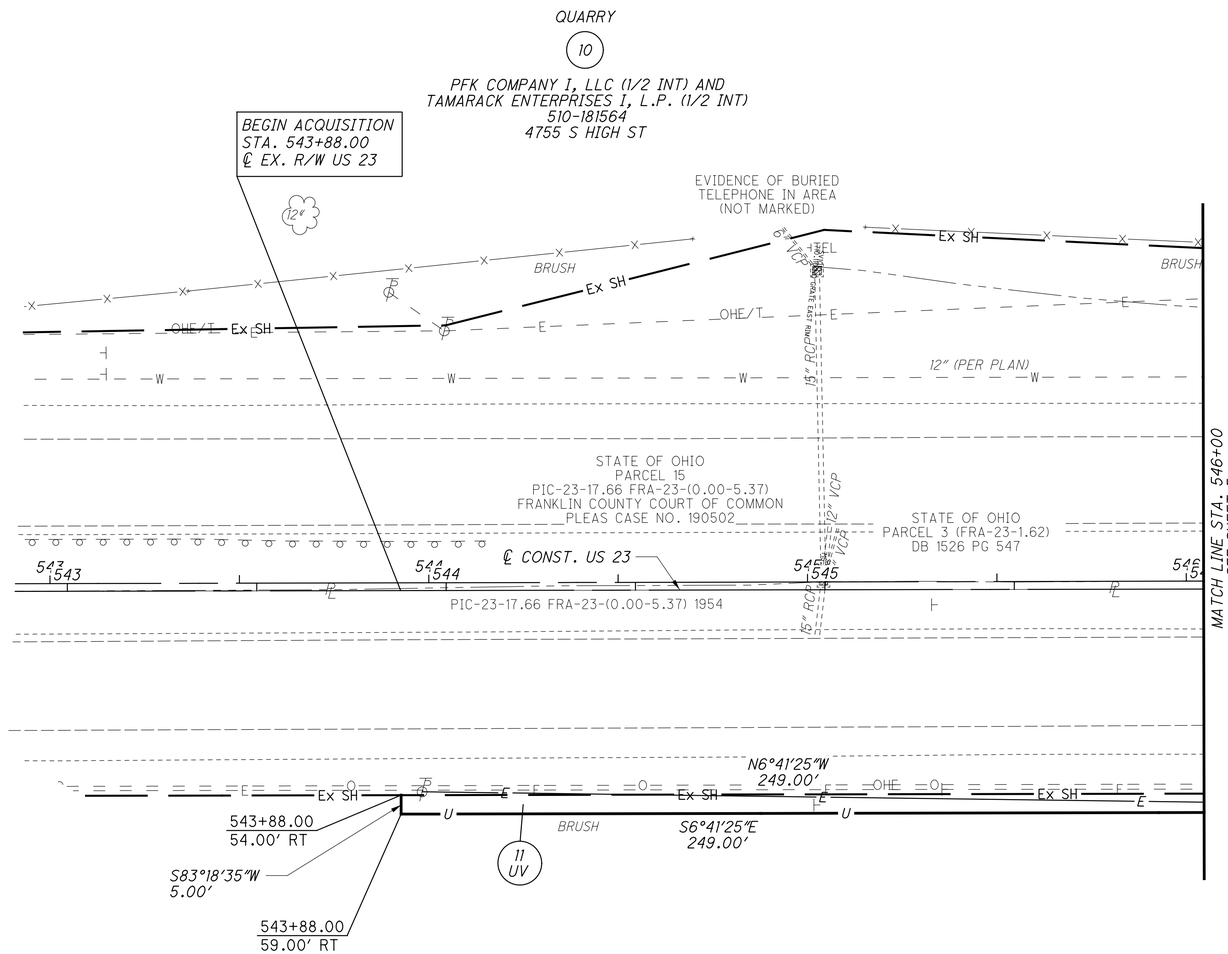

REV. BY	DATE	DESCRIPTION

DATE COMPLETED: 1/30/17

HORIZONTAL SCALE IN FEET
0 10 20 40

PID NO. 92616

R/W DESIGNER RKL
R/W REVIEWER RAK

RIGHT OF WAY DETAIL SHEET
STA. 543+00 TO STA. 546+00

FRA-270-51.50

4 / 9

549
554

x:\Projects\2013\1321\1010\FRA\92616\row\sheets\92616RD001.dgn 12/8/2022 10:18:35 AM jkoontz

FRANKLIN COUNTY
HAMILTON TOWNSHIP
CITY OF COLUMBUS
SEC. 21, T-4-N, R-22-W

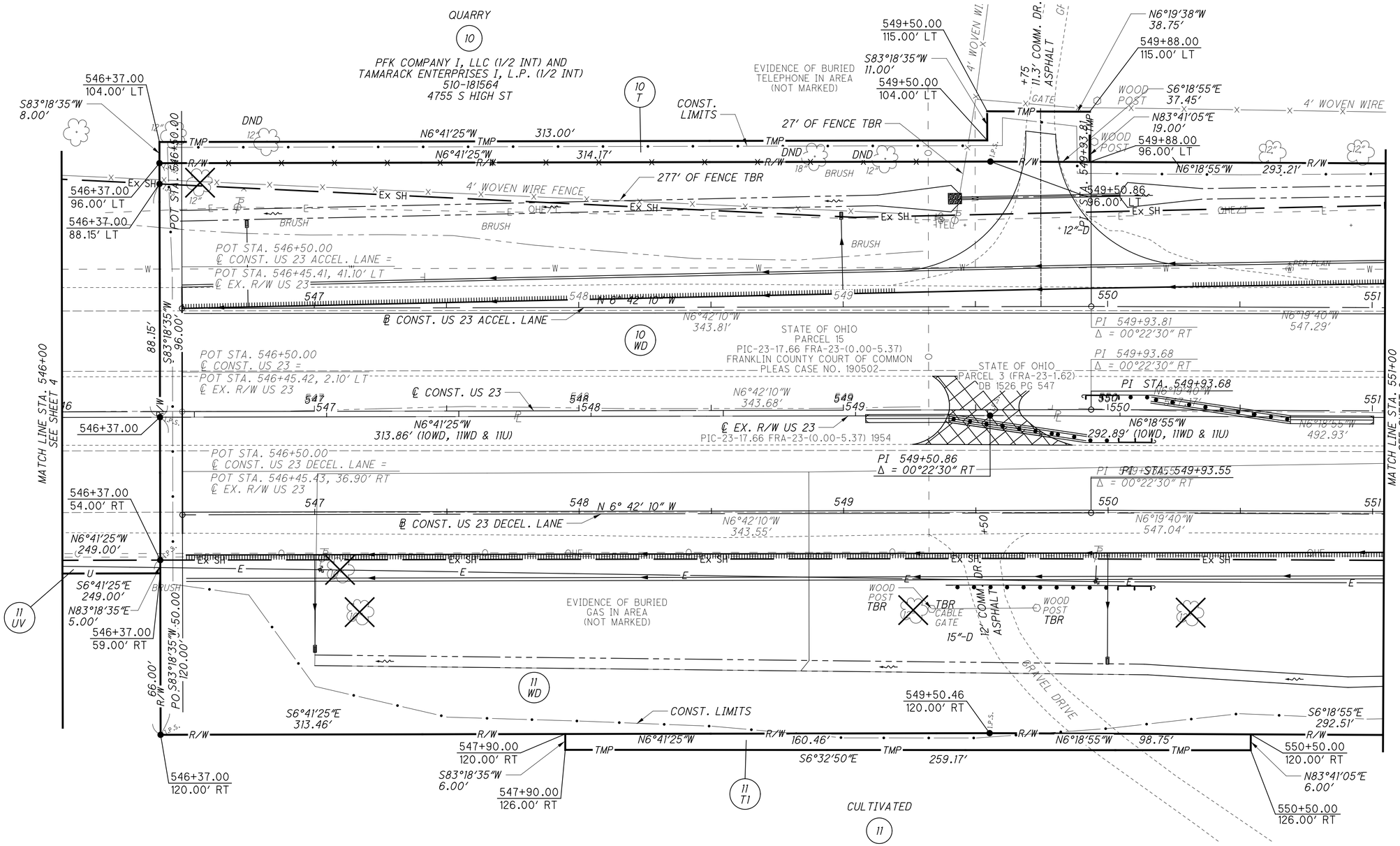

REV. BY	DATE	DESCRIPTION

DATE COMPLETED: 1/30/17

HORIZONTAL SCALE IN FEET
0 10 20 40

PID NO. 92616

R/W DESIGNER RKL
R/W REVIEWER RAK

RIGHT OF WAY DETAIL SHEET
STA. 546+00 TO STA. 551+00

FRA-270-51.50

5 / 9

550 / 554

x:\Projects\2013\1321\1010\FRA\92616\row\sheets\92616RD002.dgn 12/8/2022 10:18:35 AM jkoontz

FRANKLIN COUNTY
HAMILTON TOWNSHIP
CITY OF COLUMBUS
SEC. 21, T-4-N, R-22-W

QUARRY (10) — PFK COMPANY I, LLC (1/2 INT) AND TAMARACK ENTERPRISES I, L.P. (1/2 INT), 510-181564, 4755 S HIGH ST

EVIDENCE OF BURIED TELEPHONE IN AREA (NOT MARKED)

GAS STATION (12) — SOUTH HIGH STREET DUCHESS, LLC, 510-180714, 4569 S HIGH ST

CANOPY

QUARRY (10) — PFK COMPANY I, LLC (1/2 INT) AND TAMARACK ENTERPRISES I, L.P. (1/2 INT), 510-181564, 4755 S HIGH ST

EVIDENCE OF BURIED TELEPHONE IN AREA (NOT MARKED)

FENCE

LIGHT POLE (TBR)

"BP"

+18 35' COMM. DR. ASPHALT

ELEC. BOX (TBR)

ASPHALT

552+43.75, 96.00' LT

553+90.00, 96.00' LT

554+43.79, 96.00' LT

96+75.00, 96.00' LT

96+75.80, 95.88' LT

N6°18'55"W 293.21'

N6°18'55"W 146.25'

N6°18'55"W 53.79'

N7°27'39"W 212.93'

S10°08'48"E 213.36'

CONST. LIMITS

Ex SH

Ex R/W

Ex LA R/W

TMP

R/W

552+44.33, 84.08' LT

S4°12'59"W 54.71'

12" B

12" RCP

+33 37' COMM. DR. ASPHALT

5' CHAIN LINK FENCE

96+75.00, 86.00' LT

554+43.79, 86.00' LT

12" (PER CTP0600)

12" (PER PLAN)

N83°41'05"E 96.00'

LIGHT POLE (TBR)

552 | N 6° 19' 40" W | 553 | 554 | 555

℄ CONST. US 23 ACCEL. LANE

STATE OF OHIO
PARCEL 15
PIC-23-17.66 FRA-23-(0.00-5.37)
FRANKLIN COUNTY COURT OF COMMON PLEAS CASE NO. 190502

10 WD

STATE OF OHIO
PARCEL 3 (FRA-23-1.62)
DB 1526 PG 547

12 WD

LIGHT POLE (TBR)

S83°41'05"W 86.00'

POC: 10WD, 11WL, 11WD 14WL, 14WD, 14E
POB: 12WD, 13WD

STATE OF OHIO
PARCEL 109-WL
DB 2498 PG 368

PC STA. 555+41.10

POB: 10WD, 11WD
552+43.75
N 6° 19' 40" W

℄ CONST. US 23

552 | 1552 | 553 | 1553 | 554 | 1554 | 97 | 555 | 98

N6°18'55"W 292.89' (10WD, 11WD & 11U)

PIC-23-17.66 FRA-23-(0.00-5.37) 1954

N6°18'55"W 492.93'

PIC-23-17.66 FRA-23-(0.00-5.37) 1954

N6°18'55"W 200.04'

Sta. 554+43.79 BK = Sta. 96+75.00 AH

FRA-200-8.46 - 1962

N6°18'55"W 94.54'

PC STA. 555+40.85 = Sta. 97+69.54 BK = Sta. 97+94.69 AH

MATCH LINE STA. 551+00 SEE SHEET 5

MATCH LINE STA. 98+50 SEE SHEET 7

℄ EX. R/W US 23

OH E

S83°41'05"W 54.00'

13 WD

13

THE CITY OF COLUMBUS, OHIO
NO PID

N83°41'05"E 62.00'

552 | N 6° 19' 40" W | 553 | 554 | 555

℄ CONST. US 23 DECEL. LANE

552+43.75, 54.00' RT

553+15.37, 54.00' RT

554+43.79, 62.00' RT

N6°18'55"W 71.62'

N2°45'02"W 128.67'

S83°41'05"W 10.08'

90' OF FENCE TBR

552+43.56, 51.93' RT

Ex SH

Ex R/W

Ex LA R/W

E

SIGN (TBR)

+02 25' COMM. ASPHALT

96+75.00, 62.00' RT

N0°53'54"E 394.88'

S0°53'54"W BRUSH 393.38'

14 WL

554+43.79, 72.08' RT

554+43.39 70.38' RT

FOR SALE SIGN

96+75.00, 72.08' RT

12" PVC

12" RCP

HAMILTON TWP
CITY OF COLUMBUS

11 WD

N83°41'05"E 120.00'

46.00'

S6°18'55"E 200.04'

ASPHALT

N83°41'05"E 38.00'

S83°41'05"W 27.92'

S2°36'36"E 425.59'

11 WL

CONST. LIMITS

R/W

LA R/W

TMP

12" RCP

552+43.75, 100.00' RT

96+75.00, 100.00' RT

S6°18'55"E 292.51'

S2°34'22"E 501.27'

552+43.75, 120.00' RT

N6°18'55"W 18.79'

S16°44'51"W 20.42'

14 T1

S83°41'05"W 8.00'

96+75.00, 108.00' RT

554+43.79, 108.00' RT

554+43.79, 100.00' RT

11 T2

11

CULTIVATED

PFK COMPANY II, LLC (1/2 INT) AND TAMARACK ENTERPRISES II, L.P. (1/2 INT), 510-181566, S HIGH ST

CULTIVATED

11

PFK COMPANY II, LLC (1/2 INT) AND TAMARACK ENTERPRISES II, L.P. (1/2 INT), 510-181566, S HIGH ST

COMMERCIAL

14

PFK COMPANY II, LLC, A DELAWARE LIMITED LIABILITY COMPANY, AND TAMARACK ENTERPRISES II, L.P., A DELAWARE LIMITED PARTNERSHIP, 510-180712, S HIGH ST

℄ CONST. US 23 ACCEL LN
P.I. Sta. 557+88.42
Δ = 7° 07' 30" (RT)
Dc = 1° 26' 32"
R = 3,972.54'
T = 247.32'
L = 494.00'
E = 7.69'
C = 493.69'
C.B. = N 2° 45' 55" W

℄ CONST. US 23
P.I. Sta. 263+44.63
Δ = 16° 23' 08" (RT)
Dc = 2° 30' 00"
R = 2,291.83'
T = 329.97'
L = 655.43'
E = 23.63'
C = 653.20'
C.B. = N 8° 46' 00" E

℄ CONST. US 23 DECEL LN
P.I. Sta. 557+75.60
Δ = 6° 54' 24" (RT)
Dc = 1° 28' 16"
R = 3,894.54'
T = 235.01'
L = 469.45'
E = 7.08'
C = 469.17'
C.B. = N 2° 52' 28" W

℄ EX. R/W US 23
P.I. Sta. 106+35.74
Δ = 24° 13' 42" (RT)
Dc = 1° 27' 44"
R = 3,918.40'
T = 841.05'
L = 1,656.95'
E = 89.24'
C = 1,644.63'
C.B. = N 5° 47' 56" E

REV. BY	DATE	DESCRIPTION
CCW	10/21/22	UPDATED OWNERSHIP ON PARCEL 14

DATE COMPLETED: 1/30/17

HORIZONTAL SCALE IN FEET: 0, 10, 20, 40

PID NO. 92616

R/W DESIGNER RKL
R/W REVIEWER RAK

RIGHT OF WAY DETAIL SHEET
STA. 551+00 TO STA. 98+50

FRA-270-51.50

6 / 9

551 / 554

x:\Projects\2013\1321\1010\FRA\92616\row\sheets\92616RD003.dgn 12/8/2022 10:18:36 AM jkoontz

FRANKLIN COUNTY
HAMILTON TOWNSHIP
CITY OF COLUMBUS
SEC. 21, T-4-N, R-22-W

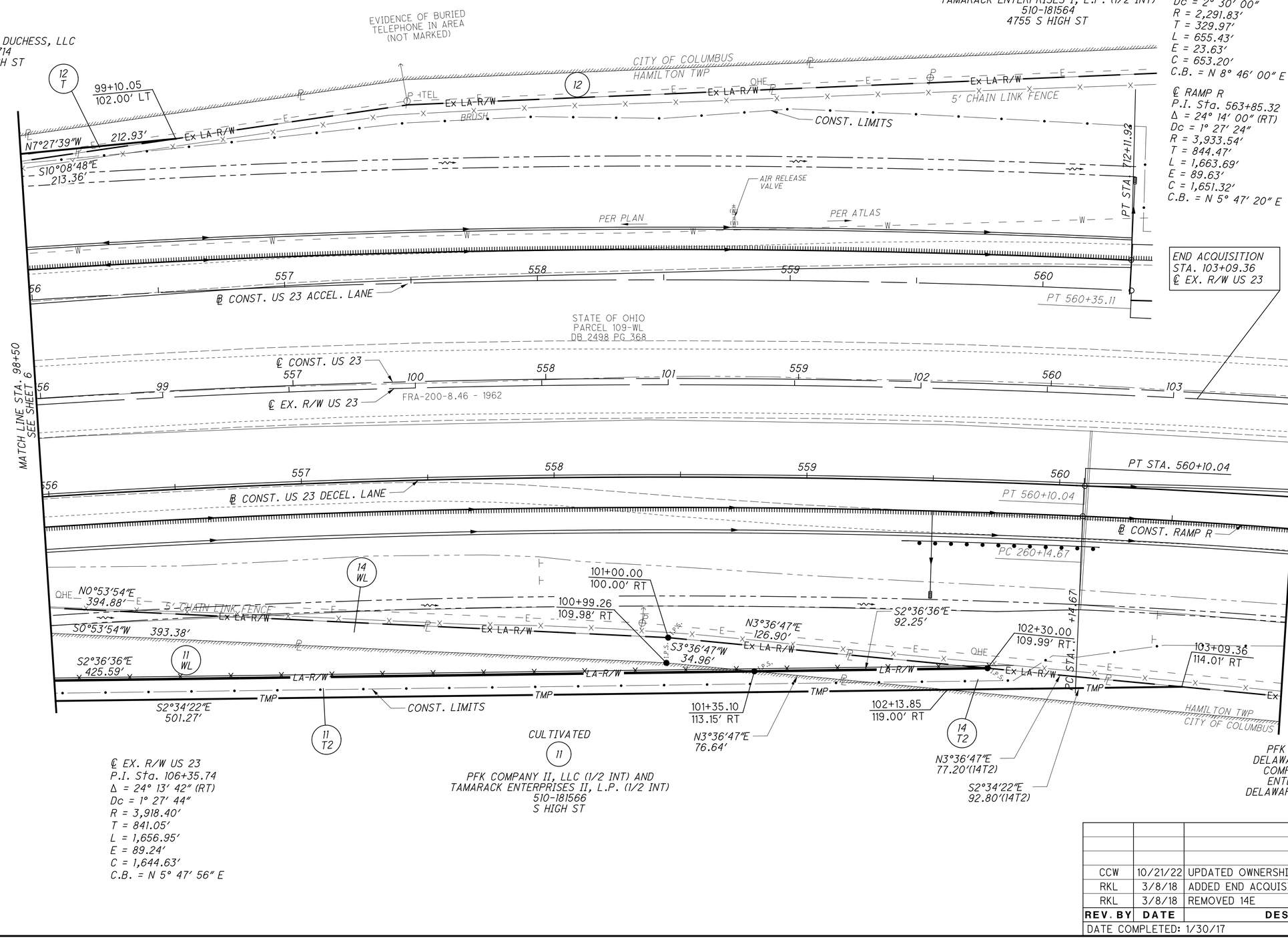

REV. BY	DATE	DESCRIPTION
CCW	10/21/22	UPDATED OWNERSHIP ON PARCEL 14
RKL	3/8/18	ADDED END ACQUISITION FLAG
RKL	3/8/18	REMOVED 14E

DATE COMPLETED: 1/30/17

HORIZONTAL SCALE IN FEET
0 10 20 40

PID NO. 92616

R/W DESIGNER RKL
R/W REVIEWER RAK

RIGHT OF WAY DETAIL SHEET
STA. 98+50 TO STA. 103+50

FRA-270-51.50

7 / 9

552 / 554

x:\Projects\2013\1321\1010\FRA\92616\row\sheets\92616RD004.dgn 12/8/2022 10:18:37 AM jkoontz

FRANKLIN COUNTY
HAMILTON TOWNSHIP
CITY OF COLUMBUS
SEC. 21, T-4-N, R-22-W

℄ CONST. US 23
P.I. Sta. 263+44.63
Δ = 16° 23′ 08″ (RT)
Dc = 2° 30′ 00″
R = 2,291.83′
T = 329.97′
L = 655.43′
E = 23.63′
C = 653.20′
C.B. = N 8° 46′ 00″ E

℄ EX. R/W US 23
P.I. Sta. 106+35.74
Δ = 24° 13′ 42″ (RT)
Dc = 1° 27′ 44″
R = 3,918.40′
T = 841.05′
L = 1,656.95′
E = 89.24′
C = 1,644.63′
C.B. = N 5° 47′ 56″ E

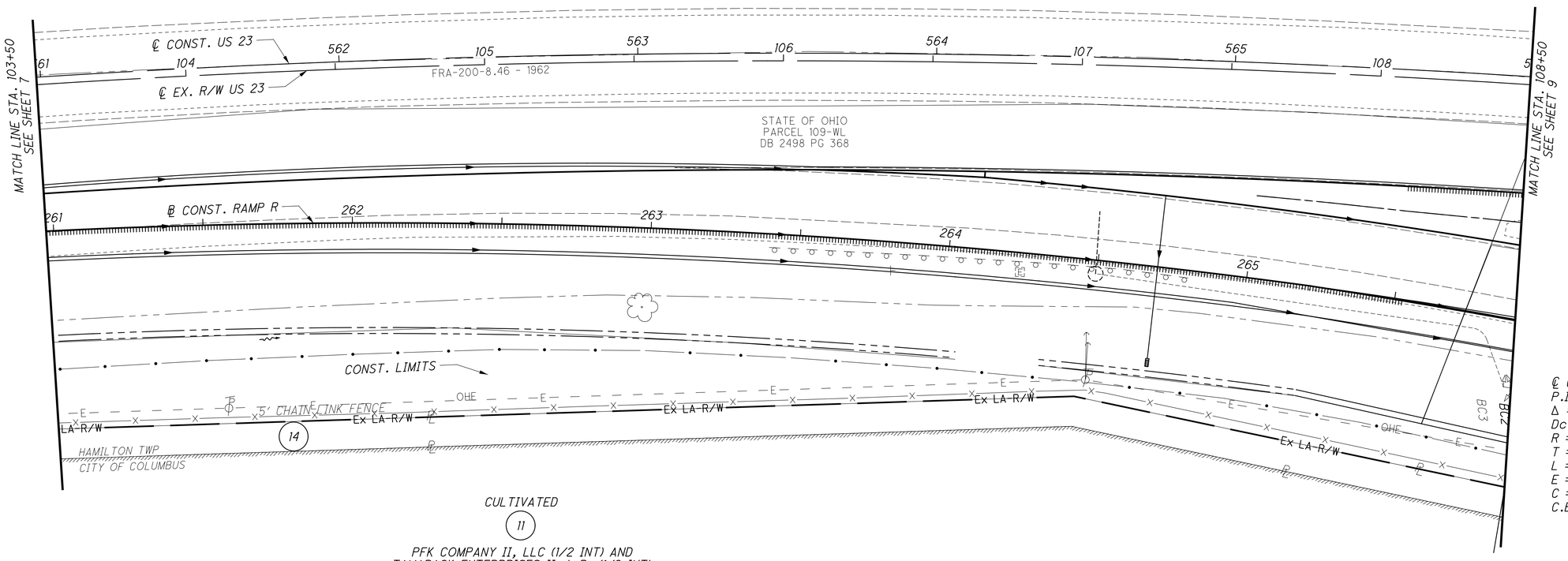

℄ CONST. RAMP R
P.I. Sta. 269+39.51
Δ = 38° 51′ 07″ (RT)
Dc = 7° 30′ 00″
R = 763.94′
T = 269.42′
L = 518.02′
E = 46.11′
C = 508.16′
C.B. = N 36° 23′ 08″ E

CULTIVATED
11
PFK COMPANY II, LLC (1/2 INT) AND
TAMARACK ENTERPRISES II, L.P. (1/2 INT)
510-181566
S HIGH ST

14
PFK COMPANY II, LLC, A
DELAWARE LIMITED LIABILITY
COMPANY, AND TAMARACK
ENTERPRISES II, L.P., A
DELAWARE LIMITED PARTNERSHIP
510-180712
S HIGH ST

REV. BY	DATE	DESCRIPTION
CCW	10/21/22	UPDATED OWNERSHIP ON PARCEL 14
RKL	3/8/18	REMOVED 14E

DATE COMPLETED: 1/30/17

HORIZONTAL SCALE IN FEET
0 10 20 40

PID NO. 92616

R/W DESIGNER RKL
R/W REVIEWER RAK

RIGHT OF WAY DETAIL SHEET
STA. 103+50 TO STA. 108+50

FRA-270-51.50

8 / 9

553
554

x:\Projects\2013\1321\1010\FRA\92616\row\sheets\92616RD005.dgn 12/8/2022 10:18:38 AM jkoontz

FRANKLIN COUNTY
HAMILTON TOWNSHIP
CITY OF COLUMBUS
SEC. 21, T-4-N, R-22-W

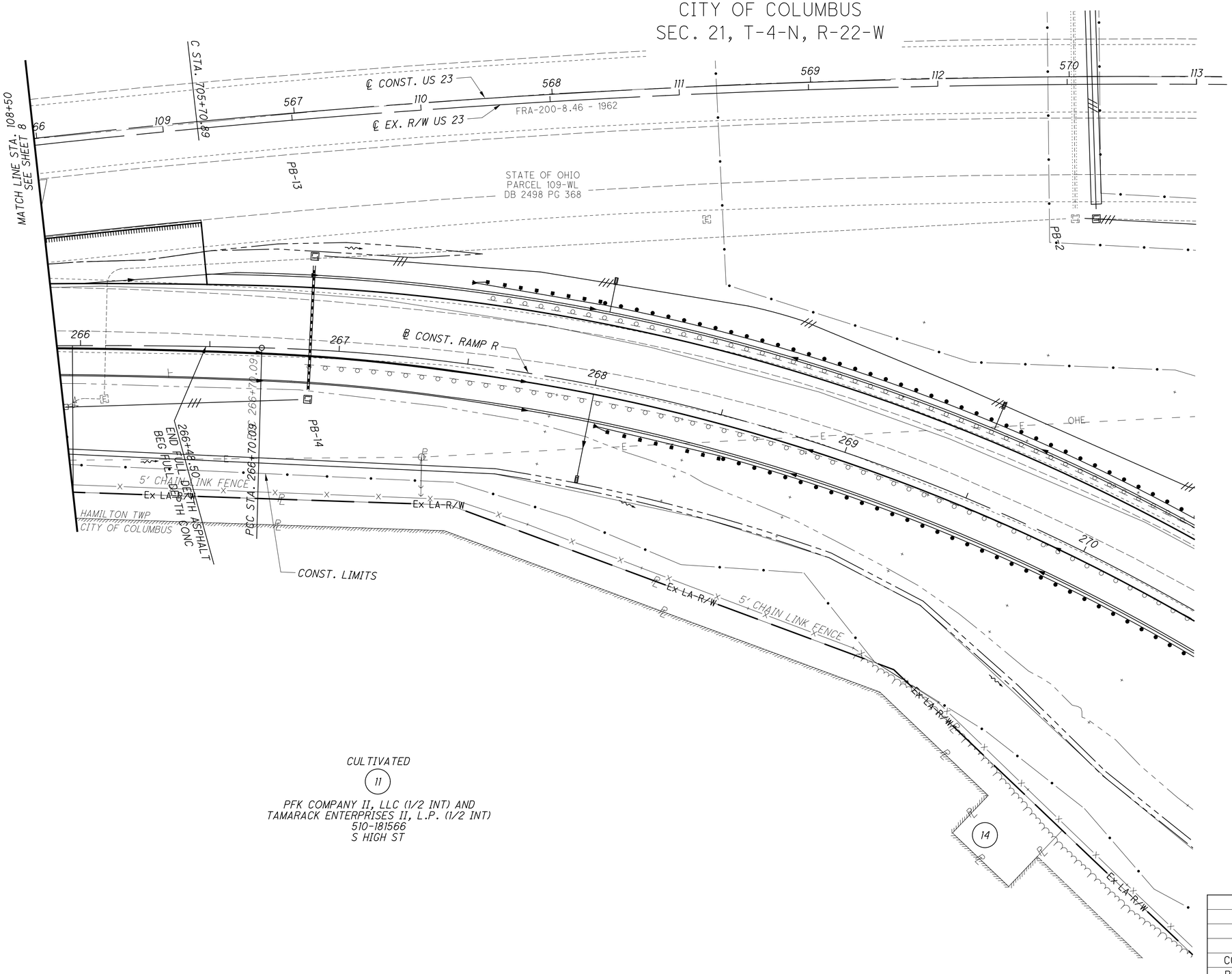

℄ EX. R/W US 23
P.I. Sta. 106+35.74
Δ = 24° 13′ 42″ (RT)
Dc = 1° 27′ 44″
R = 3,918.40′
T = 841.05′
L = 1,656.95′
E = 89.24′
C = 1,644.63′
C.B. = N 5° 47′ 56″ E

℄ CONST. US 23
P.I. Sta. 263+44.63
Δ = 16° 23′ 08″ (RT)
Dc = 2° 30′ 00″
R = 2,291.83′
T = 329.97′
L = 655.43′
E = 23.63′
C = 653.20′
C.B. = N 8° 46′ 00″ E

℄ CONST. RAMP R
P.I. Sta. 269+39.51
Δ = 38° 51′ 07″ (RT)
Dc = 7° 30′ 00″
R = 763.94′
T = 269.42′
L = 518.02′
E = 46.11′
C = 508.16′
C.B. = N 36° 23′ 08″ E

REV. BY	DATE	DESCRIPTION
CCW	10/21/22	UPDATED OWNERSHIP ON PARCEL 14
RKL	3/8/18	REMOVED 14E AND END ACQUISITION FLAG

DATE COMPLETED: 1/30/17

HORIZONTAL SCALE IN FEET
0 10 20 40

PID NO. 92616

R/W DESIGNER RKL
R/W REVIEWER RAK

RIGHT OF WAY DETAIL SHEET
STA. 108+50 TO STA. 113+00

FRA-270-51.50

9 / 9

554
554

x:\Projects\2013\1321\1010\FRA\92616\row\sheets\92616RD006.dgn 12/8/2022 10:18:39 AM jkoontz

FRA-IR 270-51.50/FRA-US 23-4.19 (PART 1 AND PART 2)
220245 PID - 92616
Dist 6 5/11/2023

Contract Proposal available @
www.contracts.dot.state.oh.us

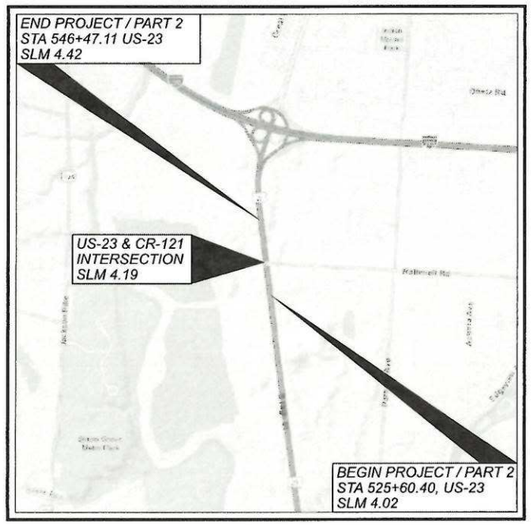

LOCATION MAP

LATITUDE: N 39°51'45" LONGITUDE: W 83°00'15"

PORTION TO BE IMPROVED
INTERSTATE HIGHWAY
FEDERAL ROUTES
STATE ROUTES
COUNTY & TOWNSHIP ROADS
OTHER ROADS

DESIGN DESIGNATION

SEE SHEET P.3

DESIGN EXCEPTIONS

DESIGN FEATURE	APPROVAL DATES	SHEET NUMBERS
SHOULDER WIDTH	6-6-2022	P.5-P.7

ADA DESIGN WAIVERS

NONE

UNDERGROUND UTILITIES
OHIO811.org Before You Dig

PLAN PREPARED BY:

IBI Group
8101 North High Street, Suite 100
Columbus, OH 43235 USA
Phone: 614-818-4900
Fax: 614-818-4901

ENGINEER'S SEAL
ENTIRE PLANS

STATE OF OHIO · WILLIAM L. CROXTON IV · E-70541 · REGISTERED · PROFESSIONAL ENGINEER

SIGNED: William L Croxton IV
DATE: 12-9-2022

STATE OF OHIO
DEPARTMENT OF TRANSPORTATION

FRA-23-4.19 PART 2

CITY OF COLUMBUS, HAMILTON TOWNSHIP
FRANKLIN COUNTY
FOR PART 1, SEE FRA-270-51.50

INDEX OF SHEETS:

TITLE SHEET	P.1
SCHEMATIC PLAN	P.3
TYPICAL SECTIONS	P.4-P.10
GENERAL NOTES	P.11-P.16
MAINTENANCE OF TRAFFIC	P.17-P.37
GENERAL SUMMARY	P.38-P.42
SUBSUMMARIES	P.43-P.45
PROJECT SITE PLAN	P.46
PLAN & PROFILES:	
US-23 (SOUTH HIGH STREET)	P.47-P.57
CR-121 (RATHMELL ROAD)	P.58-P.63
CROSS SECTIONS:	
US-23 (SOUTH HIGH STREET)	P.64-P.82
CR-121 (RATHMELL ROAD)	P.83-P.94
INTERSECTION DETAILS	P.95
DRIVE DETAILS	P.96
DRAINAGE DETAILS	P.97-P.106
WATER WORK	P.107-P.108
SIGNING AND PAVEMENT MARKINGS	P.109-P.122
TRAFFIC SIGNALS	P.123-P.132
TRAFFIC SIGNAL INTERCONNECT	P.133-P.136
DYNAMIC MESSAGE SIGN (DMS)	P.137-P.140
LIGHTING	P.141-P.144
RIGHT OF WAY	P.145-P.162
	P.163-P.170
SOIL PROFILES	

SEE SHEET P.2 FOR COC SIGNATURES AND COC DPS E-PLAN NUMBER.

STANDARD CONSTRUCTION DRAWINGS		SUPPLEMENTAL SPECS
OHIO DEPARTMENT OF TRANSPORTATION (ODOT)	CITY OF COLUMBUS (COC)	
SEE PART 1	SEE PART 1	SEE PART 1
		SPECIAL PROVISIONS
		SEE PART 1

FEDERAL PROJECT NUMBER

E131(486)

RAILROAD INVOLVEMENT

NONE

PROJECT DESCRIPTION

SAFETY IMPROVEMENT PROJECT AT SIGNALIZED INTERSECTION OF US-23 (SOUTH HIGH STREET), CR-121 (RATHMELL ROAD), & PRIVATE DRIVE LOCATED SOUTH OF US-23 & I-270 INTERCHANGE, INCLUDING PAVEMENT WIDENING & RECONSTRUCTION OF 2100-FT ALONG US-23 AND 1300-FT ALONG CR-121. US-23 IMPROVEMENTS AT NORTHERLY LIMITS SHALL TIE INTO ODOT FRA-270-51.50 PART 1 PROJECT AND CR-121 IMPROVEMENTS AT THE EASTERLY LIMITS SHALL TIE INTO FUTURE EXISTING COC RATHMELL ROAD IMPROVEMENT PROJECT (E-03844).

INTERSECTION UPGRADES INCLUDE COC SIGNAL MODIFICATIONS, NEW COC INTERSECTION LIGHTING, ADDITION OF DROP RIGHT TURN LANE ON WB APPROACH, AND EXTENSION OF TURN LANE LENGTHS ON ALL APPROACHES. CORRIDOR UPGRADES INCLUDE ADDITION OF US-23 NB AUXILIARY LANE, WIDENING OF ALL US-23 NB SHOULDERS, WIDENING OF ALL US-23 NB/SB GRADED SHOULDERS AND DITCHES, AND PLANING/RESURFACING ALONG ALL OF US-23 SB AND ON EXISTING SALVAGED PAVEMENT ALONG US-23 NB. WORK ALSO INCLUDES ACCESS MANAGEMENT, DRAINAGE & BMP'S, TRAFFIC CONTROL, RELOCATION OF ODOT DYNAMIC MESSAGE SIGN (DMS) FROM US-23 MEDIAN TO EAST SIDE OF US-23 NB, AND NEW COC SIGNAL INTERCONNECT ALONG EAST SIDE OF US-23.

EARTH DISTURBED AREAS (EDA)

PROJECT EDA:	8.55 ACRES
ESTIMATED CONTRACTOR EDA:	1.40 ACRES
NOTICE OF INTENT EDA:	9.95 ACRES

2019 SPECIFICATIONS (ODOT)

THE STANDARD SPECIFICATIONS OF THE STATE OF OHIO, DEPARTMENT OF TRANSPORTATION, INCLUDING SUPPLEMENTAL SPECIFICATIONS LISTED IN THE PLANS AND CHANGES LISTED IN THE PROPOSAL SHALL GOVERN THIS IMPROVEMENT, WITH THE EXCEPTION OF CITY OF COLUMBUS CONSTRUCTION ITEMS AS NOTED ON SHEET P.2.

I HEREBY APPROVE THESE PLANS AND DECLARE THAT THE MAKING OF THIS IMPROVEMENT WILL NOT REQUIRE THE CLOSING TO TRAFFIC OF THE HIGHWAY EXCEPT FOR THE SIDE ROADS AS DESCRIBED ON SHEET P.23 AND THAT PROVISIONS FOR THE MAINTENANCE AND SAFETY OF TRAFFIC WILL BE AS SET FORTH ON THE PLANS AND ESTIMATES.

APPROVED _____
DATE 12/19/22 DISTRICT DEPUTY DIRECTOR

APPROVED _____
DATE 2-27-2023 DIRECTOR, DEPARTMENT OF TRANSPORTATION

3667-E

TITLE SHEET (1 OF 2)
FRA-23-4.19 PART 2 (PID 92616)

DESIGN AGENCY: IBI
DESIGNER: WLC
REVIEWER: KMK 12-01-22
PROJECT ID: 92616
SHEET: P.1 TOTAL: 170

FRA-23-4.19 PART 2 (PID 92616)
MODEL: Sheet PAPERSIZE: 17x11(in.) DATE: 2023-01-31 TIME: 8:26:07 AM USER: william.croxton
\\10.10.12.5\bishare\122592_SafetyDesign\7.0_Production\7.3_Design\04_Civil\Worksets\10380_FRA-23\400-Engineering\

DocuSign Envelope ID: 6F3E6F37-68F6-4F23-A3CD-31298D4458F4

CITY OF COLUMBUS DPS E-PLAN NUMBER

3667E

CITY OF COLUMBUS DOW PROJECT NUMBER

20-100

2018 SPECIFICATIONS (CITY OF COLUMBUS)

THE CITY OF COLUMBUS CONSTRUCTION AND MATERIALS SPECIFICATIONS (CMSC), 2018 EDITION INCLUDING ALL REVISIONS AND SUPPLEMENTS IN EFFECT AT THE TIME OF SIGNATURE BY THE DIRECTOR OF PUBLIC SERVICE SHALL GOVERN THE FOLLOWING CITY OF COLUMBUS CONSTRUCTION ITEMS THAT ARE PART OF THIS PLAN: WATER WORKS, TRAFFIC SIGNALS, TRAFFIC SIGNAL INTERCONNECT, AND LIGHTING.

CITY OF COLUMBUS APPROVALS

CITY OF COLUMBUS SIGNATURES ON THIS PLAN SIGNIFY ONLY CONCURRENCE WITH THE GENERAL PURPOSES AND GENERAL LOCATION OF THE PROJECT. ALL TECHNICAL DETAILS REMAIN THE RESPONSIBILITY OF THE ENGINEER PREPARING THE PLANS.

APPROVED Steven Wasoby
DATE 4/21/2023 *DESIGN SECTION ENGINEER, DIVISION OF DESIGN AND CONSTRUCTION*

APPROVED Patricia A. Austin JMG
DATE 4/26/2023 *ADMINISTRATOR, DIVISION OF POWER*

APPROVED RMV Robert Priestas
DATE 4/26/2023 *ADMINISTRATOR, DIVISION OF SEWERAGE AND DRAINAGE*

APPROVED TEH John Newsome
DATE 4/26/2023 *ASSISTANT ADMINISTRATOR, DIVISION OF WATER*

APPROVED kristen l. Atha by AMA
DATE 5/2/2023 *DIRECTOR, DEPARTMENT OF PUBLIC UTILITIES*

APPROVED Rob Comer CIO2
DATE 4/26/2023 *FIRE PREVENTION BUREAU, DIVISION OF FIRE*

APPROVED Darryl Joyce
DATE 4/26/2023 *ENGINEERING SUPERVISOR, DEPARTMENT OF TECHNOLOGY*

APPROVED Don E. Evans for Bernita A Reese
DATE 5/1/2023 *DIRECTOR, DEPARTMENT OF RECREATION AND PARKS*

APPROVED James Young
DATE 5/3/2023 *CITY ENGINEER/ADMINISTRATOR, DIVISION OF DESIGN AND CONSTRUCTION*

APPROVED Jennifer Gallagher
DATE 5/4/2023 *DIRECTOR, DEPARTMENT OF PUBLIC SERVICE*

DESIGN AGENCY
IBI
DESIGNER WLC
REVIEWER KMK 01-22-12
PROJECT ID 92616
SHEET P.2 TOTAL 170

FRA-23-4.19 PART 2 (PID 92616)
MODEL: Sheet PAPERSIZE: 17x11(in.) DATE: 2022-12-09 TIME: 9:29:50 AM USER: william.croxton
\\IOJ20.IJ2.5\Ibishore\J22592_SafetyDesign\7.0_Production\7.3_Design\04_Civil\Worksets\I0380_FRA-23\400-Engineering\Roadway\Sheets\I0380_GT002.dgn

PRIMARY PROJECT CONTROL INFORMATION

POINT NO.	STATION	OFFSET	ROADWAY	COORDINATES (U.S. SURVEY FEET)				ORTHO-METRIC HEIGHT	DESCRIPTION
				GRID		SCALED GROUND			
				NORTHING	EASTING	NORTHING	EASTING		
CP#1	103+46.32	11.61' RT	CR-121	678788.923	1827278.477	678828.517	1827385.062	717.94	IRON PIN CAPPED "IBIGROUP"
CP#2	112+00.16	20.51' LT	CR-121	678791.911	1828133.307	678831.505	1828239.942	712.36	IRON PIN CAPPED "IBIGROUP"
CP#3	533+12.61	68.3 ' LT	US-23	678678.100	1826881.769	678717.687	1826988.331	731.82	IRON PIN CAPPED "IBIGROUP"
CP#4	540+90.70	62.45' LT	US-23	679451.494	1826796.697	679491.126	1826903.254	723.08	IRON PIN CAPPED "IBIGROUP"
CP#5	553+76.83	65.81' RT	US-23	680743.619	1826776.792	680783.327	1826883.348	720.35	IRON PIN CAPPED "IBIGROUP"
CP#6	520+53.85	56.92' RT	US-23	677442.649	1827153.129	677482.165	1827259.706	737.83	IRON PIN CAPPED "IBIGROUP"

DESIGN DESIGNATION

	US-23 (SOUTH HIGH STREET)		PRIVATE DRIVE (QUARRY ACCESS)	CR-121 (RATHMELL ROAD)
	SOUTH LEG	NORTH LEG	WEST LEG	EAST LEG
CURRENT ADT (2022)	35,060	40,930	2,520	5,330
DESIGN YEAR ADT (2042)	37,220	43,500	2,520	5,890
DESIGN HOURLY VOLUME (2042)	3,710	4,050	80	660
DIRECTIONAL DISTRIBUTION	67%	65%	50%	53%
TRUCKS (24 HOUR B&C)	15%	18%	88%	7%
Td (AM)	13%	16%	92%	5%
Td (PM)	18%	8%	36%	2%
DESIGN SPEED	55 MPH		N/A	55 MPH
LEGAL SPEED	50 MPH		N/A	50 MPH
DESIGN FUNCTIONAL CLASSIFICATION	03 - PRINCIPAL ARTERIAL (URBAN)		N/A	05 - MAJOR COLLECTOR (URBAN)
NHS PROJECT	YES		N/A	NO

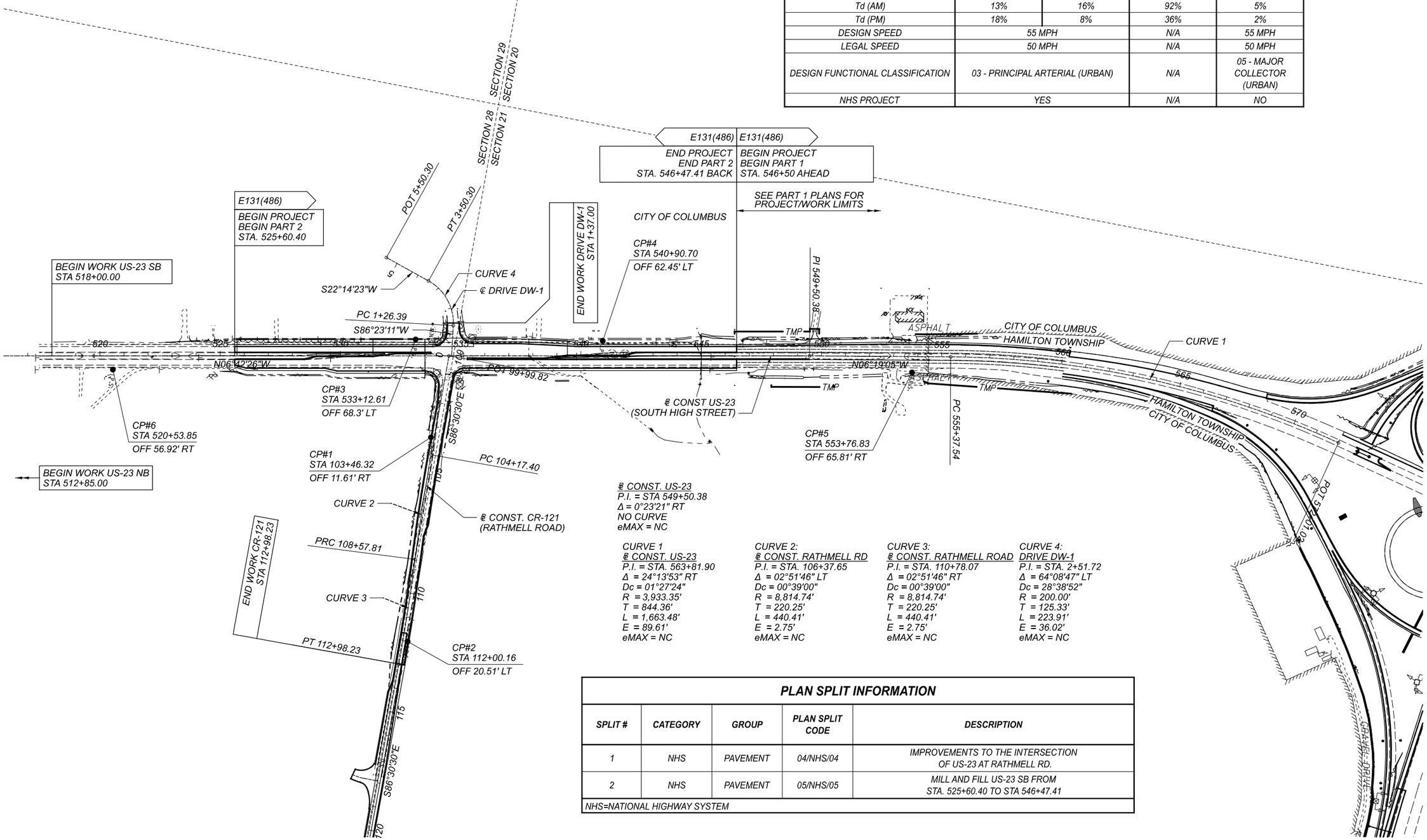

℄ CONST. US-23
P.I. = STA 549+50.38
Δ = 0°23'21" RT
NO CURVE
eMAX = NC

CURVE 1
℄ CONST. US-23
P.I. = STA. 563+81.90
Δ = 24°13'53" RT
Dc = 01°27'24"
R = 3,933.35'
T = 844.36'
L = 1,663.48'
E = 89.61'
eMAX = NC

CURVE 2:
℄ CONST. RATHMELL RD
P.I. = STA. 106+37.65
Δ = 02°51'46" LT
Dc = 00°39'00"
R = 8,814.74'
T = 220.25'
L = 440.41'
E = 2.75'
eMAX = NC

CURVE 3:
℄ CONST. RATHMELL ROAD
P.I. = STA. 110+78.07
Δ = 02°51'46" RT
Dc = 00°39'00"
R = 8,814.74'
T = 220.25'
L = 440.41'
E = 2.75'
eMAX = NC

CURVE 4:
DRIVE DW-1
P.I. = STA. 2+51.72
Δ = 64°08'47" LT
Dc = 28°38'52"
R = 200.00'
T = 125.33'
L = 223.91'
E = 36.02'
eMAX = NC

PLAN SPLIT INFORMATION

SPLIT #	CATEGORY	GROUP	PLAN SPLIT CODE	DESCRIPTION
1	NHS	PAVEMENT	04/NHS/04	IMPROVEMENTS TO THE INTERSECTION OF US-23 AT RATHMELL RD.
2	NHS	PAVEMENT	05/NHS/05	MILL AND FILL US-23 SB FROM STA. 525+60.40 TO STA 546+47.41

NHS=NATIONAL HIGHWAY SYSTEM

HORIZONTAL SCALE IN FEET
0 100 200 400

SCHEMATIC PLAN

FRA-23-4.19 PART 2 (PID 92616)

MODEL: GB001 (Sheet) PAPERSIZE: 17x11 (in.) DATE: 2022-12-09 TIME: 9:30:03 AM USER: william.croxton
\\10.120.112.5\bishare\122592_SafetyDesign\7.0_Production\7.3_Design\04_Civil\Worksets\110380_FRA-23\400-Engineering\Roadway\Sheets\110380_GB001.dgn

DESIGN AGENCY
IBI

DESIGNER WLC
REVIEWER KMK 12-01-22
PROJECT ID 92616
SHEET P.3 TOTAL 170

EXISTING LEGEND: (SEE NOTE #2)

(A#) (20'± WIDTH) NB TRAVELED WAY
A1-(8.5"±) ASPHALT CONCRETE (2"± ORIGINAL + 6.5"± SHOWN PER 2013 PLANS)
A2-(1"± ORIGINAL) ROAD MIX SURFACE COURSE±
A3-(3.5"± ORIGINAL) BRICK
A4-(5.5"± ORIGINAL) PLAIN CONCRETE
A5-(12"±X4"± ORIGINAL INTEGRAL CONCRETE CURB (WITH A1 ON TOP)

(B#) (2'± WIDTH) NB INSIDE/OUTSIDE SHOULDER
B1-(8.5"±) ASPHALT CONCRETE (2"± ORIGINAL + 6.5"± SHOWN PER 2013 PLANS)
B2-(3"± ORIGINAL) BITUMINOUS BASE COURSE
B3-(1.5"± ORIGINAL) INSULATION COURSE

(C#) (24'± WIDTH) SB TRAVELED WAY
C1-(6"± SHOWN PER 2013 PLANS) ASPHALT CONCRETE
C2-(9"± PER 1954 PLANS) REINFORCED CONCRETE PAVEMENT
C3-(4"± PER 1954 PLANS) SUBBASE

(D#) (4'± ORIGINAL WIDTH) SB OUTSIDE SHOULDER
D1-(6"± SHOWN PER 2013 PLANS) ASPHALT CONCRETE
D2-(6"± PER 1954 PLANS) STABILIZED CRUSHED AGGREGATE SHOULDER

(E#) (2'± WIDTH) NB INSIDE SHOULDER
(8'± WIDTH) NB OUTSIDE SHOULDER
(2'± WIDTH) SB INSIDE SHOULDER
(5'± WIDTH) SB OUTSIDE SHOULDER
E1-(6"± PER 1986 PLANS) ASPHALT CONCRETE
E2-(6"± PER 1986 PLANS) AGGREGATE BASE

(F#) F1-(1.25"± PER 1989 PLANS) ASPHALT SURFACE COURSE
F2-(1.75"± PER 1989 PLANS) ASPHALT INTERMEDIATE COURSE
F3-(8" PER 1989 PLANS) ASPHALT CONCRETE BASE
F4-(8" PER 1989 PLANS) AGGREGATE BASE

(G) (2'± WIDTH) ALONG SHOULDERS
(2"± AVG. DEPTH) COMPACTED AGGREGATE (PER 2013 PLANS)

(H) 6" DEEP UNDERDRAINS (50" TYP) (PER 1954 PLANS)
(STA 495+00 TO STA 545+00, STA 547+00 TO STA 570+50
NOTE: AGGREGATE DRAINS BETWEEN STA 545+00 TO STA 547+00

(I) SPECIAL 8" COMBINED CURB AND GUTTER (2'± WIDTH) (PER 1989 PLANS)

(J) 4" BASE PIPE UNDERDRAINS (<18" TYP) (PER 1989 PLANS)

(K) SHOULDER RUMBLE STRIPS (16" WIDE PER 2013 PLANS)

(L) 8"± TO 14"± ASPHALT CONCRETE

(M) 6"± TO 8"± AGGREGATE BASE

(N) GUARDRAIL

(O) UPDATED DMS LOCATION ON EX. DMS SUPPORT CONSTRUCTED PER
FRA-DMS REPLACEMENT FY20 PROJECT IN 2020 (PID 109467) (US-23 NB DMS)

PROPOSED LEGEND:

(1) US-23 - (1.50") ITEM 442 - ASPHALT CONCRETE SURFACE COURSE, 12.5MM, TYPE A, (446), PG70-22M
CR-121 - (1.25") ITEM 441 - ASPHALT CONCRETE SURFACE COURSE, TYPE 1, (446), PG70-22M

(2A) US-23 - (1.75") ITEM 442 - ASPHALT CONCRETE INTERMEDIATE COURSE, 12.5MM, TYPE A, (446)
CR-121 - (1.75") ITEM 441 - ASPHALT CONCRETE INTERMEDIATE COURSE, TYPE 2, (446)

(2B) US-23 - (1.75") ITEM 442 - ASPHALT CONCRETE INTERMEDIATE COURSE, 12.5MM, TYPE A, (448), PG 64-28, AS PER PLAN

(3) US-23 - (9") ITEM 301 - ASPHALT CONCRETE BASE, PG64-22, (449)
(PLACED IN TWO LIFTS)
CR-121 - (9") ITEM 301 - ASPHALT CONCRETE BASE, PG64-22, (449)
(PLACED IN TWO LIFTS)

(4) (VAR., 6" MIN) ITEM 304 - AGGREGATE BASE
(SEE NOTE #4)

(5) ITEM 407 - NON-TRACKING TACK COAT
(PLACED IN BETWEEN LIFT OF ASPHALT)
(APPLIED AT 0.055 GAL/SY AVG FOR NEW PAVEMENT
(APPLIED AT 0.085 GAL/SY AVG FOR PLANED ASPHALT SURFACE)

(6A) SUBGRADE STABILIZATION (FOR US-23 AND DW-1):
UNSTABLE SUBGRADE - CHEMICALLY STABILIZED SUBGRADE
ITEM 204 - PROOF ROLLING
(APPLIED AT 1 HR/2000 SY FOR RECONSTRUCTION)
(APPLIED AT 1 HR/3000 SY FOR NEW CONSTRUCTION)
ITEM 206 - CEMENT
(APPLIED AT 5% PER 115 LB/CF SOIL)
ITEM 206 - CEMENT STABILIZED SUBGRADE, 12-INCHES DEEP
ITEM 206 - CURING COAT
ITEM 206 - MIXTURE DESIGN FOR CHEMICALLY STABILIZED SOILS
(SPECIFIED ON PROJECTS > 40,000 SY, SEE SUPPLEMENT 1120

(6B) SUBGRADE STABILIZATION (FOR CR-121)
UNSTABLE SUBGRADE - EXCAVATE AND REPLACE
ITEM 204 - SUBGRADE COMPACTION
ITEM 204 - PROOF ROLLING
(APPLIED AT 1 HR/2000 SY FOR RECONSTRUCTION)
(APPLIED AT 1 HR/3000 SY FOR NEW CONSTRUCTION)
(12") ITEM 204 - EXCAVATION OF SUBGRADE
(12") ITEM 204 - GRANULAR MATERIAL, TYPE B
ITEM 204 - GEOTEXTILE FABRIC

(7) ITEM 254 - PAVEMENT PLANING, ASPHALT CONCRETE (1" MIN, 3.25" MAX)

(8) ITEM 202 - PAVEMENT REMOVED (SEE NOTE #3)

(9) ITEM 605 - 4" SHALLOW PIPE UNDERDRAINS WITH GEOTEXTILE FABRIC (VAR. 18" TO 30" DEPTH)

(10) ITEM 605 - 4" BASE PIPE UNDERDRAINS WITH GEOTEXTILE FABRIC (18" DEPTH)

(11) ITEM 606 - GUARDRAIL, TYPE MGS

(12) ITEM 606 - GUARDRAIL, BARRIER DESIGN, TYPE MGS

(13) ITEM 609 - CURB, TYPE 4-C

(14) ITEM 618 - RUMBLE STRIPS, TRANSVERSE (ASPHALT CONCRETE)
ITEM 618 - RUMBLE STRIPS, SHOULDER (ASPHALT CONCRETE)

(15) ITEM 659 - SEEDING AND MULCHING, CLASS 2

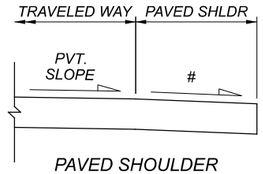

PAVED SHOULDER (ANY WIDTH) CROSS SLOPE DETAILS FOR LOW SIDE OF SUPERELEVATED SECTION

= 0.040 OR SUPERELEVATION RATE, WHICHEVER IS GREATER

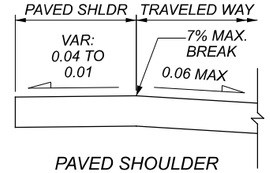

PAVED SHOULDER (4' TO 10' WIDTH) CROSS SLOPE DETAILS FOR HIGH SIDE OF SUPERELEVATED SECTION

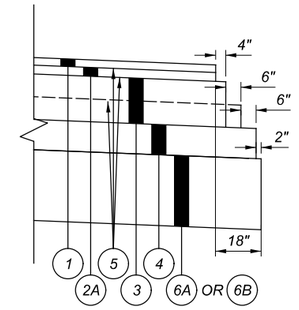

PAVED SHOULDER EDGE COURSE DETAIL FOR US-23 & CR-121

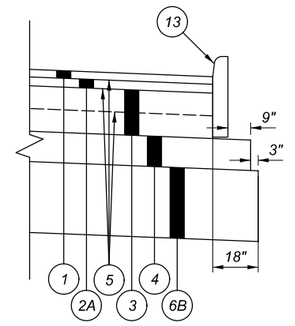

PAVED SHOULDER EDGE COURSE DETAIL WITH CURB, TYPE 4-C FOR CR-121

TYPICAL SECTION NOTES:

1. SEE CROSS SECTIONS FOR DETAILED GRADING AND SIDESLOPE CONDITIONS, INCLUDING DITCH SECTIONS.

2. THE EXISTING PAVEMENT BUILDUP (COMPOSITION AND DEPTHS) ARE BASED ON EXISTING PLAN INFORMATION AND AVERAGE RESULTS OF BORING LOCATIONS PER REPORT OF ROADWAY EXPLORATION DATED 11-18-2020 BY STANTEC.

3. ALL SAWCUTS AND THE REMOVAL LIMITS AND THE REMOVAL OF ALL EXISTING PAVEMENT LAYERS, INCLUDING ASPHALT, CONCRETE, BRICK, FROM THE SURFACE TO THE BOTTOM OF PAVEMENT COURSES AT LOCATIONS SHOWN IN THE PLANS SHALL BE PAID UNDER ITEM 202 - PAVEMENT REMOVED. THE REMOVAL OF ANY UNBOUND AGGREGATE OR NATURAL SOIL MATERIAL IS NOT INCLUDED AND SHALL BE PAID UNDER ITEM 203 - EXCAVATION.

4. FOR FULL DEPTH ASPHALT PAVEMENT WIDENING, THE EXISTING PAVEMENT EDGES SHALL BE SAW CUT PER ODOT C&MS 202.05 AT LOCATIONS SHOWN IN THE ROADWAY PLANS OR AT SOUND PAVEMENT, AS DIRECTED BY THE ENGINEER. THE EXISTING PAVEMENT AND FULL DEPTH ASPHALT WIDENING SECTION SHOULD MEET AT THE SAME SUBGRADE ELEVATION. THE BASE UNDER THE WIDENING SECTION SHOULD BE THICKENED TO MATCH THE ADJACENT SUBGRADE OF EXISTING MAINLINE PAVEMENT AND PROPOSED DRIVEWAY PAVEMENT.

5. THE CONSTRUCTION LIMITS SHOWN IN ROADWAY PLANS ARE DEFINED BY 2' OFFSET FROM EDGE OF PROPOSED GRADING DUE TO ROUNDING.

CROSS REFERENCES:

SEE SHEET P.4 FOR TYPICAL SECTION NOTES
SEE SHEET P.4 FOR PAVED SHOULDER DETAILS
SEE SHEET P.4 FOR GEOTECHNICAL BORING INFO
SEE SHEET P.5-7 FOR US-23 TYPICAL SECTIONS
SEE SHEET P.8 FOR CR-121 TYPICAL SECTIONS
SEE SHEET P.9 FOR ROADSIDE GRADING DETAILS
SEE SHEET P.10 FOR END CONDITIONS
SEE SHEET P.95 FOR INTERSECTION DETAILS - US-23 & CR-121
SEE SHEET P.96 FOR DRIVE DETAILS
SEE SHEET P.97-106 FOR DRAINAGE DETAILS

GEOTECHNICAL BORING INFORMATION

BORING ID	STATION	OFFSET	ROADWAY	LOCATION	EXISTING PAVEMENT COMPOSITION
B-001-0-20	525+42.77	19.88' RT	US-23	NB INSIDE THRU LANE	13" ASPHALT, 3.5" BRICK
B-002-0-20	525+96.25	34.29' LT	US-23	SB OUTSIDE THRU LANE	6" ASPHALT, 8" CONCRETE
B-003-0-20	528+46.43	43.86' RT	US-23	NB OUTSIDE SHOULDER	9.5" ASPHALT
B-004-0-20	528+82.42	14.83' LT	US-23	SB INSIDE SHOULDER	3.25" ASPHALT
B-005-0-20	531+06.81	44.27' RT	US-23	NB OUTSIDE SHOULDER	7" ASPHALT
B-006-0-20	531+56.69	43.16' LT	US-23	SB OUTSIDE SHOULDER	6.75" ASPHALT
B-007-0-20	532+71.37	1.99' LT	US-23	NB LT. TURN LANE	13" ASPHALT
B-008-0-20	533+46.90	46.05' RT	US-23	NB RT. TURN LANE	12" ASPHALT
B-008-1-20	107+84.65	21.21' LT	CR-121	WB LANE	9.75" ASPHALT
B-008-2-20	0+95.94	22.28' RT	QUARRY DR.	WB LANE	15.5" ASPHALT
B-009-0-20	536+11.09	6.63' RT	US-23	SB LT. TURN LANE	13" ASPHALT
B-010-0-20	536+02.26	37.02' RT	US-23	NB OUTSIDE THRU LANE	12.25" ASPHALT, 4.5" CONCRETE
B-011-0-20	537+16.32	45.57' LT	US-23	SB RT. TURN LANE	13" ASPHALT
B-012-0-20	539+00.04	46.81' RT	US-23	NB OUTSIDE SHOULDER	6" ASPHALT
B-013-0-20	540+12.56	19.35' LT	US-23	SB INSIDE LANE	5.25" ASPHALT, 9.5" CONCRETE
B-014-0-20	542+05.06	19.97' RT	US-23	NB INSIDE LANE	13" ASPHALT, 3.5" BRICK
B-015-0-20	543+06.58	15.79' LT	US-23	SB INSIDE LANE	6" ASPHALT, 9" CONCRETE
B-016-0-20	545+13.97	43.34' RT	US-23	NB OUTSIDE SHOULDER	7" ASPHALT
B-017-0-20	546+23.77	41.51' LT	US-23	NB OUTSIDE SHOULDER	7" ASPHALT
B-018-0-20	550+89.29	43.86' RT	US-23	NB OUTSIDE SHOULDER	7" ASPHALT
B-019-0-20	554+09.68	18.74' RT	US-23	NB INSIDE LANE	18" ASPHALT
B-020-0-20	556+15.66	43.83' RT	US-23	NB OUTSIDE SHOULDER	N/A - SOIL

TYPICAL SECTIONS (1 OF 7)

DESIGN AGENCY
IBI

DESIGNER WLC
REVIEWER KMK 12-01-22
PROJECT ID 92616
SHEET P.4 TOTAL 170

FRA-23-4.19 PART 2 (PID 92616)

MODEL: Sheet PAPERSIZE: 17x11 (in.) DATE: 2023-05-04 TIME: 4:20:45 PM USER: william.croxton
\\10.120.112.5\bkshare\122592_SafetyDesign\7.0_Production\7.3_Design\04_CivilWorksets\110380_FRA-23\400-Engineering\Roadway\Sheets\110380_GY001.dgn

A 2'± (NDC 4'): STA 525+60.40 TO STA 528+00.40
VARIES 2'± (NDC 4') TO 4' : STA 528+00.40 TO STA 528+50.40 (MATCHLINE TYPICAL #2A, LT)
VARIES 4' TO 2'± (NDC 4'): STA 542+28.28 (MATCHLINE TYPICAL #2B, RT) TO STA 542+78.28
2'± (NDC 4'): STA 542+78.28 TO STA STA 546+47.41 (MATCHLINE PART 1)

B VARIES 2' TO 4' : STA 525+60.40 TO STA 525+70.40
4' : STA 526+70.40 TO STA 528+50.40 (MATCHLINE TYPICAL #2A, LT)
4' : STA 542+28.28 (MATCHLINE TYPICAL #2B, RT) TO STA 546+47.41 (MATCHLINE PART 1)

C VARIES 0' TO 12' : STA 525+60.40 TO STA 526+10.40
12' : STA 526+10.40 TO STA 529+35.40 (MATCHLINE TYPICAL #2A, RT)
12' : STA 534+51.11 (INTERSECTION CR-121) TO STA 546+47.41 (MATCHLINE PART 1)

D VARIES 8' TO 10' : STA 525+60.40 TO STA 526+10.40
10' : STA 526+10.40 TO STA 529+35.40 (MATCHLINE TYPICAL #2A, RT)
10' : STA 535+17.27 (MATCHLINE INTERSECTION CR-121) TO STA 546+47.41 (MATCHLINE PART 1)

Y STA 528+50.40 (MATCHLINE TYPICAL #2A, LT) TO STA 534+51.11 (INTERSECTION CR-121)
STA 529+35.40 (MATCHLINE TYPICAL #2A, RT) TO STA 534+51.11 (INTERSECTION CR-121)

Z STA 534+51.11 (INTERSECTION CR-121) TO STA 539+93.28 (MATCHLINE TYPICAL #2B, LT)
STA 534+51.11 (INTERSECTION CR-121) TO STA 542+28.28 (MATCHLINE TYPICAL #2B, RT)

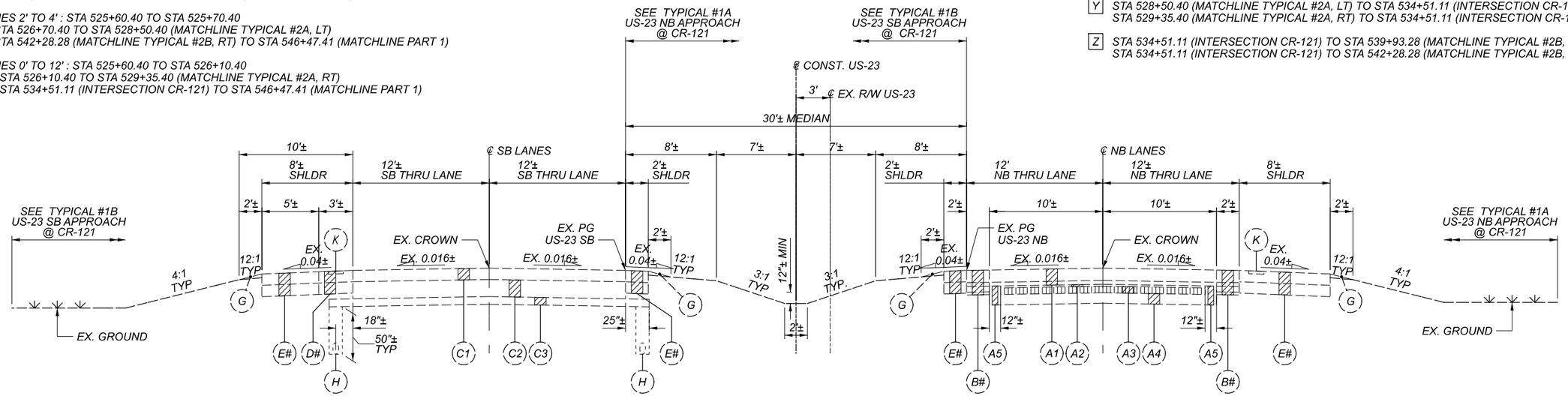

TYPICAL #1
EXISTING NORMAL SECTION - US-23 (SOUTH HIGH STREET)
SB LANES: STA 525+60.40 TO STA 546+47.41 (MATCHLINE PART 1)
NB LANES: STA 525+60.40 TO STA 546+47.41 (MATCHLINE PART 1)

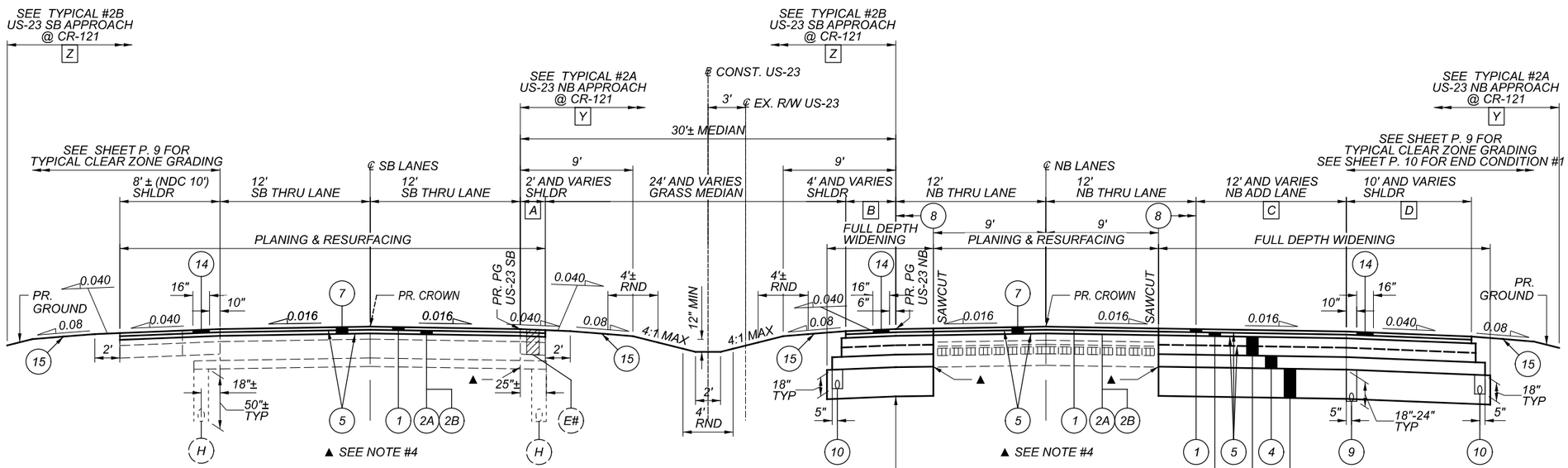

TYPICAL #2
PROPOSED NORMAL WIDENING & RECONSTRUCTION SECTION - US-23 (SOUTH HIGH STREET)
SB LANES: STA 525+60.40 TO STA 546+47.41 (MATCHLINE PART 1)
NB LANES: STA 525+60.40 TO STA 546+47.41 (MATCHLINE PART 1)

CROSS REFERENCES:

SEE SHEET P.4 FOR TYPICAL SECTION NOTES
SEE SHEET P.4 FOR PAVED SHOULDER DETAILS
SEE SHEET P.4 FOR GEOTECHNICAL BORING INFO
SEE SHEET P.5-7 FOR US-23 TYPICAL SECTIONS
SEE SHEET P.8 FOR CR-121 TYPICAL SECTIONS
SEE SHEET P.9 FOR ROADSIDE GRADING DETAILS
SEE SHEET P.10 FOR END CONDITIONS
SEE SHEET P.95 FOR INTERSECTION DETAILS - US-23 & CR-121
SEE SHEET P.96 FOR DRIVE DETAILS
SEE SHEET P.97-106 FOR DRAINAGE DETAILS

TYPICAL SECTIONS (2 OF 7)

FRA-23-4.19 PART 2 (PID 92616)

MODEL: Sheet PAPERSIZE: 17x11 (in.) DATE: 2023-05-04 TIME: 4:20:48 PM USER: william.croxton
\\10.120.112.5\bbshare\122592_SafetyDesign\7.0_Production\7.3_Design\04_CivilWorksets\110380_FRA-23\400-Engineering\RoadwaySheets\110380_GY002.dgn

DESIGN AGENCY: IBI
DESIGNER: WLC
REVIEWER: KMK 12-01-22
PROJECT ID: 92616
SHEET: P.5 TOTAL: 170

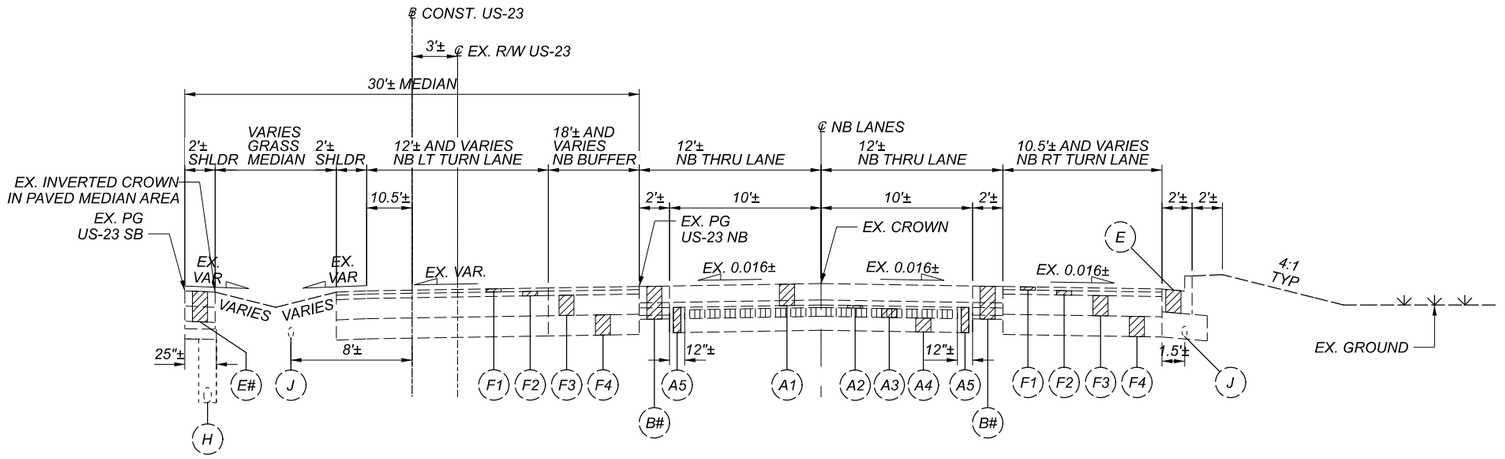

TYPICAL #1A
US-23 NB APPROACH @ CR-121

A 4' : STA 528+50.40 (MATCHLINE TYPICAL #2A, LT) TO STA 531+83.02
VARIES 4' TO 6' : STA 531+83.02 TO STA 531+85.01 (END GRASS MEDIAN)
VARIES 6' TO 3': STA 531+85.01 (END GRASS MEDIAN) TO STA 532+31.58
3' : STA 532+31.58 TO STA 533+75.40
0' MAINLINE RESURFACING APPLIES: STA 533+75.40 TO STA 534+51.11 (INTERSECTION CR-121)

B VARIES 22' TO 10' : STA 528+50.40 (MATCHLINE TYPICAL #2A, LT) TO STA 529+00.40
10' : STA 529+00.40 TO STA 531+35.40
VARIES 10' TO 0' : STA 531+35.40 TO STA 531+85.01 (END GRASS MEDIAN)

C 4' : STA 528+50.40 (MATCHLINE TYPICAL #2A, LT) TO STA 531+83.02
VARIES 4' TO 6' : STA 531+83.02 TO STA 531+85.01 (END GRASS MEDIAN)
VARIES 6' TO 3' : STA 531+85.01 (END GRASS MEDIAN) TO STA 532+31.58
3' : STA 532+31.58 TO STA 533+75.40
0' MAINLINE RESURFACING APPLIES: STA 533+75.40 TO STA 534+51.11 (INTERSECTION CR-121)

D VARIES 0' TO 12' : STA 528+49.65 (MATCHLINE TYPICAL #2A, LT) TO STA 529+00.40
12' : STA 529+00.40 TO STA 534+49.07 (INTERSECTION CR-121)

E VARIES 0' TO 12' : STA 531+34.65 TO STA 532+30.65
12' : STA 532+30.65 TO STA 534+49.07 (INTERSECTION CR-121)

F VARIES 0' TO 12' : STA 531+00.07 (MATCHLINE TYPICAL #2A, RT) TO STA 531+50.07
12' : STA 531+50.07 TO STA 533+48.00 (MATCHLINE INTERSECTION CR-121)

G 10' : STA 531+00.07 TO STA 533+48.00 (MATCHLINE INTERSECTION CR-121)

H SAWCUT, LT

I SAWCUT, RT

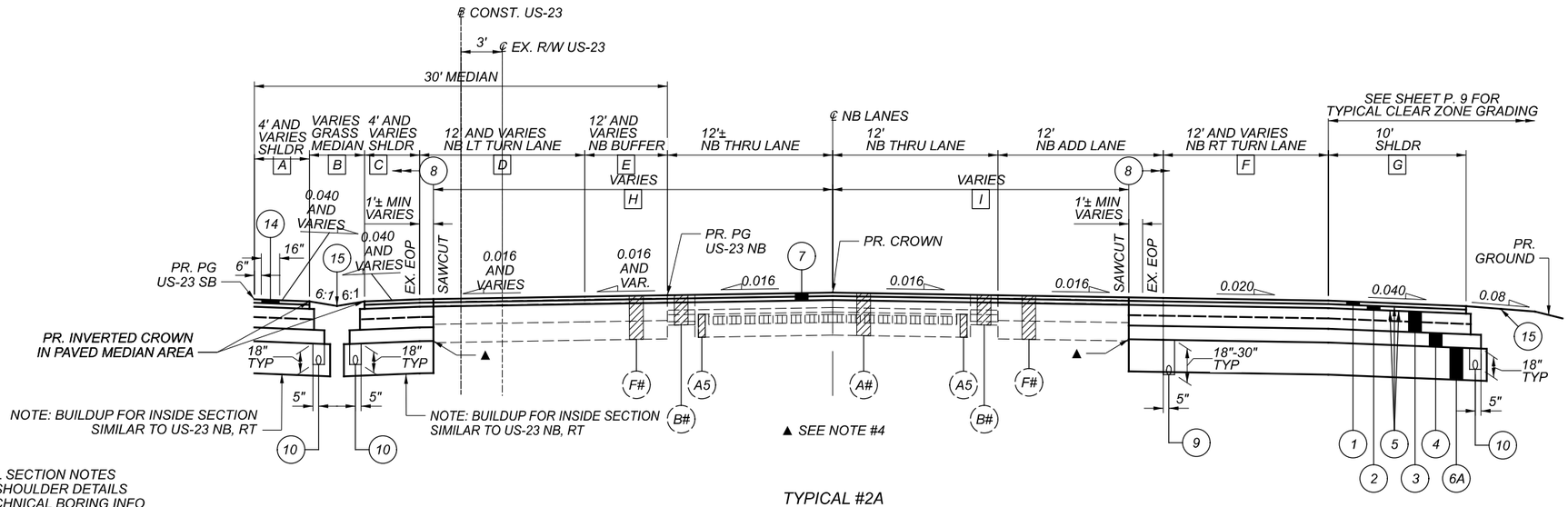

TYPICAL #2A
US-23 NB APPROACH @ CR-121
STA 528+50.40 (MATCHLINE TYPICAL #2A, LT) TO STA 534+51.11 (INTERSECTION CR-121)
STA 529+35.40 (MATCHLINE TYPICAL #2A, RT) TO STA 534+51.11 (INTERSECTION CR-121)

CROSS REFERENCES:

SEE SHEET P.4 FOR TYPICAL SECTION NOTES
SEE SHEET P.4 FOR PAVED SHOULDER DETAILS
SEE SHEET P.4 FOR GEOTECHNICAL BORING INFO
SEE SHEET P.5-7 FOR US-23 TYPICAL SECTIONS
SEE SHEET P.8 FOR CR-121 TYPICAL SECTIONS
SEE SHEET P.9 FOR ROADSIDE GRADING DETAILS
SEE SHEET P.10 FOR END CONDITIONS
SEE SHEET P.95 FOR INTERSECTION DETAILS - US-23 & CR-121
SEE SHEET P.96 FOR DRIVE DETAILS
SEE SHEET P.97-106 FOR DRAINAGE DETAILS

TYPICAL SECTIONS (3 OF 7)

DESIGN AGENCY
IBI

DESIGNER WLC
REVIEWER KMK 12-01-22
PROJECT ID 92616
SHEET P.6 TOTAL 170

FRA-23-4.19 PART 2 (PID 92616)

MODEL: Sheet PAPERSIZE: 17x11 (in.) DATE: 2023-05-04 TIME: 4:43:14 PM USER: william.croxton
\\10.120.112.5\bbshare\122592_SafetyDesign\7.0_Production\7.3_Design\04_Civil\Worksets\1103B0_FRA-23\400-Engineering\Roadway\Sheets\1103B0_GY003.dgn

A 0' DW-1 APPLIES: STA 534+51.11 TO STA 535+53.40 (MATCHLINE INTERSECTION DW-1)
8'±: STA 535+53.40 (MATCHLINE INTERSECTION DW-1) TO STA 539+93.29

B 12' : STA 535+53.40 (MATCHLINE INTERSECTION CR-121) TO STA 539+32.98
VARIES 12' TO 0' : STA 539+32.98 TO STA 539+82.99 (MATCHLINE TYPICAL #2B, LT)

C 12' : STA 534+49.07 (INTERSECTION CR-121) TO STA 537+48.03
VARIES 12' TO 0' : STA 537+48.03 TO STA 538+44.03

D 12' : STA 534+49.07 (INTERSECTION CR-121) TO STA 540+79.03
VARIES 12' TO 0' : STA 540+79.03 TO STA 541+29.03 (MATCHLINE TYPICAL #2B, RT)

E VARIES 0' TO 6' : STA 537+48.03 TO STA 537+96.41 (BEGIN GRASS MEDIAN)
4' : STA 537+96.41 (BEGIN GRASS MEDIAN) TO STA 541+29.03 (MATCHLINE TYPICAL #2B, RT)

F VARIES 4' TO 10' : STA 537+96.41 (BEGIN GRASS MEDIAN) TO STA 538+44.03
10' : STA 538+44.03 TO STA 540+48.28
VARIES 10' TO 22' : STA 540+48.28 TO STA 541+29.03 (MATCHLINE TYPICAL #2B, RT)

G 6' : STA 534+49.07 (INTERSECTION CR-121) TO STA 537+96.41 (BEGIN GRASS MEDIAN)
4' : STA 537+96.41 (BEGIN GRASS MEDIAN) TO STA 541+29.03 (MATCHLINE TYPICAL #2B, RT)

H SAWCUT, RT

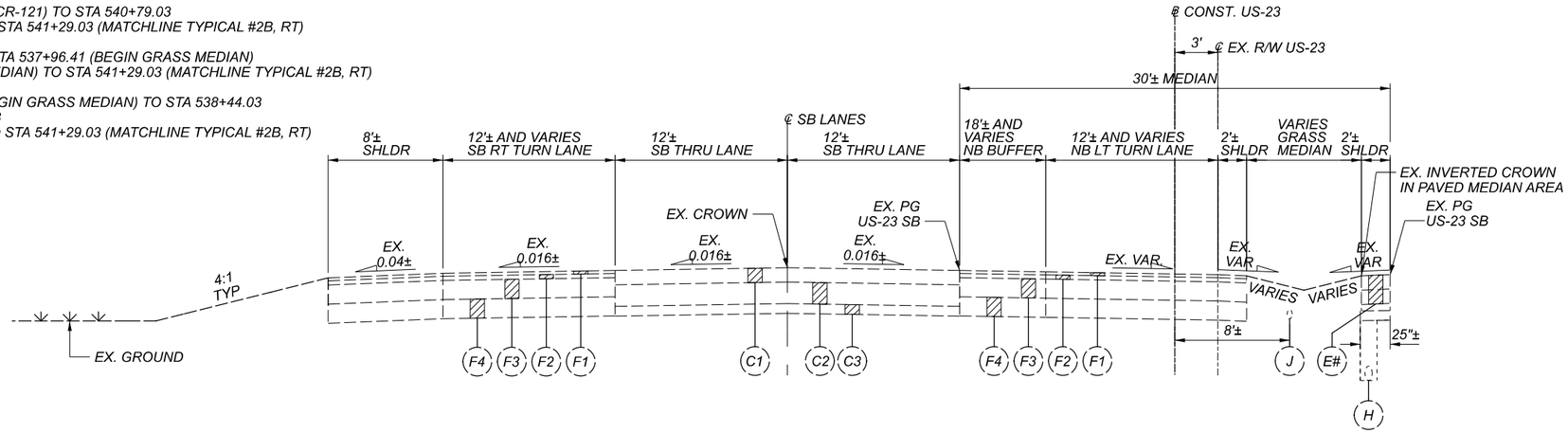

TYPICAL #1B
US-23 SB APPROACH @ CR-121

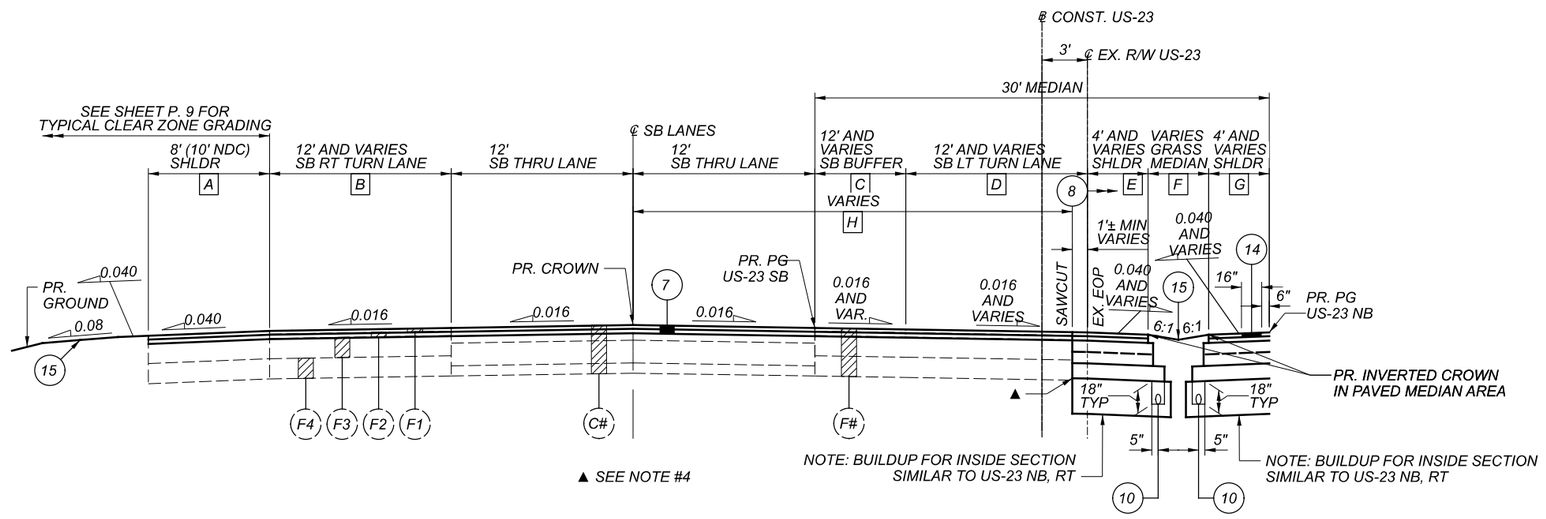

TYPICAL #2B
US-23 SB APPROACH @ CR-121
STA 534+51.11 (INTERSECTION CR-121) TO STA 539+93.28 (MATCHLINE TYPICAL #2B, LT)
STA 534+51.11 (INTERSECTION CR-121) TO STA 542+28.28 (MATCHLINE TYPICAL #2B, RT)

CROSS REFERENCES:

SEE SHEET P.4 FOR TYPICAL SECTION NOTES
SEE SHEET P.4 FOR PAVED SHOULDER DETAILS
SEE SHEET P.4 FOR GEOTECHNICAL BORING INFO
SEE SHEET P.5-7 FOR US-23 TYPICAL SECTIONS
SEE SHEET P.8 FOR CR-121 TYPICAL SECTIONS
SEE SHEET P.9 FOR ROADSIDE GRADING DETAILS
SEE SHEET P.10 FOR END CONDITIONS
SEE SHEET P.95 FOR INTERSECTION DETAILS - US-23 & CR-121
SEE SHEET P.96 FOR DRIVE DETAILS
SEE SHEET P.97-106 FOR DRAINAGE DETAILS

TYPICAL SECTIONS (4 OF 7)

FRA-23-4.19 PART 2 (PID 92616)

MODEL: Sheet PAPERSIZE: 17x11 (in.) DATE: 2023-05-04 TIME: 4:20:53 PM USER: william.croxton
\\10.120.112.5\bbshare\122592_SafetyDesign\7.0_Production\7.3_Design\04_CivilWorksets\110380_FRA-23\400-Engineering\Roadway\Sheets\110380_GY004.dgn

DESIGN AGENCY
IBI

DESIGNER WLC
REVIEWER KMK 12-01-22
PROJECT ID 92616
SHEET P.7 TOTAL 170

X1 11'±: CR-121 WB APPROACH @ US-23

X2 VARIES 11'± TO 0': CR-121 WB APPROACH @ US-23

X3 3'±: CR-121 WB APPROACH @ US-23

A VARIES 0' TO 4' : STA 110+32.67 TO STA 112+98.23 (MATCHLINE PROJECT CYPRUS)

B 18' : STA 100+51.64 (MATCHLINE INTERSECTION US-23) TO STA 104+17.40
VARIES 18' TO 0' : STA 104+17.40 TO STA 110+32.67

C VARIES 10' TO 4' : STA 535+17.27 (MATCHLINE INTERSECTION US-23) TO STA 100+88.59
4' : STA 100+88.89 TO STA 112+98.23 (MATCHLINE PROJECT CYPRUS)

D 11' : STA 100+51.64 (MATCHLINE INTERSECTION US-23) TO STA 107+07.40
VARIES 11' TO 0' : STA 107+07.40 TO STA 107+57.40

E 11' : STA 100+51.64 (MATCHLINE INTERSECTION US-23) TO STA 112+98.23 (MATCHLINE PROJECT CYPRUS)

F 11' : STA 100+51.64 (MATCHLINE INTERSECTION US-23) TO STA 112+98.23 (MATCHLINE PROJECT CYPRUS)

G 17' : STA 100+51.64 (MATCHLINE INTERSECTION US-23) TO STA 101+32.62
VARIES 17' TO 11' : STA 101+32.62 TO STA 101+92.62
11' : STA 101+92.62 TO STA 112+98.23 (MATCHLINE PROJECT CYPRUS)

H VARIES 10' TO 4' : STA 533+51.04 (MATCHLINE INTERSECTION US-23) TO STA 101+32.62
4' : STA 101+32.62 TO STA 112+98.23 (MATCHLINE PROJECT CYPRUS)

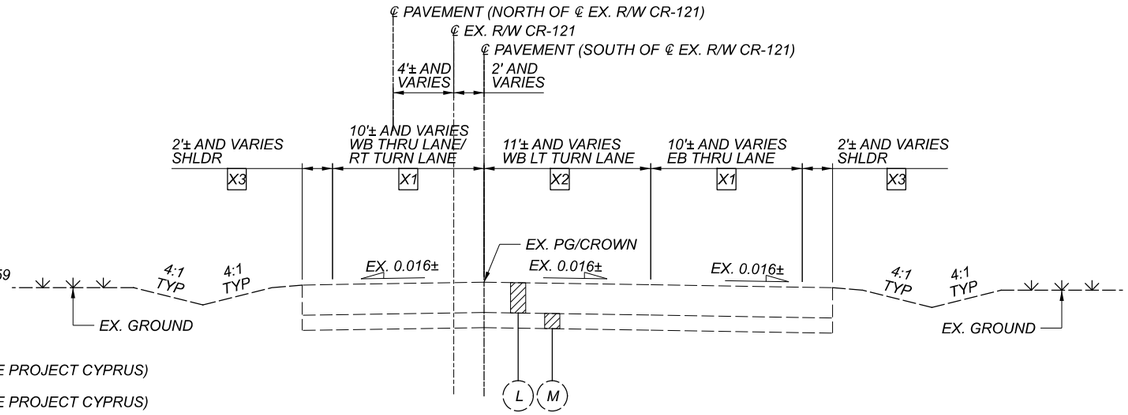

TYPICAL #5
EXISTING NORMAL SECTION - CR-121 (RATHMELL ROAD)
STA 99+99.82 (INTERSECTION US-23) TO STA 112+98.23 (MATCHLINE PROJECT CYPRUS)

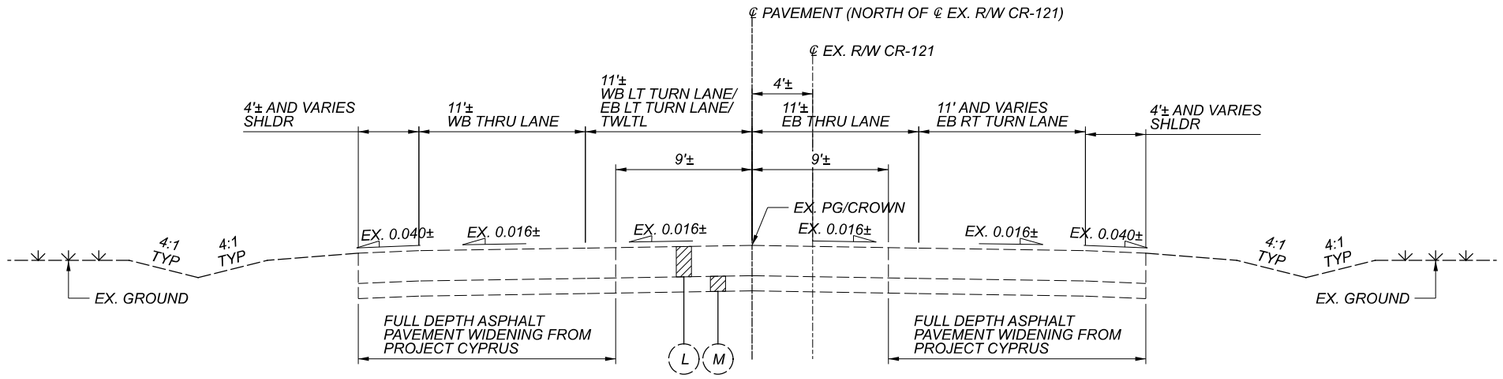

TYPICAL #6
(FUTURE) EXISTING NORMAL SECTION - CR-121 (RATHMELL ROAD)
STA 112+98.23 (MATCHLINE PROJECT CYPRUS) TO EAST

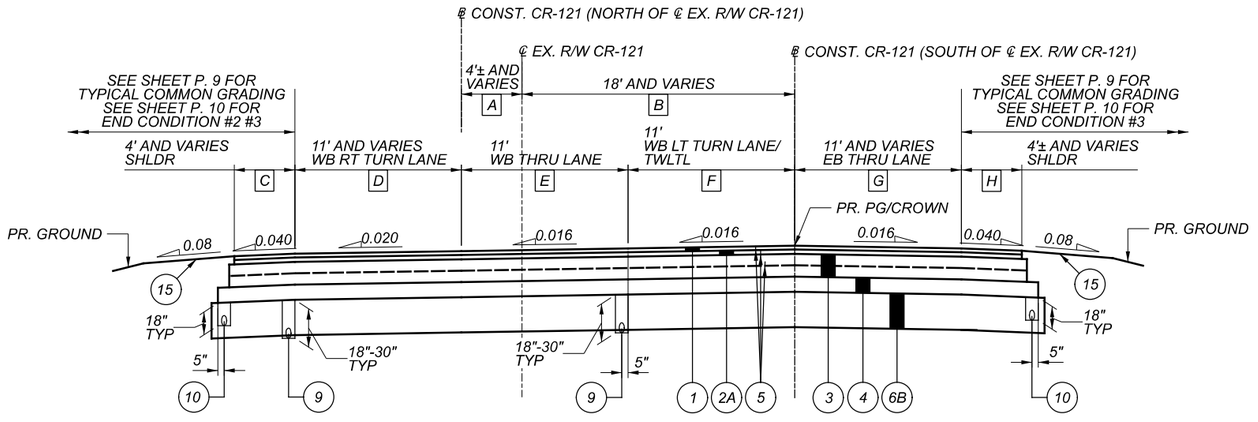

TYPICAL #7
PROPOSED NORMAL SECTION - CR-121 (RATHMELL ROAD)
STA 99+99.82 (INTERSECTION US-23) TO STA 112+98.23 (MATCHLINE PROJECT CYPRUS)

CROSS REFERENCES:

SEE SHEET P.4 FOR TYPICAL SECTION NOTES
SEE SHEET P.4 FOR PAVED SHOULDER DETAILS
SEE SHEET P.4 FOR GEOTECHNICAL BORING INFO
SEE SHEET P.5-7 FOR US-23 TYPICAL SECTIONS
SEE SHEET P.8 FOR CR-121 TYPICAL SECTIONS
SEE SHEET P.9 FOR ROADSIDE GRADING DETAILS
SEE SHEET P.10 FOR END CONDITIONS
SEE SHEET P.95 FOR INTERSECTION DETAILS - US-23 & CR-121
SEE SHEET P.96 FOR DRIVE DETAILS
SEE SHEET P.97-106 FOR DRAINAGE DETAILS

FRA-23-4.19 PART 2 (PID 92616)

MODEL: Sheet PAPERSIZE: 17x11 (in.) DATE: 2023-05-04 TIME: 4:20:55 PM USER: william.croxton
\\10.120.112.5\bkshare\122592_SafetyDesign\7.0_Production\7.3_Design\04_Civil\Worksets\110380_FRA-23\400-Engineering\Roadway\Sheets\110380_GY005.dgn

TYPICAL SECTIONS (5 OF 7)

DESIGN AGENCY
IBI

DESIGNER
WLC

REVIEWER
KMK 12-01-22

PROJECT ID
92616

SHEET P.8 TOTAL 170

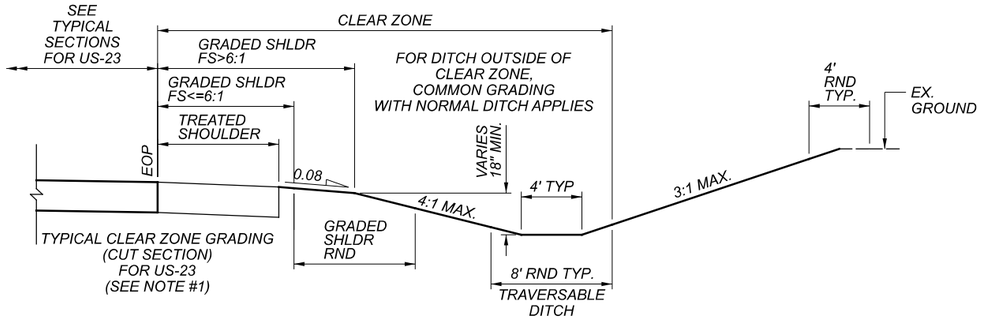

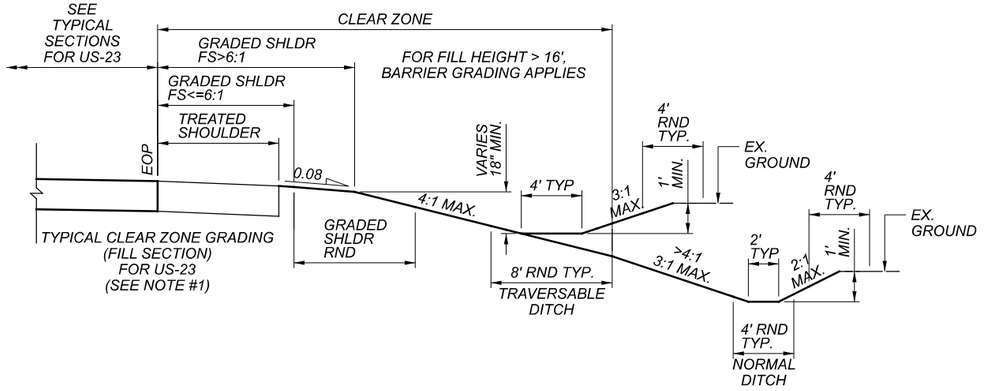

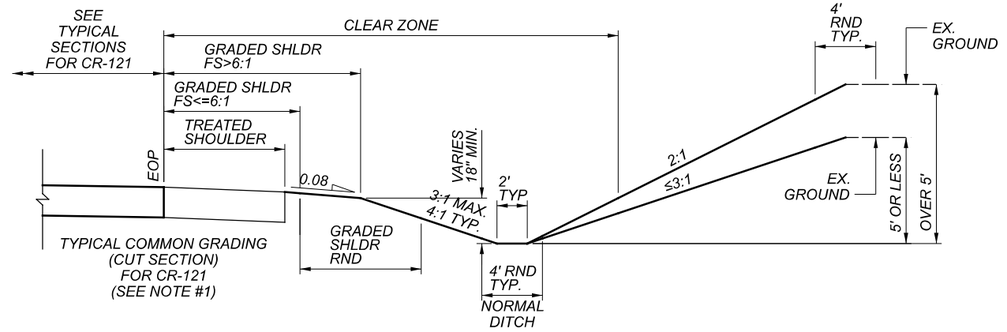

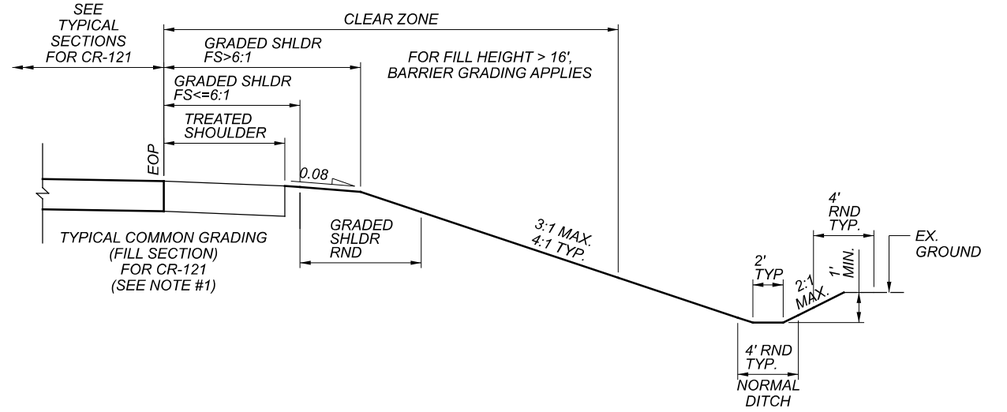

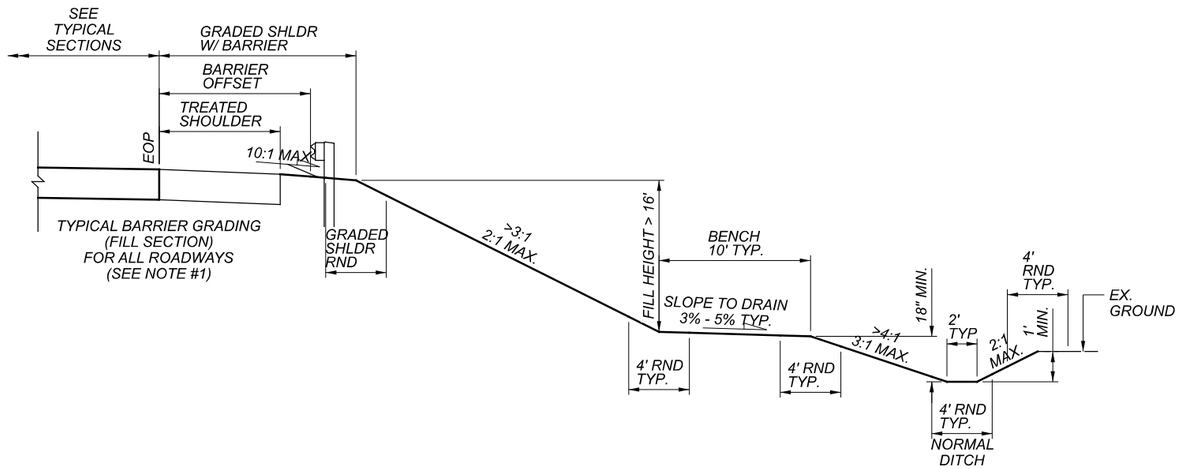

CROSS REFERENCES:

SEE SHEET P.4 FOR TYPICAL SECTION NOTES
SEE SHEET P.4 FOR PAVED SHOULDER DETAILS
SEE SHEET P.4 FOR GEOTECHNICAL BORING INFO
SEE SHEET P.5-7 FOR US-23 TYPICAL SECTIONS
SEE SHEET P.8 FOR CR-121 TYPICAL SECTIONS
SEE SHEET P.9 FOR ROADSIDE GRADING DETAILS
SEE SHEET P.10 FOR END CONDITIONS
SEE SHEET P.95 FOR INTERSECTION DETAILS - US-23 & CR-121
SEE SHEET P.96 FOR DRIVE DETAILS
SEE SHEET P.97-106 FOR DRAINAGE DETAILS

ROADSIDE GRADING NORMAL DESIGN CRITERIA

ROADWAY	DESIGN FUNCTIONAL CLASS	DESIGN YEAR ADT	GRADING TYPE	TREATED SHOULDER		GRADED SHOULDER						GUARDRAIL OFFSET	CLEAR ZONE WIDTH				
						WIDTH			ROUNDING								
				WIDTH	TYPE	W/O BARRIER		W/ BARRIER	W/O BARRIER		W/ BARRIER		FS <= 6:1	FS 6:1-4:1	BS <= 6:1	BS 6:1-4:1	BS > 4:1
						FS <= 6:1	FS > 6:1		FS <= 6:1	FS > 6:1							
US-23	* ARTERIAL	> 2000	CLEAR ZONE	10' RT.	PAVED	10' RT.	15' RT	15' RT	NONE	10' RT	4'	12' RT	23'	29'	23'	21'	17'
				4' MED		4' MED	9' MED	9' MED	NONE	10' MED	4'	6' MED					
CR-121	COLLECTOR	> 2000	COMMON	4'	PAVED	8'	10'	11'	NONE	8'	4'	8'	21'	27'	21'	17'	15'

FS=FORESLOPE, BS=BACKSLOPE

** THE MEDIAN AND RIGHT SHOULDER WIDTH CRITERIA FOR INTERSTATES, OTHER FREEWAYS, AND EXPRESSWAYS SHALL APPLY TO THE SHOULDERS OF DIVIDED ARTERIALS AND DIVIDED COLLECTORS*

TYPICAL SECTIONS (6 OF 7)

DESIGN AGENCY
IBI
DESIGNER WLC
REVIEWER KMK 12-01-22
PROJECT ID 92616
SHEET P.9 TOTAL 170

FRA-23-4.19 PART 2 (PID 92616)

MODEL: Sheet PAPERSIZE: 17x11 (in.) DATE: 2022-12-09 TIME: 9:30:21 AM USER: william.croxton
\\10.120.112.5\bishare\122592_SafetyDesign\7.0_Production\7.3_Design\04_Civil\Worksets\110380_FRA-23\400-Engineering\Roadway\Sheets\110380_GY006.dgn

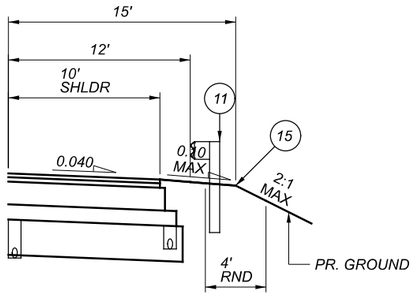

END CONDITION #1
GUARDRAIL SECTION, RT - US-23
STA 526+12.50 RT TO STA 529+73.74, RT
STA 540+00.00 RT TO STA 545+12.50, RT

A 2.5': STA 99+99.82 (MATCHLINE US-23) TO STA 101+00
VARIES 2.5' TO 5.5': STA 101+00 TO STA 101+50
5.5': STA 101+50 TO STA 102+00

B 0.10 (TO PVT): STA 99+99.82 (MATCHLINE US-23) TO STA 101+00
VARIES 0.10 (TO PVT) TO 0.080 (TO DITCH): STA 101+00 TO STA 101+50
0.080 (TO DITCH): STA 101+50 TO STA 102+00

C VARIES 16.6' TO 18.3' : STA 100+92.02 TO STA 101+28.28

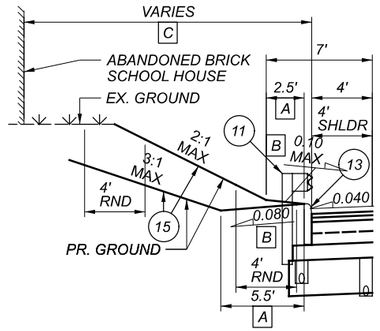

END CONDITION #2
TYPE 4-C CURB & GUARDRAIL SECTION WITH DITCH, LT - CR-121
STA 99+99.82 (MATCHLINE US-23) TO STA 102+00, LT

A 4': STA 102+00 TO STA 102+02.92
VARIES 4' TO 4.75': STA 102+02.92 TO STA 102+16.49
4.75': STA 102+16.49 TO STA 102+67.74

B VARIES 0' TO 2': STA 102+00 TO STA 102+50
2': STA 102+50 TO STA 102+67.74

C VARIES 0" TO 18": STA 102+00 TO STA 102+50
18": STA 102+50 TO STA 102+67.74

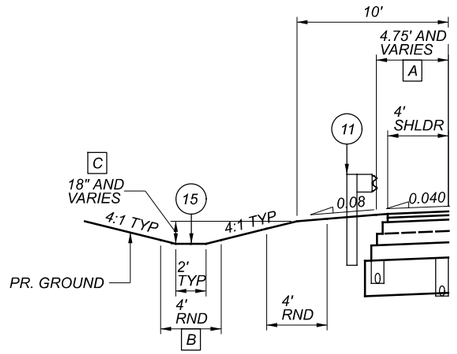

END CONDITION #3
GUARDRAIL SECTION WITH DITCH, LT - CR-121
STA 102+00 TO STA 102+67.74, LT

CROSS REFERENCES:

SEE SHEET P.4 FOR TYPICAL SECTION NOTES
SEE SHEET P.4 FOR PAVED SHOULDER DETAILS
SEE SHEET P.4 FOR GEOTECHNICAL BORING INFO
SEE SHEET P.5-7 FOR US-23 TYPICAL SECTIONS
SEE SHEET P.8 FOR CR-121 TYPICAL SECTIONS
SEE SHEET P.9 FOR ROADSIDE GRADING DETAILS
SEE SHEET P.10 FOR END CONDITIONS
SEE SHEET P.95 FOR INTERSECTION DETAILS - US-23 & CR-121
SEE SHEET P.96 FOR DRIVE DETAILS
SEE SHEET P.97-106 FOR DRAINAGE DETAILS

TYPICAL SECTIONS (7 OF 7)

DESIGN AGENCY
IBI

DESIGNER
WLC

REVIEWER
KMK 12-01-22

PROJECT ID
92616

SHEET P.10 | TOTAL 170

FRA-23-4.19 PART 2 (PID 92616)

MODEL: Sheet PAPERSIZE: 17x11 (in.) DATE: 2022-12-09 TIME: 9:30:23 AM USER: william.croxton
\\10.120.112.5\bbshare\122592_SafetyDesign\7.0_Production\7.3_Design\04_CivilWorksets\110380_FRA-23\400-Engineering\Roadway\Sheets\110380_GY007.dgn

GENERAL NOTES:

UTILITIES:

LISTED BELOW ARE ALL UTILITIES LOCATED WITHIN THE PROJECT CONSTRUCTION LIMITS TOGETHER WITH THEIR RESPECTIVE OWNERS:

UTILITIES	
ELECTRIC	
AEP OHIO (DISTR) 777 HOPEWELL DR. HEATH, OH 43056 PAUL PAXTON (740-348-5322) PTPAXTON@AEP.COM AEP SOLUTION CTR 800-277-2177	AEP OHIO (TRANS) 8600 SMITHS MILL ROAD NEW ALBANY, OH 43054 MICHAEL CARR (380-205-5072) MDCARR@AEP.COM TL_PUBLICPROJECTS@AEP.COM
GAS	
COLUMBIA GAS OF OHIO (DISTR.) 3550 JOHNNY APPLESEED CT. COLUMBUS, OH 43231 ROB CALDWELL (614-818-2104) RCALDWELL@NISOURCE.COM COLUMBIAGAS_COLUMBUSENG @NISOURCE.COM CUST SERV 800-344-4077 DAMAGE PREV 866-632-6243	NE OHIO NATURAL GAS CORP. 5640 LANCASTER-NEWARK RD. PLEASANTVILLE, OH 43148 QUEENIE FORTALEZA (740-400-4319) QFORTALEZA@EGAS.NET
OHIO DEPARTMENT OF TRANSPORTATION (ODOT)	
CENTRAL OFFICE ITS LAB (ITS) 1606 W. BROAD ST. COLUMBUS, OH 43223 (614-387-4113) CEN.ITS.LAB@DOT.OHIO.GOV	
TELECOM	
AT&T OHIO 111 N. 4TH ST., ROOM 82 COLUMBUS, OH 43215 NICOLE WILSON (614-483-1065) NW9565@ATT.COM REPAIR SERV 888-611-4466 DAMAGE PREV 937-296-3929	CHARTER COMMUNICATIONS 3760 INTERCHANGE RD. COLUMBUS, OH 43204 SAM LUTZ (614-481-5047) SAMUEL.LUTZ@CHARTER.COM DL-MOH-CONSTRUCTION-FRELO- TEAM@CHARTER.COM
CITY OF COLUMBUS (COC)	
COC-DoT (ITS) CABLE INTERCONNECT SECTION 1355 MCKINLEY AVE., BLDG C COLUMBUS, OH 43222 DAVE MCNALLY (614-645-7756) DWMCNALLY@COLUMBUS.GOV	COC-DPS (TRAFFIC SIGNALS) DIV. OF TRAFFIC MGMT 1820 E. 17TH AVE. COLUMBUS, OH 43219 ANDREW VOLENIK (614-645-7799) AMVOLENIK@COLUMBUS.GOV
COC-DPU (POWER-TRANS. & DISTR.) DIV. OF POWER 3500 INDIANOLA AVE. COLUMBUS, OH 43214 JAMES GROSS (614-645-2756) JMGROSS@COLUMBUS.GOV	COC-DPU (STREET LIGHTING) DIV. OF POWER 3500 INDIANOLA AVE. COLUMBUS, OH 43214 CHRIS VOGEL (614-645-6963) CVOGEL@COLUMBUS.GOV
COC-DPU (SANITARY, STORM) DIV. OF SEWERAGE & DRAINAGE 1250 FAIRWOOD AVE. COLUMBUS, OH 43206 SEWER MAINTENANCE MANAGER 614-645-7102	COC-DPU (WATER DISTR.) DIV. OF WATER 910 DUBLIN RD. COLUMBUS, OH 43215 (614-645-7788)
SAFETY =DEPARTMENT OF PUBLIC SAFETY DPS =DEPARTMENT OF PUBLIC SERVICES DPU = DEPARTMENT OF PUBLIC UTILITIES DoT = DEPARTMENT OF TECHNOLOGY	
OUPS DESIGN TICKET: A932303373-00A OUPS DIG TICKET: A927701148-00A,A927701157-00A, A927701173-00A	

THE LOCATION OF THE UNDERGROUND UTILITIES SHOWN ON THE PLANS ARE OBTAINED FROM THE OWNER OF THE UTILITIES AS REQUIRED BY SECTION 153.64 O.R.C.

COLUMBIA GAS OF OHIO - DISTR. (CGO):

COLUMBIA GAS OF OHIO (DISTR.) (CGO) HAS AN EXISTING 8" M.P. GAS LINE SITUATED WITHIN AN EXISTING 20' UTILITY EASEMENT WITHIN THE PROJECT LIMITS. THE HORIZONTAL AND VERTICAL LOCATION OF THIS GAS LINE HAS BEEN SHOWN IN THE PLANS, PROFILES, AND CROSS SECTIONS PER FIELD MARKINGS AND EXISTING PLAN INFORMATION. SUPPLEMENTAL TEST HOLES WREE PROVIDED BY CGO ON 2- 5- 2021 WHICH CERTIFIES THE LOCATION AND ELEVATIONS SHOWN IN THE PLANS.

PRIOR TO ANY CONSTRUCTION, THE CONTRACTOR SHALL CONTACT OHIO 811 TO ENSURE THAT THIS GAS LINE IS CLEARLY MARKED IN THE FIELD. THE CONTRACTOR SHALL NOT DISTURB THIS GAS LINE DURING CONSTRUCTION OF THIS PROJECT.

NORTHEAST OHIO NATURAL GAS CORPORATION (NEONGC):

NORTHEAST OHIO NATURAL GAS CORPORATION (NEONGC) HAS AN EXISTING INACTIVE 6" GAS LINE SITUATED WITHIN AN EXISTING 8' UTILITY EASEMENT WITHIN THE PROJECT LIMITS.

PRIOR TO ANY CONSTRUCTION, THE CONTRACTOR SHALL CONTACT OHIO 811 TO ENSURE THAT THIS GAS LINE IS CLEARLY MARKED IN THE FIELD. BASED ON PAST CORRESPONDENCE WITH NEONGSC IT HAS BEEN CONFIRMED THAT THE CONTRACTOR MAY DISTURB (REMOVE, CUT, AND CAP) ANY PORTIONS OF THIS INACTIVE GAS LINE THAT CONFLICTS DURING CONSTRUCTION OF THIS PROJECT. THE CONTRACTOR SHALL CONTACT NEONGC WITH ALL ANTICIPATED CONFLICT AREAS AND VERIFY WHETHER A NEONGC INSPECTOR IS REQUIRED ON- SITE AT LEAST 14 DAYS PRIOR TO ANY PIPELINE REMOVAL.

CITY OF COLUMBUS DIVISION OF POWER (COC DPU):

THE DIVISION OF POWER (DOP) MAY HAVE UNDERGROUND AND OVERHEAD PRIMARY, SECONDARY, AND STREET LIGHTING AT THIS WORK LOCATION. THE CONTRACTOR IS HEREBY REQUIRED TO CONTACT OUPS AT 811 OR 1-800-362-2764 AT LEAST 48 HOURS PRIOR TO CONDUCTING ANY ACTIVITY WITHIN THE CONSTRUCTION AREA.

ANY REQUIRED RELOCATION, SUPPORT, PROTECTION, OR ANY OTHER ACTIVITY CONCERNED WITH THE CITY'S ELECTRICAL FACILITIES IN THE CONSTRUCTION AREA IS TO BE PERFORMED BY THE CONTRACTOR UNDER THE DIRECTION OF DOP PERSONNEL AND AT THE EXPENSE OF THE PROJECT. THE CONTRACTOR SHALL USE MATERIAL AND MAKE REPAIRS TO A CITY OF COLUMBUS STREET LIGHTING SYSTEM BY FOLLOWING DOP'S "MATERIAL AND INSTALLATION SPECIFICATIONS" (MIS) AND THE CITY OF COLUMBUS "CONSTRUCTION AND MATERIALS SPECIFICIATIONS" (CMSC). ANY NEW OR RE- INSTALLED UNDERGROUND STREETLIGHT SYSTEM SHALL REQUIRED TESTING AS REFERRED TO IN SECTION 1001.18 OF THE CMSC MANUAL. THE CONTRACTOR SHALL CONFORM TO THE DOP'S EXISTING STREET LIGHTING LOCKOUT/TAGOUT (LOTO) PROCEDURE MIS- 01, COPIES OF WHICH ARE AVAILABLE FROM DOP.

IF ANY ELECTRIC FACILITY BELONGING TO DOP IS DAMAGED IN ANY MANNER BY THE CONTRACTOR, ITS AGENTS, SERVANTS, OR EMPLOYEES, AND REQUIRES EMERGENCY REPAIRS, THE DOP DISPATCH OFFICE SHOULD BE CONTACTED IMMEDIATELY AT (614) 645- 7627. DOP SHALL MAKE ALL NECESSARY REPAIRS, AND THE EXPENESE OF SUCH REPAIRS AND OTHER RELATED COSTS SHALL BE PAID BY THE CONTACTOR TO THE DIVISION OF POWER, CITY OF COLUMBUS, OHIO

COORDINATION WITH ADJACENT PROJECTS:

THE CONTRACTOR SHALL COORDINATE WORK WITH ODOT AND THE CONTRACTORS ON THE ADJACENT PROJECTS.

THERE ARE SEVERAL PROJECTS (FUTURE EXISTING, CONCURRENT, AND FUTURE PROPOSED) BY OTHER PUBLIC AGENCIES, UTILITIES, AND PRIVATE DEVELOPMENTS WHICH MAY BE ADJACENT TO, OVERLAP WITH, AND/OR BE IN THE VICINITY OF THE FRA-23-4.19 PART 2 (PID 110380) PROJECT. PER CM&S 105.08, COOPERATION BETWEEN SEPARATE CONTRACTORS IS EXPECTED FOR THE DURATION OF THIS PROJECT. THE CONTRACTOR SHALL BE AWARE OF AND COORDINATE, IF NECESSARY, WITH THE FOLLOWING KNOWN PROJECTS AND ASSOCIATED TENTATIVE CONSTRUCTION SCHEDULES LISTED BELOW:

ODOT:

- FRA-270-51.50 PART 1 (PID 92616) – INTERCHANGE UPGRADE AT I-270 & US-23 (CONCURRENT PROJECT WHICH IS ADJACENT TO AND OVERLAPS WITH PART 2.

- FRA-665-14.00 (PID 104949) – DECK OVERLAY ON SR-665 BRIDGE OVER SCIOTO RIVER (FUTURE EXISTING PROJECT WHICH IS IN VICINITY OF PART 2)
  BEGIN CONST: 6-1-2022, END CONSTR: 10-15-2022

CITY OF COLUMBUS:

- FRA-RATHMELL ROAD IMPROVEMENTS (E-03844) - IMPROVEMENTS ALONG RATHMELL ROAD FROM 1200 FEET WEST OF FOSTERSON DRIVE TO A POINT 250 FEET EAST OF FOSTERSON DRIVE (FUTURE EXISTING PROJECT WHICH IS ADJACENT TO AND OVERLAPS WITH PART 2)
  BEGIN CONSTR: SPRING 2022, END CONSTR: FALL 2022

- FRA-TRAFFIC SIGNAL SYSTEM (CTSS) – PHASE F (E-03676) (PID 110521) CITY-WIDE ITS UPGRADE ALONG PORTIONS OF US-23 (FUTURE PROPOSED PROJECT WHICH OVERLAPS WITH PART 2)
  BEGIN CONSTR: SUMMER 2023, END CONSTR: SPRING 2025

FRANKLIN COUNTY ENGINEER:

- FRA-317-1.46 (PID 109581) – INTERSECTION UPGRADE AT SR-317 & LOCKBOURNE ROAD (FUTURE EXISTING PROJECT WHICH IS IN VICINITY OF PART 2)
  BEGIN CONSTR: SUMMER 2022, END CONSTR: FALL 2022

AEP TRANSMISSION

- CYPRUS 138kV EXTENSION - NEW AEP TRANSMISSION/DISTRIBUTION (FUTURE EXISTING PROJECT WHICH OVERLAPS PART 2)
  AEP TRANS. CONSTR: 4-18-2022 TO 7-26-2022
  AEP DISTR. CONSTR: 7-26-2022 TO 9-1-2022
  JOINT-USERS BEGIN TRANSFERS TO VACATE EX. POLES: 9-1-2022
  JOINT-USERS END TRANSFERS TO VACATE EX. POLES: 12-1-2022

PRIVATE DELOPMENT

- PROJECT CYPRUS - SITE DEVELOPMENT FOR P.P.N. 510-180711-00 (FUTURE EXISTING PROJECT WHICH IS ADJACENT TO PART 2)
  FINAL SITE COMPLIANCE PLAN NO.: 21345-199
  STORM SEWER PLAN NO.: CC-19298
  SANITARY SEWER PLAN NO.: CC-19279
  WATER SERVICE PLAN NO.: WSP-6646
  MASS GRADING NO.: CC-19232
  WATERLINE ONLY PLAN NO.: 21-100
  12" WATERLINE PLAN NO.: 22-002

COORDINATION SHALL BE MADE TO PREVENT CONFLICTING ADVANCE WARNING SIGNS, CONFLICTING DETOUR ROUTES, OVERLAPING/CONFLICTING LANE CLOSURES, AND TO ENSURE THAT A MINIMUM DISTANCE OF 2 MILES BETWEEN ADJACENT LANE CLOSURES IS MAINTAINED. THIS IS NOT AN EXHAUSTIVE LIST OF COORDINATION ITEMS THAT MAY NEED TO BE RESOLVED BETWEEN PROJECTS. THE DEPARTMENT RESERVES THE RIGHT TO DECIDE WHICH PROJECT'S ACTIVITIES TAKE PRECEDENCE. PROJECTS THAT HAVE ACTIVITIES DELAYED DUE TO CONFLICTS WILL CONSIDER THIS AN EXCUSABLE, NON-COMPENSABLE DELAY PER CMS 108.06.B. ON PROJECTS THAT HAVE ACTIVITIES DELAYED DUE TO CONFLICTS WHERE THE CONTRACTOR FAILED TO MEET THE NOTIFICATION REQUIREMENTS, THE DELAYS SHALL NOT BE CONSIDERED EXCUSABLE OR COMPENSABLE.

ATTENDANCE AT DEPARTMENT ORDERED TRAFFIC COORDINATION MEETINGS BETWEEN ADJACENT PROJECTS SHALL BE CONSIDERED MANDATORY FOR EACH PROJECT'S SUPERINTENDENT, AND INCIDENTAL TO THE LUMP SUM MAINTENANCE OF TRAFFIC PAYMENT ITEM

CONTRACTOR USE OF PARCEL 2T:

PARCEL 2 IS CURRENTLY OWNED BY MAGELLAN ENTERPRISES, LLC., A DELAWARE LIMITED LIABILITY COMPANY. THE CONTRACTOR IS PERMITTED TO GRADE AND SEED WITHIN THE DEFINED LIMITS OF PARCEL 2T (NON-EXCLUSIVE TEMPORARY EASEMENT) IN ADDITION TO NECESSARY UTILITY TIE-IN WORK AT THE SOUTHEAST CORNER OF US-23 & RATHMELL ROAD. THE CONTRACTOR SHALL ONLY PERFORM UTILITY TIE- IN WORK NECESSARY TO RE- CONNECT THE EXISTING CITY OF COLUMBUS 144 STRAND FIBER OPTIC CABLE INTERCONNECT CTSS PHASE C FROM THE EXISTING AEP JOINT- USER DROP POLE LOCATION #19 TO THE PROPOSED SIGNAL CONFIGURATION AS SHOWN IN THE PLANS.

FURTHERMORE, THE FOLLOWING PROVISIONS SHALL APPLY:
1.)NO OVERNIGHT AND/OR EXTENDED PARKING
2.)NO STAGING OF CONSTRUCTION EQUIPMENT
3.)NO STORAGE OF WASTE MATERIAL OR CONSTRUCTION DEBRIS OR EXCAVATION OF BORROW MATERIAL
4.)ADHERENCE TO ALL OHSA MINIMUM CLEARANCE WORKSITE REQUIREMENTS FOR THE OVERHEAD ENERGIZED AEP TRANSMISSION LINES

CITY OF COLUMBUS CIP - PERMITS:

WHEN EXCAVATING WITHIN CITY OF COLUMBUS RIGHT OF WAY LIMITS, THE CONTRACTOR SHALL OBTAIN AN EXCAVATION PERMIT FROM CITY OF COLUMBUS, DEPARTMENT OF PUBLIC SERVICE - PERMIT OFFICE BETWEEN THE HOURS OF 7:30 AM AND 4:00 PM MONDAY THROUGH FRIDAY.

PHON: 614-645-7497, FAX: 614-645-1876
EMAIL: colspermit@columbus.gov

PERMITS AND/OR FEES REQUIRED FOR THE PROJECT SHALL BE INCIDENTAL TO THE COST OF THE ASSOCIATED WORK (I.E. 203-EXCAVATION, 611-SEWER/DRAINAGE, 638-WATER WORK, 630-PARKING METERS, 690-ELECTRIC/POWER, 625-LIGHTING, ETC.)

DESIGN AGENCY
IBI
DESIGNER
WLC
REVIEWER
KMK 12-01-22
PROJECT ID
92616
SHEET P.11 TOTAL 170

FRA-23-4.19 PART 2 (PID 92616)
MODEL: Sheet PAPERSIZE: 17x11(in.) DATE: 2023-01-27 TIME: 8:14:58 AM USER: william.croxton
\\10.120.112.5\ibishare\122592-SafetyDesign\7.0_Production\7.3_Design\04_Civil\Worksets\10380_FRA-23\400-Engineering\10380_GN00Ldgn

GENERAL NOTES (CONT.)

EXISTING PLANS:

THE FOLLOWING EXISTING PLANS ARE AVAILABLE AT ODOT D-6 UPON REQUEST:

ODOT:

1954 - PIC-23-17.66 & FRA-23-(0.00-5.37) (US-23 SB NEW CONSTRUCTION)
1962 - FRA-200-9.46 (I-270 & US-23 INTERCHANGE)
1986 - FRA-23-(2.05-5.41) (US-23 RESURFACING)
2003 - FRA-23-00.32 (PID 23410) (US-23 RESURFACING)
2003 - COLUMBUS METRO FREEWAY MGMT SYSTEM (US-23 NB DMS)
2013 - FRA-23-(0.00-5.63) (PID 80108) (US-23 RESURFACING)
2019 - FRA-DMS REPLACEMENT-FY20 (PID 109467) (US-23 NB DMS)
2022 - FRA-270-51.50 (PID 92616) PART 1 (I-270 & US-23 INTERCHANGE)

CITY OF COLUMBUS:

1989 - US-23 & RATHMELL RD. INTERSECTION IMPROVEMENT (1989-73)
2022 - FRA-RATHMELL ROAD WIDENING (E-XXX)
2022 - FRA-TRAFFIC SIGNAL SYSTEM (CTSS) – PHASE F (E-03676) (PID 110521)

FRANKLIN COUNTY ENGINEER:

1835 - HIGH ST. ROAD RECORD
1837 -RATHMELL RD. ROAD RECORD
1935 - RATHMELL ROAD IMPROVEMENT (US-23 TO GROVEPORT RD.)

SURVEYING PARAMETERS - FRA-23-4.19 PART 2 (PID 110380):

PRIMARY PROJECT CONTROL MONUMENTS GOVERN ALL POSITIONING ON ODOT PROJECTS. SEE SHEET P.3 FOR PROJECT CONTROL INFORMATION FOR THIS PROJECT.

USE THE FOLLOWING PROJECT CONTROL, VERTICAL POSITIONING, AND HORIZONTAL POSITIONING PARAMETERS FOR ALL SURVEYING:

PROJECT CONTROL:
POSITIONING METHOD: STATIC GNSS
MONUMENT TYPE: B

VERTICAL POSITIONING:
ORTHOMETRIC HEIGHT DATUM: NAVD88
GEOID: GEOID12B

HORIZONTAL POSITIONING:
REFERENCE FRAME: NAD83 (2011) (EPOCH:2010.0000)
ELLIPSOID: GRS80
MAP PROJECTION: LAMBERT CONFORMAL CONIC
COORDINATE SYSTEM: OHIO STATE PLANE (SOUTH) ZONE
COMBINED SCALE FACTOR: 1.00005833
PROJECT ADJUSTMENT FACTOR (1/X): 0.99994167
ORIGIN OF COORDINATE SYSTEM: 0,0

USE THE POSITIONING METHODS AND MONUMENT TYPE USED IN THE ORIGINAL SURVEY TO RESTORE ALL MONUMENTS RELATED TO PRIMARY PROJECT CONTROL THAT ARE DAMAGED OR DESTROYED BY CONSTRUCTION ACTIVITIES. RESTORE THE DAMAGED OR DESTROYED MONUMENTS IN ACCORDANCE WITH C&MS 623.

UNITS ARE IN U.S. SURVEY FEET.

SURVEYING PARAMETERS - FRA-270-51.50 PART 1 (PID 92616):

SEE FRA-270-51.50 PART 1 (PID 92616) PLANS.

WORK LIMITS:

THE WORK LIMITS SHOWN ON THESE PLANS ARE FOR PHYSICAL CONSTRUCTION ONLY. PROVIDE THE INSTALLATION AND OPERATION OF ALL WORK ZONE TRAFFIC CONTROL AND WORK ZONE TRAFFIC CONTROL DEVICES REQUIRED BY THESE PLANS WHETHER INSIDE OR OUTSIDE THESE WORK LIMITS.

ROUNDING:

THE ROUNDING AT SLOPE BREAKPOINTS SHOWN ON THE TYPICAL SECTIONS APPLIES TO ALL CROSS SECTIONS EVEN THOUGH OTHERWISE SHOWN.

BENCHING OF FOUNDATION SLOPES:

ALTHOUGH CROSS SECTIONS INDICATE SPECIFIC DIMENSIONS FOR PROPOSED BENCHING OF THE EMBANKMENT FOUNDATIONS IN CERTAIN AREAS, NO WAIVER OF THE SPECIFICATIONS IS INTENDED. BENCH ALL OTHER SLOPED EMBANKMENT AREAS AS SET FORTH IN C&MS 203.05. NO ADDITIONAL PAYMENT WILL BE MADE FOR BENCHING REQUIRED UNDER THE PROVISIONS OF C&MS 203.05.

ITEM 204 - SUBGRADE COMPACTION AND PROOF ROLLING:

CONSTRUCT THE SUBGRADE AS FOLLOWS AND IN THE FOLLOWING SEQUENCE:

1. SHAPE THE SUBGRADE TO WITHIN 0.2 FEET OF THE PLAN SUBGRADE ELEVATION.

2. EXCAVATE AND REPLACE UNSUITABLE SUBGRADE BEFORE PROOF ROLLING. THE EXCAVATION LIMITS ARE SHOWN AND LABELED ON THE CROSS SECTIONS AS UNSUITABLE SUBGRADE. UNSUITABLE SUBGRADE INCLUDES UNSUITABLE SOIL (A-4B, A-2-5, A-5, A-7-5, AND SOIL WITH A LIQUID LIMIT GREATER THAN 65) AND ANY COAL, SHALE, OR ROCK WHICH NEEDS TO BE REMOVED ACCORDING TO SECTION 204.05 OF THE CONSTRUCTION AND MATERIAL SPECIFICATIONS (C&MS).

IF THERE IS UNSUITABLE SUBGRADE IN A SHALLOW FILL LOCATION, EXCAVATE AND REPLACE THE UNSUITABLE SUBGRADE BEFORE CONSTRUCTING THE SHALLOW FILL AND SHAPING THE SUBGRADE.

3. COMPACT THE SUBGRADE ACCORDING TO C&MS 204.03.

4. APPROXIMATE LIMITS FOR EXCAVATION OF UNSTABLE SUBGRADE ARE SHOWN AND LABELED ON THE CROSS SECTIONS AS UNSTABLE SUBGRADE. THE ENGINEER WILL IDENTIFY THE ACTUAL LIMITS OF EXCAVATION FOR UNSTABLE SUBGRADE BASED ON THE PROOF ROLLING RESULTS AND VISUAL OBSERVATIONS.

PROOF ROLL THE COMPACTED SUBGRADE ACCORDING TO C&MS 204.06.

5. EXCAVATE UNSTABLE SUBGRADE AS DIRECTED BY THE ENGINEER AND STABILIZE BY REPLACING WITH THE SPECIFIED MATERIALS ACCORDING TO C&MS 204.07. EXCAVATIONS WILL EXTEND 18 INCHES BEYOND THE EDGE OF THE SURFACE OF THE PAVEMENT, PAVED SHOULDERS, OR PAVED MEDIANS.

6. PROOF ROLL THE STABILIZED AREAS ACCORDING TO C&MS 204.06 TO VERIFY STABILITY.

7. FINE GRADE THE SUBGRADE TO THE SPECIFIED GRADE.

THE QUANTITIES FOR EXCAVATING THE UNSUITABLE SUBGRADE AND UNSTABLE SUBGRADE ARE BOTH PAID UNDER ITEM 204-EXCAVATION OF SUBGRADE.

GENERAL NOTES (2 OF 6)

DESIGN AGENCY
IBI

DESIGNER
WLC

REVIEWER
KMK 12-01-22

PROJECT ID
92616

SHEET P.12 | TOTAL 170

FRA-23-4.19 PART 2 (PID 92616)

MODEL: Sheet PAPERSIZE: 17x11(in.) DATE: 2023-05-04 TIME: 4:29:10 PM USER: william.croxton
\\10.120.112.5\ibishare\122592_SafetyDesign\7.0_Production\7.3_Design\04_Civil\Worksets\110380_FRA-23\400-Engineering\Roadway\Sheets\110380_GN002.dgn

ROADWAY NOTES:

ITEM 201-CLEARING AND GRUBBING:
REMOVE ALL TREES AND STUMPS SPECIFICALLY MARKED FOR REMOVAL WITHIN THE CONSTRUCTION LIMITS UNDER THE LUMP SUM BID FOR ITEM 201- CLEARING AND GRUBBING. THE FOLLOWING IS AN APPROXIMATE ESTIMATE OF THE NUMBER OF TREES AND STUMPS TO BE REMOVED.

SIZES	NO. TREES	NO. STUMPS	TOTAL
18" (OVER 12" TO 24")	68	1	69
30" (OVER 24" TO 36")	12	0	12
48" (OVER 36" TO 60")	0	0	0
60" (OVER 60")	0	0	0

ITEM 202-REMOVAL MISC.: ABANDONED TELECOM FACILITIES
THIS ITEM SHALL CONSIST OF REMOVING AND DISPOSING OF ANY EXISTING ABANDONED TELECOM FACILTITIES AT LOCATIONS SHOWN IN THE PLANS. IT IS KNOWN THAT AT&T OHIO RELOCATED MAJORITY OF THEIR AERIAL AND UNDERGROUND LINES ONTO THE NEW AEP TRANSMISSION LINE FACILITIES WITH COMBINED DISTRIBUTION AND JOINT- USERS' FACILITIES WITHIN A NEW PRIVATE EASEMENT. BUT SOME OF THE EXISTING UNDERGROUND INFRASTRUCTURE WAS ABANDONED AND WILL BE IN CONFLICT WITH THE PROJECT. THE CONTRACTOR SHALL CONTACT AT&T OHIO BEFORE ANY REMOVAL WORK TO CONFIRM THAT NO ACTIVE LINES ARE PRESENT AND IN USE. UPON VERIFICATION, THE CONTRACTOR SHALL REMOVE ALL EXISTING ABANDONED TELECOM FACILITIES (MANHOLES, PULLBOXES, CONDUIT, INACTIVE CABLE, ETC.) LOCATED WITHIN ANY EARTH DISTURBING AREA.

PAYMENT FOR THE ABOVE WORK SHALL BE PAID FOR AT THE UNIT PRICE BID FOR ITEM 202 - REMOVAL MISC.: ABANDONED TELECOM FACILITIES (LS), AND SHALL INCLUDE ALL LABOR, TOOLS, EQUIPMENT, AND MATERIALS NECESSARY TO COMPLETE ALL WORK.

ITEM 202-REMOVAL MISC.: BUILDING FOUNDATION
THIS ITEM SHALL CONSIST OF REMOVING AND DISPOSING OF THE EXISTING BUILDING FOUNDATION IN ITS ENTIRETY AT LOCATIONS SHOWN IN THE PLANS.

PAYMENT FOR THE ABOVE WORK SHALL BE PAID FOR AT THE UNIT PRICE BID FOR ITEM 202 - REMOVAL MISC.: BUILDING FOUNDATION (LS), AND SHALL INCLUDE ALL LABOR, TOOLS, EQUIPMENT, AND MATERIALS NECESSARY TO COMPLETE ALL WORK.

ITEM 202-REMOVAL MISC.: CONCRETE SLAB:
THIS ITEM SHALL CONSIST OF REMOVING AND DISPOSING OF THE EXISTING CONCRETE SLAB AND ANY FOUNDATION IN ITS ENTIRETY AT LOCATIONS SHOWN IN THE PLANS.

PAYMENT FOR THE ABOVE WORK SHALL BE PAID FOR AT THE UNIT PRICE BID FOR ITEM 202 - REMOVAL MISC.: CONCRETE SLAB (LS), AND SHALL INCLUDE ALL LABOR, TOOLS, EQUIPMENT, AND MATERIALS NECESSARY TO COMPLETE ALL WORK.

ITEM 202-REMOVAL MISC.: CROSSES:
THIS ITEM SHALL CONSIST OF REMOVING AND STORING OF THE EXISTING CROSSES AT LOCATIONS SHOWN IN THE PLANS. DUE TO THE SENSTIVE NATURE OF THIS WORK, THE CONTRACTOR SHALL REMOVE ALL CROSSES PRIOR TO CONSTRUCTION AND SHALL EXERCISE REASONABLE CARE AND JUDGMENT ON TRANSPORTATION AND TEMPORARY STORAGE FOR THESE ITEMS. THE CONTRACTOR SHALL SUBMIT THESE ITEMS TO ODOT DISTRICT 6 PRIOR TO CONSTRUCTION.

PAYMENT FOR THE ABOVE WORK SHALL BE PAID FOR AT THE UNIT PRICE BID FOR ITEM 202 - REMOVAL MISC.: CROSSES (LS), AND SHALL INCLUDE ALL LABOR, TOOLS, EQUIPMENT, AND MATERIALS NECESSARY TO COMPLETE ALL WORK.

ITEM 202-REMOVAL MISC.: FIELD DRIVE:
THIS ITEM SHALL CONSIST OF REMOVING EXISTING AND ABANDONED FIELD DRIVES WITHIN THE EXISTING AND PROPOSED RIGHT OF WAY AT LOCATIONS SHOWN IN THE PLANS. THE CONTRACTOR SHALL GRADE AND SEED PER THE CROSS SECTIONS WITHIN THE CONSTRUCTION LIMITS UNDER ITEM 203 AND ITEM 659, BUT SHALL REMOVE AND DISPOSE OF ANY OBSTRUCTIONS ENCOUNTERED WITHIN THE FIELD DRIVE LIMITS UNDER THIS ITEM, INCLUDING BUT NOT LIMITED TO, CRUSHED ASPHALT/CONCRETE WEARING COURSES OR BURIED DRIVE PIPES. THE CONTRACTOR SHALL ENSURE THAT ALL FIELD DRIVE ACCESS FROM THE MAIN ROADWAY TO THE PROPERTY IS ELIMINATED WITHIN THE DESIGNATED AREA.

PAYMENT FOR THE ABOVE WORK SHALL BE PAID FOR AT THE UNIT PRICE BID FOR ITEM 202 - REMOVAL MISC.: FIELD DRIVE (LS), AND SHALL INCLUDE ALL LABOR, TOOLS, EQUIPMENT, AND MATERIALS NECESSARY TO COMPLETE ALL WORK.

ITEM 202-REMOVAL MISC.: LANDSCAPED AREA WITH ROCKS:
THIS ITEM SHALL CONSIST OF REMOVING AND DISPOSING OF THE EXISTING ROCKS AND OTHER MISCELLEANOUS ITEMS WITHIN LANDSCAPED AREAS AT LOCATIONS SHOWN IN THE PLANS.

PAYMENT FOR THE ABOVE WORK SHALL BE PAID FOR AT THE UNIT PRICE BID FOR ITEM 202 - REMOVAL MISC.: LANDSCAPED AREA WITH ROCKS (LS), AND SHALL INCLUDE ALL LABOR, TOOLS, EQUIPMENT, AND MATERIALS NECESSARY TO COMPLETE ALL WORK.

ITEM 202-REMOVAL MISC.: WOOD POST:
THIS ITEM SHALL CONSIST OF REMOVING AND DISPOSING OF THE EXISTING WOOD POSTS AT LOCATIONS SHOWN IN THE PLANS.

PAYMENT FOR THE ABOVE WORK SHALL BE PAID FOR AT THE UNIT PRICE BID FOR ITEM 202 - REMOVAL MISC.: WOOD POST (EACH), AND SHALL INCLUDE ALL LABOR, TOOLS, EQUIPMENT, AND MATERIALS NECESSARY TO COMPLETE ALL WORK.

ITEM 202-REMOVAL MISC.: TRENCH DRAIN WITH GRATE:
THIS ITEM SHALL CONSIST OF REMOVING AND DISPOSING OF THE EXISTING TRENCH DRAINS WITH GRATES AT LOCATIONS SHOWN IN THE PLANS.

PAYMENT FOR THE ABOVE WORK SHALL BE PAID FOR AT THE UNIT PRICE BID FOR ITEM 202 - REMOVAL MISC.: TRENCH DRAIN WITH GRATE (FT), AND SHALL INCLUDE ALL LABOR, TOOLS, EQUIPMENT, AND MATERIALS NECESSARY TO COMPLETE ALL WORK.

ITEM 606-ANCHOR ASSEMBLY, MGS TYPE E, MASH 2016:
THIS ITEM SHALL CONSIST OF FURNISHING AND INSTALLING ANY OF THE GUARDRAIL END TERMINALS FOR TYPE MGS GUARDRAIL AS LISTED ON ROADWAY ENGINEERING'S WEB PAGE UNDER ROADSIDE SAFETY DEVICES FOR APPROVED GUARDRAIL END TREATMENTS. INSTALLATION SHALL BE AT THE LOCATIONS SPECIFIED IN THE PLANS, IN ACCORDANCE WITH THE MANUFACTURER'S SPECIFICATIONS.

THE FACE OF THE TYPE E IMPACT HEAD SHALL BE COVERED WITH A SHEET OF TYPE G REFLECTIVE SHEETING, PER C&MS 730.19.

REFER TO THE MANUFACTURER'S INSTRUCTIONS REGARDING THE INSTALLATION OF, AND THE GRADING AROUND THE FOUNDATION TUBES AND GROUND STRUT. THE TOP OF ANY FOUNDATION TUBE SHOULD BE LESS THAN 4 INCHES ABOVE THE GROUND. THE PLACEMENT OF THE FOUNDATION TUBES SHOULD BE AN APPROPRIATE DEPTH BELOW THE LEVEL LINE IN ORDER TO MAINTAIN THE FINISHED GUARDRAIL HEIGHT OF 31 INCHES FROM THE EDGE OF THE SHOULDER.

ON-SITE GRADING IS REQUIRED IF THE TOP OF THE FOUNDATION TUBES OR TOP OF THE GROUND STRUT DOES PROJECT MORE THAN 4 INCHES ABOVE THE GROUND LINE.

PAYMENT FOR THE ABOVE WORK SHALL BE MADE AT THE UNIT PRICE BID FOR ITEM 606-ANCHOR ASSEMBLY, MGS TYPE E, MASH 2016 (EACH), AND SHALL INCLUDE ALL LABOR, TOOLS, EQUIPMENT AND MATERIALS NECESSARY TO CONSTRUCT A COMPLETE AND FUNCTIONAL ANCHOR ASSEMBLY SYSTEM, INCLUDING ALL RELATED TRANSITIONS, REFLECTIVE SHEETING, HARDWARE, GRADING, EMBANKMENT AND EXCAVATION NOT SEPARATELY.

ITEM 606 - IMPACT ATTENUATOR, TYPE 1 (BIDIRECTIONAL):
THIS ITEM SHALL CONSIST OF FURNISHING AND INSTALLING ANY ONE OF THE TYPE 1 IMPACT ATTENUATORS AS LISTED ON THE OFFICE OF ROADWAY ENGINEERING'S WEB PAGE. INSTALLATION SHALL BE AT THE LOCATIONS SPECIFIED IN THE PLANS, IN ACCORDANCE WITH THE MANUFACTURER'S SPECIFICATIONS.

PAYMENT FOR THE ABOVE WORK SHALL BE MADE AT THE UNIT PRICE BID FOR ITEM 606, IMPACT ATTENUATOR, TYPE 1 (BIDIRECTIONAL) (EACH), AND SHALL INCLUDE ALL LABOR, TOOLS, EQUIPMENT AND MATERIALS NECESSARY TO CONSTRUCT A COMPLETE AND FUNCTIONAL IMPACT ATTENUATOR SYSTEM, INCLUDING ALL RELATED TRANSITIONS, HARDWARE, REFLECTIVE SHEETING AND GRADING, NOT SEPARATELY SPECIFIED, AS REQUIRED BY THE MANUFACTURER.

ITEM 623-MONUMENT ASSEMBLY
ITEM 623-REFERENCE MONUMENT
CONSTRUCT MONUMENT ASSEMBLIES IN ACCORDANCE WITH THE DETAILS SHOWN ON THE ODOT SCD RM-1.1 AT THE LOCATIONS SHOWN ON SHEET P.146.

ITEM SPECIAL-PRE-CONSTRUCTION VIDEO:
THIS ITEM SHALL CONSIST OF PROVIDING A PRE-CONSTRUCTION AUDIO-VISUAL DIGITAL VIDEO OF THE EXISTING CONDITIONS WITHIN THE PROJECT LIMITS PRIOR TO CONSTRUCTION TO PROVIDE DOCUMENTATION OF PRE-CONSTRUCTION CONDITIONS. THE DIGITAL VIDEO SHALL ALSO INCLUDE ALL BUILDINGS WITHIN 300 FEET OF ANY SHEET PILE OR BEARING PILE INSTALLATION.

THE DIGITAL VIDEO SHALL BE OF PROFESSIONAL QUALITY THAT CLEARLY LOGS AN ACCURATE VISUAL DEPICTION OF THE EXISTING CONDITIONS AND PRODUCES AN AUDIO COMMENTARY OF THE OPERATOR WITH PROPER VOLUME, CLARITY, AND FREE FROM DISTORTION. AT A MINIMUM THE COMMENTARY SHALL INCLUDE THE DATE AND TIME, STREET NAME, LOCATION, INTERSECTING STREETS AND KNOWN ADDRESSES WHEN CROSSED, AND GENERAL OBSERVATIONS OF PAVEMENT AND ROADSIDE CONDITIONS.

THE FINAL DIGITAL VIDEO SHALL BE CONVERTED TO A COMMON DIGITAL MEDIA FILE FORMAT SUCH AS MP4, WMV, OR EQUIVALENT.

THE CONTRACTOR SHALL SUBMIT THE DIGITAL MEDIA FILE TO THE ODOT DISTRICT 6 PRIOR TO CONSTRUCTION.

THE FOLLOWING ESTIMATED QUANTITIES HAVE BEEN CARRIED TO THE GENERAL SUMMARY:

ITEM SPECIAL-PRE-CONSTRUCTION VIDEO LS

ITEM SPECIAL-SURVEY AND MONITORING OF EXISTING BUILDING
THIS ITEM SHALL CONSIST OF SURVEYING AND MONITORING OF THE 1-STORY ABANDONED BRICK SCHOOLHOUSE LOCATED AT THE N.E. CORNER OF THE INTERSECTION OF US-23 AND CR-121 WHICH CURRENTLY ENCROACHES INTO THE EXISTING RIGHT OF WAY. THIS BUILDING IS CONSIDERED AN HISTORIC STRUCTURE AND IS TO REMAIN UNDISTURBED.

THE CONTRACTOR SHALL CONDUCT A PRE- AND POST-CONSTRUCTION SURVEY OF THE EXISTING BUILDING AND DELIVER ACOPY IN DIGITAL VIDEO FORMAT TO ODOT DISTRICT 6 BEFORE AND AFTER WORK IS INITIATED AND COMPLETED, RESPECTIVELY.

THE CONTRACTOR SHALL PROVIDE A TECHNICIAN TO CONTINUOUSLY OPERATE VIDEO EQUIPMENT TO MONITOR THE VIBRATORY EFFECTS ON THE CONDITION OF THE EXISTING BUILDING DURING ANY CONSTRUCTION ACTIVITIES WITHIN 100 FEET OF THE BUILDING, INCLUDING, BUT NOT LIMITED TO, SUBGRADE STABILIZATION, SUBGRADE COMPACTION, EARTHWORK AND SEEDING ACTIVITIES, GUARDRAIL INSTALLATION, SIGNAL POLE INSTALLATION, UTILITY ADJUSTMENTS OR RELOCATIONS, AND/OR PAVEMENT REMOVAL AND INSTALLATION OPERATIONS. THE CONTRACTOR SHALL NOTIFY THE ENGINEER IMMEDIATELY OF ANY CHANGE IN CONDITION OF THE EXISTING STRUCTURE.

PAYMENT FOR THE ABOVE WORK SHALL BE PAID FOR AT THE UNIT PRICE BID FOR ITEM SPECIAL- SURVEY AND MONITORING OF EXISTING BUILDING (LS), AND SHALL INCLUDE ALL PREPARATION, INSTALLATION, AND OPERATION OF ALL EQUIPMENT AND REPORTS NECESSARY TO COMPLETE WORK.

ITEM SPECIAL-SURVEY AND MONITORING OF EXISTING BUILDING LS

GENERAL NOTES (3 OF 6)

DESIGN AGENCY
IBI

DESIGNER
WLC

REVIEWER
KMK 12-01-22

PROJECT ID
92616

SHEET P.13 | TOTAL 170

FRA-23-4.19 PART 2 (PID 92616)

MODEL: Sheet PAPERSIZE: 17x11(in.) DATE: 2022-12-09 TIME: 9:30:30 AM USER: william.croxton
\\10.120.112.5\ibishare\22592_SafetyDesign\7.0_Production\7.3_Design\04_Civil\Worksets\10380_FRA-23\400-Engineering\Roadway\Sheets\10380_GN003.dgn

DRAINAGE NOTES:

ITEM SPECIAL - FILL AND PLUG EXISTING CONDUIT, 15"
THIS ITEM SHALL CONSIST OF THE CONSTRUCTION OF BULKHEADS IN AN EXISTING 15 INCH DIAMETER CONDUIT AND FILLING THE AREA SEALED OFF WITH ITEM 613, SAND OR OTHER MATERIAL APPROVED BY THE ENGINEER.

LOCATE THE BULKHEADS AT THE LIMITS OF THE AREA TO BE FILLED, AS INDICATED ON THE PLANS. THE BULKHEADS CONSIST OF BRICK OR CONCRETE MASONRY WITH A MINIMUM THICKNESS OF 12 INCHES.

PUMP THE FILL MATERIAL INTO PLACE OR BY OTHER MEANS APPROVED BY THE ENGINEER, SO THAT AFTER SETTLEMENT, AT LEAST 90 PERCENT OF THE CROSSSECTIONAL AREA OF THE CONDUIT, FOR ITS ENTIRE LENGTH IS FILLED. THE LENGTH OF FILLED AND PLUGGED CONDUIT TO BE PAID FOR IS THE ACTUAL NUMBER OF FEET (MEASURED ALONG THE CENTERLINE OF EACH CONDUIT FROM OUTER FACE TO OUTER FACE OF BULKHEADS) FILLED AND PLUGGED AS DESCRIBED ABOVE.

IN LIEU OF FILLING AND PLUGGING THE EXISTING CONDUIT, THE PIPE MAY BE CRUSHED AND BACKFILLED PER 203, OR IT MAY BE REMOVED. THE LENGTH, MEASURED AS PROVIDED ABOVE, WILL BE PAID FOR AT THE CONTRACT PRICE PER FOOT FOR, ITEM SPECIAL, FILL AND PLUG EXISTING CONDUIT.

CROSSINGS AND CONNECTIONS TO EXISTING PIPES AND UTILITIES:
WHERE PLANS PROVIDE FOR A PROPOSED CONDUIT TO BE CONNECTED TO, OR CROSS OVER OR UNDER AN EXISTING SEWER OR UNDERGROUND UTILITY, THE CONTRACTOR SHALL LOCATE THE EXISTING PIPES OR UTILITIES BOTH AS TO LINE AND GRADE BEFORE STARTING TO LAY THE PROPOSED CONDUIT.

IF IT IS DETERMINED THAT THE ELEVATION OF THE EXISTING CONDUIT, OR EXISTING APPURTENANCE TO BE CONNECTED, DIFFERS FROM THE PLAN ELEVATION OR RESULTS IN A CHANGE IN THE PLAN CONDUIT SLOPE, THE ENGINEER SHALL BE NOTIFIED BEFORE STARTING CONSTRUCTION OF ANY PORTION OF THE PROPOSED CONDUIT WHICH WILL BE AFFECTED BY THE VARIANCE IN THE EXISTING ELEVATIONS.

IF IT IS DETERMINED THAT THE PROPOSED CONDUIT WILL INTERSECT AN EXISTING SEWER OR UNDERGROUND UTILITY IF CONSTRUCTED AS SHOWN ON THE PLAN, THE ENGINEER SHALL BE NOTIFIED BEFORE STARTING CONSTRUCTION OF ANY PORTION OF THE PROPOSED CONDUIT WHICH WOULD BE AFFECTED BY THE INTERFERENCE WITH AN EXISTING FACILITY.

PAYMENT FOR ALL THE OPERATIONS DESCRIBED ABOVE SHALL BE INCLUDED IN THE CONTRACT PRICE FOR THE PERTINENT ITEM 611 CONDUIT ITEM.

ITEM 611-CONDUIT, BORED OR JACKED
WHERE IT IS SPECIFIED THAT A CONDUIT BE INSTALLED BY THE METHOD OF BORING OR JACKING, NO TRENCH EXCAVATION SHALL BE CLOSER THAN 10 FEET TO THE EDGE OF PAVEMENT. PROVIDE A STEEL CASING PIPE CONFORMING TO 748.06. JOINTS WITH A CIRCUMFERENCIAL FULLY PENETRATING B- U4B WELD THAT IS PERFORMED BY AN ODOT APPROVED FIELD WELDER OR MACHINED INTERLOCKING JOINTS ARE PERMITTED. THE INSTALLED CASING PIPE IS THE STORM WATER CONVEYANCE CARRIER UNLESS OTHERWISE SPECIFIED IN THE PLANS. HYDROSTATIC TESTING IS NOT REQUIRED FOR THE CASING PIPE.

REVIEW OF DRAINAGE FACILITIES:
PRIOR TO THE START OF WORK AND AGAIN BEFORE FINAL ACCEPTANCE, PERFORM AN INSPECTION WITH REPRESENTATIVES OF ODOT DISTRICT 6, CONTRACTOR AND LOCALS OF ALL EXISTING DRAINAGE FACILITIES THAT ARE TO REMAIN IN SERVICE WHICH MAY BE AFFECTED BY THE WORK. THE CONDITION OF THE EXISTING CONDUITS AND THEIR APPURTENANCES IS DETERMINED FROM FIELD OBSERVATIONS. RECORDS OF THE INSPECTION ARE MAINTAINED BY THE DEPARTMENT.

CONFIRM ALL EXISTING SEWERS INSPECTED INITIALLY BY THE ABOVE- MENTIONED PARTIES ARE MAINTAINED AND LEFT IN A CONDITION COMPARABLE TO THAT DETERMINED BY THE ORIGINAL INSPECTION. THE CONTRACTOR IS RESPONSIBLE TO CORRECT ANY CHANGE IN THE CONDITION RESULTING FROM THEIR OPERATIONS AS DIRECTED AND APPROVED BY THE ENGINEER.

PAYMENT FOR ALL OPERATIONS DESCRIBED ABOVE IS INCLUDED IN THE CONTRACT PRICE FOR THE PERTINENT 611 CONDUIT ITEMS.

EXISTING SUBSURFACE DRAINAGE
PROVIDE UNOBSTRUCTED OUTLETS FOR ALL EXISTING UNDERDRAINS OR AGGREGATE DRAINS ENCOUNTERED DURING CONSTRUCTION.

PROVIDE AN OUTLET PER ODOT SCD DM- 1.1 FOR ALL UNDERDRAINS THAT OUTLET TO A SLOPE. UNDERDRAINS THAT CAN BE CONNECTED TO THE NEW OR EXISTING UNDERDRAINS AT THE END OF THE PROJECT LIMITS AS WELL AS ALL NECESSARY BENDS OR BRANCHES REQUIRED FOR CONNECTION ARE INCLUDED IN THE BASIS OF PAYMENT FOR UNCLASSIFIED PIPE UNDERDRAINS.

THE FOLLOWING ESTIMATED QUANTITIES HAVE BEEN INCLUDED IN THE GENERAL SUMMARY:

ITEM 601 - TIED CONCRETE BLOCK MAT, WITH TYPE 1 UNDERLAYMENT	*6 SY*
ITEM 605 - 4" UNCLASSIFIED PIPE UNDERDRAINS	*100 FT*
ITEM 605 - 6" UNCLASSIFIED PIPE UNDERDRAINS	*100 FT*
ITEM 611 - 4" CONDUIT, TYPE F FOR UNDERDRAIN OUTLET	*50 FT*
ITEM 611 - 6" CONDUIT, TYPE F FOR UNDERDRAIN OUTLETS	*50 FT*
ITEM 611 - PRECAST REINFORCED CONCRETE OUTLET	*3 EACH*

GENERAL NOTES (4 OF 6)

DESIGN AGENCY
IBI

DESIGNER
WLC

REVIEWER
KMK 12-01-22

PROJECT ID
92616

SHEET P.14 | TOTAL 170

FRA-23-4.19 PART 2 (PID 92616)

MODEL: Sheet PAPERSIZE: 17x11(in.) DATE: 2022-12-09 TIME: 9:30:32 AM USER: william.croxton
\\10.120.112.5\ibishare\122592_SafetyDesign\7.0_Production\7.3_Design\04_Civil\Worksets\110380_FRA-23\400-Engineering\Roadway\Sheets\110380_GN004.dgn

EROSION CONTROL NOTES:

SEEDING AND MULCHING:

SEE SHEET P. 45 FOR EARTHWORK AND EROSION CONTROL SUBSUMMARY, WHICH INCLUDES PAY ITEMS PROVIDED TO PROMOTE GROWTH AND CARE OF PERMANENT SEEDED AREAS

SEEDING AND MULCHING SHALL BE APPLIED TO ALL AREAS OF EXPOSED SOIL BETWEEN THE RIGHT-OF-WAY LINES, AND WITHIN THE CONSTRUCTION LIMITS FOR AREAS OUTSIDE THE RIGHT-OF-WAY LINES COVERED BY WORK AGREEMENT OR SLOPE EASEMENT. QUANTITY CALCULATIONS FOR SEEDING AND MULCHING ARE BASED ON THESE LIMITS.

WATER QUALITY NOTES:

POST CONSTRUCTION STORM WATER TREATMENT:

THIS PLAN UTILIZES STRUCTURAL BEST MANAGEMENT PRACTICES (BMP'S) FOR POST CONSTRUCTION STORM WATER TREATMENT.

VEGETATED BIOFILTER:

THIS PLAN UTILIZES VEGETATED BIOFILTER(S) FOR POST CONSTRUCTION STORM WATER TREATMENT. PLACE EITHER ITEM 660 SODDING OR ITEM 659 SEEDING AND MULCHING WITH A 4-INCH LIFT OF TOPSOIL AS SHOWN IN THE PLANS TO ANY DISTURBED AREA ON THE SHOULDER AND FORESLOPE DRAINING TO A VEGETATED BIOFILTER. THE DITCH FOR EACH VEGETATED BIOFILTER SHALL BE TRAPEZOIDAL, AS SHOWN IN THE PLAN CROSS SECTIONS. PROVIDE ITEM 670 AS SPECIFIED IN THE PLANS.

ENVIRONMENTAL NOTES:

PROTECTION OF DRINKING WATER RESOURCES:

THIS PROJECT IS LOCATED WITHIN A PUBLIC DRINKING WATER PROTECTION AREA AS ESTABLISHED UNDER CHAPTER 1115 OF THE CITY OF COLUMBUS CODES. AS SUCH ALL CONSTRUCTION ACTIVITIES MUST BE DONE IN COMPLIANCE WITH CHAPTER 1115. PRIOR TO CONSTRUCTION, THE CONTRACTOR IS REQUIRED TO PROVIDE TO THE WELLFIELD PROTECTION COORDINATOR FOR THE CITY OF COLUMBUS PLANS ON HOW EQUIPMENT WILL BE REFUELED AND HOW MAINTENANCE OF EQUIPMENT WILL BE PERFORMED. IN ADDITION, A SPILL PREVENTION CONTROL AND COUNTERMEASURES (SPCC) PLAN MUST BE SUBMITTED AND APPROVED BY WELLFIELD PROTECTION COORDINATOR PRIOR TO COMMENCEMNT OF CONSTRUCTION. THE CONTRACTOR SHALL BE FULLY RESPONSIBLE FOR INFORMING ALL SUBCONTRACTORS AND OTHER AGENTS OF THE REQUIREMENTS OF CHAPTER 1115. ADDITIONALLY, THE CONTRACTOR MUST IMMEDIATELY REPORT ANY SPILLS TO THE WELLFIELD PROTECTION COORDINATOR. IF A SPILL IS ABOVE THE STATE REPORTABLE AMOUNT, THE CONTRACTOR SHOULD ALSO PROVIDE THE FRANKLIN COUNTY EMERGENCY MANAGEMENT (614- 794- 0213) AND THE OHIO EPA ENVIRONMENTAL RESPONSE AND REVITALIZATION (800- 282- 9378) FOR CLEANUP OF THE SPILL. THE WELLFIELD PROTECTION COORDINATOR FOR THE CITY OF COLUMBUS CAN BE REACHED AT THE WELLFIELD PROTECTION OFFICE, PARSONS AVENUE WATER PLANT, 5600 PARSONS AVENUE, LOCKBOURNE, OH 43137 (PHONE 614-645-3227) (EMAIL: REANDREWS@COLUMBUS.GOV)

GENERAL NOTES (5 OF 6)

DESIGN AGENCY

IBI

DESIGNER
WLC

REVIEWER
KMK 12-01-22

PROJECT ID
92616

SHEET P.15 | TOTAL 170

FRA-23-4.19 PART 2 (PID 92616)

MODEL: Sheet PAPERSIZE: 17x11 (in.) DATE: 2022-12-09 TIME: 9:30:34 AM USER: william.croxton
\\10.12.5.15\bishare\122592_SafetyDesign\7.0_Production\7.3_Design\04_Civil\Worksets\10380_FRA-23\400-Engineering\Roadway\Sheets\10380_GN005.dgn

PAVEMENT NOTES:

PART-WIDTH CONSTRUCTION:

BECAUSE OF THE NECESSITY TO BUILD THIS PROJECT UNDER TRAFFIC AND TO CONSTRUCT THE FULL PAVEMENT WIDTH IN STAGES, EXERCISE CARE TO PREVENT THE CONSTRUCTION OF A BUTT JOINT IN THE BASE COURSES. LAP LONGITUDINAL JOINTS AS SHOWN ON ODOT SCD BP-3.1.

PAVEMENT RESTORATION FOR PIPE INSTALLATIONS AND/OR REMOVALS

THE FOLLOWING QUANTITIES HAVE BEEN PROVIDED FOR PAVEMENT RESTORATION FOLLOWING INSTALLATION AND/OR REMOVAL OF PIPES AND HAVE BEEN CARRIED TO THE GENERAL SUMMARY:

ITEM 202-PAVEMENT REMOVED	*445 SY*
ITEM 204-SUBGRADE COMPACTION	*445 SY*
(9") ITEM 301-ASPHALT CONCRETE BASE, PG64-22, (449)	*125 CY*
(6") ITEM 304-AGGREGATE BASE	*75 CY*
ITEM 407-NON-TRACKING TACK COAT (APPLIED AT AVG. 0.055 GAL/SY)	*221 GAL*

THE ABOVE QUANTITIES ARE BASED ON PAVEMENT THICKNESS SHOWN ABOVE A PAVEMENT RESTORATION WIDTH THAT INCLUDES THE TRENCH WIDTH PLUS TWO FEET ON EACH SIDE OF THE TRENCH.

PROVIDE ANY MATERIALS USED OUTSIDE THE LIMITS STATED ABOVE AT NO ADDITIONAL COST.

ITEM 442-ASPHALT CONCRETE INTERMEDIATE COURSE, 12.5 MM, TYPE A (448), PG 64-28, AS PER PLAN

THIS ITEM SHALL CONSIST OF A VARIABLE DEPTH INTERMEDIATE WEDGE COURSE (0", 3" MAX) IN BETWEEN THE SALVAGED PLANED PAVEMENT SURFACE COURSE (1.50") AND STANDARD DEPTH INTERMEDIATE COURSE TO ACCOUNT FOR DIFFERENCES IN EXISTING/PROPOSED PROFILE GRADE ELEVATIONS WITHIN THE PLANING (VAR DEPTH) & RESURFACING (3.25") AND FULL DEPTH ASPHALT PAVEMENT AREAS BASED ON A 1- INCH MINIMUM PLANING DEPTH AS SPECIFIED IN THE PLANS.

ALL REQUIREMENTS OF ITEM 442 ARE APPLICABLE.

GENERAL NOTES (6 OF 6)

DESIGN AGENCY

IBI

DESIGNER
WLC

REVIEWER
KMK 12-01-22

PROJECT ID
92616

SHEET P.16 | TOTAL 170

FRA-23-4.19 PART 2 (PID 92616)

MODEL: Sheet PAPERSIZE: 17x11(in.) DATE: 2023-01-04 TIME: 9:11:55 AM USER: william.croxton
\\10.120.112.5\ibishare\122592_SafetyDesign\7.0_Production\7.3_Design\04_Civil\Worksets\110380_FRA-23\400-Engineering\Roadway\Sheets\110380_GN006.dgn

ITEM 614 - MAINTAINING TRAFFIC

A MINIMUM OF TWO LANES OF TRAFFIC ON US- 23 IN EACH DIRECTION SHALL BE MAINTAINED AT ALL TIMES BY USE OF THE EXISTING PAVEMENT, THE COMPLETED PAVEMENT, ITEM 615 PAVEMENT FOR MAINTAINING TRAFFIC, ITEM 615 ROADS FOR MAINTAINING TRAFFIC, AND TEMPORARY SURFACES USING ITEMS 410 AND 614.

A MINIMUM OF ONE LANE OF TRAFFIC ON RATHMELL ROAD IN EACH DIRECTION SHALL BE MAINTAINED AT ALL TIMES, EXCEPT FOR A LIMITED NUMBER OF WEEKEND CLOSURES (7PM FRIDAY TO 5AM MONDAY), A MAXIMUM OF 4 WEEKEND CLOSURES WILL BE ALLOWED WHEN THROUGH TRAFFIC MAY BE DETOURED AS SHOWN ON SHEET 23. A DISINCENTIVE SHALL BE ASSESSED IN THE AMOUNT OF $75 FOR EACH MINUTE THE ROADWAY REMAINS CLOSED TO TRAFFIC BEYOND THE SPECIFIED LIMIT.

ACCESS TO THE QUARRY AND ADJACENT PROPERTIES SHALL BE MAINTAINED AT ALL TIMES BY USE OF THE EXISTING PAVEMENT, THE COMPLETED PAVEMENT, AND TEMPORARY SURFACES USING ITEMS 410 AND 614.

LENGTH AND DURATION OF LANE CLOSURES AND RESTRICTIONS SHALL BE AT THE APPROVAL OF THE ENGINEER. IT IS THE INTENT TO MINIMIZE THE IMPACT TO THE TRAVELING PUBLIC. LANE CLOSURES OR RESTRICTIONS OVER SEGMENTS OF THE PROJECT IN WHICH NO WORK IS ANTICIPATED WITHIN A REASONABLE TIME FRAME, AS DETERMINED BY THE ENGINEER, SHALL NOT BE PERMITTED. THE LEVEL OF UTILIZATION OF MAINTENANCE OF TRAFFIC DEVICES SHALL BE COMMENSURATE WITH THE WORK IN PROGRESS.

NOTICE OF CLOSURE SIGNS (W20- H13) SHALL BE ERECTED BY THE CONTRACTOR PRIOR TO THE SCHEDULED ROAD OR RAMP CLOSURE IN ACCORDANCE WITH THE NOTICE OF CLOSURE TIME TABLE BELOW. AT THE APPROVAL OF THE ENGINEER, PORTABLE CHANGEABLE MESSAGE SIGNS MAY BE USED IN LIEU OF THE STANDARD FLAT SHEET SIGN FOR CLOSURE DURATIONS OF LESS THAN 1 WEEK.

THE SIGNS SHALL BE ERECTED ON THE RIGHT-HAND SIDE OF THE ROAD/RAMP FACING TRAFFIC. THEY SHALL BE PLACED SO AS NOT TO INTERFERE WITH THE VISIBILITY OF ANY OTHER TRAFFIC CONTROL SIGNS. ON ROADWAYS, THEY SHOULD BE ERECTED AT OR NEAR THE POINT OF CLOSURE. THE SIGNS MAY BE ERECTED ANYWHERE ON RAMPS AS LONG AS THEY ARE VISIBLE TO THE MOTORISTS USING THE RAMP. ON ENTRANCE RAMPS, THE SIGN SHALL BE ERECTED WELL IN ADVANCE OF THE MERGE AREA TO AVOID DISTRACTING MOTORISTS.

NOTICE OF CLOSURE SIGN TIME TABLE

ITEM	DURATION OF CLOSURE	SIGN DISPLAY TO PUBLIC	NOTIFICATION DUE TO DISTRICT 6 COMMUNICATIONS OFFICE
RAMP & ROAD CLOSURES	≥ 2 WEEKS	14 CALENDAR DAYS PRIOR TO CLOSURE	21 CALENDAR DAYS PRIOR TO CLOSURE
	> 12 HOURS & < 2 WEEKS	7 CALENDAR DAYS PRIOR TO CLOSURE	14 CALENDAR DAYS PRIOR TO CLOSURE
	≤ 12 HOURS	2 BUSINESS DAYS PRIOR TO CLOSURE	4 BUSINESS DAYS PRIOR TO CLOSURE

THE SIGN SHALL DISPLAY THE DATE OF THE CLOSURE IN MMM-DD FORMAT AND THE NUMBER OF DAYS OF THE CLOSURE. THE LAST LINE OF THE W20-H13 SIGN SHALL DISPLAY THE PHONE NUMBER OF THE DISTRICT 6 PUBLIC INFORMATION CONSTRUCTION LINE, (740) 833- 8268, WHICH A MOTORIST MAY CALL FOR ADDITIONAL INFORMATION.

THE FOLLOWING ESTIMATED QUANTITIES HAVE BEEN INCLUDED IN THE GENERAL SUMMARY FOR USE AS DETERMINED BY THE ENGINEER FOR THE MAINTENANCE OF TRAFFIC.

ITEM 411, STABILIZED CRUSHED AGGREGATE 185 CY
ITEM 614, ASPHALT CONCRETE FOR MAINTAINING TRAFFIC 50 CY
ITEM 616, WATER 4 M. GAL

ALL WORK AND TRAFFIC CONTROL DEVICES SHALL BE IN ACCORDANCE WITH C&MS 614 AND OTHER APPLICABLE PORTIONS OF THE SPECIFICATIONS, AS WELL AS THE OHIO MANUAL OF UNIFORM TRAFFIC CONTROL DEVICES. PAYMENT FOR ALL LABOR, EQUIPMENT AND MATERIALS SHALL BE INCLUDED IN THE LUMP SUM CONTRACT PRICE FOR ITEM 614, MAINTAINING TRAFFIC, UNLESS SEPARATELY ITEMIZED IN THE PLAN.

DUST CONTROL

THE CONTRACTOR SHALL FURNISH AND APPLY WATER FOR DUST CONTROL AS DIRECTED BY THE ENGINEER. THE FOLLOWING ESTIMATED QUANTITIES HAVE BEEN INCLUDED FOR DUST CONTROL PURPOSES:

ITEM 616, WATER 75 M. GAL.

EARTHWORK FOR MAINTAINING TRAFFIC

THE FOLLOWING QUANTITIES HAVE BEEN INCLUDED IN THE PLAN FOR INFORMATION ONLY.

EXCAVATION FOR MAINTAINING TRAFFIC 263 CY
EMBANKMENT FOR MAINTAINING TRAFFIC 737 CY

WHEN UNDERCUTS ARE NECESSARY FOR MAINLINE PAVEMENT OR EMBANKMENT CONSTRUCTION, EVALUATE THE NEED FOR TEMPORARY ROAD UNDERCUTS IF WITHIN A CLOSE PROXIMITY TO THE MAINLINE UNDERCUTS. A GEOTECHNICAL EVALUATION SHOULD BE CONSIDERED TO DETERMINE IF THE EXISTING SOIL CONDITIONS ARE ADEQUATE TO SUPPORT THE TEMPORARY ROAD. ADDITIONAL SOIL BORINGS ALONG THE TEMPORARY ROAD ARE NOT NORMALLY REQUIRED.

TRENCH FOR WIDENING

TRENCH EXCAVATION FOR BASE WIDENING SHALL BE ONLY ON ONE SIDE OF THE PAVEMENT AT A TIME. THE OPEN TRENCH SHALL BE ADEQUATELY MAINTAINED AND PROTECTED WITH DRUMS OR BARRICADES AT ALL TIMES. PLACEMENT OF PROPOSED SUBBASE AND BASE MATERIAL SHALL FOLLOW AS CLOSELY AS POSSIBLE BEHIND EXCAVATION OPERATIONS. THE LENGTH OF WIDENING TRENCH WHICH IS OPEN AT ANY ONE TIME SHALL BE HELD TO A MINIMUM AND SHALL AT ALL TIMES BE SUBJECT TO APPROVAL OF THE ENGINEER

OVERNIGHT TRENCH CLOSING

THE BASE WIDENING SHALL BE COMPLETED TO A DEPTH OF NO MORE THAN 12 INCHES BELOW THE EXISTING PAVEMENT BY THE END OF EACH WORK DAY. NO TRENCH SHALL BE LEFT OPEN OVERNIGHT EXCEPT FOR A SHORT LENGTH (25 FEET OR LESS) OF A WORK SECTION AT THE END OF THE TRENCH. IN CASE WORK MUST BE SUSPENDED BECAUSE OF INCLEMENT WEATHER OR OTHER REASONS, THE TRENCH FOR THE UNCOMPLETED BASE WIDENING SHALL BE BACKFILLED AT THE DIRECTION OF THE ENGINEER.

PLACEMENT OF ASPHALT CONCRETE

TWO-WAY TRAFFIC SHALL BE MAINTAINED AT ALL TIMES EXCEPT THAT ONE- WAY TRAFFIC WILL BE PERMITTED FOR MINIMUM PERIODS OF TIME CONSISTENT WITH THE REQUIREMENTS OF THE SPECIFICATIONS FOR PROTECTION OF COMPLETED ASPHALT CONCRETE COURSES.

WORK ZONE MARKINGS

THE FOLLOWING ESTIMATED QUANTITIES HAVE BEEN CARRIED TO THE GENERAL SUMMARY FOR USE AT LOCATIONS IDENTIFIED BY THE ENGINEER FOR WORK ZONE PAVEMENT MARKINGS AND SIGNS PER THE REQUIREMENTS OF C&MS 614.04 AND 614.11.

ITEM 614, WORK ZONE LANE LINE, CLASS III, 6", 642 PAINT 1.56 MILE
ITEM 614, WORK ZONE CENTER LINE, CLASS III, 642 PAINT 0.58 MILE
ITEM 614, WORK ZONE EDGE LINE, CLASS III, 4", 642 PAINT 0.42 MILE
ITEM 614, WORK ZONE EDGE LINE, CLASS III, 6", 642 PAINT 2.35 MILE
ITEM 614, WORK ZONE CHANNELIZING LINE, CLASS III, 8", 642 PAINT 1075 FT
ITEM 614, WORK ZONE CHANNELIZING LINE, CLASS III, 12", 642 PAINT 2363 FT
ITEM 614, WORK ZONE DOTTED LINE, CLASS III, 6", 642 PAINT 143 FT
ITEM 614, WORK ZONE STOP LINE, CLASS III, 642 PAINT 219 FT
ITEM 614, WORK ZONE ARROW, CLASS III, 642 PAINT 55 EACH

ITEM 614 - WORK ZONE IMPACT ATTENUATOR FOR 24" WIDE HAZARDS (UNIDIRECTIONAL)

THIS ITEM SHALL CONSIST OF FURNISHING AND INSTALLING A NON- GATING IMPACT ATTENUATOR. FURNISH AN IMPACT ATTENUATOR FROM THE OFFICE OF ROADWAY ENGINEERING'S APPROVED LIST FOR WORK ZONE IMPACT ATTENUATORS, FROM THE ROADWAY STANDARDS APPROVED PRODUCTS WEB PAGE.

INSTALLATION SHALL BE AT THE LOCATIONS SPECIFIED IN THE PLANS IN ACCORDANCE WITH THE MANUFACTURER'S SPECIFICATIONS.

THE CONTRACTOR SHALL REPAIR OR REPLACE A DAMAGED UNIT WITHIN 24 HOURS OF A DAMAGING IMPACT.

WHEN BIDIRECTIONAL DESIGNS ARE SPECIFIED, THE CONTRACTOR SHALL SUPPLY APPROPRIATE TRANSITIONS.

WHEN GATING IMPACT ATTENUATORS ARE DESIRED, THE CONTRACTOR SHALL SUBMIT DOCUMENTATION TO THE ENGINEER FOR ACCEPTANCE.

THE COST FOR THE ADDITIONAL BARRIER REQUIRED FOR A GATING IMPACT ATTENUATOR SHALL BE INCLUDED IN THE COST OF THE GATING IMPACT ATTENUATOR.

PAYMENT FOR THE ABOVE WORK SHALL BE MADE AT THE UNIT PRICE BID AND SHALL INCLUDE ALL LABOR, TOOLS, EQUIPMENT AND MATERIALS NECESSARY TO CONSTRUCT AND MAINTAIN A COMPLETE AND FUNCTIONAL IMPACT ATTENUATOR SYSTEM, INCLUDING ALL RELATED BACKUPS, TRANSITIONS, LEVELING PADS, HARDWARE AND GRADING, NOT SEPARATELY SPECIFIED, AS REQUIRED BY THE MANUFACTURER.

WORK ZONE INCREASED PENALTIES SIGN (R11-H5A)

R11- H5A- 48 SIGNS SHALL BE FURNISHED, ERECTED, AND MAINTAINED IN GOOD CONDITION AND/OR REPLACED AS NECESSARY AND SUBSEQUENTLY REMOVED BY THE CONTRACTOR. SIGNS SHALL BE MOUNTED AT THE APPROPRIATE OFFSETS AND ELEVATIONS AS PRESCRIBED BY THE OHIO MANUAL OF UNIFORM TRAFFIC CONTROL DEVICES. THEY SHALL BE MAINTAINED ON SUPPORTS MEETING CURRENT SAFETY CRITERIA.

THE SIGNS MAY BE ERECTED OR UNCOVERED NO MORE THAN FOUR HOURS BEFORE THE ACTUAL START OF WORK. THE SIGNS SHALL BE REMOVED OR COVERED NO LATER THAN FOUR HOURS FOLLOWING RESTORATION OF ALL LANES TO TRAFFIC WITH NO RESTRICTIONS, OR SOONER AS DIRECTED BY THE ENGINEER. TEMPORARY SIGN COVERING AND UNCOVERING DUE TO TEMPORARY LANE RESTORATIONS SHALL BE GUIDED BY THE FOUR- HOUR LIMITATIONS STATED ABOVE. SUCH LANE RESTORATIONS SHOULD BE EXPECTED TO REMAIN IN EFFECT FOR 30 OR MORE CONSECUTIVE CALENDAR DAYS, SUCH AS DURING WINTER SHUT-DOWNS.

THE R11- H5A- 48 SIGNS SHALL BE MOUNTED ON 2 NO. 3 POSTS WHEN LOCATED WITHIN CLEAR ZONES.

THE CONTRACTOR MAY USE SIGNS AND SUPPORTS IN USED, BUT GOOD, CONDITION PROVIDED THE SIGNS MEET CURRENT ODOT SPECIFICATIONS. SIGN FACES SHALL BE RETROREFLECTORIZED WITH TYPE G SHEETING COMPLYING WITH THE REQUIREMENTS OF C&MS 730.19.

WORK ZONE INCREASED PENALTIES SIGNS AND SUPPORTS WILL BE MEASURED AS THE NUMBER OF SIGN INSTALLATIONS, INCLUDING THE SIGN AND NECESSARY SUPPORTS. IF A SIGN AND SUPPORT COMBINATION IS REMOVED AND REERECTED AT ANOTHER LOCATION AS DIRECTED BY THE ENGINEER, IT SHALL BE CONSIDERED ANOTHER UNIT.

PAYMENT FOR ACCEPTED QUANTITIES, COMPLETE, IN PLACE WILL BE MADE AT THE CONTRACT UNIT PRICE. PAYMENT SHALL BE FULL COMPENSATION FOR ALL MATERIALS, LABOR, INCIDENTALS AND EQUIPMENT FOR FURNISHING, ERECTING, MAINTAINING, COVERING DURING SUSPENSION OF WORK, AND REMOVAL OF THE SIGN
AND SUPPORT.

ITEM 614, WORK ZONE INCREASED PENALTIES SIGN 1 EACH

FLOODLIGHTING

FLOODLIGHTING OF THE WORK SITE FOR OPERATIONS CONDUCTED DURING NIGHTTIME PERIODS SHALL BE ACCOMPLISHED SO THAT THE LIGHTS DO NOT CAUSE GLARE TO THE DRIVERS ON THE ROADWAY. TO ENSURE THE ADEQUACY OF THE FLOODLIGHT PLACEMENT, THE CONTRACTOR AND THE ENGINEER SHALL DRIVE THROUGH THE WORK SITE EACH NIGHT WHEN THE LIGHTING IS IN PLACE AND OPERATIVE PRIOR TO COMMENCING ANY WORK. IF GLARE IS DETECTED, THE LIGHT PLACEMENT AND SHIELDING SHALL BE ADJUSTED TO THE SATISFACTION OF THE ENGINEER BEFORE WORK PROCEEDS.

PAYMENT FOR ALL LABOR, EQUIPMENT AND MATERIALS SHALL BE INCLUDED IN THE LUMP SUM CONTRACT PRICE FOR ITEM 614, MAINTAINING TRAFFIC.

MAINTENANCE OF TRAFFIC NOTES (1 OF 4)

DESIGN AGENCY
IBI

DESIGNER BSS
REVIEWER KMK 12-01-22
PROJECT ID 92616
SHEET P.17 TOTAL 170

FRA-23-4.19 PART 2 (PID 92616)

MODEL: Sheet PAPERSIZE: 17x11 (in.) DATE: 2022-12-09 TIME: 8:30:38 AM USER: william.croxton
\\10.120.112.5\bbshare\122592_SafetyDesign\7.0_Production\7.3_Design\04_CivilWorksets\110380_FRA-23\400-Engineering\MOT\Sheets\110380_MN001.dgn

MAINTENANCE OF TRAFFIC SIGNAL/FLASHER INSTALLATION

THE CONTRACTOR SHALL BE RESPONSIBLE FOR MAINTAINING TRAFFIC SIGNAL/FLASHER INSTALLATIONS WITHIN THE PROJECT UNDER THE FOLLOWING CONDITIONS:

1. EXISTING SIGNAL/FLASHER INSTALLATIONS WHICH THE PLANS REQUIRE THE CONTRACTOR TO ADJUST, MODIFY, ADD ONTO OR REMOVE, OR WHICH THE CONTRACTOR ACTUALLY ADJUSTS, MODIFIES OR OTHERWISE DISTURBS. THE CONTRACTOR SHALL BE RESPONSIBLE FOR THE ENTIRE INSTALLATION (AT AN INTERSECTION) FROM THE TIME HIS OPERATIONS FIRST DISTURB THE INSTALLATION UNTIL THE INSTALLATION HAS BEEN SUBSEQUENTLY REMOVED OR MODIFIED AND THE WORK IS ACCEPTED.

2. NEW OR REUSED SIGNAL/FLASHER INSTALLATIONS OR DEVICES, INSTALLED BY THE CONTRACTOR. THE CONTRACTOR SHALL BE RESPONSIBLE FOR MAINTENANCE OF THESE FROM THE TIME OF INSTALLATION UNTIL THE WORK IS ACCEPTED.

THE CONTRACTOR SHALL CORRECT AS QUICKLY AS POSSIBLE ALL OUTAGES OR MALFUNCTIONS. HE SHALL PROVIDE THE MAINTAINING AGENCY AND THE ENGINEER SUCH ADDRESSES AND PHONE NUMBERS WHERE HIS MAINTENANCE FORCES CAN BE CONTACTED. THE CONTRACTOR SHALL PROVIDE ONE OR MORE PERSONS TO RECEIVE ALL CALLS AND DISPATCH THE NECESSARY MAINTENANCE FORCES TO CORRECT OUTAGES. SUCH A PERSON OR PERSONS MAY BE USED TO PERFORM OTHER DUTIES AS LONG AS PROMPT ATTENTION IS GIVEN TO THESE CALLS AND A PERSON IS READILY AVAILABLE CONTINUOUSLY 24 HOURS A DAY, 7 DAYS A WEEK. ALL LAMP OUTAGES, CABLE OUTAGES, ELECTRICAL FAILURES, EQUIPMENT MALFUNCTIONS AND MISALIGNED SIGNAL
HEADS SHALL BE CORRECTED TO THE SATISFACTION OF THE ENGINEER WITH THE SIGNAL BACK TO SERVICE WITHIN FOUR HOURS AFTER THE CONTRACTOR HAS BEEN NOTIFIED OF THE OUTAGE.

IN THE EVENT NEW SIGNALS ARE DAMAGED PRIOR TO ACCEPTANCE, ALL DAMAGED EQUIPMENT EXCEPT POLES AND CONTROL EQUIPMENT SHALL BE REPLACED BY THE CONTRACTOR TO THE SATISFACTION OF THE ENGINEER WITH THE SIGNAL BACK IN SERVICE WITHIN 8 HOURS AFTER THE CONTRACTOR'S NOTIFICATION OF THE OUTAGE. THE CONTRACTOR SHALL ARRANGE FOR FULL TRAFFIC CONTROL UNTIL THE SIGNAL IS BACK IN OPERATION. IF POLES AND/OR CONTROL EQUIPMENT ARE DAMAGED AND MUST BE REPLACED, THE CONTRACTOR SHALL MAKE TEMPORARY REPAIRS AS NECESSARY TO BRING THE SIGNAL BACK INTO FULL OPERATION WITHIN THE ALLOWED 8- HOUR PERIOD, AND SHALL MAKE PERMANENT REPAIRS OR REPLACEMENT AS SOON THEREAFTER AS POSSIBLE.

NONE OF THE ABOVE SHALL BE CONSTRUED AS COLLECTIVE OR CONSECUTIVE OUTAGE TIME PERIODS AT ANY ONE LOCATION. THAT IS, WHERE MORE THAN ONE OUTAGE OCCURS AT ANY ONE LOCATION THEN THE ALLOTTED TIME LIMIT SHALL BE FOR THE WORST SINGLE OUTAGE.

WHERE OUTAGES ARE THE DIRECT RESULT OF A VEHICLE ACCIDENT THE RESPONSE OF THE CONTRACTOR SHALL BE AS OUTLINED ABOVE. THE CONTRACTOR SHALL BE RESPONSIBLE FOR COLLECTION OF ANY COMPENSATION FOR THIS WORK FROM THOSE PARTIES RESPONSIBLE FOR THE DAMAGE.

WHERE THE CONTRACTOR HAS FAILED TO, OR CANNOT RESPOND TO, AN OUTAGE OR SIGNAL EQUIPMENT MALFUNCTION, AT THESE LOCATIONS WITHIN HIS RESPONSIBILITY, WITHIN PERIODS AS SPECIFIED ABOVE, THE ENGINEER MAY INVOKE THE PROVISIONS OF SECTION 105.15 AND ANY SUBSEQUENT BILLINGS TO THE STATE OR THE CITY OF COLUMBUS, OHIO FOR POLICE SERVICES AND MAINTENANCE SERVICES BY CITY FORCES SHALL BE DEDUCTED FROM MONIES DUE OR TO BECOME DUE THE CONTRACTOR IN ACCORDANCE WITH PROVISIONS OF SECTION 105.15.

THE CONTRACTOR SHALL PROVIDE THE MAINTENANCE SERVICE ENTIRELY WITH HIS FORCES OR HE MAY CHOOSE TO ENTER INTO A COOPERATIVE UNDERSTANDING WITH THE LOCAL MAINTAINING AGENCY TO PROVIDE THE MAINTENANCE. THE CONTRACTOR SHALL INFORM THE ENGINEER, IN WRITING, OF THE MAINTENANCE METHOD SELECTED.

THE CONTRACTOR SHALL BE RESPONSIBLE FOR ANY DAMAGE TO ANY TRAFFIC SIGNAL COMPONENTS REQUIRED TO BE HANDLED DURING THE RELOCATION OF POLES AND REVISIONS TO THE SIGNAL SYSTEM. WHEN A TRAFFIC SIGNAL MUST BE TAKEN OUT OF SERVICE BY THE CONTRACTOR, DUE TO CONSTRUCTION PROCEDURES, THIS OUTAGE SHALL NOT EXCEED 4 HOURS AND SHALL NOT INCLUDE THE HOURS OF 6 AM TO 6 PM. ANY SIGNALIZED INTERSECTION, WHERE THE SIGNAL IS OUT OF SERVICE DUE TO CONSTRUCTION PROCEDURES, OR DUE TO AN OUTAGE OR MALFUNCTION OF EQUIPMENT AS DESCRIBED ABOVE, SHALL BE PROTECTED, BY THE CONTRACTOR, BY THE INSTALLATION OF TEMPORARY "STOP" SIGNS.

ANY VEHICULAR TRAFFIC SIGNAL HEAD, EITHER NEW OR EXISTING WHICH WILL BE OUT OF OPERATION SHALL BE COVERED IN THE MANNER DESCRIBED IN 632.25.

THE CONTRACTOR SHALL MAINTAIN COMPLETE RECORDS OF MALFUNCTIONS INCLUDING:

1. TIME OF NOTIFICATION OF MALFUNCTION;

2. TIME OF WORK CREWS ARRIVAL TO CORRECT THE MALFUNCTION;

3. ACTIONS TAKEN TO CORRECT THE MALFUNCTION, INCLUDING A LIST OF PARTS REPAIRED OR REPLACED;

4. A DIAGNOSIS OF REASON FOR THE MALFUNCTION AND PROBABILITY OF REOCCURRENCE;

5. TIME OF COMPLETION OF THE REPAIR AND SYSTEM RESTORED TO FULL SERVICE.

A COPY OF THESE RECORDS SHALL BE PROVIDED TO THE ENGINEER WITHIN THREE (3) WORKING DAYS FOLLOWING COMPLETION OF EACH REPAIR.

ALL COSTS RESULTING FROM THE ABOVE REQUIREMENTS SHALL BE CONSIDERED TO BE INCLUDED IN THE LUMP SUM PRICE BID FOR ITEM 614, MAINTAINING TRAFFIC.

ITEM 614 - SPECIAL - WORK ZONE TRAFFIC SIGNAL

UNDER THIS ITEM OF WORK, THE CONTRACTOR SHALL FURNISH, INSTALL, RELOCATE, MODIFY AND SUBSEQUENTLY REMOVE: TEMPORARY SIGNAL SUPPORTS, DOWN GUYS, GROUND RODS, SIGNAL CABLE, POWER CABLE, SERVICE CABLE, CONDUIT RISERS, MESSENGER WIRE, SIGNAL HEADS, COVERING OF VEHICULAR SIGNAL HEADS AND A TEMPORARY CONTROLLER AS NEEDED TO RENDER A FULLY FUNCTIONAL TEMPORARY SIGNALIZED INTERSECTION.

AS DETAILED WITHIN, TEMPORARY TRAFFIC SIGNALS OR TRAFFIC SIGNAL MODIFICATIONS TO ACCOMMODATE INDIVIDUAL MAINTENANCE OF TRAFFIC PHASES SHALL BE INSTALLED AT THE INTERSECTIONS LISTED BELOW.

- US-23 & RATHMELL RD

ALL TEMPORARY TRAFFIC SIGNAL EQUIPMENT SHALL COMPLY WITH THE SPECIFICATIONS OUTLINED FOR THE PERMANENT SIGNAL INSTALLATION INCLUDING GROUNDING AND BONDING AND "TRAFFIC SIGNAL PLAN AND SPECIFICATION COMPLIANCE". ALL METHODS OF TRAFFIC CONTROL SHALL BE APPROVED BY THE ENGINEER AND SHALL BE IN PLACE AND OPERATING PRIOR TO THE DEACTIVATION AND REMOVAL AND/OR RELOCATION OF ANY EXISTING SIGNAL EQUIPMENT. ALL MODIFICATIONS TO SIGNALIZATION SHALL BE DONE UNDER THE PROTECTION OF A LAW ENFORCEMENT OFFICER.

ANY VEHICULAR TRAFFIC SIGNAL HEAD THAT WILL BE OUT OF OPERATION SHALL BE COVERED IN ACCORDANCE WITH 632.25. ANY EXISTING VEHICULAR OR PEDESTRIAN HEAD THAT IS NOT FUNCTIONAL SHALL BE REMOVED IMMEDIATELY OR COVERED. ANY PEDESTRIAN BUTTONS NOT IN USE SHALL ALSO BE COVERED.

EACH TEMPORARY SIGNAL POLE LOCATION SHALL BE STAKED AND THE LOCATION APPROVED BY THE CITY OF COLUMBUS. THE CONTRACTOR MAY REUSE EXISTING SPAN AND PIGTAILS OR INSTALL NEW AS REQUIRED. THE CONTRACTOR SHALL TRANSFER EXISTING SIGNAL ITEMS AND EXTEND EXISTING CABLE AS NEEDED. WEATHERPROOF CABLE SPLICING IS PERMITTED. DOWN GUYS SHALL BE SPECIFIED FOR ALL TEMPORARY WOOD POLES. ONE DOWN GUY PER POLE SHALL BE USED FOR A LAYOUT THAT CONTAINS A MAXIMUM OF 2 VEHICULAR SIGNAL HEADS PER SPAN. TWO DOWN GUYS PER POLE SHALL BE SPECIFIED FOR 3 OR MORE VEHICULAR SIGNAL HEADS PER SPAN. DOWN GUYS SHALL BE POSITIONED TO COUNTERACT THE MOMENT CREATED BY THE SPAN CONFIGURATION. ANY CHANGE TO THE PLANNED POLE LOCATION OR SPAN CONFIGURATION AS DETAILED IN THE PLAN SHALL BE APPROVED BY THE CITY OF COLUMBUS. THE CONTRACTOR SHALL SUBMIT A DIAGRAM TO THE CITY DOCUMENTING PROPOSED CHANGES.

INSTALL THE SPAN TO PROVIDE FOR A 5 TO 6 PERCENT SAG FOR WOOD POLES. ATTACH THE SPAN NO CLOSER THAN 2 FT. FROM THE TOP OF THE POLE. THE LOWEST VEHICULAR HEAD IN EACH DIRECTION SHALL BE 16.5 FT. ABOVE PAVEMENT SURFACE WITH THE REMAINING VEHICULAR HEADS MEETING THE REQUIREMENTS OF THE OHIO MANUAL OF UNIFORM TRAFFIC CONTROL DEVICES.

THE CONTRACTOR SHALL SHIFT EXISTING SIGNAL HEADS TO ALIGN WITH LANES IN THE INDIVIDUAL MAINTENANCE OF TRAFFIC PHASES. DETAILED HEAD PLACEMENT HAS BEEN PROVIDED FOR EACH PHASE OF WORK IN THE MAINTENANCE OF TRAFFIC PLAN. THIS ITEM SHALL CONSIST OF ADJUSTING THE LOCATION OF TEMPORARY TRAFFIC SIGNAL HEADS FOR EACH PHASE OF CONSTRUCTION INCLUDING UNLASHING AND RELASHING ALL WIRING. ALL TEMPORARY AERIAL WIRING SHALL BE A MINIMUM OF 21 FT. ABOVE THE ROADWAY SURFACE.

VEHICULAR DETECTION SHALL BE MAINTAINED AT ALL TIMES AND DURING ALL PHASES OF CONSTRUCTION USING EITHER EXISTING LOOP DETECTORS OR TEMPORARY VIDEO OR RADAR DETECTION.

LOCATE THE NON-FUSED POWER SUPPLY VOLTAGE (120 VOLT) IN A SEPARATE CONDUIT. IN ADDITION, LOCATE THE LOOP DETECTOR, PUSH BUTTON, AND VIDEO DETECTION CABLES IN A SEPARATE CONDUIT FROM ALL OTHER CABLES.

THIS ITEM OF WORK SHALL INCLUDE ALL LABOR, EQUIPMENT AND MATERIAL NECESSARY TO PROVIDE POWER TO THE TRAFFIC SIGNAL CONTROLLER FROM THE PROPOSED OR EXISTING POWER SOURCES AS DETERMINED BY CONSTRUCTION SEQUENCING.

THIS ITEM OF WORK SHALL INCLUDE ALL LABOR, EQUIPMENT AND MATERIALS NECESSARY TO FURNISH, INSTALL, MODIFY, REMOVE, STORE, ERECT, RELOCATE, ADJUST AND REPAIR TEMPORARY TRAFFIC SIGNAL ITEMS AS DESCRIBED ABOVE.

ALL COSTS FOR THE ABOVE WORK SHALL BE INCLUDED IN THE PRICE BID FOR ITEM 614 SPECIAL, WORK ZONE TRAFFIC SIGNAL AND SHALL BE PER EACH INTERSECTION.

ACCESS TO PRIVATE PROPERTY

ACCESS TO DRIVES SHALL BE MAINTAINED VIA EXISTING PAVEMENT AND TEMPORARY PAVEMENT OR ITEM 410. IN THE EVENT THAT A DRIVE CANNOT BE MAINTAINED AND A CLOSURE IS NEEDED THE CONTRACTOR WILL COORDINATE WITH THE PROPERTY OWNER TO MINIMIZE THE IMPACT TO THE OWNER.

COMMERCIAL PROPERTY WITH MULTIPLE DRIVES MAY HAVE ONE DRIVE CLOSED WHEN WORKING IN THE AREA OF THE DRIVE. COMMERCIAL PROPERTY WITH ONLY ONE DRIVEWAY OR DRIVEWAYS WITH ONE DIRECTION TRAFFIC USE WILL BE CONSTRUCTED PART WIDTH. THE CONTRACTOR WILL COORDINATE WITH THE PROPERTY OWNER TO MINIMIZE THE IMPACT TO THE OWNER.

MAINTAIN ACCESS TO RESIDENTIAL PROPERTIES AT ALL TIMES. WHEN A RESIDENTIAL DRIVE IS CLOSED FOR CONSTRUCTION, MAINTAIN ALTERNATE ACCESS TO THE PROPERTY. IT MAY BE REQUIRED FOR THE CONTRACTOR TO MAINTAIN ONE PASSABLE LANE WITHIN A CLOSURE IN ORDER FOR VEHICLES TO ACCESS RESIDENCY WITH A VEHICLE.

UNLESS CALLED OUT IN THE PLANS THE CONTRACTOR WILL COORDINATED ANY CLOSURES WITH PROPERTY OWNERS AND BE RESPONSIBLE FOR ANY AND ALL PROPERTY USE AGREEMENTS FOR ALTERNATIVE ACCESS.

SUCCESSFULLY NOTIFY THE OCCUPANTS/OWNERS OF COMMERCIAL OR RESIDENTIAL DRIVES TO BE CLOSED AND COORDINATE THE CLOSURE AT LEAST 48 HOURS BEFORE THE CLOSURE BEGINS (SIMPLY LEAVING A WRITTEN NOTICE OR PHONE MESSAGE IS NOT SUFFICIENT). COORDINATE ALTERNATE ACCESS TO RESIDENTIAL PROPERTIES WITH THE OWNER/OCCUPANT.

PAYMENT FOR ALL LABOR, EQUIPMENT, LAW ENFORCEMENT OFFICERS AND MATERIALS SHALL BE INCLUDED IN THE LUMP SUM CONTRACT PRICE FOR ITEM 614, MAINTAINING TRAFFIC UNLESS ITEMIZED SEPARATELY

MAINTENANCE OF TRAFFIC NOTES (2 OF 4)

DESIGN AGENCY
IBI

DESIGNER
BSS

REVIEWER
KMK 12-01-22

PROJECT ID
92616

SHEET P.18 | TOTAL 170

FRA-23-4.19 PART 2 (PID 92616)

MODEL: Sheet PAPERSIZE: 17x11 (in.) DATE: 2022-12-09 TIME: 8:30:41 AM USER: william.croxton
\\10.120.112.5\bbshare\122592_SafetyDesign\7.0_Production\7.3_Design\04_CivilWorksets\110380_FRA-23\400-Engineering\MOT\Sheets\110380_MN002.dgn

ITEM 614 - LAW ENFORCEMENT OFFICER (WITH PATROL CAR) FOR ASSISTANCE DURING CONSTRUCTION OPERATIONS

USE OF LAW ENFORCEMENT OFFICERS (LEOS) BY CONTRACTORS OTHER THAN THE USES SPECIFIED BELOW WILL NOT BE PERMITTED AT PROJECT COST. LEOS SHOULD NOT BE USED WHERE THE OMUTCD INTENDS THAT FLAGGERS BE USED.

IN ADDITION TO THE REQUIREMENTS OF C&MS 614 AND THE OMUTCD, A UNIFORMED LEO WITH AN OFFICIAL PATROL CAR (CAR WITH TOP- MOUNTED EMERGENCY FLASHING LIGHTS AND COMPLETE MARKINGS OF THE APPROPRIATE LAW ENFORCEMENT AGENCY) SHALL BE PROVIDED FOR THE FOLLOWING TRAFFIC CONTROL TASKS:

-DURING THE ENTIRE ADVANCE PREPARATION AND CLOSURE SEQUENCE WHERE COMPLETE BLOCKAGE OF TRAFFIC IS REQUIRED.

-DURING A TRAFFIC SIGNAL INSTALLATION WHEN IMPACTING THE NORMAL FUNCTION OF THE SIGNAL OR THE FLOW OF TRAFFIC, OR WHEN TRAFFIC NEEDS TO BE DIRECTED THROUGH AN ENERGIZED TRAFFIC SIGNAL CONTRARY TO THE SIGNAL DISPLAY (E.G., DIRECTING MOTORISTS THROUGH A RED LIGHT).

IN ADDITION TO THE REQUIREMENT OF C&MS 614 AND THE OMUTCD, A UNIFORMED LEO WITH AN OFFICIAL PATROL CAR (CAR WITH TOP- MOUNTED EMERGENCY FLASHING LIGHTS AND COMPLETE MARKINGS OF THE APPROPRIATE LAW ENFORCEMENT AGENCY) SHOULD BE PROVIDED FOR THE FOLLOWING TRAFFIC CONTROL TASKS AS APPROVED BY THE ENGINEER:

-FOR LANE CLOSURES: DURING INITIAL SET- UP PERIODS, TEAR DOWN PERIODS, SUBSTANTIAL SHIFTS OF A CLOSURE POINT OR WHEN NEW LANE CLOSURE ARRANGEMENTS ARE INITIATED FOR LONG- TERM LANE CLOSURES/SHIFTS (FOR THE FIRST AND LAST DAY OF MAJOR CHANGES IN TRAFFIC CONTROL SETUP).

IN GENERAL, LEOS SHOULD BE POSITIONED IN ADVANCE OF AND ON THE SAME SIDE AS THE LANE RESTRICTION OR AT THE POINT OF ROAD CLOSURE, AND TO MANUALLY CONTROL TRAFFIC MOVEMENTS THROUGH SIGNALIZED INTERSECTIONS IN WORK ZONES.

LEOS SHOULD NOT FORGO THEIR TRAFFIC CONTROL RESPONSIBILITIES TO APPREHEND MOTORISTS FOR ROUTINE TRAFFIC VIOLATIONS. HOWEVER, IF A MOTORIST'S ACTIONS ARE CONSIDERED TO BE RECKLESS, THEN PURSUIT OF THE MOTORIST IS APPROPRIATE.

THE LEOS WORK AT THE DIRECTION OF THE CONTRACTOR. THE CONTRACTOR IS RESPONSIBLE FOR SECURING THE SERVICES OF THE LEOS WITH THE APPROPRIATE AGENCIES AND COMMUNICATING THE INTENTIONS OF THE PLANS WITH RESPECT TO DUTIES OF THE LEOS. THE ENGINEER SHALL HAVE FINAL CONTROL OVER THE LEOS' DUTIES AND PLACEMENT, AND WILL RESOLVE ANY ISSUES THAT MAY ARISE BETWEEN THE TWO PARTIES.

ENSURE PROVIDED LEOS HAVE BEEN TRAINED APPROPRIATE TO THE JOB DECISIONS THEY ARE REQUIRED TO MAKE WHILE ON THE PROJECT, IN ACCORDANCE WITH C&MS 614.03.

THE LEO SHALL REPORT IN TO THE CONTRACTOR PRIOR TO THE START OF THE SHIFT, IN ORDER TO RECEIVE INSTRUCTIONS REGARDING SPECIFIC WORK ASSIGNMENTS DURING HIS/HER SHIFT. THE LEO IS EXPECTED TO STAY AT THE PROJECT SITE FOR THE ENTIRE DURATION OF HIS/HER SHIFT. THE LEO SHALL REPORT TO THE CONTRACTOR AT THE END OF HIS/HER SHIFT. SHOULD IT BE NECESSARY TO LEAVE THE PROJECT SITE, THE LEO SHALL NOTIFY THE ENGINEER. THE CONTRACTOR SHALL PROVIDE THE LEO WITH A TWO- WAY COMMUNICATION DEVICE WHICH SHALL BE RETURNED TO THE CONTRACTOR AT THE END OF HIS/HER SHIFT.

LEOS (WITH PATROL CAR) REQUIRED BY THE TRAFFIC MAINTENANCE TASKS ABOVE SHALL BE PAID FOR ON A UNIT PRICE (HOURLY) BASIS UNDER ITEM 614, LAW ENFORCEMENT OFFICER (WITH PATROL CAR) FOR ASSISTANCE. THE FOLLOWING ESTIMATED QUANTITIES HAVE BEEN CARRIED TO THE GENERAL SUMMARY.

ITEM 614, LAW ENFORCEMENT OFFICER WITH PATROL CAR FOR ASSISTANCE 240 HOURS

THE HOURS PAID SHALL INCLUDE ANY MINIMUM SHOW- UP TIME REQUIRED BY THE LAW ENFORCEMENT AGENCY INVOLVED.

ANY ADDITIONAL COSTS (ADMINISTRATIVE OR OTHERWISE) INCURRED BY THE CONTRACTOR TO OBTAIN THE SERVICES OF AN LEO ARE INCLUDED WITH THE BID UNIT PRICE FOR ITEM 614, LAW ENFORCEMENT OFFICER WITH PATROL CAR FOR ASSISTANCE.

WORK ZONE RAISED PAVEMENT MARKER, AS PER PLAN

WORK ZONE RAISED PAVEMENT MARKERS, AS PER PLAN, AND THEIR INSTALLATION SHALL CONFORM TO C&MS 614 OR C&MS 621 AS SPECIFIED HEREIN.

-RAISED PAVEMENT MARKERS IN USE DURING THE SNOW- PLOWING SEASON SHALL CONFORM TO 621.
-RAISED PAVEMENT MARKERS IN USE DURING THE NON- SNOW- PLOW SEASON SHALL CONFORM TO EITHER 614 OR TO 621.

THE SNOW- PLOWING SEASON SHALL RUN FROM OCTOBER 15 THROUGH APRIL 1.

IF PROJECT DELAYS, NOT THE FAULT OF ODOT, CAUSE THE WORK TO EXTEND INTO THE SNOW- PLOWING SEASON, THE CONTRACTOR SHALL BE RESPONSIBLE FOR REPLACING WORK ZONE RAISED PAVEMENT MARKERS (WZRPMS) CONFORMING TO C&MS 614, WITH RAISED PAVEMENT MARKERS CONFORMING TO 621, AS DETERMINED BY THE ENGINEER, AT THE CONTRACTOR'S EXPENSE.
THIS ITEM SHALL INCLUDE PURCHASE, INSTALLATION AND REMOVAL OF ITEM 614 WORK ZONE RAISED PAVEMENT MARKER, AS PER PLAN, INCLUDING FILLING OF ANY DEPRESSIONS CREATED IN THE PAVEMENT AS PER C&MS 621.08.

TRANSITION AREA RESURFACING

RESURFACING OF THE TRANSITION AREAS SHALL BE PERFORMED AT THE TIME THAT THE SURFACE COURSE IS BEING APPLIED TO THE ENTIRE PROJECT. PRIOR TO APPLICATION OF THE SURFACE COURSE ON THE PROJECT, THE EXISTING PAVEMENT WITHIN THE TRANSITION AREA SHALL BE REMOVED TO A DEPTH NECESSARY TO REACH THE LEVEL OF THE INTERMEDIATE COURSE OF THE PAVEMENT, AS DETERMINED BY THE ENGINEER.

THE FOLLOWING ITEMS HAVE BEEN CARRIED TO THE GENERAL SUMMARY:

($$$) ITEM 254 PAVEMENT PLANING, ASPHALT CONCRETE (1" MIN, 3.25" MAX)	6248 SY
($$$) ITEM 407 NON-TRACKING TACK COAT (APPLIED AT AVG 0.085 GAL/SY)	532 GAL
($$$) ITEM 442 (1.5") ASPHALT CONCRETE SURFACE COURSE, 12.5MM, TYPE A (446), PG 70-22M	261 CY
($$$) ITEM 442 (1.75") ASPHALT CONCRETE INTERMEDIATE COURSE, 12.5MM, TYPE A (446)	304 CY

($$$) FUNDING SPLIT 5/NHS/PV

ITEM 614 - PORTABLE CHANGEABLE MESSAGE SIGNS, AS PER PLAN

THE CONTRACTOR SHALL FURNISH, INSTALL, MAINTAIN AND REMOVE, WHEN NO LONGER NEEDED, A CHANGEABLE MESSAGE SIGN. THE SIGN SHALL BE OF A TYPE SHOWN ON A LIST OF APPROVED PCMS UNITS AVAILABLE ON THE OFFICE OF MATERIALS MANAGEMENT WEB PAGE. THE LIST CONTAINS CLASS A AND B UNITS WITH MINIMUM LEGIBILITY DISTANCES OF 800 FEET AND 650 FEET, RESPECTIVELY.

EACH SIGN SHALL BE TRAILER-MOUNTED AND EQUIPPED WITH A FUNCTIONAL DIMMING MECHANISM, TO DIM THE SIGN DURING DARKNESS, AND A TAMPER AND VANDAL PROOF ENCLOSURE. EACH SIGN SHALL BE PROVIDED WITH APPROPRIATE TRAINING AND OPERATION INSTRUCTIONS TO ENABLE ON-SITE PERSONNEL TO OPERATE AND TROUBLESHOOT THE UNIT. THE SIGN SHALL ALSO BE CAPABLE OF BEING POWERED BY AN ELECTRICAL SERVICE DROP FROM A LOCAL UTILITY COMPANY. THE PCMS SHALL BE DELINEATED IN ACCORDANCE WITH C&MS 614.03.

PLACEMENT, OPERATION, MAINTENANCE AND ALL ACTIVATION OF THE SIGNS BY THE CONTRACTOR SHALL BE AS DIRECTED BY THE ENGINEER. THE PCMS SHALL BE LOCATED IN A HIGHLY VISIBLE POSITION YET PROTECTED FROM TRAFFIC. THE CONTRACTOR SHALL, AT THE DIRECTION OF THE ENGINEER, RELOCATE THE PCMS TO IMPROVE VISIBILITY OR ACCOMMODATE CHANGED CONDITIONS. WHEN NOT IN USE, THE PCMS SHALL BE TURNED OFF. ADDITIONALLY, WHEN NOT IN USE FOR EXTENDED PERIODS OF TIME, THE PCMS SHALL BE TURNED AWAY FROM ALL TRAFFIC.

THE ENGINEER SHALL BE PROVIDED ACCESS TO EACH SIGN UNIT AND SHALL BE PROVIDED WITH APPROPRIATE TRAINING AND OPERATION INSTRUCTIONS TO ENABLE ODOT PERSONNEL TO OPERATE AND TROUBLESHOOT THE UNIT, AND TO REVISE SIGN MESSAGES, IF NECESSARY.

ALL MESSAGES TO BE DISPLAYED ON THE SIGN WILL BE PROVIDED BY THE ENGINEER. A LIST OF ALL REQUIRED PRE-PROGRAMMED MESSAGES WILL BE GIVEN TO THE CONTRACTOR AT THE PROJECT PRECONSTRUCTION CONFERENCE. THE SIGN SHALL HAVE THE CAPABILITY TO STORE UP TO 99 MESSAGES. MESSAGE MEMORY OR PRE-PROGRAMMED DISPLAYS SHALL NOT BE LOST AS A RESULT OF POWER FAILURES TO THE ON-BOARD COMPUTER. THE SIGN LEGEND SHALL BE CAPABLE OF BEING CHANGED IN THE FIELD. THREE- LINE PRESENTATION FORMATS WITH UP TO SIX MESSAGE PHASES SHALL BE SUPPORTED. PCMS FORMAT SHALL PERMIT THE COMPLETE MESSAGE FOR EACH PHASE TO BE READ AT LEAST TWICE.

THE PCMS SHALL CONTAIN AN ACCURATE CLOCK AND PROGRAMMING LOGIC WHICH WILL ALLOW THE SIGN TO BE ACTIVATED, DEACTIVATED OR MESSAGES CHANGED AUTOMATICALLY AT DIFFERENT TIMES OF THE DAY FOR DIFFERENT DAYS OF THE WEEK.

THE PCMS UNIT SHALL BE MAINTAINED IN GOOD WORKING ORDER BY THE CONTRACTOR IN ACCORDANCE WITH THE PROVISIONS OF C&MS 614.07. THE CONTRACTOR SHALL, PRIOR TO ACTIVATING THE UNIT, MAKE ARRANGEMENTS, WITH AN AUTHORIZED SERVICE AGENT FOR THE PCMS, TO ASSURE PROMPT SERVICE IN THE EVENT OF FAILURE. ANY FAILURE SHALL NOT RESULT IN THE SIGN BEING OUT OF SERVICE FOR MORE THAN 12 HOURS, INCLUDING WEEKENDS. FAILURE TO COMPLY MAY RESULT IN AN ORDER TO STOP WORK AND OPEN ALL TRAFFIC LANES AND/OR IN THE DEPARTMENT TAKING APPROPRIATE ACTION TO SAFELY CONTROL TRAFFIC. THE ENTIRE COST TO CONTROL TRAFFIC, ACCRUED BY THE DEPARTMENT DUE TO THE CONTRACTOR'S NONCOMPLIANCE, WILL BE DEDUCTED FROM MONEYS DUE, OR TO BECOME DUE THE CONTRACTOR ON HIS CONTRACT.

THE CONTRACTOR SHALL BE RESPONSIBLE FOR 24- HOUR- PER- DAY OPERATION AND MAINTENANCE OF THESE SIGNS ON THE PROJECT FOR THE DURATION OF THE PHASES WHEN THE PLAN REQUIRES THEIR USE.

PAYMENT FOR THE ABOVE DESCRIBED ITEM SHALL BE AT THE CONTRACT UNIT PRICE. PAYMENT SHALL INCLUDE ALL LABOR, MATERIALS, EQUIPMENT, FUELS, LUBRICATING OILS, SOFTWARE, HARDWARE AND INCIDENTALS TO PERFORM THE ABOVE DESCRIBED WORK.

ITEM 614, PORTABLE CHANGEABLE MESSAGE SIGN, AS PER PLAN
60 SIGN MONTH
ASSUMING 2 PCMS SIGNS FOR 30 MONTHS

DELINEATION OF PORTABLE AND PERMANENT BARRIER

BARRIER REFLECTORS AND OBJECT MARKERS SHALL BE INSTALLED ON ALL PORTABLE BARRIER (PB) USED FOR TRAFFIC CONTROL AND ON PERMANENT CONCRETE BARRIER (INCLUDING BRIDGE PARAPETS) LOCATED WITHIN 5 FEET OF THE EDGE OF THE ADJACENT TRAVEL LANE.

BARRIER REFLECTORS SHALL CONFORM TO C&MS 626, EXCEPT THAT THE SPACING SHALL BE AS PER TRAFFIC SCD MT- 101.70. OBJECT MARKERS AND THEIR INSTALLATION SHALL CONFORM TO C&MS 614.03 AND SCD MT-101.70. WHEN THE PB CONTAINS GLARE SCREEN, ONE SET OF THREE VERTICAL STRIPES OF SHEETING SHALL BE CONSIDERED EQUIVALENT TO AN OBJECT MARKER, ONE-WAY.

INCREASED BARRIER DELINEATION, AS SPECIFIED HEREIN, SHALL BE INSTALLED ON ALL PB AND CONCRETE PERMANENT BARRIER LOCATED WITHIN 5 FEET OF THE EDGE OF THE TRAVELED LANE.

THE INCREASED BARRIER DELINEATION SHALL CONSIST OF THE TRIPLE STACKING OF WORK ZONE BARRIER REFLECTORS.

TRIPLE- STACKED BARRIER REFLECTORS SHALL CONSIST OF ALIGNING THREE BARRIER REFLECTORS VERTICALLY, AT LOCATIONS WHERE A SINGLE BARRIER REFLECTOR WOULD BE OTHERWISE ATTACHED. THERE SHALL BE NO OPEN SPACE BETWEEN THE ADJACENT BARRIER REFLECTORS. THE TRIPLE-STACKED BARRIER REFLECTORS SHALL CONFORM TO C&MS 626, EXCEPT THAT THEY SHALL BE SPACED AND ALIGNED PER TRAFFIC SCD MT-101.70.

PAYMENT SHALL BE FULL COMPENSATION FOR ALL MATERIAL, LABOR, INCIDENTALS AND EQUIPMENT NECESSARY FOR FURNISHING, INSTALLING, MAINTAINING AND REMOVING EACH OF THE ABOVE ITEMS.

DESIGN AGENCY
IBI
DESIGNER BSS
REVIEWER KMK 12-01-22
PROJECT ID 92616
SHEET P.19 TOTAL 170

FRA-23-4.19 PART 2 (PID 92616)
MODEL: Sheet PAPERSIZE: 17x11 (in.) DATE: 2022-12-09 TIME: 8:30:44 AM USER: william.croxton
\\10.120.112.5\bbshare\122592_SafetyDesign\7.0_Production\7.3_Design\04_Civil\Worksets\110380_FRA-23\400-Engineering\MOT\Sheets\110380_MN003.dgn

NOTIFICATION OF TRAFFIC RESTRICTIONS

THROUGHOUT THE DURATION OF THE PROJECT, THE CONTRACTOR SHALL NOTIFY THE PROJECT ENGINEER IN WRITING OF ALL TRAFFIC RESTRICTIONS AND UPCOMING MAINTENANCE OF TRAFFIC CHANGES. THE CONTRACTOR SHALL ENSURE THE WRITTEN NOTIFICATION IS SUBMITTED IN A TIMELY MANNER TO ALLOW THE PROJECT ENGINEER TO MEET THE REQUIRED TIME FRAMES SET FORTH IN THE TABLE BELOW TO INFORM THE SPECIAL HAULING PERMITS SECTION (HAULING.PERMITS@DOT.OHIO.GOV) AND THE DISTRICT PUBLIC INFORMATION OFFICE (PIO). THIS NOTIFICATION SHALL BE RECEIVED BY THE PROJECT ENGINEER PRIOR TO THE PHYSICAL SETUP OF ANY APPLICABLE SIGNS OR MESSAGE BOARDS.

INFORMATION SHOULD INCLUDE BUT IS NOT LIMITED TO ALL CONSTRUCTION ACTIVITIES THAT IMPACT OR INTERFERE WITH TRAFFIC AND SHALL LIST THE SPECIFIC LOCATION, TYPE OF WORK, ROAD STATUS, DATE AND TIME OF RESTRICTION, DURATION OF RESTRICTION, NUMBER OF LANES MAINTAINED, NUMBER OF LANES CLOSED, MINIMUM VERTICAL CLEARANCE, MINIMUM WIDTH OF DRIVABLE PAVEMENT, DETOUR ROUTES IF APPLICABLE, AND ANY OTHER INFORMATION REQUESTED BY THE PROJECT ENGINEER.

NOTIFICATION TIME FRAME TABLE

ITEM	DURATION OF CLOSURE	NOTIFICATION DUE TO DISTRICT 6 COMMUNICATIONS OFFICE	SIGN DISPLAYED TO PUBLIC
RAMP & ROAD CLOSURES	≥ 2 WEEKS	21 CALENDAR DAYS PRIOR TO CLOSURE	14 CALENDAR DAYS PRIOR TO CLOSURE
	> 12 HOURS & < 2 WEEKS	14 CALENDAR DAYS PRIOR TO CLOSURE	7 CALENDAR DAYS PRIOR TO CLOSURE
	≤ 12 HOURS	4 BUSINESS DAYS PRIOR TO CLOSURE	2 BUSINESS DAYS PRIOR TO CLOSURE
LANE CLOSURES & RESTRICTIONS	≥ 2 WEEKS	14 CALENDAR DAYS PRIOR TO CLOSURE	
	< 2 WEEKS	5 BUSINESS DAYS PRIOR TO CLOSURE	
START OF CONSTRUCTION & TRAFFIC PATTERN CHANGES	N/A	14 CALENDAR DAYS PRIOR TO IMPLEMENTATION	

ANY UNFORESEEN CONDITIONS NOT SPECIFIED IN THE PLANS REQUIRING TRAFFIC RESTRICTIONS SHALL ALSO BE REPORTED TO THE PROJECT ENGINEER USING THE NOTIFICATION TIME TABLE.

PUBLIC OUTREACH AND NOTIFICATION

THE CONTRACTOR SHALL BE RESPONSIBLE FOR CONTACTING THE DISTRICT 6 PUBLIC INFORMATION OFFICE VIA EMAIL AT d06.pio@dot.ohio.gov TO COORDINATE EFFORTS TO NOTIFY ALL LOCAL COUNTY, STATE AND FEDERAL EMERGENCY SERVICES, SCHOOL DISTRICTS AND ADJACENT RESIDENTS AND BUSINESSES OF THE UPCOMING CLOSURE. ADVANCE NOTIFICATION SHALL OCCUR NO LATER THAN TWENTY- ONE (21) DAYS PRIOR TO CLOSING THE ROAD. IF, SUBSEQUENT TO THE ADVANCE NOTIFICATION, THE START DATE IS CHANGED, THEN A NEW SEVEN (7) DAY NOTIFICATION WILL BE REQUIRED. THE ROAD CANNOT BE CLOSED UNLESS PRIOR NOTIFICATION HAS BEEN ACCOMPLISHED. THE SAME PARTIES SHALL BE NOTIFIED WHEN THE CLOSURE HAS CONCLUDED AND THE ROAD IS BACK OPEN TO TRAFFIC. ALL NOTIFICATIONS SHALL BE MADE UTILIZING THE TEMPLATE PROVIDED BY THE DISTRICT 6 PUBLIC INFORMATION OFFICE.

LANES OPEN DURING HOLIDAYS AND SPECIAL EVENTS

NO WORK SHALL BE PERFORMED AND THE SAME NUMBER OF LANES AS WERE AVAILABLE AT THE START OF THE PROJECT SHALL BE OPEN TO TRAFFIC DURING THE FOLLOWING DESIGNATED HOLIDAYS OR EVENTS:

HOLIDAYS

CHRISTMAS	FOURTH OF JULY
NEW YEAR'S EVE	LABOR DAY
MEMORIAL DAY	THANKSGIVING

THE PERIOD OF TIME THAT THE LANES ARE TO BE OPEN DEPENDS ON THE DAY OF THE WEEK ON WHICH THE HOLIDAY FALLS. THE FOLLOWING SCHEDULE SHALL BE USED TO DETERMINE THIS PERIOD:

DAY OF HOLIDAY	TIME ALL LANES MUST BE OPEN TO TRAFFIC
SUNDAY	12:00 NOON FRIDAY THROUGH 6:00 AM MONDAY
MONDAY	12:00 NOON FRIDAY THROUGH 6:00 AM TUESDAY
TUESDAY	12:00 NOON MONDAY THROUGH 6:00 AM WEDNESDAY
WEDNESDAY	12:00 NOON TUESDAY THROUGH 6:00 AM THURSDAY
THURSDAY	12:00 NOON WEDNESDAY THROUGH 6:00 AM FRIDAY
THANKSGIVING	5:00 AM WEDNESDAY THROUGH 6:00 AM MONDAY
FRIDAY	12:00 NOON THURSDAY THROUGH 6:00 AM MONDAY
SATURDAY	12:00 NOON FRIDAY THROUGH 6:00 AM MONDAY

SPECIAL EVENTS

OSU HOME FOOTBALL GAME DAYS - LANE RAMP OR SHOULDER CLOSURES ARE NOT PERMITTED FROM 3 HOURS PRIOR TO KICKOFF TO 3 HOURS FOLLOWING THE CONCLUSION OF THE GAME ON THE FOLLOWING ROUTES:

US 23 BETWEEN I- 270 (SOUTH SIDE) AND SR 361 (PICKAWAY COUNTY)

NO EXTENSIONS OF TIME SHALL BE GRANTED FOR DELAYS IN MATERIAL DELIVERIES, UNLESS SUCH DELAYS ARE INDUSTRY WIDE, OR FOR LABOR STRIKES, UNLESS SUCH STRIKES ARE AREA WIDE.

SHOULD THE CONTRACTOR FAIL TO MEET ANY OF THESE REQUIREMENTS, THE CONTRACTOR SHALL BE ASSESSED A DISINCENTIVE PER THE LANE VALUE CONTRACT (PN 127).

LANE VALUE CONTRACT TABLE

THE CONTRACTOR SHALL BE ASSESSED A DISINCENTIVE AS DESIGNATED IN THE LANE VALUE CONTRACT TABLE FOR EACH UNIT OF TIME A LANE/SHOULDER/RAMP IS CLOSED BY THE CONTRACTOR'S ACTION WHILE NOT OTHERWISE PERMITTED BY THE LANE VALUE CONTRACT TABLE.

LANE VALUE CONTRACT TABLE

SECTION (SLM)	EXISTING NUMBER OF LANES PER DIRECTION	LANE CLOSURES ARE NOT PERMITTED			DISINCENTIVE AMOUNTS PER MINUTE PER LANE
		LANE REDUCTION	MON - FRI	SAT - SUN	
US-23 SOUTH OF RATHMELL ROAD	2	2 TO 1	6AM-9AM & 3PM-6PM	NO RESTRICTION	$75
US-23 NORTH OF RATHMELL ROAD	2	2 TO 1	6AM-9AM & 3PM-7PM	NO RESTRICTION	$75
RATHMELL ROAD*	1	FULL CLOSURE	5AM MON - 7PM FRI	NO RESTRICTION	$75

* SEE SHEET 17 FOR NUMBER OF ALLOWABLE FULL CLOSURES OF RATHMELL ROAD

PRE-MAINTENANCE OF TRAFFIC MEETING

NO WORK SHALL BE PERFORMED AND THE SAME NUMBER OF LANES AS WERE AVAILABLE AT THE START OF THE PROJECT SHALL BE OPEN TO TRAFFIC DURING A PRE- MAINTENANCE OF TRAFFIC MEETING SHALL BE HELD (MINIMUM 14 WORK DAYS) PRIOR TO WORK BEGINNING OR ANY CHANGE OF PHASING. THIS MEETING SHALL INCLUDE THE DISTRICT WORK ZONE TRAFFIC MANAGER (d06.mot@dot.ohio.gov) AS WELL AS THE CONTRACTOR AND ANY OF HIS SUB- CONTRACTORS INVOLVED WITH TEMPORARY TRAFFIC CONTROL. FOR COLUMBUS SECTIONS OF ROADWAY, ALSO INCLUDE THE TEMPORARY CONTROL COORDINATOR (614-645-6269 OR 614-645-5845) FROM THE CITY OF COLUMBUS TRANSPORTATION DIVISION.

WEEKLY MAINTENANCE OF TRAFFIC MEETING

AFTER THE INITIAL PRE-MAINTENANCE OF TRAFFIC MEETING, THE CONTRACTOR SHALL MEET WITH THE PROJECT ENGINEER ON A WEEKLY BASIS TO GO OVER A DETAILED MAINTENANCE OF TRAFFIC REPORT OF AT LEAST 7 CALENDAR DAYS. THIS MEETING SHOULD BE HELD ON THE SAME DAY AND TIME OF EACH WEEK.

THE CONTRACTOR WILL PROVIDE TO THE PROJECT ENGINEER A WRITTEN DETAIL OF THE INFORMATION REQUIRED BY THE NOTIFICATION OF TRAFFIC RESTRICTIONS NOTE PRIOR TO THE MEETING.

IN ADDITION TO THE DETAILED MAINTENANCE OF TRAFFIC REPORT THE CONTRACTOR SHALL GIVE A GENERAL LOOK AHEAD OF AN ADDITIONAL 2 WEEKS OF UPCOMING WORK ACTIVITES. THIS WILL INCLUDE ANY NOTIFICATION REQUIREMENTS FOR RESTRICTIONS THAT HAVE A DURATION GREATER THAN 12 HOURS.

SEQUENCE OF CONSTRUCTION

PHASE 1

PLACE TEMPORARY PAVEMENT ALONG THE EXISTING US- 23 INSIDE PAVEMENT NORTHBOUND AND SOUTHBOUND.

PHASE 1A

SHIFT US- 23 SOUTHBOUND TRAFFIC TO THE INSIDE AND PERFORM FULL DEPTH ROADWAY WORK ON THE OUTSIDE. PERFORM WORK ON THE QUARRY DRIVE USING SINGLE LANE CLOSURES ON WEEKENDS OR OVERNIGHT. QUARRY DRIVE ACCESS SHALL BE MAINTAINED AT ALL TIMES.

PHASE 2

SHIFT US- 23 NORTHBOUND TRAFFIC TO THE INSIDE AND PERFORM FULL DEPTH ROADWAY WIDENING ON THE OUTSIDE. PERFORM WORK IN THE RATHMELL ROAD INTERSECTION AREA USING SINGLE LANE CLOSURES ON WEEKENDS OR OVERNIGHT. RATHMELL ROAD FULL DEPTH WIDENING SHALL BE COMPLETED DURING FULL CLOSURE WITH DETOUR ON WEEKENDS (7 PM FRI - 5 AM MON). INSTALL TEMPORARY TRAFFIC SIGNAL PRIOR TO PHASE 2 AND REMOVE EXISTING TRAFFIC SIGNAL INSTALLATION.

PHASE 3

SHIFT US- 23 TRAFFIC TO THE OUTSIDE AND PERFORM FULL DEPTH ROADWAY WIDENING ON THE INSIDE. PERFORM WORK IN THE RATHMELL ROAD AND QUARRY DRIVE INTERSECTION MEDIAN AREAS USING SINGLE LANE CLOSURES ON WEEKENDS OR OVERNIGHT. PLACE TEMPORARY MARKINGS ON RATHMELL ROAD IN THE FINAL CONFIGURATION PER THE TRAFFIC CONTROL PLANS.

DRAINAGE

OPEN TRENCH PIPE CROSSINGS SHALL BE CONSTRUCTED USING SINGLE LANE CLOSURES PER SCD MT- 95.30 DURING OVERNIGHT HOURS OR ON WEEKENDS. THE CONTRACTOR HAS THE OPTION TO PROPOSE TRENCHLESS INSTALLATION AT NO ADDITIONAL COST TO THE OWNER.

FINAL STEP

PERFORM REMAINING GRADING, SEEDING AND MULCHING. PLACE FINAL ASPHALT SURFACE COURSE AND THERMOPLASTIC PAVEMENT MARKINGS PER TRAFFIC CONTROL PLANS. REMOVE TEMPORARY TRAFFIC SIGNAL AND PLACE PROPOSED PERMANENT TRAFFIC SIGNAL IN OPERATION.

DESIGNATED DETOUR ROUTE ON LOCAL ROADS

A LOCAL ROUTE HAS BEEN DESIGNATED TO BE THE DETOUR ROUTE. THIS ROUTE IS SHOWN ON SHEET P. 23. DURING THAT TIME THAT TRAFFIC IS DETOURED, THE CONTRACTOR SHALL MAINTAIN THIS ROUTE IN A CONDITION WHICH IS REASONABLY SMOOTH AND FREE FROM HOLES, RUTES, RIDGES, BUMPS, DUST, AND STANDING WATER. ONCE THE DETOUR IS REMOVED AND TRAFFIC IS RETURNED TO ITS NORMAL PATTERN, THE DESIGNATED DETOUR ROUTE ON A LOCAL ROAD SHALL BE RESTORED TO A CONDITION THAT IS EQUIVALENT TO THAT WHICH EXISTED PRIOR TO ITS USE FOR THIS PURPOSE. ALL SUCH WORK SHALL BE PERFORMED WHEN AND AS DETERMINED BY THE ENGINEER.

THE FOLLOWING ESTIMATED QUANTITIES ARE PROVIDED AS DETERMINED BY THE ENGINEER TO MAINTAIN AND SUBSEQUENTLY RESTORE THE DESIGNATED DETOUR ROUTE ON LOCAL ROADS.

ITEM 254 PAVEMENT PLANING, ASPHALT CONCRETE (1.25" MIN) 7334 SY

ITEM 407 NON-TRACKING TACK COAT (APPLIED AT AVG 0.085 GAL/SY) 624 GAL

ITEM 442 (1.25") ASPHALT CONCRETE SURFACE COURSE, 12.5MM, TYPE A (446), PG 70-22M 255 CY

MAINTENANCE OF TRAFFIC NOTES (4 OF 4)

DESIGN AGENCY

IBI

DESIGNER BSS

REVIEWER KMK 12-01-22

PROJECT ID 92616

SHEET P.20 TOTAL 170

FRA-23-4.19 PART 2 (PID 92616)

MODEL: Sheet PAPERSIZE: 17x11 (in.) DATE: 2022-12-09 TIME: 9:30:46 AM USER: william.croxton
\\10.120.112.5\bidshare\122592_SafetyDesign\7.0_Production\7.3_Design\04_Civil\Worksets\110380_FRA-23\400-Engineering\MOT\Sheets\110380_MN004.dgn

MAINTENANCE OF TRAFFIC SUBSUMMARY (1 OF 2)

SHEET NO.	REF. NO.	STATION FROM	STATION TO	614 INCREASED BARRIER DELINEATION FT	614 WORK ZONE IMPACT ATTENUATOR, 24" WIDE HAZARDS, (UNIDIRECTIONAL) EACH	614 DETOUR SIGNING LS	614 WORK ZONE RAISED PAVEMENT MARKER, AS PER PLAN EACH	614 BARRIER REFLECTOR, TYPE 1 (ONE WAY) EACH	614 OBJECT MARKER, ONE WAY EACH	614 WORK ZONE LANE LINE, CLASS I, 6", 642 PAINT MILE	614 WORK ZONE CENTER LINE, CLASS I, 642 PAINT MILE	614 WORK ZONE EDGE LINE, CLASS I, 6", 642 PAINT (WHITE) MILE	614 WORK ZONE EDGE LINE, CLASS I, 6", 642 PAINT (YELLOW) MILE	614 WORK ZONE CHANNELIZING LINE, CLASS I, 12", 642 PAINT FT	614 WORK ZONE TRANSVERSE/DIAGONAL LINE, CLASS I, 642 PAINT FT	614 WORK ZONE STOP LINE, CLASS I, 642 PAINT FT	614 WORK ZONE ARROW, CLASS I, 642 PAINT EACH	615 ROADS FOR MAINTAINGING TRAFFIC LS	615 PAVEMENT FOR MAINTAINING TRAFFIC, CLASS A SY	622 PORTABLE BARRIER, UNANCHORED FT
		PHASE 1/1A																		
25-26	WEW-1	515+85	525+60									0.18							939	
25-26	WEY-1	516+10	529+77										0.26						1202	
26-27	WEW-2	525+00	533+84									0.17							520	
27-28	WEW-3	535+53	546+47				34					0.21							832	
27-28	WEY-2	538+50	546+47										0.15						909	
27	PB-1	539+90	541+80	190	1			5	5											190
27-28	WCH-1	539+90	546+47				34							657						
28	WEY-3	542+90	546+47				19						0.07						189	
		PHASE 2																		
29-30	WCH-1	513+10	523+35				52							1025						
29-32	WEW-1	516+10	546+47				52					0.58								
29-30	WEY-1	516+10	529+77				52						0.26							
30-32	WLL-1	523+35	546+47				20			0.44										
30-31	PB-1	524+90	533+50	860	1			18	18											860
30-31	WCH-2	531+23	533+90				8							267						
31	WCH-3	533+22	533+90				3							68						
31	WA-1	533+30															1			
31	WA-2	533+80															1			
31	WEY-2	535+30	539+24										0.07							
31	WCH-4	535+30	539+13				11							383						
31-32	WEY-3	535+30	546+47																	
31-32	PB-2	535+38	546+47	1110	1			23	23				0.21							1110
31	WA-3	535+40															1			
31	WA-4	536+40															1			
31	WA-5	537+40															1			
31	WA-6	538+40															1			
31-32	WLL-2	539+90	546+47				6			0.12										
32	WEW-2	542+90	546+47									0.07								
32	WEY-4	542+90	546+47										0.07							
		RATHMELL RD & DW-1 (QUARRY DRIVE)									0.58	0.42		1075	176	65	29			
		SUBTOTALS CARRIED TO SHEET P.22		2160	3	LS	291	46	46	0.56	0.58	1.62	1.09	3475	176	65	35	LS	4591	2160

FRA-23-4.19 PART 2 (PID 92616)

MODEL: Sheet PAPERSIZE: 17x11 (in.) DATE: 2022-12-09 TIME: 9:30:49 AM USER: william.croxton
\\10.120.112.5\bishare\122592_Safety\Design\7.0_Production\7.3_Design\04_Civil\Worksets\110380_FRA-23400-Engineering\MOT\Sheets\110380_MS001.dgn

DESIGN AGENCY
IBI

DESIGNER
BSS

REVIEWER
KMK 12-01-22

PROJECT ID
92616

SHEET P.21 TOTAL 170

SHEET NO.	REF. NO.	STATION FROM	STATION TO	614 INCREASED BARRIER DELINEATION	614 WORK ZONE IMPACT ATTENUATOR, 24" WIDE HAZARDS, (UNIDIRECTIONAL)	614 DETOUR SIGNING	614 WORK ZONE RAISED PAVEMENT MARKER, AS PER PLAN	614 BARRIER REFLECTOR, TYPE 1 (ONE WAY)	614 OBJECT MARKER, ONE WAY	614 WORK ZONE LANE LINE, CLASS I, 6", 642 PAINT	614 WORK ZONE CENTER LINE, CLASS I, 642 PAINT	614 WORK ZONE EDGE LINE, CLASS I, 6", 642 PAINT (WHITE)	614 WORK ZONE EDGE LINE, CLASS I, 6", 642 PAINT (YELLOW)	614 WORK ZONE CHANNELIZING LINE, CLASS I, 12", 642 PAINT	614 WORK ZONE TRANSVERSE/DIAGONAL LINE, CLASS I, 642 PAINT	614 WORK ZONE STOP LINE, CLASS I, 642 PAINT	614 WORK ZONE ARROW, CLASS I, 642 PAINT	615 ROADS FOR MAINTAINGING TRAFFIC	615 PAVEMENT FOR MAINTAINING TRAFFIC, CLASS A	622 PORTABLE BARRIER, UNANCHORED
				FT	EACH	LS	EACH	EACH	EACH	MILE	MILE	MILE	MILE	FT	FT	FT	EACH	LS	SY	FT
		PHASE 3																		
33-36	WEY-1	515+85	546+47				39						0.58							
33-36	WEW-1	515+85	546+47				39					0.58								
33-34	WCH-1	515+85	523+35				39							750						
34	WCH-2	522+00	531+00				46							900						
34-36	WLL-1	523+35	546+47							0.44										
34-35	PB-1	524+90	532+31	750	1			16	16											750
34-36	WEW-2	525+00	546+47				46					0.41								
34-36	WEY-2	525+00	546+47				46						0.41							
34-36	WLL-2	526+50	546+47				18			0.38										
34-35	PB-2	528+00	533+50	550	1			12	12											550
34-35	WCH-3	530+12	533+90				10							378						
34-35	WCH-4	530+12	533+90				10							378						
34	WA-1	530+75															2			
34-36	WLL-3	531+00	546+47				14			0.29										
34-35	WCH-5	531+35	533+90				7							255						
34-35	WCV-1	531+35	533+90												110					
34	WA-2	531+75															2			
35	WA-3	532+75															2			
35	WA-4	533+75															2			
35	WSL-1	533+90														80				
35	WSL-2	535+30														58				
35	WCH-6	535+30	537+50				7							220						
35	WCH-7	535+30	539+84				12							454						
35	WCH-8	535+30	537+50				7							220						
35	WCV-2	353+50	537+50																	
35	WA-5	535+40													90		2			
35-36	PB-3	535+50	546+47	1100	1			23	23											1100
35	WA-6	536+40															2			
35-36	PB-4	536+50	546+47	1000				21	21											1000
35	WA-7	537+40															2			
35	WA-8	538+40															1			
35	WA-9	539+40															1			
		SUBTOTALS FROM THIS SHEET		3400	3	LS	340	72	72	1.11	0.00	0.99	0.99	3555	200	138	16	LS	0	3400
		SUBTOTALS CARRIED FROM SHEET P.21		2160	3	LS	291	46	46	0.56	0.58	1.62	1.09	3475	176	65	35	LS	4591	2160
		TOTALS CARRIED TO GENERAL SUMMARY		5560	6	LS	631	118	118	1.67	0.58	4.68		7030	376	203	51	LS	4591	5560

MAINTENANCE OF TRAFFIC SUBSUMMARY (2 OF 2)

FRA-23-4.19 PART 2 (PID 92616)

MODEL: Sheet PAPERSIZE: 17x11 (in.) DATE: 2022-12-09 TIME: 9:30:51 AM USER: william.croxton
\\10.120.112.5\bishare\122592_Safety\Design\7.0_Production\7.3_Design\04_Civil\Worksets\110380_FRA-23400-Engineering\MOT\Sheets\110380_MS002.dgn

DESIGN AGENCY
IBI

DESIGNER
BSS

REVIEWER
KMK 12-01-22

PROJECT ID
92616

SHEET P.22 TOTAL 170

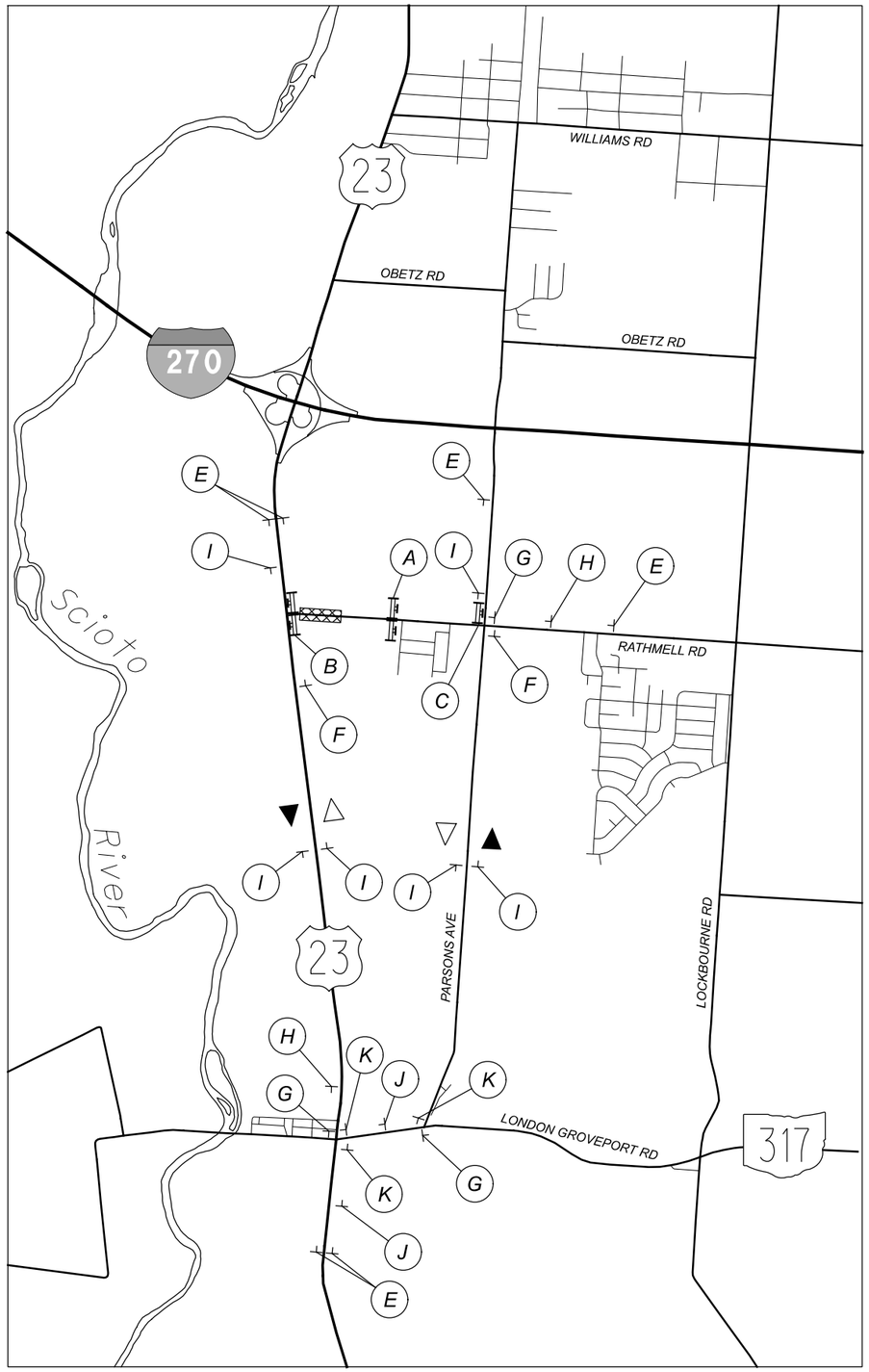

A

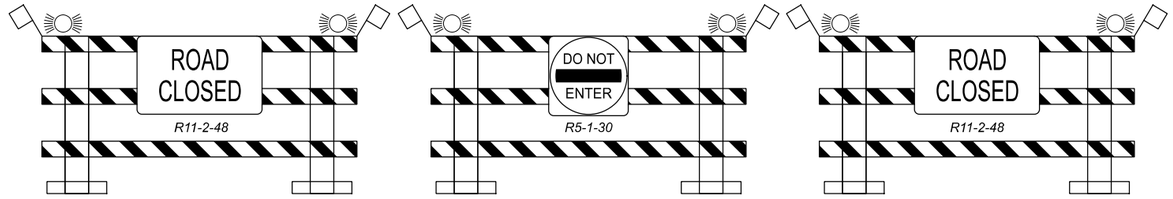

B

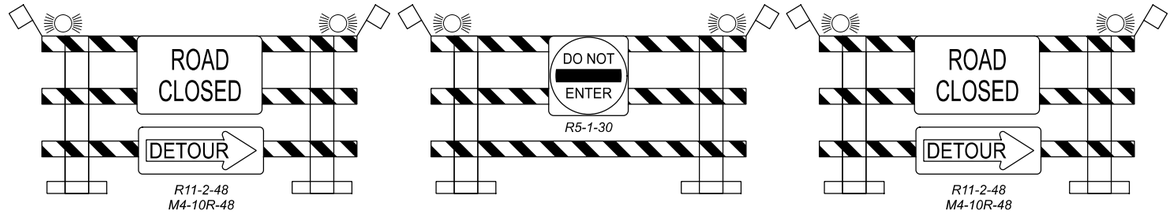

C

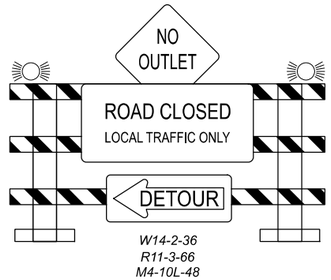

PLACE ON RIGHT SHOULDER

ROAD WILL BE CLOSED MMM-DD FOR XX DAYS
INFO:

W20-H13-60

PLACE NOTICE OF CLOSURE SIGNS OR PCMS 7 DAYS PRIOR TO CLOSURE

W20-3-36

D

48" X 48"

E

M4-8a-24

F

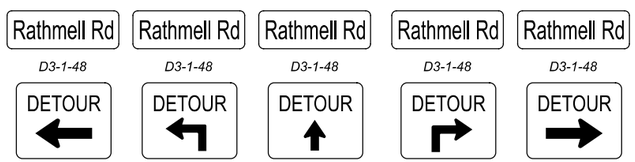

G H I J K

PROVIDE 500' SPACING WHERE FEASIBLE (TYP.)

LEGEND

- TYPE III BARRICADE
- TEMPORARY SIGN SUPPORT
- WORK ZONE
- EASTBOUND DETOUR ROUTE
- WESTBOUND DETOUR ROUTE

NOTES:

1. INSTALLATION AND REMOVAL OF ALL SIGNS AND BARRICADES TO BE INCLUDED IN THE LUMP SUM PRICE FOR ITEM 614 DETOUR SIGNING.
2. NORTHBOUND RIGHT TURN LANE AND SOUTHBOUND LEFT TURN LANE ON US-23 SHALL BE CLOSED WITH DRUMS DURING DETOUR.
3. TRAFFIC SIGNAL PHASING SHALL BE REVISED TO REMOVE PHASES FOR SOUTHBOUND LEFT TURN AND WESTBOUND MOVEMENTS. SEE TEMPORARY TRAFFIC SIGNAL PLAN ON SHEET 37.

MAINTENANCE OF TRAFFIC DETOUR PLAN

DESIGN AGENCY
IBI

DESIGNER
BSS

REVIEWER
KMK 12-01-22

PROJECT ID
92616

SHEET P.23 TOTAL 170

FRA-23-4.19 PART 2 (PID 92616)

MODEL: Sheet PAPERSIZE: 17x11 (in.) DATE: 2022-12-09 TIME: 9:30:53 AM USER: william.croxton
\\10.120.112.5\bishare\122592_SafetyDesign\7.0_Production\7.3_Design\04_Civil\Worksets\110380_FRA-23\400-Engineering\MOT\Sheets\110380_MD001.dgn

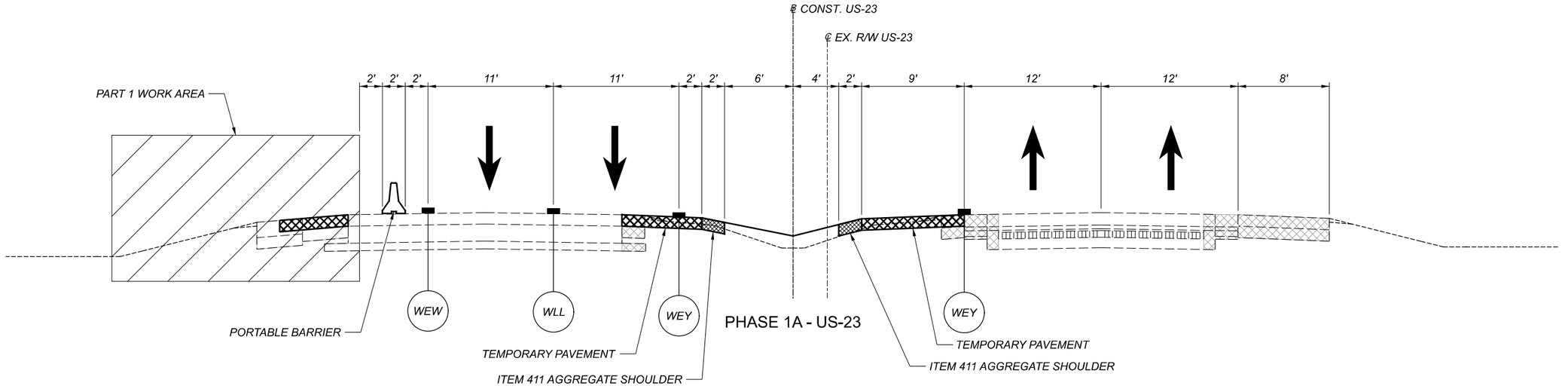

PHASE 1A - US-23

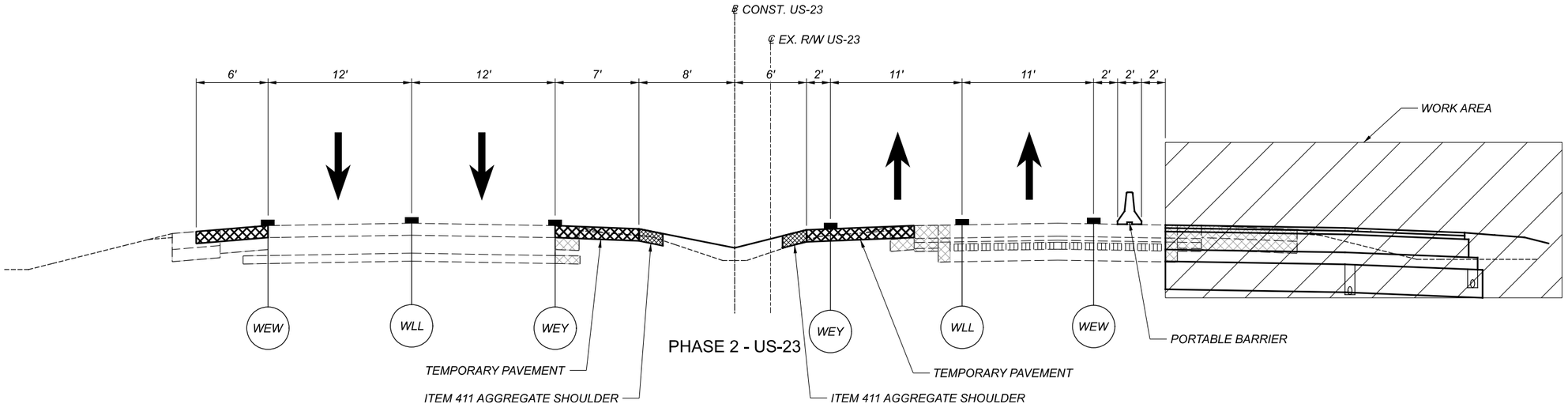

PHASE 2 - US-23

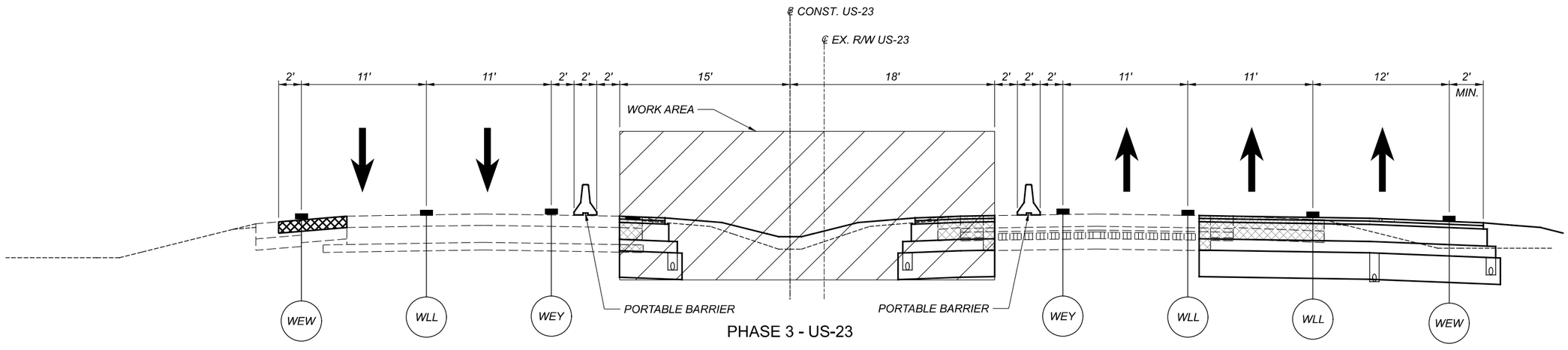

PHASE 3 - US-23

MAINTENANCE OF TRAFFIC TYPICAL SECTIONS

DESIGN AGENCY
IBI

DESIGNER
BSS

REVIEWER
KMK 12-01-22

PROJECT ID
92616

SHEET P.24 | TOTAL 170

FRA-23-4.19 PART 2 (PID 92616)

MODEL: Sheet PAPERSIZE: 17x11 (in.) DATE: 2022-12-09 TIME: 9:30:55 AM USER: william.croxton
\\10.120.112.5\bbshare\122592_SafetyDesign\7.0_Production\7.3_Design\04_CivilWorksets\110380_FRA-23\400-Engineering\MOT\Sheets\110380_MY001.dgn

MAINTENANCE OF TRAFFIC LEGEND

WEW	WORK ZONE EDGE LINE, CLASS I, 6", 642 PAINT (WHITE)
WEY	WORK ZONE EDGE LINE, CLASS I, 6", 642 PAINT (YELLOW)
WLL	WORK ZONE LANE LINE, CLASS I, 6", 642 PAINT
WCH	WORK ZONE CHANNELIZING LINE, CLASS I, 12", 642 PAINT
WCV	WORK ZONE TRANSVERSE/DIAGONAL LINE, CLASS I, 6", 642 PAINT
WSL	WORK ZONE STOP LINE, CLASS I, 642 PAINT
WA	WORK ZONE ARROW, CLASS I, 642 PAINT

	DIRECTION OF TRAVEL
	DRUMS
PB	PORTABLE BARRIER
	WORK ZONE IMPACT ATTENUATOR
	TYPE III BARRICADE
	TEMPORARY PAVEMENT
	WORK AREA
	WORK AREA TO BE COMPLETED DURING PERMITTED LANE CLOSURE HOURS
	EX. DRIVE/MEDIAN ACCESS REMOVED

NOTES:

1.REMOVE CONFLICTING MARKINGS AND RAISED PAVEMENT MARKERS

2. ALL SHOULDERS 2' MIN. UNLESS OTHERWISE NOTED

TEMPORARY PAVEMENT PLACEMENT

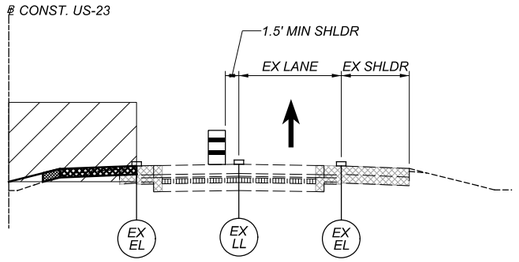

TYPICAL SECTION - WORKING HOURS

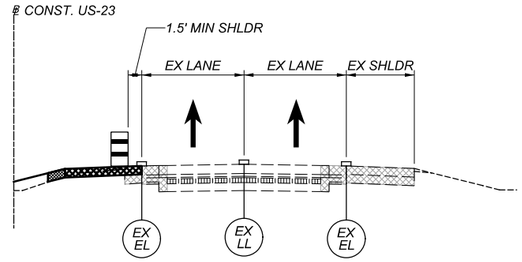

TYPICAL SECTION - NON-WORKING HOURS

NOTES:

1. DURING THE HOURS SPECIFIED AS LISTED IN THIS PLAN, NIGHTTIME LANE CLOSURES SHALL BE IMPLEMENTED PER ODOT SCD MT-95.30 FOR SHOULDER WORK AND TEMPORARY PAVEMENT WORK ADJACENT TO US 23.

2. EXISTING SHOULDERS THAT ARE TO BE RECONSTRUCTED SHALL FIRST BE PLANED TO THE EXISTING AGGREGATE BASE WHICH WILL REMAIN IN PLACE. THEY SHALL THEN BE REPAVED WITH CLASS A PAVEMENT FOR MAINTAINING TRAFFIC. PAYMENT FOR THE PLANING AND INSTALLATION OF TEMPORARY PAVEMENT WITHIN THE EXISTING SHOULDER FOOTPRINT SHALL BE AS PER ITEM 615, ROADS FOR MAINTAINING TRAFFIC. SHOULDER REPLACEMENT SHALL BE LIMITED TO THE LENGTH THAT CAN BE COMPLETED IN THE SAME WORK DAY.

3. FOR AREAS ADJACENT TO VEHICULAR TRAFFIC, OPEN TRENCH SHALL BE ADEQUATELY MAINTAINED AND PROTECTED WITH THE PROPER TRAFFIC CONTROL DEVICES AT ALL TIMES. DROP OFFS WITHIN THE WORK ZONE SHALL CONFORM TO THE REQUIREMENTS SET FORTH ON ODOT SCD MT-101.90.

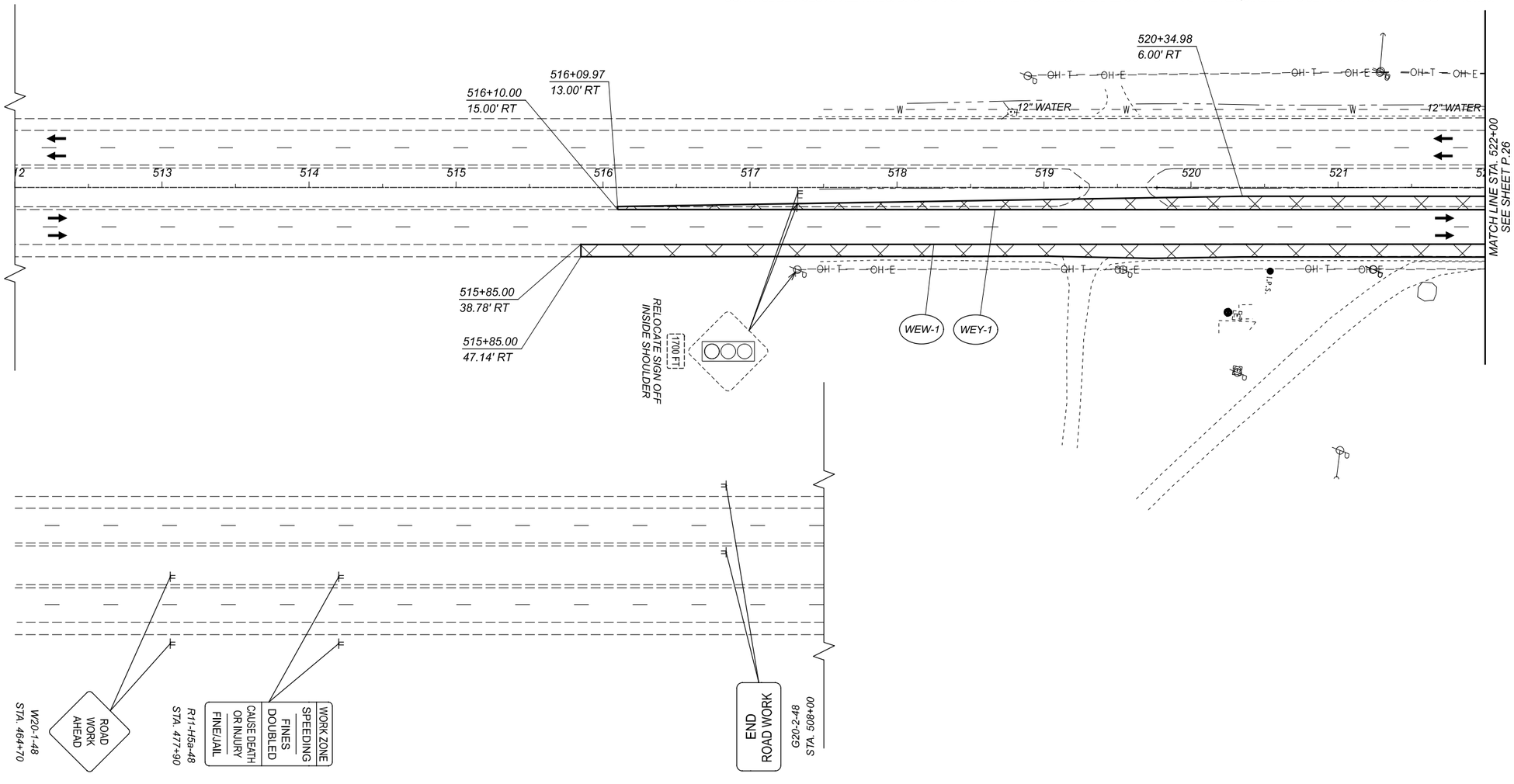

HORIZONTAL SCALE IN FEET
0 20 40 80

MAINTENANCE OF TRAFFIC PLAN PHASE 1/1A - US-23 (SOUTH HIGH STREET) STA 512+00 TO STA 522+00

DESIGN AGENCY
IBI

DESIGNER	BSS
REVIEWER	KMK 12-01-22
PROJECT ID	92616
SHEET	P.25
TOTAL	170

FRA-23-4.19 PART 2 (PID 92616)

MODEL: II0380_MPI PAPERSIZE: 17x11(in.) DATE: 2022-12-09 TIME: 9:31:00 AM USER: william.croxton
\\10.120.12.5\bishare\122592_SafetyDesign\7.0_Production\7.3_Design\04_Civil\Worksets\II0380_FRA-23\400-Engineering\MOT\Sheets\II0380_MP00I_PHI.dgn

MODEL: 110380_MP2 PAPERSIZE: 17x11 (in.) DATE: 2022-12-09 TIME: 9:31:10 AM USER: william.croxton
\\10.120.112.5\ibishare\122592_SafetyDesign\7.0_Production\7.3_Design\04_Civil\Worksets\110380_FRA-23\400-Engineering\MOT\Sheets\110380_MP002_PHI.dgn

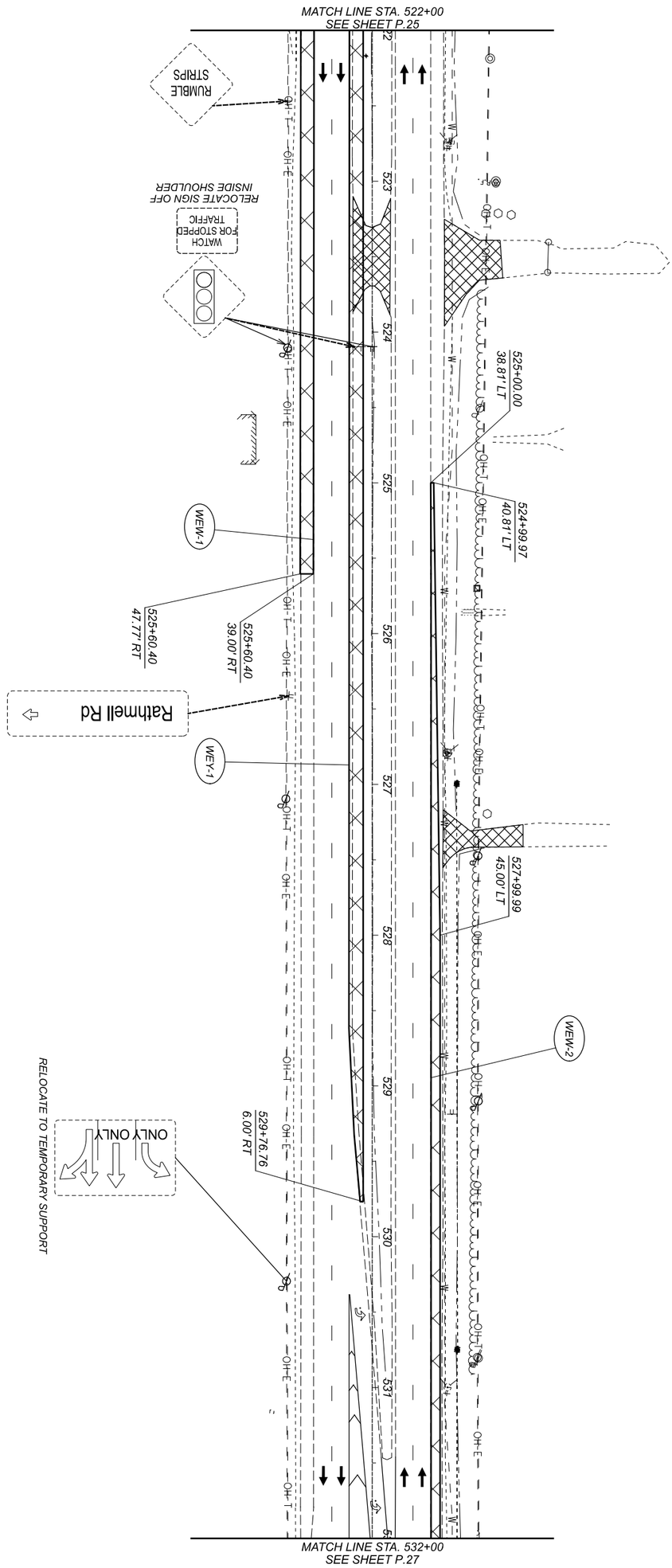

MAINTENANCE OF TRAFFIC PLAN PHASE 1/1A - US-23 (SOUTH HIGH STREET)
STA 522+00 TO STA 532+00

HORIZONTAL SCALE IN FEET
0 40
20 80

SHEET	TOTAL	PROJECT ID	REVIEWER	DESIGNER	DESIGN AGENCY
P 26	170	92616	KMK 12-01-22	BSS	IBI

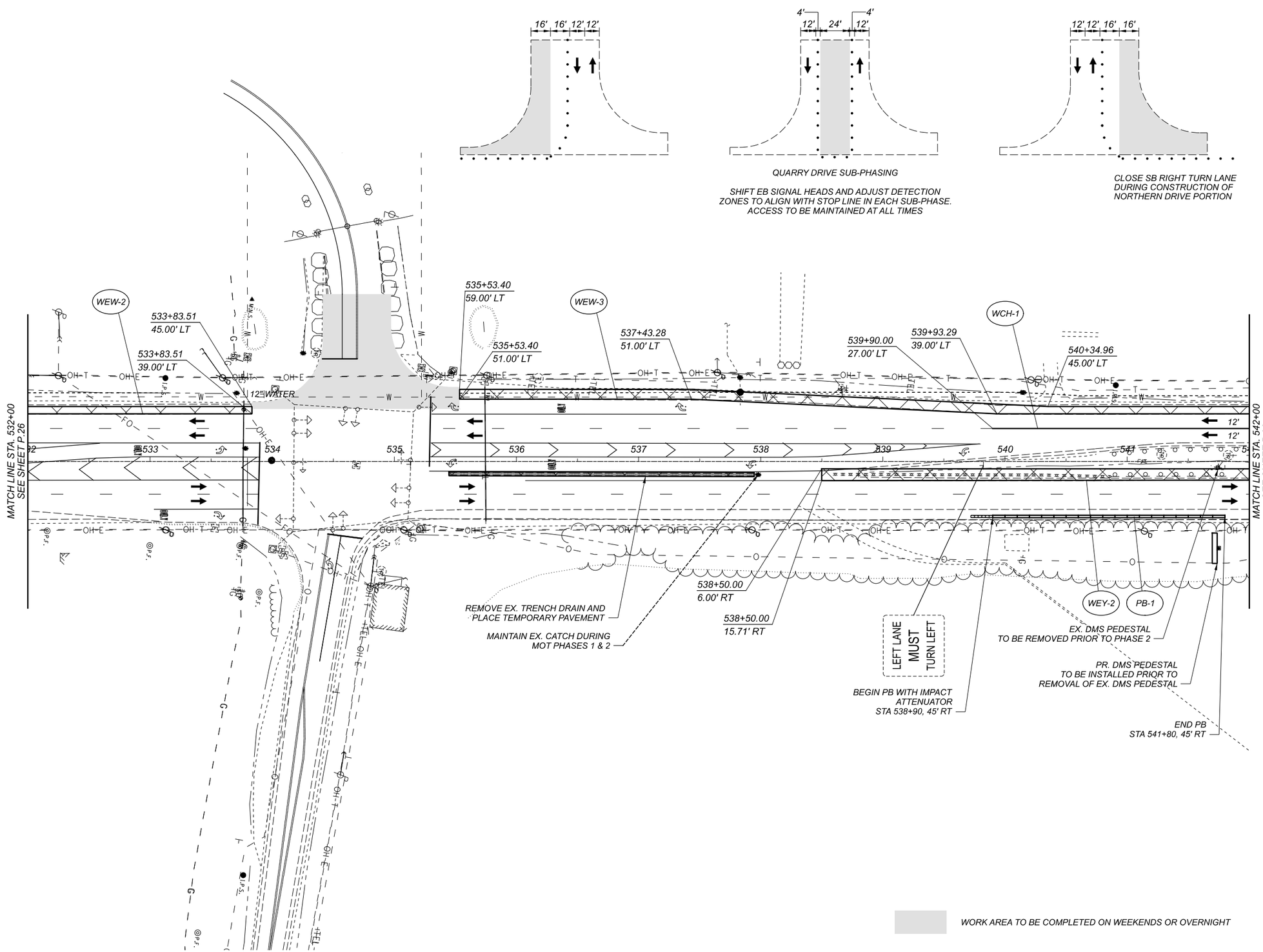

HORIZONTAL SCALE IN FEET
0 20 40 80

MAINTENANCE OF TRAFFIC PLAN PHASE 1/1A - US-23 (SOUTH HIGH STREET)
STA 532+00 TO STA 542+00

FRA-23-4.19 PART 2 (PID 92616)

MODEL: II0380_MP3 PAPERSIZE: 17x11(in.) DATE: 2022-12-09 TIME: 9:31:14 AM USER: william.croxton
\\IOJ20.II2.5\bfshare\122592_SafetyDesign\7.0_Production\7.3_Design\04_Civil\Worksets\II0380_FRA-23\400-Engineering\MOT\Sheets\II0380_MP003_PHI.dgn

DESIGN AGENCY
IBI

DESIGNER BSS
REVIEWER KMK 12-01-22
PROJECT ID 92616
SHEET P.27 TOTAL 170

MODEL: 110380_MP4 PAPERSIZE: 17x11 (in.) DATE: 2022-12-09 TIME: 9:31:19 AM USER: william.croxton
\\10.120.112.5\iblshare\122592_SafetyDesign\7.0_Production\7.3_Design\04_Civil\Worksets\110380_FRA-23\400-Engineering\MOT\Sheets\110380_MP004_PHI.dgn

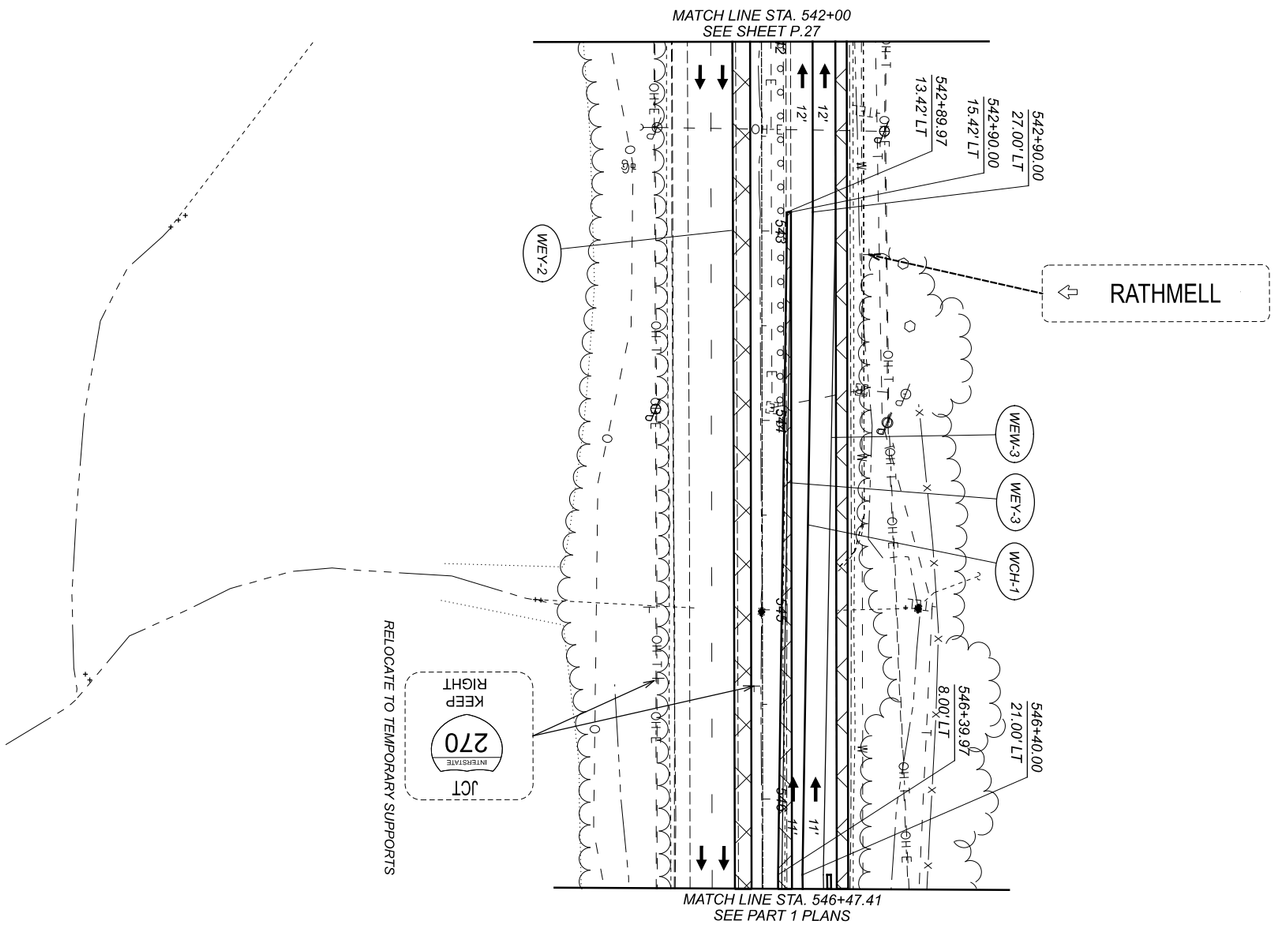

SHEET	TOTAL
P 28	170

PROJECT ID: 92616

REVIEWER: KMK 12-01-22

DESIGNER: BSS

DESIGN AGENCY: IBI

MAINTENANCE OF TRAFFIC PLAN PHASE 1/1A - US-23 (SOUTH HIGH STREET)
STA 542+00 TO STA 546+47.41

HORIZONTAL SCALE IN FEET

0 40

20 80

MODEL: 110380_MPI PAPERSIZE: 17x11(in.) DATE: 2022-12-09 TIME: 9:31:23 AM USER: william.croxton
\\10.120.112.5\iblshare\122592_SafetyDesign\7.0_Production\7.3_Design\04_Civil\Worksets\110380_FRA-23\400-Engineering\MOT\Sheets\110380_MP001_PH2.dgn

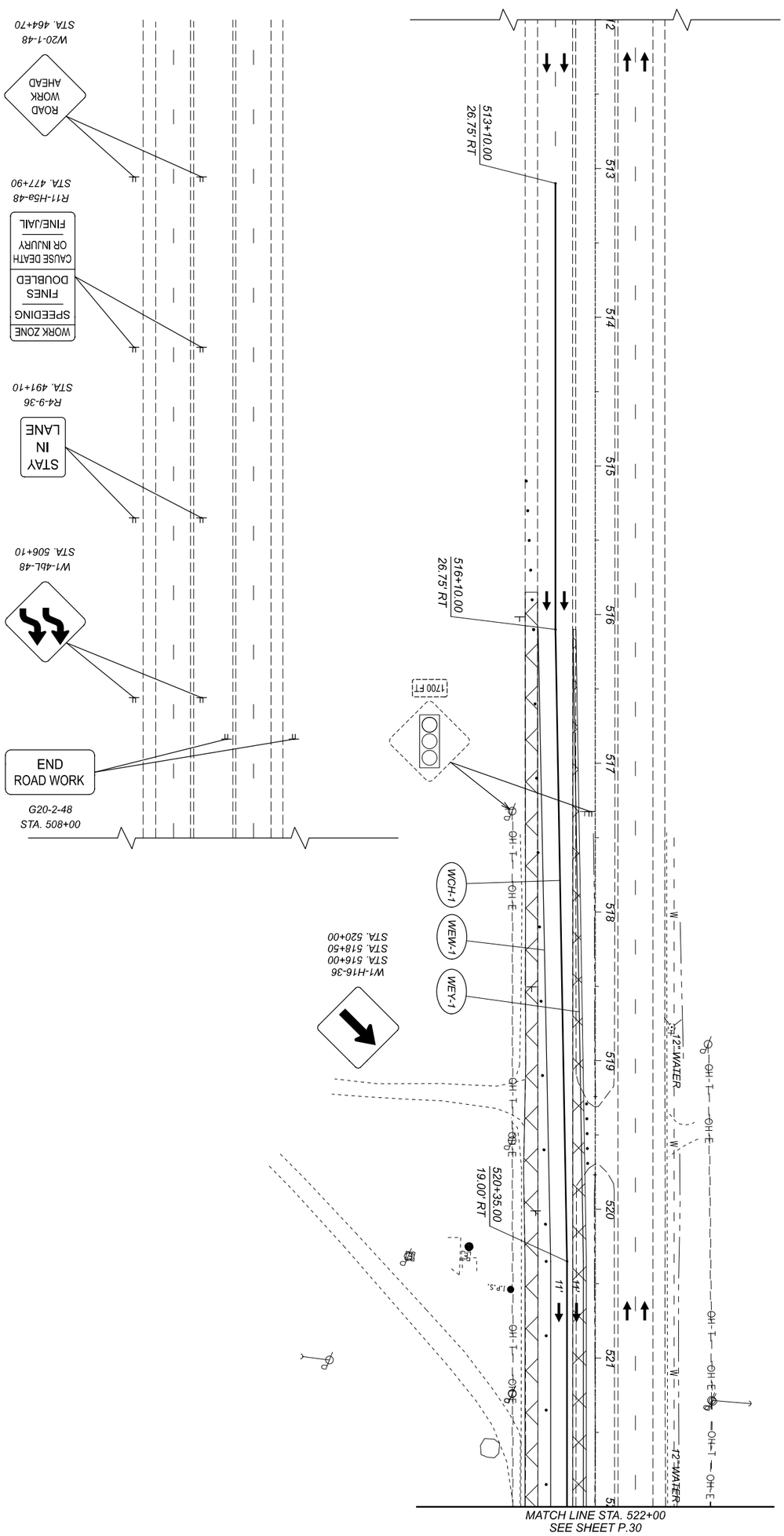

MAINTENANCE OF TRAFFIC PLAN PHASE 2 - US-23 (SOUTH HIGH STREET)
STA 512+00 TO STA 522+00

HORIZONTAL SCALE IN FEET
0 40
20 80

MODEL: 110380_MP2 PAPERSIZE: 17x11 (in.) DATE: 2022-12-09 TIME: 9:31:27 AM USER: william.croxton
\\10.120.112.5\ibishare\122592_SafetyDesign\7.0_Production\7.3_Design\04_Civil\Worksets\110380_FRA-23\400-Engineering\MOT\Sheets\110380_MP002_PH2.dgn

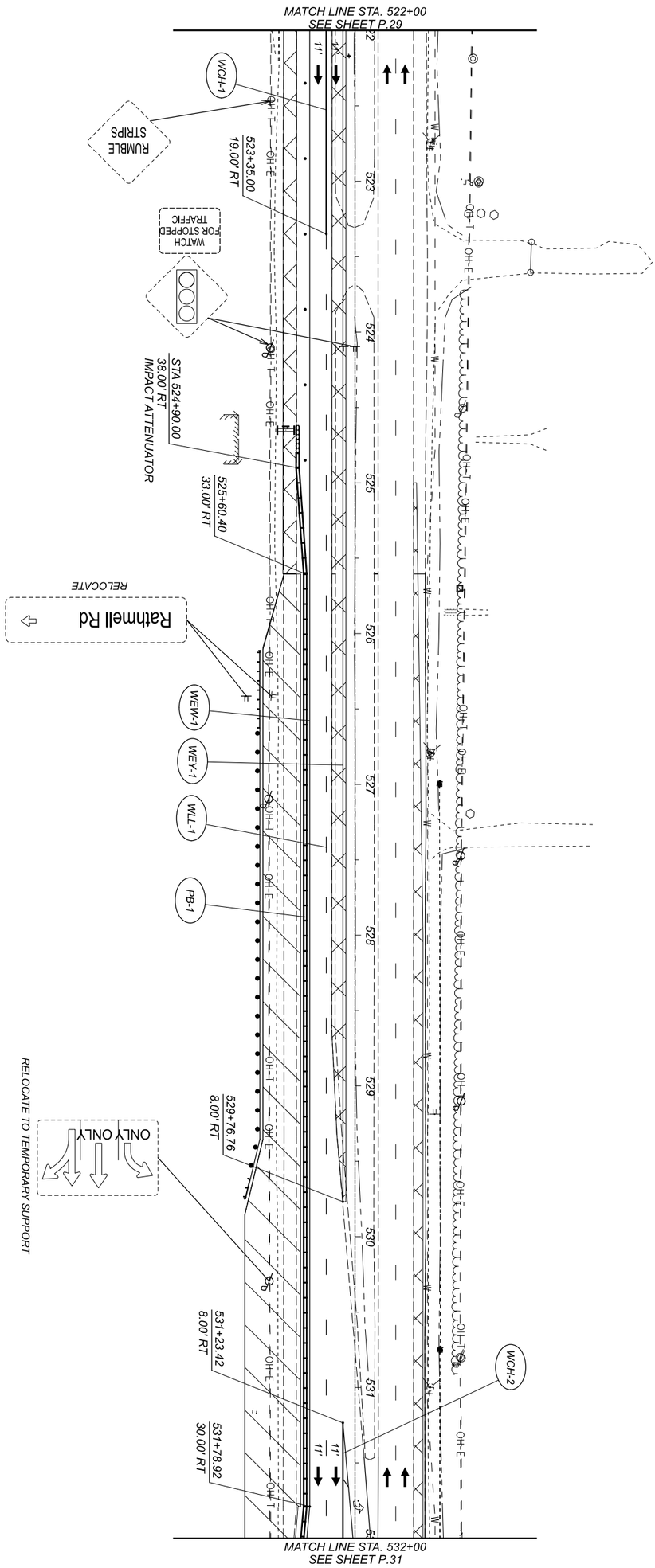

MAINTENANCE OF TRAFFIC PLAN PHASE 2 - US-23 (SOUTH HIGH STREET)
STA 522+00 TO STA 532+00

HORIZONTAL SCALE IN FEET
0 40
20 80

SHEET	TOTAL
P 30	170

PROJECT ID: 92616
REVIEWER: KMK 12-01-22
DESIGNER: BSS
DESIGN AGENCY: IBI

MODEL: 110380_MP3 PAPERSIZE: 17x11 (in.) DATE: 2022-12-09 TIME: 9:31:31 AM USER: william.croxton
\\10.120.12.5\iblshare\122592_SafetyDesign\7.0_Production\7.3_Design\04_Civil\Worksets\110380_FRA-23\400-Engineering\MOT\Sheets\110380_MP003_PH2.dgn

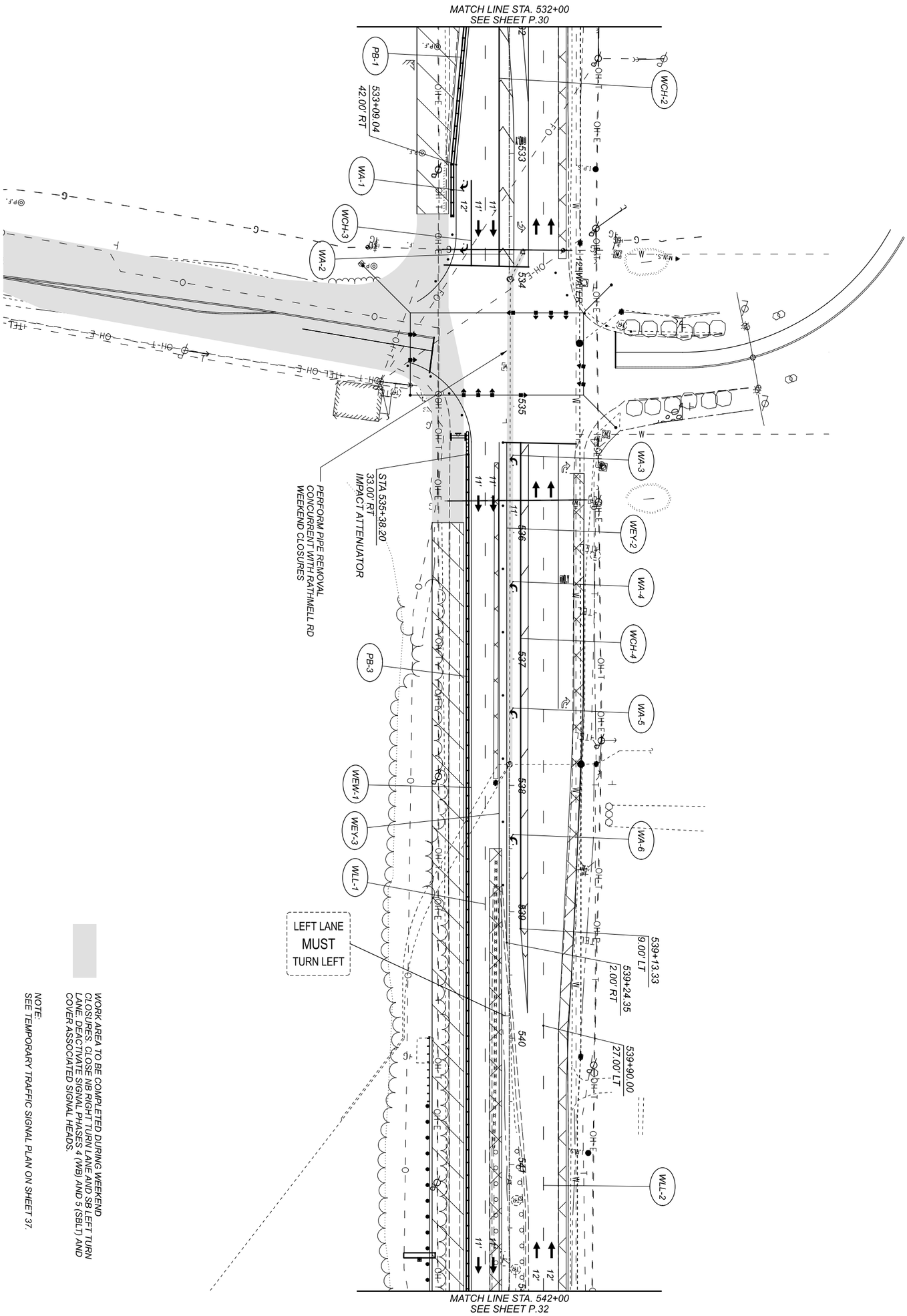

WORK AREA TO BE COMPLETED DURING WEEKEND CLOSURES. CLOSE NB RIGHT TURN LANE AND SB LEFT TURN LANE. DEACTIVATE SIGNAL PHASES 4 (WB) AND 5 (SBLT) AND COVER ASSOCIATED SIGNAL HEADS.

NOTE:
SEE TEMPORARY TRAFFIC SIGNAL PLAN ON SHEET 37.

MAINTENANCE OF TRAFFIC PLAN PHASE 2 - US-23 (SOUTH HIGH STREET)
STA 532+00 TO STA 542+00

HORIZONTAL SCALE IN FEET
0 40
20 80

DESIGN AGENCY: IBI
DESIGNER: BSS
REVIEWER: KMK 12-01-22
PROJECT ID: 92616
SHEET: P 31 | TOTAL: 170

MODEL: 110380_MP4 PAPERSIZE: 17x11 (in.) DATE: 2022-12-09 TIME: 9:31:35 AM USER: william.croxton
\\10.120.112.5\ibishare\122592_SafetyDesign\7.0_Production\7.3_Design\04_Civil\Worksets\110380_FRA-23\400-Engineering\MOT\Sheets\110380_MP004_PH2.dgn

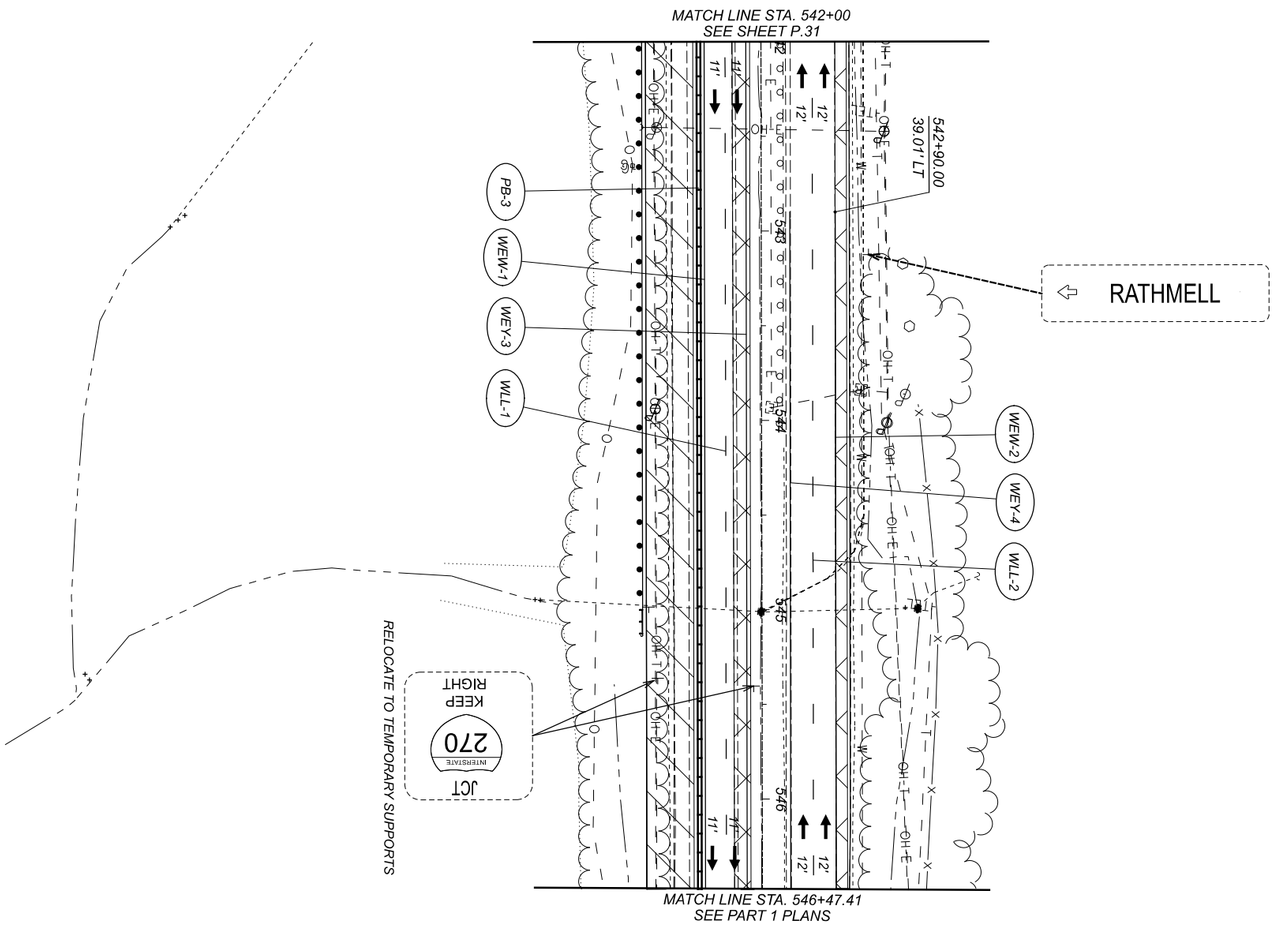

MAINTENANCE OF TRAFFIC PLAN PHASE 2 - US-23 (SOUTH HIGH STREET)
STA 542+00 TO STA 546+47.41

HORIZONTAL SCALE IN FEET
0 40
20 80

MODEL: 110380_MPI PAPERSIZE: 17x11(in.) DATE: 2022-12-09 TIME: 9:31:39 AM USER: william.croxton
\\10.120.12.5\iblshare\122592_SafetyDesign\7.0_Production\7.3_Design\04_Civil\Worksets\110380_FRA-23\400-Engineering\MOT\Sheets\110380_MP001_PH3.dgn

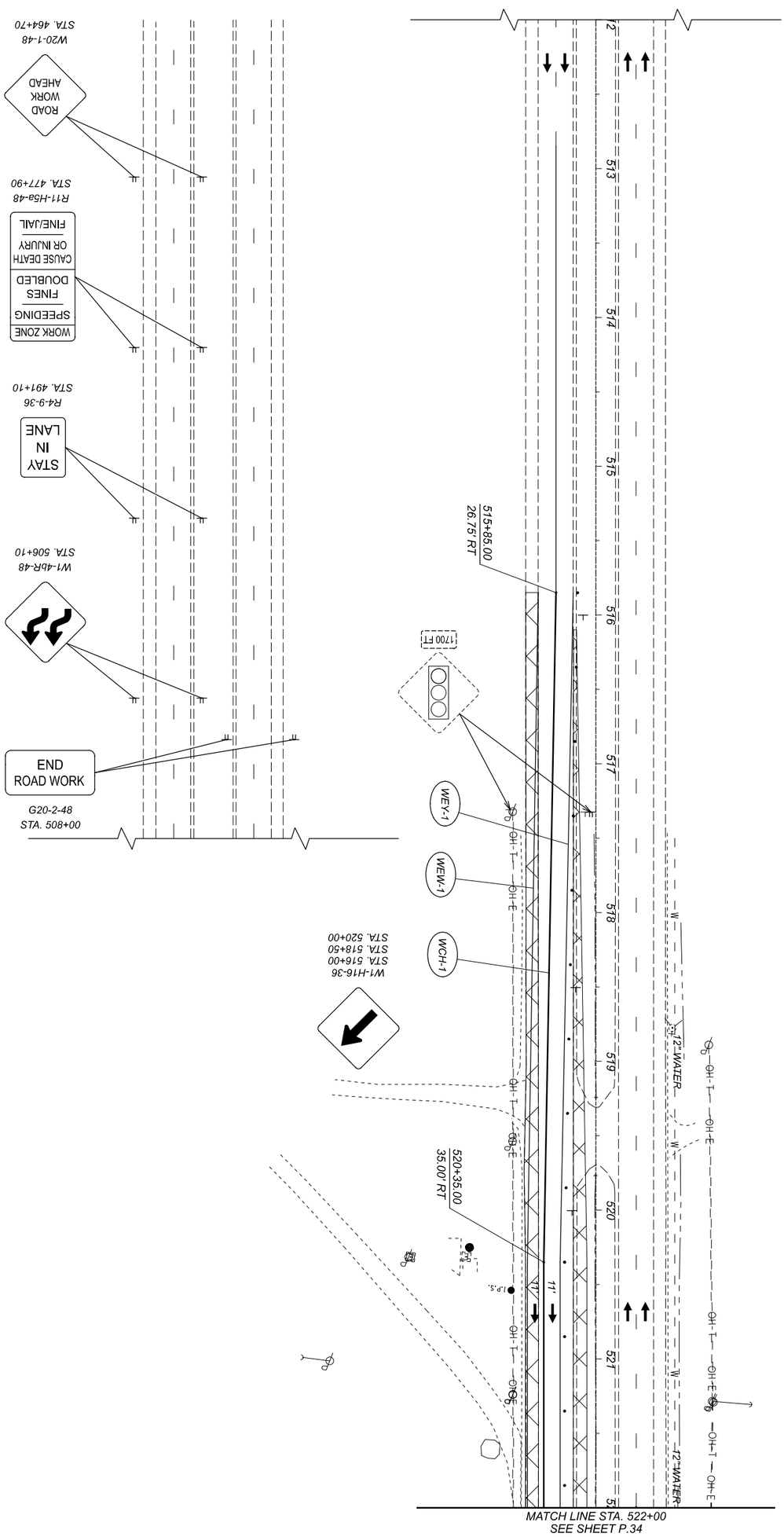

MAINTENANCE OF TRAFFIC PLAN PHASE 3 - US-23 (SOUTH HIGH STREET)
STA 512+00 TO STA 522+00

HORIZONTAL SCALE IN FEET
0 40
20 80

SHEET	TOTAL
P.33	170

PROJECT ID 92616

REVIEWER KMK 12-01-22

DESIGNER BSS

DESIGN AGENCY IBI

MODEL: 110380_MP2 PAPERSIZE: 17x11 (in.) DATE: 2022-12-09 TIME: 9:31:43 AM USER: william.croxton
\\10.120.112.5\ibishare\122592_SafetyDesign\7.0_Production\7.3_Design\04_Civil\Worksets\110380_FRA-23\400-Engineering\MOT\Sheets\110380_MP002_PH3.dgn

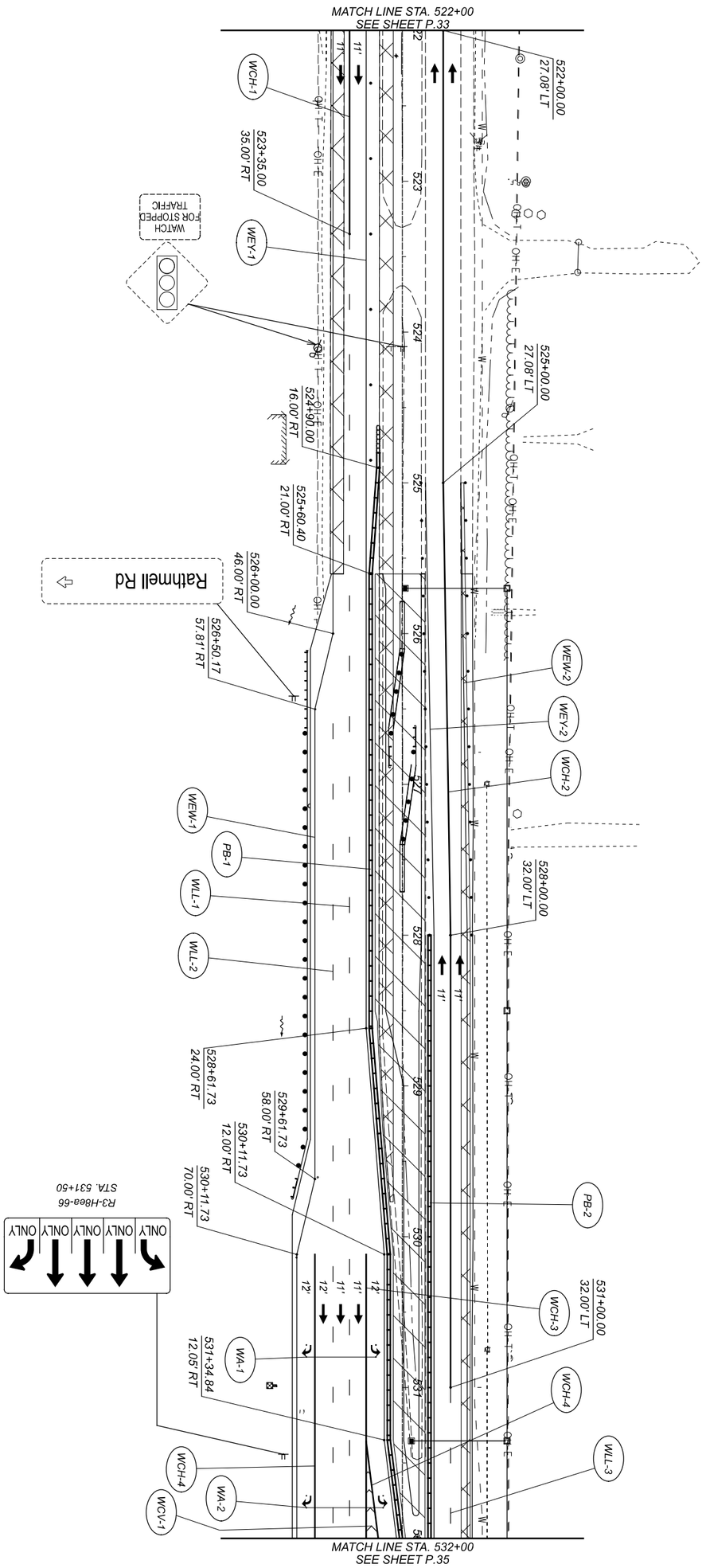

MAINTENANCE OF TRAFFIC PLAN PHASE 3 - US-23 (SOUTH HIGH STREET)
STA 522+00 TO STA 532+00

HORIZONTAL SCALE IN FEET
0 40
20 80

MODEL: 110380_MP3 PAPERSIZE: 17x11 (in.) DATE: 2022-12-09 TIME: 9:31:47 AM USER: william.croxton
\\10.120.112.5\iblshare\122592_SafetyDesign\7.0_Production\7.3_Design\04_Civil\Worksets\110380_FRA-23\400-Engineering\MOT\Sheets\110380_MP003_PH3.dgn

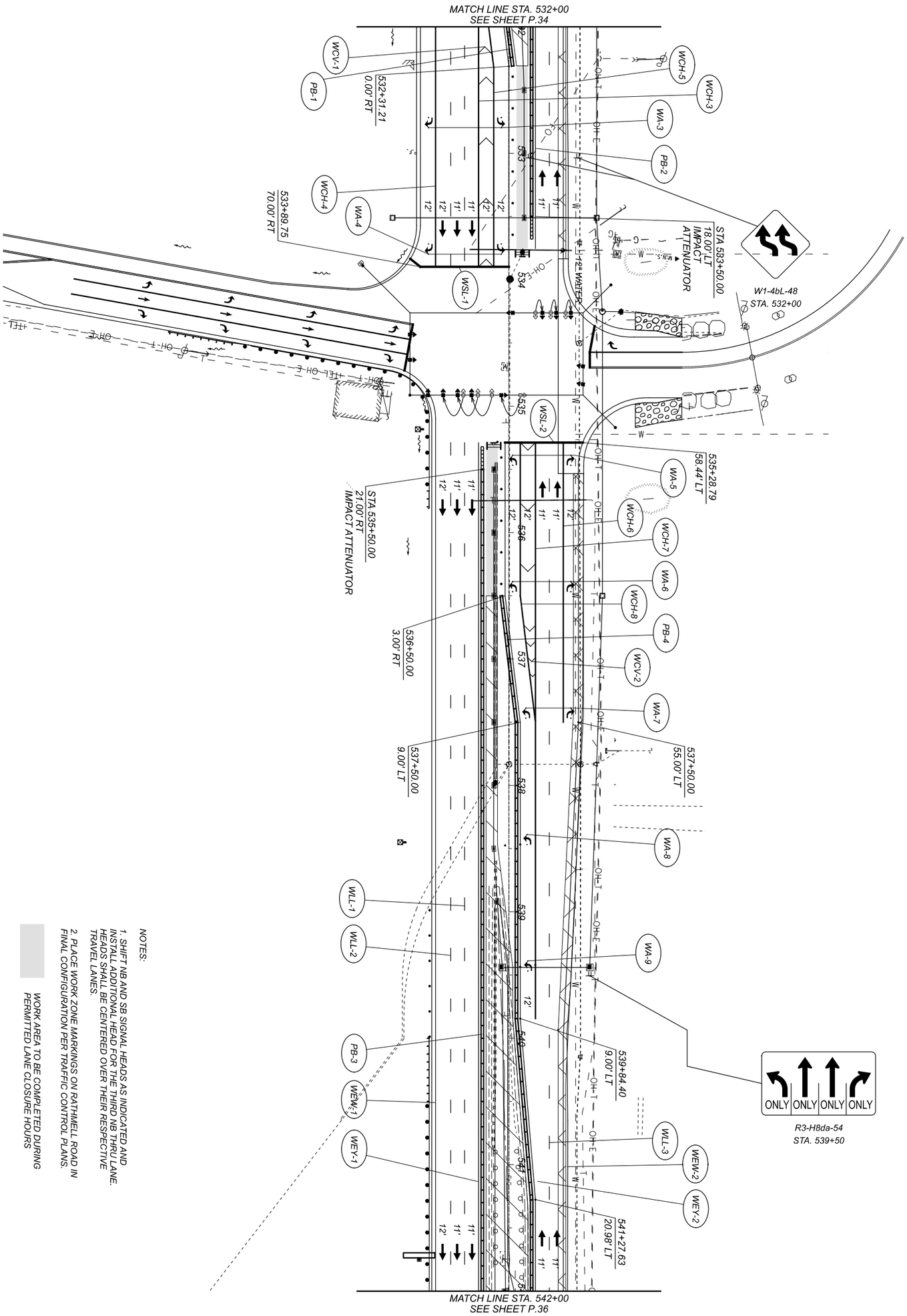

NOTES:

1. SHIFT NB AND SB SIGNAL HEADS AS INDICATED AND INSTALL ADDITIONAL HEAD FOR THE THIRD NB THRU LANE. HEADS SHALL BE CENTERED OVER THEIR RESPECTIVE TRAVEL LANES.
2. PLACE WORK ZONE MARKINGS ON RATHMELL ROAD IN FINAL CONFIGURATION PER TRAFFIC CONTROL PLANS.

WORK AREA TO BE COMPLETED DURING PERMITTED LANE CLOSURE HOURS

MAINTENANCE OF TRAFFIC PLAN PHASE 3 - US-23 (SOUTH HIGH STREET)
STA 532+00 TO STA 542+00

HORIZONTAL SCALE IN FEET
0 40
20 80

DESIGNER BSS
REVIEWER KMK 12-01-22
PROJECT ID 92616
SHEET P.35 TOTAL 170
DESIGN AGENCY IBI

MODEL: 110380_MP4 PAPERSIZE: 17x11 (in.) DATE: 2022-12-09 TIME: 9:31:52 AM USER: william.croxton
\\10.120.112.5\iblshare\122592_SafetyDesign\7.0_Production\7.3_Design\04_Civil\Worksets\110380_FRA-23\400-Engineering\MOT\Sheets\110380_MP004_PH3.dgn

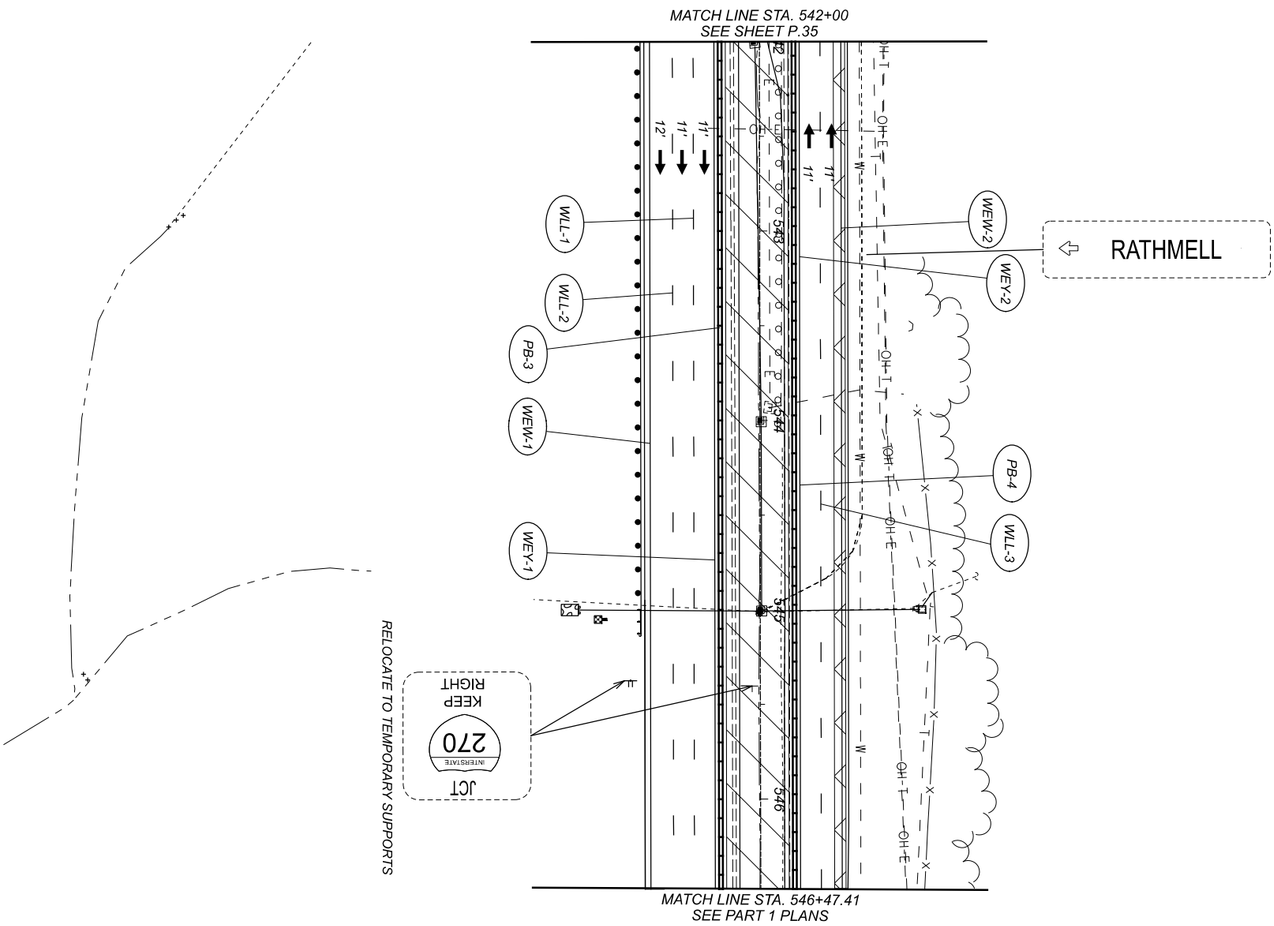

MAINTENANCE OF TRAFFIC PLAN PHASE 3 - US-23 (SOUTH HIGH STREET)
STA 542+00 TO STA 546+47.41

HORIZONTAL SCALE IN FEET
0 40
20 80

SHEET	TOTAL	PROJECT ID	REVIEWER	DESIGNER	DESIGN AGENCY
P 36	170	92616	KMK 12-01-22	BSS	IBI

LEGEND

SIGNAL HEADS: TEMP. VEHICULAR HEAD ■▶ EX. VEHICULAR HEAD □▷

SIGNAL POLES: PROP. ANCHOR/STRAIN POLE ◉ EX. ANCHOR/STRAIN POLE ◎
TEMPORARY WOOD SIGNAL POLE ●

CONTROLLERS & CABINETS: EX. CABINET W/PAD [PAD] PROP. UPS W/PAD TYPE 2 [UPS PAD]
TEMPORARY CABINET (NO PAD) [T.C]

DETECTION: STOP LINE RADAR UNIT >[S] DETECTION ZONE [Z1A]

SIGNS: SPAN MOUNTED SIGN ⊣

WORK AREAS: ▨

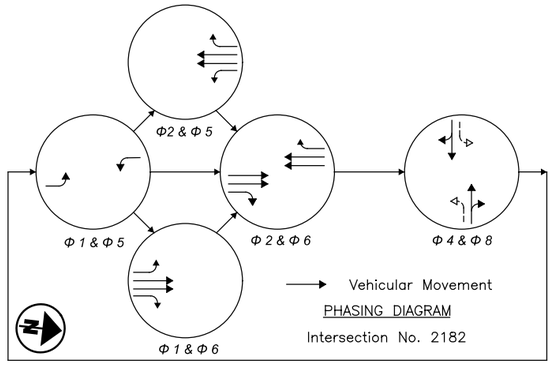

EXISTING VEHICULAR TRAFFIC SIGNAL HEAD CONFIGURATION (REMOVE)

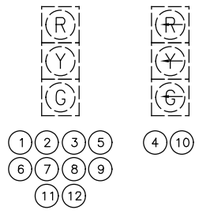

TEMPORARY VEHICULAR TRAFFIC SIGNAL HEAD CONFIGURATION

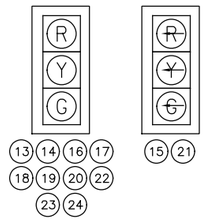

TEMPORARY SPAN MOUNTED SIGNS

R3-5L-30
(A) (B)

COVER SIGN "A' DURING
RATHMELL RD WEEKEND CLOSURES

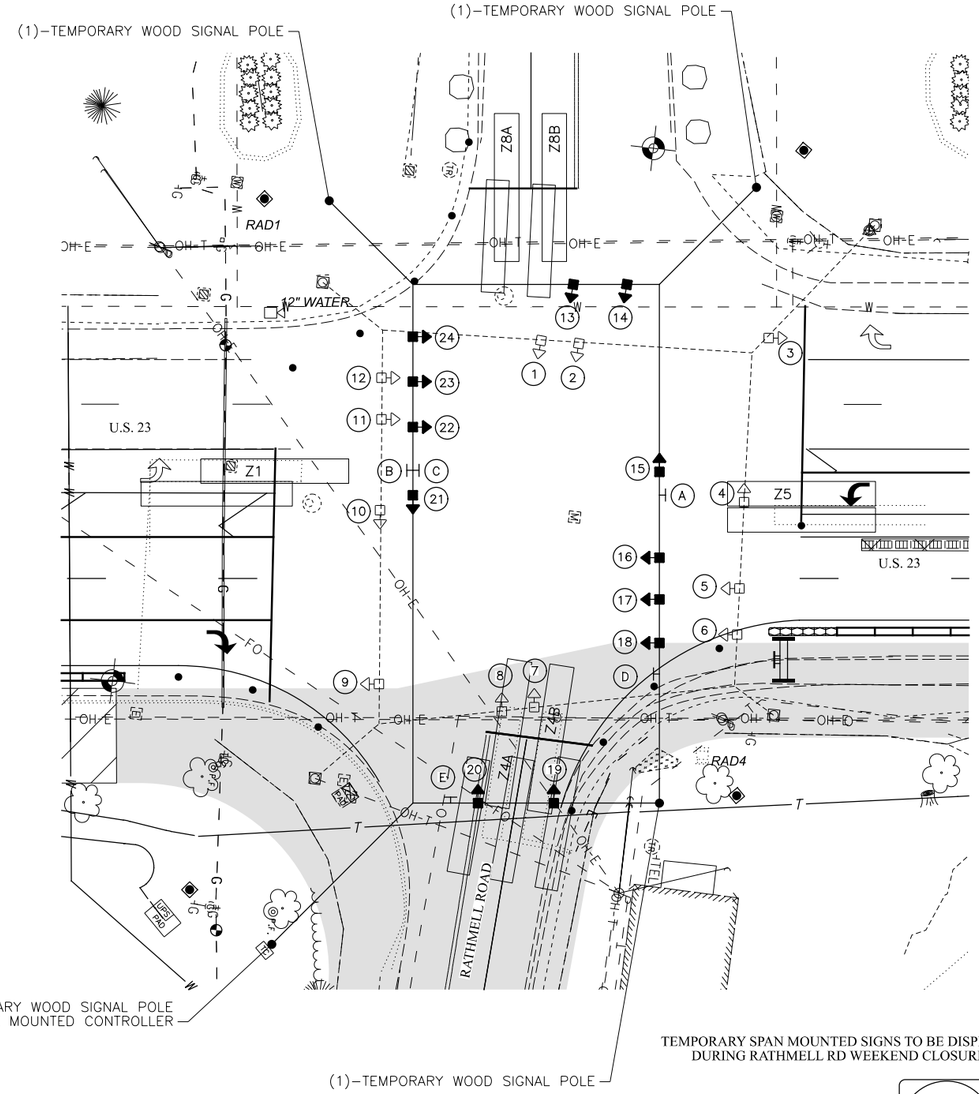

TIMING CHART

PHASE	1	2	3	4	5	6	7	8
MOVEMENT	NBLT	SB	-	WB	SBLT	NB	-	EB
MIN INITIAL	EX	EX	-	EX	EX	EX	-	EX
WALK	EX	EX	-	EX	EX	EX	-	EX
PED CHANGE	EX	EX	-	EX	EX	EX	-	EX
PASS / EXT	EX	EX	-	EX	EX	EX	-	EX
YELLOW	EX	EX	-	EX	EX	EX	-	EX
RED CLR	EX	EX	-	EX	EX	EX	-	EX
MAX GRN 1	EX	EX	-	EX	EX	EX	-	EX
MAX GRN 2	EX	EX	-	EX	EX	EX	-	EX
PED RECALL	EX	EX	-	EX	EX	EX	-	EX
VEH RECALL	EX	EX	-	EX	EX	EX	-	EX
MEMORY	EX	EX	-	EX	EX	EX	-	EX

EX = EXISTING TIMING SHALL BE TRANSFERRED TO TEMPORARY CONTROLLER
D = DE-ACTIVATE

NOTE:
PHASES 4 (WB) AND 5 (SBLT) TO BE DEACTIVATED
DURING RATHMELL RD WEEKEND CLOSURES

DETECTION ASSIGNMENTS

DETECTION ZONE	PHASE	DELAY DATA	
		DELAY IN SECONDS	INHIBIT DELAY DURING GRN
Z1	1	3	1
Z4A	4	3	4
Z4B	4	8	4
Z5	5	3	5
Z8A	8	8	8
Z8B	8	3	8
DILEMMA ZONE SPEED THRESHOLD > 35 MPH			

TEMPORARY SPAN MOUNTED SIGNS TO BE DISPLAYED
DURING RATHMELL RD WEEKEND CLOSURES

R3-2-24 (C) R3-1-24 (D) R5-1-30 (E)

SIGNS "C' AND "D" SHALL ALSO BE
GROUND MOUNTED IN CLOSED TURN LANE

NOTES:

1. *AN EXISTING TRAFFIC SIGNAL, OR ANY PART THEREOF, SHALL NOT BE TAKEN OUT OF SERVICE UNLESS ALTERNATE MEANS OF TRAFFIC CONTROL ARE IN PLACE AND OPERATIONAL. UNLESS DIRECTED BY THE CITY OF COLUMBUS, CITY ENGINEER OR APPOINTED DESIGNEE EXISTING TRAFFIC SIGNALS SHALL NOT BE TAKEN OUT OF SERVICE BETWEEN THE HOURS OF:*
- 7:00 AM TO 9:00 AM MONDAY THROUGH FRIDAY AND
- 4:00 PM TO 6:00 PM, MONDAY THROUGH FRIDAY (3:30 PM 6:00 PM FOR THE DOWNTOWN BUSINESS DISTRICT)
- OR ONE HOUR BEFORE SUNSET THROUGH ONE-HALF HOUR AFTER SUN RISE, WHICHEVER IS THE LONGEST DURATION.

2. *ANY UNUSED SIGNAL HEAD, PEDESTRIAN SIGNAL HEAD, PEDESTRIAN PUSHBUTTON, OR POLE OR SPAN/ARM MOUNTED SIGN SHALL BE COVERED AND DISCONNECTED. VEHICULAR SIGNAL HEADS AND PEDESTRIAN SIGNAL HEADS SHALL BE COVERED PER THE REQUIREMENTS OF CMSC 632.25.*

3. *VEHICULAR SIGNAL HEADS SHALL BE ALIGNED PER THE PLAN. NO TWO VEHICULAR SIGNAL HEADS SHALL BE LOCATED WITHIN EIGHT FEET OF ONE ANOTHER, MEASURED PERPENDICULAR TO THE TRAVEL LANE.*

4. *SIGNS SHALL BE ALIGNED PER THE PLANS. EXISTING SIGNS IN CONFLICT WITH THE PROPOSED TEMPORARY TRAFFIC CONTROL SETUP SHALL BE COVERED OR TEMPORARILY REMOVED*

5. *WEATHERPROOF SPLICES MAY BE INTRODUCED INTO SIGNAL CABLE IN ORDER TO RELOCATE EXISTING VEHICULAR SIGNAL HEADS. NO SPLICES SHALL REMAIN IN THE CABLE WHEN THE SIGNAL HEADS ARE RETURNED TO THEIR ORIGINAL POSITION.*

6. *ALL EXISTING VEHICULAR DETECTION SHALL BE MAINTAINED AT ALL TIMES. LOOPS THAT CANNOT BE USED AS A RESULT OF LANE SHIFTS, LANE CLOSURES, ETC. SHALL BE DEACTIVATED DURING CONSTRUCTION. TEMPORARY RADAR OR VIDEO DETECTION SHALL BE USED TO MAINTAIN DETECTION WHEN AN EXISTING LOOP CANNOT BE USED. IF THE EXISTING DETECTION IS RADAR OR VIDEO, THE ZONES ON THE EXISTING RADAR OR VIDEO UNIT SHALL BE RELOCATED TO THE NEW LANE ALIGNMENT. WHEN TEMPORARY RADAR DETECTION IS USED, DILEMMA ZONE DETECTION SHALL BE PROVIDED FOR APPROACHES WITH SPEEDS GREATER THAN 40 MPH.*

7. *EXISTING PEDESTRIAN PUSHBUTTONS, PUSHBUTTON SIGNS, AND SIGNAL HEADS SHALL BE MAINTAINED FOR ALL CROSSWALKS THAT REMAIN OPEN DURING CONSTRUCTION. TEMPORARY PUSHBUTTONS AND SIGNS OR RELOCATED PUSHBUTTONS AND SIGNS SHALL BE POSITIONED ACCORDING TO THE CITY OF COLUMBUS ADA RULES AND REGULATIONS. RELOCATED PEDESTRIAN SIGNAL HEADS SHALL BE POSITIONED SUCH THAT THE HEAD IS AIMED AT THE CENTER OF THE CROSSWALK AREA (NOT THE CURB RAMP) THAT IS OPPOSITE THE UNIT. A MINIMUM OF ONE CROSSWALK TO CROSS EACH STREET AT A SIGNALIZED INTERSECTION SHALL BE MAINTAINED AT ALL TIMES. FOR SIGNALIZED INTERSECTIONS WITH THREE LEGS, THE CROSSWALK TO CROSS THE DEAD END STREET MAY BE CLOSED AS LONG A PEDESTRIAN PATH IS PROVIDED ALONG THE "TOP SIDE" OF THE INTERSECTION.*

8. *UNLESS NOTED IN THE PLANS, THE TRAFFIC SIGNAL SHALL UTILIZE THE EXISTING TIMING AND PHASING.*

9. *IF ANY CHANGES ARE MADE TO THE SIGNAL OPERATION INCLUDING PHASING CHANGES, PHASE OMISSIONS, TIMING CHAGES, ETC., SIGNAL OPERATION CHANGED SIGNS (W23-H2B) SHALL BE INSTALLED ON THE SPAN OR ARM FOR ALL DIRECTIONS. CENTER THE SIGN OVER THE APPROACH. SIGN SHALL BE LEFT IN PLACE NO LONGER THAN THE DURATION SPECIFIED UNDER ITEM 630 SIGNING, MISC.: TRAFFIC SIGNAL SIGNS.*

10. *TEMPORARY WOOD SIGNAL POLES SHALL BE SIZED AND THE TEMPORARY SIGNAL SPAN SHALL BE ADJUSTED SUCH THAT THE MINIMUM ROADWAY CLEARANCE TO THE BOTTOM OF THE LOWEST SIGNAL HEAD IS 16.5' MINIMUM AND THE HIGHEST SIGNAL HEAD IS 19' MAXIMUM.*

11. *WHEN TEMPORARY TRAFFIC SIGNAL CABINETS ARE USED, BASE MOUNTED CABINETS SHALL BE MOUNTED ON A STURDY FOUNDATION SECURE FROM ANIMALS AND WEATHER. POLE MOUNTED CABINETS SHALL BE POSITIONED TO PREVENT AN OVERHANG GREATER THAN 4 IN. INTO A PEDESTRIAN PATHWAY.*

12. *THE CONTRACTOR IS RESPONSIBLE FOR LOCATING, COORDINATION, AND PAYING FOR POWER SERVICE AS NEEDED FOR THE MAINTENANCE OF TRAFFIC PHASES.*

13. *SIGNAL SHALL REMAIN CONNECTED TO THE CTSS THROUGHOUT CONSTRUCTION. THE CONTRACTOR SHALL INSTALL A TEMPORARY DROP CABLE AND ETHERNET RADIO CABLE OR RELOCATE THE EXISTING CABLES TO THE TEMPORARY CABINET.*

14. *SEE PERMANENT SIGNAL PLANS FOR REMOVAL OF EXISTING SIGNAL ITEMS.*

HORIZONTAL SCALE IN FEET
0 10 20 40

MAINTENANCE OF TRAFFIC SIGNAL PLAN
US-23 (SOUTH HIGH STREET) & CR-121 (RATHMELL ROAD)

DESIGN AGENCY: IBI
DESIGNER: BSS
REVIEWER: KMK 12-01-22
PROJECT ID: 92616
SHEET: P.37 TOTAL: 170

FRA-23-4.19 PART 2 (PID 92616)

MODEL: I10380_MH001 PAPERSIZE: 17x11(in.) DATE: 2022-12-09 TIME: 9:31:55 AM USER: william.croxton
\\10.120.12.5\ibishare\122592_SafetyDesign\7.0_Production\7.3_Design\04_Civil\Worksets\I10380_FRA-23\400-Engineering\MOT\Sheets\I10380_MH001.dgn

SHEET NUM.										PART.		ITEM	ITEM EXT	GRAND TOTAL	UNIT	DESCRIPTION	SEE SHEET NO.
OFFICE CALCS	P.13	P.14	P.16	P.43	P.44	P.45	P.98	P.108	P.146	04/NHS/04	05/NHS/05						
																ROADWAY	
	LS									LS		201	11000	LS		CLEARING AND GRUBBING	
				1						1		202	20010	1	EACH	HEADWALL REMOVED	
8,675			445	144						9,264		202	23000	9,264	SY	PAVEMENT REMOVED	
				210						210		202	30000	210	SF	WALK REMOVED	
				14						14		202	30200	14	FT	STEPS REMOVED	
				20						20		202	30700	20	FT	CONCRETE BARRIER REMOVED	
				174						174		202	32500	174	FT	CURB AND GUTTER REMOVED	
								220		220		202	34900	220	FT	PIPE REMOVED	
				2,586						2,586		202	35100	2,586	FT	PIPE REMOVED, 24" AND UNDER	
				425						425		202	38000	425	FT	GUARDRAIL REMOVED	
				200						200		202	38300	200	FT	GUARDRAIL REMOVED, BARRIER DESIGN	
				1						1		202	47800	1	EACH	IMPACT ATTENUATOR REMOVED	
				4						4		202	58000	4	EACH	MANHOLE REMOVED	
				10						10		202	58300	10	EACH	CATCH BASIN OR INLET REMOVED	
				565						565		SPECIAL	20270000	565	FT	FILL AND PLUG EXISTING CONDUIT, 15" DIAMETER	P.14
				257						257		202	75000	257	FT	FENCE REMOVED	
				LS						LS		202	98000	LS		REMOVAL MISC.: ABANDONED TELECOM FACILITIES	P.13
				LS						LS		202	98000	LS		REMOVAL MISC.: BUILDING FOUNDATION	P.13
				LS						LS		202	98000	LS		REMOVAL MISC.: CONCRETE SLAB	P.13
				LS						LS		202	98000	LS		REMOVAL MISC.: CROSSES	P.13
				LS						LS		202	98000	LS		REMOVAL MISC.: FIELD DRIVE	P.13
				LS						LS		202	98000	LS		REMOVAL MISC.: LANDSCAPED AREA WITH ROCKS	P.13
				10						10		202	98100	10	EACH	REMOVAL MISC.: WOOD POST	P.13
				254						254		202	98200	254	FT	REMOVAL MISC.: TRENCH DRAIN WITH GRATE	P.13
						15,674				15,674		203	10000	15,674	CY	EXCAVATION	
						9,962				9,962		203	20000	9,962	CY	EMBANKMENT	
7,335			445							7,780		204	10000	7,780	SY	SUBGRADE COMPACTION	
2,445										2,445		204	13000	2,445	CY	EXCAVATION OF SUBGRADE	
2,445										2,445		204	30010	2,445	CY	GRANULAR MATERIAL, TYPE B	
9										9		204	45000	9	HOUR	PROOF ROLLING	
7,335										7,335		204	50000	7,335	SY	GEOTEXTILE FABRIC	
249										249		206	10500	249	TON	CEMENT	
9,617										9,617		206	11000	9,617	SY	CURING COAT	
9,617										9,617		206	15010	9,617	SY	CEMENT STABILIZED SUBGRADE, 12 INCHES DEEP	
					1,012.5					1,012.5		606	15050	1,012.5	FT	GUARDRAIL, TYPE MGS	
					100					100		606	15550	100	FT	GUARDRAIL, BARRIER DESIGN, TYPE MGS	
					3					3		606	26150	3	EACH	ANCHOR ASSEMBLY, MGS TYPE E, MASH 2016	P.13
					5					5		606	26550	5	EACH	ANCHOR ASSEMBLY, MGS TYPE T	
					2					2		606	60012	2	EACH	IMPACT ATTENUATOR, TYPE 1 (BIDIRECTIONAL)	
									1	1		623	38500	1	EACH	MONUMENT ASSEMBLY, TYPE C	
									2	2		623	40500	2	EACH	REFERENCE MONUMENT, TYPE A	
									1	1		623	40520	1	EACH	RIGHT-OF-WAY MONUMENT, TYPE B	
	LS									LS		SPECIAL	69098400	LS		PRE-CONSTRUCTION VIDEO	P.13
	LS									LS		SPECIAL	69098400	LS		SURVEY AND MONITORING OF EXISTING BUILDING	P.13
																EROSION CONTROL	
		6					16			22		601	21050	22	SY	TIED CONCRETE BLOCK MAT WITH TYPE 1 UNDERLAYMENT	
							25			25		601	32204	25	CY	ROCK CHANNEL PROTECTION, TYPE C WITH GEOTEXTILE FABRIC	
						2				2		659	00100	2	EACH	SOIL ANALYSIS TEST	
						4,146	51			4,197		659	00300	4,197	CY	TOPSOIL	
						37,345				37,345		659	00510	37,345	SY	SEEDING AND MULCHING, CLASS 2	
						1,868				1,868		659	14000	1,868	SY	REPAIR SEEDING AND MULCHING	
						1,868				1,868		659	15000	1,868	SY	INTER-SEEDING	
						5.21				5.21		659	20000	5.21	TON	COMMERCIAL FERTILIZER	
						7.72				7.72		659	31000	7.72	ACRE	LIME	
						207				207		659	35000	207	MGAL	WATER	
						85				85		659	40000	85	MSF	MOWING	
							1,138			1,138		670	00700	1,138	SY	DITCH EROSION PROTECTION	
						LS				LS		832	15000	LS		STORM WATER POLLUTION PREVENTION PLAN	
						LS				LS		832	15002	LS		STORM WATER POLLUTION PREVENTION INSPECTIONS	
						LS				LS		832	15010	LS		STORM WATER POLLUTION PREVENTION INSPECTION SOFTWARE	
						135,155				135,155		832	30000	135,155	EACH	EROSION CONTROL	

GENERAL SUMMARY (1 OF 5)

FRA-23-4.19 PART 2 (PID 92616)

MODEL: Sheet PAPERSIZE: 17x11 (in.) DATE: 2023-05-04 TIME: 4:29:45 PM USER: william.croxton
\\10.120.112.5\bistshare\122592_SafetyDesign\7.0_Production\7.3_Design\04_Civil\Worksets\110380_FRA-23400-Engineering\Roadway\Sheets\110380_GG001.dgn

DESIGN AGENCY
IBI

DESIGNER
WLC

REVIEWER
KMK 12-01-22

PROJECT ID
92616

SHEET NUM.										PART.		ITEM	ITEM EXT	GRAND TOTAL	UNIT	DESCRIPTION	SEE SHEET NO.
OFFICE CALCS	P.14	P.16	P.17	P.19	P.20	P.44	P.97	P.98	P.108	04/NHS/04	05/NHS/05						
																DRAINAGE	
							0.97			0.97		602	20000	0.97	CY	CONCRETE MASONRY	
								3,246		3,246		605	05110	3,246	FT	4" SHALLOW PIPE UNDERDRAINS WITH GEOTEXTILE FABRIC	
	100									100		605	05200	100	FT	4" UNCLASSIFIED PIPE UNDERDRAINS	
								7,572		7,572		605	06020	7,572	FT	4" BASE PIPE UNDERDRAINS WITH GEOTEXTILE FABRIC	
	100									100		605	13300	100	FT	6" UNCLASSIFIED PIPE UNDERDRAINS	
	50							288		338		611	00410	338	FT	4" CONDUIT, TYPE F FOR UNDERDRAIN OUTLET	
	50									50		611	00510	50	FT	6" CONDUIT, TYPE F FOR UNDERDRAIN OUTLETS	
							11			11		611	01100	11	FT	6" CONDUIT, TYPE C	
							11			11		611	04600	11	FT	12" CONDUIT, TYPE C	
							788			788		611	05900	788	FT	15" CONDUIT, TYPE B	
							347			347		611	06100	347	FT	15" CONDUIT, TYPE C	
							286			286		611	07600	286	FT	18" CONDUIT, TYPE C	
							216			216		611	09100	216	FT	21" CONDUIT, TYPE C	
							225			225		611	10400	225	FT	24" CONDUIT, TYPE B	
							369			369		611	10600	369	FT	24" CONDUIT, TYPE C	
							70			70		611	13400	70	FT	30" CONDUIT, TYPE B	
							557			557		611	13600	557	FT	30" CONDUIT, TYPE C	
							96			96		611	96600	96	FT	CONDUIT, BORED OR JACKED, 21" O.D., TYPE B, 748.06	P.14
							85			85		611	96600	85	FT	CONDUIT, BORED OR JACKED, 36" O.D., TYPE B, 748.06	P.14
							6			6		611	98300	6	EACH	CATCH BASIN, NO. 5	
							2			2		611	98341	2	EACH	CATCH BASIN, NO. 5A	
							12			12		611	98370	12	EACH	CATCH BASIN, NO. 6	
							2			2		611	98410	2	EACH	CATCH BASIN, NO. 8	
							4			4		611	98434	4	EACH	CATCH BASIN, NO. 8A	
							1			1		611	98470	1	EACH	CATCH BASIN, NO. 2-2B	
							1			1		611	99574	1	EACH	MANHOLE, NO. 3	
	3							8		11		611	99710	11	EACH	PRECAST REINFORCED CONCRETE OUTLET	
																PAVEMENT	
					7,334					7,334		254	01000	7,334	SY	PAVEMENT PLANING, ASPHALT CONCRETE (1.25" MIN)	
14,917				6,248						5,693	15,472	254	01000	21,165	SY	PAVEMENT PLANING, ASPHALT CONCRETE (1" MIN, 3.25" MAX)	
4,062		125								4,187		301	56000	4,187	CY	ASPHALT CONCRETE BASE, PG64-22, (449)	
2,804		75								2,879		304	20000	2,879	CY	AGGREGATE BASE	
4,262		221		532	624					3,815	1,824	407	20000	5,639	GAL	NON-TRACKING TACK COAT	
			185							185		411	10000	185	CY	STABILIZED CRUSHED AGGREGATE	
241										241		441	10100	241	CY	ASPHALT CONCRETE SURFACE COURSE, TYPE 1, (446), PG70-22M	
337										337		441	10200	337	CY	ASPHALT CONCRETE INTERMEDIATE COURSE, TYPE 2, (446)	
993				261	255					863	646	442	10000	1,509	CY	ASPHALT CONCRETE SURFACE COURSE, 12.5 MM, TYPE A (446), PG 70-22M	
1,158				304						709	753	442	10080	1,462	CY	ASPHALT CONCRETE INTERMEDIATE COURSE, 12.5 MM, TYPE A (446)	
290										177	113	442	20171	290	CY	ASPHALT CONCRETE INTERMEDIATE COURSE, 12.5 MM, TYPE A (448), PG 64-28, AS PER PLAN	P.16
						131				131		609	24510	131	FT	CURB, TYPE 4-C	
						14				14		618	39000	14	EACH	RUMBLE STRIPS, TRANSVERSE (ASPHALT CONCRETE)	
						6,546				6,546		618	40100	6,546	FT	RUMBLE STRIPS, SHOULDER (ASPHALT CONCRETE)	
																WATER WORK	
									3	3		638	98000	3	EACH	WATER WORK, MISC.: CMSC 802 - 6" VALVE	P.107
									7	7		638	98000	7	EACH	WATER WORK, MISC.: CMSC 807 - VALVE BOX ADJUSTED TO GRADE	P.107
									3	3		638	98000	3	EACH	WATER WORK, MISC.: CMSC 809 - FIRE HYDRANT, RELOCATED	P.107
									1	1		638	98000	1	EACH	WATER WORK, MISC.: CMSC 810 - 18" HYDRANT EXTENSION	P.107
									LS	LS		638	98100	LS		WATER WORK, MISC.: CMSC SPECIAL - WATER AS-BUILT COORDINATE TABLE	P.107
									16	16		638	98600	16	FT	WATER WORK, MISC.: CMSC 801 - 6" WATER PIPE & FITTINGS	P.107
									225	225		638	98600	225	FT	WATER WORK, MISC.: CMSC 808 - RELOCATE 12" WATER MAIN	P.107

GENERAL SUMMARY (2 OF 5)

FRA-23-4.19 PART 2 (PID 92616)

MODEL: Sheet PAPERSIZE: 17x11 (in.) DATE: 2023-04-17 TIME: 2:24:14 PM USER: william.croxton
\\10.120.112.5\bitshare\122592_SafetyDesign\7.0_Production\7.3_Design\04_Civil\Worksets\110380_FRA-23400-Engineering\Roadway\Sheets\110380_GG002.dgn

DESIGN AGENCY
IBI

DESIGNER
WLC

REVIEWER
KMK 12-01-22

PROJECT ID
92616

SHEET P.39 TOTAL 170

SHEET NUM.										PART.		ITEM	ITEM EXT	GRAND TOTAL	UNIT	DESCRIPTION	SEE SHEET NO.
P.44	P.109	P.111	P.133	P.138	P.141					04/NHS/04	05/NHS/05						
																LIGHTING	
					4					4		625	98000	4	EACH	LIGHTING, MISC.: CMSC 1001 - 13 INCH X 24 INCH PULL BOX (MIS-54)	P.141
					3					3		625	98000	3	EACH	LIGHTING, MISC.: CMSC 1001 - 17 INCH X 30 INCH X 24 INCH (MIS-54-APP)	P.141
					1					1		625	98000	1	EACH	LIGHTING, MISC.: CMSC 1001 - STREETLIGHT CIRCUIT RISER (MIS-56)	P.141
					1					1		625	98000	1	EACH	LIGHTING, MISC.: CMSC 1001 - METER, SELF CONTAINED WITH METER SOCKET, 100 AMP (MIS-57)	P.141
					6					6		625	98000	6	EACH	LIGHTING, MISC.: CMSC 1001 - 8' STREET LIGHT FOUNDATION (MIS-202)	P.141
					2					2		625	98000	2	EACH	LIGHTING, MISC.: CMSC 1001 - POLE, ALUMINUM, 10' BRACKET, T-BASE, 40' MOUNTING HEIGHT (MIS-301)	P.141
					4					4		625	98000	4	EACH	LIGHTING, MISC.: CMSC 1001 - POLE, ALUMINUM, 15' BRACKET, T-BASE, 40' MOUNTING HEIGHT (MIS-302)	P.141
					6					6		625	98000	6	EACH	LIGHTING, MISC.: CMSC 1001 - 3-WIRE POLE TO BE WIRED (MIS-501)	P.141
					1					1		625	98000	1	EACH	LIGHTING, MISC.: CMSC 1001 -3-WIRE, 480V PAD MOUNT CONTROLLER (MIS-603)	P.141
					6					6		625	98000	6	EACH	LIGHTING, MISC.: CMSC 1001 - COBRA HEAD LED LUMINAIRE (MIS-800)	P.141
					1					1		625	98000	1	EACH	LIGHTING, MISC.: CMSC 1001 - POWER SERVICE, AS PER PLAN	P.141
					190					190		625	98100	190	FT	LIGHTING, MISC.: CMSC 1001 - 2-WIRE #6 DUPLEX OVERHEAD CIRCUIT (MIS-402)	P.141
					10					10		625	98100	10	FT	LIGHTING, MISC.: CMSC 1001 - 2-WIRE UNDERGROUND CIRCUIT (MIS-403)	P.141
					725					725		625	98100	725	FT	LIGHTING, MISC.: CMSC 1001 - 3-WIRE UNDERGROUND CIRCUIT (MIS-404)	P.141
					275					275		625	98100	275	FT	LIGHTING, MISC.: CMSC 1001 - 2-INCH CONDUIT, CONCRETE ENCASED (MIS-700)	P.141
					410					410		625	98100	410	FT	LIGHTING, MISC.: CMSC 1001 - 3-INCH RIGID STEEL WITH 2-INCH CONDUIT INSERT (MIS-702)	P.141
																TRAFFIC SURVEILLANCE	
				2,200						2,200		625	23000	2,200	FT	NO. 4 AWG 600 VOLT DISTRIBUTION CABLE	
				345						345		625	25408	345	FT	CONDUIT, 2", 725.051	
			78							78		625	25803	78	FT	CONDUIT, CONCRETE ENCASED, 3", 725.051, AS PER PLAN	P.123
			1,904							1,904		625	25920	1,904	FT	CONDUIT, MISC.:ENCASED INTERCONNECT CONDUIT BANK, TC2, SCH 40, (4)-3" & (1)-1.5"	P.126
			103							103		625	25920	103	FT	CONDUIT, MISC.:ENCASED INTERCONNECT CONDUIT BANK, TC2, SCH 80, (4)-3" & (1)-1.5"	P.126
				120						120		625	25906	120	FT	CONDUIT, 2", JACKED OR DRILLED, 725.051	
			2,085							2,085		625	29001	2,085	FT	TRENCH, AS PER PLAN	P.123
				357						357		625	29011	357	FT	TRENCH, 30" DEEP, AS PER PLAN	P.137
				4						4		625	30700	4	EACH	PULL BOX, 725.08, 18"	
				1						1		625	30710	1	EACH	PULL BOX, 725.08, 32"	
			6							6		625	31600	6	EACH	PULL BOX, MISC.:PULLBOX, 32"	P.123
				2						2		625	32000	2	EACH	GROUND ROD	
				4						4		625	32001	4	EACH	GROUND ROD, AS PER PLAN	P.137
				1						1		625	34001	1	EACH	POWER SERVICE, AS PER PLAN	P.137
				477						477		625	36010	477	FT	UNDERGROUND WARNING/MARKING TAPE	
				1						1		630	70044	1	EACH	OVERHEAD SIGN SUPPORT, DMS PEDESTAL	
				1						1		630	70060	1	EACH	CATWALK, DMS PEDESTAL	
				1						1		630	70082	1	EACH	OVERHEAD SIGN SUPPORT FOUNDATION, DMS PEDESTAL	
			301							301		632	62810	301	FT	INTERCONNECT CABLE, MISC.: CMSC 1620 - FIBER OPTIC CABLE, 24 STRAND	P.126
			1							1		632	62820	1	EACH	INTERCONNECT, MISC.: CMSC 1620 - TERMINATION PANEL, 24 FIBER	P.126
			12							12		632	62820	12	EACH	INTERCONNECT, MISC.: FIBER OPTIC FUSION SPLICE	P.126
			1							1		632	70401	1	EACH	CONDUIT RISER, 2" DIAMETER, AS PER PLAN	P.126
				1						1		633	67101	1	EACH	CABINET FOUNDATION, AS PER PLAN	P.137
				1						1		633	67201	1	EACH	CONTROLLER WORK PAD, AS PER PLAN	P.137
			1							1		633	99000	1	EACH	CONTROLLER ITEM, MISC.: LAYER 2 ETHERNET SWITCH	P.126
			1							1		633	99000	1	EACH	CONTROLLER ITEM, MISC.:FIBER OPTIC ETHERNET TRANSCEIVER, SHORT RANGE	P.126
				463						463		804	15040	463	FT	FIBER OPTIC CABLE, 144 FIBER	
				26						26		809	24500	26	FT	CONDUIT, 4", MULTICELL, HDPE WITH 4 – 1" INNERDUCTS	
				146						146		809	64550	146	FT	ETHERNET CABLE, OUTDOOR-RATED	
				1						1		809	65990	1	EACH	ITS DEVICE, MISC.: REMOVE AND RELOCATE DMS CABINET	P.137
				1						1		809	65990	1	EACH	ITS DEVICE, MISC.: REMOVE AND RELOCATE DMS SIGN	P.137
				1						1		809	65990	1	EACH	ITS DEVICE, MISC.: REMOVAL OF DMS INSTALLATION	P.137
																TRAFFIC CONTROL	
		283								201	82	621	00100	283	EACH	RPM	
	3									3		625	32000	3	EACH	GROUND ROD	
25										25		626	00110	25	EACH	BARRIER REFLECTOR, TYPE 2 (ONE-WAY)	
3										3		626	00110	3	EACH	BARRIER REFLECTOR, TYPE 2 (BIDIRECTIONAL)	

FRA-23-4.19 PART 2 (PID 92616)
MODEL: Sheet PAPERSIZE: 17x11 (in.) DATE: 2023-04-07 TIME: 3:39:45 PM USER: william.croxton
\\10.120.112.5\bistshare\122592_SafetyDesign\7.0_Production\7.3_Design\04_Civil\Worksets\110380_FRA-23400-Engineering\Roadway\Sheets\110380_GG003.dgn

DESIGN AGENCY
IBI

DESIGNER
WLC

REVIEWER
KMK 12-01-22

PROJECT ID
92616

SHEET NUM.										PART.		ITEM	ITEM EXT	GRAND TOTAL	UNIT	DESCRIPTION	SEE SHEET NO.
P.109	P.111	P.127								04/NHS/04	05/NHS/05						
																TRAFFIC CONTROL (CONT.)	
326										326		630	03100	326	FT	GROUND MOUNTED SUPPORT, NO. 3 POST	
1										1		630	72410	1	EACH	OVERHEAD SIGN SUPPORT, TYPE TC-15.116, DESIGN 1	
1										1		630	72560	1	EACH	OVERHEAD SIGN SUPPORT, TYPE TC-16.22, DESIGN 14	
		7								7		630	79000	7	EACH	SIGN HANGER ASSEMBLY, SPAN WIRE	
5										5		630	79100	5	EACH	SIGN HANGER ASSEMBLY, MAST ARM	
1		11								12		630	79500	12	EACH	SIGN SUPPORT ASSEMBLY, POLE MOUNTED	
215.8		102.5								318.3		630	80100	318.3	SF	SIGN, FLAT SHEET	
366										366		630	80224	366	SF	SIGN, OVERHEAD EXTRUSHEET	
		3								3		630	80500	3	EACH	SIGN, DOUBLE FACED, STREET NAME	
3										3		630	84510	3	EACH	RIGID OVERHEAD SIGN SUPPORT FOUNDATION	
12										12		630	84900	12	EACH	REMOVAL OF GROUND MOUNTED SIGN AND DISPOSAL	
2										2		630	85100	2	EACH	REMOVAL OF GROUND MOUNTED SIGN AND REERECTION	
14										14		630	86002	14	EACH	REMOVAL OF GROUND MOUNTED POST SUPPORT AND DISPOSAL	
9										9		630	87500	9	EACH	REMOVAL OF POLE MOUNTED SIGN AND DISPOSAL	
		1								1		630	97700	1	EACH	SIGNING, MISC.: TRAFFIC SIGNAL SIGNS	P.124
	0.42									0.42		644	00100	0.42	MILE	EDGE LINE, 4"	
	2.2									1.27	0.93	644	00104	2.2	MILE	EDGE LINE, 6"	
	1.48									1.02	0.46	644	00204	1.48	MILE	LANE LINE, 6"	
	0.58									0.58		644	00300	0.58	MILE	CENTER LINE	
	1,075									1,075		644	00400	1,075	FT	CHANNELIZING LINE, 8"	
	2,363									1,093	1,270	644	00404	2,363	FT	CHANNELIZING LINE, 12"	
	219									148	71	644	00500	219	FT	STOP LINE	
	176									176		644	00700	176	FT	TRANSVERSE/DIAGONAL LINE	
	418									148	270	644	00720	418	FT	CHEVRON MARKING	
	49									36	13	644	01300	49	EACH	LANE ARROW	
	143									143		644	01510	143	FT	DOTTED LINE, 6"	
	1,112									1,112		646	50100	1,112	FT	REMOVAL OF PAVEMENT MARKING	
																TRAFFIC SIGNALS	
		3								3		625	18511	3	EACH	BRACKET ARM, 30', AS PER PLAN	P.123
		171								171		625	23001	171	FT	NO. 4 AWG 600 VOLT DISTRIBUTION CABLE, AS PER PLAN	P.124
		103								103		625	25409	103	FT	CONDUIT, 2", 725.051, AS PER PLAN	P.123
		76								76		625	25505	76	FT	CONDUIT, 3", 725.051, AS PER PLAN	P.123
		101								101		625	25803	101	FT	CONDUIT, CONCRETE ENCASED, 2", 725.051, AS PER PLAN	P.123
		194								194		625	29001	194	FT	TRENCH, AS PER PLAN	P.123
		1								1		625	31600	1	EACH	PULL BOX, MISC.: PULLBOX, 27"	P.123
		1								1		625	31600	1	EACH	PULL BOX, MISC.: PULLBOX, 48"	P.123
		1								1		625	31600	1	EACH	PULL BOX, MISC.: PULLBOX, 725.06, 12"X18" (TRAFFIC)	P.123
		9								9		625	32001	9	EACH	GROUND ROD, AS PER PLAN	P.126
		14								14		632	04911	14	EACH	VEHICULAR SIGNAL HEAD, (LED), 3-SECTION, 12" LENS, 1-WAY, POLYCARBONATE, BLACK, AS PER PLAN	P.124
		1								1		632	05081	1	EACH	VEHICULAR SIGNAL HEAD, (LED), 5-SECTION, 12" LENS, 1-WAY, POLYCARBONATE, BLACK, AS PER PLAN	P.124
		15								15		632	25001	15	EACH	COVERING OF VEHICULAR SIGNAL HEAD, AS PER PLAN	P.126
		184								184		632	29901	184	FT	MESSENGER WIRE, 7 STRAND, ¼" DIAMETER WITH ACCESSORIES, AS PER PLAN	P.124
		593								593		632	30401	593	FT	MESSENGER WIRE, 7 STRAND, ½" DIAMETER WITH ACCESSORIES, AS PER PLAN	P.124
		593								593		632	30601	593	FT	TETHER WIRE, WITH ACCESSORIES, AS PER PLAN	P.124
		781								781		632	40701	781	FT	SIGNAL CABLE, 7 CONDUCTOR, NO. 14 AWG, AS PER PLAN	P.124
		986								986		632	40901	986	FT	SIGNAL CABLE, 9 CONDUCTOR, NO. 14 AWG, AS PER PLAN	P.124
		4								4		632	64001	4	EACH	STRAIN POLE FOUNDATION, AS PER PLAN	P.126
		2								2		632	64021	2	EACH	PEDESTAL FOUNDATION, AS PER PLAN	P.126
		20								20		632	68201	20	FT	POWER CABLE, 2 CONDUCTOR, NO. 6 AWG, AS PER PLAN	P.124
		141								141		632	68301	141	FT	POWER CABLE, 3 CONDUCTOR, NO. 6 AWG, AS PER PLAN	P.124
		1								1		632	70001	1	EACH	POWER SERVICE, AS PER PLAN	P.124
1										1		632	77233	1	EACH	SIGNAL SUPPORT, MECHANICAL DAMPER FOR TC-81.21 MAST ARM (GREATER THAN 39' IN LENGTH), AS PER PLAN	P.126
		1								1		632	83600	1	EACH	STRAIN POLE, MISC.: STRAIN POLE, TYPE 4170, DESIGN 13	P.124
		3								3		632	83600	3	EACH	STRAIN POLE, MISC.: COMBINATION STRAIN POLE, TYPE 4170, DESIGN 13	P.124
		2								2		632	90010	2	EACH	PEDESTAL, MISC.: PEDESTAL SUPPORT, 21, TRANSFORMER BASE	P.124
		1								1		632	90101	1	EACH	REMOVAL OF TRAFFIC SIGNAL INSTALLATION, AS PER PLAN	P.126
		1								1		632	90104	1	EACH	REUSE OF TRAFFIC CONTROL ITEM: RADIO ANTENNA	P.126
		1								1		632	90104	1	EACH	REUSE OF TRAFFIC CONTROL ITEM: TRAFFIC FLOW MONITOR	P.126
		1								1		632	90400	1	EACH	SIGNALIZATION, MISC.: DILEMMA ZONE RADAR DETECTION SYSTEM	P.124
		1								1		632	90400	1	EACH	SIGNALIZATION, MISC.: POWER METER CABINET (TYPE 1 OR II), BASE MOUNT, WITH FOUNDATION	P.124
		1								1		632	90400	1	EACH	SIGNALIZATION, MISC.: STOP LINE RADAR DETECTION SYSTEM	P.124
		1								1		633	67101	1	EACH	CABINET FOUNDATION, AS PER PLAN	P.124
		1								1		633	67201	1	EACH	CONTROLLER WORK PAD, AS PER PLAN	P.124
		1								1		633	75001	1	EACH	UNINTERRUPTIBLE POWER SUPPLY (UPS), 1000 WATT, AS PER PLAN	P.124
		1								1		633	99000	1	EACH	CONTROLLER ITEM, MISC.: CONTROLLER UNIT, TS2/A2, W/ P-UPS CABINET 16CH, GROUND MOUNTED	P.125

GENERAL SUMMARY (4 OF 5)

FRA-23-4.19 PART 2 (PID 92616)

MODEL: Sheet PAPERSIZE: 17x11 (in.) DATE: 2023-01-27 TIME: 9:02:25 AM USER: william.croxton
\\10.120.112.5\bistshare\122592_Safety\Design\7.0_Production\7.3_Design\04_Civil\Worksets\110380_FRA-23400-Engineering\Roadway\Sheets\110380_GG004.dgn

DESIGN AGENCY: IBI

DESIGNER: WLC

REVIEWER: KMK 12-01-22

PROJECT ID: 92616

SHEET: P.41 TOTAL: 170

SHEET NUM.										PART.		ITEM	ITEM EXT	GRAND TOTAL	UNIT	DESCRIPTION	SEE SHEET NO.
P.17	P.18	P.19	P.22							04/NHS/04	05/NHS/05						
																MAINTENANCE OF TRAFFIC	
		240								240		614	11110	240	HOUR	LAW ENFORCEMENT OFFICER WITH PATROL CAR FOR ASSISTANCE	
	1									1		SPECIAL	61411300	1	EACH	WORK ZONE TRAFFIC SIGNAL	P.18
			5,560							5,560		614	11630	5,560	FT	INCREASED BARRIER DELINEATION	
			6							6		614	12380	6	EACH	WORK ZONE IMPACT ATTENUATOR, 24" WIDE HAZARDS, (UNIDIRECTIONAL)	P.17
			LS							LS		614	12420	LS		DETOUR SIGNING	
1										1		614	12484	1	EACH	WORK ZONE INCREASED PENALTIES SIGN	
			631							631		614	12801	631	EACH	WORK ZONE RAISED PAVEMENT MARKER, AS PER PLAN	P.19
50										50		614	13000	50	CY	ASPHALT CONCRETE FOR MAINTAINING TRAFFIC	
			118							118		614	13310	118	EACH	BARRIER REFLECTOR, TYPE 1, ONE WAY	P.19
			118							118		614	13350	118	EACH	OBJECT MARKER, ONE WAY	P.19
		60								60		614	18601	60	SNMT	PORTABLE CHANGEABLE MESSAGE SIGN, AS PER PLAN	P.19
			1.67							1.67		614	20110	1.67	MILE	WORK ZONE LANE LINE, CLASS I, 6", 642 PAINT	
1.56										1.56		614	20560	1.56	MILE	WORK ZONE LANE LINE, CLASS III, 6", 642 PAINT	
			0.58							0.58		614	21100	0.58	MILE	WORK ZONE CENTER LINE, CLASS I, 642 PAINT	
0.58										0.58		614	21550	0.58	MILE	WORK ZONE CENTER LINE, CLASS III, 642 PAINT	
			4.68							4.68		614	22110	4.68	MILE	WORK ZONE EDGE LINE, CLASS I, 6", 642 PAINT	
0.42										0.42		614	22350	0.42	MILE	WORK ZONE EDGE LINE, CLASS III, 4", 642 PAINT	
2.35										2.35		614	22360	2.35	MILE	WORK ZONE EDGE LINE, CLASS III, 6", 642 PAINT	
			7,030							7,030		614	23210	7,030	FT	WORK ZONE CHANNELIZING LINE, CLASS I, 12", 642 PAINT	
1,075										1,075		614	23680	1,075	FT	WORK ZONE CHANNELIZING LINE, CLASS III, 8", 642 PAINT	
2,363										2,363		614	23690	2,363	FT	WORK ZONE CHANNELIZING LINE, CLASS III, 12", 642 PAINT	
143										143		614	24612	143	FT	WORK ZONE DOTTED LINE, CLASS III, 6", 642 PAINT	
			376							376		614	25200	376	FT	WORK ZONE TRANSVERSE/DIAGONAL LINE, CLASS I, 642 PAINT	
			203							203		614	26200	203	FT	WORK ZONE STOP LINE, CLASS I, 642 PAINT	
219										219		614	26610	219	FT	WORK ZONE STOP LINE, CLASS III, 642 PAINT	
			51							51		614	30200	51	EACH	WORK ZONE ARROW, CLASS I, 642 PAINT	
55										55		614	30650	55	EACH	WORK ZONE ARROW, CLASS III, 642 PAINT	
			LS							LS		615	10000	LS		ROADS FOR MAINTAINING TRAFFIC	
			4,591							4,591		615	20000	4,591	SY	PAVEMENT FOR MAINTAINING TRAFFIC, CLASS A	
79										79		616	10000	79	MGAL	WATER	
			5,560							5,560		622	41100	5,560	FT	PORTABLE BARRIER, UNANCHORED	
																INCIDENTALS	
										LS		614	11000	LS		MAINTAINING TRAFFIC	
										LS		623	10000	LS		CONSTRUCTION LAYOUT STAKES AND SURVEYING	
										LS		624	10000	LS		MOBILIZATION	

GENERAL SUMMARY (5 OF 5)

DESIGN AGENCY

IBI

DESIGNER
WLC

REVIEWER
KMK 12-01-22

PROJECT ID
92616

SHEET P.42 | TOTAL 170

FRA-23-4.19 PART 2 (PID 92616)

MODEL: Sheet PAPERSIZE: 17x11 (in.) DATE: 2022-12-09 TIME: 9:32:08 AM USER: william.croxton
\\10.120.112.5\bishare\122592_SafetyDesign\7.0_Production\7.3_Design\04_CivilWorksets\110380_FRA-23\400-Engineering\Roadway\Sheets\110380_GG005.dgn

ITEM 202 REMOVALS SUBSUMMARY

SHEET NO.	REF. NO.	STATION FROM	STATION TO	202 HEADWALL REMOVED EACH	202 PAVEMENT REMOVED SY	202 WALK REMOVED SF	202 STEPS REMOVED FT	202 CONCRETE BARRIER REMOVED FT	202 CURB AND GUTTER REMOVED FT	202 PIPE REMOVED, 24" AND UNDER FT	202 GUARDRAIL REMOVED FT	202 GUARDRAIL REMOVED, BARRIER DESIGN FT	202 IMPACT ATTENUATOR REMOVED EACH	202 MANHOLE REMOVED EACH	202 CATCH BASIN OR INLET REMOVED EACH	202 SPECIAL - FILL AND PLUG EXISTING CONDUIT: 15" DIAMETER FT	202 FENCE REMOVED FT	202 REMOVAL MISC.: BUILDING FOUNDATION LS	202 REMOVAL MISC.: CONCRETE SLAB LS	202 REMOVAL MISC.: CROSSES LS	202 REMOVAL MISC.: FIELD DRIVE LS	202 REMOVAL MISC.: LANDSCAPED AREA WITH ROCKS LS	202 REMOVAL MISC.: WOOD POST EACH	202 REMOVAL MISC.: TRENCH DRAIN WITH GRATE FT
47	R-1	523+22 LT	523+22 LT																				3	
47	R-2	523+10 LT/RT	523+88 LT/RT		144																			
47	R-3	524+70 LT	524+73 LT			60																		
47	R-4	524+55 RT	525+88 RT															LS						
47	R-5	525+84 LT	525+88 LT			80																		
47	R-6	525+84 LT	525+88 RT				9																	
48	R-7	527+00 LT													1									
48	R-8	527+00 LT	530+75 LT							376														
48	R-9	530+75 LT													1									
48,49,58	R-10	530+75 LT	533+71 LT							297														
48	R-11	527+20 LT																					1	
48	R-12	527+22 LT	527+40 LT					20																
48	R-12A	527+17 LT	527+55 LT																		LS			
49,58	R-13	533+71 LT													1									
49,58	R-14	533+71 LT	534+51 LT							80														
49,58	R-15	534+51 LT												1										
49,58	R-16	534+25 LT													1									
49,58	R-17	534+25 LT	534+51 LT							41														
49,50,58	R-18	534+51 LT	537+83 LT							333														
49,58	R-19	534+75 LT	534+96 LT																			LS		
49,58	R-20	535+64 LT	535+82 LT																			LS		
49,58	R-21	533+78 LT													1									
49,58	R-22	533+78 LT	534+00 LT							24														
49,58	R-23	534+00 LT												1										
49,58	R-24	534+00 LT	537+83 LT							384														
48,49,58	R-25	535+45 RT	537+98 RT																					254
49,58	R-26	533+01 RT	101+27 RT						174															
49,58	R-26A	532+27 RT	532+35 RT															LS						
50	R-27	537+73 LT	537+83 LT							22														
50	R-28	537+83 LT													1									
50	R-29	537+83 LT	537+83 LT							12														
50	R-30	537+83 LT												1										
50	R-31	537+83 LT	537+83 LT							57														
50	R-32	537+83 LT												1										
50	R-33	537+83 LT	537+98 RT							19														
50	R-34	537+83 LT	537+98 RT							19														
50	R-35	537+98 RT													1									
50	R-36	538+16 LT	538+34 LT																		LS			
50	R-37	538+17 LT	538+29 LT																				3	
50	R-38	537+83 LT	540+15 LT							232														
50	R-39	540+15 LT													1									
50,51	R-40	540+15 LT	545+01 LT							475														
50	R-41	540+27 LT																					1	
50	R-42	540+21 LT	540+58 LT																		LS			
50	R-43	540+47 LT	540+48 LT			70																		
50,51	R-44	540+86 LT	544+08 LT								325													
51	R-45	538+59 RT	541+86 RT								100	200	1											
51	R-46	540+00 RT	540+19 RT																LS					
51	R-47	543+17 LT	543+51 LT																				2	
51	R-48	543+92 LT	546+47.41 LT														257							
51	R-49	544+91 LT	545+00 LT							12														
51	R-50	545+00 LT													1									
51	R-51	545+00 LT	545+01 LT							83														
51	R-51	545+01 LT													1									
51	R-52	545+01 LT	544+94 LT	1						120														
58	R-53	100+53 LT	100+58 LT				5																	
58	R-54	100+56 LT	100+63 LT																	LS				
60	R-55	111+02 LT	111+19 LT																		LS			
50	AB-1	537+83 LT	540+33.60 RT													285								
50	AB-2	537+83 LT	540+35.65 RT													280								
TOTALS CARRIED TO GENERAL SUMMARY				1	144	210	14	20	174	2586	425	200	1	4	10	565	257	LS	LS	LS	LS	LS	10	254

FRA-23-4.19 PART 2 (PID 92616)

MODEL: Sheet PAPERSIZE: 17x11(in.) DATE: 2022-12-09 TIME: 9:32:10 AM USER: william.croxton
\\10\20\2.5\Ibishore\22592_SafetyDesign\7.0_Production\7.3_Design\04_Civil\Worksets\10380_FRA-23\400-Engineering\Roadway\Sheets\10380_GS00Ldgn

DESIGN AGENCY: IBI

DESIGNER: WLC
REVIEWER: KMK 12-01-22
PROJECT ID: 92616
SHEET: P.43 TOTAL: 170

SHEET NO.	REF. NO.	STATION FROM	STATION TO	606 GUARDRAIL, TYPE MGS (FT)	606 GUARDRAIL, BARRIER DESIGN, TYPE MGS (FT)	606 ANCHOR ASSEMBLY, MGS TYPE E, MASH 2016 (EACH)	606 ANCHOR ASSEMBLY, MGS TYPE T (EACH)	606 IMPACT ATTENUATOR, TYPE 1 (BIDIRECTIONAL) (EACH)	626 BARRIER REFLECTOR, TYPE 2 (ONE-WAY) (EACH)	626 BARRIER REFLECTOR, TYPE 2 (BIDIRECTIONAL) (EACH)			
P.47 - P.48	GR-1	526+12.50 RT	529+73.74	300.0		1	1		4				
P.47	GR-2	525+78.61 CL	526+87.50 RT	12.5	50		1	1	6				
P.47 - P.48	GR-3	526+62.50 LT	527+71.39 CL	12.5	50		1	1	6				
P.50 - P.51	GR-4	540+00 RT	545+12.50 RT	450.0		1	1		6				
P.49,P.58	GR-5	102+65.42 LT	535+79.59 RT	237.5		1	1		3	3			
TOTALS CARRIED TO GENERAL SUMMARY				1012.5	100	3	5	2	25	3			

SHEET NO.	REF. NO.	STATION FROM	STATION TO	609 CURB, TYPE 4-C (FT)	618 RUMBLE STRIPS, TRANSVERSE (ASPHALT CONCRETE) (EACH)	618 RUMBLE STRIPS, SHOULDER (ASPHALT CONCRETE) (FT)			
P.34,P.50-P.51	C-1			131					
P.47	PV-1	524+42.40	524+56.73		2				
P.48	PV-2	527+56.73	527+71.06		3				
P.48	PV-3	530+71.06	530+85.40		3				
P.50	PV-4	538+18.28	538+32.62		2				
P.50	PV-5	541+32.62	541+46.95		2				
P.51	PV-6	544+46.95	544+61.28		2				
P.47 - P.49	RS-1	522+00.00	533+83.51			1184			
P.48 - P.49	RS-2	528+50.40	533+75.40			525			
P.47 - P.48	RS-3	525+70.40	528+50.40			280			
P.47 - P.48	RS-4	512+85.00	529+35.40			1651			
P.49 - P.51	RS-5	535+28.28	546+47.41			1120			
P.49 - P.51	RS-6	535+17.27	546+47.41			1131			
-	RS-7	539+93.29	546+47.41			655			
TOTALS CARRIED TO GENERAL SUMMARY				131	14	6546			

NOTES:
1. ALL RUMBLE STRIPS, TRANSVERSE (ASPHALT CONCRETE) (PV-1 THRU PV-6) SHALL BE CONSTRUCTED PER ODOT SCD BP-9.2 (BASED ON SPEED LIMIT 50 MPH OR GREATER) AT LOCATIONS SHOWN IN THE PLANS.
2. ALL RUMBLE STRIPS, SHOULDER (ASPHALT CONCRETE) (PV-7 THRU PV-8) SHALL BE CONSTRUCTED PER ODOT BP-9.1 AT LOCATIONS SHOWN IN THE PLANS

ROADWAY AND PAVEMENT SUBSUMMARY

FRA-23-4.19 PART 2 (PID 92616)

DESIGN AGENCY: IBI

DESIGNER: WLC

REVIEWER: KMK 12-01-22

PROJECT ID: 92616

SHEET: P.44 TOTAL: 170

MODEL: Sheet PAPERSIZE: 17x11(in.) DATE: 2022-12-09 TIME: 9:32:12 AM USER: william.croxton
\\10.20.12.5\ibishare\122592_SafetyDesign\7.0_Production\7.3_Design\04_Civil\Worksets\10380_FRA-23\400-Engineering\Roadway\Sheets\10380_GS002.dgn

SHEET NO.	REF. NO.	STATION FROM	STATION TO	203 EXCAVATION CY	203 EMBANKMENT CY		659 SEEDING AND MULCHING, CLASS 2 SY
		US-23					
P.64		522+50.00	523+00.00	4	0		SEE SHEET P.45
P.65		523+50.00	524+50.00	248	3		
P.66		525+00.00	525+60.40	517	23		
P.67		525+70.00	526+50.00	826	30		
P.68		527+00.00	528+00.00	1259	67		
P.69		528+50.00	529+50.00	1079	83		
P.70		530+00.00	531+00.00	1268	41		
P.71		531+35.40	532+00.00	715	22		
P.72		532+50.00	533+51.04	982	4		
P.73		534+00.00	534+50.00	239	157		
P.74		535+00.00	536+00.00	511	113		
P.75		536+50.00	537+50.00	369 (A)	381 (A)		
P.76		538+00.00	539+00.00	428 (A)	1082 (A)		
P.77		539+43.28	540+00.00	537 (A)	876 (A)		
P.78		540+50.00	541+00.00	973 (A)	1127 (A)		
P.79		541+50.00	542+00.00	1312 (A)	1165 (A)		
P.80		542+50.00	543+50.00	935	368		
P.81		544+00.00	545+00.00	424 (A)	760 (A)		
P.82		545+50.00	546+47.41	440 (A)	1436 (A)		
TOTALS CARRIED TO GENERAL SUMMARY				13066	7738		--

(A) VOLUME INCLUDES SPECIAL BENCHING

SHEET NO.	REF. NO.	STATION FROM	STATION TO	203 EXCAVATION CY	203 EMBANKMENT CY		659 SEEDING AND MULCHING, CLASS 2 SY
		CR-121 (RATHMELL ROAD)					
		INTERSECTION EARTHWORK (VIA ORD)		299	29		
P.83		101+32.62	102+00.00	103	183		SEE SHEET P.45
P.84		102+50.00	103+00.00	237	272		
P.85		103+50.00	104+00.00	167	216		
P.86		104+50.00	105+50.00	110	550		
P.87		106+00.00	106+50.00	351	86		
P.88		107+00.00	107+50.00	208	224		
P.89		108+00.00	108+50.00	300	31		
P.90		109+00.00	110+00.00	225	145		
P.91		110+50.00	111+00.00	81	148		
P.92		111+50.00	112+00.00	207	132		
P.93		112+50.00	112+98.23	246	140		
P.94		113+50.00	114+00.00	74	68		
TOTALS CARRIED TO GENERAL SUMMARY				2608	2224		--

ITEM 659 - SOIL ANALYSIS TEST — 659

TOTAL SEEDING AND MULCHING (S&M) = 37345 SY

ITEM 659 - SOIL ANALYSIS TEST
USE 1 TEST PER 10000 CY OF TOPSOIL (MIN. 2 TESTS)

(S&M SY) X (1 TEST / 48400 SY) 0.77 TEST

659 SOIL ANALYSIS TEST EACH

TOTALS CARRIED TO GENERAL SUMMARY 2

ITEM 659 - TOPSOIL — 659

TOTAL SEEDING AND MULCHING (S&M) = 37345 SY

ITEM 659 - TOPSOIL (T=4")
USE 111 CY PER 1000 SY OF TOTAL S&M

(S&M SY) X (111 CY / 1000 SY) 4145.30 CY

659 TOPSOIL (T=4") CY

TOTALS CARRIED TO GENERAL SUMMARY 4146

ITEM 659 - SEEDING AND MULCHING, CLASS 2 — 659

* TOTAL PROJECT CONSTRUCTION LIMITS AREA = 612726 SF
TOTAL PVT AREA = -268364 SF
TOTAL CURB AREA = -66 SF
TOTAL DRIVEWAY AREA = -8197 SF
TOTAL SEEDING AND MULCHING (S&M SF) 336099 SF

* EXCLUDES CONSTRUCTION LIMITS FOR TRAFFIC CONTROL ALONG CR-121 (STA 112+98.23 TO STA 117+25.82)

(S&M SF) X (1/9) 37345 SY

659 SEEDING AND MULCHING, CLASS 2 SY

TOTALS CARRIED TO GENERAL SUMMARY 37345

ITEM 659 - REPAIR SEEDING AND MULCHING — 659

TOTAL SEEDING AND MULCHING (S&M) = 37345 SY

ITEM 659 - REPAIR SEEDING AND MULCHING
USE 5% OF TOTAL S&M

(S&M SY) X (0.05) 1867.25 SY

659 REPAIR SEEDING AND MULCHING SY

TOTALS CARRIED TO GENERAL SUMMARY 1868

ITEM 659 - INTER-SEEDING — 659

TOTAL SEEDING AND MULCHING (S&M) = 37345 SY

ITEM 659 - INTER-SEEDING
USE 5% OF TOTAL S&M

(S&M SY) X (0.05) 1867.25 SY

659 INTER-SEEDING SY

TOTALS CARRIED TO GENERAL SUMMARY 1868

ITEM 659 - COMMERCIAL FERTILIZER — 659

TOTAL SEEDING AND MULCHING (S&M) = 37345 SY
TOTAL INTER-SEEDING = 1868 SY

ITEM 659 - COMMERCIAL FERTILIZER
USE 1 TON PER 7410 SY OF TOTAL S&M (INCLUDES 2 APPLICATIONS)
USE 1 TON PER 11110 SY OF TOTAL INTER-SEEDING AREA

(S&M SY) X (1 TON / 7410 SY) 5.04 TON
(INTER-SEEDING SY) X (1 TON / 7410 SY) 0.17 TON
5.21 TON

659 COMMERCIAL FERTILIZER TON

TOTALS CARRIED TO GENERAL SUMMARY 5.21

ITEM 659 - LIME — 659

TOTAL SEEDING AND MULCHING (S&M) = 37345 SY

ITEM 659 - LIME
APPLY OVER TOTAL S&M

(S&M SY) X (1 ACRE / 4840 SY) 7.72 ACRE

659 LIME ACRE

TOTALS CARRIED TO GENERAL SUMMARY 7.72

ITEM 659 - WATER — 659

TOTAL SEEDING AND MULCHING (S&M) = 37345 SY
TOTAL INTER-SEEDING = 1868 SY

ITEM 659 - WATER
USE TWO APPLICATIONS AT 0.0027 MGAL PER SY OF TOTAL S&M
USE ONE APPLICATION AT 0.0027 MGAL PER SY OF TOTAL INTER-SEEDING

(S&M SY) X (2) X (0.0027 M GAL) 201.66 MGAL
(INTER-SEEDING SY) X (0.0027 M GAL) 5.04 MGAL
206.71 MGAL

659 WATER MGAL

TOTALS CARRIED TO GENERAL SUMMARY 207

ITEM 659 - MOWING — 659

TOTAL SEEDING AND MULCHING (S&M) = 37345 SY

ITEM 659 - MOWING
USE 25% OF TOTAL S&M IF CONSTRUCTION SEASON>1 YEAR

(S&M SY) X (0.25) X (9 SF / SY) X (1/1000) 84.03 MSF

659 MOWING MSF

TOTALS CARRIED TO GENERAL SUMMARY 85

ITEM 832 — 832 | 832 | 832 | 832

THE FOLLOWING PAY ITEMS HAVE BEEN PROVIDED PER ODOT SS 832.

ITEM 832 - EROSION CONTROL
USE ODOT TSEC_BMP SPREADSHEET

832 STORM WATER POLLUTION PREVENTION PLAN LS
832 STORM WATER POLLUTION PREVENTION INSPECTIONS LS
832 STORM WATER POLLUTION PREVENTION INSPECTION SOFTWARE LS
832 EROSION CONTROL EACH

TOTALS CARRIED TO GENERAL SUMMARY LS | LS | LS | 135155

EARTHWORK AND EROSION CONTROL SUBSUMMARY

DESIGN AGENCY IBI
DESIGNER WLC
REVIEWER KMK 12-01-22
PROJECT ID 92616
SHEET P.45 TOTAL 170

FRA-23-4.19 PART 2 (PID 92616)

MODEL: Sheet PAPERSIZE: ltxll (in.) DATE: 2022-12-09 TIME: 9:32:14 AM USER: william.croxton
\\10.120.12.5\ibishare\22592_Safety\Design\7.0_Production\7.3_Design\04_Civil\Worksets\10380_FRA-23\400-Engineering\Roadway\Sheets\10380_GS003.dgn

POST CONSTRUCTION STORM WATER BEST MANAGEMENT PRACTICES (BMP)

BMP TYPE#	BEGIN				END				EDA TREATMENT CREDIT (AC.)	DITCH WIDTH	
	STA.	ROADWAY	LATITUDE	LONGITUDE	STA.	ROADWAY	LATITUDE	LONGITUDE		BOTTOM	EROSION CONTROL
VBF-1	525+70	US-23	39.860360	83.003792	528+50	US-23	39.861123	83.003914	0.47	5'	7.5'
VBF-2	528+50	US-23	39.861123	83.003914	531+35	US-23	39.861900	83.004039	0.48	5'	7.5'
VBF-3	531+35	US-23	39.861900	83.004039	533+51	US-23	39.862488	83.004133	0.49	5'	7.5'
VBF-4	535+53	US-23	39.863038	83.004237	536+50	US-23	39.863301	83.004279	0.33	8'	11'
VBF-5	536+50	US-23	39.863301	83.004279	539+43	US-23	39.864103	83.004369	0.50	8'	11'
VBF-6	539+43	US-23	39.864103	83.004369	545+00	US-23	39.865613	83.004690	0.94	6'	7.5'
# VBF = VEGETATED BIOFILTER							TREATMENT PROVIDED		3.21		
*CALCULATED PER ODOT L&D VOL. 2, SEC. 1111.7							TREATMENT REQUIRED*		1.8		

PROJECT DATA	
TOTAL AREA (RIGHT OF WAY)	15.48 AC.
PROJECT EARTH DISTURBED AREA (E.D.A.)	8.55 AC.
ESTIMATED CONTRACTOR EARTH DISTURBED AREA (E.D.A.)	1.40 AC.
TOTAL EARTH DISTURBED AREA (E.D.A.)	9.95 AC.
NOTICE OF INTENT (NOI) EARTH DISTURBED AREA (E.D.A)	9.95 AC.
IMPERVIOUS AREA - PRE-CONSTRUCTION	9.76 AC.
IMPERVIOUS AREA - POST CONSTRUCTION	11.30 AC.
RUNOFF COEFFICIENT FOR PRE-CONSTRUCTION	0.5-0.9
RUNOFF COEFFICIENT FOR POST-CONSTRUCTION	0.6
POST-CONSTRUCTION BMP: VEGETATED BIOFILTERS WERE PROVIDED TO MEET NPDES POST-CONSTRUCTION REQUIREMENTS.	
IMMEDIATE RECEIVING WATERS	UNNAMED TRIBUTARY
SUBSEQUENT RECEIVING WATERS	SCIOTO RIVER

NOTES:

1. *SEE PLAN SHEETS FOR PIPE INFORMATION.*
2. *ALL VEGETATED BIOFILTERS SHALL RECEIVE THE FOLLOWING TREATMENT:*
   - *A. ITEM 659 - TOPSOIL (T = 4") APPLIED TO THE GRASS PORTION OF THE SHOULDER AND FORESLOPE.*
   - *B. ITEM 670 - DITCH EROSION PROTECTION CENTERED ON THE DITCH WITH WIDTH AS DETAILED.*

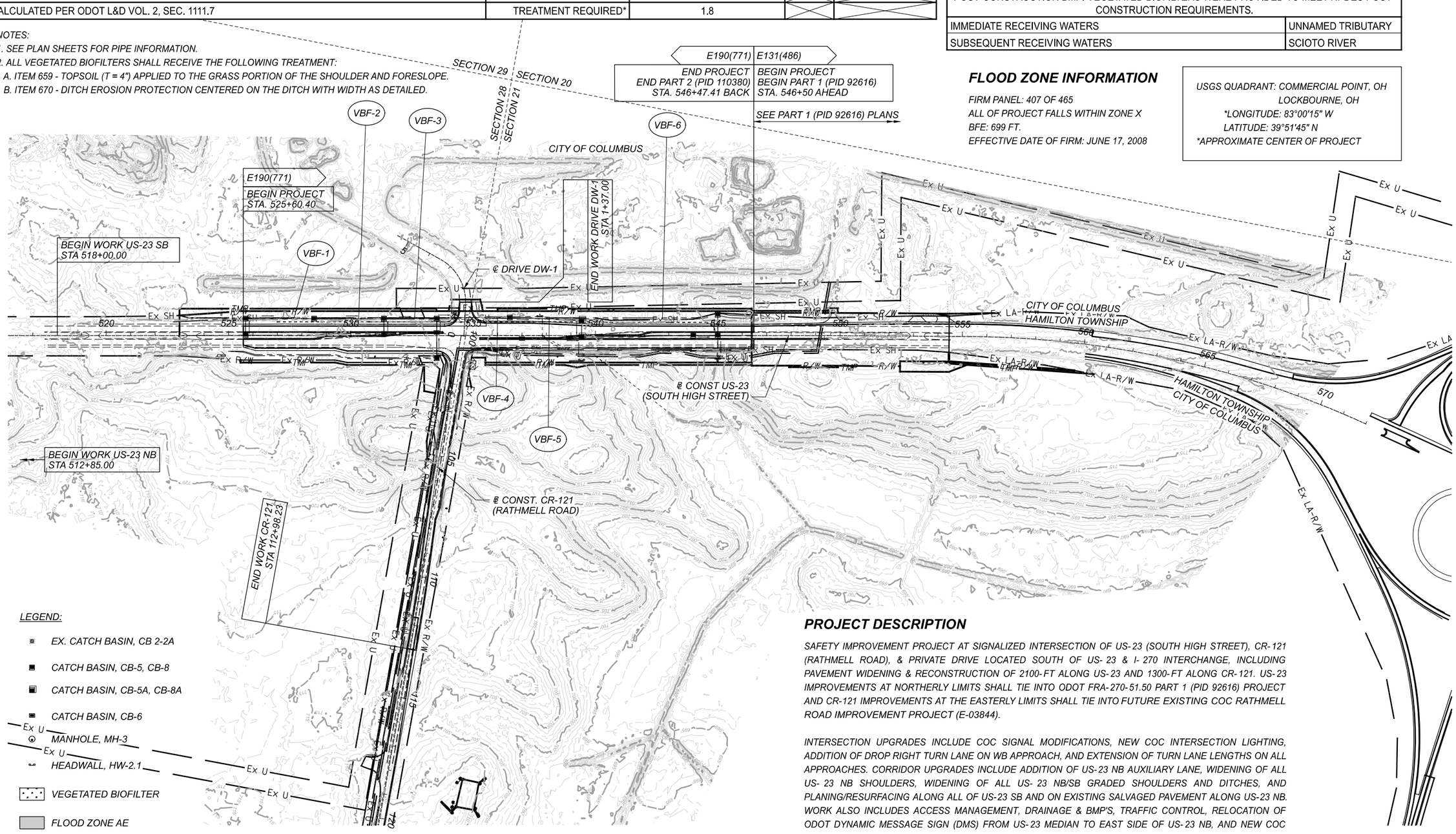

LEGEND:

- *EX. CATCH BASIN, CB 2-2A*
- *CATCH BASIN, CB-5, CB-8*
- *CATCH BASIN, CB-5A, CB-8A*
- *CATCH BASIN, CB-6*
- *MANHOLE, MH-3*
- *HEADWALL, HW-2.1*
- *VEGETATED BIOFILTER*
- *FLOOD ZONE AE*

FLOOD ZONE INFORMATION

FIRM PANEL: 407 OF 465
ALL OF PROJECT FALLS WITHIN ZONE X
BFE: 699 FT.
EFFECTIVE DATE OF FIRM: JUNE 17, 2008

USGS QUADRANT: COMMERCIAL POINT, OH
LOCKBOURNE, OH
**LONGITUDE: 83°00'15" W*
LATITUDE: 39°51'45" N
**APPROXIMATE CENTER OF PROJECT*

PROJECT DESCRIPTION

SAFETY IMPROVEMENT PROJECT AT SIGNALIZED INTERSECTION OF US-23 (SOUTH HIGH STREET), CR-121 (RATHMELL ROAD), & PRIVATE DRIVE LOCATED SOUTH OF US- 23 & I- 270 INTERCHANGE, INCLUDING PAVEMENT WIDENING & RECONSTRUCTION OF 2100-FT ALONG US-23 AND 1300-FT ALONG CR-121. US-23 IMPROVEMENTS AT NORTHERLY LIMITS SHALL TIE INTO ODOT FRA-270-51.50 PART 1 (PID 92616) PROJECT AND CR-121 IMPROVEMENTS AT THE EASTERLY LIMITS SHALL TIE INTO FUTURE EXISTING COC RATHMELL ROAD IMPROVEMENT PROJECT (E-03844).

INTERSECTION UPGRADES INCLUDE COC SIGNAL MODIFICATIONS, NEW COC INTERSECTION LIGHTING, ADDITION OF DROP RIGHT TURN LANE ON WB APPROACH, AND EXTENSION OF TURN LANE LENGTHS ON ALL APPROACHES. CORRIDOR UPGRADES INCLUDE ADDITION OF US-23 NB AUXILIARY LANE, WIDENING OF ALL US- 23 NB SHOULDERS, WIDENING OF ALL US- 23 NB/SB GRADED SHOULDERS AND DITCHES, AND PLANING/RESURFACING ALONG ALL OF US-23 SB AND ON EXISTING SALVAGED PAVEMENT ALONG US-23 NB. WORK ALSO INCLUDES ACCESS MANAGEMENT, DRAINAGE & BMP'S, TRAFFIC CONTROL, RELOCATION OF ODOT DYNAMIC MESSAGE SIGN (DMS) FROM US-23 MEDIAN TO EAST SIDE OF US-23 NB, AND NEW COC SIGNAL INTERCONNECT ALONG EAST SIDE OF US-23.

HORIZONTAL SCALE IN FEET
0 100 200 400

PROJECT SITE PLAN

FRA-23-4.19 PART 2 (PID 92616)

MODEL: DE001 [Sheet] PAPERSIZE: 17x11 (in.) DATE: 2022-12-09 TIME: 9:32:18 AM USER: william.croxton
\\10.120.112.5\bishare\122592_Safety\Design\7.0_Production\7.3_Design\04_Civil\Worksets\110380_FRA-23400-Engineering\Drainage\Sheets\1110380_DE001.dgn

DESIGN AGENCY: IBI
DESIGNER: BDB
REVIEWER: KMK 12-01-22
PROJECT ID: 92616
SHEET: P.46 TOTAL: 170

MODEL: I10380_GPI PAPERSIZE: ltxll(ln.) DATE: 2022-12-09 TIME: 9:32:30 AM USER: william.croxton
\\10.120.112.5\ibishare\12592-SafetyDesign\7.0_Production\7.3_Design\04_Civil\Worksets\I10380_FRA-23\400-Engineering\Roadway\Sheets\I10380_GP00Ldgn

PUBLIC AGENCY/UTILITY LEGEND:
(ODOT) = OHIO DEPARTMENT OF TRANSPORTATION
(COC) = CITY OF COLUMBUS
(AEP-D) = AMERICAN ELECTRIC POWER DISTRIBUTION
(AEP-T) - AMERICAN ELECTRIC POWER TRANSMISSION
(ATT) = AT&T OHIO
(CC) = CHARTER COMMUNICATIONS
(CGO) - COLUMBIA GAS OF OHIO
(NEONGC) - NORTHEAST OHIO NATURAL GAS CORPORATION

PFK COMPANY I, LLC, A DELAWARE LIMITED LIABILITY COMPANY AND TAMARACK ENTERPRISES I, L.P., A DELAWARE LIMITED PARTNERSHIP
4755 S. HIGH ST.
P.P.N. 510-181564-00

E131(486)
BEGIN PROJECT
BEGIN PART 2
STA. 525+60.40

SEE SHEET P. 11 FOR CGO, NEONGC, COC DPU GENERAL NOTE

**** SEE SHEET P. 13 FOR ATT PAY ITEM NOTE (ITEM 202 - REMOVAL, MISC.: ABANDONED TELECOM FACILITIES)*

BEGIN WORK US-23 SB
STA 522+00.00
BEGIN WORK US-23 NB
STA 512+85.00

PAVEMENT RESTORATION FOR MOT US-23SB CONTINUES TO STA 522+00 SEE SHEET P.25, P.29, P.33

PAVEMENT RESTORATION FOR MOT US-23NB CONTINUES TO STA 512+85 SEE SHEET P.25, P.29, P.33

CP#6

EX. FIELD DRIVE (ABANDONED)
EX. GATE
EX. FIELD DRIVE (ABANDONED) (DND)
WOOD POSTS (3) (TBR)
EX. POLE (AEP-D) (RELBO)
EX. CONC. WALK
CONST. LIMITS
MISC. SMALL TREES & BUSHES
PR. DITCH
EX. 12" WM (COC CTP0600)(DND)
EX. FH (COC) (DND)
15" TYPE C
20'± EX. WALK (TBR)
9'± EX. STEPS (TBR)
B-002-0-20
BM#1
℄ LANES/EX. CROWN US-23 SB
℄ LANES/PR. CROWN US-23 SB
EX. PG (INSIDE EOP) US-23 SB
PR. PG (INSIDE EOP) US-23 SB
25' FLARE ARC (RATE 7:1)
12.5' GR
AA, TYPE T
50' GR BD
℄ CONST. US-23 (SOUTH HIGH STREET)
℄ EX. R/W US-23
N06°42'26"W 4,719.49'
N06°42'26"W 4,719.48'
B-001-0-20
PR. DITCH
50' GR, BD
IA, TYPE 1 (BIDIRECTIONAL)
SAWCUT
℄ LANES/ PR. CROWN US-23 NB
25' FLARE ARC (RATE 7:1)
+75.00, PR. OH TRUSS SIGN SUPPORT
EX. PG (INSIDE EOP) US-23 NB
℄ LANES/EX. CROWN US-23 NB
EX. POLE (COC-101624) (TBR)
PR. POLE (COC) (PART 1)
PR. OHD 69kV 3-PH TRANS. LINES W/ 14.4 kV DISTR. UNDERBUILD (COC) (PART 1)
EX. OHD 69kV 3-PH TRANS. LINES W/ 14.4 kV DISTR. UNDERBUILD (COC) (TBR-PART 1)
CONST. LIMITS
TOP OF EX. BLDG. FOUNDATION
PR. ITS (COC) (PR. CONDUIT-PART 2)
PR. DITCH
CONST. LIMITS
10' US-23 NB INSIDE SHOULDER WIDTH TAPER (RATE=5:1)
50' US-23 NB ADD-LANE DIVERGING TAPER (RATE=4.2:1)
US-23 NB OUTSIDE SHOULDER WIDTH TAPER (RATE=25:1)
50' BARRIER LON (FOR OH TRUSS SIGN SUPPORT) (45.69' CALC)
AA, TYPE E
300' GR
825' US-23 NB ADD-LANE STORAGE LENGTH IN ADVANCE OF INTERSECTION (825' MIN. REQUIRED)

MAGELLAN ENTERPRISES LLC, A DELAWARE LIMITED LIABILITY COMPANY
5076 S. HIGH ST.
P.P.N. 510-180711-00

MATCHLINE US-23 - STA 527+00 SEE SHEET P.48

NOTES:
1. SEE SHEET P.11 FOR CONTRACTOR'S USE OF PARCEL 2T.

ROADWAY LEGEND:
- *BORING LOCATIONS PER REPORT OF ROADWAY EXPLORATION DATED 9-9-2020 BY STANTEC.*
- *UTILITY TEST HOLE AND/OR POT HOLE (SEE PLAN SHEETS FOR DATA)*
- *EX. TREE/STUMP REMOVED*
- *PR. ROCK CHANNEL PROTECTION*
- *EX. DRIVE/MEDIAN ACCESS REMOVED FOR ACCESS MANAGEMENT ALONG US-23*

PAVEMENT LEGEND:
- *PLANING (VAR. DEPTH) & RESURFACING (3.25") WITH PR. ASPHALT LEVELING COURSES (VAR. DEPTH)*
- *PAVEMENT RESTORATION FOR MOT (SEE SHEET XXX) PLANING (3") & RESURFACING (3")*
- *PR. ASPHALT PAVEMENT (FULL DEPTH)*
- *PAVEMENT RESTORATION FOR PIPE INSTALLATIONS AND/OR REMOVALS (SEE SHEET P.16)*

DISPOSITION LEGEND:
(DND) = DO NOT DISTURB
(TBR) = TO BE REMOVED
(TBRBO) = TO BE REMOVED BY OTHERS
(REL) = TO BE RELOCATED
(RELBO) = TO BE RELOCATED BY OTHERS
(TBA) = TO BE ABANDONED
(TBABO) = TO BE ABANDONED BY OTHERS
(ATG) = ADJUST TO GRADE
(ATGBO) = ADJUST TO GRADE BY OTHERS
(RTG) = RECONSTRUCT TO GRADE
(RTGBO) = RECONSTRUCT TO GRADE BY OTHERS

PROJECT LEGEND:
(PART 1) = ODOT FRA-270-51.50 PART 1 (PID 92616)
(PART 2) = ODOT FRA-23-4.19 PART 2 (PID 110380)
(■) = ODOT FRA-DMS REPLACEMENT-FY20 (PID 109467) (US-23 NB DMS)
(■■) = FUTURE PROPOSED COC FRA-TRAFFIC SIGNAL SYSTEM (CTSS) – PHASE F (E-03676) (PID 110521)
(▲) = FUTURE EXISTING COC FRA-RATHMELL ROAD IMPROVEMENTS (E-03844)
(▲▲) = FUTURE EXISTING AEP TRANSMISSION CYPRUS 138kV EXTENSION
(▲▲▲) = FUTURE EXISTING PRIVATE DEVELOPMENT PROJECT CYPRUS - SITE DEVELOPMENT FOR P.P.N. 510-180711-00
SEE SHEET P.11 FOR ADDITIONAL INFORMATION ON ADJACENT PROJECTS

PAVEMENT LIMITS ASSOCIATED WITH:
ODOT FRA-270-51.50 PART 1 (PID 92616) OR
COC FRA-RATHMELL ROAD IMPROVEMENTS (E-03844)

CROSS REFERENCES:
SEE SHEET P.3 FOR PROJECT CONTROL
SEE SHEET P.43-P.45 FOR SUBSUMMARIES
SEE SHEET P.52 FOR PROFILE - US-23 SB - STA 522+00 TO STA 532+00
SEE SHEET P.55 FOR PROFILE - US-23 NB - STA 522+00 TO STA 532+00
SEE SHEET P.97-P.106 FOR DRAINAGE DETAILS
SEE SHEET P.109-P.132 FOR TRAFFIC CONTROL, SEE SHEET P.133-140 FOR TRAFFIC SURVEILLANCE

HORIZONTAL SCALE IN FEET
0 10 20 40

PLAN - US-23 (SOUTH HIGH STREET) STA 522+00 TO STA 527+00

DESIGN AGENCY: IBI
DESIGNER: WLC
REVIEWER: KMK 12-01-22
PROJECT ID: 92616
SHEET: P.47 TOTAL: 170

PFK COMPANY I, LLC, A DELAWARE LIMITED LIABILITY COMPANY AND TAMARACK ENTERPRISES I, L.P., A DELAWARE LIMITED PARTNERSHIP
4755 S. HIGH ST.
P.P.N. 510-181564-00

525' (MATCH EXISTING)
US-23 NB LEFT-TURN LANE LENGTH (285' MIN REQUIRED, 525'± EXISTING)

285'
US-23 NB LEFT-TURN LANE DECELERATION LENGTH

* ELECTRIC EASEMENT (AEP-T)
IN 20211201021767 2

SEE SHEET P. 11 FOR CGO, NEONGC, COC DPU GENERAL NOTE

*** SEE SHEET P. 13 FOR ATT PAY ITEM NOTE (ITEM 202 - REMOVAL, MISC.: ABANDONED TELECOM FACILITIES)

50'
US-23 NB INSIDE SHOULDER WIDTH TAPER
(RATE=25:1)

50'
US-23 NB LEFT-TURN LANE DIVERGING TAPER
(RATE=4.2:1)

96'
US-23 NB LEFT-TURN LANE DIVERGING TAPER
(RATE=8:1)

EX. FIELD DRIVE (ABANDONED)

EX. FIELD DRIVE (ABANDONED) (TBR)

+26.69
100.00' LT.

+41.42
100.00' LT.

+21.42

+40.00

+16.90
47.04' LT.

+55.41
46.82' LT.

+00.40

+50.40

+00.40

+35.40

TMP

R/W

CONST. LIMITS

WOOD POST (TBR)

PR. DITCH

15" TYPE C

18" TYPE C

EX. POLE (AEP-D) (RELBO)

MISC. SMALL TREES & BUSHES

EX. 15" RCP (TBR)

EX. 12" WM (COC CTP0600) (DND)

EX. FH (COC) (DND)

B-006-0-20

B-004-0-20

B-003-0-20

B-005-0-20

SAWCUT

PR. PG (INSIDE EOP) US-23 SB

℄ LANES/PR. CROWN US-23 SB

℄ CONST. US-23 (SOUTH HIGH STREET)

℄ EX. R/W US-23

PR. PG (INSIDE EOP) US-23 NB

℄ LANES/PR. CROWN US-23 NB

PR. TRENCH DRAIN

PR. ITS (COC)

PR. ITS (COC) (PR. CONDUIT-PART 2)

PR. OHD 69kV 3-PH TRANS. LINES W/ 14.4 kV DISTR. UNDERBUILD (COC) (PART 1)

EX. OHD 69kV 3-PH TRANS. LINES W/ 14.4 kV DISTR. UNDERBUILD (COC) (TBR-PART 1)

EX. POLE (COC-101623) (TBR-PART 1)

EX. POLE (COC-101622) (TBR-PART 1)

PR. POLE W/ DOWN GUY(COC) (PART 1)

PR. POLE (COC) (PART 1)

PR. CANTILEVER SIGN SUPPORT

CONC. PAD (DND-UNK)

WELL (DND-UNK)

54" TWIN

50"

97' EX ROW

75' EX ROW

107' EX. ROW

CONST. LIMITS

Ex R/W

Ex SH

OH-T

OH-E

Ex U

15" TYPE B

IA, TYPE 1 (BIDIRECTIONAL)

50' GR, BD

300' GR

RS-1

RS-2

RS-3

RS-4

GR-1

GR-3

PV-2

PV-3

14.33'

4A, TYPE T

+61.74

+73.74

+60.40

+57.41

+56.73

+71.06

+85.40

+78.92

+11.73

+85.01

+39.89

+71.39

N06°42'26"W 4,719.49'

N06°42'26"W 4,719.48'

528

526

530

531

529

R-7

R-8

R-9

R-10

R-11

R-12

R-12A

MATCHLINE US-23 - STA 527+00
SEE SHEET P.47

MATCHLINE US-23 - STA 532+00
SEE SHEET P.49

825'
US-23 NB ADD-LANE STORAGE LENGTH IN ADVANCE OF INTERSECTION
(825' MIN. REQUIRED)

50'
US-23 NB RIGHT-TURN LANE DIVERGING TAPER
(RATE=4.2:1)

450' (285' MIN. REQUIRED + 165' PROJECT CYPRUS)
US-23 NB RIGHT-TURN LANE LENGTH
(285' MIN. REQUIRED FOR FRA-23-4.19 PROJECT, 230'± EXISTING)
(ADDITIONAL 165 FEET REQUIRED FOR PROJECT CYPRUS)

MAGELLAN ENTERPRISES LLC,
A DELAWARE LIMITED LIABILITY COMPANY
5076 S. HIGH ST.
P.P.N. 510-180711-00

NOTES:
1. SEE SHEET P.11 FOR CONTRACTOR'S USE OF PARCEL 2T.

CROSS REFERENCES:
SEE SHEET P.3 FOR PROJECT CONTROL, SEE SHEET P.47 FOR PLAN LEGENDS
SEE SHEET P.43-P.45 FOR SUBSUMMARIES
SEE SHEET P.52 FOR PROFILE - US-23 SB - STA 522+00 TO STA 532+00
SEE SHEET P.55 FOR PROFILE - US-23 NB - STA 522+00 TO STA 532+00
SEE SHEET P.97-P.106 FOR DRAINAGE DETAILS
SEE SHEET P.109-P.132 FOR TRAFFIC CONTROL, SEE SHEET P.133-140 FOR TRAFFIC SURVEILLANCE

HORIZONTAL SCALE IN FEET
0 10 20 40

PLAN - US-23 (SOUTH HIGH STREET)
STA 527+00 TO STA 532+00

DESIGN AGENCY
IBI

DESIGNER WLC
REVIEWER KMK 12-01-22
PROJECT ID 92616
SHEET P.48 TOTAL 170

FRA-23-4.19 PART 2 (PID 92616)

MODEL: I10380_GP2 PAPERSIZE: 17x11in.) DATE: 2022-12-09 TIME: 9:32:36 AM USER: william.croxton
\\10.120.25\ibishare\22592_SafetyDesign\7.0_Production\7.3_Design\04_Civil\Worksets\I10380_FRA-23\400-Engineering\Roadway\Sheets\

℄ CONST. INTERSECTION STA 534+51.11 US-23 = STA 99+99.82 CR-121
EX. LANDSCAPE AREA WITH STONE WALL BORDER (DND-OUTSIDE PR. R/W) (TBR-INSIDE PR. R/W)
CURVE 4: DRIVE DW-1 P.I. = STA. 2+51.72 Δ = 64°08'47" LT Dc = 28°38'52" R = 200.00' T = 125.33' L = 223.91' E = 36.02'
BEGIN WORK DRIVE DW-1 STA 1+37.00
CURVE 4
SECTION 28 SECTION 21
EX. WS (TAP ID 251446) (DND)
EX. WS (TAP ID 241015) (DND)
ROW OF 12" TREES (8 TOTAL)
[WW1A] EX. VALVE BOX (ATG) STA 535+22.25, 70.1' LT
[WW1B] EX. VALVE BOX (ATG) STA 535+22.25, 54.7' LT
[WW2A] EX. VALVE BOX (ATG) STA 535+76.71, 53.0' LT
PFK COMPANY I, LLC, A DELAWARE LIMITED LIABILITY COMPANY AND TAMARACK ENTERPRISES I, L.P., A DELAWARE LIMITED PARTNERSHIP 4755 S. HIGH ST. P.P.N. 510-181564-00
SEE SHEET P. 11 FOR CGO, NEONGC, COC DPU GENERAL NOTE
*** SEE SHEET P. 13 FOR ATT PAY ITEM NOTE (ITEM 202 - REMOVAL, MISC.: ABANDONED TELECOM FACILITIES)
FUTURE EX. OHD 138kV 3-PH TRANS. LINES (AEP-T) (DND-▲▲)
FUTURE EX. POLE (AEP-T #15) (DND-▲▲)
FUTURE EX. UG 13.2 kV DISTR. (AEP-D) (DND-▲▲)
525' (MATCH EXISTING) US-23 NB LEFT-TURN LANE LENGTH (285' MIN REQUIRED, 525'± EXISTING)
96' US-23 NB LEFT-TURN LANE DIVERGING TAPER (RATE 8:1)
144' US-23 NB OFFSET LEFT-TURN LANE (50' MIN.)
EX. 8" M.P. GAS (CGO)
80' ELECTRIC EASEMENT (AEP-T) IN 202112010217672
FUTURE EX. POLE (AEP-D #18) (DND-▲▲)
FUTURE EX. POLE (AEP-D #19) (DND-▲▲)
465' (465' MATCH EXISTING) US-23 SB RIGHT-TURN LANE LENGTH (315' MIN. REQUIRED, 465'± EXISTING)
CONST. LIMITS PR. DITCH
PRV. SIGN (DND)
CONST. LIMITS PR. DITCH
LARGE ROCKS (8) (TBR)
EX. GV (CGO) (DND)
EX. GAS MARKER (CGO) (DND)
EX. POLE/GUY WIRES (AEP-D #45) (TBRBO-▲▲)
EX. POLE/GUY WIRES (AEP-D #44) (TBRBO-▲▲)
EX. POLE/GUY WIRES (AEP-D #47) (TBRBO-▲▲)
FUTURE EX. POLE (AEP-D) (RELBO)
EX. WSV (COC) (DND)
EX. FH (COC) (DND)
EX. TELECOM MARKER (ATT) (TBABO-▲▲) (TBR)***
EX. TELECOM DUCT BANK (ATT) (TBABO-▲▲) (TBR)***
PR. DITCH
CP#3
24" TYPE C
15" TYPE C
24" TYPE B
EX. 12" WM (COC CTP0600) (DND)
EX. 15" RCP (TBR)
21" TYPE C
EX. GV (CGO) (ATGBO)
EX. 15" RCP (TBR)
B-008-2-20
EX. 15" RCP (TBR)
TH#1
EX. 12" WV (COC) (ATG) (EX. 724.60) (PR. 725.22)
EX. 12" WM (COC CTP0600) (DND)
EX. 6" CASING PIPE (ATT) (TBABO-▲▲) (TBR)***
EX. TELECOM MH (ATT) (TBABO-▲▲) (TBR)***
FUTURE EX. 12" WV (COC 22-002)(DND-▲)
FUTURE EX. 12" WM IN CASING PIPE (COC 22-002)(DND-▲)
SAWCUT
EX. CASING PIPE (CGO) (EXTEND FOR PVT WID. BY OTHERS)
MATCHLINE INTERSECTION DRIVE DW-1
℄ LANES/PR. CROWN US-23 SB
PR. PG (INSIDE EOP) US-23 SB
℄ CONST. US-23 (SOUTH HIGH STREET)
N06°42'26"W 4,719.49'
EX. TRENCH DRAIN (TBR)
B-009-0-20
B-010-0-20
EX. OHD 69kV 3-PH TRANS. LINES W/ 14.4 kV DISTR. UNDERBUILD (COC) (TBR-PART 1)
B-007-0-20
℄ EX. R/W US-23
FUTURE EX. OHD 138kV 3-PH TRANS. LINES (AEP-T) (DND-▲▲)
EX. UDG TELECOM (CC) (RELBO-▲▲)
CITY OF COLUMBUS NO PARCEL NUMBER
MATCHLINE INTERSECTION CR-121
PR. OHD 69kV 3-PH TRANS. LINES W/ 14.4 kV DISTR. UNDERBUILD (COC) (PART 1)
FUTURE EX. UG 13.2 kV DISTR. (AEP-D) (DND-▲▲)
EX. POLE (COC-101620) (TBR-PART 1)
EX. GAS VALVE (CGO) (DND)
PR. POLE (COC) (PART 1)
STEPS
MISC. SMALL TREES & BUSHES
TOP OF EX. BLDG FOUNDATION
EX. POLE W/ 1Φ TRANSF (COC-101621) (TBR-PART 1)
PR. ITS (COC) (PR. CONDUIT-PART 2)
PR. ITS (COC) (PR. CONDUIT-PART 2) (PR. 144 STRAND ITS - CROP LINE)
8' GAS EASEMENT (NEONGC) IIN 19560427000729 1 P.B. 25, PG 42
EX. 6" GAS (INACTIVE) (NEONGC) (DND)
EX. GAS MARKER (NEONGC) (ATGBO)
CROP LINE
450' (285' MIN REQUIRED + 165' PROJECT CYPRUS) US-23 NB RIGHT-TURN LANE LENGTH (285' MIN. REQUIRED FOR FRA-23-4.19 PROJECT, 230'± EXISTING) (ADDITIONAL 165 FEET REQUIRED FOR PROJECT CYPRUS)
825' US-23 NB ADD-LANE STORAGE LENGTH (825' MIN. REQUIRED)
319' US-23 SB OFFSET LEFT-TURN LANE (50' MIN.)
700' (600' MATCH EXISTING + 100' PROJECT CYPRUS) US-23 SB LEFT-TURN LANE LENGTH (490' MIN REQUIRED, 600'± EXISTING) (ADDITIONAL 100 FEET REQUIRED FOR PROJECT CYPRUS)
1-STORY BRICK SCHOOLHOUSE (ABANDONED)
EX. GAS MARKER (ATT) (TBABO-▲▲) (TBR)*** CROSSES (9)(TBR)
EX. GAS MARKER (NEONGC) (RELBO)
7.41' ENCROACHES EX. R/W
EX. POLE/GUY WIRES (AEP-D #43) (TBRBO-▲▲))
EX. TELECOM DUCT BANK (ATT) (TBABO-▲▲) (TBR)***
EX. OHD 144 STRAND ITS (COC CTSS - PHASE C) (RELBO-▲▲))
EX. 6" GAS (INACTIVE) (NEONGC) (DND)
PFK COMPANY II, LLC, A DELAWARE LIMITED LIABILITY COMPANY AND TAMARACK ENTERPRISES II, L.P., A DELAWARE LIMITED PARTNERSHIP S. HIGH ST. P.P.N. 510-181566-00
MAGELLAN ENTERPRISES LLC, A DELAWARE LIMITED LIABILITY COMPANY 5076 S. HIGH ST. P.P.N. 510-180711-00
FUTURE EX. OHD 13.2 kV DISTR. (AEP-D)
FUTURE EX. OHD 144 STRAND ITS (COC) (DND-▲▲)
20' GAS EASEMENT (CGO) IIN 199203120078951
FUTURE EX. 12" WM (COC 22-002)(DND-▲)
NOTES:
1. SEE SHEET P. 58 FOR CGO TEST HOLE INFORMATION FOR TH#1 AND TH#2
2. SEE SHEET P.11 FOR CONTRACTOR'S USE OF PARCEL 2T.
CROSS REFERENCES:
SEE SHEET P.3 FOR PROJECT CONTROL, SEE SHEET P.47 FOR PLAN LEGENDS
SEE SHEET P.43-P.45 FOR SUBSUMMARIES
SEE SHEET P.53 FOR PROFILE - US-23 SB - STA 532+00 TO STA 542+00
SEE SHEET P.56 FOR PROFILE - US-23 NB - STA 532+00 TO STA 542+00
SEE SHEET P.95 FOR INTERSECTION DETAILS - US-23 & CR-121 / SEE SHEET P.96 FOR DRIVE DETAILS
SEE SHEET P.97-P.106 FOR DRAINAGE DETAILS
SEE SHEET P.107-P.108 FOR WATER WORK
SEE SHEET P.109-P.132 FOR TRAFFIC CONTROL, SEE SHEET P.133-140 FOR TRAFFIC SURVEILLANCE
SEE SHEET P.141-P.144 FOR LIGHTING
MATCHLINE US-23 - STA 532+00 SEE SHEET P.48
MATCHLINE US-23 - STA 537+00 SEE SHEET P.50
HORIZONTAL SCALE IN FEET
0 10 20 40
PLAN - US-23 (SOUTH HIGH STREET) STA 532+00 TO STA 537+00
DESIGN AGENCY
IBI
DESIGNER WLC
REVIEWER KMK 12-01-22
PROJECT ID 92616
SHEET P.49 TOTAL 170
FRA-23-4.19 PART 2 (PID 92616)
MODEL: II0380_GP3 PAPERSIZE: 17x11 (in.) DATE: 2023-04-14 TIME: 11:57:33 PM USER: william.croxton
\\10J20.II2.5\Ibishare\122592_SafetyDesign\7.0_Production\7.3_Design\04_Civil\Worksets\II0380_FRA-23\400-Engineering\Roadway\Sheets\II0380_GP003.dgn

MODEL: II0380_GP4 PAPERSIZE: 17x11 (in.) DATE: 2022-12-09 TIME: 9:32:46 AM USER: william.croxton
\\10.120.11.25\ibfshare\122592_SafetyDesign\7.0_Production\7.3_Design\04_Civil\Worksets\II0380_FRA-23\400-Engineering\Roadway\Sheets\II0380_GP004.dgn

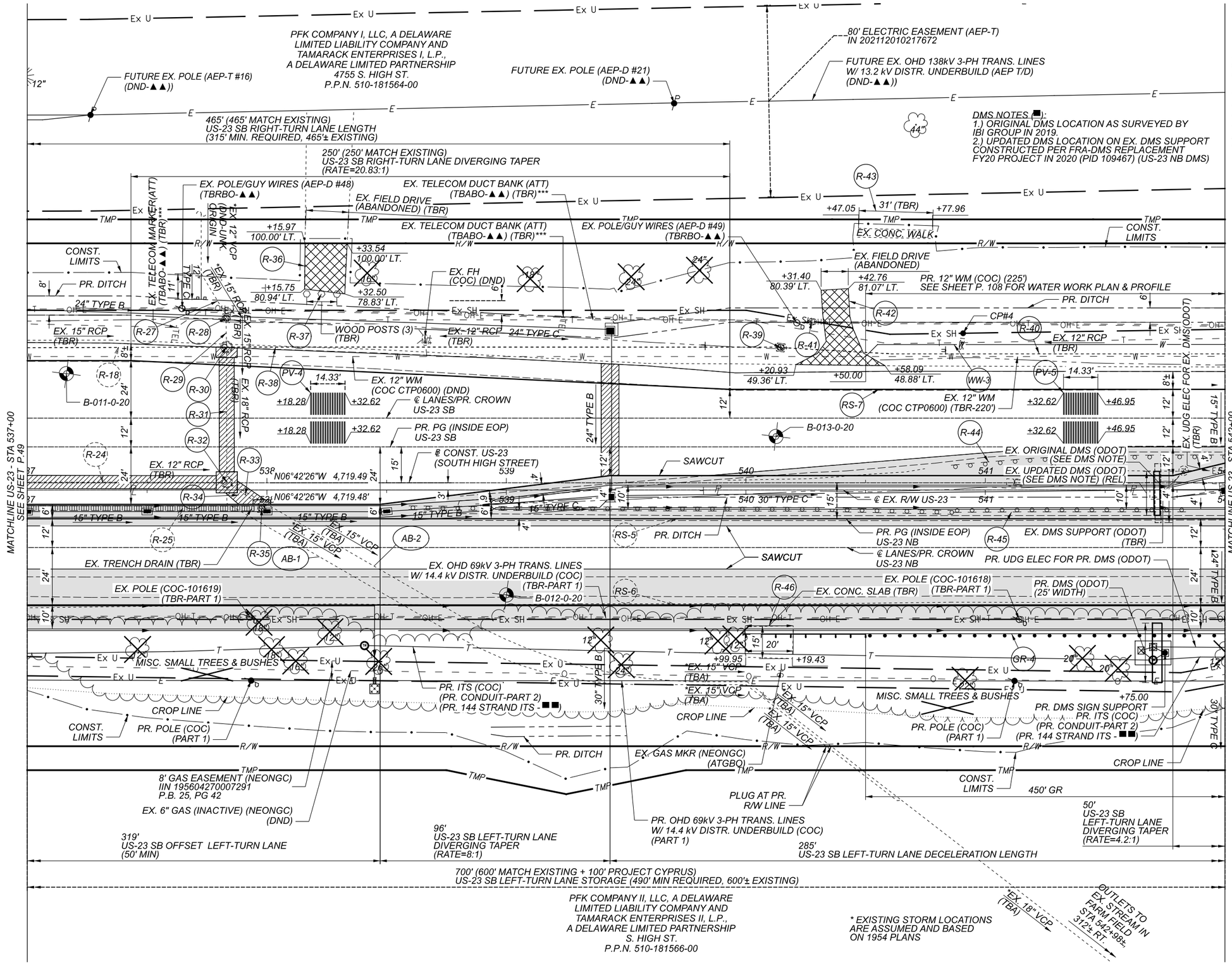

SEE SHEET P. 11 FOR CGO, NEONGC, COC DPU GENERAL NOTE

*** SEE SHEET P. 13 FOR ATT PAY ITEM NOTE (ITEM 202 - REMOVAL, MISC.: ABANDONED TELECOM FACILITIES)

HORIZONTAL SCALE IN FEET
0 10 20 40

PLAN - US-23 (SOUTH HIGH STREET) STA 537+00 TO STA 542+00

CROSS REFERENCES:
SEE SHEET P. 3 FOR PROJECT CONTROL, SEE SHEET P.47 FOR PLAN LEGENDS
SEE SHEET P. 43-P.45 FOR SUBSUMMARIES
SEE SHEET P. 53 FOR PROFILE - US-23 SB - STA 532+00 TO STA 542+00
SEE SHEET P. 56 FOR PROFILE - US-23 NB - STA 532+00 TO STA 542+00
SEE SHEET P. 97-P.106 FOR DRAINAGE DETAILS
SEE SHEET P. 107-P.108 FOR WATER WORK
SEE SHEET P. 109-P.132 FOR TRAFFIC CONTROL, SEE SHEET P.133-140 FOR TRAFFIC SURVEILLANCE

DESIGN AGENCY: IBI
DESIGNER: WLC
REVIEWER: KMK 12-01-22
PROJECT ID: 92616
SHEET: P.50
TOTAL: 170

FUTURE EX. POLE (AEP-T #17)
(DND-▲▲)

FUTURE EX. OHD 138kV 3-PH TRANS. LINES
W/ 13.2 kV DISTR. UNDERBUILD (AEP T/D)
(DND-▲▲))

FUTURE EX. POLE (AEP-T #23)
(DND-▲▲)

* ELECTRIC EASEMENT (AEP-T)
IN 202112010217672

SEE SHEET P. 11 FOR
CGO, NEONGC, COC
DPU GENERAL NOTE

*** SEE SHEET P. 13
FOR ATT PAY ITEM
NOTE (ITEM 202 -
REMOVAL, MISC.:
ABANDONED TELECOM
FACILITIES)

285'
US-23 SB LEFT-TURN LANE DECELERATION LENGTH
50'
US-23 SB LEFT-TURN LANE DIVERGING TAPER
(RATE=4.2:1)

FUTURE EX. OHD ELEC (AEP)
(POWER SERVICE FOR EX. DMS)
(TBRBO)

FUTURE EX. UDG ELEC (AEP)
(POWER SERVICE FOR PR. DMS)
(DND-▲▲)

FUTURE EX. PEDESTRAL (AEP)
(POWER SERVICE FOR PR. DMS)
(DND-▲▲)

PFK COMPANY I, LLC, A DELAWARE
LIMITED LIABILITY COMPANY AND
TAMARACK ENTERPRISES I, L.P.,
A DELAWARE LIMITED PARTNERSHIP
4755 S. HIGH ST.
P.P.N. 510-181564-00

E131(486)
END PROJECT
END PART 2
STA. 546+47.41 BACK

E131(486)
BEGIN PROJECT
BEGIN PART 1
STA. 546+50 AHEAD

SEE PART 1 PLANS FOR
PROJECT/WORK LIMITS

EX. POLE/GUY WIRES (AEP-D #51)
(TBRBO-▲▲)

EX. DMS SERVICE POLE (ODOT)
(TBR-POWER SERVICE FOR EX. DMS)

EX. UDG ELEC (ODOT)
(TBR-POWER SERVICE FOR EX. DMS)

PR. UDG ELEC FOR PR. DMS (ODOT)

CONST.
LIMITS

PR. 12" WM (COC) (225')
SEE SHEET P. 108 FOR
WATER WORK PLAN & PROFILE

WOOD POSTS (2)
(TBR)

MISC. SMALL TREES & BUSHES

(E) DEAD

EX. POLE/GUY WIRES (AEP-D #50)
(TBRBO-▲▲)

PR. DITCH

EX. WIRE FENCE (TBR)

EX. 6" TILE (TBR)

EX. TELECOM MARKER (ATT)
(TBABO-▲▲) (TBR)***

EX. TELECOM DUCT BANK (ATT)
(TBABO-▲▲) (TBR)***

CONST.
LIMITS

EX. POLE/GUY WIRES (AEP-D #52)
(TBRBO-▲▲)

PARCEL 10-WD
TO BE ACQUIRED
UNDER PART 1

EX. 12" RCP
(TBR)

EX. TELECOM MARKER (ATT)
(TBABO-▲▲) (TBR)***

EX. 12" WM
(COC CTP0600) (TBR-220')

EX. 12" WM
(COC CTP0600) (DND)

EX. DITCH

EX. 12" RCP (TBR)

21" O.D. TYPE B

EX. 12" RCP (TBA)

EX. 12" RCP
(TBR)

3' MIN OUT TO OUT
SEPARATION

EX. UDG ELEC FOR EX. DMS (ODOT)
(TBR)

SAWCUT

B-015-0-20

B-017-0-20

℄ LANES/PR. CROWN
US-23 SB

STATION EQUATION:
STA 546+47.41 BACK
PART 2 =
STA 546+50.00 AHEAD
PART 1

℄ LANES/EX. CROWN
US-23 SB LANES

PR. PG (INSIDE EOP)
US-23 SB

EX. PG (INSIDE EOP)
US-23 SB LANES

30" TYPE C

℄ CONST. US-23
(SOUTH HIGH STREET)

N06°42'26"W 4,719.49'

N06°42'26"W 4,719.48'

℄ EX. R/W US-23

PR. DITCH

EX. OHD ELEC (AEP)
(TBRBO-▲▲)

B-014-0-20

PR. UDG ELEC FOR PR. DMS (ODOT)

EX. OHD 69kV 3-PH TRANS. LINES
W/ 14.4 kV DISTR. UNDERBUILD (COC)
(TBR-PART 1)

EX. SERVICE POLE (AEP)
(TBRBO-▲▲)

EX. POLE (COC-101617)
(TBR-PART 1)

PR. PG (INSIDE EOP)
US-23 NB

℄ LANES/PR. CROWN
US-23 NB

36" O.D. TYPE B

B-016-0-20

SAW
CUT

EX. POLE (COC-101615)
(TBR-PART 1)

MISC. SMALL TREES & BUSHES

PR. ITS (COC)

PR. DITCH

CONST.
LIMITS

PR. ITS (COC)
(PR. CONDUIT-PART 2)
(PR. 144 STRAND ITS - ■■)

PR. POLE (COC)
(PART 1)

CROP LINE

CP#5

PARCEL 11-WD
TO BE ACQUIRED
UNDER PART 1

EX. GAS MARKER (NEONGC)
(ATGBO)

EX. GAS VALVE (NEONGC)
(ATGBO)

975' GR

AA, TYPE T

PR. OHD 69kV 3-PH TRANS. LINES
W/ 14.4 kV DISTR. UNDERBUILD (COC)
(PART 1)

8' GAS EASEMENT (NEONGC)
IIN 195604270007291
P.B. 25, PG 42

EX. 6" GAS (INACTIVE) (NEONGC)
(DND)

PR. POLE (COC)
(PART 1)

PFK COMPANY II, LLC, A DELAWARE
LIMITED LIABILITY COMPANY AND
TAMARACK ENTERPRISES II, L.P.,
A DELAWARE LIMITED PARTNERSHIP
S. HIGH ST.
P.P.N. 510-181566-00

* EXISTING STORM LOCATIONS
ARE ASSUMED AND BASED
ON 1954 PLANS

MATCHLINE US-23 - STA 542+00
SEE SHEET P. 50

CROSS REFERENCES:
SEE SHEET P. 3 FOR PROJECT CONTROL, SEE SHEET P. 47 FOR PLAN LEGENDS
SEE SHEET P. 43-P. 45 FOR SUBSUMMARIES
SEE SHEET P. 54 FOR PROFILE - US-23 SB - STA 542+00 TO STA 552+00
SEE SHEET P. 57 FOR PROFILE - US-23 NB - STA 542+00 TO STA 552+00
SEE SHEET P. 97-P. 106 FOR DRAINAGE DETAILS
SEE SHEET P. 107-P108 FOR WATER WORK
SEE SHEET P. 109-P. 132 FOR TRAFFIC CONTROL, SEE SHEET P. 133-140 FOR TRAFFIC SURVEILLANCE

HORIZONTAL
SCALE IN FEET
0 10 20 40

PLAN - US-23 (SOUTH HIGH STREET)
STA 542+00 TO STA 546+47.41

DESIGN AGENCY
IBI

DESIGNER
WLC

REVIEWER
KMK 12-01-22

PROJECT ID
92616

SHEET P.51 TOTAL 170

FRA-23-4.19 PART 2 (PID 92616)

MODEL: II0380_GP5 PAPERSIZE: 17x11(in.) DATE: 2023-04-10 TIME: 10:35:57 AM USER: william.croxton
\\10.120.112.5\ibishare\12592_SafetyDesign\7.0_Production\7.3_Design\04_Civil\Worksets\II0380_FRA-23\400-Engineering\Roadway\Sheets\II0380_GP005.dgn

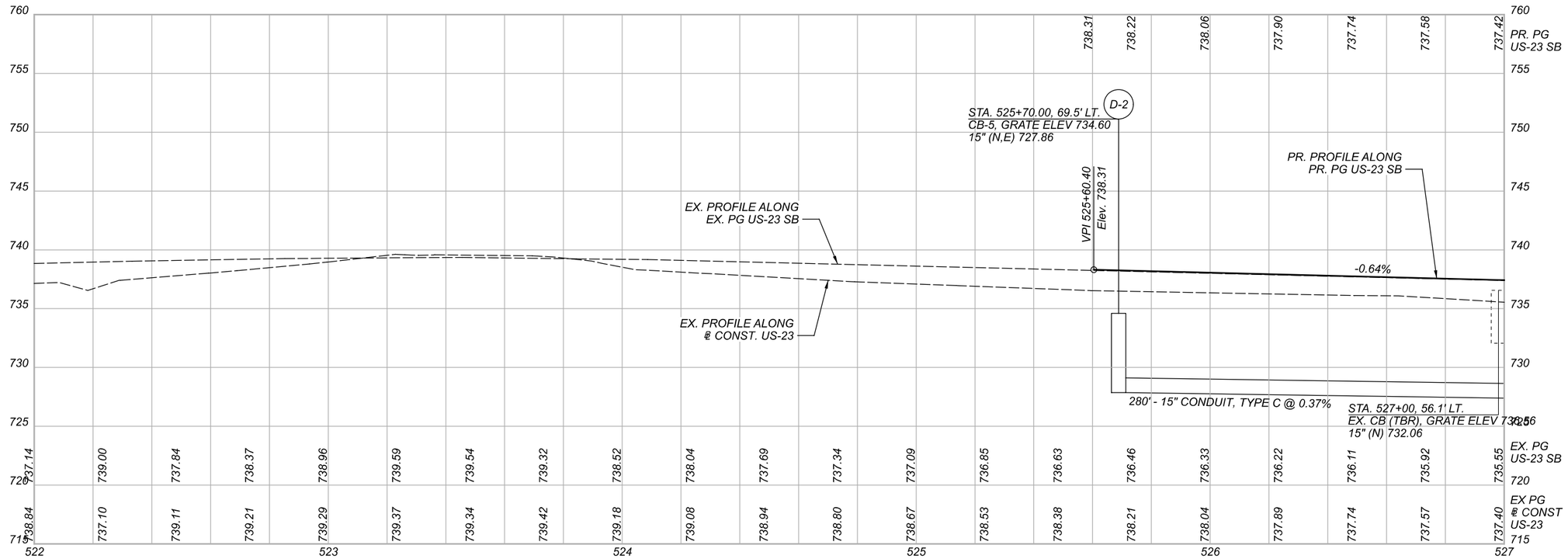

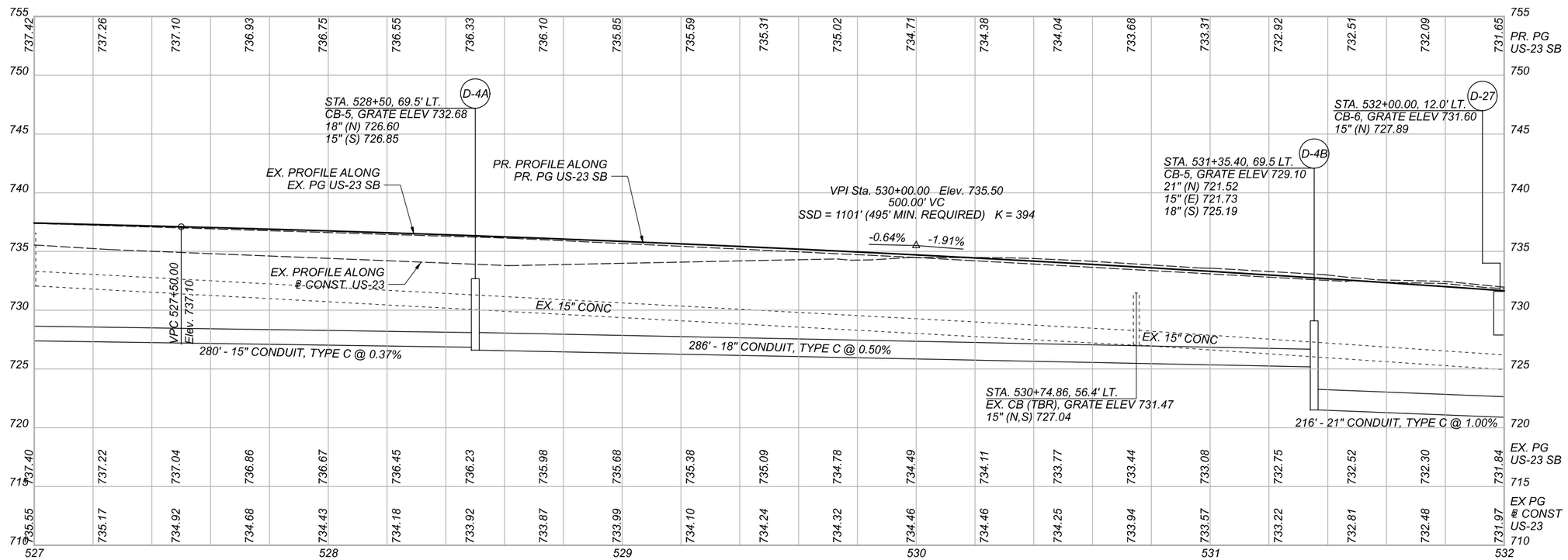

PROFILE - US-23 SB (SOUTH HIGH STREET)
STA 522+00 TO STA 532+00

DESIGN AGENCY
IBI

DESIGNER	WLC
REVIEWER	KMK 12-01-22
PROJECT ID	92616
SHEET	P.52
TOTAL	170

FRA-23-4.19 PART 2 (PID 92616)

MODEL: I10380_GF1 PAPERSIZE: 11x17in.) DATE: 2022-12-09 TIME: 9:32:57 AM USER: william.croxton
\\10.120.12.5\ibishare\12592_SafetyDesign\7.0_Production\7.3_Design\04_Civil\Worksets\I0380_FRA-23\400-Engineering\Roadway\Sheets\I0380_GF00l.dgn

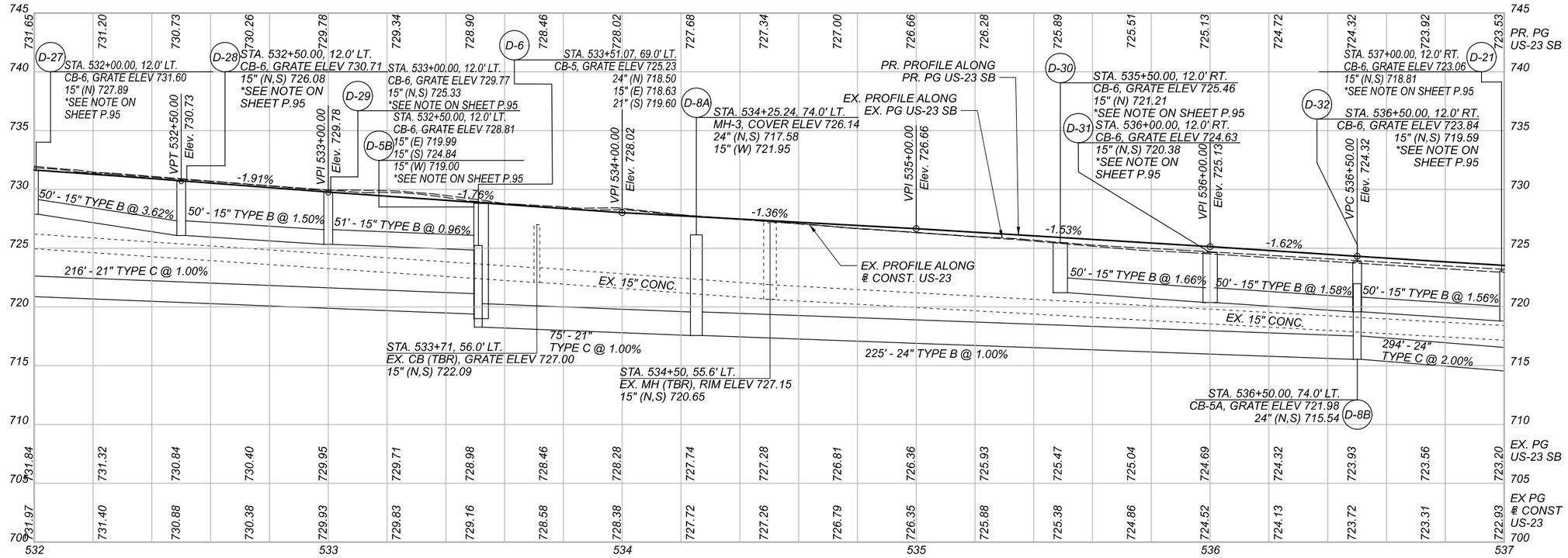

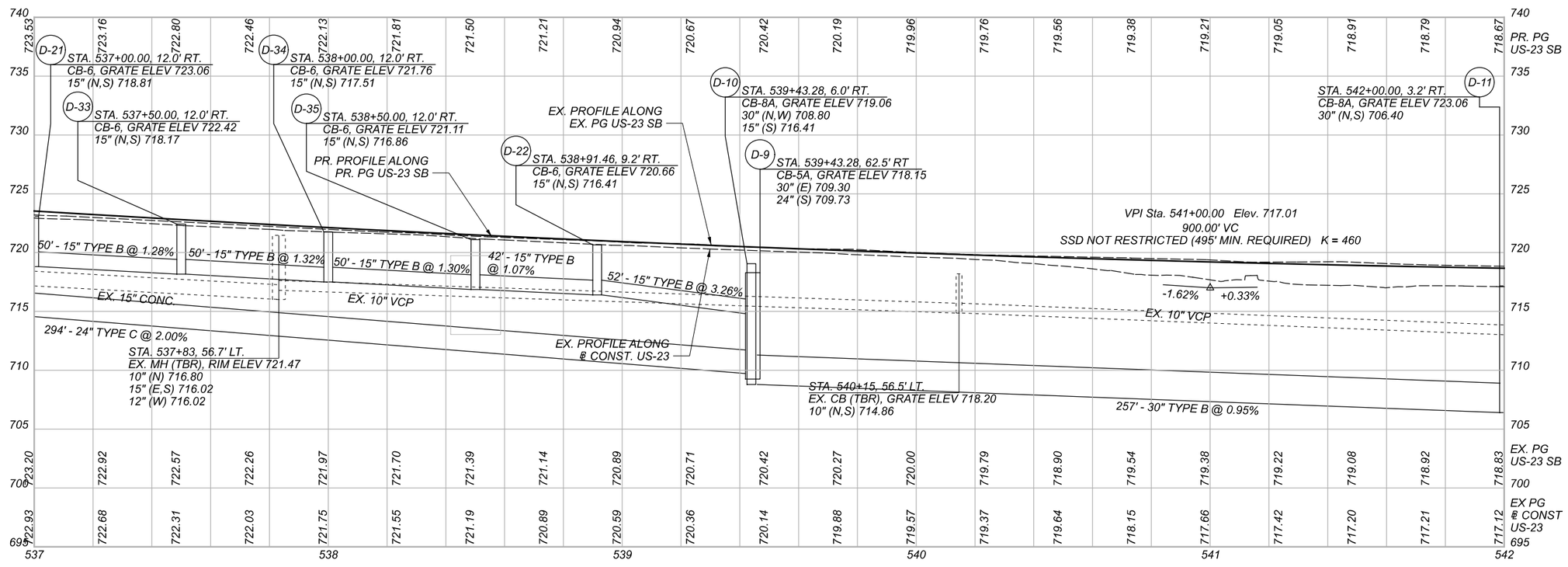

NOTE:
ALL CB-6 STA. AND OFFSETS ARE TO CENTER OF GRATE AND GRATE ELEV. HAVE NO DEPRESSION

PROFILE - US-23 SB (SOUTH HIGH STREET)
STA 532+00 TO STA 542+00

FRA-23-4.19 PART 2 (PID 92616)

MODEL: I10380_GF3 PAPERSIZE: 17x11 (in.) DATE: 2022-12-09 TIME: 9:33:01 AM USER: william.croxton
\\10.120.2.5\ibishare\22592_SafetyDesign\7.0_Production\7.3_Design\04_Civil\Worksets\I0380_FRA-23\400-Engineering\Roadway\Sheets\I0380_GF002.dgn

DESIGN AGENCY: IBI

DESIGNER	WLC
REVIEWER	KMK 12-01-22
PROJECT ID	92616
SHEET	P.53
TOTAL	170

MODEL: 110380_GF5 PAPERSIZE: 17x11 (in.) DATE: 2022-12-09 TIME: 9:33:04 AM USER: william.croxton
\\10.120.112.5\ibishare\122592_SafetyDesign\7.0_Production\7.3_Design\04_Civil\Worksets\110380_FRA-23\400-Engineering\Roadway\Sheets\110380_GF003.dgn

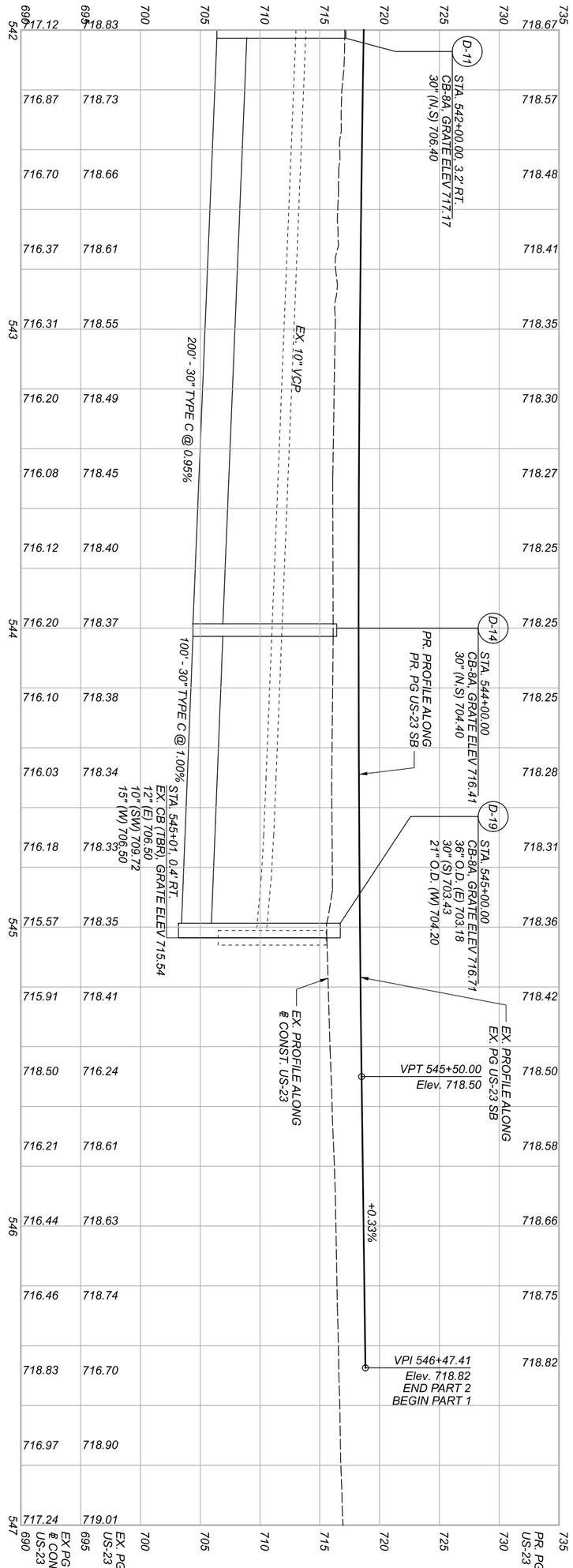

PROFILE - US-23 SB (SOUTH HIGH STREET)
STA 542+00 TO STA 546+47.41

DESIGN AGENCY: IBI
DESIGNER: WLC
REVIEWER: KMK 12-01-22
PROJECT ID: 92616
SHEET: P.54 TOTAL: 170

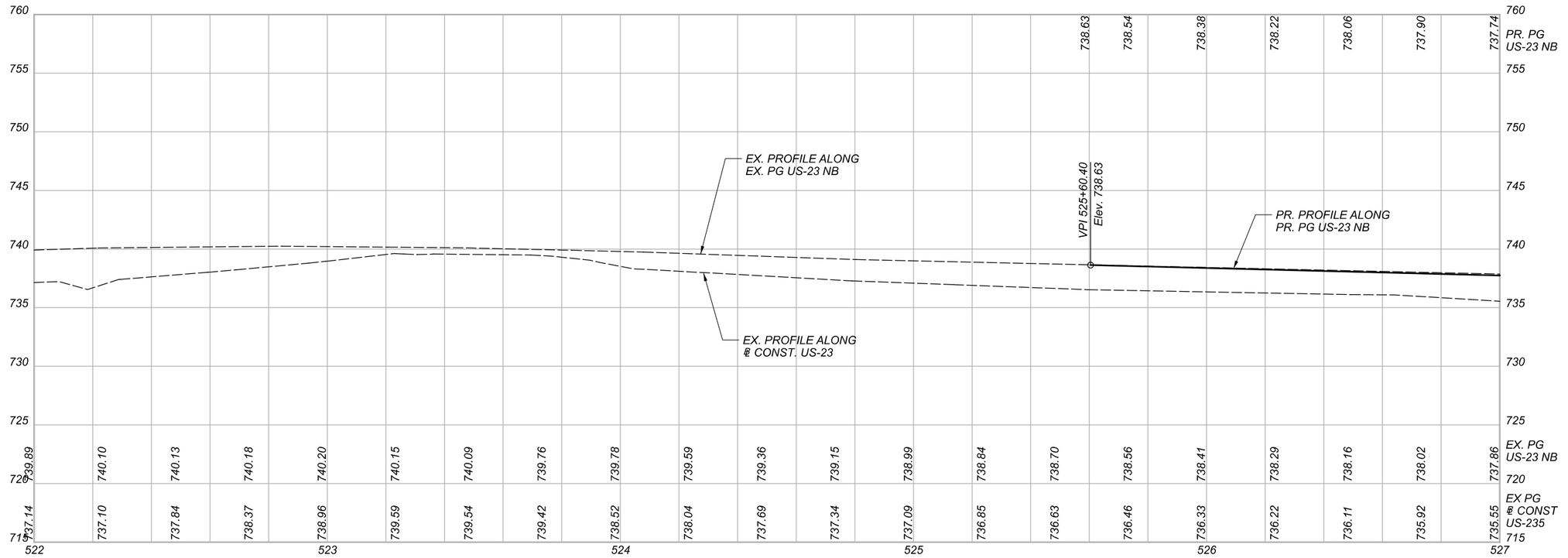

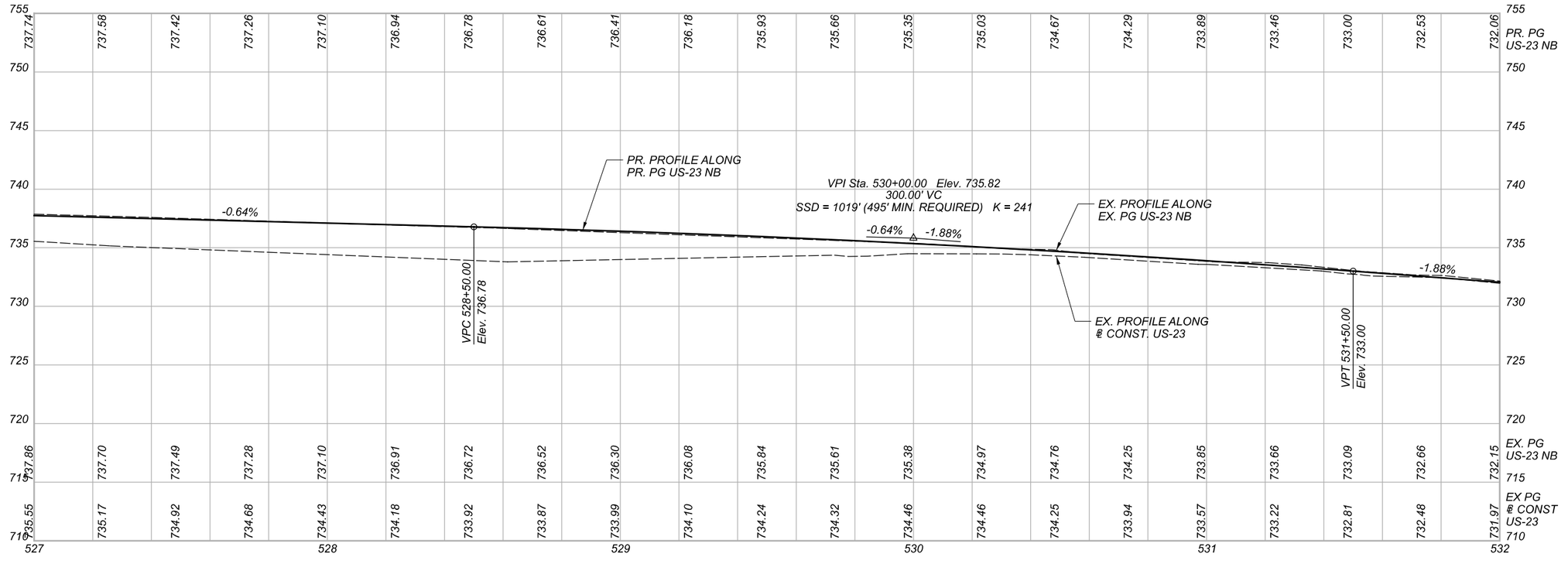

PROFILE - US-23 NB (SOUTH HIGH STREET)
STA 522+00 TO STA 532+00

FRA-23-4.19 PART 2 (PID 92616)

MODEL: I0380_GF9 PAPERSIZE: 17x11(in.) DATE: 2022-12-09 TIME: 9:33:06 AM USER: william.croxton
\\10.120.12.5\ibishare\12592_SafetyDesign\7.0_Production\7.3_Design\04_Civil\Worksets\I0380_FRA-23\400-Engineering\Roadway\Sheets\I0380_GF005.dgn

DESIGN AGENCY
IBI

DESIGNER
WLC

REVIEWER
KMK 12-01-22

PROJECT ID
92616

SHEET P.55 TOTAL 170

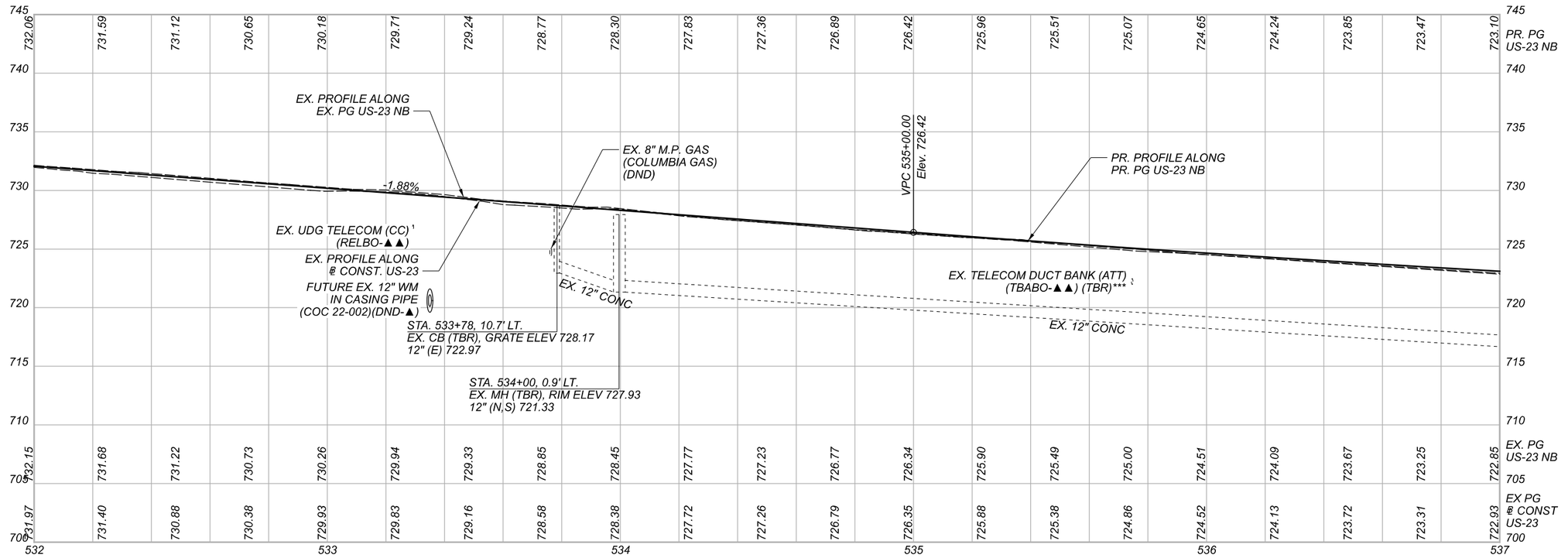

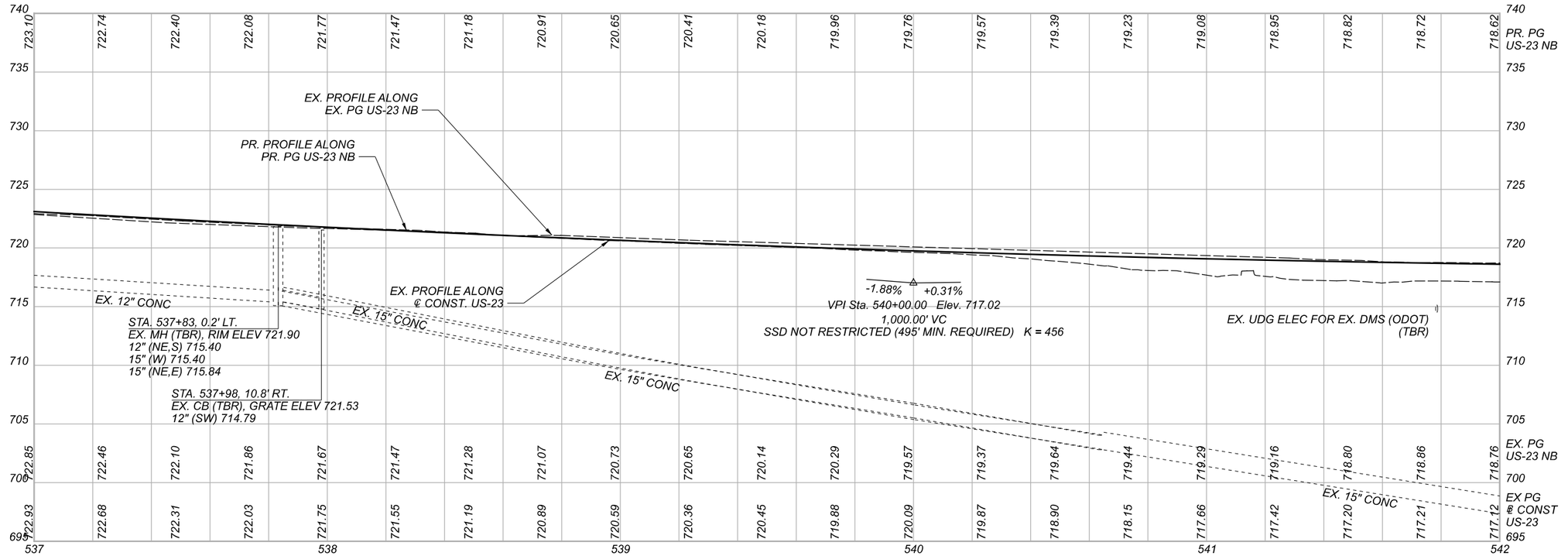

PROFILE - US-23 NB (SOUTH HIGH STREET)
STA 532+00 TO STA 542+00

FRA-23-4.19 PART 2 (PID 92616)

MODEL: I0380_GFII PAPERSIZE: 17x11(in.) DATE: 2022-12-09 TIME: 9:33:11 AM USER: william.croxton
\\10.120.112.5\ibishare\12592_SafetyDesign\7.0_Production\7.3_Design\04_Civil\Worksets\I0380_FRA-23\400-Engineering\Roadway\Sheets\I0380_GF006.dgn

DESIGN AGENCY	IBI
DESIGNER	WLC
REVIEWER	KMK 12-01-22
PROJECT ID	92616
SHEET	P.56
TOTAL	170

MODEL: 110380_GF13 PAPERSIZE: 17x11(in.) DATE: 2022-12-09 TIME: 9:33:14 AM USER: william.croxton
\\10.120.112.5\iblshare\122592_SafetyDesign\7.0_Production\7.3_Design\04_Civil\Worksets\110380_FRA-23\400-Engineering\Roadway\Sheets\110380_GF007.dgn

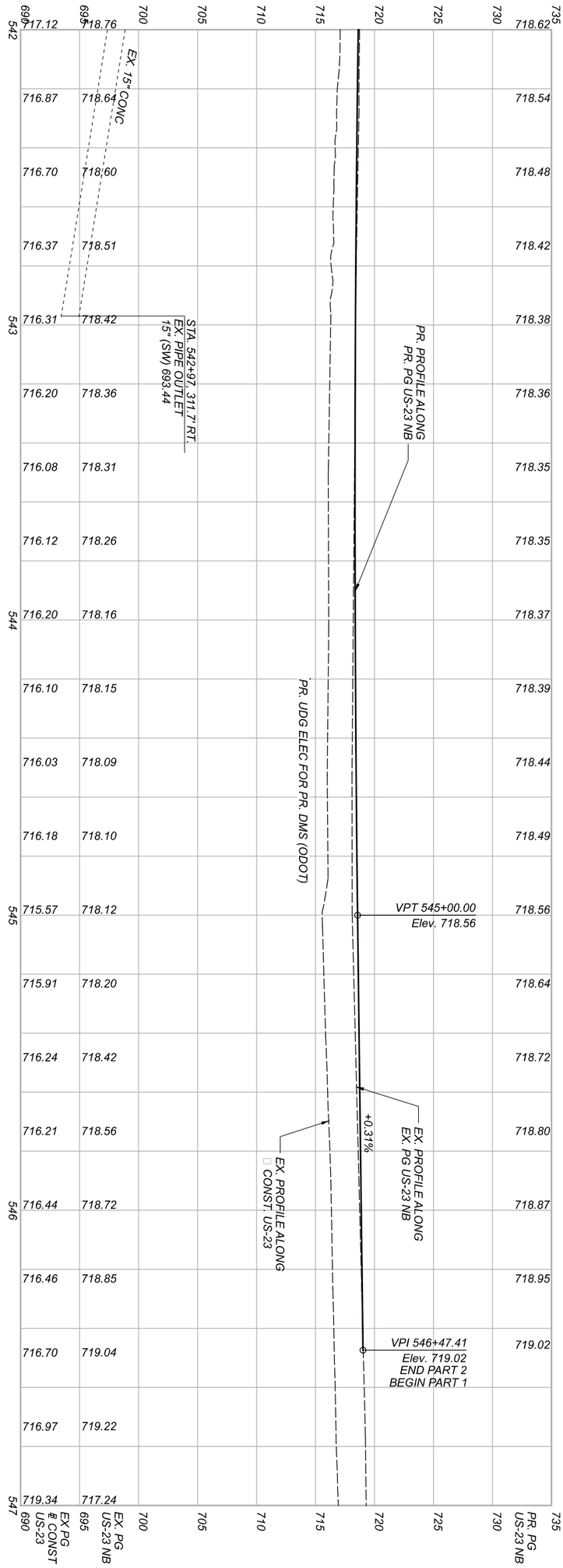

PROFILE - US-23 NB (SOUTH HIGH STREET)
STA 542+00 TO STA 546+47.41

DESIGNER	REVIEWER	PROJECT ID	SHEET	TOTAL
WLC	KMK 12-01-22	92616	P 57	170

DESIGN AGENCY

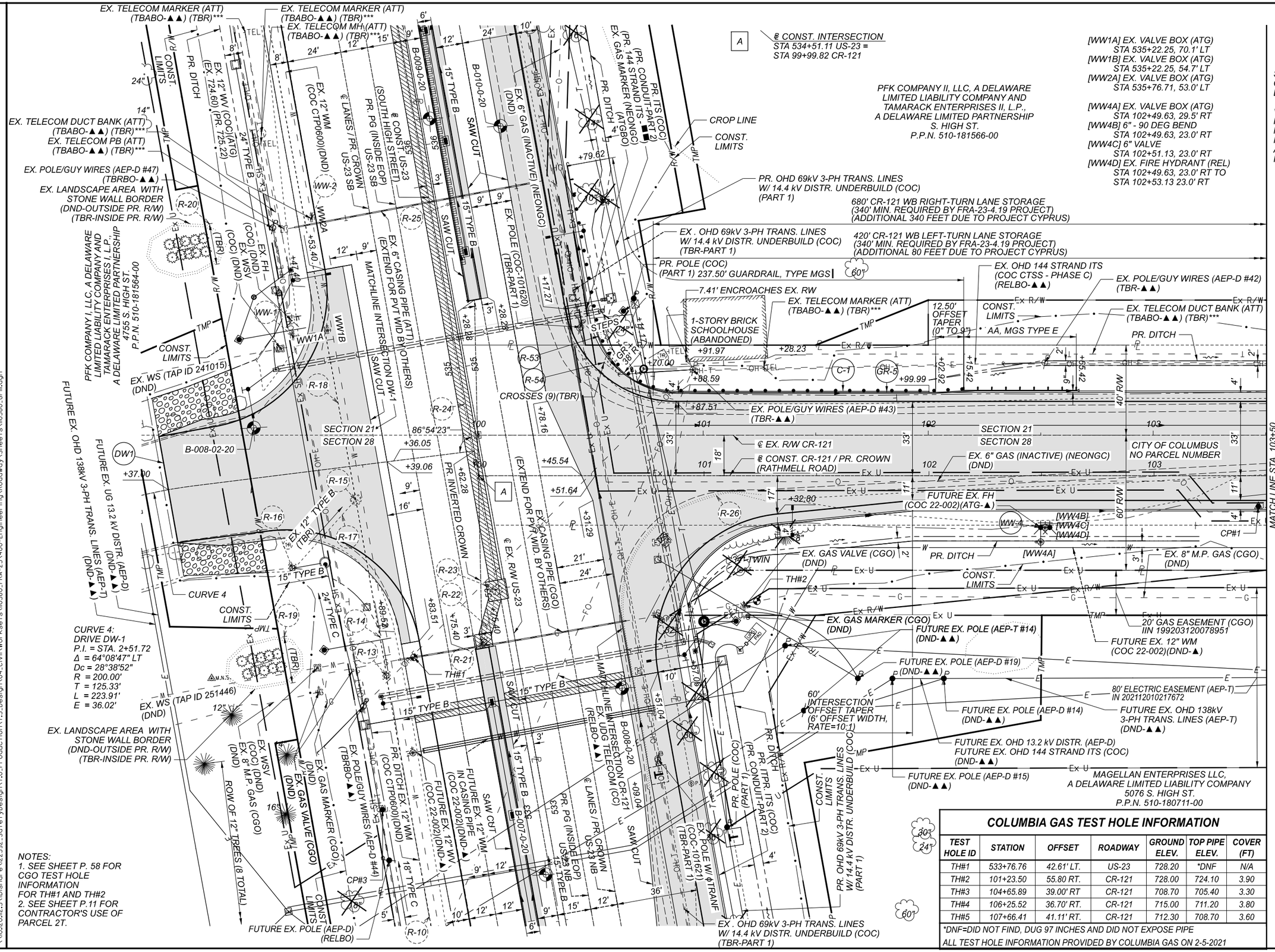

NOTES:
1. SEE SHEET P. 58 FOR CGO TEST HOLE INFORMATION FOR TH#1 AND TH#2
2. SEE SHEET P.11 FOR CONTRACTOR'S USE OF PARCEL 2T.

COLUMBIA GAS TEST HOLE INFORMATION

TEST HOLE ID	STATION	OFFSET	ROADWAY	GROUND ELEV.	TOP PIPE ELEV.	COVER (FT)
TH#1	533+76.76	42.61' LT.	US-23	728.20	*DNF	N/A
TH#2	101+23.50	55.80 RT.	CR-121	728.00	724.10	3.90
TH#3	104+65.89	39.00' RT	CR-121	708.70	705.40	3.30
TH#4	106+25.52	36.70' RT.	CR-121	715.00	711.20	3.80
TH#5	107+66.41	41.11' RT.	CR-121	712.30	708.70	3.60

*DNF=DID NOT FIND, DUG 97 INCHES AND DID NOT EXPOSE PIPE
ALL TEST HOLE INFORMATION PROVIDED BY COLUMBIA GAS ON 2-5-2021

CROSS REFERENCES:
SEE SHEET P.3 FOR PROJECT CONTROL, SEE SHEET P.47 FOR PLAN LEGENDS
SEE SHEET P.43-P.45 FOR SUBSUMMARIES
SEE SHEET P.62 FOR PROFILE - CR-121 - STA 99+99.82 TO STA 108+50
SEE SHEET P.95 FOR INTERSECTION DETAILS - US-23 & CR-121 / SEE SHEET P.96 FOR DRIVE DETAILS
SEE SHEET P.97-P.106 FOR DRAINAGE DETAILS
SEE SHEET P.107-P.108 FOR WATER WORK
SEE SHEET P.109-P.132 FOR TRAFFIC CONTROL, SEE SHEET P.133-140 FOR TRAFFIC SURVEILLANCE
SEE SHEET P.141-P.144 FOR LIGHTING

PLAN - CR-121 (RATHMELL ROAD) STA 99+99.82 TO STA 103+50

DESIGN AGENCY: IBI
DESIGNER: WLC
REVIEWER: KMK 12-01-22
PROJECT ID: 92616
SHEET P.58 TOTAL 170

FRA-23-4.19 PART 2 (PID 92616)

MODEL: I:\0380_CPIII PAPERSIZE: 17x11(in.) DATE: 2023-04-17 TIME: 2:24:46 PM USER: william.croxton
\\10.120.2.5\Ibishare\22592_SafetyDesign\7.0_Production\7.3_Design\04_Civil\Worksets\I0380_FRA-23\400-Engineering\Roadway\Sheets\I0380_CPIII.dgn

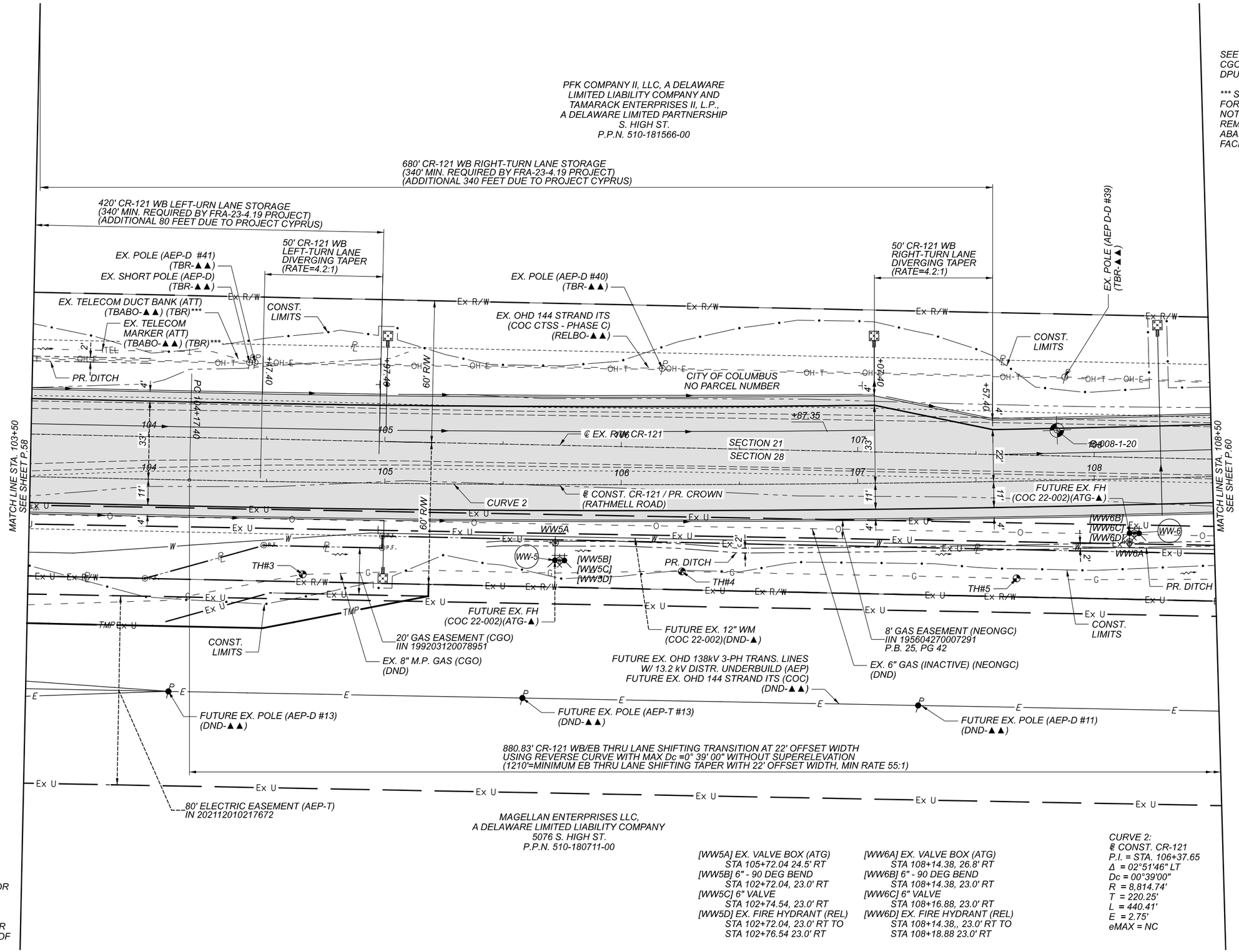

SEE SHEET P. 11 FOR CGO, NEONGC, COC DPU GENERAL NOTE

*** SEE SHEET P. 13 FOR ATT PAY ITEM NOTE (ITEM 202 - REMOVAL, MISC.: ABANDONED TELECOM FACILITIES)

HORIZONTAL SCALE IN FEET
0 10 20 40

NOTES:
1. SEE SHEET P. 58 FOR CGO TEST HOLE INFORMATION FOR TH#1 AND TH#2
2. SEE SHEET P.11 FOR CONTRACTOR'S USE OF PARCEL 2T.

[WW5A] EX. VALVE BOX (ATG)
STA 105+72.04 24.5' RT
[WW5B] 6" - 90 DEG BEND
STA 102+72.04, 23.0' RT
[WW5C] 6" VALVE
STA 102+74.54, 23.0' RT
[WW5D] EX. FIRE HYDRANT (REL)
STA 102+72.04, 23.0' RT TO
STA 102+76.54 23.0' RT

[WW6A] EX. VALVE BOX (ATG)
STA 108+14.38, 26.8' RT
[WW6B] 6" - 90 DEG BEND
STA 108+14.38, 23.0' RT
[WW6C] 6" VALVE
STA 108+16.88, 23.0' RT
[WW6D] EX. FIRE HYDRANT (REL)
STA 108+14.38,, 23.0' RT TO
STA 108+18.88 23.0' RT

CURVE 2:
℄ CONST. CR-121
P.I. = STA. 106+37.65
Δ = 02°51'46" LT
Dc = 00°39'00"
R = 8,814.74'
T = 220.25'
L = 440.41'
E = 2.75'
eMAX = NC

CROSS REFERENCES:
SEE SHEET P. 3 FOR PROJECT CONTROL. SEE SHEET P. 47 FOR PLAN LEGENDS
SEE SHEET P. 43-P. 45 FOR SUBSUMMARIES
SEE SHEET P. 62 FOR PROFILE - CR-121 - STA 99+99.82 TO STA 108+50
SEE SHEET P. 97-P. 106 FOR DRAINAGE DETAILS
SEE SHEET P. 107-P. 108 FOR WATER WORK.
SEE SHEET P. 109-P. 132 FOR TRAFFIC CONTROL

PLAN - CR-121 (RATHMELL ROAD) STA 103+50 TO STA 108+50

DESIGN AGENCY: IBI

DESIGNER: WLC
REVIEWER: KMK 12-01-22
PROJECT ID: 92616
SHEET: P.59 TOTAL: 170

FRA-23-4.19 PART 2 (PID 92616)

MODEL: li0380_GPli2 PAPERSIZE: 17x11(in.) DATE: 2023-04-17 TIME: 2:25:16 PM USER: william.croxton
\\10.120.12.5\ibishare\122592_SafetyDesign\7.0_Production\7.3_Design\04_Civil\Worksets\li0380_FRA-23\400-Engineering\Roadway\Sheets\li0380_GPli2.dgn

MODEL: \\0380_GPI3 PAPERSIZE: 17x11(in.) DATE: 2022-12-09 TIME: 9:33:26 AM USER: william.croxton
\\10.120.12.5\ibishare\22592_SafetyDesign\7.0_Production\7.3_Design\04_Civil\Worksets\\0380_FRA-23\400-Engineering\Roadway\Sheets\0380_GPI3_Roadway\Sheets\\0380_GPI3.dgn

HORIZONTAL SCALE IN FEET
0 10 20 40

PLAN - CR-121 (RATHMELL ROAD)
STA 108+50 TO STA 113+50

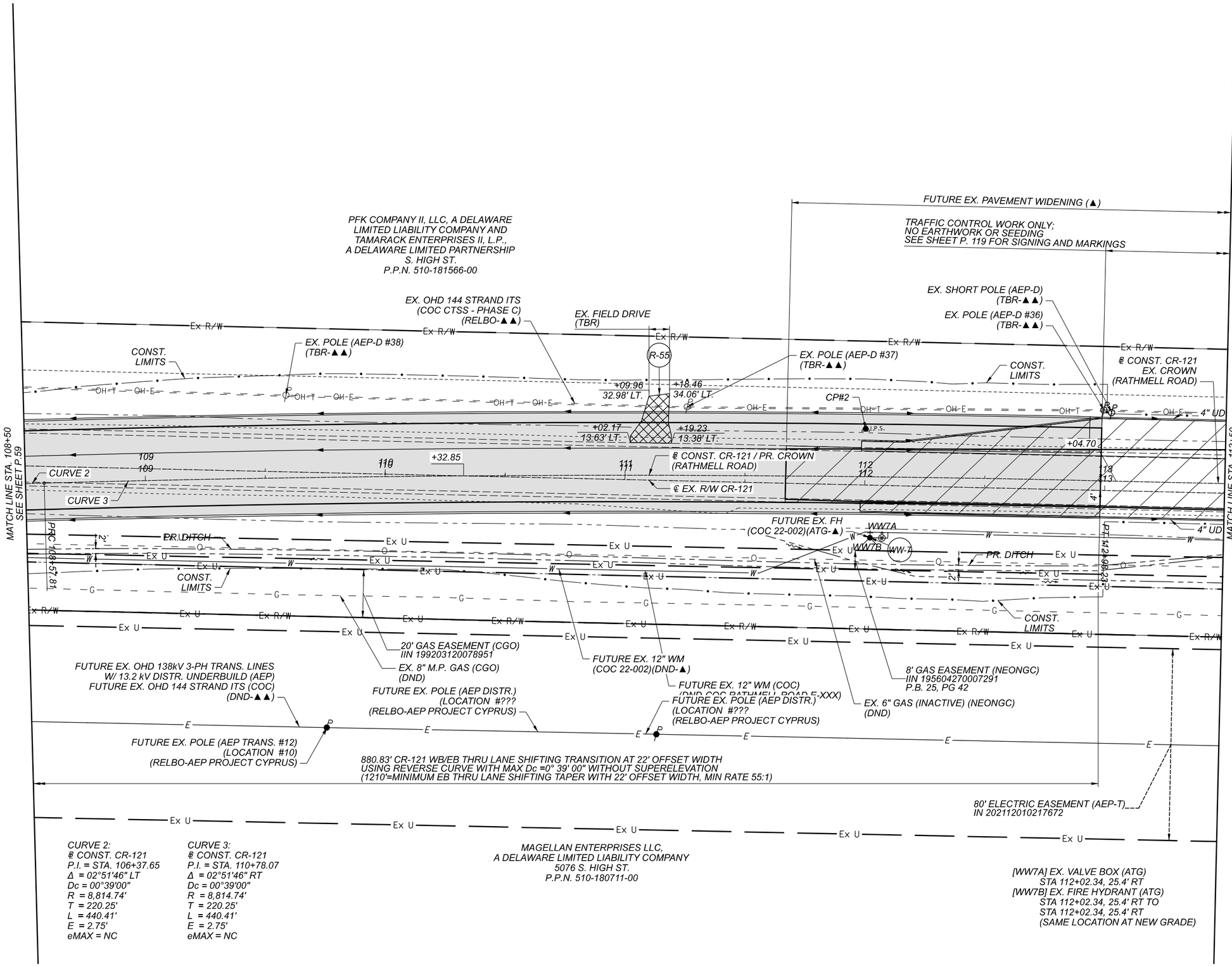

CROSS REFERENCES:
SEE SHEET P.3 FOR PROJECT CONTROL. SEE SHEET P.47 FOR PLAN LEGENDS
SEE SHEET P.43-P.45 FOR SUBSUMMARIES
SEE SHEET P.63 FOR PROFILE - CR-121 - STA 108+50 TO STA 118+50
SEE SHEET P.97-P.106 FOR DRAINAGE DETAILS
SEE SHEET P.107-P.108 FOR WATER WORK.
SEE SHEET P.109-P.132 FOR TRAFFIC CONTROL

DESIGN AGENCY
IBI

DESIGNER	WLC
REVIEWER	KMK 12-01-22
PROJECT ID	92616
SHEET	P.60
TOTAL	170

MODEL: II0380_GPII4 PAPERSIZE: 17x11 (in.) DATE: 2022-12-09 TIME: 9:33:30 AM USER: william.croxton
\\10.120.112.5\bishare\12592_SafetyDesign\7.0_Production\7.3_Design\04_Civil\Worksets\II0380_FRA-23\400-Engineering\Roadway\Sheets\II0380_GPII4.dgn

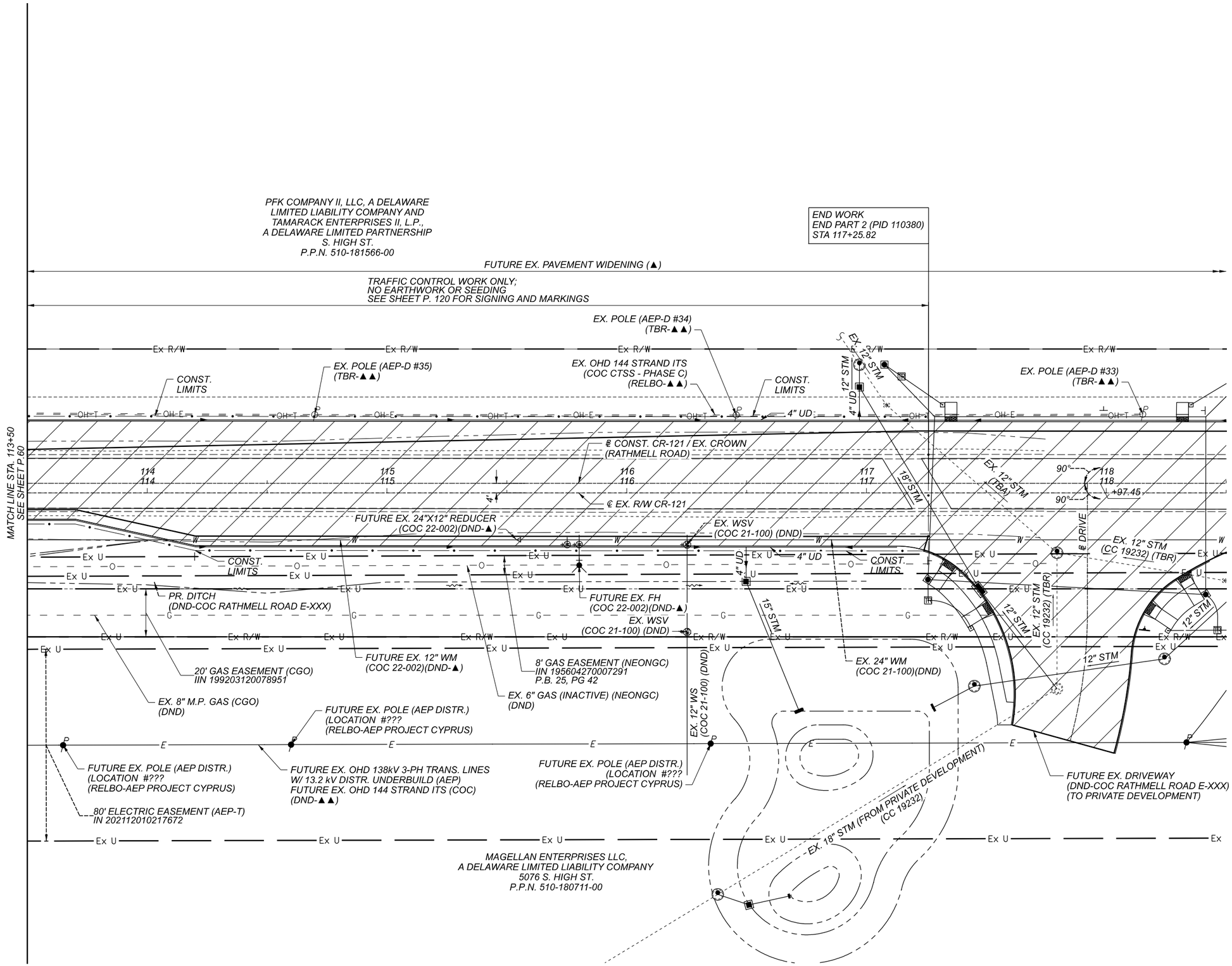

SEE SHEET P. 11 FOR CGO, NEONGC, COC DPU GENERAL NOTE

*** SEE SHEET P. 13 FOR ATT PAY ITEM NOTE (ITEM 202 - REMOVAL, MISC.: ABANDONED TELECOM FACILITIES)

HORIZONTAL SCALE IN FEET
0 10 20 40

PLAN - CR-121 (RATHMELL ROAD)
STA 113+50 TO STA 118+50

CROSS REFERENCES:
SEE SHEET P.3 FOR PROJECT CONTROL, SEE SHEET P.47 FOR PLAN LEGENDS
SEE SHEET P.43-P.45 FOR SUBSUMMARIES
SEE SHEET P.63 FOR PROFILE - CR-121 - STA 108+50 TO STA 118+50
SEE SHEET P.109-P.132 FOR TRAFFIC CONTROL

DESIGN AGENCY
IBI

DESIGNER WLC
REVIEWER KMK 12-01-22
PROJECT ID 92616
SHEET P.61 TOTAL 170

MODEL: 110380_GFIII PAPERSIZE: 17x11 (in.) DATE: 2022-12-09 TIME: 9:33:34 AM USER: william.croxton
\\10.120.112.5\ibishare\122592_SafetyDesign\7.0_Production\7.3_Design\04_Civil\Worksets\110380_FRA-23\400-Engineering\Roadway\Sheets\110380_GFIII.dgn

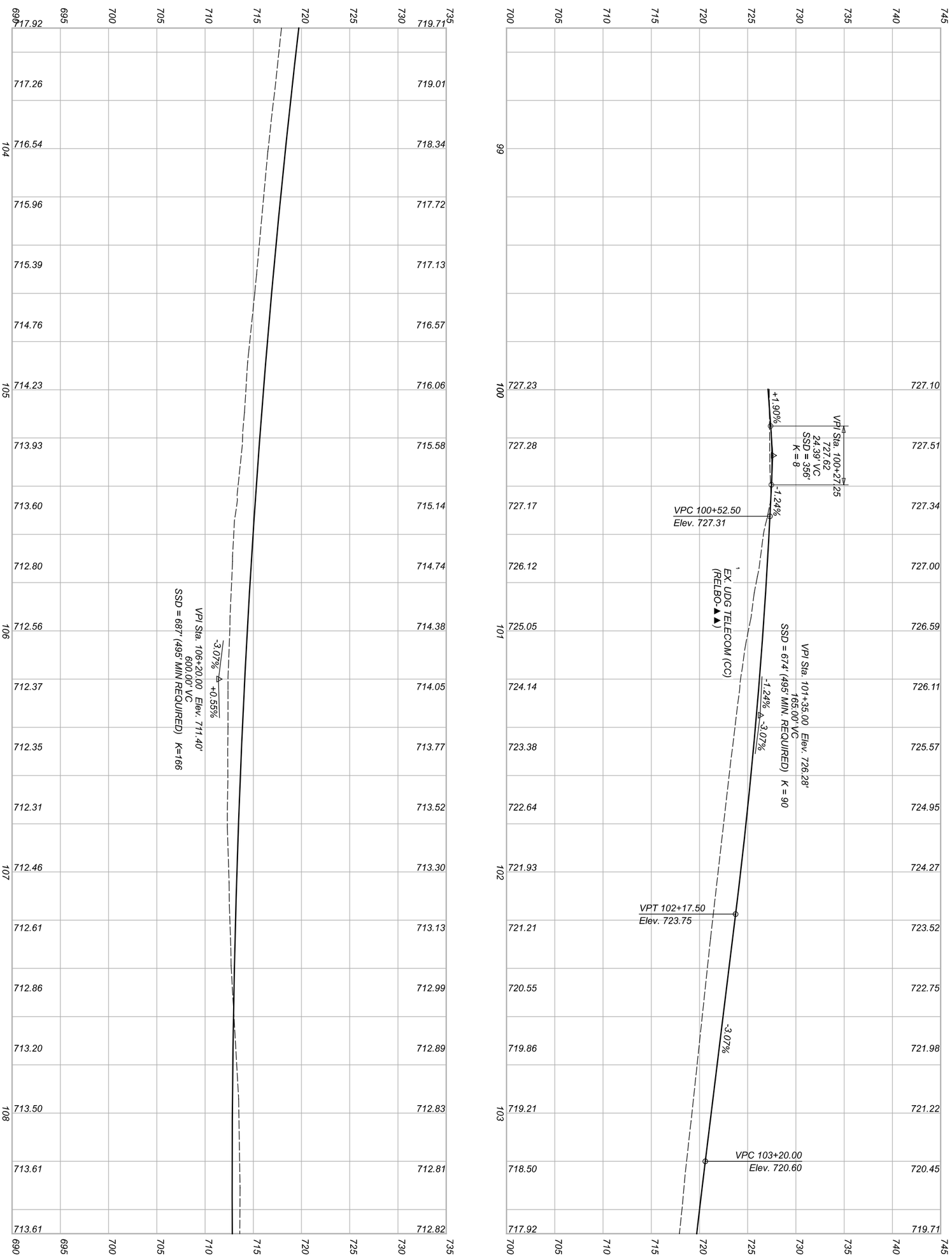

SHEET	TOTAL
P 62	170

PROJECT ID
92616

REVIEWER	
KMK	12-01-22

DESIGNER
WLC

DESIGN AGENCY

PROFILE - CR-121 (RATHMELL ROAD)
STA 99+99.82 TO STA 108+50

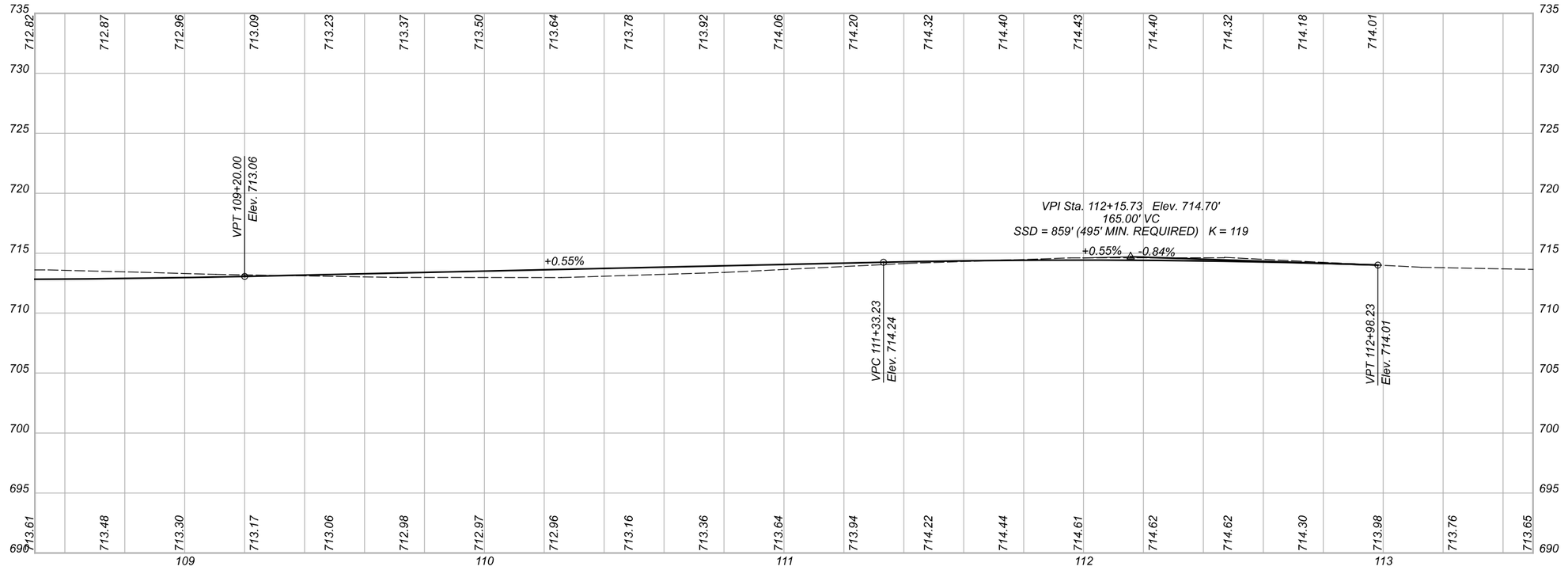

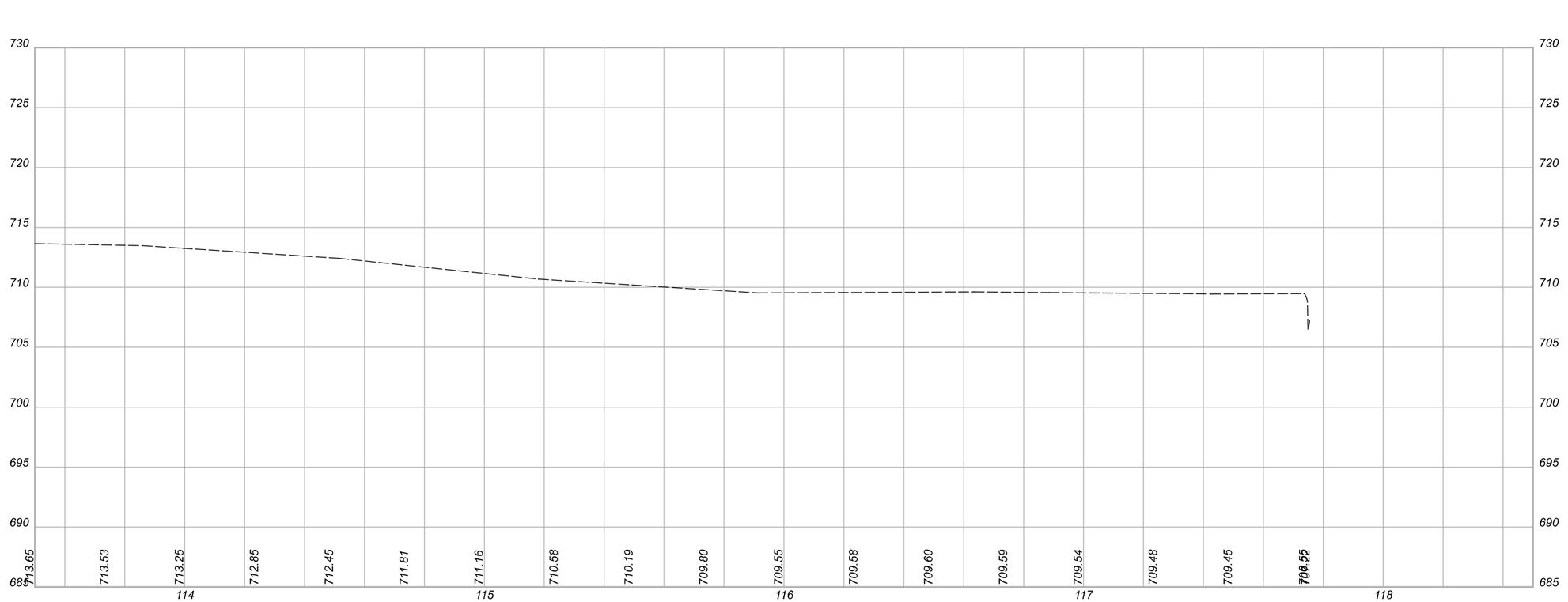

PROFILE - CR-121 (RATHMELL ROAD)
STA 108+50 TO STA 118+50

DESIGN AGENCY

IBI

DESIGNER	WLC
REVIEWER	KMK 12-01-22
PROJECT ID	92616
SHEET	P.63
TOTAL	170

FRA-23-4.19 PART 2 (PID 92616)

MODEL: \\0380_GFI3 PAPERSIZE: 17x11(in.) DATE: 2022-12-09 TIME: 9:33:36 AM USER: william.croxton
\\10.120.2.5\ibishare\22592_SafetyDesign\7.0_Production\7.3_Design\04_Civil\Worksets\10380_FRA-23\400-Engineering\Roadway\Sheets\10380_GFI3.dgn

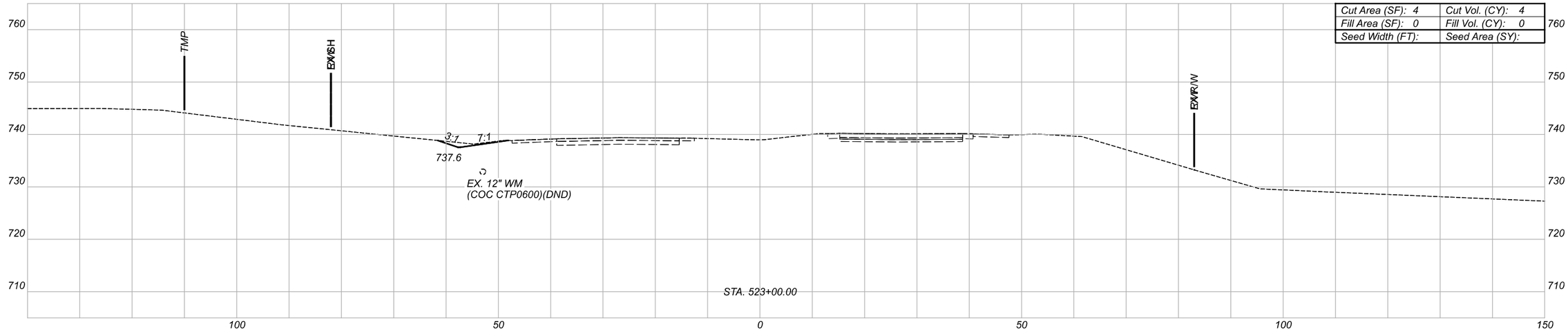

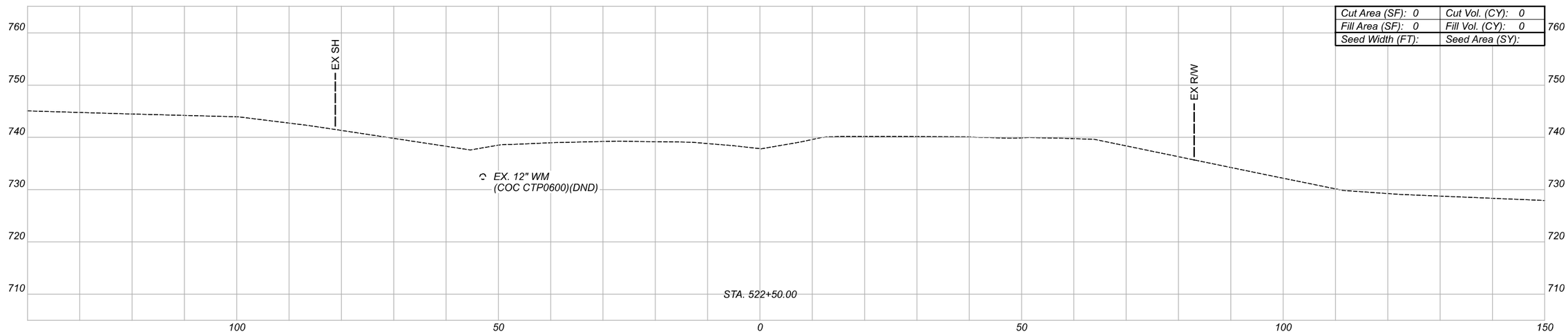

FOR SEEDING QUANTITIES, SEE SHEET P.12

CROSS SECTIONS - US-23 (SOUTH HIGH STREET)
STA 522+50 TO STA 523+00

FRA-23-4.19 PART 2 (PID 92616)

MODEL: 522+50.00 [Sheet] PAPERSIZE: 17x11(in.) DATE: 2022-12-09 TIME: 9:33:39 AM USER: william.croxton
\\10.20.12.5\bishare\22592_SafetyDesign\7.0_Production\7.3_Design\04_Civil\Worksets\10380_FRA-23\400-Engineering\Roadway\Sheets\10380_XS002.dgn

Sheet Totals		
Seeding	Cut	Fill
-	4	0

DESIGN AGENCY: IBI

DESIGNER: MEP

REVIEWER: KMK 12-01-22

PROJECT ID: 92616

SHEET: P.64 TOTAL: 170

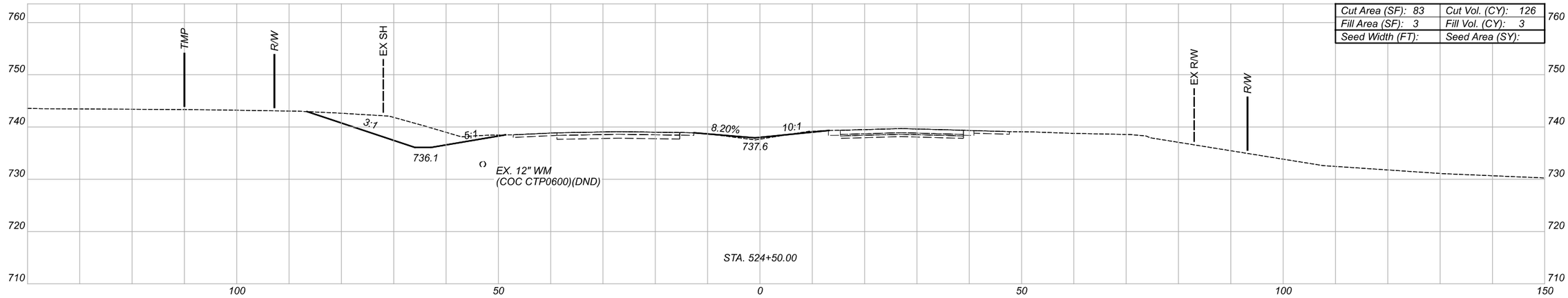

Cut Area (SF): 83	Cut Vol. (CY): 126
Fill Area (SF): 3	Fill Vol. (CY): 3
Seed Width (FT):	Seed Area (SY):

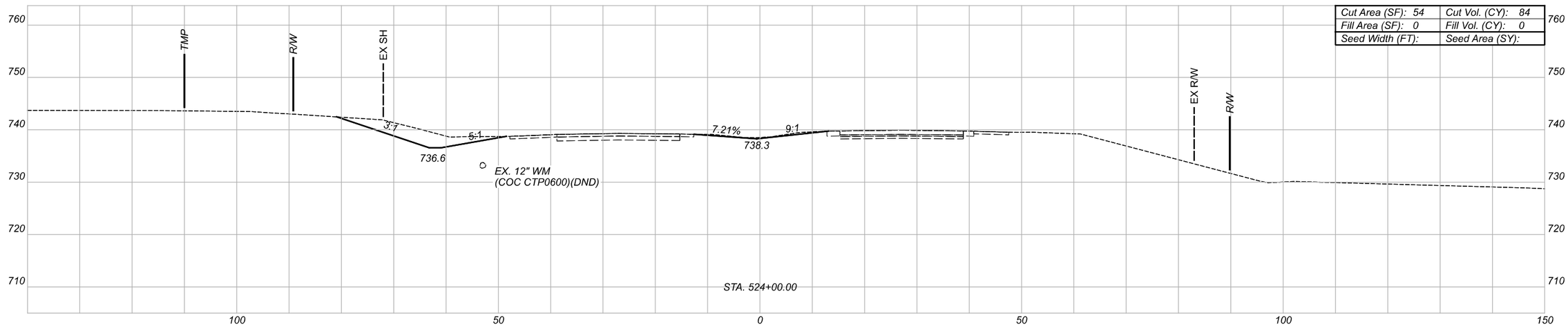

Cut Area (SF): 54	Cut Vol. (CY): 84
Fill Area (SF): 0	Fill Vol. (CY): 0
Seed Width (FT):	Seed Area (SY):

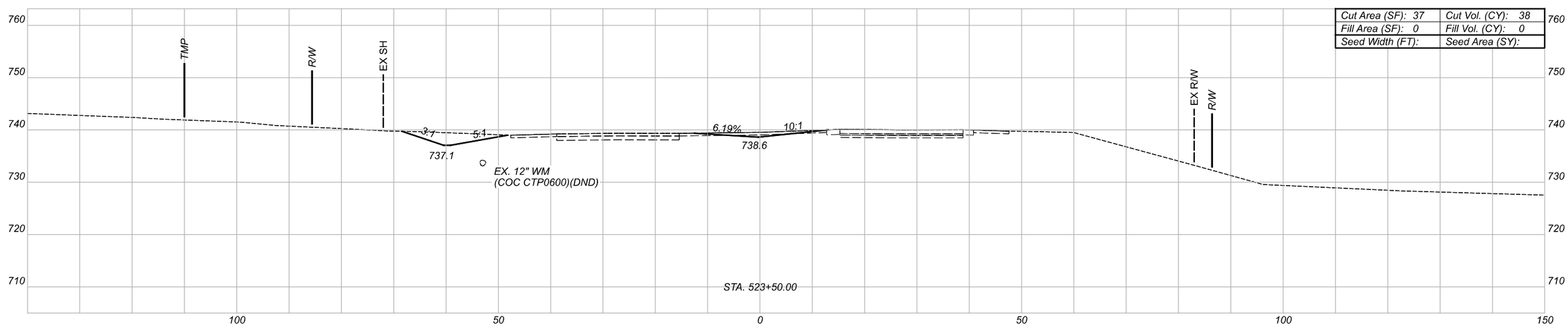

Cut Area (SF): 37	Cut Vol. (CY): 38
Fill Area (SF): 0	Fill Vol. (CY): 0
Seed Width (FT):	Seed Area (SY):

CROSS SECTIONS - US-23 (SOUTH HIGH STREET)
STA 523+50 TO STA 524+50

FRA-23-4.19 PART 2 (PID 92616)

MODEL: 523+50.00 [Sheet] PAPERSIZE: 17x11(in.) DATE: 2022-12-09 TIME: 9:33:41 AM USER: william.croxton
\\10.120.12.5\ibshare\122592_SafetyDesign\7.0_Production\7.3_Design\04_Civil\Worksets\10380_FRA-23\400-Engineering\Roadway\Sheets\10380_XS002.dgn

DESIGN AGENCY
IBI

DESIGNER	MEP
REVIEWER	KMK 12-01-22
PROJECT ID	92616
SHEET	P.65
TOTAL	170

Sheet Totals		
Seeding	Cut	Fill
-	248	3

FOR SEEDING QUANTITIES, SEE SHEET P.12

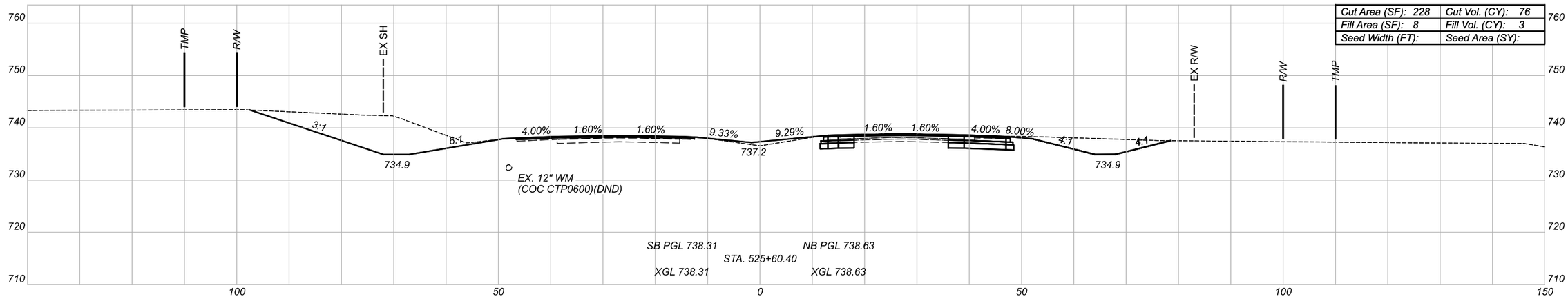

Cut Area (SF): 228	Cut Vol. (CY): 76
Fill Area (SF): 8	Fill Vol. (CY): 3
Seed Width (FT):	Seed Area (SY):

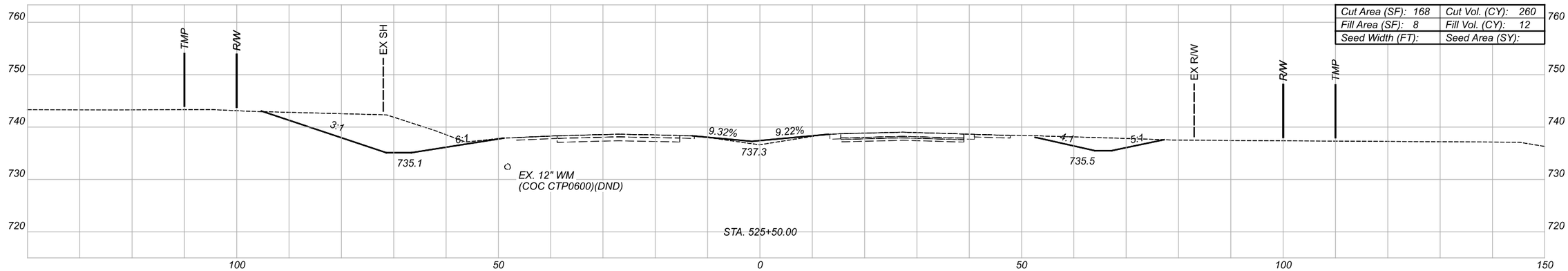

Cut Area (SF): 168	Cut Vol. (CY): 260
Fill Area (SF): 8	Fill Vol. (CY): 12
Seed Width (FT):	Seed Area (SY):

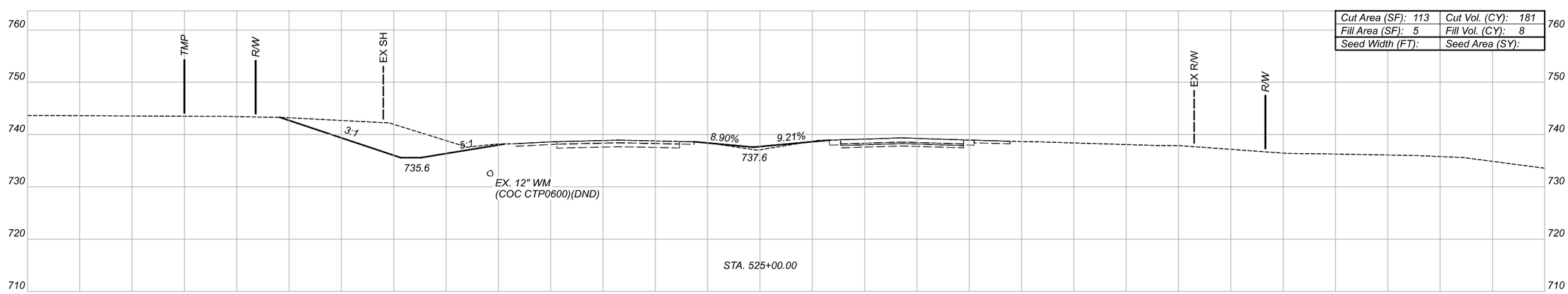

Cut Area (SF): 113	Cut Vol. (CY): 181
Fill Area (SF): 5	Fill Vol. (CY): 8
Seed Width (FT):	Seed Area (SY):

CROSS SECTIONS - US-23 (SOUTH HIGH STREET)
STA 525+00 TO STA 525+60.40

FOR SEEDING QUANTITIES, SEE SHEET P.12

Sheet Totals		
Seeding	Cut	Fill
-	517	23

DESIGN AGENCY: IBI

DESIGNER: MEP

REVIEWER: KMK 12-01-22

PROJECT ID: 92616

SHEET: P.66 TOTAL: 170

FRA-23-4.19 PART 2 (PID 92616)

MODEL: 525+00.00 [Sheet] PAPERSIZE: 11x17(in.) DATE: 2022-12-09 TIME: 9:33:42 AM USER: william.croxton
\\10.120.12.5\ibishare\122592_SafetyDesign\7.0_Production\7.3_Design\04_Civil\Worksets\110380_FRA-23\400-Engineering\Roadway\Sheets\110380_XS002.dgn

CROSS SECTIONS - US-23 (SOUTH HIGH STREET)
STA 525+70 TO STA 526+50

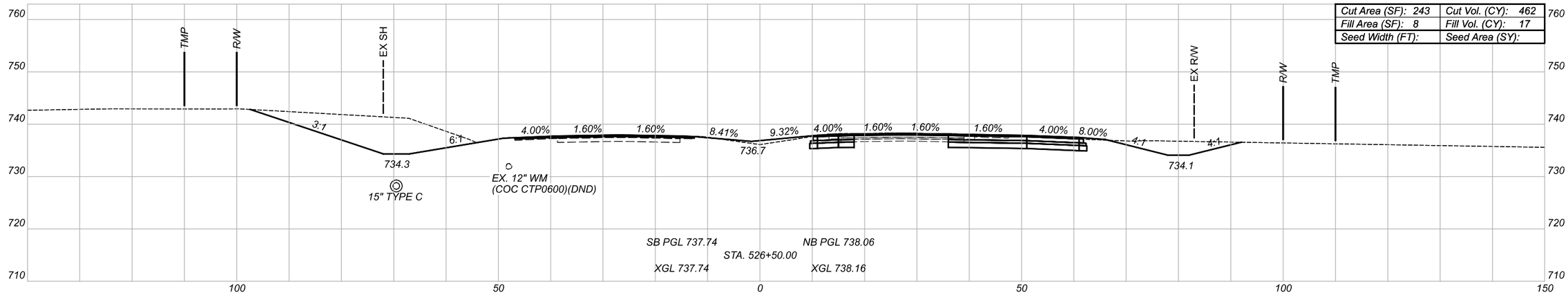

Cut Area (SF): 243	Cut Vol. (CY): 462
Fill Area (SF): 8	Fill Vol. (CY): 17
Seed Width (FT):	Seed Area (SY):

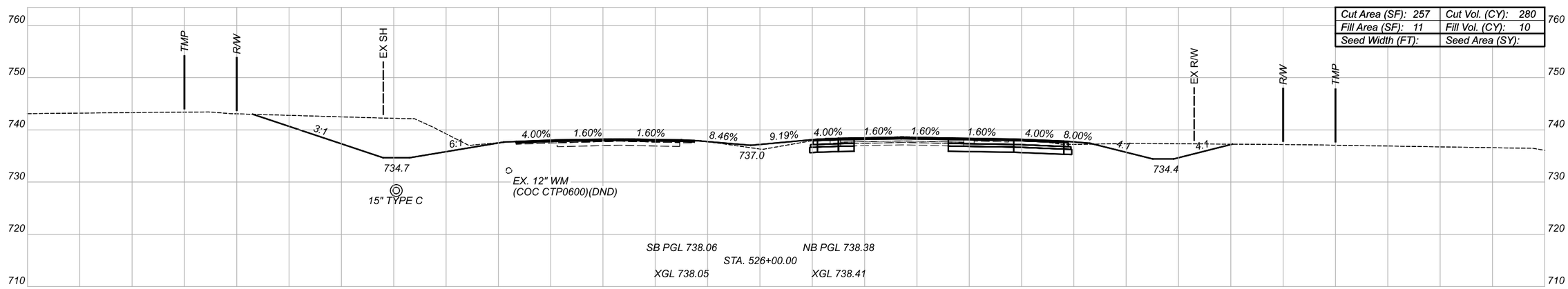

Cut Area (SF): 257	Cut Vol. (CY): 280
Fill Area (SF): 11	Fill Vol. (CY): 10
Seed Width (FT):	Seed Area (SY):

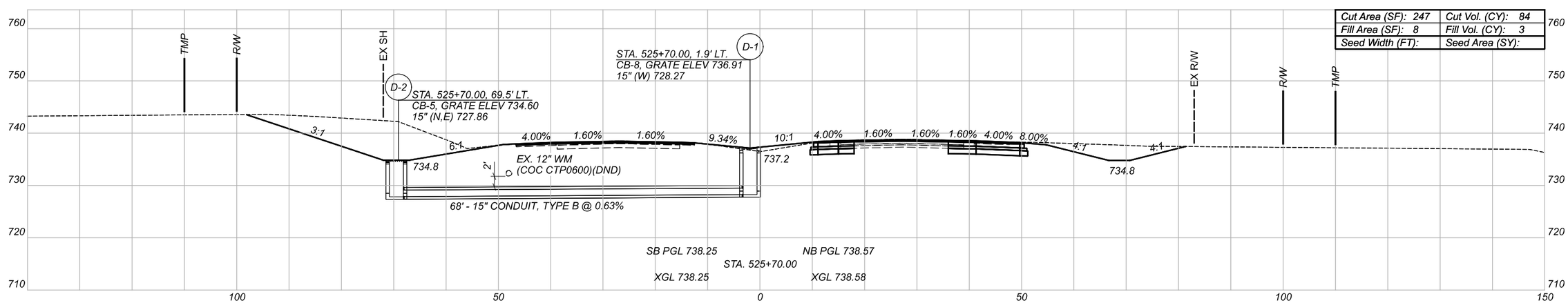

Cut Area (SF): 247	Cut Vol. (CY): 84
Fill Area (SF): 8	Fill Vol. (CY): 3
Seed Width (FT):	Seed Area (SY):

FOR SEEDING QUANTITIES, SEE SHEET P.12

Sheet Totals		
Seeding	Cut	Fill
-	826	30

DESIGN AGENCY

IBI

DESIGNER	MEP
REVIEWER	KMK 12-01-22
PROJECT ID	92616
SHEET	P.67
TOTAL	170

FRA-23-4.19 PART 2 (PID 92616)

MODEL: 525+70.00 (Sheet1) PAPERSIZE: 17x11(in.) DATE: 2022-12-09 TIME: 9:33:43 AM USER: william.croxton
\\10.120.11.25\ibishare\122592_SafetyDesign\7.0_Production\7.3_Design\04_Civil\Worksets\110380_FRA-23\400-Engineering\Roadway\Sheets\110380_XS002.dgn

CROSS SECTIONS - US-23 (SOUTH HIGH STREET)
STA 527+00 TO STA 528+00

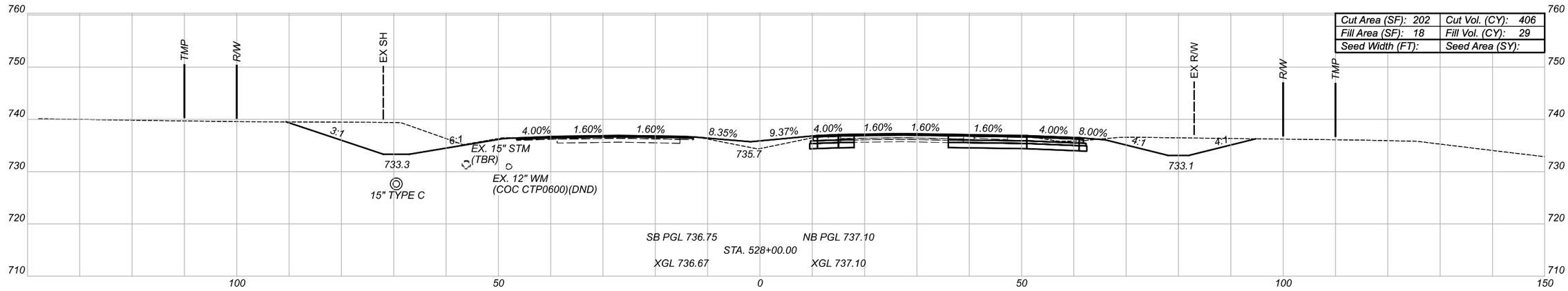

Cut Area (SF): 202	Cut Vol. (CY): 406
Fill Area (SF): 18	Fill Vol. (CY): 29
Seed Width (FT):	Seed Area (SY):

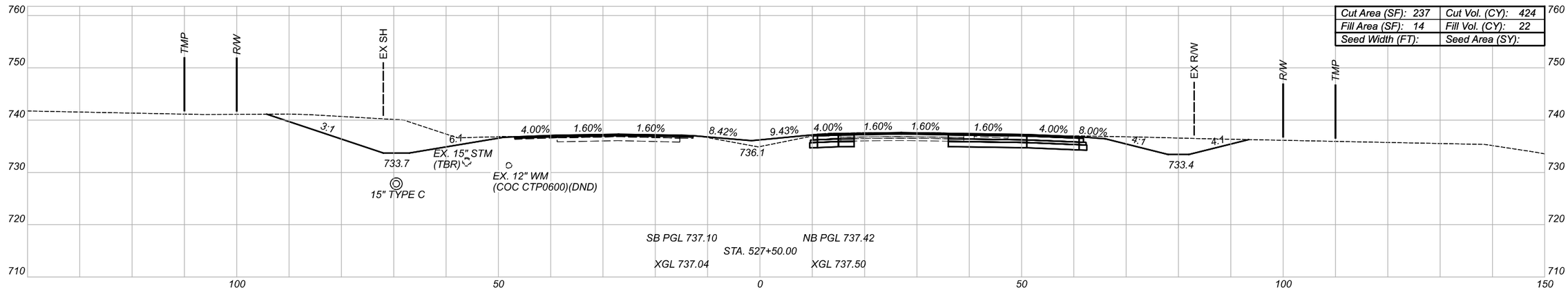

Cut Area (SF): 237	Cut Vol. (CY): 424
Fill Area (SF): 14	Fill Vol. (CY): 22
Seed Width (FT):	Seed Area (SY):

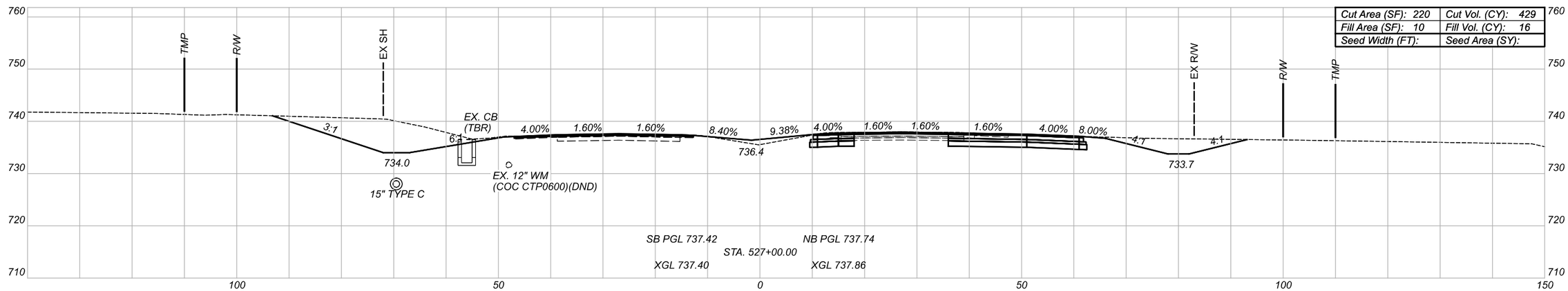

Cut Area (SF): 220	Cut Vol. (CY): 429
Fill Area (SF): 10	Fill Vol. (CY): 16
Seed Width (FT):	Seed Area (SY):

FOR SEEDING QUANTITIES, SEE SHEET P.12

Sheet Totals		
Seeding	Cut	Fill
-	1259	67

DESIGN AGENCY

IBI

DESIGNER	MEP
REVIEWER	KMK 12-01-22
PROJECT ID	92616
SHEET	P.68
TOTAL	170

FRA-23-4.19 PART 2 (PID 92616)

MODEL: 527+00.00 [Sheet] PAPERSIZE: 17x11(in.) DATE: 2022-12-09 TIME: 9:33:44 AM USER: william.croxton
\\101.20.112.5\ibishare\122592_SafetyDesign\7.0_Production\7.3_Design\04_Civil\Worksets\110380_FRA-23\400-Engineering\Roadway\Sheets\110380_XS002.dgn

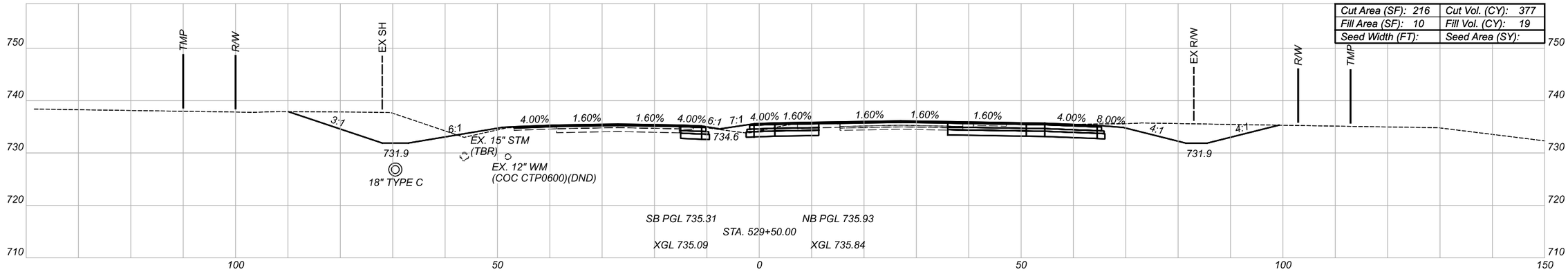

Cut Area (SF): 216	Cut Vol. (CY): 377
Fill Area (SF): 10	Fill Vol. (CY): 19
Seed Width (FT):	Seed Area (SY):

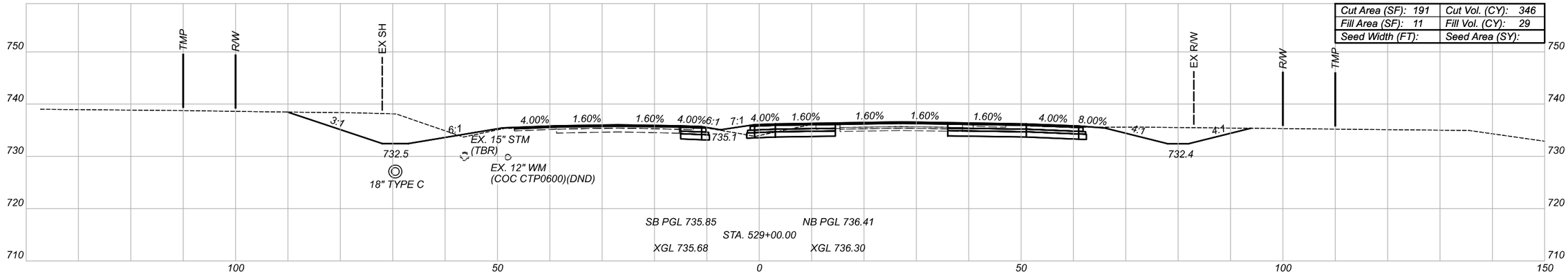

Cut Area (SF): 191	Cut Vol. (CY): 346
Fill Area (SF): 11	Fill Vol. (CY): 29
Seed Width (FT):	Seed Area (SY):

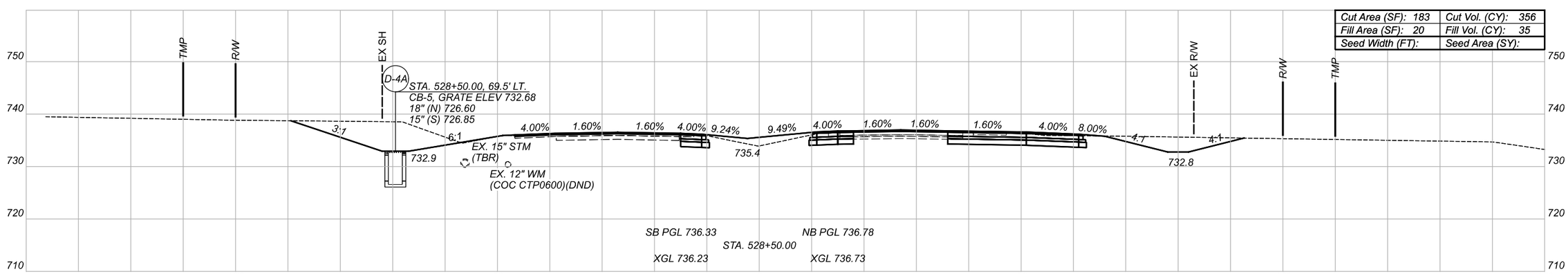

Cut Area (SF): 183	Cut Vol. (CY): 356
Fill Area (SF): 20	Fill Vol. (CY): 35
Seed Width (FT):	Seed Area (SY):

FOR SEEDING QUANTITIES, SEE SHEET P.12

Sheet Totals		
Seeding	Cut	Fill
-	1079	93

CROSS SECTIONS - US-23 (SOUTH HIGH STREET) STA 528+50 TO STA 529+50

DESIGN AGENCY

IBI

DESIGNER	MEP
REVIEWER	KMK 12-01-22
PROJECT ID	92616
SHEET	P.69
TOTAL	170

FRA-23-4.19 PART 2 (PID 92616)

MODEL: 528+50.00 [Sheet] PAPERSIZE: 17x11(in.) DATE: 2022-12-09 TIME: 9:33:45 AM USER: william.croxton
\\10.120.12.5\ibishare\22592_SafetyDesign\7.0_Production\7.3_Design\04_Civil\Worksets\10380_FRA-23\400-Engineering\Roadway\Sheets\10380_XS002.dgn

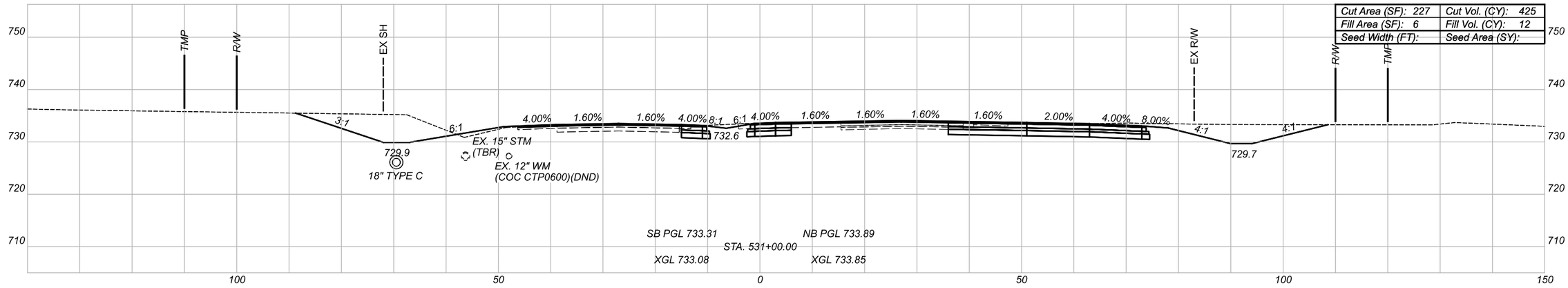

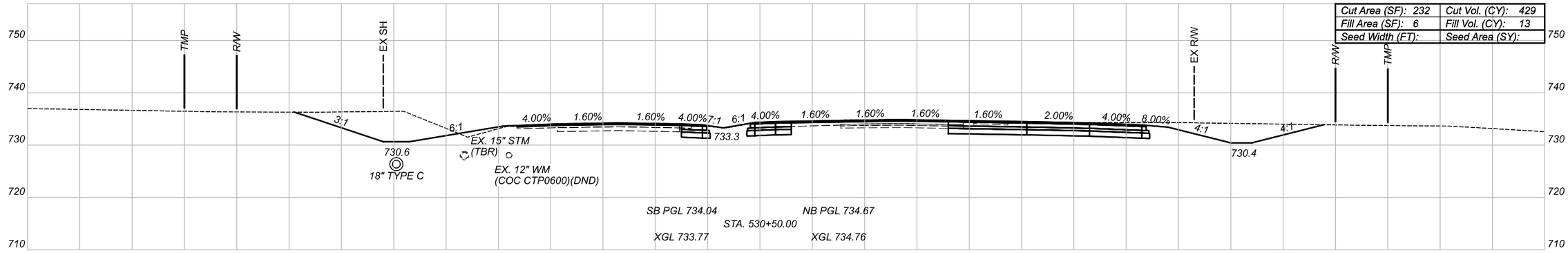

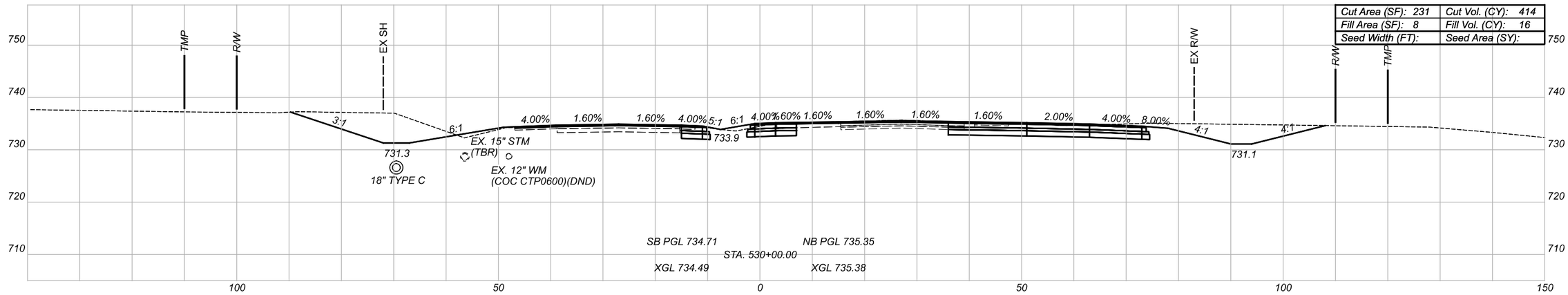

FOR SEEDING QUANTITIES, SEE SHEET P.12

Sheet Totals		
Seeding	Cut	Fill
-	1268	41

CROSS SECTIONS - US-23 (SOUTH HIGH STREET)
STA 530+00 TO STA 531+00

DESIGN AGENCY
IBI

DESIGNER
MEP

REVIEWER
KMK 12-01-22

PROJECT ID
92616

SHEET P.70 | TOTAL 170

FRA-23-4.19 PART 2 (PID 92616)

MODEL: 530+00.00 [Sheet] PAPERSIZE: 17x11(in.) DATE: 2022-12-09 TIME: 9:33:46 AM USER: william.croxton
\\Iol20.i2.5\ibishare\122592_SafetyDesign\7.0_Production\7.3_Design\04_Civil\Worksets\10380_FRA-23\400-Engineering\Roadway\Sheets\10380_XS002.dgn

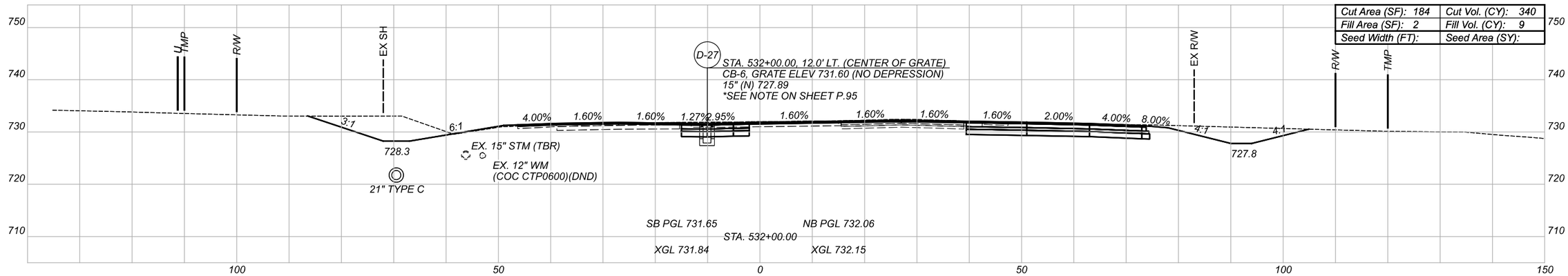

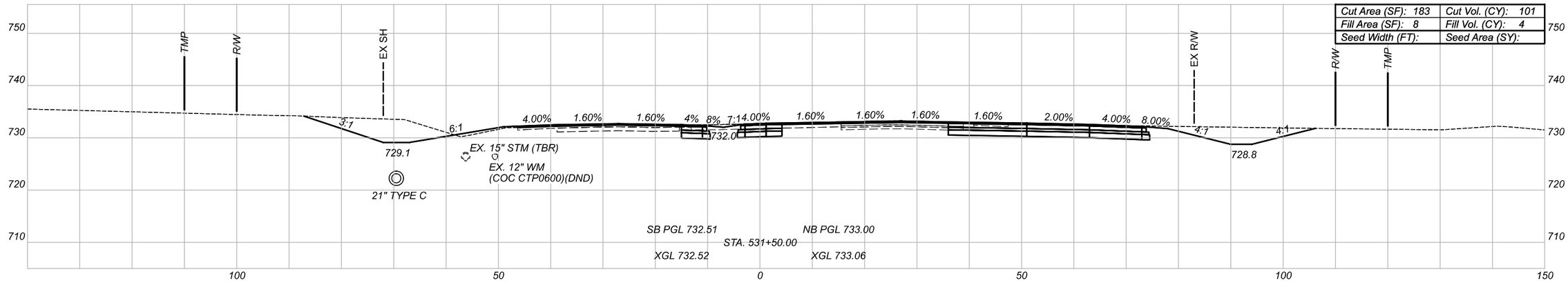

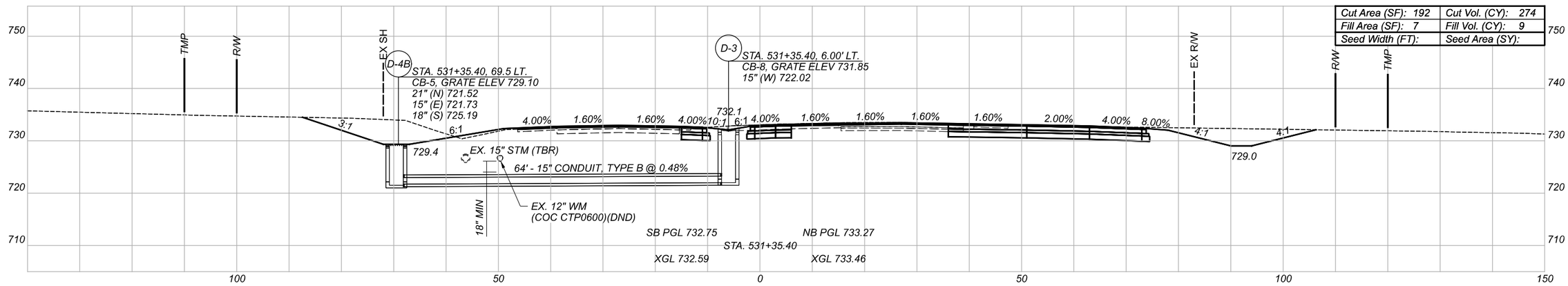

FOR SEEDING QUANTITIES, SEE SHEET P.12

Sheet Totals		
Seeding	Cut	Fill
-	715	22

CROSS SECTIONS - US-23 (SOUTH HIGH STREET)
STA 531+35.40 TO STA 532+00

DESIGN AGENCY
IBI

DESIGNER
MEP

REVIEWER
KMK 12-01-22

PROJECT ID
92616

SHEET P.71 | TOTAL 170

FRA-23-4.19 PART 2 (PID 92616)

MODEL: 531+35.40 [Sheet] PAPERSIZE: 17x11(in) DATE: 2022-12-09 TIME: 9:33:47 AM USER: william.croxton
\\IOJ20.II2.5\ibishare\122592_SafetyDesign\7.0_Production\7.3_Design\04_Civil\Worksets\II0380_FRA-23\400-Engineering\Roadway\Sheets\II0380_XS002.dgn

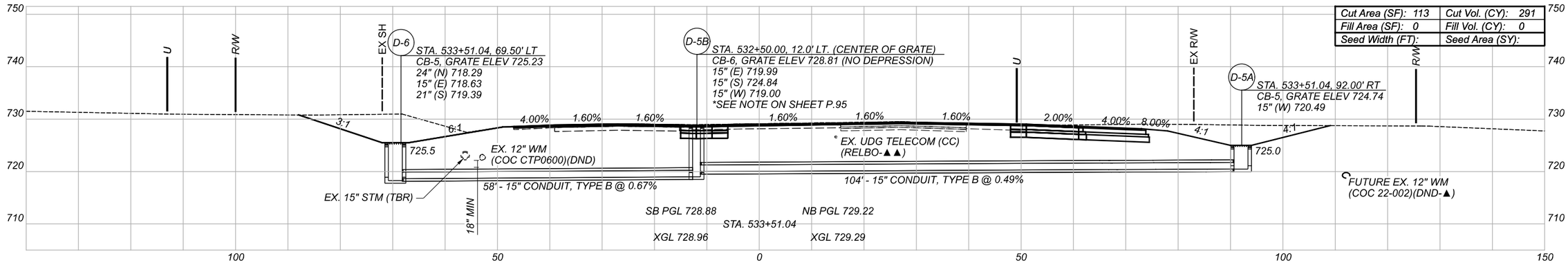

Cut Area (SF): 113	Cut Vol. (CY): 291
Fill Area (SF): 0	Fill Vol. (CY): 0
Seed Width (FT):	Seed Area (SY):

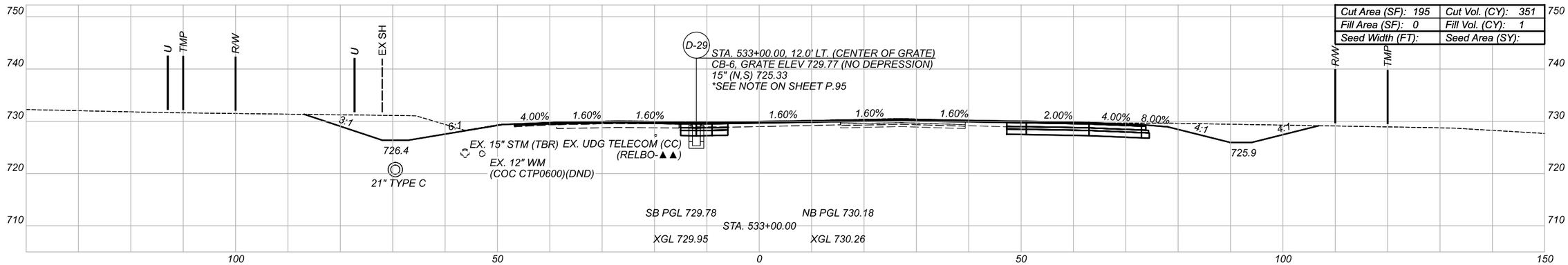

Cut Area (SF): 195	Cut Vol. (CY): 351
Fill Area (SF): 0	Fill Vol. (CY): 1
Seed Width (FT):	Seed Area (SY):

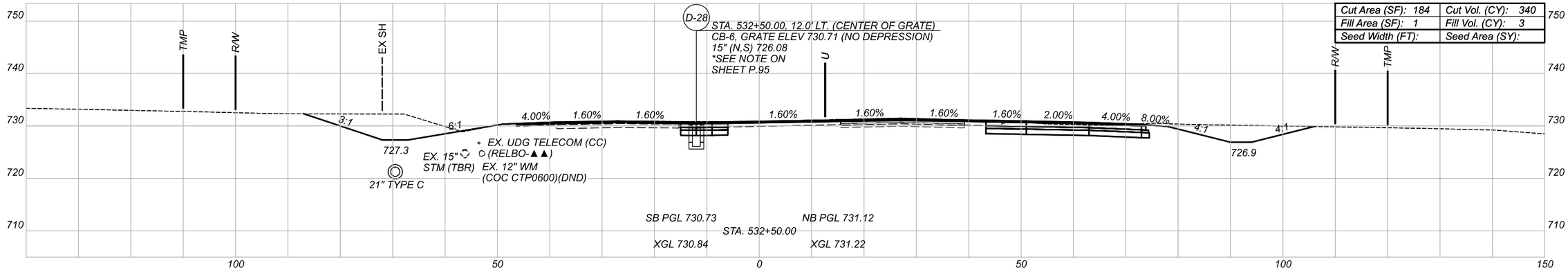

Cut Area (SF): 184	Cut Vol. (CY): 340
Fill Area (SF): 1	Fill Vol. (CY): 3
Seed Width (FT):	Seed Area (SY):

FOR SEEDING QUANTITIES, SEE SHEET P.12

Sheet Totals		
Seeding	Cut	Fill
-	982	4

CROSS SECTIONS - US-23 (SOUTH HIGH STREET)
STA 532+50 TO STA 533+51.04

DESIGN AGENCY: IBI

DESIGNER: MEP

REVIEWER: KMK 12-01-22

PROJECT ID: 92616

SHEET: P.72 TOTAL: 170

FRA-23-4.19 PART 2 (PID 92616)

MODEL: 532+50.00 (Sheet1 PAPERSIZE: 17x11(in.) DATE: 2022-12-09 TIME: 9:33:49 AM USER: williamcroxton
\\10.120.112.5\ibishare\122592_SafetyDesign\7.0_Production\7.3_Design\04_Civil\Worksets\110380_FRA-23\400-Engineering\Roadway\Sheets\110380_XS002.dgn

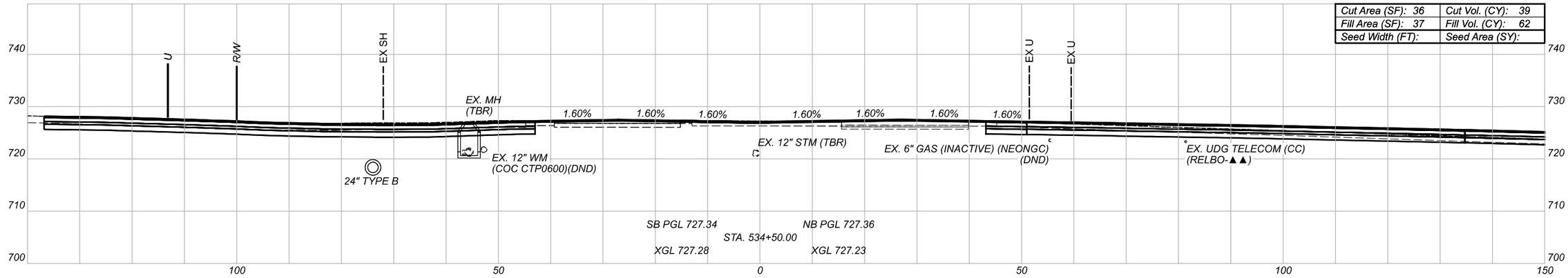

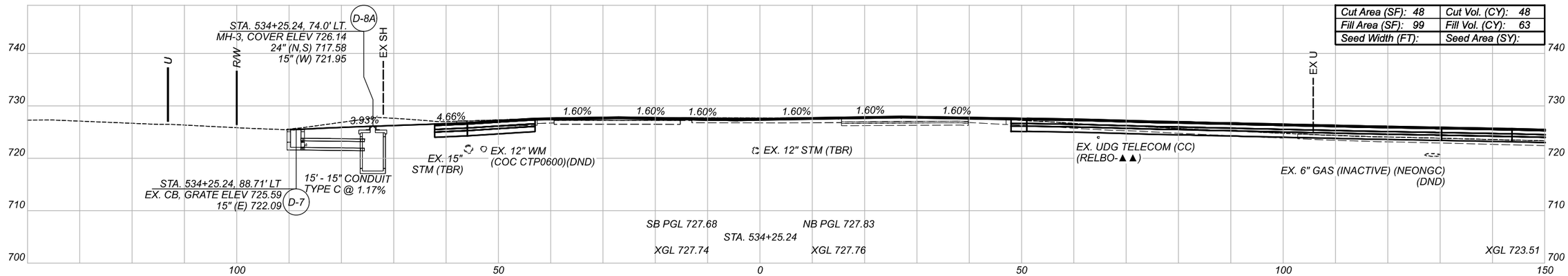

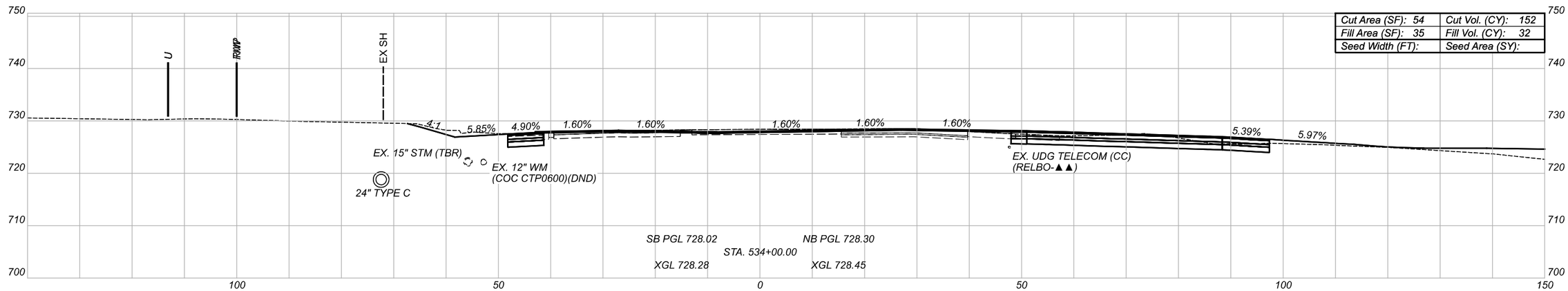

FOR SEEDING QUANTITIES, SEE SHEET P.12

Sheet Totals		
Seeding	Cut	Fill
-	239	157

CROSS SECTIONS - US-23 (SOUTH HIGH STREET)
STA 534+00 TO STA 534+50

DESIGN AGENCY
IBI

DESIGNER
MEP

REVIEWER
KMK 12-01-22

PROJECT ID
92616

SHEET P.73 TOTAL 170

FRA-23-4.19 PART 2 (PID 92616)

MODEL: 534+00.00 [Sheet] PAPERSIZE: 17x11(in.) DATE: 2022-12-09 TIME: 9:33:50 AM USER: william.croxton
\\IOJ20LI2.5\bishare\122592_SafetyDesign\7.0_Production\7.3_Design\04_Civil\Worksets\110380_FRA-23\400-Engineering\Roadway\Sheets\110380_XS002.dgn

D-30 STA. 535+50.00, 12.0' RT.
CB-6, GRATE ELEV 725.46
15" (N) 721.21

D-31 STA. 536+00.00, 12.0' RT.
CB-6, GRATE ELEV 724.63
15" (N,S) 720.38

D-32 STA. 536+50.00, 12.0' RT.
CB-6, GRATE ELEV 723.84
15" (N,S) 719.59

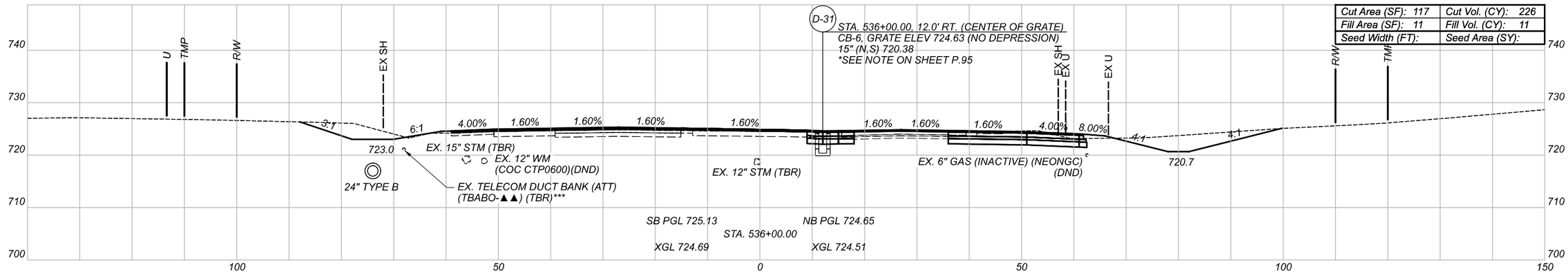

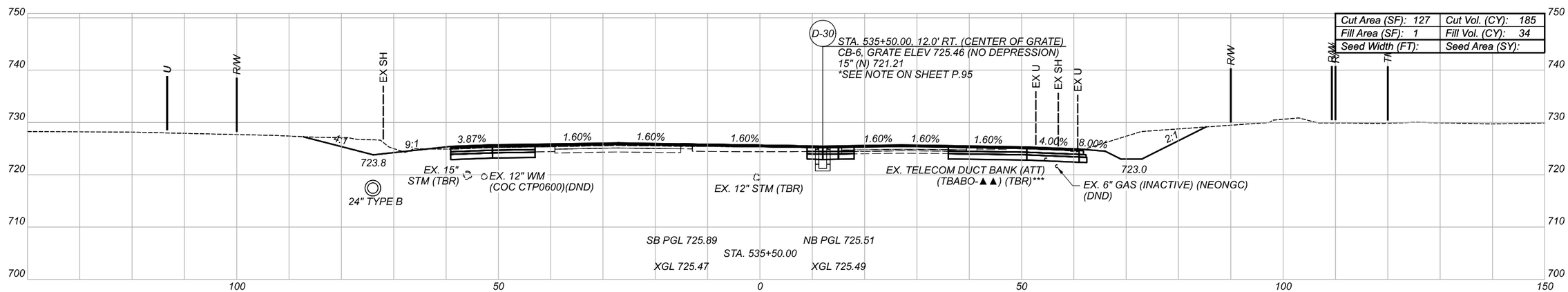

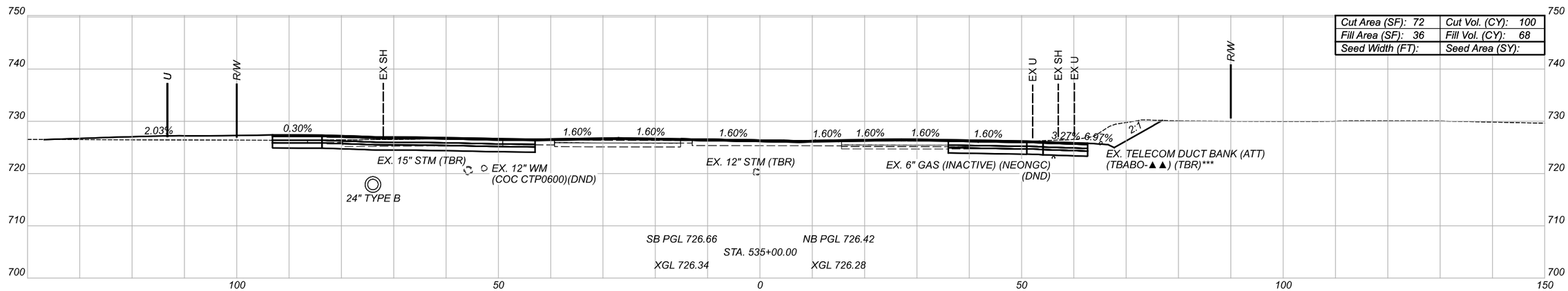

FOR SEEDING QUANTITIES, SEE SHEET P.12

Sheet Totals		
Seeding	Cut	Fill
-	511	113

CROSS SECTIONS - US-23 (SOUTH HIGH STREET) STA 535+00 TO STA 536+00

DESIGN AGENCY
IBI

DESIGNER	MEP
REVIEWER	KMK 12-01-22
PROJECT ID	92616
SHEET	P.74
TOTAL	170

FRA-23-4.19 PART 2 (PID 92616)

MODEL: 535+00.00 [Sheet] PAPERSIZE: ltxll (in.) DATE: 2022-12-09 TIME: 9:33:52 AM USER: william.croxton
\\10.120.12.5\bishare\22592_SafetyDesign\7.0_Production\7.3_Design\04_Civil\Worksets\10380_FRA-23\400-Engineering\Roadway\Sheets\10380_XS002.dgn

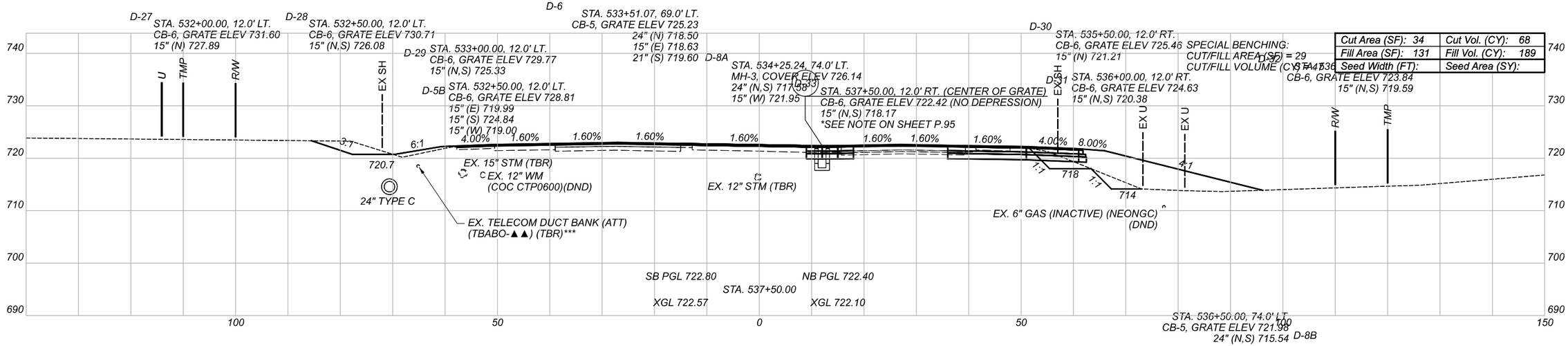

Cut Area (SF): 34	Cut Vol. (CY): 68
Fill Area (SF): 131	Fill Vol. (CY): 189
Seed Width (FT):	Seed Area (SY):

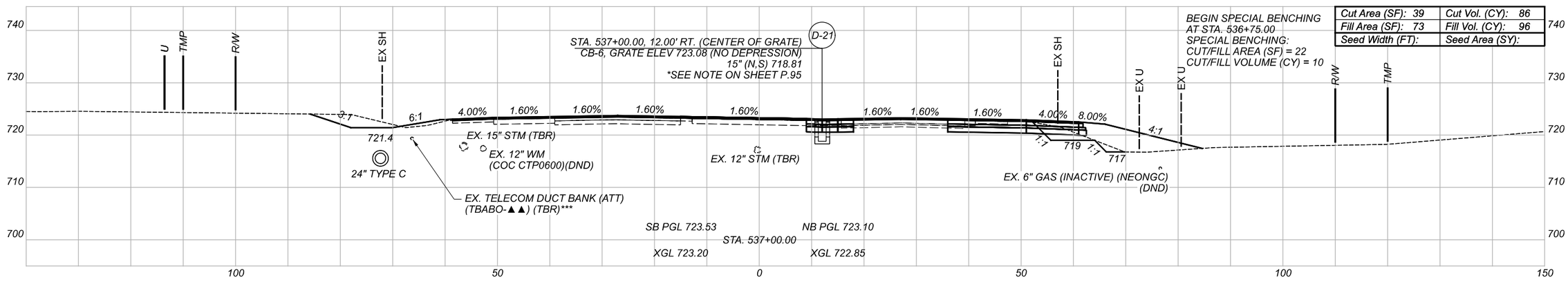

Cut Area (SF): 39	Cut Vol. (CY): 86
Fill Area (SF): 73	Fill Vol. (CY): 96
Seed Width (FT):	Seed Area (SY):

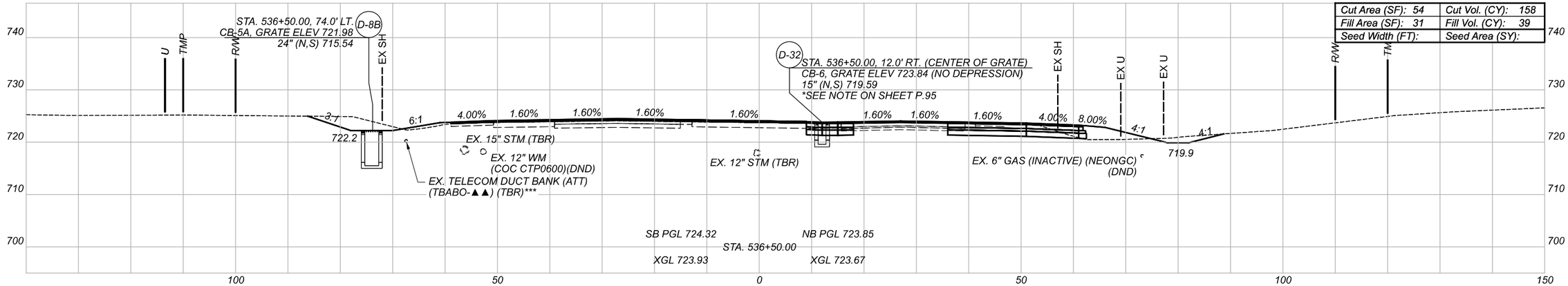

Cut Area (SF): 54	Cut Vol. (CY): 158
Fill Area (SF): 31	Fill Vol. (CY): 39
Seed Width (FT):	Seed Area (SY):

FOR SEEDING QUANTITIES, SEE SHEET P.12

Benching		Sheet Totals		
Cut	Fill	Seeding	Cut	Fill
57	57	-	312	324

CROSS SECTIONS - US-23 (SOUTH HIGH STREET)
STA 536+50 TO STA 537+50

DESIGN AGENCY: IBI

DESIGNER: MEP

REVIEWER: KMK 12-01-22

PROJECT ID: 92616

SHEET: P.75 TOTAL: 170

FRA-23-4.19 PART 2 (PID 92616)

MODEL: 536+50.00 [Sheet1] PAPERSIZE: 17x11(in.) DATE: 2022-12-09 TIME: 9:33:53 AM USER: william.croxton
\\10.120.12.5\ibishare\22592_SafetyDesign\7.0_Production\7.3_Design\04_Civil\Worksets\10380_FRA-23\400-Engineering\Roadway\Sheets\10380_XS002.dgn

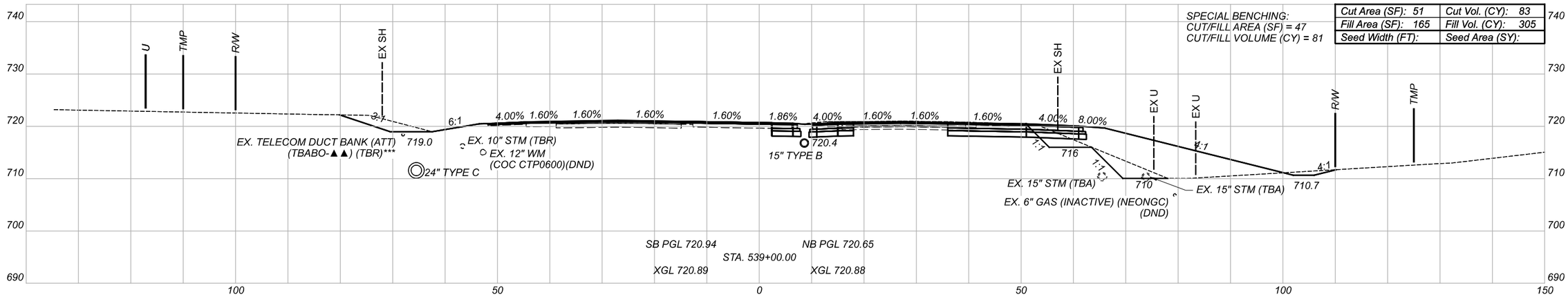

Cut Area (SF): 51	Cut Vol. (CY): 83
Fill Area (SF): 165	Fill Vol. (CY): 305
Seed Width (FT):	Seed Area (SY):

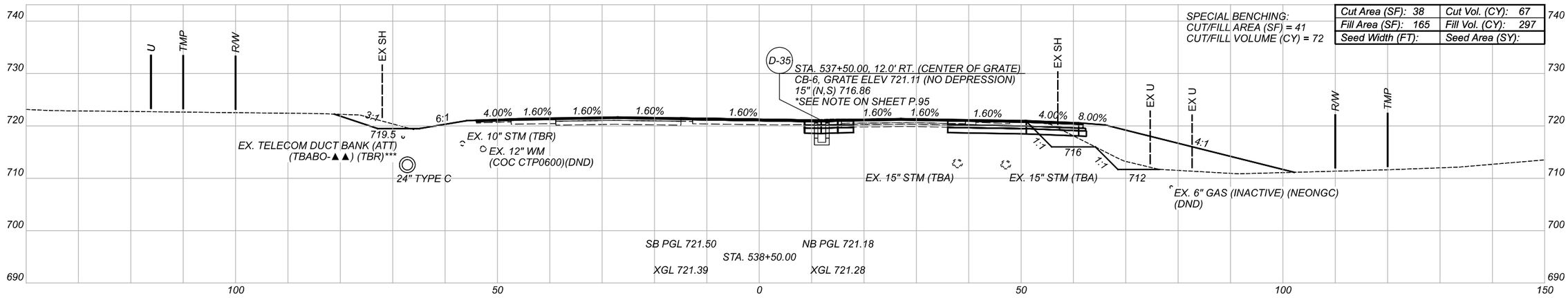

Cut Area (SF): 38	Cut Vol. (CY): 67
Fill Area (SF): 165	Fill Vol. (CY): 297
Seed Width (FT):	Seed Area (SY):

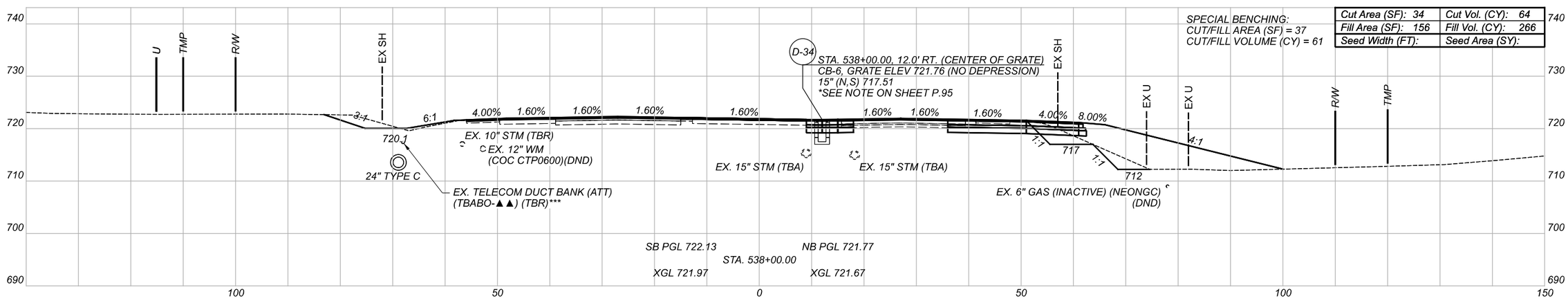

Cut Area (SF): 34	Cut Vol. (CY): 64
Fill Area (SF): 156	Fill Vol. (CY): 266
Seed Width (FT):	Seed Area (SY):

FOR SEEDING QUANTITIES, SEE SHEET P.12

Benching		Sheet Totals		
Cut	Fill	Seeding	Cut	Fill
214	214	-	214	868

CROSS SECTIONS - US-23 (SOUTH HIGH STREET)
STA 538+00 TO STA 539+00

DESIGN AGENCY
IBI

DESIGNER
MEP

REVIEWER
KMK 12-01-22

PROJECT ID
92616

SHEET P.76 TOTAL 170

FRA-23-4.19 PART 2 (PID 92616)

MODEL: 538+00.00 [Sheet] PAPERSIZE: 17x11 (in.) DATE: 2022-12-09 TIME: 9:33:55 AM USER: william.croxton
\\IO.IO.II2.5\Ibishare\I22592_SafetyDesign\7.0_Production\7.3_Design\04_Civil\Worksets\II0380_FRA-23\400-Engineering\Roadway\Sheets\II0380_XS002.dgn

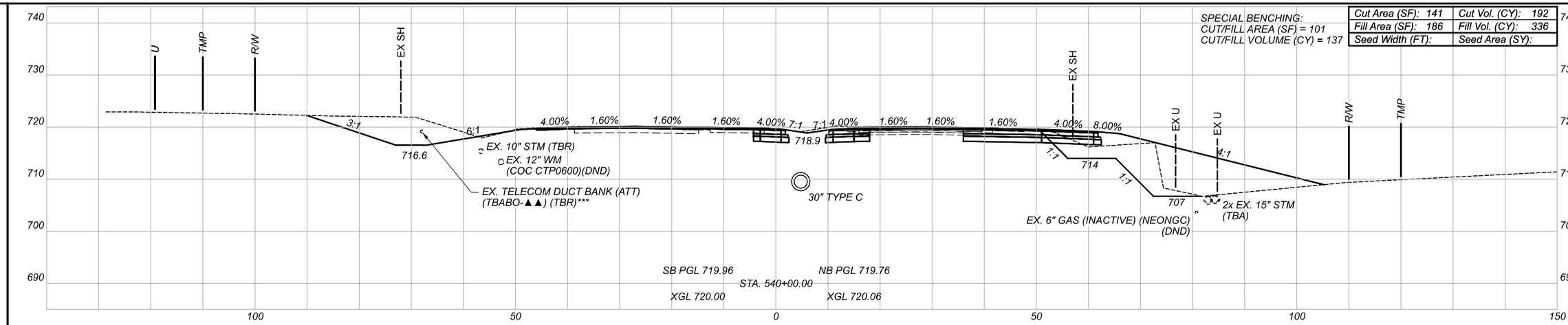

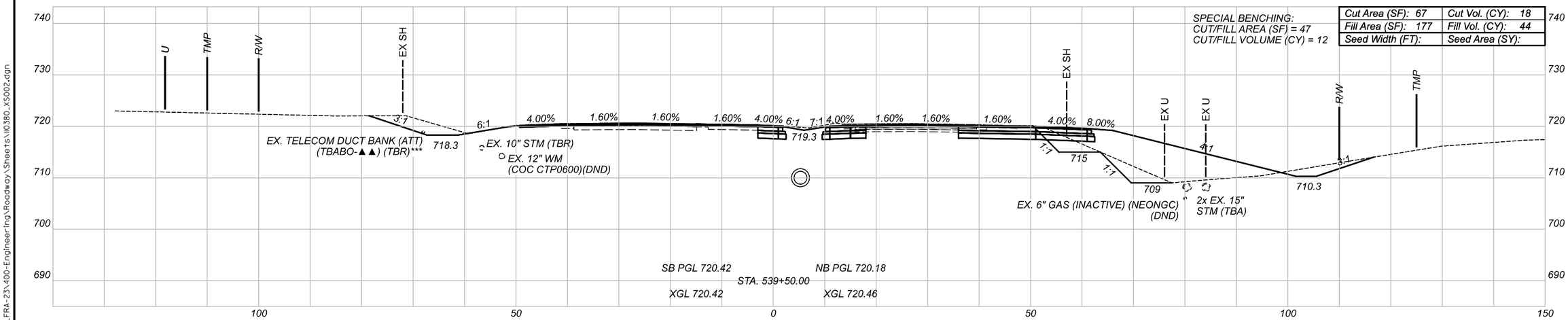

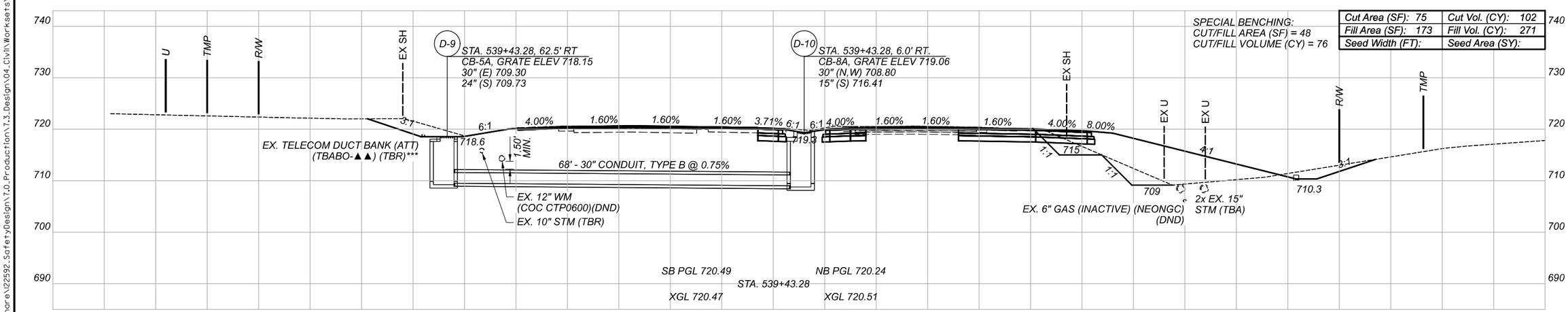

FOR SEEDING QUANTITIES, SEE SHEET P.12

Benching		Sheet Totals		
Cut	Fill	Seeding	Cut	Fill
225	225	-	312	651

CROSS SECTIONS - US-23 (SOUTH HIGH STREET)
STA 539+43.28 TO STA 540+00

DESIGN AGENCY: IBI

DESIGNER: MEP

REVIEWER: KMK 12-01-22

PROJECT ID: 92616

SHEET: P.77 TOTAL: 170

FRA-23-4.19 PART 2 (PID 92616)

MODEL: 539+43.28 [Sheet] PAPERSIZE: 17x11(in.) DATE: 2022-12-09 TIME: 9:33:57 AM USER: william.croxton
\\IOJ20.IT2.5\IbiShare\122592_SafetyDesign\7.0_Production\7.3_Design\04_Civil\Worksets\110380_FRA-23\400-Engineering\Roadway\Sheets\110380_XS002.dgn

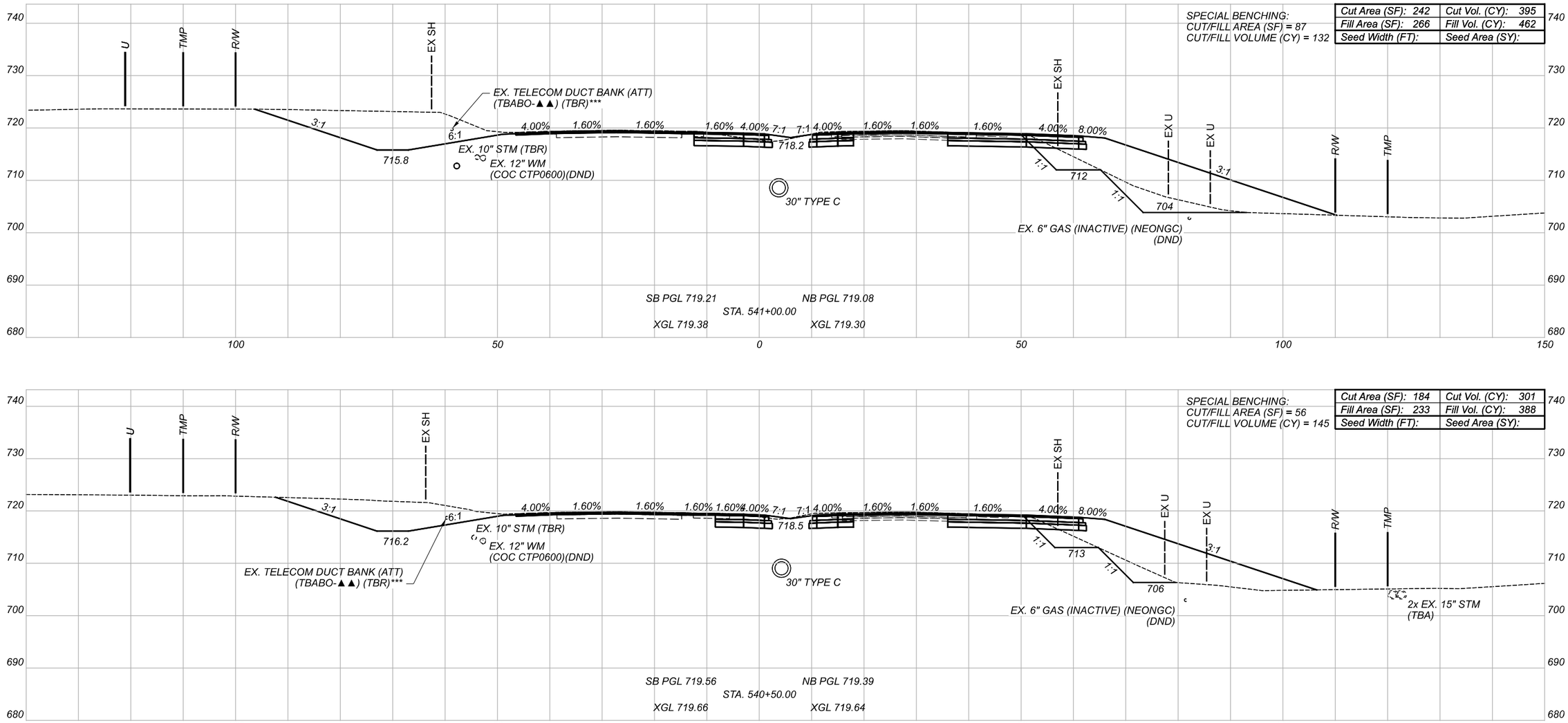

FOR SEEDING QUANTITIES, SEE SHEET P.12

Benching		Sheet Totals		
Cut	Fill	Seeding	Cut	Fill
277	277	-	696	850

CROSS SECTIONS - US-23 (SOUTH HIGH STREET)
STA 540+50 TO STA 541+00

DESIGN AGENCY
IBI

DESIGNER
MEP

REVIEWER
KMK 12-01-22

PROJECT ID
92616

SHEET P.78 TOTAL 170

FRA-23-4.19 PART 2 (PID 92616)

MODEL: 540+50.00 [Sheet] PAPERSIZE: 11x17 (in.) DATE: 2022-12-09 TIME: 9:33:58 AM USER: william.croxton
\\10.12.5\ibishare\122592_SafetyDesign\7.0_Production\7.3_Design\04_Civil\Worksets\10380_FRA-23\400-Engineering\Roadway\Sheets\10380_XS002.dgn

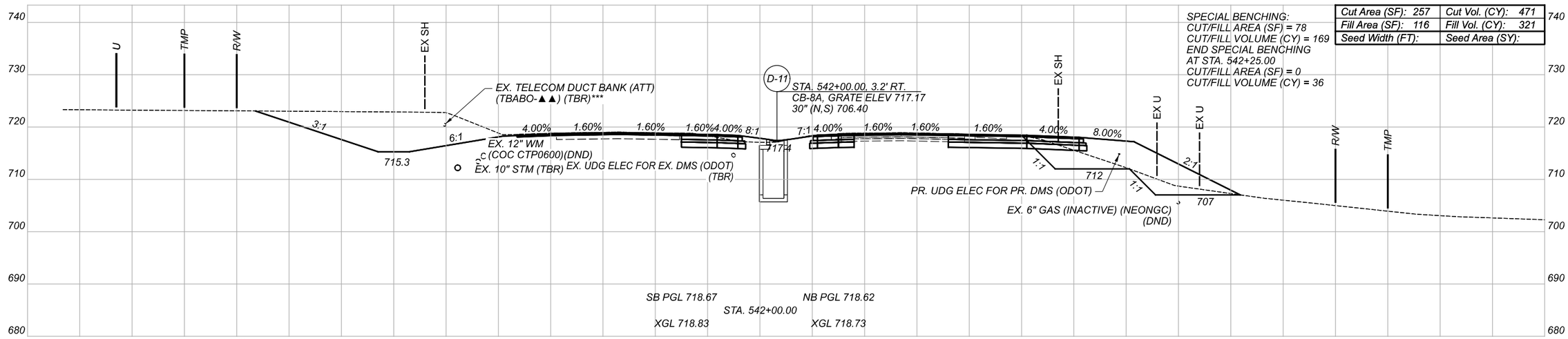

SPECIAL BENCHING:
CUT/FILL AREA (SF) = 78
CUT/FILL VOLUME (CY) = 169
END SPECIAL BENCHING
AT STA. 542+25.00
CUT/FILL AREA (SF) = 0
CUT/FILL VOLUME (CY) = 36

Cut Area (SF): 257	Cut Vol. (CY): 471
Fill Area (SF): 116	Fill Vol. (CY): 321
Seed Width (FT):	Seed Area (SY):

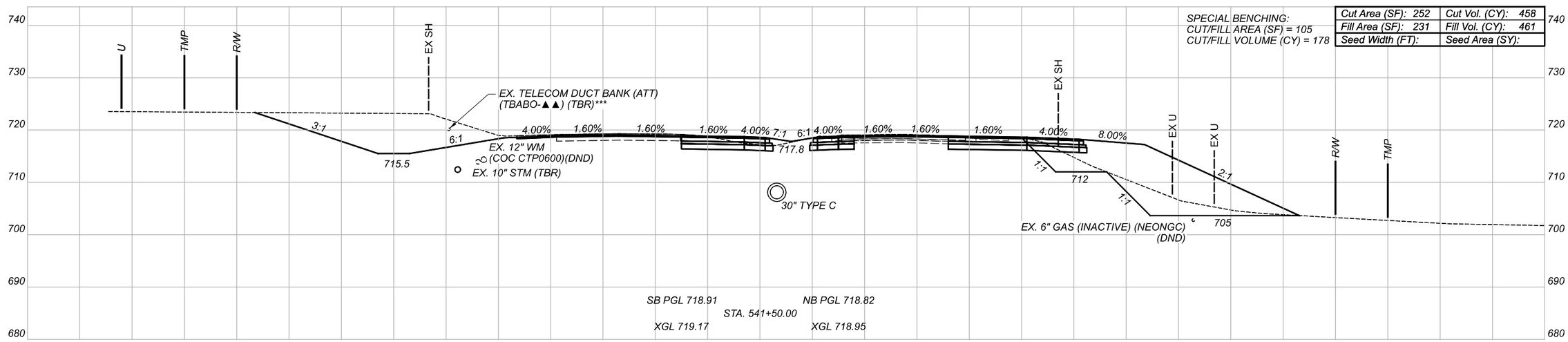

SPECIAL BENCHING:
CUT/FILL AREA (SF) = 105
CUT/FILL VOLUME (CY) = 178

Cut Area (SF): 252	Cut Vol. (CY): 458
Fill Area (SF): 231	Fill Vol. (CY): 461
Seed Width (FT):	Seed Area (SY):

FOR SEEDING QUANTITIES, SEE SHEET P.12

Benching		Sheet Totals		
Cut	Fill	Seeding	Cut	Fill
383	383	-	929	782

CROSS SECTIONS - US-23 (SOUTH HIGH STREET)
STA 541+50 TO STA 542+00

FRA-23-4.19 PART 2 (PID 92616)

DESIGN AGENCY: IBI

DESIGNER: MEP

REVIEWER: KMK 12-01-22

PROJECT ID: 92616

SHEET: P.79 TOTAL: 170

MODEL: 541+50.00 (Sheet1 PAPERSIZE: 17x11(in.) DATE: 2022-12-09 TIME: 9:33:59 AM USER: william.croxton
\\10.120.12.5\ibishare\22592_SafetyDesign\7.0_Production\7.3_Design\04_Civil\Worksets\10380_FRA-23\400-Engineering\Roadway\Sheets\10380_XS002.dgn

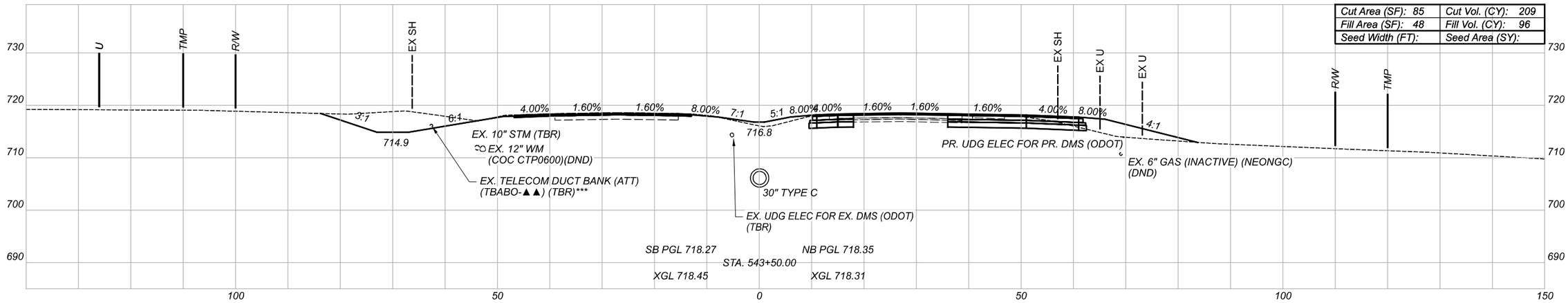

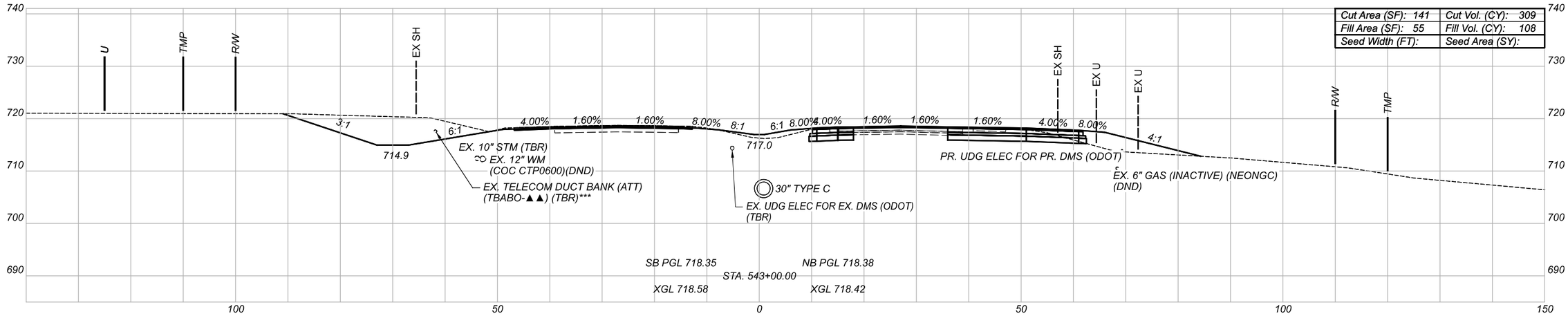

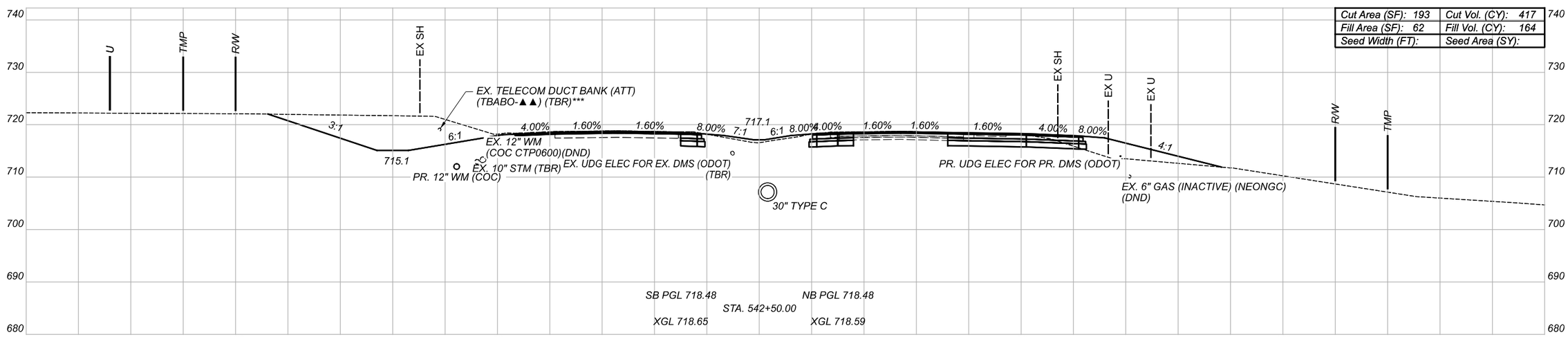

FOR SEEDING QUANTITIES, SEE SHEET P.12

CROSS SECTIONS - US-23 (SOUTH HIGH STREET)
STA 542+50 TO STA 543+50

Sheet Totals		
Seeding	Cut	Fill
-	935	368

DESIGN AGENCY: IBI

DESIGNER: MEP

REVIEWER: KMK 12-01-22

PROJECT ID: 92616

SHEET: P.80 TOTAL: 170

FRA-23-4.19 PART 2 (PID 92616)

MODEL: 542+50.00 [Sheet] PAPERSIZE: 17x11in DATE: 2022-12-09 TIME: 9:34:01 AM USER: william.croxton
\\10.120.12.5\ibishare\22592_SafetyDesign\7.0_Production\7.3_Design\04_Civil\Worksets\10380_FRA-23\400-Engineering\Roadway\Sheets\10380_XS002.dgn

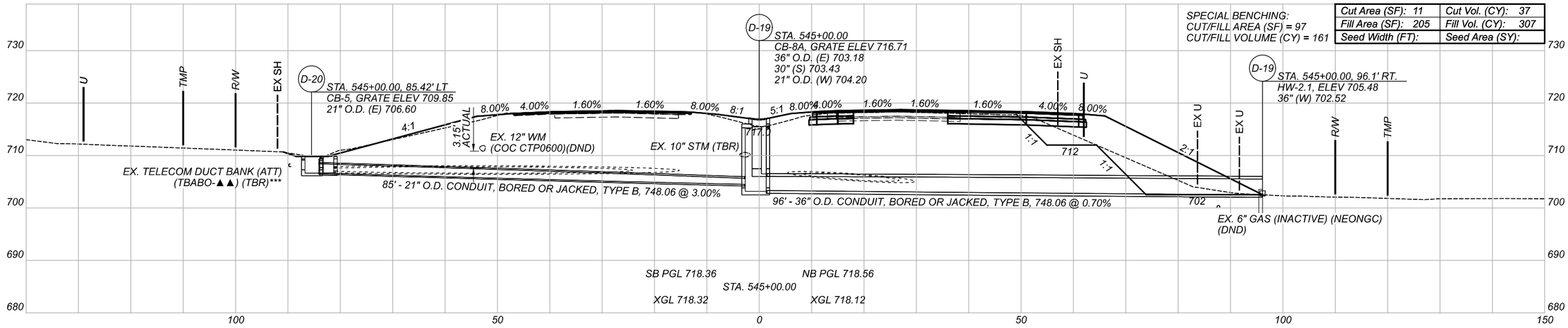

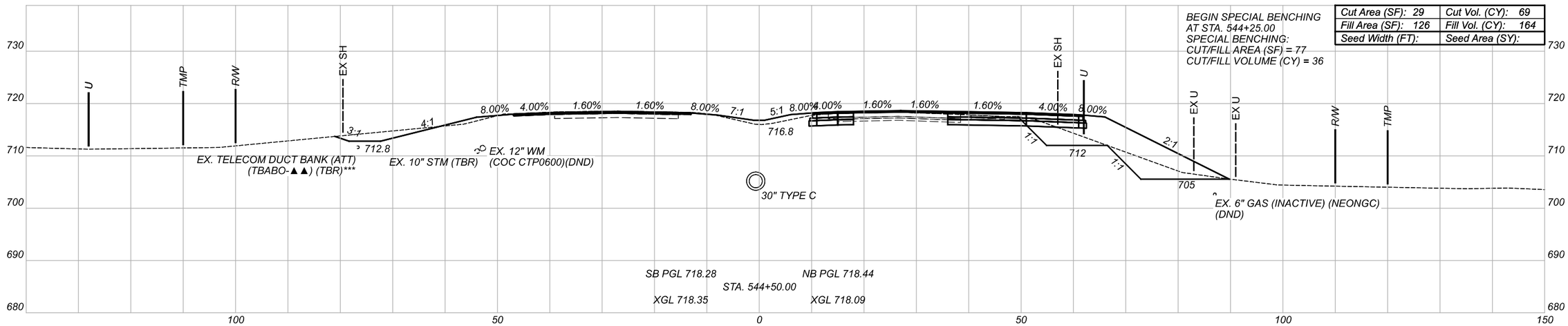

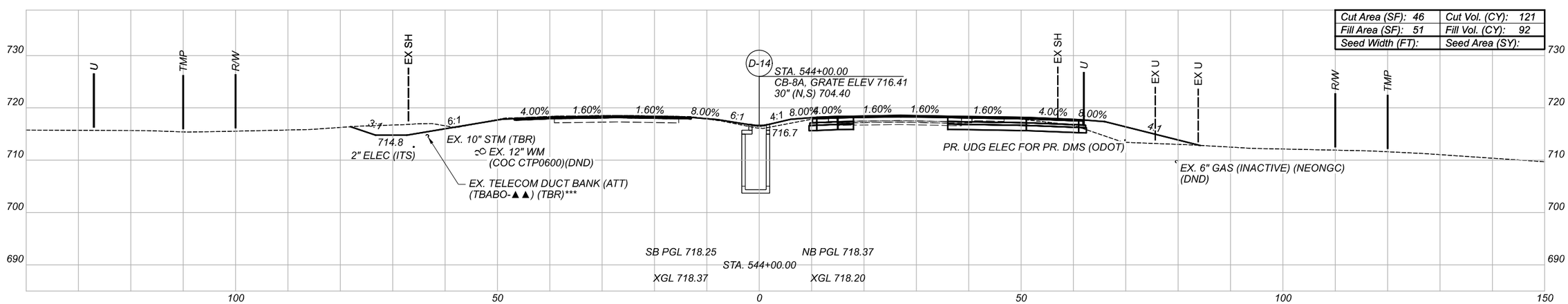

FOR SEEDING QUANTITIES, SEE SHEET P.12

Benching		Sheet Totals		
Cut	Fill	Seeding	Cut	Fill
197	197	-	227	563

CROSS SECTIONS - US-23 (SOUTH HIGH STREET)
STA 544+00 TO STA 545+00

DESIGN AGENCY
IBI

DESIGNER
MEP

REVIEWER
KMK 12-01-22

PROJECT ID
92616

SHEET P.81 TOTAL 170

FRA-23-4.19 PART 2 (PID 92616)

MODEL: 544+00.00 [Sheet] PAPERSIZE: 17x11in DATE: 2022-12-09 TIME: 9:34:02 AM USER: william.croxton
\\10.120.112.5\ibishare\22592_SafetyDesign\7.0_Production\7.3_Design\04_Civil\Worksets\110380_FRA-23\400-Engineering\Roadway\Sheets\110380_XS002.dgn

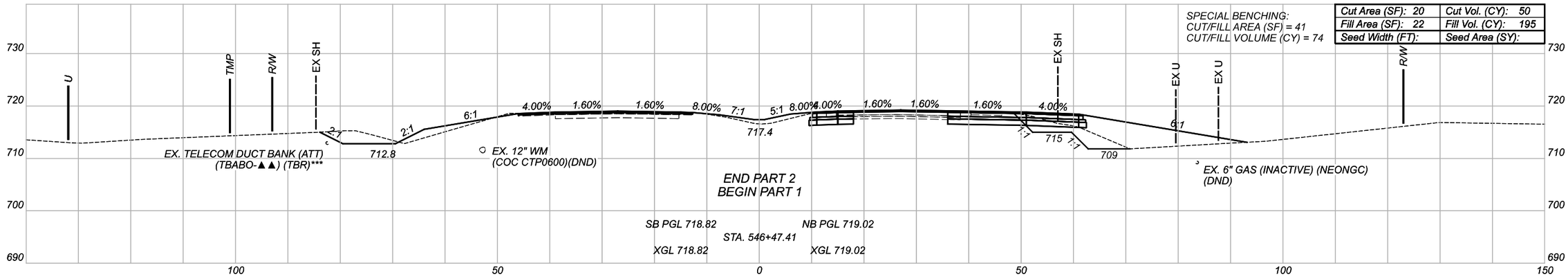

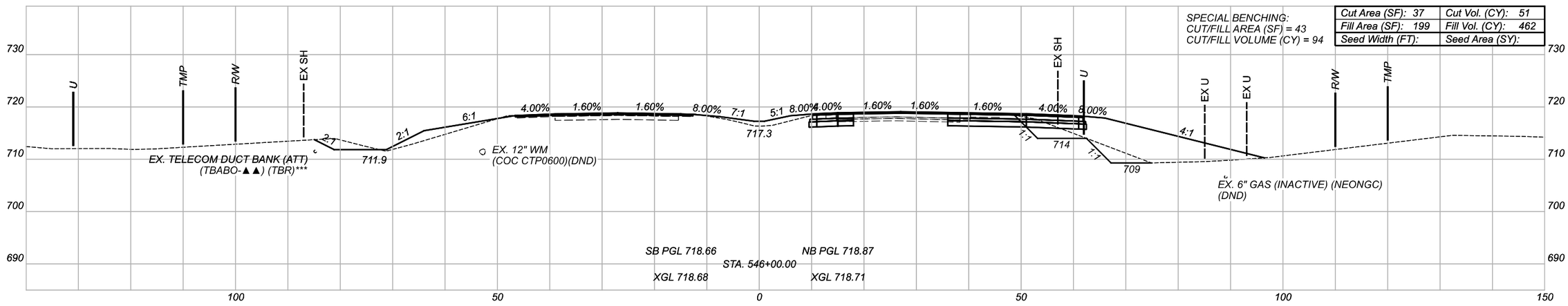

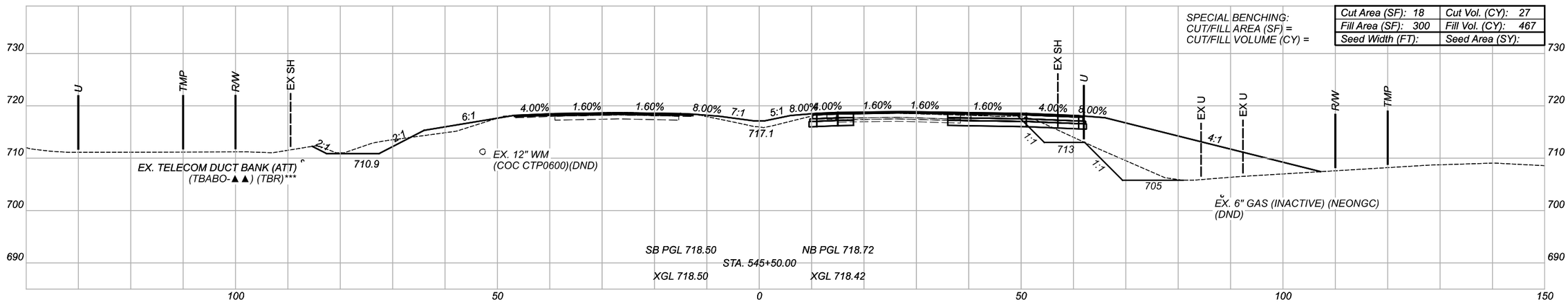

FOR SEEDING QUANTITIES, SEE SHEET P.12

Benching		Sheet Totals		
Cut	Fill	Seeding	Cut	Fill
312	312	-	128	1124

CROSS SECTIONS - US-23 (SOUTH HIGH STREET)
STA 545+50 TO STA 546+47.41

DESIGN AGENCY: IBI

DESIGNER: MEP

REVIEWER: KMK 12-01-22

PROJECT ID: 92616

SHEET: P.82 TOTAL: 170

FRA-23-4.19 PART 2 (PID 92616)

MODEL: 545+50.00 [Sheet1] PAPERSIZE: 17x11(in.) DATE: 2022-12-09 TIME: 9:34:04 AM USER: william.croxton
\\IOJ20.II2.5\ibishare\122592_SafetyDesign\7.0_Production\7.3_Design\04_Civil\Worksets\I0380_FRA-23\400-Engineering\Roadway\Sheets\I0380_XS002.dgn

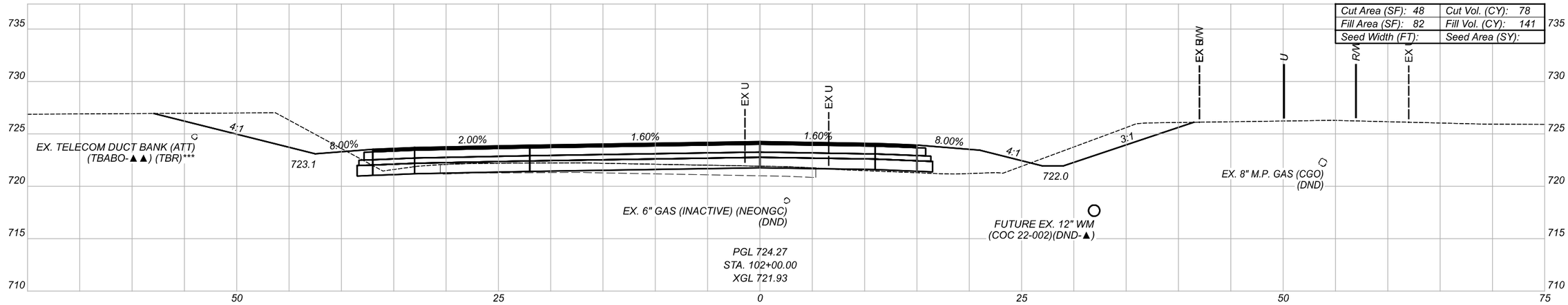

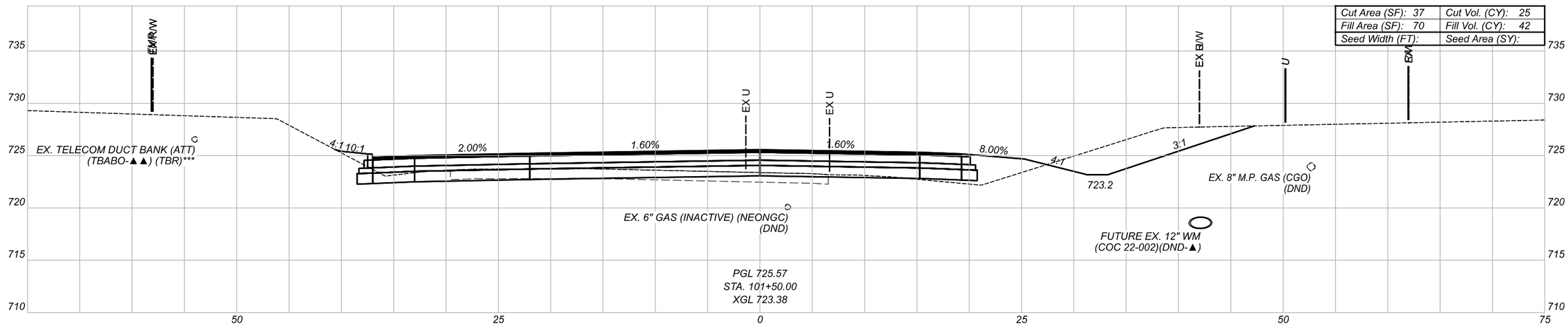

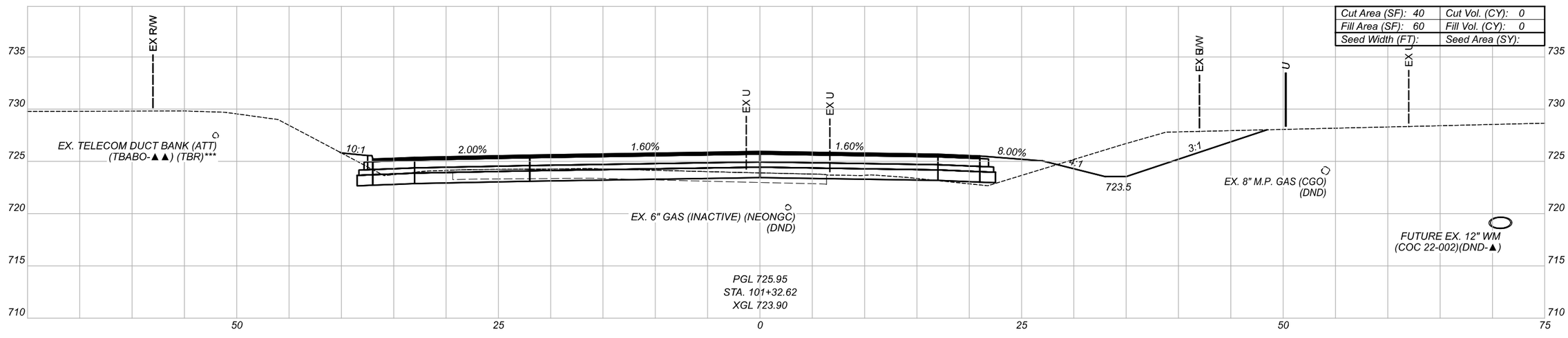

FOR SEEDING QUANTITIES, SEE SHEET P.12

CROSS SECTIONS - CR-121 (RATHMELL ROAD)
STA 101+32.62 TO STA 102+00

Sheet Totals		
Seeding	Cut	Fill
-	163	183

DESIGN AGENCY: IBI

DESIGNER: MEP

REVIEWER: KMK 12-01-22

PROJECT ID: 92616

SHEET: P.83 TOTAL: 170

FRA-23-4.19 PART 2 (PID 92616)

MODEL: 101+32.62-1[Sheet1] PAPERSIZE: 17x11(in.) DATE: 2022-12-09 TIME: 9:34:11 AM USER: william.croxton
\\10.120.112.5\ibishare\122592_SafetyDesign\7.0_Production\7.3_Design\04_Civil\Worksets\110380_FRA-23\400-Engineering\Roadway\Sheets\110380_XS004.dgn

CROSS SECTIONS - CR-121 (RATHMELL ROAD)
STA 102+50 TO STA 103+00

Cut Area (SF): 77	Cut Vol. (CY): 132
Fill Area (SF): 57	Fill Vol. (CY): 125
Seed Width (FT):	Seed Area (SY):

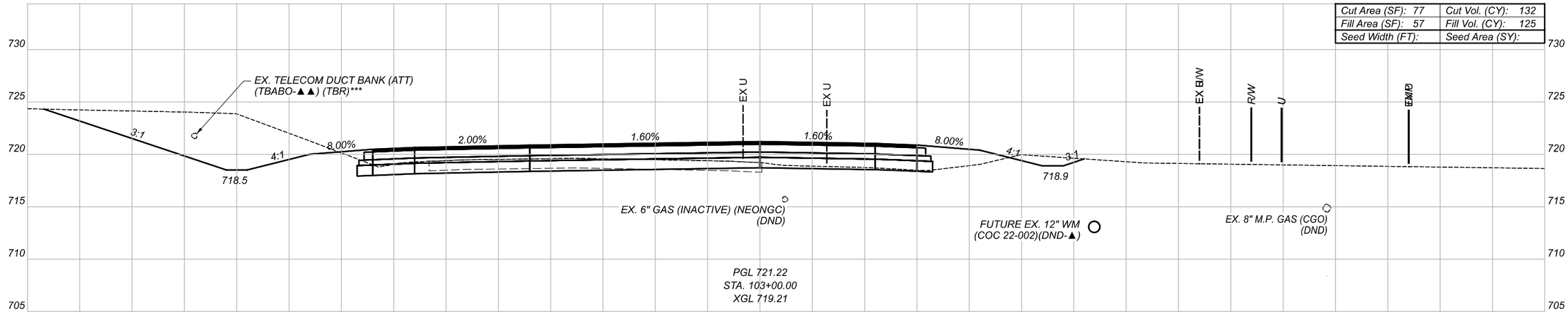

Cut Area (SF): 65	Cut Vol. (CY): 105
Fill Area (SF): 78	Fill Vol. (CY): 147
Seed Width (FT):	Seed Area (SY):

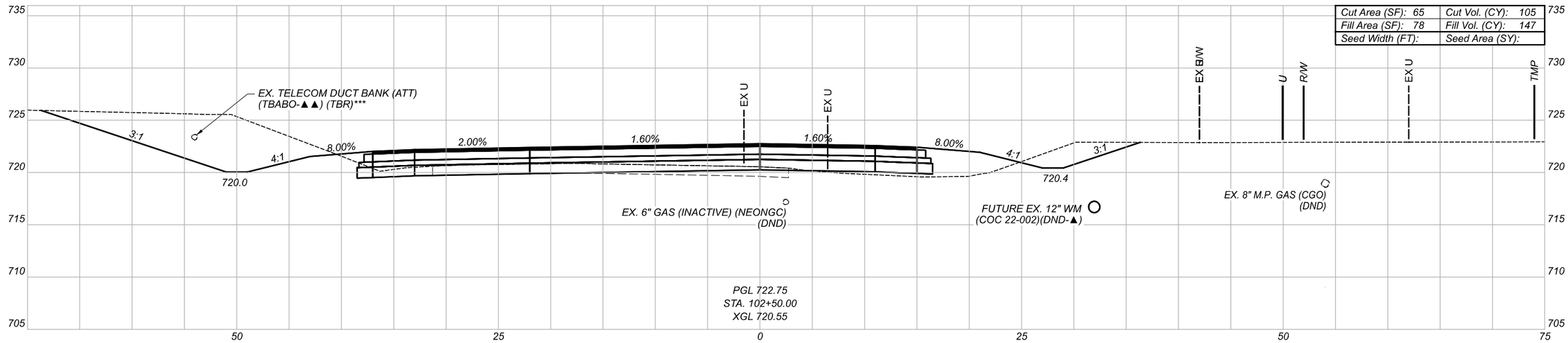

FOR SEEDING QUANTITIES, SEE SHEET P.12

Sheet Totals		
Seeding	Cut	Fill
-	237	272

DESIGN AGENCY: IBI

DESIGNER: MEP

REVIEWER: KMK 12-01-22

PROJECT ID: 92616

SHEET: P.84 TOTAL: 170

FRA-23-4.19 PART 2 (PID 92616)

MODEL: 102+50.00-[Sheet] PAPERSIZE: 17x11(in.) DATE: 2023-01-06 TIME: 8:30:08 AM USER: matt.phillips
\\10.120.12.5\bishore\122592_SafetyDesign\7.0_Production\7.3_Design\04_Civil\Worksets\10380_FRA-23\400-Engineering\Roadway\Sheets\10380_XS004.dgn

CROSS SECTIONS - CR-121 (RATHMELL ROAD)
STA 103+50 TO STA 104+00

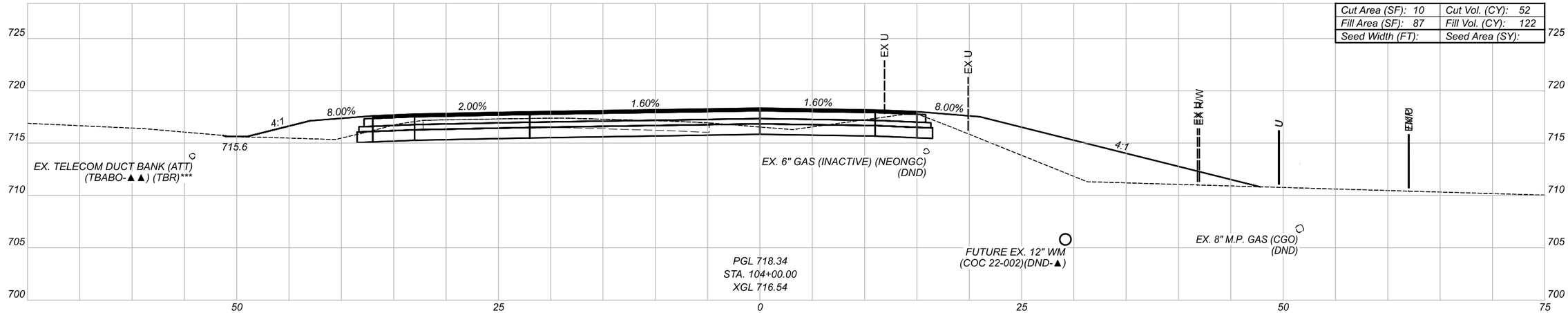

Cut Area (SF): 10	Cut Vol. (CY): 52
Fill Area (SF): 87	Fill Vol. (CY): 122
Seed Width (FT):	Seed Area (SY):

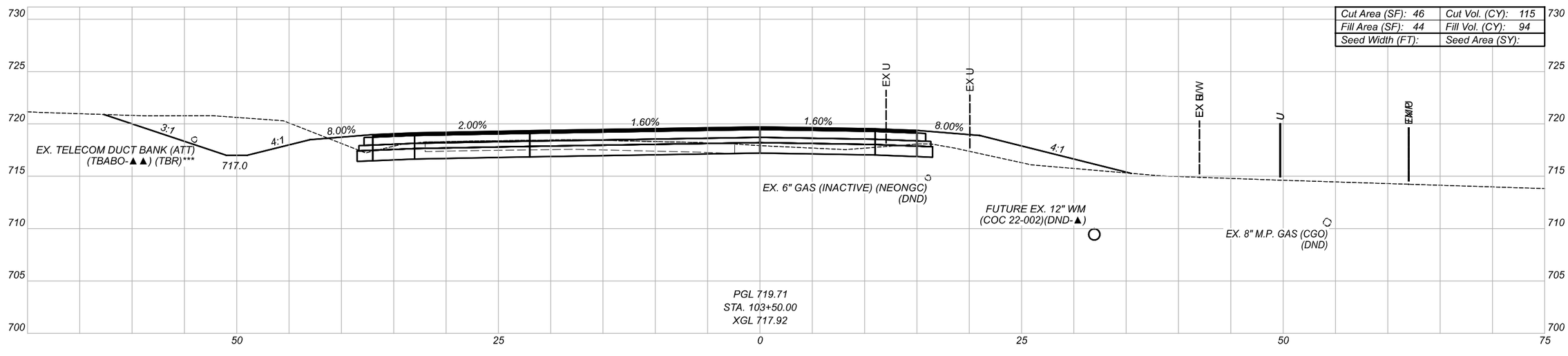

Cut Area (SF): 46	Cut Vol. (CY): 115
Fill Area (SF): 44	Fill Vol. (CY): 94
Seed Width (FT):	Seed Area (SY):

FOR SEEDING QUANTITIES, SEE SHEET P.12

Sheet Totals		
Seeding	Cut	Fill
-	167	216

DESIGN AGENCY
IBI

DESIGNER
MEP

REVIEWER
KMK 12-01-22

PROJECT ID
92616

SHEET P.85 TOTAL 170

FRA-23-4.19 PART 2 (PID 92616)

MODEL: I03+50.00-I[Sheet] PAPERSIZE: 17x11(in.) DATE: 2023-01-06 TIME: 8:31:09 AM USER: matt.phillips
\\10.120.112.5\ibishare\122592_SafetyDesign\7.0_Production\7.3_Design\04_Civil\Worksets\110380_FRA-23\400-Engineering\Roadway\Sheets\110380_XS004.dgn

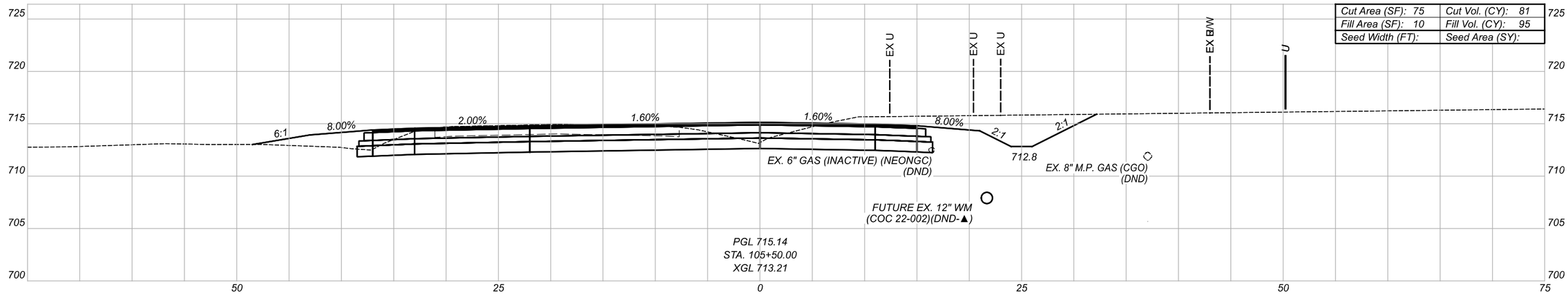

Cut Area (SF): 75	Cut Vol. (CY): 81
Fill Area (SF): 10	Fill Vol. (CY): 95
Seed Width (FT):	Seed Area (SY):

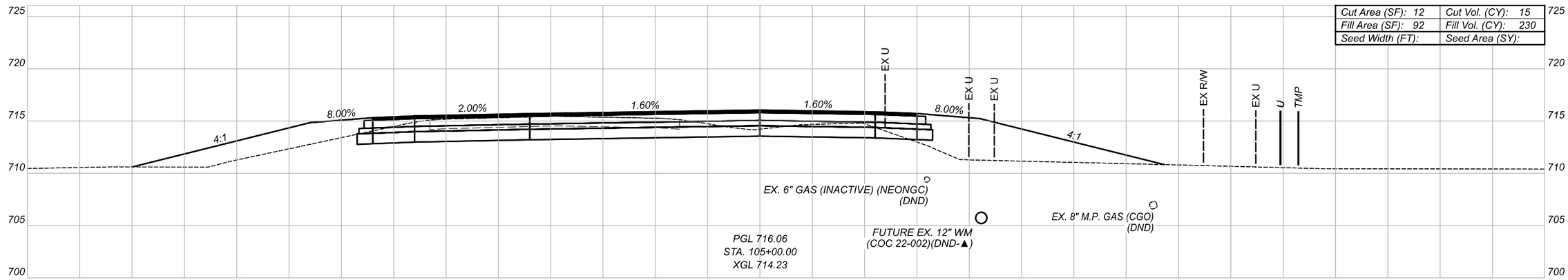

Cut Area (SF): 12	Cut Vol. (CY): 15
Fill Area (SF): 92	Fill Vol. (CY): 230
Seed Width (FT):	Seed Area (SY):

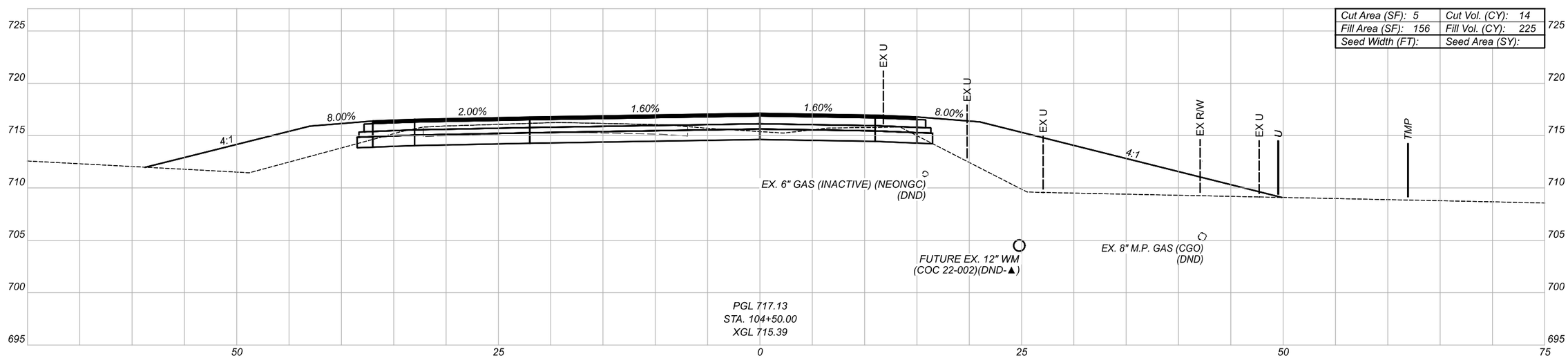

Cut Area (SF): 5	Cut Vol. (CY): 14
Fill Area (SF): 156	Fill Vol. (CY): 225
Seed Width (FT):	Seed Area (SY):

FOR SEEDING QUANTITIES, SEE SHEET P.12

Sheet Totals		
Seeding	Cut	Fill
-	110	550

CROSS SECTIONS - CR-121 (RATHMELL ROAD)
STA 104+50 TO STA 105+50

DESIGN AGENCY
IBI

DESIGNER
MEP

REVIEWER
KMK 12-01-22

PROJECT ID
92616

SHEET P.86 TOTAL 170

FRA-23-4.19 PART 2 (PID 92616)

MODEL: I04+50.00-I[Sheet] PAPERSIZE: 17x11(in.) DATE: 2023-01-06 TIME: 8:31:10 AM USER: matt.phillips
\\IO.I20.II2.5\ibishare\I22592_SafetyDesign\7.0_Production\7.3_Design\04_Civil\Worksets\II0380_FRA-23\400-Engineering\Roadway\Sheets\II0380_XS004.dgn

MODEL: I06+00.00-I(Sheet) PAPERSIZE: 17x11(in.) DATE: 2023-01-06 TIME: 8:31:10 AM USER: matt.phillips
\\10.120.112.5\ibishare\22592_SafetyDesign\7.0_Production\7.3_Design\04_Civil\Worksets\10380_FRA-23\400-Engineering\Roadway\Sheets\10380_XS004.dgn

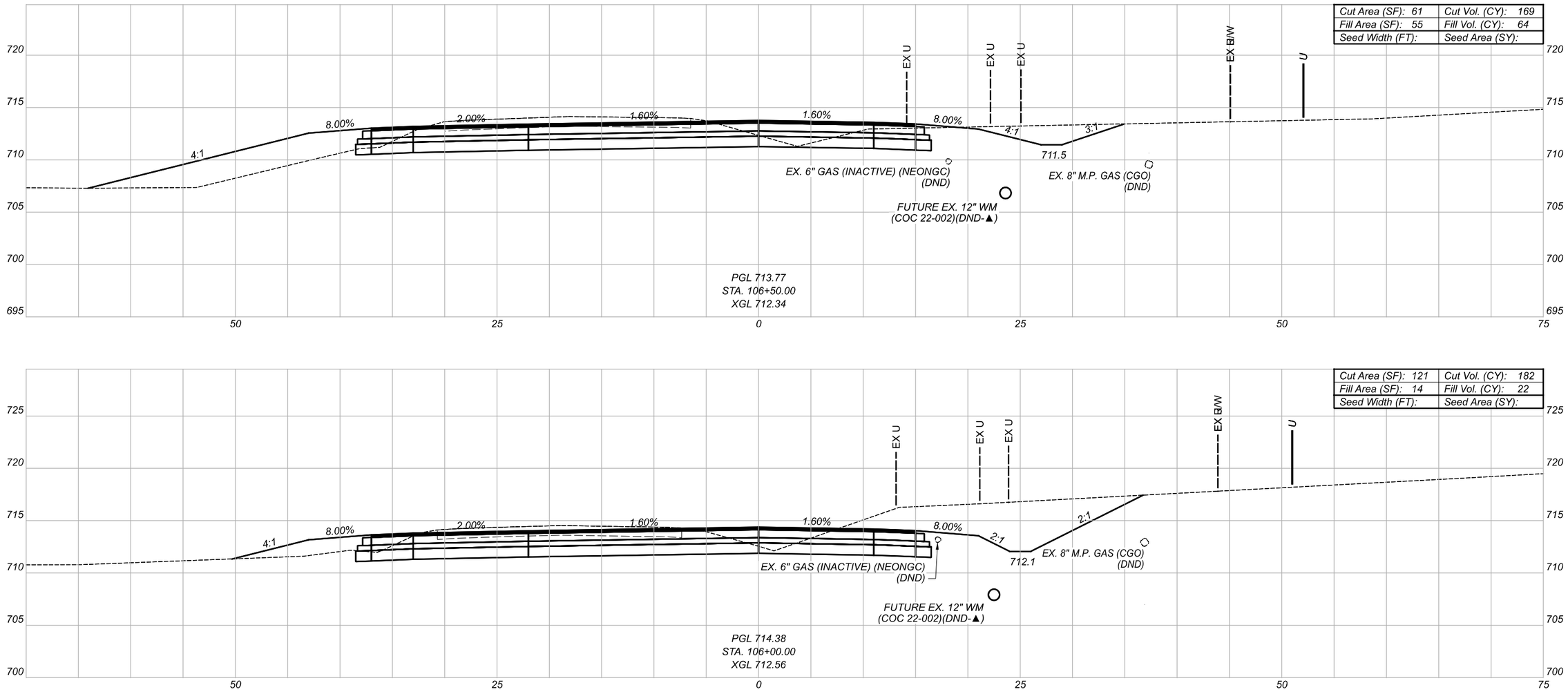

CROSS SECTIONS - CR-121 (RATHMELL ROAD)
STA 106+00 TO STA 106+50

FOR SEEDING QUANTITIES, SEE SHEET P.12

Sheet Totals		
Seeding	Cut	Fill
-	351	86

DESIGN AGENCY: IBI

DESIGNER: MEP

REVIEWER: KMK 12-01-22

PROJECT ID: 92616

SHEET: P.87 TOTAL: 170

CROSS SECTIONS - CR-121 (RATHMELL ROAD)
STA 107+00 TO STA 107+50

Cut Area (SF): 65	Cut Vol. (CY): 106
Fill Area (SF): 23	Fill Vol. (CY): 97
Seed Width (FT):	Seed Area (SY):

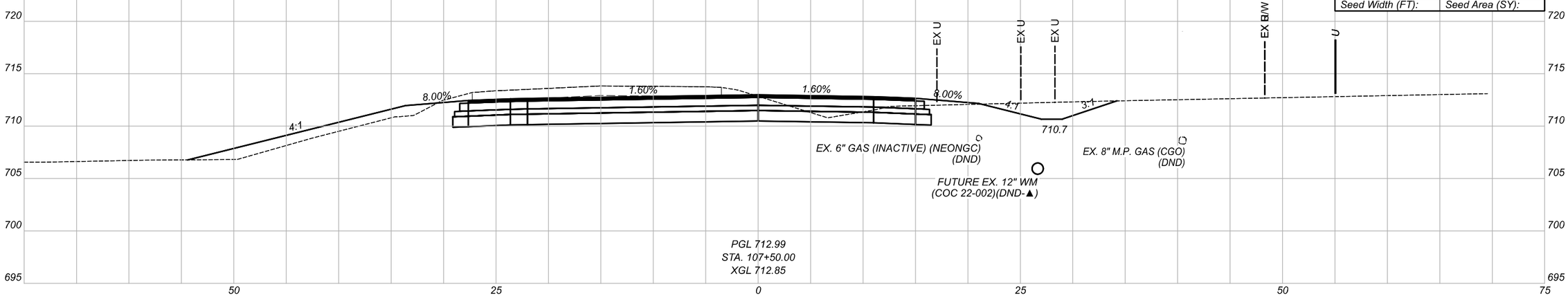

Cut Area (SF): 49	Cut Vol. (CY): 102
Fill Area (SF): 82	Fill Vol. (CY): 127
Seed Width (FT):	Seed Area (SY):

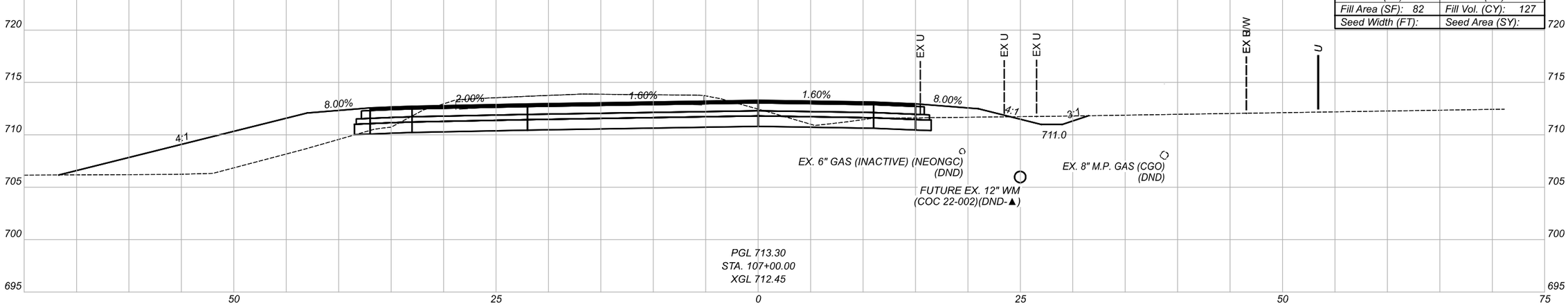

FOR SEEDING QUANTITIES, SEE SHEET P.12

Sheet Totals		
Seeding	Cut	Fill
-	208	224

DESIGN AGENCY
IBI

DESIGNER
MEP

REVIEWER
KMK 12-01-22

PROJECT ID
92616

SHEET P.88 TOTAL 170

FRA-23-4.19 PART 2 (PID 92616)

MODEL: I07+00.00-I[Sheet] PAPERSIZE: 17x11 (in.) DATE: 2022-12-09 TIME: 9:34:16 AM USER: william.croxton
\\I0.I20.II2.5\ibishare\I22592_SafetyDesign\7.0_Production\7.3_Design\04_Civil\Worksets\I10380_FRA-23\400-Engineering\Roadway\Sheets\I10380_XS004.dgn

CROSS SECTIONS - CR-121 (RATHMELL ROAD)
STA 108+00 TO STA 108+50

Cut Area (SF): 78	Cut Vol. (CY): 156
Fill Area (SF): 7	Fill Vol. (CY): 8
Seed Width (FT):	Seed Area (SY):

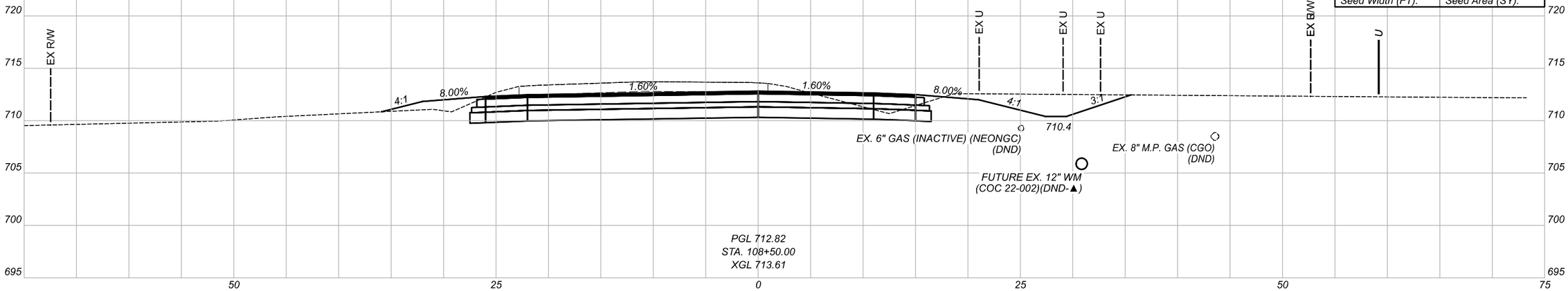

Cut Area (SF): 91	Cut Vol. (CY): 144
Fill Area (SF): 2	Fill Vol. (CY): 23
Seed Width (FT):	Seed Area (SY):

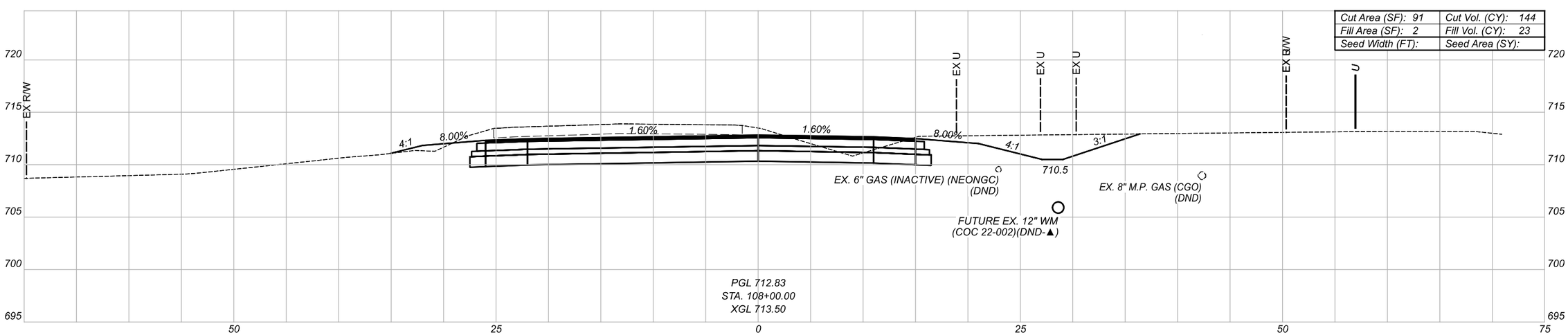

FOR SEEDING QUANTITIES, SEE SHEET P.12

Sheet Totals		
Seeding	Cut	Fill
-	360	31

DESIGN AGENCY: IBI

DESIGNER: MEP

REVIEWER: KMK 12-01-22

PROJECT ID: 92616

SHEET: P.89 TOTAL: 170

FRA-23-4.19 PART 2 (PID 92616)

MODEL: I08+00.00-I[Sheet] PAPERSIZE: 17x11 (in.) DATE: 2022-12-09 TIME: 9:34:17 AM USER: william.croxton
\\10.120.112.5\ibishare\122592_SafetyDesign\7.0_Production\7.3_Design\04_Civil\Worksets\110380_FRA-23\400-Engineering\Roadway\Sheets\110380_XS004.dgn

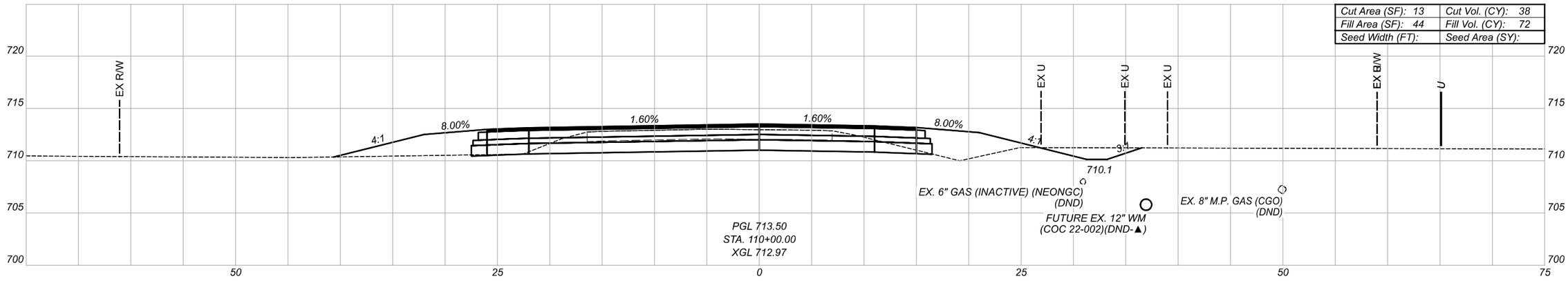

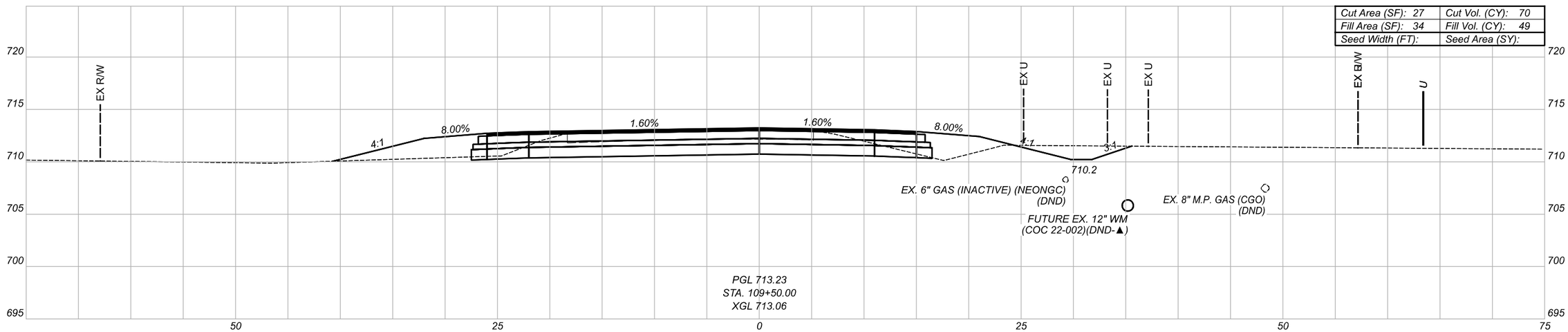

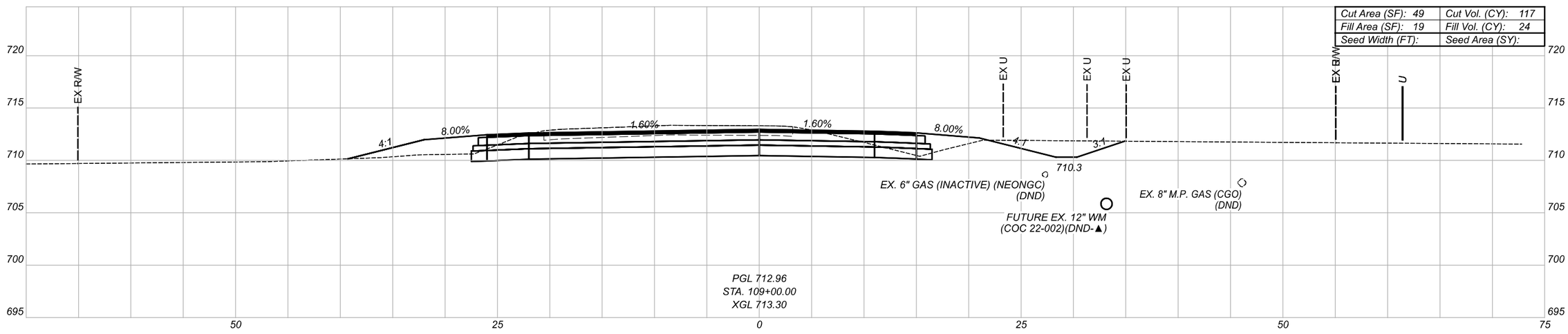

FOR SEEDING QUANTITIES, SEE SHEET P.12

Sheet Totals		
Seeding	Cut	Fill
-	225	145

CROSS SECTIONS - CR-121 (RATHMELL ROAD)
STA 109+00 TO STA 110+00

DESIGN AGENCY: IBI

DESIGNER: MEP

REVIEWER: KMK 12-01-22

PROJECT ID: 92616

SHEET: P.90 TOTAL: 170

FRA-23-4.19 PART 2 (PID 92616)

MODEL: 109+00.00-[Sheet] PAPERSIZE: 17x11in DATE: 2022-12-09 TIME: 9:34:18 AM USER: williamcroxton
\\10.120.112.5\ibishare\22592_SafetyDesign\7.0_Production\7.3_Design\04_Civil\Worksets\110380_FRA-23\400-Engineering\Roadway\Sheets\110380_XS004.dgn

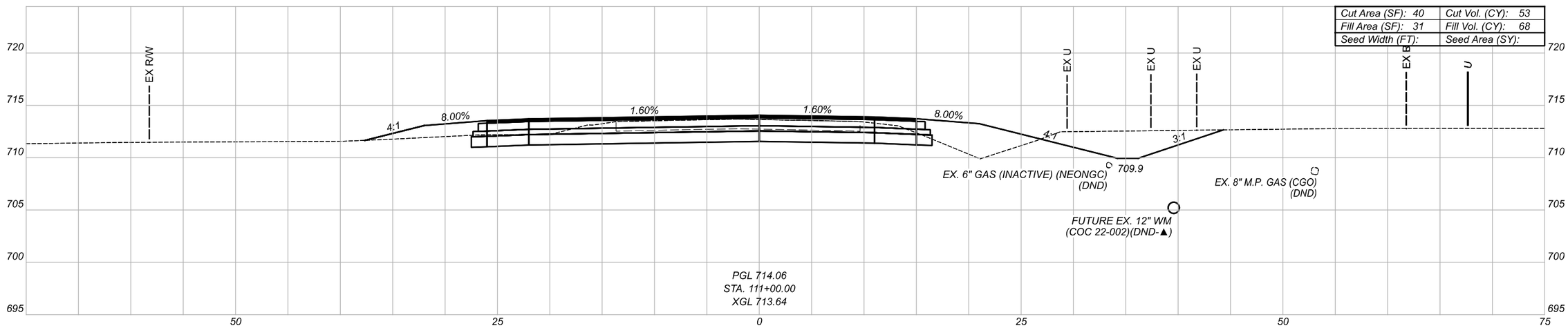

Cut Area (SF): 40	Cut Vol. (CY): 53
Fill Area (SF): 31	Fill Vol. (CY): 68
Seed Width (FT):	Seed Area (SY):

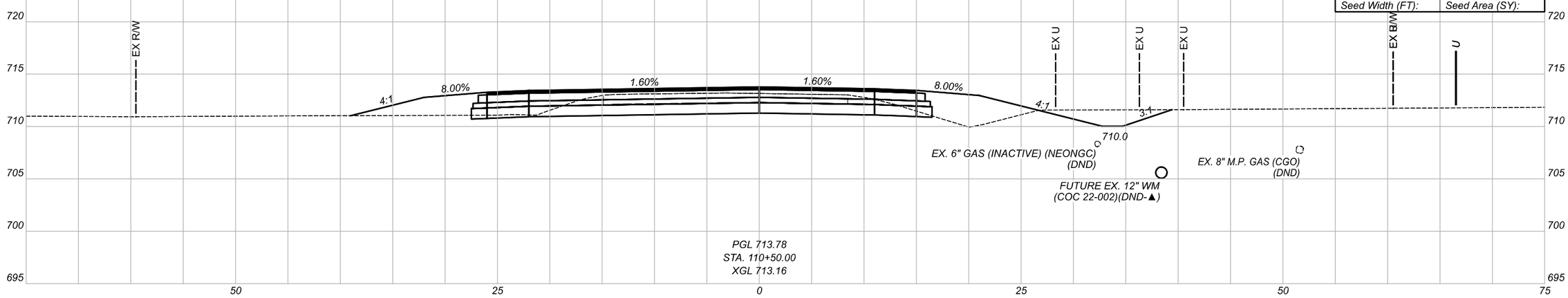

Cut Area (SF): 17	Cut Vol. (CY): 28
Fill Area (SF): 43	Fill Vol. (CY): 80
Seed Width (FT):	Seed Area (SY):

FOR SEEDING QUANTITIES, SEE SHEET P.12

Sheet Totals		
Seeding	Cut	Fill
-	81	148

CROSS SECTIONS - CR-121 (RATHMELL ROAD)
STA 110+50 TO STA 111+00

DESIGN AGENCY: IBI

DESIGNER: MEP

REVIEWER: KMK 12-01-22

PROJECT ID: 92616

SHEET: P.91 TOTAL: 170

FRA-23-4.19 PART 2 (PID 92616)

MODEL: 110+50.00-1[Sheet] PAPERSIZE: 17x11(in.) DATE: 2022-12-09 TIME: 9:34:19 AM USER: william.croxton
\\10.120.112.5\ibishare\122592_SafetyDesign\7.0_Production\7.3_Design\04_Civil\Worksets\110380_FRA-23\400-Engineering\Roadway\Sheets\110380_XS004.dgn

MODEL: Ill+50.00-I[Sheet] PAPERSIZE: 17x11(in) DATE: 2022-12-09 TIME: 9:34:20 AM USER: william.croxton
\\IOJ20.II2.5\Ibishore\I22592_SafetyDesign\7.0_Production\7.3_Design\04_Civil\Worksets\II0380_FRA-23\400-Engineering\Roadway\Sheets\II0380_XS004.dgn

CROSS SECTIONS - CR-121 (RATHMELL ROAD)
STA 111+50 TO STA 112+00

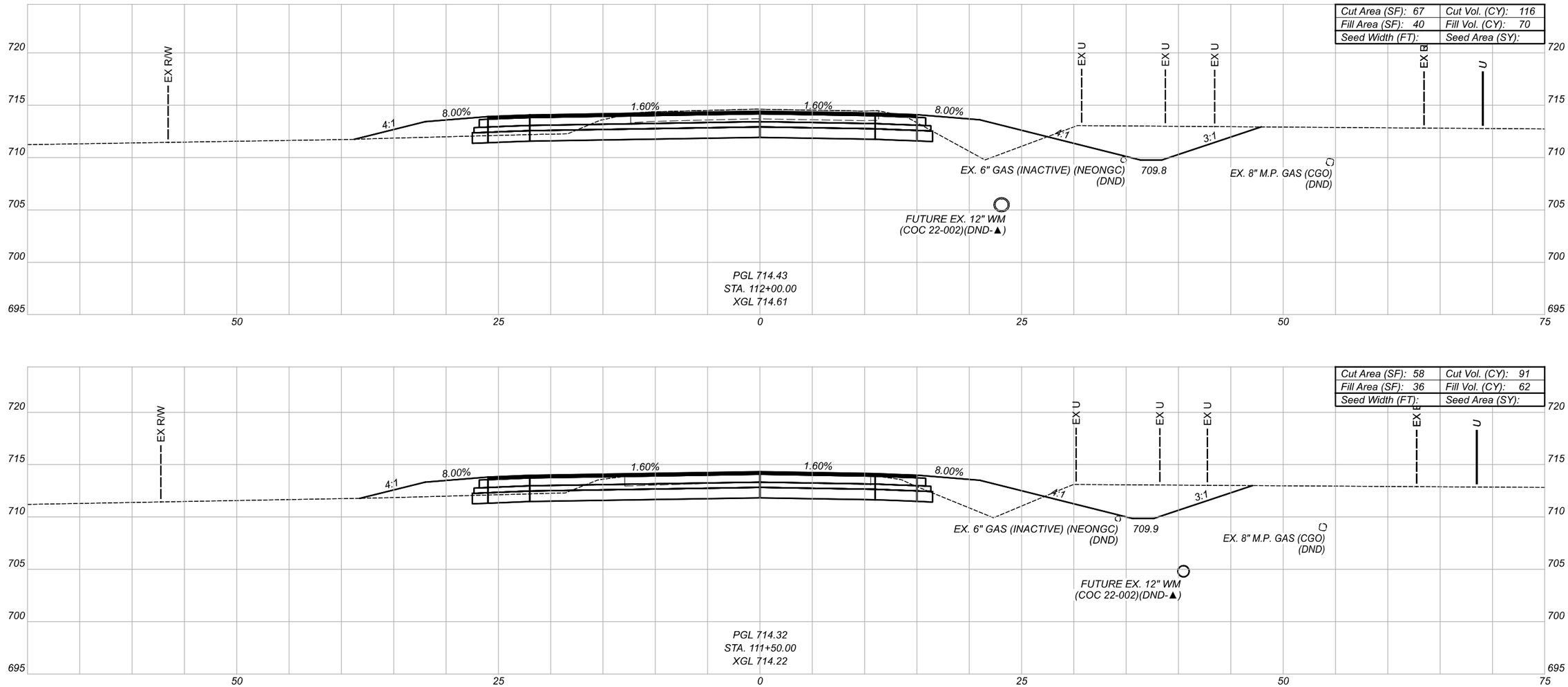

FOR SEEDING QUANTITIES, SEE SHEET P.12

Sheet Totals		
Seeding	Cut	Fill
-	207	132

DESIGN AGENCY
IBI

DESIGNER
MEP

REVIEWER
KMK 12-01-22

PROJECT ID
92616

SHEET P.92 TOTAL 170

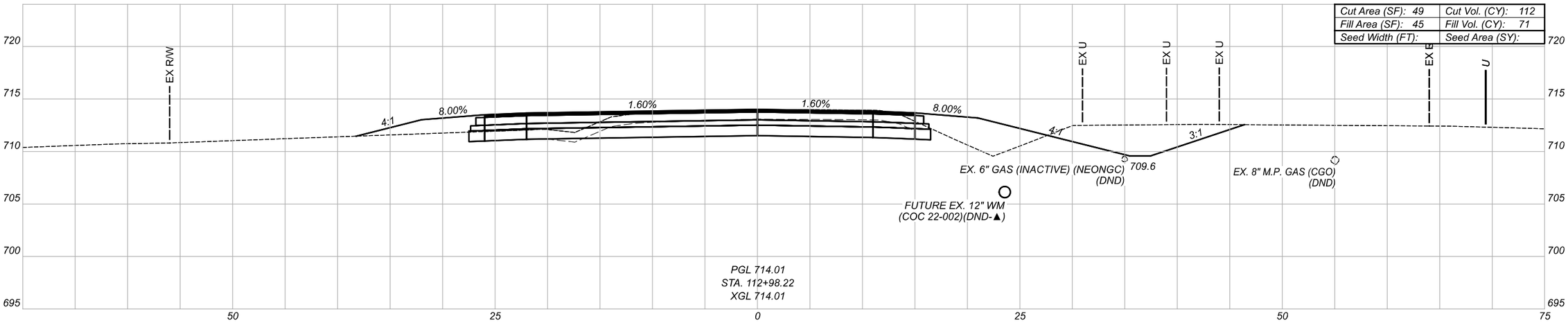

Cut Area (SF): 49	Cut Vol. (CY): 112
Fill Area (SF): 45	Fill Vol. (CY): 71
Seed Width (FT):	Seed Area (SY):

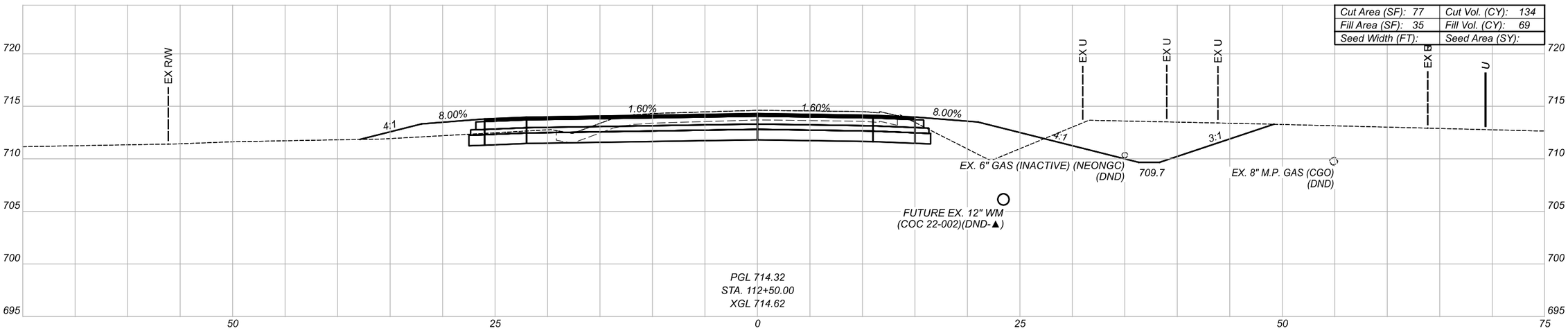

Cut Area (SF): 77	Cut Vol. (CY): 134
Fill Area (SF): 35	Fill Vol. (CY): 69
Seed Width (FT):	Seed Area (SY):

FOR SEEDING QUANTITIES, SEE SHEET P.12

Sheet Totals		
Seeding	Cut	Fill
-	246	140

CROSS SECTIONS - CR-121 (RATHMELL ROAD)
STA 112+50 TO STA 112+98.23

DESIGN AGENCY
IBI

DESIGNER
MEP

REVIEWER
KMK 12-01-22

PROJECT ID
92616

SHEET P.93 TOTAL 170

FRA-23-4.19 PART 2 (PID 92616)

MODEL: 112+50.00-1[Sheet] PAPERSIZE: 17x11(in.) DATE: 2022-12-09 TIME: 9:34:21 AM USER: william.croxton
\\10.120.112.5\ibishare\122592_SafetyDesign\7.0_Production\7.3_Design\04_Civil\Worksets\110380_FRA-23\400-Engineering\Roadway\Sheets\110380_XS004.dgn

MODEL: I13+50.00-[Sheet] PAPERSIZE: 17x11(in.) DATE: 2022-12-09 TIME: 9:34:22 AM USER: william.croxton
\\10.120.12.5\ibishare\22592_SafetyDesign\7.0_Production\7.3_Design\04_Civil\Worksets\I0380_FRA-23\400-Engineering\Roadway\Sheets\I0380_XS004.dgn

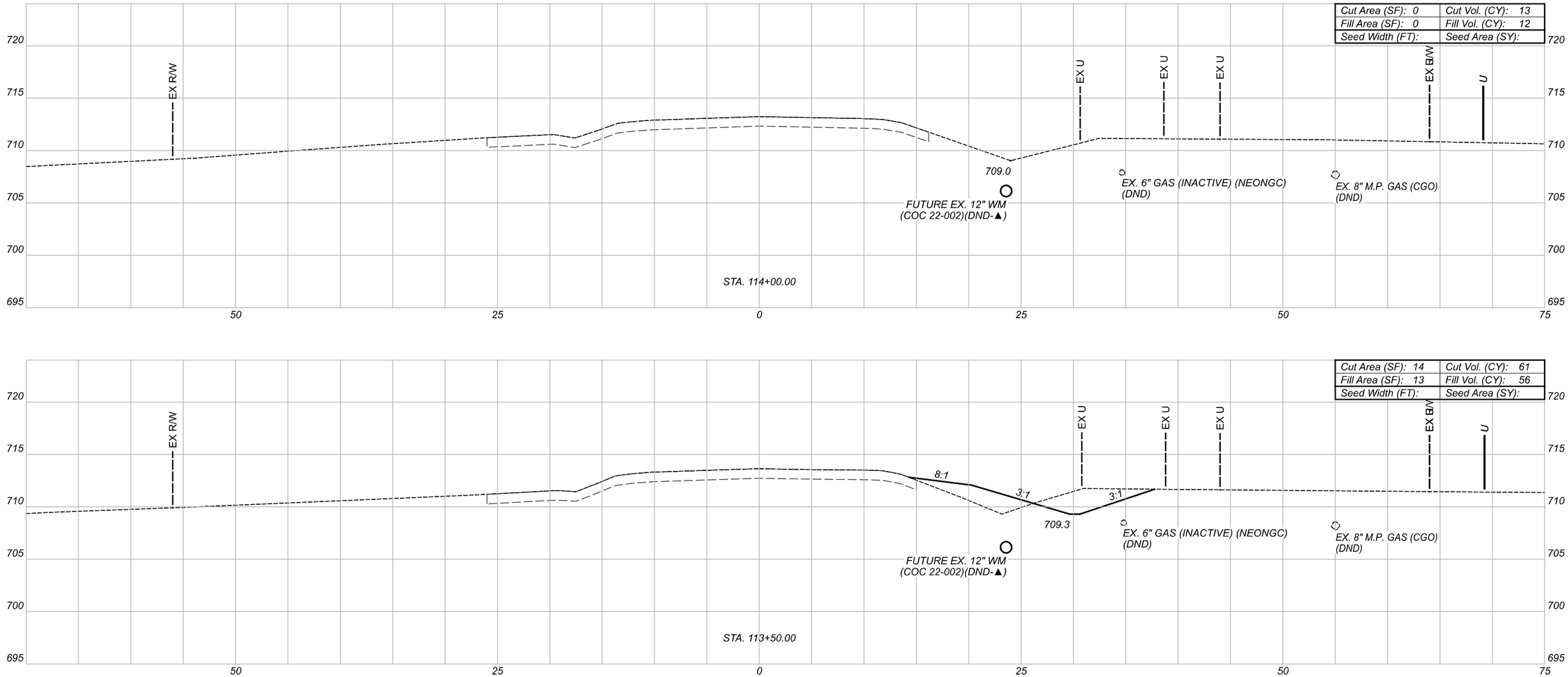

CROSS SECTIONS - CR-121 (RATHMELL ROAD)
STA 113+50 TO STA 114+00

DESIGN AGENCY
IBI

DESIGNER
MEP

REVIEWER
KMK 12-01-22

PROJECT ID
92616

Sheet Totals		
Seeding	Cut	Fill
-	74	68

SHEET P.94 TOTAL 170

FOR SEEDING QUANTITIES, SEE SHEET P.12

A — 727.10 - ℄ CONST. INTERSECTION
STA 534+51.11 US-23 =
STA 99+99.82 CR-121

B — 727.39 - PR. PG US-23 NB
STA 534+48.41 US-23 =
STA 100+15.06 CR-121

C — 727.62 - PR. CROWN US-23 NB LANES
STA 534+46.25 US-23 =
STA 100+27.25 CR-121

D — 727.32 - MATCHLINE INTERSECTION CR-121
STA 534+41.93 US-23 =
STA 100+51.64 CR-121

E — 724.30 - END INTERSECTION TAPER
STA 101+92.62 CR-121
OFF 11.00' RT

F — 726.93 - ℄ CONST. INTERSECTION
STA 534+62.28 US-23 =
STA 0+00 DRIVE DW-1

G — 727.16 - PR. PG US-23 SB
STA 534+63.09 US-23 =
STA 0+15.02 DRIVE DW-1

H — 727.34 - PR. CROWN US-23 SB LANES
STA 534+63.74 US-23 =
STA 0+27.04 DRIVE DW-1

I — 727.14 - MATCHLINE INTERSECTION DRIVE DW-1
STA 534+64.39 US-23 =
STA 0+39.06 DRIVE DW-1

J — * 728.47
STA 1+37.00

K — * 728.08
STA 1+37.00
OFF 24.00' LT

L — * 726.98
STA 1+37.00
OFF 24.00' RT

M — 728.33 - BEGIN PR. INVERTED CROWN
STA 533+75.40
OFF 12.00' LT

N — 725.80 - END PR. INVERTED CROWN
STA 535+28.28
OFF 12.00' RT

NOTES:
1. STATION AND OFFSETS ARE BASED UPON ℄ CONST. US-23, ℄ CONST. CR-121 AND ℄ DRIVE DW-1 UNLESS OTHERWISE SHOWN.
3. ALL PAVEMENT ELEVATIONS AT 25 FT. INTERVALS UNLESS OTHERWISE SHOWN.
4. HP=HIGH POINT, LP=LOW POINT, PG=PROFILE GRADE, *=MATCH EXISTING
5. CONTRACTOR SHALL PROVIDE A 24' ROUNDED CROWN FOR US-23 NORTHBOUND AND US-23 SOUTHBOUND WITHIN THE LIMITS OF THE INTERSECTION.

CURVE 4:
DRIVE DW-1
PI = STA 2+51.72
Δ = 64°08'47" LT
Dc = 28°38'52"
R = 200.00'
T = 125.33'
L = 223.91'
E = 36.02'

CURVE C2:
Δ = 86°54'23"
R = 60.00'
L = 91.01'

CURVE C1:
Δ = 90°00'00"
R = 60.00'
L = 94.25'

CURVE C3:
Δ = -79°48'04"
R = 50.00'
L = 69.64'

CURVE C4:
Δ = -94°29'18"
R = 60.00'
L = 98.95'

STA 533+83.51, 99.00' LT US-23
STA 0+94.60, 84.00' LT DRIVE DW-1

STA 535+53.40, 111.00' LT US-23
STA 1+15.76, 84.99' RT DRIVE DW-1

STA 533+51.04, 123.00' RT US-23
STA 101+38.59, 76.70' RT CR-121

STA 535+17.27, 101.00' RT US-23
STA 100+87.51, 83.00' LT CR-121

TRANS. US-23 SB MEDIAN SHOULDER FROM 4% @ STA. 531+50 TO 1% @ STA. 531+85.02

TRANS. US-23 NB MEDIAN SHOULDER FROM 4% @ STA. 531+50 TO 3.2% @ STA. 531+85.02

TRANS. US-23 SB MEDIAN SHOULDER FROM 1.6% @ STA. 538+93.66 TO 4% @ STA. 539+50

TRANS. US-23 NB MEDIAN SHOULDER FROM 1.6% @ STA. 538+93.66 TO 4% @ STA. 539+50

D-4A - PR. TRENCH DRAIN

8A - PR. TRENCH DRAIN

PR. INVERTED CROWN

℄ EX. R/W US-23
PR. PG US-23 NB

℄ US-23 NB LANES
PR. CROWN US-23 NB

℄ US-23 SB LANES
PR. CROWN US-23 SB

PR. PG US-23 SB
℄ CONST. US-23

℄ CONST. CR-121
(RATHMELL ROAD)
PR. PG/PR. CROWN

℄ DRIVE DW-1
PR. PG/PR. CROWN

PAY LIMITS DRIVE DW-1

PAY LIMITS CR-121

℄ EX. R/W CR-121
(RATHMELL ROAD)

60' INTER. OFFSET TAPER
(6' OFFSET WIDTH, RATE=10:1)

MATCHLINE INTERSECTION DRIVE DW-1

MATCHLINE INTERSECTION CR-121

PR. TRAFFIC SIGNAL POLE

D-5B — PR. CB-6*
STA 533+51.07, 12.00' LT. (CENTER OF GRATE)
T/G = 728.81 (NO DEPRESSION)

D-29 — PR. CB-6*
STA 533+00.00, 12.00' LT. (CENTER OF GRATE)
T/G = 729.77 (NO DEPRESSION)

D-21 — PR. CB-6*
STA 537+00.00, 12.00' RT. (CENTER OF GRATE)
T/G = 723.08 (NO DEPRESSION)

D-30 — PR. CB-6*
STA 535+50.00, 12.00' RT. (CENTER OF GRATE)
T/G = 725.46 (NO DEPRESSION)

D-27 — PR. CB-6*
STA 532+00.00, 12.00' LT. (CENTER OF GRATE)
T/G = 731.60 (NO DEPRESSION)

D-31 — PR. CB-6*
STA 536+00.00, 12.00' RT. (CENTER OF GRATE)
T/G = 724.63 (NO DEPRESSION)

D-28 — PR. CB-6*
STA 532+50.00, 12.00' LT. (CENTER OF GRATE)
T/G = 730.71 (NO DEPRESSION)

D-32 — PR. CB-6*
STA 536+50.00, 12.00' RT. (CENTER OF GRATE)
T/G = 723.84 (NO DEPRESSION)

*PLACE CATCHBASINS WITH GRATE PERPENDICULAR TO TRAVELED WAY

HORIZONTAL SCALE IN FEET
0 10 20 40

INTERSECTION DETAILS
US-23 (SOUTH HIGH STREET) & CR-121 (RATHMELL ROAD)

FRA-23-4.19 PART 2 (PID 92616)

DESIGN AGENCY: IBI
DESIGNER: WLC
REVIEWER: KMK 12-01-22
PROJECT ID: 92616
SHEET: P.95 TOTAL: 170

MODEL: Plan | [Sheet] PAPERSIZE: 17x11(in.) DATE: 2022-12-09 TIME: 9:34:28 AM USER: william.croxton
\\10.120.12.5\bishore\122592_SafetyDesign\7.0_Production\7.3_Design\04_Civil\Worksets\10380_FRA-23\400-Engineering\

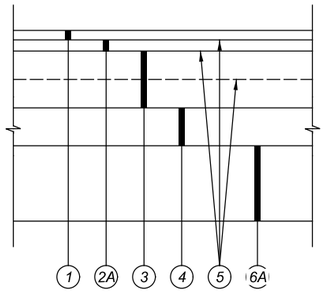

DRIVEWAY PAVEMENT BUILDUP
DW-1

(SIMILAR PAVEMENT BUILDUP TO ADJACENT US-23 MAINLINE)

PROPOSED LEGEND:

(1) (1.50") ITEM 442 - ASPHALT CONCRETE SURFACE COURSE, 12.5MM, TYPE A, (446), PG70-22M

(2A) (1.75") ITEM 442 - ASPHALT CONCRETE INTERMEDIATE COURSE, 12.5MM, TYPE A, (446)

(3) (9") ITEM 301 - ASPHALT CONCRETE BASE, PG64-22, (449)
(PLACED IN TWO LIFTS)

(4) (6") ITEM 304 - AGGREGATE BASE

(5) ITEM 407 - NON-TRACKING TACK COAT
(PLACED IN BETWEEN LIFT OF ASPHALT)
(APPLIED AT 0.055 GAL/SY AVG FOR NEW PAVEMENT

(6A) SUBGRADE STABILIZATION (FOR US-23 AND DW-1):
UNSTABLE SUBGRADE - CHEMICALLY STABILIZED SUBGRADE
ITEM 204 - PROOF ROLLING
(APPLIED AT 1 HR/2000 SY FOR RECONSTRUCTION)
(APPLIED AT 1 HR/3000 SY FOR NEW CONSTRUCTION)
ITEM 206 - CEMENT
(APPLIED AT 5% PER 115 LB/CF SOIL)
ITEM 206 - CEMENT STABILIZED SUBGRADE, 12-INCHES DEEP
ITEM 206 - CURING COAT
ITEM 206 - MIXTURE DESIGN FOR CHEMICALLY STABILIZED SOILS
(SPECIFIED ON PROJECTS > 40,000 SY, SEE SUPPLEMENT 1120

PAVEMENT LEGEND:

PLANING (VAR. DEPTH) & RESURFACING (3.25") WITH
PR. ASPHALT LEVELING COURSES (VAR. DEPTH)

PR. ASPHALT PAVEMENT (FULL DEPTH)

PAVEMENT RESTORATION FOR PIPE INSTALLATIONS
AND/OR REMOVALS (SEE SHEET P.16)

CROSS REFERENCES:

SEE SHEET P.95 FOR INTERSECTION DETAILS - US-23 & CR-121 & DW-1

NOTES:

1. DUE TO SIMILAR FULL DEPTH PAVEMENT BUILDUP TO ADJACENT US-23 MAINLINE, THE DRIVEWAY PAVEMENT CALCULATIONS FOR DW-1 HAVE BEEN INCLUDED WITH GENERAL PAVEMENT CALCULATIONS. THE DRIVEWAY PAVEMENT ESTIMATED QUANTITIES HAVE BEEN CARRIED TO GENERAL SUMMARY AND LISTED UNDER OFFICE CALCS.

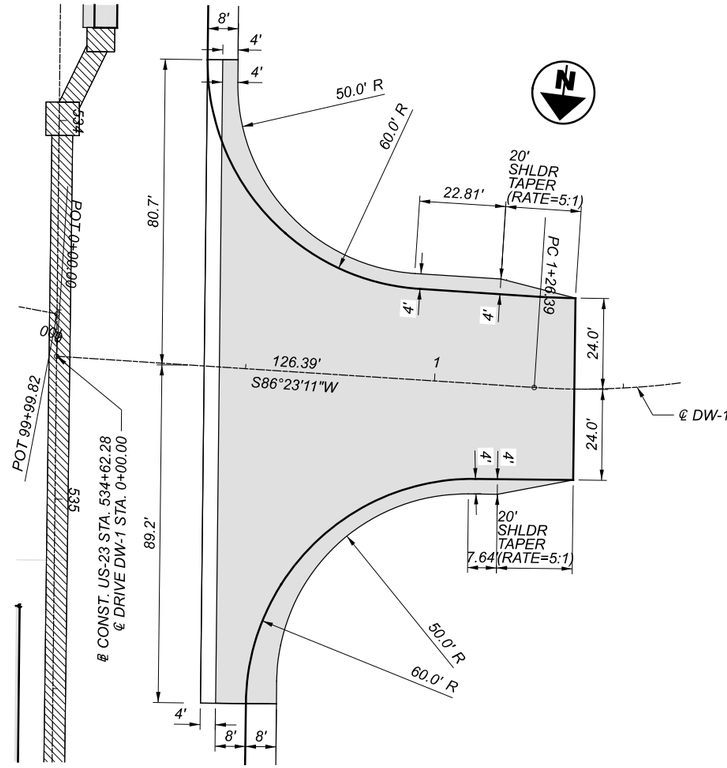

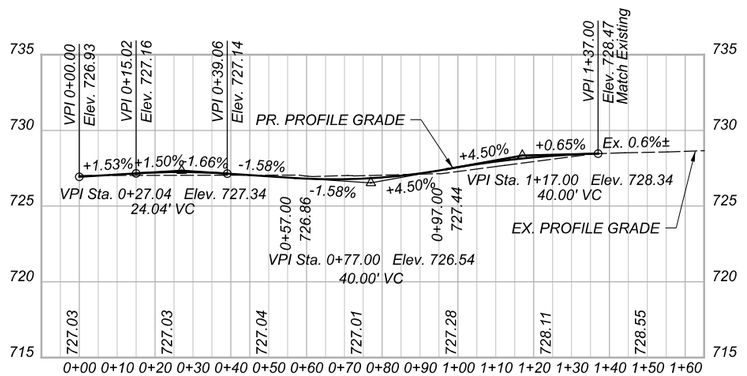

DRIVEWAY PLAN AND PROFILE
DW-1
STA. 534+62.28 (LT)

HORIZONTAL
SCALE IN FEET
0 10 20 40

DRIVE DETAILS

DESIGN AGENCY
IBI

DESIGNER WLC
REVIEWER KMK 12-01-22
PROJECT ID 92616
SHEET P.96 TOTAL 170

FRA-23-4.19 PART 2 (PID 92616)

MODEL: Plan 1 [Sheet] PAPERSIZE: 17x11 (in.) DATE: 2023-05-04 TIME: 4:30:19 PM USER: william.croxton
\\10.120.112.5\bkshare\122592_SafetyDesign\7.0_Production\7.3_Design\04_Civil\Worksets\110380_FRA-23\400-Engineering\Roadway\Sheets\110380_GD001.dgn

SHEET NO.	REF. NO.	STATION FROM	STATION TO	602 CONCRETE MASONRY	611 6" CONDUIT, TYPE C	611 12" CONDUIT, TYPE C	611 15" CONDUIT, TYPE B	611 15" CONDUIT, TYPE C	611 18" CONDUIT, TYPE C	611 21" CONDUIT, TYPE C	611 24" CONDUIT, TYPE B	611 24" CONDUIT, TYPE C	611 30" CONDUIT, TYPE B	611 30" CONDUIT, TYPE C	611 CONDUIT, BORED OR JACKED, 21" O.D., TYPE B, 748.06	611 CONDUIT, BORED OR JACKED, 36" O.D., TYPE B, 748.06	611 CATCH BASIN, NO. 5	611 CATCH BASIN, NO. 5A	611 CATCH BASIN, NO.6	611 CATCH BASIN, NO. 8	611 CATCH BASIN, NO. 8A	611 CATCH BASIN, NO. 2-2B	611 MANHOLE, NO. 3
				CY	FT	FT	FT	FT	FT	FT	FT	FT	FT	FT	FT	FT	EACH	EACH	EACH	EACH	EACH	EACH	EACH
		US-23																					
99	D-1	525+70.00	525+70.00				68													1			
99	D-2	525+70.00	528+50.00					280									1						
100	D-4A	528+50.00	531+35.40						286								1						
100	D-3	531+35.40	531+35.40				64													1			
100	D-4B	531+35.40	533+51.04							216							1						
101	D-5B	533+51.03	533+51.04				57												1				
101	D-5A	533+51.03	533+51.03				105										1						
101	D-6	533+51.04	534+25.24									75					1						
101	D-7	534+25.35	534+25.24					15														1	
101	D-8A	534+25.24	536+50.00								225												1
101	D-8B	536+50.00	539+43.28									294						1					
101, 102	D-21	537+00.00	537+50.00				50												1				
102	D-22	538+91.46	539+43.28					52											1				
102	D-25	537+72.63	537+72.63			11																	
102	D-26	537+72.63	537+72.63	0.21																			
102	D-9	539+43.28	539+43.28										70					1					
102	D-10	539+43.28	542+00.00											257							1		
102	D-11	542+00.00	544+00.00											200							1		
103	D-20	545+00.00	545+00.00												96		1						
103	D-17	544+91.06	545+00.00		11																		
103	D-14	544+00.00	545+00.00											100							1		
103	D-19	545+00.00	545+00.00													85					1		
103	D-16	545+00.00	545+00.00	0.76																			
100, 101	D-27	532+00.00	532+50.00				50												1				
102	D-28	532+50.00	533+00.00				50												1				
102	D-29	533+00.00	533+51.04				52												1				
102	D-30	535+50.00	536+00.00				50												1				
102	D-31	536+00.00	536+50.00				50												1				
102	D-32	536+50.00	537+00.00				50												1				
103	D-33	537+50.00	538+00.00				50												1				
103	D-34	538+00.00	538+50.00				50												1				
103	D-35	538+50.00	538+91.46				42												1				
TOTALS CARRIED TO GENERAL SUMMARY				0.97	11	11	788	347	286	216	225	369	70	557	96	85	6	2	12	2	4	1	1

DRAINAGE SUBSUMMARY (1 OF 2)

DESIGN AGENCY
IBI

DESIGNER
BDB

REVIEWER
KMK 12-01-22

PROJECT ID
92616

SHEET P.97 TOTAL 170

FRA-23-4.19 PART 2 (PID 92616)

MODEL: Sheet PAPERSIZE: 17x11(in.) DATE: 2022-12-09 TIME: 9:34:37 AM USER: william.croxton
\\10\20\2.5\ibishare\22592_SafetyDesign\7.0_Production\7.3_Design\04_Civil\Worksets\10380_FRA-23\400-Engineering\Drainage\Sheets\10380_D500i.dgn

SHEET NO.	REF. NO.	STATION FROM	STATION TO	601 TIED CONCRETE BLOCK MAT WITH TYPE 1 UNDERLAYMENT	605 4" SHALLOW PIPE UNDERDRAINS WITH GEOTEXTILE FABRIC	605 4" BASE PIPE UNDERDRAINS WITH GEOTEXTILE FABRIC	611 4" CONDUIT, TYPE F FOR UNDERDRAIN OUTLET	611 PRECAST REINFORCED CONCRETE OUTLET	FOR INFORMATION ONLY UNDERDRAIN BENDS AND BRANCHES PLUG	4" X 4" TEE	4" X 4" CROSS	4" X 4" WYE	4" X 90° ELL	4" X 45° ELL	4" X 22.50° ELL	4" X 4" COUPLER
				SY	FT	FT	FT	EACH	EACH	EACH	EACH	EACH	EACH	EACH	EACH	EACH
		US-23														
99	UD-1	525+60 RT	527+00 RT			142			1						1	
99	UD-2	525+60 RT	527+00 RT		142				1						1	
99	UD-3	525+60 RT	527+00 RT			140			1						1	
100	UD-1	527+00 RT	530+99 RT			401				1					2	
100	UD-2	527+00 RT	530+99 RT	2	399		35	1					1			
100	UD-3	527+00 RT	531+35 LT			439								1	2	
100	UD-4	528+00 LT	531+35 LT			337								1		1
100	UD-5	531+08 RT	532+00 RT			97			1							
100	UD-6	531+04 RT	532+00 RT		97				1							
100	UD-7	531+40 LT	532+00 LT			61			1					2		
100	UD-8	531+40 LT	532+00 LT			61			1					2		
101	UD-5	532+00 RT	533+51 RT			159								1		
101	UD-6	532+00 RT	535+18 RT	2	318		18	1					1			
101	UD-7	532+00 LT	533+51 LT			153								1		
101	UD-8	532+00 LT	533+49 LT			153								1		
101	UD-9	535+23 RT	537+00 RT			177			1							
101	UD-10	535+23 RT	537+00 RT		177				1							
101	UD-11	535+28 RT	537+00 RT			172			1							
101	UD-12	535+28 RT	537+00 RT			172			1							
102	UD-9	537+00 RT	538+45 RT			145				1						
102	UD-10	537+00 RT	538+45 RT	2	145		32	1					1			
102	UD-11	537+00 RT	539+43 RT			246								3		
102	UD-12	537+00 RT	539+39 RT			246								3		
102	UD-13	538+55 RT	542+00 RT			346			1							
102	UD-14	538+55 RT	542+00 RT		346				1							
102	UD-15	539+48 RT	542+00 RT			252			1							
102	UD-16	539+48 RT	542+00 LT			253			1						1	
103	UD-13	542+00 RT	545+05 RT			305					1					
103	UD-14	542+00 RT	545+05 RT	2	305		32	1		1						
103	UD-15	542+00 RT	544+00 RT			205								1		
103	UD-16	542+00 LT	542+78 LT			80									1	1
103	UD-17	544+05 RT	545+00 RT			100			1					1		
103	UD-18	545+05 RT	546+47 RT			150										1
103	UD-19	545+05 RT	546+47 RT		143											1
103	UD-20	545+05 RT	546+47 RT			143								1		1
		CR-121 (RATHMELL ROAD)														
104	UD-21	100+89 RT	103+50 RT			239			1							
104	UD-22	100+77 LT	103+50 LT		273				1							
104	UD-23	100+51 LT	103+50 LT			314			1							
105	UD-21	103+50 RT	105+00 RT	2		150	23	1					1			
105	UD-22	103+50 LT	105+01 LT	2	150		38	1					1			
105	UD-23	103+50 LT	105+01 LT			150				1						
105	UD-24	105+05 RT	108+28 RT	2		325	78	1	1				1			
105	UD-25	105+05 LT	107+08 LT	2	202		32	1	1				1			
105	UD-26	105+05 LT	107+07 LT			202			1	1						
105	UD-27	107+12 LT	108+28 LT			117			1		1				1	
105	UD-28	107+57 LT	108+28 LT		71				1		1					
105	UD-29	108+28 RT	108+50 RT			22										
105	UD-30	108+28 LT	108+50 LT		22											
105	UD-31	108+28 LT	108+50 LT			22										
106	UD-29	108+50 RT	112+98 RT			346										
106	UD-30	108+50 LT	112+93 LT		346											
106	UD-31	108+50 LT	112+98 LT			350										
106	UD-32	111+99 RT	112+98 RT			100										1
106	UD-33	111+99 LT	112+93 LT		110								1			
106	UD-34	111+99 LT	112+98 LT			100				1						1
TOTALS CARRIED TO GENERAL SUMMARY				16	3246	7572	288	8	24	6	3	0	8	18	10	7

SHEET NO.	REF. NO.	STATION FROM		STATION TO		601 ROCK CHANNEL PROTECTION, TYPE C WITH GEOTEXTILE FABRIC	659 TOPSOIL (T=4")	670 DITCH EROSION PROTECTION
						CY	CY	SY
		US-23						
99, 100	EC-1	525+70	LT	528+50	LT		9	156
100	EC-2	528+50	LT	531+35	LT		9	159
100, 101	EC-3	531+35	LT	533+70	LT		8	131
101	EC-4	535+53	LT	536+50	LT		4	87
101, 102	EC-5	536+50	LT	539+43	LT		11	261
102, 103	EC-6	539+43	LT	544+59	LT		10	344
101	EC-7	534+25	LT	534+45	LT	10		
101	EC-8	534+93	LT	535+17	LT	12		
103	EC-9	545+00	RT	545+00	RT	3		
TOTALS CARRIED TO GENERAL SUMMARY						25	51	1138

DRAINAGE SUBSUMMARY (2 OF 2)

FRA-23-4.19 PART 2 (PID 92616)

MODEL: Sheet PAPERSIZE: 17x11(in.) DATE: 2022-12-09 TIME: 9:34:39 AM USER: william.croxton
\\10.120.12.5\ibishare\22592_SafetyDesign\7.0_Production\7.3_Design\04_Civil\Worksets\10380_FRA-23\400-Engineering\Drainage\Sheets\10380_DS002.dgn

DESIGN AGENCY: IBI

DESIGNER: BDB

REVIEWER: KMK 12-01-22

PROJECT ID: 92616

SHEET: P.98 TOTAL: 170

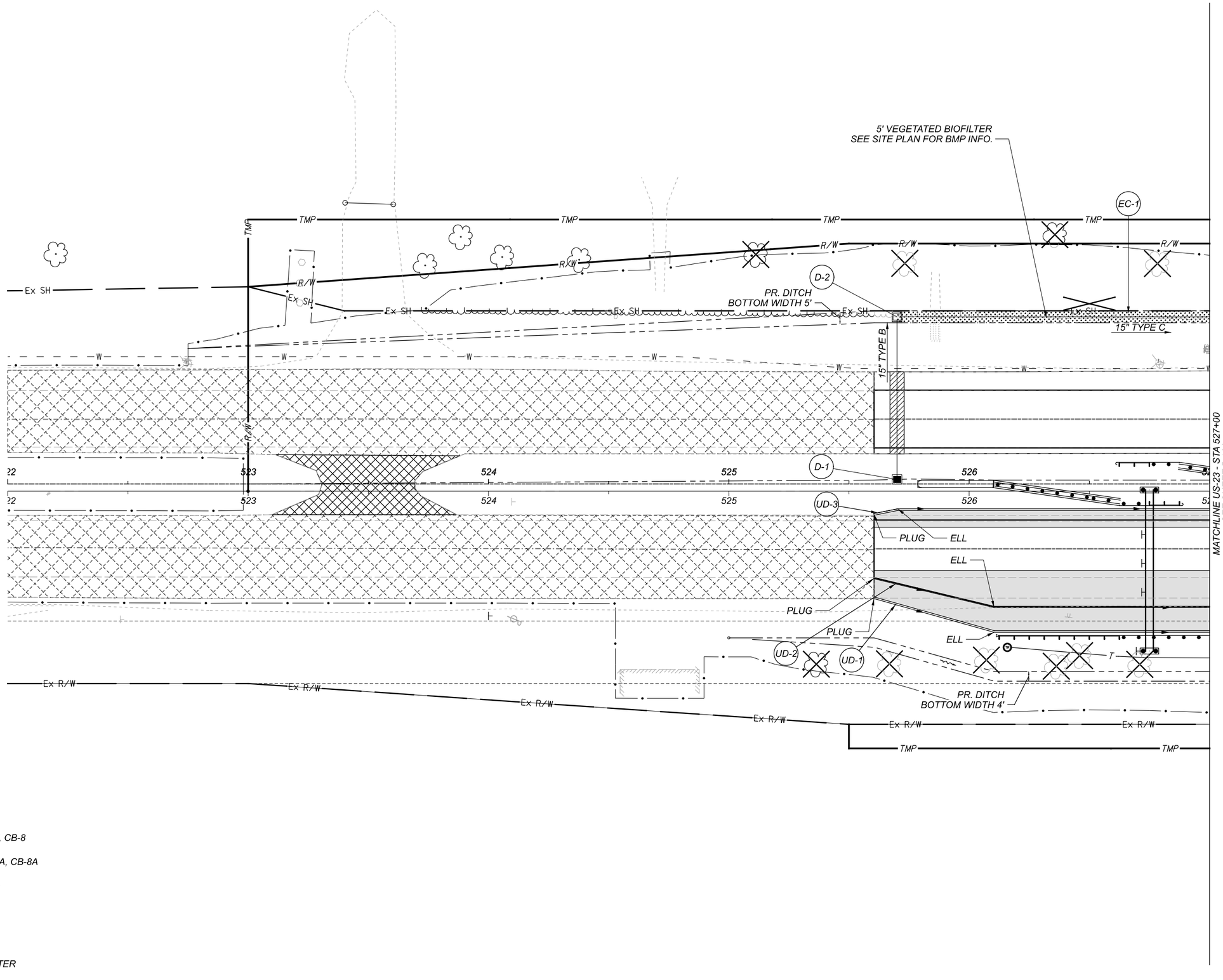

LEGEND:

- CATCH BASIN, CB-5, CB-8
- CATCH BASIN, CB-5A, CB-8A
- CATCH BASIN, CB-6
- MANHOLE, MH-3
- HEADWALL, HW-2.1
- VEGETATED BIOFILTER

HORIZONTAL SCALE IN FEET
0 10 20 40

DRAINAGE DETAILS - US-23 (SOUTH HIGH STREET)
STA 522+00 TO STA 527+00

FRA-23-4.19 PART 2 (PID 92616)

DESIGN AGENCY: IBI

DESIGNER	BDB
REVIEWER	KMK 12-01-22
PROJECT ID	92616
SHEET	P.99
TOTAL	170

MODEL: DP00I PAPERSIZE: 17x11(in.) DATE: 2022-12-09 TIME: 9:34:44 AM USER: william.croxton
\\10.120.112.5\ibishare\122592_SafetyDesign\7.0_Production\7.3_Design\04_Civil\Worksets\110380_FRA-23\400-Engineering\Drainage\Sheets\110380_DP00i.dgn

HORIZONTAL SCALE IN FEET
0 10 20 40

DRAINAGE DETAILS - US-23 (SOUTH HIGH STREET)
STA 527+00 TO STA 532+00

DESIGN AGENCY
IBI

DESIGNER	BDB
REVIEWER	KMK 12-01-22
PROJECT ID	92616
SHEET	P.100
TOTAL	170

FRA-23-4.19 PART 2 (PID 92616)

MODEL: DP2 PAPERSIZE: 17x11(in.) DATE: 2022-12-09 TIME: 9:34:50 AM USER: williamcroxton
\\10.120.12.5\ibishare\122592_SafetyDesign\7.0_Production\7.3_Design\04_Civil\Worksets\110380_FRA-23\400-Engineering\Drainage\Sheets\110380_DP002.dgn

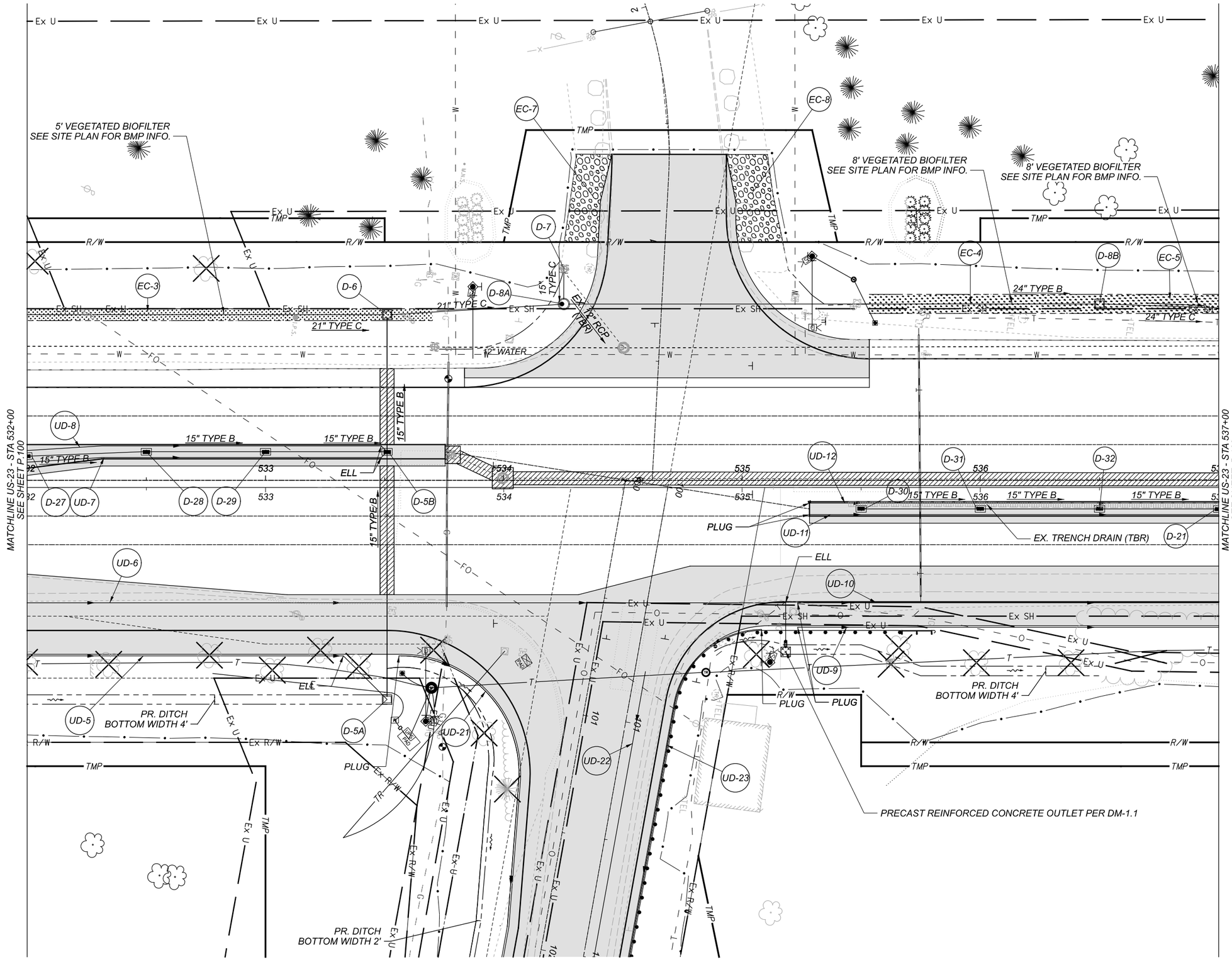

HORIZONTAL SCALE IN FEET
0 10 20 40

DRAINAGE DETAILS - US-23 (SOUTH HIGH STREET)
STA 532+00 TO STA 537+00

FRA-23-4.19 PART 2 (PID 92616)

MODEL: DP3 PAPERSIZE: I7xII(In.) DATE: 2022-12-09 TIME: 9:35:40 AM USER: william.croxton
\\10.120.12.5\bishare\122592_SafetyDesign\7.0_Production\7.3_Design\04_Civil\Worksets\110380_FRA-23\400-Engineering\Drainage\Sheets\110380_DP003.dgn

DESIGN AGENCY
IBI

DESIGNER	BDB
REVIEWER	KMK 12-01-22
PROJECT ID	92616
SHEET	P.101
TOTAL	170

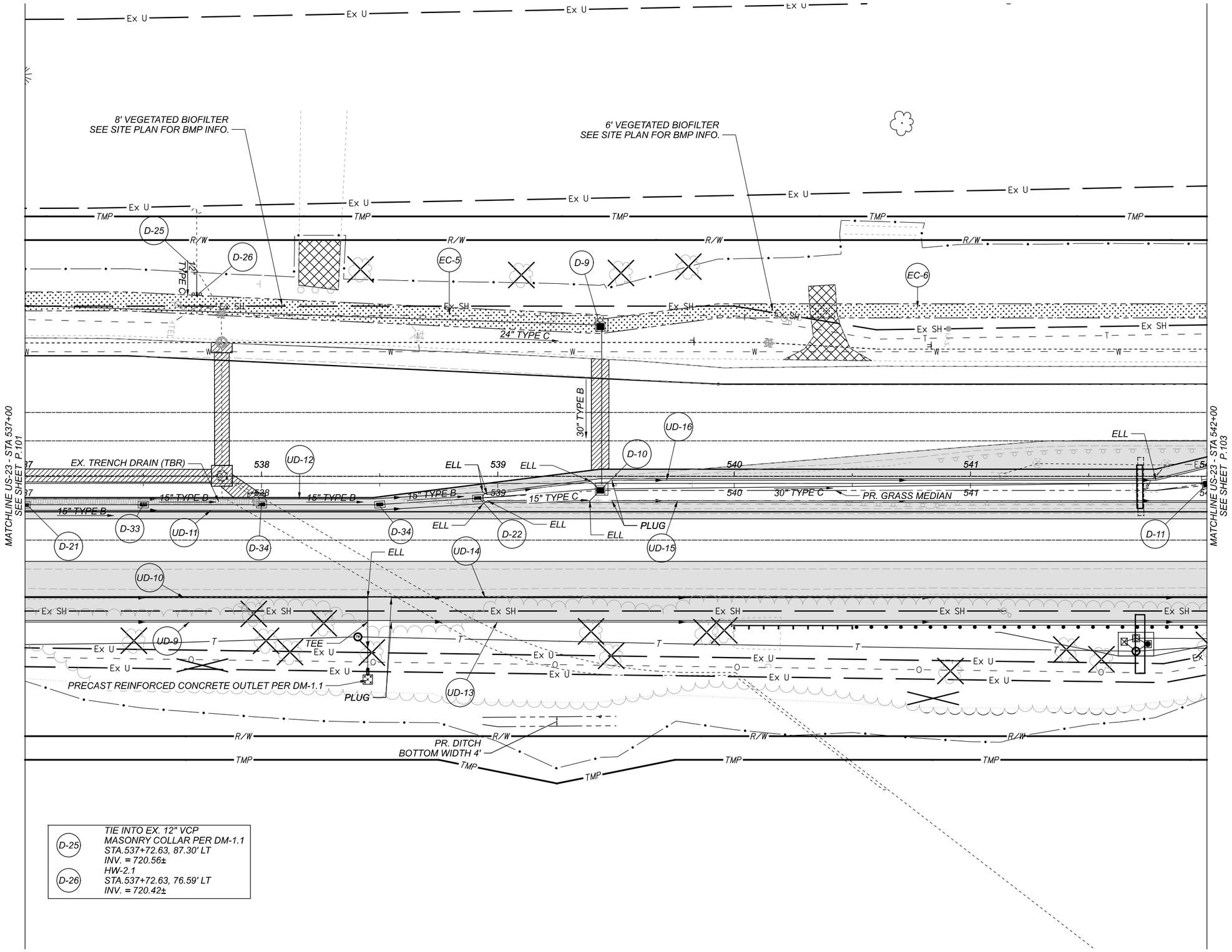

D-25	TIE INTO EX. 12" VCP MASONRY COLLAR PER DM-1.1 STA.537+72.63, 87.30' LT INV. = 720.56±
D-26	HW-2.1 STA.537+72.63, 76.59' LT INV. = 720.42±

HORIZONTAL SCALE IN FEET
0 10 20 40

DRAINAGE DETAILS - US-23 (SOUTH HIGH STREET)
STA 537+00 TO STA 542+00

FRA-23-4.19 PART 2 (PID 92616)

MODEL: DP4 PAPERSIZE: 17x11(in.) DATE: 2022-12-09 TIME: 9:35:51 AM USER: william.croxton
\\10.120.12.5\ibishare\122592_SafetyDesign\7.0_Production\7.3_Design\04_Civil\Worksets\110380_FRA-23\400-Engineering\Drainage\Sheets\110380_DP004.dgn

DESIGN AGENCY: IBI

DESIGNER	BDB
REVIEWER	KMK 12-01-22
PROJECT ID	92616
SHEET	P.102
TOTAL	170

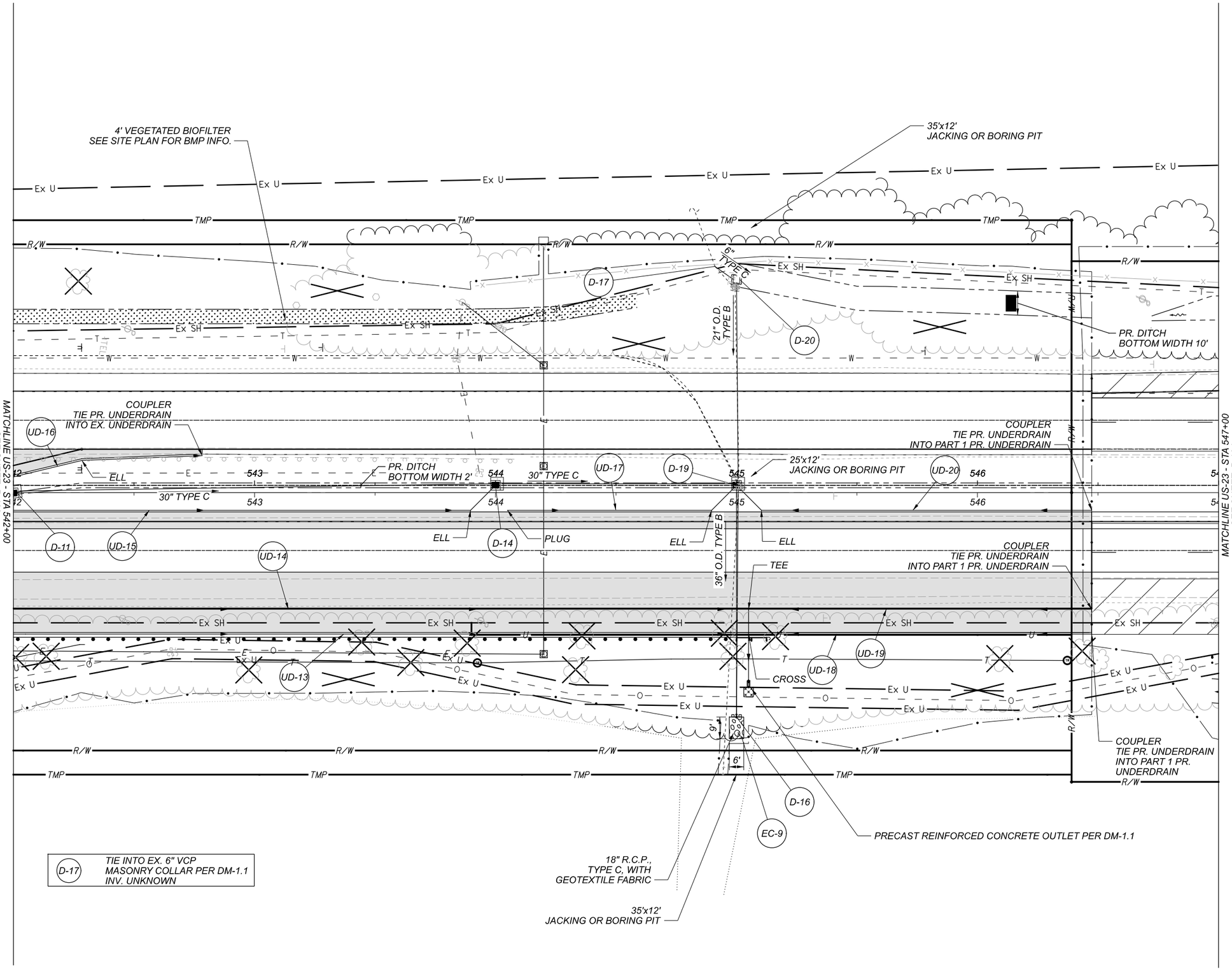

HORIZONTAL SCALE IN FEET
0 10 20 40

DRAINAGE DETAILS - US-23 (SOUTH HIGH STREET) STA 542+00 TO STA 547+00

DESIGN AGENCY
IBI

DESIGNER
BDB

REVIEWER
KMK 12-01-22

PROJECT ID
92616

SHEET P.103 TOTAL 170

FRA-23-4.19 PART 2 (PID 92616)

MODEL: DP5 PAPERSIZE: 17x11(in.) DATE: 2022-12-09 TIME: 9:35:59 AM USER: william.croxton
\\10.20.12.5\bishore\122592_SafetyDesign\7.0_Production\7.3_Design\04_Civil\Worksets\10380_FRA-23\400-Engineering\Drainage\Sheets\10380_DP005.dgn

MODEL: DP40| PAPERSIZE: 17x11 (In.) DATE: 2022-12-09 TIME: 9:36:05 AM USER: william.croxton
\\10.120.112.5\ibishare\122592_SafetyDesign\7.0_Production\7.3_Design\04_Civil\Worksets\110380_FRA-23\400-Engineering\Drainage\Sheets\110380_DP40|.dgn

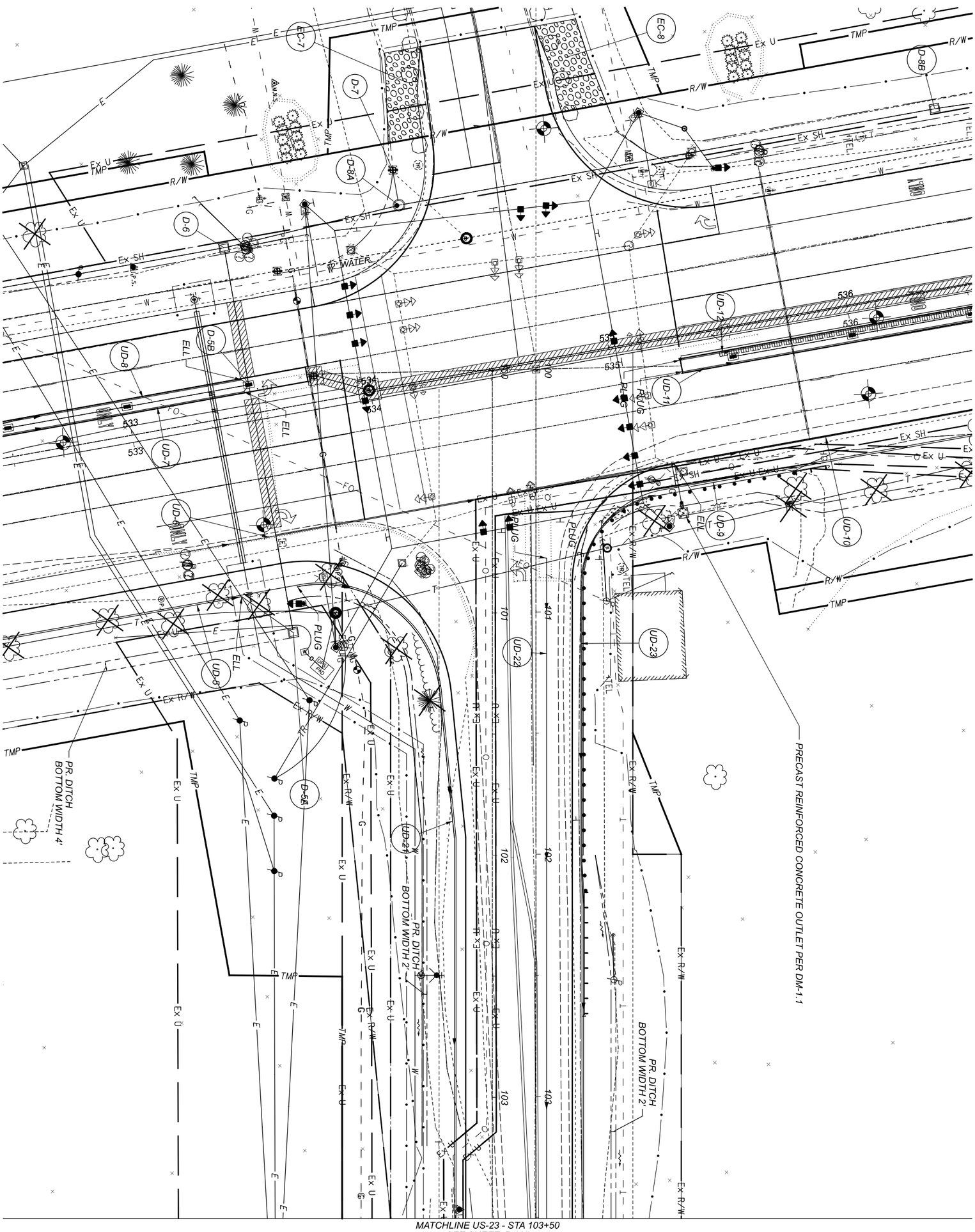

MATCHLINE US-23 - STA 103+50
SEE SHEET P.105

DESIGNER BDB
REVIEWER KMK 12-01-22
PROJECT ID 92616
SHEET P.104
TOTAL 170
DESIGN AGENCY IBI

DRAINAGE DETAILS - CR-121 (RATHMELL ROAD)
STA 99+99.82 TO STA 103+50

HORIZONTAL SCALE IN FEET
0 20
10 40

MODEL: DP402 PAPERSIZE: 17x11 (in.) DATE: 2022-12-09 TIME: 9:36:09 AM USER: william.croxton
\\10.120.112.5\lblshare\122592_SafetyDesign\7.0_Production\7.3_Design\04_Civil\Worksets\110380_FRA-23\400-Engineering\Drainage\Sheets\110380_DP402.dgn

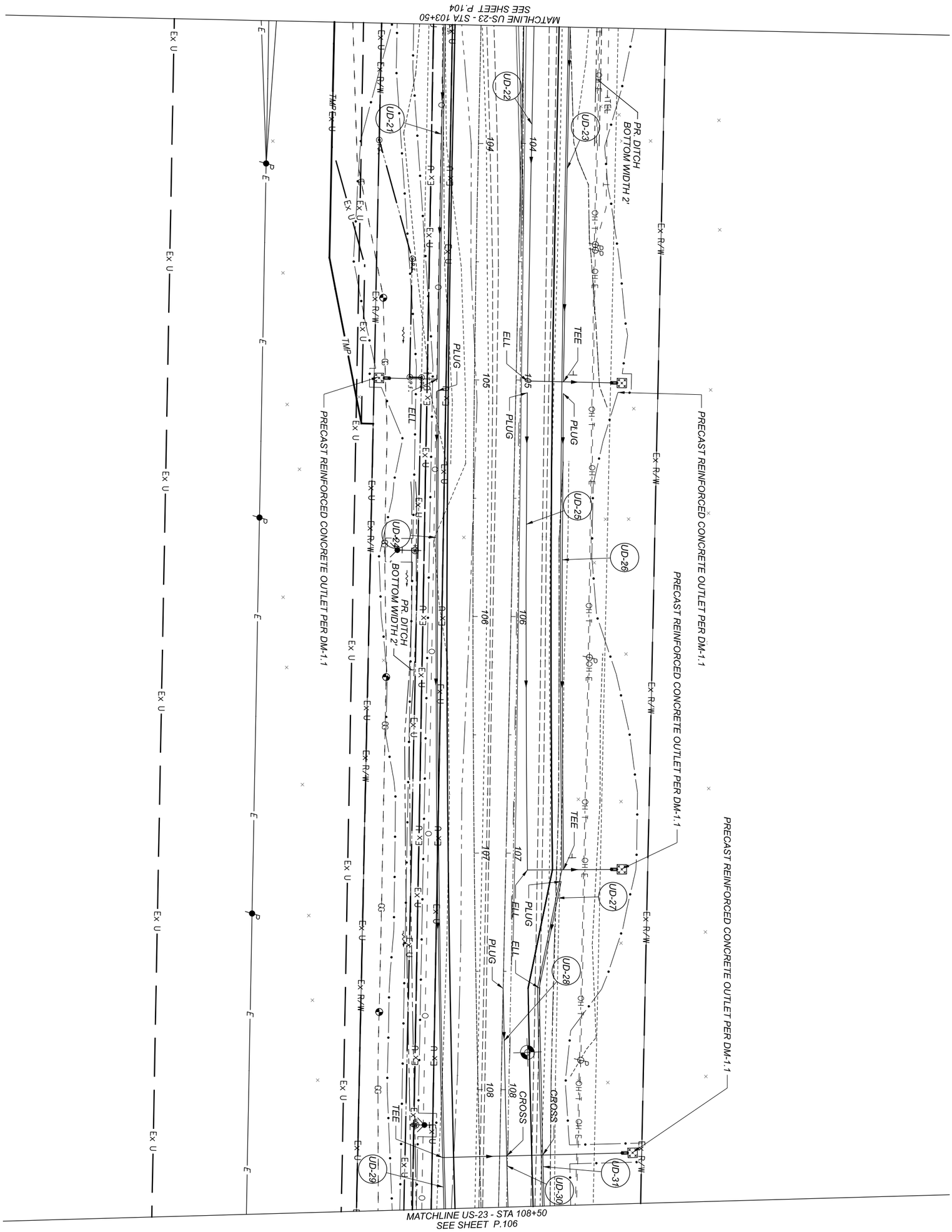

DRAINAGE DETAILS - CR-121 (RATHMELL ROAD)
STA 103+50 TO STA 108+50

HORIZONTAL SCALE IN FEET
0 20
10 40

DESIGNER	BDB
REVIEWER	KMK 12-01-22
PROJECT ID	92616
SHEET	P.105
TOTAL	170

DESIGN AGENCY

MODEL: DP403 PAPERSIZE: 17x11 (in.) DATE: 2022-12-09 TIME: 9:36:13 AM USER: william.croxton
\\10.120.112.5\ibishare\122592_SafetyDesign\7.0_Production\7.3_Design\04_Civil\Worksets\110380_FRA-23\400-Engineering\Drainage\Sheets\110380_DP403.dgn

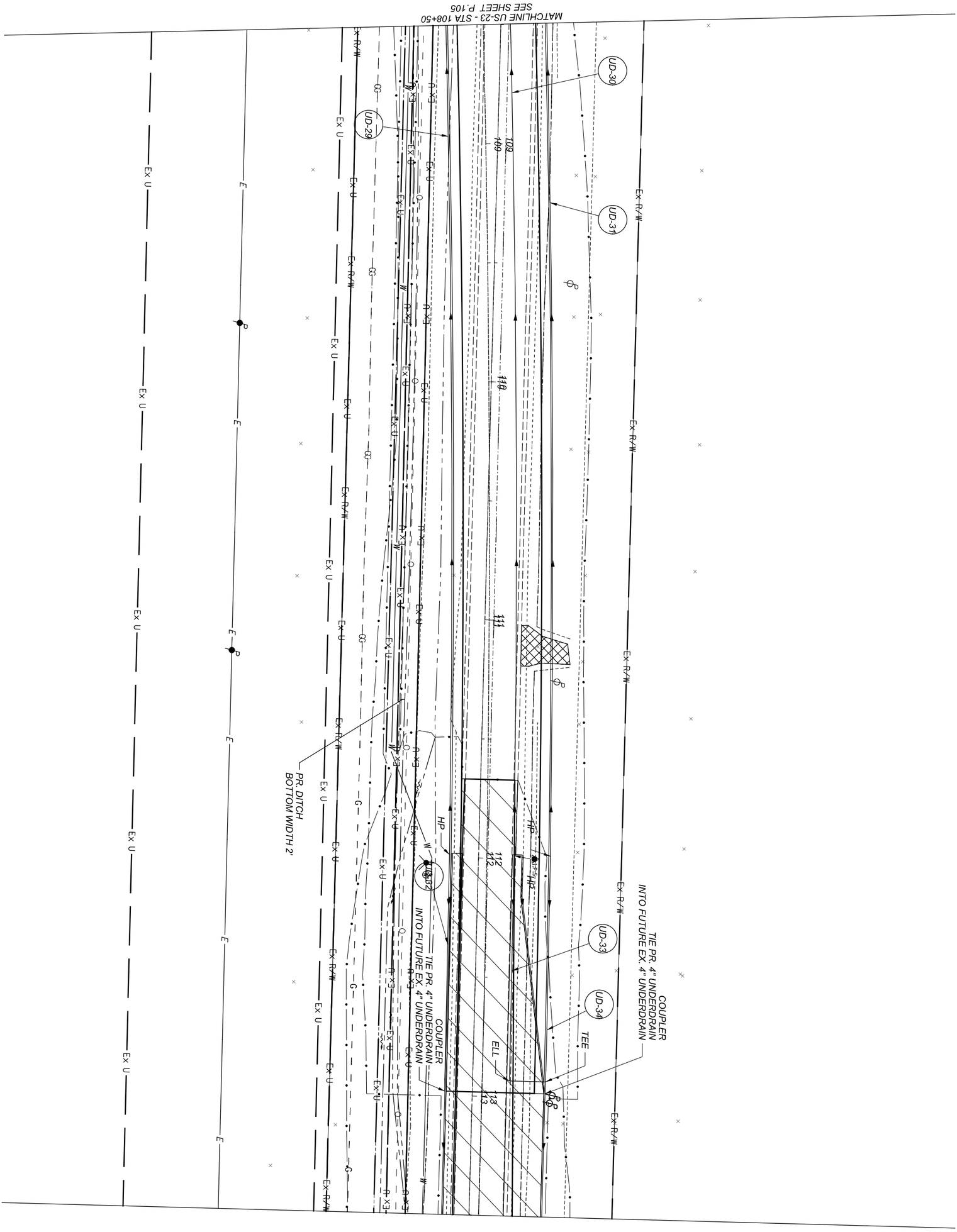

DRAINAGE DETAILS - CR-121 (RATHMELL ROAD)
STA 108+50 TO STA 113+50

HORIZONTAL SCALE IN FEET
0 20
10 40

DESIGN AGENCY: IBI

DESIGNER	REVIEWER	PROJECT ID	SHEET	TOTAL
BDB	KMK 12-01-22	92616	P.106	170

WATER WORK:

CITY OF COLUMBUS, DIVISION OF WATER GENERAL NOTES:

THE CITY OF COLUMBUS, CONSTRUCTION AND MATERIAL SPECIFICATIONS, 2018 EDITION AND ALL REVISIONS, INCLUDING ALL SUPPLEMENTS THERETO, SHALL GOVERN ALL CONSTRUCTION ITEMS THAT ARE A PART OF THIS PLAN, UNLESS OTHERWISE NOTED.

ALL WATER MAIN MATERIALS AND INSTALLATIONS SHALL BE IN ACCORDANCE WITH THE CURRENT RULES AND REGULATIONS OF THE CITY OF COLUMBUS, DIVISION OF WATER. ALL CITY OF COLUMBUS, DIVISION OF WATER STANDARD DRAWINGS SHALL APPLY TO THE PROJECT, UNLESS OTHERWISE NOTED.

FOR ANY EMERGENCIES INVOLVING THE WATER DISTRIBUTION SYSTEM, PLEASE CONTACT THE DIVISION OF WATER DISTRIBUTION MAINTENANCE OFFICE AT 614-645-7788.

ALL BRASS FITTINGS ASSOCIATED WITH WATER WORK, INCLUDING REPAIRS TO THE EXISTING SYSTEM, SHALL CONFORM TO THE REVISED ALLOWABLE LEAD EXTRACTION LIMIT PER THE UPDATED NSF/ANSI 61 STANDARD. THE DIVISION OF WATER'S APPROVED MATERIALS LIST HAS BEEN UPDATED TO REFLECT THIS REQUIREMENT.

IT SHALL BE UNLAWFUL FOR ANY PERSON TO PERFORM ANY WORK ON CITY OF COLUMBUS WATER MAIN SYSTEMS WITHOUT FIRST SECURING LICENSE TO ENGAGE IN SUCH WORK, AS INDICATED IN COLUMBUS CITY CODE SECTION 1103.02 AND 1103.06. THIS WORK INCLUDES ANY ATTACHMENTS, ADDITIONS TO OR ALTERATIONS IN ANY CITY SERVICE PIPE OR APPURTENANCES (INCLUDING WATER SERVICE LINES AND TAPS). THIS REQUIREMENT MAY BE MET BY UTILIZATION OF A SUBCONTRACTOR WHO HOLDS A CITY OF COLUMBUS WATER CONTRACTOR LICENSE OR A COMBINED WATER/SEWER CONTRACTOR LICENSE TO PERFORM THIS WORK. UTILIZATION OF A SUBCONTRACTOR MUST MEET THE LICENSING REQUIREMENTS OF CITY OF COLUMBUS BUILDING CODE, IN PARTICULAR SECTION 4114.119 AND 4114.529.

THE CONTRACTOR SHALL OBTAIN THE PROPER HYDRANT PERMIT(S), AND PAY ANY APPLICABLE FEES, FOR ANY APPROVED HYDRANT USAGE DEEMED NECESSARY FOR WORK UNDER THIS IMPROVEMENT. PERMITS MAY BE OBTAINED THROUGH THE DIVISION OF WATER PERMIT OFFICE (614-645-7330). THE CONTRACTOR SHALL ADHERE TO ALL RULES & REGULATIONS GOVERNING SAID PERMIT AND MUST HAVE THE ORIGINAL PERMIT ON SITE ANYTIME IN WHICH THE HYDRANT IS IN USE. PERMITS MAY BE OBTAINED BY ACCESSING HTTP://PORTAL.COLUMBUS.GOV/PERMITS/. COST TO BE INCLUDED IN THE VARIOUS BID ITEMS.

THESE DESIGN PLANS HAVE ASSUMED DUCTILE IRON AS THE BASELINE PIPE MATERIAL FOR DESIGN. ALL FITTINGS, DEFLECTIONS, AND OTHER DESIGN ELEMENTS ARE BASED OFF OF THE DUCTILE IRON STANDARDS. PVC WILL NOT BE PERMITTED SINCE THIS IS LOCATED IN A PRIORITY 1 STREET.

ALL WATER MAINS SHALL BE CLEANED AND FLUSHED, AND ANY WATER MAIN 12-INCH AND LARGER MUST BE PROPERLY PIGGED, IN ACCORDANCE WITH SECTION 801.15 OF THE CITY OF COLUMBUS, CONSTRUCTION AND MATERIAL SPECIFICATIONS.

ALL WATER MAINS SHALL BE PRESSURE TESTED IN ACCORDANCE WITH SECTION 801.16 OF THE CITY OF COLUMBUS, CONSTRUCTION AND MATERIAL SPECIFICATIONS. THE CITY MAY NOT APPROVE ANY TEST LASTING LESS THAN TWO HOURS, REGARDLESS OF THE AMOUNT OF LEAKAGE.

ALL WATER MAINS SHALL BE DISINFECTED IN ACCORDANCE WITH SECTION 801.17 OF THE CITY OF COLUMBUS CONSTRUCTION AND MATERIAL SPECIFICATIONS. SPECIAL ATTENTION IS DIRECTED TO APPLICABLE SECTIONS OF A.W.W.A. C- 651. WHEN THE WATER MAINS ARE READY FOR DISINFECTION, THE INSPECTOR SHALL SUBMIT A WRITTEN REQUEST FOR CHLORINATION OF THE MAINS THAT NEED DISINFECTED, THREE (3) SETS OF "AS- BUILT" PLANS (FULL SIZE SHEETS ONLY), THE AS- BUILT SURVEY COORDINATES, WATER SERVICE REPORTS AND A PRESSURE TEST TO THE CITY OF COLUMBUS, DIVISION OF WATER. THE CONTRACTOR SHALL BE RESPONSIBLE FOR ALL COSTS ASSOCIATED WITH THE DISINFECTION OF ALL WATER MAINS CONSTRUCTED UNDER THIS PLAN.

CITY OF COLUMBUS, DIVISION OF WATER GENERAL NOTES: (CONT.)

THE CONTRACTOR SHALL PROVIDE CHLORINATION TAPS AND BLOWOFFS AS PER THE REQUIREMENTS OF SECTION 801.17 OF THE CITY OF COLUMBUS, CONSTRUCTION AND MATERIAL SPECIFICATIONS. IN ADDITIONS TO THE BLOWOFF LOCATIONS NOTED IN 801.17, THE CONTRACTOR SHALL ALSO INSTALL BLOWOFFS AT EVERY 1,100 LINEAR FEET OF THE WATER MAIN INSTALLED FOR SAMPLING.

ANY SECTION OF WATER MAIN THAT IS LONGER THAN 20 FEET IN LENGTH SHALL BE CHLORINATED. HAND SWABBING METHODS WILL ONLY BE PERMITTED FOR SECTIONS LESS THAN OR EQUAL TO 20 FEET IN LENGTH. USE UNSCENTED HOUSEHOLD BLEACH FOR HAND SWABBING OF PIPE AND FITTINGS. PLEASE NOTE THAT CUT- IN- TEES, SLEEVES, AND ANY OTHER REQUIRED FITTINGS OR PIPING SHALL BE TAKEN INTO ACCOUNT AND ARE INCLUDED IN THE TOTAL LENGTH OF THE SECTION (CUT TO CUT).

ONLY ONE CONNECTION TO AN EXISTING WATER MAIN IS PERMITTED BEFORE DISINFECTION OF A NEW WATER MAIN HAS BEEN COMPLETED. ALL OTHER CONNECTIONS MUST BE MADE AFTER THE MAIN HAS BEEN DISINFECTED.

ALL FIRE HYDRANTS TO BE INSTALLED IN THE CITY OF COLUMBUS SHALL BE PAINTED WITH THE COLOR "SAFETY ORANGE." THE FIRE HYDRANTS SHALL BE PROVIDED WITH TWO COATS IN A GLOSS ENAMEL OF THE "SAFETY ORANGE" COLOR FOR THE ENTIRE HYDRANT. THE TOPS OF THE FIRE HYDRANTS ARE NO LONGER RQUIRED TO BE PAINTED PLACK. AFTER INSTALLATION OF FIRE HYDRANTS, THE CONTRACTOR IS RESPONSIBLE TO APPLY TOUCH UP PAINT TO ANY DAMAGE TO THE FACTORY APPLIED HYDRANT PAINT. HYDRANTS WILL NOT BE ACCEPTED UNTIL ANY PAINT DAMAGE FROM SHIPPING OR INSTALLATION HAS BEEN REPAIRED. USE HYDRANT TOUCH UP PAINT IN ACCORDANCE WITH THE APPROVED MATERIALS LIST.

ALL FIRE HYDRANTS, WHETHER NEW OR RELOCATED, SHALL BE INSPECTED AND APPROVED BY THE DIVISION OF FIRE PRIOR TO BEING PUT INTO SERVICE. THE CONTRACTOR SHALL CONTACT THE DIVISION OF FIRE AT 614- 645- 7642 EXT. 75658 TO SCHEDULE THE INSPECTION OF THE NEW OR RELOCATED FIRE HYDRANTS. THE CITY WILL PROVIDE THE CONTRACTOR "OUT OF SERVICE" RINGS THAT SHALL BE PLACED ON ALL NEW OR RELOCATED FIRE HYDRANTS TO CLEARLY IDENTIFY THEM AS INACTIVE. AFTER WRITTEN NOTIFICATION OF ACCEPTANCE HAS BEEN RECEIVED AND FINAL WATER MAIN CONNECTIONS HAVE OCCURRED, THE CONTRACTOR SHALL REMOVE THE "OUT OF SERVICE" RINGS FROM THE FIRE HYDRANTS. ALL "OUT OF SERVICE" RINGS SHALL BE RETURNED TO THE CITY. ALL COORDINATION AND WORK REQUIRED TO TEST AND ACCEPT THE FIRE HYDRANTS SHALL BE INCLUDED IN THE PRICE BID ITEM 809.

MAINTAIN EIGHTEEN (18) INCHES VERTICAL AND TEN (10) FEET HORIZONTAL SEPARATION BETWEEN ANY SANITARY OR STORM SEWER PIPING AND ALL PROPOSED WATER MAINS.

WHEN CROSSING THE EXISTING WATER MAIN, AND LOW STRENGTH MORTAR (ITEM 613) IS TO BE USED AS BACKFILL, THE CONTRACTOR SHALL PROVIDE SIZE NO. 57 CRUSHED CARBONATE STONE (CCS) 1 FOOT BELOW TO 1 FOOT ABOVE THE EXISTING WATER MAIN.

IF DURING EXCAVATION, THE POLYETHYLENE ENCASEMENT ON THE EXISTING WATER MAIN BECOMES DAMAGED, THE CONTRACTOR SHALL REPAIR THE POLYETHYLENE ENCASEMENT PER MANUFACTURER'S SPECIFICATIONS AND DOW STANDARD DRAWINGS L- 1003 AND L- 1004, AT THEIR OWN EXPENSE. ENSURE THAT THE ENTIRE EXPOSED AREA IS COVERED WITH NEW POLYETHYLENE ENCASEMENT AND SECURELY TAPED, PRIOR TO BACKFILLING.

CONTRACTOR SHALL ADHERE TO THE REQUIREMENTS OF THE OHIO ADMINISTRATIVE CODE CHAPTER 3745- 83- 02 WATER DISRUPTION OF SERVICE RULE. EXCAVATE PITS SUFFICIENTLY BELOW THE AREA TO BE CONNECTED TO IN ORDER TO MAINTAIN WATER LEVELS BELOW THE WATER MAIN. IF WATER FROM THE PIT ENTERS THE EXISTING MAIN, CONTACT DIVISION OF WATER IMMEDIATELY. ENSURE THAT SUFFICIENTLY SIZED PUMPS ARE UTILIZED TO REMOVE WATER FROM THE TRENCH AND BACKUP PUMPS ARE KEPT ON SITE FOR REDUNDANCY.

CITY OF COLUMBUS, DIVISION OF WATER GENERAL NOTES: (CONT.)

"SURVEY COORDINATES" SHALL INCLUDE ALL MATERIAL, EQUIPMENT, AND LABOR NECESSARY TO OBTAIN HORIZONTAL AND VERTICAL (NORTHING, EASTING, AND CENTERLINE ELEVATION) SURVEY COORDINATES FOR THE WATER MAIN IMPROVEMENTS. THE SURVEY COORDINATES SHALL BE OBTAINED FOR THE COMPLETED WATER MAIN CONSTRUCTION AND SHALL INCLUDE ALL VALVES, TEES, CROSSES, BENDS, HORIZONTAL DEFLECTIONS, PLUGS, REDUCERS, TAPPING SLEEVES, FIRE HYDRANTS, AIR RELEASES, CURB STOPS, AND CASING PIPE TERMINI. ADDITIONAL SURVEY COORDINATES ARE REQUIRED ON THE WATER MAIN EVERY 200 FEET WHERE NO FITTING OR OTHER WATER MAIN STRUCTURE IS BEING INSTALLED WITHIN THAT LENGTH OF THE IMPROVEMENT.

ALL SURVEY COORDINATES SHALL BE REFERENCED TO THE APPLICABLE COUNTY ENGINEER'S MONUMENTS, AND SHALL BE BASED ON THE NORTH AMERICAN DATUM OF 1983 (NAD 83) WITH THE 2011 ADJUSTMENT, WITH FURTHER REFERENCE MADE TO THE OHIO STATE PLANE SOUTH COORDINATE SYSTEM, SOUTH ZONE, WITH ELEVATIONS BASED ON NAVD 88 DATUM. ALL COORDINATES (NORTHING, EASTING, CENTERLINE ELEVATION) SHALL BE REFERENCED TO THE NEAREST HUNDREDTH (N XXXXXX.XX, E XXXXXX.XX, C/L ELEV. XXX.XX). ALL SURVEY COORDINATES SHALL BE ACCURATE TO WITHIN 1.0 FOOT HORIZONTAL AND A TENTH OF A FOOT (0.10) OR LESS VERTICAL.

THE COORDINATES SHALL BE DOCUMENTED TO THE ENGINEER IN DIGITAL SPREADSHEET FORM AND SHALL INCLUDE THE APPLICABLE ITEM, STATION, NORTHING, EASTING, AND CENTERLINE ELEVATION. COORDINATES SHALL BE SUBMITTED TO THE ENGINEER ON A BI- WEEKLY BASIS. COORDINATES SHALL ALSO BE REQUIRED TO BE SUBMITTED TO THE DIVISION OF WATER AS PART OF THE REQUEST FOR CHLORINATION.

LUMP SUM PAYMENT IS FULL COMPENSATION FOR ALL WORK INVOLVED IN OBTAINING AND DOCUMENTING THE SURVEY COORDINATES AS DESCRIBED IN THIS SPECIFICATION.

ALL WATER MAIN VALVE BOXES, WATER TAP BOXES, TEST STATIONS, PITOMETER TAP STRUCTURES, METER PIT COVERS, AND OTHER SURFACE UTILITY STRUCTURES WITHIN THE DISTURBED AREA SHALL BE ADJUSTED TO GRADE. ANY OF THESE STRUCTURES LOCATED WITHIN PAVEMENT, DRIVEWAYS, OR OTHER TRAVELED AREAS, WHETHER EXISTING OR PROPOSED, SHALL BE EQUIPPED WITH A TRAFFIC RATED, HEAVY DUTY VALVE BOX AND/OR COVER IN ACCORDANCE WITH THE STANDARD DRAWINGS. EXISTING WATER TAP BOXES TO REMAIN THAT ARE ENCOUNTERED WITHIN THE PROJECT LIMITS SHALL BE CLEANED OUT, CENTERED OVER THE CURB STOP, AND ADJUSTED TO THE PROPOSED GRADE.

RISER RINGS WILL NOT BE PERMITTED ON ANY NEWLY INSTALLED VALVE BOXES TO BRING VALVES TO FINAL GRADE. THE CONTRACTOR SHALL ENSURE THAT THE BOXES ARE INSTALLED AT THE CORRECT GRADE FOR FINAL PAVING OPERATIONS AND THAT THEIR PAVING CONTRACTOR INSTALLS PAVEMENT CORRECTLY AT LIDS DURING PAVING OPERATIONS. VALVE LIDS ARE NOT PERMITTED TO SET ABOVE FINAL GRADE AND SHALL BE A MAXIMUM OF ¼" BELOW FINAL GRADE.

WHERE NEW CONDUIT IS PROPOSED TO CROSS AN EXISTING OR PROPOSED WATER MAIN OR WATER TAP/SERVICE LINE, A MINIMUM OF 12- INCHES OF VERTICAL CLEARANCE SHALL BE MAINTAINED BETWEEN THE CONDUIT AND THE WATER MAIN OR TAP/SERVICE LINE. A MINIMUM OF 3- FEET OF HORIZONTAL CLEARANCE (OUT TO OUT) IS REQUIRED AT LOCATIONS WHERE THE CONDUIT IS PARALLEL TO THE WATER MAIN AND AT LOCATIONS OF WATER MAIN THRUST BLOCKS.

A MINIMUM OF 3 FEET OF HORIZONTAL CLEARANCE (OUT TO OUT) SHALL BE MAINTAINED BETWEEN ALL EXISTING WATER MAINS AND FOUNDATIONS FOR POLES, PULL BOXES, PUSH BUTTON PEDESTALS, AND ANY OTHER MISCELLANEOUS ELECTRICAL STRUCTURE.

CITY OF COLUMBUS, DIVISION OF WATER GENERAL NOTES: (CONT.)

MINIMUM OF 4 FEET OF COVER IS REQUIRED PRIOR TO PRESSURE TESTING ANY WATER MAIN. A SUFFICIENT AMOUNT OF BACKFILL SHALL BE INSTALLED TO PROVIDE THE ADEQUATE RESTRAINT IN AREAS WHERE REQUIRED.

THE PROPOSED WATER MAIN SHALL BE LOCATED A MINIMUM DISTANCE OF TWENTY (20) FEET AWAY FROM ANY EXISTING OR PROPOSED STRUCTURE, OVERHANG OR FOOTER.

FIRE HYDRANT RELOCATIONS SHALL CONFORM TO APPLICABLE SECTIONS OF ITEM 809 OF THE CITY OF COLUMBUS CONSTRUCTION AND MATERIAL SPECIFICATIONS. WORK SHALL CONSIST OF REMOVING THE EXISTING HYDRANT, INSTALLING NEW 6" PIPE AND FITTING AS REQUIRED TO LOCATE THE FIRE HYDRANT 2 FEET FROM BACK OF PROPOSED CURB OR 8 FEET OFF EDGE OF PAVEMENT, RESETTING HYDRANT AND BLOCKING AS REQUIRED. ALL 6" PIPE SHALL BE INSTALLED AT 4'- 0" MINIMUM COVER. HYDRANT EXTENSIONS SHALL BE PROVIDED PER ITEM 810, AS REQUIRED. RELOCATED FIRE HYDRANTS SHALL BE ADJUSTED TO PROPER GRADE AND FACED IN THE PROPER DIRECTION. WHEN A HYDRANT IS RELOCATED FIFTEEN (15) FEET OR MORE FROM THE "TYPICAL HYDRANT SETTING" VALVE LOCATION (SEE L-6409 & L- 6637), AN ADDITIONAL VALVE SHALL BE INSTALLED, AND RESTRAINED, WITHIN TWO (2) FEET OF THE RELOCATED HYDRANT. PAYMENT IS TO BE INCLUDED UNDER ITEM 809, FIRE HYDRANT RELOCATED.

RELOCATED FIRE HYDRANTS SHALL BE PUT BACK IN SERVICE AS SOON AS POSSIBLE. THE CONTRACTOR SHALL NOTIFY THE DIVISION OF FIRE ALARM OFFICE, 221-3132, WHENEVER FIRE HYDRANTS ARE TAKEN OUT OF SERVICE AND PLACED BACK IN SERVICE. NO TWO (2) ADJACENT FIRE HYDRANTS SHALL BE TAKEN OUT OF SERVICE CONCURRENTLY.

THE CONTRACTOR SHALL COORDINATE HIS WORK SUCH THAT NO WATER CUSTOMER WILL HAVE THEIR SERVICE DISRUPTED MORE THAN TWO (2) TIMES THROUGHOUT THE DURATION OF THIS PROJECT.

IF A LEAD WATER TAP IS ENCOUNTERED AND IS NEITHER DAMAGED NOR PART OF A PLANNED RELOCATION/REPLACEMENT, THE CONTRACTOR SHALL REPORT THE PRESENCE OF THE LEAD TAP TO THE DIVISION OF WATER DISTRIBUTION MAINTENANCE GROUP AT 614-645-7788.

IF A LEAD TAP IS EITHER DAMAGED DURING CONSTRUCTION OR IS PART OF A PLANNED WATER TAP RELOCATION/REPLACEMENT, THE CONTRACTOR SHALL TAKE THE FOLLOWING STEPS:

1. IF DAMAGED, IMMEDIATELY CONTACT LEW FLEMISTER, DIVISION OF WATER, (614-645-7028), TO REQUEST THE SHUT OFF OF THE EXISTING CURB STOP. IF LEW CANNOT BE REACHED, CONTACT THE DIVISION OF WATER DISTRIBUTION ENGINEERING OFFICE AT 614-645-7677 TO REQUEST THE SHUT OFF.
2. CONTRACTOR SHALL EXPOSE THE OWNER'S SIDE OF THE WATER SERVICE TO CONFIRM THE MATERIAL. THE INSPECTOR SHALL BE PRESENT FOR THIS.
3. IF THE CUSTOMER'S PRIVATE SERVICE MATERIAL IS LEAD, STOP WORK AND NOTIFY THE DIVISION OF WATER DISTRIBUTION ENGINEERING OFFICE (614- 645- 7677) IMMEDIATELY. IF THE MATERIAL IS NOT LEAD, THE CONTRACTOR SHALL REPLACE THE LEAD TAP (FROM EXISTING CORPORATION STOP TO CURB STOP) AND REINSTATE SERVICE TO THE CUSTOMER. PARTIAL REPAIRS OF THE LEAD TAP ARE NOT PERMITTED.
4. REFER TO DIVISION OF WATER STANDARD DRAWINGS L-7102C AND L-9901 FOR INFORMATION ON WATER TAP RELOCATIONS, PLACING NEW CURB STOPS, AND RELOCATING CURB BOXES.

THE CONTRACTOR IS REQUIRED TO SUBMIT A SEQUENCE OF CONSTRUCTION TO THE CITY AT THE PRECONSTRUCTION CONFERENCE. THIS SEQUENCE OF CONSTRUCTION SHOULD ALSO DETAIL THE CONTRACTOR'S PLANS FOR TESTING AND CHLORINATION OF THE NEW MAINS, INCLUDING THE SOURCE OF THE WATER AND LOCATION OF TEMPORARY CHLORINATION AND BLOW- OFF TAPS. THE CITY SHALL HAVE THE RIGHT TO APPROVE, REJECT OR MODIFY THE CONSTRUCTION SEQUENCE TO ENSURE THAT THE INTERRUPTIONS ARE HELD TO A MINIMUM. NOTE: THE CITY MAY TAKE UP TO 10 WORKING DAYS TO RESPOND TO THIS SUBMITTAL.

WATER WORK NOTES

DESIGN AGENCY

IBI

DESIGNER	WLC/CJK
REVIEWER	KMK 12-01-22
PROJECT ID	92616
SHEET	P.107
TOTAL	170

FRA-23-4.19 PART 2 (PID 92616)
MODEL: Sheet PAPERSIZE: 17x11in.) DATE: 2023-04-10 TIME: 10:47:11 AM USER: william.croxton
\\10.120.12.5\bishare\12592_SafetyDesign\7.0_Production\7.3_Design\04_Civil\Worksets\10380_FRA-23\400-Engineering\Utilities\Sheets\10380_UN001.dgn

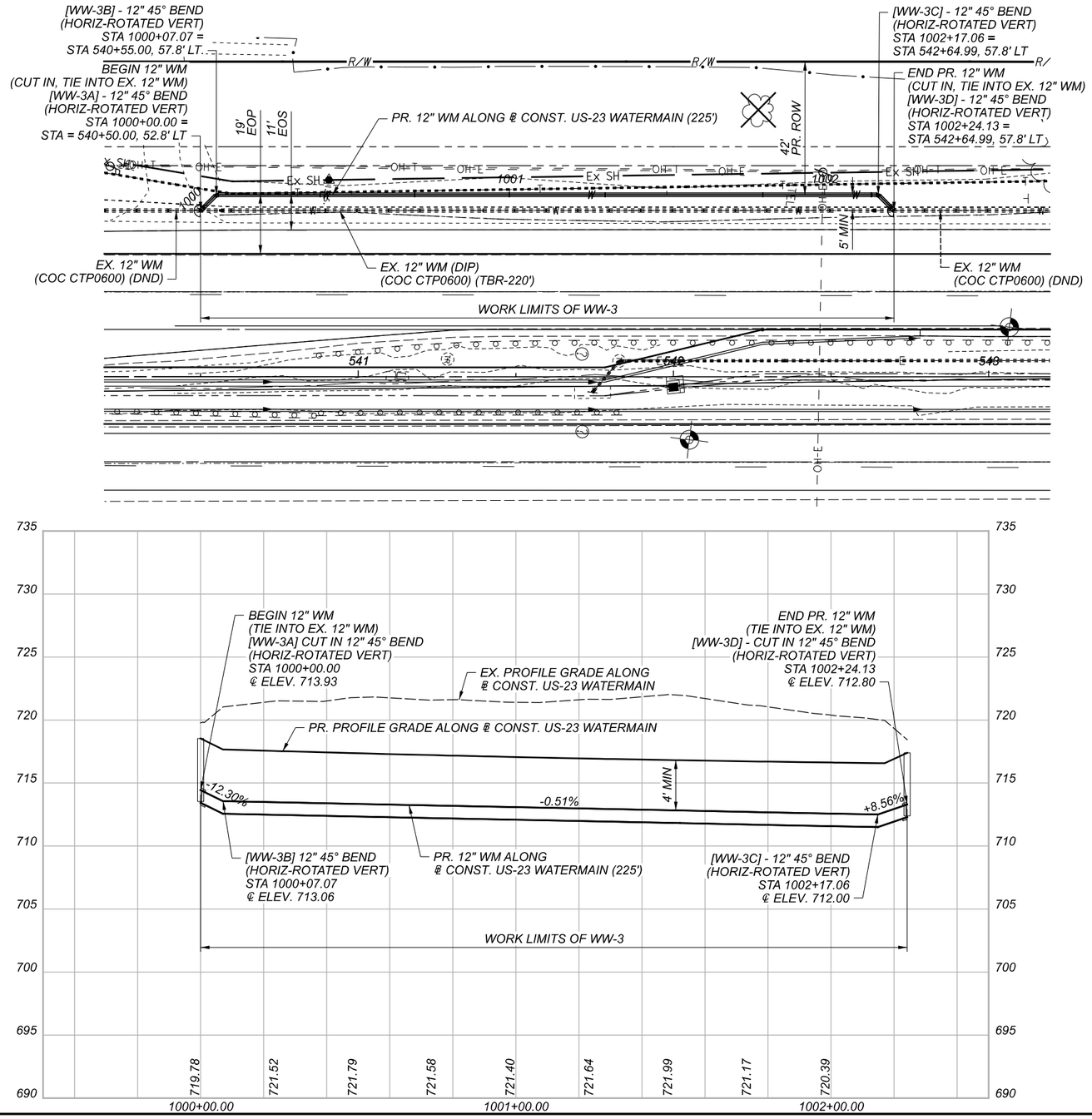

#=MEASUREMENTS BASED ON AS-BUILT DATA FROM CITY OF COLUMBUS-DPU
$$$=EX. 45° BEND

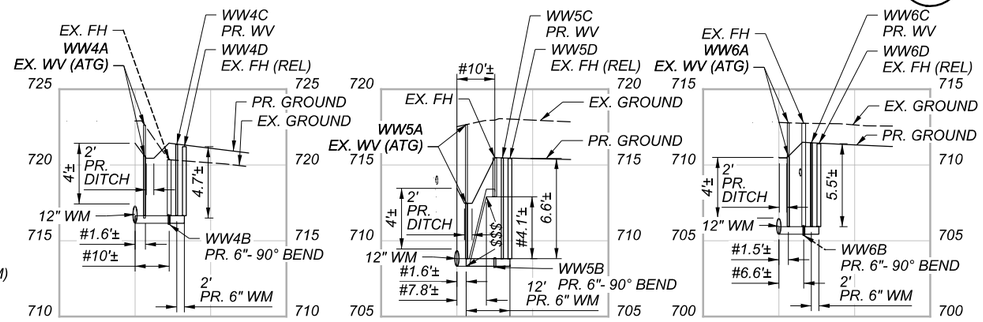

HORIZONTAL SCALE IN FEET
0 10 20 40

SURVEY COORDINATE DATA

REF. NO.	ITEM	STATION	OFFSET	AS-BUILT NORTHING	AS-BUILT EASTING	AS-BUILT CL ELEVATION
[WW1A]	VALVE BOX ADJUSTED TO GRADE	535+26.50	70.1' LT			
[WW1B]	VALVE BOX ADJUSTED TO GRADE	535+26.50	54.7' LT			
[WW2A]	VALVE BOX ADJUSTED TO GRADE	535+76.71	53.0' LT			
[WW-3A]	12" 45 DEG BEND (HORIZ-ROTATED VERT)	540+50.00	52.8' LT.			
[WW-3B]	12" 45 DEG BEND (HORIZ-ROTATED VERT)	540+55.00	57.8' LT.			
[WW-3C]	12" 45 DEG BEND (HORIZ-ROTATED VERT)	542+65.00	57.8' LT.			
[WW-3D]	12" 45 DEG BEND (HORIZ-ROTATED VERT)	542+70.00	52.8' LT.			
[WW-4A]	VALVE BOX ADJUSTED TO GRADE	102+49.63	29.5' RT			
[WW-4B]	6" - 90 DEG BEND	102+49.63	23.0' RT			
[WW-4C]	6" VALVE	102+51.13	23.0' RT			
[WW-4D]	FIRE HYDRANT, RELOCATED	102+53.13	23.0' RT			
[WW-5A]	VALVE BOX ADJUSTED TO GRADE	105+72.04	24.5' RT.			
[WW-5B]	6" - 90 DEG BEND	105+72.04	32.0' RT			
[WW-5C]	6" VALVE	105+74.54	32.0' RT			
[WW-5D]	FIRE HYDRANT, RELOCATED	105+76.54	32.0' RT			
[WW-6A]	VALVE BOX ADJUSTED TO GRADE	108+14.38	26.8' RT			
[WW-6B]	6" - 90 DEG BEND	108+14.38	23.0' RT			
[WW-6C]	6" VALVE	108+16.88	23.0' RT			
[WW-6D]	FIRE HYDRANT, RELOCATED	108+18.88	23.0' RT			
[WW-7A]	VALVE BOX ADJUSTED TO GRADE	112+07.34	25.4' RT.			
[WW-7B]	18" HYDRANT EXTENSION	112+02.34	25.4' RT.			

SHEET NO.	REF. NO.	STATION FROM	STATION TO	202 PIPE REMOVED (FT)	638 WATER WORK, MISC.: CMSC 802 - 6" VALVE (EACH)	638 WATER WORK, MISC.: CMSC 807 - VALVE BOX ADJUSTED TO GRADE (EACH)	638 WATER WORK, MISC.: CMSC 809 - FIRE HYDRANT, RELOCATED (EACH)	638 WATER WORK, MISC.: CMSC 810 - 18" HYDRANT EXTENSION (EACH)	638 WATER WORK, MISC.: CMSC SPECIAL - WATER AS-BUILT COORDINATE TABLE (LS)	638 WATER WORK, MISC.: CMSC 801 - 6" WATER PIPE & FITTINGS (FT)	638 WATER WORK, MISC.: CMSC 808 - RELOCATE 12" WATER MAIN (FT)
		GENERAL NOTES							LS		
P.49	WW-1	535+26.50 LT				1					
		535+26.50 LT				1					
P.49	WW-2	535+76.71 LT				1					
P.50-P.51	WW-3	540+50.00 LT	541+70.00 LT	220							225
P.58	WW-4	102+49.63 RT			1	1	1			2	
P.59	WW-5	105+72.04 RT			1	1	1			12	
P.59	WW-6	108+14.38 RT			1	1	1			2	
P.60	WW-7	112+02.34 RT				1		1			
TOTALS CARRIED TO GENERAL SUMMARY				220	3	7	3	1	LS	16	225

WATER WORKS PLAN AND PROFILE STA 1000+00.00 TO STA 1002+24.13

DESIGN AGENCY
IBI

DESIGNER WLC/CJK
REVIEWER KMK 12-01-22
PROJECT ID 92616
SHEET P.108 TOTAL 170

FRA-23-4.19 PART 2 (PID 92616)

MODEL: PnP Sheet PAPERSIZE: 17x11(in.) DATE: 2023-04-17 TIME: 2:26:00 PM USER: william.croxton
\\10.120.2.5\ibishare\122592_SafetyDesign\7.0_Production\7.3_Design\04_Civil\Worksets\110380_FRA-23\400-Engineering\Utilities\Sheets\110380_UPI00.dgn

SHEET NO.	REFERENCE NO.	LOCATION	STATION	SIDE	CODE	SIZE (INCHES)	625 GROUND ROD EACH	630 GROUND MOUNTED SUPPORT, NO. 3 POST FT	630 OVERHEAD SIGN SUPPORT, TYPE TC-15.116, DESIGN 1 EACH	630 OVERHEAD SIGN SUPPORT, TYPE TC-16.22, DESIGN 14 EACH	630 SIGN HANGER ASSEMBLY MAST ARM EACH	630 SIGN SUPPORT ASSEMBLY, POLE MOUNTED EACH	630 SIGN, FLAT SHEET SF	630 SIGN, OVERHEAD EXTRUSHEET SF	630 RIGID OVERHEAD SIGN SUPPORT FOUNDATION EACH	630 REMOVAL OF GROUND MOUNTED SIGN AND DISPOSAL EACH	630 REMOVAL OF GROUND MOUNTED SIGN AND REERECTION EACH	630 REMOVAL OF GROUND MOUNTED POST SUPPORT AND DISPOSAL EACH	630 REMOVAL OF POLE MOUNTED SIGN AND DISPOSAL EACH	632 SIGNAL SUPPORT, MECHANICAL DAMPER FOR TC-81.21 MAST ARM (GREATER THAN 39' IN LENGTH), AS PER PLAN EACH
112	S-1	US-23	524+00	RT	W3-3-36	36x36		14					9.0								
112	R-1	US-23	524+09	RT												2			1		
112	R-2	US-23	524+10	RT																2	
112	R-3	US-23	526+41	RT												1			2		
112	S-2	US-23	526+75	RT	W3-4-36	36x36	2		1			1	9.0		2						
					GUIDE SIGN	156x108								117							
					E1-H5P	96x30								20							
					GUIDE SIGN	132x132								121							
					E1-H5P	96x30								20							
					GUIDE SIGN	96x132								88							
113	S-3	US-23	528+50	RT	D3-H6-96	96x24		19					16.0								
113	R-4	US-23	529+19	LT												2			1		
113	S-4	US-23	529+50	LT	W8-H6a-48	48x48		37					16.0								
					R2-1-36	36x48							12.0								
113	S-5	US-23	529+60	RT	R3-5L-30	30x36	1			1	5		7.5		1						**1**
					R3-5a-30	30x36							7.5								
					R3-5a-30	30x36							7.5								
					R3-5a-30	30x36							7.5								
					R3-5r-30	30x36							7.5								
113	R-5	US-23	530+28	RT																1	
114	R-6	US-23	533+11	RT																1	
114	S-6	NOT USED																			
114	S-7	NOT USED																			
114	R-7	US-23	534+00	RT																**2**	
114	S-8	NOT USED																			
114	R-8	US-23	535+21	RT																**1**	
114	S-9	NOT USED																			
114	S-10	US-23	535+35	LT	R3-H8DS-66	66x30		26					13.8								
114	R-9	US-23	535+48	LT																1	
115	R-10	US-23	539+82	RT												1			1		
115	S-11	US-23	539+83	LT	R3-H8da-54	54x30		26					11.3								
115	S-12	US-23	540+83	LT	D3-H6-96	96x24		19					16.0								
116	S-13	US-23	542+28	LT	R3-H8ca-48 (x2)	48x30		52					20.0								
116	R-11	US-23	542+44	RT																1	
116	R-12	US-23	543+13	LT												1			2		
116	S-14	US-23	543+13	LT	SPECIAL			14									1				
116	S-15	US-23	543+28	LT	W3-4-36	36x36		14					9.0								
116	R-13	US-23	545+36	RT												1			2		
116	R-14	US-23	545+40	RT												1			2		
116	S-16	US-23	545+78	LT	W3-3-36	36x36		14					9.0								
116	R-15	US-23	546+73	LT												1			1		
117	S-17A	PRIVATE DRIVE	1+37	RT	W14-2	24x24		12					4.0			1			1		
					SPECIAL												**1**				
117	S-17	RATHMELL RD	100+77	LT	R3-8b-48	48x30		26					10.0								
117	R-16	RATHMELL RD	101+85	LT												1			1		
118	S-18	RATHMELL RD	104+98	LT	R3-8b-48	48x30		26					10.0								
118	S-19	RATHMELL RD	105+00	RT	R3-9cP-24	24x6		14					1.0								
					R3-9b-24	24x36							6.0								
118	S-20	RATHMELL RD	107+02	LT	M2-1-21	21x15		14					2.2								
					M1-4-24-2	24x24							4.0								
TOTALS CARRIED TO GENERAL SUMMARY							**3**	**326**	**1**	**1**	**5**	**1**	**215.8**	**366**	**3**	**12**	**2**	**14**	**9**	**1**

SIGNING SUBSUMMARY

DESIGN AGENCY

IBI

DESIGNER JMB

REVIEWER KMK 12-01-22

PROJECT ID 92616

SHEET P.109 TOTAL 170

FRA-23-4.19 PART 2 (PID 92616)

MODEL: Sheet PAPERSIZE: 17x11 (in.) DATE: 2022-12-09 TIME: 8:36:31 AM USER: william.croxton
\\10.120.112.5\fileshare\122592_SafetyDesign\7.0_Production\7.3_Design\04_Civil\Worksets\110380_FRA-23\400-Engineering\Traffic\Sheets\110380_TS001.dgn

SHEET NO.	REFERENCE NO.	LOCATION	STATION FROM	STATION TO	SIDE	621 RPM	644 EDGE LINE, 4"	644 EDGE LINE, 6"	644 LANE LINE, 6"	644 CENTER LINE	644 CHANNELIZING LINE, 8"	644 CHANNELIZING LINE, 12"	644 STOP LINE	644 TRANSVERSE/DIAGONAL LINE	644 CHEVRON MARKING	644 LANE ARROW	644 DOTTED LINE, 6"	646 REMOVAL OF PAVEMENT MARKING
						EACH	MILE	MILE	MILE	MILE	FT	FT	FT	FT	FT	EACH	FT	FT
112-116	LL	US-23 NB	512+85	546+47.12	RT	43			0.64									
112-116	EY	US-23 NB	512+85	546+47.12	RT			0.64										
112-116	EW	US-23 NB	512+85	546+47.12	RT	16		0.64										
112-116	LL	US-23 SB	522+00	546+47.12	LT	32			0.46									
112-116	EY	US-23 SB	522+00	546+47.12	LT			0.46										
112-116	EW	US-23 SB	522+00	546+47.12	LT	16		0.46										
112-116	LL	US-23 NB	526+45	546+47.12	RT	26			0.38									
113-114	CH	US-23 NB	529+20	533+85	RT	13						465						
113	A	US-23 NB	529+69		RT											1		
113	A	US-23 NB	530+45		RT											1		
113	A	US-23 NB	531+01		RT											1		
113	A	US-23 NB	531+44		RT											1		
113-114	CH	US-23 NB	530+06	533+85	RT	10						379						
113-114	CH	US-23 NB	531+36	533+85	RT	7						249						
113-114	CV	US-23 NB	531+36	533+85	RT										148			
114	A	US-23 NB	532+33		LT											1		
114	A	US-23 NB	532+43		RT											1		
114	A	US-23 NB	532+99		LT											1		
114	A	US-23 NB	533+09		RT											1		
114	A	US-23 NB	533+65		LT											1		
114	A	US-23 NB	533+75		RT											1		
114	S	US-23 NB	533+75		LT/RT								12					
114	S	US-23 NB	533+85		RT								71					
114	S	US-23 SB	535+18		LT								59					
114-115	CV	US-23 SB	535+18	539+43	LT										270			
114-115	CH	US-23 SB	535+18	537+23	LT	6						205						
114-115	CH	US-23 SB	535+18	539+43	LT	12						425						
114-115	CH	US-23 SB	535+18	541+58	LT	17						640						
114	S	US-23 SB	535+28		RT								12					
114	A	US-23 SB	535+28		LT											1		
114	A	US-23 SB	535+38		RT											1		
114	A	US-23 SB	535+94		RT											1		
114	A	US-23 SB	536+04		LT											1		
114	A	US-23 SB	536+60		LT											1		
114	A	US-23 SB	536+70		RT											1		
SUB-TOTALS CARRIED TO SHEET P.111						198	0	2.20	1.48	0	0	2363	154	0	418	16	0	0

PAVEMENT MARKING SUBSUMMARY (1 OF 2)

DESIGN AGENCY
IBI

DESIGNER
JMB

REVIEWER
KMK 12-01-22

PROJECT ID
92616

SHEET P.110 TOTAL 170

FRA-23-4.19 PART 2 (PID 92616)

MODEL: Sheet PAPERSIZE: 17x11 (in.) DATE: 2022-12-09 TIME: 9:36:33 AM USER: william.croxton
\\10.120.112.5\bishare\122592_SafetyDesign\7.0_Production\7.3_Design\04_Civil\Worksets\110380_FRA-23400-Engineering\Traffic\Sheets\110380_TS002.dgn

SHEET NO.	REFERENCE NO.	LOCATION	STATION FROM	STATION TO	SIDE	621 RPM	644 EDGE LINE, 4"	644 EDGE LINE, 6"	644 LANE LINE, 6"	644 CENTER LINE	644 CHANNELIZING LINE, 8"	644 CHANNELIZING LINE, 12"	644 STOP LINE	644 TRANSVERSE/DIAGONAL LINE	644 CHEVRON MARKING	644 LANE ARROW	644 DOTTED LINE, 6"	646 REMOVAL OF PAVEMENT MARKING
						EACH	MILE	MILE	MILE	MILE	FT	FT	FT	FT	FT	EACH	FT	FT
115	A	US-23 SB	538+02		RT											1		
115	A	US-23 SB	539+34		LT											1		
115	A	US-23 SB	540+33		LT											1		
115	A	US-23 SB	541+32		LT											1		
117	CL	QUARRY DRIVE	0+58	1+37	RT	3				0.03								
117	8H	QUARRY DRIVE	0+64	1+37	LT	3					73							
117	A	QUARRY DRIVE	0+74		LT											1		
117	S	QUARRY DRIVE	0+64		LT								31					
117	DL	RATHMELL RD	0+58	100+77	LT												143	
117	S	RATHMELL RD	100+77		RT								34					
117	A	RATHMELL RD	100+87		RT											3		
117	A	RATHMELL RD	101+53		LT											3		
117-119	4W	RATHMELL RD	100+77	111+98	LT		0.21											
117-119	4W	RATHMELL RD	100+77	111+98	RT	16	0.21											
117-118	CL	RATHMELL RD	100+77	104+98	RT	6				0.08								
117-118	8H	RATHMELL RD	100+77	104+48	LT	10					371							
117-118	8H	RATHMELL RD	100+77	107+08	LT	17					631							
117	A	RATHMELL RD	102+19		LT											3		
117	A	RATHMELL RD	102+85		LT											3		
118	A	RATHMELL RD	103+51		LT											3		
118	A	RATHMELL RD	104+17		LT											3		
118	A	RATHMELL RD	104+83		LT											1		
118-120	CSD	RATHMELL RD	104+48	113+70	CL	13				0.17								
118	CSD	RATHMELL RD	104+98	113+70	LT	12				0.17								
118	A	RATHMELL RD	105+49		LT											1		
118	A	RATHMELL RD	106+15		LT											1		
118	A	RATHMELL RD	106+81		LT											1		
118	A	RATHMELL RD	105+98		LT											2		
119	A	RATHMELL RD	108+98		LT											2		
119	R	RATHMELL RD	111+98	117+54	LT													556
119	R	RATHMELL RD	111+98	117+54	LT													556
119	A	RATHMELL RD	111+98		LT											2		
120	CL	RATHMELL RD	113+70	117+25	LT/RT	5				0.13								
120	TY	RATHMELL RD	113+70	117+25	LT/RT									176				
FUNDING SPLITS:																		
04/NHS/PV						201	0.42	1.27	1.02	0.58	1075	1093	148	176	148	39	143	1112
05/NHS/PV						82	0.00	0.93	0.46	0.00	0	1270	71	0	270	10	0	0
SUB-TOTALS THIS SHEET						85	0.42	0.00	0.00	0.58	1075	0	65	176	0	33	143	1112
SUB-TOTALS SHEET P.110						198	0.00	2.20	1.48	0.00	0	2363	154	0	418	16	0	0
TOTALS CARRIED TO GENERAL SUMMARY						283	0.42	2.20	1.48	0.58	1075	2363	219	176	418	49	143	1112

PAVEMENT MARKING SUBSUMMARY (2 OF 2

FRA-23-4.19 PART 2 (PID 92616)

MODEL: Sheet PAPERSIZE: 17x11 (in.) DATE: 2022-12-09 TIME: 9:36:36 AM USER: william.croxton
\\10.120.112.5\bishare\122592_SafetyDesign\7.0_Production\7.3_Design\04_Civil\Worksets\110380_FRA-23\400-Engineering\Traffic\Sheets\110380_TS003.dgn

DESIGN AGENCY: IBI

DESIGNER: JMB

REVIEWER: KMK 12-01-22

PROJECT ID: 92616

SHEET: P.111 TOTAL: 170

SIGN LEGEND

EXISTING SIGN TO BE REMOVED — R-X

EXISTING SIGN TO REMAIN

PROPOSED SIGN — S-X

PAVEMENT MARKING LEGEND

4W	EDGE LINE, 4" (WHITE)	8H	CHANNELIZING LINE, 8"
EW	EDGE LINE, 6" (WHITE)	CH	CHANNELIZING LINE, 12"
EY	EDGE LINE, 6" (YELLOW)	S	STOP LINE
LL	LANE LINE, 6"	CV	CHEVRON MARKING
CL	CENTER LINE, SOLID DOUBLE	A	LANE ARROW
CSD	CENTER LINE, SOLID & DASHED	DL	DOTTED LINE, 6" (WHITE)
TY	TRANSVERSE LINE, YELLOW		

NOTE:
ALL PAVEMENT MARKINGS SHALL BE ITEM 644.

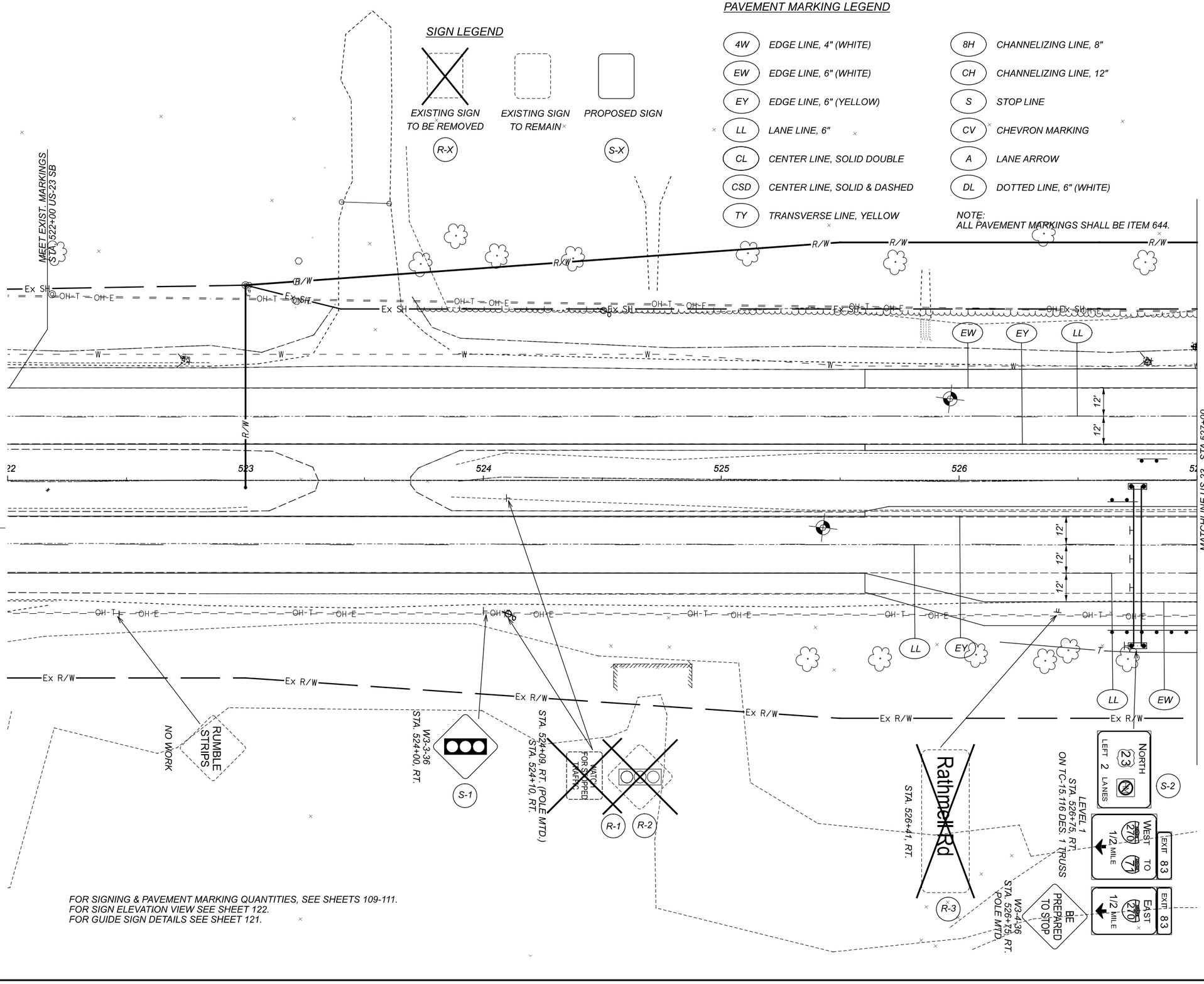

FOR SIGNING & PAVEMENT MARKING QUANTITIES, SEE SHEETS 109-111.
FOR SIGN ELEVATION VIEW SEE SHEET 122.
FOR GUIDE SIGN DETAILS SEE SHEET 121.

HORIZONTAL SCALE IN FEET
0 10 20 40

SIGNING & PAVEMENT MARKING PLAN - US-23 (SOUTH HIGH STREET)
STA 522+00 TO STA 527+00

DESIGN AGENCY: IBI

DESIGNER: JMB
REVIEWER: KMK 12-01-22
PROJECT ID: 92616
SHEET: P.112 TOTAL: 170

FRA-23-4.19 PART 2 (PID 92616)

MODEL: II0380_TPI PAPERSIZE: 17x11(in.) DATE: 2022-12-09 TIME: 9:36:47 AM USER: william.croxton
\\10.120.112.5\ibishare\122592_SafetyDesign\7.0_Production\7.3_Design\04_Civil\Worksets\II0380_FRA-23\400-Engineering\Traffic\Sheets\II0380_TP001.dgn

MODEL: 110380_TP2 PAPERSIZE: 17x11 (in.) DATE: 2022-12-09 TIME: 9:36:52 AM USER: william.croxton
\\10.120.112.5\iblshare\122592_SafetyDesign\7.0_Production\7.3_Design\04_Civil\Worksets\110380_FRA-23\400-Engineering\Traffic\Sheets\110380_TP002.dgn

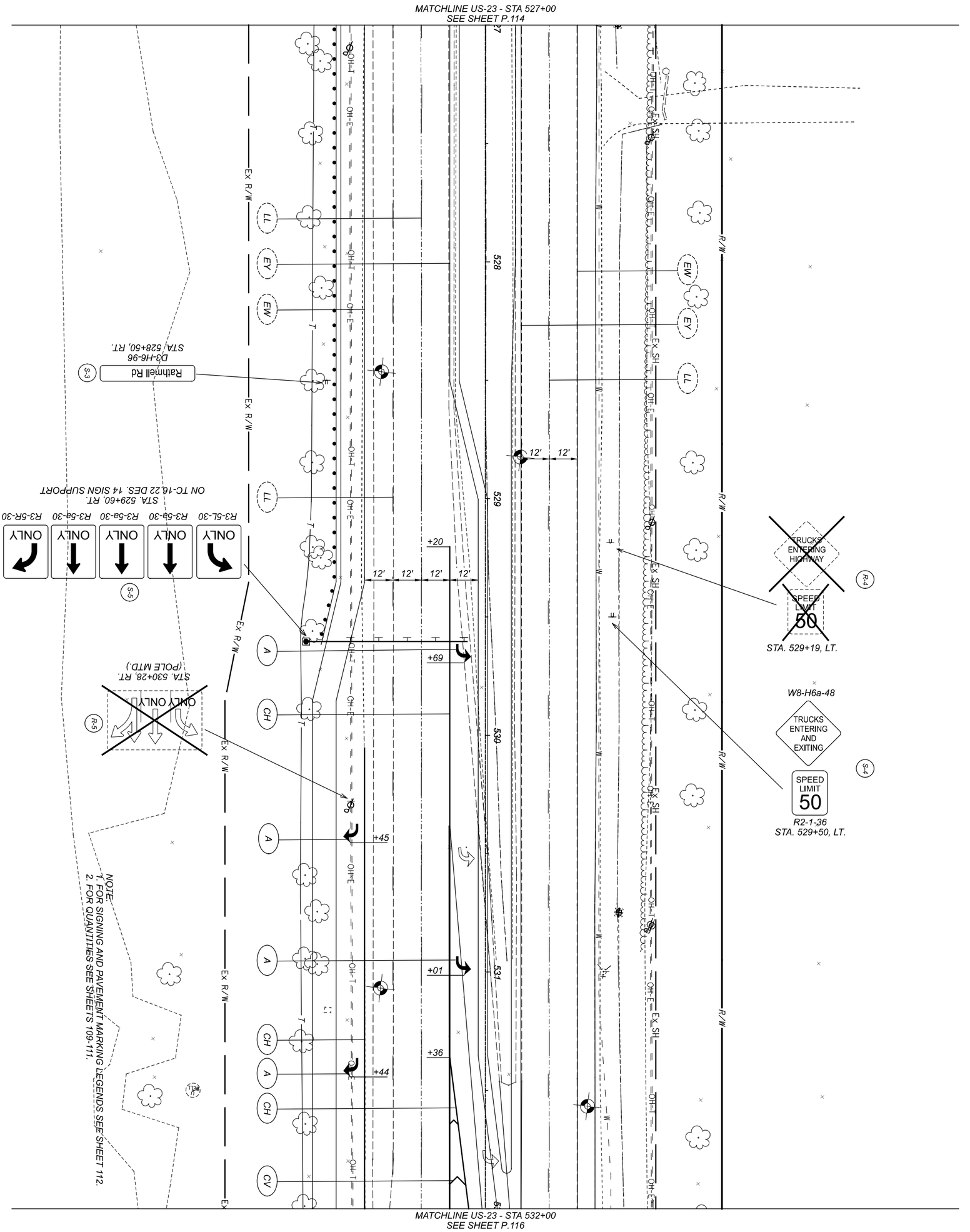

SIGNING & PAVEMENT MARKING PLAN - US-23 (SOUTH HIGH STREET)
STA 527+00 TO STA 532+00

DESIGN AGENCY: IBI
DESIGNER: JMB
REVIEWER: KMK 12-01-22
PROJECT ID: 92616
SHEET: P.113 TOTAL: 170

HORIZONTAL SCALE IN FEET
0 20
10 40

MODEL: II0380_TP3 PAPERSIZE: 17x11 (in.) DATE: 2022-12-09 TIME: 9:36:56 AM USER: william.croxton
\\10.120.112.5\iblshare\122592_SafetyDesign\7.0_Production\7.3_Design\04_Civil\Worksets\II0380_FRA-23\400-Engineering\Traffic\Sheets\II0380_TP003.dgn

MATCHLINE US-23 - STA 532+00
SEE SHEET P.115

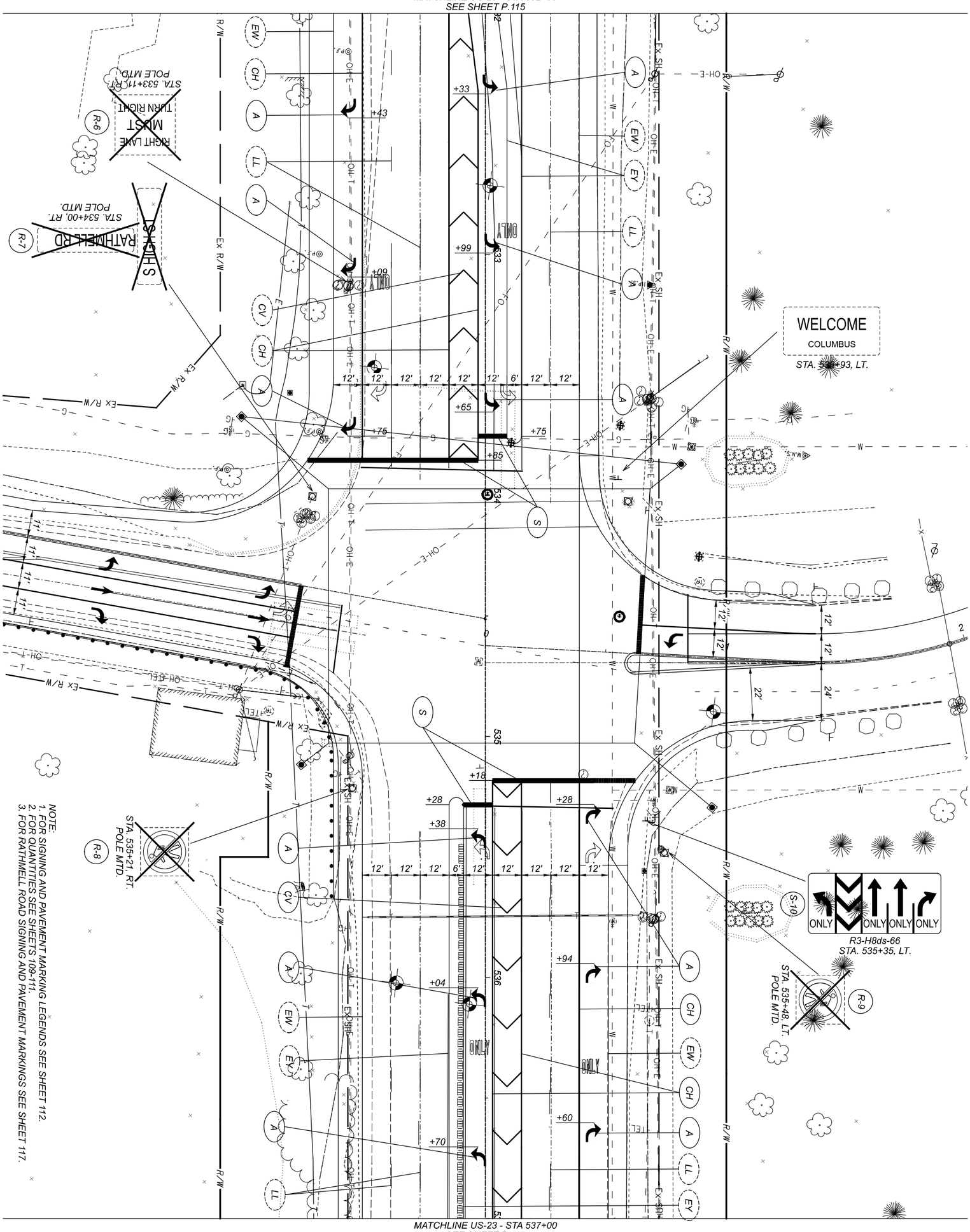

NOTE:
1. FOR SIGNING AND PAVEMENT MARKING LEGENDS SEE SHEET 112.
2. FOR QUANTITIES SEE SHEETS 109-111.
3. FOR RATHMELL ROAD SIGNING AND PAVEMENT MARKINGS SEE SHEET 117.

MATCHLINE US-23 - STA 537+00
SEE SHEET P.117

SHEET	TOTAL
P. 114	170

PROJECT ID: 92616

DESIGNER: JMB

REVIEWER: KMK 12-01-22

DESIGN AGENCY: IBI

SIGNING & PAVEMENT MARKING PLAN - US-23 (SOUTH HIGH STREET)
STA 532+00 TO STA 537+00

HORIZONTAL SCALE IN FEET
0 20
10 40

MODEL: 110380_TP4 PAPERSIZE: 17x11 (in.) DATE: 2022-12-09 TIME: 9:37:00 AM USER: william.croxton
\\10.120.112.5\iblshare\122592_SafetyDesign\7.0_Production\7.3_Design\04_Civil\Worksets\110380_FRA-23\400-Engineering\Traffic\Sheets\110380_TP004.dgn

MATCHLINE US-23 - STA 537+00
SEE SHEET P.116

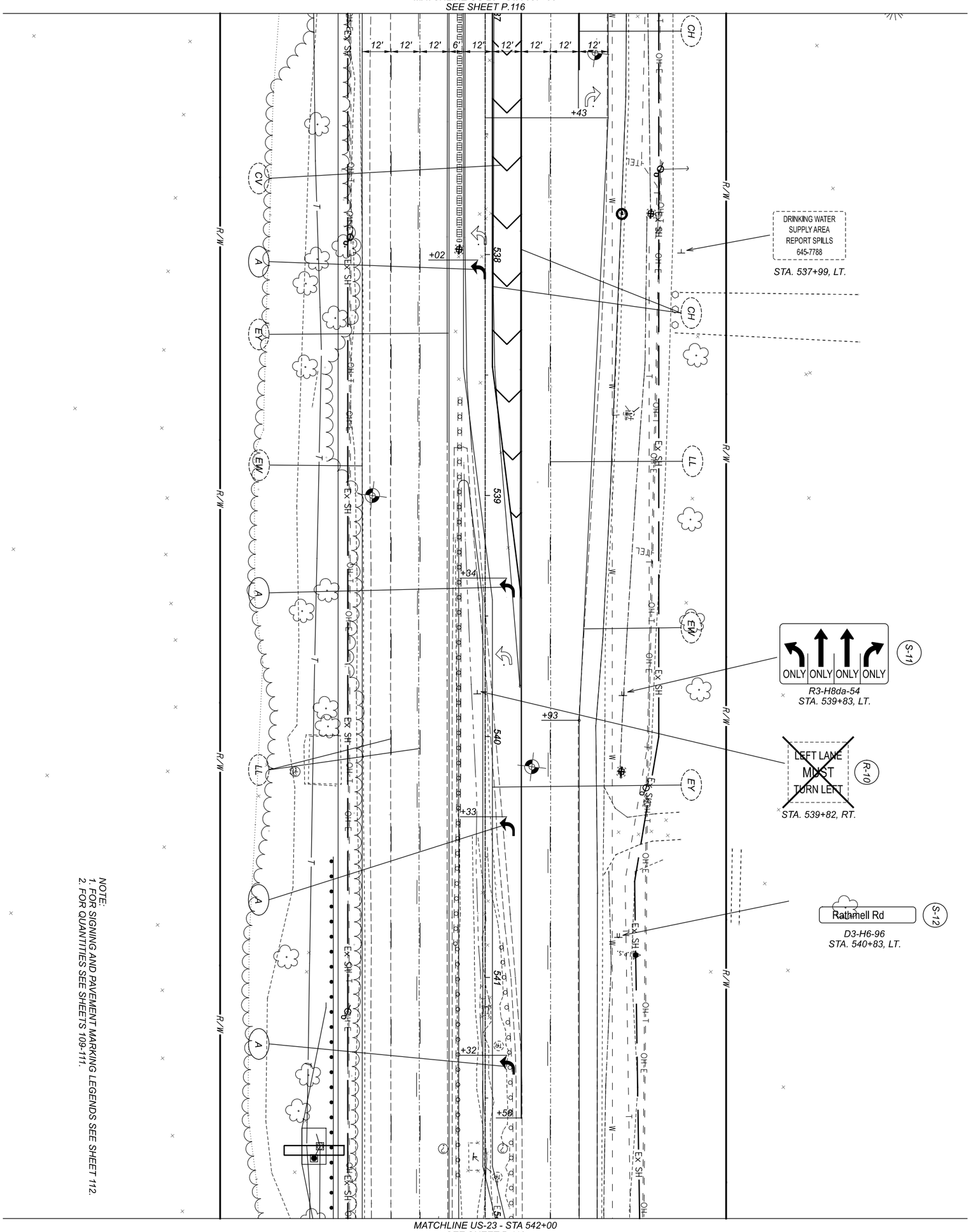

NOTE:
1. FOR SIGNING AND PAVEMENT MARKING LEGENDS SEE SHEET 112.
2. FOR QUANTITIES SEE SHEETS 108-111.

MATCHLINE US-23 - STA 542+00
SEE SHEET P.118

SIGNING & PAVEMENT MARKING PLAN - US-23 (SOUTH HIGH STREET)
STA 537+00 TO STA 542+00

SHEET	P. 115
TOTAL	170
PROJECT ID	92616
REVIEWER	KMK 12-01-22
DESIGNER	JMB
DESIGN AGENCY	IBI

HORIZONTAL SCALE IN FEET
0 20
10 40

FRA-23-4.19 PART 2 (PID 92616)

MODEL: 110380_TP5 PAPERSIZE: 17x11 (in.) DATE: 2022-12-09 TIME: 9:37:04 AM USER: william.croxton
\\10.120.112.5\ibishare\122592_SafetyDesign\7.0_Production\7.3_Design\04_Civil\Worksets\110380_FRA-23\400-Engineering\Traffic\Sheets\110380_TP005.dgn

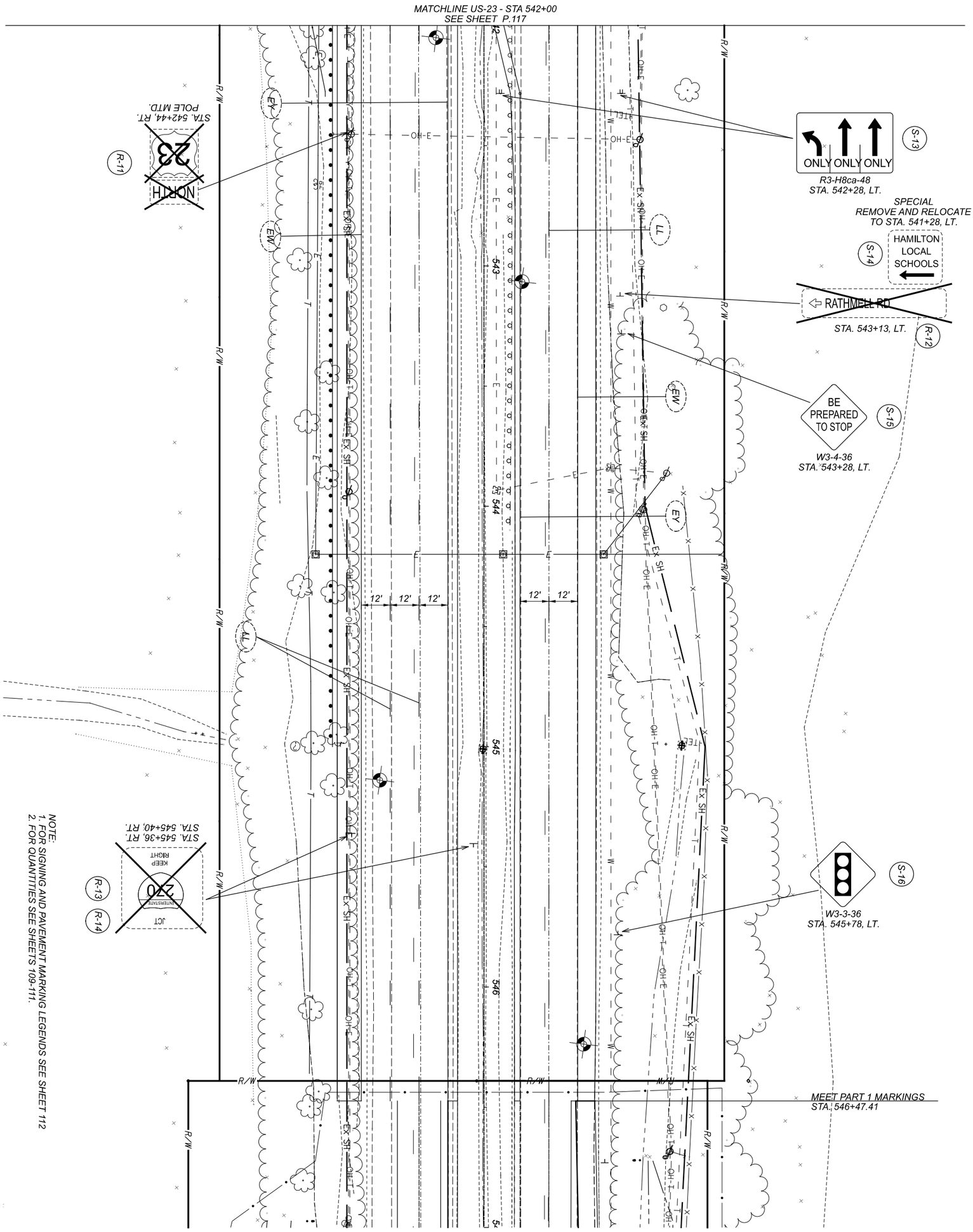

NOTE:
1. FOR SIGNING AND PAVEMENT MARKING LEGENDS SEE SHEET 112
2. FOR QUANTITIES SEE SHEETS 109-111.

DESIGN AGENCY: IBI	DESIGNER: JMB	REVIEWER: KMK 12-01-22	PROJECT ID: 92616
SHEET: P.116	TOTAL: 170		

SIGNING & PAVEMENT MARKING PLAN - US-23 (SOUTH HIGH STREET)
STA 542+00 TO STA 547+00

HORIZONTAL SCALE IN FEET
0 10 20 40

MODEL: II0380_TPI01 PAPERSIZE: 17x11 (In.) DATE: 2022-12-09 TIME: 9:37:08 AM USER: william.croxton
\\10.120.12.5\iblshare\122592_SafetyDesign\7.0_Production\7.3_Design\04_Civil\Worksets\II0380_FRA-23\400-Engineering\Traffic\Sheets\II0380_TPI01.dgn

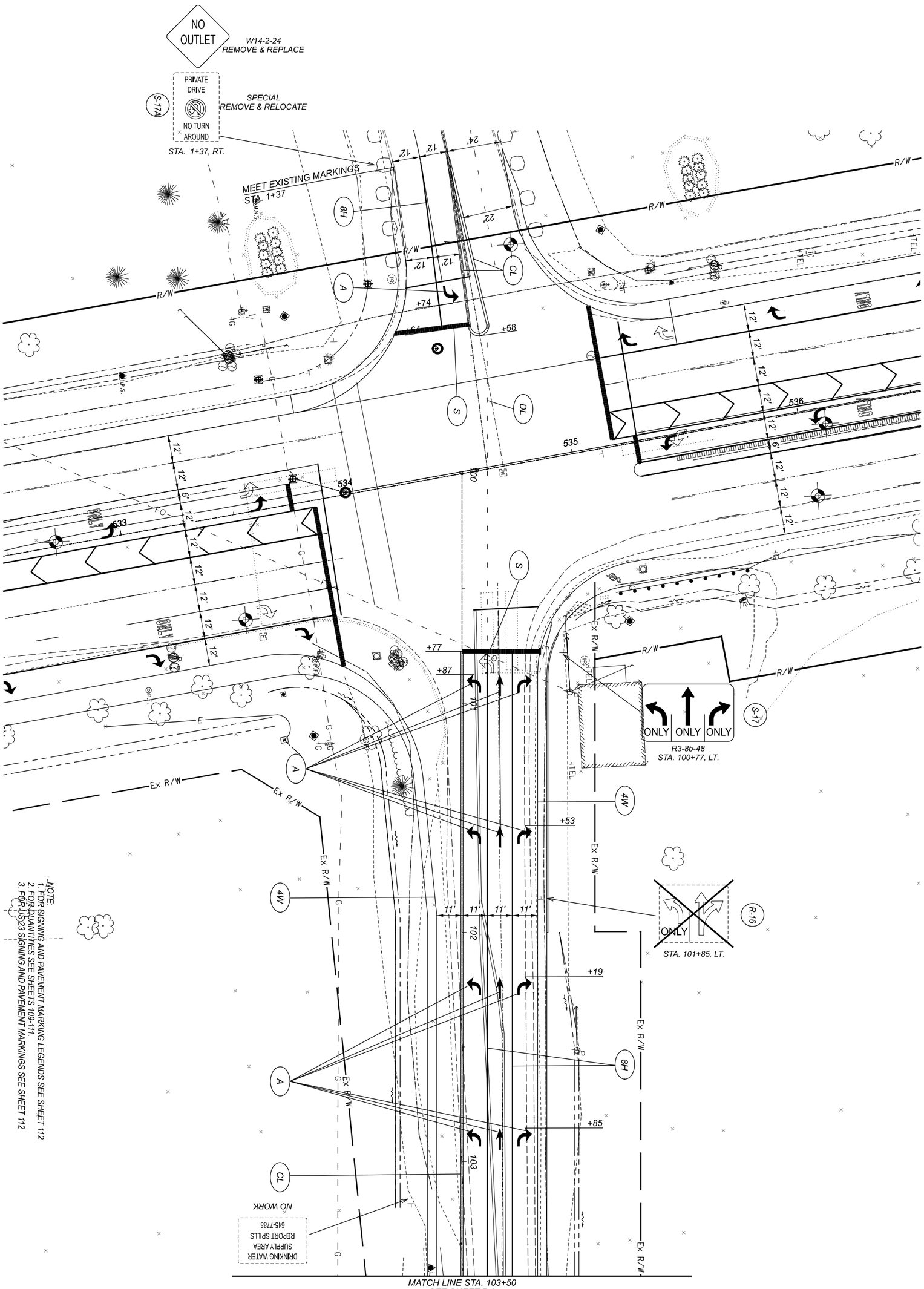

SIGNING & PAVEMENT MARKING PLAN - CR-121 (RATHMELL ROAD)
STA 99+99.82 TO STA 103+50

HORIZONTAL SCALE IN FEET
0 20
10 40

SHEET	TOTAL	PROJECT ID	REVIEWER	DESIGNER	DESIGN AGENCY
P.117	170	92616	KMK 12-01-22	JMB	IBI

MODEL: 110380_TP102 PAPERSIZE: 17x11(in.) DATE: 2022-12-09 TIME: 9:37:12 AM USER: william.croxton
\\10.120.12.5\iblshare\122592_SafetyDesign\7.0_Production\7.3_Design\04_Civil\Worksets\110380_FRA-23\400-Engineering\Traffic\Sheets\110380_TP102.dgn

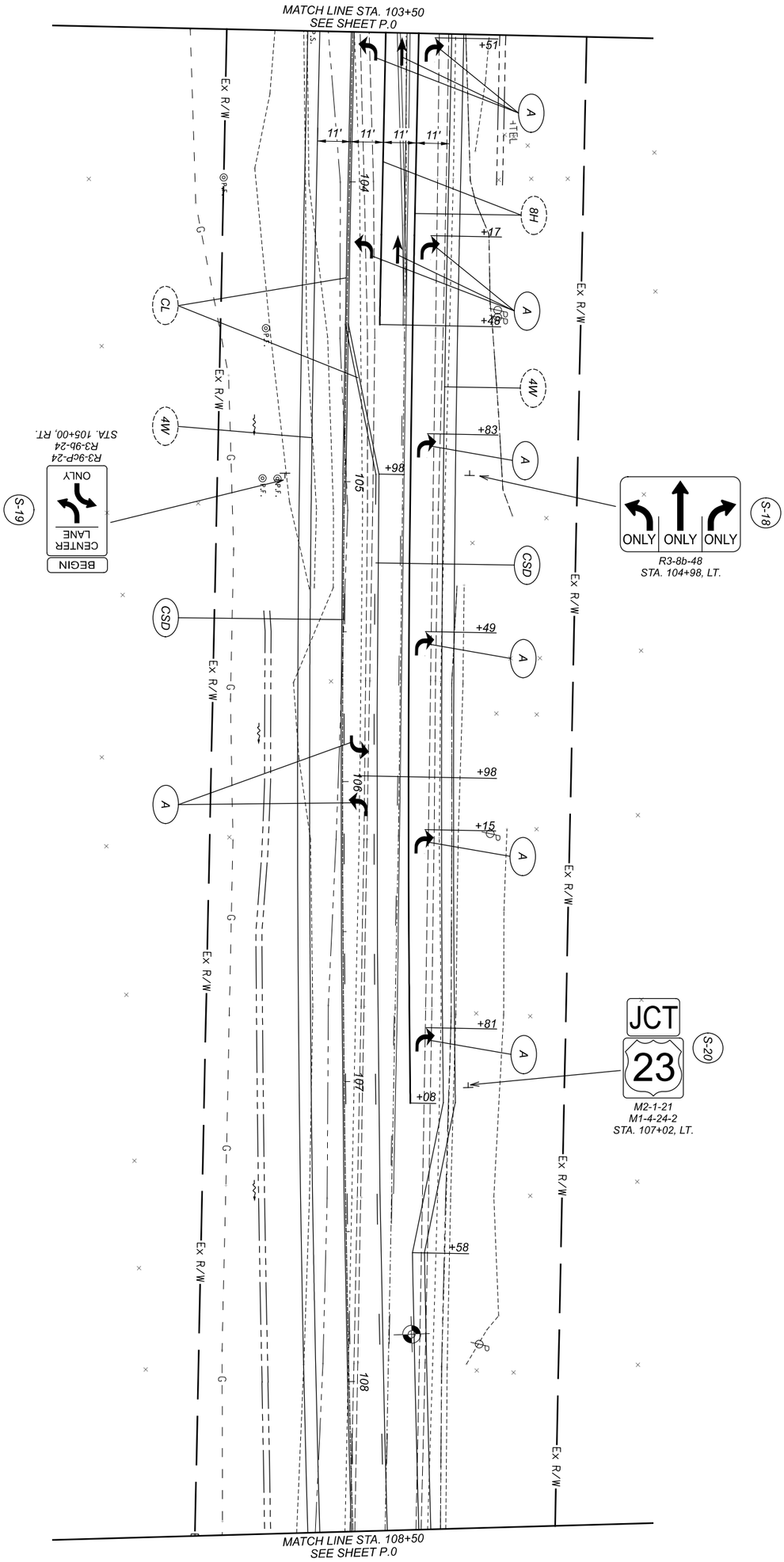

NOTE:
1. FOR SIGNING AND PAVEMENT MARKING LEGENDS SEE SHEET 112
2. FOR QUANTITIES SEE SHEETS 109-111.

SIGNING & PAVEMENT MARKING PLAN - CR-121 (RATHMELL ROAD)
STA 103+50 TO STA 108+50

HORIZONTAL SCALE IN FEET
0 20
10 40

DESIGNER JMB
REVIEWER KMK 12-01-22
PROJECT ID 92616
SHEET P. 118
TOTAL 170
DESIGN AGENCY IBI

MODEL: 110380_TP103 PAPERSIZE: 17x11(in.) DATE: 2022-12-09 TIME: 9:37:16 AM USER: william.croxton
\\10.120.112.5\iblshare\122592_SafetyDesign\7.0_Production\7.3_Design\04_Civil\Worksets\110380_FRA-23\400-Engineering\Traffic\Sheets\110380_TP103.dgn

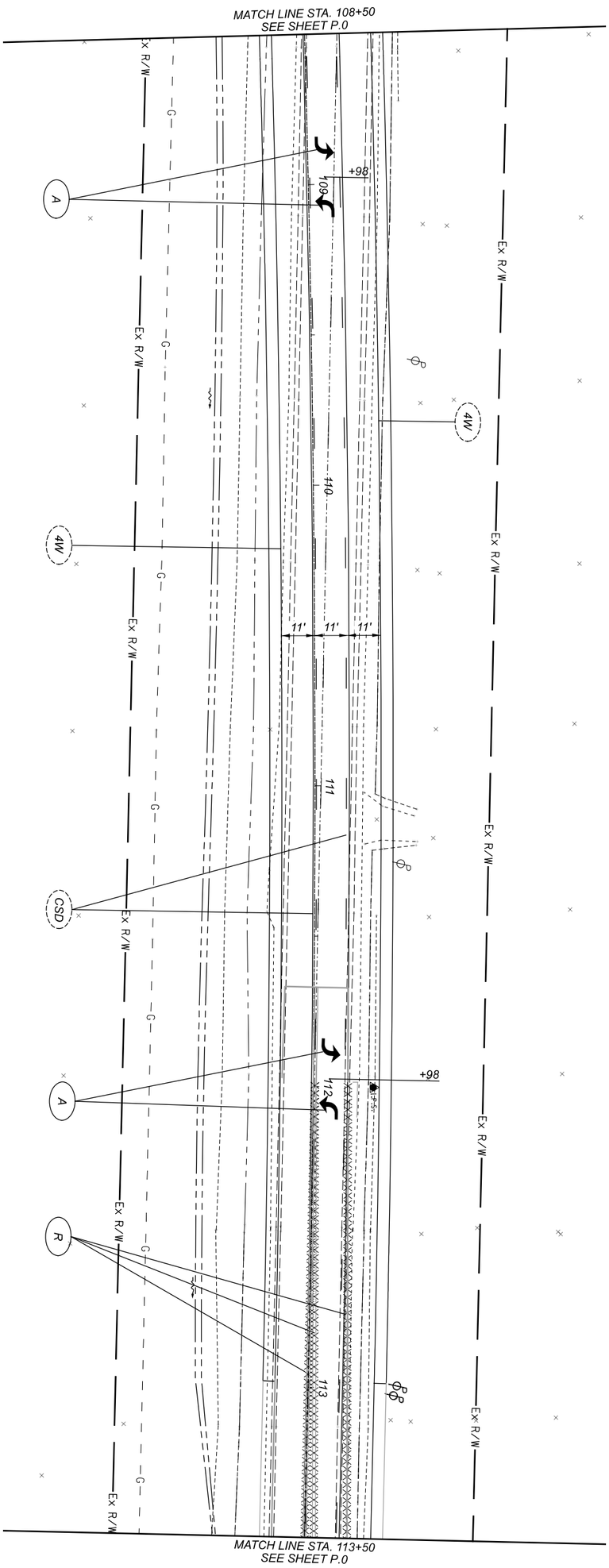

NOTE:
1. FOR SIGNING AND PAVEMENT MARKING LEGENDS SEE SHEET 112
2. FOR QUANTITIES SEE SHEETS 109-111.
3. FROM STA. 111+98 CL TO STA. 117+54 CL REMOVE CENTER LINE DOUBLE SOLID AND REPLACE WITH CENTER LINE SOLID-DASHED.

SIGNING & PAVEMENT MARKING PLAN - CR-121 (RATHMELL ROAD)
STA 108+50 TO STA 113+50

HORIZONTAL SCALE IN FEET
0 20
10 40

SHEET	TOTAL
P. 119	170

PROJECT ID: 92616
REVIEWER: KMK 12-01-22
DESIGNER: JMB
DESIGN AGENCY: IBI

MODEL: II0380_TPI04 PAPERSIZE: 17x11(in.) DATE: 2022-12-09 TIME: 9:37:20 AM USER: william.croxton
\\IOJ20.II2.5\iblshare\I22592_SafetyDesign\7.0_Production\7.3_Design\04_Civil\Worksets\II0380_FRA-23\400-Engineering\Traffic\Sheets\II0380_TPI04.dgn

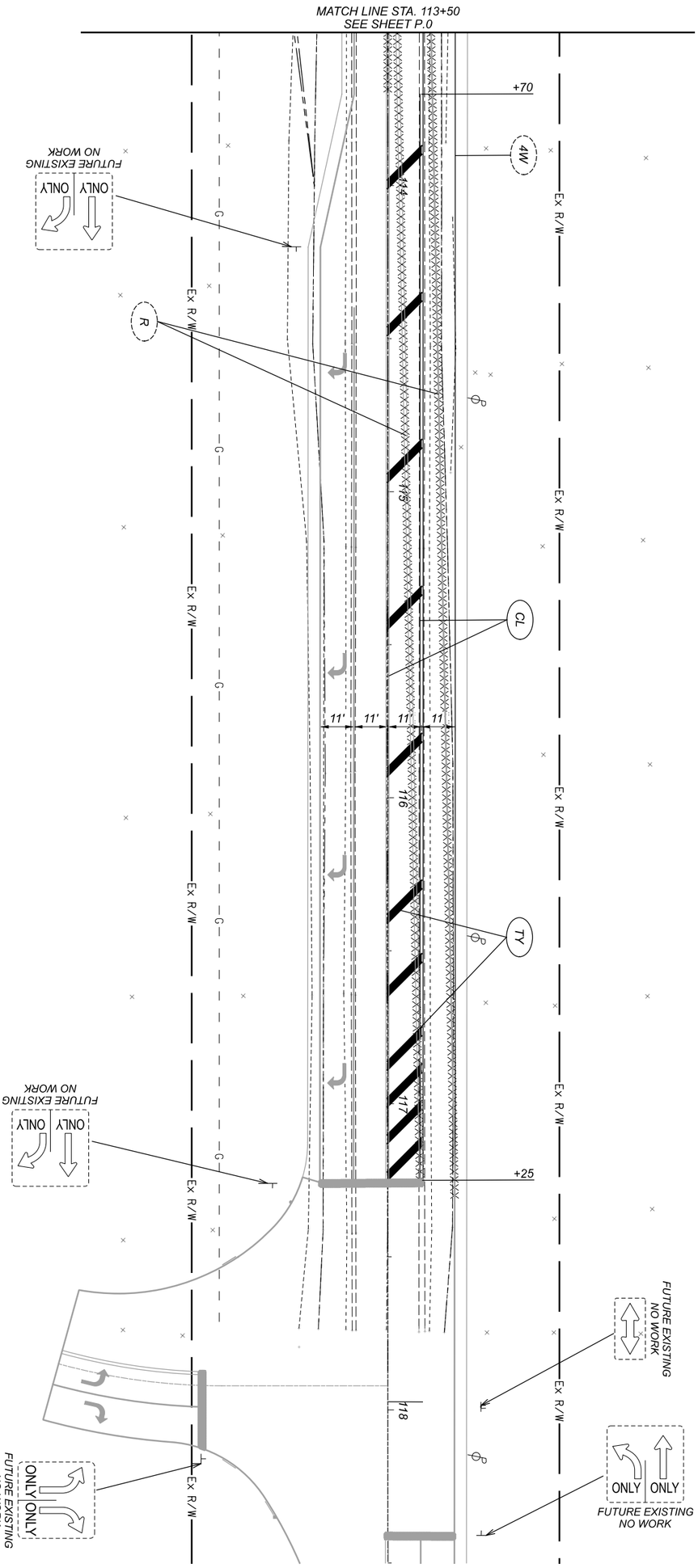

NOTE:
1. FOR SIGNING AND PAVEMENT MARKING LEGENDS SEE SHEET 112
2. FOR QUANTITIES SEE SHEETS 109-111
3. EXISTING CHANNELIZING LINE, RIGHT TURN ARROWS, EDGE LINE ON SOUTH SIDE OF RATHMELL RD, STOP LINE, AND CROSSWALK LINES TO REMAIN.

SIGNING & PAVEMENT MARKING PLAN - CR-121 (RATHMELL ROAD)
STA 113+50 TO STA 118+50

HORIZONTAL SCALE IN FEET
0 20
10 40

DESIGN AGENCY: IBI
DESIGNER: JMB
REVIEWER: KMK 12-01-22
PROJECT ID: 92616
SHEET: P.120
TOTAL: 170

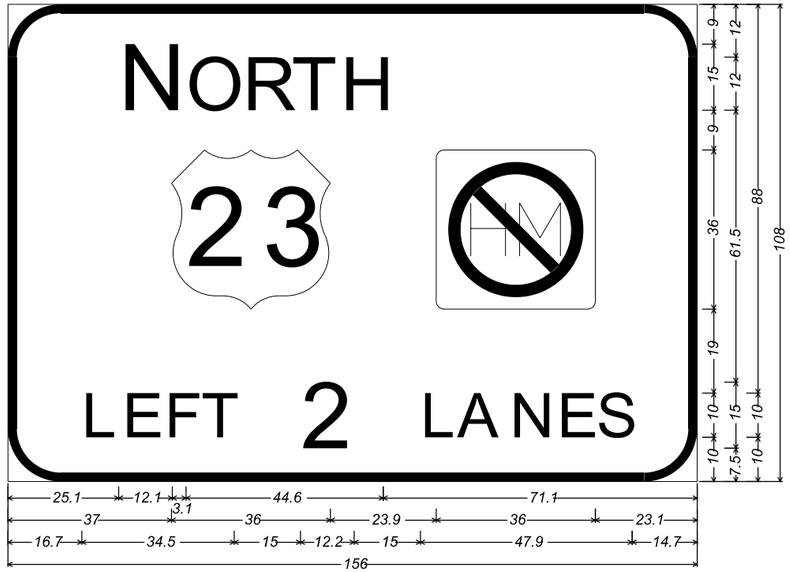

12.0" Radius, 2.0" Border, White on Green;
"NORTH", E 2K; US 23 M1-4; No Hazardous Material R14-3; "LEFT 2 LANES", E 2K;
Table of letter and object lefts

N	O	R	T	H
25.1	40.3	53.1	64.2	75.2

37.0	96.9

L	E	F	T	2	L	A	N	E	S
16.7	25.9	35.4	43.7	66.2	93.4	101.7	113.6	124.3	133.2

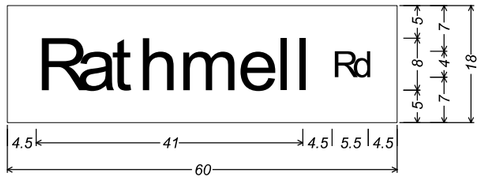

No border, None on Green;
"Rathmell" White, D 2K; "Rd" White, D 2K;
Table of letter and object lefts

R	a	t	h	m	e	l	l	R	d
4.5	10.7	16.1	20.1	26.4	35.5	41.3	44.2	50.0	53.1

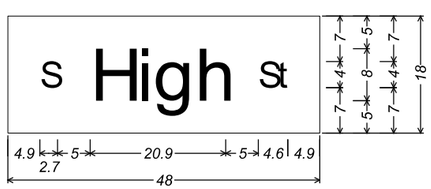

No border, None on Green;
"S" White, D 2K; "High" White, D 2K;
"St" White, D 2K;
Table of letter and object lefts

S	H	i	g	h	S	t
4.9	12.6	19.8	22.4	28.8	38.5	41.5

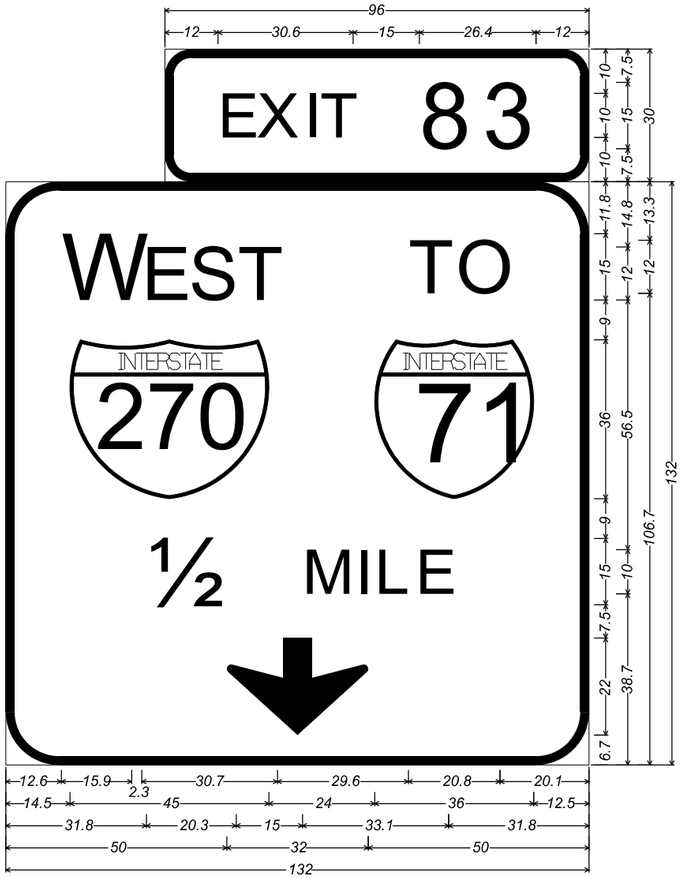

6.0" Radius, 2.0" Border, White on Green;
"EXIT 83", E 2K;

12.0" Radius, 2.0" Border, White on Green;
"WEST", E 2K; "TO", E 2K; Interstate 270 M1-1; Interstate 71 M1-1; "½ MILE", E 2K;
Down Arrow C-1 - 22.0" 270°;
Table of letter and object lefts

E	X	I	T	8	3
12.0	20.9	31.6	35.1	57.6	71.8

W	E	S	T	T	O
12.6	30.8	41.4	52.5	91.1	101.8

14.5	83.5

1/2	M	I	L	E
31.8	67.1	79.1	83.5	92.7

50.0

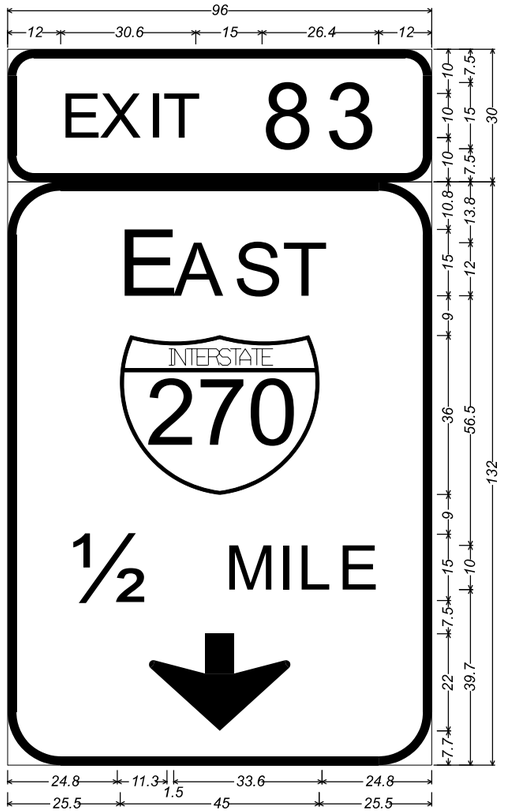

6.0" Radius, 2.0" Border, White on Green;
"EXIT 83", E 2K;

12.0" Radius, 2.0" Border, White on Green;
"EAST", E 2K; Interstate 270 M1-1; "½ MILE", E 2K;
Down Arrow C-1 - 22.0" 270°;
Table of letter and object lefts

E	X	I	T	8	3
12.0	20.9	31.6	35.1	57.6	71.9

E	A	S	T
24.8	37.6	51.1	62.2

25.5

1/2	M	I	L	E
13.8	49.1	61.1	65.5	74.7

32.0

SIGN DETAILS

DESIGN AGENCY
IBI

DESIGNER JMB
REVIEWER KMK 12-01-22
PROJECT ID 92616
SHEET P.121 TOTAL 170

FRA-23-4.19 PART 2 (PID 92616)

MODEL: Sheet PAPERSIZE: 17x11 (in.) DATE: 2022-12-09 TIME: 9:37:22 AM USER: william.croxton
\\10.120.112.5\bishare\122592_SafetyDesign\7.0_Production\7.3_Design\04_CadWorksets\110380_FRA-23\400-Engineering\Traffic\Sheets\110380_TD001.dgn

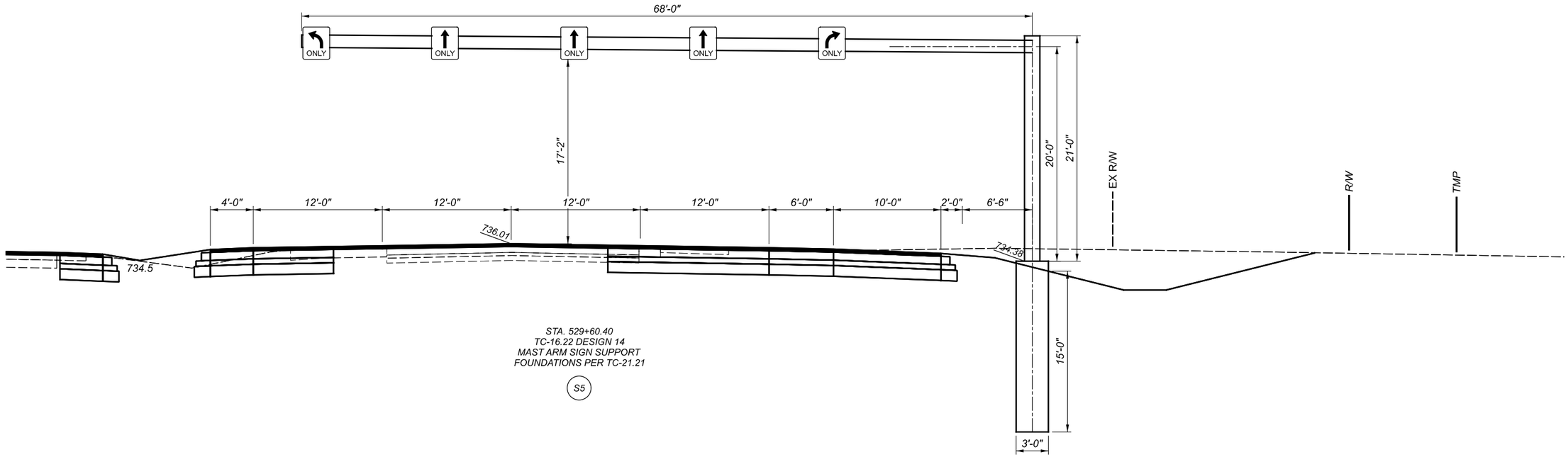

STA. 529+60.40
TC-16.22 DESIGN 14
MAST ARM SIGN SUPPORT
FOUNDATIONS PER TC-21.21

S5

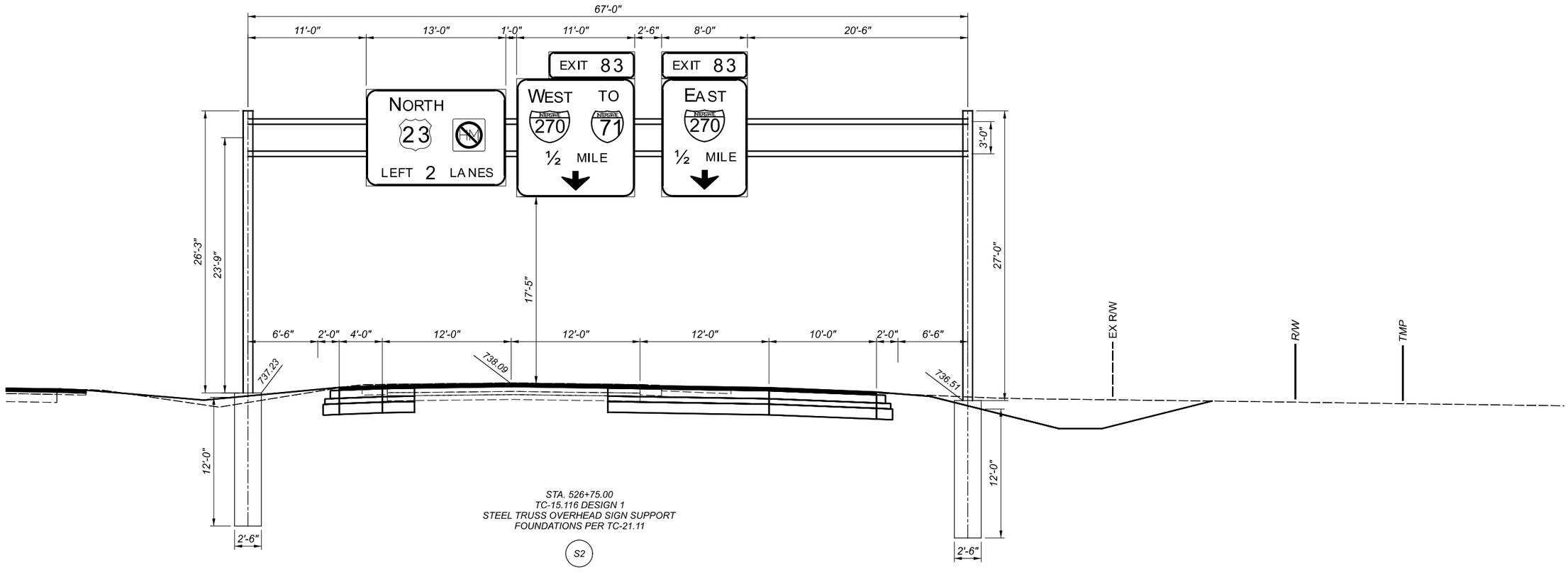

STA. 526+75.00
TC-15.116 DESIGN 1
STEEL TRUSS OVERHEAD SIGN SUPPORT
FOUNDATIONS PER TC-21.11

S2

FRA-23-4.19 PART 2 (PID 92616)

MODEL: 526+75.00 (Sheet) PAPERSIZE: 17x11(in.) DATE: 2022-12-09 TIME: 9:37:29 AM USER: william.croxton
\\10.120.112.5\ibishare\122592_SafetyDesign\7.0_Production\7.3_Design\04_Civil\Worksets\110380_FRA-23\400-Engineering\Traffic\Sheets\110380_TE001.dgn

SIGN ELEVATION DETAILS
US-23 (SOUTH HIGH STREET)

DESIGN AGENCY
IBI

DESIGNER
JMB

REVIEWER
KMK 12-01-22

PROJECT ID
92616

SHEET P.122 | TOTAL 170

GENERAL

THE DIVISION OF DESIGN AND CONSTRUCTION IS A SUBUNIT OF THE CITY OF COLUMBUS DEPARTMENT OF PUBLIC SERVICE AND IS OWNER OF PART OR ALL OF THE FACILITIES COVERED BY THESE PLANS.

ALL INCIDENTAL WORK ITEMS CALLED FOR IN THESE PLANS FOR WHICH NO SPECIFIC METHOD OF PAYMENT IS PROVIDED SHALL BE PERFORMED BY THE CONTRACTOR AND THE TOTAL COST OF SAID ITEMS SHALL BE INCLUDED IN THE PRICE OF ITS ASSOCIATED BID ITEM.

PLAN AND SPECIFICATION COMPLIANCE

THE CONTRACTOR SHALL FURNISH AND INSTALL TRAFFIC SIGNAL DEVICES IN COMPLIANCE WITH THESE PLANS AND SPECIFICATIONS, THE 2018 CITY OF COLUMBUS CONSTRUCTION AND MATERIAL SPECIFICATIONS AND ITS SUPPLEMENTAL SPECIFICATIONS, OHIO MANUAL OF UNIFORM TRAFFIC CONTROL DEVICES FOR STREETS AND HIGHWAYS, AND THE STANDARD CONSTRUCTION DRAWINGS ISSUED BY THE CITY OF COLUMBUS. THE CITY OF COLUMBUS, SHALL DETERMINE WHETHER THE SUPPLIED ITEMS MEET OR EXCEED THESE SPECIFICATIONS.

TRAFFIC SIGNAL CONTROL EQUIPMENT SHALL MEET OR EXCEED THE STANDARDS SPECIFIED IN THE FOLLOWING DOCUMENTS:

(A) SPECIFICATIONS LISTED IN THIS PLAN;
(B) APPLICABLE SECTIONS OF NEMA STANDARDS PUBLICATION NO. TS2-1998 AND/OR TS1 1989;
(C) 2018 CITY OF COLUMBUS CONSTRUCTION AND MATERIAL SPECIFICATIONS 625, 632, 633, 725, 732 & 733;
(D) CITY OF COLUMBUS STANDARD CONSTRUCTION DRAWINGS

IN CASE OF A CONFLICTING SPECIFICATION STATEMENT, THE SPECIFICATION DOCUMENT HIERARCHY SHALL BE IN THE ORDER LISTED FROM (A) HIGHEST, TO (D) LOWEST.

MAINTENANCE OF TRAFFIC SIGNAL INSTALLATIONS

A) PROPOSED TRAFFIC SIGNAL INSTALLATION

THE CONTRACTOR SHALL BE RESPONSIBLE FOR MAINTAINING ALL PROPOSED TRAFFIC SIGNAL DEVICES UNDER THE FOLLOWING CONDITIONS FROM THE TIME OF INSTALLATION UNTIL THE DEVICE HAS BEEN ACCEPTED BY THE CITY.

THE CONTRACTOR SHALL PROVIDE 2 OR MORE CONTACTS WHO CAN RECEIVE ALL DEVICE OUT-OF-SERVICE CALLS THAT FALL UNDER THE CONTRACTOR'S RESPONSIBILITY. THE CONTRACTOR SHALL DISPATCH MAINTENANCE PERSONNEL TO CORRECT THE PROBLEM. THE CONTRACTOR SHALL PROVIDE THE CITY AND THE PROJECT ENGINEER WITH ADDRESSES AND PHONE NUMBERS OF THESE CONTACTS. MAINTENANCE PERSONNEL MAY BE USED TO PERFORM OTHER DUTIES AS LONG AS PROMPT ATTENTION IS GIVEN TO THESE CALLS AND A PERSON IS CONTINUOUSLY AVAILABLE 24 HOURS A DAY AND 7 DAYS A WEEK. THE CONTRACTOR SHALL PROVIDE MAINTENANCE SERVICE ENTIRELY WITH HIS PERSONNEL.

THE CONTRACTOR SHALL CORRECT ALL BULB OUTAGES, DEVICE MALFUNCTIONS OF ANY TYPE, INTERNAL CABINET POWER LOSES, SPAN OR CABLE PROBLEMS AND MISALIGNED OR DAMAGED VEHICULAR OR PEDESTRIAN SIGNAL HEADS WITHIN 2 HOURS AFTER THE CONTRACTOR'S CONTACT PERSON HAS BEEN NOTIFIED OF ANY ONE OF THE ABOVE. IN THE EVENT A NEW SIGNAL DEVICE IS DAMAGED PRIOR TO ACCEPTANCE, THE DAMAGED DEVICE, EXCEPT POLES, SHALL BE REPLACED OR REPAIRED BY THE CONTRACTOR TO THE SATISFACTION OF THE CITY. ANY DAMAGED CABINET ASSEMBLY DEVICE IF REPAIRED SHALL BE TESTED ONCE AGAIN BY THE CITY BEFORE THE DEVICE CAN BE INSTALLED.

IN THE EVENT OF A LOSS OF POWER TO THE SIGNAL INDICATIONS OTHER THAN AN ELECTRIC COMPANY GENERAL POWER OUTAGE, THE CONTRACTOR, AT HIS EXPENSE, SHALL IMMEDIATELY TAKE ACTION (WITHIN 30 MINUTES) TO PROPERLY ERECT TEMPORARY STOP SIGN(S) AND PROVIDE POLICE OFFICER(S) TO DIRECT TRAFFIC UNTIL THE SIGNAL IS BACK ON "FLASH" OR OPERATING PROPERLY.

IF A TRAFFIC STRAIN, SUPPORT OR PEDESTAL POLE IS DAMAGED AND THAT DAMAGE CAUSES POLE INSTABILITY, THEN THE CONTRACTOR SHALL TAKE IMMEDIATE ACTION (WITHIN 2 HOURS) TO STABILIZE IT. THE CONTRACTOR SHALL STILL BE RESPONSIBLE FOR PROVIDING THE PROJECT WITH A NEW UNDAMAGED POLE.

WHERE OUT-OF-SERVICE CALLS ARE THE DIRECT RESULT OF A VEHICULAR ACCIDENT, THE RESPONSE OF THE CONTRACTOR SHALL BE AS OUTLINED ABOVE. THE CONTRACTOR SHALL BE RESPONSIBLE FOR THE COLLECTION OF ANY COMPENSATION FROM THOSE PARTIES RESPONSIBLE FOR THE DAMAGE TO THE CONTRACTOR'S MATERIALS.

WHERE THE CONTRACTOR HAS FAILED TO RESPOND OR CANNOT RESPOND TO AN OUT-OF-SERVICE CALL WITHIN THE TIME PERIOD SPECIFIED ABOVE AT LOCATIONS UNDER HIS RESPONSIBILITY, THE CITY MAY TAKE ACTION AS IT DEEMS NECESSARY TO CORRECT THE SITUATION. THIS ACTION MAY INCLUDE CONTROLLING THE INTERSECTION USING COLUMBUS POLICE OFFICERS, COMPLETELY REMOVING OR REPLACING ANY MALFUNCTIONING TRAFFIC CONTROL DEVICE, AND/OR INSTALLING ANY DEVICE(S) REQUIRED TO RETURN THE INTERSECTION TO REGULAR SIGNAL OPERATION. ALL COSTS ASSOCIATED WITH THESE ACTIONS SHALL BE BILLED DIRECTLY TO THE CONTRACTOR AND NOT INCLUDED IN ITEM 614 MAINTAINING TRAFFIC, AS PER PLAN.

MAINTENANCE OF TRAFFIC SIGNAL INSTALLATIONS (CONT.)

ANY NON-OPERATING VEHICULAR OR PEDESTRIAN SIGNAL HEAD OR PUSHBUTTON SHALL BE COVERED AS REFERENCED IN THESE PLANS. ALL SIGNAL HEADS, WHILE COVERED, SHALL BE DARK BY DISCONNECTING POWER TO THE SIGNAL INDICATIONS. NO COVERED HEAD SHALL BLOCK THE VIEW OF AN OPERATING HEAD. A MINIMUM OF 2 VEHICULAR SIGNAL HEADS PER TRAVELLED DIRECTION (SPACED 8 FT. APART MINIMUM AND 12 FT. MAXIMUM) SHALL BE OPERATING AT ALL TIMES.

B) EXISTING TRAFFIC SIGNAL DEVICES

THE CITY OF COLUMBUS, (ELECTRONICS MAINTENANCE SHOP, 614-645-7933), SHALL PERFORM ROUTINE MAINTENANCE ON ALL EXISTING CABINET ASSEMBLY ITEMS ONLY. THE GENERAL CONTRACTOR SHALL BE RESPONSIBLE FOR THE MAINTENANCE OF ALL OTHER EXISTING TRAFFIC SIGNAL DEVICES ONCE ANY PROJECT SIGNAL WORK HAS STARTED. IF, IN THE COURSE OF WORK, THE GENERAL CONTRACTOR OR ANY PROJECT SUB-CONTRACTOR CAUSES DAMAGE TO ANY EXISTING TRAFFIC SIGNAL DEVICE OTHER THAN THE CABINET ASSEMBLY, THEN THE CONTRACTOR, AT THE CONTRACTOR'S COST, SHALL REPAIR AND/OR REPLACE THE DAMAGED DEVICE TO THE SATISFACTION OF THE CITY. DAMAGE TO THE CABINET ASSEMBLY BY ANY PROJECT CONTRACTOR SHALL BE REPAIRED BY THE CITY AND BILLED TO THE GENERAL CONTRACTOR.

ALL COSTS RESULTING FROM THE ABOVE REQUIREMENTS, EXCEPT AS NOTED, SHALL BE CONSIDERED TO BE INCLUDED IN THE LUMP SUM BID PRICE FOR ITEM 614 MAINTAINING TRAFFIC, AS PER PLAN.

GROUNDING AND BONDING

REQUIREMENTS OF THE CURRENT EDITION OF THE CMSC AND THE CITY OF COLUMBUS STANDARD CONSTRUCTION DRAWINGS ARE MODIFIED AS FOLLOWS:

1. ALL NON-CURRENT CARRYING METALLIC PARTS CONTAINING ELECTRICAL CONDUCTORS SHALL BE PERMANENTLY JOINED TO FORM AN EFFECTIVE GROUND FAULT CURRENT PATH BACK TO THE GROUNDED CONDUCTOR AT THE POWER METER CABINET, AS NOTED BELOW.

   A. PROVIDE AN EQUIPMENT GROUNDING CONDUCTOR IN METALLIC CONDUITS (725.04)/POLYVINYL CHLORIDE CONDUITS (725.051) AND POLYETHYLENE CONDUITS (725.052) IN ADDITION TO THE CONDUCTORS SPECIFIED.

   B. METAL PULL BOX FRAMES SHALL BE BONDED BY ATTACHMENT OF THE EQUIPMENT GROUNDING CONDUCTOR TO THE FRAME AS ILLUSTRATED ON SCD 4021 THROUGH 4023.

   C. IF MULTIPLE CONDUIT RUNS BEGIN AND END AT THE SAME POINTS, EQUIPMENT GROUNDING CONDUCTORS SHALL BE PROVIDED AS SHOWN IN THE DETAILS.

   D. THE MESSENGER WIRE AT SIGNALIZED INTERSECTIONS SHALL BE USED AS THE CONDUCTIVE PATH FROM CORNER TO CORNER IF CONDUIT IS NOT PROVIDED UNDER THE ROADWAY. WHEN CONDUIT CONNECTS THE CORNERS OF AN INTERSECTION, AN EQUIPMENT GROUNDING CONDUCTOR SHALL BE USED IN THE CONDUIT UNLESS OTHERWISE DIRECTED BY THE CITY.

2. CONDUITS.

   A. THE 725.04 CONDUIT SHALL HAVE HEAVY DUTY GROUNDING BUSHINGS INSTALLED AT ALL TERMINATION POINTS. THE BUSHING MATERIAL SHALL BE COMPATIBLE WITH GALVANIZED STEEL CONDUIT AND THE GROUNDING LUG MATERIAL SHALL BE COMPATIBLE FOR USE WITH COPPER WIRE. THREADED OR COMPRESSION TYPE BUSHINGS MAY BE USED.

   B. THE 725.05 CONDUIT SHALL HAVE THE INSIDE AND OUTSIDE DIAMETERS OF THE CONDUIT DEBURRED AT ALL TERMINATION POINTS.

   C. BOTH ENDS OF METALLIC CONDUIT SHALL BE BONDED TO THE EQUIPMENT GROUNDING CONDUCTOR.

3. WIRE FOR GROUNDING AND BONDING.

   A. USE INSULATED COPPER WIRE FOR THE EQUIPMENT GROUNDING CONDUCTOR. BONDING JUMPERS IN BOXES AND ENCLOSURES MAY BE BARE OR INSULATED COPPER WIRE. WIRE SHALL BE AS FOLLOWS:

      i. USE 4 AWG BETWEEN THE POWER SERVICE AND SUPPORTS, POLES, PEDESTALS, CONTROLLER OR FLASHER CABINETS.
      ii. THE INSULATION SHALL BE GREEN WITH TWO (2) YELLOW STRIPES (TRACERS).
      iii. SPLICES IN THE GROUNDING AND BONDING CABLE SHALL NOT BE PERMITTED IN PULL BOXES.

4. GROUND ROD.

   A. THE TYPICAL GROUNDING CONDUCTOR (GROUND WIRE) SHALL BE 4 AWG INSULATED COPPER.

GROUNDING AND BONDING (CONT.)

5. POWER SERVICE.

   A. AT THE POWER METER CABINET, THE GROUNDING ELECTRODE CONDUCTOR (GROUND WIRE) FROM THE BREAKER BOX NEUTRAL (AC-) BAR TO THE GROUND ROD SHALL BE A CONTINUOUS UN-SPLICED CONDUCTOR.

   B. THE SERVICE NEUTRAL (AC-) SHALL ONLY BE CONNECTED TO GROUND AT THE MAIN POWER SERVICE IN THE POWER METER CABINET.

   C. POWER SERVICE DISCONNECT SWITCHES ARE NOT USED BETWEEN THE SECONDARY SIDE OF THE TRANSFORMER SUPPLYING POWER SERVICE AND THE CONTROLLER CABINET.

   D. A POWER SERVICE MAIN CIRCUIT BREAKER IS USED IN THE METER CABINET AND THE CONTROLLER CABINET BETWEEN THE SECONDARY SIDE OF THE TRANSFORMER SUPPLYING POWER SERVICE AND THE CONTROLLER CABINET.

   GROUNDING AND BONDING SHALL BE CONSIDERED INCIDENTAL TO ITEM 625, NO. 4 AWG, 600 VOLT DISTRIBUTION CABLE, AS PER PLAN.

ITEM 625 BRACKET ARM, 30', AS PER PLAN

BRACKET ARM SHALL BE INSTALLED PER SCD 4110 ON SIGNAL POLES AT LOCATIONS AS SHOWN IN THE PLANS TO FACILITATE THE INSTALLATION OF VEHICULAR DETECTION, CCTV, AND WIRELESS RADIO EQUIPMENT IN AREAS CLEAR OF OBSTRUCTIONS.

BRACKET ARM SHALL BE MADE OF ALUMINUM ALLOY TUBING. CONTRACTOR SHALL FIELD VERIFY EXISTING CONDITIONS OR VERIFY PLAN DETAILS TO DETERMINE THE SIZE AND CONFIGURATION OF REQUIRED CLAMPS PRIOR TO ORDERING - NO COMPENSATION WILL BE PROVIDED FOR MODIFICATIONS.

ALL STRUCTURAL STEEL PRODUCTS SHALL BE GALVANIZED ON THE INTERIOR AND THE EXTERIOR SURFACES AS PER ASTM A123. THE EXTERIOR SURFACE OF ALL STRUCTURAL STEEL AND ALUMINUM PRODUCTS SHALL BE PROPERLY PREPARED FOR THE APPLICATION OF AN EXTERIOR COATING. THE COATING COLOR ON BOTH STEEL AND ALUMINUM PRODUCTS SHALL MATCH EACH OTHER. IT IS THE RESPONSIBILITY OF THE CONTRACTOR TO ENSURE THAT BOTH PRODUCT MANUFACTURERS MATCH COATING COLORS SO THAT A CONSISTENT END PRODUCT IS ACHIEVED.

ALL EXTERIOR SURFACES, ALL ATTACHMENT HARDWARE, AND ALL CLEVIS HANGERS SHALL HAVE A COATING APPLIED TO THEM. EXTERIOR SURFACES OF ALL BOLT AND SCREW FASTENERS, WASHER NUTS, AND OTHER ATTACHMENT HARDWARE SHALL HAVE A COATING APPLIED TO THEM. FASTENER THREADS SHALL NOT BE CLOGGED WITH COATING MATERIAL.

THE EXTERIOR COATING FOR ALL ITEMS ABOVE SHALL:
1. MEET FEDERAL SPEC #595B, BE SEMI-GLOSS AND CONFORM TO COLORS AS SHOWN IN THE PLANS; AND
2. BE APPLIED OVER PROPERLY PREPARED GALVANIZING MATERIAL ON STEEL PRODUCTS AND OVER PROPERLY PREPARED ALUMINUM FOR ALUMINUM PRODUCTS; AND
3. HAVE A MINIMUM 5-YEAR REPAIR WARRANTY OF COATING DELAMINATION, BLISTERING, OR CORROSION.

ANY ALTERNATIVE PROCESSES FOR FINISH COATING OF BRACKET ARM PROPOSED BY THE CONTRACTOR MUST BE SUBMITTED TO THE ENGINEER FOR APPROVAL PRIOR TO STARTING WORK.

FOR ALUMINUM PARTS, EACH COATING LAYER SHALL BE PROPERLY CURED BEFORE THE APPLICATION OF THE NEXT COAT. THE APPLICATION PROCEDURE SHALL BE SUCH TO WARRANTY A FINISH WITHOUT DELAMINATION, BLISTERING, OR CORROSION AS PER THE MINIMUM (5) YEAR REPAIR WARRANTY.

THE COATING PROCESS SHALL INVOLVE SUCH STEPS AS THE FOLLOWING:
1. MECHANICAL PREPARATION BRACKET ARM ASSEMBLY (BRACKET ARM AND ALL CONNECTION COMPONENTS) SHALL BE ROTARY-SANDED TO A SATIN-GROUND FINISH. BRACKETS SHALL BE ETCHED TO A MATTE FINISH. THIS TREATMENT WILL PLACE A ROUGH SURFACE ON THESE ITEMS SO THE BASE COATING LAYER WILL HAVE EXCELLENT ADHESION.
2. CLEANING - THE BRACKET ARM ASSEMBLY SHALL BE IMMERSED IN AN ALCOHOLIC-PHOSPHORIC ACID SOLUTION THAT WILL CHEMICALLY CLEAN THESE ITEMS. THE CLEANING SOLUTIONS SHALL BE KEPT AT A NOMINAL 70 DEGREES FAHRENHEIT. THE BRACKET ARM ASSEMBLYSHALL BE IMMERSED IN THE SOLVENT SOLUTION FOR 5 MINUTES AND THEN COLD-WATER RINSED UNTIL CHEMICALS ARE WASHED OFF.
3. CONVERSION COATING - THE BRACKET ARM ASSEMBLY SHALL THEN BE IMMERSED IN AN AMORPHOUS CHROMATE CONVERSION COATING SOLUTION FOR 5 MINUTES. THE SOLUTION SHALL BE MAINTAINED AT 70˚ F. THIS TREATMENT WILL RESULT IN THE FORMATION OF A SURFACE FILM IN WHICH THE FILM CHEMICALLY BONDS ITSELF TO THE BASE METAL BY DIFFUSION AND BECOMES A PART OF THE BASE METAL. THE BRACKET AND PEDESTAL ASSEMBLY SHALL BE COLD-WATER RINSED. THIS SURFACE WILL PROVIDE OPTIMUM ADHESION AND GOOD STABILITY FOR THE COLOR FILM SO THAT IT DOES NOT CHIP, PEEL, OR FLAKE.
4. PRIMER COATING - AN ALUMINUM PRIMER SHALL BE APPLIED AS REQUIRED TO THE BRACKET ARM ASSEMBLY TO FURTHER IMPROVE COATING ADHESION.
5. FINAL COATING - EACH COAT SHALL BE PROPERLY DRIED BEFORE ADDITIONAL COATS ARE APPLIED. THE FINISH COAT OF PAINT SHALL MEET FEDERAL STANDARD #595B AND CONFORM TO COLOR #27038 (SEMI-GLOSS BLACK). THE FINISH COAT SHALL HAVE A MINIMUM 5-YEAR REPAIR WARRANTY OF COATING DELAMINATION, BLISTERING, OR CORROSION.
6. DRYING - THE BRACKET ARM ASSEMBLY SHALL BE THOROUGHLY DRIED THEN PROTECTED FOR SHIPMENT AS OUTLINE BEFORE.

ITEM 625 BRACKET ARM, 30', AS PER PLAN (CONT.)

ALL COATED ITEMS SHALL BE SHIPPED IN A MANNER SELECTED BY THE MANUFACTURER, WHICH WILL PROTECT MATERIAL FROM DAMAGE DURING DELIVERY. MATERIALS DAMAGED IN TRANSIT SHALL BE REPAIRED OR REPLACED. ALL COSTS ASSOCIATED WITH CORRECTING DAMAGED MATERIAL SHALL BE BORNE BY THE CONTRACTOR.

THE WORK AS DESCRIBED WILL BE MEASURED AS THE NUMBER OF BRACKET ARMS FURNISHED AND INSTALLED, COMPLETE IN PLACE.

ITEM 625 CONDUIT, (CONCRETE ENCASED), (BY SIZE), 725.051, AS PER PLAN

CONDUIT SHALL BE CONSTRUCTED IN ACCORDANCE WITH THE CURRENT CITY OF COLUMBUS, OHIO "CONSTRUCTION AND MATERIALS SPECIFICATIONS" (2018 EDITION, SECTION 625 TITLED "TRAFFIC SIGNAL UNDERGROUND") INCLUDING ALL SUPPLEMENTS THERETO, IN FORCE ON THE DATE OF THE CONTRACT.

ITEM 625 TRENCH, AS PER PLAN

IN ADDITION TO THE REQUIREMENTS OF 625.13, THE INSTALLATION DEPTH OF THE PROPOSED CONDUIT SHALL CORRELATE TO THE DEPTH OF THE PULL BOX STRUCTURE SERVICING THE CONDUIT RUN. CONDUIT ENTERING 18 INCH PULL BOXES SHALL BE 24 INCHES DEEP. CONDUIT ENTERING 27 INCH PULL BOXES SHALL BE 30 INCHES DEEP. CONDUIT ENTERING 32 INCH PULL BOXES SHALL BE 30 to 36 INCHES DEEP. CONDUIT ENTERING 48 INCH PULL BOXES SHALL BE 39 INCHES DEEP. IT SHALL BE THE CONTRACTOR'S RESPONSIBILITY TO MODIFY THE DEPTH OF THE CONDUIT TO ACCOMMODATE THE VARIOUS TERMINATION DEPTHS AND UTILITY CONFLICTS. SHARP CHANGES IN CONDUIT ELEVATION WILL NOT BE PERMITTED. IF BOTH ENDS OF A CONDUIT RUN ENTER THE SAME SIZE STRUCTURE, THEN THE ENTIRE LENGTH OF CONDUIT SHALL BE PLACED AT THAT DEPTH. IF THE TWO ENDS ENTER DIFFERENT DEPTH STRUCTURES, THE CHANGE IN ELEVATION SHALL BE MADE OVER THE ENTIRE LENGTH OF THE CONDUIT RUN. INCIDENTAL TO THIS ITEM IS THE REPAIR OF SIDEWALK, ROADWAY, BRICK, CURB, CURB RAMPS, AND LANDSCAPING.

ITEM 625 PULL BOX, MISC.: PULL BOX, (BY TYPE), (BY SIZE)

PULL BOXES SHALL BE CONSTRUCTED IN ACCORDANCE WITH THE CURRENT CITY OF COLUMBUS, OHIO "CONSTRUCTION AND MATERIALS SPECIFICATIONS" (2018 EDITION, SECTION 625 TITLED "TRAFFIC SIGNAL UNDERGROUND") INCLUDING ALL SUPPLEMENTS THERETO, IN FORCE ON THE DATE OF THE CONTRACT.

ITEMS 625, 632 AND 633, AS PER PLAN OR MISC

ITEM 625: BRACKET ARM, 30', AS PER PLAN
ITEM 625: NO. 4 AWG 600 VOLT DISTRIBUTION CABLE, AS PER PLAN
ITEM 625: CONDUIT, 2", 725.051, AS PER PLAN
ITEM 625: CONDUIT, 3", 725.051, AS PER PLAN
ITEM 625: CONDUIT, CONCRETE ENCASED, 2", 725.051, AS PER PLAN
ITEM 625: TRENCH, AS PER PLAN
ITEM 625: PULL BOX, MISC.: PULL BOX, 27"
ITEM 625: PULL BOX, MISC.: PULL BOX, 48"
ITEM 625: PULL BOX, MISC.: PULL BOX, 725.06, 12"X18" (TRAFFIC)
ITEM 625: GROUND ROD, AS PER PLAN
ITEM 630: SIGNING, MISC.: TRAFFIC SIGNAL SIGNS
ITEM 632: VEHICULAR SIGNAL HEAD, (LED), 3-SECTION, 12" LENS, 1- WAY, POLYCARBONATE, BLACK, AS PER PLAN
ITEM 632: VEHICULAR SIGNAL HEAD, (LED), 5-SECTION, 12" LENS, 1- WAY, POLYCARBONATE, BLACK, AS PER PLAN
ITEM 632: COVERING OF VEHICULAR SIGNAL HEAD, AS PER PLAN
ITEM 632: MESSENGER WIRE, 7 STRAND, 1/4" DIAMETER WITH ACCESSORIES, AS PER PLAN
ITEM 632: MESSENGER WIRE, 7 STRAND, 1/2" DIAMETER WITH ACCESSORIES, AS PER PLAN
ITEM 632: TETHER WIRE, WITH ACCESSORIES, AS PER PLAN
ITEM 632: SIGNAL CABLE, 2 CONDUCTOR, NO. 14 AWG, AS PER PLAN
ITEM 632: SIGNAL CABLE, 7 CONDUCTOR, NO. 14 AWG, AS PER PLAN
ITEM 632: SIGNAL CABLE, 9 CONDUCTOR, NO. 14 AWG, AS PER PLAN
ITEM 632: STRAIN POLE FOUNDATION , AS PER PLAN
ITEM 632: PEDESTAL FOUNDATION, AS PER PLAN
ITEM 632: POWER CABLE, 2 CONDUCTOR, NO. 6 AWG, AS PER PLAN
ITEM 632: POWER CABLE, 3 CONDUCTOR, NO. 6 AWG, AS PER PLAN
ITEM 632: POWER SERVICE, AS PER PLAN
ITEM 632: STRAIN POLE, MISC.: STRAIN POLE, TYPE 4170, DESIGN 13
ITEM 632: STRAIN POLE, MISC.: COMBINATION STRAIN POLE, TYPE 4170, DESIGN 13, AS PER PLAN
ITEM 632: PEDESTAL, MISC.: PEDESTAL SUPPORT, 21', TRANSFORMER BASE
ITEM 632: REMOVAL OF TRAFFIC SIGNAL INSTALLATION, AS PER PLAN
ITEM 632: REUSE OF TRAFFIC CONTROL ITEM: TRAFFIC FLOW MONITOR
ITEM 632: SIGNALIZATION, MISC.: DILEMMA ZONE RADAR DETECTION SYSTEM
ITEM 632: SIGNALIZATION, MISC.: STOP LINE RADAR DETECTION SYSTEM
ITEM 632: SIGNALIZATION, MISC.: POWER METER CABINET (TYPE I OR II), BASE MOUNT, WITH FOUNDATION
ITEM 633: CABINET FOUNDATION, AS PER PLAN
ITEM 633: CONTROLLER WORK PAD, AS PER PLAN
ITEM 633: UNINTERRUPTIBLE POWER SUPPLY (UPS), 1000 WATT, AS PER PLAN
ITEM 633: CONTROLLER ITEM, MISC.: CONTROLLER UNIT, TS2/A2, W/ P-UPS CABINET 16CH, GROUND MOUNTED

IN LIEU OF USING 2019 ODOT CONSTRUCTION AND MATERIAL SPECIFICATIONS, THESE ITEMS SHALL FOLLOW THE CITY OF COLUMBUS 2018 CONSTRUCTION AND MATERIAL SPECIFICATIONS.

TRAFFIC SIGNAL NOTES (1 OF 4)

DESIGN AGENCY
IBI

DESIGNER JMB
REVIEWER KMK 12-01-22
PROJECT ID 92616
SHEET P.123 TOTAL 170

FRA-23-4.19 PART 2 (PID 92616)

MODEL: Sheet PAPERSIZE: 17x11(in.) DATE: 2023-01-25 TIME: 12:05:45 PM USER: Judy.bennett
\\10.20.112.5\bishare\122592_SafetyDesign\7.0_Production\7.3_Design\04_Civil\Worksets\110380_FRA-23-X00-Engineering\Signals\Sheets\110380_CN001.dgn

ITEM 625 NO. 4 AWG 600 VOLT DISTRIBUTION CABLE, AS PER PLAN

INSULATED CABLE SHALL BE USED FOR THE GROUND WIRE (GND) WHERE INDICATED FOR SYSTEM GROUNDING AND BONDING. THE JACKET OF THE GND WIRE SHALL BE GREEN WITH TWO YELLOW STRIPES/TRACERS. THIS GND WIRE SHALL BE SEPARATE FROM THE GROUND ROD WIRE, BUT SHALL BE CONNECTED TO THE SAME GROUNDING BOLT USED FOR THE GROUND ROD WIRE ATTACHMENT AT THE POLE. THE GND WIRE SHALL BE TAGGED AS "GND SYS" AT ALL POLE LOCATIONS, PULL BOXES, AND & CONTROL CABINETS.

ITEM 625 TRACING WIRE, AS PER PLAN

TRACING WIRE SHALL BE NO SMALLER THAN #10 AWG WIRE. THE WIRE SHALL BE INSULATED, ORANGE IN COLOR, AND CONSTRUCTED OF COPPER CLAD STEEL (STRANDED). TRACING WIRE JACKET SHALL BE HDPE OR HMWPE. TRACING WIRE SHALL BE INSTALLED THROUGH ALL CONDUITS AND DUCT BANKS WHICH CONTAIN FIBER OPTIC CABLE BUT ARE NON-METALLIC AND CONTAIN NO METALLIC OR OTHERWISE "TRACEABLE"COMPONENTS. TRACING WIRE SHALL BE INSTALLED ALONG WITH FIBER OPTIC CABLE IN THE FOLLOWING LOCATIONS:

1. THROUGH A 1-1/2 INCH CONDUIT WITHIN IN A DUCT BANK
2. THROUGH A SINGLE NEWLY INSTALLED COMMUNICATIONS CONDUIT, GIVEN CONDUIT IS NOT PART OF A DUCT BANK AND IS 3" OR GREATER DIAMETER
3. THROUGH EXISTING CONDUIT PATH WHERE NEW FIBER IS BEING INSTALLED AS PART OF THIS PROJECT, EXCLUDING LOCATIONS WITH EXISTING FUNCTIONAL TRACING WIRE AS DETERMINED BY THE ENGINEER.

APPROXIMATELY 10 FT. OF SLACK OF THE TRACING WIRE SHALL BE LEFT INSIDE THE ADJACENT PULL-BOXES CONNECTING THE CONDUIT RUNS.

IN SITUATIONS WHERE A TYPE 2 FIBER OPTIC CABLE MARKER IS TO BE INSTALLED IN CONJUNCTION WITH THE TRACING WIRE, THE TRACING WIRE SHALL BE RUN THROUGH THE MARKER AND CONNECTED TO TERMINALS AT THE TOP OF THE MARKER.

LABEL AND TERMINATE TRACING WIRE TO TERMINAL BLOCKS IN PULL BOXES APPROXIMATELY EVERY 1000 FT. (MAX). MOISTURE DISPLACEMENT CONNECTORS SHALL BE USED AT ALL CONNECTION POINTS. 3M DBR CONNECTORS, COPPERHEAD SNAKEBITE CONNECTORS, OR APPROVED EQUAL SHALL BE USED. AFTER ALL CONNECTIONS ARE COMPLETED THE CONTRACTOR SHALL CONTACT THE ENGINEER FOR A LOCATE OR CONDUCTIVITY TEST.

THE TRACING WIRE SHALL ENTER A PULL BOX ON ONE SIDE AND BE ROUTED AROUND THE INSIDE PERIMETER OF THE PULL BOX TO THE OTHER SIDE AND THEN EXIT THE OPPOSING SIDE. THE TRACING WIRE SHALL BE CONTINUOUSLY RUN BETWEEN PULL BOXES (ABSOLUTELY NO SPLICES EXCEPT IN A PULL BOX). CONDUIT THAT BRANCHES OFF THE MAIN CONDUIT RUN SHALL HAVE ITS TRACING WIRE TERMINATED IN A PULL BOX OR CONTROLLER CABINET. THE WIRE SHALL BE TAGGED AS "TRACING WIRE", COILED (10 FEET IN LENGTH) AND LEFT DISCONNECTED AT EACH END (OPEN CIRCUIT).

IF RIGID GALVANIZED STEEL CONDUIT IS USED TO JACK UNDER A ROADWAY, TRACING WIRE SHALL BE CONNECTED TO EACH END OF THE CONDUIT USING A HEAVY DUTY WIRE LUG BUSHING APPROVED BY ENGINEER SO THE CONDUIT WILL ACT AS A CONDUCTOR COMPLETING THE TRACING WIRE CIRCUIT.

PAYMENT FOR ALL TRACING WIRE SHALL BE INCLUDED IN THE CONDUIT AND FIBER BID ITEMS.

ITEM 630 SIGNING, MISC.: TRAFFIC SIGNAL SIGNS

WHEN USED, THE CONTRACTOR SHALL INSTALL W3-3-36 "SIGNAL AHEAD" SIGNS WITH W16-15P-24 "NEW" SUPPLEMENTAL PLACARDS AND POSTS IF REQUIRED JUST PRIOR TO THE SIGNAL BEING PLACED ON FLASH. THE "NEW SIGNAL" AND "SIGNAL AHEAD" SIGNS SHALL BE COVERED UNTIL THE SIGNAL IS PLACED ON REGULAR OPERATION AT WHICH TIME THE CONTRACTOR SHALL UNCOVER THEM.

WHEN USED, THE CONTRACTOR SHALL INSTALL THE W23-H2B-30 "SIGNAL OPERATION CHANGED" SIGN JUST PRIOR TO ACTIVATING THE CHANGE IN SIGNAL OPERATION. THE "SIGNAL OPERATION CHANGED" SIGN SHALL BE COVERED UNTIL THE SIGNAL OPERATION CHANGE IS IN EFFECT AT WHICH TIME THE CONTRACTOR SHALL UNCOVER IT. IN ORDER TO INSTALL THE "SIGNAL OPERATION CHANGED" SIGN AS SHOWN IN THE PLANS, THE CONTRACTOR SHALL SHIFT AN ADJACENT PERMANENT SIGN, WHEN NECESSARY, TO CREATE ENOUGH SPACE TO INSTALL THE "SIGNAL OPERATION CHANGED" SIGN IN THE LOCATION SHOWN IN THE PLANS.

THE CONTRACTOR SHALL REMOVE THESE ITEMS 3 WEEKS AFTER THEY ARE UNCOVERED. AT THE SAME TIME, THE CONTRACTOR SHALL RETURN ANY PERMANENT SIGN, WHICH HAS BEEN TEMPORARILY SHIFTED IN ORDER TO ACCOMMODATE THE "SIGNAL OPERATION CHANGED" SIGN, TO THE LOCATION SPECIFIED IN THE PLANS. FAILURE TO REMOVE THESE ITEMSAND RELOCATE PERMANENT SIGNS SHALL RESULT IN THE CITY REMOVING THEM, ALONG WITH RELOCATING PERMANENT SIGNS, AND BILLING THE CONTRACTOR FOR ALL COSTS INVOLVED. ALL REMOVED MATERIAL SHALL BE CONSIDERED FORFEITED TO THE CITY.

MOUNTING HARDWARE AND POSTS SHALL BE INCIDENTAL TO THIS BID ITEM.

PAYMENT SHALL BE PER THE UNIT PRICE BID TO INSTALL AND REMOVE ALL NECESSARY SIGNS AT EACH INTERSECTION.

ITEM 632 POWER SERVICE, AS PER PLAN

IN ADDITION TO THE REQUIREMENTS OF 632.24, THE CONTRACTOR SHALL CONTACT THE SERVICE PROVIDER AND MAKE ARRANGEMENTS FOR THE CONNECTION OF POWER FOR THE TRAFFIC SIGNAL CONTROLLER CABINET. THE CONTRACTOR SHALL CONTACT THE POWER SERVICE PROVIDER A MINIMUM OF 120 CALENDAR DAYS IN ADVANCE OF THE NEED FOR POWER WITH THE ADDRESS(ES) OF THE TRAFFIC SIGNAL CONTROLLER CABINET(S) AS PROVIDED IN THE PLANS.

POWER SHALL BE SUPPLIED BY COLUMBUS DIVISION OF POWER. POWER SHALL BE 120/240 VAC. POWER SERVICE SHALL BE FROM THE APPROXIMATE LOCATION(s) AS SHOWN ON THE PLANS. CONTACT (COLUMBUS DIVISION OF POWER BUSINESS MANAGER (614-645-7216).

INTERSECTION	INTERSECTION NUMBER	TRAFFIC SIGNAL CONTROLLER CABINET ADDRESS	POWER SERVICE PROVIDER
US23 (HIGH ST) & RATHMELL RD	2182	4752 S. HIGH ST	DOP

ITEM 632 STRAIN POLE, MISC.: (COMBINATION) STRAIN POLE, TYPE 4170, (BY DESIGN), AS PER PLAN

TRAFFIC SIGNAL POLES SHALL BE PER SCD 4170.

IN ADDITION TO THE REQUIREMENTS OF 732.11 AND 732.12, THE FOLLOWING SHALL ALSO APPLY:

THE TOP FINISH COAT OF PAINT SHALL HAVE A MINIMUM 5-YEAR REPAIR WARRANTY OF COATING DELAMINATION, BLISTERING, OR CORROSION.

UNION METAL STRUCTURES SHALL BE EITHER POWDER-COATED WITH THE THOMARIOS POWDER-COATING SYSTEM OR WET-COATED WITH THE SRT WET-COAT SYSTEM.

VALMONT STEEL STRUCTURES SHALL BE EITHER POWDER-COATED WITH FINISH SPECIFICATION F-573 DATED 4-11-07, WHICH INCLUDES EPOXY POWDER PRIME COAT AND PENTABOND POWDER FINISH COAT OR SHALL BE WET-COATED WITH MANUFACTURER RECOMMENDED EQUIVALENT WET-COAT PAINT SYSTEM.

MILLERBERND STRUCTURES SHALL BE WET-COATED WITH THE MILLERBOND PAINTING SYSTEM DESIGNED FOR USE ON CARBON, STAINLESS STEEL, ALUMINUM, AND GALVANIZED POLE PRODUCTS, WHICH INCLUDES A DUAL-CURE CHEMISTRY ORGANIC ZINC RICH URETHANE BASE PRIMER COAT AND DUAL-CURE CHEMISTRY I2 POLYASPARTIC ALIPHATIC POLYUREA FINISH COAT.

ALL COATING SYSTEMS SHALL MEET THE MINIMUM REQUIREMENTS OF ODOT SUPPLEMENTAL SPECIFICATION 916 STANDARD PERFORMANCE BASED PAINT PROCESSES FOR LIGHT POLES, SIGN SUPPORTS AND TRAFFIC SUPPORTS FOR WET-COAT SYSTEMS.

THIS ITEM OF WORK SHALL BE MEASURED AS EACH COMPLETE SIGNAL SUPPORT OR STRAIN POLE IN PLACE IN ESSENTIALLY A VERTICAL POSITION UNDER FULL PLAN LOADING. ALL LABOR, EQUIPMENT, AND MATERIALS NECESSARY TO PURCHASE, TRANSPORT, STORE, ERECT, ADJUST, AND REPAIR THE SIGNAL SUPPORT OR STRAIN POLE SHALL BE INCLUDED FOR PAYMENT IN THE BID ITEM.

PAYMENT SHALL BE AS PER ITEM 632.

ITEM 632 SIGNALIZATION, MISC.: POWER METER CABINET (TYPE I OR II), BASE MOUNT, WITH FOUNDATION

THIS ITEM SHALL INCLUDE THE POWER METER CABINET, POWER METER SOCKET, LOAD CENTER PANEL, CONCRETE FOUNDATION, GROUNDING, AND INCIDENTALS AS DESCRIBED HEREIN.

THE CONDUIT AND FOUR (4) ANCHOR BOLTS AND REQUIRED CONDUIT ELLS AND THEIR INSTALLATION SHALL BE INCIDENTAL TO THE COST OF THIS ITEM.

FOR TYPE I POWER METER CABINETS:

THE POWER METER CABINET SUPPLIED SHALL BE A MILBANK SLIMLINE SERIES COMMERCIAL PEDESTAL (CATALOG NO. CP3A51C1VIAOSP3-CITY OF COLUMBUS).

FOR TYPE II POWER METER CABINETS:

THE POWER METER CABINET SUPPLIED SHALL BE APX TECHNOLOGIES, INC. BASE-MOUNTED ENCLOSURE (APX CATALOG NO. TC362015) WITH ALUMINUM PANEL KIT OPTION OR APPROVED EQUAL.

THE POWER METER SOCKET SUPPLIED SHALL BE A MILBANK CATALOG NO. U9551-RRL, TALON CATALOG NO. 40405-02QG, OR APPROVED EQUAL.
THE LOAD CENTER SHALL BE A SCHNEIDER ELECTRIC Q024L60NRNM, EATON CH2L70RP, OR APPROVED EQUIVALENT.

THE WORK AS DESCRIBED WILL BE MEASURED AS THE NUMBER OF POWER METER CABINETS fURNISHED AND INSTALLED AND SHALL INCLUDE FURNISHING ALL MATERIALS, EQUIPMENT, LABOR AND I NCIDENTALS, INCLUDING HUBS, CONDUITS ELLS AND FLEXIBLE CONDUIT, AND WIRING IN THE POWER METER CABINET, NECESSARY TO COMPLETE THE WORK SPECIFIED, COMPLETE IN PLACE.

ITEM 632 SIGNALIZATION, MISC.: DILEMMA ZONE RADAR DETECTION SYSTEM

THIS ITEM OF WORK SHALL CONSIST OF FURNISHING AND INSTALLING A DILEMMA ZONE RADAR DETECTION SYSTEM. EACH RADAR DETECTOR UNIT SHALL BE MOUNTED DIRECTLY TO A POLE, MAST ARM, OR BRACKET ARM AS SHOWN ON THE PLAN OR AS RECOMMENDED BY THE MANUFACTURER. MOUNTING HARDWARE AND CABLE CONNECTIONS SHALL BE INSTALLED PER CURRENT MANUFACTURER SPECIFICATIONS. THE SENSOR SHALL BE GROUNDED TO THE GROUND LUG OF THE SIGNAL POLE PER CURRENT MANUFACTURER SPECIFICATIONS.

THE DETECTION SYSTEM SHALL INCLUDE THE FOLLOWING:

1. RADAR DETECTOR UNITS APPROVED THROUGH THE OHIO DEPARTMENT OF TRANSPORTATION'S TRAFFIC AUTHORIZED PRODUCTS LIST AND AS SHOWN IN THE PLANS.
2. N/A
3. CONTACT CLOSURE DEVICES IF NECESSARY OR AS RECOMMENDED BY THE MANUFACTURER TO CONNECT TO THE TRAFFIC CONTROLLER AND BE COMPATIBLE WITH CITY OF COLUMBUS SIGNAL CABINETS. IF USED, THE DEVICES SHALL BE SECURED TO A SINGLE PANEL THAT CAN BE MOUNTED INTERIOR TO THE TRAFFIC SIGNAL CABINET.
4. SENSOR CABLE(S) SHALL BE PROVIDED AS REQUIRED AND AS RECOMMENDED BY THE MANUFACTURER. THE CABLE SHALL BE SUITABLE FOR INSTALLATION IN CONDUIT AND OVERHEAD WITH APPROPRIATE SPAN WIRE. THE DETECTOR CABLE SHALL BE RUN CONTINUOUSLY FROM THE DETECTOR UNIT TO THE CONTROLLER CABINET (NO SPLICES).
5. AN ETHERNET CABLE (MINIMUM 7 FEET).

A CITY SIGNAL MAINTENANCE REPRESENTATIVE SHALL BE ON SITE DURING INSTALLATION AND TESTING OF THE UNITS.

PAYMENT FOR ITEM 632 SIGNALIZATION, MISC.: DILEMMA ZONE RADAR DETECTION SYSTEM SHALL BE MADE AT THE CONTRACT UNIT PRICE FOR EACH SYSTEM, COMPLETE AND IN PLACE INCLUDING ALL REQUIRED DETECTOR UNITS, CABINET HARDWARE, MOUNTING BRACKETS, CABLES, AND CONNECTIONS TESTED AND ACCEPTED.

ITEM 632 SIGNALIZATION, MISC.: STOP LINE RADAR DETECTION SYSTEM

THIS ITEM OF WORK SHALL CONSIST OF FURNISHING AND INSTALLING A STOP LINE RADAR DETECTION SYSTEM. EACH RADAR DETECTOR UNIT SHALL BE MOUNTED DIRECTLY TO A POLE, MAST ARM, OR BRACKET ARM AS SHOWN ON THE PLAN OR AS RECOMMENDED BY THE MANUFACTURER. MOUNTING HARDWARE AND CABLE CONNECTIONS SHALL BE INSTALLED PER CURRENT MANUFACTURER SPECIFICATIONS. THE SENSOR SHALL BE GROUNDED TO THE GROUND LUG OF THE SIGNAL POLE PER CURRENT MANUFACTURER SPECIFICATIONS.

THE DETECTION SYSTEM SHALL INCLUDE THE FOLLOWING:

1. RADAR DETECTOR UNITS APPROVED THROUGH THE OHIO DEPARTMENT OF TRANSPORTATION'S TRAFFIC AUTHORIZED PRODUCTS LIST AND AS SHOWN IN THE PLANS.
2. SHELF-MOUNTED CABINET INTERFACE DEVICE WITH SIX (6) RADAR UNIT CABLE INPUTS, COMPATIBLE WITH ITEM 1 IN THIS NOTE, TO PROVIDE POWER, SURGE PROTECTION, AND ETHERNET CONNECTIVITY FOR THE RADAR DETECTOR UNITS.
3. CONTACT CLOSURE DEVICES IF NECESSARY OR AS RECOMMENDED BY THE MANUFACTURER TO CONNECT TO THE TRAFFIC CONTROLLER AND BE COMPATIBLE WITH CITY OF COLUMBUS SIGNAL CABINETS. IF USED, THE DEVICES SHALL BE SECURED TO A SINGLE PANEL THAT CAN BE MOUNTED INTERIOR TO THE TRAFFIC SIGNAL CABINET.
4. SENSOR CABLE(S) SHALL BE PROVIDED AS REQUIRED AND AS RECOMMENDED BY THE MANUFACTURER. THE CABLE SHALL BE SUITABLE FOR INSTALLATION IN CONDUIT AND OVERHEAD WITH APPROPRIATE SPAN WIRE. THE DETECTOR CABLE SHALL BE RUN CONTINUOUSLY FROM THE DETECTOR UNIT TO THE CONTROLLER CABINET (NO SPLICES).
5. AN ETHERNET CABLE (MINIMUM 7 FEET).

A CITY SIGNAL MAINTENANCE REPRESENTATIVE SHALL BE ON SITE DURING INSTALLATION AND TESTING OF THE UNIT.

PAYMENT FOR ITEM 632 SIGNALIZATION, MISC.: STOP LINE RADAR DETECTION SYSTEM SHALL BE MADE AT THE CONTRACT UNIT PRICE FOR EACH SYSTEM, COMPLETE AND IN PLACE INCLUDING ALL REQUIRED DETECTOR UNITS, CABINET HARDWARE, MOUNTING BRACKETS, CABLES, AND CONNECTIONS TESTED AND ACCEPTED.

ITEM 632 VEHICULAR SIGNAL HEAD, (LED), (BY SECTION), 12" LENS, 1-WAY, POLYCARBONATE, BLACK, AS PER PLAN

SIGNAL HEADS AND LED LAMP MODULES SHALL BE PER THE CITY'S TRAFFIC QPL.

ITEM 632 PEDESTAL, MISC.: PEDESTAL SUPPORT, 21', TRANSFORMER BASE

PEDESTALS SHALL BE CONSTRUCTED IN ACCORDANCE WITH THE CITY OF COLUMBUS, OHIO "CONSTRUCTION AND MATERIAL SPECIFICATIONS" , 2018 EDITION, SECTION 632, TITLED "TRAFFIC SIGNAL EQUIPMENT", INCLUDING ALL SUPPLEMENTS THERETO, IN FORCE ON THE DATE OF THE CONTRACT.

ITEM 632 MESSENGER WIRE, (BY SIZE), WITH ACCESSORIES, AS PER PLAN

MESSENGER WIRE SHALL BE CONSTRUCTED IN ACCORDANCE WITH THE CITY OF COLUMBUS, OHIO "CONSTRUCTION AND MATERIAL SPECIFICATIONS" , 2018 EDITION, SECTION 632, TITLED "TRAFFIC SIGNAL EQUIPMENT", INCLUDING ALL SUPPLEMENTS THERETO, IN FORCE ON THE DATE OF THE CONTRACT.

ITEM 632 TETHER WIRE, WITH ACCESSORIES, AS PER PLAN

TETHER WIRE SHALL BE CONSTRUCTED IN ACCORDANCE WITH THE CITY OF COLUMBUS, OHIO "CONSTRUCTION AND MATERIAL SPECIFICATIONS", 2018 EDITION, SECTION 632, TITLED "TRAFFIC SIGNAL EQUIPMENT", INCLUDING ALL SUPPLEMENTS THERETO, IN FORCE ON THE DATE OF THE CONTRACT.

ITEM 632 SIGNAL CABLE, (BY CONDUCTOR), NO. 14 AWG, AS PER PLAN

THE SIGNAL CABLE SHALL BE CONSTRUCTED IN ACCORDANCE WITH THE CITY OF COLUMBUS, OHIO "CONSTRUCTION AND MATERIAL SPECIFICATIONS" , 2018 EDITION, SECTION 632, TITLED "TRAFFIC SIGNAL EQUIPMENT", INCLUDING ALL SUPPLEMENTS THERETO, IN FORCE ON THE DATE OF THE CONTRACT.

ITEM 632 POWER CABLE, (BY CONDUCTOR), NO. 6 AWG, AS PER PLAN

POWER CABLE SHALL BE CONSTRUCTED IN ACCORDANCE WITH THE CITY OF COLUMBUS, OHIO "CONSTRUCTION AND MATERIAL SPECIFICATIONS" , 2018 EDITION, SECTION 632, TITLED "TRAFFIC SIGNAL EQUIPMENT", INCLUDING ALL SUPPLEMENTS THERETO, IN FORCE ON THE DATE OF THE CONTRACT.

ITEM 633 CABINET FOUNDATION, AS PER PLAN

THE CABINET FOUNDATION SHALL BE CONSTRUCTED IN ACCORDANCE WITH THE CITY OF COLUMBUS, OHIO "CONSTRUCTION AND MATERIAL SPECIFICATIONS" , 2018 EDITION, SECTION 633, TITLED "TRAFFIC SIGNAL CONTROLLERS" INCLUDING ALL SUPPLEMENTS THERETO, IN FORCE ON THE DATE OF THE CONTRACT.

ITEM 633 CONTROLLER WORK PAD, AS PER PLAN

THE CONTROLLER WORK PAD SHALL BE CONSTRUCTED IN ACCORDANCE WITH THE CITY OF COLUMBUS, OHIO"CONSTRUCTION AND MATERIAL SPECIFICATIONS" , 2018 EDITION, SECTION 633, TITLED "TRAFFIC SIGNAL CONTROLLERS" INCLUDING ALL SUPPLEMENTS THERETO, IN FORCE ON THE DATE OF THE CONTRACT.

ITEM 633 UNINTERRUPTIBLE POWER SUPPLY (UPS), 1000 WATT, AS PER PLAN

AS AN EXCEPTION TO THE REQUIREMENTS OF 633 AND 733, THIS ITEM SHALL NOT INCLUDE A SEPARATE ENCLOSURE. THE UPS EQUIPMENT SHALL BE HOUSED IN THE COMBINED SIGNAL CONTROLLER/UPS CABINET PAID FOR UNDER ITEM 633 CONTROLLER UNIT TS2/A2, W/ P-UPS CABINET, #CH, GROUND MOUNTED, AS PER PLAN.

ALL CONNECTIONS, WIRING, AND MISCELLANEOUS MATERIALS FOR FULL OPERATION OF THE UPS SYSTEM SHALL BE INCLUDED IN THE UNIT PRICE BID FOR THIS ITEM. PAYMENT SHALL BE PER ITEM 633 AND SHALL BE MADE AT THE UNIT PRICE BID PER EACH, COMPLETE IN PLACE, TESTED, AND ACCEPTED.

PROTECTION OF CITY/COUNTY/ODOT TRAFFIC SIGNALS AND INTERCONNECT INFRASTRUCTURE

PROTECTION OF THE EXISTING CITY OF COLUMBUS DPS TRAFFIC SIGNAL FACILITIES, FRANKLIN COUNTY ENGINEER'S OFFICE, AND ODOT INFRASTRUCTURE DURING CONSTRUCTION ACTIVITIES IS CRITICALLY IMPORTANT FOR THE SAFETY OF CONSTRUCTION WORKERS AND THE GENERAL PUBLIC.

ANY DAMAGE TO THIS CRITICAL INFRASTRUCTURE SHALL BE REPORTED IMMEDIATELY BY THE CONTRACTOR TO THE ENGINEER AND REPAIRED THE SAME DAY UNLESS APPROVED BY THE OWNER, AT THE SOLE DISCRETION OF THE ENGINEER. ALL COSTS OF THE EMERGENCY REPAIRS FOR THE DAMAGE SHALL BE THE RESPONSIBILITY OF THE CONTRACTOR REGARDLESS OF WHO DOES THE REPAIR. THE ENGINEER SHALL DETERMINE ACCEPTABLE TIME PERIODS FOR COMPLETION OF REPAIRS. FOR INSTANCES WHERE THE CONTRACTOR CANNOT PERFORM THE REPAIR WORK WITHIN THIS TIME PERIOD, THE CITY, COUNTY AND ODOT RESERVES THE RIGHT TO USE THEIR INTERNAL FORCES OR OUTSOURCES TO COMPLETE THE WORK AND MAY BILL THE CONTRACTOR BASED ON TIME AND MATERIAL COSTS.

ANY AND ALL EXISTING FIELD EQUIPMENT, INCLUDING VEHICLE DETECTION, SURVEILLANCE, INTERCONNECT, OR SIGNAL EQUIPMENT DAMAGED DURING CONSTRUCTION SHALL BE REPAIRED OR REPLACED AT THE DIRECTION OF THE ENGINEER AND SHALL BE SUBJECT TO INSPECTION AND REQUIRE FINAL APPROVAL OF THE RESPECTIVE OWNER AGENCY. DOWNTIME TO THE CTSS NETWORK CAUSED BY DAMAGE TO CTSS FIBER OPTIC CABLE SHALL BE CHARGED TO THE CONTRACTOR AT A RATE OF $400 PER HOUR.

TRAFFIC SIGNAL NOTES (2 OF 4)

DESIGN AGENCY
IBI

DESIGNER JMB
REVIEWER KMK 12-01-22
PROJECT ID 92616
SHEET P.124 TOTAL 170

FRA-23-4.19 PART 2 (PID 92616)

MODEL: Sheet PAPERSIZE: 17x11(in.) DATE: 2023-01-25 TIME: 12:20:52 PM USER: Judy.bennett
\\10.120.112.5\bishare\122592_SafetyDesign\7.0_Production\7.3_Design\04_Civil\Worksets\110380_FRA-23\400-Engineering\Signals\Sheets\110380_CN002.dgn

ITEM 633 CONTROLLER ITEM, MISC.: CONTROLLER UNIT TS2/A2, W/ P-UPS CABINET, 16CH, GROUND MOUNTED

IN ADDITION TO THE OTHER REQUIREMENTS OF 633 & 733, THE CONTROLLER (TS2, TYPE 2/TS1 COMPATIBLE) SHALL BE PER THE CITY'S QPL AND INCLUDE AN ETHERNET MODULE. THE CABINET ASSEMBLY SHALL MEET ALL CITY STANDARDS AS SET FORTH BETWEEN THE SUPPLIERS AND THE DIVISION OF TRAFFIC MANAGEMENT.

THE CONTROLLER AND BATTERY BACK-UP CABINET FOUNDATION SHALL BE PER SCD 4162 AND THE CABINET SHALL BE A SINGLE CABINET UNIT WITH TWO INTERNAL COMPARTMENTS ACCESSED BY SEPARATE DOORS (P-UPS, TYPE 1 OR TYPE 2).

IN ADDITION TO THE OTHER SPECIFICATION DOCUMENTS, THE CABINET ASSEMBLY SHALL MEET THE FOLLOWING SPECIFICATIONS.

(A) ALL LABELS SHALL BE PERMANENTLY SECURED TO THE CABINET. PLASTIC LABEL MAKER TAPE IS NOT CONSIDERED TO BE PERMANENT. CROY TYPE LABELS ARE ACCEPTABLE.

(B) THE 120 VAC, CONVENIENCE OUTLET ASSEMBLY (GFI TYPE) SHALL BE MOUNTED ON THE RIGHT SIDE PANEL OF THE CABINET NEAR THE DOOR HINGE AREA OR THE CENTER PORTION OF THE DOOR. THE OUTLET SHALL NOT INTERFERE WITH THE REMOVAL OR INSTALLATION OF ANY EQUIPMENT.

(C) LOAD SWITCHES SHALL BE EDI MODEL 510 WITH LIGHTS PERMANENTLY LABELLED AS R, Y, G OR A, B, C. A LOAD SWITCH SHALL BE PROVIDED FOR EACH BACK PANEL LOAD SWITCH SOCKET POSITION WHETHER USED OR UNUSED. ALL LOAD SWITCHES SHALL REST IN A SUPPORT RACK. LOAD SWITCHES 9-12 SHALL BE USED FOR THE PEDESTRIAN SIGNAL HEADS AND LOAD SWITCHES 13-16 SHALL BE USED FOR OVERLAPS.

(D) LIGHTNING PROTECTION DEVICES SUCH AS ITT, SURRESTOR, GENERAL ELECTRIC, OR APPROVED EQUAL (AS DETERMINED BY THE DIVISION OF TRAFFIC MANAGEMENT) SHALL BE PROVIDED.

(E) THE NEMA TYPE 4 CABINET SHALL BE PER THE CITY'S QPL. ALL EXTERIOR CABINET SEAMS SHALL BE EITHER CONTINUOUSLY WELDED, TACK WELDED, SEALED WITH A 15 TO 20 YEAR SILICONE SEALER, AND/OR OVERLAPPED SUCH THAT WATER DOES NOT ENTER THE CABINET. ALL CABINET EDGES SHALL BE SMOOTH (FREE OF ANY SHARP EDGES). THE CABINET DOOR FRAME OPENINGS SHALL BE DOUBLE-FLANGED ON ALL FOUR SIDES. EACH CABINET DOOR SHALL BE HINGED USING A HEAVY GAUGE CONTINUOUS HINGE THAT HAS A STAINLESS STEEL HINGE PIN. THE HINGES SHALL BE BOLTED TO THE CABINET SO THE DOORS CAN BE REMOVED. THE BOLTS AND NUTS SHALL BE MADE OF STAINLESS STEEL, TAMPERPROOF AND SECURELY FASTENED TO PREVENT VIBRATIONS FROM LOOSENING THE NUTS. THE DOORS SHALL BE EQUIPPED WITH THREE (3) POINT LATCHING MECHANISMS AND HANDLES WHICH CAN BE PADLOCKED. IN ADDITION TO THE DOOR STOP POSITIONS LISTED IN NEMA TS-2, THE DOORS SHALL BE DESIGNED SUCH THAT EACH INCLUDES A DOOR STOP AT 135 DEGREES. THE POLICE DOOR, CONTROLLER ENCLOSURE DOOR, AND UPS ENCLOSURE DOOR SHALL HAVE A KEYHOLE COVER. BOLT PATTERN SHALL CONSIST OF AN ANCHOR BOLT POSITIONED IN EACH CABINET CORNER. (P-UPS CABINET SIZE - 55"H x 60"W x 26"D (TYPE 1), OR 57"H x 58"W x 29"D (TYPE 2)).

(F) A THYRECTOR SURGE PROTECTOR WITH A RMS INPUT OF 150 VOLTS AND INPUT PEAK OF 210 VOLTS SHALL BE PROVIDED IN ADDITION TO ANY LIGHTNING PROTECTION DEVICE. THE THYRECTOR SHALL BE PLACED ACROSS THE INPUT AC POWER LINE.

(G) TWO (2) CIRCUIT SOLID STATE FLASHER, EDI MODEL 810, RATED AT 15 AMPS (MINIMUM) PER CIRCUIT SHALL BE PROVIDED (NEMA TYPE 3). CIRCUIT 1 SHALL CONTROL THE MAINLINE FLASHING SIGNAL INDICATIONS. CIRCUIT 2 SHALL CONTROL THE SIDE STREET FLASHING SIGNAL INDICATIONS.

(H) THE MAIN CIRCUIT BREAKER AND AUXILIARY CIRCUIT BREAKER, AS REQUIRED BY NEMA TS-2, SHALL BE LABELED AS "MAIN"AND "AUX," RESPECTIVELY.

(I) THE CABINET ASSEMBLY SHALL CONTAIN ALL PEDESTRIAN SIGNAL CIRCUITRY FOR EACH NEMA DEFINED THROUGH PHASE.

(J) A POLICE DOOR MOUNTED SIGNAL SHUTDOWN SWITCH WITH SWITCH POSITIONS LABELED AS "SIG ON" AND "SIG OFF" SHALL BE INSTALLED.

(K) A POLICE DOOR MOUNTED SIGNALFLASH SWITCH WITH SWITCH POSITIONS LABELLED AS "ON SIG" AND "ON FLASH" SHALL NOT ONLY PLACE THE SIGNALS ON FLASH BUT ALSO STOP-TIME THE CONTROLLER UNIT. A RUN/STOP-TIME SWITCH WITH SWITCH POSITIONS LABELLED AS "CONT. RUN" AND "STOP-TIME" SHALL BE INSTALLED ON THE INSIDE OF THE CONTROLLER ENCLOSURE DOOR. THE RUN/STOP-TIME SWITCH SHALL ALLOW THE CONTROLLER UNIT TO TIME NORMALLY BUT KEEP THE SIGNALS ON FLASH. THE SIGNALFLASH SWITCH SHALL NOT RETURN THE SIGNALS TO NORMAL OPERATION UNLESS THE RUN/STOP-TIME SWITCH IS RESET TO THE STOP-TIME POSITION SO THE SIGNALFLASH SWITCH CAN AGAIN STOP-TIME THE CONTROLLER UNIT. THE SIGNALFLASH SWITCH SHALL NOT REMOVE POWER TO THE CONTROLLER UNIT OR ITS AUXILIARY EQUIPMENT.

(L) A POLICE DOOR MOUNTED AUTOMANUAL TRANSFER SWITCH WITH SWITCH POSITIONS LABELLED AS "AUTO" AND "MANUAL" SHALL BE INSTALLED. A MANUAL PUSH BUTTON CONTROL SHALL NOT BE INSTALLED UNLESS SPECIFIED, BUT WIRING FOR A PUSH BUTTON CONTROL SHALL BE PROVIDED UP TO THE POINT WHERE THE PUSH BUTTON WOULD HAVE BEEN CONNECTED.

ITEM 633 CONTROLLER ITEM, MISC.: CONTROLLER UNIT TS2/A2, W/ P-UPS CABINET, 16CH, GROUND MOUNTED (CONT.)

(M) A CONTROLLER SHUTDOWN SWITCH WITH SWITCH POSITIONS LABELLED AS "CONT ON" AND "CONT OFF" AND A COORDINATED/ FREE SWITCH WITH SWITCH POSITIONS LABELLED AS "COORD" AND "FREE" SHALL BE INSTALLED INSIDE THE CABINET NEXT TO THE RUN/STOP-TIME SWITCH. A COORDINATED/FREE SWITCH SHALL NOT BE REQUIRED IF THE CONTROLLER HAS A BUILT-IN COORD/FREE SWITCH.

(N) THE WATCH DOG TIMER SHALL CAUSE THE CONTROLLER TO GO INTO A FLASH OPERATION IF A MICROPROCESSOR FAILURE IS DETECTED.

(O) ALL BACK PANEL HARDWARE SHALL BE MOUNTED WITH SCREWS. ALL SCREWS SHALL BE COMPLETELY SCREWED DOWN. RIVETS OR OTHER NONREMOVABLE FASTENERS ARE NOT ACCEPTABLE. WIRE CONNECTIONS ON THE BACK PANEL SHALL BE MADE WITH CRIMP TERMINALS AND THREADED FASTENERS. TELEPHONE TYPE KNIFE CONNECTORS (SOLDERED OR OTHERWISE) ARE NOT ACCEPTABLE.

(P) ALL WIRES FASTENED TO THE LOAD SWITCH AND FLASHER PLUGS SHALL BE SOLDERED IN PLACE.

(Q) THE BACK PANEL AND POWER DISTRIBUTION PANEL SHALL HAVE SILK SCREENED TERMINAL/SOCKET FUNCTION IDENTIFICATION LABELS SUCH AS AC COM, PHASE 3 GREEN, 115 VAC, SIGNAL BUS, ETC. REFERENCE NUMBERS SHALL NOT BE ACCEPTABLE IN LIEU OF FUNCTION LABELS BUT THEY CAN SUPPLEMENT THEM. ADDITIONAL TERMINAL BLOCKS AND AUXILIARY PANELS SHALL USE SILK SCREENED REFERENCE NUMBERS TO IDENTIFY TERMINAL CONNECTIONS.

(R) ALL TERMINAL STRIPS IN CLOSE PROXIMITY OF SHELF MOUNTED CONTROL DEVICE EQUIPMENT SHALL BE COVERED WITH NON-CONDUCTIVE MATERIAL TO PREVENT ACCIDENTAL CONTACT WITH THE DEVICES. ALL TERMINAL STRIPS SHALL BE READILY ACCESSIBLE WITHOUT REMOVAL OF ANY EQUIPMENT.

(S) IN ADDITION TO THE ALUMINUM SHELF WITH INTERNAL STORAGE AS SPECIFIED BY 733 B.10, THE CONTROLLER ENCLOSURE SHALL HAVE ONE NONVENTED (SOLID) SHELF. THE SHELVES SHALL BE SPACED AT LEAST 9" APART. BOTH SHELVES SHALL HAVE A WIDTH OF 13" AND THE BACK EDGE OF THE SHELF SHALL BE LIPPED WITH THE LIP POINTING UP. THE FRONT EDGE OF THE SHELF SHALL BE LIPPED WITH THE LIP POINTING DOWN. ALL LIP EDGES SHALL BE ROUNDED. THE SHELVES SHALL BE ATTACHED TO THE CONTROLLER ENCLOSURE SIDE PANELS. THE SHELF ARRANGEMENT SHALL BE DESIGNED SO ALL SHELF DEVICES FIT ON THEM.

(T) THERE SHALL BE A MINIMUM OF ONE (1) INCH EMPTY SPACE BETWEEN ALL ITEMS ATTACHED TO THE DOOR AND ALL SHELF-MOUNTED DEVICES INCLUDING ITS CONNECTING HARNESS(ES), ALL LOAD SWITCHES, FLASHER AND ALL SIDE-PANEL-MOUNTED ITEMS.

(U) ALL CABINETS SHALL HAVE TWO VENTILATION FANS. THE THERMOSTAT CONTROLLING THE VENTILATING FAN CIRCUIT SHALL BE SET AT 95 DEGREES FAHRENHEIT.

(V) ALL FLASH TRANSFER RELAYS SHALL BE WIRED FOR FAILSAFE OPERATION (ENERGIZED DURING NORMAL OPERATION) AND WIRED WITH A MAXIMUM OF TWO PHASES PER RELAY.

(W) THE POWER CABLE SHALL BE CONNECTED TO AN ACCESSIBLE TERMINAL STRIP THAT SHALL BE OF SUFFICIENT SIZE TO ACCEPT THE GAUGE OF THE SUPPLIED POWER CABLE. THE TERMINAL STRIP SHALL BE COVERED OR SHIELDED TO MINIMIZE ACCIDENTAL CONTACT DURING NORMAL SERVICING OPERATIONS. THE COVER SHALL BE SNAPPED ON/OFF OR SECURED BY STANDARD SCREWS. THE POWER CABLE LUG TERMINAL CONNECTION SHALL BE LOCATED IMMEDIATELY BELOW THE MAIN POWER DISTRIBUTION BREAKER. THERE SHALL BE A MINIMUM OF TWO (2) INCHES CLEARANCE BETWEEN THE POWER TERMINAL AND THE BOTTOM OF THE CONTROLLER ENCLOSURE.

(X) A #4 WIRE LUG SHALL BE PROVIDED FOR ATTACHING A GROUNDING WIRE FROM A GROUND ROD. THE GROUNDING WIRE BE ATTACHED TO THE POWER DISTRIBUTION PANEL GROUND BUS, ILSCO MODEL NBCE-1336-2. THE NEUTRAL BUS SHALL ONLY BE CONNECTED TO THE GROUND BUS IN THE POWER METER CABINET, NOT THE TRAFFIC SIGNAL CABINET.

(Y) A SOLID STATE RELAY, CRYDOM PART NO. CWA2450, SHALL BE INSTALLED WHICH WILL ALLOW POWER TO BE REMOVED FROM THE VEHICULAR POWER BUS, ILSCO MODEL NBCE-1336-2. THE SOLID STATE RELAY SHALL BE RATED AT 50 AMPS AND 120 VOLTS AND SHALL BE EQUIPPED WITH A PLASTIC COVER.

(Z) ALL EXTERNAL RELAY COILS SHALL HAVE NOISE SUPPRESSION DEVICES.

ITEM 633 CONTROLLER ITEM, MISC.: CONTROLLER UNIT TS2/A2, W/ P-UPS CABINET, 16CH, GROUND MOUNTED (CONT.)

(AA) THE DOOR FILTER (U.L. LISTED CLASS 2, STANDARD 900) SHALL CONSIST OF THREE DISTINCT LAYERS OF FILTERING MEDIA. THE FIRST AIR ENTERING LAYER SHALL BE COMPOSED OF A DUAL FIBER BLEND OF 100% NON-WOVEN POLYESTER TO TRAP LARGER SIZED PARTICLES. THE NEXT LAYER SHALL BE A DUAL PLY, DUAL DENIER, 100% NON-WOVEN POLYESTER OF SMALLER SIZE TO TRAP FINER PARTICLES PASSING THROUGH THE FIRST LAYER. A NON-TOXIC, NON-MIGRATORY, ODORLESS TACKIFIER SHALL BE APPLIED TO THESE LAYERS. ADHESIVES SPRAYED ON THE LAYERS ARE NOT ACCEPTABLE. THE TACKIFIER SHALL BE INCORPORATED INTO THE LAYER MEDIA DURING THE MANUFACTURING PROCESS OF THE RAW MATERIAL. A 10 GAUGE MESH SHALL BE INCORPORATED IN THE FILTER DESIGN FOR RIGIDITY. SUFFICIENT MEDIA OVERLAP SHALL BE PRESENT ABOUT THE WIRE PERIMETER TO INSURE POSITIVE SELF SEAL. THE DOOR FILTER HOLDER SHALL BE DESIGNED SO THE FILTER MAKES POSITIVE CONTACT WITH THE CABINET DOOR AT ALL TIMES AND UNDER ALL CONDITIONS AND SITUATIONS.

(BB) AN OUTLET RECEPTACLE AND BOX SHALL BE INSTALLED IN THE CONTROLLER ENCLOSURE TO PROTECT NETWORK EQUIPMENT FROM AN IMBALANCE FLOW OF CURRENT FROM THE HOT TO THE NEUTRAL. THE OUTLET SHALL BE A NEMA DUPLEX 5-15 RECEPTACLE, RATED AT 15 AMPS (MINIMUM) AT 120 VAC. THE OUTLET SHALL MEET OR EXCEED FEDERAL SPECIFICATIONS AND UL 498 STANDARDS AND SHALL BE RATED AS WEATHER-RESISTANT. THE RECEPTACLE SHALL BE INSTALLED WITHIN A METALLIC, SINGLE GANG ELECTRICAL BOX WITH A COVER PLATE. THE ELECTRICAL BOX SHALL BE STANDARD DEPTH (NOMINALLY 2 1/8 IN.) AND SHALL BE UL-LISTED. THE OUTLET SHALL BE INSTALLED INSIDE THE CONTROLLER ENCLOSURE ALONG ONE OF THE SIDE WALLS AND SHALL BE WIRED FROM THE SAME CIRCUIT BREAKER AS THE OTHER OUTLETS, UNLESS OTHERWISE DIRECTED BY THE ENGINEER.

(CC) A SURGE SUPPRESSION DEVICE SHALL BE INSTALLED IN THE CONTROLLER ENCLOSURE TO PROVIDE PROTECTED POWER OUTLETS TO NETWORK EQUIPMENT. THE SURGE SUPPRESSION DEVICE SHALL BE SECURELY MOUNTED IN THE CABINET IN A METHOD APPROVED BY THE ENGINEER. THE SURGE SUPPRESSION DEVICE INSTALLED SHALL HAVE 6 NEMA 5-15 OUTLETS AND SHALL BE CAPABLE OF BEING PLUGGED INTO A STANDARD 5-15 OUTLET. THE OUTPUT CURRENT OF THE SURGE SUPPRESSION DEVICE SHALL BE 15 AMPS. THE SURGE SUPPRESSION DEVICE SHALL HAVE AN ENERGY HANDLING RATING OF 1280 JOULES, UL 1499 LET THROUGH RATING OF 330 VOLTS, AND SURGE CURRENT RATING OF 50,000 AMPS.

(DD) THE UPS PORTION OF THE CABINET SHALL INCLUDE A GENERATOR POWER PANEL WITH A HEAVY DUTY POWER RELAY VERSUS THE LINE VOLTAGE GENERATOR SWITCH. THE GENERATOR INLET SHALL BE A RECESSED PANEL WITH A DOOR THAT IS FLUSH WITH THE EXTERNAL SIDE OF THE CABINET. IT SHALL INCLUDE A RECESSED PLUG, AUTOMATIC TRANSFER SWITCH AND A DOOR THAT SECURELY CLOSES OVER THE POWER CORD.

PROVIDE AN ARC FLASH HAZARD WARNING SIGN ON THE OUTSIDE OF THE FRONT DOOR OF THE CABINET IN ACCORDANCE WITH THE NATIONAL ELECTRICAL CODE PARAGRAPH 110.16.

FOR LOCATIONS WITHOUT A POWER METER CABINET, PROVIDE AN AVAILABLE FAULT CURRENT SIGN ON THE OUTSIDE OF THE FRONT DOOR OF THE TRAFFIC SIGNAL CONTROLLER CABINET IN ACCORDANCE WITH THE NATIONAL ELECTRICAL CODE PARAGRAPH 110.24.

TRAFFIC SIGNAL NOTES (3 OF 4)

FRA-23-4.19 PART 2 (PID 92616)

MODEL: Sheet PAPERSIZE: 17x11 (in.) DATE: 2022-12-09 TIME: 9:37:38 AM USER: william.croxton
\\Nol20.il2.5\ibisnare\12592_SafetyDesign\7.0_Production\7.3_Design\04_Civil\Worksets\I10380_FRA-23\400-Engineering\Signals\Sheets\I10380_CN003.dgn

DESIGN AGENCY: IBI

DESIGNER: JMB

REVIEWER: KMK 12-01-22

PROJECT ID: 92616

SHEET: P.125 TOTAL: 170

ITEM 625 GROUND ROD, AS PER PLAN

GROUND RODS SHALL BE CONSTRUCTED IN ACCORDANCE WITH THE CITY OF COLUMBUS, OHIO "CONSTRUCTION AND MATERIAL SPECIFICATIONS" , 2018 EDITION, SECTION 630, TITLED "TRAFFIC SIGNS AND SIGN SUPPORTS", INCLUDING ALL SUPPLEMENTS THERETO, IN FORCE ON THE DATE OF THE CONTRACT.

ITEM 632 COVERING OF VEHICULAR SIGNAL HEAD, AS PER PLAN

THIS ITEM SHALL BE CONSTRUCTED IN ACCORDANCE WITH THE CITY OF COLUMBUS, OHIO "CONSTRUCTION AND MATERIAL SPECIFICATIONS" , 2018 EDITION, SECTION 632, TITLED "TRAFFIC SIGNAL EQUIPMENT", INCLUDING ALL SUPPLEMENTS THERETO, IN FORCE ON THE DATE OF THE CONTRACT.

ITEM 632 STRAIN POLE FOUNDATION, AS PER PLAN

THIS ITEM SHALL BE CONSTRUCTED IN ACCORDANCE WITH THE CITY OF COLUMBUS, OHIO "CONSTRUCTION AND MATERIAL SPECIFICATIONS" , 2018 EDITION, SECTION 632, TITLED "TRAFFIC SIGNAL EQUIPMENT", INCLUDING ALL SUPPLEMENTS THERETO, IN FORCE ON THE DATE OF THE CONTRACT.

ITEM 632 PEDESTAL FOUNDATION, AS PER PLAN

THIS ITEM SHALL BE CONSTRUCTED IN ACCORDANCE WITH THE CITY OF COLUMBUS, OHIO "CONSTRUCTION AND MATERIAL SPECIFICATIONS" , 2018 EDITION, SECTION 632, TITLED "TRAFFIC SIGNAL EQUIPMENT", INCLUDING ALL SUPPLEMENTS THERETO, IN FORCE ON THE DATE OF THE CONTRACT.

ITEM 632 REMOVAL OF TRAFFIC SIGNAL INSTALLATION, AS PER PLAN

THIS ITEM SHALL BE CONSTRUCTED IN ACCORDANCE WITH THE CITY OF COLUMBUS, OHIO "CONSTRUCTION AND MATERIAL SPECIFICATIONS" , 2018 EDITION, SECTION 632, TITLED "TRAFFIC SIGNAL EQUIPMENT", INCLUDING ALL SUPPLEMENTS THERETO, IN FORCE ON THE DATE OF THE CONTRACT.

ITEM 632 REUSE OF TRAFFIC CONTROL ITEM: TRAFFIC FLOW MONITOR

THIS ITEM SHALL BE CONSTRUCTED IN ACCORDANCE WITH THE CITY OF COLUMBUS, OHIO "CONSTRUCTION AND MATERIAL SPECIFICATIONS" , 2018 EDITION, SECTION 632, TITLED "TRAFFIC SIGNAL EQUIPMENT", INCLUDING ALL SUPPLEMENTS THERETO, IN FORCE ON THE DATE OF THE CONTRACT.

THIS ITEM OF WORK SHALL INCLUDE REMOVING EXISTING TRAFFIC FLOW MONITOR FROM EXISTING STRAIN POLE, STORAGE ON-SITE, INSTALLATION OF TRAFFIC FLOW MONITOR ON NEW STRAIN POLE WITH BRACKET ARM AT THE SOUTHWEST CORNER OF US-23 (S. HIGH ST) AND RATHMELL RD, AND ALL ASSOCIATED LABOR, EQUIPMENT, CCTV CABLE, CONNECTION TO PROPOSED CONTROLLER, AND OTHER SUPPLIES NECESSARY TO PROVIDE A FULLY FUNCTIONING TRAFFIC MONITORING SYSTEM.

ITEM 632 REUSE OF TRAFFIC CONTROL ITEM: RADIO ANTENNA

THIS ITEM SHALL BE CONSTRUCTED IN ACCORDANCE WITH THE CITY OF COLUMBUS, OHIO "CONSTRUCTION AND MATERIAL SPECIFICATIONS" , 2018 EDITION, SECTION 632, TITLED "TRAFFIC SIGNAL EQUIPMENT", INCLUDING ALL SUPPLEMENTS THERETO, IN FORCE ON THE DATE OF THE CONTRACT.

THIS ITEM OF WORK SHALL INCLUDE REMOVING EXISTING RADIO ANTENNA FROM EXISTING STRAIN POLE, STORAGE ON-SITE, INSTALLATION OF RADIO ANTENNA ON NEW STRAIN POLE WITH BRACKET ARM AT THE SOUTHEAST CORNER OF US-23 (S. HIGH ST) AND RATHMELL RD, AND ALL ASSOCIATED LABOR, EQUIPMENT, CAT 53 CABLE, CONNECTION TO PROPOSED CONTROLLER, AND OTHER SUPPLIES NECESSARY TO PROVIDE A FULLY FUNCTIONING RADIO ANTENNA.

CITY OF COLUMBUS INTERCONNECT NOTES

CONTRACTOR QUALIFICATIONS

ANY CONTRACTOR WHO ENTERS IN AN EXISTING SPLICE ENCLOSURE TO MAKE SPLICES OR INSTALLS A NEW SPLICE ENCLOSURE INTO FIBER OPTIC CABLE MAINTAINED BY THE CITY SHALL BE QUALIFIED TO DO ODOT TYPE 56 WORK. THE CONTRACTOR SHALL ALSO BE A CERTIFIED MEMBER IN GOOD STANDING OF THE CORNING OPTICAL COMMUNICATIONS NETWORK OR PREFERRED INSTALLERS. PROOF OF THESE CERTIFICATIONS SHALL BE PRESENTED AT THE PRECONSTRUCTION MEETING AND THE CONTRACTOR SHALL BE ABLE TO PRESENT PROOF AT ANY TIME DURING THE CONSTRUCTION PERIOD. (8/26/2015)

ITEM 625 - CONDUIT, MISC.: ENCASED INTERCONNECT CONDUIT BANK, (4)-3" & (1)-1.5", TC-2, SCH-40 & SCH-80

IN ADDITION TO THE REQUIREMENTS OF 625.12,

ANY CONDUIT WITHOUT A SPACER ABOVE IT (I.E. ANY TOP ROW CONDUIT) SHALL BE WIRE-WRAPPED TO THE SPACER BENEATH IT IN ORDER TO BE HELD IN PLACE.

A NUMBER 10 GAUGE, STRANDED COPPER, POLYESTER OR CROSS LINKED POLYETHYLENE (XLPE) INSULATED TRACING WIRE SHALL BE INSTALLED IN THE 1-1/2□ CONDUIT. THE WIRE INSULATION SHALL BE RESISTANT TO MOISTURE ABSORPTION AND ABRASIVE ACTIONS. THE TRACING WIRE JACKET SHALL BE ORANGE; NO OTHER JACKET COLOR IS ALLOWED. THE TRACING WIRE SHALL ENTER A PULLBOX THROUGH THE 1-1/2□ CONDUIT AND SHALL BE ROUTED AROUND THE INSIDE PERIMETER OF THE PULLBOX TO THE OTHER SIDE AND THEN EXIT THE OPPOSING 1-1/2□ CONDUIT. THE TRACING WIRE SHALL BE CONTINUOUSLY RUN BETWEEN PULLBOXES (ABSOLUTELY NO SPLICES EXCEPT IN A PULLBOX). CONDUIT THAT BRANCHES OFF THE MAIN CONDUIT RUN SHALL HAVE ITS TRACING WIRE TERMINATED IN A PULLBOX OR CONTROLLER CABINET. THE WIRE SHALL BE TAGGED AS □TRACING WIRE□, COILED (3 FEET IN LENGTH) AND LEFT DISCONNECTED AT EACH END (OPEN CIRCUIT).

ENCASED CONDUIT BANK SHALL BE ORIENTED AS REPRESENTED IN THE PLANS AND INSTALLED AS SHOWN IN SCD 4001.

THE COST FOR THE TRACING WIRE AND ITS INSTALLATION SHALL BE INCIDENTAL TO THE COST OF THIS PAY ITEM.

ITEM 632 - INTERCONNECT CABLE, MISC.: CMSC-FIBER OPTIC CABLE, 24 STRAND

IN ADDITION TO THE REQUIREMENTS OF SUPPLEMENTAL SPECIFICATION 1620, THE CONTRACTOR SHALL PROVIDE ALL MATERIALS REQUIRED FOR THE INSTALLATION, CONNECTORIZATION, AND SPLICING OF THE SPECIFIED COMMUNICATIONS CABLES. THE 24-STRAND CABLE SHALL BE CORNING PART NUMBER 144EU4-T4701D20.

ITEM 632 - INTERCONNECT, MISC.: CMSC 1620-TERMINATION PANEL, 24 FIBER

THE TERMINATION PANEL SHALL BE FURNISHED AND INSTALLED IN THE TRAFFIC SIGNAL CONTROLLER CABINET AT THE LOCATION SHOWN ON THE PLANS. THE TERMINATION PANEL HOUSING SHALL BE CORNING MODEL SPH-01P AND SHALL INCLUDE ONE CLOSET CONNECTOR HOUSING, CORNING MODEL CCH-CP24-A9-P03RH.

ITEM 632 - INTERCONNECT, MISC.: FIBER OPTIC FUSION SPLICE

IN ADDITION TO THE REQUIREMENTS OF SUPPLEMENTAL SPECIFICATION 1620, THE CONTRACTOR SHALL PROVIDE ALL MATERIALS REQUIRED FOR THE INSTALLATION, CONNECTORIZATION, AND SPLICING OF THE SPECIFIED COMMUNICATIONS CABLES.

ITEM 625 - PULL BOX, MISC.: PULL BOX, 32"

IN ADDITION TO THE REQUIREMENTS OF SUPPLEMENTAL SPECIFICATION 1620, THE CONTRACTOR SHALL PROVIDE ALL MATERIALS REQUIRED FOR THE INSTALLATION, CONNECTORIZATION, AND SPLICING OF THE SPECIFIED COMMUNICATIONS CABLES.

ITEM 632 - CONDUIT RISER, 2" DIAMETER, AS PER PLAN

IN ADDITION TO THE REQUIREMENTS OF 632 AND 725, THE CONDUIT RISER FOR FIBER OPTIC CABLES SHALL BE AS DETAILED ON CITY OF COLUMBUS STANDARD DRAWING 4602.

ITEM 633 CONTROLLER ITEM, MISC.: LAYER 2 ETHERNET SWITCH

THE CONTRACTOR SHALL PURCHASE AND INSTALL ENVIRONMENTALLY HARDENED LAYER 2 ETHERNET SWITCHES AS SHOWN ON THE PLANS. LAYER 2 ETHERNET SWITCHES SHALL BE COMNET MODEL CNGE11FX3TX8MS THIS WORK IS THE FURNISHING AND INSTALLATION OF A LAYER 2 SWITCH WITH THREE 100/1000BASE-FX SFP PORTS AND EIGHT SWITCHED 10/100/1000BASE-TX RJ45 PORTS.

ALL EQUIPMENT SHALL BE NEW AND IN STRICT ACCORDANCE WITH THE DETAILS SHOWN ON THE PLANS AND THE SPECIFICATIONS.

TRAFFIC MAINTENANCE SHALL BE CONTACTED AT 645-7393 14 CALENDAR DAYS PRIOR TO INSTALLATION TO PROGRAM THE SWITCH. THE CONTRACTOR SHALL INSTALL THE SWITCH IN THE CABINET BUT SHALL NOT MAKE ANY CONNECTIONS TO THE SWITCH.

THE TRAFFIC MAINTENANCE MANAGER SHALL INSPECT THE CONDITION OF ALL COMPONENTS UPON INSTALLATION. NO DAMAGED COMPONENT WILL BE ACCEPTED, AND NO COMPONENT SHALL BE CONSIDERED INSTALLED UNTIL THE TRAFFIC MAINTENANCE MANAGER APPROVES OF THE SWITCH INSTALLATION. LAYER 2 ETHERNET SWITCHES SHALL SUPPORT DIRECT CONNECTIVITY TO PROPOSED AND EXISTING NETWORKS CONFIGURED IN RING AND MESH FAULT TOLERANT TOPOLOGIES ENABLING APPLICATIONS TO OPERATE RELIABLY, AND WITH LOW LATENCY.

ALL EQUIPMENT SHALL INCLUDE LICENSES, WHERE REQUIRED, FOR ANY SOFTWARE OR HARDWARE IN THE SYSTEM.

1. INSTALL POWER ADAPTER, POWER CABLES, CATEGORY 5E OR CATEGORY 6 PATCH CORDS, AND SINGLE MODE PATCH CABLES AS REQUIRED AND DEPICTED ON COMMUNICATIONS DIAGRAMS.
2. SECURELY MOUNT THE SWITCH AND POWER SUPPLY IN THE CABINET.
3. MAKE POWER CONNECTION TO AN AVAILABLE OUTLET ON THE INSTALLED SURGE SUPPRESSOR.
4. MAKE THE COMMUNICATION CONNECTIONS.
5. ESTABLISH AND VERIFY COMMUNICATIONS TO THE NETWORK PRIOR TO TRANSITIONING SIGNAL CONTROLLER TO NEW SYSTEM.

THE CONTRACTOR SHALL BE RESPONSIBLE FOR PROVIDING A COMPLETE, FUNCTIONAL SYSTEM INCLUDING ALL NECESSARY CABLES AND CONNECTORS IN ACCORDANCE TO THE SPECIFICATIONS AND AS SPECIFIED ON THE PLANS. ALL MISCELLANEOUS PATCH AND INTERCONNECT CABLES SHALL MEET THE PROPOSED EQUIPMENT SPECIFICATION REQUIREMENTS AND SHALL MEET EIA/TIA TELECOMMUNICATIONS STANDARDS. ADDITIONALLY, FIBER OPTIC PATCH CABLES SHALL CONFORM TO THE PLAN REQUIREMENTS FOR PATCH CABLES.

ITEM 633 CONTROLLER ITEM, MISC.: FIBER OPTIC ETHERNET TRANSCEIVER, SHORT RANGE

THE CONTRACTOR SHALL FURNISH AND INSTALL SINGLE MODE FIBER (SMF), SMALL FORM FACTOR PLUGGABLE (SFP) GIGABIT INTERFACE CONVERTER (GBIC) MODULES AT LOCATIONS AS SHOWN ON THE PLANS.

THE GBIC TRANSCEIVER SHALL BE 1000BASE LX/LH SFP-LC TRANSCEIVER (CISCO PART #GLC-LX-SM-RGD).

THE CONTRACTOR SHALL INSTALL THE SFP MODULE IN THE ETHERNET SWITCH SLOT AND CONFIGURE AS NECESSARY.

THE CONTRACTOR SHALL BE RESPONSIBLE FOR PROVIDING A COMPLETE, FUNCTIONAL SYSTEM INCLUDING ALL NECESSARY CABLES AND CONNECTORS IN ACCORDANCE TO THE SPECIFICATIONS AND AS SPECIFIED ON THE PLANS. ALL MISCELLANEOUS PATCH AND INTERCONNECT CABLES SHALL MEET THE PROPOSED EQUIPMENT SPECIFICATION REQUIREMENTS AND SHALL MEET EIA/TIA TELECOMMUNICATIONS STANDARDS.

THE WORK AS DESCRIBED WILL BE MEASURED AS ONE UNIT FOR EACH OF THE INSTALLATIONS SPECIFIED, AND SHALL INCLUDE ALL MATERIALS, EQUIPMENT AND INCIDENTALS, COMPLETE IN PLACE. PATCH CABLES, TERMINATIONS, CONNECTIONS, AND OTHER MISCELLANEOUS ITEMS AND MATERIALS SHALL BE CONSIDERED INCIDENTAL TO THIS WORK AND NO SEPARATE PAYMENT WILL BE MADE.

TRAFFIC SIGNAL NOTES (4 OF 4)

DESIGN AGENCY
IBI

DESIGNER
JMB

REVIEWER
KMK 12-01-22

PROJECT ID
92616

SHEET P.126 TOTAL 170

FRA-23-4.19 PART 2 (PID 92616)

MODEL: Sheet PAPERSIZE: 17x11 (in.) DATE: 2023-01-25 TIME: 12:25:25 PM USER: judy.bennett
\\10.120.12.5\ibishare\122592_SafetyDesign\7.0_Production\7.3_Design\04_Civil\Worksets\10380_FRA-23\400-Engineering\Signals\Sheets\10380_CN004.dgn

	LOCATION	LENGTH	625										630					632																					633			
			BRACKET ARM, 30', AS PER PLAN	NO. 4 AWG 600 VOLT DISTRIBUTION CABLE, AS PER PLAN	CONDUIT, 2", 725.051, AS PER PLAN	CONDUIT, 3", 725.051, AS PER PLAN	CONDUIT, CONCRETE ENCASED, 2", 725.051, AS PER PLAN	TRENCH, AS PER PLAN	PULL BOX, MISC.: PULL BOX, 27"	PULL BOX, MISC.: PULL BOX, 48"	PULL BOX, MISC.: PULL BOX, 725.06, 12"X18" (TRAFFIC)	GROUND ROD, AS PER PLAN	SIGN HANGER ASSEMBLY,SPAN WIRE	SIGN SUPORT ASSEMBLY, POLE MOUNTED	SIGN, FLAT SHEET	SIGN, DOUBLE FACED, STREET NAME	SIGNING, MISC.: TRAFFIC SIGNAL SIGNS	VEHICULAR SIGNAL HEAD, (LED), 3-SECTION, 12" LENS, 1-WAY, POLYCARBONATE, BLACK, AS PER PLAN	VEHICULAR SIGNAL HEAD, (LED), 5-SECTION, 12" LENS, 1-WAY, POLYCARBONATE, BLACK, AS PER PLAN	COVERING OF VEHICULAR SIGNAL HEAD, AS PER PLAN	MESSENGER WIRE, 7 STRAND, ¼" DIAMETER WITH ACCESSORIES, AS PER PLAN	MESSENGER WIRE, 7 STRAND, ½" DIAMETER WITH ACCESSORIES, AS PER PLAN	TETHER WIRE, WITH ACCESSORIES, AS PER PLAN	SIGNAL CABLE, 7 CONDUCTOR, NO. 14 AWG, AS PER PLAN	SIGNAL CABLE, 9 CONDUCTOR, NO. 14 AWG, AS PER PLAN	STRAIN POLE FOUNDATION, AS PER PLAN	PEDESTAL FOUNDATION, AS PER PLAN	POWER CABLE, 2 CONDUCTOR, NO. 6 AWG, AS PER PLAN	POWER CABLE, 3 CONDUCTOR, NO. 6 AWG, AS PER PLAN	POWER SERVICE, AS PER PLAN	STRAIN POLE, MISC.: STRAIN POLE, TYPE 4170, DESIGN 13	STRAIN POLE, MISC.: COMBINATION STRAIN POLE, TYPE 4170, DESIGN 13	PEDESTAL, MISC.: PEDESTAL SUPPORT, 21', TRANSFORMER BASE	REMOVAL OF TRAFFIC SIGNAL INSTALLATION, AS PER PLAN	REUSE OF TRAFFIC CONTROL ITEM: TRAFFIC FLOW MONITOR	REUSE OF TRAFFIC CONTROL ITEM: RADIO ANTENNA	SIGNALIZATION, MISC.: DILEMMA ZONE RADAR DETECTION SYSTEM	SIGNALIZATION, MISC.: STOP LINE RADAR DETECTION SYSTEM	SIGNALIZATION, MISC.: POWER METER CABINET (TYPE I OR II), BASE MOUNT, WITH FOUNDATION	CABINET FOUNDATION, AS PER PLAN	CONTROLLER WORK PAD, AS PER PLAN	UNINTERRUPTIBLE POWER SUPPLY (UPS), 1000 WATT, AS PER PLAN	CONTROLLER ITEM, MISC.: CONTROLLER UNIT, TS2/A2, W/ P-UPS CABINET 16CH, GROUND MOUNTED
			EACH	FT	FT	FT	FT	FT	EACH	EACH	EACH	EACH	EACH	EACH	SF	EACH	EACH	EACH	EACH	EACH	FT	FT	FT	FT	FT	EACH	EACH	FT	EACH	EACH	EACH	EACH	EACH	EACH	EACH	EACH	EACH	EACH	EACH	EACH	EACH
	US 23 & RATHMELL RD																1																1	1	1							
129	N/W-2											1														1																
129	N/W-2 TO PULL BOX-NW	21		21	21			21																						1										
129	PULL BOX-NW								1																																
129	PULL BOX-NW TO N/W-1	20		40	20			20																																
129	POLE N/W-1		1									1		3	12.5	1						42	42			1					1										
129	POLE N/W-1 TO POLE N/E-1												2		15.0							127	127																		
129	POLE N/E-1											1		3	12.5	1						15	15			1			1												
129	POLE N/W-1 TO POLE S/W-1												1		7.5							106	106																		
129	POLE S/W-1		1									1		2	12.5							17	17			1				1											
129	POLE S/W-1 TO POLE S/E-1												2		15.0						184	133	133																		
129	S/E-2											1															1					1										
129	S/E-2 TO PULL BOX-3	14		14	14			14																																
129	POLE S/E-1		1									1		3	12.5	1						47	47			1				1											
129	S/E-1 TO PULL BOX-3	14		14		28		14																																
129	POLE N/E-1 TO POLE S/E-1												2		15.0							106	106																		
129	SIG. HEADS 1,2,3,4,5																	5		5				111	252																
129	SIG. HEAD 6																	1		1				94																	
129	SIG. HEADS 7,8																	2		2				32	179																
129	SIG. HEADS 9,10,11,12																	4		4				88	208																
129	SIG. HEAD 13																	1		1				424																	
129	SIG. HEADS 14,15																	1	1	2				32	347																
129	PULL BOX-3								1																																
129	PULL BOX-3 TO CONTROLLER	24		72	48	48		24																																
129	CONTROLLER											2																			1				1	1		1	1	1	1
129	PWR SOURCE TO PWR METER	91					91	91																					141											
129	PWR METER TO CONTROLLER	10		10			10	10			1	1															20									1					
	TOTALS CARRIED TO GENERAL SUMMARY		3	171	103	76	101	194	1	1	1	9	7	11	102.5	3	1	14	1	15	184	593	593	781	986	4	2	20	141	1	1	3	2	1	1	1	1	1	1	1	1

FRA-23-4.19 PART 2 (PID 92616)

MODEL: Sheet PAPERSIZE: 17x11(in.) DATE: 2023-01-25 TIME: 2:48:40 PM USER: Judy.bennett
\\10.120.112.5\ibishare\122592_SafetyDesign\7.0_Production\7.3_Design\04_Civil\Worksets\110380_FRA-23\400-Engineering\Signals\Sheets\110380_CS001.dgn

TRAFFIC SIGNAL SUBSUMMARY
US-23 (SOUTH HIGH STREET) & CR-121 (RATHMELL ROAD)

DESIGN AGENCY
IBI

DESIGNER JMB
REVIEWER KMK 12-01-22
PROJECT ID 92616
SHEET P.127 TOTAL 170

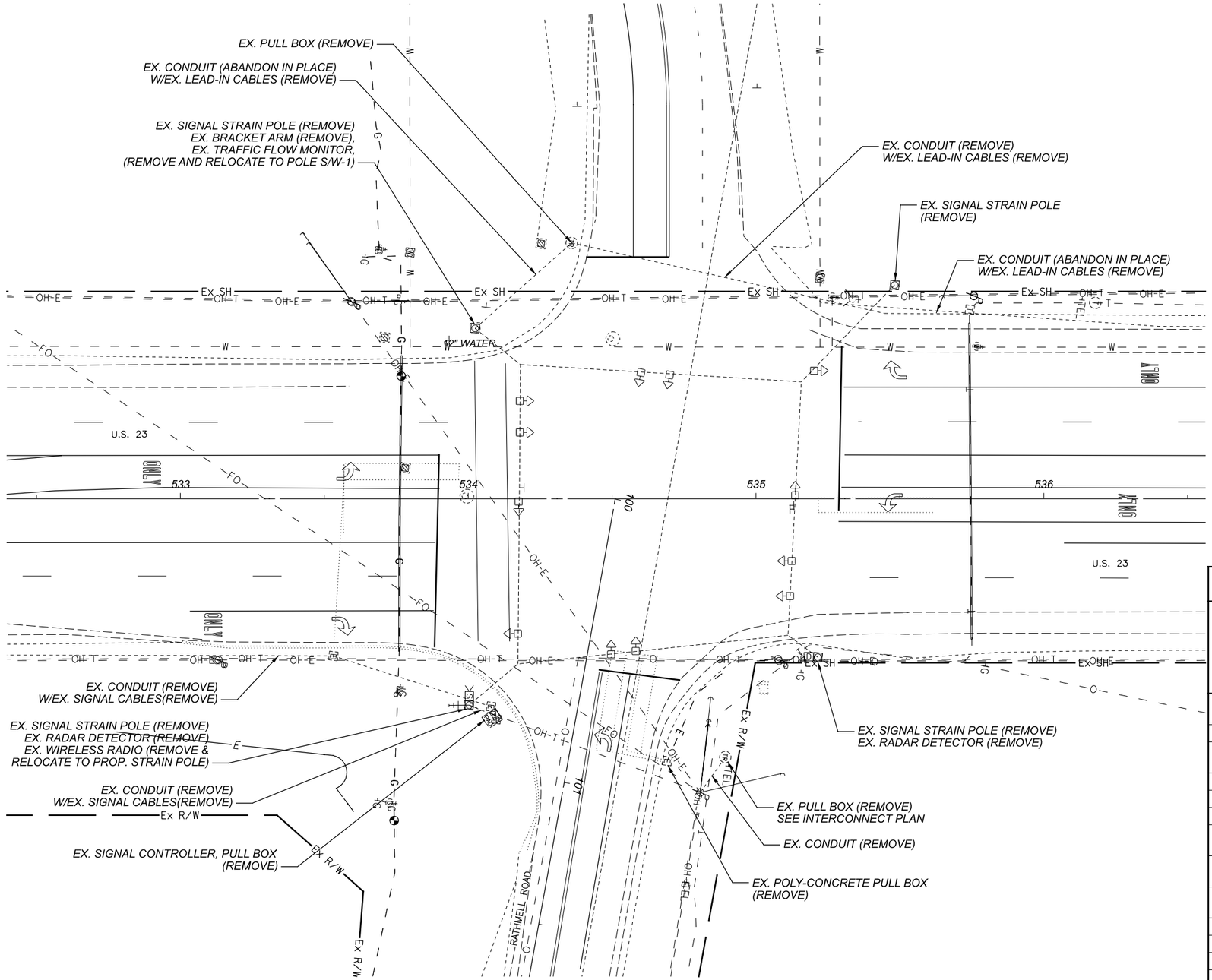

LEGEND

SIGNAL HEADS: EX. VEHICULAR HEAD; EX. PEDESTRIAN HEAD

SIGNAL POLES: EX. ANCHOR/STRAIN POLE; EX. EMBEDDED POLE; EX. WOOD POLE; GUY ANCHOR; EX. PEDESTAL; PUSHBUTTON

CONTROLLERS & CABINETS: EX. CABINET W/PAD; EX. CABINET (NO PAD); UPS W/PAD TYPE 1; UPS W/PAD TYPE 2

PULL BOXES: EX. PULL BOX

DETECTION: STOP LINE RADAR UNIT; DILEMMA ZONE RADAR; VIDEO CAMERA; TRAFFIC FLOW MONITOR; LOOP DETECTOR L1A; DETECTION ZONE Z1A

HORIZONTAL SCALE IN FEET
0 10 20 40

ITEM 632 REMOVAL OF TRAFFIC SIGNAL INSTALLATION, AS PER PLAN

QUANTITY	REMOVED ITEM DESCRIPTION	DELIVERED TO 1820 E. 17TH AVE.	DELIVERED TO 1881 E 25TH AVE	REUSED BY PROJECT	DISPOSED OF BY PROJECT
1	GROUND MOUNTED CABINET AND CONTROLLER	X			
2	RADAR DETECTION UNITS	X			
LUMP	SIGNAL CABLE, CONDUIT AND MESSENGER WIRE				X
12	VEHICULAR SIGNAL HEAD	X			
4	ANCHOR BASE POLE	X			
3	PULL BOX (POLY-CONCRETE)				X
1	PULL BOX LIDS & FRAMES (CONCRETE; I.E. 27", 32" OR 48")	X			
1	PULL BOX CASTING (ROUND; I.E. 27", 32" OR 48")				X
2	POLE MOUNTED SIGN	X			
2	SPAN MOUNTED SIGN	X			
2	STREET NAME SIGN	X			
5	CABINET/POLE FOUNDATION				X
1	FIBER OPTIC TERMINATION PANEL		X		
1	FIBER OPTIC SPLICE ENCLOSURE			X	
1	WIRELESS RADIO			X	
1	TRAFFIC FLOW MONITOR			X	
1	LAYER 2 SWITCH		X		
2	ETHERNET TRANSCEIVERS (GBIC MODULES)		X		
1	TERMINAL PORT SERVER		X		

TRAFFIC SIGNAL REMOVAL PLAN
US-23 (SOUTH HIGH STREET) & CR-121 (RATHMELL ROAD)

DESIGN AGENCY: IBI

DESIGNER: JAW
REVIEWER: KMK 12-01-22
PROJECT ID: 92616
SHEET: P.128 TOTAL: 170

FRA-23-4.19 PART 2 (PID 92616)

MODEL: II0380_CP001 PAPERSIZE: 17x11(in.) DATE: 2023-01-25 TIME: 11:08:21 AM USER: judy.bennett
\\10.120.12.5\bishare\22592_SafetyDesign\7.0_Production\7.3_Design\04_Civil\Worksets\II0380_FRA-23\400-Engineering\Signals\Sheets\II0380_CP001.dgn

LEGEND

SIGNAL HEADS: PROP. VEHICULAR HEAD / EX. VEHICULAR HEAD
PROP. PEDESTRIAN HEAD / EX. PEDESTRIAN HEAD
SIGNAL POLES: PROP. ANCHOR/STRAIN POLE / EX. ANCHOR/STRAIN POLE
EX. EMBEDDED POLE / EX. WOOD POLE / GUY ANCHOR
PROP. PEDESTAL / EX. PEDESTAL / PUSHBUTTON
CONTROLLERS & CABINETS: EX. CABINET W/PAD / PROP. CABINET W/PAD
EX. CABINET (NO PAD) / PROP. CABINET (NO PAD)
UPS W/PAD TYPE 1 / UPS W/PAD TYPE 2
PULL BOXES: EX. PULL BOX
PROP. PULL BOX
DETECTION: STOP LINE RADAR UNIT / DILEMMA ZONE RADAR
VIDEO CAMERA / TRAFFIC FLOW MONITOR
LOOP DETECTOR L1A / DETECTION ZONE Z1A

15

2 3 4 5 6 7 8 10 11 12 13 14

1 9

SIGNAL INDICATIONS
12" LED LENS

FOR SIGNAL PLAN LAYOUT NOTES SEE SHEET 130.

POLE S/W-1, SIGNAL COMBINATION STRAIN POLE W/(1)-RADAR UNIT W/(1)-30' BRACKET ARM & (1)-TRAFFIC FLOW MONITOR (RELOCATED FROM EX. POLE) STA 533+87.0, 81.3' LT

POLE N/W-1, SIGNAL COMBINATION STRAIN POLE W/(1)-RADAR UNIT W/(1)-30' BRACKET ARM W/(1)-RADAR UNIT STA 535+29.2, 94.1' LT

(1)-2" CONDUIT, W/(1)-7/C, (1)-GND
(1)-2" CONDUIT (EMPTY)
IN TRENCH = 20'

PB-NW, PULL BOX, 725.08, 27"
STA. 535+46.9, 84.3' LT

(1)-2" CONDUIT, W/(1)-7/C, (2)-GND
(1)-2" CONDUIT (EMPTY)
IN TRENCH = 21'

POLE N/W-2, SIGNAL PEDESTAL, 21'
W/(1)-VEHICULAR SIGNAL HEAD
STA 535+55.8, 66.0' LT

MESSENGER WIRE W/ TRAFFIC FLOW MONITOR CABLE

PB-3, PULL BOX, 725.08, 48", TYPE 1
STA 533+69.6, 87.1' RT

(1)-2" CONDUIT, W/(1)-7/C, (1)-GND
(1)-2" CONDUIT (EMPTY)
IN TRENCH = 14'

POLE S/E-2, SIGNAL PEDESTAL, 21'
W/ (1)-VEHICULAR SIGNAL HEAD
STA 533+57.4, 81.0' RT

(1)-3" CONDUIT, W/(4)-9/C, (1)-7/C, (1)-GND
(1)-3" CONDUIT, W/(6)-RADAR CABLES, (1)-CCTV
IN TRENCH = 14'

(1)-2" CONDUIT, W/3/C POWER CABLE
ENCASED IN TRENCH = 91'

POWER SOURCE PROP. COC DOP POLE
W/(1)-2" CONDUIT RISER (POWER)
(1)-2" CONDUIT RISER (LIGHTING)
EXISTING

POWER METER CABINET
STA 533+54.2, 100.6' RT

(1)-3" CONDUIT, W/(4)-9/C, (2)-7/C, (3)-GND
(1)-2" CONDUIT, W/-INTERCONNECT
(1)-3" CONDUIT, W/(6)-RADAR CABLES,
(1)-CCTV, & (1)-RADIO
(1)-2" CONDUIT, EMPTY
IN TRENCH = 24'

(1)-2" CONDUIT, W/2/C POWER CABLE
& (1)-GND
ENCASED IN TRENCH = 4'

PULL BOX, 12"x18"
STA 533+56.6, 103.9' RT

(1)-2" CONDUIT, W/2/C POWER CABLE & (1)-GND
ENCASED IN TRENCH = 6'

GRD MTD CONTROLLER
W/ (1)-UPS
W/(1)-TERMINATION PANEL
W/(1)-LAYER 2 ETHERNET SWITCH
& (1)-ETHERNET TRANSCEIVER
STA 533+60.2, 108.7' RT

EX. DROP CABLE (SEE INTERCONNECT PLAN)

PROP. AEP POLE
STA. 533+29.8, 165.0' RT

PROP. DROP CABLE
(SEE INTERCONNECT PLAN)

POLE S/E-1, SIGNAL COMBINATION STRAIN POLE
W/ (1)-30' BRACKET ARM
W/(2)-RADAR UNITS, (1)-RELOCATED RADIO ANTENNA
STA 533+67.3, 101.2' RT

POLE N/E-1, SIGNAL STRAIN POLE
W/(1)-RADAR UNIT
STA 535+11.7, 76.3' RT

SEE INTERCONNECT PLANS

RAD1 RAD2 RAD3 RAD4 RAD5 RAD6
SN1 SN2 SN3 SN4 SN5 SN6 SN7
Z1 Z4A Z4B Z4C Z5 Z8A Z8B
+94 +57 +55 +67 +65 +62 +09
534 536 100 101 102
TR INT
RATHMELL RD
US 23 (S. HIGH ST)

SIGNS

ONLY
SN1, SN2, SN3, SN5
R3-5L-30

ONLY
SN4, SN6, SN7
R3-5R-30

SN11-SN18
(2 ON EACH SIGNAL POLE)
R9-3-30

Rathmell Rd
SN10 (ON POLE NE-1)
18" X VARIES

S High St
SN9 (ON POLE NW-1)
SN10 (ON POLE SE-1)
18" X VARIES

FOR STREET NAME SIGN DETAILS SEE SHEET 121.

HORIZONTAL SCALE IN FEET
0 10 20 40

TRAFFIC SIGNAL PLAN
US-23 (SOUTH HIGH STREET) & CR-121 (RATHMELL ROAD)

DESIGN AGENCY: IBI
DESIGNER: JAW
REVIEWER: KMK 12-01-22
PROJECT ID: 92616
SHEET: P.129 TOTAL: 170

FRA-23-4.19 PART 2 (PID 92616)

MODEL: II0380_CP001 PAPERSIZE: 17x11 (in.) DATE: 2023-01-25 TIME: 11:17:21 PM USER: judy.bennett
\\10.120.112.5\ibishare\122592_SafetyDesign\7.0_Production\7.3_Design\04_Civil\Worksets\II0380_FRA-23\400-Engineering\Signals\Sheets\II0380_CP002.dgn

PLAN SHEET NOTES

1. THE CONTRACTOR SHALL ENSURE THAT ALL PROPOSED SIDEWALKS/ PATHWAYS MEET ADA GUIDELINES PER CITY SPECIFICATIONS.

2. THE CONTRACTOR SHALL ENSURE THAT ALL EXISTING SIDEWALKS/ PATHWAYS WITHIN THE PROJECT WORK LIMITS MEET ADA GUIDELINES PER CITY SPECIFICATIONS.

3. ALL CABLES, UNLESS SPECIFIED IN THE PLANS, ARE TO BE ROUTED INSIDE THE ANCHOR BASE SIGNAL SUPPORT POLE OR PEDESTAL. CABLES NOT SERVING A GIVEN POLE OR PEDESTAL SHALL NOT BE ROUTED THROUGH THE POLE.

4. POWER, SERVICE AND INTERCONNECT CABLE SHALL BE CONTINUOUS WITH NO SPLICES, EXCEPT AS NOTED.

5. FOR SIGNING AND PAVEMENT MARKINGS, SEE SHEET 114.

6. CENTER ALL DETECTION ZONES IN THE CENTER OF THEIR LANE, UNLESS SPECIFIED OTHERWISE.

7. FOR POLE BASE FOUNDATIONS NOT WITHIN SIDEWALK AREA, THE TOP OF THE POLE BASE FOUNDATION SHALL BE EDGED USING A 1/2" SIDEWALK EDGER INSTEAD OF BEING CHAMFERED.

8. THE CITY OF COLUMBUS SHALL APPROVE BOLT ALIGNMENT, POLE/PEDESTAL FOUNDATION LOCATION, AND ELEVATION PRIOR TO THE CONTRACTOR INSTALLING THE FOUNDATION.

9. TAGGING OF CABLE IN THE PULL BOX IMMEDIATELY ADJACENT TO THE CONTROL CABINET IS NOT REQUIRED EXCEPT FOR TAGGING OF CERTAIN CABLE AS DIRECTED BY THE PROJECT ENGINEER, OR AS PER PLAN.

10. DO NOT ENCASE THE GROUND ROD, THE GROUNDING WIRE, OR THE EMT CONDUIT ENDS IN CONCRETE THAT FALL OUTSIDE OF THE FOUNDATION. FULL ACCESS TO THESE ITEMS MUST BE MAINTAINED AT ALL TIMES. PERMANENTLY MARK THE TOP OF FOUNDATION CONCRETE, WITH A MARKER OR SYMBOL SO THE ROD LOCATION CAN BE IDENTIFIED BY OTHERS.

11. ANY SIGNAL POLE BASE FOUNDATION ADJACENT TO A SIDEWALK AREA SHALL BE FLUSH WITH THE TOP OF THE SIDEWALK UNLESS OTHERWISE STATED. SIGNAL POLE FOUNDATIONS WITHIN SIDEWALK AREA SHALL BE PER STD DWG 4161.

12. THE CONTRACTOR SHALL NOT INSTALL POLE FOUNDATIONS UNTIL THE POLE LOCATION AREA IS AT FINISHED GRADE.

13. UNDERGROUND CONDUIT AND TRENCH THAT ARE UNDER PROPOSED SIDEWALK OR ROADWAY AREAS SHALL BE INSTALLED PRIOR TO THE PLACEMENT OF SIDEWALKS OR ANY ASPHALT OR CONCRETE ROADWAY COURSE.

14. THE CONTRACTOR SHALL PROVIDE AND INSTALL POWER CABLE/CONDUIT FROM THE TRAFFIC SIGNAL CONTROLLER CABINET, THROUGH THE POWER METER CABINET, AND TO THE POWER/WOOD POLE IDENTIFIED ON THE PLANS. COIL ENOUGH CABLE AT THE BOTTOM OF THE POWER POLE TO REACH THE POWER HOOK-UP POINT ON THE POLE.

15. N/A.

16. FOR INTERCONNECT SEE SHEETS 134-135.

17. N/A.

18. THE CONTROL CABINET DOOR SHALL BE LOCATED ON THE SOUTHEAST SIDE OF THE CABINET.

19. N/A

20. USE A SEPARATE CONDUIT FOR EACH GROUPING OF CABLES UNLESS OTHERWISE INDICATED: ONE CONDUIT FOR 120VAC SIGNAL CABLE (3/C, 7/C, 9/C); ONE CONDUIT FOR POWER; ONE CONDUIT FOR 2 CONDUCTOR CABLE (LOOP & PUSHBUTTON); AND ONE CONDUIT FOR INTERCONNECT/COMMUNICATIONS CABLE (TWISTED PAIR, FIBER OPTICS OR COAX). ANY OTHER LOW VOLTAGE CABLE NOT SPECIFIED ABOVE CAN BE PLACED IN THE 2 CONDUCTOR CABLE CONDUIT. POWER CABLE MUST BE PLACED IN ITS OWN CONDUIT.

21. UNLESS OTHERWISE SPECIFIED THE FOLLOWING SHALL APPLY. A PREFORMED PVC CONDUIT ELBOW SHALL BE USED TO CHANGE THE PVC CONDUIT DIRECTION BEYOND WHAT ITS NATURAL BENDING FLEX WOULD YIELD. RIGID METAL CONDUIT CAN BE BENT TO FORM AN ELBOW OR ANY OTHER BENDING ANGLE REQUIRED ONLY IF A PROPER CONDUIT BENDING MACHINE IS USED. THE ELBOW RADIUS FOR ANY NON-INTERCONNECT CONDUIT SHALL BE 24" OR LARGER WHEN USED IN A HORIZONTAL OR VERTICAL MANNER. ANY TYPE OF ELBOW USED FOR INTERCONNECT CONDUIT SHALL HAVE A RADIUS OF 36" OR LARGER WHEN USED IN A HORIZONTAL DIRECTION OR IN A VERTICAL DIRECTION WHEN THE TRENCH IS 36" OR DEEPER. IF THE TRENCH IS LESS THAN 36" THEN THE VERTICAL ELBOW RADIUS SHALL BE 24".

22. ALL CLAMPS AND BANDING MATERIAL SHALL BE PAINTED TO MATCH THE SIGNAL SUPPORTS.

23. N/A

DETAIL SHEET NOTES

1. SET CONFLICT MONITOR FOR 10 SEC FLASH.

2. N/A

3. N/A

4. N/A

5. BACK PANEL WIRING (FRONT SIDE JUMPERS ONLY)
A1) HARD WIRE 'PED RECYCLE' TO GROUND.
B) INSTALL A DIODE BETWEEN TERMINALS, Ø2 'PHASE ON' OUTPUT AND Ø1 'OMIT' INPUT, SO THE LEFT TURN PHASE (Ø1) IS OMITTED DURING THE THROUGH PHASE (Ø2).
C) INSTALL A DIODE BETWEEN TERMINALS, Ø6 'PHASE ON' OUTPUT AND Ø5 'OMIT' INPUT, SO THE LEFT TURN PHASE (Ø5) IS OMITTED DURING THE THROUGH PHASE (Ø6).
D) USE DIODES TO PREVENT FEEDBACK ON MULTI-USE TERMINALS.

DETAIL SHEET NOTES

6. CONTROLLER SOFTWARE PROGRAMMING
A) INITIALIZE IN Ø2 & Ø6 GREEN
B) N/A
C) ENABLE DUAL ENTRY. ACTIVATE Ø4 & Ø8.
D) ENABLE SIMULTANEOUS GAP OUT. ACTIVATE Ø2, Ø4, Ø6 & Ø8.

7. N/A

8. N/A

9A. INTERCONNECT CABLE SHALL BE CONTINUOUSLY RUN BETWEEN CONTROLLER CABINETS. NO SPLICES ARE PERMITTED EXCEPT WHERE NOTED.

9B. N/A

10. N/A

11. N/A

12. N/A

PHASING DIAGRAM

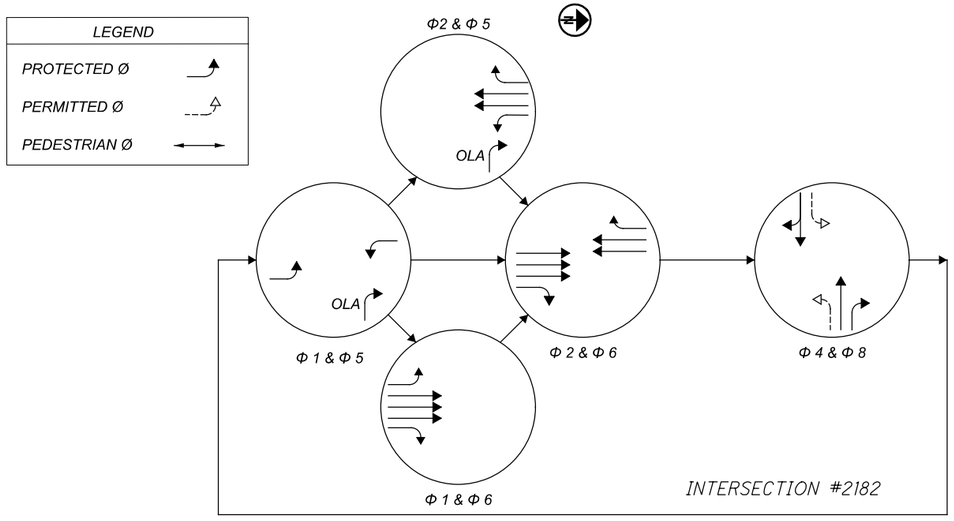

TIMING CHART

PHASE	1	2	3	4	5	6	7	8
MOVEMENT	NBLT	SB	-	WB	SBLT	NB	-	EB
MIN INITIAL	10	30	-	10	10	30	-	10
WALK	-	-	-	-	-	-	-	-
PED CHANGE	-	-	-	-	-	-	-	-
PASS / EXT	3.7	1.0	-	3.7	3.7	1.0	-	3.7
YELLOW	4.5	5.5	-	4.8	4.5	5.5	-	4.8
RED CLR	3.0	1.0	-	2.7	3.0	1.0	-	2.7
MAX GRN 1	20	50	-	35	30	60	-	35
MAX GRN 2	20	60	-	35	40	90	-	35
PED RECALL	OFF	OFF	-	OFF	OFF	OFF	-	OFF
VEH RECALL	OFF	MIN	-	OFF	OFF	MIN	-	OFF
MEMORY	OFF	ON	-	OFF	OFF	ON	-	OFF

FRA-23-4.19 PART 2 (110380)

MODEL: Sheet PAPERSIZE: 17x11(in.) DATE: 2023-01-25 TIME: 1:37:42 PM USER: judy.bennett
\\10.120.112.5\ibishare\122592_SafetyDesign\7.0_Production\7.3_Design\04_Civil\Worksets\110380_FRA-23\400-Engineering\Signals\Sheets\110380_CD001.dgn

TRAFFIC SIGNAL DETAILS (1 OF 3)
US-23 (SOUTH HIGH STREET) & CR-121 (RATHMELL ROAD)

DESIGN AGENCY
IBI

DESIGNER
JMB

REVIEWER
KMK 12-01-22

PROJECT ID
92616

SHEET P.130 | TOTAL 170

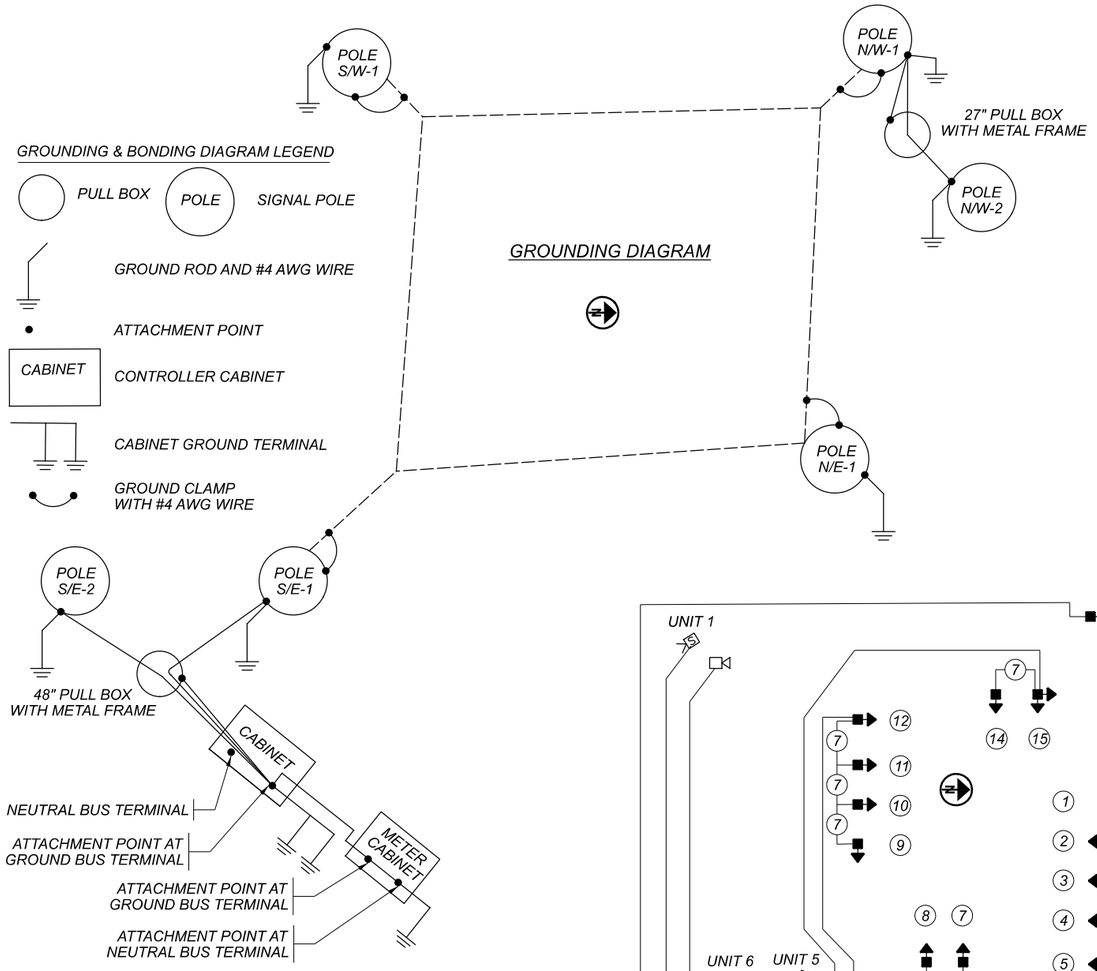

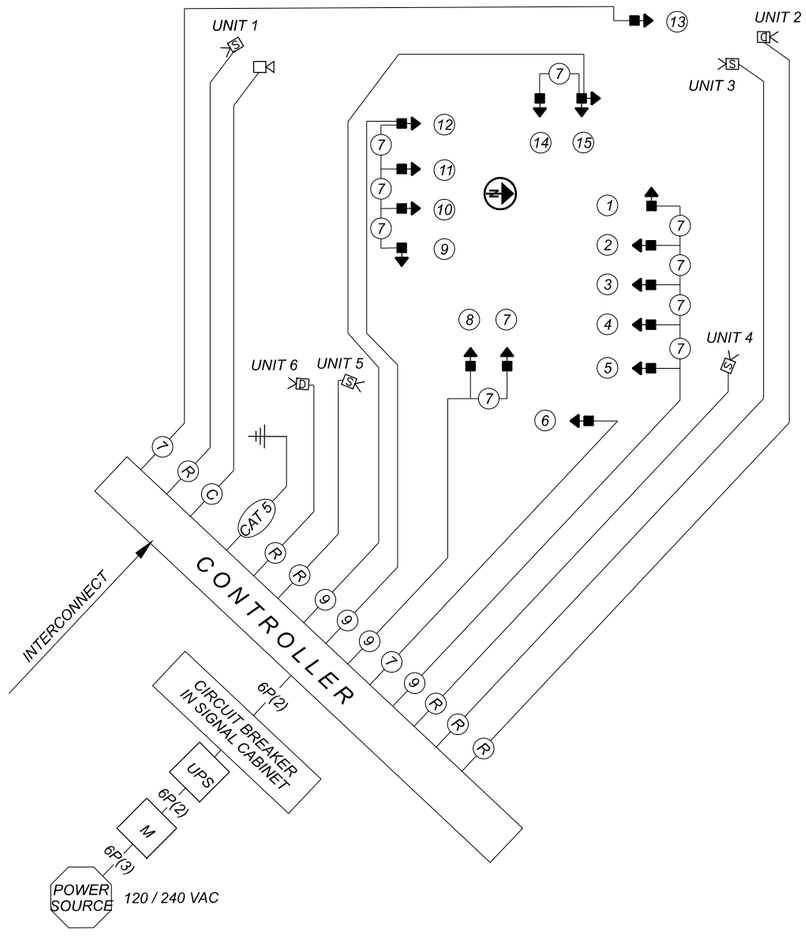

WIRING DIAGRAM LEGEND

- VEHICULAR SIGNAL HEAD
- WIRELESS ETHERNET RADIO
- RADAR DETECTION UNIT
- TRAFFIC FLOW MONITOR
- 6P (2) — 2/C #6 AWG (POWER)
- 6P (3) — 3/C #6 AWG (POWER)
- POWER SOURCE — POWER SOURCE (COC)
- 7 — SIGNAL CABLE, 7 CONDUCTOR, NO. 14 AWG
- 9 — SIGNAL CABLE, 9 CONDUCTOR, NO. 14 AWG
- CAT 5 — CAT 5E CABLE
- R — RADAR DETECTION CABLE
- C — CAMERA CABLE

FIELD WIRING HOOK-UP CHART

SIGNAL HEAD	INDICATION	FIELD TERMINAL	FLASH	SIGNAL HEAD	INDICATION	FIELD TERMINAL	FLASH
1	<--R---	Ø1R	R	15	R	Ø4R	R
	<--Y---	Ø1Y			Y	Ø4Y	
	<--G---	Ø1G			G	Ø4G	
(NB LT)	-	-		(WB RT)	---Y-->	OLA	
	-	-			---G-->	OLA	
2,3,4,5,6	R	Ø6R	R	-	-	-	-
	Y	Ø6Y			-	-	
	G	Ø6G		-	-	-	
(NB)	-	-		-	-	-	-
	-	-			-	-	
7,8	R	Ø8R	R		-	-	
	Y	Ø8Y		-	-	-	
	G	Ø8G			-	-	
(EB)	-	-		PEDESTRIAN MOVEMENTS			
	-	-		-	-	-	-
9	<--R---	Ø5R	R	-	-	-	
	<--Y---	Ø5Y			-	-	-
(SB LT)	<--G---	Ø5G		-	-	-	
10,11,12,13	R	Ø2R	R	-	-	-	-
	Y	Ø2Y		-	-	-	
	G	Ø2G		-	-	-	
(SB)	-	-		-	-	-	-
	-	-		OVERLAPS			
14	R	Ø4R	R	OLA	---Y-->	Ø5Y	OUT
	Y	Ø4Y			---G-->	Ø5G	
(WB)	G	Ø4G		-	-	-	-
LS = LOAD SWITCH					-	-	

RADAR DETECTION CHART

DETECTION ZONE	RADAR DETECTOR	PHASE	DETECTION ZONE SIZE (WXL)	PRESENCE	PURPOSE	DELAY DATA	
						DELAY (SEC.)	INHIBIT DELAY DURING GREEN (PHASE)
--	6	Ø6	2 LANES X 600'	X	DILEMMA ZONE		
Z1	1	Ø1	6' X 40'	X	CALL/EXTEND	3	Ø1
Z5	4	Ø5	6' X 40'	X	CALL/EXTEND	3	Ø5
--	2	Ø2	2 LANES X 600'	X	DILEMMA ZONE		
Z4A	5	Ø4	6' X 31'	X	CALL/EXTEND	3	Ø4
Z4B	5	Ø4	6' X 33'	X	CALL/EXTEND	0	Ø4
Z4C	5	Ø4	6' X 35'	X	CALL/EXTEND	12	Ø4
Z8A	3	Ø8	6' X 30'	X	CALL/EXTEND	3	Ø8
Z8B	3	Ø8	6' X 30'	X	CALL/EXTEND	8	Ø8

Note: Advance/Dilemma Zone Speed Threshold: >35 MPH

TRAFFIC SIGNAL DETAILS (2 OF 3)
US-23 (SOUTH HIGH STREET) & CR-121 (RATHMELL ROAD)

DESIGN AGENCY: IBI
DESIGNER: JMB
REVIEWER: KMK 12-01-22
PROJECT ID: 92616
SHEET: P.131 TOTAL: 170

FRA-23-4.19 PART 2 (110380)

MODEL: Sheet PAPERSIZE: 17x11(in.) DATE: 2023-01-25 TIME: 11:45:14 PM USER: Judy.bennett
\\10.120.12.5\Ibishore\22592_Safety\Design\7.0_Production\7.3_Design\04_Civil\Worksets\110380_FRA-23\400-Engineering\Signals\Sheets\110380_CD002.dgn

INTERSECTION	SHEET NO.	POLE SIZES & ATTACHMENT HEIGHTS						DETECTION BRACKET ARM		POLE FABRICATION DATA CLOCKWISE FROM HANDHOLE AT 0 DEGREES					FIELD ORIENTATION			
		POLE DESIGNATION	POLE COLOR	POLE DESIGN NO.	POLE HT. (FT.)	SPAN ATTACHMENT HT. (FT)	RADAR DETECTOR (FT)	ATTACHMENT HEIGHT (FT)	BRACKET ARM LENGTH (FT)	ANCHOR BOLT REF. LINE	BRACKET ARM	2" BHC ANGLE/HT. (DEG.)/(FT.)	3" BHC ANGLE/HT. (DEG.)/(FT.)	SUPPLEMENTAL SIGNAL HEAD	INDEX LINE ANGLE (HANDHOLE)	ANCHOR BOLT REF. LINE	CAPPED FOUNDATION CONDUIT ELL 2" DIA.	FOUNDATION ELEVATION
U.S. 23 & RATHMELL ROAD	129	S/W-1	SEMI-GLOSS BLACK #27038	13	33	27	20	32	30	90	225	180 / 28'	-	-	142	52	0	730.23
		N/W-1		13	39	33	20	38	30	90	135	180 / 34'	-	-	220	130		727.23
		N/E-1		13	33	29	20	-	-	90	-	180 / 30'	-	-	142	52	270	727.80
																		-
		S/E-1		13	39	32	20	38	30	90	135	-	180 / 33'	-	220	130	0	728.40
																		-
		S/E-2		PEDESTAL	21							-		100	180	90		728.65
																		-
		N/W-2		PEDESTAL	21							-		97	180	90		724.38

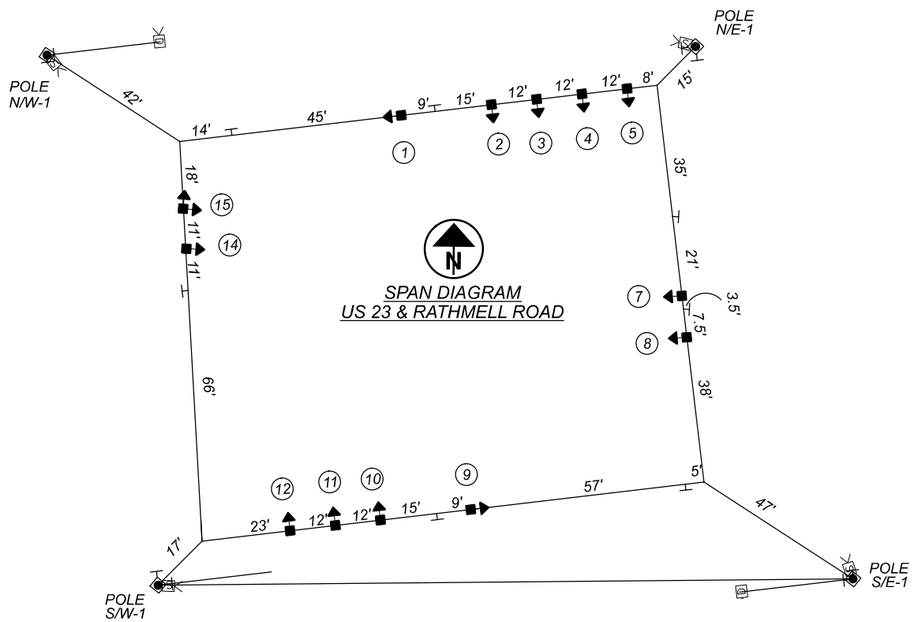

SPAN DIAGRAM
US 23 & RATHMELL ROAD

NOTES:
1.) THE LOWEST SIGNAL HEAD HEIGHT IN EACH DIRECTION SHALL BE SET AT 16.5 FEET (17 FEET PREFERRED). ADJUST THE SPAN ACCORDINGLY.

2.) THE DIMENSIONS SHOWN ON THE SPAN DIAGRAM ARE ESTIMATES. FINAL HEAD POSITIONS SHALL BE ON THE LANE LINE, CHANNEL LINE OR ON THE LANE CENTERLINE. THE DISTANCE BETWEEN THE HEADS ARE AS INDICATED.

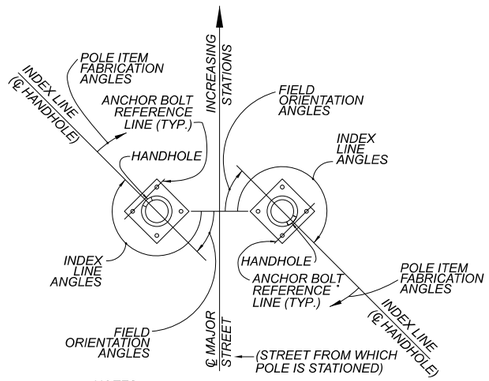

NOTES:
ALL ANGLES MEASURED CLOCKWISE.
INDEX LINE GOES THROUGH THE CENTER OF THE HANDHOLE.

TYPICAL STRAIN POLE & PEDESTAL ORIENTATION DETAIL
NOT TO SCALE

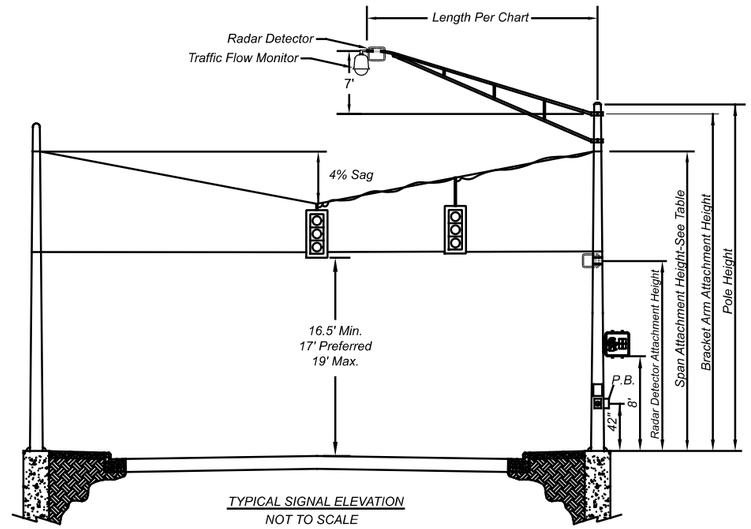

TYPICAL SIGNAL ELEVATION
NOT TO SCALE

NOTES:
1.) THE LOWEST SIGNAL HEAD HEIGHT IN EACH DIRECTION SHALL BE SET AT 16.5 FEET (17 FEET PREFERRED). ADJUST THE SPAN ACCORDINGLY.

TRAFFIC SIGNAL DETAILS (3 OF 3)
US-23 (SOUTH HIGH STREET) & CR-121 (RATHMELL ROAD)

DESIGN AGENCY
IBI

DESIGNER JMB
REVIEWER KMK 12-01-22
PROJECT ID 92616
SHEET P.132 TOTAL 170

FRA-23-4.19 PART 2 (110380)

MODEL: Sheet PAPERSIZE: 17x11(in.) DATE: 2023-01-25 TIME: 21:10 PM USER: Judy.Bennett
\\10.120.12.5\Ibishore\122592.SafetyDesign\7.0_Production\7.3_Design\04_Civil\Worksets\110380_FRA-23\400-Engineering\Signals\Sheets\110380_CD003.dgn

SHEET NO.	LOCATION	LENGTH	625					632				633	
			CONDUIT, CONCRETE ENCASED, 3", 725.051, AS PER PLAN	CONDUIT, MISC.: ENCASED INTERCONNECT CONDUIT BANK, TC2, SCH 40, (4)-3" & (1)-1.5"	CONDUIT, MISC.: ENCASED INTERCONNECT CONDUIT BANK, TC2, SCH 80, (4)-3" & (1)-1.5"	TRENCH, AS PER PLAN	PULL BOX, MISC.: PULL BOX, 32"	INTERCONNECT CABLE, MISC.: CMSC 1620 - FIBER OPTIC CABLE, 24 STRAND	CONDUIT RISER, 2" DIAMETER, AS PER PLAN	INTERCONNECT, MISC.: CMSC 1620 - TERMINATION PANEL, 24 FIBER	INTERCONNECT, MISC.: FIBER OPTIC FUSION SPLICE	CONTROLLER ITEM, MISC.: LAYER 2 ETHERNET SWITCH	CONTROLLER ITEM, MISC.: FIBER OPTIC ETHERNET TRANSCEIVER, SHORT RANGE
			FT	FT	FT	FT	EACH	FT	EACH	EACH	EACH	EACH	EACH
	US 23 & RATHMELL ROAD												
134	PB1						1						
134	PB1 TO PB2	459		459		459							
134	PB2						1						
134	PB2 TO PB3	292		292		292							
134	UTILITY POLE (AERIAL SPLICE) TO PULL BOX	78	78			78		128	1		12		
134	PB3 (PULLBOX QUANTIFIED WITH SIGNAL)							150					
134	PB3 TO CABINET	23		23		23		23					
134	CABINET									1		1	1
134	PB3 TO PB4	114			103	103							
134	PB4						1						
134	PB4 TO PB5	356		356		356							
134	PB5						1						
135	PB5 TO PB6	329		329		329							
	PULL BOX 6 (SEE DMS SHEETS)												
135	PB6 TO PB7	202		202		202							
135	PB7						1						
135	PB7 TO PB8	243		243		243							
135	PB8						1						
TOTALS CARRIED TO GENERAL SUMMARY			78	1904	103	2085	6	301	1	1	12	1	1

TRAFFIC SIGNAL INTERCONNECT SUBSUMMARY
US-23 (SOUTH HIGH STREET) & CR-121 (RATHMELL ROAD)

DESIGN AGENCY

IBI

DESIGNER JMB

REVIEWER KMK 12-01-22

PROJECT ID 92616

SHEET P.133 | TOTAL 170

FRA-23-4.19 PART 2 (PID 92616)

MODEL: Sheet PAPERSIZE: 17x11(in.) DATE: 2023-04-07 TIME: 3:51:23 PM USER: william.croxton
\\10.120.112.5\ibishare\122592_SafetyDesign\7.0_Production\7.3_Design\04_Civil\Worksets\1l0380_FRA-23\400-Engineering\Signals\Sheets\1l0380_CS002.dgn

NOTE:
AS OF 10-27-2022, THESE PLANS (3667E HIGH/RATHMELL PROJECT) WILL CONSTRUCT THE INFRASTRUCTURE (EMPTY CONDUIT BANK, PULL BOXES) FOR FUTURE FIBER WITHIN THE PROJECT LIMITS AS INDICATED IN THESE PLANS. THE FUTURE CTSS PHASE F PROJECT WILL INSTALL THE 144-STRAND FIBER THROUGH THIS INFRASTRUCTURE AND TIE INTO THE SIGNAL AT HIGH STREET & RATHMELL ROAD.

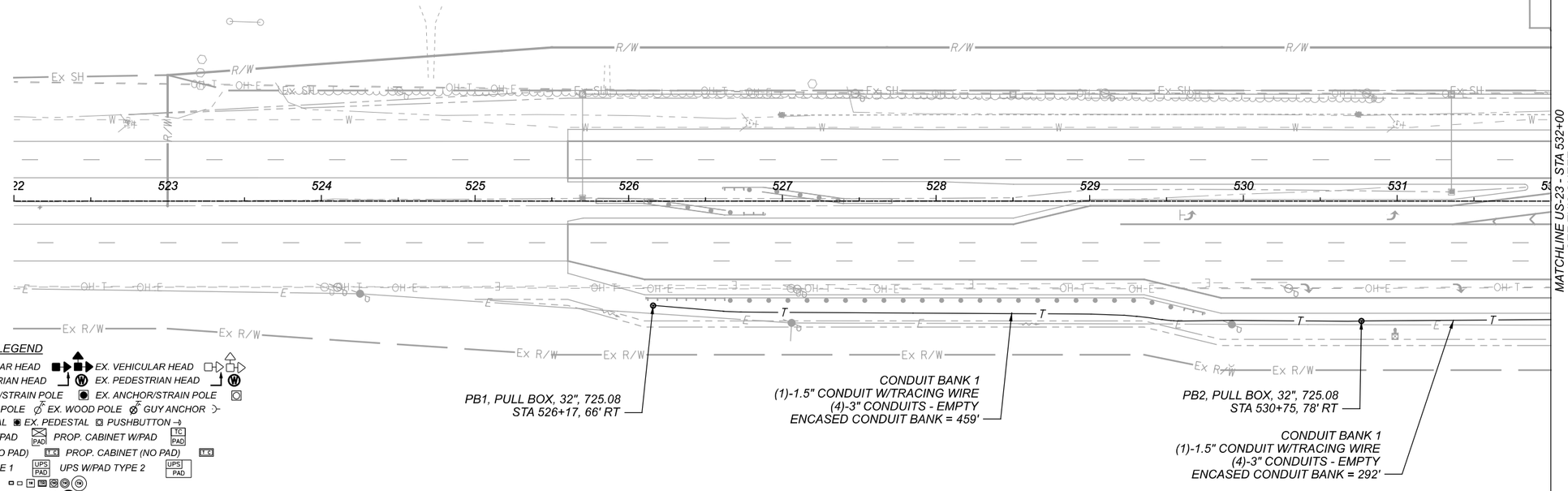

LEGEND

SIGNAL HEADS:	PROP. VEHICULAR HEAD / PROP. PEDESTRIAN HEAD	EX. VEHICULAR HEAD / EX. PEDESTRIAN HEAD
SIGNAL POLES:	PROP. ANCHOR/STRAIN POLE	EX. ANCHOR/STRAIN POLE
	EX. EMBEDDED POLE / EX. WOOD POLE / GUY ANCHOR	
	PROP. PEDESTAL / EX. PEDESTAL / PUSHBUTTON	
CONTROLLERS & CABINETS:	EX. CABINET W/PAD	PROP. CABINET W/PAD
	EX. CABINET (NO PAD)	PROP. CABINET (NO PAD)
	UPS W/PAD TYPE 1	UPS W/PAD TYPE 2
PULL BOXES:	EX. PULL BOX	
	PROP. PULL BOX	
DETECTION:	STOP LINE RADAR UNIT	DILEMMA ZONE RADAR
	VIDEO CAMERA	TRAFFIC FLOW MONITOR
	LOOP DETECTOR L1A	DETECTION ZONE Z1A
INTERCONNECT:	DUCT BANK	
	EX. AERIAL FIBER —TR—	PR. FIBER —INT—

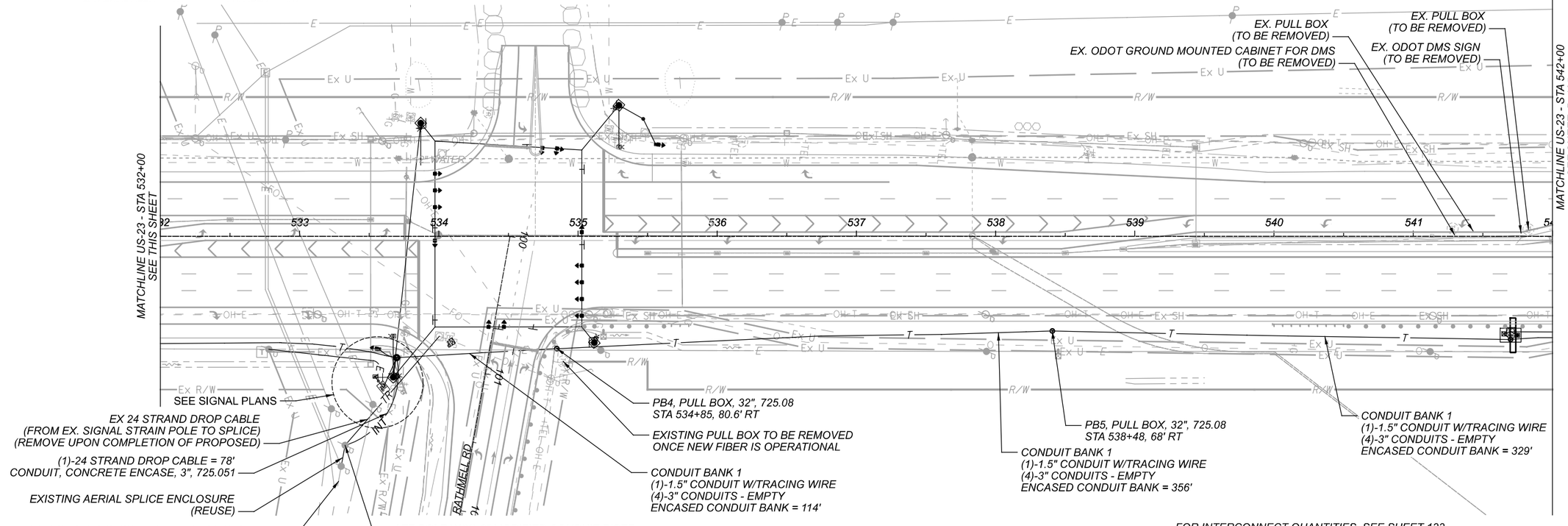

FOR INTERCONNECT QUANTITIES, SEE SHEET 133.

HORIZONTAL SCALE IN FEET
0 20 40 80

TRAFFIC SIGNAL INTERCONNECT PLAN - US 23 (SOUTH HIGH STREET)
STA 522+00 TO STA 542+00

DESIGN AGENCY: IBI

DESIGNER	JAW
REVIEWER	KMK 12-01-22
PROJECT ID	92616
SHEET	P.134
TOTAL	170

FRA-23-4.19 PART 2 (PID 92616)

MODEL: I10380_CMI PAPERSIZE: 17x11(in.) DATE: 2023-01-26 TIME: 10:27:59 AM USER: jason.watt
\\10.20.12.5\ibishare\122592_SafetyDesign\7.0_Production\7.3_Design\04_Civil\Worksets\I0380_FRA-23\400-Engineering\Signals\Sheets\I0380_CM001.dgn

MODEL: 110380_CM3 PAPERSIZE: 17x11 (in.) DATE: 2022-12-09 TIME: 9:38:17 AM USER: william.croxton
\\10.120.112.5\ibishare\122592_SafetyDesign\7.0_Production\7.3_Design\04_Civil\Worksets\110380_FRA-23\400-Engineering\Signals\Sheets\110380_CM002.dgn

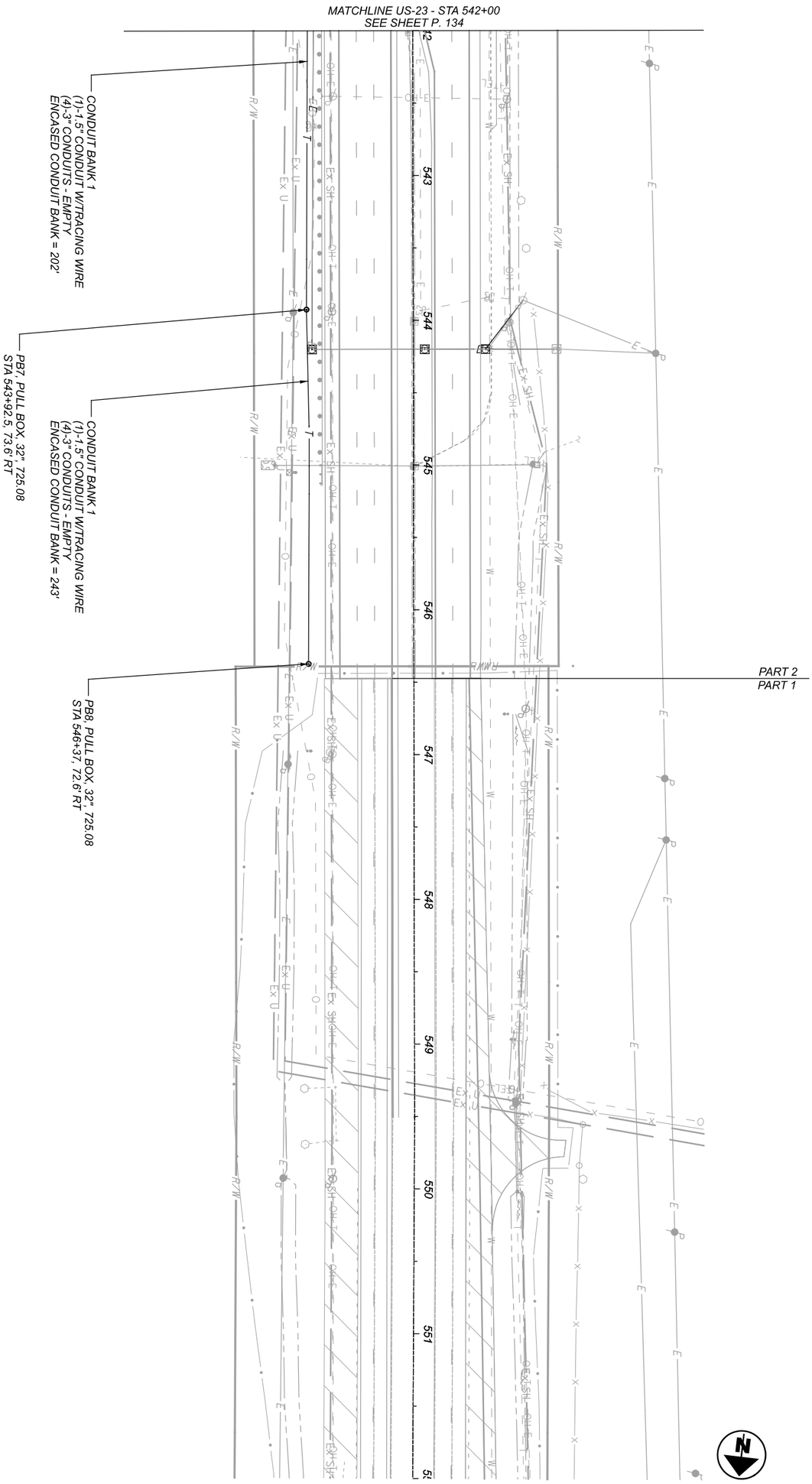

FOR LEGEND, SEE SHEET 134
FOR INTERCONNECT QUANTITIES SEE SHEET 133.

TRAFFIC SIGNAL INTERCONNECT PLAN - US-23 (SOUTH HIGH STREET)
STA 542+00 TO STA 552+00

DESIGN AGENCY: IBI

DESIGNER: JAW

REVIEWER: KMK 12-01-22

PROJECT ID: 92616

SHEET: P. 135 | TOTAL: 170

HORIZONTAL SCALE IN FEET
0 40
20 80

TRAFFIC SIGNAL CABINET ASSEMBLY

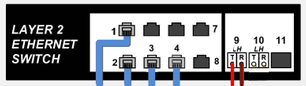

ETHERNET SWITCH PORT DESTINATION

PORT 2: INT#20710: HIGH ST. AT SCIOTO DOWNS

PORT 9: INT#SIG4255: PARSONS AVE. AT RATHMELL RD.

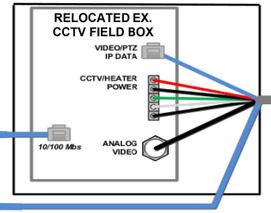

RELOCATED
EXISTING WIRELESS LINK TO:
INT# 2070: HIGH ST AT
SCIOTO DOWNS

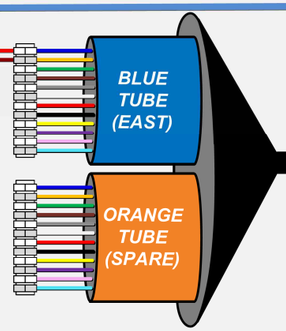

24 STRAND DROP

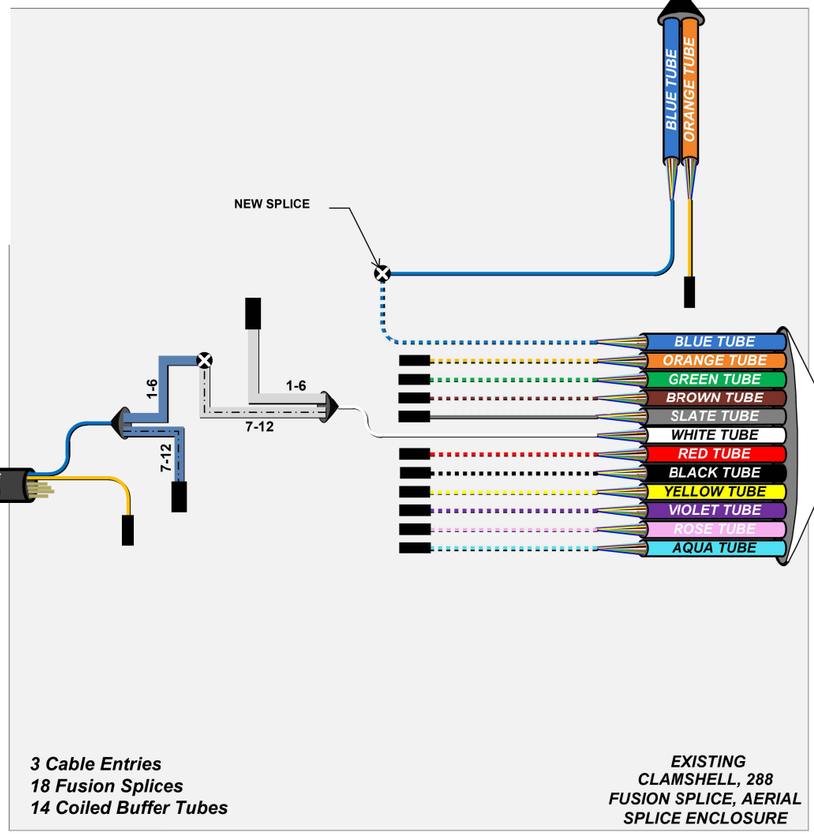

3 Cable Entries
18 Fusion Splices
14 Coiled Buffer Tubes

EXISTING
CLAMSHELL, 288
FUSION SPLICE, AERIAL
SPLICE ENCLOSURE

PATCH PANEL ENCLOSURE – 24 TERMINATION

LEGEND

- FIBER PATCH CABLES T/R STANDARD
- FIBER PATCH CABLES R/T CROSSOVER
- EXISTING FIBER PATCH CABLES
- CAT 5E CABLE
- TERMINATION PANEL UPC (Blue)/APC (Green)
- EXISTING/PROPOSED FIBER OR BUFFER TUBE LEFT COILED IN SPLICE ENCLOSURE
- FUSION SPLICE – 6 FIBERS/ SINGLE FIBER
- FUSION SPLICE – 12 FIBER BUFFER TUBE
- EXISTING FUSION SPLICE – 12 FIBER BUFFER TUBE
- INTERSECTION LOCATION
- GBIC OPTICAL TRANSCEIVER LH - SHORT HAUL LED ZX – LONG HAUL LASER
- SFP/COPPER/CAT5/5E/6 CONNECTOR
- COPPER/CAT5/5E/6 CONNECTOR
- 144 STRAND SMF
- WIRELESS ETHERNET RADIO

KEY PLAN

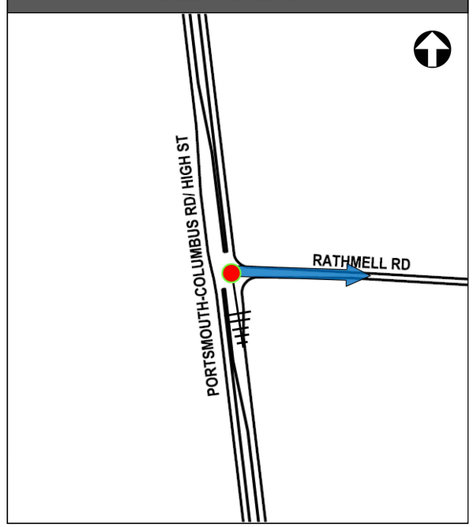

THE SPLICING AND PATCHING CONFIGURATION SHOWN ON THIS SHEET ARE BASED ON THE CONFIGURATION AT THE TIME OF DESIGN. THE CONTRACTOR SHALL CONTACT THE FIBER CONSTRUCTION COORDINATOR TO VERIFY THE SPLICING AND PATCHING CONFIGURATION ARE CURRENT PRIOR TO INSTALLATION.

INTERSECTION 2182

COMMUNICATION DIAGRAM
HIGH STREET AT RATHMELL ROAD

DESIGN AGENCY: IBI

DESIGNER: JAW
REVIEWER: KMK 12-01-22
PROJECT ID: 92616
SHEET: P.136 TOTAL: 170

FRA-23-4.19 PART 2 (PID 110380)

MODEL: 110380_CM5 PAPERSIZE: 17x11 (in.) DATE: 2022-12-09 TIME: 9:38:19 AM USER: william.croxton
\\10.120.112.5\bbshare\122592_SafetyDesign\7.0_Production\7.3_Design\04_Civil\Worksets\110380_FRA-23\400=Engineering\Signals\Sheets\110380_CM003.dgn

FIELD VERIFICATION OF UTILITIES
PRIOR TO ORDERING DMS SUPPORT STRUCTURES, THE CONTRACTOR SHALL FIELD VERIFY THAT THE PROPOSED LOCATION IS CLEAR FROM OVERHEAD AND UNDERGROUND UTILITY CONFLICTS. IN ADDITION TO CONTACTING OUPS FOR UTILITY FIELD MARKINGS, THE CONTRACTOR SHALL ALSO CONTACT ODOT DISTRICT 6 AND ODOT CENTRAL OFFICE ITS LAB TO REQUEST FIELD MARKINGS OF ANY PUBLIC UNDERGROUND UTILITIES (E.G., LIGHTING AND ITS FACILITIES). THE CONTRACTOR SHALL BE FULLY RESPONSIBLE FOR IDENTIFYING UTILITY CONFLICTS, AND NOTIFYING THE ENGINEER OF ANY POTENTIAL CONFLICTS. THE SIGN LOCATION SHALL BE ADJUSTED BY THE ENGINEER AS NECESSARY.

ODOT DISTRICT 6 TRAFFIC
400 EAST WILLIAM ST.
DELAWARE, OH 43015
CONTACT: KEN GREENE
PHONE: (740) 833-8198

ODOT CENTRAL OFFICE ITS LAB
1606 WEST BROAD STREET
COLUMBUS, OH 43223
PHONE: (614) 387-4113
EMAIL: CEN.ITS.LAB@DOT.OHIO.GOV

DYNAMIC MESSAGE SIGN INSTALLATIONS
THE CONTRACTOR SHALL FURNISH AND INSTALL THIS ITEM ACCORDING TO ODOT SUPPLEMENTAL SPECIFICATION 809, AS WELL AS ANY STANDARD CONSTRUCTION DRAWINGS NOTED ON THE PLANS. THE CONTRACTOR SHALL COORDINATE AND PAY FOR THE COMMISSIONING OF EACH DMS, INCIDENTAL TO THE DMS PAY ITEM, AND PROVIDE COPIES OF THE COMMISSIONING REPORTS AND FULL FUNCTIONALITY CHECK LISTS TO ODOT ITS. THE MANUFACTURER SHALL COMMISSION THE SIGNS AND ODOT OFFICE OF TRAFFIC OPERATIONS SHALL BE PRESENT.

DMS & DDMS SUPPORT STRUCTURES
THE CONTRACTOR SHALL FURNISH AND INSTALL THIS ITEM ACCORDING TO ODOT SUPPLEMENTAL SPECIFICATION 809, AS WELL AS ANY STANDARD CONSTRUCTION DRAWINGS NOTED ON THE PLANS.

THE CONTRACTOR SHALL FURNISH SHOP DRAWINGS TO THE PROJECT ENGINEER FOR APPROVAL. THE DRAWINGS SHALL BE STAMPED BY A PROFESSIONAL ENGINEER FROM THE MANUFACTURER. THE ITEM SHALL NOT BE RELEASED FOR CONSTRUCTION UNTIL APPROVED BY THE OFFICE OF TRAFFIC OPERATIONS.

ITEM 625 - GROUND ROD, AS PER PLAN
THE CONTRACTOR SHALL INSTALL GROUND RODS PER STANDARD CONSTRUCTION DRAWING ITS-50.10. A GROUND ROD SHALL BE INSTALLED AT EACH ELECTRIC PULL BOX INSTALLED ON THIS PROJECT AND CONNECTED TO THE PULL BOX FRAME. AT EACH PULL BOX LOCATION, THE GROUND ROD SHALL BE TIED INTO THE DISTRIBUTION CABLE USED AS THE GROUND WIRE TO SERVICE THE ITS CABINET, IN ORDER TO PROVIDE A COMPLETE GROUNDING SYSTEM.

ITEM 625 - PULL BOX, 725.08, 32"
THE CONTRACTOR SHALL FURNISH AND INSTALL A 32" ROUND PULL BOX WITH CONCRETE PAD PER STANDARD CONSTRUCTION DRAWING ITS-14.11.

ITEM 625 - NO. 4 AWG 600 VOLT DISTRIBUTION CABLE
A MINIMUM OF 10 FEET SLACK CABLE SHALL BE COILED IN EACH ELECTRICAL PULL BOX. THE CABLE QUANTITIES ACCOUNT FOR FOUR DISTRIBUTION CABLES (HOT (2 CABLES), NEUTRAL, AND GROUND) FROM POWER SERVICE TO GROUND MOUNTED ITS CABINET. 10 FEET OF CABLE AT ALL SERVICE TERMINATIONS, 10 FEET OF CABLE FOR EACH PULL BOX, AND 15 FEET OF CABLE BETWEEN ODOT CABINETS AND NEAREST PULL BOX HAS BEEN ACCOUNTED FOR IN THE CABLE QUANTITIES.

ITEM 633 - CABINET FOUNDATION, AS PER PLAN
THE CONTRACTOR SHALL INSTALL A CABINET FOUNDATION FOR EACH ITS GROUND MOUNTED CABINET. SEE SUPPLEMENTAL SPECIFICATION 809 FOR CONDUIT REQUIREMENTS ENTERING THE ITS GROUND MOUNTED CABINET.

ITEM 633 - CONTROLLER WORK PAD, AS PER PLAN
THE CONTRACTOR SHALL INSTALL A WORKPAD AT EACH DMS PEDESTAL SUPPORT PER ODOT STANDARD CONSTRUCTION DRAWING ITS-30.14. IF NECESSARY, THE CONTRACTOR SHALL GRADE THE SURROUNDING AREA SLIGHTLY IN ORDER TO INSTALL A LEVEL WORK PAD AND RESTORE SITE CONDITIONS AS APPROVED BY THE PROJECT ENGINEER. PAYMENT FOR ALL OF THE ABOVE WORK SHALL BE INCIDENTAL TO THE UNIT BID PRICE FOR ITEM 633, CONTROLLER WORK PAD, AS PER PLAN AND SHALL INCLUDE ALL LABOR, MATERIALS, AND EQUIPMENT NECESSARY TO CONSTRUCT THE ITEM.

ITEM 625 - TRENCH, 30" DEEP, AS PER PLAN
THIS ITEM CONSISTS OF ALL PARTS, MATERIALS, AND LABOR TO PREPARE A 30" DEEP TRENCH IN A SLOPED AREA. PER CMS 102.05 THE CONTRACTOR SHALL VISIT, INVESTIGATE, AND INSPECT THE SITE IN ORDER TO ESTABLISH A SATISFIED UNDERSTANDING OF ALL CHARACTER, QUALITY, QUANTITIES, AND THE CONDITIONS TO BE ENCOUNTERED IN PERFORMING THE WORK. NOTIFY PROJECT ENGINEER 1 WEEK PRIOR TO BACKFILL.

ITEM 625 - POWER SERVICE, AS PER PLAN
AEP DISTRIBUTION WILL INSTALL AN OVERHEAD TRANSFORMER AT AEP POLE LOCATION #23 AND TEMPORARY OVERHEAD SECONDARY DROP WITH RELOCATION TO TRANSMISSION LINE TO MAINTAIN EXISTING POWER SERVICE TO THE DYNAMIC MESSAGE SIGN PRIOR TO THE COMMENCEMENT OF THIS PROJECT. AEP DISTRIBUTION WILL INSTALL AN UNDERGROUND SECONDARY LINE TO A SECONDARY PEDESTAL TO BE LOCATED WITHIN THE PROPOSED RIGHT OF WAY (APPROXIMATE LOCATION SHOWN ON SHEET P.139, SUBJECT TO CHANGE BY AEP). ODOT'S SITE CONTRACTOR WILL BE RESPONSIBLE FOR ALL WORK ON THE SERVICE SIDE OF THIS PEDESTAL FOR POWER SERVICE. ALL ITEMS SHOWN PER ODOT SCD ITS-15.10 INCIDENTAL TO ITEM 625 - POWER SERVICE, AS PER PLAN. THE EXISTING ODOT SERVICE POLE AND TEMPORARY OVERHEAD SECONDARY SHALL BE REMOVED UPON COMPLETION OF THE UNDERGROUND SECONDARY WORK AND RECONNECTION OF SERVICE TO THE RELOCATED DYNAMIC MESSAGE SIGN. REMOVAL OF THE EXISTING SERVICE POLE FOR ODOT DMS SHALL BE INCLUDED IN THE BID ITEM FOR ITEM 625 - POWER SERVICE, AS PER PLAN.

CONNECTION TO THE DYNAMIC MESSAGE SIGN INSTALLATION SHALL BE IN ACCORDANCE WITH ITEM 625 AND THE NATIONAL ELECTRIC CODE. SERVICE SHOULD BE COMPLETE 120/240V GROUNDED 4 WIRE SYSTEM TO SERVE EACH DMS INSTALLATION. 4 WIRE SYSTEM TO OBSERVE CONVENTIONAL COLOR CODE: LINE 1 (BLACK), LINE 2 (RED), NEUTRAL (WHITE), GROUND (GREEN).

INSTALL 240/120 VOLT, 100 AMP GROUND MOUNTED POWER SERVICE PER ODOT SCD ITS-15.10 . PROVIDE POWER SERVICE WITH 80 AMPERE OVER CURRENT PROTECTION FOR FULL SIZE DMS INSTALLATION.

ITEM 809 - ITS DEVICE, MISC.: REMOVE AND RELOCATE DMS CABINET
PRIOR TO THE REMOVAL OF THE DMS CABINET, ODOT TRAFFIC OPERATIONS SHOULD BE NOTIFIED A MINIMUM OF THREE (3) DAYS IN ADVANCE IN ORDER TO BE PRESENT AT THE TIME OF REMOVAL. AT SUCH TIME THE CABINET IS TO BE REMOVED, ODOT ITS MAINTENANCE PERSONNEL SHALL BE GIVEN AN OPPORTUNITY TO REMOVE ANY PARTS OR COMPONENTS PRIOR TO THE CABINET BEING REMOVED AND RELOCATED. THE EXISTING DMS CABINET SHALL BE RELOCATED TO A NEW LOCATION AS DETAILED ON SHEET P.139.

EXISTING DMS CABINET PARTS TO BE DELIVERED TO ODOT ITS. CONTACT CEN.ITS.LAB@DOT.OHIO.GOV TO COORDINATE.

ITEM 809 - ITS DEVICE, MISC.: REMOVE AND RELOCATE DMS SIGN
PRIOR TO THE REMOVAL OF THE DMS, ODOT TRAFFIC OPERATIONS SHOULD BE NOTIFIED A MINIMUM OF THREE (3) DAYS IN ADVANCE IN ORDER TO BE PRESENT AT THE TIME OF REMOVAL. AT SUCH TIME THE SIGN IS TO BE REMOVED, ODOT ITS MAINTENANCE PERSONNEL SHALL BE GIVEN AN OPPORTUNITY TO REMOVE ANY PARTS OR COMPONENTS PRIOR TO THE SIGN BEING REMOVED AND RELOCATED. SUCH ITEMS INCLUDE, BUT ARE NOT LIMITED TO, THE DMS POWER SUPPLIES, PIXEL BOARDS, COMMUNICATION EQUIPMENT, ETC. THIS ITEM SHALL ALSO INCLUDE REMOVAL OF THE EXISTING DMS SUPPORT, ANY MOUNTING HARDWARE, AND REMOVAL OF THE FOUNDATION 1 FOOT BELOW THE GROUND LINE. THE EXISTING DMS SIGN SHALL BE RELOCATED TO A NEW PEDESTAL SUPPORT AS DETAILED ON SHEET P.139.

EXISTING WIRELESS COMMUNICATION ASSEMBLY SHALL ALSO BE RELOCATED WITH THE DMS AND SHALL REMAIN OPERATIONAL UNTIL THE DMS IS CONNECTED INTO THE CTSS PHASE F STAGE 3 INTERCONNECT SYSTEM.

PAYMENT FOR ALL DMS COMMUNICATION WIRING PER MANUFACTURER REQUIREMENTS SHALL BE INCLUDED IN THE BID ITEM FOR ITEM 809 - ITS DEVICE, MISC.: REMOVE AND RELOCATE DMS SIGN.

EXISTING DMS PARTS TO BE DELIVERED TO ODOT ITS. CONTACT CEN.ITS.LAB@DOT.OHIO.GOV TO COORDINATE.

ITEM 809 - ITS DEVICE, MISC.: REMOVAL OF DMS INSTALLATION
ALL EXISTING TRAFFIC SURVEILLANCE EQUIPMENT THAT IS TO BE REMOVED AS SHOWN IN THE PLANS SHALL BE TURNED OVER TO THE ODOT ITS ENGINEER. THE CONTRACTOR SHALL SECURELY STORE THE EQUIPMENT AND CONTACT THE ODOT ITS ENGINEER (CEN.ITS.LAB@DOT.OHIO.GOV) TO SCHEDULE DELIVERY. THE ODOT ITS ENGINEER SHALL PROVIDE THE CONTRACTOR WITH WRITTEN DOCUMENTATION OF ANY ITEMS THAT ARE TO BE DISPOSED OF BY THE CONTRACTOR. THIS ITEM SHALL INCLUDE BUT IS NOT LIMITED TO THE REMOVAL OF THE EXISTING DMS SUPPORT, CATWALK AND LADDER, ANY MOUNTING HARDWARE, REMOVAL OF FOUNDATIONS 1 FOOT BELOW THE GROUND LINE, EXISTING PULLBOXES, AND EXISTING CONDUIT AND CABLES.

BEFORE ANY EQUIPMENT IS REMOVED THE CONTRACTOR SHALL REVIEW THE ITS DOWNTIME NOTES IN THESE PLANS TO ENSURE THAT THEY ARE IN COMPLIANCE WITH THE NOTIFICATION REQUIREMENTS.

ITS DOWNTIME
THE DMS DOWNTIME SHALL BE LIMITED TO A MAXIMUM OF FORTY-EIGHT(48) HOURS. THE EXISTING DMS SHALL BE DISCONNECTED AND THE NEW DMS CONNECTED IN THE SAME DAY. THE CONTRACTOR SHALL REDUCE DOWNTIME BETWEEN DISCONNECTING EXISTING DMS AND HAVING NEW DMS FULLY OPERATIONAL BY INSTALLING NEW DMS BEFORE DISCONNECTING POWER, COORDINATING MANUFACTURER COMMISSIONING, ETC.

SEE SUPPLEMENTAL SPECIFICATION 809 FOR DETAILS AND REQUIREMENTS RELATED TO ANY DOWNTIME OF ITS DEVICES (DMS, CCTV, HAR, FIBER, ETC.), INCLUDING INFORMATION REGARDING DISINCENTIVES.

THE CONTRACTOR SHALL REFER TO SUPPLEMENTAL SPECIFICATION 809.17 FOR MAINTAINING ITS DURING CONSTRUCTION. EXISTING WIRELESS COMMUNICATIONS ASSEMBLIES (WIRELESS RADIOS, CAMERAS, ETC.) SHALL BE RELOCATED BY ODOT ITS. THE CONTRACTOR SHALL COORDINATE REMOVAL OF EXISTING DMS AND DMS SUPPORT STRUCTURES WITH ODOT ITS (CEN.ITS.LAB@DOT.OHIO.GOV) TO MINIMIZE WIRELESS COMMUNICATIONS DOWNTIME. WIRELESS COMMUNICATION EQUIPMENT SHALL BE MOVED IN THE SAME DAY THAT THE NEW DMS IS ACTIVATED. PAYMENT FOR MAINTAINING ITS DURING CONSTRUCTION SHALL BE INCIDENTAL TO THE UNIT BID PRICE FOR ITEM 809, DYNAMIC MESSAGE SIGN (DMS), FULL-SIZE WALK-IN.

MAINTAINING ITS DURING CONSTRUCTION
THE CONTRACTOR SHALL MAINTAIN ALL PREEXISTING OR NEWLY INSTALLED PERMANENT ITS/TRAFFIC DEVICES AND INFRASTRUCTURE DURING CONSTRUCTION ACCORDING TO ODOT SUPPLEMENTAL SPECIFICATION 809.

TRACER WIRE
SEE SUPPLEMENTAL SPECIFICATION 804 FOR CURRENT TRACER WIRE REQUIREMENTS.

PAYMENT FOR ALL TRACER WIRE SHALL BE INCLUDED IN THE BID ITEM FOR THE FIBER OPTIC CABLE PAY ITEM.

FIBER OPTIC CABLE MARKER
SEE SUPPLEMENTAL SPECIFICATION 804 FOR CURRENT FIBER OPTIC CABLE MARKER REQUIREMENTS.

PAYMENT FOR ALL FIBER OPTIC CABLE MARKERS SHALL BE INCLUDED IN THE BID ITEM FOR THE FIBER OPTIC CABLE PAY ITEM.

ABANDON CONDUITS
REMOVE PORTIONS OF FOUNDATIONS PER CMS TO ABANDON UNDERGROUND CONDUITS.

FIBER TERMINATION DETAILS
FIBER TERMINATION AND SPLICING WILL BE PERFORMED BY ODOT OFFICE OF TRAFFIC OPERATIONS (OTO). THE EQUIPMENT AND/OR PAY ITEMS NEEDED TO COMPLETE THIS WORK WILL BE PROVIDED BY OTO AND WILL NOT BE CARRIED TO THE GENERAL SUMMARY.

DMS NOTES - SITE 99 - US-23 NB AT RATHMELL ROAD

DESIGN AGENCY
IBI

DESIGNER JMK
REVIEWER KMK 12-01-22
PROJECT ID 92616
SHEET P.137 TOTAL 170

FRA-23-4.19 PART 2 (PID 92616)

MODEL: Sheet PAPERSIZE: 17x11 (in.) DATE: 2023-01-04 TIME: 11:11:10 AM USER: william.croxton
\\10.120.112.5\bbshare\122592_SafetyDesign\7.0_Production\7.3_Design\04_CivilWorksets\110380_FRA-23-400=Engineering\Signals\Sheets\110380_CN005.dgn

FIBER TERMINATION DETAILS

FIBER TERMINATION AND SPLICING WILL BE PERFORMED BY ODOT OFFICE OF TRAFFIC OPERATIONS (OTO). THE EQUIPMENT AND/OR PAY ITEMS NEEDED TO COMPLETE THIS WORK WILL BE PROVIDED BY OTO AND WILL NOT BE CARRIED TO THE GENERAL SUMMARY.

SHEET NO.	LOCATION	625	625	625	625	625	625	625	625	625	625	630	630	630	633	633	804	809	809	809	809	809
		NO. 4 AWG 600 VOLT DISTRIBUTION CABLE	CONDUIT, 2", 725.051	CONDUIT, 2", JACKED OR DRILLED, 725.051	TRENCH, 30" DEEP, AS PER PLAN	PULL BOX, 725.08, 18"	PULL BOX, 725.08, 32"	GROUND ROD	GROUND ROD, AS PER PLAN	POWER SERVICE, AS PER PLAN	UNDERGROUND WARNING/MARKING TAPE	OVERHEAD SIGN SUPPORT, DMS PEDESTAL	CATWALK, DMS PEDESTAL	OVERHEAD SIGN SUPPORT FOUNDATION, DMS PEDESTAL	CABINET FOUNDATION, AS PER PLAN	CONTROLLER WORK PAD, AS PER PLAN	FIBER OPTIC CABLE, 144 FIBER	CONDUIT, 4", MULTICELL, HDPE WITH 4-1" INNERDUCTS	ETHERNET CABLE, OUTDOOR-RATED	ITS DEVICE, MISC.: REMOVE AND RELOCATE DMS CABINET	ITS DEVICE, MISC.: REMOVE AND RELOCATE DMS SIGN	ITS DEVICE, MISC.: REMOVAL OF DMS INSTALLATION
		FT	FT	FT	FT	EACH	EACH	EACH	EACH	EACH	FT	EACH	EACH	EACH	EACH	EACH	FT	FT	FT	EACH	EACH	EACH
139	SITE 99	2200	345	120	357	4	1	2	4	1	477	1	1	1	1	1	463	26	146	1	1	1
TOTALS CARRIED TO GENERAL SUMMARY		2200	345	120	357	4	1	2	4	1	477	1	1	1	1	1	463	26	146	1	1	1

FRA-23-4.19 PART 2 (PID 92616)

MODEL: Sheet PAPERSIZE: 17x11 (in.) DATE: 2023-01-04 TIME: 10:44:25 AM USER: william.croxton
\\10.120.112.5\bibishare\122592_Safety\Design\7.0_Production\7.3_Design\04_Civil\Worksets\110380_FRA-23400-Engineering\Signals\Sheets\110380_CN006.dgn

DMS SUBSUMMARY - SITE 99 - US-23 NB AT RATHMELL ROAD

DESIGN AGENCY: IBI

DESIGNER: JMK

REVIEWER: KMK 12-01-22

PROJECT ID: 92616

SHEET: P.138 TOTAL: 170

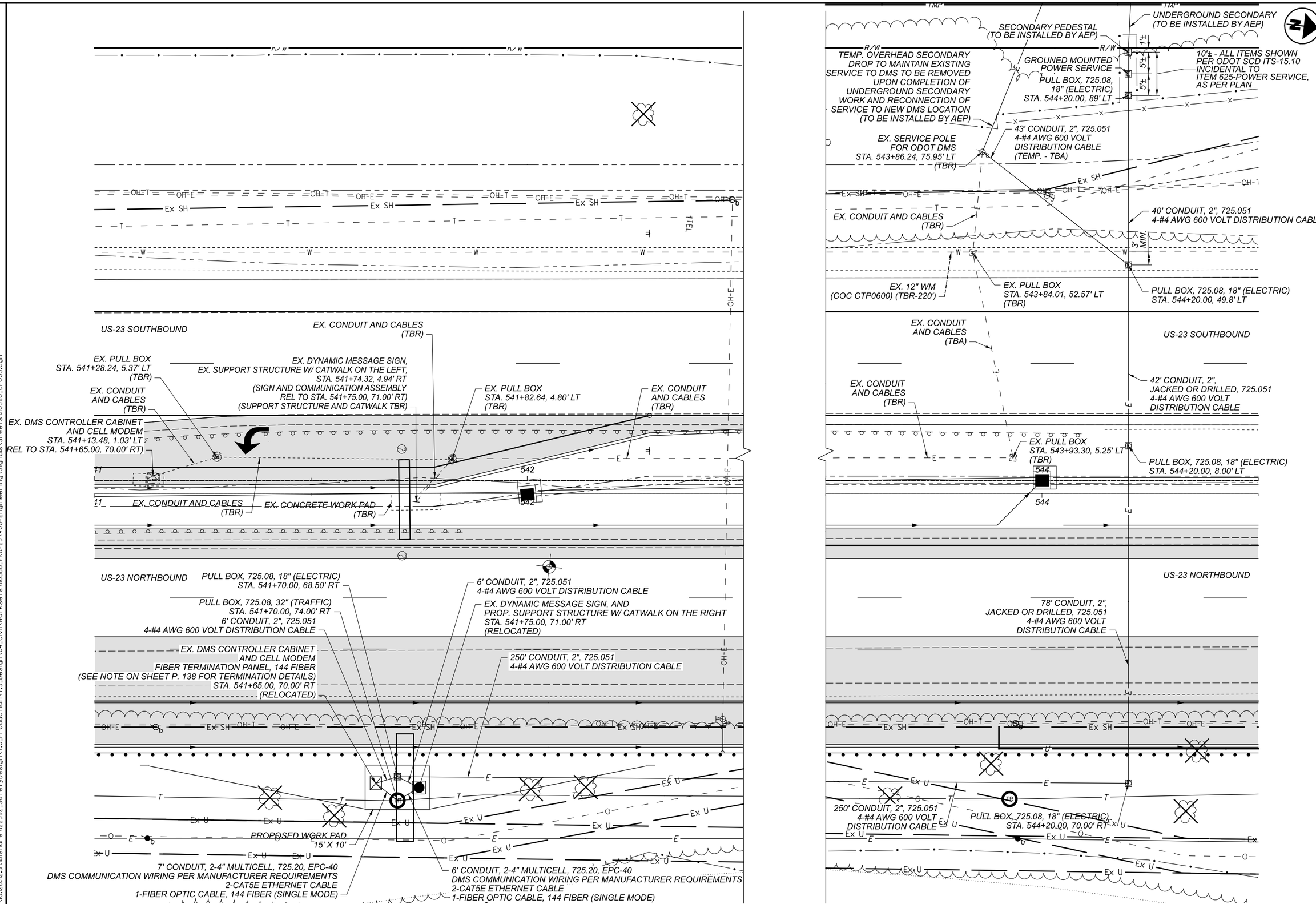

HORIZONTAL SCALE IN FEET 0 5 10 20

DMS PLAN - SITE 99 - US-23 NB AT RATHMELL ROAD
STA. 541+00 TO STA. 544+50

DESIGN AGENCY: IBI

DESIGNER: JMK

REVIEWER: KMK 12-01-22

PROJECT ID: 92616

SHEET: P.139 TOTAL: 170

FRA-23-4.19 PART 2 (PID 92616)

MODEL: BLP_U023SB - Plan I[Sheet] PAPERSIZE: 17x11 (in.) DATE: 2023-01-04 TIME: 11:20:34 AM USER: william.croxton
\\10.120.112.5\ibishare\122592_SafetyDesign\7.0_Production\7.3_Design\04_Civil\Worksets\110380_FRA-23\400-Engineering\Signals\Sheets\110380_CP003.dgn

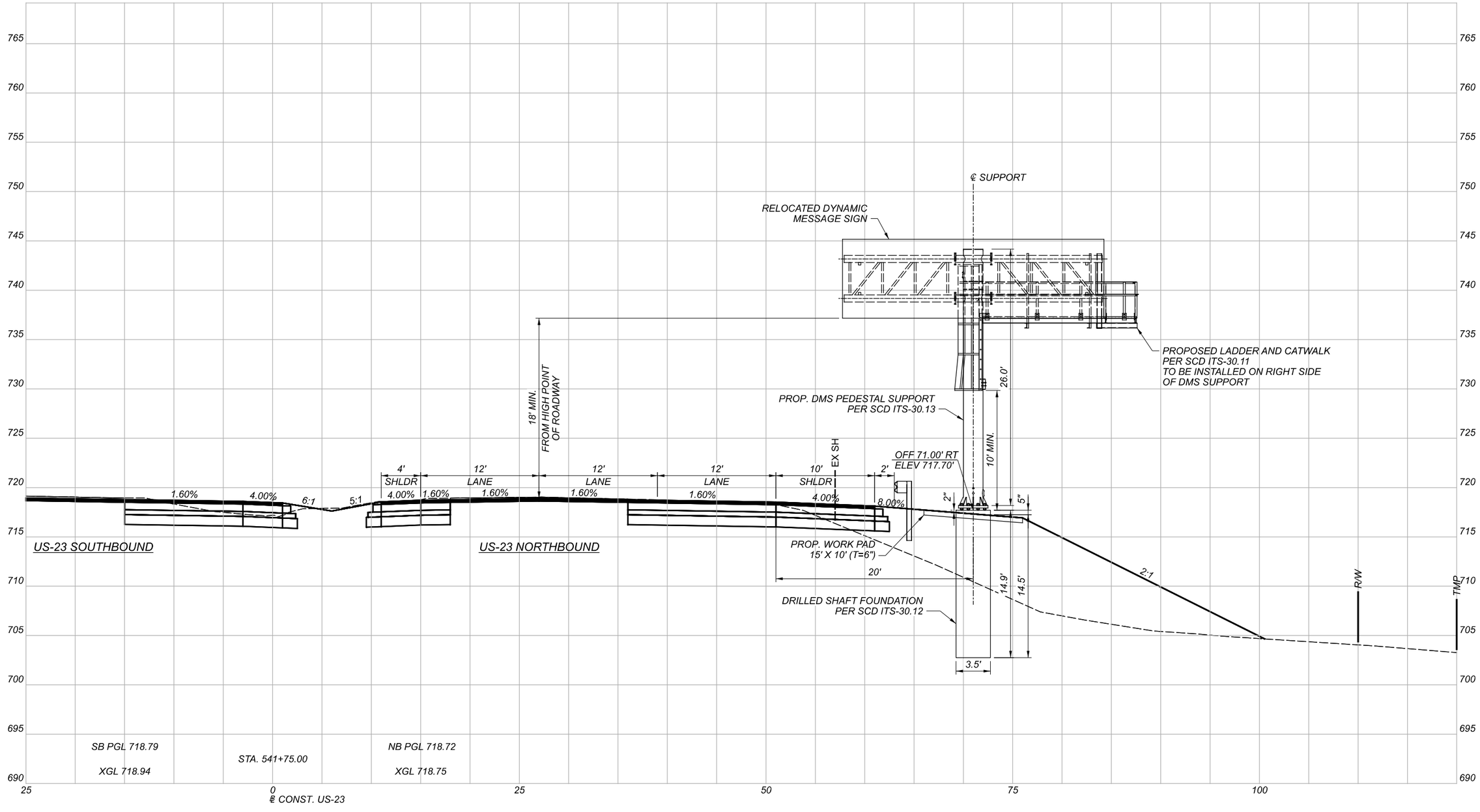

DMS ELEVATION VIEW - SITE 99 - US-23 NB AT RATHMELL ROAD
STA 541+75

FRA-23-4.19 PART 2 (PID 92616)

MODEL: BLP_U023SB - 541+75.00-3 [Sheet] PAPERSIZE: 17x11 (in.) DATE: 2023-01-04 TIME: 11:35:16 AM USER: william.croxton
\\10.120.112.5\bishare\122592_SafetyDesign\7.0_Production\7.3_Design\04_Civil\Worksets\110380_FRA-23\400-Engineering\Signals\Sheets\110380_CD004.dgn

DESIGN AGENCY
IBI

DESIGNER
JMK

REVIEWER
KMK 12-01-22

PROJECT ID
92616

SHEET P.140 TOTAL 170

STREET LIGHTING NOTES

THE STREET LIGHTING SHALL BE CONSTRUCTED IN ACCORDANCE WITH THE CURRENT CITY OF COLUMBUS, OHIO "CONSTRUCTION AND MATERIAL SPECIFICATIONS" (2018 EDITION, SECTION 1001, TITLED "STREET LIGHTING"), INCLUDING ALL SUPPLEMENTS THERETO, IN FORNCE ON THE DATE OF THE CONTRACT, SHALL GOVERN ALL MATERIALS AND WORKMANSHIP INVOLVED IN THE IMPROVEMENTS SHOWN ON THESE PLANS, EXCEPT AS SUCH SPECIFICATIONS ARE MODIFIED BY THE FOLLOWING SPECIFICATIONS OR BY THE CONSTRUCTION DETAILS SET FORTH HEREIN.

CIRCUIT VOLTAGE FOR ALL LUMINAIRES SHALL BE 480 VOLT, UNLESS OTHERWISE NOTED.

CENTERLINE OF LIGHT POLE FOUNDATION AND CONDUIT TRENCH TO BE PLACED IN ACCORDANCE WITH THE PLAN DETAILS.

ALL PROPOSED LUMINAIRES SHALL BE 3000K LED.

NO SPLICES SHALL BE MADE TO CIRCUIT CABLES EXCEPT AT NOTED LOCATIONS WHEN PERMITTED.

TRENCH LOCATION SHALL BE DEFLECTED AROUND OBSTACLES AS NOTED IN THIS PLAN.

WHERE THE TRENCH IS OFFSET FROM THE CENTERLINE OF THE FOUNDATIONS, THE CONDUIT SHALL BE DIRECTED TOWARD THE ELL OF THE FOUNDATION AT APPROXIMATELY 45 DEGREE ANGKLE. THE FOUNDATION ELLS MAY BE AIMED OUT OF THE FOUNDATION AT APPROXIMATELY 45 DEGREE ANGLES TO FACILITATE CONNECTION TO CONDUIT WITH THE LEAST AMOUNT OF BENDS.

THE PLAN DETAILS SHALL BE CONSIDERED SUPPLEMENTAL TO MIS SPECIFICATIONS.

LIGHT POLE FOUNDATIONS SHALL BE LOCATED APPROXIMATELY WHERE SHOWN ON THE PLANS WITH EXACT LOCATIONS TO BE DETERMINED IN THE FIELD AFTER CONSIDERATION IS GIVEN TO THE LOCATION OF UNDERGROUND AND OVERHEAD UTILITIES, PAVEMENTS AND GRADES.

IT SHALL BE THE CONTRACTOR'S RESPONSIBILITY TO PROVIDE THE ANCHOR BOLTS AND ENSURE THAT THE BOLT SIZE, ANCHOR BOLT CIRCLE AND PATTERN MATCH THE LIGHT POLE.

AS BUILT RECORD
THE CONTRACTOR SHALL MAINTAIN A SET OF PROJECT RECORD DOCUMENTS. THESE DOCUMENTS SHALL INCLUDE REVIEWED SHOP DRAWINGS, CHANGE ORDERS, EQUIPMENT OPERATING INSTRUCTIONS, FIELD TEST RECORDS, AND AS BUILT DRAWINGS. THE AS BUILT DRAWING SHALL BE MARKED LEGIBLY IN RED, THE ACTUAL LOCATION OF EQUIPMENT AND CONDUITS AS CONSTRUCTED. ALL EQUIPMENT AND UNDERGROUND CONDUITS INSTALLED SHALL HAVE LOCATIONS MARKED IN DISTANCES OFF A LANDMARK AT LEAST EVERY 25 FEET AND AS NECESSARY AT BENDS FOR LOCATION AT A LATER DATE.

ALL ITEMS OF WORK CALLED FOR ON THE PLANS, FOR WHICH NO SPECIFIC METHOD OF PAYMENT IS PROVIDED, SHALL BE PERFORMED BY THE CONTRACTOR AND THE COST OF THESE SHALL BE INCLUDED IN THE UNIT PRICE BID FOR THE VARIOUS RELATED ITEMS. THIS INCLUDEDS, BUT IS NOT LIMITED TO, SUCH INCIDENTAL ITEMS AS RELOCATION OF MAIL BOXES, SAW CUTTING AND REMOVAL AND/OR RELOCATION OF SIGNS, RAILROAD TIES, SPRINKLERS, RELOCATING ROOF OR SUMP DRAINS AROUND LIGHT POLE FOUNDATIONS, HAND DIGGING AROUND UNDERGROUND UTILITIES OR OTHER MISCELLANEOUS ITEMS.

PRIOR TO ANY PAINTING, THE CONTRACTOR SHALL SUBMIT PAINT SAMPLES AND SHOP DRAWINGS TO THE CITY OF COLUMBUS. PAINT SAMPLES SHALL BE REPRESENTATIVE OF THE COLOR, TYPE AND MANUFACTURE THAT WILL BE USED FOR THE LIGHT POLE.

FOR THE DIVISION OF POWER

THE DIVISION OF POWER (DOP) MAY HAVE UNDERGROUND AND OVERHEAD PRIMARY, SECONDARY, AND STREET LIGHTING AT THIS WORK LOCATION. THE CONTRACTOR IS HEREBY REQUIRED TO CONTACT OUPS AT 811 OR 1-800-362-2764 FORTY-EIGHT HOURS PRIOR TO CONDUCTING ANY ACTIVITY WITH THE CONSTRUCTION AREA.

ANY REQUIRED RELOCATION, SUPPORT, PROTECTION, OR ANY OTHER ACTIVITY CONCERNED WITH THE CITY'S ELECTRICAL FACILITIES IN THE CONSTRUCTION AREA IS TO BE PERFORMED BY THE CONTRACTOR UNDE THE DIRECTION OF DOP PERSONNEL AND AT THE EXPENSE OF THE PROJECT. THE CONTRACTOR SHALL USE MATERIAL AND MAKE REPAIRS TO A CITY OF COLUMBUS STREET LIGHTING SYSTEM BY FOLLOWING DOP'S "MATERIAL AND INSTALLATION SPECIFICATIONS" (MIS) AND THE CITY OF COLUMBUS "CONSTRUCTION AND MATERIAL SPECIFICATIONS" (CMS). ANY NEW OR RE-INSTALLED UNDERGROUND STREETLIGHT SYSTEM SHALL REQUIRE TESTING AS REFERRED TO IN SECTION 1001.18 OF THE CMS MANUAL. THE CONTRACTOR SHALL CONFORM TO DOP'S EXISTING CONDUCTOR SAFETY POLICY AND, MIS-1, COPIES OF WHICH ARE AVAILABLE FROM DOP.

IF ANY ELECTRIC FACILITY BELONGING TO THE DOP IS DAMAGED IN ANY MANNER BY THE CONTRACTOR, ITS AGENTS, SERVANTS, OR EMPLOYEES, AND REQUIRES EMERGENCY REPAIRS, THE DOP DISPATCH OFFICE SHOULD BE CONTACTED IMMEDIATLEY AT (614) 645-7627. DOP SHALL MAKE ALL NECESSARY REPAIRS, AND THE EXPENSE OF SUCH REPAIRS AND OTHER RELATED COSTS SHALL BE PAID BY THE CONTRACTOR TO THE DIVISION OF POWER, CITY OF COLUMBUS, OHIO.

INSPECTION/ACCEPTANCE BY THE DIVISION OF POWER

UPON COMPLETION OF CONSTRUCTION OF THE PROJECT, THE CONTRACTOR WILL BE REQUIRED TO FOLLOW THE PROCEDURES FOR INSPECTION AND ACCEPTANCE OF A STREET LIGHTING PROJECT BY THE DIVISION OF POWER. FOR THIS PROJECT, THE CONTRACTOR WILL BE REQUIRED TO SHOW THE DIVISION OF POWER THAT ALL LUMINAIRES ARE FUNCTIONING PROPERLY. DURING THE FINALL INSPECTION/ACCEPTANCE PROCESS, THE CONTRACTOR WILL BE REQUIRED TO COVER THE PHOTOCELL, IN ORDER TO VERIFY OPERATION OF THE LUMINAIRE TO THE DIVISION OF POWER.

POWER SERVICE, AS PER PLAN

IN ADDITION TO THE REQUIREMENTS OF 1001.15 AND MIS-603, THE CONTRACTOR SHALL CONTACT THE SERVICE PROVIDER AND MAKE ARRANGEMENTS FOR THE CONNECTION OF POWER FOR THE LIGHTING CONTROL CENTER. THE CONTRACTOR SHALL CONTACT THE POWER SERVICE PROVIDER A MINIMUM OF 120 CALENDAR DAYS IN ADVANCE OF THE NEED FOR POWER WITH THE ADDRESS OF THE LIGHTING CONTROL CENTER AS PROVIDED IN THE PLANS.

POWER SHALL BE SUPPLIED BY COLUMBUS DIVISION OF POWER. POWER SHALL BE 480 VAC. POWER SERVICE SHALL BE FROM THE APPROXIMATE LOCATION AS SHOWN ON THE PLANS. CONTACT COLUMBUS DIVISION OF POWER PROJECT MANAGER .

THE CONTRACTOR SHALL INSTALL TWO #4 5KV CABLES FROM THE LINE TERMINALS OF THE CONTROL PANEL TO THE SERVICE, LEAVING 6 FT + OF CABLE COILED FOR CONNECTION BY THE DIVISION OF POWER . THE NEUTRAL CABLE SHALL BE CLEARLY MARKED WITH WHITE STRIPE AND WHITE TAPE.

THE TRANSFORMER IS TO BE A POLE MOUNT TRANSFORMER, PROVIDED BY THE DIVISION OF POWER, AND INSTALLED BY THE CONTRACTOR.

THE CONTRACTOR SHALL INSTALL A SERVICE POLE AT THE LOCATION INDICATED IN THE PLANS TO RECEIVE THE PROPOSED OVERHEAD CABLES.

THE CONTRACTOR SHALL INSTALL A CONDUIT RISER ON THE SERVICE POLE UNDERGROUND TO THE PROPOSED LIGHT CONTROL CENTER.

ALL WORK AND MATERIAL, NOT ITEMIZED SEPARATELY, IS CONSIDERED INCIDENTAL TO ITEM 1001 - POWER SERVICE, AS PER PLAN.

INTERSECTION	INTERSECTION NUMBER	LIGHTING CONTROL CABINET ADDRESS	POWER SERVICE PROVIDER
US23 (HIGH ST) & RATHMELL RD	2182	4752 S. HIGH ST.	DOP

ITEM 625: LIGHTING, MISC: CMSC 1001 - VARIES

IN LIEU OF USING 2018 ODOT CONSTRUCTION AND MATERIAL SPECIFICATIONS, THE ITEMS LISTED BELOW IN THE SUB-SUMMARY SHALL FOLLOW THE CITY OF COLUMBUS 2018 CONSTRUCTION AND MATERIAL SPECIFICATIONS.

SUB-SUMMARAY OF LIGHTING ITEMS

ITEM NO. (ODOT)	ITEM NAME (ODOT)	ITEM NO. (COC)	QTY	UNIT	ITEM DESCRIPTION
625	LIGHTING, MISC.:	1001	4	EACH	13 INCH X 24 INCH PULL BOX (MIS-54)
625	LIGHTING, MISC.:	1001	3	EACH	17 INCH X 30 INCH X 24 INCH (MIS-54-APP)
625	LIGHTING, MISC.:	1001	1	EACH	STREETLIGHT CIRCUIT RISER (MIS-56)
625	LIGHTING, MISC.:	1001	1	EACH	METER, SELF CONTAINED WITH METER SOCKET, 100 AMP (MIS-57)
625	LIGHTING, MISC.:	1001	6	EACH	8' STREET LIGHT FOUNDATION (MIS-202)
625	LIGHTING, MISC.:	1001	2	EACH	POLE, ALUMINUM, 10' BRACKET, T-BASE, 40' MOUNTING HEIGHT (MIS-301)
625	LIGHTING, MISC.:	1001	4	EACH	POLE, ALUMINUM, 15' BRACKET, T-BASE, 40' MOUNTING HEIGHT (MIS-302)
625	LIGHTING, MISC.:	1001	190	CIRCUIT FOOT	2-WIRE #6 DUPLEX OVERHEAD CIRCUIT (MIS-402)
625	LIGHTING, MISC.:	1001	10	CIRCUIT FOOT	2-WIRE UNDERGROUND CIRCUIT (MIS-403)
625	LIGHTING, MISC.:	1001	725	CIRCUIT FOOT	3-WIRE UNDERGROUND CIRCUIT (MIS-404)
625	LIGHTING, MISC.:	1001	6	EACH	3-WIRE POLE TO BE WIRED (MIS-501)
625	LIGHTING, MISC.:	1001	1	EACH	3-WIRE, 480V PAD MOUNT CONTROLLER (MIS-603)
625	LIGHTING, MISC.:	1001	275	LINEAR FOOT	2-INCH CONDUIT, CONCRETE ENCASED (MIS-700)
625	LIGHTING, MISC.:	1001	410	LINEAR FOOT	3-INCH RIGID STEEL WITH 2-INCH CONDUIT INSERT (MIS-702)
625	LIGHTING, MISC.:	1001	6	EACH	COBRA HEAD LED LUMINAIRE (MIS-800)
625	LIGHTING, MISC.:	1001	1	EACH	POWER SERVICE, AS PER PLAN

NON-PAYMENT MIS SPECIFICATIONS

MIS	Item Description
1	Street Light Lockout/Tagout (LOTO)
2	Guidelines for Inspection & Acceptance of Street Lighting Systems
3	Guidelines for Street Lighting "Materials for Approval" Submittal Packages
4	Inspection Checklist
58	Minimum Tree Clearance for Downtown, Urban, & Rural Areas

LIGHTING NOTES AND SUBSUMMARY

DESIGN AGENCY
IBI

DESIGNER
JAW

REVIEWER
KMK 12-01-22

PROJECT ID
92616

SHEET P.141 TOTAL 170

FRA-23-4.19 PART 2 (PID 92616)

MODEL: Sheet PAPERSIZE: 17x11 (in.) DATE: 2022-12-09 TIME: 8:38:50 AM USER: william.croxton
\\10.120.112.5\bilshare\122592_Safety\Design\7.0_Production\7.3_Design\04_Civil\Worksets\110380_FRA-23400-Engineering\Lighting\Sheets\110380_LN001.dgn

STREET LIGHTING LEGEND

- PROPOSED POLE, ALUMINUM, 10' BRACKET, T-BASE, 40' MOUNTING HEIGHT (MIS-301) W/ COBRA HEAD LED LUMINAIRE (MIS-800)
- PROPOSED POLE, ALUMINUM, 15' BRACKET, T-BASE, 40' MOUNTING HEIGHT (MIS-302) W/ COBRA HEAD LED LUMINAIRE (MIS-800)
- PROPOSED 13 INCH X 24 INCH PULL BOX (MIS-54)
- PROPOSED 17 INCH X 30 INCH PULL BOX (MIS-54-APP)
- PROPOSED 2" CONDUIT, CONCRETE ENCASED, IN TRENCH (MIS-700) W/ 3 WIRE CIRCUIT CABLE (MIS-404)
- PROPOSED 3" RIGID STEEL WITH 2" CONDUIT INSERT (MIS-702) W/ 3 WIRE CIRCUIT CABLE (MIS-404)
- PROPOSED 3-WIRE, 480V PAD MOUNT CONTROLLER (MIS-603)
- PROPOSED WOODEN SERVICE POLE W/ RISER, STREET LIGHT CIRCUIT (MIS-56)
- PROPOSED TRANSFORMER
- PROPOSED 2-WIRE #6 DUPLEX OVERHEAD CIRCUIT (MIS-402)

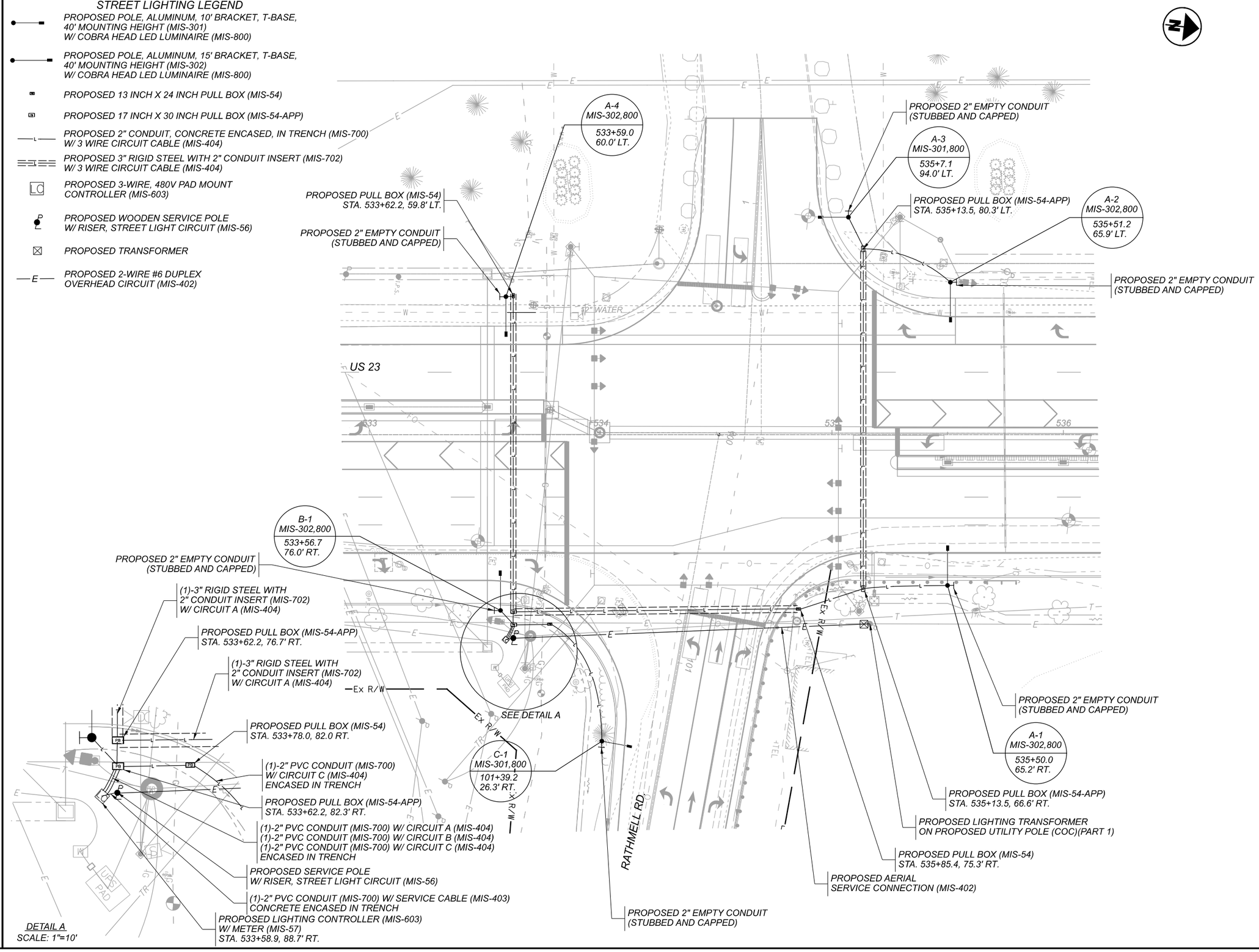

DETAIL A
SCALE: 1"=10'

HORIZONTAL SCALE IN FEET
0 10 20 40

LIGHTING PLAN
STA 352+00 TO STA 537+00

DESIGN AGENCY
IBI

DESIGNER
JAW

REVIEWER
KMK 12-01-22

PROJECT ID
92616

SHEET P.142 TOTAL 170

FRA-23-4.19 PART 2 (PID 92616)

MODEL: 110380_LP001[Sheet] PAPERSIZE: 17x11 (in.) DATE: 2022-12-09 TIME: 9:38:56 AM USER: william.croxton
\\10.120.112.5\ibishare\122592_SafetyDesign\7.0_Production\7.3_Design\04_Civil\Worksets\110380_FRA-23\400-Engineering\Lighting\Sheets\110380_LP001.dgn

VOLTAGE DROP STUDY

BASIC FORMULAS AND DATA:

LED ELECTRICAL DATA

LAMP WATTAGE	LINE VOLTS	LINE AMP. OPERATING
187	480	0.39

WIRE SIZE

14	3.10
12	2.00
10	1.20
8	0.78
6	0.49
4	0.31
2	0.19
1/0	0.12
2/0	0.10
4/0	0.079

LIGHTING POWER SERVICE DATA

CONTROL CENTER	LINE VOLTAGE (VOLTS)	CONNECTED LOAD (KVA)	SERVICE ENTRANCE CABLE (AWG)	ENCLOSURE RATING (AMPS)	LEG	CIRCUIT LOAD (AMPS)	CIRCUIT FUSE SIZE (AMPS)	CIRCUIT CABLE SIZE (AWG)	MAINTAINING AGENCY
3-WIRE, 480V PAD MOUNT CONTROLLER	480	0.9	#6	100	A	1.6	15 A	4	CITY OF COLUMBUS
					B	0.4	15 A	4	
					C	0.4	15 A	4	

VOLTAGE DROP CALCULATIONS

County-Route-Section: US23 — No. of Wires for Calculation Purposes: 3
Power Service: LC Leg: A
Supply Voltage: 480
Wire Resistance Used: No. 4 AWG. 0.310; No. 4 AWG. 0.310

Voltage: 480			
Wire Factor Used (Two - No. 10 AWG Wires):	2.40	ohms/mft/1000	
Wire Factor Used (Two - No. 8 AWG Wires):	1.56	ohms/mft/1000	
Wire Factor Used (Two - No. 6 AWG Wires):	0.98	ohms/mft/1000	
Wire Factor Used (Three - No. 4 AWG Wires):	0.62	ohms/mft/1000	Leg: 'A'

Section			Amperes		Ampere-Feet	AWG	Voltage Drop		% Drop	At Point
From	To	FEET	At Point	Accum.			In Section	Accum.		
A-2	PB	51	0.39	0.39	20	4	0.00	0.00	0.00	A-2
A-3	PB	25	0.39	0.39	10	4	0.00	0.00	0.00	A-3
PB	PB	157	0.00	0.78	122	4	0.00	0.00	0.00	PB
A-1	PB	46	0.39	0.39	18	4	0.00	0.00	0.00	A-1
PB	PB	162	0.00	1.17	189	4	0.00	0.00	0.00	PB
A-4	PB	84	0.39	0.39	33	4	0.00	0.00	0.00	A-4
PB	LC	25	0.00	1.56	39	4	0.04	0.04	0.01	PB

1. AT A POINT WHERE A CIRCUIT BRANCHES (I.E., PB) THE ACCUMULATED LOAD BEYOND THIS POINT IS SHOWN IN THE "AT POINT" COLUMN TO FACILITATE CHECKING.

VOLTAGE DROP CALCULATIONS

County-Route-Section: US23 — No. of Wires for Calculation Purposes: 3
Power Service: LC Leg: B
Supply Voltage: 480
Wire Resistance Used: No. 4 AWG. 0.310; No. 4 AWG. 0.310

Voltage: 480			
Wire Factor Used (Two - No. 10 AWG Wires):	2.40	ohms/mft/1000	
Wire Factor Used (Two - No. 8 AWG Wires):	1.56	ohms/mft/1000	
Wire Factor Used (Two - No. 6 AWG Wires):	0.98	ohms/mft/1000	
Wire Factor Used (Three - No. 4 AWG Wires):	0.62	ohms/mft/1000	Leg: 'B'

Section			Amperes		Ampere-Feet	AWG	Voltage Drop		% Drop	At Point
From	To	FEET	At Point	Accum.			In Section	Accum.		
B-1	PB	20	0.39	0.39	8	4	0.01	0.01	0.00	B-1
PB	LC	10	0.00	0.39	4	4	0.00	0.00	0.00	PB

1. AT A POINT WHERE A CIRCUIT BRANCHES (I.E., PB) THE ACCUMULATED LOAD BEYOND THIS POINT IS SHOWN IN THE "AT POINT" COLUMN TO FACILITATE CHECKING.

VOLTAGE DROP CALCULATIONS

County-Route-Section: US23 — No. of Wires for Calculation Purposes: 3
Power Service: LC Leg: C
Supply Voltage: 480
Wire Resistance Used: No. 4 AWG. 0.310; No. 4 AWG. 0.310

Voltage: 480			
Wire Factor Used (Two - No. 10 AWG Wires):	2.40	ohms/mft/1000	
Wire Factor Used (Two - No. 8 AWG Wires):	1.56	ohms/mft/1000	
Wire Factor Used (Two - No. 6 AWG Wires):	0.98	ohms/mft/1000	
Wire Factor Used (Three - No. 4 AWG Wires):	0.62	ohms/mft/1000	Leg: 'A'

Section			Amperes		Ampere-Feet	AWG	Voltage Drop		% Drop	At Point
From	To	FEET	At Point	Accum.			In Section	Accum.		
C-1	PB	80	0.39	0.39	31	4	0.03	0.03	0.01	C-1
PB	LC	10	0.00	0.39	4	4	0.00	0.00	0.00	PB

1. AT A POINT WHERE A CIRCUIT BRANCHES (I.E., PB) THE ACCUMULATED LOAD BEYOND THIS POINT IS SHOWN IN THE "AT POINT" COLUMN TO FACILITATE CHECKING.

CIRCUIT SCHEMATIC LEGEND

- *PROPOSED LIGHT POLE & LUMINAIRE*
- *PROPOSED 3-WIRE UNDERGROUND CIRCUIT (MIS-404)*
- *PROPOSED 3-WIRE, 480V PAD MOUNT CONTROLLER (MIS-603)*
- *PROPOSED TRANSFORMER*

CIRCUIT SCHEMATIC

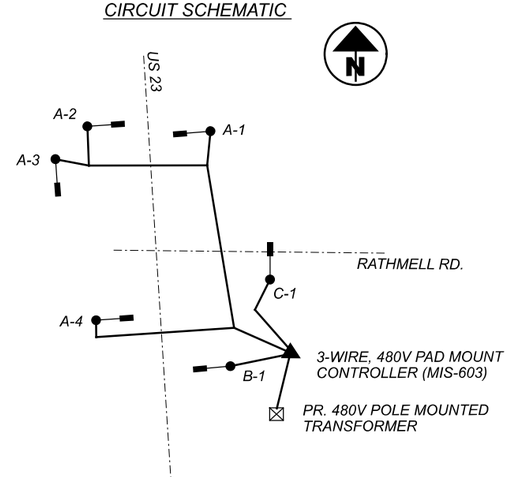

LIGHTING DETAILS

DESIGN AGENCY: IBI

DESIGNER: JAW
REVIEWER: KMK 12-01-22
PROJECT ID: 92616
SHEET: P.143 TOTAL: 170

FRA-23-4.19 PART 2 (PID 92616)

MODEL: Sheet PAPERSIZE: 17x11 (in.) DATE: 2022-12-09 TIME: 8:39:02 AM USER: william.croxton
\\10.120.112.5\bfshare\122592_SafetyDesign\7.0_Production\7.3_Design\04_CivilWorksets\110380_FRA-23\400-Engineering\Lighting\Sheets\110380_LD001.dgn

LUMINAIRE SCHEDULE						
Catalog Number	Description	Lamp	File	Lumens	LLF	Watts
ATB0 P455 R2 3K	Autobahn 187 W, Type II, 3000K	1	ATB0_P455_R2_3K.ies	25,269	0.85	187

STATISTICS						
Description	Roadway Classification	Avg.	Max.	Min.	Max/Min	Avg/Min
US 23 (Target)	Arterial (Low Ped)	0.9 fc	-	-	-	3:1
Rathmell Road (Target)	Collector (Low Ped)	0.6 fc	-	-	-	4:1
Intersection (Target)	-	1.5 fc	-	-	-	4:1
US 23 & Rathmell Rd.	Arterial, Collector	1.6 fc	3.6 fc	0.4 fc	9.0:1	4.1:1

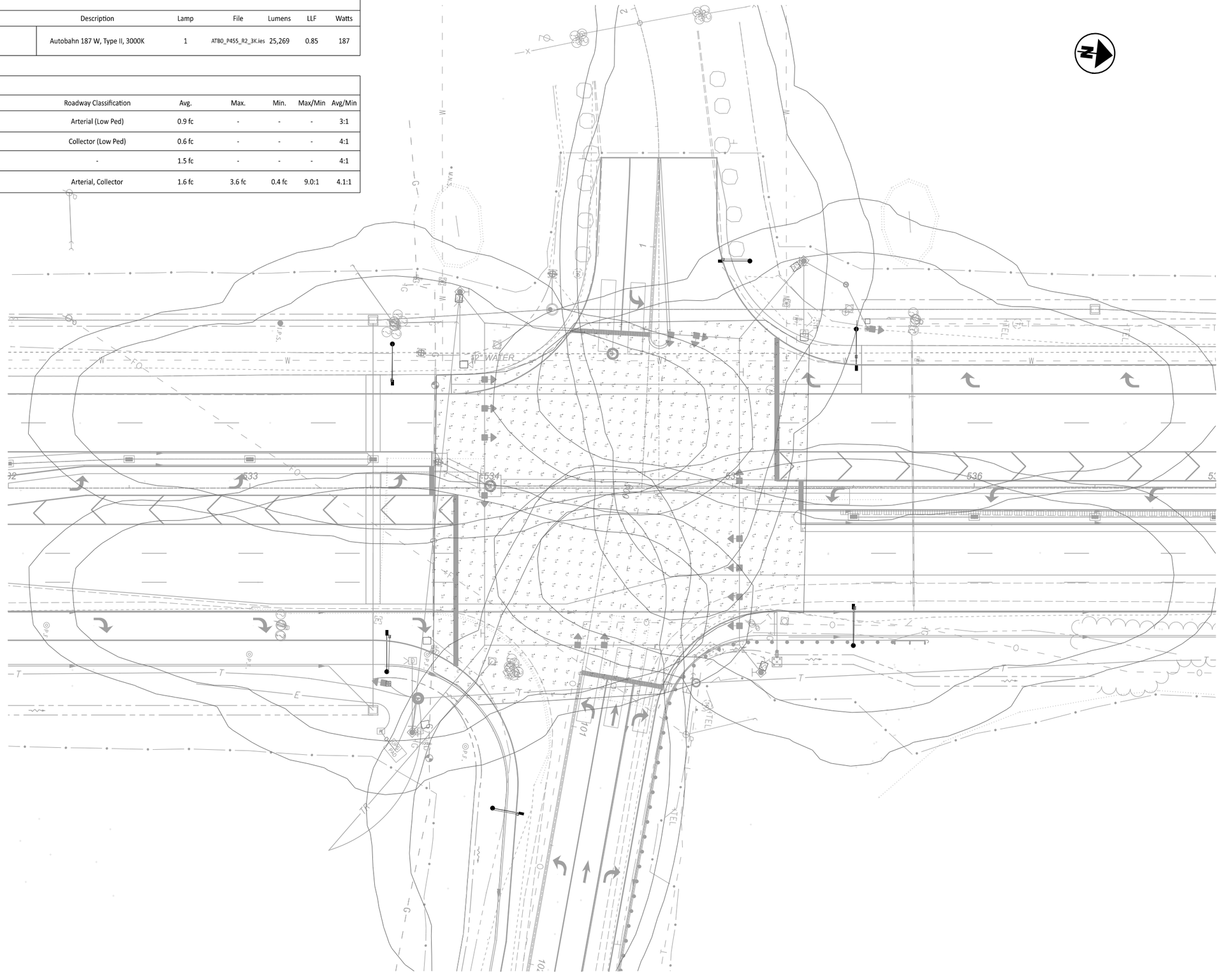

HORIZONTAL
SCALE IN FEET
0 10 20 40

LIGHTING DETAILS
(PHOTOMETRIC DATA)

DESIGN AGENCY
IBI

DESIGNER
JAW

REVIEWER
KMK 12-01-22

PROJECT ID
92616

SHEET P.144 | TOTAL 170

FRA-23-4.19 PART 2 (PID 92616)

MODEL: II0380_LP001(Sheet1) PAPERSIZE: 17x11(in.) DATE: 2022-12-09 TIME: 9:39:07 AM USER: william.croxton
\\10.120.12.5\bishare\122592_SafetyDesign\7.0_Production\7.3_Design\04_Civil\Worksets\II0380_FRA-23\400-Engineering\Lighting\Sheets\II0380_LD002.dgn

RIGHT OF WAY LEGEND SHEET FRA-23-4.19 PART 2

FRANKLIN COUNTY
HAMILTON TOWNSHIP
SEC. 21 & 28, T.4N, R.22W
CONGRESS LANDS
CITY OF COLUMBUS

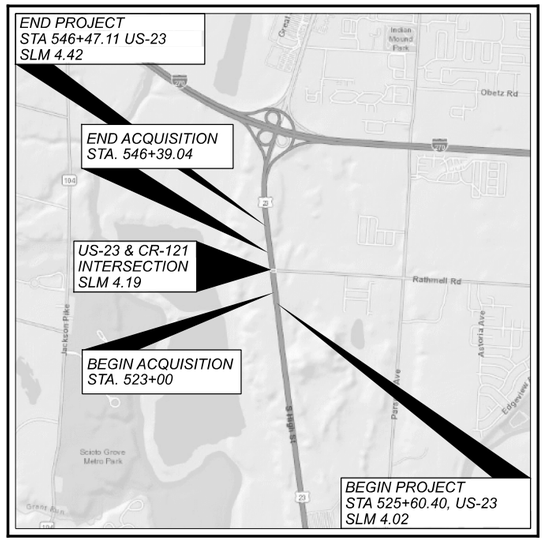

LOCATION MAP

LATITUDE: N 39°51'45" LONGITUDE: W 83°00'15"

INDEX OF SHEETS:

LEGEND SHEET	1
CENTERLINE PLAT	2
PROPERTY MAP	3
SUMMARY OF ADDITIONAL R/W	4
R/W TOPOGRAPHIC SHEETS	5-17 (ODD)
R/W BOUNDARY SHEETS	6-18 (EVEN)

MONUMENT LEGEND

- EXISTING R/W MONUMENT BOX
- PROPOSED R/W MONUMENT BOX
- I.P.F. IRON PIN FOUND
- I.P.S. IRON PIN SET W/ ID CAP
- P.F. IRON PIPE FOUND
- P.S. IRON PIPE SET

PROJECT DESCRIPTION

SAFETY IMPROVEMENT PROJECT AT SIGNALIZED INTERSECTION OF US-23 (SOUTH HIGH STREET), CR-121 (RATHMELL ROAD), & PRIVATE DRIVE LOCATED SOUTH OF US-23 & I-270 INTERCHANGE, INCLUDING PAVEMENT WIDENING & RECONSTRUCTION OF 2100-FT ALONG US-23 AND 1300-FT ALONG CR-121. US-23 IMPROVEMENTS AT NORTHERLY LIMITS SHALL TIE INTO ODOT FRA-270-51.50 PART 1 (PID 92616) PROJECT AND CR-121 IMPROVEMENTS AT THE EASTERLY LIMITS SHALL TIE INTO FUTURE EXISTING COC RATHMELL ROAD IMPROVEMENT PROJECT (E-03844).

INTERSECTION UPGRADES INCLUDE COC SIGNAL MODIFICATIONS, NEW COC INTERSECTION LIGHTING, ADDITION OF DROP RIGHT TURN LANE ON WB APPROACH, AND EXTENSION OF TURN LANE LENGTHS ON ALL APPROACHES. CORRIDOR UPGRADES INCLUDE ADDITION OF US-23 NB AUXILIARY LANE, WIDENING OF ALL US-23 NB SHOULDERS, WIDENING OF ALL US-23 NB/SB GRADED SHOULDERS AND DITCHES, AND PLANING/RESURFACING ALONG ALL OF US-23 SB AND ON EXISTING SALVAGED PAVEMENT ALONG US-23 NB. WORK ALSO INCLUDES ACCESS MANAGEMENT, DRAINAGE & BMP'S, TRAFFIC CONTROL, RELOCATION OF ODOT DYNAMIC MESSAGE SIGN (DMS) FROM US-23 MEDIAN TO EAST SIDE OF US-23 NB, AND NEW COC SIGNAL INTERCONNECT ALONG EAST SIDE OF US-23.

PLANS PREPARED BY:

FIRM NAME : IBI GROUP

R/W DESIGNER: WILLIAM L. CROXTON, P.E.
JENNIFER M. KELLEY, P.E.

R/W REVIEWER: DAVID L. CHIESA, P.S.

FIELD REVIEWER: BENJAMIN S. BROWN, P.E.

PRELIMINARY R/W FIELD REVIEW DATE: 9-10-2020

FINAL R/W FIELD REVIEW DATE: 12-21-2021

TRACINGS FIELD REVIEW DATE: 4-22-2022

OWNERSHIP UPDATED BY: WILLIAM L. CROXTON, P.E.

DATE COMPLETED: 4-22-2022

PLAN COMPLETION DATE: R/W TRACINGS 4-22-2022

CONVENTIONAL SYMBOLS

County Line
Township Line
Section Line
Corporation Line ... or ...
Fence Line (Ex) ... (Pr)
Center Line
Right of Way (Ex) ... Ex R/W
Right of Way (Pr) ... R/W
Standard Highway Ease.(Ex) ... Ex SH
Standard Highway Ease.(Pr) ... SH
Temporary Right of Way ... TMP
Channel Ease. (Pr) ... CH
Utility Ease. (Ex) ... Ex U
Railroad ... or
Guardrail (Ex) ... (Pr)
Construction Limits
Edge of Pavement (Ex)
Edge of Pavement (Pr)
Edge of Shoulder (Ex)
Edge of Shoulder (Pr)
Ditch / Creek (Ex)
Ditch / Creek (Pr)
Tree Line (Ex)
Ownership Hook Symbol , Example
Property Line Symbol , Example
Break Line Symbol , Example
Tree (Pr), Tree (Ex), Shrub (Ex)
Tree (Remove) , Shrub (Remove)
Evergreen (Ex) , Stump
Evergreen (Remove) , Stump (Remove)
Wetland (Pr) , Grass (Pr) , Aerial Target
Post (Ex) , Mailbox (Ex) MB , Mailbox (Pr) MB
Light (Ex) , Telephone Marker (Ex) TEL
Fire Hydrant (Ex) , Water Meter (Ex) WM
Water Valve (Ex) , Utility Valve Unknown (Ex.)
Telephone Pole (Ex) , Power Pole (Ex)
Light Pole (Ex)

UTILITIES

ELECTRIC
AEP OHIO (DISTR.)
777 HOPEWELL DR.
HEATH, OH 43056
PAUL PAXTON (740-348-5322)
PTPAXTON@AEP.COM
AEP SOLUTION CTR 800-277-2177

ELECTRIC
AEP OHIO (TRANS.)
8600 SMITHS MILL ROAD
NEW ALBANY, OH 43054
MICHAEL CARR (380-205-5072)
MDCARR@AEP.COM
TL_PUBLICPROJECTS@AEP.COM

GAS
COLUMBIA GAS OF OHIO (DISTR.)
3550 JOHNNY APPLESEED CT.
COLUMBUS, OH 43231
ROB CALDWELL (614-818-2104)
RCALDWELL@NISOURCE.COM
COLUMBIAGAS_COLUMBUSENG@NISOURCE.COM
CUST SERV 800-344-4077
DAMAGE PREV 866-632-6243

GAS
NE OHIO NATURAL GAS CORP.
5640 LANCASTER-NEWARK RD.
PLEASANTVILLE, OH 43148
QUEENIE FORTALEZA (740-400-4319)
QFORTALEZA@EGAS.NET

TELECOM
AT&T OHIO
111 N. 4TH ST., ROOM 82
COLUMBUS, OH 43215
NICOLE WILSON (614-483-1065)
NW9565@ATT.COM
REPAIR SERV 888-611-4466
DAMAGE PREV 937-296-3923

TELECOM
CHARTER COMMUNICATIONS
3760 INTERCHANGE RD.
COLUMBUS, OH 43204
SAM LUTZ (614-481-5047)
SAMUEL.LUTZ@CHARTER.COM

OHIO DEPARTMENT OF TRANSPORTATION (ODOT)
CENTRAL OFFICE ITS LAB (ITS)
1606 W. BROAD ST.
COLUMBUS, OH 43223
614-387-4113
CEN.ITS.LAB@DOT.OHIO.GOV

CITY OF COLUMBUS (COC)
COC-DoT (ITS)
CABLE INTERCONNECT SECTION
1355 MCKINLEY AVE., BLDG C
COLUMBUS, OH 43222
DAVE MCNALLY (614-645-7756)
DWMCNALLY@COLUMBUS.GOV

CITY OF COLUMBUS (COC)
COC-DPS (TRAFFIC SIGNALS)
DIV. OF TRAFFIC MANAGEMENT
1820 E. 17TH AVE.
COLUMBUS, OH 43219
ANDREW VOLENIK (614-645-7799)
AMVOLENIK@COLUMBUS.GOV

CITY OF COLUMBUS (COC)
COC-DPU (POWER-TRANS. & DISTR.)
DIV. OF POWER
3500 INDIANOLA AVE.
COLUMBUS, OH 43214
JAMES GROSS (614-645-2756)
JMGROSS@COLUMBUS.GOV

CITY OF COLUMBUS (COC)
COC-DPU (STREET LIGHTING)
DIV. OF POWER
3500 INDIANOLA AVE.
COLUMBUS, OH 43214
CHRIS VOGEL (614-645-6963)
CVOGEL@COLUMBUS.GOV

CITY OF COLUMBUS (COC)
COC-DPU (SANITARY, STORM)
DIV. OF SEWERAGE & DRAINAGE
1250 FAIRWOOD AVE.
COLUMBUS, OH 43206
SEWER MAINTENANCE MANAGER
614-645-7102

CITY OF COLUMBUS (COC)
COC-DPU (WATER DISTRIBUTION)
DIV. OF WATER
910 DUBLIN RD.
COLUMBUS, OH 43215
614-645-7788

SAFETY = DEPT. OF PUBLIC SAFETY
DPS = DEPT. OF PUBLIC SERVICES
DPU = DEPT. OF PUBLIC UTILITIES
DoT = DEPT. OF TECHNOLOGY

OUPS DESIGN TICKET: A932303373-00A
OUPS DIG TICKET: A927701148-00A,A927701157-00A, A927701173-00A

NOTES: THE LOCATION OF THE UNDERGROUND UTILITIES SHOWN ON THE PLANS ARE OBTAINED FROM THE OWNER OF THE UTILITIES AS REQUIRED BY SECTION 153.64 O.R.C.

STRUCTURE KEY

- RESIDENTIAL
- COMMERCIAL
- OUT-BUILDING

TYPES OF TITLE LEGEND

WD = WARRANTY DEED
T = TEMPORARY EASEMENT
V = PARCEL TO BE BOUGHT IN THE NAME OF THE CITY OF COLUMBUS, FRANKLIN COUNTY, OHIO

* DENOTES RIGHT OF WAY ENCROACHMENT (SEE R/W TOPO SHEETS FOR DISPOSITION)

X DENOTES REMOVAL ITEMS FOR TREES, SHRUBS, OR STRUCTURES (SEE R/W TOPO SHEETS FOR LOCATION AND DESCRIPTION)

SEE SHEET 5 OF 18 FOR:
- PUBLIC AGENCY/UTILITY LEGEND
- ROADWAY LEGEND
- PAVEMENT LEGEND
- DISPOSITION LEGEND
- PROJECT LEGEND

UNDERGROUND UTILITIES

OHIO811.org Before You Dig

I, David L. Chiesa, P. S. have conducted a survey of the existing conditions for the Ohio Department of Transportation in September 2019. The results of that survey are contained herein. The horizontal coordinates expressed herein are based on the Ohio State Plane Coordinates System South Zone on NAD 83 (2011) datum. The Project Coordinates (US Survey Feet) are relative to State Plane Grid Coordinates (Meters or US Survey Feet) by a Project Adjustment Factor of 0.99994167. As a part of this project I have reestablished the locations of the existing property lines and the existing centerline of Right of Way for property takes contained herein. As a part of this project I have established the proposed property lines, calculated the Gross Take, present roadway occupied (PRO), Net Take and Net Residue; as well as prepared the legal descriptions necessary to acquire the parcels as shown herein. As a part of this work I have set right of way monuments at the property corners, property line intersection, points along the right of way and/or angle points on the right of way, Section Corners and other points as shown herein. All of my work contained herein was conducted in accordance with Ohio Administrative Code 4733-37 commonly known as "Minimum Standards for Boundary Surveys in the State of Ohio" unless noted. The words I and my as used herein are to mean either myself or someone working under my direct supervision.

David L. Chiesa, Professional Land Surveyor 7740 Date: 4-22-2022

SURVEYORS SEAL

STATE OF OHIO · DAVID L. CHIESA · S-7740 · REGISTERED · PROFESSIONAL SURVEYOR

RIGHT OF WAY LEGEND SHEET
FRA-23-4.19 PID #110380

E190(771)

DESIGN AGENCY: IBI

DESIGNER: WLC/JMK
REVIEWER: DLC 4-22-22
PROJECT ID: 110380
SUBSET 1 TOTAL 18
SHEET P.145 TOTAL 170

FRA-23-4.19 PART 2 (PID 110380)

MODEL: Sheet PAPERSIZE: 17x11(in.) DATE: 2022-05-12 TIME: 4:22:21 PM USER: william.croxton
\\10.120.2.5\ibishare\22592_SafetyDesign\7.0_Production\7.3_Design\04_Civil\Worksets\110380_FRA-23\400-Engineering\RW\Sheets\110380_RL001.dgn

Instrument Number: 202204260064125
Recorded Date: 04/26/2022 1:31:46 PM

Daniel J. O'Connor Jr.
Franklin County Recorder
373 South High Street, 18th Floor
Columbus, OH 43215
(614) 525-3930
http://Recorder.FranklinCountyOhio.gov
Recorder@FranklinCountyOhio.gov

Transaction Number: T20220046169
Document Type: PLAT
Document Page Count: 1

Submitted By: ROBERT WYND Walk-In	**Return To:** ROBERT WYND Hold at Counter
Developer: OHIO STATE OF	**Plat:** HAMILTON TOWNSHIP CENTERLINE PLAT
Recording Fees:	**Instrument Number:** 202204260064125
Plat Recording Fee: $86.40	**Volume/Page:** PB 132 104
Total Fees: $86.40	**Recorded Date:** 04/26/2022 1:31:46 PM
Amount Paid: $86.40	
Amount Due: $0.00	

OFFICIAL RECORDING COVER PAGE

DO NOT DETACH

THIS PAGE IS NOW PART OF THIS RECORDED DOCUMENT
NOTE: If the document data differs from this cover sheet, please first check the document on our website to ensure it has been corrected. The document data always supersedes the cover page.
If an error on the cover sheet appears on our website after review please let our office know.
COVER PAGE DOES NOT INCLUDE ALL DATA, PLEASE SEE INDEX AND DOCUMENT FOR ANY ADDITIONAL INFORMATION.

PROJECT CONTROL:

THE PROJECT COORDINATE VALUES ARE DERIVED FROM AN ACTUAL GPS SURVEY MADE IN SEPTEMBER 2019. THE HORIZONTAL COORDINATES EXPRESSED HEREIN ARE BASED ON THE OHIO STATE PLANE COORDINATE SYSTEM (OHIO SOUTH ZONE NAD 83 WITH 2011 ADJUSTMENT). THE PROJECT ADJUSTMENT FACTOR (PAF-GRID TO GROUND CONVERSION) USED FOR THIS PROJECT IS 0.99994167. ELEVATIONS ARE NAVD 1988 COMPUTED USING GEOID 2009.

BASIS OF BEARINGS:

THE BASIS OF BEARINGS WERE ESTABLISHED BY GPS OBSERVATIONS AND OBSERVATIONS OF SELECTED STATIONS IN THE OHIO DEPARTMENT OF TRANSPORTATION VIRTUAL REFERENCE SYSTEM (VRS) AND WERE USED TO ESTABLISH A BASIS OF BEARING OF NORTH 06°42'26"WEST FOR THE CENTERLINE OF U.S. ROUTE 23.

BASIS OF STATIONING:

U.S. ROUTE 23 AND RATHMELL ROAD CENTERLINE STATIONING WAS ESTABLISHED FROM STATE OF OHIO DEPARTMENT OF TRANSPORTAION RIGHT OF WAY PLAN No. PIC -23-17.66 FRA-23-(0.00-5.37) AS ESTABLISHED FOR THIS PROJECT.

BASIS OF ℄ EX. R/W AND RIGHT OF WAY WIDTH:

THE EXISTING R/W AND RIGHT OF WAY WIDTH WERE DETERMINED USING EXISTING MONUMENTATION FOUND IN THE CENTERLINE AND ALONG THE RIGHT OF WAY AND EXISTING DOCUMENTATION ON FILE FROM THE CITY OF COLUMBUS AND FRANKLIN COUNTY (GIS, DEEDS, RECORD SURVEYS AND STATE OF OHIO DEPARTMENT OF TRANSPORTAION RIGHT OF WAY PLAN No. PIC 23-17.66 FRA-23-(0.00-5.37).

THE PROPOSED RIGHT OF WAY SHALL BE REFERENCED FROM THE CENTERLINE OF EXISTING RIGHT OF WAY (℄ EX. R/W)

FRANKLIN COUNTY
HAMILTON TOWNSHIP
SEC. 21 & 28, T.4N, R.22W
CONGRESS LANDS
CITY OF COLUMBUS

SEC. 29 SEC. 20 SEC. 28 SEC. 21

CENTERLINE MONUMENT NOTE:

SETTING OF ALL MONUMENTS SHALL BE PERFORMED BY A SURVEYOR REGISTERED IN THE STATE OF OHIO. THE MONUMENT ASSEMBLIES AND REFERENCE MONUMENTS WILL BE INSTALLED BY THE CONTRACTOR AT THE TIME OF CONSTRUCTION. THE IRON PIN AND CAP (WHEN REQUIRED) ARE TO BE INSTALLED BY THE CONTRACTOR'S SURVEYOR.

CHANGES OR ALTERATIONS TO THE LOCATION OF ANY MONUMENTS SHOWN IN THIS TABLE, REQUIRE PRIOR APPROVAL FROM THE DISTRICT REAL ESTATE ADMINISTRATOR OF THE OHIO DEPARTMENT OF TRANSPORTATION. IN THE EVENT THAT CHANGES OR ALTERATIONS ARE APPROVED, A REVISED CENTERLINE PLATWITH THE NEW LOCATIONS SHALL BE RECORDED IN THE APPLICABLE COUNTY RECORDS AND THE OHIO DEPARTMENT OF TRANSPORTATION. SPECIFICATIONSFOR MONUMENT ASSEMBLIES, REFERENCE MONUMENTS AND RIGHT OF WAY MONUMENTS ARE SHOWN ON STANDARD CONSTRUCTION DRAWING RM-1.1.

PART 1 AND PART 2 PROJECT TIE-IN INFORMATION:

1. MATCHLINE/STATION EQUATION:
   END PART 2 PROJECT STA. 546+47.41 (BACK) ℄ CONST. US-23
   BEGIN PART 1 PROJECT STA. 546+50.00 (AHEAD) ℄ CONST. US-23
2. CENTERLINE/BASELINE RELATIONSHIP - THE ℄ EX. R/W US-23 AND ℄ CONST. US-23 SHOWN IN PART 2 IS INDEPENDENT OF PART 1. SEE FRA-270-51.50 PART 1 (PID 92616) PLANS.
3. STATIONING RELATIONSHIP - US-23 CENTERLINE STATIONING FOR PART 2 IS INDEPENDENT OF US-23 CENTERLINE STATIONING FOR PART 1. SEE FRA-270-51.50 PART 1 (PID 92616) PLANS.

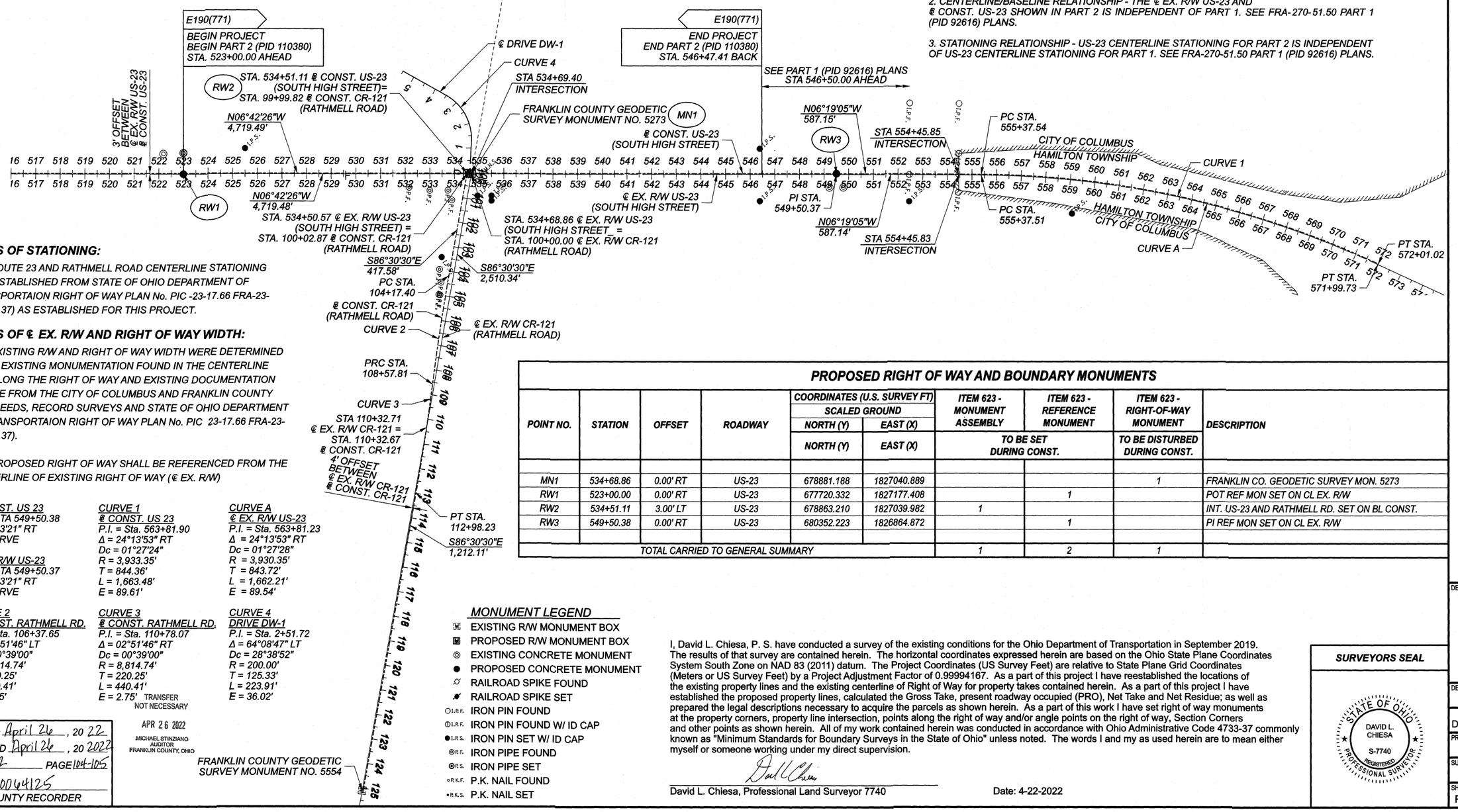

CURVE 1	CURVE A	CURVE 2	CURVE 3	CURVE 4
℄ CONST. US 23	℄ EX. R/W US-23	℄ CONST. RATHMELL RD.	℄ CONST. RATHMELL RD.	DRIVE DW-1
P.I. = STA 549+50.38	P.I. = Sta. 563+81.23	P.I. = Sta. 106+37.65	P.I. = Sta. 110+78.07	P.I. = Sta. 2+51.72
Δ = 0°23'21" RT	Δ = 24°13'53" RT	Δ = 02°51'46" LT	Δ = 02°51'46" RT	Δ = 64°08'47" LT
NO CURVE	Dc = 01°27'28"	Dc = 00°39'00"	Dc = 00°39'00"	Dc = 28°38'52"
	R = 3,930.35'	R = 8,814.74'	R = 8,814.74'	R = 200.00'
℄ EX. R/W US-23	T = 843.72'	T = 220.25'	T = 220.25'	T = 125.33'
P.I. = STA 549+50.37	L = 1,662.21'	L = 440.41'	L = 440.41'	L = 223.91'
Δ = 0°23'21" RT	E = 89.54'	E = 2.75'	E = 2.75' TRANSFER NOT NECESSARY	E = 36.02'
NO CURVE				
CURVE 1				
℄ CONST. US 23				
P.I. = Sta. 563+81.90				
Δ = 24°13'53" RT				
Dc = 01°27'24"				
R = 3,933.35'				
T = 844.36'				
L = 1,663.48'				
E = 89.61'				

PROPOSED RIGHT OF WAY AND BOUNDARY MONUMENTS

POINT NO.	STATION	OFFSET	ROADWAY	COORDINATES (U.S. SURVEY FT) SCALED GROUND NORTH (Y)	COORDINATES (U.S. SURVEY FT) SCALED GROUND EAST (X)	ITEM 623 - MONUMENT ASSEMBLY	ITEM 623 - REFERENCE MONUMENT	ITEM 623 - RIGHT-OF-WAY MONUMENT	DESCRIPTION
				NORTH (Y)	EAST (X)	TO BE SET DURING CONST.		TO BE DISTURBED DURING CONST.	
MN1	534+68.86	0.00' RT	US-23	678881.188	1827040.889			1	FRANKLIN CO. GEODETIC SURVEY MON. 5273
RW1	523+00.00	0.00' RT	US-23	677720.332	1827177.408		1		POT REF MON SET ON CL EX. R/W
RW2	534+51.11	3.00' LT	US-23	678863.210	1827039.982	1			INT. US-23 AND RATHMELL RD. SET ON BL CONST.
RW3	549+50.38	0.00' RT	US-23	680352.223	1826864.872		1		PI REF MON SET ON CL EX. R/W
TOTAL CARRIED TO GENERAL SUMMARY						1	2	1	

MONUMENT LEGEND

- EXISTING R/W MONUMENT BOX
- PROPOSED R/W MONUMENT BOX
- EXISTING CONCRETE MONUMENT
- PROPOSED CONCRETE MONUMENT
- RAILROAD SPIKE FOUND
- RAILROAD SPIKE SET
- I.R.F. IRON PIN FOUND
- I.R.F. IRON PIN FOUND W/ ID CAP
- I.R.S. IRON PIN SET W/ ID CAP
- R.F. IRON PIPE FOUND
- R.S. IRON PIPE SET
- P.K.F. P.K. NAIL FOUND
- P.K.S. P.K. NAIL SET

I, David L. Chiesa, P. S. have conducted a survey of the existing conditions for the Ohio Department of Transportation in September 2019. The results of that survey are contained herein. The horizontal coordinates expressed herein are based on the Ohio State Plane Coordinates System South Zone on NAD 83 (2011) datum. The Project Coordinates (US Survey Feet) are relative to State Plane Grid Coordinates (Meters or US Survey Feet) by a Project Adjustment Factor of 0.99994167. As a part of this project I have reestablished the locations of the existing property lines and the existing centerline of Right of Way for property takes contained herein. As a part of this project I have established the proposed property lines, calculated the Gross Take, present roadway occupied (PRO), Net Take and Net Residue; as well as prepared the legal descriptions necessary to acquire the parcels as shown herein. As a part of this work I have set right of way monuments at the property corners, property line intersection, points along the right of way and/or angle points on the right of way, Section Corners and other points as shown herein. All of my work contained herein was conducted in accordance with Ohio Administrative Code 4733-37 commonly known as "Minimum Standards for Boundary Surveys in the State of Ohio" unless noted. The words I and my as used herein are to mean either myself or someone working under my direct supervision.

David L. Chiesa, Professional Land Surveyor 7740

Date: 4-22-2022

SURVEYORS SEAL

STATE OF OHIO · DAVID L. CHIESA · S-7740 · REGISTERED · PROFESSIONAL SURVEYOR

RECEIVED April 26, 20 22
RECORDED April 26, 20 2022
BOOK 132 PAGE 104-105
20220426006412 5
COUNTY RECORDER

APR 26 2022
MICHAEL STINZIANO
AUDITOR
FRANKLIN COUNTY, OHIO

HORIZONTAL SCALE IN FEET
0 100 200 400

CENTERLINE PLAT

DESIGN AGENCY
IBI

DESIGNER WLC/JMK
REVIEWER DLC 4-22-22
PROJECT ID 110380
SUBSET 2 TOTAL 18
SHEET P.146 TOTAL 170

FRA-23-4.19 PART 2 (PID 110380)

MODEL: GC001 [Sheet] PAPERSIZE: 34x22 (in.) DATE: 2022-04-22 TIME: 6:01:38 PM USER: william.croxton
\\10.120.112.5\dishare\122592_SafetyDesign\7.0_Production\7.3_Design\04_Civil\Worksets\110380_FRA-23400-Engineering\RW\Sheets\110380_RC001.dgn

FRANKLIN COUNTY
HAMILTON TOWNSHIP
SEC. 21 & 28, T.4N, R.22W
CONGRESS LANDS
CITY OF COLUMBUS

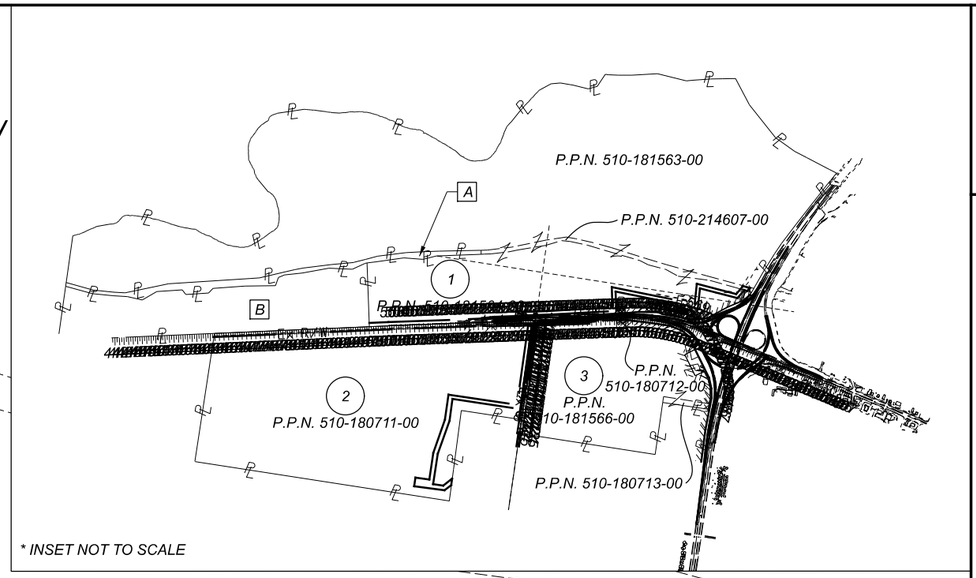

* INSET NOT TO SCALE

HORIZONTAL SCALE IN FEET
0 10 20 40

PROPERTY MAP

P.P.N. 510-181563-00
A
P.P.N. 510-214607-00
SEC. 28
SEC. 29
SEC. 21
SEC. 20
80' ELECTRIC EASEMENT (AEP-T) IN 202112010217672
1
P.P.N. 510-181564-00
BEGIN ACQUISITION STA. 523+00.00
END ACQUISITION STA. 546+39.04
℄ CONST. US-23 (SOUTH HIGH STREET)
℄ EX. R/W US-23 (SOUTH HIGH STREET)
20' GAS EASEMENT (CGO) O.R.V. 18855, PG. H05
8' GAS EASEMENT (NEONGC) VOL. 1953, PG. 376 P.B. 25, PG 42
P.P.N. 510-180712-00
CITY OF COLUMBUS
HAMILTON TOWNSHIP
Ex LA R/W
Ex U
Ex SH
Ex R/W
R/W
2
P.P.N. 510-180711-00
END ACQUISITION STA. 105+19.69
℄ EX. CR-121 (RATHMELL ROAD)
℄ CONST. CR-121 (RATHMELL ROAD)
3
P.P.N. 510-181566-00
80' ELECTRIC EASEMENT (AEP-T) IN 202112170229502

OWNERSHIP NAME AND NUMBER

(1) PFK COMPANY I, LLC, A DELAWARE LIMITED LIABILITY COMPANY AND TAMARACK ENTERPRISES I, L.P., A DELAWARE LIMITED PARTNERSHIP

(2) MAGELLAN ENTERPRISES LLC, A DELAWARE LIMITED LIABILITY COMPANY

(3) PFK COMPANY II, LLC, A DELAWARE LIMITED LIABILITY COMPANY AND TAMARACK ENTERPRISES II, L.P., A DELAWARE LIMITED PARTNERSHIP

[A] TAMARACK ENTERPRISES I, L.P., A DELAWARE LIMITED PARTNERSHIP
P.P.N. 510-297192-00

[B] PFK COMPANY II, LLC, A DELAWARE LIMITED LIABILITY COMPANY AND TAMARACK ENTERPRISES II, L.P., A DELAWARE LIMITED PARTNERSHIP
P.P.N. 510-291662-00

REV. BY	DATE	DESCRIPTION
WLC	6-30-22	UPDATED EX. R/W FOR PARCEL 2

DATE COMPLETED: R/W TRACINGS 4-22-2022

DESIGN AGENCY: IBI
DESIGNER: WLC/JMK
REVIEWER: DLC 4-22-22
PROJECT ID: 110380
SUBSET 3 / TOTAL 18
SHEET P.147 / TOTAL 170

FRA-23-4.19 PART 2 (PID 110380)

MODEL: CLX_RW_US023 - Plan 1 [Sheet] PAPERSIZE: 17x11 (in.) DATE: 2022-07-13 TIME: 3:11:12 PM USER: william.croxton
\\10.120.112.5\bishare\122592_Safety\Design\7.0_Production\7.3_Design\04_Civil\Worksets\110380_FRA-23400-Engineering\RW\Sheets\110380_RM001.dgn

TOTAL NUMBER OF :

3 OWNERSHIPS 0 TOTAL TAKES

8 PARCELS 0 OWNERSHIPS W/ STRUCTURES INVOLVED

GRANTEE:

ALL RIGHT OF WAY ACQUIRED IN THE NAME OF
CITY OF COLUMBUS, OHIO, A MUNICIPAL CORPORATION
UNLESS OTHERWISE SHOWN.

PARCEL NO.	OWNER	SHEET NO.	OWNERS RECORD	AUDITOR'S PARCEL	RECORD AREA	TOTAL P.R.O.	GROSS TAKE	P.R.O. IN TAKE	NET TAKE	STRUC-TURE	NET RESIDUE LEFT	NET RESIDUE RIGHT	TYPE FUND	REMARKS	AS ACQUIRED
1-WDV	PFK COMPANY I, LLC,	5-14, 15-16	IN 200403030046558	510-181564-00	247.244	9.752 (c)	5.479	4.037	1.442						
	A DELAWARE LIMITED LIABILITY COMPANY		IN 200107230166570		-1.338	-1.119								PARCEL 10-WD TO BE ACQUIRED UNDER FRA-270-51.50 PART 1 (PID 92616)	
	(50% INTEREST)		IN 200107230166571	SUBTOTAL	245.906	8.633	5.479	4.037	1.442					AUDITOR'S FUTURE RECORD AREA FOR PARCEL 510-181564-00	
	AND		IN 200107230166572												
	TAMARACK ENTERPRISES I, L.P.,		IN 200107230166573	510-181563-00	1018.556	0.000	0.000	0.000	0.000					PROPERTY LEASED TO OLEN CORPORATION (O.R.V. 11557, PG. I11)	
	A DELAWARE LIMITED PARTNERSHIP		IN 200107230166574	510-214607-00	14.943	0.000	0.000	0.000	0.000					80' ELECTRIC ESMT OVERLAP (AEP-T) = 0.055 AC	
	(50% INTEREST)		IN 200108080182906											*+WOOD POSTS (9)(1 ENC.), +MISC. SMALL TREES & BUSHES,	
				TOTAL	1279.405	8.633	5.479	4.037	1.442		1269.330			+CONC. WALK (35' TOT.), *+9 STEPS, +CONC. BARRIER (20' TOT.),	
														+EX. FIELD DRIVE (ABANDONED)(3), +WIRE FENCE (257' TOT.),	
														+19 TREES: 8"(1),12"(1),14"(2),16"(5),18"(3),20"(3),24"(4),48"(1)	
														+LANDSC. AREA W/ STONE WALL BORDER (2) (TBR-60' TOT. INSIDE PR. R/W)	
1-T1		5-10, 15-16		510-181564-00			0.293	0.000	0.293					TO GRADE AND SEED	
														80' ELECTRIC ESMT OVERLAP (AEP-T) = 0.020 AC	
1-T2		9-10, 15-16		510-181564-00			0.140	0.000	0.140	S(2)				TO GRADE AND SEED AND TO CONSTRUCT DRIVEWAY	
														PRV. SIGN (TBR), PRV. SIGN (DND), LARGE ROCKS (8)(TBR)	
1-T3		9-14, 15-16		510-181564-00			0.239	0.000	0.239					TO GRADE AND SEED, +CONC. WALK (31' TOT.)	
2	MAGELLAN ENTERPRISES LLC,	5-10, 15-16	IN 202105210090589	510-180711-00	480.431 $	0.000								*+TOP OF EX. BUILDING FOUNDATION (2),	
	A DELAWARE LIMITED LIABILITY COMPANY													*+32 TREES: 8"(2),10"(4),12"(2),14"(1),16"(2),18"(2),20"(3),22"(4),	
														28"(1), 30"(4), 32"(1), 34"(2), 36"(4)	
2-T		5-10, 15-18		510-180711-00			0.433	0.000	0.433					TO GRADE AND SEED	
														80' ELECTRIC ESMT OVERLAP (AEP-T) = 0.227 AC	
														20' GAS ESMT. OVERLAP (CGO) = 0.092 AC	
3-WDV	PFK COMPANY II, LLC,	9-14, 15-16	IN 200403030046559		209.506	2.158 (c)	2.772	1.406	1.366						
	A DELAWARE LIMITED LIABILITY COMPANY		IN 200107230167042	510-181566-00	-0.144	0.000								PARCEL 11-WL TO BE ACQUIRED UNDER FRA-270-51.50 PART 1 (PID 92616)	
	(50% INTEREST)		IN 200107230167043		-1.670	-0.752								PARCEL 11-WD TO BE ACQUIRED UNDER FRA-270-51.50 PART 1 (PID 92616)	
	AND		IN 200107230167044	SUBTOTAL	207.692	1.406	2.772	1.406	1.366					AUDITOR'S FUTURE RECORD AREA FOR PARCEL 510-181566-00	
	AND TAMARACK ENTERPRISES II, L.P.,		IN 200107230167045												
	A DELAWARE LIMITED PARTNERSHIP		IN 200107230167046												
	(50% INTEREST)		IN 200108080182912	510-180713-00	3.000	0.000	0.000	0.000	0.000						
			IN 201810300147990	510-180712-00	0.909 $$	0.000	0.000	0.000	0.000						
					-0.109	0.000								PARCEL 14-WL TO BE ACQUIRED UNDER FRA-270-51.50 PART 1 (PID 92616)	
					-0.199	0.000								PARCEL 14-WD TO BE ACQUIRED UNDER FRA-270-51.50 PART 1 (PID 92616)	
				SUBTOTAL	0.601	0.000	0.000	0.000	0.000					AUDITOR'S FUTURE RECORD AREA FOR PARCEL 510-180712-00	
				TOTAL	211.293	1.406	2.772	1.406	1.366			208.521		8' GAS ESMT. OVERLAP (NEONGC) = 0.210 AC	
														*+CROSSES (9), +MISC. SMALL TREES & BUSHES, +STEPS (5' TOT),	
														+CONC. SLAB, +STUMP	
														+30 TREES: 10"(1),12"(9),14"(2),16"(4),18"(3),20"(5),22"(1),24"(3),26"(1),34"(1)	
														*1-STY BRICK SCHOOLHOUSE (ABANDONED)(7.41' ENCROACHES)(DND)	
3-T1		9-14, 15-16		510-181566-00			0.261	0.000	0.261					TO GRADE AND SEED	
3-T2		9-10, 15-16		510-181566-00			0.011	0.000	0.011					TO GRADE AND SEED	

$ - PER FRANKLIN COUNTY AUDITOR'S WEBSITE, CURRENT RECORD AREA FOR PARCEL 510-180711-00 (495.945 AC) DOES NOT REFLECT DEDUCTION OF PARCELS ACQUIRED UNDER THE FOLLOWING PLATS AS NOTED BELOW:
- 12.864 AC (P.R.O. IN TAKE 8.721 AC, NET TAKE 4.143 AC) - IN 202108130143406
- 0.808 AC (P.R.O. IN TAKE 0.000 AC, NET TAKE 0.808 AC) - IN 202108130143406
- 1.300 AC (P.R.O. IN TAKE 0.000 AC, NET TAKE 1.300 AC) - IN 202108130143406
- 0.542 AC (P.R.O. IN TAKE 0.000 AC, NET TAKE 0.542 AC) - IN 202206090086468

$$ - PER FRANKLIN COUNTY AUDITOR, IT IS KNOWN THAT PARCEL 510-180712-00 HAS A TRANSFER ERROR. IN 1993, 0.367 AC WAS SPLIT OUT OF PARCEL 510-180712-00 TO BE COMBINED INTO PARCEL 510-181566 BY OFFICIAL RECORD 22009 D18. THE EXCEPTION WAS MISSED ON EVERY TRANSFER OF PARCEL 510-180712-00 SINCE THEN. IN 2001, PARCEL 510-181566-00 WAS TRANSFERRED WITHOUT INCLUDING THE DESCRIPTION FOR THE 0.367 ACRES CREATING ANOTHER SPLIT THAT IS STILL IN THE NAME OF MICHAEL FINNELL BY OR 22009 D18 (SHOWN AS "VNP-KNOWN" PARCEL BY AUDITOR). IT WAS A MISSED SPLIT SO IT WAS NOT GIVEN A PARCEL NUBMER.

* DENOTES RIGHT OF WAY ENCROACHMENT
\+ DENOTES REMOVAL ITEMS

SUMMARY NOTES:
1. ALL AREAS IN ACRES, EXCEPT FOR PARCELS <0.001 AC (50 SF)
2. NET RESIDUE = RECORD AREA - TOTAL PRO - NET TAKE
3. NET TAKE = GROSS TAKE - PRO IN TAKE
4. (c) = CALCULATED AREA
5. * = RIGHT OF WAY ENCROACHMENT

TEMPORARY EASEMENT NOTES:
1. ALL TEMPORARY PARCELS TO BE ACQUIRED IN THE NAME OF THE STATE OF OHIO DEPARTMENT OF TRANSPORTATION.
2. ALL TEMPORARY PARCELS TO BE OF 30 MONTH DURATION.
2. UNDER NO CIRCUMSTANCES ARE TEMPORARY EASEMENTS TO BE USED FOR STORAGE OF MATERIAL OR EQUIPMENT BY THE CONTRACTOR UNLESS OTHERWISE NOTED.

INSTRUMENT LEGEND:
PB. PG. = PLAT BOOK, PAGE
IIN = INSTRUMENT IMAGING NUMBER
OR. PG. = OFFICIAL RECORD, PAGE
VOL. PG. = VOLUME, PAGE

PARCEL LEGEND:
WD = WARRANTY DEED
T = TEMPORARY EASEMENT
V = TO BE BOUGHT IN THE NAME OF THE CITY OF COLUMBUS, FRANKLIN COUNTY, OHIO

REV. BY	DATE	DESCRIPTION
WLC	7-13-22	REMOVED HATCH FOR DRIVE, STA. 523+50 LT
WLC	7-13-22	ADDED "X" TO 48" TREE, STA. 526+50 LT
WLC	6-30-22	UPDATED EX. ROW FOR PARCEL 2

FIELD REVIEW BY: BSB DATE: 4-22-2022
OWNERSHIP VERIFIED BY: WLC DATE: 4-22-2022
DATE COMPLETED: R/W TRACINGS 4-22-2022

DESIGN AGENCY
IBI

DESIGNER WLC/JMK
REVIEWER DLC 4-22-22
PROJECT ID 110380
SUBSET 4 TOTAL 18
SHEET P.148 TOTAL 170

SUMMARY OF ADDITIONAL RIGHT OF WAY

FRA-23-4.19 PART 2 (110380)

MODEL: Sheet PAPERSIZE: 17x11 (in.) DATE: 2022-07-13 TIME: 3:11:16 PM USER: william.croxton
\\10.120.112.5\bishare\122592_SafetyDesign\7.0_Production\7.3_Design\04_Civil\Worksets\110380_FRA-23\400-Engineering\RW\Sheets\110380_RS001.dgn

MODEL: II0380_RDI PAPERSIZE: 17x11in.) DATE: 2022-07-13 TIME: 5:09:10 PM USER: william.croxton
\\10\20.II2.5\Ibishare\122592_Safety\Design\7.0_Production\7.3_Design\04_Civil\Worksets\II0380_FRA-23\400-Engineering\RW\Sheets\II0380_RT001.dgn

PUBLIC AGENCY/UTILITY LEGEND:
(ODOT) = OHIO DEPARTMENT OF TRANSPORTATION
(COC) = CITY OF COLUMBUS
(AEP-D) = AMERICAN ELECTRIC POWER DISTRIBUTION
(AEP-T) - AMERICAN ELECTRIC POWER TRANSMISSION
(ATT) = AT&T OHIO
(CC) = CHARTER COMMUNICATIONS
(CGO) - COLUMBIA GAS OF OHIO
(NEONGC) - NORTHEAST OHIO NATURAL GAS CORPORATION

FRANKLIN COUNTY
HAMILTON TOWNSHIP
SEC. 28, T.4N, R.22W
CONGRESS LANDS
CITY OF COLUMBUS

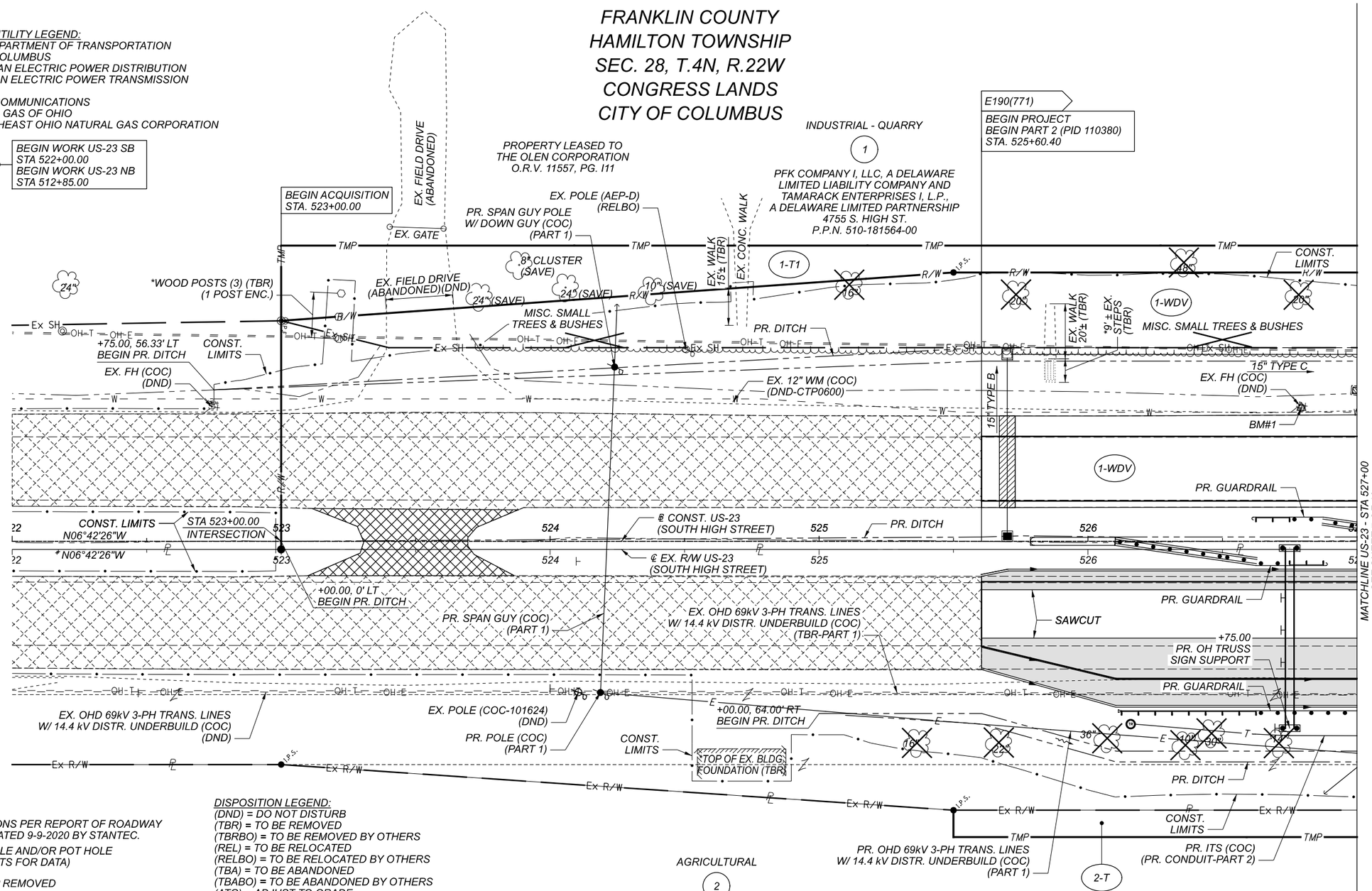

ROADWAY LEGEND:

- *BORING LOCATIONS PER REPORT OF ROADWAY EXPLORATION DATED 9-9-2020 BY STANTEC.*
- *UTILITY TEST HOLE AND/OR POT HOLE (SEE PLAN SHEETS FOR DATA)*
- *EX. TREE/STUMP REMOVED*
- *PR. ROCK CHANNEL PROTECTION*
- *EX. DRIVE/MEDIAN ACCESS REMOVED FOR ACCESS MANAGEMENT ALONG US-23*

PAVEMENT LEGEND:

- *PLANING (VAR. DEPTH) & RESURFACING (3.25") WITH PR. ASPHALT LEVELING COURSES (VAR. DEPTH)*
- *PAVEMENT RESTORATION FOR MOT (SEE SHEET XXX) PLANING (3") & RESURFACING (3")*
- *PR. ASPHALT PAVEMENT (FULL DEPTH)*
- *PAVEMENT RESTORATION FOR PIPE INSTALLATIONS AND/OR REMOVALS (SEE SHEET P.16)*

DISPOSITION LEGEND:
(DND) = DO NOT DISTURB
(TBR) = TO BE REMOVED
(TBRBO) = TO BE REMOVED BY OTHERS
(REL) = TO BE RELOCATED
(RELBO) = TO BE RELOCATED BY OTHERS
(TBA) = TO BE ABANDONED
(TBABO) = TO BE ABANDONED BY OTHERS
(ATG) = ADJUST TO GRADE
(ATGBO) = ADJUST TO GRADE BY OTHERS
(RTG) = RECONSTRUCT TO GRADE
(RTGBO) = RECONSTRUCT TO GRADE BY OTHERS

PROJECT LEGEND:
(PART 1) = ODOT FRA-270-51.50 PART 1 (PID 92616)
(PART 2) = ODOT FRA-23-4.19 PART 2 (PID 110380)
(■) = ODOT FRA-DMS REPLACEMENT-FY20 (PID 109467) (US-23 NB DMS)
(■■) = FUTURE PROPOSED COC FRA-TRAFFIC SIGNAL SYSTEM (CTSS) – PHASE F (E-03676) (PID 110521)
(▲) = FUTURE EXISTING COC FRA-RATHMELL ROAD IMPROVEMENTS (E-03844)
(▲▲) = FUTURE EXISTING AEP TRANSMISSION CYPRUS 138kV EXTENSION
(▲▲▲) = FUTURE EXISTING PRIVATE DEVELOPMENT PROJECT CYPRUS - SITE DEVELOPMENT FOR P.P.N. 510-180711-00
SEE SHEET P.11 FOR ADDITIONAL INFORMATION ON ADJACENT PROJECTS

PAVEMENT LIMITS ASSOCIATED WITH:
ODOT FRA-270-51.50 PART 1 (PID 92616) OR
COC FRA-RATHMELL ROAD IMPROVEMENTS (E-03844)

REV. BY	DATE	DESCRIPTION
WLC	7-13-22	ADDED DISPOSTION OF TREES WITHIN PR. ROW
WLC	7-13-22	REMOVED HATCH FOR DRIVE, STA. 523+50 LT
WLC	7-13-22	ADDED "X" TO 48" TREE, STA. 526+50 LT
WLC	6-30-22	UPDATED EX. ROW FOR PARCEL 2

DATE COMPLETED: R/W TRACINGS 4-22-2022

HORIZONTAL SCALE IN FEET
0 10 20 40

RIGHT OF WAY TOPO SHEET - US-23 (SOUTH HIGH STREET)
STA 522+00 TO STA 527+00

DESIGN AGENCY
IBI

DESIGNER WLC/JMK
REVIEWER DLC 4-22-22
PROJECT ID 110380
SUBSET 5 TOTAL 18
SHEET P.149 TOTAL 170

FRANKLIN COUNTY
HAMILTON TOWNSHIP
SEC. 28, T.4N, R.22W
CONGRESS LANDS
CITY OF COLUMBUS

INDUSTRIAL - QUARRY

1

PFK COMPANY I, LLC, A DELAWARE LIMITED LIABILITY COMPANY AND TAMARACK ENTERPRISES I, L.P., A DELAWARE LIMITED PARTNERSHIP
4755 S. HIGH ST.
P.P.N. 510-181564-00

PROPERTY LEASED TO THE OLEN CORPORATION
O.R.V. 11557, PG. I11

STA 523+00.00
OFF 113.00' LT

S83°17'34"W
27.99'

IRON PIN FD "BIRD + BULL"
STA 523+01.53, OFF 84.98' LT
(ADJACENT TO RIGHT OF WAY REFERENCE MONUMENT FD.)

STA 523+00.00
OFF 85.01' LT

℄ REFERENCE MONUMENT FD.
(FOR POT STA. 523+00)

RIGHT OF WAY REFERENCE MONUMENT FD.
STA 523+00.00, OFF 85.01' LT
(SET PER LOCATION PLAT
PIC-23-17.66 & FRA-23-(0.00-5.37) (1954), P.B. 17, PG. 400
"POT STA. 523+00" FOR ℄ EX. R/W US-23)

S83°17'34"W
85.01'

N10°49'26"W
250.65'

1-T1

N06°42'26"W
1,050.00'

STA 525+50.00
OFF 103.00' LT

N06°42'26"W
2,089.04' (1-WDV)
800.00' (1-T1)

1-WDV

STATE OF OHIO
PARCEL 15
PIC-23-17.66 FRA-23-(0.00-5.37)
FRANKLIN COUNTY COURT OF COMMON PLEAS CASE NO. 190502

INTERSECTION
℄ CONST US-23
STA. 523+00.00
OFF. 3.00' LT.

POT REFERENCE MONUMENT SET
STA 523+00.00

N06°42'26"W

S 06°42'26" E
2,339.04' (1-WDV)

℄ CONST. US-23
(SOUTH HIGH STREET)

℄ EX. R/W US-23
(SOUTH HIGH STREET)

S 06°42'26" E
1,168.86' (1-WDV)

MATCHLINE US-23 - STA 527+00
SEE SHEET 8 OF 18

CITY OF COLUMBUS
IN 202108130143406

STA 525+50.00
OFF 97.00' RT

S83°17'34"W
10.00'

STA 525+50.00
OFF 107.00' RT

CITY OF COLUMBUS
IN 202206090086468

N06°42'26"W
385.40'

S06°42'26"E
385.40'

2-T

AGRICULTURAL

2

MAGELLAN ENTERPRISES LLC,
A DELAWARE LIMITED LIABILITY COMPANY
225 RATHMELL RD.
P.P.N. 510-180711-00

REV. BY	DATE	DESCRIPTION
WLC	6-30-22	UPDATED EX. R/W FOR PARCEL 2

DATE COMPLETED: R/W TRACINGS 4-22-2022

HORIZONTAL SCALE IN FEET
0 10 20 40

RIGHT OF WAY BOUNDARY SHEET - US-23 (SOUTH HIGH STREET)
STA 522+00 TO STA 527+00

DESIGN AGENCY
IBI

DESIGNER WLC/JMK
REVIEWER DLC 4-22-22
PROJECT ID 110380
SUBSET 6 TOTAL 18
SHEET P.150 TOTAL 170

FRA-23-4.19 PART 2 (PID 110380)

MODEL: I10380_RDI PAPERSIZE: 17x11(in.) DATE: 2022-07-13 TIME: 3:15:31 PM USER: william.croxton
\\10.120.12.5\bishare\22592_SafetyDesign\7.0_Production\7.3_Design\04_Civil\Worksets\I0380_FRA-23\400-Engineering\RW\Sheets\I10380_R

FRANKLIN COUNTY
HAMILTON TOWNSHIP
SEC. 28, T.4N, R.22W
CONGRESS LANDS
CITY OF COLUMBUS

INDUSTRIAL - QUARRY
1
PFK COMPANY I, LLC, A DELAWARE LIMITED LIABILITY COMPANY AND TAMARACK ENTERPRISES I, L.P., A DELAWARE LIMITED PARTNERSHIP
4755 S. HIGH ST.
P.P.N. 510-181564-00

PROPERTY LEASED TO THE OLEN CORPORATION
O.R.V. 11557, PG. I11

1-T1

FUTURE EX. 80' ELECTRIC EASEMENT (AEP TRANS) ---TBD---

EX. FIELD DRIVE (ABANDONED)

EX. FIELD DRIVE (ABANDONED)(TBR)

EX. CONC. BARRIER 20' (TBR)

TMP / R/W / CONST. LIMITS

WOOD POST (TBR)

EX. POLE (AEP-D) (RELBO)

PR. DITCH

15" TYPE C

EX. 15" RCP (TBR)

18" TYPE C

EX. 12" WM (COC) (DND-CTP0600)

MISC. SMALL TREES & BUSHES

1-WDV

EX. POLE (AEP-D) (RELBO)

EX. FH (COC) (DND)

PR. DITCH

21" TYPE C

EX. 15" RCP (TBR)

CONST. LIMITS

Ex U

MATCHLINE US-23 - STA 527+00
SEE SHEET 5 OF 18

MATCHLINE US-23 - STA 532+00
SEE SHEET 9 OF 18

SAWCUT

PR. GUARDRAIL

PR. DITCH

N06°42'26"W

℄ CONST. US-23 (SOUTH HIGH STREET)

℄ EX. R/W US-23 (SOUTH HIGH STREET)

15" TYPE B

EX. OHD 69kV 3-PH TRANS. LINES W/ 14.4 kV DISTR. UNDERBUILD (COC) (TBR-PART 1)

EX. POLE (COC-101622) (TBR-PART 1)

PR. ITS (COC)

PR. ITS (COC) (PR. CONDUIT-PART 2)

EX. POLE (COC-101623) (TBR-PART 1)

+60.40
PR. CANTILEVER SIGN SUPPORT

CONST. LIMITS

Ex R/W

PR. POLE W/ DOWN GUY (COC) (PART 1)

PR. OHD 69kV 3-PH TRANS. LINES W/ 14.4 kV DISTR. UNDERBUILD (COC) (PART 1)

2-T

PR. POLE (COC) (PART 1)

CONC. PAD (DND-UNK)

54" TWIN

50"

WELL (DND-UNK)

AGRICULTURAL
2
MAGELLAN ENTERPRISES LLC,
A DELAWARE LIMITED LIABILITY COMPANY
225 RATHMELL RD.
P.P.N. 510-180711-00

WLC	6-30-22	UPDATED EX. ROW FOR PARCEL 2
REV. BY	DATE	DESCRIPTION

DATE COMPLETED: R/W TRACINGS 4-22-2022

HORIZONTAL SCALE IN FEET
0 10 20 40

RIGHT OF WAY TOPO SHEET - US-23 (SOUTH HIGH STREET)
STA 527+00 TO STA 532+00

DESIGN AGENCY
IBI

DESIGNER WLC/JMK
REVIEWER DLC 4-22-22
PROJECT ID 110380
SUBSET 7 TOTAL 18
SHEET P.151 TOTAL 170

FRA-23-4.19 PART 2 (PID 110380)

MODEL: I10380_R02 PAPERSIZE: 17x11(in.) DATE: 2022-07-13 TIME: 3:11:35 PM USER: william.croxton
\\10.120.112.5\bishare\122592_SafetyDesign\7.0_Production\7.3_Design\04_Civil\Worksets\I10380_FRA-23\400-Engineering\RW\Sheets\I10380_RT002.dgn

FRA-23-4.19 PART 2 (PID 110380)

MODEL: II0380_RD2 PAPERSIZE: 17x11(in.) DATE: 2022-07-13 TIME: 3:11:41 PM USER: william.croxton
\\10.120.12.5\bishare\122592_SafetyDesign\7.0_Production\7.3_Design\04_Civil\Worksets\II0380_FRA-23\400-Engineering\RW\Sheets\II0380_R

FRANKLIN COUNTY
HAMILTON TOWNSHIP
SEC. 28, T.4N, R.22W
CONGRESS LANDS
CITY OF COLUMBUS

INDUSTRIAL - QUARRY

1

PFK COMPANY I, LLC, A DELAWARE
LIMITED LIABILITY COMPANY AND
TAMARACK ENTERPRISES I, L.P.,
A DELAWARE LIMITED PARTNERSHIP
4755 S. HIGH ST.
P.P.N. 510-181564-00

PROPERTY LEASED TO
THE OLEN CORPORATION
O.R.V. 11557, PG. I11

* ELECTRIC EASEMENT (AEP-T)
IN 202112010217672

Ex U

1-T1

TMP — TMP — N06°42'26"W 1,050.00' — TMP — TMP — TMP

R/W — R/W — R/W — N06°42'26"W 2,089.04' (1-WDV) 800.00' (1-T1) — R/W — R/W

1-WDV

Ex SH — Ex SH — Ex SH — Ex SH — Ex SH — Ex SH

STATE OF OHIO
PARCEL 15
PIC-23-17.66 FRA-23-(0.00-5.37)
FRANKLIN COUNTY COURT OF COMMON
PLEAS CASE NO. 190502

1-WDV

MATCHLINE US-23 - STA 527+00
SEE SHEET 6 OF 18

MATCHLINE US-23 - STA 532+00
SEE SHEET 10 OF 18

℄ CONST. US-23
(SOUTH HIGH STREET)

℄ EX. R/W US-23
(SOUTH HIGH STREET)

527 — N06°42'26"W — 528 — 529 — 3' — 530 — S 06°42'26" E 2,339.04' (1-WDV) — 531 — S 06°42'26" E 1,168.86' (1-WDV) — 532

CITY OF COLUMBUS
IN 202108130143406

IRON PIPE (TO BE SET BY EMHT)
IN 202206090086468

N06°42'26"W 385.40' — Ex R/W — Ex R/W — N04°36'10"E 50.99' — Ex R/W — N06°42'26"W 348.17' — Ex R/W

S06°42'26"E 385.40' — TMP — TMP — S04°36'10"W 50.99' — TMP — TMP — S06°42'26"E 314.60' — TMP

2-T

STA 529+35.40
OFF 97.00' RT

STA 529+35.40
OFF 107.00' RT

STA 529+85.40
OFF 107.00' RT

STA 529+85.40
OFF 117.00' RT

IRON PIPE (TO BE SET BY EMHT)
IN 202206090086468

CITY OF COLUMBUS
IN 202206090086468

AGRICULTURAL

2

MAGELLAN ENTERPRISES LLC,
A DELAWARE LIMITED LIABILITY COMPANY
225 RATHMELL RD.
P.P.N. 510-180711-00

HORIZONTAL
SCALE IN FEET
0 10 20 40

RIGHT OF WAY BOUNDARY SHEET - US-23 (SOUTH HIGH STREET)
STA 527+00 TO STA 532+00

REV. BY	DATE	DESCRIPTION
WLC	6-30-22	UPDATED EX. ROW FOR PARCEL 2

DATE COMPLETED: R/W TRACINGS 4-22-2022

DESIGN AGENCY
IBI

DESIGNER
WLC/JMK

REVIEWER
DLC 4-22-22

PROJECT ID
110380

SUBSET 8 | TOTAL 18

SHEET P.152 | TOTAL 170

FRANKLIN COUNTY
HAMILTON TOWNSHIP
SEC. 21 & 28, T.4N, R.22W
CONGRESS LANDS
CITY OF COLUMBUS

HORIZONTAL SCALE IN FEET
0 10 20 40

RIGHT OF WAY TOPO SHEET - US-23 (SOUTH HIGH STREET)
STA 532+00 TO STA 537+00

CURVE 4
DRIVE DW-1
P.I. = STA. 2+51.72
Δ = 64°08'47" LT
Dc = 28°38'52"
R = 200.00'
T = 125.33'
L = 223.91'
E = 36.02'

BEGIN WORK DRIVE DW-1 STA 1+37.00

EX. LNDSCP AREA WITH STONE WALL BORDER (DND-OUTSIDE PR. R/W) (TBR-30' TOT. INSIDE PR. R/W)
FUTURE EX. OHD 138 kV 3-PH TRANS. LINES (AEP-T) (DND-▲▲)
FUTURE EX. UG 13.2 kV DISTR (AEP-D) (DND-▲▲)
FUTURE EX. POLE (AEP-T #15) (DND-▲▲)
EX. POLE/GUY WIRES (AEP-D #45) (TBRBO-▲▲)
ROW OF 12" TREES (8 TOTAL)
EX. POLE/GUY WIRES (AEP-D #17) (TBRBO-▲▲)
EX. 8" M.P. GAS (CGO)
EX. GV (CGO)(DND)
EX. GAS MARKER (CGO) (DND)
EX. GV (CGO) (ATGBO)
EX. POLE/GUY WIRES (AEP-D #44) (TBRBO-▲▲)
EX. WSV (COC) (DND)
EX. WS (TAP ID 251446) (DND)
EX. WS (TAP ID 241015) (DND)
PRV. SIGN (DND)
PRV. SIGN (TBR)
CONST. LIMITS
PR. DITCH
LARGE ROCKS (8) (TBR)
CURVE 4
80' ELECTRIC EASEMENT (AEP-T) IN 202112010217672
INDUSTRIAL QUARRY
PFK COMPANY I, LLC, A DELAWARE LIMITED LIABILITY COMPANY AND TAMARACK ENTERPRISES I, L.P., A DELAWARE LIMITED PARTNERSHIP 4755 S. HIGH ST. P.P.N. 510-181564-00
PROPERTY LEASED TO THE OLEN CORPORATION O.R.V. 11557, PG. I11
FUTURE EX. POLE (AEP-D #18) (DND-▲▲)
FUTURE EX. POLE (AEP-D #19) (DND-▲▲)
EX. LNDSCP AREA W/ STONE WALL BORDER (DND-OUTSIDE PR. R/W) (TBR-30' TOT. INSIDE PR. R/W)
EX. POLE/GUY WIRES (AEP-D #47) (TBRBO-▲▲)
EX. TELECOM MARKER (ATT) (TBR-▲▲)
EX. FH (COC) (DND)
EX. TELECOM DUCT BANK (ATT) (RELBO-▲▲)
24" TYPE B
24" TYPE C
EX. TELECOM MARKER (ATT) (TBR-▲▲)
EX. 15" RCP (TBR)
EX. 12" WM (COC-CTP0600) (DND)
EX. 12" WV (COC) (ATG) (EX. 724.60)(PR. 725.22)
EX. 12" WM (COC-CTP0600) (DND)
EX. TELECOM MH (ATT) (TBR-▲▲)
EX. 6" CASING PIPE (ATT) (TBABO-▲▲)
EX. UDG TELECOM (CC) (RELBO-▲▲)
SAWCUT
15" TYPE B
15" TYPE C
21" TYPE C
STA. 534+51.11 ℄ CONST. US-23 = STA. 99+99.82 ℄ CONST. CR-121
STA. 534+50.57 ℄ EX. R/W US-23 = STA. 100+02.87 ℄ CONST. CR-121
STA 534+69.40 INTERSECTION
STA. 534+68.86 ℄ EX. R/W US-23 = STA. 100+00.00 ℄ EX. R/W CR-121
EX. TRENCH DRAIN (TBR) ℄ CONST. US-23 (SOUTH HIGH STREET)
EX. 12" RCP (TBR)
EX. CASING PIPE (CGO) (EXTEND FOR PVT WID. BY OTHERS)
N06°42'26"W ℄ EX. R/W US-23 (SOUTH HIGH STREET)
FUTURE EX. OHD 138 kV 3-PH TRANS. LINES (AEP-T) (DND-▲▲)
FUTURE EX. UG 13.2 kV DISTR (AEP-D) (DND-▲▲)
EX. POLE W/ 1Ø TRANSF. (COC-101621) (TBR-PART 1)
FUTURE EX. 12" WM IN CASING PIPE (COC 22-002) (DND-▲▲)
EX. GAS MRK (CGO) (TBRBO)
EX. POLE (COC-101620) (TBR-PART 1)
EX. GAS MARKER (NEONGC) (RELBO)
EX. OHD 69kV 3-PH TRANS. LINES W/ 14.4 kV DISTR. UNDERBUILD (COC) (TBR-PART 1)
PR. GUARDRAIL
PR. ITS (COC) (PR. CONDUIT-PART 2) (PR. 144 STRAND ITS■■)
STEPS (TBR)
EX. GAS VALVE (CGO) (DND)
MISC. SMALL TREES & BUSHES
* TOP OF EX. BLDG FOUNDATION (TBR)
PR. ITS (COC)
PR. POLE (COC) (PART 1)
STEPS (5) (TBR)
CROP LINE
*CROSSES (9)(TBR)
7.41' ENCROACHES EX. RW
EX. TELECOM MARKER (ATT) (TBR-▲▲)
8' GAS EASEMENT (NEONGC) VOL. 1953, PG. 376 P.B. 25, PG 42
EX. 6" GAS (INACTIVE) (NEONGC) (DND-SEE NOTE ON SHEET 11)
EX. GAS MARKER (NEONGC)(ATGBO)
PR. OHD 69kV 3-PH TRANS. LINES W/ 14.4 kV DISTR. UNDERBUILD (COC) (PART 1)
PR. OHD 69kV 3-PH TRANS. LINES W/ 13.2 kV DISTR. UNDERBUILD (COC) (PART 1)
FUTURE EX. POLE (AEP-T #14) (DND-▲▲)
1-STY BRICK SCHOOLHOUSE (ABANDONED) (DND)
EX. POLE/GUY WIRES (AEP-D #43) (TBRBO-▲▲)
EX. TELECOM MARKER (ATT) (RELBO-▲▲)
EX. OHD 144 STRAND ITS (COC CTSS - PHASE C) (RELBO-▲▲)
EX. TELECOM DUCT BANK (ATT) (RELBO-▲▲)
CONST. LIMITS
EX. 6" GAS (INACTIVE) (NEONGC) (DND-SEE NOTE ON SHEET 11)
PFK COMPANY II, LLC, A DELAWARE LIMITED LIABILITY COMPANY AND TAMARACK ENTERPRISES II, L.P., A DELAWARE LIMITED PARTNERSHIP S. HIGH ST. P.P.N. 510-181566-00
AGRICULTURAL (1) (2) (3)
MAGELLAN ENTERPRISES LLC, A DELAWARE LIMITED LIABILITY COMPANY 225 RATHMELL RD. P.P.N. 510-180711-00
80' ELECTRIC EASEMENT (AEP-T) IN 202112170229502
FUTURE EX. OHD 138kV 3-PH TRANS. LINES W/ 13.2 kV DISTR. UNDERBUILD (AEP T/D) FUTURE EX. OHD 144 STRAND ITS (COC) (DND-▲▲)
FUTURE EX. 12" WM (COC 22-002) (DND-▲▲)
EX. 8" M.P. GAS (CGO) (DND)
EX. GV (CGO) (TBRBO)
EX. GAS MRK (CGO) (DND)
20' GAS EASEMENT (CGO) O.R.V. 18855, PG. H05
SEE SHEET 15 OF 18 FOR RATHMELL ROAD
℄ CONST. CR-121 (RATHMELL ROAD)
℄ EX. R/W CR-121 (RATHMELL ROAD)
SEC. 28 SEC. 21
1-T1 1-T2 1-T3 1-WDV 2-T 3-WDV 3T-2 3-T1
MATCHLINE US-23 - STA 532+00 SEE SHEET 7 OF 18
MATCHLINE US-23 - STA 537+00 SEE SHEET 11 OF 18

REV. BY	DATE	DESCRIPTION
WLC	7-13-22	ADDED DISPOSTION OF TREES WITHIN PR. ROW
WLC	6-30-22	UPDATED EX. ROW FOR PARCEL 2

DATE COMPLETED: R/W TRACINGS 4-22-2022

DESIGN AGENCY: IBI
DESIGNER: WLC/JMK
REVIEWER: DLC 4-22-22
PROJECT ID: 110380
SUBSET: 9 TOTAL: 18
SHEET: P.153 TOTAL: 170

FRA-23-4.19 PART 2 (PID 110380)

MODEL: II0380_RD3 PAPERSIZE: 17x11 (in.) DATE: 2022-07-13 TIME: 3:11:47 PM USER: william.croxton
\\10.120.12.5\ibfshore\122592_Safety\Design\7.0_Production\7.3_Design\04_Civil\Worksets\II0380_FRA-23\400-Engineering\RW\Sheets\II0380_RT003.dgn

OVERLAP TABLE		
PARCEL NO.	AREA OF OVERLAP	DESCRIPTION
1-WDV	0.055 AC	80' ELECTRIC EASEMENT (AEP-T) IN 202112010217672
1-T1	0.020 AC	80' ELECTRIC EASEMENT (AEP-T) IN 202112010217672
1-T2	0.099 AC	80' ELECTRIC EASEMENT (AEP-T) IN 202112010217672
2-T	0.227 AC	80' ELECTRIC EASEMENT (AEP-T) IN 202112170229502
2-T	0.092 AC	20' GAS EASEMENT (CGO)
3-WDV	0.210 AC	8' GAS EASEMENT (NEONGC)

FRANKLIN COUNTY
HAMILTON TOWNSHIP
SEC. 21 & 28, T.4N, R.22W
CONGRESS LANDS
CITY OF COLUMBUS

INDUSTRIAL - QUARRY

1

PFK COMPANY I, LLC, A DELAWARE LIMITED LIABILITY COMPANY AND TAMARACK ENTERPRISES I, L.P., A DELAWARE LIMITED PARTNERSHIP
4755 S. HIGH ST.
P.P.N. 510-181564-00

PROPERTY LEASED TO THE OLEN CORPORATION
O.R.V. 11557, PG. I11

1-T1 | 1-T2 | 1-T3 | 1-WDV

N06°42'26"W 1,050.00' | S06°42'26"E 800.00' (1-T1) | N83°17'34"E 10.00' | STA 533+50.00 OFF 113.00' LT | STA 533+50.00 OFF 103.00' LT

N85°24'08"W 47.93' | TMP | STA 534+09.40 OFF 150.00' LT | STA 534+00.00 OFF 103.00' LT | S06°42'26"E 140.00' (1-T2)

N06°42'26"W 120.00' | STA 535+29.40 OFF 150.00' LT | N70°34'43"E 48.18' | STA 535+40.00 OFF 103.00' LT | N06°42'26"W 2,089.04' (1-WDV)

S83°17'34"W 10.00' | N06°42'26"W 1,039.04' | STA 536+00.00 OFF 113.00' LT | S06°42'26"E 1,039.04 (1-T3) | STA 536+00.00 OFF 103.00' LT

80' ELECTRIC EASEMENT (AEP-T) IN 202112010217672

Ex U | Ex SH | R/W | TMP

STATE OF OHIO
PARCEL 15
PIC-23-17.66 FRA-23-(0.00-5.37)
FRANKLIN COUNTY COURT OF COMMON PLEAS CASE NO. 190502

MONUMENT ASSEMBLY SET
STA 534+51.11, OFF 3.00' LT
STA. 534+51.11 ℄ CONST. US-23 = STA. 99+99.82 ℄ CONST. CR-121

STA. 534+50.57 ℄ EX. R/W US-23 = STA. 100+02.87 ℄ CONST. CR-121

STA 534+69.40
INTERSECTION

MONUMENT FD
(FRANKLIN COUNTY GEODETIC SURVEY MONUMENT NO. 5273)
STA 534+68.90, OFF 0.24' LT

STA. 534+68.86 ℄ EX. R/W US-23 = STA. 100+00.00 ℄ EX. R/W CR-121

℄ CONST. US-23 (SOUTH HIGH STREET)
N06°42'26"W 533
℄ EX. R/W US-23 (SOUTH HIGH STREET)
534 | 535 | 536
S 06°42'26" E 1,168.86' (1-WDV)
STA 535+09.50
S 06°42'26" E 2,339.04' (1-WDV) 1,129.54' (3-WDV)
N 06°42'26" W 40.64' (3-WDV)

MATCHLINE US-23 - STA 532+00 SEE SHEET 8 OF 18

MATCHLINE US-23 - STA 537+00 SEE SHEET 12 OF 18

SEC. 28 | SEC. 21

CITY OF COLUMBUS IN 202108130143406

CITY OF COLUMBUS O.R.V. 13735, PG. J07

CITY OF COLUMBUS IN 202206090086468

20' GAS EASEMENT (CGO) O.R.V. 18855, PG. H05

STA 533+33.57 OFF 107.00' RT

N06°42'26"W 348.17' | S06°42'26"E 314.60' | STA 533+00.00 OFF 117.00' RT

2-T

AGRICULTURAL

2

MAGELLAN ENTERPRISES LLC, A DELAWARE LIMITED LIABILITY COMPANY
225 RATHMELL RD.
P.P.N. 510-180711-00

IRON PIPE (TO BE SET BY EMHT) IN 202206090086468

N34°42'56"E 40.00' | STA 101+50.00 OFF 80.00' RT

S83°17'34"W 106.63'

N87°46'52"E 201.00'

80' ELECTRIC EASEMENT (AEP-T) IN 202112170229502

CITY OF COLUMBUS IN 202206090086468

CITY OF COLUMBUS O.R.V. 13735, PG. J07

CITY OF COLUMBUS O.R.V. 12995 PG. J13

℄ CONST. CR-121 (RATHMELL ROAD)

℄ EX. R/W CR-121 (RATHMELL ROAD)

RATHMELL ROAD (FORMER COUNTY ROAD) 60' ORIGINAL HIGHWAY ESMT ROAD RECORD 7, PG. 68 (1837)

CITY OF COLUMBUS O.R.V. 12995 PG. J13

S86°30'30"E 101

N 86°30'30" W 88.40'

18'

33.53' EX. R/W

STA 101+50.00 OFF 40.00' LT

3-T2

N86°30'30"W 50.00'

N71°41'25"E 53.85'

SEE SHEET 16 OF 18 FOR RATHMELL ROAD

3-WDV

STA 535+50.00 OFF 87.00' RT | S06°42'26"E 56.15' | STA 534+93.85 OFF 87.00' RT

STA 535+50.00 OFF 107.00' RT | S06°42'26"E 1,089.04' | S83°17'34"W 10.00' | STA 535+50.00 OFF 117.00' RT

S06°42'26"E 325.00'

3-T1

AGRICULTURAL

3

PFK COMPANY II, LLC, A DELAWARE LIMITED LIABILITY COMPANY AND TAMARACK ENTERPRISES II, L.P., A DELAWARE LIMITED PARTNERSHIP
S. HIGH ST.
P.P.N. 510-181566-00

8' GAS EASEMENT (NEONGC) VOL. 1953, PG. 376 P.B. 25, PG 42

HORIZONTAL SCALE IN FEET
0 | 10 | 20 | 40

RIGHT OF WAY BOUNDARY SHEET - US-23 (SOUTH HIGH STREET)
STA 532+00 TO STA 537+00

REV. BY	DATE	DESCRIPTION
WLC	8-8-22	ADDED OVERLAP AREA FOR PARCEL 1-T2
WLC	6-30-22	UPDATED EX. ROW FOR PARCEL 2

DATE COMPLETED: R/W TRACINGS 4-22-2022

DESIGN AGENCY: IBI

DESIGNER: WLC/JMK
REVIEWER: DLC 4-22-22
PROJECT ID: 110380
SUBSET: 10 | TOTAL: 18
SHEET: P.154 | TOTAL: 170

FRA-23-4.19 PART 2 (PID 110380)

MODEL: II0380_RD3 PAPERSIZE: 17x11in.) DATE: 2022-08-12 TIME: 8:01:00 AM USER: william.croxton
\\10\120.02.5\bishare\122592_SafetyDesign\7.0_Production\7.3_Design\04_Civil\Worksets\II0380_FRA-23\400-Engineering\RW\Sheets\II0380_RB003.dgn

FRANKLIN COUNTY
HAMILTON TOWNSHIP
SEC. 21, T.4N, R.22W
CONGRESS LANDS
CITY OF COLUMBUS

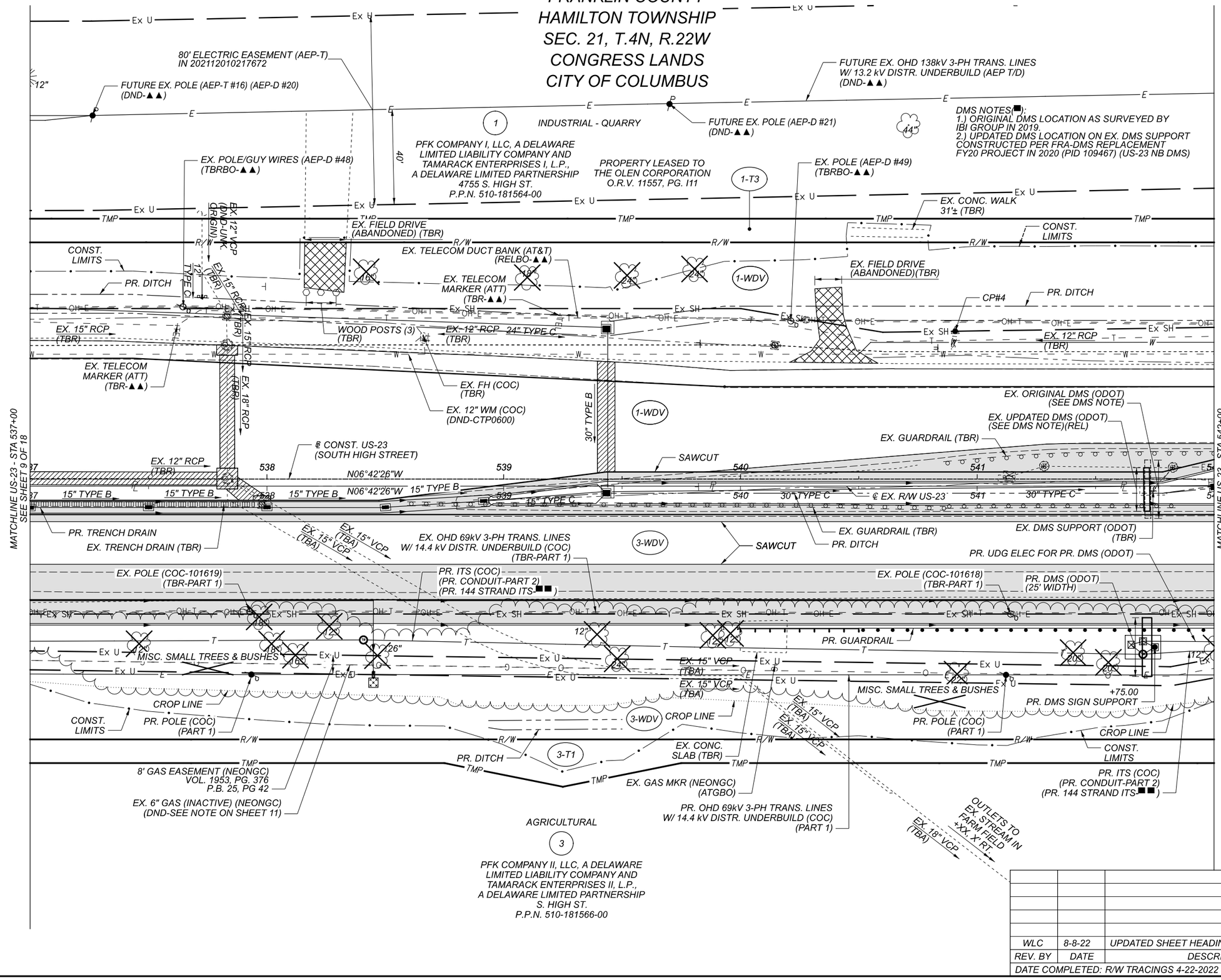

HORIZONTAL SCALE IN FEET
0 10 20 40

RIGHT OF WAY TOPO SHEET - US-23 (SOUTH HIGH STREET)
STA 537+00 TO STA 542+00

FRA-23-4.19 PART 2 (PID 110380)

MODEL: II0380_RD4 PAPERSIZE: 17x11(in.) DATE: 2022-08-12 TIME: 8:01:04 AM USER: william.croxton
\\10.120.12.25\bshare\122592_SafetyDesign\7.0_Production\7.3_Design\04_Civil\Worksets\II0380_FRA-23\400-Engineering\RW\Sheets\II0380_RT004.dgn

REV. BY	DATE	DESCRIPTION
WLC	8-8-22	UPDATED SHEET HEADING TO "SEC. 21"

DATE COMPLETED: R/W TRACINGS 4-22-2022

DESIGN AGENCY: IBI

DESIGNER	WLC/JMK
REVIEWER	DLC 4-22-22
PROJECT ID	110380
SUBSET	11
TOTAL	18
SHEET	P.155
TOTAL	170

FRANKLIN COUNTY
HAMILTON TOWNSHIP
SEC. 21, T.4N, R.22W
CONGRESS LANDS
CITY OF COLUMBUS

Ex U

80' ELECTRIC EASEMENT (AEP-T)
IN 202112010217672

INDUSTRIAL - QUARRY

1

PFK COMPANY I, LLC, A DELAWARE
LIMITED LIABILITY COMPANY AND
TAMARACK ENTERPRISES I, L.P.,
A DELAWARE LIMITED PARTNERSHIP
4755 S. HIGH ST.
P.P.N. 510-181564-00

PROPERTY LEASED TO
THE OLEN CORPORATION
O.R.V. 11557, PG. I11

1-T3

TMP

R/W

N06°42'26"W
2,089.04' (1-WDV)
1,039.04' (1-T3)

N06°42'26"W
1,039.04'

1-WDV

Ex SH

STATE OF OHIO
PARCEL 15
PIC-23-17.66 FRA-23-(0.00-5.37)
FRANKLIN COUNTY COURT OF COMMON
PLEAS CASE NO. 190502

MATCHLINE US-23 - STA 537+00
SEE SHEET 10 OF 18

MATCHLINE US-23 - STA 542+00
SEE SHEET 14 OF 18

℄ CONST. US-23
(SOUTH HIGH STREET)

℄ EX. R/W US-23
(SOUTH HIGH STREET)

3'

537 538 539 540 541 542

N06°42'26"W

S 06°42'26" E
2,339.04' (1-WDV)
1,129.54' (3-WDV)

3-WDV

8' GAS EASEMENT (NEONGC)
VOL. 1953, PG. 376
P.B. 25, PG 42

S06°42'26"E
1,089.04'

S06°42'26"E
325.00'

3-T1

S04°36'10"W
50.99'

S18°01'02"E
50.99'

S06°42'26"E
664.04'

STA 538+75.00
OFF 117.00' RT

STA 539+25.00
OFF 127.00' RT

STA 539+75.00
OFF 117.00' RT

AGRICULTURAL

3

PFK COMPANY II, LLC, A DELAWARE
LIMITED LIABILITY COMPANY AND
TAMARACK ENTERPRISES II, L.P.,
A DELAWARE LIMITED PARTNERSHIP
S. HIGH ST.
P.P.N. 510-181566-00

OVERLAP TABLE		
PARCEL NO.	AREA OF OVERLAP	DESCRIPTION
3-WDV	0.210 AC	8' GAS EASEMENT (NEONGC)

REV. BY	DATE	DESCRIPTION
WLC	8-8-22	UPDATED SHEET HEADING TO "SEC. 21"

DATE COMPLETED: R/W TRACINGS 4-22-2022

HORIZONTAL
SCALE IN FEET
0 10 20 40

RIGHT OF WAY BOUNDARY SHEET - US-23 (SOUTH HIGH STREET)
STA 537+00 TO STA 542+00

DESIGN AGENCY
IBI

DESIGNER
WLC/JMK

REVIEWER
DLC 4-22-22

PROJECT ID
110380

SUBSET 12 TOTAL 18

SHEET P.156 TOTAL 170

FRA-23-4.19 PART 2 (PID 110380)

MODEL: II0380_RD4 PAPERSIZE: I7xII(in.) DATE: 2022-08-12 TIME: 8:01:09 AM USER: william.croxton
\\10.120.12.5\Ibishare\122592_SafetyDesign\7.0_Production\7.3_Design\04_Civil\Worksets\II0380_FRA-23\400-Engineering\RW\Sheets\II0380_RB004.dgn

FRANKLIN COUNTY
HAMILTON TOWNSHIP
SEC. 21, T.4N, R.22W
CONGRESS LANDS
CITY OF COLUMBUS

FUTURE EX. POLE (AEP-T #17) (AEP-D #22) (DND-▲▲)
FUTURE EX. POLE (AEP-D #23) (DND-▲▲)
FUTURE EX. OHD 138kV 3-PH TRANS. LINES W/ 13.2 kV DISTR. UNDERBUILD (AEP T/D) (DND-▲▲)
1 INDUSTRIAL - QUARRY
PFK COMPANY I, LLC, A DELAWARE LIMITED LIABILITY COMPANY AND TAMARACK ENTERPRISES I, L.P., A DELAWARE LIMITED PARTNERSHIP
4755 S. HIGH ST.
P.P.N. 510-181564-00
FUTURE EX. OHD ELEC (AEP) (POWER SERVICE FOR EX. DMS) (TBRBO)
PROPERTY LEASED TO THE OLEN CORPORATION O.R.V. 11557, PG. I11
80' ELECTRIC EASEMENT (AEP-T) IN 202112010217672
40'
E190(771) E131(486)
END PROJECT END PART 2 (PID 110380) STA. 546+47.41 BACK
BEGIN PROJECT BEGIN PART 1 (PID 92616) STA. 546+50 AHEAD
END ACQUISITION STA. 546+39.04
SEE PART 1 (PID 92616) PLANS
EX. POLE (AEP-D #51) (TBRBO-▲▲)
EX. DMS SERVICE POLE (ODOT) (TBR-POWER SERVICE FOR EX. DMS)
EX. UDG ELEC (ODOT) (TBR-POWER SERVICE FOR EX. DMS)
FUTURE EX. UDG ELEC (AEP) (POWER SERVICE FOR PR. DMS) (DND-▲▲)
FUTURE EX. PEDESTAL (AEP) (POWER SERVICE FOR PR. DMS) (DND-▲▲)
PR. UDG ELEC FOR PR. DMS (ODOT)
1-T3
EX. TELECOM MARKER (ATT) (TBR-▲▲)
EX. POLE/GUY WIRES (AEP-D #52) (TBRBO-▲▲)
EX. TELECOM DUCT BANK (AT&T) (RELBO-▲▲)
CONST. LIMITS
WOOD POSTS (2) (TBR)
1-WDV
MISC. SMALL TREES & BUSHES
(8) DEAD
EX. POLE (AEP-D #50) (TBRBO-▲▲)
EX. WIRE FENCE 257' (TBR)
PR. DITCH
EX. 6" TILE
21" O.D. TYPE B
EX. 12" RCP (TBR)
EX. 12" WM (COC) (DND-CTP0600)
EX. DITCH
EX. TELECOM MARKER (ATT) (TBR-▲▲)
EX. OHD ELEC (AEP) (TBRBO-▲▲)
EX. UDG ELEC FOR EX. DMS(ODOT) (TBR)
SAWCUT
EX. GUARDRAIL (TBR)
EX. 12" RCP (TBA)
STATION EQUATION:
STA 546+47.41 BACK PART 1 (PID 92616)= STA 546+50.00 AHEAD PART 2 (PID 110380)
PARCEL 10-WD TO BE ACQUIRED UNDER PART 1
STA 546+39.04
546 INTERSECTION
N06°42'26"W
30" TYPE C
℄ CONST. US-23 (SOUTH HIGH STREET)
℄ EX. R/W US-23
MATCHLINE US-23 - STA 542+00
SEE SHEET 11 OF 18
3-WDV
EX. OHD 69kV 3-PH TRANS. LINES W/ 14.4 kV DISTR. UNDERBUILD (COC) (TBR-PART 1)
PR. UDG ELEC FOR PR. DMS (ODOT)
PARCEL 11-UV TO BE ACQUIRED UNDER PART 1
SAW CUT
EX. SERVICE POLE (AEP) (TBRBO-▲▲)
PR. GUARDRAIL
EX. POLE (COC-101617) (REL-PART 1)
PR. ITS (COC) (PR. CONDUIT-PART 2) (PR. 144 STRAND ITS-■■)
36" O.D. TYPE B
EX. 12" RCP (TBR)
EX. POLE (COC-101615) (REL-PART 1)
MISC. SMALL TREES & BUSHES
CONST. LIMITS
CROP LINE
PR. UDG ELEC FOR PR. DMS (ODOT)
3-WDV
PR. POLE (COC) (PART 1)
PR. ITS (COC)
PARCEL 11-WD TO BE ACQUIRED UNDER PART 1
EX. GAS MARKER (NEONGC) (ATGBO)
EX. GAS VALVE (NEONGC) (ATGBO)
3-T1
AGRICULTURAL
3
PFK COMPANY II, LLC, A DELAWARE LIMITED LIABILITY COMPANY AND TAMARACK ENTERPRISES II, L.P., A DELAWARE LIMITED PARTNERSHIP
S. HIGH ST.
P.P.N. 510-181566-00
PR. OHD 69kV 3-PH TRANS. LINES W/ 14.4 kV DISTR. UNDERBUILD (COC) (PART 1)
8' GAS EASEMENT (NEONGC) VOL. 1953, PG. 376 P.B. 25, PG 42
EX. 6" GAS (INACTIVE) (NEONGC) (DND-SEE NOTE ON SHEET 11)
THE FOLLOWING PARCELS TO BE ACQUIRED UNDER PART 1 (PID 92616) WITHIN P.P.N. 510-181566-00. SEE PART 1 RIGHT OF WAY PLANS FOR ADDITIONAL INFORMATION:
PARCEL 10-WD PARCEL 14-WL
PARCEL 11-WL PARCEL 14-WD
PARCEL 11-WD

HORIZONTAL SCALE IN FEET
0 10 20 40

RIGHT OF WAY TOPO SHEET - US-23 (SOUTH HIGH STREET)
STA 542+00 TO STA 546+47.41

REV. BY	DATE	DESCRIPTION
WLC	8-8-22	UPDATED SHEET HEADING TO "SEC. 21"

DATE COMPLETED: R/W TRACINGS 4-22-2022

DESIGN AGENCY: IBI
DESIGNER: WLC/JMK
REVIEWER: DLC 4-22-22
PROJECT ID: 110380
SUBSET 13 TOTAL 18
SHEET P.157 TOTAL 170

FRA-23-4.19 PART 2 (PID 110380)

MODEL: II0380_RD5 PAPERSIZE: 17x11(in.) DATE: 2022-08-12 TIME: 8:01:13 AM USER: william.croxton
\\10.120.12.5\ibishare\122592_SafetyDesign\7.0_Production\7.3_Design\04_Civil\Worksets\II0380_FRA-23\400-Engineering\RW\Sheets\II0380_RT005.dgn

FRANKLIN COUNTY
HAMILTON TOWNSHIP
SEC. 21, T.4N, R.22W
CONGRESS LANDS
CITY OF COLUMBUS

INDUSTRIAL - QUARRY

1

PFK COMPANY I, LLC, A DELAWARE LIMITED LIABILITY COMPANY AND TAMARACK ENTERPRISES I, L.P., A DELAWARE LIMITED PARTNERSHIP
4755 S. HIGH ST.
P.P.N. 510-181564-00

PROPERTY LEASED TO THE OLEN CORPORATION
O.R.V. 11557, PG. I11

* ELECTRIC EASEMENT (AEP-T)
IN 202112010217672

MATCHLINE US-23 - STA 542+00
SEE SHEET 12 OF 18

Ex U
TMP
R/W
Ex SH

N06°42'26"W
2,089.04' (1-WDV)
1,039.04 (1-T3)

N06°42'26"W
1,039.04'

1-T3
1-WDV
3-WDV
3-T1

STA. 544+00.00
OFF. 70.00' LT.

STA. 545+00.00
OFF. 95.00' LT.

STA 546+39.04
OFF 113.00' LT

N83°17'34"E
10.00'

STA 546+39.04
OFF 103.00' LT

STA 546+39.04
OFF 88.05' LT

14.95'

IRON PIN SET
(TO BE SET BY DLZ)
PER PART 1 (PID 92616)

STATE OF OHIO
PARCEL 15
PIC-23-17.66 FRA-23-(0.00-5.37)
FRANKLIN COUNTY COURT OF COMMON PLEAS CASE NO. 190502

PARCEL 10-WD TO BE ACQUIRED UNDER PART 1 (PID 92616)

N 83°17'34" E
103.00'

103'
96'

STA 546+39.04
INTERSECTION

STA 546+39.04
OFF 0.00' LT

℄ CONST. US-23
(SOUTH HIGH STREET)

℄ EX. R/W US-23
(SOUTH HIGH STREET)

3'

S 06°42'26" E
2,339.04' (1-WDV)
1,129.54' (3-WDV)

546
IRON PIN SET
(TO BE SET BY DLZ)
PER PART 1 (PID 92616)

(54.00' TO EX. SH)

N 83°17'34" E
107.00'

54'
124'

STA 546+39.04
OFF 54.00' RT

IRON PIN SET
(TO BE SET BY DLZ)
PER PART 1 (PID 92616)

137'

PARCEL 11-WD TO BE ACQUIRED UNDER PART 1 (PID 92616)

PARCEL 11-UV TO BE ACQUIRED UNDER PART 1 (PID 92616)

8' GAS EASEMENT (NEONGC)
VOL. 1953, PG. 376
P.B. 25, PG 42

S06°42'26"E
1,089.04'

S06°42'26"E
664.04'

STA 546+39.04
OFF 107.00' RT

N83°17'34"E
10.00'

STA 546+39.04
OFF 117.00' RT

IRON PIN SET
(TO BE SET BY DLZ)
PER PART 1 (PID 92616)

THE FOLLOWING PARCELS TO BE ACQUIRED UNDER PART 1 (PID 92616) WITHIN P.P.N. 510-181566-00. SEE PART 1 RIGHT OF WAY PLANS FOR ADDITIONAL INFORMATION:

PARCEL 10-WD PARCEL 14-WL
PARCEL 11-WL PARCEL 14-WD
PARCEL 11-WD

AGRICULTURAL

3

PFK COMPANY II, LLC, A DELAWARE LIMITED LIABILITY COMPANY AND TAMARACK ENTERPRISES II, L.P., A DELAWARE LIMITED PARTNERSHIP
S. HIGH ST.
P.P.N. 510-181566-00

OVERLAP TABLE		
PARCEL NO.	AREA OF OVERLAP	DESCRIPTION
3-WDV	0.210 AC	8' GAS EASEMENT (NEONGC)

REV. BY	DATE	DESCRIPTION
WLC	8-8-22	UPDATED SHEET HEADING TO "SEC. 21"

DATE COMPLETED: R/W TRACINGS 4-22-2022

HORIZONTAL SCALE IN FEET
0 10 20 40

RIGHT OF WAY BOUNDARY SHEET - US-23 (SOUTH HIGH STREET)
STA 542+00 TO STA 546+47.41

DESIGN AGENCY
IBI

DESIGNER	WLC/JMK
REVIEWER	DLC 4-22-22
PROJECT ID	110380
SUBSET	14
TOTAL	18
SHEET	P.158
TOTAL	170

FRA-23-4.19 PART 2 (PID 110380)

MODEL: II0380_RD5 PAPERSIZE: 17x11(in.) DATE: 2022-08-12 TIME: 8:01:17 AM USER: william.croxton
\\10.120.12.5\bishare\122592_SafetyDesign\7.0_Production\7.3_Design\04_Civil\Worksets\II0380_FRA-23\400-Engineering\RW\Sheets\II0380_RB005.dgn

FRANKLIN COUNTY
CITY OF COLUMBUS
HAMILTON TOWNSHIP
SEC. 21 & 28, T.4N, R.22W
CONGRESS LANDS

RIGHT OF WAY TOPO SHEET - CR-121 (RATHMELL ROAD)
STA 99+99.82 TO STA 103+50

HORIZONTAL SCALE IN FEET
0 10 20 40

EX. TELECOM DUCT BANK (ATT) (RELBO-▲▲)
EX. POLE/GUY WIRES (AEP DISTR.) (LOCATION #47) (TBRBO-AEP PROJECT CYPRUS)
EX. LNDSCP AREA W/ STONE WALL BORDER (DND-OUTSIDE PR. R/W) (TBR-30' TOT. INSIDE PR. R/W)
EX. FH (COC) (DND)
EX. WSV (COC) (DND)
CONST. LIMITS
PRV. SIGN (DND)
EX. WS (TAP ID 241015) (DND)
FUTURE EX. OHD 138 kV 3-PH TRANS. LINES (AEP-T) (DND-▲▲)
FUTURE EX. UG 13.2 kV DISTR (AEP-D) (DND-▲▲)
EX. OHD 69kV 3-PH TRANS. LINES W/ 14.4 kV DISTR. UNDERBUILD (COC) (TBR-PART 1)
EX. TELECOM MH (ATT) (TBR-▲▲)
EX. TELECOM MARKER (ATT) (TBR-▲▲)
EX. 12" WM (COC) (DND-CTP0600)
EX. 12" WV (COC) (PR. 725.22)
EX. 12" WV (COC) (EX. 724.60)
PR. DITCH
PR. ITS (COC) (PR. CONDUIT-PART 2) (PR. 144 STRAND ITS■■)
EX. 6" CASING PIPE (ATT) (TBABO-▲▲)
EX. POLE (COC-101620) (TBR-PART 1)
EX. CASING PIPE (CGO) (EXTEND FOR PVT (W/ID. BY OTHERS)
EX. POLE (COC-101621) W/ 1Ø TRANSF. (TBR-PART 1)
EX. UDG TELECOM (CC) (RELBO-▲▲)
EX. POLE/GUY WIRES (AEP-D #44) (TBRBO-▲▲)
EX. 8" M.P. GAS (CGO) (DND)
EX. GAS VALVE (CGO)
EX. GAS MARKER (CGO)
FUTURE EX. 12" WM (COC 22-002) (DND-▲)
FUTURE EX. POLE (AEP-T #14) (DND-▲▲)
PR. POLE (COC) (PART 1)
FUTURE EX. OHD 138kV 3-PH TRANS. LINES W/ 13.2 kV DISTR. UNDERBUILD (AEP T/D) FUTURE EX. OHD 144 STRAND ITS (COC) (DND-▲▲)
80' ELECTRIC EASEMENT (AEP-T) IN 202112170229502
FUTURE EX. POLE (AEP-D #14) (DND-▲▲)
FUTURE EX. POLE (AEP-D #15) (DND-▲▲)
RIGHT OF WAY BEING DEEDED BY DEVELOPMENT PLAT TO THE CITY OF COLUMBUS
PR. OHD 69kV 3-PH TRANS. LINES W/ 14.4 kV DISTR. UNDERBUILD (COC) (PART 1)
CONST. LIMITS
PR. ITS (COC) (PR. CONDUIT-PART 2)
PR. OHD 69kV 3-PH TRANS. LINES W/ 14.4 kV DISTR. UNDERBUILD (COC) (PART 1)
EX. OHD 69kV 3-PH TRANS. LINES W/ 14.4 kV DISTR. UNDERBUILD (COC) (PART 1)
CROP LINE
CONST. LIMITS
EX. 6" GAS (INACTIVE) (NEONGC) (DND-SEE NOTE ON SHEET 11)
EX. GAS MARKER (NEONGC) (ATGBO)
PR. POLE (COC) (PART 1)
STEPS (5) (TBR)
*CROSSES (9)(TBR)
7.41' ENCROACHES EX. RW
1-STY BRICK SCHOOLHOUSE (ABANDONED) (DND)
EX. TELECOM MARKER (ATT) (TBR-▲▲)
EX. OHD 144 STRAND ITS (COC CTSS - PHASE C) (RELBO-▲▲)
CONST. LIMITS
EX. POLE (AEP-D #42) (TBR-▲▲)
EX. TELECOM DUCT BANK (ATT) (RELBO-▲▲)
PR. DITCH
PR. GUARDRAIL
EX. POLE (AEP-D #43) (TBR-▲▲)
EX. 8" M.P. GAS (CGO) (DND)
CONST. LIMITS
20' GAS EASEMENT (CGO) O.R.V. 18855, PG. H05
FUTURE EX. 12" WM (COC 22-002) (DND-▲)
EX. 6" GAS (INACTIVE) (NEONGC) (DND-SEE NOTE ON SHEET 11)
8' GAS ESMT (NEONGC) VOL. 1953, PG. 376 P.B. 25, PG. 42
MATCHLINE RATHMELL ROAD - STA. 103+50 SEE SHEET 17 OF 18
FRANKLIN COUNTY GEODETIC SURVEY MONUMENT NO. 5273
STA 534+69.40 INTERSECTION
STA. 534+68.86 ℄ EX. R/W US-23 = STA. 100+00.00 ℄ EX. R/W CR-121
STA. 534+50.57 ℄ EX. R/W US-23 = STA. 100+02.87 ℄ CONST. CR-121
STA. 534+51.11 ℄ CONST. US-23 = STA. 99+99.82 ℄ CONST. CR-121
℄ EX. R/W CR-121 (RATHMELL ROAD)
℄ CONST. CR-121 (RATHMELL ROAD)
℄ EX. R/W US-23 (SOUTH HIGH STREET)
SEC. 21
SEC. 28
S86°30'30"E
N06°42'26"W
CURVE 4
DRIVE DW-1
P.I. = STA. 2+51.72
Δ = 64°08'47" LT
Dc = 28°38'52"
R = 200.00'
T = 125.33'
L = 223.91'
E = 36.02'
ROW OF 12" TREES (8 TOTAL)
INDUSTRIAL - QUARRY
1
PFK COMPANY I, LLC, A DELAWARE LIMITED LIABILITY COMPANY AND TAMARACK ENTERPRISES I, L.P., A DELAWARE LIMITED PARTNERSHIP 4755 S. HIGH ST. P.P.N. 510-181564-00
PROPERTY LEASED TO THE OLEN CORPORATION O.R.V. 11557, PG. I11
AGRICULTURAL
3
PFK COMPANY II, LLC, A DELAWARE LIMITED LIABILITY COMPANY AND TAMARACK ENTERPRISES II, L.P., A DELAWARE LIMITED PARTNERSHIP S. HIGH ST. P.P.N. 510-181566-00
AGRICULTURAL
2
MAGELLAN ENTERPRISES LLC, A DELAWARE LIMITED LIABILITY COMPANY 225 RATHMELL RD. P.P.N. 510-180711-00
1-T1 1-T2 1-T3 1-WDV 2-T 3-T1 3-T2 3-WDV

REV. BY	DATE	DESCRIPTION
WLC	7-13-22	ADDED DISPOSTION OF TREES WITHIN PR. ROW
WLC	6-30-22	UPDATED EX. ROW FOR PARCEL 2

DATE COMPLETED: R/W TRACINGS 4-22-2022

DESIGN AGENCY: IBI
DESIGNER: WLC/JMK
REVIEWER: DLC 4-22-22
PROJECT ID: 110380
SUBSET 15 TOTAL 18
SHEET P.159 TOTAL 170

FRA-23-4.19 PART 2 (PID 110380)

MODEL: II0380_RTI0| PAPERSIZE: I7x11 (in.) DATE: 2022-07-13 TIME: 3:22:21 PM USER: william.croxton
\\10\20\I2.5\Ibishare\122592_SafetyDesign\7.0_Production\7.3_Design\04_Civil\Worksets\II0380_FRA-23\400-Engineering\RW\

FRANKLIN COUNTY
CITY OF COLUMBUS
HAMILTON TOWNSHIP
SEC. 21 & 28, T.4N, R.22W
CONGRESS LANDS

OVERLAP TABLE		
PARCEL NO.	AREA OF OVERLAP	DESCRIPTION
1-WDV	0.055 AC	80' ELECTRIC EASEMENT (AEP-T) IN 202112010217672
1-T1	0.020 AC	80' ELECTRIC EASEMENT (AEP-T) IN 202112010217672
1-T2	0.099 AC	80' ELECTRIC EASEMENT (AEP-T) IN 202112010217672
2-T	0.227 AC	80' ELECTRIC EASEMENT (AEP-T) IN 202112170229502
2-T	0.092 AC	20' GAS EASEMENT (CGO)
3-WDV	0.210 AC	8' GAS EASEMENT (NEONGC)

HORIZONTAL SCALE IN FEET
0 10 20 40

N

N06°42'26"W 1,039.04'
S06°42'26"E 1,039.04 (1-T3)
R/W
TMP
1-T3
STA 536+00.00 OFF 113.00' LT
S83°17'34"W 10.00'
STA 536+00.00 OFF 103.00' LT
Ex U
1-WDV
Ex SH
STA 535+40.00 OFF 103.00' LT
N70°34'43"E 48.18'
TMP
R/W
STATE OF OHIO
PARCEL 15
PIC-23-17.66 FRA-23-(0.00-5.37)
FRANKLIN COUNTY COURT OF COMMON PLEAS CASE NO. 190502
3-WDV
536
S 06°42'26" E 1,129.54' (3-WDV)
STA Linear Annotation 2,089.04
P.O.T. STA 100+00.00
N 06°42'26" W 40.64' (3-WDV)
535
STA. 534+68.86 ℄ EX. R/W US-23 = STA. 100+00.00 ℄ EX. R/W CR-121
FRANKLIN COUNTY GEODETIC SURVEY MONUMENT NO. 5273
SEC. 21
SEC. 28
STA 534+69.40 INTERSECTION
STA. 534+51.11 ℄ CONST. US-23 = STA. 99+99.82 ℄ CONST. CR-121
STA. 534+50.57 ℄ EX. R/W US-23 = STA. 100+02.87 ℄ CONST. CR-121
100
101
102
103
Ex U
Ex SH
Ex R/W
P.L.
1-T2
N06°42'26"W 120.00'
TMP
S06°42'26"E 140.00' (1-T2)
N85°24'08"W 47.93'
STA 534+09.40 OFF 150.00' LT
STA 534+00.00 OFF 103.00' LT
M.N.S.
STA 533+50.00 OFF 103.00' LT
N83°17'34"E 10.00'
STA 533+50.00 OFF 113.00' LT
N06°42'26"W 2,089.04' (1-WDV)
1-T1
S06°42'26"E 800.00' (1-T1)
N06°42'26"W 1,050.00'
INDUSTRIAL - QUARRY
1
PFK COMPANY I, LLC, A DELAWARE LIMITED LIABILITY COMPANY AND TAMARACK ENTERPRISES I, L.P., A DELAWARE LIMITED PARTNERSHIP
4755 S. HIGH ST.
P.P.N. 510-181564-00
PROPERTY LEASED TO THE OLEN CORPORATION
O.R.V. 11557, PG. I11
534
℄ CONST. US-23 (SOUTH HIGH STREET)
S 06°42'26" E 1,168.86' (1-WDV)
533
N 06°42'26" W 1128.21' (3-WDV)
℄ EX. R/W US-23 (SOUTH HIGH STREET)
CITY OF COLUMBUS IN 202108130143406
CITY OF COLUMBUS O.R.V. 13735, PG. J07
CITY OF COLUMBUS IN 202206090086468
P.F.
I.P.S.
8' GAS EASEMENT (NEONGC) VOL. 1953, PG. 376 P.B. 25, PG 42
CITY OF COLUMBUS O.R.V. 12995 PG. J13
℄ CONST. CR-121 (RATHMELL ROAD)
℄ EX. R/W CR-121 (RATHMELL ROAD)
RATHMELL ROAD (FORMER COUNTY ROAD) 60' ORIGINAL HIGHWAY ESMT ROAD RECORD 7, PG. 68 (1837)
CITY OF COLUMBUS O.R.V. 12995 PG. J13
CITY OF COLUMBUS IN 202205170086759
S86°30'30"E
MATCHLINE RATHMELL ROAD - STA. 103+50 SEE SHEET 18 OF 18
AGRICULTURAL
3
PFK COMPANY II, LLC, A DELAWARE LIMITED LIABILITY COMPANY AND TAMARACK ENTERPRISES II, L.P., A DELAWARE LIMITED PARTNERSHIP
S. HIGH ST.
P.P.N. 510-181566-00
3-T1
S06°42'26"E 1,089.04'
S06°42'26"E 325.00'
STA 535+50.00 OFF 117.00' RT
S83°17'34"W 10.00'
STA 535+50.00 OFF 107.00' RT
S06°42'26"E 56.15'
S83°17'34"W 20.00'
STA 535+50.00 OFF 87.00' RT
STA 534+93.85 OFF 87.00' RT
STA 101+50.00 OFF 40.00' LT
STA 102+00.00 OFF 60.00' LT
N71°41'25"E 53.85'
S03°29'30"W 20.00'
STA 102+00.00 OFF 40.00' LT
3-T2
N86°30'30"W 50.00'
STA 101+50.00 OFF 80.00' RT
CITY OF COLUMBUS O.R.V. 13735, PG. J07
IRON PIPE (TO BE SET BY EMHT) IN 202206090086468
STA 103+50.00 OFF 60.00' RT
N87°46'52"E 201.00'
2-T
N86°30'30"W 199.50'
20' GAS EASEMENT (CGO) O.R.V. 18855, PG. H05
STA 102+50.50 OFF 80.00' RT
N34°42'26"E 40.00'
STA 533+33.57 OFF 107.00' RT
IRON PIPE (TO BE SET BY EMHT) IN 202206090086468
S04°31'W 46.59'
80' ELECTRIC EASEMENT (AEP-T) IN 202112170229502
S83°17'34"W 106.63'
STA 533+00.00 OFF 223.63' RT
STA 533+00.00 OFF 117.00' RT
AGRICULTURAL
2
MAGELLAN ENTERPRISES LLC, A DELAWARE LIMITED LIABILITY COMPANY
225 RATHMELL RD.
P.P.N. 510-180711-00
N06°42'26"W 348.17'
S06°42'26"E 314.60'

REV. BY	DATE	DESCRIPTION
WLC	8-8-22	ADDED OVERLAP AREA FOR PARCEL 1-T2
WLC	6-30-22	UPDATED EX. ROW FOR PARCEL 2

DATE COMPLETED: R/W TRACINGS 4-22-2022

RIGHT OF WAY BOUNDARY SHEET - CR-121 (RATHMELL ROAD)
STA 99+99.82 TO STA 103+50

DESIGN AGENCY
IBI

DESIGNER WLC/JMK
REVIEWER DLC 4-22-22
PROJECT ID 110380
SUBSET 16 TOTAL 18
SHEET P.160 TOTAL 170

FRA-23-4.19 PART 2 (PID 110380)

MODEL: RB10I PAPERSIZE: 17x11(in.) DATE: 2022-08-12 TIME: 8:01:24 AM USER: willam.croxton
\\10.10.12.5\Tblshare\122592_SafetyDesign\7.0_Production\7.3_Design\04_Civil\Worksets\110380_FRA-23\400-Engineering\RW\Sheets\110380_RB10I.dgn

FRANKLIN COUNTY
CITY OF COLUMBUS
HAMILTON TOWNSHIP
SEC. 21 & 28, T.4N, R.22W
CONGRESS LANDS

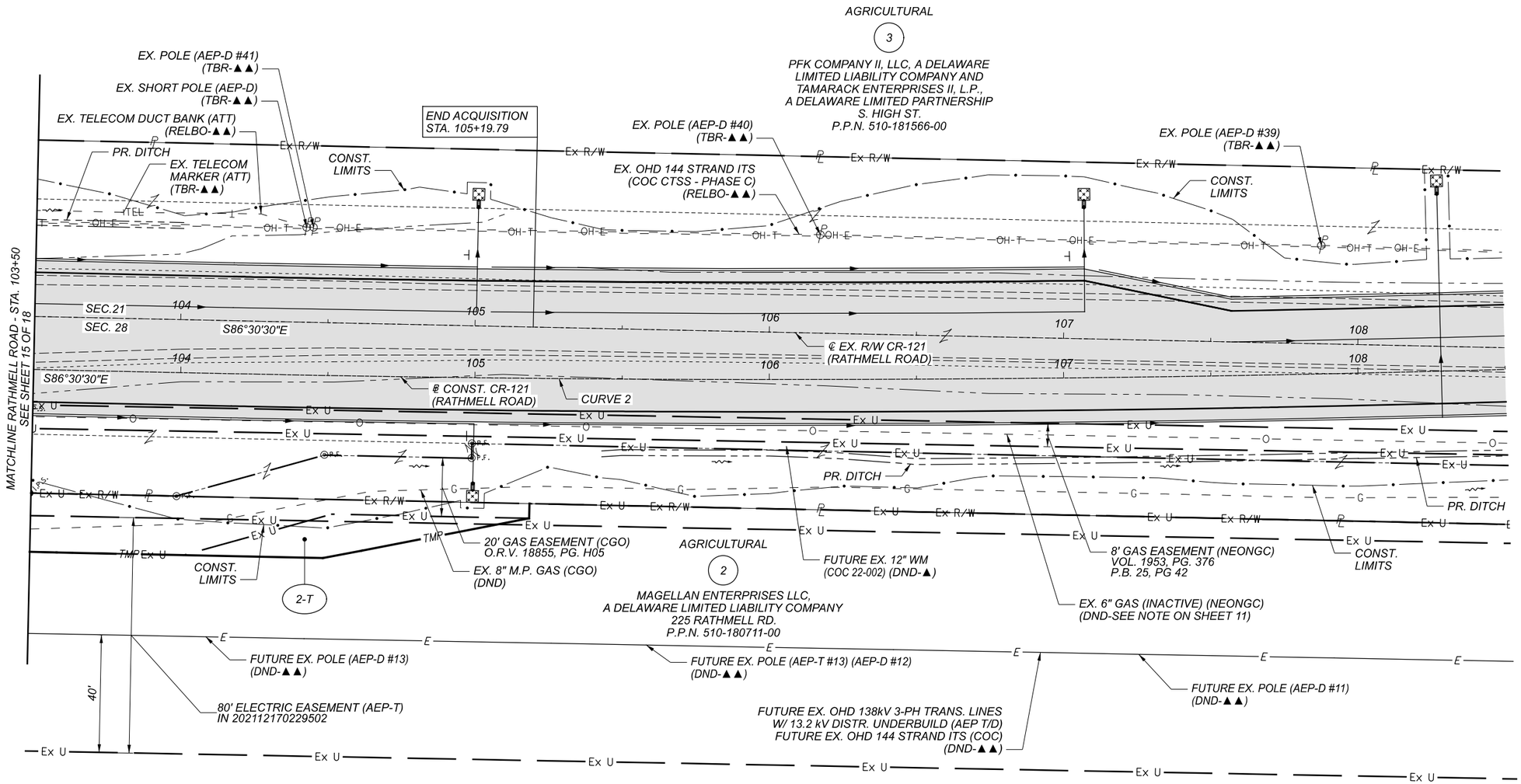

CURVE 2
℄ CONST. (CR-121) RATHMELL RD.
P.I. = Sta. 106+37.65
Δ = 02°51'46" LT
Dc = 00°39'00"
R = 8,814.74'
T = 220.25'
L = 440.41'
E = 2.75'

WLC	7-13-22	MODIFIED ROW LINETYPE OVERLAPS
WLC	6-30-22	UPDATED EX. ROW FOR PARCEL 2
REV. BY	DATE	DESCRIPTION

DATE COMPLETED:R/W TRACINGS 4-22-2022

HORIZONTAL SCALE IN FEET
0 10 20 40

RIGHT OF WAY TOPO SHEET - CR-121 (RATHMELL ROAD)
STA 103+50 TO STA 108+50

DESIGN AGENCY
IBI

DESIGNER
WLC/JMK

REVIEWER
DLC 4-22-22

PROJECT ID
110380

SUBSET 17 | TOTAL 18

SHEET P.161 | TOTAL 170

FRA-23-4.19 PART 2 (PID 110380)

MODEL: I10380_RT102 PAPERSIZE: 17x11(in.) DATE: 2022-07-13 TIME: 3:21:31 PM USER: william.croxton
\\10.120.2.5\ibishare\122592_SafetyDesign\7.0_Production\7.3_Design\04_Civil\Worksets\I10380_FRA-23.400-Engineering\RW\Sheets\I10380_RT102.dgn

FRANKLIN COUNTY
CITY OF COLUMBUS
HAMILTON TOWNSHIP
SEC. 21 & 28, T.4N, R.22W
CONGRESS LANDS

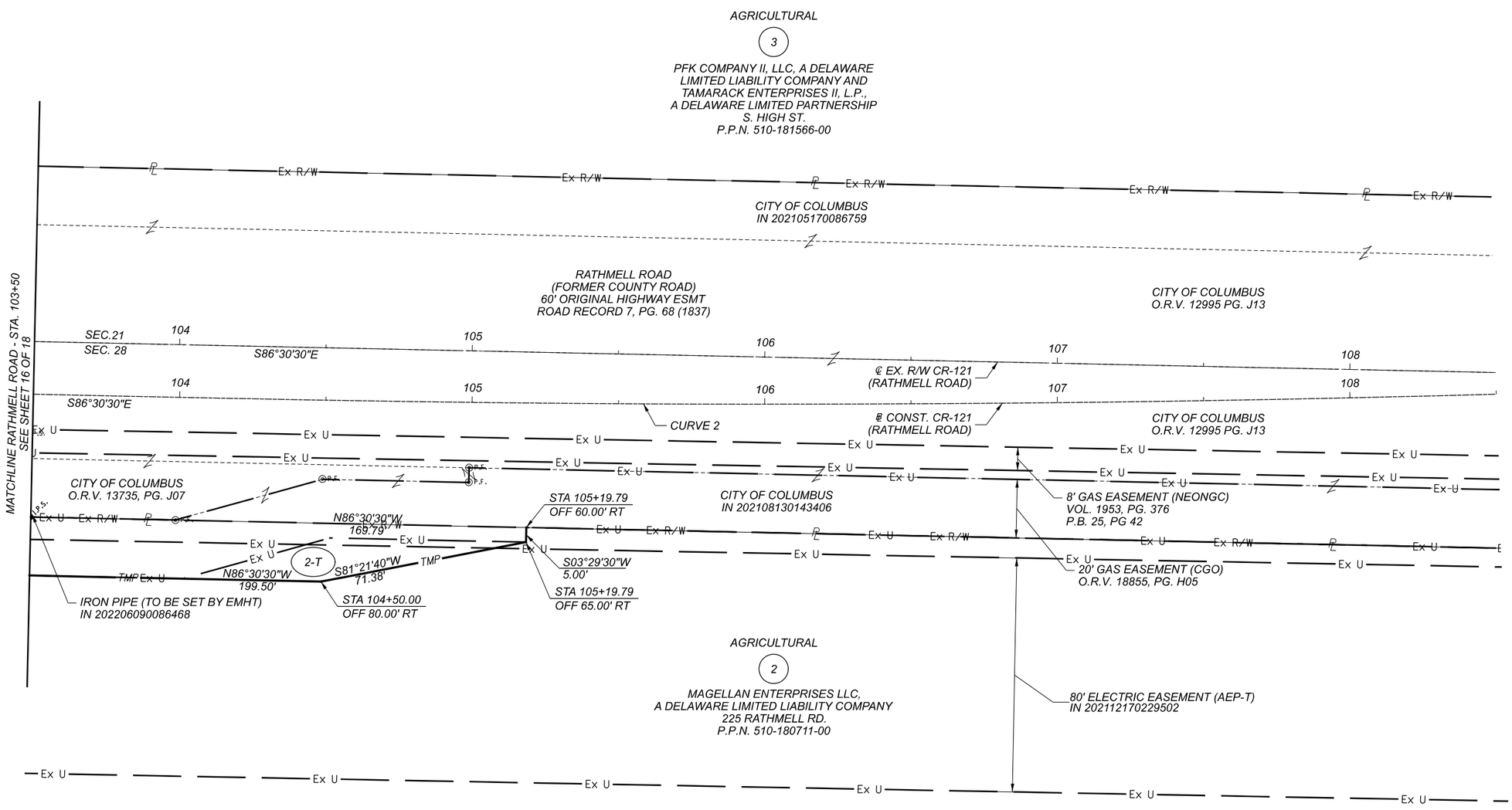

HORIZONTAL SCALE IN FEET
0 10 20 40

RIGHT OF WAY BOUNDARY SHEET - CR-121 (RATHMELL ROAD)
STA 103+50 TO STA 108+50

CURVE 2
℄ CONST. CR-121 (RATHMELL RD.)
P.I. = Sta. 106+37.65
Δ = 02°51'46" LT
Dc = 00°39'00"
R = 8,814.74'
T = 220.25'
L = 440.41'
E = 2.75'

OVERLAP TABLE

PARCEL NO.	AREA OF OVERLAP	DESCRIPTION
2-T	0.227 AC	80' ELECTRIC EASEMENT (AEP-T) IN 202112170229502
2-T	0.092 AC	20' GAS EASEMENT (CGO)

REV. BY	DATE	DESCRIPTION
WLC	6-30-22	UPDATED EX. ROW FOR PARCEL 2

DATE COMPLETED: R/W TRACINGS 4-22-2022

DESIGN AGENCY: IBI
DESIGNER: WLC/JMK
REVIEWER: DLC 4-22-22
PROJECT ID: 110380
SUBSET 18 TOTAL 18
SHEET P.162 TOTAL 170

FRA-23-4.19 PART 2 (PID 110380)

MODEL: RB02 PAPERSIZE: 17x11 (in.) DATE: 2022-07-13 TIME: 3:12:36 PM USER: william.croxton
\\10.120.25.5\bishore\22592_SafetyDesign\7.0_Production\7.3_Design\04_Civil\Worksets\110380_FRA-23\400-Engineering\RW\Sheets\110380_RB02.dgn

PROJECT DESCRIPTION

THIS PROJECT, FRA-23-4.19, CONSISTS OF INTERSECTION SAFETY LANE AND SHOULDER IMPROVEMENTS TO U.S. 23 AND RATHMELL ROAD. THE INTERSECTION IS APPROXIMATELY 0.9 MILES SOUTH OF I-270 AND THE PROJECT EXTENDS APPROXIMATELY 1500 FEET NORTH AND SOUTH OF THE INTERSECTION AND 500 FEET EAST ON RATHMELL ROAD.

HISTORIC RECORDS

SELECT BORINGS FROM THE FRA-270-51.50 AND A RATHMELL ROAD EXPLORATION IN 2014 THAT WERE WITHIN THE FRA-23-4.19 PROJECT VICINITY WERE USED IN THE GB1 ANALYSES OF THIS REPORT. SOILS IN THESE BORINGS CONSISTED OF GRAVEL AND STONE FRAGMENTS WITH SAND, SILT AND CLAY (A-2-7), SILT AND CLAY (A-6A) AND SILTY CLAY (A-6B).

GEOLOGY

THE PROJECT IS LOCATED IN THE SOUTHERN OHIO LOAMY TILL PLAIN REGION OF OHIO AND IS IN THE GENERAL VICINITY OF THE BEREA ESCARPMENT. THIS REGION IS DESCRIBED AS HAVING LOAMY TILL AND END RECESSIONAL MORAINES, COMMONLY ASSOCIATED WITH BOULDER BELTS. WITHIN THIS REGION, THE LOAMY TILL IS DESCRIBED AS HAVING LOWLANDS SURROUNDED IN ALL DIRECTIONS BY RELATIVE UPLANDS WITH A BROAD REGIONAL SHAPE TOWARDS THE SCIOTO RIVER VALLEY WITH ELEVATIONS RANGING BETWEEN 600 TO 850 FEET. UNDERLYING BEDROCK CONSISTED OF OLENTANGY SHALE TO OHIO SHALE WITH ELEVATIONS RANGING FROM 501 TO 800 FEET.

RECONNAISSANCE

REPRESENTATIVES VISITED THE SITE ON APRIL 24, 2020. THE AREAS SURROUNDING THE PROJECT SITE CAN BE DESCRIBED AS RURAL, WITH LIMITED COMMERCIAL AREAS IN THE VICINITY. THE EXISTING PAVEMENT WAS NOTED AS BEING IN RELATIVELY GOOD CONDITIONS, WITH SOME TYPICAL MINOR CRACKING. BORINGS WERE SURVEYED AND STAKED AT THE PROPOSED LOCATIONS.

U.S. 23 IS CLASSIFIED AS A PRINCIPAL ARTERIAL ROUTE, WHEREAS RATHMELL ROAD IS CLASSIFIED AS A MAJOR ARTERIAL COLLECTOR ROUTE ACCORDING TO THE RURAL COUNTY FRANKLIN FUNCTIONAL CLASS MAP. U.S. 23 AND RATHMELL ROAD HAS AN ANNUAL AVERAGE DAILY TRAFFIC (AADT) COUNT OF 37,975 AND 5,043 RESPECTIVELY

SUBSURFACE EXPLORATION

TWENTY TWO BORINGS WERE COMPLETED AS PART OF THE EXPLORATION. ALL BUT ONE BORING WERE ADVANCED THROUGH EXISTING PAVEMENT USING A 4-INCH THIN WALL CORING BIT TO EVALUATE EXISTING PAVEMENT CONDITIONS. TWENTY ONE BORINGS WERE ADVANCED ALONG U.S. 23 AND ONE BORING WAS ADVANCED IN THE WESTBOUND LANE OF RATHMELL ROAD.

BORINGS WERE DRILLED WITH A CME 45 TRUCK-MOUNTED DRILL RIG USING 3.25-INCH I.D. HOLLOW-STEM AUGERS. DISTURBED SOIL SAMPLES WERE OBTAINED IN ACCORDANCE WITH THE STANDARD PENETRATION TEST (AASHTO T206) AT EITHER CONTINUOUS SAMPLING OR 2.5-FOOT INTERVALS. BORINGS ALONG THE U.S. 23 NORTHBOUND SHOULDER EXTENDED 10 TO 12 FEET BELOW GROUND SURFACE AND ALL OTHER BORINGS WERE ADVANCED 6 TO 8 FEET BELOW GROUND SURFACE. THE ENERGY RATIO (ER) OF THE AUTOMATIC HAMMER AND DRILL ROD SYSTEMS WAS MEASURED TO BE 88.4 PERCENT ON APRIL 24, 2018.

EXPLORATION FINDINGS

ASPHALT PAVEMENT RANGED IN THICKNESS BETWEEN 4 TO 18 INCHES, WITH SOME BORINGS HAVING UNDERLYING CONCRETE AND BRICK BASES RANGING IN THICKNESS FROM 3.5 TO 9.5 INCHES. ITEM 304 AGGREGATE BASE WAS ENCOUNTERED THROUGHOUT THE PROJECT, RANGING FROM 3 TO 9 INCHES IN THICKNESS. SOILS WITHIN THE PROJECT LIMITS PRIMARILY INCLUDED GRAVEL AND STONE FRAGMENTS WITH SAND (A-1-B) AND SILT AND CLAY (A-6A) WITH OCCASIONAL ZONES OF SANDY SILT (A-4A) AND SILTY CLAY (A-6B). SOME COARSE GRAINED SOILS INCLUDED VARIOUS AMOUNTS OF SILT AND CLAY. PLASTICITY INDEX (PI) VALUES RANGED FROM 4 TO 22 WITH MOISTURE CONTENTS ON AVERAGE RANGING NEAR 14%. SPT N60 VALUES RANGED FROM 6 TO 68 BLOWS PER FOOT (BPF) WITH POCKET PENETROMETER READINGS RANGING FROM 0.25 TO GREATER THAN 4.5 TONS PER SQUARE FOOT (TSF). BEDROCK WAS NOT ENCOUNTERED IN ANY BORING PERFORMED DURING THIS EXPLORATION.

SULFATE TESTING RESULTS INDICATED THAT ALL BORINGS EXHIBITED VERY LOW SULFATE LEVELS (<100 PPM). ORGANIC CONTENT TESTS RESULTED IN SHALLOW SOILS AT THE NORTH END OF THE PROJECT TO HAVE ORGANIC CONTENTS BETWEEN 2.4% AND 2.7%. STRUCTURAL NUMBER CALCULATIONS FOR THE EXISTING PAVEMENT CONDITIONS ON U.S. 23 RANGED FROM 1.70 TO 6.24 AND 5.17 FOR RATHMELL ROAD.

SPECIFICATIONS

THIS GEOTECHNICAL EXPLORATION WAS PERFORMED IN ACCORDANCE WITH THE STATE OF OHIO, DEPARTMENT OF TRANSPORTATION, OFFICE OF GEOTECHNICAL ENGINEERING, SPECIFICATIONS FOR GEOTECHNICAL EXPLORATIONS, DATED JULY 2019.

AVAILABLE INFORMATION

THE AVAILABLE SOIL AND BEDROCK INFORMATION THAT CAN BE CONVENIENTLY SHOWN ON THE GEOTECHNICAL EXPLORATION SHEETS HAS BEEN SO REPORTED. ADDITIONAL EXPLORATIONS MAY HAVE BEEN MADE TO STUDY SOME SPECIAL ASPECTS OF THE PROJECT. COPIES OF THIS DATA, IF ANY, MAY BE INSPECTED IN THE DISTRICT DEPUTY DIRECTOR'S OFFICE OR THE OFFICE OF GEOTECHNICAL ENGINEERING AT 1980 WEST BROAD STREET.

LEGEND

DESCRIPTION	ODOT CLASS	CLASSIFIED MECH.	CLASSIFIED VISUAL
GRAVEL AND/OR STONE FRAGMENTS	A-1-a	3	5
GRAVEL AND/OR STONE FRAGMENTS WITH SAND	A-1-b	13	8
GRAVEL AND/OR STONE FRAGMENTS WITH SAND AND SILT	A-2-4	7	7
GRAVEL AND/OR STONE FRAGMENTS WITH SAND, SILT AND CLAY	A-2-6	4	2
FINE SAND	A-3	0	1
COARSE AND FINE SAND	A-3a	0	1
SANDY SILT	A-4a	8	6
SILT AND CLAY	A-6a	9	12
SILTY CLAY	A-6b	2	5
CLAY	A-7-6	0	1
	TOTAL	46	48
ASPHALT/PAVEMENT = X = APPROXIMATE THICKNESS	VISUAL		
SOD AND TOPSOIL = X = APPROXIMATE THICKNESS	VISUAL		

BORING LOCATION - PLAN VIEW

HISTORIC BORING LOCATION - PLAN VIEW
FRA-270-51.50, 2016 & Rii # W-12-137, 2013

DRIVE SAMPLE AND/OR ROCK CORE BORING PLOTTED TO VERTICAL SCALE ONLY. HORIZONTAL BAR INDICATES A CHANGE IN STRATIGRAPHY.

N_{60} INDICATES STANDARD PENETRATION RESISTANCE NORMALIZED TO 60% DRILL ROD ENERGY RATIO.

X/Y/D" NUMBER OF BLOWS FOR STANDARD PENETRATION TEST (SPT):
X= NUMBER OF BLOWS FOR 6 INCHES (UNCORRECTED).
Y/D"= NUMBER OF BLOWS (UNCORRECTED) FOR D" OF PENETRATION AT REFUSAL.

WC INDICATES WATER CONTENT IN PERCENT.

NP INDICATES A NON-PLASTIC SAMPLE.

SS INDICATES A SPLIT SPOON SAMPLE, STANDARD PENETRATION TEST.

W— INDICATES FREE WATER.

HISTORIC LEGEND

DESCRIPTION	ODOT CLASS	CLASSIFIED MECH.	CLASSIFIED VISUAL
GRAVEL AND/OR STONE FRAGMENTS WITH SAND AND SILT	A-2-4	3	2
GRAVEL AND/OR STONE FRAGMENTS WITH SAND, SILT AND CLAY	A-2-6	2	0
GRAVEL AND/OR STONE FRAGMENTS WITH SAND, SILT AND CLAY	A-2-7	0	2
SILT AND CLAY	A-6a	2	0
SILTY CLAY	A-6b	2	3
	TOTAL	9	7

RECON. - EH 04/24/20
DRILLING - EH & DC 05/19/20 TO 05/28/20
DRAWN - MJ 09/20 & 12/20
REVIEWED - JMM 12/20

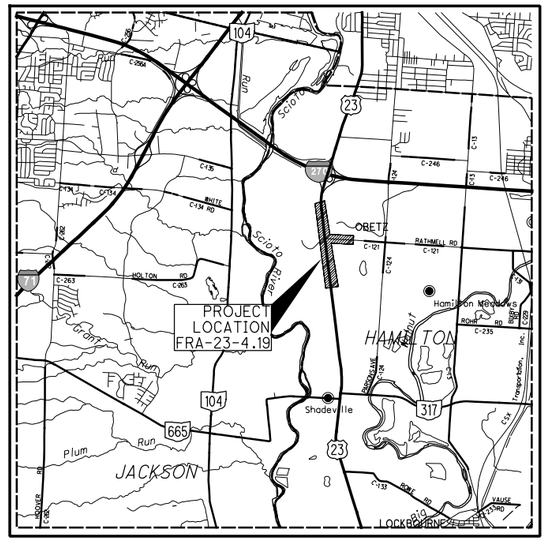

LOCATION MAP

SCALE IN MILES

0 1 2 3 4

N

PARTICLE SIZE DEFINITIONS

12"	3"	2.0 mm	0.42 mm	0.074 mm	0.005 mm
BOULDERS	COBBLES	GRAVEL	COARSE SAND	FINE SAND	SILT	CLAY
		No. 10 SIEVE	No. 40 SIEVE	No. 200 SIEVE		

INDEX OF SHEETS

LOCATION FROM STA.	TO STA.	PLAN VIEW SHEET	PROFILE SHEET	CROSS SECTION SHEET	CUT MAX	FILL MAX
US 23						
516+00	528+50	4	4	-	- FT.	- FT.
528+50	541+00	5	5	-	- FT.	- FT.
541+00	553+00	6	6	-	- FT.	- FT.
553+00	566+00	7	7	-	- FT.	- FT.
RATHMELL RD.						
100+00	111+50	8	8	-	- FT.	- FT.

SOIL PROFILE
FRA-23-4.19

DESIGN AGENCY
Stantec
11687 Lebanon Road
Cincinnati OH 45241
(513) 842-8200

DESIGNER MSJ
REVIEWER JMM 12-06-21
PROJECT ID 110380
SUBSET P.1 TOTAL 8
SHEET 163 TOTAL 170

FRA-23-4.19

MODEL: Sheet PAPERSIZE: 17x11(in.) DATE: 12/6/2021 TIME: 3:58:49 PM USER: MJennings
V:\1736\active\755280\4 engineering\110380\400-Engineering\Geotechnical\Sheets\110380IC001.dgn

SUMMARY OF SOIL TEST DATA
US 23

EXPLORATION NO., STATION & OFFSET	FROM - TO	SAMPLE ID	N60	% REC	tsf HP	% GR	% CS	% FS	% SILT	% CLAY	LL	PL	PI	% WC	ODOT CLASS (GI)	ppm SO4
B-001-0-20	01.40 - 02.90	SS-1	56	60	-	53	22	9	10	6	NP	NP	NP	15	A-1-b (0)	810
STA. 525+43, 20' RT	02.90 - 03.50	SS-2A	9	67	-	-	-	-	-	-	-	-	-	11	A-1-b (VISUAL)	-
LATITUDE = 41.52637	03.50 - 04.40	SS-2B	-	-	2.00		SAME AS SS-3							15	A-6a (VISUAL)	-
LONGITUDE = 83.016164	04.40 - 05.90	SS-3	11	80	2.50	2	3	18	47	30	30	17	13	21	A-6a (9)	-
	05.90 - 07.40	SS-4	19	100	3.50		SAME AS SS-3							21	A-6a (VISUAL)	-
B-002-0-20	01.20 - 02.70	SS-1	43	53	-	60	15	7	11	7	20	16	4	10	A-1-b (0)	<100
STA. 525+96, 34' LT	02.70 - 04.20	SS-2	36	73	-	62	20	5	8	5	NP	NP	NP	7	A-1-a (0)	-
LATITUDE = 41.526497	04.20 - 05.70	SS-3	29	67	-		SAME AS SS-2							6	A-1-a (VISUAL)	-
LONGITUDE = 83.016384	05.70 - 07.20	SS-4	32	73	-		SAME AS SS-2							7	A-1-a (VISUAL)	-
B-003-0-20	00.80 - 02.30	SS-1	32	73	-	64	12	9	9	6	21	14	7	12	A-2-4 (0)	-
STA. 528+46, 44' RT	02.30 - 03.80	SS-2	10	93	2.00	-	-	-	-	-	-	-	-	11	A-3a (VISUAL)	-
LATITUDE = 41.527205	03.80 - 05.30	SS-3	11	87	1.00	10	6	17	42	25	26	17	9	20	A-4a (6)	-
LONGITUDE = 83.016213	05.30 - 06.80	SS-4	11	67	2.50		SAME AS SS-3							18	A-4a (VISUAL)	-
B-004-0-20	00.30 - 01.80	SS-1	22	93	-	44	19	12	18	7	27	20	7	17	A-2-4 (0)	870
STA. 528+82, 15' LT	01.80 - 03.30	SS-2	9	47	2.00	22	12	15	23	28	40	18	22	25	A-6b (8)	-
LATITUDE = 41.527205	03.30 - 04.80	SS-3	16	13	-		SAME AS SS-2							-	A-6b (VISUAL)	-
LONGITUDE = 83.016213	04.80 - 06.30	SS-4	16	53	3.00		SAME AS SS-2							13	A-6b (VISUAL)	-
B-005-0-20	00.60 - 02.10	SS-1	29	73	-	52	16	13	14	5	NP	NP	NP	10	A-1-b (0)	<100
STA. 531+07, 44' RT	03.10 - 04.60	SS-2	22	20	-	-	-	-	-	-	-	-	-	9	A-1-b (VISUAL)	-
LATITUDE = 41.527914	05.60 - 07.10	SS-3	13	33	1.00	39	15	12	21	13	27	16	11	20	A-2-6 (0)	-
LONGITUDE = 83.016328	08.10 - 09.60	SS-4	19	13	4.50+	39	15	12	21	13	27	16	11	29	A-2-6 (0)	-
	10.60 - 12.10	SS-5	14	33	4.50+		SAME AS SS-3							26	A-2-6 (VISUAL)	-
B-006-0-20	00.60 - 02.10	SS-1	20	87	4.50+	29	18	16	19	18	25	15	10	10	A-4a (0)	<100
STA. 531+57, 43' LT	02.10 - 03.60	SS-2	23	93	-	45	35	6	8	6	22	17	5	8	A-1-b (0)	-
LATITUDE = 41.528021	03.60 - 05.10	SS-3	10	87	-		SAME AS SS-2							7	A-1-b (VISUAL)	-
LONGITUDE = 83.016668	05.10 - 06.50	SS-4	9	73	3.50	-	-	-	-	-	-	-	-	18	A-6b (VISUAL)	-
B-007-0-20	01.10 - 02.60	SS-1	11	73	-	56	15	8	14	7	18	14	4	13	A-1-b (0)	130
STA. 532+71, 2' LT	02.60 - 04.10	SS-2	22	53	-	50	21	9	13	7	NP	NP	NP	16	A-1-b (0)	-
LATITUDE = 41.528347	04.10 - 05.60	SS-3	14	80	-	-	-	-	-	-	-	-	-	12	A-3 (VISUAL)	-
LONGITUDE = 83.01657	05.60 - 07.10	SS-4	27	80	-	-	-	-	-	-	-	-	-	9	A-2-4 (VISUAL)	-
B-008-0-20	01.00 - 02.50	SS-1	32	73	-	62	16	8	11	3	NP	NP	NP	12	A-1-a (0)	640
STA. 533+47, 46' RT	03.50 - 05.00	SS-2	26	80	-	65	16	6	10	3	20	15	5	7	A-1-a (0)	-
LATITUDE = 41.528569	06.00 - 07.50	SS-3	24	60	-		SAME AS SS-2							11	A-1-a (VISUAL)	-
LONGITUDE = 83.01643	08.50 - 10.00	SS-4	26	7	-		SAME AS SS-2							8	A-1-a (VISUAL)	-
	11.00 - 12.50	SS-5	23	7	-		SAME AS SS-2							4	A-1-a (VISUAL)	-
B-008-2-20	01.30 - 02.80	SS-1	59	93	-	55	19	7	12	7	NP	NP	NP	9	A-1-b (0)	470
STA. 534+90, 95' LT	02.80 - 04.30	SS-2	36	73	-	61	17	6	10	6	NP	NP	NP	8	A-1-b (0)	-
LATITUDE = 41.528911	04.30 - 05.80	SS-3	26	87	-		SAME AS SS-2							7	A-1-b (VISUAL)	-
LONGITUDE = 83.017003	05.80 - 07.30	SS-4	27	100	-		SAME AS SS-2							6	A-1-b (VISUAL)	-
B-009-0-20	01.10 - 02.60	SS-1	24	80	3.50	39	17	13	17	14	27	17	10	14	A-2-4 (0)	600
STA. 536+11, 7' RT	02.60 - 04.10	SS-2	13	60	2.50	40	30	9	11	10	27	18	9	12	A-2-4 (0)	-
LATITUDE = 41.529275	04.10 - 05.60	SS-3	6	40	3.00		SAME AS SS-2							21	A-2-4 (VISUAL)	-
LONGITUDE = 83.016691	05.60 - 07.10	SS-4	7	100	1.50		SAME AS SS-2							19	A-2-4 (VISUAL)	-
B-010-0-20	01.50 - 03.00	SS-1	33	100	-	65	17	6	9	3	26	19	7	9	A-2-4 (0)	1400
STA. 536+02, 37' RT	03.00 - 04.50	SS-2	26	33	2.50	21	14	14	24	27	29	16	13	12	A-6a (4)	-
LATITUDE = 41.529261	04.50 - 05.30	SS-3A	17	73	-	-	-	-	-	-	-	-	-	14	A-2-6 (VISUAL)	-
LONGITUDE = 83.016577	05.30 - 06.00	SS-4B	-	-	4.50	-	-	-	-	-	-	-	-	18	A-6a (VISUAL)	-
	06.00 - 07.50	5	11	60	4.25	-	-	-	-	-	-	-	-	20	A-6a (VISUAL)	-
B-011-0-20	01.10 - 02.60	SS-1	14	73	4.50	17	10	17	27	29	29	16	13	14	A-6a (5)	490
STA. 537+16, 46' LT	02.60 - 04.10	SS-2	14	53	2.50		SAME AS SS-1							15	A-6a (VISUAL)	-
LATITUDE = 41.529544	04.10 - 05.60	SS-3	10	47	1.00	12	8	44	18	18	17	12	5	19	A-4a (0)	-
LONGITUDE = 83.016927	05.60 - 07.10	SS-4	9	40	2.50		SAME AS SS-3							24	A-4a (VISUAL)	-

SUMMARY OF SOIL TEST DATA
US 23 (CONTINUED)

EXPLORATION NO., STATION & OFFSET	FROM - TO	SAMPLE ID	N60	% REC	tsf HP	% GR	% CS	% FS	% SILT	% CLAY	LL	PL	PI	% WC	ODOT CLASS (GI)	ppm SO4
B-012-0-20	00.50 - 02.00	SS-1	26	87	-	47	20	10	14	9	NP	NP	NP	14	A-1-b (0)	<100
STA. 539+00, 47' RT	03.00 - 04.50	SS-2	16	20	-		SAME AS SS-1							10	A-1-b (VISUAL)	-
LATITUDE = 41.530076	05.50 - 07.00	SS-3	16	67	2.25	26	13	11	25	25	32	18	14	11	A-6a (4)	-
LONGITUDE = 83.016675	08.00 - 09.50	SS-4	19	13	0.25	-	-	-	-	-	-	-	-	11	A-7-6 (VISUAL)	-
	10.50 - 12.00	SS-5	36	80	2.50	-	-	-	-	-	-	-	-	22	A-6a (VISUAL)	-
B-013-0-20	01.20 - 02.70	SS-1	23	80	-	3	6	48	19	24	23	13	10	12	A-4a (1)	<100
STA. 540+13, 19' LT	02.70 - 02.90	SS-2	50/2"	100	-		SAME AS SS-1							12	A-4a (VISUAL)	-
LATITUDE = 41.53036																
LONGITUDE = 83.016965																
B-014-0-20	01.40 - 02.90	SS-1	56	80	-	61	16	7	11	5	NP	NP	NP	10	A-1-b (0)	640
STA. 542+04, 20' RT	02.90 - 04.40	SS-2	19	60	2.00		SAME AS SS-1							16	A-1-b (VISUAL)	-
LATITUDE = 41.530897	04.40 - 05.90	SS-3	17	53	2.00	24	13	16	28	19	25	16	9	8	A-4a (2)	-
LONGITUDE = 83.016909	05.90 - 07.40	SS-4	30	67	3.00		SAME AS SS-3							11	A-4a (VISUAL)	-
B-015-0-20	01.30 - 02.80	SS-1	10	67	2.75	37	15	11	15	22	31	18	13	23	A-6a (1)	<100
STA. 543+07, 16' LT	02.80 - 04.30	SS-2	10	60	4.00		SAME AS SS-1							25	A-6a (VISUAL)	-
LATITUDE = 41.531162	04.30 - 05.80	SS-3	20	33	3.00	23	15	15	29	18	21	14	7	14	A-4a (2)	-
LONGITUDE = 83.017084	05.80 - 07.30	SS-4	14	100	1.00		SAME AS SS-3							15	A-4a (VISUAL)	-
B-016-0-20	00.60 - 02.10	SS-1	23	80	-	46	22	12	16	4	NP	NP	NP	11	A-1-b (0)	<100
STA. 545+14, 43' RT	03.10 - 04.60	SS-2	19	60	-		SAME AS SS-1							8	A-1-b (VISUAL)	-
LATITUDE = 41.531747	05.60 - 07.10	SS-3	10	60	2.00	25	11	12	28	24	32	19	13	16	A-6a (5)	-
LONGITUDE = 83.016962	08.10 - 09.60	SS-4	11	20	-		SAME AS SS-3							14	A-6a (VISUAL)	-
	10.60 - 12.10	SS-5	14	100	2.25	-	-	-	-	-	-	-	-	24	A-4a (VISUAL)	-
B-017-0-20	00.60 - 02.10	SS-1	14	53	4.00	20	13	20	23	24	27	16	11	15	A-6a (3)	<100
STA. 546+24, 42' LT	02.10 - 03.60	SS-2	34	100	4.50+	21	6	25	26	22	28	16	12	17	A-6a (3)	-
LATITUDE = 41.532017	03.60 - 05.10	SS-3	37	100	4.50+		SAME AS SS-2							13	A-6a (VISUAL)	-
LONGITUDE = 83.017319	05.10 - 06.60	SS-4	40	73	4.00		SAME AS SS-2							12	A-6a (VISUAL)	-
B-018-0-20	00.60 - 02.10	SS-1	23	80	-	52	19	10	12	7	NP	NP	NP	11	A-1-b (0)	<100
STA. 550+89, 44' RT	03.10 - 04.60	SS-2	9	73	1.50	10	6	15	33	36	34	19	15	20	A-6a (9)	-
LATITUDE = 41.533313	05.60 - 07.10	SS-3	13	80	2.50		SAME AS SS-2							22	A-6a (VISUAL)	-
LONGITUDE = 83.017215	08.10 - 09.60	SS-4	13	73	4.50+	15	11	19	28	27	27	17	10	24	A-4a (4)	-
	10.60 - 12.10	SS-5	17	40	0.50		SAME AS SS-4							13	A-4a (VISUAL)	-
B-019-0-20	01.50 - 03.00	SS-1	24	80	4.00	41	12	11	22	14	24	16	8	14	A-4a (0)	<100
STA. 554+10, 19' RT	03.00 - 04.50	SS-2	13	53	3.50	9	11	15	27	38	38	20	18	23	A-6b (9)	-
LATITUDE = 41.534179	04.50 - 06.00	SS-3	14	53	3.25		SAME AS SS-2							21	A-6b (VISUAL)	-
LONGITUDE = 83.017441	06.00 - 07.50	SS-4	11	40	3.75		SAME AS SS-2							21	A-6b (VISUAL)	-
B-020-0-20	00.00 - 01.50	SS-1	68	80	-	45	22	12	13	8	NP	NP	NP	6	A-1-b (0)	<100
STA. 557+70, 19' RT	02.50 - 04.00	SS-2	13	80	3.50	37	21	16	16	10	21	15	6	13	A-2-4 (0)	-
LATITUDE = 41.535159	05.00 - 06.50	SS-3	9	67	2.50		SAME AS SS-2							28	A-2-4 (VISUAL)	-
LONGITUDE = 83.017566	07.50 - 09.00	SS-4	10	67	3.00		SAME AS SS-2							13	A-2-4 (VISUAL)	-
	10.00 - 11.50	SS-5	32	40	-	-	-	-	-	-	-	-	-	13	A-3a (VISUAL)	-

SOIL PROFILE
SUMMARY OF SOIL TEST DATA

DESIGN AGENCY
Stantec
11687 Lebanon Road
Cincinnati OH 45241
(513) 842-8200

DESIGNER MSJ
REVIEWER JMM 12-06-21
PROJECT ID 110380
SUBSET P.2 TOTAL 8
SHEET 164 TOTAL 170

FRA-23-4.19

MODEL: Sheet PAPERSIZE: 17x11 (in.) DATE: 12/6/2021 TIME: 3:59:34 PM USER: MJennings
V:\1736\active\75528014\engineering\110380\400-Engineering\Geotechnical\Sheets\110380IC002.dgn

SUMMARY OF SOIL TEST DATA
HISTORIC US 23

EXPLORATION NO., STATION & OFFSET	FROM - TO	SAMPLE ID	N60	% REC	tsf HP	% GR	% CS	% FS	% SILT	% CLAY	LL	PL	PI	% WC	ODOT CLASS (GI)	ppm SO4
B-001-0-14	01.00 - 02.50	SS-1	18	72	-	BROWN GRAVEL WITH SAND, SILT AND CLAY								8	A-2-7 (VISUAL)*	0
STA. 546+41, 44' RT.	02.50 - 04.00	SS-2	14	44	-	49	24	11	16					9	A-2-7 (VISUAL)*	0
LATITUDE = 39.865923	04.00 - 05.50	SS-3	7	56	0.50	15	13	16	27	29	28	15	13	17	A-6a (5)*	
LONGITUDE = 83.004669	05.50 - 07.00	SS-4	9	89	1.00	34	15	13	19	19	26	15	11	13	A-6a (1)	
B-002-0-14	00.00 - 1.50	SS-1	23	78	-	BROWN GRAVEL WITH SAND AND SILT								9	A-2-4 (VISUAL)*	
STA. 549+94, 49' LT.	01.50 - 03.00	SS-2	16	83	2.00	6	7	12	29	46	23	16	7	20	A-4a (8)*	
LATITUDE = 39.866854	03.00 - 04.50	SS-3	23	11	-	SAME AS SS-2								10	A-4a (VISUAL)*	
LONGITUDE = 83.005151	04.50 - 06.00	SS-4	18	67	2.25	11	20	18	31	20	23	16	7	12	A-4a (3)	
B-002-0-14A	06.00 - 07.50	SS-5	30	33	1.50	SAME AS SS-4								9	A-4a (VISUAL)	
B-003-0-14	00.00 - 1.50	SS-1	72	72	-	SAME AS SS-2								4	A-2-4 (VISUAL)	
STA. 553+61, 48' RT.	01.50 - 03.00	SS-2	27	72	-	38	19	14	18	11	25	15	10	8	A-2-4 (0)*	0
LATITUDE = 39.867884	03.00 - 04.50	SS-3	16	94	2.75	5	10	17	28	40	34	16	18	20	A-6b (10)*	60
LONGITUDE = 83.004958	04.50 - 06.00	SS-4	16	100	1.25	SAME AS SS-3								15	A-6b (VISUAL)	
B-003-0-14A	06.00 - 07.50	SS-5	14	78	2.50	SAME AS SS-3								15	A-6b (VISUAL)	

SUMMARY OF SOIL TEST DATA
RATHMELL RD.

EXPLORATION NO., STATION & OFFSET	FROM - TO	SAMPLE ID	N60	% REC	tsf HP	% GR	% CS	% FS	% SILT	% CLAY	LL	PL	PI	% WC	ODOT CLASS (GI)	ppm SO4
B-008-1-20	00.70 - 02.20	SS-1	27	60	4.50+	52	16	13	14	5	27	16	11	10	A-2-6 (0)	<100
STA. 107+85, 23' LT	02.20 - 03.70	SS-2	13	53	3.00	52	16	13	14	5	27	16	11	13	A-2-6 (0)	-
LATITUDE = 41.528798	03.70 - 05.20	SS-3	22	80	4.50+	33	23	15	20	9	23	14	9	16	A-2-4 (0)	-
LONGITUDE = 83.013779	05.20 - 06.70	SS-4	13	47	3.50	SAME AS SS-3								20	A-2-4 (VISUAL)	-

SUMMARY OF SOIL TEST DATA
HISTORIC RATHMELL RD.

EXPLORATION NO., STATION & OFFSET	FROM - TO	SAMPLE ID	N60	% REC	tsf HP	% GR	% CS	% FS	% SILT	% CLAY	LL	PL	PI	% WC	ODOT CLASS (GI)	ppm SO4
B-002-0-13	00.50 - 02.00	SS-1	21	61	-	47	19	10	18	6	21	15	6	8	A-1-b (0)	-
STA. 101+39, 7' RT.	02.00 - 03.50	SS-2	14	89	-	12	51	19	13	5	NP	NP	NP	10	A-1-b (0)	-
LATITUDE = 41.528792	03.50 - 05.00	SS-3	12	100	-	-	-	-	-	-	-	-	-	9	A-1-b (VISUAL)	-
LONGITUDE = 83.016138	05.00 - 06.50	SS-4	22	78	-	-	-	-	-	-	-	-	-	8	A-3a (VISUAL)	-

SOIL PROFILE
SUMMARY OF SOIL TEST DATA

FRA-23-4.19

MODEL: Sheet PAPERSIZE: 17x11 (in.) DATE: 12/6/2021 TIME: 4:00:24 PM USER: MJennings
W:\1736\active\155280\4 engineering\110380\400-Engineering\Geotechnical\Sheets\110380IC003.dgn

DESIGN AGENCY
Stantec
11687 Lebanon Road
Cincinnati OH 45241
(513) 842-8200

DESIGNER MSJ
REVIEWER JMM 12-06-21
PROJECT ID 110380
SUBSET P.3 TOTAL 8
SHEET 165 TOTAL 170

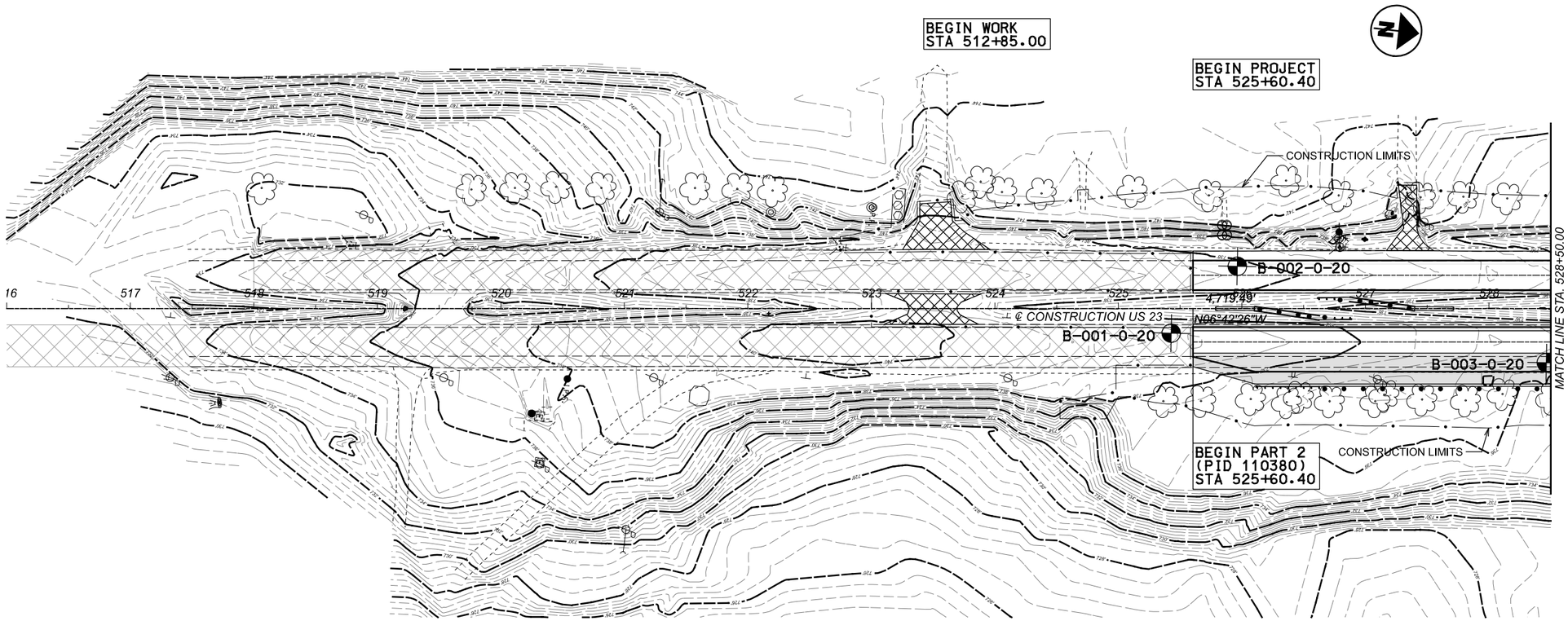

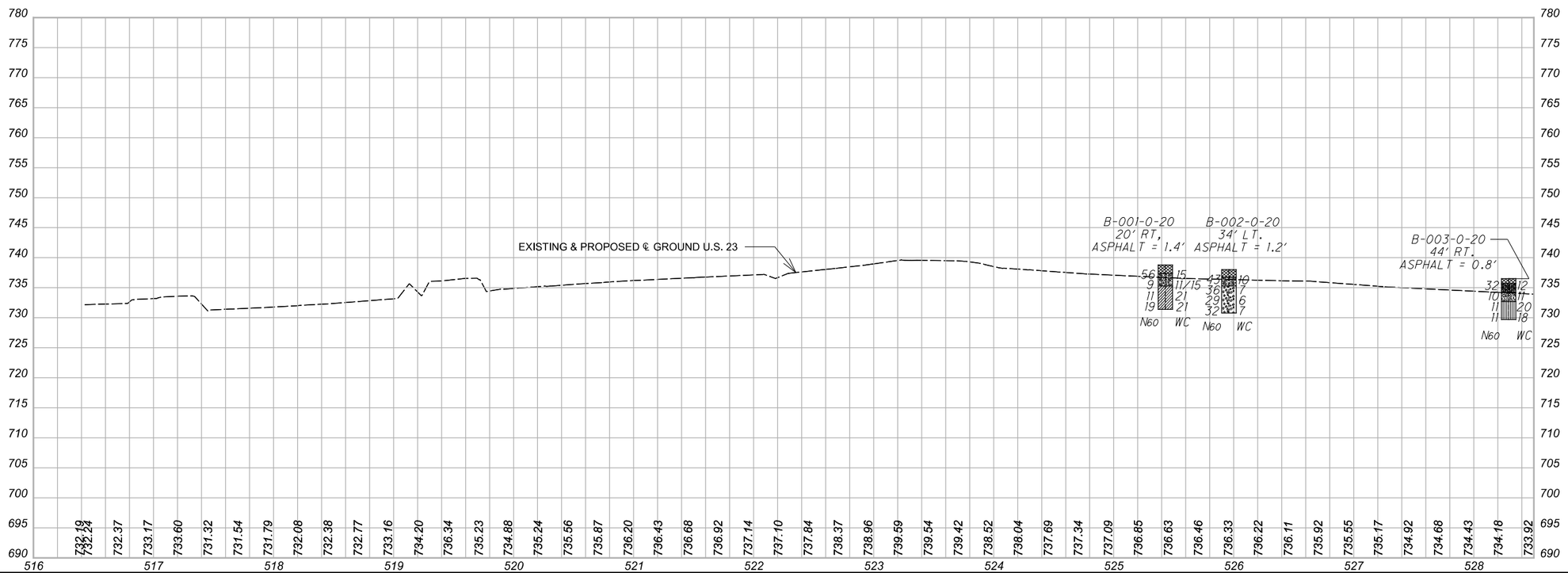

HORIZONTAL SCALE IN FEET
0 25 50 100

SOIL PROFILE U.S. 23
BEGINNING TO STA 528+50.00

FRA-23-4.19

MODEL: Plan (1Sheet) PAPERSIZE: 17x11(in.) DATE: 12/6/2021 TIME: 4:15:22 PM USER: MJennings
V:\1736\active\175528014\engineering\110380\400-Engineering\Geotechnical\Sheets\110380P001.dgn

DESIGN AGENCY
Stantec
11687 Lebanon Road
Cincinnati OH 45241
(513) 842-8200

DESIGNER	
MSJ	
REVIEWER	
JMM 12-06-21	
PROJECT ID	
110380	
SUBSET	TOTAL
P.4	8
SHEET	TOTAL
166	170

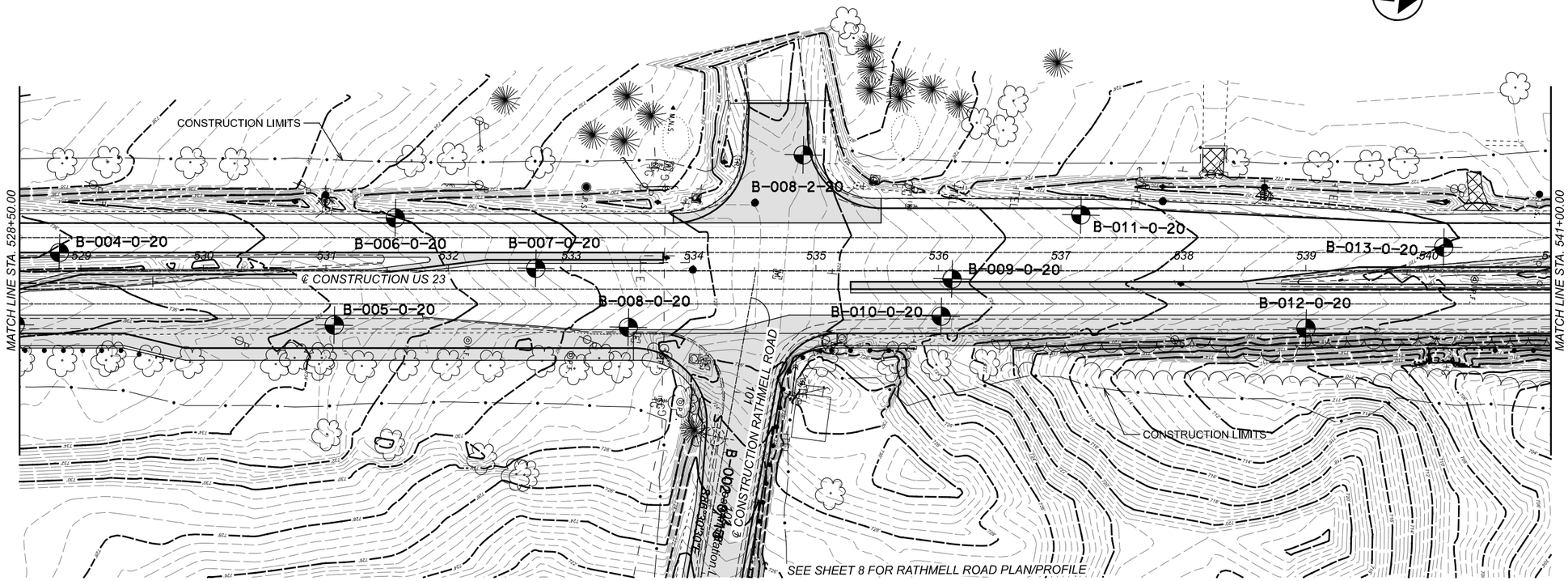

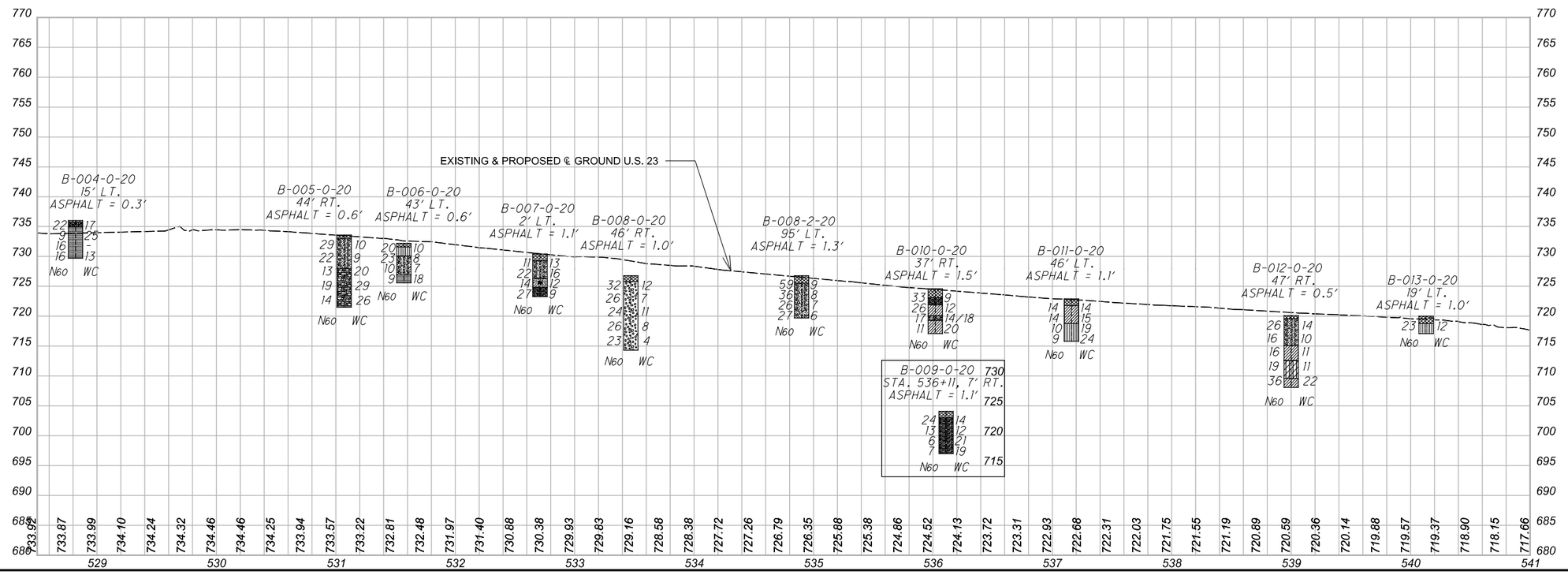

HORIZONTAL SCALE IN FEET
0 25 50 100

SOIL PROFILE U.S. 23
STA 528+50.00 TO STA 541+00.00

DESIGN AGENCY
Stantec
11687 Lebanon Road
Cincinnati OH 45241
(513) 842-8200

DESIGNER MSJ
REVIEWER JMM 12-06-21
PROJECT ID 110380
SUBSET P.5 TOTAL 8
SHEET 167 TOTAL 170

FRA-23-4.19

MODEL: Plan 2 [Sheet] PAPERSIZE: 17x11(in.) DATE: 12/6/2021 TIME: 4:55:51 PM USER: MJennings
V:\1736\active\755280\4\engineering\110380\400-Engineering\Geotechnical\Sheets\110380P001.dgn

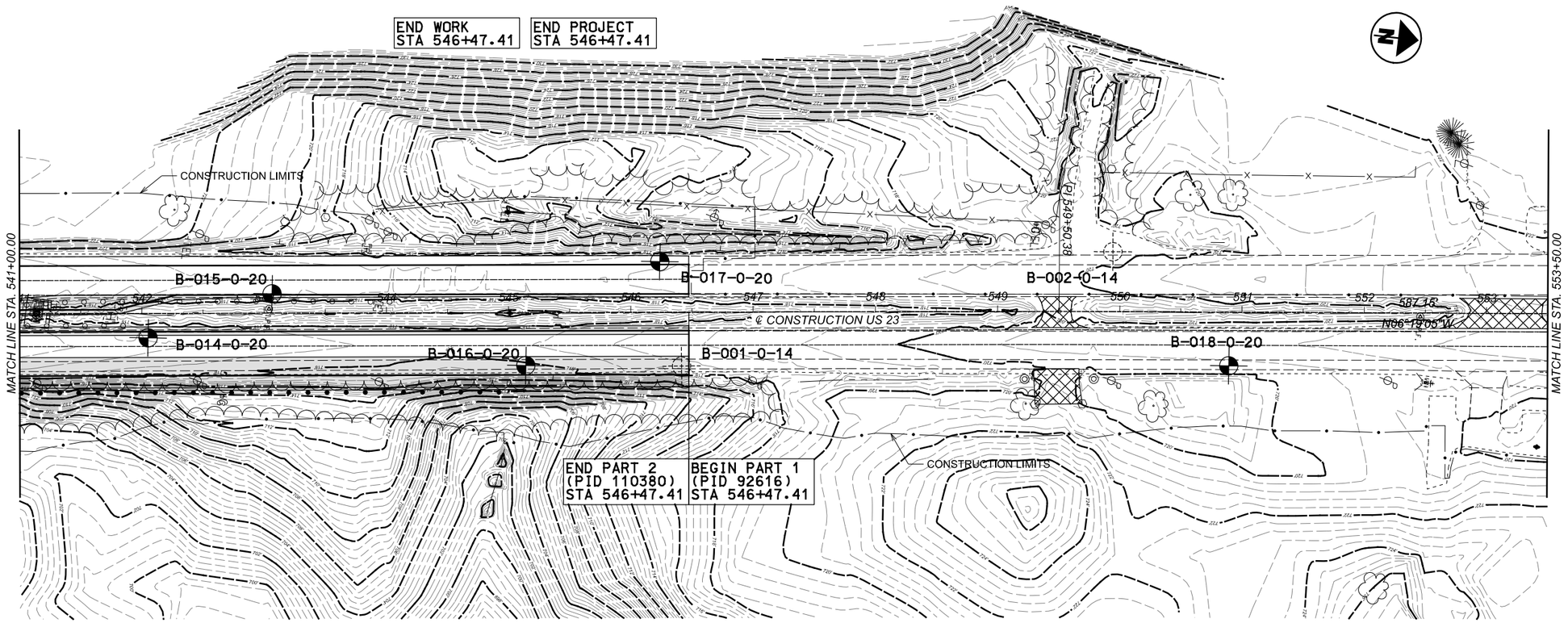

HORIZONTAL SCALE IN FEET
0 25 50 100

SOIL PROFILE U.S. 23
STA 541+00.00 TO STA 553+50.00

FRA-23-4.19

MODEL: Plan 3 (Sheet1) PAPERSIZE: 17x11 (in.) DATE: 12/6/2021 TIME: 4:16:34 PM USER: MJennings
V:\1736\active\175528014\engineering\110380\400-Engineering\Geotechnical\Sheets\110380IP001.dgn

DESIGN AGENCY
Stantec
11687 Lebanon Road
Cincinnati OH 45241
(513) 842-8200

DESIGNER	
MSJ	
REVIEWER	
JMM 12-06-21	
PROJECT ID	
110380	
SUBSET	TOTAL
P.6	8
SHEET	TOTAL
168	170

MODEL: Plan 4 (Sheet) PAPERSIZE: 17x11 (In.) DATE: 12/6/2021 TIME: 4:17:05 PM USER: MJennings
V:\1736\active\175528014\engineering\110380\400-Engineering\Geotechnical\Sheets\110380P001.dgn

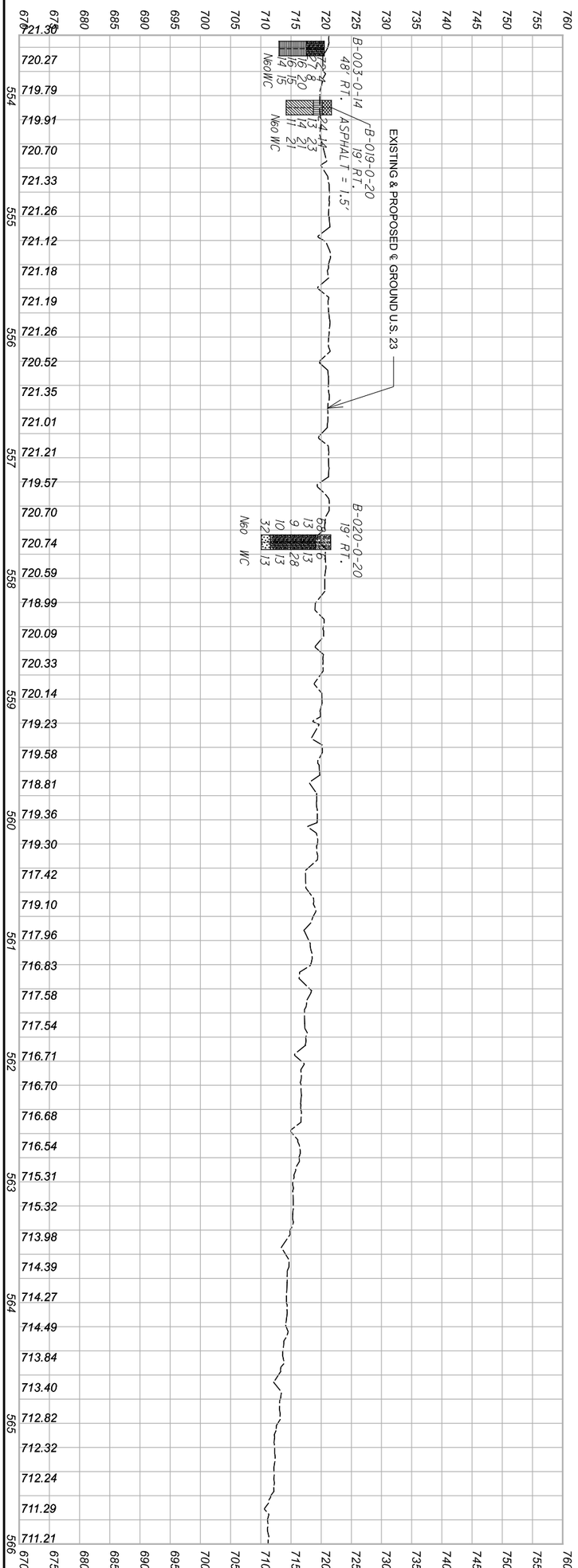

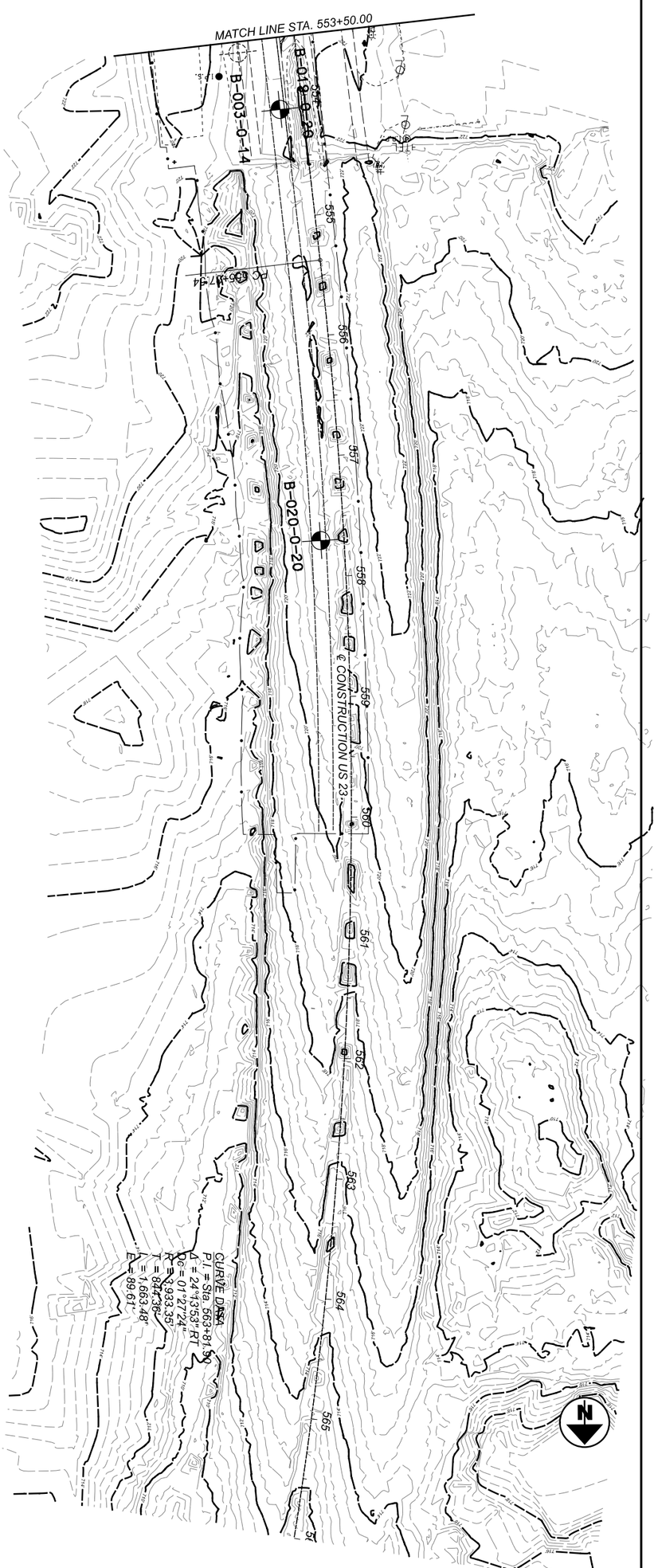

SOIL PROFILE U.S. 23
STA 533+00.00 TO END

HORIZONTAL SCALE IN FEET
0 50
25 100

SHEET	TOTAL
169	170

SUBSET	TOTAL
P.7	8

PROJECT ID: 110380

REVIEWER: JMM 12-06-21

DESIGNER: MSJ

DESIGN AGENCY: Stantec
11687 Lebanon Road
Cincinnati OH 45241
(513) 842-8200

FRA-23-4.19

MODEL: Plan 3 (Sheet) PAPERSIZE: 17x11 (in.) DATE: 12/6/2021 TIME: 4:46:14 PM USER: MJennings
V:\1736\active\175528014\engineering\110380\400-Engineering\Geotechnical\Sheets\110380P002.dgn

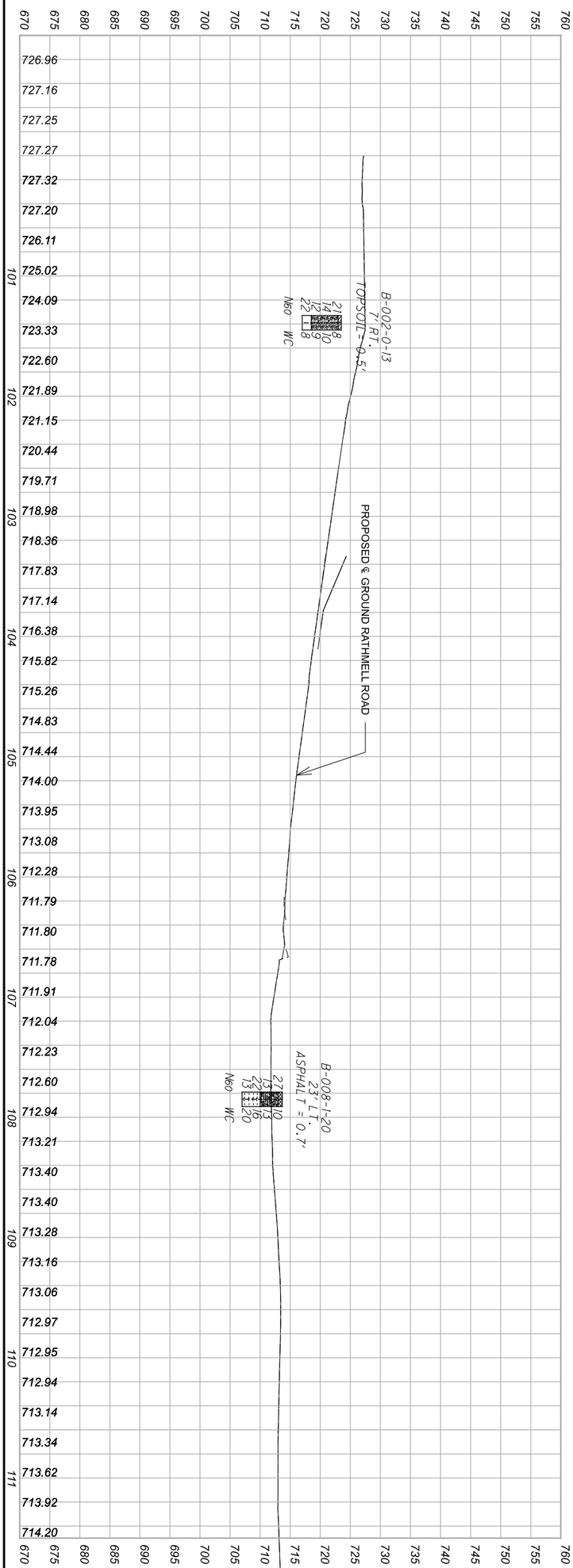

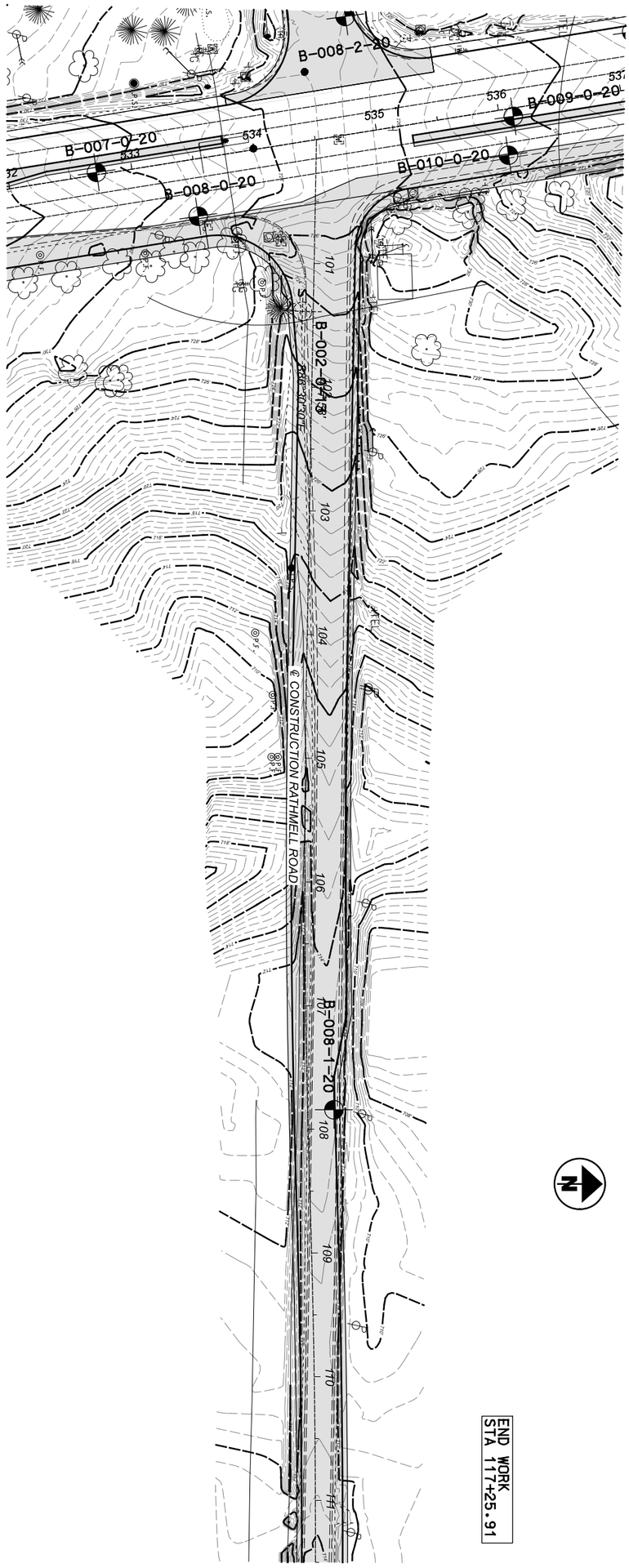

SOIL PROFILE RATHMELL ROAD
BEGINNING TO STA 111+50.00

HORIZONTAL
SCALE IN FEET
0 50
25 100

DESIGN AGENCY
Stantec
11687 Lebanon Road
Cincinnati OH 45241
(513) 842-8200

DESIGNER MSJ
REVIEWER JMM 12-06-21
PROJECT ID 110380
SUBSET P.8 TOTAL 8
SHEET 170 TOTAL 170

SPECIAL PROVISIONS

WATERWAY PERMITS CONDITIONS

C-R-S: FRA-270/23-51.50 /4.19 (Part 1 & 2)

PID: 92616

Date: 03/09/2023

1. Waterway Permits Time Restrictions:

A Regional General Permit (RGP), Section A (Linear Transportation) from the United States Army Corps of Engineers (USACE) is pending for FRA-270/23-51.50/4.19 (Part 1 & 2), PID: 92616. No fill activities in aquatic resources are not authorized until the authorization letter is acquired. When provided, a copy of the RGP and authorization letter shall be kept at the work site at all times and made available to all contractors and subcontractors. The pending permit will expire: October 24, 2024.

For work pending authorization in aquatic resources (including streams, wetlands, jurisdictional ditches, captured streams, lakes, ponds), the Department will consider the Contractor's submission of a reauthorization to the waterway permit expiration date based on project constraints. If more than one permit is authorized for the project, then all permits become invalid once the first permit expires. In order for the request to be considered, the Contractor must submit a justification to the Engineer at least 90 days prior to the waterway permit expiration date. The Engineer will submit the request for a time extension to the Ohio Department of Transportation, Office of Environmental Services, Waterway Permits Unit (ODOT-OES-WPU) for consideration and coordination with the U.S. Army Corps of Engineers (USACE), Ohio Environmental Protection Agency (OEPA), U.S. Coast Guard (USCG), U.S. Fish and Wildlife Service (USFWS), and Ohio Department of Natural Resources (ODNR) as appropriate.

2. Deviations From Permitted Construction Activities:

Once the permit is authorized and obtained, no deviation from the requirements for work in aquatic resources depicted in the plans, Special Provisions, and/or Working Drawings may be made unless a modification has been submitted to ODOT-OES-WPU and approved by the appropriate agencies (i.e., USACE, OEPA, USCG, ODNR, and USFWS).

NOTE: Plan sheets submitted with the Pre-Construction Notification (PCN) are pending approval by the USACE in accordance with RGP A and are included in these Special Provisions.

For emergency situations resulting in unanticipated impacts to aquatic resources, provide notification (verbal or written) to the Engineer as soon as possible following discovery of the situation. Written notification to the Engineer and notification to the ODOT-OES-WPU (614-466-2159) must be made within 24 hours.

For non-emergency situations, notify the Engineer in writing for submission to the ODOT-OES-WPU (614-466-2159) for consideration and coordination with the appropriate agencies. Notification must be made at least 90 days prior to planned, non-permitted activities. Consideration of the requested deviation is at the discretion of the Director and must be coordinated with the appropriate regulatory agencies.

3. In-Stream Work Restrictions:

Work in the following aquatic resources is further restricted as follows:

Stream Name /Description	Location	Work restriction dates (No in-stream work permitted)
Stream 15	STA 690+86.92 and STA 273+21.83	None

In-stream work has been defined as the placement and/or removal of fill materials (temporary or permanent) below ordinary high water of a stream. Examples of "fill" include, but are not limited to: bridge piers, abutments, culverts, rock channel protection, scour protection, and temporary access fills.

Fills placed within a stream identified in the above table (outside of the work restriction dates) can continue to be worked from during the work restriction dates, but cannot be expanded, removed, or otherwise modified (below ordinary high water) until once again outside of the work restriction dates.

4. Materials:

Materials utilized in or adjacent to aquatic resources for temporary or permanent fill or bank protection shall consist of suitable material free from toxic contaminants in other than trace quantities. Asphalt products are specifically excluded for use as fill. Chromated Copper Arsenate (CCA), creosote, and other pressure treated lumber shall not be used in structures that are placed in aquatic resources.

5. Cultural Resources:

Per CMS 107.10, if archeological sites, historical sites, or human remains are discovered, cease all work in the immediate area and notify the Engineer who will immediately contact the ODOT-District Environmental Coordinator and ODOT-OES-Cultural Resource Section at 614-466-2159. In the event of human remains are identified by OES-Cultural Resources Section, the Engineer shall also contact the Franklin County Sheriff's Office at 614-525-3333.

6. Aquatic Resource Demarcation:

The tables attached (Table C and Table D) includes detailed fill quantities pending authorization within the aquatic resources. Aquatic resources not pending authorization for impact by these Special Provisions shall be demarcated in the field as per SS 832 prior to site disturbance. The fence shall remain in place and be maintained throughout the construction process. Following the completion of the project, the fence and posts shall be removed.

7. Spill containment:

Provide and Maintain an Oil Spill Kit with a minimum capacity of 65 gallons. The Spill Kit shall contain:

- 6 - 3 in. X 8 ft. Oil only socks
- 4 - 18 in. X18 in. Oil only pillows
- 2 - 5 in. X 10ft. Booms
- 50 - 16in. X 20 in. Oil only pads
- 10- Disposable Bags
- 1 - 65 Gallon drum with lid
- 25 pounds of Granular Oil Absorbent

The Oil Spill Kit shall be located within 150 feet of any equipment working in a stream or wetland. The oil Spill Kit shall be maintained for the life of the contract. Any materials utilized during the project will be replaced within 48 hours. All costs associated with furnishing and maintaining the above referenced spill containment kit is incidental to work.

8. Blasting:

State law requires notification to the Ohio Department of Natural Resources should blasting be required within or near stream channels (See ORC 1533.58 & CMS 107.09). Notify the Engineer, in writing, a minimum of 30 days in advance of blasting, for submission to ODOT-OES-WPU (614-466-2159) for coordination with ODNR.

9. Project Inspection:

Inspection of Work may include inspection by representatives of other government agencies or railroad corporations that pay a portion of the cost of the Work or regulate the Work through State and Federal law. Comments from the representatives of these agencies shall be directed to the Engineer who will immediately contact the ODOT-District Environmental Coordinator and ODOT-OES-WPU at 614-466-2159.

10. Temporary Access Fills:

Definitions:

Hydraulic Opening
The cross-sectional area allowing an unimpeded discharge equal to twice the highest monthly flow without producing a rise in the backwater above the Ordinary High Water Mark (OHWM).

Standard Temporary Discharge
Discharge equal to twice the *highest monthly flow* without producing a rise in the backwater above the OHWM. The U.S. Geologic Service publication "Techniques for estimating Selected Streamflow Characteristics of Rural Unregulated Streams in Ohio" provides equations that estimate monthly flow for Ohio Waterways These flows are also available in a web application by USGS StreamStats, (https://water.usgs.gov/osw/streamstats/ohio.html). The highest monthly flow is the highest monthly mean discharge occurring in a 12-month period from January to December.

Average Monthly Flow
The average monthly flow represents the estimated "normal" flow.

Temporary Access Fills (TAFs)
Include, but are not limited to, dewatering fills, causeways, cofferdams, access pads, temporary bridges, etc. below the OHWM.

Requirements
21 calendar days prior to the initiation of any in-stream work, provide the Engineer with Working Drawings that include:

- Plan view drawing (50 scale or less) showing the location of all TAFs proposed for use on the project.
- Scaled cross section and profile drawing showing the OHWM and the proposed hydraulic opening.
- Identify the minimum diameter size, placement location and thickness of non-erodible Dumped Rock Fill material on the plan and profile.
- Calculations analyzing the hydraulic impacts of the TAF on the waterway. Include in the calculations an analysis of the hydraulic opening sized adequately to pass the Standard Temporary

Discharge without producing a rise in backwater above the OHWM. Include, in the analysis, calculated channel velocities adjacent to the TAF, culvert exit velocities, calculated headwater and tailwater elevations, and any additional appropriate calculations to assess potential impacts to the waterway during normal and anticipated high flow (twice the highest monthly flow) events.

- A description of all temporary material to be placed below the OHWM elevation.
- A description of the installation and staging of all temporary fill over the life of the contract.
- Identify the protection methods and/or structural Best Management Practices for minimizing impacts to the waterway.
- Volume of temporary fill below the OHWM elevation.
- A description of the diversion ditches, equipment, conduits or means for maintaining normal flows in the waterway.
- A description of the removal of all temporary fill and restoration of the channel and all areas impacted by the TAFs.
- A schedule outlining the timing of the placement and removal of all temporary fill.
- Have competent individuals prepare and check the Working Drawings and hydraulic calculations. Provide a cover sheet containing the preparer(s) and checker(s): First Name, Last Name and Initials. The preparer(s) and checker(s) shall not be the same individual. Have an Ohio Registered Engineer review, approve, sign, seal and date the Working Drawings and hydraulic calculations according to ORC 4733 and OAC 4733-35. Include the following statement on the Working Drawings:

  "These Working Drawings were prepared in compliance with the terms of these Special Provisions and all contract documents."

Do not begin in-stream work until the Engineer has accepted the Working Drawings and hydraulic calculations.

The design and construction of the Contractor's TAF must minimize impacts to water bodies, stream banks, stream beds, and riparian zones to the maximum extent practicable.

Fording of waterways and other aquatic resources is prohibited.

Construct TAFs in such a manner that will maintain flows, minimize upstream flooding, and avoid overtopping the TAF on a regular basis. ***TAFs shall be designed and constructed so that the hydraulic opening provides capacity for a discharge equal to twice the highest monthly flow without producing a rise in the backwater above the (OHWM)***.

If the Contractor proposes a TAF which does not meet all the requirements of these Special Provisions, the Contractor must submit a request in writing for a modified TAF to the Engineer. The request must include all Working Drawings and hydraulic calculations required by these Special Provisions. The Department makes no guarantee to grant the request. The Contractor's proposed TAF request will be coordinated by OES with the USACE and the OEPA, as appropriate. The time frame allowed for the coordination of the contractor's proposed TAF will be a minimum of 60 days.

Installation of any temporary fill without appropriate authorization is strictly prohibited. All direct coordination with the USACE and/or OEPA will be performed through OES.

TAFs Construction and Payment

Begin planning and installing causeways and access fills as early in construction as possible to avoid conflicts with these Special Provisions or other environmental commitments that have been included in the construction plans.

TAFs in Streams and Rivers may include, but are not limited to, causeways, cofferdams, access pads, sheet piling, temporary bridges, etc. The Contractor must make every attempt to minimize disturbance to waterbodies, stream banks, stream beds and riparian zones during the construction, maintenance, and removal of the TAF. Construct the TAFs as narrow as practical. Install in-stream conduits parallel to the stream banks. Make the TAFs in shallow areas rather than deep pools where possible. Minimize clearing, grubbing, and excavation of stream banks, and approach sections. Construct the TAFs as to not cause erosion or allow sediment deposits in the waterway.

Prior to the initiation of any in-stream work, establish a monument upstream of the proposed TAF to visually monitor the water elevation in the waterway where the fill is permitted. Maintain the monument throughout the project. Provide a visual mark on the monument that identifies the elevation 1 foot above the OHWM. Ensure that the monument can be read from the bank of the waterway. Have this elevation set and certified by an Ohio Registered Surveyor. All costs associated with furnishing and maintaining the above referenced monument is incidental to the work.

Should the surface water elevation exceed the elevation 1 foot above OHWM, the Department will compensate the Contractor for repair of any resulting damage to the TAF up to the elevation of 1 foot above the OHWM, except as noted. The Department will recognize this event as an excusable, non-compensable delay in accordance with Section 108.06 B. of the Construction & Materials Specifications.

Follow the requirements in Item 502 for Structures for Maintaining Traffic and in Item 503 for Cofferdams and Excavation Bracing and any modifications to these items as shown in the plans. The Department will not pay for repair and maintenance of TAFs associated with Items 502 and 503 as a result of surface water elevation exceeding 1 foot above the OHWM. Compensation for damages associated with waterway flows will be provided as described in Items 502 and 503.

Construct the TAFs, not including Items 502 and 503, to a water elevation at least 1 foot (0.3 m) above the OHWM. If more than one-third the width of the stream is filled, then use culvert pipes to allow the movement of aquatic life. Ensure that any ponding of water behind the TAF will not damage property, flood roadways, or threaten human health and safety.

The following minimum requirements apply to TAFs where culverts are used:

A. Furnish culverts on the existing stream bottom.
B. Avoid a drop in water elevation at the downstream end of the culvert that would result in an adverse impact to the waterway.
C. Furnish a sufficient number of culverts in addition to stream openings to provide a discharge equal to twice the highest monthly flow without producing a rise in the backwater above the OHWM.
D. Furnish culverts with a minimum diameter of 18 inches (0.5 m).

All TAFs must be constructed of suitable materials. Causeways and access fills must be encapsulated with clean, non-erodible, nontoxic Dumped Rock Fill, Type A, B, C, or D, meeting the requirements of C&MS 703.19.B. Utilize appropriately sized Dumped Rock Fill determined by the Contractor's engineer for encapsulating the sides of the TAF. Encapsulate all sides of the TAF with the non-erodible material. For causeways, contractors may use clean aggregate meeting C&MS 703.01 Size Number 1 and 2 for creating a working surface above the OHWM. Extend the non-erodible encapsulating material to at least the elevation of the top of the working surface. Extend clean aggregate up the slope from the original stream bank for 50 feet (10 m) to remove erodible material and prevent tracking from equipment onto the TAF.

When the work requiring TAF is complete, all portions of the TAF (including all rock and culverts) will be removed in its entirety. Do not dispose of TAF material in other aquatic resources or where erosion into another aquatic resource is possible. The stream bottom affected by the TAFs will be restored to its pre-construction elevations. The TAFs will not be paid as a separate item but will be included by the Contractor as part of the total project cost.

Unless specific TAF compensation is included in the plans, all environmental protection and control associated with the authorized activities, are incidental to the work within the boundaries of the aquatic resources.

11. Excavation Activities:

Excavated material will be placed at an upland site and disposed of in such a manner that sediment and runoff to streams and other aquatic resources is controlled and minimized. Additionally, no more than incidental fallback into aquatic resources is permitted during the excavation process. If any changes to the proposed work are deemed necessary, notify the Engineer who will immediately contact the ODOT-District Environmental Coordinator and ODOT-OES-WPU at 614-466-2159.

12. Demolition Debris:

The intentional discharge of demolition debris from any structure (including but not limited to bridges, culverts, abutments, wing walls, piers) is not authorized for this project. If any demolition debris inadvertently falls into aquatic resources, it must be removed immediately. Notify the Engineer immediately in writing of any inadvertent fill discharged into aquatic resources. The Engineer will immediately contact ODOT-OES-WPU at 614-466-2159 if any unintentional discharge occurs.

13. Construction Completion Certification:

Upon completion of the work, notify the Engineer. The USACE Construction Completion Certification must be completed and signed by the Engineer then provided via US mail or email to:

Waterway Permits Program Manager
ODOT - Office of Environmental Services
1980 West Broad Street, Mail Stop 4170
Columbus, Ohio 43223
Adrienne.Earley@dot.ohio.gov

A copy of the certification will be provided once the pending permit is authorized and obtained.

Version: July 2020

USACE Regional General Permit (RGP) A (Linear Transportation)
FRA-IR 270-51.50/FRA-23-4.19 Pt 1&2, PID 92616
2/8/2023

TABLE C. STREAM DISCHARGE AND FILL QUANTITIES

Stream	Station	Description of Impacts	Length (LF) within Project	Width (LF)	Depth (LF)	Permanent Fill Below OHWM												Total Permanent Fill			Total Temporary Fill			Total Impact Length
						Proposed Concrete (Includes Culvert, Piers, Walls, Abutments, etc.)			Proposed RCP			Proposed Earthen, Granular, or Embankment Fill			Proposed Other (Flap Gate)									
						Length (LF)	Area (AC)	Volume (CY)	Length (LF)	Area (AC)	Volume (CY)	Length (LF)	Area (AC)	Volume (CY)	Length (LF)	Area (AC)	Volume (CY)	Length (LF)	Area (AC)	Volume (CY)	Length (LF)	Area (AC)	Volume (CY)	Length (LF)
Stream 15	STA 690+86.92	Culvert extension, concrete pad, RCP, flap gate, TAF	2,260	12	1	50	0.014	22.22	25	0.007	11.11	-	-	-	5	0.001	2.22	80	0.022	35.56	10	0.003	4.44	90
Stream 15	STA 273+21.83	Culvert extension, RCP, backfill for minor realignment of stream with culvert, TAF	2,260	8	1	40	0.007	11.85	30	0.006	8.89	35	0.006	10.37	-	-	-	105	0.019	31.11	10	0.002	2.96	115
					SUM:	90	0.021	34.07	55	0.012	20	35	0.006	10.37	5	0.001	2.22	185	0.041	66.67	20	0.005	7.41	205

LF = linear feet; AC = acres; CY = cubic yards; RCP = rock channel protection or the like (specify if different, i.e.. concrete block matting); NA = Not Applicable

USACE Regional General Permit (RGP) A (Linear Transportation)
FRA-IR 270-51.50/FRA-23-4.19 Pt 1&2, PID 92616
2/8/2023

TABLE D. WETLAND DISCHARGE AND FILL QUANTITIES

Wetland	Station	Description of Impacts	Acreage (AC) within Project	Permanent Fill Within Wetland Boundary				Total Permanent Fill		Total Impact Acreage
				Proposed Earthen, Granular, or Embankment Fill		Proposed Other (Turf Reinforcing Mat)				
				Area (AC)	Volume (CY)	Area (AC)	Volume (CY)	Area (AC)	Volume (CY)	Area (AC)
Wetland Z	STA 8+00	Culvert removal, excavation, grading	0.003	0.003	4.84	-	-	0.003	4.84	0.003
Wetland AL	STA 803+13 to 804+10	Ditch cleanout, grading, install turf reinforcing mat	0.051	0.022	34.90	0.018	29.63	0.040	64.53	0.040
			SUM:	0.025	39.74	0.018	29.63	0.043	69.37	0.043

LF = linear feet; AC = acres; CY = cubic yards; RCP = rock channel protection or the like (specify if different, i.e.. concrete block matting); NA = Not Applicabl

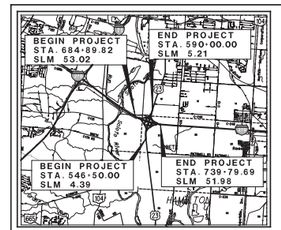

LOCATION MAP
LATITUDE: 39° 52' 30" LONGITUDE: 83° 00' 14"
SCALE IN MILES
0 1 2 3 4

PORTION TO BE IMPROVED
INTERSTATE HIGHWAY
FEDERAL ROUTES
STATE ROUTES
COUNTY & TOWNSHIP ROADS
OTHER ROADS

DESIGN DESIGNATION - SEE SHEET 2

ENGINEERS SEAL:

SIGNED:
DATE:
SHEETS: 429 -482

ENGINEERS SEAL:

SIGNED:
DATE:
SHEETS: 483 -545

ENGINEERS SEAL:

SIGNED:
DATE:
SHEETS: 1 - 428

UNDERGROUND UTILITIES
CONTACT BOTH SERVICES
CALL TWO WORKING DAYS
BEFORE YOU DIG
CALL
1-800-362-2764
(TOLL FREE)
OHIO UTILITIES PROTECTION SERVICE
NON-MEMBERS
MUST BE CALLED DIRECTLY
OIL & GAS PRODUCERS UNDERGROUND
PROTECTION SERVICE CALL: 1-800-925-0988

STATE OF OHIO
DEPARTMENT OF TRANSPORTATION

FRA-270-51.50 PART 1

CITY OF COLUMBUS
HAMILTON TOWNSHIP
FRANKLIN COUNTY

FOR PART 2, SEE FRA-23-4.19 (PID 110380)

INDEX OF SHEETS:

TITLE SHEET	1	PLAN AND PROFILE - RAMP P2	257 - 258
TRAFFIC DATA	2	CROSS SECTIONS - RAMP P2	259 - 264
SCHEMATIC PLAN	3 - 4	PLAN - RAMP Q	265 - 266
CONTROL POINTS	5 - 6	PLAN AND PROFILE - RAMP R	267 - 272
STANDARD ABBREVIATIONS	7	CROSS SECTIONS - RAMP R	273 - 300
TYPICAL SECTIONS	8 - 14	PLAN AND PROFILE - RAMP S	301 - 304
GENERAL NOTES	15 - 19	CROSS SECTIONS RAMP S	305 - 319
MAINTENANCE OF TRAFFIC	20 - 76	PLAN AND PROFILE - ACCESS ROAD	320
GENERAL SUMMARY	77 - 84	EARTHWORK AND SEEDING SUBSUMMARY	321 - 324
SUBSUMMARIES	85 - 100	SUPERELEVATION TABLE	325 - 332
PROJECT SITE PLAN	101	INTERSECTION DETAILS	333 - 334
PLAN - IR 270 EASTBOUND	102 - 104	PAVEMENT DETAILS	335 - 348
PLAN - IR 270 WESTBOUND	105 - 108	DRIVEWAY PROFILES	349 - 350
CROSS SECTIONS - IR 270 WESTBOUND	109 - 137	CONCRETE JOINT DETAILS	351 - 359
PLAN AND PROFILE - IR 270 EASTBOUND MERGE	138 - 143	STORM SEWER PROFILES	360 - 366
CROSS SECTIONS - IR 270 EASTBOUND MERGE	144 - 171	CULVERT DETAILS	367 - 376
PLAN AND PROFILE - IR 270 CD LANE	172 - 173	DRIVE PIPE DETAILS	377
PLAN - US 23	174 - 175	FLAP GATE DETAILS	378
PLAN AND PROFILE - US 23 ACCEL. LANE	176 - 178	SIGNING AND PAVEMENT MARKINGS	379 - 391
CROSS SECTIONS - US 23 ACCEL. LANE	179 - 188	SIGNING ELEVATION DETAILS	392 - 398
PLAN AND PROFILE - US 23 DECEL. LANE	189 - 191	TRAFFIC SIGNAL PLANS	399 - 414
CROSS SECTIONS - US 23 DECEL. LANE	192 - 201	TRAFFIC SIGNAL INTERCONNECT PLANS	415 - 428
PLAN AND PROFILE - RAMP L	202 - 207	LIGHTING PLANS	429 - 455
CROSS SECTIONS - RAMP L	208 - 219	LIGHTING CIRCUIT DIAGRAMS	456 - 469
PLAN AND PROFILE - RAMP M	220 - 222	OVERHEAD POWER	470 - 482
PLAN - RAMP N	223 - 224	STRUCTURES OVER 20' (FRA-023-0517)	483 - 504
PLAN AND PROFILE - RAMP O	225 - 227	STRUCTURES OVER 20' (FRA-270-5264)	505 - 545
PLAN AND PROFILE - RAMP P1	228 - 233	RIGHT OF WAY PLANS	546 - 554
CROSS SECTIONS - RAMP P1	234 - 256	SOIL PROFILES	

PARTS 1 AND 2

ODOT STANDARD CONSTRUCTION DRAWINGS												COC STANDARD CONSTRUCTION DRAWINGS						SUPPLEMENTAL SPECIFICATIONS	
BP-2.1	1/21/22	DM-4.4	1/15/15	ITS-14.10	1/21/22	MT-95.41	1/17/20	MT-105.10	1/17/20	TC-51.12	1/15/16	1500	9/15/15	4170	7/1/21	MTS-1	1/1/18	SS800	SEE PROPOSAL
BP-2.2	1/15/21	F-1.1	7/19/13	ITS-15.10	1/15/21	MT-95.45	1/17/20	MT-120.00	7/15/23	TC-52.10	10/18/13	1510	9/15/15	4200	8/1/15	MTS-2	1/1/18	SS804	7/15/22
BP-2.3	7/18/14	F-3.1	7/19/13	ITS-15.11	1/15/21	MT-95.50	7/21/17	RM-1.1	1/15/21	TC-52.20	1/15/21	1520	9/15/15	4202	8/10/17	MTS-3	1/1/18	SS809	7/15/22
BP-2.5	1/21/22	F-3.2	7/18/14	ITS-16.10	7/16/21	MT-95.82	7/19/13	RM-4.2	4/17/20	TC-65.10	1/17/14	1540	9/15/15	4205	5/1/14	MTS-4	1/1/18	SS813	10/18/18
BP-3.1	1/21/22	F-3.3	7/19/13	ITS-30.11	4/16/21	MT-96.11	4/16/21	RM-4.3	1/21/22	TC-65.11	7/15/22	1550	9/15/15	4253	5/1/14	MTS-54	1/1/18	SS825	1/17/20
BP-4.1	7/19/13	F-3.4	7/19/13	ITS-30.12	4/16/21	MT-96.26	1/18/18	RM-4.4	7/19/18	TC-71.10	7/15/22	4000	8/10/17	4330	8/10/17	MTS-54APP	1/1/18	SS832	7/15/22
BP-5.1	7/15/22	HL-10.11	7/15/22	ITS-30.13	4/16/21	MT-97.12	1/20/17	TC-12.31	1/21/22	TC-72.20	1/20/18	4001	8/1/15	4331	5/1/14	MTS-56	1/1/18	SS833	1/21/22
BP-6.1	7/19/13	HL-10.12	1/20/17	ITS-30.14	1/15/21	MT-97.31	1/20/17	TC-15.16	7/16/21	TC-73.20	1/17/20	4002	5/1/14	4600	7/1/20	MTS-57	1/1/18	SS844	4/20/18
BP-9.1	1/18/18	HL-10.13	4/17/20	ITS-50.10	1/15/21	MT-98.10	1/17/20	TC-16.22	7/16/21	TC-81.11	7/16/21	4020	5/1/14	4602	7/1/20	MTS-58	1/1/18	SS861	1/15/21
BP-9.2	1/15/21	HL-10.31	7/15/22	MGS-1.1	7/16/21	MT-98.11	1/17/20	TC-21.11	7/16/21	TC-83.10	1/17/20	4021	7/1/20	4603	7/1/20	MTS-202	1/1/18	SS878	1/21/22
CB-1.1	7/16/21	HL-20.11	1/15/21	MGS-2.1	1/19/18	MT-98.21	1/17/20	TC-21.21	7/15/23	TC-83.20	7/15/22	4022	7/1/20	4650	7/1/20	MTS-301	1/1/18	SS904	7/15/22
CB-2-2B	7/15/22	HL-20.21	1/15/21	MGS-3.2	1/18/13	MT-99.20	4/19/18	TC-22.10	4/17/20	TC-84.20	10/18/13	4023	7/1/20			MTS-302	1/1/18	SS909	10/21/22
CB-5A,8A	7/16/21	HL-30.11	1/15/21	MGS-4.2	7/19/13	MT-99.30	1/17/20	TC-22.20	1/17/14	TC-84.21	10/18/13	4051	5/1/14			MTS-402	1/1/18	SS913	4/18/21
CB-5	7/16/21	HL-30.21	4/17/20	MGS-4.3	1/18/13	MT-99.60	1/15/16	TC-41.10	7/19/13	TC-85.10	7/15/16	4054	8/10/17			MTS-403	1/1/18		
CB-6	1/21/22	HL-30.22	1/15/21	MGS-5.2	7/15/16	MT-101.60	1/17/20	TC-41.20	10/18/13	TC-85.11	7/16/21	4105	8/10/17	L-6309B	9/1/22	MTS-404	1/1/18	COC1611	2/1/13
CB-8	7/16/21	HL-40.20	7/15/22	MGS-5.3	7/15/16	MT-101.70	1/17/20	TC-41.30	10/18/13	TC-85.22	1/18/18	4110	10/1/18	L-631D	1/26/18	MTS-501	1/1/18	COC1620	9/10/18
DM-1.1	1/17/20	HL-60.11	7/21/17	MGS-6.1	1/19/18	MT-101.75	1/17/20	TC-41.40	10/18/13			4122	10/1/18	L-631I	1/26/18	MTS-603	1/1/18		
DM-1.2	7/16/21	HL-60.31	1/17/20	MH-1	7/16/21	MT-101.80	1/17/20	TC-41.41	7/19/18			4160	10/1/18	L-6318B	1/26/18	MTS-700	1/1/18		
DM-1.3	7/18/14	MHW-2.1	1/20/18	MT-95.10	7/19/18	MT-101.90	1/17/20	TC-41.50	10/18/13			4161	8/1/15	L-8508B	9/21/22	MTS-702	1/1/18		
DM-4.1	1/17/20	HW-2.2	1/20/18	MT-95.31	7/19/18	MT-102.10	1/17/20	TC-42.10	10/18/13			4162	7/1/20			MTS-800	1/1/18		
DM-4.2	1/20/13	ITS-10.11	7/18/15	MT-95.32	4/19/18	MT-102.20	4/19/18	TC-42.20	10/18/13			4163	7/1/21						GEOTECHNICAL REPORT (11/18/20)
DM-4.3	1/15/16	ITS-14.11	1/21/22	MT-95.40	1/17/20	MT-103.10	1/21/22	TC-51.11	1/15/16			4164	10/1/20						

SPECIAL PROVISIONS

PROJECT DESCRIPTION

THIS PROJECT CONSISTS OF THE REMOVAL OF RAMP N (IR 270WEST TO US 23 SOUTH) AND RAMP O (IR 270 EAST TO US23 NORTH). WORK INCLUDES THE RECONFIGURATION OF RAMP P1 (IR 270 EAST) AND RAMP S (IR 270 WEST), THE CONSTRUCTION OF A SINGLE LEFT TURN LANE AT RAMP S AND US 23, AND THE CONSTRUCTION OF TWO SIGNALIZED INTERSECTIONS TO PROVIDE ACCESS TO US 23 NORTH AND SOUTH. WORK ALSO INCLUDES FULL DEPTH PAVEMENT AND PAVEMENT OVERLAY ON RAMPS L, M, O, P1, AND S.

EARTH DISTURBED AREAS

PROJECT EARTH DISTURBED AREA: 78.0 ACRES
ESTIMATED CONTRACTOR EARTH DISTURBED AREA: 9.22 ACRES
NOTICE OF INTENT EARTH DISTURBED AREA: 87.2 ACRES

LIMITED ACCESS

THIS IMPROVEMENT IS ESPECIALLY DESIGNED FOR THROUGH TRAFFIC AND HAS BEEN DECLARED A LIMITED ACCESS HIGHWAY OR FREEWAY BY ACTION OF THE DIRECTOR IN ACCORDANCE WITH THE PROVISIONS OF SECTION 5511.02 OF THE OHIO REVISED CODE.

2019 SPECIFICATIONS

THE STANDARD SPECIFICATIONS OF THE STATE OF OHIO, DEPARTMENT OF TRANSPORTATION, INCLUDING SUPPLEMENTAL SPECIFICATIONS LISTED IN THE PLANS AND CHANGES LISTED IN THE PROPOSAL SHALL GOVERN THIS IMPROVEMENT.

I HEREBY APPROVE THESE PLANS AND DECLARE THAT THE MAKING OF THIS IMPROVEMENT WILL NOT REQUIRE THE CLOSING TO TRAFFIC OF THE HIGHWAY EXCEPT AS NOTED ON SHEET 20, AND THAT DETOURS WILL BE PROVIDED AS INDICATED ON THE PLANS.

APPROVED _____
DATE _____ DISTRICT DEPUTY DIRECTOR

APPROVED _____
DATE _____ DIRECTOR, DEPARTMENT OF TRANSPORTATION

PLAN CERTIFIED AS TO COMPLETENESS AND QUALITY

SIGNATURE _____ DATE _____
FIRM _____ TITLE _____

PLAN PREPARED BY:
DLZ
INNOVATIVE IDEAS. EXCEPTIONAL MISSION. UNMATCHED CLIENT SERVICE.
DLZ OHIO, INC.
6121 HUNTLEY RD.
COLUMBUS, OH 43229

3196-E

FEDERAL PROJECT NO. E131 (486)
PID NO. 92616
CONSTRUCTION PROJECT NO.
RAILROAD INVOLVEMENT NONE
FRA-270-51.50
1/554

X:\Projects\20133.1321\1010\FRA\92616\roadway\sheets\92616GT001.dgn 2/10/2023 10:02:03 AM cwong

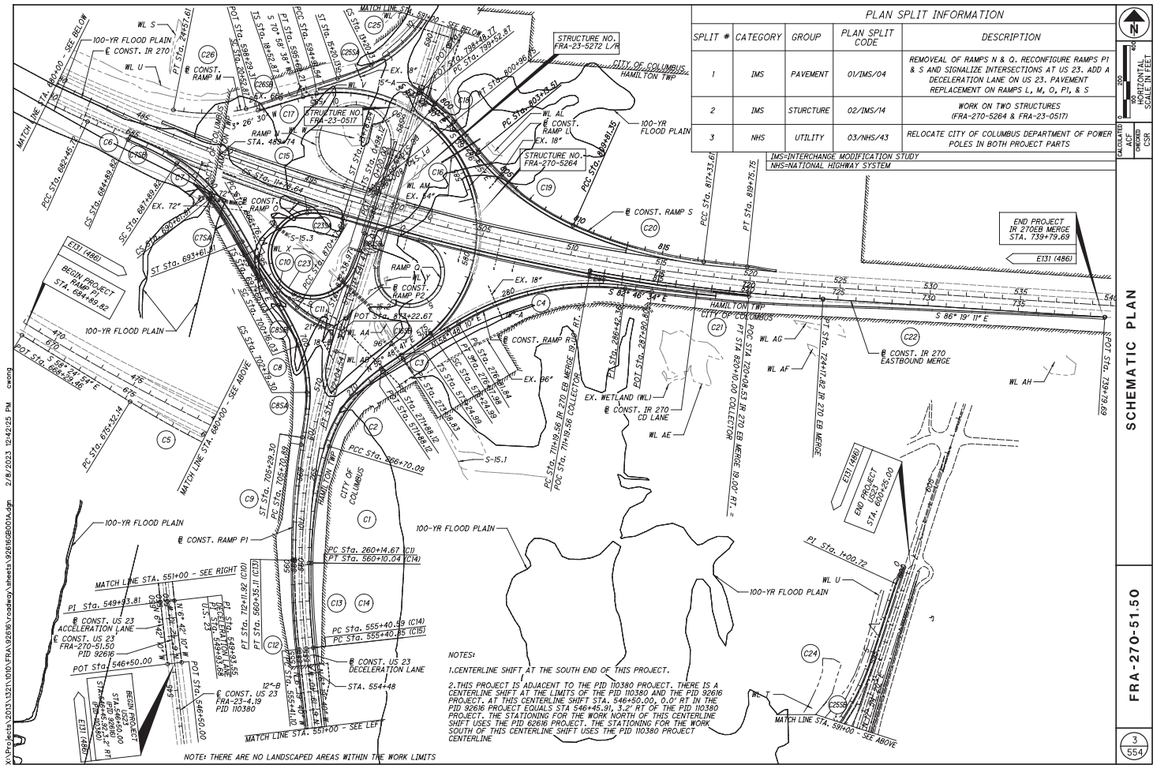

X:\Projects\2023\1321\100\FRA\92616\roadway\sheets\92616ROM001.dgn 2/8/2023 12:42:25 PM cwong

UTILITIES

LISTED BELOW ARE ALL UTILITIES LOCATED WITHIN THE PROJECT CONSTRUCTION LIMITS TOGETHER WITH THEIR RESPECTIVE OWNERS:

AEP-COLUMBUS SOUTHERN POWER
850 TECH CENTER DRIVE
GAHANNA, OH 43230
ATTN: MR. PAUL PAXTON
PHONE: (614) 883-6831

COLUMBIA GAS OF OHIO
3550 JOHNNY APPLESEED CT.
COLUMBUS, OH 43231
ATTN: MR. BRYAN KOPACHY
PHONE: (614) 818-2133
E-MAIL: BKOPACHY@NISOURCE.COM

SOUTH CENTRAL POWER COMPANY
P.O. BOX 250
LANCASTER, OH 43130
ATTN: MR. PHIL STRINGER

WIDE OPEN WEST
3675 CORPORATE DRIVE
COLUMBUS, OH 43231
ATTN: MR. JAYTEE NOVARIA
PHONE: (614) 948-4653
E-MAIL: JNOVARIA@WIDEOPENWEST.COM

CITY OF COLUMBUS
DEPARTMENT OF
SEWERAGE AND DRAINAGE
SEWER MAINTENANCE
OPERATIONS CENTER
1250 FAIRWOOD AVE.
COLUMBUS, OH 43206
PHONE: (614) 645-7100
THIS OFFICE OPERATES 24/7

THE LOCATION OF THE UNDERGROUND UTILITIES SHOWN ON THE PLANS ARE AS OBTAINED FROM THE OWNERS AS REQUIRED BY SECTION 153.64 O.R.C.

THE FOLLOWING CITY OF COLUMBUS UTILITIES MAY BE LOCATED WITHIN THE WORK LIMITS OF THIS PROJECT:

CITY OF COLUMBUS
DEPARTMENT OF TECHNOLOGY
1355 MCKINLEY AVE.
BUILDING C
COLUMBUS, OH 43222
PHONE: (614) 645-7756

CITY OF COLUMBUS
SUPPORT SERVICES DIVISION-COMMUNICATIONS
4211 GROVES ROAD
COLUMBUS, OH 43232
PHONE: (614) 724-7047
RADIO ROOM: (614) 724-4006

AT&T OHIO
111 N. FOURTH ST.
COLUMBUS, OH 43215
ATTN: MR. GARY VAN ALMSICK
PHONE: (614) 223-7276
E-MAIL: GV2755@ATT.COM

CITY OF COLUMBUS
DIVISION OF WATER
910 DUBLIN ROAD
COLUMBUS, OH 43215
PHONE: (614) 645-7188

CITY OF COLUMBUS, DPU
DIVISION OF POWER
3500 INDIANOLA AVE.
COLUMBUS, OH 43223
PHONE: (614) 645-7627

ODOT D-6 TRAFFIC (HIGHWAY LIGHTING)
400 E. WILLIAM ST.
DELAWARE, OH 43015
(740) 833-8024

ODOT CENTRAL OFFICE ITS
1606 W. BROAD ST.
COLUMBUS, OH 43223
614-387-4113
CEN.ITS.LAB@DOT.OHIO.GOV

CITY OF COLUMBUS
DEPARTMENT OF PUBLIC SERVICE
TRAFFIC MAINTENANCE
1820 EAST 17TH AVENUE
COLUMBUS, OH 43219
PHONE: (614) 645-7393

SURVEY PARAMETERS

PRIMARY PROJECT CONTROL MONUMENTS GOVERN ALL POSITIONING ON ODOT PROJECTS. SEE SHEET 5-6 OF THE PLANS FOR A TABLE CONTAINING PROJECT CONTROL INFORMATION.

USE THE FOLLOWING PROJECT CONTROL, VERTICAL POSITIONING, AND HORIZONTAL POSITIONING PARAMETERS FOR ALL SURVEYING:

PROJECT CONTROL

POSITIONING METHOD: OHIO VRS
VERTICAL POSITIONING
ORTHOMETRIC HEIGHT DATUM: NAVD 88
GEOID: GEOID09
HORIZONTAL POSITIONING
REFERENCE FRAME: NAD 83 (CORS96)
ELLIPSOID: GRS80
MAP PROJECTION: LAMBERT CONFORMAL CONIC
COORDINATE SYSTEM: OHIO STATE PLANE, SOUTH ZONE
COMBINED SCALE FACTOR: 0.999943725167
ORIGIN OF COORDINATE SYSTEM: 0,0

USE THE POSITIONING METHODS AND MONUMENT TYPE USED IN THE ORIGINAL SURVEY TO RESTORE ALL MONUMENTS RELATED TO PRIMARY PROJECT CONTROL THAT ARE DAMAGED OR DESTROYED BY CONSTRUCTION ACTIVITIES. RESTORE THE DAMAGED OR DESTROYED MONUMENTS IN ACCORDANCE WITH C&MS 623.

UNITS ARE IN U.S. SURVEY FEET.

PROTECTION OF RIGHT-OF-WAY LANDSCAPING

PRIOR TO BEGINNING WORK, THE CONTRACTOR, THE PROJECT ENGINEER, AND A REPRESENTATIVE OF THE MAINTAINING AGENCY WILL REVIEW AND RECORD ALL LANDSCAPING ITEMS WITHIN THE RIGHT-OF-WAY (BOTH WITHIN AND OUTSIDE THE CONSTRUCTION LIMITS) A RECORD OF THIS REVIEW WILL BE KEPT IN THE PROJECT ENGINEER'S FILES. PRIOR TO FINAL ACCEPTANCE, A FINAL REVIEW OF LANDSCAPING ITEMS WILL BE MADE.

CONSTRICT ALL ACTIVITIES, EQUIPMENT STORAGE, AND STAGING TO WITHIN THE CONSTRUCTION LIMITS.

SUBMIT A WRITTEN REQUEST TO THE PROJECT ENGINEER TO USE ANY AREA OUTSIDE THESE LIMITS. THE DOCUMENT SUBMITTED MUST CLEARLY IDENTIFY THE AREA AND EXPLAIN THE PROPOSED USE AND RESTORATION OF THE AREA. USE OF THESE AREAS FOR DISPOSAL OF WASTE MATERIAL AND CONSTRUCTION DEBRIS, EXCAVATION OF BORROW MATERIAL AND PLACEMENT OF PORTABLE PLANTS IS PROHIBITED. THE REQUEST MUST BE APPROVED, IN WRITING, BEFORE THE CONTRACTOR HAS PERMISSION TO USE THE AREA.

ANY ITEMS DAMAGED BEYOND THE CONSTRUCTION LIMITS, AS DEFINED ABOVE, WILL BE REPLACED IN KIND OR AS APPROVED BY THE PROJECT ENGINEER.

PROOF ROLLING

THE FOLLOWING QUANTITY IS PROVIDED IN THE GENERAL SUMMARY TO ADDRESS LOCATIONS REQUIRING PROOF ROLLING. SEE PLAN SHEET NO. 94 FOR ADDITIONAL INFORMATION.
ITEM 204 - PROOF ROLLING 7 HOUR.

ADDITIONAL SOIL INFORMATION

THE SOIL PROFILE AND/OR STRUCTURE FOUNDATION INVESTIGATIONS SHEETS CONTAIN ALL AVAILABLE SOIL AND BEDROCK INFORMATION WHICH CAN BE CONVENIENTLY SHOWN. ADDITIONAL SUBSURFACE INVESTIGATION INFORMATION IS AVAILABLE FROM ODOT DISTRICT 6

FENCE LENGTHS

THE LENGTHS OF FENCE SHOWN IN THE PLANS ARE HORIZONTAL DIMENSIONS. MEASUREMENTS OF THE FINAL QUANTITIES WILL BE IN ACCORDANCE WITH ITEM 607.

PART-WIDTH CONSTRUCTION

BECAUSE OF THE NECESSITY TO BUILD THIS PROJECT UNDER TRAFFIC AND TO CONSTRUCT THE FULL PAVEMENT WIDTH IN STAGES, EXERCISE CARE TO PREVENT THE CONSTRUCTION OF A BUTT JOINT IN THE BASE COURSES. LAP LONGITUDINAL JOINTS AS SHOWN ON STANDARD CONSTRUCTION DRAWING BP-3.1.

WORK LIMITS

THE WORK LIMITS SHOWN ON THESE PLANS ARE FOR PHYSICAL CONSTRUCTION ONLY. PROVIDE THE INSTALLATION AND OPERATION OF ALL WORK ZONE TRAFFIC CONTROL AND WORK ZONE TRAFFIC CONTROL DEVICES REQUIRED BY THESE PLANS WHETHER INSIDE OR OUTSIDE THESE WORK LIMITS.

CLEARING AND GRUBBING

ALTHOUGH THERE ARE NO TREES OR STUMPS SPECIFICALLY MARKED FOR REMOVAL WITHIN THE LIMITS OF THE PROJECT, A LUMP SUM QUANTITY IS INCLUDED IN THE GENERAL SUMMARY FOR ITEM 201, CLEARING AND GRUBBING. ALL PROVISIONS AS SET FORTH IN THE SPECIFICATIONS UNDER THIS ITEM ARE INCLUDED IN THE LUMP SUM PRICE BID FOR ITEM 201, CLEARING AND GRUBBING.

MONUMENT ASSEMBLIES

CONSTRUCT MONUMENT ASSEMBLIES IN ACCORDANCE WITH THE DETAILS SHOWN ON THE STANDARD CONSTRUCTION DRAWINGS AND AT THE LOCATIONS SHOWN IN THE RIGHT OF WAY PLANS.

ITEM 204 - PROOF ROLLING AND TEST ROLLING

THE GLOBAL STABILIZATION SHALL BE SUBJECT TO PROOF ROLLING OR TEST ROLLING AS FOLLOWS:

EXCAVATION OF SUBGRADE - RAMPS P1 AND P2

1. PROOF ROLL THE STABILIZED AREAS ACCORDING TO 204.06 TO VERIFY STABILITY.
2. FINE GRADE THE SUBGRADE TO THE SPECIFIED GRADE.
3. COMPACT THE SUBGRADE ACCORDING TO 204.03.

CEMENT STABILIZATION - RAMPS L, S, AND R, US-23 ACCEL. AND DECEL. LANES, IR 270 CD LANE, IR 270 EASTBOUND MERGE

1. STABILIZE SUBGRADE
2. PROOF ROLL THE STABILIZED AREAS ACCORDING TO 204.06 TO VERIFY STABILITY

THE QUANTITIES FOR EXCAVATING THE UNSTABLE SUBGRADE ARE PAID UNDER ITEM 204 EXCAVATION OF SUBGRADE.

CONTRACTION AND/OR EXPANSION JOINTS

ALTHOUGH SPECIFIC LOCATIONS OF CERTAIN CONTRACTION AND EXPANSION JOINTS HAVE BEEN DETAILED ON THIS PLAN, NO WAIVER OF THE SPECIFICATIONS IS INTENDED. IN ALL CASES, THE PROVISION OF EXPANSION JOINTS AT ALL MAJOR STRUCTURES INCLUDING THE MAXIMUM SPACING BETWEEN CONTRACTION JOINTS IS IN ACCORDANCE WITH STANDARD CONSTRUCTION DRAWING BP-2.2 AND THE SPECIFICATIONS.

CONNECTION BETWEEN EXISTING AND PROPOSED GUARDRAIL

WHEN IT IS NECESSARY TO SPLICE PROPOSED GUARDRAIL TO EXISTING GUARDRAIL, ONLY THE EXISTING GUARDRAIL SHALL BE CUT, DRILLED, OR PUNCHED. THE CONNECTION SHALL BE MADE USING A W-BEAM, BEAM SPLICE AS SHOWN IN AASHTO M 180-12, EXCEPT THE BEAM WASHERS ARE NOT TO BE USED. PAYMENT SHALL BE INCLUDED IN THE CONTRACT PRICE FOR THE RESPECTIVE GUARDRAIL ITEMS.

BENCHING OF FOUNDATION SLOPES

ALTHOUGH CROSS-SECTIONS INDICATE SPECIFIC DIMENSIONS FOR PROPOSED BENCHING OF THE EMBANKMENT FOUNDATIONS IN CERTAIN AREAS, NO WAIVER OF THE SPECIFICATIONS IS INTENDED. BENCH ALL OTHER SLOPED EMBANKMENT AREAS AS SET FORTH IN 203.05. NO ADDITIONAL PAYMENT WILL BE MADE FOR BENCHING REQUIRED UNDER THE PROVISIONS OF 203.05

ITEM 606 - ANCHOR ASSEMBLY, MGS TYPE E (MASH 2016)

THIS ITEM SHALL CONSIST OF FURNISHING AND INSTALLING ANY OF THE GUARDRAIL END TERMINALS FOR TYPE MGS GUARDRAIL AS LISTED ON ROADWAY ENGINEERING'S WEB PAGE UNDER ROADSIDE SAFETY DEVICES FOR APPROVED GUARDRAIL END TREATMENTS. INSTALLATION SHALL BE AT THE LOCATIONS SPECIFIED IN THE PLANS, IN ACCORDANCE WITH THE MANUFACTURER'S SPECIFICATIONS.

THE FACE OF THE TYPE E IMPACT HEAD SHALL BE COVERED WITH A SHEET OF TYPE G, ASTM D4956 TYPE XI REFLECTIVE SHEETING, PER C&MS 730.193.

REFER TO THE MANUFACTURER'S INSTRUCTIONS REGARDING THE INSTALLATION OF, AND THE GRADING AROUND THE FOUNDATION TUBES AND GROUND STRUT. THE TOP OF ANY FOUNDATION TUBE SHOULD BE LESS THAN 4 INCHES ABOVE THE GROUND. THE PLACEMENT OF THE FOUNDATION TUBES SHOULD BE AN APPROPRIATE DEPTH BELOW THE LEVEL LINE IN ORDER TO MAINTAIN THE FINISHED GUARDRAIL HEIGHT OF 31 INCHES FROM THE EDGE OF THE SHOULDER.

ON-SITE GRADING IS REQUIRED IF THE TOP OF THE FOUNDATION TUBES OR TOP OF THE GROUND STRUT DOES PROJECT MORE THAN 4 INCHES ABOVE THE GROUND LINE.

PAYMENT FOR THE ABOVE WORK SHALL BE MADE AT THE UNIT PRICE BID FOR ITEM 606, ANCHOR ASSEMBLY, MGS TYPE E, EACH, AND SHALL INCLUDE ALL LABOR, TOOLS, EQUIPMENT AND MATERIALS NECESSARY TO CONSTRUCT A COMPLETE AND FUNCTIONAL ANCHOR ASSEMBLY SYSTEM, INCLUDING ALL RELATED TRANSITIONS, REFLECTIVE SHEETING, HARDWARE, GRADING, EMBANKMENT AND EXCAVATION NOT SEPARATELY SPECIFIED, AS REQUIRED BY THE MANUFACTURER.

PAVING UNDER GUARDRAIL

THIS OPERATION SHALL INCLUDE PREPARATION OF THE GRADED SHOULDER USING ITEM 209, LINEAR GRADING, AS PER PLAN AND PAVING UNDER THE GUARDRAIL USING 441 ASPHALT CONCRETE, INTERMEDIATE COURSE, TYPE 1, (448), UNDER GUARDRAIL, AS PER PLAN.

ITEM 209, LINEAR GRADING, AS PER PLAN SHALL CONSIST OF EXCAVATING TOPSOIL, AND PLACING GRANULAR MATERIAL.

ALL COLLECTED DEBRIS AND TOPSOIL, INCLUDING RHIZOMES, ROOTS AND OTHER VEGETATIVE PLANT MATERIAL SHALL BE REMOVED AND DISPOSED OF AS SPECIFIED IN 105.17.

THE REMOVED MATERIAL SHALL BE REPLACED WITH COMPACTABLE GRANULAR MATERIALCONFORMING TO 703.16 PLACED TO GRADE AS DETAILED ON THE TYPICAL SECTION OR AS APPROVED BY THE ENGINEER.

ALL EQUIPMENT, MATERIALS AND LABOR REQUIRED TO PERFORM THE WORK OUTLINED ABOVE SHALL BE INCLUDED FOR PAYMENT UNDER ITEM 209, LINEAR GRADING, AS PER PLAN.

PAVING UNDER GUARDRAIL SHALL CONSIST OF PLACING ITEM 441 TO THE DEPTH SPECIFIED USING ONE OF THE FOLLOWING METHODS:

METHOD A:

1. SET GUARDRAIL POSTS
2. PLACE ITEM 441

METHOD B:

1. PLACE ITEM 441
2. BORE ASPHALT AT POST LOCATIONS (MAY BE OMITTED IF STEEL POSTS ARE USED)
3. SET GUARDRAIL POSTS
4. PATCH AROUND POSTS. THE MATERIALS USED FOR PATCHING SHALL BE AN ASPHALT CONCRETE APPROVED BY THE ENGINEER. PATCHED AREAS SHALL BE COMPACTED USING EITHER HAND OR MECHANICAL METHODS. FINISHED SURFACES SHALL BE SMOOTH AND SLOPED TO DRAIN AWAY FROM THE POSTS.

ROUNDING

THE ROUNDING AT SLOPE BREAKPOINTS SHOWN ON THE TYPICAL SECTIONS APPLIES TO ALL CROSS-SECTIONS EVEN THOUGH OTHERWISE SHOWN.

PAVING UNDER GUARDRAIL (CONTINUED)

ALL EQUIPMENT, MATERIALS AND LABOR REQUIRED TO PERFORM THE WORK OUTLINED ABOVE, WITH THE EXCEPTION OF SETTING GUARDRAIL POSTS, SHALL BE INCLUDED FOR PAYMENT UNDER ITEM 441, ASPHALT CONCRETE, INTERMEDIATE COURSE, TYPE 1 (448), UNDER GUARDRAIL, AS PER PLAN. THE FOLLOWING QUANTITIES HAVE BEEN CARRIED TO THE GENERAL SUMMARY FOR THE ABOVE NOTED WORK:

ITEM 209, LINEAR GRADING, AS PER PLAN. 0.2 MILE

ITEM 441, ASPHALT CONCRETE, INTERMEDIATE COURSE, TYPE 1 (448), UNDER GUARDRAIL, AS PER PLAN. 7 CU. YD.

IMPACT ATTENUATORS

THIS ITEM SHALL CONSIST OF FURNISHING AND INSTALLING ANY OF THE TYPE 2 IMPACT ATTENUATORS AS LISTED ON THE OFFICE OF ROADWAY ENGINEERING'S WEB PAGE (REFER TO THE POSTED SHOP DRAWINGS FOR THE MOST CURRENT APPROVED PRODUCT MODELS). WHEN BI-DIRECTIONAL DESIGNS ARE SPECIFIED, THE CONTRACTOR SHALL SUPPLY APPROPRIATE TRANSITIONS. THE FACE OF THE IMPACT HEAD SHALL BE COVERED WITH TYPE G REFLECTIVE SHEETING, PER C&MS 730.19.

PAYMENT FOR THE ABOVE WORK SHALL BE MADE AT THE UNIT PRICE BID FOR ITEM 606, IMPACT ATTENUATOR, TYPE 2, EACH, AND SHALL INCLUDE ALL LABOR, TOOLS, EQUIPMENT AND MATERIALS NECESSARY TO CONSTRUCT A COMPLETE AND FUNCTIONAL IMPACT ATTENUATOR SYSTEM, INCLUDING ALL RELATED BACKUPS/BACKSTOPS, TRANSITIONS, HARDWARE AND GRADING, NOT SEPARATELY SPECIFIED, AS REQUIRED BY THE MANUFACTURER. INSTALLATION SHALL BE AT THE LOCATIONS SPECIFIED IN THE PLANS, IN ACCORDANCE WITH THE MANUFACTURER'S SPECIFICATIONS.

X:\Projects\2023\1321\100\FRA\92616\roadway\sheets\92616ROM001.dgn 1/12/2023 10:10:13 AM cwong

CALCULATED ACF CHECKED CSR

GENERAL NOTES

FRA-270-51.50

15

554

CALCULATED
ACF
CHECKED
CSR

CROSSINGS AND CONNECTIONS TO EXISTING PIPES AND UTILITIES

WHERE PLANS PROVIDE FOR A PROPOSED CONDUIT TO BE CONNECTED TO, OR CROSS OVER OR UNDER AN EXISTING SEWER OR UNDERGROUND UTILITY, THE CONTRACTOR SHALL LOCATE THE EXISTING PIPES OR UTILITIES BOTH AS TO LINE AND GRADE BEFORE STARTING TO LAY THE PROPOSED CONDUIT.

IF IT IS DETERMINED THAT THE ELEVATION OF THE EXISTING CONDUIT, OR EXISTING APPURTENANCE TO BE CONNECTED, DIFFERS FROM THE PLAN ELEVATION OR RESULTS IN A CHANGE IN THE PLAN CONDUIT SLOPE, THE ENGINEER SHALL BE NOTIFIED BEFORE STARTING CONSTRUCTION OF ANY PORTION OF THE PROPOSED CONDUIT WHICH WILL BE AFFECTED BY THE VARIANCE IN THE EXISTING ELEVATIONS.

IF IT IS DETERMINED THAT THE PROPOSED CONDUIT WILL INTERSECT AN EXISTING SEWER OR UNDERGROUND UTILITY IF CONSTRUCTED AS SHOWN ON THE PLAN, THE ENGINEER SHALL BE NOTIFIED BEFORE STARTING CONSTRUCTION OF ANY PORTION OF THE PROPOSED CONDUIT WHICH WOULD BE AFFECTED BY THE INTERFERENCE WITH AN EXISTING FACILITY. PAYMENT FOR ALL THE OPERATIONS DESCRIBED ABOVE SHALL BE INCLUDED IN THE CONTRACT PRICE FOR THE PERTINENT 611 CONDUIT ITEM.

PIPE CONNECTIONS TO CORRUGATED METAL STRUCTURES

CONNECTIONS OF PROPOSED LONGITUDINAL DRAINAGE TO CORRUGATED METAL STRUCTURES SHALL BE MADE BY MEANS OF A SHOP FABRICATED OR FIELD WELDED STUB ON THE STRUCTURE. THE STUB SHALL MEET THE REQUIREMENTS OF 707 AND HAVE A MINIMUM LENGTH OF 2 FEET AND A MINIMUM WALL THICKNESS OF 0.064 INCHES.

THE LOCATION AND ELEVATION OF THE STUB ARE TO BE CONSIDERED APPROXIMATE AND MAY BE ADJUSTED BY THE ENGINEER TO AVOID CUTTING THROUGH JOINTS IN THE STRUCTURE.

THE FIELD WELDED JOINT, IF USED, SHALL BE THOROUGHLY CLEANED AND REGALVANIZED OR OTHERWISE SUITABLY REPAIRED. WELDING SHALL MEET THE REQUIREMENTS OF 513.21.

A MASONRY COLLAR, AS PER STANDARD DRAWING DM-1.1, WILL BE REQUIRED TO CONNECT THE LONGITUDINAL DRAINAGE TO THE STUB, WHEN PIPE OTHER THAN CORRUGATED METAL IS PROVIDED FOR THE LONGITUDINAL DRAINAGE. PAYMENT FOR CUTTING INTO THE STRUCTURE AND PROVIDING THE CONNECTION DESCRIBED, SHALL BE INCLUDED IN THE CONTRACT PRICE FOR ITEM 611 OR 522.

FARM DRAINS

ALL FARM DRAINS, WHICH ARE ENCOUNTERED DURING CONSTRUCTION, SHALL BE PROVIDED WITH UNOBSTRUCTED OUTLETS. EXISTING COLLECTORS WHICH ARE LOCATED BELOW THE ROADWAY DITCH ELEVATIONS, AND WHICH CROSS THE ROADWAY, SHALL BE REPLACED WITHIN THE CONSTRUCTION LIMITS BY ITEM 611 CONDUIT, TYPE B, ONE COMMERCIAL SIZE LARGER THAN THE EXISTING CONDUIT.

EXISTING COLLECTORS AND ISOLATED FARM DRAINS, WHICH ARE ENCOUNTERED ABOVE THE ELEVATION OF ROADWAY DITCHES, SHALL BE OUTLETTED INTO THE ROADWAY DITCH BY 611 TYPE F CONDUIT. THE OPTIMUM OUTLET ELEVATION SHALL BE ONE FOOT ABOVE THE FLOWLINE ELEVATION OF THE DITCH. LATERAL FIELD TILES WHICH CROSS THE ROADWAY SHALL BE INTERCEPTED BY 611, TYPE E CONDUIT, AND CARRIED IN A LONGITUDINAL DIRECTION TO AN ADEQUATE OUTLET OR ROADWAY CROSSING.

THE LOCATION, TYPE, SIZE AND GRADE OF REPLACEMENTS SHALL BE DETERMINED BY THE ENGINEER AND PAYMENT SHALL BE MADE ON FINAL MEASUREMENTS.

EROSION CONTROL PADS AND ANIMAL GUARDS SHALL BE PROVIDED AT THE OUTLET END OF ALL FARM DRAINS AS PER STANDARD CONSTRUCTION DRAWING DM-1.1, EXCEPT WHEN THEY OUTLET INTO A DRAINAGE STRUCTURE. PAYMENT FOR THE EROSION CONTROL PADS AND ANIMAL GUARDS AND ANY NECESSARY BENDS OR BRANCHES SHALL BE INCLUDED FOR PAYMENT IN THE PERTINENT CONDUIT ITEMS. THE FOLLOWING ESTIMATED QUANTITIES HAVE BEEN INCLUDED IN THE GENERAL SUMMARY FOR THE WORK NOTED ABOVE:

611 6" CONDUIT, TYPE B	100 FT
611 6" CONDUIT, TYPE E	100 FT
611 6" CONDUIT, TYPE F	100 FT
601 ROCK CHANNEL PROTECTION TYPE C WITH FILTER	10 CU. YD

REVIEW OF DRAINAGE FACILITIES

BEFORE ANY WORK IS STARTED ON THE PROJECT AND AGAIN BEFORE FINAL ACCEPTANCE BY THE STATE, REPRESENTATIVES OF THE STATE AND THE CONTRACTOR, ALONG WITH LOCAL REPRESENTATIVES, SHALL MAKE AN INSPECTION OF ALL EXISTING SEWERS WHICH ARE TO REMAIN IN SERVICE AND WHICH MAY BE AFFECTED BY THE WORK. THE CONDITION OF THE EXISTING CONDUITS AND THEIR APPURTENANCE SHALL BE DETERMINED FROM FIELD OBSERVATIONS. RECORDS OF THE INSPECTION SHALL BE KEPT IN WRITING BY THE STATE.

ALL NEW CONDUITS, INLETS, CATCH BASINS, AND MANHOLES CONSTRUCTED AS A PART OF THE PROJECT SHALL BE FREE OF ALL FOREIGN MATTER AND IN A CLEAN CONDITION BEFORE THE PROJECT WILL BE ACCEPTED BY THE STATE.

ALL EXISTING SEWERS INSPECTED INITIALLY BY THE ABOVE MENTIONED PARTIES SHALL BE MAINTAINED AND LEFT IN A CONDITION REASONABLY COMPARABLE TO THAT DETERMINED BY THE ORIGINAL INSPECTION, ANY CHANGE IN THE CONDITION RESULTING FROM THE CONTRACTOR'S OPERATIONS SHALL BE CORRECTED BY THE CONTRACTOR TO THE SATISFACTION OF THE ENGINEER.

PAYMENT FOR ALL OPERATIONS DESCRIBED ABOVE SHALL BE INCLUDED IN THE CONTRACT PRICE FOR THE PERTINENT 611 CONDUIT ITEMS.

UNRECORDED STORM WATER DRAINAGE

FURNISH A CONTINUANCE FOR ALL UNRECORDED STORM WATER DRAINAGE, SUCH AS ROOF DRAINS, FOOTER DRAINS, OR YARD DRAINS, DISTURBED BY THE WORK. FURNISH EITHER AN OPEN CONTINUANCE OR AN UNOBSTRUCTED CONTINUANCE BY CONNECTING A CONDUIT THROUGH THE CURB OR INTO A DRAINAGE STRUCTURE. THE LOCATION, TYPE, SIZE AND GRADE OF THE NEEDED CONDUIT TO REPLACE OR EXTEND AN EXISTING DRAIN WILL BE DETERMINED BY THE ENGINEER. ALL SUCH CONTINUANCE REQUIRES A RIGHT OF WAY USE PERMIT.

THE FOLLOWING ESTIMATED QUANTITIES HAVE BEEN INCLUDED IN THE GENERAL SUMMARY FOR USE AS DIRECTED BY THE ENGINEER FOR THE WORK NOTED ABOVE:

611, 6" CONDUIT, TYPE B, FOR DRAINAGE CONNECTION	100 FT.
611, 6" CONDUIT, TYPE C, FOR DRAINAGE CONNECTION	100 FT.
611, 6" CONDUIT, TYPE E, FOR DRAINAGE CONNECTION	100 FT.
611, 6" CONDUIT, TYPE F, FOR DRAINAGE CONNECTION	100 FT.

MANHOLES, CATCH BASINS AND INLETS REMOVED OR ABANDONED

PAYMENT FOR ALL OF THE ABOVE SHALL BE INCLUDED IN THE CONTRACT PRICE FOR THE PERTINENT 202 ITEM.

ITEM SPECIAL - PIPE CLEANOUT

THIS WORK SHALL CONSIST OF REMOVING SEDIMENT AND DEBRIS FROM THE EXISTING DRAINAGE CONDUITS SPECIFIED IN THE PLANS. ALL MATERIAL REMOVED SHALL BE DISPOSED OF AS PER 105.16 AND 105.17. ALL SEWERS SHALL BE CLEANED OUT TO THE SATISFACTION OF THE ENGINEER.

CLEANOUT OF THE PIPE SHALL BE PAID FOR AT THE UNIT PRICE BID FOR ITEM SPECIAL - PIPE CLEANOUT. THIS PRICE SHALL INCLUDE THE COST FOR MATERIAL, EQUIPMENT, LABOR, AND ALL INCIDENTALS REQUIRED TO COMPLETE THE CLEANOUT.

THE FOLLOWING ESTIMATED QUANTITIES HAVE BEEN INCLUDED IN THE GENERAL SUMMARY FOR THE ABOVE NOTED WORK:

SPECIAL, PIPE CLEANOUT, 24" AND UNDER	4500 FT.
SPECIAL, PIPE CLEANOUT, 27" TO 48"	250 FT.
SPECIAL, PIPE CLEANOUT, OVER 48"	1500 FT.

THE CONTRACTOR SHALL PROVIDE A VIDEO OF THE INSIDE OF THE PIPE AFTER CLEANING TO VERIFY PIPE HAS BEEN COMPLETELY CLEANED.

THE PIPES LABELED ON SHEETS 174, 175, 202, 206, 221, 224, 225, 226, 227, 229, 230, 257, 258, 269, 270, AND 302 SHALL BE CLEANED OUT PER ITEM SPECIAL - PIPE CLEANOUT.

EXISTING SUBSURFACE DRAINAGE

PROVIDE UNOBSTRUCTED OUTLETS FOR ALL EXISTING UNDERDRAINS OR AGGREGATE DRAINS ENCOUNTERED DURING CONSTRUCTION.

PROVIDE AN OUTLET PER STANDARD CONSTRUCTION DRAWING DM-1.1 FOR ALL UNDERDRAINS THAT OUTLET TO A SLOPE.

UNDERDRAINS THAT CAN BE CONNECTED TO THE NEW OR EXISTING UNDERDRAINS AT THE END OF THE PROJECT LIMITS AS WELL AS ALL NECESSARY BENDS OR BRANCHES REQUIRED FOR CONNECTION ARE INCLUDED IN THE BASIS OF PAYMENT FOR UNCLASSIFIED PIPE UNDERDRAINS.

THE FOLLOWING ESTIMATED QUANTITIES HAVE BEEN INCLUDED IN THE GENERAL SUMMARY FOR THE WORK NOTED ABOVE:

601, TIED CONCRETE BLOCK MAT, TYPE 1	10 SQ. YD.
605, AGGREGATE DRAINS	50 FT.
611 6" CONDUIT, TYPE F	100 FT.
611, PRECAST REINFORCED CONCRETE OUTLET	10 EACH
605 6" UNCLASSIFIED PIPE UNDERDRAINS	200 FT.

SEEDING AND MULCHING

THE FOLLOWING QUANTITIES ARE PROVIDED TO PROMOTE GROWTH AND CARE OF PERMANENT SEEDED AREAS:

659, SOIL ANALYSIS TEST	2 EACH
659, TOPSOIL	5574 CU. YD.
659, SEEDING AND MULCHING	50299 SQ. YD.
659, REPAIR SEEDING AND MULCHING	2511 SQ. YD.
659, INTER-SEEDING	2511 SQ. YD.
659, COMMERCIAL FERTILIZER	7.79 TON
659, LIME	10.38 ACRES
659, WATER	407 M. GAL
659, MOWING	113 M. SQ. FT.

SEEDING AND MULCHING SHALL BE APPLIED TO ALL AREAS OF EXPOSED SOIL BETWEEN THE RIGHT-OF-WAY LINES, AND WITHIN THE CONSTRUCTION LIMITS FOR AREAS OUTSIDE THE RIGHT-OF-WAY LINES COVERED BY WORK AGREEMENT OR SLOPE EASEMENT. QUANTITY CALCULATIONS FOR SEEDING AND MULCHING ARE BASED ON THESE LIMITS.

CULVERT AND STORM SEWER EXTENSIONS

THE EXISTING CULVERT OR STORM SEWER SHOULD BE REMOVED BACK TO THE FIRST JOINT AT THE OUTLET END AND THE SECOND JOINT AT THE INLET END OF THE CULVERT, MEASURED IN THE FIELD AND PROVIDE A MASONRY COLLAR PER DM-1.1 AT CONNECTION. MATCH EXISTING MATERIAL FOR CULVERT EXTENSION. THE CONTRACTOR SHALL INSPECT EACH PIPE TO ENSURE PIPE IS IN GOOD CONDITION AND SHALL PROMPTLY INFORM THE ENGINEER IF ADDITIONAL PIPE REMOVAL AND REPLACEMENT IS REQUIRED.

PERMITS, WATERWAY PERMITS

A WATERWAYS PERMIT SHALL BE OBTAINED FOR THE PROJECT PRIOR TO PROJECT CONSTRUCTION. ONCE RECEIVED, THE SPECIAL PROVISIONS FOR THE PROJECT SHALL BE ATTACHED TO THE CONSTRUCTION PLANS. ALL CONDITIONS SHALL BE ADHERED TO DURING CONSTRUCTION. ALSO, A COPY OF THE PERMIT IS TO BE KEPT AT THE WORK SITE AT ALL TIMES.

ANTI-SEGREGATION

PROVIDE ANTI-SEGREGATION EQUIPMENT FOR ALL COURSES OF UNIFORM THICKNESS IN ACCORDANCE WITH C&MS 401.12

NON-RUBBER TIRE VEHICLES

NO NON-RUBBER TIRE VEHICLE SHALL BE MOVED ON STATE OR COUNTY ROADS. EXCEPTIONS MAY BE GRANTED BY AN AUTHORIZED STATE OR COUNTY OFFICIAL WHERE SHORT DISTANCES AND SPECIAL CIRCUMSTANCES ARE INVOLVED. GRANTING OF EXCEPTIONS MUST BE IN WRITING AND ANY RESULTING DAMAGE MUST BE REPAIRED FOR THE SATISFACTION OF THE STATE OR COUNTY

PAVEMENT REPAIRS

THE CONTRACTOR IS RESPONSIBLE FOR ALL PAVEMENT REPAIRS THAT ARE NEEDED FROM THE START OF CONSTRUCTION THRU COMPLETION OF THE PROJECT. ANY PAVEMENT REPAIRS SHALL BE INCLUDED IN THE BID COST FOR ITEM 614 MAINTENANCE OF TRAFFIC.

PAVEMENT FOR MAINTAINING TRAFFIC

A QUANTITY OF 50 CY OF ASPHALT FOR MAINTAIN TRAFFIC HAS BEEN TO BE USED AS DIRECTED BY THE ENGINEER TO LEVEL OUT ANY SETTLEMENT IN THE TEMPORARY PAVEMENT DURING CONSTRUCTION OPERATIONS.

ITEM 202 - PAVEMENT REMOVED AS PER PLAN

ALL EXISTING PAVEMENT TO BE REMOVED CONTAINING LAYERS OF CONCRETE, INCLUDING COMPOSITE ASPHALT OVER CONCRETE PAVEMENT, SHALL BE REMOVED UNDER ITEM 202 PAVEMENT REMOVED, AS PER PLAN. EXISTING PAVEMENT NOT CONTAINING CONCRETE SHALL BE REMOVED UNDER ITEM 202 PAVEMENT REMOVED, ASPHALT. SEE THE EXISTING TYPICAL SECTIONS FOR PAVEMENT BUILDUP. PAYMENT FOR THE OPERATION DESCRIBED ABOVE SHALL BE INCLUDED IN THE CONTRACT PRICE FOR THE PERTINENT 202 ITEMS.

DRAINAGE AND UTILITY SETTLEMENT

PIPES, DRAINAGE STRUCTURES, OR UTILITIES LOCATED IN FILL ALONG THE TOE OF EMBANKMENTS SHALL NOT BE CONSTRUCTED UNTIL AT LEAST 30 DAYS AFTER COMPLETION OF EMBANKMENT.

ITEM 203 EMBANKMENT, AS PER PLAN

AS SPECIFIED IN THE GEOTECHNICAL REPORT, DRAINAGE LAYERS SHOULD BE COMPOSED OF FINE AGGREGATE THAT MEETS THE GRADATION CRITERIA OF C&MS 703.02 OR 703.03, SHOULD BE GRADED TO DRAIN, AND SHOULD HAVE A MINIMUM OF 2 FEET COVER. SEE PLAN SHEET NO 324 FOR ADDITIONAL INFORMATION.

ITEM 203 GRANULAR MATERIAL, TYPE E, AS PER PLAN

IN THE AREA ALONG TEMPORARY RAMP L BETWEEN STA. 91+00 AND 93+00, GRANULAR MATERIAL, TYPE E, SIZES NO. 1 AND NO. 2 STONE MAY BE PLACED BY THE METHOD OF END DUMPING IF SOFT/WET FOUNDATION SOILS ARE PRESENT AT THE TIME OF CONSTRUCTION. END DUMPING METHODS MAY BE USED UP TO AN ELEVATION 12 INCHES ABOVE THE FOUNDATION SUBGRADE. ABOVE THIS ELEVATION, EMBANKMENT CONSTRUCTION METHODS WILL BE IN ACCORDANCE WITH 203.05 TO 203.07 INCLUSIVE. DURING NORMAL CLEARING AND GRUBBING WHERE END DUMPING IS PERMITTED, THE REQUIREMENTS OF 201.04 FOR SCALPING SHALL BE WAIVED.

TEST PITS CONSTRUCTED FOR TEMPORARY RAMP L SHALL BE PAID FOR AS PART OF THIS PAY ITEM

BENCHING OF FOUNDATION SLOPES

ALTHOUGH CROSS-SECTIONS INDICATE SPECIFIC DIMENSIONS FOR PROPOSED BENCHING OF THE EMBANKMENT FOUNDATIONS IN CERTAIN AREAS, NO WAIVER OF THE SPECIFICATIONS IS INTENDED. BENCH ALL OTHER SLOPED EMBANKMENT AREAS AS SET FORTH IN 203.05. NO ADDITIONAL PAYMENT WILL BE MADE FOR BENCHING REQUIRED UNDER THE PROVISIONS OF 203.05

TEMPORARY DRAINAGE ITEMS

TEMPORARY DRAINAGE ITEMS LABELED ON THE MAINTENANCE OF TRAFFIC PLAN ARE ITEMIZED ON THE MOT PLANS. PAYMENT FOR THE TEMPORARY DRAINAGE ITEMS ARE ITEMIZED AND CARRIED TO THE GENERAL SUMMARY.

X:\Projects\2013\1321\000\FRA\926R\Vcadwg\sheets\926R0P001.dgn 12/8/2022 3:02:18 PM cwong

CALCULATED
ACF
CHECKED
CSR

TEMPORARY RAMP L

CONTRACTOR SHALL MAINTAIN TRAFFIC ALONG RAMP L DURING THE RECONSTRUCTION OF THE BRIDGES BY CONSTRUCTING A TEMPORARY RAMP AS SHOWN ON SHEETS 36- 41. DUE TO THE POTENTIAL PRESENCE OF PEAT SOILS IN THIS AREA, THE CONTRACTOR SHALL DIG TEST PITS TO DETERMINE THE PRESENCE AND DEPTH EXTENT OF THE PEAT. TEST PITS SHALL BE LOCATED AT 50' ON-CENTER ALONG THE ALIGNMENT AND EXTEND TO A MINIMUM DEPTH OF 4.0' EACH. TEST PITS SHALL BE PAID FOR AS PART OF THE PAY ITEM, ITEM 203 - GRANULAR MATERIAL, TYPE E, AS PER PLAN.

CONDITION 1: WHERE PEAT IS NOT ENCOUNTERED WITHIN 4.0' BELOW THE SUBGRADE, A 2.0' THICK GEOGRID AND STONE WORK PLATFORM SHALL BE CONSTRUCTED AT THE FOUNDATION SUBGRADE. THE FOUNDATION SUBGRADE SHALL BE SCALPED IN ACCORDANCE WITH C&MS ITEM 201 PRIOR TO CONSTRUCTION OF THE WORK PLATFORM. THE WORK PLATFORM SHALL BE CONSTRUCTED USING ITEM 203 GRANULAR MATERIAL, TYPE E, SIZES NO. 1 AND NO. 2 STONE. TWO LAYERS OF GEOGRID SHALL BE INCORPORATED IN THE WORK PLATFORM. THE STONE MAY BE END DUMPED TO A DEPTH OF 12 INCHES.

CONDITION 2: PEAT WITH DEPTHS LESS THAN 4.0. REMOVE PEAT IN ITS ENTIRETY. CONSTRUCT 2.0' THICK GEOGRID AND STONE WORK PLATFORM AT BOTTOM OF EXCAVATION. THE WORK PLATFORM SHALL BE CONSTRUCTED USING ITEM 203 GRANULAR MATERIAL, TYPE E, AS PER PLAN, SIZES NO. 1 AND NO. 2 STONE WITH TWO LAYERS OF GEOGRID - ONE AT THE BASE AND ANOTHER PLACED MID-HEIGHT. THE STONE MAY BE END DUMPED TO A DEPTH OF 12 INCHES.

CONDITION 3: PEAT IN EXCESS OF 4.0' SHALL BE REMOVED TO A DEPTH OF 4.0' AND REPLACED WITH ITEM 203 GRANULAR MATERIAL, TYPE E, AS PER PLAN SIZES NO.1 AND NO. 2 STONE WITH GEOGRID AT THE BASE AND ANOTHER LAYER OF GEOGRID PLACED MID-HEIGHT WITHIN THE BACKFILL.

THE FOLLOWING CONTINGENCY QUANTITIES HAVE BEEN CARRIED TO THE GENERAL SUMMARY FOR THE STABILIZATION OF TEMPORARY RAMP L.

ITEM 203 EXCAVATION,	504 CY
ITEM 203 GRANULAR MATERIAL, TYPE E, AS PER PLAN	504 CY
ITEM 204 GEOTEXTILE	2216 SY
ITEM 861 GEOGRID	756 SY

WATER

THE CITY OF COLUMBUS, CONSTRUCTION AND MATERIAL SPECIFICATIONS, 2018 EDITION AND ALL REVISIONS, INCLUDING ALL SUPPLEMENTS THERETO, SHALL GOVERN ALL CONSTRUCTION ITEMS THAT ARE A PART OF THIS PLAN, UNLESS OTHERWISE NOTED.

ALL WATER MAIN MATERIALS AND INSTALLATIONS SHALL BE IN ACCORDANCE WITH THE CURRENT RULES AND REGULATIONS OF THE CITY OF COLUMBUS, DIVISION OF WATER. ALL CITY OF COLUMBUS, DIVISION OF WATER STANDARD DRAWINGS SHALL APPLY TO THE PROJECT, UNLESS OTHERWISE NOTED.

FOR ANY EMERGENCIES INVOLVING THE WATER DISTRIBUTION SYSTEM, PLEASE CONTACT THE DIVISION OF WATER DISTRIBUTION MAINTENANCE OFFICE AT 614-645-7788.

ALL BRASS FITTINGS ASSOCIATED WITH WATER WORK, INCLUDING REPAIRS TO THE EXISTING SYSTEM, SHALL CONFORM TO THE REVISED ALLOWABLE LEAD EXTRACTION LIMIT PER THE UPDATED NSF/ANSI 61 STANDARD. THE DIVISION OF WATER'S APPROVED MATERIALS LIST HAS BEEN UPDATED TO REFLECT THIS REQUIREMENT.

NO PERSON SHALL BEGIN CONSTRUCTION OR INSTALLATION OF A PUBLIC WATER MAIN UNTIL PLANS HAVE BEEN APPROVED BY THE STATE OF OHIO ENVIRONMENTAL PROTECTION AGENCY (OEPA).

ALL WATER MAINS SHALL BE CLEANED AND FLUSHED, AND ANY WATER MAIN 12-INCH AND LARGER MUST BE PROPERLY PIGGED, IN ACCORDANCE WITH SECTION 801.18 OF THE CITY OF COLUMBUS, CONSTRUCTION AND MATERIAL SPECIFICATIONS.

IT SHALL BE UNLAWFUL FOR ANY PERSON TO PERFORM ANY WORK ON CITY OF COLUMBUS WATER MAIN SYSTEMS WITHOUT FIRST SECURING LICENSE TO ENGAGE IN SUCH WORK, AS INDICATED IN COLUMBUS CITY CODE SECTION 1103.02 AND 1103.06. THIS WORK INCLUDES ANY ATTACHMENTS, ADDITIONS TO OR ALTERATIONS IN ANY CITY SERVICE PIPE OR APPURTENANCES (INCLUDING WATER SERVICE LINES AND TAPS). THIS REQUIREMENT MAY BE MET BY UTILIZATION OF A SUBCONTRACTOR WHO HOLDS A CITY OF COLUMBUS WATER CONTRACTOR LICENSE OR A COMBINED WATER/SEWER CONTRACTOR LICENSE TO PERFORM THIS WORK. UTILIZATION OF A SUBCONTRACTOR MUST MEET THE LICENSING REQUIREMENTS OF CITY OF COLUMBUS BUILDING CODE, IN PARTICULAR SECTION 4114.19 AND 4114.529.

THE CONTRACTOR SHALL OBTAIN THE PROPER HYDRANT PERMIT(S), AND PAY ANY APPLICABLE FEES, FOR ANY APPROVED HYDRANT USAGE DEEMED NECESSARY FOR WORK UNDER THIS IMPROVEMENT. PERMITS MAY BE OBTAINED THROUGH THE DIVISION OF WATER PERMIT OFFICE (645-7330). THE CONTRACTOR SHALL ADHERE TO ALL RULES & REGULATIONS GOVERNING SAID PERMIT AND MUST HAVE THE ORIGINAL PERMIT ON SITE ANYTIME IN WHICH THE HYDRANT IS IN USE. PERMITS MAY BE OBTAINED AT ACCESSING HTTPS://PORTAL.COLUMBUS.GOV/PERMITS/. COST TO BE INCLUDED IN THE VARIOUS BID ITEMS.

ALL WATER MAINS SHALL BE PRESSURE TESTED IN ACCORDANCE WITH SECTION 801.16 OF THE CITY OF COLUMBUS, CONSTRUCTION AND MATERIAL SPECIFICATIONS. THE CITY MAY NOT APPROVE ANY TEST LASTING LESS THAN TWO HOURS, REGARDLESS OF THE AMOUNT OF LEAKAGE.

ANY SECTION OF WATER MAIN THAT IS LONGER THAN 20 FEET IN LENGTH SHALL BE CHLORINATED. HAND SWABBING METHODS WILL ONLY BE PERMITTED FOR SECTIONS LESS THAN OR EQUAL TO 20 FEET IN LENGTH. USE UNSCENTED HOUSEHOLD BLEACH FOR HAND SWABBING OF PIPE AND FITTINGS. PLEASE NOTE THAT CUT-IN-TEES, SLEEVES, AND ANY OTHER REQUIRED FITTINGS OR PIPING SHALL BE TAKEN INTO ACCOUNT AND ARE INCLUDED IN THE TOTAL LENGTH OF THE SECTION (CUT TO CUT).

ONLY ONE CONNECTION TO AN EXISTING WATER MAIN IS PERMITTED BEFORE DISINFECTION OF A NEW WATER MAIN HAS BEEN COMPLETED. ALL OTHER CONNECTIONS MUST BE MADE AFTER THE MAIN HAS BEEN DISINFECTED.

ALL FIRE HYDRANTS TO BE INSTALLED IN THE CITY OF COLUMBUS SHALL BE PAINTED WITH THE COLOR "SAFETY ORANGE". THE FIRE HYDRANTS SHALL BE PROVIDED WITH TWO COATS IN A GLOSS ENAMEL OF THE "SAFETY ORANGE" COLOR FOR THE ENTIRE HYDRANT. THE TOPS OF THE FIRE HYDRANTS ARE NO LONGER REQUIRED TO BE PAINTED BLACK. AFTER INSTALLATION OF FIRE HYDRANTS, THE CONTRACTOR IS RESPONSIBLE TO APPLY TOUCH UP PAINT TO ANY DAMAGE TO THE FACTORY APPLIED HYDRANT PAINT. HYDRANTS WILL NOT BE ACCEPTED UNTIL ANY PAINT DAMAGE FROM SHIPPING OR INSTALLATION HAS BEEN REPAIRED. USE HYDRANT TOUCH UP PAINT IN ACCORDANCE WITH THE APPROVED MATERIALS LIST.

MAINTAIN EIGHTEEN (18) INCHES VERTICAL AND TEN (10) FEET HORIZONTAL SEPARATION BETWEEN ANY SANITARY OR STORM SEWER PIPING AND ALL PROPOSED WATER MAINS.

WHEN CROSSING THE EXISTING WATER MAIN, AND LOW STRENGTH MORTAR (ITEM 613) IS TO BE USED AS BACKFILL, THE CONTRACTOR SHALL PROVIDE SIZE NO. 57 CRUSHED CARBONATE STONE (CCS) 1 FOOT BELOW TO 1 FOOT ABOVE THE EXISTING WATER MAIN.

IF DURING EXCAVATION, THE POLYETHYLENE ENCASEMENT ON THE EXISTING WATER MAIN BECOMES DAMAGED, THE CONTRACTOR SHALL REPAIR THE POLYETHYLENE ENCASEMENT PER MANUFACTURER'S SPECIFICATIONS AND DOW STANDARD DRAWINGS L-1003 AND L-1004, AT THEIR OWN EXPENSE. ENSURE THAT THE ENTIRE EXPOSED AREA IS COVERED WITH NEW POLYETHYLENE ENCASEMENT AND SECURELY TAPED, PRIOR TO BACKFILLING.

CONTRACTOR SHALL ADHERE TO THE REQUIREMENTS OF THE OHIO ADMINISTRATIVE CODE CHAPTER 3745-83-02 WATER DISRUPTION OF SERVICE RULE. EXCAVATE PITS SUFFICIENTLY BELOW THE AREA TO BE CONNECTED TO IN ORDER TO MAINTAIN WATER LEVELS BELOW THE WATER MAIN. IF WATER FROM THE PIT ENTERS THE EXISTING MAIN, CONTACT DIVISION OF WATER IMMEDIATELY. ENSURE THAT SUFFICIENTLY SIZED PUMPS ARE UTILIZED TO REMOVE WATER FROM THE TRENCH AND BACKUP PUMPS ARE KEPT ON SITE FOR REDUNDANCY.

"ITEM SPECIAL SURVEY COORDINATES"SHALL INCLUDE ALL MATERIAL, EQUIPMENT, AND LABOR NECESSARY TO OBTAIN HORIZONTAL AND VERTICAL (NORTHING, EASTING, AND CENTERLINE OF PIPE ELEVATION) SURVEY COORDINATES FOR THE WATER MAIN IMPROVEMENTS. THE SURVEY COORDINATES SHALL BE OBTAINED FOR THE COMPLETED WATER MAIN CONSTRUCTION AND SHALL INCLUDE ALL VALVES, TEES, CROSSES, BENDS, HORIZONTAL DEFLECTIONS, PLUGS, REDUCERS, TAPPING SLEEVES, FIRE HYDRANTS, AIR RELEASES, CURB STOPS, TRACER WIRE BOXES, AND CASING PIPE TERMINI. ADDITIONAL SURVEY COORDINATES ARE REQUIRED ON THE WATER MAIN EVERY 200 FEET WHERE NO FITTING OR OTHER WATER MAIN STRUCTURE IS BEING INSTALLED WITHIN THAT LENGTH OF THE IMPROVEMENT.

ALL SURVEY COORDINATES SHALL BE REFERENCED TO THE APPLICABLE COUNTY ENGINEER'S MONUMENTS, AND SHALL BE BASED ON THE NORTH AMERICAN DATUM OF 1983 (NAD 83) WITH THE (NSRS2007) ADJUSTMENT, WITH FURTHER REFERENCE MADE TO THE OHIO STATE PLANE SOUTH COORDINATE SYSTEM, SOUTH ZONE, WITH ELEVATIONS BASED ON NAVD 88 DATUM. ALL COORDINATES (NORTHING, EASTING, CENTERLINE ELEVATION) SHALL BE REFERENCED TO THE NEAREST HUNDREDTH IN XXXXXX.XX, E XXXXXX.XX, C/L ELEV. XXX.XX). ALL SURVEY COORDINATES SHALL BE ACCURATE TO WITHIN 1.0 FOOT HORIZONTAL AND A TENTH OF A FOOT (0.10) OR LESS VERTICAL.

THE COORDINATES SHALL BE DOCUMENTED TO THE ENGINEER IN DIGITAL SPREADSHEET FORM AND SHALL INCLUDE THE APPLICABLE ITEM, STATION, NORTHING, EASTING, AND CENTERLINE ELEVATION. COORDINATES SHALL BE SUBMITTED TO THE ENGINEER ON A BI-WEEKLY BASIS. COORDINATES SHALL ALSO BE REQUIRED TO BE SUBMITTED TO THE DIVISION OF WATER AS PART OF THE REQUEST FOR CHLORINATION.

LUMP SUM PAYMENT IS FULL COMPENSATION FOR ALL WORK INVOLVED IN OBTAINING AND DOCUMENTING THE SURVEY COORDINATES AS DESCRIBED IN THIS SPECIFICATION.

ALL WATER MAIN VALVE BOXES, WATER TAP BOXES, TEST STATIONS, PITOMETER TAP STRUCTURES, METER PIT COVERS, AND OTHER SURFACE UTILITY STRUCTURES WITHIN THE DISTURBED AREA SHALL BE ADJUSTED TO GRADE. ANY OF THESE STRUCTURES LOCATED WITHIN PAVEMENT, DRIVEWAYS, OR OTHER TRAVELED AREAS, WHETHER EXISTING OR PROPOSED, SHALL BE EQUIPPED WITH A TRAFFIC RATED, HEAVY DUTY VALVE BOX AND/OR COVER IN ACCORDANCE WITH THE STANDARD DRAWINGS. EXISTING WATER TAP BOXES TO REMAIN THAT ARE ENCOUNTERED WITHIN THE PROJECT LIMITS SHALL BE CLEANED OUT, CENTERED OVER THE CURB STOP, AND ADJUSTED TO THE PROPOSED GRADE.

WHERE NEW CONDUIT IS PROPOSED TO CROSS AN EXISTING OR PROPOSED WATER MAIN OR WATER TAP/SERVICE LINE, A MINIMUM OF 12-INCHES OF VERTICAL CLEARANCE SHALL BE MAINTAINED BETWEEN THE CONDUIT AND THE WATER MAIN OR TAP/SERVICE LINE. A MINIMUM OF 3-FEET OF HORIZONTAL CLEARANCE (OUT TO OUT) IS REQUIRED AT LOCATIONS WHERE THE CONDUIT IS PARALLEL TO THE WATER MAIN AND AT LOCATIONS OF WATER MAIN THRUST BLOCKS.

A MINIMUM OF 3 FEET OF HORIZONTAL CLEARANCE (OUT TO OUT) SHALL BE MAINTAINED BETWEEN ALL EXISTING WATER MAINS AND FOUNDATIONS FOR POLES, PULL BOXES, PUSH BUTTON PEDESTALS, AND ANY OTHER MISCELLANEOUS ELECTRICAL STRUCTURE.

DURING CONSTRUCTION, THE CONTRACTOR SHALL USE EXTREME CAUTION NOT TO DAMAGE THE EXISTING WATER MAINS DUE TO MINIMAL COVER.

FIRE HYDRANT RELOCATIONS SHALL CONFORM TO APPLICABLE SECTIONS OF ITEM 809 OF THE CITY OF COLUMBUS CONSTRUCTION AND MATERIAL SPECIFICATIONS. WORK SHALL CONSIST OF REMOVING THE EXISTING HYDRANT, INSTALLING NEW 6" PIPE AND FITTING AS REQUIRED TO LOCATE THE FIRE HYDRANT 2 FEET FROM BACK OF PROPOSED CURB OR 8 FEET OFF EDGE OF PAVEMENT, RESETTING HYDRANT AND BLOCKING AS REQUIRED. ALL 6"PIPE SHALL BE INSTALLED AT 4"-0" MINIMUM COVER. HYDRANT EXTENSIONS SHALL BE PROVIDED PER ITEM 810, AS REQUIRED. RELOCATED FIRE HYDRANTS SHALL BE PUT BACK IN SERVICE AS SOON AS POSSIBLE.

CALCULATED ALF
DRAWN CSR

<u>WATER (CONTINUED)</u>

IF A LEAD TAP IS EITHER DAMAGED DURING CONSTRUCTION OR IS PART OF A PLANNED WATER TAP RELOCATION/REPLACEMENT, THE CONTRACTOR SHALL TAKE THE FOLLOWING STEPS:

1. IF DAMAGED, IMMEDIATELY CONTACT LEW FLEMISTER, DIVISION OF WATER, (614-645-7028), TO REQUEST THE SHUT OFF OF THE EXISTING CURB STOP. IF LEW CANNOT BE REACHED, CONTACT THE DIVISION OF WATER DISTRIBUTION ENGINEERING OFFICE AT 614-645-7677 TO REQUEST THE SHUT OFF.

2. CONTRACTOR SHALL EXPOSE THE OWNER'S SIDE OF THE WATER SERVICE TO CONFIRM THE MATERIAL. THE INSPECTOR SHALL BE PRESENT FOR THIS.

3. IF THE CUSTOMER'S PRIVATE SERVICE MATERIAL IS LEAD, STOP WORK AND NOTIFY THE DIVISION OF WATER DISTRIBUTION ENGINEERING OFFICE (614-645-7677) IMMEDIATELY. IF THE MATERIAL IS NOT LEAD, THE CONTRACTOR SHALL REPLACE THE LEAD TAP (FROM EXISTING CORPORATION STOP TO CURB STOP) AND REINSTATE SERVICE TO THE CUSTOMER. PARTIAL REPAIRS OF THE LEAD TAP ARE NOT PERMITTED.

4. REFER TO DIVISION OF WATER STANDARD DRAWINGS L-7102C AND L-9901 FOR INFORMATION ON WATER TAP RELOCATIONS, PLACING NEW CURB STOPS, AND RELOCATING CURB BOXES.

<u>ITEM 618 - RUMBLE STRIPS, SHOULDER (ASPHALT CONCRETE), AS PER PLAN</u>

THE CONTRACTOR SHALL MILL 2 INCHES BY 2 FEET WIDE OF THE EXISTING ASPHALT SHOULDER IN ORDER TO REMOVE THE EXISTING RUMBLE STRIPS WITHIN THE PROJECT LIMITS IN THE AREA WHERE TRAFFIC IS SHIFTED. THE CONTRACTOR SHALL THEN COAT ALL MILLED SURFACES HORIZONTAL AND VERTICAL WITH APPROVED AC LIQUID. NEXT THE CONTRACTOR SHALL PLACE 2 INCHES OF ITEM 448 ASPHALT CONCRETE SURFACE COURSE, TYPE 1, PG 64-28.

ONCE THE PROJECT IS COMPLETE, THE CONTRACTOR SHALL INSTALL NEW RUMBLE STRIPS AS PER THE CONSTRUCTION AND MATERIAL SPECIFICATIONS SECTION 618.

ALL COST ASSOCIATED WITH THE REMOVAL OF THE EXISTING PAVEMENT, PLACEMENT OF THE SURFACE COURSE AND INSTALLATION OF THE RUMBLE STRIPS SHALL BE INCLUDED IN UNIT PRICE BID PER FOOT OF ITEM 618 - RUMBLE STRIPS, SHOULDER (ASPHALT CONCRETE), AS PER PLAN.

AN ESTIMATED QUANTITY OF 9190 FEET HAS BEEN CARRIED TO THE MAINTENANCE OF TRAFFIC SUBSUMMARY.

<u>COORDINATION BETWEEN CONTRACTORS</u>

THE CONTRACTOR SHALL COORDINATE WORK ON THIS PROJECT WITH ADJACENT CONSTRUCTION PROJECTS, INCLUDING PID 105839 SPOT PAVE WORK, WHILE THIS PROJECT IS UNDER CONSTRUCTION.

<u>PAVEMENT CUTTING, SAWING, AND EXCAVATION OPERATIONS NOTE:</u>

ALL PUBLIC AGENCIES AND PRIVATE CONTRACTORS PERFORMING PAVEMENT-CUTTING OPERATIONS ON CITY OF COLUMBUS STREETS AND ROADWAYS SHALL PROTECT THE ENVIRONMENT FROM DISCHARGES CREATED BY THEIR PAVEMENT CUTTING OPERATIONS. NOTE THAT COLUMBUS CITY CODE 1145 PROHIBITS NON-STORM WATER DISCHARGE INTO THE CITY OF COLUMBUS SEWER SYSTEM, CURB INLETS AND ANY PART OF ITS MS4 (MUNICIPAL SEPARATE STORM SEWER SYSTEM).

THE REQUIREMENT INCLUDES BUT IS NOT LIMITED TO WET OR DRY SAW-CUTTING, JACK HAMMERING, EXCAVATION EQUIPMENT USE, ETC. THE PUBLIC AGENCY AND/OR PRIVATE CONTRACTOR WORK CREWS SHALL RECOVER AND DISPOSE OF DETRITUS, POLLUTED WATERS, OR OTHER SUCH DISCHARGES RESULTING FROM THEIR PAVEMENT CUTTING OPERATIONS AND PROTECT ALL STORM SEWER INLETS FROM RECEIVING ANY DISCHARGES FROM THE CONSTRUCTION OPERATIONS. THE AGENCY OR CONTRACTOR RESPONSIBLE FOR EACH PAVEMENT CUTTING ACTIVITY SHALL BE SOLELY LIABLE FOR NOTICE OF VIOLATIONS (NOV/S) AND FINES ISSUED BY CITY OF COLUMBUS AND/OR STATE OF OHIO AUTHORITIES.

EQUIPMENT, MATERIALS AND METHODS SHALL BE PROVIDED BY THE RESPONSIBLE PUBLIC AGENCY AND/OR PRIVATE CONTRACTOR TO WORK CREWS PERFORMING THE PAVEMENT CUTTING ACTIVITY AND MADE AVAILABLE TO WORK CREWS FOR USE IN CLEANING UP DISCHARGES RESULTING FROM SUCH CUTTING ACTIVITIES AND PREVENTING RUNOFF. ALL WORK CREWS SHALL BE TRAINED TO EXERCISE AND EMPLOY EQUIPMENT, MATERIALS, AND ENVIRONMENTAL PROTECTIVE MEASURES TO PREVENT POLLUTED DISCHARGES FROM ENTERING THE CITY OF COLUMBUS STORM SEWER SYSTEM AND WATERS OF THE STATE OF OHIO.

THE PUBLIC AGENCY AND/OR PRIVATE CONTRACTOR IS SOLELY RESPONSIBLE FOR ENSURING THAT THE INLET PROTECTION IS ADEQUATE. THE MOST STRINGENT PROJECT PLANS, NOTES AND/OR DRAWINGS INCLUDING STORMWATER POLLUTION PREVENTION PLAN (SWP3) OR SPILL PREVENTION/REMEDIATION PLAN SHALL APPLY TO ALL PAVEMENT CUTTING, SAWING OR EXCAVATION OPERATIONS.

NOTE TO SPECIFICATION WRITERS: IF SWP3 OR SPILL PREVENTION/REMEDIATION PLANS ARE INCLUDED IN CONTRACT DOCUMENTS, THEY SHOULD BE CITED IN THE LAST PARAGRAPH ABOVE BY VOLUME, PAGE OR SHEET NUMBERS; SO DIRECTING THE READER TO SUCH PLAN.

<u>DELINEATION OF PORTABLE AND PERMANENT BARRIER</u>

BARRIER REFLECTORS AND OBJECT MARKERS SHALL BE INSTALLED ON ALL PORTABLE BARRIER (PB) USED FOR TRAFFIC CONTROL AND ON PERMANENT CONCRETE BARRIER (INCLUDING BRIDGE PARAPETS) LOCATED WITHIN 5 FEET OF THE EDGE OF THE ADJACENT TRAVEL LANE.

BARRIER REFLECTORS SHALL CONFORM TO C&MS 626, EXCEPT THAT THE SPACING SHALL BE AS PER TRAFFIC SCD MT-101.70. OBJECT MARKERS AND THEIR INSTALLATION SHALL CONFORM TO C&MS 614.03 AND SCD MT-101.70. WHEN THE PB CONTAINS GLARE SCREEN, ONE SET OF THREE VERTICAL STRIPES OF SHEETING SHALL BE CONSIDERED EQUIVALENT TO AN OBJECT MARKER, ONE-WAY.

INCREASED BARRIER DELINEATION, AS SPECIFIED HEREIN, SHALL BE INSTALLED ON ALL PB AND CONCRETE PERMANENT BARRIER LOCATED WITHIN 5 FEET OF THE EDGE OF THE TRAVELED LANE.

THE INCREASED BARRIER DELINEATION SHALL CONSIST OF THE TRIPLE STACKING OF WORK ZONE BARRIER REFLECTORS.

TRIPLE-STACKED BARRIER REFLECTORS SHALL CONSIST OF ALIGNING THREE BARRIER REFLECTORS VERTICALLY, AT LOCATIONS WHERE A SINGLE BARRIER REFLECTOR WOULD BE OTHERWISE ATTACHED. THERE SHALL BE NO OPEN SPACE BETWEEN THE ADJACENT BARRIER REFLECTORS. THE TRIPLE-STACKED BARRIER REFLECTORS SHALL CONFORM TO C&MS 626, EXCEPT THAT THEY SHALL BE SPACED AND ALIGNED PER TRAFFIC SCD MT-101.70.

THE FOLLOWING ESTIMATED QUANTITIES HAVE BEEN INCLUDED IN THE PLANS AND CARRIED TO THE GENERAL SUMMARY:

ITEM 614, BARRIER REFLECTOR, TYPE B	739 EACH
ITEM 614, OBJECT MARKER, 1-WAY	329 EACH

PAYMENT SHALL BE FULL COMPENSATION FOR ALL MATERIAL, LABOR, INCIDENTALS AND EQUIPMENT NECESSARY FOR FURNISHING, INSTALLING, MAINTAINING AND REMOVING EACH OF THE ABOVE ITEMS

X:\Projects\2013\1321\1010\FRA\0268\roadway\sheets\0268GN001.dgn 2/10/2023 9:02:40 AM cwong

CALCULATED ALF
DRAWN CSR

<u>ENDANGERED BAT HABITAT REMOVAL</u>

THE PROJECT IS LOCATED WITHIN THE KNOWN HABITAT RANGES OF THE FEDERALLY LISTED AND PROTECTED INDIANA BAT AND NORTHERN LONG-EARED BAT. NO TREES SHALL BE REMOVED UNDER THIS PROJECT FROM APRIL 1 THROUGH SEPTEMBER 30. ALL NECESSARY TREE REMOVAL SHALL OCCUR FROM OCTOBER 1 THROUGH MARCH 31. THIS REQUIREMENT IS NECESSARY TO AVOID AND MINIMIZE IMPACTS TO THESE SPECIES AS REQUIRED BY THE ENDANGERED SPECIES ACT. FOR THE PURPOSES OF THIS NOTE, A TREE IS DEFINED AS A LIVE, DYING, OR DEAD WOODY PLANT, WITH A TRUNK THREE INCHES OR GREATER IN DIAMETER AT A HEIGHT OF 4.5 FEET ABOVE THE GROUND SURFACE, AND WITH A MINIMUM HEIGHT OF 13 FEET.

<u>ECOLOGICAL ENVIRONMENTAL COMMITMENTS</u>

2. STREAM CHANNEL EXCAVATION - THE CONTRACTOR SHALL TAKE ALL PRECAUTIONS NECESSARY TO PREVENT ANY INCIDENTAL DISCHARGES ASSOCIATED WITH THE EXCAVATION AND HAULING OF MATERIAL FROM THE STREAM CHANNEL. THIS PERTAINS TO ANY EXCAVATION OPERATION SUCH AS FOUNDATION, PIER OR ABUTMENT EXCAVATION, CHANNEL CLEAN- OUT, EXCAVATION FOR ROCK CHANNEL PROTECTION AND REMOVAL OF ANY TEMPORARY FILL ASSOCIATED WITH CONSTRUCTION OPERATIONS.

3. NO TOXIC OR HAZARDOUS MATERIALS SUCH AS SEALANTS, PAINT, SOLVENTS, CLEANING AGENTS, EARTHEN MATERIALS, WASTE-WATER FUELS OR DEBRIS OF ANY KIND SHALL BE DISCHARGED TO ANY STREAMS, DRAINAGE COURSES OR BODIES OF WATER. ALL ASPHALT OR CONCRETE GRINDINGS, EXCESS ASPHALT OR CONCRETE MATERIALS OR ANY OTHER DEBRIS GENERATED DURING RESURFACING OR OTHER SIMILAR ACTIVITIES SHALL NOT BE DISPOSED OF WITHIN A FLOODPLAIN BELOW THE 100-YEAR FLOOD ELEVATION. THE CONTRACTOR SHALL TAKE ALL PRECAUTIONS NECESSARY TO PREVENT LIQUIDS USED TO REPAIR, CLEAN, SEAL, OR TREAT ANY BRIDGE STRUCTURE (E.G. PAINT, SEALER, SOLVENT) FROM ENTERING STREAMS, WETLANDS OR OTHER "WATERS OF THE UNITED STATES" AND TAKE THE APPROPRIATE ACTIONS IN THE EVENT OF A RELEASE.

5. BEST MANAGEMENT PRACTICES (BMP'S) SHOULD BE USED TO MINIMIZE SEDIMENTATION AND EROSION. RIPARIAN ZONE HABITAT SHOULD BE PRESERVED WHERE POSSIBLE. RIPARIAN AREAS SHOULD NOT BE MOWED.

6. TREE CLEARING - NO TREE CLEARING SHALL OCCUR UNTIL ALL NECESSARY PERMITS AND CONSULTATIONS HAVE BEEN COMPLETED.

<u>ASBESTOS NOTIFICATION</u>

AN ASBESTOS SURVEY OF THE BRIDGE STRUCTURES SCHEDULED FOR REHABILITATION WAS CONDUCTED BY A CERTIFIED ASBESTOS HAZARD EVALUATION SPECIALIST. THE SURVEY DETERMINED THAT NO ASBESTOS WAS PRESENT ON THE BRIDGE STRUCTURES.

A COPY OF THE OHIO ENVIRONMENTAL PROTECTION AGENCY (OEPA) NOTIFICATION OF DEMOLITION AND RENOVATION FORMS, PARTIALLY COMPLETED AND SIGNED BY THE BRIDGE OWNER, WILL BE PROVIDED TO THE SUCCESSFUL BIDDER. THE CONTRACTOR SHALL COMPLETE THE FORM AND SUBMIT IT TO THE ADDRESS BELOW AT LEAST TEN (10) WORKING DAYS PRIOR TO THE START OF ANY DEMOLITION AND/OR RENOVATION.

MR. RICK FOWLER (CENTRAL DISTRICT OFFICE)
OHIO EPA, CDO
PO BOX 1049
COLUMBUS, OHIO 43216

THE CONTRACTOR SHALL PROVIDE A COPY OF THE COMPLETED FORM TO THE ENGINEER. INFORMATION REQUIRED ON THE FORM WILL INCLUDE: 1) THE CONTRACTORS NAME AND ADDRESS, 2) THE SCHEDULED DATES FOR THE START AND COMPLETION OF THE BRIDGE REMOVAL AND 3) A DESCRIPTION OF THE PLANNED DEMOLITION WORK AND THE METHODS) TO BE USED. COPIES OF THE OEPA FORM AND BRIDGE INSPECTION REPORT ARE AVAILABLE FOR REVIEW AT THE ODOT DISTRICT 6 OFFICE, 400 EAST WILLIAM STREET, DELAWARE, OHIO 43065.

BASIS FOR PAYMENT THE CONTRACTOR SHALL FURNISH ALL FEES, LABOR, AND MATERIAL NECESSARY TO COMPLETE AND SUBMIT THE OEPA NOTIFICATION FORM. PAYMENT FOR THIS WORK SHALL BE INCLUDED IN ITEM 202 PORTIONS OF STRUCTURE REMOVED, AS PER PLAN.

<u>WETLANDS AVOIDANCE</u>

JURISDICTIONAL WETLANDS HAVE BEEN IDENTIFIED TO THE RIGHT OR LEFT OF APPROXIMATE STATION 270+00 TO STATION 280+00 (RAMP R,) STATION 580+00 TO STATION 585+00 (US 23), STATION 0+00 TO STATION 20+00 (RAMP M), STATION 0+00 TO STATION 20+00 (RAMP O), STATION 0+00 TO STATION 20+00 (RAMP Q), STATION 0+00 TO STATION 20+00 (RAMP N), STATION 800+00 TO STATION 810+00 (RAMP S), AND STATION 515+00 TO STATION 8540+00 (IR 270), AS SHOWN ON THE SCHEMATIC PLAN SHEET 3 .

<u>DIVISION OF POWER</u>

THE DIVISION OF POWER (DOP) MAY HAVE UNDERGROUND AND OVERHEAD PRIMARY, SECONDARY, AND STREET LIGHTING AT THIS WORK LOCATION. THE CONTRACTOR IS HEREBY REQUIRED TO CONTACT OUPS AT 811 OR 1-800-362-2764 FORTY-EIGHT HOURS PRIOR TO CONDUCTING ANY ACTIVITY WITHIN THE CONSTRUCTION AREA.

ANY REQUIRED RELOCATION, SUPPORT, PROTECTION, OR ANY OTHER ACTIVITY CONCERNED WITH THE CITY'S ELECTRICAL FACILITIES IN THE CONSTRUCTION AREA IS TO BE PERFORMED BY THE CONTRACTOR UNDER THE DIRECTION OF DOP PERSONNEL AND AT THE EXPENSE OF THE PROJECT. THE CONTRACTOR SHALL USE MATERIAL AND MAKE REPAIRS TO A CITY OF COLUMBUS STREET LIGHTING SYSTEM BY FOLLOWING DOP'S "MATERIAL AND INSTALLATION SPECIFICATIONS" (MIS) AND THE CITY OF COLUMBUS "CONSTRUCTION AND MATERIAL SPECIFICATIONS" (CMSC). ANY NEW OR RE-INSTALLED UNDERGROUND STREETLIGHT SYSTEM SHALL REQUIRE TESTING AS REFERRED TO IN SECTION 1000.18 OF THE CMSC MANUAL. THE CONTRACTOR SHALL CONFORM TO DOP'S EXISTING CONDUCTOR SAFETY POLICY AND HOLD CARD SYSTEM, MIS-95, COPIES OF WHICH ARE AVAILABLE FROM DOP.

IF ANY ELECTRIC FACILITY BELONGING TO DOP IS DAMAGED IN ANY MANNER BY THE CONTRACTOR, ITS AGENTS, SERVANTS, OR EMPLOYEES, AND REQUIRES EMERGENCY REPAIRS, THE DOP DISPATCH OFFICE SHOULD BE CONTACTED IMMEDIATELY AT (614) 645-7627. DOP SHALL MAKE ALL NECESSARY REPAIRS, AND THE EXPENSE OF SUCH REPAIRS AND OTHER RELATED COSTS SHALL BE PAID BY THE CONTRACTOR TO THE DIVISION OF POWER, CITY OF COLUMBUS, OHIO.

<u>NOTICE FROM THE CITY OF COLUMBUS</u>

THE PUMPING OR DIRECT DISCHARGE OF SEDIMENT LADEN (MUDDY) WATER TO THE CITY'S SEWER SYSTEM OR A RECEIVING STREAM IS A VIOLATION OF OHIO EPA AND CITY OF COLUMBUS REGULATIONS.

ALL INLETS RECEIVING FLOW FROM RUNOFF, PUMPING ACTIVITIES, OR OTHER DIRECT DISCHARGES SHALL BE FITTED WITH AN INLET PROTECTION DEVICE THAT IS PROPERLY SIZED AND SECURED TO REDUCE THE DISCHARGE OF SEDIMENT INTO THE STORM SYSTEM AND RECEIVING SYSTEM. INLET PROTECTION IS REQUIRED ON ALL INLETS RECEIVING DISCHARGE REGARDLESS OF WHETHER OR NOT THE INLET IS TRIBUTARY TO ANY DOWNSTREAM EROSION AND SEDIMENT CONTROLS.

DISCHARGE HOSES USED DURING PUMPING ACTIVITIES SHALL BE FITTED WITH SEDIMENT BAGS THAT ARE PROPERLY SIZED PER MANUFACTURER'S RECOMMENDATIONS REGARDLESS OF WHAT OTHER SEDIMENT CONTROLS ARE IN PLACE FURTHER DOWNSTREAM. SEDIMENT BAGS MUST BE PROPERLY SECURED TO THE DISCHARGE HOSE AND PLACED OVER VEGETATED AREAS, WHERE FEASIBLE, DURING DISCHARGE. SEE DETAIL BELOW FOR A TYPICAL SEDIMENT BAG INSTALLATION.

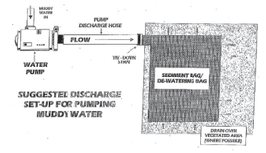

SUGGESTED DISCHARGE SET-UP FOR PUMPING MUDDY WATER

	WATER COORDINATES					
	STATE PLANE COORDINATES (OHIO SOUTH ZONE)					
				AS BUILT		
SHEET	DESCRIPTION	STATION	OFFSET	NORTHING	EASTING	CENTERLINE ELEVATION
177	FIRE HYDRANT (RELOCATED)	554+68.95	20.4' LT			
177	FIRE HYDRANT (RELOCATED)	554+69.46	28.0' LT			

X:\Projects\2013\1321\1010\FRA\0268\roadway\sheets\0268GN001.dgn 3/7/2023 5:51:00 AM cwong

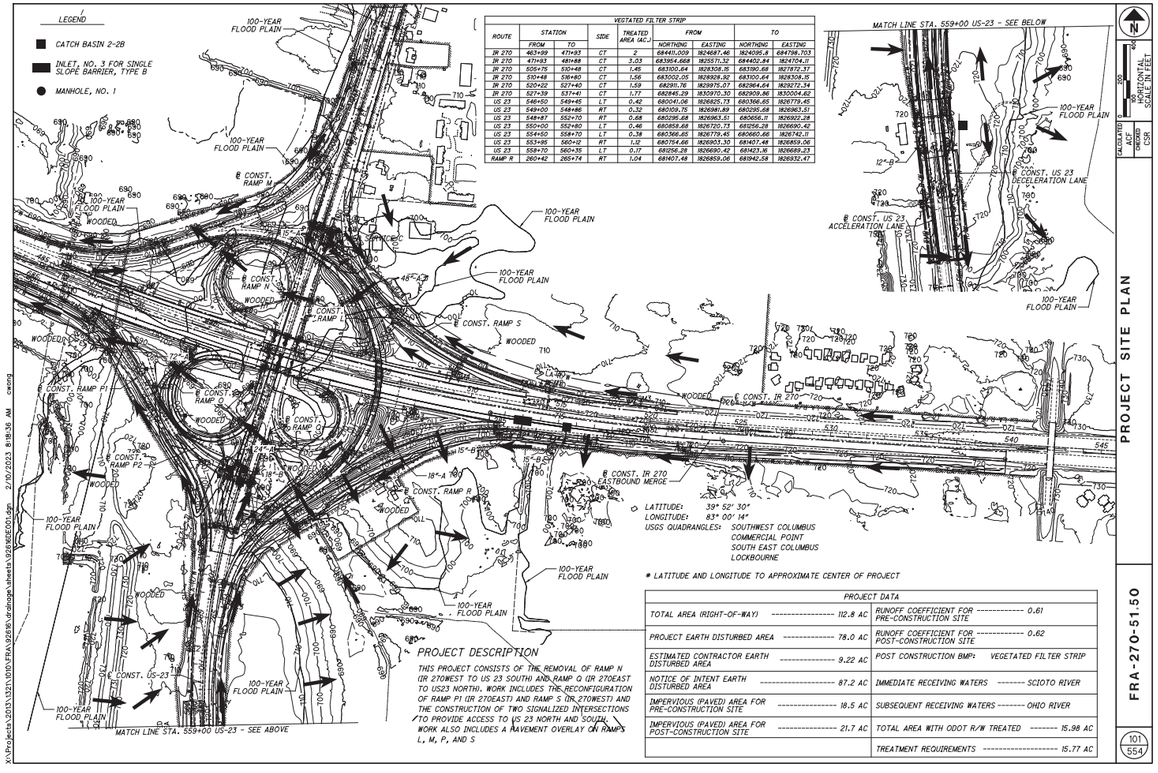

VEGTATED FILTER STRIP							
ROUTE	STATION FROM	STATION TO	SIDE	TREATED AREA (AC.)	FROM NORTHING	FROM EASTING	TO NORTHING	TO EASTING
IR 270	463+39	471+93	CT	2	684411.009	1826857.46	1824095.8	684798.703
IR 270	471+93	481+88	CT	3.03	683964.668	1825571.32	684402.84	1824704.11
IR 270	505+75	510+48	CT	1.45	683100.64	1826308.15	683390.68	1827872.37
IR 270	510+48	516+80	CT	1.56	683502.05	1826928.62	683100.64	1826308.15
IR 270	520+22	527+40	CT	1.59	68291.76	1829975.07	682964.64	1829272.34
IR 270	527+39	537+41	CT	1.77	682845.29	1830970.30	682939.86	1830004.62
US 23	546+50	549+45	LT	0.42	680041.06	1826825.73	680366.65	1826779.45
US 23	549+50	548+46	RT	0.32	680139.71	1826961.89	680295.58	1826967.51
US 23	548+87	552+70	RT	0.68	680299.68	1826963.51	680656.11	1826922.28
US 23	550+00	552+80	LT	0.46	680858.68	1826720.73	681256.28	1826690.42
US 23	554+50	559+70	LT	0.58	680366.65	1826779.45	680660.65	1826742.11
US 23	553+95	560+12	RT	1.12	680754.66	1826953.10	681407.48	1826859.06
US 23	559+70	560+35	LT	0.17	681256.28	1826690.42	681423.16	1826689.23
RAMP R	260+42	265+74	RT	1.04	681407.48	1826859.06	681942.58	1826932.47

PROJECT DESCRIPTION

THIS PROJECT CONSISTS OF THE REMOVAL OF RAMP N (IR 270WEST TO US 23 SOUTH) AND RAMP Q (IR 270EAST TO US23 NORTH). WORK INCLUDES THE RECONFIGURATION OF RAMP P1 (IR 270EAST) AND RAMP S (IR 270WEST) AND THE CONSTRUCTION OF TWO SIGNALIZED INTERSECTIONS TO PROVIDE ACCESS TO US 23 NORTH AND SOUTH. WORK ALSO INCLUDES A PAVEMENT OVERLAY ON RAMPS L, M, P, AND S

* LATITUDE AND LONGITUDE TO APPROXIMATE CENTER OF PROJECT

PROJECT DATA			
TOTAL AREA (RIGHT-OF-WAY)	112.8 AC	RUNOFF COEFFICIENT FOR PRE-CONSTRUCTION SITE	0.61
PROJECT EARTH DISTURBED AREA	78.0 AC	RUNOFF COEFFICIENT FOR POST-CONSTRUCTION SITE	0.62
ESTIMATED CONTRACTOR EARTH DISTURBED AREA	9.22 AC	POST CONSTRUCTION BMP:	VEGETATED FILTER STRIP
NOTICE OF INTENT EARTH DISTURBED AREA	87.2 AC	IMMEDIATE RECEIVING WATERS	SCIOTO RIVER
IMPERVIOUS (PAVED) AREA FOR PRE-CONSTRUCTION SITE	18.5 AC	SUBSEQUENT RECEIVING WATERS	OHIO RIVER
IMPERVIOUS (PAVED) AREA FOR POST-CONSTRUCTION SITE	21.7 AC	TOTAL AREA WITH ODOT R/W TREATED	15.98 AC
		TREATMENT REQUIREMENTS	15.77 AC

PROJECT SITE PLAN

FRA-270-51.50

101
554

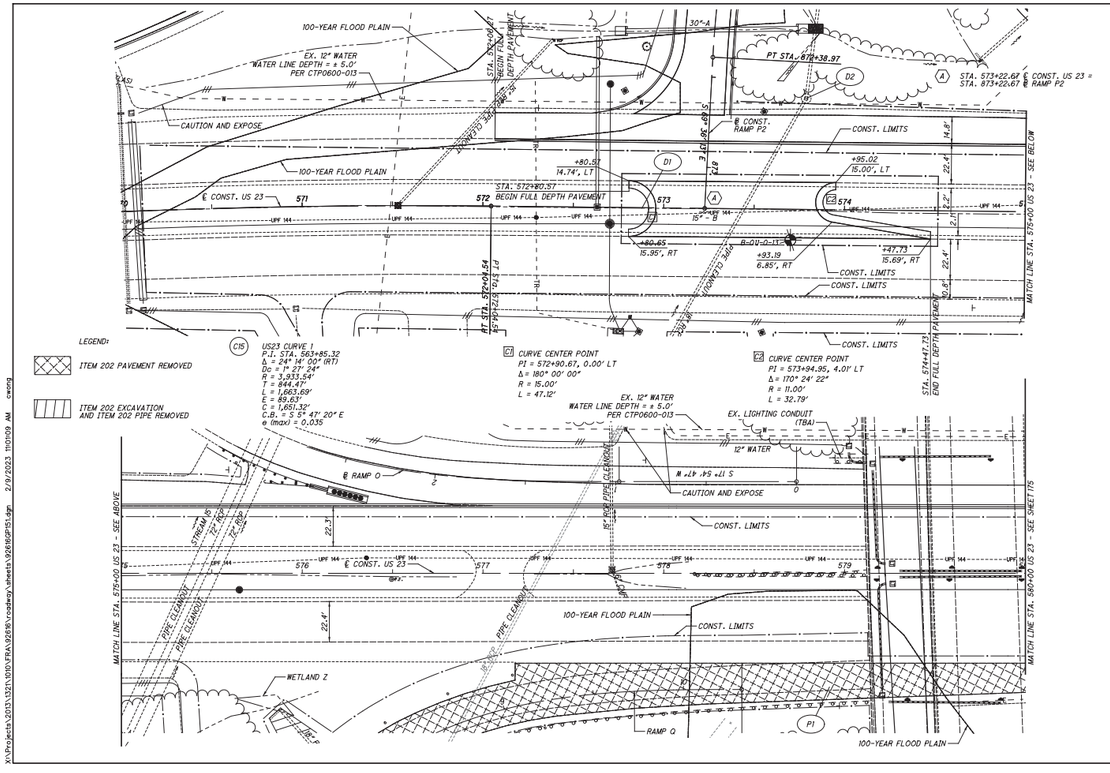

PLAN - US 23
STA. 570-00 TO STA. 580-00

FRA-270-51.50

174
554

CROSS REFERENCES	
SHEET NO.	DESCRIPTION
5 -7	℄ REFERENCES & BENCHMARKS
3	CURVE DATA & GEOMETRIC PLAN
85 -94	ROADWAY QUANTITIES
273 -290	CROSS SECTIONS
390	SIGNING & PAVEMENT MARKING
334	INTERSECTION DETAILS

PLAN - US 23
STA. 580+00 TO STA. 590+00

HORIZONTAL SCALE IN FEET

CALCULATED ACT
CHECKED CSR

FRA-270-51.50

175
554

CROSS REFERENCES	
SHEET NO.	DESCRIPTION
5 -7	℄ REFERENCES & BENCHMARKS
3	CURVE DATA & GEOMETRIC PLAN
85 -94	ROADWAY QUANTITIES
372	CULVERT DETAILS
208- 219	CROSS SECTIONS
389	SIGNING & PAVEMENT MARKING
338	CORE DETAILS

PLAN AND PROFILE - RAMP L
STA. 571+88.12 TO STA. 576+00

HORIZONTAL SCALE IN FEET

CALCULATED ACT
CHECKED CSR

FRA-270-51.50

202
554

X:\Projects\2013\1321.1010\FRA\92616\roadway\sheets\92616GP205.dgn 2/9/2023 11:28:13 AM cwong

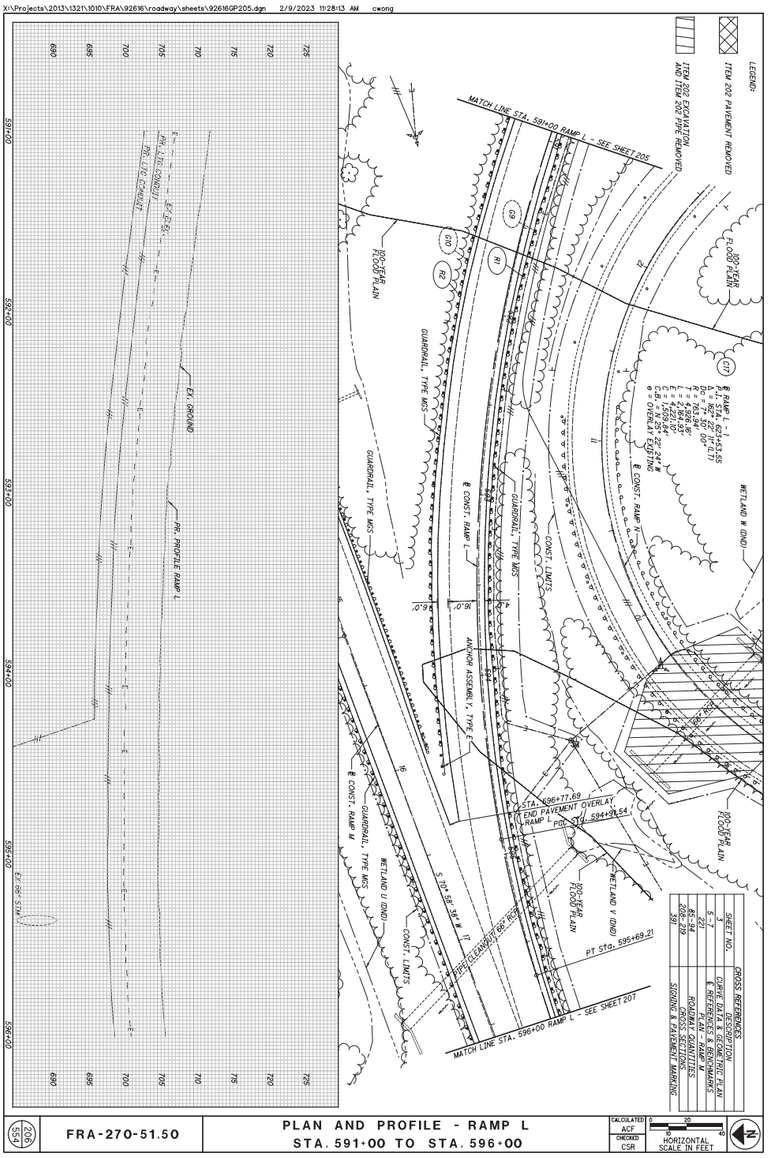

206 554 | FRA-270-51.50 | PLAN AND PROFILE - RAMP L STA. 591+00 TO STA. 596+00 | CALCULATED ACF | CHECKED CSR | 0 10 20 HORIZONTAL SCALE IN FEET

X:\Projects\2013\1321.1010\FRA\92616\roadway\sheets\92616GP206.dgn 2/9/2023 11:30:58 AM cwong

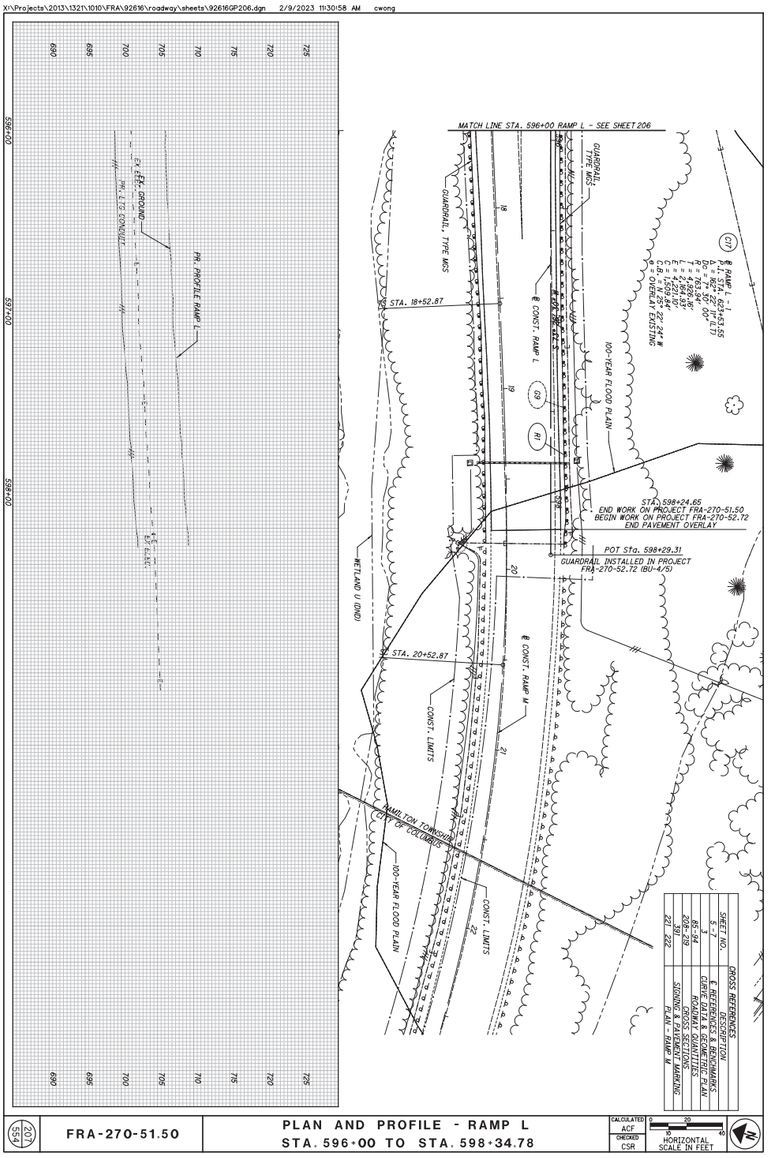

207 554 | FRA-270-51.50 | PLAN AND PROFILE - RAMP L STA. 596+00 TO STA. 598+34.78 | CALCULATED ACF | CHECKED CSR | 0 10 20 HORIZONTAL SCALE IN FEET

X:\Projects\2013\1321\1010\FRA\92616\roadway\sheets\92616GP251.dgn 2/9/2023 11:37:13 AM cwong

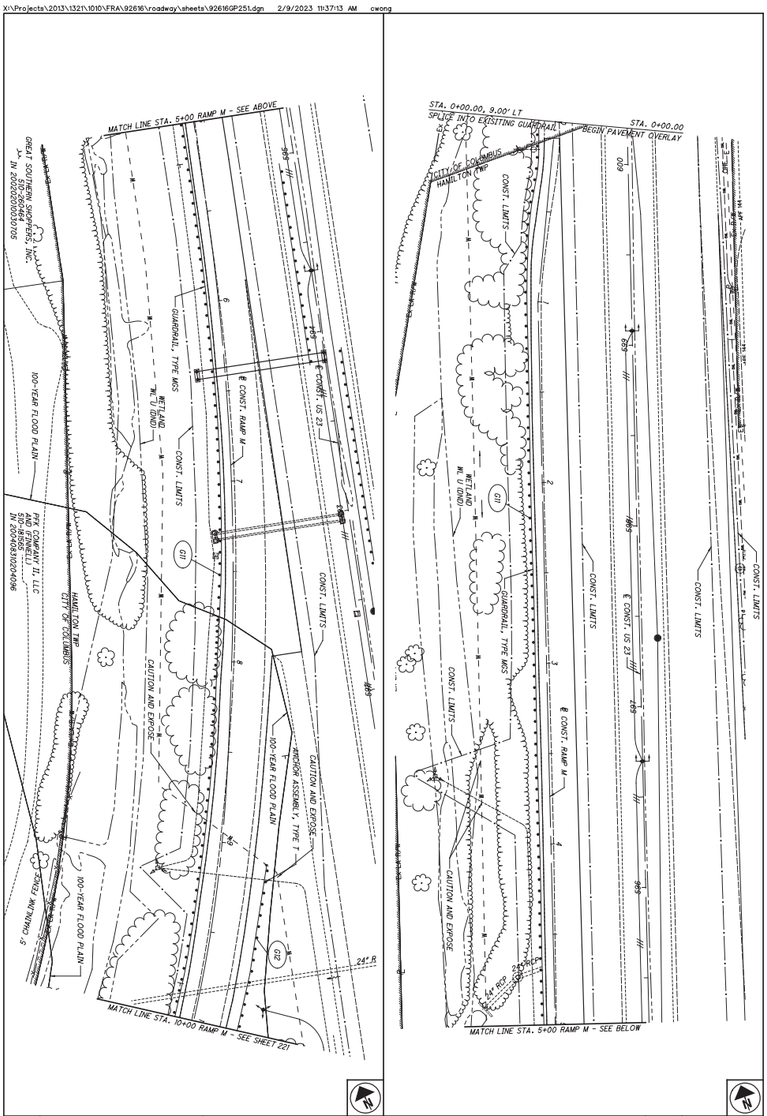

220 554	FRA-270-51.50	PLAN - RAMP M STA. 0+00.00 TO STA. 10+00.00	CALCULATED ACF CHECKED CSR 0 20 40 0 10 20 30 40 HORIZONTAL SCALE IN FEET

X:\Projects\2013\1321\1010\FRA\92616\roadway\sheets\92616GP252.dgn 2/9/2023 11:44:42 AM cwong

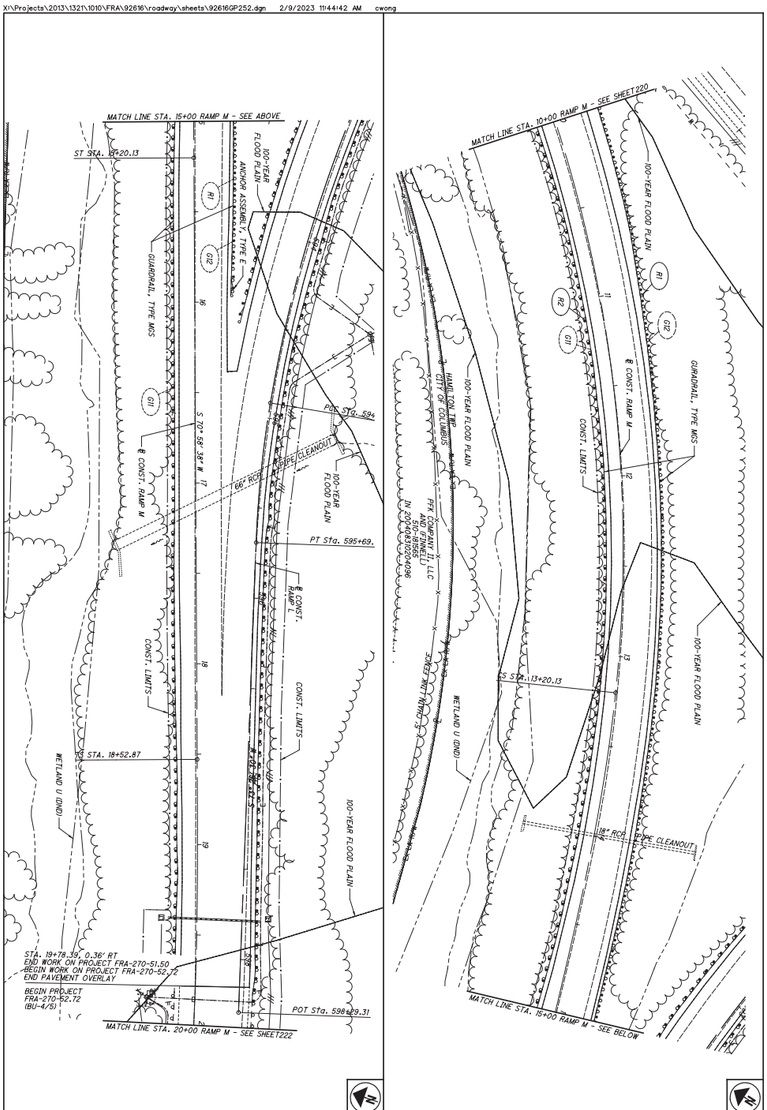

221 554	FRA-270-51.50	PLAN - RAMP M STA. 10+00.00 TO STA. 20+00.00	CALCULATED ACF CHECKED CSR 0 20 40 0 10 20 30 40 HORIZONTAL SCALE IN FEET

PLAN - RAMP M
STA. 20-00.00 TO STA. 24-57.61

HORIZONTAL SCALE IN FEET
0 20 40

CALCULATED ACP
DRAWN CSR

FRA-270-51.50

222
554

X:\Projects\2023\1321\1100\FRA\92696\roadway\sheets\92696GP253.dgn 2/9/2023 11:50:37 AM cwong

PLAN - RAMP N
STA. 0-00 TO STA. 10-00

HORIZONTAL SCALE IN FEET
0 20 40

CALCULATED ACP
DRAWN CSR

FRA-270-51.50

223
554

X:\Projects\2023\1321\1100\FRA\92696\roadway\sheets\92696GP301.dgn 2/9/2023 11:58:38 AM cwong

X:\Projects\2013\1321\1010\FRA\92616\roadway\sheets\92616GP302.dgn 2/9/2023 12:15:55 PM cwong

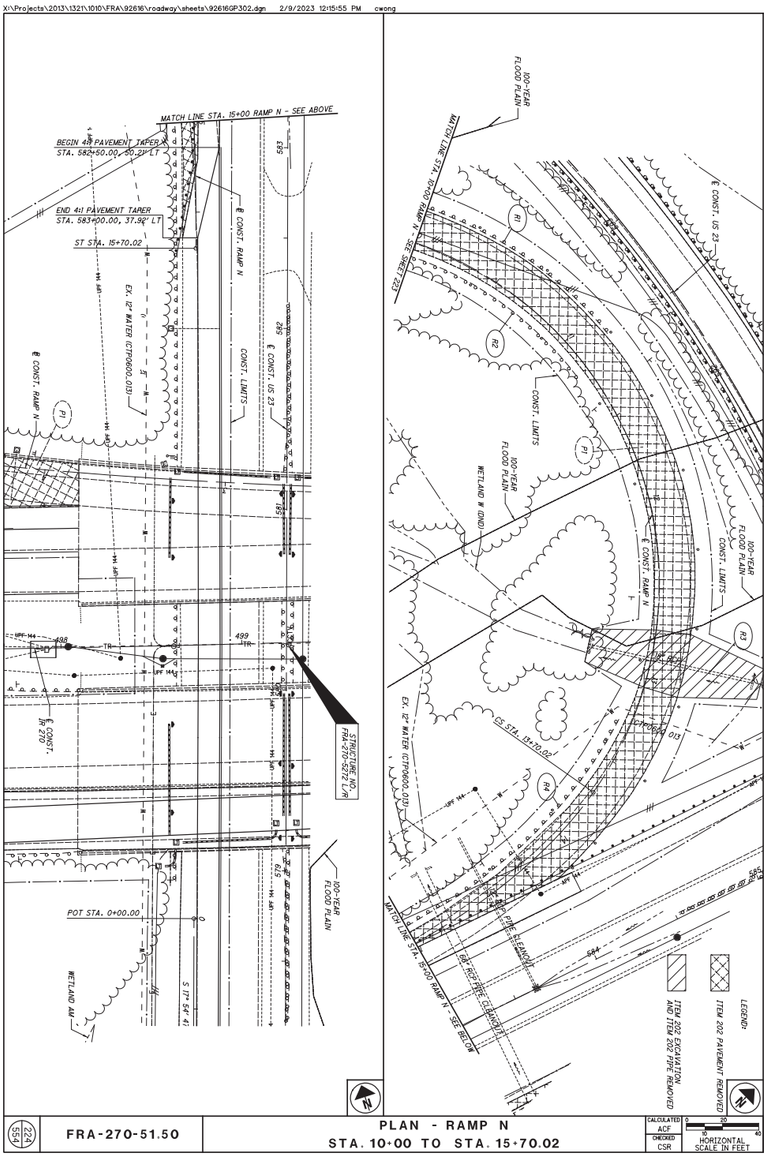

224 554	FRA-270-51.50	PLAN - RAMP N STA. 10+00 TO STA. 15+70.02

CALCULATED ACF
CHECKED CSR

0 30 60
HORIZONTAL SCALE IN FEET

X:\Projects\2013\1321\1010\FRA\92616\roadway\sheets\92616GP351.dgn 2/9/2023 12:24:47 PM cwong

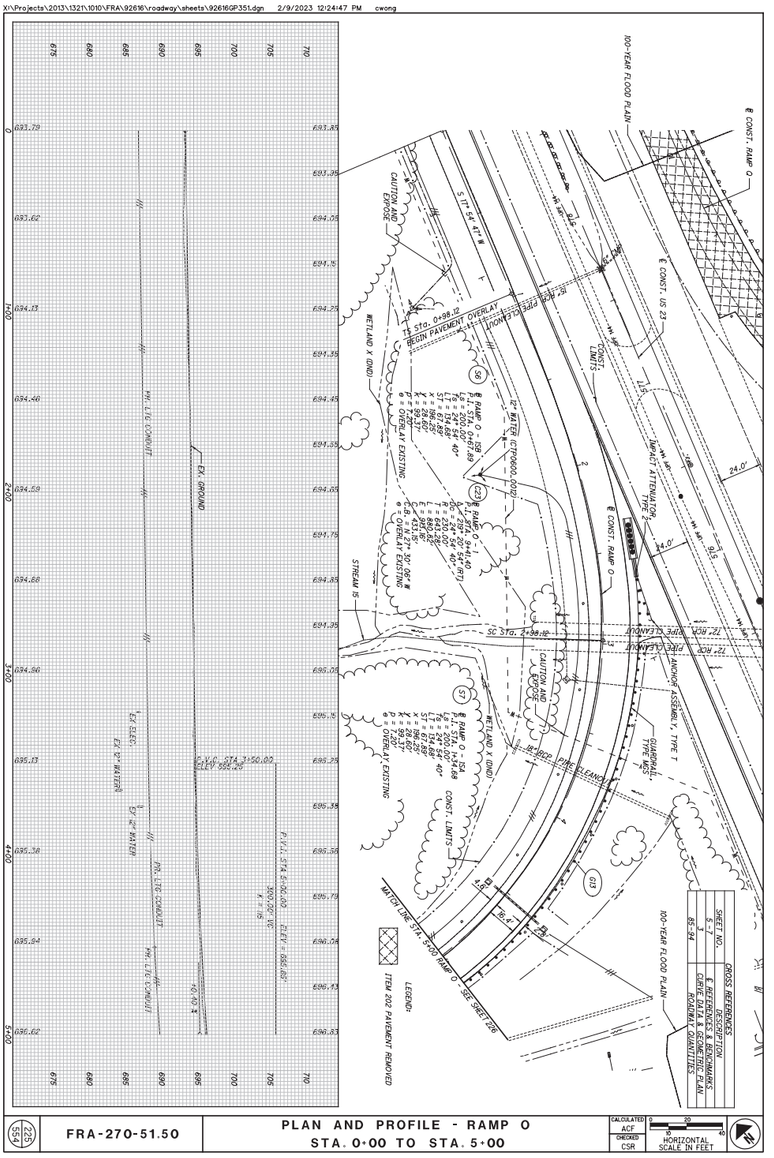

225 554	FRA-270-51.50	PLAN AND PROFILE - RAMP O STA. 0+00 TO STA. 5+00

CALCULATED ACF
CHECKED CSR

0 30 60
HORIZONTAL SCALE IN FEET

X:\Projects\2013\1321\1010\FRA\92616\roadway\sheets\92616GP352.dgn 2/9/2023 12:33:01 PM cwong

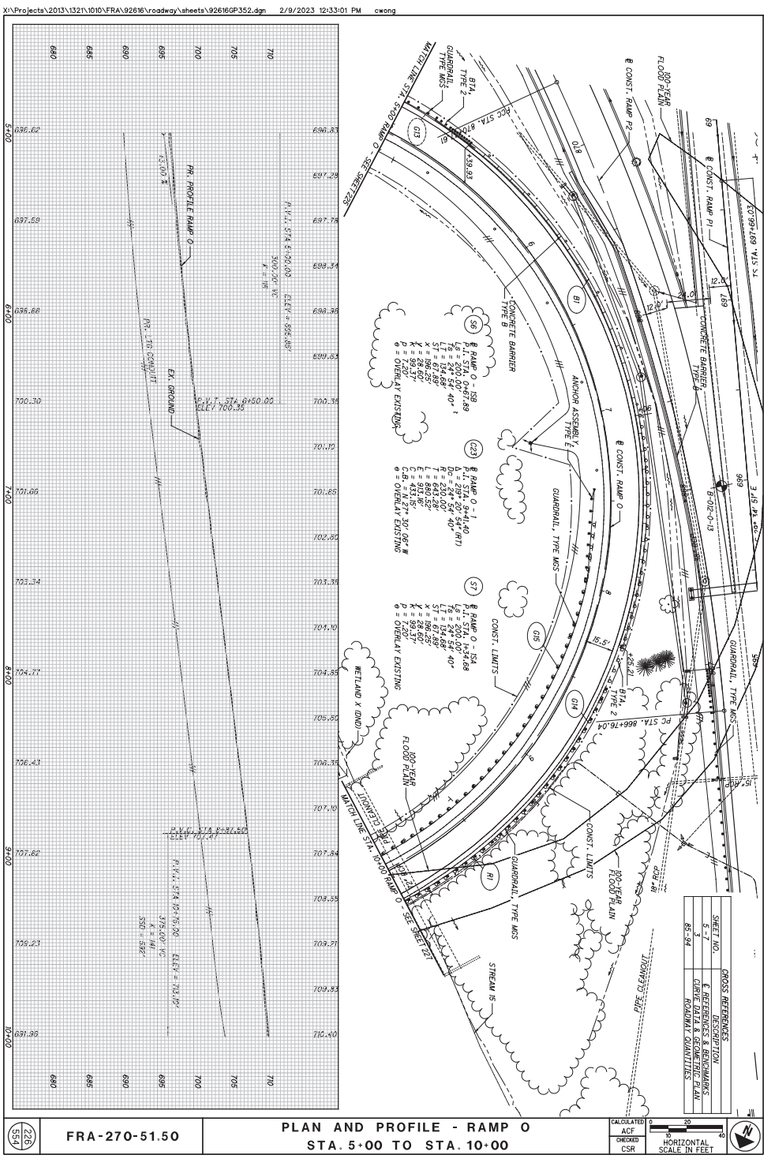

226 554 | FRA-270-51.50 | PLAN AND PROFILE - RAMP O STA. 5+00 TO STA. 10+00 | CALCULATED ACF | CHECKED CSR | HORIZONTAL SCALE IN FEET

X:\Projects\2013\1321\1010\FRA\92616\roadway\sheets\92616GP353.dgn 2/9/2023 12:44:37 PM cwong

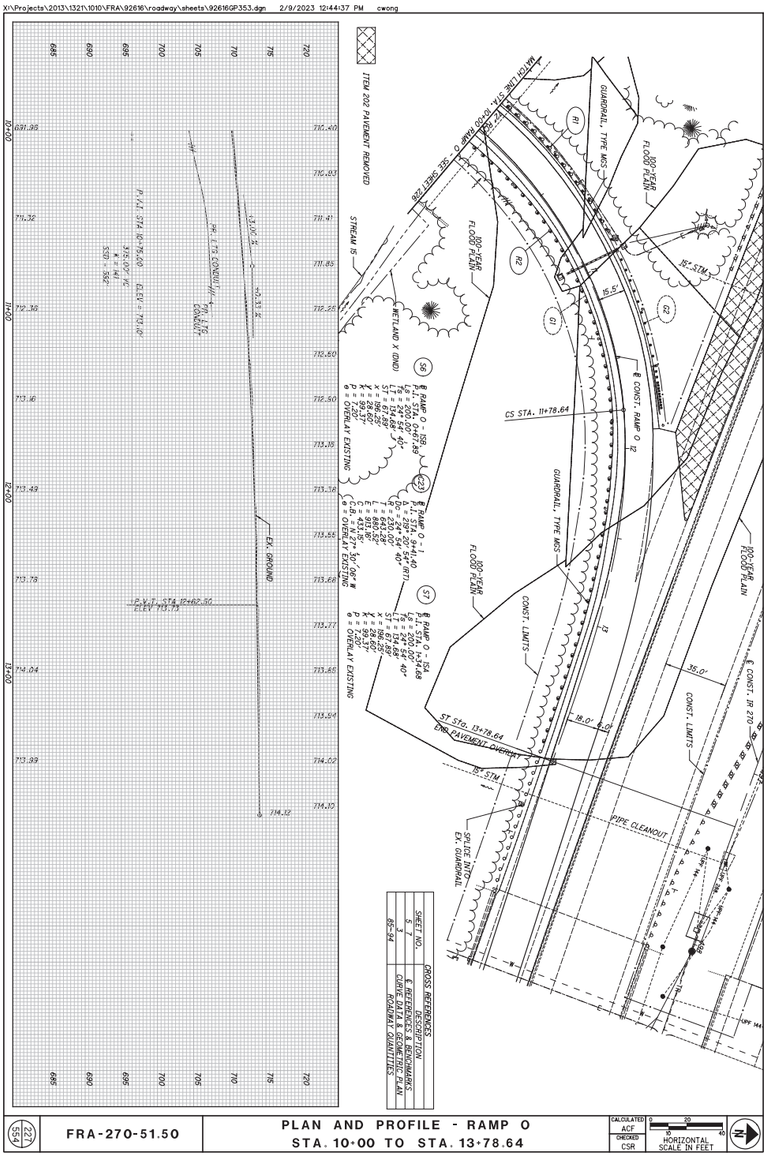

227 554 | FRA-270-51.50 | PLAN AND PROFILE - RAMP O STA. 10+00 TO STA. 13+78.64 | CALCULATED ACF | CHECKED CSR | HORIZONTAL SCALE IN FEET

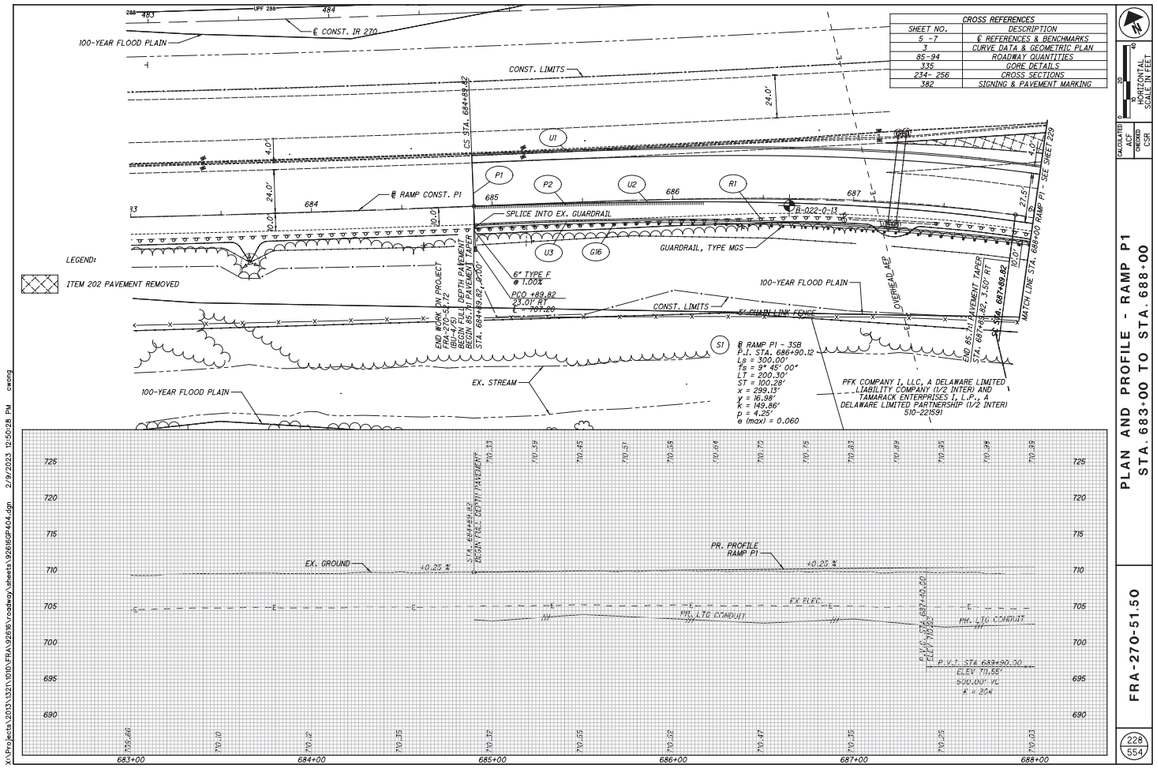
CROSS REFERENCES
SHEET NO. | DESCRIPTION
5 - 7 | ℄ REFERENCES & BENCHMARKS
3 | CURVE DATA & GEOMETRIC PLAN
85-94 | ROADWAY QUANTITIES
335 | GORE DETAILS
234- 256 | CROSS SECTIONS
382 | SIGNING & PAVEMENT MARKING
100-YEAR FLOOD PLAIN
℄ CONST. IR 220
CONST. LIMITS
℄ RAMP CONST. P1
SPLICE INTO EX. GUARDRAIL
GUARDRAIL, TYPE MGS
6" TYPE F @ 1.00%
PCO +89.82 23.01' RT ELEV. = 709.00
END WORK ON PROJECT STA. 685+17.12 BEGIN FULL DEPTH PAVEMENT STA. 684+81.82, 250' RT
B-022-0-11
6' CHAIN LINK FENCE
OVERHEAD AEP
END 8S.11 PAVEMENT TAPER STA. 687+60.82, 150' RT
℄ SYM. 687+60.82
MATCH LINE STA. 688+00 RAMP P1 - SEE SHEET 229
℄ RAMP P1 - 3SB
P.I. STA. 686+90.12
Lc = 300.00'
Tc = 9° 45' 00"
LT = 200.30'
ST = 100.28'
x = 299.15'
y = 16.98'
K = 149.86'
p = 4.25'
e (max) = 0.060
PFK COMPANY I, LLC, A DELAWARE LIMITED LIABILITY COMPANY (1/2 INTER) AND TAMARACK ENTERPRISES I, L.P., A DELAWARE LIMITED PARTNERSHIP (1/2 INTER) 510-221591
EX. STREAM
LEGEND:
ITEM 202 PAVEMENT REMOVED
PR. PROFILE RAMP P1
EX. GROUND
EX ELEC.
PH. LTG CONDUIT
P.V.I. STA 683+90.00 ELEV. 711.55' 500.00' VC K = 204
EX. GRADE AT ℄ RAMP P1 ELEV. 710.03
+0.25 %
683+00
684+00
685+00
686+00
687+00
688+00
PLAN AND PROFILE - RAMP P1
STA. 683+00 TO STA. 688+00
FRA-270-51.50
228
554
HORIZONTAL SCALE IN FEET
CALCULATED ACF
CHECKED CSR
X:\Projects\2013\1321\100\FRA\92656\roadway\sheets\92656P404.dgn 2/9/2023 12:50:28 PM cwong

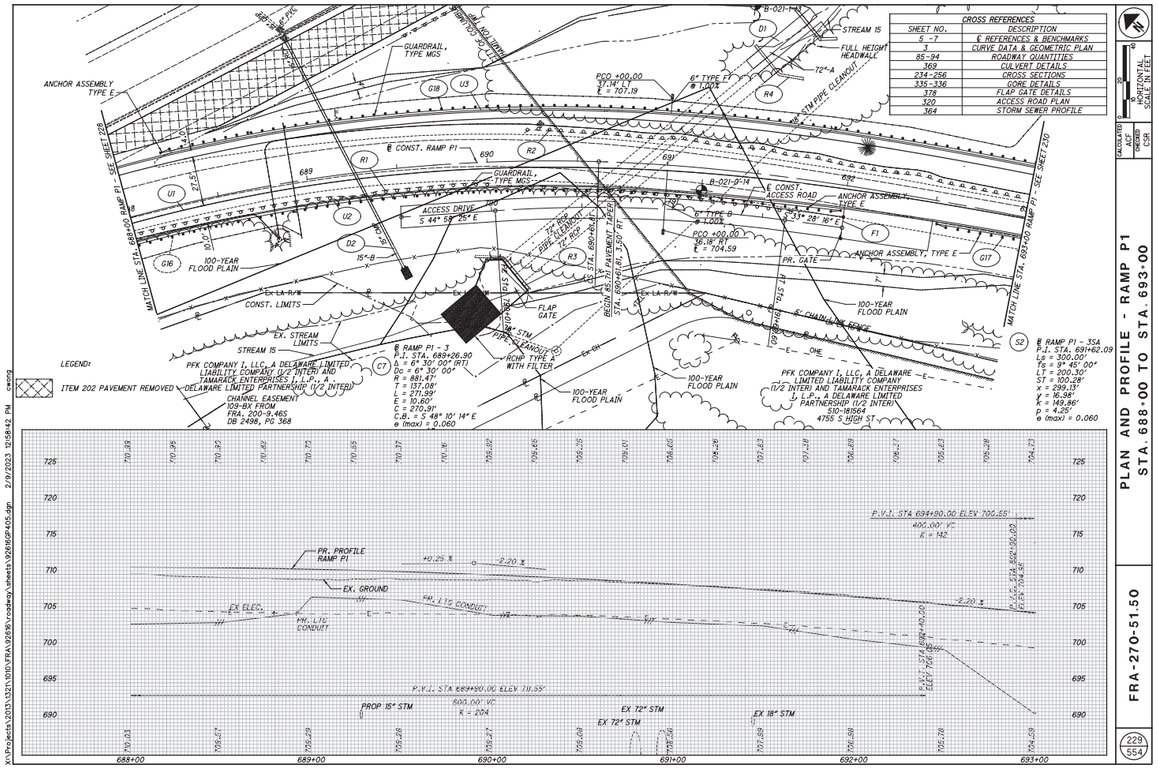
CROSS REFERENCES
SHEET NO. | DESCRIPTION
5 - 7 | ℄ REFERENCES & BENCHMARKS
3 | CURVE DATA & GEOMETRIC PLAN
85-94 | ROADWAY QUANTITIES
169 | CULVERT DETAILS
234-256 | CROSS SECTIONS
335-336 | GORE DETAILS
378 | FLAP GATE DETAILS
320 | ACCESS ROAD PLAN
364 | STORM SEWER PROFILE
ANCHOR ASSEMBLY TYPE E
GUARDRAIL, TYPE MGS
PCO +00.00 17.14' LT ELEV. = 707.19
6" TYPE F @ 1.00%
STREAM 15
FULL HEIGHT HEADWALL
72"-A
24" RCP PIPE CULVERT
MATCH LINE STA. 688+00 RAMP P1 - SEE SHEET 228
℄ CONST. RAMP P1
B-021-9-14
℄ CONST. ACCESS ROAD
ANCHOR ASSEMBLY, TYPE E
ACCESS DRIVE S 44° 59' 35" E
6" TYPE F @ 1.00%
PCO +00.00 16.18' RT ELEV. = 704.59
100-YEAR FLOOD PLAIN
PR. GATE
ANCHOR ASSEMBLY, TYPE E
MATCH LINE STA. 689+40 RAMP P1 - SEE SHEET 229
℄ CONST. ACCESS ROAD
S 33° 28' 10" E
CONST. LIMITS
EX. STREAM LIMITS
STREAM 15
FLAP GATE
RCHP TYPE A WITH FILTER
6' CHAIN LINK FENCE
℄ RAMP P1 - 3
P.I. STA. 689+26.90
Δ = 6° 30' 00" (RT)
Dc = 6° 30' 00"
R = 881.41'
T = 157.08'
L = 271.99'
E = 10.63'
C = 270.91'
C.B. = S 48° 10' 14" E
e (max) = 0.060
PFK COMPANY I, LLC, A DELAWARE LIMITED LIABILITY COMPANY (1/2 INTER) AND TAMARACK ENTERPRISES I, L.P., A DELAWARE LIMITED PARTNERSHIP (1/2 INTER)
CHANNEL EASEMENT 109-BX FROM FRA. 200-9,465 DB 2498, PG 368
PFK COMPANY I, LLC, A DELAWARE LIMITED LIABILITY COMPANY (1/2 INTER) AND TAMARACK ENTERPRISES I, L.P., A DELAWARE LIMITED PARTNERSHIP (1/2 INTER) 510-181564 4755 S HIGH ST
℄ RAMP P1 - 3SA
P.I. STA. 691+62.09
Ls = 300.00'
Ts = 9° 45' 00"
LT = 200.30'
ST = 100.28'
x = 299.15'
y = 16.98'
k = 149.86'
p = 4.25'
e (max) = 0.060
LEGEND:
ITEM 202 PAVEMENT REMOVED
100-YEAR FLOOD PLAIN
P.V.I. STA 689+90.00 ELEV. 705.55' 400.00' VC K = 142
PR. PROFILE RAMP P1
EX. GROUND
EX ELEC.
PH. LTG CONDUIT
+0.25 %
-2.20 %
P.V.I. STA 691+90.00 ELEV. 711.55'
PROP 15" STM
500.00' VC K = 204
EX 72" STM
EX 18" STM
688+00
689+00
690+00
691+00
692+00
693+00
PLAN AND PROFILE - RAMP P1
STA. 688+00 TO STA. 693+00
FRA-270-51.50
229
554
HORIZONTAL SCALE IN FEET
CALCULATED ACF
CHECKED CSR
X:\Projects\2013\1321\100\FRA\92656\roadway\sheets\92656P405.dgn 2/9/2023 12:54:42 PM cwong

SEEDING
END WIDTH
SQ. YDS.
END AREA
CUT
FILL
VOLUME
CUT
FILL
CALCULATED BY: ACF
CHECKED BY: CSR
EX. PAVEMENT
SUBGRADE STABILIZATION
ITEM 671 - EROSION CONTROL MAT
710.33
685+00.00
710.32
EX. ELEC.
PR. LTE CONDUIT
6H
2H
2%
8.0'
18.0'
EX LA-R/W
682.7
684+89.82
710.30
682.7
760
750
740
730
720
710
700
690
680
670
660
650
120
100
80
60
40
20
0
20
40
60
80
100
120
CROSS SECTIONS RAMP P1
STA. 684+50.00 TO STA. 685+00.00
FRA-270-51.50
234
554
12/7/2022 2:57:16 PM
c:\eng

SEEDING
END WIDTH
SQ. YDS.
END AREA
CUT
FILL
VOLUME
CUT
FILL
CALCULATED BY: ACF
CHECKED BY: CSR
EX. PAVEMENT
SUBGRADE STABILIZATION
ITEM 671 - EROSION CONTROL MAT
710.58
686+00.00
710.55
EX. ELEC.
PR. LTE CONDUIT
6H
2H
2%
8.0'
18.0'
EX LA-R/W
682.9
685+50.00
710.54
682.9
750
740
730
720
710
700
690
680
670
660
120
100
80
60
40
20
0
20
40
60
80
100
120
CROSS SECTIONS RAMP P1
STA. 685+50.00 TO STA. 686+00.00
FRA-270-51.50
235
554
12/7/2022 2:57:20 PM
c:\eng

x:\Projects\2013\1321\1010\FRA\92616\roadway\sheets\92616XS400.dgn 12/7/2022 2:57:23 PM cwong

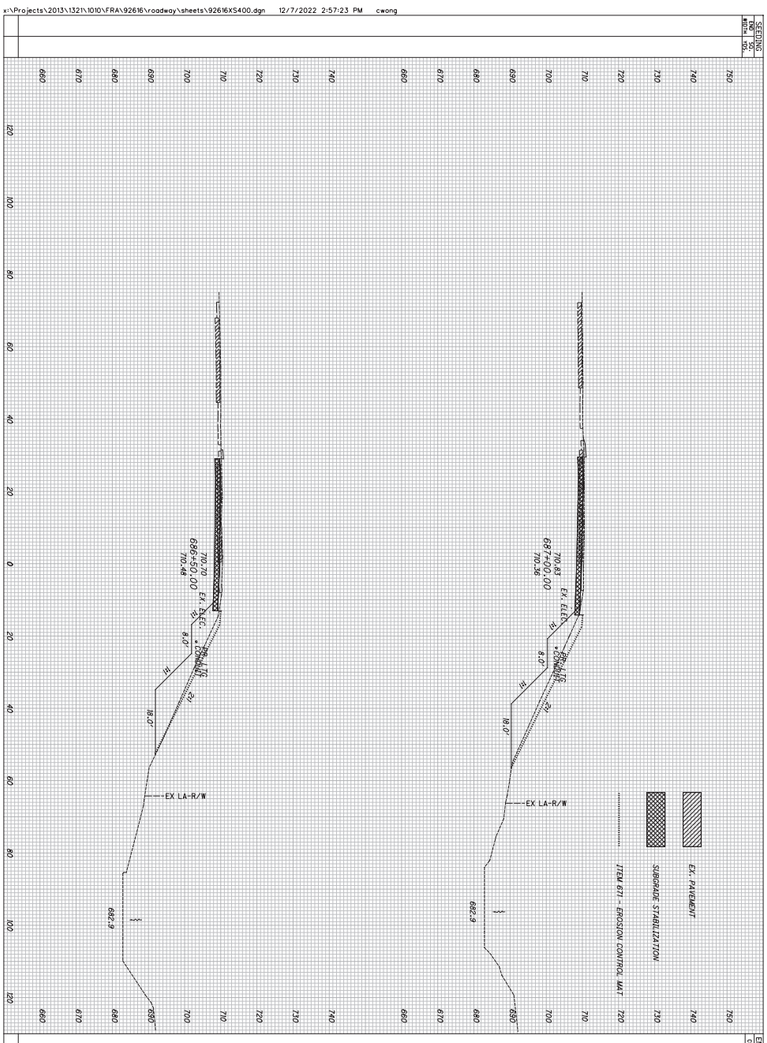

236 / 554	FRA-270-51.50	CROSS SECTIONS RAMP P1 STA. 686+50.00 TO STA. 687+00.00	CALCULATED ACF CHECKED CSR

x:\Projects\2013\1321\1010\FRA\92616\roadway\sheets\92616XS400.dgn 12/7/2022 2:57:26 PM cwong

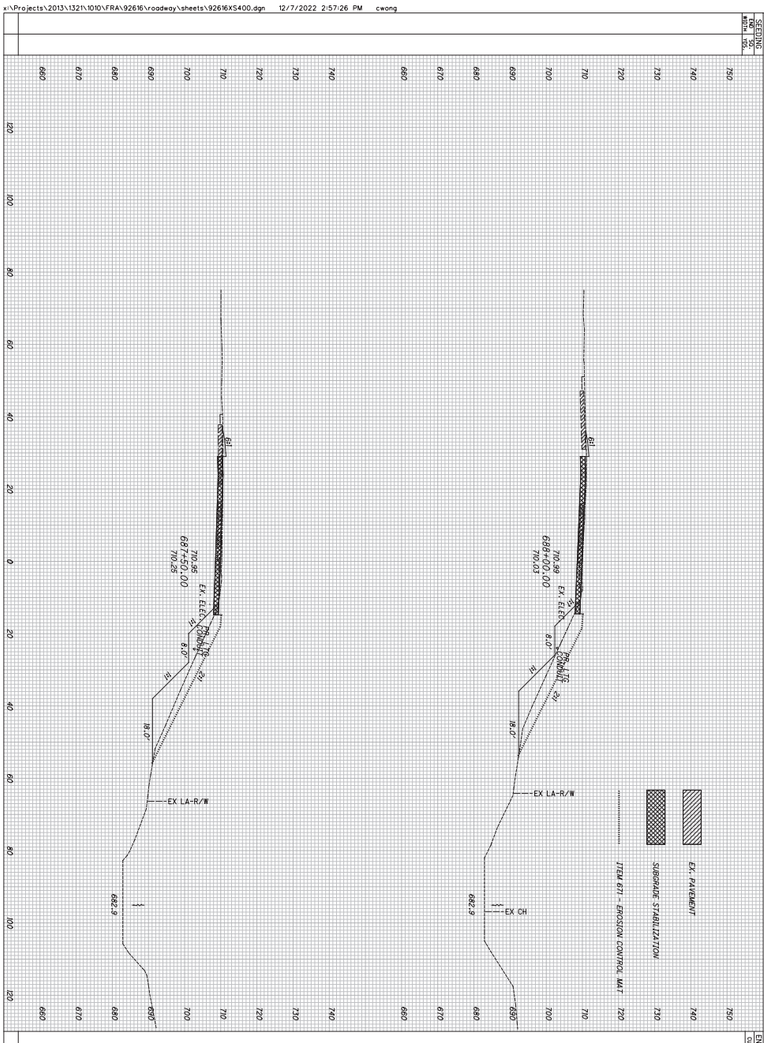

237 / 554	FRA-270-51.50	CROSS SECTIONS RAMP P1 STA. 687+50.00 TO STA. 688+00.00	CALCULATED ACF CHECKED CSR

SEEDING
END WIDTH
SIDE SLOPE
END AREA
CUT
FILL
VOLUME
CUT
FILL
CALCULATED BY: ACF
CHECKED BY: CSR
EX. PAVEMENT
SUBGRADE STABILIZATION
ITEM 671 - EROSION CONTROL MAT
EX. ELEC.
PR. LTG CONDUIT
EX. ELEC CONDUIT
EX. LA-R/M
710.2
710.70
688+00.00
709.30
710.90
688+50.00
709.56
682.9
8.0'
18.0'
12.5±'
6±'
4:1
3:1
2:1
750
740
730
720
710
700
690
680
670
660
120
100
80
60
40
20
0
20
40
60
80
100
120
CROSS SECTIONS RAMP P1
STA. 688+50.00 TO STA. 689+00.00
FRA-270-51.50
238
554

SEEDING
END WIDTH
SIDE SLOPE
END AREA
CUT
FILL
VOLUME
CUT
FILL
CALCULATED BY: ACF
CHECKED BY: CSR
EX. PAVEMENT
SUBGRADE STABILIZATION
ITEM 671 - EROSION CONTROL MAT
EX. ELEC.
PR. LTG CONDUIT
EX. LA-R/M
EX CH
702.8
709.32
690+00.00
709.27
STA 690+15.74, 65.34' RT
EX. 72" RCP E (HAS FLAPGATE) 682.07
STA 690+08.98, 57.12' RT
EX. 72" RCP E (HAS FLAPGATE) 682.02
8.0'
12.1'
6±'
4:1
3:1
2:1
750
740
730
720
710
700
690
680
670
660
100
80
60
40
20
0
20
40
60
80
100
120
140
CROSS SECTIONS RAMP P1
STA. 689+50.00 TO STA. 690+00.00
FRA-270-51.50
239
554

x:\Projects\2013\1321\1010\FRA\92616\roadway\sheets\92616XS400.dgn 12/7/2022 2:57:36 PM cwong

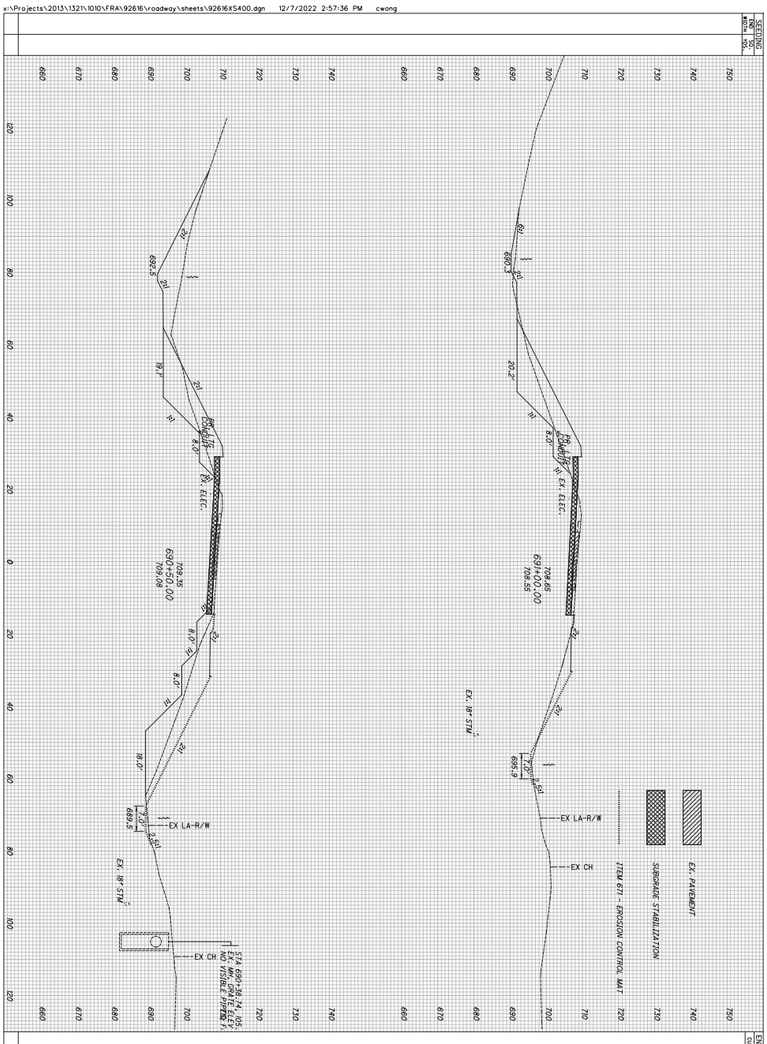

240
554

FRA-270-51.50

CROSS SECTIONS RAMP P1
STA. 690+50.00 TO STA. 691+00.00

CALCULATED ACF
CHECKED CSR

x:\Projects\2013\1321\1010\FRA\92616\roadway\sheets\92616XS400.dgn 12/7/2022 2:57:39 PM cwong

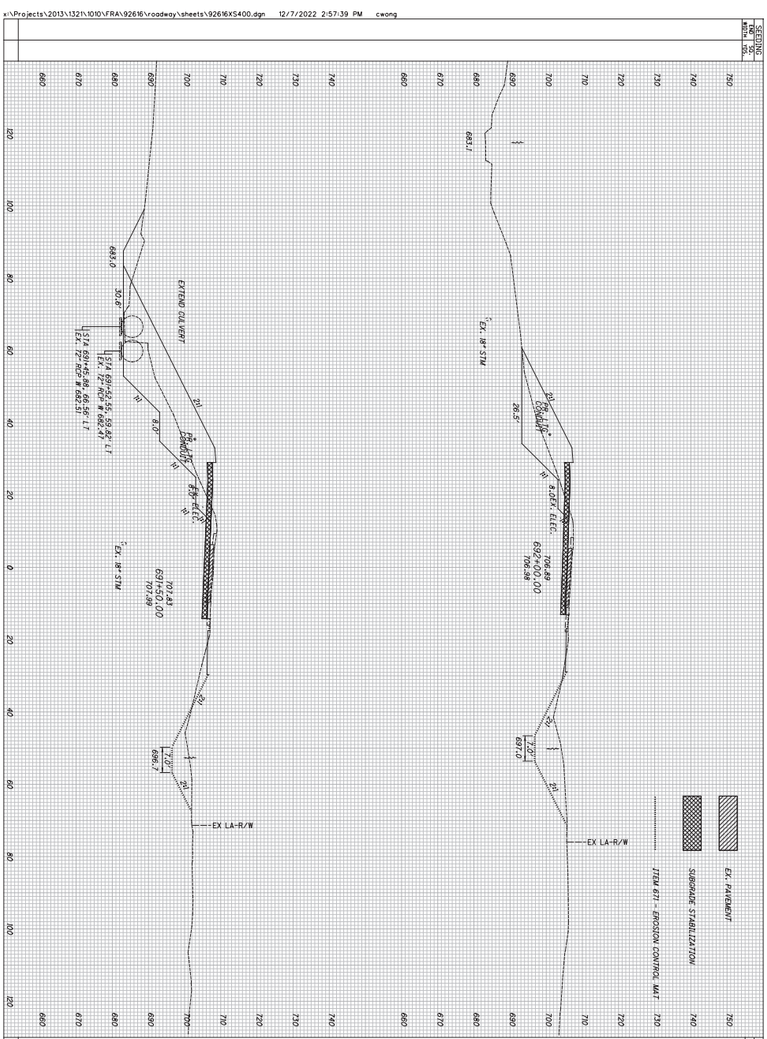

241
554

FRA-270-51.50

CROSS SECTIONS RAMP P1
STA. 691+50.00 TO STA. 692+00.00

CALCULATED ACF
CHECKED CSR

CROSS SECTIONS RAMP P1
STA. 692+50.00 TO STA. 693+00.00

FRA-270-51.50

242
554

PLAN AND PROFILE - RAMP P2
STA. 871+00 TO STA. 873+22.67

FRA-270-51.50

258
554

℄ CONST. IR 270
100-YEAR FLOOD PLAIN
GUARDRAIL, TYPE MGS
CONST. LIMITS
R1
P1
℄ CONST. RAMP Q
50' STA. 2+00.00
ST STA 0+00.00
ST STA 0+72.37
MATCH LINE STA. 3+50 RAMP Q - SEE BELOW
CONST. LIMITS
P1
CONST. LIMITS
LEGEND:
ITEM 202 PAVEMENT REMOVED
ITEM 202 EXCAVATION AND ITEM 202 PIPE REMOVED
RAMP Q
P.I. Sta. 0+77.61
Δ = 272° 30' 02" (RT)
Dc = 32° 44' 26"
R = 175.00'
Le = 200.00'
θs = 32° 44' 26"
LT = 135.69'
ST = 68.81'
x = 193.57'
y = 37.22'
K = 98.92'
p = 9.41'
Δc = 207° 01' 11" (RT)
Lc = 632.31'
Es = 10.64'
C = 340.32'
C1 = C2 = 197.11'
C.B.1 = S 63° 42' 16" E
C.B. = S 61° 39' 46" W
C.B.2 = S 7° 01' 48" W
℄ CONST. RAMP Q
100-YEAR FLOOD PLAIN
100-YEAR FLOOD PLAIN
CONST. LIMITS
R2
WETLAND WL 2
WETLAND WL 9 (IND)
CS 5-SM 8+32.11
US 23
MATCH LINE STA. 3+50 RAMP Q - SEE ABOVE
MATCH LINE STA. 8+50 RAMP Q - SEE SHEET 266
PLAN - RAMP Q
STA. 0+00 TO STA. 8+50
HORIZONTAL SCALE IN FEET
CALCULATED ACF
CHECKED CSR
FRA-270-51.50
265
554
X:\Projects\2013\1321\1000\FRA\926RW\roadway\sheets\926RWP501.dgn 2/9/2023 1:26:32 PM cwong

WETLAND AB (IND)
STREAM 15
CONST. LIMITS
WOODED
WOODED
100-YEAR FLOOD PLAIN
GUARDRAIL, TYPE MGS
100-YEAR FLOOD PLAIN
POT STA. 271+88.12
BEGIN ℄ CONST. RAMP L
STA. 271+88.12, 20.69' LT
℄ CONST. RAMP R
PROP. OVERHEAD SIGN STA. 274+53
℄ CONST. RAMP R
N 55° 48' 41" E
℄ CONST. RAMP L
MATCH LINE STA. 270+00 RAMP R - SEE SHEET 268
R1
U1
U3
24.0'
27'
24.0'
℄ TYPE E @ 1.00%
18-008-0-13
274
12.0'
12.0'
U2
100-YEAR FLOOD PLAIN
GUARDRAIL, TYPE MGS
BRUSH & TREES
G20
BEGIN 63.7H PAVEMENT TAPER STA. 271+13.50, 1.50' RT
PT STA. 271+68.12
W WIDEN PIPE CLEANOUT
RCO +00.00 20.69' RT ℄ 718.72
PIPE CLEANOUT STA. 273+88.65, 0.00' RT
END 63.7H PAVEMENT TAPER STA. 273+88.65, 0.00' LT
MATCH LINE STA. 275+00 RAMP R - SEE SHEET 270
STREAM 15
STREAM 15
100-YEAR FLOOD PLAIN
ITEM 670 - DITCH EROSION CONTROL PROTECTION MAT
ITEM 836 - TURF REINFORCING MAT, TYPE 1
ITEM 836 - TURF REINFORCING MAT, TYPE 2
CONST. LIMITS
Ex. Ladder
5' CHAIN LINK FENCE
HAMILTON TWP CITY OF COLUMBUS
B-007-1-13
18" RCP
18" RCP
18" RCP
15" CPP
RELOCATE STREAM
℄ RAMP R1 - 3
P.I. STA. 274+68.44
Δ = 2° 59' 29" (RT)
Dc = 1° 00' 00"
R = 5,729.58'
Le = 149.61'
L = 299.15'
T = 1.95'
C = 299.11'
C.B. = N 57° 18' 26" E
e (max) = 0.016
P.V.I. STA 274+20.00
ELEV = 720.75'
120.00' VC
K = 30
+3.50 %
-4.11 %
P.V.I. STA 277+10.00
ELEV = 738.33'
540.00' VC
K = 72
EX ELEC.
EX. GROUND
PR. PROFILE RAMP R
PR. LTG CONDUIT
P.V.I. STA 269+60.00
ELEV = 703.75'
500.00' VC
K = 78
STA 271+72.92', 186.15' LT
EX. MH, GRATE ELEV 690.64
EX. 18" RCP NW 684.24
EX. 18" RCP SE 684.64
STA 272+20.36', 108.15' RT
EX. MH, GRATE ELEV 691.30
EX. 18" RCP NE 685.45
EX. 18" RCP W 685.58
EX. 15" RCP S 686.00
735
730
725
720
715
710
705
700
270+00
271+00
272+00
273+00
274+00
275+00
CROSS REFERENCES
SHEET NO. | DESCRIPTION
5 -7 | ℄ REFERENCES & BENCHMARKS
3 | CURVE DATA & GEOMETRIC PLAN
85-94 | ROADWAY QUANTITIES
372 | CULVERT DETAILS
273-300 | CROSS SECTIONS
338 | GORE DETAILS
PLAN AND PROFILE - RAMP R
STA. 270+00 TO STA. 275+00
HORIZONTAL SCALE IN FEET
CALCULATED ACF
CHECKED CSR
FRA-270-51.50
269
554
X:\Projects\2013\1321\1000\FRA\926RW\roadway\sheets\926RWP553.dgn 2/9/2023 1:39:46 PM cwong

SEEDING		END AREA		VOLUME		CALCULATED	
END WIDTH	SQ. YDS.	CUT	FILL	CUT	FILL	JGS	
						CHECKED	
						CSR	

ITEM 203 - EMBANKMENT, AS PER PLAN

EX. PAVEMENT

ITEM 671 - EROSION CONTROL MAT

CROSS SECTIONS - RAMP R
STA. 272+50.00 TO STA. 273+00.00

CROSS REFERENCES	
SHEET NO.	DESCRIPTION
S -7	E REFERENCES & BENCHMARKS
3	CURVE DATA & GEOMETRIC PLAN
85-94	ROADWAY QUANTITIES
305-319	CROSS SECTIONS
335-336	GORE DETAILS

HORIZONTAL SCALE IN FEET

CALCULATED	JGS
CHECKED	CSR

FRA-270-51.50

285
554

PLAN AND PROFILE RAMP S
STA. 803+00.00 TO STA. 808+00.00

FRA-270-51.50

302
554

X:\Projects\2013\1321\1010\FRA\926RW\roadway\sheets\926RW02602.dgn 2/10/2023 7:13:32 AM cwong

X:\Projects\2013\1321\1010\FRA\926RW\roadway\sheets\926RW03502.dgn 2/17/2023 12:29:29 PM cwong

STORM SEWER PROFILE - RAMP P1
STA. 689+26

HORIZONTAL SCALE IN FEET
0 10 20
CALCULATED ACC
DRAWN
CSR

FRA-270-51.50

364
554

X:\Projects\2013\1321\1000\FRA\926R60\drainage\sheets\926R60018.dgn 2/8/2023 9:59:17 AM cwong

CULVERT DETAILS - RAMP N
STA. 9+38

HORIZONTAL SCALE IN FEET
0 10 20
CALCULATED ACC
DRAWN
CSR

FRA-270-51.50

367
554

X:\Projects\2013\1321\1000\FRA\926R60\drainage\sheets\926R60200.dgn 2/1/2023 2:54:46 PM cwong

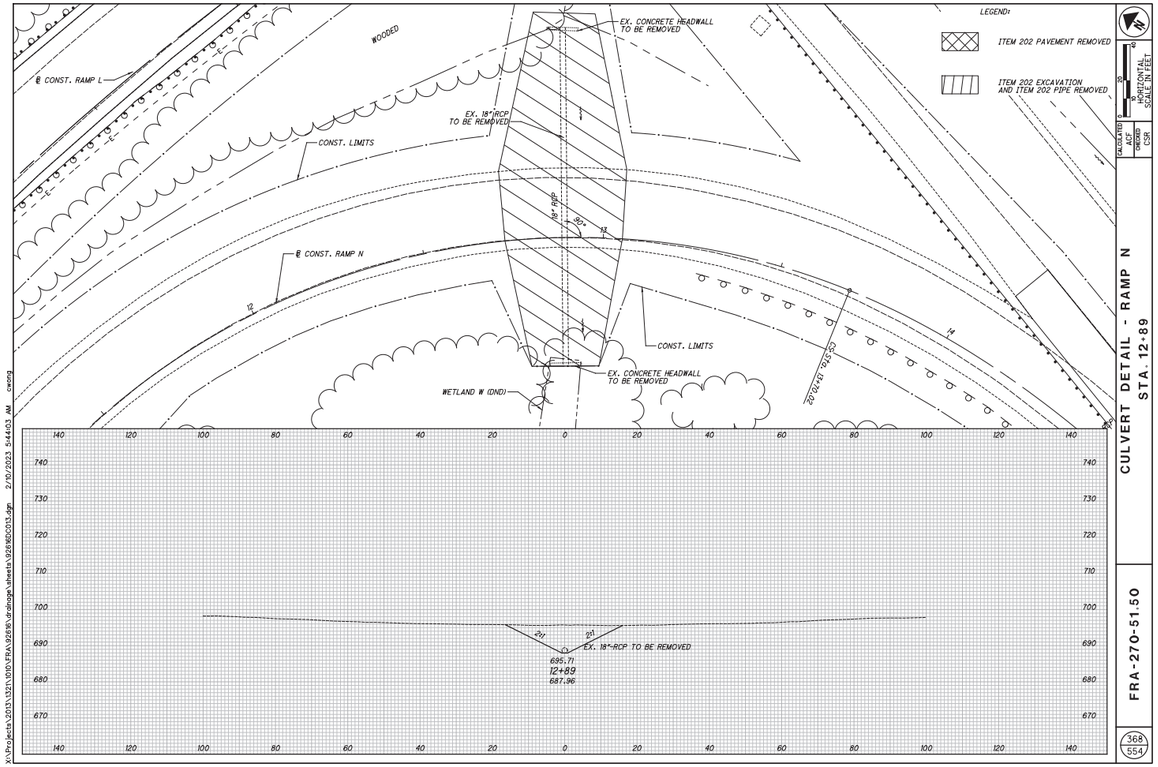

CULVERT DETAIL - RAMP N
STA. 12-89

FRA-270-51.50

368
554

EXISTING STRUCTURE DATA			
CFN:	1869032 1869031	DESIGN SERVICE LIFE:	50 YEARS
SIZE:	72"	STREAM pH:	7.6
TYPE:	RCP	ABBRASIVENESS:	N/A
LENGTH:	176'	HEADWALL:	FULL HEIGHT
DATE CONSTRUCTED:	1964		

ESTIMATED QUANTITIES			
ITEM	QUANTITY	UNIT	DESCRIPTION
601	8	SY	RIPRAP, TYPE D
601	78	CY	ROCK CHANNEL PROTECTION, TYPE C WITH FILTER
602	69	CY	CONCRETE MASONRY
611	70	FT	72" CONDUIT, TYPE A,706.02
611	2	EACH	DRAINAGE STRUCTURE, MISC.: FLAP GATE 72"

HYDRAULIC DATA	
DRAINAGE AREA: 2703.55 ACRES	
Q_{50} = 1067 CFS	Q_{100} = 1224 CFS
V_{50} = 18.9 FPS	V_{100} = 21.7 FPS
HW_{50} = 697.36	HW_{100} = 700.51

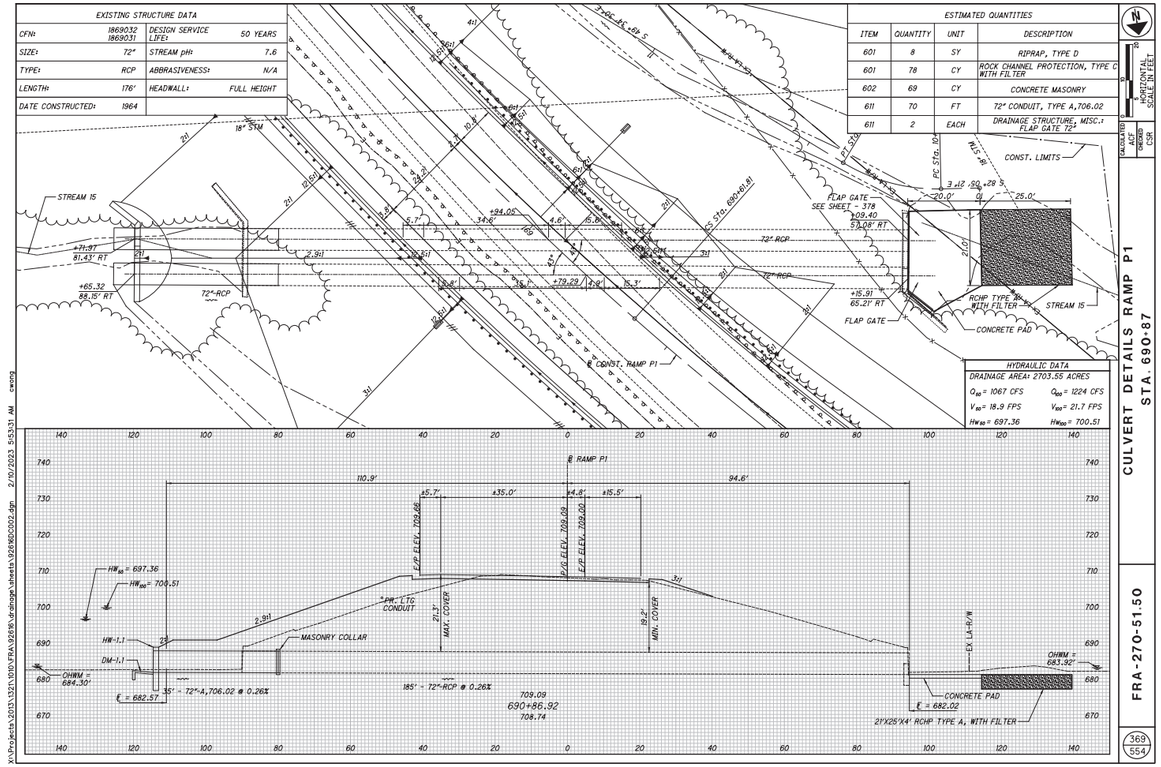

CULVERT DETAILS RAMP P1
STA. 690-87

FRA-270-51.50

369
554

LEGEND:
ITEM 202 PAVEMENT REMOVED
ITEM 202 EXCAVATION AND ITEM 202 PIPE REMOVED
WETLAND Z
EX. CONCRETE HEADWALL TO BE REMOVED
EX. 18" RCP TO BE REMOVED
ELEV. 731.75
CONST. LIMITS
ONE ELEV. ±732.0' CLEARANCE ±37.0'
℄ CONST. RAMP Q
EX. CONCRETE HEADWALL TO BE REMOVED
WETLAND Y (DND)
ELEV. 732.97
℄ CONST. US 23
577
CULVERT DETAIL - RAMP Q
STA. 8+00.00
HORIZONTAL SCALE IN FEET
CALCULATED AGT
CHECKED CSR
EX. 18"-A TO BE REMOVED
684.86
8+00.06
688.06
FRA-270-51.50
371
554
X:\Projects\2021\1321\1010\FRA\92690\drdrings\sheets\926901CD14.dgn 2/8/2023 10:27:03 AM cwong

EXISTING STRUCTURE DATA
CFN: 1869019
SIZE: 96"
TYPE: CORRUGATED METAL
LENGTH: 126'
DATE CONSTRUCTED: 1963
DESIGN SERVICE LIFE: 75 YEARS
STREAM pH: 7.0
ABBRASIVENESS: N/A
HEADWALL: HALF HEIGHT
EXCAVATION AND REPLACEMENT WITH LOW STRENGTH MORTAR BACKFILL
ESTIMATED QUANTITIES
ITEM | QUANTITY | UNIT | DESCRIPTION
601 | 12 | SY | RIPRAP, TYPE D
602 | 11 | CY | CONCRETE MASONRY
611 | 31 | FT | 96" CONDUIT, TYPE A, AS PER PLAN, 707.02
203 | 146 | CY | EXCAVATION
613 | 146 | CY | LOW STRENGTH MORTAR BACKFILL
601 | 71 | CY | ROCK CHANNEL PROTECTION, TYPE A WITH FILTER
WETLAND AA (DND)
30.0'
CLEAN PIPE OF DEBRIS
STREAM 15
96" CMP
30'X8'X4'
±18.37
101.98' Lt
WETLAND AB (DND)
℄ CONST. RAMP L
CONST. LIMITS
℄ CONST. RAMP R
EX. 96" PIPE (31' TBR)
±19.75
℄ RAMP R
101.6'
92.3'
0.58'
4.0'
24.0'
10.0'
TOP ELEV. 699.33
FLOW ELEV. 700.91
PR. LTG. CONDUIT
28.5' MAX. COVER
26.2' MAX. COVER
2.5%
CONCRETE COLLAR
HW = 703.36
HW = 706.89
EX. LAKE/W
HW=2.2
OHWM = 687.49'
DM-1.1
30'X30'X4' TYPE A RCMP WITH FILTER
℄ = 685.49
173' - 96"-CMP @ 0.29%
721.87
273+21.83
723.09
31' - 96"-A,707.02 @ 0.29%
℄ = 686.05
CULVERT DETAIL - RAMP R
STA. 273+22.00
HORIZONTAL SCALE IN FEET
CALCULATED AGT
CHECKED CSR
FRA-270-51.50
372
554
X:\Projects\2021\1321\1010\FRA\92690\drdrings\sheets\926901CD05.dgn 2/8/2023 10:34:27 AM cwong

US Army Corps of Engineers
Huntington District

Permit Number: 2023-00233-SCR

Name of Permittee: Ohio Department of Transportation

Date of Issuance: March 30, 2023

Upon completion of the activity authorized by this permit and any mitigation required by the permit, sign this certification and return it to the following address:

U.S. Army Corps of Engineers - Huntington District
Building 10/ Section 10
PO Box 3990
Columbus, OH 43218-3990

Please note that your permitted activity is subject to a compliance inspection by an U.S. Army Corps of Engineers representative. If you fail to comply with this permit you are subject to permit suspension, modification, or revocation.

I hereby certify that the work authorized by the above-referenced permit has been completed in accordance with the terms and conditions of the said permit, and required mitigation was completed in accordance with the permit conditions.

_____ _____
Signature of Permittee Date

Stantec Consulting Services Inc.
1500 Lake Shore Drive Suite 100, Columbus OH 43204-3800

November 18, 2020
File: 175528015

Attention: Kyle Koppes, PE
IBI Group
Suite 104
4150 Belden Village Street
Canton OH 44718

Dear Mr. Koppes,

Reference: FRA-23-4.19, PID 110380

Stantec is pleased to submit the Final Report of Roadway Exploration for the above referenced project. This report provides the geotechnical findings and recommendations for the proposed intersection improvements for US Route 23 at Rathmell Road. The existing pavement analysis was updated from the draft report submittal to use the structural number coefficients for existing pavement from the ODOT Flexible Pavement Design Manual as recommended by ODOT.

Please let us know if you have any questions or comments.

Regards,

Stantec Consulting Services Inc.

Jared Musselman PE
Senior Project Engineer
Phone: 614 545 3398
Fax: 614 486 4387
Jared.Musselman@stantec.com

Attachment: Report of Roadway Exploration

c. Stan Harris
Ryan Hutson

mj u:\175528014\technical_production\working_report\final\revision 1\let.docx

Design with community in mind

FRA-23-4.19

Report of Roadway Exploration - FINAL

November 12, 2020

Prepared for:

IBI Group
8101 North High Street, Suite 100
Columbus, Ohio 43235, United States

Prepared by:

Stantec Consulting Services Inc.
1500 Lake Shore Drive, Columbus,
Ohio 43204

This document entitled FRA-23-4.19 was prepared by Stantec Consulting Services Inc. (“Stantec”) for the account of IBI Group (the “Client”). Any reliance on this document by any third party is strictly prohibited. The material in it reflects Stantec’s professional judgment in light of the scope, schedule and other limitations stated in the document and in the contract between Stantec and the Client. The opinions in the document are based on conditions and information existing at the time the document was published and do not take into account any subsequent changes. In preparing the document, Stantec did not verify information supplied to it by others. Any use which a third party makes of this document is the responsibility of such third party. Such third party agrees that Stantec shall not be responsible for costs or damages of any kind, if any, suffered by it or any other third party as a result of decisions made or actions taken based on this document.

Prepared by _____
(signature)

Evan Holcombe, EI

Reviewed by _____
(signature)

Jared Musselman, PE

Approved by _____
(signature)

Stan Harris, PE

Revision	Description	Author		Quality Check		Independent Review	
00	FINAL	EH	8/17/20	JM	9/4/20	SAH	9/9/20
01	FINAL	EH	11/12/20	JM	11/12/20		

Table of Contents

EXECUTIVE SUMMARY ..... **I**

1.0 INTRODUCTION **1**
1.1 PROJECT LOCATION AND BACKGROUND 1

2.0 SITE GEOLOGY **2**
2.1 GENERAL 2
2.2 SOIL GEOLOGY 2
2.3 BEDROCK GEOLOGY 2
2.4 HYDROLOGY AND HYDROGEOLOGY 3
2.5 RECONNAISSANCE 3

3.0 EXPLORATION **3**
3.1 HISTORICAL PROJECTS 3
3.2 PROJECT EXPLORATION PROGRAM AND SAMPLING METHODS 4
3.3 LABORATORY TESTING 4

4.0 FINDINGS **5**

5.0 ANALYSES AND RECOMMENDATIONS **5**
5.1 GENERAL 5
5.2 SUBGRADE ANALYSIS 6
5.3 EXISTING PAVEMENT CONDITIONS 6

LIST OF FIGURES

Figure 1: Site Vicinity Map 1

LIST OF APPENDICES

APPENDIX A PLAN OF EXPLORATIONS

APPENDIX B BORING LOGS

APPENDIX C SUBGRADE ANALYSIS

APPENDIX D PAVEMENT CORE PHOTOS

APPENDIX E STRUCTURAL NUMBER CALCULATIONS

FRA-23-4.19

Executive Summary

The Ohio Department of Transportation (ODOT), District 6 and its design consultant, IBI, are planning intersection safety improvements to U.S. 23 and Rathmell Road in Franklin County. The project consists of constructing lane and shoulder improvements to the traditional existing intersection of U.S. 23 and Rathmell Road to accommodate an increase in traffic. The intersection is approximately 0.9 miles south of Interstate 270 and the project limits extend approximately 1500 feet beyond the intersection on US 23 and 500 feet east on Rathmell Road. Stantec has been tasked with performing the geotechnical exploration for the roadway project.

A total of twenty-two (22) borings were advanced by Stantec to obtain geotechnical data for the design and construction of the proposed project improvements. One boring was advanced along the eastbound lanes of Rathmell Road and the remaining twenty-one (21) borings were advanced along the northbound and southbound lanes of U.S. 23 to evaluate the existing pavement subgrade.

Twenty-one of twenty-two borings were advanced through existing asphalt pavement ranging in thickness from 0.3 to 1.5 inches. Borings B-002-0-20, B-010-0-20, B-013-0-20, and B-015-0-20 had a concrete base layer underlying the asphalt pavement, ranging from 5 to 9.5 inches. Borings B-001-0-20 and B-014-0-20 had a 3.5-inch brick layer underlying the asphalt pavement. No shoulders or turn lane borings encountered concrete or brick base courses within the project limits. ODOT Item 304 aggregate base course throughout the project ranged from 3 to 9 inches in thickness. Soils consisted of primarily Gravel and Stone Fragments with Sand (A-1-b) and Silt and Clay (A-6a) with occasional zones of Sandy Silt (A-4a) and Silt Clay (A-6b). Some coarse-grained soils included various amounts of silt and clay, classifying as Gravel and Stone Fragments with Sand and Silt (A-2-4) to Gravel and Stone Fragments with Sand, Silt and Clay (A-2-6). Plasticity Index values of fine grained soils ranged from 4 to 22 percent with an average moisture content near 14 percent. N_{60} blow counts ranged from 6 to 68 blows per foot (bpf). Hand penetrometer readings ranged from 0.25 to greater than 4.5 tons per square foot (tsf) on fine-grained soils. Sulfate levels were below 3,000 parts per million (ppm) throughout the project site.

Based on the results of the GB1 analyses, it is recommended that either Item 204 - Excavate and Replace 12 inches with geotextile or Item 206 - Chemical Stabilization to a depth of 12 inches be performed on both U.S. 23 and Rathmell Road. A CBR value of 8 is also recommended for both U.S. 23 and Rathmell Road.

Asphalt pavement cores were extracted along the shoulders and drive lanes of US 23 and one in the drive lane of Rathmell Road. These samples were drilled using either an 8-inch or 12-inch thin wall coring bit. Pavement analysis was completed in accordance to ODOT Flexible Pavement Design Manual (FPDM) Section 400. Calculated Structural Numbers for the existing pavement conditions on the shoulders of US 23 ranged from 1.17 to 2.25, the driving lanes of US 23 ranged from 3.69 to 4.03 and the driving lane of Rathmell Road was 3.43.

1.0 INTRODUCTION

1.1 PROJECT LOCATION AND BACKGROUND

The Ohio Department of Transportation (ODOT), District 6, and IBI are planning intersection safety improvements to U.S 23 and Rathmell Road in Franklin County. The project consists of constructing lane and shoulder improvements to the traditional existing intersection of U.S. 23 and Rathmell Road to accommodate an increase in traffic. The intersection is approximately 0.9 miles south of I-270 and the project limits extend approximately 1500 feet north and south beyond the intersection on U.S. 23 and 500 feet east on Rathmell Road.

This report summarizes the exploration program implemented, along with findings and recommendations pertaining to the roadway and subgrade. Figure 1 shows the site vicinity.

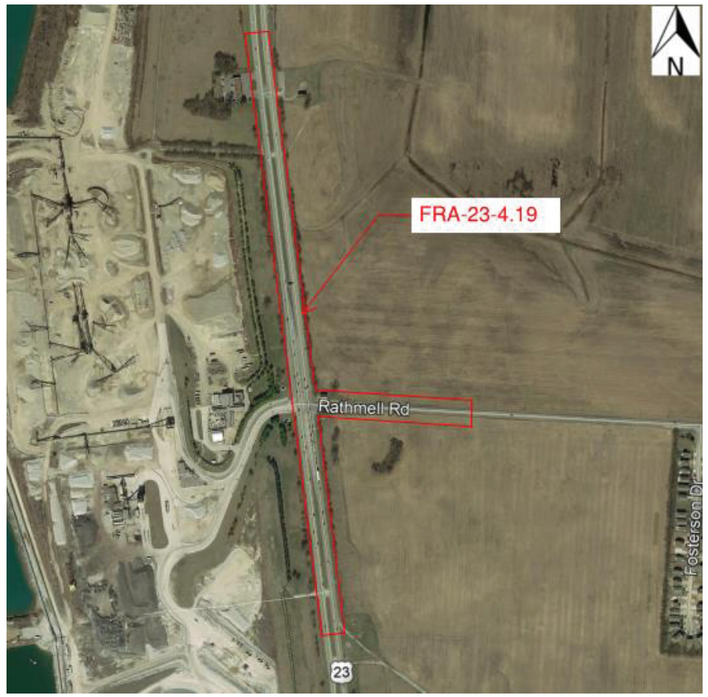

Figure 1: Site Vicinity Map

FRA-23-4.19

2.0 SITE GEOLOGY

2.1 GENERAL

The Physiographic Regions of Ohio Map (Ohio Department of Natural Resources (ODNR), 1998) indicates that the project site is located in the Southern Ohio Loamy Till Plain region of Ohio, but more specifically the Columbus Lowland district. The project is in the general vicinity of the Berea Escarpment. This region is described as having loamy till, and end and recessional moraines, commonly associated with boulder belts. This specific district in Ohio is described as having lowlands surrounded in all directions by relative uplands, having a broad regional slope toward the Scioto Valley with many larger streams with typical elevations between 600 to 850 feet.

2.2 SOIL GEOLOGY

Two primary soils are located in the project area, as shown in the Web Soil Survey (United States Department of Agriculture (USDA), 2014):

1. Miamian Silt Loam (MkB) – 2 to 6 percent slopes, well drained having a medium runoff with moderately low to moderately high hydraulic conductivities (0.06 to 0.20 inches per hour), described as loess derived from quartzite over loamy till derived from limestone and dolomite.

2. Ockley Silt Loam (OcB) – 2 to 6 percent slopes, well drained having a moderately high to high hydraulic conductivities (0.60 to 2.00 inches per hour), described as loess over loamy outwash over sandy and gravelly outwash.

The Surficial Geology of the Springfield Quadrangle indicates surficial units of ice contact deposits underlain by Sands and gravels from the Wisconsinan-age. The ice contact deposits soils have a maximum thickness of 50 feet and consist of highly variable deposits of poorly sorted gravel and sand and may be partially covered or surrounded by till. The underlying Sands and Gravels in this region are typically well to moderately sorted, moderately to well-rounded and have a maximum layer thickness of 60 feet. Bedrock units found within this region consist of Shale from the Devonian-age.

The Shaded Drift Thickness Map of Ohio (ODNR, 2004) shows glaciated area drift thicknesses of 51 to 80 feet with outwash valleys to the east with deeper thicknesses ranging from 211 to 260 feet. Glacially deposited sediments from the Teays Valley found within the project area classify as ground moraines from the Wisconsinan and Illinoian periods.

2.3 BEDROCK GEOLOGY

The Bedrock Geology Map of The Commercial Point, Ohio Quadrangle (Ohio Department of Natural Resources (ODNR), 1997) indicates Olentangy Shale-Ohio Shale undivided formation in the project area. The Shaded Bedrock Topography Map of Ohio (ODNR, 2004) describes land surface elevations ranging from 501 to 800 feet in the project area. The Abandoned Underground Mines of Ohio Map (ODNR, 2012)

shows the project limits are not located within an area of any known mines; however, a surface mine is operational to the west of the project area. The Ohio Karst Areas Map (ODNR, 2000) indicates no probable karst areas exist within the project vicinity.

2.4 HYDROLOGY AND HYDROGEOLOGY

The Hydrogeologic Settings of the Unconsolidated Aquifers of Ohio (ODNR, 2000) map indicates the soils near the project yield 100 to 500 gallons per minute (gpm) with nearby areas yielding greater than 500 gpm. The Yields of the Uppermost Bedrock Aquifers of Ohio Map (ODNR, 2000) indicates 0 to 25 gpm yield of the bedrock groundwater in the project vicinity. No static groundwater was encountered during drilling in any borings. Perched water from recent rainfalls and from pavement coring was encountered periodically throughout the duration of the drilling across the project site.

The surrounding area is relatively flat, with no significant surficial water features present within or near the project limits. Surface water appears to generally flow into roadside drainage ditches.

2.5 RECONNAISSANCE

Stantec representatives visited the site on April 24, 2020. The areas surrounding the project site can be described as rural, with limited commercial areas in the vicinity. The existing pavement was noted as being in relatively good conditions, with some typical minor cracking. Borings were surveyed and staked at the proposed locations.

U.S. 23 is classified as a principal arterial route, whereas Rathmell Road is classified as a major arterial collector route according to the Rural County Franklin Functional Class Map. U.S. 23 and Rathmell Road have an annual average daily traffic (AADT) count of 37,975 and 5,043 respectively, at the project site according to the most recent traffic count in 2019 (ODOT Traffic Data Management System).

3.0 EXPLORATION

3.1 HISTORICAL PROJECTS

Historical boring logs from the FRA-23-0.00 and PIC-23-17.66 construction project in 1951 were used from the ODOT TIMS database to estimate potential soil types encountered during the current exploration. These borings were completed for the construction of U.S. 23. From the results of the 1951 geotechnical exploration, soils encountered primarily included Organic Material: Peat, Cinders, Clay (A-7-6), Clay and Silt (A-6), Elastic Silt and Clay (A-7-5), and Silt and Clay (A-6). Borings performed on the northside of the current project, from the previous FRA-270-51.50 roadway exploration (2016) and a Rathmell Road roadway widening exploration (2013) were also used for this report. Information from the applicable borings can be found in the GB1 Spreadsheets discussed in Section 5.2.

3.2 PROJECT EXPLORATION PROGRAM AND SAMPLING METHODS

A total of twenty-two (22) borings were advanced by Stantec to obtain geotechnical data to aid in the design and construction of the proposed project.

The borings were advanced in accordance with the ODOT Specifications for Geotechnical Explorations (SGE). The borings were performed with a CME 45 truck-mounted drill rig using 3.25-inch inside diameter (ID) hollow stem augers to advance the borings through soil. 8-inch and 12-inch thin wall coring bits were used to advance through the existing asphalt pavement and preserve desired pavements cores. Standard Penetration Test (SPT) sampling was performed at continuous intervals. The energy ratio (ER) of the automatic hammer and drill rod systems was measured to be 88.4 percent on April 24, 2018.

The SPT is performed by advancing a split-spoon sampler, 18 inches in length, with a 140-pound automatic hammer dropping 30 inches at select depth intervals in the boring. The number of hammer blows needed to advance the sampler each 6-inch increment is recorded. The sum of the blow counts from the last two 6-inch increments is called the field N-value (N_{Field}). The field N-value is corrected to an equivalent rod energy ratio of 60 percent (N_{60}) according to the equation below.

$$N_{60} = N_{Field}(\frac{ER}{60})$$

The depths/elevations of the SPTs with the corresponding N_{60}-values are shown on the boring logs in Appendix B.

Visual classifications were assigned to the soils encountered and portions from each sample were collected in air-sealed glass jars. Additional soil samples were obtained from auger cuttings within the top two feet of each boring to test Sulfate Content levels. The borings were checked for the presence of groundwater during drilling and at conclusion with the depth of water recorded. Borings were backfilled or sealed according to the ODOT SGE and capped with asphalt cold patch when drilled through the existing pavement. All samples were transported to Stantec's materials testing laboratory for further testing, following ASTM D4220 and ODOT Supplement 1122 guidelines.

3.3 LABORATORY TESTING

Soil samples retrieved in the field were transported to Stantec's materials testing laboratory where a natural moisture content (MC) was determined for each of the soil samples obtained. Engineering classification testing was performed on selected samples reflecting the primary soil horizons indicated in the field. The engineering classification tests conducted on the samples included sieve and hydrometer analysis (ASTM D 422) and Atterberg Limits (ASTM D 4318). These samples were classified in accordance with the Modified AASHTO Soil Classification System. Additional soil samples were obtained at each boring location to be used for determining sulfate content in soils in accordance to ODOT Supplement 1122. Due to the high organic content soils encountered at the southern end of the FRA-270-51.50 project (northern end of the current project), organic content testing was performed on samples from Borings B-019-0-20 and B-020-0-20. A summary of the results of the laboratory tests performed can be found on the boring logs in Appendix B.

4.0 FINDINGS

Twenty-one of twenty-two borings were advanced through existing asphalt pavement ranging in thickness between 4 and 18 inches. Borings B-002-0-20, B-010-0-20, B-013-0-20, and B-015-0-20 had a concrete base layer underlying the asphalt pavement, ranging from 5 to 9.5 inches in thickness. Borings B-001-0-20 and B-014-0-20 had a 3.5-inch thick brick layer underlying the asphalt pavement. No borings advanced through the shoulders or turn lane encountered concrete or brick base courses within the project limits. ODOT Item 304 aggregate base course throughout the project ranged from 3 to 9 inches in thickness.

Soils within the project limits consisted of primarily Gravel and Stone Fragments with Sand (A-1-b) and Silt and Clay (A-6a) with occasional zones of Sandy Silt (A-4a) and Silt Clay (A-6b). Some coarse-grained soils included various amounts of silt and clay, classifying as Gravel and Stone Fragments with Sand and Silt (A-2-4) to Gravel and Stone Fragments with Sand, Silt and Clay (A-2-6). Plasticity Index values of fine grained soils ranged from 4 to 22 percent with an average moisture content near 14 percent. N_{60} blow counts ranged from 6 to 68 blows per foot (bpf). Hand penetrometer readings ranged from 0.25 to greater than 4.5 tons per square foot (tsf) on fine-grained soils.

Borings on the northern end of the project site (B-019-0-20 and B-020-0-20) were tested for organic content, as peat and high organic content soils are historically known in the northern area of the project limits. Results indicated soils from 1.5 feet to 3.0 feet below ground surface had organic contents of 2.4% to 2.7%. This classifies as slightly organic soil using ODOT SGE classifications.

Boring B-013-0-20 located in the US 23 southbound left turn lane encountered auger refusal at 2.9 feet below ground surface. The refusal was estimated to be on a concrete surface due to hard augering and the presence of concrete chips in the auger cuttings.

5.0 ANALYSES AND RECOMMENDATIONS

5.1 GENERAL

The recommendations that follow are based on the information discussed in this report and the interpretation of the subsurface conditions encountered at the site during the field exploration. If future design changes are made, Stantec should be notified so that such changes can be reviewed, and the recommendations amended, as necessary.

These conclusions and recommendations are based on data and subsurface conditions from the borings advanced during this exploration using the degree of care and skill ordinarily exercised under similar circumstances by competent members of the engineering profession. No warranties can be made regarding the continuity of conditions.

FRA-23-4.19

5.2 SUBGRADE ANALYSIS

A subgrade analysis was completed in accordance with ODOT Geotechnical Bulletin (GB) 1. Three separate spreadsheets were created to represent subgrade conditions for the Northbound and Southbound lanes of U.S. 23, as well as Rathmell Road. All GB1 spreadsheets include borings performed as part of this geotechnical exploration, as well as available historical borings performed within the project limits. Each GB1 spreadsheet document is provided in Appendix C.

The GB1 spreadsheets provide subgrade recommendations based upon the soil classifications, SPT N_{60} values, hand penetration readings, and sulfate contents recorded for each boring. As shown in Appendix C, an average N_{60L} (lowest N_{60} of each boring) of US 23 northbound, US 23 southbound and Rathmell Road were 12, 15 and 12 bpf, respectively. Average low hand penetrometer readings were 2.5, 2.5 and 2.8 tsf for US 23 northbound, US 23 southbound and Rathmell Road, respectively. Sulfate contents on tested samples were less than 3,000 parts per million (ppm) throughout the entire project site.

Given the low sulfate contents along with average low blow counts and hand penetrometer readings, the following subgrade stabilization alternatives are recommended for both U.S 23 and Rathmell Road:

1. Item 204 - Excavate and Replace to a depth of 12 inches with geotextile
2. Item 206 - Chemical stabilization to a depth of 12 inches

These recommendations are given based on the results of the GB1 analysis of each roadway.

A California Bearing Ratio (CBR) value of 8 is recommended for both US 23 and Rathmell Road based on the results of the GB1 analyses.

5.3 EXISTING PAVEMENT CONDITIONS

Asphalt pavement cores were extracted along the shoulders and drive lanes of US 23 and one in the drive lane of Rathmell Road. These samples were drilled using either an 8-inch or 12-inch thin wall coring bit.

Pavement analysis was completed in accordance with the ODOT Flexible Pavement Design Manual (FPDM) Section 400 at the locations on U.S 23 and Rathmell Road. Layer thicknesses were approximated from the pavement cores collected from the field. Structural coefficient values were selected from the ODOT FPDM for specific pavement layers encountered. Structural number coefficients were selected from Table 401-1 in the ODOT Pavement Design Manual. A structural number of 0.23 was used for all existing asphalt concrete courses, 0.27 for all existing concrete and brick base layers and 0.17 for existing 304 aggregate base courses. Calculated Structural Numbers for the existing pavement conditions on the shoulders of US 23 ranged from 1.17 to 2.25, the driving lanes of US 23 ranged from 3.69 to 4.03 and the driving lane of Rathmell Road was 3.43. Borings B-010-0-20 and B-014-0-20 showed evidence of a previous overlay where new surface and base course were constructed over older surface courses. Photos of the pavement cores recovered during the field exploration are provided in Appendix D. The detailed composition of the existing pavement cores with structural numbers are provided in Appendix E.

APPENDICES

Appendix A PLAN OF EXPLORATIONS

FRA-23-4.19

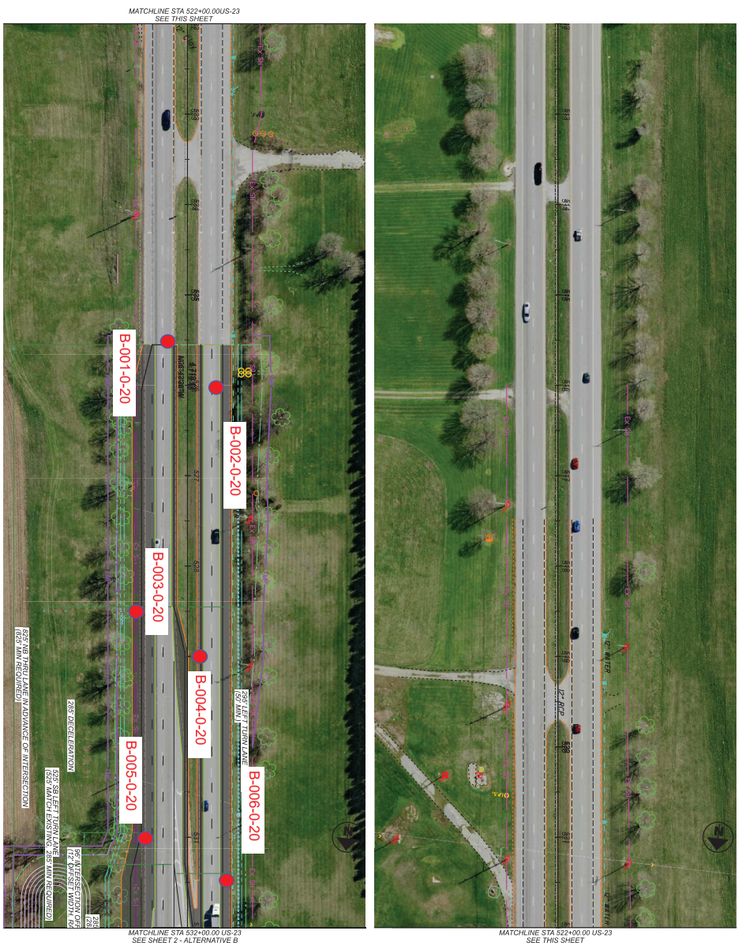

Plan of Exploration

US-23 STA 512+00 TO STA 532+00

HORIZONTAL SCALE IN FEET

0 40 20 80

FRA-23-4.19

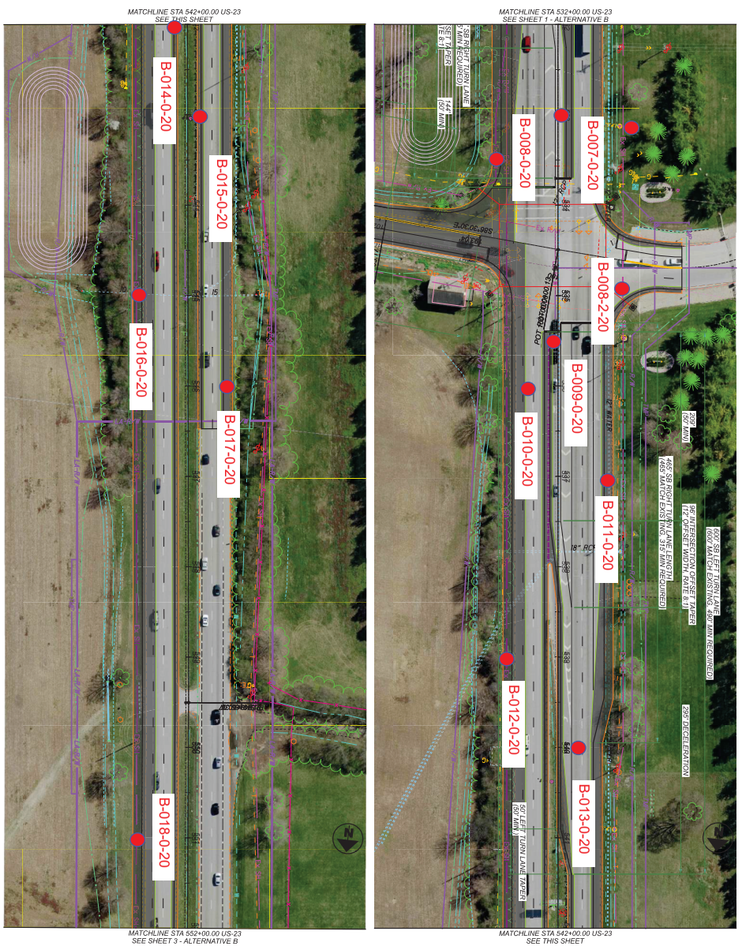

Plan of Exploration

US-23 STA 532+00 TO STA 552+00

HORIZONTAL SCALE IN FEET

0 40 20 80

FRA-23-4.19

Plan of Exploration

US-23 STA 552+00 TO STA 572+00

HORIZONTAL SCALE IN FEET

0 40 20 80

FRA-23-4.19

Plan of Exploration

RATHMELL ROAD - STA 100+00.00 TO STA 120+00

HORIZONTAL SCALE IN FEET

0 40 20 80

Appendix B BORING LOGS

STANDARD ODOT LOG W/ SULFATES (8.5 X 11) - OH DOT.GDT - 9/9/20 09:41 - U:\175528014\TECHNICAL_PRODUCTION\FIELD_DATA\GINT LOGS\WORKING\175528014_FRA-23-4.19_GINT LOGS

PROJECT: FRA-23-4.19	DRILLING FIRM / OPERATOR: STANTEC / DC	DRILL RIG: CME 45 TRUCK #815	STATION / OFFSET: 525+43, 20' RT.
TYPE: ROADWAY	SAMPLING FIRM / LOGGER: STANTEC / EH	HAMMER: CME AUTOMATIC	ALIGNMENT: US 23 NB INSIDE LANE
PID: 110380 SFN: 110380	DRILLING METHOD: 3.25" HSA	CALIBRATION DATE: 2/28/20	ELEVATION: 738.8 (MSL) EOB: 7.4 ft.
START: 5/28/20 END: 5/28/20	SAMPLING METHOD: SPT	ENERGY RATIO (%): 86.2	LAT / LONG: 41.526370, 83.016164

EXPLORATION ID B-001-0-20

PAGE 1 OF 1

MATERIAL DESCRIPTION AND NOTES	ELEV. 738.8	DEPTHS	SPT/ RQD	N_{60}	REC (%)	SAMPLE ID	HP (tsf)	GR	CS	FS	SI	CL	LL	PL	PI	WC	ODOT CLASS (GI)	SO4 ppm	BACK FILL
1.1' Asphalt Pavement 0.3' Brick Base	737.4	1																	
DENSE TO VERY DENSE, GRAYISH BROWN, **GRAVEL AND STONE FRAGMENTS WITH SAND**, TRACE SILT AND CLAY, WET	735.3	2 3	51 26 13	56	60	SS-1	-	53	22	9	10	6	NP	NP	NP	15	A-1-b (0)	810	
			3 3 3	9	67	SS-2A	-	-	-	-	-	-	-	-	-	11	A-1-b (V)	-	
						SS-2B	2.00	-	-	-	-	-	-	-	-	15	A-6a (V)	-	
STIFF TO VERY STIFF, BROWN, **SILT AND CLAY**, SOME SAND, TRACE GRAVEL, DAMP		4 5	4 3 5	11	80	SS-3	2.50	2	3	18	47	30	30	17	13	21	A-6a (9)	-	
	731.4	6 7 EOB	4 6 7	19	100	SS-4	3.50	-	-	-	-	-	-	-	-	21	A-6a (V)	-	

NOTES: BORING BACKFILLED WITH AUGER CUTTINGS AND PATCHED WITH FAST SET QUICKCRETE TO MATCH EXISTING PAVEMENT DEPTH

ABANDONMENT METHODS, MATERIALS, QUANTITIES: AUGER CUTTINGS MIXED WITH AUGER CUTTINGS; PLACED CEMENT

PROJECT: FRA-23-4.19 | DRILLING FIRM / OPERATOR: STANTEC / DC | DRILL RIG: CME 45 TRUCK #815 | STATION / OFFSET: 525+96, 34' LT. | EXPLORATION ID B-002-0-20
TYPE: ROADWAY | SAMPLING FIRM / LOGGER: STANTEC / EH | HAMMER: CME AUTOMATIC | ALIGNMENT: US 23 SB OUTSIDE LANE | PAGE 1 OF 1
PID: 110380 SFN: 110380 | DRILLING METHOD: 3.25" HSA | CALIBRATION DATE: 2/28/20 | ELEVATION: 738.2 (MSL) EOB: 7.2 ft.
START: 5/21/20 END: 5/21/20 | SAMPLING METHOD: SPT | ENERGY RATIO (%): 86.2 | LAT / LONG: 41.526497, 83.016384

MATERIAL DESCRIPTION AND NOTES	ELEV. 738.2	DEPTHS	SPT/ RQD	N_{60}	REC (%)	SAMPLE ID	HP (tsf)	GRADATION (%) GR	CS	FS	SI	CL	ATTERBERG LL	PL	PI	WC	ODOT CLASS (GI)	SO4 ppm	BACK FILL
0.5' Asphalt Pavement 0.7' Concrete Base	737.0																		
DENSE, BROWN, **GRAVEL AND STONE FRAGMENTS WITH SAND**, LITTLE SILT, TRACE CLAY, WET	735.5	1 2 3	6 15 15	43	53	SS-1	-	60	15	7	11	7	20	16	4	10	A-1-b (0)	<100	
MEDIUM DENSE TO DENSE, BROWN, **GRAVEL AND STONE FRAGMENTS**, LITTLE SAND, TRACE SILT, TRACE CLAY, MOIST		4 5	14 15 10 7 12 8	36	73	SS-2	-	62	20	5	8	5	NP	NP	NP	7	A-1-a (0)	-	
				29	67	SS-3	-	-	-	-	-	-	-	-	-	6	A-1-a (V)	-	
	731.0	6 EOB 7	6 11 11	32	73	SS-4	-	-	-	-	-	-	-	-	-	7	A-1-a (V)	-	

NOTES: BORING BACKFILLED WITH AUGER CUTTINGS AND PATCHED WITH FAST SET QUICKCRETE TO MATCH EXISTING PAVEMENT DEPTH
ABANDONMENT METHODS, MATERIALS, QUANTITIES: AUGER CUTTINGS MIXED WITH AUGER CUTTINGS; PLACED CEMENT

STANDARD ODOT LOG W/ SULFATES (8.5 X 11) - OH DOT.GDT - 9/9/20 09:42 - U:\175528014\TECHNICAL_PRODUCTION\FIELD_DATA\GINT_LOGS\WORKING\175528014_FRA-23-4.19_GINT LOGS

PROJECT: FRA-23-4.19 | DRILLING FIRM / OPERATOR: STANTEC / DC | DRILL RIG: CME 45 TRUCK #815 | STATION / OFFSET: 528+46, 44' RT. | EXPLORATION ID B-003-0-20
TYPE: ROADWAY | SAMPLING FIRM / LOGGER: STANTEC / EH | HAMMER: CME AUTOMATIC | ALIGNMENT: US 23 NB OUTSIDE SHOULDER | PAGE 1 OF 1
PID: 110380 SFN: 110380 | DRILLING METHOD: 3.25" HSA | CALIBRATION DATE: 2/28/20 | ELEVATION: 736.6 (MSL) EOB: 6.8 ft.
START: 5/27/20 END: 5/27/20 | SAMPLING METHOD: SPT | ENERGY RATIO (%): 86.2 | LAT / LONG: 41.527205, 83.016213

MATERIAL DESCRIPTION AND NOTES	ELEV. 736.6	DEPTHS	SPT/ RQD	N_{60}	REC (%)	SAMPLE ID	HP (tsf)	GRADATION (%) GR	CS	FS	SI	CL	ATTERBERG LL	PL	PI	WC	ODOT CLASS (GI)	SO4 ppm	BACK FILL
0.8' Asphalt Pavement	735.8																		
DENSE, TANNISH BROWN, **GRAVEL AND STONE FRAGMENTS WITH SAND AND SILT**, TRACE CLAY, DAMP	734.3	1 2	9 13 9	32	73	SS-1	-	64	12	9	9	6	21	14	7	12	A-2-4 (0)	-	
LOOSE, BROWN, **COARSE AND FINE SAND**, SOME GRAVEL, MOIST	732.8	3 4	5 4 3	10	93	SS-2	2.00	-	-	-	-	-	-	-	-	11	A-3a (V)	-	
STIFF, BROWN, **SANDY SILT**, LITTLE GRAVEL, SOME CLAY, MOIST		5	4 4 4	11	87	SS-3	1.00	10	6	17	42	25	26	17	9	20	A-4a (6)	-	
	729.8	EOB 6	3 4 4	11	67	SS-4	2.50	-	-	-	-	-	-	-	-	18	A-4a (V)	-	

NOTES: BORING BACKFILLED WITH AUGER CUTTINGS AND PATCHED WITH FAST SET QUICKCRETE TO MATCH EXISTING PAVEMENT DEPTH
ABANDONMENT METHODS, MATERIALS, QUANTITIES: AUGER CUTTINGS MIXED WITH AUGER CUTTINGS; PLACED CEMENT

STANDARD ODOT LOG W/ SULFATES (8.5 X 11) - OH DOT.GDT - 9/9/20 09:42 - U:\175528014\TECHNICAL_PRODUCTION\FIELD_DATA\GINT_LOGS\WORKING\175528014_FRA-23-4.19_GINT LOGS

PROJECT: FRA-23-4.19 | DRILLING FIRM / OPERATOR: STANTEC / DC | DRILL RIG: CME 45 TRUCK #815 | STATION / OFFSET: 528+82, 15' LT. | EXPLORATION ID B-004-0-20
TYPE: ROADWAY | SAMPLING FIRM / LOGGER: STANTEC / EH | HAMMER: CME AUTOMATIC | ALIGNMENT: US 23 SB INSIDE SHOULDER | PAGE 1 OF 1
PID: 110380 SFN: 110380 | DRILLING METHOD: 3.25" HSA | CALIBRATION DATE: 2/28/20 | ELEVATION: 736.0 (MSL) EOB: 6.3 ft.
START: 5/19/20 END: 5/19/20 | SAMPLING METHOD: SPT | ENERGY RATIO (%): 86.2 | LAT / LONG: 41.527283, 83.016442

MATERIAL DESCRIPTION AND NOTES	ELEV. 736.0	DEPTHS	SPT/ RQD	N_{60}	REC (%)	SAMPLE ID	HP (tsf)	GRADATION (%) GR	CS	FS	SI	CL	ATTERBERG LL	PL	PI	WC	ODOT CLASS (GI)	SO4 ppm	BACK FILL
0.3' Asphalt Pavement	735.7																		
MEDIUM DENSE, GRAY TO BROWN, **GRAVEL AND STONE FRAGMENTS WITH SAND AND SILT**, TRACE CLAY, MOIST	734.9	1	16 12 3	22	93	SS-1	-	44	19	12	18	7	27	20	7	17	A-2-4 (0)	870	
STIFF TO VERY STIFF, BROWN, **SILTY CLAY**, SOME GRAVEL, SOME SAND, MOIST		2	2 3 3	9	47	SS-2	2.00	22	12	15	23	28	40	18	22	25	A-6b (8)	-	
		3	4 6 5	16	13	SS-3	-	-	-	-	-	-	-	-	-	-	A-6b (V)	-	
		4	4 6 5	16	53	SS-4	3.00	-	-	-	-	-	-	-	-	13	A-6b (V)	-	
	729.7 EOB	5																	
		6																	

NOTES: BORING BACKFILLED WITH AUGER CUTTINGS AND PATCHED WITH FAST SET QUICKCRETE TO MATCH EXISTING PAVEMENT DEPTH
ABANDONMENT METHODS, MATERIALS, QUANTITIES: AUGER CUTTINGS MIXED WITH AUGER CUTTINGS; PLACED CEMENT

STANDARD ODOT LOG W/ SULFATES (8.5 X 11) - OH DOT.GDT - 9/9/20 09:42 - U:\175528014\TECHNICAL_PRODUCTION\FIELD_DATA\GINT LOGS\WORKING\175528014_FRA-23-4.19_GINT LOGS

PROJECT: FRA-23-4.19 | DRILLING FIRM / OPERATOR: STANTEC / DC | DRILL RIG: CME 45 TRUCK #815 | STATION / OFFSET: 531+07, 44' RT. | EXPLORATION ID B-005-0-20
TYPE: ROADWAY | SAMPLING FIRM / LOGGER: STANTEC / EH | HAMMER: CME AUTOMATIC | ALIGNMENT: US 23 NB OUTSIDE SHOULDER | PAGE 1 OF 1
PID: 110380 SFN: 110380 | DRILLING METHOD: 3.25" HSA | CALIBRATION DATE: 2/28/20 | ELEVATION: 733.6 (MSL) EOB: 12.1 ft.
START: 5/22/20 END: 5/22/20 | SAMPLING METHOD: SPT | ENERGY RATIO (%): 86.2 | LAT / LONG: 41.527914, 83.016328

MATERIAL DESCRIPTION AND NOTES	ELEV. 733.6	DEPTHS	SPT/ RQD	N_{60}	REC (%)	SAMPLE ID	HP (tsf)	GRADATION (%) GR	CS	FS	SI	CL	ATTERBERG LL	PL	PI	WC	ODOT CLASS (GI)	SO4 ppm	BACK FILL
0.6' Asphalt Pavement	733.0																		
MEDIUM DENSE, BROWN, **GRAVEL AND STONE FRAGMENTS WITH SAND**, LITTLE SILT, TRACE CLAY, DAMP		1	12 14 6	29	73	SS-1	-	52	16	13	14	5	NP	NP	NP	10	A-1-b (0)	<100	
		2																	
		3																	
		4	4 10 5	22	20	SS-2	-	-	-	-	-	-	-	-	-	9	A-1-b (V)	-	
	728.0	5																	
MEDIUM DENSE, BROWN, **GRAVEL AND STONE FRAGMENTS WITH SAND, SILT, AND CLAY**, WET		6	2 5 4	13	33	SS-3	1.00	39	15	12	21	13	27	16	11	20	A-2-6 (0)	-	
		7																	
		8	7 7 6	19	13	SS-4	4.5+	39	15	12	21	13	27	16	11	29	A-2-6 (0)	-	
		9																	
		10																	
	721.5	11	5 4 6	14	33	SS-5	4.5+	-	-	-	-	-	-	-	-	26	A-2-6 (V)	-	
	EOB	12																	

NOTES: BORING BACKFILLED WITH AUGER CUTTINGS AND PATCHED WITH FAST SET QUICKCRETE TO MATCH EXISTING PAVEMENT DEPTH
ABANDONMENT METHODS, MATERIALS, QUANTITIES: AUGER CUTTINGS MIXED WITH AUGER CUTTINGS; PLACED CEMENT

STANDARD ODOT LOG W/ SULFATES (8.5 X 11) - OH DOT.GDT - 9/9/20 09:42 - U:\175528014\TECHNICAL_PRODUCTION\FIELD_DATA\GINT LOGS\WORKING\175528014_FRA-23-4.19_GINT LOGS

PROJECT: FRA-23-4.19 | DRILLING FIRM / OPERATOR: STANTEC / DC | DRILL RIG: CME 45 TRUCK #815 | STATION / OFFSET: 531+57, 43' LT. | EXPLORATION ID B-006-0-20
TYPE: ROADWAY | SAMPLING FIRM / LOGGER: STANTEC / EH | HAMMER: CME AUTOMATIC | ALIGNMENT: US 23 SB OUTSIDE SHOULDER
PID: 110380 SFN: 110380 | DRILLING METHOD: 3.25" HSA | CALIBRATION DATE: 2/28/20 | ELEVATION: 732.2 (MSL) EOB: 6.6 ft. | PAGE 1 OF 1
START: 5/19/20 END: 5/19/20 | SAMPLING METHOD: SPT | ENERGY RATIO (%): 86.2 | LAT / LONG: 41.528021, 83.016668

MATERIAL DESCRIPTION AND NOTES	ELEV. 732.2	DEPTHS	SPT/ RQD	N_{60}	REC (%)	SAMPLE ID	HP (tsf)	GRADATION (%) GR	CS	FS	SI	CL	ATTERBERG LL	PL	PI	WC	ODOT CLASS (GI)	SO4 ppm	BACK FILL
0.6' Asphalt Pavement	731.6																		
VERY STIFF, BROWN TO REDDISH BROWN, **SANDY SILT**, SOME GRAVEL, LITTLE CLAY, DAMP - Aggregate Base @ 0.6'-1.0'	730.1	1	7 9 5	20	87	SS-1	4.5+	29	18	16	19	18	25	15	10	10	A-4a (0)	<100	
LOOSE TO MEDIUM DENSE, REDDISH BROWN, **GRAVEL AND STONE FRAGMENTS WITH SAND**, TRACE SILT, TRACE CLAY, DAMP		2 3	9 9 7	23	93	SS-2	-	45	35	6	8	6	22	17	5	8	A-1-b (0)	-	
	726.9	4	3 4 3	10	87	SS-3	-	-	-	-	-	-	-	-	-	7	A-1-b (V)	-	
STIFF, BROWN, **SILTY CLAY**, LITTLE GRAVEL, SOME SAND, MOIST	725.6	5 EOB 6	3 3 3	9	73	SS-4	3.50	-	-	-	-	-	-	-	-	18	A-6b (V)	-	

NOTES: BORING BACKFILLED WITH AUGER CUTTINGS AND PATCHED WITH FAST SET QUICKCRETE TO MATCH EXISTING PAVEMENT DEPTH
ABANDONMENT METHODS, MATERIALS, QUANTITIES: AUGER CUTTINGS MIXED WITH BENTONITE CHIPS; PLACED CEMENT

PROJECT: FRA-23-4.19 | DRILLING FIRM / OPERATOR: STANTEC / DC | DRILL RIG: CME 45 TRUCK #815 | STATION / OFFSET: 532+71, 2' LT. | EXPLORATION ID B-007-0-20
TYPE: ROADWAY | SAMPLING FIRM / LOGGER: STANTEC / EH | HAMMER: CME AUTOMATIC | ALIGNMENT: US 23 NB LT. TURN LANE
PID: 110380 SFN: 110380 | DRILLING METHOD: 3.25" HSA | CALIBRATION DATE: 2/28/20 | ELEVATION: 730.4 (MSL) EOB: 7.1 ft. | PAGE 1 OF 1
START: 5/27/20 END: 5/27/20 | SAMPLING METHOD: SPT | ENERGY RATIO (%): 86.2 | LAT / LONG: 41.528347, 83.016570

MATERIAL DESCRIPTION AND NOTES	ELEV. 730.4	DEPTHS	SPT/ RQD	N_{60}	REC (%)	SAMPLE ID	HP (tsf)	GRADATION (%) GR	CS	FS	SI	CL	ATTERBERG LL	PL	PI	WC	ODOT CLASS (GI)	SO4 ppm	BACK FILL
1.1' Asphalt Pavement	729.3																		
MEDIUM DENSE, BROWN, **GRAVEL AND STONE FRAGMENTS WITH SAND**, TRACE TO LITTLE SILT, TRACE TO LITTLE CLAY, MOIST TO WET - Aggregate Base @ 1.1'-1.8'	726.3	1 2 3 4	6 3 5 11 9 6	11	73	SS-1	-	56	15	8	14	7	18	14	4	13	A-1-b (0)	130	
MEDIUM DENSE, BROWN, **FINE SAND**, TRACE SILT, WET	724.8	5	4 4 6	14	80	SS-3	-	-	-	-	-	-	-	-	-	12	A-3 (V)	-	
MEDIUM DENSE, BROWN, **GRAVEL AND STONE FRAGMENTS WITH SAND AND SILT**, MOIST	723.3	6 EOB 7	9 9 10	27	80	SS-4	-	-	-	-	-	-	-	-	-	9	A-2-4 (V)	-	

NOTES: BORING BACKFILLED WITH AUGER CUTTINGS AND PATCHED WITH FAST SET QUICKCRETE TO MATCH EXISTING PAVEMENT DEPTH
ABANDONMENT METHODS, MATERIALS, QUANTITIES: AUGER CUTTINGS MIXED WITH BENTONITE CHIPS; PLACED CEMENT

STANDARD ODOT LOG W/ SULFATES (8.5 X 11) - OH DOT.GDT - 9/9/20 09:42 - U:\175528014\TECHNICAL_PRODUCTION\FIELD_DATA\GINT LOGS\WORKING\175528014_FRA-23-4.19_GINT LOGS

PROJECT: FRA-23-4.19 | DRILLING FIRM / OPERATOR: STANTEC / DC | DRILL RIG: CME 45 TRUCK #815 | STATION / OFFSET: 533+47, 46' RT. | EXPLORATION ID B-008-0-20
TYPE: ROADWAY | SAMPLING FIRM / LOGGER: STANTEC / EH | HAMMER: CME AUTOMATIC | ALIGNMENT: US 23 NB RT. TURN LANE | PAGE 1 OF 1
PID: 110380 SFN: 110380 | DRILLING METHOD: 3.25" HSA | CALIBRATION DATE: 2/28/20 | ELEVATION: 726.8 (MSL) EOB: 12.5 ft.
START: 5/21/20 END: 5/21/20 | SAMPLING METHOD: SPT | ENERGY RATIO (%): 86.2 | LAT / LONG: 41.528569, 83.016430

MATERIAL DESCRIPTION AND NOTES	ELEV.	DEPTHS	SPT/ RQD	N_{60}	REC (%)	SAMPLE ID	HP (tsf)	GR	CS	FS	SI	CL	LL	PL	PI	WC	ODOT CLASS (GI)	SO4 ppm	BACK FILL
1.0' Asphalt Pavement	726.8																		
MEDIUM DENSE TO DENSE, LIGHT BROWN, **GRAVEL AND STONE FRAGMENTS**, SOME SAND, LITTLE SILT, TRACE CLAY, DAMP TO MOIST	725.8	1	5 12 10	32	73	SS-1	-	62	16	8	11	3	NP	NP	NP	12	A-1-a (0)	640	
		2																	
		3																	
		4	12 12 6	26	80	SS-2	-	65	16	6	10	3	20	15	5	7	A-1-a (0)	-	
		5																	
		6																	
		7	7 9 8	24	60	SS-3	-	-	-	-	-	-	-	-	-	11	A-1-a (V)	-	
		8																	
		9	10 12 6	26	7	SS-4	-	-	-	-	-	-	-	-	-	8	A-1-a (V)	-	
		10																	
		11																	
	714.3	12 EOB	13 7 9	23	7	SS-5	-	-	-	-	-	-	-	-	-	4	A-1-a (V)	-	

NOTES: BORING BACKFILLED WITH AUGER CUTTINGS AND PATCHED WITH FAST SET QUICKCRETE TO MATCH EXISTING PAVEMENT DEPTH
ABANDONMENT METHODS, MATERIALS, QUANTITIES: AUGER CUTTINGS MIXED WITH BENTONITE CHIPS; PLACED CEMENT

STANDARD ODOT LOG W/ SULFATES (8.5 X 11) - OH DOT.GDT - 9/9/20 09:42 - U:\175528014\TECHNICAL_PRODUCTION\FIELD_DATA\GINT LOGS\WORKING\175528014_FRA-23-4.19_GINT LOGS

PROJECT: FRA-23-4.19 | DRILLING FIRM / OPERATOR: STANTEC / DC | DRILL RIG: CME 45 TRUCK #815 | STATION / OFFSET: 108+00, 7' LT. | EXPLORATION ID B-008-1-20
TYPE: ROADWAY | SAMPLING FIRM / LOGGER: STANTEC / EH | HAMMER: CME AUTOMATIC | ALIGNMENT: RATHMELL RD. WB LANE | PAGE 1 OF 1
PID: 110380 SFN: 110380 | DRILLING METHOD: 3.25" HSA | CALIBRATION DATE: 2/28/20 | ELEVATION: 713.7 (MSL) EOB: 6.7 ft.
START: 5/20/20 END: 5/20/20 | SAMPLING METHOD: SPT | ENERGY RATIO (%): 86.2 | LAT / LONG: 41.528798, 83.013779

MATERIAL DESCRIPTION AND NOTES	ELEV.	DEPTHS	SPT/ RQD	N_{60}	REC (%)	SAMPLE ID	HP (tsf)	GR	CS	FS	SI	CL	LL	PL	PI	WC	ODOT CLASS (GI)	SO4 ppm	BACK FILL
0.7' Ashalt Pavement	713.0																		
MEDIUM DENSE, BROWN, **GRAVEL AND STONE FRAGMENTS WITH SAND, SILT, AND CLAY**, DAMP - Aggregate Base @ 0.7'-1.4'		1	15 11 8	27	60	SS-1	4.5+	52	16	13	14	5	27	16	11	10	A-2-6 (0)	<100	
		2																	
		3	4 3 6	13	53	SS-2	3.00	52	16	13	14	5	27	16	11	13	A-2-6 (0)	-	
	710.0	4																	
MEDIUM DENSE, BROWN, **GRAVEL AND STONE FRAGMENTS WITH SAND AND SILT**, TRACE CLAY, MOIST		5	8 9 6	22	80	SS-3	4.5+	33	23	15	20	9	23	14	9	16	A-2-4 (0)	-	
	707.0	6 EOB	6 5 4	13	47	SS-4	3.50	-	-	-	-	-	-	-	-	20	A-2-4 (V)	-	

NOTES: BORING BACKFILLED WITH AUGER CUTTINGS AND PATCHED WITH FAST SET QUICKCRETE TO MATCH EXISTING PAVEMENT DEPTH
ABANDONMENT METHODS, MATERIALS, QUANTITIES: AUGER CUTTINGS MIXED WITH BENTONITE CHIPS; PLACED CEMENT

STANDARD ODOT LOG W/ SULFATES (8.5 X 11) - OH DOT.GDT - 9/9/20 09:42 - U:\175528014\TECHNICAL_PRODUCTION\FIELD_DATA\GINT LOGS\WORKING\175528014_FRA-23-4.19_GINT LOGS

PROJECT: FRA-23-4.19 | DRILLING FIRM / OPERATOR: STANTEC / DC | DRILL RIG: CME 45 TRUCK #815 | STATION / OFFSET: 534+90, 95' LT. | EXPLORATION ID B-008-2-20
TYPE: ROADWAY | SAMPLING FIRM / LOGGER: STANTEC / EH | HAMMER: CME AUTOMATIC | ALIGNMENT: QUARRY DRIVE ENTRANCE | PAGE 1 OF 1
PID: 110380 SFN: 110380 | DRILLING METHOD: 3.25" HSA | CALIBRATION DATE: 2/28/20 | ELEVATION: 726.8 (MSL) EOB: 7.1 ft.
START: 5/28/20 END: 5/28/20 | SAMPLING METHOD: SPT | ENERGY RATIO (%): 86.2 | LAT / LONG: 41.528911, 83.017003

MATERIAL DESCRIPTION AND NOTES	ELEV. 726.8	DEPTHS	SPT/ RQD	N_{60}	REC (%)	SAMPLE ID	HP (tsf)	GRADATION (%) GR	CS	FS	SI	CL	ATTERBERG LL	PL	PI	WC	ODOT CLASS (GI)	SO4 ppm	BACK FILL
1.3' Asphalt Pavement	725.5																		
DENSE TO VERY DENSE, BROWN, **GRAVEL AND STONE FRAGMENTS WITH SAND**, LITTLE SILT, TRACE CLAY, DAMP - Aggregate Base @ 1.3'-1.6'		1 2 3 4 5 6	15 18 23 15 13 12 9 9 9 7 9 10	59 36 26 27	93 73 87 100	SS-1 SS-2 SS-3 SS-4	- - - -	55 61 - -	19 17 - -	7 6 - -	12 10 - -	7 6 - -	NP NP - -	NP NP - -	NP NP - -	9 8 7 6	A-1-b (0) A-1-b (0) A-1-b (V) A-1-b (V)	470 - - -	
	719.7	7 EOB																	

NOTES: BORING BACKFILLED WITH AUGER CUTTINGS AND PATCHED WITH FAST SET QUICKCRETE TO MATCH EXISTING PAVEMENT DEPTH
ABANDONMENT METHODS, MATERIALS, QUANTITIES: AUGER CUTTINGS MIXED WITH BENTONITE CHIPS; PLACED CEMENT

PROJECT: FRA-23-4.19 | DRILLING FIRM / OPERATOR: STANTEC / DC | DRILL RIG: CME 45 TRUCK #815 | STATION / OFFSET: 536+11, 7' RT. | EXPLORATION ID B-009-0-20
TYPE: ROADWAY | SAMPLING FIRM / LOGGER: STANTEC / EH | HAMMER: CME AUTOMATIC | ALIGNMENT: US 23 SB LT. TURN LANE | PAGE 1 OF 1
PID: 110380 SFN: 110380 | DRILLING METHOD: 3.25" HSA | CALIBRATION DATE: 2/28/20 | ELEVATION: 724.1 (MSL) EOB: 7.1 ft.
START: 5/20/20 END: 5/20/20 | SAMPLING METHOD: SPT | ENERGY RATIO (%): 86.2 | LAT / LONG: 41.529275, 83.016691

MATERIAL DESCRIPTION AND NOTES	ELEV. 724.1	DEPTHS	SPT/ RQD	N_{60}	REC (%)	SAMPLE ID	HP (tsf)	GRADATION (%) GR	CS	FS	SI	CL	ATTERBERG LL	PL	PI	WC	ODOT CLASS (GI)	SO4 ppm	BACK FILL
1.1' Asphalt Pavement	723.0																		
LOOSE TO MEDIUM DENSE, DARK BROWN, **GRAVEL AND STONE FRAGMENTS WITH SAND AND SILT**, TRACE TO LITTLE CLAY, DAMP TO MOIST - Aggregate Base @ 1.1'-1.4'		1 2 3 4 5 6	13 11 6 5 6 3 3 2 2 2 2 3	24 13 6 7	80 60 40 100	SS-1 SS-2 SS-3 SS-4	3.50 2.50 3.00 1.50	39 40 - -	17 30 - -	13 9 - -	17 11 - -	14 10 - -	27 27 - -	17 18 - -	10 9 - -	14 12 21 19	A-2-4 (0) A-2-4 (0) A-2-4 (V) A-2-4 (V)	600 - - -	
	717.0	7 EOB																	

NOTES: BORING BACKFILLED WITH AUGER CUTTINGS AND PATCHED WITH FAST SET QUICKCRETE TO MATCH EXISTING PAVEMENT DEPTH
ABANDONMENT METHODS, MATERIALS, QUANTITIES: AUGER CUTTINGS MIXED WITH BENTONITE CHIPS; PLACED CEMENT

STANDARD ODOT LOG W/ SULFATES (8.5 X 11) - OH DOT.GDT - 9/9/20 09:42 - U:\175528014\TECHNICAL_PRODUCTION\FIELD_DATA\GINT LOGS\WORKING\175528014_FRA-23-4.19_GINT LOGS

STANDARD ODOT LOG W/ SULFATES (8.5 X 11) - OH DOT.GDT - 9/9/20 09:42 - U:\175528014\TECHNICAL_PRODUCTION\FIELD_DATA\GINT_LOGS\WORKING\175528014_FRA-23-4.19_GINT LOGS

PROJECT: FRA-23-4.19 | DRILLING FIRM / OPERATOR: STANTEC / DC | DRILL RIG: CME 45 TRUCK #815 | STATION / OFFSET: 536+02, 37' RT. | EXPLORATION ID B-010-0-20
TYPE: ROADWAY | SAMPLING FIRM / LOGGER: STANTEC / EH | HAMMER: CME AUTOMATIC | ALIGNMENT: US 23 NB OUTSIDE LANE | PAGE 1 OF 1
PID: 110380 SFN: 110380 | DRILLING METHOD: 3.25" HSA | CALIBRATION DATE: 2/28/20 | ELEVATION: 724.6 (MSL) EOB: 7.5 ft.
START: 5/26/20 END: 5/26/20 | SAMPLING METHOD: SPT | ENERGY RATIO (%): 86.2 | LAT / LONG: 41.529261, 83.016577

MATERIAL DESCRIPTION AND NOTES	ELEV. 724.6	DEPTHS	SPT/ RQD	N_{60}	REC (%)	SAMPLE ID	HP (tsf)	GRADATION (%) GR	CS	FS	SI	CL	ATTERBERG LL	PL	PI	WC	ODOT CLASS (GI)	SO4 ppm	BACK FILL
1.1' Asphalt Pavment 0.4' Concrete Base (severly broken)	723.1																		
DENSE, BROWN AND GRAY, **GRAVEL AND STONE FRAGMENTS WITH SAND AND SILT**, TRACE CLAY, DAMP -Aggregate base @ 1.5'-1.9'	721.9	1	16 13 10	33	100	SS-1	-	65	17	6	9	3	26	19	7	9	A-2-4 (0)	1400	
VERY STIFF, BROWN, **SILT AND CLAY**, SOME GRAVEL, SOME SAND, DAMP	720.1	2	5 9 9	26	33	SS-2	2.50	21	14	14	24	27	29	16	13	12	A-6a (4)	-	
MEDIUM DENSE, BROWN, **GRAVEL AND STONE FRAGMENTS WITH SAND, SILT, AND CLAY**, MOIST	719.3	3	7 6 6	17	73	SS-3A	-	-	-	-	-	-	-	-	-	14	A-2-6 (V)	-	
		4				SS-4B	4.50	-	-	-	-	-	-	-	-	18	A-6a (V)	-	
STIFF TO VERY STIFF, BOWN, **SILT AND CLAY**, MOIST	717.1	5	5 4 4	11	60	5	4.25	-	-	-	-	-	-	-	-	20	A-6a (V)	-	
		EOB 6																	
		7																	

NOTES: BORING BACKFILLED WITH AUGER CUTTINGS AND PATCHED WITH FAST SET QUICKCRETE TO MATCH EXISTING PAVEMENT DEPTH
ABANDONMENT METHODS, MATERIALS, QUANTITIES: AUGER CUTTINGS MIXED WITH BENTONITE CHIPS; PLACED CEMENT

STANDARD ODOT LOG W/ SULFATES (8.5 X 11) - OH DOT.GDT - 9/9/20 09:42 - U:\175528014\TECHNICAL_PRODUCTION\FIELD_DATA\GINT_LOGS\WORKING\175528014_FRA-23-4.19_GINT LOGS

PROJECT: FRA-23-4.19 | DRILLING FIRM / OPERATOR: STANTEC / DC | DRILL RIG: CME 45 TRUCK #815 | STATION / OFFSET: 537+16, 46' LT. | EXPLORATION ID B-011-0-20
TYPE: ROADWAY | SAMPLING FIRM / LOGGER: STANTEC / EH | HAMMER: CME AUTOMATIC | ALIGNMENT: US 23 SB RT. TURN LANE | PAGE 1 OF 1
PID: 110380 SFN: 110380 | DRILLING METHOD: 3.25" HSA | CALIBRATION DATE: 2/28/20 | ELEVATION: 722.9 (MSL) EOB: 7.1 ft.
START: 5/20/20 END: 5/20/20 | SAMPLING METHOD: SPT | ENERGY RATIO (%): 86.2 | LAT / LONG: 41.529544, 83.016927

MATERIAL DESCRIPTION AND NOTES	ELEV. 722.9	DEPTHS	SPT/ RQD	N_{60}	REC (%)	SAMPLE ID	HP (tsf)	GRADATION (%) GR	CS	FS	SI	CL	ATTERBERG LL	PL	PI	WC	ODOT CLASS (GI)	SO4 ppm	BACK FILL
1.1' Asphalt Pavement	721.8																		
STIFF, BROWN, **SILT AND CLAY**, LITTLE GRAVEL, SOME SAND, DAMP - Aggregate Base @ 1.1'-1.5'	718.8	1	6 5 5	14	73	SS-1	4.50	17	10	17	27	29	29	16	13	14	A-6a (5)	490	
STIFF, BROWN, **SANDY SILT**, LITTLE GRAVEL, LITTLE CLAY, MOIST	715.8	2	4 4 6	14	53	SS-2	2.50	-	-	-	-	-	-	-	-	15	A-6a (V)	-	
		3	4 3 4	10	47	SS-3	1.00	12	8	44	18	18	17	12	5	19	A-4a (0)	-	
		EOB 4	2 2 4	9	40	SS-4	2.50	-	-	-	-	-	-	-	-	24	A-4a (V)	-	
		5																	
		6																	
		7																	

NOTES: BORING BACKFILLED WITH AUGER CUTTINGS AND PATCHED WITH FAST SET QUICKCRETE TO MATCH EXISTING PAVEMENT DEPTH
ABANDONMENT METHODS, MATERIALS, QUANTITIES: AUGER CUTTINGS MIXED WITH BENTONITE CHIPS; PLACED CEMENT

PROJECT: FRA-23-4.19 | DRILLING FIRM / OPERATOR: STANTEC / DC | DRILL RIG: CME 45 TRUCK #815 | STATION / OFFSET: 539+00, 47' RT. | EXPLORATION ID B-012-0-20
TYPE: ROADWAY | SAMPLING FIRM / LOGGER: STANTEC / EH | HAMMER: CME AUTOMATIC | ALIGNMENT: US 23 NB OUTSIDE SHOULDER
PID: 110380 SFN: 110380 | DRILLING METHOD: 3.25" HSA | CALIBRATION DATE: 2/28/20 | ELEVATION: 720.1 (MSL) EOB: 12.0 ft. | PAGE 1 OF 1
START: 5/20/20 END: 5/20/20 | SAMPLING METHOD: SPT | ENERGY RATIO (%): 86.2 | LAT / LONG: 41.530076, 83.016675

MATERIAL DESCRIPTION AND NOTES	ELEV. 720.1	DEPTHS	SPT/ RQD	N_{60}	REC (%)	SAMPLE ID	HP (tsf)	GRADATION (%) GR	CS	FS	SI	CL	ATTERBERG LL	PL	PI	WC	ODOT CLASS (GI)	SO4 ppm	BACK FILL
0.5' Asphalt Pavement	719.6																		
MEDIUM DENSE, BROWN, **GRAVEL AND STONE FRAGMENTS WITH SAND**, LITTLE SILT, TRACE CLAY, WET			8 10 8	26	87	SS-1	-	47	20	10	14	9	NP	NP	NP	14	A-1-b (0)	<100	
	715.1		5 5 6	16	20	SS-2	-	-	-	-	-	-	-	-	-	10	A-1-b (V)	-	
VERY STIFF, BROWN AND GRAY MOTTLED, **SILT AND CLAY**, SOME GRAVEL, SOME SAND, DAMP			3 6 5	16	67	SS-3	2.25	26	13	11	25	25	32	18	14	11	A-6a (4)	-	
	712.6																		
VERY STIFF, GRAY, **CLAY**, TRACE SAND, TRACE SILT, MOIST TO WET - gray clay layer estimated from auger cuttings			4 6 7	19	13	SS-4	0.25	-	-	-	-	-	-	-	-	11	A-7-6 (V)	-	
	709.6																		
HARD, LIGHT BROWN WITH LITTLE GRAY MOTTLING, **SILT AND CLAY**, DAMP TO MOIST	708.1	EOB	11 13 12	36	80	SS-5	2.50	-	-	-	-	-	-	-	-	22	A-6a (V)	-	

NOTES: BORING BACKFILLED WITH AUGER CUTTINGS AND PATCHED WITH FAST SET QUICKCRETE TO MATCH EXISTING PAVEMENT DEPTH
ABANDONMENT METHODS, MATERIALS, QUANTITIES: AUGER CUTTINGS MIXED WITH BENTONITE CHIPS; PLACED CEMENT

STANDARD ODOT LOG W/ SULFATES (8.5 X 11) - OH DOT.GDT - 9/9/20 09:42 - U:\175528014\TECHNICAL_PRODUCTION\FIELD_DATA\GINT LOGS\WORKING\175528014_FRA-23-4.19_GINT LOGS

PROJECT: FRA-23-4.19 | DRILLING FIRM / OPERATOR: STANTEC / DC | DRILL RIG: CME 45 TRUCK #815 | STATION / OFFSET: 540+13, 19' LT. | EXPLORATION ID B-013-0-20
TYPE: ROADWAY | SAMPLING FIRM / LOGGER: STANTEC / EH | HAMMER: CME AUTOMATIC | ALIGNMENT: US 23 SB INSIDE LANE
PID: 110380 SFN: 110380 | DRILLING METHOD: 3.25" HSA | CALIBRATION DATE: 2/28/20 | ELEVATION: 720.0 (MSL) EOB: 2.9 ft. | PAGE 1 OF 1
START: 5/20/20 END: 5/20/20 | SAMPLING METHOD: SPT | ENERGY RATIO (%): 86.2 | LAT / LONG: 41.530360, 83.016965

MATERIAL DESCRIPTION AND NOTES	ELEV. 720.0	DEPTHS	SPT/ RQD	N_{60}	REC (%)	SAMPLE ID	HP (tsf)	GRADATION (%) GR	CS	FS	SI	CL	ATTERBERG LL	PL	PI	WC	ODOT CLASS (GI)	SO4 ppm	BACK FILL
0.4' Asphalt Pavemet 0.8' Concrete Base	718.8																		
VERY STIFF, GRAY, **SANDY SILT**, TRACE GRAVEL, SOME CLAY, DAMP			4 8 8	23	80	SS-1	-	3	6	48	19	24	23	13	10	12	A-4a (1)	<100	
	717.1	EOB	50/2"	-	100	SS-2	-	-	-	-	-	-	-	-	-	12	A-4a (V)	-	
- auger refusal @ 2.9' on concrete																			

NOTES: BORING BACKFILLED WITH AUGER CUTTINGS AND PATCHED WITH FAST SET QUICKCRETE TO MATCH EXISTING PAVEMENT DEPTH
ABANDONMENT METHODS, MATERIALS, QUANTITIES: AUGER CUTTINGS MIXED WITH BENTONITE CHIPS; PLACED CEMENT

STANDARD ODOT LOG W/ SULFATES (8.5 X 11) - OH DOT.GDT - 9/9/20 09:42 - U:\175528014\TECHNICAL_PRODUCTION\FIELD_DATA\GINT LOGS\WORKING\175528014_FRA-23-4.19_GINT LOGS

PROJECT: FRA-23-4.19 | DRILLING FIRM / OPERATOR: STANTEC / DC | DRILL RIG: CME 45 TRUCK #815 | STATION / OFFSET: 542+04, 20' RT. | EXPLORATION ID B-014-0-20
TYPE: ROADWAY | SAMPLING FIRM / LOGGER: STANTEC / EH | HAMMER: CME AUTOMATIC | ALIGNMENT: US 23 NB INSIDE LANE | PAGE 1 OF 1
PID: 110380 SFN: 110380 | DRILLING METHOD: 3.25" HSA | CALIBRATION DATE: 2/28/20 | ELEVATION: 718.8 (MSL) EOB: 7.4 ft.
START: 5/22/20 END: 5/22/20 | SAMPLING METHOD: SPT | ENERGY RATIO (%): 86.2 | LAT / LONG: 41.530897, 83.016909

MATERIAL DESCRIPTION AND NOTES	ELEV. 718.8	DEPTHS	SPT/ RQD	N_{60}	REC (%)	SAMPLE ID	HP (tsf)	GRADATION (%) GR	CS	FS	SI	CL	ATTERBERG LL	PL	PI	WC	ODOT CLASS (GI)	SO4 ppm	BACK FILL
1.1' Asphalt Pavement 0.4' Brick Base	717.4	1																	
DENSE TO VERY DENSE, BROWN, **GRAVEL AND STONE FRAGMENTS WITH SAND**, LITTLE SILT, TRACE CLAY, DAMP	715.3	2 3 4	63 13 26 13 9 4	56 19	80 60	SS-1 SS-2	- 2.00	61 -	16 -	7 -	11 -	5 -	NP -	NP -	NP -	10 16	A-1-b (0) A-1-b (V)	640 -	
VERY STIFF TO HARD, BROWN, **SANDY SILT**, SOME GRAVEL, LITTLE CLAY, DAMP	711.4	5 6 7 EOB	4 6 6 4 7 14	17 30	53 67	SS-3 SS-4	2.00 3.00	24 -	13 -	16 -	28 -	19 -	25 -	16 -	9 -	8 11	A-4a (2) A-4a (V)	- -	

NOTES: BORING BACKFILLED WITH AUGER CUTTINGS AND PATCHED WITH FAST SET QUICKCRETE TO MATCH EXISTING PAVEMENT DEPTH
ABANDONMENT METHODS, MATERIALS, QUANTITIES: AUGER CUTTINGS MIXED WITH BENTONITE CHIPS; PLACED CEMENT

PROJECT: FRA-23-4.19 | DRILLING FIRM / OPERATOR: STANTEC / DC | DRILL RIG: CME 45 TRUCK #815 | STATION / OFFSET: 543+07, 16' LT. | EXPLORATION ID B-015-0-20
TYPE: ROADWAY | SAMPLING FIRM / LOGGER: STANTEC / EH | HAMMER: CME AUTOMATIC | ALIGNMENT: US 23 SB INSIDE LANE | PAGE 1 OF 1
PID: 110380 SFN: 110380 | DRILLING METHOD: 3.25" HSA | CALIBRATION DATE: 2/28/20 | ELEVATION: 718.5 (MSL) EOB: 7.3 ft.
START: 5/21/20 END: 5/21/20 | SAMPLING METHOD: SPT | ENERGY RATIO (%): 86.2 | LAT / LONG: 41.531162, 83.017084

MATERIAL DESCRIPTION AND NOTES	ELEV. 718.5	DEPTHS	SPT/ RQD	N_{60}	REC (%)	SAMPLE ID	HP (tsf)	GRADATION (%) GR	CS	FS	SI	CL	ATTERBERG LL	PL	PI	WC	ODOT CLASS (GI)	SO4 ppm	BACK FILL
0.7' Asphalt Pavement 0.8' Concrete Base	717.2	1																	
STIFF, BROWN, **SILT AND CLAY**, AND GRAVEL, SOME SAND, MOIST - Aggregate Base @ 1.3'-1.6'	714.2	2 3 4	6 3 4 3 3 4	10 10	67 60	SS-1 SS-2	2.75 4.00	37 -	15 -	11 -	15 -	22 -	31 -	18 -	13 -	23 25	A-6a (1) A-6a (V)	<100 -	
STIFF TO VERY STIFF, BROWN, **SANDY SILT**, SOME GRAVEL, LITTLE CLAY, DAMP	711.2	5 6 7 EOB	5 8 6 4 5 5	20 14	33 100	SS-3 SS-4	3.00 1.00	23 -	15 -	15 -	29 -	18 -	21 -	14 -	7 -	14 15	A-4a (2) A-4a (V)	- -	

NOTES: BORING BACKFILLED WITH AUGER CUTTINGS AND PATCHED WITH FAST SET QUICKCRETE TO MATCH EXISTING PAVEMENT DEPTH
ABANDONMENT METHODS, MATERIALS, QUANTITIES: AUGER CUTTINGS MIXED WITH BENTONITE CHIPS; PLACED CEMENT

STANDARD ODOT LOG W/ SULFATES (8.5 X 11) - OH DOT.GDT - 9/9/20 09:42 - U:\175528014\TECHNICAL_PRODUCTION\FIELD_DATA\GINT LOGS\WORKING\175528014_FRA-23-4.19_GINT LOGS

PROJECT: FRA-23-4.19 | DRILLING FIRM / OPERATOR: STANTEC / DC | DRILL RIG: CME 45 TRUCK #815 | STATION / OFFSET: 545+14, 43' RT. | EXPLORATION ID B-016-0-20
TYPE: ROADWAY | SAMPLING FIRM / LOGGER: STANTEC / EH | HAMMER: CME AUTOMATIC | ALIGNMENT: US 23 NB OUTSIDE SHOULDER | PAGE 1 OF 1
PID: 110380 SFN: 110380 | DRILLING METHOD: 3.25" HSA | CALIBRATION DATE: 2/28/20 | ELEVATION: 717.9 (MSL) EOB: 12.1 ft.
START: 5/22/20 END: 5/22/20 | SAMPLING METHOD: SPT | ENERGY RATIO (%): 86.2 | LAT / LONG: 41.531747, 83.016962

MATERIAL DESCRIPTION AND NOTES	ELEV.	DEPTHS	SPT/ RQD	N_{60}	REC (%)	SAMPLE ID	HP (tsf)	GRADATION (%) GR	CS	FS	SI	CL	ATTERBERG LL	PL	PI	WC	ODOT CLASS (GI)	SO4 ppm	BACK FILL
0.6' Asphalt Pavement	717.3																		
MEDIUM DENSE, BROWN, **GRAVEL AND STONE FRAGMENTS WITH SAND**, LITTLE SILT, TRACE CLAY, MOIST - Aggregate Base @ 0.6'-0.9'	714.2	1	7 10 6	23	80	SS-1	-	46	22	12	16	4	NP	NP	NP	11	A-1-b (0)	<100	
STIFF TO VERY STIFF, BROWN, **SILT AND CLAY**, SOME GRAVEL, SOME SAND, DAMP		2																	
		3	15 9 4	19	60	SS-2	-	-	-	-	-	-	-	-	-	8	A-1-b (V)	-	
		4																	
		5																	
		6	4 3 4	10	60	SS-3	2.00	25	11	12	28	24	32	19	13	16	A-6a (5)	-	
		7																	
		8																	
		9	3 4 4	11	20	SS-4	-	-	-	-	-	-	-	-	-	14	A-6a (V)	-	
	707.3	10																	
STIFF, BROWNISH GRAY, **SANDY SILT**, TRACE GRAVEL, LITTLE CLAY, MOIST	705.8	11																	
EOB		12	4 4 6	14	100	SS-5	2.25	-	-	-	-	-	-	-	-	24	A-4a (V)	-	

NOTES: BORING BACKFILLED WITH AUGER CUTTINGS AND PATCHED WITH FAST SET QUICKCRETE TO MATCH EXISTING PAVEMENT DEPTH
ABANDONMENT METHODS, MATERIALS, QUANTITIES: AUGER CUTTINGS MIXED WITH BENTONITE CHIPS; PLACED CEMENT

PROJECT: FRA-23-4.19 | DRILLING FIRM / OPERATOR: STANTEC / DC | DRILL RIG: CME 45 TRUCK #815 | STATION / OFFSET: 546+24, 42' LT. | EXPLORATION ID B-017-0-20
TYPE: ROADWAY | SAMPLING FIRM / LOGGER: STANTEC / EH | HAMMER: CME AUTOMATIC | ALIGNMENT: US 23 NB OUTSIDE SHOULDER | PAGE 1 OF 1
PID: 110380 SFN: 110380 | DRILLING METHOD: 3.25" HSA | CALIBRATION DATE: 2/28/20 | ELEVATION: 718.7 (MSL) EOB: 6.6 ft.
START: 5/20/20 END: 5/20/20 | SAMPLING METHOD: SPT | ENERGY RATIO (%): 86.2 | LAT / LONG: 41.532017, 83.017319

MATERIAL DESCRIPTION AND NOTES	ELEV.	DEPTHS	SPT/ RQD	N_{60}	REC (%)	SAMPLE ID	HP (tsf)	GRADATION (%) GR	CS	FS	SI	CL	ATTERBERG LL	PL	PI	WC	ODOT CLASS (GI)	SO4 ppm	BACK FILL
0.6' Asphalt Pavement	718.1																		
STIFF TO HARD, DARK BROWN TO BROWN WITH LITTLE BLACK, **SILT AND CLAY**, SOME GRAVEL, SOME SAND, DAMP TO MOIST - Aggregate base @ 0.6'-0.8'		1	4 4 6	14	53	SS-1	4.00	20	13	20	23	24	27	16	11	15	A-6a (3)	<100	
		2																	
		3	6 12 12	34	100	SS-2	4.5+	21	6	25	26	22	28	16	12	17	A-6a (3)	-	
		4																	
		5	11 14 12	37	100	SS-3	4.5+	-	-	-	-	-	-	-	-	13	A-6a (V)	-	
	712.1	6	11 14 14	40	73	SS-4	4.00	-	-	-	-	-	-	-	-	12	A-6a (V)	-	
EOB																			

NOTES: BORING BACKFILLED WITH AUGER CUTTINGS AND PATCHED WITH FAST SET QUICKCRETE TO MATCH EXISTING PAVEMENT DEPTH
ABANDONMENT METHODS, MATERIALS, QUANTITIES: AUGER CUTTINGS MIXED WITH BENTONITE CHIPS; PLACED CEMENT

STANDARD ODOT LOG W/ SULFATES (8.5 X 11) - OH DOT.GDT - 9/9/20 09:42 - U:\175528014\TECHNICAL_PRODUCTION\FIELD_DATA\GINT LOGS\WORKING\175528014_FRA-23-4.19_GINT LOGS

STANDARD ODOT LOG W/ SULFATES (8.5 X 11) - OH DOT.GDT - 9/9/20 09:43 - U:\175528014\TECHNICAL_PRODUCTION\FIELD_DATA\GINT LOGS\WORKING\175528014_FRA-23-4.19_GINT LOGS

PROJECT: FRA-23-4.19 | DRILLING FIRM / OPERATOR: STANTEC / DC | DRILL RIG: CME 45 TRUCK #815 | STATION / OFFSET: 550+89, 44' RT. | EXPLORATION ID B-018-0-20
TYPE: ROADWAY | SAMPLING FIRM / LOGGER: STANTEC / EH | HAMMER: CME AUTOMATIC | ALIGNMENT: US 23 NB OUTSIDE SHOULDER
PID: 110380 SFN: 110380 | DRILLING METHOD: 3.25" HSA | CALIBRATION DATE: 2/28/20 | ELEVATION: 720.3 (MSL) EOB: 12.1 ft. | PAGE 1 OF 1
START: 5/27/20 END: 5/27/20 | SAMPLING METHOD: SPT | ENERGY RATIO (%): 86.2 | LAT / LONG: 41.533313, 83.017215

MATERIAL DESCRIPTION AND NOTES	ELEV. 720.3	DEPTHS	SPT/ RQD	N_{60}	REC (%)	SAMPLE ID	HP (tsf)	GRADATION (%) GR	CS	FS	SI	CL	ATTERBERG LL	PL	PI	WC	ODOT CLASS (GI)	SO4 ppm	BACK FILL
0.6' Asphalt Pavement	719.7																		
MEDIUM DENSE, BROWN, **GRAVEL AND STONE FRAGMENTS WITH SAND**, LITTLE SILT, TRACE CLAY, MOIST	717.2	1	7 9 7	23	80	SS-1	-	52	19	10	12	7	NP	NP	NP	11	A-1-b (0)	<100	
STIFF, BROWN AND GRAY MOTTLED, **SILT AND CLAY**, LITTLE GRAVEL, SOME SAND, MOIST	712.2	2 3 4	2 2 4	9	73	SS-2	1.50	10	6	15	33	36	34	19	15	20	A-6a (9)	-	
		5 6 7	3 4 5	13	80	SS-3	2.50	-	-	-	-	-	-	-	-	22	A-6a (V)	-	
STIFF TO VERY STIFF, BROWN, **SANDY SILT**, LITTLE GRAVEL, SOME SAND, MOIST	708.2	8 9 10	3 5 4	13	73	SS-4	4.5+	15	11	19	28	27	27	17	10	24	A-4a (4)	-	
EOB		11 12	7 8 4	17	40	SS-5	0.50	-	-	-	-	-	-	-	-	13	A-4a (V)	-	

NOTES: BORING BACKFILLED WITH AUGER CUTTINGS AND PATCHED WITH FAST SET QUICKCRETE TO MATCH EXISTING PAVEMENT DEPTH
ABANDONMENT METHODS, MATERIALS, QUANTITIES: AUGER CUTTINGS MIXED WITH BENTONITE CHIPS; PLACED CEMENT

STANDARD ODOT LOG W/ SULFATES (8.5 X 11) - OH DOT.GDT - 9/9/20 09:43 - U:\175528014\TECHNICAL_PRODUCTION\FIELD_DATA\GINT LOGS\WORKING\175528014_FRA-23-4.19_GINT LOGS

PROJECT: FRA-23-4.19 | DRILLING FIRM / OPERATOR: STANTEC / DC | DRILL RIG: CME 45 TRUCK #815 | STATION / OFFSET: 554+10, 19' RT. | EXPLORATION ID B-019-0-20
TYPE: ROADWAY | SAMPLING FIRM / LOGGER: STANTEC / EH | HAMMER: CME AUTOMATIC | ALIGNMENT: US 23 NB INSIDE LANE
PID: 110380 SFN: 110380 | DRILLING METHOD: 3.25" HSA | CALIBRATION DATE: 2/28/20 | ELEVATION: 721.7 (MSL) EOB: 7.5 ft. | PAGE 1 OF 1
START: 5/20/20 END: 5/20/20 | SAMPLING METHOD: SPT | ENERGY RATIO (%): 86.2 | LAT / LONG: 41.534179, 83.017441

MATERIAL DESCRIPTION AND NOTES	ELEV. 721.7	DEPTHS	SPT/ RQD	N_{60}	REC (%)	SAMPLE ID	HP (tsf)	GRADATION (%) GR	CS	FS	SI	CL	ATTERBERG LL	PL	PI	WC	ODOT CLASS (GI)	SO4 ppm	BACK FILL
1.5' Asphalt Pavement	720.2	1																	
VERY STIFF, BROWN, **SANDY SILT**, AND GRAVEL, LITTLE CLAY, DAMP - Aggregate base @ 1.5'-1.8'	718.7	2 3	5 7 10	24	80	SS-1	4.00	41	12	11	22	14	24	16	8	14	A-4a (0)	<100	
STIFF, BROWN, **SILTY CLAY**, TRACE GRAVEL, SOME SAND, DRY TO DAMP		4 5	9 4 5	13	53	SS-2	3.50	9	11	15	27	38	38	20	18	23	A-6b (9)	-	
		6	4 5 5	14	53	SS-3	3.25	-	-	-	-	-	-	-	-	21	A-6b (V)	-	
	714.2	7	4 4 4	11	40	SS-4	3.75	-	-	-	-	-	-	-	-	21	A-6b (V)	-	
EOB																			

NOTES: BORING BACKFILLED WITH AUGER CUTTINGS AND PATCHED WITH FAST SET QUICKCRETE TO MATCH EXISTING PAVEMENT DEPTH
ABANDONMENT METHODS, MATERIALS, QUANTITIES: AUGER CUTTINGS MIXED WITH BENTONITE CHIPS; PLACED CEMENT

Appendix C SUBGRADE ANALYSIS

STANDARD ODOT LOG W/ SULFATES (8.5 X 11) - OH DOT.GDT - 9/9/20 09:43 - U:\17552801 4\TECHNICAL_PRODUCTION\FIELD_DATA\GINT LOGS\WORKING\17552801 4_FRA-23-4.19_GINT LOGS

PROJECT: FRA-23-4.19	DRILLING FIRM / OPERATOR: STANTEC / DC	DRILL RIG: CME 45 TRUCK #815	STATION / OFFSET: 557+70, 19' RT.
TYPE: ROADWAY	SAMPLING FIRM / LOGGER: STANTEC / EH	HAMMER: CME AUTOMATIC	ALIGNMENTUS 23 OUTSIDE SHOULDER
PID: 110380 SFN: 110380	DRILLING METHOD: 3.25" HSA	CALIBRATION DATE: 2/28/20	ELEVATION: 721.6 (MSL) EOB: 11.5 ft.
START: 5/21/20 END: 5/21/20	SAMPLING METHOD: SPT	ENERGY RATIO (%): 86.2	LAT / LONG: 41.535159, 83.017566

EXPLORATION ID B-020-0-20

PAGE 1 OF 1

MATERIAL DESCRIPTION AND NOTES	ELEV. 721.6	DEPTHS	SPT/ RQD	N_{60}	REC (%)	SAMPLE ID	HP (tsf)	GRADATION (%) GR	CS	FS	SI	CL	ATTERBERG LL	PL	PI	WC	ODOT CLASS (GI)	SO4 ppm	BACK FILL
VERY DENSE, BROWN AND GRAY, **GRAVEL AND STONE FRAGMENTS WITH SAND**, LITTLE SILT, TRACE CLAY, DAMP	719.1	1	21 30 17	68	80	SS-1	-	45	22	12	13	8	NP	NP	NP	6	A-1-b (0)	<100	
LOOSE TO MEDIUM DENSE, BROWN, **GRAVEL AND STONE FRAGMENTS WITH SAND AND SILT**, TRACE CLAY, DAMP	711.6	2, 3, 4	9 3 6	13	80	SS-2	3.50	37	21	16	16	10	21	15	6	13	A-2-4 (0)	-	
		5, 6, 7	3 3 3	9	67	SS-3	2.50	-	-	-	-	-	-	-	-	28	A-2-4 (V)	-	
		8, 9	2 3 4	10	67	SS-4	3.00	-	-	-	-	-	-	-	-	13	A-2-4 (V)	-	
DENSE, BROWN, **COARSE AND FINE SAND**, AND GRAVEL, SOME SILT, DAMP	710.1	10, 11 EOB	10 12 10	32	40	SS-5	-	-	-	-	-	-	-	-	-	13	A-3a (V)	-	

NOTES: BORING BACKFILLED WITH AUGER CUTTINGS

ABANDONMENT METHODS, MATERIALS, QUANTITIES: AUGER CUTTINGS MIXED WITH BENTONITE CHIPS; PLACED CEMENT

OHIO DEPARTMENT OF TRANSPORTATION

OFFICE OF GEOTECHNICAL ENGINEERING

PLAN SUBGRADES
Geotechnical Bulletin GB1

FRA-23-4.19

110380

Safety improvement involving widening and turn lane improvements at the intersection of US 23 and Rathmell Road

Stantec

Prepared By: Evan Holcombe
Date prepared: Wednesday, September 9, 2020

Stantec Consulting
1500 Lake Shore Drive Suite 100
Columbus OH, 43204

NO. OF BORINGS: 15

OHIO DEPARTMENT OF TRANSPORTATION
Subgrade Analysis
V. 14.5 1/18/2019

#	Boring ID	Alignment	Station	Offset	Dir	Drill Rig	ER	Boring EL.	Proposed Subgrade EL	Cut Fill
1	B-001-0-20	US 23 NB	525+43	20	RT.	CME 45C Truck #815	86	738.8	737.3	1.5 C
2	B-003-0-20	US 23 NB	525+96	34	RT.	CME 45C Truck #815	86	736.6	735.1	1.5 C
3	B-005-0-20	US 23 NB	531+07	44	RT.	CME 45C Truck #815	86	733.6	732.1	1.5 C
4	B-007-0-20	US 23 NB	532+71	2	LT.	CME 45C Truck #815	86	730.4	728.9	1.5 C
5	B-008-0-20	US 23 NB	533+47	46	RT.	CME 45C Truck #815	86	726.8	725.3	1.5 C
6	B-010-0-20	US 23 NB	536+02	37	RT.	CME 45C Truck #815	86	724.6	723.1	1.5 C
7	B-012-0-20	US 23 NB	539+00	47	RT.	CME 45C Truck #815	86	720.1	718.6	1.5 C
8	B-014-0-20	US 23 NB	542+04	20	RT.	CME 45C Truck #815	86	718.8	717.3	1.5 C
9	B-016-0-20	US 23 NB	545+14	43	RT.	CME 45C Truck #815	86	717.9	716.4	1.5 C
10	B-017-0-20	US 23 NB	546+24	42	LT.	CME 45C Truck #815	86	718.7	717.2	1.5 C
11	B-018-0-20	US 23 NB	550+89	44	RT.	CME 45C Truck #815	86	720.3	718.8	1.5 C
12	B-019-0-20	US 23 NB	554+10	19	RT.	CME 45C Truck #815	86	721.7	720.2	1.5 C
13	B-020-0-20	US 23 NB	557+70	19	RT.	CME 45C Truck #815	86	721.6	720.1	1.5 C
14	B-001-0-14	US 23 NB	546+41	44	RT.	N/A	N/A	718.3	716.8	1.5 C
15	B-003-0-14	US 23 NB	553+61	48	RT.	N/A	N/A	721.2	719.7	1.5 C

#	Boring	Sample	Sample Depth From	Sample Depth To	Subgrade Depth From	Subgrade Depth To	Standard Penetration N_{60}	Standard Penetration N_{60L}	HP (tsf)	LL	PL	PI	% Silt	% Clay	P200	Moisture M_c	Moisture M_{OPT}	Ohio DOT Class	Ohio DOT GI	Sulfate Content (ppm)	Problem Unsuitable	Problem Unstable	Excavate and Replace (Item 204) Unsuitable	Excavate and Replace (Item 204) Unstable	Recommendation (Enter depth in inches)
1	B 001-0 20	SPT-1	1.4	2.9	-0.1	1.4	56			0	0	NP	10	6	16	15	6	A-1-b	0	814					
		SPT-2	2.9	4.4	1.4	2.9	9		2							15	14	A-6a	10			N_{60}			
		SPT-3	4.4	5.9	2.9	4.4	11		2.5	30	17	13	47	30	77	21	14	A-6a	9						
		SPT-4	5.9	7.4	4.4	5.9	19	9	3.5							21	14	A-6a	10						
2	B 003-0 20	SPT-1	0.8	2.3	-0.7	0.8	32			21	14	7	9	6	15	12	10	A-2-4	0						
		SPT-2	2.3	3.8	0.8	2.3	10		2							11	8	A-3a	0						
		SPT-3	3.8	5.3	2.3	3.8	11		1	26	17	9	26	17	43	20	12	A-4a	2						
		SPT-4	5.3	6.8	3.8	5.3	11	10	2.5							18	10	A-4a	8						
3	B 005-0 20	SPT-1	0.6	2.1	-0.9	0.6	29			0	0	NP	14	5	19	10	6	A-1-b	0	0					
		SPT-2	3.1	4.6	1.6	3.1	22									9	6	A-1-b	0						
		SPT-3	5.6	7.1	4.1	5.6	13		1	27	16	11	21	13	34	20	10	A-2-6	0						
		SPT-4	8.1	9.6	6.6	8.1	19	13	4.5+	27	16	11	21	13	34	29	10	A-2-6							
4	B 007-0 20	SPT-1	1.1	2.6	-0.4	1.1	11			18	14	4	14	7	21	13	6	A-1-b	0	131					
		SPT-2	2.6	4.1	1.1	2.6	22			0	0	NP	13	7	20	16	6	A-1-b	0						
		SPT-3	4.1	5.6	2.6	4.1	14									12	8	A-3	0						
		SPT-4	5.6	7.1	4.1	5.6	27	11								9	10	A-2-4	0						
5	B 008-0 20	SPT-1	1.0	2.5	-0.5	1.0	32			0	0	NP	11	3	14	12	6	A-1-a	0	643					
		SPT-2	3.5	5.0	2.0	3.5	26			20	15	5	10	3	13	7	6	A-1-a	0						
		SPT-3	6.0	7.5	4.5	6.0	24									11	6	A-1-a	0						
		SPT-4	8.5	10.0	7.0	8.5	26	24								8	6	A-1-a							
6	B 010-0 20	SPT-1	1.5	3.0	0.0	1.5	33			26	19	7	9	3	12	9	10	A-2-4	0						
		SPT-2	3.0	4.5	1.5	3.0	26		2.5	29	16	13	24	27	51	12	14	A-6a	4						
		SPT-3	4.5	6.0	3.0	4.5	17		4.5							18	14	A-6a	10						
		SPT-4	6.0	7.5	4.5	6.0	11	11	4.25							20	14	A-6a	10						
7	B 012-0 20	SPT-1	0.5	2.0	-1.0	0.5	26			0	0	NP	14	9	23	14	6	A-1-b	0	100					
		SPT-2	3.0	4.5	1.5	3.0	16									10	6	A-1-b	0						
		SPT-3	5.5	7.0	4.0	5.5	16		2.25	32	18	14	25	25	50	11	14	A-6a	4						
		SPT-4	8.0	9.5	6.5	8.0	19	16	0.25							11	18	A-7-6							
8	B 014-0 20	SPT-1	1.4	2.9	-0.1	1.4	56			0	0	NP	11	5	16	10	6	A-1-b	0	643					
		SPT-2	2.9	4.4	1.4	2.9	19		2							16	6	A-1-b	0						
		SPT-3	4.4	5.9	2.9	4.4	17		2	25	16	9	28	19	47	8	11	A-4a	1						
		SPT-4	5.9	7.4	4.4	5.9	30	17	3							11	10	A-4a	8						
9	B 016-0 20	SPT-1	0.6	2.1	-0.9	0.6	23			0	0	NP	16	4	20	11	6	A-1-b	0	0					
		SPT-2	3.1	4.6	1.6	3.1	19									8	6	A-1-b	0						
		SPT-3	5.6	7.1	4.1	5.6	10		2	32	19	13	28	24	52	16	14	A-6a	5						
		SPT-4	8.1	9.6	6.6	8.1	11	10								14	10	A-4a							
10	B 017-0 20	SPT-1	0.6	2.1	-0.9	0.6	23		4	27	16	11	23	24	47	15	14	A-6a	3	0					
		SPT-2	2.1	3.6	0.6	2.1	19		4.5+	28	16	12	26	22	48	17	14	A-6a	3			Mc			
		SPT-3	3.6	5.1	2.1	3.6	10		4.5+							13	14	A-6a	10						
		SPT-4	5.1	6.6	3.6	5.1	11	10	4							12	14	A-6a	10						
11	B 018-0 20	SPT-1	0.6	2.1	-0.9	0.6	23			0	0	NP	12	7	19	11	6	A-1-b	0	0					
		SPT-2	3.1	4.6	1.6	3.1	9		1.5	34	19	15	33	36	69	20	14	A-6a	9			HP & Mc			
		SPT-3	5.6	7.1	4.1	5.6	13		2.5							22	14	A-6a	10						
		SPT-4	8.1	9.6	6.6	8.1	13	9	4.5+	27	17	10	28	27	55	24	12	A-4a							
12	B 019-0 20	SPT-1	1.5	3.0	0.0	1.5	24		4	24	16	8	22	14	36	14	11	A-4a	0	0		Mc			
		SPT-2	3.0	4.5	1.5	3.0	13		3.5	38	20	18	27	38	65	23	16	A-6b	9			N_{60} & Mc			
		SPT-3	4.5	6.0	3.0	4.5	14		3.25							21	16	A-6b	16						
		SPT-4	6.0	7.5	4.5	6.0	11	11	3.75							21	16	A-6b	16						
13	B 020-0 20	SPT-1	0.0	1.5	-1.5	0.0	68			0	0	NP	13	8	21	6	6	A-1-b	0	0					
		SPT-2	2.5	4.0	1.0	2.5	13		3.5	21	15	6	16	10	26	13	10	A-2-4	0			N_{60} & Mc			12"
		SPT-3	5.0	6.5	3.5	5.0	9		2.5							28	10	A-2-4	0						
		SPT-4	7.5	9.0	6.0	7.5	10	9	3							13	10	A-2-4							
14	B 001-0 14	SPT-1	1.0	2.5	-0.5	1.1	18									8	10	A-2-7	4	0					
		SPT-2	2.5	4.0	1.1	2.6	14									9	10	A-2-7	4						
		SPT-3	4.0	5.5	2.6	4.1	7		0.5	28	15	13	27	29	56	17	14	A-6a	5						
		SPT-4	5.5	7.0	4.1	5.6	9	7	1	28	15	13	19	19	38	13	14	A-6a	1						
15	B 003-0 14	SPT-1	0.0	1.5	-1.5	0.0	72									4	10	A-2-4	0						
		SPT-2	1.5	3.0	0.0	1.5	27			25	15	10	18	11	29	8	10	A-2-4	0						
		SPT-3	3.0	4.5	1.5	3.0	15		2.75	34	15	19	28	40	68	20	16	A-6b	10			Mc			
		SPT-4	4.5	6.0	3.0	4.5	15	15	3.25							15	16	A-6b	16						

OHIO DEPARTMENT OF TRANSPORTATION
Subgrade Analysis
V. 14.5 1/18/2019

GB1 Figure B – Subgrade Stabilization

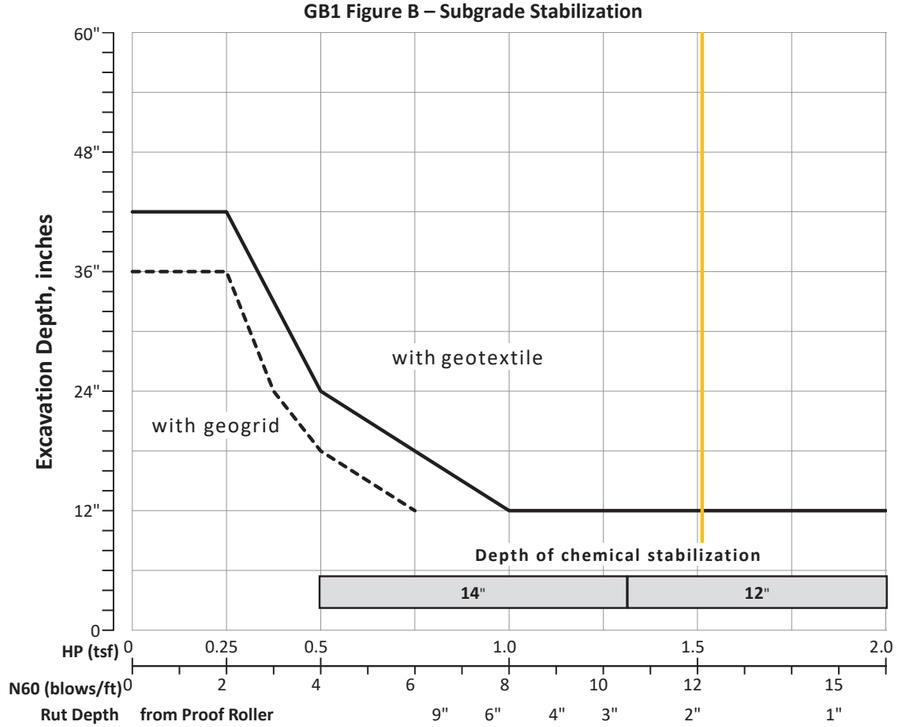

OVERRIDE TABLE

Calculated Average	New Values	Check to Override
2.52	1.00	HP
12.13	6.00	N60L

Average HP
Average N_{60L}

OHIO DEPARTMENT OF TRANSPORTATION

Subgrade Analysis

V. 14.5 1/18/2019

PID: 110380

County-Route-Section: FRA-23-4.19
No. of Borings: 15

Geotechnical Consultant: Stantec
Prepared By: Evan Holcombe
Date prepared: 9/9/2020

Chemical Stabilization Options		
320	Rubblize & Roll	Option
206	Cement Stabilization	Option
	Lime Stabilization	No
206	Depth	12"

Excavate and Replace Stabilization Options	
Global Geotextile Average(N60L):	12"
Average(HP):	0"
Global Geogrid Average(N60L):	0"
Average(HP):	0"

Design CBR	8

% Samples within 6 feet of subgrade			
$N_{60} \leq 5$	0%	HP ≤ 0.5	2%
$N_{60} < 12$	30%	0.5 < HP ≤ 1	6%
$12 \leq N_{60} < 15$	13%	1 < HP ≤ 2	13%
$N_{60} \geq 20$	36%	HP > 2	36%
M+	11%		
Rock	0%		
Unsuitable	3%		

Excavate and Replace at Surface	
Average	0"
Maximum	0"
Minimum	0"

% Proposed Subgrade Surface	
Unstable & Unsuitable	20%
Unstable	20%
Unsuitable	0%

	N_{60}	N_{60L}	HP	LL	PL	PI	Silt	Clay	P 200	M_C	M_{OPT}	GI
Average	19	12	2.52	20	12	11	20	16	37	15	11	4
Maximum	72	24	4.50	38	20	19	47	40	77	29	18	16
Minimum	7	7	0.25	0	0	4	9	3	12	4	6	0

Classification Counts by Sample

ODOT Class	Rock	A-1-a	A-1-b	A-2-4	A-2-5	A-2-6	A-2-7	A-3	A-3a	A-4a	A-4b	A-5	A-6a	A-6b	A-7-5	A-7-6	A-8a	A-8b	Totals
Count	0	4	12	7	0	2	2	1	1	7	0	0	16	5	0	1	0	0	58
Percent	0%	7%	21%	12%	0%	3%	3%	2%	2%	12%	0%	0%	28%	9%	0%	2%	0%	0%	100%
% Rock|Granular|Cohesive	0%	62%									38%								100%
Surface Class Count	0	2	13	5	0	0	2	1	1	2	0	0	7	2	0	0	0	0	35
Surface Class Percent	0%	6%	37%	14%	0%	0%	6%	3%	3%	6%	0%	0%	20%	6%	0%	0%	0%	0%	100%

OHIO DEPARTMENT OF TRANSPORTATION

Subgrade Analysis

V. 14.5 1/18/2019

OHIO DEPARTMENT OF TRANSPORTATION

OFFICE OF GEOTECHNICAL ENGINEERING

PLAN SUBGRADES
Geotechnical Bulletin GB1

FRA-23-4.19
110380

Safety improvement involving widening and turn lane improvements at the intersection of US 23 and Rathmell Road

Stantec Consulting Services Inc.

Prepared By: Evan Holcombe
Date prepared: Wednesday, September 9, 2020

Stantec Consulting
1500 Lake Shore Drive Suite 100
Columbus OH, 43204

evan.holcombe@stantec.com
614-208-6059

NO. OF BORINGS: 9

OHIO DEPARTMENT OF TRANSPORTATION

Subgrade Analysis

V. 14.5 1/18/2019

#	Boring ID	Alignment	Station	Offset	Dir	Drill Rig	ER	Boring EL.	Proposed Subgrade EL	Cut Fill
1	B-002-0-20	US 23 SB	525+96	34	LT.	CME 45C Truck #815	86	738.2	736.7	1.5 C
2	B-004-0-20	US 23 SB	528+82	15	LT.	CME 45C Truck #815	86	736.6	735.1	1.5 C
3	B-006-0-20	US 23 SB	531+57	43	LT.	CME 45C Truck #815	86	732.2	730.7	1.5 C
4	B-008-2-20	US 23 SB	534+90	95	LT.	CME 45C Truck #815	86	726.8	725.3	1.5 C
5	B-009-0-20	US 23 SB	536+11	7	RT.	CME 45C Truck #815	86	724.1	722.6	1.5 C
6	B-011-0-20	US 23 SB	537+16	46	LT.	CME 45C Truck #815	86	722.9	721.4	1.5 C
7	B-013-0-20	US 23 SB	540+13	19	LT.	CME 45C Truck #815	86	720.0	718.5	1.5 C
8	B-015-0-20	US 23 SB	543+07	16	LT.	CME 45C Truck #815	86	718.5	717.0	1.5 C
9	B-002-0-14	US 23 SB	549+94	49	LT.	N/A	85	720.2	718.7	1.5 C

OHIO DEPARTMENT OF TRANSPORTATION

Subgrade Analysis

V. 14.5 1/18/2019

#	Boring	Sample	Sample Depth		Subgrade Depth		Standard Penetration		HP (tsf)	Physical Characteristics						Moisture		Ohio DOT		Sulfate Content (ppm)	Problem		Excavate and Replace (Item 204)		Recommendation (Enter depth in inches)
			From	To	From	To	N_{60}	N_{60L}		LL	PL	PI	% Silt	% Clay	P200	M_C	M_{OPT}	Class	GI		Unsuitable	Unstable	Unsuitable	Unstable	
1	B 002-0 20	SPT-1	1.2	2.7	-0.3	1.2	43			20	16	4	11	7	18	10	6	A-1-b	0	0					
		SPT-2	2.7	4.2	1.2	2.7	36									7	6	A-1-a	0						
		SPT-3	4.2	5.7	2.7	4.2	29			0	0	NP	8	5	13	6	6	A-1-a	0						
		SPT-4	5.7	7.2	4.2	5.7	32	29								7	6	A-1-a	0						
2	B 004-0 20	SPT-1	0.3	1.8	-1.2	0.3	22			27	20	7	18	7	25	17	10	A-2-4	0	869		Mc			
		SPT-2	1.8	3.3	0.3	1.8	9		2	40	18	22	23	28	51	25	16	A-6b	8			N_{60} & Mc		12"	
		SPT-3	3.3	4.8	1.8	3.3	16										16	A-6b	16						
		SPT-4	4.8	6.3	3.3	4.8	16	9	3							13	16	A-6b	16						
3	B 006-0 20	SPT-1	0.6	2.1	-0.9	0.6	20		4.5+	25	15	10	19	18	37	10	10	A-4a	0	0					
		SPT-2	2.1	3.6	0.6	2.1	23			22	17	5	8	6	14	8	6	A-1-b	0						
		SPT-3	3.6	5.1	2.1	3.6	10									7	6	A-1-b	0						
		SPT-4	5.1	6.6	3.6	5.1	9	9								18	16	A-6b	16						
4	B 008-2 20	SPT-1	1.3	2.8	-0.2	1.3	59			0	0	NP	12	7	19	9	6	A-1-b	0	457					
		SPT-2	2.8	4.3	1.3	2.8	36			0	0	NP	10	6	16	8	6	A-1-b	0						
		SPT-3	4.3	5.8	2.8	4.3	26									7	6	A-1-b	0						
		SPT-4	5.8	7.3	4.3	5.8	27	26								6	6	A-1-b	0						
5	B 009-0 20	SPT-1	1.1	2.6	-0.4	1.1	24		3.5	27	17	10	17	14	31	14	10	A-2-4	0	487		Mc			
		SPT-2	2.6	4.1	1.1	2.6	13		2.5	27	18	9	11	10	21	12	10	A-2-4	0						
		SPT-3	4.1	5.6	2.6	4.1	6		3							21	10	A-2-4	0						
		SPT-4	5.6	7.1	4.1	5.6	7	6	1.5							19	10	A-2-4	0						
6	B 011-0 20	SPT-1	1.1	2.6	-0.4	1.1	14		4.5	29	16	13	27	29	56	14	14	A-6a	5						
		SPT-2	2.6	4.1	1.1	2.6	14		2.5							15	14	A-6a	10						
		SPT-3	4.1	5.6	2.6	4.1	10		1	17	12	5	18	18	36	19	10	A-4a	0						
		SPT-4	5.6	7.1	4.1	5.6	9	9	2.5							24	10	A-4a	8						
7	B 013-0 20	SPT-1	1.2	2.7	-0.3	1.2	23			23	13	10	19	24	43	12	10	A-4a	2	0					
		SPT-2	2.7	2.9	1.2	1.4	50									12	10	A-4a	8						
		SPT-3																							
		SPT-4						23																	
8	B 015-0 20	SPT-1	1.3	2.8	-0.2	1.3	10		2.75	31	18	13	15	22	37	23	14	A-6a	1	0		N_{60} & Mc		12"	
		SPT-2	2.8	4.3	1.3	2.8	10		4							25	14	A-6a	10			N_{60} & Mc			
		SPT-3	4.3	5.8	2.8	4.3	20		3	21	14	7	29	18	47	14	10	A-4a	2						
		SPT-4	5.8	7.3	4.3	5.8	14	10	1							15	10	A-4a	8						
9	B 002-0 14	SPT-1	0.0	1.5	-1.5	0.0	23									9	10	A-2-4	0						
		SPT-2	1.5	3.0	0.0	1.5	16		2	23	16	7	29	46	75	20	11	A-4a	8			Mc			
		SPT-3	3.0	4.5	1.5	3.0	23									10	10	A-4a	8						
		SPT-4	4.5	6.0	3.0	4.5	18	16	2.25	23	16	7	31	20	51	12	11	A-4a	3						

OHIO DEPARTMENT OF TRANSPORTATION

Subgrade Analysis

V. 14.5 1/18/2019

GB1 Figure B – Subgrade Stabilization

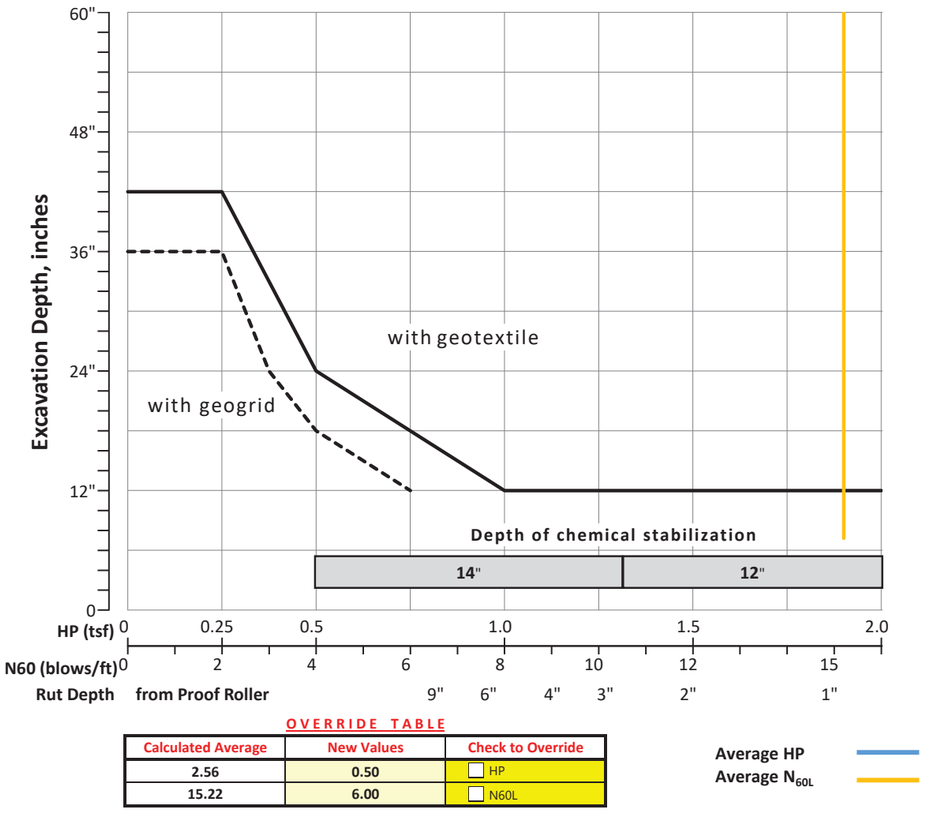

OVERRIDE TABLE

Calculated Average	New Values	Check to Override
2.56	0.50	☐ HP
15.22	6.00	☐ N60L

Average HP

Average N_{60L}

OHIO DEPARTMENT OF TRANSPORTATION

Subgrade Analysis

V. 14.5 1/18/2019

PID: 110380

County-Route-Section: FRA-23-4.19
No. of Borings: 9

Geotechnical Consultant: Stantec Consulting Services Inc.
Prepared By: Evan Holcombe
Date prepared: 9/9/2020

Chemical Stabilization Options		
320	Rubblize & Roll	Option
206	Cement Stabilization	Option
	Lime Stabilization	No
206	Depth	12"

Excavate and Replace Stabilization Options	
Global Geotextile Average(N60L):	12"
Average(HP):	0"
Global Geogrid Average(N60L):	0"
Average(HP):	0"

Design CBR	8

% Samples within 6 feet of subgrade			
$N_{60} \leq 5$	0%	HP ≤ 0.5	0%
$N_{60} < 12$	27%	0.5 < HP ≤ 1	6%
$12 \leq N_{60} < 15$	12%	1 < HP ≤ 2	9%
$N_{60} \geq 20$	49%	HP > 2	33%
M+	18%		
Rock	0%		
Unsuitable	0%		

Excavate and Replace at Surface	
Average	0"
Maximum	0"
Minimum	0"

% Proposed Subgrade Surface	
Unstable & Unsuitable	25%
Unstable	25%
Unsuitable	0%

	N_{60}	N_{60L}	HP	LL	PL	PI	Silt	Clay	P 200	M_C	M_{OPT}	GI
Average	21	15	2.56	21	13	9	18	17	35	14	10	4
Maximum	59	29	4.50	40	20	22	31	46	75	25	16	16
Minimum	6	6	1.00	0	0	4	8	5	13	6	6	0

Classification Counts by Sample

ODOT Class	Rock	A-1-a	A-1-b	A-2-4	A-2-5	A-2-6	A-2-7	A-3	A-3a	A-4a	A-4b	A-5	A-6a	A-6b	A-7-5	A-7-6	A-8a	A-8b	Totals
Count	0	3	7	5	0	0	0	0	0	10	0	0	4	4	0	0	0	0	33
Percent	0%	9%	21%	15%	0%	0%	0%	0%	0%	30%	0%	0%	12%	12%	0%	0%	0%	0%	100%
% Rock|Granular|Cohesive	0%	76%									24%								100%
Surface Class Count	0	2	5	5	0	0	0	0	0	6	0	0	4	2	0	0	0	0	24
Surface Class Percent	0%	8%	21%	21%	0%	0%	0%	0%	0%	25%	0%	0%	17%	8%	0%	0%	0%	0%	100%

OHIO DEPARTMENT OF TRANSPORTATION

OFFICE OF GEOTECHNICAL ENGINEERING

PLAN SUBGRADES
Geotechnical Bulletin GB1

FRA-23-4.19
110380

Safety improvement involving widening and turn lane improvements at the intersection of US 23 and Rathmell Road

Stantec Consulting Services Inc.

Prepared By: Evan Holcombe
Date prepared: Wednesday, September 9, 2020

Stantec Consulting
1500 Lake Shore Drive Suite 100
Columbus OH, 43204

evan.holcombe@stantec.com
614-208-6059

NO. OF BORINGS: 2

OHIO DEPARTMENT OF TRANSPORTATION
Subgrade Analysis
V. 14.5 1/18/2019

#	Boring ID	Alignment	Station	Offset	Dir	Drill Rig	ER	Boring EL.	Proposed Subgrade EL	Cut Fill
1	B-008-1-20	Rathmell Rd	108+00	7	LT.	CME 45C Truck #815	86	713.7	712.2	1.5 C
2	B-002-0-13	Rathmell Rd	101+42	25	RT.	Mobile B-53	78	723.5	722.0	1.5 C

OHIO DEPARTMENT OF TRANSPORTATION

Subgrade Analysis

V. 14.5 1/18/2019

#	Boring	Sample	Sample Depth From	Sample Depth To	Subgrade Depth From	Subgrade Depth To	Standard Penetration N_{60}	Standard Penetration N_{60L}	HP (tsf)	Physical Characteristics LL	PL	PI	% Silt	% Clay	P200	Moisture M_C	Moisture M_{OPT}	Ohio DOT Class	Ohio DOT GI	Sulfate Content (ppm)	Problem Unsuitable	Problem Unstable	Excavate and Replace (Item 204) Unsuitable	Excavate and Replace (Item 204) Unstable	Recommendation (Enter depth in inches)
1	B	SPT-1	0.7	2.2	-0.8	0.7	27		4.5+	27	16	11	14	5	19	10	10	A-2-6	0	0					
	008-1	SPT-2	2.2	3.7	0.7	2.2	13		3	27	16	11	14	5	19	13	10	A-2-6	0			N_{60} & Mc			12"
	20	SPT-3	3.7	5.2	2.2	3.7	22		4.5+	23	14	9	20	9	29	16	10	A-2-4	0						
		SPT-4	5.2	6.7	3.7	5.2	13	13	3.5							20	10	A-2-4	0						
2	B	SPT-1	0.5	2.0	-1.0	0.5	21			21	6	15	18	6	24	8	10	A-2-4	0	869					
	002-0	SPT-2	2.0	3.5	0.5	2.0	14		2	0	0	NP	13	5	18	10	16	A-6b	0						
	13	SPT-3	3.5	5.0	2.0	3.5	12									9	16	A-6b	16						
		SPT-4	5.0	6.5	3.5	5.0	22	12	3							8	16	A-6b	16						

OHIO DEPARTMENT OF TRANSPORTATION

Subgrade Analysis

V. 14.5 1/18/2019

PID: 110380

County-Route-Section: FRA-23-4.19
No. of Borings: 2

Geotechnical Consultant: Stantec Consulting Services Inc.
Prepared By: Evan Holcombe
Date prepared: 9/9/2020

Chemical Stabilization Options		
320	Rubblize & Roll	Option
206	Cement Stabilization	Option
	Lime Stabilization	No
206	Depth	12''

Excavate and Replace Stabilization Options	
Global Geotextile Average(N60L):	12''
Average(HP):	0''
Global Geogrid Average(N60L):	0''
Average(HP):	0''

Design CBR	8

% Samples within 6 feet of subgrade			
$N_{60} \leq 5$	0%	HP ≤ 0.5	0%
$N_{60} < 12$	0%	0.5 < HP ≤ 1	0%
$12 \leq N_{60} < 15$	50%	1 < HP ≤ 2	13%
$N_{60} \geq 20$	50%	HP > 2	38%
M+	13%		
Rock	0%		
Unsuitable	0%		

Excavate and Replace at Surface	
Average	0''
Maximum	0''
Minimum	0''

% Proposed Subgrade Surface	
Unstable & Unsuitable	17%
Unstable	17%
Unsuitable	0%

	N_{60}	N_{60L}	HP	LL	PL	PI	Silt	Clay	P 200	M_C	M_{OPT}	GI
Average	18	13	2.88	20	10	12	16	6	22	12	12	4
Maximum	27	13	3.50	27	16	15	20	9	29	20	16	16
Minimum	12	12	2.00	0	0	9	13	5	18	8	10	0

Classification Counts by Sample

ODOT Class	Rock	A-1-a	A-1-b	A-2-4	A-2-5	A-2-6	A-2-7	A-3	A-3a	A-4a	A-4b	A-5	A-6a	A-6b	A-7-5	A-7-6	A-8a	A-8b	Totals
Count	0	0	0	3	0	2	0	0	0	0	0	0	0	3	0	0	0	0	8
Percent	0%	0%	0%	38%	0%	25%	0%	0%	0%	0%	0%	0%	0%	38%	0%	0%	0%	0%	100%
% Rock|Granular|Cohesive	0%	63%									38%								100%
Surface Class Count	0	0	0	2	0	2	0	0	0	0	0	0	0	2	0	0	0	0	6
Surface Class Percent	0%	0%	0%	33%	0%	33%	0%	0%	0%	0%	0%	0%	0%	33%	0%	0%	0%	0%	100%

Appendix D PAVEMENT CORE PHOTOS

175528014
FRA-23-4.19
Boring B-004-0-20
Location US 23 NB Inside Shoulder
Buildup
1.5" Surface Course
1.75" Asphalt Concrete Base
Date 5/22/20

175528014
FRA-23-4.19
Boring B-005-0-20
Location US 23 NB Outside Shoulder
Buildup
1.0" Surface Course
1.0" Intermediate Course
5.0" AC Base
Date 5/19/20

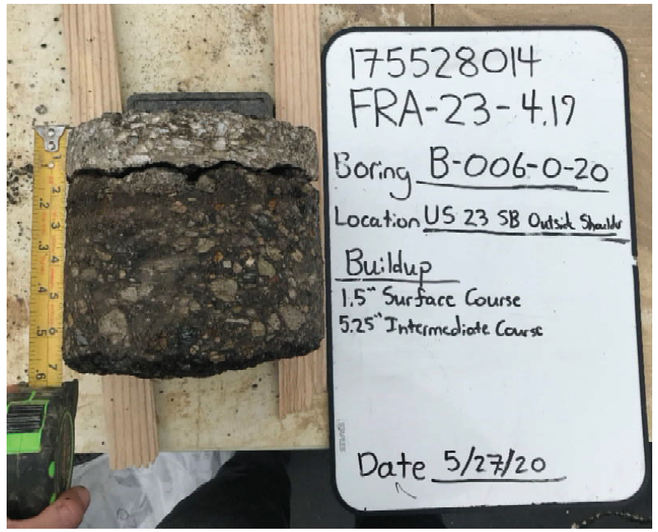
175528014
FRA-23-4.19
Boring B-006-0-20
Location US 23 SB Outside Shoulder
Buildup
1.5" Surface Course
5.25" Intermediate Course
Date 5/27/20

175528014
FRA-23-4.19
Boring B-008-1-20
Location Rathmell Rd. WB Lane
Buildup
1.25" Surface Course
5.5" Intermediate Course
3.0" AC Base Course
Date 5/28/20

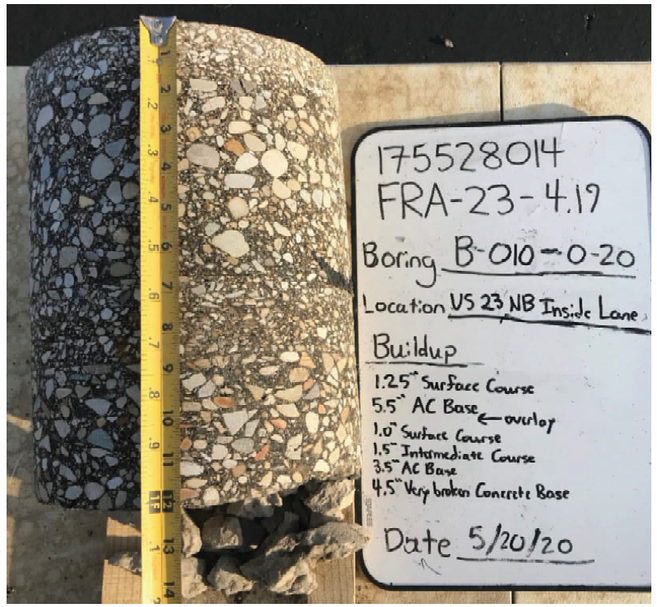
175528014
FRA-23-4.19
Boring B-010-0-20
Location US 23 NB Inside Lane
Buildup
1.25" Surface Course
5.5" AC Base ← overlay
1.0" Surface Course
1.5" Intermediate Course
3.5" AC Base
4.5" Very broken Concrete Base
Date 5/20/20

175528014
FRA-23-4.19
Boring B-011-0-20
Location US 23 SB Rt. Turn Lane
Buildup
1.5" Surface Course
11.5" AC Base . ● Lift break @ 8.5"
Date 5/20/20

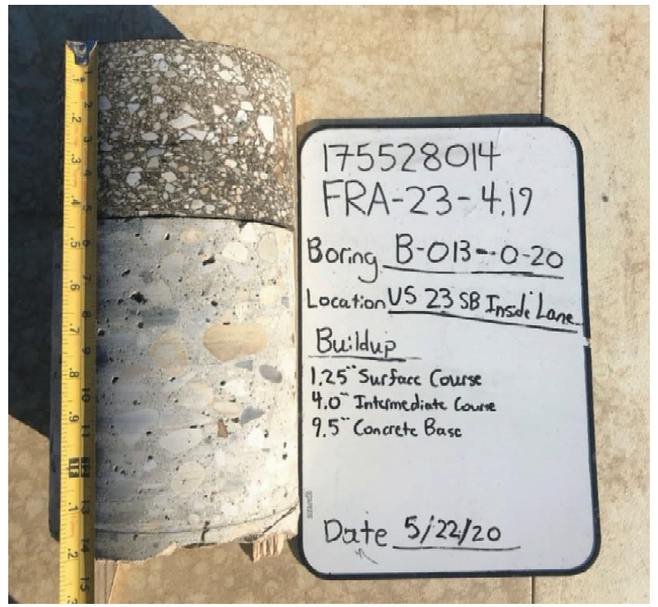
175528014
FRA-23-4.19
Boring B-013-0-20
Location US 23 SB Inside Lane
Buildup
1.25" Surface Course
4.0" Intermediate Course
9.5" Concrete Base
Date 5/22/20

175528014
FRA-23-4.19
Boring B-014-0-20
Location US 23 NB Inside Lane
Buildup
1.5" Surface Course
6.25" Intermediate Course
2.5" Surface Course ← Possible overlay
2.75" Intermediate Course
3.5" Brick
Date 5/21/20

Appendix E STRUCTURAL NUMBER CALCULATIONS

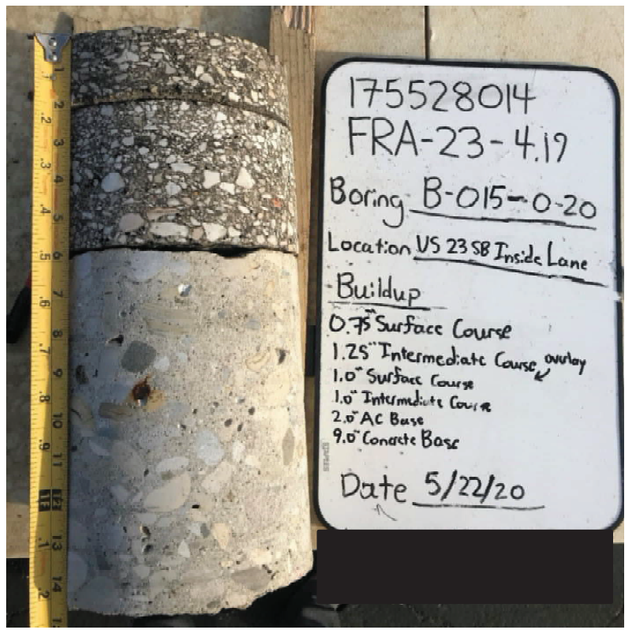

U.S 23 Southbound Inside Shoulder (B-004-0-20)			
Material	Thickness (in)	Structural Coefficient	Structural Number (SN)
AC Surface Course	1.5	0.23	0.35
Asphalt Concrete Base Course	1.75	0.23	0.40
Item 304 Aggregate Base	3	0.14	0.42
		Total SN	**1.17**
U.S 23 Northbound Outside Shoulder (B-005-0-20)			
Material	Thickness (in)	Structural Coefficient	Structural Number (SN)
AC Surface Course	1	0.23	0.23
AC Intermediate Course	1	0.23	0.23
Asphalt Concrete Base Course	5	0.23	1.15
Item 304 Aggregate Base	2.5	0.14	0.35
		Total SN	**1.96**
U.S 23 Southbound Outside Shoulder (B-006-0-20)			
Material	Thickness (in)	Structural Coefficient	Structural Number (SN)
AC Surface Course	1.5	0.23	0.35
Asphalt Concrete Base Course	5.25	0.23	1.21
Item 304 Aggregate Base	5	0.14	0.70
		Total SN	**2.25**
U.S 23 Northbound Inside Lane (B-010-0-20)			
Material	Thickness (in)	Structural Coefficient	Structural Number (SN)
AC Surface Course	1.25	0.23	0.29
Asphalt Concrete Base Course	5	0.23	1.15
AC Surface Course	1	0.23	0.23
AC Intermediate Course	1.5	0.23	0.35
Asphalt Concrete Base Course	3.5	0.23	0.81
Cracked and Seated Plain Concrete	4.5	0.27	1.22
		Total SN	**4.03**
U.S 23 Southbound Right Turn Lane (B-011-0-20)			
Material	Thickness (in)	Structural Coefficient	Structural Number (SN)
AC Surface Course	1.5	0.23	0.35
Asphalt Concrete Base Course	11.5	0.23	2.65
Item 304 Aggregate Base	5	0.14	0.70
		Total SN	**3.69**
U.S 23 Southbound Inside Lane (B-013-0-20)			
Material	Thickness (in)	Structural Coefficient	Structural Number (SN)
AC Surface Course	1.25	0.23	0.29
AC Intermediate Course	4	0.23	0.92
Cracked and Seated Plain Concrete	9.5	0.27	2.57
		Total SN	**3.77**

U.S 23 Northbound Inside Lane (B-014-0-20)			
Material	Thickness (in)	Structural Coefficient	Structural Number (SN)
AC Surface Course	1.5	0.23	0.35
Asphalt Concrete Base Course	6.25	0.23	1.44
AC Surface Course	2.5	0.23	0.58
Asphalt Concrete Base Course	2.75	0.23	0.63
Brick Base	3.5	0.27	0.95
		Total SN	**3.94**
U.S 23 Southbound Inside Lane (B-015-0-20)			
Material	Thickness (in)	Structural Coefficient	Structural Number (SN)
AC Surface Course	0.75	0.23	0.17
Asphalt Concrete Base Course	6.25	0.23	1.44
AC Surface Course	2.5	0.23	0.58
Asphalt Concrete Base Course	2.75	0.23	0.63
Brick Base	3.5	0.27	0.95
		Total SN	**3.76**
Rathmell Road Westbound Lane (B-008-1-20)			
Material	Thickness (in)	Structural Coefficient	Structural Number (SN)
AC Surface Course	1.25	0.23	0.29
AC Intermediate Course	5.5	0.23	1.27
Asphalt Concrete Base Course	3	0.23	0.69
Item 304 Aggregate Base	8.5	0.14	1.19
		Total SN	**3.43**

* A structural coefficient of 0.23 was used for all existing asphalt pavement from the *ODOT Pavement Design Manual Table 401-1*

* A structural coefficient of 0.27 was used for all existing concrete and brick base from the *ODOT Pavement Design Manual Table 401-1*

* A structural coefficient of 0.14 was used for all existing Item 304 Aggregate Base course from the *ODOT Pavement Design Manual Table 401-1*