D07 - BH FY20 (C)
190530 PID - 105419
Dist 7 10/24/2019

FOR LOCATION MAPS AND LATITUDE AND LONGITUDE FOR INDIVIDUAL BRIDGE LOCATIONS, SEE SHEET 2-3.

LOCATION MAP

LATITUDE: N 40°17'49" LONGITUDE: W 84°09'40"

STATE OF OHIO

DEPARTMENT OF TRANSPORTATION

D07-BH-FY20(C)

AUGLAIZE, CLARK, DARKE, MERCER, MONTGOMERY, AND SHELBY COUNTIES

INDEX OF SHEETS:

TITLE SHEET	1
LOCATION MAPS	2-3
GENERAL NOTES	4-6
MAINTENANCE OF TRAFFIC	7-11
GENERAL SUMMARY	12-14
STRUCTURES OVER 20' SPAN	
AUG-075-0310R	15-16
AUG-075-0498L/R	17-21
CLA-004-0667R	22-23
CLA-040-1084L	24-25
CLA-041-3207	26-27
CLA-070-2631	28-29
DAR-036-1257L/R	30-31
DAR-121-1712	32-34
DAR-121-2883	35-36
MER-197-0875	37-38
MER-219-0233	39-42
MOT-70-0859	43-44
MOT-675-0063L	45-46
MOT-675-0296	47-48
MOT-725-1606	49-51
SHE-075-1854	52-53

PROJECT DESCRIPTION

REHABILITATION OF VARIOUS STRUCTURES BY PATCHING THE SUBSTRUCTURE, PATCHING PARAPETS, PATCHING APPROACH SLAB/DECK, STRUCTURAL STEEL REPAIR, PAINTING OF STRUCTURAL COMPONENTS, AND SEALING CONCRETE SURFACES.

EARTH DISTURBED AREAS

PROJECT EARTH DISTURBED AREA:	N/A*
ESTIMATED CONTRACTOR EARTH DISTURBED AREA:	N/A*
NOTICE OF INTENT EARTH DISTURBED AREA:	N/A*

* MAINTENANCE PROJECT

LIMITED ACCESS

THIS IMPROVEMENT IS ESPECIALLY DESIGNED FOR THROUGH TRAFFIC AND HAS BEEN DECLARED A LIMITED ACCESS HIGHWAY OR FREEWAY BY ACTION OF THE DIRECTOR IN ACCORDANCE WITH THE PROVISIONS OF SECTION 5511.02 OF THE OHIO REVISED CODE.

2019 SPECIFICATIONS

THE STANDARD SPECIFICATIONS OF THE STATE OF OHIO, DEPARTMENT OF TRANSPORTATION, INCLUDING SUPPLEMENTAL SPECIFICATIONS LISTED IN THE PLANS AND CHANGES LISTED IN THE PROPOSAL SHALL GOVERN THIS IMPROVEMENT.

DESIGN DESIGNATION

NONE REQUIRED

DESIGN EXCEPTIONS

NONE REQUIRED

UNDERGROUND UTILITIES
OHIO811.org Before You Dig

PLAN PREPARED BY:
ODOT DISTRICT 7 - ENGINEERING
1001 ST. MARYS AVE.
SIDNEY, OH

ENGINEERS SEAL:

STATE OF OHIO
DANIEL HERMAN GRILLIOT
No. 73588
REGISTERED PROFESSIONAL ENGINEER

SIGNED: Daniel Herman Grilliot
DATE: 7/22/19

STANDARD CONSTRUCTION DRAWINGS							SUPPLEMENTAL SPECIFICATIONS		SPECIAL PROVISIONS
MT-95.30	7/19/19	PCB-91	1/18/13				800-2019	7/19/19	
MT-95.31	7/19/19	RB-1-55	7/19/13				821	4/20/12	
MT-95.45	4/19/19	TVPF-1-18	7/20/18				832	10/19/18	
MT-97.10	4/19/19	VPF-1-90	7/20/18				844	4/20/18	
MT-98.10	1/20/17						921	4/20/12	
MT-98.11	4/19/19								
MT-98.20	4/19/19								
MT-101.70	7/20/18								
TC-41.20	10/18/13								
TC-42.20	10/18/13								
TC-52.10	10/18/13								
TC-52.20	7/20/18								

I HEREBY APPROVE THESE PLANS AND DECLARE THAT THE MAKING OF THIS IMPROVEMENT WILL NOT REQUIRE THE CLOSING TO TRAFFIC OF THE HIGHWAY AND THAT PROVISIONS FOR THE MAINTENANCE AND SAFETY OF TRAFFIC WILL BE AS SET FORTH ON THE PLANS AND ESTIMATES.

APPROVED Daniel J. Chudzinski, PE, PS
DATE 7-22-2019 DISTRICT DEPUTY DIRECTOR

APPROVED Jack Marchbanks Jr.
DATE 8/9/19 DIRECTOR, DEPARTMENT OF TRANSPORTATION

FEDERAL PROJECT NO. E190(160)
PID NO. 105419
CONSTRUCTION PROJECT NO.
RAILROAD INVOLVEMENT NONE
D07-BH-FY20(C)
1 / 53

Contract Proposal Available @
www.contracts.dot.state.oh.us/home

I:\ProjectData\D07\105419_BH-FY20_C\Design\Roadway\Sheets\105419_GT001.dgn Sheet 7/22/2019 8:58:00 AM

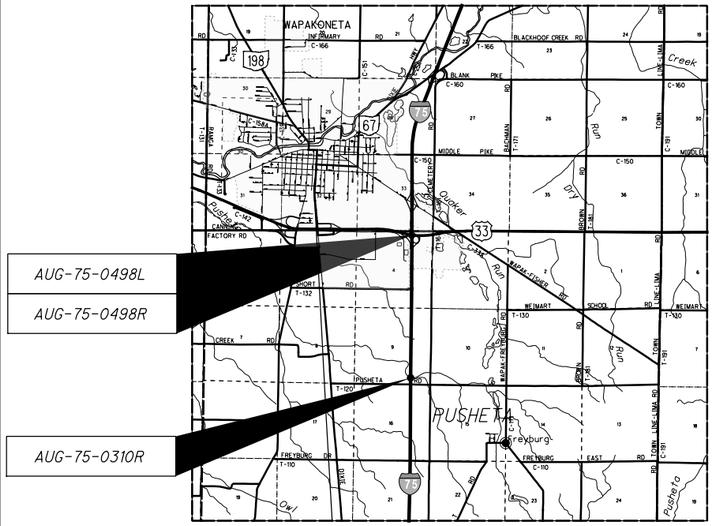

LOCATION MAP (STRUCTURE: AUG-75-0310R), SFN: 0602019
LATITUDE: N 40° 31′ 39″ LONGITUDE: W 84° 10′ 10″

LOCATION MAP (STRUCTURE: AUG-75-0498L), SFN: 0602043
LATITUDE: N 40° 33′ 17″ LONGITUDE: W 84° 10′ 12″

LOCATION MAP (STRUCTURE: AUG-75-0498R), SFN: 0602078
LATITUDE: N 40° 33′ 17″ LONGITUDE: W 84° 10′ 11″

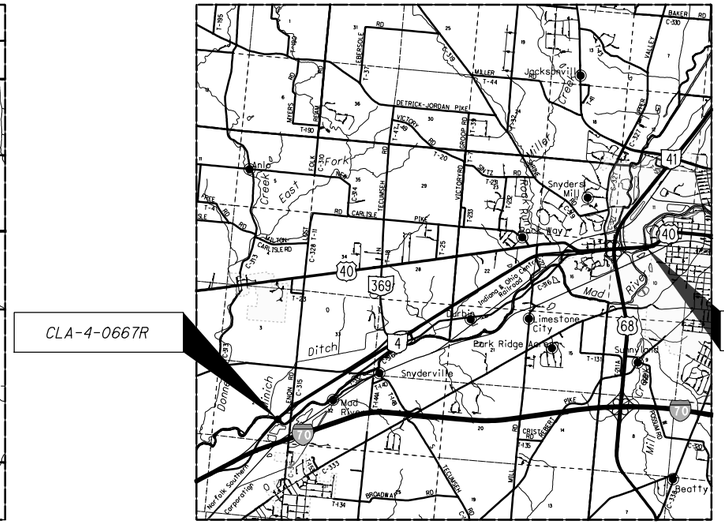

LOCATION MAP (STRUCTURE: CLA-40-1084L), SFN: 1200992
LATITUDE: N 39° 55′ 34″ LONGITUDE: W 83° 50′ 52″

LOCATION MAP (STRUCTURE: CLA-4-0667R), SFN: 1200062
LATITUDE: N 39° 53′ 32″ LONGITUDE: W 83° 56′ 17″



LOCATION MAP (STRUCTURE: CLA-41-3207), SFN: 1202014
LATITUDE: N 40° 00′ 05.70″ LONGITUDE: W 84° 01′ 08″



LOCATION MAP (STRUCTURE: CLA-70-2631), SFN: 1205250
LATITUDE: N 39° 56′ 02″ LONGITUDE: W 83° 35′ 22.70″

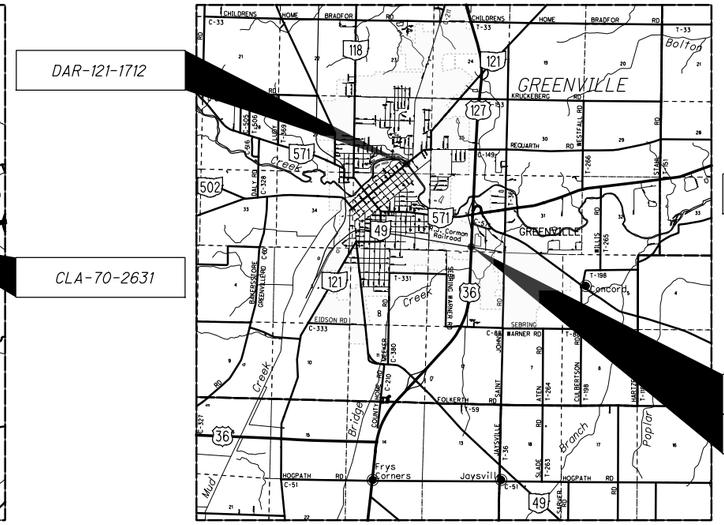

LOCATION MAP (STRUCTURE: DAR-36-1257L), SFN: 1902342
LATITUDE: N 40° 05′ 35″ LONGITUDE: W 84° 36′ 27″

LOCATION MAP (STRUCTURE: DAR-36-1257R), SFN: 1902377,
LATITUDE: N 40° 05′ 35″ LONGITUDE: W 84° 36′ 26″

LOCATION MAP (STRUCTURE: DAR-121-1712), SFN: 1902016
LATITUDE: N 40° 06′ 31″ LONGITUDE: W 84° 37′ 26″

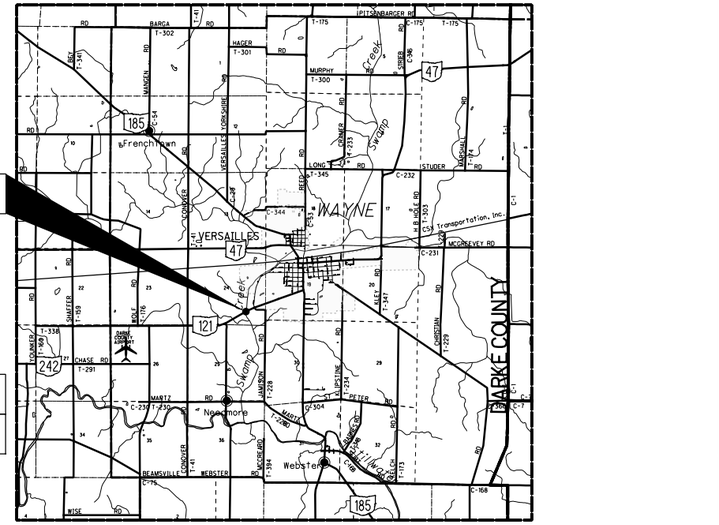

LOCATION MAP (STRUCTURE: DAR-121-2883), SFN: 1902229
LATITUDE: N 40° 12′ 46.5″ LONGITUDE: W 84° 29′ 55″

SCALE IN MILES
0 1 2 3 4

N

PORTION TO BE IMPROVED
INTERSTATE HIGHWAY
FEDERAL ROUTES
STATE ROUTES
COUNTY & TOWNSHIP ROADS
OTHER ROADS

CALCULATED DHG
CHECKED LCG

LOCATION MAPS (1 OF 2)

D07-BH-FY20(C)

I:\ProjectData\D07\10549_BH-FY20_C\Design\Roadway\Sheets\10549_GM001.dgn Sheet 7/19/2019 9:14:46 AM dgrillio

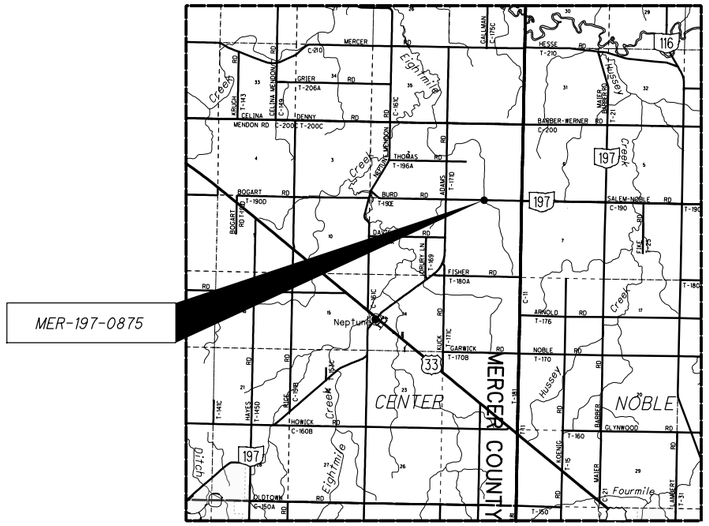

LOCATION MAP (STRUCTURE: MER-197-0875), SFN: 5402972
LATITUDE: N 40° 37′ 34.30″ LONGITUDE: W 84° 27′ 55.70″

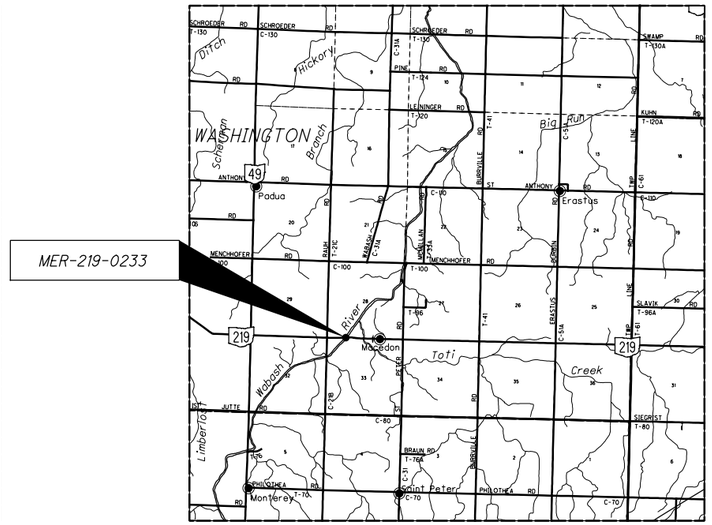

LOCATION MAP (STRUCTURE: MER-219-0233), SFN: 5403006
LATITUDE: N 40° 28′ 47.50″ LONGITUDE: W 84° 45′ 38″

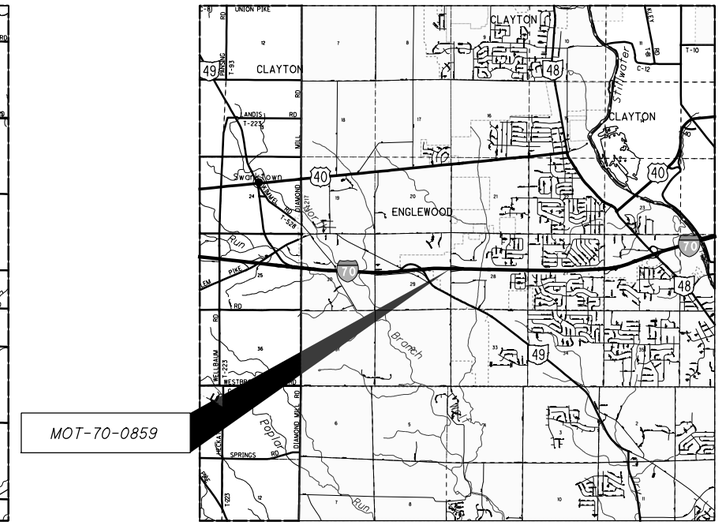

LOCATION MAP (STRUCTURE: MOT-70-0859), SFN: 5705371
LATITUDE: N 39° 51′ 18″ LONGITUDE: W 84° 19′ 50″

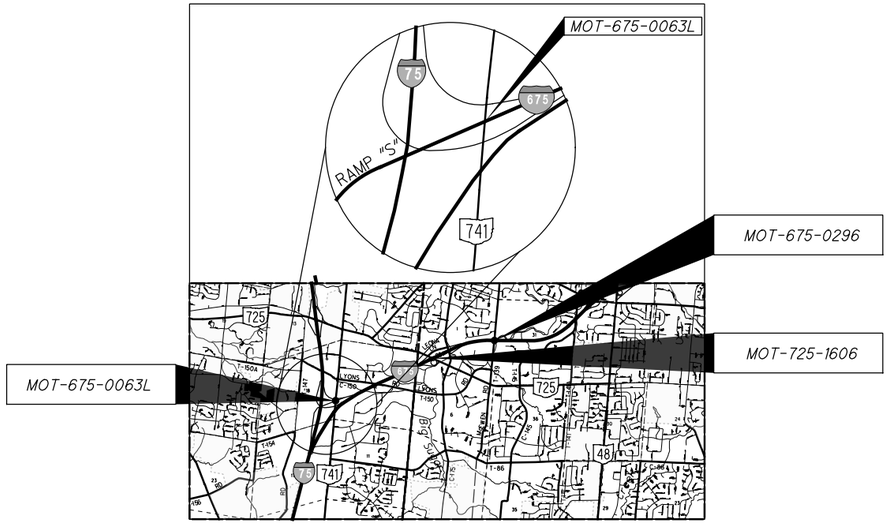

LOCATION MAP (STRUCTURE: MOT-675-0063L), SFN: 5710766
LATITUDE: N 39° 37′ 27″ LONGITUDE: W 84° 13′ 35″

LOCATION MAP (STRUCTURE: MOT-675-0296), SFN: 5711150
LATITUDE: N 39° 38′ 10.5″ LONGITUDE: W 84° 11′ 15″

LOCATION MAP (STRUCTURE: MOT-725-16.06), SFN: 5710251
LATITUDE: N 39° 37′ 57.81″ LONGITUDE: W 84° 12′ 12″

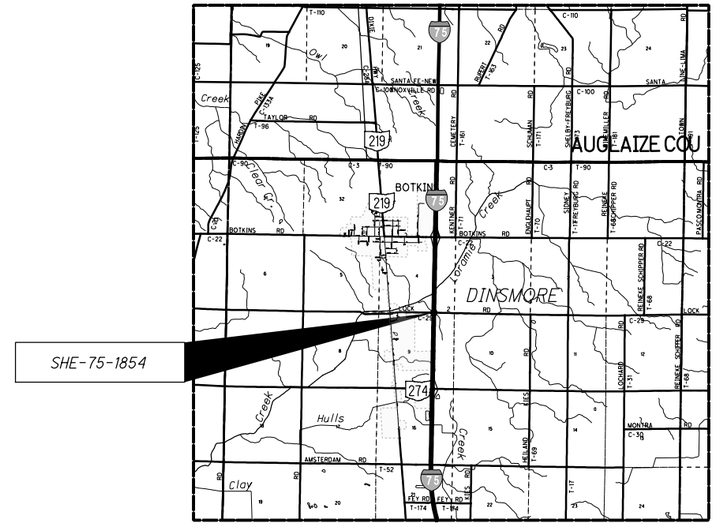

LOCATION MAP (STRUCTURE: SHE-75-1854), SFN: 7502613
LATITUDE: N 40° 27′ 12.2″ LONGITUDE: W 84° 10′ 9.5″

SCALE IN MILES
0 1 2 3 4

N

PORTION TO BE IMPROVED
INTERSTATE HIGHWAY
FEDERAL ROUTES
STATE ROUTES
COUNTY & TOWNSHIP ROADS
OTHER ROADS

CALCULATED DHG
CHECKED LCG

LOCATION MAPS (2 OF 2)

D07-BH-FY20(C)

I:\ProjectData\D07\105419_BH-FY20_C\Design\Roadway\Sheets\105419_GM002.dgn Sheet 7/19/2019 9:14:48 AM dgrillo

UTILITIES

LISTED BELOW ARE UTILITIES LOCATED WITHIN THE PROJECT CONSTRUCTION LIMITS TOGETHER WITH THEIR RESPECTIVE OWNERS:

MOT-725-16.06

ELECTRIC	FIBER OPTIC
ODOT - DISTRICT 7	ODOT - DISTRICT 7
1001 ST. MARYS AVE.	1001 ST. MARYS AVE.
SIDNEY, OH 45365	SIDNEY, OH 45365
JUSTIN YOH	JUSTIN YOH
937-497-6897	937-497-6897
JUSTIN.YOH@DOT.OHIO.GOV	JUSTIN.YOH@DOT.OHIO.GOV

THERE ARE NO UNDERGROUND UTILITIES SHOWN ON THIS PLAN. THE NATURE OF THE WORK REQUIRED BY THIS PROJECT WILL NOT AFFECT ANY KNOWN UNDERGROUND UTILITIES THAT EXIST UNDER OR ADJACENT TO THE WORK AREA.

EXISTING PLANS

EXISTING PLANS MAY BE INSPECTED IN THE ODOT DISTRICT 7 OFFICE AT 1001 ST. MARYS AVENUE SIDNEY, OHIO.

WORK LIMITS

THE WORK LIMITS SHOWN ON THESE PLANS ARE FOR PHYSICAL CONSTRUCTION ONLY. PROVIDE THE INSTALLATION AND OPERATION OF ALL WORK ZONE TRAFFIC CONTROL AND WORK ZONE TRAFFIC CONTROL DEVICES REQUIRED BY THESE PLANS WHETHER INSIDE OR OUTSIDE THESE WORK LIMITS.

CLEARING AND GRUBBING

ALTHOUGH THERE ARE NO TREES OR STUMPS SPECIFICALLY MARKED FOR REMOVAL WITHIN THE LIMITS OF THE PROJECT, A LUMP SUM QUANTITY IS INCLUDED IN THE GENERAL SUMMARY FOR ITEM 201, CLEARING AND GRUBBING. ALL PROVISIONS AS SET FORTH IN THE SPECIFICATIONS UNDER THIS ITEM ARE INCLUDED IN THE LUMP SUM PRICE BID FOR ITEM 201, CLEARING AND GRUBBING.

THE ONLY BRIDGE REQUIRING CLEARING AND GRUBBING IS CLA-41-3207 TO THE LIMITS SHOWN ON THE BRIDGE SITE PLAN.

ITEM 202 - FENCE REMOVED FOR REUSE

THE FOLLOWING QUANTITY IS INCLUDED TO REMOVE AND REUSE THE FENCE:

MOT-675-0296
FENCE REMOVED FOR REUSE 40 FT.

ITEM 607 - FENCE REBUILT, TYPE CLT

CAREFULLY RECONDITION AND RE-ERECT FENCE AND COMPONENT PARTS AS DETAILED ON THE PLANS. DO NOT DAMAGE THE FENCE OR COMPONENT PARTS. ANY NEW PARTS WHICH ARE NEEDED, AS DETERMINED BY THE ENGINEER, WILL BE SUPPLIED BY THE CONTRACTOR AT NO ADDITIONAL COST TO THE STATE.

THE AMOUNT OF REBUILT FENCE TO BE PAID FOR WILL BE THE NUMBER OF FEET REBUILT, COMPLETE IN PLACE, AND MEASURED AS PROVIDED FOR IN 607.09.

PAYMENT FOR THE ABOVE WILL BE PAID FOR AT THE CONTRACT PRICE PER FOOT FOR ITEM 607, FENCE REBUILT, TYPE CLT.

MOT-675-0296
FENCE REBUILT, TYPE CLT 40 FT.

FENCE LENGTHS

THE LENGTHS OF FENCE SHOWN IN THE PLANS ARE HORIZONTAL DIMENSIONS. MEASUREMENTS OF THE FINAL QUANTITIES WILL BE IN ACCORDANCE WITH ITEM 607.

SEEDING AND MULCHING

THE FOLLOWING QUANTITIES ARE PROVIDED TO PROMOTE GROWTH AND CARE OF PERMANENT SEEDED AREAS:

659, SEEDING AND MULCHING	700 SQ. YD.
659, REPAIR SEEDING AND MULCHING	35 SQ. YD.
659, COMMERCIAL FERTILIZER	0.10 TON
659, WATER	4 M. GAL.

SEEDING AND MULCHING SHALL BE APPLIED TO ALL AREAS OF EXPOSED SOIL BETWEEN THE RIGHT-OF-WAY LINES, AND WITHIN THE CONSTRUCTION LIMITS FOR AREAS OUTSIDE THE RIGHT-OF-WAY LINES COVERED BY WORK AGREEMENT OR SLOPE EASEMENT. QUANTITY CALCULATIONS FOR SEEDING AND MULCHING ARE BASED ON THESE LIMITS.

ENVIRONMENTAL

INDIANA BAT AND NORTHERN LONG-EARED BAT PROTECTION AT AUG-75-0310R, CLA-40-1084L, CLA-4-0667R, CLA-41-3207, DAR-121-1712, DAR-121-2883, MER-197-0875, MER-219-0233: PRIOR TO THE START OF CONSTRUCTION, THE CONTRACTOR MUST INSPECT THE BRIDGE WORK AREAS FOR EVIDENCE OF BATS. WRITTEN CONFIRMATION OF THE INSPECTION, INCLUDING A STATEMENT WHETHER EVIDENCE OF BATS WAS FOUND, MUST BE PROVIDED TO THE ODOT CONSTRUCTION ENGINEER. IF BATS ARE PRESENT WITHIN THE BRIDGE WORK AREAS, CONSTRUCTION MAY NOT OCCUR FROM APRIL 1 TO SEPTEMBER 30; ALL ACCESS MUST OCCUR FROM OCTOBER 1 TO MARCH 31.

MIGRATORY BIRD PROTECTION AT AUG-75-0310R, CLA-40-1084L, CLA-4-0667R, CLA-41-3207, DAR-121-1712, DAR-121-2883, MER-197-0875, MER-219-0233: PRIOR TO THE START OF CONSTRUCTION THE CONTRACTOR MUST INSPECT THE BRIDGE FOR EVIDENCE OF ACTIVE BIRD NESTS. WRITTEN CONFIRMATION OF THE INSPECTION, INCLUDING A STATEMENT WHETHER ACTIVE NESTS WERE FOUND, MUST BE PROVIDED TO THE ODOT CONSTRUCTION ENGINEER. IF AN ACTIVE NESTS CONTAINING AN EGG OR CHICK IS PRESENT, IMPACTS TO THE NEST MUST BE AVOIDED UNTIL ALL DEVELOPING BIRDS ARE ABLE TO INDEPENDENTLY FLY FROM THE NEST. NESTS THAT DO NOT CONTAIN AN EGG OR CHICK ARE CONSIDERED INACTIVE AND MAY BE REMOVED TO DISCOURAGE BIRDS FROM NESTING AND CONSTRUCTION ACTIVITIES MAY PROCEED. NESTING BIRDS MAY BE AVOIDED BY UNDERTAKING THE WORK FROM OCTOBER 1 TO MARCH 1. IF AN ACTIVE NEST CANNOT BE AVOIDED, THE CONTRACTOR MUST OBTAIN A DEPREDATION PERMIT FROM THE USFWS PRIOR TO DESTROYING ANY ACTIVE NEST. INFORMATION ON OBTAINING A DEPREDATION PERMIT MAY BE OBTAINED BY CONTACTING THE REGION 3 MIGRATORY BIRD REGIONAL PERMIT OFFICE AT 5600 AMERICAN BLVD. WEST, SUITE 990, BLOOMINGTON, MN 55437-1458; PHONE: 612-713-5436. IF OPERATING UNDER A PERMIT, DOCUMENTATION MUST BE PROVIDED TO THE ODOT CONSTRUCTION ENGINEER.

NO INSTREAM WORK PERMITTED AT AUG-75-0310R, CLA-40-1084L, CLA-4-0667R, CLA-41-3207, DAR-121-1712, DAR-121- 2883, MER-197-0875, MER-219-0233: PRIOR TO THE START OF CONSTRUCTION, THE CONTRACTOR SHALL MARK THE ORDINARY HIGH WATER MARK THROUGH CONSTRUCTION FENCING OR STAKING AND ALERT ON-SITE STAFF TO THE LOCATION OF THE ORDINARY HIGH WATER MARK. THE CONTRACTOR SHALL NOT PLACE TEMPORARY FILL OR PERMANENT FILL WITHIN ANY WETLAND OR BELOW THE ORDINARY HIGH WATER MARK OF ANY WATERWAY, INCLUDING SCAFFOLDING OR BRACING. THE CONTRACTOR SHALL NOT PLACE EQUIPMENT BELOW ORDINARY HIGH WATER MARK. IF DEBRIS ENTERS THE WATERWAY DURING CONSTRUCTION, THE CONTRACTOR SHALL REMOVE THE DEBRIS IMMEDIATELY, UTILIZING EQUIPMENT STAGED ABOVE THE ORDINARY HIGH WATER MARK.

PROTECTION OF CANOE TRAFFIC AT DAR-121-1712, CLA-4-0667R, CLA-40-1084L: THE CONTRACTOR SHALL MONITOR THE RIVER FOR RECREATIONAL USERS DURING OVERHEAD WORK. OVERHEAD WORK INVOLVING DEMOLITION OR OTHER ACTIVITIES THAT COULD RESULT IN FALLING DEBRIS OR MATERIALS SHALL BE SUSPENDED IF CANOEISTS OR OTHER RIVER USERS ARE WITHIN THE AREA.

PROTECTION OF GREENVILLE CITY PARK AT DAR-121-1712: THE CONTRACTOR SHALL NOT STAGE EQUIPMENT AND MATERIALS WITHIN GREENVILLE CITY PARK, LOCATED IMMEDIATELY NORTH OF THE PROJECT STRUCTURE.

PROTECTION OF GREENVILLE CREEK TRAIL AT DAR-121-1712: THE CONTRACTOR SHALL MONITOR THE TRAIL FOR FACILITY USERS. OVERHEAD WORK INVOLVING DEMOLITION OR OTHER ACTIVITIES THAT COULD RESULT IN FALLING DEBRIS OR MATERIALS SHALL BE SUSPENDED IF PEDESTRIANS/CYCLISTS ARE WITHIN THE AREA. THE CONTRACTOR SHALL NOT STAGE HEAVY EQUIPMENT OR MATERIALS ON THE TRAIL.

ITEM 202 - REMOVAL MISC.: REMOVAL OF BRIDGE ID SIGN AND REERECTION

ITEM 202 - REMOVAL MISC.: REMOVAL OF BRIDGE ID SIGN AND DISPOSAL

THE TWO ITEMS INCLUDED HERE ARE FOR THE TWO EX. BRIDGE ID SIGNS ON THE AUG-75-0498L BRIDGE PIER 1 THAT ARE SHOWN BELOW. ONLY THE ONE BRIDGE ID SIGN (AUG-75-0498L) WILL BE REERECTED AND IS TO BE ATTACHED TO THE FRONT FACE OF THE D-WALL IN FRONT OF THE PIER THE SIGNS ARE CURRENTLY ATTACHED TO. THE SIGN IS TO BE ATTACHED BY USING TWO 5/16" DIAMETER BOLTS X 3" LONG TAP CONS OR EQUIVALENT. THE OTHER SIGN (AUG-33- 63) WILL BE FOR DISPOSAL.

AUG-75-0498L	SIGN TO BE REMOVED AND REERECTED
AUG-33- 63	SIGN TO BE REMOVED AND DISPOSAL

PAYMENT SHALL INCLUDE ALL LABOR, MATERIAL, AND EQUIPMENT REQUIRED TO PERFORM THE ITEM OF WORK AS DESCRIBED ABOVE.

PAYMENT FOR THIS ITEM WILL BE UNDER:

ITEM 202 - REMOVAL MISC.: REMOVAL OF BRIDGE ID SIGN AND REERECTION	1 EACH
ITEM 202 - REMOVAL MISC.: REMOVAL OF BRIDGE ID SIGN AND DISPOSAL	1 EACH

ITEM 202 - WALK REMOVED, AS PER PLAN

THE INTENT OF THIS ITEM IS TO REMOVE A PORTION OF THE EXISTING CONCRETE WALK AS REQUIRED TO CONSTRUCT THE PROPOSED CURB RAMP, TYPE B2 AS SHOWN ON SHEET 32 AT APPROX. STA. 27+56 RT. AT THE DAR-121-1712 BRIDGE. SAW CUT ALONG EXISTING JOINTS TO PREVENT DAMAGE TO THE SECTION OF EXISTING CONCRETE WALK AND CURB THAT IS TO REMAIN IN PLACE. ALL WORK, EQUIPMENT, LABOR, MATERIAL, AND INCIDENTALS NECESSARY TO COMPLETE THIS ITEM OF WORK SHALL BE INCLUDED IN THE UNIT PRICE BID PER SQUARE FOOT, FOR ITEM 202 - WALK REMOVED, AS PER PLAN.

A QUANTITY OF 80 SQ. FT. HAS BEEN CARRIED TO THE GENERAL SUMMARY.

ITEM 202 - CURB AND GUTTER REMOVED, AS PER PLAN

THE INTENT OF THIS ITEM IS TO REMOVE A PORTION OF THE EXISTING CONCRETE CURB AND GUTTER, IN PREPARATION FOR THE INSTALL OF NEW CURB RAMP, TYPE B2 AT APPROX. STA. 27+56 RT. AT THE DAR-121-1712 BRIDGE. IT IS NOT THE INTENT OF THIS PROJECT TO REMOVE DETERIORATED CURB OUTSIDE THE LIMITS AS MARKED JUST FOR RESTORATION PURPOSES. ANY PORTION OF THE EXISTING ASPHALT PAVEMENT THAT THE CONTRACTOR DEEMS NECESSARY FOR REMOVAL TO ALLOW FOR THE PLACEMENT OF FORMS SHALL BE INCLUDED IN THIS ITEM OF WORK. IT IS ESTIMATED THAT 2 SQ. YD. OF ASPHALT PAVEMENT REMOVAL WILL BE NECESSARY. SAW CUTTING SHALL BE USED FOR REMOVAL AREAS TO PREVENT DAMAGE TO THE SECTIONS OF CURB AND ASPHALT PAVEMENT THAT IS TO REMAIN IN PLACE. ALL WORK, LABOR EQUIPMENT, MATERIAL AND INCIDENTALS NECESSARY TO COMPLETE THIS ITEM OF WORK SHALL BE INCLUDED IN THE UNIT PRICE BID PER FOOT, FOR ITEM 202 - CURB AND GUTTER REMOVED, AS PER PLAN.

A QUANTITY OF 16 FT. HAS BEEN CARRIED TO THE GENERAL SUMMARY.

ITEM 608 - CURB RAMP, AS PER PLAN

THE INTENT OF THIS ITEM IS TO INSTALL A NEW CURB RAMP, TYPE B2 AS SHOWN ON SHEET 32 AT APPROX. STA. 27+56 RT. AT THE DAR-121-1712 BRIDGE PRIOR TO ANY SIDEWALK CLOSURE DUE TO THE BRIDGE WORK AT THIS LOCATION. INSTALLATION SHALL BE IN ACCORDANCE WITH THE 2019 C&MS, AND CURRENT STANDARD DRAWING BP-7.1, WITH THE EXCEPTION THAT THE DESIGN AND SHAPES MAY VARY TO ALLOW FOR THE INSTALLATION INTO EXISTING CONDITIONS. INCLUDED IN THE COST OF THIS ITEM SHALL BE ANY RESTORATION TO AREAS WHERE EXISTING ASPHALT PAVEMENT WAS REMOVED IN PREPARATION OF NEW CURB RAMP INSTALLATION. THE CONTRACTOR SHALL MAKE CERTAIN THAT RESTORATIONS AND PLACEMENT OF SURFACE COURSE ASSURES THAT THE FLOW OF STORM WATER DOES NOT FLOW INTO THE CURB RAMP OR POND IN FRONT OF IT. ALL WORK, LABOR EQUIPMENT, MATERIAL AND INCIDENTALS NECESSARY TO COMPLETE THIS ITEM OF WORK SHALL BE INCLUDED IN THE UNIT PRICE BID PER SQUARE FOOT, FOR ITEM 608 - CURB RAMP, AS PER PLAN.

A QUANTITY OF 128 SQ. FT. HAS BEEN CARRIED TO THE GENERAL SUMMARY.

CALCULATED DHG CHECKED LCG

GENERAL NOTES (1 OF 3)

D07-BH-FY20(C)

I:\ProjectData\D07\105419_BH-FY20_C\Design\Roadway\Sheets\105419_GN001.dgn Sheet 7/19/2019 9:44:50 AM dgrillio

I:\ProjectData\D07\105419_BH-FY20_C\Design\Roadway\Sheets\105419_GN002.dgn Sheet 7/19/2019 9:14:50 AM dgrillo

STANDARD DRAWINGS AND SUPPLEMENTAL SPECIFICATIONS

REFER TO THE FOLLOWING STANDARD BRIDGE DRAWING(S):

PCB-91 DATED 1/18/13
RB-1-55 DATED 7/19/13
TVPF-1-18 DATED 7/20/18
VPF-1-90 DATED 7/20/18

AND TO THE FOLLOWING SUPPLEMENTAL SPECIFICATION(S):

844 DATED 4/20/18

DESIGN SPECIFICATIONS

THESE STRUCTURES CONFORM TO "STANDARD SPECIFICATIONS FOR HIGHWAY BRIDGES" ADOPTED BY THE AMERICAN ASSOCIATION OF STATE HIGHWAY AND TRANSPORTATION OFFICIALS, 17TH EDITION, INCLUDING THE INTERIM SPECIFICATIONS AND THE 2019 ODOT BRIDGE DESIGN MANUAL.

EXISTING STRUCTURE VERIFICATION

EXISTING STRUCTURE VERIFICATION: DETAILS AND DIMENSIONS SHOWN ON THESE PLANS PERTAINING TO THE EXISTING STRUCTURE HAVE BEEN OBTAINED FROM PLANS OF THE EXISTING STRUCTURE AND FROM FIELD OBSERVATIONS AND MEASUREMENTS. CONSEQUENTLY, THEY ARE INDICATIVE OF THE EXISTING STRUCTURE AND THE PROPOSED WORK BUT THEY SHALL BE CONSIDERED TENTATIVE AND APPROXIMATE. THE CONTRACTOR IS REFERRED TO CMS SECTIONS 102.05, 105.02 AND 513.04.

BASE CONTRACT BID PRICES UPON A RECOGNITION OF THE UNCERTAINTIES DESCRIBED ABOVE AND UPON A PREBID EXAMINATION OF THE EXISTING STRUCTURE. HOWEVER, THE DEPARTMENT WILL PAY FOR ALL PROJECT WORK BASED UPON ACTUAL DETAILS AND DIMENSIONS WHICH HAVE BEEN VERIFIED IN THE FIELD.

ITEM 202 - VANDAL PROTECTION FENCE REMOVED AND RESET, AS PER PLAN

EXISTING VANDAL PROTECTION FENCE POSTS, FENCING, AND ALUMINUM RAILING TO BE REMOVED ONLY AS NEEDED WHEN IN CONFLICT WITH AREAS TO BE REPAIRED. ALL VANDAL PROTECTION POSTS AND ALUMINUM RAILS POSTS REMOVED SHALL HAVE NEW ANCHORS WHEN RE-INSTALLED PER VPF-1-90. ALL FENCING ELEMENTS TO BE BRACED AT ALL TIMES FOR STABILITY AND SAFETY TO TRAFFIC BELOW.

ALL LABOR, MATERIAL, AND INCIDENTALS REQUIRED TO PERFORM THIS ITEM OF WORK SHALL BE INCLUDED IN THE UNIT PRICE PER FOOT FOR ITEM 202 - VANDAL PROTECTION FENCE REMOVED AND RESET, AS PER PLAN.

ITEM 202, PORTIONS OF STRUCTURE REMOVED, OVER 20 FOOT SPAN, AS PER PLAN

THIS ITEM SHALL INCLUDE THE ELEMENTS INDICATED IN THE PLANS AND GENERAL NOTES AND THAT ARE NOT SEPARATELY LISTED FOR PAYMENT, EXCEPT FOR WEARING COURSE REMOVAL. ITEMS TO BE REMOVED INCLUDE ALL EXISTING MATERIALS BEING REPLACED BY NEW CONSTRUCTION AND MISCELLANEOUS ITEMS THAT ARE NOT SHOWN TO BE INCORPORATED INTO THE FINAL CONSTRUCTION AND ARE DIRECTED TO BE REMOVED BY THE ENGINEER. THE USE OF EXPLOSIVES, HEADACHE BALLS AND/OR HOE-RAMS WILL NOT BE PERMITTED. THE METHOD OF REMOVAL AND THE WEIGHT OF HAMMER SHALL BE APPROVED BY THE ENGINEER. PERFORM ALL WORK IN A MANNER THAT WILL NOT CUT, ELONGATE OR DAMAGE THE EXISTING REINFORCING STEEL TO BE PRESERVED. CHIPPING HAMMERS SHALL NOT BE HEAVIER THAN THE NOMINAL 90-POUND CLASS. PNEUMATIC HAMMERS SHALL NOT BE PLACED IN DIRECT CONTACT WITH REINFORCING STEEL THAT IS TO BE RETAINED IN THE REBUILT STRUCTURE.SUBMIT CONSTRUCTION PLANS ACCORDING TO CMS 501.05.

SAW CUT BOUNDARIES OF PROPOSED CONCRETE REMOVALS 1 INCH DEEP. REMOVE CONCRETE TO A ROUGH SURFACE. LEAVE THE EXISTING REINFORCING STEEL, IF REQUIRED IN THE PLANS, IN PLACE. INSTALL DOWEL BARS IF SPECIFIED. PRIOR TO CONCRETE PLACEMENT ABRASIVELY CLEAN JOINT SURFACES AND EXISTING EXPOSED REINFORCEMENT TO REMOVE LOOSE AND DISINTEGRATED CONCRETE AND LOOSE RUST. THOROUGHLY CLEAN THE JOINT SURFACE AND EXPOSED REINFORCEMENT OF ALL DIRT, DUST, RUST OR OTHER FOREIGN MATERIAL BY THE USE OF WATER, AIR UNDER PRESSURE, OR OTHER METHODS THAT PRODUCE SATISFACTORY RESULTS. EXISTING REINFORCING STEEL DOES NOT HAVE TO HAVE A BRIGHT STEEL FINISH BUT REMOVE ALL PACK AND LOOSE RUST. THOROUGHLY DRENCH EXISTING CONCRETE SURFACES WITH CLEAN WATER AND ALLOW TO DRY TO A DAMP CONDITION BEFORE PLACING CONCRETE.

ITEM 514, FIELD PAINTING, MISC.: ZINC RICH PRIMER

THIS ITEM SHALL CONSIST OF REMOVAL OF ANY LOOSE OR DETERIORATED CONCRETE, CLEANING OF THE REINFORCING STEEL AND APPLICATION OF A ZINC RICH PRIMER TO ALL EXPOSED STEEL ON THE BOTTOM OF PIER 1 ON DAR-121-1712 OR AS DIRECTED BY THE ENGINEER. THE LOOSE /DETERIORATED CONCRETE SHALL BE REMOVED AS DIRECTED BY THE ENGINEER. ALL DEBRIS SHALL BE COLLECTED AND REMOVED OFF SITE. BLAST CLEAN ALL EXPOSED REINFORCING STEEL. ACCEPTABLE METHODS INCLUDE HIGH-PRESSURE WATER BLASTING WITH OR WITHOUT ABRASIVES IN THE WATER, ABRASIVE WITH CONTAINMENT, OR VACUUM ABRASIVE BLASTING. APPLY A ZINC RICH PRIMER (708.02B) OVER ALL EXPOSED STEEL SURFACES. THE APPLICATION OF THE PRIMER SHALL FOLLOW CMS 514 AND ALL MANUFACTURER SPECIFICATIONS.

PAYMENT FOR ALL EQUIPMENT, LABOR, AND MATERIALS NEEDED SHALL BE MADE UNDER ITEM 514, FIELD PAINTING, MISC: ZINC RICH PRIMER.

ITEM 516 - 2" DEEP JOINT SEALER, AS PER PLAN

A 2" DEEP X ½" WIDE STRIP SHALL BE SAWCUT OUT OF THE ASPHALT ABUTTING CONCRETE AS DETAILED IN THE PLANS. IN LIEU OF SAWCUTTING AFTER CONSTRUCTION, THIS JOINT MAY BE FORMED DURING CONSTRUCTION. JOINT SEALER AS PER 705.04 SHALL BE USED TO SEAL THE JOINT CREATED.

ITEM 516 - RESET BEARING, AS PER PLAN

THIS ITEM SHALL INCLUDE ALL WORK NECESSARY TO PROPERLY ALIGN ROTATED AND/OR FLOATING EXISTING BRIDGE BEARINGS PER 516.07, INCLUDING REMOVAL OF UPPER BEARING PLATE WELDS TO THE EXISTING BEAM, REMOVAL OF THE ENTIRE BEARING WHERE NECESSARY TO PERFORM WORK, PROPER STORAGE OF THE BEARINGS UNTIL REINSTALLATION, REPLACEMENT OF ANY DAMAGED SHEET LEAD WITH PREFORMED BEARING PADS (711.21), INSTALLATION OF ANY NECESSARY STEEL SHIMS OF THE SAME SIZE AS THE BEARING TO PROVIDE A SNUG FIT, AND REPAIR OF DAMAGED PAINT ACCORDING TO ITEM 514.22. ALL WORK SHALL BE TO THE SATISFACTION OF THE ENGINEER. PAYMENT FOR ALL OF THE ABOVE DESCRIBED LABOR AND MATERIALS WILL BE MADE AT THE CONTRACT BID FOR ITEM 516 - RESET BEARING DEVICE, AS PER PLAN.

ITEM 516, JACKING AND TEMPORARY SUPPORT OF SUPERSTRUCTURE, AS PER PLAN

THIS WORK CONSISTS OF RAISING OR RE-POSITIONING EXISTING STRUCTURES TO THE DIMENSIONS AND REQUIREMENTS DEFINED IN THE PROJECT PLANS.

SUBMIT CONSTRUCTION PLANS IN ACCORDANCE WITH CMS 501.05.

IF, DURING THE JACKING OPERATIONS, CRACKING OF THE CONCRETE SUPERSTRUCTURE, SEPARATION OF THE CONCRETE DECK FROM THE STEEL STRINGERS, OR OTHER DAMAGE TO THE STRUCTURE IS VISUALLY OBSERVED, IMMEDIATELY CEASE THE JACKING OPERATION AND INSTALL SUPPORTS TO THE SATISFACTION OF THE ENGINEER. ANALYZE THE DAMAGE AND SUBMIT A METHOD OF CORRECTION TO THE ENGINEER FOR APPROVAL. EPOXY INJECT ALL BEAMS THAT SEPARATE FROM THE DECK FOR THE DISTANCE OF THE SEPARATION IN ACCORDANCE WITH CMS 512.07. THE DEPARTMENT WILL NOT PAY FOR THE COST OF THIS EPOXY INJECTION OR OTHER REQUIRED REPAIRS. THE BRIDGE BEARINGS SHALL BE FULLY SEATED AT ALL CONTACT AREAS. IF FULL SEATING IS NOT ATTAINED, SUBMIT A REPAIR PLAN TO THE ENGINEER. THE DEPARTMENT WILL NOT PAY FOR THE REPAIR COSTS TO ENSURE FULL SEATING ON BEARINGS.

THE DEPARTMENT WILL MEASURE THIS WORK ON A LUMP SUM BASIS.

THE DEPARTMENT WILL PAY FOR THE ACCEPTED QUANTITIES AT THE CONTRACT PRICE FOR ITEM 516, JACKING AND TEMPORARY SUPPORT OF SUPERSTRUCTURE, AS PER PLAN.

ITEM 517 - BRIDGE RAILING REBUILT, AS PER PLAN

THIS ITEM OF WORK INCLUDES ALL PROVISIONS SET FORTH IN ITEM 517, BRIDGE RAILING REBUILT, AS WELL AS THE REMOVAL AND DISPOSAL OF ALL EXISTING REBAR WHERE DESIGNATED, ALL PROPOSED REBAR PER ITEM 509, AND ALL PROPOSED DOWELS PER ITEM 510.

ALL LABOR, MATERIAL, AND INCIDENTALS REQUIRED TO PERFORM THIS ITEM OF WORK SHALL BE INCLUDED IN THE UNIT PRICE PER FOOT FOR ITEM 517 - BRIDGE RAILING REBUILT, AS PER PLAN.

EPOXY COATED REINFORCING STEEL							DOWEL HOLES WITH NONSHRINK, NONMETALLIC GROUT
MARK	NUMBER TOTAL	LENGTH	WEIGHT	TYPE	DIMENSIONS A	DIMENSIONS B	
MOT-725-1606							
S501	882	2'-6"	2300	1	0'-9 ¼"	1'-10¾"	882
S502	64	34'-0"	2270	STR			
S503	4	11'-6"	48	STR			4
S504	4	17'-8"	74	STR			4
S505	4	18'-1"	75	STR			4
S506	4	11'-3"	47	STR			4
FOR INFORMATION ONLY			4814 LB				898

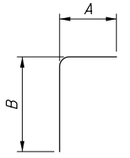

TYPE-1

CALCULATED DHG
CHECKED LCG

GENERAL NOTES (2 OF 3)

D07-BH-FY20(C)

ITEM 519 - PATCHING CONCRETE STRUCTURE, AS PER PLAN

519.01 DESCRIPTION

INSTALL CONCRETE PATCHES PER CM&S 519 EXCEPT AS NOTED BELOW. ALL CONCRETE PATCHES SHALL BE PLACED TO THE EXISTING SURFACE UNLESS OTHERWISE DETAILED IN THE PLANS.

519.02 MATERIALS

CONCRETE SHALL BE CLASS QC SCC.

519.03 QUALITY CONTROL

THE PROPOSED FORM SHALL NOT BE SUPPORTED THROUGH THE PATCH. THE FORM SYSTEM SHALL PROVIDE ENOUGH HEAD PRESSURE TO ENSURE THE PATCH IS FULLY CONSOLIDATED AND NULL OF VOIDS. THE FORM SYSTEM SHALL INCORPORATE VENTS ALONG THE TOP OF THE PATCH TO ALLOW ENTRAPPED AIR TO ESCAPE DURING CONCRETE PLACEMENT AND CAN BE CLOSED OR PLUGGED ONCE FILLED.

519.04 BASIS OF PAYMENT

PAYMENT FOR ALL OF THE ABOVE DESCRIBED LABOR AND MATERIALS WILL BE MADE AT THE CONTRACT PRICE BID FOR ITEM 519 PATCHING CONCRETE STRUCTURES, AS PER PLAN.

ITEM SPECIAL - PATCHING CONCRETE BRIDGE DECK, TYPE B

THIS ITEM OF WORK SHALL BE IN ACCORDANCE WITH PROPOSAL NOTE 512 - ITEM SPECIAL PATCHING CONCRETE BRIDGE DECKS WITH THE FOLLOWING REVISIONS: THE INTENT OF THIS ITEM IS TO REMOVE UNSOUND PROBLEM AREAS, INCLUDING EXISTING BRIDGE JOINTS AND PATCH THESE AREAS; NOT SOUND THE ENTIRE DECK.

THIS ITEM IS TO BE USED TO PATCH THE TOP OF THE BACKWALLS AT THE JOINT AREAS ON THE FOLLOWING STRUCTURES:

CLA-41-3207, DAR-36-1257L, DAR-36-1257R

ITEM 530 - STRUCTURE, MISC.: CLEANING OF BACKWALLS, ABUTMENT SEATS, AND BEAM ENDS

1. BRIDGE SEATS:
   A) REMOVE WITH A SHOVEL, BROOM, HAND SCRAPER OR OTHER MECHANICAL MEANS, ALL GROSS SOLIDS FROM THE ENTIRE BEAM SEATS AND AROUND ALL AREAS SURROUNDING THE BEAM BEARINGS, TO THE MAXIMUM EXTENT PRACTICABLE PRIOR TO INTRODUCING WATER.
   B) AFTER REMOVING ALL GROSS SOLIDS PRESSURE WASH THE ABUTMENTS, BACKWALLS, BEAM SEATS AND THE END OF THE BEAMS.

THE CONTRACTOR SHALL BE RESPONSIBLE FOR OBTAINING THE WATER SUPPLY USED DURING THE SWEEPING AND CLEANING OPERATION. THE CONTRACTOR IS RESPONSIBLE FOR THE PROPER DISPOSAL OF ANY DEBRIS COLLECTED DURING OPERATIONS IN ACCORDANCE WITH C&MS 105.16. DISCHARGING TO OR COLLECTING PORTABLE WATER FROM STREAMS IS PROHIBITED. THE BRIDGE ABUTMENT SEATS SHALL BE SWEPT AND CLEARED OF DEBRIS BEFORE POWER WASHING IT WITH WATER. PAYMENT FOR ALL OF THE AFOREMENTIONED WILL BE MADE AT CONTRACT BID PRICE AS FOLLOWS:

ITEM 530 SPECIAL - STRUCTURE, MISC.: CLEANING OF BACKWALLS, ABUTMENT SEATS, AND BEAM ENDS.

PRESSURE WASHING STRUCTURE CONCRETE

PRESSURE WASH THE ABUTMENTS AND BACKWALLS AS SHOWN IN THE PLANS TO REMOVE DIRT AND DEBRIS. MINIMUM WATER PRESSURE SHALL BE 1,500 PSI. CONTRACTOR SHALL NOT PRESSURE WASH NEAR EXISTING UTILITIES OR BRIDGE ITEMS CONTAINING OR COATED WITH ASBESTOS OR TRANSITE.

ITEM 530 - STRUCTURE, MISC.: ABUTMENT REFACING WITH GALVANIC ANODE PROTECTION

IN AREAS DESIGNATED IN THE PLANS, PERFORM ALL WORK AS DESCRIBED IN ITEM 844 - CONCRETE PATCHING WITH GALVANIC ANODE PROTECTION, AS PER PLAN WITH THE EXCEPTION THAT THE ENTIRE ABUTMENT FACE SHALL BE EXTENDED 6 INCHES AS DETAILED IN THE PLANS. ALL WORK DESCRIBED IN THE ITEM 844 NOTE AS WELL AS DETAILED DRAINS AND WEEPHOLE EXTENSIONS SHALL BE PAID FOR UNDER ITEM 530 SPECIAL - STRUCTURES, MISC.: ABUTMENT REFACING WITH GALVANIC ANODE PROTECTION. DOWEL HOLES AND REINFORCING STEEL SHALL BE PAID FOR SEPARATELY.

ITEM 844 - CONCRETE PATCHING WITH GALVANIC ANODE PROTECTION, AS PER PLAN

844.01 DESCRIPTION

INSTALL CONCRETE PATCHES USING GALVANIC ANODES PER SUPPLEMENTAL SPECIFICATION 844 EXCEPT AS NOTED BELOW. ALL CONCRETE PATCHES SHALL BE PLACED TO THE EXISTING SURFACE UNLESS OTHERWISE DETAILED IN THE PLANS.

844.02 MATERIALS

CONCRETE SHALL BE CLASS QC SCC.

844.04 GALVANIC ANODE INSTALLATION

INSTALL ANODE UNITS AND REPAIR MATERIAL IMMEDIATELY FOLLOWING PREPARATION AND CLEANING OF STEEL REINFORCEMENT. REPAIR MATERIAL SHALL BE PLACED NO LATER THAN ONE (1) WEEK AFTER CONCRETE REMOVAL UNLESS APPROVED BY THE ENGINEER. GALVANIC ANODES SHALL BE INSTALLED IN THE LOCATIONS AND SPACING AS SPECIFIED IN THE PLANS. IN NO CASE, SHALL THE SPACING EXCEED 18 INCHES.

THE CONTRACTOR SHALL PERFORM HIS WORK AS TO NOT DAMAGE THE EMBEDDED ANODES OR CREATE ANY AIR VOIDS AROUND THE EMBEDDED ANODES WHILE SETTING FORMWORK OR PLACING CONCRETE.

844.06 QUALITY CONTROL

THE PROPOSED FORM SYSTEM MUST BE SUBMITTED, AND ACCEPTED BY THE PROJECT ENGINEER PRIOR TO THE INSTALLATION OF ANY FORMWORK. THE FORM SYSTEM SHALL NOT BE SUPPORTED THROUGH THE PATCH. THE FORM SYSTEM SHALL PROVIDE ENOUGH HEAD PRESSURE TO ENSURE THE PATCH IS FULLY CONSOLIDATED AND NULL OF VOIDS. THE FORM SYSTEM SHALL INCORPORATE VENTS ALONG THE TOP OF THE PATCH TO ALLOW ENTRAPPED AIR TO ESCAPE DURING CONCRETE PLACEMENT. THE FORM SYSTEM SHALL INCORPORATE A GATE/VALVE SYSTEM CAPABLE OF CONTAINING THE SELF CONSOLIDATING CONCRETE ONCE CONCRETE PLACEMENT IS COMPLETE.

844.08 BASIS OF PAYMENT

PAYMENT FOR ALL OF THE ABOVE DESCRIBED LABOR AND MATERIALS WILL BE MADE AT THE CONTRACT PRICE BID FOR ITEM 844 CONCRETE PATCHING WITH GALVANIC ANODE PROTECTION, AS PER PLAN

PAYMENT WILL INCLUDE REMOVAL OF THE UNSOUND CONCRETE, FORMWORK, PLACEMENT OF THE QC SCC CONCRETE MIX.

i:\ProjectData\D07\105419_BH-FY20_C\Design\Roadway\Sheets\105419_GN003.dgn Sheet 7/19/2019 9:14:51 AM dgrillio

ITEM 614, MAINTAINING TRAFFIC (LANES OPEN DURING HOLIDAYS OR SPECIAL EVENTS)

NO WORK SHALL BE PERFORMED AND ALL EXISTING LANES SHALL BE OPEN TO TRAFFIC DURING THE FOLLOWING DESIGNATED HOLIDAYS OR EVENTS:

CHRISTMAS	FOURTH OF JULY
NEW YEARS	LABOR DAY
MEMORIAL DAY	THANKSGIVING

THE PERIOD OF TIME THAT THE LANES ARE TO BE OPEN DEPENDS ON THE DAY OF THE WEEK ON WHICH THE HOLIDAY OR EVENT FALLS. THE FOLLOWING SCHEDULE SHALL BE USED TO DETERMINE THIS PERIOD:

DAY OF HOLIDAY OR EVENT	TIME ALL LANES MUST BE OPEN TO TRAFFIC
SUNDAY	12:00N FRIDAY THROUGH 6:00 AM MONDAY
MONDAY	12:00N FRIDAY THROUGH 6:00 AM TUESDAY
TUESDAY	12:00N MONDAY THROUGH 6:00 AM WEDNESDAY
WEDNESDAY	12:00N TUESDAY THROUGH 6:00 AM THURSDAY
THURSDAY	12:00N WEDNESDAY THROUGH 6:00 AM FRIDAY
THURSDAY (THANKSGIVING ONLY)	6:00 AM WEDNESDAY THROUGH 6:00 AM MONDAY
FRIDAY	12:00N THURSDAY THROUGH 6:00 AM MONDAY
SATURDAY	12:00N FRIDAY THROUGH 6:00 AM MONDAY

SHOULD THE CONTRACTOR FAIL TO MEET ANY OF THESE REQUIREMENTS, THE CONTRACTOR SHALL BE ASSESSED A DISINCENTIVE PER THE LANE VALUE CONTRACT (PN 127).

LANE VALUE CONTRACT TABLE	
DESCRIPTION OF ROUTE	DISINCENTIVE
I.R. 75 (AUG-75-0310R)	$100/MIN/LANE
I.R. 75 (AUG-75-0498L)	$100/MIN/LANE
I.R. 75 (AUG-75-0498R)	$100/MIN/LANE
S.R. 4 (CLA-4-0667R)	$50/MIN/LANE
I.R. 70 (CLA-70-2631)	$100/MIN/LANE
U.S. 36 / 127 (DAR-36-1257L)	$25/MIN/LANE
U.S. 36 / 127 (DAR-36-1257R)	$25/MIN/LANE
I.R. 70 (MOT-70-0859)	$150/MIN/LANE
I.R. 675 (MOT-675-0296)	$100/MIN/LANE
I.R. 675 (MOT-725-1606)	$100/MIN/LANE
I.R. 75 (SHE-75-1854)	$100/MIN/LANE

PERMITTED LANE CLOSURE TIMES (I-75: AUGLAIZE AND SHELBY COUNTIES)

THE PERMITTED LANE CLOSURE TIMES WILL BE AS FOLLOWS: ONE LANE MAY BE CLOSED FROM 7:00 PM TO 7:00 AM EACH NIGHT, BEGINNING SUNDAY AT 7:00 P.M. THROUGH FRIDAY AT 7:00 A.M. TWO LANE CLOSURES ARE NOT PERMITTED.

NO WORK WITHIN ACTIVE TRAVEL LANES OR WHICH WILL SLOW TRAFFIC IS PERMITTED AT ANY OTHER TIMES.

SHOULD THE CONTRACTOR FAIL TO MEET ANY OF THESE REQUIREMENTS, THE CONTRACTOR SHALL BE ASSESSED A DISINCENTIVE FOR EACH MINUTE THE ABOVE DESCRIBED LANE CLOSURE RESTRICTIONS ARE VIOLATED PER THE LANE VALUE CONTRACT TABLE BELOW AND PN 127.

LANE VALUE CONTRACT TABLE	
DESCRIPTION OF ROUTE	DISINCENTIVE
I.R. 75 (AUG-75-0310R)	$100/MIN/LANE
I.R. 75 (AUG-75-0498L)	$100/MIN/LANE
I.R. 75 (AUG-75-0498R)	$100/MIN/LANE
I.R. 75 (SHE-75-1854)	$100/MIN/LANE

PERMITTED LANE CLOSURE TIMES (CLARK, DARKE, AND MONTGOMERY COUNTIES)

LANE CLOSURES SHALL ONLY BE IMPLEMENTED AT THE TIMES LISTED ON THE OHIO DEPARTMENT OF TRANSPORTATION'S PERMITTED LANE CLOSURE WEB SITE WHICH IS LOCATED AT:

HTTP://PLCM.DOT.STATE.OH.US

THE PERMITTED CLOSURE TIMES LISTED ON THE WEBSITE, FOURTEEN (14) CALENDAR DAYS PRIOR TO THE BID LETTING DATE, SHALL BE IN EFFECT FOR THIS PROJECT.

NO WORK WITHIN ACTIVE TRAVEL LANES OR WHICH WILL SLOW TRAFFIC IS PERMITTED AT ANY OTHER TIMES.

SHOULD THE CONTRACTOR FAIL TO MEET ANY OF THESE REQUIREMENTS, THE CONTRACTOR SHALL BE ASSESSED A DISINCENTIVE FOR EACH MINUTE THE ABOVE DESCRIBED LANE CLOSURE RESTRICTIONS ARE VIOLATED PER THE LANE VALUE CONTRACT TABLE BELOW AND PN 127.

LANE VALUE CONTRACT TABLE	
DESCRIPTION OF ROUTE	DISINCENTIVE
S.R. 4 (CLA-4-0667R)	$50/MIN/LANE
I.R. 70 (CLA-70-2631)	$100/MIN/LANE
U.S. 36 / 127 (DAR-36-1257L)	$25/MIN/LANE
U.S. 36 / 127 (DAR-36-1257R)	$25/MIN/LANE
I.R. 70 (MOT-70-0859)	$150/MIN/LANE
I.R. 675 (MOT-675-0296)	$100/MIN/LANE
I.R. 675 (MOT-725-1606)	$100/MIN/LANE

NOTIFICATION OF TRAFFIC RESTRICTIONS

THROUGHOUT THE DURATION OF THE PROJECT, THE CONTRACTOR SHALL NOTIFY THE PROJECT ENGINEER IN WRITING OF ALL TRAFFIC RESTRICTIONS AND UPCOMING MAINTENANCE OF TRAFFIC CHANGES. THE CONTRACTOR SHALL ENSURE THE WRITTEN NOTIFICATION IS SUBMITTED IN A TIMELY MANNER TO ALLOW THE PROJECT ENGINEER TO MEET THE REQUIRED TIME FRAMES SET FORTH IN THE TABLE BELOW TO INFORM SPECIAL HAULING PERMITS SECTION (HAULING.PERMITS@DOT.OHIO.GOV) AND THE DISTRICT PUBLIC INFORMATION OFFICE (PIO). THIS NOTIFICATION SHALL BE RECEIVED BY THE PROJECT ENGINEER PRIOR TO THE PHYSICAL SETUP OF ANY APPLICABLE SIGNS OR MESSAGE BOARDS.

INFORMATION SHOULD INCLUDE, BUT IS NOT LIMITED TO, ALL CONSTRUCTION ACTIVITIES THAT IMPACT OR INTERFERE WITH TRAFFIC AND SHALL LIST THE SPECIFIC LOCATION, TYPE OF WORK, ROAD STATUS, DATE AND TIME OF RESTRICTION, DURATION OF RESTRICTION, NUMBER OF LANES MAINTAINED, NUMBER OF LANES CLOSED, MINIMUM VERTICAL CLEARANCE, MINIMUM WIDTH OF DRIVABLE PAVEMENT, DETOUR ROUTES, IF APPLICABLE, AND ANY OTHER INFORMATION REQUESTED BY THE PROJECT ENGINEER.

NOTIFICATION TIME TABLE		
ITEM	DURATION OF CLOSURE	NOTICE DUE TO D7 PERMITS & PIO
RAMP & ROAD CLOSURES	>= 2 WKS	21 CALENDAR DAYS PRIOR TO CLOSURE
	> 12 HRS & < 2 WKS	14 CALENDAR DAYS PRIOR TO CLOSURE
	< 12 HRS	4 BUSINESS DAYS PRIOR TO CLOSURE
LANE CLOSURES AND RESTRICTIONS	>= 2 WKS	14 CALENDAR DAYS PRIOR TO CLOSURE
	< 2 WKS	5 BUSINESS DAYS PRIOR TO CLOSURE
START OF CONSTRUCTION & TRAFFIC PATTERN CHANGES	N/A	14 CALENDAR DAYS PRIOR TO IMPLEMENTATION

ANY UNFORESEEN CONDITIONS NOT SPECIFIED IN THE PLANS REQUIRING TRAFFIC RESTRICTIONS SHALL ALSO BE REPORTED TO THE PROJECT ENGINEER USING THE NOTIFICATION TIME TABLE.

LENGTH AND DURATION OF LANE CLOSURES AND RESTRICTIONS SHALL BE AT THE APPROVAL OF THE ENGINEER. IT IS THE INTENT TO MINIMIZE THE IMPACT TO THE TRAVELING PUBLIC. LANE CLOSURES OR RESTRICTIONS OVER SEGMENTS OF THE PROJECT IN WHICH NO WORK IS ANTICIPATED WITHIN A REASONABLE TIME FRAME, AS DETERMINED BY THE ENGINEER, SHALL NOT BE PERMITTED. THE LEVEL OF UTILIZATION OF MAINTENANCE OF TRAFFIC DEVICES SHALL BE COMMENSURATE WITH THE WORK IN PROGRESS.

THE CONTRACTOR SHALL PROVIDE, ERECT AND MAINTAIN SIGNS AND SIGN SUPPORTS, AS DETAILED IN THE OHIO MANUAL OF UNIFORM TRAFFIC CONTROL DEVICES OF THE TYPE AND LOCATION AS SHOWN IN THE STD. DWGS.

ALL WORK AND TRAFFIC CONTROL DEVICES SHALL BE IN ACCORDANCE WITH C&MS 614 AND OTHER APPLICABLE PORTIONS OF THE SPECIFICATIONS, AS WELL AS THE OHIO MANUAL OF UNIFORM TRAFFIC CONTROL DEVICES. PAYMENT FOR ALL LABOR, EQUIPMENT AND MATERIALS SHALL BE INCLUDED IN THE LUMP SUM CONTRACT PRICE FOR ITEM 614, MAINTAINING TRAFFIC, UNLESS SEPARATELY ITEMIZED IN THE PLAN.

FLOODLIGHTING

FLOODLIGHTING OF THE WORK SITE FOR OPERATIONS CONDUCTED DURING NIGHTTIME PERIODS SHALL BE ACCOMPLISHED SO THAT THE LIGHTS DO NOT CAUSE GLARE TO THE DRIVERS ON THE ROADWAY. TO ENSURE THE ADEQUACY OF THE FLOODLIGHT PLACEMENT, THE CONTRACTOR AND THE ENGINEER SHALL DRIVE THROUGH THE WORK SITE EACH NIGHT WHEN THE LIGHTING IS IN PLACE AND OPERATIVE PRIOR TO COMMENCING ANY WORK. IF GLARE IS DETECTED, THE LIGHT PLACEMENT AND SHIELDING SHALL BE ADJUSTED TO THE SATISFACTION OF THE ENGINEER BEFORE WORK PROCEEDS.

PAYMENT FOR ALL LABOR, EQUIPMENT AND MATERIALS SHALL BE INCLUDED IN THE LUMP SUM CONTRACT PRICE FOR ITEM 614, MAINTAINING TRAFFIC.

ITEM 614, REPLACEMENT SIGN

FLATSHEET SIGNS FURNISHED BY THE CONTRACTOR IN ACCORDANCE WITH THE REQUIREMENTS OF THE PLANS, SPECIFICATIONS AND PROPOSAL WHICH BECOME DAMAGED BY TRAFFIC FOR REASONS BEYOND THE CONTROL OF THE CONTRACTOR SHALL BE REPLACED IN KIND WHEN ORDERED BY THE ENGINEER. REPLACEMENT SIGNS SHALL BE NEW. OTHER MATERIALS MAY BE IN USED, BUT GOOD, CONDITION SUBJECT TO APPROVAL BY THE ENGINEER.

PAYMENT FOR THE NEW SIGNS SHALL BE MADE AT THE CONTRACT PRICE PER EACH FOR ITEM 614, REPLACEMENT SIGN, AND SHALL INCLUDE THE COST OF REMOVING AND DISPOSING OF DAMAGED SIGNS, HARDWARE AND SUPPORTS, AND PROVIDING THE NECESSARY REPLACEMENT HARDWARE, SUPPORTS, ECT.

AN ESTIMATED QUANTITY OF 5 EACH HAS BEEN PROVIDED IN THE GENERAL SUMMARY.

ITEM 614, REPLACEMENT DRUM

DRUMS FURNISHED BY THE CONTRACTOR IN ACCORDANCE WITH THE REQUIREMENTS OF THE PLANS, SPECIFICATIONS AND PROPOSAL WHICH BECOME DAMAGED BY TRAFFIC FOR REASONS BEYOND THE CONTROL OF THE CONTRACTOR SHALL BE REPLACED IN KIND WHEN ORDERED BY THE ENGINEER. REPLACEMENT DRUMS SHALL BE NEW.

PAYMENT FOR THE NEW DRUMS SHALL BE MADE AT THE CONTRACT PRICE PER EACH FOR ITEM 614, REPLACEMENT DRUM, AND SHALL INCLUDE THE COST OF REMOVING AND DISPOSING OF THE DAMAGED DRUM, AND PROVIDING AND MAINTAINING THE REPLACEMENT DRUM IN ACCORDANCE WITH THE CONTRACT REQUIREMENTS FOR THE ORIGINAL DRUM.

AN ESTIMATED QUANTITY OF 5 EACH HAS BEEN PROVIDED IN THE GENERAL SUMMARY.

DETOUR SIGNING

THE CONTRACTOR SHALL PROVIDE THE DETOUR SIGNING AS SHOWN ON SHEET 9 FOR THE SIDEWALK AT THE DAR-121-1712 BRIDGE. PAYMENT FOR ALL LABOR, EQUIPMENT, AND MATERIALS SHALL BE INCLUDED IN THE LUMP SUM CONTRACT FOR ITEM 614 DETOUR SIGNING.

ITEM 614, WORK ZONE CROSSWALK LINE, CLASS I, 740.06, TYPE 1

THIS ITEM IS FOR USE AFTER THE CURB RAMP HAS BEEN INSTALLED AND BEFORE THE BRIDGE WORK AT THE DAR-121-1712 LOCATION BEGINS ALLOWING THE PEDESTRIAN DETOUR AS SIGNED IN THESE PLANS TO BE FOLLOWED. A QUANTITY OF 97 FT. HAS BEEN CARRIED TO THE GENERAL SUMMARY. PERMANENT CROSSWALK LINES WILL NOT BE PLACED ONCE THE JOB IS COMPLETED.

CALCULATED DHG CHECKED PNS

MAINTENANCE OF TRAFFIC NOTES (1 OF 3)

D07-BH-FY20(C)

I:\Project Data\D07\105419_BH-FY20_C\Design\Roadway\Sheets\105419_MN001.dgn Sheet 7/19/2019 9:14:52 AM dgrillio

I:\ProjectData\D07\105419_BH-FY20_C\Design\Roadway\Sheets\105419_MN002.dgn Sheet 7/19/2019 9:14:53 AM dgrillo

DELINEATION OF PORTABLE AND PERMANENT BARRIER

BARRIER REFLECTORS AND OBJECT MARKERS SHALL BE INSTALLED ON ALL PORTABLE BARRIER (PB) USED FOR TRAFFIC CONTROL; AND, ON PERMANENT CONCRETE BARRIER (INCLUDING BRIDGE PARAPETS) LOCATED WITHIN 5 FEET OF THE EDGE OF THE ADJACENT TRAVEL LANE.

BARRIER REFLECTORS SHALL CONFORM TO C&MS 626, EXCEPT THAT THE SPACING SHALL BE AS PER TRAFFIC SCD MT-101.70. OBJECT MARKERS AND THEIR INSTALLATION SHALL CONFORM TO C&MS 614.03 AND SCD MT-101.70. WHEN THE PB CONTAINS GLARE SCREEN, ONE SET OF THREE VERTICAL STRIPES OF SHEETING SHALL BE CONSIDERED EQUIVALENT TO AN OBJECT MARKER, ONE-WAY.

ESTIMATED QUANTITIES HAVE BEEN PROVIDED ON THE DETAILED MOT SHEETS FOR THIS ITEM.

PAYMENT SHALL BE FULL COMPENSATION FOR ALL MATERIAL, LABOR, INCIDENTALS AND EQUIPMENT NECESSARY FOR FURNISHING, INSTALLING, MAINTAINING AND REMOVING EACH OF THE ABOVE ITEMS.

ITEM 614, PORTABLE CHANGEABLE MESSAGE SIGNS, AS PER PLAN

THE CONTRACTOR SHALL FURNISH, INSTALL, MAINTAIN AND REMOVE, WHEN NO LONGER NEEDED, A CHANGEABLE MESSAGE SIGN. THE SIGN SHALL BE OF A TYPE SHOWN ON A LIST OF APPROVED PCMS UNITS AVAILABLE ON THE OFFICE OF MATERIALS MANAGEMENT WEB PAGE. THE LIST CONTAINS CLASS A AND B UNITS WITH MINIMUM LEGIBILITY DISTANCES OF 800 FEET AND 650 FEET, RESPECTIVELY.

EACH SIGN SHALL BE TRAILER-MOUNTED AND EQUIPPED WITH A FUNCTIONAL DIMMING MECHANISM, TO DIM THE SIGN DURING DARKNESS, AND A TAMPER AND VANDAL PROOF ENCLOSURE. EACH SIGN SHALL BE PROVIDED WITH APPROPRIATE TRAINING AND OPERATION INSTRUCTIONS TO ENABLE ON-SITE PERSONNEL TO OPERATE AND TROUBLESHOOT THE UNIT. THE SIGN SHALL ALSO BE CAPABLE OF BEING POWERED BY AN ELECTRICAL SERVICE DROP FROM A LOCAL UTILITY COMPANY. THE PCMS SHALL BE DELINEATED IN ACCORDANCE WITH C&MS 614.03.

PLACEMENT, OPERATION, MAINTENANCE AND ALL ACTIVATION OF THE SIGNS BY THE CONTRACTOR SHALL BE AS DIRECTED BY THE ENGINEER. THE PCMS SHALL BE LOCATED IN A HIGHLY VISIBLE POSITION YET PROTECTED FROM TRAFFIC. THE CONTRACTOR SHALL, AT THE DIRECTION OF THE ENGINEER, RELOCATE THE PCMS TO IMPROVE VISIBILITY OR ACCOMMODATE CHANGED CONDITIONS. WHEN NOT IN USE, THE PCMS SHALL BE TURNED OFF. ADDITIONALLY, WHEN NOT IN USE FOR EXTENDED PERIODS OF TIME, THE PCMS SHALL BE TURNED AWAY FROM ALL TRAFFIC.

THE ENGINEER SHALL BE PROVIDED ACCESS TO EACH SIGN UNIT AND SHALL BE PROVIDED WITH APPROPRIATE TRAINING AND OPERATION INSTRUCTIONS TO ENABLE ODOT PERSONNEL TO OPERATE AND TROUBLESHOOT THE UNIT, AND TO REVISE SIGN MESSAGES, IF NECESSARY.

THE CONTRACTOR SHALL IMPLEMENT A SYSTEM WHEREBY CHANGEABLE MESSAGES WILL BE IMPLEMENTED WITHIN 4 HOURS FOLLOWING TELEPHONE NOTIFICATION FROM THE PROJECT ENGINEER TO A DESIGNATED PHONE.

ALL MESSAGES TO BE DISPLAYED ON THE SIGN WILL BE PROVIDED BY THE ENGINEER. A LIST OF ALL REQUIRED PRE-PROGRAMMED MESSAGES WILL BE GIVEN TO THE CONTRACTOR AT THE PROJECT PRECONSTRUCTION CONFERENCE. THE SIGN SHALL HAVE THE CAPABILITY TO STORE UP TO 99 MESSAGES. MESSAGE MEMORY OR PRE-PROGRAMMED DISPLAYS SHALL NOT BE LOST AS A RESULT OF POWER FAILURES TO THE ON-BOARD COMPUTER. THE SIGN LEGEND SHALL BE CAPABLE OF BEING CHANGED IN THE FIELD. THREE-LINE PRESENTATION FORMATS WITH UP TO SIX MESSAGE PHASES SHALL BE SUPPORTED. PCMS FORMAT SHALL PERMIT THE COMPLETE MESSAGE FOR EACH PHASE TO BE READ AT LEAST TWICE.

THE PCMS SHALL CONTAIN AN ACCURATE CLOCK AND PROGRAMMING LOGIC WHICH WILL ALLOW THE SIGN TO BE ACTIVATED, DEACTIVATED OR MESSAGES CHANGED AUTOMATICALLY AT DIFFERENT TIMES OF THE DAY FOR DIFFERENT DAYS OF THE WEEK.

THE PCMS SHALL CONTAIN A CELLULAR TELEPHONE DATA LINK WHICH WILL (IN ACTIVE CELLULAR PHONE AREAS) ALLOW REMOTE SIGN ACTIVATION, MESSAGE CHANGES, MESSAGE ADDITIONS AND REVISIONS TO TIME OF DAY PROGRAMS. THE SYSTEM SHALL ALSO PERMIT VERIFICATION OF CURRENT AND PROGRAMMED MESSAGES. ONE REMOTE DATA INPUT DEVICE (LAPTOP COMPUTER PLUS MODEM OR EQUIVALENT) SHALL BE FURNISHED FOR USE BY THE DISTRICT TRAFFIC ENGINEER, OR EQUIVALENT, AND SHALL BE INSURED AGAINST THEFT. THE PCMS UNIT SHALL BE MAINTAINED IN GOOD WORKING ORDER BY THE CONTRACTOR IN ACCORDANCE WITH THE PROVISIONS OF C&MS 614.07. THE CONTRACTOR SHALL, PRIOR TO ACTIVATING THE UNIT, MAKE ARRANGEMENTS, WITH AN AUTHORIZED SERVICE AGENT FOR THE PCMS, TO ASSURE PROMPT SERVICE IN THE EVENT OF FAILURE. ANY FAILURE SHALL NOT RESULT IN THE SIGN BEING OUT OF SERVICE FOR MORE THAN 12 HOURS, INCLUDING WEEKENDS. FAILURE TO COMPLY MAY RESULT IN AN ORDER TO STOP WORK AND OPEN ALL TRAFFIC LANES AND/OR IN THE DEPARTMENT TAKING APPROPRIATE ACTION TO SAFELY CONTROL TRAFFIC. THE ENTIRE COST TO CONTROL TRAFFIC, ACCRUED BY THE DEPARTMENT DUE TO THE CONTRACTOR'S NONCOMPLIANCE, WILL BE DEDUCTED FROM MONEYS DUE, OR TO BECOME DUE THE CONTRACTOR ON HIS CONTRACT.

THE CONTRACTOR SHALL BE RESPONSIBLE FOR 24-HOUR-PER-DAY OPERATION AND MAINTENANCE OF THESE SIGNS ON THE PROJECT FOR THE DURATION OF THE PHASES WHEN THE PLAN REQUIRES THEIR USE.

PAYMENT FOR THE ABOVE DESCRIBED ITEM SHALL BE AT THE CONTRACT UNIT PRICE. PAYMENT SHALL INCLUDE ALL LABOR, MATERIALS, EQUIPMENT, FUELS, LUBRICATING OILS, SOFTWARE, HARDWARE, AND INCIDENTALS TO PERFORM THE ABOVE DESCRIBED WORK.

ITEM 614, PORTABLE CHANGEABLE MESSAGE SIGN, AS PER PLAN — 2 SIGN MONTHS

ASSUMING 2 PCMS SIGNS FOR 1 MONTH

ITEM 614 - LAW ENFORCEMENT OFFICER (WITH PATROL CAR) FOR ASSISTANCE DURING CONSTRUCTION OPERATIONS

USE OF LAW ENFORCEMENT OFFICERS (LEOS) BY CONTRACTORS OTHER THAN THE USES SPECIFIED BELOW WILL NOT BE PERMITTED AT PROJECT COST. LEOS SHOULD NOT BE USED WHERE THE OMUTCD INTENDS THAT FLAGGERS BE USED.

IN ADDITION TO THE REQUIREMENTS OF C&MS 614 AND THE OMUTCD, A UNIFORMED LEO WITH AN OFFICIAL PATROL CAR (CAR WITH TOP-MOUNTED EMERGENCY FLASHING LIGHTS AND COMPLETE MARKINGS OF THE APPROPRIATE LAW ENFORCEMENT AGENCY) SHALL BE PROVIDED FOR THE FOLLOWING TRAFFIC CONTROL TASKS:

- DURING THE ENTIRE ADVANCE PREPARATION AND CLOSURE SEQUENCE WHERE COMPLETE BLOCKAGE OF TRAFFIC IS REQUIRED.
- DURING A TRAFFIC SIGNAL INSTALLATION WHEN IMPACTING THE NORMAL FUNCTION OF THE SIGNAL OR THE FLOW OF TRAFFIC, OR WHEN TRAFFIC NEEDS TO BE DIRECTED THROUGH AN ENERGIZED TRAFFIC SIGNAL CONTRARY TO THE SIGNAL DISPLAY (E.G., DIRECTING MOTORISTS THROUGH A RED LIGHT).

IN ADDITION TO THE REQUIREMENT OF C&MS 614 AND THE OMUTCD, A UNIFORMED LEO WITH AN OFFICIAL PATROL CAR (CAR WITH TOP-MOUNTED EMERGENCY FLASHING LIGHTS AND COMPLETE MARKINGS OF THE APPROPRIATE LAW ENFORCEMENT AGENCY) SHOULD BE PROVIDED FOR THE FOLLOWING TRAFFIC CONTROL TASKS AS APPROVED BY THE ENGINEER:

- FOR LANE CLOSURES: DURING INITIAL SET-UP PERIODS, TEAR DOWN PERIODS, SUBSTANTIAL SHIFTS OF A CLOSURE POINT OR WHEN A NEW LANE CLOSURE ARRANGEMENTS ARE INITIATED FOR LONG-TERM LANE CLOSURES/SHIFTS (FOR THE FIRST AND LAST DAY OF MAJOR CHANGES IN TRAFFIC CONTROL SETUP).

IN GENERAL, LEOS SHOULD BE POSITIONED IN ADVANCE OF AND ON THE SAME SIDE AS THE LANE RESTRICTION OR AT THE POINT OF ROAD CLOSURE, AND TO MANUALLY CONTROL TRAFFIC MOVEMENTS THROUGH SIGNALIZED INTERSECTIONS IN WORK ZONES.

LEOS SHOULD NOT FORGO THEIR TRAFFIC CONTROL RESPONSIBILITIES TO APPREHEND MOTORISTS FOR ROUTINE TRAFFIC VIOLATIONS. HOWEVER, IF A MOTORIST'S ACTIONS ARE CONSIDERED TO BE RECKLESS, THEN PURSUIT OF THE MOTORIST IS APPROPRIATE.

THE LEOS WORK AT THE DIRECTION OF THE CONTRACTOR. THE CONTRACTOR IS RESPONSIBLE FOR SECURING THE SERVICES OF THE LEOS WITH THE APPROPRIATE AGENCIES AND COMMUNICATING THE INTENTIONS OF THE PLANS WITH RESPECT TO DUTIES OF THE LEOS. THE ENGINEER SHALL HAVE FINAL CONTROL OVER THE LEOS' DUTIES AND PLACEMENT, AND WILL RESOLVE ANY ISSUES THAT MAY ARISE BETWEEN THE TWO PARTIES.

ENSURE PROVIDED LEOS HAVE BEEN TRAINED APPROPRIATE TO THE JOB DECISIONS THEY ARE REQUIRED TO MAKE WHILE ON THE PROJECT, IN ACCORDANCE WITH C&MS 614.03.

THE LEO SHALL REPORT IN TO THE CONTRACTOR PRIOR TO THE START OF THE SHIFT, IN ORDER TO RECEIVE INSTRUCTIONS REGARDING THE SPECIFIC WORK ASSIGNMENTS DURING HIS/HER SHIFT. THE LEO IS EXPECTED TO STAY AT THE PROJECT SITE FOR THE ENTIRE DURATION OF HIS/HER SHIFT. THE LEO SHALL REPORT TO THE CONTRACTOR AT THE END OF HIS/HER SHIFT. SHOULD IT BE NECESSARY TO LEAVE THE PROJECT SITE, THE LEO SHALL NOTIFY THE ENGINEER. THE CONTRACTOR SHALL PROVIDE THE LEO WITH A TWO-WAY COMMUNICATION DEVICE WHICH SHALL BE RETURNED TO THE CONTRACTOR AT THE END OF HIS/HER SHIFT.

LEOS (WITH PATROL CAR) REQUIRED BY THE TRAFFIC MAINTENANCE TASKS ABOVE SHALL BE PAID FOR ON A UNIT PRICE (HOURLY) BASIS UNDER ITEM 614, LAW ENFORCEMENT OFFICER (WITH PATROL CAR) FOR ASSISTANCE. THE FOLLOWING ESTIMATED QUANTITIES HAVE BEEN CARRIED TO THE GENERAL SUMMARY:

ITEM 614, LAW ENFORCEMENT OFFICER WITH PATROL CAR FOR ASSISTANCE 24 HOURS

THE HOURS PAID SHALL INCLUDE ANY MINIMUM SHOW-UP TIME REQUIRED BY THE LAW ENFORCEMENT AGENCY INVOLVED.

ANY ADDITIONAL COSTS (ADMINISTRATIVE OR OTHERWISE) INCURRED BY THE CONTRACTOR TO OBTAIN THE SERVICES OF A LEO ARE INCLUDED WITH THE BID UNIT PRICE FOR ITEM 614, LAW ENFORCEMENT OFFICER WITH PATROL CAR FOR ASSISTANCE.

ITEM 614, WORK ZONE IMPACT ATTENUATOR FOR 24" WIDE HAZARDS (UNIDIRECTIONAL OR BIDIRECTIONAL)

THIS ITEM SHALL CONSIST OF FURNISHING AND INSTALLING A NONGATING IMPACT ATTENUATOR. FURNISH AN IMPACT ATTENUATOR FROM THE OFFICE OF ROADWAY ENGINEERING'S APPROVED LIST FOR WORK ZONE IMPACT ATTENUATORS, FROM THE ROADWAY STANDARDS APPROVED PRODUCTS WEB PAGE.

INSTALLATION SHALL BE AT THE LOCATIONS SPECIFIED IN THE PLANS IN ACCORDANCE WITH THE MANUFACTURER'S SPECIFICATIONS.

THE CONTRACTOR SHALL REPAIR OR REPLACE A DAMAGED UNIT WITHIN 24 HOURS OF A DAMAGING IMPACT.

WHEN BIDIRECTIONAL DESIGNS ARE SPECIFIED, THE CONTRACTOR SHALL SUPPLY APPROPRIATE TRANSITIONS.

WHEN GATING IMPACT ATTENUATORS ARE DESIRED, THE CONTRACTOR SHALL SUBMIT DOCUMENTATION TO THE ENGINEER FOR ACCEPTANCE.

THE COST FOR THE ADDITIONAL BARRIER REQUIRED FOR A GATING IMPACT ATTENUATOR SHALL BE INCLUDED IN THE COST OF THE GATING IMPACT ATTENUATOR.

PAYMENT FOR THE ABOVE WORK SHALL BE MADE AT THE UNIT PRICE BID AND SHALL INCLUDE ALL LABOR, TOOLS, EQUIPMENT AND MATERIALS NECESSARY TO CONSTRUCT AND MAINTAIN A COMPLETE AND FUNCTIONAL IMPACT ATTENUATOR SYSTEM, INCLUDING ALL RELATED BACKUPS, TRANSITIONS, LEVELING PADS, HARDWARE AND GRADING, NOT SEPARATELY SPECIFIED, AS REQUIRED BY THE MANUFACTURER.

CALCULATED DHG CHECKED PNS

MAINTENANCE OF TRAFFIC NOTES (2 OF 3)

D07-BH-FY20(C)

LOCATION SPECIFIC MOT

AUG-075-0310R (N.B. I.R. 75 OVER PUSHETA CREEK)

I.R. 75: CLOSE THE OUTSIDE SHOULDER USING MT-95.45 AND DRUMS OR CONES. MAINTAIN A 2'-0" LATERAL CLEARANCE FROM THE EXISTING EDGE LINES. OUTSIDE LANE MAY BE CLOSED USING MT-95.30 AND THE PERMITTED LANE CLOSURE TIMES (I-75) NOTE. A TRUCK-MOUNTED ATTENUATOR IS REQUIRED WHENEVER WORKERS ARE PRESENT.

AUG-075-0498L/R (S.B./N.B. I.R. 75 OVER U.S. 33)

I.R. 75: LANES MAY BE CLOSED USING MT-95.30, MT-98.11, MT-98.20 AND THE PERMITTED LANE CLOSURE TIMES (I-75) NOTE. A TRUCK-MOUNTED ATTENUATOR IS REQUIRED WHENEVER WORKERS ARE PRESENT.

U.S. 33: LANES MAY BE CLOSED USING MT-95.30 & MT-98.11 ONLY WHEN NECESSARY TO PERFORM WORK. A TRUCK-MOUNTED ATTENUATOR IS REQUIRED WHENEVER WORKERS ARE PRESENT.

CLA-004-0667R (N.B. S.R. 4 OVER MAD RIVER)

S.R. 4: MAINTAIN BOTH ONE-WAY TRAFFIC LANES AT ALL TIMES. DURING CONCRETE PLACEMENT ONLY, ONE LANE MAY BE CLOSED USING MT-95.30. A TRUCK-MOUNTED ATTENUATOR IS REQUIRED. ALL OTHER STAGING SHALL BE BEHIND GUARDRAIL.

CLA-040-1084L (W.B. U.S. 40 OVER BUCK CREEK)

U.S. 40: MAINTAIN BOTH ONE-WAY TRAFFIC LANES AT ALL TIMES. DURING CONCRETE PLACEMENT ONLY, ONE LANE MAY BE CLOSED USING MT-95.30. A TRUCK-MOUNTED ATTENUATOR IS REQUIRED. ALL OTHER STAGING SHALL BE BEHIND GUARDRAIL.

CLA-041-3207 (S.R. 41 OVER WEST FORK OF HONEY CREEK)

S.R. 41: LANES MAY BE CLOSED USING MT-97.10.

CLA-070-2631 (SYLVAN SHORES DR. OVER I.R. 70)

SYLVAN SHORES DR: LANES MAY BE CLOSED USING MT-97.10.

I.R. 70: LANES MAY BE CLOSED USING MT-95.30 AND THE PERMITTED LANE CLOSURE TIMES NOTE. A TRUCK-MOUNTED ATTENUATOR IS REQUIRED WHENEVER WORKERS ARE PRESENT.

DAR-036-1257L/R (W.B./E.B. U.S. 36/S.B. 127 OVER RJ CORMAN RAILROAD)

U.S. 36/127: LANES MAY BE CLOSED USING MT-95.30. A TRUCK-MOUNTED ATTENUATOR IS REQUIRED.

DAR-121-1712 (S.R. 121 OVER GREENVILLE CREEK)

S.R. 121: LANES MAY BE CLOSED USING MT-95.31. ONLY 1 SB OR NB LANE MAY BE CLOSED AT A TIME. SIDEWALK ADJACENT TO THE CLOSED LANE SHALL BE DETOURED AS DETAILED.

TRAIL UNDER BRIDGE: THE TRAIL IS TO REMAIN OPEN AT ALL TIMES. SEE SHEET 4 FOR ADDITIONAL NOTES.

SIDEWALK ON BRIDGE: AT LEAST ONE SIDEWALK ON THE BRIDGE IS TO REMAIN OPEN FOR PEDESTRIANS AT ALL TIMES. SIDEWALK DETOURS TO BE PROVIDED AS SHOWN ON THIS SHEET. CURB RAMP TO BE INSTALLED PRIOR TO CLOSING OF SIDEWALK.

DAR-121-2883 (S.R. 121 OVER SWAMP CREEK)

S.R. 121: LANES MAY BE CLOSED USING MT-97.10.

MER-197-0875 (S.R. 197 OVER DAVIS CREEK)

S.R. 197: LANES MAY BE CLOSED USING MT-97.10.

MER-219-0233 (S.R. 219 OVER WABASH RIVER)

S.R. 219: LANES MAY BE CLOSED USING MT-97.10.

MOT-070-0859 (HOKE RD. OVER I.R. 70)

HOKE RD.: NO LANE CLOSURES ALLOWED.

I.R. 70: CLOSE THE OUTSIDE SHOULDER USING MT-95.45 AND DRUMS OR CONES. MAINTAIN A 2'-0" LATERAL CLEARANCE FROM THE EXISTING EDGE LINES. A TRUCK-MOUNTED ATTENUATOR IS REQUIRED WHENEVER WORKERS ARE PRESENT.

MOT-675-0063L (S.B. I.R. 675 OVER S.R. 741)

S.R. 741: DURING CONCRETE PLACEMENT ONLY, ONE LANE MAY BE CLOSED USING MT-95.31. A TRUCK-MOUNTED ATTENUATOR IS REQUIRED. ALL OTHER STAGING SHALL BE BEHIND GUARDRAIL.

I.R. 675: NO IMPACT TO TRAFFIC.

MOT-675-0296 (MCEWEN RD. OVER I.R. 675)

MCEWEN RD: LANES MAY BE CLOSED USING MT-97.10 DURING CONCRETE PLACEMENT.

I.R. 675: CLOSE THE OUTSIDE SHOULDER WITH MT-95.45 AND DRUMS OR CONES. MAINTAIN A 2'-0" LATERAL CLEARANCE FROM THE EXISTING EDGE LINES. A TRUCK-MOUNTED ATTENUATOR IS REQUIRED WHENEVER WORKERS ARE PRESENT.

MOT-725-1606 (S.R. 725 OVER I.R. 675)

S.R. 725: SHOULDER TO BE CLOSED USING DETAILED MOT SHEETS AND MT-95.45. ONE LANE MAY BE CLOSED USING DRUMS BEGINNING AT 7:00 P.M. SUNDAY THROUGH 6:00 A.M. THURSDAY. ALL RAMPS SHALL REMAIN OPEN FOR THE DURATION OF THE PROJECT.

I.R. 675: LANES MAY BE CLOSED USING MT-95.30, MT-98.11, AND THE PERMITTED LANE CLOSURE TIMES NOTE. A TRUCK-MOUNTED ATTENUATOR IS REQUIRED WHENEVER WORKERS ARE PRESENT.

SHE-075-1854 (LOCK TWO RD. OVER I-75)

LOCK TWO RD: LANES MAY BE CLOSED USING MT-97.10.

I.R. 75: LANES MAY BE CLOSED USING MT-95.30 AND THE PERMITTED LANE CLOSURE TIMES (I-75) NOTE. A TRUCK-MOUNTED ATTENUATOR IS REQUIRED WHENEVER WORKERS ARE PRESENT.

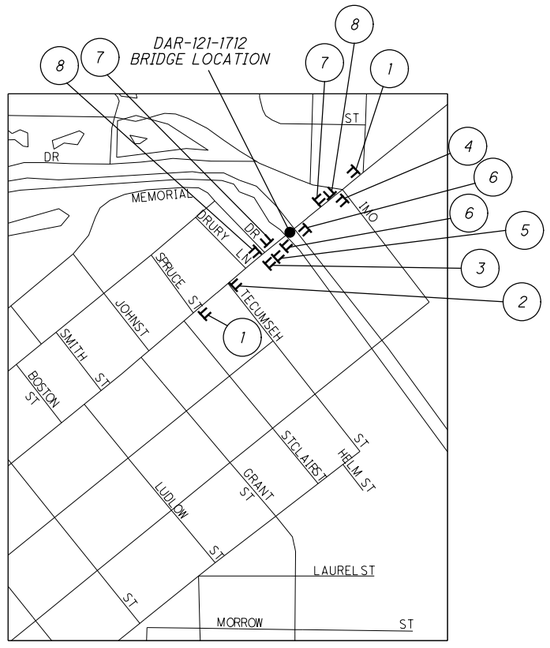

DAR-121-1712 PEDESTRIAN DETOUR MAP
(RIGHT SIDEWALK CLOSED)

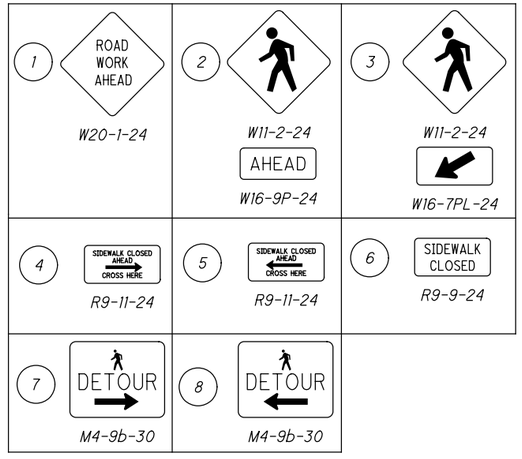

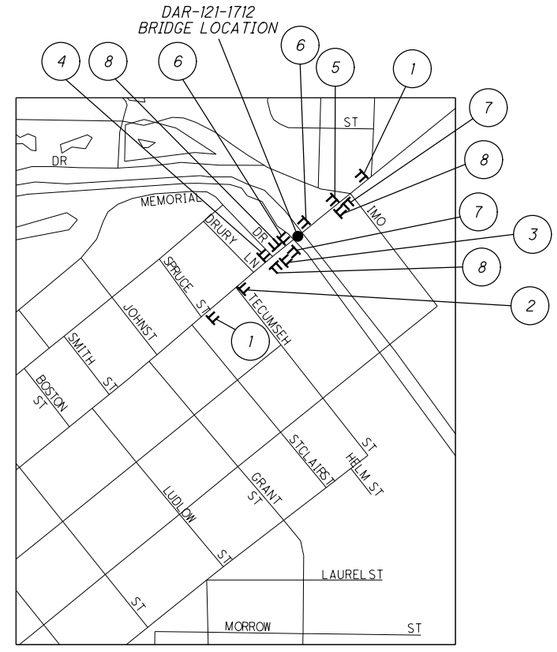

DAR-121-1712 PEDESTRIAN DETOUR MAP
(LEFT SIDEWALK CLOSED)

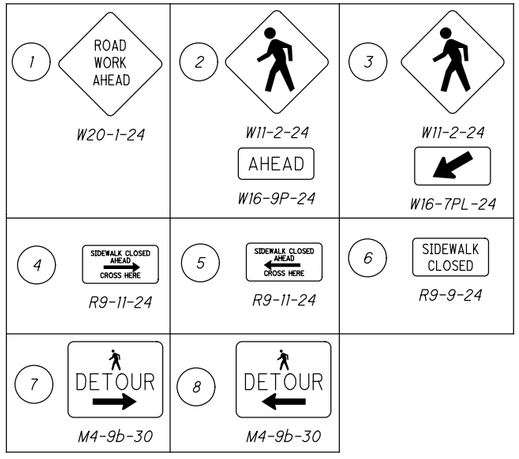

CALCULATED DHG
CHECKED PNS

MAINTENANCE OF TRAFFIC NOTES (3 OF 3)

D07-BH-FY20(C)

I:\ProjectData\D07\105419_BH-FY20_C\Design\Roadway\Sheets\105419_MN003.dgn Sheet 7/19/2019 9:14:54 AM dgrillillo

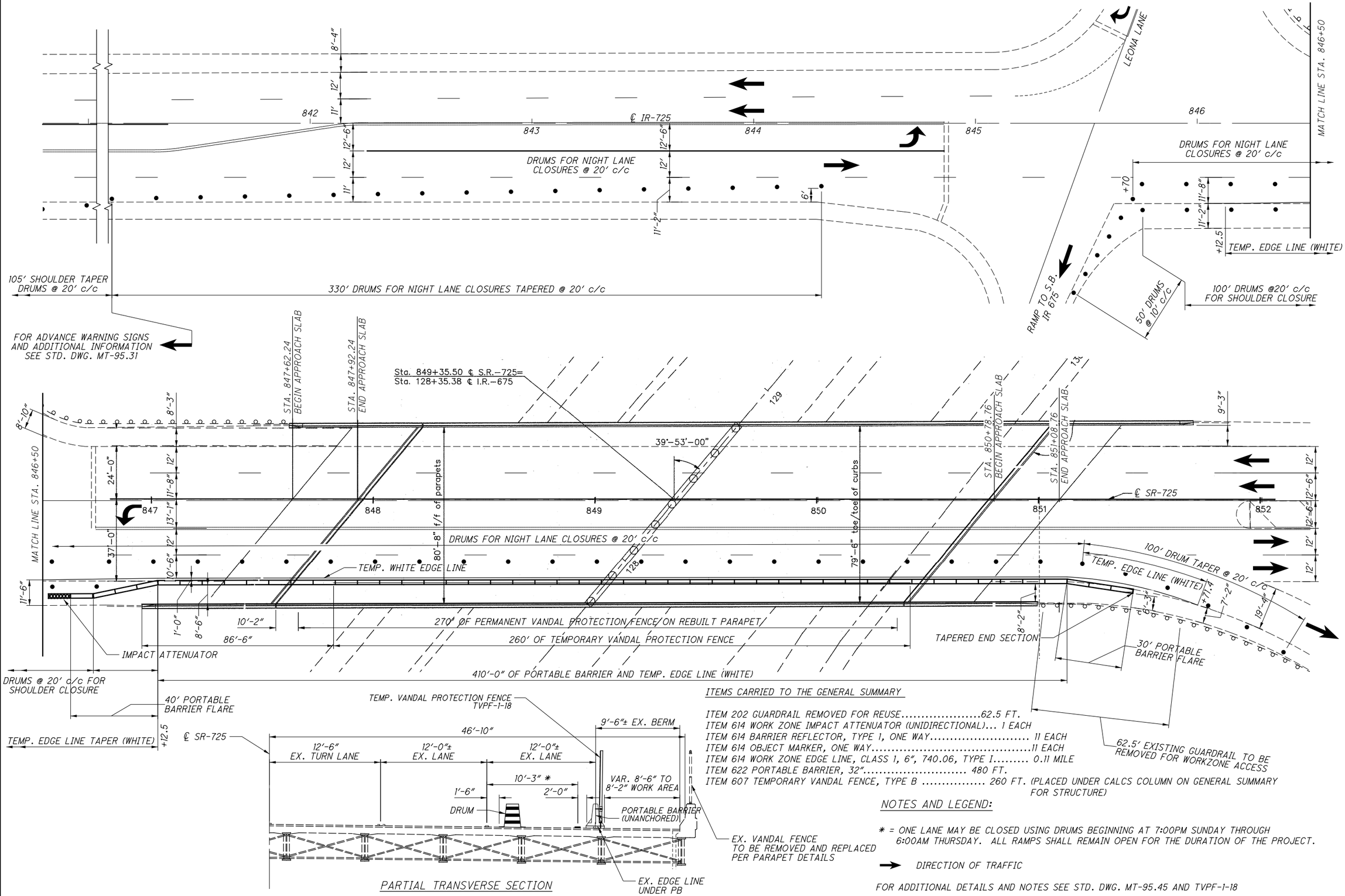

ITEMS CARRIED TO THE GENERAL SUMMARY

ITEM 202 GUARDRAIL REMOVED FOR REUSE.....62.5 FT.
ITEM 614 WORK ZONE IMPACT ATTENUATOR (UNIDIRECTIONAL)... 1 EACH
ITEM 614 BARRIER REFLECTOR, TYPE 1, ONE WAY..... 11 EACH
ITEM 614 OBJECT MARKER, ONE WAY.....11 EACH
ITEM 614 WORK ZONE EDGE LINE, CLASS 1, 6", 740.06, TYPE I..... 0.11 MILE
ITEM 622 PORTABLE BARRIER, 32"..... 480 FT.
ITEM 607 TEMPORARY VANDAL FENCE, TYPE B ..... 260 FT. (PLACED UNDER CALCS COLUMN ON GENERAL SUMMARY FOR STRUCTURE)

NOTES AND LEGEND:

* = ONE LANE MAY BE CLOSED USING DRUMS BEGINNING AT 7:00PM SUNDAY THROUGH 6:00AM THURSDAY. ALL RAMPS SHALL REMAIN OPEN FOR THE DURATION OF THE PROJECT.

→ DIRECTION OF TRAFFIC

FOR ADDITIONAL DETAILS AND NOTES SEE STD. DWG. MT-95.45 AND TVPF-1-18

HORIZONTAL SCALE IN FEET
0 10 20 40

CALCULATED MEF
CHECKED PNS

MAINTENANCE OF TRAFFIC - PHASE 1
S.R. 725 OVER I.R. 675

D07-BH-FY20(C)

10
53

i:\ProjectData\D07\105419_BH-FY20_C\Design\Roadway\Sheets\105419_MH002.dgn Sheet 7/19/2019 9:14:55 AM dgrillio

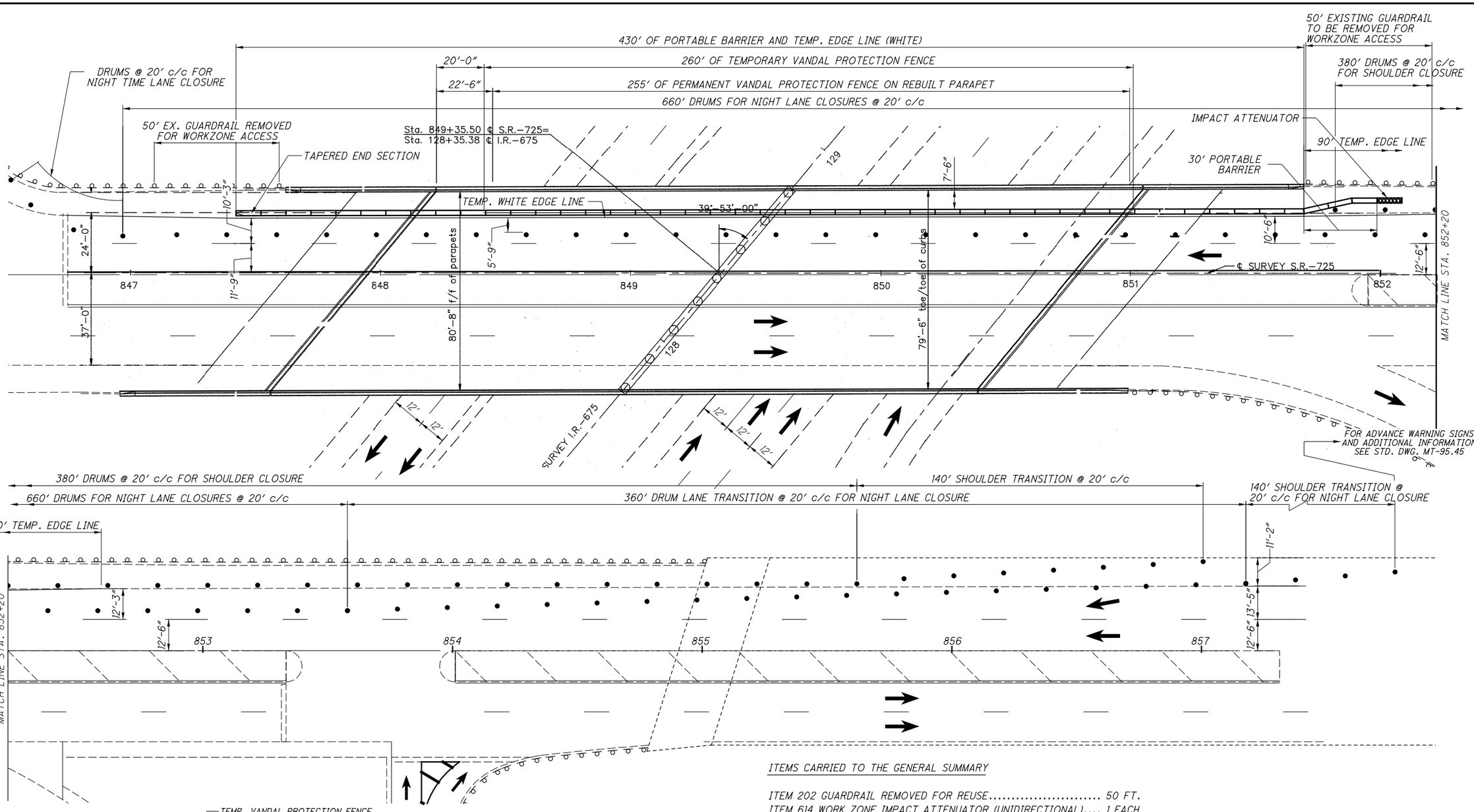

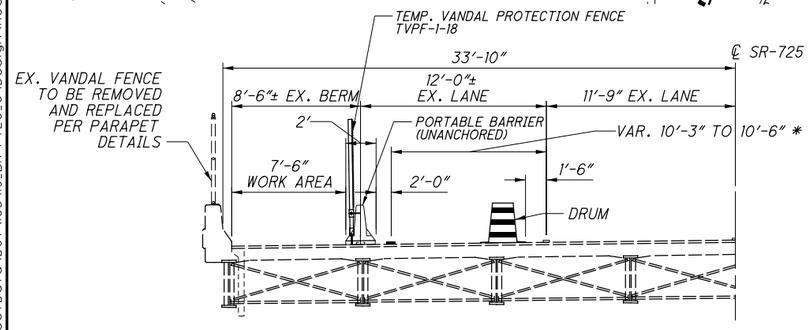

PARTIAL TRANSVERSE SECTION

ITEMS CARRIED TO THE GENERAL SUMMARY

ITEM 202 GUARDRAIL REMOVED FOR REUSE..... 50 FT.
ITEM 614 WORK ZONE IMPACT ATTENUATOR (UNIDIRECTIONAL).... 1 EACH
ITEM 614 BARRIER REFLECTOR, TYPE 1, ONE WAY..... 11 EACH
ITEM 614 OBJECT MARKER, ONE WAY..... 11 EACH
ITEM 614 WORK ZONE EDGE LINE, CLASS 1, 6", 740.06, TYPE I.. 0.12 MILE
ITEM 622 PORTABLE BARRIER 32"..... 460 FT.
ITEM 607 TEMPORARY VANDAL FENCE, TYPE B ..... 260 FT. (PLACED UNDER CALCS COLUMN ON GENERAL SUMMARY FOR STRUCTURE)

NOTES AND LEGEND:

* = ONE LANE MAY BE CLOSED USING DRUMS BEGINNING AT 7:00PM SUNDAY THROUGH 6:00AM THURSDAY. ALL RAMPS SHALL REMAIN OPEN FOR THE DURATION OF THE PROJECT.

→ DIRECTION OF TRAFFIC

FOR ADDITIONAL DETAILS AND NOTES SEE STD. DWG. MT-95.45 AND TVPF-1-18

HORIZONTAL SCALE IN FEET
0 10 20 40

CALCULATED MEF
CHECKED PNS

MAINTENANCE OF TRAFFIC - PHASE 2
S.R. 725 OVER I.R. 675

D07-BH-FY20(C)

11
53

I:\ProjectData\D07\105419_BH-FY20_C\Design\Roadway\Sheets\105419_MH003.dgn Sheet 7/19/2019 9:15:22 AM dgrillio

SHEET NUM.										PART.				ITEM	ITEM EXT	GRAND TOTAL	UNIT	DESCRIPTION	SEE SHEET NO.
				4	10	11			CALCS	01/IMS/BR	02/STR/BR	03/NHS/BR	04/SC2/BR						
																		ROADWAY	
				LS							LS			201	11000	LS		CLEARING AND GRUBBING	
				80									80	202	30001	80	SF	WALK REMOVED, AS PER PLAN	4
				16									16	202	32501	16	FT	CURB AND GUTTER REMOVED, AS PER PLAN	4
					62.5	50				112.5				202	38200	112.5	FT	GUARDRAIL REMOVED FOR REUSE	
				40						40				202	75200	40	FT	FENCE REMOVED FOR REUSE	
				1						1				202	98100	1	EACH	REMOVAL MISC.: REMOVAL OF BRIDGE ID SIGN AND DISPOSAL	4
				1						1				202	98100	1	EACH	REMOVAL MISC.: REMOVAL OF BRIDGE ID SIGN AND REERECTION	4
				40						40				607	23004	40	FT	FENCE REBUILT, TYPE CLT	
				128									128	608	52001	128	SF	CURB RAMP, AS PER PLAN	4
																		EROSION CONTROL	
				700						250	200	200	50	659	10000	700	SY	SEEDING AND MULCHING	
				35						12	10	10	3	659	14000	35	SY	REPAIR SEEDING AND MULCHING	
				0.1						0.03	0.03	0.03	0.01	659	20000	0.1	TON	COMMERCIAL FERTILIZER	
				4						1	1	1	1	659	35000	4	MGAL	WATER	
										1,500	1,400	1,200	300	832	30000	4,400	EACH	EROSION CONTROL	
																		STRUCTURE REPAIR (AUG-075-0310R)	
									18	18				512	10100	18	SY	SEALING OF CONCRETE SURFACES (EPOXY-URETHANE)	
									7	7				512	74000	7	SY	REMOVAL OF EXISTING COATINGS FROM CONCRETE SURFACES	
									67	67				519	11101	67	SF	PATCHING CONCRETE STRUCTURE, AS PER PLAN	6
																		STRUCTURE REPAIR (AUG-075-0498L)	
									LS	LS				503	21300	LS		UNCLASSIFIED EXCAVATION	
									257	257				512	10100	257	SY	SEALING OF CONCRETE SURFACES (EPOXY-URETHANE)	
									211	211				512	74000	211	SY	REMOVAL OF EXISTING COATINGS FROM CONCRETE SURFACES	
									329	329				519	11101	329	SF	PATCHING CONCRETE STRUCTURE, AS PER PLAN	6
									2	2				SPECIAL	53000400	2	EACH	STRUCTURES, MISC.: CLEANING OF BACKWALLS, ABUTMENT SEATS, AND BEAM ENDS	6
									45	45				844	10001	45	SF	CONCRETE PATCHING WITH GALVANIC ANODE PROTECTION, AS PER PLAN	6
																		STRUCTURE REPAIR (AUG-075-0498R)	
									LS	LS				503	21300	LS		UNCLASSIFIED EXCAVATION	
									270	270				512	10100	270	SY	SEALING OF CONCRETE SURFACES (EPOXY-URETHANE)	
									3	3				512	10600	3	FT	CONCRETE REPAIR BY EPOXY INJECTION	
									219	219				512	74000	219	SY	REMOVAL OF EXISTING COATINGS FROM CONCRETE SURFACES	
									327	327				519	11101	327	SF	PATCHING CONCRETE STRUCTURE, AS PER PLAN	6
									2	2				SPECIAL	53000400	2	EACH	STRUCTURES, MISC.: CLEANING OF BACKWALLS, ABUTMENT SEATS, AND BEAM ENDS	6
									93	93				844	10001	93	SF	CONCRETE PATCHING WITH GALVANIC ANODE PROTECTION, AS PER PLAN	6
																		STRUCTURE REPAIR (CLA-004-0667R)	
									63			63		509	10000	63	LB	EPOXY COATED REINFORCING STEEL	
									20			20		510	10000	20	EACH	DOWEL HOLES WITH NONSHRINK, NONMETALLIC GROUT	
									8			8		512	10100	8	SY	SEALING OF CONCRETE SURFACES (EPOXY-URETHANE)	
									3			3		512	74000	3	SY	REMOVAL OF EXISTING COATINGS FROM CONCRETE SURFACES	
									2			2		516	46701	2	EACH	RESET BEARING, AS PER PLAN	5
									LS			LS		516	47001	LS		JACKING AND TEMPORARY SUPPORT OF SUPERSTRUCTURE, AS PER PLAN	5
									44			44		844	10001	44	SF	CONCRETE PATCHING WITH GALVANIC ANODE PROTECTION, AS PER PLAN	6
																		STRUCTURE REPAIR (CLA-040-1084L)	
									LS			LS		202	11203	LS		PORTIONS OF STRUCTURE REMOVED, OVER 20 FOOT SPAN, AS PER PLAN	5
									LS			LS		503	21300	LS		UNCLASSIFIED EXCAVATION	
									140			140		509	10000	140	LB	EPOXY COATED REINFORCING STEEL	
									32			32		510	10000	32	EACH	DOWEL HOLES WITH NONSHRINK, NONMETALLIC GROUT	
									2			2		511	50210	2	CY	CLASS QC1 CONCRETE, SUBSTRUCTURE	
									28			28		512	10100	28	SY	SEALING OF CONCRETE SURFACES (EPOXY-URETHANE)	
									6			6		512	74000	6	SY	REMOVAL OF EXISTING COATINGS FROM CONCRETE SURFACES	
									11			11		516	13600	11	SF	1" PREFORMED EXPANSION JOINT FILLER	
									111			111		844	10001	111	SF	CONCRETE PATCHING WITH GALVANIC ANODE PROTECTION, AS PER PLAN	6

CALCULATED DHG
CHECKED LCG

GENERAL SUMMARY (1 OF 3)

D07-BH-FY20(C)

I:\ProjectData\D07\10549_BH-FY20_C\Design\Roadway\Sheets\10549_GG001.dgn Sheet 7/19/2019 9:15:58 AM dgrillio

SHEET NUM.	CALCS	PART. 01/IMS/BR	PART. 02/STR/BR	PART. 03/NHS/BR	PART. 04/SC2/BR	ITEM	ITEM EXT	GRAND TOTAL	UNIT	DESCRIPTION	SEE SHEET NO.
										STRUCTURE REPAIR (CLA-041-3207)	
	20		20			512	10100	20	SY	SEALING OF CONCRETE SURFACES (EPOXY-URETHANE)	
	7		7			512	10600	7	FT	CONCRETE REPAIR BY EPOXY INJECTION	
	85		85			516	31011	85	FT	2" DEEP JOINT SEALER, AS PER PLAN	5
	5		5			519	12300	5	SY	PATCHING CONCRETE BRIDGE DECK - TYPE B	
	102		102			844	10001	102	SF	CONCRETE PATCHING WITH GALVANIC ANODE PROTECTION, AS PER PLAN	6
										STRUCTURE REPAIR (CLA-070-2631)	
	20	20				202	75267	20	FT	VANDAL PROTECTION FENCE REMOVED AND RESET, AS PER PLAN	5
	31	31				512	10100	31	SY	SEALING OF CONCRETE SURFACES (EPOXY-URETHANE)	
	14	14				512	74000	14	SY	REMOVAL OF EXISTING COATINGS FROM CONCRETE SURFACES	
	159	159				519	11101	159	SF	PATCHING CONCRETE STRUCTURE, AS PER PLAN	6
										STRUCTURE REPAIR (DAR-036-1257L)	
	46			46		512	10100	46	SY	SEALING OF CONCRETE SURFACES (EPOXY-URETHANE)	
	81			81		516	31011	81	FT	2" DEEP JOINT SEALER, AS PER PLAN	5
	12			12		519	12300	12	SY	PATCHING CONCRETE BRIDGE DECK - TYPE B	
	43			43		844	10001	43	SF	CONCRETE PATCHING WITH GALVANIC ANODE PROTECTION, AS PER PLAN	6
										STRUCTURE REPAIR (DAR-036-1257R)	
	LS			LS		503	21300	LS		UNCLASSIFIED EXCAVATION	
	46			46		512	10100	46	SY	SEALING OF CONCRETE SURFACES (EPOXY-URETHANE)	
	81			81		516	31011	81	FT	2" DEEP JOINT SEALER, AS PER PLAN	5
	12			12		519	12300	12	SY	PATCHING CONCRETE BRIDGE DECK - TYPE B	
	47			47		844	10001	47	SF	CONCRETE PATCHING WITH GALVANIC ANODE PROTECTION, AS PER PLAN	6
										STRUCTURE REPAIR (DAR-121-1712)	
	7				7	512	10100	7	SY	SEALING OF CONCRETE SURFACES (EPOXY-URETHANE)	
	44				44	512	10600	44	FT	CONCRETE REPAIR BY EPOXY INJECTION	
	5				5	512	74000	5	SY	REMOVAL OF EXISTING COATINGS FROM CONCRETE SURFACES	
	3				3	514	27700	3	SF	FIELD PAINTING, MISC.: ZINC RICH PRIMER	5
	140				140	844	10001	140	SF	CONCRETE PATCHING WITH GALVANIC ANODE PROTECTION, AS PER PLAN	6
										STRUCTURE REPAIR (DAR-121-2883)	
	4		4			512	10100	4	SY	SEALING OF CONCRETE SURFACES (EPOXY-URETHANE)	
	3		3			512	74000	3	SY	REMOVAL OF EXISTING COATINGS FROM CONCRETE SURFACES	
	17		17			844	10001	17	SF	CONCRETE PATCHING WITH GALVANIC ANODE PROTECTION, AS PER PLAN	6
										STRUCTURE REPAIR (MER-197-0875)	
	LS		LS			202	11203	LS		PORTIONS OF STRUCTURE REMOVED, OVER 20 FOOT SPAN, AS PER PLAN	5
	LS		LS			503	21300	LS		UNCLASSIFIED EXCAVATION	
	19		19			509	10000	19	LB	EPOXY COATED REINFORCING STEEL	
	8		8			510	10000	8	EACH	DOWEL HOLES WITH NONSHRINK, NONMETALLIC GROUT	
	1		1			511	50210	1	CY	CLASS QC1 CONCRETE, SUBSTRUCTURE	
	18		18			512	10100	18	SY	SEALING OF CONCRETE SURFACES (EPOXY-URETHANE)	
	66		66			844	10001	66	SF	CONCRETE PATCHING WITH GALVANIC ANODE PROTECTION, AS PER PLAN	6
										STRUCTURE REPAIR (MER-219-0233)	
	LS		LS			503	21300	LS		UNCLASSIFIED EXCAVATION	
	917		917			509	10000	917	LB	EPOXY COATED REINFORCING STEEL	
	224		224			510	10000	224	EACH	DOWEL HOLES WITH NONSHRINK, NONMETALLIC GROUT	
	66		66			512	10100	66	SY	SEALING OF CONCRETE SURFACES (EPOXY-URETHANE)	
	3		3			512	10600	3	FT	CONCRETE REPAIR BY EPOXY INJECTION	
	19		19			512	74000	19	SY	REMOVAL OF EXISTING COATINGS FROM CONCRETE SURFACES	
	334		334			SPECIAL	53000600	334	SF	STRUCTURES, MISC.: ABUTMENT REFACING WITH GALVANIC ANODE PROTECTION	6
	6		6			844	10001	6	SF	CONCRETE PATCHING WITH GALVANIC ANODE PROTECTION, AS PER PLAN	6
										STRUCTURE REPAIR (MOT-070-0859)	
	LS	LS				202	11203	LS		PORTIONS OF STRUCTURE REMOVED, OVER 20 FOOT SPAN, AS PER PLAN	5
	1	1				511	50210	1	CY	CLASS QC1 CONCRETE, SUBSTRUCTURE	
	118	118				512	10100	118	SY	SEALING OF CONCRETE SURFACES (EPOXY-URETHANE)	
	95	95				512	74000	95	SY	REMOVAL OF EXISTING COATINGS FROM CONCRETE SURFACES	
	208	208				844	10001	208	SF	CONCRETE PATCHING WITH GALVANIC ANODE PROTECTION, AS PER PLAN	6
										STRUCTURE REPAIR (MOT-675-0063L)	
	4	4				512	10100	4	SY	SEALING OF CONCRETE SURFACES (EPOXY-URETHANE)	
	2	2				512	74000	2	SY	REMOVAL OF EXISTING COATINGS FROM CONCRETE SURFACES	
	19	19				844	10001	19	SF	CONCRETE PATCHING WITH GALVANIC ANODE PROTECTION, AS PER PLAN	6

CALCULATED DHG
CHECKED LCG

GENERAL SUMMARY (2 OF 3)

D07-BH-FY20(C)

I:\ProjectData\D07\105419_BH-FY20_C\Design\Roadway\Sheets\105419_GG002.dgn Sheet 7/19/2019 9:45:59 AM dgrillio

SHEET NUM.										PART.				ITEM	ITEM EXT	GRAND TOTAL	UNIT	DESCRIPTION	SEE SHEET NO.
	7	8	10	11				CALCS		01/IMS/BR	02/STR/BR	03/NHS/BR	04/SK2/BR						
																		STRUCTURE REPAIR (MOT-675-0296)	
								31		31				512	10100	31	SY	SEALING OF CONCRETE SURFACES (EPOXY-URETHANE)	
								15		15				512	74000	15	SY	REMOVAL OF EXISTING COATINGS FROM CONCRETE SURFACES	
								151		151				844	10001	151	SF	CONCRETE PATCHING WITH GALVANIC ANODE PROTECTION, AS PER PLAN	6
																		STRUCTURE REPAIR (MOT-725-1606)	
								LS		LS				202	11203	LS		PORTIONS OF STRUCTURE REMOVED, OVER 20 FOOT SPAN, AS PER PLAN	5
								564		564				202	75260	564	FT	VANDAL PROTECTION FENCE REMOVED	
								353		353				512	10100	353	SY	SEALING OF CONCRETE SURFACES (EPOXY-URETHANE)	
								72		72				512	74000	72	SY	REMOVAL OF EXISTING COATINGS FROM CONCRETE SURFACES	
								553		553				517	75501	553	FT	BRIDGE RAILING REBUILT, AS PER PLAN	5
								133		133				519	11101	133	SF	PATCHING CONCRETE STRUCTURE, AS PER PLAN	6
								525		525				607	39900	525	FT	VANDAL PROTECTION FENCE, 6' STRAIGHT, COATED FABRIC	
								520		520				607	39994	520	FT	TEMPORARY VANDAL FENCE, TYPE B	
																		STRUCTURE REPAIR (SHE-075-1854)	
								26		26				512	10100	26	SY	SEALING OF CONCRETE SURFACES (EPOXY-URETHANE)	
								14		14				512	74000	14	SY	REMOVAL OF EXISTING COATINGS FROM CONCRETE SURFACES	
								110		110				519	11101	110	SF	PATCHING CONCRETE STRUCTURE, AS PER PLAN	6
																		MAINTENANCE OF TRAFFIC	
		24								24				614	11110	24	HOUR	LAW ENFORCEMENT OFFICER WITH PATROL CAR FOR ASSISTANCE	
			1	1						2				614	12336	2	EACH	WORK ZONE IMPACT ATTENUATOR (UNIDIRECTIONAL)	
	LS												LS	614	12420	LS		DETOUR SIGNING	
	5									5				614	12500	5	EACH	REPLACEMENT SIGN	
	5									5				614	12600	5	EACH	REPLACEMENT DRUM	
			11	11						22				614	13310	22	EACH	BARRIER REFLECTOR, TYPE 1, ONE WAY	
			11	11						22				614	13350	22	EACH	OBJECT MARKER, ONE WAY	
		2								2				614	18601	2	SNMT	PORTABLE CHANGEABLE MESSAGE SIGN, AS PER PLAN	8
			0.11	0.12						0.23				614	22210	0.23	MILE	WORK ZONE EDGE LINE, CLASS I, 6", 740.06, TYPE I	
	97												97	614	27400	97	FT	WORK ZONE CROSSWALK LINE, CLASS I, 740.06, TYPE I	
			480	460						940				622	41000	940	FT	PORTABLE BARRIER, 32"	
																		INCIDENTALS	
										LS	LS	LS	LS	614	11000	LS		MAINTAINING TRAFFIC	
										LS	LS	LS	LS	623	10000	LS		CONSTRUCTION LAYOUT STAKES AND SURVEYING	
										LS	LS	LS	LS	624	10000	LS		MOBILIZATION	

CALCULATED DHG
CHECKED LCG

GENERAL SUMMARY (3 OF 3)

D07-BH-FY20(C)

I:\ProjectData\D07\105419_BH-FY20_C\Design\Roadway\Sheets\105419_GG003.dgn Sheet 7/19/2019 9:16:00 AM dgrillio

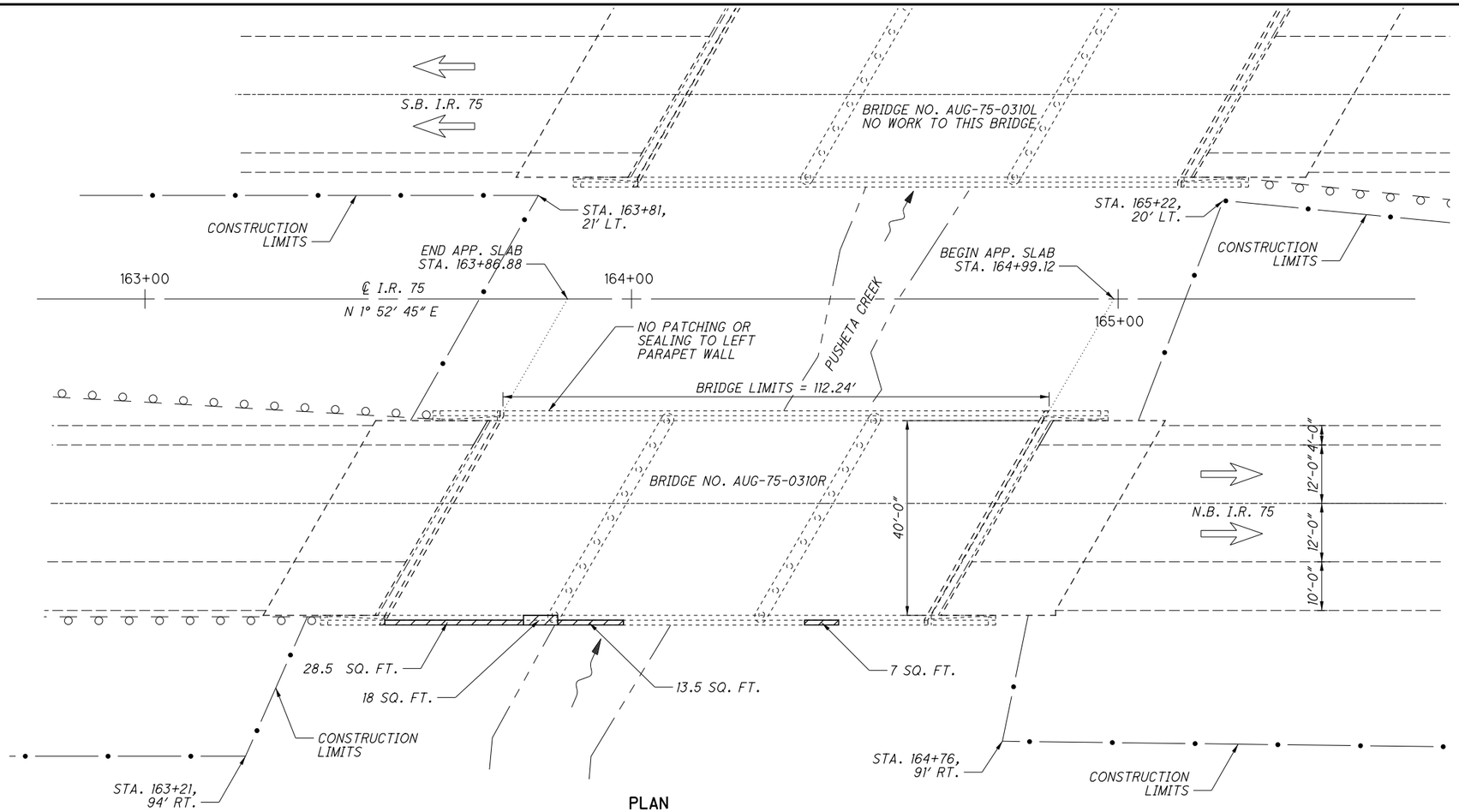

PLAN

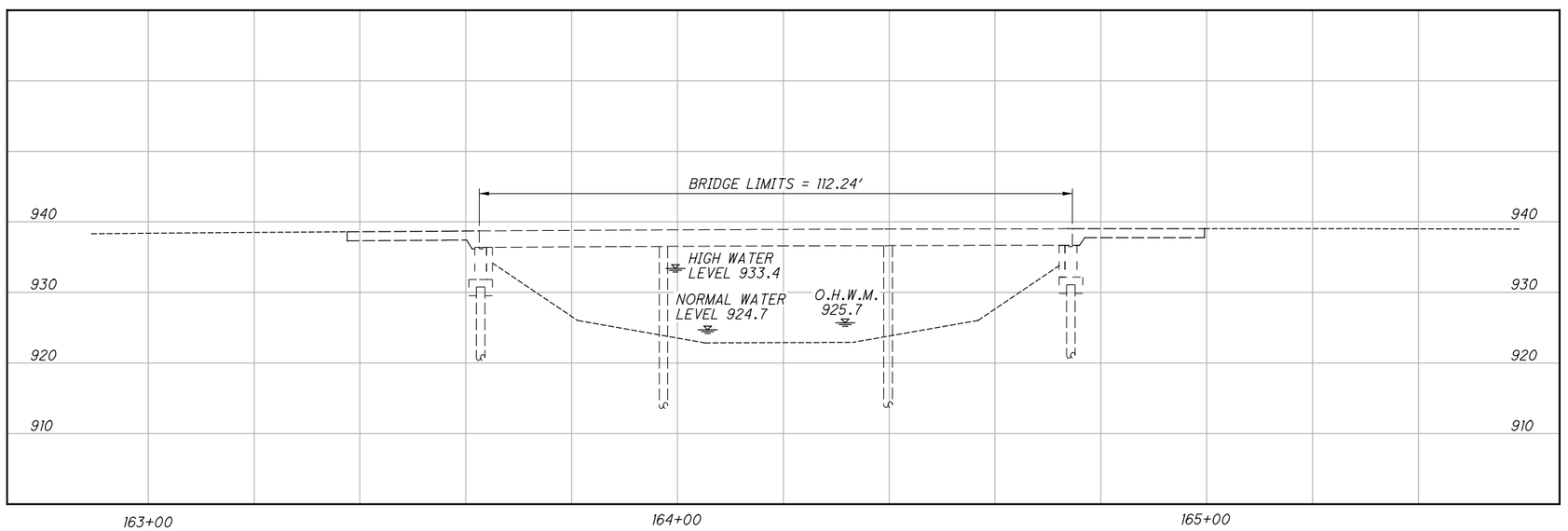

PROFILE ON ℄ NORTHBOUND LANES

LEGEND & NOTES

DESIGN TRAFFIC I.R. 75:
2010 ADT = 35510 2010 ADTT = 14204
2030 ADT = 43320 2030 ADTT = 17328
DIRECTIONAL DISTRIBUTION = 55%
DESIGN TRAFFIC DATA TAKEN FROM 2013 REHAB PLANS
O.H.W.M. = ORDINARY HIGH WATER MARK

REHABILITATION PLAN DISCLAIMER

DIMENSIONS AND DATA ARE TAKEN FROM EXISTING PLANS AND FIELD MEASUREMENT. ALL DIMENSIONS AND ELEVATIONS ARE TO BE CONSIDERED +/- AND FOR REFERENCE ONLY.

EXISTING R/W LOCATION

THE EXISTING R/W IS BEYOND THE SHOWN LIMITS OF THE PLAN VIEW. THE R/W IS APPROXIMATELY 125 FT. LT. AND RT. OF CENTERLINE AT THE BRIDGE WITH IT WIDENING TO 165 FT. TO THE LEFT OF CENTERLINE AND 155 FT. TO THE RIGHT OF CENTERLINE GOING TOWARD PUSHETA ROAD. REFERENCE TO THE OLD R/W PLANS IS TO BE MADE FOR SPECIFIC DETAILS.

HYDRAULIC DATA

DRAINAGE AREA = 17.3 SQ. MILES
Q (50) = 1500 CFS
Q (100) = 1680 CFS
HYDRAULIC DATA TAKEN FROM STREAMSTATS

EXISTING STRUCTURE

TYPE: CONTINUOUS REINFORCED CONCRETE SLAB WITH CAPPED PILE SUBSTRUCTURE
SPANS: 34'-0", 42'-6", 34'-0" C/C BRGS.
ROADWAY: 40'-0" TOE/TOE PARAPET
LOADING: CF=2000 (57) ADEQUATE FOR AASHO ALTERNATE LOADING
SKEW: 30° LEFT FORWARD
APPROACH SLABS: AS-1-54 (25' LONG)
ALIGNMENT: TANGENT
CROWN: 3/16"/FT
STRUCTURAL FILE NUMBER: 0602019
DATE BUILT: 1962 REHABILITATED: 1997, 2013
WEARING SURFACE: 3¼"± ASPHALT CONCRETE
COORDINATES: LATITUDE N 40° 31' 39"
LONGITUDE W 84° 10' 10"
DISPOSITION: TO BE REHABILITATED

PROPOSED WORK

1. PATCH RIGHT PARAPET.

DESIGN AGENCY
ODOT DISTRICT 7
ENGINEERING

REVIEWED MRB DATE 6/27/2019
STRUCTURE FILE NUMBER 0602019
DRAWN DHG REVISED
DESIGNED DHG CHECKED LCG

AUGLAIZE COUNTY
STA. 163+86.88
STA. 164+99.12

SITE PLAN
BRIDGE NO.: AUG-075-0310R
N.B. I.R. 75 OVER PUSHETA CREEK

D07-BH-FY20(C)
PID No. 105419

1 / 2

15
53

I:\ProjectData\D07\105419_BH-FY20_C\Design\Structures\AUG075_0310R\Sheets\075_0310R_SP001.dgn Sheet 7/19/2019 9:16:02 AM dgrillo

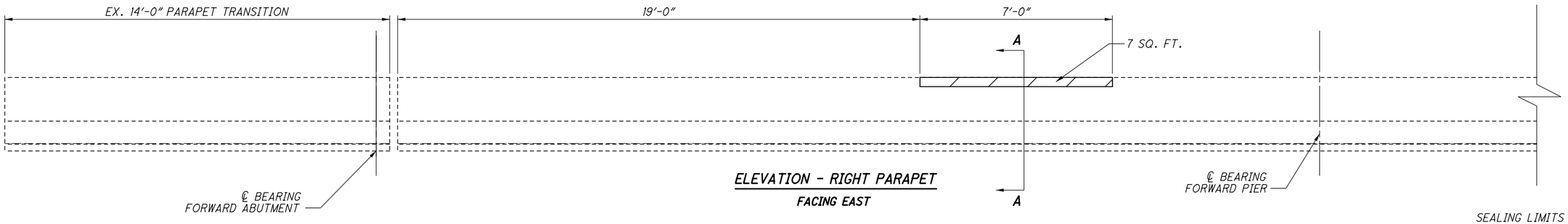

ELEVATION - RIGHT PARAPET

FACING EAST

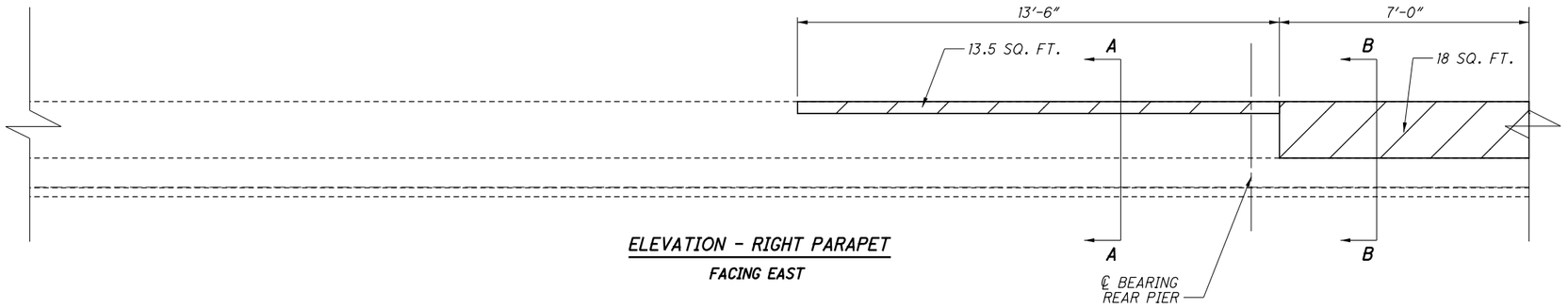

ELEVATION - RIGHT PARAPET

FACING EAST

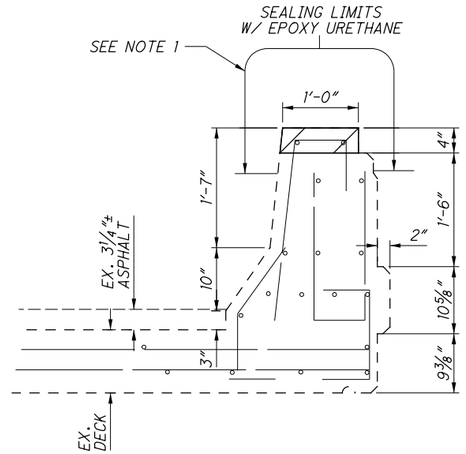

SECTION A-A

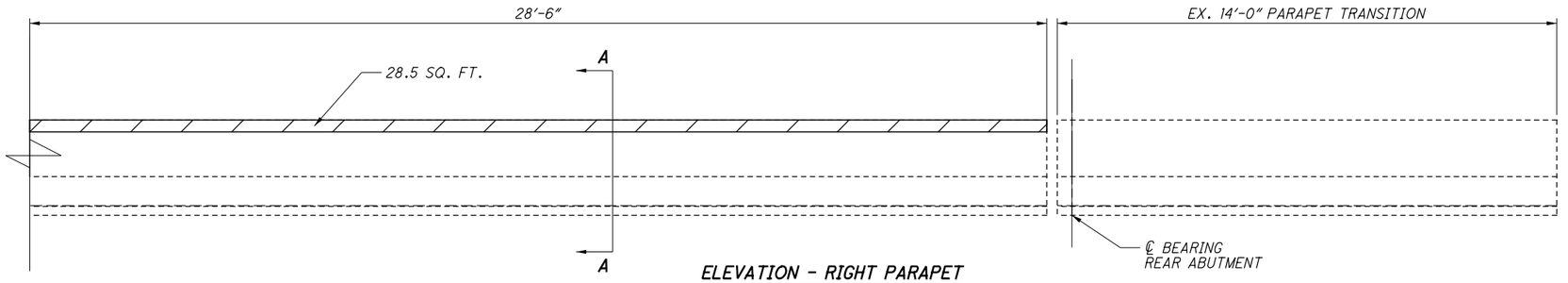

ELEVATION - RIGHT PARAPET

FACING EAST

	ITEM 519 - PATCHING
RIGHT PARAPET TOTAL =	67 SQ. FT.

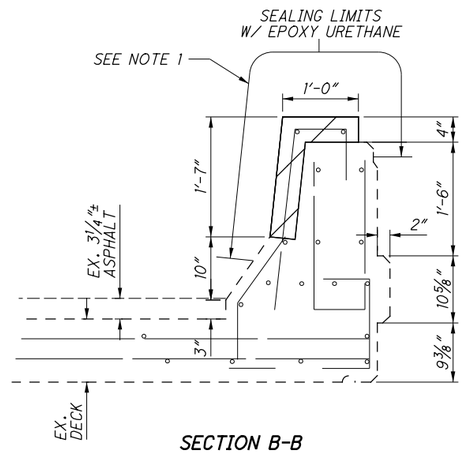

SECTION B-B

LEGEND & NOTES

ITEM 519 - PATCHING CONCRETE STRUCTURE, AS PER PLAN

1. SEAL CONCRETE SURFACES WITH EPOXY URETHANE 6" BEYOND REPAIR LIMITS.

DESIGN AGENCY
ODOT DISTRICT 7
ENGINEERING

DESIGNED	DRAWN	REVIEWED	DATE
DHG	DHG	MRB	6/27/2019
CHECKED	REVISED	STRUCTURE FILE NUMBER	
LCG		0602019	

RIGHT PARAPET REPAIR DETAILS

BRIDGE NO.: AUG-075-0310R
N.B. I.R. 75 OVER PUSHETA CREEK

D07-BH-FY20(C)
PID No. 105419

2 / 2

16
53

I:\Project Data\D07\105419_BH-FY20_C\Design\Structures\AUG075_0310R\Sheets\075_0310R_SA001.dgn Sheet 7/19/2019 9:16:03 AM dgrillio

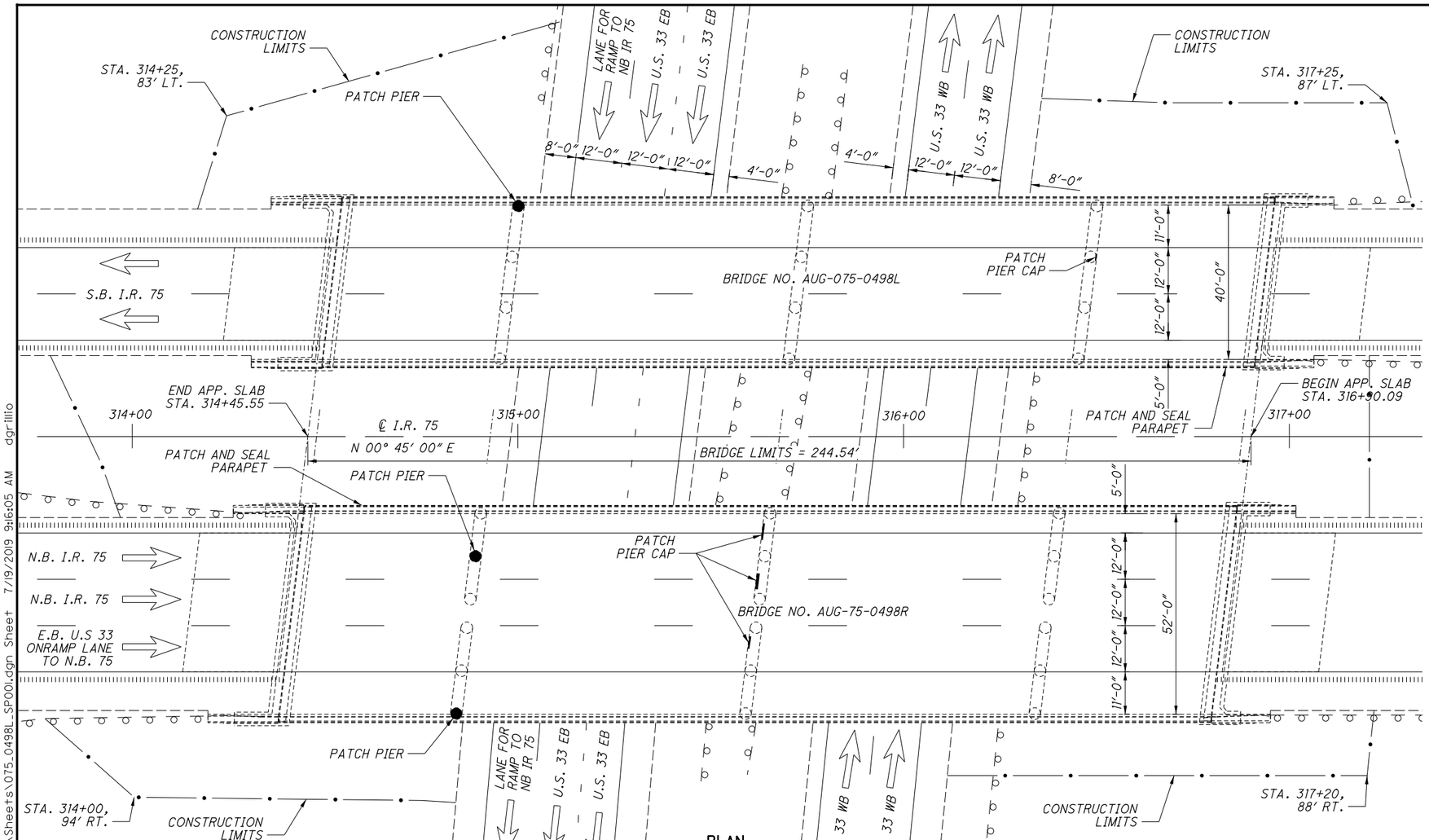

PLAN

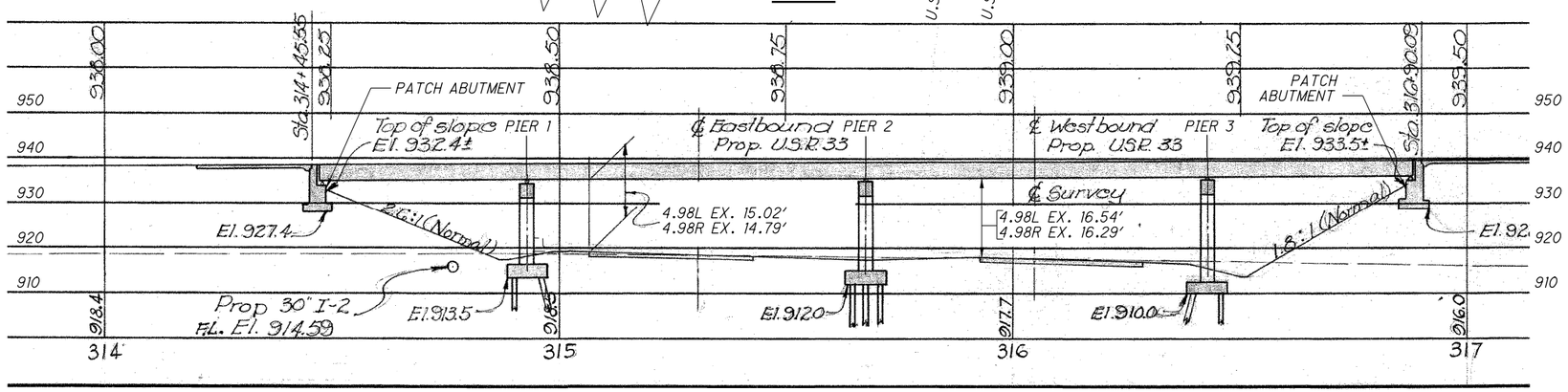

PROFILE ON ℄ I.R. 75

TAKEN FROM ORIGINAL PLANS

NOTES

TRAFFIC DATA I.R. 75:
2017 ADT = 38968 2016 ADTT = 12499
TRAFFIC DATA U.S. 33 WEST OF BRIDGE:
2017 ADT = 16966 2016 ADTT = 4029
TRAFFIC DATA U.S. 33 EAST OF BRIDGE:
2017 ADT = 5674 2016 ADTT = 1523

TRAFFIC DATA TAKEN FROM TRANSPORTATION DATA MANAGEMENT SYSTEM

REHABILITATION PLAN DISCLAIMER

DIMENSIONS AND DATA ARE TAKEN FROM EXISTING PLANS AND FIELD MEASUREMENT. ALL DIMENSIONS AND ELEVATIONS ARE TO BE CONSIDERED +/- AND FOR REFERENCE ONLY.

EXISTING R/W LOCATION

THE EXISTING R/W IS BEYOND THE SHOWN LIMITS OF THE PLAN VIEW.

EXISTING STRUCTURE

TYPE: CONTINUOUS STEEL BEAMS WITH REINFORCED CONCRETE DECK AND SUBSTRUCTURE
SPANS: 45'-0", 75'-0"", 75'-0", 45'-0" C/C BRGS.
ROADWAY: 40'-0" (L), 52'-0" (R) TOE/TOE PARAPET
LOADING: CF=2000 (57) ADEQUATE FOR AASHO ALTERNATE LOADING
SKEW: 6° 59' 00" LEFT FORWARD
APPROACH SLABS: AS-1-54 (25' LONG)
ALIGNMENT: TANGENT
CROWN: 3/16"/FT
STRUCTURAL FILE NUMBER: 0602043/0602078
DATE BUILT: 1959 REHABILITATED: 1992, 1997, 2010, 2013
WEARING SURFACE: 2"± ASPHALT CONCRETE
COORDINATES: LATITUDE N 40° 33' 17"
LONGITUDE W 84° 10' 11"
DISPOSITION: TO BE REHABILITATED

PROPOSED WORK

1. *PATCH BRIDGE PARAPET.*
2. *PATCH ABUTMENTS.*
3. *PATCH PIERS.*
4. *CLEAN ABUTMENT BEAM SEATS.*

WORK LISTED IS NOT INCLUSIVE. CONTRACTOR WILL SEQUENCE WORK AS NEEDED.

DESIGN AGENCY
ODOT DISTRICT 7
ENGINEERING

DRAWN	REVIEWED	DATE
DHG	MRB	6/27/2019
DESIGNED	CHECKED	STRUCTURE FILE NUMBER
DHG	LCG	0602043/0602078
	REVISED	

AUGLAIZE COUNTY
STA. 314+45.55
STA. 316+90.09

SITE PLAN
BRIDGE NO.: AUG-075-0498L/R
N.B./S.B. I.R. 75 OVER U.S. 33

D07-BH-FY20(C)
PID No. 105419

1 / 5

17
53

I:\Project Data\D07\105419_BH-FY20_C\Design\Structures\AUG075_0498L\Sheets\075_0498L_SP001.dgn Sheet 7/19/2019 9:16:05 AM dgrillio

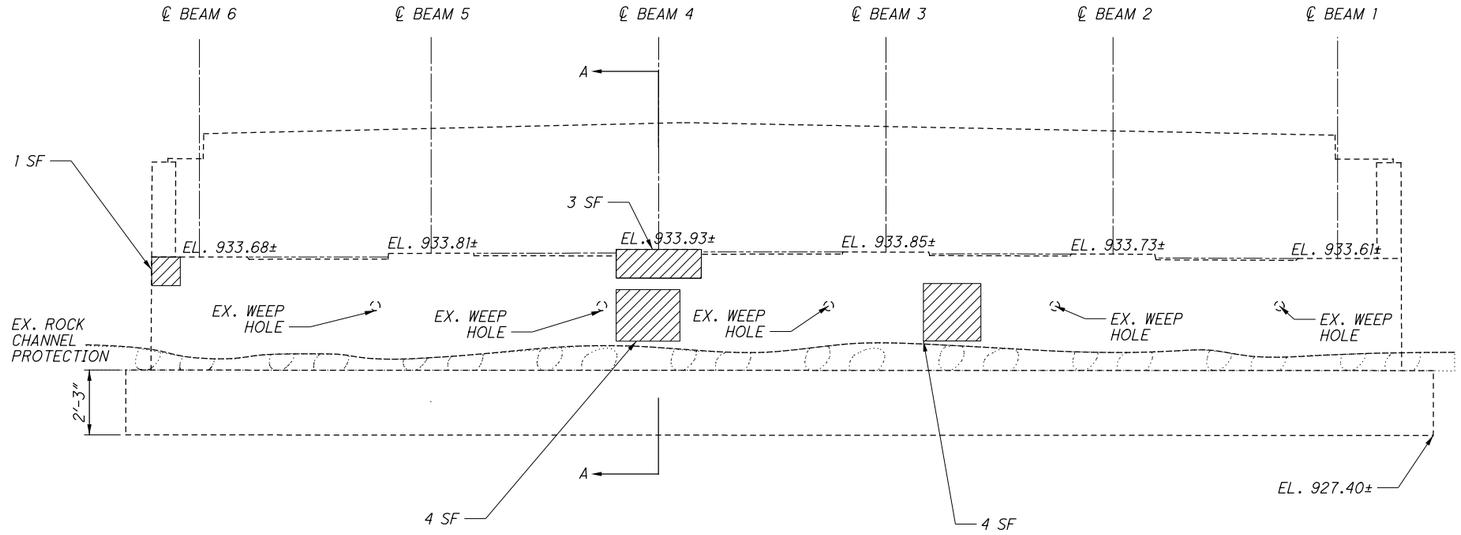

REAR ABUTMENT ELEVATION

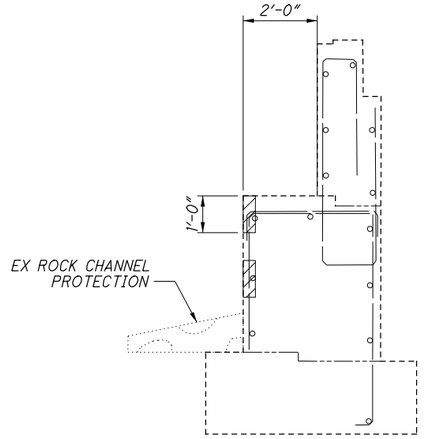

SECTION A-A

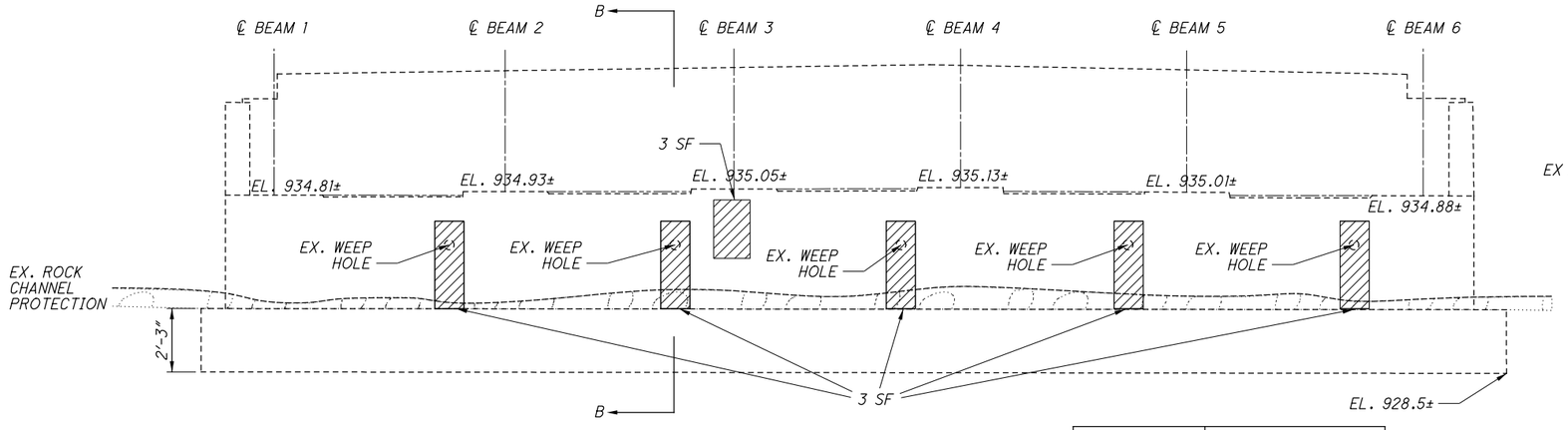

FORWARD ABUTMENT ELEVATION

	ITEM 844 PATCHING
REAR ABUTMENT	12 SQ. FT.
FWD. ABUTMENT	18 SQ. FT.
TOTAL =	30 SQ. FT.

	# OF ANODES	
REAR ABUTMENT	0	
FWD. ABUTMENT	0	
TOTAL =	0	FOR REFERENCE ONLY

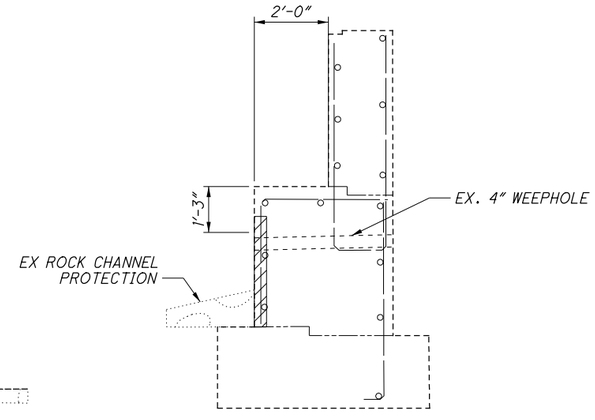

SECTION B-B

LEGEND & NOTES

ITEM 844 - CONCRETE PATCHING WITH GALVANIC ANODE PROTECTION, AS PER PLAN

(ANODES TO BE PLACED IN PATCHES GREATER THAN OR EQUAL TO 5 SQ. FT. PER SS844)

1. SEAL CONCRETE SURFACES WITH EPOXY URETHANE 6" BEYOND REPAIR LIMITS.
2. CLEAN THE BACKWALLS, ABUTMENT SEATS, AND BEAM ENDS. SEE SHEET 6/53.

DESIGN AGENCY
ODOT DISTRICT 7
ENGINEERING

DESIGNED PJB | DRAWN PJB | REVIEWED MRB | DATE 6/27/2019
CHECKED LCG | REVISED | STRUCTURE FILE NUMBER 0602043

ABUTMENT REPAIR DETAIL

BRIDGE NO.: AUG-075-0498L
S.B. I.R. 75 OVER U.S. 33

D07-BH-FY20(C)
PID No. 105419

2 / 5

18
53

I:\ProjectData\D07\105419_BH-FY20_C\Design\Structures\AUG075_0498L\Sheets\075_0498L_SR001.dgn Sheet 7/19/2019 9:16:38 AM dgrillo

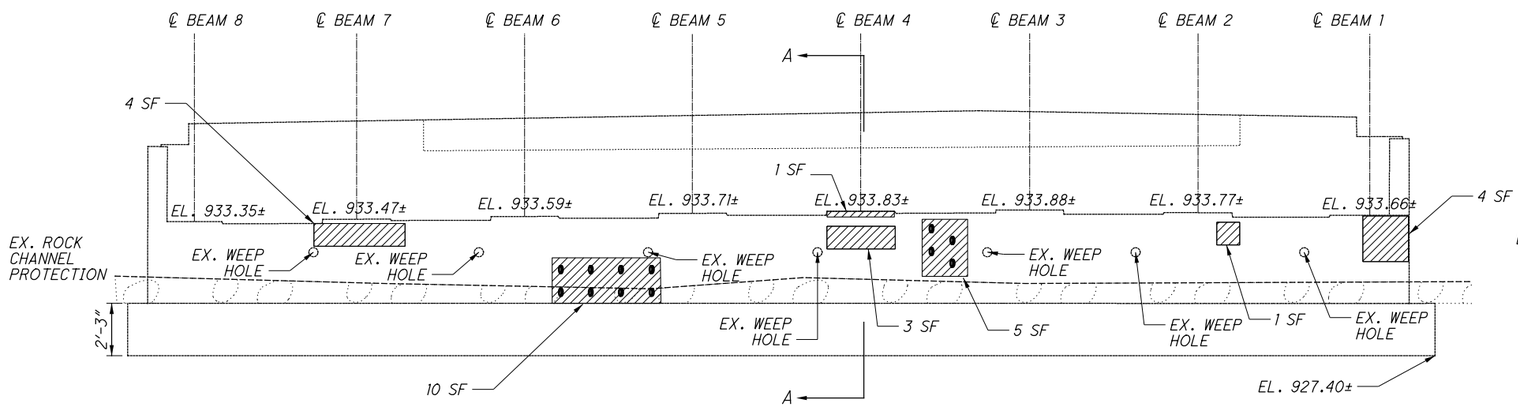

REAR ABUTMENT ELEVATION

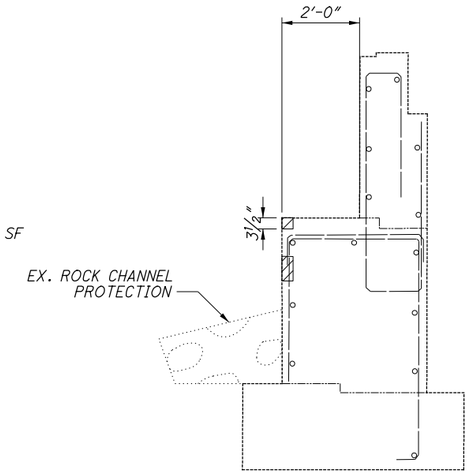

SECTION A-A

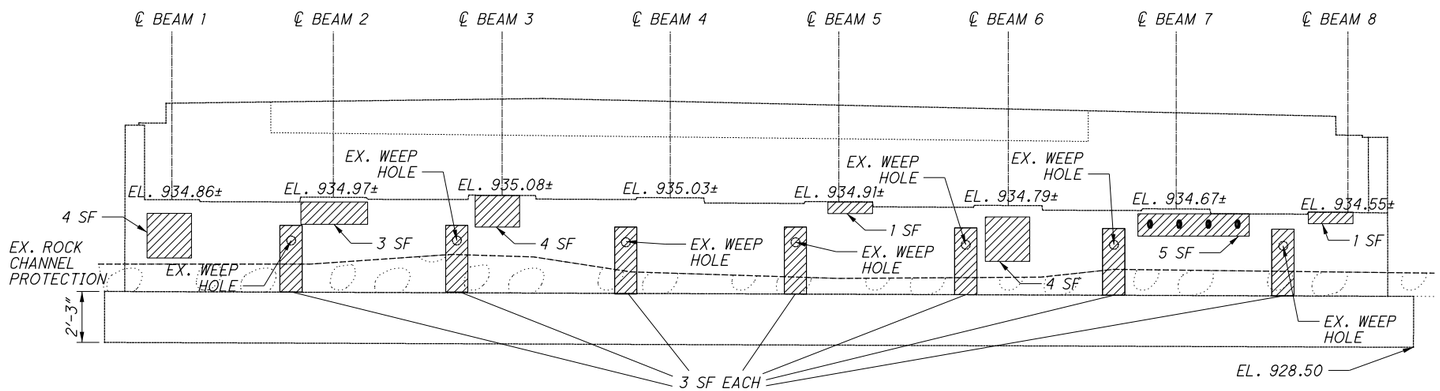

FORWARD ABUTMENT ELEVATION

	ITEM 844 PATCHING
REAR ABUTMENT	28 SQ. FT.
FWD. ABUTMENT	43 SQ. FT.
TOTAL =	71 SQ. FT.

	# OF ANODES	
REAR ABUTMENT	12	
FWD. ABUTMENT	4	
TOTAL =	16	FOR REFERENCE ONLY

LEGEND & NOTES

ITEM 844 - CONCRETE PATCHING WITH GALVANIC ANODE PROTECTION, AS PER PLAN

(ANODES TO BE PLACED IN PATCHES GREATER THAN OR EQUAL TO 5 SQ. FT. PER SS844)

1. SEAL CONCRETE SURFACES WITH EPOXY URETHANE 6" BEYOND REPAIR LIMITS.
2. CLEAN THE BACKWALLS, ABUTMENT SEATS, AND BEAM ENDS. SEE SHEET 6/53.

DESIGN AGENCY
ODOT DISTRICT 7
ENGINEERING

REVIEWED MRB DATE 6/27/2019
STRUCTURE FILE NUMBER 0602078

DRAWN PJB
REVISED

DESIGNED PJB
CHECKED LCG

ABUTMENT REPAIR DETAIL
BRIDGE NO.: AUG-075-0498R
N.B. I.R. 75 OVER U.S. 33

D07-BH-FY20(C)
PID No. 105419

3 / 5

19
53

I:\ProjectData\D07\105419_BH-FY20_C\Design\Structures\AUG075_0498R\Sheets\075_0498R_SR001.dgn Sheet 7/19/2019 9:16:40 AM dgrillo

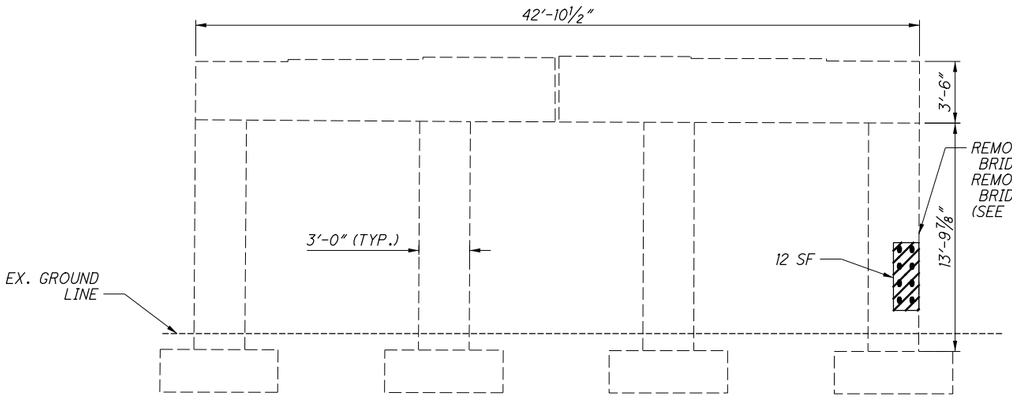

AUG-075-0498L, PIER 1
(NORTH FACE)

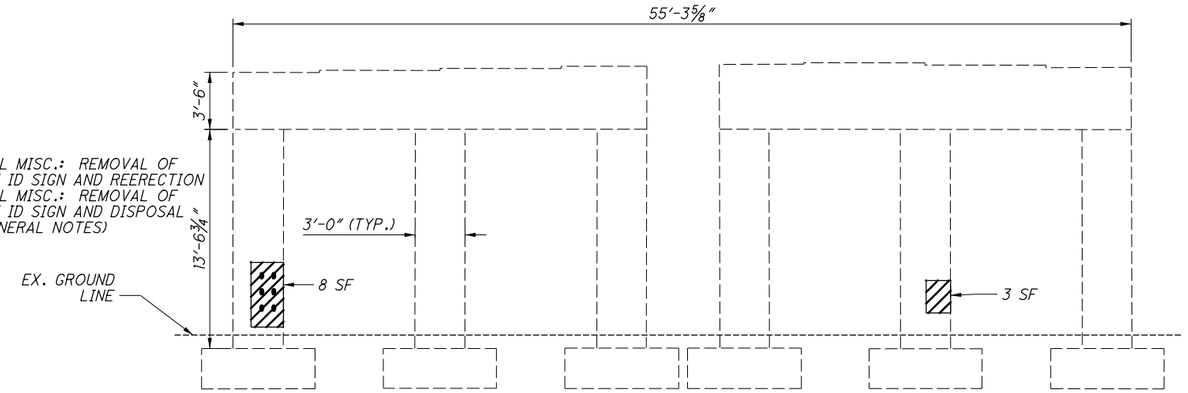

AUG-075-0498R, PIER 1
(NORTH FACE)

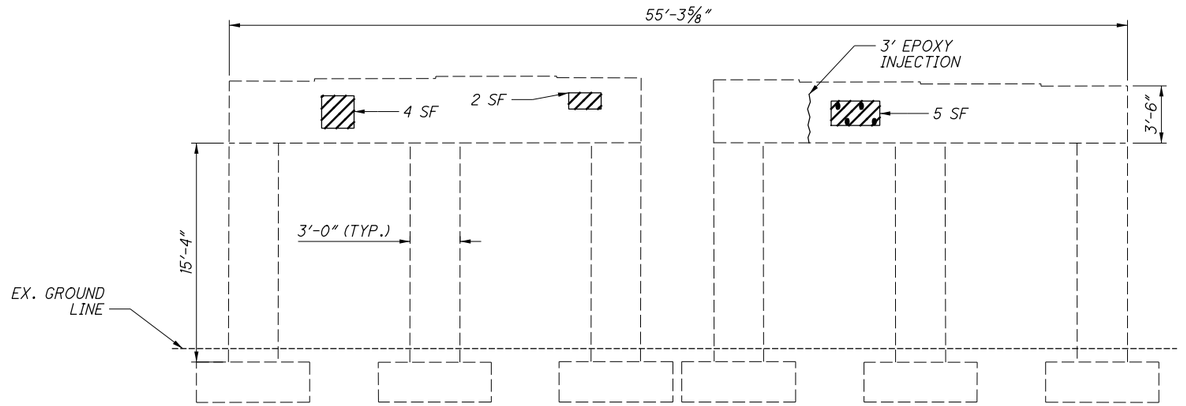

AUG-075-0498R, PIER 2
(SOUTH FACE)

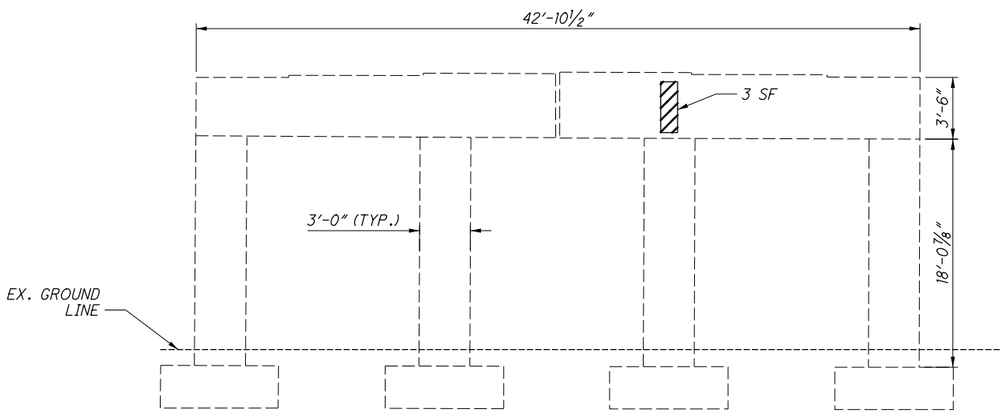

AUG-075-0498L, PIER 3
(NORTH FACE)

	ITEM 512E10600 CONCRETE REPAIR BY EPOXY INJECTION
AUG-75-0498R PIER 2	3 FT.
TOTAL =	3 FT.

	ITEM 844 PATCHING
AUG-75-0498L PIER 1	12 SQ. FT.
AUG-75-0498L PIER 3	3 SQ. FT.
AUG-75-0498R PIER 1	11 SQ. FT.
AUG-75-0498R PIER 2	11 SQ. FT.
TOTAL =	37 SQ. FT.

	# OF ANODES	
AUG-75-0498L	8	
AUG-75-0498R	10	
TOTAL =	18	FOR REFERENCE ONLY

LEGEND & NOTES

ITEM 844 - CONCRETE PATCHING WITH GALVANIC ANODE PROTECTION, AS PER PLAN

(ANODES TO BE PLACED IN PATCHES GREATER THAN OR EQUAL TO 5 SQ. FT. PER SS844)

1. ONLY PIERS SHOWN REQUIRE WORK
2. SEAL CONCRETE SURFACES WITH EPOXY URETHANE 6" BEYOND REPAIR LIMITS.

DESIGN AGENCY
ODOT DISTRICT 7
ENGINEERING

DESIGNED PJB | DRAWN PJB | REVIEWED MRB | DATE 6/27/2019
CHECKED LCG | REVISED | STRUCTURE FILE NUMBER 0602043/0602078

PIER REPAIR DETAIL
BRIDGE NO.: AUG-075-0498L/R
N.B./S.B. I.R. 75 OVER U.S. 33

D07-BH-FY20(C)
PID No. 105419

4 / 5

20 / 53

I:\ProjectData\D07\105419_BH-FY20_C\Design\Structures\AUG075_0498L\Sheets\075_0498L_SI001.dgn Sheet 7/19/2019 9:16:41 AM dgrillio

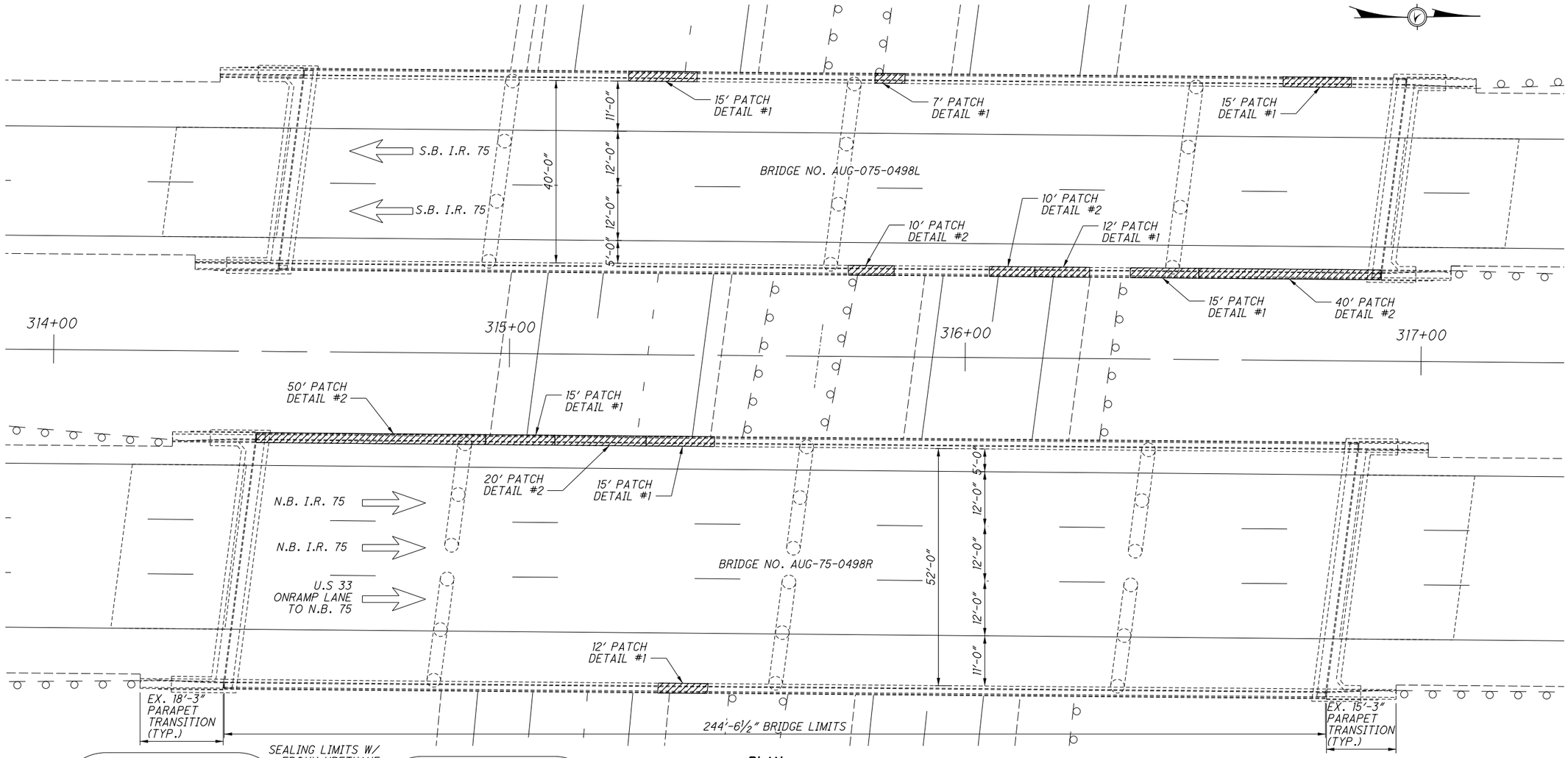

PLAN

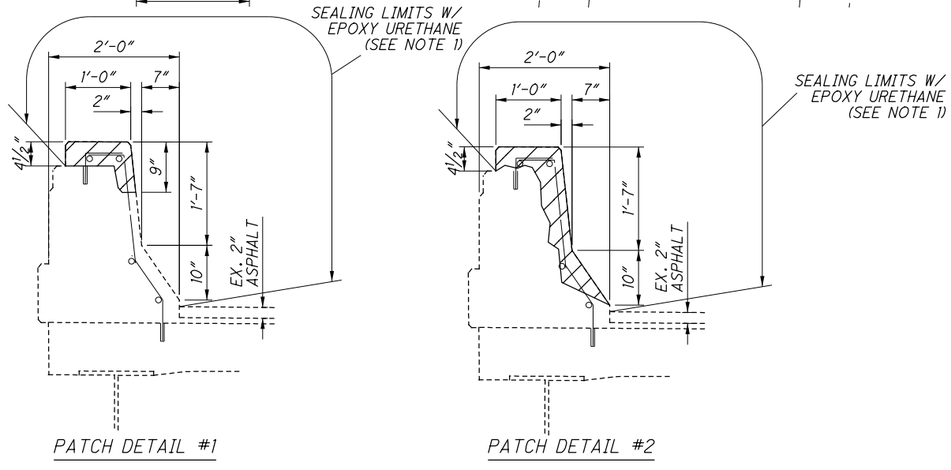

PATCH DETAIL #1

PATCH DETAIL #2

	ITEM 519 PATCHING
AUG-75-0498L	329 SQ. FT.
AUG-75-0498R	327 SQ. FT.
TOTAL =	656 SQ. FT.

LEGEND & NOTES

ITEM 519 - PATCHING CONCRETE STRUCTURE AS PER PLAN

1. SEAL ENTIRE LENGTH OF PARAPETS ON BOTH BRIDGES AND ALL PARAPET TRANSITIONS AS DETAILED. PARAPET TRANSITION SEALING LIMITS TO BE SIMILAR TO PARAPET SEALING LIMITS DETAILED.

DESIGN AGENCY
ODOT DISTRICT 7
ENGINEERING

DESIGNED	DRAWN	REVIEWED	DATE
PJB	PJB	MRB	6/27/2019
CHECKED	REVISED	STRUCTURE FILE NUMBER	
LCG		0602043/0602078	

PARAPET REPAIR DETAIL
BRIDGE NO.: AUG-075-0498L/R
N.B./S.B. I.R. 75 OVER U.S. 33

D07-BH-FY20(C)
PID No. 105419

5 / 5

21
53

I:\ProjectData\D07\105419_BH-FY20_C\Design\Structures\AUG075_0498L\Sheets\075_0498L_SA001.dgn Sheet 7/19/2019 9:16:43 AM dgrillo

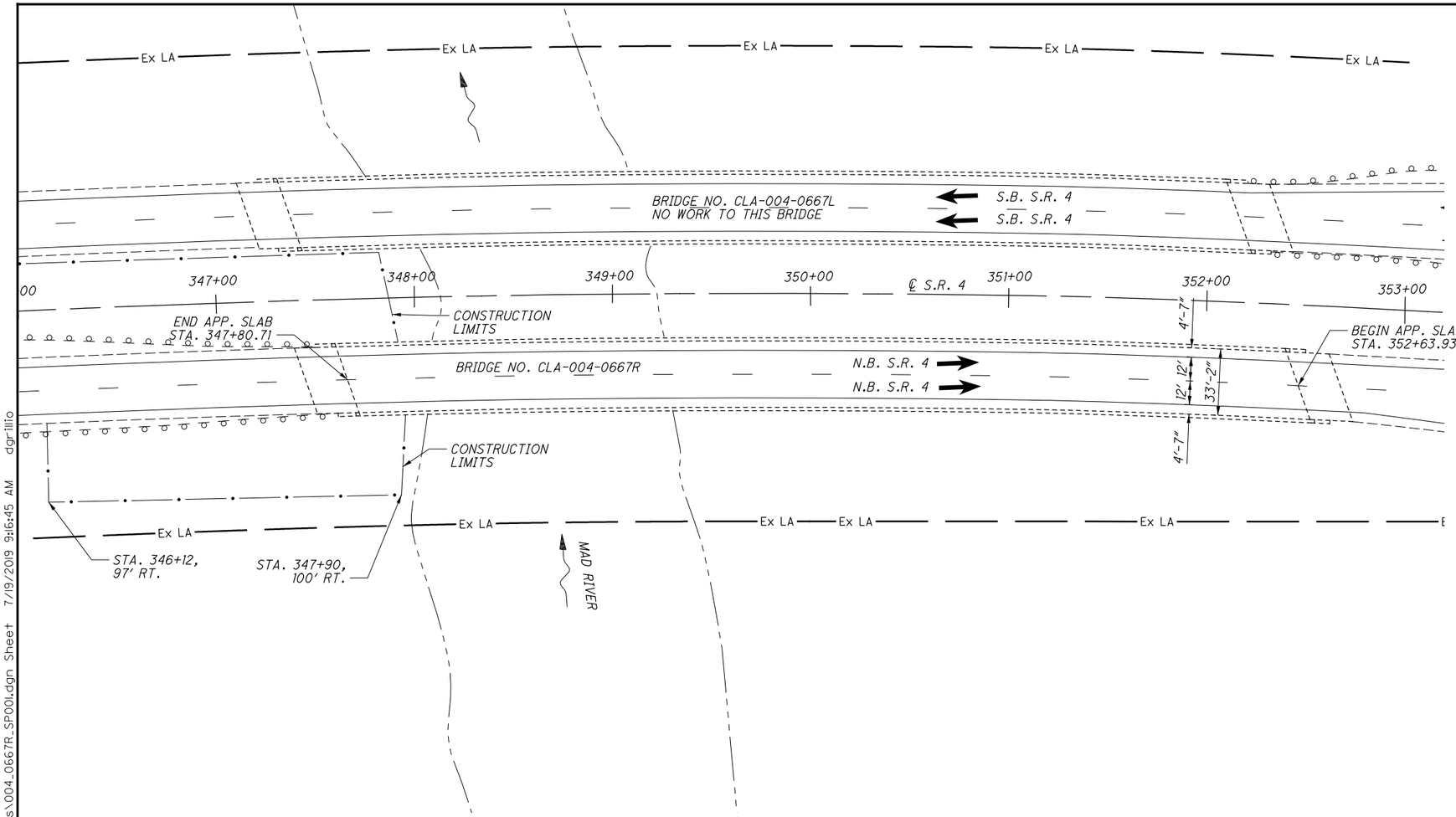

PLAN

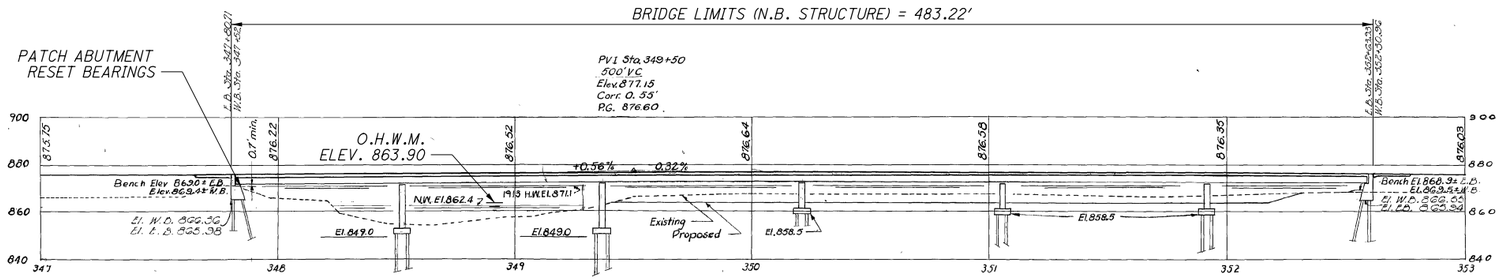

PROFILE ON ℄ OF N.B. STRUCTURE

LEGEND & NOTES

TRAFFIC DATA N.B. S.R. 4:
2016 ADT = 12020 2016 ADTT = 862

TRAFFIC DATA TAKEN FROM TRANSPORTATION DATA MANAGEMENT SYSTEM

O.H.W.M. = ORDINARY HIGH WATER MARK

REHABILITATION PLAN DISCLAIMER

DIMENSIONS AND DATA ARE TAKEN FROM EXISTING PLANS AND FIELD MEASUREMENT. ALL DIMENSIONS AND ELEVATIONS ARE TO BE CONSIDERED +/- AND FOR REFERENCE ONLY.

HYDRAULIC DATA

DRAINAGE AREA = 497 SQ. MILES
Q (50) = 26100 CFS
Q (100) = 29600 CFS
HYDRAULIC DATA TAKEN FROM STREAMSTATS

EXISTING STRUCTURE

TYPE: CONTINUOUS STEEL BEAM WITH REINFORCED CONCRETE DECK & SUBSTRUCTURE
SPANS: 68'-0", 4 @ 85'-0", 68'-0" C/C BRGS.
ROADWAY: 33'-2" TOE/TOE PARAPET
LOADING: CF=2000
SKEW: 20° RIGHT FORWARD
APPROACH SLABS: 20'-0" LONG
ALIGNMENT: 0°-40' CURVE
SLOPE: 1/4"/FT
STRUCTURAL FILE NUMBER: 1200062
DATE BUILT: 1957 REHABILITATED: 1983, 1997, 2015, 2016
WEARING SURFACE: 2¾" MICROSILICA CONCRETE
COORDINATES: LATITUDE N 39° 53' 32"
LONGITUDE W 83° 56' 17"
DISPOSITION: TO BE REHABILITATED

PROPOSED WORK

1. PATCH ABUTMENT, REAR ABUTMENT BEAM SEATS, AND BREASTWALL.
2. REMOVE AND RESET REAR ABUTMENT BEARINGS.

WORK LISTED IS NOT INCLUSIVE. CONTRACTOR WILL SEQUENCE WORK AS NEEDED.

DESIGN AGENCY
ODOT DISTRICT 7
ENGINEERING

DATE
REVIEWED MRB 6/27/2019
STRUCTURE FILE NUMBER 1200062

DRAWN DHG REVISED
DESIGNED DHG CHECKED LCG

CLARK COUNTY
STA. 347+80.71
STA. 352+63.93

SITE PLAN
BRIDGE NO.: CLA-004-0667R
N.B. S.R. 4 OVER MAD RIVER

D07-BH-FY20(C)
PID No. 105419

1 / 2

22
53

i:\ProjectData\D07\105419_BH-FY20_C\Design\Structures\CLA004_0667R\Sheets\004_0667R_SP001.dgn Sheet+ 7/9/2019 9:16:45 AM dgrillio

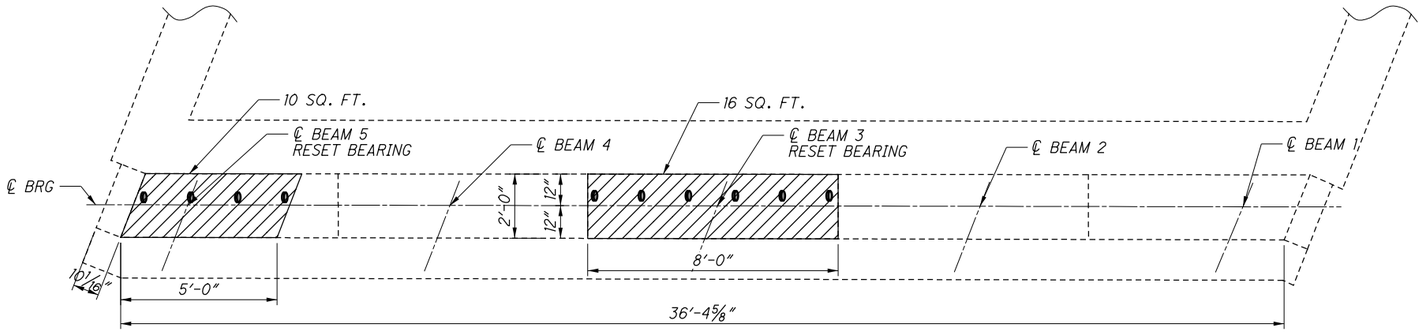

REAR ABUTMENT PLAN

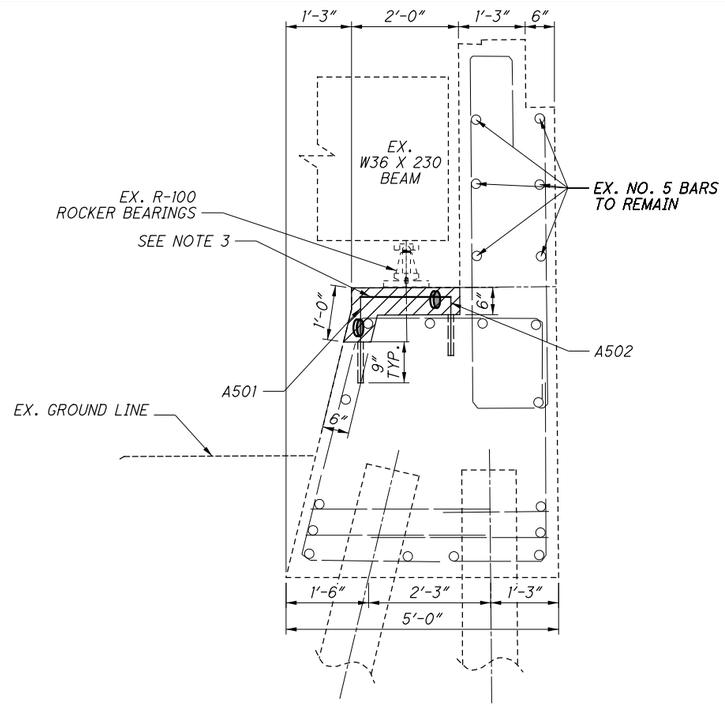

SECTION A-A

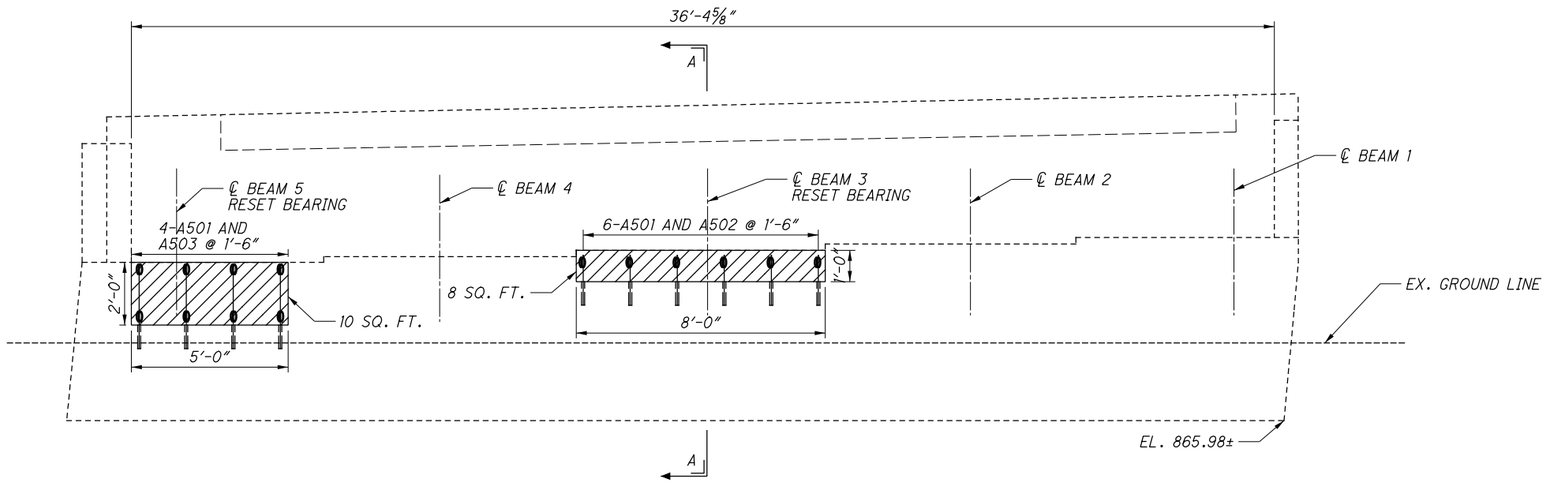

REAR ABUTMENT ELEVATION

MARK	NUMBER TOTAL	LENGTH	WEIGHT	TYPE	DIMENSIONS A	DIMENSIONS B	DOWEL HOLES
CLA-004-0667R REAR ABUTMENT							
A501	10	2'-7"	27	1	1'-1"	1'-8"	10
A502	6	3'-1"	19	1	1'-7"	1'-8"	6
A503	4	4'-1"	17	1	2'-7"	1'-8"	4
		TOTAL	63				20

	ITEM 844 PATCHING
REAR ABUTMENT	44 SQ. FT.
TOTAL =	44 SQ. FT.

	# OF ANODES	
REAR ABUTMENT	24	
TOTAL =	24	FOR REFERENCE ONLY

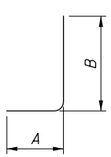

TYPE-1

NOTES & LEGEND

1. SEAL CONCRETE SURFACES WITH EPOXY URETHANE 6" BEYOND REPAIR LIMITS.
2. CONFIRM THICKNESS OF BEARING PRIOR TO PLACING CONCRETE UNDER BEAMS.
3. REINFORCEMENT ADDED FOR CRACK CONTROL IS TO BE PLACED WITH A COVER OF 2" TO THE BEAM SEAT SURFACE.

ITEM 844 - CONCRETE PATCHING WITH GALVANIC ANODE PROTECTION, AS PER PLAN

(ANODES TO BE PLACED IN PATCHES GREATER THAN OR EQUAL TO 5 SQ. FT. PER SS844)

DESIGN AGENCY
ODOT DISTRICT 7
ENGINEERING

REVIEWED MRB DATE 6/27/2019
STRUCTURE FILE NUMBER 1200062

DRAWN PJB
REVISED

DESIGNED PJB
CHECKED LCG

REAR ABUTMENT REPAIR DETAIL
BRIDGE NO.: CLA-004-0667R
N.B. S.R. 4 OVER MAD RIVER

D07-BH-FY20(C)
PID No. 105419

2 / 2

23
53

I:\ProjectData\D07\105419_BH-FY20_C\Design\Structures\CLA004_0667R\Sheets\004_0667R_SR001.dgn Sheet 7/19/2019 9:17:01 AM dgrillio

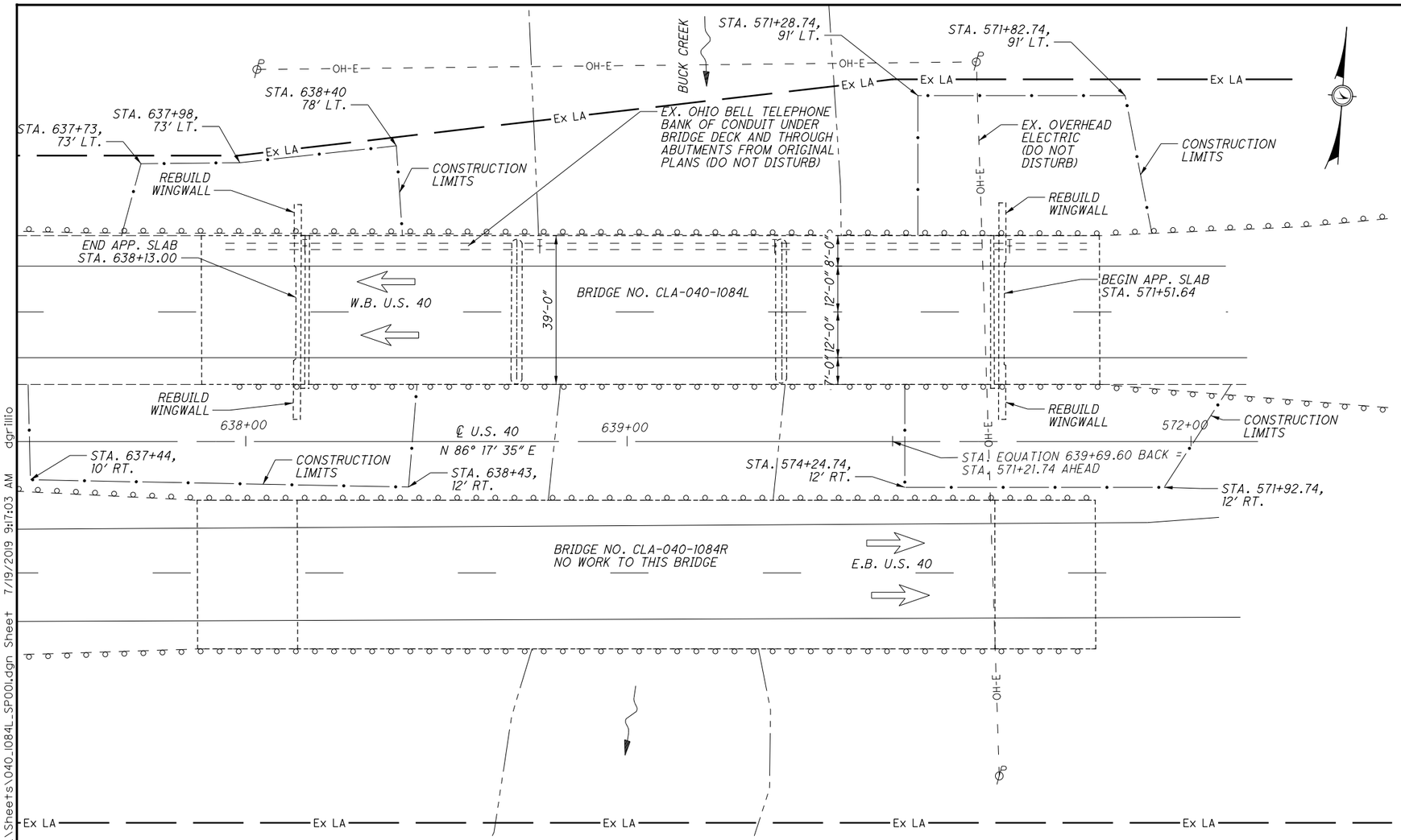

PLAN

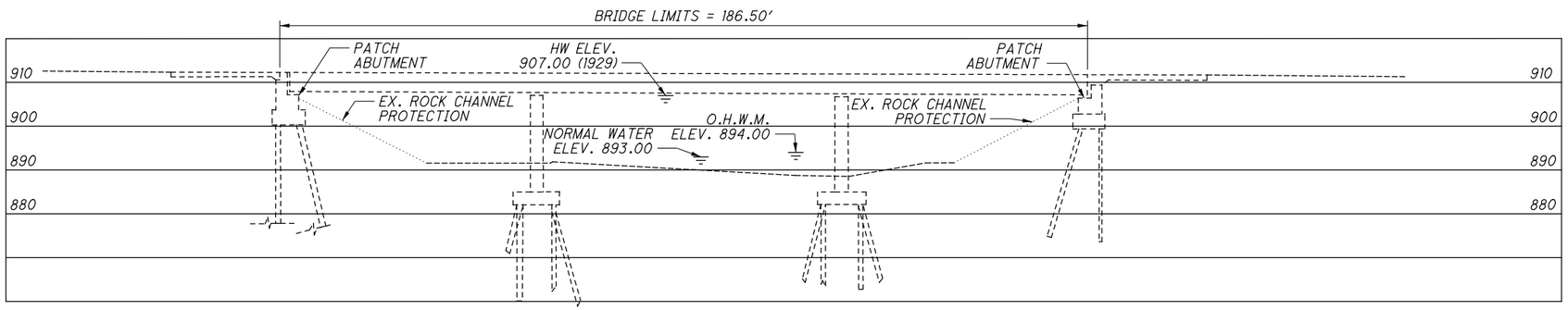

PROFILE ON ℄ WESTBOUND LANES

TAKEN FROM ORIGINAL PLANS

LEGEND & NOTES

DESIGN TRAFFIC W.B. U.S. 40:

2016 ADT = 10609 2016 ADTT = 408

DESIGN TRAFFIC DATA TAKEN FROM TRANSPORTATION DATA MANAGEMENT SYSTEM

O.H.W.M. = ORDINARY HIGH WATER MARK

REHABILITATION PLAN DISCLAIMER

DIMENSIONS AND DATA ARE TAKEN FROM EXISTING PLANS AND FIELD MEASUREMENT. ALL DIMENSIONS AND ELEVATIONS ARE TO BE CONSIDERED +/- AND FOR REFERENCE ONLY.

HYDRAULIC DATA

DRAINAGE AREA = 141 SQ. MILES
Q (50) = 9860 CFS
Q (100) = 11200 CFS
HYDRAULIC DATA TAKEN FROM STREAMSTATS

EXISTING STRUCTURE

TYPE: CONTINUOUS STEEL BEAMS WITH REINFORCED CONCRETE DECK AND SUBSTRUCTURE
SPANS: 56'-0", 70'-0"', 56'-0" C/C BRGS.
ROADWAY: 39'-0" F/F GUARDRAIL
LOADING: CF=2000 (57)
SKEW: NONE
APPROACH SLABS: AS-1-81M (25' LONG)
ALIGNMENT: TANGENT
CROWN: 3/16"/FT
STRUCTURAL FILE NUMBER: 1200992
DATE BUILT: 1968 REHABILITATED: 1996
WEARING SURFACE: 2" MICROSILICA CONCRETE
COORDINATES: LATITUDE N 39° 55' 34"
LONGITUDE W 83° 50' 52"
DISPOSITION: TO BE REHABILITATED

PROPOSED WORK

1. *PATCH ABUTMENTS.*
2. *REBUILD WINGWALLS.*

WORK LISTED IS NOT INCLUSIVE. CONTRACTOR WILL SEQUENCE WORK AS NEEDED.

DESIGN AGENCY
ODOT DISTRICT 7
ENGINEERING

DATE
REVIEWED MRB 6/27/2019
STRUCTURE FILE NUMBER 1200992

DRAWN DHG
REVISED

DESIGNED DHG
CHECKED LCG

CLARK COUNTY
STA. 638+13.00
STA. 571+51.64

SITE PLAN
BRIDGE NO.: CLA-040-1084L
W.B. U.S. 40 OVER BUCK CREEK

D07-BH-FY20(C)
PID No. 105419

1 / 2

24
53

I:\ProjectData\D07\105419_BH-FY20_CV\Design\Structures\CLA040_1084L\Sheets\040_1084L_SP001.dgn Sheet 7/19/2019 9:17:03 AM dgrillio

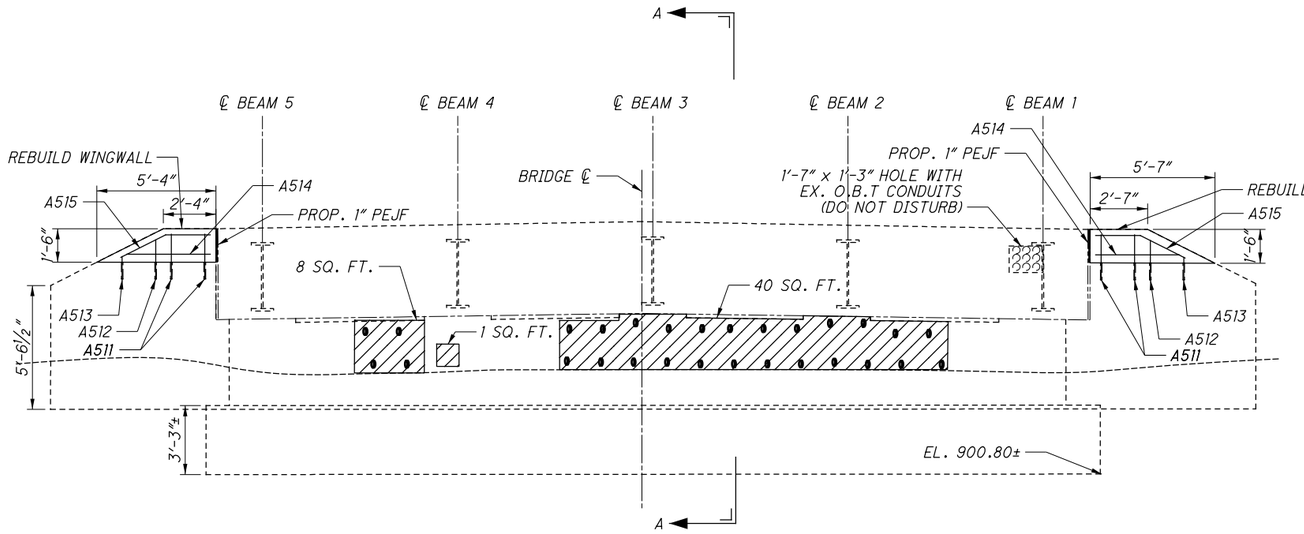

REAR ABUTMENT ELEVATION

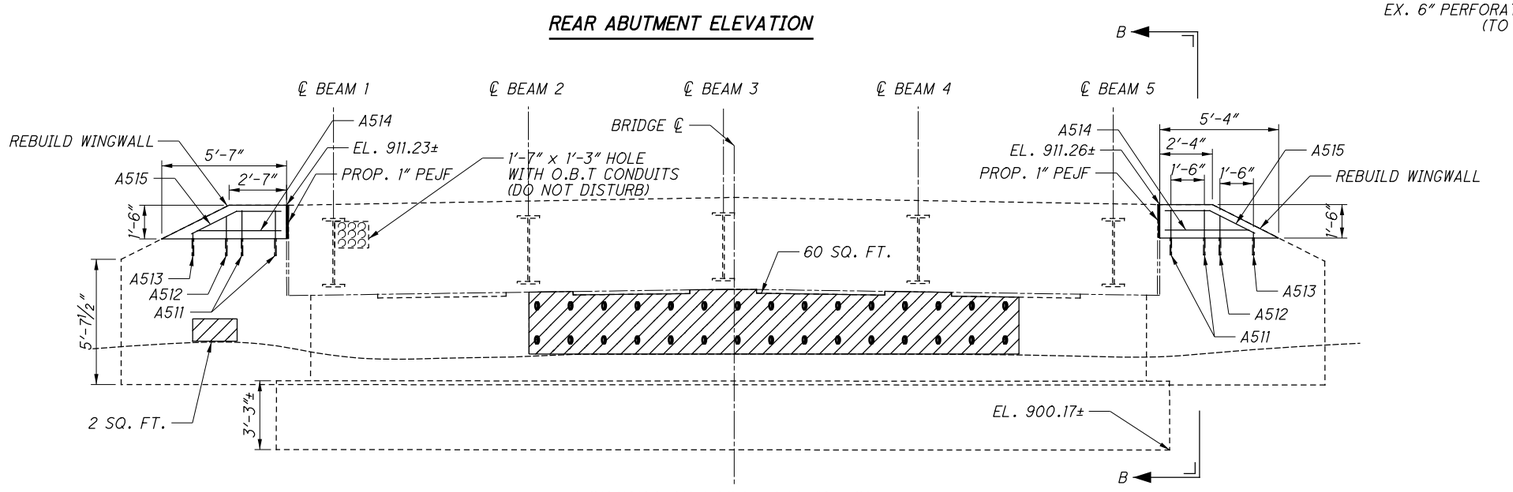

FORWARD ABUTMENT ELEVATION

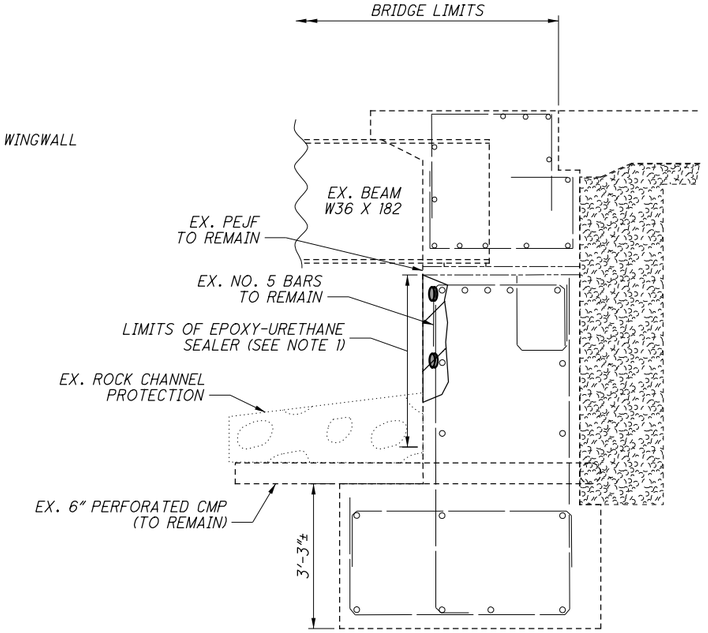

SECTION A-A

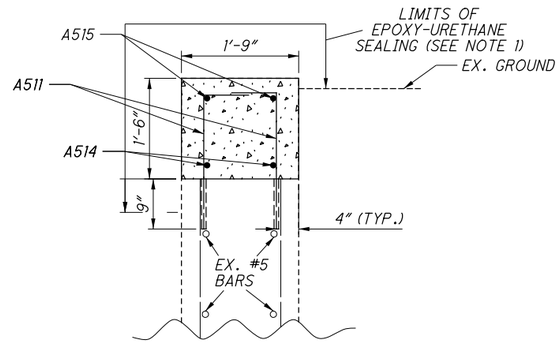

SECTION B-B

MARK	NUMBER TOTAL	LENGTH	WEIGHT	TYPE	DIMENSIONS A	B	C	DOWEL HOLES
CLA-40-1084L WINGWALL REBUILD								
A511	16	2'-6"	42	1	0'-8"	2'-0"		16
A512	8	2'-3"	19	1	0'-8"	1'-9"		8
A513	8	1'-6"	13	1	0'-8"	1'-0"		8
A514	8	3'-9"	31	STR				
A515	8	4'-3"	35	19	2'-0"	2'-0"	1'-0"	
		TOTAL	140					32

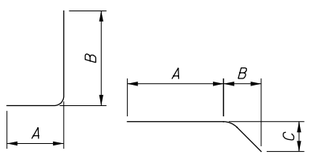

TYPE-1 TYPE-19

	ITEM 844 PATCHING
REAR ABUTMENT	49 SQ. FT.
FWD. ABUTMENT	62 SQ. FT.
TOTAL =	111 SQ. FT.

	# OF ANODES	
REAR ABUTMENT	28	
FWD. ABUTMENT	30	
TOTAL =	58	FOR REFERENCE ONLY

NOTES & LEGEND

1. SEAL CONCRETE SURFACES WITH EPOXY URETHANE 6" BEYOND REPAIR LIMITS UNLESS DETAILED OTHERWISE.

ITEM 844 - CONCRETE PATCHING WITH GALVANIC ANODE PROTECTION, AS PER PLAN

(ANODES TO BE PLACED IN PATCHES GREATER THAN OR EQUAL TO 5 SQ. FT. PER SS844)

ITEM 202 - PORTIONS OF STRUCTURE REMOVED, OVER 20 FOOT SPAN, AS PER PLAN

ITEM 511 - CLASS QC1 CONCRETE, SUBSTRUCTURE

DESIGN AGENCY
ODOT DISTRICT 7
ENGINEERING

DESIGNED	DRAWN	REVIEWED	DATE
PJB	PJB	MRB	6/27/2019
CHECKED	REVISED	STRUCTURE FILE NUMBER	
LCG		1200992	

ABUTMENT REPAIR DETAIL
BRIDGE NO.: CLA-040-1084L
W.B. U.S. 40 OVER BUCK CREEK

D07-BH-FY20(C)
PID No. 105419

2 / 2

25
53

i:\Project Data\D07\105419_BH-FY20_C\Design\Structures\CLA040_1084L\Sheets\040_1084L_SR001.dgn Sheet 7/19/2019 9:17:04 AM dgrillio

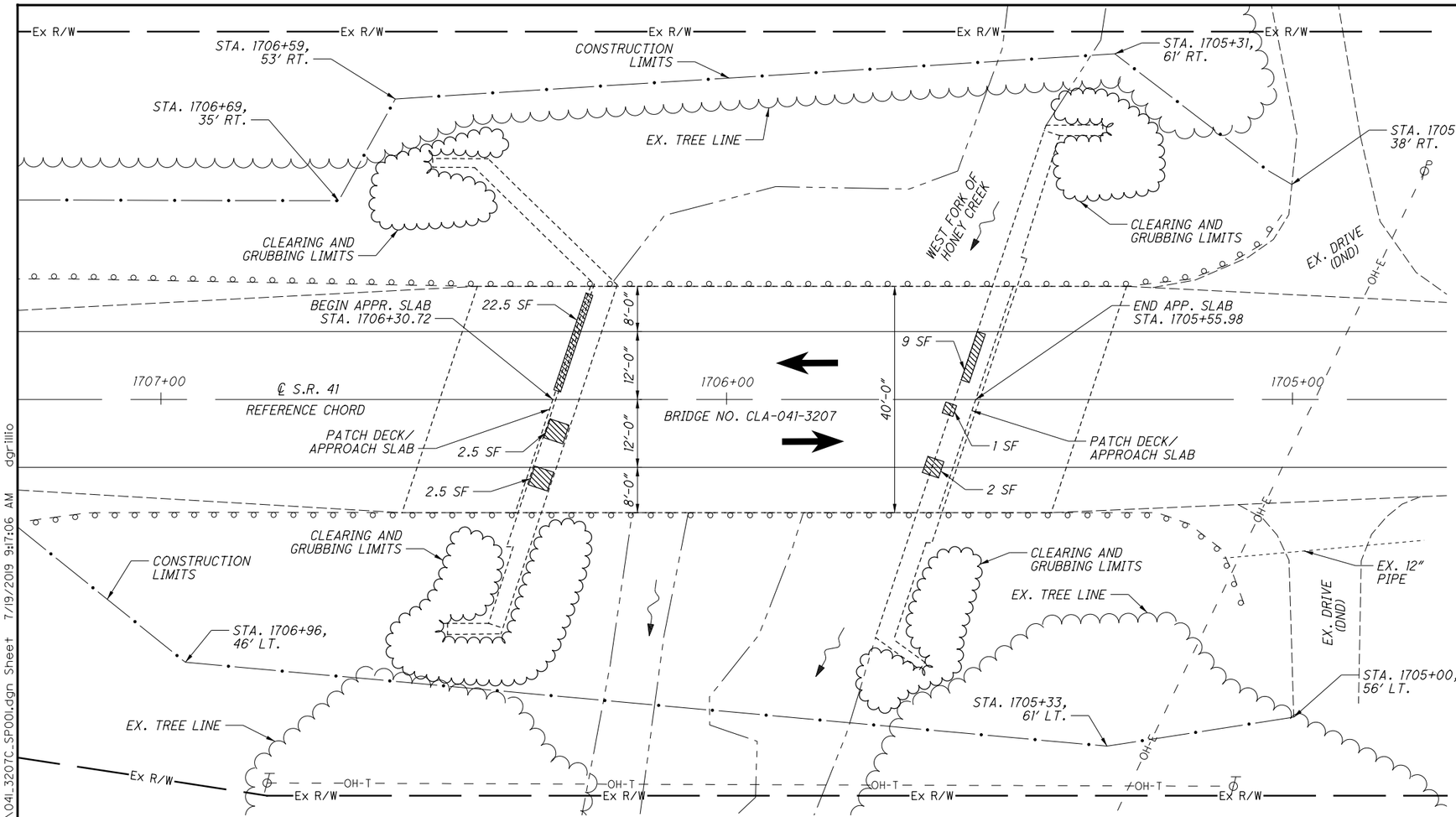

PLAN

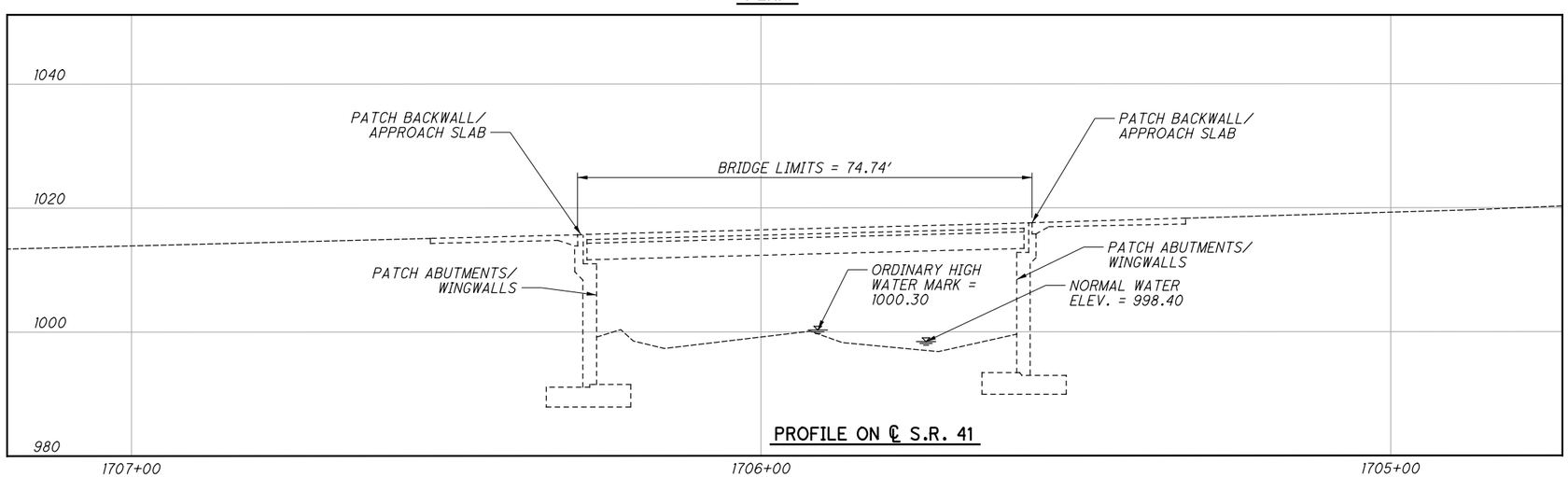

PROFILE ON ℄ S.R. 41

	ITEM 519 TYPE B PATCHING
BACKWALL/APPR. SLAB	5 SQ. YD.
TOTAL =	5 SQ. YD.

LEGEND & NOTES

ITEM 519 - PATCHING CONCRETE BRIDGE DECK - TYPE B (SEE PROPOSAL NOTE 512)

CLEARING AND GRUBBING LIMITS

DND = DO NOT DISTURB

DESIGN TRAFFIC U.S. 41:
2017 ADT = 1485 2017 ADTT = 64
TRAFFIC DATA TAKEN FROM TRANSPORTATION DATA MANAGEMENT SYSTEM

REHABILITATION PLAN DISCLAIMER

DIMENSIONS AND DATA ARE TAKEN FROM EXISTING PLANS AND FIELD MEASUREMENT. ALL DIMENSIONS AND ELEVATIONS ARE TO BE CONSIDERED +/- AND FOR REFERENCE ONLY.

HYDRAULIC DATA

DRAINAGE AREA = 16.9 SQ. MILES
Q (10) = 1790 CFS
Q (100) = 3050 CFS
HYDRAULIC DATA TAKEN FROM STREAMSTATS

EXISTING STRUCTURE

TYPE: COMPOSITE STEEL BEAM (A588) WITH REINFORCED CONCRETE DECK ON CONCRETE SUBSTRUCTURE
SPANS: 70'-0" C/C BRGS.
ROADWAY: 40'-0" F/F GUARDRAIL
LOADING: HS20-44 CASE II AND THE ALT. MILITARY LOADING
SKEW: 18° 26' 00" LEFT FORWARD
APPROACH SLABS: AS-1-81 (20' LONG)
ALIGNMENT: PARALLEL TO REFERENCE CHORD
CROWN: 3/16"/FT
STRUCTURAL FILE NUMBER: 1202014
DATE BUILT: 1944 REHABILITATED: 1988
WEARING SURFACE: 1" MONOLITHIC CONCRETE
COORDINATES: LATITUDE N 40° 00' 05.70"
LONGITUDE W 84° 01' 08"
DISPOSITION: TO BE REHABILITATED

PROPOSED WORK

1. CLEARING AND GRUBBING AROUND ABUTMENTS.
2. PATCH ABUTMENTS AND WINGWALLS USING ANODES.
3. PATCH TOP OF BACKWALLS/APPROACH SLAB.

WORK LISTED IS NOT INCLUSIVE. CONTRACTOR WILL SEQUENCE WORK AS NEEDED.

DESIGN AGENCY
ODOT DISTRICT 7
ENGINEERING

REVIEWED MRB DATE 6/27/2019
STRUCTURE FILE NUMBER 1202014
DRAWN DHG
REVISED
DESIGNED DHG
CHECKED LCG

CLARK COUNTY
STA. 1706+30.72
STA. 1705+55.98

SITE PLAN
BRIDGE NO.: CLA-041-3207
S.R. 41 OVER WEST FORK OF HONEY CREEK

D07-BH-FY20(C)
PID No. 105419

1 / 2

26
53

I:\ProjectData\D07\105419_BH-FY20_C\Design\Structures\CLA041_3207C\Sheets\041_3207C_SP001.dgn Sheet 7/19/2019 9:17:06 AM dgrillio

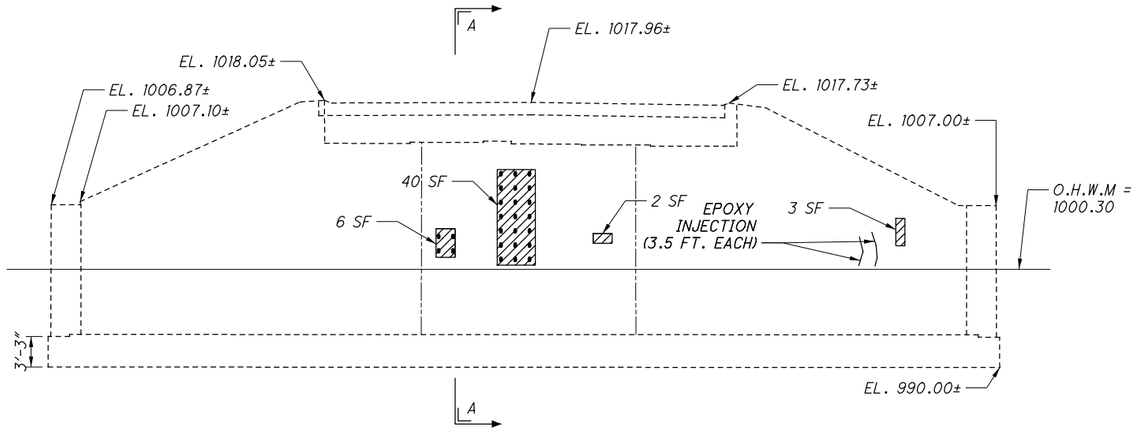

REAR ABUTMENT ELEVATION

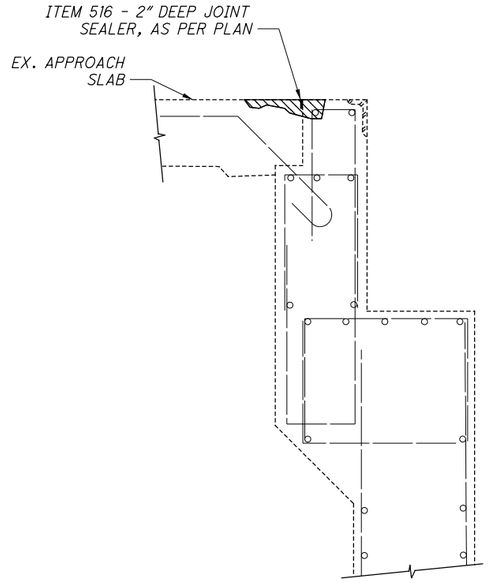

EXISTING ABUTMENT SECTION A-A

REAR ABUTMENT SHOWN
FORWARD ABUTMENT SIMLIAR

	ITEM 512 EPOXY INJECTION
REAR ABUTMENT	7 FT.
TOTAL =	7 FT.

	ITEM 844 PATCHING
REAR ABUTMENT	51 SQ. FT.
FWD. ABUTMENT	51 SQ. FT.
TOTAL =	102 SQ. FT.

	# OF ANODES	
REAR ABUTMENT	25	
FWD. ABUTMENT	35	
TOTAL =	60	FOR REFERENCE ONLY

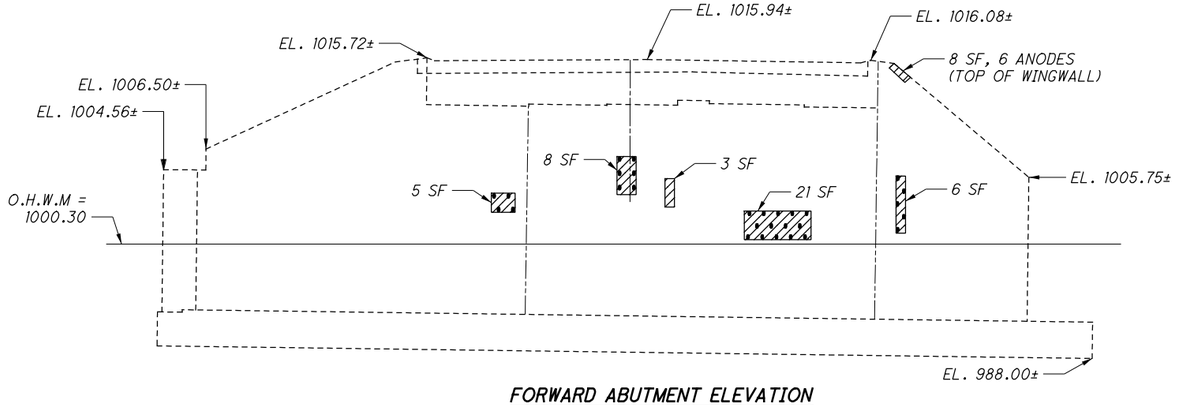

FORWARD ABUTMENT ELEVATION

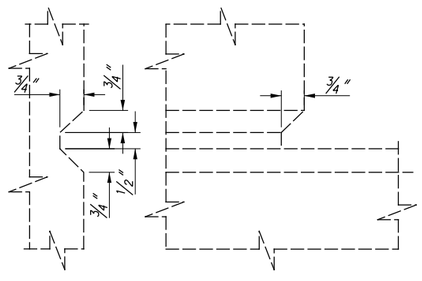

RUSTICATION DETAIL

LEGEND & NOTES

ITEM 844 - CONCRETE PATCHING WITH GALVANIC ANODE PROTECTION, AS PER PLAN

(ANODES TO BE PLACED IN PATCHES GREATER THAN OR EQUAL TO 5 SQ. FT. PER SS844)

ITEM 519 - PATCHING CONCRETE BRIDGE DECK - TYPE B

1. NO PATCHING TO BE PERFORMED BELOW OHWM ELEV. = 1000.30. ON EITHER ABUTMENT.
2. ALL PATCHES SHALL MATCH THE EXISTING RUSTICATION WHERE APPLICABLE.
3. SEAL CONCRETE SURFACES WITH EPOXY URETHANE 6" BEYOND REPAIR LIMITS.

DESIGN AGENCY
ODOT DISTRICT 7
ENGINEERING

DESIGNED	DRAWN	REVIEWED	DATE
PJB	PJB	MRB	6/27/2019
CHECKED	REVISED	STRUCTURE FILE NUMBER	
LCG		1202014	

ABUTMENT AND DECK REPAIR DETAIL
BRIDGE NO.: CLA-041-3207
S.R. 41 OVER WEST FORK OF HONEY CREEK

D07-BH-FY20(C)
PID No. 105419

2 / 2

27
53

i:\ProjectData\D07\105419_BH-FY20_C\Design\Structures\CLA041_3207C\Sheets\041_3207C_SD001.dgn Sheet+ 7/19/2019 9:17:08 AM dgrillio

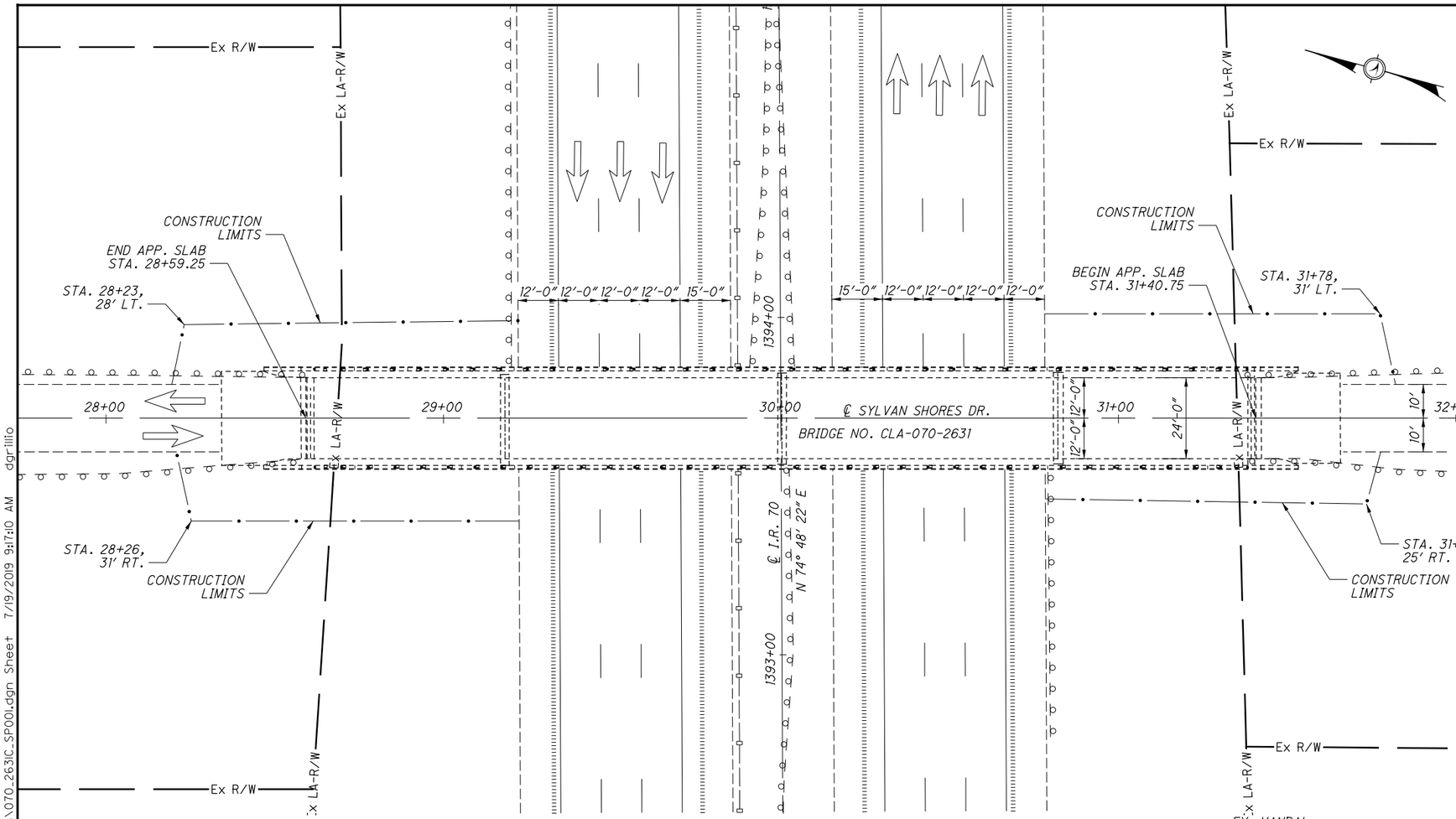

PLAN

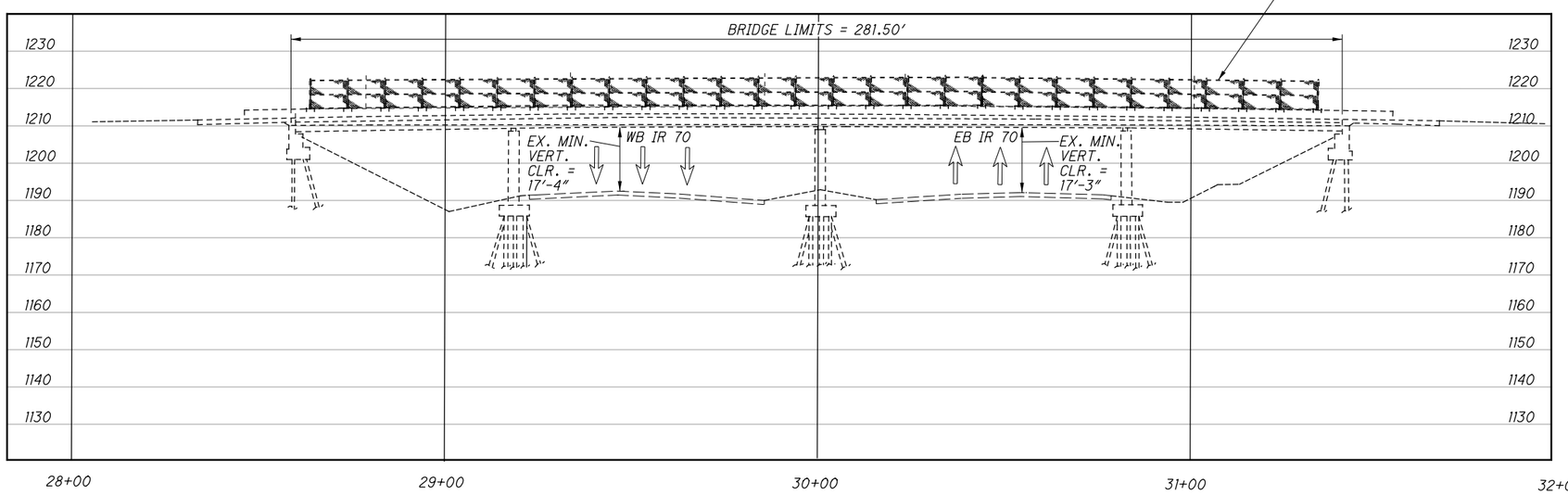

PROFILE ON ℄ SYLVAN SHORES DR.

NOTES

TRAFFIC DATA SYLVAN SHORES DR.:
2017 ADT = 284 2016 ADTT = DATA NOT PROVIDED

TRAFFIC DATA I.R. 70:
2017 ADT = 53187 2016 ADTT = 18274

TRAFFIC DATA TAKEN FROM TRANSPORTATION DATA MANAGEMENT SYSTEM

REHABILITATION PLAN DISCLAIMER

DIMENSIONS AND DATA ARE TAKEN FROM EXISTING PLANS AND FIELD MEASUREMENT. ALL DIMENSIONS AND ELEVATIONS ARE TO BE CONSIDERED +/- AND FOR REFERENCE ONLY.

EXISTING STRUCTURE

TYPE: CONTINUOUS STEEL BEAMS WITH REINFORCED CONCRETE DECK AND SUBSTRUCTURE
SPANS: 57'-0", 81'-6", 81'-6", 57'-0" C/C BRGS.
ROADWAY: 24'-0" F/F CURB
LOADING: CF = 130(57)
SKEW: NONE
APPROACH SLABS: AS-1-67 (25' LONG MODIFIED)
ALIGNMENT: TANGENT
CROWN: 3/16"/FT
STRUCTURAL FILE NUMBER: 1205250
DATE BUILT: 1967 REHABILITATED: 2011
WEARING SURFACE: 2½"± MICROSILICA CONCRETE
COORDINATES: LATITUDE N 40° 33' 17"
LONGITUDE W 84° 10' 12"
DISPOSITION: TO BE REHABILITATED

PROPOSED WORK

1. PATCH CURB AND PARAPETS.

WORK LISTED IS NOT INCLUSIVE. CONTRACTOR WILL SEQUENCE WORK AS NEEDED.

DESIGN AGENCY
ODOT DISTRICT 7
ENGINEERING

DATE 6/27/2019
REVIEWED MRB
STRUCTURE FILE NUMBER 1205250

DRAWN DHG
REVISED

DESIGNED DHG
CHECKED LCG

CLARK COUNTY
STA. 28+59.25
STA. 31+40.75

SITE PLAN
BRIDGE NO.: CLA-070-2631
SYLVAN SHORES DR. OVER I.R. 70

D07-BH-FY20(C)
PID No. 105419

1 / 2

28
53

I:\ProjectData\D07\105419_BH-FY20_C\Design\Structures\CLA070_263IC\Sheets\070_263IC_SP001.dgn Sheet 7/19/2019 9:17:10 AM dgrillo

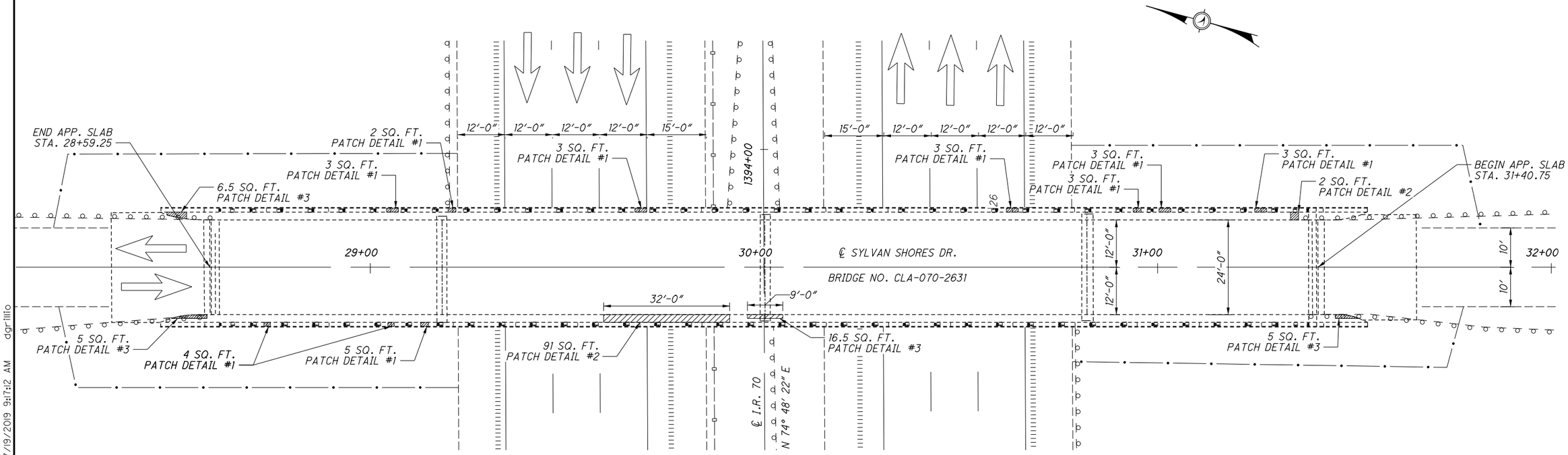

PLAN

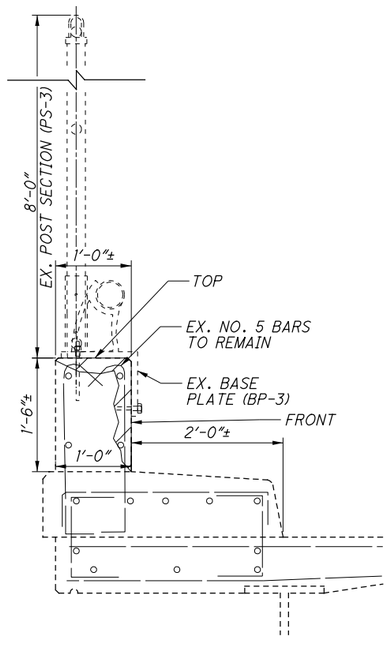

PATCH DETAIL #1

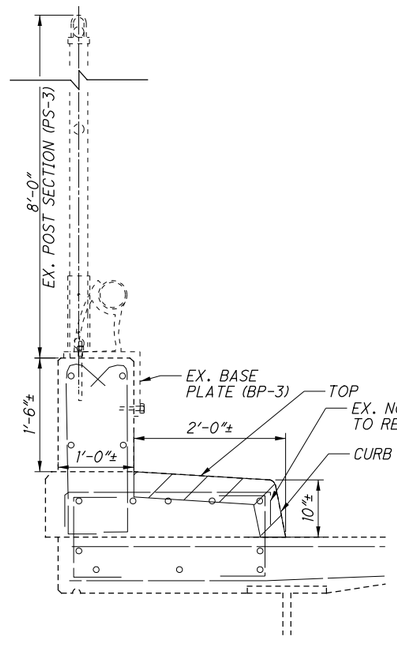

PATCH DETAIL #2

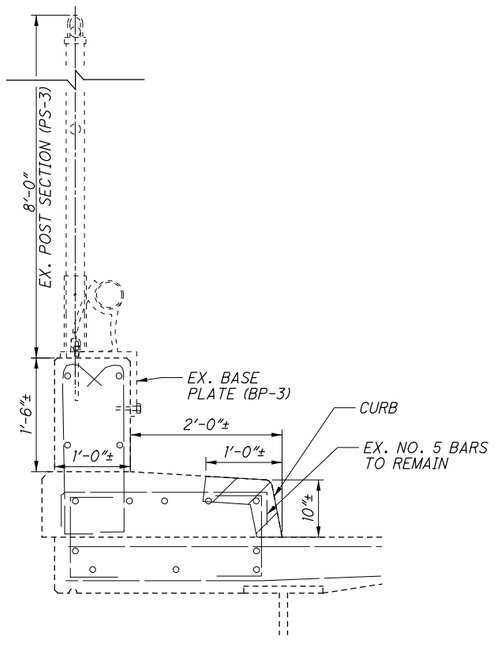

PATCH DETAIL #3

	ITEM 519 PATCHING
WEST PARAPET	130.5 SQ. FT.
EAST PARAPET	28.5 SQ. FT.
TOTAL =	159 SQ. FT.

LEGEND & NOTES

1. SEAL CONCRETE SURFACES WITH EPOXY URETHANE 6" BEYOND REPAIR LIMITS.
2. REMOVE AND RESET PORTIONS OF THE EXISTING VANDAL FENCING AND ALUMINUM RAIL AS NEEDED.

ITEM 519 - PATCHING CONCRETE STRUCTURE AS PER PLAN

DESIGN AGENCY
ODOT DISTRICT 7
ENGINEERING

DESIGNED	DRAWN	REVIEWED	DATE
PJB	PJB	MRB	6/27/2019
CHECKED	REVISED	STRUCTURE FILE NUMBER	
LCG		1205250	

PARAPET REPAIR DETAIL
BRIDGE NO.: CLA-070-2631
SYLVAN SHORES DR. OVER I.R. 70

D07-BH-FY20(C)
PID No. 105419

2 / 2

29
53

i:\ProjectData\D07\105419_BH-FY20_C\Design\Structures\CLA070_263IC\Sheets\070_263IC_S001.dgn 7/19/2019 9:17:12 AM dgrillio

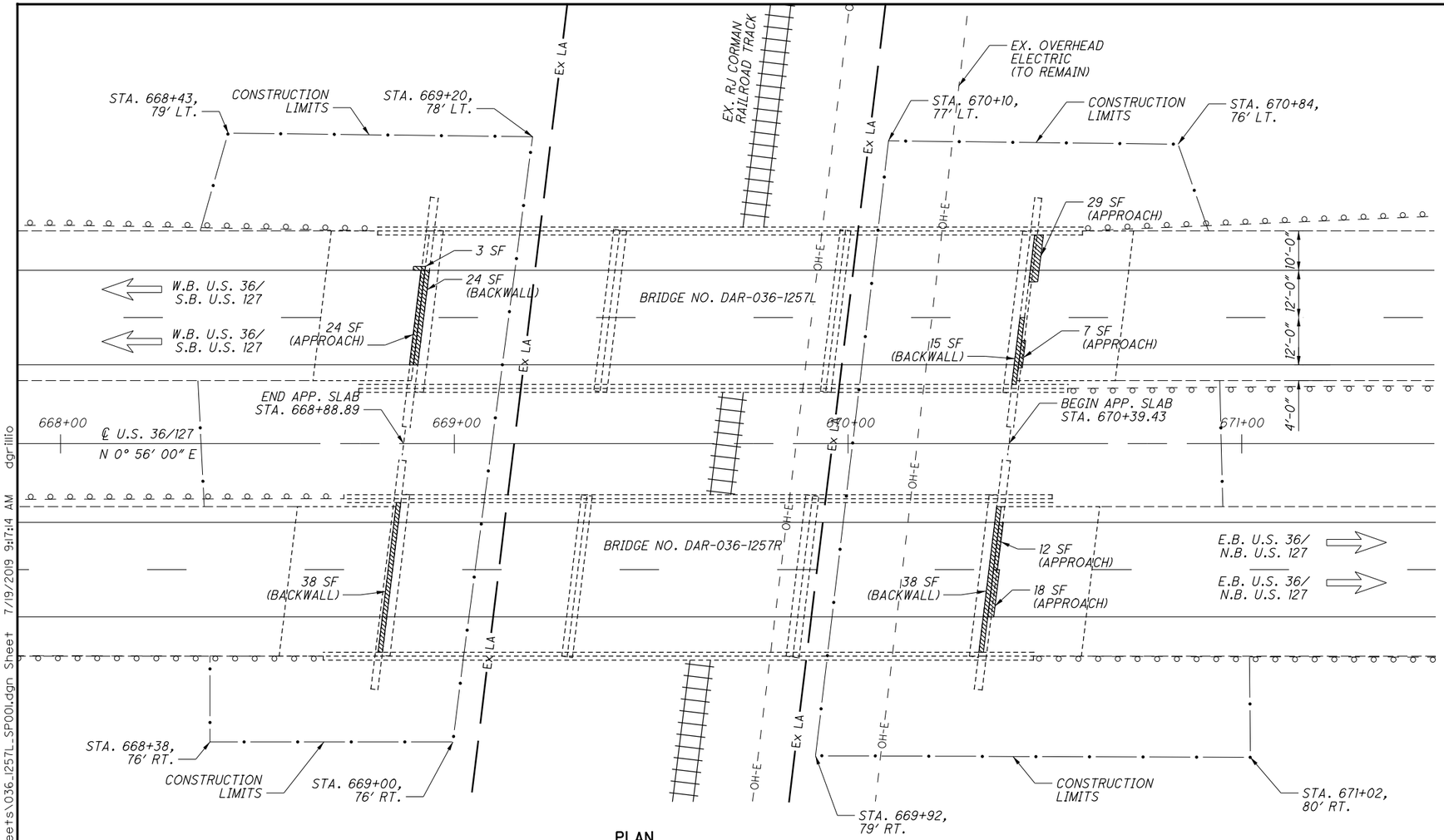

PLAN

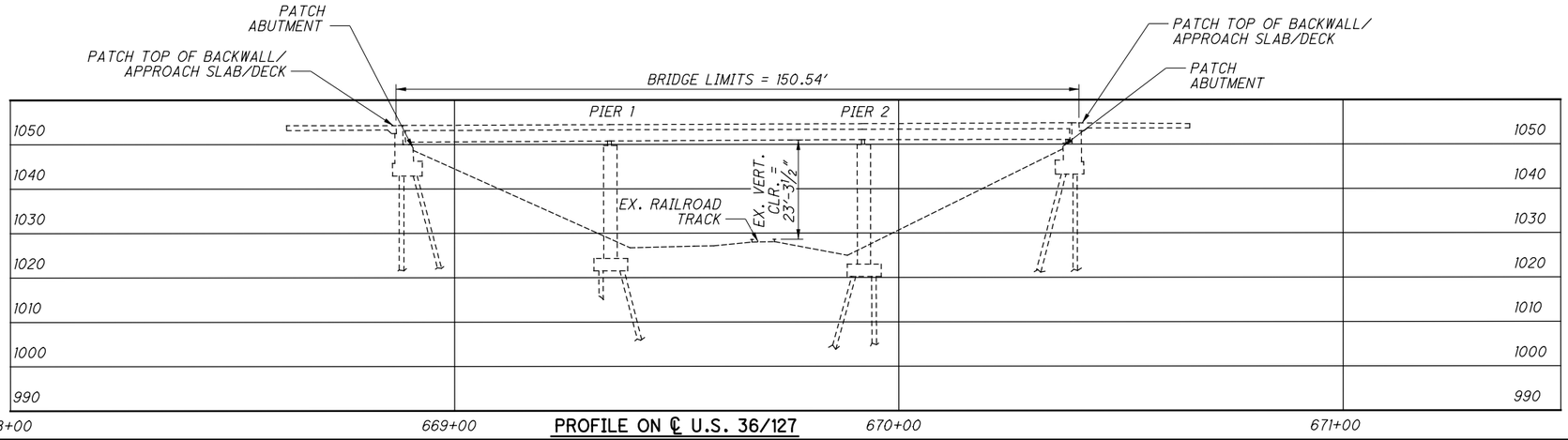

PROFILE ON ℄ U.S. 36/127

NOTES & LEGEND

TRAFFIC DATA: W.B. 36/S.B. U.S. 127
2017 ADT = 5433 2016 ADTT = 726

TRAFFIC DATA: E.B. 36/N.B. U.S. 127
2017 ADT = 5263 2016 ADTT = 805

TRAFFIC DATA TAKEN FROM TRANSPORTATION DATA MANAGEMENT SYSTEM

REHABILITATION PLAN DISCLAIMER

DIMENSIONS AND DATA ARE TAKEN FROM EXISTING PLANS AND FIELD MEASUREMENT. ALL DIMENSIONS AND ELEVATIONS ARE TO BE CONSIDERED +/- AND FOR REFERENCE ONLY.

EXISTING R/W LOCATION

THE EXISTING R/W LINES THAT PARALLEL U.S. 36/U.S. 127 ARE BEYOND THE SHOWN LIMITS OF THE PLAN VIEW.

ITEM 519 - PATCHING CONCRETE BRIDGE DECK - TYPE B (SEE PROPOSAL NOTE 512)

	ITEM 519 TYPE B PATCHING
DAR-36-1257L	12 SQ. YD.
DAR-36-1257R	12 SQ. YD.

EXISTING STRUCTURE

TYPE: CONTINUOUS STEEL BEAMS WITH REINFORCED CONCRETE DECK AND SUBSTRUCTURE
SPANS: 45'-0", 56'-0"', 45'-0" C/C BRGS.
ROADWAY: 40'-0" TOE/TOE PARAPET
LOADING: CF=2000 (57)
SKEW: 7° 00' 00" LEFT FORWARD
APPROACH SLABS: AS-1-54 (25' LONG)
ALIGNMENT: TANGENT
CROWN: 3/16"/FT
STRUCTURAL FILE NUMBER: 1902342/1902377
DATE BUILT: 1966 REHABILITATED: 2000
WEARING SURFACE: 1½"± MICROSILICA CONCRETE
COORDINATES: LATITUDE N 40° 05' 35"
LONGITUDE W 84° 36' 27"
DISPOSITION: TO BE REHABILITATED

PROPOSED WORK

1. PATCH ABUTMENTS.
2. PATCH TOP OF BACKWALLS/APPROACH SLAB.

WORK LISTED IS NOT INCLUSIVE. CONTRACTOR WILL SEQUENCE WORK AS NEEDED.

DESIGN AGENCY
ODOT DISTRICT 7
ENGINEERING

DESIGNED	DRAWN	REVIEWED	DATE
DHG	DHG	MRB	6/27/2019
CHECKED	REVISED	STRUCTURE FILE NUMBER	
LCG		1902342/1902377	

DARKE COUNTY
STA. 668+88.89
STA. 670+39.43

SITE PLAN
BRIDGE NO.: DAR-036-1257L/R
W.B./E.B. U.S. 36/S.B./N.B. U.S. 127 OVER RAILROAD

D07-BH-FY20(C)
PID No. 105419

1 / 2

30
53

i:\ProjectData\D07\105419_BH-FY20_C\Design\Structures\DAR036_1257L\Sheets\036_1257L_SP001.dgn Sheet 7/19/2019 9:17:14 AM dgrillio

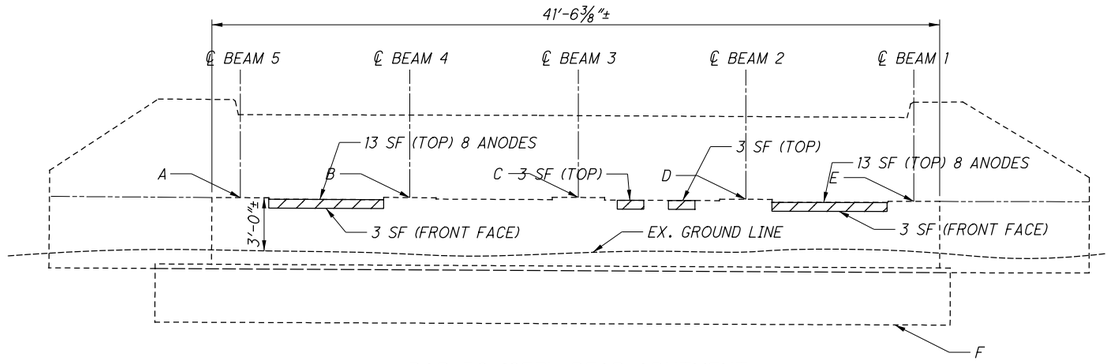

DAR-36-1257L REAR ABUTMENT

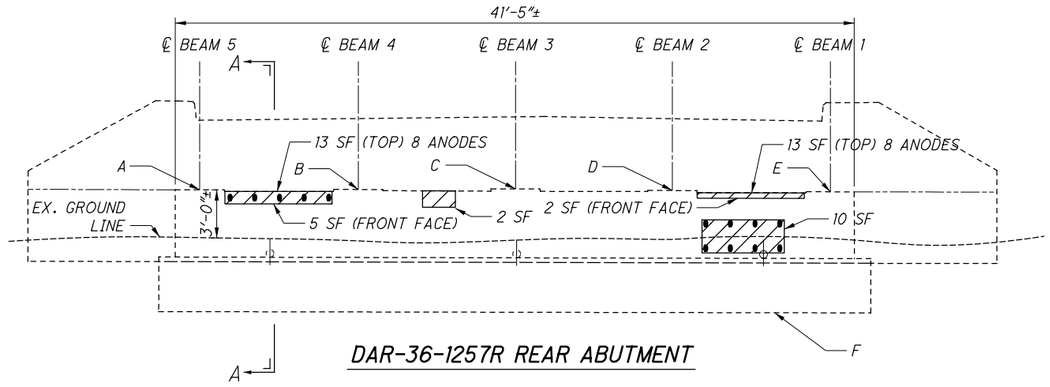

DAR-36-1257R REAR ABUTMENT

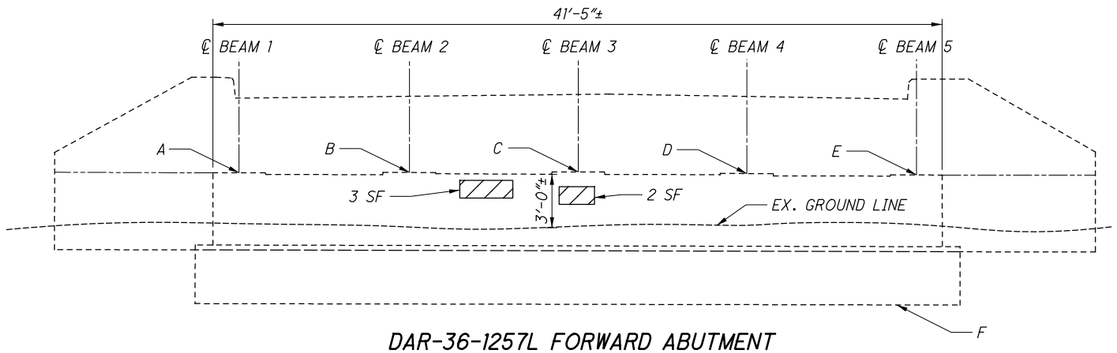

DAR-36-1257L FORWARD ABUTMENT

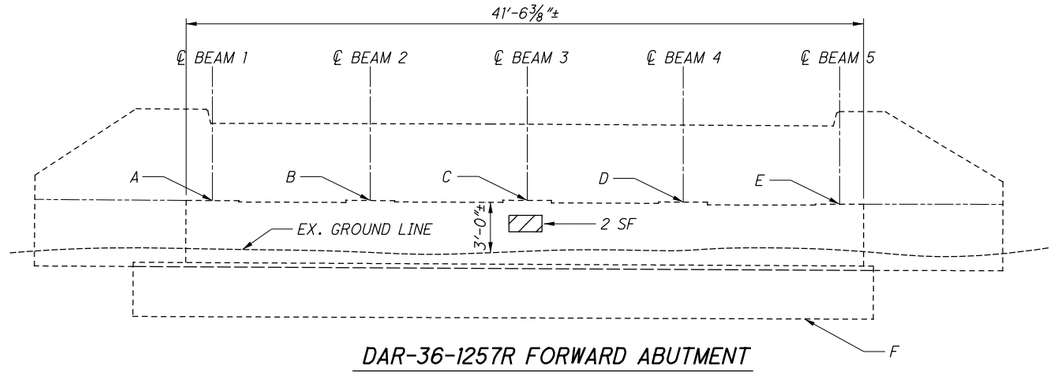

DAR-36-1257R FORWARD ABUTMENT

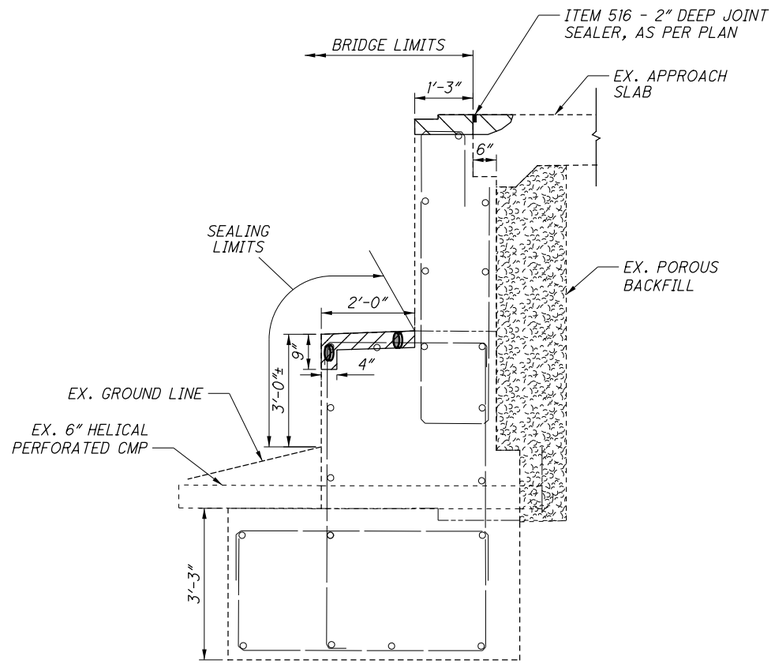

SECTION A-A

TYP. BOTH ABUTMENTS

	ELEVATIONS (FROM EXISTING PLANS ARE ±)					
LOCATION	A	B	C	D	E	F
DAR-36-1257L REAR ABUT.	1051.05	1051.20	1051.29	1051.15	1051.00	1043.90
DAR-36-1257L FWD. ABUT.	1051.07	1051.22	1051.38	1051.29	1051.15	1044.00
DAR-36-1257R REAR ABUT.	1050.96	1051.11	1051.26	1051.18	1051.04	1043.90
DAR-36-1257R FWD. ABUT.	1051.15	1051.30	1051.39	1051.25	1051.10	1044.00

	ITEM 844 PATCHING
DAR-36-1257L REAR ABUTMENT	38 SQ. FT.
DAR-36-1257L FWD. ABUTMENT	5 SQ. FT.
DAR-36-1257L TOTAL =	43 SQ. FT.
DAR-36-1257R REAR ABUTMENT	45 SQ. FT.
DAR-36-1257R FWD. ABUTMENT	2 SQ. FT.
DAR-36-1257R TOTAL =	47 SQ. FT.

	# OF ANODES	
DAR-36-1257L	16	
DAR-36-1257R	29	
TOTAL =	45	FOR REFERENCE ONLY

NOTES & LEGEND

ITEM 519 - PATCHING CONCRETE BRIDGE DECK - TYPE B

ITEM 844 - CONCRETE PATCHING WITH GALVANIC ANODE PROTECTION, AS PER PLAN

(ANODES TO BE PLACED IN PATCHES GREATER THAN OR EQUAL TO 5 SQ. FT. PER SS844)

1. SEAL ENTIRE BEAM SEAT AND BREAST WALL.

DESIGN AGENCY
ODOT DISTRICT 7
ENGINEERING

REVIEWED MRB DATE 6/27/2019
STRUCTURE FILE NUMBER 1902342/1902377

DRAWN PJB REVISED
DESIGNED PJB CHECKED LCG

ABUTMENT REPAIR DETAIL

BRIDGE NO.: DAR-036-1257L/R
W.B./E.B. U.S. 36/S.B./N.B. U.S. 127 OVER RAILROAD

D07-BH-FY20(C)
PID No. 105419

2 / 2

31
53

I:\Project Data\D07\105419_BH-FY20_C\Design\Structures\DAR036_1257L\Sheets\036_1257L_SR001.dgn Sheet 7/19/2019 9:17:16 AM dgrillio

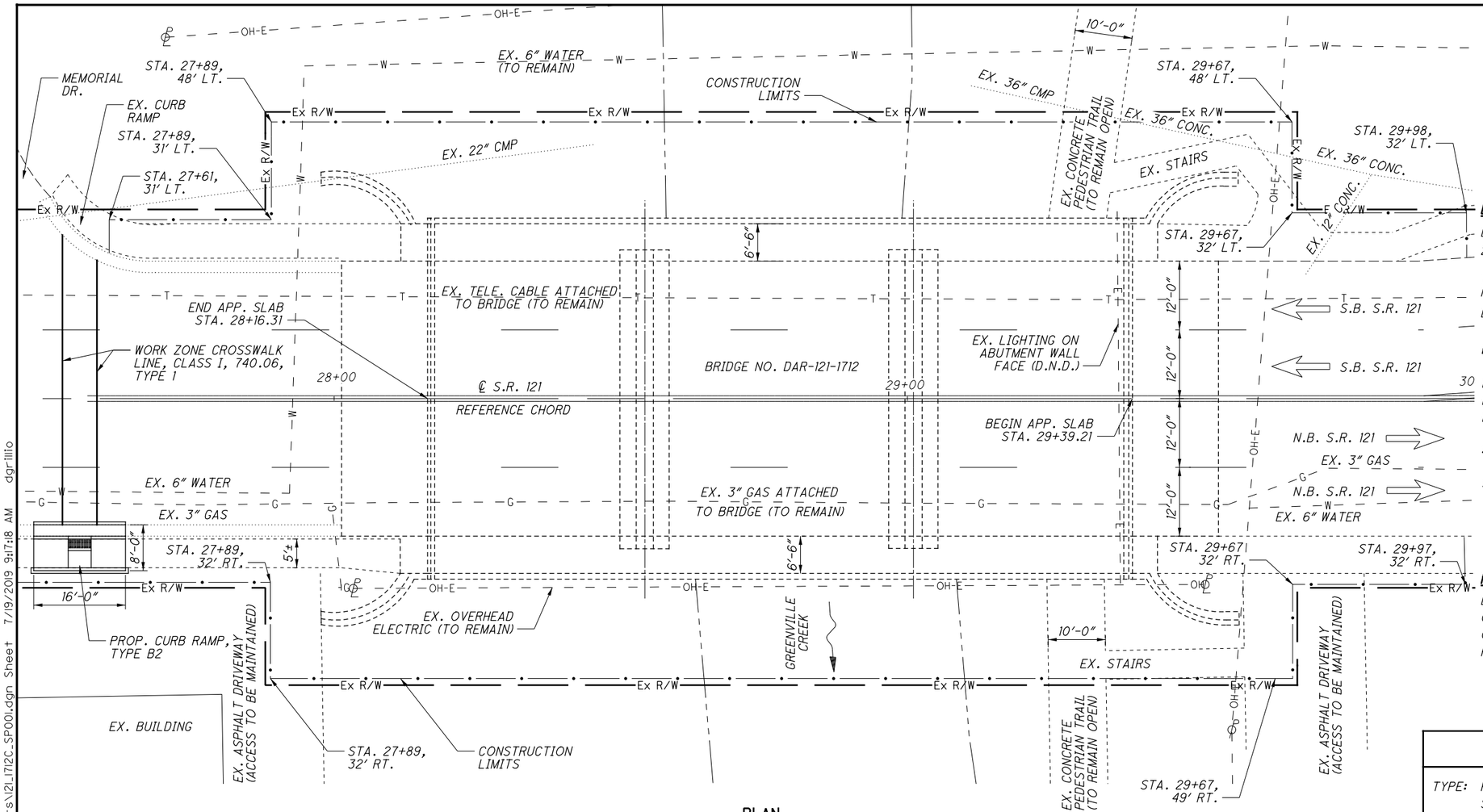

PLAN

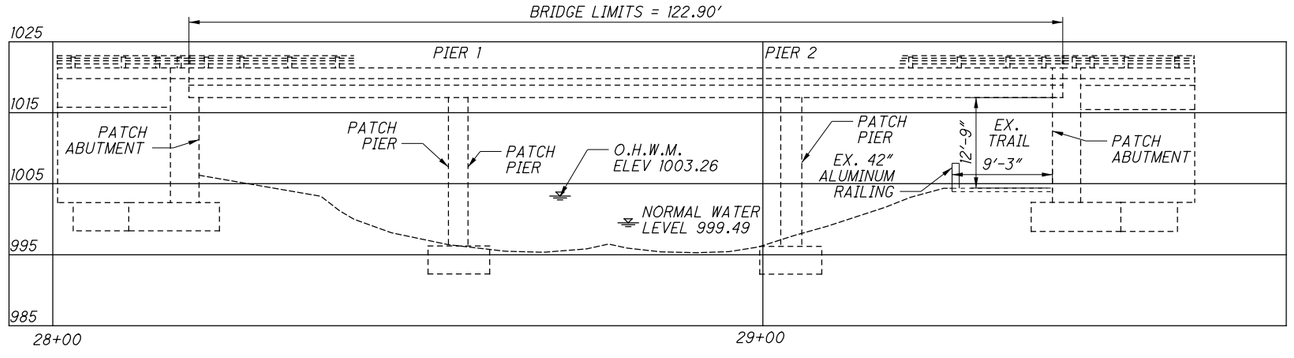

PROFILE ON ℄ S.R. 121

LEGEND & NOTES

DESIGN TRAFFIC S.R. 121:
2017 ADT = 11812 2016 ADTT = 153

TRAFFIC DATA TAKEN FROM TRANSPORTATION DATA MANAGEMENT SYSTEM

D.N.D. = DO NOT DISTURB

REHABILITATION PLAN DISCLAIMER

DIMENSIONS AND DATA ARE TAKEN FROM EXISTING PLANS AND FIELD MEASUREMENT. ALL DIMENSIONS AND ELEVATIONS ARE TO BE CONSIDERED +/- AND FOR REFERENCE ONLY.

SIDEWALK DETOUR

SEE MOT NOTES REGARDING SIDEWALK DETOUR.

HYDRAULIC DATA

DRAINAGE AREA = 138 SQ. MILES
Q (25) = 8480 CFS
Q (100) = 11000 CFS
HYDRAULIC DATA TAKEN FROM STREAMSTATS

EXISTING STRUCTURE

TYPE: PRESTRESSED CONCRETE BOX BEAMS ON SPREAD FOOTING SUBSTRUCTURE
SPANS: 36.70', 45.42', 36.62' C/C BRGS.
ROADWAY: 48'-0" F/F CURB
LOADING: HS-20-44 & ALTERNATE MILTARY LOADING
SKEW: NONE
APPROACH SLABS: AS-1-72 (15' LONG)
ALIGNMENT: 0°-16'-36" CURVE
CROWN: 3/16"/FT
STRUCTURAL FILE NUMBER: 1902016
DATE BUILT: 1933 REHABILITATED: 1978
WEARING SURFACE: 3" ASPHALT CONCRETE
COORDINATES: LATITUDE N 40° 06' 31"
LONGITUDE W 84° 37' 26"
DISPOSITION: TO BE REHABILITATED

PROPOSED WORK

1. PATCH SUBSTRUCTURE.
2. EPOXY INJECT SUBSTRUCTURE.

WORK LISTED IS NOT INCLUSIVE. CONTRACTOR WILL SEQUENCE WORK AS NEEDED.

DESIGN AGENCY
ODOT DISTRICT 7
ENGINEERING

DATE
REVIEWED MRB 6/27/2019
DRAWN DHG REVISED
DESIGNED DHG CHECKED LCG
STRUCTURE FILE NUMBER 1902016

DARKE COUNTY
STA. 28+16.31
STA. 29+39.21

SITE PLAN
BRIDGE NO.: DAR-121-1712
S.R. 121 OVER GREENVILLE CREEK

D07-BH-FY20(C)
PID No. 105419

1 / 3
32
53

I:\ProjectData\D07\105419_BH-FY20_C\Design\Structures\DAR121_1712C\Sheets\121_1712C_SP001.dgn Sheet 7/19/2019 9:17:18 AM dgrillio

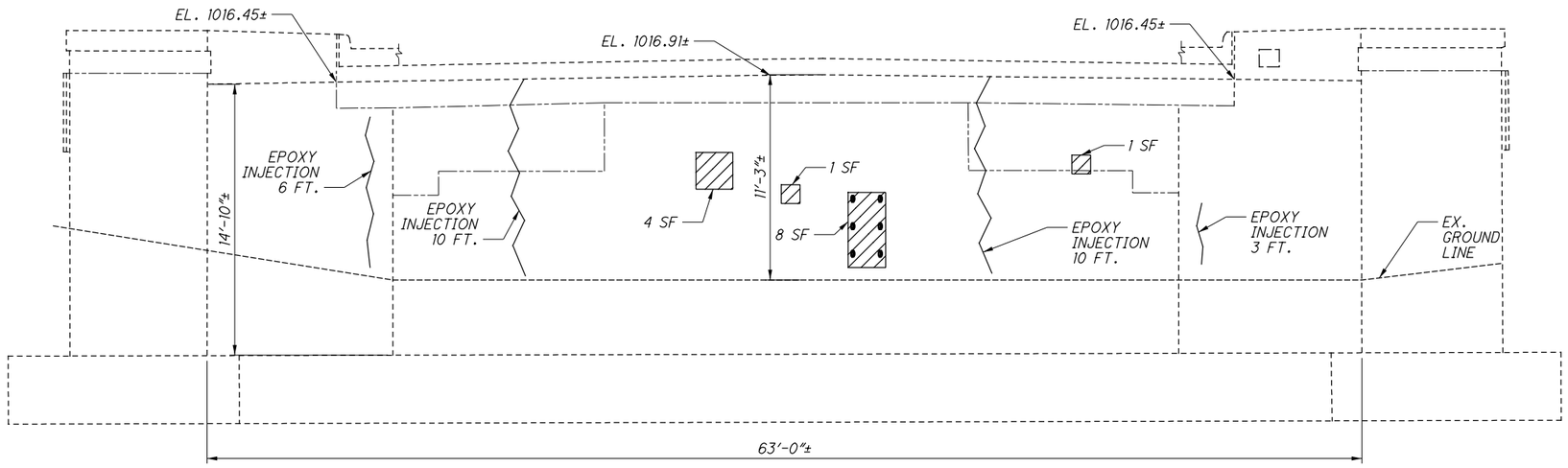

REAR ABUTMENT ELEVATION

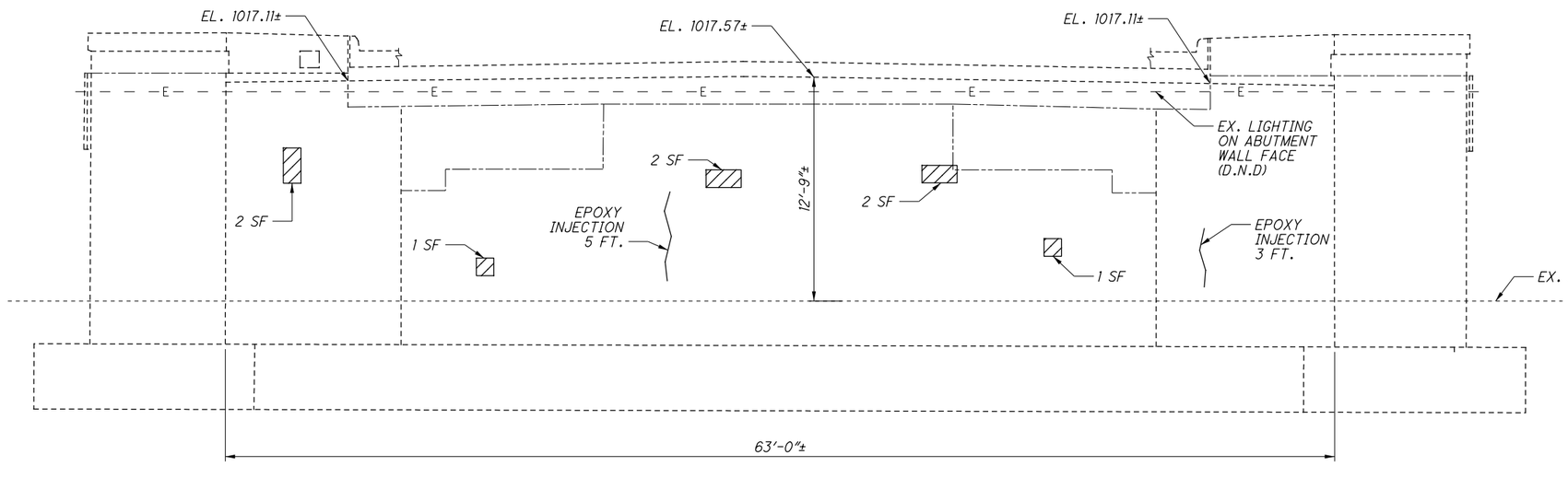

FORWARD ABUTMENT ELEVATION

NOTES & LEGEND

1. SEAL CONCRETE SURFACES WITH EPOXY URETHANE 6" BEYOND REPAIR LIMITS. SEALER COLOR ON FORWARD ABUTMENT TO MATCH EXISTING.

ITEM 844 - CONCRETE PATCHING WITH GALVANIC ANODE PROTECTION, AS PER PLAN

(ANODES TO BE PLACED IN PATCHES GREATER THAN OR EQUAL TO 5 SQ. FT. PER SS844)

	ITEM 512 EPOXY INJECTION
REAR ABUTMENT	29 FT.
FWD. ABUTMENT	8 FT.
TOTAL =	37 FT.

	ITEM 844 PATCHING
REAR ABUTMENT	14 SQ. FT.
FWD. ABUTMENT	8 SQ. FT.
TOTAL =	22 SQ. FT.

	# OF ANODES	
REAR ABUTMENT	6	
TOTAL =	6	FOR REFERENCE ONLY

DESIGN AGENCY
ODOT DISTRICT 7
ENGINEERING

DESIGNED PJB | DRAWN PJB | CHECKED LCG | REVIEWED MRB | DATE 6/27/2019 | REVISED | STRUCTURE FILE NUMBER 1902016

ABUTMENT REPAIR DETAIL
BRIDGE NO.: DAR-121-1712
S.R. 121 OVER GREENVILLE CREEK

D07-BH-FY20(C)
PID No. 105419

2 / 3

33
53

I:\ProjectData\D07\105419_BH-FY20_C\Design\Structures\DAR\2L1712C\Sheets\2L1712C_SR001.dgn Sheet 7/19/2019 9:17:19 AM dgrillio

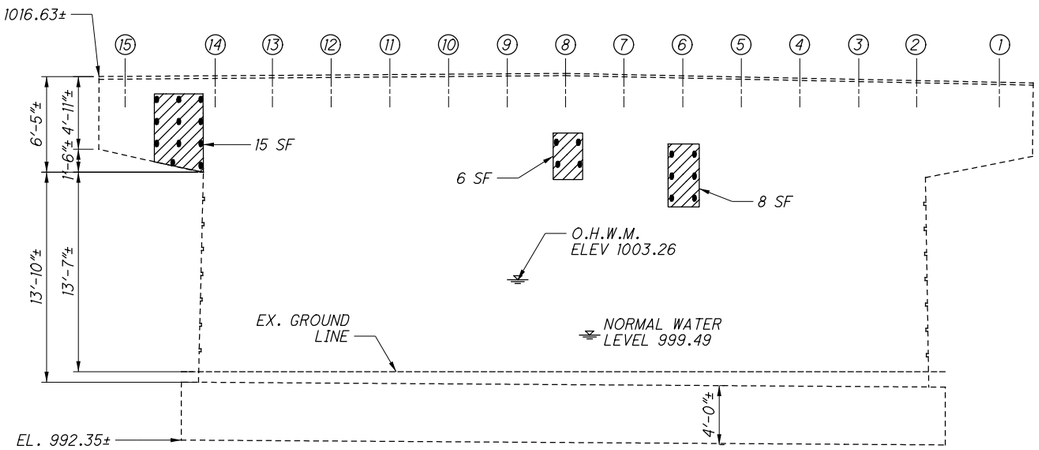

PIER 1
(FACING WEST)

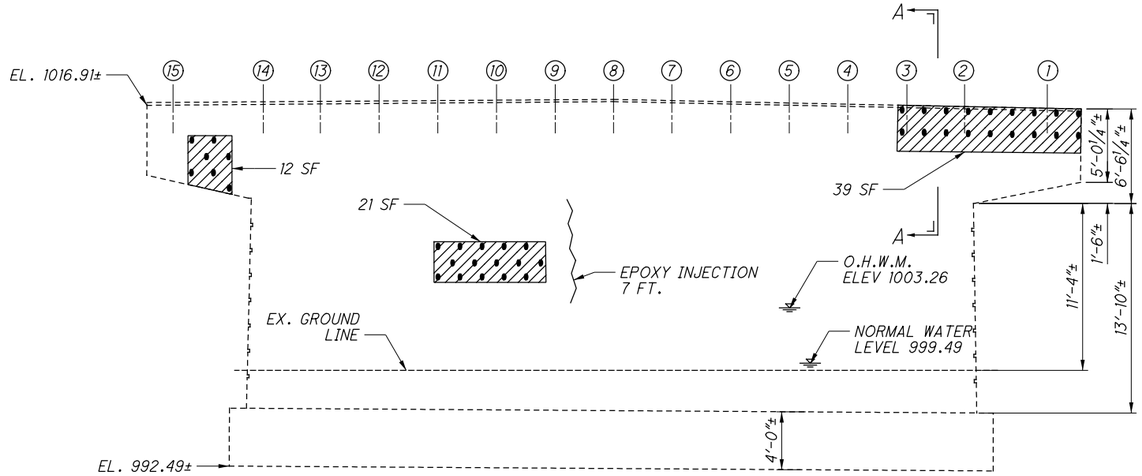

PIER 2
(FACING WEST)

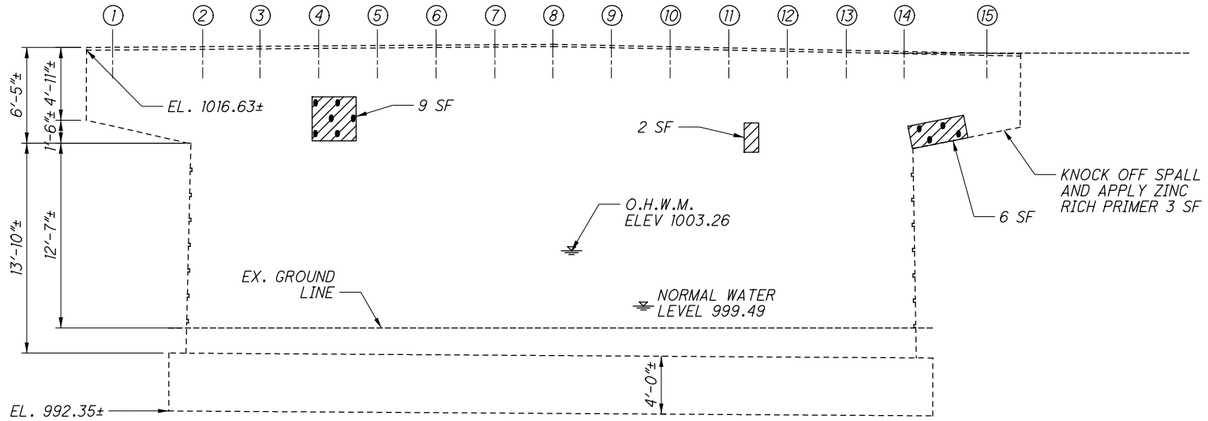

PIER 1
(FACING EAST)

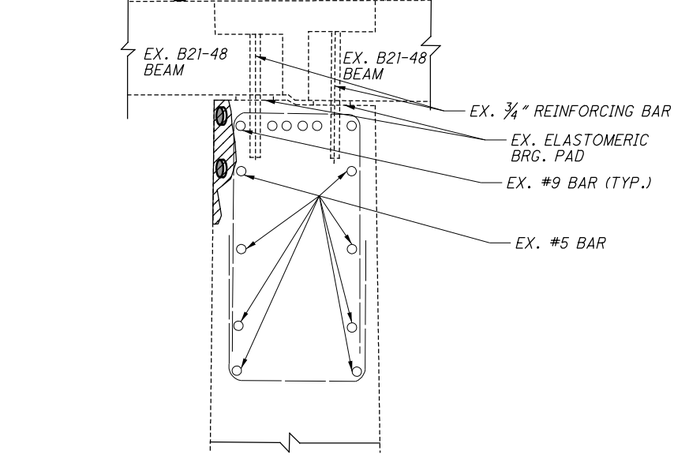

SECTION A-A
(PARTIAL PIER ELEVATION VIEW)

NOTES & LEGEND

1. PIER REPAIRS ARE NOT TO BE SEALED.

ITEM 844 - CONCRETE PATCHING WITH GALVANIC ANODE PROTECTION, AS PER PLAN

(ANODES TO BE PLACED IN PATCHES GREATER THAN OR EQUAL TO 5 SQ. FT. PER SS844)

(1) = BEAM NUMBER

	ITEM 512 EPOXY INJECTION
PIER 1	0 FT.
PIER 2	7 FT.
TOTAL =	7 FT.

	ITEM 844 PATCHING
PIER 1	46 SQ. FT.
PIER 2	72 SQ. FT.
TOTAL =	118 SQ. FT.

	# OF ANODES	
PIER 1	31	
PIER 2	40	
TOTAL =	71	FOR REFERENCE ONLY

DESIGN AGENCY
ODOT DISTRICT 7
ENGINEERING

DATE
REVIEWED 6/27/2019
DRAWN PJB
REVISED
DESIGNED PJB
CHECKED LCG

STRUCTURE FILE NUMBER
1902016

PIER REPAIR DETAIL
BRIDGE NO.: DAR-121-1712
S.R. 121 OVER GREENVILLE CREEK

D07-BH-FY20(C)
PID No. 105419

3 / 3

34
53

I:\ProjectData\D07\105419_BH-FY20_C\Design\Structures\DAR121_1712C\Sheets\121_1712C_SI001.dgn Sheet 7/19/2019 9:17:19 AM dgrillo

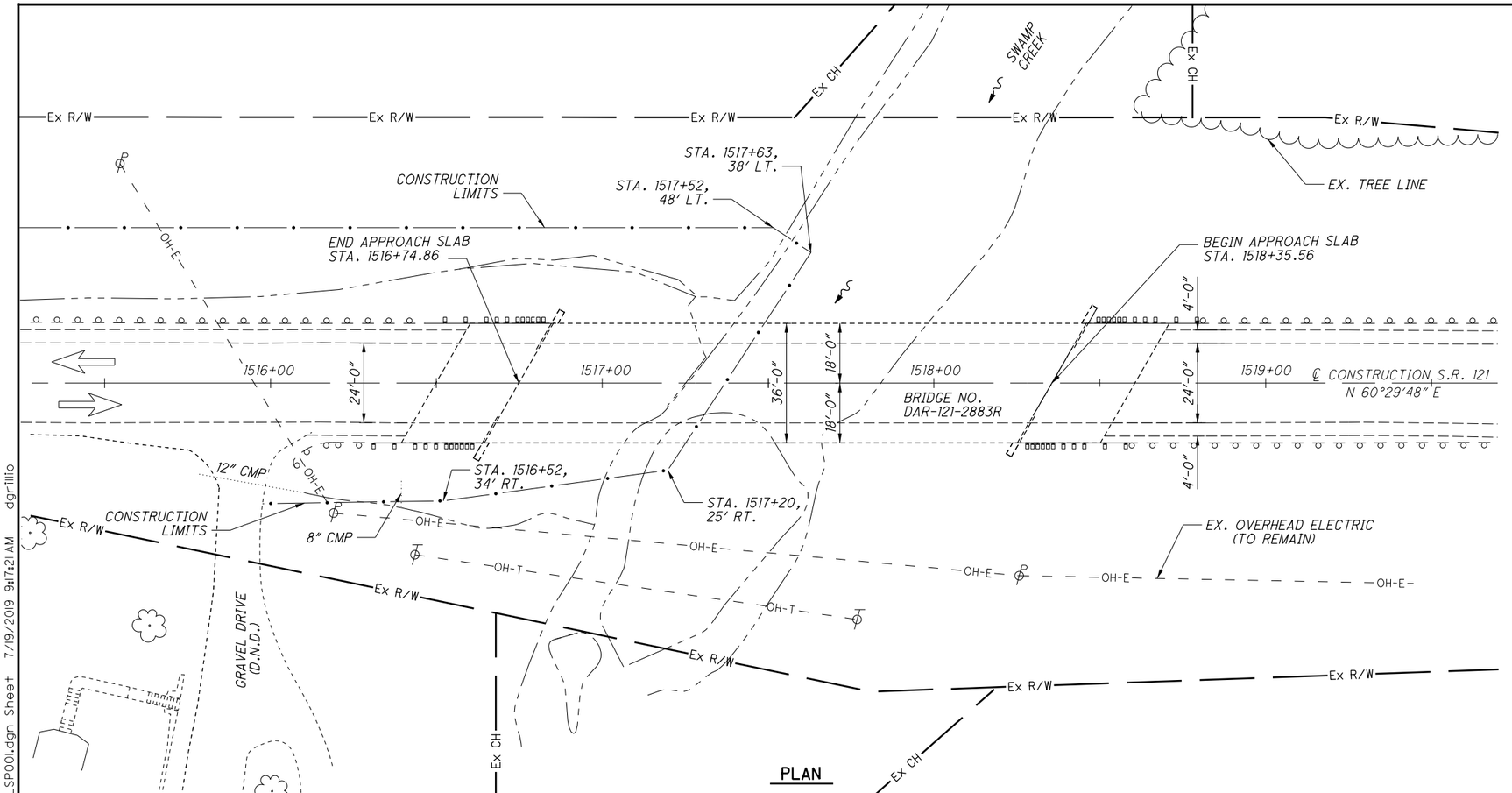

PLAN

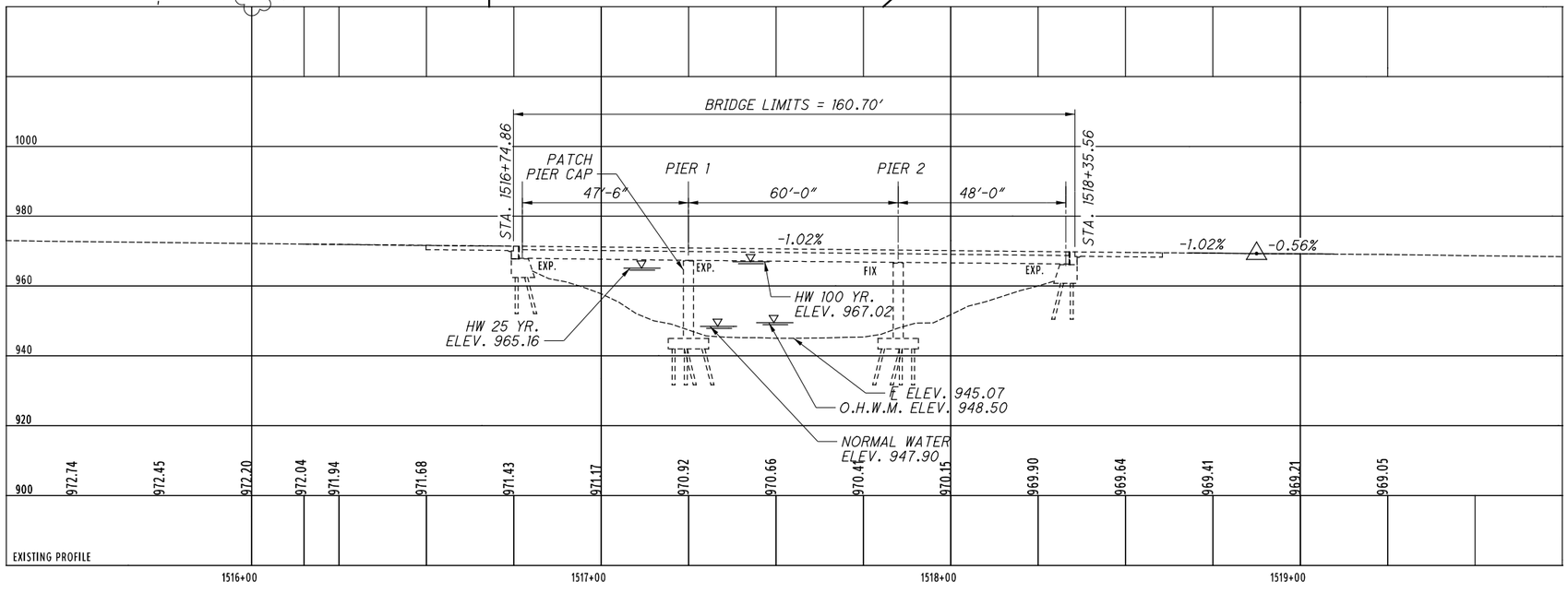

PROFILE ON ℄ CONSTRUCTION S.R. 121

LEGEND & NOTES

DESIGN TRAFFIC S.R. 121:
2017 ADT = 2962 2016 ADTT = 104

TRAFFIC DATA TAKEN FROM TRANSPORTATION DATA MANAGEMENT SYSTEM

D.N.D. = DO NOT DISTURB

REHABILITATION PLAN DISCLAIMER

DIMENSIONS AND DATA ARE TAKEN FROM EXISTING PLANS AND FIELD MEASUREMENT. ALL DIMENSIONS AND ELEVATIONS ARE TO BE CONSIDERED +/- AND FOR REFERENCE ONLY.

HYDRAULIC DATA

DRAINAGE AREA = 58.9 SQ. MILES
Q (25) = 5030 CFS
Q (100) = 6580 CFS
HYDRAULIC DATA TAKEN FROM STREAMSTATS

EXISTING STRUCTURE

TYPE: CONTINUOUS STEEL BEAMS WITH REINFORCED CONCRETE DECK AND SUBSTRUCTURE
SPANS: 47'-6", 60'-0"', 48'-0" C/C BRGS.
ROADWAY: 36'-0" F/F GUARDRAIL
LOADING: HS20 AND THE ALTERNATE MILITARY LOADING
F.W.S. LOADING = 60 PSF
SKEW: 30° LEFT FORWARD
APPROACH SLABS: AS-1-81 (25' LONG)
ALIGNMENT: TANGENT
CROWN: 3/16"/FT
STRUCTURAL FILE NUMBER: 1902229
DATE BUILT: 1960 REHABILITATED: 2006
WEARING SURFACE: 1" MONOLITHIC CONCRETE
COORDINATES: LATITUDE N 40° 12' 46.5"
LONGITUDE W 84° 29' 55"
DISPOSITION: TO BE REHABILITATED

PROPOSED WORK

1. PATCH PIER CAPS.

DESIGN AGENCY
ODOT DISTRICT 7
ENGINEERING

REVIEWED MRB DATE 6/27/2019
STRUCTURE FILE NUMBER 1902229

DRAWN DHG REVISED
DESIGNED DHG CHECKED LCG

DARKE COUNTY
STA. 1516+74.86
STA. 1518+35.56

SITE PLAN
BRIDGE NO.: DAR-121-2883
S.R. 121 OVER SWAMP CREEK

D07-BH-FY20(C)
PID No. 105419

1 / 2

35
53

I:\ProjectData\D07\105419_BH-FY20_C\Design\Structures\DAR121-2883C\Sheets\121-2883C_SP001.dgn 7/19/2019 9:17:21 AM dgrillio

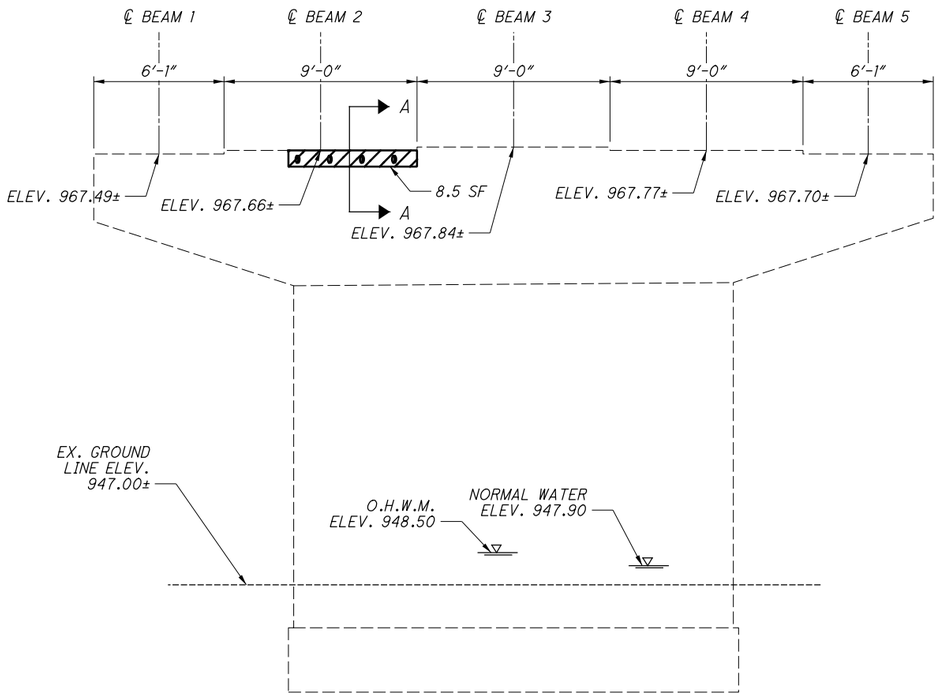

PIER 1
(FACING EAST)

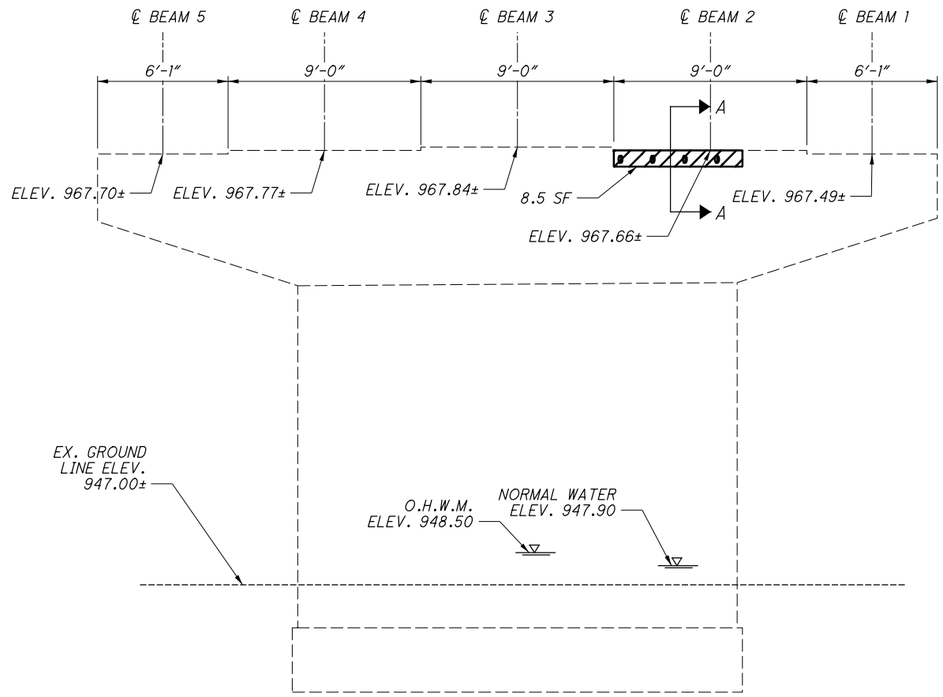

PIER 1
(FACING WEST)

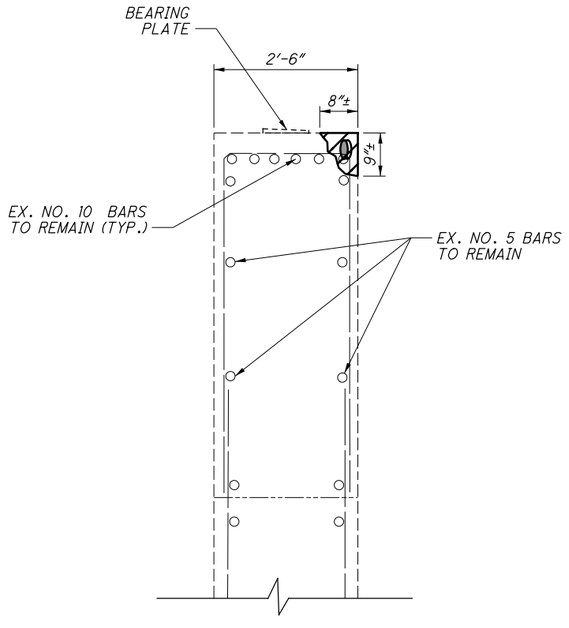

SECTION A-A

NOTES & LEGEND

1. SEAL CONCRETE SURFACES WITH EPOXY URETHANE 6″ BEYOND REPAIR LIMITS.

ITEM 844 - CONCRETE PATCHING WITH GALVANIC ANODE PROTECTION, AS PER PLAN

(ANODES TO BE PLACED IN PATCHES GREATER THAN OR EQUAL TO 5 SQ. FT. PER SS844)

	ITEM 844 PATCHING
PIER 1 (FACING EAST)	8.5 SQ. FT.
PIER 1 (FACING WEST)	8.5 SQ. FT.
TOTAL =	17 SQ. FT.

	# OF ANODES	
PIER 1 (FACING EAST)	4	
PIER 1 (FACING WEST)	4	
TOTAL =	8	FOR REFERENCE ONLY

DESIGN AGENCY
ODOT DISTRICT 7
ENGINEERING

DESIGNED	DRAWN	REVIEWED	DATE
PJB	PJB	MRB	6/27/2019
CHECKED	REVISED	STRUCTURE FILE NUMBER	
LCG		1902229	

PIER 1 REPAIR DETAIL
BRIDGE NO.: DAR-121-2883
S.R. 121 OVER SWAMP CREEK

D07-BH-FY20(C)
PID No. 105419

2 / 2

36
53

I:\ProjectData\D07\105419_BH-FY20_C\Design\Structures\DAR121_2883C\Sheets\121_2883C_S100.dgn Sheet 7/19/2019 9:17:22 AM dgrillo

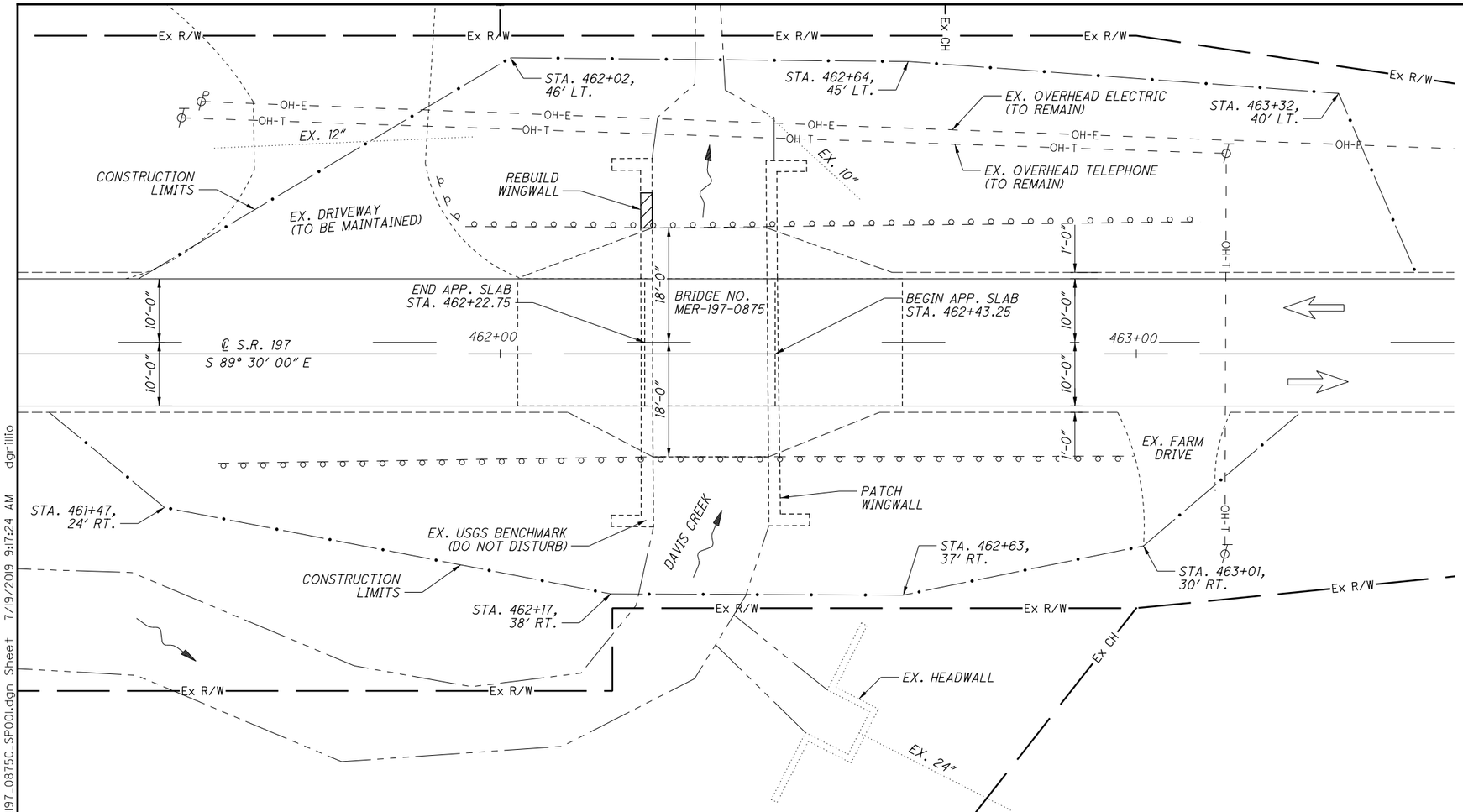

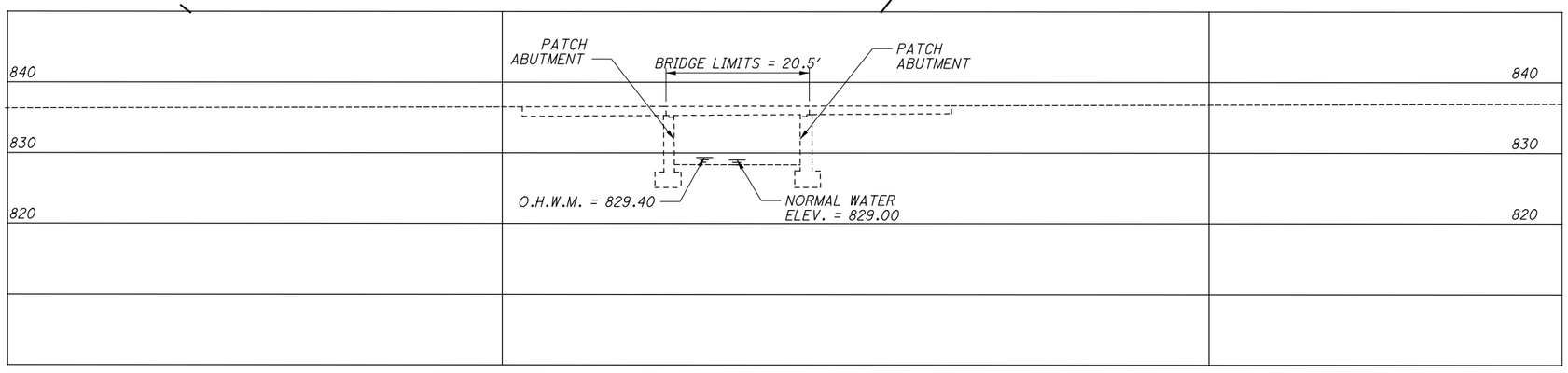

NOTES

DESIGN TRAFFIC S.R. 197:
2017 ADT = 178 2017 ADTT = 8
TRAFFIC DATA TAKEN FROM TRANSPORTATION DATA MANAGEMENT SYSTEM

REHABILITATION PLAN DISCLAIMER

DIMENSIONS AND DATA ARE TAKEN FROM EXISTING PLANS AND FIELD MEASUREMENT. ALL DIMENSIONS AND ELEVATIONS ARE TO BE CONSIDERED +/- AND FOR REFERENCE ONLY.

HYDRAULIC DATA

DRAINAGE AREA = 1.21 SQ. MILES
Q (10) = 166 CFS
Q (100) = 267 CFS
HYDRAULIC DATA TAKEN FROM STREAMSTATS

EXISTING STRUCTURE

TYPE: REINFORCED CONCRETE SLAB ON SPREAD FOOTING
SPANS: 18'-0"
ROADWAY: 36'-0" F/F GUARDRAIL
LOADING: CF = 130
SKEW: NONE
APPROACH SLABS: AS-1-54 (20' LONG)
ALIGNMENT: TANGENT
CROWN: 3/16"/FT
STRUCTURAL FILE NUMBER: 5402972
DATE BUILT: 1965
WEARING SURFACE: 3" ASPHALT CONCRETE
COORDINATES: LATITUDE N 40° 37' 34.30"
LONGITUDE W 84° 27' 55.70"
DISPOSITION: TO BE REHABILITATED

PROPOSED WORK

1. PATCH ABUTMENTS AND WINGWALLS.

WORK LISTED IS NOT INCLUSIVE. CONTRACTOR WILL SEQUENCE WORK AS NEEDED.

DESIGN AGENCY
ODOT DISTRICT 7
ENGINEERING

DESIGNED	DRAWN	REVIEWED	DATE
DHG	DHG	MRB	6/27/2019
CHECKED	REVISED	STRUCTURE FILE NUMBER	
LCG		5402972	

MERCER COUNTY
STA. 462+22.75
STA. 462+43.25

SITE PLAN
BRIDGE NO.: MER-197-0875
S.R. 197 OVER DAVIS CREEK

D07-BH-FY20(C)
PID No. 105419

I:\Project Data\D07\105419_BH-FY20_C\Design\Structures\MER197_0875C\Sheets\197_0875C_SP001.dgn 7/19/2019 9:17:24 AM dgrillo

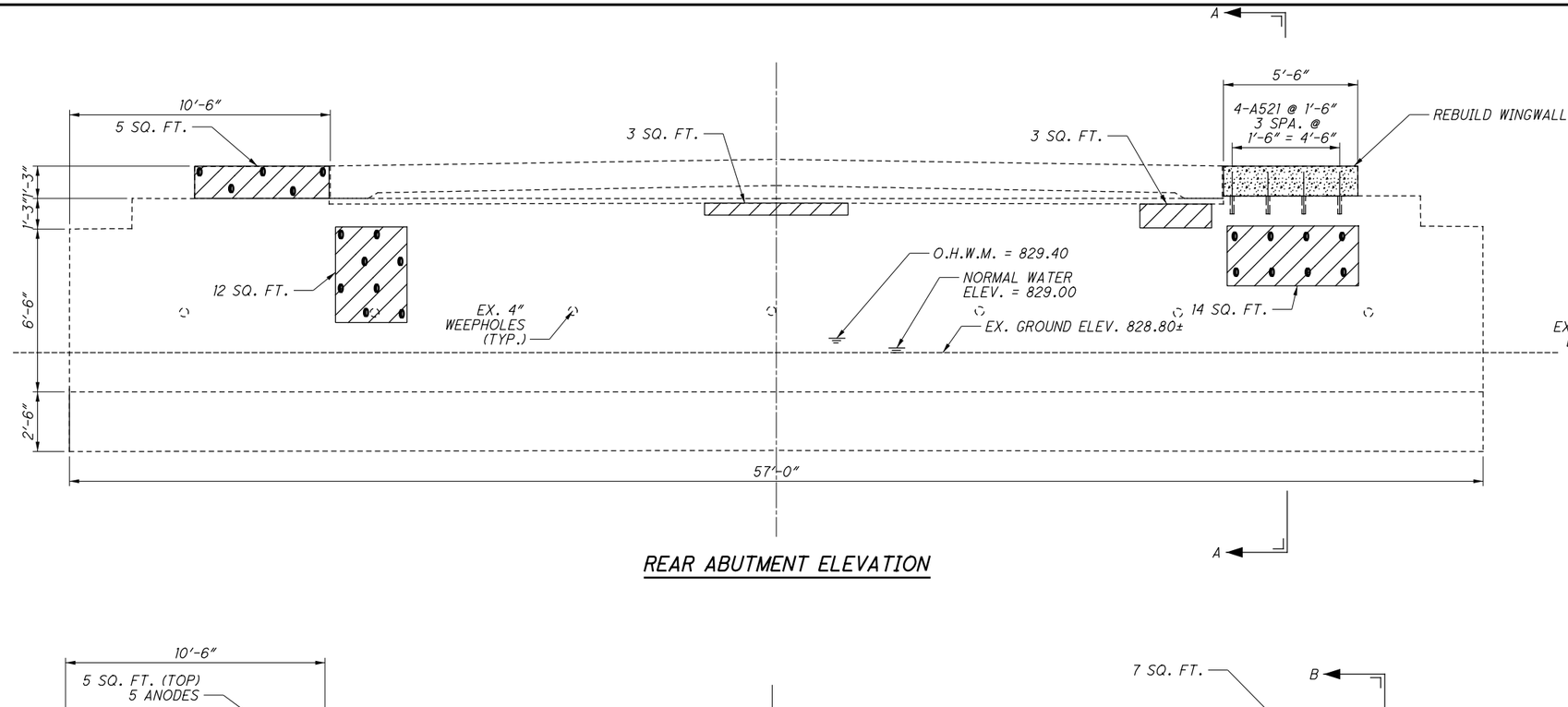

REAR ABUTMENT ELEVATION

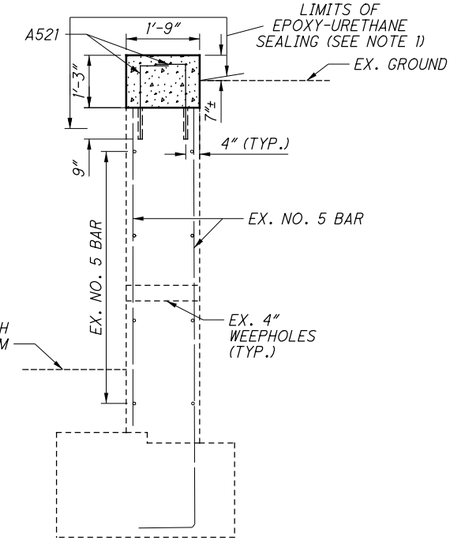

SECTION A-A

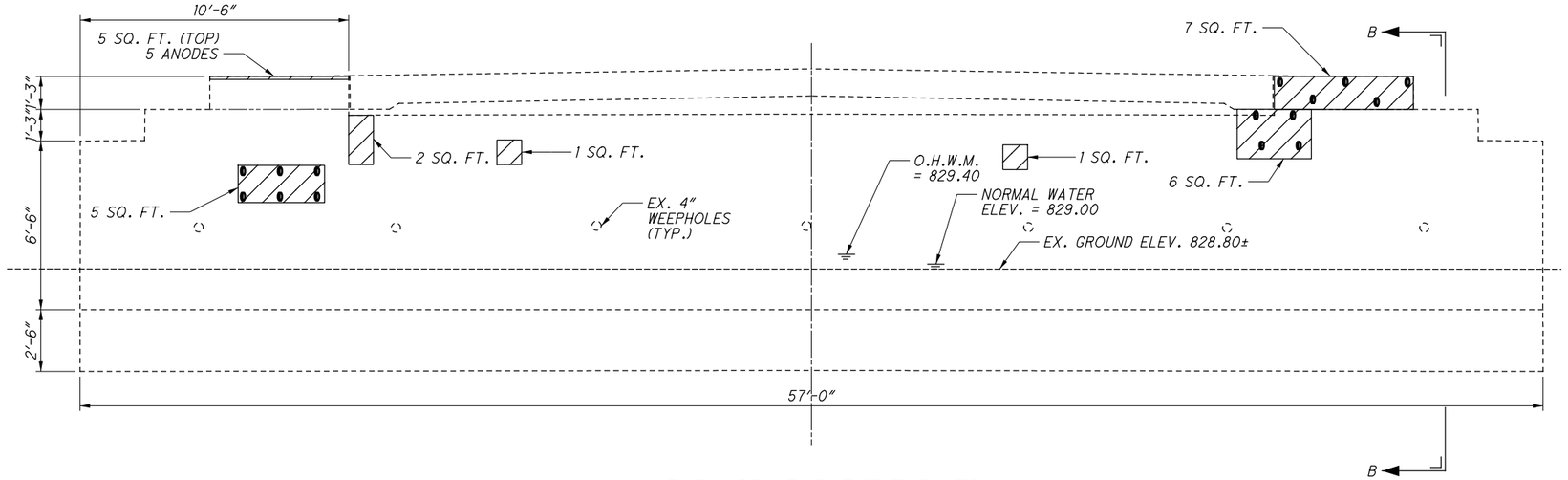

FORWARD ABUTMENT ELEVATION

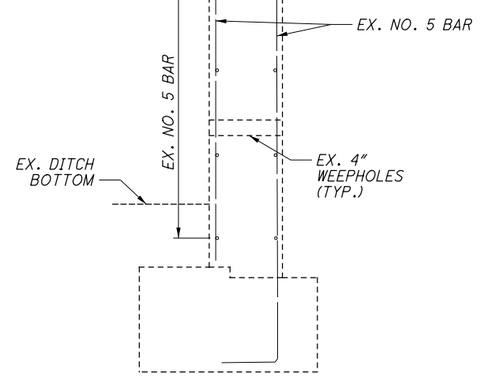

VIEW B-B

MARK	NUMBER TOTAL	LENGTH	WEIGHT	TYPE	DIMENSIONS A	DIMENSIONS B	DOWEL HOLES
MER-197-0875 REAR ABUTMENT WINGWALL REBUILD							
A521	8	2'-3"	19	1	0'-8"	1'-9"	8
		TOTAL	19				8

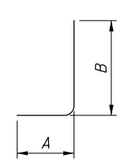

TYPE-1

	ITEM 844 PATCHING
REAR ABUTMENT	37 SQ. FT.
FWD. ABUTMENT	29 SQ. FT.
TOTAL =	66 SQ. FT.

	# OF ANODES	
REAR ABUTMENT	21	
FWD. ABUTMENT	20	
TOTAL =	41	FOR REFERENCE ONLY

NOTES & LEGEND

1. SEAL CONCRETE SURFACES WITH EPOXY URETHANE 6" BEYOND REPAIR LIMITS.

ITEM 844 - CONCRETE PATCHING WITH GALVANIC ANODE PROTECTION, AS PER PLAN

(ANODES TO BE PLACED IN PATCHES GREATER THAN OR EQUAL TO 5 SQ. FT. PER SS844)

ITEM 202 - PORTIONS OF STRUCTURE REMOVED, OVER 20 FOOT SPAN, AS PER PLAN

ITEM 511 - CLASS QC1 CONCRETE, SUBSTRUCTURE

DESIGN AGENCY
ODOT DISTRICT 7
ENGINEERING

DESIGNED	DRAWN	REVIEWED	DATE
PJB	PJB	MRB	6/27/2019
CHECKED	REVISED	STRUCTURE FILE NUMBER	
LCG		5402972	

ABUTMENT REPAIR DETAIL
BRIDGE NO.: MER-197-0875
S.R. 197 OVER DAVIS CREEK

D07-BH-FY20(C)
PID No. 105419

2 / 2

38
53

I:\Project Data\D07\105419_BH-FY20_C\Design\Structures\MER197_0875C\Sheets\197_0875C_SR001.dgn Sheet 7/19/2019 9:17:26 AM dgrillio

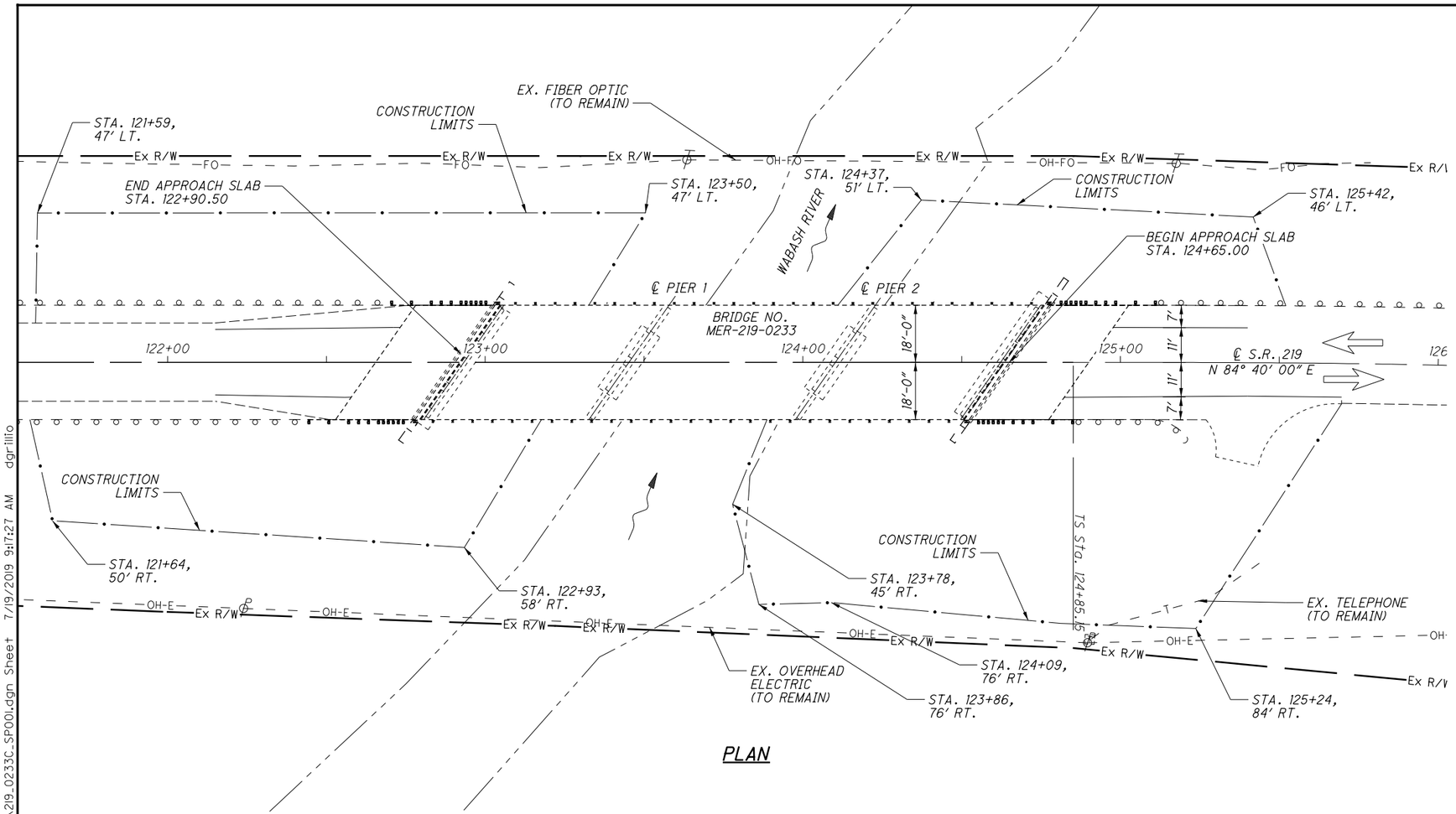

PLAN

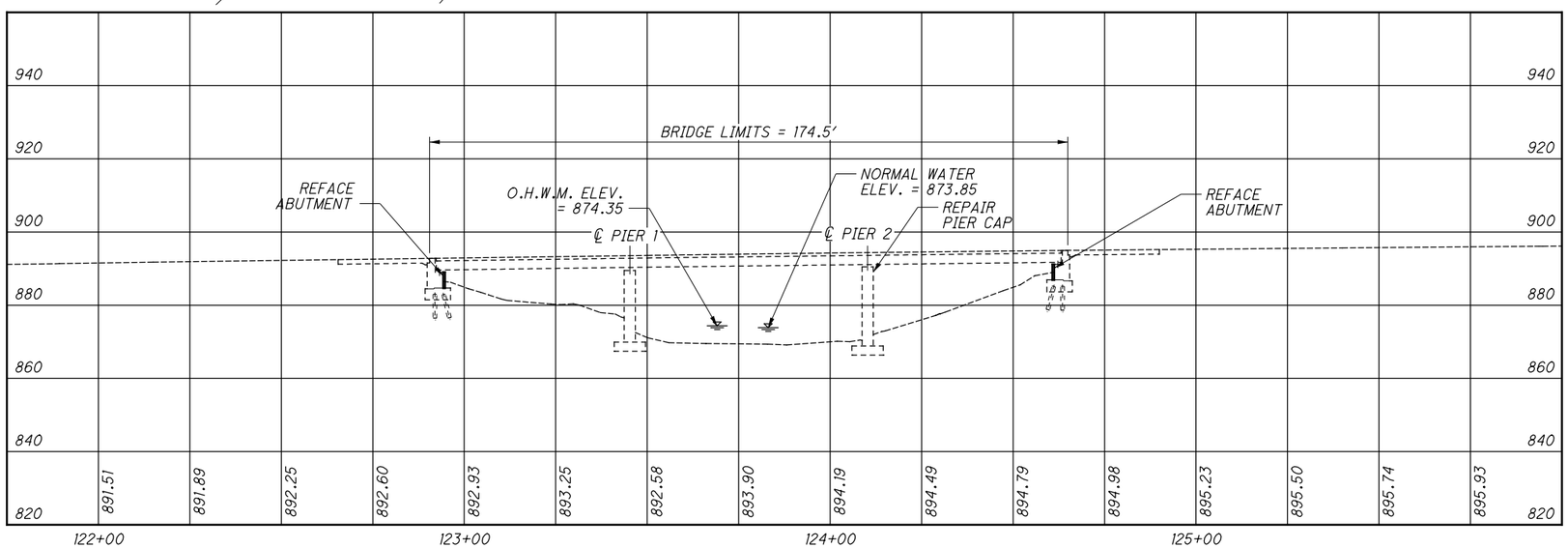

PROFILE ALONG ℄ S.R. 219

NOTES

DESIGN TRAFFIC S.R. 219:
2017 ADT = 1149 2017 ADTT = 131

TRAFFIC DATA TAKEN FROM TRANSPORTATION DATA MANAGEMENT SYSTEM

REHABILITATION PLAN DISCLAIMER

DIMENSIONS AND DATA ARE TAKEN FROM EXISTING PLANS AND FIELD MEASUREMENT. ALL DIMENSIONS AND ELEVATIONS ARE TO BE CONSIDERED +/- AND FOR REFERENCE ONLY.

HYDRAULIC DATA

DRAINAGE AREA = 101 SQ. MILES
Q (10) = 5420 CFS
Q (100) = 8720 CFS
HYDRAULIC DATA TAKEN FROM STREAMSTATS

EXISTING STRUCTURE

TYPE: CONTINUOUS STEEL BEAM WITH COMPOSITE REINFORCED CONCRETE DECK AND SUBSTRUCTURE
SPANS: 52'-0", 65'-0"', 52'-0" C/C BRGS.
ROADWAY: 36'-0" F/F GUARDRAIL
LOADING: HS20-44 AND ALTERNATE MILITARY, CASE II
SKEW: 35° LEFT FORWARD
APPROACH SLABS: AS-1-81 (25' LONG)
ALIGNMENT: TANGENT
CROWN: 3/16"/FT
STRUCTURAL FILE NUMBER: 5403006
DATE BUILT: 1963 REHABILITATED: 2011
WEARING SURFACE: 1" MONOLITHIC CONCRETE
COORDINATES: LATITUDE N 40° 28' 47.50"
LONGITUDE W 84° 45' 38"
DISPOSITION: TO BE REHABILITATED

PROPOSED WORK

1. REFACE ABUTMENTS
2. REPAIR PIER 2 CAP.

WORK LISTED IS NOT INCLUSIVE. CONTRACTOR WILL SEQUENCE WORK AS NEEDED.

DESIGN AGENCY
ODOT DISTRICT 7
ENGINEERING

DESIGNED	DRAWN	REVIEWED	DATE
DHG	DHG	MRB	6/27/2019
CHECKED	REVISED	STRUCTURE FILE NUMBER	
LCG		5403006	

MERCER COUNTY
STA. 122+90.50
STA. 124+65.00

SITE PLAN
BRIDGE NO.: MER-219-0233
S.R. 219 OVER WABASH RIVER

D07-BH-FY20(C)
PID No. 105419

I:\ProjectData\D07\105419_BH-FY20_C\Design\Structures\MER219_0233C\Sheets\219_0233C_SP001.dgn 7/19/2019 9:17:27 AM dgrillo

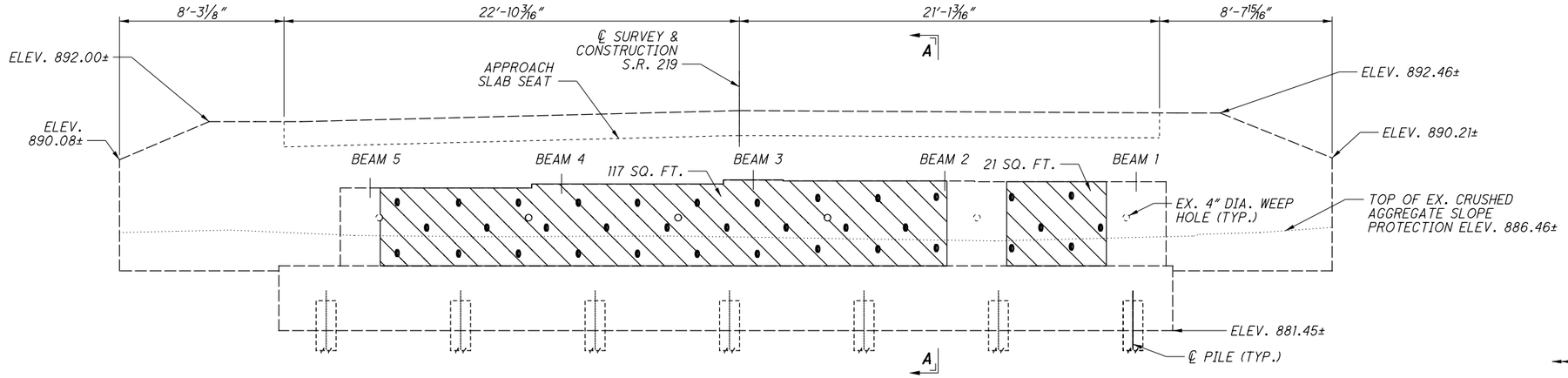

REAR ABUTMENT ELEVATION

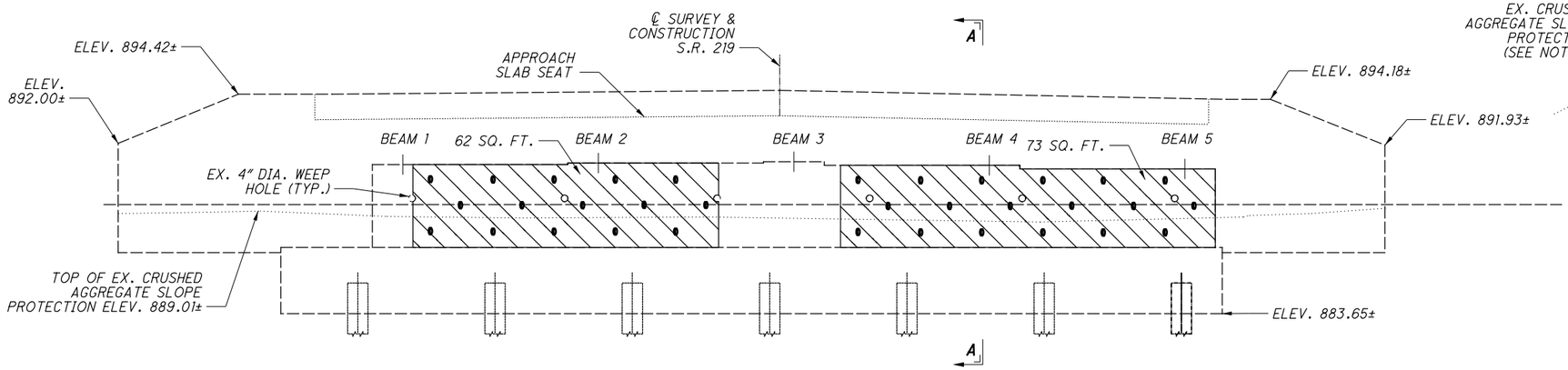

FORWARD ABUTMENT ELEVATION

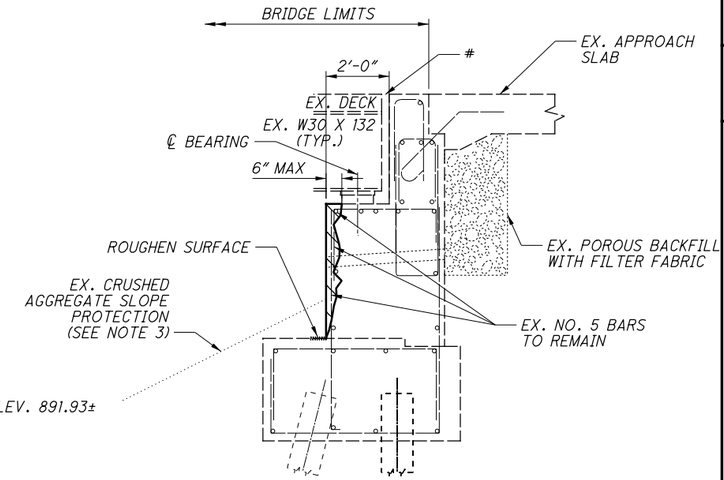

SECTION A-A

NOTES AND LEGEND

1) DETAILS WERE TAKEN FROM EXISTING PLANS AND SHOULD BE CONSIDERED EXISTING UNLESS LABELED PROPOSED.

2) AREAS OF PATCHING SHOWN ARE APPROXIMATE. FINAL AREAS ARE TO BE LOCATED AND MARKED BY THE ENGINEER USING CONCRETE SOUNDING TECHNIQUES.

3) EX. CRUSHED AGGREGATE SLOPE PROTECTION TO BE EXCAVATED AND REUSED TO ALLOW PLACEMENT OF THE ABUTMENT FACING. DESCRIBED WORK TO BE PAID UNDER ITEM 503 - UNCLASSIFIED EXCAVATION.

\# - EX. STRIP SEAL EXPANSION JOINT NOT SHOWN FOR CLARITY

DIA. - DIAMETER

- AREA OF UNSOUND CONCRETE TO BE REMOVED PER ITEM 844

BRIDGE: MER-219-0233	AREA OF UNSOUND CONCRETE TO BE REMOVED PER ITEM 844
	SQ. FT.
REAR ABUTMENT	138
FORWARD ABUTMENT	135
INFORMATION ONLY	273

DESIGN AGENCY
ODOT DISTRICT 7
ENGINEERING

DESIGNED	DRAWN	REVIEWED	DATE
DHG	DHG	MRB	6/27/2019
CHECKED	REVISED	STRUCTURE FILE NUMBER	
LCG		5403006	

ABUTMENT REMOVAL LIMITS
BRIDGE NO.: MER-219-0233
S.R. 219 OVER WABASH RIVER

D07-BH-FY20(C)
PID No. 105419

I:\Project Data\D07\105419_BH-FY20_C\Design\Structures\MER219_0233C\Sheets\219_0233C_SR001.dgn 7/19/2019 9:17:29 AM dgrillio

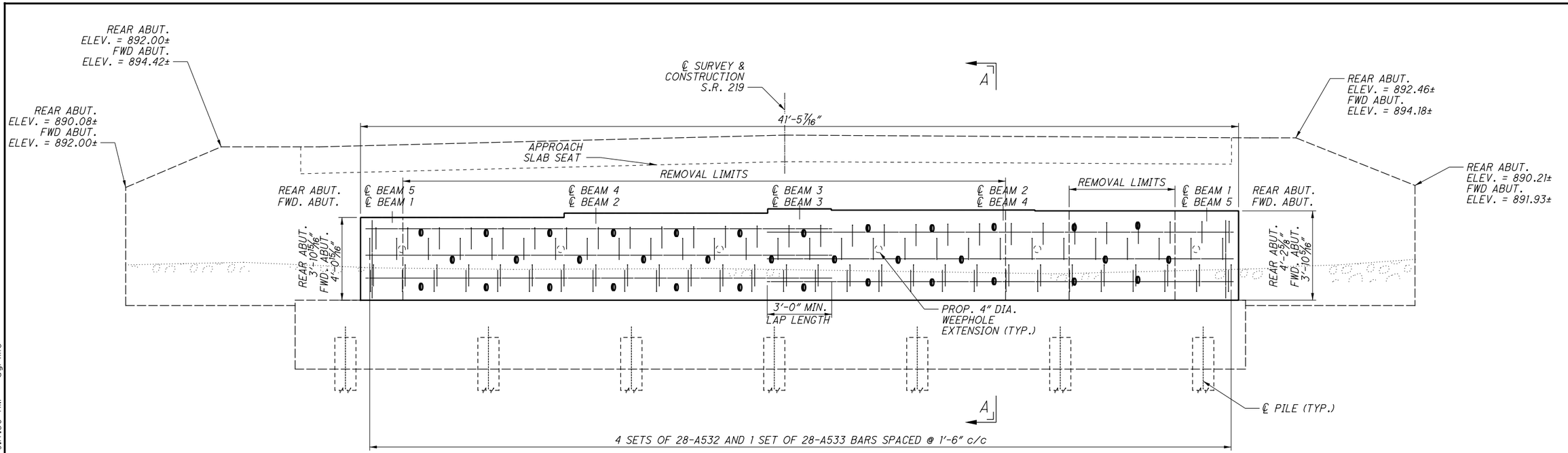

PROPOSED REAR ABUTMENT ELEVATION

(REAR ABUTMENT SHOWN - SIMILAR FOR FORWARD ABUTMENT)
(EXISTING STEEL NOT SHOWN)

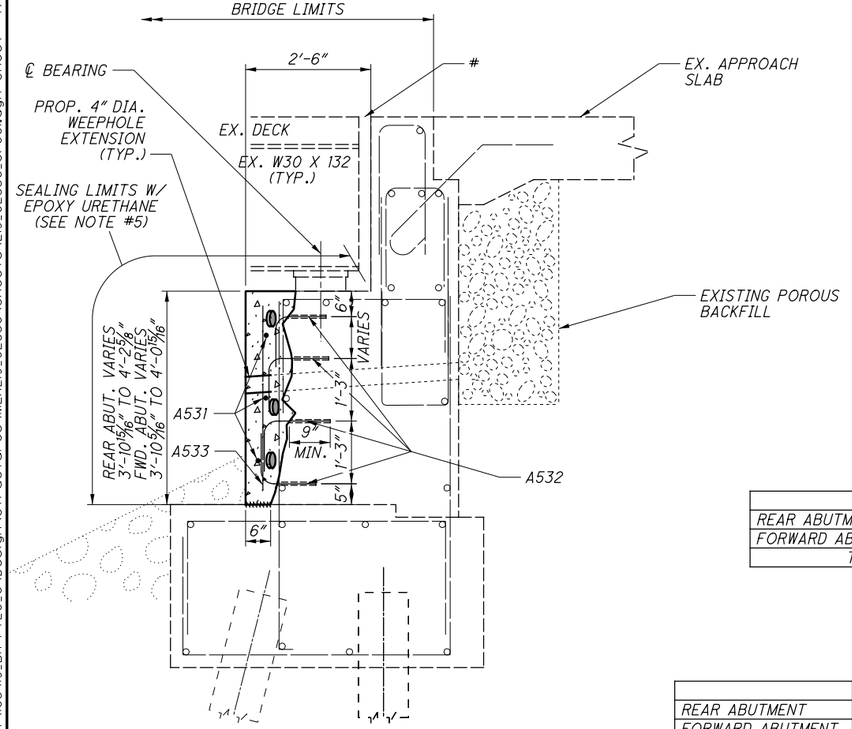

SECTION A-A

(TYPICAL FOR REAR AND FORWARD ABUTMENTS)

MARK	NUMBER TOTAL	LENGTH	WEIGHT	TYPE	DIMENSIONS A	DIMENSIONS B	DOWEL HOLES
MER-219-0233 ABUTMENT FACING							
A531	12	22'-0"	275	STR			
A532	224	1'-10"	428	1	1'-0"	1'-0"	224
A533	56	3'-8"	214	STR			
		TOTAL	917				224

	ITEM SPECIAL
REAR ABUTMENT	169 SQ. FT.
FORWARD ABUTMENT	165 SQ. FT.
TOTAL =	334 SQ. FT.

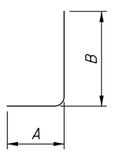

TYPE-1

	# OF ANODES	TAKEN FROM:
REAR ABUTMENT	35	THIS SHEET
FORWARD ABUTMENT	33	REMOVAL LIMITS SHEET
TOTAL =	68	FOR REFERENCE ONLY

NOTES AND LEGEND

1. DETAILS WERE TAKEN FROM EXISTING PLANS AND SHOULD BE CONSIDERED EXISTING UNLESS LABELED PROPOSED.
2. CARE SHALL BE TAKEN TO AVOID THE EXISTING REINFORCING STEEL WHEN PLACING THE DOWELS. A PACHOMETER SHALL BE USED TO LOCATE THE EXISTING STEEL, WHEN NOT EXPOSED.
3. THE 4" DIAMETER DRAINS SHALL EXTEND FROM THE NEW FACE OF THE ABUTMENT TO THE REMOVAL LIMITS AND BE SLOPED TO DRAIN. DRAINS SHALL BE FORMED USING PVC PIPE. REMOVAL LIMITS SHALL BE PREPPED SO THAT THE BACK OF THE DRAIN IS AS FLUSH AS POSSIBLE TO THE CONCRETE. COST OF THE PROPOSED 4" DIAMETER DRAINS SHALL BE INCLUDED IN ITEM 844.
4. MINIMUM LAP LENGTH: #4 BAR = 2'-6"
   #5 BAR = 3'-0"
5. ENDS OF ABUTMENT FACING AND BREASTWALL TO BE SEALED WITH EPOXY URETHANE AS WELL.
6. SEE REMOVAL LIMITS SHEET FOR LOCATIONS OF ANODES TO BE PLACED IN THE FWD. ABUTMENT.

- EX. STRIP SEAL EXPANSION JOINT NOT SHOWN FOR CLARITY

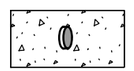

- ITEM 530 - ITEM SPECIAL: ABUTMENT REFACING WITH GALVANIC ANODE PROTECTION



- EXISTING SLOPE PROTECTION

DESIGN AGENCY
ODOT DISTRICT 7
ENGINEERING

REVIEWED MRB DATE 6/27/2019
STRUCTURE FILE NUMBER 5403006

DRAWN DHG
REVISED

DESIGNED DHG
CHECKED LCG

PROPOSED ABUTMENT DETAILS
BRIDGE NO.: MER-219-0233
S.R. 219 OVER WABASH RIVER

D07-BH-FY20(C)
PID No. 105419

3 / 4

41
53

I:\ProjectData\D07\105419_BH-FY20_C\Design\Structures\MER219_0233C\Sheets\219_0233C_SF001.dgn Sheet† 7/19/2019 9:47:30 AM dgrillio

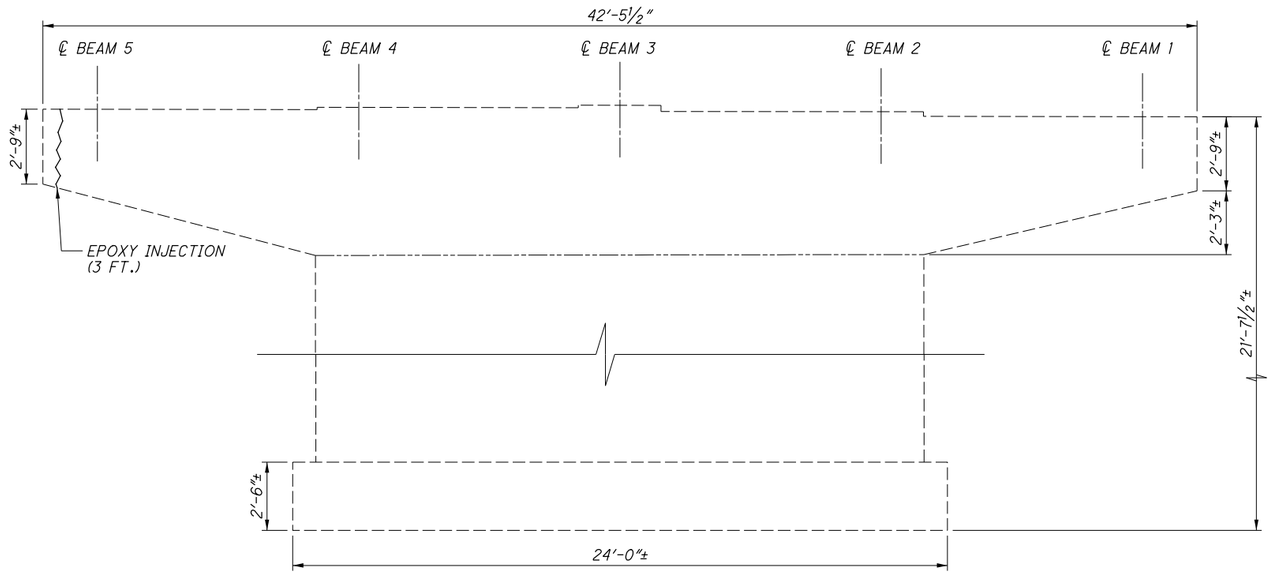

PIER 2
(EAST FACE)

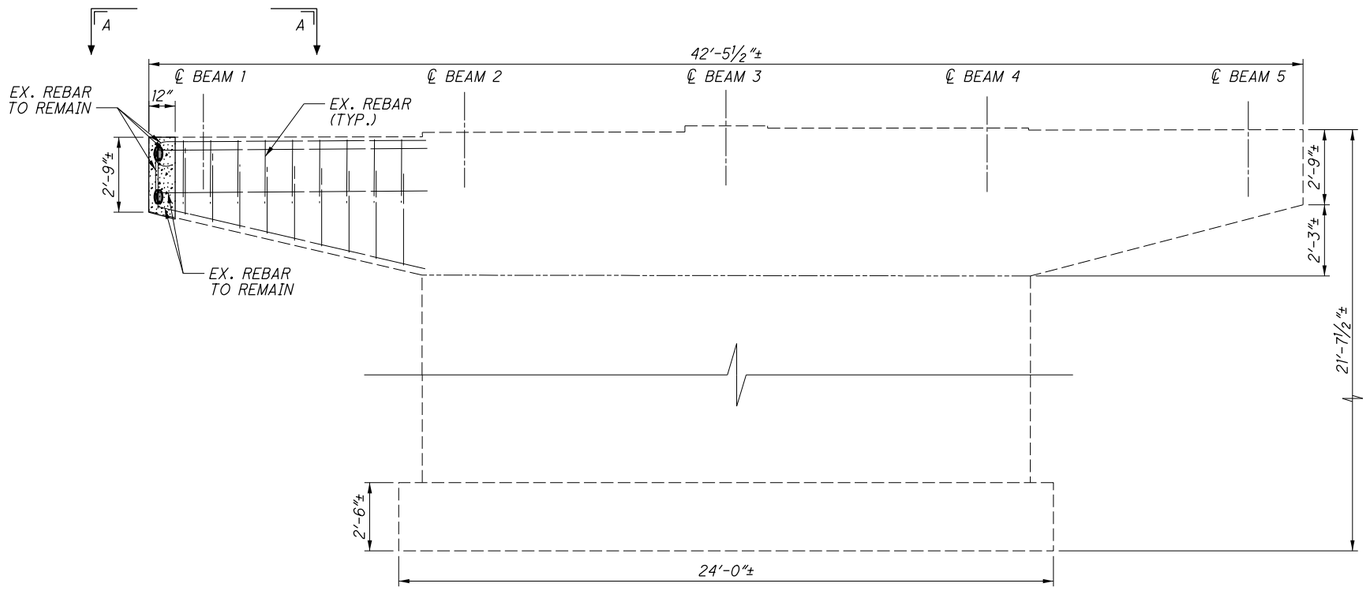

PIER 2
(WEST FACE)

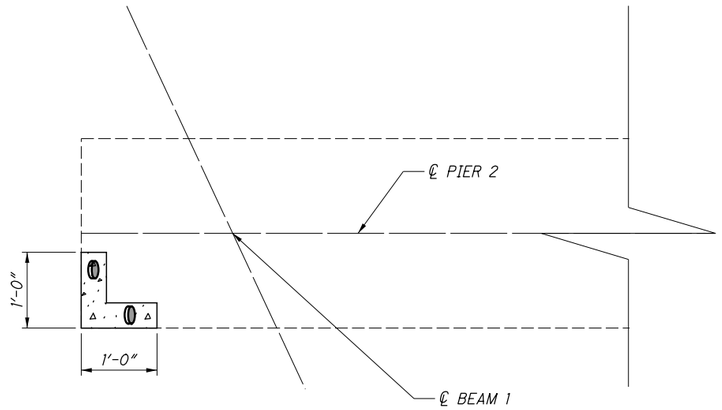

VIEW A-A
PIER 2 PLAN VIEW

NOTES & LEGEND

1. SEAL CONCRETE SURFACES WITH EPOXY URETHANE 6" BEYOND PATCH LIMITS.

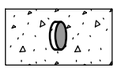

- ITEM 844 - CONCRETE PATCHING WITH GALVANIC ANODE PROTECTION, AS PER PLAN

	ITEM 512 EPOXY INJECTION
PIER 2	3 FT.
TOTAL =	3 FT.

	ITEM 844 PATCHING
PIER 2	6 SQ. FT.
TOTAL =	6 SQ. FT.

	# OF ANODES	
PIER 2	4	
TOTAL =	4	FOR REFERENCE ONLY

DESIGN AGENCY
ODOT DISTRICT 7
ENGINEERING

DESIGNED PJB | DRAWN PJB | REVIEWED MRB | DATE 6/27/2019
CHECKED LCG | REVISED | STRUCTURE FILE NUMBER 5403006

PIER REPAIR DETAILS
BRIDGE NO.: MER-219-0233
S.R. 219 OVER WABASH RIVER

D07-BH-FY20(C)
PID No. 105419

4 / 4

42
53

I:\ProjectData\D07\105419_BH-FY20_C\Design\Structures\MER219_0233C\Sheets\219_0233C_S001.dgn Sheet 7/19/2019 9:17:31 AM dgrillo

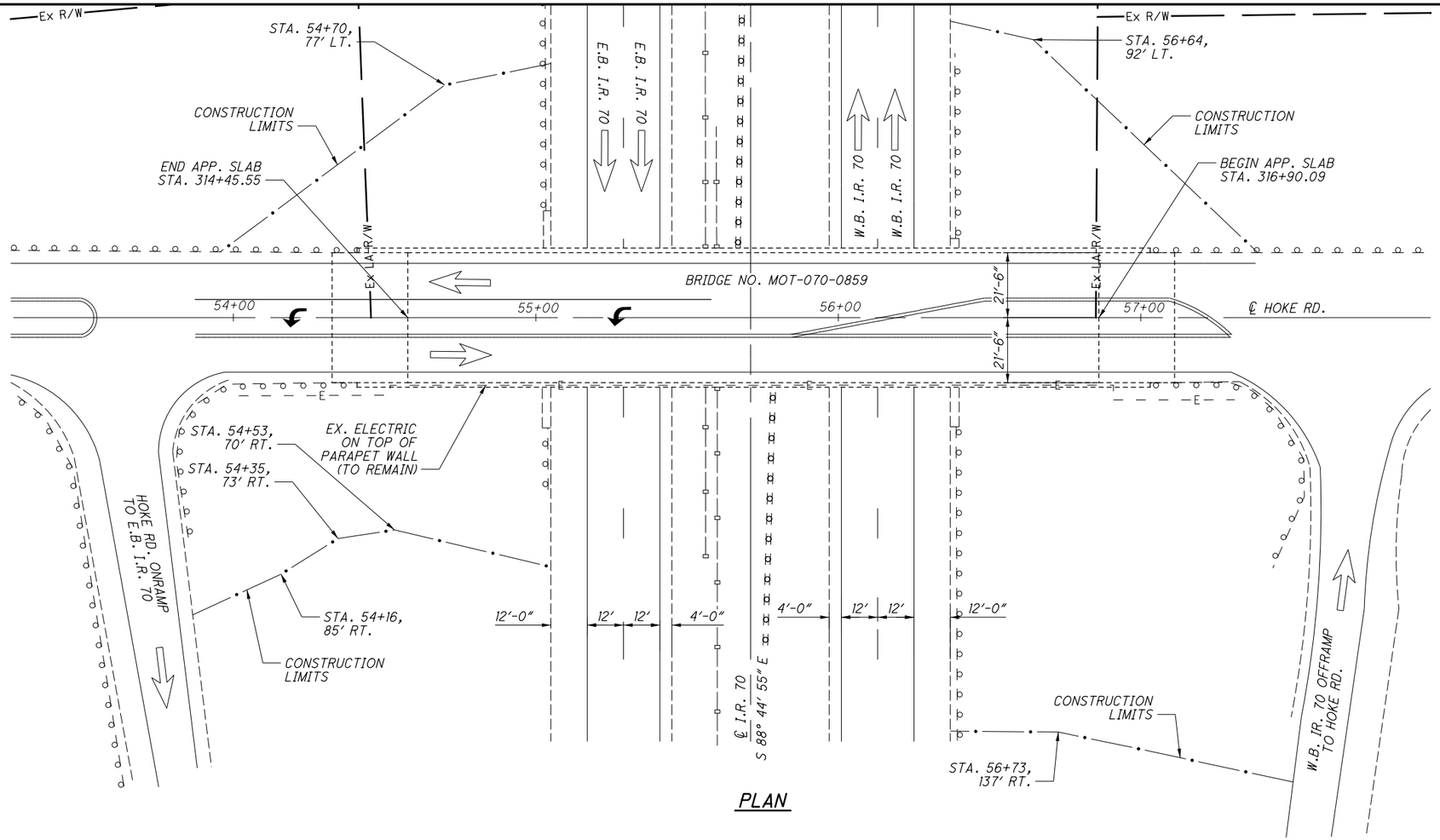

PLAN

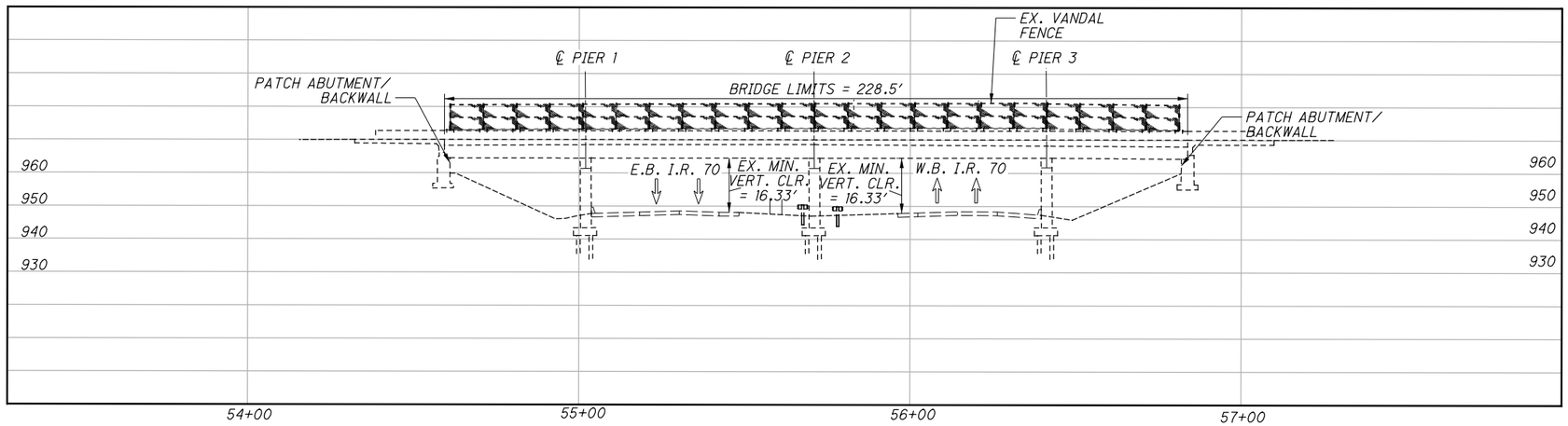

PROFILE

NOTES

TRAFFIC DATA HOKE RD.:
2017 ADT = 12208 NO ADTT DATA PROVIDED

TRAFFIC DATA I-70:
2017 ADT = 45958 2016 ADTT = 17775

TRAFFIC DATA TAKEN FROM TRANSPORTATION DATA MANAGEMENT SYSTEM

REHABILITATION PLAN DISCLAIMER

DIMENSIONS AND DATA ARE TAKEN FROM EXISTING PLANS AND FIELD MEASUREMENT. ALL DIMENSIONS AND ELEVATIONS ARE TO BE CONSIDERED +/- AND FOR REFERENCE ONLY.

EXISTING R/W LOCATION

THE EXISTING R/W ON THE EAST SIDE OF THE INTERCHANGE IS BEYOND THE LIMITS OF THE PLAN VIEW.

EXISTING STRUCTURE

TYPE: CONTINUOUS STEEL BEAMS WITH REINFORCED CONCRETE DECK AND SUBSTRUCTURE
SPANS: 42'-0", 70'-0", 70'-0", 42'-0" C/C BRGS.
ROADWAY: 43'-0" TOE/TOE PARAPET
LOADING: HS20-44, CASE II AND ALTERNATE MILITARY LOADING
SKEW: NONE
APPROACH SLABS: AS-1-81 (25' LONG)
ALIGNMENT: TANGENT
CROWN: 3/16"/FT
STRUCTURAL FILE NUMBER: 5705371
DATE BUILT: 1959 REHABILITATED: 1993
WEARING SURFACE: 1¼"± MONOLITHIC CONCRETE
COORDINATES: LATITUDE N 39° 51' 18"
LONGITUDE W 84° 19' 50"
DISPOSITION: TO BE REHABILITATED

PROPOSED WORK

1. PATCH ABUTMENTS AND BACKWALLS.

WORK LISTED IS NOT INCLUSIVE. CONTRACTOR WILL SEQUENCE WORK AS NEEDED.

DESIGN AGENCY
ODOT DISTRICT 7
ENGINEERING

DRAWN DHG | REVIEWED MRB | DATE 6/27/2019
DESIGNED DHG | CHECKED LCG | REVISED | STRUCTURE FILE NUMBER 5705371

MONTGOMERY COUNTY
STA. 54+57.64
STA. 56+86.14

SITE PLAN
BRIDGE NO.: MOT-070-0859
HOKE RD. OVER I.R. 70

D07-BH-FY20(C)
PID No. 105419

1 / 2

43
53

i:\ProjectData\D07\105419_BH-FY20_C\Design\Structures\MOT070_0859C\Sheets\070_0859C_SP001.dgn Sheet 7/19/2019 9:17:32 AM dgrillio

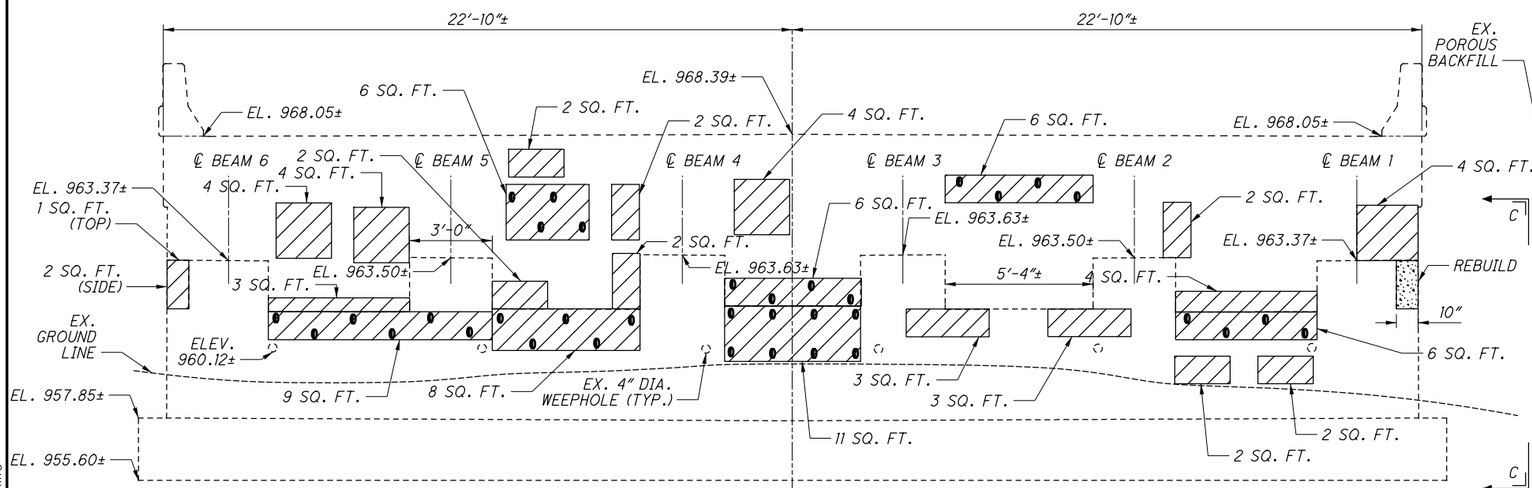

REAR ABUTMENT ELEVATION

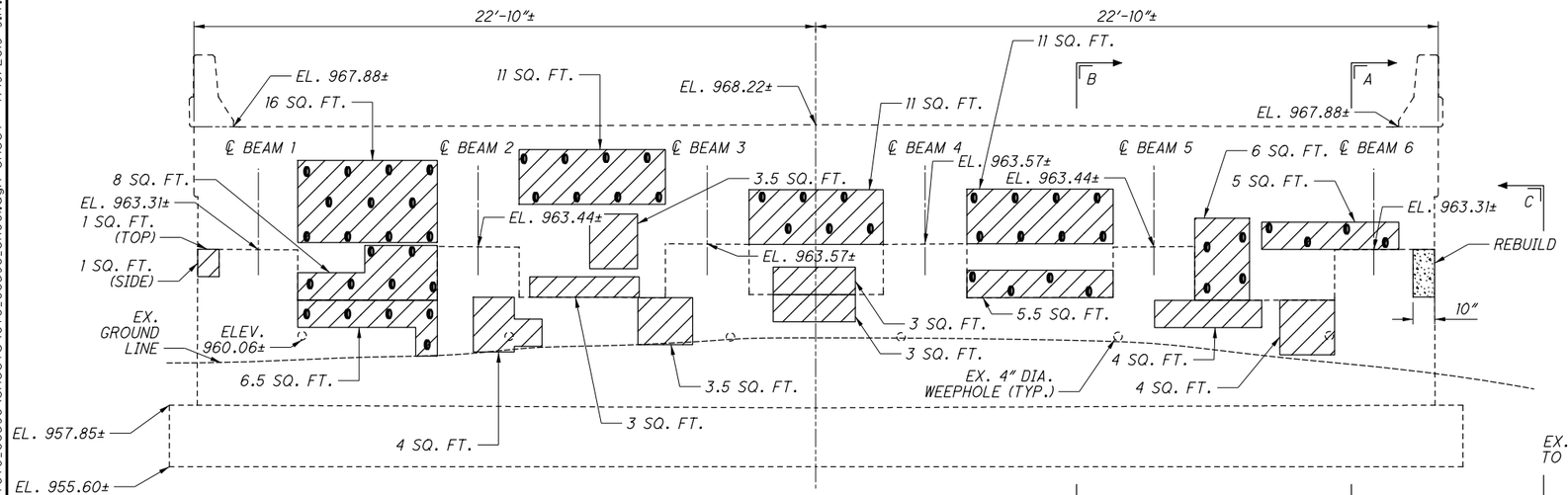

FORWARD ABUTMENT ELEVATION

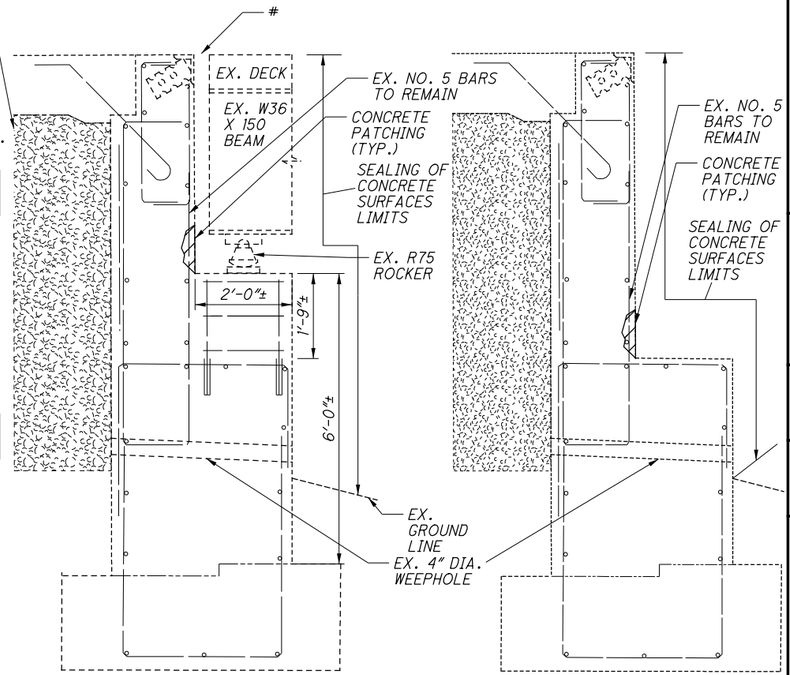

SECTION A-A

SECTION B-B

NOTES & LEGEND

	ITEM 844 PATCHING
REAR ABUTMENT	98 SQ. FT.
FWD. ABUTMENT	110 SQ. FT.
TOTAL =	208 SQ. FT.

	# OF ANODES	
REAR ABUTMENT	35	
FWD. ABUTMENT	56	
TOTAL =	91	FOR REFERENCE ONLY

1. SEAL CONCRETE SURFACES TO THE LIMITS SHOWN FOR THE ABUTMENTS. SEAL WITH EPOXY URETHANE 6" BEYOND THE TWO REBUILD AREAS. MATCH THE EXISTING SEALER COLOR.

- EX. STRIP SEAL EXPANSION JOINT NOT SHOWN FOR CLARITY

ITEM 844 - CONCRETE PATCHING WITH GALVANIC ANODE PROTECTION, AS PER PLAN

(ANODES TO BE PLACED IN PATCHES GREATER THAN OR EQUAL TO 5 SQ. FT. PER SS844)

ITEM 202 - PORTIONS OF STRUCTURE REMOVED, OVER 20 FOOT SPAN, AS PER PLAN

ITEM 511 - CLASS QC1 CONCRETE, SUBSTRUCTURE

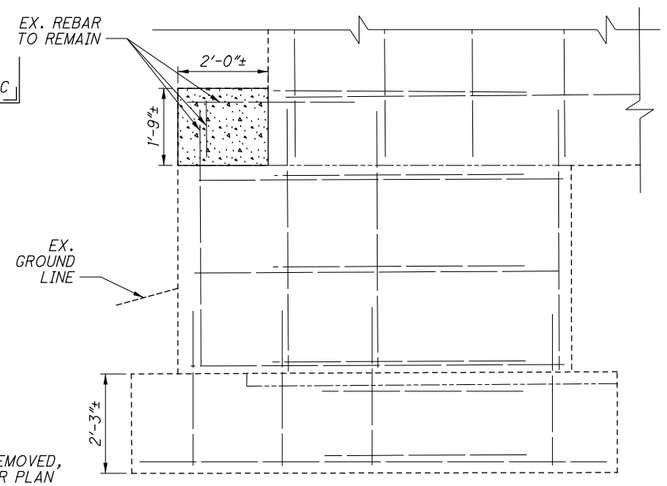

VIEW C-C

DESIGN AGENCY: ODOT DISTRICT 7 ENGINEERING
DESIGNED: PJB | DRAWN: PJB | CHECKED: LCG | REVIEWED: MRB | DATE: 6/27/2019 | REVISED: | STRUCTURE FILE NUMBER: 5705371

ABUTMENT REPAIR DETAIL
BRIDGE NO.: MOT-070-0859
HOKE RD. OVER I.R. 70

D07-BH-FY20(C)
PID No. 105419

2 / 2

44
53

I:\ProjectData\D07\105419_BH-FY20_C\Design\Structures\MOT070_0859C\Sheets\070_0859C_SR001.dgn Sheet+ 7/9/2019 9:17:34 AM dgrlilio

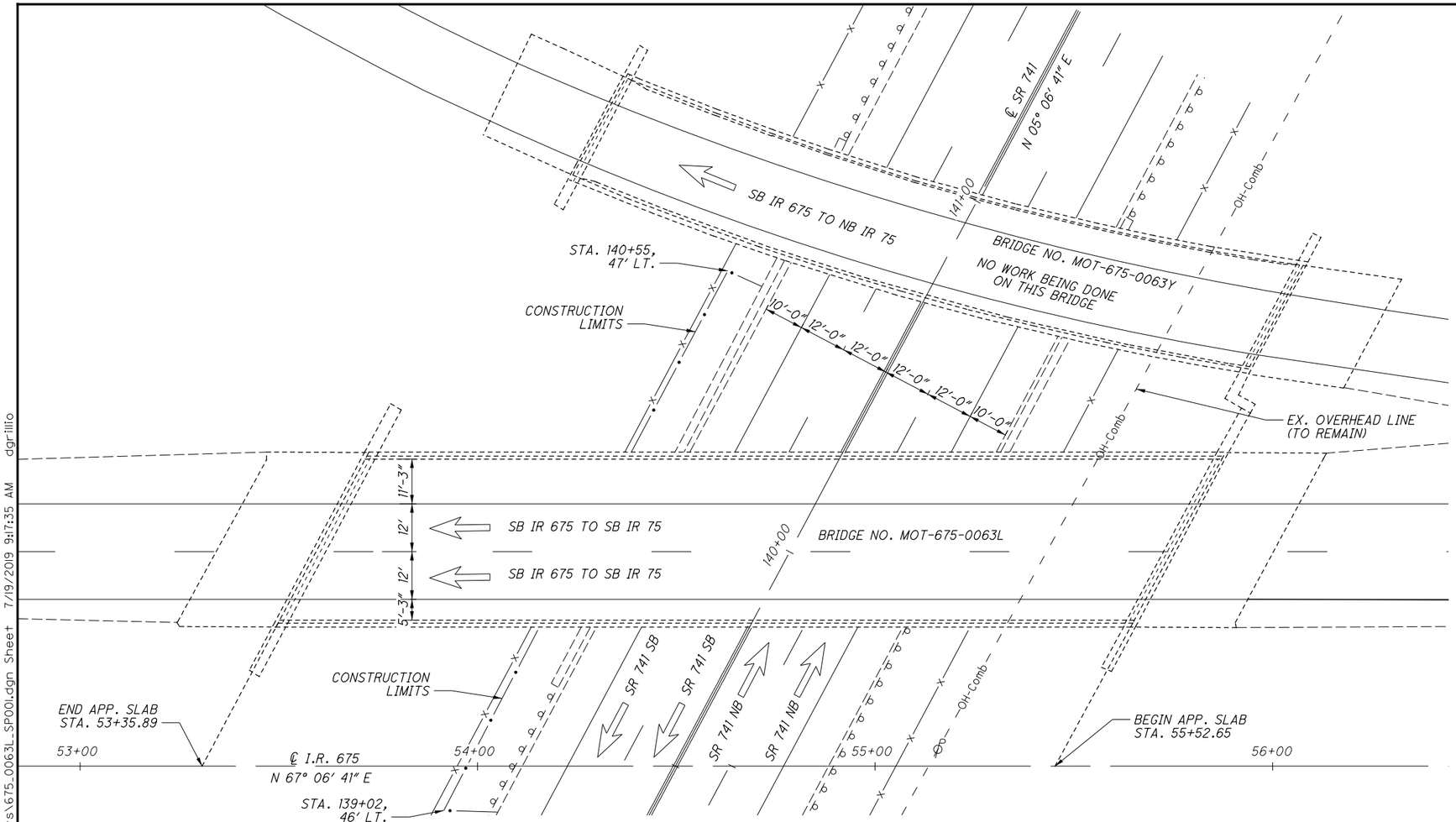

PLAN

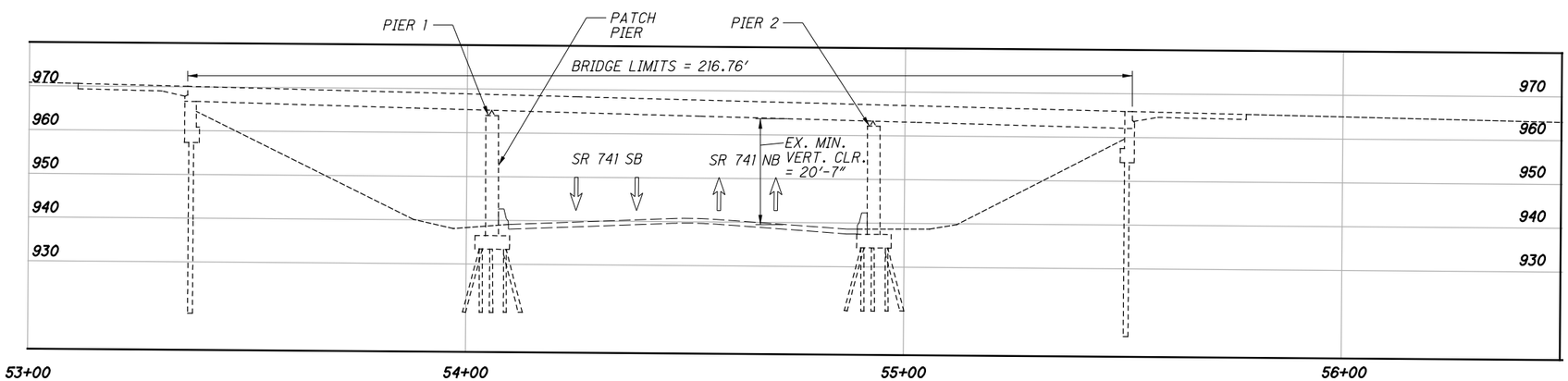

PROFILE

NOTES

TRAFFIC DATA I.R. 675:
2017 ADT = 22367 2016 ADTT = 1745

TRAFFIC DATA S.R. 741:
2017 ADT = 22969 2016 ADTT = 462

TRAFFIC DATA TAKEN FROM TRANSPORTATION DATA MANAGEMENT SYSTEM

REHABILITATION PLAN DISCLAIMER

DIMENSIONS AND DATA ARE TAKEN FROM EXISTING PLANS AND FIELD MEASUREMENT. ALL DIMENSIONS AND ELEVATIONS ARE TO BE CONSIDERED +/- AND FOR REFERENCE ONLY.

EXISTING R/W LOCATION

THE EXISTING R/W IS BEYOND THE SHOWN LIMITS OF THE PLAN VIEW, SINCE IT IS WITHIN THE INTERCHANGE. REFERENCE TO THE OLD R/W PLANS IS TO BE MADE FOR SPECIFIC DETAILS.

EXISTING STRUCTURE

TYPE: CONTINUOUS STEEL BEAMS WITH REINFORCED CONCRETE DECK AND SUBSTRUCTURE
SPANS: 69'-0", 87'-6", 58'-0" C/C BRGS.
ROADWAY: 40'-6" TOE/TOE PARAPET
LOADING: HS20-44 CASE II & ALT. MILITARY LOADING
SKEW: 28° 00' 00" LEFT FORWARD
APPROACH SLABS: AS-1-72 (25' LONG)
ALIGNMENT: TANGENT
CROWN: 3/16"/FT
STRUCTURAL FILE NUMBER: 5710766
DATE BUILT: 1983
WEARING SURFACE: MICROSILICA CONCRETE
COORDINATES: LATITUDE N 39° 37' 27"
LONGITUDE W 84° 13' 35"
DISPOSITION: TO BE REHABILITATED

PROPOSED WORK

1. PATCH PIER COLUMN.

WORK LISTED IS NOT INCLUSIVE. CONTRACTOR WILL SEQUENCE WORK AS NEEDED.

DESIGN AGENCY
ODOT DISTRICT 7
ENGINEERING

DESIGNED	DRAWN	REVIEWED	DATE
DHG	DHG	MRB	6/27/2019
CHECKED	REVISED	STRUCTURE FILE NUMBER	
LCG		5710766	

MONTGOMERY COUNTY
STA. 53+35.89
STA. 55+52.65

SITE PLAN
BRIDGE NO.: MOT-675-0063L
I.R. 675 OVER S.R. 741

D07-BH-FY20(C)
PID No. 105419

1 / 2

45
53

I:\ProjectData\D07\105419_BH-FY20_C\Design\Structures\MOT675_0063L\Sheets\675_0063L_SP001.dgn Sheet 7/19/2019 9:17:35 AM dgrillo

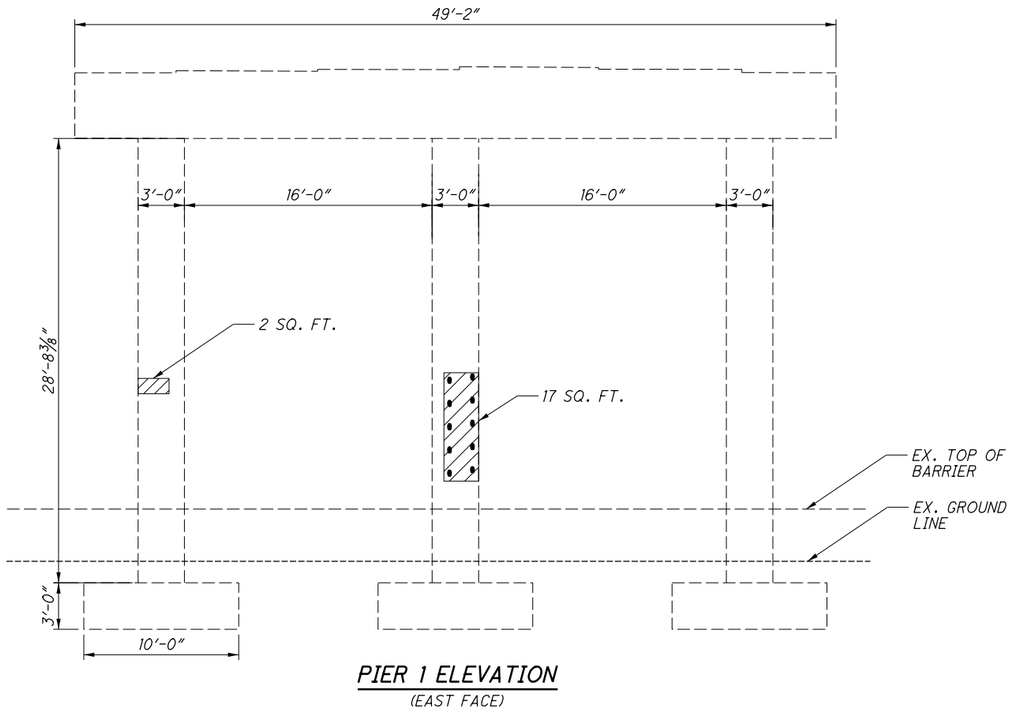

PIER 1 ELEVATION
(EAST FACE)

NOTES & LEGEND

1. SEAL CONCRETE SURFACES WITH EPOXY URETHANE 6" BEYOND REPAIR LIMITS.

ITEM 844 - CONCRETE PATCHING WITH GALVANIC ANODE PROTECTION, AS PER PLAN

(ANODES TO BE PLACED IN PATCHES GREATER THAN OR EQUAL TO 5 SQ. FT. PER SS844)

	ITEM 844 PATCHING
PIER 1	19 SQ. FT.

	# OF ANODES	
PIER 1	10	
TOTAL =	10	FOR REFERENCE ONLY

DESIGN AGENCY
ODOT DISTRICT 7
ENGINEERING

DESIGNED	DRAWN	REVIEWED	DATE
PJB	PJB	MRB	6/27/2019
CHECKED	REVISED	STRUCTURE FILE NUMBER	
LCG		5710766	

PIER REPAIR DETAIL
BRIDGE NO.: MOT-675-0063L
I.R. 675 OVER S.R. 741

D07-BH-FY20(C)
PID No. 105419

2 / 2

46
53

I:\ProjectData\D07\105419_BH-FY20_C\Design\Structures\MOT675_0063L\Sheets\675_0063L_S001.dgn Sheet 7/19/2019 9:17:36 AM dgrillio

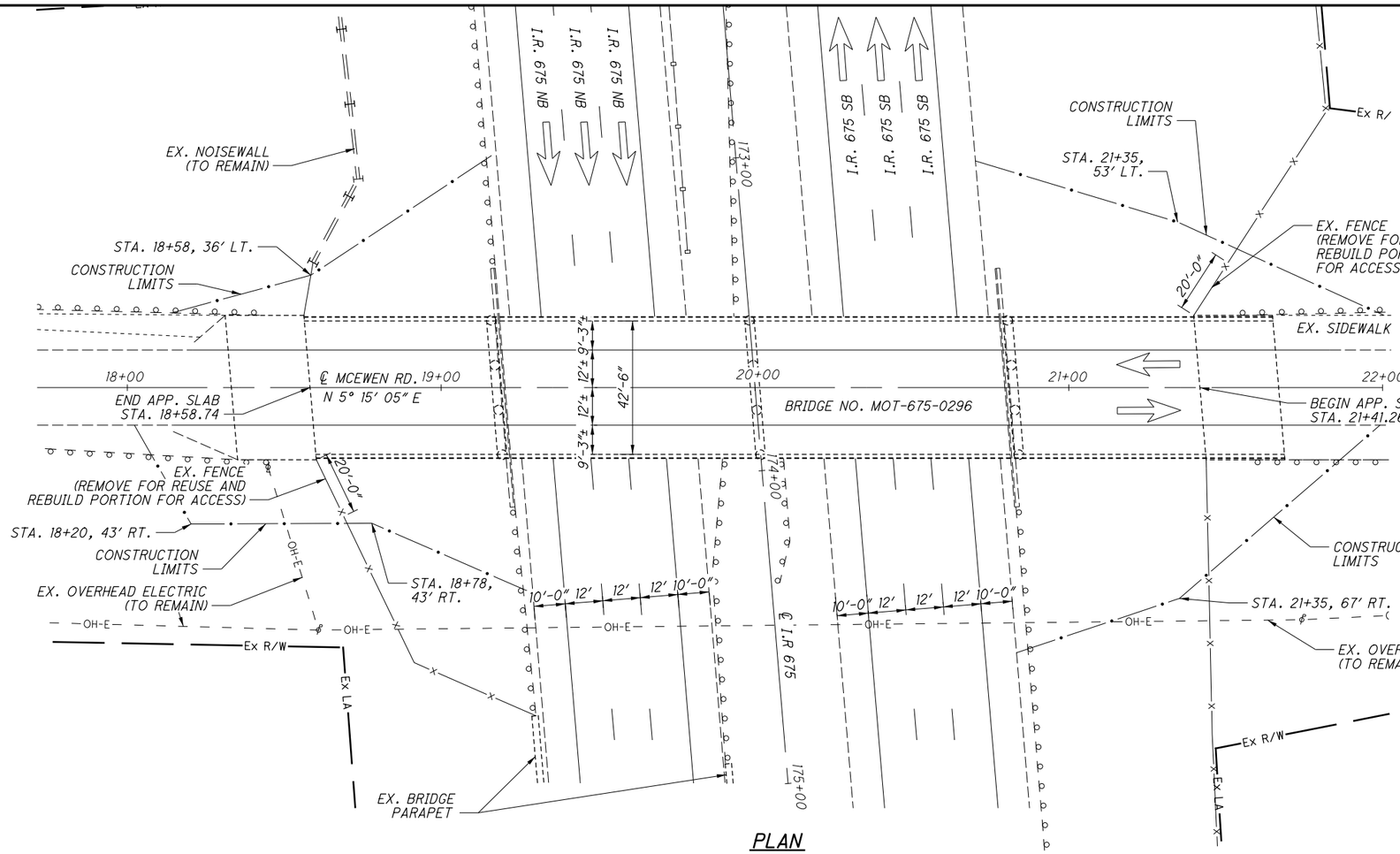

PLAN

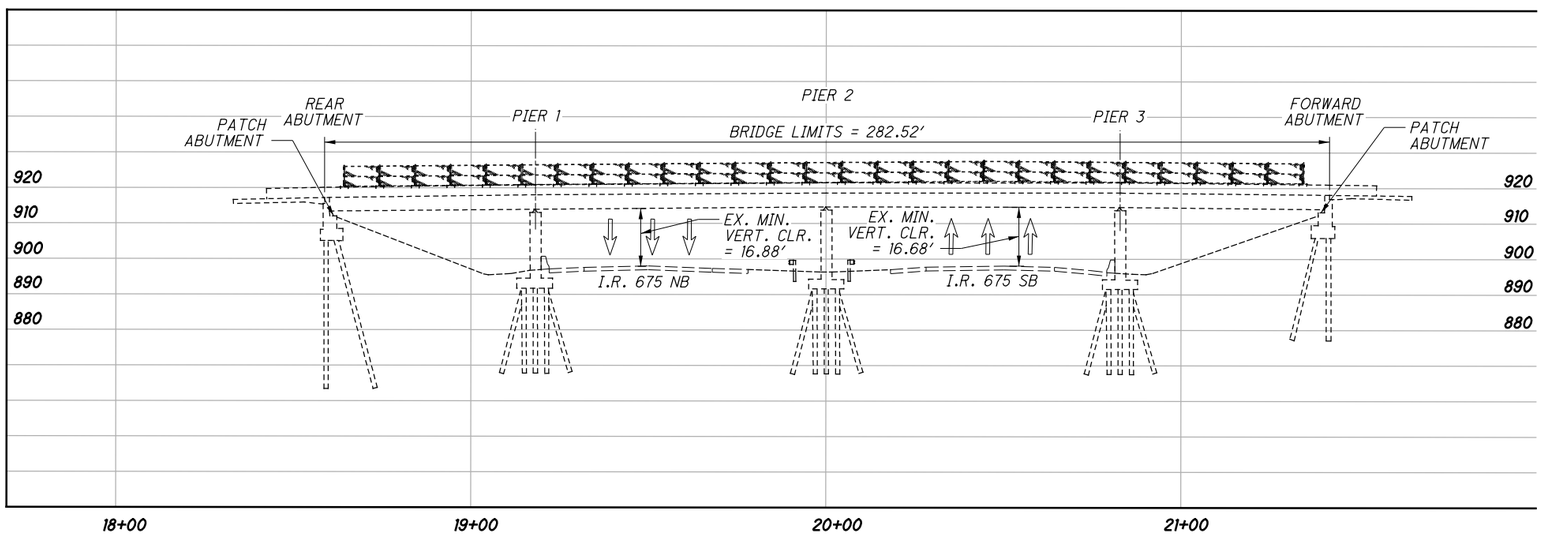

PROFILE

NOTES

TRAFFIC DATA I.R. 675:
2017 ADT = 79361 2016 ADTT = 5110

TRAFFIC DATA MCEWEN RD.:
2017 ADT = 7448 NO TRUCK VOLUMES PROVIDED

TRAFFIC DATA TAKEN FROM TRANSPORTATION DATA MANAGEMENT SYSTEM

REHABILITATION PLAN DISCLAIMER

DIMENSIONS AND DATA ARE TAKEN FROM EXISTING PLANS AND FIELD MEASUREMENT. ALL DIMENSIONS AND ELEVATIONS ARE TO BE CONSIDERED +/- AND FOR REFERENCE ONLY.

EXISTING STRUCTURE

TYPE: CONTINUOUS STEEL BEAMS WITH REINFORCED CONCRETE DECK AND SUBSTRUCTURE
SPANS: 57'-0", 82'-0", 82'-0", 57'-0" C/C BRGS.
ROADWAY: 42'-6" TOE/TOE PARAPET
LOADING: HS20-44 CASE II & ALTERNATE MILITARY LOADING
SKEW: 4° 42' 00" RIGHT FORWARD
APPROACH SLABS: AS-1-72 (25' LONG)
ALIGNMENT: TANGENT
CROWN: 3/16"/FT
STRUCTURAL FILE NUMBER: 5711150
DATE BUILT: 1983 REHABILITATED: 1993
WEARING SURFACE: 1¼"± MICROSILICA CONCRETE
COORDINATES: LATITUDE N 39° 38' 10.5"
LONGITUDE W 84° 11' 15"
DISPOSITION: TO BE REHABILITATED

PROPOSED WORK

1. PATCH ABUTMENTS.

WORK LISTED IS NOT INCLUSIVE. CONTRACTOR WILL SEQUENCE WORK AS NEEDED.

DESIGN AGENCY
ODOT DISTRICT 7
ENGINEERING

DATE
REVIEWED MRB 6/27/2019
STRUCTURE FILE NUMBER 5711150

DRAWN DHG REVISED
DESIGNED DHG CHECKED LCG

MONTGOMERY COUNTY
STA. 18+58.74
STA. 21+41.26

SITE PLAN
BRIDGE NO.: MOT-675-0296
MCEWEN RD. OVER I.R. 675

D07-BH-FY20(C)
PID No. 105419

1 / 2

47
53

I:\ProjectData\D07\105419_BH-FY20_C\Design\Structures\MOT675_0296C\Sheets\675_0296C_SP001.dgn Sheet 7/19/2019 9:17:38 AM dgrillo

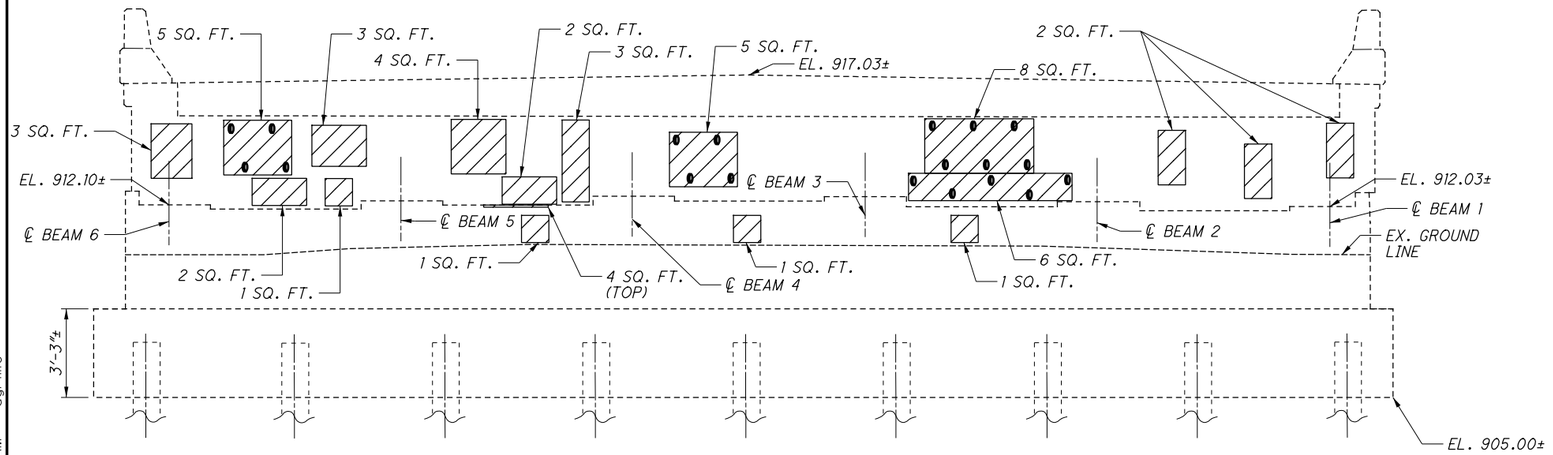

REAR ABUTMENT ELEVATION

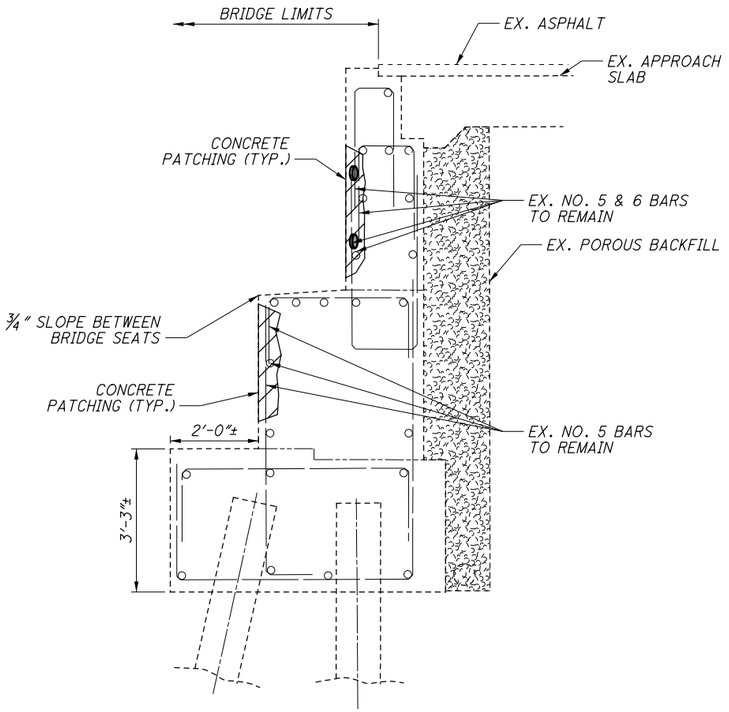

SECTION A-A

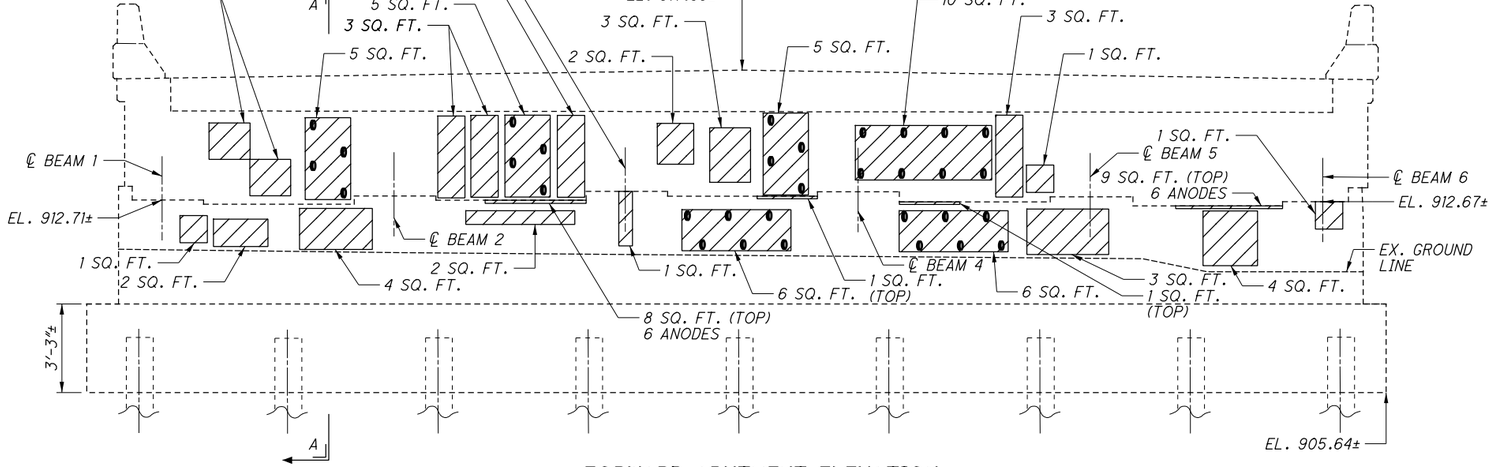

FORWARD ABUTMENT ELEVATION

	ITEM 844 PATCHING
REAR ABUTMENT	55 SQ. FT.
FWD. ABUTMENT	96 SQ. FT.
TOTAL =	151 SQ. FT.

	# OF ANODES	
REAR ABUTMENT	19	
FWD. ABUTMENT	44	
TOTAL =	63	FOR REFERENCE ONLY

NOTES & LEGEND

1. SEAL CONCRETE SURFACES WITH EPOXY URETHANE 6" BEYOND REPAIR LIMITS.

ITEM 844 - CONCRETE PATCHING WITH GALVANIC ANODE PROTECTION, AS PER PLAN

(ANODES TO BE PLACED IN PATCHES GREATER THAN OR EQUAL TO 5 SQ. FT. PER SS844)

DESIGN AGENCY: ODOT DISTRICT 7 ENGINEERING

DESIGNED	DRAWN	REVIEWED	DATE
PJB	PJB	MRB	6/27/2019
CHECKED	REVISED	STRUCTURE FILE NUMBER	
LCG		5711150	

ABUTMENT REPAIR DETAIL

BRIDGE NO.: MOT-675-0296
MCEWEN RD. OVER I.R. 675

D07-BH-FY20(C)
PID No. 105419

2 / 2

48
53

I:\ProjectData\D07\105419_BH-FY20_C\Design\Structures\MOT675_0296C\Sheets\675_0296C_SR001.dgn Sheet 7/19/2019 9:47:39 AM dgrillo

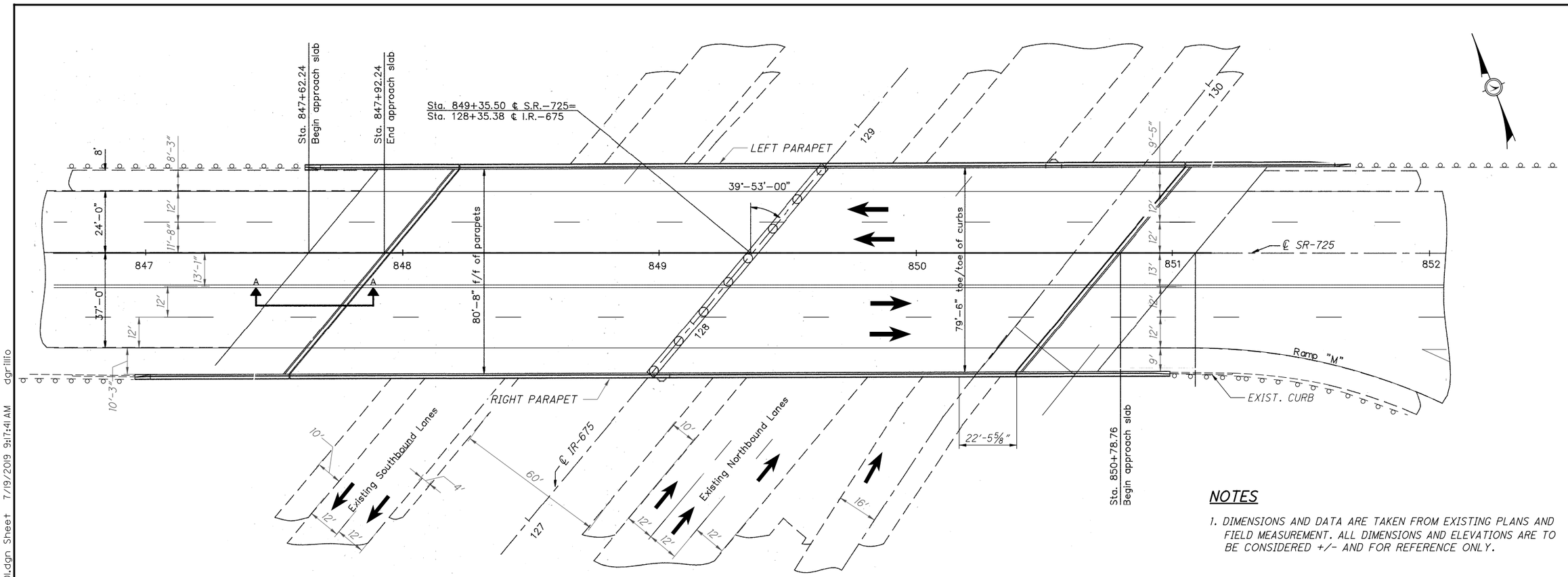

PLAN

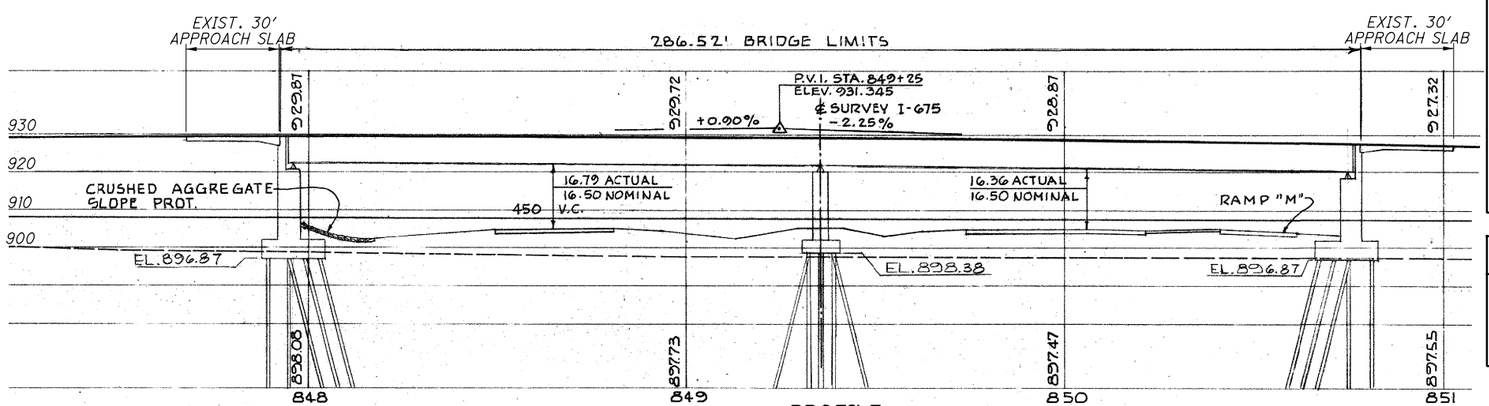

PROFILE

NOTES

1. DIMENSIONS AND DATA ARE TAKEN FROM EXISTING PLANS AND FIELD MEASUREMENT. ALL DIMENSIONS AND ELEVATIONS ARE TO BE CONSIDERED +/- AND FOR REFERENCE ONLY.

2. THE EXISTING R/W OF THE INTERCHANGE IS BEYOND THE LIMITS OF THE PLAN VIEW.

EXISTING STRUCTURE

TYPE: CONTINUOUS PLATE GIRDER WITH REINFORCED CONCRETE DECK AND SUBSTRUCTURE

SPANS: 140' - 140'

ROADWAY: 80'-8" F/F PARAPET

LOADING: HS 20-44 CASE II AND ALT, MILITARY LOADING (ORIG.)

SKEW: 39°-53'-00" LT. FWD.

APPROACH SLABS: AS-1-72 (30' LONG)

ALIGNMENT: TANGENT

CROWN: 3/16"/FT

STRUCTURAL FILE NUMBER: 5710251

DATE BUILT: 1979, REHABILITATED 1993

DISPOSITION: TO BE REHABILITATED

PROPOSED WORK

1. REMOVE EXISTING VANDAL PROTECTION FENCE (VPF)
2. REPAIR CONCRETE PARAPETS
3. INSTALL NEW VPF

WORK LISTED IS NOT INCLUSIVE. CONTRACTOR WILL SEQUENCE WORK AS NEEDED.

DESIGN AGENCY
ODOT DISTRICT 7
ENGINEERING

DESIGNED	DRAWN	REVIEWED	DATE
MEF	MEF	MRB	6/27/2019
CHECKED	REVISED	STRUCTURE FILE NUMBER	
DHG		5710251	

MONTGOMERY COUNTY
STA. 847+92.24
STA. 850+78.76

SITE PLAN
BRIDGE NO.: MOT-725-1606
S.R. 725 OVER I.R. 675

D07-BH-FY20(C)
PID No. 105419

1 / 3

49
53

I:\Project Data\D07\105419_BH-FY20_C\Design\Structures\MOT725_1606C\Sheets\725_1606C_SP001.dgn Sheet 7/19/2019 9:17:41 AM dgrillio

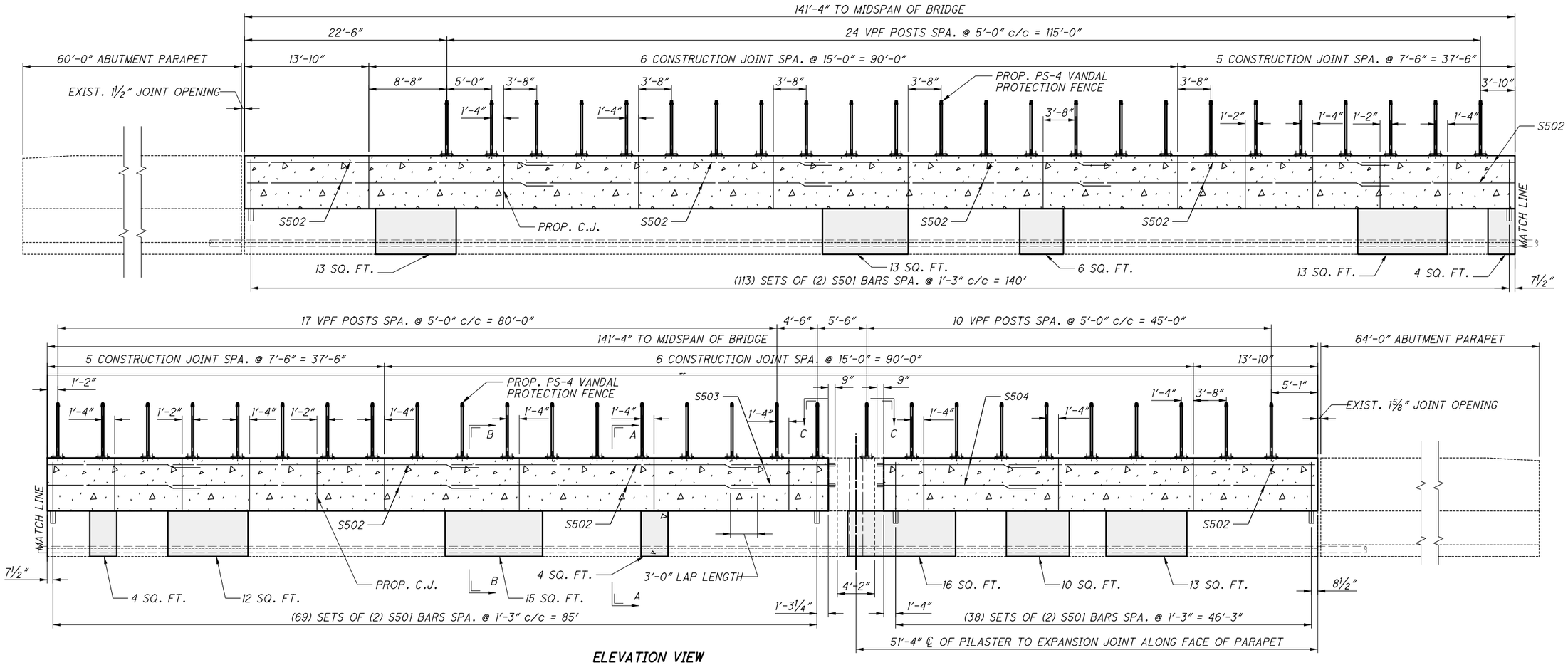

ELEVATION VIEW
LEFT PARAPET

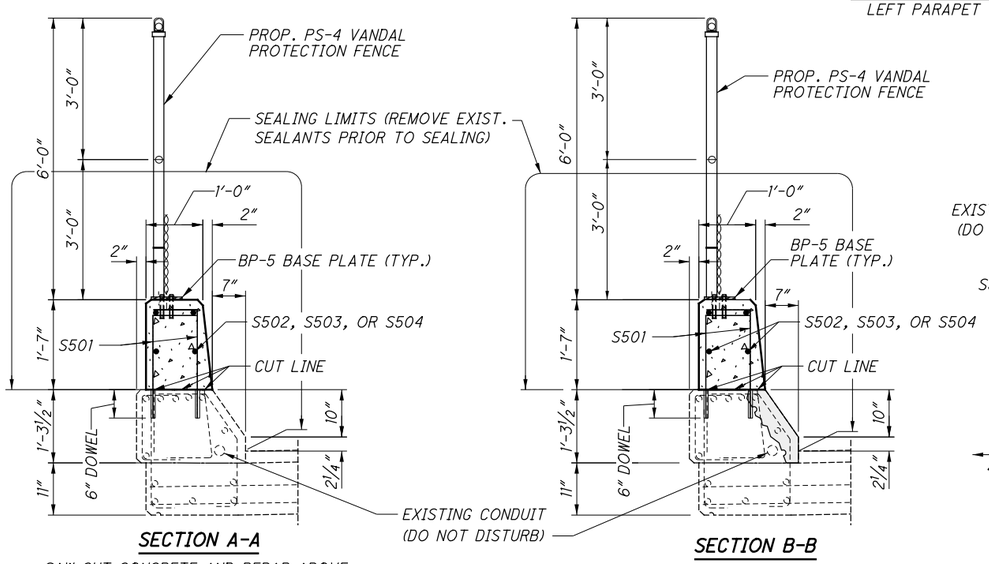

SECTION A-A
SAW CUT CONCRETE AND REBAR ABOVE CONSTRUCTION JOINT AND REBUILD

SECTION B-B

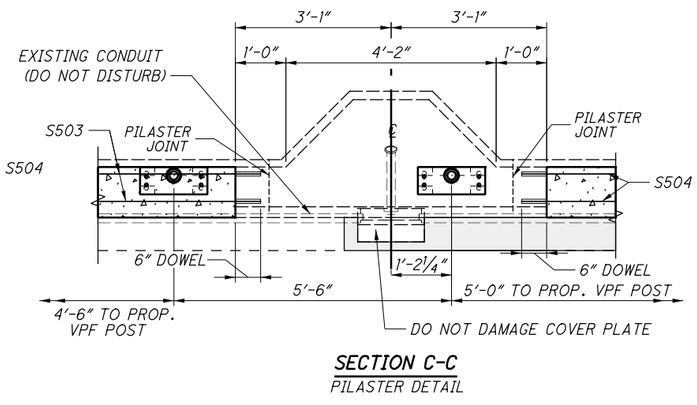

SECTION C-C
PILASTER DETAIL

NOTES AND LEGEND

C.J. = CONSTRUCTION JOINT

1. EXISTING DETAILS SHOWN ARE TAKEN FROM EXISTING PLANS AND FIELD MEASUREMENTS ARE FOR REFERENCE ONLY.
2. ALL UNDISTURBED AREAS DESIGNATED FOR SEALING SHALL HAVE THE EXISTING CONCRETE COATINGS REMOVED PRIOR TO APPLICATION OF EPOXY URETHANE SEALANT.
3. FOR REBAR DETAILS AND QUANTITIES SEE SHEET 5/53
4. FOR ADDITIONAL VANDAL PROTECTION FENCE DETAILS AND NOTES, SEE STD. DWG. VPF-1-90

= ITEM 519 PATCHING LIMITS

= ITEM 202 REMOVAL & ITEM 517 - BRIDGE RAILING REBUILT LIMITS

DESIGN AGENCY
ODOT DISTRICT 7
ENGINEERING

DESIGNED	DRAWN	REVIEWED	DATE
MEF	MEF	MRB	6/27/2019
CHECKED	REVISED	STRUCTURE FILE NUMBER	
DHG		5710251	

LEFT PARAPET REPAIR DETAILS

BRIDGE NO.: MOT-725-1606
S.R. 725 OVER I.R. 675

D07-BH-FY20(C)
PID No. 105419

2 / 3

50
53

I:\Project Data\D07\105419_BH-FY20_C\Design\Structures\MOT725_1606C\Sheets\725_1606C_SS001.dgn Sheet 7/19/2019 9:18:7 AM dgrillio

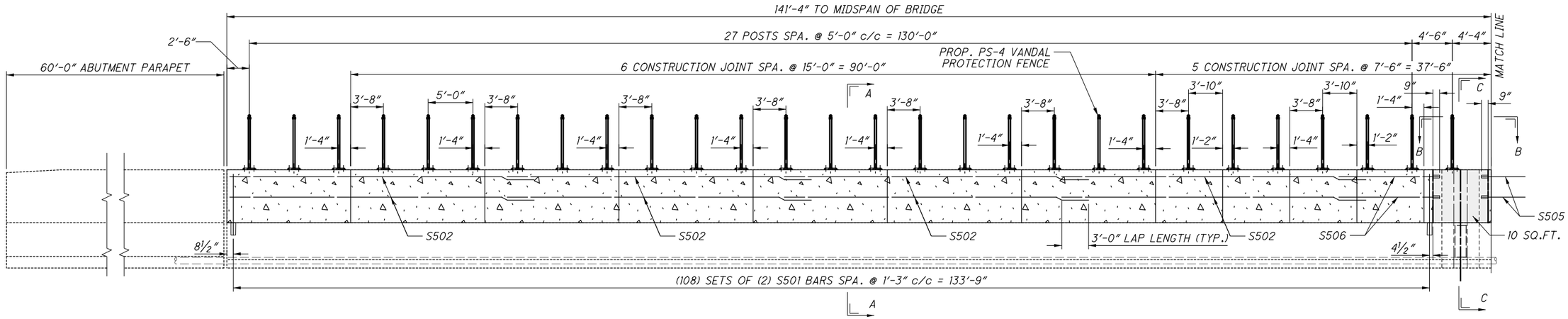

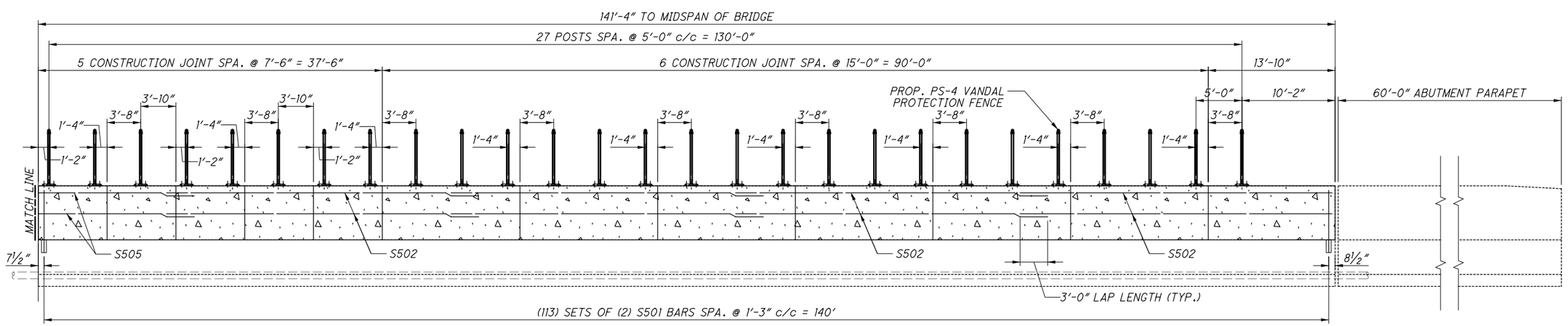

ELEVATION VIEW
RIGHT PARAPET

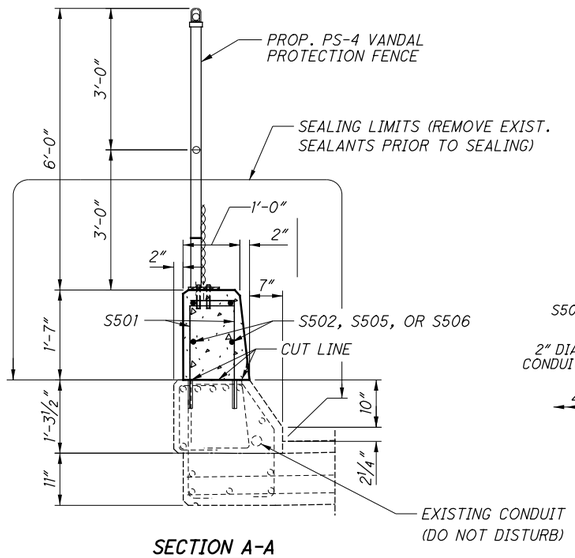

SECTION A-A
SAW CUT CONCRETE AND REBAR ABOVE CONSTRUCTION JOINT AND REBUILD

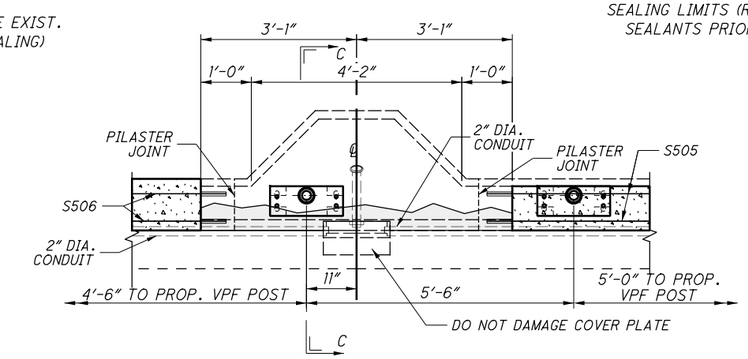

SECTION B-B
PILASTER DETAIL

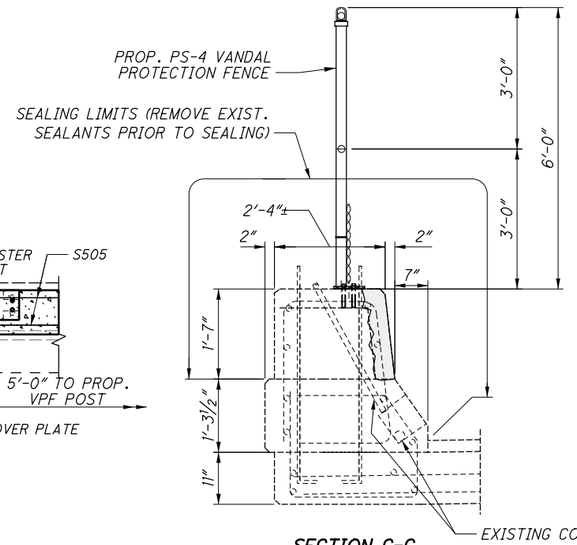

SECTION C-C
CONCRETE PATCHING AT PILASTER

NOTES AND LEGEND

C.J. = CONSTRUCTION JOINT

1. EXISTING DETAILS SHOWN ARE TAKEN FROM EXISTING PLANS AND FIELD MEASUREMENTS ARE FOR REFERENCE ONLY.
2. ALL UNDISTURBED AREAS DESIGNATED FOR SEALING SHALL HAVE THE EXISTING CONCRETE COATINGS REMOVED PRIOR TO APPLICATION OF EPOXY URETHANE SEALANT.
3. FOR REBAR DETAILS AND QUANTITIES SEE SHEET 5/53
4. FOR ADDITIONAL VANDAL PROTECTION FENCE DETAILS AND NOTES, SEE STD. DWG. VPF-1-90

= ITEM 519 PATCHING LIMITS

= ITEM 202 REMOVAL & ITEM 517 - BRIDGE RAILING REBUILT LIMITS

DESIGN AGENCY
ODOT DISTRICT 7
ENGINEERING

DESIGNED	DRAWN	REVIEWED	DATE
MEF	MEF	MRB	6/27/2019
CHECKED	REVISED	STRUCTURE FILE NUMBER	
DHG		5710251	

RIGHT PARAPET REPAIR DETAILS

BRIDGE NO.: MOT-725-1606
S.R. 725 OVER I.R. 675

D07-BH-FY20(C)
PID No. 105419

3 / 3

51
53

I:\Project Data\D07\105419_BH-FY20_C\Design\Structures\MOT725_1606C\Sheets\725_1606C_SS002.dgn Sheet 7/19/2019 9:18:18 AM dgrillio

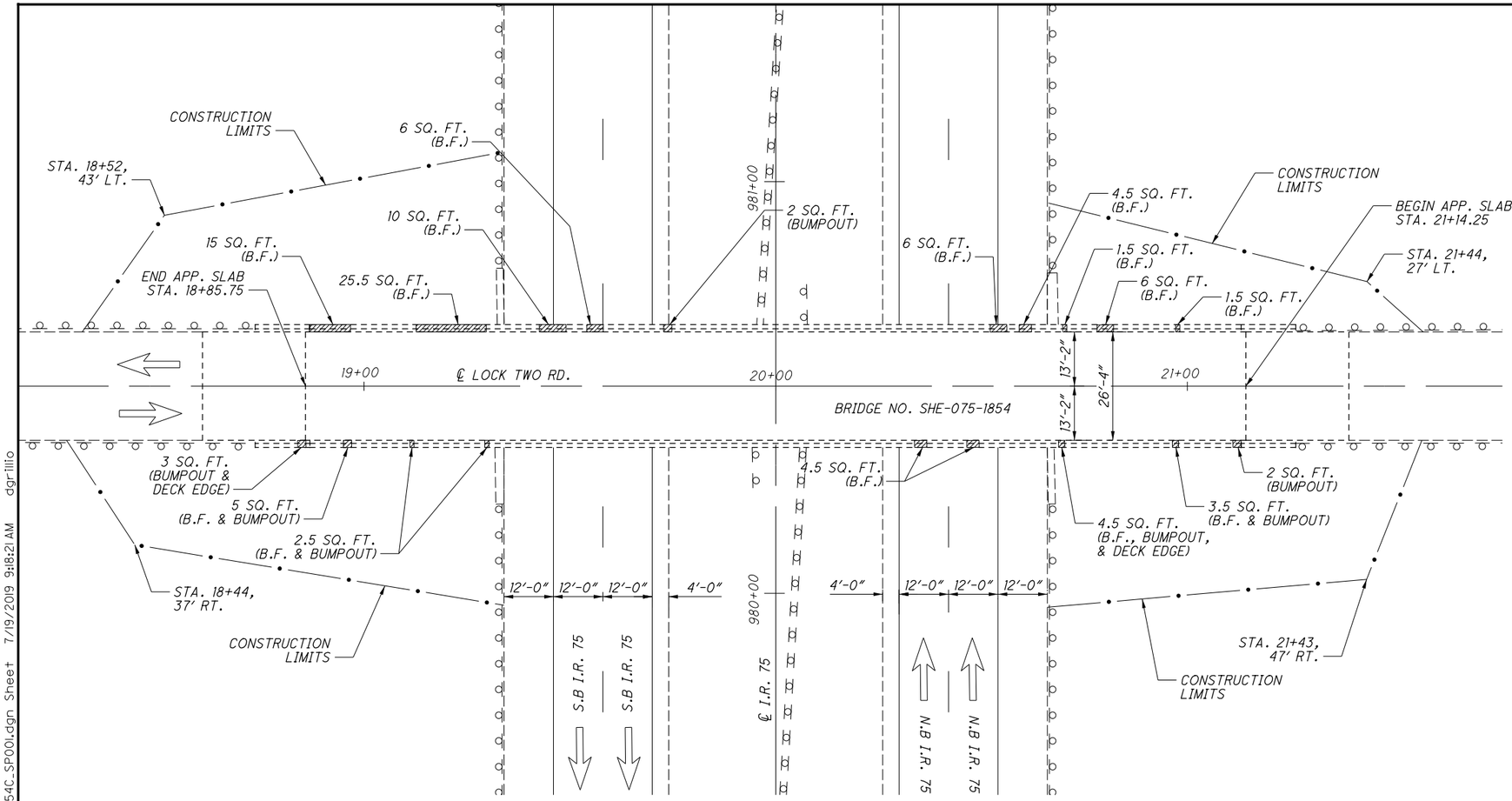

PLAN

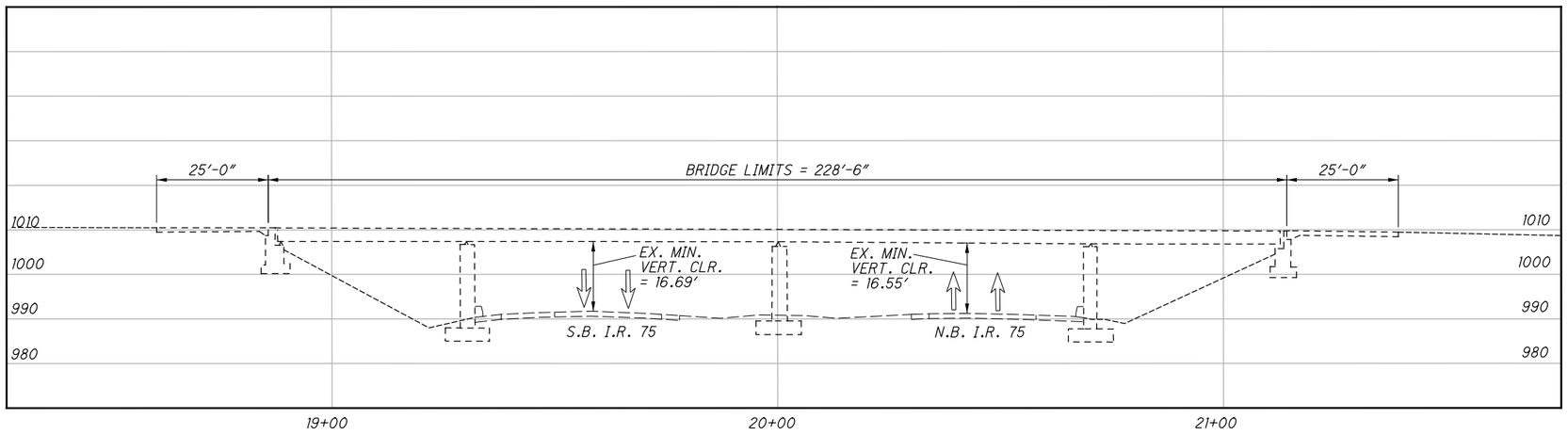

PROFILE

NOTES & LEGEND

TRAFFIC DATA I.R 75:
2017 ADT = 39128 2016 ADTT = 14827

TRAFFIC DATA LOCK TWO RD.:
2017 ADT = 269 NO TRUCK VOLUMES PROVIDED

TRAFFIC DATA TAKEN FROM TRANSPORTATION DATA MANAGEMENT SYSTEM

B.F. = BACK FACE

REHABILITATION PLAN DISCLAIMER

DIMENSIONS AND DATA ARE TAKEN FROM EXISTING PLANS AND FIELD MEASUREMENT. ALL DIMENSIONS AND ELEVATIONS ARE TO BE CONSIDERED +/- AND FOR REFERENCE ONLY.

EXISTING R/W LOCATION

THE EXISTING R/W IS JUST BEYOND THE SHOWN LIMITS OF THE PLAN VIEW. REFERENCE TO THE OLD R/W PLANS IS TO BE MADE FOR SPECIFIC DETAILS.

EXISTING STRUCTURE

TYPE: CONTINUOUS STEEL BEAMS WITH REINFORCED CONCRETE DECK AND SUBSTRUCTURE
SPANS: 42'-0", 70'-0"', 70'-0", 42'-0" C/C BRGS.
ROADWAY: 26'-4" TOE/TOE PARAPET
LOADING: CF = 130(57)
SKEW: NONE
APPROACH SLABS: AS-1-81 (25' LONG)
ALIGNMENT: TANGENT
CROWN: 3/16"/FT
STRUCTURAL FILE NUMBER: 7502613
DATE BUILT: 1962 REHABILITATED: 1998
WEARING SURFACE: 2"± MICROSILICA CONCRETE
COORDINATES: LATITUDE N 40° 27' 12.2"
LONGITUDE W 84° 10' 9.5"
DISPOSITION: TO BE REHABILITATED

PROPOSED WORK

1. PATCH AND SEAL BRIDGE PARAPET.

WORK LISTED IS NOT INCLUSIVE. CONTRACTOR WILL SEQUENCE WORK AS NEEDED.

DESIGN AGENCY
ODOT DISTRICT 7
ENGINEERING

DESIGNED	DRAWN	REVIEWED	DATE
DHG	DHG	MRB	6/27/2019
CHECKED	REVISED	STRUCTURE FILE NUMBER	
LCG		7502613	

SHELBY COUNTY
STA. 18+85.75
STA. 21+14.25

SITE PLAN
BRIDGE NO.: SHE-075-1854
LOCK TWO RD. OVER I-75

D07-BH-FY20(C)
PID No. 105419

1 / 2

52
53

I:\ProjectData\D07\105419_BH-FY20_C\Design\Structures\SHE075_1854C\Sheets\075_1854C_SP001.dgn Sheet 7/19/2019 9:18:21 AM dgrillo

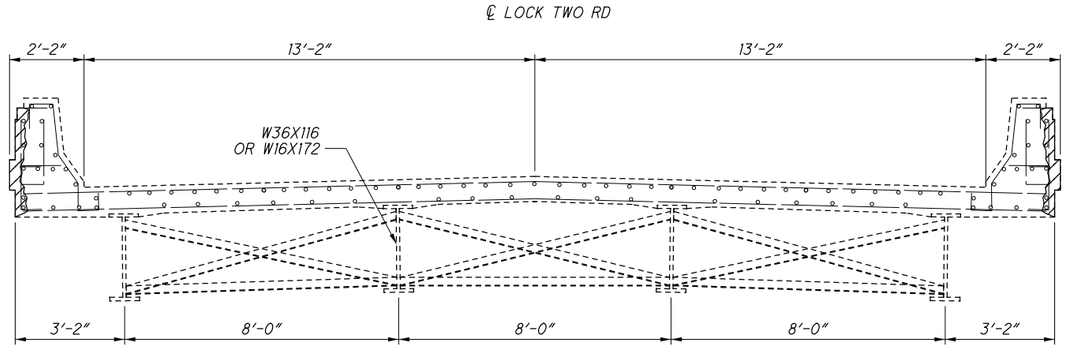

TRANSVERSE SECTION

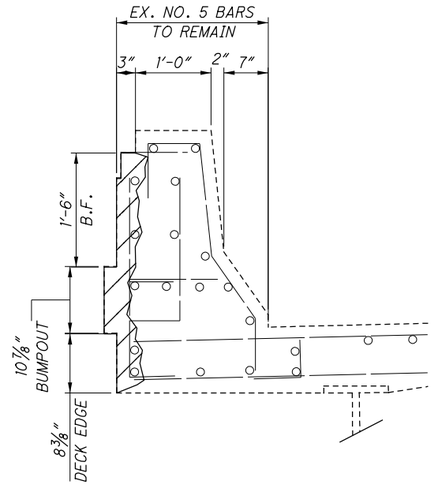

TYPICAL REMOVAL SECTION

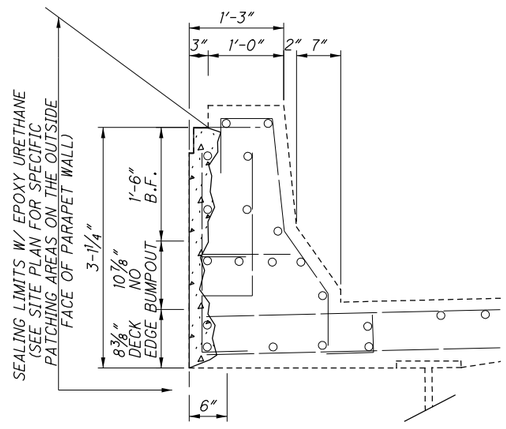

TYPICAL PATCHING SECTION

(DO NOT RECONSTRUCT BUMPOUT)

	ITEM 519 PATCHING
SOUTH PARAPET	32 SQ. FT.
NORTH PARAPET	78 SQ. FT.
TOTAL =	110 SQ. FT.

NOTES & LEGEND

1. SEAL CONCRETE SURFACES WITH EPOXY URETHANE 6″ BEYOND REPAIR LIMITS.

B.F. = BACK FACE

CONCRETE REMOVAL LIMITS FOLLOWING ITEM 519

ITEM 519 - PATCHING CONCRETE STRUCTURE, AS PER PLAN

DESIGN AGENCY
ODOT DISTRICT 7
ENGINEERING

DESIGNED DHG | DRAWN DHG | REVIEWED MRB | DATE 6/27/2019 | CHECKED LCG | REVISED | STRUCTURE FILE NUMBER 7502613

TRANSVERSE SECTION/PARAPET DETAILS

BRIDGE NO.: SHE-075-1854
LOCK TWO RD. OVER I-75

D07-BH-FY20(C)
PID No. 105419

2 / 2

53
53

I:\ProjectData\D07\105419_BH-FY20_C\Design\Structures\SHE075_1854C\Sheets\075_1854C_SP002.dgn Sheet 7/19/2019 9:18:22 AM dgrillio