Copy Send Return this

STRUCTURE MAINTENANCE

COUNTY-ROUTE-SECTION: Aug-75-04.98 L

INTERSECTING FEATURE: S.R. 33

SFN: 0602043

Repairs Needed (Detailed Description/Drawing/Location):

Pack Rust Under Bearing Plates - Remove Base Plates, Clean, Paint, + Shim As Needed

(025 97AUG002

Initials/Date WE 3/28/97

Work Performed By B & C: (Description)

(Shimmed 3 Rockers + Cleaned)

Start Date: 3/26/97

Ending Date: 3/26/97

Initials: LL

County Assistance:

Materials & Quantities Used:

3 pcs 8" x 16" Rubber pads

B & C Comments:

Bridge Supt. Comments:

Bridge Engineer RC Chudley **Date** 3/24/97 **Priority** (3)

Comments Checked PID# 13077 (98 FY) No work, work done Proj: 735(94)

NOTE: After The Above Work Has Been Completed, This Information Is To Be Reviewed By The Bridge Engineer, Entered Into **BMS** Then Placed In The STRUCTURE'S FILE.

entered in BMS 3-27-97 BOL

DATE SENT TO COUNTY: 05-09-96

DEPARTMENT OF TRANSPORTATION

DAMAGE: Attachment 2 bridge wall

Rev. 9-94

Accident Damage Inspection /Repair Form

Bridge Number: AUG-75-0498 L

Work performed by:		Type of billing:	
Private Contractor	ODOT Personnel	Actual Cost	Unit Rate
	x		
☑ Check One		☑ Check One	

Auglaize (County) I-75 (Route) .1 mi. s. mp 2 (Location) mp 111 (Mile marker)

5-13-96 (Date of Inspection)

(Date of Repair)

Return this completed form and the patrol report to the District Auditors office.

Harold Shafer (Inspection performed by)

Sam Rayland (Supervisor)

☑ No Repairs will not be performed because: No Damage Repairs will not be performed by Bridge / Culvert

☐ Yes Repairs will be performed by the following work unit: _____

(Repaired by)

(Supervisor)

Labor (Actual)

Employee (s) Full Name	Hrs	Rate	Amount

DATE SENT TO COUNTY: 03-14-96

DEPARTMENT OF TRANSPORTATION

DAMAGE: Attachment 2 bridge

Rev. 9-94

Accident Damage Inspection /Repair Form

Work performed by:		Type of billing:	
Private Contractor	ODOT Personnel	Actual Cost	Unit Rate
	x		
☑ Check One		☑ Check One	

Bridge Number: AUG-75-0498 L

Auglaize	I-75	300 ft. s.	mp 111
County	Route	Section	Mile marker

Location

3-15-96	
Date of Inspection	Date of Repair

Return this completed form and the patrol report to the District Auditors office.

Harold Shafer	SJR
Inspection performed by	Supervisor

☑ No Repairs will not be performed because:
No Repairs
No Damage to bridge

☐ Yes Repairs will be performed by the following work unit: _____

Repaired by	Supervisor

Labor (Actual)

Employee (s) Full Name	Hrs	Rate	Amount
Total Labor			

Equipment used to complete inspection (Actual)

Description	Equip. No	Mi/Hrs.	Rate	Amount
Ford Crew Cab	8231076	80		
Total Equipment				

Description	Equip. No		Rate	Amount
Total Equipment				

Material Used (Unit Rates & ODOT Actual)

Description	Qty	Unit	Unit Cost	Amount
Total Material				

Material Used by Contractor (Actual)

Project No. _____

Description	Ref. No.#	Unit Cost	Qty	Total
Total Material				

Grand Total _____

DOT-0678 Invoice No. _____ Patrol Report (OH-1) No 6-166-6

STRUCTURE MAINTENANCE

CO.-RT.-SEC. Aug-75-0498 L
Repairs Needed:

Loose Rockers - Shim Loose Rockers

(1)

initials / date

WE 2/9/96

B&C response:

date
initials / completed

Materials & Quantities:

suppliers:

Comments:

Bridge Supt. _____

Bridge Engineer Determined by Bridge Engr. to wait until conditions are worse 2-23-96 (1) SO. END

This form is to be placed in the STRUCTURE FILE after completion. SEE Aug-75-0498 R

(2)

STRUCTURE MAINTENANCE

CO.-RT.-SEC. AUG-75-04984 S.E.C.

Repairs Needed:

SHIM ROCKER - RIGHT REAR OUTSIDE BEAM - CHECK OTHERS

BEAM NICKED - CHECK AND GRIND IF NEEDED

initials / date

RAR 1/30/95

B&C response:

Check + set (2) Rockers NO PADS used

100% Compl.

date

initials / completed

HA 2-7-95

Materials & Quantities:

suppliers:

Comments: Traffic Control Needed To Work on Nicked Beam S-R33 East under EMS Driving Lane

Bridge Supt. _____

Bridge Engineer _____

This form is to be placed in the STRUCTURE FILE after completion.

FHWA REGION	STATE	PROJECT	
5	OHIO		

AUGLAIZE COUNTY
ALLEN COUNTY
AUG-75-4.54
ALL-75-0.00

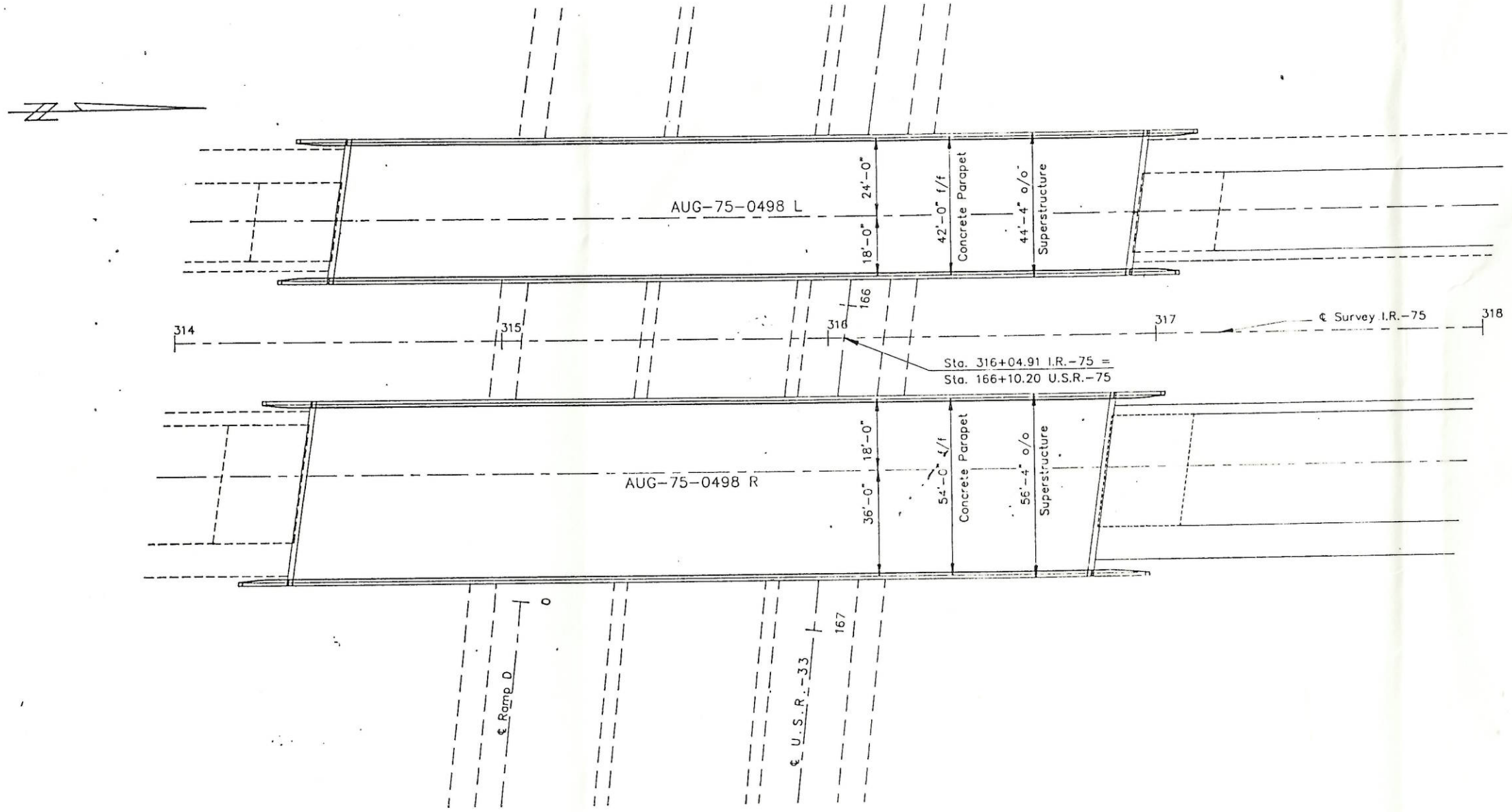

PLAN

0 10 20 40

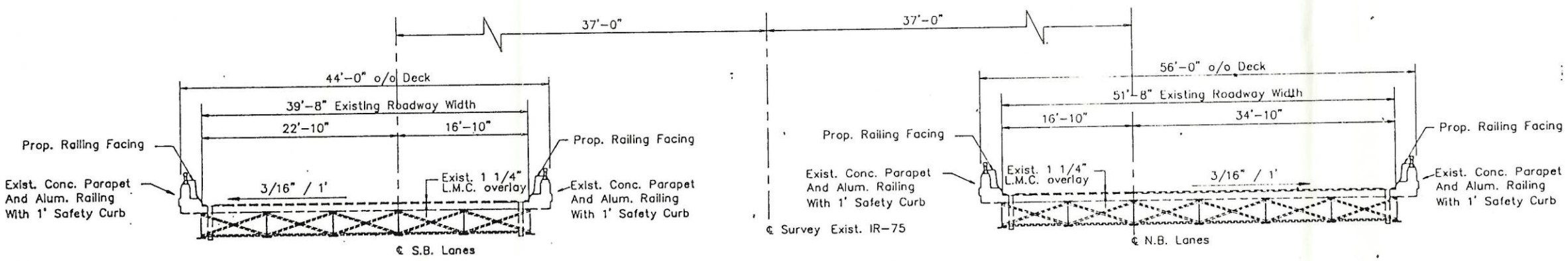

TRANSVERSE SECTION

AUG-75-0498 L & R REQUIRED WORK

1. Remove and store existing aluminun railing.
2. Patch bridge deck and abutments as directed by the Engineer.
3. Modify wingwalls.
4. Reface parapets on bridge deck and construct parapets on wingwalls.
5. Modify scuppers.
6. Seal joints and concrete surfaces.
7. Paint structural steel.

EXISTING STRUCTURES

TYPE: Continuous Steel Beams with Reinforced Concrete Deck and Substructure.
SPANS: 45'-0", 75'-0", 75'-0", 45'-0" c/c BRGS.
ROADWAY: Northbound; 54'-0" f/f Concete Parapet
Southbound; 42'-0" f/f Concete Parapet
LOAD FREQUENCY: CF 2000 (57). Adequate for AASHO Alternate Loading.
WEARING SURFACE: 1" Monolithic Concrete 1 1/4" LMC
APPROACH SLABS: AS-1-54 (25' Long)
SKEW: 6°-59' L.F.
ALIGNMENT: Tangent.

STATE OF OHIO
DEPARTMENT OF TRANSPORTATION
DIVISION OF DESIGN AND CONSTRUCTION

GENERAL PLAN AND TRANSVERSE SECTION

BRIDGE NO. AUG-75-0498 L&R
IR-75 OVER U.S.R. 33

PRESENT TOPOGRAPHY		PROPOSED WORK			
SURVEYED INFO. FROM EXIST. PLANS	DRAWN INFO. FROM EXIST. PLANS	DESIGNED	DRAWN	CHECKED	REV
		JTS 7/91	MEF 8/91		

A:AU75BR1 19920214

FHWA REGION	STATE	PROJECT	
5	OHIO		

205/231

AUGLAIZE COUNTY
ALLEN COUNTY
AUG-75-4.54
ALL-75-0.00

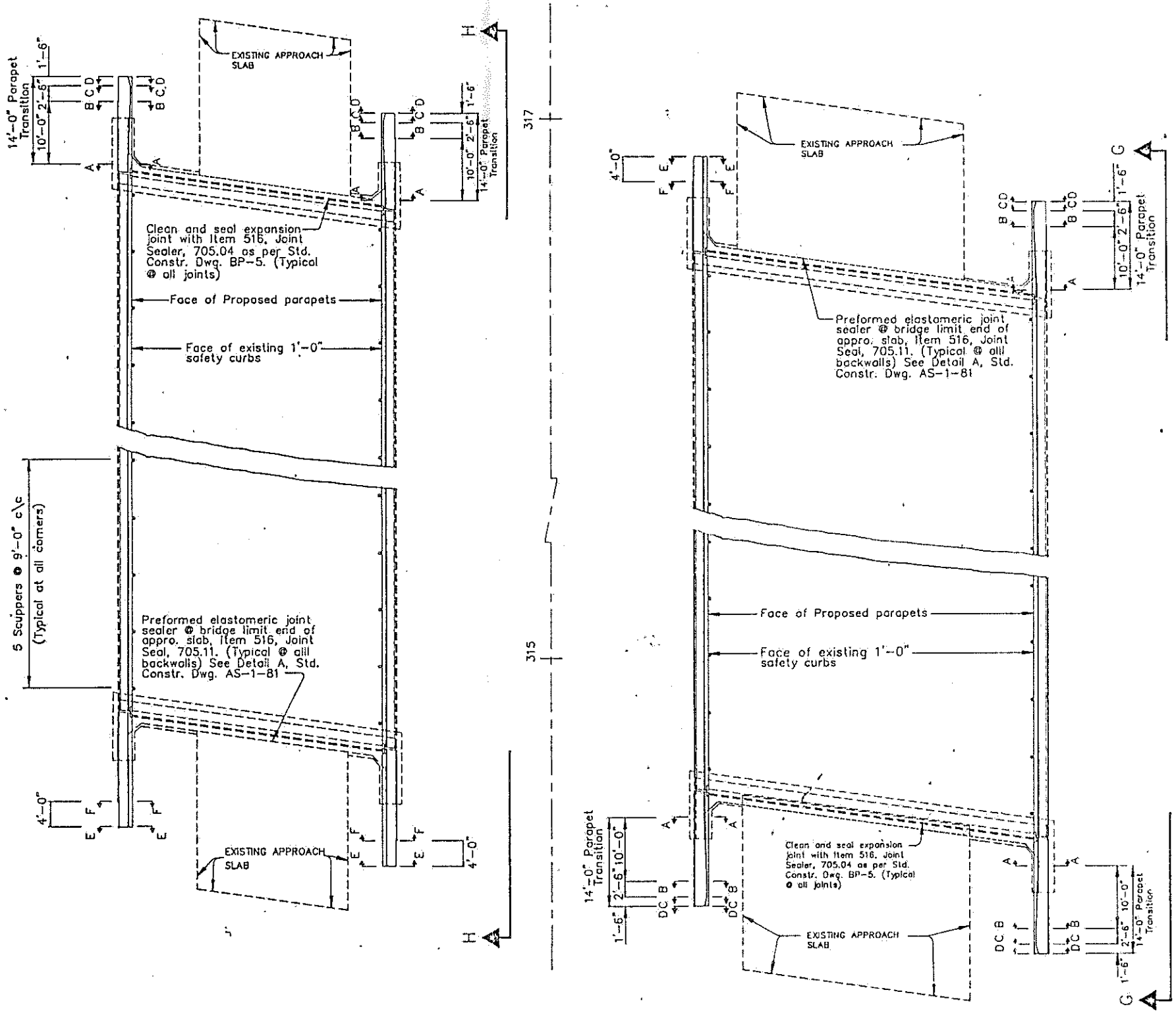

PARAPET MODIFICATION DETAIL

FOR SECTIONS A-A, B-B, C-C, D-D, E-E and F-F SEE SHEET [8732]

FOR ELEVATION VIEWS G-G & H-H SEE SHEET [7732]

STATE OF OHIO
DEPARTMENT OF TRANSPORTATION
DIVISION OF DESIGN AND CONSTRUCTION

6/32

PARAPET MODIFICATION DETAILS
BRIDGE NO. AUG-75-0498 L&R
I.R.-75 OVER U.S.R.-33

PRESENT TOPOGRAPHY		PROPOSED WORK			
SURVEYED INFO. FROM EXIST. PLANS	DRAWN INFO. FROM EXIST. PLANS	DESIGNED	DRAWN	CHECKED	REVIEWED
		JTS 7/91	CLT 8/91		

20214

FHWA REGION	STATE	PROJECT	
5	OHIO		

206
231

AUGLAIZE COUNTY
ALLEN COUNTY
AUG–75–4.54
ALL–75–0.00

SCALE IN FEET
0 4 8

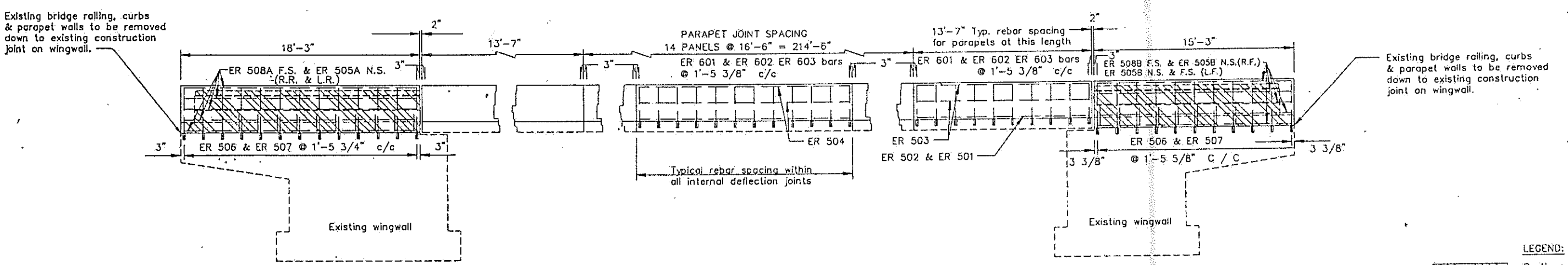

ELEVATION VIEW G–G
RIGHT RAIL SHOWN
TYPICAL FOR LEFT EXCEPT AS NOTED

LEGEND:
Portions of existing railing, curbs and parapet walls to be removed.

NOTE: Proposed reinforcing steel to be doweled into existing wingwall and bridge deck and parapet a minimum of 6". Actual location of dowel holes may be adjusted as directed by the Engineer to avoid conflict with existing reinforcing steel.

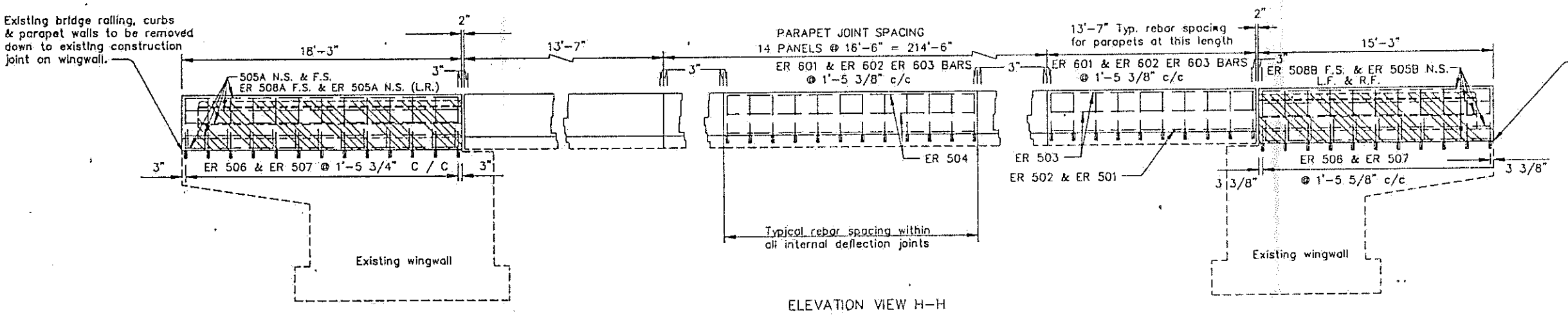

ELEVATION VIEW H–H
RIGHT RAIL SHOWN
TYPICAL FOR LEFT EXCEPT AS NOTED

STATE OF OHIO
DEPARTMENT OF TRANSPORTATION
DIVISION OF DESIGN AND CONSTRUCTION

7/32

PARAPET ELEVATIONS
BRIDGE NO. AUG–75–0498 L&R
I.R.–75 OVER U.S.R.–33

PRESENT TOPOGRAPHY		PROPOSED WORK			
SURVEYED INFO. FROM EXIST. PLANS	DRAWN INFO. FROM EXIST. PLANS	DESIGNED	DRAWN	CHECKED	REVIEWED
		JTS 7/91	MEF 8/91		

SBR5 19920214

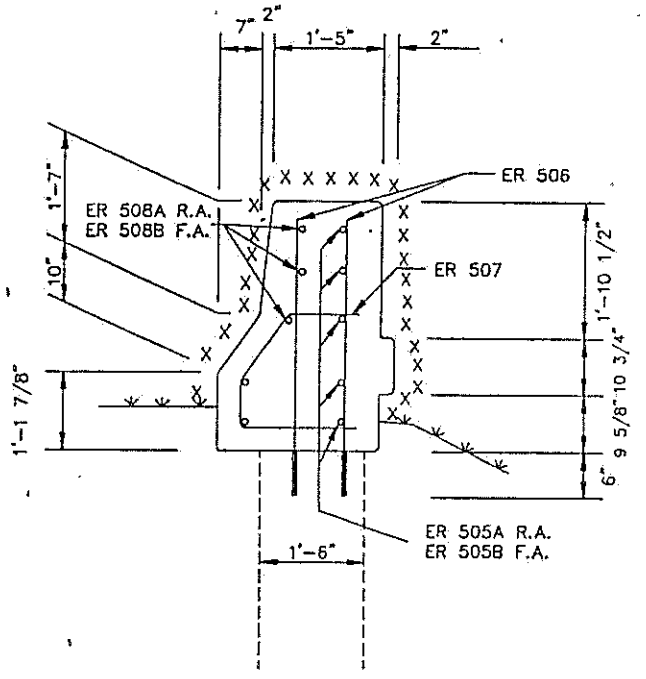

SECTION A–A

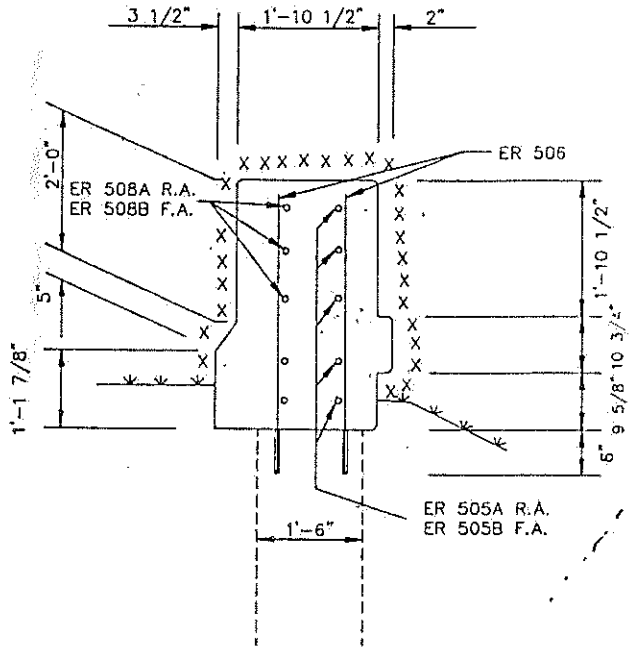

SECTION B–B

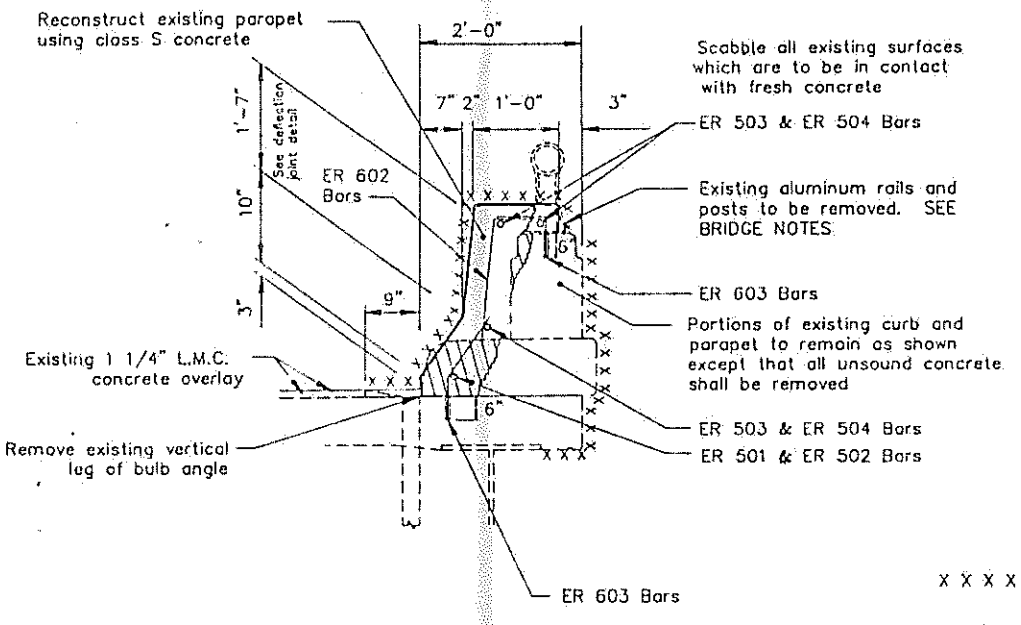

BRIDGE DECK SECTION

RAILING FACED, AS PER PLAN

FHWA REGION	STATE	PROJECT	
5	OHIO		

207
231

AUGLAIZE COUNTY
ALLEN COUNTY
AUG–75–4.54
ALL–75–0.00

FOR LOCATIONS OF SECTIONS A–A B–B, C–C, D–D, E–E, and F–F SEE SHEET 6 / 32

FOR ELEVATION VIEWS G–G AND H–H SEE SHEET 7 / 32

LEGEND

X X X X X X — Surfaces to be sealed under Item Special Sealing of Concrete Surfaces

Existing curb (and portion of parapet wall if necessary) to be removed under Item 202, Portions of Structures Removed.

NOTE:
FOR DETAILS NOT SHOWN SEE STD. CONSTR. DWG. BR-1

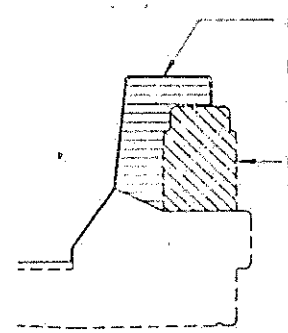

DEFLECTION JOINT DETAIL

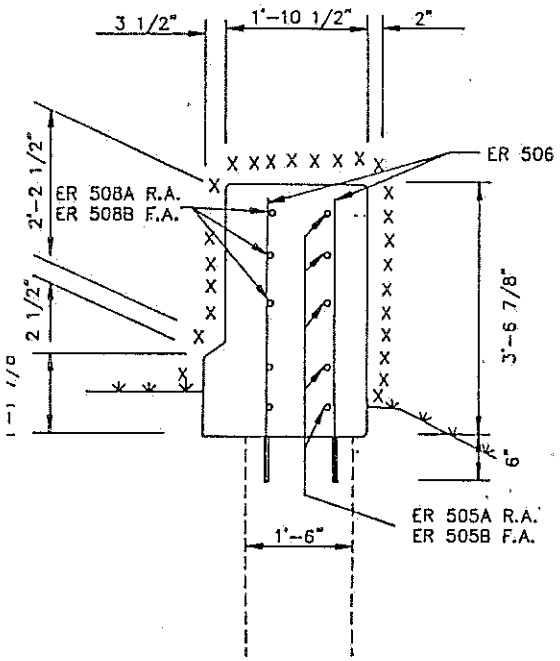

SECTION C–C

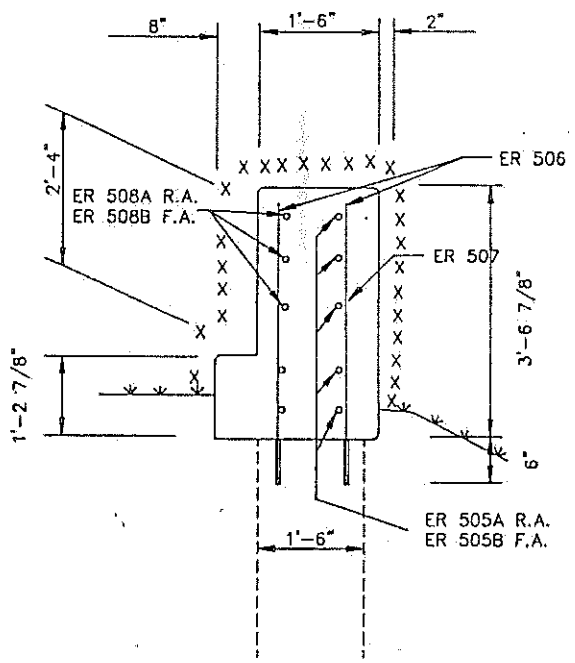

SECTION D–D

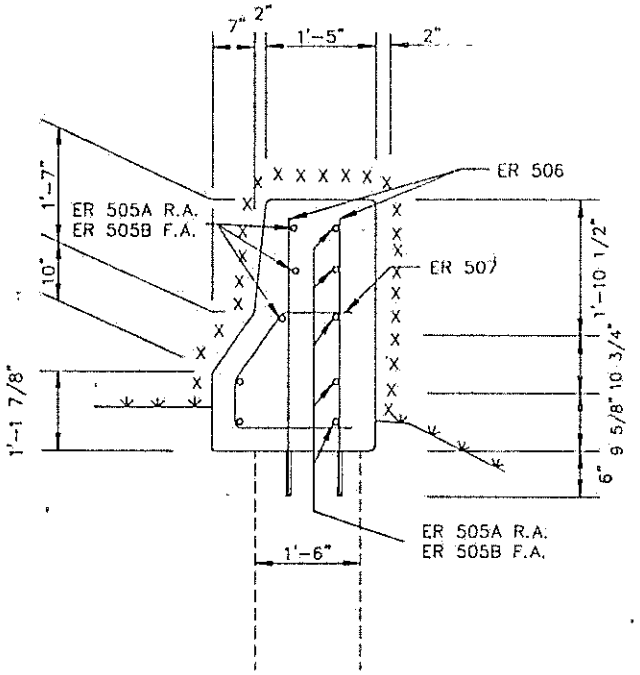

SECTION E–E

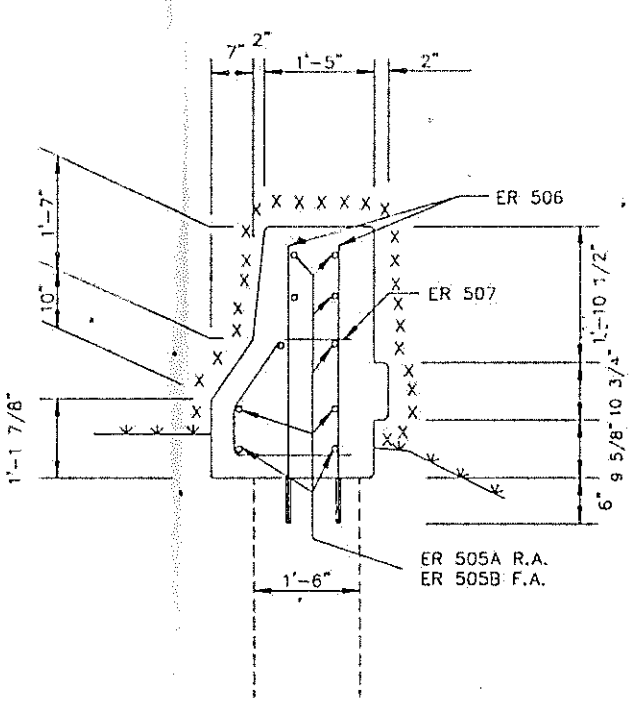

SECTION F–F

STATE OF OHIO
DEPARTMENT OF TRANSPORTATION
DIVISION OF DESIGN AND CONSTRUCTION

8 / 33

PARAPET MODIFICATION DETAILS
BRIDGE NO. AUG–75–0498 L&R
I.R–75 OVER U.S.R.–33

PRESENT TOPOGRAPHY		PROPOSED WORK			
SURVEYED INFO. FROM EXIST. PLANS	DRAWN INFO. FROM EXIST. PLANS	DESIGNED	DRAWN	CHECKED	REVIEWED
		JTS 7/91	TAK 8/91		

SBR4 19920214

FORCE ACCOUNT WORK
YEAR OF 1992

PROGR ACTIV	LOCATION	START DATE	COMPL DATE	COST LABOR	EQUIP	MATERL	TOTAL	REMARKS	PCOU PART
61-55	AUG-029-0584 B	4- 6-92	4-14-92	2307.84	568.15	507.07	$ 3383.06	B-UNDERPIN BACKWALL	
61-55	AUG-029-0584 B	5-11-92	5-11-92	322.91	20.35	13.68	$ 356.94	B-BACKWALL REPAIR	
63-43	AUG-033-0268	6-12-92	6-15-92	752.80	434.71	0.0	$ 1187.51	C-RESET EXISTING PIPE	
61-42	AUG-033-0419 R	9- 1-92	9- 1-92	377.20	367.24	0.0	$ 744.44	B-CHANNEL CLEANOUT	
61-53	AUG-065-0831	2-19-92	2-19-92	179.64	72.41	0.0	$ 252.05	B-TEMP.REPAIR OF HOLE IN BRIDGE DECK	
61-55	AUG-067-1784	3-16-92	3-24-92	1562.61	384.45	855.79	$ 2802.85	B-POUR NEW FLOOR UNDER BOX CULVERT	
61-41	AUG-067-1784	3-16-92	3-24-92	644.64	1209.76	0.0	$ 1805.40	B-CHANNEL CLEANOUT	
61-17	AUG-67-VAR.	5- 5-92	5- 6-92	259.12	84.68	0.0	$ 343.80	M-SAW FOR COUNTY GARAGE	
61-57	AUG-075-0310 R	12-18-92	12-18-92	104.14	94.82	697.51	$ 896.47	B-ACCIDENT REPAIR	
61-56	AUG-075-0498 L	4-23-92	4-23-92	90.00	7.03	0.0	$ 97.03	B-RESET ROCKERS	
61-56	AUG-075-1234	4-23-92	4-23-92	90.00	7.03	0.0	$ 97.03	B-RESET ROCKERS	
63-43	AUG-119-0080	7- 6-92	10- 1-92	6780.72	3443.11	4189.87	$14413.70	C-REPL.18'CMP W/27'X66'RCP&TWIN 33'X104'	
63-43	AUG-197-1107	9- 2-92	9-11-92	2723.37	37.00	2408.20	$ 5168.57	C-BUILD & POUR H.WALLS-MINUS$810.70MATLS	
63-43	AUG-197-1107	9-14-92	10-14-92	8530.12	6435.72	24957.27	$39923.11	C-REPL.10'SLAB W/10'X8'X72'PRECAST BOX	
61-55	AUG-197-1211	3- 2-92	3-30-92	5431.84	1414.80	524.79	$ 7371.43	B-UNDERPIN BACKWALL	
63-43	AUG-219-1272	11-16-92	11-18-92	745.36	576.11	718.55	$ 2040.02	C-REPL.30'CMP WITH 30'X40'RCP	
63-43	AUG-385-0181	12- 7-92	12-16-92	2432.40	1538.59	812.57	$ 4783.56	C-REPLACE 30'CMP WITH 27" X 54' RCP	
63-43	AUG-385-0205	12-17-92	12-18-92	834.80	601.87	986.89	$ 2423.56	C-REPLACE 30'CMP WITH 30" X 56' RCP	
63-43	AUG-385-0363	12-21-92	12-22-92	750.56	434.08	357.95	$ 1542.59	C-REPLACE 12'CMP & CIP WITH 15"X56'RCP	
63-43	AUG-385-0381	12-23-92	12-23-92	376.80	220.45	342.95	$ 940.20	C-REPLACE 15'CMP & CIP WITH 15'X56'RCP	
62-52	AUGLAIZE	4-30-92	4-30-92	272.72	28.86	30.03	$ 331.61	M-REPAIR D.INLET R.AREA #0726 SB 75	
66-41	AUGLAIZE CO.	6-24-92	6-30-92	1098.60	77.99	1035.74	$ 2212.33	M-REPAIR SALT BIN #64040 ST.MARYS O.POST	
61-53	CHP-036-1244	3-11-92	3-13-92	878.62	212.83	55.64	$ 1147.09	B-PATCH BRIDGE DECK	
61-42	CHP-036-1244	9- 2-92	9- 2-92	188.60	371.69	0.0	$ 560.29	B-CHANNEL CLEANOUT	
61-44	CHP-036-1487	4-29-92	4-29-92	348.32	59.86	1290.00	$ 1698.18	B-UNDERPIN FOOTER-EROSION CONTROL	

OHIO DEPARTMENT OF TRANSPORTATION
DIVISION OF HIGHWAYS
BRIDGE INSPECTION REPORT

0602043 STRUCTURE FILE NUMBER

BRIDGE NUMBER AUG (COUNTY) 075 (ROUTE) 0498L (UNIT)

YEAR BUILT 5900

DISTRICT 07 BRIDGE TYPE 322 TYPE SERVICE 1 11 USR33

LmC-82

		MAT.	TYPE	80	81	82	83	84	85	87	88	89
DECK	1. FLOOR		1	2	2	2	2	2	2	2	2	2
	2. WEARING SURFACE		E	1	2	1	1	2	1	2	2	2
	3. CURBS & WALKWAYS		1	1	2	2	2	2	2	2	2	2
	4. MEDIAN			—	—	—	—	—	—	—	—	—
	5. RAILING		3	1	1	2	2	2	2	2	2	2
	6. DRAINAGE		3	2	1	1	1	1	2	2	2	1
	7. EXPANSION JOINTS		2	2	2	1	2	2	2	3	3	2
	8. SUMMARY			7	7	7	7	7	7	7	7	7
SUPERSTRUCTURE	9. ALIGNMENT			1	1	1	1	1	1	1	1	1
	10. BEAMS OR GIRDERS		1	1	2	2	2	2	2	1	2	2
	11. DIAPHRAGMS OR CROSSFRAMES			1	2	2	1	2	2	2	2	2
	12. JOIST											
	13. FLOOR BEAMS											
	14. FLOOR BEAM CONNECTIONS											
	15. VERTICALS											
	16. DIAGONALS											
	17. END POST											
	18. TOP CHORD											
	19. LOWER CHORD											
	20. LOWER LATERAL BRACING											
	21. TOP LATERAL BRACING											
	22. SWAY BRACING											
	23. PORTALS											
	24. BEARINGS		2	1	2	2	2	2	2	3	3	2
	25. ARCH											
	26. ARCH COLUMNS OR HANGERS											
	27. SPANDRAL WALLS											
	28. SUSPENSION SYSTEM											
	29. SUSPENDERS											
	30. TOWERS											
	31. BENT POST											
	32. ANCHORAGE											
	33. BRIDGE MACHINERY											
	34. PAINT			1	2	1	2	2	2	2	3	3
	35. LIVE LOAD RESPONSE			1	1	2	2	3	5	5	5	5
	36. SUMMARY			8	8	7	7	6	7	5	5	5
SUBSTRUCTURE	37. ABUTMENTS	2	5	2	2	2	2	2	2	2	2	2
	38. ABUTMENT SEATS			2	2	1	1	2	1	2	2	2
	39. PIERS	2	5	1	1	1	1	2	1	2	2	2
	40. PIER SEATS			1	1	1	1	1	1	1	1	1
	41. BACKWALLS			2	2	2	2	2	2	2	2	2
	42. WINGWALLS			1	2	2	1	2	2	2	2	2
	43. FENDERS & DOLPHINS			—	—	—	—	—	—	—	—	—
	44. SUMMARY			7	6	7	7	6	7	7	6	6
CULVERTS	45. GENERAL											
	46. ALIGNMENT											
	47. HEADWALLS OR END WALLS											
	48. SUMMARY											
CHANNEL	49. ALIGNMENT											
	50. PROTECTION											
	51. WATERWAY ADEQUACY											
	52. SUMMARY											
APPROACHES	53. PAVEMENT		2	2	2	1	1	1	1	2	2	2
	54. ALIGNMENT			1	1	1	1	1	1	1	1	1
	55. GRADE			1	1	1	1	1	1	1	2	2
	56. APPROACH SLABS			2	2	1	1	2	1	2	2	1
	57. GUARDRAIL		1	1	1	1	1	1	1	1	2	1
	58. RELIEF JOINTS			2	2	—	—	—	—	—	—	—
	59. EMBANKMENT			1	1	1	1	1	1	1	1	1
	60. SUMMARY			7	7	8	8	8	8	7	6	6
GENERAL	61. NAVIGATION LIGHTS			—	—	—	—	—	—	—	—	—
	62. WARNING SIGNS			—	—	—	1	—	—	—	—	—
	63. INSPECTION RESPONSIBILITY			1	1	1	1	1	1	1	1	1
	64. MAINTENANCE RESPONSIBILITY			1	1	1	1	1	1	1	1	1
	65. VERTICAL CLEARANCE			—	—	1	1	1	2	1	1	1
	66. GENERAL APPRAISAL			7A	7A	7A	7A	6A	7A	5A	5A	5A
	INSPECTED BY:			MM	MM	RL	RL	RL	RL	RR	WE	WE
	DATE			10-16	3-5	1-11	1-4	1-2	1-24	5-22	5-5	3-16
	YEAR			80	82	83	84	85	86	87	88	89

1
1

Form AU-76
Rev. 10-72

STATE OF OHIO
DEPARTMENT OF TRANSPORTATION

INTER-OFFICE COMMUNICATION

County of Aug Laize Dist. 7
S. ~~H.~~ IR 75 Sec. 4.97
Date October 3, 1975

To Bridge Dept Attention: Mr. Rudy

From H R Blank Project 356-74 For Mr Bowman Proj. Supv.

Subject Bridge Deck waterproofing and resurfacing

The following listed bridge decks were repaired and deck surface was covered with Royston Laboratories Bridge membrane Primer 713 and Bridge membrane No. 10, then covered with 1/2" Sand Asphalt and 1" Item Asphalt Concrete,

- ✓ Aug. 75-04.98 Rt/Lt over existing USR 33
- ✓ Aug. 75-05.15 Rt/Lt Over N Y C RR
- ✓ Aug. 67-03.45 S.R. 67
- ✓ Aug. 75-07.54 Rt/Lt over Aug Laize River
- ✓ Aug. 75-08.76 Hengsther Road
- ✓ Aug. 75-10.47 Buckland Holden Road
- ✓ Aug 75-12.34 National Road

No work was performed on Bridge Aug 75-05.45 Wapk-Fisher Road.

✓ At Bridge Aug. 75-06.08 Middle Pike Road, following operation to remove deteriorated concrete, complete deck was over-layed with 1" plus of Later Modified Portland Cement Concrete, using Dow Chemical DPS Modifier A.

H R Blank

In file
1-14-76
cwk

CHECKLIST FOR INVENTORY UPDATE

STRUCTURE NUMBER AU6-75-0498L (0602043)

PROJECT NUMBER 405-82

_____ I. INVENTORY

(—) File Folders
(—) Aperture Cards
(X) Bridge Cards
(X) BR-87
(—) Posting and Vertical Clearance Book
(—) Ditch Files
(—) Bridge Type Inventory List
(—) Bridge Identification Signs
(—) BARS drawer
(X) Deck Condition Survey Report Listing

_____ II. MAPS

(—) Large District Mylar
(—) Small District Mylar
(—) Individual County Mylars
(—) Large Permit Map Mylar
(—) Individual County Permit Maps (Vertical Clear & Postings)
(—) Posted Bridge Map Mylar
(—) USGS

_____ III. INSPECTION

(X) BR-86
(—) Bridge Inspection Review Sheets (Originals)
(X) Bridge Inspection Summary (Black Books)

_____ IV. COMPUTER PRINTOUTS

(—) Contract Repair and Replacement Needs
(X) Waterproofing Bridge Deck List
(—) Bridge Painting Estimates
(—) Bridge Painting Inventory

_____ V. WORK PERFORMED

LMC

CONTRACT STRUCTURE REPAIR

Project Number 405-82 Bridge Number AU6-75-0498 L
0602043

Contractor: Eisenhour Construction Company, Inc

Deck Patching and Waterproofing

Type Patching:					
Quantity: Plan =		S.Y.	- Pay =		S.Y.
Type Waterproofing:					
Supplier:					
Quantity: Plan =		S.Y.	- Pay =		S.Y.

Latex Modified Concrete Overlay

Modifier:					
1½" Thick: Plan =	1062	S.Y.	- Pay =	1062.16	S.Y.
Variable thickness: Plan =	22	C.Y.	- Pay =	9.10	C.Y.
Full Depth: Plan =	2	C.Y.	- Pay =	0	C.Y.

Dense Concrete Overlay

1 3/4" Thick: Plan =		S.Y.	- Pay =		S.Y.
Variable thickness: Plan =		C.Y.	- Pay =		C.Y.
Full Depth: Plan =		C.Y.	- Pay =		C.Y.

Other

Extend Exp Jts (79.9) = 80.00
Scupper extensions (20) = 20
Silane treatment, Appl. 150 to Parapets (308) = 293.16

Completed = 11-18-82

STATE OF OHIO - DEPT. OF HIGHWAYS
BUREAU OF BRIDGES

STEEL BEAM AND GIRDER BRIDGES

DATE ~~5-16-62~~ 3-82

OHIO-BR. ACME 14799-8

TYPE OF BRIDGE	Twin Cont. Stl. Bm.	NO. OF SPANS	4 ea.	ENCASED OR GUNITED	DATE BUILT 1959
APPROX. SAFE LOAD CAPACITY - OF STRUCTURE	CF=2000(51)			OF FLOOR SYSTEM	~~Lt(0602043); Rt(0602078)~~

CLEAR SPAN	LENGTH OUT TO OUT OF FLOOR	WIDTH BETWEEN CURBS ~~OR FELLOE GUARDS~~	WIDTH OUT TO OUT OF SUPERSTRUCTURE	WIDTH OF SIDEWALKS	HEIGHT OF FLOOR ABOVE BRIDGE SEAT	PROVISION FOR EXPANSION ROLLER NEST / ROCKERS / SLIDING
2@42.48' 2@71.98'	242.52' ea.	39'-8" S.B. Lane 51'-8" N.B. Lane	44'-4" S.B. Lane 56'-4" N.B. Lane	2@1'-0" ea.	4'-3 5/8" (N.B.)	V

TYPE AND SIZE OF RAILING OR HUB GUARD	AR-1-57 (type "A") 3-1-58	TYPE AND SIZE OF CURB OR FELLOE GUARD	10" high with 2" slope
DESCRIPTION OF FLOOR DRAINAGE	Bulb ∠ 5×3½×13.0 with 10 Scuppers in ca. gutter (both br.)		
ALIGNMENT AND SKEW OF STRUCTURE	Tan. 6°-59' L.F.	APPROACH SLABS	2-AS-1-54 ea. LENGTH 25' ea.
STREAM ~~over U.S. 33~~		HEIGHT FROM GRADE TO STREAM BED	HEIGHT FROM GRADE TO HIGH WATER
CHANNEL CHARACTERISTICS	APPROX. WIDTH BETWEEN BANKS	CHANNEL DEPTH	NATURE OF BOTTOM
CONDITION OF BANKS			ALIGNMENT OF STREAM ABOVE AND BELOW STRUCTURE
SKEW OF NORMAL FLOW			SKEW OF FLOOD FLOW

BEAM SPANS

STD. DRAWING NO. CSB-2-56 (3-1-58) Sht's. 2 & 3

LENGTH C. TO C. OF END BEARINGS	45'; 2@75'; 45'	SHAPE AND SIZE OF INSIDE BEAMS	S.B. Lane - Spans 1 & 4 : 4-33 WF 141;	Spans 2 & 3 : 4-33 WF 220
LENGTH OVER ALL	241.51 ea.		N.B. do - do : 6-33 WF 130;	do : 6-33 WF 200
SPACING OF BEAMS	7'-11" S.B. Lane 7'-5" N.B. Lane	SHAPE AND SIZE OF OUTSIDE BEAMS	S.B. do - do : 2-33 WF 141;	do : 2-33 WF 220
			N.B. do - do : 2-33 WF 130;	do : 2-33 WF 200

PLATE GIRDER

STD. DRAWING NO.

LENGTH C. TO C. OF END PINS OR BEARINGS		FLANGE SECTION AT CENTER	TOP / BOTTOM
LENGTH OVER ALL		SIZE AND SPACING OF RIVETS IN BOTTOM FLANGE AT CENTER	
HEIGHT BACK TO BACK OF ANGLES			
WEB THICKNESS			

	INTERMEDIATE FLOOR BEAMS	END FLOOR BEAMS
NO. AND SPACING		
SECTION		
CONNECTIONS NO. & SIZE RIVETS F.B. TO CONN.		
CONNECTIONS NO. & SIZE RIVETS CONN. TO GIRDER		

[redacted] CROSS FRAMES

KIND	NO. LINES	SIZE	WIDTH OF FLANGE	THICKNESS OF WEB	SPACING
I BEAMS	Intermediate	3 ∠'s 3×3×5/16 Welded			
CHANNELS	End	5 ∠'s 4×4×5/16 do			
WOOD		SIZE, TREATMENT, SPECIES			

DO JOISTS REST ON TOP OF FLOOR BEAMS? HOW FRAMED TO FLOOR BEAMS?

ARE SHELF ANGLES USED? END JOISTS - LENGTH SUPPORTS

FLOOR

REINFORCED CONCRETE SLAB ~~8¾" (incl. 1" W.S.)~~ INCHES THICK CONCRETE INCHES THICK ON CORRUGATED ARCHES OR BUCKLE PLATES

WEARING SURFACE TYPE ~~Mono. Conc.~~ THICKNESS ~~1"~~ PLANK SIZE, TREATMENT, SPECIES

STRIP SIZE, TREATMENT, SPECIES ~~(1975) 1½" Asphalt~~ HOW FASTENED TO JOISTS

SUB-STRUCTURE

STD. DRAWING NO.

ABUTMENTS AND PIERS	MATERIAL	TYPE	HEIGHT FOOTER TO BRIDGE SEAT	WIDTH OF BRIDGE SEAT	LENGTH OF BRIDGE SEAT	FOUNDATIONS (PILING)	WINGS (LENGTHS, ANGLES ETC.)
REAR							
FORWARD							
PIER		(See Back)					
PIER							

Rt. Br. (℄ N.B. Lane) Sta. ~~314+42.05=4.97~~ ℄ Br. (N.B. Lane) Sta. ~~315+63.31~~

BRIDGE NO.	COUNTY	ROUTE NO.	S. H. NO.	SECTION	STRENGTH H10 / H12 / H15 / H20	ROADWAY 15-18 / 19-22 / 23+	CLEARANCE 12 / 12-14 / 14+ / OPEN	TYPE A / B / G / S / T
AUG-75-0498	Auglaize	75						24

AUG-75-0498	Auglaize	75			H10- H12 H15 H20	15-18 19-22 23 +	12- 12-14 14 + OPEN	A B G S T
BRIDGE NO.	COUNTY	ROUTE NO.	S. H. NO.	SECTION	STRENGTH	ROADWAY	CLEARANCE	TYPE

SKETCH OF STRUCTURE SHOWING DIMENSIONS

Abuts. & Piers	Material	Type	Height Footer to Bridge Seat Right	Left	Width of Seat	Length of Seat	Foundation	Wings
N.B. Lane								
Rear	Concrete	Gravity	3.70	4.01	2'-0"	54'-4 7/8"		20'-2" @ 83°-01'; 20'-4 3/8" @ 96°-59'
Fwd.	do	do	4.11	3.80	do	do		17'-2" @ 96°-59'; 17'-4 3/8" @ 83°-01'
Pier 1	do	Pedestal (6)	17.37	17.06	3'-0"	2 @ 25'-5"	24-12" R/C CIP-25.9	
Pier 2	do	do	19.14	18.82	do	do	26- do 22.38'	
Pier 3	do	do	21.62	21.31	do	do	24- do 25.36'	
S.B. Lane								
Rear	Concrete	Gravity	4.03	3.96	2'-0"	42'-4"		20'-2" @ 83°-01'; 20'-4 3/8" @ 96°-59'
Fwd.	do	do	4.06	4.13	do	do		17'-2" @ 96°-59'; 17'-4 3/8" @ 83°-01'
Pier 1	do	Pedestal (4)	17.32	17.39	3'-0"	2 @ 21'-4"	16-12" R/C CIP-28.95'	
Pier 2	do	do	19.09	19.16	do	do	18- do 27.05'	
Pier 3	do	do	21.57	21.64	do	do	16- do 26.93'	

1975 Bridge Deck Waterproofing — Project 356-74
Step 1 - Acid clean & water flush - Repair existing WS
Step 2 - Apply Royston Laboratories "Primer 13"
Step 3 - Apply Royston Laboratories sheet membrane "No. 10"
Step 4 - Place 1/2 inch sand asphalt overlay
Step 5 - Place 1 inch 404 asphaltic concrete surface course.
Contractor - Ohio Engineering Co., Findlay, Ohio

PROJ 638-81
LATEX MODIFIED
Concrete

LOCATION SKETCH

(See Green Card)

REMARKS:-

Profile Gr.: +0.5%
~~4'-5 5/8" bet. pier unit caps N.B. Br.~~
~~2 1/2" bet. pier unit caps S.B. Br.~~
Paint Struct. Steel: 754 227 lbs.
Fabricator: Bethlehem Steel, Buffalo N.Y.
Contractor - Launder & Sons, Toledo O.
Concrete by Quality S&G Wapakoneta O.

Proj 552-58 F= ACI -196(6)

~~Structure File Number~~
~~Lt - 0602043~~
~~Rt - 0602078~~

OHIO-BR.
14805-8

STATE OF OHIO - DEPT. OF HIGHWAYS
BUREAU OF BRIDGES

STEEL BEAM AND GIRDER BRIDGES

DATE 5-16-62 (10-82)

OHIO-BR. FORM 4799-8

TYPE OF BRIDGE | NO. OF SPANS | ENCASED OR GUNITED | DATE BUILT

APPROX. SAFE LOAD CAPACITY OF STRUCTURE | OF FLOOR SYSTEM | 0602043

CLEAR SPAN	LENGTH OUT TO OUT OF FLOOR	WIDTH BETWEEN CURBS OR FELLOE GUARDS	WIDTH OUT TO OUT OF SUPERSTRUCTURE	WIDTH OF SIDEWALKS	HEIGHT OF FLOOR ABOVE BRIDGE SEAT	PROVISION FOR EXPANSION: ROLLER NEST / ROCKERS / SLIDING

TYPE AND SIZE OF RAILING OR HUB GUARD | TYPE AND SIZE OF CURB OR FELLOE GUARD

DESCRIPTION OF FLOOR DRAINAGE

ALIGNMENT AND SKEW OF STRUCTURE | APPROACH SLABS | LENGTH

STREAM SB IR 75 over USR 33 | HEIGHT FROM GRADE TO STREAM BED | HEIGHT FROM GRADE TO HIGH WATER

CHANNEL CHARACTERISTICS | APPROX. WIDTH BETWEEN BANKS | CHANNEL DEPTH | NATURE OF BOTTOM

CONDITION OF BANKS | ALIGNMENT OF STREAM ABOVE AND BELOW STRUCTURE

SKEW OF NORMAL FLOW | SKEW OF FLOOD FLOW

BEAM SPANS

STD. DRAWING NO.

LENGTH C. TO C. OF END BEARINGS		SHAPE AND SIZE OF INSIDE BEAMS	
LENGTH OVER ALL		SHAPE AND SIZE OF OUTSIDE BEAMS	
SPACING OF BEAMS			

PLATE GIRDER

STD. DRAWING NO.

LENGTH C. TO C. OF END PINS OR BEARINGS		FLANGE SECTION AT CENTER	TOP	
LENGTH OVER ALL			BOTTOM	
HEIGHT BACK TO BACK OF ANGLES		SIZE AND SPACING OF RIVETS IN BOTTOM FLANGE AT CENTER		
WEB THICKNESS				

INTERMEDIATE FLOOR BEAMS

NO. AND SPACING

SECTION

CONNECTIONS: NO. & SIZE RIVETS F.B. TO CONN. | NO. & SIZE RIVETS CONN. TO GIRDER

END FLOOR BEAMS

FLOOR JOISTS

KIND	NO. LINES	SIZE	WIDTH OF FLANGE	THICKNESS OF WEB	SPACING
I BEAMS					
CHANNELS					
WOOD		SIZE, TREATMENT, SPECIES			

DO JOISTS REST ON TOP OF FLOOR BEAMS? | HOW FRAMED TO FLOOR BEAMS?

ARE SHELF ANGLES USED? | END JOISTS - LENGTH | SUPPORTS

FLOOR

REINFORCED CONCRETE SLAB 8½" (incls 3/4" MWS) INCHES THICK | CONCRETE INCHES THICK ON CORRUGATED ARCHES OR BUCKLE PLATES

WEARING SURFACE TYPE Mono. Conc + LMC | THICKNESS 3/4" + 1 1/4" | PLANK SIZE, TREATMENT, SPECIES

STRIP SIZE, TREATMENT, SPECIES | HOW FASTENED TO JOISTS

SUB-STRUCTURE

STD. DRAWING NO.

ABUTMENTS AND PIERS	MATERIAL	TYPE	HEIGHT FOOTER TO BRIDGE SEAT	WIDTH OF BRIDGE SEAT	LENGTH OF BRIDGE SEAT	FOUNDATIONS (PILING)	WINGS (LENGTHS, ANGLES ETC.)
REAR							
FORWARD							
PIER							
PIER							

BRIDGE NO.	COUNTY	ROUTE NO.	S. H. NO.	SECTION	STRENGTH: H10 / H12 / H15 / H20	ROADWAY: 15-18 / 19-22 / 23 +	CLEARANCE: 12 — 13-14 / 14 + / OPEN	TYPE: A / B / C / S / T
75-0498 L	Auglaize							

75-0498 L Auglaize

BRIDGE NO. | COUNTY | ROUTE NO. | S.M. NO. | SECTION | STRENGTH | ROADWAY | CLEARANCE | TYPE

SKETCH OF STRUCTURE SHOWING DIMENSIONS

Project 356-74, Compl. 1975
1½" 404 on Boyston W.P.

Project 405-82, Remove 404
& WP Membrane, Place
LMC 1¼" thick = 1062 S.Y.
" Var. " = 22 C.Y.
Full Depth = 2 C.Y.
Extend Exp Jts, scuppers
Silane (150) to parapets.

LOCATION SKETCH

REMARKS: Profile Grade: +0.50%
Project 552-58; ACI-196(6)
Plan Reference: AUG-33-11.50; AUG-25-4.92
Plan Number: AUG-25-0504
Station: 314+45.55 to 316+90.09
Pages: 292 - 305
Paint Structural Steel: 377,114 lbs
Fabricator: Bethlehem Steel, Buffalo, N.W.
Contractor: Launder & Sms, Toledo, Ohio

SFN-0602043

0602043 75-0498L

OHIO DEPARTMENT OF TRANSPORTATION
DIVISION OF HIGHWAYS

BRIDGE INVENTORY & APPRAISAL CODE SHEET

CODED BY CWR DATE 5-16-73 CHECKED BY ____ DATE ____

PROCESSING KEY	
STRUCTURE FILE NO.	TRANS. CODE
06,0,2,0,43	

75-0498L

CARD NO.	(1) ODOT DISTRICT	(2) CITY OR TOWN	(3) INVENTORY ROUTE: ON/UNDER	SYSTEM	ROUTE NUMBER	DIRECT. SUFFIX	DESIGNATION	PREF. ROUTE	(4) FEATURE(S) INTERSECTED	(5) INV. RTE. BRIDGE NO.: COUNTY	UNIT NUMBER: STRAIGHT LINE MILEAGE	SPECIAL DESIGNATION	(6) SECTION I. D. NUMBER	(7) INVENTORY ROUTE A.D.T. (TENS)	(8) A.D.T. YEAR	(9) FED. AID SYSTEM	(10) ADMIN. JURISD.	(11) FUNCTIONAL CLASS	(12)
1	07	0~0	1	1	7.5		1		USR 33	AUG	0498	L	0497	00100	78	01	10	01	

AUG-25-0504

CARD NO.	(13) DEFENSE: SECTION NUMBER	MILEPOINT BEGIN SECTION	SECTION LENGTH	(14) TOT. MIN HORIZONTAL CLEAR.: NON-CARD. OPENING	CARDINAL OPENING	(15) PRACTICAL MAXIMUM VERTICAL CLEAR.: FT.	IN.	(16)	(17) INTERSECTED ROUTE: ON/UNDER	SYSTEM	ROUTE NUMBER	DIRECT. SUFFIX	DESIGNATION	PREF. ROUTE	(18) FEATURE(S) INTERSECTED	(19) INTER. RTE. BRIDGE NO.: COUNTY	UNIT NUMBER: STRAIGHT LINE MILEAGE	SPECIAL DESIGNATION
2				000	397	9	9		2	2	33		1		IR 7.5	AUG	1635	

CARD NO.	(20) INTERSECTED ROUTE A.D.T. (TENS)	(21) A.D.T. YEAR	(22) FED. AID SYSTEM	(23) ADMIN. JURISD.	(24) FUNCTIONAL CLASS	(25) DEFENSE: SECTION NUMBER	MILEPOINT BEGIN SECTION	SECTION LENGTH	(26) TOT MIN HORIZONTAL CLEAR.: NON-CARD. OPENING	CARDINAL OPENING	(27) PRACTICAL MAXIMUM VERTICAL CLEAR.: FT.	IN.	(28)	(29) BY-PASS LENGTH	(30) COORDINATES: LATITUDE: DEGREES	MINUTES	LONGITUDE: DEGREES	MINUTES	PHYS. VULNER.	TOLL	(33) YEAR BUILT: ORIG. CONS.	MAJOR RECON.	(34) NO. LANES: ON STRUCT.	UNDER STRUCT.	(35) HORIZ. CURVE: DEG.	MIN.	(36) SKEW	(37) DESIGN LOADING
3	00,23,5	75	03	10	02				65,4	58,0	17	03		01						3	59	00	02	04			07	50

WB EB WB EB: 15'-10"

CARD NO.	(38) APPROACH ROADWAY WIDTH	(39) MEDIAN TYPE	(40) FLARED	(41) BRIDGE ROADWAY WIDTH (CB/CB)	(42) DECK WIDTH (OUT/OUT)	(43) RAIL. TYPE	(44) DECK DRAIN.	(45) SIDEWALKS: LEFT	RIGHT	(46) FLOOR SLAB	(47) WEARING SURFACE: TYPE	THICKNESS (INCH)	(48) STRUCTURE TYPE: MAIN SPANS: NUMBER	TYPE CODE	APPR. SPANS: NUMBER	TYPE CODE	(49) TOTAL NO. SPANS	(50) MAXIMUM SPAN LENGTH	(51) OVERALL STRUCTURE LENGTH	(52) TYPE SERVICE	(53) BRIDGE DESCRIPTION	(54) MINIMUM VERTICAL CLEAR. ON BRIDGE: FT.	IN.	(55)	(56)	(57) BEARING TYPE
4	041	000	0	039.7	044.3	34	0~0	16	03	004	322	0~0	004	007.5	009246	11		9~9				N

1'C+1'28 -1/4" +1 1/4" LMC

CARD NO.	(58) SUBSTRUCTURE: ABUTMENTS REAR MAT'L	TYPE	FWD. MAT'L	TYPE	PIERS PREDOMINATE NUMBER UNITS	MAT'L	TYPE	OTHER NUMBER UNITS	MAT'L	TYPE	OTHER NUMBER UNITS	MAT'L	TYPE	(59) PILING	(60) MIN. VERT. UNDERCLEAR. (MAIN LANES): NON-CARD. OPENING FT.	IN.	CARDINAL OPENING FT.	IN.	(61) MIN. LATERAL UNDERCLEAR. TO EDGE OF LANE: NON-CARD. DIRECT. LEFT	RIGHT	CARDINAL DIRECT. LEFT	RIGHT	(62) NAVIGATION: CONTROLLED	VERT. CLEAR.	HORIZ. CLEAR.	(63) OHIO ORIGINAL CONSTR. PROJ. NO.	(64) MICROFILM REEL NO.	(65) ORIGINAL CONSTRUCTION FEDERAL AID PROJECT NUMBER
5	2	5	2	5	03	2	5	0~0				0	2	16	1.0	15	0.8	21.5	19.9	1.2.0	2.2.9				055258		ACI-1966(6)

WB EB WB EB

CARD NO.	(66) LOAD RATING: OPERATING RATING	INVENTORY RATING	OHIO % OF LEGAL	RATING YEAR	(67) INSP. RESP.	(68) MAINT. RESP.	(69) APPRAISAL: DECK GEOM.	UNDERCLEAR.	SAFE LOAD CAP.	WATERWAY ADEQ.	APPR. ALIGN.	REMAIN. LIFE	(70) PROPOSED IMPROVEMENTS: YEAR NEEDED	TYPE SERVICE	TYPE WORK	LENGTH OF IMPROVEMENT	IMPR. DES. LOAD	PROPOSED ROAD WIDTH	NUMBER LANES	DESIGN A.D.T. (TENS)	YEAR A.D.T.	ADJ. ROWY.: YEAR	TYPE	(71) COST OF IMPROVEMENTS: TOTAL COST ($1000'S)	YEAR OF COSTS	BREAKDOWN ($1000'S): PRELIM. ENG.	DEMOLITION	SUB-STRUCTURE	SUPER-STRUCTURE	(72) PRIORITY
6	96.0	92.7	1.50	73	1	1	1	6	9	N	5	3																	

REMARKS: CWR 12-20-73 (CWR 10-8-76 (QAS 5-20-81
FL 1-14-76 (CWR 3-22-78 (

O.A. CODE ____ DATA

BR-87
REV. 5-74

BRIDGE INVENTORY & APPRAISAL CODE SHEET

OHIO DEPARTMENT OF TRANSPORTATION
DIVISION OF HIGHWAYS

BR-87
REV. 5-74

CODED BY CWR DATE 5-16-73 CHECKED BY _____ DATE _____

0602043 75-0498L

PROCESSING KEY	
STRUCTURE FILE NO.	TRANS. CODE
0602043	

75-0498L

CARD NO.	(1) DOT DISTRICT	(2) CITY OR TOWN	(3) INVENTORY ROUTE: ON/UNDER	SYSTEM	ROUTE NUMBER	DIRECT. SUFFIX	DESIGNATION	PREF. ROUTE	(4) FEATURE(S) INTERSECTED	(5) INV.RTE. BRIDGE NO.: COUNTY	UNIT NUMBER: STRAIGHT LINE MILEAGE	SPECIAL DESIGNATION	(6) SECTION I. D. NUMBER	(7) INVENTORY ROUTE A.D.T. (TENS)	(8) A.D.T. YEAR	(9) FED. AID SYSTEM	(10) ADMIN. JURISD.	(11) FUNCTIONAL CLASS	(12)
1	07	0~0	1	1	7.5		1		US R 33	AUG	049.8	L	049.7	00100.7	78	01	10	01	

1116-25-0504

CARD NO.	(13) DEFENSE: SECTION NUMBER	MILEPOINT BEGIN SECTION	SECTION LENGTH	(14) TOT. MIN HORIZONTAL CLEAR.: NON-CARD. OPENING	CARDINAL OPENING	(15) PRACTICAL MAXIMUM VERTICAL CLEAR.: FT.	IN.	(16)	(17) INTERSECTED ROUTE: ON/UNDER	SYSTEM	ROUTE NUMBER	DIRECT. SUFFIX	DESIGNATION	PREF. ROUTE	(18) FEATURE(S) INTERSECTED	(19) INTER. RTE. BRIDGE NO.: COUNTY	UNIT NUMBER: STRAIGHT LINE MILEAGE	SPECIAL DESIGNATION
2				000	39.7	9~9			2	2	33		1		IR 7.5	AUG	1635	

CARD NO.	(20) INTERSECTED ROUTE A.D.T. (TENS)	(21) A.D.T. YEAR	(22) FED. AID SYSTEM	(23) ADMIN. JURISD.	(24) FUNCTIONAL CLASS	(25) DEFENSE: SECTION NUMBER	MILEPOINT BEGIN SECTION	SECTION LENGTH	(26) TOT MIN HORIZONTAL CLEAR.: NON-CARD. OPENING	CARDINAL OPENING	(27) PRACTICAL MAXIMUM VERTICAL CLEAR.: FT.	IN.	(28)	(29) BY-PASS LENGTH	(30) COORDINATES: LATITUDE DEGREES	MINUTES	LONGITUDE DEGREES	MINUTES	(31) HYD. VULNER.	(32) TOLL	(33) YEAR BUILT: ORIG. CONS.	MAJOR RECON.	(34) NO. LANES: ON STRUCT.	UNDER STRUCT.	(35) HORIZ. CURVE: DEG.	MIN.	(36) SKEW	(37) DESIGN LOADING
3	0023.5	75	03	10	02				656	679	17	02		01						3	59	00	02	04			07	50

WB EB: 16'-00

CARD NO.	(38) APPROACH ROADWAY WIDTH	(39) MEDIAN TYPE	(40) FLARED	(41) BRIDGE ROADWAY WIDTH (CB/CB)	(42) DECK WIDTH (OUT/OUT)	(43) RAIL TYPE	(44) DECK GRAIN	(45) SIDEWALKS: LEFT	RIGHT	(46) FLOOR SLAB	(47) WEARING SURFACE: TYPE	THICKNESS (INCH)	(48) STRUCTURE TYPE: MAIN SPANS NUMBER	TYPE CODE	APPR. SPANS NUMBER	TYPE CODE	(49) TOTAL NO. SPANS	(50) MAXIMUM SPAN LENGTH	(51) OVERALL STRUCTURE LENGTH	(52) TYPE SERVICE	(53) BRIDGE DESCRIPTION	(54) MINIMUM VERTICAL CLEAR. ON BRIDGE: FT.	IN.	(55)	(56)	(57) BEARING TYPE
4	041	000	0	039.7	044.3	3	4	0~0		16	03		004	322	0~0		004	0075	00246	1		9	~9			2

1"C+1½"B

CARD NO.	(58) SUBSTRUCTURE: ABUTMENTS REAR MAT'L	TYPE	FWD. MAT'L	TYPE	PIERS PREDOM. NO. UNITS	MAT'L	TYPE	OTHER NO. UNITS	MAT'L	TYPE	OTHER NO. UNITS	MAT'L	TYPE	PILING	(60) MIN. VERT. UNDERCLEAR. (MAIN LINES): NON-CARD. OPENING FT.	IN.	CARDINAL OPENING FT.	IN.	(61) MIN. LATERAL UNDERCLEAR. TO EDGE OF LANE: NON-CARD. DIRECT. LEFT	RIGHT	CARDINAL DIRECT. LEFT	RIGHT	(62) NAVIGATION: CONTROLLED	VERT. CLEAR.	HORIZ. CLEAR.	(63) OHIO ORIGINAL CONSTR. PROJ. NO.	(64) MICROFILM REEL NO.	(65) ORIGINAL CONSTRUCTION FEDERAL AID PROJECT NUMBER
5	2	5	2	5	03	2	5	0~0			0	2	16	08	15	07	21.5	19.6	22.0	22.2				055258		ACI-1966(6)

CARD NO.	(66) LOAD RATING: OPERATING RATING	INVENTORY RATING	OHIO % OF LEGAL	RATING YEAR	(67) INSP. RESP.	(68) APPRAISAL: HORIZ. ALIGN.	DECK GEOM.	UNDERCLEAR.	SUPERSTR. LOAD CAP.	WATERWAY ADEQ.	APPR. ALIGN.	REMAIN. LIFE	(70) PROPOSED IMPROVEMENTS: YEAR NEEDED	TYPE SERVICE	TYPE WORK	LENGTH OF IMPROVEMENT	IMPR. DES. LOAD	PROPOSED ROAD WIDTH	NUMBER LANES	DESIGN A.D.T. (TENS)	YEAR A.D.T.	ADJ. RDWY.: YEAR	TYPE	(71) COST OF IMPROVEMENTS: TOTAL COST ($1000'S)	YEAR OF COSTS	BREAKDOWN ($1000'S): PRELIM. ENG.	RIGHT-OF-WAY	SUB-STRUCTURE	SUPER-STRUCTURE	(72) PRIORITY
6	96.0	92.7	1.50	73	1	1	7	6	2	2																			

REMARKS: CWR 12-20-73 / CWR 10-8-76
FL 1-14-76 // CWR 3-20-78

OFFICIAL USE ONLY — O.A. CODE _____ — DATA RECORDED

OHIO DEPARTMENT OF TRANSPORTATION
DIVISION OF HIGHWAYS
BRIDGE INSPECTION REPORT

STRUCTURE FILE NUMBER: 0 6 0 2 0 4 3

BRIDGE NUMBER: A06 (COU) 75 (ROUTE) 0498L (UNIT) YEAR BUILT: 5900

DISTRICT: 07 BRIDGE TYPE: 322 TYPE SERVICE: 111 USR 33

		MAT.	TYPE	GB	69	70	71	72	73	74	75	76	77	78	79
DECK	1. FLOOR		1						1	1	1	2	1	1	2
	2. WEARING SURFACE		6						1	2	1	1	2	2	2
	3. CURBS & WALKWAYS		1						1	1	1	1	1	1	2
	4. MEDIAN								—	—	—	—	—	—	—
	5. RAILING		3						1	1	1	1	1	2	2
	6. DRAINAGE		4						1	1	1	1	1	2	1
	7. EXPANSION JOINTS		2						1	1	2	2	2	2	2
	8. SUMMARY								8	7	7	7	7	7	7
SUPERSTRUCTURE	9. ALIGNMENT								1	1	1	1	1	1	1
	10. BEAMS OR GIRDERS		1						1	1	1	1	1	1	1
	11. DIAPHRAGMS OR CROSSFRAMES								1	1	1	2	1	1	1
	12. JOIST														
	13. FLOOR BEAMS														
	14. FLOOR BEAM CONNECTIONS														
	15. VERTICALS														
	16. DIAGONALS														
	17. END POST														
	18. TOP CHORD														
	19. LOWER CHORD														
	20. LOWER LATERAL BRACING														
	21. TOP LATERAL BRACING														
	22. SWAY BRACING														
	23. PORTALS														
	24. BEARINGS		2						1	1	1	2	1	1	2
	25. ARCH														
	26. ARCH COLUMNS OR HANGERS														
	27. SPANDREL WALLS														
	28. SUSPENSION SYSTEM														
	29. SUSPENDERS														
	30. TOWERS														
	31. BENT POST														
	32. ANCHORAGE														
	33. BRIDGE MACHINERY														
	34. PAINT								1	2	1	3	1	1	1
	35. LIVE LOAD RESPONSE								1	1	1	1	1	2	1
	36. SUMMARY								8	8	8	8	7	8	10
SUBSTRUCTURE	37. ABUTMENTS	2	5						1	2	1	2	2	2	2
	38. ABUTMENT SEATS								1	1	1	1	2	2	2
	39. PIERS	2	5						1	1	1	1	1	1	1
	40. PIER SEATS								1	1	1	1	1	1	1
	41. BACKWALLS								1	2	1	2	2	2	2
	42. WINGWALLS								1	1	1	1	1	2	1
	43. FENDERS & DOLPHINS								—	—	—	—	—	—	—
	44. SUMMARY								8	7	8	8	7	7	8
CULVERTS	45. GENERAL														
	46. ALIGNMENT														
	47. HEADWALLS or END WALLS														
	48. SUMMARY														
CHANNEL	49. ALIGNMENT														
	50. PROTECTION														
	51. WATERWAY ADEQUACY														
	52. SUMMARY														
APPROACHES	53. PAVEMENT		2						1	2	1	2	2	1	2
	54. ALIGNMENT								1	1	1	1	1	1	1
	55. GRADE								1	1	1	1	1	1	1
	56. APPROACH SLABS								1	2	1	1	2	2	2
	57. GUARD RAIL		1						1	1	1	1	1	1	1
	58. RELIEF JOINTS								1	1	—	—	—	—	—
	59. EMBANKMENT								1	1	1	1	2	2	1
	60. SUMMARY								8	7	8	8	7	7	7
GENERAL	61. NAVIGATION LIGHTS								—	—	—	—	—	—	—
	62. WARNING SIGNS								—	—	—	—	—	—	—
	63. INSPECTION RESPONSIBILITY								1	1	1	1	1	1	1
	64. MAINTENANCE RESPONSIBILITY								1	1	1	1	1	1	1
	65. VERTICAL CLEARANCE								—	—	—	—	—	—	—
	66. GENERAL APPRAISAL								8	6	7	6A	6A	7A	6A
	INSPECTED BY								FM	FM	RW	HD	RM	RM	RM
	DATE								1-23	2-12	3-4	3-8	1-24	11-16	1-8
	YEAR								74	75	76	77	78	78	80

BR-1173

BR-1173 C.W.R. 8-22-73

BRIDGE INVENTORY & APPRAISAL CODE SHEET

OHIO DEPARTMENT OF TRANSPORTATION
DIVISION OF HIGHWAYS

BR-07
REV. 5-74

CODED BY cwr DATE 5-16-73
CHECKED BY _____ DATE _____

PROCESSING KEY	TRANS. CODE
STRUCTURE FILE NO.	B
0,6,0,2,0,4,3	

75-0498 L

CARD NO.	(1) ODOT DISTRICT	(2) CITY OR TOWN	(3) INVENTORY ROUTE: ON/UNDER	SYSTEM	ROUTE NUMBER	DIRECT. SUFFIX	DESIGNATION	PREF. ROUTE	(4) FEATURE(S) INTERSECTED	(5) INV.RTE. BRIDGE NO.: COUNTY	UNIT NUMBER: STRAIGHT LINE MILEAGE	SPECIAL DESIGNATION	(6) SECTION I. D. NUMBER	(7) INVENTORY ROUTE A.D.T. (TENS)	(8) A.D.T. YEAR	(9) FED.AID SYSTEM	(10) ADMIN. JURISD.	(11) FUNCTIONAL CLASS	(12)
1	07	0~0	1	1	7.5		1		US R 33	AUG	04.98	L	04.97	00143	75	01	10	01	

AUG-25-0504

CARD NO.	(13) DEFENSE: SECTION NUMBER	MILEPOINT BEGIN SECTION	SECTION LENGTH	(14) TOT.MIN HORIZONTAL CLEAR.: NON-CARD. OPENING	CARDINAL OPENING	(15) PRACTICAL MAXIMUM VERTICAL CLEAR.: FT.	IN.	(16)	(17) INTERSECTED ROUTE: ON/UNDER	SYSTEM	ROUTE NUMBER	DIRECT. SUFFIX	DESIGNATION	PREF. ROUTE	(18) FEATURE(S) INTERSECTED	(19) INTER. RTE. BRIDGE NO.: COUNTY	UNIT NUMBER: STRAIGHT LINE MILEAGE	SPECIAL DESIGNATION
2				000	39.7	9~9			2	2	33		1		I.R. 7.5	AUG	16.35	

CARD NO.	(20) INTERSECTED ROUTE A.D.T. (TENS)	(21) A.D.T. YEAR	(22) FED. AID SYSTEM	(23) ADMIN. JURISD.	(24) FUNCTIONAL CLASS	(25) DEFENSE: SECTION NUMBER	MILEPOINT BEGIN SECTION	SECTION LENGTH	(26) TOT MIN HORIZONTAL CLEAR.: NON-CARD. OPENING	CARDINAL OPENING	(27) PRACTICAL MAXIMUM VERTICAL CLEAR.: FT.	IN.	(28)	(29) BY-PASS LENGTH	(30) COORDINATES: LATITUDE DEGREES	LATITUDE MINUTES	LONGITUDE DEGREES	LONGITUDE MINUTES	(31) PHYS. VULNER.	(32) TOLL	(33) YEAR BUILT: ORIG. CONS.	MAJOR RECON.	(34) NO. LANES: ON STRUCT.	UNDER STRUCT.	(35) HORIZ. CURVE: DEG.	MIN.	(36) SKEW	(37) DESIGN LOADING
3	0,0,0,2,3,5	75	03	10	02				656	679	17	02		01						3	59	00	02	04			07	50

WB EB=16'00

CARD NO.	(38) APPROACH ROADWAY WIDTH	(39) MEDIAN TYPE	(40) FLARED	(41) BRIDGE ROADWAY WIDTH (CB/CB)	(42) DECK WIDTH (OUT/OUT)	(43) RAIL TYPE	(44) DECK DRAIN.	(45) SIDEWALKS: LEFT	RIGHT	(46) FLOOR SLAB	(47) WEARING SURFACE: TYPE	THICKNESS (INCH)	(48) STRUCTURE TYPE: MAIN SPANS NUMBER	MAIN SPANS TYPE CODE	APPR. SPANS NUMBER	APPR. SPANS TYPE CODE	(49) TOTAL NO. SPANS	(50) MAXIMUM SPAN LENGTH	(51) OVERALL STRUCTURE LENGTH	(52) TYPE SERVICE	(53) BRIDGE DESCRIPTION	(54) MINIMUM VERTICAL CLEAR. ON BRIDGE: FT.	IN.	(55)	(56)	(57) BEARING TYPE
4	041	000	0	037.7	044.3	3	4	0~0		1	6	03	004	322	0~0		004	0075	00246	1	1		9~9			2

1'C+1½'B

CARD NO.	(58) SUBSTRUCTURE: ABUTMENTS REAR MAT'L	TYPE	FWD. MAT'L	TYPE	PIERS PREDOMINATE NUMBER UNITS	MAT'L	TYPE	OTHER NUMBER UNITS	MAT'L	TYPE	OTHER NUMBER UNITS	MAT'L	TYPE	(59) PILING	(60) MIN. VERT. UNDERCLEAR. (MAIN LANES): NON-CARD. OPENING FT.	IN.	CARDINAL OPENING FT.	IN.	(61) MIN. LATERAL UNDERCLEAR. TO EDGE OF LANE: NON-CARD. DIRECT. LEFT	RIGHT	CARDINAL DIRECT. LEFT	RIGHT	(62) NAVIGATION: CONTROLLED	VERT. CLEAR.	HORIZ. CLEAR.	(63) OHIO ORIGINAL CONSTR. PROJ. NO.	(64) MICROFILM REEL NO.	(65) ORIGINAL CONSTRUCTION FEDERAL AID PROJECT NUMBER
5	2	5	2	5	03	2	5	0~1				0		2	16	08	15	07	21.5	19.6	22.0	22.2				055258		ACI-1966(6)

CARD NO.	(66) LOAD RATING: OPERATING RATING	INVENTORY RATING	OHIO % OF LEGAL	RATING YEAR	(67) INSP. RESP.	(68) MAINT. RESP.	(69) APPRAISAL: DECK GEOM.	UNDERCLEAR.	SAFE LOAD CAP.	ALTERNAT ROUT.	APPR. ALIGN.	REMAIN. LIFE	(70) PROPOSED IMPROVEMENTS: YEAR NEEDED	TYPE SERVICE	TYPE WORK	LENGTH OF IMPROVEMENT	IMPR. DES. LOAD	PROPOSED ROAD WIDTH	NUMBER LANES	DESIGN A.D.T. (TENS)	YEAR A.D.T.	ADJ. ROWY.: YEAR	TYPE	(71) COST OF IMPROVEMENTS: TOTAL COST ($1000'S)	YEAR OF COSTS	BREAKDOWN ($1000'S): PRELIM. ENG.	DEMOLITION	SUB-STRUCTURE	SUPER-STRUCTURE	(72) PRIORITY
6	9.6.0	9.2.7	1.50	73	1	1	7	6	7	N	8	3																	

REMARKS: cwr 12-20-73 cwr 10-8-76 FL 1-14-76 cwr 3-22-78

SPECIAL USE ONLY — O.A. CODE _____ REVIEWED BY _____ DATA RECORDER

STATE OF OHIO
TRAFFIC CRASH REPORT

AUG-75-0498 L

Southbound

OH-1 (Rev. 1/77)

LOCAL REPORT NO. 6-525-6 | OH-2 OH-3 OH-5 | CITY CODE

—DEPT. OF HIGHWAY SAFETY ONLY—

ACCIDENT SEVERITY: FATAL / X INJURY / PROP. DAMAGE / P.D. UNDER $150 / ON PRIV. PROP.

FILE NO. LOCAL USE

REPORTING AGENCY: STATE HIGHWAY PATROL OH PØ6ØØ

TIME OF CRASH: 0130 | DAY: FRI | DATE OF CRASH: MO 6 DAY 23 YR 78

HIT & RUN UNSOLVED / HIT & RUN SOLVED

IN COUNTY OF: AUGLAIZE | ON ROUTE, CO. OR TWP. ROAD, STREET ADDRESS: I575 | AT JUNCTION OR INTERSECTION WITH: MILEPOST #111

(IN CITY, VILLAGE, TOWNSHIP) OF: DUCHOUQUET | 1/10 X MILES FEET N (S) E W OF MILEPOST, JUNCTION, INTERSECTION, BRIDGE, ETC.: MILEPOST # 111 | PHOTO REFERENCE: NO

FED-AID	LOG-LOC	JUR	TC	FLT	DESCRIPTION	DIR. ALIGN

UNIT NO. 1

TOTAL UNITS INVOLVED: 2

DRIVER — LAST: NICHOLS | FIRST: SHEILA | MIDDLE: (NMN) | SEX: F | DATE OF BIRTH: MO 2 DAY 28 YR 59 | AGE: 19 | SOCIAL SECURITY NUMBER: 284 48 1355

ADDRESS — NUMBER STREET: Box 502 | CITY: BOTKINS | STATE: OH | 45306 | PHONE: 513 693-4651

CIRCLE DAMAGED AREAS

STATE: OH | OPERATOR LIC. NO.: NF 378663 | RESTR | CLASS: 134 | ENDOR | OCCUPATION: ASSEMBLER | DAMAGE SEVERITY: SL MO SE DE

OWNER — LAST: SAME | FIRST | MIDDLE | ADDRESS — NUMBER STREET | CITY | STATE | PHONE

VEHICLE YEAR 19	MAKE	MODEL NAME	COLOR	BODY STYLE	VEHICLE DIR. N (S) E W	ODOMETER READING	STATE	LICENSE NO.	YEAR
71	CHEVS	ELL	BLU	2T			OH	220534	78

NAME OF INSURANCE COMPANY/AGENT: ROSER INS. WAPAKONETA, OH | NAME OF WRECKER | INJURED TAKEN TO: MEMORIAL HOSP LIMA, OH | BY WHOM: FRIEND

DAMAGE ESTIMATE: NONE / OVER $150 X / UNDER $150 | ALCOHOL TEST GIVEN: X NO / YES | TYPE | RESULTS | ORD. OR CODE NUMBER: CITY ORD. / STATE CODE | ORD. DESCRIPTION

105

UNIT NO. 2

DRIVER — LAST: BRIDGE | FIRST | MIDDLE | SEX | DATE OF BIRTH: MO. DAY YR. | AGE | SOCIAL SECURITY NUMBER

ADDRESS — NUMBER STREET | CITY | STATE | PHONE | CIRCLE DAMAGED AREAS

VEH. / PED. / ANIMAL / TRAIN

STATE | OPERATOR LIC. NO. | RESTR | CLASS | ENDOR | OCCUPATION | DAMAGE SEVERITY: SL MO SE DE

OWNER — LAST: STATE OF OHIO, DEPT. OF TRANSPORTATION | FIRST | MIDDLE | ADDRESS — NUMBER STREET: 25 S. FRONT | CITY: COLUMBUS | STATE: OH | 43216 | PHONE: (614) 466-2200

PROPERTY: CITY / COUNTY / X STATE / FEDERAL / PRIVATE

VEHICLE YEAR 19	MAKE	MODEL NAME	COLOR	BODY STYLE	VEHICLE DIR. N S E W	ODOMETER READING	STATE	LICENSE NO.	YEAR

NAME OF INSURANCE COMPANY/AGENT | NAME OF WRECKER | INJURED TAKEN TO | BY WHOM

OWNER NOTIFIED: YES / X NO

DAMAGE ESTIMATE: NONE X / OVER $150 / UNDER $150 | ALCOHOL TEST GIVEN: NO / YES | TYPE | RESULTS | ORD. OR CODE NUMBER: CITY ORD. / STATE CODE | ORD. DESCRIPTION

OCC. 1 UNIT / WIT.

NAME — LAST | FIRST | MIDDLE | DATE OF BIRTH: MO. DAY YR. | AGE

ADDRESS — NUMBER STREET | CITY | STATE | PHONE | SEX

OCC. 2 UNIT / WIT.

NAME — LAST | FIRST | MIDDLE | DATE OF BIRTH: MO DAY YR. | AGE

ADDRESS — NUMBER STREET | CITY | STATE | PHONE | SEX

OCC. 3 UNIT / WIT.

NAME — LAST | FIRST | MIDDLE | DATE OF BIRTH: MO. DAY YR. | AGE

ADDRESS — NUMBER STREET | CITY | STATE | PHONE | SEX

OCC. 4 UNIT / WIT.

NAME — LAST | FIRST | MIDDLE | DATE OF BIRTH: MO. DAY YR. | AGE

ADDRESS — NUMBER STREET | CITY | STATE | PHONE | SEX

TIME POLICE:	RECEIVED ON CALL	DISPATCHED	ARRIVED SCENE	CLEARED SCENE	OTHER INVESTIGATION	TOTAL TIME
	1551	1551	1551	1640		1

OCC. 1	INJURED TAKEN TO	BY WHOM	OCC. 3	INJURED TAKEN TO	BY WHOM	OFFICER'S I.D.
						1322-6-5
OCC. 2	JUL 06 1978		OCC. 4			CHECKED BY: 1418

	DR.	DR./PED 1	DR./PED 2	OCCUPANT 1	OCCUPANT 2	OCCUPANT 3	OCCUPANT 4
INJURY SEVERITY							
Fatal	1						
Incapacitating injury	2						
Visible signs of injury	3	X					
Claimed injury	4						
No claimed injury	5						
RESTRAINTS IN USE							
Seat belt	1						
Harness and seat belt	2						
Shoulder harness	3						
None in use	4	X					
Other	5						
None installed	6						
POSITION							
Front left	1	X					
Front center	2						
Front right	3						
Back left	4						
Back center	5						
Back right	6						
Other	7						
CONDITION (PED/DR)							
Apparently normal	1						
Sick	2						
Fatigued	3						
Apparently sleepy	4	X					
Physical defect	5						
Apparently drinking	6						
OMVI	7						
Apparent drug usage	8						
EJECTION							
Total	1						
Partial	2						
Not ejected	3	X					
Trapped	4						

STATE OF OHIO

REPORT NO. (LOCAL): 6-525-6

TYPE OF CRASH

(Two Moving Motor Vehicles)
- 01 ☐ Head-on
- 02 ☐ Rear-end
- 03 ☐ Sideswipe
- 04 ☐ Angle
- 05 ☐ Turning

(One Moving MV and —)
- 06 ☐ Parked motor vehicle
- 07 ☐ Pedestrian
- 08 ☐ Animal
- 09 ☐ Train
- 10 ☐ Pedalcycles
- 11 ☐ Other non-motor vehicle
- 12 ☒ Fixed object
- 13 ☐ Other object

(One MV Only)
- 14 ☐ Overturning
- 15 ☐ Other non-collision

MOTORCYCLE

UNIT 1	UNIT 2	
☐	☐	1 Light (up to 100 cc)
☐	☐	2 Medium (101 to 349 cc)
☐	☐	3 Heavy (over 350 cc)
☐	☐	4 Yes / 5 No — Helmet
☐	☐	6 Yes / 7 No — Extended fork

LOCATION
- 1 ☐ Street or highway intersection
- 2 ☐ Intersection related
- 3 ☐ Driveway access
- 4 ☐ Railroad crossing
- 5 ☒ Bridge (over 20' span)
- 6 ☐ Subway (underpass)
- 7 ☐ Bridge or culvert (spans 20' and under)
- 8 ☐ Interchange
- 9 ☐ Non-intersection

CONTOUR
- 1 ☒ Straight, level
- 2 ☐ Straight, grade
- 3 ☐ Straight, hillcrest
- 4 ☐ Curve, level
- 5 ☐ Curve, grade
- 6 ☐ Curve, hillcrest

OCCURRENCE
- 1 ☒ On roadway
- 2 ☐ Off roadway
- 3 ☐ Off left side
- 4 ☐ Off right side
- 5 ☐ On other roadway (divided highway)

RAMP

Lettercode ____
- 1 ☐ Ramp beginning
- 2 ☐ On the ramp
- 3 ☐ Ramp end
- 4 ☐ At the intersection of two ramps

LIGHT CONDITIONS
- 1 ☐ Daylight
- 2 ☐ Dawn or dusk
- 3 ☒ Dark—no lights
- 4 ☐ Dark but lighted
- 5 ☐ Other ____

CAUSATIVE FACTORS

UNIT 1	UNIT 2	
☐	☐	01 Failure to yield
☐	☐	02 Ran stop signal
☐	☐	03 Driving wrong way
☐	☐	04 Improper passing
☐	☐	05 Improper turning
☐	☐	06 OMVI
☐	☐	07 Driving too slow
☐	☐	08 Traffic signal violation
☐	☐	09 Left of center
☐	☐	10 Stopped or parked illegally
☐	☐	11 Excessive speed
☐	☐	12 Following too close
☐	☐	13 Driver inattention
☐	☐	14 View obstruction
☐	☐	15 None
☐	☐	16 Vehicle defects
☐	☐	17 Road defects
☐	☐	18 Ped. action
☒	☐	19 Other DROVE OFF ROADWAY

DEFECTS

UNIT 1	UNIT 2	
☐	☐	1 Brakes
☐	☐	2 Lights
☐	☐	3 Steering
☐	☐	4 Tires
☐	☐	5 Other ____
☒	☐	6 None

WEATHER
- 1 ☒ No adverse weather condition
- 2 ☐ Rain
- 3 ☐ Snow
- 4 ☐ Fog
- 5 ☐ Heavy wind
- 6 ☐ Other ____

PEDESTRIAN ACTION
- 01 ☐ In crosswalk
- 02 ☐ Crossing other than crosswalk
- 03 ☐ Walking with traffic
- 04 ☐ Walking against traffic
- 05 ☐ Working or playing in roadway
- 06 ☐ Entering or leaving vehicle
- 07 ☐ On highway but not in roadway
- 08 ☐ Off highway
- 09 ☐ Other ____
- 10 ☐ Working on car

FIXED ROADSIDE OBJECT STRUCK

UNIT 1	UNIT 2	
☐	☐	1 Light or utility pole
☒	☐	2 Bridge or culvert
☐	☐	3 Sign, signal or support
☐	☐	4 Guard rail
☐	☐	5 Fence
☐	☐	6 Tree
☐	☐	7 Ditch or embankment
☐	☐	8 Curb
☐	☐	9 Construct. barricade
☐	☐	10 None
☐	☐	11 Other ____

ROAD CONDITIONS
- 1 ☒ Dry
- 2 ☐ Wet
- 3 ☐ Snow or ice
- 4 ☐ Mud or sand
- 5 ☐ Other ____

NO. LANES: 2

INTENDED DRIVER ACTION

UNIT 1	UNIT 2	
☒	☐	01 Going straight
☐	☐	02 Changing lanes
☐	☐	03 Passing
☐	☐	04 Turning right
☐	☐	05 Turning left
☐	☐	06 Stopped to turn
☐	☐	07 Parking
☐	☐	08 Unparking
☐	☐	09 Parked
☐	☐	10 Backing
☐	☐	11 Stopped in traffic
☐	☐	12 U-turn
☐	☐	13 Merging onto freeway
☐	☐	14 Exiting from freeway
☐	☐	15 Swerving to avoid
☐	☐	16 Other ____

TRAFFIC CONTROL

UNIT 1	UNIT 2	
☐	☐	1 Traffic officer
☐	☐	2 Stop sign
☐	☐	3 Yield sign
☐	☐	4 Railroad signal
☐	☐	5 Traffic signal
☐	☐	6 Official barricade
☒	☐	7 Other CENTER LINE
☐	☐	8 None

ROAD SURFACE
- 1 ☒ Asphalt
- 2 ☐ Concrete
- 3 ☐ Gravel
- 4 ☐ Other ____

ROAD WIDTH: 24'-D

TYPE OF UNIT

UNIT 1	UNIT 2	
☒	☐	01 Passenger car
☐	☐	02 Single body truck
☐	☐	03 Pickup
☐	☐	04 Van
☐	☐	05 Truck Tractor
☐	☐	06 Tractor/Semi-Trailer
☐	☐	07 Tractor/Double Trailer
☐	☐	08 Fire truck
☐	☐	09 Police vehicle
☐	☐	10 Emergency vehicle
☐	☐	11 Bus public
☐	☐	12 Bus school
☐	☐	13 Bus church
☐	☐	14 Taxi
☐	☐	15 Train
☐	☐	16 Motorcycle
☐	☐	17 Motor scooter
☐	☐	18 Motor home
☐	☐	19 Bicycle
☐	☐	20 Motorized bicycle
☐	☐	21 Animal w/rider
☐	☐	22 Animal w/buggy
☐	☐	23 Farm veh., unlicensed
☐	☐	24 Other ____

TOWING

UNIT 1	UNIT 2	
☐	☐	01 Trailer
☐	☐	02 Camper
☐	☐	03 Other ____

ACCIDENT DESCRIPTION TO INCLUDE POINT OF IMPACT:

UNIT #1 WAS SOUTHBOUND ON I-75. DRIVER #1 FELL ASLEEP AND UNIT #1 DRIFTED TO THE LEFT. DRIVER #1 AWOKE AND ATTEMPTED TO AVOID STRIKING A BRIDGE. UNIT #1 STRUCK THE BRIDGE, CROSSED THE ROAD AND RE-STRUCK THE BRIDGE.

DIAGRAM (Show all lanes, label all units)

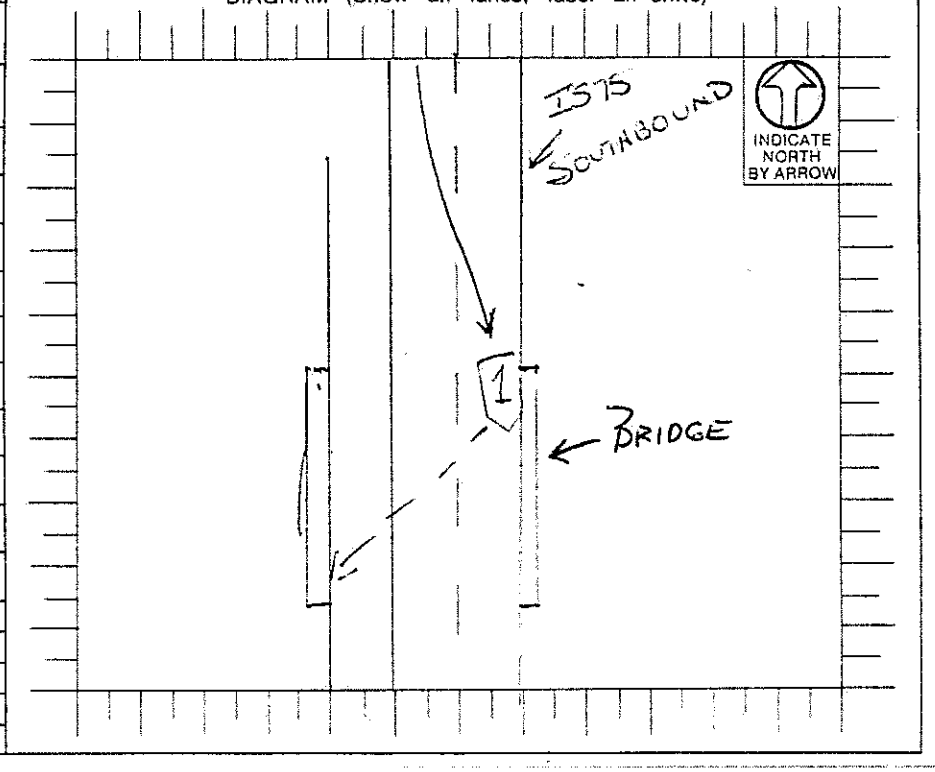

—OTHER INVESTIGATION NOTES—

ACCIDENT REPORT TAKEN ON POST AT 4:00PM 6-23-78

SPEED			SKIDMARK DATA	UNIT 1	UNIT 2
UNIT	STATED	POSTED	R.F.	N	
			L.F.	O	
1	50-55	55	R.R.	N	
			L.R.	E	
2			% Gr.	0%	

CLIPPING send to: [illegible]

ODOT, DIVISION OF HIGHWAYS

DISTRICT SEVEN, SIDNEY

PAPER: Bellefontaine Examiner

DATE: 6/23/78

PAGE: 7

Patrol Investigates 3 Thursday Crashes

Three property-damage accidents were probed Thursday by the Bellefontaine post of the Ohio Highway Patrol. In addition, troopers issued 32 citations.

At 2:15 p.m., Michele J. Spangler, 726 N. Main, was driving west on U.S. Route 33 when she attempted a left turn onto S.R. 235 and struck an eastbound automobile in the left rear. The second vehicle was driven by Linda L. Ridenour of Lima.

Damage to the Spangler auto proved moderate, while slight damages were sustained by the Ridenour vehicle. Miss Spangler was cited for failure to yield the right of way, and was ordered into Bellefontaine Munucipal court on June 29.

At 10:45 p.m., Jesse J. Savage, R. 2, was heading east on S.R. 47 when her automobile's engine caught fire. Slight damages resulted to the car, and there were no injuries.

At an unknown time Thursday, Randall C. Revlett of Dayton was driving a U.S. Army jeep east on Route 33, at the junction with S.R. 235, when a piece of "over height" scrap machinery on a trailer pulled by the jeep struck a traffic signal. No damages were reported to the vehicle.

0515 Lane
0492L
SB I-75

CLIPPING send to: [illegible]

ODOT, DIVISION OF HIGHWAYS

DISTRICT SEVEN, SIDNEY

PAPER: St. Marys Evening Leader

DATE: 6/24/78

PAGE: 12

AUG-75-

State Highway Patrol

Sheila Nichols, 19, Botkins, was taken by a friend to Lima Memorial Hospital where she was treated for injuries and released following a one-car accident at 1:30 a.m. Friday.

She was southbound on I-75 near US 33 when she fell asleep, according to the State Highway Patrol office. She drifted to the left and awoke attempting to avoid striking a bridge. Nichol's car struck the bridge, crossed the road and restruck the bridge. There was no apparent damage to the bridge, however her vehicle was severely damaged. She was not cited.

Logan County
Reese
Signal file

Auglaize County
Rudy

BRIDGE INVENTORY & APPRAISAL CODE SHEET

OHIO DEPARTMENT OF TRANSPORTATION
DIVISION OF HIGHWAYS

CODED BY FL DATE 1-14-76
CHECKED BY C.W.E. DATE 1-15-76

BR-87
REV. 5-74

PROCESSING KEY	
STRUCTURE FILE NO.	TRANS. CODE
06,02,04,3	C

CARD NO.	(1) ODOT DISTRICT	(2) CITY OR TOWN	(3) INVENTORY ROUTE: ON/UNDER	SYSTEM	ROUTE NUMBER	DIRECT. SUFFIX	DESIGNATION	PREF. ROUTE	(4) FEATURE(S) INTERSECTED	(5) INV. RTE. BRIDGE NO.: COUNTY	UNIT NUMBER: STRAIGHT LINE MILEAGE	SPECIAL DESIGNATION	(6) SECTION I. D. NUMBER	(7) INVENTORY ROUTE A.D.T. (TENS)	(8) A.D.T. YEAR	(9) FED. AID SYSTEM	(10) ADMIN. JURISD.	(11) FUNCTIONAL CLASS	(12)
1	07	0,0,0,0	1	1	7.5		1		U.S.R. 33	AUG	0,4,9,8	L	0490 0497	0,0,1,4,4,4 / 1437	72	01 ✓	1,0	2,1 01	
2									I.R. 7.5	AUG	1,6,3,5								

CARD NO.	(13) DEFENSE: SECTION NUMBER	MILEPOINT BEGIN SECTION	SECTION LENGTH	(14) TOT. MIN HORIZONTAL CLEAR.: NON-CARD. OPENING	CARDINAL OPENING	(15) PRACTICAL MAXIMUM VERTICAL CLEAR.: FT.	IN.	(16)	(17) INTERSECTED ROUTE: ON/UNDER	SYSTEM	ROUTE NUMBER	DIRECT. SUFFIX	DESIGNATION	PREF. ROUTE	(18) FEATURE(S) INTERSECTED	(19) INTER. RTE. BRIDGE NO.: COUNTY	UNIT NUMBER: STRAIGHT LINE MILEAGE	SPECIAL DESIGNATION
2				000	39.7	99	99		22		3.3		1		I.R. 7.5	AUG	1,6,3,5	

CARD NO.	(20) INTERSECTED ROUTE A.D.T. (TENS)	(21) A.D.T. YEAR	(22) FED. AID SYSTEM	(23) ADMIN. JURISD.	(24) FUNCTIONAL CLASS	(25) DEFENSE: SECTION NUMBER	MILEPOINT BEGIN SECTION	SECTION LENGTH	(26) TOT MIN HORIZONTAL CLEAR.: NON-CARD. OPENING	CARDINAL OPENING	(27) PRACTICAL MAXIMUM VERTICAL CLEAR.: FT.	IN.	(28)	(29) BY-PASS LENGTH	(30) COORDINATES: LATITUDE DEGREES	LATITUDE MINUTES	LONGITUDE DEGREES	LONGITUDE MINUTES	(31) PHYS. VULNER.	(32) TOLL	(33) YEAR BUILT: ORIG. CONS.	MAJOR RECON.	(34) NO. LANES: ON STRUCT.	UNDER STRUCT.	(35) HORIZ. CURVE: DEG.	MIN.	(36) SKEW	(37) DESIGN LOADING
3	0,0,0,1,6,3 / 2,3,5,7,5	72	0,3	1,0	2,2 02				5,1,0	5,1,0	1,7	0,5		01						3	5,9	0,0	0,2	0,4					0,7	5,0

W8 (Rt) (16-05 EB)

CARD NO.	(38) APPROACH ROADWAY WIDTH	(39) MEDIAN TYPE	(40) FLARED	(41) BRIDGE ROADWAY WIDTH (CB/CB)	(42) DECK WIDTH (OUT/OUT)	(43) RAIL. TYPE	(44) DECK DRAIN.	(45) SIDEWALKS: LEFT	RIGHT	(46) (47) WEARING SURFACE: FLOOR SLAB	TYPE	THICKNESS (INCH)	(48) STRUCTURE TYPE: MAIN SPANS NUMBER	MAIN SPANS TYPE CODE	APPR. SPANS NUMBER	APPR. SPANS TYPE CODE	(49) TOTAL NO. SPANS	(50) MAXIMUM SPAN LENGTH	(51) OVERALL STRUCTURE LENGTH	(52) TYPE SERVICE	(53) BRIDGE DESCRIPTION	(54) MINIMUM VERTICAL CLEAR. ON BRIDGE: FT.	IN.	(55)	(56)	(57) BEARING TYPE
4	0,4,1	0,0,0	0	0,3,9,7	0,4,4,3	3	4	0	0	1	6	03	0,0,4	3,2,2	0,0,0	0,0,0	0,0,4	0,0,7,5	0,0,0,2,4,6	1,1		9,9,9	9					2

1"Ct 1½"B

CARD NO.	(58) SUBSTRUCTURE: ABUTMENTS REAR MAT'L	REAR TYPE	AHD. MAT'L	AHD. TYPE	PIERS PREDOMINATE NUMBER UNITS	PREDOMINATE MAT'L	PREDOMINATE TYPE	OTHER NUMBER UNITS	OTHER MAT'L	OTHER TYPE	OTHER NUMBER UNITS	OTHER MAT'L	OTHER TYPE	(59) PILING	(60) MIN. VERT. UNDERCLEAR. (MAIN LANES): NON-CARD. OPENING FT.	IN.	CARDINAL OPENING FT.	IN.	(61) MIN. LATERAL UNDERCLEAR. TO EDGE OF LANE: NON-CARD. DIRECT. LEFT	NON-CARD. DIRECT. RIGHT	CARDINAL DIRECT. LEFT	CARDINAL DIRECT. RIGHT	(62) NAVIGATION: CONTROLLED	VERT. CLEAR.	HORIZ. CLEAR.	(63) OHIO ORIGINAL CONSTR. PROJ. NO.	(64) MICROFILM REEL NO.	(65) ORIGINAL CONSTRUCTION FEDERAL AID PROJECT NUMBER
5	2	5	2	5	0,3	2	5	0			0			2	1.7	0,0	1.5	0.9	0,5,0	1,0,0	0,5,0	1,0,0				0,5,5,2	58		A.C.I.-1,9,6,(6)

CARD NO.	(66) LOAD RATING: OPERATING RATING	INVENTORY RATING	OHIO % OF LEGAL	RATING YEAR	(67) INSP. RESP.	(68) MAINT. RESP.	(69) APPRAISAL: DECK GEOM.	UNDERCLEAR.	APPR. ALIGN.	REMAIN. LIFE	(70) PROPOSED IMPROVEMENTS: YEAR NEEDED	TYPE SERVICE	TYPE WORK	LENGTH OF IMPROVEMENT	IMPR. DES. LOAD	PROPOSED ROAD WIDTH	NUMBER LANES	DESIGN A.D.T. (TENS)	YEAR A.D.T.	ADJ. ROWY.: YEAR	TYPE	(71) COST OF IMPROVEMENTS: TOTAL COST ($1000'S)	YEAR OF COSTS	BREAKDOWN ($1000'S): PRELIM. ENG.	DEMOLITION	SUB-STRUCTURE	SUPER-STRUCTURE	(72) PRIORITY
6	9,5,8	9,2,7	1,5,0	7,3	1		7	7	7	4	0																	0

REMARKS: PLAN NO. AUG-25-0504 Proj 356-74 waterproof and l
Rev. 12-20-73
" 1-14-76

OFFICIAL USE ONLY
O.A. CODE _____
REVIEWED BY _____
DATE _____
DATA RECORDER (STAMP)
DATE _____

-87

OHIO DEPARTMENT OF TRANSPORTATION
DIVISION OF HIGHWAYS

BRIDGE INVENTORY & APPRAISAL CODE SHEET

PROCESSING KEY

STRUCTURE FILE NO.	TRANS. CODE
06.02.04.3	C

CODED BY C.W.R. DATE 12-20-73 REVIEWED BY _____ DATE _____

1 — CARD NO.

- (1) ODOT DISTRICT
- (2) CITY OR TOWN
- (3) INVENTORY ROUTE: ON/UNDER; SYSTEM; ROUTE NUMBER; DIRECT. SUFFIX; DESIGNATION; PREF. ROUTE
- (4) FEATURE(S) INTERSECTED
- (5) INV. RTE. BRIDGE NO.: COUNTY; UNIT NUMBER; STRAIGHT LINE MILEAGE; SPECIAL DESIGNATION
- (6) SECTION I. D. NUMBER
- (7) INVENTORY ROUTE A.D.T. (TENS)
- (8) A.D.T. YEAR
- (9) FED. AID. SYSTEM
- (10) ADMIN. JURISD.
- (11) FUNCTIONAL CLASS
- (12)

2 — CARD NO.

- (13) DEFENSE: SECTION NUMBER; MILEPOINT BEGIN SECTION; SECTION LENGTH
- (14) TOT. MIN HORIZONTAL CLEAR.: NON-CARD. OPENING; CARDINAL OPENING
- (15) PRACTICAL MAXIMUM VERTICAL CLEAR.: FT.; IN.
- (16)
- (17) INTERSECTED ROUTE: ON/UNDER; SYSTEM; ROUTE NUMBER; DIRECT. SUFFIX; DESIGNATION; PREF. ROUTE
- (18) FEATURE(S) INTERSECTED
- (19) INTR. RTE. BRIDGE NO.: COUNTY; UNIT NUMBER; STRAIGHT LINE MILEAGE; SPECIAL DESIGNATION

3 — CARD NO.

- (20) INTERSECTED ROUTE A.D.T. (TENS)
- (21) A.D.T. YEAR
- (22) FED. AID SYSTEM
- (23) ADMIN. JURISD.
- (24) FUNCTIONAL CLASS
- (25) DEFENSE: SECTION NUMBER; MILEPOINT BEGIN SECTION; SECTION LENGTH
- (26) TOT. MIN HORIZONTAL CLEAR.: NON-CARD. OPENING; CARDINAL OPENING
- (27) PRACTICAL MAXIMUM VERTICAL CLEAR.: FT.; IN.
- (28)
- (29) BY-PASS LENGTH
- (30) COORDINATES: LATITUDE DEGREES; MINUTES; LONGITUDE DEGREES; MINUTES
- (31) PHYS. VULNER.
- (32) TOLL
- (33) YEAR BUILT: ORIG. CONS.; MAJOR RECON.
- (34) NO. LANES: ON STRUCT.; UNDER STRUCT.
- (35) HORIZ. CURVE: DEG.; MIN.
- (36) SKEW
- (37) DESIGN LOADING

4 — CARD NO.

- (38) APPROACH ROADWAY WIDTH
- (39) MEDIAN TYPE
- (40) FLARED
- (41) BRIDGE ROADWAY WIDTH (CB/CB)
- (42) DECK WIDTH (OUT/OUT)
- (43) RAIL. TYPE
- (44) DECK DRAIN.
- (45) SIDEWALKS: LEFT; RIGHT
- (46) FLOOR SLAB
- (47) WEARING SURFACE: TYPE; THICKNESS (INCH)
- (48) STRUCTURE TYPE: MAIN SPANS; NUMBER; TYPE CODE; APPR. SPANS; NUMBER; TYPE CODE
- (49) TOTAL NO. SPANS
- (50) MAXIMUM SPAN LENGTH
- (51) OVERALL STRUCTURE LENGTH
- (52) TYPE SERVICE
- (53) BRIDGE DESCRIPTION
- (54) MINIMUM VERTICAL CLEAR. ON BRIDGE: FT.; IN.
- (55)
- (56)
- (57) BEARING TYPE

5 — CARD NO.

- (58) SUBSTRUCTURE: ABUTMENTS REAR; FWD.; PIERS PREDOMINATE; OTHER; OTHER; MAT'L; TYPE; NUMBER UNITS
- (59) PILING
- (60) MIN. VERT. UNDERCLEAR. (MAIN LANES): NON-CARD. OPENING; CARDINAL OPENING; FT.; IN.
- (61) MIN. LATERAL UNDERCLEAR. TO EDGE OF LANE: NON-CARD. DIRECT.; CARDINAL DIRECT.; LEFT; RIGHT
- (62) NAVIGATION: CONTROLLED; VERT. CLEAR.; HORIZ. CLEAR.
- (63) OHIO ORIGINAL CONSTR. PROJ. NO.
- (64) MICROFILM REEL NO.
- (65) ORIGINAL CONSTRUCTION FEDERAL AID PROJECT NUMBER

6 — CARD NO.

- (66) LOAD RATING: OPERATING RATING; INVENTORY RATING; OHIO % OF LEGAL; INSP. RESP.; MAINT. RESP.
- (69) APPRAISAL: DECK GEOM.; UNDERCLEAR.; SAFE LOAD CAP.; WATERWAY ADEQ.; APPR. ALIGN; REMAIN. LIFE
- (70) PROPOSED IMPROVEMENTS: YEAR NEEDED; TYPE SERVICE; TYPE WORK; LENGTH OF IMPROVEMENT; IMPR. DES. LOAD; PROPOSED ROAD WIDTH; NUMBER LANES; DESIGN A.D.T. (TENS); YEAR A.D.T.; ADJ. ROWY.: YEAR; TYPE
- (71) COST OF IMPROVEMENTS: TOTAL COST ($1000'S); YEAR OF COSTS; BREAKDOWN ($1000'S): PRELIM. ENG.; DEMO-LITION; SUB-STRUCTURE; SUPER-STRUCTURE; PRIORITY

DATA RECORDER (STAMP)

A14-75-0498 L

BRIDGE INVENTORY & APPRAISAL CODE SHEET

OHIO DEPARTMENT OF TRANSPORTATION
DIVISION OF HIGHWAYS

CODED BY C.W.B. DATE 5-16-73 REVIEWED BY _____ DATE _____

PROCESSING KEY	
STRUCTURE FILE NO.	TRANS. CODE
1 7	8
0602043	A

CARD NO.	(1) ODOT DISTRICT	(2) CITY OR TOWN	(3) INVENTORY ROUTE: ON/UNDER	SYSTEM	ROUTE NUMBER	DIRECT. SUFFIX	DESIGNATION	PREF. ROUTE	(4) FEATURE(S) INTERSECTED	(5) INV. RTE. BRIDGE NO.: COUNTY	UNIT NUMBER: STRAIGHT LINE MILEAGE	SPECIAL DESIGNATION	(6) SECTION I.D. NUMBER	(7) INVENTORY ROUTE A.D.T. (TENS)	(8) A.D.T. YEAR	(9) FED. AID. SYSTEM	(10) ADMIN. JURISD.	(11) FUNCTIONAL CLASS	(12)
9	10	12	16	17	18	23	24	25	26	51	54	59	61	65	71	73	75	77	79 80
1	0 7	0 0 0 0	1	1	. . 7 5		1		U.S.R. 3 3.	A U G	0 4 9 8	L	0 4 9 0	0 0 1 3 2 8	7 0	0 1	2 0	2 1	

CARD NO.	(13) DEFENSE: SECTION NUMBER	MILEPOINT BEGIN SECTION	SECTION LENGTH	(14) TOT. MIN HORIZONTAL CLEAR.: NON-CARD. OPENING	CARDINAL OPENING	(15) PRACTICAL MAXIMUM VERTICAL CLEAR.: FT.	IN.	(16)	(17) INTERSECTED ROUTE: ON/UNDER	SYSTEM	ROUTE NUMBER	DIRECT. SUFFIX	DESIGNATION	PREF. ROUTE	(18) FEATURE(S) INTERSECTED	(19) INTR. RTE. BRIDGE NO.: COUNTY	UNIT NUMBER: STRAIGHT LINE MILEAGE	SPECIAL DESIGNATION
9	10	16	18	22	25	28	30	32	36	37	38	43	44	45	46	71	74	79 80
2				0 0 0	3 9 7	9 9	9 9		2	2	. . 3 3		1		I.R. 7 5	A U G	1 6 3 5	

CARD NO.	(20) INTERSECTED ROUTE A.D.T. (TENS)	(21) A.D.T. YEAR	(22) FED. AID SYSTEM	(23) ADMIN. JURISD.	(24) FUNCTIONAL CLASS	(25) DEFENSE: SECTION NUMBER	MILEPOINT BEGIN SECTION	SECTION LENGTH	(26) TOT MIN HORIZONTAL CLEAR.: NON-CARD. OPENING	CARDINAL OPENING	(27) PRACTICAL MAXIMUM VERTICAL CLEAR.: FT.	IN.	(28)	(29) BY-PASS LENGTH	(30) COORDINATES: LATITUDE DEGREES	LATITUDE MINUTES	LONGITUDE DEGREES	LONGITUDE MINUTES	31 PHYS. VULNER.	32 TOLL	(33) YEAR BUILT: ORIG. CONS.	MAJOR RECON.	(34) NO. LANES: ON STRUCT.	UNDER STRUCT.	(35) HORIZ. CURVE: DEG.	MIN.	(36) SKEW	(37) DESIGN LOADING
9	10	16	19	20	22	24	29	33	36	39	42	44	46	50	52	54	57	60	63	64	65	67	69	71	73	75	77	79 80
3	0 0 0 1 5 8	7 0	0 3	2 0	2 2				5 1 0	5 1 0	1 7	0 5		0 1						3	5 9	0 0	0 2	0 4			0 7	5 0

W8(Rt) (16-05 EB)

CARD NO.	(38) APPROACH ROADWAY WIDTH	(39) MEDIAN TYPE	40 FLARED	(41) BRIDGE ROADWAY WIDTH (CB/CB)	(42) DECK WIDTH (OUT/OUT)	43 RAIL TYPE	44 DECK DRAIN.	(45) SIDEWALKS: LEFT	RIGHT	46 FLOOR SLAB	(47) WEARING SURFACE: TYPE	THICKNESS (INCH)	(48) STRUCTURE TYPE: MAIN SPANS NUMBER	MAIN SPANS TYPE CODE	APPR. SPANS NUMBER	APPR. SPANS TYPE CODE	(49) TOTAL NO. SPANS	(50) MAXIMUM SPAN LENGTH	(51) OVERALL STRUCTURE LENGTH	(52) TYPE SERVICE	(53) BRIDGE DESCRIPTION	(54) MINIMUM VERTICAL CLEAR. ON BRIDGE: FT.	IN.	(55)	(56)	57 BEARING TYPE
9	10	13	16	17	21	23	26	27	30	33	34	35	37	40	43	46	49	52	56	62	64	66	68	70	75	78
4	0 4 1	0 0 0	0	0 3 9 7	0 4 4 3	3	4	0 0 0	0 0 0	1	1	0 1	0 0 4	3 2 2	0 0 0	0 0 0	0 0 4	0 0 7 5	0 0 0 2 4 6	1 1		9 9	9 9				N

1" Conc.

CARD NO.	(58) SUBSTRUCTURE: ROUTHENTS REAR HAT'L	REAR TYPE	FWD. HAT'L	FWD. TYPE	PIERS PREDOMINATE NUMBER UNITS	OTHER HAT'L	OTHER TYPE	OTHER NUMBER UNITS	OTHER HAT'L	OTHER TYPE	59 PILING	(60) MIN. VERT. UNDERCLEAR. (MAIN LANES) NON-CARD. OPENING FT.	IN.	CARDINAL OPENING FT.	IN.	(61) MIN. LATERAL UNDERCLEAR. TO EDGE OF LANE: NON-CARD. DIRECT. LEFT	RIGHT	CARDINAL DIRECT. LEFT	RIGHT	(62) NAVIGATION: CONTROLLED	VERT. CLEAR.	HORIZ. CLEAR.	(63) OHIO ORIGINAL CONSTR. PROJ. NO.	(64) MICROFILM REEL NO.	(65) ORIGINAL CONSTRUCTION FEDERAL AID PROJECT NUMBER
9	10 11	13	14	15	16	17	18	20	21	22	24	25 26	27	29	31	33	35	38	41	44	47	48	51	56	61	67 60
5	2	5	2	5	0 3	2	5	0 0	0	0	0	0 2	1 7	0 0	1 5	0 9	0 5 0	1 0 0	0 5 0	1 0 0				0 5 5 2	5 8		A C I - 1 9 6 (6)	

CARD NO.	(66) LOAD RATING: OPERATING RATING	INVENTORY RATING	OHIO % OF LEGAL	67 INSP. RESP.	68 MAINT. RESP.	(69) APPRAISAL: DECK GEOM.	UNDERCLEAR.	SAFE LOAD CAP.	WATERWAY ADEQ.	APPR. ALIGN	REMAIN. LIFE	(70) PROPOSED IMPROVEMENTS: YEAR NEEDED	TYPE SERVICE	TYPE WORK	LENGTH OF IMPROVEMENT	IMPR. DES. LOAD	PROPOSED ROAD WIDTH	NUMBER LANES	DESIGN A.D.T. (TENS)	YEAR A.D.T.	ADJ. RDWY.: YEAR	TYPE	(71) COST OF IMPROVEMENTS: TOTAL COST ($1000'S)	YEAR OF COSTS	BREAKDOWN ($1000'S): PRELIM. ENG.	DEMOLITION	SUB-STRUCTURE	SUPER-STRUCTURE	72 PRIORITY	75
9	10	13	18	19	20	21	22	23	24	25	26 27	28	30	31	34	38	41	45	47	53	55	57	60	63	65	68	71	75	79	80
6	9 5 8	9 2 7	1 5 0	1	1	7	7	7	N	7	4	0 <																	0	

DATA RECORDER 0602043

STATE OF OHIO
DEPARTMENT OF HIGHWAYS
BUREAU OF MAINTENANCE AND REPAIR
1967
CONTRACT BRIDGE PAINTING ESTIMATES

Prop. No. 2

Br. No. AUG-75-0498 L
Type Cont. Steel Beam
Approx. Wt. 184 Tons

County AUGLAIZE
Length 45'-75'-75'-45'
Ave. Thickness 1"

S.R. I-R-75
Width 44'-4" o/o
% of Rust 10%

CLEAN	Labor 1.03 X 184 X 0.10	= 19 hrs.	@ 4.00	=	76.00
	Material 0.08 X 184 X 0.10	= 3.2 tons	@ 20.00	=	64.00
	Equipment 0.36 X 184 X 0.10	= 7 hrs.	@ 5.00	=	35.00
	Supervision	= 5 hrs.	@ 5.00	=	25.00
	Overhead 15% of Labor & Material (165.)				25.00
			TOTAL	=	225.00
SPOT PRIME	Labor None.	= hrs.	@	=	
	Material	= gals.	@	=	
	Equipment	= hrs.	@	=	
	Supervision	= hrs.	@	=	
	Overhead 15% of Labor & Material			=	
			TOTAL	=	
PRIME COAT	Labor 0.54 X 184	= 99.5 hrs.	@ 4.00	=	398.00
	Material 0.38 X 184	= 70 gals.	@ 3.00	=	210.00
	Equipment 0.07 X 184	= 13 hrs.	@ 2.00	=	26.00
	Supervision	= 25 hrs.	@ 5.00	=	125.00
	Overhead 15% of Labor & Material (733.)			=	110.00
			TOTAL	=	869.00
FIELD COAT	Labor 0.47 X 184	= 86.5 hrs.	@ 4.00	=	346.00
	Material 0.29 X 184	= 54 gals.	@ 2.30	=	125.00
	Equipment 0.07 X 184	= 13 hrs.	@ 2.00	=	26.00
	Supervision	= 22 hrs.	@ 5.00	=	110.00
	Overhead 15% of Labor & Material (581.)			=	87.00
			TOTAL	=	694.00
FIELD COAT	Labor None.	= hrs.	@	=	
	Material	= gals.	@	=	
	Equipment	= hrs.	@	=	
	Supervision	= hrs.	@	=	
	Overhead 15% of Labor & Material			=	
			TOTAL	=	

Premium of Industrial Insurance	20% of Labor Cost (1080.)	= 216.00
Maintaining Traffic	5% of Total Cost (2004.)	= 100.00
Estimated Cost		= 2104.00
Estimated Cost of Engineering, Superintendence and Contingencies	8%	= 169.00
Estimated Total Cost and Expense		= 2273.00

Prepared By J. W. SCHELL
Title E.T.
Date 1-21-66

Checked by [illegible]

OHIO DEPARTMENT OF TRANSPORTATION
DIVISION OF HIGHWAYS

BRIDGE INVENTORY & APPRAISAL CODE SHEET

CODED BY 0216 DATE 5-16-73
CHECKED BY C.W.R. DATE 10-8-76

BR-87
REV. 5-74

PROCESSING KEY	
STRUCTURE FILE NO.	TRANS. CODE
0,6,0,2,0,4,3	C

CARD NO.	(1) ODOT DISTRICT	(2) CITY OR TOWN	(3) INVENTORY ROUTE: ON/UNDER	SYSTEM	ROUTE NUMBER	DIRECT. SUFFIX	DESIGNATION	PREF. ROUTE	(4) FEATURE(S) INTERSECTED	(5) INV. RTE. BRIDGE NO.: COUNTY	UNIT NUMBER: STRAIGHT LINE MILEAGE	SPECIAL DESIGNATION	(6) SECTION I. D. NUMBER	(7) INVENTORY ROUTE A.D.T. (TENS)	(8) A.D.T. YEAR	(9) FED. AID SYSTEM	(10) ADMIN. JURISD.	(11) FUNCTIONAL CLASS	(12)
1	10,7	0,0,0,0	1	1	7,5		1		USR 33	AUG	0,4,9,8	L	0,4,9,7	0,0,1,4,3,7	7,3	0,1	1,0	0,1	

CARD NO.	(13) DEFENSE: SECTION NUMBER	MILEPOINT BEGIN SECTION	SECTION LENGTH	(14) TOT. MIN HORIZONTAL CLEAR.: NON-CARD. OPENING	CARDINAL OPENING	(15) PRACTICAL MAXIMUM VERTICAL CLEAR.: FT.	IN.	(16)	(17) INTERSECTED ROUTE: ON/UNDER	SYSTEM	ROUTE NUMBER	DIRECT. SUFFIX	DESIGNATION	PREF. ROUTE	(18) FEATURE(S) INTERSECTED	(19) INTER. RTE. BRIDGE NO.: COUNTY	UNIT NUMBER: STRAIGHT LINE MILEAGE	SPECIAL DESIGNATION
2				0,0,0	3,9,7	9	~9		2	2	3,3		1		I.R. 7.5	AUG	1,6,5,5	

CARD NO.	(20) INTERSECTED ROUTE A.D.T. (TENS)	(21) A.D.T. YEAR	(22) FED. AID SYSTEM	(23) ADMIN. JURISD.	(24) FUNCTIONAL CLASS	(25) DEFENSE: SECTION NUMBER	MILEPOINT BEGIN SECTION	SECTION LENGTH	(26) TOT MIN HORIZONTAL CLEAR.: NON-CARD. OPENING	CARDINAL OPENING	(27) PRACTICAL MAXIMUM VERTICAL CLEAR.: FT.	IN.	(28)	(29) BY-PASS LENGTH	(30) COORDINATES: LATITUDE DEGREES	LATITUDE MINUTES	LONGITUDE DEGREES	LONGITUDE MINUTES	(31) PHYS. VULNER.	(32) TOLL	(33) YEAR BUILT: GRID. CONS.	MAJOR RECON.	(34) NO. LANES: ON STRUCT.	UNDER STRUCT.	(35) HORIZ. CURVE: DEG.	MIN.	(36) SKEW	(37) DESIGN LOADING
3	0,0,0,2,3,5	7,5	0,3	1,0	0,2				5,1,0	5,1,0	1,7	0,5		0,1						3	5,9	0,0	0,2	0,4			0,7	5,0

65.6 67.9 WB EB = ~~16-05~~ 16-00

CARD NO.	(38) APPROACH ROADWAY WIDTH	(39) MEDIAN TYPE	(40) FLARED	(41) BRIDGE ROADWAY WIDTH (CB/CB)	(42) DECK WIDTH (OUT/OUT)	(43) RAIL TYPE	(44) DECK DRAIN.	(45) SIDEWALKS: LEFT	RIGHT	(46) FLOOR SLAB	(47) WEARING SURFACE: TYPE	THICKNESS (INCH)	(48) STRUCTURE TYPE: MAIN SPANS NUMBER	MAIN SPANS TYPE CODE	APPR. SPANS NUMBER	APPR. SPANS TYPE CODE	(49) TOTAL NO. SPANS	(50) MAXIMUM SPAN LENGTH	(51) OVERALL STRUCTURE LENGTH	(52) TYPE SERVICE	(53) BRIDGE DESCRIPTION	(54) MINIMUM VERTICAL CLEAR. ON BRIDGE: FT.	IN.	(55)	(56)	(57) BEARING TYPE
4	0,4,1	0,0,0	0	0,3,9,7	0,4,4,3	3	4	0 ~	0	1	6	0,3	0,0,4	3,2,2	0 ~	0	0,0,4	0,0,7,5	0,0,2,4,6	1,1		9 ~	9					N

1"C+1½"B

CARD NO.	(58) SUBSTRUCTURE: ABUTMENTS REAR MAT'L	REAR TYPE	AHD. MAT'L	AHD. TYPE	PIERS PREDOMINATE NUMBER UNITS	PREDOMINATE MAT'L	PREDOMINATE TYPE	OTHER NUMBER UNITS	OTHER MAT'L	OTHER TYPE	OTHER NUMBER UNITS	OTHER MAT'L	OTHER TYPE	PILING	(60) MIN. VERT. UNDERCLEAR. (MAIN LANES): NON-CARD. OPENING FT.	IN.	CARDINAL OPENING FT.	IN.	(61) MIN. LATERAL UNDERCLEAR. TO EDGE OF LANE: NON-CARD. DIRECT. LEFT	RIGHT	CARDINAL DIRECT. LEFT	RIGHT	(62) NAVIGATION: CONTROLLED	VERT. CLEAR.	HORIZ. CLEAR.	(63) OHIO ORIGINAL CONSTR. PROJ. NO.	(64) MICROFILM REEL NO.	(65) ORIGINAL CONSTRUCTION FEDERAL AID PROJECT NUMBER
5	2	5	2	5	0,3	2	5	0 ~				0	2	1,7	0,0	1,5	0,9	0,5,0	1,0,0	0,5,0	1,0,0				0,5,5,2	5,8		ACI-1,9,6,(6)

16 08 15 07 21.5 19.6 22.0 22.2

CARD NO.	(66) LOAD RATING: OPERATING RATING	INVENTORY RATING	OHIO % OF LEGAL	RATING YEAR	(67) INSP. RESP.	(68) MAINT. RESP.	(69) APPRAISAL: DECK GEOM.	UNDERCLEAR.	RAIL LOAD CAP.	WATERWAY ADEQ.	APPR. ALIGN.	REMAIN. LIFE	(70) PROPOSED IMPROVEMENTS: YEAR NEEDED	TYPE SERVICE	TYPE WORK	LENGTH OF IMPROVEMENT	IMPR. DES. LOAD	PROPOSED ROAD WIDTH	NUMBER LANES	DESIGN A.D.T. (TENS)	YEAR A.D.T.	ADJ. ROWY.: YEAR	TYPE	(71) COST OF IMPROVEMENTS: TOTAL COST ($1000'S)	YEAR OF COSTS	BREAKDOWN ($1000'S): PRELIM. ENG.	DEMOLITION	SUB-STRUCTURE	SUPER-STRUCTURE	PRIORITY
6	9,6,0	9,2,7	1,5,0	7,3	1	1	9,6,9	N			8	4	0 ~																0

REMARKS: Rev CWR 12-20-73
" RL 1-14-76
" CWR 10-8-76

Resurf + WP Proj 356-74

Plan Ref:
" No : AUG-25-0504

OFFICIAL USE ONLY
O.A. CODE
REVIEWED BY
DATE
DATA RECORDER (STAMP)
DATE

Project Engineer:
Steve Irous 735-92
Aug-75 at 33
0498 L+R steel beam
Slab bridge joint
needs more repair.
Won't hold backer
rod. Will need to
patch or something.
Are they overlaying
with asphalt?
How bad is it?
Backwall + appr. slab

---

field office Belle.st rt. at top ramp
Go thru old truck stop behind
Storage garages.
NE quadrant of intersection

We have in the plans
just to seal joints

AU6-75 SB @ US2 33

no visible damage to bridge.

awl 7-26-78