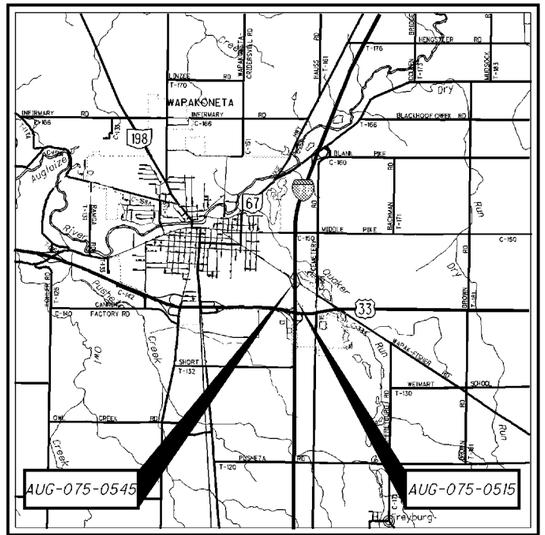

LOCATION MAP (STRUCTURE:AUG-075-0515 L&R)
LEFT SFN: 0602108 RIGHT SFN: 0602132
LATITUDE: 40° 33′ 24″ LONGITUDE: 84° 10′ 12″

LOCATION MAP (STRUCTURE: AUG-075-0545)
SFN: 0602159
LATITUDE: 40° 33′ 39″ LONGITUDE: 84° 10′ 12″

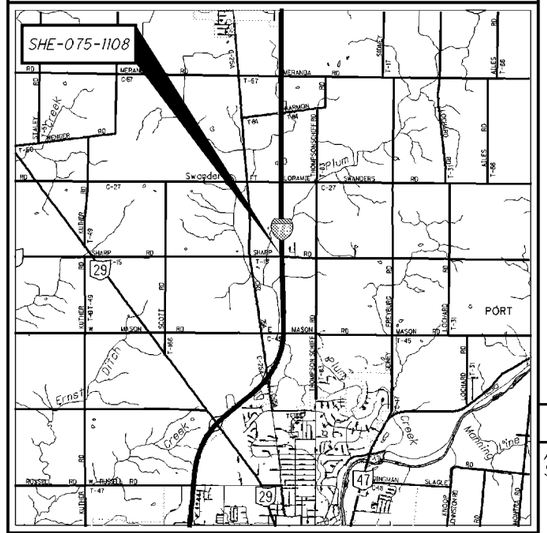

LOCATION MAP (STRUCTURE: SHE-075-1108)
SFN: 7502192
LATITUDE: 40° 20′ 46″ LONGITUDE: 84° 09′ 35″

STATE OF OHIO

DEPARTMENT OF TRANSPORTATION

AUG/SHE-075-5.15/5.45/11.08

AUGLAIZE COUNTY
SHELBY COUNTY

INDEX OF SHEETS:

TITLE SHEET	1
GENERAL NOTES	2
MAINTENANCE OF TRAFFIC	3-9
GENERAL SUMMARY	10-11
MISCELLANEOUS DETAILS	12-19
TRAFFIC CONTROL	20-21
STRUCTURES 20′ SPAN AND OVER	
AUG-075-0515 L&R (IR-75 OVER AMETEK RAILROAD)	22-29
AUG-075-0545 (BELLEFONTAINE STREET OVER IR-75)	30-32
AUG-075-0545 (BELLEFONTAINE STREET OVER IR-75) AESTHETIC DETAILS	33-39
SHE-075-1108 (SHARP ROAD OVER IR-75)	40-56

PROJECT DESCRIPTION

THE PRIMARY PURPOSE OF THIS PROJECT IS AS FOLLOWS:

AUG-075-0515 L&R — REMOVE AND REPLACE BRIDGE PARAPETS

AUG-075-0545 — PATCH SPALLS AT EXISTING SEMI-INTEGRAL ABUTMENT, ADD ABUTMENT PEDESTALS, ADD AESTHETIC DETAILS TO PARAPETS

SHE-075-1108 — CONVERT EXISTING RAILING TO MODIFIED JERSEY SHAPE BARRIER, REMOVE BACKWALL, EXPANSION JOINT AND BEARINGS AND CONVERT TO SEMI-INTEGRAL ABUTMENTS, OVERLAY EXISTING DECK WITH 1¾" SUPERPLASTICIZED DENSE CONCRETE OVERLAY, REMOVE AND REPLACE APPROACH SLABS, FIELD PAINT EXISTING BEAMS, ADD FENCE TO PARAPETS. 1

PROJECT EARTH DISTURBED AREA: N/A (MAINTENANCE PROJECT)

ESTIMATED CONTRACTOR EARTH DISTURBED AREA: N/A (MAINTENANCE PROJECT)

NOTICE OF INTENT EARTH DISTURBED AREA: N/A (MAINTENANCE PROJECT)

2013 SPECIFICATIONS

THE STANDARD SPECIFICATIONS OF THE STATE OF OHIO, DEPARTMENT OF TRANSPORTATION, INCLUDING CHANGES AND SUPPLEMENTAL SPECIFICATIONS LISTED IN THE PROPOSAL SHALL GOVERN THIS IMPROVEMENT.

I HEREBY APPROVE THESE PLANS AND DECLARE THAT THE MAKING OF THIS IMPROVEMENT WILL NOT REQUIRE THE CLOSING TO TRAFFIC OF THE HIGHWAY EXCEPT FOR THE SIDE ROADS AS DESCRIBED ON SHEET 9 AND THAT PROVISIONS FOR THE MAINTENANCE AND SAFETY OF TRAFFIC WILL BE SET FORTH ON THE PLANS AND ESTIMATES.

DESIGN DESIGNATION:

AUG-075-0515 L&R

CURRENT ADT (2010)	18,650 VPD
DIRECTIONAL DISTRIBUTION	50%
TRUCKS (24 HOUR B&C)	33%
DESIGN SPEED	70 MPH
LEGAL SPEED	70 MPH
DESIGN FUNCTIONAL CLASSIFICATION:	URBAN INTERSTATE

AUG-075-0545

CURRENT ADT (1999)	100 VPD
DIRECTIONAL DISTRIBUTION	50%
TRUCKS (24 HOUR B&C)	0%
DESIGN FUNCTIONAL CLASSIFICATION:	URBAN PRINCIPAL ARTERIAL

SHE-075-1108

CURRENT ADT (1971)	150 VPD
DIRECTIONAL DISTRIBUTION	50%
TRUCKS (24 HOUR B&C)	0%
DESIGN FUNCTIONAL CLASSIFICATION:	RURAL LOCAL ROAD

1 REV. 1 - 3/28/16

UNDERGROUND UTILITIES
CONTACT BOTH SERVICES
CALL TWO WORKING DAYS
BEFORE YOU DIG
CALL
1-800-362-2764
(TOLL FREE)
OHIO UTILITIES PROTECTION SERVICE
NON-MEMBERS
MUST BE CALLED DIRECTLY
OIL & GAS PRODUCERS UNDERGROUND PROTECTION SERVICE CALL: **1-800-925-0988**

ENGINEERS SEAL:
AESTHETICS
SHEETS 33-39
SIGNED:
DATE:

ENGINEERS SEAL:
STRUCTURES
SHEETS 22-36
& 40-56
STATE OF OHIO JASON T. CENTERS 71869 REGISTERED PROFESSIONAL ENGINEER
SIGNED:
DATE: 3/28/16

ENGINEERS SEAL:
MOT
STATE OF OHIO CRAIG M. KETRON E-61924 REGISTERED PROFESSIONAL ENGINEER
SIGNED: Craig M. Ketron
DATE: 3/28/16

STANDARD CONSTRUCTION DRAWINGS

BP-3.1	7/18/14	TC-41.20	10/18/13			800	7/17/15		
BP-5.1	7/19/13	TC-42.20	10/18/13			821	4/20/12		
BP-9.1	7/19/13	TC-52.10	10/18/13			832	1/17/14		
F-2.1	7/19/13	TC-52.20	1/17/14			921	4/20/12		
F-3.1	7/19/13	TC-61.30	1/17/14						
RM-4.2	4/18/14	TC-65.10	1/17/14						
		TC-65.11	1/17/14						
MT-95.40	7/19/13	TC-72.20	7/20/12						
MT-95.41	7/18/14								
MT-101.60	7/19/13	AS-1-81	1/18/13						
MT-101.70	1/17/14	BR-1-13	1/17/14						
MT-101.90	7/19/13	PCB-91	1/18/13						
MT-102.10	7/19/13	SICD-1-96	7/18/14						
MT-105.10	7/19/13								
		VPF-1-90	7/17/15	1					

DESIGN EXCEPTIONS

NONE REQUIRED

APPROVED _____
DATE _____ DISTRICT DEPUTY DIRECTOR

APPROVED _____
DATE _____ DIRECTOR, DEPARTMENT OF TRANSPORTATION

PLAN PREPARED BY:
CH2MHILL
FIFTH THIRD CENTRE, SUITE 1100
1 SOUTH MAIN STREET
DAYTON, OHIO 45402-1828
TEL: 937-228-4285
FAX: 937-228-7572

FEDERAL PROJECT NO. E120 (843)
PID NO. 93767
CONSTRUCTION PROJECT NO.
RAILROAD INVOLVEMENT AMETEK RAILROAD
AUG/SHE-075-5.15/5.45/11.08
1/56

93767GT01.dgn Sheet 3/24/2016 3:58PM CH_ODOTV8i_Half_BW.pen \\doypsp01\DAY Copier BW PS jcenters

UTILITIES

LISTED BELOW ARE ALL UTILITIES LOCATED WITHIN THE PROJECT CONSTRUCTION LIMITS TOGETHER WITH THEIR RESPECTIVE OWNERS:

AEP - AMERICAN ELECTRIC POWER:
209 NORTH WOOD STREET
FOSTORIA, OH 44830
CONTACT: MR. JEFF MEYERS
PHONE: (419) 436-2008

DAYTON POWER & LIGHT COMPANY:
1900 DRYDEN ROAD
DAYTON, OH 45439
CONTACT: MR. WILLIAM GOURLEY
PHONE: (937) 331-4521

PIONEER RURAL ELECTRIC CO-OP:
344 WEST US ROUTE 36
PIQUA, OH 45356
CONTACT: MR. TODD GARRETT
PHONE: (937) 773-2523

THERE ARE NO UNDERGROUND UTILITIES SHOWN ON THIS PLAN. THE NATURE OF THE WORK REQUIRED BY THIS PROJECT WILL NOT AFFECT ANY KNOWN UNDERGROUND UTILITIES THAT EXIST UNDER OR ADJACENT TO THE WORK AREA.

COOPERATION WITH RAILROAD

THE CONTRACTOR SHALL COORDINATE ALL WORK ON, OVER OR ADJACENT TO THE RAILROAD WITHIN PROJECT LIMITS. THE CONTRACTOR SHALL CONTACT THE FOLLOWING, AT LEAST 30 DAYS IN ADVANCE, IN ORDER TO COORDINATE THE NECESSARY WORK. UNDER NO CIRCUMSTANCES SHALL THERE BE ANY WORK PERFORMED WITHIN THE RAILROAD RIGHT-OF-WAY WITHOUT THE PROPER WRITTEN AUTHORIZATION AND/OR FLAGGING PROTECTION FROM THE RAILROAD.

AMETEK CHEMICAL PRODUCTS DIVISION
ATTN: MR. RON GASIOR, PLANT MANAGER
PHONE: 419-739-3224

CONNECTION BETWEEN EXISTING AND PROPOSED GUARDRAIL

WHEN IT IS NECESSARY TO SPLICE PROPOSED GUARDRAIL TO EXISTING GUARDRAIL, ONLY THE EXISTING GUARDRAIL SHALL BE CUT, DRILLED, OR PUNCHED. THE CONNECTION SHALL BE MADE USING A W-BEAM, BEAM SPLICE AS SHOWN IN AASHTO M 180-12, EXCEPT THE BEAM WASHERS ARE NOT TO BE USED. PAYMENT SHALL BE INCLUDED IN THE CONTRACT PRICE FOR THE RESPECTIVE GUARDRAIL ITEMS.

IN THE EVENT THAT THE PROPOSED BRIDGE TERMINAL ASSEMBLY AND PROPOSED TYPE 5 GUARDRAIL OFFSETS DO NOT MATCH THE EXISTING GUARDRAIL OFFSET AT THE CONNECTION LOCATION, THE CONTRACTOR SHALL USE A 15:1 OR FLATTER TAPER RATE TO CONNECT THE PROPOSED TYPE 5 GUARDRAIL TO THE EXISTING GUARDRAIL. THE TAPER SHALL OCCUR BEYOND THE LIMITS OF THE PROPOSED BRIDGE TERMINAL ASSEMBLY. SEE SHEET 19 FOR ADDITIONAL DETAILS.

REF. NO.	SHEET NO.	STATION FROM	STATION TO	SIDE	202 GUARDRAIL REMOVED FT	202 BRIDGE TERMINAL ASSEMBLY REMOVED EACH	254 PAVEMENT PLANING, ASPHALT CONCRETE SY	407 TACK COAT (0.075 GAL/SY) GAL	423 CRACK SEALING, TYPE I SY	441 1.5" ASPHALT CONCRETE SURFACE COURSE, TYPE 1, (448), PG64-22 CY	606 GUARDRAIL, TYPE 5 FT	606 BRIDGE TERMINAL ASSEMBLY, TYPE 1 EACH	606 BRIDGE TERMINAL ASSEMBLY, TYPE 2 EACH	609 CURB, TYPE 4-C FT	626 BARRIER REFLECTOR EACH
		AUG-075-0515 L&R													
GR-1	22	322+39.67	322+64.64	LT	25	1					25		1		2
GR-2	22	324+07.08	324+38.22	LT	32	1					31.25	1		20	2
GR-3	22	323+89.61	324+20.66	LT	32	1					31.25	1		20	2
GR-4	22	322+00.19	322+31.05	RT	32	1					31.25	1		20	2
GR-5	22	321+82.23	322+13.44	RT	32	1					31.25	1		20	2
GR-6	22	323+55.53	323+80.43	RT	25	1					25		1		2
P-1	25	322+13.44	323+55.53	RT			33		17	2					
P-2	25	322+31.05	323+73.05	RT			33		17	2					
P-3	25	322+47.39	323+89.61	LT			33		17	2					
P-4	25	322+64.64	324+07.08	LT			33		17	2					
		SHE-075-1108													
GR-1	33	18+19.37	18+75.62	LT	82	1					56.25	1		15	2
GR-2	33	18+21.33	18+77.58	RT	82	1					56.25	1		15	2
GR-3	33	21+24.38	21+80.63	LT	82	1					56.25	1		15	2
GR-4	33	21+26.40	21+82.64	RT	82	1					56.25	1		15	2
P-1	33	18+35.75	18+60.75	LT/RT			73	5		3					
P-2	33	21+39.25	21+64.25	LT/RT			73	5		3					
TOTALS CARRIED TO GENERAL SUMMARY					506	10	278	10	68	14	400	8	2	140	20

ITEM 618 - RUMBLE STRIPS, (ASPHALT CONCRETE), AS PER PLAN

THE CONTRACTOR SHALL MILL 2 INCHES BY 2 FEET WIDE OF THE EXISTING ASPHALT SHOULDER IN ORDER TO REMOVE THE EXISTING RUMBLE STRIPS ALONG IR-75 IN THE AREA WHERE TRAFFIC IS SHIFTED. THE CONTRACTOR SHALL THEN COAT ALL MILLED SURFACES HORIZONTAL AND VERTICAL WITH APPROVED AC LIQUID. NEXT THE CONTRACTOR SHALL PLACE 2 INCHES OF ITEM 448 ASPHALT CONCRETE SURFACE COURSE, TYPE 1, PG64-28. ONCE THE PROJECT IS COMPLETE, THE CONTRACTOR SHALL INSTALL NEW RUMBLE STRIPS AS PER CONSTRUCTION AND MATERIAL SPECIFICATIONS SECTION 618. ALL COST ASSOCIATED WITH THE REMOVAL OF THE EXISTING PAVEMENT, PLACEMENT OF THE SURFACE COURSE AND INSTALLATION OF THE RUMBLE STRIPS SHALL BE INCLUDED IN THE UNIT PRICE BID PER FOOT OF ITEM 618 - RUMBLE STRIPS, (ASPHALT CONCRETE), AS PER PLAN.

AN ESTIMATED QUANTITY OF 6385 FEET HAS BEEN CARRIED TO THE GENERAL SUMMARY.

CALCULATED CMK
CHECKED JC

GENERAL NOTES

AUG/ SHE-075-5.15/ 5.45/ 11.08

93767gn01.dgn Sheet 7/17/2015 11:41AM CH_ODOTV8i_Half_BW.pen \\artigone\Plansets-400 mpierce

ITEM 614, MAINTAINING TRAFFIC

THE PRIMARY PURPOSE OF THIS PROJECT IS AS FOLLOWS:

AUG-075-0515 L&R	REMOVE AND REPLACE BRIDGE PARAPETS
AUG-075-0545	PATCH SPALLS AT EXISTING SEMI-INTEGRAL ABUTMENT BEARING RETAINERS
SHE-075-1108	CONVERT EXISTING RAILING TO MODIFIED JERSEY SHAPE BARRIER, REMOVE BACKWALL, EXPANSION JOINT AND BEARINGS AND CONVERT TO SEMI-INTEGRAL ABUTMENTS, OVERLAY EXISTING DECK WITH 1 1/4" MICRO SILICA MODIFIED CONCRETE OVERLAY.

THE FOLLOWING WORK SHALL BE PERFORMED:

PERFORM ALL STRUCTURE REPAIRS INCLUDING REPLACING THE BRIDGE DECK, REPLACING PARAPET WALLS AND PAINTING STRUCTURAL STEEL.
TRAFFIC SHALL BE MAINTAINED AS PER APPLICABLE STANDARD CONSTRUCTION DRAWINGS, AS SHOWN IN THESE PLANS, AND AS DIRECTED BY THE ENGINEER.

THE CONTRACTOR SHALL BE RESPONSIBLE FOR MAINTAINING SAFE AND EFFECTIVE TRAFFIC CONTROL 24 HOURS A DAY FOR THE DURATION OF THIS PROJECT. THIS INCLUDES PROVIDING, PLACING, MAINTAINING, AND SUBSEQUENTLY REMOVING ALL NECESSARY TRAFFIC CONTROL MEASURES FOR ALL PROPOSED CONSTRUCTION OPERATIONS.

BEFORE WORK BEGINS, THE CONTRACTOR SHALL SUBMIT TO THE ENGINEER THE NAMES AND TELEPHONE NUMBERS OF PERSONS WHO CAN BE CONTACTED 24 HOURS A DAY BY THE OHIO DEPARTMENT OF TRANSPORTATION, THE HIGHWAY PATROL, AND ALL OTHER INTERESTED POLICE AGENCIES.

THESE PERSONS SHALL BE RESPONSIBLE FOR REPAIRING AND/OR REPLACING ALL TRAFFIC CONTROL DEVICES NEEDED TO MAINTAIN SAFETY FOR THE DURATION OF THIS PROJECT. THESE PERSONS SHALL HAVE AVAILABLE ALL MATERIALS, EQUIPMENT, AND INCIDENTALS NECESSARY TO PERFORM THE REQUIRED REPAIRS WITHIN A REASONABLE PERIOD OF TIME.

THE CONTRACTOR SHALL PROVIDE, ERECT, AND MAINTAIN SIGNS (IN PROPER POSITIONS, CLEAN AND LEGIBLE, AND IN GOOD WORKING CONDITION) AND REMOVE ALL LIGHTS, SIGNS, CONES, DRUMS, AND ANY OTHER TRAFFIC CONTROL DEVICES NECESSARY FOR THE MAINTENANCE OF TRAFFIC ACCORDING TO THESE PLAN NOTES AND DETAILS.

THE CONTRACTOR SHALL FURNISH AND INSTALL ADVANCE WARNING "ROAD WORK AHEAD" (W20-1) SIGNS AND "END ROAD WORK" (G20-2) SIGNS ON THE MAINLINE ROAD AND SHARP RD, AND "ROAD WORK AHEAD" (W20-1) SIGNS ON RAMPS ENTERING THE CONSTRUCTION ZONE. THE SIGNS SHALL BE DUAL INSTALLATIONS AND SHALL BE PLACED ACCORDING TO STANDARD CONSTRUCTION DRAWING MT-95.40 WITH FINAL LOCATIONS AS DIRECTED BY THE ENGINEER.

VEHICLES AND OTHER EQUIPMENT SHALL NOT BE PERMITTED TO STOP OR TO BE PARKED ALONG THE ROADWAY EXCEPT WITHIN DESIGNATED WORK AREAS AND SHALL NOT ENTER OR LEAVE WORK AREAS IN A MANNER WHICH WILL BE HAZARDOUS TO, OR INTERFERE WITH THE NORMAL FLOW OF TRAFFIC. PERSONAL VEHICLES WILL NOT BE PERMITTED TO PARK WITHIN RIGHT-OF-WAY EXCEPT WITHIN SPECIFIC AREAS DESIGNATED BY THE ENGINEER.

ITEM 614, MAINTAINING TRAFFIC (CON'T)

TRAFFIC SHALL BE MAINTAINED IN A UNIFORM PATTERN THROUGHOUT THE ENTIRE LENGTH OF THE PROJECT AND SHALL NOT BE SUBJECTED TO CONSTANT LANE SHIFTS.

A MINIMUM LANE WIDTH OF 12 FEET SHALL BE PROVIDED FOR MAINTENANCE OF TRAFFIC PURPOSES AT ALL TIMES UNLESS OTHERWISE SHOWN IN THE PLANS OR OTHERWISE DIRECTED BY THE ENGINEER.

NO WORK SHALL BE PERFORMED AND ALL EXISTING LANES SHALL BE OPEN TO TRAFFIC DURING THE FOLLOWING DESIGNATED HOLIDAYS OR EVENTS:

CHRISTMAS	FOURTH OF JULY
NEW YEARS	LABOR DAY
MEMORIAL DAY	THANKSGIVING

THE PERIOD OF TIME THAT THE LANES ARE TO BE OPEN DEPENDS ON THE DAY OF THE WEEK ON WHICH THE HOLIDAY OR EVENT FALLS. THE FOLLOWING SCHEDULE SHALL BE USED TO DETERMINE THIS PERIOD:

DAY OF HOLIDAY OR EVENT	TIME ALL LANES MUST BE OPEN TO TRAFFIC
SUNDAY	12:00N FRIDAY THROUGH 6:00 AM MONDAY
MONDAY	12:00N FRIDAY THROUGH 6:00 AM TUESDAY
TUESDAY	12:00N MONDAY THROUGH 6:00 AM WEDNESDAY
WEDNESDAY	12:00N TUESDAY THROUGH 6:00 AM THURSDAY
THURSDAY	12:00N WEDNESDAY THROUGH 6:00 AM FRIDAY
THURSDAY (THANKSGIVING ONLY)	12:00N WEDNESDAY THROUGH 6:00 AM MONDAY
FRIDAY	12:00N THURSDAY THROUGH 6:00 AM MONDAY
SATURDAY	12:00N FRIDAY THROUGH 6:00 AM MONDAY

NO EXTENSIONS OF TIME SHALL BE GRANTED FOR DELAYS IN MATERIAL DELIVERIES, UNLESS SUCH DELAYS ARE INDUSTRY-WIDE, OR FOR LABOR STRIKES, UNLESS SUCH STRIKES ARE AREA-WIDE.

SHOULD THE CONTRACTOR FAIL TO MEET ANY OF THESE REQUIREMENTS, THE CONTRACTOR SHALL BE ASSESSED A DISINCENTIVE IN THE AMOUNT OF $75 FOR EACH MINUTE THE ABOVE DESCRIBED LANE CLOSURE RESTRICTIONS ARE VIOLATED.

LENGTH AND DURATION OF LANE CLOSURES AND RESTRICTIONS SHALL BE AT THE APPROVAL OF THE ENGINEER. IT IS THE INTENT TO MINIMIZE THE IMPACT TO THE TRAVELING PUBLIC. LANE CLOSURES OR RESTRICTIONS OVER SEGMENTS OF THE PROJECT IN WHICH NO WORK IS ANTICIPATED WITHIN A REASONABLE TIME FRAME, AS DETERMINED BY THE ENGINEER, SHALL NOT BE PERMITTED. THE LEVEL OF UTILIZATION OF MAINTENANCE OF TRAFFIC DEVICES SHALL BE COMMENSURATE WITH THE WORK IN PROGRESS.

NOTICE OF CLOSURE SIGNS, AS DETAILED IN THESE PLANS, SHALL BE ERECTED BY THE CONTRACTOR AT LEAST ONE WEEK IN ADVANCE OF THE SCHEDULED ROAD OR RAMP CLOSURE. THE SIGNS SHALL BE ERECTED ON THE RIGHT-HAND SIDE OF THE ROAD/RAMP FACING TRAFFIC. THEY SHALL BE PLACED SO AS NOT TO INTERFERE WITH THE VISIBILITY OF ANY OTHER TRAFFIC CONTROL SIGNS. ON ROADWAYS, THEY SHOULD BE ERECTED AT THE POINT OF CLOSURE.

ITEM 614, MAINTAINING TRAFFIC (CON'T)

ROAD WILL BE CLOSED
FOR 60 DAYS
INFO: 888-200-9919

W20-H13-60

THE FOLLOWING ESTIMATED QUANTITY HAS BEEN INCLUDED IN THE GENERAL SUMMARY FOR USE AS DETERMINED BY THE ENGINEER FOR THE MAINTENANCE OF TRAFFIC.

ITEM 614, ASPHALT CONCRETE FOR MAINTAINING TRAFFIC	20 CU. YD.

THE CONTRACTOR SHALL PROVIDE, ERECT AND MAINTAIN STANDARD 48 X 30 INCH ROAD CLOSED SIGNS, SIGN SUPPORTS, BARRICADES AND LIGHTS, AND ADVANCED WARNING SIGNS, AS DETAILED IN SCD MT-101.60 AT THE FOLLOWING LOCATIONS DURING PERIODS IN WHICH THE AFFECTED ROAD ARE CLOSED TO TRAFFIC.

SHARP ROAD 500 FT AND 1000 FT BEFORE CLOSURE.

ALL WORK AND TRAFFIC CONTROL DEVICES SHALL BE IN ACCORDANCE WITH CMS 614 AND OTHER APPLICABLE PORTIONS OF THE SPECIFICATIONS, AS WELL AS THE OHIO MANUAL OF UNIFORM TRAFFIC CONTROL DEVICES. PAYMENT FOR ALL LABOR, EQUIPMENT AND MATERIALS SHALL BE INCLUDED IN THE LUMP SUM CONTRACT PRICE FOR ITEM 614, MAINTAINING TRAFFIC, UNLESS SEPARATELY ITEMIZED IN THE PLAN.

ITEM 614, REPLACEMENT DRUM

DRUMS FURNISHED BY THE CONTRACTOR IN ACCORDANCE WITH THE REQUIREMENTS OF THE PLANS, SPECIFICATIONS AND PROPOSAL WHICH BECOME DAMAGED BY TRAFFIC FOR REASONS BEYOND THE CONTROL OF THE CONTRACTOR SHALL BE REPLACED IN KIND WHEN ORDERED BY THE ENGINEER. REPLACEMENT DRUMS SHALL BE NEW.

PAYMENT FOR THE NEW DRUMS SHALL BE MADE AT THE CONTRACT PRICE PER EACH FOR ITEM 614, REPLACEMENT DRUM, AND SHALL INCLUDE THE COST OF REMOVING AND DISPOSING OF THE DAMAGED DRUM, AND PROVIDING AND MAINTAINING THE REPLACEMENT DRUM IN ACCORDANCE WITH THE CONTRACT REQUIREMENTS FOR THE ORIGINAL DRUM.

AN ESTIMATED QUANTITY OF 20 EACH HAS BEEN PROVIDED IN THE GENERAL SUMMARY.

FLOODLIGHTING

FLOODLIGHTING OF THE WORK SITE FOR OPERATIONS CONDUCTED DURING NIGHTTIME PERIODS SHALL BE ACCOMPLISHED SO THAT THE LIGHTS DO NOT CAUSE GLARE TO THE DRIVERS ON THE ROADWAY. TO ENSURE THE ADEQUACY OF THE FLOODLIGHT PLACEMENT, THE CONTRACTOR AND THE ENGINEER SHALL DRIVE THROUGH THE WORK SITE EACH NIGHT WHEN THE LIGHTING IS IN PLACE AND OPERATIVE PRIOR TO COMMENCING ANY WORK. IF GLARE IS DETECTED, THE LIGHT PLACEMENT AND SHIELDING SHALL BE ADJUSTED TO THE SATISFACTION OF THE ENGINEER BEFORE WORK PROCEEDS.

PAYMENT FOR ALL LABOR, EQUIPMENT AND MATERIALS SHALL BE INCLUDED IN THE LUMP SUM CONTRACT PRICE FOR ITEM 614, MAINTAINING TRAFFIC.

SHARP ROAD

A MINIMUM OF ONE LANE OF TRAFFIC IN EACH DIRECTION SHALL BE MAINTAINED AT ALL TIMES, EXCEPT FOR A PERIOD NOT TO EXCEED 60 CONSECUTIVE CALENDAR DAYS, WHEN THROUGH TRAFFIC MAY BE DETOURED AS SHOWN ON SHEET 9. A DISINCENTIVE SHALL BE ASSESSED IN THE AMOUNT OF $600 FOR EACH CALENDAR DAY THE ROADWAY REMAINS CLOSED TO TRAFFIC BEYOND THE SPECIFIED LIMIT.

ITEM 614, REPLACEMENT SIGN

FLATSHEET SIGNS FURNISHED BY THE CONTRACTOR IN ACCORDANCE WITH THE REQUIREMENTS OF THE PLANS, SPECIFICATIONS AND PROPOSAL WHICH BECOME DAMAGED BY TRAFFIC FOR REASONS BEYOND THE CONTROL OF THE CONTRACTOR SHALL BE REPLACED IN KIND WHEN ORDERED BY THE ENGINEER. REPLACEMENT SIGNS SHALL BE NEW. OTHER MATERIALS MAY BE IN USED, BUT GOOD, CONDITION SUBJECT TO APPROVAL BY THE ENGINEER.

PAYMENT FOR THE NEW SIGNS SHALL BE MADE AT THE CONTRACT PRICE PER EACH FOR ITEM 614, REPLACEMENT SIGN, AND SHALL INCLUDE THE COST OF REMOVING AND DISPOSING OF DAMAGED SIGNS, HARDWARE AND SUPPORTS, AND PROVIDING THE NECESSARY REPLACEMENT HARDWARE, SUPPORTS, ETC.

AN ESTIMATED QUANTITY OF 5 EACH HAS BEEN PROVIDED IN THE GENERAL SUMMARY.

SHOULDER CLOSURES:

THE CONTRACTOR SHALL USE PORTABLE BARRIER TO CLOSE THE SHOULDER(S) ADJACENT TO THE WORK AREA DURING THE SURFACE PREPARATION AND PAINTING OF THE STRUCTURAL STEEL OF THE BRIDGE. THE USE OF DRUMS, TO CLOSE THE SHOULDERS, DURING THE SURFACE PREPARATION AND PAINTING OF THE STRUCTURAL STEEL OF THE BRIDGE SHALL NOT BE PERMITTED.

FOR SHOULDER CLOSINGS FOR BRIDGE AUG-075-5.45, PLACE SIGNS AND BARRELS ACCORDING TO THE OMUTCD, FIGURE 6H-5. DRUMS WILL BE PLACED ON THE SHOULDER SIDE OF EDGE LINE AND AT LEAST ONE FOOT FROM THE EDGE LINE. WHEN WORK IS BEING PERFORMED ON THE TRAFFIC SIDE OF GUARDRAIL OR BARRIER, A TRUCK MOUNTED ATTENUATOR (TMA) IS REQUIRED. PCB HAS NOT BEEN INCLUDED IN THESE PLANS. IF THE CONTRACTOR CHOOSES TO UTILIZE PCB, IT WILL BE AT THE CONTRACTOR'S EXPENSE.

PERMITTED LANE CLOSURE TIMES

THE CONTRACTOR IS ADVISED THAT IT WILL BE NECESSARY TO SCHEDULE NIGHTTIME WORK FOR CONSTRUCTION ACTIVITIES AT SOME OF THE WORK LOCATIONS. IN ORDER TO COMFORM WITH THIS REQUIRMENT, THE CONTRACTOR SHALL BE RESPONSIBLE FOR ALL INCRECMENTAL COSTS ASSOCIATED WITH NIGHTTIME CONSTRUCTION ACTIVITIES.

LANE CLOSURES SHALL ONLY BE IMPLEMENTED AT THE TIMES LISTED ON THE OHIO DEPARTMENT OF TRANSPORTATION'S PERMITTED LANE CLOSURE WEBSITE WHICH IS LOCATED AT:

http://plcm.dot.state.oh.us

THE PERMITTED CLOSURE TIMES LISTED ON THE WEBSITE, 14 CALENDAR DAYS PRIOR TO THE BID LETTING DATE, SHALL BE IN EFFECT FOR THIS PROJECT.

NO WORK WITHIN ACTIVE TRAVEL LANES OR WHICH SHALL SLOW TRAFFIC IS PERMITTED AT ANY OTHER TIMES.

CALCULATED CMK
CHECKED JTC

MAINTENANCE OF TRAFFIC NOTES

AUG/SHE-075-5.15/5.45/11.08

93767mn01.dgn Sheet 6/8/2015 12:19PM CH_ODOTV8i_Half_BW.pen \\DAYPSP01\DAY Copier BW PS jcenters

93767rm02.dgn Sheet 6/8/2015 4:58AM CH_ODOTV8i_Half_BW.pen \\DAYPSPONDAY Copier BW PS jcenters

ITEM 614, WORK ZONE IMPACT ATTENUATOR FOR 24" WIDE HAZARDS (UNIDIRECTIONAL OR BIDIRECTIONAL)

THIS ITEM SHALL CONSIST OF FURNISHING AND INSTALLING A NON-GATING IMPACT ATTENUATOR. FURNISH AN IMPACT ATTENUATOR FROM THE OFFICE OF ROADWAY ENGINEERING'S APPROVED LIST FOR WORK ZONE IMPACT ATTENUATORS, FROM THE ROADWAY STANDARDS WEB PAGE FOR ROADWAY STANDARDS APPROVED PRODUCTS.

INSTALLATION SHALL BE AT THE LOCATIONS SPECIFIED IN THE PLANS IN ACCORDANCE WITH THE MANUFACTURER'S SPECIFICATIONS.

THE CONTRACTOR SHALL REPAIR OR REPLACE A DAMAGED UNIT WITHIN 24 HOURS OF A DAMAGING IMPACT.

WHEN BIDIRECTIONAL DESIGNS ARE SPECIFIED, THE CONTRACTOR SHALL SUPPLY APPROPRIATE TRANSITIONS.

WHEN GATING IMPACT ATTENUATORS ARE DESIRED, THE CONTRACTOR SHALL SUBMIT DOCUMENTATION TO THE ENGINEER FOR ACCEPTANCE.

THE COST FOR THE ADDITIONAL BARRIER REQUIRED FOR A GATING IMPACT ATTENUATOR SHALL BE INCLUDED IN THE COST OF THE GATING IMPACT ATTENUATOR.

PAYMENT FOR THE ABOVE WORK SHALL BE MADE AT THE UNIT PRICE BID AND SHALL INCLUDE ALL LABOR, TOOLS, EQUIPMENT AND MATERIALS NECESSARY TO CONSTRUCT AND MAINTAIN A COMPLETE AND FUNCTIONAL IMPACT ATTENUATOR SYSTEM, INCLUDING ALL RELATED BACKUPS, TRANSITIONS, LEVELING PADS, HARDWARE AND GRADING, NOT SEPARATELY SPECIFIED, AS REQUIRED BY THE MANUFACTURER.

ITEM 614, PORTABLE CHANGEABLE MESSAGE SIGNS, AS PER PLAN

THE CONTRACTOR SHALL FURNISH, INSTALL, MAINTAIN AND REMOVE, WHEN NO LONGER NEEDED, A CHANGEABLE MESSAGE SIGN. THE SIGN SHALL BE OF A TYPE SHOWN ON A LIST OF APPROVED PCMS UNITS AVAILABLE ON THE OFFICE OF MATERIALS MANAGEMENT WEB PAGE. THE LIST CONTAINS CLASS A AND B UNITS WITH MINIMUM LEGIBILITY DISTANCES OF 650 FEET AND 475 FEET, RESPECTIVELY.

EACH SIGN SHALL BE TRAILER-MOUNTED AND EQUIPPED WITH A FUNCTIONAL DIMMING MECHANISM, TO DIM THE SIGN DURING DARKNESS, AND A TAMPER AND VANDAL PROOF ENCLOSURE. EACH SIGN SHALL BE PROVIDED WITH APPROPPIATE TRAINING AND OPERATION INSTRUCTIONS TO ENABLE ON-SITE PERSONNEL TO OPERATE AND TROUBLESHOOT THE UNIT. THE SIGN SHALL ALSO BE CAPABLE OF BEING POWERED BY AN ELECTRICAL SERVICE DROP FROM A LOCAL UTILITY COMPANY. The PCMS SHALL BE DELINEATED IN ACCORDANCE WITH CMS 614.03.

PLACEMENT, OPERATION, MAINTENANCE AND ALL ACTIVATION OF THE SIGNS BY THE CONTRACTOR SHALL BE AS DIRECTED BY THE ENGINEER. THE PCMS SHALL BE LOCATED IN A HIGHLY VISIBLE POSITION YET PROTECTED FROM TRAFFIC. THE CONTRACTOR SHALL, AT THE DIRECTION OF THE ENGINEER, RELOCATE THE PCMS TO IMPROVE VISIBILITY OR ACCOMMODATE CHANGED CONDITIONS. WHEN NOT IN USE, THE PCMS SHALL BE TURNED OFF. ADDITIONALLY, WHEN NOT IN USE FOR EXTENDED PERIODS OF TIME, THE PCMS SHALL BE TURNED AWAY FROM ALL TRAFFIC.

THE ENGINEER SHALL BE PROVIDED ACCESS TO EACH SIGN UNIT AND SHALL BE PROVIDED WITH APPROPRIATE TRAINING AND OPERATION INSTRUCTIONS TO ENABLE ODOT PERSONNEL TO OPERATE AND TROUBLESHOOT THE UNIT, AND TO REVISE SIGN MESSAGES, IF NECESSARY.

ITEM 614, PORTABLE CHANGEABLE MESSAGE SIGNS, AS PER PLAN (CON'T)

THE CONTRACTOR SHALL IMPLEMENT A SYSTEM WHEREBY CHANGEABLE MESSAGES WILL BE IMPLEMENTED WITHIN 4 HOURS FOLLOWING TELEPHONE NOTIFICATION FROM THE PROJECT ENGINEER TO A DESIGNATED PHONE.

ALL MESSAGES TO BE DISPLAYED ON THE SIGN WILL BE PROVIDED BY THE ENGINEER. A LIST OF ALL REQUIRED PRE-PROGRAMMED MESSAGES WILL BE GIVEN TO THE CONTRACTOR AT THE PROJECT PRECONSTRUCTION CONFERENCE. THE SIGN SHALL HAVE THE CAPABILITY TO STORE UP TO 99 MESSAGES. MESSAGE MEMORY OR PRE-PROGRAMMED DISPLAYS SHALL NOT BE LOST AS A RESULT OF POWER FAILURES TO THE ON-BOARD COMPUTER. THE SIGN LEGEND SHALL BE CAPABLE OF BEING CHANGED IN THE FIELD. THREE-LINE PRESENTATION FORMATS WITH UP TO SIX MESSAGE PHASES SHALL BE SUPPORTED. PCMS FORMAT SHALL PERMIT THE COMPLETE MESSAGE FOR EACH PHASE TO BE READ AT LEAST TWICE. THE PCMS SHALL CONTAIN AN ACCURATE CLOCK AND PROGRAMMING LOGIC WHICH WILL ALLOW THE SIGN TO BE ACTIVATED, DEACTIVATED OR MESSAGES CHANGED AUTOMATICALLY AT DIFFERENT TIMES OF THE DAY FOR DIFFERENT DAYS OF THE WEEK.

THE PCMS SHALL CONTAIN A CELLULAR TELEPHONE DATA LINK WHICH WILL (IN ACTIVE CELLULAR PHONE AREAS) ALLOW REMOTE SIGN ACTIVATION, MESSAGE CHANGES, MESSAGE ADDITIONS AND REVISIONS TO TIME OF DAY PROGRAMS. THE SYSTEM SHALL ALSO PERMIT VERIFICATION OF CURRENT AND PROGRAMMED MESSAGES. ONE REMOTE DATA INPUT DEVICE (LAPTOP COMPUTER PLUS MODEM OR EQUIVALENT) SHALL BE FURNISHED FOR USE BY THE DISTRICT TRAFFIC ENGINEER, OR EQUIVALENT, AND SHALL BE INSURED AGAINST THEFT.

THE PCMS UNIT SHALL BE MAINTAINED IN GOOD WORKING ORDER BY THE CONTRACTOR IN ACCORDANCE WITH THE PROVISIONS OF CMS 614.07. THE CONTRACTOR SHALL, PRIOR TO ACTIVATING THE UNIT, MAKE ARRANGEMENTS, WITH AN AUTHORIZED SERVICE AGENT FOR THE PCMS, TO ASSURE PROMPT SERVICE IN THE EVENT OF FAILURE. ANY FAILURE SHALL NOT RESULT IN THE SIGN BEING OUT OF SERVICE FOR MORE THAN 12 HOURS, INCLUDING WEEKENDS. FAILURE TO COMPLY MAY RESULT IN AN ORDER TO STOP WORK AND OPEN ALL TRAFFIC LANES AND/OR IN THE DEPARTMENT TAKING APPROPRIATE ACTION TO SAFELY CONTROL TRAFFIC. THE ENTIRE COST TO CONTROL TRAFFIC, ACCRUED BY THE DEPARTMENT DUE TO THE CONTRACTOR'S NONCOMPLIANCE, WILL BE DEDUCTED FROM MONEYS DUE, OR TO BECOME DUE THE CONTRACTOR ON HIS CONTRACT.

THE CONTRACTOR SHALL BE RESPONSIBLE FOR 24-HOUR-PER-DAY OPERATION AND MAINTENANCE OF THESE SIGNS ON THE PROJECT FOR THE DURATION OF THE PHASES WHEN THE PLAN REQUIRES THEIR USE.

PAYMENT FOR THE ABOVE DESCRIBED ITEM SHALL BE AT THE CONTRACT UNIT PRICE. PAYMENT SHALL INCLUDE ALL LABOR, MATERIALS, EQUIPMENT, FUELS, LUBRICATING OILS, SOFTWARE, HARDWARE AND INCIDENTALS TO PERFORM THE ABOVE DESCRIBED WORK.

ITEM 614, PORTABLE CHANGEABLE MESSAGE SIGN, AS PER PLAN 2 SIGN MONTH

ITEM 614 - LAW ENFORCEMENT OFFICER (WITH PATROL CAR) FOR ASSISTANCE DURING CONSTRUCTION OPERATIONS

USE OF LAW ENFORCEMENT OFFICERS (LEOS) BY CONTRACTORS OTHER THAN THE USES SPECIFIED BELOW WILL NOT BE PERMITTED AT PROJECT COST. LEOS SHOULD NOT BE USED WHERE THE OMUTCD INTENDS THAT FLAGGERS BE USED.

ITEM 614 - LAW ENFORCEMENT OFFICER (WITH PATROL CAR) FOR ASSISTANCE DURING CONSTRUCTION OPERATIONS (CON'T)

IN ADDITION TO THE REQUIREMENTS OF CMS 614 AND THE OMUTCD, A UNIFORMED LEO WITH AN OFFICIAL PATROL CAR (CAR WITH TOP-MOUNTED EMERGENCY FLASHING LIGHTS AND COMPLETE MARKINGS OF THE APPROPRIATE LAW ENFORCEMENT AGENCY) SHALL BE PROVIDED FOR THE FOLLOWING TRAFFIC CONTROL TASKS:

- DURING THE ENTIRE ADVANCE PREPARATION AND CLOSURE SEQUENCE WHERE COMPLETE BLOCKAGE OF TRAFFIC IS REQUIRED.

IN ADDITION TO THE REQUIREMENT OF CMS 614 AND THE OMUTCD, A UNIFORMED LEO WITH AN OFFICIAL PATROL CAR (CAR WITH TOP-MOUNTED EMERGENCY FLASHING LIGHTS AND COMPLETE MARKINGS OF THE APPROPRIATE LAW ENFORCEMENT AGENCY) SHOULD BE PROVIDED FOR THE FOLLOWING TRAFFIC CONTROL TASKS:

- FOR LANE CLOSURES: DURING INITIAL SET-UP PERIODS, TEAR DOWN PERIODS, SUBSTANTIAL SHIFTS OF A CLOSURE POINT OR WHEN NEW LANE CLOSURE ARRANGEMENTS ARE INITIATED FOR LONG-TERM LANE CLOSURES/SHIFTS (FOR THE FIRST AND LAST DAY OF MAJOR CHANGES IN TRAFFIC CONTROL SETUP). IN GENERAL, LEOS SHOULD BE POSITIONED AT THE POINT OF LANE RESTRICTION OR ROAD CLOSURE AND TO MANUALLY CONTROL TRAFFIC MOVEMENTS THROUGH INTERSECTIONS IN WORK ZONES.
- WHEN CONSTRUCTION VEHICLES ARE ENTERING/EXITING THE ZONE DIRECTLY FROM/INTO AN OPEN LANE OF TRAFFIC. IF A LANE HAS BEEN CLOSED TO PROVIDE AN ACCELERATION/DECELERATION LANE FOR THE VEHICLE, THE LEO WILL NOT BE REQUIRED.

LEOS SHOULD NOT FORGO THEIR TRAFFIC CONTROL RESPONSIBILITIES TO APPREHEND MOTORISTS FOR ROUTINE TRAFFIC VIOLATIONS. HOWEVER, IF A MOTORIST'S ACTIONS ARE CONSIDERED TO BE RECKLESS, THEN PURSUIT OF THE MOTORIST IS APPROPRIATE.

THE LEOS WORK AT THE DIRECTION OF THE CONTRACTOR. THE CONTRACTOR IS RESPONSIBLE FOR SECURING THE SERVICES OF THE LEOS WITH THE APPROPRIATE AGENCIES AND COMMUNICATING THE INTENTIONS OF THE PLANS WITH RESPECT TO DUTIES OF THE LEOS. THE ENGINEER SHALL HAVE FINAL CONTROL OVER THE LEOS' DUTIES AND PLACEMENT, AND WILL RESOLVE ANY ISSUES THAT MAY ARISE BETWEEN THE TWO PARTIES.

THE LEO SHALL REPORT IN TO THE CONTRACTOR PRIOR TO THE START OF THE SHIFT, IN ORDER TO RECEIVE INSTRUCTIONS REGARDING SPECIFIC WORK ASSIGNMENTS DURING HIS/HER SHIFT. THE LEO IS EXPECTED TO STAY AT THE PROJECT SITE FOR THE ENTIRE DURATION OF HIS/HER SHIFT. THE LEO SHALL REPORT TO THE CONTRACTOR AT THE END OF HIS/HER SHIFT. ONCE THE LEO HAS COMPLETED THE DUTIES DESCRIBED ABOVE AND STILL HAS TIME REMAINING ON HIS/HER SHIFT, THE LEO MAY BE ASKED TO PATROL THROUGH THE WORK ZONE (WITH FLASHING LIGHTS OFF) OR BE PLACED AT A LOCATION TO DETER MOTORISTS FROM SPEEDING. SHOULD IT BE NECESSARY TO LEAVE THE PROJECT SITE, THE LEO SHALL NOTIFY THE ENGINEER. THE CONTRACTOR SHALL PROVIDE THE LEO WITH A TWO-WAY COMMUNICATION DEVICE WHICH SHALL BE RETURNED TO THE CONTRACTOR AT THE END OF HIS/HER SHIFT.

LEOS (WITH PATROL CAR) REQUIRED BY THE TRAFFIC MAINTENANCE TASKS ABOVE SHALL BE PAID FOR ON A UNIT PRICE (HOURLY) BASIS UNDER ITEM 614, LAW ENFORCEMENT OFFICER (WITH PATROL CAR) FOR ASSISTANCE. THE FOLLOWING ESTIMATED QUANTITIES HAVE BEEN CARRIED TO THE GENERAL SUMMARY.

ITEM 614 - LAW ENFORCEMENT OFFICER (WITH PATROL CAR) FOR ASSISTANCE DURING CONSTRUCTION OPERATIONS (CON'T)

ITEM 614, LAW ENFORCEMENT OFFICER WITH PATROL CAR FOR ASSISTANCE 50 HOURS

THE HOURS PAID SHALL INCLUDE ANY MINIMUM SHOW-UP TIME REQUIRED BY THE LAW ENFORCEMENT AGENCY INVOLVED.

ANY ADDITIONAL COSTS (ADMINISTRATIVE OR OTHERWISE) INCURRED BY THE CONTRACTOR TO OBTAIN THE SERVICES OF AN LEO ARE INCLUDED WITH THE BID UNIT PRICE FOR ITEM 614, LAW ENFORCEMENT OFFICER WITH PATROL CAR FOR ASSISTANCE.

DELINEATION OF PORTABLE AND PERMANENT BARRIER

BARRIER REFLECTORS AND OBJECT MARKERS SHALL BE INSTALLED ON ALL PORTABLE BARRIER (PB) USED FOR TRAFFIC CONTROL AND ON PERMANENT CONCRETE BARRIER (INCLUDING BRIDGE PARAPETS) LOCATED WITHIN 5 FEET OF THE EDGE OF THE ADJACENT TRAVEL LANE.

BARRIER REFLECTORS SHALL CONFORM TO C&MS 626, EXCEPT THAT THE SPACING SHALL BE AS PER TRAFFIC SCD MT-101.70. OBJECT MARKERS AND THEIR INSTALLATION SHALL CONFORM TO C&MS 614.03 AND SCD MT-101.70. WHEN THE PB CONTAINS GLARE SCREEN, ONE SET OF THREE VERTICAL STRIPES OF SHEETING SHALL BE CONSIDERED EQUIVALENT TO AN OBJECT MARKER, ONE-WAY.

INCREASED BARRIER DELINEATION, AS SPECIFIED HEREIN, SHALL BE INSTALLED ON ALL PB. INCREASED BARRIER DELINEATION SHALL BE INSTALLED ON CONCRETE PERMANENT BARRIER LOCATED WITHIN 5 FEET OF THE EDGE OF THE TRAVELED LANE ALONG TAPERS AND TRANSITION AREAS AND ALONG CURVES (OUTSIDE ONLY) WITH DEGREE OF CURVATURE GREATER THAN OR EQUAL TO 3 DEGREES.

THE INCREASED BARRIER DELINEATION SHALL CONSIST OF THE TRIPLE STACKING OF WORK ZONE BARRIER REFLECTORS.

TRIPLE-STACKED BARRIER REFLECTORS SHALL CONSIST OF ALIGNING THREE BARRIER REFLECTORS VERTICALLY, AT LOCATIONS WHERE A SINGLE BARRIER REFLECTOR WOULD BE OTHERWISE ATTACHED. THERE SHALL BE NO OPEN SPACE BETWEEN THE ADJACENT BARRIER REFLECTORS. THE TRIPLE-STACKED BARRIER REFLECTORS SHALL CONFORM TO C&MS 626, EXCEPT THAT THEY SHALL BE SPACED AND ALIGNED PER TRAFFIC SCD MT-101.70.

THE FOLLOWING ESTIMATED QUANTITIES HAVE BEEN INCLUDED IN THE PLANS AND CARRIED TO THE GENERAL SUMMARY:

ITEM 614, OBJECT MARKER, ONE-WAY 58 EACH
ITEM 614, INCREASED BARRIER DELINEATION 2900 FEET

PAYMENT SHALL BE FULL COMPENSATION FOR ALL MATERIAL, LABOR, INCIDENTALS AND EQUIPMENT NECESSARY FOR FURNISHING, INSTALLING, MAINTAINING AND REMOVING EACH OF THE ABOVE ITEMS.

ALONG RUNS OF INCREASED BARRIER DELINEATION WHERE THIS ITEM IS PROVIDED, THE QUANTITY SHALL BE MEASURED AS THE ENTIRE LENGTH OF THE RUN OF INCREASED BARRIER DELINEATION, INCLUDING THE SPACES BETWEEN THE STACKS OF BARRIER REFLECTORS.

CALCULATED CMK CHECKED JTC

MAINTENANCE OF TRAFFIC NOTES

AUG/SHE-075-5.15/5.45/11.08

REF. NO.	SHEET NO.	S.L.M. FROM	S.L.M. TO	SIDE	614 WORK ZONE IMPACT ATTENUATOR EACH	614 WORK ZONE LANE LINE, 642 PAINT MILE	614 WORK ZONE EDGE LINE, 642 PAINT (WHITE) MILE	614 WORK ZONE EDGE LINE, 642 PAINT (YELLOW) MILE	614 WORK ZONE CHANNELIZING LINE, 642 PAINT FT	622 PORTABLE BARRIER, 32" FT
		AUG-075-5.15 L&R								
PB-1	6	5.10	5.16	RT	1					340
PB-2	6	5.14	5.20	LT	1					320
PB-3	7	5.10	5.16	RT	1					320
PB-4	7	5.14	5.20	LT	1					320
CH-1	6	4.89	4.98	RT					455	
CH-2	6	4.95	4.98	RT					137	
CH-3	6	5.05	5.14	LT					455	
CH-4	6	5.12	5.14	LT					103	
CH-5	6	5.16	5.25	RT					455	
CH-6	6	5.16	5.25	RT					455	
CH-7	6	5.32	5.40	LT					455	
CH-8	7	4.89	4.98	RT					455	
CH-9	7	5.05	5.14	LT					455	
CH-10	7	5.12	5.14	LT					103	
CH-11	7	5.16	5.25	RT					455	
CH-12	7	5.16	5.25	RT					455	
CH-13	7	5.32	5.40	LT					455	
WEL-1	6	4.89	4.95	RT			0.06			
WEL-2	6	4.93	4.95	RT			0.03			
WEL-3	6	4.96	5.25	RT			0.29			
WEL-4	6	5.05	5.12	LT			0.07			
WEL-5	6	5.12	5.32	LT			0.20			
WEL-6	6	5.26	5.40	LT			0.14			
WEL-7	6	5.28	5.32	LT			0.04			
WEL-8	7	4.89	4.98	RT			0.09			
WEL-9	7	4.93	4.98	RT			0.05			
WEL-10	7	4.93	5.25	RT			0.31			
WEL-11	7	5.05	5.12	LT			0.07			
WEL-12	7	5.08	5.12	LT			0.04			
WEL-13	7	5.08	5.32	LT			0.24			
WEL-14	7	5.25	5.32	LT			0.07			
WEL-15	7	5.32	5.40	LT			0.15			
YEL-1	6	4.89	5.25	RT				0.35		
YEL-2	6	5.05	5.40	LT				0.35		
YEL-3	7	4.89	5.25	RT				0.35		
YEL-4	7	5.05	5.40	LT				0.35		
LL-1	6	4.98	5.16	RT		0.18				
LL-2	6	4.98	5.16	RT		0.18				
LL-3	6	5.14	5.26	LT		0.13				
LL-4	6	5.14	5.32	LT		0.18				
LL-5	7	4.98	5.16	RT		0.18				
LL-6	7	4.98	5.16	RT		0.18				
LL-7	7	5.14	5.25	LT		0.12				
LL-8	7	5.14	5.32	LT		0.18				
		SHE-075-11.08								
PB-1	8	11.01	11.08	RT	1					370
PB-2	8	11.06	11.08	RT	1					140
PB-3	8	11.08	11.10	LT	1					140
PB-4	8	11.08	11.15	LT	1					370
TOTALS CARRIED TO GENERAL SUMMARY					8	1.33	1.85	1.40	4893	2320

CALCULATED CMK
CHECKED JTC

ESTIMATED QUANTITIES
MAINTENANCE OF TRAFFIC

AUG / SHE - 075 - 5.15 / 5.45 / 11.08

93767mq101.dgn Sheet 6/8/2015 5:01AM CH_ODOTV8i_Half_BW.pen \\DAYPSP01\DAY Copier BW PS jcenters

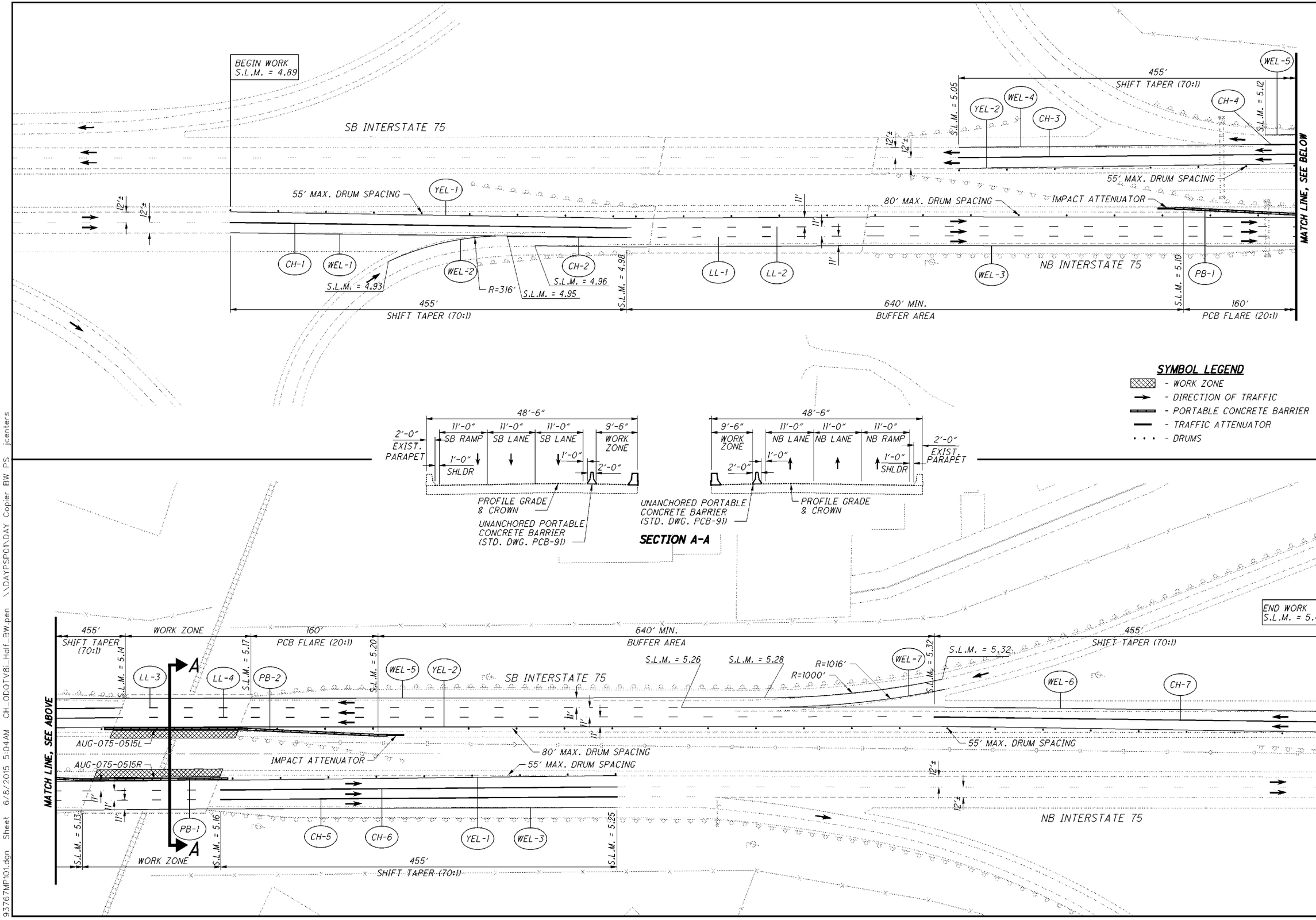

HORIZONTAL SCALE IN FEET
0 25 50 100

CALCULATED MRP
CHECKED CMK

93767MP101.dgn Sheet 6/8/2015 5:04AM CH_ODOTV8i_Half_BW.pen \\DAYPSP01\DAY Copier BW FS jcenters

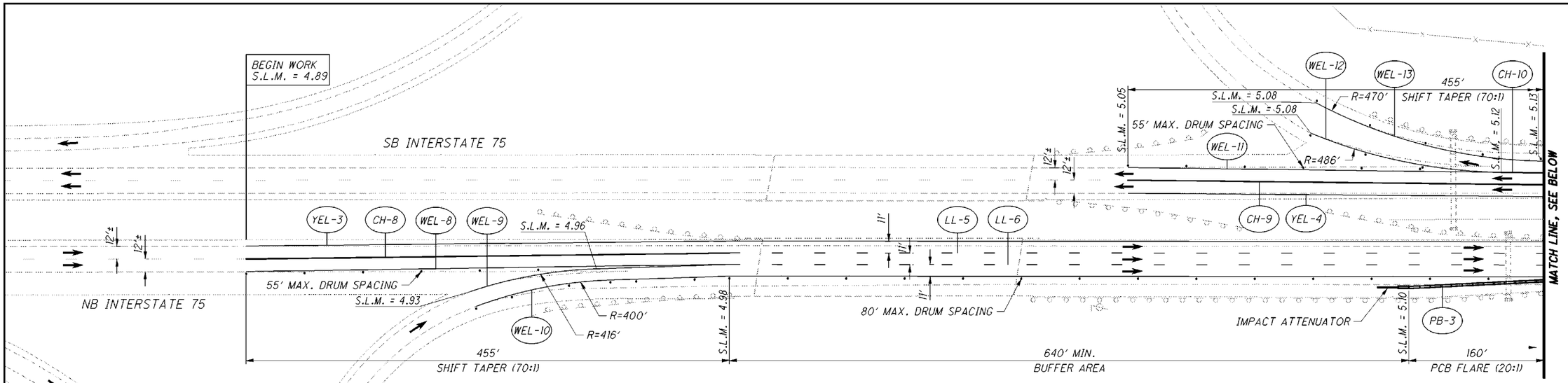

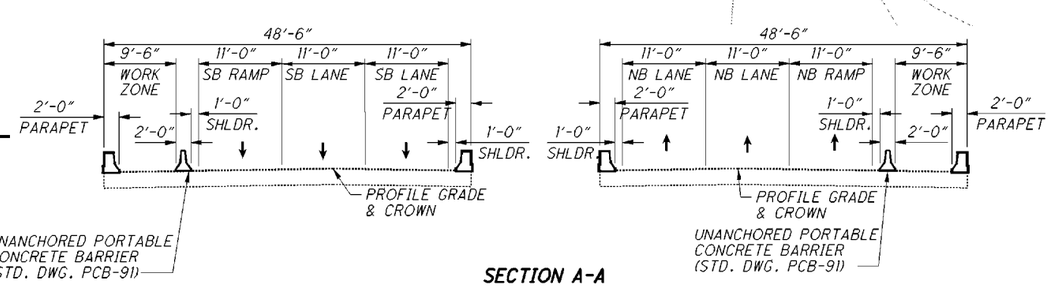

SECTION A-A

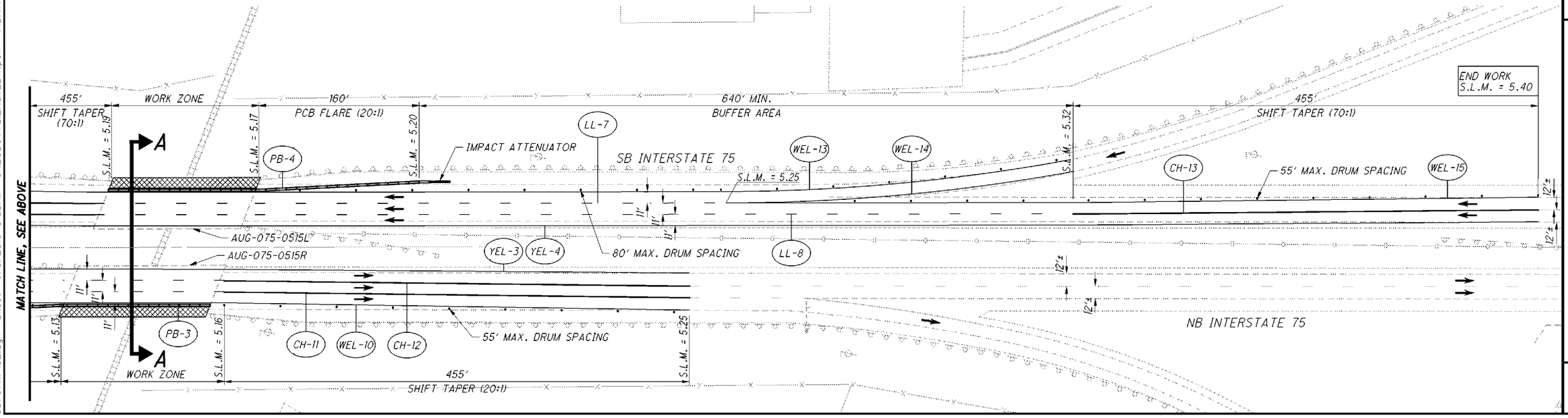

93767MP102.dgn Sheet 6/8/2015 5:05AM CH_ODOTV8i_Half_BW.pen \\DAYPSP01\DAY Copier BW PS jcenters

HORIZONTAL SCALE IN FEET
0 25 50 100
CALCULATED MRP
CHECKED CMK

MAINTENANCE OF TRAFFIC - PHASE 2
INTERSTATE 75

AUG/SHE-075-5.15/5.45/11.08

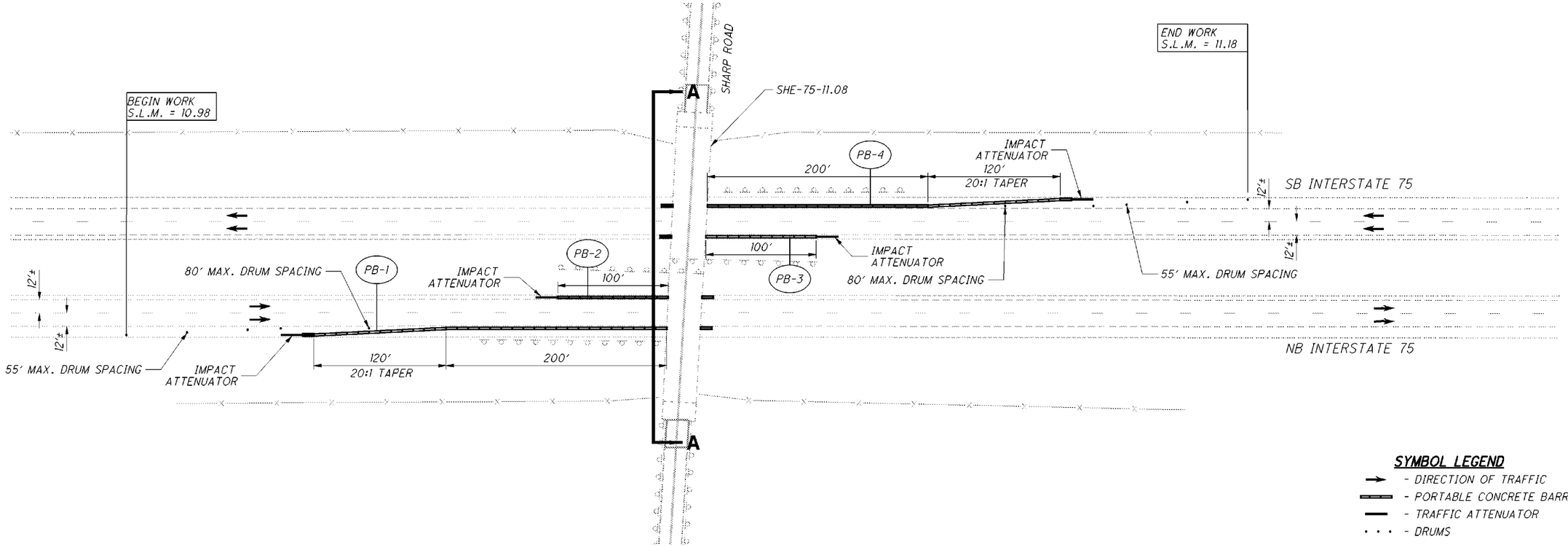

SYMBOL LEGEND

- DIRECTION OF TRAFFIC
- PORTABLE CONCRETE BARRIER
- TRAFFIC ATTENUATOR
- DRUMS

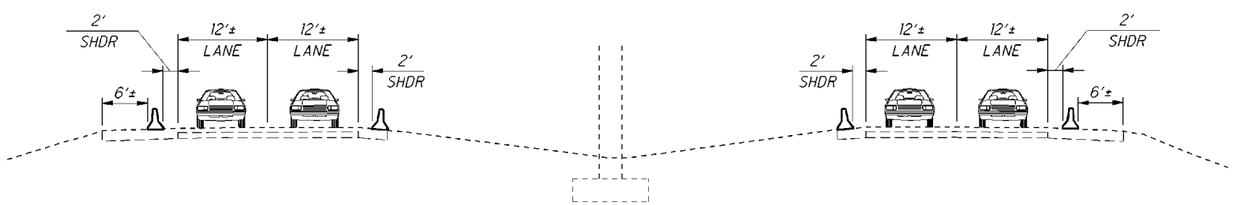

NOTES:

1. FOR ADVANCED WARNING SIGNS AND WORK ZONE SIGNING, SEE OMUTCD FIGURE 6H-5.

HORIZONTAL SCALE IN FEET
0 25 50 100

CALCULATED MRP
CHECKED CMK

MAINTENANCE OF TRAFFIC INTERSTATE 75

AUG/SHE-075-5.15/5.45/11.08

93767MP001.dgn Sheet 6/8/2015 5:08AM CH_ODOTV8i_Half_BW.pen \\DAYPSP01\DAY Copier BW PS jcenters

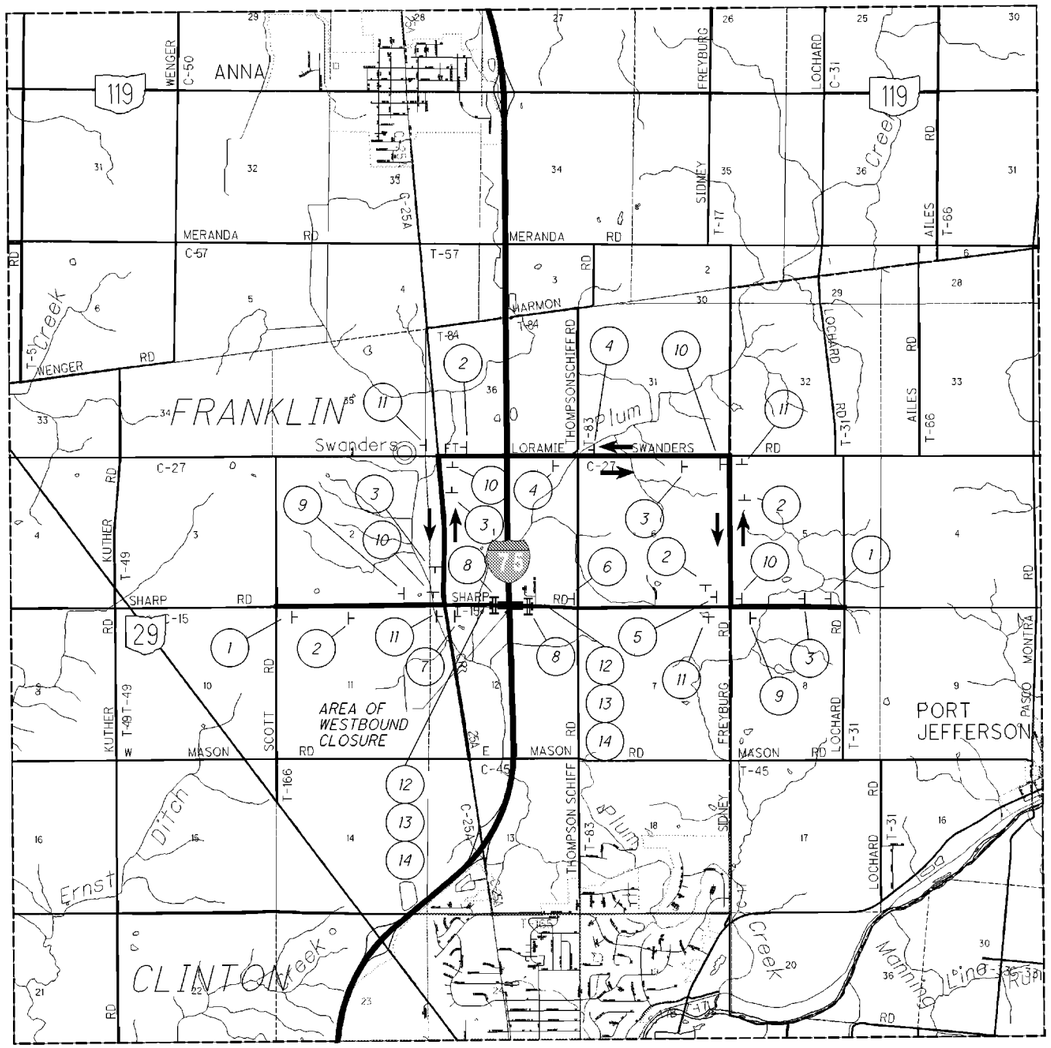

1	DETOUR AHEAD	W20-2-36	
2	SHARP RD. / DETOUR	D3-1-12 / M4-H9BL-30	
3	SHARP RD. / DETOUR	D3-1-12 / M4-H9BR-30	
4	SHARP RD. / DETOUR	D3-1-12 / M4-9-30	
* 5	ROAD CLOSED 1.5 MILES AHEAD LOCAL TRAFFIC ONLY / DETOUR	R11-3A-60 / M4-10R-48	
* 6	ROAD CLOSED 0.4 MILES AHEAD LOCAL TRAFFIC ONLY	R11-3A-60	
* 7	ROAD CLOSED 0.4 MILES AHEAD LOCAL TRAFFIC ONLY / DETOUR	R11-3A-60 / M4-10L-48	
* 8	ROAD CLOSED	R11-2-48	
* 9	END DETOUR	M4-8A-24	
10	SHARP RD. / DETOUR	D3-1-12 / M4-9R-30	
11	SHARP RD. / DETOUR	D3-1-12 / M4-9L-30	
12	ROAD CLOSED AHEAD / 500 FEET	W20-3-48 / W16-2P-30	
13	TYPE A WARNING LIGHT / ROAD CLOSED AHEAD / 1000 FEET	TYPE A WARNING LIGHT / W20-3-48 / W16-2P-30	
14	TYPE A WARNING LIGHT / ROAD WORK AHEAD	TYPE A WARNING LIGHT / W20-1-48	

NOTES:

1. * TYPE III BARRICADE
2. PLACE SIGNS 12, 13, AND 14 PER STANDARD CONSTRUCTION DRAWING MT-101.60.

HORIZONTAL SCALE IN FEET
0 500 1000 2000

CALCULATED CMK
CHECKED JTC

DETOUR MAP

AUG/SHE-075-5.15/5.45/11.08

93767MD001.dgn Sheet 6/8/2015 5:16AM CH_ODOTV6i_Half_BW.pen \\DAYPSP01\DAY Copier BW PS jcenter

SHEET NUMBER											PARTICIPATION			ITEM	ITEM EXT	GRAND TOTAL	UNIT	DESCRIPTION	SEE SHEET NO.
2	3	4	5	21	23	31	34	43			01/IMS/BR	02/IMS/OT							
																		ROADWAY	
506											506			202	38000	506	FT	GUARDRAIL REMOVED	
10											10			202	47000	10	EACH	BRIDGE TERMINAL ASSEMBLY REMOVED	
400											400			606	13000	400	FT	GUARDRAIL, TYPE 5	
8											8			606	35000	8	EACH	BRIDGE TERMINAL ASSEMBLY, TYPE 1	
2											2			606	35100	2	EACH	BRIDGE TERMINAL ASSEMBLY, TYPE 2	
								40			40			607	35000	40	FT	FENCE REMOVED AND REBUILT	
																		PAVEMENT	
278											278			254	01000	278	SY	PAVEMENT PLANING, ASPHALT CONCRETE	
10											10			407	10000	10	GAL	TACK COAT	
68											68			423	00200	68	SY	CRACK SEALING, TYPE I	
14											14			441	50000	14	CY	ASPHALT CONCRETE SURFACE COURSE, TYPE 1, (448), PG64-22	
140											140			609	24510	140	FT	CURB, TYPE 4-C	
6385											6385			618	40101	6385	FT	RUMBLE STRIPS, (ASPHALT CONCRETE), AS PER PLAN	2
																		TRAFFIC CONTROL	
				125							125			621	00100	125	EACH	RPM	
				146							146			621	54000	146	EACH	RAISED PAVEMENT MARKER REMOVED	
20											20			626	00100	20	EACH	BARRIER REFLECTOR	
				1.42							1.42			642	00094	1.42	MILE	EDGE LINE, 6"	
				0.71							0.71			642	00194	0.71	MILE	LANE LINE, 6"	
				1154							1154			642	00394	1154	FT	CHANNELIZING LINE, 12"	
				90							90			642	00690	90	FT	TRANSVERSE/DIAGONAL LINE	
				2375							2375			642	01550	2375	FT	DOTTED LINE, 12"	
				0.1							0.1			646	10000	0.1	MILE	EDGE LINE, 4"	
				0.05							0.05			646	10200	0.05	MILE	CENTER LINE	
																		STRUCTURE 20 FOOT SPAN AND OVER (AUG-075-0515)	
					LS						LS			202	11201	LS		PORTIONS OF STRUCTURE REMOVED, AS PER PLAN	23
					14209						14209			509	10000	14209	LB	EPOXY COATED REINFORCING STEEL	
					1264						1264			510	10000	1264	EACH	DOWEL HOLES WITH NONSHRINK, NONMETALLIC GROUT	
					85						85			511	34450	85	CY	CLASS QC2 CONCRETE WITH QC/QA, BRIDGE DECK (PARAPET)	
					539						539			512	10100	539	SY	SEALING OF CONCRETE SURFACES (EPOXY-URETHANE)	
																		STRUCTURE 20 FOOT SPAN AND OVER (AUG-075-0545)	
						817					817			509	10000	817	LB	EPOXY COATED REINFORCING STEEL	
						80					80			510	10000	80	EACH	DOWEL HOLES WITH NONSHRINK, NONMETALLIC GROUT	
						7					7			511	45712	7	CY	CLASS QC1 CONCRETE WITH QC/QA, ABUTMENT	
						29					29			512	10100	29	SY	SEALING OF CONCRETE SURFACES (EPOXY-URETHANE)	
						74					74			516	13600	74	SF	1" PREFORMED EXPANSION JOINT FILLER	
						48					48			519	11100	48	SF	PATCHING CONCRETE STRUCTURE	
																		STRUCTURE 20 FOOT SPAN AND OVER (AUG-075-0545)	
							LS					LS		202	11203	LS		PORTIONS OF STRUCTURE REMOVED, OVER 20 FOOT SPAN, AS PER PLAN	34
							2958					2958		509	10000	2958	LB	EPOXY COATED REINFORCING STEEL	
							252					252		510	10000	252	EACH	DOWEL HOLES WITH NONSHRINK, NONMETALLIC GROUT	
							16					16		511	34449	16	CY	CLASS QC2 CONCRETE, BRIDGE DECK (PARAPET), AS PER PLAN	34
							392					392		512	10101	392	SY	SEALING OF CONCRETE SURFACES (EPOXY-URETHANE), AS PER PLAN	34
							352					352		512	74000	352	SY	REMOVAL OF EXISTING COATINGS FROM CONCRETE SURFACES	

CALCULATED CMK CHECKED JC

GENERAL SUMMARY

AUG/SHE-075-5.15/5.45/11.08

93767qg101.dgn Sheet 7/17/2015 11:47AM CH_OOOTV8i_Half_BW.pen \\antigone\Plansets-400 mpierce

SHEET NUMBER											PARTICIPATION			ITEM	ITEM EXT	GRAND TOTAL	UNIT	DESCRIPTION	SEE SHEET NO.
2	3	4	5	21	23	31	34	43			01/IMS/BR	02/IMS/OT							
																		STRUCTURE 20 FOOT SPAN AND OVER (SHE-075-1108)	
								LS			LS			202	11201	LS		PORTIONS OF STRUCTURE REMOVED, AS PER PLAN	41
								156			156			202	22900	156	SY	APPROACH SLAB REMOVED	
								7902			7902			509	10001	7902	LB	EPOXY COATED REINFORCING STEEL, AS PER PLAN	41
								275			275			509	20001	275	LB	REINFORCING STEEL, REPLACEMENT OF EXISTING REINFORCING STEEL, AS PER PLAN	41
								216			216			510	10000	216	EACH	DOWEL HOLES WITH NONSHRINK, NONMETALLIC GROUT	
								30			30			511	34445	30	CY	CLASS QC2 CONCRETE, BRIDGE DECK, AS PER PLAN	42
								16			16			511	34449	16	CY	CLASS QC2 CONCRETE, BRIDGE DECK (PARAPET), AS PER PLAN	42
								7			7			511	45710	7	CY	CLASS QC1 CONCRETE, ABUTMENT	
								14			14			511	81300	14	EACH	CONCRETE, MISC.: EMBEDDED GALVANIC ANODE (EGA)	41
								769			769			512	10100	769	SY	SEALING OF CONCRETE SURFACES (EPOXY-URETHANE)	
								64			64			512	10300	64	SY	SEALING CONCRETE BRIDGE DECKS WITH HMWM RESIN	
								24			24			512	33000	24	SY	TYPE 2 WATERPROOFING	
								21			21			512	74000	21	SY	REMOVAL OF EXISTING COATINGS FROM CONCRETE SURFACES	
								8168			8168			514	00050	8168	SF	SURFACE PREPARATION OF EXISTING STRUCTURAL STEEL	
								8168			8168			514	00056	8168	SF	FIELD PAINTING OF EXISTING STRUCTURAL STEEL, PRIME COAT	
								8168			8168			514	00060	8168	SF	FIELD PAINTING STRUCTURAL STEEL, INTERMEDIATE COAT	
								8168			8168			514	00067	8168	SF	FIELD PAINTING STRUCTURAL STEEL, FINISH COAT, AS PER PLAN	42
								16			16			514	00504	16	MNHR	GRINDING FINS, TEARS, SLIVERS ON EXISTING STRUCTURAL STEEL	
								9			9			514	10000	9	EACH	FINAL INSPECTION REPAIR	
								64			64			516	14020	64	FT	SEMI-INTEGRAL ABUTMENT EXPANSION JOINT SEAL	
								8			8			516	44001	8	EACH	ELASTOMERIC BEARING WITH INTERNAL LAMINATES AND LOAD PLATE (NEOPRENE), AS PER PLAN	50
																		(10" X 1 1/4 X 1'-2" PAD WITH 1'-1" X 1 1/2" X 1'-3" STEEL LOAD PLATE)	
								LS			LS			516	47001	LS		JACKING AND TEMPORARY SUPPORT OF SUPERSTRUCTURE, AS PER PLAN	41
								437			437			517	76201	437	FT	RAILING FACED, AS PER PLAN	41
								20			20			518	21200	20	CY	POROUS BACKFILL WITH FILTER FABRIC	
								1			1			SPECIAL	51911900	1	CY	PATCHING CONCRETE STRUCTURE, MISC.: WITH PUMPED SELF-CONSOLIDATING CONCRETE	41
								146			146			526	25001	146	SY	REINFORCED CONCRETE APPROACH SLABS (T=15"), AS PER PLAN	41
								668			668			848	10200	668	SY	SUPERPLASTICIZED DENSE CONCRETE OVERLAY USING HYDRODEMOLITION, (1 3/4" THICK)	
								668			668			848	20001	668	SY	SURFACE PREPARATION USING HYDRO DEMOLITION, AS PER PLAN	43
								21			21			848	30200	21	CY	SUPERPLASTICIZED DENSE CONCRETE OVERLAY (VARIABLE THICKNESS), MATERIAL ONLY	
								50			50			848	50000	50	SY	HAND CHIPPING	
								454			454			607	39900	454	FT	VANDAL PROTECTION FENCE, 6' STRAIGHT, COATED FABRIC /1	
								1			1			848	50200	1	CY	FULL-DEPTH REPAIR	
																		MAINTENANCE OF TRAFFIC	
		50					40				50	40		614	11110	90	HOUR	LAW ENFORCEMENT OFFICER WITH PATROL CAR FOR ASSISTANCE	
		2900									2900			614	11630	2900	FT	INCREASED BARRIER DELINEATION	
			8								8			614	12350	8	EACH	WORK ZONE IMPACT ATTENUATOR	
	5										5			614	12500	5	EACH	REPLACEMENT SIGN	
							4					4		614	12336	4	EACH	WORK ZONE IMPACT ATTENUATOR (UNIDIRECTIONAL)	
	20										20			614	12600	20	EACH	REPLACEMENT DRUM	
	20										20			614	13000	20	CY	ASPHALT CONCRETE FOR MAINTAINING TRAFFIC	
							27					27		614	13300	27	EACH	BARRIER REFLECTOR, TYPE B	
		58					27				58	27		614	13350	85	EACH	OBJECT MARKER, ONE WAY	
		2									2			614	18601	2	SNMT	PORTABLE CHANGEABLE MESSAGE SIGN, AS PER PLAN	4
			1.33								1.33			614	20100	1.33	MILE	WORK ZONE LANE LINE, CLASS I, 642 PAINT	
			3.25				0.2				3.25	0.2		614	22100	3.45	MILE	WORK ZONE EDGE LINE, CLASS I, 642 PAINT	
			4893								4893			614	23200	4893	FT	WORK ZONE CHANNELIZING LINE, CLASS I, 642 PAINT	
							360					360		614	24200	360	FT	WORK ZONE DOTTED LINE, CLASS I, 642 PAINT	
			2320				1320				2320	1320		622	41000	3640	FT	PORTABLE BARRIER, 32"	
							0.1					0.1		642	00190	0.1	MILE	LANE LINE, 4"	
											LS			614	11000	LS		MAINTAINING TRAFFIC	
											3			619	16010	3	MNTH	FIELD OFFICE, TYPE B	
											LS			623	10000	LS		CONSTRUCTION LAYOUT STAKES AND SURVEYING	
											LS			624	10000	LS		MOBILIZATION	

/1 REV. 1 - 3/28/16

CALCULATED CMK CHECKED JC

GENERAL SUMMARY

AUG / SHE - 075 - 5.15 / 5.45 / 11.08

93767gg102.dgn Sheet 3/24/2016 4:00PM CH_ODOTV8i_Half_BW.pen \\daypsp01\DAY Copier BW PS jcenters

NOTES

GENERAL: *Components shown on this drawing are used in a variety of guardrail systems. See individual guardrail drawing for specific applications.*

See CMS 606 for guardrail specifications not covered on these drawings.

Refer to AASHTO M 180 for dimensional details of W-Beam and Thrie-Beam rail elements, related buffer and end sections, beam splices, post and splice bolts, nuts, and Type 1 W-Beam to Thrie-Beam Transition sections.

RAIL ELEMENTS: *W-Beam Rail has an effective length of 12'-6" unless otherwise specified, with ¾" x 2½" post bolt slots on 6'-3" centers regardless of post spacing. Field punch or drill bolt holes or slots for irregularly spaced posts as specified in CMS 606.04.*

RAIL SPLICES: *Lap splices between two rail elements or between a rail and terminal connector in the direction of traffic. Lap the buffer or flared end sections in the direction of traffic.*

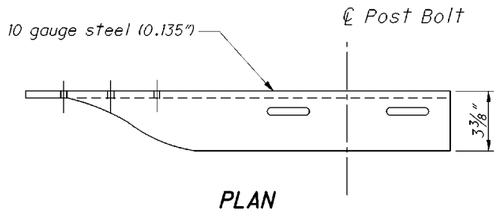

PLAN

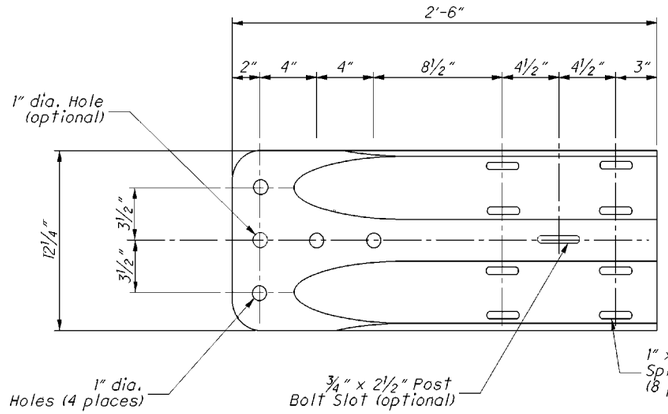

ELEVATION

W-BEAM TERMINAL CONNECTOR

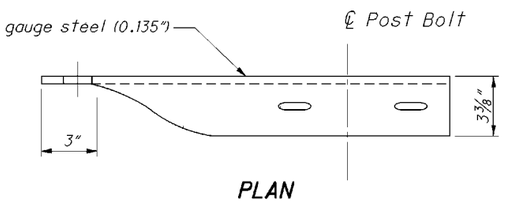

PLAN

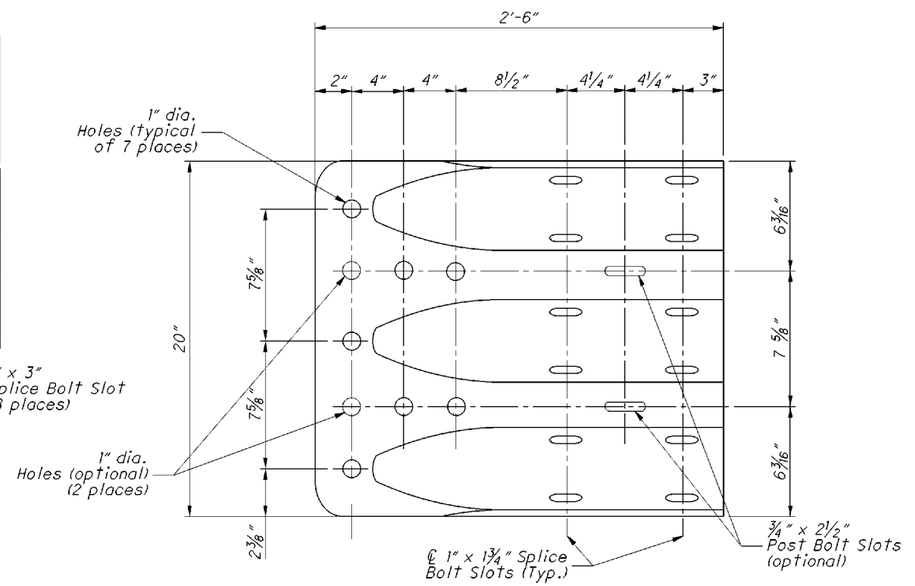

ELEVATION

THRIE-BEAM TERMINAL CONNECTOR

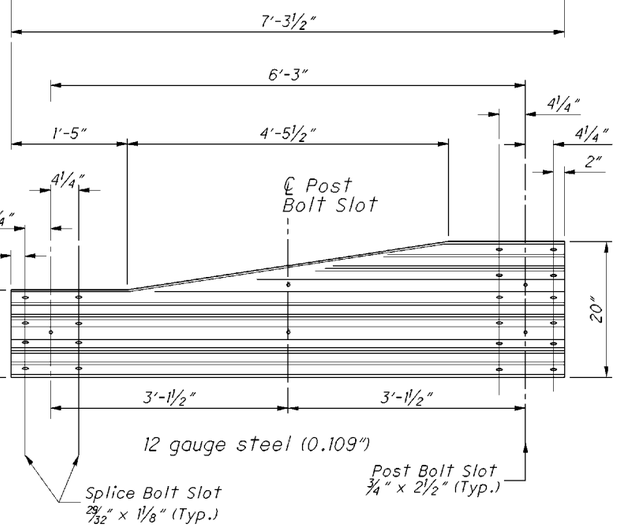

PLAN

ELEVATION

TYPE 2 TRANSITION SECTION

(Asymmetric W to Thrie-Beam)

For details of Type 1 Transition Section (Symmetric), refer to AASHTO M 180, Figure 4.

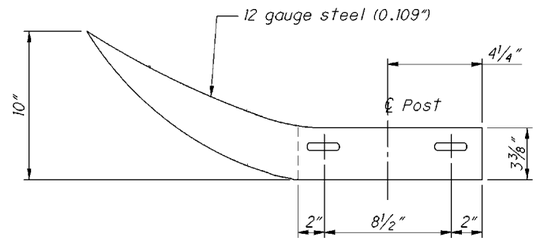

PLAN

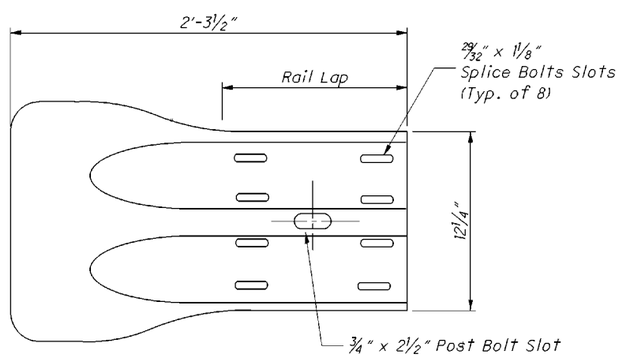

ELEVATION

W-BEAM FLARED END SECTION

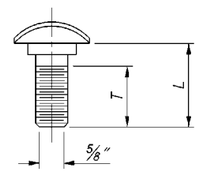

GUARDRAIL BOLT (For Post and Splice Bolts)		
L	**T min.**	**Bolt Use**
18" (Standard Rail)	4"	Type 5: WP/WB, PB
26" (Barrier Rail)		
10"	4"	Type 5: SP/WB, PB
1¼	1⅛	Splice Bolt

WP = Wood Post WB = Wood Blockout
SP = Steel Post PB = Plastic Blockout

Longer Bolt may be needed for round Wood Post larger than 8" dia.

OFFICE OF ROADWAY ENGINEERING

DESIGNED | REVIEWED

REVISION DATE | CHECKED

PTS NUMBER

PLAN INSERT SHEET

GUARDRAIL DETAILS (Rail Components)

AUG/SHE-075-5.15/5.45/11.08

1 / 3

12 / 56

PIS1_GR-1.1_1-18-2013.dgn Sheet 6/8/2015 6:15AM CH_ODOTV8i_Half_BW.pen \\DAYPSP01\DAY Copier BW PS jcenters

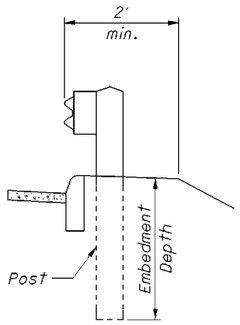

DETAIL A

See POST EMBEDMENT DEPTH Note

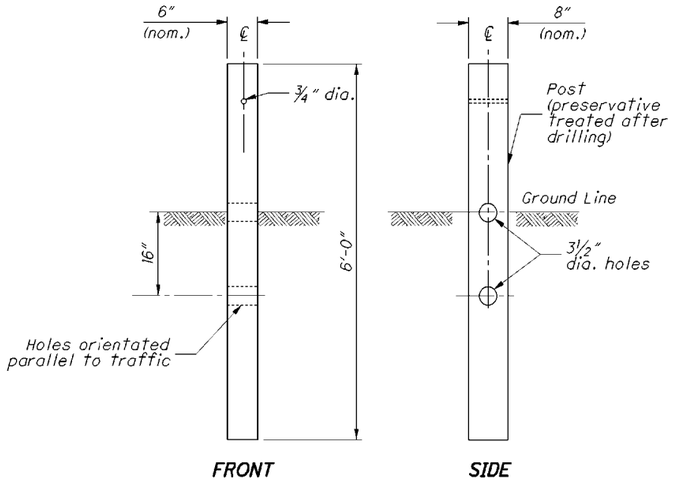

TYPE 1 BREAKAWAY CRT POST

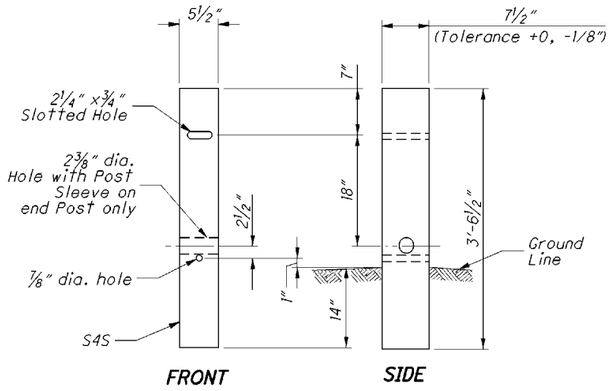

TYPE 2 BREAKAWAY CRT POST

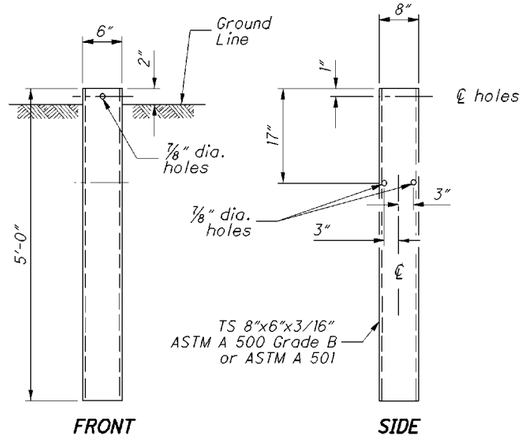

STEEL GROUND TUBE

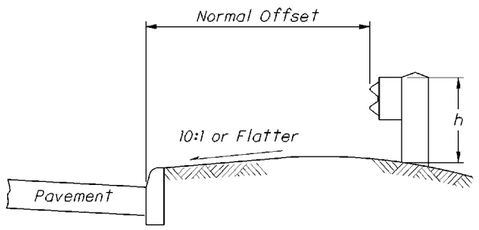

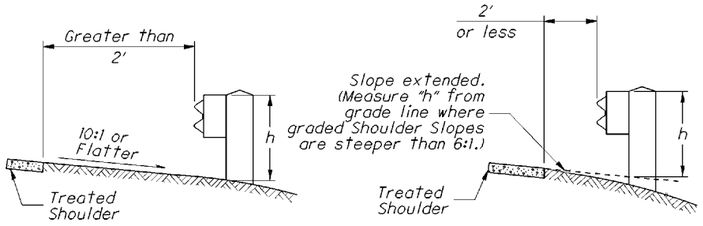

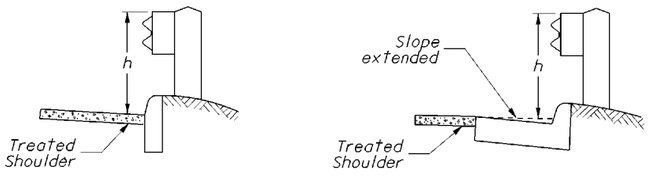

h = Standard Height (See GUARDRAIL HEIGHT Note)

MEASURING GUARDRAIL HEIGHT

NOTES

GUARDRAIL HEIGHT: *For initial installation, construct the guardrail within ± 1" of the standard height, h, or* ***29"*** *to the top of W-Beam rail. (See MEASURING GUARDRAIL HEIGHT Detail.)*
When subsequent projects, such as resurfacings, affect the height of existing guardrail, the finished height is to be within ±2.5" of the standard height.

POST EMBEDMENT DEPTH: *Standard embedment is 3'-5" min. Where less than 2' of graded shoulder width (10:1 or flatter) exists, measured from the face of the guardrail (see DETAIL "A"), use longer posts so that a minimum of 5'-5" embedment depth is provided. Payment for the longer posts will be made at the unit price bid for* ***ITEM 606 - GUARDRAIL POST, 9', Each.***

SPECIAL POST MOUNTINGS: *Install posts located over a drainage inlet or structure as shown in the FOOTING ANCHOR Detail, or anchor per the details shown on* ***SCD GR-2.2.***

Install posts located over a footing with a cover of less than 2'-6" with a footing anchor as detailed here. (A plate, as detailed on SECTION B-B of ***SCD GR-2.2****, may be used as an alternative attachment method.) Where the cover is between 2'-6" and 3'-5", the footing anchor may be omitted and the post encased instead with 4" (min.) of concrete.*

Do not drive posts located over a culvert with less than 4'-3" of cover; instead set in drilled or dug holes. Where the available post embedment depth is less than 3'-5", encase the post with a minimum of 4" concrete.

All costs associated with special post mountings are included in the unit price bid of Item 606 Guardrail of the type specified in the plans.

ANCHORS: *Holes and grouting shall comply with CMS 510. Use either cement or non-shrink, nonmetallic grout.*

Expansion shield anchors as specified in CMS 712.01 may be substituted except where concrete deterioration has occurred, as determined by the Engineer. Where self-drilling anchors are used, drill the holes with the expansion shield (not by a drill bit) and install the shield flush with the concrete surface.

PROTECTIVE COATING: *In lieu of the complying with CMS 710.06, coat expansion shields, anchors and concrete insert anchor assemblies embedded in concrete in accordance with ASTM A 153 or be of stainless steel. Any bolts screwed into these devices shall meet CMS 710.06. (See sheet 3 for Concrete Insert Anchor Assembly Detail.)*

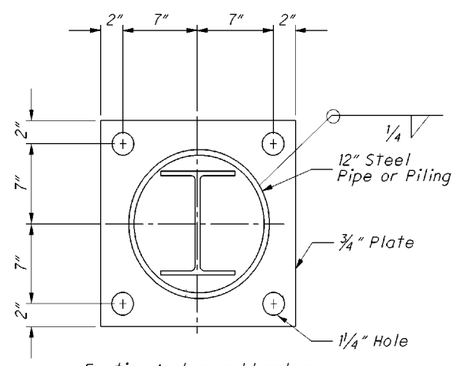

Footing Anchor and hardware need not be galvanized

SECTION A-A

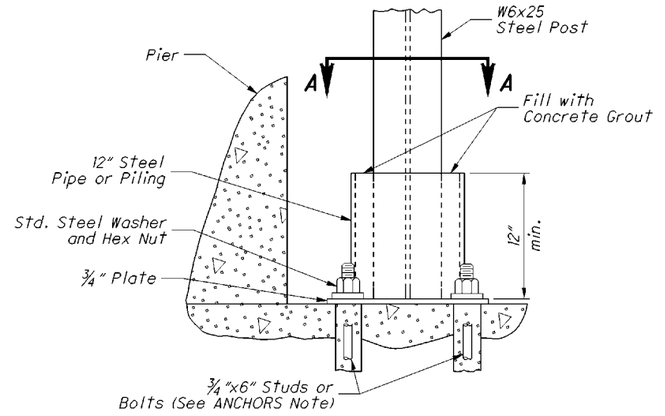

ELEVATION
FOOTING ANCHOR

See SPECIAL POST MOUNTINGS Note.

OFFICE OF ROADWAY ENGINEERING
DESIGNED | REVIEWED
REVISION DATE | CHECKED
PTS NUMBER
PLAN INSERT SHEET
GUARDRAIL DETAILS (Rail Components)
AUG/SHE-075-5.15/5.45/11.08
2 / 3
13 / 56

PIS2_GR-1.1_1-18-2013.dgn Sheet 6/8/2015 6:18AM CH_ODOTV8i_Half_BW.pen \\DAYPSP01\DAY Copier BW PS jcenters

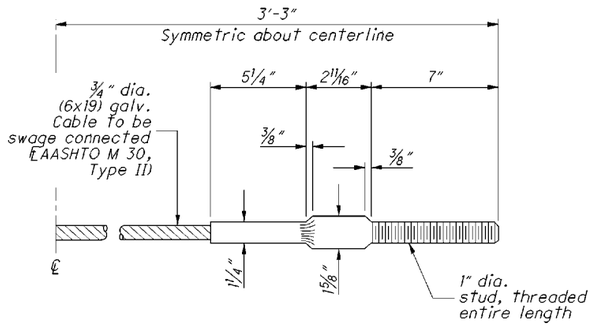

STANDARD SWAGED FITTING AND STUD

CABLE ANCHOR

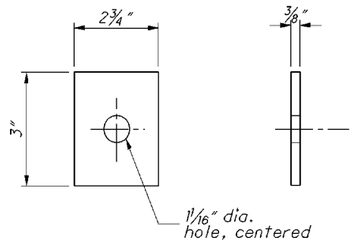

END PLATE

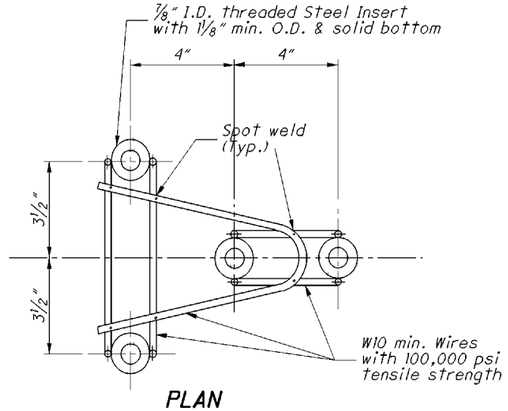

PLAN

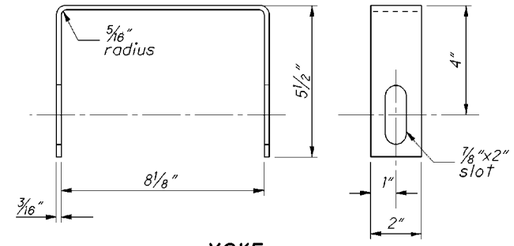

YOKE

Two required in Assembly

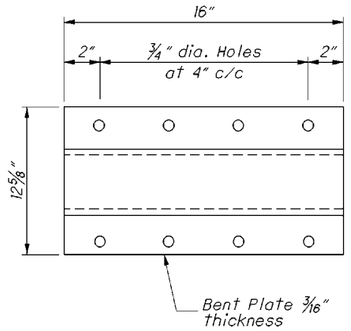

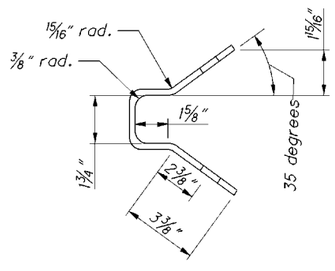

ANCHOR BRACKET

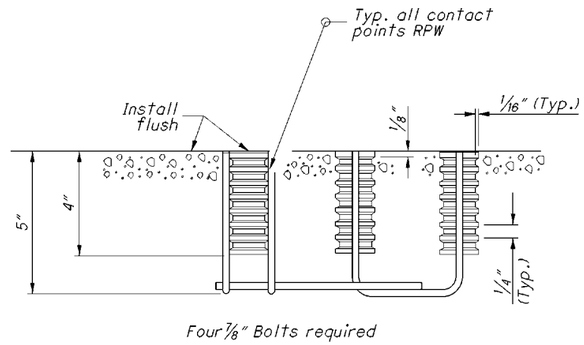

Four 7/8" Bolts required

ELEVATION

CONCRETE INSERT ANCHOR ASSEMBLY (W-BEAM ONLY)

See ANCHORS and PROTECTIVE COATINGS Notes on Sheet 2

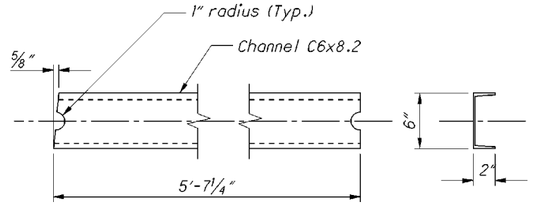

STRUT

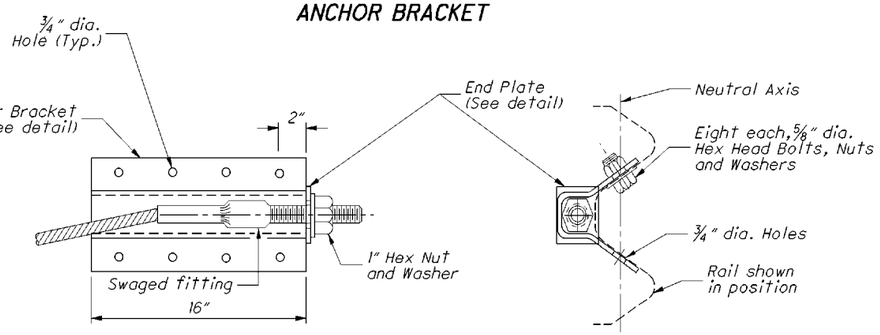

ANCHOR BRACKET ASSEMBLY DETAILS

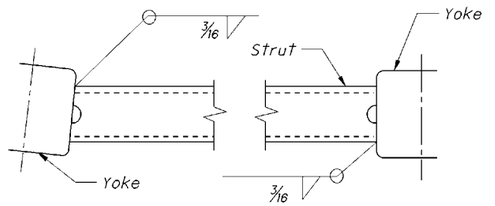

Channel legs shown down. For opposite hand, install Channel legs up.

STRUT AND YOKE ASSEMBLY

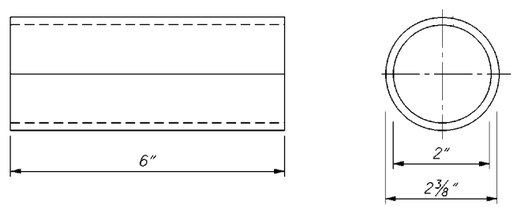

POST SLEEVE

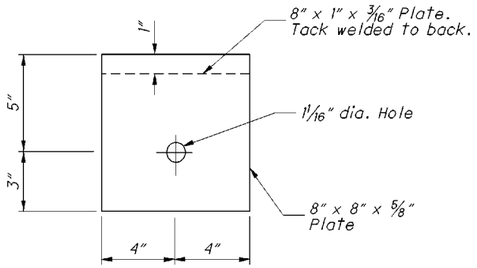

BEARING PLATE

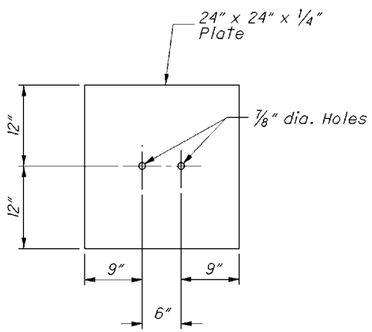

SOIL PLATE

PIS3_GR-1.1.1-18-2013.dgn Sheet 6/8/2015 6:20AM CH_ODOTV8i_Half_BW.pen \\DAYPSP01\DAY Copier BW PS .icenters

OFFICE OF ROADWAY ENGINEERING

DESIGNED | REVIEWED

REVISION DATE | CHECKED

PIS NUMBER

PLAN INSERT SHEET

GUARDRAIL DETAILS (Rail Components)

AUG/SHE-075-5.15/5.45/11.08

3 / 3

14 / 56

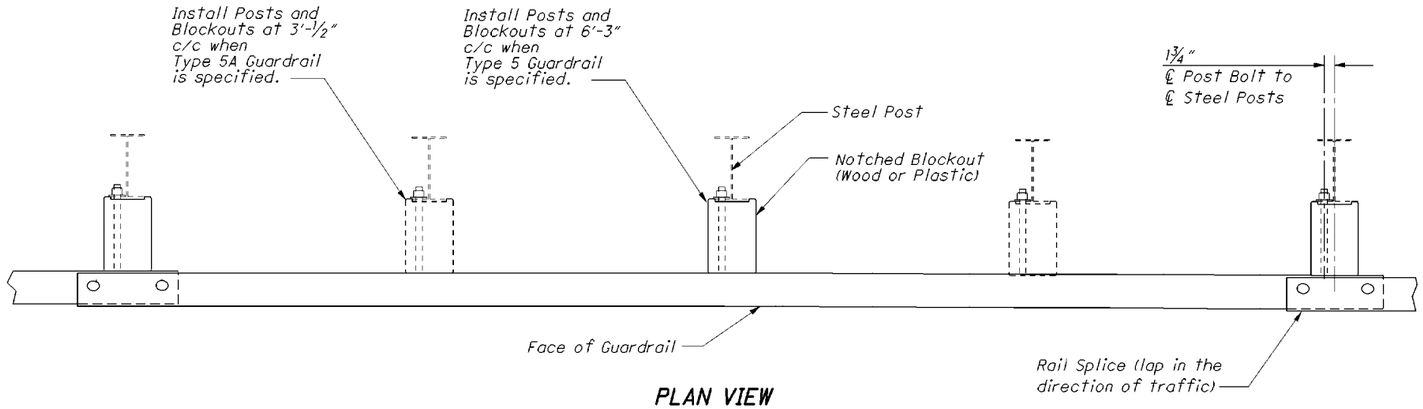

PLAN VIEW
(Steel Posts shown)

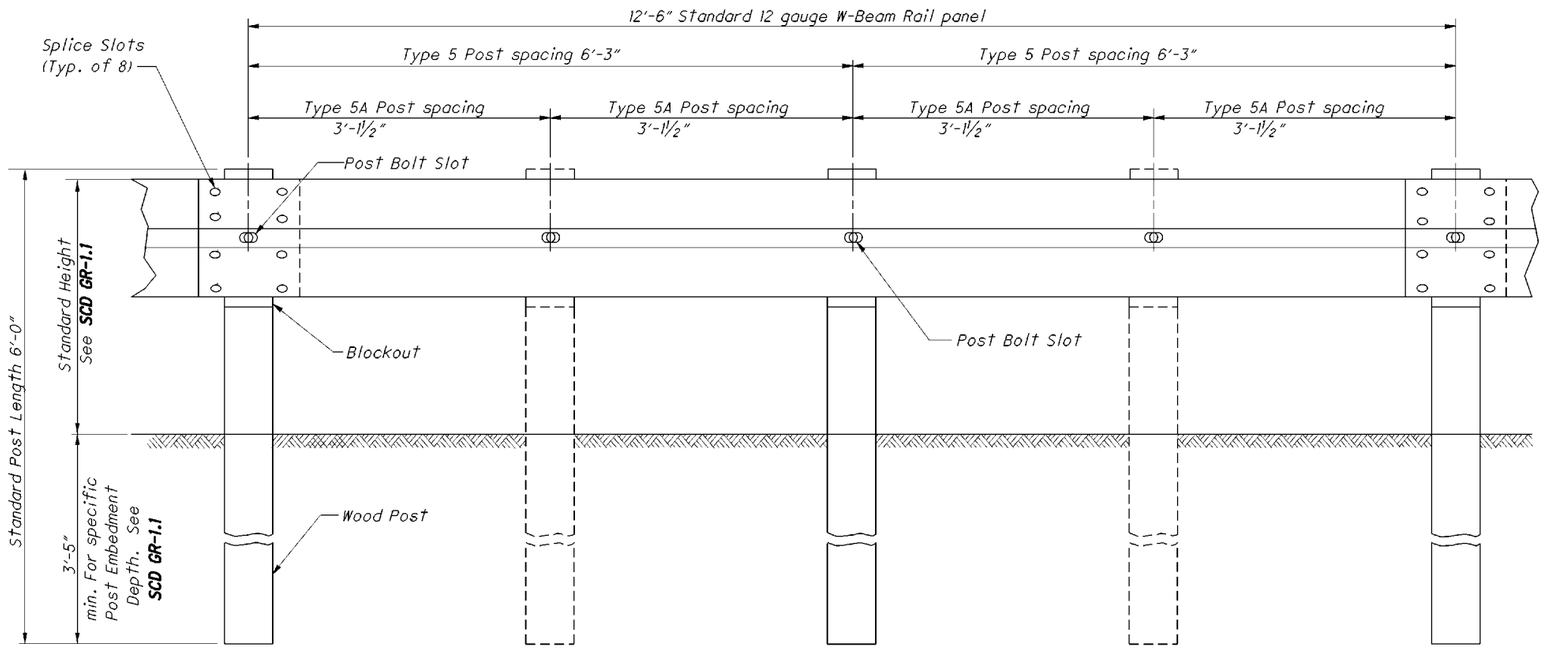

ELEVATION
(Wood Posts shown)

NOTES

RAIL: Use W-Beam rail meeting AASHTO M 180 Type II Class A, as specified in CMS 606.

POSTS: Posts may be constructed of wood or steel. Wood posts may be round or 6"x8" square-sawed.

Use round wood posts on runs of single-sided rail. The round posts shall be 8"±1 in diameter at the top and not more than 3" larger at the butt with a uniform taper.

Fabricated wood posts with square ends. Posts shall be pressure-treated as per CMS 710.14. Bore bolt holes and, if required, trim the tops of posts after the posts are set.

Steel posts are to be W6x9 or W6x8.5 galvanized steel. Use the same type of post throughout the length of the project unless otherwise specified in the plans or permitted by the Engineer.

All posts are 6'-0" long unless specified otherwise in the Contract Document. Posts may be set in drilled holes or may be driven to grade.

WELDED BEAM POSTS: Welded beam guardrail posts may be used for Item 606, Guardrail, provided the web and flange sizes are as shown here. Welding of the web to the flanges must comply with ASTM A 769, Class 1, using Grade 36 steel [250 MPa yield point] with the following exceptions:

Sec. 7.2 Test reports of tensile properties for each lot shall accompany each shipment.

Sec. 12 Beams that have imperfections repaired by welding shall not be accepted for use in Item 606.

Sec. 13 Random samples shall be tested by the Department from materials delivered to the project site, or other locations designated by the Laboratory.

ALTERNATE POSTS: Engineered guardrail posts having met NCHRP 350 criteria, and listed on the ***Office of Materials Management's*** Approved List are permitted as an equal alternate when installed according to the Manufacturer's instructions and within the limitations shown on the Approved List.

BLOCKOUTS: Blockout dimensions are dependent on post used. Wood Blockouts are to be pressure treated as specified in CMS 710.14. Bore bolt holes. Approved alternate blockouts may be used in lieu of the wood blockouts shown. The approved list is maintained by the ***Office of Roadway Engineering.***

WASHERS: Install appropriate sized standard galvanized steel washers on the nut side of bolts installed on wood posts.

DELINEATION: For barrier reflectors, see CMS 626.

MISCELLANEOUS: For other guardrail details, see ***SCD GR-1.1.***

STEEL BEAM POSTS (English)				
Size	**Beam depth**	**Flange width**	**Flange thickness**	**Web thickness**
Rolled W6x8.5	5.8"	3.94"	0.193"	0.170"
Rolled W6x9	5.9"	3.94"	0.215"	0.170"
Welded 6x8.5	6.0"	3.94"	0.193"	0.170"
Welded 6x9	6.0"	3.94"	0.215"	0.170"

OFFICE OF ROADWAY ENGINEERING

DESIGNED | REVIEWED | REVISION DATE | CHECKED | PTS NUMBER

PLAN INSERT SHEET

GUARDRAIL TYPE 5 & 5A

AUG/SHE-075-5.15/5.45/11.08

1 / 2

15 / 56

PIS4_GR-2.1_1-18-2013.dgn Sheet 6/8/2015 6:26AM CH_ODOTV6i_Half_BW.pen \\DAYPSP01\DAY Copier BW PS jcenters

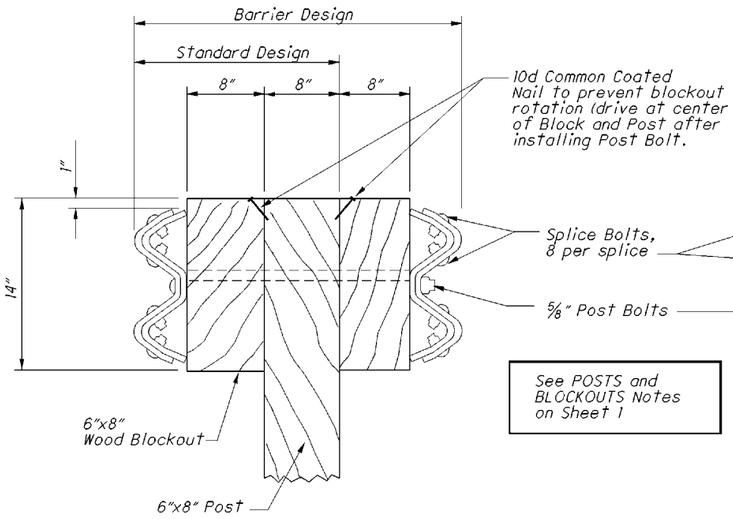

SQUARE WOOD POST

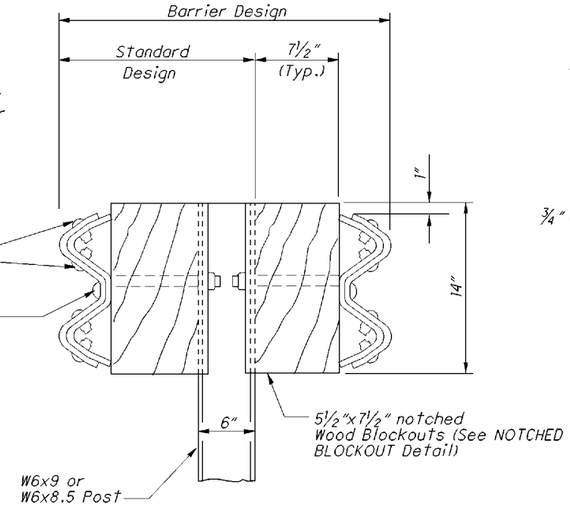

See POSTS and BLOCKOUTS Notes on Sheet 1

STEEL POST

See POSTS Note, Sheet 1

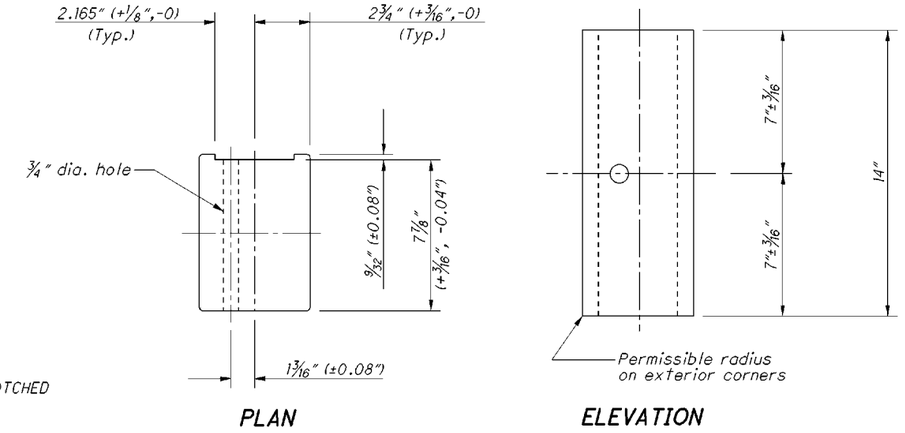

NOTCHED BLOCKOUTS FOR STEEL POSTS

See BLOCKOUTS Note on Sheet 1

Method 1 Routed Blockout

Method 2 Notched Post

Toenail not required if post is cut as shown

Alternate methods of placing the Blockouts on round Posts may be submitted for consideration and approved by the Engineer.

ROUND WOOD POSTS

Single Sided runs only (Standard Design)

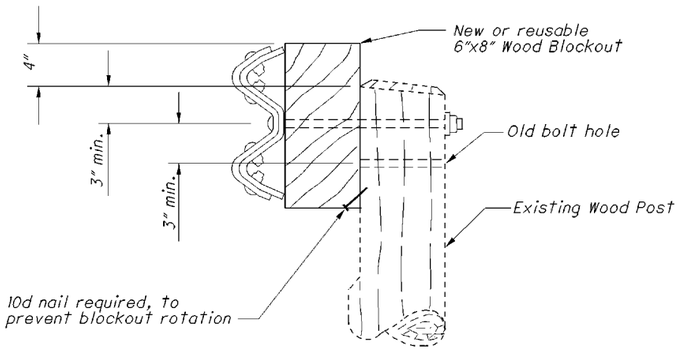

WOOD POSTS WITH WOOD BLOCK RAISING EXISTING GUARDRAIL HEIGHT

OFFICE OF ROADWAY ENGINEERING

DESIGNED | REVIEWED | CHECKED | REVISION DATE | PTS NUMBER

PLAN INSERT SHEET

GUARDRAIL TYPE 5 & 5A

AUG/SHE-075-5.15/5.45/11.08

2 / 2

16 / 56

PIS5_GR-2.1.1-18-2013.dgn Sheet 6/8/2015 6:27AM CH_ODOTV8I_Half_BW.pen \\DAYPSP01\DAY Copier BW PS jcenters

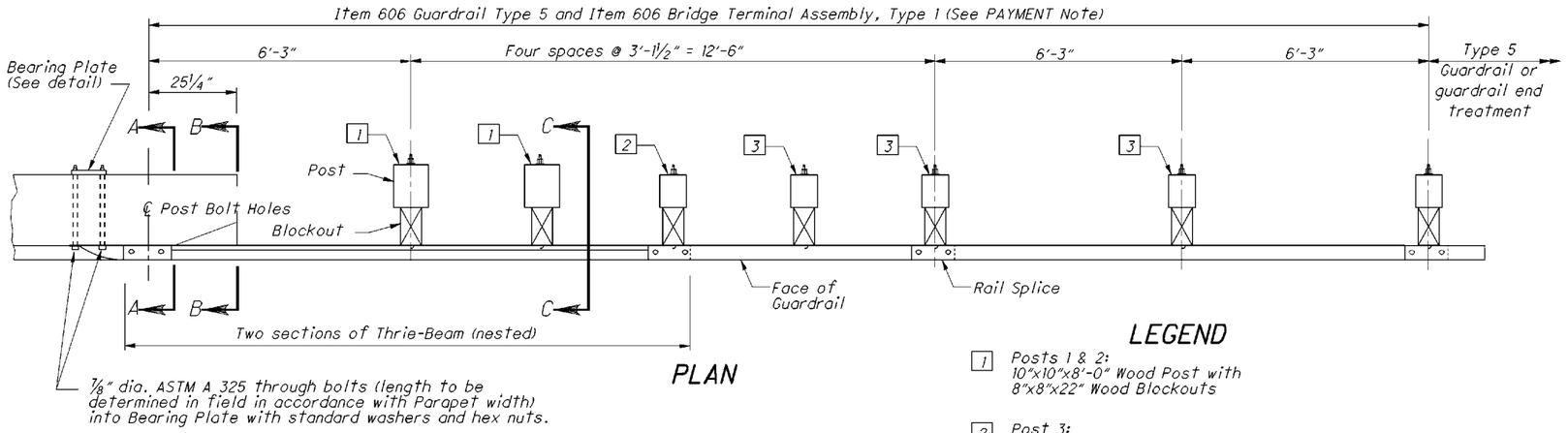

LEGEND

1 Posts 1 & 2:
10"x10"x8'-0" Wood Post with
8"x8"x22" Wood Blockouts

2 Post 3:
8"x8"x8'-0" Wood Post with
8"x8"x22" Wood Blockouts

3 Posts 4, 5 & 6:
8"x8"x6'-0" Wood Post with
8"x8"x14" Wood Blockouts

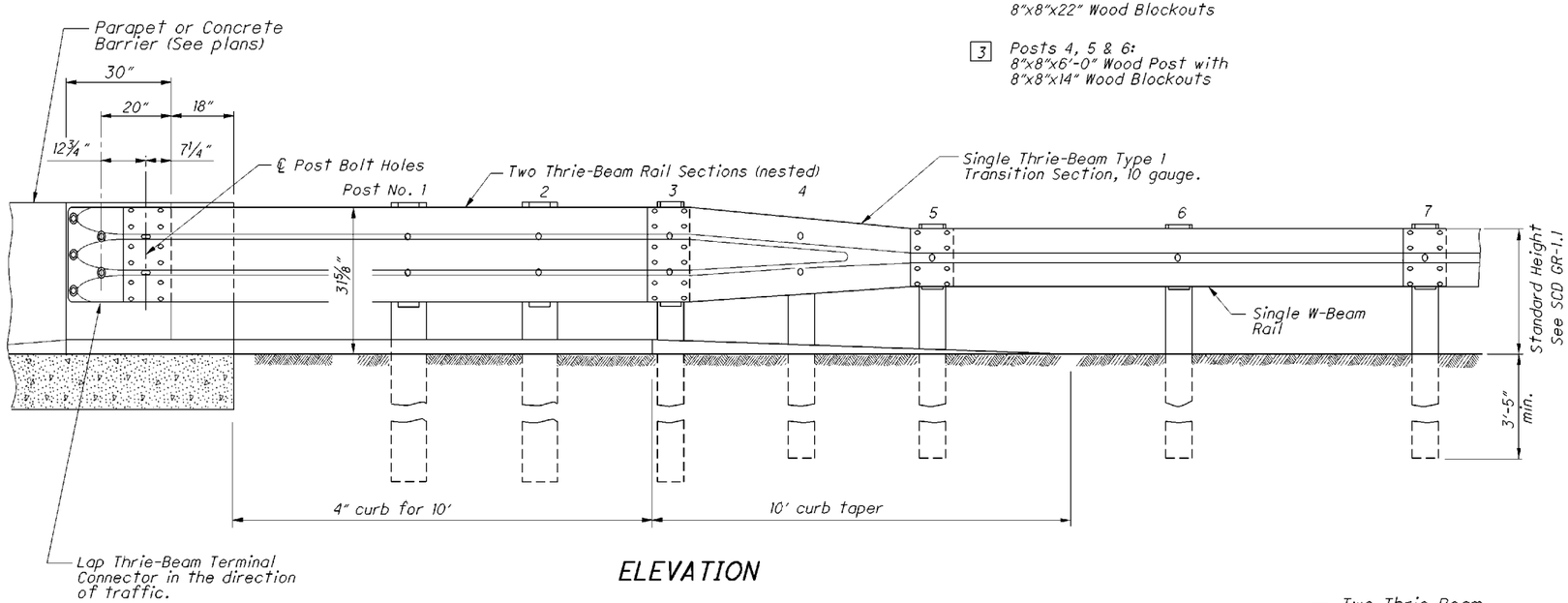

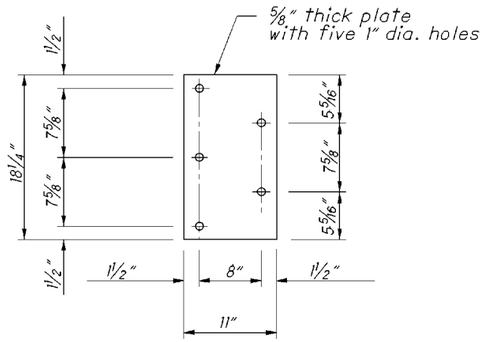

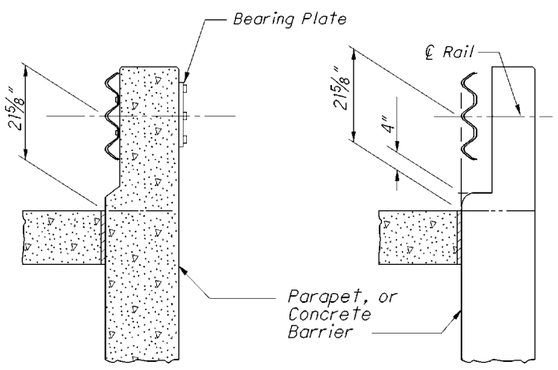

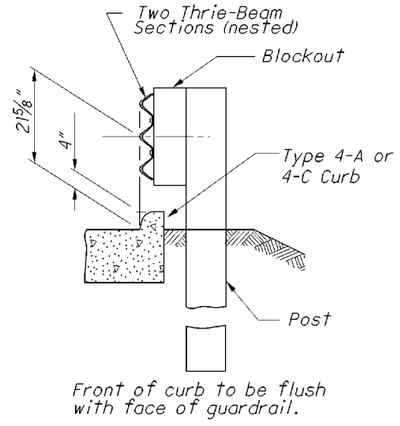

NOTES

GENERAL: For additional details, see **SCD GR-1.1.**

APPLICATION: Use Type 1 Bridge Terminal Assembly to connect guardrail runs to bridges having deflector Parapet Type Bridge Railing (see **Structural Engineering's SCD BR-1).** It may also be used to connect guardrail runs to the approach ends of Concrete Barrier (see **SCD RM-4.6).**

On undivided, bi-directional roadways, Type 1's may be used to anchor guardrail runs to the trailing end of Deflector Parapets or Concrete Barrier installations.

THRIE BEAM TRANSITION: Symmetrical W-Beam to Thrie Beam transition panel shall be 10 gauge.

POSTS: Posts may be set in drilled holes or driven to grade. See **SCD GR-1.1** for additional Post embedment details.

WOOD POSTS - Use square sawed pressure treated wood as per CMS 710.14 and fabricate with square ends. Bore bolt holes and trim the tops of posts, if required, after the posts are set.

STEEL POSTS - are allowed as an alternate. Use W8x24 for 10"x10" wood posts and use W6x25 for 8"x8" posts. Use same post material throughout assembly.

BLOCKOUTS: Use wood blockouts only, steel or plastic blockouts are not permitted. Use notched blockouts with steel posts.

CURB: Provide a Type 4A or 4C concrete curb minimum of 20', or longer as shown on plans, including a 10' taper (from curb height to flush). Front of curb to be flush with face of guardrail.

FLARED GUARDRAIL: Begin Standard Guardrail Flares as shown on **SCD GR-5.1** preferably at or beyond Post No. 7; however, the flare may begin at Post No. 5.

PAYMENT: Item 606 - Bridge Terminal Assembly, Type 1, Each, includes the cost of extra components, in excess of normal guardrail, for additional and different size of posts and blockouts, nested Thrie-Beam, transition and connector sections, Bearing Plate, bolts, washers, nuts, and other hardware.

The curb is required in this design, and is paid separately under **Item 609 - Curb, Type 4A (or 4C), per Foot,** for the curb and taper sections, including materials, forming and labor needed to construct as shown.

OFFICE OF ROADWAY ENGINEERING

DESIGNED | REVIEWED
REVISION DATE | CHECKED
PTS NUMBER

PLAN INSERT SHEET

BRIDGE TERMINAL ASSEMBLY, TYPE 1

AUG/SHE-075-5.15/5.45/11.08

1 / 1

17
56

PTS6_GR-3.1.1-2013.dgn Sheet 6/8/2015 6:29AM CH_ODOTv8i_Half_BW.pen \\DAYPSP01\DAY Copier BW PS icenters

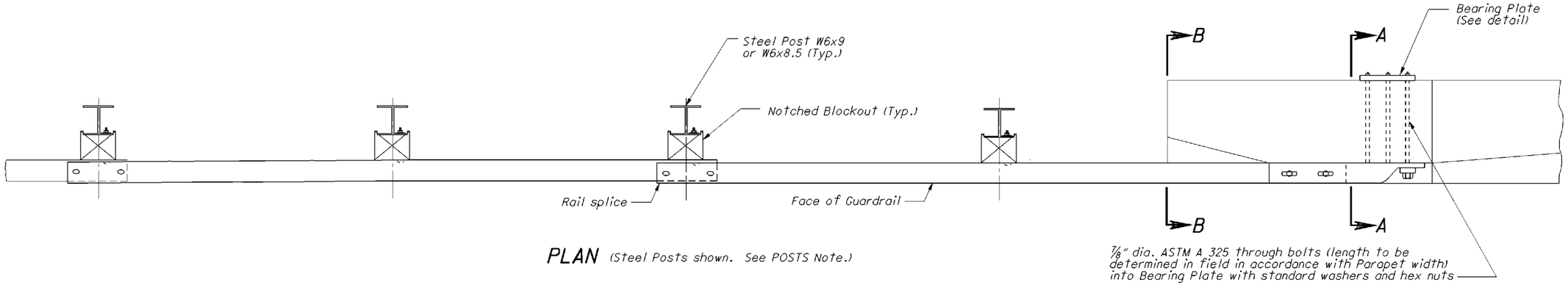

PLAN (Steel Posts shown. See POSTS Note.)

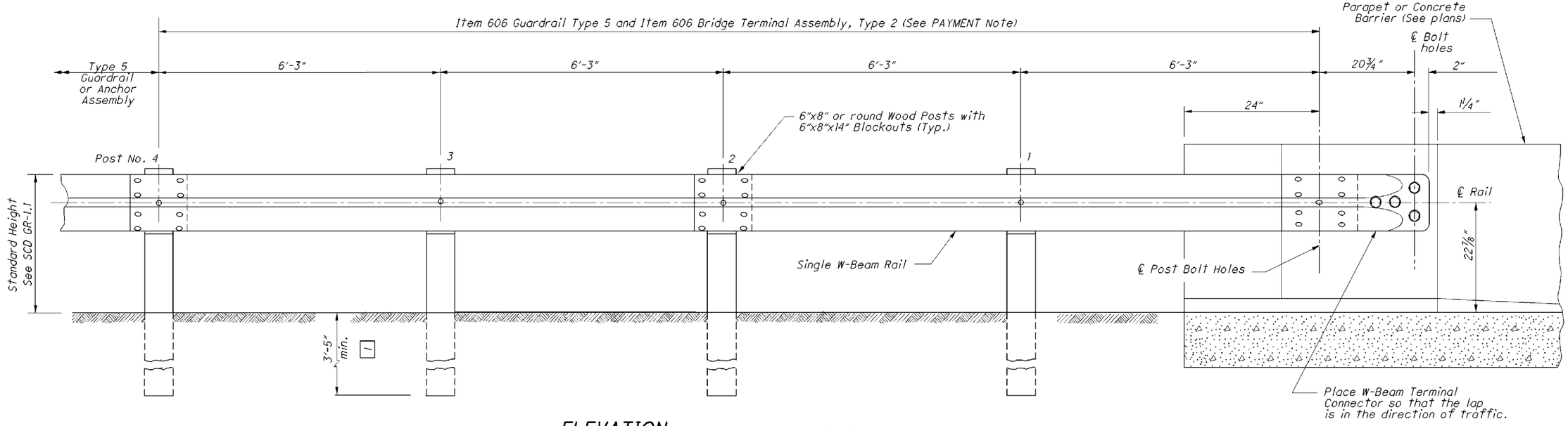

ELEVATION (Wood Posts shown. See POSTS Note.)

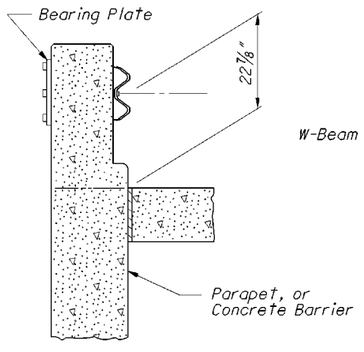

SECTION A-A

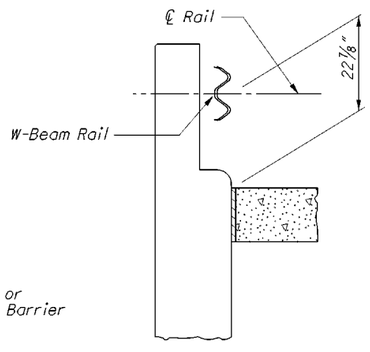

SECTION B-B

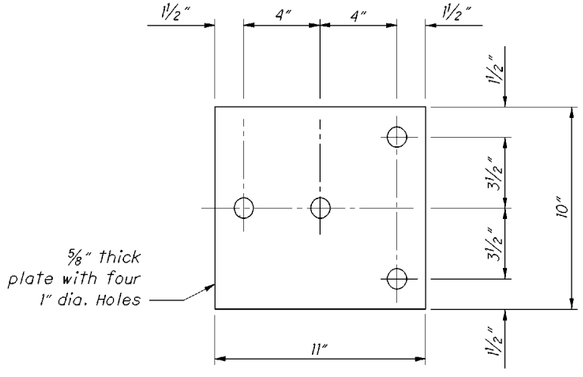

BEARING PLATE

NOTES

GENERAL: For additional rail and post details, see **SCD GR-1.1.**

APPLICATION: Use Type 2 Bridge Terminal Assembly to connect guardrail runs to the trailing end of Parapets or Concrete Barriers (see **SCD RM-4.6** for barrier) on one-directional roadways. Do not use if located within clear zone of opposing traffic.

POSTS: Posts shall be of standard size and material specified for the appropriate type of guardrail to be installed leaving the bridge or barrier. For Type 5 guardrail, see **SCD GR-2.1.**

BLOCKOUTS: Wood or plastic blockouts are permitted.

FLARED GUARDRAIL: Begin Standard Guardrail Flares as shown on **SCD GR-5.1,** preferably at or beyond Post No. 4, however, the flare may begin at Post No. 2.

PAYMENT: **Item 606 - Bridge Terminal Assembly, Type 2, Each.** includes the cost of extra components, in excess of normal guardrail for the Terminal connector, Bearing Plates, bolts, washers, nuts, and other hardware.

OFFICE OF ROADWAY ENGINEERING

DESIGNED | REVIEWED

REVISION DATE | CHECKED

PIS NUMBER

PLAN INSERT SHEET

BRIDGE TERMINAL ASSEMBLY, TYPE 2

AUG/SHE-075-5.15/5.45/11.08

1 / 1

18
56

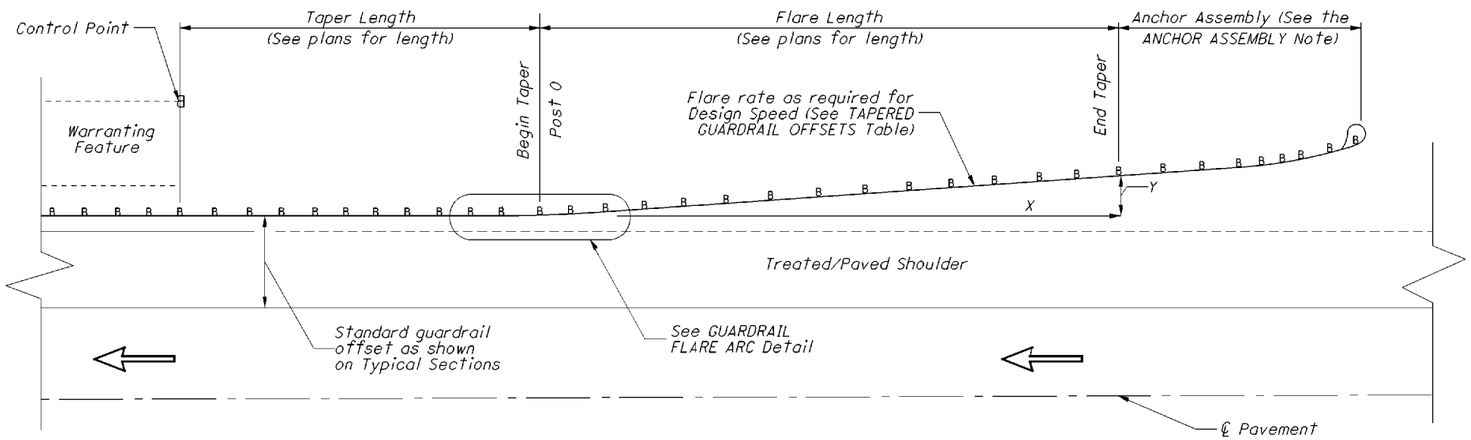

STANDARD GUARDRAIL FLARE

(Plan View)

NOTES

STANDARD GUARDRAIL FLARE: *Construct the flare shown here when indicated in the construction plans and in conujunction with* ***SCD GR-5.2.***

FLARE RATES AND OFFSET SPEEDS: *Use the Design Speed shown on the plans to determine flare rates and offsets. Where a Design Speed is not shown or availale, ust eh legal posted speed limit.*

ANCHOR ASSEMBLY: *Use a Type B Anchor Assembly with standard guardrail flares unless otherwise specified. The Type A can be used, with restrictions.* ***Location and Design Manuel, Volume 1, Section 603.***

CONTROL POINT: *The point shown designates the extent of the hazard being protected and is shown for design use only.*

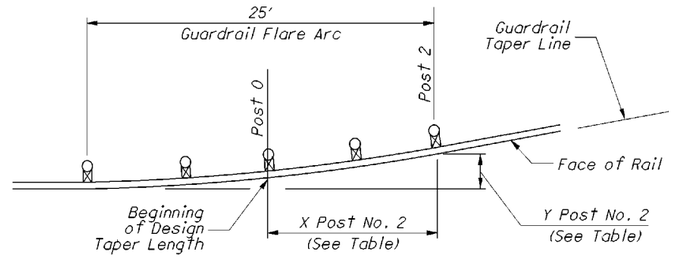

GUARDRAIL FLARE ARC DETAIL

TAPERED GUARDRAIL OFFSETS (Feet)

Post No.	Flare Length	45 MPH or less 10:1 Taper		50 MPH 11:1 Taper		55 MPH 12:1 Taper		60 MPH 13:1 Taper		65 MPH 14:1 Taper		70 MPH 15:1 Taper	
		X	Y	X	Y	X	Y	X	Y	X	Y	X	Y
0		0	0.3	0	0.3	0	0.3	0	0.2	0	0.2	0	0.2
2	25	12.4	1.3	12.5	1.1	12.5	1.0	12.5	1.0	12.5	0.9	12.5	0.8
4		24.9	2.5	24.9	2.3	24.9	2.1	24.9	1.9	24.9	1.8	24.9	1.7
6	50	37.3	3.7	37.3	3.4	37.4	3.1	37.4	2.9	37.4	2.7	37.4	2.5
8		49.8	5.0	49.8	4.5	49.8	4.1	49.9	3.8	49.9	3.6	49.9	3.3
10	75	62.2	6.2	62.2	5.7	62.3	5.2	62.3	4.8	62.3	4.5	62.4	4.2
12		74.6	7.5	74.7	6.8	74.7	6.2	74.8	5.7	74.8	5.3	74.8	5.0
14	100	87.1	8.7	87.1	7.9	87.2	7.3	87.2	6.7	87.3	6.2	87.3	5.8
16		99.5	9.9	99.6	9.1	99.7	8.3	99.7	7.7	99.7	7.1	99.8	6.7
18	125	111.9	11.2	112.0	10.2	112.1	9.3	112.2	8.6	112.2	8.0	112.3	7.5
20		124.4	12.4	124.5	11.3	124.6	10.4	124.7	9.5	124.7	8.9	124.7	8.3
22	150	136.8	13.7	136.9	12.5	137.0	11.4	137.1	10.5	137.1	9.8	137.2	9.1
24		149.3	14.9	149.4	13.6	149.5	12.5	149.6	11.5	149.6	10.7	149.7	10.0
26	175	161.7	16.2	161.8	14.7	161.9	13.5	162,0	12.5	162.1	11.6	162.1	10.8
28		174.1	17.4	174.3	15.8	174.4	14.5	174.5	13.4	174.6	12.5	174.6	11.6
30	200	186.6	18.7	186.7	17.0	186.9	15.6	186.9	14.4	187.9	13.4	187.1	12.5
32		199.0	19.9	199.2	18.1	199.3	16.6	199.4	15.3	199.5	14.3	199.6	13.3

All "X" dimensions shown are from the ceterline of Post 0 to the centerline of the indicated post along the standard guardrail offset line extended.

All "Y" dimensions shown are from the standard guardrail offset line extended to the face of rail at the post indicated.

OFFICE OF ROADWAY ENGINEERING

DESIGNED | REVIEWED

REVISION DATE | CHECKED

PTS NUMBER

PLAN INSERT SHEET

GUARDRAIL FLARE DETAILS

AUG/SHE-075-5.15/5.45/11.08

1 / 1

19 / 56

PISB_GR-5.1_1-18-2013.dgn Sheet 6/8/2015 6:37AM CH_ODOTv8i_Half_BW.pen \\DAYPSP01\DAY Copier BW PS jcenters

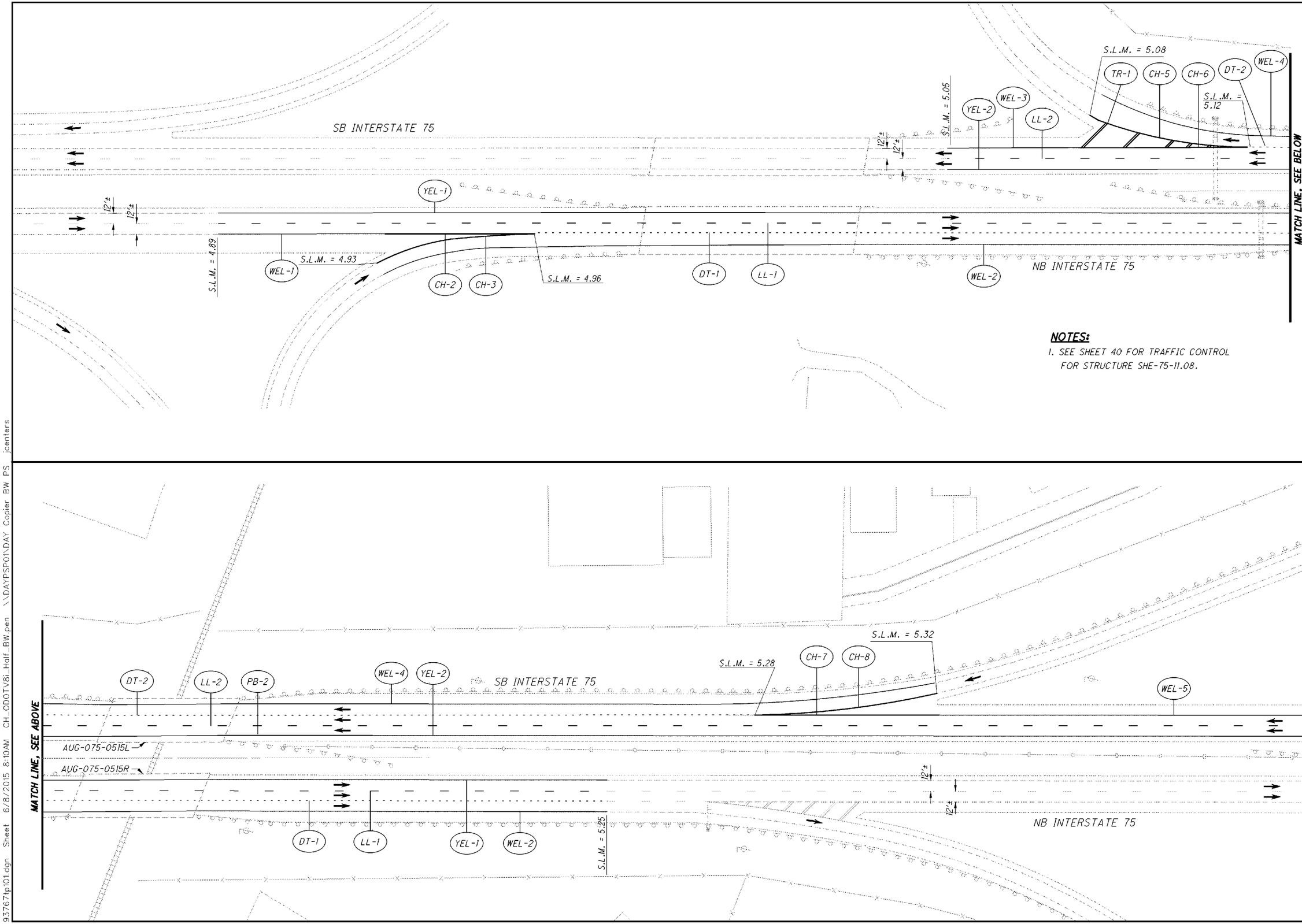

NOTES:

1. SEE SHEET 40 FOR TRAFFIC CONTROL FOR STRUCTURE SHE-75-11.08.

HORIZONTAL SCALE IN FEET
0 25 50 100

CALCULATED MRP
CHECKED CMK

TRAFFIC CONTROL PLAN INTERSTATE 75

AUG/SHE-075-5.15/5.45/11.08

93767tp101.dgn Sheet 6/8/2015 8:10AM CH_ODOTV8i_Half_BW.pen \\DAYPSP01\DAY Copier BW PS jcenters

REF. NO.	SHEET NO.	STATION/S.L.M. FROM	STATION/S.L.M. TO	SIDE	621 RPM EACH	621 RAISED PAVEMENT MARKER REMOVED EACH	642 EDGE LINE, 6" (WHITE) MILE	642 EDGE LINE, 6" (YELLOW) MILE	642 LANE LINE, 6" MILE	642 CHANNELIZING LINE, 12" FT	642 TRANSVERSE/ DIAGONAL LINE FT	642 DOTTED LINE, 12" FT	646 EDGE LINE, 4" MILE	646 CENTER LINE (DOUBLE SOLID) MILE
		AUG-075-0515 L&R												
CH-1		NOT USED												
CH-2	20	4.93	4.96	RT	3	3				170				
CH-3	20	4.93	4.96	RT	3	3				185				
CH-4		NOT USED												
CH-5	20	5.08	5.12	LT	3	3				186				
CH-6	20	5.08	5.12	LT	3	3				193				
CH-7	20	5.28	5.32	LT	3	3				210				
CH-8	20	5.28	5.32	LT	3	3				210				
DT-1	20	4.96	5.25	RT		13						1530		
DT-2	20	5.12	5.28	LT		8						845		
LL-1	20	4.89	5.25	RT	16	16			0.36					
LL-2	20	5.05	5.40	LT	16	16			0.35					
WEL-1	20	4.89	4.93	RT	2	2	0.04							
WEL-2	20	4.93	5.25	RT	16	16	0.32							
WEL-3	20	5.05	5.08	LT	2	2	0.03							
WEL-4	20	5.08	5.32	LT	11	11	0.24							
WEL-5	20	5.32	5.40	LT	4	4	0.08							
YEL-1	20	4.89	5.25	RT	16	16		0.36						
YEL-2	20	5.05	5.40	LT	16	16		0.35						
TR-1	20	5.08	5.12	LT							90			
		SHE-075-1108												
WEL-1	33	18+60.75	21+39.25	LT	3	3							0.05	
WEL-2	33	18+60.75	21+39.25	RT	3	3							0.05	
DY-1	33	18+60.75	21+39.25	CL	3	3								0.05
TOTALS CARRIED TO GENERAL SUMMARY					125	146	0.71	0.71	0.71	1154	90	2375	0.10	0.05

CALCULATED CMK
CHECKED JTC

ESTIMATED QUANTITIES
TRAFFIC CONTROL

AUG/SHE-075-5.15/5.45/11.08

93767ts101.dgn Sheet 6/8/2015 6:38AM CH_ODOTV8i_Half_BW.pen \\DAYPSP01\DAY Copier BW PS jcenters

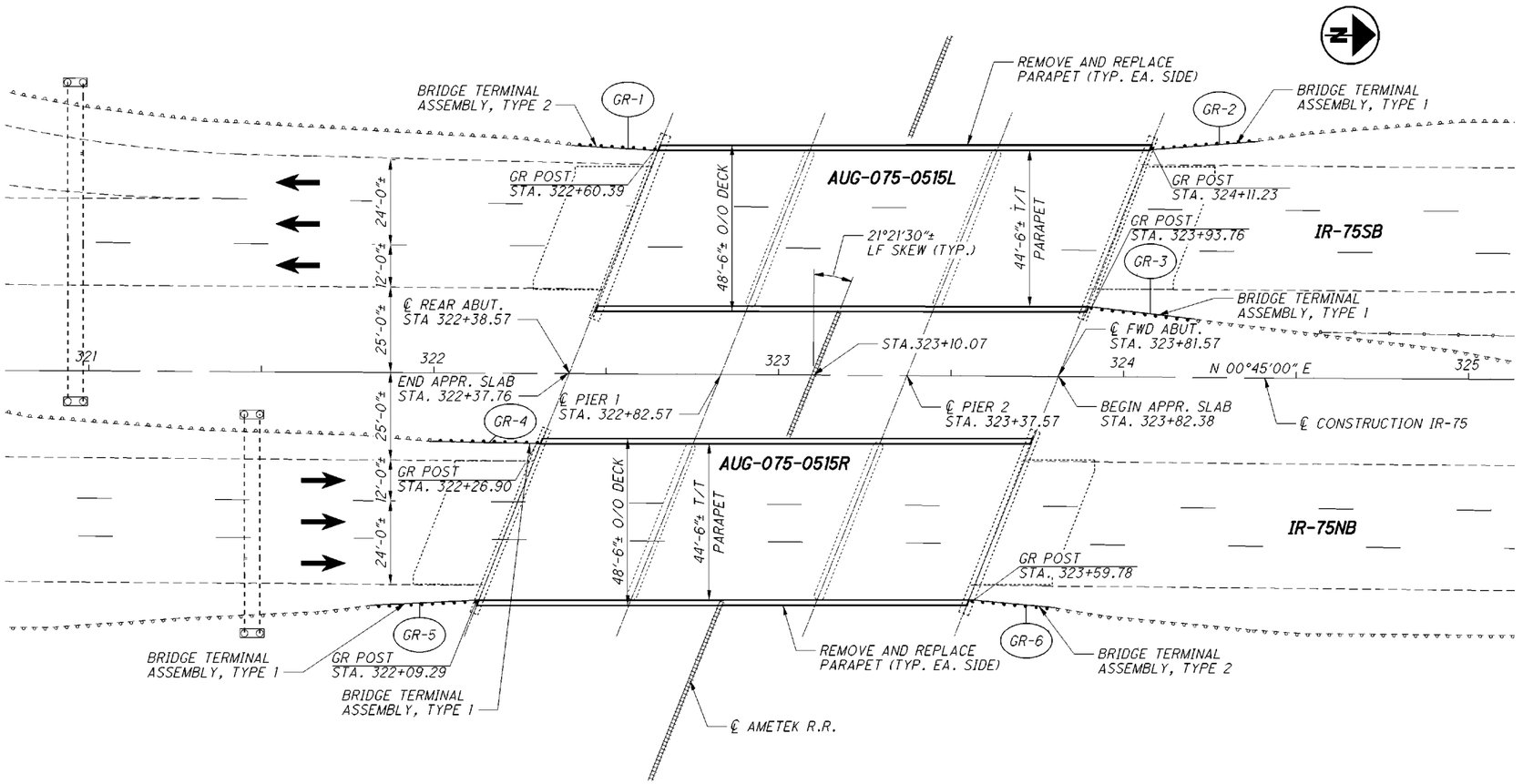

PLAN

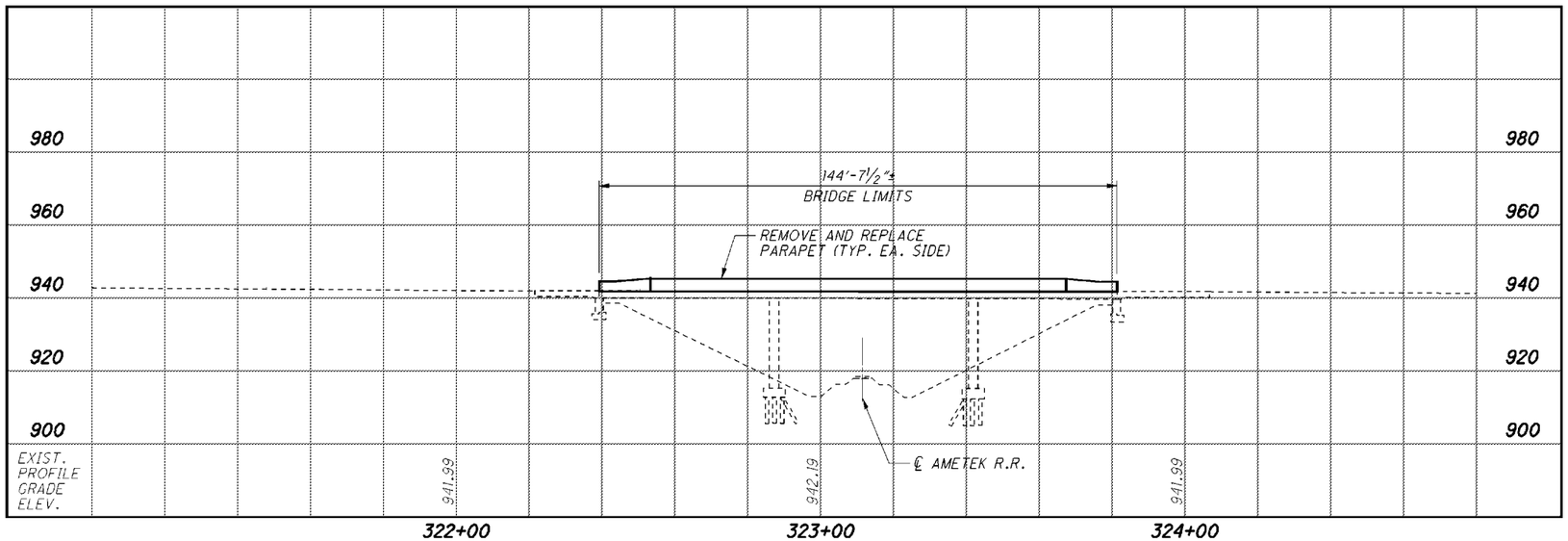

PROFILE ALONG ℄ CONSTRUCTION IR-75

NOTES:

1. STATIONS, ELEVATIONS, AND DIMENSIONS ARE GIVEN FOR INFORMATION ONLY AND WERE OBTAINED FROM THE EXISTING PLANS. ALL EXISTING INFORMATION ARE APPROXIMATE.
2. SEE ROADWAY SUBSUMMARY ON SHEET 2 FOR GUARDRAIL QUANTITIES.
3. SEE SHEETS 2, 12-19 FOR ADDITIONAL GUARDRAIL NOTES AND DETAILS.

EXISTING STRUCTURE

TYPE: CONTINUOUS REINFORCED CONCRETE SLAB ON REINFORCED CONCRETE SUBSTRUCTURE
SPANS: 44'-0"±, 55'-0"±, 44'-0"± C/C BRGS.
ROADWAY: 44'-6"± T/T PARAPETS
LOADING: HS-20
SKEW: 21°21'30"± LEFT FORWARD
APPROACH SLABS: 25'-0"± LONG (AS-1-54)
ALIGNMENT: TANGENT
CROWN: 3/16"/FT.
STRUCTURAL FILE NUMBER: 0602108 (LEFT)/0602132 (RIGHT)
DATE BUILT: 1958 REHABILITATED: 1992, 2006
WEARING SURFACE: EXIST. 1¼" LMC; 2" BITUMINOUS ASPHALTIC CONCRETE (2009)
CONDITION: GOOD (TO REMAIN)

PROPOSED WORK

REMOVE AND REPLACE BRIDGE PARAPETS

DESIGN AGENCY
CH2MHILL
ONE DAYTON CENTRE, SUITE 1100
ONE SOUTH MAIN STREET
DAYTON, OHIO 45402

DESIGNED	DRAWN	REVIEWED	DATE
BJM	TJC	JTC	06/14
CHECKED	REVISED	STRUCTURE FILE NUMBER	
VS		0602108/0602132	

AUGLAIZE COUNTY
STA. 322+37.76
STA. 323+82.38

SITE PLAN
BRIDGE NO. AUG-075-0515L/R
IR-75 OVER AMETEK TRACKS

AUG/SHE-075-5.15/5.45/11.08
PID No. 93767

075_0515SP001.dgn Sheet 6/8/2015 6:48AM CH_ODOTV8i Half_BW.pen \\DAYPSP01\DAY Copier BW PS jcenters

GENERAL NOTES

REFER TO THE FOLLOWING STANDARD BRIDGE DRAWINGS:

BR-1-13	REVISED	01-17-2014
PCB-91	REVISED	01-18-2013

DESIGN SPECIFICATIONS:

THIS STRUCTURE CONFORMS TO "STANDARD SPECIFICATIONS FOR HIGHWAY BRIDGES" ADOPTED BY THE AMERICAN ASSOCIATION OF STATE HIGHWAY AND TRANSPORTATION OFFICIALS (AASHTO), 2002, AND THE ODOT BRIDGE DESIGN MANUAL.

DESIGN LOADING:

HS-20 CASE I AND THE ALTERNATE MILITARY LOADING. FUTURE WEARING SURFACE (FWS) OF 60 PSI

DESIGN DATA:

CONCRETE CLASS QC2 - COMPRESSIVE STRENGTH 4500 PSI (PARAPETS)
REINFORCING STEEL - ASTM A615 OR A996 GRADE 60 MINIMUM YIELD STRENGTH 60,000 PSI

EXISTING STRUCTURE VERIFICATION:

DETAILS AND DIMENSIONS SHOWN ON THESE PLANS PERTAINING TO THE EXISTING STRUCTURE HAVE BEEN OBTAINED FROM PLANS OF THE EXISTING STRUCTURE AND FROM FIELD OBSERVATIONS AND MEASUREMENTS. CONSEQUENTLY, THEY ARE INDICATIVE OF THE EXISTING STRUCTURE AND THE PROPOSED WORK BUT THEY SHALL BE CONSIDERED TENTATIVE AND APPROXIMATE. THE CONTRACTOR IS REFERRED TO CMS SECTIONS 102.05 AND 105.02.

BASE CONTRACT BID PRICES UPON A RECOGNITION OF THE UNCERTAINTIES DESCRIBED ABOVE AND UPON A PREBID EXAMINATION OF THE EXISTING STRUCTURE. HOWEVER, THE DEPARTMENT WILL PAY FOR ALL PROJECT WORK BASED UPON ACTUAL DETAILS AND DIMENSIONS THAT HAVE BEEN VERIFIED IN THE FIELD.

MAINTENANCE OF TRAFFIC

IN GENERAL, THE PROPOSED WORK FOR THE I-75 BRIDGE OVER AMETEX RAILROAD SHALL CONSIST OF THE REMOVAL AND REPLACEMENT OF THE BRIDGE PARAPETS. REMOVAL AND CONSTRUCTION OPERATIONS ARE TO BE PERFORMED WHILE MAINTAINING TWO LANES OF TRAFFIC IN BOTH DIRECTION ON IR-75 PER THE M.O.T. PLANS. THE MAJOR ITEMS OF WORK REQUIRING PHASED CONSTRUCTION ARE DESCRIBED BELOW. SOME PROJECT WORK ITEMS, SUCH AS SEALING OF CONCRETE SURFACES, MAY BE PERFORMED AT THE CONTRACTOR'S DISCRETION DURING THE CONTRACT SCHEDULE PERIOD; HOWEVER, THE PERFORMANCE OF ALL WORK MUST BE COORDINATED TO SATISFY MAINTENANCE OF TRAFFIC AND SAFETY REQUIREMENTS. SEE M.O.T. PLANS FOR ADDITIONAL MAINTENANCE OF TRAFFIC REQUIREMENTS.

PHASE I CONSTRUCTION:

1. INSTALL PORTABLE CONCRETE BARRIER ON THE EXISTING IR-75 NB AND SB BRIDGES AND APPROACHES. ROUTE TRAFFIC ACROSS THE BRIDGES ACCORDING TO THE MAINTENANCE OF TRAFFIC PLANS.
2. REMOVE THE EXISTING INSIDE PARAPETS IN ACCORDANCE WITH 202.03 AND PLAN REQUIREMENTS.
3. CONSTRUCT PROPOSED INSIDE PARAPETS.

PHASE 2 CONSTRUCTION:

1. RELOCATE PORTABLE CONCRETE BARRIER ON THE EXISTING IR-75 NB & SB BRIDGES AND APPROACHES. ROUTE TRAFFIC ACROSS BRIDGES ACCORDING TO THE MAINTENANCE OF TRAFFIC PLANS.
2. REMOVE THE OUTSIDE PARAPETS IN ACCORDANCE WITH 202.03 AND PLAN REQUIREMENTS.
3. CONSTRUCT PROPOSED OUTSIDE PARAPET.
4. REMOVE PORTABLE CONCRETE BARRIER AND RESUME ORIGINAL TRAFFIC FLOW.

ITEM 202, PORTIONS OF STRUCTURE REMOVED AS PER PLAN:

DESCRIPTION: THIS WORK CONSISTS OF THE REMOVAL OF CONCRETE PARAPETS AS SHOWN IN THE PLANS.

ADDITIONAL CONCRETE REMOVAL MAY BE REQUIRED IF UNSOUND OR DETERIORATED CONCRETE IS ENCOUNTERED BEYOND THE PLAN CUT LINES. THE CONTRACTOR SHALL REMOVE ANY UNSOUND OR DETERIORATED CONCRETE BEYOND THE PLAN CUT LINE AS DIRECTED BY THE ENGINEER. PERFORM WORK CAREFULLY DURING PARAPET REMOVALS TO PROTECT PORTIONS OF THE EXISTING STEEL SUPPORTING SYSTEM THAT ARE TO BE SALVAGED AND INCORPORATED INTO THE PROPOSED STRUCTURE. THE USE OF EXPLOSIVES, HEADACHE BALLS AND/OR HOE RAM TYPE OF EQUIPMENT IS PROHIBITED. SUBMIT CONSTRUCTION PLANS ACCORDING TO CMS 501.05.

REMOVAL METHODS: THE CONTRACTOR SHALL REMOVE CONCRETE BY CUTTING AND BY MEANS OF APPROVED HAND OPERATED PNEUMATIC HAMMERS EMPLOYING POINTED OR BLUNTED CHISEL TYPE TOOLS. THE WEIGHT OF THE HAMMER SHALL NOT BE MORE THAN 90 POUNDS.

CUT LINE CONSTRUCTION JOINT PREPARATION: SAW CUT BOUNDARIES OF PROPOSED CONCRETE REMOVALS 1 INCH DEEP. REMOVE CONCRETE TO A ROUGH SURFACE. LEAVE THE EXISTING REINFORCING STEEL, IF REQUIRED IN THE PLANS, IN PLACE. INSTALL DOWEL BARS IF SPECIFIED. PRIOR TO CONCRETE PLACEMENT ABRASIVELY CLEAN JOINT SURFACES AND EXISTING EXPOSED REINFORCEMENT TO REMOVE LOOSE AND DISINTEGRATED CONCRETE AND LOOSE RUST. THOROUGHLY CLEAN THE JOINT SURFACE AND EXPOSED REINFORCEMENT OF ALL DIRT, DUST, RUST, OR OTHER FOREIGN MATERIAL BY THE USE OF WATER, AIR UNDER PRESSURE, OR OTHER METHODS THAT PRODUCE SATISFACTORY RESULTS. EXISTING REINFORCING STEEL DOES NOT HAVE TO HAVE A BRIGHT STEEL FINISH, BUT REMOVE ALL PACK AND LOOSE RUST. THOROUGHLY DRENCH EXISTING CONCRETE SURFACES WITH CLEAN WATER AND ALLOW TO DRY TO A DAMP CONDITION BEFORE PLACING CONCRETE.

MEASUREMENT AND PAYMENT: THE DEPARTMENT WILL MEASURE THE QUANTITY OF REMOVAL ON A LUMP SUM BASIS. THE DEPARTMENT WILL PAY FOR ACCEPTED QUANTITIES OF REMOVALS AT THE CONTRACT PRICE FOR ITEM 202, PORTIONS OF STRUCTURE REMOVED, AS PER PLAN.

ABBREVIATIONS

THE FOLLOWING ABBREVIATIONS HAVE BEEN USED THROUGHOUT THESE PLANS:

& = AND
@ = AT
° = DEGREES
' = FEET OR MINUTES
" = INCHES OR SECONDS
± = PLUS OR MINUS

AASHTO = AMERICAN ASSOCIATION OF STATE HIGHWAY AND TRANSPORTATION OFFICIALS
ABUT. = ABUTMENT
ADT = AVERAGE DAILY TRAFFIC
ADTT = AVERAGE DAILY TRUCK TRAFFIC
APPR. = APPROACH
APPROX. = APPROXIMATE
ASTM = AMERICAN SOCIETY OF TESTING AND MATERIALS

BM = BENCHMARK
BOT. = BOTTOM
BOT./FTG. = BOTTOM OF FOOTING
BRGS. = BEARINGS

℄ = CENTERLINE
C/C = CENTER TO CENTER
CFS = CUBIC FEET PER SECOND
CJ = CONSTRUCTION JOINT
CLR. = CLEAR
CMS = CONSTRUCTION AND MATERIAL SPECIFICATIONS
CONSTR./CONST. = CONSTRUCTION
CON'T = CONTINUED
COL. = COLUMN
C.P.P. = CORRUGATED PLASTIC PIPE
C.R./CR = COUNTY ROAD
CU = CUBIC
CVN = CHARPY V-NOTCH

DEFL. = DEFLECTION
DIA. = DIAMETER
DIM. = DIMENSION
DL = DEAD LOAD
DWG. = DRAWING

E =EAST
EA. = EACH
EF = EACH FACE
EL./ELEV. = ELEVATION
EMBED. = EMBEDMENT
EQ. = EQUAL
EX./EXIST. = EXISTING
EXP. = EXPANSION
EXT. = EXTENSION

F = FAHRENHEIT
FF = FAR FACE
F/F = FACE TO FACE
FS = FIELD SPLICE
FT. = FEET
FT/FT. = FOOT/FOOT
FT/S = FEET PER SECOND
FTG. = FOOTING
FWD. = FORWARD
FWS = FUTURE WEARING SURFACE

GEN. = GENERAL

HR = HOUR
HW = HIGH WATER

IN. = INCHES
INT. = INTERMEDIATE

LF = LEFT FORWARD
LONG. = LONGITUDINAL
LT. = LEFT

MAX. = MAXIMUM
MIN. = MINIMUM
MISC. = MISCELLANEOUS

N = NORTH
NF = NEAR FACE
#/NO. = NUMBER

OHWM = ORDINARY HIGH WATER MARK
OUT/OUT = OUT TO OUT

PEJF = PREFORMED EXPANSION JOINT FILLER
℗/PL = PLATE
PSF = POUND PER SQUARE FOOT
PSI = POUND PER SQUARE INCH
PT. = POINT
PVI = POINT OF VERTICAL INTERSECTION

Q = FLOW

R = RADIUS
REF. = REFERENCE
REINF. = REINFORCED
REQ'D. = REQUIRED
RF = RIGHT FORWARD
RT. = RIGHT

SHLDR. = SHOULDER
SPA. = SPACING
SQ = SQUARE
STA. = STATION
STD. = STANDARD
STR. = STRAIGHT
SUPER = SUPERSTRUCTURE

T = THICKNESS
TELE = TELEPHONE
TRANS. = TRANSVERSE
TWP. = TOWNSHIP
TYP. = TYPICAL

V = VELOCITY
V.C. = VERTICAL CURVE
VERT. = VERTICAL

W = WEST
W/ = WITH
W/O = WITHOUT
W.P. = WORKING POINT
WT. = WEIGHT

YD = YARD

ESTIMATED QUANTITIES

ITEM	EXTENSION	TOTAL	UNIT	DESCRIPTION	ABUT.	PIERS	SUPER.	GEN.	SHEET
202	11201	LUMP		PORTIONS OF STRUCTURE REMOVED, AS PER PLAN			LUMP		2/8
509	10000	14209	POUND	EPOXY COATED REINFORCING STEEL			14209		
510	10000	1264	EACH	DOWEL HOLES WITH NONSHRINK, NONMETALLIC GROUT			1264		
511	34450	85	CD YD	CLASS QC2 CONCRETE WITH QC/QA, BRIDGE DECK (PARAPET)			85		
512	10100	539	SQ YD	SEALING OF CONCRETE SURFACES (EPOXY-URETHANE)			539		

DESIGN AGENCY
CH2MHILL
ONE DAYTON CENTRE, SUITE 1100
ONE SOUTH MAIN STREET
DAYTON, OHIO 45402

DESIGNED BJM | DRAWN TJC | CHECKED VS | REVIEWED JTC | DATE 06/14 | REVISED | STRUCTURE FILE NUMBER 0602108/0602132

GENERAL NOTES & ESTIMATED QUANTITIES
BRIDGE NO. AUG-075-0515L/R
IR-75 OVER AMETEK TRACKS

AUG/SHE-075-5.15/5.45/11.08
PID No. 93767

2 / 8

23
56

075_0515GN001.dgn Sheet 6/8/2015 6:49AM CH_ODOTV8i_Half_BW.pen \\DAYPSP01\DAY Copier BW PS jcenters

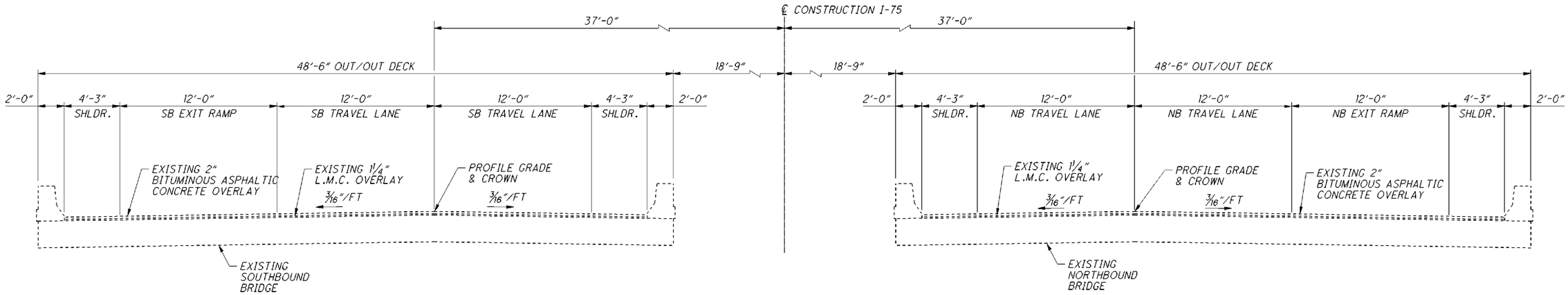

EXISTING CONDITION

ALL EXISTING DIMENSIONS (±)

PROPOSED WORK:

SEE GENERAL NOTES.

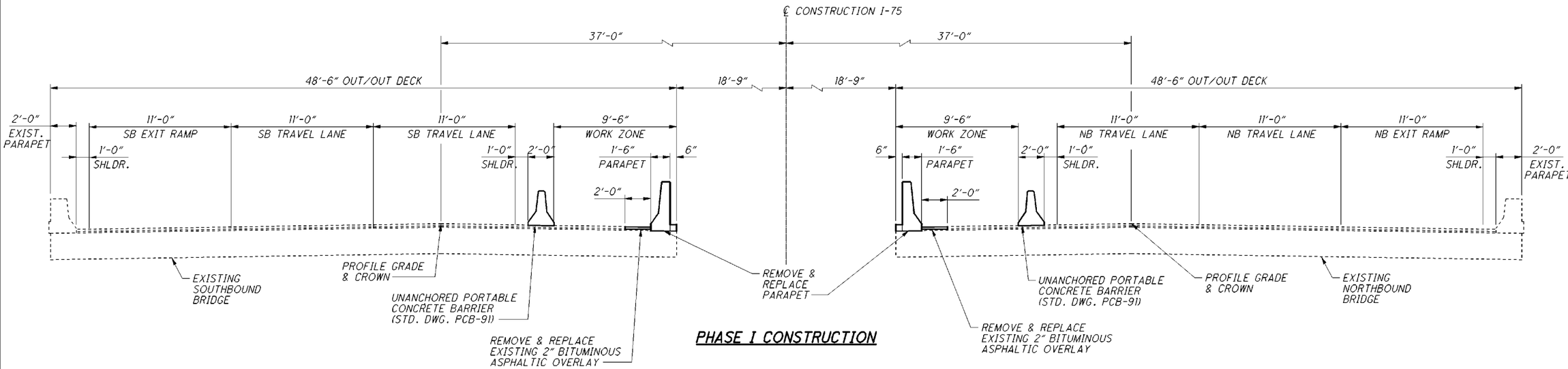

PHASE 1 CONSTRUCTION

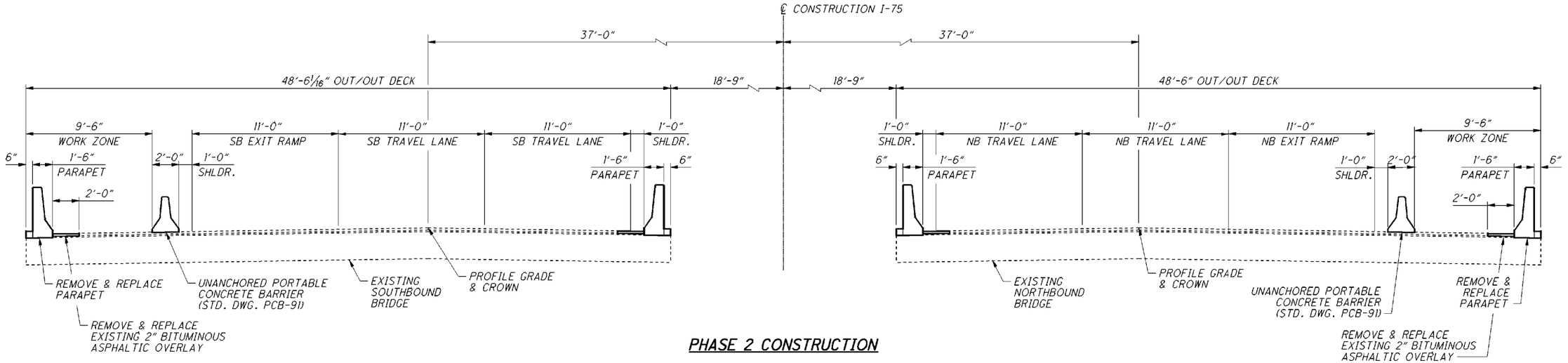

PHASE 2 CONSTRUCTION

075_0515PC001.dgn Sheet 6/8/2015 6:51AM CH_000TV8i_Half_BW.pen \\DAYPSP01\DAY Copier BW PS jcenters

DESIGN AGENCY
CH2MHILL
ONE DAYTON CENTRE, SUITE 1100
ONE SOUTH MAIN STREET
DAYTON, OHIO 45402

DESIGNED	DRAWN	REVIEWED	DATE
BJM	TJC	JTC	06/14
CHECKED	REVISED	STRUCTURE FILE NUMBER	
VS		0602108/0602132	

PHASED CONSTRUCTION DETAILS

BRIDGE NO. AUG-075-0515L/R
IR-75 OVER AMETEK TRACKS

AUG/SHE-075-5.15/5.45/11.08
PID No. 93767

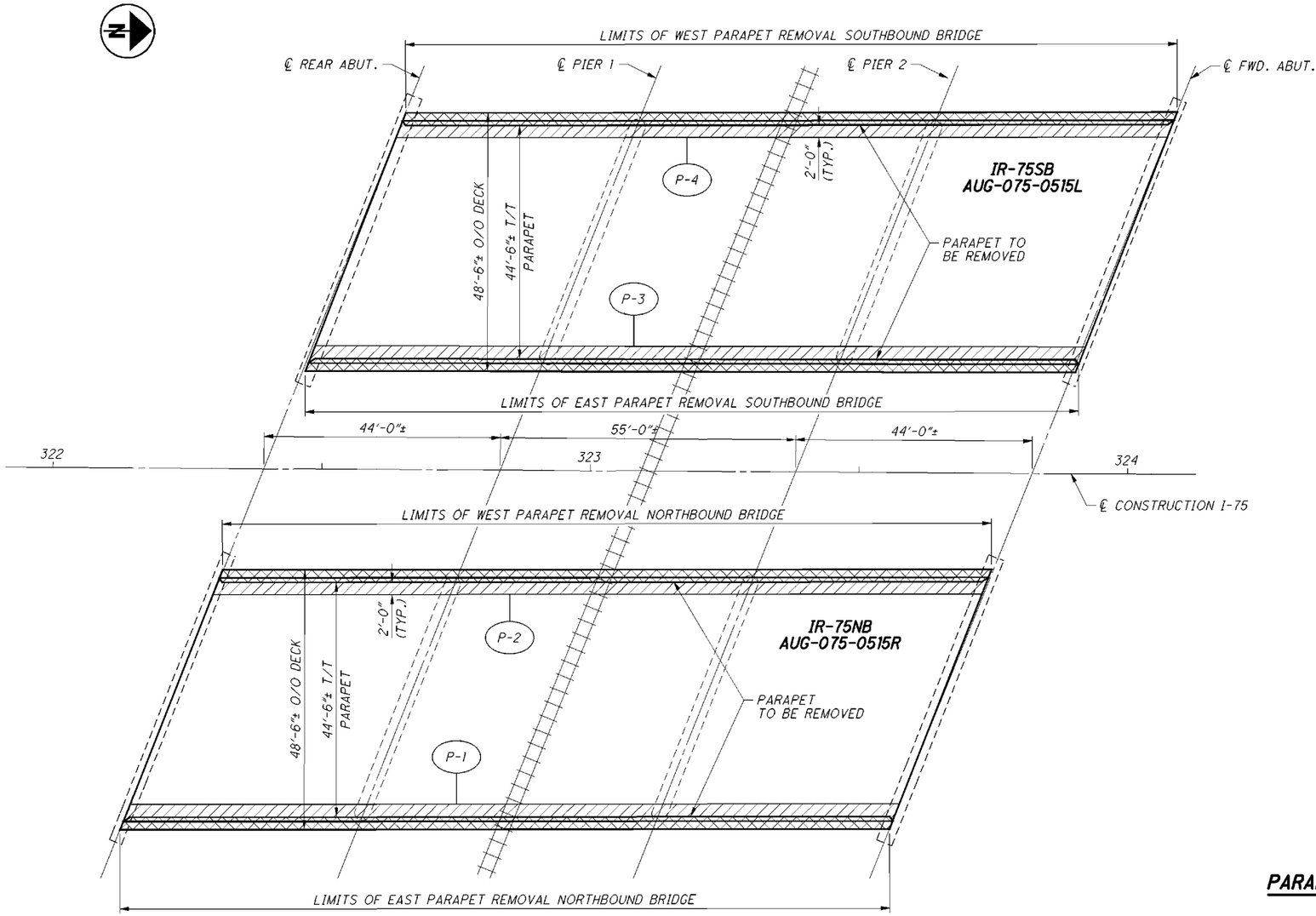

DECK PLAN

PARAPET ON DECK REMOVAL LIMIT

LEGEND:

ITEM 202 - PORTIONS OF STRUCTURE REMOVED, AS PER PLAN

REMOVE AND REPLACE EXISTING 2" BITUMINOUS ASPHALTIC OVERLAY (SEE SHEET 2 FOR PAVEMENT QUANTITIES.)

DESIGN AGENCY
CH2MHILL
ONE DAYTON CENTRE, SUITE 1100
ONE SOUTH MAIN STREET
DAYTON, OHIO 45402

DESIGNED	DRAWN	REVIEWED	DATE
BJM	TJC	JTC	06/14
CHECKED	REVISED	STRUCTURE FILE NUMBER	
VS		0602108/0602132	

REMOVAL DETAILS
BRIDGE NO. AUG-075-0515L/R
IR-75 OVER AMETEK TRACKS

AUG/SHE-075-5.15/5.45/11.08
PID No. 93767

4 / 8

25 / 56

075_0515RE001.dgn Sheet 6/8/2015 6:52AM CH_ODOTV8i_Half_BW.pen \\DAYPSP01\DAY Copier BW PS jcenters

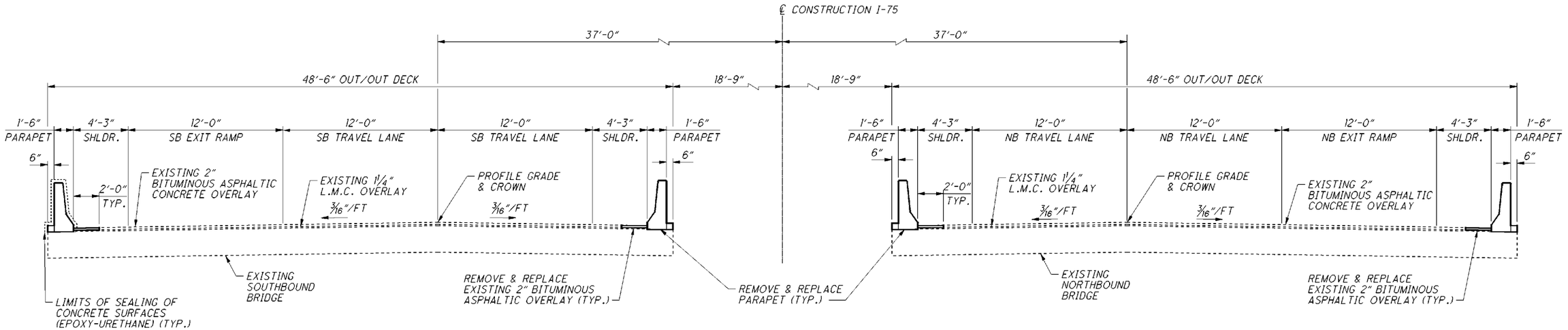

TYPICAL TRANSVERSE SECTION

ALL EXISTING DIMENSIONS (±)

075_0515TS001.dgn Sheet 6/8/2015 6:59AM CH_ODOTV8i_Half_BW.pen \\DAYPSP01\DAY Copier BW PS jcenters

DESIGN AGENCY
CH2MHILL
ONE DAYTON CENTRE, SUITE 1100
ONE SOUTH MAIN STREET
DAYTON, OHIO 45402

DESIGNED	DRAWN	REVIEWED	DATE
BJM	TJC	JTC	06/14
CHECKED	REVISED	STRUCTURE FILE NUMBER	
VS		0602108/0602132	

TRANSVERSE SECTION
BRIDGE NO. AUG-075-0515L/R
IR-75 OVER AMETEK TRACKS

AUG/SHE-075-5.15/5.45/11.08
PID No. 93767

5 / 8

26
56

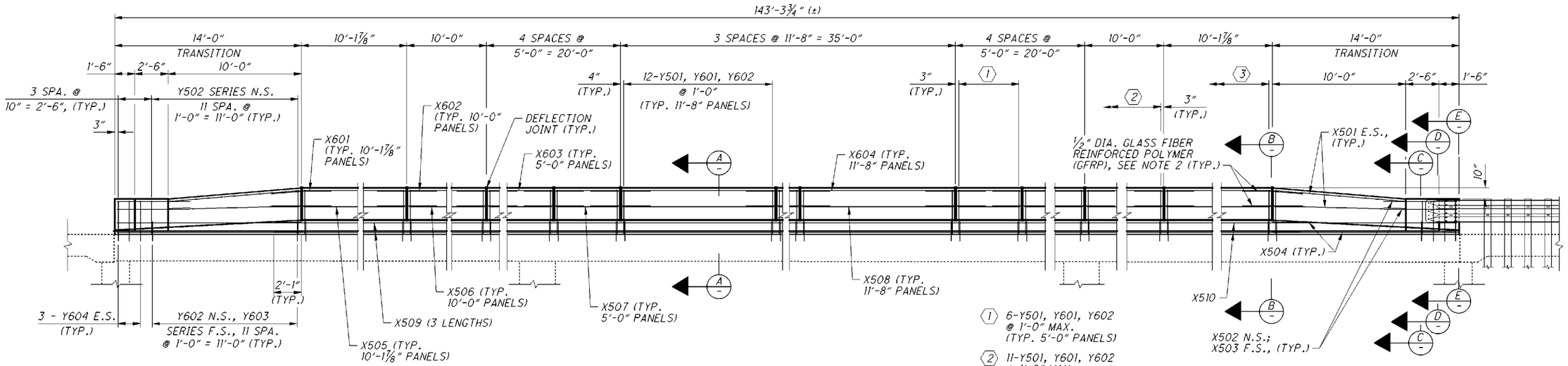

PARAPET ELEVATION

EAST PARPAET SHOWN, WEST PARAPET SIMILAR

(1) 6-Y501, Y601, Y602 @ 1'-0" MAX. (TYP. 5'-0" PANELS)

(2) 11-Y501, Y601, Y602 @ 1'-0" MAX. (TYP. 10'-0" PANELS)

(3) 11-Y501, Y601, Y602 @ 1'-0" MAX. (TYP. 10'-1⅞" PANELS)

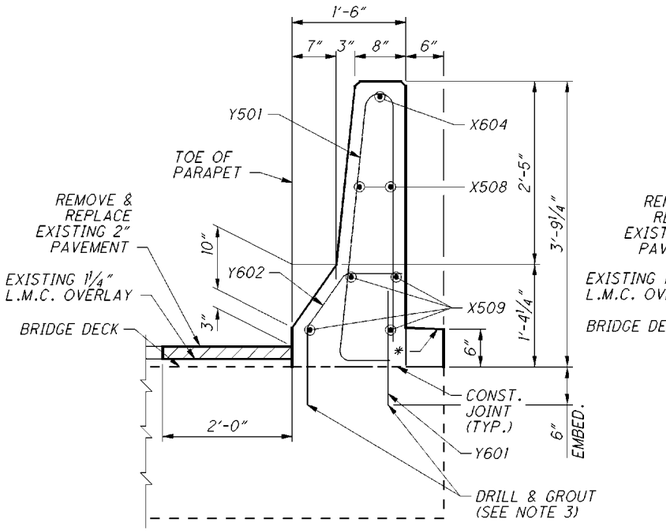

A SECTION

* MIN. SLOPE ½"/FT

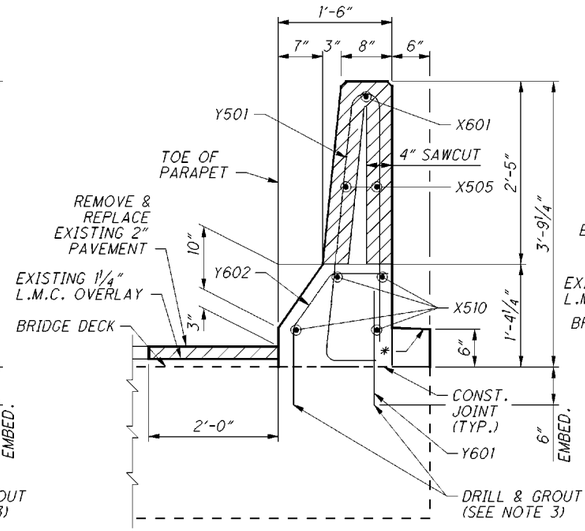

B SECTION

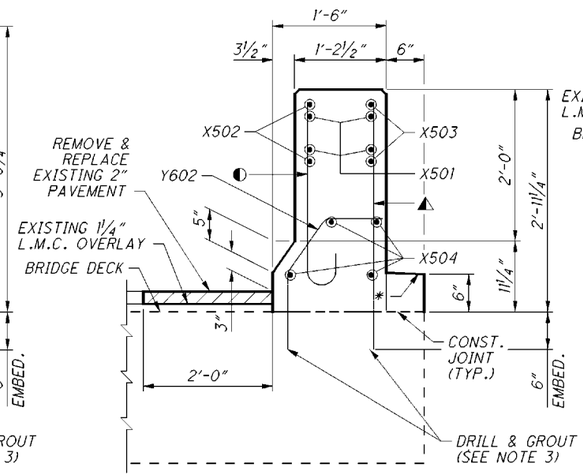

C SECTION

◐ : Y502 SERIES

◭ : Y603 SERIES

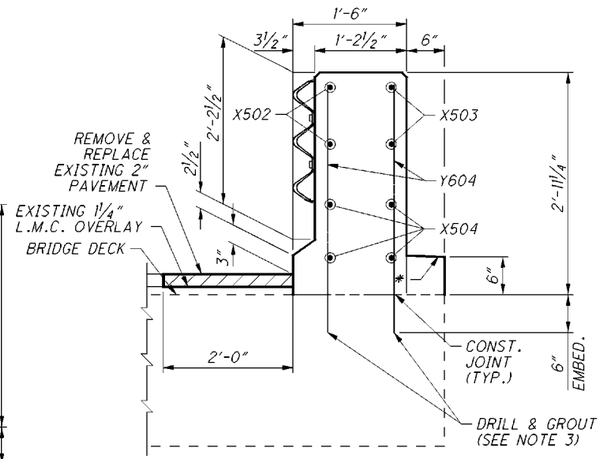

D SECTION

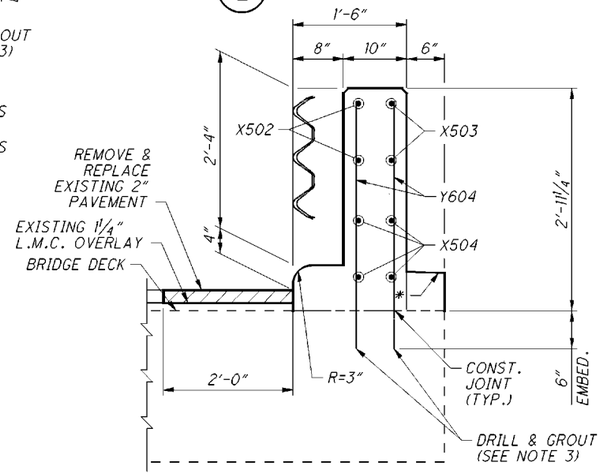

E SECTION

NOTES:

1. SEE STANDARD DRAWING BR-1-13 FOR ADDITIONAL DETAILS NOT SHOWN, NOTES REGARDING INSTALLATION AND SEALING OF DEFLECTION JOINTS, AND FOR NOTES AND PAYMENT DETAILS FOR THE GFRP STIFFENING REINFORCEMENT.
2. A TOTAL OF 48 GFRP STIFFENING REINFORCEMENT BARS, ½" DIA. x 4'-6" LONG, ARE REQUIRED FOR EACH LEFT BRIDGE PARAPET.
3. DRILL AND PLACE GROUT FOR DOWEL HOLES AS SPECIFIED IN CMS SECTION 510.00. PAYMENT FOR WORK CONSISTING OF DRILLING AND PLACING GROUT INTO HOLES SHALL BE INCLUDED IN THE UNIT BID PRICE (EACH) FOR ITEM 510, DOWEL HOLES WITH NONSHRINK, NONMETALLIC GROUT. FURNISHING AND PLACING REINFORCING STEEL SHALL BE INCLUDING WITH ITEM 509.
4. FOR LIMITS OF REMOVAL AND REPLACEMENT OF EXISTING PAVEMENT REFER TO SHEET 4.

LEGEND:

N.S. = NEAR SIDE
F.S. = FAR SIDE
E.S. = EACH SIDE

DESIGN AGENCY
CH2MHILL
ONE DAYTON CENTRE, SUITE 1100
ONE SOUTH MAIN STREET
DAYTON, OHIO 45402

DESIGNED	DRAWN	REVIEWED	DATE
BJM	TJC	JTC	06/14
CHECKED	REVISED	STRUCTURE FILE NUMBER	
VS		0602108/0602132	

PARAPET DETAILS - LEFT BRIDGE

BRIDGE NO. AUG-075-0515L/R
IR-75 OVER AMETEK TRACKS

AUG/SHE-075-5.15/5.45/11.08
PID No. 93767

6 / 8

27 / 56

075_0515RA001.dgn Sheet 6/8/2015 6:55AM CH_ODOTV8i_Half_BW.pen \\DAYPSP01\DAY Copier BW PS 1centers

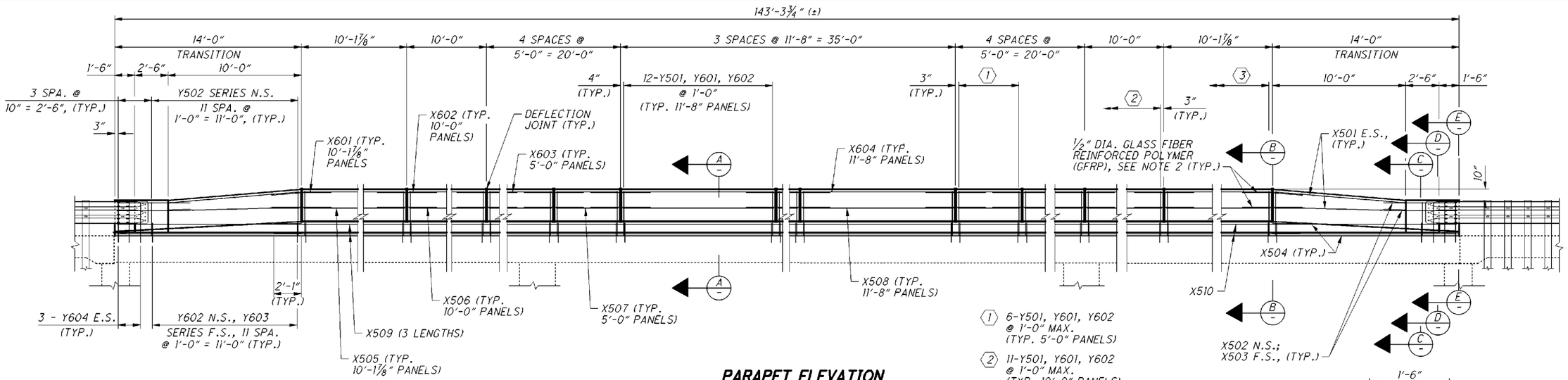

PARAPET ELEVATION

EAST PARAPET SHOWN, WEST PARAPET SIMILAR

(1) 6-Y501, Y601, Y602 @ 1'-0" MAX. (TYP. 5'-0" PANELS)

(2) 11-Y501, Y601, Y602 @ 1'-0" MAX. (TYP. 10'-0" PANELS)

(3) 11-Y501, Y601, Y602 @ 1'-0" MAX. (TYP. 10'-1⅞" PANELS)

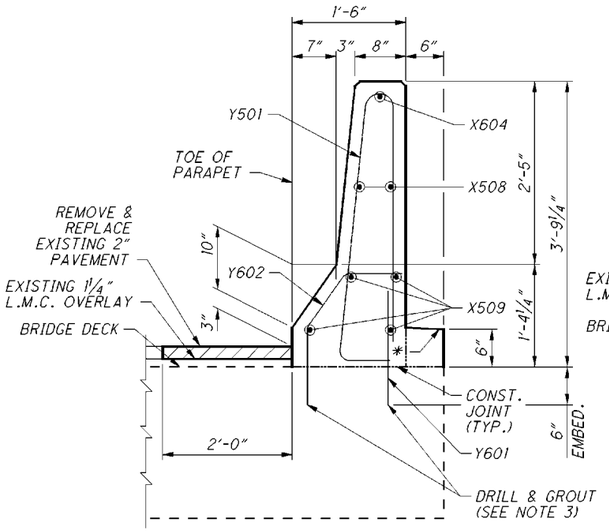

A SECTION

* MIN. SLOPE ½" /FT

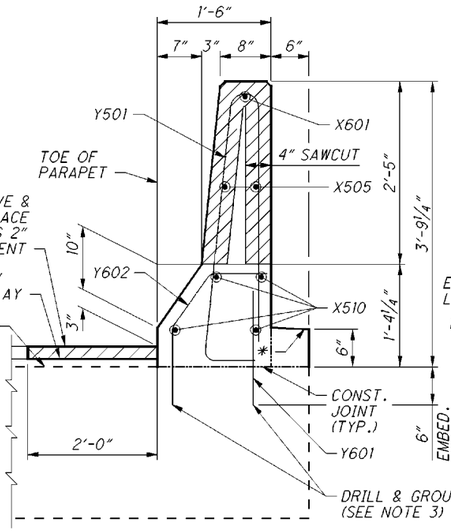

B SECTION

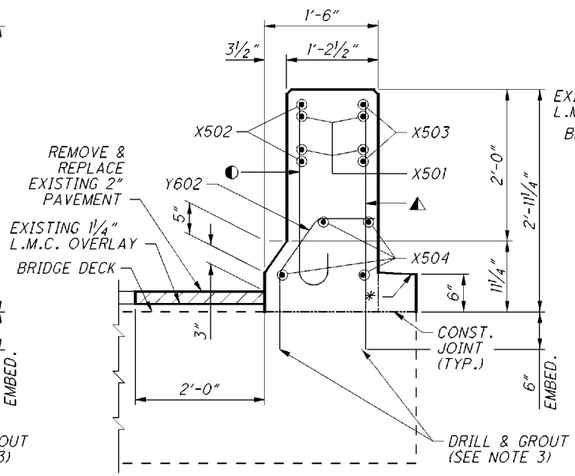

C SECTION

◐ : Y502 SERIES

◭ : Y603 SERIES

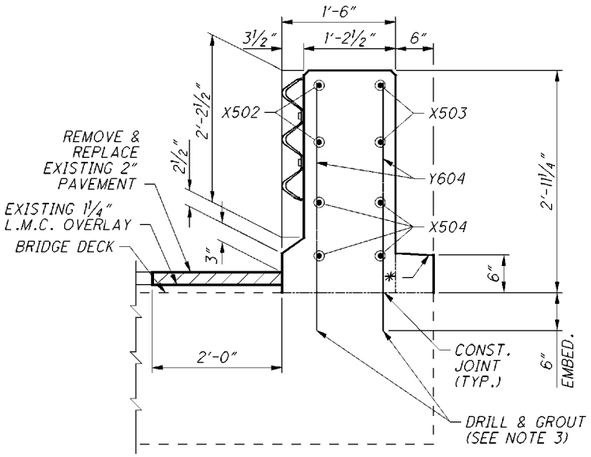

D SECTION

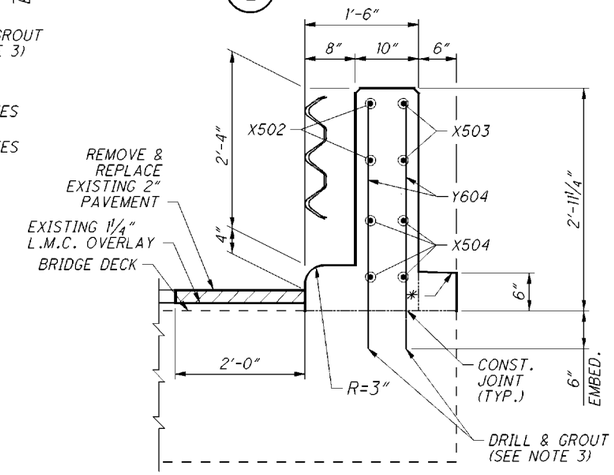

E SECTION

NOTES:

1. SEE STANDARD DRAWING BR-1-13 FOR ADDITIONAL DETAILS NOT SHOWN, NOTES REGARDING INSTALLATION AND SEALING OF DEFLECTION JOINTS, AND FOR NOTES AND PAYMENT DETAILS FOR THE GFRP STIFFENING REINFORCEMENT.
2. A TOTAL OF 48 GFRP STIFFENING REINFORCEMENT BARS, ½" DIA. x 4'-6" LONG, ARE REQUIRED FOR EACH RIGHT BRIDGE PARAPET.
3. DRILL AND PLACE GROUT FOR DOWEL HOLES AS SPECIFIED IN CMS SECTION 510.00. PAYMENT FOR WORK CONSISTING OF DRILLING AND PLACING GROUT INTO HOLES SHALL BE INCLUDED IN THE UNIT BID PRICE (EACH) FOR ITEM 510, DOWEL HOLES WITH NONSHRINK, NONMETALLIC GROUT. FURNISHING AND PLACING REINFORCING STEEL SHALL BE INCLUDING WITH ITEM 509.
4. FOR LIMITS OF REMOVAL AND REPLACEMENT OF EXISTING PAVEMENT REFER TO SHEET 4.

LEGEND:

N.S. = NEAR SIDE
F.S. = FAR SIDE
E.S. = EACH SIDE

075_0515RA002.dgn Sheet 6/8/2015 6:56AM CH_ODOTV8i_Half_BW.pen \\DAYPSP01\DAY Copier BW PS icenters

DESIGN AGENCY
CH2MHILL
ONE DAYTON CENTRE, SUITE 1100
ONE SOUTH MAIN STREET
DAYTON, OHIO 45402

DESIGNED	DRAWN	REVIEWED	DATE
BJM	TJC	JTC	06/14
CHECKED	REVISED	STRUCTURE FILE NUMBER	
VS		0602108/0602132	

PARAPET DETAILS - RIGHT BRIDGE

BRIDGE NO. AUG-075-0515L/R
IR-75 OVER AMETEK TRACKS

AUG/SHE-075-5.15/5.45/11.08
PID No. 93767

SUPERSTRUCTURE - PARAPET

MARK	QUANTITY			LENGTH	WEIGHT	TYPE	DIMENSIONS						
	LEFT BRIDGE	RIGHT BRIDGE	TOTAL				A	B	C	D	E	R	INC.
X501	16	16	32	10'-0"	334	STR							
X502	8	8	16	5'-8"	95	25	1'-10"	2'-5"	1'-4"	1½"	5"		
X503	8	8	16	5'-8"	95	STR							
X504*	16	16	32	13'-10"	462	STR							
X505	8	8	16	9'-9"	163	STR							
X506	8	8	16	9'-8"	161	STR							
X507	32	32	64	4'-8"	312	STR							
X508	12	12	24	11'-4"	284	STR							
X509	24	24	48	30'-0"	1502	STR							
X510	8	8	16	38'-7"	644	STR							
X601	4	4	8	9'-9"	117	STR							
X602	4	4	8	9'-8"	116	STR							
X603	16	16	32	4'-8"	224	STR							
X604	6	6	12	11'-4"	204	STR							
Y501	256	256	512	7'-7"	4050	23	10"	3'-6"	3'-3"			1½"	
Y502	4 SERIES OF 12	4 SERIES OF 12	8 SERIES OF 12	3'-2" TO 4'-1"	363	30	12	2'-7"	3'-6"				1"
Y601	256	256	512	1'-8"	1282	STR							
Y602	304	304	608	3'-4"	3044	13	1'-0"	8½"	6"	9"			
Y603	4 SERIES OF 12	4 SERIES OF 12	8 SERIES OF 12	3'-2" TO 4'-1"	523	29	12	3'-2"	4'-1"				1"
Y604	24	24	48	3'-3"	234	STR							
				SUB-TOTAL	14209								

* FILED BEND BARS WHERE NECESSARY.

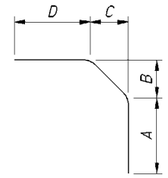

TYPE-13

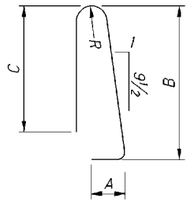

TYPE-23

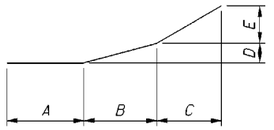

TYPE-25

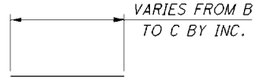

A = NO. OF BARS IN SERIES

TYPE-29

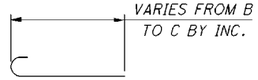

A = NO. OF BARS IN SERIES

TYPE-30

NOTES:

1. THE BAR SIZE IS SPECIFIED ON THE PLANS IN THE BAR MARK COLUMN. THE FIRST NUMBER INDICATES THE BAR SIZE NUMBER.
2. ALL DIMENSIONS ARE MEASURED OUT-TO-OUT OF BAR UNLESS NOTED OTHERWISE.
3. FOR STANDARD HOOK DIMENSIONS, SEE SECTION 509.05 OF THE SPECIFICATIONS.
4. ALL REINFORCING STEEL TO BE EPOXY COATED.
5. PAYMENT FOR REINFORCING STEEL SHALL BE INCLUDED IN THE CONTRACT BID PRICE FOR ITEM 509, EPOXY COATED REINFORCING STEEL.

DESIGN AGENCY
CH2MHILL
ONE DAYTON CENTRE, SUITE 1100
ONE SOUTH MAIN STREET
DAYTON, OHIO 45402

DESIGNED BJM | DRAWN TJC | REVIEWED JTC | DATE 06/14
CHECKED VS | REVISED | STRUCTURE FILE NUMBER 0602108/0602132

REINFORCING STEEL LIST

BRIDGE NO. AUG-075-0515L/R
IR-75 OVER AMETEK TRACKS

AUG/SHE-075-5.15/5.45/11.08
PID No. 93767

075_0515RL001.dgn Sheet 6/9/2015 5:22AM CH_ODOTV8i_Half_BW.pen \\DAYPSP01\DAY Copier BW PS jcenters

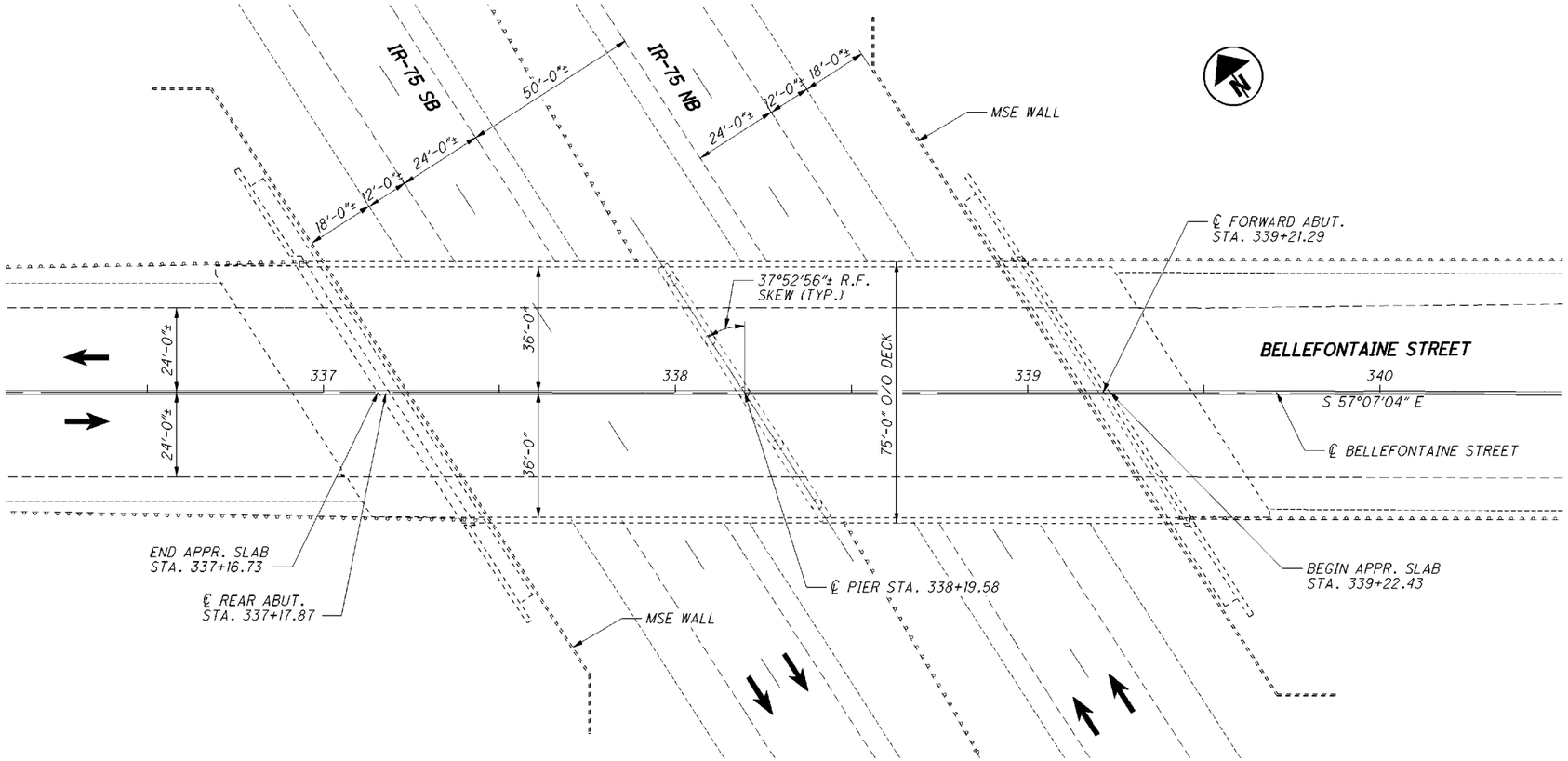

PLAN

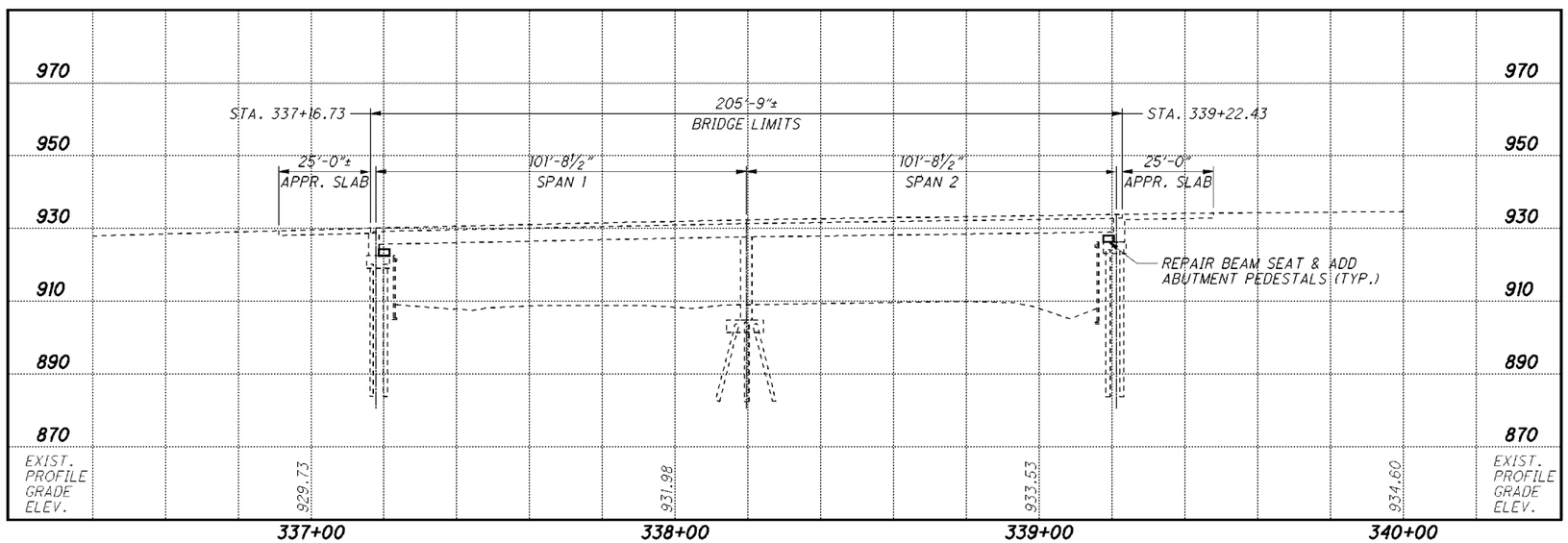

PROFILE ALONG ℄ BELLEFONTAINE STREET

NOTE:

STATIONS, ELEVATIONS, AND DIMENSIONS ARE GIVEN FOR INFORMATION ONLY AND WERE OBTAINED FROM THE EXISTING PLANS.

EXISTING STRUCTURE

TYPE: CONTINUOUS STEEL BEAMS WITH REINFORCED CONCRETE DECK AND SUBSTRUCTURE
SPANS: 101'-8½"±, 101'-8½"±, C/C BRGS.
ROADWAY: 72'-0"± T/T PARAPETS
LOADING: HS-20
SKEW: 32°52'56" RIGHT FORWARD
APPROACH SLAB: 25'-0" LONG (AS-1-81)
ALIGNMENT: TANGENT
CROWN: 0.016"/FT.
STRUCTURAL FILE NUMBER: 0602159
DATE BUILT: 1997
WEARING SURFACE: BITUMINOUS ASPHALTIC CONCRETE
CONDITION: SATISFACTORY (TO REMAIN)

PROPOSED WORK

REMOVE LOOSE CONCRETE AND DEBRIS AT ABUTMENTS NEAR BEARING SEATS, ADD ABUTMENT PEDESTALS, ADD AESTHETIC DETAILS TO PARAPET

DESIGN AGENCY
CH2MHILL
ONE DAYTON CENTRE, SUITE 1100
ONE SOUTH MAIN STREET
DAYTON, OHIO 45402

DESIGNED	DRAWN	REVIEWED	DATE
BJM	TJC	JTC	06/14
CHECKED	REVISED	STRUCTURE FILE NUMBER	
VS		0602159	

AUGLAIZE COUNTY
STA. 322+37.76
STA. 323+82.38

SITE PLAN
BRIDGE NO. AUG-075-0545
BELLEFONTAINE STREET OVER IR-75

AUG/SHE-075-5.15/5.45/11.08
PID No. 93767

075_0545SP001.dgn Sheet 6/8/2015 8:14AM CH_ODOTV8i_Half_BW.pen \\DAYPSP01\DAY Copier BW PS jcenters

GENERAL NOTES

DESIGN SPECIFICATIONS:

THIS STRUCTURE CONFORMS TO "STANDARD SPECIFICATIONS FOR HIGHWAY BRIDGES" ADOPTED BY THE AMERICAN ASSOCIATION OF STATE HIGHWAY AND TRANSPORTATION OFFICIALS (AASHTO), 2002, AND THE ODOT BRIDGE DESIGN MANUAL.

DESIGN LOADING:

HS-20 CASE I AND THE ALTERNATE MILITARY LOADING. FUTURE WEARING SURFACE (FWS) OF 60 PSI

DESIGN DATA:

CONCRETE CLASS OC1 - COMPRESSIVE STRENGTH 4000 PSI (ABUTMENTS)
REINFORCING STEEL - ASTM A615 OR A996 GRADE 60 MINIMUM YIELD STRENGTH 60,000 PSI

EXISTING STRUCTURE VERIFICATION:

DETAILS AND DIMENSIONS SHOWN ON THESE PLANS PERTAINING TO THE EXISTING STRUCTURE HAVE BEEN OBTAINED FROM PLANS OF THE EXISTING STRUCTURE AND FROM FIELD OBSERVATIONS AND MEASUREMENTS. CONSEQUENTLY, THEY ARE INDICATIVE OF THE EXISTING STRUCTURE AND THE PROPOSED WORK BUT THEY SHALL BE CONSIDERED TENTATIVE AND APPROXIMATE. THE CONTRACTOR IS REFERRED TO CMS SECTIONS 102.05 AND 105.02.

BASE CONTRACT BID PRICES UPON A RECOGNITION OF THE UNCERTAINTIES DESCRIBED ABOVE AND UPON A PREBID EXAMINATION OF THE EXISTING STRUCTURE. HOWEVER, THE DEPARTMENT WILL PAY FOR ALL PROJECT WORK BASED UPON ACTUAL DETAILS AND DIMENSIONS THAT HAVE BEEN VERIFIED IN THE FIELD.

ITEAM 512, SEALING OF CONCRETE SURFACES (EPOXY URETHANE):

THE FINISH COAT COLOR FOR ALL CONCRETE SURFACES TO RECEIVE SEALER SHALL MATCH THE EXISTING SEALER COLOR TO THE APPROVAL OF THE ENGINEER.

ABBREVIATIONS

THE FOLLOWING ABBREVIATIONS HAVE BEEN USED THROUGHOUT THESE PLANS:

& = AND
@ = AT
° = DEGREES
' = FEET OR MINUTES
" = INCHES OR SECONDS
± = PLUS OR MINUS

AASHTO = AMERICAN ASSOCIATION OF STATE HIGHWAY AND TRANSPORTATION OFFICIALS
ABUT. = ABUTMENT
ADT = AVERAGE DAILY TRAFFIC
ADTT = AVERAGE DAILY TRUCK TRAFFIC
APPR. = APPROACH
APPROX. = APPROXIMATE
ASTM = AMERICAN SOCIETY OF TESTING AND MATERIALS

BM = BENCHMARK
BOT. = BOTTOM
BOT./FTG. = BOTTOM OF FOOTING
BRGS. = BEARINGS

℄ = CENTERLINE
C/C = CENTER TO CENTER
CFS = CUBIC FEET PER SECOND
CJ = CONSTRUCTION JOINT
CLR. = CLEAR
CMS = CONSTRUCTION AND MATERIAL SPECIFICATIONS
CONSTR./CONST. = CONSTRUCTION
CON'T = CONTINUED

HR = HOUR
HW = HIGH WATER

IN. = INCHES
INT. = INTERMEDIATE

LF = LEFT FORWARD
LONG. = LONGITUDINAL
LT. = LEFT

MAX. = MAXIMUM
MIN. = MINIMUM
MISC. = MISCELLANEOUS

N = NORTH
NF = NEAR FACE
#/NO. = NUMBER

OHWM = ORDINARY HIGH WATER MARK
OUT/OUT = OUT TO OUT

PEJF = PREFORMED EXPANSION JOINT FILLER
℗/PL = PLATE
PSF = POUND PER SQUARE FOOT
PSI = POUND PER SQUARE INCH
PT. = POINT
PVI = POINT OF VERTICAL INTERSECTION

COL. = COLUMN
C.P.P. = CORRUGATED PLASTIC PIPE
C.R./CR = COUNTY ROAD
CU = CUBIC
CVN = CHARPY V-NOTCH

DEFL. = DEFLECTION
DIA. = DIAMETER
DIM. = DIMENSION
DL = DEAD LOAD
DWG. = DRAWING

E =EAST
EA. = EACH
EF = EACH FACE
EL./ELEV. = ELEVATION
EMBED. = EMBEDMENT
EQ. = EQUAL
EX./EXIST. = EXISTING
EXP. = EXPANSION
EXT. = EXTENSION

F = FAHRENHEIT
FF = FAR FACE
F/F = FACE TO FACE
FS = FIELD SPLICE
FT. = FEET
FT/FT. = FOOT/FOOT
FT/S = FEET PER SECOND
FTG. = FOOTING
FWD. = FORWARD
FWS = FUTURE WEARING SURFACE

GEN. = GENERAL

O = FLOW

R = RADIUS
REF. = REFERENCE
REINF. = REINFORCED
REQ'D. = REQUIRED
RF = RIGHT FORWARD
RT. = RIGHT

SHLDR. = SHOULDER
SPA. = SPACING
SQ = SQUARE
STA. = STATION
STD. = STANDARD
STR. = STRAIGHT
SUPER = SUPERSTRUCTURE

T = THICKNESS
TELE = TELEPHONE
TRANS. = TRANSVERSE
TWP. = TOWNSHIP
TYP. = TYPICAL

V = VELOCITY
V.C. = VERTICAL CURVE
VERT. = VERTICAL

W = WEST
W/ = WITH
W/O = WITHOUT
W.P. = WORKING POINT
WT. = WEIGHT

YD = YARD

ESTIMATED QUANTITIES

ITEM	EXTENSION	TOTAL	UNIT	DESCRIPTION	ABUT.	PIERS	SUPER.	GEN.	SHEET
509	10000	817	POUND	EPOXY COATED REINFORCING STEEL	817				
510	10000	80	EACH	DOWEL HOLES WITH NONSHRINK, NONMETALLIC GROUT	80				
511	45712	7	CU YD	CLASS OC1 CONCRETE WITH QC/QA, ABUTMENT	7				
512	10100	29	SQ YD	SEALING OF CONCRETE SURFACES (EPOXY-URETHANE)	29				2/3
516	13600	74	SQ FT	1" PREFORMED EXPANSION JOINT FILLER	74				
519	11100	48	SQ FT	PATCHING CONCRETE STRUCTURE	48				

SUBSTRUCTURE - ABUTMENT PEDESTAL

MARK	QUANTITY			LENGTH	WEIGHT	TYPE	DIMENSIONS						
	REAR ABUT.	FWD. ABUT.	TOTAL				A	B	C	D	E	R	INC.
A501	40	40	80	1'-10"	153	STR							
A502	20	20	40	4'-6"	188	2	1'-4"	2'-1"	1'-4"				
A503	12	12	24	16'-4"	409	3	2'-2½"	5'-8"					
A504	4	4	8	8'-1"	67	2	1'-4"	5'-8"	1'-4"				
				SUB-TOTAL	817								

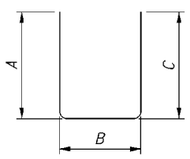

TYPE-2

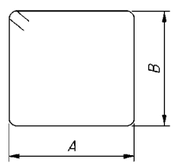

TYPE-3

NOTES:

1. THE BAR SIZE IS SPECIFIED ON THE PLANS IN THE BAR MARK COLUMN. THE FIRST NUMBER INDICATES THE BAR SIZE NUMBER.
2. ALL DIMENSIONS ARE MEASURED OUT-TO-OUT OF BAR UNLESS NOTED OTHERWISE.
3. FOR STANDARD HOOK DIMENSIONS, SEE SECTION 509.05 OF THE SPECIFICATIONS.
4. PAYMENT FOR REINFORCING STEEL SHALL BE INCLUDED IN THE CONTRACT BID PRICE FOR ITEM 509, EPOXY COATED REINFORCING STEEL.

DESIGN AGENCY
CH2MHILL
ONE DAYTON CENTRE, SUITE 1100
ONE SOUTH MAIN STREET
DAYTON, OHIO 45402

DESIGNED	DRAWN	REVIEWED	DATE
BJM	TJC	JTC	06/14
CHECKED	REVISED	STRUCTURE FILE NUMBER	
VS		0602159	

GENERAL NOTES, ESTIMATED QUANTITIES & REINFORCING STEEL LIST

BRIDGE NO. AUG-075-0545
BELLEFONTAINE STREET OVER IR-75

AUG/SHE-075-5.15/5.45/11.08
PID No. 93767

2 / 3

31
56

075_0545GN001.dgn Sheet 6/8/2015 7:08AM CH_ODOTV8i_Half_BW.pen \\DAYPSP01\DAY Copier BW PS jcenters

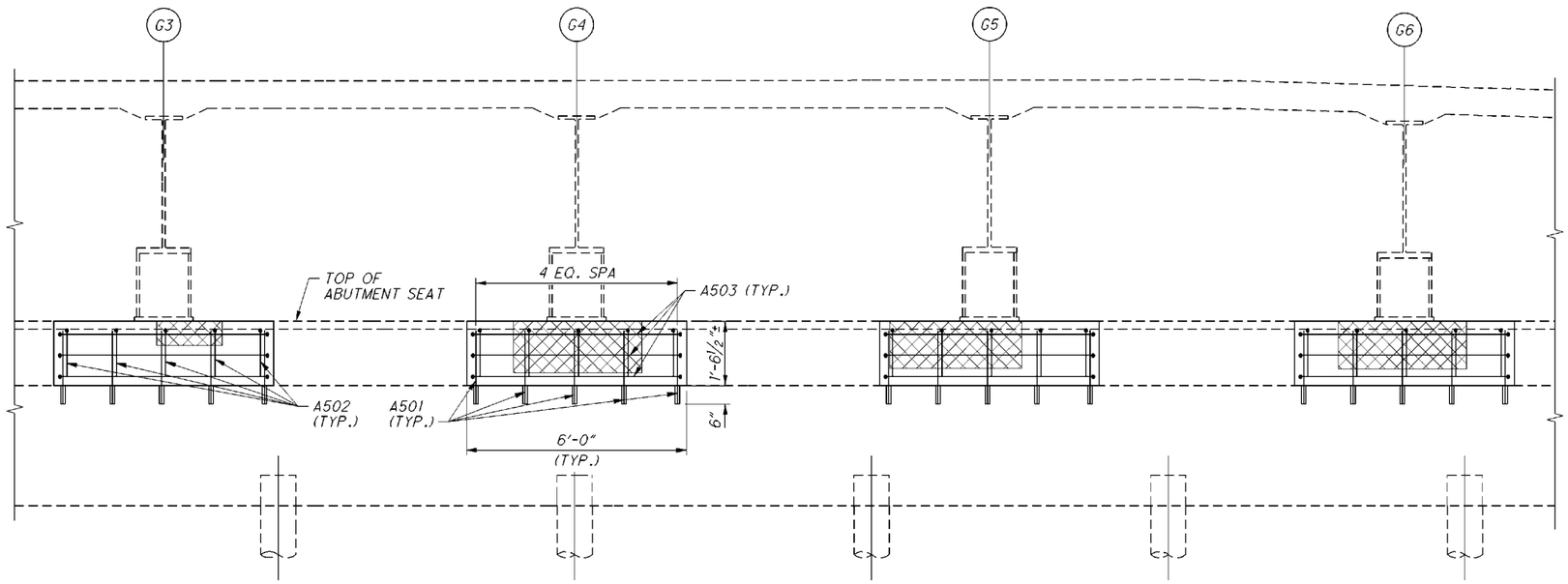

PARTIAL REAR ABUTMENT ELEVATION

FORWARD ABUTMENT SIMILAR

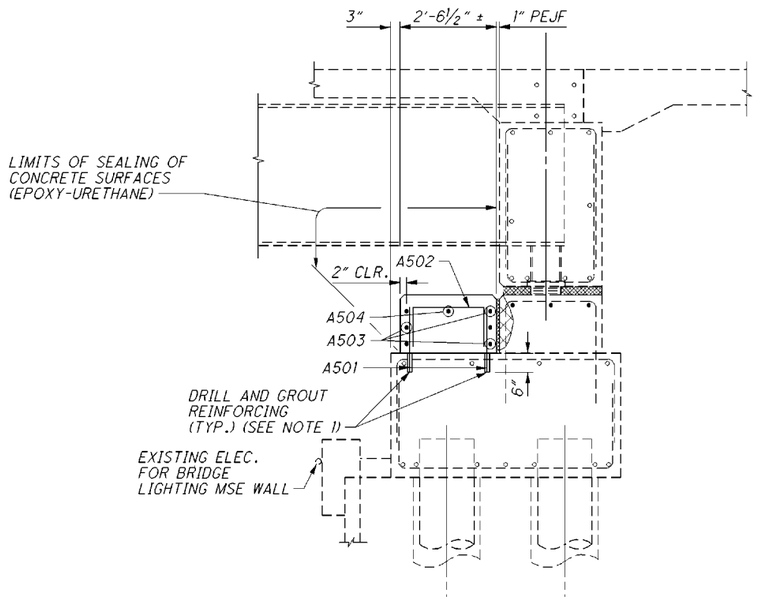

REAR ABUTMENT ELEVATION

(FORWARD ABUTMENT SIMILAR)

NOTES:

1. DRILL DOWEL HOLES WHERE SHOWN IN PLANS. PRIOR TO DRILLING DOWEL HOLES LOCATE ALL EXISTING REINFORCING STEEL BARS IN THE AREA OF HOLE WITH THE AID OF A REINFORCING STEEL BAR LOCATOR (PACHOMETER). IF AN EXISTING BAR IS ENCOUNTERED AT THE SAME LOCATION AS A PROPOSED DOWEL, MOVE THE DOWEL HOLE TO EITHER SIDE OF THE EXISTING BAR. DRILL AND PLACE GROUT FOR DOWEL HOLE AS SPECIFIED IN CMS SECTION 510.00. PAYMENT FOR WORK CONSISTING OF DRILLING AND PLACING GROUT INTO HOLES SHALL BE INCLUDED WITH THE UNIT BID PRICE (EACH) FOR ITEM 510, DOWEL HOLES WITH NONSHRINK NONMETALLIC GROUT. FURNISHING AND PLACING OF REINFORCING STEEL SHALL BE INCLUDED WITH ITEM 509.

APPROXIMATE LIMITS OF UNSOUND CONCRETE TO BE REPAIRED WITH ITEM 519, PATCHING CONCRETE STRUCTURE

DESIGN AGENCY
CH2MHILL
ONE DAYTON CENTRE, SUITE 1100
ONE SOUTH MAIN STREET
DAYTON, OHIO 45402

DESIGNED	DRAWN	REVIEWED	DATE
BJM	TJC	JTC	06/14
CHECKED	REVISED	STRUCTURE FILE NUMBER	
VS		0602159	

ABUTMENT PEDESTAL DETAILS
BRIDGE NO. AUG-075-0545
BELLEFONTAINE STREET OVER IR-75

AUG/SHE-075-5.15/5.45/11.08
PID No. 93767

3 / 3

32
56

075_0545AR0001.dgn Sheet 6/8/2015 7:16AM CH_ODOTV8i_Half_BW.pen \\DAYPSP01\DAY Copier BW PS jcenters

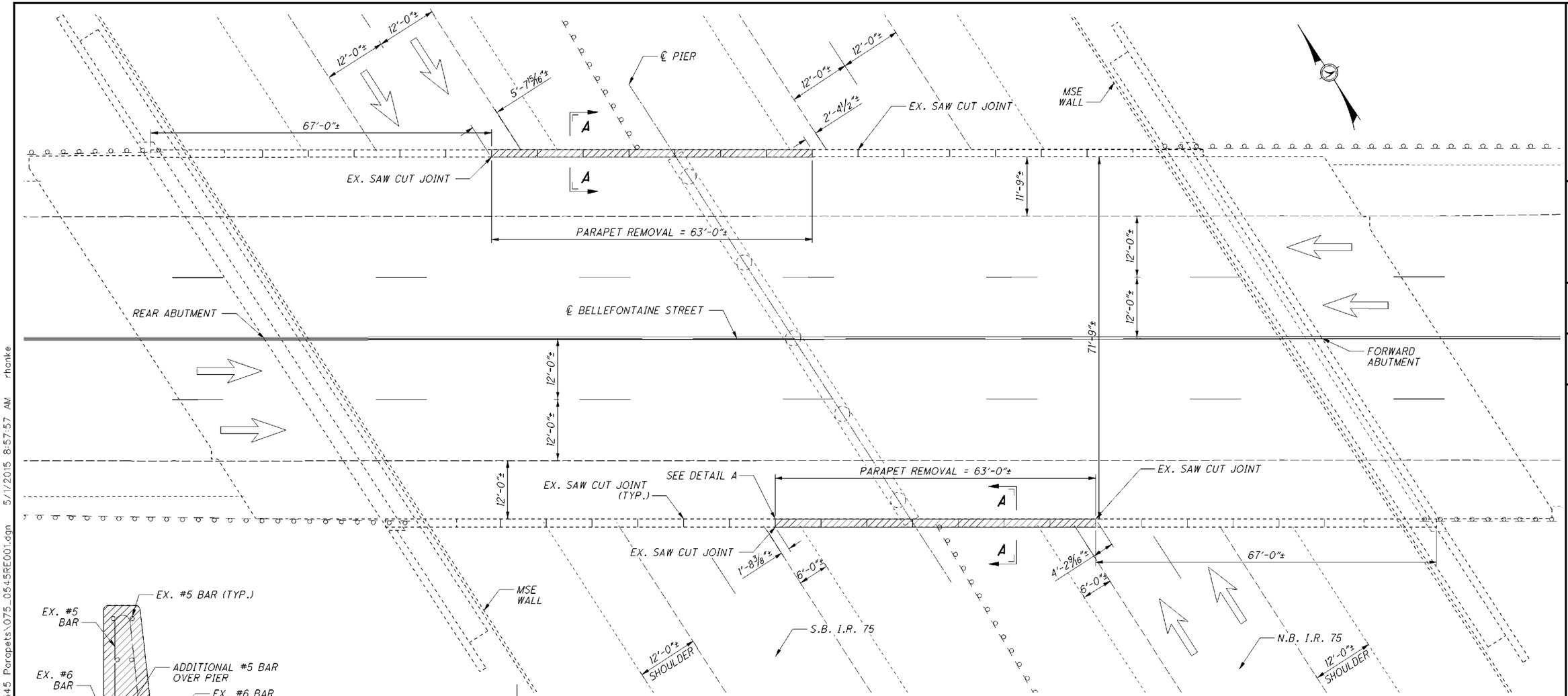

PLAN VIEW

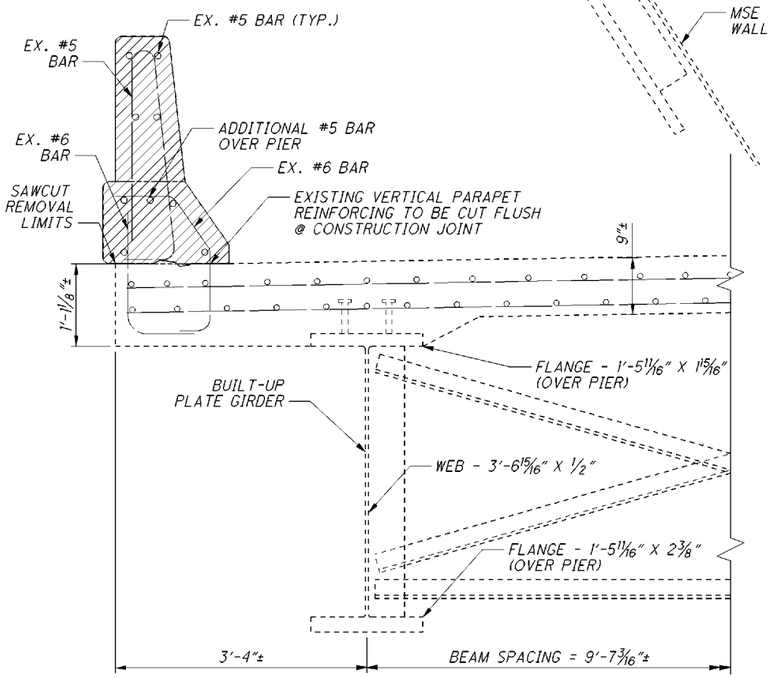

SECTION A-A

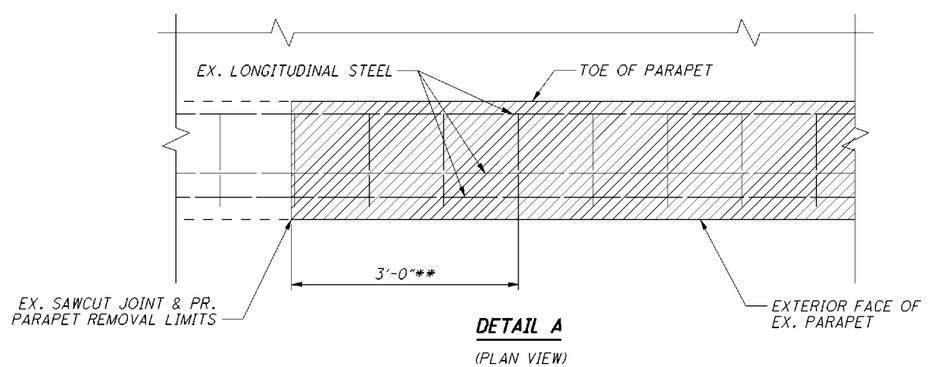

DETAIL A

(PLAN VIEW)

NOTES & LEGEND

** - 3'-0" MIN. OF THE EXISTING LONGITUDINAL PARAPET REINFORCING STEEL SHALL BE SALVAGED SO THAT IT MAY BE LAPPED WITH THE PROPOSED REINFORCING STEEL. TYPICAL OF ALL PARAPET REMOVAL LIMITS.

- PORTIONS OF STRUCTURE REMOVED, OVER 20 FOOT SPAN, AS PER PLAN

DESIGN AGENCY
ODOT DISTRICT 7
PLANNING & ENGINEERING

DESIGNED	DRAWN	REVIEWED	DATE
CWW	CWW	MRB	4-7-15
CHECKED	REVISED	STRUCTURE FILE NUMBER	
DHG		0602159	

PARAPET LETTERING REMOVAL DETAILS

BRIDGE NO.: AUG-075-0545
BELLEFONTAINE STREET OVER IR-75

AUG/SHE-075-5.15/5.45/11.08
PID No. 93767

1/7

33/56

I:\PROJECTS\District Wide\AUG-SHE-75-5.15-5.45-11.08\93767\AUG-75-0545 Parapets\075_0545RE001.dgn 5/1/2015 8:57:57 AM rhanke

GENERAL NOTES

DESIGN SPECIFICATIONS:

THIS STRUCTURE CONFORMS TO "STANDARD SPECIFICATIONS FOR HIGHWAY BRIDGES" ADOPTED BY THE AMERICAN ASSOCIATION OF STATE HIGHWAY AND TRANSPORTATION OFFICIALS (AASHTO), 2002, AND THE ODOT BRIDGE DESIGN MANUAL.

DESIGN DATA:

CONCRETE CLASS QC2 - COMPRESSIVE STRENGTH 4500 PSI (PARAPETS)
REINFORCING STEEL - ASTM A615 OR A996 GRADE 60 MINIMUM YIELD STRENGTH 60,000 PSI

EXISTING STRUCTURE VERIFICATION:

DETAILS AND DIMENSIONS SHOWN ON THESE PLANS PERTAINING TO THE EXISTING STRUCTURE HAVE BEEN OBTAINED FROM PLANS OF THE EXISTING STRUCTURE AND FROM FIELD OBSERVATIONS AND MEASUREMENTS. CONSEQUENTLY, THEY ARE INDICATIVE OF THE EXISTING STRUCTURE AND THE PROPOSED WORK BUT THEY SHALL BE CONSIDERED TENTATIVE AND APPROXIMATE. THE CONTRACTOR IS REFERRED TO CMS SECTIONS 102.05 AND 105.02.

BASE CONTRACT BID PRICES UPON A RECOGNITION OF THE UNCERTAINTIES DESCRIBED ABOVE AND UPON A PREBID EXAMINATION OF THE EXISTING STRUCTURE. HOWEVER, THE DEPARTMENT WILL PAY FOR ALL PROJECT WORK BASED UPON ACTUAL DETAILS AND DIMENSIONS THAT HAVE BEEN VERIFIED IN THE FIELD.

ITEM 202, PORTIONS OF STRUCTURE REMOVED, OVER 20 FOOT SPAN, AS PER PLAN

ITEM 202, PORTIONS OF STRUCTURE REMOVED, OVER 20 FOOT SPAN AS PER PLAN: THIS ITEM SHALL INCLUDE THE ELEMENTS INDICATED IN THE PLANS AND GENERAL NOTES AND THAT ARE NOT SEPARATELY LISTED FOR PAYMENT, EXCEPT FOR WEARING COURSE REMOVAL. ITEMS TO BE REMOVED INCLUDE ALL EXISTING MATERIALS BEING REPLACED BY NEW CONSTRUCTION AND MISCELLANEOUS ITEMS THAT ARE NOT SHOWN TO BE INCORPORATED INTO THE FINAL CONSTRUCTION AND ARE DIRECTED TO BE REMOVED BY THE ENGINEER. THE USE OF EXPLOSIVES, HEADACHE BALLS AND/OR HOE-RAMS WILL NOT BE PERMITTED. THE METHOD OF REMOVAL AND THE WEIGHT OF HAMMER SHALL BE APPROVED BY THE ENGINEER. PERFORM ALL WORK IN A MANNER THAT WILL NOT CUT, ELONGATE OR DAMAGE THE EXISTING REINFORCING STEEL TO BE PRESERVED. CHIPPING HAMMERS SHALL NOT BE HEAVIER THAN THE NOMINAL 90-POUND CLASS. PNEUMATIC HAMMERS SHALL NOT BE PLACED IN DIRECT CONTACT WITH REINFORCING STEEL THAT IS TO BE RETAINED IN THE REBUILT STRUCTURE. SUBMIT CONSTRUCTION PLANS ACCORDING TO CMS 501.05.

CUT LINE CONSTRUCTION JOINT PREPARATION: SAW CUT BOUNDARIES OF PROPOSED CONCRETE REMOVALS 1 INCH DEEP. REMOVE CONCRETE TO A ROUGH SURFACE. LEAVE THE EXISTING REINFORCING STEEL, IF REQUIRED IN THE PLANS, IN PLACE. INSTALL DOWEL BARS IF SPECIFIED. PRIOR TO CONCRETE PLACEMENT ABRASIVELY CLEAN JOINT SURFACES AND EXISTING EXPOSED REINFORCEMENT TO REMOVE LOOSE AND DISINTEGRATED CONCRETE AND LOOSE RUST. THOROUGHLY CLEAN THE JOINT SURFACE AND EXPOSED REINFORCEMENT OF ALL DIRT, DUST, RUST OR OTHER FOREIGN MATERIAL BY THE USE OF WATER, AIR UNDER PRESSURE, OR OTHER METHODS THAT PRODUCE SATISFACTORY RESULTS. EXISTING REINFORCING STEEL DOES NOT HAVE TO HAVE A BRIGHT STEEL FINISH, BUT REMOVE ALL PACK AND LOOSE RUST. THOROUGHLY DRENCH EXISTING CONCRETE SURFACES WITH CLEAN WATER AND ALLOW TO DRY TO A DAMP CONDITION BEFORE PLACING CONCRETE.

DUE TO THE POSSIBLE PRESENCE OF ATTACHMENTS (E.G., FINISHING MACHINE, SCUPPER AND FORM SUPPORTS, ETC.) TO EXISTING STRUCTURAL MEMBERS, PERFORM WORK CAREFULLY DURING PARAPET REMOVAL TO AVOID DAMAGING STRUCTURAL MEMBERS THAT ARE TO REMAIN. REPLACE OR REPAIR STRUCTURAL MEMBERS DAMAGED BY THE REMOVAL OPERATIONS AT NO COST TO THE PROJECT. AT LEAST 7 DAYS BEFORE PERFORMING REPAIR WORK, SUBMIT A PROPOSED REPAIR PLAN, DEVELOPED BY AN OHIO REGISTERED PROFESSIONAL ENGINEER TO THE DIRECTOR. OBTAIN THE DIRECTOR'S APPROVAL BEFORE PERFORMING REPAIR.

MEASUREMENT & PAYMENT: THE DEPARTMENT WILL MEASURE THE QUANTITY OF REMOVALS ON A LUMP SUM BASIS. THE DEPARTMENT WILL PAY FOR THE ACCEPTED QUANTITIES OF REMOVALS AT THE CONTRACT PRICE FOR ITEM 202, PORTIONS OF STRUCTURE REMOVED, OVER 20 FOOT SPAN, AS PER PLAN.

ITEM 511, CLASS QC2 CONCRETE, BRIDGE DECK (PARAPET), AS PER PLAN

IN ADDITION TO THE REQUIREMENTS OF ITEM 511, THIS ITEM SHALL INCLUDE THE COST OF THE PARAPET LETTERING. LETTERS SHALL BE CAST INTO PARAPET CONCRETE AT AN DEPRESSION DEPTH OF 2 INCHES. THE MATERIAL USED TO FORM THE LETTERS INTO THE CONCRETE SHALL BE APPROVED BY THE ENGINEER. THE CONTRACTOR SHALL PROVIDE A MOCKUP OF THE PROPOSED LETTERING TO THE CITY OF WAPAKONETA FOR APPROVAL OF AESTHETICS AND PLAN FOR SEALING OF CONCRETE SURFACES.

DEFLECTION JOINTS SHALL BE CONSTRUCTED BY SAWING 1 1/4" DEEP ALONG THE PERIMETER OF THE PARAPET AS SOON AS THE SAW CAN BE OPERATED WITHOUT DAMAGING THE CONCRETE. THE USE OF AN EDGE GUIDE, FENCE OR JIG IS REQUIRED TO ENSURE THAT THE CUT JOINT IS STRAIGHT, TRUE AND ALIGNED ON ALL FACES OF THE PARAPET. THE LOCATION OF THE SAW CUT JOINTS SHALL BE ADJUSTED SO AS TO AVOID INTERSECTING DEPRESSED LETTERING. THE JOINT WIDTH SHALL BE THE WIDTH OF THE SAW BLADE, A NOMINAL WIDTH OF 1/4". CAULK THE CONTROL JOINTS WITH A POLYURETHANE OR POLYMERIC MATERIAL CONFORMING TO ASTM C920, TYPE S. THE BOTTOM 1/2" OF THE OUTSIDE FACE OF THE PARAPET SHOULD BE LEFT UNSEALED TO ALLOW ANY WATER WHICH MAY ENTER THE JOINT TO ESCAPE.

A PARAPET FORM AND WORK PLATFORM PLAN SHALL BE SUBMITTED TO THE ENGINEER FOR ACCEPTANCE. THE PARAPET FORM AND WORK PLATFORM PLAN SHALL BE IN ACCORDANCE WITH CMS 501.05.B.2. ANCHORS SUPPORTING THE FORMS MAY BE DOWELED INTO THE AREA BELOW THE PROPOSED PARAPET. A MINIMUM OF 2 ½" OF COVER SHALL BE PROVIDED. ANCHORS SHALL BE SPACED AT A MINIMUM OF 24 INCHES. VOIDS LEFT BY THE ANCHORS SHALL BE PRESSURE GROUTED BEFORE THE CONCRETE IS SEALED.

COST OF ALL MATERIALS, LABOR, TOOLS AND INCIDENTALS NECESSARY ARE INCLUDED FOR PAYMENT WITH ITEM 511 CLASS QC2 CONCRETE, BRIDGE DECK (PARAPET), AS PER PLAN

ITEM 512, SEALING OF CONCRETE SURFACES (EPOXY URETHANE), AS PER PLAN:

CONCRETE SURFACES SHALL BE SEALED AS DETAILED IN THE PLANS. FEDERAL COLOR NUMBER 21105 (RED) SHALL BE APPLIED TO THE DEPRESSED SURFACES OF THE LETTERS. ALL REMAINING PARAPET SURFACES SHALL BE SEALED WITH FEDERAL COLOR NUMBER 17778 - LIGHT NEUTRAL.

QUANTITIES FORWARDED TO GENERAL SUMMARY SHEET 10/56.

ESTIMATED QUANTITIES

ITEM	EXTENSION	TOTAL	UNIT	DESCRIPTION	ABUT.	PIERS	SUPER.	GEN.	SHEET #
202	11203	LUMP		PORTIONS OF STRUCTURE REMOVED, OVER 20 FOOT SPAN, AS PER PLAN					4/7
509	10000	2958	POUND	EPOXY COATED REINFORCING STEEL			2958		
510	10000	252	EACH	DOWEL HOLES WITH NONSHRINK, NONMETALLIC GROUT			252		
511	34449	16	CU YD	CLASS QC2 CONCRETE, BRIDGE DECK (PARAPET), AS PER PLAN			16		4/7
512	10101	392	SQ YD	SEALING OF CONCRETE SURFACES (EPOXY-URETHANE), AS PER PLAN			392		4/7
512	74000	352	SQ YD	REMOVAL OF EXISTING COATINGS FROM CONCRETE SURFACES			352		
614	11110	40	HOUR	LAW ENFORCEMENT OFFICER WITH PATROL CAR FOR ASSISTANCE				40	
614	12336	4	EACH	WORK ZONE IMPACT ATTENUATOR (UNIDIRECTIONAL)				4	
614	13300	27	EACH	BARRIER REFLECTOR, TYPE B				27	
614	13350	27	EACH	OBJECT MARKER, ONE WAY				27	
614	22100	0.2	MILE	WORK ZONE EDGE LINE, CLASS I, 642 PAINT				0.2	
614	24200	360	FT	WORK ZONE DOTTED LINE, CLASS I, 642 PAINT				360	
622	41000	1320	FT	PORTABLE BARRIER, 32"				1320	
642	00190	0.1	MILE	LANE LINE, 4"				0.1	
614	11000	LUMP		MAINTAINING TRAFFIC					

MARK	NUMBER: LEFT PARAPET	NUMBER: RIGHT PARAPET	NUMBER: TOTAL	LENGTH	WEIGHT	TYPE	DIMENSIONS: A	B	C	D	E	R	INC	DOWELS
X501	16	16	32	32'-6"	1085	STR								
X502	1	1	2	35'-6"	74	STR								
Y601	63	63	126	1'-3"	237	STR								126
Y602	63	63	126	2'-4"	442	13	8"	9"	7"	9"				126
Y603	63	63	126	5'-11"	1120	22	8"	2'-9"	2'-6"			2"		
			SUB-TOTAL		2958								SUB-TOTAL	252

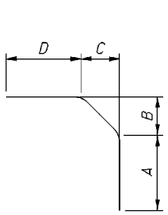

TYPE-13

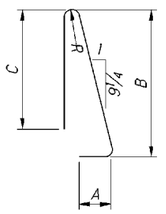

TYPE-22

DESIGN AGENCY
ODOT DISTRICT 7
PLANNING & ENGINEERING

DESIGNED	DRAWN	REVIEWED	DATE
CWW	CWW	MRB	4/7/15
CHECKED	REVISED	STRUCTURE FILE NUMBER	
MRB		0602159	

PARAPET LETTERING GENERAL NOTES AND ESTIMATED QUANTITIES

BRIDGE NO.: AUG-075-0545
BELLEFONTAINE STREET OVER IR-75

AUG/SHE-075-5.15/5.45/11.08
PID No. 93767

I:\PROJECTS\District Wide\AUG-SHE-75-5.15-5.45-11.08\93767\AUG-75-0545 Parapets\075_0545GN001.dgn 5/1/2015 8:58:05 AM rhanke

I:\PROJECTS\District Wide\AUG-SHE-75-5.15-5.45-11.08\93767\AUG-75-0545 Parapets\075_0545MN001.dgn 5/1/2015 8:58:06 AM rhanke

ITEM 614, MAINTAINING TRAFFIC

THE INSIDE SHOULDERS OF MAINLINE IR 75 AND THE OUTSIDE LANES AND SHOULDERS OF BELLEFONTAINE STREET SHALL BE CLOSED AS DETAILED IN THE PLANS. ADDITIONAL LANES OF IR 75 MAY BE CLOSED PER STANDARD DRAWING MT-95.30.

LENGTH AND DURATION OF LANE CLOSURES AND RESTRICTIONS SHALL BE AT THE APPROVAL OF THE ENGINEER. IT IS THE INTENT TO MINIMIZE THE IMPACT TO THE TRAVELING PUBLIC. LANE CLOSURES OR RESTRICTIONS OVER SEGMENTS OF THE PROJECT IN WHICH NO WORK IS ANTICIPATED WITHIN A REASONABLE TIME FRAME, AS DETERMINED BY THE ENGINEER, SHALL NOT BE PERMITTED. THE LEVEL OF UTILIZATION OF MAINTENANCE OF TRAFFIC DEVICES SHALL BE COMMENSURATE WITH THE WORK IN PROGRESS.

ALL WORK AND TRAFFIC CONTROL DEVICES SHALL BE IN ACCORDANCE WITH C&MS 614 AND OTHER APPLICABLE PORTIONS OF THE SPECIFICATIONS, AS WELL AS THE OHIO MANUAL OF UNIFORM TRAFFIC CONTROL DEVICES. PAYMENT FOR ALL LABOR, EQUIPMENT AND MATERIALS SHALL BE INCLUDED IN THE LUMP SUM CONTRACT PRICE FOR ITEM 614, MAINTAINING TRAFFIC, UNLESS SEPARATELY ITEMIZED IN THE PLAN.

ITEM 614, MAINTAINING TRAFFIC (LANES OPEN DURING HOLIDAYS OR SPECIAL EVENTS)

NO WORK SHALL BE PERFORMED AND ALL EXISTING LANES SHALL BE OPEN TO TRAFFIC DURING THE FOLLOWING DESIGNATED HOLIDAYS OR EVENTS:

CHRISTMAS	FOURTH OF JULY
NEW YEARS	LABOR DAY
MEMORIAL DAY	THANKSGIVING

THE PERIOD OF TIME THAT THE LANES ARE TO BE OPEN DEPENDS ON THE DAY OF THE WEEK ON WHICH THE HOLIDAY OR EVENT FALLS. THE FOLLOWING SCHEDULE SHALL BE USED TO DETERMINE THIS PERIOD:

DAY OF HOLIDAY OR EVENT	TIME ALL LANES MUST BE OPEN TO TRAFFIC
SUNDAY	12:00N FRIDAY THROUGH 6:00 AM MONDAY
MONDAY	12:00N FRIDAY THROUGH 6:00 AM TUESDAY
TUESDAY	12:00N MONDAY THROUGH 6:00 AM WEDNESDAY
WEDNESDAY	12:00N TUESDAY THROUGH 6:00 AM THURSDAY
THURSDAY	12:00N WEDNESDAY THROUGH 6:00 AM FRIDAY
THURSDAY (THANKSGIVING ONLY)	6:00 AM WEDNESDAY THROUGH 6:00 AM MONDAY
FRIDAY	12:00N THURSDAY THROUGH 6:00 AM MONDAY
SATURDAY	12:00N FRIDAY THROUGH 6:00 AM MONDAY

SHOULD THE CONTRACTOR FAIL TO MEET ANY OF THESE REQUIREMENTS, THE CONTRACTOR SHALL BE ASSESSED A DISINCENTIVE IN THE AMOUNT OF $50 FOR EACH MINUTE THE ABOVE DESCRIBED LANE CLOSURE RESTRICTIONS ARE VIOLATED.

PERMITTED LANE CLOSURE

LANES CLOSURES SHALL ONLY BE IMPLEMENTED AT THE TIMES LISTED ON THE OHIO DEPARTMENT OF TRANSPORTATION'S PERMITTED LANE CLOSURE WEB SITE WHICH IS LOCATED AT:

http://plcm.dot.state.oh.us

THE PERMITTED CLOSURE TIMES LISTED ON THE WEBSITE, 14 CALENDAR DAYS PRIOR TO THE BID LETTING DATE, SHALL BE IN EFFECT FOR THIS PROJECT.

NO WORK WITHIN ACTIVE TRAVEL LANES OR WHICH WILL SLOW TRAFFIC IS PERMITTED AT ANY OTHER TIMES.

FLOODLIGHTING

FLOODLIGHTING OF THE WORK SITE FOR OPERATIONS CONDUCTED DURING NIGHTTIME PERIODS SHALL BE ACCOMPLISHED SO THAT THE LIGHTS DO NOT CAUSE GLARE TO THE DRIVERS ON THE ROADWAY. TO ENSURE THE ADEQUACY OF THE FLOODLIGHT PLACEMENT, THE CONTRACTOR AND THE ENGINEER SHALL DRIVE THROUGH THE WORK SITE EACH NIGHT WHEN THE LIGHTING IS IN PLACE AND OPERATIVE PRIOR TO COMMENCING ANY WORK. IF GLARE IS DETECTED, THE LIGHT PLACEMENT AND SHIELDING SHALL BE ADJUSTED TO THE SATISFACTION OF THE ENGINEER BEFORE WORK PROCEEDS.

PAYMENT FOR ALL LABOR, EQUIPMENT AND MATERIALS SHALL BE INCLUDED IN THE LUMP SUM CONTRACT PRICE FOR ITEM 614, MAINTAINING TRAFFIC.

ITEM 614 - LAW ENFORCEMENT OFFICER (WITH PATROL CAR) FOR ASSISTANCE DURING CONSTRUCTION OPERATIONS

USE OF LAW ENFORCEMENT OFFICERS (LEOS) BY CONTRACTORS OTHER THAN THE USES SPECIFIED BELOW WILL NOT BE PERMITTED AT PROJECT COST. LEOS SHOULD NOT BE USED WHERE THE OMUTCD INTENDS THAT FLAGGERS BE USED.

IN ADDITION TO THE REQUIREMENTS OF C&MS 614 AND THE OMUTCD, A UNIFORMED LEO WITH AN OFFICIAL PATROL CAR (CAR WITH TOP-MOUNTED EMERGENCY FLASHING LIGHTS AND COMPLETE MARKINGS OF THE APPROPRIATE LAW ENFORCEMENT AGENCY) SHALL BE PROVIDED FOR THE FOLLOWING TRAFFIC CONTROL TASKS:

DURING THE ENTIRE ADVANCE PREPARATION AND CLOSURE SEQUENCE WHERE COMPLETE BLOCKAGE OF TRAFFIC IS REQUIRED.

DURING A TRAFFIC SIGNAL INSTALLATION WHEN IMPACTING THE NORMAL FUNCTION OF THE SIGNAL OR THE FLOW OF TRAFFIC OR WHEN TRAFFIC NEEDS TO BE DIRECTED THROUGH AN ENERGIZED TRAFFIC SIGNAL CONTRARY TO THE SIGNAL DISPLAY (E.G., DIRECTING MOTORISTS THROUGH A RED LIGHT).

IN ADDITION TO THE REQUIREMENT OF C&MS 614 AND THE OMUTCD, A UNIFORMED LEO WITH AN OFFICIAL PATROL CAR (CAR WITH TOP-MOUNTED EMERGENCY FLASHING LIGHTS AND COMPLETE MARKINGS OF THE APPROPRIATE LAW ENFORCEMENT AGENCY) SHOULD BE PROVIDED FOR THE FOLLOWING TRAFFIC CONTROL TASKS:

FOR LANE CLOSURES: DURING INITIAL SET-UP PERIODS, TEAR DOWN PERIODS, SUBSTANTIAL SHIFTS OF A CLOSURE POINT OR WHEN NEW LANE CLOSURE ARRANGEMENTS ARE INITIATED FOR LONG-TERM LANE CLOSURES/SHIFTS (FOR THE FIRST AND LAST DAY OF MAJOR CHANGES IN TRAFFIC CONTROL SETUP). IN GENERAL, LEOS SHOULD BE POSITIONED AT THE POINT OF LANE RESTRICTION OR ROAD CLOSURE AND TO MANUALLY CONTROL TRAFFIC MOVEMENTS THROUGH INTERSECTIONS IN WORK ZONES.

WHEN CONSTRUCTION VEHICLES ARE ENTERING/EXITING THE ZONE DIRECTLY FROM/INTO AN OPEN LANE OF TRAFFIC. IF A LANE HAS BEEN CLOSED TO PROVIDE AN ACCELERATION/DECELERATION LANE FOR THE VEHICLE, THE LEO WILL NOT BE REQUIRED.

LEOS SHOULD NOT FORGO THEIR TRAFFIC CONTROL RESPONSIBILITIES TO APPREHEND MOTORISTS FOR ROUTINE TRAFFIC VIOLATIONS. HOWEVER, IF A MOTORIST'S ACTIONS ARE CONSIDERED TO BE RECKLESS, THEN PURSUIT OF THE MOTORIST IS APPROPRIATE.

THE LEOS WORK AT THE DIRECTION OF THE CONTRACTOR. THE CONTRACTOR IS RESPONSIBLE FOR SECURING THE SERVICES OF THE LEOS WITH THE APPROPRIATE AGENCIES AND COMMUNICATING THE INTENTIONS OF THE PLANS WITH RESPECT TO DUTIES OF THE LEOS. THE ENGINEER SHALL HAVE FINAL CONTROL OVER THE LEOS' DUTIES AND PLACEMENT, AND WILL RESOLVE ANY ISSUES THAT MAY ARISE BETWEEN THE TWO PARTIES.

THE LEO SHALL REPORT IN TO THE CONTRACTOR PRIOR TO THE START OF THE SHIFT, IN ORDER TO RECEIVE INSTRUCTIONS REGARDING SPECIFIC WORK ASSIGNMENTS DURING HIS/HER SHIFT. THE LEO IS EXPECTED TO STAY AT THE PROJECT SITE FOR THE ENTIRE DURATION OF HIS/HER SHIFT. THE LEO SHALL REPORT TO THE CONTRACTOR AT THE END OF HIS/HER SHIFT. ONCE THE LEO HAS COMPLETED THE DUTIES DESCRIBED ABOVE AND STILL HAS TIME REMAINING ON HIS/HER SHIFT, THE LEO MAY BE ASKED TO PATROL THROUGH THE WORK ZONE (WITH FLASHING LIGHTS OFF) OR BE PLACED AT A LOCATION TO DETER MOTORISTS FROM SPEEDING. SHOULD IT BE NECESSARY TO LEAVE THE PROJECT SITE, THE LEO SHALL NOTIFY THE ENGINEER. THE CONTRACTOR SHALL PROVIDE THE LEO WITH A TWO-WAY COMMUNICATION DEVICE WHICH SHALL BE RETURNED TO THE CONTRACTOR AT THE END OF HIS/HER SHIFT.

LEOS (WITH PATROL CAR) REQUIRED BY THE TRAFFIC MAINTENANCE TASKS ABOVE SHALL BE PAID FOR ON A UNIT PRICE (HOURLY) BASIS UNDER ITEM 614, LAW ENFORCEMENT OFFICER (WITH PATROL CAR) FOR ASSISTANCE. THE FOLLOWING ESTIMATED QUANTITIES HAVE BEEN CARRIED TO THE GENERAL SUMMARY.

ITEM 614, LAW ENFORCEMENT OFFICER WITH PATROL CAR FOR ASSISTANCE 40 HOURS

THE HOURS PAID SHALL INCLUDE ANY MINIMUM SHOW-UP TIME REQUIRED BY THE LAW ENFORCEMENT AGENCY INVOLVED.

ANY ADDITIONAL COSTS (ADMINISTRATIVE OR OTHERWISE) INCURRED BY THE CONTRACTOR TO OBTAIN THE SERVICES OF AN LEO ARE INCLUDED WITH THE BID UNIT PRICE FOR ITEM 614, LAW ENFORCEMENT OFFICER WITH PATROL CAR FOR ASSISTANCE.

ITEM 614, WORK ZONE IMPACT ATTENUATOR FOR 24" WIDE HAZARDS (UNIDIRECTIONAL OR BIDIRECTIONAL)

THIS ITEM SHALL CONSIST OF FURNISHING AND INSTALLING A NON-GATING IMPACT ATTENUATOR. FURNISH AN IMPACT ATTENUATOR FROM THE OFFICE OF ROADWAY ENGINEERING'S APPROVED LIST FOR WORK ZONE IMPACT ATTENUATORS, FROM THE ROADWAY STANDARDS WEB PAGE FOR ROADWAY STANDARDS APPROVED PRODUCTS.

INSTALLATION SHALL BE AT THE LOCATIONS SPECIFIED IN THE PLANS IN ACCORDANCE WITH THE MANUFACTURER'S SPECIFICATIONS.

THE CONTRACTOR SHALL REPAIR OR REPLACE A DAMAGED UNIT WITHIN 24 HOURS OF A DAMAGING IMPACT.

WHEN BIDIRECTIONAL DESIGNS ARE SPECIFIED, THE CONTRACTOR SHALL SUPPLY APPROPRIATE TRANSITIONS.

WHEN GATING IMPACT ATTENUATORS ARE DESIRED, THE CONTRACTOR SHALL SUBMIT DOCUMENTATION TO THE ENGINEER FOR ACCEPTANCE.

THE COST FOR THE ADDITIONAL BARRIER REQUIRED FOR A GATING IMPACT ATTENUATOR SHALL BE INCLUDED IN THE COST OF THE GATING IMPACT ATTENUATOR.

PAYMENT FOR THE ABOVE WORK SHALL BE MADE AT THE UNIT PRICE BID AND SHALL INCLUDE ALL LABOR, TOOLS, EQUIPMENT AND MATERIALS NECESSARY TO CONSTRUCT AND MAINTAIN A COMPLETE AND FUNCTIONAL IMPACT ATTENUATOR SYSTEM, INCLUDING ALL RELATED BACKUPS, TRANSITIONS, LEVELING PADS, HARDWARE AND GRADING, NOT SEPARATELY SPECIFIED, AS REQUIRED BY THE MANUFACTURER.

DELINEATION OF PORTABLE AND PERMANENT BARRIER

BARRIER REFLECTORS AND OBJECT MARKERS SHALL BE INSTALLED ON ALL PORTABLE BARRIER (PB) USED FOR TRAFFIC CONTROL AND ON PERMANENT CONCRETE BARRIER (INCLUDING BRIDGE PARAPETS) LOCATED WITHIN 5 FEET OF THE EDGE OF THE ADJACENT TRAVEL LANE.

BARRIER REFLECTORS SHALL CONFORM TO C&MS 626, EXCEPT THAT THE SPACING SHALL BE AS PER TRAFFIC SCD MT-101.70. OBJECT MARKERS AND THEIR INSTALLATION SHALL CONFORM TO C&MS 614.03 AND SCD MT-101.70. WHEN THE PB CONTAINS GLARE SCREEN, ONE SET OF THREE VERTICAL STRIPES OF SHEETING SHALL BE CONSIDERED EQUIVALENT TO AN OBJECT MARKER, ONE-WAY.

INCREASED BARRIER DELINEATION, AS SPECIFIED HEREIN, SHALL BE INSTALLED ON ALL PB AND CONCRETE PERMANENT BARRIER LOCATED WITHIN 5 FEET OF THE EDGE OF THE TRAVELED LANE ALONG TAPERS AND TRANSITION AREAS AND ALONG CURVES (OUTSIDE ONLY) WITH DEGREE OF CURVATURE GREATER THAN OR EQUAL TO 3 DEGREES.

THE INCREASED BARRIER DELINEATION SHALL CONSIST OF EITHER DELINEATION PANELS OR THE TRIPLE STACKING OF WORK ZONE BARRIER REFLECTORS.

DELINEATION PANELS SHALL CONSIST OF PANELS OF DELINEATION, APPROXIMATELY 34 INCHES LONG AND 6 INCHES WIDE AND SHALL BE "CRIMPED." PANELS SHALL BE INSTALLED AND SPACED PER TRAFFIC SCD MT-101.70.

TRIPLE-STACKED BARRIER REFLECTORS SHALL CONSIST OF ALIGNING THREE BARRIER REFLECTORS VERTICALLY, AT LOCATIONS WHERE A SINGLE BARRIER REFLECTOR WOULD BE OTHERWISE ATTACHED. THERE SHALL BE NO OPEN SPACE BETWEEN THE ADJACENT BARRIER REFLECTORS. THE TRIPLE-STACKED BARRIER REFLECTORS SHALL CONFORM TO C&MS 626, EXCEPT THAT THEY SHALL BE SPACED AND ALIGNED PER TRAFFIC SCD MT-101.70.

THE FOLLOWING ESTIMATED QUANTITIES HAVE BEEN INCLUDED IN THE PLANS AND CARRIED TO THE GENERAL SUMMARY:

ITEM 614, BARRIER REFLECTOR, TYPE B	23 EACH
ITEM 614, OBJECT MARKER, ONE-WAY	23 EACH
ITEM 614, INCREASED BARRIER DELINEATION	580 FEET

PAYMENT SHALL BE FULL COMPENSATION FOR ALL MATERIAL, LABOR, INCIDENTALS AND EQUIPMENT NECESSARY FOR FURNISHING, INSTALLING, MAINTAINING AND REMOVING EACH OF THE ABOVE ITEMS.

ALONG RUNS OF INCREASED BARRIER DELINEATION WHERE THIS ITEM IS PROVIDED, THE QUANTITY SHALL BE MEASURED AS THE ENTIRE LENGTH OF THE RUN OF INCREASED BARRIER DELINEATION, INCLUDING THE SPACES BETWEEN THE INDIVIDUAL DELINEATION PANELS OR STACKS OF BARRIER REFLECTORS.

CALCULATED CWW CHECKED PNS

PARAPET LETTERING MAINTENANCE OF TRAFFIC NOTES

AUG/SHE-075-5.15/5.45/11.08
PID No. 93767

SOUTH BOUND IR 75 M.O.T. SIGNS

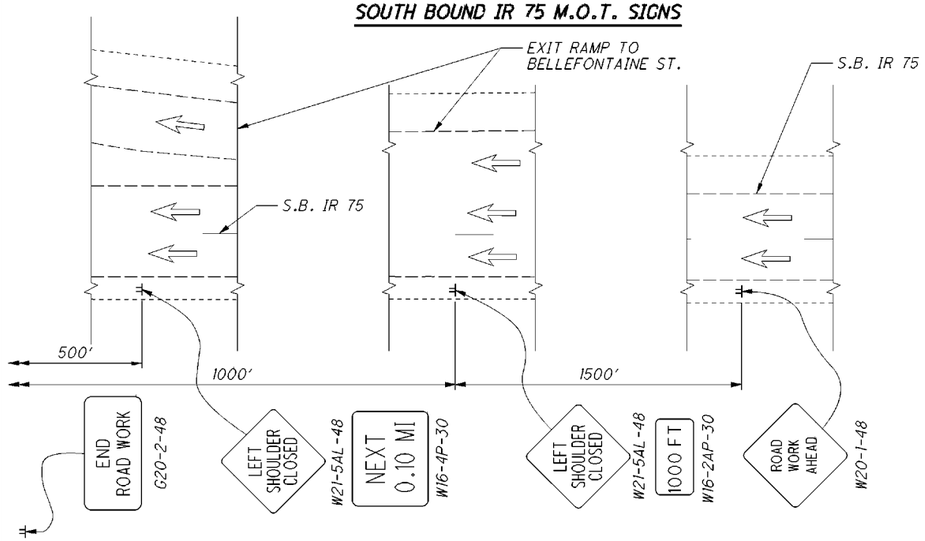

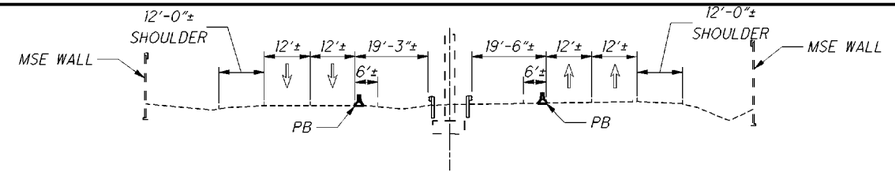

SECTION A-A

NOTES & LEGEND

- PROPOSED WORK AREA

PB - PORTABLE BARRIER

NORTH BOUND IR 75 M.O.T. SIGNS

PARAPET LETTERING MAINTENANCE OF TRAFFIC (I.R. 75 SHOULDER CLOSURE)

CALCULATED CWW
CHECKED PNS

AUG/SHE-075-5.15/5.45/11.08
PID No. 93767

4 / 7

36
56

I:\PROJECTS\District Wide\AUG-SHE-75-5.15-5.45-11.08\93767\AUG-75-0545 Parapets\075_0545WH001.dgn 5/1/2015 8:58:16 AM rhanke

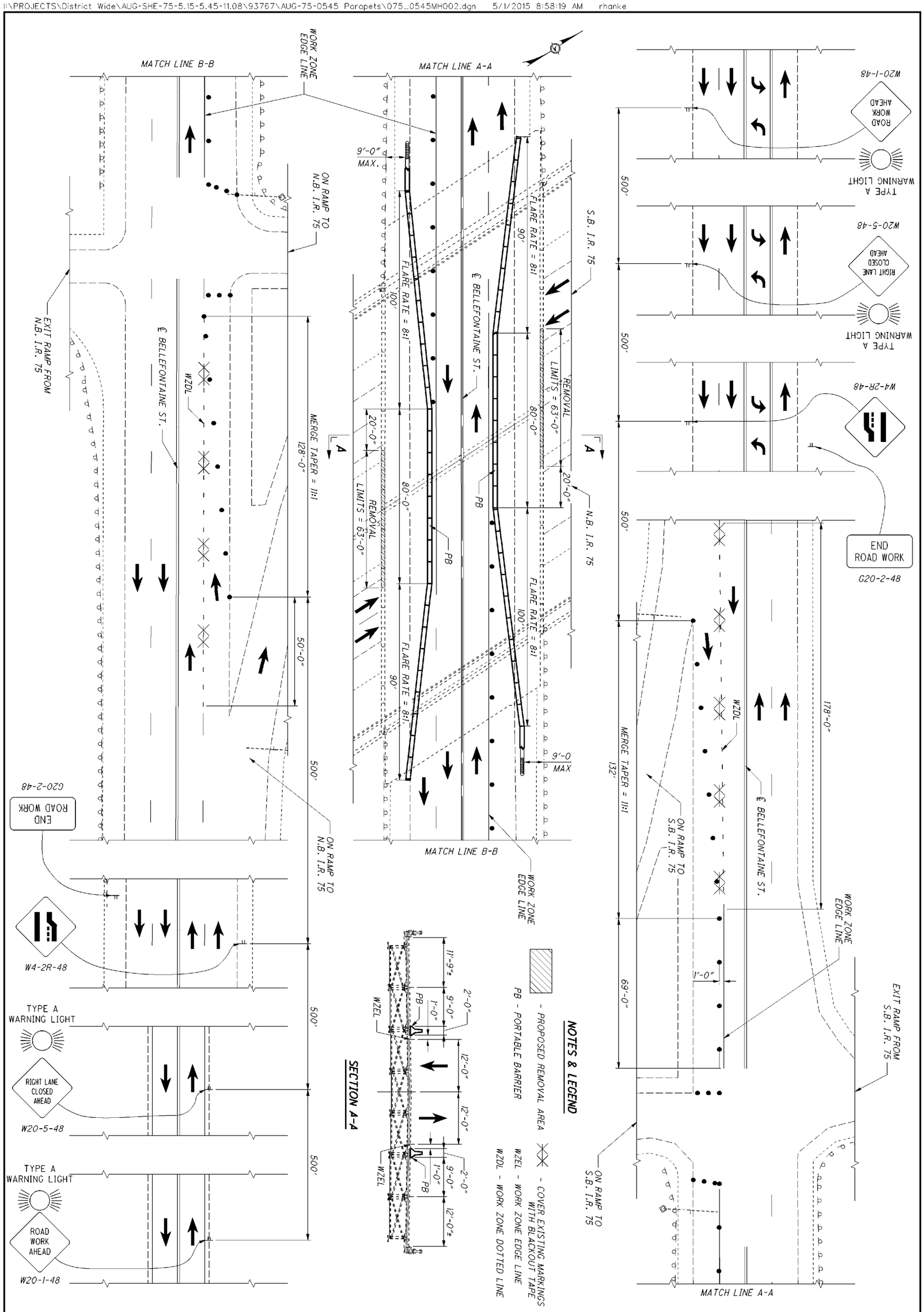

37 / 56	5 / 7	AUG/SHE-075-5.15/5.45/11.08 PID No. 93767	**PARAPET LETTERING MAINTENANCE OF TRAFFIC (BELLEFONTAINE STREET LANE CLOSURE)**	CALCULATED CWW CHECKED PNS

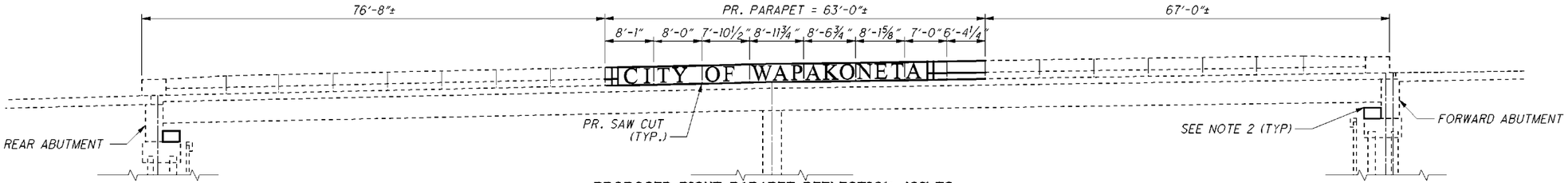

PROPOSED RIGHT PARAPET DEFLECTION JOINTS

(LOOKING NORTHBOUND)

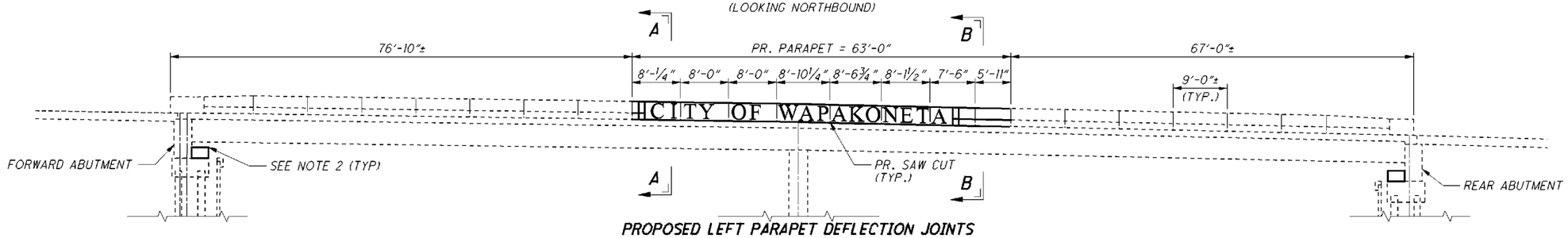

PROPOSED LEFT PARAPET DEFLECTION JOINTS

(LOOKING SOUTHBOUND)

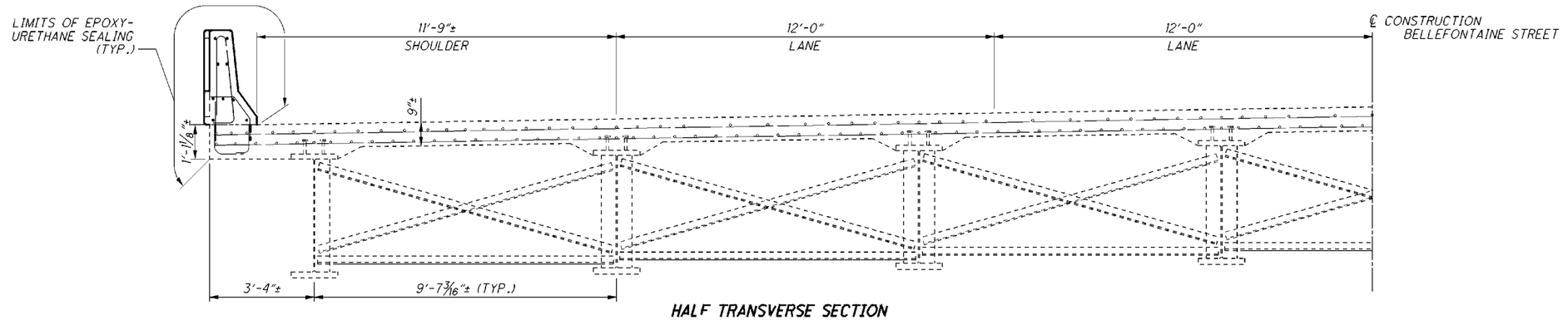

HALF TRANSVERSE SECTION

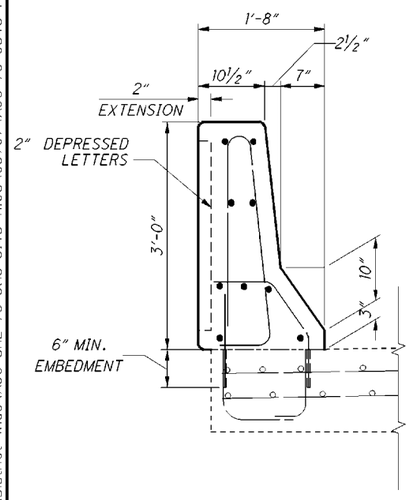

SECTION A-A

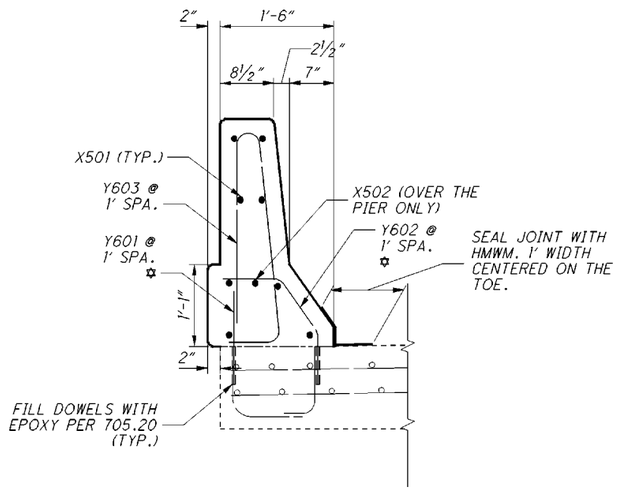

SECTION B-B

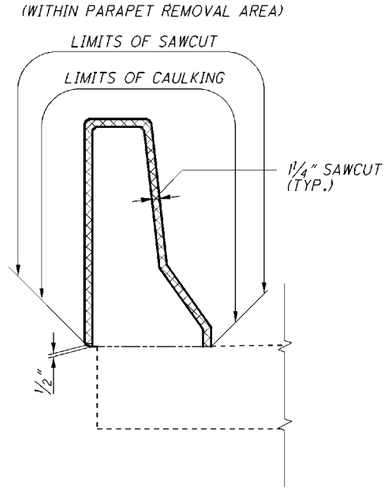

SAWCUT JOINT DETAIL

(STEEL NOT SHOWN)

NOTES & LEGEND

1. SEE SHEET 7/7 FOR ADDITIONAL DEFLECTION JOINT NOTES AND DETAILS.
2. SEE SHEET 32/56 FOR ABUTMENT PEDESTAL DETAILS.
3. ALL EXISTING SEALERS SHALL BE REMOVED WITHIN THE LIMITS OF THE PROPOSED EPOXY-URETHANE SEALING.

MIN. LAP FOR #5 BARS = 2'-6"

✡ - AVOID EXISTING REINFORCING STEEL

DESIGN AGENCY
ODOT DISTRICT 7
PLANNING & ENGINEERING

DESIGNED	DRAWN	REVIEWED	DATE
CWW	CWW	MRB	4/7/15
CHECKED	REVISED	STRUCTURE FILE NUMBER	
DHG		0602159	

PARAPET LETTERING SUPERSTRUCTURE DETAILS

BRIDGE NO.: AUG-075-0545
BELLEFONTAINE STREET OVER IR-75

AUG/SHE-075-5.15/5.45/11.08
PID No. 93767

6/7

38
56

I:\PROJECTS\District Wide\AUG-SHE-75-5.15-5.45-11.08\93767\AUG-75-0545 Parapets\075_0545SD001.dgn 5/1/2015 8:58:21 AM rhanke

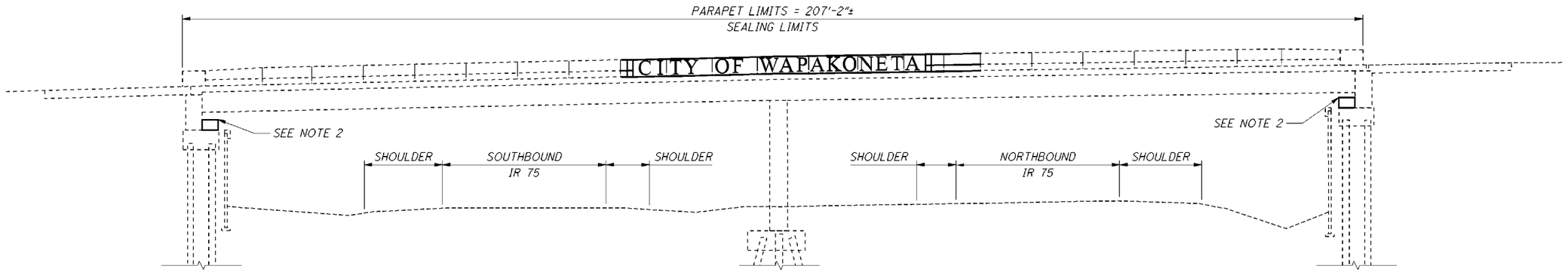

BRIDGE PROFILE

(LOOKING NORTH)

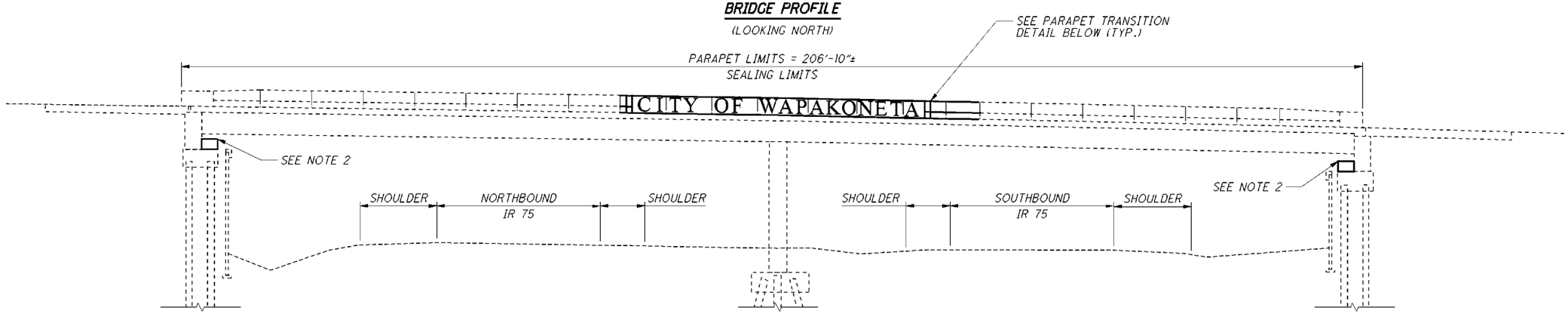

BRIDGE PROFILE

(LOOKING SOUTH)

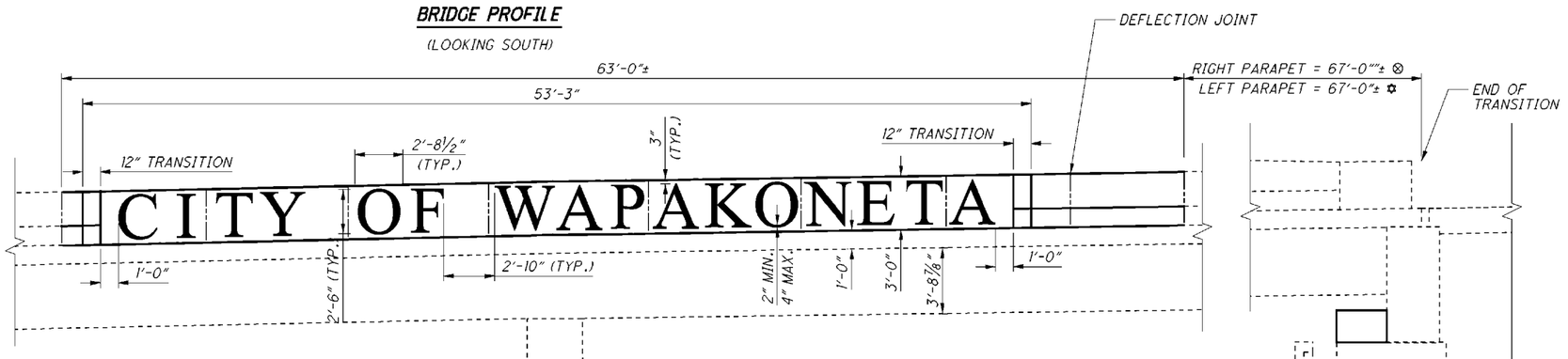

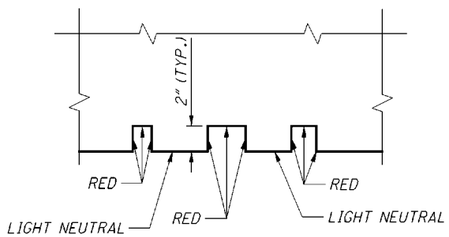

DEPRESSED LETTER DEPTH

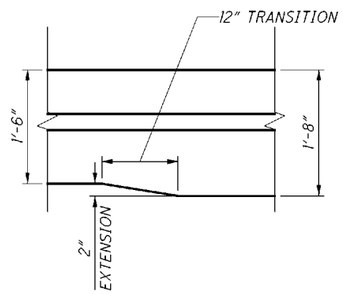

PARAPET TRANSITION

(PLAN VIEW)

NOTES

1. SEE SHEET 4/7 FOR ITEM 511, CLASS QC2 CONCRETE, BRIDGE DECK (PARAPET), AS PER PLAN NOTE FOR ADDITIONAL DETAILS.
2. SEE SHEET 32/56 FOR ABUTMENT PEDESTAL DETAILS.

⊗ - MEASURED FROM THE END OF THE TRANSITION ON THE FORWARD ABUTMENT.

✡ - MEASURED FROM THE END OF THE TRANSITION ON THE REAR ABUTMENT.

DESIGN AGENCY
ODOT DISTRICT 7
PLANNING & ENGINEERING

DESIGNED	DRAWN	REVIEWED	DATE
CWW	CWW	MRB	4/7/15
CHECKED	REVISED	STRUCTURE FILE NUMBER	
DHG		0602159	

PARAPET LETTERING AESTHETICS DETAILS

BRIDGE NO.: AUG-75-0545
BELLEFONTAINE STREET OVER IR-75

AUG/SHE-075-5.15/5.45/11.08
PID No. 93767

7 / 7

39
56

I:\PROJECTS\District Wide\AUG-SHE-75-5.15-5.45-11.08\93767\AUG-75-0545 Parapets\075_0545MD002.dgn 5/1/2015 8:58:25 AM rhanke

1 REV. 1 - 3/28/16

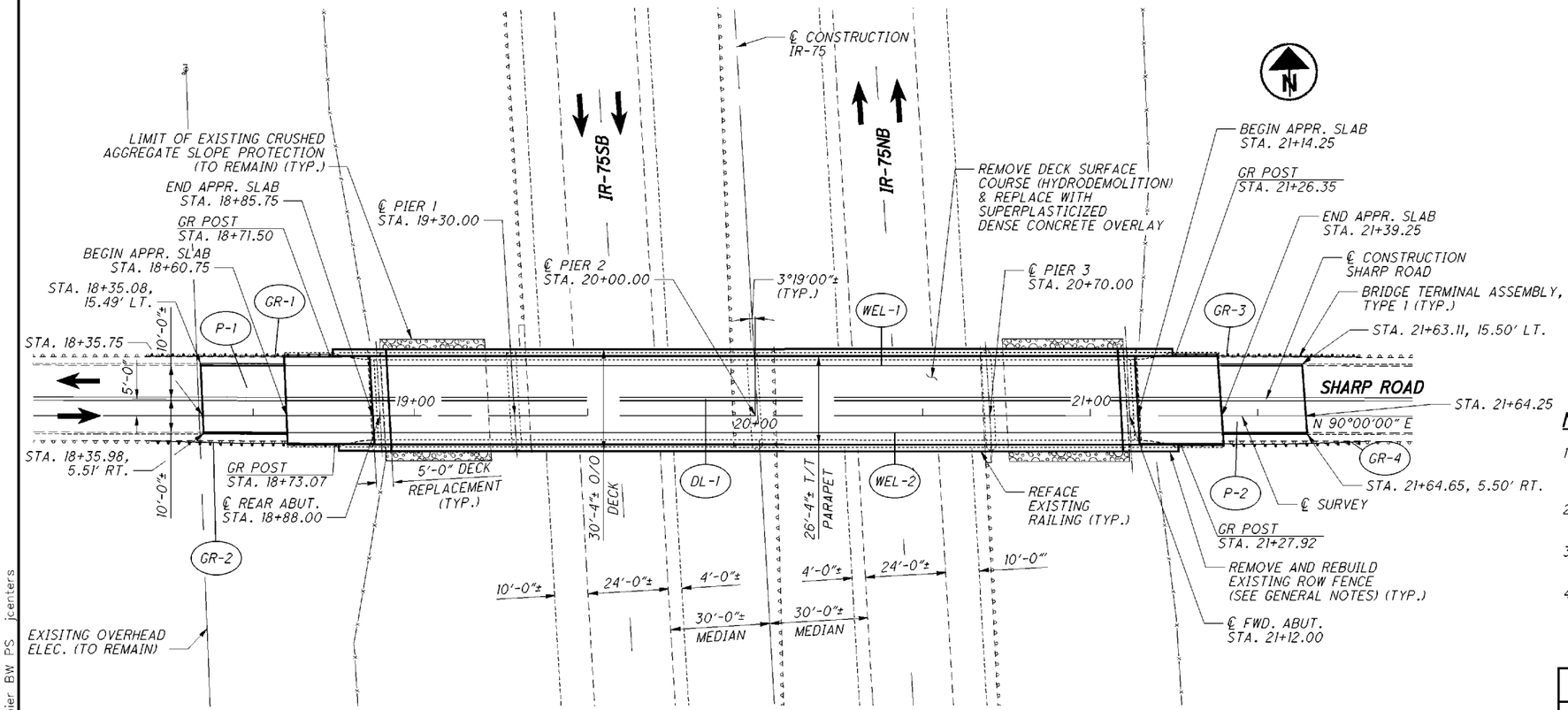

PLAN

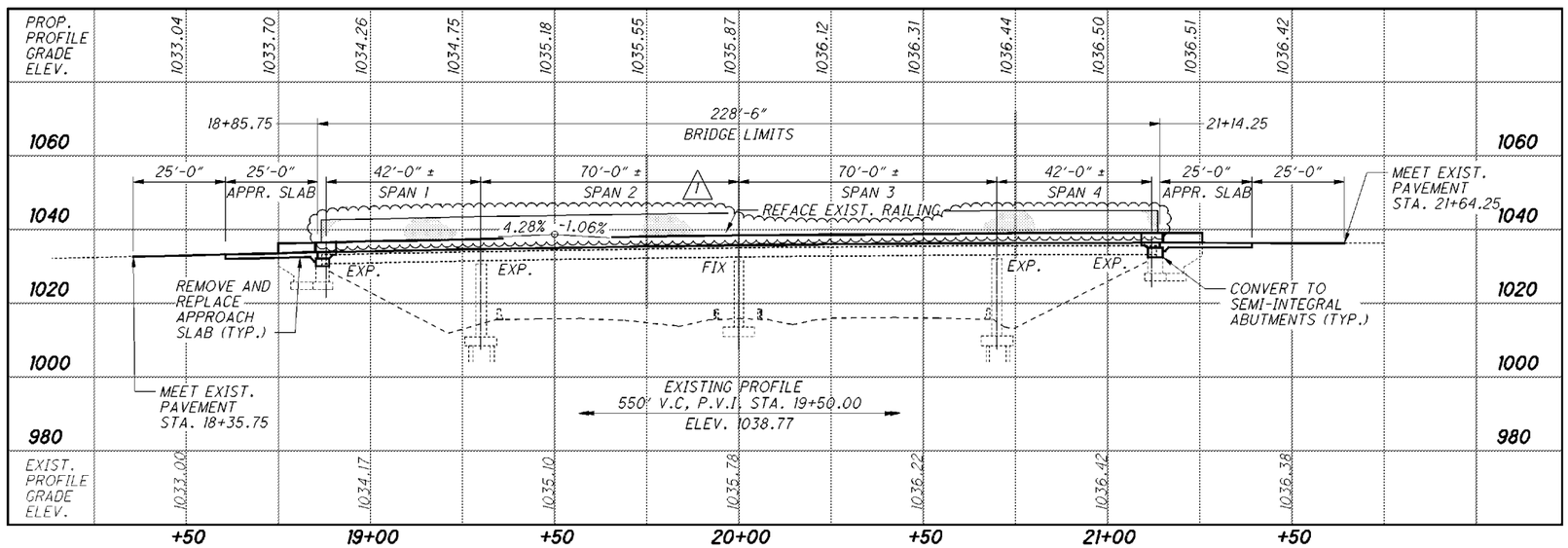

PROFILE ALONG ℄ OF CONSTRUCTION SHARP ROAD

NOTES:

1. STATIONS, ELEVATIONS, AND DIMENSIONS ARE GIVEN FOR INFORMATION ONLY AND WERE OBTAINED FROM THE EXISTING PLANS.
2. SEE ROADWAY SUBSUMMARY ON SHEET 2 FOR GUARDRAIL AND STRIPING QUANTITIES.
3. SEE SHEET 2, 12-19 FOR ADDITIONAL GUARDRAIL NOTES AND DETAILS.
4. SEE SCD BP-3.1 FEATHERING AT STRUCTURES DETAIL FOR ADDITIONAL NOTES AND DETAILS FOR PLACEMENT OF ASPHALT. PAVEMENT PLANNING WILL BE 1½" DEPTH TAPERING TO ¾" DEPTH AT THE EDGE OF THE APPROACH SLAB.

EXISTING STRUCTURE

TYPE: CONTINUOUS STEEL BEAMS WITH REINFORCED CONCRETE DECK AND SUBSTRUCTURE
SPANS: 42'-0"±, 70'-0"±, 70'-0"±, 42'-0"± C/C BRGS.
ROADWAY: 24'-0"± F/F CURBS
LOADING: HS-20
SKEW: 3°19'00" (±) RIGHT FORWARD
APPROACH ROADWAY: 25'-0"± LONG (AS-1-54 MODIFIED)
ALIGNMENT: TANGENT
CROWN: 3/16"/FT.
STRUCTURAL FILE NUMBER: 7502192
DATE BUILT: 1963
WEARING SURFACE: ½" MONOLITHIC CONCRETE
CONDITION: FAIR (TO REMAIN)

PROPOSED WORK

- REMOVE AND REPLACE PORTION OF DECK AT ABUTMENTS.
- REMOVE AND REPLACE APPROACH SLABS.
- REMOVE BACKWALLS, EXPANSION JOINTS, AND BEARINGS AND CONVERT TO SEMI-INTEGRAL ABUTMENTS.
- CONVERT EXISTING RAILING TO MODIFIED JERSEY SHAPE BARRIER.
- REMOVE A TOTAL OF ¾" OF THE EXISTING DECK SURFACE (INITIAL ¼" BY CONVENTIONAL SCARIFICATION METHODS AND FINAL ½" USING HYDRODEMOLITION)
- ADD A 1¾" SUPERPLASTICIZED DENSE CONCRETE (SDC) OVERLAY.
- PATCH DAMAGED AREA ON PIER COLUMN.
- FIELD PAINT EXISTING BEAMS AND CROSS FRAMES.
- SEAL ALL EXPOSED CONCRETE SURFACES.
- ADD VANDAL PROTECTION FENCE. 1

DESIGN AGENCY
CH2MHILL
ONE DAYTON CENTRE, SUITE 1100
ONE SOUTH MAIN STREET
DAYTON, OHIO 45402

DESIGNED	DRAWN	REVIEWED	DATE
BJM	TJC	JTC	06/14
CHECKED	REVISED	STRUCTURE FILE NUMBER	
VS		7502192	

SHELBY COUNTY
STA. 18+85.75
STA. 21+14.25

SITE PLAN
BRIDGE NO. SHE-075-1108
SHARP ROAD OVER IR-75

AUG/SHE-075-5.15/5.45/11.08
PID No. 93767

1 / 17

40 / 56

075_1108SP001.dgn Sheet 3/24/2016 4:17PM CH_ODOTV8i_Half_BW.pen \\daypsp01\DAY Copier BW PS jcenters

GENERAL NOTES

REFER TO THE FOLLOWING STANDARD BRIDGE DRAWINGS:

AS-1-81	REVISED	01-18-13
SICD-1-96	REVISED	07-18-14
VPF-1-90	REVISED	07-17-15

AND TO THE FOLLOWING SUPPLEMENTAL SPECIFICATIONS:

848	DATED	04-18-14

1

DESIGN SPECIFICATIONS:

THIS STRUCTURE CONFORMS TO "STANDARD SPECIFICATIONS FOR HIGHWAY BRIDGES" ADOPTED BY THE AMERICAN ASSOCIATION OF STATE HIGHWAY AND TRANSPORTATION OFFICIALS, 2002, AND THE ODOT BRIDGE DESIGN MANUAL.

DESIGN LOADING:

HS-20 CASE II AND THE ALTERNATE MILITARY LOADING. FUTURE WEARING SURFACE (FWS) OF 60 PSF.

DESIGN DATA:

CONCRETE CLASS QC2 - COMPRESSIVE STRENGTH 4500 PSI (SUPERSTRUCTURE)
CONCRETE CLASS QC1 - COMPRESSIVE STRENGTH 4000 PSI (SUBSTRUCTURE)
REINFORCING STEEL - ASTM A615 OR A996 GRADE 60 MINIMUM YIELD STRENGTH 60,000 PSI.

EXISTING STRUCTURE VERIFICATION:

DETAILS AND DIMENSIONS SHOWN ON THESE PLANS PERTAINING TO THE EXISTING STRUCTURE HAVE BEEN OBTAINED FROM PLANS OF THE EXISTING STRUCTURE AND FROM FIELD OBSERVATIONS AND MEASUREMENTS. CONSEQUENTLY, THEY ARE INDICATIVE OF THE EXISTING STRUCTURE AND THE PROPOSED WORK BUT THEY SHALL BE CONSIDERED TENTATIVE AND APPROXIMATE. THE CONTRACTOR IS REFERRED TO CMS SECTIONS 102.05, 105.02, AND 513.04.

BASE CONTRACT BID PRICES UPON A RECOGNITION OF THE UNCERTAINTIES DESCRIBED ABOVE AND UPON A PREBID EXAMINATION OF THE EXISTING STRUCTURE. HOWEVER, THE DEPARTMENT WILL PAY FOR ALL PROJECT WORK BASED UPON ACTUAL DETAILS AND DIMENSIONS THAT HAVE BEEN VERIFIED IN THE FIELD.

MAINTENANCE OF TRAFFIC:

THE BRIDGE WILL BE CLOSED DURING CONSTRUCTION. FOR MAINTENANCE OF TRAFFIC PLANS, SEE SHEET 9.

TRAFFIC PROTECTION DURING HYDRODEMOLITION:

IN ACCORDANCE WITH TRAFFIC PROTECTION REQUIREMENTS OF SUPPLEMENTAL SPECIFICATION 848, FALSEWORK SHALL BE PLACED IN BETWEEN THE EXISTING BEAMS ABOVE ALL INTERSTATE TRAFFIC PRIOR TO HYDRODEMOLITION.

ITEM 202, PORTIONS OF STRUCTURE REMOVED, AS PER PLAN:

DESCRIPTION: THIS WORK CONSISTS OF THE REMOVAL OF A PORTION OF THE CONCRETE DECK, EXPANSION JOINTS, AND OTHER APPURTENANCES FROM SUPPORTING SYSTEMS AS SHOWN IN THE PLANS. THIS WORK SHALL ALSO INCLUDE THE REMOVAL OF THE ABUTMENT BACKWALLS AND ABUTMENT ROCKER BEARINGS IN ACCORDANCE WITH THE DETAILS SHOWN IN THE PLANS.

ADDITIONAL CONCRETE REMOVAL MAY BE REQUIRED IF UNSOUND OR DETERIORATED CONCRETE IS ENCOUNTERED BEYOND THE PLAN CUT LINES. THE CONTRACTOR SHALL REMOVE ANY UNSOUND OR DETERIORATED CONCRETE BEYOND THE PLAN CUT LINE AS DIRECTED BY THE ENGINEER. THE PROVISIONS OF ITEM 202 APPLY EXCEPT AS SPECIFIED BY THE FOLLOWING NOTES. PERFORM WORK CAREFULLY DURING DECK REMOVALS TO PROTECT PORTIONS OF THE EXISTING STEEL SUPPORTING SYSTEM THAT ARE TO BE SALVAGED AND INCORPORATED INTO THE PROPOSED STRUCTURE. THE USE OF EXPLOSIVES, HEADACHE BALLS AND/OR HOE RAM TYPE OF EQUIPMENT IS PROHIBITED. SUBMIT CONSTRUCTION PLANS ACCORDING TO CMS 501.05.

PROTECTION OF STEEL SUPPORT SYSTEMS: BEFORE DECK SLAB CUTTING IS PERMITTED, DRAW THE OUTLINE OF THE PRIMARY STEEL MEMBERS IN CONTACT WITH THE BOTTOM OF THE DECK ON THE SURFACE OF THE DECK. DRILL SMALL DIAMETER PILOT HOLES 2 INCHES OUTSIDE THESE LINES TO CONFIRM THE LOCATION OF FLANGE EDGES. DECK CUTS OVER OR WITHIN 2" OF FLANGE EDGES SHALL NOT EXTEND LOWER THAN THE BOTTOM LAYER OF DECK SLAB REINFORCING STEEL. CUTS MADE OUTSIDE 2 INCHES OF FLANGE EDGES MAY EXTEND THE FULL DEPTH OF THE DECK. PERFORM WORK CAREFULLY DURING CUTTING OF THE DECK SLAB TO AVOID DAMAGING STEEL MEMBERS THAT ARE TO BE INCORPORATED INTO THE PROPOSED STRUCTURE. REPLACE OR REPAIR STEEL MEMBERS DAMAGED BY THE DECK SLAB CUTTING OPERATIONS AT NO COST TO THE PROJECT. AT LEAST 7 DAYS BEFORE PERFORMING REPAIR WORK, SUBMIT A PROPOSED REPAIR PLAN, DEVELOPED BY AN OHIO REGISTERED PROFESSIONAL ENGINEER TO THE DIRECTOR. OBTAIN THE DIRECTOR'S APPROVAL BEFORE PERFORMING REPAIR.

REMOVAL METHODS: THE CONTRACTOR MAY REMOVE CONCRETE BY CUTTING AND BY MEANS OF HAND OPERATED PNEUMATIC HAMMERS EMPLOYING POINTED OR BLUNTED CHISEL TYPE TOOLS. FOR REMOVALS OVER STRUCTURAL MEMBERS, THE CONTRACTOR MAY USE A HAMMER HEAVIER THAN 35 POUNDS BUT NOT TO EXCEED 90 POUNDS UNLESS APPROVED BY THE ENGINEER. REMOVAL METHODS OVER STRUCTURAL MEMBERS SHALL ENSURE ADEQUATE DEPTH CONTROL AND PREVENT NICKING OR GOUGING THE PRIMARY STRUCTURAL MEMBERS.

DUE TO THE POSSIBLE PRESENCE OF ATTACHMENTS TO EXISTING STRUCTURE MEMBERS, PREFORM WORK CAREFULLY DURING DECK REMOVAL TO AVOID DAMAGING STRUCTURAL MEMBERS TO REMAIN. REPLACE OR REPAIR STRUCTURAL MEMBERS DAMAGED BY REMOVAL OPERATIONS AT NO COST TO THE PROJECT. AT LEAST 7 DAYS BEFORE PERFORMING WORK, SUBMIT A PROPOSED REPAIR PLAN, DEVELOPED BY AN OHIO REGISTERED PROFESSIONAL ENGINEER TO THE DIRECTOR. OBTAIN DIRECTORS APPROVAL BEFORE PERFORMING REPAIR.

ITEM 202, PORTIONS OF STRUCTURE REMOVED, AS PER PLAN, CONTINUED:

SUBSTRUCTURE CONCRETE REMOVAL: REMOVE CONCRETE BY MEANS OF APPROVED PNEUMATIC HAMMERS EMPLOYING POINTED AND BLUNT CHISEL TOOLS. HYDRAULIC HOE-RAM TYPE HAMMERS WILL NOT BE PERMITTED. THE WEIGHT OF THE HAMMER SHALL NOT BE MORE THAN 35 POUNDS FOR REMOVAL WITHIN 18 INCHES OF PORTIONS TO BE PRESERVED. OUTSIDE THE 18 INCH LIMIT, THE CONTRACTOR MAY USE HAMMERS NOT EXCEEDING 90 POUNDS UPON THE APPROVAL OF THE ENGINEER. DO NOT PLACE PNEUMATIC HAMMERS IN DIRECT CONTACT WITH REINFORCING STEEL THAT IS TO BE RETAINED IN THE REBUILT STRUCTURE.

CUT LINE CONSTRUCTION JOINT PREPARATION: SAW CUT BOUNDARIES OF PROPOSED CONCRETE REMOVALS 1 INCH DEEP. REMOVE CONCRETE TO A ROUGH SURFACE. LEAVE THE EXISTING REINFORCING STEEL, IF REQUIRED IN THE PLANS, IN PLACE. INSTALL DOWEL BARS IF SPECIFIED. PRIOR TO CONCRETE PLACEMENT ABRASIVELY CLEAN JOINT SURFACES AND EXISTING EXPOSED REINFORCEMENT TO REMOVE LOOSE AND DISINTEGRATED CONCRETE AND LOOSE RUST. THOROUGHLY CLEAN THE JOINT SURFACE AND EXPOSED REINFORCEMENT OF ALL DIRT, DUST, RUST, OR OTHER FOREIGN MATERIAL BY THE USE OF WATER, AIR UNDER PRESSURE, OR OTHER METHODS THAT PRODUCE SATISFACTORY RESULTS. EXISTING REINFORCING STEEL DOES NOT HAVE TO HAVE A BRIGHT STEEL FINISH, BUT REMOVE ALL PACK AND LOOSE RUST. THOROUGHLY DRENCH EXISTING CONCRETE SURFACES WITH CLEAN WATER AND ALLOW TO DRY TO A DAMP CONDITION BEFORE PLACING CONCRETE.

MEASUREMENT AND PAYMENT: THE DEPARTMENT WILL MEASURE THE QUANTITY OF REMOVAL ON A LUMP SUM BASIS. THE DEPARTMENT WILL PAY FOR ACCEPTED QUANTITIES OF REMOVALS AT THE CONTRACT PRICE FOR ITEM 202, PORTIONS OF STRUCTURE REMOVED, AS PER PLAN.

ITEM 509, EPOXY COATED REINFORCING STEEL, AS PER PLAN:

IN ADDITION TO CONFORMING TO 509 REQUIREMENTS, THE LABOR REQUIRED TO FIELD DRILL THE 2" DIAMETER HOLES IN THE EXISTING STEEL BEAMS AT THE ABUTMENT DIAPHRAGMS SHALL BE INCLUDED WITH ITEM 509, EPOXY COATED REINFORCING STEEL, AS PER PLAN FOR PAYMENT.

ITEM 509 - REINFORCING STEEL, REPLACEMENT OF EXISTING REINFORCING STEEL, AS PER PLAN:

REPLACE ALL EXISTING REINFORCING BARS DEEMED BY THE ENGINEER TO BE UNUSABLE BECAUSE OF CORROSION. THE DEPARTMENT WILL MEASURE THE REPLACEMENT REINFORCING STEEL BY THE NUMBER OF POUNDS ACCEPTED IN PLACE.

REPLACE ALL EXISTING REINFORCING STEEL BARS WHICH ARE TO BE INCORPORATED INTO THE NEW WORK AND ARE DEEMED BY THE ENGINEER TO BE MADE UNUSABLE BY CONCRETE REMOVAL OPERATIONS WITH NEW EPOXY COATED REINFORCING STEEL OF THE SAME SIZE AT NO COST TO THE DEPARTMENT.

ITEM 511 - CONCRETE MISC.: EMBEDDED GALVANIC ANODE (EGA):

PART 1 GENERAL

1.01 SUMMARY

A. THIS SECTION INCLUDES FURNISHING ALL LABOR, TOOLS, MATERIALS, EQUIPMENT AND SERVICES NECESSARY TO PROPERLY INSTALL EMBEDDED GALVANIC ANODES.

1.02 REFERENCES

A. ACI/ICRI 2008 CONCRETE REPAIR MANUAL.

B. ACI GUIDELINE NO. 222 CORROSION OF METALS IN CONCRETE.

C. ICRI GUIDELINE 310.IR-2008 GUIDE FOR SURFACE PREPARATION FOR THE REPAIR OF DETERIORATED CONCRETE RESULTING FROM REINFORCING STEEL CORROSION.

D. ASTM A615/A615M-09 STANDARD SPECIFICATION FOR DEFORMED AND PLAIN BILLET-STEEL BAR FOR CONCRETE REINFORCEMENT.

E. ASTM B6-09 STANDARD SPECIFICATION FOR ZINC.

F. ASTM B418-09 STANDARD SPECIFICATION FOR CAST AND WROUGHT GALVANIC ZINC ANODES.

1.03 MANUFACTURER TECHNICAL ASSISTANCE

A. THE CONTRACTOR WILL ENLIST AND PAY FOR THE SERVICES OF A QUALIFIED CORROSION TECHNICIAN SUPPLIED BY THE EMBEDDED GALVANIC ANODE MANUFACTURER TO PROVIDE ON-SITE TECHNICAL ASSISTANCE FOR THE INITIAL INSTALLATION OF THE CORROSION PROTECTION SYSTEM.

B. THE CONTRACTOR SHALL COORDINATE ITS WORK WITH THE DESIGNATED CORROSION TECHNICIAN TO ALLOW SITE SUPPORT DURING PROJECT STARTUP AND INITIAL ANODE INSTALLATION. THE TECHNICIAN SHALL PROVIDE CONTRACTOR TRAINING FOR VERIFICATION OF EMBEDDED REINFORCING STEEL CONTINUITY AND ANODE INSTALLATION.

ITEM 511 - CONCRETE MISC.: EMBEDDED GALVANIC ANODE (EGA), CONTINUED:

PART 2 MATERIALS

2.01 MATERIALS

A. EMBEDDED GALVANIC ANODES SHALL HAVE THE FOLLOWING NOMINATION DIMENSIONS: 2.5 IN. LONG BY 3.1 IN. WIDE BY 1.2 IN. DEEP, PRE-MANUFACTURED, AND CONSIST OF A MINIMUM OF 3.5 OZ (100 GRAMS) OF ZINC IN COMPLIANCE WITH ASTM B418 TYPE II AND ASTM B6 SPECIAL HIGH GRADE WITH IRON CONTENT OF 15 PPM OR LESS CAST AROUND APAIR OF HEAT TREATED, UNCOATED STEEL TIE WIRES AND ENCASED IN A HIGHLY ALKALINE CEMENTITIOUS SHELL WITH A PH OF 14 OR GREATER. THE ANODE UNIT SHALL CONTAIN NO ADDED SULFATE NOR SHALL IT CONTAIN CHLORIDE, BROMIDE OR OTHER CONSTITUENTS THAT ARE CORROSIVE TO REINFORCING STEEL. ANODE UNITS SHALL BE SUPPLIED WITH INTEGRAL UNSPLICED WIRES WITH LOOP TIES FOR DIRECTLY TYING TO THE REINFORCING STEEL. EMBEDDED GALVANIC ANODES SHALL BE GALVASHIELD XP2 AVAILABLE FROM VECTOR CORROSION TECHNOLOGIES (WWW.VECTOR-CORROSION.COM) USA (813) 830-7566, CANADA (204) 489-6300, OR APPROVED EQUAL.

APPLICATIONS FOR EQUALS INCLUDE:

1. A HIGHLY ALKALINE CEMENTITIOUS SHELL WITH A PH OF 14 OR GREATER
2. PROVIDE A MINIMUM OF 10 YEARS SERVICE LIFE (IN SIMILAR ENVIRONMENT)
3. CONTAIN NO ADDED CONSTITUENTS CORROSIVE TO REINFORCING STEEL OR DETRIMENTAL TO CONCRETE, EG CHLORIDE, BROMIDE, SULFATES, ETC.
4. PROVEN TRACK RECORD WITH BRIDGE WORK SHOWING A MINIMUM OF 10 YEARS SATISFACTORY FIELD PERFORMANCE.
5. A MINIMUM OF 3 PROJECTS OF SIMILAR SIZE AND APPLICATION.
6. ANODE UNITS SHALL BE SUPPLIED WITH SOLID ZINC (ASTM B6 SPECIAL HIGH GRADE) CORE CAST AROUND ANNEALED UNCOATED STEEL TIE WIRES FOR TYING TO THE REINFORCING STEEL.
7. ANODE UNITS SHALL BE SUPPLIED WITH INTEGRAL UNSPLICED TIE WIRES SUCH THAT ZINC ANODE IS CONNECTED TO THE REINFORCEMENT WITH A CONTINUOUS, UNSPLICED WIRE.
8. THIRD PARTY PRODUCT EVALUATION, SUCH AS FROM CONCRETE INNOVATIONS APPRAISAL SERVICE, BBA ETC.

B. REPAIR MORTARS, CONCRETE AND BONDING AGENTS SHALL BE AS DESCRIBED IN THE NOTE FOR ITEM SPECIAL, PATCHING CONCRETE STRUCTURE, MISC.: WITH HIGH EARLY STRENGTH PUMPED SELF-CONSOLIDATING CONCRETE ON SHEET 3. ANODES USED WITH HIGHER RESISTANCE REPAIR MATERIALS SHALL BE EMBEDDED IN GALVASHIELD EMBEDDING MORTAR TO CREATE A CONDUCTIVE BRIDGE TO THE SUBSTRATE PRIOR TO REPAIR MATERIAL INSTALLATION.

C. DEFORMED BARS FOR REINFORCMENT SHALL BE HOT ROLLED STEEL IN ACCORDANCE WITH ASTM A615/A615M, GRADE 60 (GRADE 400).

D. DELIVER, STORE, AND HANDLE ALL MATERIALS IN ACCORDANCE WITH MANUFACTURER'S INSTRUCTIONS.

PART 3 EXECUTION

3.01 CONCRETE REMOVAL

A. REMOVE LOOSE OR DELAMINATED CONCRETE AND UNDERCUT ALL EXPOSED REINFORCING BY REMOVING CONCRETE FROM THE FULL CIRCUMFERENCE OF THE STEEL AS PER ICRI R310.IR. THE MINIMUM CLEARANCE BETWEEN THE CONCRETE SUBSTRATE AND REINFORCING STEEL SHALL BE ¾".

3.02 CLEANING AND REPAIR OF REINFORCING STEEL

A. CLEAN EXPOSED REINFORCING STEEL OF RUST, MORTAR, ETC. TO PROVIDE SUFFICIENT ELECTRICAL CONNETION AND MECHANICAL BOND.

B. IF SIGNIFICANT REDUCTION IN THE CROSS SECTION OF THE REINFORCING STEEL HAS OCCURRED, REPLACE OR INSTALL SUPPLEMENTAL REINFORCEMENT AS DIRECTED BY THE ENGINEER. ALL SUPPLEMENTAL REINFORCING SHALL BE CONSIDERED INCIDENTAL AND INCLUDED IN THE COST OF THE ITEM 509, REINFORCING STEEL, REPLACEMENT OF EXISTING REIN FORCING STEEL.

C. SECURE LOOSE REINFORCING STEEL BY TYING TIGHTLY TO THE OTHER BARS WITH STEEL TIE WIRE.

1 REV. 1 - 3/28/16

075_1108GN001.dgn Sheet 3/24/2016 4:30PM CH_ODOTV8i_Half_BW.pen \\daypsp01\DAY Copier BW PS jcenters

DESIGN AGENCY
CH2MHILL
ONE DAYTON CENTRE, SUITE 1100
ONE SOUTH MAIN STREET
DAYTON, OHIO 45402

DESIGNED	DRAWN	REVIEWED	DATE
BJM	TJC	JTC	06/14
CHECKED	REVISED	STRUCTURE FILE NUMBER	
VS		7502192	

GENERAL NOTES 1
BRIDGE NO. SHE-075-1108
SHARP ROAD OVER IR-75

AUG/SHE-075-5.15/5.45/11.08
PID No. 93767

GENERAL NOTES, CONTINUED

ITEM 511 - CONCRETE MISC.: EMBEDDED GALVANIC ANODE (EGA) CONTINUED:

3.03 GALVANIC ANODE INSTALLATION

A. INSTALL ANODE UNITS AND REPAIR MATERIAL IMMEDIATELY FOLLOWING PREPARATION AND CLEANING OF THE STEEL REINFORCEMENT. REPAIR MATERIAL SHALL BE PLACED NO LATER THAN ONE (1) WEEK AFTER CONCRETE REMOVAL UNLESS APPROVED BY ENGINEER.

B. GALVANIC ANODES SHALL BE INSTALLED IN THE LOCATIONS AND SPACING AS SPECIFIED IN THE PLANS, IN NO CASE, SHALL THE SPACING EXCEED 18 INCHES.

C. PLACE THE GALVANIC ANODES AS CLOSE AS POSSIBLE TO THE PATCH EDGE WHILE PROVIDING SUFFICIENT CLEARANCE BETWEEN ANODES AND SUBSTRATE TO ALLOW REPAIR MATERIAL TO ENCASE ANODE.

D. THE TIE WIRES SHALL BE WRAPPED AROUND THE CLEANED REINFORCING STEEL MULTIPLE TIMES IN OPPOSITE DIRECTIONS AND THEN TWISTED TIGHT USING A REBAR TIE WIRE TWISTING TOOL OR PLIERS TO ALLOW LITTLE OR NO ANODE MOVEMENT DURING CONCRETE PLACEMENT.

a. WHENEVER POSSIBLE, PLACE ANODE SUCH THAT THE BARFIT GROOVE FITS ALONG THE BAR.

b. PLACE ANODE BESIDE OR BENEATH THE BAR AND SECURE TO CLEAN REINFORCING STEEL.

c. IF SUFFICIENT CONCRETE COVER EXISTS, THE ANODE MAY BE PLACED ALONG A SINGLE BAR OR AT THE INTERSECTION BETWEEN TWO BARS AND SECURED TO EACH CLEAN BAR.

E. ELECTRICAL CONTINUITY.

a. CONFIRM ELECTRICAL CONNECTION BETWEEN ANODE TIE WIRE AND REINFORCING STEEL BY MEASURING DC RESISTANCE (OHM) OR POTENTIAL (MV) WITH A MULTI-METER.

b. ELECTRICAL CONNECTION IS ACCEPTABLE IF THE DC RESISTANCE MEASURED WITH A MULTIMETER IS LESS THAN 1 OHM OR THE DC POTENTIAL IS LESS THAN 1 MV.

c. CONFIRM ELECTRICAL CONTINUITY OF THE EXPOSED REINFORCING STEEL WITHIN THE REPAIR AREA. IF NECESSARY, ELECTRICAL CONTINUITY SHALL BE ESTABLISHED WITH STEEL TIE WIRE.

d. ELECTRICAL CONTINUITY BETWEEN TEST AREAS IS ACCEPTABLE IF THE DC RESISTANCE MEASURED WITH MULTI-METER IS LESS THAN 1 OHM OR THE POTENTIAL IS LESS THAN 1 MV.

EACH EMBEDDED GALVANIC ANODE PROVIDED AND INSTALLED WITH ALL INCIDENTALS, INCLUDING REMOVAL OF ALL UNSOUND CONCRETE AND CLEANING AND REPAIR OF EXISTING REINFORCING STEEL, SHALL BE PAID FOR AT THE UNIT PRICE BID PER EACH ITEM 511, CONCRETE MISC.: EMBEDDED GALVANIC ANODE (EGA). PRIOR TO REPAIR MATERIAL INSTALLATION.

ITEM 511, CLASS QSC2 CONCRETE, BRIDGE DECK (PARAPET), AS PER PLAN:

THE ACCEPTED QUANTITIES SHALL INCLUDE THE PARAPET SECTIONS AT EACH END OF THE BRIDGE AND THE PARAPET SECTIONS ADJACENT TO EACH APPROACH SLAB.

ITEM 511, CLASS QC2 CONCRETE, BRIDGE DECK, AS PER PLAN:

PRIOR TO PLACING THE SEMI-INTEGRAL ABUTMENT EXPANSION JOINT SEAL, A 4" x 4" CLOSED CELL ETHYLENE VINYL ACETATE FOAM SHALL BE INSTALLED. AN ADDITIONAL SEAL SHALL BE INSTALLED BETWEEN THE END OF THE DECK RAILING AND THE END OF THE WINGWALL TRANSITION. THE FOLLOWING PRODUCTS MAY BE USED: THERMAL-CHEM E.V.A. BY THERMAL-CHEM INC., MM EVA SERIES BY MM SYSTEMS, OR AN APPROVED EQUAL. INSTALL WITH A BONDER PER MANUFACTURER'S RECOMMENDATIONS.

IN ADDITION, INSTALL A 3 INCH THICKNESS OF POLYSTYRENE SHEETING BETWEEN THE ABUTMENT DIAPRHAGM AND THE POROUS BACKFILL AND BETWEEN THE ENDS OF THE DECK RAILING AND THE END OF THE WINGWALL TRANSITIONS.

FROM THE BOTTOM OF THE APPROACH SLAB TO THE PROPOSED BEAM SEAT, THE SEMI-INTEGRAL ABUTMENT EXPANSION JOINT SEAL RUNNING ALONG THE BRIDGE SEAT SHALL BE INSTALLED PRIOR TO THE POLYSTYRENE SHEETING.

PAYMENT FOR LABOR, MATERIALS, AND INSTALLATION OF THESE ITEMS SHALL BE INCLUDED IN ITEM 511, CLASS QC2 CONCRETE, BRIDGE DECK, AS PER PLAN.

ALL WORK NECESSARY TO DRILL THE 2" DIAMETER HOLES IN THE EXISTING BEAMS, AS DETAILED ON SHEET 9, SHALL BE INCLUDED FOR PAYMENT WITH ITEM 511, CLASS QC2 CONCRETE, BRIDGE DECK, AS PER PLAN.

ITEM 517 - RAILING FACED, AS PER PLAN:

DESCRIPTION: THIS WORK CONSISTS OF FACING CURB STYLE PARAPETS, USING CAST IN PLACE CONCRETE, TO OBTAIN THE DEFLECTOR SHAPE AS SHOWN IN THE PLANS.

REMOVAL: CAREFULLY REMOVE THE EXISTING ALUMINUM RAILING, POSTS, CURB PLATES, EXISTING CONCRETE CURB AND BULB ANGLE GUTTER. REMOVE ALL LOOSE OR UNSOUND CONCRETE. REMOVE SOUND CONCRETE, AS NECESSARY, TO OBTAIN A MINIMUM 4 INCH THICKNESS OF NEW CONCRETE.

ITEM 517 - RAILING FACED, AS PER PLAN, CONTINUED:

DOWEL HOLES AND REINFORCING STEEL: DRILL DOWEL HOLES WHERE SHOWN IN THE PLANS. INSTALL REINFORCING STEEL ACCORDING TO ITEM 510 USING EPOXY GROUT, 705.20. PRIOR TO DRILLING DOWEL HOLES, LOCATE ALL EXISTING REINFORCING STEEL BARS IN THE AREA OF THE HOLE WITH THE AID OF A REINFORCING STEEL BAR LOCATOR (PACHOMETER). IF AN EXISTING BAR IS ENCOUNTERED AT THE SAME LOCATION AS A PROPOSED DOWEL HOLE, MOVE THE DOWEL HOLE TO EITHER SIDE OF THE EXISTING BAR. THE DEPARTMENT WILL PAY FOR ALL REINFORCING STEEL, DOWEL HOLES AND GROUTING WITH ITEM 517.

SURFACE PREPARATION: THOROUGHLY CLEAN THE PARAPET SURFACE IN CONTACT WITH THE REFACING WITH DETERGENT TO REMOVE SURFACE CONTAMINANTS. AFTER DETERGENT CLEANING AND WITHIN 24 HOURS OF PLACING CONCRETE, BLAST CLEAN AND AIR BROOM OR POWER SWEEP ALL SURFACES IN CONTACT WITH THE REFACING TO REMOVE ALL SPALLS, LAITANCE, CURING COMPOUNDS, CONCRETE SEALERS AND OTHER CONTAMINANTS DETRIMENTAL TO THE ACHIEVEMENT OF AN ADEQUATE BOND. ACCEPTABLE BLAST CLEANING METHODS ARE HIGHPRESSURE WATER BLASTING WITH OR WITHOUT ABRASIVES IN WATER, ABRASIVE BLASTING WITH CONTAINMENT OR VACUUM ABRASIVE BLASTING. USE HAND TOOLS AS NECESSARY TO REMOVE SCALE FROM ANY EXPOSED REINFORCING STEEL.

MATERIALS: CONCRETE SHALL BE CLASS QC2 WITH A COMPRESSIVE STRENGTH OF 4500 PSI. FURNISH REINFORCING STEEL ACCORDING TO 709.00, GRADE 60, WITH A MINIMUM YIELD STRENGTH OF 60,000 PSI.

CONTROL JOINTS: SAWCUT 1-1/4 INCH DEEP CONTROL JOINTS ALONG THE PERIMETER OF THE PARAPET AS SOON AS THE SAW CAN BE OPERATED WITHOUT DAMAGING THE CONCRETE. PLACE THE JOINT SAW CUTS AT THE SAME LOCATION AS THE EXISTING DEFLECTION JOINTS. USE AN EDGE GUIDE, FENCE OR JIG TO ENSURE THAT THE CUT JOINT IS STRAIGHT, TRUE AND ALIGNED ON ALL FACES OF THE PARAPET. THE JOINT WIDTH SHALL BE THE WIDTH OF THE SAW BLADE, A NOMINAL WIDTH OF 1/4 INCH. SEAL THE PERIMETER OF THE CONTROL JOINT TO A MINIMUM DEPTH OF ONE INCH WITH A POLYURETHANE OR POLYMERIC MATERIAL CONFORMING TO ASTM C920, TYPE S. LEAVE THE BOTTOM ONE-HALF INCH OF BOTH THE INSIDE AND OUTSIDE FACES OF THE PARAPET UNSEALED TO ALLOW ANY WATER WHICH MAY ENTER THE JOINT TO ESCAPE.

METHOD OF MEASUREMENT: THE DEPARTMENT WILL MEASURE THIS ITEM IN FEET BY THE ACTUAL LENGTH OF RAILING FACED BETWEEN THE ENDS OF THE EXISTING CONCRETE PARAPET.

BASIS OF PAYMENT: PAYMENT FOR THIS ITEM INCLUDES ALL COSTS OF REMOVAL, DOWEL HOLES, REINFORCING STEEL, CONCRETE, SHRINKAGE CONTROL JOINTS, EPOXY INJECTION AND INSPECTION PLATFORMS. THE DEPARTMENT WILL PAY FOR ACCEPTED QUANTITIES AT THE CONTRACT PRICE FOR ITEM 517, RAILING FACED, AS PER PLAN.

ITEM 514, FIELD PAINTING STRUCTURAL STEEL, FINISH COAT, AS PER PLAN:

THE FINISH COAT COLOR FOR ALL STRUCTURAL STEEL MEMBERS SHALL BE BLUE, FEDERAL STANDARD NO. 595B-15526.

ITEM SPECIAL - PATCHING CONCRETE STRUCTURE, MISC.: WITH PUMPED SELF - CONSOLIDATING CONCRETE:

IN ADDITION TO THE WORK ITEMS REQUIRED IN CMS 519, THIS ITEM WILL ALSO INCLUDE THE DEVELOPMENT, DELIVERY AND PLACEMENT OF A SPECIAL CONCRETE MIX, FORM PUMPING TO PLACE AND CONSOLIDATED CONCRETE AS DESCRIBED IN THE FOLLOWING NOTE:

PROVIDE A CONCRETE WITH THE FOLLOWING PROPERTIES:

MINIMUM PORTLAND CEMENT CONTENT NO MICROSILICA AND NO FLY ASH	800 LB/CU. YD.
MAXIMUM COURSE AGGREGATE SIZE	#8
MAXIMUM WATER/CEMENT RATIO	0.38

COURSE TO FINE AGGREGATE RATIO TO PRODUCE SELF CONSOLIDATING CONCRETE:

MINIMUM 3 DAY STRENGTH	4000 PSI
MINIMUM 28 DAY STRENGTH	5500 PSI
AIR CONTENT	8% +/- 2%
MINIMUM SPREAD	24"

PROVIDE A CONCRETE MIX AT A SLUMP THAT ALLOWS THE CONCRETE MIX TO BE PUMPED THROUGH A 3½" DIAMETER ACCESS HOLE THROUGH THE BOTTOM OF THE FORM AND SELF CONSOLIDATE THE PIER. THE PUMPED CONCRETE SHALL UTILIZE A FORM MOUNTED GATE VALVE SYSTEM OR SIMILAR OPERATION THAT PROVIDES ENOUGH HEAD PRESSURE TO ENSURE AIR IS FORCED OUT OF THE FORMS.

THE FINAL CONCRETE MIX WILL BE A SELF CONSOLIDATING CONCRETE USING AN APPROVED SELF CONSOLIDATING ADMIXTURE.

SUBMIT THE MIX DESIGN AND TEST RESULTS TO THE ENGINEER FOR REVIEW AND ACCEPTANCE.

ITEM SPECIAL - PATCHING CONCRETE STRUCTURE, MISC.: WITH PUMPED SELF - CONSOLIDATING CONCRETE, CONTINUED:

AREAS TO BE PATCHED WILL HAVE SQUARE EDGES AND BE ROUGHLY SQUARE OR RECTANGULAR IN SHAPE. WHERE THE BOND BETWEEN THE CONCRETE AND THE REINFORCING STEEL HAS BEEN DESTROYED, OR WHERE MORE THAN ONE HALF OF THE PERIPHERY OF THE STEEL HAS BEEN EXPOSED. THE ADJACENT CONCRETE WILL BE REMOVED TO A DEPTH THAT WILL PROVIDE A MINIMUM OF 1" CLEARANCE AROUND THE STEEL EXCEPT WHERE OTHER REINFORCING STEEL MAKES THIS IMPRACTICABLE.

AVOID DAMAGING OR DEBONDING THE REINFORCING STEEL, OR SHATTERING THE CONCRETE, BEYOND THE AREA TO BE PATCHED.

AFTER COMPLETING REMOVAL BUT BEFORE FORMING, PLACE GALVANIC ANODES AS DEFINED IN ITEM 511 CONCRETE, MISC.: EMBEDDED GALVANIC ANODE (EGA) NOTE.

REPAIR MORTARS, CONCRETE, AND BONDING AGENTS SHALL BE HYDRAULIC CEMENT-BASED MATERIALS WITH A 28-DAY MOIST CURED ELECTRICAL RESISTIVITY LESS THAN 15,000 OHM-CM. NON CONDUCTIVE REPAIR MATERIALS SUCH AS MAGNESIUM AMMONIUM PHOSPHATE CONCRETE OR MORTARS, AND EPOXY MORTARS OR BONDING AGENTS, SHALL NOT BE PERMITTED. CONCRETE MIXTURES CONTAINING HIGH LEVELS OF SUPPLEMENTARY CEMENTITIOUS MATERIALS SUCH AS SILICA FUME, GROUND-GRANULATED BLAST FURNACE SLAG. FLY ASH OR METAKAOLIN MAY NOT MEET THIS RESISTIVITY REQUIREMENT.

DURING THE CONCRETE OPERATIONS ASSURE THE REPRESENTATIVES OF THE READY MIX PRODUCER AND THE CHEMICAL ADMIXTURE MANUFACTURER ARE ON SITE TO DETERMINE ANY ADJUSTMENTS REQUIRED TO COMPLETE THE CONCRETE PLACEMENT.

THE CONTRACTOR SHALL PERFORM HIS WORK AS TO NOT DAMAGE THE EMBEDDED ANODES OR CREATE AND AIR VOIDS AROUND THE EMBEDDED ANODES WHILE SETTING FORMWORK OR PLACING THE CONCRETE.

THE FORM PUMPING SYSTEM PROPOSED MUST BE SUBMITTED, AND ACCEPTED BY THE PROJECT ENGINEER PRIOR TO THE INSTALLATION OF ANY FORMWORK. A TEST AREA SHALL BE USED TO DETERMINE THE PERFORMANCE OF THE PROPOSED PUMPING SYSTEM. UPON ACCEPTANCE OF THE TEST SECTION BY THE PROJECT ENGINEER, THE CONTRACTOR MAY CONTINUE TO USE THE PROPOSED PUMPING SYSTEM.

THE DEPARTMENT WILL PAY FOR THE ACCEPTED QUANTITY OF CUBIC YARDS.

THE DEPARTMENT WILL CALCULATE THE AMOUNT OF CUBIC YARDS OF SELF CONSOLIDATING CONCRETE NEEDED PER PIER PATCH AS SHOWN BELOW:

PATCH SIZE (SQ. FT.) X 0.563 (MAX. DEPTH OF 6 ¾") X 1/27 = CU. YDS

ALL WORK DESCRIBED ABOVE SHALL BE PAID FOR AT THE UNIT BID PRICE PER CUBIC YARD FOR ITEM SPECIAL, PATCHING CONCRETE STRUCTURE, MISC.: WITH PUMPED SELF-CONSOLIDATING CONCRETE SHALL INCLUDE FORMWORK, DEVELOPMENT AND PLACEMENT OF THE SELF-CONSOLIDATING CONCRETE MIX, LABOR, ETC. NEEDED TO PERFORM THIS ITEM OF WORK.

ITEM 516, JACKING AND TEMPORARY SUPPORT OF SUPERSTRUCTURE, AS PER PLAN:

THIS WORK CONSISTS OF RAISING OR RE-POSITIONING EXISTING STRUCTURES TO THE DIMENSIONS AND REQUIREMENTS DEFINED IN THE PROJECT PLANS.

SUBMIT CONSTRUCTION PLANS IN ACCORDANCE WITH CMS 501.05.

IF, DURING THE JACKING OPERATIONS, CRACKING OF THE CONCRETE SUPERSTRUCTURE, SEPARATION OF THE CONCRETE DECK FROM THE STEEL STRINGERS, OR OTHER DAMAGE TO THE STRUCTURE IS VISUALLY OBSERVED, IMMEDIATELY CEASE THE JACKING OPERATION AND INSTALL SUPPORTS TO THE SATISFACTION OF THE ENGINEER. ANALYZE THE DAMAGE AND SUBMIT A METHOD OF CORRECTION TO THE ENGINEER FOR APPROVAL. EPOXY INJECT ALL BEAMS THAT SEPARATE FROM THE DECK FOR THE DISTANCE OF THE SEPARATION IN ACCORDANCE WITH CMS 512.07. THE DEPARTMENT WILL NOT PAY FOR THE COST OF THIS EPOXY INJECTION OR OTHER REQUIRED REPAIRS. THE BRIDGE BEARINGS SHALL BE FULLY SEATED AT ALL CONTACT AREAS. IF FULL SEATING IS NOT ATTAINED, SUBMIT A REPAIR PLAN TO THE ENGINEER. THE DEPARTMENT WILL NOT PAY FOR THE REPAIR COSTS TO ENSURE FULL SEATING ON BEARINGS.

THE DEPARTMENT WILL MEASURE THIS WORK ON A LUMP SUM BASIS.

THE DEPARTMENT WILL PAY FOR THE ACCEPTED QUANTITIES AT THE CONTRACT PRICE FOR ITEM 516, JACKING AND TEMPORARY SUPPORT OF SUPERSTRUCTURE, AS PER PLAN.

ITEM 526, REINFORCED CONCRETE APPROACH SLAB (T=15"), AS PER PLAN:

FURNISH APPROACH SLABS CONFORMING TO CMS 526, ALONG WITH THE REQUIREMENTS SHOWN ON SHEET 16. THE ACCEPTED QUANTITIES SHALL INCLUDE JOINT FILLERS, JOINT SEALS AND WATERPROOFING. THE DEPARTMENT WILL MEASURE APPROACH SLABS BY THE NUMBER OF SQUARE YARDS. APPROACH SLAB CONCRETE SHALL BE PLACED SEPERATELY FROM THE SUPERSTRUCTURE CONCRETE.

ITEM 607, FENCE REMOVED AND REBUILT:

A PORTION OF THE EXISTING RIGHT-OF-WAY FENCE ATTACHED TO BOTH SIDES OF THE EXISTING REAR AND FORWARD ABUTMENT WING WALLS/PARAPET MAY NEED TO BE REMOVED AND REBUILT IN ORDER TO CONSTRUCT THE EXISTING WINGWALL/PARAPETS. FOR ESTIMATING PURPOSES 40 FEET OF FENCE REMOVED AND REBUILT WILL BE REQUIRED.

075_1108GN002.dgn Sheet 6/9/2015 9:18AM CH_ODOTV8i_Half_BW.pen \\DAYPSP01\DAY Copier BW PS jcenters

DESIGN AGENCY
CH2MHILL
ONE DAYTON CENTRE, SUITE 1100
ONE SOUTH MAIN STREET
DAYTON, OHIO 45402

DESIGNED	DRAWN	REVIEWED	DATE
BJM	TJC	JTC	06/14
CHECKED	REVISED	STRUCTURE FILE NUMBER	
VS		7502192	

GENERAL NOTES II
BRIDGE NO. SHE-075-1108
SHARP ROAD OVER IR-75

AUG/SHE-075-5.15/5.45/11.08
PID No. 93767

ABBREVIATIONS

THE FOLLOWING ABBREVIATIONS HAVE BEEN USED THROUGHOUT THESE PLANS:

& = AND
@ = AT
° = DEGREES
' = FEET OR MINUTES
" = INCHES OR SECONDS
± = PLUS OR MINUS

AASHTO = AMERICAN ASSOCIATION OF STATE HIGHWAY AND TRANSPORTATION OFFICIALS
ABUT. = ABUTMENT
ADT = AVERAGE DAILY TRAFFIC
ADTT = AVERAGE DAILY TRUCK TRAFFIC
APPR. = APPROACH
APPROX. = APPROXIMATE
ASTM = AMERICAN SOCIETY OF TESTING AND MATERIALS

BM = BENCHMARK
BOT. = BOTTOM
BOT./FTG. = BOTTOM OF FOOTING
BRGS. = BEARINGS

℄ = CENTERLINE
C/C = CENTER TO CENTER
CFS = CUBIC FEET PER SECOND
CJ = CONSTRUCTION JOINT
CLR. = CLEAR
CMS = CONSTRUCTION AND MATERIAL SPECIFICATIONS
CONSTR./CONST. = CONSTRUCTION
CON'T = CONTINUED
COL. = COLUMN
C.P.P. = CORRUGATED PLASTIC PIPE
C.R./CR = COUNTY ROAD
CU = CUBIC
CVN = CHARPY V-NOTCH

DEFL. = DEFLECTION
DIA. = DIAMETER
DIM. = DIMENSION
DL = DEAD LOAD
DWG. = DRAWING

E =EAST
EA. = EACH
EF = EACH FACE
EL./ELEV. = ELEVATION
EMBED. = EMBEDMENT
EQ. = EQUAL
EX./EXIST. = EXISTING
EXP. = EXPANSION
EXT. = EXTENSION

F = FAHRENHEIT
FF = FAR FACE
F/F = FACE TO FACE
FS = FIELD SPLICE
FT. = FEET
FT/FT. = FOOT/FOOT
FT/S = FEET PER SECOND
FTG. = FOOTING
FWD. = FORWARD
FWS = FUTURE WEARING SURFACE

GEN. = GENERAL

HR = HOUR
HW = HIGH WATER

IN. = INCHES
INT. = INTERMEDIATE

LF = LEFT FORWARD
LONG. = LONGITUDINAL
LT. = LEFT

MAX. = MAXIMUM
MIN. = MINIMUM
MISC. = MISCELLANEOUS

N = NORTH
NF = NEAR FACE
#/NO. = NUMBER

OHWM = ORDINARY HIGH WATER MARK
OUT/OUT = OUT TO OUT

PEJF = PREFORMED EXPANSION JOINT FILLER
℄/PL = PLATE
PSF = POUND PER SQUARE FOOT
PSI = POUND PER SQUARE INCH
PT. = POINT
PVI = POINT OF VERTICAL INTERSECTION

Q = FLOW

R = RADIUS
REF. = REFERENCE
REINF. = REINFORCED
REQ'D. = REQUIRED
RF = RIGHT FORWARD
RT. = RIGHT

SHLDR. = SHOULDER
SPA. = SPACING
SQ = SQUARE
STA. = STATION
STD. = STANDARD
STR. = STRAIGHT
SUPER = SUPERSTRUCTURE

T = THICKNESS
TELE = TELEPHONE
TRANS. = TRANSVERSE
TWP. = TOWNSHIP
TYP. = TYPICAL

V = VELOCITY
V.C. = VERTICAL CURVE
VERT. = VERTICAL

W = WEST
W/ = WITH
W/O = WITHOUT
W.P. = WORKING POINT
WT. = WEIGHT

YD = YARD

ESTIMATED QUANTITIES

ITEM	EXTENSION	TOTAL	UNIT	DESCRIPTION	ABUT.	PIERS	SUPER.	GEN.	SHEET
202	11201	LUMP		PORTIONS OF STRUCTURE REMOVED, AS PER PLAN	LUMP		LUMP		2/17
202	22900	156	SQ YD	APPROACH SLAB REMOVED				156	
509	10001	7902	POUND	EPOXY COATED REINFORCING STEEL, AS PER PLAN	3753		4149		2/17
509	20001	275	POUND	REINFORCING STEEL, REPLACEMENT OF EXISTING REINFORCING STEEL, AS PER PLAN	50	25	200		2/17
510	10000	216	EACH	DOWEL HOLES WITH NONSHRINK, NONMETALLIC GROUT	216				
511	34445	30	CU YD	CLASS QC2 CONCRETE, BRIDGE DECK, AS PER PLAN			30		3/17
511	34449	16	CU YD	CLASS QC2 CONCRETE, BRIDGE DECK (PARAPET), AS PER PLAN			16		3/17
511	45710	7	CU YD	CLASS QC1 CONCRETE, ABUTMENT	7				
511	81300	14	EACH	CONCRETE, MISC.: EMBEDDED GALVANIC ANODE (EGA)		14			2/17
512	10100	769	SQ YD	SEALING OF CONCRETE SURFACES (EPOXY-URETHANE)	47	230	492		
512	10300	64	SQ YD	SEALING CONCRETE BRIDGE DECKS WITH HMWM RESIN			64		
512	33000	24	SQ YD	TYPE 2 WATERPROOFING	24				
512	74000	21	SQ YD	REMOVAL OF EXISTING COATINGS FROM CONCRETE SURFACE	21				
514	00050	8168	SQ FT	SURFACE PREPERATION OF EXISTING STRUCTURAL STEEL			8168		
514	00056	8168	SQ FT	FIELD PAINTING OF EXISTING STRUCTURAL STEEL, PRIME COAT			8168		
514	00060	8168	SQ FT	FIELD PAINTING STRUCTURAL STEEL, INTERMEDIATE COAT			8168		
514	00067	8168	SQ FT	FIELD PAINTING STRUCTURAL STEEL, FINISH COAT, AS PER PLAN			8168		3/17
514	00504	16	MN HR	GRINDING FINS, TEARS, SLIVERS ON EXISTING STRUCTURAL STEEL			16		
514	10000	9	EACH	FINAL INSPECTION REPAIR			9		
516	14020	64	FT	SEMI-INTEGRAL EXPANSION JOINT SEAL	64				
516	44001	8	EACH	ELASTOMERIC BEARING WITH INTERNAL LAMINATES AND LOAD PLATE (NEOPRENE), AS PER PLAN	8				11/17
				(10" X 1¼" X 1'-2" PAD WITH 1'-1" X 1½" X 1'-3" STEEL LOAD PLATE)					
516	47001	LUMP		JACKING AND TEMPORARY SUPPORT OF SUPERSTRUCTURE , AS PER PLAN				LUMP	3/17
517	76201	437	FT	RAILING FACED, AS PER PLAN			437		3/17
518	21200	20	CU YD	POROUS BACKFILL WITH FILTER FABRIC	20				
519	11900	1	CU YD	SPECIAL - PATCHING CONCRETE STRUCTURE, MISC.: WITH PUMPED SELF-CONSOLIDATING CONCRETE		1			3/17
526	25001	146	SQ YD	REINFORCED CONCRETE APPROACH SLAB (T=15"), AS PER PLAN				146	3/17
607	39900	454	FT	VANDAL PROTECTION FENCE, 6' STRAIGHT, COATED FABRIC			454		
848	10200	668	SQ YD	SUPERPLASTICIZED DENSE CONCRETE OVERLAY USING HYDRODEMOLITION (1¾")			668		
848	20001	668	SQ YD	SURFACE PREPARATION USING HYDRODEMOLITION, AS PER PLAN			668		4/17
848	30200	21	CU YD	SUPERPLASTICIZED DENSE CONCRETE OVERLAY (VARIABLE THICKNESS), MATERIAL ONLY			21		
848	50000	50	SQ YD	HAND CHIPPING			50		
848	50200	1	CU YD	FULL DEPTH REPAIR			1		

GENERAL NOTES, CONTINUED

ITEM 848, SURFACE PREPARATION USING HYDRODEMOLITION, AS PER PLAN:

TOTAL UNIFORM REMOVAL DEPTH "D" SHALL BE ¾". CONVENTIONAL SCARIFICATION EQUIPMENT SHALL BE USED TO MAKE AN INITIAL PASS ACROSS THE DECK TO REMOVE ¼". IF THE USE OF MECHANICAL SCARIFICATION RESULTS IN THE EXPOSING OR SNAGGING THE TOP MAT OF REINFORCING STEEL, THE SCARIFYING EQUIPMENT SHALL BE IMMEDIATELY STOPPED.

THE FINAL ½" SHALL BE REMOVED USING HYDRO-DEMOLITION EQUIPMENT.

ROADWAY QUANTITIES	
BRIDGE PLAN SHEET NO.	607
	FENCE REMOVED AND REBUILT
	FT
1/17	40
TOTALS CARRIED TO GENERAL SUMMARY ON SHEET 10/56	40

1 REV. 1 - 3/28/16

DESIGN AGENCY
CH2MHILL
ONE DAYTON CENTRE, SUITE 1100
ONE SOUTH MAIN STREET
DAYTON, OHIO 45402

DESIGNED BJM | DRAWN TJC | REVIEWED JTC | DATE 06/14 | STRUCTURE FILE NUMBER 7502192 | CHECKED VS | REVISED

ESTIMATED QUANTITIES & GENERAL NOTES III

BRIDGE NO. SHE-075-1108
SHARP ROAD OVER IR-75

AUG/SHE-075-5.15/5.45/11.08
PID No. 93767

4 / 17

43 / 56

075_1108E0001.dgn Sheet 3/24/2016 4:44PM CH_ODOTV8i_Half_BW.pen \\daysps01\DAY Copier BW PS .icenters

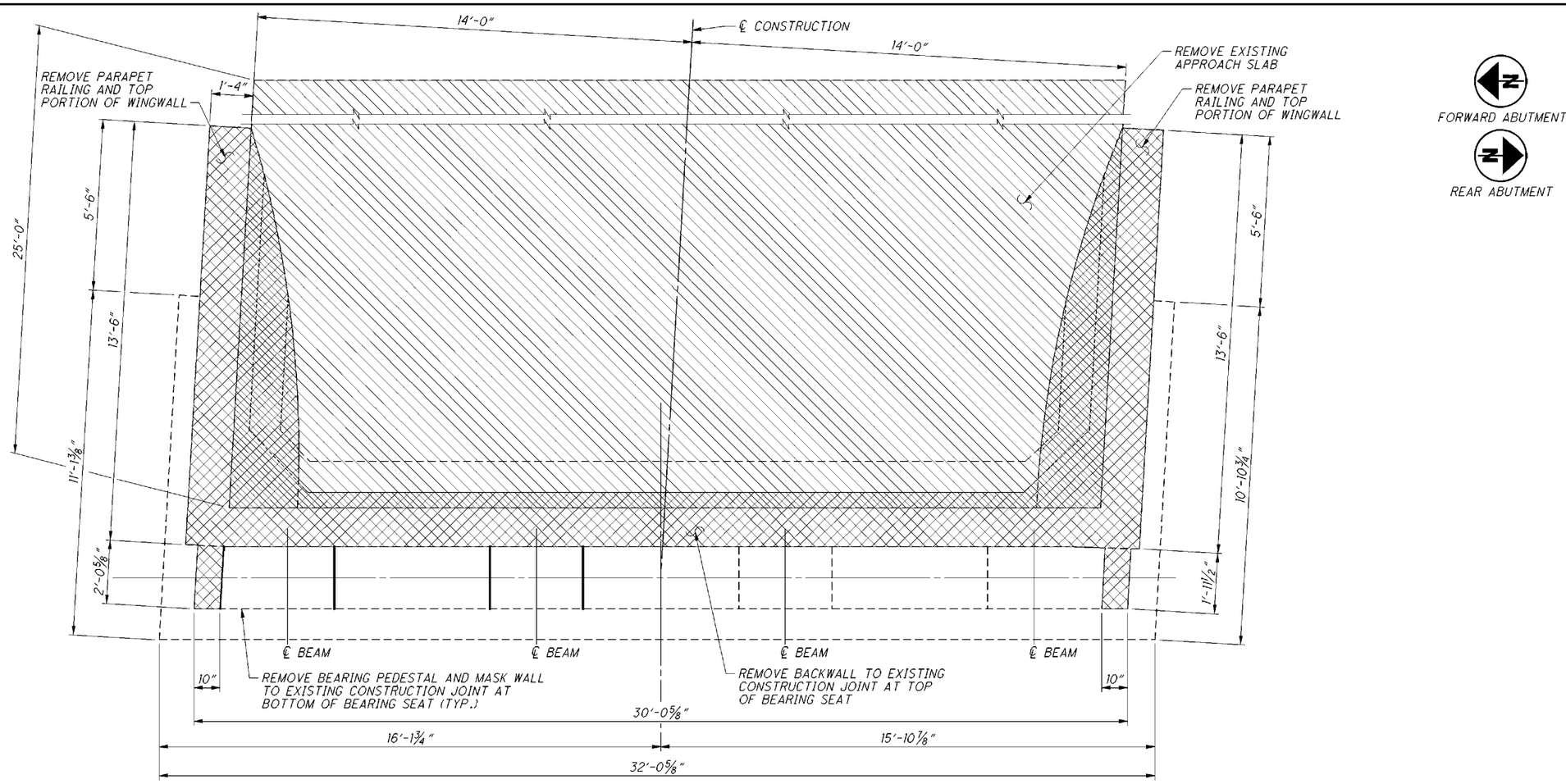

PLAN - FORWARD ABUTMENT

REAR ABUTMENT SIMILAR

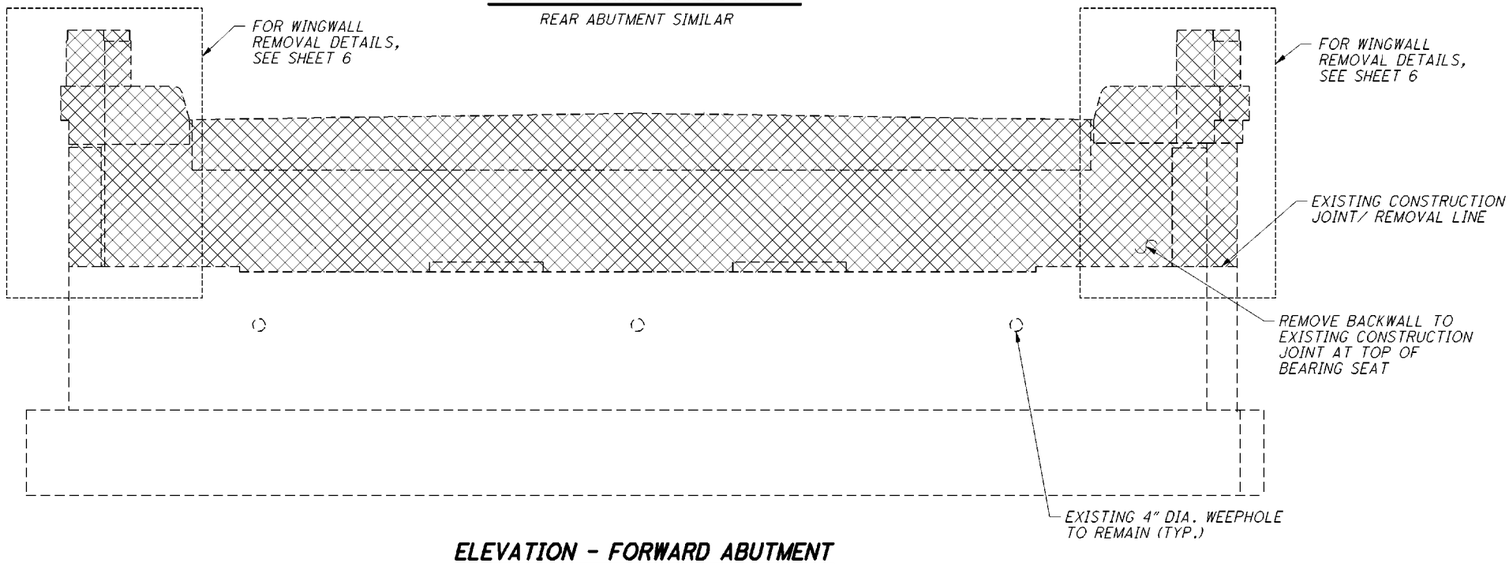

ELEVATION - FORWARD ABUTMENT

REAR ABUTMENT SIMILAR

FORWARD ABUTMENT

REAR ABUTMENT

NOTES:

1. FOR LOCATION OF ABUTMENT BACKWALL REMOVAL LINE, SEE SHEET 6.
2. ALL EXISTING DIMENSIONS SHOWN ON THIS SHEET ARE APPROXIMATE.

ITEM 202 - APPROACH SLAB REMOVED

ITEM 202 - PORTIONS OF STRUCTURE REMOVED, AS PER PLAN

DESIGN AGENCY
CH2MHILL
ONE DAYTON CENTRE, SUITE 1100
ONE SOUTH MAIN STREET
DAYTON, OHIO 45402

DESIGNED	DRAWN	REVIEWED	DATE
BJM	TJC	JTC	06/14
CHECKED	REVISED	STRUCTURE FILE NUMBER	
VS		7502192	

REMOVAL DETAILS (1 OF 3)

BRIDGE NO. SHE-075-1108
SHARP ROAD OVER IR-75

AUG/SHE-075-5.15/5.45/11.08
PID No. 93767

5 / 17

44 / 56

075_1108RE001.dgn Sheet 6/9/2015 9:21AM CH_ODOTV8i_Half_BW.pen \\DAYPSP01\DAY Copier BW PS jcenters

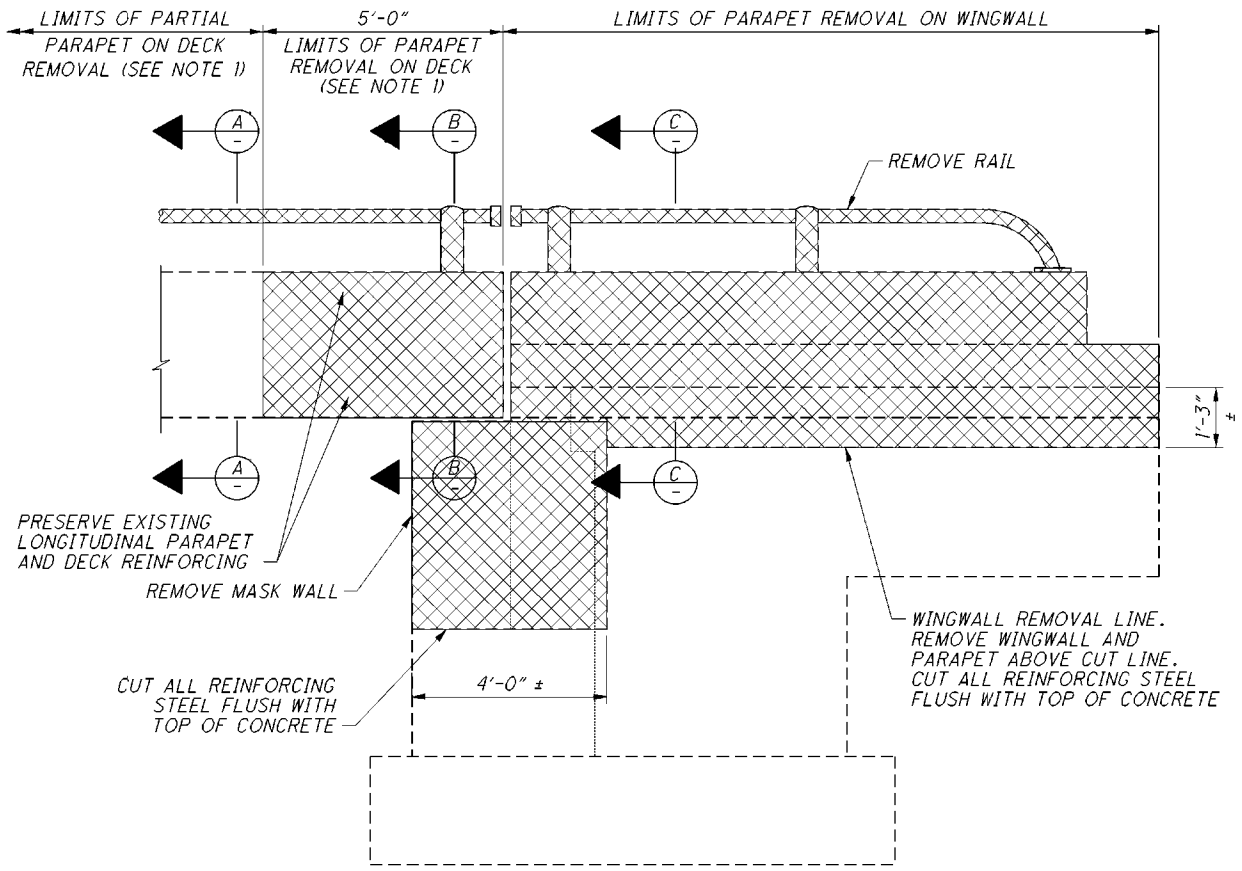

TYPICAL WINGWALL ELEVATION

SOUTHEAST WINGWALL SHOWN,
ALL OTHER WINGWALLS SIMILAR

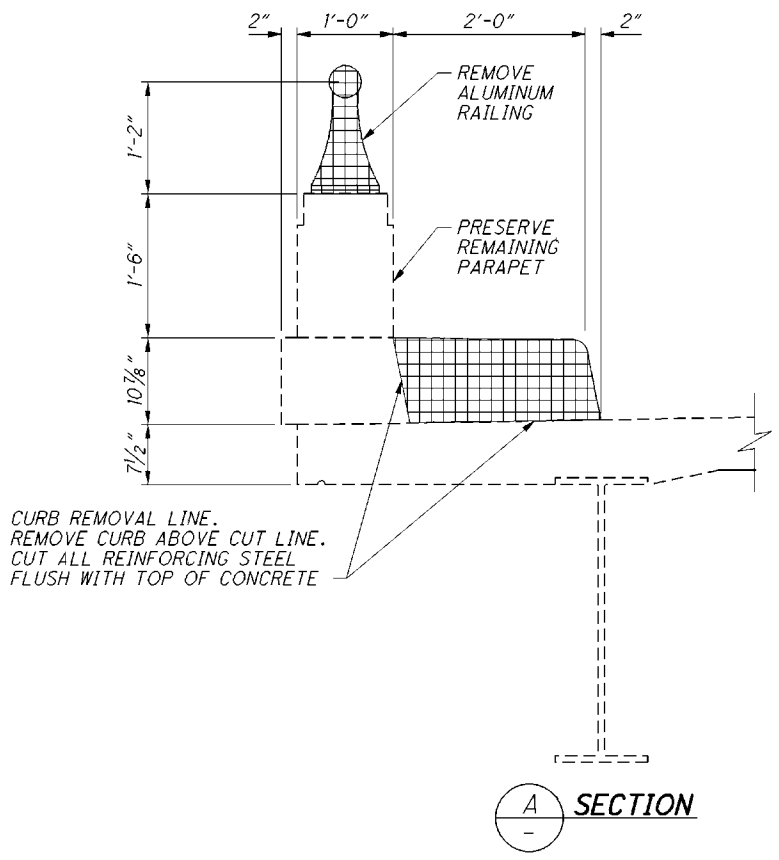

A SECTION

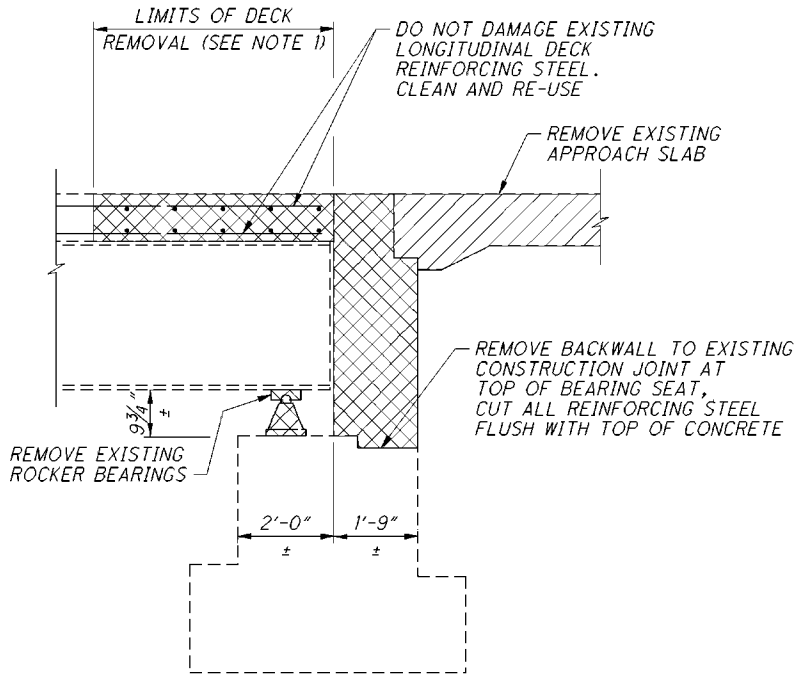

TYPICAL ABUTMENT SECTION

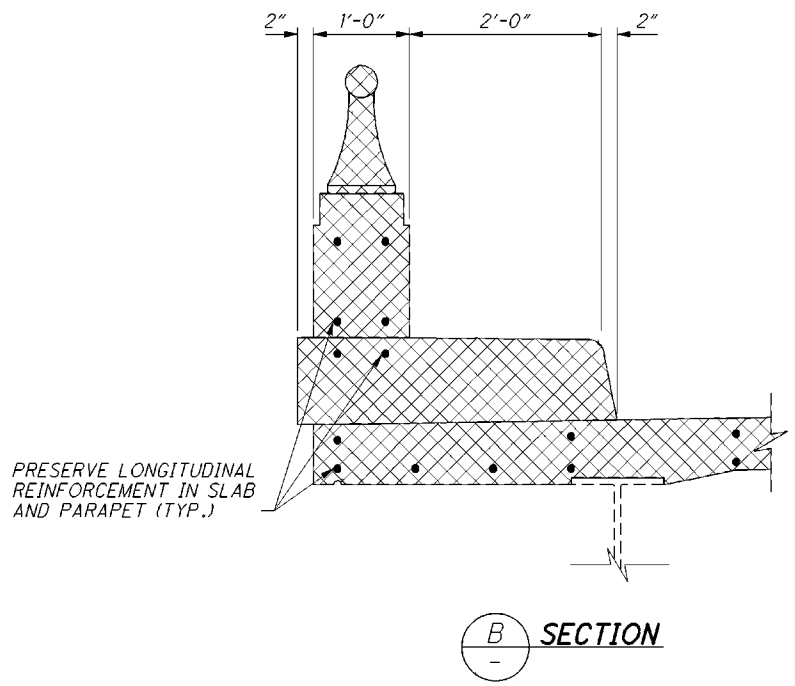

B SECTION

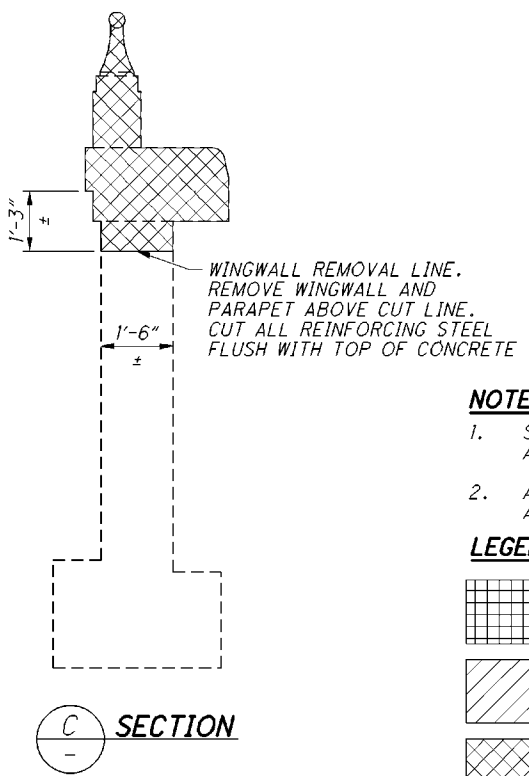

C SECTION

NOTES:

1. SEE SHEET 7 FOR LENGTH OF PARTIAL PARAPET AND PARAPET REMOVAL ON DECK AND DECK REMOVAL.
2. ALL EXISTING DIMENSIONS SHOWN ON THIS SHEET ARE APPROXIMATE.

LEGEND:

- REMOVAL INCLUDED WITH ITEM 517- RAILING FACED, AS PER PLAN
- ITEM 202 - APPROACH SLAB REMOVED
- ITEM 202 - PORTIONS OF STRUCTURE REMOVED, AS PER PLAN

DESIGN AGENCY
CH2MHILL
ONE DAYTON CENTRE, SUITE 1100
ONE SOUTH MAIN STREET
DAYTON, OHIO 45402

DESIGNED	DRAWN	REVIEWED	DATE
BJM	TJC	JTC	06/14
CHECKED	REVISED	STRUCTURE FILE NUMBER	
VS		7502192	

REMOVAL DETAILS (2 OF 3)

BRIDGE NO. SHE-075-1108
SHARP ROAD OVER IR-75

AUG/SHE-075-5.15/5.45/11.08
PID No. 93767

6 / 17

45 / 56

075_1108RE002.dgn Sheet 6/9/2015 9:25AM CH_ODOTV8i_Half_BW.pen \\DAYPSP01\DAY Copier BW PS icenters

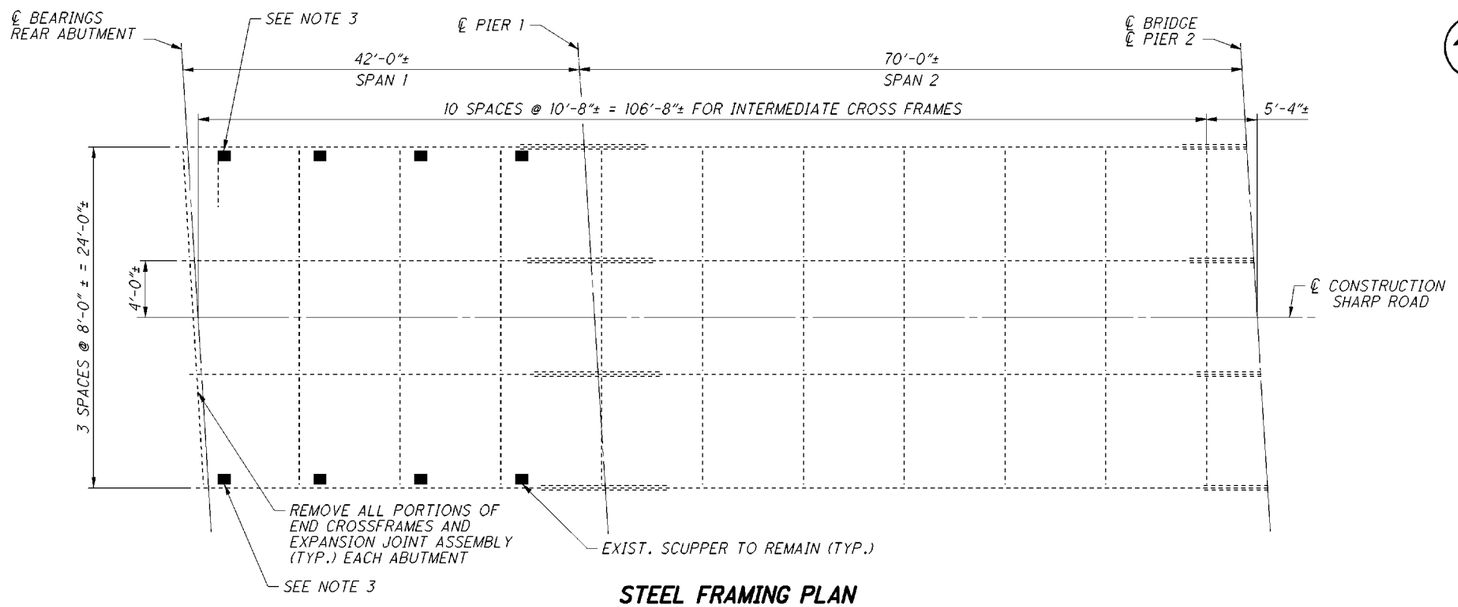

STEEL FRAMING PLAN

SYMMETRICAL ABOUT ℄ PIER 2

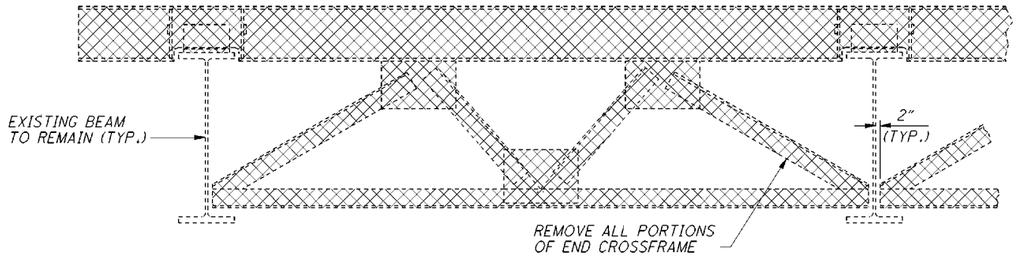

END CROSSFRAME REMOVAL DETAIL

TYPICAL END CROSSFRAME

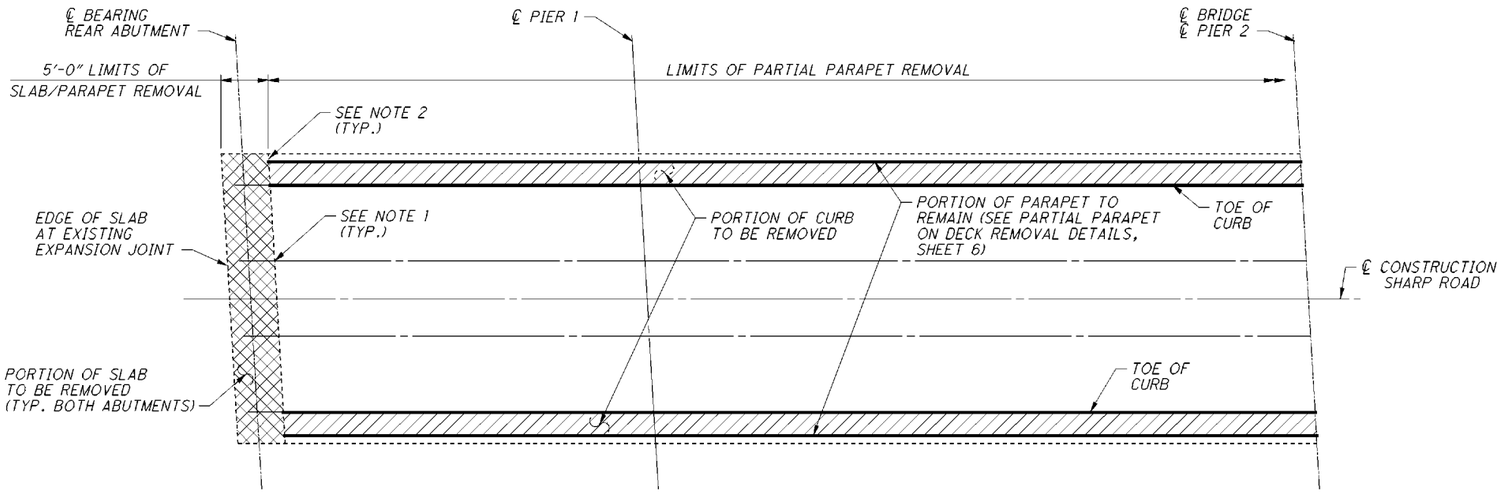

DECK PLAN

SYMMETRICAL ABOUT ℄ PIER 2

NOTES:

1. REMOVAL LINE IS LOCATED PARALLEL TO ℄ BEARINGS. PRESERVE ALL DECK REINFORCING STEEL THAT REMAINS EMBEDDED IN THE DECK.
2. REMOVAL LINE AT TOE OF PARAPET IS LOCATED NORMAL TO EDGE OF SLAB. PRESERVE ALL LONGITUDINAL PARAPET REINFORCEMENT.
3. EXISTING SCUPPER IS LOCATED WITHIN DECK REMOVAL LIMITS. CARE SHALL BE TAKEN TO PRESERVE EXISTING SCUPPER

REMOVAL INCLUDED WITH ITEM 517 - RAILING FACED, AS PER PLAN.

ITEM 202 - PORTIONS OF STRUCTURE REMOVED, AS PER PLAN

DESIGN AGENCY
CH2MHILL
ONE DAYTON CENTRE, SUITE 1100
ONE SOUTH MAIN STREET
DAYTON, OHIO 45402

DESIGNED	DRAWN	REVIEWED	DATE
BJM	TJC	JTC	06/14
CHECKED	REVISED	STRUCTURE FILE NUMBER	
VS		7502192	

REMOVAL DETAILS (3 OF 3)
BRIDGE NO. SHE-075-1108
SHARP ROAD OVER IR-75

AUG/SHE-075-5.15/5.45/11.08
PID No. 93767

7 / 17

46
56

075_1108RE003.dgn Sheet 6/9/2015 9:26AM CH_ODOTV8i_Half_BW.pen \\DAYPSP01\DAY Copier BW PS jcenters

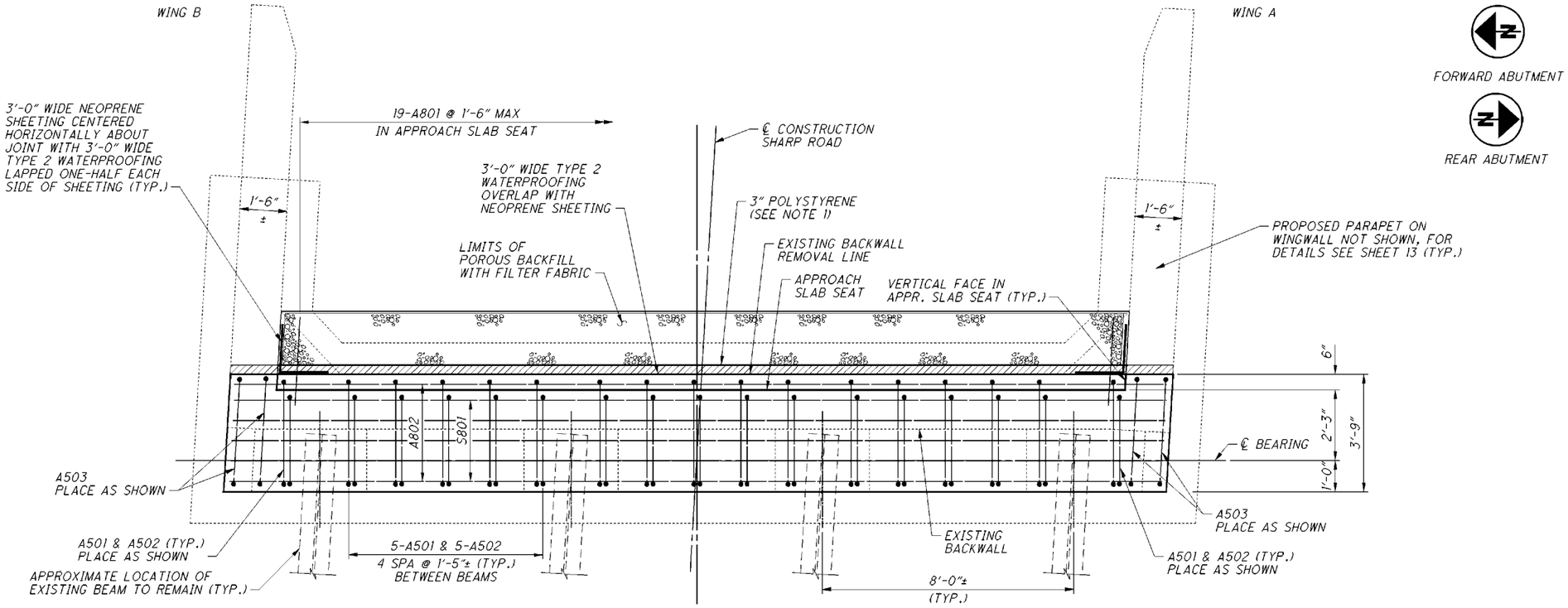

PLAN

FORWARD ABUTMENT SHOWN, REAR ABUTMENT SIMILAR

EXISTING ELEVATIONS (±)							
LOCATION	A	B	C	D	E	F	G
REAR ABUT.	1030.48	1030.59	1030.58	1030.45	1029.90	1029.81	1029.87
FWD. ABUT.	1032.99	1033.11	1033.11	1032.99	1032.41	1032.35	1032.41

ELEVATIONS ARE GIVEN FOR INFORMATION ONLY AND WERE OBTAINED FROM THE EXISTING PLANS

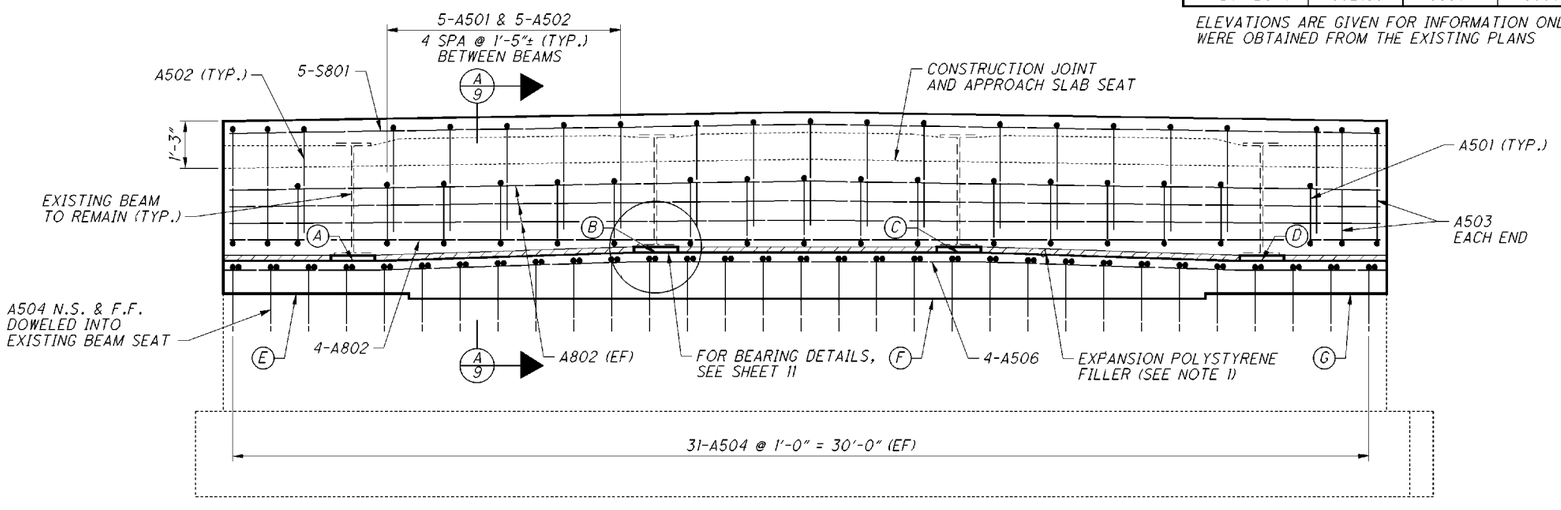

ELEVATION

FORWARD ABUTMENT SHOWN, REAR ABUTMENT SIMILAR

NOTES:

1. EXPANDED POLYSTYRENE FILLER BETWEEN TOP OF EXISTING BEAM SEAT AND BOTTOM OF PROPOSED DIAPHRAGM AND BETWEEN THE ABUTMENT DIAPHRAGM AND POROUS BACKFILL INCLUDED WITH ITEM 511, CLASS QC2 CONCRETE, BRIDGE DECK AS PER PLAN FOR PAYMENT. TAPER POLYSTYRENE FILLER TO MATCH SLOPE WHERE THE EXISTING BEAM SEAT IS SLOPED BETWEEN BEARING SEAT.
2. SEE SHEETS 5 & 6 FOR EXISTING ABUTMENT AND WINGWALL REMOVAL LIMITS.
3. FOR ADDITIONAL NOTES, SEE SHEET 9.
4. FOR REINFORCEMENT STEEL LIST, SEE SHEET 17.

DESIGN AGENCY
CH2MHILL
ONE DAYTON CENTRE, SUITE 1100
ONE SOUTH MAIN STREET
DAYTON, OHIO 45402

DESIGNED BJM | DRAWN TJC | REVIEWED JTC | DATE 06/14
CHECKED VS | REVISED | STRUCTURE FILE NUMBER 7502192

ABUTMENT DETAILS I
BRIDGE NO. SHE-075-1108
SHARP ROAD OVER IR-75

AUG/SHE-075-5.15/5.45/11.08
PID No. 93767

8 / 17
47 / 56

075_1108AR001.dgn Sheet 6/9/2015 9:27AM CH_ODOTV8i_Half_BW.pen \\DAYPSP01\DAY Copier BW PS jcenters

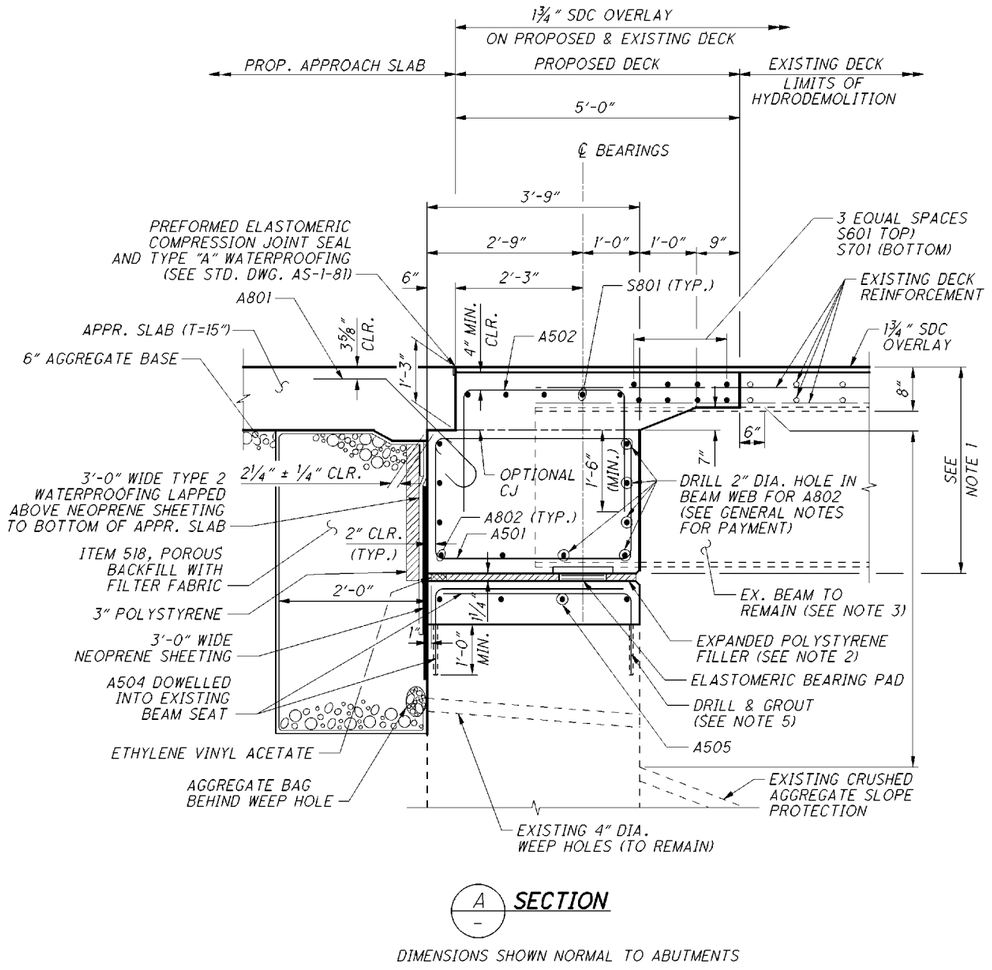

A – **SECTION**

DIMENSIONS SHOWN NORMAL TO ABUTMENTS

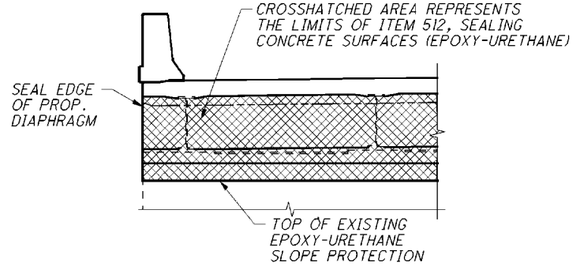

ABUTMENT SEALING LIMITS

TYPICAL, EACH ABUTMENT DIAPHRAGM

NOTES:

1. CONCRETE FOR DECK AND DIAPHRAGM SHALL BE ITEM 511, CLASS QC2 CONCRETE, BRIDGE DECK, AS PER PLAN.
2. PLACE EXPANDED POLYSTYRENE FILLER BETWEEN TOP OF EXISTING BEAM SEAT AND BOTTOM OF PROPOSED DIAPHRAGM. TAPER POLYSTYRENE FILLER TO MATCH SLOPE WHERE THE EXISTING BEAM SEAT IS SLOPED BETWEEN BEARING SEAT. POLYSTYRENE FILLER TO BE INCLUDED WITH ITEM 511, CLASS QC2 CONCRETE, BRIDGE DECK, AS PER PLAN FOR PAYMENT.
3. CLEAN AND PAINT EXISTING BEAMS, CROSSFRAMES AND SCUPPERS IN ACCORDANCE WITH THE REQUIREMENTS OF ITEM 514.
4. VERTICAL REINFORCING STEEL PROTRUDING FROM EXISTING ABUTMENT STEM SHALL BE CUT FLUSH TO REMOVAL LINE. PAYMENT SHALL BE INCLUDED WITH ITEM 202, PORTIONS OF STRUCTURE REMOVED, AS PER PLAN.
5. DRILL AND PLACE GROUT FOR DOWEL HOLES AS SPECIFIED IN CMS SECTION 510.00. PAYMENT FOR WORK CONSISTING OF DRILLING AND PLACING GROUT INTO HOLES SHALL BE INCLUDED IN THE UNIT BID PRICE (EACH) FOR ITEM 510, DOWEL HOLES WITH NONSHRINK, NONMETALLIC GROUT. FURNISHING AND PLACING REINFORCING STEEL SHALL BE INCLUDED WITH ITEM 509.

DESIGN AGENCY
CH2MHILL
ONE DAYTON CENTRE, SUITE 1100
ONE SOUTH MAIN STREET
DAYTON, OHIO 45402

DESIGNED	DRAWN	REVIEWED	DATE
BJM	TJC	JTC	06/14
CHECKED	REVISED	STRUCTURE FILE NUMBER	
VS		7502192	

ABUTMENT DETAILS II
BRIDGE NO. SHE-075-1108
SHARP ROAD OVER IR-75

AUG/SHE-075-5.15/5.45/11.08
PID No. 93767

9 / 17

48
56

075_1108AR002.dgn Sheet 6/9/2015 9:28AM CH_ODOTV8i_Half_BW.pen \\DAYPSP01\DAY Copier BW PS jcenters

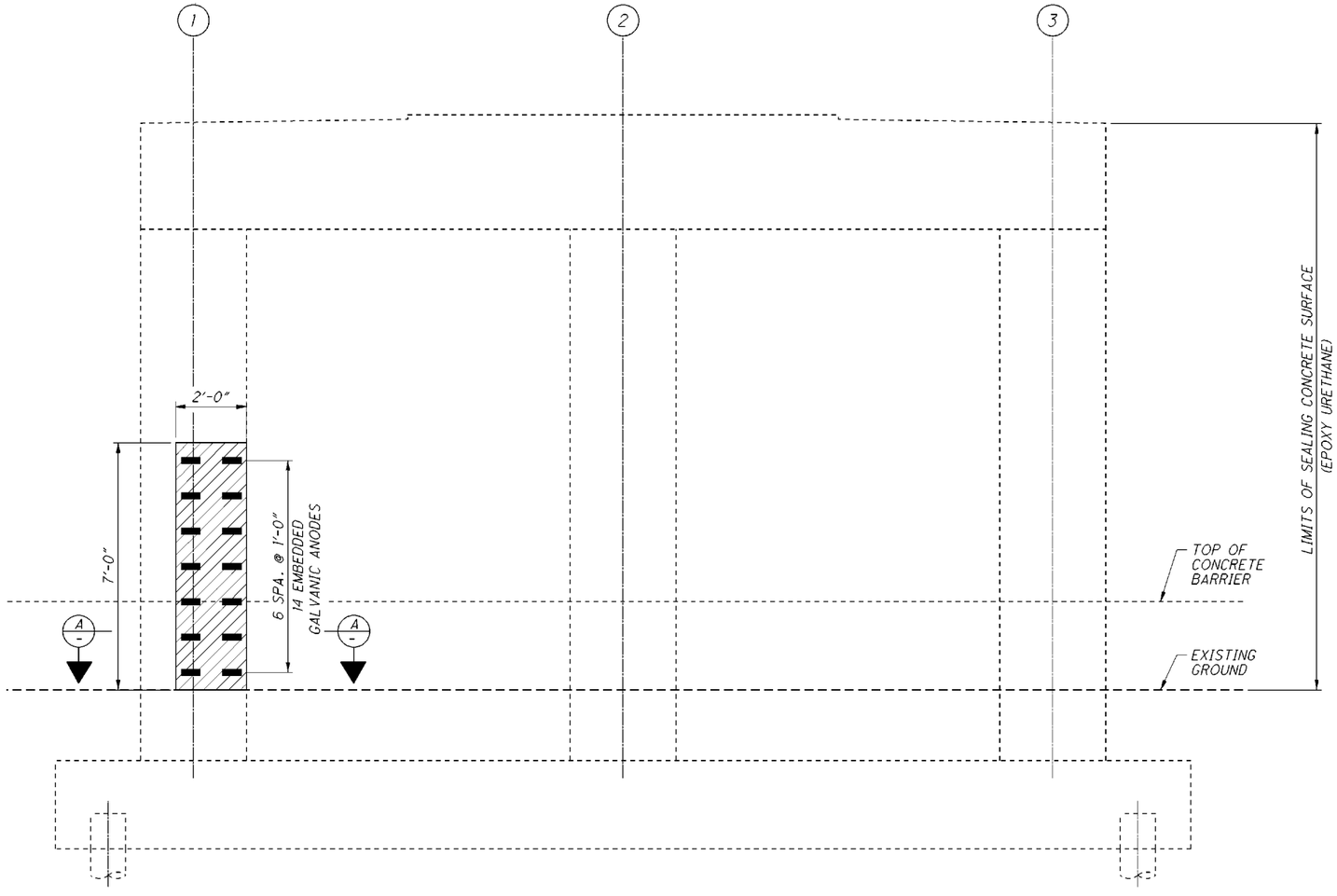

PIER 3
(LOOKING EAST)

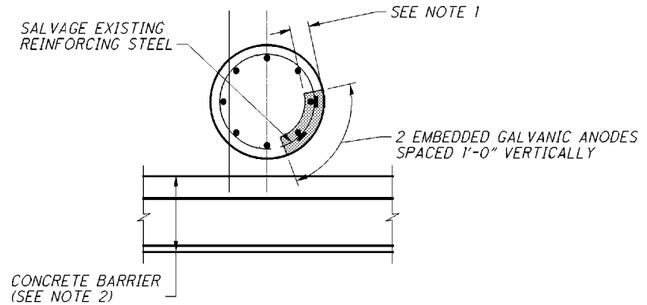

A
SECTION

LEGEND:

- APPROXIMATE LIMITS OF UNSOUND CONCRETE TO BE REPAIRED
- PROPOSED CONCRETE
- PROPOSED EMBEDDED GALVANIC ANODE
- (X) COLUMN NUMBER

NOTES:

1. REMOVAL DEPTH SHALL BE A MINIMUM DEPTH OF 4¾" BUT SHALL NOT EXCEED A DEPTH OF 6¾".
2. EXTREME CARE SHALL BE TAKEN DURING CONCRETE REMOVAL AS NOT TO CAUSE ANY DAMAGE TO THE EXISTING CONCRETE BARRIER.

DESIGN AGENCY
CH2MHILL
ONE DAYTON CENTRE, SUITE 1100
ONE SOUTH MAIN STREET
DAYTON, OHIO 45402

DESIGNED	DRAWN	REVIEWED	DATE
BJM	TJC	JTC	06/14
CHECKED	REVISED	STRUCTURE FILE NUMBER	
VS		7502192	

PIER DETAILS
BRIDGE NO. SHE-075-1108
SHARP ROAD OVER IR-75

AUG/SHE-075-5.15/5.45/11.08
PID No. 93767

10 / 17

49
56

075_1108PC001.dgn Sheet 6/9/2015 9:30AM CH_ODOTV8i_Half_BW.pen \\DAYPSP01\DAY Copier BW PS

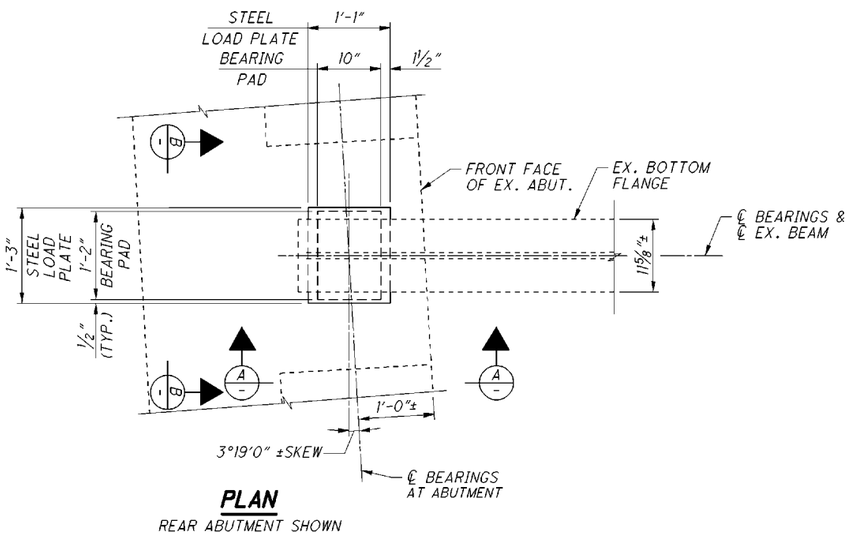

PLAN

REAR ABUTMENT SHOWN

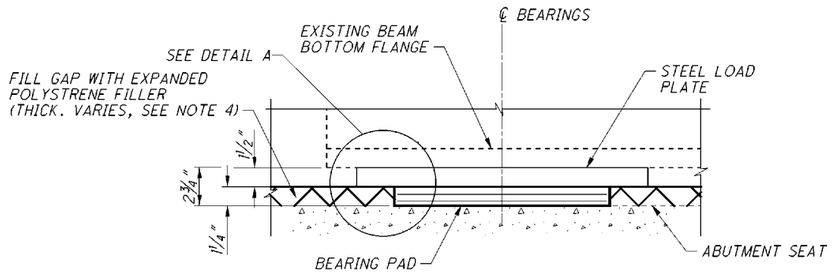

A ELEVATION

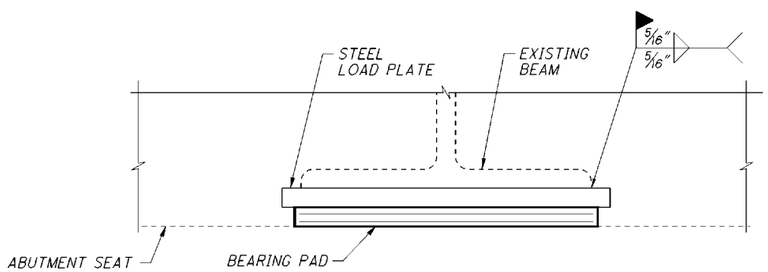

B ELEVATION

LAMINATED ELASTOMERIC EXPANSION BEARING DETAILS

REAR ABUTMENT SHOWN, FORWARD ABUTMENT SIMILAR BUT OPPOSITE HAND

NOTES:

1. ELASTOMERIC BEARINGS: THE ELASTOMER SHALL HAVE A HARDNESS OF 60 DUROMETER. THE BEARINGS WERE DESIGNED UNDER DIVISION I, SECTION 14.6.6 (METHOD A) OF THE AASHTO STANDARD SPECIFICATIONS FOR HIGHWAY BRIDGES
2. LOAD PLATE: THE STEEL LOAD PLATE SHALL MEET THE GRADE 50 REQUIREMENTS OF STRUCTURAL STEEL ASTM A709.
3. BASIS OF PAYMENT: THE UNIT BID PRICE SHALL INCLUDE ALL MATERIALS, LABOR, AND INCIDENTALS NECESSARY TO FURNISH AND INSTALL LAMINATED ELASTOMERIC BEARINGS, STEEL PLATES, AS DETAILED. PAYMENT WILL BE MADE AT THE CONTRACT PRICE FOR ITEM 516, ELASTOMERIC BEARING WITH INTERNAL LAMINATES AND LOAD PLATE (NEOPRENE), AS PER PLAN.

   REAR & FORWARD ABUTMENTS (ALL BEAMS):

   BEARING PAD: 10" x 1¼" x 1'-2"
   LOAD PLATE: 1'-1" x 1½" x 1'-3"

4. EXPANDED POLYSTRENE FILLER IS INCLUDED WITH ITEM 511, CLASS QC2 CONCRETE, BRIDGE DECK, FOR PAYMENT.

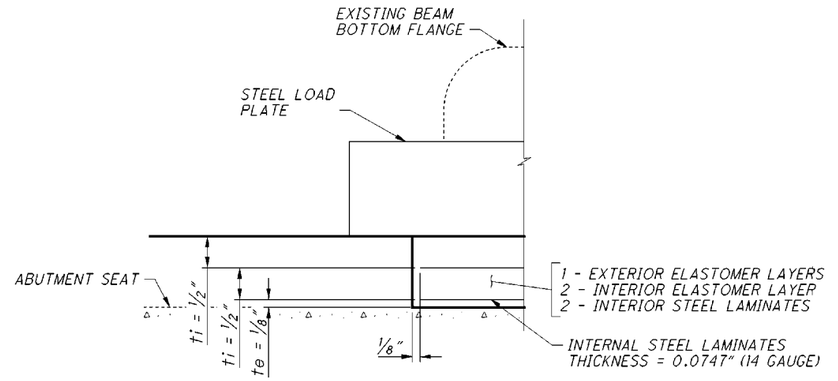

DETAIL A

LEGEND:

te = THICKNESS OF EXTERNAL ELASTOMER LAYER

ti = THICKNESS OF INTERNAL ELASTOMER LAYER

DESIGN AGENCY
CH2MHILL
ONE DAYTON CENTRE, SUITE 1100
ONE SOUTH MAIN STREET
DAYTON, OHIO 45402

DESIGNED	DRAWN	REVIEWED	DATE
BJM	TJC	JTC	06/14
CHECKED	REVISED	STRUCTURE FILE NUMBER	
VS		7502192	

BEARING DETAILS

BRIDGE NO. SHE-075-1108
SHARP ROAD OVER IR-75

AUG/SHE-075-5.15/5.45/11.08
PID No. 93767

11 / 17

50
56

075_1108BR001.dgn Sheet 6/9/2015 9:31AM CH_ODOTV8i_Half_BW.pen \\DAYPSP01\DAY Copier BW PS jcenters

1 REV. 1 - 3/28/16

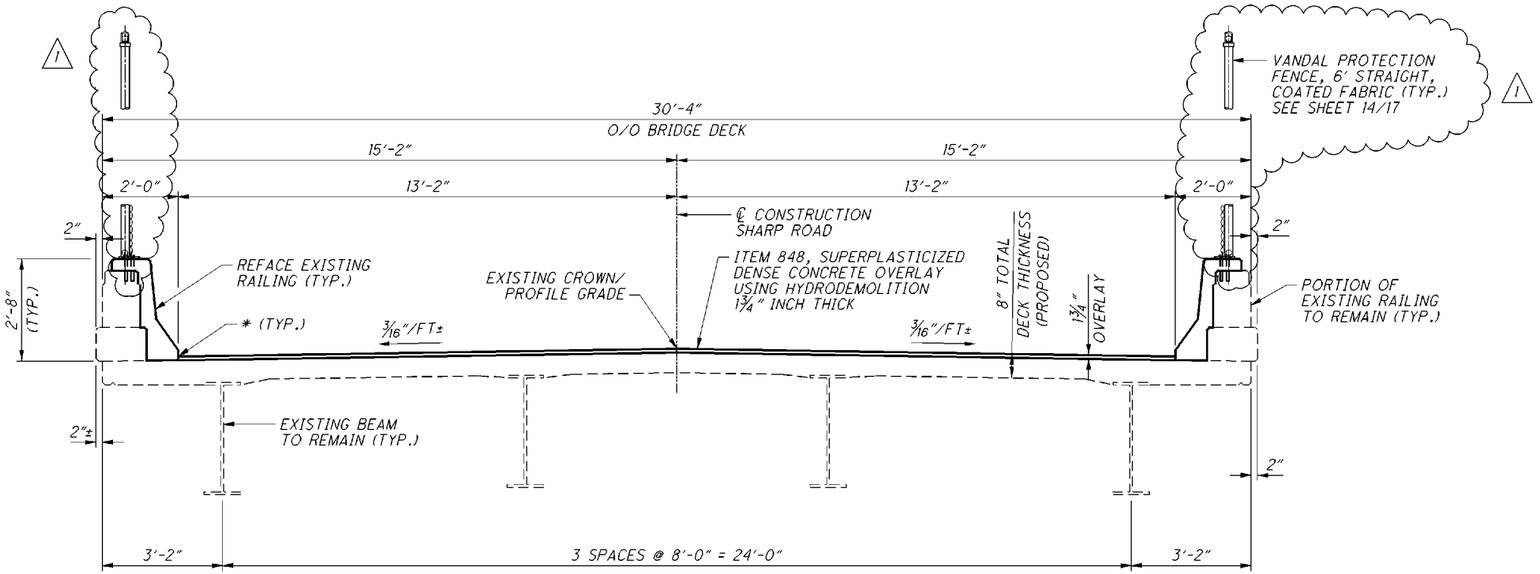

TRANSVERSE SECTION IN SPAN

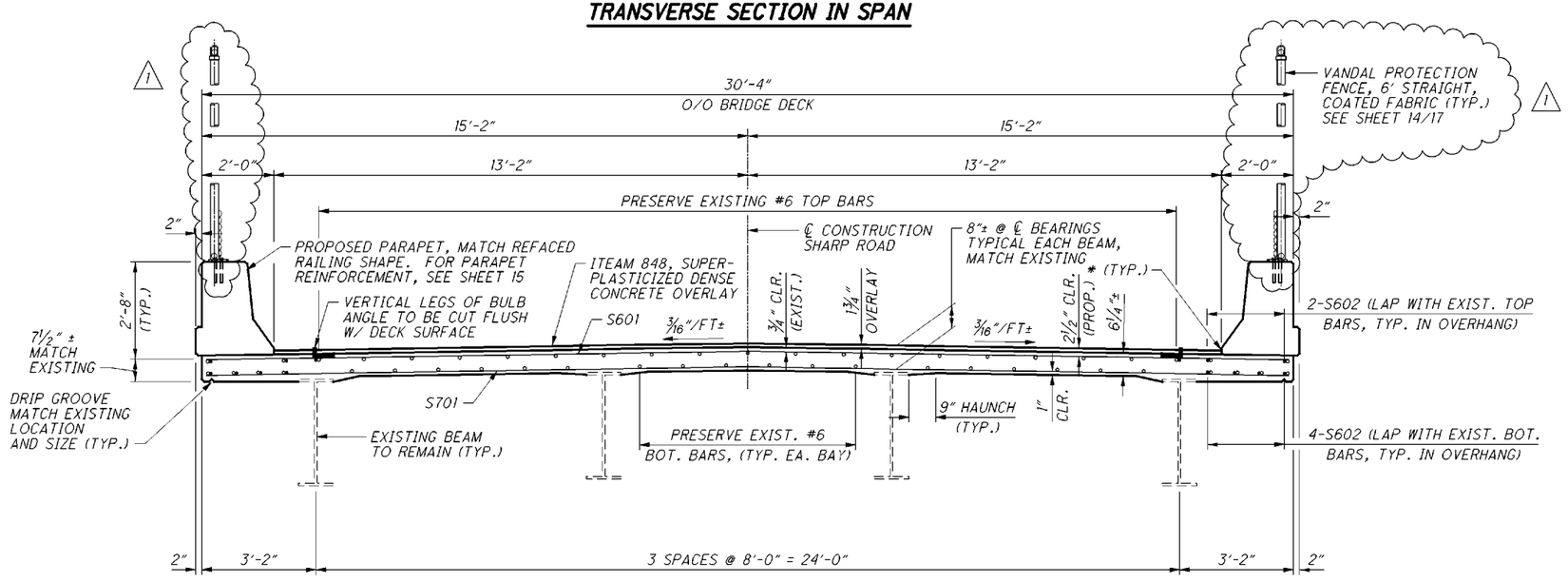

TRANSVERSE SECTION AT ABUTMENTS

ALL EXISTING DIMENSIONS ARE ±

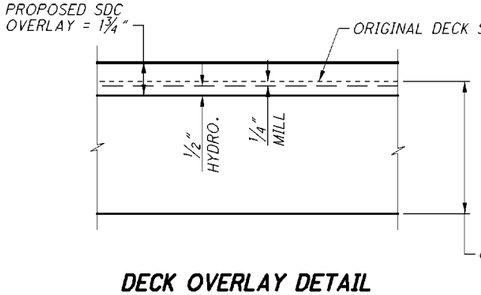

DECK OVERLAY DETAIL

* SEAL WITH HMWM RESIN PER CMS 511.19

NOTES:

1. TRANSVERSE DIMENSIONS SHOWN ARE APPROXIMATE. IT MAY BE NECESSARY TO VARY THESE DIMENSIONS TO MEET THE PROPOSED APPROACH SLAB AND THE EXISTING DECK.
2. THE ESTIMATED QUANTITY OF DECK SLAB CONCRETE IS BASED ON THE CONSTANT DECK SLAB THICKNESS, AS SHOWN, PLUS THE QUANTITY OF CONCRETE THAT FORMS EACH BEAM HAUNCH. THE ESTIMATE ASSUMES A CONSTANT HAUNCH THICKNESS OF 1 3/16" INCHES AND A CONSTANT HAUNCH WIDTH OUTSIDE THE EDGE OF EACH BEAM FLANGE OF 9 INCHES. DEVIATE FROM THIS HAUNCH THICKNESS AS NECESSARY TO PLACE THE DECK SURFACE AT THE FINISHED GRADE. THE ALLOWABLE TOLERANCE FOR THE HAUNCH WIDTH OUTSIDE THE EDGE OF EACH BEAM FLANGE IS ±3 INCHES.
3. THE HAUNCH THICKNESS WAS MEASURED AT THE CENTERLINE OF THE BEAM, FROM THE SURFACE OF THE DECK TO THE BOTTOM OF THE TOP FLANGE MINUS THE DECK SLAB THICKNESS. THE AREA OF ALL EMBEDDED STEEL PLATES HAS BEEN DEDUCTED FROM THE HAUNCH QUANTITY IN ACCORDANCE WITH 511.24.

DESIGN AGENCY
CH2MHILL
ONE DAYTON CENTRE, SUITE 1100
ONE SOUTH MAIN STREET
DAYTON, OHIO 45402

DESIGNED BJM | DRAWN TJC | REVIEWED JTC | DATE 06/14 | CHECKED VS | REVISED | STRUCTURE FILE NUMBER 7502192

TRANSVERSE SECTIONS
BRIDGE NO. SHE-075-1108
SHARP ROAD OVER IR-75

AUG/SHE-075-5.15/5.45/11.08
PID No. 93767

12 / 17

51
56

075_1108TS001.dgn Sheet 3/24/2016 4:47PM CH_ODOTV8i_Half_BW.pen \\daypsp01\DAY Copier BW PS jcenters

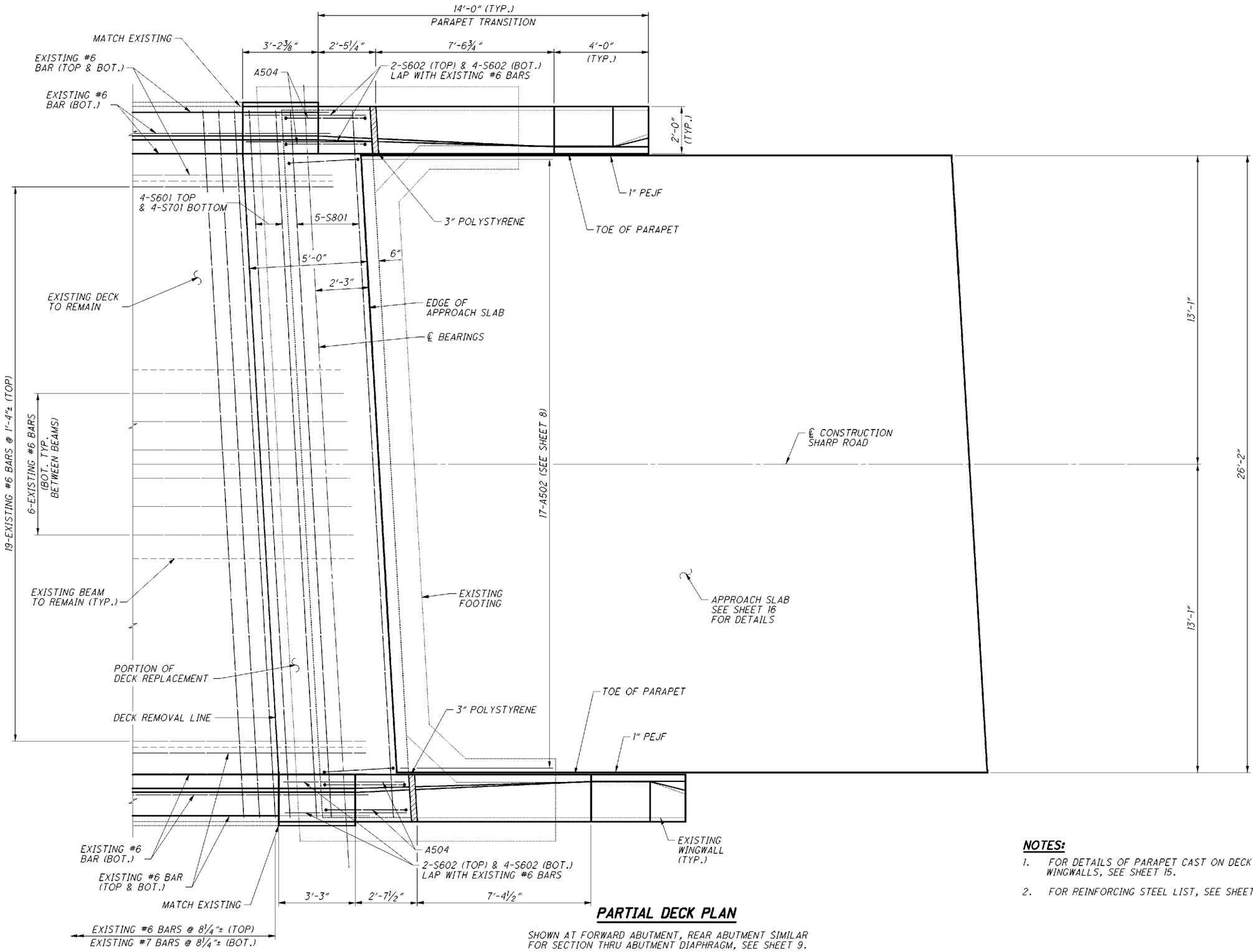

PARTIAL DECK PLAN

SHOWN AT FORWARD ABUTMENT, REAR ABUTMENT SIMILAR
FOR SECTION THRU ABUTMENT DIAPHRAGM, SEE SHEET 9.

NOTES:

1. FOR DETAILS OF PARAPET CAST ON DECK AND EXISTING WINGWALLS, SEE SHEET 15.
2. FOR REINFORCING STEEL LIST, SEE SHEET 17.

DESIGN AGENCY
CH2MHILL
ONE DAYTON CENTRE, SUITE 1100
ONE SOUTH MAIN STREET
DAYTON, OHIO 45402

DESIGNED	DRAWN	REVIEWED	DATE
BJM	TJC	JTC	06/14
CHECKED	REVISED	STRUCTURE FILE NUMBER	
VS		7502192	

PARTIAL DECK PLAN
BRIDGE NO. SHE-075-1108
SHARP ROAD OVER IR-75

AUG/SHE-075-
5.15/5.45/11.08
PID No. 93767

13 / 17

52
56

075_1108DP001.dgn Sheet 6/9/2015 9:35AM CH_ODOTV8i_Half_BW.pen \\DAYPSP01\DAY Copier BW PS jcenters

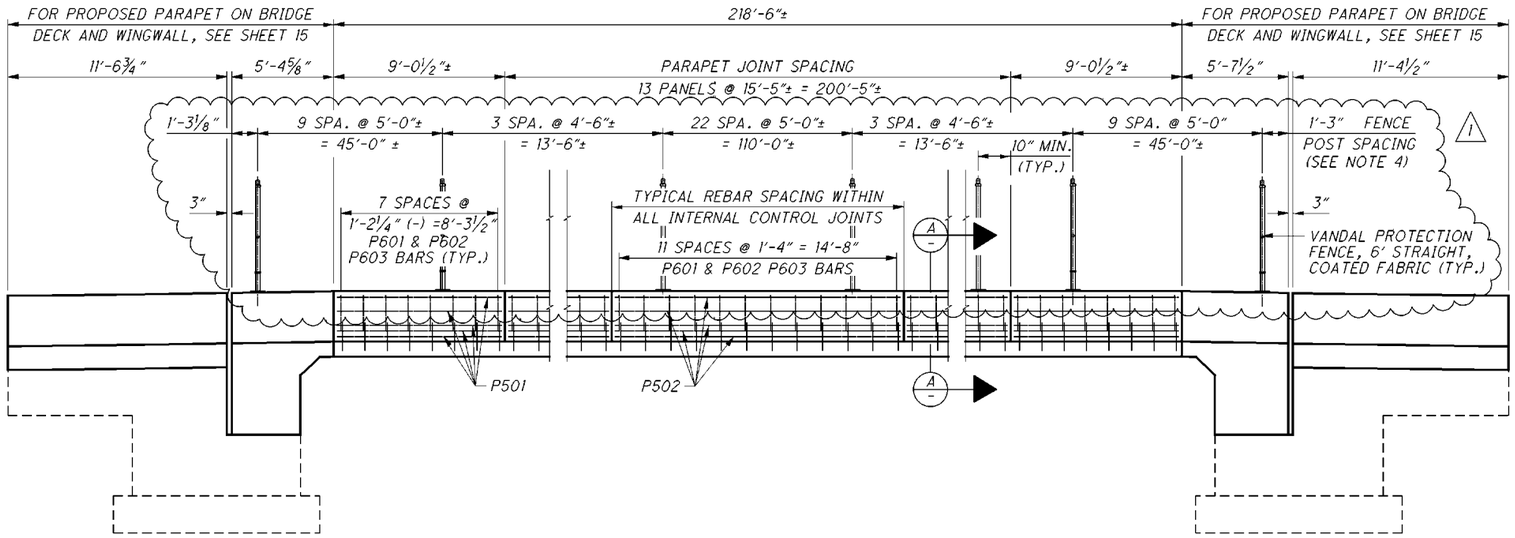

PARAPET ELEVATION

SOUTH PARAPET SHOWN, NORTH PARAPET SIMILAR

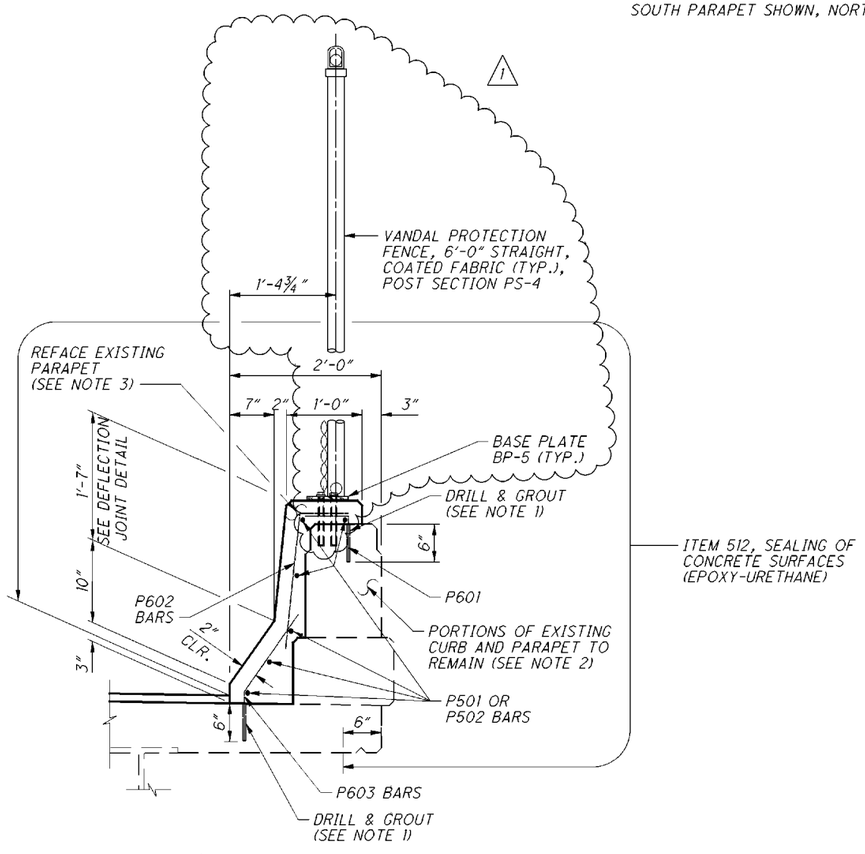

A — SECTION

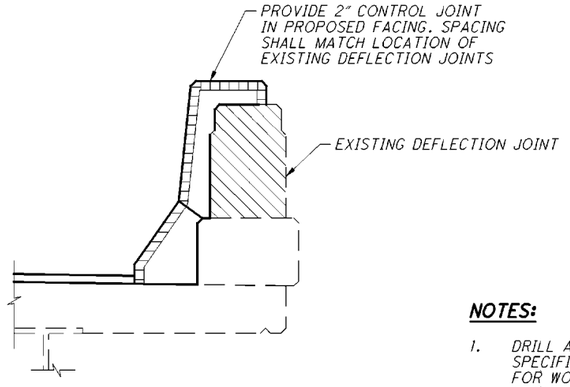

CONTROL JOINT DETAIL

NOTES:

1. DRILL AND PLACE GROUT FOR DOWEL HOLES AS SPECIFIED IN CMS SECTION 510.00. PAYMENT FOR WORK CONSISTING OF DRILLING AND PLACING GROUT INTO HOLES SHALL BE INCLUDED IN THE UNIT BID PRICE FOR ITEM 517, RAILING FACED, AS PER PLAN.
2. FOR EXISTING CURB AND PARTIAL PARAPET REMOVAL DETAILS, SEE SHEET 6.
3. FOR ADDITIONAL INFORMATION FOR REFACING EXISTING PARAPETS, SEE GENERAL NOTES. CONCRETE AND REINFORCING STEEL ARE INCLUDED WITH ITEM 517, RAILING FACED, AS PER PLAN FOR PAYMENT.
4. PROPOSED FENCE POSTS ARE SPACED TO AVOID THE EXISTING PARAPET JOINTS. THE CONTRACTOR SHALL FIELD VERIFY THE LOCATION OF THE EXISTING PARAPET JOINTS AND ADJUST POST SPACING AS REQUIRED. MAXIMUM POST SPACING SHALL NOT EXCEED 5'-0".

1 REV. 1 - 3/28/16

DESIGN AGENCY
CH2MHILL
ONE DAYTON CENTRE, SUITE 1100
ONE SOUTH MAIN STREET
DAYTON, OHIO 45402

DESIGNED BJM | DRAWN TJC | REVIEWED JTC | DATE 06/14
CHECKED VS | REVISED | STRUCTURE FILE NUMBER 7502192

PARAPET ELEVATION
BRIDGE NO. SHE-075-1108
SHARP ROAD OVER IR-75

AUG/SHE-075-5.15/5.45/11.08
PID No. 93767

14 / 17

53 / 56

075_1108RA001.dgn Sheet 3/25/2016 6:36AM CH_ODOTV8i_Half_BW.pen \\daypsp01\DAY Copier BW PS jcenters

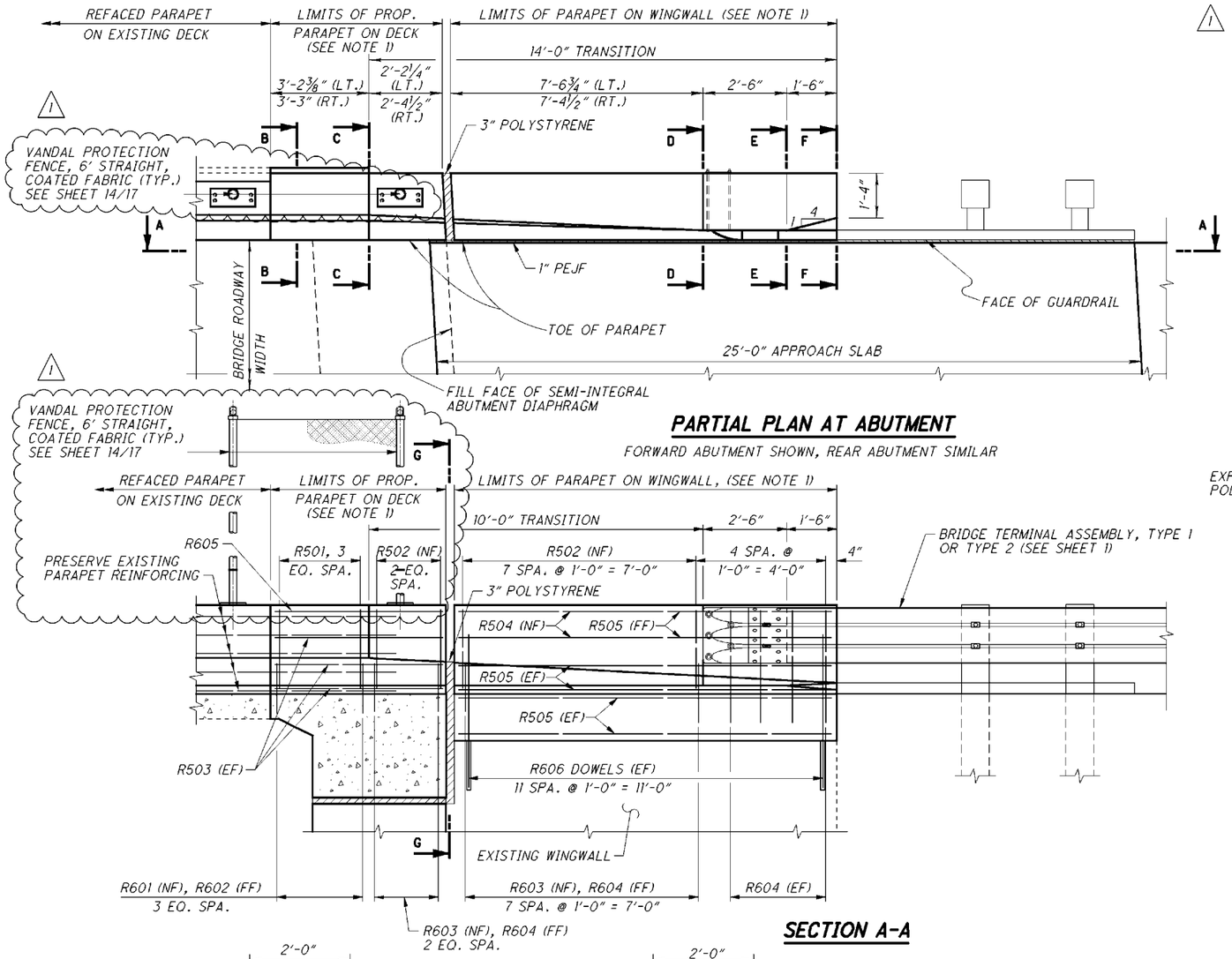

PARTIAL PLAN AT ABUTMENT

FORWARD ABUTMENT SHOWN, REAR ABUTMENT SIMILAR

SECTION A-A

1 REV. 1 - 3/28/16

NOTES:

1. PARAPET/WINGWALL CONCRETE INCLUDED WITH ITEM 511, CLASS QC2 CONCRETE, BRIDGE DECK (PARAPET) FOR PAYMENT. PARAPET REINFORCING INCLUDED WITH ITEM 509, EPOXY COATED REINFORCING STEEL, AS PER PLAN.
2. FOR PARAPET REINFORCING LIST, SEE SHEET 17.
3. PREFORMED EXPANSION JOINT FILLERS INCLUDED WITH ITEM 526, REINFORCED CONCRETE APPROACH SLABS (T=15") AS PER PLAN FOR PAYMENT.

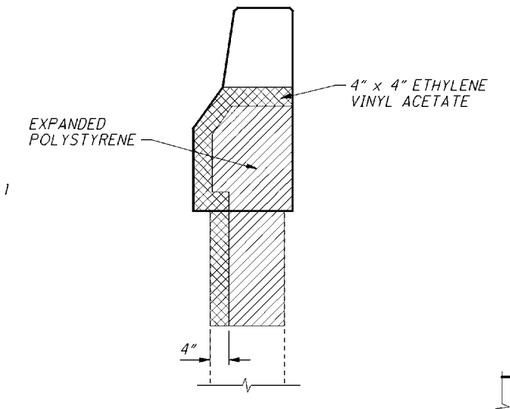

SECTION G-G

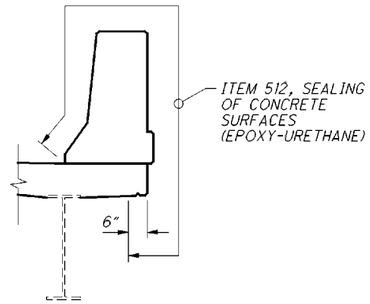

PARAPET ON DECK

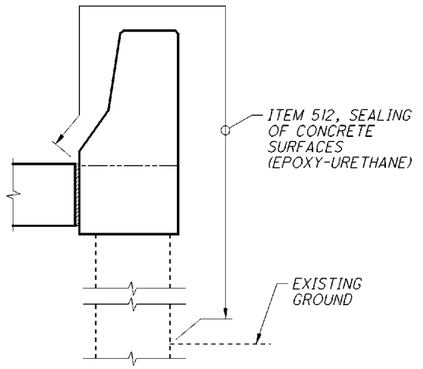

PARAPET ON WINGWALL

CONCRETE SEALING DETAILS

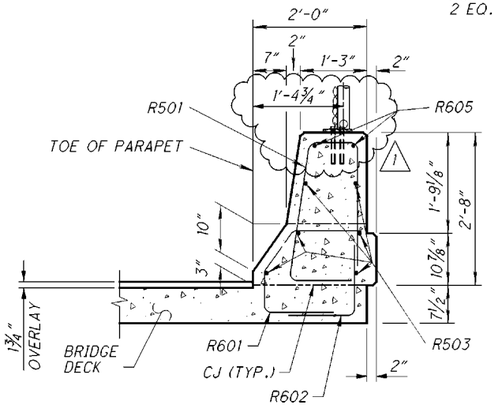

SECTION B-B

MATCH EXISTING PARAPET SHAPE FIELD BEND BARS IF NECESSARY

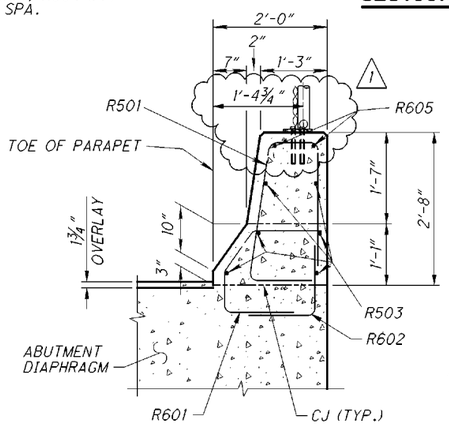

SECTION C-C

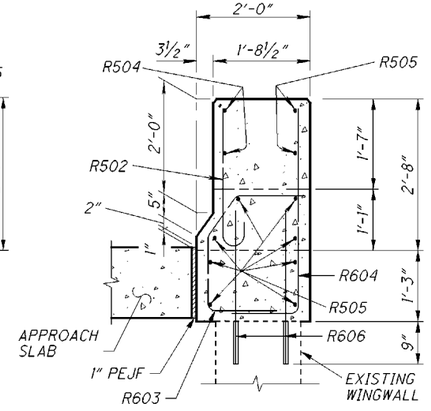

SECTION D-D

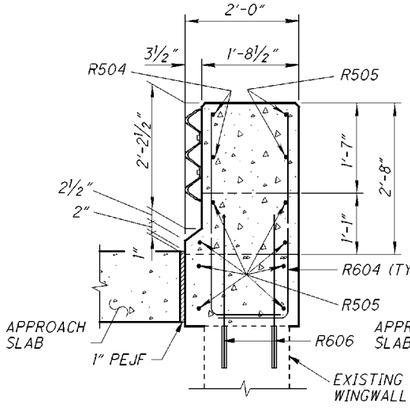

SECTION E-E

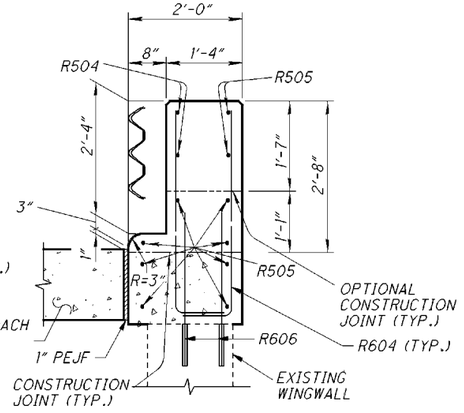

SECTION F-F

DESIGN AGENCY
CH2MHILL
ONE DAYTON CENTRE, SUITE 1100
ONE SOUTH MAIN STREET
DAYTON, OHIO 45402

DESIGNED BJM | DRAWN TJC | CHECKED VS | REVIEWED JTC | DATE 06/14 | REVISED | STRUCTURE FILE NUMBER 7502192

PARAPET DETAILS

BRIDGE NO. SHE-075-1108
SHARP ROAD OVER IR-75

AUG/SHE-075-5.15/5.45/11.08
PID No. 93767

075_1108RA002.dgn Sheet 3/25/2016 4:49AM CH_OGCTV8i_Half_BW.pen \\daypsp01\DAY Copier BW PS icenters

REAR ABUTMENT

FORWARD ABUTMENT

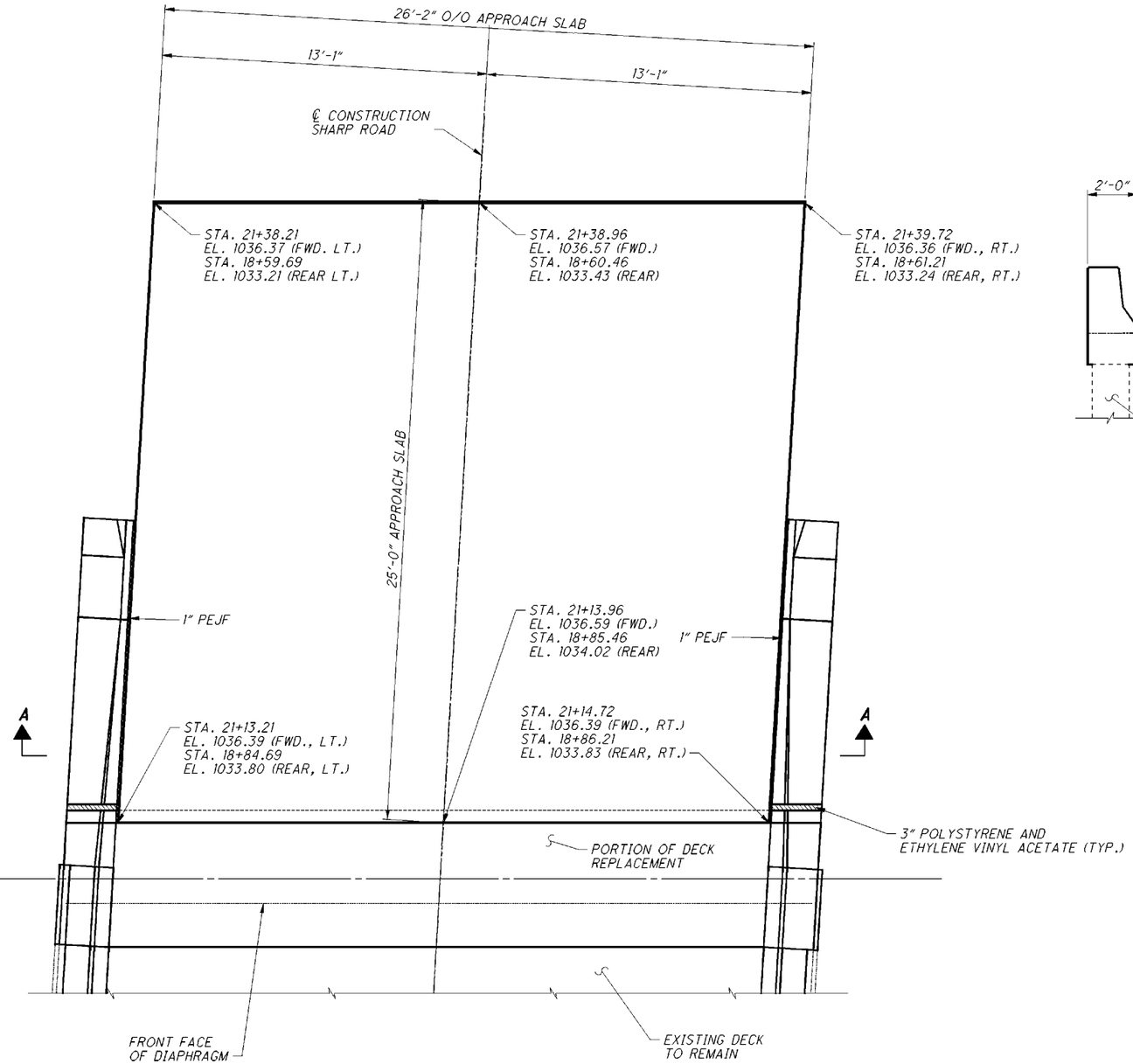

PLAN

(FORWARD APPROACH SHOWN, REAR APPROACH SIMILAR)

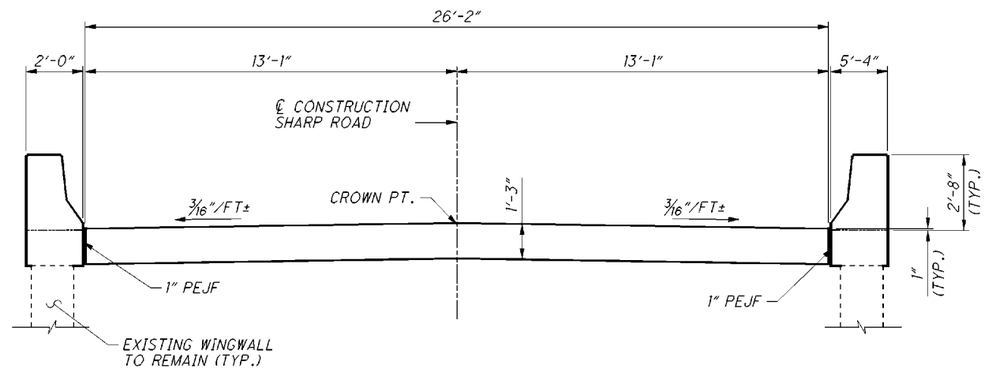

SECTION A-A

(LOOKING AHEAD STATION)

NOTES:

1. SEE STANDARD DRAWING AS-1-81 FOR ADDITIONAL DETAILS.
2. STATIONS AND ELEVATIONS ARE GIVEN FOR INFORMATION ONLY AND WERE OBTAINED FROM THE EXISTING PLANS.

075_1108DP002.dgn Sheet 6/9/2015 9:39AM CH_ODOTV8i_Half_BW.pen \\DAYPSP01\DAY Copier BW PS jcenters

DESIGN AGENCY
CH2MHILL
ONE DAYTON CENTRE, SUITE 1100
ONE SOUTH MAIN STREET
DAYTON, OHIO 45402

DESIGNED BJM | DRAWN TJC | REVIEWED JTC | DATE 06/14 | CHECKED VS | REVISED | STRUCTURE FILE NUMBER 7502192

APPROACH SLAB PLAN AND DETAILS

BRIDGE NO. SHE-075-1108
SHARP ROAD OVER IR-75

AUG/SHE-075-5.15/5.45/11.08
PID No. 93767

ABUTMENT DIAPHRAGM

MARK	QUANTITY			LENGTH	WEIGHT	TYPE	DIMENSIONS						
	REAR ABUT.	FWD. ABUT.	TOTAL				A	B	C	D	E	R	INC.
A501	17	17	34	10'-9"	381	3	3'-5"	1'-8"					
A502	17	17	34	7'-6"	266	2	2'-5"	2'-11"	2'-5"				
A503	4	4	8	12'-11"	108	3	3'-5"	2'-9"					
A504	62	62	124	5'-0"	647	1	3'-5"	1'-8"					
A505	4	4	8	30'-0"	250	STR							
A801	19	19	38	4'-11"	499	18	2'-7"	1'-0"	1'-0"				
A802	10	10	20	30'-0"	1602	STR							
				SUB-TOTAL	3753								

DECK

MARK	QUANTITY			LENGTH	WEIGHT	TYPE	DIMENSIONS						
	REAR ABUT.	FWD. ABUT.	TOTAL				A	B	C	D	E	R	INC.
S601	4	4	8	30'-0"	360	STR							
S602	12	12	24	5'-1"	183	STR							
S701	4	4	8	30'-0"	491	STR							
S801	5	5	10	30'-0"	801	STR							
				SUB-TOTAL	1835								

PARAPET

MARK	QUANTITY			LENGTH	WEIGHT	TYPE	DIMENSIONS						
	REAR ABUT.	FWD. ABUT.	TOTAL				A	B	C	D	E	R	INC.
R501	8	8	16	6'-2"	103	34	3"	2'-5"	11"	2'-2"	1'-0"		
R502	22	22	44	3'-0"	138	16	2'-5"						
R503	12	12	24	5'-1"	127	STR							
R504	4	4	8	10'-11"	91	25	7'-2"	2'-5"	1'-4"	1½"	5"		
R505*	20	20	40	11'-0"	459	STR							
R601	8	8	16	3'-6"	88	14	1'-0"	8"	8½"	6"	1'-2"		
R602	8	8	16	2'-2"	52	1	1'-0"	1'-4"					
R603	22	22	44	4'-1"	270	14	1'-0"	1'-3"	8½"	6"	1'-2"		
R604	38	38	76	4'-5"	504	1	1'-0"	3'-7"					
R605	4	4	8	5'-1"	61	STR							
R606	48	48	96	2'-11"	421	STR							
				SUB-TOTAL	2314								

* FIELD BEND AS NECESSARY

RAILING**

MARK	QUANTITY	LENGTH	WEIGHT	TYPE	DIMENSIONS						
					A	B	C	D	E	R	INC.
P501	24	8'-10"	221	STR							
P502	156	15'-1"	2454	STR							
P601	344	1'-2"	603	1	8"	8"					
P602	344	2'-2"	1120	19	1'-8"	2"	7"				
P603	344	2'-0"	1033	19	8"	1'-0"	9"				
		SUB-TOTAL	5431								

** BARS SHOWN FOR INFORMATIONAL PURPOSES ONLY. BARS ARE INCLUDED WITH ITEM 517, RAILING FACED, AS PER PLAN FOR PAYMENT.

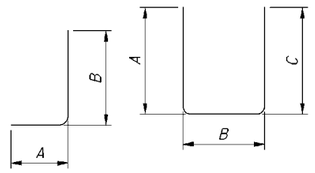

TYPE-1

TYPE-2

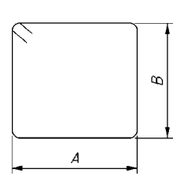

TYPE-3

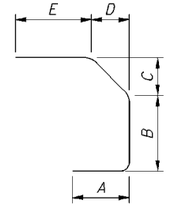

TYPE-14

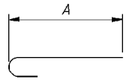

TYPE-16

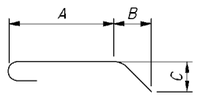

TYPE-18

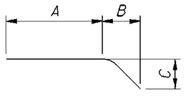

TYPE-19

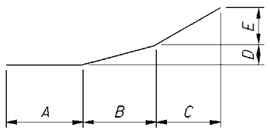

TYPE-25

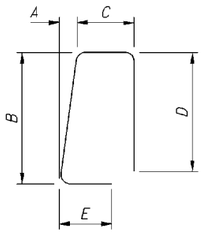

TYPE-34

NOTES:

1. THE BAR SIZE IS SPECIFIED ON THE PLANS IN THE BAR MARK COLUMN. THE FIRST NUMBER INDICATES THE BAR SIZE NUMBER.
2. ALL DIMENSIONS ARE MEASURED OUT-TO-OUT OF BAR UNLESS NOTED OTHERWISE.
3. FOR STANDARD HOOK DIMENSIONS, SEE SECTION 509.05 OF THE SPECIFICATIONS.
4. ALL REINFORCING STEEL TO BE EPOXY COATED.
5. PAYMENT FOR REINFORCING STEEL SHALL BE INCLUDED IN THE CONTRACT BID PRICE FOR ITEM 509, EPOXY COATED REINFORCING STEEL, AS PER PLAN.

DESIGN AGENCY
CH2MHILL
ONE DAYTON CENTRE, SUITE 1100
ONE SOUTH MAIN STREET
DAYTON, OHIO 45402

DESIGNED BJM | DRAWN TJC | CHECKED VS | REVIEWED JTC | DATE 06/14

STRUCTURE FILE NUMBER 7502192

REVISED

REINFORCING STEEL LIST

BRIDGE NO. SHE-075-1108
SHARP ROAD OVER IR-75

AUG/SHE-075-5.15/5.45/11.08
PID No. 93767

075_1108RL001.dgn Sheet 6/11/2015 5:39AM CH_ODOTV8i_Half_BW.pen \\DAYPSP01\DAY Copier BW PS jcenters