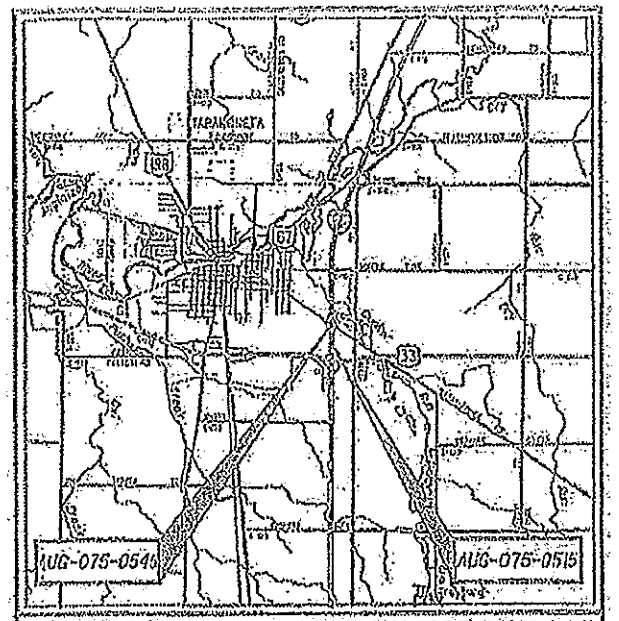

LOCATION MAP (STRUCTURE: AUG-075-0515 L&R)
LEFT SFN: 0602108 RIGHT SFN: 0602132
LATITUDE: 40° 33' 24" LONGITUDE: 84° 10' 12"

LOCATION MAP (STRUCTURE: AUG-075-0545)
SFN: 0602159
LATITUDE: 40° 33' 39" LONGITUDE: 84° 10' 12"

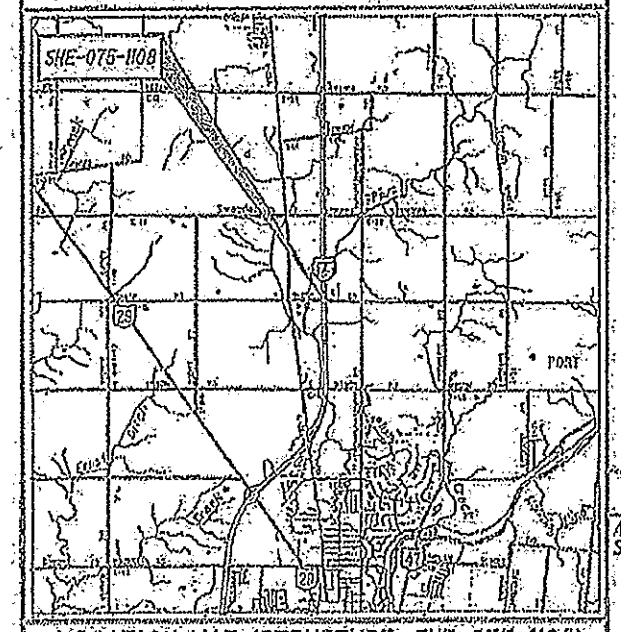

LOCATION MAP (STRUCTURE: SHE-075-1108)
SFN: 7502192
LATITUDE: 40° 20' 46" LONGITUDE: 84° 09' 35"

STATE OF OHIO
DEPARTMENT OF TRANSPORTATION
AUG/SHE-075-5.15/5.45/11.08

AUGLAIZE COUNTY
SHELBY COUNTY

Proj 590-15

INDEX OF SHEETS:

TITLE SHEET	1
GENERAL NOTES	2
MAINTENANCE OF TRAFFIC	3-9
GENERAL SUMMARY	10-11
MISCELLANEOUS DETAILS	12-19
TRAFFIC CONTROL	20-21
STRUCTURES 20' SPAN AND OVER	
AUG-075-0515 L&R (IR-75 OVER AMETEK RAILROAD)	22-29
AUG-075-0546 (BELLEFONTAINE STREET OVER IR-75)	30-32
AUG-075-0545 (BELLEFONTAINE STREET OVER IR-75) AESTHETIC DETAILS	33-39
SHE-075-1108 (SHARP ROAD OVER IR-75)	40-56

PROJECT DESCRIPTION

THE PRIMARY PURPOSE OF THIS PROJECT IS AS FOLLOWS:

AUG-075-0515 L&R — REMOVE AND REPLACE BRIDGE PARAPETS

AUG-075-0546 — PATCH SPALLS AT EXISTING SEMI-INTEGRAL ABUTMENT, ADD ABUTMENT PEDESTALS, ADD AESTHETIC DETAILS TO PARAPETS

SHE-075-1108 — CONVERT EXISTING RAILING TO MODIFIED JERSEY SHAPE BARRIER, REMOVE BACKWALL, EXPANSION JOINT AND BEARINGS AND CONVERT TO SEMI-INTEGRAL ABUTMENTS, OVERLAY EXISTING DECK WITH 1¼" SUPERPLASTICIZED DENSE CONCRETE OVERLAY, REMOVE AND REPLACE APPROACH SLABS, FIELD PAINT EXISTING BEAMS.

PROJECT EARTH DISTURBED AREA: N/A (MAINTENANCE PROJECT)

ESTIMATED CONTRACTOR EARTH DISTURBED AREA: N/A (MAINTENANCE PROJECT)

NOTICE OF INTENT EARTH DISTURBED AREA: N/A (MAINTENANCE PROJECT)

2013 SPECIFICATIONS

THE STANDARD SPECIFICATIONS OF THE STATE OF OHIO, DEPARTMENT OF TRANSPORTATION, INCLUDING CHANGES AND SUPPLEMENTAL SPECIFICATIONS LISTED IN THE PROPOSAL SHALL GOVERN THIS IMPROVEMENT.

I HEREBY APPROVE THESE PLANS AND DECLARE THAT THE MAKING OF THIS IMPROVEMENT WILL NOT REQUIRE THE CLOSING TO TRAFFIC OF THE HIGHWAY EXCEPT FOR THE SIDE ROADS AS DESCRIBED ON SHEET 9, AND THAT PROVISIONS FOR THE MAINTENANCE AND SAFETY OF TRAFFIC WILL BE SET FORTH ON THE PLANS AND ESTIMATES.

DESIGN DESIGNATION:

AUG-075-0515 L&R

CURRENT ADT (2010)	18,650 VPD
DIRECTIONAL DISTRIBUTION	50%
TRUCKS (24 HOUR B&C)	33%
DESIGN SPEED	70 MPH
LEGAL SPEED	70 MPH
DESIGN FUNCTIONAL CLASSIFICATION:	URBAN INTERSTATE

AUG-075-0546

CURRENT ADT (1999)	100 VPD
DIRECTIONAL DISTRIBUTION	50%
TRUCKS (24 HOUR B&C)	0%
DESIGN FUNCTIONAL CLASSIFICATION:	URBAN PRINCIPAL ARTERIAL

SHE-075-1108

CURRENT ADT (1971)	150 VPD
DIRECTIONAL DISTRIBUTION	50%
TRUCKS (24 HOUR B&C)	0%
DESIGN FUNCTIONAL CLASSIFICATION:	RURAL LOCAL ROAD

UNDERGROUND UTILITIES

CONTACT BOTH SERVICES
CALL TWO WORKING DAYS
BEFORE YOU DIG

CALL
1-800-362-2764
(TOLL FREE)
OHIO UTILITIES PROTECTION SERVICE
NON-MEMBERS
MUST BE CALLED DIRECTLY

OIL & GAS PRODUCERS UNDERGROUND
PROTECTION SERVICE CALL: 1-800-925-0988

ENGINEERS SEAL:
AESTHETICS
SHEETS 33-39

SIGNED: Chris Dass
DATE: 7-13-15

ENGINEERS SEAL:
STRUCTURES
SHEETS 22-39
& 40-56

SIGNED:
DATE: 6/11/15

ENGINEERS SEAL:
MOT

SIGNED: Craig M. Keltz
DATE: 6/11/15

PLAN PREPARED BY:
CH2MHILL
FIFTH THIRD CENTRE, SUITE 1100
1 SOUTH MAIN STREET
DAYTON, OHIO 45402-1020
TEL: 937-220-4205
FAX: 937-220-7872

STANDARD CONSTRUCTION DRAWINGS

BP-3.1	7/18/14	TC-41.20	10/18/13				000	10/16/15	
BP-5.1	7/19/13	TC-42.20	10/18/13				021	4/20/12	
BP-9.1	7/19/13	TC-52.10	10/18/13				032	1/17/14	
F-2.1	7/19/13	TC-52.20	1/17/14				021	4/20/12	
F-3.1	7/19/15	TC-61.30	1/17/14						
MM-4.2	4/18/14	TC-65.10	1/17/14						
		TC-65.11	1/17/14						
MT-95.10	7/19/13	TC-72.20	7/20/12						
MT-95.11	7/18/14								
MT-101.60	7/18/13	AS-1-01	1/18/13						
MT-101.70	1/17/14	DR-1-13	1/17/14						
MT-101.80	7/19/13	FCD-91	1/18/13						
MT-102.10	7/19/13	SICD-1-08	7/18/14						
MT-105.10	7/18/13								

DESIGN EXCEPTIONS

NONE REQUIRED

APPROVED: Randy Chandler, P.E. P.S. for A.T.
DATE: 7/9/15 DISTRICT DEPUTY DIRECTOR

APPROVED: George Wheeler III
DATE: 7-27-15 DIRECTOR, DEPARTMENT OF TRANSPORTATION

FEDERAL PROJECT NO. E120 (343)
PID NO. 93767
CONSTRUCTION PROJECT NO.
RAILROAD INVOLVEMENT: AMETEK RAILROAD
AUG/SHE-075-5.15/5.45/11.08
1/56

AUG - /SHE-IR 75-5.15/5.45/11.08
150590 PID - 93767 Contract Proposal Available @ www.contracts.dot.state.oh.us/home
Dist 7 12/3/2015

\\DAYPS\Civil_Projects\Highway\Auglaize\SHE-075-5.15\5.45\11.08\Plans\Sheets\93767GT01.dgn Sheet 5/9/2005 9:33AM

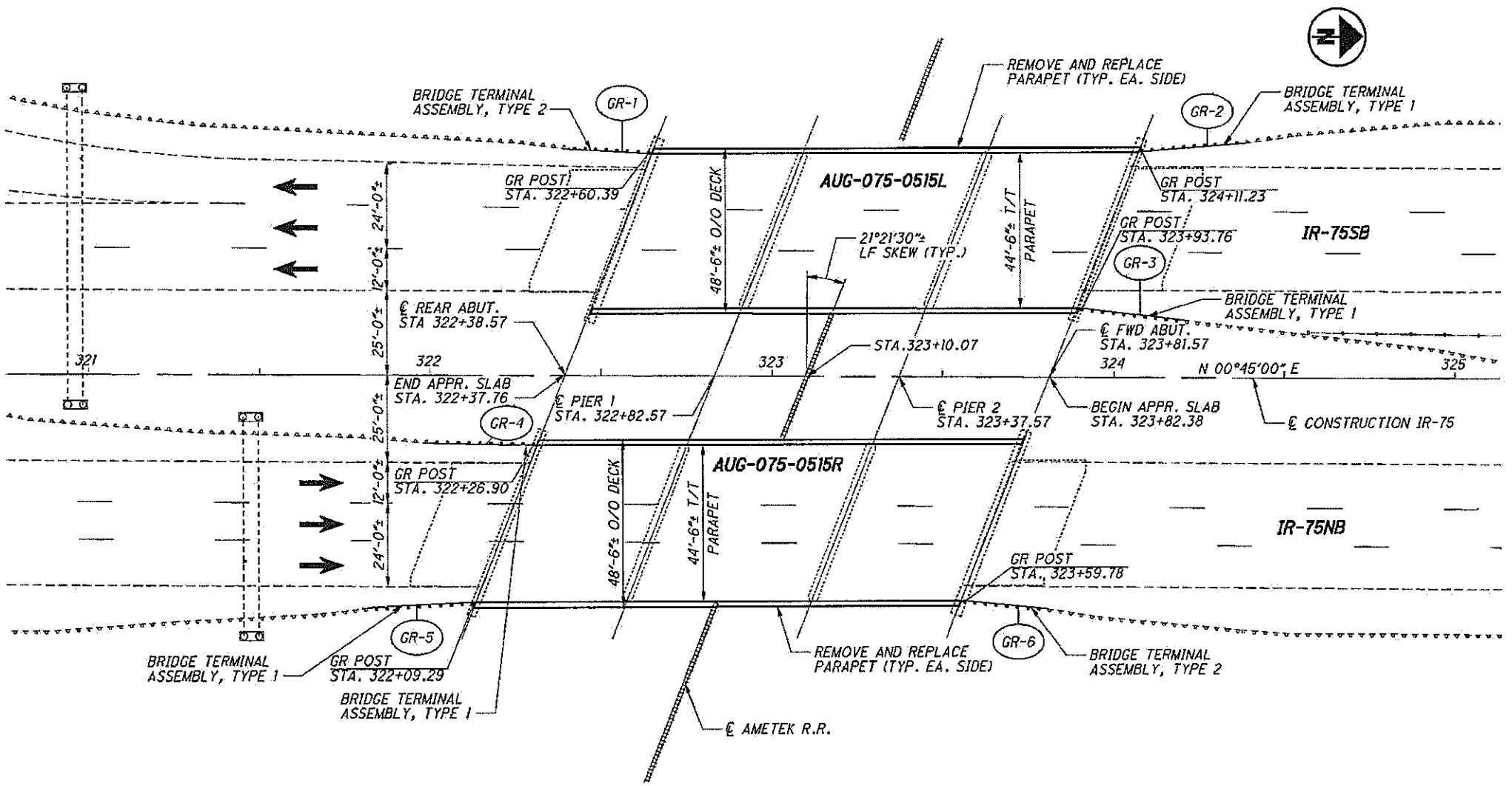

PLAN

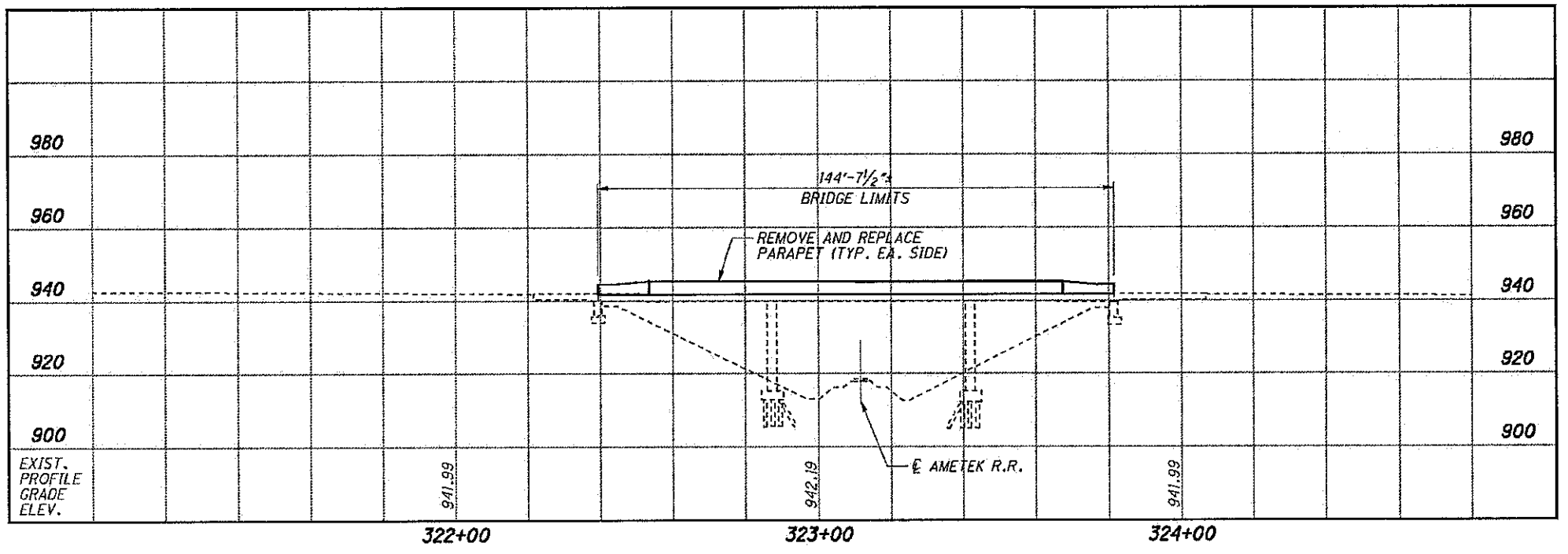

PROFILE ALONG ℄ CONSTRUCTION IR-75

NOTES:

1. STATIONS, ELEVATIONS, AND DIMENSIONS ARE GIVEN FOR INFORMATION ONLY AND WERE OBTAINED FROM THE EXISTING PLANS. ALL EXISTING INFORMATION ARE APPROXIMATE.
2. SEE ROADWAY SUBSUMMARY ON SHEET 2 FOR GUARDRAIL QUANTITIES.
3. SEE SHEETS 2, 12-19 FOR ADDITIONAL GUARDRAIL NOTES AND DETAILS.

EXISTING STRUCTURE

TYPE: CONTINUOUS REINFORCED CONCRETE SLAB ON REINFORCED CONCRETE SUBSTRUCTURE
SPANS: 44'-0"±, 55'-0"±, 44'-0"± C/C BRGS.
ROADWAY: 44'-6"± T/T PARAPETS
LOADING: HS-20
SKEW: 21°21'30"± LEFT FORWARD
APPROACH SLABS: 25'-0"± LONG (AS-1-54)
ALIGNMENT: TANGENT
CROWN: 3/16"/FT.
STRUCTURAL FILE NUMBER: 0602108 (LEFT)/0602132 (RIGHT)
DATE BUILT: 1958 REHABILITATED: 1992, 2006
WEARING SURFACE: EXIST. 1¼" LMC; 2" BITUMINOUS ASPHALTIC CONCRETE (2009)
CONDITION: GOOD (TO REMAIN)

PROPOSED WORK

REMOVE AND REPLACE BRIDGE PARAPETS

DESIGN AGENCY
CH2MHILL
ONE DAYTON CENTRE, SUITE 1100
ONE SOUTH MAIN STREET
DAYTON, OHIO 45402

DESIGNED	DRAWN	REVIEWED	DATE
BJM	TJC	JTC	06/14
CHECKED	REVISED	STRUCTURE FILE NUMBER	
VS		0602108/0602132	

AUGLAIZE COUNTY
STA. 322+37.76
STA. 323+82.38

SITE PLAN
BRIDGE NO. AUG-075-0515L/R
IR-75 OVER AMETEK TRACKS

AUG/SHE-075-5.15/5.45/11.08
PID No. 93767

1 / 8

22 / 56

075_0515SP001.dgn Sheet 6/8/2015 6:48AM CH_ODOTV8i_Half_BW.pen \\DAYPSP01\DAY Copier BW PS 1centers

GENERAL NOTES

REFER TO THE FOLLOWING STANDARD BRIDGE DRAWINGS:

BR-1-13	REVISED	01-17-2014
PCB-91	REVISED	01-18-2013

DESIGN SPECIFICATIONS:

THIS STRUCTURE CONFORMS TO "STANDARD SPECIFICATIONS FOR HIGHWAY BRIDGES" ADOPTED BY THE AMERICAN ASSOCIATION OF STATE HIGHWAY AND TRANSPORTATION OFFICIALS (AASHTO), 2002, AND THE ODOT BRIDGE DESIGN MANUAL.

DESIGN LOADING:

HS-20 CASE I AND THE ALTERNATE MILITARY LOADING. FUTURE WEARING SURFACE (FWS) OF 60 PSI

DESIGN DATA:

CONCRETE CLASS QC2 - COMPRESSIVE STRENGTH 4500 PSI (PARAPETS)
REINFORCING STEEL - ASTM A615 OR A996 GRADE 60 MINIMUM YIELD STRENGTH 60,000 PSI

EXISTING STRUCTURE VERIFICATION:

DETAILS AND DIMENSIONS SHOWN ON THESE PLANS PERTAINING TO THE EXISTING STRUCTURE HAVE BEEN OBTAINED FROM PLANS OF THE EXISTING STRUCTURE AND FROM FIELD OBSERVATIONS AND MEASUREMENTS. CONSEQUENTLY, THEY ARE INDICATIVE OF THE EXISTING STRUCTURE AND THE PROPOSED WORK BUT THEY SHALL BE CONSIDERED TENTATIVE AND APPROXIMATE. THE CONTRACTOR IS REFERRED TO CMS SECTIONS 102.05 AND 105.02.

BASE CONTRACT BID PRICES UPON A RECOGNITION OF THE UNCERTAINTIES DESCRIBED ABOVE AND UPON A PREBID EXAMINATION OF THE EXISTING STRUCTURE. HOWEVER, THE DEPARTMENT WILL PAY FOR ALL PROJECT WORK BASED UPON ACTUAL DETAILS AND DIMENSIONS THAT HAVE BEEN VERIFIED IN THE FIELD.

MAINTENANCE OF TRAFFIC

IN GENERAL, THE PROPOSED WORK FOR THE I-75 BRIDGE OVER AMETEX RAILROAD SHALL CONSIST OF THE REMOVAL AND REPLACEMENT OF THE BRIDGE PARAPETS. REMOVAL AND CONSTRUCTION OPERATIONS ARE TO BE PERFORMED WHILE MAINTAINING TWO LANES OF TRAFFIC IN BOTH DIRECTION ON IR-75 PER THE M.O.T. PLANS. THE MAJOR ITEMS OF WORK REQUIRING PHASED CONSTRUCTION ARE DESCRIBED BELOW. SOME PROJECT WORK ITEMS, SUCH AS SEALING OF CONCRETE SURFACES, MAY BE PERFORMED AT THE CONTRACTOR'S DISCRETION DURING THE CONTRACT SCHEDULE PERIOD; HOWEVER, THE PERFORMANCE OF ALL WORK MUST BE COORDINATED TO SATISFY MAINTENANCE OF TRAFFIC AND SAFETY REQUIREMENTS. SEE M.O.T. PLANS FOR ADDITIONAL MAINTENANCE OF TRAFFIC REQUIREMENTS.

PHASE 1 CONSTRUCTION:

1. INSTALL PORTABLE CONCRETE BARRIER ON THE EXISTING IR-75 NB AND SB BRIDGES AND APPROACHES. ROUTE TRAFFIC ACROSS THE BRIDGES ACCORDING TO THE MAINTENANCE OF TRAFFIC PLANS.
2. REMOVE THE EXISTING INSIDE PARAPETS IN ACCORDANCE WITH 202.03 AND PLAN REQUIREMENTS.
3. CONSTRUCT PROPOSED INSIDE PARAPETS.

PHASE 2 CONSTRUCTION:

1. RELOCATE PORTABLE CONCRETE BARRIER ON THE EXISTING IR-75 NB & SB BRIDGES AND APPROACHES. ROUTE TRAFFIC ACROSS BRIDGES ACCORDING TO THE MAINTENANCE OF TRAFFIC PLANS.
2. REMOVE THE OUTSIDE PARAPETS IN ACCORDANCE WITH 202.03 AND PLAN REQUIREMENTS.
3. CONSTRUCT PROPOSED OUTSIDE PARAPET.
4. REMOVE PORTABLE CONCRETE BARRIER AND RESUME ORIGINAL TRAFFIC FLOW.

ITEM 202, PORTIONS OF STRUCTURE REMOVED AS PER PLAN:

DESCRIPTION: THIS WORK CONSISTS OF THE REMOVAL OF CONCRETE PARAPETS AS SHOWN IN THE PLANS.

ADDITIONAL CONCRETE REMOVAL MAY BE REQUIRED IF UNSOUND OR DETERIORATED CONCRETE IS ENCOUNTERED BEYOND THE PLAN CUT LINES. THE CONTRACTOR SHALL REMOVE ANY UNSOUND OR DETERIORATED CONCRETE BEYOND THE PLAN CUT LINE AS DIRECTED BY THE ENGINEER. PERFORM WORK CAREFULLY DURING PARAPET REMOVALS TO PROTECT PORTIONS OF THE EXISTING STEEL SUPPORTING SYSTEM THAT ARE TO BE SALVAGED AND INCORPORATED INTO THE PROPOSED STRUCTURE. THE USE OF EXPLOSIVES, HEADACHE BALLS AND/OR HOE RAM TYPE OF EQUIPMENT IS PROHIBITED. SUBMIT CONSTRUCTION PLANS ACCORDING TO CMS 501.05.

REMOVAL METHODS: THE CONTRACTOR SHALL REMOVE CONCRETE BY CUTTING AND BY MEANS OF APPROVED HAND OPERATED PNEUMATIC HAMMERS EMPLOYING POINTED OR BLUNTED CHISEL TYPE TOOLS. THE WEIGHT OF THE HAMMER SHALL NOT BE MORE THAN 90 POUNDS.

CUT LINE CONSTRUCTION JOINT PREPARATION: SAW CUT BOUNDARIES OF PROPOSED CONCRETE REMOVALS 1 INCH DEEP. REMOVE CONCRETE TO A ROUGH SURFACE. LEAVE THE EXISTING REINFORCING STEEL, IF REQUIRED IN THE PLANS, IN PLACE. INSTALL DOWEL BARS IF SPECIFIED. PRIOR TO CONCRETE PLACEMENT ABRASIVELY CLEAN JOINT SURFACES AND EXISTING EXPOSED REINFORCEMENT TO REMOVE LOOSE AND DISINTEGRATED CONCRETE AND LOOSE RUST. THOROUGHLY CLEAN THE JOINT SURFACE AND EXPOSED REINFORCEMENT OF ALL DIRT, DUST, RUST, OR OTHER FOREIGN MATERIAL BY THE USE OF WATER, AIR UNDER PRESSURE, OR OTHER METHODS THAT PRODUCE SATISFACTORY RESULTS. EXISTING REINFORCING STEEL DOES NOT HAVE TO HAVE A BRIGHT STEEL FINISH, BUT REMOVE ALL PACK AND LOOSE RUST. THOROUGHLY DRENCH EXISTING CONCRETE SURFACES WITH CLEAN WATER AND ALLOW TO DRY TO A DAMP CONDITION BEFORE PLACING CONCRETE.

MEASUREMENT AND PAYMENT: THE DEPARTMENT WILL MEASURE THE QUANTITY OF REMOVAL ON A LUMP SUM BASIS. THE DEPARTMENT WILL PAY FOR ACCEPTED QUANTITIES OF REMOVALS AT THE CONTRACT PRICE FOR ITEM 202, PORTIONS OF STRUCTURE REMOVED, AS PER PLAN.

ABBREVIATIONS

THE FOLLOWING ABBREVIATIONS HAVE BEEN USED THROUGHOUT THESE PLANS:

& = AND
@ = AT
° = DEGREES
' = FEET OR MINUTES
" = INCHES OR SECONDS
± = PLUS OR MINUS

AASHTO = AMERICAN ASSOCIATION OF STATE HIGHWAY AND TRANSPORTATION OFFICIALS
ABUT. = ABUTMENT
ADT = AVERAGE DAILY TRAFFIC
ADTT = AVERAGE DAILY TRUCK TRAFFIC
APPR. = APPROACH
APPROX. = APPROXIMATE
ASTM = AMERICAN SOCIETY OF TESTING AND MATERIALS

BM = BENCHMARK
BOT. = BOTTOM
BOT./FTG. = BOTTOM OF FOOTING
BRGS. = BEARINGS

℄ = CENTERLINE
C/C = CENTER TO CENTER
CFS = CUBIC FEET PER SECOND
CJ = CONSTRUCTION JOINT
CLR. = CLEAR
CMS = CONSTRUCTION AND MATERIAL SPECIFICATIONS
CONSTR./CONST. = CONSTRUCTION
CON'T = CONTINUED
COL. = COLUMN
C.P.P. = CORRUGATED PLASTIC PIPE
C.R./CR = COUNTY ROAD
CU = CUBIC
CVN = CHARPY V-NOTCH

DEFL. = DEFLECTION
DIA. = DIAMETER
DIM. = DIMENSION
DL = DEAD LOAD
DWG. = DRAWING

E =EAST
EA. = EACH
EF = EACH FACE
EL./ELEV. = ELEVATION
EMBED. = EMBEDMENT
EQ. = EQUAL
EX./EXIST. = EXISTING
EXP. = EXPANSION
EXT. = EXTENSION

F = FAHRENHEIT
FF = FAR FACE
F/F = FACE TO FACE
FS = FIELD SPLICE
FT. = FEET
FT/FT. = FOOT/FOOT
FT/S = FEET PER SECOND
FTG. = FOOTING
FWD. = FORWARD
FWS = FUTURE WEARING SURFACE

GEN. = GENERAL

HR = HOUR
HW = HIGH WATER

IN. = INCHES
INT. = INTERMEDIATE

LF = LEFT FORWARD
LONG. = LONGITUDINAL
LT. = LEFT

MAX. = MAXIMUM
MIN. = MINIMUM
MISC. = MISCELLANEOUS

N = NORTH
NF = NEAR FACE
#/NO. = NUMBER

OHWM = ORDINARY HIGH WATER MARK
OUT/OUT = OUT TO OUT

PEJF = PREFORMED EXPANSION JOINT FILLER
P/PL = PLATE
PSF = POUND PER SQUARE FOOT
PSI = POUND PER SQUARE INCH
PT. = POINT
PVI = POINT OF VERTICAL INTERSECTION

Q = FLOW

R = RADIUS
REF. = REFERENCE
REINF. = REINFORCED
REQ'D. = REQUIRED
RF = RIGHT FORWARD
RT. = RIGHT

SHLDR. = SHOULDER
SPA. = SPACING
SQ = SQUARE
STA. = STATION
STD. = STANDARD
STR. = STRAIGHT
SUPER = SUPERSTRUCTURE

T = THICKNESS
TELE = TELEPHONE
TRANS. = TRANSVERSE
TWP. = TOWNSHIP
TYP. = TYPICAL

V = VELOCITY
V.C. = VERTICAL CURVE
VERT. = VERTICAL

W = WEST
W/ = WITH
W/O = WITHOUT
W.P. = WORKING POINT
WT. = WEIGHT

YD = YARD

ESTIMATED QUANTITIES

ITEM	EXTENSION	TOTAL	UNIT	DESCRIPTION	ABUT.	PIERS	SUPER.	GEN.	SHEET
202	11201	LUMP		PORTIONS OF STRUCTURE REMOVED, AS PER PLAN			LUMP		2/8
509	10000	14209	POUND	EPOXY COATED REINFORCING STEEL			14209		
510	10000	1264	EACH	DOWEL HOLES WITH NONSHRINK, NONMETALLIC GROUT			1264		
511	34450	85	CD YD	CLASS QC2 CONCRETE WITH QC/QA, BRIDGE DECK (PARAPET)			85		
512	10100	539	SQ YD	SEALING OF CONCRETE SURFACES (EPOXY-URETHANE)			539		

DESIGN AGENCY
CH2MHILL
ONE DAYTON CENTRE, SUITE 1100
ONE S. MAIN STREET
DAYTON, OHIO 45402

DESIGNED BJM | DRAWN TJC | CHECKED VS | REVIEWED JTC | DATE 06/14

STRUCTURE FILE NUMBER 0602108/0602132

REVISED

GENERAL NOTES & ESTIMATED QUANTITIES

BRIDGE NO. AUG-075-0515L/R
IR-75 OVER AMETEK TRACKS

AUG/SHE-075-5.15/5.45/11.08
PID No. 93767

2 / 8

23
56

075_0515GN001.dgn Sheet 6/8/2015 6:49AM CH_ODOTV8i_Half_BW.pen \\DAYPSP01\DAY Copier BW PS jcenters

inter-office communication

Date: May 15, 2007

To: Steve Kremer, Highway Management
Construction Engineer

From: Brad Lightle, Planning BAL
System Assessment Engineer

Subject: AUG-75-0515 L & R SFN: 0602108, 0602132
Final Inspection Project # 455-06 PID 25325

We have inspected the structures on the project indicated above and found no deficiencies; therefore, we recommend the bridges be finaled.

If you have any questions, feel free to contact me.

Thank you.

BAL/gw
c: File

Red Pencil

STATE OF OHIO

DEPARTMENT OF TRANSPORTATION

AUG-75-5.15

CITY OF WAPAKONETA
DUCHOQUET TOWNSHIP
AUGLAIZE COUNTY

INDEX OF SHEETS:

TITLE SHEET	1
GENERAL NOTES	2-3
MAINTENANCE OF TRAFFIC	4-4A
GENERAL SUMMARY	5
STRUCTURE	6-13

455-86

PROJECT DESCRIPTION

ABUTMENT MAINTENANCE:
ABUTMENT REPAIR INCLUDING INSTALLATION OF GALVANIC ANODES.

MAINTENANCE
Project Earth Disturbed Area - N/A
Estimated Contractor Earth Disturbed Area - N/A
Notice of Intent Earth Disturbed Area - N/A

LIMITED ACCESS

THIS IMPROVEMENT IS ESPECIALLY DESIGNED FOR THROUGH TRAFFIC AND HAS BEEN DECLARED A LIMITED ACCESS HIGHWAY OR FREEWAY BY ACTION OF THE DIRECTOR IN ACCORDANCE WITH THE PROVISIONS OF SECTION 5511.02 OF THE OHIO REVISED CODE.

2005 SPECIFICATIONS

THE STANDARD SPECIFICATIONS OF THE STATE OF OHIO, DEPARTMENT OF TRANSPORTATION, INCLUDING CHANGES AND SUPPLEMENTAL SPECIFICATIONS LISTED IN THE PROPOSAL SHALL GOVERN THIS IMPROVEMENT.

I HEREBY APPROVE THESE PLANS AND DECLARE THAT THE MAKING OF THIS IMPROVEMENT WILL NOT REQUIRE THE CLOSING TO TRAFFIC OF THE HIGHWAY AND THAT PROVISIONS FOR THE MAINTENANCE AND SAFETY OF TRAFFIC WILL BE AS SET FORTH ON THE PLANS.

FEDERAL PROJECT NO.	PID NO.	CONSTRUCTION PROJECT NO.	RAILROAD INVOLVEMENT
NONFEDERAL	25325		NONE

STANDARD CONSTRUCTION DRAWINGS — SUPPLEMENTAL

APPLICATIONS FOR EQUALS INCLUDE:

1. A HIGHLY ALKALINE CEMENTITIOUS SHELL WITH A pH OF 14 OR GREATER.
2. PROVIDE A MINIMUM OF 10 YEARS OF SERVICE LIFE (IN SIMILAR ENVIRONMENT).
3. CONTAIN NO CORROSIVE CONSTITUENTS DETRIMENTAL TO REINFORCING STEEL, e.g. CHLORIDE, etc.
4. PROVEN TRACK RECORD WITH BRIDGE WORK SHOWING SATISFACTORY FIELD PERFORMANCE.
5. A MINIMUM OF THREE PROJECTS OF SIMILAR SIZE AND APPLICATION.
6. ANODES SHALL BE SUPPLIED WITH INTEGRAL TIE WIRES FOR TYING TO THE REINFORCING STEEL.
7. PRODUCT EVALUATION BY AN INDEPENDENT AGENCY SUCH AS HITEC, CIAS, BRE, etc.

B. REPAIR MORTARS, CONCRETE, AND BONDING AGENTS SHALL BE HYDRAULIC CEMENT-BASED MATERIALS WITH A 28-DAY MOIST CURED ELECTRICAL RESISTIVITY LESS THAN 15,000 ohm-cm. NON CONDUCTIVE REPAIR MATERIALS SUCH AS MAGNESIUM AMMONIUM PHOSPHATE CONCRETE OR MORTARS, AND EPOXY MORTARS OR BONDING AGENTS, SHALL NOT BE PERMITTED. CONCRETE MIXTURES CONTAINING HIGH LEVELS OF SUPPLEMENTARY CEMENTITIOUS MATERIALS SUCH AS SILICA FUME, GROUND-GRANULATED BLAST FURNACE SLAG, FLYASH OR METAKAOLIN MAY NOT MEET THIS RESISTIVITY REQUIREMENT.

C. DELIVER, STORE, AND HANDLE ALL MATERIALS IN ACCORDANCE WITH MANUFACTURER'S INSTRUCTIONS

PART 3 EXECUTION

3.01 CLEANING AND REPAIR OF REINFORCING STEEL

A. REMOVE ALL UNSOUND CONCRETE TO FULLY EXPOSE THE REINFORCING STEEL IN ACCORDANCE WITH THE RECOMMENDATIONS OF ICRI GUIDELINE NUMBER 03730

B. CLEAN EXPOSED REINFORCING STEEL OF RUST, MORTAR, etc. USING A HAND-HELD GRINDER WITH A WIRE WHEEL, OR ABRASIVE BLASTING TO PROVIDE SUFFICIENT ELECTRICAL CONNECTION AND MECHANICAL BOND.

C. IF SIGNIFICANT REDUCTION IN THE CROSS SECTION OF THE REINFORCING STEEL HAS OCCURRED, REPLACE OR INSTALL SUPPLEMENTAL REINFORCEMENT AS DIRECTED BY THE ENGINEER.

D. SECURE LOOSE REINFORCING STEEL BY TYING TIGHTLY TO OTHER BARS WITH STEEL TIE WIRE

3.02 GALVANIC ANODE INSTALLATION

A. GALVANIC ANODES SHALL BE INSTALLED IN THE LOCATIONS AND SPACING AS SPECIFIED ON THE DRAWINGS. IN NO CASE SHALL THE DISTANCE BETWEEN THE ANODES EXCEED 24 INCHES.

B. SECURE THE ANODE IN POSITION BETWEEN THE EXISTING SUBSTRATE AND ANY NEW REINFORCING STEEL, IF POSSIBLE. PROVIDE SUFFICIENT CLEARANCE (3/4 MINIMUM) BETWEEN THE SUBSTRATE AND EACH ANODE TO ALLOW REPAIR MATERIAL TO COMPLETELY ENCASE THE ANODE. USE OF REBAR CHAIRS OR SLAB BOLSTERS IS ACCEPTABLE. PROVIDE AT LEAST 1 INCH OF CONCRETE COVER BETWEEN THE EXTERIOR SURFACE AND THE ANODE.

C. SECURE THE GALVANIC ANODES TO THE REINFORCING STEEL USING

E. ELECTRICAL CONTINUITY CONT'D

2. CONFIRM ELECTRICAL CONTINUITY OF THE EXPOSED REINFORCING STEEL WITHIN ANY REPAIR AREA. IF NECESSARY, ELECTRICAL CONTINUITY SHALL BE ESTABLISHED WITH STEEL TIE WIRE.
3. ELECTRICAL CONTINUITY IS ACCEPTABLE IF THE DC RESISTANCE MEASURED WITH A MULTI-METER IS LESS THAN 1 ohms.

3.03 CONCRETE REPLACEMENT

A. COMPLETE THE REPAIR FOLLOWING NORMAL CONCRETE PLACEMENT PROCEDURES, TAKING CARE NOT TO DAMAGE, OR TO CREATE AIR VOIDS AROUND THE EMBEDDED GALVANIC ANODES.

EACH EMBEDDED GALVANIC ANODE PROVIDED AND INSTALLED WITH ALL INCIDENTALS INCLUDED SHALL BE PAID FOR AT THE PRICE BID FOR:

ITEM	DESCRIPTION	UNIT
511E81300	CONCRETE MISCELLANEOUS: EMBEDDED GALVANIC ANODE	EACH

TYPICAL EMBEDDED GALVANIC ANODE TO REINFORCING STEEL ATTACHMENT DETAIL

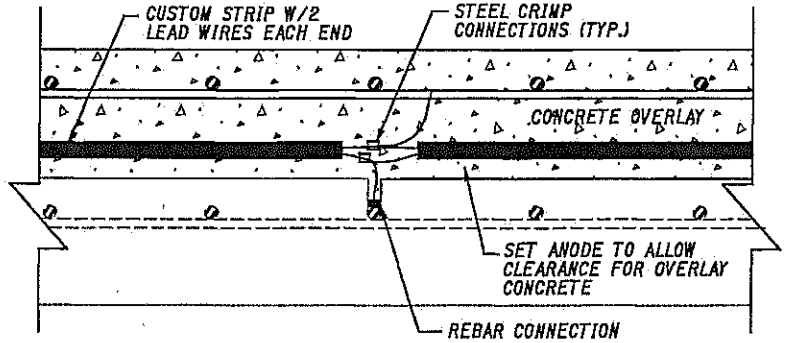

ANODE MONITORING STATION

A. INSTALL ANODE MONITORING STATION AT AN ACCESSIBLE LOCATION NEAR THE MONITORED ZONE, AS DIRECTED BY THE ENGINEER.

B. EACH MONITORING STATION SHALL CONSIST OF A WEATHERPROOF PVC ELECTRICAL JUNCTION BOX AND SHALL BE OF SUFFICIENT SIZE TO CONTAIN CONNECTION WIRES, A TOGGLE SWITCH AND A BATTERY-POWERED DATA LOGGER. INSTRUMENTATION FOR THE MONITORING STATION WILL BE SUPPLIED BY THE ANODE MANUFACTURER. THE COVER OF THE JUNCTION BOX SHALL INCLUDE A WEATHER STRIP SEAL, AND SHALL BE SECURED WITH BRASS SCREWS OR OTHER NON-CORROSIVE CLOSURE DEVICE.

C. ANODE(S) IN THE ZONE TO BE MONITORED SHALL BE CONNECTED TO THE REINFORCING STEEL ONLY THROUGH THE MONITORING STATION. STEEL CONNECTION WIRES ON ONE END OF THE ANODE(S) SHALL BE CUT OFF AND COATED WITH EPOXY OR RTV SILICONE CAULK TO MAKE A WATERPROOF SEAL. THE STEEL CONNECTION WIRES ON THE OTHER END OF THE ANODE(S) SHALL BE USED TO CONNECT INDIVIDUAL ANODES TOGETHER AND TO THE MONITORING STATION USING A RED INSULATED WIRE. PRECAUTIONS SHALL BE MADE TO PREVENT CONTACT OF THE ANODE CONNECTION WIRES AND THE REINFORCEMENT. THE CONNECTION BETWEEN THE ANODE WIRES AND THE INSULATED WIRE SHALL BE COMPLETELY COATED WITH EPOXY OR RTV SILICONE CAULK TO MAKE A WATERPROOF SEAL.

D. A BLACK INSULATED WIRE SHALL BE USED TO CONNECT THE REIN-

CALCULATED BCW CHECKED BAB

GENERAL NOTES

REPLACE ANY ASPHALT THAT IS REMOVED DUE TO CORING THROUGH THE DECK WITH 448 ASPHALT CONCRETE SURFACE COURSE, TYPE 1, PG70-22M. THE REPLACEMENT ASPHALT THICKNESS WILL MATCH THE EXISTING ASPHALT THICKNESS AND WILL BE FLUSH WITH THE EXISTING ASPHALT SURFACE COURSE.

A FORM PUMPING SYSTEM MAY BE USED IN LIEU OF CORING THE BRIDGE DECK. ANY FORM PUMPING SYSTEM PROPOSED MUST BE SUBMITTED, AND ACCEPTED BY THE PROJECT ENGINEER PRIOR TO THE INSTALLATION OF ANY FORMWORK. A TEST AREA ON THE FIRST BRIDGE TO BE DONE SHALL BE USED TO DETERMINE THE PERFORMANCE OF THE PROPOSED PUMPING SYSTEM. UPON COMPLETING THE TEST SECTION THE PROJECT ENGINEER SHALL INSPECT THE AREA FOR THE PRESENCE OF AIR VOIDS TO ENSURE THAT ALL PATCHED AREAS ARE FILLED. UPON APROVAL OF THE TEST AREA BY THE PROJECT ENGINEER THE CONTRACTOR MAY USE THE APPROVED FORM PUMPING SYSTEM.

DURING LANE CLOSURES (SEE MAINTENANCE OF TRAFFIC NOTES), PERFORM WORK CONCURRENTLY ON THE CLOSED SECTION FORWARD AND REAR ABUTMENTS OF A STRUCTURE.

THE DEPARTMENT WILL MEASURE THE NUMBER OF CUBIC YARDS DETERMINED BY CALCULATIONS FROM THE PLAN DIMENSIONS FOR THE ABUTMENT WIDENING WORK. THE DEPARTMENT WILL MEASURE THE NUMBER OF CUBIC YARDS FOR THE PATCHED AREAS BY DETERMINING THE SQUARE YARDAGE OF ACTUAL PATCHED AREAS AND MULTIPLYING BY A DEPTH OF 0.167 YARDS TO CALCULATE THE VOLUME OF CUBIC YARDS.

THE DEPARTMENT WILL PAY FOR THE ACCEPTED QUANTITY OF CUBIC YARDS.

PAYMENT WILL INCLUDE REMOVAL OF THE UNSOUND CONCRETE, FORMWORK, STRUCTURAL SUPPORTS, CORING, DEVELOPMENT AND PLACEMENT OF THE SELF CONSOLIDATING CONCRETE MIX, PRESSURE GROUTING, SEALING, AND ASPHALT PATCHING.

ITEM 203 EXCAVATION

EXCAVATE ROCK SLOPE PROTECTION AND/OR SPALLED CONCRETE TO EXPOSE THE COMPLETE FACE OF THE VERTICAL SLAB SEAT WALL AND TOP OF THE FOOTER. REFER TO SHEET 6 FOR MORE INFORMATION.

ITEM 511 CONCRETE, MISC.: CORE HOLES

CORE HOLES SHALL BE DRILLED COMPLETELY THROUGH THE BRIDGE DECK IN ORDER TO PLACE THE SELF CONSOLIDATING CONCRETE. EACH HOLE SHALL HAVE A DIAMETER OF 3½", AND SPACED EVERY 4 TO 6 FEET. THE ANGLE OF THE HOLE SHALL NOT BE GREATER THAN 20 DEGREES PAST THE VERTICAL IN ORDER TO MAINTAIN CLEARANCE BETWEEN THE TRANSVERSE AND LONGITUDINAL BARS. UNDER NO CIRCUMSTANCES SHALL THE HOOK BARS BE DAMAGED WHILE DRILLING THE CORE HOLES.

EACH CORE HOLE INCLUDING INCIDENTALS SHALL BE PAID FOR AT THE PRICE BID FOR:

ITEM	DESCRIPTION	UNIT
511E81300	CONCRETE, MISC.: CORE HOLES	EACH

ITEM 530 SPECIAL - STRUCTURE, MISC.: STRUCTURAL ASSESSMENT

THE CONTRACTOR WILL BE RESPONSIBLE FOR THE STRUCTURAL ASSESSMENT OF ALL STRUCTURES DESCRIBED IN THESE PLANS. THE CONTRACTOR WILL PROVIDE THE SERVICES OF AN OHIO REGISTERED PROFESSIONAL ENGINEER WHO WILL PREPARE, SEAL AND DATE AN ASSESSMENT OF THE NEED, IF ANY, FOR TEMPORARY SUPPORT OF THE DECK SLAB DURING WORK PERFORMED AS DESCRIBED IN THESE PLANS. REFER TO THE NOTE TITLED "ITEM 516 JACKING AND TEMPORARY SUPPORT OF SUPERSTRUCTURE, AS PER PLAN" FOR MORE INFORMATION REGARDING TEMPORARY SUPPORT. SAID ENGINEER WILL BE PRESENT AT THE WORK SITE ANY TIME CONCRETE REMOVAL IS PERFORMED ON A STRUCTURE, AND WILL ASSESS THE STRUCTURAL INTEGRITY OF THE ABUTMENTS AND DECK SLAB OF EACH STRUCTURE DURING CONCRETE REMOVAL AND ANY TIME AN ASSESSMENT IS REQUESTED BY THE ODOT PROJECT ENGINEER. THE ADDITIONAL REQUESTED ASSESSMENT (ODOT REQUESTED ASSESSMENT) WILL BE SUBMITTED BY THE REGISTERED ENGINEER TO THE ODOT PROJECT ENGINEER AT ANY TIME UPON REQUEST WITH NO LIMIT TO THE NUMBER OF REQUESTS.

ONE COPY OF THE ASSESSMENT WILL BE SUBMITTED TO THE PROJECT ENGINEER UPON REQUEST. EACH ASSESSMENT SHALL BE PAID FOR AT THE PRICE BID FOR:

ITEM	DESCRIPTION	UNIT
530E00400	SPECIAL - STRUCTURE, MISC.: STRUCTURAL ASSESSMENT	4 EACH

ITEM 516 JACKING AND TEMPORARY SUPPORT OF SUPERSTRUCTURE, AS PER PLAN

IF THE STRUCTURAL ASSESSMENT PERFORMED BY AN OHIO REGISTERED ENGINEER DETERMINES THAT TEMPORARY SUPPORT OF A SUPERSTRUCTURE IS NEEDED, WHEN REMOVING CONCRETE PAST THE 6" MAXIMUM LIMIT OF REMOVAL, SAID ENGINEER WILL ANALYZE AND DESIGN THE SUPPORT. THE DESIGN CALCULATIONS FOR THE SUPPORT WILL BE SUBMITTED TO THE ODOT PROJECT ENGINEER UPON REQUEST. THE DESIGN OF THE SUPPORT SHALL BE SUCH THAT THE EQUIPMENT, MATERIALS, AND EMPLOYEES INSTALLING THE TEMPORARY SUPPORT OF THE SUPERSTRUCTURE SHALL NOT BE WITHIN 10 FT. OF THE EXISTING RAILROAD POLE LINE.

THE DESIGN OF THE SUPPORT, THE MATERIALS, LABOR, AND ALL INCIDENTALS REQUIRED TO CONSTRUCT AND INSTALL THE SUPPORT WILL BE PAID FOR AT THE BID PRICE FOR:

SEQUENCE OF CONSTRUCTION

STAGE 1 CONSTRUCTION

1. REMOVE AREAS OF UNSOUND CONCRETE ON PORTIONS OF THE OUTSIDE ABUTMENT BACKWALLS
2. PLACE RESTEEL AND GALVANIC ANODES IN THE OUTSIDE PORTIONS OF THE ABUTMENT
3. POUR CONCRETE FOR WIDENING OF THE BRIDGE SLAB SEAT

* MAINTAIN TRAFFIC AT ALL TIMES ACCORDING TO THE NOTES DESCRIBED ON SHEET 4 OF THESE PLANS

STAGE 2 CONSTRUCTION

1. REMOVE AREAS OF UNSOUND CONCRETE ON PORTIONS OF THE INSIDE ABUTMENT BACKWALLS
2. PLACE RESTEEL AND GALVANIC ANODES IN THE INSIDE PORTIONS OF THE ABUTMENT
3. POUR CONCRETE FOR WIDENING OF THE BRIDGE SLAB SEAT

* MAINTAIN TRAFFIC AT ALL TIMES ACCORDING TO THE NOTES DESCRIBED ON SHEET 4 OF THESE PLANS

GENERAL

THE PROJECT ENGINEER SHALL NOTIFY THE CENTRAL OFFICE SPECIAL HAULING PERMITS OFFICE 2 WEEKS PRIOR TO THE START OF THE PROJECT. THE PROJECT ENGINEER SHALL ALSO NOTIFY THE CENTRAL OFFICE SPECIAL HAULING PERMITS OFFICE IF AT ANY TIME THE STRUCTURAL ASSESSMENT INDICATES A REDUCED LOAD CARRYING CAPACITY PRIOR TO THE SHORING OF THE STRUCTURE.

RAILROAD NOTES

THE CONTRACTOR SHALL NOTIFY THE AMETEK FACILITIES MANAGER 10 DAYS (10) PRIOR TO CONSTRUCTION TO INFORM THEM OF ANY WORK BEING PERFORMED AROUND THE RAILROAD. THE CONTRACTOR SHALL CONTACT FRANK URWIN AT (419)-303-7822

EROSION CONTROL DEVICES SHALL BE PLACED AT THE BOTTOM OF THE SLOPES TO PREVENT ANY RUN-OFF FROM EFFECTING THE OPERATION OF THE RAILROAD. IN ADDITION TO THE EROSION CONTROL DEVICES, A HIGHLY VISIBLE, PLASTIC CONSTRUCTION FENCE SHALL BE PLACED AT A MAXIMUM OF 15 FT FROM THE ABUTMENT. THE CONTRACTOR SHALL KEEP ALL MATERIAL, EQUIPMENT, AND PERSONNEL WITHIN THIS AREA WHILE WORKING BELOW THE BRIDGE DECKS.

ITEM	DESCRIPTION	UNIT

CALCULATED BCW CHECKED RAR

GENERAL NOTES

DEPARTMENT OF TRANSPORTATION

AUG-75-5.15

CITY OF WAPAKONETA
DUCHOQUET TOWNSHIP
AUGLAIZE COUNTY

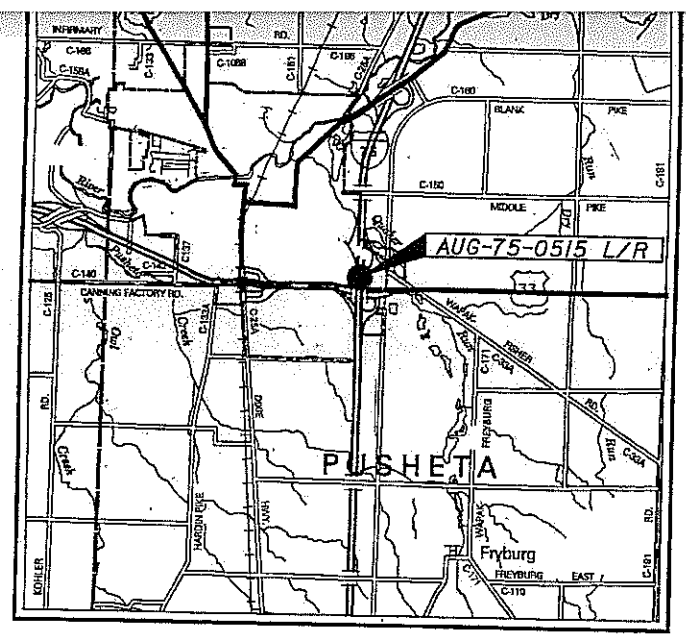

LOCATION MAP

LATITUDE: N40°33'24" LONGITUDE: W84°10'12"

SCALE IN MILES
0 1 2 3 4

PORTION TO BE IMPROVED
INTERSTATE & DIVIDED HIGHWAY
UNDIVIDED STATE & FEDERAL ROUTES
OTHER ROADS

DESIGN DESIGNATION

CURRENT ADT (2005)	38260
DESIGN YEAR ADT (2025)	53264
DESIGN HOURLY VOLUME (2025)	4794
DIRECTIONAL DISTRIBUTION	55%
TRUCKS (24 HOUR B&C)	40%
DESIGN SPEED	70 MPH
LEGAL SPEED	65 MPH

DESIGN FUNCTIONAL CLASSIFICATION -
URBAN INTERSTATE

INDEX OF SHEETS:

TITLE SHEET	1
GENERAL NOTES	2-3
MAINTENANCE OF TRAFFIC	4-4A
GENERAL SUMMARY	5
STRUCTURE	6-13

455-86

ABUTMENT MAINTENANCE:
ABUTMENT REPAIR INCLUDING INSTALLATION OF GALVANIC ANODES.

MAINTENANCE
Project Earth Disturbed Area - N/A
Estimated Contractor Earth Disturbed Area - N/A
Notice of Intent Earth Disturbed Area - N/A

LIMITED ACCESS

THIS IMPROVEMENT IS ESPECIALLY DESIGNED FOR THROUGH TRAFFIC AND HAS BEEN DECLARED A LIMITED ACCESS HIGHWAY OR FREEWAY BY ACTION OF THE DIRECTOR IN ACCORDANCE WITH THE PROVISIONS OF SECTION 5511.02 OF THE OHIO REVISED CODE.

2005 SPECIFICATIONS

THE STANDARD SPECIFICATIONS OF THE STATE OF OHIO, DEPARTMENT OF TRANSPORTATION, INCLUDING CHANGES AND SUPPLEMENTAL SPECIFICATIONS LISTED IN THE PROPOSAL SHALL GOVERN THIS IMPROVEMENT.

I HEREBY APPROVE THESE PLANS AND DECLARE THAT THE MAKING OF THIS IMPROVEMENT WILL NOT REQUIRE THE CLOSING TO TRAFFIC OF THE HIGHWAY AND THAT PROVISIONS FOR THE MAINTENANCE AND SAFETY OF TRAFFIC WILL BE AS SET FORTH ON THE PLANS.

UNDERGROUND UTILITIES
TWO WORKING DAYS
BEFORE YOU DIG
CALL 1-800-362-2764 (TOLL FREE)
OHIO UTILITIES PROTECTION SERVICE
NON-MEMBERS
MUST BE CALLED DIRECTLY

PLAN PREPARED BY:
OHIO DEPARTMENT OF TRANSPORTATION
DISTRICT 7
PRODUCTION DEPARTMENT
SIDNEY, OHIO

ENGINEERS SEAL:

STATE OF OHIO
PAUL ROBERT MARTKER
No. 47858
REGISTERED PROFESSIONAL ENGINEER

SIGNED: Paul R. Martker
DATE: 7-17-06

STANDARD CONSTRUCTION DRAWINGS

DM-4.3	7-19-02
DM-4.4	7-19-02
TC-52.10	4-20-01
TC-52.20	4-20-01
MT-35.10	4-20-01
MT-95.30	7-16-04
MT-98.13	4-19-02
MT-98.16	4-19-02
MT-98.19	10-18-02
MT-105.10	10-18-02
MT-105.11	10-18-02

SUPPLEMENTAL SPECIFICATIONS

800	9-13-06
832	4-25-06

SPECIAL PROVISIONS

APPROVED William L. Harrison /PAN
DATE 7-17-06 DISTRICT DEPUTY DIRECTOR

APPROVED Gordon Proctor
DATE 8-10-06 DIRECTOR, DEPARTMENT OF TRANSPORTATION

FEDERAL PROJECT NO.
PID NO.
CONSTRUCTION PROJECT NO.
AUG-75-5.15
RAILROAD INVOLVEMENT
NONE
1 / 13

AUG-IR 75 - 5.15 (City of Wapakoneta
060455 PID - 25325
Dist 7 10/18/2006

bwilthel 12-JUL-2006 8:31AM
I:\PROJECTS\Aug\075\0515\Pid 25325\25325gt.dgn

EXISTING STRUCTURE VERIFICATION:

DETAILS AND DIMENSIONS SHOWN ON THESE PLANS PERTAINING TO THE EXISTING STRUCTURE HAVE BEEN OBTAINED FROM PLANS OF THE EXISTING STRUCTURE AND FROM FIELD OBSERVATIONS AND MEASUREMENTS. CONSEQUENTLY, THEY ARE INDICATIVE OF THE EXISTING STRUCTURE AND THE PROPOSED WORK BUT THEY SHALL BE CONSIDERED TENTATIVE AND APPROXIMATE. THE CONTRACTOR IS REFERRED TO CMS SECTIONS 102.05, 105.02 AND 513.02/863.07 OR 865.08.

CONTRACT BID PRICES SHALL BE BASED UPON A RECOGNITION OF THE UNCERTAINTIES DESCRIBED ABOVE AND UPON A PREBID EXAMINATION OF THE EXISTING STRUCTURE BY THE CONTRACTOR. HOWEVER, ALL PROJECT WORK SHALL BE BASED UPON ACTUAL DETAILS AND DIMENSIONS WHICH HAVE BEEN VERIFIED BY THE CONTRACTOR IN THE FIELD.

ITEM 511 CONCRETE, MISC.: EMBEDDED GALVANIC ANODE (EGA)

PART 1 GENERAL

1.01 SUMMARY

A. THIS SECTION INCLUDES FURNISHING ALL LABOR, TOOLS, MATERIALS, EQUIPMENT AND SERVICES NECESSARY TO PROPERLY INSTALL EMBEDDED GALVANIC ANODES IN CONCRETE OVERLAY OR ENCASEMENT APPLICATIONS.

1.02 REFERENCES

A. ACI/ICRI 1999 CONCRETE REPAIR MANUAL, 2ND EDITION
B. ACI GUIDELINE NO. 222 - CORROSION OF METALS IN CONCRETE
C. ICRI GUIDELINE NO. 03730 - GUIDE FOR SURFACE PREPARATION FOR THE REPAIR OF DETERIORATED CONCRETE RESULTING FROM REINFORCING STEEL CORROSION
D. ASTM A615/A615M-00 STANDARD SPECIFICATION FOR DEFORMED AND PLAIN BILLET-STEEL BAR FOR CONCRETE REINFORCEMENT
E. ASTM B69-98 ROLLED ZINC
F. ASTM B418-95A STANDARD SPECIFICATION FOR CAST AND WROUGHT GALVANIC ZINC ANODES

1.03 MANUFACTURER TECHNICAL ASSISTANCE

A. THE CONTRACTOR WILL ENLIST AND PAY FOR THE SERVICES OF A QUALIFIED CORROSION TECHNICIAN SUPPLIED BY THE EMBEDDED GALVANIC ANODE MANUFACTURER TO PROVIDE ON-SITE TECHNICAL ASSISTANCE FOR:
   1. INITIAL INSTALLATION OF THE CORROSION PROTECTION SYSTEM
   2. INSTALLATION OF ANODE MONITORING STATION
B. THE CONTRACTOR SHALL COORDINATE ITS WORK WITH THE DESIGNATED CORROSION TECHNICIAN TO ALLOW SITE SUPPORT DURING PROJECT STARTUP, INITIAL ANODE INSTALLATION, AND INSTALLATION OF THE MONITORING STATION. THE TECHNICIAN SHALL PROVIDE CONTRACTOR TRAINING FOR VERIFICATION OF EMBEDDED REINFORCING STEEL CONTINUITY, ANODE INSTALLATION, AND SHALL INSTALL THE MONITORING STATION.

PART 2 MATERIALS

A. EMBEDDED GALVANIC ANODES SHALL BE PRE-MANUFACTURED CEMENTITIOUS PRISMS CONTAINING AT LEAST 0.25 lb OF ZINC PER LINEAL FOOT OF ANODE, IN COMPLIANCE WITH ASTM B69, OR ASTM B418 TYPE I, HAVING NOMINAL WIDTH AND THICKNESS OF 1.375 INCHES AND LENGTH OF 72 INCHES. EACH ANODE SHALL HAVE A PAIR OF INTEGRAL STEEL CONNECTION WIRES, IN COMPLIANCE WITH BRIGHT ANNEALED ASTM A82-97A, PROTRUDING 12 INCHES FROM EACH END. THE EMBEDDED GALVANIC ANODE SHELL SHALL BE A HIGHLY ALKALINE CEMENTITIOUS MORTAR HAVING A pH OF 14 OR GREATER. THE CEMENTITIOUS SHELL SHALL CONTAIN NO CHLORIDES OR OTHER CORROSIVE CONSTITUENTS AS PER ACI GUIDELINE NO. 222.

   EMBEDDED GALVANIC ANODES SHALL BE VECTOR GALVASHIELD CUSTOM ANODES AVAILABLE FROM VECTOR CORROSION TECHNOLOGIES, INC. (813)-830-7566 (www.vector-corrosion.com), OR APPROVED EQUAL.

   APPLICATIONS FOR EQUALS INCLUDE:
   1. A HIGHLY ALKALINE CEMENTITIOUS SHELL WITH A pH OF 14 OR GREATER.
   2. PROVIDE A MINIMUM OF 10 YEARS OF SERVICE LIFE (IN SIMILAR ENVIRONMENT).
   3. CONTAIN NO CORROSIVE CONSTITUENTS DETRIMENTAL TO REINFORCING STEEL, e.g. CHLORIDE, etc.
   4. PROVEN TRACK RECORD WITH BRIDGE WORK SHOWING SATISFACTORY FIELD PERFORMANCE.
   5. A MINIMUM OF THREE PROJECTS OF SIMILAR SIZE AND APPLICATION.
   6. ANODES SHALL BE SUPPLIED WITH INTEGRAL TIE WIRES FOR TYING TO THE REINFORCING STEEL.
   7. PRODUCT EVALUATION BY AN INDEPENDENT AGENCY SUCH AS NITEC, CIAS, BRE, etc.
B. REPAIR MORTARS, CONCRETE, AND BONDING AGENTS SHALL BE HYDRAULIC CEMENT-BASED MATERIALS WITH A 28-DAY MOIST CURED ELECTRICAL RESISTIVITY LESS THAN 15,000 ohm-cm. NON CONDUCTIVE REPAIR MATERIALS SUCH AS MAGNESIUM AMMONIUM PHOSPHATE CONCRETE OR MORTARS, AND EPOXY MORTARS OR BONDING AGENTS, SHALL NOT BE PERMITTED. CONCRETE MIXTURES CONTAINING HIGH LEVELS OF SUPPLEMENTARY CEMENTITIOUS MATERIALS SUCH AS SILICA FUME, GROUND-GRANULATED BLAST FURNACE SLAG, FLYASH OR METAKAOLIN MAY NOT MEET THIS RESISTIVITY REQUIREMENT.
C. DELIVER, STORE, AND HANDLE ALL MATERIALS IN ACCORDANCE WITH MANUFACTURER'S INSTRUCTIONS

PART 3 EXECUTION

3.01 CLEANING AND REPAIR OF REINFORCING STEEL

A. REMOVE ALL UNSOUND CONCRETE TO FULLY EXPOSE THE REINFORCING STEEL IN ACCORDANCE WITH THE RECOMMENDATIONS OF ICRI GUIDELINE NUMBER 03730
B. CLEAN EXPOSED REINFORCING STEEL OF RUST, MORTAR, etc. USING A HAND-HELD GRINDER WITH A WIRE WHEEL, OR ABRASIVE BLASTING TO PROVIDE SUFFICIENT ELECTRICAL CONNECTION AND MECHANICAL BOND.
C. IF SIGNIFICANT REDUCTION IN THE CROSS SECTION OF THE REINFORCING STEEL HAS OCCURRED, REPLACE OR INSTALL SUPPLEMENTAL REINFORCEMENT AS DIRECTED BY THE ENGINEER.
D. SECURE LOOSE REINFORCING STEEL BY TYING TIGHTLY TO OTHER BARS WITH STEEL TIE WIRE

3.02 GALVANIC ANODE INSTALLATION

A. GALVANIC ANODES SHALL BE INSTALLED IN THE LOCATIONS AND SPACING AS SPECIFIED ON THE DRAWINGS. IN NO CASE SHALL THE DISTANCE BETWEEN THE ANODES EXCEED 24 INCHES.
B. SECURE THE ANODE IN POSITION BETWEEN THE EXISTING SUBSTRATE AND ANY NEW REINFORCING STEEL, IF POSSIBLE. PROVIDE SUFFICIENT CLEARANCE (3/4 MINIMUM) BETWEEN THE SUBSTRATE AND EACH ANODE TO ALLOW REPAIR MATERIAL TO COMPLETELY ENCASE THE ANODE. USE OF REBAR CHAIRS OR SLAB BOLSTERS IS ACCEPTABLE. PROVIDE AT LEAST 1 INCH OF CONCRETE COVER BETWEEN THE EXTERIOR SURFACE AND THE ANODE.
C. SECURE THE GALVANIC ANODES TO THE REINFORCING STEEL USING THE ANODE TIE WIRES. THE TIE WIRES SHALL BE WRAPPED AROUND THE CLEANED REINFORCING STEEL AND TWISTED TIGHT TO ALLOW LITTLE OR NO FREE MOVEMENT IN REPAIR AREAS, OR SHALL BE ATTACHED TO THE REINFORCING STEEL USING A VECTOR REBAR CONNECTOR IN AREAS WITH SOUND CONCRETE.
D. CONNECT ANODES TOGETHER USING THE ANODE TIE WIRES AND STEEL CRIMP CONNECTORS. ROWS OF ANODES SHOULD BE CONNECTED TOGETHER BY STRINGING STEEL REINFORCING TIE WIRE BETWEEN THE ROWS AND CONNECTING TO THE ANODE TIE WIRES USING STEEL CRIMP CONNECTORS.
E. ELECTRICAL CONTINUITY
   1. CONFIRM ELECTRICAL CONNECTION BETWEEN ANODE, TIE WIRE, AND REINFORCING STEEL BY MEASURING DC RESISTANCE (ohm) WITH A MULTI-METER.

E. ELECTRICAL CONTINUITY CONT'D
   2. CONFIRM ELECTRICAL CONTINUITY OF THE EXPOSED REINFORCING STEEL WITHIN ANY REPAIR AREA. IF NECESSARY, ELECTRICAL CONTINUITY SHALL BE ESTABLISHED WITH STEEL TIE WIRE.
   3. ELECTRICAL CONTINUITY IS ACCEPTABLE IF THE DC RESISTANCE MEASURED WITH A MULTI-METER IS LESS THAN 1 ohms.

3.03 CONCRETE REPLACEMENT

A. COMPLETE THE REPAIR FOLLOWING NORMAL CONCRETE PLACEMENT PROCEDURES, TAKING CARE NOT TO DAMAGE, OR TO CREATE AIR VOIDS AROUND THE EMBEDDED GALVANIC ANODES.

EACH EMBEDDED GALVANIC ANODE PROVIDED AND INSTALLED WITH ALL INCIDENTALS INCLUDED SHALL BE PAID FOR AT THE PRICE BID FOR:

ITEM	DESCRIPTION	UNIT
511E81300	CONCRETE MISCELLANEOUS: EMBEDDED GALVANIC ANODE	EACH

TYPICAL EMBEDDED GALVANIC ANODE TO REINFORCING STEEL ATTACHMENT DETAIL

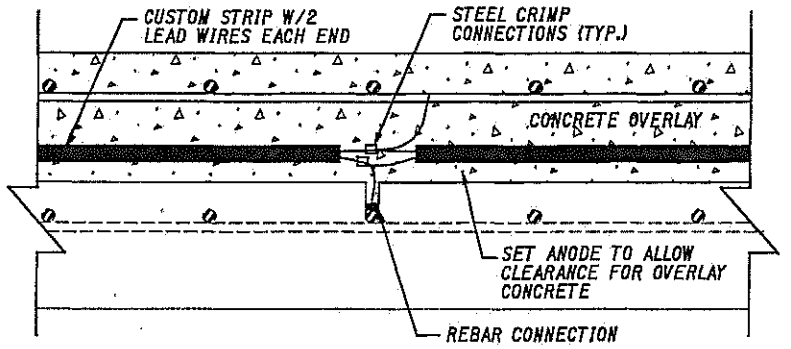

ANODE MONITORING STATION

A. INSTALL ANODE MONITORING STATION AT AN ACCESSIBLE LOCATION NEAR THE MONITORED ZONE, AS DIRECTED BY THE ENGINEER.
B. EACH MONITORING STATION SHALL CONSIST OF A WEATHERPROOF PVC ELECTRICAL JUNCTION BOX AND SHALL BE OF SUFFICIENT SIZE TO CONTAIN CONNECTION WIRES, A TOGGLE SWITCH AND A BATTERY-POWERED DATA LOGGER. INSTRUMENTATION FOR THE MONITORING STATION WILL BE SUPPLIED BY THE ANODE MANUFACTURER. THE COVER OF THE JUNCTION BOX SHALL INCLUDE A WEATHER STRIP SEAL, AND SHALL BE SECURED WITH BRASS SCREWS OR OTHER NON-CORROSIVE CLOSURE DEVICE.
C. ANODE(S) IN THE ZONE TO BE MONITORED SHALL BE CONNECTED TO THE REINFORCING STEEL ONLY THROUGH THE MONITORING STATION. STEEL CONNECTION WIRES ON ONE END OF THE ANODE(S) SHALL BE CUT OFF AND COATED WITH EPOXY OR RTV SILICONE CAULK TO MAKE A WATERPROOF SEAL. THE STEEL CONNECTION WIRES ON THE OTHER END OF THE ANODE(S) SHALL BE USED TO CONNECT INDIVIDUAL ANODES TOGETHER AND TO THE MONITORING STATION USING A RED INSULATED WIRE. PRECAUTIONS SHALL BE MADE TO PREVENT CONTACT OF THE ANODE CONNECTION WIRES AND THE REINFORCEMENT. THE CONNECTION BETWEEN THE ANODE WIRES AND THE INSULATED WIRE SHALL BE COMPLETELY COATED WITH EPOXY OR RTV SILICONE CAULK TO MAKE A WATERPROOF SEAL.
D. A BLACK INSULATED WIRE SHALL BE USED TO CONNECT THE REINFORCING STEEL TO THE MONITORING STATION SWITCH. THE CONNECTION TO THE REINFORCING STEEL SHALL BE A DIRECT CONNECTION TO AN EXPOSED BAR, OR A VECTOR REBAR CONNECTOR. THE CONNECTION BETWEEN THE INSULATED WIRE AND REINFORCING SHALL BE COMPLETELY COATED IN EPOXY OR RTV SILICONE CAULK TO MAKE A WATERPROOF SEAL.
E. THE RED AND BLACK INSULATED WIRES SHALL BE ENCASED IN A WATERPROOF CONDUIT THAT EXTENDS FROM INSIDE THE CONCRETE TO THE MONITORING STATION. THE END OF THE CONDUIT LOCATED INSIDE THE CONCRETE SHALL BE SEALED WITH RTV SILICONE CAULKING.

ITEM	DESCRIPTION	UNIT
511E81300	CONCRETE MISCELLANEOUS: ANODE MONITORING STATION	EACH

I:\PROJECTS\Aug\075\0515\Pld 25325\25325gn001.dgn 12-JUL-2006 8:22AM bwilithel

ITEM 519 SPECIAL-PATCHING CONCRETE STRUCTURE, MISC.: WITH HIGH EARLY STRENGTH PUMPED SELF CONSOLIDATING CONCRETE

IN ADDITION TO THE WORK ITEMS REQUIRED IN 519, THIS ITEM WILL INCLUDE THE DEVELOPMENT, DELIVERY AND PLACEMENT OF A SPECIAL CONCRETE MIX; DESIGN, CONSTRUCTION AND REMOVAL OF DECK STRUCTURAL SUPPORTS; DRILLING AND CORING TO PLACE AND CONSOLIDATE CONCRETE; WIDENING OF ABUTMENT SEATS AS DESCRIBED IN THE FOLLOWING NOTE:

PROVIDE A CONCRETE WITH THE FOLLOWING PROPERTIES:

MINIMUM CEMENT CONTENT OF NO MICROSILICA	800 LB/CU. YD.
MAXIMUM COARSE AGGREGATE SIZE	#8
MAXIMUM WATER/CEMENT RATIO	0.38
COARSE TO FINE AGGREGATE RATIO TO PRODUCE SELF CONSOLIDATING CONCRETE	
MINIMUM 12 HOUR STRENGTH	2500 PSI
MINIMUM 3 DAY STRENGTH	4000 PSI
MINIMUM 28 DAY STRENGTH	5500 PSI
MINIMUM AIR CONTENT	7% ±2%
MINIMUM SPREAD	24"

PROVIDE A CONCRETE MIX AT A SLUMP THAT ALLOWS THE CONCRETE MIX TO BE PUMPED THROUGH A 3½" DIAMETER ACCESS HOLE FROM THE TOP OF THE DECK AND SELF CONSOLIDATE, FILLING THE PATCH LOCATIONS OF THE UNDERSIDE OF THE DECK, THE ABUTMENT SEAT AND THE VERTICAL ABUTMENT WALL. THE FINAL CONCRETE MIX WILL BE A SELF CONSOLIDATING CONCRETE USING AN APPROVED SELF CONSOLIDATING ADMIXTURE.

SUBMIT THE MIX DESIGN AND TEST RESULTS TO THE ENGINEER FOR REVIEW AND ACCEPTANCE.

WHEN PERFORMING THE DISINTEGRATED CONCRETE REMOVAL, PROVIDE PATCHES WITH A DEPTH OF NO GREATER THAN 6 INCHES. AREAS TO BE PATCHED WILL HAVE SQUARE EDGES AND BE ROUGHLY SQUARE OR RECTANGULAR IN SHAPE. THE ONLY EXCEPTION TO THE MAXIMUM REMOVAL OF 6 INCHES IS AS FOLLOWS: WHERE THE BOND BETWEEN THE CONCRETE AND ANY REINFORCING STEEL HAS BEEN DESTROYED, OR WHERE MORE THAN ONE HALF OF THE PERIPHERY OF THE STEEL HAS BEEN EXPOSED, THE ADJACENT CONCRETE WILL BE REMOVED TO A DEPTH THAT WILL PROVIDE A MINIMUM OF 1" CLEARANCE AROUND THE STEEL EXCEPT WHERE OTHER REINFORCING STEEL MAKES THIS IMPRACTICABLE.

AVOID DAMAGING OR DEBONDING THE REINFORCING STEEL, OR SHATTERING THE CONCRETE, BEYOND THE AREA TO BE PATCHED.

AFTER COMPLETING REMOVAL BUT BEFORE FORMING, PLACE GALVANIC ANODES AS DEFINED IN THE GALVANIC ANODE NOTE FOUND ON SHEET NO. 2.

AFTER LOCATING THE EXISTING REINFORCING STEEL BARS USING A PACHOMETER, DRILL 3½" DIAMETER HOLES THROUGH THE BRIDGE DECK MISSING THE EXISTING REBAR. UNDER NO CIRCUMSTANCES SHALL THE HOOK BARS BE DAMAGED. PROVIDE THE HOLES EVERY 4 TO 6 FEET. REFER TO THE STRUCTURE SHEETS FOR MORE DETAILS REGARDING CORE HOLE LOCATIONS. USE THE 3½" DIAMETER HOLES TO DELIVER THE CONCRETE.

AFTER THE HOLES HAVE BEEN DRILLED, PUMP THE CONCRETE INTO THE CORE HOLES UNTIL THE PATCH AREAS ARE FILLED AND ALL AIR VOIDS ARE DETERMINED TO HAVE BEEN ELIMINATED. THE ENGINEER WILL USE THE 1" BREATHING HOLES AND MONITORING HOLES CUT INTO THE VERTICAL FORMS TO DETERMINE WHEN THE AIR VOIDS HAVE BEEN ELIMINATED, (I.E. WHEN CONCRETE SEEPS FROM THE BREATHING/MONITORING HOLES.) REFER TO SHEET NO. 11 REGARDING THE MONITORING HOLES AND SHEET NO. 11 REGARDING THE BREATHING HOLES.

REPAIR MORTARS, CONCRETE, AND BONDING AGENTS SHALL BE HYDRAULIC CEMENT-BASED MATERIALS WITH A 28-DAY MOIST CURED ELECTRICAL RESISTIVITY LESS THAN 15,000 ohm-cm. NON CONDUCTIVE REPAIR MATERIALS SUCH AS MAGNESIUM AMMONIUM PHOSPHATE CONCRETE OR MORTARS, AND EPOXY MORTARS OR BONDING AGENTS, SHALL NOT BE PERMITTED. CONCRETE MIXTURES CONTAINING HIGH LEVELS OF SUPPLEMENTARY CEMENTITIOUS MATERIALS SUCH AS SILICA FUME, GROUND-GRANULATED BLAST FURNACE SLAG, FLYASH OR METAKAOLIN MAY NOT MEET THIS RESISTIVITY REQUIREMENT.

PLACE THE CONCRETE THROUGH THE 3½" DIAMETER CORE HOLES BY PUMPING AND FREE FALL. ASSURE THE CONCRETE HAS COMPLETELY FILLED THE PATCH VOIDS BEFORE MOVING TO ANOTHER 3½" ACCESS HOLE. USE VIBRATION EQUIPMENT TO HELP CONSOLIDATE THE CONCRETE MIX. CONTINUE PLACING THE CONCRETE INTO THE CORE HOLES AND FINISH THE CONCRETE IN THE HOLES LEVEL WITH THE DECK CONCRETE.

DURING THE CONCRETE OPERATIONS ASSURE THE REPRESENTATIVES OF THE READY MIX PRODUCER AND THE CHEMICAL ADMIXTURE MANUFACTURER ARE ON SITE TO DETERMINE ANY ADJUSTMENTS REQUIRED TO COMPLETE THE CONCRETE PLACEMENT.

UPON PLACEMENT OF THE CONCRETE A MINIMUM OF 6 HOURS OF CURE TIME MUST BE REACHED BEFORE THE BRIDGE IS OPENED TO TRAFFIC.

DO NOT SPILL ANY CONCRETE ONTO A TRAVELLED LANE AT ANY TIME DURING THE PROJECT.

WHEN THE FORMWORK IS REMOVED, THE PROJECT ENGINEER WILL DETERMINE IF THE NEW CONCRETE IS FLUSH WITH THE UNDERSIDE OF THE DECK. IF THERE ARE VOIDS FOUND BETWEEN THE NEW CONCRETE AND THE UNDERSIDE OF THE DECK, THEN THE CONTRACTOR WILL PRESSURE GROUT THE VOIDS UNTIL ALL MATERIAL IS FOUND TO BE IN CONTACT WITH ONE ANOTHER. THE GROUT MATERIAL WILL ACHIEVE AT LEAST 4000 PSI IN 7 DAYS AND CONSIST OF CEMENT AND SAND MEETING ODOT MATERIALS SPECIFICATIONS.

REPLACE ANY ASPHALT THAT IS REMOVED DUE TO CORING THROUGH THE DECK WITH 448 ASPHALT CONCRETE SURFACE COURSE, TYPE 1, PG70-22M. THE REPLACEMENT ASPHALT THICKNESS WILL MATCH THE EXISTING ASPHALT THICKNESS AND WILL BE FLUSH WITH THE EXISTING ASPHALT SURFACE COURSE.

A FORM PUMPING SYSTEM MAY BE USED IN LIEU OF CORING THE BRIDGE DECK. ANY FORM PUMPING SYSTEM PROPOSED MUST BE SUBMITTED, AND ACCEPTED BY THE PROJECT ENGINEER PRIOR TO THE INSTALLATION OF ANY FORMWORK. A TEST AREA ON THE FIRST BRIDGE TO BE DONE SHALL BE USED TO DETERMINE THE PERFORMANCE OF THE PROPOSED PUMPING SYSTEM. UPON COMPLETING THE TEST SECTION THE PROJECT ENGINEER SHALL INSPECT THE AREA FOR THE PRESENCE OF AIR VOIDS TO ENSURE THAT ALL PATCHED AREAS ARE FILLED. UPON APROVAL OF THE TEST AREA BY THE PROJECT ENGINEER THE CONTRACTOR MAY USE THE APPROVED FORM PUMPING SYSTEM.

DURING LANE CLOSURES (SEE MAINTENANCE OF TRAFFIC NOTES), PERFORM WORK CONCURRENTLY ON THE CLOSED SECTION FORWARD AND REAR ABUTMENTS OF A STRUCTURE.

THE DEPARTMENT WILL MEASURE THE NUMBER OF CUBIC YARDS DETERMINED BY CALCULATIONS FROM THE PLAN DIMENSIONS FOR THE ABUTMENT WIDENING WORK. THE DEPARTMENT WILL MEASURE THE NUMBER OF CUBIC YARDS FOR THE PATCHED AREAS BY DETERMINING THE SQUARE YARDAGE OF ACTUAL PATCHED AREAS AND MULTIPLYING BY A DEPTH OF 0.167 YARDS TO CALCULATE THE VOLUME OF CUBIC YARDS.

THE DEPARTMENT WILL PAY FOR THE ACCEPTED QUANTITY OF CUBIC YARDS.

PAYMENT WILL INCLUDE REMOVAL OF THE UNSOUND CONCRETE, FORMWORK, STRUCTURAL SUPPORTS, CORING, DEVELOPMENT AND PLACEMENT OF THE SELF CONSOLIDATING CONCRETE MIX, PRESSURE GROUTING, SEALING, AND ASPHALT PATCHING.

ITEM 203 EXCAVATION

EXCAVATE ROCK SLOPE PROTECTION AND/OR SPALLED CONCRETE TO EXPOSE THE COMPLETE FACE OF THE VERTICAL SLAB SEAT WALL AND TOP OF THE FOOTER. REFER TO SHEET 6 FOR MORE INFORMATION.

ITEM 511 CONCRETE, MISC.: CORE HOLES

CORE HOLES SHALL BE DRILLED COMPLETELY THROUGH THE BRIDGE DECK IN ORDER TO PLACE THE SELF CONSOLIDATING CONCRETE. EACH HOLE SHALL HAVE A DIAMETER OF 3½", AND SPACED EVERY 4 TO 6 FEET. THE ANGLE OF THE HOLE SHALL NOT BE GREATER THAN 20 DEGREES PAST THE VERTICAL IN ORDER TO MAINTAIN CLEARANCE BETWEEN THE TRANSVERSE AND LONGITUDINAL BARS. UNDER NO CIRCUMSTANCES SHALL THE HOOK BARS BE DAMAGED WHILE DRILLING THE CORE HOLES.

EACH CORE HOLE INCLUDING INCIDENTALS SHALL BE PAID FOR AT THE PRICE BID FOR:

ITEM	DESCRIPTION	UNIT
511E81300	CONCRETE, MISC.: CORE HOLES	EACH

ITEM 530 SPECIAL - STRUCTURE, MISC.: STRUCTURAL ASSESSMENT

THE CONTRACTOR WILL BE RESPONSIBLE FOR THE STRUCTURAL ASSESSMENT OF ALL STRUCTURES DESCRIBED IN THESE PLANS. THE CONTRACTOR WILL PROVIDE THE SERVICES OF AN OHIO REGISTERED PROFESSIONAL ENGINEER WHO WILL PREPARE, SEAL AND DATE AN ASSESSMENT OF THE NEED, IF ANY, FOR TEMPORARY SUPPORT OF THE DECK SLAB DURING WORK PERFORMED AS DESCRIBED IN THESE PLANS. REFER TO THE NOTE TITLED "ITEM 516 JACKING AND TEMPORARY SUPPORT OF SUPERSTRUCTURE, AS PER PLAN" FOR MORE INFORMATION REGARDING TEMPORARY SUPPORT. SAID ENGINEER WILL BE PRESENT AT THE WORK SITE ANY TIME CONCRETE REMOVAL IS PERFORMED ON A STRUCTURE, AND WILL ASSESS THE STRUCTURAL INTEGRITY OF THE ABUTMENTS AND DECK SLAB OF EACH STRUCTURE DURING CONCRETE REMOVAL AND ANY TIME AN ASSESSMENT IS REQUESTED BY THE ODOT PROJECT ENGINEER. THE ADDITIONAL REQUESTED ASSESSMENT (ODOT REQUESTED ASSESSMENT) WILL BE SUBMITTED BY THE REGISTERED ENGINEER TO THE ODOT PROJECT ENGINEER AT ANY TIME UPON REQUEST WITH NO LIMIT TO THE NUMBER OF REQUESTS.

ASSESSMENT SUBMITTAL WILL INCLUDE AT LEAST THE FOLLOWING:

1. THE SIGNATURE AND NUMBER, OR PROFESSIONAL SEAL, OF THE OHIO REGISTERED PROFESSIONAL ENGINEER WHO PREPARED THE ASSESSMENT.
2. ANALYSIS AND CALCULATIONS OF THE STRESSES INDUCED OR CREATED IN THE STRUCTURE, AND ANY TEMPORARY OR PERMANENT SUPPORTS. DESIGN CALCULATIONS FOR ANY TEMPORARY OR PERMANENT SUPPORTS.
3. LOADING FOR ANALYSIS SHALL BE FOR HS-20-44 AND FOR FOUR OHIO LEGAL LOADS (2FI, 3FI, 4FI, AND 5CI) AS OUTLINED IN SECTION 900 OF THE 2003 ODOT BRIDGE DESIGN MANUAL. AT NO TIME SHALL THE CAPACITY BE REDUCED BELOW 150% LEGAL.
4. THE ENGINEER PERFORMANCE ANALYSIS SHALL CHECK WITH THE ODOT SPECIAL HAULING PERMITS OFFICE TO IDENTIFY ANY OTHER LOADING CONFIGURATIONS APPROVED TO PASS OVER THE STRUCTURE

ONE COPY OF THE ASSESSMENT WILL BE SUBMITTED TO THE PROJECT ENGINEER UPON REQUEST. EACH ASSESSMENT SHALL BE PAID FOR AT THE PRICE BID FOR:

ITEM	DESCRIPTION	UNIT
530E00400	SPECIAL - STRUCTURE, MISC.: STRUCTURAL ASSESSMENT	4 EACH

ITEM 516 JACKING AND TEMPORARY SUPPORT OF SUPERSTRUCTURE, AS PER PLAN

IF THE STRUCTURAL ASSESSMENT PERFORMED BY AN OHIO REGISTERED ENGINEER DETERMINES THAT TEMPORARY SUPPORT OF A SUPERSTRUCTURE IS NEEDED, WHEN REMOVING CONCRETE PAST THE 6" MAXIMUM LIMIT OF REMOVAL, SAID ENGINEER WILL ANALYZE AND DESIGN THE SUPPORT. THE DESIGN CALCULATIONS FOR THE SUPPORT WILL BE SUBMITTED TO THE ODOT PROJECT ENGINEER UPON REQUEST. THE DESIGN OF THE SUPPORT SHALL BE SUCH THAT THE EQUIPMENT, MATERIALS, AND EMPLOYEES INSTALLING THE TEMPORARY SUPPORT OF THE SUPERSTRUCTURE SHALL NOT BE WITHIN 10 FT. OF THE EXISTING RAILROAD POLE LINE.

THE DESIGN OF THE SUPPORT, THE MATERIALS, LABOR, AND ALL INCIDENTALS REQUIRED TO CONSTRUCT AND INSTALL THE SUPPORT WILL BE PAID FOR AT THE BID PRICE FOR:

SEQUENCE OF CONSTRUCTION

STAGE 1 CONSTRUCTION

1. REMOVE AREAS OF UNSOUND CONCRETE ON PORTIONS OF THE OUTSIDE ABUTMENT BACKWALLS
2. PLACE RESTEEL AND GALVANIC ANODES IN THE OUTSIDE PORTIONS OF THE ABUTMENT
3. POUR CONCRETE FOR WIDENING OF THE BRIDGE SLAB SEAT

* MAINTAIN TRAFFIC AT ALL TIMES ACCORDING TO THE NOTES DESCRIBED ON SHEET 4 OF THESE PLANS

STAGE 2 CONSTRUCTION

1. REMOVE AREAS OF UNSOUND CONCRETE ON PORTIONS OF THE INSIDE ABUTMENT BACKWALLS
2. PLACE RESTEEL AND GALVANIC ANODES IN THE INSIDE PORTIONS OF THE ABUTMENT
3. POUR CONCRETE FOR WIDENING OF THE BRIDGE SLAB SEAT

* MAINTAIN TRAFFIC AT ALL TIMES ACCORDING TO THE NOTES DESCRIBED ON SHEET 4 OF THESE PLANS

GENERAL

THE PROJECT ENGINEER SHALL NOTIFY THE CENTRAL OFFICE SPECIAL HAULING PERMITS OFFICE 2 WEEKS PRIOR TO THE START OF THE PROJECT. THE PROJECT ENGINEER SHALL ALSO NOTIFY THE CENTRAL OFFICE SPECIAL HAULING PERMITS OFFICE IF AT ANY TIME THE STRUCTURAL ASSESSMENT INDICATES A REDUCED LOAD CARRYING CAPACITY PRIOR TO THE SHORING OF THE STRUCTURE.

RAILROAD NOTES

THE CONTRACTOR SHALL NOTIFY THE AMETEK FACILITIES MANAGER 10 DAYS (10) PRIOR TO CONSTRUCTION TO INFORM THEM OF ANY WORK BEING PERFORMED AROUND THE RAILROAD. THE CONTRACTOR SHALL CONTACT FRANK URWIN AT (419)-303-7822

EROSION CONTROL DEVICES SHALL BE PLACED AT THE BOTTOM OF THE SLOPES TO PREVENT ANY RUN-OFF FROM EFFECTING THE OPERATION OF THE RAILROAD. IN ADDITION TO THE EROSION CONTROL DEVICES, A HIGHLY VISIBLE, PLASTIC CONSTRUCTION FENCE SHALL BE PLACED AT A MAXIMUM OF 15 FT FROM THE ABUTMENT. THE CONTRACTOR SHALL KEEP ALL MATERIAL, EQUIPMENT, AND PERSONNEL WITHIN THIS AREA WHILE WORKING BELOW THE BRIDGE DECKS.

ITEM	DESCRIPTION	UNIT
607E98000	FENCE MISC.: CONSTRUCTION FENCE	320 FT

REINFORCING STEEL:

NEW REINFORCING STEEL WAY REQUIRE FIELD CUTTING OR BENDING TO BE PROPERLY FITTED. PAYMENT SHALL BE INCLUDED IN THE APPLICABLE REINFORCING STEEL ITEM.

SEEDING AND MULCHING

AS DETERMINED BY THE ENGINEER, ANY SEEDED AREA FOUND TO BE DISTURBED (DISTURBED IS DEFINED AS EXPOSED SOIL) DUE TO THE CONTRACTOR'S EQUIPMENT, LOCATED WITHIN THE STATE RIGHT OF WAY, AND WITHIN 200 FEET OF EACH STRUCTURE, WILL BE SEEDED AS PER THE ESTIMATED QUANTITIES PROVIDED BELOW:

ITEM 659 SEEDING AND MULCHING ..... 450 SQ. YD.
ITEM 659 WATER ..... 4 M. GAL.

QUANTITIES CARRIED TO THE GENERAL SUMMARY

CALCULATED BCW CHECKED BAB

GENERAL NOTES

AUG-75-5.15

3 13

i:\PROJECTS\Aug\075\0515\Pid 25325\25325gn002.dgn 12-JUL-2006 8:22AM bwilthei

BR-100
Revised 10-2001

OHIO DEPARTMENT OF TRANSPORTATION
DIVISION OF ENGINEERING POLICY
OFFICE OF STRUCTURAL ENGINEERING

BRIDGE ANALYSIS AND RATING REPORT
STRUCTURE IDENTIFICATION DATA

"BARS" FILE Number 0 6 0 2 1 0 Year Built 1 9 5 8

Bridge Number AUG 75 0515 829 L
County Route No. SLM SLK Special Designation

Structure Type Concrete Slab Continuous

Feature Crossed Conrail

O/A Structure Length 145 Ft. 44196.2 mm. No. of Spans 03

Inspection Agency ODOT Maintenance Agency ODOT

Date of Analysis March 2, 2007 Data Submitted by CO

Method of Analysis Load Factor Analysis Program Bars

RATING SUMMARY for HS and State Route Legal Vehicles

English				**Metric**			
Inventory HS	20.0	36	Tons	Inventory MS	18.1	32.6	metric tons
Operating HS	25.0	45	Tons	Operating MS	22.7	40.9	metric tons
Legal	150 %	60	Tons	Legal	150 %	54.4	metric tons
2 F 1	52.6	Tons		2 F 1	47.7	metric tons	
3 F 1	56.2	Tons		3 F 1	51	metric tons	
4 F 1	59.3	Tons		4 F 1	53.8	metric tons	
5 C 1	94.1	Tons		5 C 1	85.4	metric tons	

Ratings and recommendations shown on this form reflect the judgement of this office as to the proper safe load carrying capacities for this structure based on the results obtained by using the latest version of the Bridge Analysis and Rating System (BARS) or Bridge Rating & Analysis of Structural System (Brass) or computer program. Since these ratings and recommendations are substantially dependent upon the data submitted by the originator of the analysis, this office accepts no responsibility for the accuracy thereof.

Date March 2, 2007 Rater's Initials SAH

SFN 0602108 Bridge No. AUG-75-0515 L

```
                                    RECORD                                                  REC.NO.
01      030207TRANSFER            HS20HS20     2F1 3F1 4F1        *LFS    POST              100
03      1 2F10210.0    10    20.0                                                            200
03      1 3F10312.0    10    17.0     4    17.0                                              300
03      1 4F10412.0    10    14.0     4    14.0     4    14.0                                400
03      1SPEC0512.0    12    17.0     4    17.0    31    17.0     4                          500
03      2SPEC  17.0                                                                          600
02060210 DIST 7  DLMCO                    112  58X 014461    004406  03 HS20                 100
05060210 0602108GAUG 25      5.05    3223776APERTUR       070302LFEDERAL  IR 75             200
060602101 AUG-75-0515 L OVER CONRAIL; HS20 LOADING; CONC. SLAB 24.25" THICK;                300
060602102 SPANS:  44.00'-55.00'-44.00' C/C BRGS.; SFN 0602108;                              400
060602103 2.25" LATEX MODIFIED CONC. WS; UPDATED BY SAHCO 3-02-2007                         500
08060210S01 03       44        55        44     RC          .1506                           600
10060210S01 01                  W 60.0         44                                           700
10060210S01 02                  W 60.0         55                                           800
10060210S01 03                  W 60.0         44                                           900
11060210S01 0101    36    01                                                               1000
11060210S01 0102     8    02                                                               1100
11060210S01 0203    1302  02                                                               1200
11060210S01 0202    2808  01                                                               1300
11060210S01 0201    1302  02                                                               1400
11060210S01 0301     8    02                                                               1500
11060210S01 0302    36    01                                                               1600
13060210S01  01   24.25           12.0     01 0.264 2.625                                   1700
13060210S01  01                            02  2.6722.045                                   1800
13060210S01  02   24.25           12.0     01  3.74 2.955                                   1900
13060210S01  02                            02  1.3422.045                                   2000
```

STRUCTURE I.D. = 060-210

****

* STRUCTURE HEADER AND DESCRIPTION *

****

100-- 2 DIST 7 DLMCO EA/I/O/P = FILE REQUESTS AND OUTPUT DATA EXCEPTIONS
TYPE = 112 YEAR = 58 LEN = 144.61 FT. WIDTH = 44.50 FT. 3 SPANS SP.LOAD =
INV.LL.TRK.= HS20 OP.LL.TRK.=

****

* STRUCTURE LOCATION AND PERMANENT IDENTIFICATION FACTORS *

****

200-- 5 BRIDGE= 0602108 DIST./CO.= G AUG CONST. ROUTE = 25 CONST. SECT.= 5.05 CONST. STA.= 322+37.76
MICROFILM REEL NO. DESIGN PLANS=APERTUR COMPUTATIONS= CORRESPONDENCE=070302L
ROUTE I.D.= FEDERAL MARKED ROUTE = IR 75

****

* COMMENTS *

****

300-- 6 1 AUG-75-0515 L OVER CONRAIL; HS20 LOADING; CONC. SLAB 24.25" THICK;
400-- 6 2 SPANS: 44.00'-55.00'-44.00' C/C BRGS.; SFN 0602108;
500-- 6 3 2.25" LATEX MODIFIED CONC. WS; UPDATED BY SAHCO 3-02-2007

****

* MEMBER SPECIFICATIONS AND REQUIRED ANALYSIS-GIRDER,STRINGER AND FLOOR BEAM *

****

	MEMBER ID	SPANS SYMM	STIFF. CODE	SPAN 1 (SPAN 4)	SPAN 2 (SPAN 5)	SPAN 3 (SPAN 6)	MATL CODE	ALLOWABLE STRESS FY	FB	FC*	FC**	LL DIST. FACTOR	END FL.BM	THRU DECK	MAX INV	IMPACT OP.	FACTOR POST	SPEC
600-- 8	S 1	3		44.000	55.000	44.000	RC	0.00		0.00		0.151			.00	.00	.00	.00

****

* SUPERIMPOSED DEAD LOADS-GIRDERS,STRINGERS AND FLOOR BEAMS *

****

	MEMBER ID	SYMM.	SPAN NO.	DISTANCE FR. LEFT SUPP.	LOAD TYPE	LOAD P OR W(L)	W(R)	LENGTH
700--10	S 1		1	0.000FT.	W	60.0	0.0	44.000FT.
800--10	S 1		2	0.000FT.	W	60.0	0.0	55.000FT.
900--10	S 1		3	0.000FT.	W	60.0	0.0	44.000FT.

****

* SECTION RANGE SPECIFICATIONS *

MEMBER ID	SYMM.	SPAN NO.	RANGE NO.	RANGE LENGTH	SECTION NO. LEFT	SECTION NO. RIGHT	SEC. VAR.	HINGE CODE	HINGE 1 DIST.	HINGE 2 DIST.	HYBRID GIRDER CODE	HYBRID GIRDER FY	HYBRID GIRDER CODE	HYBRID GIRDER FY
1000--11	S 1	1	1	36.000FT.	1	0			0.000FT.	0.000FT.		0.		0.
1100--11	S 1	1	2	8.000FT.	2	0			0.000FT.	0.000FT.		0.		0.
1400--11	S 1	2	1	13.167FT.	2	0			0.000FT.	0.000FT.		0.		0.
1300--11	S 1	2	2	28.667FT.	1	0			0.000FT.	0.000FT.		0.		0.
1200--11	S 1	2	3	13.167FT.	2	0			0.000FT.	0.000FT.		0.		0.
1500--11	S 1	3	1	8.000FT.	2	0			0.000FT.	0.000FT.		0.		0.
1600--11	S 1	3	2	36.000FT.	1	0			0.000FT.	0.000FT.		0.		0.

SECTION PROPERTIES (REINFORCED CONCRETE) - GIRDERS, STRINGERS, FLOOR BEAMS

MEMBER ID	SECT. NO.	SAME AS	BFL ADR	H	A	B	B*	T	I R	AS	D	COMP CODE
1700--13	S 1	1	0	24.25	0.00	0.00	12.00	0.00	1	0.26	2.63	
1800--13	S 1	1	0	0.00	0.00	0.00	0.00	0.00	2	2.67	22.04	
1900--13	S 1	2	0	24.25	0.00	0.00	12.00	0.00	1	3.74	2.95	
2000--13	S 1	2	0	0.00	0.00	0.00	0.00	0.00	2	1.34	22.04	

SUMMARY OF RATING CALCULATIONS------STRUCTURE MEMBER S 1 BARS RELEASE 5.5
INVENTORY AND/OR OPERATING ANALYSIS

INPUT CODING -- STRUCTURE 0602108 D/P STR. I.D.-- 060-210

DATE 3/ 2/ 7

BY DIST 7 DLMCO

	INVENTORY		OPERATING	
	LIVE LOAD	RATING	LIVE LOAD	RATING
	HS20	HS 23.11	HS20	HS 38.51

STRUCTURE DESCRIPTION --

IDENTIFICATION	0602108
TYPE	112
YEAR OF CONSTR.	1958
LENGTH	144.61 FEET
ROADWAY WIDTH	44.50 FEET
NUMBER OF SPANS	3

LOCATION --

DISTRICT	G
COUNTY	AUG
CONSTR. RTE.	25
CONSTR. SEC.	5.05
CONSTR. STA.	322+37.76
KEY RTE.	FEDERAL
MARKED RTE.	IR 75

MICROFILM REEL NUMBERS --

DESIGN PLANS	APERTUR
COMPUTATIONS	
CORRESPONDENCE	070302L

ANALYST REMARKS --

AUG-75-0515 L OVER CONRAIL; HS20 LOADING; CONC. SLAB 24.25" THICK;
SPANS: 44.00'-55.00'-44.00' C/C BRGS.; SFN 0602108;
2.25" LATEX MODIFIED CONC. WS; UPDATED BY SAHCO 3-02-2007

INVENTORY RATING SUMMARY --

MEMBER ID.	S 1
SPAN	2
CRITICAL C.P. DIST.	27.5 FEET
LIVE LOAD DESIGNATION	HS20

	SHEAR
	(KIPS)

OPERATING RATING SUMMARY --

MEMBER ID.	S 1
SPAN	2
CRITICAL C.P. DIST.	27.5 FEET
LIVE LOAD DESIGNATION	HS20

	SHEAR

MEMBER CAPACITY	166.1
DL EFFECT	47.1
CAPACITY FOR (LL+I)	48.4
ACTUAL (LL+I)	41.9
INVENTORY RATING	HS 23.11

(KIPS)

MEMBER CAPACITY	166.1
DL EFFECT	47.1
CAPACITY FOR (LL+I)	80.7
ACTUAL (LL+I)	41.9
OPERATING RATING	HS 38.51

SUMMARY OF RATING CALCULATIONS------STRUCTURE MEMBER S 1 BARS RELEASE 5.5
POSTING ANALYSIS

INPUT CODING -- STRUCTURE 0602108 D/P STR. I.D.-- 060-210

DATE 3/ 2/ 7

BY DIST 7 DLMCO

	INVENTORY		OPERATING		POSTING	
	LIVE LOAD	RATING	LIVE LOAD	RATING	TRUCK TYPE	GROSS TONS
	HS20	HS 23.11	HS20	HS 38.51	VEH. 2F1	52.59
					VEH. 3F1	56.18
					VEH. 4F1	59.28

STRUCTURE DESCRIPTION --

IDENTIFICATION	0602108
TYPE	112
YEAR OF CONSTR.	1958
LENGTH	144.61 FEET
ROADWAY WIDTH	44.50 FEET
NUMBER OF SPANS	3

LOCATION --

DISTRICT	G
COUNTY	AUG
CONSTR. RTE.	25
CONSTR. SEC.	5.05
CONSTR. STA.	322+37.76
KEY RTE.	FEDERAL
MARKED RTE.	IR 75

MICROFILM REEL NUMBERS --

DESIGN PLANS	APERTUR
COMPUTATIONS	
CORRESPONDENCE	070302L

ANALYST REMARKS --

AUG-75-0515 L OVER CONRAIL; HS20 LOADING; CONC. SLAB 24.25" THICK;
SPANS: 44.00'-55.00'-44.00' C/C BRGS.; SFN 0602108;
2.25" LATEX MODIFIED CONC. WS; UPDATED BY SAHCO 3-02-2007

TRUCK TYPE VEH. 2F1

MEMBER ID. S 1

SPAN 1

CRITICAL C.P. DIST. 17.6 FEET

TRUCK TYPE VEH. 3F1

MEMBER ID. S 1

SPAN 1

CRITICAL C.P. DIST. 17.6 FEET

TRUCK TYPE VEH. 4F1

MEMBER ID. S 1

SPAN 1

CRITICAL C.P. DIST. 17.6 FEET

	SHEAR (KIPS)
MEMBER CAPACITY	166.1
DL EFFECT	48.3
CAPACITY FOR (LL+I)	79.5
ACTUAL (LL+I)	22.7
POSTING GROSS TONNAGE	52.6

	SHEAR (KIPS)
MEMBER CAPACITY	166.1
DL EFFECT	48.3
CAPACITY FOR (LL+I)	79.5
ACTUAL (LL+I)	32.5
POSTING GROSS TONNAGE	56.2

	SHEAR (KIPS)
MEMBER CAPACITY	166.1
DL EFFECT	48.3
CAPACITY FOR (LL+I)	79.5
ACTUAL (LL+I)	36.2
POSTING GROSS TONNAGE	59.3

SUMMARY OF RATING CALCULATIONS------STRUCTURE MEMBER S 1 BARS RELEASE 5.5
SPECIAL LOAD ANALYSIS

INPUT CODING -- STRUCTURE 0602108 D/P STR. I.D.-- 060-210

DATE 3/ 2/ 7

BY DIST 7 DLMCO

	INVENTORY		OPERATING		SPECIAL LOAD	
	LIVE LOAD	RATING	LIVE LOAD	RATING	TRUCK TYPE	GROSS TONS
	HS20	HS 23.11	HS20	HS 38.51		
					VEH.SPEC	94.12

STRUCTURE DESCRIPTION --

IDENTIFICATION	0602108
TYPE	112
YEAR OF CONSTR.	1958
LENGTH	144.61 FEET
ROADWAY WIDTH	44.50 FEET
NUMBER OF SPANS	3

LOCATION --

DISTRICT	G
COUNTY	AUG
CONSTR. RTE.	25
CONSTR. SEC.	5.05
CONSTR. STA.	322+37.76
KEY RTE.	FEDERAL
MARKED RTE.	IR 75

MICROFILM REEL NUMBERS --

DESIGN PLANS	APERTUR
COMPUTATIONS	
CORRESPONDENCE	070302L

ANALYST REMARKS --

AUG-75-0515 L OVER CONRAIL; HS20 LOADING; CONC. SLAB 24.25" THICK;
SPANS: 44.00'-55.00'-44.00' C/C BRGS.; SFN 0602108;
2.25" LATEX MODIFIED CONC. WS; UPDATED BY SAHCO 3-02-2007

TRUCK TYPE VEH. SPEC	
MEMBER ID.	S 1
SPAN	3
CRITICAL C.P. DIST.	0.0 FEET

	SHEAR (KIPS)
MEMBER CAPACITY	-218.4

DL EFFECT	-90.2
CAPACITY FOR (LL+I)	-77.8
ACTUAL (LL+I)	-33.0
POSTING GROSS TONNAGE	94.1

*** FINAL SUMMARY OF RATING RESULTS FOR --- STRUCTURE ID. 060-210 BARS RELEASE 5.5
INVENTORY AND/OR OPERATING ANALYSIS

STRUCTURE 0602108 D/P STR. ID-- 060-210

INPUT CODING--

DATE 3/ 2/ 7

	INVENTORY		OPERATING	
	LIVE LOAD	RATING	LIVE LOAD	RATING
	HS20	HS 23.1	HS20	HS 38.5

BY DIST 7 DLMCO

STRUCTURE DESCRIPTION--

IDENTIFICATION	0602108
TYPE	112
YEAR OF CONSTR.	1958
LENGTH	144.61 FEET
ROADWAY WIDTH	44.50 FEET
NUMBER OF SPANS	3

LOCATION--

DISTRICT	G
COUNTY	AUG
CONSTR. RTE.	25
CONSTR. SEC.	5.05
CONSTR. STA.	322+37.76
KEY RTE.	FEDERAL
MARKED RTE.	IR 75

MICROFILM REEL NUMBERS--

DESIGN PLANS	APERTUR
COMPUTATIONS	
CORRESPONDENCE	070302L

ANALYST REMARKS--

AUG-75-0515 L OVER CONRAIL; HS20 LOADING; CONC. SLAB 24.25" THICK;
SPANS: 44.00'-55.00'-44.00' C/C BRGS.; SFN 0602108;
2.25" LATEX MODIFIED CONC. WS; UPDATED BY SAHCO 3-02-2007

INVENTORY RATING SUMMARY

MEMBER I.D.	S 1
SPAN	2
CRITICAL C.P. DIST.	27.5 FEET
LIVE LOAD DESIGNATION	HS20

SHEAR

(KIPS)

OPERATING RATING SUMMARY

MEMBER I.D.	S 1
SPAN	2
CRITICAL C.P. DIST.	27.5 FEET
LIVE LOAD DESIGNATION	HS20

SHEAR

MEMBER CAPACITY	166.1
DL EFFECT	47.1
CAPACITY FOR (LL+I)	48.4
ACTUAL (LL+I)	41.9

INVENTORY RATING HS 23.11

(KIPS)

MEMBER CAPACITY	166.1
DL EFFECT	47.1
CAPACITY FOR (LL+I)	80.7
ACTUAL (LL+I)	41.9

OPERATING RATING HS 38.51

*** FINAL SUMMARY OF RATING RESULTS FOR --- STRUCTURE ID. 060-210 BARS RELEASE 5.5
POSTING ANALYSIS

STRUCTURE 0602108 D/P STR. ID-- 060-210

INPUT CODING--

	INVENTORY		OPERATING		POSTING	
DATE 3/ 2/ 7	LIVE LOAD	RATING	LIVE LOAD	RATING	TRUCK TYPE	GROSS TONS
BY DIST 7 DLMCO	HS20	HS 23.11	HS20	HS 38.51	VEH. 2F1	52.6
					VEH. 3F1	56.2
					VEH. 4F1	59.3

STRUCTURE DESCRIPTION--

IDENTIFICATION	0602108
TYPE	112
YEAR OF CONSTR.	1958
LENGTH	144.61 FEET
ROADWAY WIDTH	44.50 FEET
NUMBER OF SPANS	3

LOCATION--

DISTRICT	G
COUNTY	AUG
CONSTR. RTE.	25
CONSTR. SEC.	5.05
CONSTR. STA.	322+37.76
KEY RTE.	FEDERAL
MARKED RTE.	IR 75

MICROFILM REEL NUMBERS--

DESIGN PLANS APERTUR
COMPUTATIONS
CORRESPONDENCE 070302L

ANALYST REMARKS--

AUG-75-0515 L OVER CONRAIL; HS20 LOADING; CONC. SLAB 24.25" THICK;
SPANS: 44.00'-55.00'-44.00' C/C BRGS.; SFN 0602108;
2.25" LATEX MODIFIED CONC. WS; UPDATED BY SAHCO 3-02-2007

POSTING RATING SUMMARY

TRUCK TYPE	VEH. 2F1	VEH. 3F1	VEH. 4F1
MEMBER I.D.	S 1	S 1	S 1
SPAN	1	1	1
CRITICAL C.P. DIST.	17.6 FEET	17.6 FEET	17.6 FEET

	SHEAR (KIPS)
MEMBER CAPACITY	166.1
DL EFFECT	48.3
CAPACITY FOR (LL+I)	79.5
ACTUAL (LL+I)	22.7
POSTING GROSS TONNAGE	52.6

	SHEAR (KIPS)
MEMBER CAPACITY	166.1
DL EFFECT	48.3
CAPACITY FOR (LL+I)	79.5
ACTUAL (LL+I)	32.5
POSTING GROSS TONNAGE	56.2

	SHEAR (KIPS)
MEMBER CAPACITY	166.1
DL EFFECT	48.3
CAPACITY FOR (LL+I)	79.5
ACTUAL (LL+I)	36.2
POSTING GROSS TONNAGE	59.3

*** FINAL SUMMARY OF RATING RESULTS FOR --- STRUCTURE ID. 060-210 BARS RELEASE 5.5
SPECIAL LOAD ANALYSIS

STRUCTURE 0602108 D/P STR. ID-- 060-210

INPUT CODING--

	INVENTORY	OPERATING	SPECIAL LOAD
DATE 3/ 2/ 7	LIVE LOAD RATING	LIVE LOAD RATING	TRUCK TYPE GROSS TONS
BY DIST 7 DLMCO	HS20 HS 23.11	HS20 HS 38.51	VEH.SPEC 94.1

STRUCTURE DESCRIPTION--

IDENTIFICATION	0602108
TYPE	112
YEAR OF CONSTR.	1958
LENGTH	144.61 FEET
ROADWAY WIDTH	44.50 FEET
NUMBER OF SPANS	3

LOCATION--

DISTRICT	G
COUNTY	AUG
CONSTR. RTE.	25
CONSTR. SEC.	5.05
CONSTR. STA.	322+37.76
KEY RTE.	FEDERAL
MARKED RTE.	IR 75

MICROFILM REEL NUMBERS--

DESIGN PLANS	APERTUR
COMPUTATIONS	
CORRESPONDENCE	070302L

ANALYST REMARKS--

AUG-75-0515 L OVER CONRAIL; HS20 LOADING; CONC. SLAB 24.25" THICK;
SPANS: 44.00'-55.00'-44.00' C/C BRGS.; SFN 0602108;
2.25" LATEX MODIFIED CONC. WS; UPDATED BY SAHCO 3-02-2007

SPECIAL LOAD SUMMARY

TRUCK TYPE	VEH.SPEC
MEMBER I.D.	S 1
SPAN	3
CRITICAL C.P. DIST.	0.0 FEET

	SHEAR (KIPS)
MEMBER CAPACITY	-218.4
DL EFFECT	-90.2
CAPACITY FOR (LL+I)	-77.8

ACTUAL (LL+I)	-33.0
POSTING GROSS TONNAGE	94.1

DETAIL DATA FOR FLEXURAL MEMBER

DATE 03/02/07

D/P STRUCTURE I.D. 060-210
MEMBER I.D.--S01
MATERIAL--RC
LL DIST. FACT. = 0.151

NO. SPANS = 3
NOT SYMMETRICAL

SPAN NO.	LENGTH FT.	RNG. NO.	LENGTH FT.	SEC.NO. LT	SEC.NO. RT	VAR CODE S T P	VAR CODE S T B	DL DUE TO MEM. WEIGHT W(LT) LBS/FT	DL DUE TO MEM. WEIGHT W(RT) LBS/FT
1	44.000	1	36.000	01	01			303.1	303.1
		2	8.000	02	02			303.1	303.1
2	55.000	1	13.167	02	02			303.1	303.1
		2	28.667	01	01			303.1	303.1
		3	13.167	02	02			303.1	303.1
3	44.000	1	8.000	02	02			303.1	303.1
		2	36.000	01	01			303.1	303.1

SUPERIMPOSED DISTRIBUTED DL(S)
LENGTH DISTRIBUTED**********
DIST. FROM LT SUPPORT***

SPAN NO.	W(LT) LBS/FT	W(RT) LBS/FT	* FT.	* FT.
1	60.0	60.0	0.000	44.000
2	60.0	60.0	44.000	55.000
3	60.0	60.0	99.000	44.000

SUPERIMPOSED CONCENTRATED DL(S)
DIST. FROM LT SUPPORT****

STIFF TRANS.	STIFF LONG.	SPAN NO.	P KIPS	* FT.

CHECK POINTS RATED--

SPAN NO.	DIS FRM LT SPRT FT.	FUNC M	FUNC VL	FUNC VR
1	0.000			X
1	17.600	X	X	X
1	44.000	X	X	X
2	0.000	X	X	X
2	27.500	X	X	X
2	55.000	X	X	X
3	0.000	X	X	X
3	26.400	X	X	X
3	44.000		X	

SPAN NO.	DIS FRM LT SPRT FT.	FUNC M	FUNC VL	FUNC VR

DETAIL DATA AT MOMENT CHECK POINT FOR
REINFORCED CONCRETE FLEXURAL MEMBER

BARS RELEASE 5.5

DATE 03/02/07

D/P STRUCTURE I.D. 060-210
MEMBER I.D.--S01
C.P. LOCATION 1.40

***** SECTION PROPERTIES IN RANGE 1 OF SPAN 1

H IN.	B IN.	T IN.	BP IN.		AREA SQ.IN.	IX IN**4	AS SQ.IN.	D IN.	ASP SQ.IN.	DP IN.	A IN.	K	J
24.25	12.00	0.00	12.00	+BEND	291.0	14260.5	2.67	22.04	0.00	2.62	1.00	0.000	0.000
				-BEND	291.0	14260.5	0.26	21.63	0.00	2.21	1.00	0.000	0.000

***** INFLUENCE LINE (SIMPLE SPAN)

X-DIST (FT.)
Y-ORDINATE

POS AREA =

***** ORDINATES OF AND AREAS UNDER INFLUENCE LINE (CONTINUOUS SPAN)

	SPAN 1	SPAN 2	SPAN 3	SPAN 4	SPAN 5	SPAN 6	
T 0	0.000	0.000	0.000	0.000	0.000	0.000	
E 1	2.220	-0.950	0.201	0.000	0.000	0.000	
N 2	4.466	-1.554	0.339	0.000	0.000	0.000	
T 3	6.763	-1.862	0.420	0.000	0.000	0.000	
H 4	9.136	-1.925	0.452	0.000	0.000	0.000	
5	7.211	-1.794	0.441	0.000	0.000	0.000	
P 6	5.413	-1.519	0.396	0.000	0.000	0.000	
O 7	3.767	-1.151	0.321	0.000	0.000	0.000	
I 8	2.299	-0.742	0.226	0.000	0.000	0.000	
N 9	1.035	-0.341	0.117	0.000	0.000	0.000	
T 0	0.000	0.000	0.000	0.000	0.000	0.000	AREA TOTALS
POS AREA	186.2	0.0	12.8	0.0	0.0	0.0	199.0
NEG AREA	0.0	65.1	0.0	0.0	0.0	0.0	65.1

***** ALLOWABLE STRESS

	REINF. STEEL PSI	CONC PSI
INVENTORY	20000.0	1300.0
OPERATING	30000.0	2000.0
POST VEH1	30000.0	2000.0
POST VEH2	30000.0	2000.0
POST VEH3	30000.0	2000.0
POST SPEC	30000.0	2000.0

***** MOMENT CAPACITY

	CONC + BEND FT-KIPS	REINF - BEND FT-KIPS	REINF + BEND FT-KIPS	CONC - BEND FT-KIPS
INVENTORY	166.1	17.0	166.1	17.0
OPERATING	166.1	17.0	166.1	17.0
POST VEH1	166.1	17.0	166.1	17.0
POST VEH2	166.1	17.0	166.1	17.0
POST VEH3	166.1	17.0	166.1	17.0
POST SPEC	166.1	17.0	166.1	17.0

***** TOTAL DL MOMENT EFFECT

FT-KIPS
48.3

***** AVAIL.CAPAC.FOR LL+IMPACT

	TOP +BEND F-KPS	TOP -BEND F-KPS	BOT +BEND F-KPS	BOT -BEND F-KPS
INVENTORY	47.7	36.8	47.7	36.8
OPERATING	79.5	61.4	79.5	61.4
VEH. 1	79.5	61.4	79.5	61.4
VEH. 2	79.5	61.4	79.5	61.4
VEH. 3	79.5	61.4	79.5	61.4
SPECIAL	79.5	61.4	79.5	61.4

***** LIVE LOAD AND RATING CALCULATIONS (IMPACT FACTOR = 0.296 FOR +BEND AND = 0.278 FOR -BEND)

LIVE LOAD		TRUCK LOAD LL+IMP FT-KIPS	TRUCK LOAD LL FT-KIPS	LOC.NO. 1 WHEEL FT.	DIR	AXLE SPACE FT.	LANE LOAD LL+IMP FT-KIPS	LANE LOAD LL FT-KIPS	LOC.CONC LOAD FT.	LOC.CONC LOAD 2 FT.	RATING FACT.	SAFE LOAD CAPACITY TONS	RATING VALUE
INV HS20	+BEND	40.9	31.5	3.600	L	0.0	28.5	22.0	17.600		1.167	42.0	HS 23.3
	-BEND	11.5	9.0	85.499	R	0.0	7.4	5.8	66.000	0.000			
OPER HS20	+BEND	40.9	31.5	3.600	L	0.0	28.5	22.0	17.600		1.945	70.0	HS 38.9
	-BEND	11.5	9.0	85.499	R	0.0	7.4	5.8	66.000	0.000			
POST 2F1	+BEND	22.7	17.5	27.600	R						3.506	52.6	
	-BEND	5.3	4.2	70.502	R								
POST 3F1	+BEND	32.5	25.1	27.603	R						2.443	56.2	
	-BEND	8.1	6.3	74.502	R								
POST 4F1	+BEND	36.2	27.9	31.600	R						2.196	59.3	
	-BEND	9.3	7.2	76.996	R								
POST SPEC	+BEND	31.7	24.4	29.608	R						2.510	100.4	
	-BEND	7.4	5.8	49.501	L								

DETAIL DATA AT MOMENT CHECK POINT FOR
REINFORCED CONCRETE FLEXURAL MEMBER

BARS RELEASE 5.5

DATE 03/02/07

D/P STRUCTURE I.D. 060-210
MEMBER I.D.--S01
C.P. LOCATION 2.00

***** SECTION PROPERTIES IN RANGE 1 OF SPAN 2

H IN.	B IN.	T IN.	BP IN.		AREA SQ.IN.	IX IN**4	AS SQ.IN.	D IN.	ASP SQ.IN.	DP IN.	A IN.	K	J
24.25	12.00	0.00	12.00	+BEND	291.0	14260.5	1.34	22.04	0.00	2.95	1.00	0.000	0.000
				-BEND	291.0	14260.5	3.74	21.29	0.00	2.21	1.00	0.000	0.000

***** INFLUENCE LINE (SIMPLE SPAN)

X-DIST (FT.)
Y-ORDINATE

POS AREA =

***** ORDINATES OF AND AREAS UNDER INFLUENCE LINE (CONTINUOUS SPAN)

	SPAN 1	SPAN 2	SPAN 3	SPAN 4	SPAN 5	SPAN 6	
T 0	0.000	0.000	0.000	0.000	0.000	0.000	
E 1	-1.049	-2.376	0.503	0.000	0.000	0.000	
N 2	-2.034	-3.885	0.848	0.000	0.000	0.000	
T 3	-2.893	-4.655	1.051	0.000	0.000	0.000	
H 4	-3.560	-4.812	1.130	0.000	0.000	0.000	
5	-3.973	-4.484	1.104	0.000	0.000	0.000	
P 6	-4.069	-3.797	0.989	0.000	0.000	0.000	
O 7	-3.782	-2.878	0.803	0.000	0.000	0.000	
I 8	-3.051	-1.854	0.565	0.000	0.000	0.000	
N 9	-1.812	-0.853	0.291	0.000	0.000	0.000	
T 0	0.000	0.000	0.000	0.000	0.000	0.000	
							AREA TOTALS
POS AREA	0.0	0.0	32.1	0.0	0.0	0.0	32.1
NEG AREA	115.4	162.8	0.0	0.0	0.0	0.0	278.1

***** ALLOWABLE STRESS

	REINF. STEEL PSI	CONC PSI
INVENTORY	20000.0	1300.0
OPERATING	30000.0	2000.0
POST VEH1	30000.0	2000.0
POST VEH2	30000.0	2000.0
POST VEH3	30000.0	2000.0
POST SPEC	30000.0	2000.0

***** MOMENT CAPACITY

	CONC + BEND FT-KIPS	REINF - BEND FT-KIPS	REINF + BEND FT-KIPS	CONC - BEND FT-KIPS
INVENTORY	86.0	218.4	86.0	218.4
OPERATING	86.0	218.4	86.0	218.4
POST VEH1	86.0	218.4	86.0	218.4
POST VEH2	86.0	218.4	86.0	218.4
POST VEH3	86.0	218.4	86.0	218.4
POST SPEC	86.0	218.4	86.0	218.4

***** TOTAL DL MOMENT EFFECT

FT-KIPS
-90.2

***** AVAIL.CAPAC.FOR LL+IMPACT

	TOP +BEND F-KPS	TOP -BEND F-KPS	BOT +BEND F-KPS	BOT -BEND F-KPS
INVENTORY	93.8	46.7	93.8	46.7
OPERATING	156.3	77.8	156.3	77.8
VEH. 1	156.3	77.8	156.3	77.8
VEH. 2	156.3	77.8	156.3	77.8
VEH. 3	156.3	77.8	156.3	77.8
SPECIAL	156.3	77.8	156.3	77.8

***** LIVE LOAD AND RATING CALCULATIONS (IMPACT FACTOR = 0.296 FOR +BEND AND = 0.287 FOR -BEND)

LIVE LOAD		TRUCK LOAD LL+IMP FT-KIPS	TRUCK LOAD LL FT-KIPS	LOC.NO. 1 WHEEL FT.	DIR	AXLE SPACE FT.	LANE LOAD LL+IMP FT-KIPS	LANE LOAD LL FT-KIPS	LOC.CONC LOAD FT.	LOC.CONC LOAD 2 FT.	RATING FACT.	SAFE LOAD CAPACITY TONS	RATING VALUE
INV HS20	+BEND	6.4	5.0	139.400	R	0.0	4.0	3.1	116.600				
	-BEND	28.8	22.4	85.499	R	0.0	32.9	25.6	66.000	26.400	1.418	51.0	HS 28.4
OPER HS20	+BEND	6.4	5.0	139.400	R	0.0	4.0	3.1	116.600				
	-BEND	28.8	22.4	85.499	R	0.0	32.9	25.6	66.000	26.400	2.363	85.1	HS 47.3
POST 2F1	+BEND	3.1	2.4	125.400	R								
	-BEND	13.4	10.4	70.502	R						5.795	86.9	
POST 3F1	+BEND	4.7	3.6	126.600	R								
	-BEND	20.3	15.8	74.502	R						3.831	88.1	
POST 4F1	+BEND	5.4	4.2	130.200	R								
	-BEND	23.3	18.1	76.993	R						3.338	90.1	
POST SPEC	+BEND	4.5	3.5	108.997	L								
	-BEND	33.0	25.7	76.500	R						2.353	94.1	

DETAIL DATA AT MOMENT CHECK POINT FOR
REINFORCED CONCRETE FLEXURAL MEMBER

BARS RELEASE 5.5

DATE 03/02/07

D/P STRUCTURE I.D. 060-210
MEMBER I.D.--S01
C.P. LOCATION 2.50

***** SECTION PROPERTIES IN RANGE 2 OF SPAN 2

H IN.	B IN.	T IN.	BP IN.		AREA SQ.IN.	IX IN**4	AS SQ.IN.	D IN.	ASP SQ.IN.	DP IN.	A IN.	K	J
24.25	12.00	0.00	12.00	+BEND	291.0	14260.5	2.67	22.04	0.00	2.62	1.00	0.000	0.000
				-BEND	291.0	14260.5	0.26	21.63	0.00	2.21	1.00	0.000	0.000

***** INFLUENCE LINE (SIMPLE SPAN)

X-DIST (FT.)
Y-ORDINATE

POS AREA =

***** ORDINATES OF AND AREAS UNDER INFLUENCE LINE (CONTINUOUS SPAN)

	SPAN 1	SPAN 2	SPAN 3	SPAN 4	SPAN 5	SPAN 6	
T 0	0.000	0.000	0.000	0.000	0.000	0.000	
E 1	-0.379	1.136	-0.654	0.000	0.000	0.000	
N 2	-0.735	2.630	-1.102	0.000	0.000	0.000	
T 3	-1.045	4.484	-1.366	0.000	0.000	0.000	
H 4	-1.286	6.696	-1.469	0.000	0.000	0.000	
5	-1.435	9.266	-1.435	0.000	0.000	0.000	
P 6	-1.469	6.696	-1.286	0.000	0.000	0.000	
O 7	-1.366	4.484	-1.045	0.000	0.000	0.000	
I 8	-1.102	2.631	-0.735	0.000	0.000	0.000	
N 9	-0.654	1.136	-0.379	0.000	0.000	0.000	
T 0	0.000	0.000	0.000	0.000	0.000	0.000	AREA TOTALS
POS AREA	0.0	215.4	0.0	0.0	0.0	0.0	215.4
NEG AREA	41.7	0.0	41.7	0.0	0.0	0.0	83.3

***** ALLOWABLE STRESS

	REINF. STEEL PSI	CONC PSI
INVENTORY	20000.0	1300.0
OPERATING	30000.0	2000.0
POST VEH1	30000.0	2000.0
POST VEH2	30000.0	2000.0
POST VEH3	30000.0	2000.0
POST SPEC	30000.0	2000.0

***** MOMENT CAPACITY

	CONC + BEND FT-KIPS	REINF - BEND FT-KIPS	REINF + BEND FT-KIPS	CONC - BEND FT-KIPS
INVENTORY	166.1	17.0	166.1	17.0
OPERATING	166.1	17.0	166.1	17.0
POST VEH1	166.1	17.0	166.1	17.0
POST VEH2	166.1	17.0	166.1	17.0
POST VEH3	166.1	17.0	166.1	17.0
POST SPEC	166.1	17.0	166.1	17.0

***** TOTAL DL MOMENT EFFECT

FT-KIPS
47.1

***** AVAIL.CAPAC.FOR LL+IMPACT

	TOP +BEND F-KPS	TOP -BEND F-KPS	BOT +BEND F-KPS	BOT -BEND F-KPS
INVENTORY	48.4	36.1	48.4	36.1
OPERATING	80.7	60.2	80.7	60.2
VEH. 1	80.7	60.2	80.7	60.2
VEH. 2	80.7	60.2	80.7	60.2
VEH. 3	80.7	60.2	80.7	60.2
SPECIAL	80.7	60.2	80.7	60.2

***** LIVE LOAD AND RATING CALCULATIONS (IMPACT FACTOR = 0.278 FOR +BEND AND = 0.296 FOR -BEND)

LIVE LOAD		TRUCK LOAD LL+IMP FT-KIPS	TRUCK LOAD LL FT-KIPS	LOC.NO. 1 WHEEL FT.	DIR	AXLE SPACE FT.	LANE LOAD LL+IMP FT-KIPS	LANE LOAD LL FT-KIPS	LOC.CONC LOAD FT.	LOC.CONC LOAD 2 FT.	RATING FACT.	SAFE LOAD CAPACITY TONS	RATING VALUE
INV HS20	+BEND	41.9	32.8	57.500	L	0.0	29.5	23.1	71.500		1.155	41.6	HS 23.1
	-BEND	8.4	6.5	139.400	R	0.0	7.8	6.0	116.600	0.000			
OPER HS20	+BEND	41.9	32.8	57.500	L	0.0	29.5	23.1	71.500		1.925	69.3	HS 38.5
	-BEND	8.4	6.5	139.400	R	0.0	7.8	6.0	116.600	0.000			
POST 2F1	+BEND	22.5	17.6	81.500	R						3.580	53.7	
	-BEND	4.1	3.1	125.400	R								
POST 3F1	+BEND	32.9	25.7	61.498	L						2.452	56.4	
	-BEND	6.1	4.7	126.600	R								
POST 4F1	+BEND	36.4	28.5	85.498	R						2.215	59.8	
	-BEND	7.0	5.4	130.200	R								
POST SPEC	+BEND	28.4	22.2	59.496	L						2.842	113.7	
	-BEND	5.9	4.6	108.997	L								

DETAIL DATA AT MOMENT CHECK POINT FOR
REINFORCED CONCRETE FLEXURAL MEMBER

BARS RELEASE 5.5

DATE 03/02/07

D/P STRUCTURE I.D. 060-210
MEMBER I.D.--S01
C.P. LOCATION 3.00

***** SECTION PROPERTIES IN RANGE 1 OF SPAN 3

H IN.	B IN.	T IN.	BP IN.		AREA SQ.IN.	IX IN**4	AS SQ.IN.	D IN.	ASP SQ.IN.	DP IN.	A IN.	K	J
24.25	12.00	0.00	12.00	+BEND	291.0	14260.5	1.34	22.04	0.00	2.95	1.00	0.000	0.000
				-BEND	291.0	14260.5	3.74	21.29	0.00	2.21	1.00	0.000	0.000

***** INFLUENCE LINE (SIMPLE SPAN)

X-DIST (FT.)
Y-ORDINATE

POS AREA =

***** ORDINATES OF AND AREAS UNDER INFLUENCE LINE (CONTINUOUS SPAN)

	SPAN 1	SPAN 2	SPAN 3	SPAN 4	SPAN 5	SPAN 6
T 0	0.000	0.000	0.000	0.000	0.000	0.000
E 1	0.291	-0.853	-1.812	0.000	0.000	0.000
N 2	0.565	-1.854	-3.052	0.000	0.000	0.000
T 3	0.803	-2.878	-3.783	0.000	0.000	0.000
H 4	0.989	-3.797	-4.069	0.000	0.000	0.000
5	1.104	-4.484	-3.973	0.000	0.000	0.000
P 6	1.130	-4.812	-3.560	0.000	0.000	0.000
O 7	1.051	-4.655	-2.892	0.000	0.000	0.000
I 8	0.848	-3.885	-2.034	0.000	0.000	0.000
N 9	0.503	-2.376	-1.049	0.000	0.000	0.000
T 0	0.000	0.000	0.000	0.000	0.000	0.000
POS AREA	32.0	0.0	0.0	0.0	0.0	0.0
NEG AREA	0.0	162.8	115.4	0.0	0.0	0.0

AREA TOTALS: POS AREA 32.0, NEG AREA 278.1

***** ALLOWABLE STRESS

	REINF. STEEL PSI	CONC PSI
INVENTORY	20000.0	1300.0
OPERATING	30000.0	2000.0
POST VEH1	30000.0	2000.0
POST VEH2	30000.0	2000.0
POST VEH3	30000.0	2000.0
POST SPEC	30000.0	2000.0

***** MOMENT CAPACITY

	CONC + BEND FT-KIPS	REINF - BEND FT-KIPS	REINF + BEND FT-KIPS	CONC - BEND FT-KIPS
INVENTORY	86.0	218.4	86.0	218.4
OPERATING	86.0	218.4	86.0	218.4
POST VEH1	86.0	218.4	86.0	218.4
POST VEH2	86.0	218.4	86.0	218.4
POST VEH3	86.0	218.4	86.0	218.4
POST SPEC	86.0	218.4	86.0	218.4

***** TOTAL DL MOMENT EFFECT

FT-KIPS
-90.2

***** AVAIL.CAPAC.FOR LL+IMPACT

	TOP +BEND F-KPS	TOP -BEND F-KPS	BOT +BEND F-KPS	BOT -BEND F-KPS
INVENTORY	93.8	46.7	93.8	46.7
OPERATING	156.4	77.8	156.4	77.8
VEH. 1	156.4	77.8	156.4	77.8
VEH. 2	156.4	77.8	156.4	77.8
VEH. 3	156.4	77.8	156.4	77.8
SPECIAL	156.4	77.8	156.4	77.8

***** LIVE LOAD AND RATING CALCULATIONS (IMPACT FACTOR = 0.296 FOR +BEND AND = 0.287 FOR -BEND)

LIVE LOAD		---TRUCK LOAD--- LL+IMP FT-KIPS	LL FT-KIPS	LOC.NO. 1 WHEEL FT.	DIR	AXLE SPACE FT.	---LANE LOAD--- LL+IMP FT-KIPS	LL FT-KIPS	LOC.CONC LOAD FT.	LOC.CONC LOAD 2 FT.	RATING FACT.	SAFE LOAD CAPACITY TONS	RATING VALUE
INV HS20	+BEND	6.4	5.0	3.602	L	0.0	4.0	3.1	26.400				
	-BEND	28.8	22.4	57.499	L	0.0	32.9	25.6	77.000	116.600	1.418	51.0	HS 28.4
OPER HS20	+BEND	6.4	5.0	3.602	L	0.0	4.0	3.1	26.400				
	-BEND	28.8	22.4	57.499	L	0.0	32.9	25.6	77.000	116.600	2.363	85.1	HS 47.3
POST 2F1	+BEND	3.1	2.4	17.598	L								
	-BEND	13.4	10.4	72.490	L						5.794	86.9	
POST 3F1	+BEND	4.7	3.6	16.402	L								
	-BEND	20.3	15.8	68.499	L						3.831	88.1	
POST 4F1	+BEND	5.4	4.2	12.800	L								
	-BEND	23.3	18.1	66.003	L						3.337	90.1	
POST SPEC	+BEND	4.5	3.5	34.003	R								
	-BEND	33.0	25.7	66.500	L						2.353	94.1	

DETAIL DATA AT MOMENT CHECK POINT FOR
REINFORCED CONCRETE FLEXURAL MEMBER

BARS RELEASE 5.5

DATE 03/02/07

D/P STRUCTURE I.D. 060-210
MEMBER I.D.--S01
C.P. LOCATION 3.60

***** SECTION PROPERTIES IN RANGE 2 OF SPAN 3

H IN.	B IN.	T IN.	BP IN.		AREA SQ.IN.	IX IN**4	AS SQ.IN.	D IN.	ASP SQ.IN.	DP IN.	A IN.	K	J
24.25	12.00	0.00	12.00	+BEND	291.0	14260.5	2.67	22.04	0.00	2.62	1.00	0.000	0.000
				-BEND	291.0	14260.5	0.26	21.63	0.00	2.21	1.00	0.000	0.000

***** INFLUENCE LINE (SIMPLE SPAN)

X-DIST (FT.)
Y-ORDINATE

POS AREA =

***** ORDINATES OF AND AREAS UNDER INFLUENCE LINE (CONTINUOUS SPAN)

	SPAN 1	SPAN 2	SPAN 3	SPAN 4	SPAN 5	SPAN 6	
T 0	0.000	0.000	0.000	0.000	0.000	0.000	
E 1	0.117	-0.341	1.035	0.000	0.000	0.000	
N 2	0.226	-0.742	2.299	0.000	0.000	0.000	
T 3	0.321	-1.151	3.767	0.000	0.000	0.000	
H 4	0.396	-1.519	5.413	0.000	0.000	0.000	
5	0.441	-1.793	7.211	0.000	0.000	0.000	
P 6	0.452	-1.925	9.136	0.000	0.000	0.000	
O 7	0.420	-1.862	6.763	0.000	0.000	0.000	
I 8	0.339	-1.554	4.466	0.000	0.000	0.000	
N 9	0.201	-0.950	2.220	0.000	0.000	0.000	
T 0	0.000	0.000	0.000	0.000	0.000	0.000	AREA TOTALS
POS AREA	12.8	0.0	186.2	0.0	0.0	0.0	199.0
NEG AREA	0.0	65.1	0.0	0.0	0.0	0.0	65.1

***** ALLOWABLE STRESS

	REINF. STEEL PSI	CONC PSI	CONC + BEND FT-KIPS	REINF - BEND FT-KIPS	REINF + BEND FT-KIPS	CONC - BEND FT-KIPS
INVENTORY	20000.0	1300.0	166.1	17.0	166.1	17.0
OPERATING	30000.0	2000.0	166.1	17.0	166.1	17.0
POST VEH1	30000.0	2000.0	166.1	17.0	166.1	17.0
POST VEH2	30000.0	2000.0	166.1	17.0	166.1	17.0
POST VEH3	30000.0	2000.0	166.1	17.0	166.1	17.0
POST SPEC	30000.0	2000.0	166.1	17.0	166.1	17.0

***** MOMENT CAPACITY

***** TOTAL DL MOMENT EFFECT

FT-KIPS
48.3

***** AVAIL.CAPAC.FOR LL+IMPACT

	TOP +BEND F-KPS	TOP -BEND F-KPS	BOT +BEND F-KPS	BOT -BEND F-KPS
INVENTORY	47.7	36.8	47.7	36.8
OPERATING	79.5	61.4	79.5	61.4
VEH. 1	79.5	61.4	79.5	61.4
VEH. 2	79.5	61.4	79.5	61.4
VEH. 3	79.5	61.4	79.5	61.4
SPECIAL	79.5	61.4	79.5	61.4

***** LIVE LOAD AND RATING CALCULATIONS (IMPACT FACTOR = 0.296 FOR +BEND AND = 0.278 FOR -BEND)

LIVE LOAD		TRUCK LOAD LL+IMP FT-KIPS	TRUCK LOAD LL FT-KIPS	TRUCK LOAD LOC.NO. 1 WHEEL FT.	DIR	AXLE SPACE FT.	LANE LOAD LL+IMP FT-KIPS	LANE LOAD LL FT-KIPS	LOC.CONC LOAD FT.	LOC.CONC LOAD 2 FT.	RATING FACT.	SAFE LOAD CAPACITY TONS	RATING VALUE
INV HS20	+BEND	40.9	31.5	139.400	R	0.0	28.5	22.0	125.400		1.167	42.0	HS 23.3
	-BEND	11.5	9.0	57.499	L	0.0	7.4	5.8	77.000	0.000			
OPER HS20	+BEND	40.9	31.5	139.400	R	0.0	28.5	22.0	125.400		1.945	70.0	HS 38.9
	-BEND	11.5	9.0	57.499	L	0.0	7.4	5.8	77.000	0.000			
POST 2F1	+BEND	22.7	17.5	115.400	L						3.506	52.6	
	-BEND	5.3	4.2	72.490	L								
POST 3F1	+BEND	32.5	25.1	115.399	L						2.443	56.2	
	-BEND	8.1	6.3	68.499	L								
POST 4F1	+BEND	36.2	27.9	111.401	L						2.196	59.3	
	-BEND	9.3	7.2	66.003	L								
POST SPEC	+BEND	31.7	24.4	113.401	L						2.510	100.4	
	-BEND	7.4	5.8	93.498	R								

SUMMARY OF SHEAR ANALYSIS

DATE 03/02/07

D/P STRUCTURE I.D. 060-210

MEMB. ID	MATL	SPAN NO.	DIS FRM L LT SPRT R FT.	DL SHEAR KIPS	SDL SHEAR KIPS	---INVENTORY--- LL+I MAX.V KIPS	T L	LL+I MIN.V KIPS	T L	---OPERATING--- LL+I MAX.V KIPS	T L	LL+I MIN.V KIPS	T L	--VEH. 1 -- LL+I MAX.V KIPS	LL+I MIN.V KIPS	--VEH. 2 -- LL+I MAX.V KIPS	LL+I MIN.V KIPS	--VEH. 3 -- LL+I MAX.V KIPS	LL+I MIN.V KIPS	--SPECIAL-- LL+I MAX.V KIPS	LL+I MIN.V KIPS
S01	RC	1	0.000 L	5.0	1.0	5.3	T	0.7	T	5.3	T	0.7	T	2.7	0.3	3.8	0.5	4.2	0.5	3.5	0.4
		1	17.600 L	0.4	0.1	2.4	T	1.8	T	2.4	T	1.8	T	1.4	1.1	1.9	1.5	1.9	1.5	1.2	1.8
		2	0.000 L	8.3	1.6	5.9	T	0.5	T	5.9	T	0.5	T	2.8	0.3	4.1	0.4	4.7	0.5	4.3	0.4
		2	27.500 L	0.0	0.0	2.2	T	2.2	T	2.2	T	2.2	T	1.3	1.3	1.8	1.8	1.9	1.9	1.8	1.8
		3	0.000 L	8.4	1.7	5.9	T	0.1	T	5.9	T	0.1	T	2.8	0.1	4.1	0.1	4.7	0.1	4.4	0.1
		3	26.400 L	0.4	0.1	1.8	T	2.2	T	1.8	T	2.2	T	1.1	1.3	1.5	1.8	1.5	1.9	1.8	1.6
		3	44.000 L	5.0	1.0	0.7	T	5.3	T	0.7	T	5.3	T	0.3	2.7	0.5	3.8	0.5	4.2	0.4	3.4

STATE OF OHIO

DEPARTMENT OF TRANSPORTATION

BR - 101 B
(REV.2-15-87)

BRIDGE ANALYSIS AND RATING SYSTEM INPUT DATA FORM

CARD TYPE 02, 05 AND 06

STRUCTURE HEADER AND DESCRIPTION

CARD TYPE	STRUCTURE GROUP ID	STRUCTURE NO.	RATING ANALYST IDENTIFICATION CODED BY	RATING ANALYST IDENTIFICATION REVIEW BY	ENGR. ATTN.	OVERRULE BATCH RAT. EXCEPT'S I	OVERRULE BATCH RAT. EXCEPT'S O	OVERRULE BATCH RAT. EXCEPT'S P	OVERRULE FILE REQUESTS AND OUTPUT DATA EXCEPTIONS	FL. BM. LL. b	CURB DISTANCE "A" in. i	STRUCTURE TYPE	YEAR OF CONSTRUCTION	STRUCTURE LENGTH F	STRUCTURE LENGTH I	STRUCTURE LENGTH FEET	STRUCTURE LENGTH IN	STRUCTURE LENGTH 1/16	ROADWAY WIDTH F	ROADWAY WIDTH I	ROADWAY WIDTH FEET	ROADWAY WIDTH IN	ROADWAY WIDTH 1/16	NUMBER OF SPANS	NEGATE SPEC X A b	LIVE LOAD TRUCK DESIGNATION INV.	LIVE LOAD TRUCK DESIGNATION OPER.
1 2	3 4 5	6 7 8	9 10 11 12 13 14 15 16	17 18 19 20 21 22 23 24	25	26	27	28	29 30 31 32 33 34 35	36	37 38 39 40	41 42 43 44 45 46	47 48	49	50	51 52 53 54	55 56	57 58	59	60	61 62 63 64	65 66	67 68	69 70	71	72 73 74 75	76 77 78 79 80
0,2	060	210	DIST 7	DLMCO								112	58	X		1446					4406			03		HS20	

STRUCTURE LOCATION AND PERMANENT IDENTIFICATION FACTORS

CARD TYPE	STRUCTURE GROUP ID	STRUCTURE NO.	BRIDGE NUMBER (SLM ONLY)	DISTRICT	COUNTY ABBREV.	ORIGINAL CONSTRUCTION INFORMATION ROUTE NUMBER	ORIGINAL CONSTRUCTION INFORMATION SECTION	ORIGINAL CONSTRUCTION INFORMATION STATION i + i	MICROFILM REEL NUMBER ORIG. DESIGN PLANS	MICROFILM REEL NUMBER COMPUTATIONS	OFFICIAL USE ONLY	KEY ROUTE ID (FEDERAL AID ROUTE NO.)	MARKED ROUTE
1 2	3 4 5	6 7 8	9 10 11 12 13 14 15 16	17	18 19 20	21 22 23 24 25 26 27 28	29 30 31 32 33 34 35 36	37 38 39 40 41 42 43 44	45 46 47 48 49 50 51	52 53 54 55 56 57 58	59 60 61 62 63 64 65	66 67 68 69 70 71 72 73	74 75 76 77 78 79 80
0,5	060	210	0602108	G	AUG	25	5.05	3223776	APERTUR		L	FEDERAL	IR 75

COMMENTS (DESIGN LOADING, WEARING SURFACE, MEMBER I.D.'S, STD. DRWG. REF. NOS., SPECIAL REMARKS ETC.)

ANALYST REMARKS TO BE DUPLICATED IN FORM AND CONTENT ON SUMMARY OF RATING CALCULATIONS

CARD TYPE	STRUCTURE GROUP ID	STRUCTURE NO.	SEQ	
1 2	3 4 5	6 7 8	9	10 11 12 13 14 15 16 17 18 19 20 21 22 23 24 25 26 27 28 29 30 31 32 33 34 35 36 37 38 39 40 41 42 43 44 45 46 47 48 49 50 51 52 53 54 55 56 57 58 59 60 61 62 63 64 65 66 67 68 69 70 71 72 73 74 75 76 77 78 79 80
0,6	060	210	1	AUG-75-0515 L OVER CONRAIL; HS20 LOADING; CONC. SLAB 24.25" THICK;
0,6			2	SPANS: 44.00'-55.00'-44.00' C/C BRGS.; SFN 0602108;
0,6			3	2.25" LATEX MODIFIED CONC. WS; UPDATED BY SAHCO 3-02-2007;
0,6			4	
0,6			5	
0,6			6	

DOT - 2856

S= 44.0'

STATE OF OHIO
DEPARTMENT OF TRANSPORTATION

BR - 101 E
(REV. 6 - 1 - 83) **BRIDGE ANALYSIS AND RATING SYSTEM INPUT DATA FORM** CARD TYPE 08

LLDF = $\frac{1}{4+0.06(S)}$ = $\frac{1}{4+0.06(44.0)}$ = $\frac{1}{4+2.64}$ = $\frac{1}{6.64}$ = 0.1506

MEMBER DESCRIPTION SPECIFICATIONS - GIRDER, STRINGER, FLOOR BEAM

CARD TYPE	STRUCTURE GROUP ID	STRUCTURE NO.	MEMBER ID SCB	MEMBER ID NO.	CONTINUE	TOTAL NO. OF SPANS	CANTIL. FLR. BM.	ANALYSIS CNTRL	SYMMETRICAL	SPAN 1/4 F	SPAN 1/4 I	SPAN 1/4 FEET	SPAN 1/4 IN	SPAN 1/4 1/16	SPAN 2/5 F	SPAN 2/5 I	SPAN 2/5 FEET	SPAN 2/5 IN	SPAN 2/5 1/16	SPAN 3/6 F	SPAN 3/6 I	SPAN 3/6 FEET	SPAN 3/6 IN	SPAN 3/6 1/16	SS RC CSC PSC CPS TMB	ALLOWABLE STRESS F_Y psi	ALLOWABLE STRESS f'_s ksi	ALLOWABLE STRESS f_{bs} #/sq.in.	ALLOWABLE STRESS f'_c	ALLOWABLE STRESS f''_c	LIVE LOAD DISTRIB. FACTOR "E" OR "S" IN FEET	END FLOOR BEAM	THROUGH T B	MAXIMUM IMPACT FACTOR X X % INV	MAXIMUM IMPACT FACTOR X X % OP	MAXIMUM IMPACT FACTOR X X % POST	MAXIMUM IMPACT FACTOR X X % SPEC.	STIFFENER CODE
1 2	3 4 5	6 7 8	9 10	11	12	13 14	15	16	17	18	19	20 21 22	23 24	25 26 27	28	29	30 31 32	33 34	35 36 37	38	39	40 41 42	43 44	45 46 47	48 49 50	51 52 53 54	55	56 57 58 59	60	61 62 63 64	65	66	67	68 69	70 71	72 73	74 75	76 77
0,8	060210	501				03						44					55					44			RC					.1506								
0,8																																					
0,8																																					
0,8																																					
0,8																																					
0,8																																					
0,8																																					
0,8																																					
0,8																																					
0,8																																					
0,8																																					
0,8																																					
0,8																																					
0,8																																					
0,8																																					
0,8																																					
0,8																																					
0,8																																					
0,8																																					
0,8																																					

Lmc ws $\frac{2.25''}{12} \times 150 = 28.13 \frac{lbs}{ft}$

STATE OF OHIO
DEPARTMENT OF TRANSPORTATION

BR - 101 G

(REV. 6 - 1 - 83) ## BRIDGE ANALYSIS AND RATING SYSTEM INPUT DATA FORM CARD TYPE 10

Conc. Parapets $2(4.25 \times 150)/48.5' = 26.29 \frac{lbs}{ft}$

$54.41 \frac{lbs}{ft}$

SUPERIMPOSED DEAD LOADS - GIRDERS, STRINGERS, FLOOR BEAMS

CARD TYPE	STRUCTURE GROUP ID	STRUCTURE NO.	MEMBER ID GSB	MEMBER ID NO.	b x SYMMETRICAL	SPAN NO.	DISTANCE FROM LEFT SUPPORT IN SPAN FEET	DISTANCE FROM LEFT SUPPORT IN SPAN IN 1/16	LOAD TYPE PWV	DISTRIBUTED OR CONCENTRATED LOAD "P" IN KIPS "W" IN LBS/FT P OR W_L	DISTRIBUTED OR CONCENTRATED LOAD "P" IN KIPS "W" IN LBS/FT W_R	LENGTH (DISTRIBUTED) FEET	LENGTH (DISTRIBUTED) IN 1/16
1,0	060	2.10	S91			01			W	60.0		44	
1,0						02			W	60.0		55	
1,0						03			W	60.0		44	
1,0													
1,0													
1,0													
1,0													
1,0													
1,0													
1,0													
1,0													
1,0													
1,0													
1,0													
1,0													
1,0													
1,0													
1,0													
1,0													
1,0													
1,0													

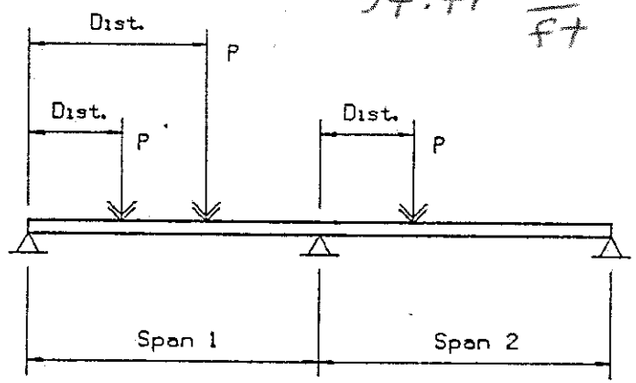

CONCENTRATED LOADS

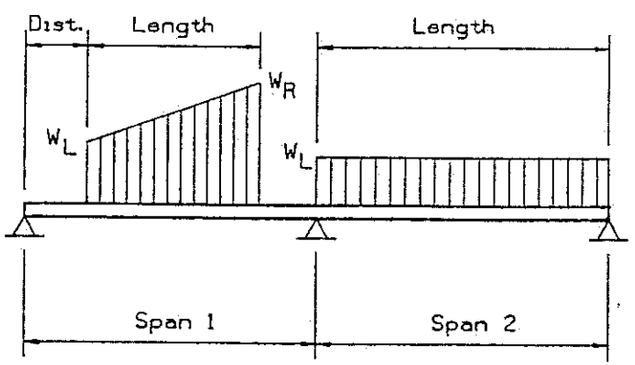

DISTRIBUTED LOADS

DOT - 2861

STATE OF OHIO
DEPARTMENT OF TRANSPORTATION

BR - 101 H
(REV. 6 - 1 - 83) **BRIDGE ANALYSIS AND RATING SYSTEM INPUT DATA FORM** **CARD TYPE 11**

SECTION RANGE SPECIFICATIONS

CARD TYPE	STRUCTURE GROUP ID	STRUCTURE NO.	MEMBER ID G S B	MEMBER ID NO.	b' × SYMMETRICAL	SPAN NO.	SECTION RANGE: RANGE NO.	RANGE LENGTH: F I	FEET	IN	1/16	SEC. NO.: LT.	RT.	SEC VAR: SPTb	TBb	HINGE LOCATION: CODE 12b	FIRST HINGE DISTANCE FROM LEFT: F I	FEET	IN	1/16	SECOND HINGE DISTANCE FROM LEFT: F I	FEET	IN	1/16	HYBRID GIRDER: YIELD STRENGTH: BASE SECTION: Ab	Fv (psi) i.	EXCEPTION: TWBb	Fv (psi) i.
1 1	060	210	S	01		01	01		36			01																
1 1							02		8			02																
1 1						02	01		130	2		02																
1 1							02		280	8		01																
1 1							03		130	2		02																
1 1						03	01		8			02																
1 1							02		36			01																
1 1																												
1 1																												
1 1																												
1 1																												
1 1																												
1 1																												
1 1																												
1 1																												
1 1																												
1 1																												
1 1																												
1 1																												
1 1																												
1 1																												
1 1																												
1 1																												
1 1																												

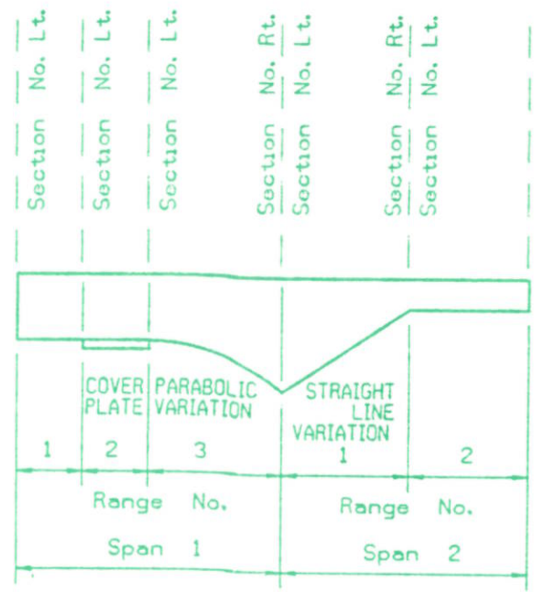

SECTION RANGE

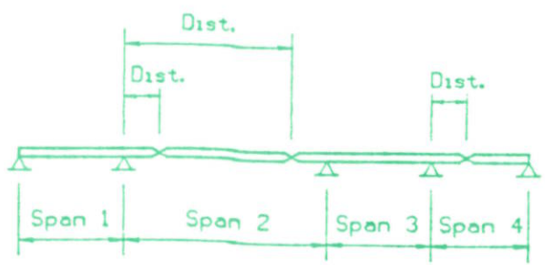

INTERMEDIATE HINGES

DOT - 2862

STATE OF OHIO
DEPARTMENT OF TRANSPORTATION

BR - 101 J

(REV. 6 - 1 - 83) BRIDGE ANALYSIS AND RATING SYSTEM INPUT DATA FORM CARD TYPE 13

SECTION PROPERTIES (REINFORCED CONCRETE) - GIRDERS, STRINGERS, FLOOR BEAMS

CARD TYPE	STRUCTURE GROUP ID	STRUCTURE NO.	MEMBER ID GIRDER NO.	BOTTOM FLANGE B	SECTION NO.	SECTION DESCRIPTION "SAME EXCEPT"	ADDRS	h in.	a in.	b in.	b' in.	t in.	i	A_s^i in.^{2}	d^i in.	COMP CODE
								xxx.yx	xxx.yx	xxx.yx	xxx.yx	xxx.yx		Bb xxx.yx NNDD	xxx.yx	b
1,3	06.0	2.05	0.1		0.1			24..25			12..0		01	0.264	2..625	
1,3													02	2..67	22..045	
1,3					02			24..25			12..0		01	3..74	2..955	
1,3													02	1..34	22..045	

RECTANGULAR BEAM

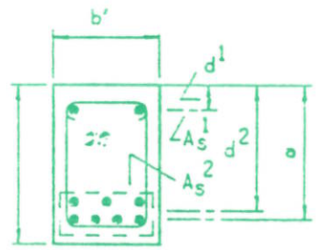

T - BEAM

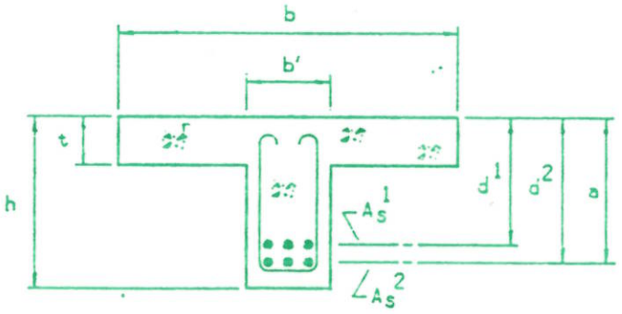

I - BEAM

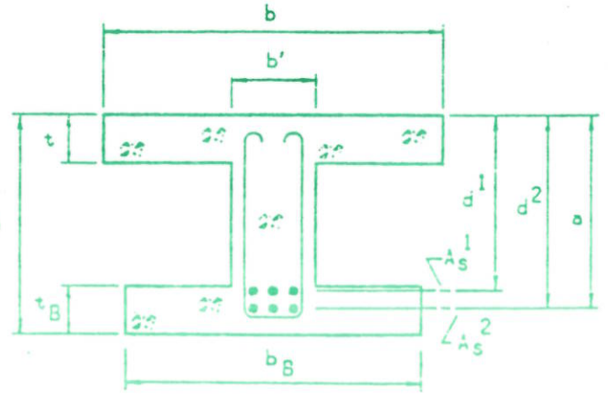

DOT - 2864

STRUCTURE MAINTENANCE

CO.-RT.-SEC. Alg-75-0515 L
Repairs Needed:

PATCH ABUT. - HEAVY DETER. ALONG TOP OF ABUT. W/ SPALLS - REMOVE LOOSE CONCRETE + PATCH

initials / date

WE 2/9/96

B&C response:

date
initials / completed

Materials & Quantities:

suppliers:

Comments:

Bridge Supt. _____

Bridge Engineer Determined by Bridge Engr. to wait until conditions are worse 2-23-96

This form is to be placed in the STRUCTURE FILE after completion.

SAM - CHECK THIS

(2)



AUG-75-0515 SB 10-4-76 Remove 404 W.S.



AUG-75-0515 SB 10-4-76 Remove 404 W.S.



AUG-75-0515 SB 10-4-76 Petromat in place

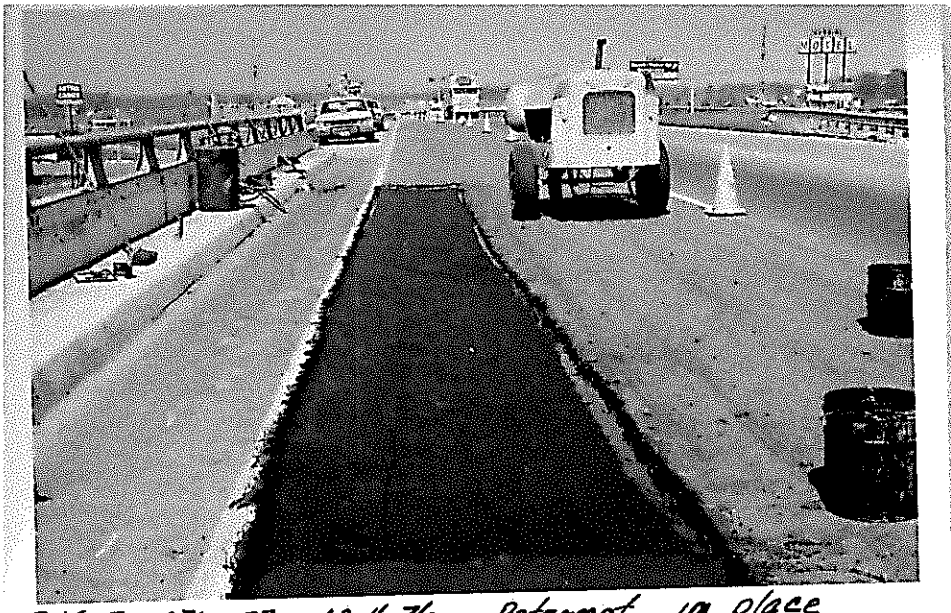

AUG-75-0515 SB 10-4-76 Petromat in place



AUG-75-0515 SB 10-4-76 Heating AC



AUG-75-0515 SB 10-4-76 Heating AC



AUG-75-0515 SB 10-4-76 Cut-out cleaned



AUG-75-0515 SB 10-4-76 Cut-out cleaned

Alla-75-0515







7) AUG-75-0515 L Looking South 10-30-80

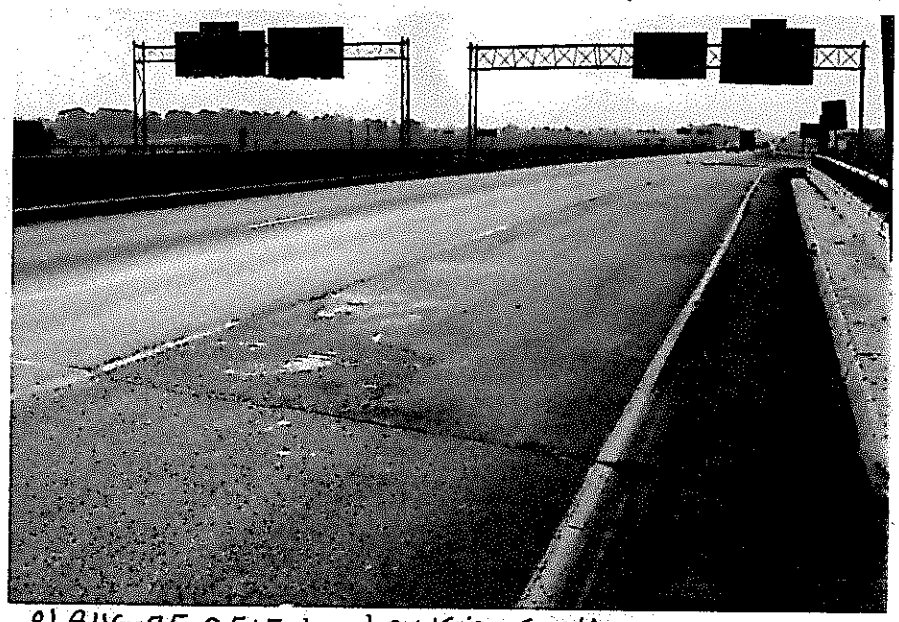

8) AUG-75-0515 L Looking South East 10-30-80



9) AUG-75-0515 L Looking Southwest 10-30-80

FHWA REGION	STATE	PROJECT	
5	OHIO		

208
231

AUGLAIZE COUNTY
ALLEN COUNTY
AUG–75–4.54
ALL–75–0.00

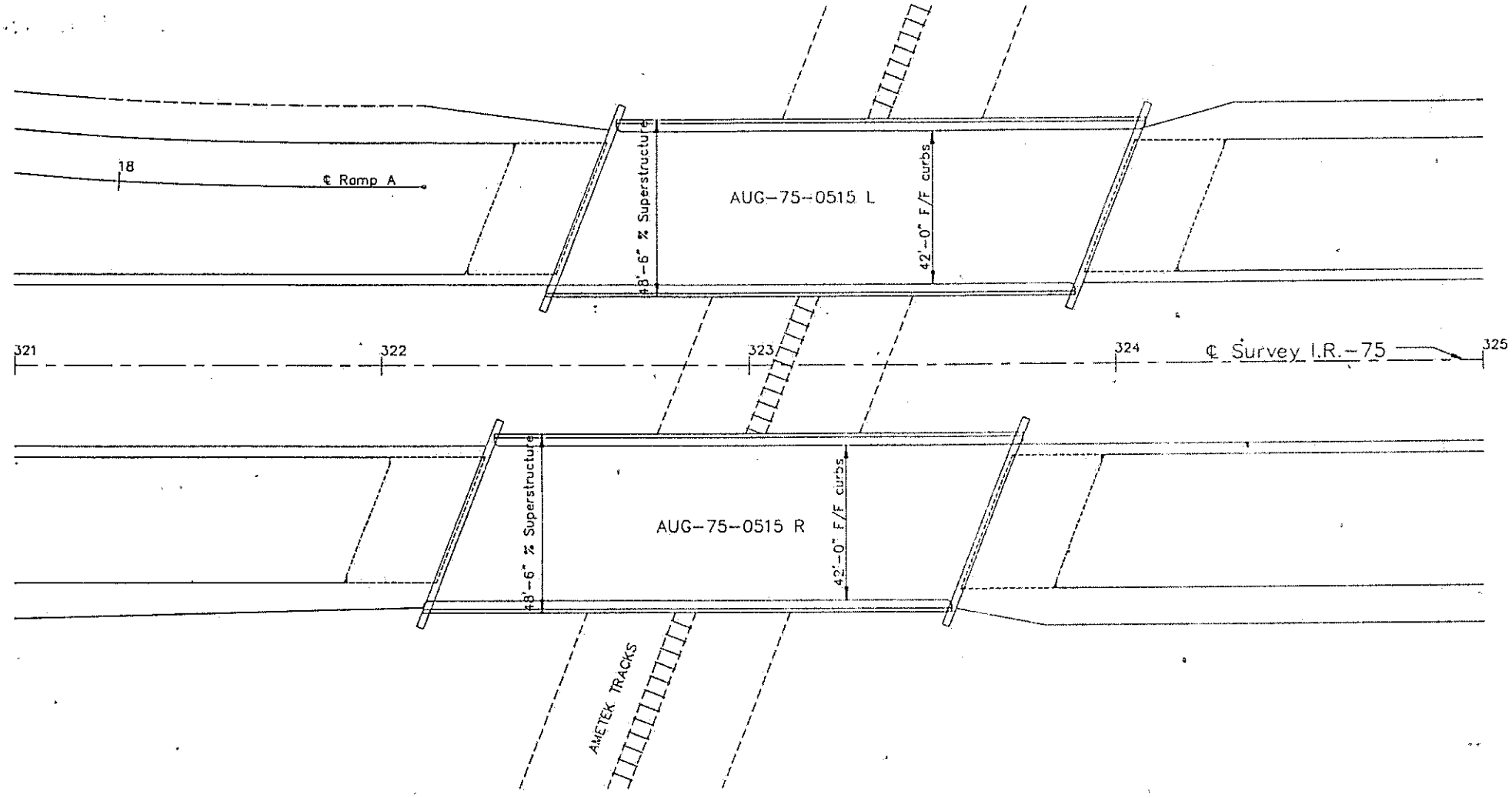

PLAN

AUG–75–0515 L & R REQUIRED WORK

1. Remove and store existing aluminum railing.
2. Patch deck and approach slabs.
3. Modify abutments.
4. Reface parapets on bridge deck.
5. Modify scuppers and place latex modified concrete overlay (1 1/4") within widening area on bridge decks.
6. Seal joints and concrete surfaces.

EXISTING STRUCTURES

TYPE: CONTINUOUS REINFORCED CONCRETE SLAB ON REINFORCED CONCRETE SUBSTRUCTURE.
SPANS: 44'–0", 75'–0", 44'–0" c/c BRGS.
ROADWAY: Northbound; 42'–0" f/f Concete Parapet
Southbound; 42'–0" f/f Concete Parapet
LOAD FREQUENCY: CF 2000 (51)
(57). ADEQUATE FOR AASHO ALTERNATE LOADING.
WEARING SURFACE: 1" MONOLITHIC CONCRETE; 1 1/4" LMC
APPROACH SLABS: AS–1–54 (25' LONG)
SKEW: 21'–21'–30" L.F.
ALIGNMENT: TANGENT.

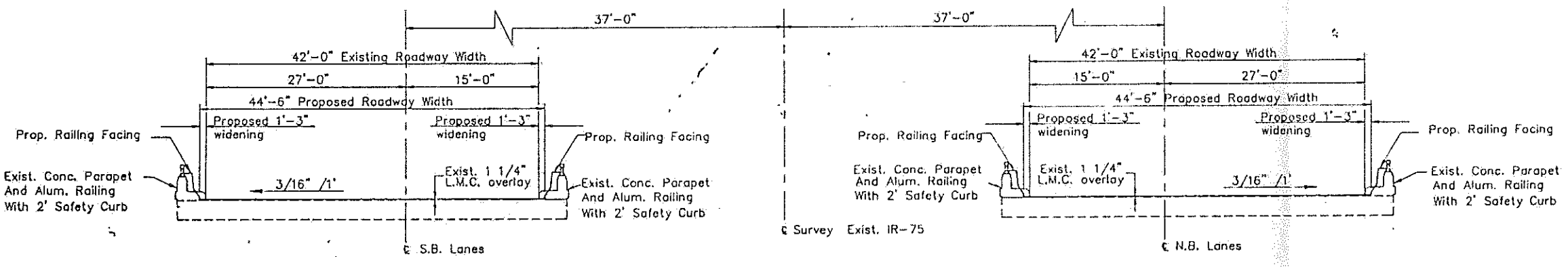

TRANSVERSE SECTION

STATE OF OHIO
DEPARTMENT OF TRANSPORTATION
DIVISION OF DESIGN AND CONSTRUCTION

9

GENERAL PLAN AND TRANSVERSE SECTION
BRIDGE NO. AUG–75–0515 L&R
OVER AMETEK TRACKS

PRESENT TOPOGRAPHY		PROPOSED WORK			
SURVEYED INFO. FROM EXIST. PLANS	DRAWN INFO. FROM EXIST. PLANS	DESIGNED	DRAWN	CHECKED	REVISED
		JTS 7/91	CLT 8/91		

U75BR2 19920214

FHWA REGION	STATE	PROJECT	
5	OHIO		

209
231

AUGLAIZE COUNTY
ALLEN COUNTY
AUG-75-4.54
ALL-75-0.00

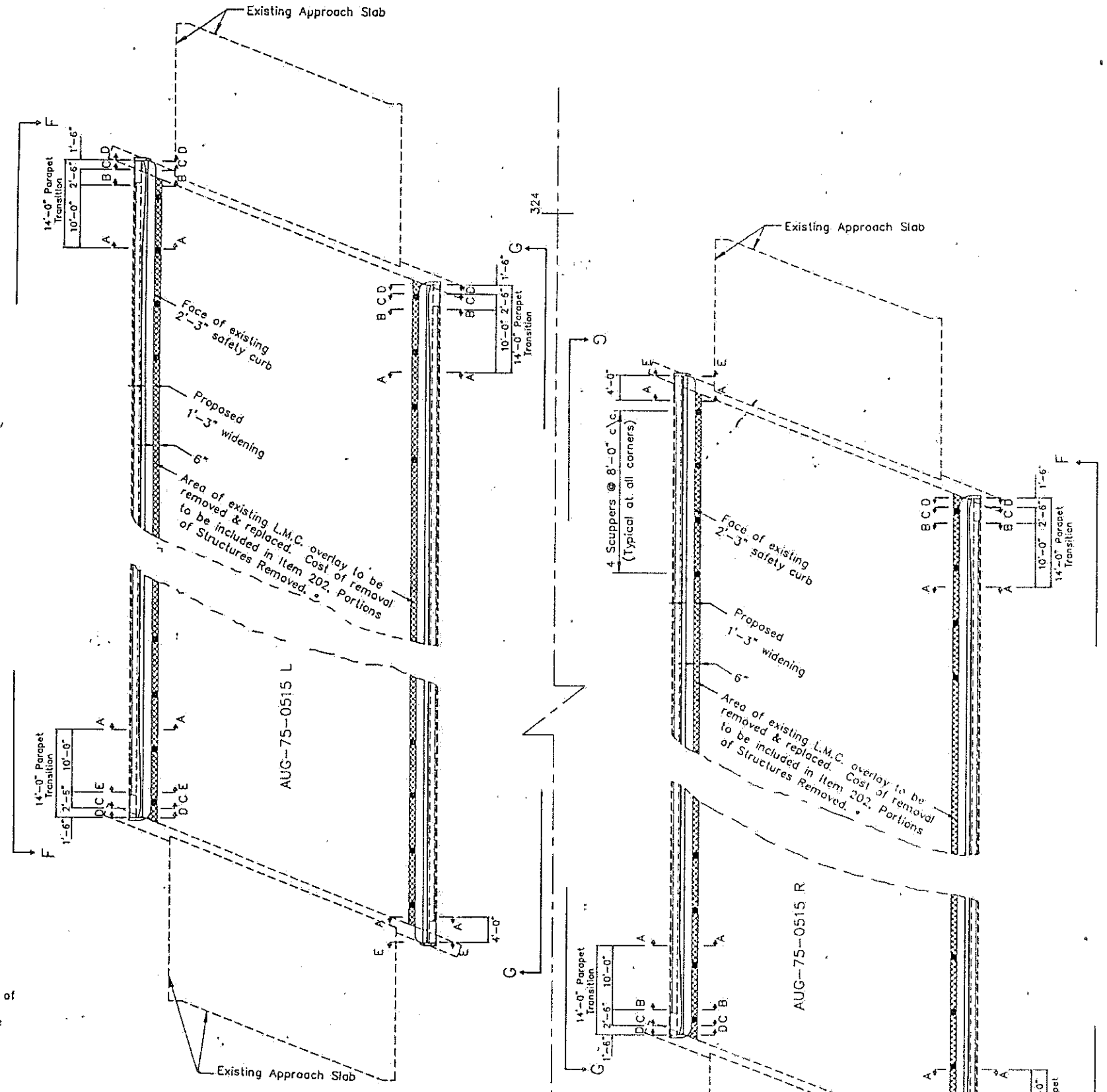

saw cut along edge of proposed area of existing L.M.C. overlay replacement. Cost of sawing to be included in price bid for replacement material.

PARAPET MODIFICATION DETAILS

0 5 10 20
Scale in Feet

FOR SECTIONS A-A, B-B, C-C, D-D and E-E SEE SHEET 12/32

FOR ELEVATION VIEWS F-F & G-G SEE SHEET 11/32

STATE OF OHIO
DEPARTMENT OF TRANSPORTATION
DIVISION OF DESIGN AND CONSTRUCTION

10/32

PARAPET MODIFICATION DETAILS
BRIDGE NO. AUG-75-0515 L & R
I.R.-75 OVER AMETEK TRACKS

PRESENT TOPOGRAPHY		PROPOSED WORK			
SURVEYED INFO. FROM EXIST. PLANS	DRAWN INFO. FROM EXIST. PLANS	DESIGNED	DRAWN	CHECKED	REVIEWED
		JTS 8/31	CLT 8/31	MEF 8/91	

BR8 19920218

FHWA REGION	STATE	PROJECT
5	OHIO	

FHWA REGION	STATE	PROJECT
5	OHIO	

AUGLAIZE COUNTY
ALLEN COUNTY
AUG-75-4.54
ALL-75-0.00

SCALE IN FEET

0 10 20 40

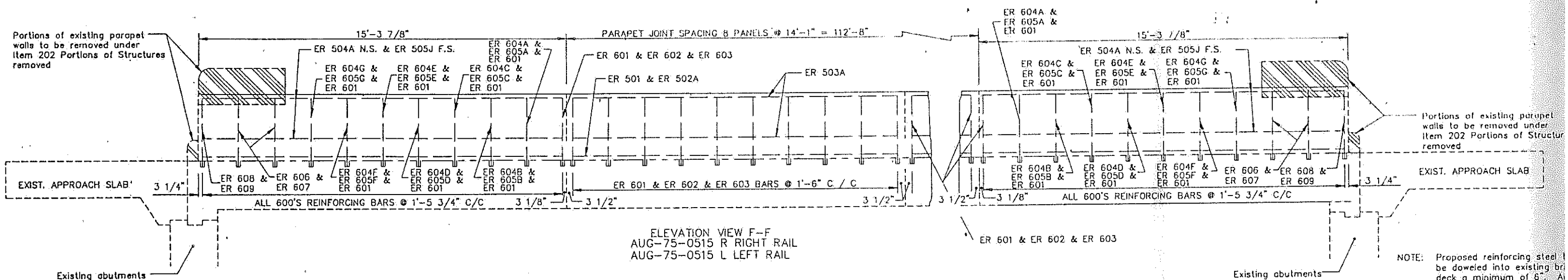

ELEVATION VIEW F-F
AUG-75-0515 R RIGHT RAIL
AUG-75-0515 L LEFT RAIL

NOTE: Proposed reinforcing steel b be doweled into existing bri deck a minimum of 6". Al location of dowel holes mo adjusted as directed by the Engineer to avoid conflict w existing reinforcing steel.

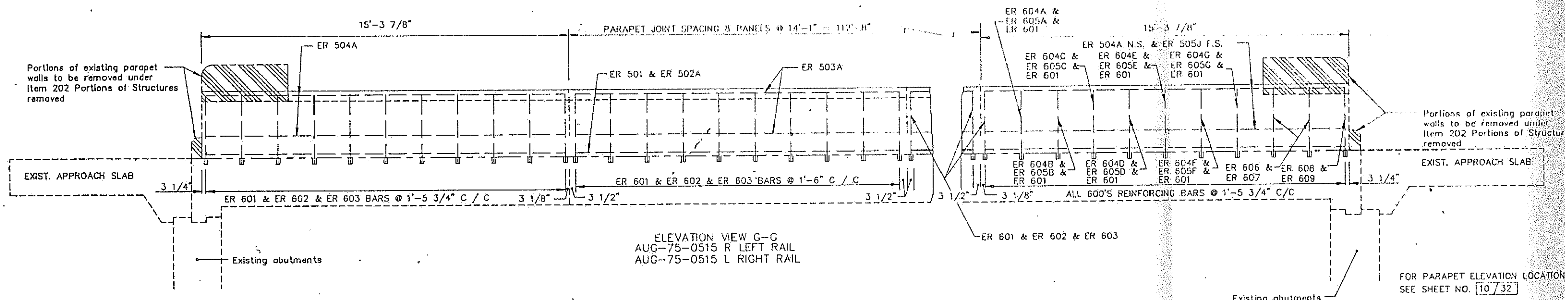

ELEVATION VIEW G-G
AUG-75-0515 R LEFT RAIL
AUG-75-0515 L RIGHT RAIL

FOR PARAPET ELEVATION LOCATION SEE SHEET NO. 10/32

FOR ADDITIONAL PARAPET MODIFICA DETAILS SEE SHEET NO. 12/32

LEGEND

Portions of existing railings, curbs and parapet walls to be removed.

STATE OF OHIO
DEPARTMENT OF TRANSPORTATION
DIVISION OF DESIGN AND CONSTRUCTION
BUREAU OF BRIDGES

PARAPET ELEVATIONS & REINFORCING STEEL LIST
BRIDGE NO. AUG-75-0515 L& I.R.-75 OVER AMETEK TRACKS

PRESENT TOPOGRAPHY		PROPOSED WORK			
SURVEYED INFO. FROM EXIST. PLANS	DRAWN INFO. FROM EXIST. PLANS	DESIGNED	DRAWN	CHECKED	R
		JTS	CLT	WEF	

A:AU75BR7 19920218

FHWA REGION	STATE	PROJECT
5	OHIO	

AUGLAIZE COUNTY

FHWA REGION	STATE	PROJECT	
5	OHIO		

AUGLAIZE COUNTY
ALLEN COUNTY
AUG-75-4.54
ALL-75-0.00

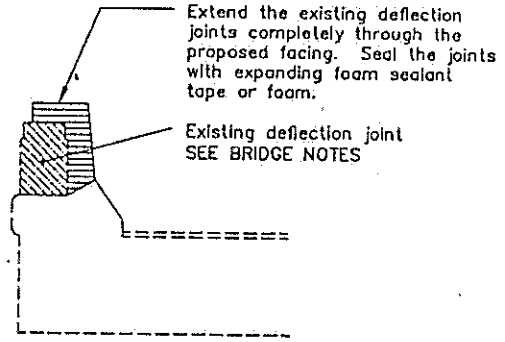

DEFLECTION JOINT DETAIL

LEGEND

XXXXXX Surfaces to be sealed under Item Special Sealing of Concrete Surfaces

Existing curb (and portion of parapet wall if necessary) to be removed under Item 202, Portions of Structures Removed.

Area of existing L.M.C. overlay to be removed and replaced. Cost of removal to be included in Item 202 Portions of Structures Removed.

NOTE:
FOR DETAILS NOT SHOWN SEE STD. CONSTR. DWG. BR-1

* Saw cut along edge of proposed area of existing L.M.C. overlay replacement. Cost of sawing to be included in price bid for proposed replacement material.

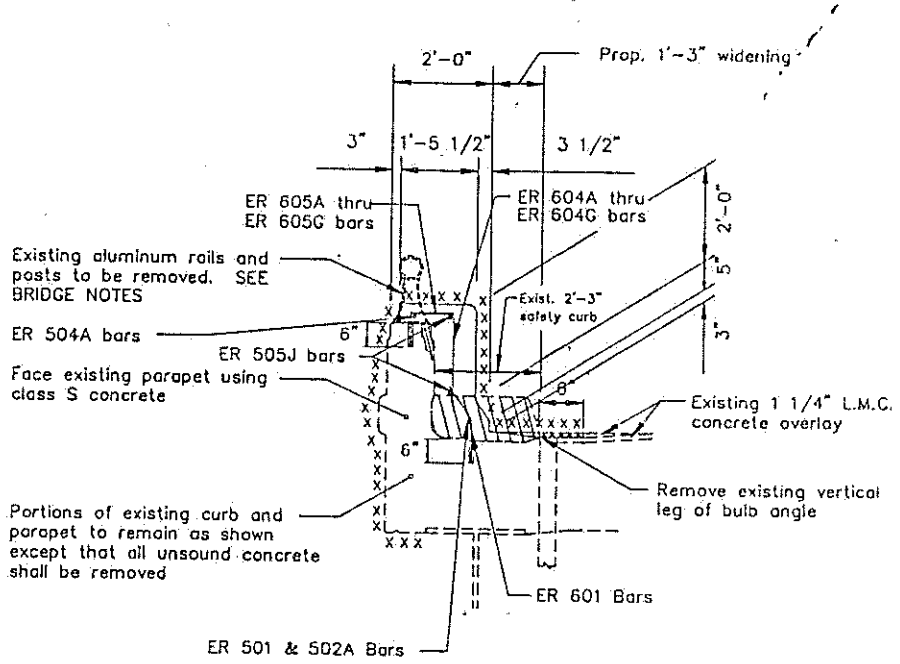

SECTION B-B

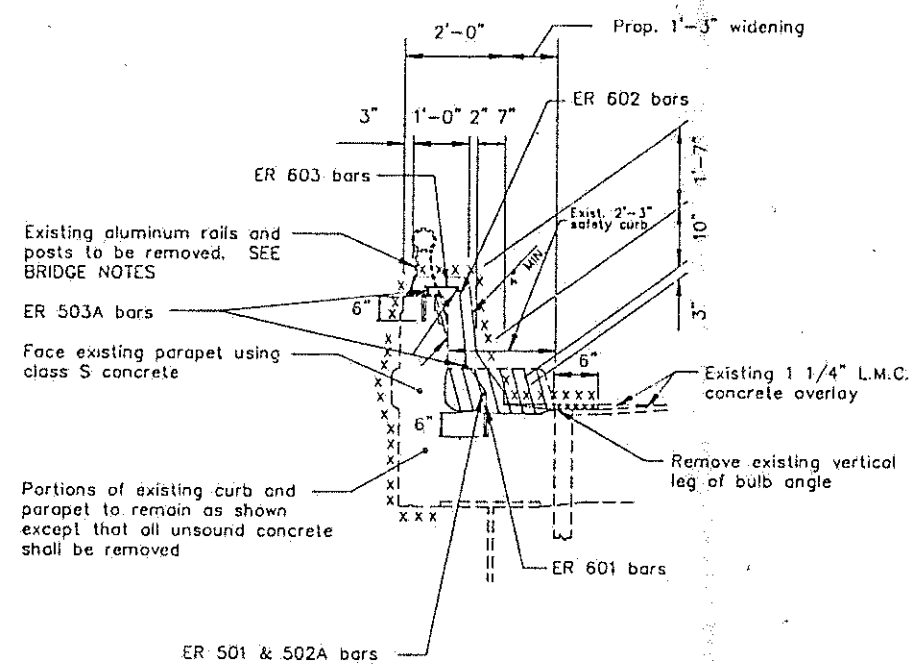

SECTION A-A

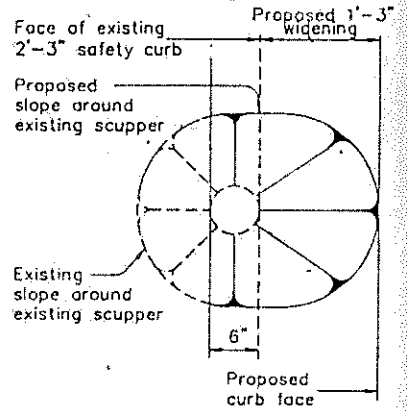

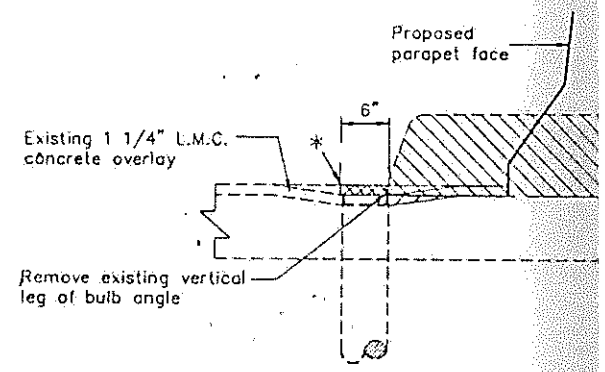

SCUPPER MODIFICATION DETAIL

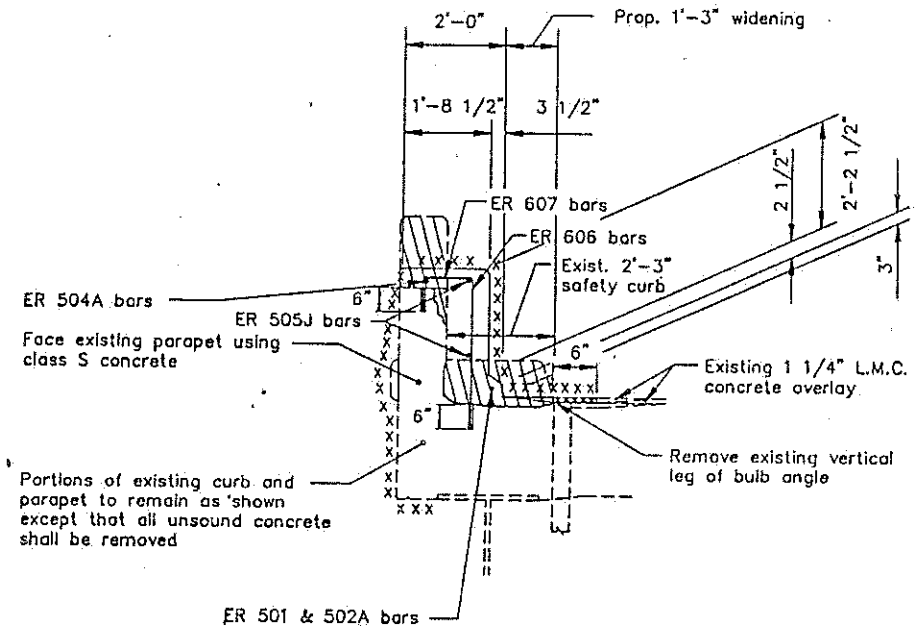

SECTION C-C

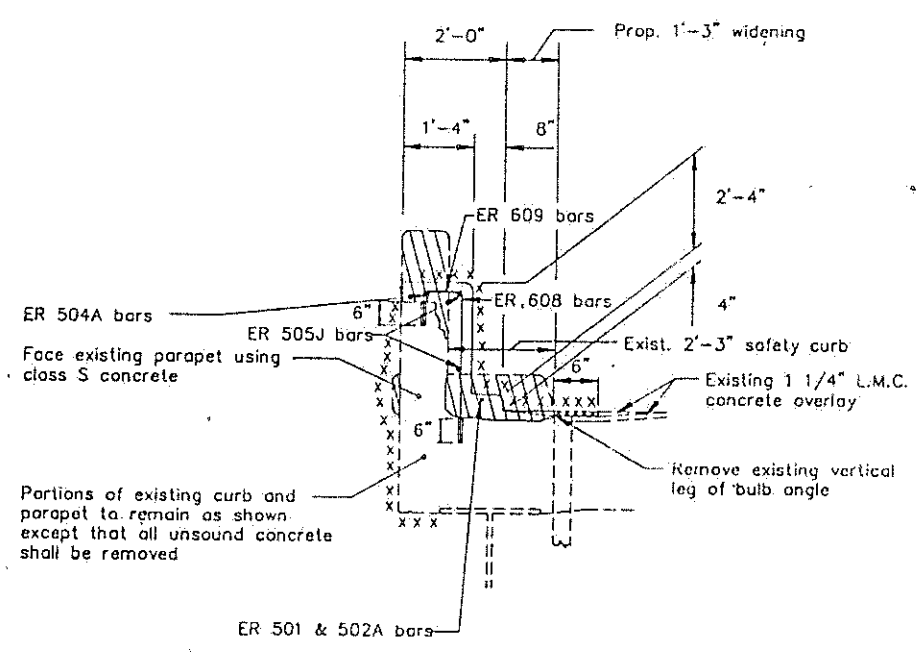

SECTION D-D

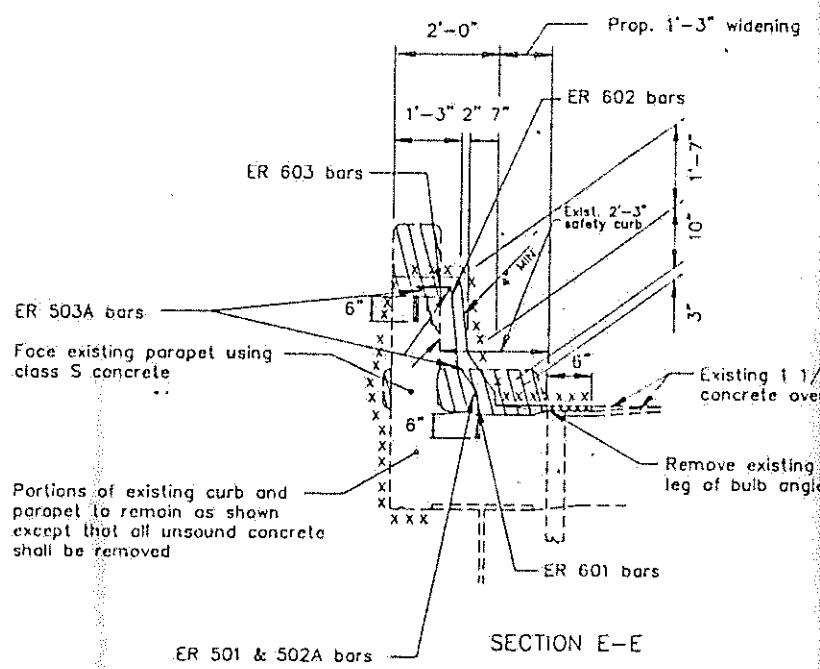

SECTION E-E

FOR LOCATIONS OF SECTIONS A-A, B-B, C-C, D-D and E-E SEE SHEET 10/32

FOR ELEVATION VIEWS F-F AND G-G SEE SHEET 11/32

STATE OF OHIO
DEPARTMENT OF TRANSPORTATION
DIVISION OF DESIGN AND CONSTRUCTION
BUREAU OF BRIDGES

PARAPET MODIFICATION DETAIL
BRIDGE NO. AUG-75-0515 L&R
I.R.-75 OVER AETEK TRACKS

PRESENT TOPOGRAPHY		PROPOSED WORK			
SURVEYED INFO. FROM EXIST. PLANS	DRAWN INFO. FROM EXIST. PLANS	DESIGNED JTS 7/91	DRAWN TAK 8/91	CHECKED	REV

A:AU75BR6 19920218

FORCE ACCOUNT WORK
YEAR OF 1991

PROGR ACTIV	LOCATION	START DATE	COMPL DATE	COST LABOR	EQUIP	MATERL	TOTAL	REMARKS	PCOU PART
61-42	AUG-067-1718	4- 9-91	4-10-91	454.20	220.56	0.0	$ 674.76	B-CHANNEL CLEANOUT	
63-44	AUG-067-1784	5-16-91	5-28-91	1991.12	323.23	609.12	$ 2923.47	C-BUILD 10'X12'DROP BOX	
61-42	AUG-067-1784	12-18-91	12-31-91	530.48	1003.12	0.0	$ 1533.60	C-CHANNEL CLEANOUT	
63-43	AUG-067-1818	4-11-91	4-11-91	137.48	176.27	289.22	$ 602.97	C-EXT. WITH 42"X8' RCP	
61-42	AUG-067-1843	4-10-91	4-11-91	295.84	244.66	0.0	$ 540.50	C-CHANNEL CLEANOUT	
62-33	AUG-075-0310 L	8- 6-91	8- 6-91	348.04	28.70	4.08	$ 380.82	B-GUARDRAIL REPAIR	
61-53	AUG-075-0515 L	4- 8-91	4-16-91	878.80	628.94	790.40	$ 2298.14	B-PATCH BRIDGE DECK- 52 BAGS 26 S.F.	
61-53	AUG-075-0515 R	4- 3-91	4- 4-91	773.88	249.14	836.00	$ 1859.02	B-PATCH BRIDGE DECK-55 BAGS 27-1/2 S.F.	
63-33	AUG-075-1234	4-18-91	4-18-91	252.40	12.16	2.72	$ 267.28	B-REPAIR GUARDRAIL - 2 WEJITS	
63-43	AUG-198-1101	12-17-90	1- 8-91	3186.96	2406.79	1226.09	$ 6819.84	C-REMOVED CMP AND REPLACED W/C.BASINS	
61-55	AUG-219-1171	5-15-91	5-15-91	130.36	15.01	0.0	$ 145.37	B-REMOVED DRIP STRIP	
62-52	AUGLAIZE	6- 4-91	6- 4-91	172.48	108.06	53.58	$ 334.12	M-PATCH CONCRETE AT DOORS E.B REST AREA	
62-52	AUGLAIZE	6- 3-91	6- 3-91	344.96	40.57	53.58	$ 439.11	M-PATCH CONCRETE AT DOORS W.B.REST AREA	
66-41	CASSELLA	1- 8-91	1- 8-91	695.76	114.71	0.0	$ 810.47	M-TORE DOWN SALT SPREADER RACKS	
62-33	CHP-004-0608	7-22-91	7-22-91	439.76	266.75	16.05	$ 722.56	B-BANNISTER REPAIR	
62-33	CHP-004-0974	2- 7-91	2-12-91	1460.64	438.94	93.23	$ 1992.81	B-GUARDRAIL REPAIR	
63-44	CHP-004-1134	2-13-91	2-14-91	579.87	75.18	0.0	$ 655.05	C-MADE & INSTALLED GRATE	
63-43	CHP-029-0823	9-23-91	10-15-91	1706.40	435.52	515.15	$ 2657.07	C-EXTEND 3X3 BOX 6'NORTH 5'SOUTH	
63-43	CHP-029-0852	9-24-91	10-15-91	1887.36	636.40	480.29	$ 3004.05	C-EXTEND 6X4 BOX 6'NORTH 4'SOUTH	
63-43	CHP-036-0665	1-30-91	2- 1-91	206.56	374.46	0.0	$ 581.02	C-CULVERT REPAIR-DUMP ROCK	
63-43	CHP-036-0701	1-28-91	1-28-91	206.56	372.06	0.0	$ 578.62	C-CULVERT REPAIR	
63-43	CHP-036-2804	2- 4-91	2- 5-91	890.72	547.40	623.16	$ 2016.28	C-POURED CONCRETE FOR EROSION CONTROL	
61-55	CHP-054-0275	9-10-91	10-15-91	5721.06	3649.35	1522.66	$10893.07	B-BRIDGE WIDENING-5'SOUTH 6'NORTH	
63-43	CHP-055-0088	3- 5-91	3-22-91	2890.16	486.94	480.51	$ 3857.61	C-EXTD.CONC.BOX 5 FT. LEFT	
63-43	CHP-055-0917	1-14-91	1-17-91	1784.88	1313.39	3726.11	$ 6824.38	C-REPL. 6'X5'STC W/60'X54'RCP	

FORCE ACCOUNT WORK

YEAR OF 1989

PROGR ACTIV	LOCATION	START DATE	COMPL DATE	COST LABOR	EQUIP	MATERL	TOTAL	REMARKS	PCOU PART
61-55	AUG-029-0767	1-26-89	2- 1-89	1248.24	531.47	204.00	$ 1983.71	B-PATCH BRIDGE PIERS	
62-52	AUG-033-0733	8-29-89	8-30-89	249.76	147.42	104.34	$ 501.52	M-REST AREA REPAIR - EASTBOUND	
62-52	AUG-033-0734	8-29-89	8-30-89	249.76	149.28	104.34	$ 503.38	M-REST AREA REPAIR - WESTBOUND	
61-57	AUG-033-2013	7-10-89	7-10-89	230.00	523.21	42.80	$ 796.01	B-ACCIDENT - RAIL REPAIR	
61-26	AUG-033-2134	7-12-89	7-13-89	868.16	485.14	45.63	$ 1398.93	B-MUDJACK BRIDGE	
61-56	AUG-033-2769	6- 2-89	6- 6-89	437.55	310.87	260.91	$ 1009.38	B-ACCIDENT - RAIL REPAIR	
61-32	AUG-067-0345	6-13-89	6-21-89	1175.80	431.22	25.35	$ 1632.37	B-CURB REPAIR	
63-43	AUG-067-0379	7- 5-89	7- 7-89	629.92	1234.61	1009.96	$ 2874.49	C-EXTEND STC W/48"X26' RCP-REMOVE CMP	
61-57	AUG-067-1013	3-29-89	3-29-89	114.64	96.17	0.0	$ 210.81	B-ACCIDENT - RAIL REPAIR	
63-43	AUG-075-0044	7-11-89	7-11-89	230.00	463.00	182.02	$ 875.02	C-ACCIDENT REPAIR-REPLACE 8' OF 36"RCP	
61-57	AUG-075-0201	11-30-89	11-30-89	248.00	19.09	76.52	$ 343.61	B-ACCIDENT - RAIL REPAIR	
61-53	AUG-075-0515	11- 2-89	11- 2-89	328.32	154.82	167.21	$ 650.35	B-PATCH CURB - 23 BAGS SET CRETE	
63-43	AUG-197-0356	5-15-89	5-19-89	1613.28	2568.05	2080.55	$ 6261.88	C-REPL.48"CMP W/48"X54'RCP.	
63-44	AUG-197-0356	5- 2-89	6- 6-89	2447.36	787.46	244.50	$ 3479.32	C-BUILD DROP BOX	
61-56	AUG-197-1426	8-18-89	8-18-89	319.52	25.07	102.40	$ 446.99	B-GUARDRAIL REPAIR	
61-53	AUG-198-0860	1-27-89	1-27-89	313.28	557.79	272.01	$ 1143.08	B-PATCH BRIDGE DECK-11-1/2 SQ.FT.23 BAGS	
61-53	AUG-198-0860	10-26-89	10-27-89	497.36	294.76	459.85	$ 1251.97	B-PATCH BRIDGE DECK-16-1/2 SQ.FT.33 BAGS	
61-53	AUG-198-0971	10-30-89	11- 1-89	578.04	310.94	264.76	$ 1153.78	B-PATCH BRIDGE DECK-9-1/2 SQ.FT. 19 BAGS	
61-17	AUG-219-0116	5-17-89	5-17-89	145.44	142.37	0.0	$ 287.81	M-SET BARRIER RAIL ON BRIDGE SLAB	
61-53	AUG-219-0116	6-22-89	8-17-89	4442.17	1290.27	2012.06	$ 7744.50	B-BRIDGE & DECK EDGE REPAIR	
63-44	AUG-364-1465	5-22-89	5-30-89	777.52	1132.97	261.50	$ 2171.99	C-POUR CONC.PAD FOR DROP BOX & EXT.42"X8	
63-44	AUG-364-1465	7-28-89	7-28-89	78.88	13.11	970.64	$ 1062.63	C-INSTALLED CATCH BASIN GRATE	
66-41	AUG.CO.GARAGE	2-17-89	2-27-89	795.12	264.04	33.85	$ 1093.01	M-INSTALL CRANE RAIL	
63-43	CHP-004-0209	10-18-89	11-28-89	4215.87	1341.53	924.13	$ 6481.53	C-BOX EXTENSION-12'LT.& 12'RT.	
61-57	CHP-036-2157	1- 5-89	1- 9-89	1051.60	1356.26	1342.00	$ 3749.86	B-ACCIDENT-3 SECT.OF CORR.METAL PIPE ARC	

OHIO DEPARTMENT OF TRANSPORTATION
DIVISION OF HIGHWAYS
BRIDGE INSPECTION REPORT

STRUCTURE FILE NUMBER 0602108 | BRIDGE NUMBER AUG 075 05154 | YEAR BUILT 5800

COUNTY | ROUTE | UNIT

DISTRICT 02 | BRIDGE TYPE 112 | TYPE SERVICE 1 12 PENN CENTRAL R.R.

LMC-82

		MAT.	TYPE	80	81	82	83	84	85	87	88	89
DECK	1. FLOOR		1	1	2	2	1	2	2	2	2	2
	2. WEARING SURFACE		E	2	2	1	1	2	1	2	2	2
	3. CURBS & WALKWAYS		1	1	2	2	2	2	2	2	2	2
	4. MEDIAN			—	—	—	—	—	—	—	—	—
	5. RAILING		3	1	1	2	2	2	2	2	2	2
	6. DRAINAGE		4	2	2	1	1	2	1	1	1	1
	7. EXPANSION JOINTS		4	1	2	2	2	2	1	2	2	2
	8. SUMMARY			6	6	7	7	7	7	7	7	7
SUPERSTRUCTURE	9. ALIGNMENT			1	1	1	1	1	1	1	1	1
	10. BEAMS OR GIRDERS											
	11. DIAPHRAGMS OR CROSSFRAMES											
	12. JOIST											
	13. FLOOR BEAMS											
	14. FLOOR BEAM CONNECTIONS											
	15. VERTICALS											
	16. DIAGONALS											
	17. END POST											
	18. TOP CHORD											
	19. LOWER CHORD											
	20. LOWER LATERAL BRACING											
	21. TOP LATERAL BRACING											
	22. SWAY BRACING											
	23. PORTALS											
	24. BEARINGS		9	1	1	1	1	1	1	—	—	
	25. ARCH											
	26. ARCH COLUMNS OR HANGERS											
	27. SPANDRAL WALLS											
	28. SUSPENSION SYSTEM											
	29. SUSPENDERS											
	30. TOWERS											
	31. BENT POST											
	32. ANCHORAGE											
	33. BRIDGE MACHINERY											
	34. PAINT											
	35. LIVE LOAD RESPONSE			1	1	2	2	5	5	5	5	5
	36. SUMMARY			8	8	8	8	7	7	7	7	7
SUBSTRUCTURE	37. ABUTMENTS	2	8	2	2	2	2	2	2	2	2	2
	38. ABUTMENT SEATS			1	1	1	1	2	2	2	2	2
	39. PIERS	2	3	1	1	1	1	1	1	1	2	2
	40. PIER SEATS			1	1	1	1	1	1	1	1	1
	41. BACKWALLS			2	—	—	2	—	—	—	—	—
	42. WINGWALLS			1	1	1	2	2	2	2	2	2
	43. FENDERS & DOLPHINS			—	—	—	—	—	—	—	—	—
	44. SUMMARY			8	8	8	7	7	7	7	6	6
CULVERTS	45. GENERAL											
	46. ALIGNMENT											
	47. HEADWALLS OR END WALLS											
	48. SUMMARY											
CHANNEL	49. ALIGNMENT											
	50. PROTECTION											
	51. WATERWAY ADEQUACY											
	52. SUMMARY											
APPROACHES	53. PAVEMENT		2	2	2	1	1	2	1	2	2	2
	54. ALIGNMENT			1	1	1	1	1	1	1	1	1
	55. GRADE			1	1	1	1	1	1	1	2	2
	56. APPROACH SLABS			2	2	1	1	2	1	2	2	2
	57. GUARDRAIL		1	1	2	2	2	1	1	1	1	2
	58. RELIEF JOINTS			1	2	—	—	—	—	—	—	—
	59. EMBANKMENT			2	2	2	2	2	2	2	2	2
	60. SUMMARY			7	7	7	7	7	6	6	6	6
GENERAL	61. NAVIGATION LIGHTS			—	—	—	—	—	—	—	—	—
	62. WARNING SIGNS			1	—	1	1	—	—	—	—	—
	63. INSPECTION RESPONSIBILITY			1	1	1	1	1	1	1	1	1
	64. MAINTENANCE RESPONSIBILITY			1	1	1	1	1	1	1	1	1
	65. VERTICAL CLEARANCE			—	—	N	N	N	N	N	N	N
	66. GENERAL APPRAISAL			6A	5A	7A	7A	7A	7A	7A	6A	6A
	INSPECTED BY:			MM	MM	RL	RL	RL	RL	WE	WE	WE
	DATE			10-16	3-5	1-11	1-4	1-2	1-28	5-22	5-5	3-16
	YEAR			80	82	83	84	85	86	87	88	89

1

1

Form AU-76
Rev. 10-72

STATE OF OHIO
DEPARTMENT OF TRANSPORTATION

INTER-OFFICE COMMUNICATION

County of Aug Laize Dist. 7

S.~~H.~~ IR75 Sec. 4.97

Date October 3, 1975

To Bridge Dept Attention: Mr. Rudy

From H R Blank Project 356-74 For Mr Bowman Proj. Supv.

Subject Bridge Deck waterproofing and resurfacing

The following listed bridge decks were repaired and deck surface was covered with Royston Laboratories Bridge membrane Primer 713 and Bridge membrane No. 10, then covered with 1/2" Sand Asphalt and 1" Item Asphalt Concrete,

- Aug. 75-04.98 Rt/Lt over existing USR33
- Aug. 75-05.15 Rt/Lt over NYC RR
- Aug. 67-03.45 S.R. 67
- Aug. 75-07.54 Rt/Lt over Aug Laize River
- Aug. 75-08.76 Hengsthen Road
- Aug. 75-10.47 Buckland Holden Road
- Aug 75-12.34 National Road

No work was performed on Bridge Aug 75-05.45 Wapak-Fisher Road.

At Bridge Aug. 75-06.08 Middle Pike Road, following operation to remove deteriorated concrete, complete deck was over-layed with 1" plus of Later Modified Portland Cement Concrete, using Dow Chemical DPS Modifier A.

H R Blank

In file

1-14-76

CWR

CHECKLIST FOR INVENTORY UPDATE

STRUCTURE NUMBER AUG-75-0515L(0602108)

PROJECT NUMBER 638-81

IR-75-4(35)111

_____ I. INVENTORY

(—) File Folders
(—) Aperture Cards
(X) Bridge Cards
(X) BR-87
(—) Posting and Vertical Clearance Book
(—) Ditch Files
(—) Bridge Type Inventory List
(—) Bridge Identification Signs
(—) BARS drawer
(X) Deck Condition Survey Report Listing

_____ II. MAPS

(—) Large District Mylar
(—) Small District Mylar
(—) Individual County Mylars
(—) Large Permit Map Mylar
(—) Individual County Permit Maps (Vertical Clear & Postings)
(—) Posted Bridge Map Mylar

_____ III. INSPECTION

(X) BR-86
(—) Bridge Inspection Review Sheets (Originals)
(X) Bridge Inspection Summary (Black Books)

_____ IV. COMPUTER PRINTOUTS

(—) Contract Repair and Replacement Needs
(X) Waterproofing Bridge Deck List
(—) Bridge Painting Estimates
(—) Bridge Painting Inventory

V WORK

Latex Modified Concrete

CONTRACT STRUCTURE REPAIR

Project Number 638-81 Bridge Number AVG-75-0515L
IR-75-4(35)111 (0602108)

Contractor: Complete General Construction Co.

Deck Patching and Waterproofing

Type Patching:					
Quantity: Plan =	S.Y.	-	Pay =		S.Y.
Type Waterproofing:					
Supplier:					
Quantity: Plan =	S.Y.	-	Pay =		S.Y.

Latex Modified Concrete Overlay

Modifier:					
1¼" Thick: Plan = 675	S.Y.	-	Pay =	676.14	S.Y.
Variable thickness: Plan = 23	C.Y.	-	Pay =	23.21	C.Y.
Full Depth: Plan = 2	C.Y.	-	Pay =	0	C.Y.

Dense Concrete Overlay

1 3/4" Thick: Plan =	S.Y.	-	Pay =		S.Y.
Variable thickness: Plan =	C.Y.	-	Pay =		C.Y.
Full Depth: Plan =	C.Y.	-	Pay =		C.Y.

Other

Epoxy sealant to parapets (183) = 181.09 S.Y.

Completed = 9-7-82

STATE OF OHIO-DEPT. OF HIGHWAYS
BUREAU OF BRIDGES

CONCRETE AND STONE MASONRY BRIDGES

DATE 8-17-66 ~~3-89~~ ...O-BR. ACME 14802-8

TYPE OF BRIDGE	Twin Continuous Conc. Slab	NO. OF SPANS	3 each
DATE BUILT	1958		
APPROX. SAFE LOAD CAPACITY	CF=2000 (51)	~~Lt (0602108)~~ ~~Rt (0602132)~~	

CLEAR SPAN	LENGTH OUT TO OUT OF FLOOR	WIDTH BETWEEN CURBS	WIDTH OUT TO OUT	WIDTH OF SIDEWALKS	HEIGHT OF FLOOR ABOVE BRIDGE SEAT	ROADWAY CLEARANCE MAX. HEIGHT / WIDTH / MIN. HEIGHT	PROVISION FOR EXPANSION
2@42.12 1@52.32 (each Br.)	144'-7½" (each)	42'-0" (each)	48'-9" (each)	2@2'-0" (each)	2'-0½"	open	—

TYPE OF RAILING	AR-1-57 Aluminum Type "A"	TYPE AND SIZE OF CURB	10" high with 3" slope
TYPE AND THICKNESS OF WEARING SURFACE	~~1" Monolithic Wearing Surface~~		
DESCRIPTION OF FLOOR DRAINAGE	4" O.D. W.I. pipe scuppers, 10 in each gutter of each bridge		
ALIGNMENT AND SKEW OF STRUCTURE	Tangent 21°-21'-30" L.F.	APPROACH SLABS	2@ AS-1-54 Ea.
LENGTH	25'		
LIGHTING SYSTEM			
~~STREAM~~	over N.Y.C. (T&O.C.) R.R.	HEIGHT FROM GRADE TO STREAM BED	℄ Gr. 942.19
HEIGHT FROM GRADE TO HIGH WATER			
CHANNEL CHARACTERISTICS	APPROX. WIDTH BETWEEN BANKS	CHANNEL DEPTH	NATURE OF BOTTOM
CONDITION OF BANKS		ALIGNMENT OF STREAM ABOVE AND BELOW STRUCTURE	
SKEW OF NORMAL FLOW		SKEW OF FLOOD FLOW	

CONCRETE SLAB

STD. DRAWING NO.

THICKNESS OF SLAB ~~2'-0½" (includes 1" Monolithic W.S.)~~ ~~(1975 - 1½" Asphalt)~~
~~Spans: 44'-55'-44' Ea.~~

CONCRETE BEAM

STD. DRAWING NO.

NO. OF BEAMS	SPACING OF BEAMS	WIDTH OF BEAMS	HEIGHT OF BEAM INCLUDING SLAB	THICKNESS OF SLAB

CONCRETE GIRDER

STD. DRAWING NO.

WIDTH OF GIRDER	DEPTH OF GIRDER AT CENTER	DEPTH OF GIRDER AT ENDS	FLOOR BEAMS SIZE	FLOOR BEAMS SPACING	THICKNESS OF FLOOR SLAB

ARCHES

STD. DRAWING NO.

MATERIAL TYPE SHAPE

TYPE OF RAIL OR PARAPET

CLEAR SPAN	RISE	CROWN THICKNESS	SPRING THICKNESS	FILLING MATERIAL	DEPTH OF FILL AT CROWN	HEIGHT OF PARAPET ABOVE GRADE

SUB-STRUCTURE

STD. DRAWING NO.

ABUTMENTS AND PIERS	MATERIAL	TYPE	HEIGHT FOOTER TO BRIDGE SEAT	WIDTH OF BRIDGE SEAT	LENGTH OF BRIDGE SEAT	FOUNDATIONS (PILING)	WINGS (LENGTHS, ANGLES ETC.)
REAR	Concrete	Gravity	see	1'-3"	52'-1⅞"	—	4'-0⅜"@0° ; 4'-0⅜"@0°
FORWARD	do	do	back	do	52'-1⅞"	—	4'-0⅜"@0° ; 4'-0⅜"@0°
PIER	do	Solid Tee ~~Shaped~~	}	2'-6"	51'-2"	27-12" R/C CIP 25.00 24.24	
PIER	do	do	}	do	51'-2"	27- do 24.45 26.63	
		~~(9'-4" overhang)~~					

Each Bridge

~~Rear Br. (℄ N.B. Lane) Sta. 322+23.29=5.149~~ ~~℄ of Br. on ℄ Survey Sta. 323+10.07~~

BRIDGE NO.	COUNTY	ROUTE NO.	S.H. NO.	SECTION	STRENGTH H10	H12	H15	H20	ROADWAY 15-18	19-22	23+	CLEARANCE 12—	12-14	14+	OPEN	TYPE A	B	G	S	T
AUG-75-0515	Auglaize	75																	14	

AUG-75-0515	Auglaize	75						
BRIDGE NO.	COUNTY	ROUTE NO.	S.H. NO.	SECTION	STRENGTH	ROADWAY	CLEARANCE	TYPE

SKETCH OF STRUCTURE SHOWING DIMENSIONS

1975 Bridge Deck Waterproofing - PROJ. 356-74
Step 1 - Acid clean & water flush - Repair existing WS
Step 2 - Apply Royston Laboratories "Primer 13"
Step 3 - Apply Royston Laboratories sheet membrane "No. 10"
Step 4 - Place 1/2 inch Sand Asphalt overlay
Step 5 - Place 1 inch 404 Asphaltic Concrete surface course
CONTRACTOR - Ohio Engineering Co., Findlay, Ohio

PROJ. 638-81
LATEX MODIFIED CONCRETE OVERLAY, 1 1/4".

Height Footer to Bridge Seat

	N.B. Lane		S.B. Lane	
Rear Abut.	3.78 R.	4.01 L.	3.99 R.	3.83 L.
Fwd. Abut.	3.84 R.	3.98 L.	4.02 R.	3.77 L.
Pier 1	25.83 R.	25.63 L.	25.83 R.	25.64 L.
Pier 2	25.83 R.	25.64 L.	25.83 R.	25.63 L.

LOCATION SKETCH

SEE GREEN CARD

REMARKS:-

Profile Grade: 1500' V.C. Grades
Rear +3.00% Fwd. -3.00%
P.I. Sta. 323+00

Material:
Reinforcing Steel furnished Pollak Steel Company
Monitube Piling furnished by Armco, Middletown
Concrete Aggregates furnished by Wapak S&G
Cement furnished by South Western Portland Fairborn, Ohio
Contractor V.N. Holderman & Sons

Structure File Number
Lt 0602108 Proj 487-56
Rt. 0602132 F = I-196(5)

OHIO-BR. 14605-8

96-OE 0303 14P | STATE OF OHIO · DEPT. OF HIGHWAYS
BUREAU OF BRIDGES

CONCRETE AND STONE MASONRY BRIDGES

DATE 8-17-66 (10-82)

OHIO-BB. ACME 14802-8

TYPE OF BRIDGE | NO. OF SPANS | DATE BUILT

APPROX. SAFE LOAD CAPACITY

0602108

CLEAR SPAN	LENGTH OUT TO OUT OF FLOOR	WIDTH BETWEEN CURBS	WIDTH OUT TO OUT	WIDTH OF SIDEWALKS	HEIGHT OF FLOOR ABOVE BRIDGE SEAT	ROADWAY CLEARANCE MAX. HEIGHT	ROADWAY CLEARANCE WIDTH	ROADWAY CLEARANCE MIN. HEIGHT	PROVISION FOR EXPANSION

TYPE OF RAILING | TYPE AND SIZE OF CURB

TYPE AND THICKNESS OF WEARING SURFACE: 3/4" Monolithic Concrete + 1 1/4" Latex Modified Concrete

DESCRIPTION OF FLOOR DRAINAGE

ALIGNMENT AND SKEW OF STRUCTURE | APPROACH SLABS | LENGTH

LIGHTING SYSTEM

STREAM SR-75 over N.Y.C. RR

CHANNEL CHARACTERISTICS | APPROX. WIDTH BETWEEN BANKS | CHANNEL DEPTH | HEIGHT FROM GRADE TO STREAM BED | NATURE OF BOTTOM | HEIGHT FROM GRADE TO HIGH WATER

CONDITION OF BANKS | ALIGNMENT OF STREAM ABOVE AND BELOW STRUCTURE

SKEW OF NORMAL FLOW | SKEW OF FLOOD FLOW

CONCRETE SLAB

STD. DRAWING NO.

THICKNESS OF SLAB: 2'-0 1/4" (incls. 3/4" MWS)

Spans 44'-55'-44'

CONCRETE BEAM

STD. DRAWING NO.

NO. OF BEAMS	SPACING OF BEAMS	WIDTH OF BEAMS	HEIGHT OF BEAM INCLUDING SLAB	THICKNESS OF SLAB

CONCRETE GIRDER

STD. DRAWING NO.

WIDTH OF GIRDER	DEPTH OF GIRDER AT CENTER	DEPTH OF GIRDER AT ENDS	FLOOR BEAMS SIZE	FLOOR BEAMS SPACING	THICKNESS OF FLOOR SLAB

ARCHES

STD. DRAWING NO.

MATERIAL | TYPE | SHAPE

TYPE OF RAIL OR PARAPET

CLEAR SPAN	RISE	CROWN THICKNESS	SPRING THICKNESS	FILLING MATERIAL	DEPTH OF FILL AT CROWN	HEIGHT OF PARAPET ABOVE GRADE

SUB-STRUCTURE

STD. DRAWING NO.

ABUTMENTS AND PIERS	MATERIAL	TYPE	HEIGHT FOOTER TO BRIDGE SEAT	WIDTH OF BRIDGE SEAT	LENGTH OF BRIDGE SEAT	FOUNDATIONS (PILING)	WINGS (LENGTHS, ANGLES ETC.)
REAR							
FORWARD							
PIER							
PIER							

BRIDGE NO.	COUNTY	ROUTE NO.	S.H. NO.	SECTION	STRENGTH M10	STRENGTH M13	STRENGTH M18	STRENGTH M20	ROADWAY 15-18	ROADWAY 19-22	ROADWAY 22+	CLEARANCE 13—	CLEARANCE 13-14	CLEARANCE 14+	CLEARANCE OPEN	TYPE A	TYPE B	TYPE G	TYPE S	TYPE T
75-0515L	Auglaize	IR-75																		

| 75-0515L | Auglaize | IR-75 | | |

BRIDGE INVENTORY & APPRAISAL CODE SHEET

OHIO DEPARTMENT OF TRANSPORTATION
DIVISION OF HIGHWAYS

BR-87
REV. 5-74

CODED BY cwe DATE 2-28-73 CHECKED BY _____ DATE _____

0602108 75-0515L

PROCESSING KEY	
STRUCTURE FILE NO.	TRANS. CODE
0,6,0,2,1,0,8	

75-0515L AU6-25-0517A

CARD NO.	(1) ODOT DISTRICT	(2) CITY OR TOWN	(3) INVENTORY ROUTE: ON/UNDER	SYSTEM	ROUTE NUMBER	DIRECT. SUFFIX	DESIGNATION	PREF. ROUTE	(4) FEATURE(S) INTERSECTED	(5) INV. RTE. BRIDGE NO.: COUNTY	UNIT NUMBER: STRAIGHT LINE MILEAGE	SPECIAL DESIGNATION	(6) SECTION I. D. NUMBER	(7) INVENTORY ROUTE A.D.T. (TENS)	(8) A.D.T. YEAR	(9) FED. AID SYSTEM	(10) ADMIN. JURISD.	(11) FUNCTIONAL CLASS	(12)
1	0,7	0,0,0	1	1	,,,75		1		PENN. CENTRAL RR.	AU6	0,5,1,5	L	0,5,0,2	0,0,1,0,0,7	7,8	0,2	1,0	1,1	

CARD NO.	(13) DEFENSE: SECTION NUMBER	MILEPOINT BEGIN SECTION	SECTION LENGTH	(14) TOT. MIN HORIZONTAL CLEAR.: NON-CARD. OPENING	CARDINAL OPENING	(15) PRACTICAL MAXIMUM VERTICAL CLEAR.: FT.	IN.	(16)	(17) INTERSECTED ROUTE: ON/UNDER	SYSTEM	ROUTE NUMBER	DIRECT. SUFFIX	DESIGNATION	PREF. ROUTE	(18) FEATURE(S) INTERSECTED	(19) INTER. RTE. BRIDGE NO.: COUNTY	UNIT NUMBER: STRAIGHT LINE MILEAGE	SPECIAL DESIGNATION
2				0,0,0	4,2,0	9	~9											

CARD NO.	(20) INTERSECTED ROUTE A.D.T. (TENS)	(21) A.D.T. YEAR	(22) FED. AID SYSTEM	(23) ADMIN. JURISD.	(24) FUNCTIONAL CLASS	(25) DEFENSE: SECTION NUMBER	MILEPOINT BEGIN SECTION	SECTION LENGTH	(26) TOT MIN HORIZONTAL CLEAR.: NON-CARD. OPENING	CARDINAL OPENING	(27) PRACTICAL MAXIMUM VERTICAL CLEAR.: FT.	IN.	(28)	(29) BY-PASS LENGTH	(30) COORDINATES: LATITUDE: DEGREES	MINUTES	LONGITUDE: DEGREES	MINUTES	(31) PAYD. VOLNER.	(32) TOLL	(33) YEAR BUILT: ORIG. CONS.	MAJOR RECON.	(34) NO. LANES: ON STRUCT.	UNDER STRUCT.	(35) HORIZ. CURVE: DEG.	MIN.	(36) SKEW	(37) DESIGN LOADING
3														0,1						3	5,8	0,0	0,2	0,0			2,1	5,0

CARD NO.	(38) APPROACH ROADWAY WIDTH	(39) MEDIAN TYPE	(40) FLARED	(41) BRIDGE ROADWAY WIDTH (CB/CB)	(42) DECK WIDTH (OUT/OUT)	(43) RAIL: TYPE	(44) DECK DRAIN.	(45) SIDEWALKS: LEFT	RIGHT	(46) FLOOR SLAB	(47) WEARING SURFACE: TYPE	THICKNESS (INCH)	(48) STRUCTURE TYPE: MAIN SPANS: NUMBER	TYPE CODE	APPR. SPANS: NUMBER	TYPE CODE	(49) TOTAL NO. SPANS	(50) MAXIMUM SPAN LENGTH	(51) OVERALL STRUCTURE LENGTH	(52) TYPE SERVICE	(53) BRIDGE DESCRIPTION	(54) MINIMUM VERTICAL CLEAR. ON BRIDGE: FT.	IN.	(55)	(56)	(57) BEARING TYPE
4	0,4,4	0,—	0	0,4,2,0	0,4,8,5	3	4	0,—	—,0	1	6	0,3	0,0,3	1,1,2	0,—	—,0	0,0,3	0,0,5,5	0,0,1,4,6	1,2		9	~9			5

1"C+1½"B

CARD NO.	(58) SUBSTRUCTURE: ABUTMENTS: REAR: MAT'L	TYPE	FWD.	MAT'L	TYPE	PIERS: PREDOMINATE: MAT'L	TYPE	NUMBER UNITS	OTHER: MAT'L	TYPE	NUMBER UNITS	OTHER: MAT'L	TYPE	(59) PILING	(60) MIN. VERT. UNDERCLEAR. (MAIN LANES): NON-CARD. OPENING FT.	IN.	CARDINAL OPENING FT.	IN.	(61) MIN. LATERAL UNDERCLEAR. TO EDGE OF LANE: NON-CARD. DIRECT. LEFT	RIGHT	CARDINAL DIRECT. LEFT	RIGHT	(62) NAVIGATION: CONTROLLED	VERT. CLEAR.	HORIZ. CLEAR.	(63) OHIO ORIGINAL CONSTR. PROJ. NO.	(64) MICROFILM REEL NO.	(65) ORIGINAL CONSTRUCTION FEDERAL AID PROJECT NUMBER
5	2	8	2	8	0,2	3	0	—	—	—	—	1	0	2	0	—,0	2,2	0,1	0	—,0	2,4,4	2,4,4				0,4,8,7,5,6		I-1,9,6 (,5,)

CARD NO.	(66) LOAD RATING: OPERATING RATING	INVENTORY RATING	OHIO % OF LEGAL	RATING YEAR	(67) APPRAISAL: INSP. RESP.	(68) MAINT. RESP.	DECK GEOM.	UNDERCLEAR.	SAFE LOAD CAP.	WATERWAY ADEQ.	APPR. ALIGN.	PERMAN. LIFE	(69) YEAR NEEDED	TYPE SERVICE	(70) PROPOSED IMPROVEMENTS: TYPE WORK	LENGTH OF IMPROVEMENT	IMPR. DES. LOAD	PROPOSED ROAD WIDTH	NUMBER LANES	DESIGN A.D.T. (TENS)	YEAR A.D.T.	ADJ. RDWY.: YEAR	TYPE	(71) COST OF IMPROVEMENTS: TOTAL COST ($1000'S)	YEAR OF COSTS	BREAKDOWN ($1000'S): PRELIM. ENG.	DEMOLITION	SUB-STRUCTURE	SUPER-STRUCTURE	(72) PRIORITY
6	4,6,0	3,2,7	1,5,0	7,3	1	1	7	7	7	N	7	3																	

REMARKS: cwe 12-20-73 / 1-16-75 | cwe 1-14-76 / " 10-8-76

OFFICIAL USE ONLY — O.A. CODE _____ REVIEWED BY _____ DATA RECORDER

L

OHIO DEPARTMENT OF TRANSPORTATION
DIVISION OF HIGHWAYS
BRIDGE INSPECTION REPORT

STRUCTURE FILE NUMBER: 0 6 0 2 1 0 8

BRIDGE NUMBER: ALG (COU) 75 (ROUTE) 0515L (UNIT) YEAR BUILT: 5800

DISTRICT: 07 BRIDGE TYPE: 112 TYPE SERVICE: 112 Penn Central RR

		MAT.	TYPE	68	69	70	71	72	73	74	75	76	77	78	79
DECK	1. FLOOR		1						1	1	1	1	1	2	2
	2. WEARING SURFACE		6						1	1	1	1	3	3	4
	3. CURBS & WALKWAYS		1						1	1	1	2	1	2	2
	4. MEDIAN								—	—	—	—			—
	5. RAILING		3						1	1	1	2	1	1	2
	6. DRAINAGE		4						1	1	1	1	1	1	2
	7. EXPANSION JOINTS		5						1	2	2	1	2	2	1
	8. SUMMARY								8	7	7	8	6	6	10
SUPERSTRUCTURE	9. ALIGNMENT								1	1	1	1	1	1	1
	10. BEAMS OR GIRDERS														
	11. DIAPHRAGMS OR CROSSFRAMES														
	12. JOIST														
	13. FLOOR BEAMS														
	14. FLOOR BEAM CONNECTIONS														
	15. VERTICALS														
	16. DIAGONALS														
	17. END POST														
	18. TOP CHORD														
	19. LOWER CHORD														
	20. LOWER LATERAL BRACING														
	21. TOP LATERAL BRACING														
	22. SWAY BRACING														
	23. PORTALS														
	24. BEARINGS		5						1	1	1	2	1	2	2
	25. ARCH														
	26. ARCH COLUMNS OR HANGERS														
	27. SPANDREL WALLS														
	28. SUSPENSION SYSTEM														
	29. SUSPENDERS														
	30. TOWERS														
	31. BENT POST														
	32. ANCHORAGE														
	33. BRIDGE MACHINERY														
	34. PAINT														
	35. LIVE LOAD RESPONSE								1	1	1	1	1	1	1
	36. SUMMARY								8	8	8	8	8	8	8
SUBSTRUCTURE	37. ABUTMENTS	2	8						1	1	1	1	2	2	2
	38. ABUTMENT SEATS								1	1	1	2	2	2	2
	39. PIERS	2	8						1	1	1	1	1	1	1
	40. PIER SEATS								1	1	1	1	1	1	1
	41. BACKWALLS								—	—	1	—	—	—	—
	42. WINGWALLS								1	1	1	1	1	1	1
	43. FENDERS & DOLPHINS								—	—	—	—	—	—	—
	44. SUMMARY								8	8	8	8	8	8	8
CULVERTS	45. GENERAL														
	46. ALIGNMENT														
	47. HEADWALLS or END WALLS														
	48. SUMMARY														
CHANNEL	49. ALIGNMENT														
	50. PROTECTION														
	51. WATERWAY ADEQUACY														
	52. SUMMARY														
APPROACHES	53. PAVEMENT		2						1	2	1	2	2	2	2
	54. ALIGNMENT								1	1	1	1	1	1	1
	55. GRADE								1	1	1	1	1	1	1
	56. APPROACH SLABS								1	1	1	1	2	1	8
	57. GUARD RAIL		1						1	1	1	2	1	2	3
	58. RELIEF JOINTS								1	2	—	—	—	—	—
	59. EMBANKMENT								1	1	1	1	2	1	2
	60. SUMMARY								8	7	8	7	7	7	7
GENERAL	61. NAVIGATION LIGHTS								—	—	—	—	—	—	—
	62. WARNING SIGNS								—	—	—	—	—	—	—
	63. INSPECTION RESPONSIBILITY								1	1	1	1	1	1	1
	64. MAINTENANCE RESPONSIBILITY								1	1	1	1	1	1	1
	65. VERTICAL CLEARANCE								—	—	—	—	—	—	—
	66. GENERAL APPRAISAL								8	7	7	7A	6A	6A	6A
	INSPECTED BY								FM	FM	RW	HD	RM	RM	RM
	DATE								1-24	1-30	3-9	3-7	1-24	11-30	1-8
	YEAR								74	75	76	77	78	78	80

BE-1173 C.W.R. 8-22-73

BE-1173-B82

AUG-75-0515 L

Sheet 3

REF. NO. 88 PROJ NO. 356-74 SHEET NO. 88-3

ITEM NO. Special SUBJECT Bridge Deck Surface Repair Under 1"

LOCATION Br 0515 over R.R. Passing Lane PLAN QUANTITY

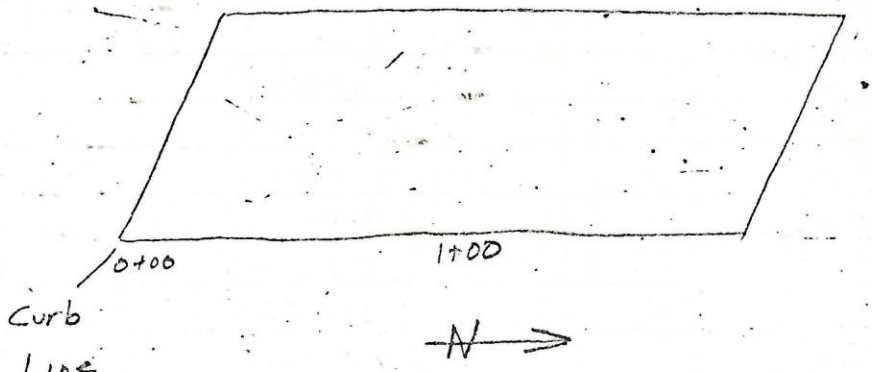

PATCH NO.	STA. @ CENTER OF PATCH	DIST. FROM CURB TO CTR. OF PATCH	REMOVAL DEPTH	DIMENSIONS	SQUARE FEET
1	0+11	8'	½"	2.3×0.5	~~+65~~ s.f 1.15
2	0+45	8'	½"	1.5×0.5	0.75 sf ✓
3	0+47	10'	½"	3.4×0.5	1.70 s.f ✓
4	0+52	8'	½"	3.3×0.5	1.65 s.f ✓
5	0+57	11'	½"	2.4×0.5	1.20 s.f ✓
6	0+58	8'	½"	2.0×0.5	1.00 s.f ✓
7	0+60	15'	½"	8.6×0.5	4.30 sf ✓
8	0+67	8'	½"	2.2×0.5	1.10 s.f ✓
9	0+68	10'	½"	2.0×0.5	1.00 sf ✓
10	0+73	8'	½"	2.5×0.5	1.25 s.f ✓
11	0+75	12'	½"	1.3×0.5	0.65 s.f ✓
12	0+76	15'	½"	1.6×0.5	0.80 sf ✓
13	0+78	8'	½"	2.3×0.5	1.15 s.f ✓
14	0+80	11'	½"	4.0×0.5	2.00 s.f ✓
15	0+85	8'	½"	3.5×0.5	1.75 sf ✓

DOC 2 SIGNATURE Danny Faith DATE Sub Total 21.45 sf ✓

PATCH NO.	STA @ CENTER OF PATCH	DIST. FROM CURB TO CTR. OF PATCH	REMOVAL DEPTH	DIMENSIONS	SQUARE FEET
16	0+86	11'	½"	2.0 x 0.5	1.00 s.f.
17	0+86	15'	½"	1.8 x 0.5	0.90 s.f.
18	0+87	17'	½"	5.4 x 0.5	2.70 s.f.
19	0+90	9'	½"	6.0 x 0.5	3.00 s.f.
20	0+91	11'	½"	1.5 x 0.5	0.75 s.f.
21	0+95	8'	½"	7.1 x 0.5	3.55 s.f.
22	0+96	15'	½"	2.0 x 0.5	1.00 s.f.
23	1+05	18'	½"	18.00 x 0.5	9.00 s.f.
24	1+06	14'	½"	3.00 x 0.5	1.50 s.f.
25	1+10	9'	½"	4.00 x 0.5	2.00 s.f.
26	1+12	13'	½"	5.5 x 0.5	2.75 s.f.
27	1+13	10'	½"	2.5 x 0.5	1.25 s.f.
28	1+15	8'	½"	4.5 x 0.5	2.25 s.f.
29	1+18	9'	½"	7.0 x 0.5	3.50 s.f.
30	1+18	15'	½"	4.1 x 0.5	2.05 s.f.
31	1+21	8'	½"	2.1 x 0.5	1.05 s.f.
32	1+25	10'	½"	3.8 x 0.5	1.90 s.f.
33	1+30	10'	½"	6.5 x 0.5	3.25 s.f.
34	1+30	13'	½"	2.0 x 0.5	1.00 s.f.
35	1+35	8'	½"	8.2 x 0.5	4.10 s.f.
36	1+38	10'	½"	6.8 x 0.5	3.40 s.f.
37	1+42	8'	½"	3.0 x 0.5	1.50 s.f.
38	1+42	11"	½"	4.5 x 0.5	2.25 s.f.
39	1+42	14'	½"	5.2 x 0.5	2.60 s.f.
				Total	79.70 S.F.
					JJR 12-15-75

SIGNATURE Danny Hall DATE 7-29-75

AUG-75-0515 L

REF. NO. 87 PROJ. NO. 356-74 SHEET NO. 10

ITEM NO. special SUBJECT Bridge deck repair 1" Plus

LOCATION RR Bra. SBL 0515 PLAN QUANTITY

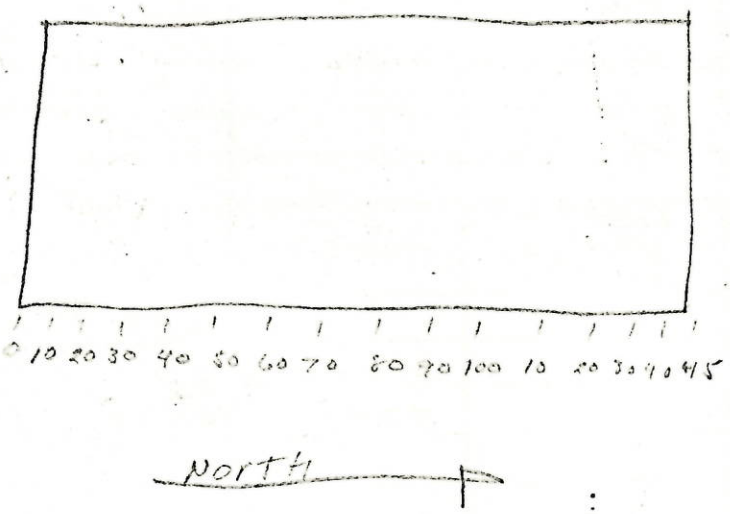

PATCH NO.	STA. @ CENTER OF PATCH	DIST. FROM CURB TO CTR. OF PATCH	REMOVAL DEPTH	DIMENSIONS	SQUARE FEET
1	1+41	11.0'	1 1/16 TO 2"	1.1X.7	.77
2	1+18	13.0'	1 1/8 TO 2"	1.1X 1.2	1.32
3	1+12	6.0'	1 1/16 TO 2 1/4	2.7X 3.4	9.18
4	1+00	10'0'	1 1/8 TO 3"	10.4X3.6 7.2X1.4 16.7X4.9 4.6X13.3 2.0X2.0	194.53
5	+79	16'	1 1/16 TO 1 3/4"	.9X2.8	2.52
6	+68	13.0'	1 1/8 TO 1 7/8	.9X1.1	.99
7	+67	16'0	1 1/16 TO 2 1/4	1.3X 1.1	1.43
8	+62	14.0'	1 1/16 TO 1 7/8	.9X.9	.81
9	+58	14.0'	1 1/8 TO 1 1/2	2.3X.6	1.38
10	+58	5.0'	1 1/16 TO 2"	1.9X2.2	4.18
11	+56	2.0'	1 1/8 TO 2 1/4"	1.0X 7.8 .7X2.8	9.76
12	+50	2.0	1 1/16 TO 1 3/4	.8X.8	.64
13	+31	12.0'	1 1/16 TO 2"	2.0X 2.6	5.20
14	+30	14.0'	1 1/8 TO 1 3/4	1.0X1.1	1.10
				SubTotal	233.81 SF

DOC 2 SIGNATURE Gary J. Meyer DATE July

9

AUG-75-0515 C

• = HRB CK

PATCH NO.	STA @ CENTER OF PATCH	DIST. FROM CURB TO CTR. OF PATCH	REMOVAL DEPTH	DIMENSIONS	SQUARE FEET
15	+22	17.0'	1 1/16 TO 2"	1.3 X 3.1	4.03
16	+35	18.0	1 1/8 TO 2 1/4	5.5 X 14.2'	78.10
17	+22	21.0'	1 1/8 TO 3"	1.9 X 3.0	5.70
18	+22	23.0	1 1/16 TO 2 1/2	2.0 X 2.6	5.20
19	+23	3.0'	1 1/8 TO 2 1/4	4.3 X 2.7 1.2 X 2.0	14.01
20	+23	6.0'	1 1/16 TO 2"	2.7 X 3.2 3.7 X 1.4	13.82
21	+28	10.0	1 1/8 TO 1 1/2"	.7 X .6	.42
22	+20	20.0	1 1/16 TO 3"	4.2 X 8.2	34.44
23	+8	14.0	1 1/8 TO 1 1/2"	.9 X .6	.54
24	+40	5.0'	1 1/16 TO 3"	8.0 X 20.0 12.0 X 6.0	232.00
				Total	622.07 SF

SEP 30 1975

622.07
79.70
701.77 SY

701.77 ÷ 9 = 77.97 SY

42.0 X 146.0 ÷ 9 = 681.33

77.97 ÷ 681.33 = 11.44 %

SIGNATURE Gary J. Meyer DATE July

BRIDGE INVENTORY & APPRAISAL CODE SHEET

OHIO DEPARTMENT OF TRANSPORTATION
DIVISION OF HIGHWAYS

CODED BY C.W.R. DATE 2-26-73
CHECKED BY CWR DATE 1-16-75

B3-37
REV. 5-74

PROCESSING KEY	
STRUCTURE FILE NO.	TRANS. CODE
0,6,0,2,1,0,8	C

CARD NO.	(1) ODOT DISTRICT	(2) CITY OR TOWN	(3) INVENTORY ROUTE: ON/UNDER	SYSTEM	ROUTE NUMBER	DIRECT. SUFFIX	DESIGNATION	PREF. ROUTE	(4) FEATURE(S) INTERSECTED	(5) INV. RTE. BRIDGE NO.: COUNTY	UNIT NUMBER: STRAIGHT LINE MILEAGE	SPECIAL DESIGNATION	(6) SECTION I. D. NUMBER	(7) INVENTORY ROUTE A.D.T. (TENS)	(8) A.D.T. YEAR	(9) FED-AID SYSTEM	(10) ADMIN. JURISD.	(11) FUNCTIONAL CLASS
1	0,7	0,0,0,0	1	1	7,5		1		P.E.N.N. C.E.N.T.R.A.L. R.R.	AUG	0,5,1,5	L	0,5,0,2	0,0,1,4,3,7	7,5	0,2	1,0	1,1
2																		
3																		

CARD NO.	(13) DEFENSE: SECTION NUMBER	MILEPOINT BEGIN SECTION	SECTION LENGTH	(14) TOT. MIN HORIZONTAL CLEAR.: NON-CARD. OPENING	CARDINAL OPENING	(15) PRACTICAL MAXIMUM VERTICAL CLEAR.: FT.	IN.	(16)	(17) INTERSECTED ROUTE: ON/UNDER	SYSTEM	ROUTE NUMBER	DIRECT. SUFFIX	DESIGNATION	PREF. ROUTE	(18) FEATURE(S) INTERSECTED	(19) INTER. RTE. BRIDGE NO.: COUNTY	UNIT NUMBER: STRAIGHT LINE MILEAGE
2				0,0	4,2,0	4,9,9,9											

CARD NO.	(20) INTERSECTED ROUTE A.D.T. (TENS)	(21) A.D.T. YEAR	(22) FED. AID SYSTEM	(23) ADMIN. JURISC.	(24) FUNCTIONAL CLASS	(25) DEFENSE: SECTION NUMBER	MILEPOINT BEGIN SECTION	SECTION LENGTH	(26) TOT MIN HORIZONTAL CLEAR.: NON-CARD. OPENING	CARDINAL OPENING	(27) PRACTICAL MAXIMUM VERTICAL CLEAR.: FT.	IN.	(28)	(29) BY-PASS LENGTH	(30) COORDINATES: LATITUDE DEGREES	MINUTES	LONGITUDE DEGREES	MINUTES	31 PATR. VULNER.	32 TOLL	(33) YEAR BUILT: ORIG. CONS.	MAJOR RECON.	(34) NO. LANES: ON STRUCT.	UNDER STRUCT.	(35) HORIZ. CURVE: DEG.	MIN.	(36) SKEW	(37) DESIGN
3														0,1						3	5,8	0,0	0,2	0,0			2,1	5,0

CARD NO.	(38) APPROACH ROADWAY WIDTH	(39) MEDIAN TYPE	40 FLARED	(41) BRIDGE ROADWAY WIDTH (CB/CB)	(42) DECK WIDTH (OUT/OUT)	43 PARAPET TYPE	44 DECK DRAIN.	(45) SIDEWALKS: LEFT	RIGHT	46 FLOOR SLAB	(47) HEARING SURFACE: TYPE	THICKNESS (INCH)	(48) STRUCTURE TYPE: MAIN SPANS NUMBER	MAIN SPANS TYPE CODE	APPR. SPANS NUMBER	APPR. SPANS TYPE CODE	(49) TOTAL NO. SPANS	(50) MAXIMUM SPAN LENGTH	(51) OVERALL STRUCTURE LENGTH	(52) TYPE SERVICE	(53) BRIDGE DESCRIPTION	(54) MINIMUM VERTICAL CLEAR. ON BRIDGE: FT.	IN.	(55)	(56)
4	0,4,4	0,0,0	0	0,4,2,0	0,4,8,5	5	4	0,0,0	0,0,0	1	6	0,3	0,0,3	1,1,2	0,0,0	0,0,0	0,0,3	0,0,5,5	0,0,0,1,4,6	1,2		9,9	9,9				

1" Conc. +1½" B

CARD NO.	(58) SUBSTRUCTURE: ABUTMENTS REAR MAT'L	TYPE	FWD. MAT'L	TYPE	PIERS PREDOMINATE MAT'L	TYPE	NUMBER UNITS	OTHER MAT'L	TYPE	NUMBER UNITS	OTHER MAT'L	TYPE	59 PILING	(60) MIN. VERT. UNDERCLEAR. (MAIN LANES): NON-CARD. OPENING FT.	IN.	CARDINAL OPENING FT.	IN.	(61) MIN. LATERAL UNDERCLEAR. TO EDGE OF LANE: NON-CARD. DIRECT. LEFT	RIGHT	CARDINAL DIRECT. LEFT	RIGHT	(62) NAVIGATION: CONTROLLED	VERT. CLEAR.	HORIZ. CLEAR.	(63) OHIO ORIGINAL CONSTR. PROJ. NO.	(64) MICROFILM REEL NO.	(65) ORIGINAL CONSTRUCTION FEDERAL AID PROJECT NUMBER
5	2	2	8	0,2	2	3	0,0	0	0,0	0	6	0	2	0,0	0,0	2,2	0,0	0,0	0,0	2,4,4	2,4,4				0,4,8,7,5,6		I-196 (5)

CARD NO.	(66) LOAD RATING: OPERATING RATING	INVENTORY RATING	OHIO % OF LEGAL	RATING YEAR	67	(68) APPRAISAL: INSP. RESP.	FLIGHT RESP.	DECK GEOM.	UNDERCLEAR.	TYPE LOAD APP.	TRAFFIC ADEQ.	HYDR. ADEQ.	SCOUR CRITICAL	YEAR NEEDED	TYPE SERVICE	TYPE WORK	(70) PROPOSED IMPROVEMENTS: LENGTH OF IMPROVEMENT	IMPR. DES. LOAD	PROPOSED ROAD WIDTH	NUMBER LANES	DESIGN A.D.T. (TENS)	YEAR A.D.T.	ADJ. ROWY. YEAR	ADJ. ROWY. TYPE	(71) COST OF IMPROVEMENTS: TOTAL COST ($1000'S)	YEAR OF COSTS	BREAKDOWN ($1000'S): PRELIM. ENG.	RELO-LATION	SUB-STRUCTURE	SUPER-STRUCTURE
6	9,6,0	9,2,7	1,5,0	7,3		1	1	7	7	7	N	7	3	0	A														

REMARKS: AUG-75-0515 L
PLAN REF AUG-25-0517 A
Proj 356-74 waterproof +1½" B.

Rev. 12-20-73
Rev. 1-16-75
" 1-14-76
" CWR 10-8-76

OFFICIAL USE ONLY
O.A. CODE
REVIEWED BY
DATE
DATA RECORDER (STAMP)
DATE

BRIDGE INVENTORY & APPRAISAL CODE SHEET

OHIO DEPARTMENT OF TRANSPORTATION
DIVISION OF HIGHWAYS

CODED BY C.W.R. DATE 1-16-75
CHECKED BY _____ DATE _____
2-28-73 CWR

BR-87
REV. 5-74

PROCESSING KEY	TRANS. CODE
STRUCTURE FILE NO.	C
0,6,0,2,1,0,8	

CARD NO.	(1) DOT DISTRICT	(2) CITY OR TOWN	(3) INVENTORY ROUTE: ON/UNDER	SYSTEM	ROUTE NUMBER	DIRECT. SUFFIX	DESIGNATION	PREF. ROUTE	(4) FEATURE(S) INTERSECTED	(5) INV.RTE. BRIDGE NO.: COUNTY	UNIT NUMBER: STRAIGHT LINE MILEAGE	SPECIAL DESIGNATION	(6) SECTION I. D. NUMBER	(7) INVENTORY ROUTE A.D.T. (TENS)	(8) A.D.T. YEAR	(9) FED.AID SYSTEM	(10) ADMIN. JURISD.	(11) FUNCTIONAL CLASS	(12)
1	07	00000	1	1	7.5		1		PENN CENTRAL R.R.	AUG	0515	L	04900	001444	72	01	10	21	

0502 14377502 11
05.02

CARD NO.	(13) DEFENSE: SECTION NUMBER	MILEPOINT BEGIN SECTION	SECTION LENGTH	(14) TOT.MIN HORIZONTAL CLEAR.: NON-CARD. OPENING	CARDINAL OPENING	(15) PRACTICAL MAXIMUM VERTICAL CLEAR.: FT.	IN.	(16)	(17) INTERSECTED ROUTE: ON/UNDER	SYSTEM	ROUTE NUMBER	DIRECT. SUFFIX	DESIGNATION	PREF. ROUTE	(18) FEATURE(S) INTERSECTED	(19) INTER. RTE. BRIDGE NO.: COUNTY	UNIT NUMBER: STRAIGHT LINE MILEAGE	SPECIAL DESIGNATION
2				000	420	99	99											

CARD NO.	(20) INTERSECTED ROUTE A.D.T. (TENS)	(21) A.D.T. YEAR	(22) FED. AID SYSTEM	(23) ADMIN. JURISD.	(24) FUNCTIONAL CLASS	(25) DEFENSE: SECTION NUMBER	MILEPOINT BEGIN SECTION	SECTION LENGTH	(26) TOT MIN HORIZONTAL CLEAR.: NON-CARD. OPENING	CARDINAL OPENING	(27) PRACTICAL MAXIMUM VERTICAL CLEAR.: FT.	IN.	(28)	(29) BY-PASS LENGTH	(30) COORDINATES: LATITUDE DEGREES	LATITUDE MINUTES	LONGITUDE DEGREES	LONGITUDE MINUTES	PHYS. VULNER.	TOLL	(33) YEAR BUILT: ORIG. CONS.	MAJOR RECON.	(34) NO. LANES: ON STRUCT.	UNDER STRUCT.	(35) HORIZ. CURVE: DEG.	MIN.	(36) SKEW	(37) DESIGN LOADING
3														0.1						3	58	00	02	00			21	50

CARD NO.	(38) APPROACH ROADWAY WIDTH	(39) MEDIAN TYPE	(40) FLARED	(41) BRIDGE ROADWAY WIDTH (CB/CB)	(42) DECK WIDTH (OUT/OUT)	(43) RAIL TYPE	(44) DECK DRAIN.	(45) SIDEWALKS: LEFT	RIGHT	(46) FLOOR SLAB	(47) WEARING SURFACE: TYPE	THICKNESS (INCH)	(48) STRUCTURE TYPE: MAIN SPANS NUMBER	MAIN SPANS TYPE CODE	APPR. SPANS NUMBER	APPR. SPANS TYPE CODE	(49) TOTAL NO. SPANS	(50) MAXIMUM SPAN LENGTH	(51) OVERALL STRUCTURE LENGTH	(52) TYPE SERVICE	(53) BRIDGE DESCRIPTION	(54) MINIMUM VERTICAL CLEAR. ON BRIDGE: FT.	IN.	(55)	(56)	BEARING TYPE
4	044	000	0	042.0	048.5	3	4	00.0	00.0	1	6	03	003	112	000	000	003	0055	00146	12		99	99			5

1" Conc. + 1½" B

CARD NO.	(58) SUBSTRUCTURE: ABUTMENTS REAR MAT'L	TYPE	FWD. MAT'L	TYPE	PIERS PREDOMINATE NUMBER UNITS	MAT'L	TYPE	OTHER NUMBER UNITS	MAT'L	TYPE	OTHER NUMBER UNITS	MAT'L	TYPE	(59) PILING	(60) MIN. VERT. UNDERCLEAR. (MAIN LANES): NON-CARD. OPENING FT.	IN.	CARDINAL OPENING FT.	IN.	(61) MIN. LATERAL UNDERCLEAR. TO EDGE OF LANE: NON-CARD. DIRECT. LEFT	RIGHT	CARDINAL DIRECT. LEFT	RIGHT	(62) NAVIGATION: CONTROLLED	VERT. CLEAR.	HORIZ. CLEAR.	(63) OHIO ORIGINAL CONSTR. PROJ. NO.	(64) MICROFILM REEL NO.	(65) ORIGINAL CONSTRUCTION FEDERAL AID PROJECT NUMBER
5	2	8	2	8	02	2	3	00	0	0	00	0	6	2	00	0.0	22	0.1/2	0.0	0.0	24.4	24.4				048756		I-196 (5)

CARD NO.	(66) LOAD RATING: OPERATING RATING	INVENTORY RATING	OHIO % OF LEGAL	RATING YEAR	(67) INSP. RESP.	(68) MAINT. RESP.	(69) APPRAISAL: DECK GEOM.	UNDERCLEAR.	WATERWAY ADEQ.	APPR. ROAD ALIGN.	CLIMATIC LIFE	(70) PROPOSED IMPROVEMENTS: YEAR NEEDED	TYPE SERVICE	TYPE WORK	LENGTH OF IMPROVEMENT	INCR. DED. LOAD	PROPOSED ROAD WIDTH	NUMBER LANES	DESIGN A.D.T. (TENS)	YEAR A.D.T.	ADJ. ROWY.: YEAR	TYPE	(71) COST OF IMPROVEMENTS: TOTAL COST ($1000'S)	YEAR OF COSTS	BREAKDOWN ($1000'S): PRELIM. ENG.	DEMOLITION	SUB-STRUCTURE	SUPER-STRUCTURE	(72) PRIORITY
6	2.5.8	2.2.7	1.5.0	7.3	1	1	7	7	7	N	7	3	0																0

REMARKS: AUG-75-0515 L
PLAN REF AUG-25-0517 A
Proj 356-74 waterproof +1½" B.

Rev. 12-20-73
Rev. 1-16-75
" 1-14-76

OFFICIAL USE ONLY
O.A. CODE _____
REVIEWED BY _____
DATE _____
DATA RECORDER (STAMP)
DATE _____

Repaired 10-4-76

57
4
9) 228 (25
18
48
45

25
.4
10

.4 = 10 Gal
.35 = 8.9 Gal
.3 = 7.6 Gal
.25 = 6.3 Gal

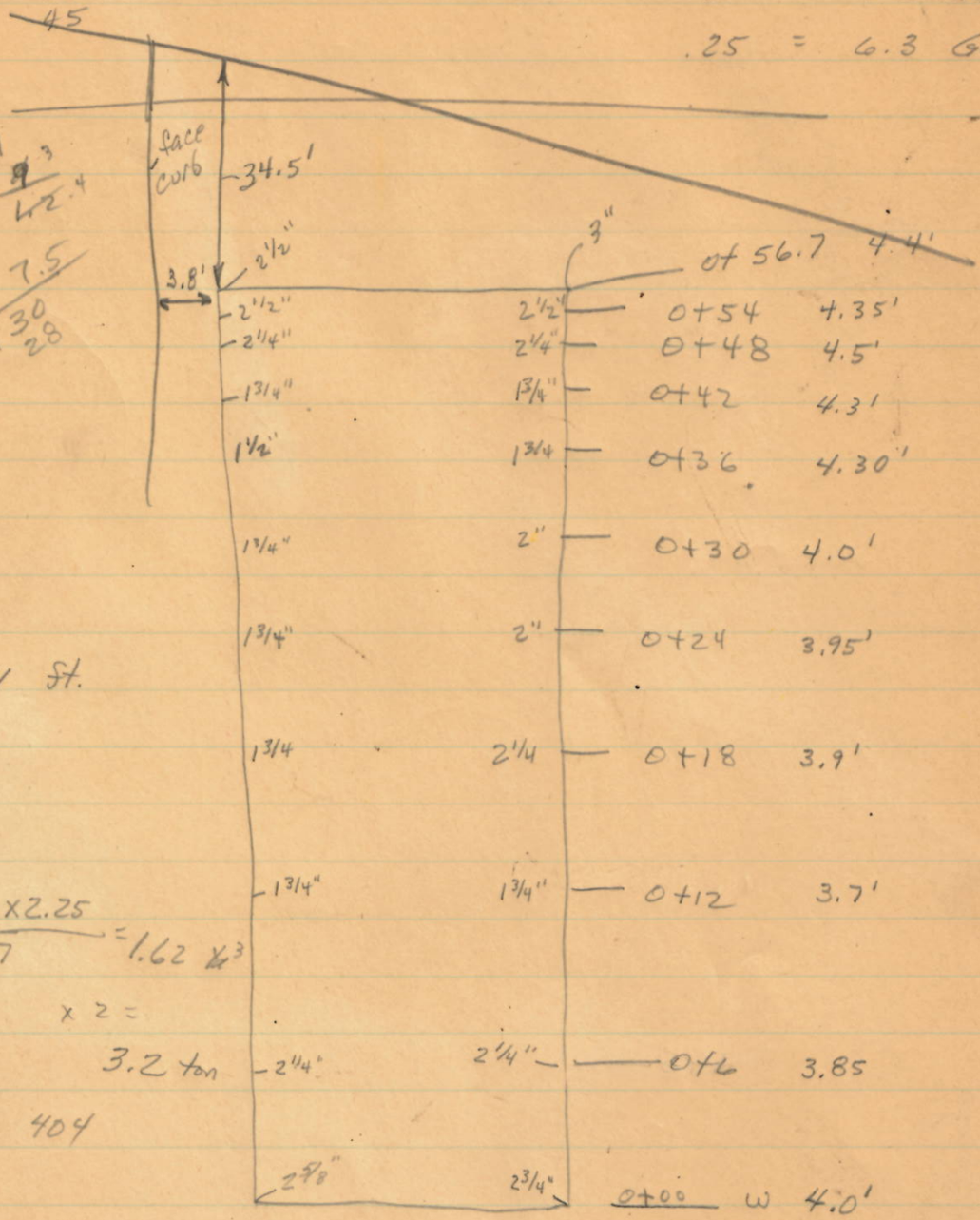

$\frac{4 \times .3}{2} = 1$

$x = \frac{9}{1.2}$

7.5
9) 30
28

Avg w = 4.11 ft.
t = 2 1/4"

$\frac{4.11 \times 56.7 \times 2.25}{12 \times 27} = 1.62$

x 2 =
3.2 ton
404

10 1/3 gal.

~~(4)x(.4) = 1~~
x = 1/

$\frac{(4)(x)(0.4)}{9} = 1$ gal

$x = \frac{9}{1.6}$
= 5.6 ft.

Form AU-76
Rev. 10-72



STATE OF OHIO
DEPARTMENT OF TRANSPORTATION

INTER-OFFICE COMMUNICATION

County of _____ Dist. _____

S. H. _____ Sec. _____

Date August 13, 1976

To SEE BELOW Attention: _____

From Roy F. Thompson, District Operations Engineer

Subject PAVEMENT DISPLACEMENT-STRUCTURE AUG-75-0515 (S.B.) OVER NYC RAILROAD

404 wearing course displacement has occurred on subject structure. Lateral displacement of the 404 wearing course on the southbound off ramp lane on the subject structure has resulted in a heaved area approximately 50 feet long along the pavement edge line. Vertical displacement is in the range of 2" - 3". The structure was part of Project 356-74 and utilized Royston Membrane Waterproofing, with 1/2" of sand asphalt and 1" - 404 Asphaltic Concrete.

Corrections will be made prior to onset of winter weather. If Field Review is desired, please do so prior to September 10th.

Roy F. Thompson
District Operations Engineer

RFT:sah

cc: Lewis
Lee
Rose
Gibboney
Scanlin
Eyink
Rudy
file

Waterproof proj 356-75 in 1975
used No. 713 Royston Primer, No. 10
Royston Heat Membrane

BRIDGE INVENTORY & APPRAISAL CODE SHEET

OHIO DEPARTMENT OF TRANSPORTATION
DIVISION OF HIGHWAYS

CODED BY C.W.R. DATE 1-16-75 CHECKED BY _____ DATE _____

BR-07
REV. 5-74

PROCESSING KEY	
STRUCTURE FILE NO.	TRANS. CODE
0,6,0,2,1,0,8	C

CARD NO.	(1) DIST.	(2) CITY OR TOWN	(3) INVENTORY ROUTE ON/UNDER	SYSTEM	ROUTE NUMBER	DIRECT. SUFFIX	DESIGNATION	PREF. ROUTE	(4) FEATURE(S) INTERSECTED	(5) INV.RTE. BRIDGE NO. COUNTY	UNIT NUMBER STRAIGHT LINE MILEAGE	SPECIAL DESIGNATION	(6) SECTION I. D. NUMBER	(7) INVENTORY ROUTE A.D.T. (TENS)	(8) A.D.T. YEAR	(9) FED.AID SYSTEM	(10) ADMIN. JURISD.	(11) FUNCTIONAL CLASS
1	0,7	0,0,0,0	1	1	,,,7,5		1		P,E,N,N, ,C,E,N,T,R,A,L, ,R,.,R,.	A,U,G	0,5,1,5	L	0,4,9,0	0,0,1,4,4,4	7,2	0,1	1,0	2,

CARD NO.	(13) DEFENSE SECTION NUMBER	MILEPOINT BEGIN SECTION	SECTION LENGTH	(14) TOT. MIN HORIZONTAL CLEAR. NON-CARD. OPENING	CARDINAL OPENING	(15) PRACTICAL MAXIMUM VERTICAL CLEAR. FT.	IN.	(16)	(17) INTERSECTED ROUTE ON/UNDER	SYSTEM	ROUTE NUMBER	DIRECT. SUFFIX	DESIGNATION	PREF. ROUTE	(18) FEATURE(S) INTERSECTED	(19) INTER. RTE. BRI COUNTY	UNIT NUMBER STRAIGHT LINE MILEAGE
2				0,0,0	4,2,0	9,9	9,9										

CARD NO.	(20) INTERSECTED ROUTE A.D.T. (TENS)	(21) A.D.T. YEAR	(22) FED. AID SYSTEM	(23) ADMIN. JURISD.	(24) FUNCTIONAL CLASS	(25) DEFENSE SECTION NUMBER	MILEPOINT BEGIN SECTION	SECTION LENGTH	(26) TOT MIN HORIZONTAL CLEAR. NON-CARD. OPENING	CARDINAL OPENING	(27) PRACTICAL MAXIMUM VERTICAL CLEAR. FT.	IN.	(28)	(29) BY-PASS LENGTH	(30) COORDINATES LATITUDE DEGREES	MINUTES	LONGITUDE DEGREES	MINUTES	(31) PHYS. YULKER.	(32) TOLL	(33) YEAR BUILT ORIG. CONS.	MAJOR RECON.	(34) NO. LANES ON STRUCT.	UNDER STRUCT.	(35) HORIZ. CURVE DEG.	MIN.	(36) SKEW
3														0,1						3	5,8	0,0	0,2	0,0			2,1

CARD NO.	(38) APPROACH ROADWAY WIDTH	(39) MEDIAN TYPE	(40) FLARED	(41) BRIDGE ROADWAY WIDTH (CB/CB)	(42) DECK WIDTH (OUT/OUT)	(43) RAIL. TYPE	(44) DECK DRAIN.	(45) SIDEWALKS LEFT	RIGHT	(46) FLOOR SLAB	(47) WEARING SURFACE TYPE	THICKNESS (INCH)	(48) STRUCTURE TYPE MAIN SPANS NUMBER	TYPE CODE	APPR. SPANS NUMBER	TYPE CODE	(49) TOTAL NO. SPANS	(50) MAXIMUM SPAN LENGTH	(51) OVERALL STRUCTURE LENGTH	(52) TYPE SERVICE	(53) BRIDGE DESCRIPTION	(54) MINIMUM VERTICAL CLEAR. ON BRIDGE FT.	IN.	(55)	(56)
4	0,4,4	0,0,0	0	0,4,2,0	0,4,8,5	3	4	0,0,0	0,0,0	1	1	0,1	0,0,3	1,1,2	0,0,0	0,0,0	0,0,3	0,0,5,5	0,0,0,1,4,6	1,2		9,9	9,9				

1" Conc.

CARD NO.	(58) SUBSTRUCTURE ABUTMENTS REAR MAT'L	TYPE	FWD. MAT'L	TYPE	PIERS PREDOMINATE NUMBER UNITS	OTHER MAT'L	TYPE	NUMBER UNITS	OTHER MAT'L	TYPE	NUMBER UNITS	TYPE	59 PILING	(60) MIN. VERT. UNDERCLEAR. (MAIN LANES) NON-CARD. OPENING FT.	IN.	CARDINAL OPENING FT.	IN.	(61) MIN. LATERAL UNDERCLEAR. TO EDGE OF LANE NON-CARD. DIRECT. LEFT	RIGHT	CARDINAL DIRECT. LEFT	RIGHT	(62) NAVIGATION CONTROLLED	VERT. CLEAR.	HORIZ. CLEAR.	(63) OHIO ORIGINAL CONSTR. PROJ. NO.	(64) MICROFILM REEL NO.	(65) ORIGINAL CONSTRUCTIO FEDERAL AID PROJECT NU
5	2	8	2	8	0,2	2	3	0,0	0	0	0,0	0	0	2	0,0	0,0	2,2	0,4	0,0,0	0,0,0	2,4,4	2,4,4				0,4,8,7,5,6		I-196 (5)

CARD NO.	(66) LOAD RATING OPERATING RATING	INVENTORY RATING	OHIO % OF LEGAL	RATING YEAR	67 INSP. RESP.	68 MAINT. RESP.	(69) APPRAISAL DECK GEOM.	SUPERCLEAR.	SUPE LOAD CAP.	69 THROUGHWAY ROAD.	APPR. ALIGN.	CERTIN. LIFE	(70) PROPOSED IMPROVEMENTS YEAR NEEDED	TYPE SERVICE	TYPE WORK	LENGTH OF IMPROVEMENT	IMPR. DES. LOAD	PROPOSED ROAD WIDTH	NUMBER LANES	DESIGN A.D.T. (TENS)	YEAR A.D.T.	ADJ. ROWY. YEAR	TYPE	(71) COST OF IMPROVEMENTS TOTAL COST ($1000'S)	YEAR OF COSTS	BREAKDOWN ($1000'S) PRELIM. ENG.	RELOCATION	SUB-STRUCTURE	SUPER STRUCT
6	2,5,8	2,2,7	1,5,0	7,3	1	1	7	7	N	7	3	0																

REMARKS: AUG-75-0515 L
PLAN REF AUG-25-0517 A

OFFICIAL USE ONLY
O.A. CODE _____
REVIEWED BY _____
DATE _____
DATA RECORDER (STAMP)
DATE _____

BRIDGE INVENTORY & APPRAISAL CODE SHEET

OHIO DEPARTMENT OF TRANSPORTATION
DIVISION OF HIGHWAYS

DATE 2-28-73 REVIEWED BY _____ DATE _____

CODED BY C. Rudy

PROCESSING KEY	
STRUCTURE FILE NO.	TRANS. CODE
2,6,0,2,1,0,8	A

CARD NO.	(1) DIST.	(2) CITY OR TOWN	(3) INVENTORY ROUTE: ON/UNDER	SYSTEM	ROUTE NUMBER	DIRECT. SUFFIX	DESIGNATION	PREF. ROUTE	(4) FEATURE(S) INTERSECTED	(5) INV. RTE. BRIDGE NO.: COUNTY	UNIT NUMBER: STRAIGHT LINE MILEAGE	SPECIAL DESIGNATION	(6) SECTION I. D. NUMBER	(7) INVENTORY ROUTE A.D.T. (TENS)	(8) A.D.T. YEAR	(9) FED. AID. SYSTEM	(10) ADMIN. JURISD.	(11) FUNCTIONAL CLASS	(12)
1	07	0,0,0,0	1	1	7.5		1		PENN CENTRAL R.R.	AUG	05.15	L	04,90	0,0,1,3,2,8	70	01	10	21	

PLAN AUG-25-0517 A

CARD NO.	(13) DEFENSE: SECTION NUMBER	MILEPOINT BEGIN SECTION	SECTION LENGTH	(14) TOT. MIN HORIZONTAL CLEAR.: NON-CARD. OPENING	CARDINAL OPENING	(15) PRACTICAL MAXIMUM VERTICAL CLEAR.: FT.	IN.	(16)	(17) INTERSECTED ROUTE: ON/UNDER	SYSTEM	ROUTE NUMBER	DIRECT. SUFFIX	DESIGNATION	PREF. ROUTE	(18) FEATURE(S) INTERSECTED	(19) INTR. RTE. BRIDGE NO.: COUNTY	UNIT NUMBER: STRAIGHT LINE MILEAGE	SPECIAL DESIGNATION
2				0,0,0	4,2,0	9,9	9,9											

CARD NO.	(20) INTERSECTED ROUTE A.D.T. (TENS)	(21) A.D.T. YEAR	(22) FED. AID SYSTEM	(23) ADMIN. JURISD.	(24) FUNCTIONAL CLASS	(25) DEFENSE: SECTION NUMBER	MILEPOINT BEGIN SECTION	SECTION LENGTH	(26) TOT MIN HORIZONTAL CLEAR.: NON-CARD. OPENING	CARDINAL OPENING	(27) PRACTICAL MAXIMUM VERTICAL CLEAR.: FT.	IN.	(28)	(29) BY-PASS LENGTH	(30) COORDINATES: LATITUDE: DEGREES	MINUTES	LONGITUDE: DEGREES	MINUTES	(31) PAYS. VOLUNER.	(32) TOLL	(33) YEAR BUILT: ORIG.-CONS.	MAJOR RECON.	(34) NO. LANES: ON STRUCT.	UNDER STRUCT.	(35) HORIZ. CURVE: DEG.	MIN.	(36) SKEW	(37) DESIGN LOADING
3														0.1					3	5	8	0,0	0,2	0,0			2.1	5,0

CARD NO.	(38) APPROACH ROADWAY WIDTH	(39) MEDIAN TYPE	(40) FLARED	(41) BRIDGE ROADWAY WIDTH (CB/CB)	(42) DECK WIDTH (OUT/OUT)	(43) RAIL. TYPE	(44) DECK DRAIN.	(45) SIDEWALKS: LEFT	RIGHT	(46) FLOOR SLAB	(47) WEARING SURFACE: TYPE	THICKNESS (INCH)	(48) STRUCTURE TYPE: MAIN SPANS: NUMBER	TYPE CODE	APPR. SPANS: NUMBER	TYPE CODE	(49) TOTAL NO. SPANS	(50) MAXIMUM SPAN LENGTH	(51) OVERALL STRUCTURE LENGTH	(52) TYPE SERVICE	(53) BRIDGE DESCRIPTION	(54) MINIMUM VERTICAL CLEAR. ON BRIDGE: FT.	IN.	(55)	(56)	(57) BEARING TYPE
4	04,4	0,0,0	0	04,2,0	04,8,5	3	4	0,0,0	0,0,0	1	1	0.1	0,0,3	1,1,2	0,0,0	0,0,0	0,0,3	0,0,5,5	0,0,0,1,4,6	1,2		9,9	9,9					UT

1" Conc

CARD NO.	(58) SUBSTRUCTURE: ABUTMENTS: REAR: NAT'L	TYPE	FND.: NAT'L	TYPE	PIERS: PREDOMINATE: NUMBER UNITS	OTHER: NAT'L	TYPE	NUMBER UNITS	OTHER: NAT'L	TYPE	NUMBER UNITS	NAT'L	TYPE	59 PILING	(60) MIN. VERT. UNDERCLEAR. (MAIN LANES): NON-CARD. OPENING: FT.	IN.	CARDINAL OPENING: FT.	IN.	(61) MIN. LATERAL UNDERCLEAR. TO EDGE OF LANE: NON-CARD. DIRECT.: LEFT	RIGHT	CARDINAL DIRECT.: LEFT	RIGHT	(62) NAVIGATION: CONTROLLED	VERT. CLEAR.	HORIZ. CLEAR.	(63) OHIO ORIGINAL CONSTR. PROJ. NO.	(64) MICROFILM REEL NO.	(65) ORIGINAL CONSTRUCTION FEDERAL AID PROJECT NUMBER
5	2	8	2	8	0,2	2	3	0,0	0	0	0,0	0	0	2	0,0	0,0	2,2	0,0	0,0	0,0	2,4,4	2,4,4				0,4,8,7,5,6		I-1,9,6 (5.)

CARD NO.	(66) LOAD RATING: OPERATING RATING	INVENTORY RATING	OHIO % OF LEGAL	67 INSP. RESP.	68 MAINT. RESP.	(69) APPRAISAL: DECK GEOM.	UNDERCLEAR.	SAFE LOAD CAP.	WATERWAY ADEQ.	APPR. ALIGN	REMAIN. LIFE	(70) PROPOSED IMPROVEMENTS: YEAR NEEDED	TYPE SERVICE	TYPE WORK	LENGTH OF IMPROVEMENT	IMPR. DES. LOAD	PROPOSED ROAD WIDTH	NUMBER LANES	DESIGN A.D.T. (TENS)	YEAR A.D.T.	ADJ. RDWY.: YEAR	TYPE	(71) COST OF IMPROVEMENTS: TOTAL COST ($1000'S)	YEAR OF COSTS	BREAKDOWN ($1000'S): PRELIM. ENG.	DEMOLITION	SUB-STRUCTURE	SUPER-STRUCTURE	72 PRIORITY	73
6	9,5,8	9,2,7	1,5,0	1	1	7	7	7	N	7	3	0																	

Cwe Rev. 12-20-73

DATA RECORDER

AUG 0 9 1973

OHIO DEPARTMENT OF TRANSPORTATION
DIVISION OF HIGHWAYS

BRIDGE INVENTORY & APPRAISAL CODE SHEET

DATE 12-20-73 REVIEWED BY

CODED BY C.W.E. DATE

PROCESSING KEY	TRANS. CODE
STRUCTURE FILE NO.	
1 7	8
0,6,0,2,1,0,8	C

CARD NO.	(1) ODOT DISTRICT	(2) CITY OR TOWN	(3) INVENTORY ROUTE: ON/UNDER	SYSTEM	ROUTE NUMBER	DIRECT. SUFFIX	DESIGNATION	PREF. ROUTE	(4) FEATURE(S) INTERSECTED	(5) INV. RTE. BRIDGE NO.: COUNTY	UNIT NUMBER: STRAIGHT LINE MILEAGE	SPECIAL DESIGNATION	(6) SECTION I. D. NUMBER	(7) INVENTORY ROUTE A.D.T. (TENS)	(8) A.D.T. YEAR	(9) FED. AID. SYSTEM	(10) ADMIN. JURISD.	(11) FUNCTIONAL CLASS	(12)
9	10	12	16	17	18	23	24	25	26	51	54	58	61	65	71	73	75	77	79 80
1																	10		

CARD NO.	(13) DEFENSE: SECTION NUMBER	MILEPOINT BEGIN SECTION	SECTION LENGTH	(14) TOT-MIN HORIZONTAL CLEAR.: NON-COMD. OPENING	CARDINAL OPENING	(15) PRACTICAL MAXIMUM VERTICAL CLEAR.: FT.	IN.	(16)	(17) INTERSECTED ROUTE: ON/UNDER	SYSTEM	ROUTE NUMBER	DIRECT. SUFFIX	DESIGNATION	PREF. ROUTE	(18) FEATURE(S) INTERSECTED	(18) INTR. RTE. BRIDGE NO.: COUNTY	UNIT NUMBER: STRAIGHT LINE MILEAGE	SPECIAL DESIGNATION
9	10	16	18	22	25	28	30	32	36	37	38	43	44	45	46	71	74	79 80
2																		

CARD NO.	(20) INTERSECTED ROUTE A.D.T. (TENS)	(21) A.D.T. YEAR	(22) FED. AID SYSTEM	(23) ADMIN. JURISD.	(24) FUNCTIONAL CLASS	(25) DEFENSE: SECTION NUMBER	MILEPOINT BEGIN SECTION	SECTION LENGTH	(26) TOT MIN HORIZONTAL CLEAR.: NON-CARD. OPENING	CARDINAL OPENING	(27) PRACTICAL MAXIMUM VERTICAL CLEAR.: FT.	IN.	(28)	(29) BY-PASS LENGTH	(30) COORDINATES: LATITUDE: DEGREES	MINUTES	LONGITUDE: DEGREES	MINUTES	31 PHYS. VULNER.	32 TOLL	(33) YEAR BUILT: ORIG. CONS.	MAJOR RECON.	(34) NO. LANES: ON STRUCT.	UNDER STRUCT.	(35) HORIZ. CURVE: DEG.	MIN.	(36) SKEW	(37) DESIGN LOADING
9	10	16	19	20	22	24	29	33	35	38	42	44	46	50	52	54	57	60	63	64	65	67	69	71	75	76	77	79 80
3																												

CARD NO.	(38) APPROACH ROADWAY WIDTH	(39) MEDIAN TYPE	40 FLARED	(41) BRIDGE ROADWAY WIDTH (CB/CB)	(42) DECK WIDTH (OUT/OUT)	43 RAIL TYPE	44 DECK DRAIN	(45) SIDEWALKS: LEFT	RIGHT	46 FLOOR SLAB	(47) WEARING SURFACE: TYPE	THICKNESS (INCH)	(48) STRUCTURE TYPE: MAIN SPANS: NUMBER	TYPE CODE	APPR. SPANS: NUMBER	TYPE CODE	(49) TOTAL NO. SPANS	(50) MAXIMUM SPAN LENGTH	(51) OVERALL STRUCTURE LENGTH	(52) TYPE SERVICE	(53) BRIDGE DESCRIPTION	(54) MINIMUM VERTICAL CLEAR. ON BRIDGE: FT.	IN.	(55)	(56)	57 BEARING TYPE
9	10	13	16	17	21	25	26	27	30	33	34	35	37	40	43	46	48	52	56	62	64	66	68	70	75	80
4																										

CARD NO.	(58) SUBSTRUCTURE: ABUTMENTS: REAR: NAT'L	TYPE	FND.: NAT'L	TYPE	PIERS: PRECOMINATE: NUMBER UNITS	OTHER: NAT'L	TYPE	NUMBER UNITS	OTHER: NAT'L	TYPE	NUMBER UNITS	NAT'L	TYPE	59 PILING	(60) MIN. VERT. UNDERCLEAR. (MAIN LANES): NON-CARD. OPENING: FT.	IN.	CARDINAL OPENING: FT.	IN.	(61) MIN. LATERAL UNDERCLEAR. TO EDGE OF LANE: NON-CARD. DIRECT.: LEFT	RIGHT	CARDINAL DIRECT.: LEFT	RIGHT	(62) NAVIGATION: CONTROLLED	VERT. CLEAR.	HORIZ. CLEAR.	(63) OHIO ORIGINAL CONSTR. PROJ. NO.	(64) MICROFILM REEL NO.	(65) ORIGINAL CONSTRUCTION FEDERAL AID PROJECT NUMBER
9	10	11	12	13	14	16	17	18	20	21	22	24	25	26	27	29	31	33	35	38	41	44	47	49	51	55	61	67 80
5																												

CARD NO.	(66) LOAD RATING: OPERATING RATING	INVENTORY RATING	OHIO % OF LEGAL	67 INSP. RESP.	68 MAINT. RESP.	(69) APPRAISAL: DECK GEOM.	UNDERCLEAR.	SAFE LOAD CAP.	WATERWAY ADEQ.	APPR. ALIGN	REMAIN. LIFE	(70) PROPOSED IMPROVEMENTS: YEAR NEEDED	TYPE SERVICE	TYPE WORK	LENGTH OF IMPROVEMENT	IMPR. DES. LOAD	PROPOSED ROAD WIDTH	NUMBER LANES	DESIGN A.D.T. (TENS)	YEAR A.D.T.	ADJ. RDWY.: YEAR	TYPE	(71) COST OF IMPROVEMENTS: TOTAL COST ($1000'S)	YEAR OF COSTS	BREAKDOWN ($1000'S): PRELIM. ENG.	DEMOLITION	SUB-STRUCTURE	SUPER-STRUCTURE	72 PRIORITY	73
9	10	13	16	19	20	21	22	23	24	25	26	27	29	30	31	34	39	41	46	47	53	55	57	59	63	66	68	71	75	79	80
6																														

DATA RECORDER (STAMP)

AUR-75-0515L

AUG-75-0515 L

OHIO DEPARTMENT OF TRANSPORTATION
DIVISION OF HIGHWAYS
BRIDGE INVENTORY & APPRAISAL CODE SHEET

DATE 8-21-73 REVISED BY C.W.R. CODED BY

PROCESSING KEY	
STRUCTURE FILE NO.	TRANS. CODE
0602108	

CARD NO.	(1) ODOT DISTRICT	(2) CITY OR TOWN	(3) INVENTORY ROUTE: ON/UNDER	SYSTEM	ROUTE NUMBER	DIRECT. SUFFIX	DESIGNATION	PREF. ROUTE	(4) FEATURE(S) INTERSECTED	(5) INV. RTE. BRIDGE NO.: COUNTY	UNIT NUMBER: STRAIGHT LINE MILEAGE	SPECIAL DESIGNATION	(6) SECTION I. D. NUMBER	(7) INVENTORY ROUTE A.D.T. (TENS)	(8) A.D.T. YEAR	(9) FED. AID. SYSTEM*	(10) ADMIN. JURISD.	(11) FUNCTIONAL CLASS	(12)
1																			

CARD NO.	(13) DEFENSE: SECTION NUMBER	MILEPOINT BEGIN SECTION	SECTION LENGTH	(14) TOT. MIN HORIZONTAL CLEAR.: NON-CARD. OPENING	CARDINAL OPENING	(15) PRACTICAL MAXIMUM VERTICAL CLEAR.: FT.	IN.	(16)	(17) INTERSECTED ROUTE: ON/UNDER	SYSTEM	ROUTE NUMBER	DIRECT. SUFFIX	DESIGNATION	PREF. ROUTE	(18) FEATURE(S) INTERSECTED	(19) INTR. RTE. BRIDGE NO.: COUNTY	UNIT NUMBER: STRAIGHT LINE MILEAGE	SPECIAL DESIGNATION
2																		

CARD NO.	(20) INTERSECTED ROUTE A.D.T. (TENS)	(21) A.D.T. YEAR	(22) FED. AID SYSTEM	(23) ADMIN. JURISD.	(24) FUNCTIONAL CLASS	(25) DEFENSE: SECTION NUMBER	MILEPOINT BEGIN SECTION	SECTION LENGTH	(26) TOT MIN HORIZONTAL CLEAR.: NON-CARD. OPENING	CARDINAL OPENING	(27) PRACTICAL MAXIMUM VERTICAL CLEAR.: FT.	IN.	(28)	(29) BY-PASS LENGTH	(30) COORDINATES: LATITUDE: DEGREES	MINUTES	LONGITUDE: DEGREES	MINUTES	(31) PATR. VULNER.	(32) TOLL	(33) YEAR BUILT: ORIG. CONS.	MAJOR RECON.	(34) NO. LANES: ON STRUCT.	UNDER STRUCT.	(35) HORIZ. CURVE: DEG.	MIN.	(36) SKEW	(37) DESIGN LOADING
3																												

CARD NO.	(38) APPROACH ROADWAY WIDTH	(39) MEDIAN TYPE	40 FLARED	(41) BRIDGE ROADWAY WIDTH (CB/CB)	(42) DECK WIDTH (OUT/OUT)	43 RAIL. TYPE	44 DECK DRAIN.	(45) SIDEWALKS: LEFT	RIGHT	46 FLOOR SLAB	(47) WEARING SURFACE: TYPE	THICKNESS (INCH)	(48) STRUCTURE TYPE: MAIN SPANS: NUMBER	TYPE CODE	APPR. SPANS: NUMBER	TYPE CODE	(49) TOTAL NO. SPANS	(50) MAXIMUM SPAN LENGTH	(51) OVERALL STRUCTURE LENGTH	(52) TYPE SERVICE	(53) BRIDGE DESCRIPTION	(54) MINIMUM VERTICAL CLEAR. ON BRIDGE: FT.	IN.	(55)	(56)	57 BEARING TYPE
4																											

CARD NO.	(58) SUBSTRUCTURE: ABUTMENTS: REAR MAT'L	TYPE	FWD. MAT'L	TYPE	PIERS: PRECOMINATE: NUMBER UNITS	OTHER: MAT'L	TYPE	NUMBER UNITS	OTHER: MAT'L	TYPE	NUMBER UNITS	MAT'L	TYPE	PILING	(60) MIN. VERT. UNDERCLEAR. (MAIN LANES): NON-CARD. OPENING: FT.	IN.	CARDINAL OPENING: FT.	IN.	(61) MIN. LATERAL UNDERCLEAR. TO EDGE OF LANE: NON-CARD. DIRECT.: LEFT	RIGHT	CARDINAL DIRECT.: LEFT	RIGHT	(62) NAVIGATION: CONTROLLED	VERT. CLEAR.	HORIZ. CLEAR.	(63) OHIO ORIGINAL CONSTR. PROJ. NO.	(64) MICROFILM REEL NO.	(65) ORIGINAL CONSTRUCTION FEDERAL AID PROJECT NUMBER
5																	22	04			24	24						

CARD NO.	(66) LOAD RATING: OPERATING RATING	INVENTORY RATING	OHIO % OF LEGAL	67 INSP. RESP.	68 MAINT. RESP.	(69) APPRAISAL: DECK GEOM.	UNDERCLEAR.	SCOUR CRIT. CODE	RAILWAY REQ.	APPR. ALIGN	REMAIN. LIFE	(70) PROPOSED IMPROVEMENTS: YEAR NEEDED	TYPE SERVICE	TYPE WORK	LENGTH OF IMPROVEMENT	IMPR. DES. LOAD	PROPOSED ROAD WIDTH	NUMBER LANES	DESIGN A.D.T. (TENS)	YEAR A.D.T.	ADJ. RDWY.: YEAR	TYPE	(71) COST OF IMPROVEMENTS: TOTAL COST ($1000'S)	YEAR OF COSTS	BREAKDOWN ($1000'S): PRELIM. ENG.	DEMOLITION	SUB-STRUCTURE	SUPER-STRUCTURE	72 PRIORITY	73
6																														

DATA RECORDER (STAMP)

BRIDGE INVENTORY & APPRAISAL CODE SHEET

OHIO DEPARTMENT OF TRANSPORTATION
DIVISION OF HIGHWAYS

DATE 2-28-73 REVIEWED BY _____ DATE _____

CODED BY C. Rudy

PROCESSING KEY	
STRUCTURE FILE NO.	TRANS. CODE
1 7	8
0,6,0,2,1,0,8	A

CARD NO.	(1) ODOT DISTRICT	(2) CITY OR TOWN	(3) INVENTORY ROUTE ON/UNDER	SYSTEM	ROUTE NUMBER	DIRECT. SUFFIX	DESIGNATION	PREF. ROUTE	(4) FEATURE(S) INTERSECTED	(5) INV.RTE. BRIDGE NO. COUNTY	UNIT NUMBER STRAIGHT LINE MILEAGE	SPECIAL DESIGNATION	(6) SECTION I. D. NUMBER	(7) INVENTORY ROUTE A.D.T. (TENS)	(8) A.D.T. YEAR	(9) FED. AID. SYSTEM	(10) ADMIN. JURISD.	(11) FUNCTIONAL CLASS	(12)
9	10	12	16	17	18	23	24	25	26	51	54	53	61	65	71	73	76	77	79 80
1	0,7	0,0,0,0	1	1	, , ,7,5		1		P,E,N,N, C,E,N,T,R,A,L, ,R,.,R,.	A,U,G	0,5,1,5	L	0,4,9,0	0,0,1,3,2,8	7,0	0,1	2,0	2,1	

CARD NO.	(13) DEFENSE SECTION NUMBER	MILEPOINT BEGIN SECTION	SECTION LENGTH	(14) TOT.-MIN HORIZONTAL CLEAR. NON-CARD. OPENING	CARDINAL OPENING	(15) PRACTICAL MAXIMUM VERTICAL CLEAR. FT.	IN.	(16)	(17) INTERSECTED ROUTE ON/UNDER	SYSTEM	ROUTE NUMBER	DIRECT. SUFFIX	DESIGNATION	PREF. ROUTE	(18) FEATURE(S) INTERSECTED	(19) INTR. RTE. BRIDGE NO. COUNTY	UNIT NUMBER STRAIGHT LINE MILEAGE	SPECIAL DESIGNATION
9	10	15	19	22	25	20	30	32	36	37	38	43	44	45	46	71	74	79 80
2				0,0,0	4,2,0	9,9	9,9											

CARD NO.	(20) INTERSECTED ROUTE A.D.T. (TENS)	(21) A.D.T. YEAR	(22) FED. AID SYSTEM	(23) ADMIN. JURISD.	(24) FUNCTIONAL CLASS	(25) DEFENSE SECTION NUMBER	MILEPOINT BEGIN SECTION	SECTION LENGTH	(26) TOT MIN HORIZONTAL CLEAR. NON-CARD. OPENING	CARDINAL OPENING	(27) PRACTICAL MAXIMUM VERTICAL CLEAR. FT.	IN.	(28)	(29) BY-PASS LENGTH	(30) COORDINATES LATITUDE DEGREES	MINUTES	LONGITUDE DEGREES	MINUTES	(31) PHYS. VULNER.	(32) TOLL	(33) YEAR BUILT ORIG. CONS.	MAJOR RECON.	(34) NO. LANES ON STRUCT.	UNDER STRUCT.	(35) HORIZ. CURVE DEG.	MIN.	(36) SKEW	(37) DESIGN LOADING
9	10	18	19	20	22	24	29	33	36	39	42	44	46	50	52	54	57	60	53	64	65	67	69	71	73	75	77	79 80
3														0,1					3	5,8	0,0	0,2	0,0			2,1	5,0	

CARD NO.	(38) APPROACH ROADWAY WIDTH	(39) MEDIAN TYPE	40 FLARED	(41) BRIDGE ROADWAY WIDTH (CB/CB)	(42) DECK WIDTH (OUT/OUT)	43 RAIL - TYPE	44 DECK DRAIN.	(45) SIDEWALKS LEFT	RIGHT	46 FLOOR SLAB	(47) WEARING SURFACE TYPE	THICKNESS (INCH)	(48) STRUCTURE TYPE MAIN SPANS NUMBER	TYPE CODE	APPR. SPANS NUMBER	TYPE CODE	(49) TOTAL NO. SPANS	(50) MAXIMUM SPAN LENGTH	(51) OVERALL STRUCTURE LENGTH	(52) TYPE SERVICE	(53) BRIDGE DESCRIPTION	(54) MINIMUM VERTICAL CLEAR. ON BRIDGE FT.	IN.	(55)	(56)	57 OPERATING TYPE
9	10	13	16	17	21	25	25	27	30	33	34	35	37	40	43	46	49	52	56	62	64	66	68	79	75	80
4	0,4,4	0,0,0	0	0,4,2,0	0,4,8,5	3	4	0,0,0	0,0,0	1	1	0,1	0,0,3	1,1,2	0,0,0	0,0,0	0,0,3	0,0,5,5	0,0,0,1,4,6	1,2		9,9	9,9				5

CARD NO.	(58) SUBSTRUCTURE ABUTMENTS REAR MAT'L	TYPE	AHD. MAT'L	TYPE	PIERS PREDOMINATE NUMBER UNITS	OTHER MAT'L	TYPE	OTHER NUMBER UNITS	OTHER MAT'L	TYPE	59 PILING	(60) MIN.-VERT. UNDERCLEAR. (MAIN LANES) NON-CARD. OPENING FT.	IN.	CARDINAL OPENING FT.	IN.	(61) MIN. LATERAL UNDERCLEAR. TO EDGE OF LANE NON-CARD. DIRECT. LEFT	RIGHT	CARDINAL DIRECT. LEFT	RIGHT	(62) NAVIGATION CONTROLLED	VERT. CLEAR.	HORIZ. CLEAR.	(63) OHIO ORIGINAL CONSTR. PROJ. NO.	(64) MICROFILM REEL NO.	(65) ORIGINAL CONSTRUCTION FEDERAL AID PROJECT NUMBER
9	10	11	12	13	14	16	17	19	20	21	22	24	25	26	27	29	31	33	36	38	41	44	47	48	51	55	61	67 80
5	2	8	2	8	0,2	2	3	0,0	0	0	0,0	0	0	2	0,0	0,0	2,2	0,0	0,0,0	0,0,0	2,4,4	2,4,4				0,4,8,7,5,6		I.-1,9,6,(5.)

2204

CARD NO.	(66) LOAD RATING OPERATING RATING	INVENTORY RATING	OHIO % OF LEGAL	67 INSP. RESP.	68 MAINT. RESP.	69 (69) APPRAISAL DECK GEOM.	UNDERCLEAR.	SAFE LOAD CAP.	WATERWAY ADEQ.	APPR. ALIGN	REMAIN. LIFE	(70) PROPOSED IMPROVEMENTS YEAR NEEDED	TYPE SERVICE	TYPE WORK	LENGTH OF IMPROVEMENT	IMPR. DES. LOAD	PROPOSED ROAD WIDTH	NUMBER LANES	DESIGN A.D.T. (TENS)	YEAR A.D.T.	ADJ. RDWY. YEAR	TYPE	TOTAL COST ($1000'S)	YEAR OF COSTS	(71) COST OF IMPROVEMENTS BREAKDOWN ($1000'S) PRELIM. ENG.	DEMOLITION	SUB-STRUCTURE	SUPER-STRUCTURE	72 PRIORITY	79
9	10	13	18	19	20	21	22	23	24	25	26	28	30	31	34	39	41	45	47	52	55	57	59	63	65	68	71	75	79	80
6	9,5,8	9,2,7	1,5,0	1	1		7	7	7	N	7	3	0																0	

DATA RECORDED 04/02/08

REF. NO. 87 SUBJECT Br. Deck Surface Repair MEASUREMENT DATE _____ INITIALS _____

ITEM NO. SPECIAL PROJECT NO. 356-74 COMPUTATION DATE July 21, 1975 INITIALS [illegible]

LOCATION Br. 75-05.15 Left (Railroad Bridge) Passing Lane S.B.

	SQ FT	STA	DEPTH	*DIST. TO Patch
1 1.2 X 1.0	= 1.20	+13	Min. Depth measured 1 1/8" Max. Depth measured 2 5/8"	
2 0.9 X 3.25	= 2.93	+15		
3 0.9 X 1.3	= 1.17	+19		
4 0.9 X 1.2	= 1.08	+20		
5 1.0 X 1.5	= 1.50	+31		
2.3 X 4.4	= 10.12	↓		
6 2.5 X 1.9	= 4.75	+34		
7 1.1 X 2.3	= 2.53	+45		
1.4 X 2.1	= 2.94			
$\frac{2.9+3.9}{2}$ X 2.8	= 9.52			
3.2 X 2.3	= 7.36			
2.1 X 3.0	= 6.30	↓		
8 8.4 X 2.6	= 21.84	+47		
2.2 X 0.8	= 1.76			
3.3 X 4.5	= 14.85			
2.5 X 5.0	= 12.50	↓		
9 1.0 X 4.6	= 4.60	+54		
10 0.9 X 3.4	= 3.06	+55		
11 2.4 X 1.9	= 4.56	+58		
12 0.9 X 3.0	= 2.70	+63		
13 1.3 X 1.4	= 1.82	+66		
14 3.3 X 3.5	= 11.55	+69		
15 1.3 X 1.3	= 1.69	+83		
16 1.6 X 0.9	= 1.44	+84		
17 2.9 X 4.0	= 11.60	+89		
1.4 X 2.4	= 3.36			
1.6 X 2.8	= 4.48			
3.25 X 2.2	= 7.15			
2.3 X 2.5	= 5.75			
3.8 X 1.7	= 6.46	↓		
Column Total	= 172.57 □'			

	SQ FT	STA	DEPTH	*DIST. TO Patch
18 2.9 X 4.0	= 11.60	+92	Min. Depth measured 1 1/4" Max. Depth measured 2 3/4"	
3.6 X 4.0	= 14.40			
1.65 X 2.45	= 4.04			
1.1 X 0.70	= 0.77			
2.5 X 3.65	= 9.13			
$\frac{1.04+.7}{2}$ X 12	= 10.44	↓		
19 1.6 X 1.1	= 1.76	1+18		
20 1.15 X 1.1	= 1.27	1+24		
Column Total	= 53.41			

Sheet Total = 225.98 □'

AUG-75-0515 L

Form AP-1

Inter-office communication

Date: Oct. 13, 2016

To: Joshua Bowman, Highway Management
Construction Engineer

From: Lee Eilerman, District Bridge Engineer

Subject: Final Inspection Proj. 590-15 PID# 93767
AUG-75-0515L SFN: 0602108

No deficiencies found

LPE 10/18/16

LPE/ghw

C: File