STATE OF OHIO
DEPARTMENT OF TRANSPORTATION

HAM-IR 75-10.15

CITY OF CINCINNATI, CITY OF READING, VILLAGE OF ARLINGTON HEIGHTS, & VILLAGE OF LOCKLAND

SYCAMORE TOWNSHIP AND SPRINGFIELD TOWNSHIP

HAMILTON COUNTY

SEE SHEETS 2 - 4

LOCATION MAP

LATITUDE: 39°13'27"N LONGITUDE: 84°26'54"W

PORTION TO BE IMPROVED
INTERSTATE HIGHWAY
FEDERAL ROUTES
STATE ROUTES
COUNTY & TOWNSHIP ROADS
OTHER ROADS

DESIGN DESIGNATION

CURRENT ADT (2026)	*120,000*
DESIGN YEAR ADT (2038)	*121,000*
DESIGN HOURLY VOLUME (2038)	*14,500*
DIRECTIONAL DISTRIBUTION	*100%*
TRUCKS (24 HOUR B&C)	*17%*
DESIGN SPEED	*60 MPH*
LEGAL SPEED	*55 MPH*
DESIGN FUNCTIONAL CLASSIFICATION:	
INTERSTATE (URBAN)	
NHS PROJECT	*YES*

DESIGN EXCEPTIONS

NONE

ADA DESIGN WAIVERS

NONE

UNDERGROUND UTILITIES
Contact Two Working Days Before You Dig
OHIO811.org Before You Dig
OHIO811, 8-1-1, or 1-800-362-2764
(Non members must be called directly)

PLAN PREPARED BY:
DISTRICT 8 ENGINEERING
505 SR 741
LEBANON, OH 45036

INDEX OF SHEETS:

TITLE SHEET	*P.1*
SCHEMATIC PLAN	*P.2-P.4*
GENERAL NOTES	*P.5-P.6*
MAINTENANCE OF TRAFFIC	*P.7-P.19*
GENERAL SUMMARY	*P.20-P.21*
ROADWAY SUBSUMMARIES	*P.22-P.24*
CURB RAMP DETAILS	*P.25-P.27*
STRUCTURES GENERAL NOTES	*P.28-P.30*
STRUCTURES SUBSUMMARY	*P.31*
STRUCTURES OVER 20' SPAN	
HAM-75-11.02R	*P.32-P.33*
HAM-75-11.52R	*P.34*
HAM-75-11.84R	*P.35*
HAM-75-11.92R	*P.36-P.52*

FEDERAL PROJECT NUMBER

E240799

RAILROAD INVOLVEMENT

NORFOLK SOUTHERN RAILWAY
MIDWEST DIV
MP CJ-250.04
DOT#524 721Y

PROJECT DESCRIPTION

REHABILITATE BRIDGE HAM-75-1192R WHICH CARRIES NORTHBOUND I-75 OVER THE MILL CREEK, NORFOLK SOUTHERN RAILROAD, BENSON ST. & SHEPARD LANE. REHAB WILL REPAIR OUT-OF-PLANE BENDING CRACKS OCCURRING IN THE STRUCTURAL STEEL, REPAIR OF A FATIGUE CRACK IN A STEEL PIER CAP, AND OTHER MINOR REHAB ITEMS. INCLUDES RESURFACING SB AND NB OF IR 75 IN THE LOCKLAND SPLIT AREA IN HAMILTON COUNTY. MINOR REHAB AT BRIDGES HAM-75-1102R, HAM-75-1152R, AND HAM-75-1184R.

EARTH DISTURBED AREAS

PROJECT EARTH DISTURBED AREA:	*0.6 ACRES*
ESTIMATED CONTRACTOR EARTH DISTURBED AREA:	*0.6 ACRES*
NOTICE OF INTENT EARTH DISTURBED AREA:	*N/A*

LIMITED ACCESS

THIS IMPROVEMENT IS ESPECIALLY DESIGNED FOR THROUGH TRAFFIC AND HAS BEEN DECLARED A LIMITED ACCESS HIGHWAY OR FREEWAY BY ACTION OF THE DIRECTOR IN ACCORDANCE WITH THE PROVISIONS OF SECTION 5511.02 OF THE OHIO REVISED CODE.

2023 SPECIFICATIONS

THE STANDARD SPECIFICATIONS OF THE STATE OF OHIO, DEPARTMENT OF TRANSPORTATION, INCLUDING SUPPLEMENTAL SPECIFICATIONS LISTED IN THE PLANS, CHANGES LISTED IN THE PROPOSAL, AND THE SUPPLEMENTAL SPECIFICATION 800 VERSION INDICATED ON THE PROPOSAL SHALL GOVERN THIS IMPROVEMENT.

I HEREBY APPROVE THESE PLANS AND DECLARE THAT THE MAKING OF THIS IMPROVEMENT WILL NOT REQUIRE THE CLOSING TO TRAFFIC OF THE HIGHWAY AND THAT PROVISIONS FOR THE MAINTENANCE AND SAFETY OF TRAFFIC WILL BE AS SET FORTH ON THE PLANS AND ESTIMATES.

Douglas A. Gruver, P.E.
District 08 Deputy Director

Pamela Boratyn
Director, Department of Transportation

STANDARD CONSTRUCTION DRAWINGS

BP-3.1	*1/19/24*	*MT-98.20*	*4/19/19*	*MT-110.10*	*7/19/13*		
BP-5.1	*1/17/25*	*MT-98.21*	*7/21/23*				
BP-7.1	*7/19/24*	*MT-98.22*	*1/17/20*	*TC-65.10*	*1/17/14*		
BP-9.1	*1/18/19*	*MT-98.29*	*1/17/20*	*TC-65.11*	*1/19/24*		
		MT-98.30	*7/16/21*	*TC-71.10*	*4/21/23*		
RM-4.2	*4/17/20*	*MT-99.20*	*4/19/19*	*TC-72.20*	*7/21/23*		
RM-4.7	*7/19/24*	*MT-99.30*	*1/17/20*	*TC-73.20*	*7/19/24*		
		MT-101.70	*7/19/24*	*TC-74.10*	*7/21/23*		
GSD-1-19	*7/19/24*	*MT-101.75*	*7/21/23*				
		MT-101.90	*7/17/20*				
MT-95.30	*7/19/19*	*MT-102.10*	*7/21/23*				
MT-95.45	*7/21/23*	*MT-102.20*	*4/19/19*				
MT-95.50	*7/21/17*	*MT-102.30*	*10/16/15*				
MT-97.10	*4/19/19*	*MT-103.10*	*1/21/22*				
MT-98.10	*1/17/20*	*MT-104.10*	*1/19/24*				
MT-98.11	*1/17/20*	*MT-105.10*	*1/17/20*				

SUPPLEMENTAL SPECIFICATIONS	
800-2023	*1/17/25*
807	*1/21/22*
809	*7/21/23*
832	*7/21/23*
843	*1/19/24*
850	*7/21/23*
873	*4/16/21*
909	*7/21/23*

SPECIAL PROVISIONS

ASBESTOS INSPECTION REPORT 3/17/2025

ENGINEER'S SEAL	*ENGINEER'S SEAL*
ROADWAY	*BRIDGE*
STATE OF OHIO · JOHN DENNIS OTIS · E-70344 · REGISTERED PROFESSIONAL ENGINEER	STATE OF OHIO · CHRISTOPHER A. HOWARD · E-62429 · REGISTERED PROFESSIONAL ENGINEER

TITLE SHEET

DESIGN AGENCY

DESIGNER BCP
REVIEWER AS 12-20-24
PROJECT ID 120341
SHEET 1 TOTAL 52

HAM-75-10.15

MODEL: Sheet_SurvFt PAPERSIZE: 34x22 (in.) DATE: 8/12/2025 TIME: 9:53:03 AM USER: bpeters1
pw:\\ohiodot-pw.bentley.com:ohiodot-pw-02\Documents\01 Active Projects\District 08\Hamilton\120341\400-Engineering\Roadway\Sheets\120341_GT001.dgn

SCHEMATIC PLAN

0 200 400

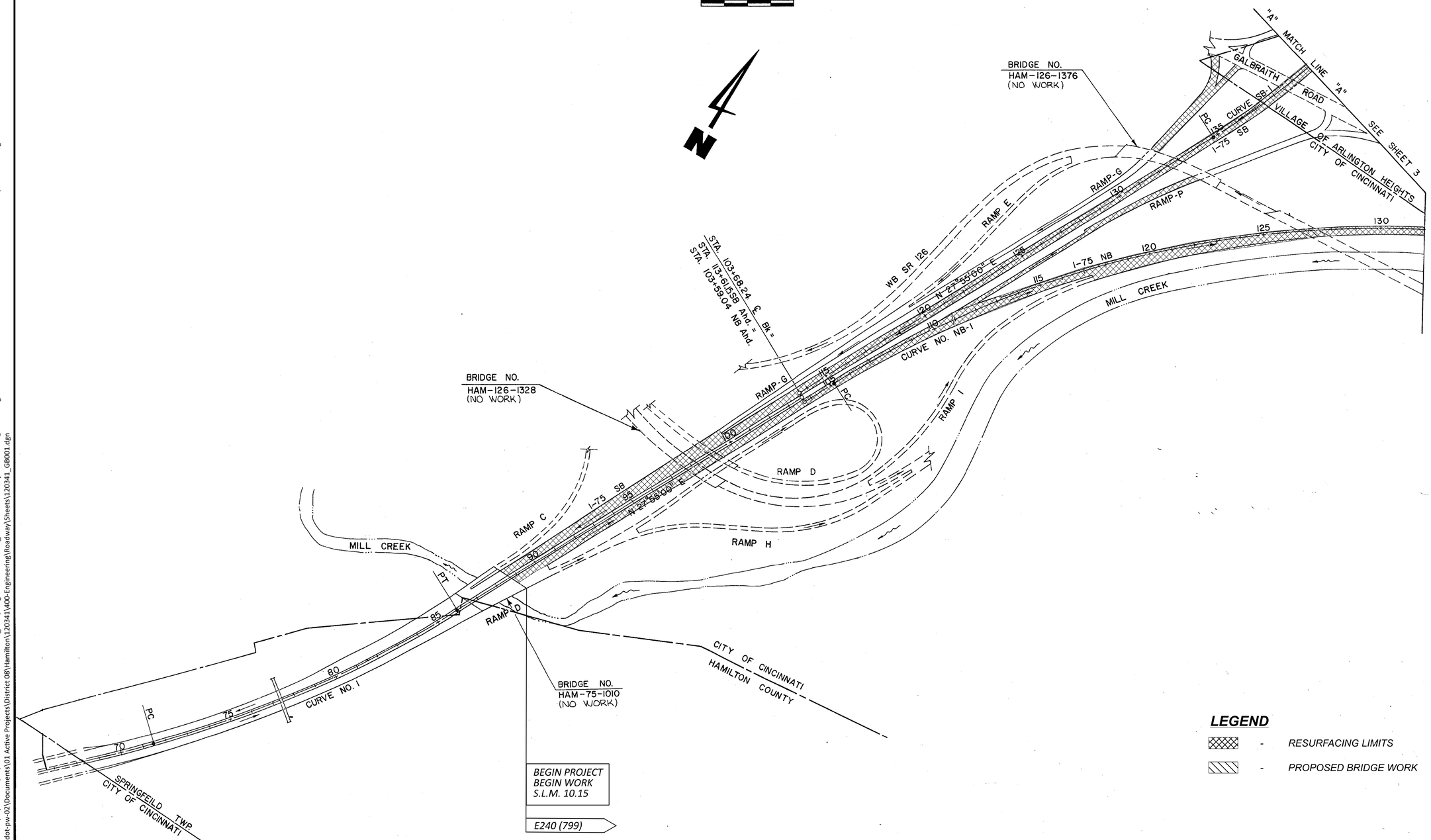

LEGEND

- RESURFACING LIMITS
- PROPOSED BRIDGE WORK

HORIZONTAL SCALE IN FEET
0 100 200 400

SCHEMATIC PLAN

DESIGN AGENCY

DESIGNER BCP
REVIEWER AS 12-20-24
PROJECT ID 120341
SHEET 2 TOTAL 52

HAM-75-10.15

MODEL: Sheet_Survft PAPERSIZE: 34x22 (in.) DATE: 8/12/2025 TIME: 9:58:01 AM PLTDRV: OHDOT_PDF.pltcfg PENTBL: OHDOT_Pen.tbl USER: Benjamin.Peters@dot.ohio.gov WORKSPACE: OHDOTCEv02 WORKSET: 120341 PRODUCT: OpenRoadsDesigner 24.00.00.205
pw:\\ohiodot-pw.bentley.com:ohiodot-pw-02\Documents\01 Active Projects\District 08\Hamilton\120341\V00-Engineering\Roadway\Sheets\120341_GB001.dgn

SCHEMATIC PLAN

0 200 400

N

CITY OF CINCINNATI
VILLAGE OF ARLINGTON HEIGHTS
NORFOLK SOUTHERN RR
WEST BRANCH MILL CREEK
VILLAGE OF LOCKLAND
VILLAGE OF ARLINGTON HEIGHTS
SOUTHBOUND I-75
WEST BRANCH MILL CREEK
COOPER AVE.
AVENUE
WYOMING
LOCK ST.
SEC. 33
SEC. 32
SEC. 33
SEC. 4

"A" MATCH LINE "A" SEE SHEET - 2

"B" MATCH LINE "B" SEE SHEET - 4

RAMP F

BRIDGE NO. HAM-75-1105 L (NO WORK)

BRIDGE NO. HAM-75-1160 L (NO WORK)

BRIDGE NO. HAM-75-1187 L (NO WORK)

BRIDGE NO. HAM-75-1198 L (NO WORK)

PC 145 PT 150 N 11°00'56" E 155 PC 160 CURVE SB-2 165 PT 170 N 39°33'06" E 175 PC 180 CURVE SB-3 185 CURVE SB-4 190 PT PC 195 CURVE SB-5 PT N 39°33'06" E

N 40°33'06" E

N 38°33'06" E

SEC. 2
SEC. 1
SEC. 2
SEC. 32

BRIDGE LOCATION HAM-75-11.02R

BRIDGE LOCATION HAM-75-11.92R

BRIDGE LOCATION HAM-75-11.84R

BRIDGE LOCATION HAM-75-11.52R

135 140 N 62°04'36" E TS 145 SC 150 CURVE NB-2 155 CS 160 CLARK ST N 29°07'53" E TS 165 SC 170 175 DAVIS 180 CURVE NB-3 185 190

MILL CREEK

GALBRAITH ROAD

RAMP N

RAMP M

STREET

STREET

NORTHBOUND I-75

VILLAGE OF ARLINGTON HEIGHTS

CITY OF READING

VILLAGE OF LOCKLAND

SEC. 1
SEC. 3

SEC. 32
SEC. 3

LEGEND

- RESURFACING LIMITS
- PROPOSED BRIDGE WORK

HORIZONTAL SCALE IN FEET
0 100 200 400

SCHEMATIC PLAN

DESIGN AGENCY

DESIGNER BCP

REVIEWER AS 12-20-24

PROJECT ID 120341

SHEET 3 TOTAL 52

HAM-75-10.15

MODEL: Sheet_SurvFt PAPERSIZE: 34x22 (in.) DATE: 8/12/2025 TIME: 10:00:06 AM PLTDRV: OHDOT_PDF.pltcfg PENTBL: OHDOT_Pen.tbl USER: Benjamin.Peters@dot.ohio.gov WORKSPACE: OHDOTCEv02 WORKSET: 120341 PRODUCT: OpenRoadsDesigner 24.00.00.205
pw:\\ohiodot-pw.bentley.com:ohiodot-pw-02\Documents\01 Active Projects\District 08\Hamilton\120341\400-Engineering\Roadway\Sheets\120341_GB002.dgn

SCHEMATIC PLAN

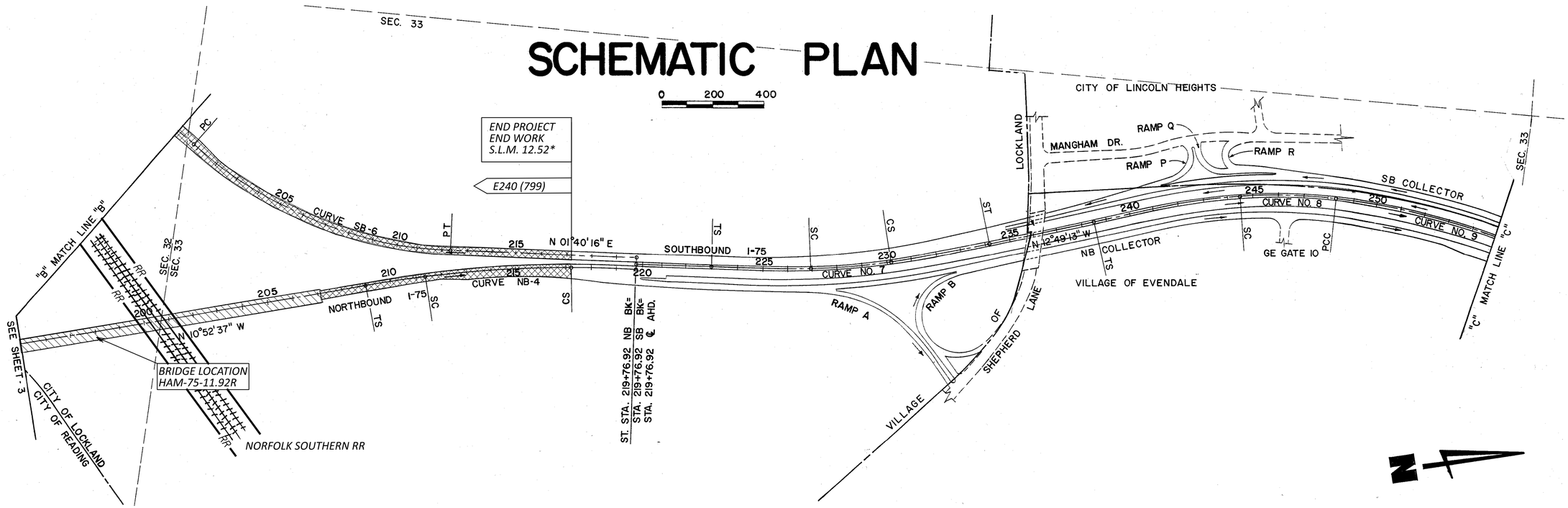

* RESURFACING ENDS AT THE BEGINNING OF THE CONCRETE MEDIAN BARRIER

LEGEND

- RESURFACING LIMITS
- PROPOSED BRIDGE WORK

HORIZONTAL SCALE IN FEET
0 100 200 400

SCHEMATIC PLAN

DESIGN AGENCY

DESIGNER BCP
REVIEWER AS 12-20-24
PROJECT ID 120341
SHEET 4 TOTAL 52

HAM-75-10.15

MODEL: Sheet_Survft PAPERSIZE: 34x22 (in.) DATE: 8/12/2025 TIME: 10:03:47 AM PLTDRV: OHDOT_PDF.pltcfg PENTBL: OHDOT_Pen.tbl USER: Benjamin.Peters@dot.ohio.gov WORKSPACE: OHDOTCEv02 WORKSET: 120341 PRODUCT: OpenRoadsDesigner 24.00.00.205
pw:\\ohiodot-pw.bentley.com:ohiodot-pw-02\Documents\01 Active Projects\District 08\Hamilton\120341\400-Engineering\Roadway\Sheets\120341_GB003.dgn

UTILITIES

LISTED BELOW ARE ALL UTILITIES LOCATED WITHIN THE PROJECT CONSTRUCTION LIMITS TOGETHER WITH THEIR RESPECTIVE OWNERS:

ODOT ITS LAB
1606 WEST BROAD STREET
COLUMBUS, OH 43223
614-387-4113
CEN.ITS.LAB@DOT.OHIO.GOV

DUKE ELECTRIC - DISTRIBUTION
139 EAST 4TH STREET, ROOM 467A
CINCINNATI, OHIO 45202
513-514-8209 (CHRIS TEPE)
CHRIS.TEPE@DUKE-ENERGY.COM

DUKE ELECTRIC - TRANSMISSION
139 EAST 4TH STREET, ROOM 552A
CINCINNATI, OHIO 45202
513-287-1266 (TIM MEYER)
TIM.MEYER@DUKE-ENERGY.COM

CINCINNATI METROPOLITAN SEWER DISTRICT
1600 GEST STREET
CINCINNATI, OHIO 45204
513-557-7188 (ROB FRANKLIN
ROB.FRANKLIN@CINCINNATI-OH.GOV

COGENT COMMUNICATIONS
PAUL BECKER
OVERLAND PARK, KS
815-557-8416
PBECKER@COGENTCO.COM

RAILROAD CONTACT INFORMATION - NORFOLK SOUTHERN RR
ELDRIDGE W. CHAMBERS
SENIOR ENGINEER - PUBLIC IMPROVEMENTS
NORFOLK SOUTHERN CORPORATION
650 PEACHTREE STREET, NW, BOX 45
ATLANTA, GA 30308
(470) 463-6307 (O)
ELDRIDGE.CHAMBERS@NSCORP.COM

CONSTRUCTION NOISE

THIS PROJECT WILL COMPLY WITH ALL LOCAL NOISE ORDINANCES

EXISTING PLANS

EXISTING PLANS ENTITLED HAM-75-9.30 MAY BE INSPECTED IN THE ODOT DISTRICT 8 OFFICE IN LEBANON.

WORK LIMITS

THE WORK LIMITS SHOWN ON THESE PLANS ARE FOR PHYSICAL CONSTRUCTION ONLY. PROVIDE THE INSTALLATION AND OPERATION OF ALL WORK ZONE TRAFFIC CONTROL AND WORK ZONE TRAFFIC CONTROL DEVICES REQUIRED BY THESE PLANS WHETHER INSIDE OR OUTSIDE THESE WORK LIMITS.

CLEARING AND GRUBBING

REMOVE TREES AND ALL VEGETATION WITHIN THE R-O-W LIMITS OF STRUCTURE HAM-75-1192R. SEE SITE PLAN FOR REMOVAL LIMITS. A LUMP SUM QUANTITY IS INCLUDED IN THE GENERAL SUMMARY FOR ITEM 201,CLEARING AND GRUBBING. ALL PROVISIONS ASSET FORTH IN THE SPECIFICATIONS UNDER THIS ITEM ARE INCLUDED IN THE LUMP SUM PRICE BID FOR ITEM 201, CLEARING AND GRUBBING.

DRINKING WATER

THIS PROJECT IS LOCATED IN A DRINKING WATER PROTECTION AREA. IN ORDER TO MINIMIZE THE POTENTIAL FOR CONTAMINATION, THE CONTRACTOR SHALL UTILIZE PROPER CONTAINMENT AND DIKING IN REFUELING AREAS. FUELS, TOXIC/HAZARDOUS MATERIALS, AND CHEMICALS SHALL NOT BE STORED NEAR DRAINAGE WAYS, DITCHES, OR STREAMS. A SPILL KIT IS TO BE MAINTAINED ON-SITE THROUGHOUT CONSTRUCTION ACTIVITIES. THE CONTRACTOR SHALL IMMEDIATELY TAKE STEPS TO MITIGATE ANY EVENT, SUCH AS A SPILL OF FUELS, OILS, OR CHEMICALS, THAT COULD THREATEN TO CONTAMINATE THE DRINKING WATER SUPPLY. ANY SUCH SPILL OR EVENT SHALL BE REPORTED IMMEDIATELY TO THE GREATER CINCINNATI WATER WORKS (513-591-7970). IF THE SPILL IS A REPORTABLE AMOUNT (PER OHIO EPA'S RELEASE REPORTING REQUIREMENTS), THE CONTRACTOR SHALL CONTACT THE LOCKLAND FIRE DEPARTMENT (513-761-2751) OR THE OHIO EPA'S SPILLS HOTLINE (1-800-282-9378) FOR CLEAN-UP OF THE SPILL.

ASBESTOS ABATEMENT

A LICENSED ASBESTOS HAZARD EVALUATION SPECIALIST INSPECTED BRIDGE SFN 3110656 SCHEDULED FOR REHABILITATION; THE ASBESTOS INSPECTION DETERMINED THAT NO ASBESTOS IS PRESENT ON THE BRIDGE STRUCTURE HAM-75-11.92R IN EXCESS OF THE ALLOWABLE REGULATORY LIMITS AND NO ABATEMENT IS REQUIRED.

ELECTRONIC SUBMISSION:

THE CONTRACTOR SHALL SUBMIT ELECTRONICALLY TO OEPA A COMPLETED NOTIFICATION OF DEMOLITION & RENOVATION FORM (NDRF) AND APPLICABLE FEES ALONG WITH THE ASBESTOS SURVEY REPORT. THE COMPLETED NDRF MUST BE SUBMITTED TO OEPA AT LEAST 10 DAYS PRIOR TO ANY DEMOLITION AND RENOVATION ACTIVITY. THE CONTRACTOR IS RESPONSIBLE FOR RETAINING AN ELECTRONIC COPY OF THE NDRF (IN PDF FORM) FOR SUBMISSION TO THE DISTRICT ENVIRONMENTAL STAFF AND ONE HARD COPY TO THE PROJECT ENGINEER.

(GO TO THE OEPA EBUSINESS CENTER AND SUBMIT THE DNRF AND PAYMENT ALONG WITH THE ASBESTOS SURVEY REPORT)

HARD COPY SUBMISSION:

THE CONTRACTOR MAY ELECT TO SUBMIT A HARD COPY OF THE COMPLETED NDRF AND PAYMENT ALONG WITH THE ASBESTOS SURVEY REPORT TO THE FOLLOWING:

ASBESTOS PROGRAM
OHIO EPA, DAPC
P.O. BOX 1049
COLUMBUS, OHIO 43216-1049

OR

ASBESTOS PROGRAM
OHIO EPA, DAPC
50 W TOWN ST, SUITE 700
COLUMBUS, OHIO 43215

IF THE CONTRACTOR ELECTS TO SUBMIT A HARD COPY TO OEPA THEY ARE RESPONSIBLE FOR RETAINING A HARD COPY OF THE NDRF FOR SUBMISSION TO THE DISTRICT ENVIRONMENTAL STAFF AND A HARD COPY TO THE PROJECT ENGINEER.

ITEM 659 - SEEDING AND MULCHING

THIS WORK CONSISTS OF PLACING TOPSOIL, PREPARING THE SEED BED, AND PLACING AND INCORPORATING SEED, AGRICULTURAL LIME, COMMERCIAL FERTILIZER, AND PLACING MULCHING MATERIAL.

PERFORM THIS WORK IN STAGES ACCORDING TO ITEM 207.

PERFORM THIS WORK IN AREAS SHOWN ON THE PLANS FOR SEEDING AND MULCHING. PERFORM SEEDING AND MULCHING AFTER COMPLETING ALL WORK IN THE AREA AND WITHIN 7 DAYS OF OBTAINING FINAL GRADE. IF IT IS ANTICIPATED THAT FUTURE WORK MAY DISTURB AN AREA, PLACE TEMPORARY SEED (CLASS 7), AND PROVIDE MULCH ACCORDING TO ITEM 207 AND PERFORM SEEDING AND MULCHING AFTER ALL WORK IS COMPLETED. IF THE CONTRACTOR DISTURBS A FINAL AREA, THEN THE CONTRACTOR SHALL RESTORE THIS AREA.

USE ALL EXCAVATION MATERIAL IN THE WORK. ALTERNATIVELY LEGALLY USE, RECYCLE, OR DISPOSE OF ALL EXCAVATED MATERIALS ACCORDING TO 105.16 AND 105.17.

ITEM 623 - CONSTRUCTION LAYOUT STAKES AND SURVEYING, AS PER PLAN

PRIOR TO THE START OF ROADWAY OPERATION, THE CONSTRACTOR SHALL REFERENCE THE LENGTH OF THE PROJECT ON BOTH SIDES OF THE ROADWAY, IN A MANNER SATISFACTORY TO THE ENGINEER. THE PAVEMENT SHALL BE REFERENCED IN 500' INCREMENTS, OR IN INCREMENTS ACCEPTABLE TO THE ENGINEER, IN A SEMIPERMANENT CONDITION.

ITEM 253 - PAVEMENT REPAIR

AN ESTIMATED QUANTITY OF 1200 CU YDS OF ITEM 253-PAVEMENT REPAIR HAS BEEN CARRIED TO THE GENERAL SUMMARY TO BE USED AS DIRECTED BY THE ENGINEER. THIS OPERATION SHALL BE PERFORMED BEFORE PAVEMENT PLANING OF ROADWAY.

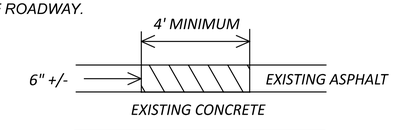

EXISTING DETERIORATED ASPHALT SHALL BE REMOVED TO A DEPTH OF 6" ± (DO NOT DISTURB CONCRETE) OR AS DIRECTED BY THE ENGINEER AND REPLACED WITH ITEM 301, ASPHALT CONCRETE BASE. THE 301 SHALL BE COMPACTED AS PER 401.08E AND IN APPROXIMATELY EQUAL LAYERS. THE LOCATIONS AND SIZE OF THE REPAIRS SHALL BE DETERMINED BY THE ENGINEER.

ITEM 254 - PAVEMENT PLANING

THE PAVEMENT PLANING SHALL BE SCHEDULED SO AS NO TRAFFIC RIDES ON THE PLANED SURFACE. THE COST OF THE ABOVE SHALL BE INCLUDED IN THE UNIT BID PRICE FOR THE RESPECTIVE ITEM. A DISINCENTIVE IN THE AMOUNT OF $20,000 SHALL BE ASSESSED FOR EACH DAY, OR PORTION THEREOF, A PLANED SURFACE IS OPEN TO TRAFFIC BEYOND THE SPECIFIED TIME LIMIT.

PROFILE AND ALIGNMENT

PLACE THE PROPOSED PAVEMENT TO FOLLOW THE ALIGNMENT AND PROFILE OF THE EXISTING PAVEMENT.

ITEM 621 - RPM REMOVED/REPLACED

I-75
ITEM 621 - RPM ..... 867 EA

THE FOLLOWING QUANTITIES HAVE BEEN CARRIED TO THE GENERAL SUMMARY:

ITEM 621 - RPM ..... 867 EA

ITEM 621 - RPM REMOVED ..... 787 EA

CONTINGENCY QUANTITIES

THE CONTRACTOR SHALL NOT ORDER MATERIALS OR PERFORM WORK LISTED IN THE GENERAL SUMMARY "AS DIRECTED BY THE ENGINEER UNLESS AUTHORIZED BY THE ENGINEER." FOR ITEMS DESIGNATED BY PLAN NOTE TO BE USED. THE ACUTAL WORK LOCATIONS AND QUANTITIES USED AT THE ENGINEER'S DIRECTION SHALL BE MADE A MATTER OF RECORD BY INCORPORATION INTO THE FINAL CHANGE ORDER GOVERNING COMPLETION OF THE PROJECT.

PERMANENT PAVEMENT MARKINGS

THE CONTRACTOR SHALL REFERENCE ALL PAVEMENT MARKINGS INCLUDING AUXILIARY PAVEMENT MARKINGS BEFORE THE START OF THE RESURFACING OPERATION. THIS WILL BE NECESSARY TO ASSURE THE CORRECT PLACEMENT OF MARKINGS IN ORIGINAL LOCATIONS.PAYMENT FOR THIS OPERATION SHALL BE INCLUDED WITH EACHRESPECTIVE PAVEMENT MARKING ITEM.

CURB RAMPS, AS PER PLAN

IN ADDITION TO THE REQUIREMENTS FOR ITEM 608 - CURB RAMP, ALL RESTORATION TO AFFECTED AREAS WITHIN THE CONSTRUCTION LIMITS SHALL BE INCLUDED IN THE UNIT COST INCLUDING ITEM 203, EXCAVATION AND EMBANKMENT AS WELL AS ITEM 659 TOPSOIL, WATER, SEEDING & MULCHING.

CURB RAMP CONSTRUCTION

ALL CURB RAMP WORK INCLUDING THE ASSOCIATED PAVEMENT REPAIRS SHALL BE COMPLETED PRIOR TO RESURFACING

GENERAL NOTES

DESIGN AGENCY

DESIGNER BCP
REVIEWER JDO 1-17-25
PROJECT ID 120341
SHEET 5 TOTAL 52

HAM-75-10.15

MODEL: Sheet_SurvFt PAPERSIZE: 34x22 (in.) DATE: 8/21/2025 TIME: 2:34:52 PM PLTDRV: OHDOT_PDF.pltcfg PENTBL: OHDOT_Pen.tbl USER: Benjamin.Peters@dot.ohio.gov WORKSPACE: OHDOTCEv02 WORKSET: 120341 PRODUCT: OpenRoadsDesigner 24.00.00.205
pw:\\ohiodot-pw.bentley.com:ohiodot-pw-02\Documents\01 Active Projects\District 08\Hamilton\120341400-Engineering\Roadway\Sheets\120341_GN001.dgn

ADJACENT PROJECT COORDINATION

PID 117525 (I-75 RECONSTRUCTION) AND PID 120341 (I-75 MILL/FILL WITH BRIDGE REHAB) WILL BE UNDER CONSTRUCTION AT THE SAME TIME. BOTH PRJECTS WILL HAVE LANE CLOSURES EXTENDING INTO THE OTHER ADJACENT PROJECT. THE CONTRACTORS SHALL COORDINATE THEIR WORK AND MOT WITH THE ADJACENT PROJECT; WORK AND MOT ON EACH PROJECT WILL GOVERN AND CONTROL AS DESCRIBED BELOW:

PID 117525 - THE MOT NECESSARY TO PERFORM PRE-PHASE 1 WORK AND IMPLEMENT PHASE 1 MOT TRAFFIC SWITCH IN BOTH DIRECTIONS WILL GOVERN AND CONTROL.

PID 120341 - BEGINNING 14 DAYS AFTER PID 117525 PLACES I-75 TRAFFIC IN PHASE 1 MOT, THE WORK AND MOT ON PID 120341 WILL GOVERN AND CONTROL. THE 14-DAY PERIOD IS TO ALLOW FULL IMPLEMENTATION OF PHASE 1 AND APPLIES TO EACH DIRECTION INDEPENDENTLY. IT IS ANTICIPATED THAT PID 117525 PHASE 1 TRAFFIC SWITCH IS JUNE 2026.

GENERAL NOTES

HAM-75-10.15

MODEL: Sheet_SurvFt PAPERSIZE: 34x22 (in.) DATE: 8/12/2025 TIME: 9:21:15 AM USER: bpeters1
pw:\\ohiodot-pw.bentley.com:ohiodot-pw-02\Documents\01 Active Projects\District 08\Hamilton\120341\400-Engineering\Roadway\Sheets\120341_GN002.dgn

DESIGN AGENCY

DESIGNER
BCP

REVIEWER
AS 12-20-24

PROJECT ID
120341

SHEET 6 | TOTAL 52

ITEM 614 - MAINTAINING TRAFFIC

MAINTAIN ALL EXSITING LANES AT ALL TIMES, EXCEPT LANE CLOSURES ARE PERMITTED IN ACCORDANCE WITH THE PLCS AND THE LANE VALUE CONTRACT TABLE, BY USE OF THE EXISITNG PAVEMENT.

ON LOCAL ROADS, MAINTAIN A MINIMUM OF ONE LANE TWO WAY TRAFFIC USING FLAGGERS AT ALL TIMES. MAINTAIN AT LEAST ONE SIDEWALK ON EACH STREET AT ALL TIMES.

ON WYOMING AVENUE, MAINTAIN A MINIMUM OF ONE LANE OF TWO WAY TRAFFIC USING FLAGGERS.FOR WORK AT THE CENTER OF THE ROADWAY, IT IS ACCEPTABLE TO CLOSE WYOMING AVENUE OVERNIGHT FROM 8 PM TO 6 PM. PROVIDE ETOUR SIGNING ACCORDING TO OMUTCD FIGURE 8H-20 USING CENTRAL AVENUE, DAVIS STREET, AND JEFFERSON AVENUE. MAINTAIN A MNIMUM OF 1 SIDEWALK AT ALL TIMES.

NO WORK SHALL BE PERFORMED AND ALL EXISTING LANES SHALL BE OPEN TO TRAFFIC DURING THE FOLLOWING DESIGNATED HOLIDAYS:

CHRISTMAS	FORTH OF JULY
NEW YEARS	LABOR DAY
MEMORIAL DAY	THANKSGIVING

THE PERIOD OF TIME THAT THE LANES ARE TO BE OPEN DEPENDS ON THE DAY OF THE WEEK ON WHICH THE HOLIDAY OR EVENT FALLS. THE FOLLOWING SCHEDULE SHALL BE USED TO DETERMINE THIS PERIOD:

DAY OF HOLIDAY OR EVENT	TIME ALL LANES MUST BE OPEN TO TRAFFIC
SUNDAY	12:00N FRIDAY THROUGH 6:00AM MONDAY
MONDAY	12:00N FRIDAY THROUGH 6:00AM TUESDAY
TUESDAY	12:00N MONDAY THROUGH 6:00AM WEDNESDAY
WEDNESDAY	12:00N TUESDAY THROUGH 6:00AM THURSDAY
THURSDAY	12:00N WEDNESDAY THROUGH 6:00AM FRIDAY
THURSDAY	(THANKSGIVING ONLY) 6:00AM WEDNESDAY THROUGH 6:00AM MONDAY
FRIDAY	12:00N THURSDAY THROUGH 6:00AM MONDAY
SATURDAY	12:00N FRIDAY THROUGH 6:00AM MONDAY

SHOULD THE CONTRACTOR FAIL TO MEET ANY OF THESE REQUIREMENTS, THE CONTRACTOR SHALL BE ASSESSED A DISINCENTIVE PER THE LANE VALUE CONTRACT TABLE (PN 127).

LENGTH AND DURATION OF LANE CLOSURES AND RESTRICTIONS SHALL BE AT THE APPROVAL OF THE ENGINEER. IT IS THE INTENT TO MINIMIZE THE IMPACT TO THE TRAVELING PUBLIC. LANE CLOSURES OR RESTRICTIONS OVER SEGMENTS OF THE PROJECT IN WHICH NO WORK IS ANTICIPATED WITHIN A REASONABLE TIME FRAME, AS DETERMINED BY THE ENGINEER, SHALL NOT BE PERMITTED. THE LEVEL OF UTILIZATION OF MAINTENANCE OF TRAFFIC DEVICES SHALL BE COMMENSURATE WITH THE WORK IN PROGRESS.

ALL WORK AND TRAFFIC CONTROL DEVICES SHALL BE IN ACCORDANCE WITH C&MS 614 AND OTHER APPLICABLE PORTIONS OF THE SPECIFICATIONS, AS WELL AS THE OHIO MANUAL OF UNIFORM TRAFFIC CONTROL DEVICES. PAYMENT FOR ALL LABOR, EQUIPMENT AND MATERIALS SHALL BE INCLUDED IN THE LUMP SUM CONTRACT PRICE FOR ITEM 614, MAINTAINING TRAFFIC, UNLESS SEPARATELY ITEMIZED IN THE PLAN.

ITEM 614, MAINTAINING TRAFFIC (NOTICE OF CLOSURE SIGN)

NOTICE OF CLOSURE SIGNS (W20-H13) SHALL BE ERECTED BY THE CONTRACTOR PRIOR TO THE SCHEDULED ROAD OR RAMP CLOSURE IN ACCORDANCE WITH THE NOTICE OF CLOSURE TIME TABLE BELOW. [AT THE APPROVAL OF THE ENGINEER, PORTABLE CHANGEABLE MESSAGE SIGNS MAY BE USED IN LIEU OF THE STANDARD FLATSHEET SIGN FOR CLOSURE DURATIONS OF LESS THAN 1 WEEK.]

THE SIGNS SHALL BE ERECTED ON THE RIGHT-HAND SIDE OF THE ROAD/RAMP FACING TRAFFIC. THEY SHALL BE PLACED SO AS NOT TO INTERFERE WITH THE VISIBILITY OF ANY OTHER TRAFFIC CONTROL SIGNS. ON ROADWAYS, THEY SHOULD BE ERECTED AT OR NEAR THE POINT OF CLOSURE. THE SIGNS MAY BE ERECTED ANYWHERE ON RAMPS AS LONG AS THEY ARE VISIBLE TO THE MOTORISTS USING THE RAMP. ON ENTRANCE RAMPS, THE SIGN SHALL BE ERECTED WELL IN ADVANCE OF THE MERGE AREA TO AVOID DISTRACTING MOTORISTS.

NOTICE OF CLOSURE SIGN TIME TABLE

ITEM	DURATION OF CLOSURE	SIGN DISPLAYED TO PUBLIC
RAMP &	>=2 WEEKS	14 CALENDAR DAYS PRIOR TO CLOSURE
ROAD	> 12 HOURS & < 2 WEEKS	7 CALENDAR DAYS PRIOR TO CLOSURE
CLOSURES	<= 12 HOURS	2 BUSINESS DAYS PRIOR TO CLOSURE

THE SIGN SHALL DISPLAY THE DATE OF THE CLOSURE IN MMM-DD FORMAT AND THE NUMBER OF DAYS OF THE CLOSURE. THE LAST LINE OF THE W20-H13 SIGN LISTS A PHONE NUMBER WHICH A MOTORIST MAY CALL FOR ADDITIONAL INFORMATION. THIS IS TO BE A SPECIFIC OFFICE WITHIN THE DISTRICT RATHER THAN THE GENERAL SWITCHBOARD NUMBER.

NOTIFICATION OF TRAFFIC RESTRICTIONS

THROUGHOUT THE DURATION OF THE PROJECT, THE CONTRACTOR SHALL NOTIFY THE PROJECT ENGINEER IN WRITING OF ALL TRAFFIC RESTRICTIONS AND UPCOMING MAINTENANCE OF TRAFFIC CHANGES. THE CONTRACTOR SHALL ENSURE THE WRITTEN NOTIFICATION IS SUBMITTED IN A TIMELY MANNER TO ALLOW THE PROJECT ENGINEER TO MEET THE REQUIRED TIME FRAMES SET FORTH IN THE TABLE BELOW TO INFORM SPECIAL HAULING PERMITS SECTION (HAULING.PERMITS@DOT.OHIO.GOV) AND THE DISTRICT PUBLIC INFORMATION OFFICE (PIO). THIS NOTIFICATION SHALL BE RECEIVED BY THE PROJECT ENGINEER PRIOR TO THE PHYSICAL SETUP OF ANY APPLICABLE SIGNS OR MESSAGE BOARDS.

INFORMATION SHOULD INCLUDE, BUT IS NOT LIMITED TO, ALL CONSTRUCTION ACTIVITIES THAT IMPACT OR INTERFERE WITH TRAFFIC AND SHALL LIST THE SPECIFIC LOCATION, TYPE OF WORK, ROAD STATUS, DATE AND TIME OF RESTRICTION, DURATION OF RESTRICTION, NUMBER OF LANES MAINTAINED, NUMBER OF LANES CLOSED, MINIMUM VERTICAL CLEARANCE, MINIMUM WIDTH OF DRIVABLE PAVEMENT, DETOUR ROUTES, IF APPLICABLE, AND ANY OTHER INFORMATION REQUESTED BY THE PROJECT ENGINEER.

NOTIFICATION TIME TABLE

ITEM	DURATION OF CLOSURE	NOTICE DUE TO PERMITS & PIO
RAMP & ROAD CLOSURES	>= 2 WEEKS	21 CALENDAR DAYS PRIOR TO CLOSURE
	> 12 HOURS & < 2 WEEKS	14 CALENDAR DAYS PRIOR TO CLOSURE
	< 12 HOURS	4 BUSINESS DAYS PRIOR TO CLOSURE
LANE CLOSURES & RESTRICTIONS	>= 2 WEEKS	14 CALENDAR DAYS PRIOR TO CLOSURE
	< 2 WEEKS	5 BUSINESS DAYS PRIOR TO CLOSURE
START OF CONSTRUCTION & TRAFFIC PATTERN CHANGES	N/A	14 CALENDAR DAYS PRIOR TO IMPLEMENTATION

ANY UNFORESEEN CONDITIONS NOT SPECIFIED IN THE PLANS REQUIRING TRAFFIC RESTRICTIONS SHALL ALSO BE REPORTED TO THE PROJECT ENGINEER USING THE NOTIFICATION TIME TABLE.

CONTACT THE FOLLOWING:
-DISTRICT PUBLIC INFORMATION OFFICER BY EMAIL AT DOT.D08.PIO@DOT.OHIO.GOV
-DISTRICT PERMIT SECTION BY EMAIL AT D08.PERMITS@DOT.OHIO.GOV
-CENTRAL OFFICE SPECIAL HAUL PERMITS SECTION BY EMAIL AT HAULING.PERMITS@DOT.OHIO.GOV

DELINEATION OF PORTABLE AND PERMANENT BARRIER

BARRIER REFLECTORS AND OBJECT MARKERS SHALL BE INSTALLED ON ALL PORTABLE BARRIER (PB) USED FOR TRAFFIC CONTROL; AND, ON PERMANENT CONCRETE BARRIER (INCLUDING BRIDGE PARAPETS) LOCATED WITHIN 5 FEET OF THE EDGE OF THE ADJACENT TRAVEL LANE.

BARRIER REFLECTORS SHALL CONFORM TO C&MS 626, EXCEPT THAT THE SPACING SHALL BE AS PER TRAFFIC SCD MT-101.70. OBJECT MARKERS AND THEIR INSTALLATION SHALL CONFORM TO C&MS 614.03 AND SCD MT-101.70. WHEN THE PB CONTAINS GLARE SCREEN, ONE SET OF THREE VERTICAL STRIPES OF SHEETING SHALL BE CONSIDERED EQUIVALENT TO AN OBJECT MARKER, ONE-WAY.

THE FOLLOWING ESTIMATED QUANTITIES HAVE BEEN INCLUDED IN THE PLANS AND CARRIED TO THE GENERAL SUMMARY:

ITEM 614, BARRIER REFLECTOR, TYPE 1 (BI-DIRECTIONAL) 25 EACH

ITEM 614, OBJECT MARKER, TWO-WAY 25 EACH

PAYMENT SHALL BE FULL COMPENSATION FOR ALL MATERIAL, LABOR, INCIDENTALS AND EQUIPMENT NECESSARY FOR FURNISHING, INSTALLING, MAINTAINING AND REMOVING EACH OF THE ABOVE ITEMS.

ITEM 614 - WORK ZONE IMPACT ATTENUATOR FOR 24" WIDE HAZARDS (UNIDIRECTIONAL)

THIS ITEM SHALL CONSIST OF FURNISHING AND INSTALLING A NON-GATING IMPACT ATTENUATOR. FURNISH A MASH 2016 ATTENUATOR FROM THE OFFICE OF ROADWAY ENGINEERING'S APPROVED LIST FOR WORK ZONE IMPACT ATTENUATORS, FROM THE ROADWAY STANDARDS APPROVED PRODUCTS WEB PAGE.
INSTALLATION SHALL BE AT THE LOCATIONS SPECIFIED IN THE PLANS IN ACCORDANCE WITH THE MANUFACTURER'S SPECIFICATIONS.
THE CONTRACTOR SHALL REPAIR OR REPLACE A DAMAGED UNIT WITHIN 24 HOURS OF A DAMAGING IMPACT.
WHEN UNIDIRECTIONAL DESIGNS ARE SPECIFIED, THE CONTRACTOR SHALL SUPPLY APPROPRIATE TRANSITIONS.
WHEN GATING IMPACT ATTENUATORS ARE DESIRED, THE CONTRACTOR SHALL SUBMIT DOCUMENTATION TO THE ENGINEER FOR ACCEPTANCE.
THE COST FOR THE ADDITIONAL BARRIER REQUIRED FOR A GATING IMPACT ATTENUATOR SHALL BE INCLUDED IN THE COST OF THE GATING IMPACT ATTENUATOR.
PAYMENT FOR THE ABOVE WORK SHALL BE MADE AT THE UNIT PRICE BID AND SHALL INCLUDE ALL LABOR, TOOLS, EQUIPMENT AND MATERIALS NECESSARY TO CONSTRUCT AND MAINTAIN A COMPLETE AND FUNCTIONAL IMPACT ATTENUATOR SYSTEM, INCLUDING ALL RELATED BACKUPS, TRANSITIONS, LEVELING PADS, HARDWARE AND GRADING, NOT SEPARATELY SPECIFIED, AS REQUIRED BY THE MANUFACTURER.

ITEM 614 - LAW ENFORCEMENT OFFICER (WITH PATROL CAR) FOR ASSISTANCE DURING CONSTRUCTION OPERATIONS

USE OF LAW ENFORCEMENT OFFICERS (LEOS) BY CONTRACTORS OTHER THAN THE USES SPECIFIED BELOW WILL NOT BE PERMITTED AT PROJECT COST. LEOS SHOULD NOT BE USED WHERE THE OMUTCD INTENDS THAT FLAGGERS BE USED.

IN ADDITION TO THE REQUIREMENT OF C&MS 614 AND THE OMUTCD, A UNIFORMED LEO WITH AN OFFICIAL PATROL CAR (CAR WITH TOP-MOUNTED EMERGENCY FLASHING LIGHTS AND COMPLETE MARKINGS OF THE APPROPRIATE LAW ENFORCEMENT AGENCY) SHOULD BE PROVIDED FOR THE FOLLOWING TRAFFIC CONTROL TASKS AS APPROVED BY THE ENGINEER:

FOR LANE CLOSURES: DURING INITIAL SET-UP PERIODS, TEAR DOWN PERIODS, SUBSTANTIAL SHIFTS OF A CLOSURE POINT OR WHEN NEW LANE CLOSURE ARRANGEMENTS ARE INITIATED FOR LONG-TERM LANE CLOSURES/SHIFTS (FOR THE FIRST AND LAST DAY OF MAJOR CHANGES IN TRAFFIC CONTROL SETUP).

FOR OPERATIONS WITHOUT POSITIVE PROTECTION OCCURRING WITHIN 10 FEET OF AN OPEN TRAVELED LANE THAT MEET ALL OF THE FOLLOWING CRITERIA:
ON A MULTI-LANE DIVIDED INTERSTATE, OTHER FREEWAY OR EXPRESSWAY; AND
AN AUTHORIZED SPEED LIMIT OF 45 MPH OR GREATER THAT IS IN EFFECT AT THE TIME OF THE OPERATION;
AND, AADT OF 50,000 (OR AADT OF 30,000 WITH 25% OR HIGHER PERCENT TRUCKS)

MOT NOTES

DESIGN AGENCY

DESIGNER BCP

REVIEWER SRK 01-10-25

PROJECT ID 120341

SHEET 7 TOTAL 52

HAM-75-10.15

MODEL: Sheet_SurvFt PAPERSIZE: 34x22 (in.) DATE: 8/20/2025 TIME: 3:29:20 PM PLTDRV: OHDOT_PDF.pltcfg PENTBL: OHDOT_Pen.tbl USER: Benjamin.Peters@dot.ohio.gov WORKSPACE: OHDOTCEv02 WORKSET: 120341 PRODUCT: OpenRoadsDesigner 24.00.00.205
pw:\\ohiodot-pw.bentley.com:ohiodot-pw-02\Documents\01 Active Projects\District 08\Hamilton\120341\400-Engineering\MOT\Sheets\120341_MN001.dgn

ITEM 614 - LAW ENFORCEMENT OFFICER (WITH PATROL CAR) FOR ASSISTANCE DURING CONSTRUCTION OPERATIONS (CONT.)

"WITHOUT POSITIVE PROTECTION" MEANS USE OF DRUMS, CONES, SHADOW VEHICLE, ETC, WITHOUT PROTECTION FROM PORTABLE BARRIER OR OTHER RIGID BARRIER ALONG THE WORK AREA. THIS PHRASE DOES NOT APPLY TO CASES WHERE POSITIVE PROTECTION IS REQUIRED. MOBILE OPERATIONS ARE REGARDED AS "WITHOUT POSITIVE PROTECTION". FOR WORK ZONES USING A COMBINATION OF BARRIER AND TEMPORARY TRAFFIC CONTROL DEVICES (CONES, DRUMS, ETC), THE DESIGNATION SHALL BE BASED UPON THE TYPE OF DEVICES USED IN THE AREA THAT WORKERS ARE LOCATED.

IF MULTIPLE ACTIVE LOCALIZED QUALIFYING WORK AREAS OCCUR WITHOUT POSITIVE PROTECTION, PER MAINLINE TRAFFIC DIRECTION, PROVIDE A UNIFORMED LEO AND OFFICIAL PATROL CAR IN ADVANCE OF:

- THE FIRST ACTIVE WORK AREA THAT DRIVERS WILL ENCOUNTER; OR
- THE ACTIVE WORK AREA LATERALLY CLOSEST TO THE OPEN TRAVELED LANE; OR
- OTHER LOCATION AS APPROVED BY THE ENGINEER.

THE UNIFORMED LEO AND OFFICIAL PATROL CAR MAY RELOCATE AMONG THE LISTED LOCATIONS AS APPROPRIATE AS THE OPERATIONS PROCEED IN THE LOCALIZED QUALIFYING WORK AREAS.

IN GENERAL, LEOS SHOULD BE POSITIONED IN ADVANCE OF AND ON THE SAME SIDE AS THE LANE RESTRICTION (OR AT THE POINT OF ROAD CLOSURE), AND TO MANUALLY CONTROL TRAFFIC MOVEMENTS THROUGH SIGNALIZED INTERSECTIONS IN WORK ZONES.

LEOS SHOULD NOT FORGO THEIR TRAFFIC CONTROL RESPONSIBILITIES TO APPREHEND MOTORISTS FOR ROUTINE TRAFFIC VIOLATIONS. HOWEVER, IF A MOTORIST'S ACTIONS ARE CONSIDERED TO BE RECKLESS, THEN PURSUIT OF THE MOTORIST IS APPROPRIATE.

THE LEOS WORK AT THE DIRECTION OF THE CONTRACTOR. THE CONTRACTOR IS RESPONSIBLE FOR SECURING THE SERVICES OF THE LEOS WITH THE APPROPRIATE AGENCIES AND COMMUNICATING THE INTENTIONS OF THE PLANS WITH RESPECT TO DUTIES OF THE LEOS. THE ENGINEER SHALL HAVE FINAL CONTROL OVER THE LEOS' DUTIES AND PLACEMENT, AND WILL RESOLVE ANY ISSUES THAT MAY ARISE BETWEEN THE TWO PARTIES.

ENSURE PROVIDED LEOS HAVE BEEN TRAINED APPROPRIATE TO THE JOB DECISIONS THEY ARE REQUIRED TO MAKE WHILE ON THE PROJECT, IN ACCORDANCE WITH C&MS 614.03.

THE LEO SHALL REPORT IN TO THE CONTRACTOR PRIOR TO THE START OF THE SHIFT, IN ORDER TO RECEIVE INSTRUCTIONS REGARDING SPECIFIC WORK ASSIGNMENTS DURING HIS/HER SHIFT. THE LEO IS EXPECTED TO STAY AT THE PROJECT SITE FOR THE ENTIRE DURATION OF HIS/HER SHIFT. THE LEO SHALL REPORT TO THE CONTRACTOR AT THE END OF HIS/HER SHIFT. SHOULD IT BE NECESSARY TO LEAVE THE PROJECT SITE, THE LEO SHALL NOTIFY THE ENGINEER. THE CONTRACTOR SHALL PROVIDE THE LEO WITH A TWO-WAY COMMUNICATION DEVICE THAT SHALL BE RETURNED TO THE CONTRACTOR AT THE END OF HIS/HER SHIFT.

LEOS (WITH PATROL CAR) REQUIRED BY THE TRAFFIC MAINTENANCE TASKS ABOVE SHALL BE PAID FOR ON A UNIT PRICE (HOURLY) BASIS UNDER ITEM 614, LAW ENFORCEMENT OFFICER (WITH PATROL CAR) FOR ASSISTANCE. THE FOLLOWING ESTIMATED QUANTITIES HAVE BEEN CARRIED TO THE GENERAL SUMMARY.

ITEM 614, LAW ENFORCEMENT OFFICER WITH PATROL CAR FOR ASSISTANCE 400 HOURS

THE HOURS PAID SHALL INCLUDE ANY MINIMUM SHOW-UP TIME REQUIRED BY THE LAW ENFORCEMENT AGENCY INVOLVED.

ANY ADDITIONAL COSTS (ADMINISTRATIVE OR OTHERWISE) INCURRED BY THE CONTRACTOR TO OBTAIN THE SERVICES OF A LEO ARE INCLUDED WITH THE BID UNIT PRICE FOR ITEM 614, LAW ENFORCEMENT OFFICER WITH PATROL CAR FOR ASSISTANCE.

ITEM 614, PORTABLE CHANGEABLE MESSAGE SIGNS, AS PER PLAN

THE CONTRACTOR SHALL FURNISH, INSTALL, MAINTAIN AND REMOVE, WHEN NO LONGER NEEDED, A CHANGEABLE MESSAGE SIGN. THE SIGN SHALL BE OF A TYPE SHOWN ON A LIST OF APPROVED PCMS UNITS AVAILABLE ON THE OFFICE OF MATERIALS MANAGEMENT WEB PAGE. THE LIST CONTAINS CLASS A AND B UNITS WITH MINIMUM LEGIBILITY DISTANCES OF 800 FEET AND 650 FEET, RESPECTIVELY.

EACH SIGN SHALL BE TRAILER-MOUNTED AND EQUIPPED WITH A FUNCTIONAL DIMMING MECHANISM, TO DIM THE SIGN DURING DARKNESS, AND A TAMPER AND VANDAL PROOF ENCLOSURE. EACH SIGN SHALL BE PROVIDED WITH APPROPRIATE TRAINING AND OPERATION INSTRUCTIONS TO ENABLE ON-SITE PERSONNEL TO OPERATE AND TROUBLESHOOT THE UNIT. THE SIGN SHALL ALSO BE CAPABLE OF BEING POWERED BY AN ELECTRICAL SERVICE DROP FROM A LOCAL UTILITY COMPANY. THE PCMS SHALL BE DELINEATED IN ACCORDANCE WITH C&MS 614.03.

1 PORTABLE CHANGEABLE MESSAGE SIGN SHALL BE PLACED IN THE RIGHT SHOULDER OF IR-75 1 MILE IN ADVANCE OF THE START OF SHOULDER TAPER FOR BOTH PHASES OF MOT. THE PCMS SHALL BE LOCATED IN A HIGHLY VISIBLE POSITION YET PROTECTED FROM TRAFFIC. THE CONTRACTOR SHALL, AT THE DIRECTION OF THE ENGINEER, RELOCATE THE PCMS TO IMPROVE VISIBILITY OR ACCOMMODATE CHANGED CONDITIONS. WHEN NOT IN USE, THE PCMS SHALL BE TURNED OFF. ADDITIONALLY, WHEN NOT IN USE FOR EXTENDED PERIODS OF TIME, THE PCMS SHALL BE TURNED AWAY FROM ALL TRAFFIC.

THE ENGINEER SHALL BE PROVIDED ACCESS TO EACH SIGN UNIT AND SHALL BE PROVIDED WITH APPROPRIATE TRAINING AND OPERATION INSTRUCTIONS TO ENABLE ODOT PERSONNEL TO OPERATE AND TROUBLESHOOT THE UNIT, AND TO REVISE SIGN MESSAGES, IF NECESSARY.

(THE CONTRACTOR SHALL IMPLEMENT A SYSTEM WHEREBY CHANGEABLE MESSAGES WILL BE IMPLEMENTED WITHIN 2 HOURS FOLLOWING TELEPHONE NOTIFICATION FROM THE PROJECT ENGINEER TO A DESIGNATED PHONE.)

ALL MESSAGES TO BE DISPLAYED ON THE SIGN WILL BE PROVIDED BY THE ENGINEER. A LIST OF ALL REQUIRED PRE-PROGRAMMED MESSAGES WILL BE GIVEN TO THE CONTRACTOR AT THE PROJECT PRECONSTRUCTION CONFERENCE. THE SIGN SHALL HAVE THE CAPABILITY TO STORE UP TO 99 MESSAGES. MESSAGE MEMORY OR PRE-PROGRAMMED DISPLAYS SHALL NOT BE LOST AS A RESULT OF POWER FAILURES TO THE ON-BOARD COMPUTER. THE SIGN LEGEND SHALL BE CAPABLE OF BEING CHANGED IN THE FIELD. THREE-LINE PRESENTATION FORMATS WITH UP TO SIX MESSAGE PHASES SHALL BE SUPPORTED. PCMS FORMAT SHALL PERMIT THE COMPLETE MESSAGE FOR EACH PHASE TO BE READ AT LEAST TWICE.

THE PCMS SHALL CONTAIN AN ACCURATE CLOCK AND PROGRAMMING LOGIC WHICH WILL ALLOW THE SIGN TO BE ACTIVATED, DEACTIVATED OR MESSAGES CHANGED AUTOMATICALLY AT DIFFERENT TIMES OF THE DAY FOR DIFFERENT DAYS OF THE WEEK.

(THE PCMS SHALL CONTAIN A CELLULAR TELEPHONE DATA LINK WHICH WILL (IN ACTIVE CELLULAR PHONE AREAS) ALLOW REMOTE SIGN ACTIVATION, MESSAGE CHANGES, MESSAGE ADDITIONS AND REVISIONS TO TIME OF DAY PROGRAMS. THE SYSTEM SHALL ALSO PERMIT VERIFICATION OF CURRENT AND PROGRAMMED MESSAGES. ONE REMOTE DATA INPUT DEVICE (LAPTOP COMPUTER PLUS MODEM OR EQUIVALENT) SHALL BE FURNISHED FOR USE BY THE DISTRICT TRAFFIC ENGINEER, OR EQUIVALENT, AND SHALL BE INSURED AGAINST THEFT.) THE PCMS UNIT SHALL BE MAINTAINED IN GOOD WORKING ORDER BY THE CONTRACTOR IN ACCORDANCE WITH THE PROVISIONS OF C&MS 614.07. THE CONTRACTOR SHALL, PRIOR TO ACTIVATING THE UNIT, MAKE ARRANGEMENTS, WITH AN AUTHORIZED SERVICE AGENT FOR THE PCMS, TO ASSURE PROMPT SERVICE IN THE EVENT OF FAILURE. ANY FAILURE SHALL NOT RESULT IN THE SIGN BEING OUT OF SERVICE FOR MORE THAN 12 HOURS, INCLUDING WEEKENDS. FAILURE TO COMPLY MAY RESULT IN AN ORDER TO STOP WORK AND OPEN ALL TRAFFIC LANES AND/OR IN THE DEPARTMENT TAKING APPROPRIATE ACTION TO SAFELY CONTROL TRAFFIC. THE ENTIRE COST TO CONTROL TRAFFIC, ACCRUED BY THE DEPARTMENT DUE TO THE CONTRACTOR'S NONCOMPLIANCE, WILL BE DEDUCTED FROM MONEYS DUE, OR TO BECOME DUE THE CONTRACTOR ON HIS CONTRACT.

THE CONTRACTOR SHALL BE RESPONSIBLE FOR 24-HOUR-PER-DAY OPERATION AND MAINTENANCE OF THESE SIGNS ON THE PROJECT FOR THE DURATION OF THE PHASES WHEN THE PLAN REQUIRES THEIR USE.

PAYMENT FOR THE ABOVE DESCRIBED ITEM SHALL BE AT THE CONTRACT UNIT PRICE. PAYMENT SHALL INCLUDE ALL LABOR, MATERIALS, EQUIPMENT, FUELS, LUBRICATING OILS, SOFTWARE, HARDWARE AND INCIDENTALS TO PERFORM THE ABOVE DESCRIBED WORK.

ITEM 614, PORTABLE CHANGEABLE MESSAGE SIGN, AS PER PLAN CLASS 1 SIGN MONTH ASSUMING 2 PCMS SIGN(S) FOR 10 MONTH(S)

WORK ZONE QUEUE DETECTION WARNING SYSTEM

THE CONTRACTOR SHALL FURNISH, INSTALL, AND MAINTAIN AN APPROVED WORK ZONE QUEUE DETECTION WARNING SYSTEM (WZQDWS) AS PER SUPPLEMENTAL SPECIFICATION 896.

THE PROBABLE INITIAL LOCATIONS OF THE WZQDWS DEVICES ARE SHOWN ON SHEET(S) 11-20 OF THE PLAN. IT IS EXPECTED THAT THESE LOCATIONS WILL VARY BASED ON PLANNED OR UNPLANNED PHASE AND TRAFFIC PATTERN CHANGES. PLACEMENT, OPERATION, MAINTENANCE AND ALL ACTIVATION OF THE DEVICES BY THE CONTRACTOR SHALL BE DIRECTED BY THE ENGINEER.

THE FOLLOWING TRAFFIC SENSOR THRESHOLDS AND PORTABLE CHANGEABLE MESSAGE SIGNS (PCMS) MESSAGES SHALL BE USED:

GREATER THAN OR EQUAL TO 50 MPH - USE FOUR CORNER FLASHING CAUTION MODE BETWEEN 50 MPH AND 25 MPH - TRAFFIC AHEAD XX MPH / SLOW DOWN BELOW OR EQUAL TO 25 MPH - TRAFFIC AHEAD XX MPH / PREPARE TO STOP

FOUR CORNER FLASHING CAUTION MODE SHALL CONSIST OF THE USE OF ONE ASTERISK IN EACH CORNER OF THE PCMS DISPLAY (4 TOTAL ASTERISKS).

XX SHALL BE ROUNDED UP TO THE NEAREST MULTIPLE OF 5 MPH MINUS 1. OCCUPANCY MAY BE DIRECTED TO BE USED BASED ON CERTAIN TRAFFIC CONDITIONS AND SCENARIOS. ODOT WILL DIRECT THE CONTRACTOR OF THE THRESHOLDS TO BE USED FOR THOSE AREAS WHERE OCCUPANCY IS DIRECTED TO BE USED.

THE FOLLOWING ESTIMATED QUANTITY HAS BEEN CARRIED TO THE GENERAL SUMMARY.

ITEM 896, PORTABLE NON-INTRUSIVE TRAFFIC SENSOR, CLASS 1 SIGN MONTH ASSUMING 8 SENSOR(S) FOR 10 MONTH(S)

ITEM 896, PORTABLE CHANGEABLE MESSAGE SIGN, AS PER PLAN CLASS 1 SIGN MONTH ASSUMING 2 PCMS SIGN(S) FOR 10 MONTH(S)

PERMITTED LANE CLOSURE SCHEDULE (PLCS)

LANE CLOSURE(S) SHALL CONFORM TO THE PLCS. PUBLISHED PLCS INFORMATION CAN BE FOUND ON THE ODOT WEBSITE AT: HTTPS://WWW.TRANSPORTATION.OHIO.GOV/WPS/PORTAL/GOV/ODOT/WORKING/DATA-TOOLS/RESOURCES/PERMITTED-LANE-CLOSURE

THE MONTHLY PUBLISHED SCHEDULES REQUIRED TO BE USED, FOR EACH PLCS SEGMENT WITHIN THE PROJECT AREA, ARE THOSE THAT COMPRISE THE CONSECUTIVE 12-MONTH PERIOD BEGINNING 15 MONTHS PRIOR TO THE MONTH AND YEAR OF SALE AND ENDING 4 MONTHS PRIOR TO THE MONTH AND YEAR OF SALE. THESE SAME 12 MONTHS APPLY FOR THE LIFE OF THE PROJECT AND SHALL BE APPLIED TO EACH RESPECTIVE MONTH OF CONSTRUCTION (MONTH OF LANE CLOSURE(S) SHALL MATCH MONTH OF PLCS USED). LANE CLOSURE(S) IN PLACE FOR MULTIPLE MONTHS SHALL ALWAYS COMPLY WITH THE CURRENT RESPECTIVE MONTH.

(FOR EXAMPLE: IF THE SALE DATE FOR THE PROJECT WAS MARCH OF 2021, THE MONTHLY PUBLISHED SCHEDULES FOR EACH APPLICABLE PLCS SEGMENT WOULD BE DECEMBER 2019 TO NOVEMBER 2020. IF THIS WAS A THREE-YEAR PROJECT, YEAR THREE WOULD STILL BE USING THE DECEMBER 2019 TO NOVEMBER 2020 MONTHLY SCHEDULES. IF THE PROJECT DESIRED TO CLOSE TWO LANES IN JUNE 2021, REFERENCE WOULD BE MADE TO THE JUNE 2020 SCHEDULE(S) FOR THE RESPECTIVE PLCS SEGMENT(S). IF THE SAME TWO LANES WERE DESIRED TO BE CLOSED AGAIN IN JULY 2021, REFERENCE WOULD BE MADE TO THE JULY 2020 SCHEDULE(S) FOR THE RESPECTIVE PLCS SEGMENT(S).)

MORE RESTRICTIVE CHANGES TO THE ALLOWABLE LANE CLOSURE HOURS ARE AT THE DISCRETION OF THE ENGINEER IN ORDER TO COMPLY WITH THE TRAFFIC MANAGEMENT IN WORK ZONES POLICY (21-008(P)) AND STANDARD PROCEDURE (123-001(SP)).

LESS RESTRICTIVE CHANGES TO THE ALLOWABLE LANE CLOSURE HOURS ARE SUBJECT TO THE TRAFFIC MANAGEMENT IN WORK ZONES POLICY (21-008(P)) AND STANDARD PROCEDURE (123-001(SP)) AND SHALL NOT BE IMPLEMENTED UNTIL, AND UNLESS, APPROVED BY THE PROPER ODOT AUTHORITY. [EXISTING MOT EXCEPTIONS THAT HAVE ALREADY BEEN APPROVED IN ACCORDANCE TO THE TRAFFIC MANAGEMENT IN WORK ZONES POLICY AND STANDARD PROCEDURE ARE DETAILED IN THE APPROVED MAINTENANCE OF TRAFFIC (MOT) POLICY EXCEPTION(S) PLAN NOTE.]

ALLOWABLE LANE CLOSURE HOURS FOR FACILITIES NOT COVERED BY THE PLCS, IF ANY, SHALL BE AS SPECIFIED ELSEWHERE IN THE PLANS.

MOT NOTES

DESIGN AGENCY

DESIGNER BCP

REVIEWER SRK 01-10-25

PROJECT ID 120341

SHEET 8 TOTAL 51

HAM-75-10.15

MODEL: Sheet_SurvFt PAPERSIZE: 34x22 (in.) DATE: 8/12/2025 TIME: 9:21:28 AM USER: bpeters1
pw:\\ohiodot-pw.bentley.com:ohiodot-pw-02\Documents\01 Active Projects\District 08\Hamilton\120341\400-Engineering\MOT\Sheets\120341_MN002.dgn

WORK ZONE MARKINGS AND SIGNS

THE FOLLOWING ESTIMATED QUANTITIES HAVE BEEN CARRIED TO THE GENERAL SUMMARY FOR USE AT LOCATIONS IDENTIFIED BY THE ENGINEER FOR WORK ZONE PAVEMENT MARKINGS AND SIGNS PER THE REQUIREMENTS OF C&MS 614.04 AND 614.11.

EXISTING PAVEMENT
ITEM 614, WORK ZONE EDGE LINE, CLASS I, 642 PAINT (WHITE), 0.43 MILES

ITEM 614, WORK ZONE LANE LINE, CLASS I, 642 PAINT, 1.8 MILES

PAVEMENT PATCHING
ITEM 614, WORK ZONE EDGE LINE, CLASS I, 642 PAINT (WHITE), 0.03 MILES

ITEM 614, WORK ZONE LANE LINE, CLASS I, 642 PAINT, 0.03 MILES

SURFACE COURSE RESURFACING
ITEM 614, WORK ZONE EDGE LINE, CLASS I, 642 PAINT (WHITE), 9.45 MILES

ITEM 614, WORK ZONE LANE LINE, CLASS I, 642 PAINT, 7.86 MILES

ITEM 614, WORK ZONE DOTTED LINE, CLASS I, 642 PAINT, 336 FEET

ITEM 614, WORK ZONE TRANSVERSE/DIAGONAL LINE, CLASS I, 642 PAINT, 1293 FEET

ITEM 614, WORK ZONES STOP LINE, CLASS I, 642 PAINT, 69 FEET

TRANSPORTATION MANAGEMENT PLAN - DESIGNATED TRAINED PERSON

TRANSPORTATION MANAGEMENT PLAN – DESIGNATED TRAINED PERSON
ACCESS MANAGEMENT FOR DAILY/NIGHTLY WORK OPERATIONS
ACCESS MANAGEMENT IS PART OF THE CONTRACTOR'S MEANS AND METHODS. IT IS ANTICIPATED THAT EQUIPMENT WILL BE TRAILERED IN/OUT OF THE WORK AREA OR DRIVEN ACROSS LANES OF TRAFFIC SINCE THE MEDIAN BARRIER RESTRICTS AVAILABLE STAGING AREAS. IF THE CONTRACTOR ELECTS TO CROSS OPEN LANES OF TRAVEL, MT-99.60 IS THE GOVERNING STANDARD EXCEPT AS FOLLOWS:

THE SHORT DURATION CLOSURE IS PERMITTED TO BE PERFORMED BETWEEN 10:00 PM AND 5:00 AM; THE DURATION OF THE CLOSURE SHALL NOT EXCEED 5 MINUTES; AND ALL EQUIPMENT SHALL CROSS PERPENDICULAR TO THE ROAD. REMOVE, TURN, OR COVER ALL SIGNS USED IN THE SHORT-DURATION CLOSURE IF THE NEXT SHORT-DURATION CLOSURE WILL OCCUR MORE THAN 2 HOURS LATER. THIS INCLUDES TURNING OFF OR REVISING THE MESSAGE ON THE PORTABLE CHANGEABLE MESSAGE SIGN. ALL COSTS ASSOCIATED WITH ACCESS MANAGEMENT INCLUDING LAW ENFORCEMENT OFFICERS AND PORTABLE CHANGEABLE MESSAGE SIGNS SHALL BE INCLUDED IN THE LUMP SUM CONTRACT PRICE FOR ITEM 614, MAINTAINING TRAFFIC.

LANE VALUE CONTRACT TABLE

DESCRIPTION OF CRITICAL LANE/RAMP TO BE MAINTAINED	RESTRICTED TIME PERIOD	TIME UNIT	
ALL LANES ON I-75 OPEN TO TRAFFIC (VARIOUS LOCATIONS)	SEE PERMITTED LANE CLOSURE SCHEDULE	1 MINUTE	$450
ONE LANE TWO-WAY TRAFFIC BY USE OF FLAGGERS ON LOCAL ROADS	NONE	1 MINUTE	$20
LOCAL RAMPS TO/FROM I-75 (NOT INCLUDING SR 126)	5 AM TO 10 PM	1 MINUTE	$70
WYOMING AVENUE: ALL LANES OPEN TO TRAFFIC	6 AM TO 8 PM	1 MINUTE	$40

TRANSPORTATION MANAGEMENT PLAN - DESIGNATED TRAINED PERSON

TRANSPORTATION MANAGEMENT PLAN – DESIGNATED TRAINED PERSON
ENSURE ALL INDIVIDUALS CONTRACTED BY, SECURED BY, DIRECTED BY OR EMPLOYED BY THE CONTRACTOR WHOM ARE INVOLVED IN THE DEVELOPMENT, DESIGN, IMPLEMENTATION, OPERATION, INSPECTION AND ENFORCEMENT OF WORK ZONE RELATED TRANSPORTATION MANAGEMENT AND TRAFFIC CONTROL HAVE BEEN TRAINED APPROPRIATE TO THE JOB DECISIONS EACH INDIVIDUAL IS REQUIRED TO MAKE. REPEAT TRAINING IN INTERVALS OF NO MORE THAN 5 YEARS TO REFLECT CHANGING PRACTICES.

DESIGNATE A TRAINED PERSON AT THE PROJECT LEVEL THAT HAS THE PRIMARY RESPONSIBILITY AND SUFFICIENT AUTHORITY FOR IMPLEMENTING AND MAINTAINING THE TRANSPORTATION MANAGEMENT PLAN (TMP) AND OTHER SAFETY AND MOBILITY ASPECTS OF THE PROJECT. FOR INFORMATION AND REQUIREMENTS REGARDING TMPS AND RELATED COMPONENTS SEE ODOT TRAFFIC MANAGEMENT IN WORK ZONES POLICY (21-008(P)) AND STANDARD PROCEDURE (123-001(SP)). MAINTAIN A 24-HOUR CONTACT FOR THE DESIGNATED TRAINED PERSON AND PROVIDE THIS CONTACT INFORMATION TO THE ENGINEER AT THE PRECONSTRUCTION CONFERENCE. THE DESIGNATED TRAINED PERSON SHALL BE PRESENT ON SITE FOR, AND INVOLVED WITH, EACH TEMPORARY TRAFFIC CONTROL SET UP/TAKE DOWN AND EACH PHASE CHANGE.

THE DUTIES OF THE DESIGNATED TRAINED PERSON ARE AS FOLLOWS:

1. BE AVAILABLE ON A 24-HOUR PER DAY BASIS IN ACCORDANCE WITH CMS 614.03.
2. BE AWARE OF ALL EXISTING AND PROPOSED TTC OPERATIONS OF THE CONTRACTOR, SUBCONTRACTORS AND SUPPLIERS, AND ENSURE COORDINATION OCCURS BETWEEN THEM TO ELIMINATE CONFLICTING TEMPORARY AND/OR PERMANENT TRAFFIC CONTROL.
3. BE PRESENT, ON SITE FOR, AND INVOLVED WITH, EACH TEMPORARY TRAFFIC CONTROL (TTC) SET UP/TAKE DOWN AND EACH PHASE CHANGE IN ACCORDANCE WITH CMS 614.03.
4. ENSURE THAT THE TTC ZONE AND ALL RELATED DEVICES ARE INSTALLED, MAINTAINED AND REMOVED IN COMPLIANCE WITH THE CONTRACT DOCUMENTS.
5. FACILITATE CORRECTIVE ACTION(S) NECESSARY TO BRING DEFICIENT TTC ZONES AND ALL RELATED DEVICES INTO COMPLIANCE WITH CONTRACT DOCUMENTS IN THE TIMEFRAME DETERMINED BY THE ENGINEER.

THE DEPARTMENT WILL DEDUCT:

A. THE PRORATED DAILY AMOUNT OF ITEM 614 MAINTAINING TRAFFIC FOR ANY DAY IN WHICH THE DESIGNATED TRAINED PERSON FAILS TO PERFORM THE DUTIES SET FORTH ABOVE. THE PRORATED DAILY AMOUNT WILL BE EQUAL TO THE ORIGINAL BID AMOUNT FOR ITEM 614 MAINTAINING TRAFFIC DIVIDED BY THE DIFFERENCE BETWEEN THE ORIGINAL COMPLETION DATE AND THE FIRST DAY OF WORK, IN CALENDAR DAYS.

B. 1% OF THE ORIGINAL BID AMOUNT FOR ITEM 614 MAINTAINING TRAFFIC FOR ANY DAY THAT A TTC ISSUE IS IDENTIFIED IN THE FIELD AND IS NOT CORRECTED IN THE GIVEN TIMEFRAME PER THE ENGINEER. DEDUCTION B SHALL NOT APPLY TO SITUATIONS COVERED BY DEDUCTION C.

C. 1% OF THE ORIGINAL BID AMOUNT FOR ITEM 614 MAINTAINING TRAFFIC FOR ANY DAY THAT A LANE OR RAMP IS BLOCKED (FULLY OR PARTIALLY) WITHOUT TTC, AS DETERMINED BY THE ENGINEER. THIS DEDUCTION SHALL BE IN ADDITION TO ANY OTHER DISINCENTIVES ESTABLISHED FOR UNAUTHORIZED LANE USE. FOR DAYS IN WHICH MORE THAN ONE DEDUCTION LISTED ABOVE OCCUR, THE HIGHEST DEDUCTION AMOUNT WILL APPLY. PAYMENT FOR THE ABOVE REQUIREMENTS, RESPONSIBILITIES AND DUTIES SHALL BE INCLUDED IN THE LUMP SUM PRICE BID FOR ITEM 614, MAINTAINING TRAFFIC.

INTERIM COMPLETION REQUIREMENTS

THE PROJECT HAS AN INTERIM COMPLETION DATE OF 10/1/2025. ALL WORK, INCLUDING PAVEMENT REPAIRS AND RESURFACING, THAT STARTS IN CALENDAR YEAR 2025 SHALL BE COMPLETED WITH THE ENTIRE PAVEMENT WIDTH AND THE ENTIRE PROJECT LENGTH ON/OR BEFORE THE INTERIM COMPLETION DATE. THIS REQUIREMENT APPLIES TO EACH DIRECTION OF I-75 INDIVIDUALLY. ON/OR BEFORE THE INTERIM COMPLETION DATE, THE ROADWAY SHALL BE PLACED IN THE FINAL CONDITION WITH ALL PAVEMENT MARKINGS AND RAISED PAVEMENT MARKERS IN PLACE AND OPEN TO TRAFFIC. THIS INTERIM COMPLETION REQUIREMENT DOES NOT APPLY TO GROOVED RECESSED PAVEMENT MARKINGS.

THE CONTRACTOR SHALL BE ASSESSED A DAILY DISINCENTIVE IN THE AMOUNT OF $3,500 PER DAY FOR FAILURE TO COMPLETE ALL THE REQUIRED WORK AND ASSOCIATED INCIDENTALS REALTED TO THE WORK. DAILY DISINCENTIVES ARE APPLICABLE TO THE WORK REQUIRED TO THE INTERIM COMPLETION DATE ONLY. THE CONTRACTOR IS STILL SUBJECT TO LIQUIDATED DAMAGES AS OUTLINED IN CMS 108.07 FOR THE REMAINDER OF THE CONTRACT.

DESCRIPTION OF CRITICAL LANE/RAMP TO BE MAINTAINED	COMPLETION DATE	TIME UNIT	DISINCENTIVE $ PER TIME PERIOD
I-75 IN EITHER DIRECTION: WORK STARTED IN 2025 SHALL BE COMPLETED IN THE ENTIRETY OF THAT DIRECTION INCLUDING RPMs	10/1/2025	DAY	$3,500

ITEM 900, SPECIAL - RAILROAD FLAGGING SERVICES

FLAGGING FOR WORK ON RAILROAD RIGHT OF WAY SHALL BE COORDINATED, OBTAINED AND PAID FOR BY THE CONTRACTOR. REQUIRED BY THE NORFOLK SOUTHERN SPECIAL PROVISIONS FOR THE PROTECTION OF RAILWAY INTEREST. NORFOLK SOUTHERN SHALL APPROVE THE FLAGGING SERVICE PROVIDER AND THEIR STAFF

NORFOLK SOUTHERN HAS THE SOLE AUTHORITY TO DETERMINE THE NEED FOR PROTECTION SERVICES TO PROTECT ITS OPERATIONS IN GENERAL. THE REQUIREMENTS OF SUCH SERVICES WILL BE WHENEVER THE CONTRACTOR'S PERSONNEL OR EQUIPMENT ARE OR ARE LIKELY TO BE, WORKING ON THE RAILROAD'S RIGHT OF WAY, OR ACROSS, OVER, ADJACENT TO, OR UNDER A TRACK, OR WHEN SUCH WORK HAS DISTURBED OR IS LIKELY TO DISTURB A RAILROAD STRUCTURE OR THE RAILROAD ROADBED OR SURFACE AND ALIGNMENT OF ANY TRACK TO SUCH EXTENT THAT THE MOVEMENT OF TRAINS MUST BE CONTROLLED BY FLAGGING.

THE TOTAL DOLLARS IN THE ESTIMATED QUANTITIES IS BASED UPON AN ESTIMATE OF TOTAL FLAGGING DOLLARS NEEDED TO COMPLETE THE PLANNED WORK.

ONLY THE FOLLOWING CERTIFIED FLAGGING PROVIDERS ARE ACCEPTABLE BY NORFOLK SOUTHERN:

RAILPROS
FIELD SUPPORT TEAM
877-315-0513 (OPTION 1)
NS.INFO@RAILPROS.COM
ADAM BROWN
334-530-2861
ADAM.BROWN@RAILPROS.COM

R&R CONSULTING TEAM
DAVID N. CRAFT
PO BOX 4739
HARRISBURG, PA 17111
717-497-4373 (CELL)
775-521-2495 (E-FAX)
DCRAFT@RRCONSULTINGTEAM.COM
WWW.RRCONSULTINGTEAM.COM

NORTH CAROLINA RAILROAD COMPANY
PP@NCRR.COM
JOHN GASS
JGASS@NCRR.COM; 864-504-0455
HTTPS://WWW.NCRR.COM/

PAYMENT FOR CERTIFIED FLAGGING PROVIDERS WILL BE MADE PER ITEM 900, SPECIAL - RAILROAD FLAGGING SERVICES, EACH BASED UPON THE INVOIES RECEIVED FROM THE FLAGGING SERVICE FOR THE DOLLARS USED, INCLUDING A FIVE PERCENT MARKUP FOR CONRACOTR OVERHEAD FOR ADMINSTERING THE CONTRACT WITH THE FLAGGING SERVICE. AN ESTIMATED QUANTITY OF $5000 HAS BEEN CARRIED TO THE GENERAL SUMMARY.

IN THE EVENT THE PROJECT IS DELAYED DUE TO RAILROAD FLAGGER AVAILABILITY, THE CONTRACTOR WILL PROVDE DOCUMENTATION SUPPORTING THEIR EFFORTS TOSCHEDULE A FLAGGER FROM THE FLAGGING SERVICE.

WORK ZONE MARKINGS AND SIGNS

THE FOLLOWING ESTIMATED QUANTITIES HAVE BEEN CARRIED TO THE GENERAL SUMMARY FOR USE AT LOCATIONS IDENTIFIED BY THE ENGINEER FOR WORK ZONE PAVEMENT MARKINGS AND SIGNS PER THE REQUIREMENTS OF C&MS 614.04 AND 614.11.

SURFACE COURSE:
ITEM 614-WZ EDGE LINE, CLASS I, 642 PAINT - 9.41 MILES
ITEM 614-WZ LANE LINE, CLASS I, 6", 642 PAINT - 7.82 MILES
ITEM 614-WZ CHANNELIZING LINE, CLASS I, 12", 642 PAINT - 5125 FEET
ITEM 614-WZ DOTTED LINE, CLASS I, 6", 642 PAINT - 5787 FEET
ITEM 614-WZ STOP LINE, CLASS I, 642 PAINT - 69 FEET
ITEM 614-WZ TRANSVERSE/DIAGONAL LINE, CLASS 1, 642 PAINT - 635 FEET

MOT NOTES

DESIGN AGENCY

DESIGNER BCP
REVIEWER SRK 01-10-25
PROJECT ID 120341
SHEET 9 TOTAL 52

HAM-75-10.15

MODEL: Sheet_Surv1 PAPERSIZE: 34x22 (in.) DATE: 8/22/2025 TIME: 3:24:43 PM PLTDRV: OHDOT_PDF.pltcfg PENTBL: OHDOT_Pen.tbl USER: Benjamin.Peters@dot.ohio.gov WORKSPACE: OHDOTCEv02 WORKSET: 120341 PRODUCT: OpenRoadsDesigner 24.00.00.205
pw:\\ohiodot-pw.bentley.com:ohiodot-pw-02\Documents\01 Active Projects\District 08\Hamilton\120341400-Engineering\MOT\Sheets\120341_MN003.dgn

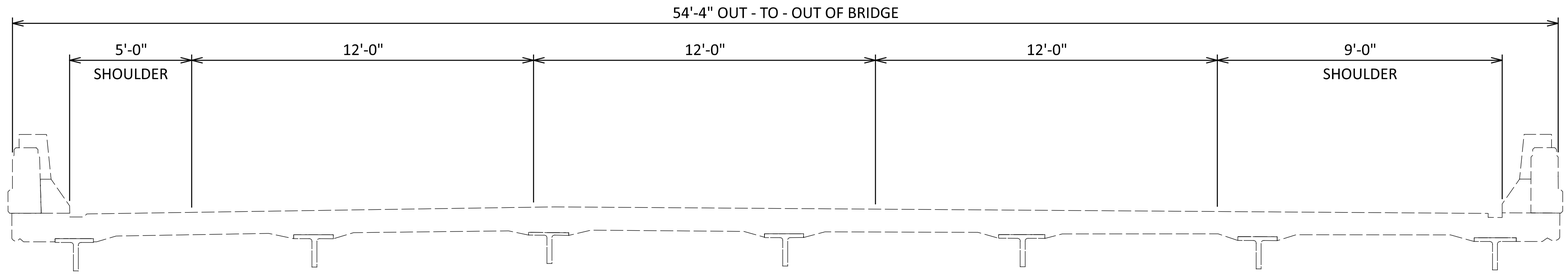

HAM-75-11.92R EXISTING ALIGNMENT

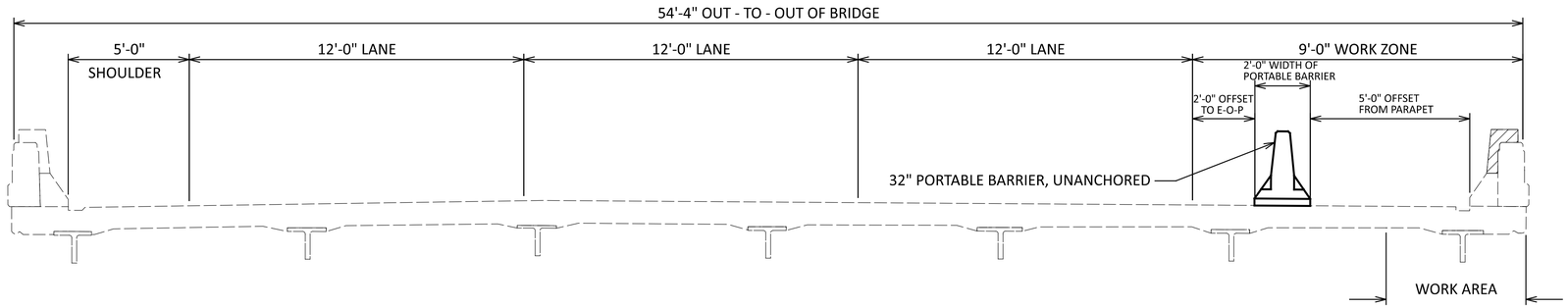

MAINTENANCE OF TRAFFIC - PHASE 1

LEGEND

- *AREA TO BE REPAIRED PARTIAL HEIGHT OF BRIDGE RAILING*

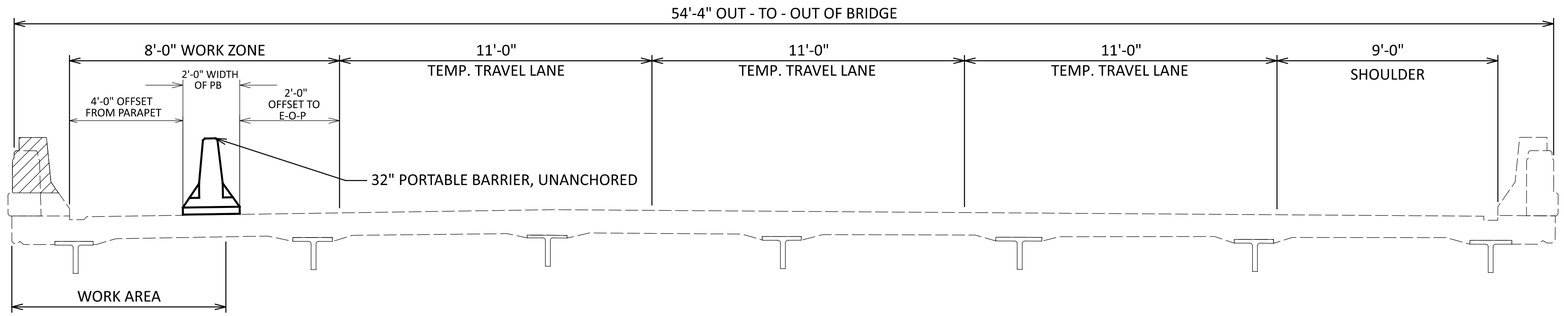

MAINTENANCE OF TRAFFIC - PHASE 2

PHASE CONSTRUCTION DETAILS - 1
BRIDGE No.: HAM-75-1192R
I-75 OVER EAST FORK MILL CREEK

SFN 3110656
DESIGN AGENCY
DESIGNER BCP | CHECKER SRK
REVIEWER SRK 01-10-2025
PROJECT ID 120341
SUBSET 1 | TOTAL 1
SHEET 10 | TOTAL 52

HAM-75-10.15

MODEL: Sheet_Surv ft PAPERSIZE: 34x22 (in.) DATE: 8/12/2025 TIME: 10:52:16 AM PLTDRV: OHDOT_PDF.pltcfg PENTBL: OHDOT_Pen.tbl USER: Benjamin.Peters@dot.ohio.gov WORKSPACE: OHDOTCEv02 WORKSET: 120341 PRODUCT: OpenRoadsDesigner 24.00.00.205
pw:\\ohiodot-pw.bentley.com:ohiodot-pw-02\Documents\01 Active Projects\District 08\Hamilton\120341\400-Engineering\MOT\Sheets\120341_XM001.dgn
(M001.dgn

PHASE NO.	SHEET NO.	STATION FROM	STATION TO	SIDE	LENGTH (FEET)	614 WORK ZONE GATING IMPACT ATTENUATOR, 24" WIDE HAZARDS (UNI-DIR.)	614 BARRIER REFLECTOR, TYPE 1 (BI-DIR.)	614 OBJECT MARKER, ONE-WAY	614 WORK ZONE EDGE LINE, CLASS I, 642 PAINT (WHITE)	614 WORK ZONE LANE LINE, CLASS I, 6", 642 PAINT	614 WORK ZONE DOTTED LINE, CLASS I, 6", 642 PAINT		621 RPM		622 PORTABLE BARRIER, UNANCHORED
						EACH	EACH	EACH	MILE	MILE	FEET		EACH		FT
1	13-14	195+36	197+25	RT	189	1	4	4	0.04				2		189
1	15	204+00	207+50	RT	350	1	7	7	0.07				3		150
2	16-19	178+65	199+65	LT	2100					0.9	2100		39		
2	16-19	178+65	199+65	RT	2100					0.9	2100		39		
2	16-19	178+65	185+80	LT	715				0.14				6		
2	17	185+50	188+00	LT	250	1	5	5							250
2	18-19	194+75	196+65	LT	190	1	4	4							190
2	17-18	195+65	199+65	LT	400	1			0.08				3		
TOTALS CARRIED TO GENERAL SUMMARY						5	20	20	0.31	1.8	4200		92		779

MAINTENANCE OF TRAFFIC ESTIMATED QUANTITIES

DESIGN AGENCY

DESIGNER BCP

REVIEWER SRK 01-10-25

PROJECT ID 120341

SHEET 11 TOTAL 52

HAM-75-10.15

MODEL: Sheet_SurvF1 PAPERSIZE: 34x22 (in.) DATE: 8/12/2025 TIME: 9:21:55 AM USER: bpeters1
pw:\\ohiodot-pw.bentley.com:ohiodot-pw-02\Documents\01 Active Projects\District 08\Hamilton\120341\400-Engineering\MOT\Sheets\120341_MS001.dgn

MODEL: Sheet_SurvFt PAPERSIZE: 34x22 (in.) DATE: 8/12/2025 TIME: 9:22:09 AM USER: bpeters1
pw:\\ohiodot-pw.bentley.com:ohiodot-pw-02\Documents\01 Active Projects\District 08\Hamilton\120341\400-Engineering\MOT\Sheets\120341_MP006.dgn

MAINTENANCE OF TRAFFIC PHASE 1
HAM-75-1192R

HORIZONTAL SCALE IN FEET
0 20
10 40

DESIGNER: BCP
REVIEWER: SRK 01-10-25
PROJECT ID: 120341
SHEET: 12 TOTAL: 52
DESIGN AGENCY

MODEL: Sheet_SurvFt PAPERSIZE: 34x22 (in.) DATE: 8/12/2025 TIME: 9:22:49 AM USER: bpeters1
pw:\\ohiodot-pw.bentley.com:ohiodot-pw-02\Documents\01 Active Projects\District 08\Hamilton\120341\400-Engineering\MOT\Sheets\120341_MP007.dgn

MAINTENANCE OF TRAFFIC PHASE 1
HAM-75-1192R

HORIZONTAL SCALE IN FEET
0 20
10 40

DESIGN AGENCY

DESIGNER BCP
REVIEWER SRK 01-10-25
PROJECT ID 120341
SHEET 13 TOTAL 52

MODEL: Sheet_SurvFt PAPERSIZE: 34x22 (in.) DATE: 8/12/2025 TIME: 9:23:24 AM USER: bpeters1
pw:\\ohiodot-pw.bentley.com:ohiodot-pw-02\Documents\01 Active Projects\District 08\Hamilton\120341\400-Engineering\MOT\Sheets\120341_MP008.dgn

DESIGNER	REVIEWER	PROJECT ID	SHEET	TOTAL
BCP	SRK 01-10-25	120341	14	52

DESIGN AGENCY

MAINTENANCE OF TRAFFIC PHASE 1
HAM-75-1192R

HORIZONTAL SCALE IN FEET
0 20
10 40

MODEL: Sheet_SurvFt PAPERSIZE: 34x22 (in.) DATE: 8/12/2025 TIME: 9:24:01 AM USER: bpeters1
pw:\\ohiodot-pw.bentley.com:ohiodot-pw-02\Documents\01 Active Projects\District 08\Hamilton\120341\400-Engineering\MOT\Sheets\120341_MP009.dgn

MAINTENANCE OF TRAFFIC PHASE 1
HAM-75-1192R

HORIZONTAL SCALE IN FEET
0 20
10 40

DESIGN AGENCY

DESIGNER BCP
REVIEWER SRK 01-10-25
PROJECT ID 120341
SHEET 15 TOTAL 52

START OF TEMPORARY LANE CHANNELIZING LINES
STA. 178+65.00

START SHIFTING TAPER
STA. 178+65.00

11'

11'

179

180

END SHIFTING TAPER
STA. 180+30.00

181

182

183

184

LEAD IN SIGNS PER MT 102.10

ROAD WORK AHEAD
R4-9-36

W24-1bR-48

W1-H16-36

LEGEND

- WORK AREA
- DRUMS
- PORTABLE BARRIER (PB)
- REMOVE EXISTING MARKINGS
- ATTENUATOR
- DIRECTION OF TRAVEL

HORIZONTAL SCALE IN FEET
0 10 20 40

MAINTENANCE OF TRAFFIC PHASE 2
HAM-75-1192R

DESIGN AGENCY

DESIGNER: BCP
REVIEWER: SRK 01-10-25
PROJECT ID: 120341
SUBSET: 2 TOTAL: 10
SHEET: 16 TOTAL: 52

HAM-75-10.15

MODEL: Sheet_SurvFt PAPERSIZE: 34x22 (in.) DATE: 8/12/2025 TIME: 9:24:35 AM USER: bpeters1
pw:\\ohiodot-pw.bentley.com:ohiodot-pw-02\Documents\01 Active Projects\District 08\Hamilton\120341\V00-Engineering\MOT\Sheets\120341_MP002.dgn

MODEL: Sheet_SurvFt PAPERSIZE: 34x22 (in.) DATE: 8/12/2025 TIME: 9:25:08 AM USER: bpeters1
pw:\\ohiodot-pw.bentley.com:ohiodot-pw-02\Documents\01 Active Projects\District 08\Hamilton\120341\400-Engineering\MOT\Sheets\120341_MP003.dgn

MAINTENANCE OF TRAFFIC PHASE 2
HAM-75-11.92R

HORIZONTAL SCALE IN FEET
0 20
10 40

DESIGNER	DESIGN AGENCY	REVIEWER	PROJECT ID	SUBSET	SHEET
BCP		SRK 01-10-25	120341	3 TOTAL 10	17 TOTAL 52

MODEL: Sheet_SurvFt PAPERSIZE: 34x22 (in.) DATE: 8/12/2025 TIME: 9:25:40 AM USER: bpeters1
pw:\\ohiodot-pw.bentley.com:ohiodot-pw-02\Documents\01 Active Projects\District 08\Hamilton\120341\400-Engineering\MOT\Sheets\120341_MP004.dgn

MAINTENANCE OF TRAFFIC PHASE 2
HAM-75-1192R

HORIZONTAL SCALE IN FEET
0 20
10 40

DESIGN AGENCY

DESIGNER BCP
REVIEWER SRK 01-10-25
PROJECT ID 120341
SHEET 18 TOTAL 52

MODEL: Sheet_SurvFt PAPERSIZE: 34x22 (in.) DATE: 8/12/2025 TIME: 9:26:14 AM USER: bpeters1
pw:\\ohiodot-pw.bentley.com:ohiodot-pw-02\Documents\01 Active Projects\District 08\Hamilton\120341\400-Engineering\MOT\Sheets\120341_MP005.dgn

MAINTENANCE OF TRAFFIC PHASE 2
HAM-75-1192R

DESIGNER: BCP
REVIEWER: SRK 01-10-25
PROJECT ID: 120341
SHEET: 19 TOTAL: 52
DESIGN AGENCY

HORIZONTAL SCALE IN FEET
0 20
10 40

SHEET NUMBER											PART.			ITEM	ITEM EXT	GRAND TOTAL	UNIT	DESCRIPTION	SEE SHEET NO.
5	8	9	11	22	23	24	29	31	40		01/IMS	02/IMS	03/IMS						
																		EROSION CONTROL	
									100,000		100,000			832	30000	100,000	EACH	EROSION CONTROL	
																		ENVIRONMENTAL / REMEDIATION	
											LUMP			SPECIAL	69071000	LS		ASBESTOS ABATEMENT, SUBMITTAL OF OEPA NOTIFICATION OF DEMOLITION OR REMOVAL FORM	
																		ROADWAY	
											LUMP			201	11000	LS		CLEARING AND GRUBBING	
					442							442		202	30000	442	SF	WALK REMOVED	
					58							58		202	32000	58	FT	CURB REMOVED	
												LUMP		SPECIAL	69098400	LS		CONSULTANT FOR CONCRETE QUALITY CONTROL INCLUDING TESTING AND INSPECTION	
					161							161		608	10000	161	SF	4" CONCRETE WALK	
					249							249		608	52001	249	SF	CURB RAMP, AS PER PLAN	
					57							57		609	26000	57	FT	CURB, TYPE 6	
																		PAVEMENT	
1,200												1,200		253	02000	1,200	CY	PAVEMENT REPAIR	
				2								2		253	02001	2	CY	PAVEMENT REPAIR, AS PER PLAN	
				147,834								147,834		254	01000	147,834	SY	PAVEMENT PLANING, ASPHALT CONCRETE, 1.50"	
				1,488								1,488		254	01600	1,488	SY	PATCHING PLANED SURFACE	
				22,175								22,175		407	20000	22,175	GAL	NON-TRACKING TACK COAT	
				4,345								4,345		441	00100	4,345	CY	ANTI-SEGREGATION EQUIPMENT	
				6,249								6,249		442	10300	6,249	CY	ASPHALT CONCRETE SURFACE COURSE, 12.5 MM, TYPE A (447)	
				10.23								10.23		618	40600	10.23	MILE	RUMBLE STRIPS, SHOULDER (ASPHALT CONCRETE)	
				352								352		617	10100	352	CY	COMPACTED AGGREGATE	
				6,343								6,343		617	20000	6,343	SY	SHOULDER PREPARATION	
				7								7		617	25000	7	MGAL	WATER	
																		TRAFFIC CONTROL	
867			92								92	867		621	00100	959	EACH	RPM	
787			92								92	787		621	54000	879	EACH	RAISED PAVEMENT MARKER REMOVED	
						7						7		644	01360	7	EACH	WRONG WAY ARROW	
						69						69		644	00500	69	FT	STOP LINE	
						1,028						1,028		644	00720	1,028	FT	CHEVRON MARKING	
						6						6		644	01300	6	EACH	LANE ARROW	
						635						635		644	00700	635	FT	TRANSVERSE/DIAGONAL LINE	
						9.41						9.41		807	10010	9.41	MILE	WET REFLECTIVE TRAFFIC PAINT, EDGE LINE, 6"	
						7.82						7.82		807	10110	7.82	MILE	WET REFLECTIVE TRAFFIC PAINT, LANE LINE, 6"	
						5,125						5,125		807	10310	5,125	FT	WET REFLECTIVE TRAFFIC PAINT, CHANNELIZING LINE, 12"	
						5,787						5,787		807	10410	5,787	FT	WET REFLECTIVE TRAFFIC PAINT, DOTTED LINE, 6"	
						17.23						17.23		850	10010	17.23	MILE	GROOVING FOR 6" RECESSED PAVEMENT MARKING, (ASPHALT)	
						10,912						10,912		850	10130	10,912	FT	GROOVING FOR 12" RECESSED PAVEMENT MARKING, (ASPHALT)	
																		MAINTENANCE OF TRAFFIC	
				400							400			614	11110	400	HOUR	LAW ENFORCEMENT OFFICER WITH PATROL CAR FOR ASSISTANCE	
			5								5			614	12380	5	EACH	WORK ZONE IMPACT ATTENUATOR, 24" WIDE HAZARDS, (UNIDIRECTIONAL)	
			20								20			614	13310	20	EACH	BARRIER REFLECTOR, TYPE 1 (BI-DIRECTIONAL)	
			20								20			614	13360	20	EACH	OBJECT MARKER, TWO WAY	
	10											10		614	18601	10	SNMT	PORTABLE CHANGEABLE MESSAGE SIGN, AS PER PLAN, ASSUMING 2 PCMS	8
		7.82	0.31								0.31	7.82		614	20110	8.13	MILE	WORK ZONE LANE LINE, CLASS I, 6", 642 PAINT	
		9.41	1.8								1.8	9.41		614	22110	11.21	MILE	WORK ZONE EDGE LINE, CLASS I, 6", 642 PAINT	
		5,125										5,125		614	23200	5,125	FT	WORK ZONE CHANNELIZING LINE, CLASS I, 8", 642 PAINT	
		5,787	4,200								4,200	5,787		614	24202	9,987	FT	WORK ZONE DOTTED LINE, CLASS I, 6", 642 PAINT	
		635										635		614	25200	635	FT	WORK ZONE TRANSVERSE/DIAGONAL LINE, CLASS I, 642 PAINT	
		69										69		614	26200	69	FT	WORK ZONE STOP LINE, CLASS I, 642 PAINT	
			779								779			622	41100	779	FT	PORTABLE BARRIER, UNANCHORED	
	10											10		896	00010	10	SNMT	PORTABLE NON-INTRUSIVE TRAFFIC SENSOR, CLASS I, 8 SENSORS	
	10											10		896	00020	10	SNMT	PORTABLE CHANGEABLE MESSAGE SIGN, 2 PCMS	
																		STRUCTURE REPAIR (HAM-IR 75-11.02R)	
								2					2	519	12300	2	SY	PATCHING CONCRETE BRIDGE DECK - TYPE B	31

GENERAL SUMMARY

DESIGN AGENCY

DESIGNER BCP

REVIEWER JDO 1-17-25

PROJECT ID 120341

SHEET 20 TOTAL 52

HAM-75-10.15

MODEL: Sheet_SurvFt PAPERSIZE: 34x22 (in.) DATE: 8/22/2025 TIME: 3:32:08 PM PLTDRV: OHDOT_PDF.pltcfg PENTBL: OHDOT_Pen.tbl USER: Benjamin.Peters@dot.ohio.gov WORKSPACE: OHDOTCEv02 WORKSET: 120341 PRODUCT: OpenRoadsDesigner 24.00.00.205
pw:\\ohiodot-pw.bentley.com:ohiodot-pw-02\Documents\01 Active Projects\District 08\Hamilton\120341\400-Engineering\Roadway\Sheets\120341_GG001.dgn

SHEET NUMBER											PART.			ITEM	ITEM EXT	GRAND TOTAL	UNIT	DESCRIPTION	SEE SHEET NO.
5	8	9	11	22	23	24	29	31	40		01/IMS	02/IMS	03/IMS						
																		STRUCTURE REPAIR (HAM-75-11.52R)	
								2					2	519	12300	2	SY	PATCHING CONCRETE BRIDGE DECK - TYPE B	31
																		STRUCTURE REPAIR (HAM-75-11.84R)	
								11					11	519	12300	11	SY	PATCHING CONCRETE BRIDGE DECK - TYPE B	31
																		STRUCTURE REPAIR (HAM-75-11.92R)	
											LUMP			202	11203	LS		PORTIONS OF STRUCTURE REMOVED, OVER 20 FOOT SPAN, AS PER PLAN	31
									130		130			202	75000	130	FT	FENCE REMOVED	
								142			142			509	20001	142	LB	CONCRETE REINFORCEMENT, REPLACEMENT OF EXISTING CONCRETE REINFORCEMENT, AS PER PLAN	31
								10			10			510	10001	10	EACH	DOWEL HOLES WITH NONSHRINK, NONMETALLIC GROUT, AS PER PLAN	
								21			21			511	34410	21	CY	CLASS QC2 CONCRETE, SUPERSTRUCTURE	
								316			316			513	95030	316	EACH	STRUCTURAL STEEL, MISC.: STEEL PREPARATION, INSPECTION, AND NDT	31
								2,250			2,250			513	95030	2,250	EACH	STRUCTURAL STEEL, MISC.: WELDING CROSSFRAME STIFFENERS	31
								316			316			513	95030	316	EACH	STRUCTURAL STEEL, MISC.: DRILLING STRUCTURAL STEEL	31
							316				316			514	27702	316	EACH	FIELD PAINTING, MISC.: FIELD PAINTING OF DAMAGED STRUCTURAL STEEL - THREE COAT OZEU SPOT PAINTING	31
											LUMP			514	27800	LS		FIELD PAINTING, MISC.: ZONE PAINTING OF STRUCTURAL STEEL NEAR EXPANSION JOINTS	31
								59			59			518	12700	59	EACH	SCUPPER, VERTICAL EXTENSION	
											LUMP			518	63300	LS		STRUCTURE DRAINAGE, MISC.: CLEANING SCUPPERS AND BRIDGE DRAINAGE SYSTEMS	31
								5			5			519	12300	5	SY	PATCHING CONCRETE BRIDGE DECK - TYPE B	
								3			3			601	32001	3	CY	ROCK CHANNEL PROTECTION, TYPE A WITH FILTER, AS PER PLAN	31
											5,000			SPECIAL	90011000	5,000	EACH	RAILROAD FLAGGING SERVICES	9
																		INCIDENTALS	
											LUMP	LUMP	LUMP	614	11000	LS		MAINTAINING TRAFFIC	
											LUMP	LUMP	LUMP	623	10000	LS		CONSTRUCTION LAYOUT STAKES AND SURVEYING	
											LUMP	LUMP	LUMP	624	10000	LS		MOBILIZATION	

GENERAL SUMMARY

DESIGN AGENCY

DESIGNER BCP

REVIEWER AS 12-20-24

PROJECT ID 120341

SHEET 21 TOTAL 52

HAM-75-10.15

MODEL: Sheet_SurvFl PAPERSIZE: 34x22 (in.) DATE: 8/22/2025 TIME: 3:38:16 PM PLTDRV: OHDOT_PDF.pltcfg PENTBL: OHDOT_Pen.tbl USER: Benjamin.Peters@dot.ohio.gov WORKSPACE: OHDOTCEv02 WORKSET: 120341 PRODUCT: OpenRoadsDesigner 24.00.00.205
pw:\\ohiodot-pw.bentley.com:ohiodot-pw-02\Documents\01 Active Projects\District 08\Hamilton\120341\400-Engineering\Roadway\Sheets\120341_GG002.dgn

LEGEND

- (A) EXISTING 6" ± ASPHALT ON 10" ± CONCRETE
- (1) ITEM 442 - 1.5" ASPHALT CONCRETE SURFACE COURSE, 12.5mm, TYPE A (447)
- (2) ITEM 407 - NON-TRACKING TACK COAT
- (3) ITEM 254 - PAVEMENT PLANING, ASPHALT CONCRETE, 1.5"
- (4) ITEM 617 - COMPACTED AGGREGATE, 2" DEPTH, 12" WIDTH

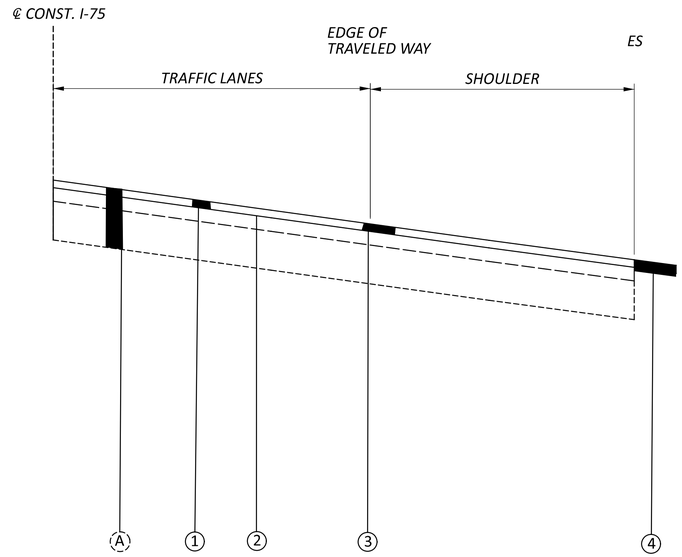

									254			407	442	441	617			618	
PLAN SPLIT	COUNTY-ROUTE	LOG POINT (MILE)		LENGTH		PAVEMENT AREA (MEASURED ELECTRONICALLY)	PAVEMENT AREA WITH NO SHOULDERS	PAVEMENT AREA	PAVEMENT PLANING ASPHALT CONCRETE		PATCHING PLANED SURFACE	NON TRACKING TACK COAT @ 0.09 GAL/SQ YD	ASPHALT CONCRETE SURFACE COURSE, 12.5mm, TYPE A (447)	ANTI-SEGREGATION EQUIPMENT	COMPACTED AGGREGATE, 2" DEPTH, 12" WIDTH	SHOULDER PREPARATION	WATER @ 20 GAL/CU YD	RUMBLE STRIPS, SHOULDER (ASPHALT CONCRETE)	NOTES
		FROM	TO						DEPTH	AREA									
				MILES	FT	SQ FT	SQ FT	SQ YD	INCHES	SQ YD	SQ YD	GAL	CU YD	CU YD	CU YD	SQ YD	MGAL	MILES	
02/IMS/05	HAM-75 NB	10.15	10.65	0.50	2640	150358	105370	16706	1.50	16706.4	168	1503.6	696.1	487.8	32.6	586.7	0.7	1	
02/IMS/05	GALBRAITH RAMP	10.52	10.84	0.32	1690	35006	26903	3890	1.50	3889.6	39	350.1	270.1	207.6	20.9	375.5	0.4	0.46	
02/IMS/05	HAM-75 NB	10.65	10.88	0.23	1220	59609	46018	6623	1.50	6623.2	67	596.1	276.0	213.0	15.1	271.0	0.3	0.38	
02/IMS/05	HAM-75 NB	10.88	11.08	0.20	1051	39201	27258	4356	1.50	4355.7	44	392.0	181.5	126.2	13.0	233.5	0.3	0.28	
02/IMS/05	GALBRAITH RAMP	11.10	11.41	0.31	1610	27676	17790	3075	1.50	3075.1	31	276.8	128.1	82.4	19.9	357.9	0.4	0.37	
02/IMS/05	HAM-75 NB	11.11	11.53	0.42	2218	121207	87170	13467	1.50	13467.4	135	1212.1	561.1	403.6	27.4	492.8	0.5	0.81	
02/IMS/05	HAM-75 NB	11.56	11.86	0.30	1584	84717	62760	9413	1.50	9413.0	95	847.2	392.2	290.6	19.6	352.0	0.4	0.53	
02/IMS/05	DAVIS ST. RAMP	11.69	11.87	0.18	950	24852	16016	2761	1.50	2761.3	28	248.5	115.1	74.1	11.7	211.2	0.2	0.3	
02/IMS/05	HAM-75 NB	11.88	11.94	0.06	317	15942	11143	1771	1.50	1771.3	18	159.4	73.8	51.6	3.9	70.4	0.1	0.12	
02/IMS/05	HAM-75 NB	12.40	12.52	0.12	634	19752	11357	2195	1.50	2194.7	22	197.5	91.4	52.6	7.8	140.8	0.2	0.55	
02/IMS/05	HAM-75 SB	10.15	10.65	0.50	2640	134120	100428	14902	1.50	14902.2	150	1341.2	620.9	464.9	32.6	586.7	0.7	0.83	
02/IMS/05	GALBRAITH RAMP	10.84	11.01	0.17	898	53106	39910	5901	1.50	5900.7	60	531.1	245.9	184.8	11.1	199.5	0.2	0.98	
02/IMS/05	HAM-75 SB	10.65	10.88	0.23	1214	34205	23780	3801	1.50	3800.6	39	342.1	158.4	110.1	15.0	269.9	0.3	0.26	
02/IMS/05	HAM-75 SB	10.88	11.18	0.30	1584	88250	59491	9806	1.50	9805.6	99	882.5	408.6	275.4	19.6	352.0	0.4	0.58	
02/IMS/05	GALBRAITH RAMP	10.90	11.04	0.14	739	19969	18610	2219	1.50	2218.8	23	199.7	92.4	86.2	9.1	164.3	0.2	0.27	
02/IMS/05	HAM-75 SB	11.18	11.62	0.44	2323	150940	95267	16771	1.50	16771.1	168	1509.4	698.8	441.1	28.7	516.3	0.6	1	
02/IMS/05	HAM-75 SB	11.67	12.17	0.50	2640	114107	83446	12679	1.50	12678.6	127	1141.1	528.3	386.3	32.6	586.7	0.7	0.61	
02/IMS/05	COOPER AVE. RAMPS	11.91	12.05	0.14	744	19669	18610	2185	1.50	2185.4	22	196.7	91.1	86.2	9.2	165.4	0.2	0.36	
02/IMS/05	HAM-75 SB	12.17	12.52	0.35	1848	121115	68664	13457	1.50	13457.2	135	1211.1	560.7	317.9	22.8	410.7	0.5	1	
	TOTALS CARRIED TO GENERAL SUMMARY									145978	1470	21897	6191	4342	352	6343	7	10.69	

PAVEMENT SUBSUMMARY

DESIGN AGENCY

DESIGNER NCD

REVIEWER JDO 1-17-25

PROJECT ID 102885

SHEET 22 TOTAL 52

HAM-75-10.15

MODEL: Sheet PAPERSIZE: 34x22 (in.) DATE: 8/12/2025 TIME: 9:27:00 AM USER: bpeters1
pw:\\ohiodot-pw.bentley.com:ohiodot-pw-02\Documents\01 Active Projects\District 08\Hamilton\120341\400-Engineering\Roadway\Sheets\120341_GS001.dgn

(1) ITEM 253 - PAVEMENT REPAIR, AS PER PLAN
(2) ITEM 407 - NON-TRACKING TACK COAT
(3) ITEM 301 - 6" ASPHALT CONCRETE BASE, PG 64-22, 2 - 3" LIFTS
(4) ITEM 304 - 6" AGGREGATE BASE

(5) ITEM 608 - CURB RAMP, AS PER PLAN
(A) EXISTING ASPHALT SECTION

TYPICAL SECTION

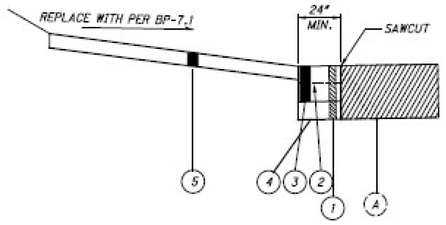

CURB CUT DETAIL

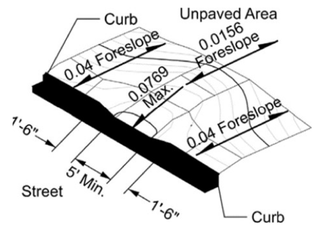

COUNTY	ROUTE	LOGPOINT OR INTERSECTING STREETNAME	FOR INFORMATION ONLY CURB RAMP TYPE PER BP-7.1							202		253	608		609
			TYPE A1	TYPE A2	TYPE B1	TYPE B2	TYPE B3	TYPE C1	TYPE C2	WALK REMOVED	CURB REMOVED	PAVEMENT REPAIR, AS PER PLAN	4" CONCRETE WALK	CURB RAMP, AS PER PLAN	CURB, TYPE 6
										SQ FT	FEET	CU YD	SQ FT	SQ FT	FEET
HAM	I-75	DAVIS ST. (EAST)		1						54.0	7.5	0.3	16	38	8
HAM	I-75	DAVIS ST. (WEST)		1						55.0	6.5	0.2	25	30	6
HAM	I-75	COOPER AVE.		1						55.0	9.2	0.2	25	30	9
HAM	I-75	RAMP TO 75 SOUTH (EAST)					1			88.0	11.0	0.4	28	28	11
HAM	I-75	RAMP TO 75 SOUTH (MEDIAN-EAST)		1						40.0		0.2	16	24	
HAM	I-75	RAMP TO 75 SOUTH (MEDIAN-WEST)	1							84.0	12	0.2	35	49	12
HAM	I-75	RAMP TO GALBRAITH RD.						1		66.0	12.0	0.4	16	50	12
TOTALS CARRIED TO GENERAL SUMMARY										442	58	2	161	249	57

PAVT. MARKING SUBSUMMARY

DESIGN AGENCY

DESIGNER NCD
REVIEWER JDO 1-17-25
PROJECT ID 120341
SHEET 23 TOTAL 52

HAM-75-10.15

MODEL: Sheet_SurvFt PAPERSIZE: 34x22 (in.) DATE: 8/20/2025 TIME: 9:29:10 AM PLTDRV: OHDOT_PDF.pltcfg PENTBL: OHDOT_Pen.tbl USER: Benjamin.Peters@dot.ohio.gov WORKSPACE: OHDOTCEv02 WORKSET: 120341 PRODUCT: OpenRoadsDesigner 24.00.00.205
pw:\\ohiodot-pw.bentley.com:ohiodot-pw-02\Documents\01 Active Projects\District 08\Hamilton\120341400-Engineering\Roadway\Sheets\120341_GS002.dgn

PAVEMENT MARKING SUBSUMMARY

PART	COUNTY-ROUTE	S.L.M.			644 WRONG WAY ARROW EACH	644 STOP LINE FT	644 CHEVRON MARKING FT	644 LANE ARROW EACH	644 TRANSVERSE/DIAGONAL LINE FT		807 WET REFLECTIVE TRAFFIC PAINT, EDGE LINE, 6" * MILE	807 WET REFLECTIVE TRAFFIC PAINT, LANE LINE, 6" MILE	807 WET REFLECTIVE TRAFFIC PAINT, CHANNELIZING LINE, 12" FT	807 WET REFLECTIVE TRAFFIC PAINT, DOTTED LINE, 6" FT		850 GROOVING FOR 6" RECESSED PAVEMENT MARKING, (ASPHALT) MILE	850 GROOVING FOR 12" RECESSED PAVEMENT MARKING, (ASPHALT) FT				
02/IMS	HAM-75 NB	10.15	TO	11.08			224				1.66	1.72	939	1079		3.38	2018				
02/IMS	HAM-75 NB	GALBRAITH RAMP									0.46					0.46					
02/IMS	HAM-75 NB	11.11	TO	11.53			184				0.81	0.81	492	940		1.62	1432				
02/IMS	HAM-75 NB	GALBRAITH RAMP									0.37					0.37					
02/IMS	HAM-75 NB	11.56	TO	11.86			95				0.53	0.64	548	540		1.17	1088				
02/IMS	HAM-75 NB	DAVIS ST. RAMP			2	18					0.3					0.3					
02/IMS	HAM-75 NB	11.88	TO	11.94							0.12	0.12				0.24					
02/IMS	HAM-75 NB	12.4	TO	12.52							0.12	0.12				0.24					
02/IMS	HAM-75 SB	10.15	TO	11.18			448				1.67	2.03	1883	1618		3.7	3501				
02/IMS	HAM-75 SB	RAMP FROM GALBRAITH									0.47					0.47					
02/IMS	HAM-75 SB	RAMP TO GALBRAITH			3	35	77	6			0.27		342			0.27	342				
02/IMS	HAM-75 SB	11.18	TO	12.17							1.61	1.69		1274		3.3	1274				
02/IMS	HAM-75 SB	COOPER AVE. RAMPS			2	16			635		0.36		496			0.36	496				
02/IMS	HAM-75 SB	12.17	TO	12.52							0.66	0.69	425	336		1.35	761				
TOTALS CARRIED TO GENERAL SUMMARY					7	69	1028	6	635		9.41	7.82	5125	5787		17.23	10912				

** WHITE EDGE LINE: 4.50 MILES*

YELLOW EDGE LINE: 4.91 MILES

DESIGN AGENCY

DESIGNER NCD

REVIEWER JDO 1-17-25

PROJECT ID 120341

SHEET 24 TOTAL 52

HAM-75-10.15

MODEL: Sheet_SurvFt PAPERSIZE: 34x22 (in.) DATE: 8/20/2025 TIME: 9:38:27 AM PLTDRV: OHDOT_PDF.pltcfg PENTBL: OHDOT_Pen.tbl USER: Benjamin.Peters@dot.ohio.gov WORKSPACE: OHDOTCEv02 WORKSET: 120341 PRODUCT: OpenRoadsDesigner 24.00.00.205
pw:\\ohiodot-pw.bentley.com:ohiodot-pw-02\Documents\01 Active Projects\District 08\Hamilton\120341400-Engineering\Roadway\Sheets\120341_GS003.dgn

Davis St.

West Ramp

Legend

NOT TO SCALE

CURB RAMP DETAILS (DAVIS ST.)

DESIGN AGENCY

DESIGNER: NCD

REVIEWER: JDO 1-17-25

PROJECT ID: 120341

SHEET: 25 TOTAL: 52

HAM-75-10.15

MODEL: Sheet_Survft PAPERSIZE: 34x22 (in.) DATE: 8/12/2025 TIME: 1:39:27 PM PLTDRV: OHDOT_PDF.pltcfg PENTBL: OHDOT_Pen.tbl USER: Benjamin.Peters@dot.ohio.gov WORKSPACE: OHDOTCEv02 WORKSET: 120341 PRODUCT: OpenRoadsDesigner 24.00.00.205
pw:\\ohiodot-pw.bentley.com:ohiodot-pw-02\Documents\01 Active Projects\District 08\Hamilton\120341\d00-Engineering\Roadway\Sheets\120341_CR001.dgn

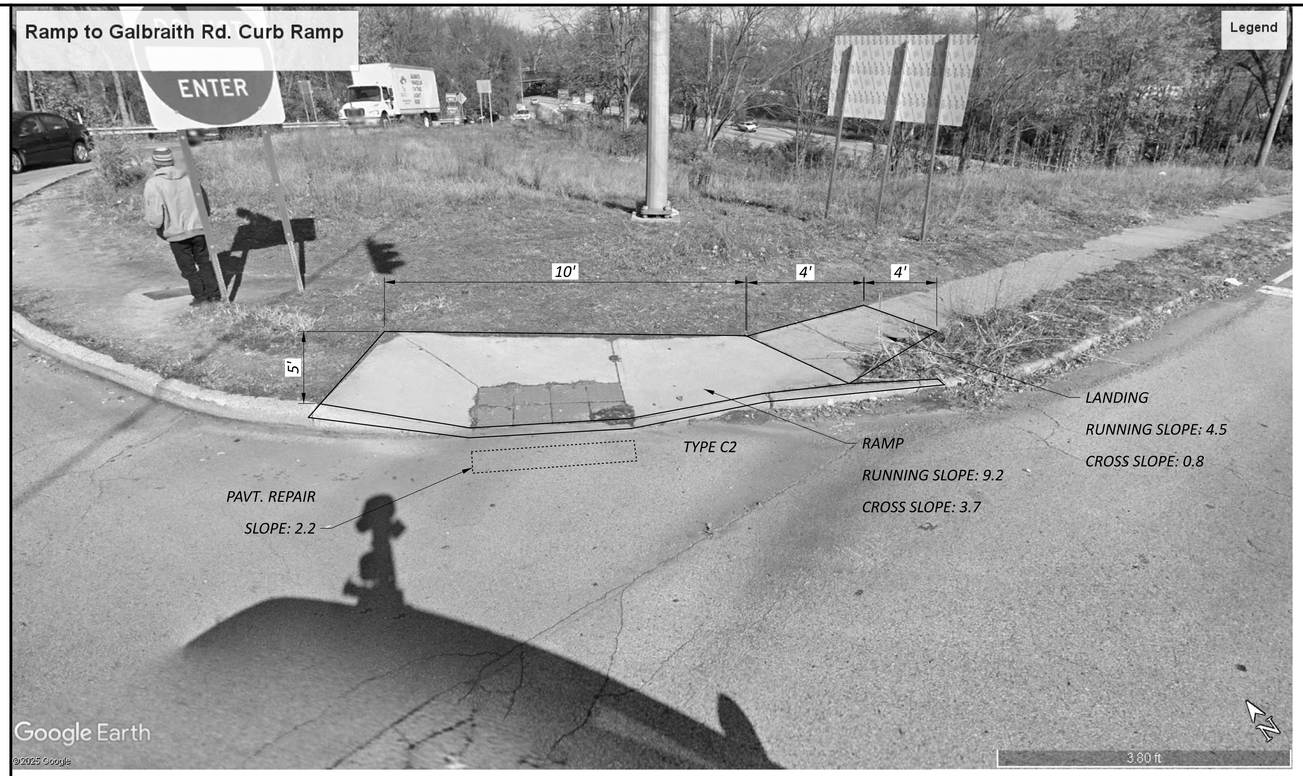

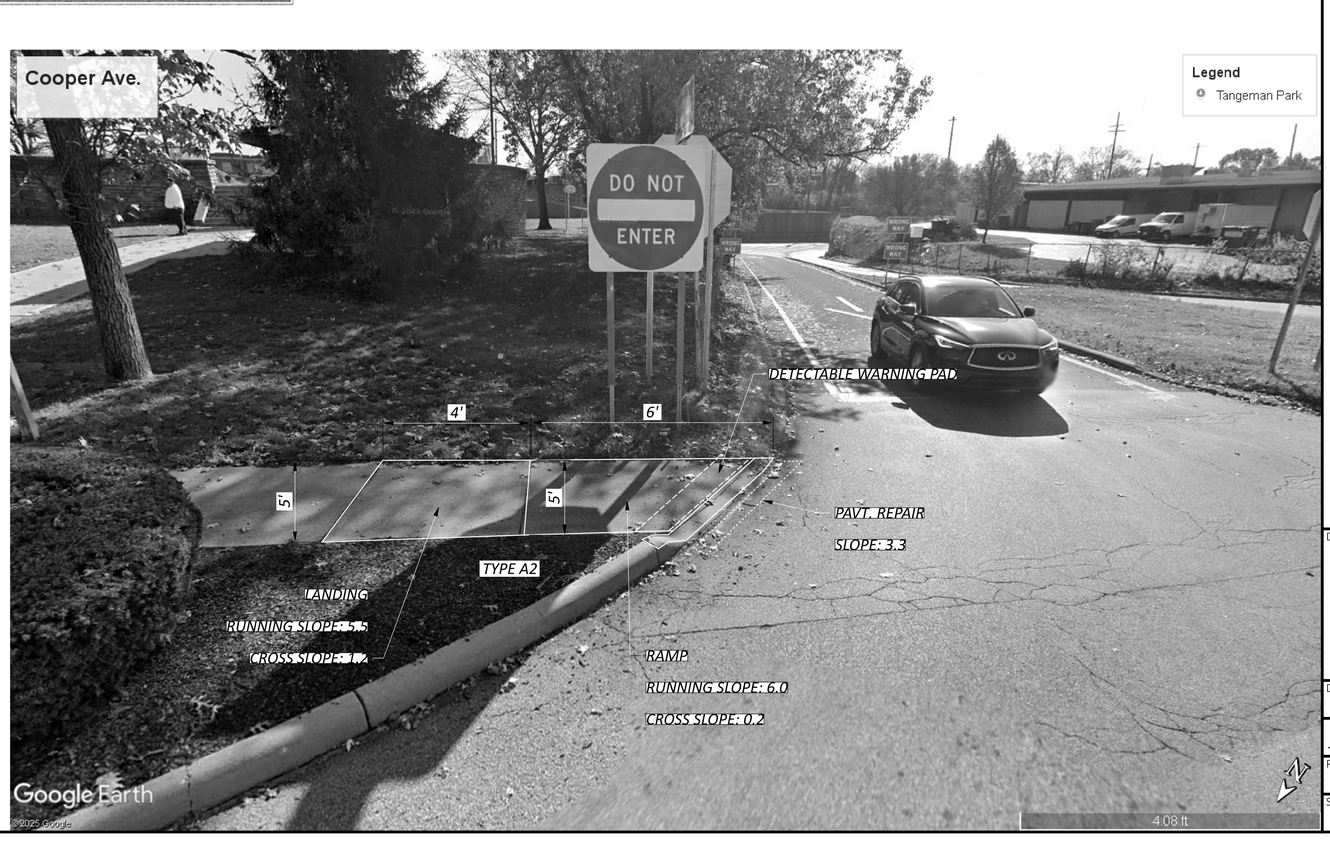

NOT TO SCALE

CURB RAMP DETAILS (RAMP TO GALBRAITH RD & COOPER AVE)

DESIGN AGENCY

DESIGNER: NCD

REVIEWER: JDO 4-21-25

PROJECT ID: 120341

SHEET: 26 TOTAL: 52

HAM-75-10.15

MODEL: Sheet_Survft PAPERSIZE: 34x22 (in.) DATE: 8/12/2025 TIME: 1:46:56 PM PLTDRV: OHDOT_PDF.pltcfg PENTBL: OHDOT_Pen.tbl USER: Benjamin.Peters@dot.ohio.gov WORKSPACE: OHDOTCEv02 WORKSET: 120341 PRODUCT: OpenRoadsDesigner 24.00.00.205
pw:\\ohiodot-pw.bentley.com:ohiodot-pw-02\Documents\01 Active Projects\District 08\Hamilton\120341\400-Engineering\Roadway\Sheets\120341_CR002.dgn

NOT TO SCALE

CURB RAMP DETAILS (RAMPS TO I-75 SOUTH)

DESIGN AGENCY

DESIGNER
NCD

REVIEWER
JDO 4-21-25

PROJECT ID
120341

SHEET 27 | TOTAL 52

HAM-75-10.15

MODEL: Sheet_SurvFt PAPERSIZE: 34x22 (in.) DATE: 8/12/2025 TIME: 1:54:03 PM PLTDRV: OHDOT_PDF.pltcfg PENTBL: OHDOT_Pen.tbl USER: Benjamin.Peters@dot.ohio.gov WORKSPACE: OHDOTCEv02 WORKSET: 120341 PRODUCT: OpenRoadsDesigner 24.00.00.205
pw:\\ohiodot-pw.bentley.com:ohiodot-pw-02\Documents\01 Active Projects\District 08\Hamilton\120341\v00-Engineering\Roadway\Sheets\120341_CR003.dgn

STANDARD DRAWINGS AND SUPPLEMENTAL SPECIFICATIONS

REFER TO THE FOLLOWING STANDARD BRIDGE DRAWINGS:

MGS-3.1	01-19-18
MGS-3.2	01-18-13
PCB-91	07-17-20

AND TO THE FOLLOWING SUPPLEMENTAL SPECIFICATIONS

800	DATED 1-17-25

DESIGN SPECIFICATIONS

THIS STRUCTURE CONFORMS TO THE 9th EDITION OF THE "LRFD BRIDGE DESIGN SPECIFICATIONS" ADOPTED BY THE AMERICAN ASSOCIATION OF STATE HIGHWAY AND TRANSPORTATION OFFICIALS, AND THE ODOT BRIDGE DESIGN MANUAL, 2020.

ITEM 202 - PORTIONS OF STRUCTURE REMOVED, OVER 20 FOOT SPAN, AS PER PLAN

THIS WORK CONSISTS OF THE REMOVAL OF HORIZONTAL DRAINAGE PIPES AND THE EXISTING TOP 1'-7" OF THE BRIDGE BARRIER FOR BRIDGE HAM-75-1192R. THE ORIGINAL CORE OF THE BARRIER BEHIND THE FACING MAY REMAIN EXCEPT WHERE NOTED BELOW:

THE FOLLOWING LOCATIONS WILL HAVE THE FACING AND CORE REPLACED FULL THICKNESS DOWN TO THE TOP OF THE BARRIER BUMP-OUT ALONG THE BACKSIDE OF THE PARAPET:

WEST BARRIER, 75' LONG STARTING 375' NORTH OF THE SOUTH ABUTMENT

EAST BARRIER, 20' LONG OVER SOUTHBOUND SHEPARD LANE STARTING AT 125' SOUTH OF THE NORTH ABUTMENT

THE DEPARTMENT WILL PAY FOR ACCEPTED QUANTITIES AT THE CONTRACT PRICES AS FOLLOWS:

ITEM	UNIT	DESCRIPTION
202	LS	PORTIONS OF STRUCTURE REMOVED, AS PER PLAN

ITEM 509 - CONCRETE REINFORCEMENT, REPLACEMENT OF EXISTING CONCRETE REINFORCEMENT, AS PER PLAN

REPLACE ALL EXISTING REINFORCING BARS DEEMED BY THE ENGINEER TO BE UNUSABLE BECAUSE OF CORROSION. THE DEPARTMENT WILL MEASURE THE REPLACEMENT CONCRETE REINFORCEMENT BY THE NUMBER OF POUNDS ACCEPTED IN PLACE. REPLACE ALL EXISTING STEEL REINFORCEMENT BARS WHICH ARE TO BE INCORPORATED INTO THE NEW WORK AND ARE DEEMED BY THE ENGINEER TO BE MADE UNUSABLE BY CONCRETE REMOVAL OPERATIONS WITH NEW CONCRETE REINFORCEMENT OF THE SAME SIZE, COATING, AND MATERIAL AT NO COST TO THE DEPARTMENT.

ADDITIONAL QUANTITIES HAVE BEEN PROVIDED FOR DOWEL HOLES, IF NEEDED, TO EMBED THE REPLACEMENT REINFORCING INTO THE EXISTING STRUCTURE. PAYMENT FOR DOWEL HOLES SHALL BE MADE AT THE BID UNIT PRICE FOR ITEM 510 - DOWEL HOLES WITH NONSHRINK, NONMETALLIC GROUT, AS PER PLAN.

ITEM 510 - DOWEL HOLES WITH NONSHRINK, NONMETALLIC GROUT, AS PER PLAN

INSTALL GALVANIZED DOWEL BARS ACCORDING TO THE MANUFACTURER'S INSTALLATION INSTRUCTIONS FOR BLACK REBAR PUBLISHED IN THE ICC-ES REPORTS LISTED BELOW.

THE HOLES FOR THE ADHESIVE ANCHORS SHALL BE DRILLED WITH A HAMMER DRILL AND CARBIDE BIT. PRIOR TO THE INSTALLATION OF THE ANCHORS, THE HOLES SHALL BE CLEANED AND DRIED IN A MANNER CONSISTENT WITH THE MANUFACTURER'S REQUIREMENTS FOR DRY CONCRETE.

THE EFFECTIVE EMBEDMENT DEPTH (H_{ef}) FOR #6 DOWEL BARS INSTALLED IN THE TOP OF THE DECK SHALL BE X INCHES.

SELECT FROM ONE OF THE FOLLOWING APPROVED PRODUCTS:

HILTI HIT-HY 200 ADHESIVE ANCHORS
ICC-ES REPORT ESR-3187)

DEWALT PURE110+ EPOXY ADHESIVE ANCHOR SYSTEM
(ICC-ES REPORT ESR-3298)

SIMPSON STRONG-TIE SET-3G EPOXY ADHESIVE ANCHORS
ICC-ES REPORT ESR-4057)

ATC ULTRABOND HS-1CC ADHESIVE ANCHOR SYSTEM
(ICC-ES REPORT ESR-4094)

THE MANUFACTURER'S INSTALLATION INSTRUCTION PUBLISHED IN THE ICC-ES REPORTS FOR ACCEPTABLE PRODUCTS ARE AVAILABLE AT:

HTTPS://ICC-ES.ORG/EVALUATION-REPORT-PROGRAM/

PRIOR TO DRILLING HOLES, LOCATE EXISTING REINFORCING STEEL BARS IN THE AREA OF THE HOLE WITH THE AID OF A REINFORCING STEEL BAR LOCATOR (PACHOMETER). IF AN EXISTING BAR IS ENCOUNTERED AT THE SAME LOCATION AS A PROPOSED DOWEL HOLE, MOVE THE THE DOWEL TO EITHER SIDE OF THE EXISTING BAR. THE DEPARTMENT WILL PAY FOR DOWEL HOLES AND GROUTING WITH ITEM 510 - DOWEL HOLES WITH NONSHRINK, NONMETALLIC GROUT, AS PER PLAN.

ITEM 519 - PATCHING CONCRETE BRIDGE DECKS, TYPE B

PATCHING DETERIORATED PORTIONS OF THE BRIDGE'S WEARING SURFACE AND BACKWALL SHALL PROCEED IN ACCORDANCE WITH PROPOSAL NOTE 512, TYPE B, AT LOCATIONS SHOWN IN THE PLANS. EXISTING REINFORCING STEEL SHALL REMAIN IN PLACE FOR RE-USE. ALL WORK, EQUIPMENT, MATERIALS, ETC. REQUIRED TO COMPLETE THE PROPOSED IMPROVEMENTS SHALL BE PAID FOR UNDER:

ITEM 519 - PATCHING CONCRETE BRIDGE DECKS, TYPE B (SQUARE YARD).

THIS WORK ALSO CONSISTS OF PATCHING THE DETERIORATED PORTIONS OF THE SOUTH BACKWALL OF SFN 3110443 WITH CONCRETE PROPOSAL NOTE 512, TYPE B PATCH. PATCHING WILL BE NEEDED IN DETERIORATRED AREAS WHERE THE DEPTH OF CONCRETE IS DEEP ENOUGH TO ENGAGE THE TOP OF BACKWALL REINFORCING STEEL.

ITEM 513 - STRUCTURAL STEEL, MISC.: DRILLING STRUCTURAL STEEL

THIS WORK SHALL CONSIST OF DRILLING AT THE END OF CRACKS, GRINDING, AND NON-DESTRUCTIVE TESTING AS DIRECTED BY THE ENGINEER. NO HOLES SHALL BE DRILLED WITHOUT PRIOR APPROVAL OF THE ENGINEER.

HOLES SHALL BE DRILLED TO REMOVE ENTIRE CRACKS OR THE APPARENT ENDS OF THE CRACKS REVEALED BY THE NDT OF SUSPECTED CRACKS DETAILED IN THESE PLANS UNDER ITEM 513-STRUCTURAL STEEL, MISC. STEEL PREPARATION, INSPECTION, AND NDT. THE EXPOSED CIRCUMFERENCE OF EACH DRILLED HOLE SHALL BE GROUND SMOOTH PER 513.12 TO MEET THE REQUIREMENTS FOR PIN HOLES AND CAREFULLY INSPECTED FOR CRACKS USING MAGNETIC PARTICLE EXAMINATION AND DYE PENETRANT, DRILLING, GRINDING, AND TESTING SHALL CONTINUE UNTIL ALL CRACK ENDS ARE REMOVED. WHEN NO CRACKS ARE DETECTED AT A LOCATION. NO HOLES SHALL BE DRILLED UNDER THIS ITEM.

THE CENTER OF THE HOLE SHALL BE POSITIONED BEYOND THE VISIBLE END OF THE CRACK SO THAT THE EDGE OF THE HOLE COINCIDES WITH THE END OF THE CRACK. IF THE CRACK ON ONE SIDE OF THE MEMBER IS LONGER THAN THE OTHER SIDE, THE HOLE SHALL BE POSITIONED RELATIVE TO THE LONGEST CRACK. FLAME CUTTING OF HOLES IS NOT PERMITTED UNDER ANY CIRCUMSTANCES. SINCE ANY OF THESE CRACKS COULD PROPAGATE INTO THE TENSION ZONES, REMOVING THEIR END IS IMPERATIVE. CRACKS LESS THAN 2" LONG, CRACKED AREAS, OR DEFECTS LESS THAN 2" IN DIAMETER SHALL BE REMOVED BY A SINGLE 2" HOLE WHEN PRACTICAL. ENDS OF CRACKS LONGER THAN 2" SHALL BE END DRILLED WITH 2" DIAMETER HOLES. HOLES SHALL BE CAREFULLY EXAMINED FOR CRACKS IN THE PLANE OF THE PLATE. 2½" DIAMETER HOLES MAY BE DRILLED WHERE THE PROXIMITY OF THE CRACK AND THE ADJACENT STEEL PRECLUDES DRILLING A 2" DIAMETER HOLE.

THE LOCATION OF ALL HOLES SHALL BE DETERMINED BY THE ENGINEER AND DRILLED UNDER HIS DIRECTION. CARE SHALL BE TAKEN NOT TO GRIND INTO THE BEAM FLANGE. BEFORE ANY DRILLING TAKES PLACE, THE DISTRICT BRIDGE MAINTENANCE ENGINEER SHALL BE NOTIFIED AND HIS CONSENT GIVEN.

THE ACCEPTED NUMBER OF HOLES DRILLED IN THE STRUCTURAL STEEL AS DETAILED ABOVE WILL BE PAID FOR AT THE CONTRACT BID PRICE PER EACH HOLE, WHICH PRICE AND PAYMENT SHALL BE FULL COMPENSATION FOR FURNISHING ALL MATERIAL, LABOR, AND EQUIPMENT NECESSARY FOR DRILLING HOLES, GRINDING, AND NONDESTRUCTIVE TESTING ON BOTH SIDES OF EACH HOLE. PAYMENTS WILL BE MADE UNDER: ITEM 513-STRUCTURAL STEEL, MISC.: DRILLING STRUCTURAL STEEL.

ESTIMATING THAT 100% OF LOCATIONS (SEE SHEETS 42 - 48) WILL REQUIRE THE DRILLING OF HOLES AT THE END OF CRACKS, THE FOLLOWING QUANTITY IS OBTAINED:

79 LOCATIONS * 4 HOLES PER LOCATION * 1.00 = 316 HOLES

TOTAL = 316 HOLES (EACH)

ITEM 513 - STRUCTURAL STEEL, MSC.: WELDING CROSSFRAME STIFFENERS

THIS WORK SHALL CONSIST OF MINIMAL REMOVAL OF EXISTING BRIDGE PAINT WHERE THE EXISTING CROSSFRAME STIFFENERS MEET THE EXISTING TOP AND BOTTOM GIRDER FLANGES AND THEN WELDING THE CROSSFRAME STIFFENERS TO THE TOP AND BOTTOM GIRDER FLANGES. DO NOT DISTURB NON-CROSSFRAME STIFFENERS. ONCE WELDING IS COMPLETE, FIELD PAINT EXPOSED FLANGE AND STIFFENER STRUCTURAL STEEL PER ITEM 514.

ITEM 513 - STRUCTURAL STEEL, MISC.: STEEL PREPARATION, INSPECTION, AND NDT:

THIS ITEM CONSISTS OF STEEL PREPARATION, INSPECTION AND NDT OF THE EXISTING STRUCTURAL STEEL FOR CRACK REPAIRS. SEE SHEETS 42 THROUGH 48.

1. GRINDING MAY BE DIRECTED BY THE ENGINEER TO ENHANCE INVESTIGATION FOR CRACK PRESENCE. ALL GRINDING MUST BE DONE CAUTIOUSLY ESPECIALLY IN TENSION ZONES.

2. THE CONTRACTOR SHALL PERFORM NON-DESTRUCTIVE TESTING (NDT) IN THE AREA USING MAGNETIC PARTICLE EXAMINATION AND/OR DYE PENETRANT SO THAT THE ENGINEER MAY FURTHER INSPECT FOR CRACKS. CONTRACTOR'S PERSONNEL PERFORMING NDT SHALL BE QUALIFIED AS PER 513.25 OF THE CMS.

3. ALL CRACKS, CRACK TIPS AND CRACKED TACK WELDS SHALL BE REMOVED ACCORDING TO AND PAID FOR UNDER ITEM 513-STRUCTURAL STEEL, MISC.: DRILLING STRUCTURAL STEEL, AND ANY CRACKS INACCESSIBLE TO DRILLING SHALL BE REMOVED BY CAREFULLY ENLARGING THE DRILLED HOLES BY GRINDING.

4. PERFORM STEPS 1 THROUGH 3 FOR EACH LOCATION.

THE ACCEPTED NUMBER OF NDT LOCATIONS AS DESCRIBED IN THIS NOTE WILL BE PAID FOR AT THE CONTRACT UNIT PRICE PER LOCATION. PER LOCATION INCLUDES BOTH SIDES OF WEB AND BOTH SIDES OF THE STIFFNER. THE PRICE AND PAYMENT SHALL BE FULL COMPENSATION FOR FURNISHING ALL MATERIAL, LABOR, AND EQUIPMENT NECESSARY TO CLEAN, GRIND, AND PERFORM NDT ON BOTH SIDES OF THE SUSPECTED CRACK LOCATION. THE CONTRACTOR SHALL DEMONSTRATED TO THE ENGINEER PRIOR TO THE START OF THE WORK THAT HE CAN SATISFACTORILY CLEAN THE METAL IN ACCORDANCE WITH SSPC-SPII.

NOTE: THE PROJECT ENGINEER SHALL INSPECT EACH LOCATION DESIGNATED ON THE PLANS VISUALLY FOR CRACKS BEFORE ANY WORK AT THAT LOCATION BEGINS. THE CONTRACTOR SHALL PROVIDE A SAFE AND SUITABLE MEANS OF ACCESS TO ALL AREAS FOR INSPECTION PURPOSES IN ACCORDANCE WITH 105.11 OF THE CMS.

PAYMENT WILL BE MADE AT THE CONTRACT PRICE BID UNDER ITEM 513-STRUCTURAL STEEL, MISC.: STEEL PREPARATION, INSPECTION, AND NDT (EACH).

STRUCTURE NOTES - 1

DESIGN AGENCY

DESIGNER BCP

REVIEWER AS 12-20-24

PROJECT ID 120341

SHEET 28 TOTAL 52

HAM-75-10.15

MODEL: Sheet_SurvFt PAPERSIZE: 34x22 (in.) DATE: 8/12/2025 TIME: 9:28:49 AM USER: bpeters1
pw:\\ohiodot-pw.bentley.com:ohiodot-pw-02\Documents\01 Active Projects\District 08\Hamilton\120341\400-Engineering\Structures\SFN_3110656\Sheets\120341_SFN_3110656_SN001.dgn

ITEM 518 - SCUPPER, VERTICAL EXTENSION

THIS WORK CONSISTS OF REMOVING THE HORIZONTAL DRAINAGE PIPES UNDERNEATH THE BRIDGE DECK AND EXTENDING THE SCUPPERS TO BE 8" BELOW THE BOTTOM FLANGE WHERE THE DRAINAGE WILL NOT FALL ON ROADS, SIDEWALKS, PARKING AREAS, OR R/W THAT DOES NOT BELONG TO ODOT. EXSITING VERTICAL SCUPPERS WILL HAVE 8" OF BOTTOM OF DRAINAGE PIPE REMOVED AND EXTENDED TO 8" BELOW BOTTOM FLANGE.

CONSTRUCT SECURE AND WATERTIGHT CONNECTIONS, INCLUDING THE CONNECTIONS TO ADJACENT CONCRETE. PROVIDE CASTINGS, TRUE TO FORM AND DIMENSION. WELD THE JOINTS OF STRUCTURAL STEEL SCUPPERS. GALVANIZE SCUPPERS ACCORDING TO 711.02.

EXISTING STRUCTURE VERIFICATION

DETAILS AND DIMENSIONS SHOWN ON THESE PLANS PERTAINING TO THE EXISTING STRUCTURE HAVE BEEN OBTAINED FROM PLANS OF THE EXISTING STRUCTURE AND FROM FIELD OBSERVATIONS AND MEASUREMENTS. CONSEQUENTLY, THEY ARE INDICATIVE OF THE EXISTING STRUCTURE AND THE PROPOSED WORK BUT THEY SHALL BE CONSIDERED TENTATIVE AND APPROXIMATE. THE CONTRACTOR IS REFERRED TO CMS SECTIONS 102.05 AND 105.02.

BASE CONTRACT BID PRICES UPON A RECOGNITION OF THE UNCERTAINTIES DESCRIBED ABOVE AND UPON A PREBID EXAMINATION OF THE EXISTING STRUCTURE. HOWEVER, THE DEPARTMENT WILL PAY FOR ALL PROJECT WORK UPON ACTUAL DETAILS AND DIMENSIONS THAT HAVE BEEN VERIFIED IN THE FIELD.

PROPOSED WORK

HAM-75-1102R (SFN 3110443)

1) PATCH DETERIORATED PORTIONS OF THE SOUTH BACKWALL WITH CONCRETE PROPOSAL NOTE 512, TYPE B PATCH

HAM-75-1152R (SFN 3110532)

1) PATCH DETERIORATED PORTIONS OF THE SOUTH BACKWALL WITH CONCRETE PROPOSAL NOTE 512, TYPE B PATCH

HAM-75-1184R (SFN 3110591)

1) PATCH DETERIORATED PORTIONS OF THE WEARING SURFACE, INCLUDING CONTIGUOUS UNSOUND AREAS WITH CONCRETE PROPOSAL NOTE 512, TYPE B PATCH. AREAS THAT AREN'T CONTAGIOUS TO A VISIBLE DETERIORATED AREA (POTHOLE) SHALL NOT BE REPAIRED

HAM-75-1192R (SFN 3110656)

1) REPAIR OUT-OF-PLANE BENDING CRACKS AT THE TOP OF CROSS -FRAME STIFFENERS
2) WELD THE CROSS FRAME STIFFENER TO THE TOP AND BOTTOM FLANGES TO MITIGATE FURTHER CRACKING AT ALL INTERMEDIATE CROSS FRAME LOCATIONS IN SPANS 4 THROUGH PIER 22
3) PAINT REPAIRED/ DAMAGED AREAS OF PAINT, PER 514
4) REMOVE AND REPLACE THE DETERIORATED PORTIONS OF THE TOP 1' - 7" OF THE BARRIER FACING
5) PATCH DETERIORATED PORTIONS OF THE WEARING SURFACE WITH PROPOSAL NOTE 512, TYPE B PATCH
6) REMOVE HORIZONTAL DRAINAGE PIPES AND EXTEND SCUPPERS TO BE 8" BELOW THE BOTTOM FLANGE. INSTALL TYPE D ROCK CHANNEL PROTECTION WITH FILTER FABRIC UNDER EACH NEW SCUPPER LOCATION TO PREVENT EROSION. CLEAN ALL BRIDGE SCUPPERS AND DRAIN PIPES TO ENSURE POSITIVE DRAINAGE FLOW
7) REMOVE TREES UNDERNEATH AND WITHIN RIGHT OF WAY LIMITS
8) ZONE PAINT STRUCTURAL STEEL WITHIN 10 FEET OF EITHER SIDE OF EACH INTERMEDIATE EXPANSION JOINT (5 LOCATIONS)

ITEM 514 - FIELD PAINTING, MISC.: PAINT REPAIR OF DAMAGED STRUCTURAL STEEL - THREE COAT OZEU SPOT PAINTING

1.0 DESCRIPTION THIS ITEM CONSISTS OF FIELD PAINTING STRUCTURAL STEEL PREVIOUSLY COATED WITH A NEWER EXISTING OZEU OR IZEU PAINT SYSTEM TO REPAIR DAMAGED AREAS FROM CROSSFRAME STIFFENER REPAIR. THIS WORK CONSIST OF PERFORMING SURFACE PREPARATION AND APPLYING A THREE-COAT PAINT SYSTEM TO THE PREPARED STEEL AND FEATHERED REMOVAL AREAS OF EXISTING OZEU OR IZEU PAINT SYSTEMS.

2.0 GENERAL C&MS 514.05 THROUGH 514.10 AND 514.13.D APPLY UNLESS MODIFIED BY THESE NOTES. WORK MAY BE COMPLETED WITH ACCORDANCE FROM PN 090.

3.0 WASHING EXISTING OZEU OR IZEU PAINTED SURFACES

CLEAN SURFACES TO BE COATED WITH LOW PRESSURE WATER. REMOVE ALL DIRT, DEBRIS, ANIMAL EXCREMENT, SALT CONTAMINANTS AND OTHER ACCUMULATED FOREIGN MATERIAL IN ACCORDANCE WITH SSPC-SP12 (LP WC), LOW PRESSURE WATER CLEANING. THE PRESSURE WASHER SHALL BE CAPABLE OF ACHIEVING AT LEAST 2000 POUNDS PER SQUARE INCH AT THE NOZZLE. WHEN USING THE POWER WASHING EQUIPMENT, THE NOZZLE SHALL BE MAINTAINED NO MORE THAN 10 INCHES FROM THE SURFACE. SUPPLY AND USE POTABLE WATER. PROVIDE TO THE ENGINEER A LETTER OF WRITTEN ACCEPTANCE FOR ANY BIODEGRADABLE DETERGENTS OR CLEANERS USED IN CONJUNCTION WITH THIS METHOD.

COLLECT AND CONTAIN WATER AND DEBRIS REMOVED DURING WASHING OPERATIONS ABOVE WATER FEATURES IN CONFORMANCE WITH C&MS 514.08 AND C&MS 514.13.D FOR ANY DEBRIS. CREATE SETTLEMENT COLLECTION BASINS AND STRAIN ALL WASH WATER ABOVE LAND FEATURES AS NECESSARY TO PRODUCE VISIBLY CLEAR WATER AND COMPLY WITH C&MS 514.08 AND C&MS 514.13.D FOR ANY DEBRIS.

4.0 SURFACE PREPARATION AFTER THE PRESSURE WASHED SURFACE HAS DRIED, REMOVE EXISTING PAINT COATING TO CONTRACT LIMITS OR AS DIRECTED BY THE ENGINEER ACCORDING TO: SSPC-SP 11, POWER TOOL CLEANING TO BARE METAL, AS SHOWN ON THE PICTORIAL SURFACE PREPARATION STANDARDS FOR PAINTING STEEL SURFACES SHOWN IN SSPC-VIS 3; SSPC SP6, COMMERCIAL BLAST CLEANING, AS SHOWN ON THE PICTORIAL SURFACE PREPARATION STANDARDS FOR PAINTING STEEL SURFACES SHOWN IN SSPC-VIS 1; OR SSPC SP12 UHP WJ-4, ULTRAHIGH-PRESSURE WATER JETTING, AS SHOWN ON THE PICTORIAL SURFACE PREPARATION STANDARDS FOR PAINTING STEEL SURFACES SHOWN IN SSPC-VIS 4. SUPPLY BLAST WATER CONTAINING A COMMERCIALLY AVAILABLE RUST INHIBITOR AT A DOSAGE THAT PREVENTS FLASH RUSTING FOR 12 HOURS AND DOCUMENTED AS ACCEPTABLE TO THE COATING'S MANUFACTURER. THE ENGINEER WILL USE THE SSPC-VIS 1, SSPC-VIS 3 OR SSPC-VIS 4 TO DETERMINE THE ACCEPTANCE OF THE SURFACE PREPARATION. FEATHER THE EXISTING PAINT TO EXPOSE A MINIMUM OF ½ INCH OF EACH COAT. CONTAIN AND DISPOSE OF WASTE GENERATED BY THE CLEANING ACCORDING TO C&MS 514.13.D.

ROUND ALL EXPOSED CORNERS OF MAIN MATERIAL TO BE PAINTED AS NECESSARY TO ACHIEVE A 1/16 INCH RADIUS OR EQUIVALENT FLAT SURFACE AT A 45 DEGREE ANGLE.

5.0 FIELD PAINTING APPLY THE PRIME, INTERMEDIATE AND FINISH COATS OF THE THREE-COAT PAINT SYSTEM SPECIFIED IN C&MS 708.02, ACCORDING TO C&MS 514.15, 514.16, 514.17, 514.19 AND 514.20 TO CONTRACT LIMITS OR AS DIRECTED BY THE ENGINEER. TINT THE FINISH COAT TO APPROXIMATELY THE SAME COLOR AS THE EXISTING FINISH COLOR, OR AS DESIGNATED IN THE CONTRACT. MATCH THE COLOR TO THE ENGINEERS SATISFACTION. THE ENGINEER WILL DETERMINE THE PRIME AND INTERMEDIATE COAT THICKNESS USING A TYPE 2 MAGNETIC GAGE AT SPOT LOCATIONS. THE PRIME, INTERMEDIATE AND FINISH COAT OF PAINT SHALL MEET THE MINIMUM DRY FILM THICKNESS REQUIREMENTS OF C&MS 514.20. APPLY PAINT AS FOLLOWS:

A. APPLY THE PRIME COAT ONLY TO THE PREPARED SURFACE OF THE BARE STEEL AND THE EXISTING PRIME COAT EXPOSED BY FEATHERING. DO NOT APPLY THE PRIME COAT TO THE ADJACENT INTERMEDIATE COAT.

B. APPLY CAULK AFTER PRIMING

C. APPLY THE INTERMEDIATE COAT TO THE NEW PRIME COAT AND TO THE EXISTING INTERMEDIATE COATS THAT ARE EXPOSED BY FEATHERING.

D. APPLY THE FINISH COAT TO THE NEW INTERMEDIATE COAT AND TO THE EXISTING FINISH COATS THAT ARE EXPOSED BY FEATHERING.

AT THE PERIMETER OF THE REPAIR AREA, APPLY THE PRIME, INTERMEDIATE AND FINISH COATS WITH A BRUSH. IN LIEU OF BRUSHING THE CONTRACTOR MAY DOUBLE MASK AREAS NOT TO BE COATED AND SPRAY TO FEATHERED REMOVAL LINES.

BLEND REPAIR AREAS WITH THE ADJACENT COATING TO PROVIDE A FINISHED SURFACE IN THE PATCHED AREAS THAT IS SMOOTH AND HAS AN EVEN PROFILE WITH THE ADJACENT SURFACE.

6.0 MEASUREMENT THE DEPARTMENT WILL MEASURE FIELD PAINTING OF DAMAGED STRUCTURAL STEEL BY THE NUMBER OF STRUCTURAL STEEL LOCATIONS PAINTED (EACH). A MINIMUM PAINT AREA AT EACH CROSSFRAME STIFFENER IS ASSUMED TO BE 24" WIDE (12" TO EACH SIDE OF THE CROSSFRAME) MEASURED ALONG THE GIRDER WEB x THE WEB DEPTH MEASURED FROM FLANGE TO FLANGE.

THE DEPARTMENT WILL DETERMINE THE SURFACE AREA BY TAKING EXACT FIELD MEASUREMENTS OF ALL PAINTED SURFACES AND CALCULATIONS.

7.0 BASIS OF PAYMENT THE DEPARTMENT WILL PAY FOR ACCEPTED QUANTITIES AT THE CONTRACT PRICES AS FOLLOWS: THE DEPARTMENT MAY CONSIDER PAINT AS ELIGIBLE FOR PAYMENT FOR MATERIAL ON-HAND AS SPECIFIED IN 109.10, HOWEVER, ONLY PAINT THAT THE CONTRACTOR CAN PROVE TO THE ENGINEER WILL BE USED DURING THE CONSTRUCTION SEASON IS ELIGIBLE FOR PAYMENT. THE CONTRACTOR SHALL PROVIDE THE ENGINEER CALCULATIONS INDICATING THE TOTAL AREA OF STEEL TO BE PAINTED DURING THE CONSTRUCTION PROJECT. THE CONTRACTOR SHALL ALSO PROVIDE CALCULATIONS SHOWING THE TOTAL NUMBER OF GALLONS REQUIRED.

IF THE CONTRACTOR CAUSES DAMAGE OR INJURY TO PUBLIC OR PRIVATE PROPERTY, THE DEPARTMENT WILL NOT PAY FOR RESTORING THE PROPERTY TO ITS ORIGINAL CONDITION.

THE DEPARTMENT WILL NOT PAY FOR REPAIRING ADJACENT COATINGS DAMAGED DURING THE WASHING, POWER TOOL CLEANING OR BLAST CLEANING OPERATION.

THE DEPARTMENT WILL NOT PAY FOR REMOVING AND REPLACING AN AREA OF COATING BECAUSE A SPOT OR MAXIMUM AVERAGE THICKNESS EXCEEDS THE MAXIMUM SPOT THICKNESS.

THE DEPARTMENT WILL NOT PAY FOR ADDITIONAL TESTING REQUIRED BY ANY HAULER, TREATMENT FACILITY, DISPOSAL FACILITY OR LANDFILL.

THE DEPARTMENT WILL NOT PAY FOR ACCESSING, INSPECTING, AND REPAIRING AREAS THAT ARE NOT FOUND TO BE IN CONFORMANCE WITH THE SPECIFICATIONS AND PERTINENT CONTRACT DOCUMENTS.

ALL OTHER REQUIREMENTS OF THIS FIELD PAINTING SPECIFICATION ARE CONSIDERED INCIDENTAL TO THE WORK.

ITEM	UNIT	DESCRIPTION
514	EACH	FIELD PAINTING, MISC.; PAINT REPAIR OF DAMAGED STRUCTURAL STEEL - THREE COAT OZEU SPOT PAINTING

ITEM 514 - FIELD PAINTING, MISC.: ZONE PAINTING OF STRUCTURAL STEEL NEAR EXPANSION JOINTS

1.0 DESCRIPTION THIS ITEM CONSISTS OF FIELD ZONE PAINTING STRUCTURAL STEEL PREVIOUSLY COATED WITH A NEWER EXISTING OZEU OR IZEU PAINT SYSTEM TO TREAT STRUCTURAL STEEL NEAR THE INTERMEDIATE EXPANSION JOINTS WITH DAMAGED SEALS. THIS WORK CONSIST OF PERFORMING SURFACE PREPARATION AND APPLYING A THREE-COAT PAINT SYSTEM TO THE PREPARED STEEL AND FEATHERED REMOVAL AREAS OF EXISTING OZEU OR IZEU PAINT SYSTEMS.

2.0 GENERAL C&MS 514.05 THROUGH 514.10 AND 514.13.D APPLY UNLESS MODIFIED BY THESE NOTES.

3.0 WASHING EXISTING OZEU OR IZEU PAINTED SURFACES

CLEAN SURFACES TO BE COATED WITH LOW PRESSURE WATER. REMOVE ALL DIRT, DEBRIS, ANIMAL EXCREMENT, SALT CONTAMINANTS AND OTHER ACCUMULATED FOREIGN MATERIAL IN ACCORDANCE WITH SSPC-SP12 (LP WC), LOW PRESSURE WATER CLEANING. THE PRESSURE WASHER SHALL BE CAPABLE OF ACHIEVING AT LEAST 2000 POUNDS PER SQUARE INCH AT THE NOZZLE. WHEN USING THE POWER WASHING EQUIPMENT, THE NOZZLE SHALL BE MAINTAINED NO MORE THAN 10 INCHES FROM THE SURFACE. SUPPLY AND USE POTABLE WATER. PROVIDE TO THE ENGINEER A LETTER OF WRITTEN ACCEPTANCE FOR ANY BIODEGRADABLE DETERGENTS OR CLEANERS USED IN CONJUNCTION WITH THIS METHOD.

COLLECT AND CONTAIN WATER AND DEBRIS REMOVED DURING WASHING OPERATIONS ABOVE WATER FEATURES IN CONFORMANCE WITH C&MS 514.08 AND C&MS 514.13.D FOR ANY DEBRIS. CREATE SETTLEMENT COLLECTION BASINS AND STRAIN ALL WASH WATER ABOVE LAND FEATURES AS NECESSARY TO PRODUCE VISIBLY CLEAR WATER AND COMPLY WITH C&MS 514.08 AND C&MS 514.13.D FOR ANY DEBRIS.

4.0 SURFACE PREPARATION AFTER THE PRESSURE WASHED SURFACE HAS DRIED, REMOVE EXISTING PAINT COATING TO CONTRACT LIMITS OR AS DIRECTED BY THE ENGINEER ACCORDING TO: SSPC-SP 11, POWER TOOL CLEANING TO BARE METAL, AS SHOWN ON THE PICTORIAL SURFACE PREPARATION STANDARDS FOR PAINTING STEEL SURFACES SHOWN IN SSPC-VIS 3; SSPC SP6, COMMERCIAL BLAST CLEANING, AS SHOWN ON THE PICTORIAL SURFACE PREPARATION STANDARDS FOR PAINTING STEEL SURFACES SHOWN IN SSPC-VIS 1; OR SSPC SP12 UHP WJ-4, ULTRAHIGH-PRESSURE WATER JETTING, AS SHOWN ON THE PICTORIAL SURFACE PREPARATION STANDARDS FOR PAINTING STEEL SURFACES SHOWN IN SSPC-VIS 4. SUPPLY BLAST WATER CONTAINING A COMMERCIALLY AVAILABLE RUST INHIBITOR AT A DOSAGE THAT PREVENTS FLASH RUSTING FOR 12 HOURS AND DOCUMENTED AS ACCEPTABLE TO THE COATING'S MANUFACTURER. THE ENGINEER WILL USE THE SSPC-VIS 1, SSPC-VIS 3 OR SSPC-VIS 4 TO DETERMINE THE ACCEPTANCE OF THE SURFACE PREPARATION. FEATHER THE EXISTING PAINT TO EXPOSE A MINIMUM OF ½ INCH OF EACH COAT. CONTAIN AND DISPOSE OF WASTE GENERATED BY THE CLEANING ACCORDING TO C&MS 514.13.D.

ROUND ALL EXPOSED CORNERS OF MAIN MATERIAL TO BE PAINTED AS NECESSARY TO ACHIEVE A 1/16 INCH RADIUS OR EQUIVALENT FLAT SURFACE AT A 45 DEGREE ANGLE.

5.0 FIELD PAINTING APPLY THE PRIME, INTERMEDIATE AND FINISH COATS OF THE THREE-COAT PAINT SYSTEM SPECIFIED IN C&MS 708.02, ACCORDING TO C&MS 514.15, 514.16, 514.17, 514.19 AND 514.20 TO CONTRACT LIMITS OR AS DIRECTED BY THE ENGINEER. TINT THE FINISH COAT TO APPROXIMATELY THE SAME COLOR AS THE EXISTING FINISH COLOR, OR AS DESIGNATED IN THE CONTRACT. MATCH THE COLOR TO THE ENGINEERS SATISFACTION. THE ENGINEER WILL DETERMINE THE PRIME AND INTERMEDIATE COAT THICKNESS USING A TYPE 2 MAGNETIC GAGE AT SPOT LOCATIONS. THE PRIME, INTERMEDIATE AND FINISH COAT OF PAINT SHALL MEET THE MINIMUM DRY FILM THICKNESS REQUIREMENTS OF C&MS 514.20. APPLY PAINT AS FOLLOWS:

STRUCTURE NOTES - 2

DESIGN AGENCY

DESIGNER BCP

REVIEWER AS 12-20-24

PROJECT ID 120341

SHEET 29 TOTAL 52

HAM-75-10.15

MODEL: Sheet_SurvFt PAPERSIZE: 34x22 (in.) DATE: 8/19/2025 TIME: 11:13:45 AM PLTDRV: OHDOT_PDF.pltcfg PENTBL: OHDOT_Pen.tbl USER: Benjamin.Peters@dot.ohio.gov WORKSPACE: OHDOTCEv02 WORKSET: 120341 PRODUCT: OpenRoadsDesigner 24.00.00.205
pw:\\ohiodot-pw.bentley.com:ohiodot-pw-02\Documents\01 Active Projects\District 08\Hamilton\120341400-Engineering\Structures\SFN_3110656\Sheets\120341_SFN_3110656_SN002.dgn

ITEM 514 - FIELD PAINTING, MISC.: ZONE PAINTING OF STRUCTURAL STEEL NEAR EXPANSION JOINTS, CONT.

A. APPLY THE PRIME COAT ONLY TO THE PREPARED SURFACE OF THE BARE STEEL AND THE EXISTING PRIME COAT EXPOSED BY FEATHERING. DO NOT APPLY THE PRIME COAT TO THE ADJACENT INTERMEDIATE COAT.

B. APPLY CAULK AFTER PRIMING

C. APPLY THE INTERMEDIATE COAT TO THE NEW PRIME COAT AND TO THE EXISTING INTERMEDIATE COATS THAT ARE EXPOSED BY FEATHERING.

D. APPLY THE FINISH COAT TO THE NEW INTERMEDIATE COAT AND TO THE EXISTING FINISH COATS THAT ARE EXPOSED BY FEATHERING.

AT THE PERIMETER OF THE REPAIR AREA, APPLY THE PRIME, INTERMEDIATE AND FINISH COATS WITH A BRUSH. IN LIEU OF BRUSHING THE CONTRACTOR MAY DOUBLE MASK AREAS NOT TO BE COATED AND SPRAY TO FEATHERED REMOVAL LINES.

BLEND REPAIR AREAS WITH THE ADJACENT COATING TO PROVIDE A FINISHED SURFACE IN THE PATCHED AREAS THAT IS SMOOTH AND HAS AN EVEN PROFILE WITH THE ADJACENT SURFACE.

6.0 MEASUREMENT THE DEPARTMENT WILL MEASURE FIELD PAINTING OF STRUCTURAL STEEL BY LUMP SUM. ALL STRUCTURAL STEEL WITHIN 10 FEET OF EACH INTERMEDIATE EXPANSION JOINT WILL BE PAINTED (5 LOCATIONS). THE LOCATIONS OF THE INTERMEDIATE EXPANSION JOINTS ARE AS FOLLOWS:

STA.. 184+28.00
STA. 188+94.00
STA. 191+35.50
STA. 196+70.31
STA. 202+26.00

7.0 BASIS OF PAYMENT THE DEPARTMENT WILL PAY FOR ACCEPTED QUANTITIES AT THE CONTRACT PRICES AS FOLLOWS: THE DEPARTMENT MAY CONSIDER PAINT AS ELIGIBLE FOR PAYMENT FOR MATERIAL ON-HAND AS SPECIFIED IN 109.10, HOWEVER, ONLY PAINT THAT THE CONTRACTOR CAN PROVE TO THE ENGINEER WILL BE USED DURING THE CONSTRUCTION SEASON IS ELIGIBLE FOR PAYMENT. THE CONTRACTOR SHALL PROVIDE THE ENGINEER CALCULATIONS INDICATING THE TOTAL AREA OF STEEL TO BE PAINTED DURING THE CONSTRUCTION PROJECT. THE CONTRACTOR SHALL ALSO PROVIDE CALCULATIONS SHOWING THE TOTAL NUMBER OF GALLONS REQUIRED.

IF THE CONTRACTOR CAUSES DAMAGE OR INJURY TO PUBLIC OR PRIVATE PROPERTY, THE DEPARTMENT WILL NOT PAY FOR RESTORING THE PROPERTY TO ITS ORIGINAL CONDITION.

THE DEPARTMENT WILL NOT PAY FOR REPAIRING ADJACENT COATINGS DAMAGED DURING THE WASHING, POWER TOOL CLEANING OR BLAST CLEANING OPERATION.

THE DEPARTMENT WILL NOT PAY FOR REMOVING AND REPLACING AN AREA OF COATING BECAUSE A SPOT OR MAXIMUM AVERAGE THICKNESS EXCEEDS THE MAXIMUM SPOT THICKNESS.

THE DEPARTMENT WILL NOT PAY FOR ADDITIONAL TESTING REQUIRED BY ANY HAULER, TREATMENT FACILITY, DISPOSAL FACILITY OR LANDFILL.

THE DEPARTMENT WILL NOT PAY FOR ACCESSING, INSPECTING, AND REPAIRING AREAS THAT ARE NOT FOUND TO BE IN CONFORMANCE WITH THE SPECIFICATIONS AND PERTINENT CONTRACT DOCUMENTS.

ALL OTHER REQUIREMENTS OF THIS FIELD PAINTING SPECIFICATION ARE CONSIDERED INCIDENTAL TO THE WORK.

ITEM	UNIT	DESCRIPTION
514	LS	FIELD PAINTING, MISC.: ZONE PAINTING OF STRUCTURAL STEEL NEAR EXPANSION JOINTS

ITEM 518 - STRUCTURE DRAINAGE, MISC.: CLEANING SCUPPERS AND BRIDGE DRAINAGE SYSTEMS

THIS ITEM CONSISTS OF REMOVING ALL DIRT, DEBRIS, AND OTHER OBSTRUCTIONS FROM THE SCUPPERS, DRAIN PIPE DOWNSPOUTS, AND PIPE OUTLETS. THE DRAINAGE SYSTEM SHALL BE CLEANED USING METHODS THAT DO NOT DAMAGE THE COMPONENTS OF THE SYSTEM INCLUDING THE SUPPORTING ATTACHMENTS. ANY COMPONENTS DAMAGED DURING THE CLEANING PROCEDURE SHALL BE REPAIRED OR REPLACED AT THE CONTRACTOR'S EXPENSE. AFTER CLEANING, THE ENTIRE SYSTEM SHALL BE FLUSHED WITH CLEAN WATER TO MAKE CERTAIN THE WATER FLOWS FREELY TO ITS OUTLET. ALL MATERIAL REMOVED FROM THE DRAINAGE SYSTEM SHALL BE PROPERLY DISPOSED OF.

ALL MATERIALS, LABOR, EQUIPMENT AND INCIDENTALS NECESSARY TO CLEAN OUT THE SCUPPERS AND DRAINAGE SYSTEMS, INCLUDING PROVIDING ACCESS TO INSPECT THE ENTIRE DRAINAGE SYSTEM BEFORE AND AFTER CLEANING, SHALL BE PAID FOR AS A LUMP SUM WITH THE FOLLOWING PAY ITEM:

ITEM	UNIT	DESCRIPTION
518	LS	STRUCTURE DRAINAGE, MISC.: CLEANING SCUPPERS AND BRIDGE DRAINAGE SYSTEMS

ITEM 601 - ROCK CHANNEL PROTECTION, TYPE D WITH FILTER, AS PER PLAN

THIS WORK CONSISTS OF INSTALLING TYPE D ROCK CHANNEL PROTECTION WITH FILTER FABRIC WITH DIMENSIONS OF 4' X 4' TO A DEPTH OF 18" THICK UNDER EACH NEW VERTICALLY DRAINING BRIDGE SCUPPER. DIMENSIONS BASED ON STANDARDS FROM L&D VOL. 2 TABLE 1002-4 AND STANDARD DRAWING DM-1.1.

THE DEPARTMENT WILL PAY FOR ACCEPTED QUANTITIES AT THE CONTRACT PRICES AS FOLLOWS:

ITEM	UNIT	DESCRIPTION
601	CY	ROCK CHANNEL PROTECTION, TYPE D WITH FILTER

RAILROAD PROJECT COORDINATION

THE CONTRACTOR SHALL PERFORM ONGOING COORDINATION OF THEIR DESIGN AND CONSTRUCTION ACTIVITIES WITH THE RAILROAD(S) THROUGHOUT THE PROJECT. THE CONTRACTOR SHALL PROVIDE A CURRENT SCHEDULE ON A MONTHLY BASIS INCLUDING ANTICIPATED DATES OF THE FOLLOWING ITEMS:

1. CONSTRUCTION SUBMITTALS REQUIRING RAIL REVIEW AND APPROVAL PRIOR TO BEGINNING CONSTRUCTION (PER THE RAIL AGREEMENT(S)).
2. CONSTRUCTION START AND END DATES FOR WORK THAT MAY CREATE AN IMPACT TO THE RAIL FACILITY/OPERATIONS.
3. ANTICIPATED DATES AND DURATION FOR FLAGGERS.
4. ANY OTHER MILESTONES THAT MAY IMPACT RAIL FACILITIES OR OPERATIONS.

MEANS AND METHODS: THE CONTRACTOR SHALL DEVELOP A DETAILED SUBMISSION INDICATING THE PROGRESSION OF WORK WITH SPECIFIC TIMES WHEN TASKS WILL BE PERFORMED FOR WORK ACTIVITIES THAT ARE ON OR IN THE VICINITY OF THE RAILROAD PROPERTY.

THIS SUBMISSION MAY REQUIRE A WALKTHROUGH AT WHICH TIME THE RAILROAD AND/OR THEIR REPRESENTATIVE WILL BE PRESENT. WORK WILL NOT BE PERMITTED TO COMMENCE UNTIL THE CONTRACTOR HAS PROVIDED THE RAILROADS WITH A SATISFACTORY PLAN THAT THE PROJECT WILL BE UNDERTAKEN WITHOUT SCHEDULING, PERFORMANCE, OR SAFETY RELATED ISSUES.

PROVIDE A LISTING OF THE ANTICIPATED EQUIPMENT TO BE USED, THE LOCATION OF ALL EQUIPMENT TO BE USED AND ENSURE A CONTINGENCY PLAN OF ACTION IS IN PLACE SHOULD A PRIMARY PIECE OF EQUIPMENT MALFUNCTIONS. ALL WORK IN THE VICINITY OF THE RAILROAD PROPERTY THAT HAS THE POTENTIAL OF AFFECTING TRAIN OPERATIONS MUST BE SUBMITTED AND APPROVED BY THE RAILROAD PRIOR TO WORK BEING PERFORMED. THIS SUBMISSION WILL ALSO INCLUDE A DETAILED NARRATIVE DISCUSSING THE COORDINATION OF PROJECT SAFETY ISSUES BETWEEN THE CONTRACTOR AND THE RAILROAD AND/OR THEIR REPRESENTATIVE. THE NARRATIVE SHALL ADDRESS PROJECT LEVEL COORDINATION AND DAY TO DAY, SPECIFIC WORK OPERATIONS INCLUDING CRANE AND EQUIPMENT OPERATIONS, ERECTIONS PLANS AND TEMPORARY WORKS. UP TO SIXTY (60) CALENDAR DAYS WILL BE REQUIRED TO REVIEW ALL CONSTRUCTION SUBMISSIONS. UP TO AN ADDITIONAL SIXTY (60) CALENDAR DAYS WILL BE REQUIRED TO REVIEW ANY SUBSEQUENT SUBMISSIONS RETURNED NOT APPROVED.

CONSTRUCTION SCHEDULE: SUBMIT A DETAILED CONSTRUCTION SCHEDULE FOR THE DURATION OF THE PROJECT CLEARLY INDICATING THE TIME PERIODS WHILE WORKING ON AND AROUND THE RAILROADS RIGHT-OF-WAY. AS THE WORK PROGRESSES, THIS SCHEDULE SHALL BE UPDATED MONTHLY AND RESUBMITTED AS NECESSARY TO REFLECT CHANGES IN WORK SEQUENCE, DURATION AND METHOD, ETC.

NOTES FROM NS RR: THE RAILROAD ENGINEER OR HIS FIELD REPRESENTATIVE MAY REQUIRE THE CONTRACTOR TO INSTALL AT-GRADE BALLAST PROTECTION CONSISTING OF FILTER FABRIC AND/OR PLYWOOD TO PREVENT FOULING OF THE BALLAST DURING PAINT REMOVAL/APPLICATION PROCESS. SUCH PROTECTION SHALL STAY IN PLACE FOR THE DURATION OF CONSTRUCTION ACTIVITIES AND BE REMOVED BEFORE DEMOBILIZATION.

THE CONTRACTOR SHALL COMMENCE NO WORK ON RAILROAD RIGHT-OF-WAY UNTIL HE HAS COMPLIED WITH THE CONDITIONS PRESENTED ON NS PUBLIC PROJECTS MANUAL (SEE APPENDIX E, NORFOLK SOUTHERN - SPECIAL PROVISIONS FOR PROTECTION OF RAILWAY INTERESTS). THE CONTRACTOR SHALL SO ARRANGE AND CONDUCT HIS WORK THAT THERE WILL BE NO INTERFERENCE WITH RAILROAD'S OPERATIONS. WHENEVER WORK IS LIABLE TO AFFECT THE OPERATIONS OR SAFETY OF TRAINS, THE METHODS OF DOING SUCH WORK SHALL FIRST BE SUBMITTED TO THE RAILROAD ENGINEER FOR APPROVAL, BUT SUCH APPROVAL SHALL NOT RELIEVE THE CONTRACTOR FROM ANY LIABILITY.

IF REQUIRED, THE CONTRACTOR MUST HIRE AN APPROVED THIRD-PARTY PROVIDER OF PROTECTIVE SERVICES FOR THE PROTECTION OF PERSONNEL WORKING ON OR NEAR THE RAILROAD RIGHT-OF-WAY.

CONSTRUCTION ACCESS

ALL WORK FROM SPANS 1 THROUGH 4 OF THE HAM-75-11.92R BRIDGE ARE TO BE ACCESSED USING THE GATE AT THE EAST END OF PATTERSON AVENUE INTO ODOT'S R-O-W. ALL OTHER SPANS ARE TO BE ACCESSED FROM THE TOP OF THE BRIDGE BY SNOOPER TRUCK OR WORK PLATFORMS WITH SHOULDER CLOSURE IN ACCORDANCE WITH THE PERMITTED LANE CLOSURE SCHEDULE (PLCS).

STRUCTURE NOTES - 3

DESIGN AGENCY

DESIGNER BCP
REVIEWER AS 12-20-24
PROJECT ID 120341
SHEET 30 TOTAL 52

HAM-75-10.15

MODEL: Sheet_SurvFt PAPERSIZE: 34x22 (in.) DATE: 8/21/2025 TIME: 2:42:09 PM PLTDRV: OHDOT_PDF.pltcfg PENTBL: OHDOT_Pen.tbl USER: Benjamin.Peters@dot.ohio.gov WORKSPACE: OHDOTCEv02 WORKSET: 120341 PRODUCT: OpenRoadsDesigner 24.00.00.205
pw:\\ohiodot-pw.bentley.com:ohiodot-pw-02\Documents\01 Active Projects\District 08\Hamilton\120341400-Engineering\Structures\SFN_3110656\Sheets\120341_SFN_3110656_SN003.dgn

ESTIMATED QUANTITIES - STRUCTURE No.: HAM-75-1102R (SFN 3110443)

ITEM	EXTENSION	TOTAL	UNIT	DESCRIPTION	ABUT.	PIERS	SUPER.	GEN.	SEE SHEET #
519	12300	2	SY	PATCHING CONCRETE BRIDGE DECKS - TYPE B			2		P.32

ESTIMATED QUANTITIES - STRUCTURE No.: HAM-75-1152R (SFN 3110532)

ITEM	EXTENSION	TOTAL	UNIT	DESCRIPTION	ABUT.	PIERS	SUPER.	GEN.	SEE SHEET #
519	12300	2	SY	PATCHING CONCRETE BRIDGE DECKS - TYPE B			2		P.34

ESTIMATED QUANTITIES - STRUCTURE No.: HAM-75-1184R (SFN 3110591)

ITEM	EXTENSION	TOTAL	UNIT	DESCRIPTION	ABUT.	PIERS	SUPER.	GEN.	SEE SHEET #
519	12300	11	SY	PATCHING CONCRETE BRIDGE DECKS - TYPE B			11		P.35

ESTIMATED QUANTITIES - STRUCTURE No.: HAM-75-1192R (SFN 3110656)

ITEM	EXTENSION	TOTAL	UNIT	DESCRIPTION	ABUT.	PIERS	SUPER.	GEN.	SEE SHEET #
202	11201		LS	PORTIONS OF STRUCTURE REMOVED, AS PER PLAN				LS	
202	75000	130	FT	FENCE REMOVED				130	P.40
509	20001	142	LB	CONCRETE REINFORCEMENT, REPLACEMENT OF EXISTING CONCRETE REINFORCEMENT, AS PER PLAN			142		P.36, P.38, P.41
510	10001	10	EACH	DOWEL HOLES WITH NONSHRINK, NONMETALLIC GROUT, AS PER PLAN			10		P.28
511	34410	21	CY	CLASS QC2 CONCRETE, SUPERSTRUCTURE			21		P.36, P.38, P.41
513	95030	2250	EACH	STRUCTURAL STEEL, MISC.: WELDING CROSSFRAME STIFFENERS			2250		P.44-P.49
513	95030	316	EACH	STRUCTURAL STEEL, MISC.: STEEL PREPARATION, INSPECTION, AND NDT.			316		P.44-P.49
513	95030	316	EACH	STRUCTURAL STEEL, MISC.: DRILLING STRUCTURAL STEEL			316		P.44-P.49
514	27702	316	EACH	FIELD PAINTING, MISC.: FIELD PAINTING OF DAMAGED STRUCTURAL STEEL - THREE COAT OZEU SPOT PAINTING			316		P.29
514	27800		LS	FIELD PAINTING, MISC.: ZONE PAINTING OF STRUCTURAL STEEL NEAR EXPANSION JOINTS				LS	
518	12700	59	EACH	SCUPPER, VERTICAL EXTENSION			59		P.36-41
518	63300		LS	STRUCTURE DRAINAGE, MISC.: CLEANING SCUPPERS AND BRIDGE DRAINAGE SYSTEMS				LS	
519	12300	5	SY	PATCHING CONCRETE BRIDGE DECKS - TYPE B			5		P.36, P.39-P.41
601	32300	3	CY	ROCK CHANNEL PROTECTION, TYPE D WITH FILTER				3	P.38
SPECIAL	900E11000	5000	EACH	SPECIAL - RAILROAD FLAGGING SERVICES				5000	P.9

STRUCTURES SUBSUMMARY

DESIGN AGENCY

DESIGNER BCP

REVIEWER AS 12-20-24

PROJECT ID 120341

SHEET 31 TOTAL 52

HAM-75-10.15

MODEL: Sheet_SurvFt PAPERSIZE: 34x22 (in.) DATE: 8/22/2025 TIME: 3:32:59 PM PLTDRV: OHDOT_PDF.pltcfg PENTBL: OHDOT_Pen.tbl USER: Benjamin.Peters@dot.ohio.gov WORKSPACE: OHDOTCEv02 WORKSET: 120341 PRODUCT: OpenRoadsDesigner 24.00.00.205
pw:\\ohiodot-pw.bentley.com:ohiodot-pw-02\Documents\01 Active Projects\District 08\Hamilton\120341400-Engineering\Structures\SFN_3110656\Sheets\120341_SFN_3110656_SQ001.dgn

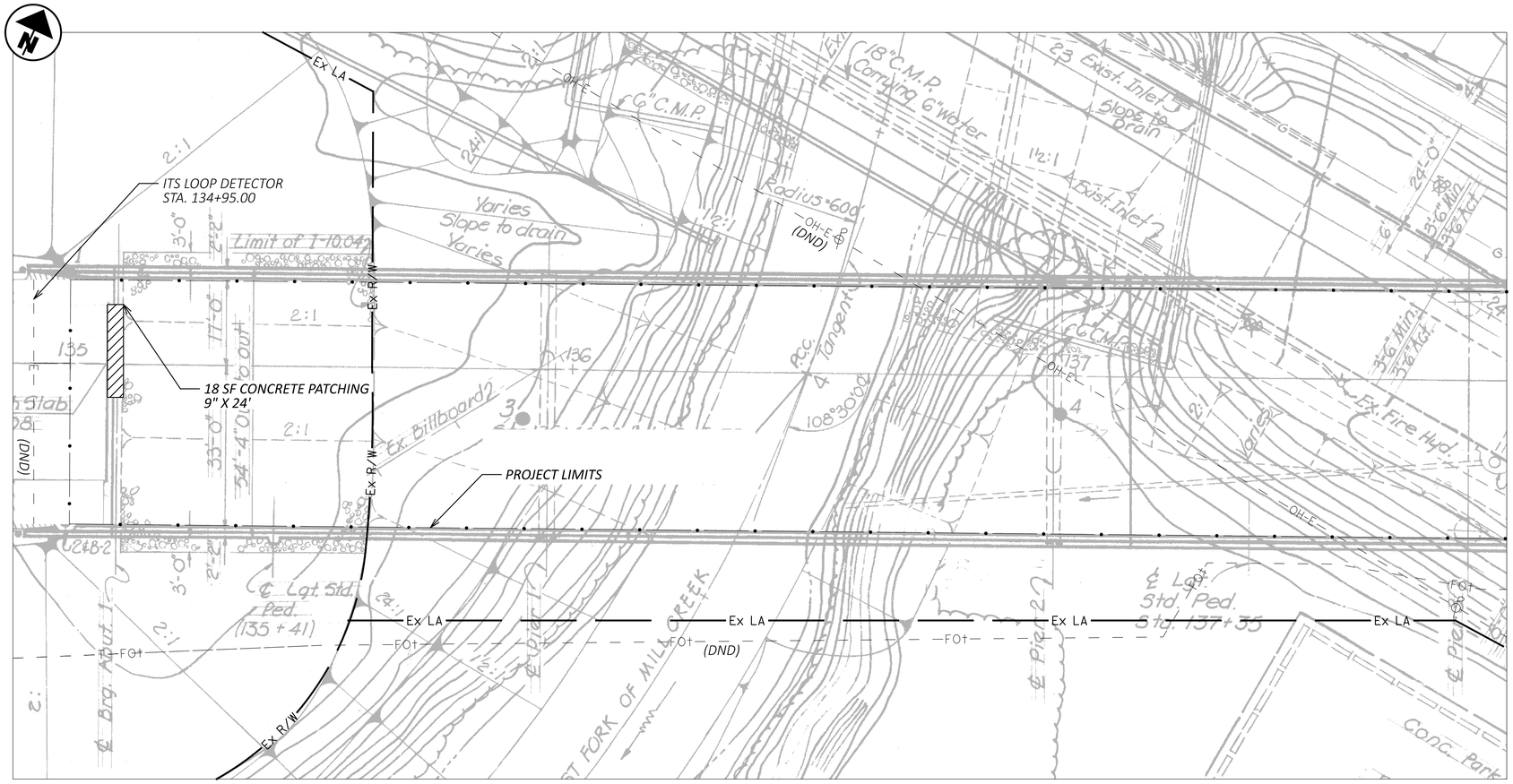

PLAN

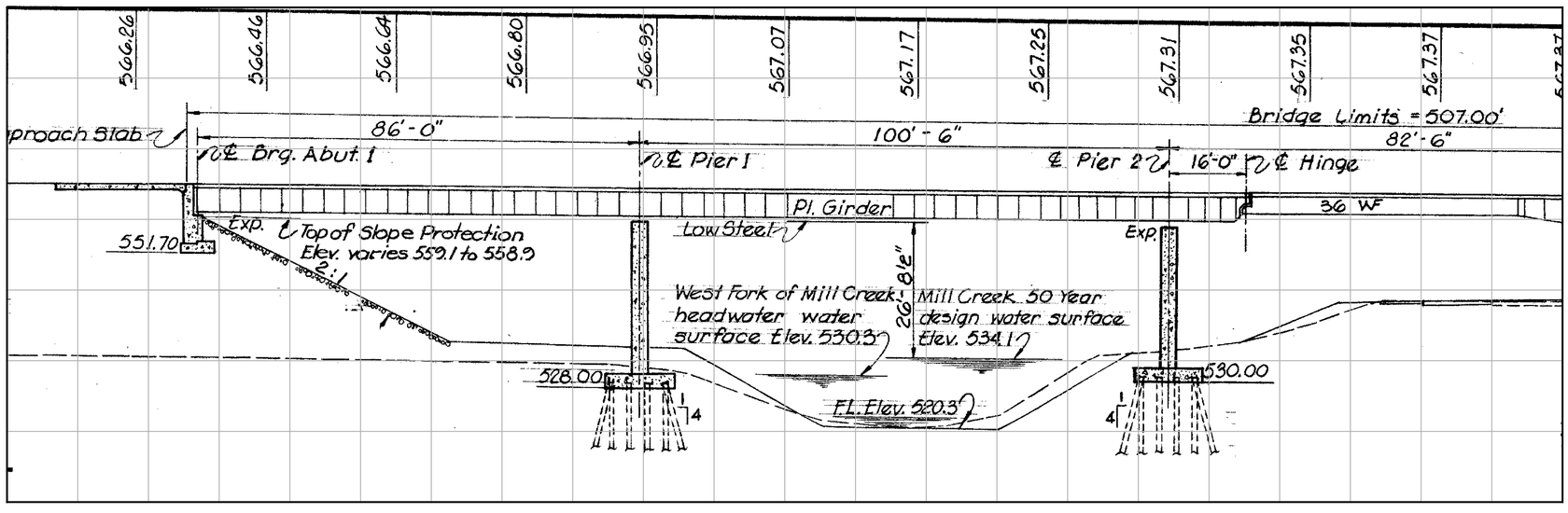

PROFILE

NOTES

1) PATCH DETERIORATED PORTIONS OF SOUTH BACKWALL PER PROPOSAL NOTE 512, TYPE B
2) DETAILS ON THIS SHEET ARE TAKEN FROM EXISTING PLANS AND SHOULD BE USED FOR INFORMATION PURPOSES ONLY
3) PERFORM ONLY THE WORK INDICATED IN THE MASKED TEXT AND/OR DESCRIBED IN THE GENERAL NOTES

DESIGN TRAFFIC:

HAM-75-1102 (NB)

2026 ADT = 112,000 2038 ADT = 114,000
DHV = 11,500 2024 ADTT = 18,228
DESIGN SPEED = 60 MPH LEGAL SPEED = 55 MPH
DESIGN FUNCTIONAL CLASSIFICATION: 01-PRINCIPAL ARTERIAL INTERSTATE
NHS ROUTE ..... YES

GALBRAITH RD

2024 ADT = 14,727
DHV = 1,272 2024 ADTT = 53
DESIGN SPEED = 40 MPH LEGAL SPEED = 40 MPH
DESIGN FUNCTIONAL CLASSIFICATION: 04-URBAN MINOR ARTERIAL
NHS ROUTE ..... NO

LEGEND

▨ - TYPE B CONCRETE PATCHING

EXISTING STRUCTURE

TYPE: CONTINUOUS ROLLED STEEL BEAM GIRDER AND WELDED PLATE GIRDER WITH REINFORCED CONCRETE DECK AND SUBSTRUCTURE

SPANS: 86'-0", 100'-6", 82'-6",80'-6",85'-0", 68'-0"
ROADWAY: 52'-0" F/F OF PARAPETS
LOADING: CF-2000 (57), ADEQUATE FOR AASHTO ALTERNATE LOADING
SKEW: 0°0'
WEARING SURFACE: 1" MONOLITHIC CONCRETE
APPROACH SLABS: AS-1-54 (25' LONG)
ALIGNMENT: TANGENT
CROWN: SUPERELEVATED
STRUCTURE FILE NUMBER: 3110443
DATE BUILT: JAN 1985
DISPOSITION: SEE PROPOSED WORK

PROPOSED WORK

1) PATCH DETERIORATED PORTIONS OF THE SOUTH BACKWALL WITH PROPOSAL NOTE 512, TYPE B PATCH

HORIZONTAL SCALE IN FEET
0 10 20 40

SITE PLAN - 1
BRIDGE NO: HAM-75-1102R
I-75 NB BRDIGE OVER GALBRAITH RD

SFN 3110443
DESIGN AGENCY

DESIGNER	CHECKER
BCP	AS

REVIEWER: AS 12-20-24
PROJECT ID: 120341
SUBSET 1 | TOTAL 2
SHEET 32 | TOTAL 52

HAM-75-10.15

MODEL: Sheet_SurvFt PAPERSIZE: 34x22 (in.) DATE: 5/28/2025 TIME: 10:36:59 AM USER: bpeters1
pw:\\ohiodot-pw.bentley.com:ohiodot-pw-02\Documents\01 Active Projects\District 08\Hamilton\120341\V00-Engineering\Structures\SFN_3110443\Sheets\120341_SFN_3110443_SP001.dgn

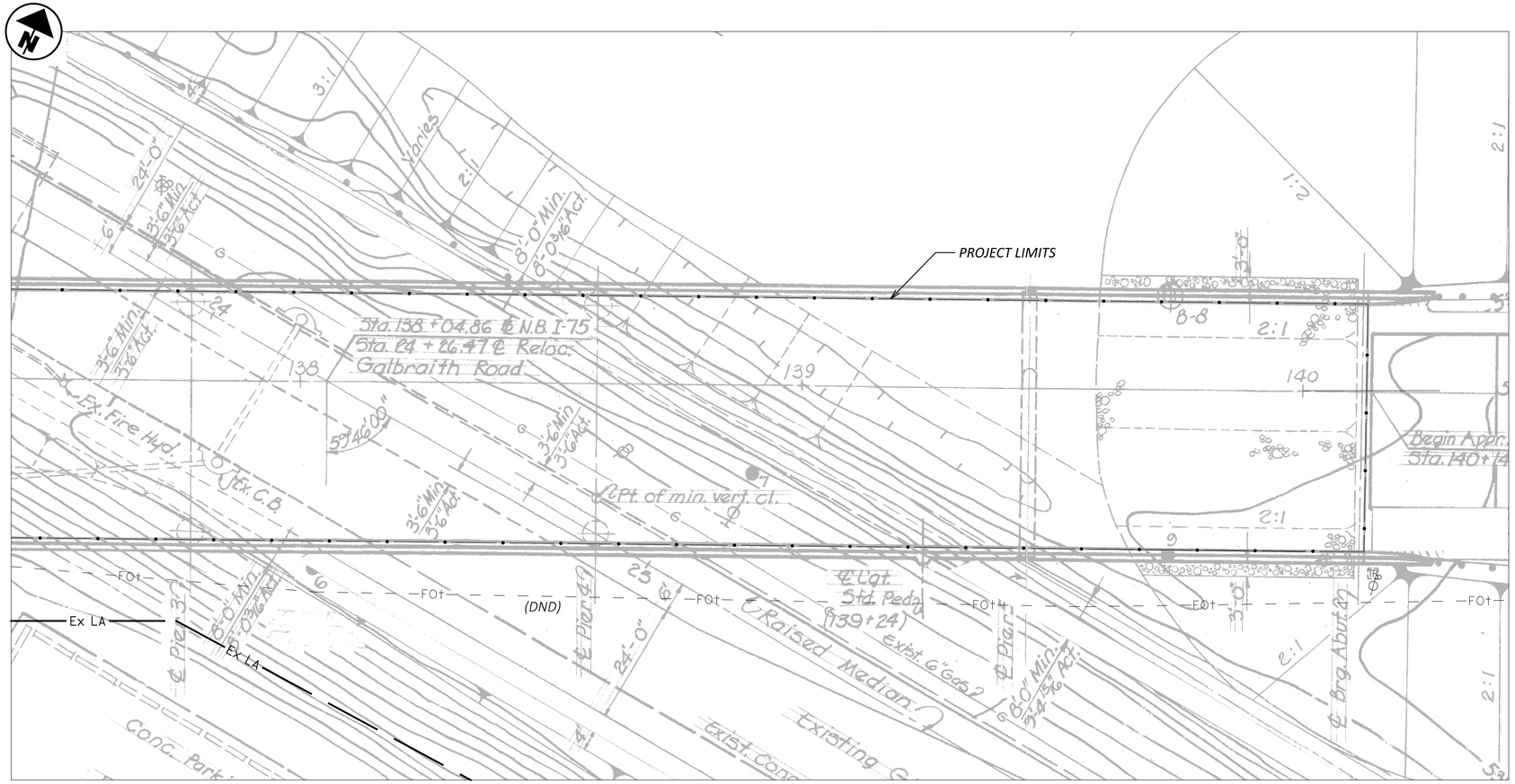

PLAN

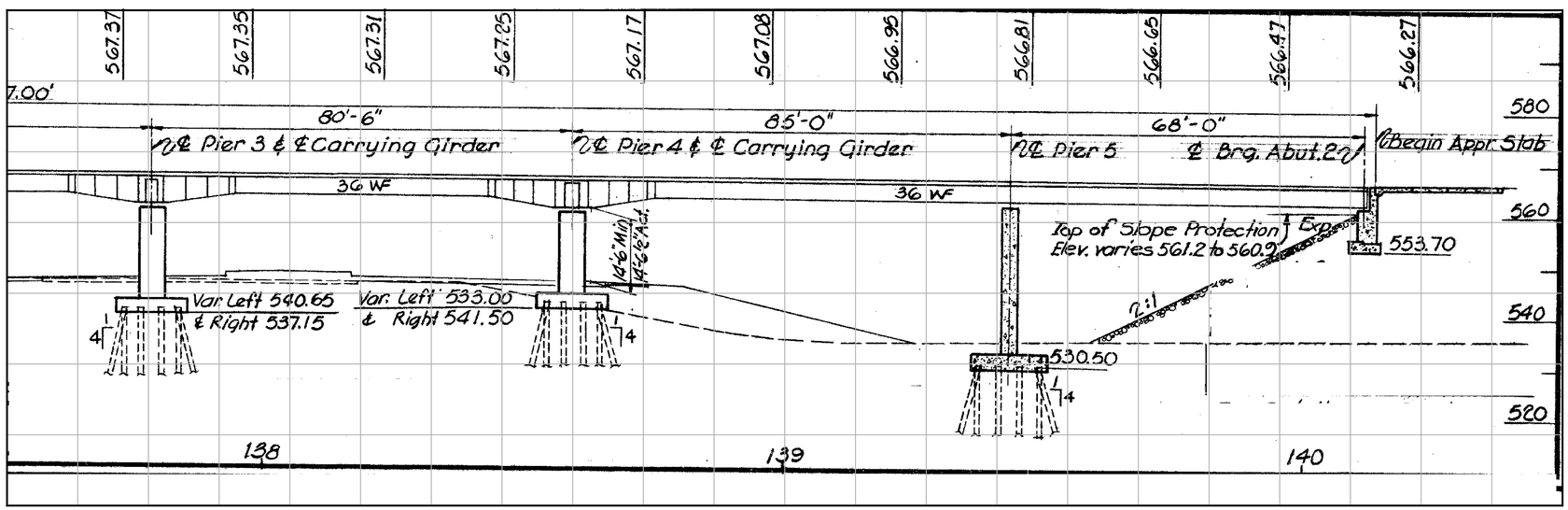

PROFILE

NOTES

1) PATCH DETERIORATED PORTIONS OF SOUTH BACKWALL PER PROPOSAL NOTE 512, TYPE B
2) DETAILS ON THIS SHEET ARE TAKEN FROM EXISTING PLANS AND SHOULD BE USED FOR INFORMATION PURPOSES ONLY
3) PERFORM ONLY THE WORK INDICATED IN THE FRAMED TEXT AND/OR DESCRIBED IN THE GENERAL NOTES

DESIGN TRAFFIC:

HAM-75-1102 (NB)

2026 ADT = 112,000 2038 ADT = 114,000
DHV = 11,500 2024 ADTT = 18,228
DESIGN SPEED = 65 MPH LEGAL SPEED = 65 MPH
DESIGN FUNCTIONAL CLASSIFICATION: 01-PRINCIPAL ARTERIAL INTERSTATE
NHS ROUTE ..... YES

GALBRAITH RD

2024 ADT = 14,727
DHV = 1,272 2024 ADTT = 53
DESIGN SPEED = 40 MPH LEGAL SPEED = 40 MPH
DESIGN FUNCTIONAL CLASSIFICATION: 04-URBAN MINOR ARTERIAL
NHS ROUTE ..... NO

LEGEND

▨ - TYPE B CONCRETE PATCHING

EXISTING STRUCTURE

TYPE: CONTINUOUS ROLLED STEEL BEAM GIRDER AND WELDED PLATE GIRDER WITH REINFORCED CONCRETE DECK AND SUBSTRUCTURE

SPANS: 86'-0", 100'-6", 82'-6",80'-6",85'-0", 68'-0"
ROADWAY: 52'-0" F/F OF PARAPETS
LOADING: CF-2000 (57), ADEQUATE FOR AASHTO ALTERNATE LOADING
SKEW: 0°0'
WEARING SURFACE: 1" MONOLITHIC CONCRETE
APPROACH SLABS: AS-1-54 (25' LONG)
ALIGNMENT: TANGENT
CROWN: SUPERELEVATED
STRUCTURE FILE NUMBER: 3110443
DATE BUILT: JAN 1985
DISPOSITION: SEE PROPOSED WORK

PROPOSED WORK

1) PATCH DETERIORATED PORTIONS OF THE SOUTH BACKWALL WITH PROPOSAL NOTE 512, TYPE B PATCH

HORIZONTAL SCALE IN FEET
0 10 20 40

SITE PLAN - 2

BRIDGE NO: HAM-75-1102R
I-75 NB BRIDGE OVER WEST FORK MILL CREEK, NS RR, & SHEPHARD LN

SFN 3110443
DESIGN AGENCY

DESIGNER	CHECKER
BCP	AS

REVIEWER: AS 12-20-24
PROJECT ID: 120341
SUBSET 2 | TOTAL 2
SHEET 33 | TOTAL 52

HAM-75-10.15

MODEL: Sheet_Survft PAPERSIZE: 34x22 (in.) DATE: 5/28/2025 TIME: 10:37:30 AM USER: bpeters1
pw:\\ohiodot-pw.bentley.com:ohiodot-pw-02\Documents\01 Active Projects\District 08\Hamilton\120341\400-Engineering\Structures\SFN_3110443\Sheets\120341_SFN_3110443_SP002.dgn

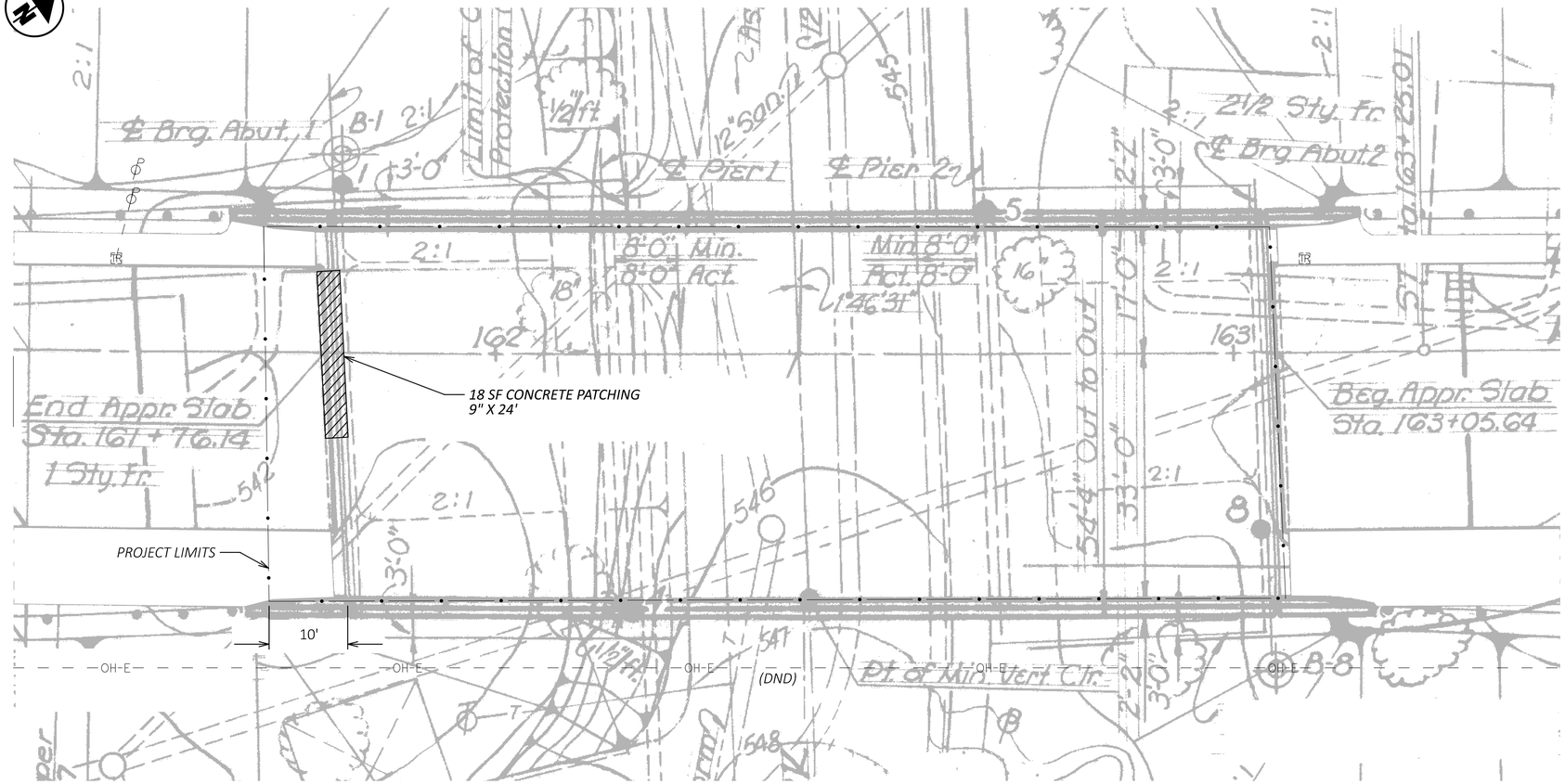

PLAN

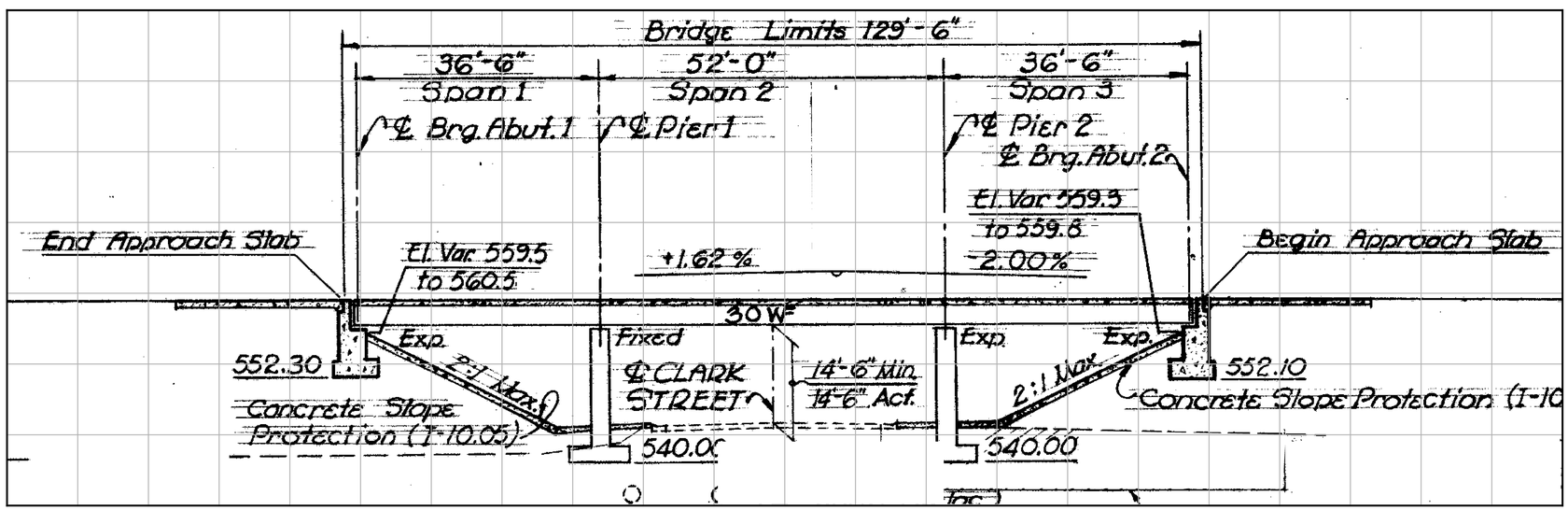

PROFILE

NOTES

1) PATCH DETERIORATED PORTIONS OF SOUTH BACKWALL PER PROPOSAL NOTE 512, TYPE B
2) DETAILS ON THIS SHEET ARE TAKEN FROM EXISTING PLANS AND SHOULD BE USED FOR INFORMATION PURPOSES ONLY
3) PERFORM ONLY THE WORK INDICATED IN THE MASKED TEXT AND/OR DESCRIBED IN THE GENERAL NOTES

DESIGN TRAFFIC:

HAM-75-1152 (NB)

2026 ADT = 126,000 2038 ADT = 126,000
DHV = 15,000 2024 ADTT = 20,436
DESIGN SPEED = 60 MPH LEGAL SPEED = 55 MPH
DESIGN FUNCTIONAL CLASSIFICATION: 01-PRINCIPAL ARTERIAL INTERSTATE
NHS ROUTE ..... YES

LEGEND

▨ - TYPE B CONCRETE PATCHING

EXISTING STRUCTURE

TYPE: CONTINUOUS ROLLED STEEL BEAM WITH REINFORCED CONCRETE DECK AND SUBSTRUCTURE

SPANS: 36'-6", 52'-0", 36'-6"
ROADWAY: 52'-0" F/F OF PARAPET
LOADING: C.F.-2000 (57), ADEQUATE FOR AASHTO ALTERNATE LOADING
SKEW: 1°46'31" RT. FWD
WEARING SURFACE: 1" MONOLITHIC CONCRETE
APPROACH SLABS: 25'0" LONG (STD AS-1-54)
ALIGNMENT: LEFT CURVE, Dc 1°28'00"
CROWN: SUPERELEVATED
STRUCTURE FILE NUMBER: 3110532
DATE BUILT: JAN 1985
DISPOSITION: SEE PROPOSED WORK

PROPOSED WORK

1) PATCH DETERIORATED PORTIONS OF THE SOUTH BACKWALL WITH PROPOSAL NOTE 512, TYPE B PATCH

HORIZONTAL SCALE IN FEET
0 10 20 40

SITE PLAN
BRIDGE NO: HAM-75-1152R
I-75 NB BRDIGE OVER CLARK ST

SFN 3110532
DESIGN AGENCY
DESIGNER BCP | CHECKER AS
REVIEWER AS 12-20-24
PROJECT ID 120341
SUBSET 1 | TOTAL 1
SHEET 34 | TOTAL 52

HAM-75-10.15

MODEL: Sheet_SurvFt PAPERSIZE: 34x22 (in.) DATE: 5/28/2025 TIME: 10:38:21 AM USER: bpeters1
pw:\\ohiodot-pw.bentley.com:ohiodot-pw-02\Documents\01 Active Projects\District 08\Hamilton\120341\400-Engineering\Structures\SFN_3110532\Sheets\120341_SFN_3110532_SP001.dgn

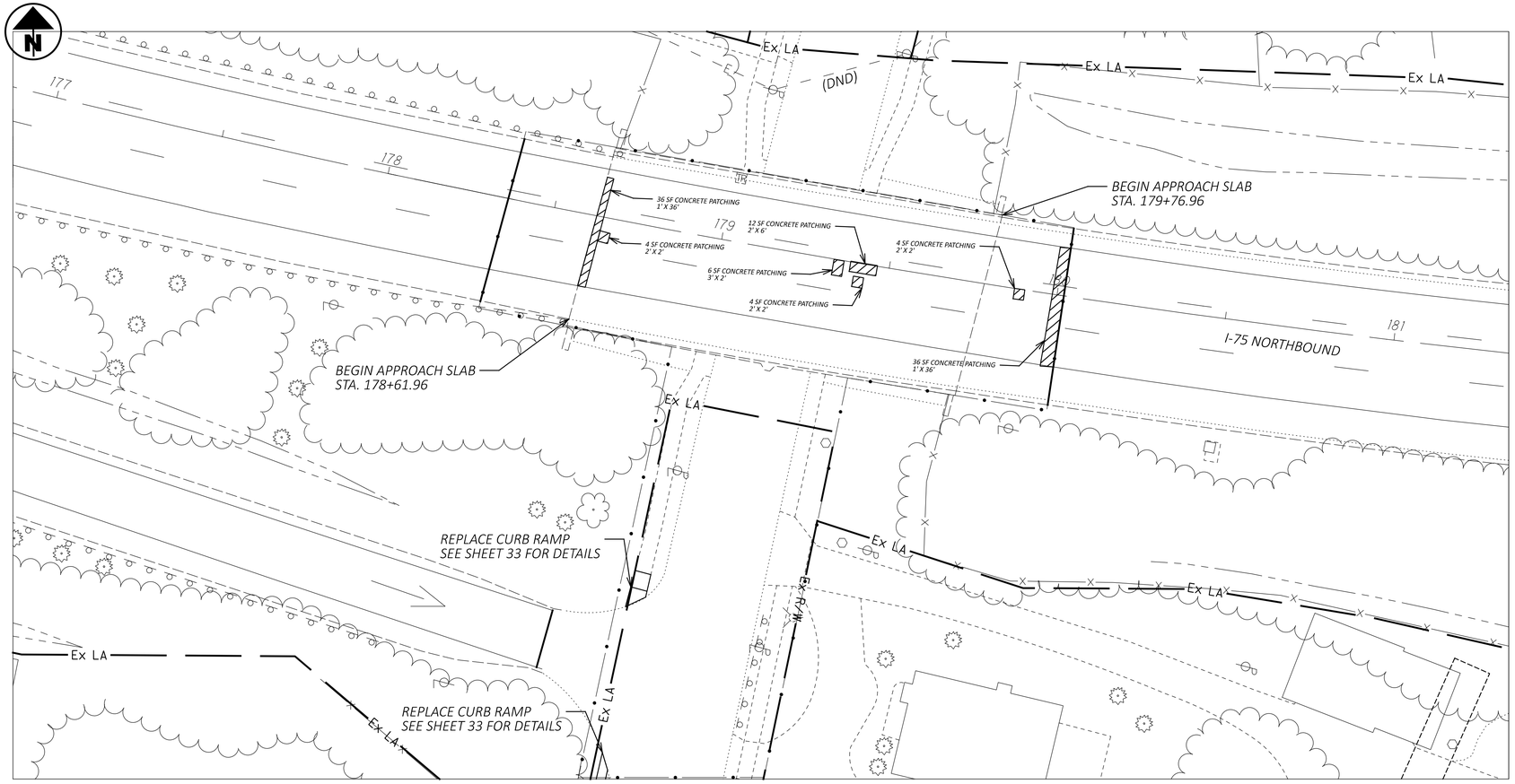

PLAN

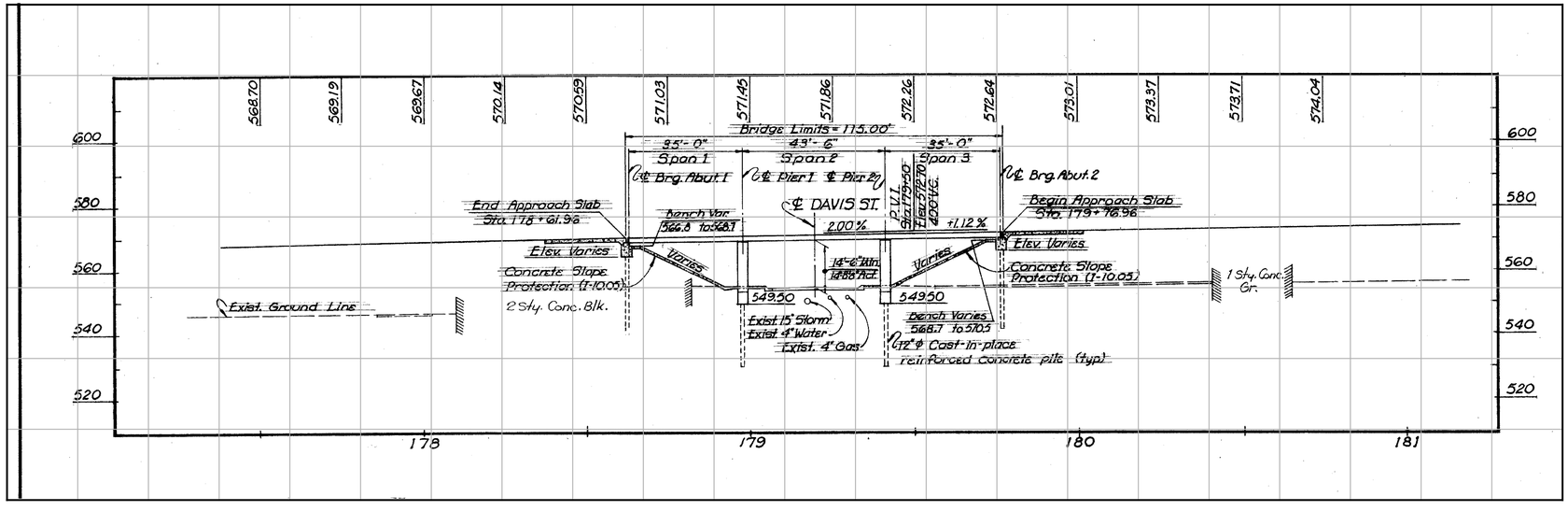

PROFILE

NOTES

1) PATCH DETERIORATED PORTIONS OF SOUTH BACKWALL PER PROPOSAL NOTE 512, TYPE B
2) DETAILS ON THIS SHEET ARE TAKEN FROM EXISTING PLANS AND SHOULD BE USED FOR INFORMATION PURPOSES ONLY
3) PERFORM ONLY THE WORK INDICATED IN THE MASKED TEXT AND/OR DESCRIBED IN THE GENERAL NOTES

DESIGN TRAFFIC:

HAM-75-1184 (NB)

2026 ADT = 126,000 2038 ADT = 126,000
DHV = 15,000 2024 ADTT = 20,152
DESIGN SPEED = 60 MPH LEGAL SPEED = 55 MPH
DESIGN FUNCTIONAL CLASSIFICATION: 01-PRINCIPAL ARTERIAL INTERSTATE
NHS ROUTE ..... YES

LEGEND

▨ - TYPE B CONCRETE PATCHING

EXISTING STRUCTURE

TYPE: CONTINUOUS REINFORCED CONCRETE SLAB BRIDGE WITH REINFORCED CONCRETE SUBSTRUCTURE

SPANS: 35'-0", 43'-6", 35'-0"
ROADWAY: 52'-0" F-T-F OF PARAPETS
LOADING: C.F. = 2000 (57) ADEQUATE FOR AASHTO ALTERNATE LOADING
SKEW: 5°07'24" L.F.
WEARING SURFACE: 1" MONOLITHIC CONCRETE
APPROACH SLABS: 25'0" LONG (AS-1-54)
ALIGNMENT: LEFT CURVE, 1°45'00"
CROWN: SUPERELEVATED 0.042'/FT.
STRUCTURE FILE NUMBER: 3110591
DATE BUILT: JAN 1985
DISPOSITION: SEE PROPOSED WORK

PROPOSED WORK

1) PATCH DETERIORATED PORTIONS OF THE WEARING SURFACE, INCLUDING CONTIGUOUS UNSOUND AREAS WITH CONCRETE PROPOSAL NOTE 512, TYPE B PATCH

HORIZONTAL SCALE IN FEET
0 10 20 40

SITE PLAN
BRIDGE NO: HAM-75-1184R
I-75 NB BRDIGE OVER DAVIST ST

SFN 3110591
DESIGN AGENCY

DESIGNER	CHECKER
BCP	AS

REVIEWER: AS 12-20-24
PROJECT ID: 120341
SUBSET 1 | TOTAL 1
SHEET 35 | TOTAL 52

HAM-75-10.15

MODEL: Sheet_SurvFt PAPERSIZE: 34x22 (in.) DATE: 5/28/2025 TIME: 10:39:30 AM USER: bpeters1
pw:\\ohiodot-pw.bentley.com:ohiodot-pw-02\Documents\01 Active Projects\District 08\Hamilton\120341\400-Engineering\Structures\SFN_3110591\Sheets\120341_SFN_3110591_SP001.dgn

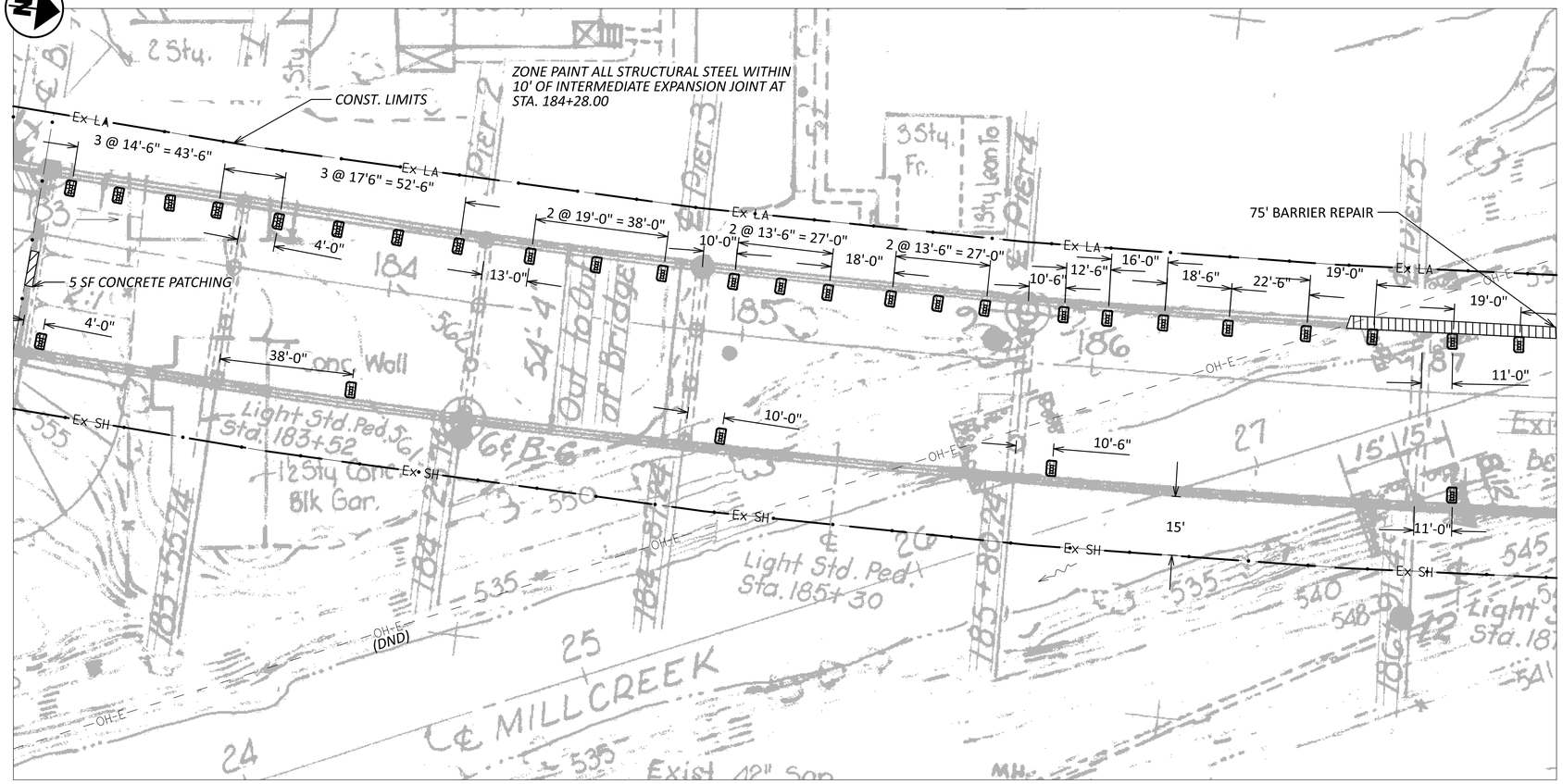

PLAN

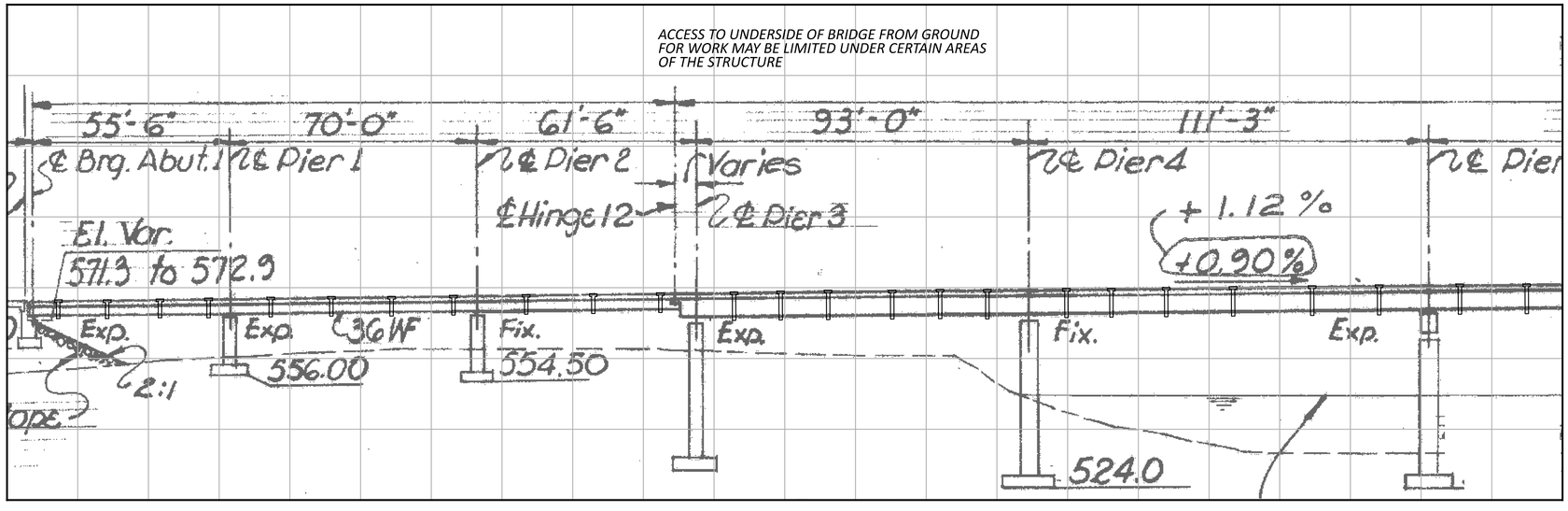

PROFILE

NOTES

1) PATCH THE DETERIORATED PORTIONS OF THE WEARING SURFACE PER PROPOSAL NOTE 512, TYPE B
2) REMOVE AND REPLACE DETERIORATED PORTIONS OF THE BARRIER
3) DETAILS ON THIS SHEET ARE TAKEN FROM EXISTING PLANS AND SHOULD BE USED FOR INFORMATION PURPOSES ONLY

DESIGN TRAFFIC:

HAM-75-1192 (NB)

2026 ADT = 126,000 2038 ADT = 126,000
DHV = 15,000 2024 ADTT = 20,152
DESIGN SPEED = 65 MPH LEGAL SPEED = 65 MPH
DESIGN FUNCTIONAL CLASSIFICATION: 01-PRINCIPAL ARTERIAL INTERSTATE
NHS ROUTE ..... YES

HYDRAULIC DATA

DRAINAGE AREA = 72.6 SQ. MILES
Q (50) = 3,820 CFS V (50) = FT/S
Q (100) = 7,140 CFS V (100) = FT/S
STRUCTURE CLEARS THE 50 YEAR
DESIGN HW BY 39 FEET.

LEGEND

- TYPE B CONCRETE PATCHING
- REMOVE AND REPLACE THE DETERIORATED PORTIONS OF THE TOP 1'-7" OF THE BARRIER
- REPLACE FACING AND CORE FOR FULL THICKNESS OF BARRIER
- EXISTING BRIDGE SCUPPERS (TO REMAIN)

EXISTING STRUCTURE

TYPE: CONTINUOUS ROLLED BEAM AND WELDED PLATE GIRDER WITH REINFORCED CONCRETE DECK AND SUBSTRUCTURE

SPANS: 56'-6"-70'-0"-61'-6"; 93'-0"-111'-3"-111'-3"-99'-0"; 113'-6"-113'-6" 126'-0"-145'-9"156'-0"-124'-0"; 120'-0"-145'-9"-156'-0"-118'-0"; 89'-0"-105'-0"-129'-0"-100'-0"-70'-0"

ROADWAY: 50' F/F OF 1'-0" SAFETY CURBS

LOADING: CF = 2000 (57) ADEQUATE FOR AASHTO ALTERNATE LOADING

SKEW: 0°

WEARING SURFACE: MONOLITHIC CONCRETE

APPROACH SLABS: 25'0" LONG (STD A-1-72)

ALIGNMENT: 1°45' CURVE TO LEFT, 350'-0" SPIRAL TO TANGENT

CROWN: SUPERELEVATED

STRUCTURE FILE NUMBER: 3110656

DATE BUILT: JAN 1985

DISPOSITION: SEE PROPOSED WORK

PROPOSED WORK

1) REPAIR OUT-OF-PLANE BENDING CRACKS AT THE TOP OF CROSS -FRAME STIFFENERS
2) WELD THE CROSS FRAME STIFFENER TO THE TOP AND BOTTOM FLANGES TO MITIGATE FURTHER CRACKING AT ALL INTERMEDIATE CROSS FRAME LOCATIONS IN SPANS 4 THROUGH SPAN 22
3) PAINT REPAIRED/ DAMAGED AREAS OF PAINT, PER 514
4) REMOVE AND REPLACE THE DETERIORATED PORTIONS OF THE TOP 1' - 7" OF THE BARRIER FACING THE FULL THICKNESS OF THE BARRIER REFACING
5) PATCH DETERIORATED PORTIONS OF THE WEARING SURFACE WITH PROPOSAL NOTE 512, TYPE B PATCH
6) REMOVE HORIZONTAL DRAINAGE PIPES AND EXTEND SCUPPERS TO BE 8" BELOW THE BOTTOM FLANGE. INSTALL TYPE D ROCK CHANNEL PROTECTION WITH FILTER FABRIC UNDER EACH NEW SCUPPER LOCATION TO PREVENT EROSION
7) REMOVE TREES UNDERNEATH AND WITHIN ROW LIMITS
8) ZONE PAINT STRUCTURAL STEEL WITHIN 10 FEET OF EITHER SIDE OF EACH INTERMEDIATE JOINT (5 LOCATIONS)

HORIZONTAL SCALE IN FEET
0 10 20 40

SITE PLAN - 1

BRIDGE NO: HAM-75-1192R
I-75 NB BRIDGE OVER WEST FORK MILL CREEK, NS RR, & SHEPHARD LN

SFN 3110656
DESIGN AGENCY
DESIGNER BCP | CHECKER AS
REVIEWER AS 12-20-24
PROJECT ID 120341
SUBSET 1 | TOTAL 6
SHEET 33 | TOTAL 49

HAM-75-10.15

MODEL: Sheet_SurvFt PAPERSIZE: 34x22 (in.) DATE: 5/28/2025 TIME: 10:40:35 AM USER: bpeters1
pw:\\ohiodot-pw.bentley.com:ohiodot-pw-02\Documents\01 Active Projects\District 08\Hamilton\120341\V00-Engineering\Structures\SFN_3110656\Sheets\0656\Sheets\120341_SP001.dgn

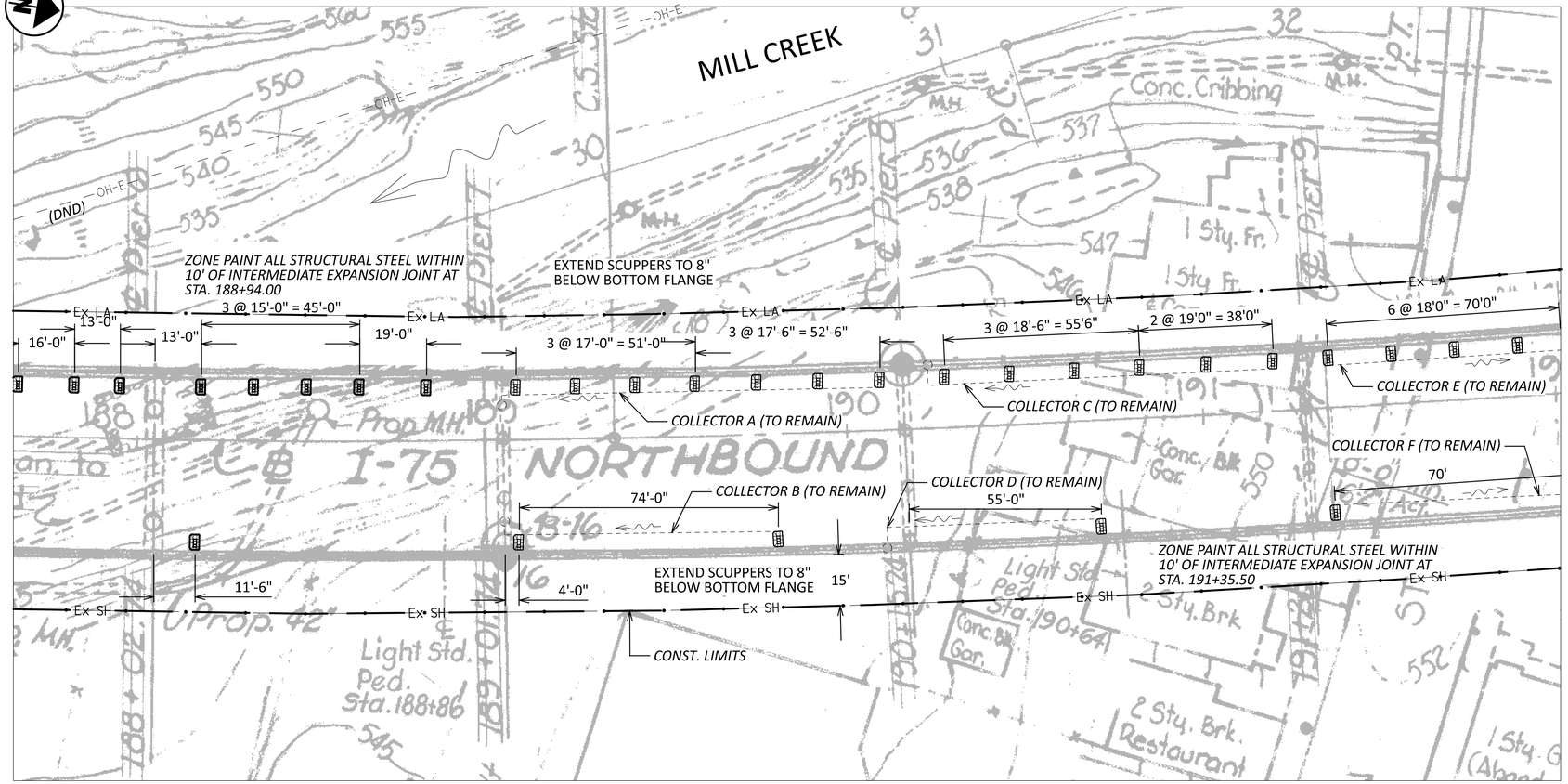

PLAN

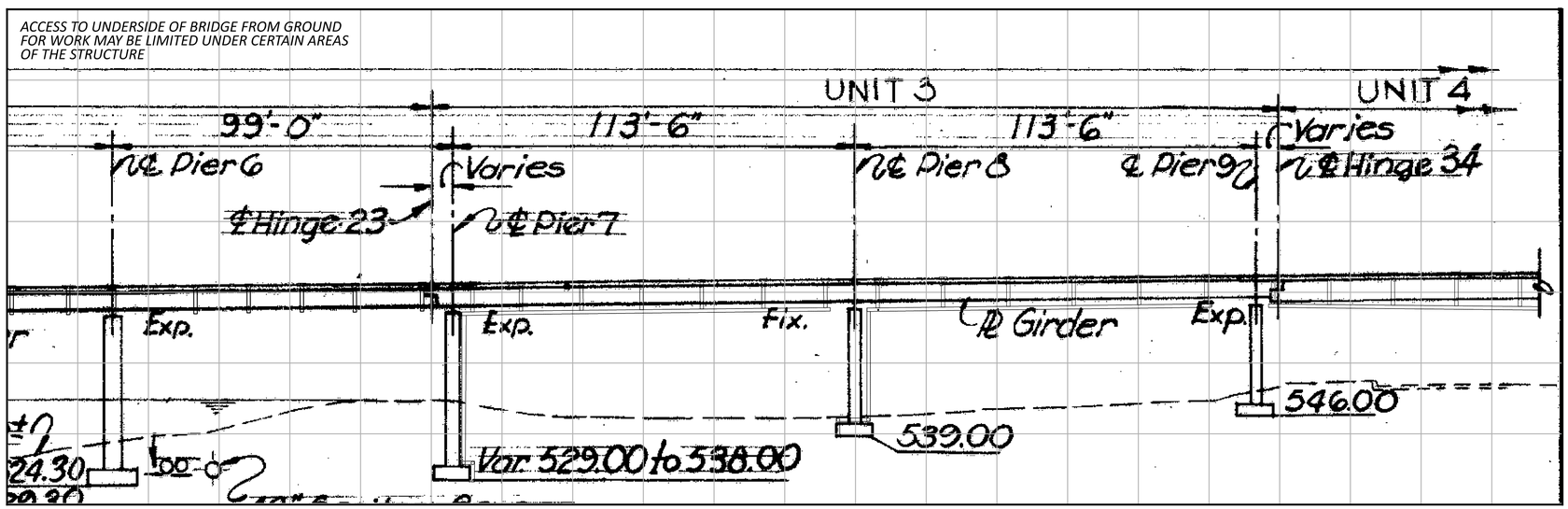

PROFILE

NOTES

1) PATCH THE DETERIORATED PORTIONS OF THE WEARING SURFACE PER PROPOSAL NOTE 512, TYPE B
2) REMOVE AND REPLACE DETERIORATED PORTIONS OF THE BARRIER
3) DETAILS ON THIS SHEET ARE TAKEN FROM EXISTING PLANS AND SHOULD BE USED FOR INFORMATION PURPOSES ONLY

DESIGN TRAFFIC:

HAM-75-1192 (NB)

2026 ADT = 126,000 2038 ADT = 126,000
DHV = 15,000 2024 ADTT = 20,152
DESIGN SPEED = 65 MPH LEGAL SPEED = 65 MPH
DESIGN FUNCTIONAL CLASSIFICATION: 01-PRINCIPAL ARTERIAL INTERSTATE
NHS ROUTE ..... YES

BENSON ST

2024 ADT = 4,916 2024 ADTT = NULL
DHV = 6,200
DESIGN SPEED = 55 MPH LEGAL SPEED = 55 MPH
DESIGN FUNCTIONAL CLASSIFICATION: 02-PRINCIPAL ARTERIAL FREEWAY
NHS ROUTE ..... YES

HYDRAULIC DATA

DRAINAGE AREA = 72.6 SQ. MILES
Q (50) = 3,820 CFS V (50) = 0.00014 FT/S
Q (100) = 7,140 CFS V (100) = 0.00026 FT/S
STRUCTURE CLEARS THE 50 YEAR DESIGN HW BY 39 FEET.

LEGEND

- TYPE B CONCRETE PATCHING
- REMOVE AND REPLACE THE DETERIORATED PORTIONS OF THE TOP 1'-7" OF THE BARRIER
- REPLACE FACING AND CORE FOR FULL THICKNESS OF BARRIER
- EXISTING BRIDGE SCUPPERS (TO REMAIN)

EXISTING STRUCTURE

TYPE: CONTINUOUS ROLLED BEAM AND WELDED PLATE GIRDER WITH REINFORCED CONCRETE DECK AND SUBSTRUCTURE

SPANS: 56'-6"-70'-0"-61'-6"; 93'-0"-111'-3"-111'-3"-99'-0"; 113'-6"-113'-6" 126'-0"-145'-9"156'-0"-124'-0"; 120'-0"-145'-9"-156'-0"-118'-0"; 89'-0"-105'-0"-129'-0"-100'-0"-70'-0"

ROADWAY: 50' F/F OF 1'-0" SAFETY CURBS

LOADING: CF = 2000 (57) ADEQUATE FOR AASHTO ALTERNATE LOADING

SKEW: 0°

WEARING SURFACE: MONOLITHIC CONCRETE

APPROACH SLABS: 25'0" LONG (STD A-1-72)

ALIGNMENT: 1°45' CURVE TO LEFT, 350'-0" SPIRAL TO TANGENT

CROWN: SUPERELEVATED

STRUCTURE FILE NUMBER: 3110656

DATE BUILT: JAN 1985

DISPOSITION: SEE PROPOSED WORK

PROPOSED WORK

1) REPAIR OUT-OF-PLANE BENDING CRACKS AT THE TOP OF CROSS -FRAME STIFFENERS
2) WELD THE CROSS FRAME STIFFENER TO THE TOP AND BOTTOM FLANGES TO MITIGATE FURTHER CRACKING AT ALL INTERMEDIATE CROSS FRAME LOCATIONS IN SPANS 4 THROUGH SPAN 22
3) PAINT REPAIRED/ DAMAGED AREAS OF PAINT, PER 514
4) REMOVE AND REPLACE THE DETERIORATED PORTIONS OF THE TOP 1' - 7" OF THE BARRIER FACING THE FULL THICKNESS OF THE BARRIER REFACING
5) PATCH DETERIORATED PORTIONS OF THE WEARING SURFACE WITH PROPOSAL NOTE 512, TYPE B PATCH
6) REMOVE HORIZONTAL DRAINAGE PIPES AND EXTEND SCUPPERS TO BE 8" BELOW THE BOTTOM FLANGE. INSTALL TYPE D ROCK CHANNEL PROTECTION WITH FILTER FABRIC UNDER EACH NEW SCUPPER LOCATION TO PREVENT EROSION
7) REMOVE TREES UNDERNEATH AND WITHIN ROW LIMITS
8) ZONE PAINT STRUCTURAL STEEL WITHIN 10 FEET OF EITHER SIDE OF EACH INTERMEDIATE JOINT (5 LOCATIONS)

HORIZONTAL SCALE IN FEET
0 10 20 40

SITE PLAN - 2

BRIDGE NO: HAM-75-1192R
I-75 NB BRIDGE OVER WEST FORK MILL CREEK, NS RR, & SHEPHARD LN

SFN	3110656
DESIGN AGENCY	
DESIGNER	BCP
CHECKER	AS
REVIEWER	AS 12-20-24
PROJECT ID	120341
SUBSET	2
TOTAL	6
SHEET	37
TOTAL	52

HAM-75-10.15

MODEL: Sheet_SurvFt PAPERSIZE: 34x22 (in.) DATE: 5/28/2025 TIME: 10:41:09 AM USER: bpeters1
pw:\\ohiodot-pw.bentley.com:ohiodot-pw-02\Documents\01 Active Projects\District 08\Hamilton\120341\V00-Engineering\Structures\SFN_3110656\Sheets\120341_SP002.dgn

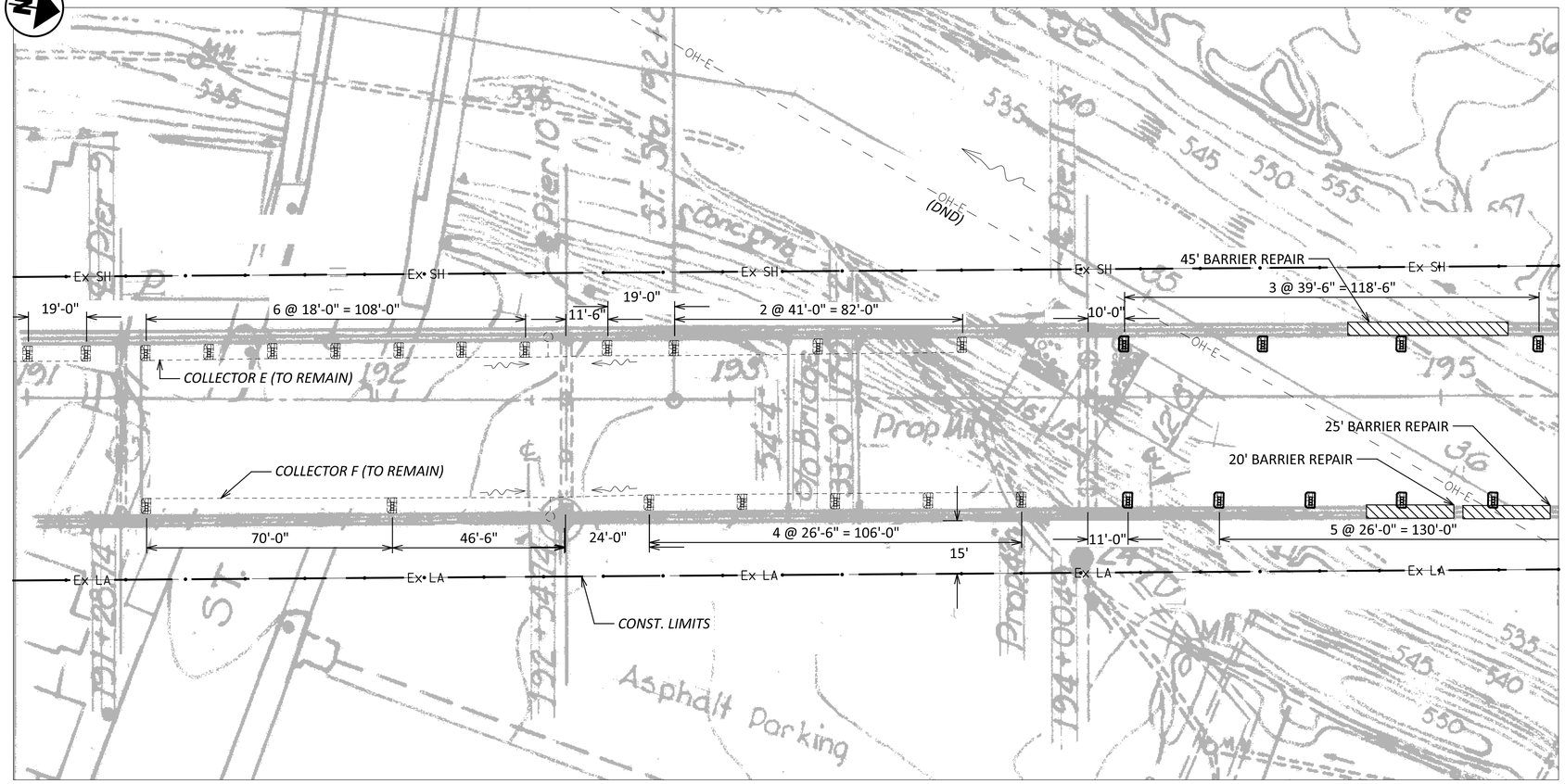

PLAN

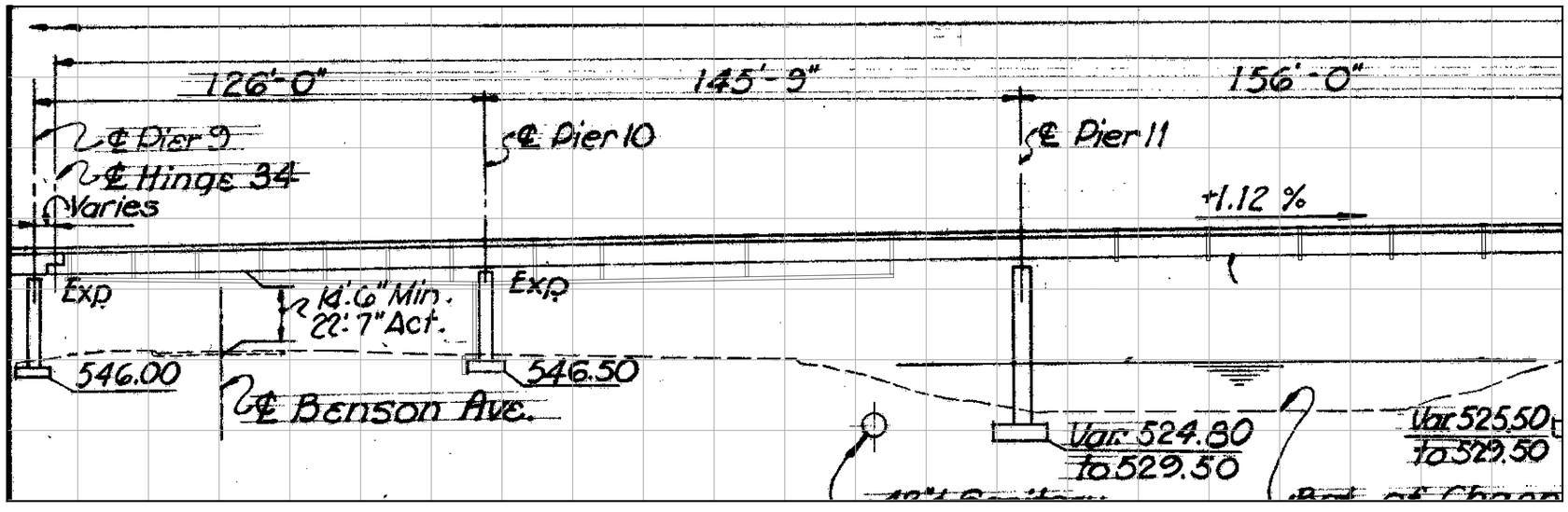

PROFILE

NOTES

1) PATCH THE DETERIORATED PORTIONS OF THE WEARING SURFACE PER PROPOSAL NOTE 512, TYPE B
2) REMOVE AND REPLACE DETERIORATED PORTIONS OF THE BARRIER
3) DETAILS ON THIS SHEET ARE TAKEN FROM EXISTING PLANS AND SHOULD BE USED FOR INFORMATION PURPOSES ONLY

DESIGN TRAFFIC:

HAM-75-1192 (NB)

2026 ADT = 126,000 2038 ADT = 126,000
DHV = 15,000 2024 ADTT = 20,152
DESIGN SPEED = 65 MPH LEGAL SPEED = 65 MPH
DESIGN FUNCTIONAL CLASSIFICATION: 01-PRINCIPAL ARTERIAL INTERSTATE
NHS ROUTE ..... YES

BENSON ST

2024 ADT = 4,916 2024 ADTT = NULL
DHV = 6,200
DESIGN SPEED = 55 MPH LEGAL SPEED = 55 MPH
DESIGN FUNCTIONAL CLASSIFICATION: 02-PRINCIPAL ARTERIAL FREEWAY
NHS ROUTE ..... YES

HYDRAULIC DATA

DRAINAGE AREA = 72.6 SQ. MILES
Q (50) = 3,820 CFS V (50) = FT/S
Q (100) = 7,140 CFS V (100) = FT/S
STRUCTURE CLEARS THE 50 YEAR
DESIGN HW BY 39 FEET.

LEGEND

- TYPE B CONCRETE PATCHING
- REMOVE AND REPLACE THE DETERIORATED PORTIONS OF THE TOP 1'-7" OF THE BARRIER
- REPLACE FACING AND CORE FOR FULL THICKNESS OF BARRIER
- EXISTING BRIDGE SCUPPERS (TO REMAIN)

EXISTING STRUCTURE

TYPE: CONTINUOUS ROLLED BEAM AND WELDED PLATE GIRDER WITH REINFORCED CONCRETE DECK AND SUBSTRUCTURE

SPANS: 56'-6"-70'-0"-61'-6"; 93'-0"-111'-3"-111'-3"-99'-0"; 113'-6"-113'-6" 126'-0"-145'-9"156'-0"-124'-0"; 120'-0"-145'-9"-156'-0"-118'-0"; 89'-0"-105'-0"-129'-0"-100'-0"-70'-0"

ROADWAY: 50' F/F OF 1'-0" SAFETY CURBS

LOADING: CF = 2000 (57) ADEQUATE FOR AASHTO ALTERNATE LOADING

SKEW: 0°

WEARING SURFACE: MONOLITHIC CONCRETE

APPROACH SLABS: 25'0" LONG (STD A-1-72)

ALIGNMENT: 1°45' CURVE TO LEFT, 350'-0" SPIRAL TO TANGENT

CROWN: SUPERELEVATED

STRUCTURE FILE NUMBER: 3110656

DATE BUILT: JAN 1985

DISPOSITION: SEE PROPOSED WORK

PROPOSED WORK

1) REPAIR OUT-OF-PLANE BENDING CRACKS AT THE TOP OF CROSS -FRAME STIFFENERS
2) WELD THE CROSS FRAME STIFFENER TO THE TOP AND BOTTOM FLANGES TO MITIGATE FURTHER CRACKING AT ALL INTERMEDIATE CROSS FRAME LOCATIONS IN SPANS 4 THROUGH SPAN 22
3) PAINT REPAIRED/ DAMAGED AREAS OF PAINT, PER 514
4) REMOVE AND REPLACE THE DETERIORATED PORTIONS OF THE TOP 1' - 7" OF THE BARRIER FACING THE FULL THICKNESS OF THE BARRIER REFACING
5) PATCH DETERIORATED PORTIONS OF THE WEARING SURFACE WITH PROPOSAL NOTE 512, TYPE B PATCH
6) REMOVE HORIZONTAL DRAINAGE PIPES AND EXTEND SCUPPERS TO BE 8" BELOW THE BOTTOM FLANGE. INSTALL TYPE D ROCK CHANNEL PROTECTION WITH FILTER FABRIC UNDER EACH NEW SCUPPER LOCATION TO PREVENT EROSION
7) REMOVE TREES UNDERNEATH AND WITHIN ROW LIMITS
8) ZONE PAINT STRUCTURAL STEEL WITHIN 10 FEET OF EITHER SIDE OF EACH INTERMEDIATE JOINT (5 LOCATIONS)

HORIZONTAL SCALE IN FEET
0 10 20 40

SITE PLAN - 3

BRIDGE NO: HAM-75-1192R
I-75 NB BRIDGE OVER WEST FORK MILL CREEK, NS RR, & SHEPHARD LN

SFN 3110656
DESIGN AGENCY
DESIGNER BCP | CHECKER AS
REVIEWER AS 12-20-24
PROJECT ID 120341
SUBSET 3 | TOTAL 6
SHEET 38 | TOTAL 52

HAM-75-10.15

MODEL: Sheet_SurvFt PAPERSIZE: 34x22 (in.) DATE: 5/28/2025 TIME: 10:41:43 AM USER: bpeters1
pw:\\ohiodot-pw.bentley.com:ohiodot-pw-02\Documents\01 Active Projects\District 08\Hamilton\120341\400-Engineering\Structures\SFN_3110656\Sheets\SFN_3110656_SP003.dgn

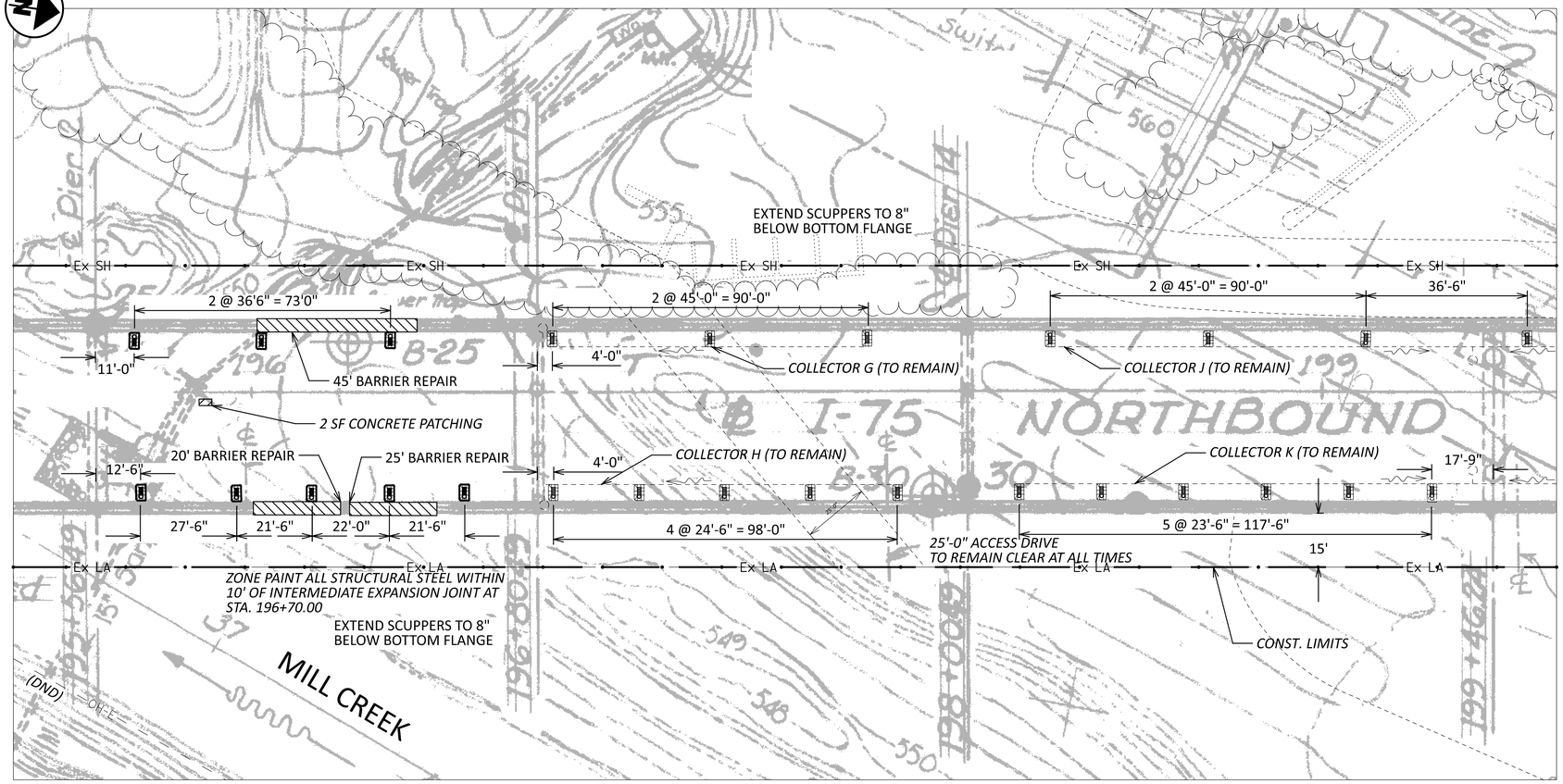

PLAN

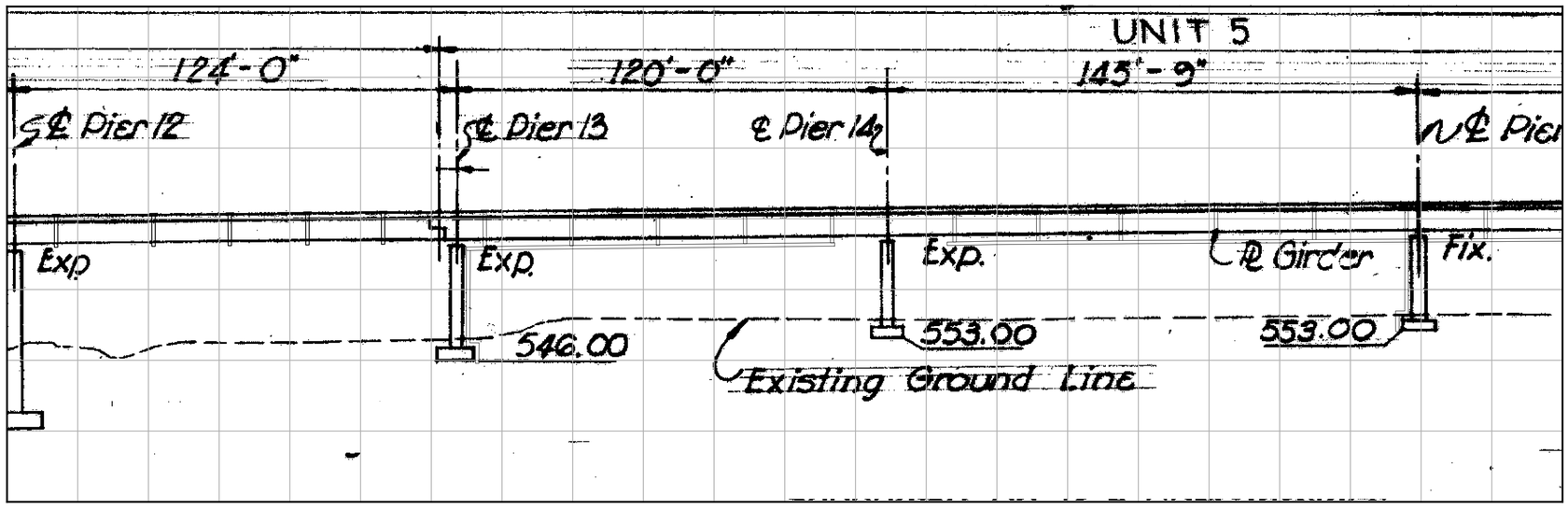

PROFILE

NOTES

1) PATCH THE APPROACH SLABS AND DECK PER PROPOSAL NOTE 512, TYPE B
2) REMOVE AND REPLACE DETERIORATED PORTIONS OF THE BARRIER
3) DETAILS ON THIS SHEET ARE TAKEN FROM EXISTING PLANS AND SHOULD BE USED FOR INFORMATION PURPOSES ONLY

DESIGN TRAFFIC:

HAM-75-1192 (NB)

2026 ADT = 126,000 2038 ADT = 126,000
DHV = 15,500 2024 ADTT = 20,152
DESIGN SPEED = 65 MPH LEGAL SPEED = 65 MPH
DESIGN FUNCTIONAL CLASSIFICATION: 01-PRINCIPAL ARTERIAL INTERSTATE
NHS ROUTE ..... YES

LEGEND

- TYPE B CONCRETE PATCHING
- REMOVE AND REPLACE THE DETERIORATED PORTIONS OF THE TOP 1'-7" OF THE BARRIER
- REPLACE FACING AND CORE FOR FULL THICKNESS OF BARRIER
- EXISTING BRIDGE SCUPPERS (TO REMAIN)
- BRIDGE SCUPPERS TO BE EXTENDED

EXISTING STRUCTURE

TYPE: CONTINUOUS ROLLED BEAM AND WELDED PLATE GIRDER WITH REINFORCED CONCRETE DECK AND SUBSTRUCTURE

SPANS: 56'-6"-70'-0"-61'-6"; 93'-0"-111'-3"-111'-3"-99'-0"; 113'-6"-113'-6" 126'-0"-145'-9"156'-0"-124'-0"; 120'-0"-145'-9"-156'-0"-118'-0"; 89'-0"-105'-0"-129'-0"-100'-0"-70'-0"

ROADWAY: 50' F/F OF 1'-0" SAFETY CURBS

LOADING: CF = 2000 (57) ADEQUATE FOR AASHTO ALTERNATE LOADING

SKEW: 0°

WEARING SURFACE: MONOLITHIC CONCRETE

APPROACH SLABS: 25'0" LONG (STD A-1-72)

ALIGNMENT: 1°45' CURVE TO LEFT, 350'-0" SPIRAL TO TANGENT

CROWN: SUPERELEVATED

STRUCTURE FILE NUMBER: 3110656

DATE BUILT: JAN 1985

DISPOSITION: SEE PROPOSED WORK

PROPOSED WORK

1) REPAIR OUT-OF-PLANE BENDING CRACKS AT THE TOP OF CROSS -FRAME STIFFENERS
2) WELD THE CROSS FRAME STIFFENER TO THE TOP AND BOTTOM FLANGES TO MITIGATE FURTHER CRACKING AT ALL INTERMEDIATE CROSS FRAME LOCATIONS IN SPANS 4 THROUGH SPAN 22
3) PAINT REPAIRED/ DAMAGED AREAS OF PAINT, PER 514
4) REMOVE AND REPLACE THE DETERIORATED PORTIONS OF THE TOP 1' - 7" OF THE BARRIER FACING THE FULL THICKNESS OF THE BARRIER REFACING
5) PATCH DETERIORATED PORTIONS OF THE WEARING SURFACE WITH PROPOSAL NOTE 512, TYPE B PATCH
6) REMOVE HORIZONTAL DRAINAGE PIPES AND EXTEND SCUPPERS TO BE 8" BELOW THE BOTTOM FLANGE. INSTALL TYPE D ROCK CHANNEL PROTECTION WITH FILTER FABRIC UNDER EACH NEW SCUPPER LOCATION TO PREVENT EROSION
7) REMOVE TREES UNDERNEATH AND WITHIN ROW LIMITS
8) ZONE PAINT STRUCTURAL STEEL WITHIN 10 FEET OF EITHER SIDE OF EACH INTERMEDIATE JOINT (5 LOCATIONS)

HORIZONTAL SCALE IN FEET
0 10 20 40

SITE PLAN - 4

BRIDGE NO: HAM-75-1192R
I-75 NB BRIDGE OVER WEST FORK MILL CREEK, NS RR, & SHEPHARD LN

SFN 3110656
DESIGN AGENCY
DESIGNER BCP | CHECKER AS
REVIEWER AS 12-20-24
PROJECT ID 120341
SUBSET 4 | TOTAL 6
SHEET 39 | TOTAL 52

HAM-75-10.15

MODEL: Sheet_SurvFt PAPERSIZE: 34x22 (in.) DATE: 8/21/2025 TIME: 2:59:20 PM PLTDRV: OHDOT_PDF.pltcfg PENTBL: OHDOT_Pen.tbl USER: Benjamin.Peters@dot.ohio.gov WORKSPACE: OHDOTCEv02 WORKSET: 120341 PRODUCT: OpenRoadsDesigner 24.00.00.205
pw:\\ohiodot-pw.bentley.com:ohiodot-pw-02\Documents\01 Active Projects\District 08\Hamilton\120341\V00-Engineering\Structures\SFN_3110656\Sheets\120341_SP004.dgn

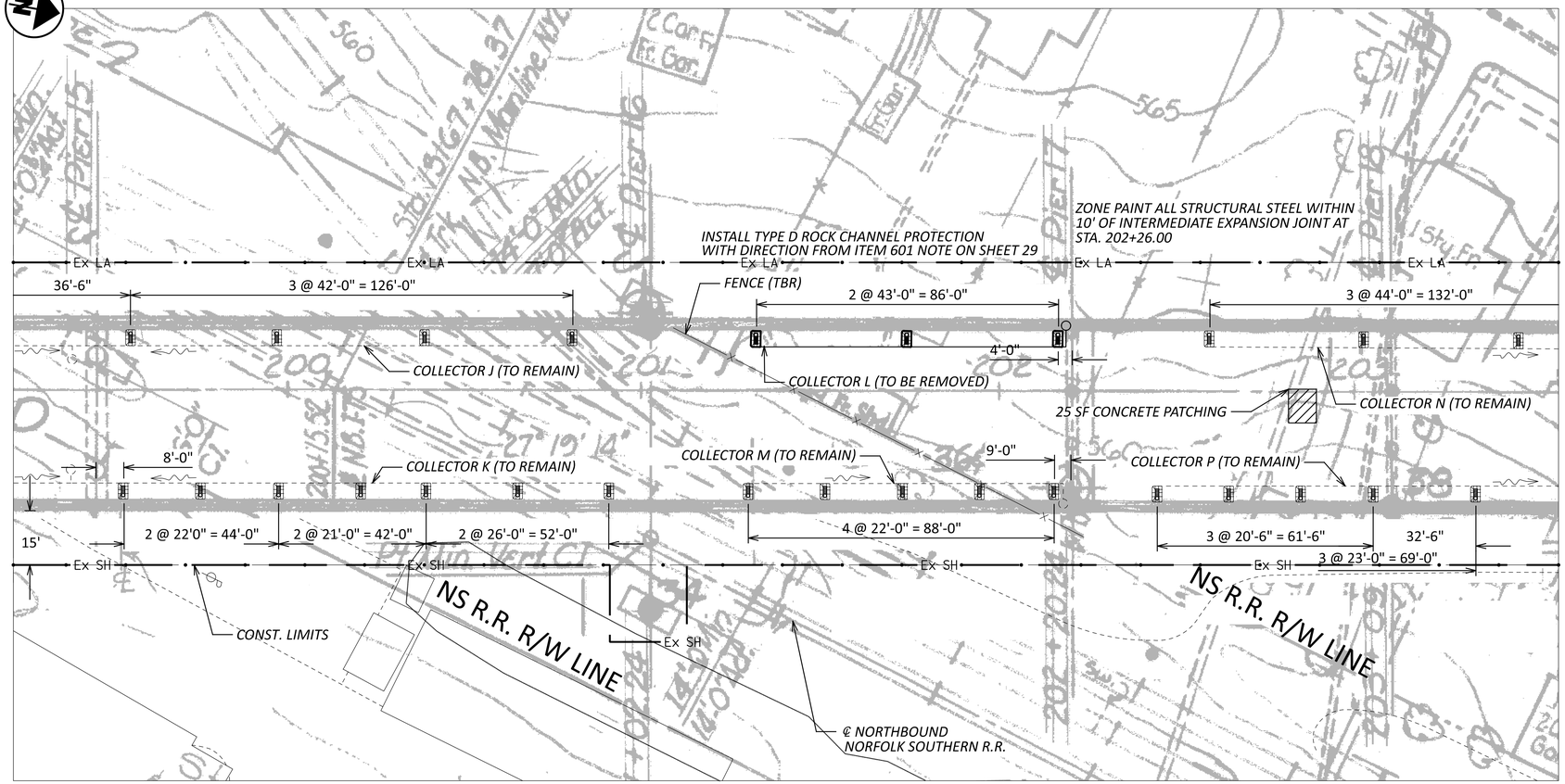

PLAN

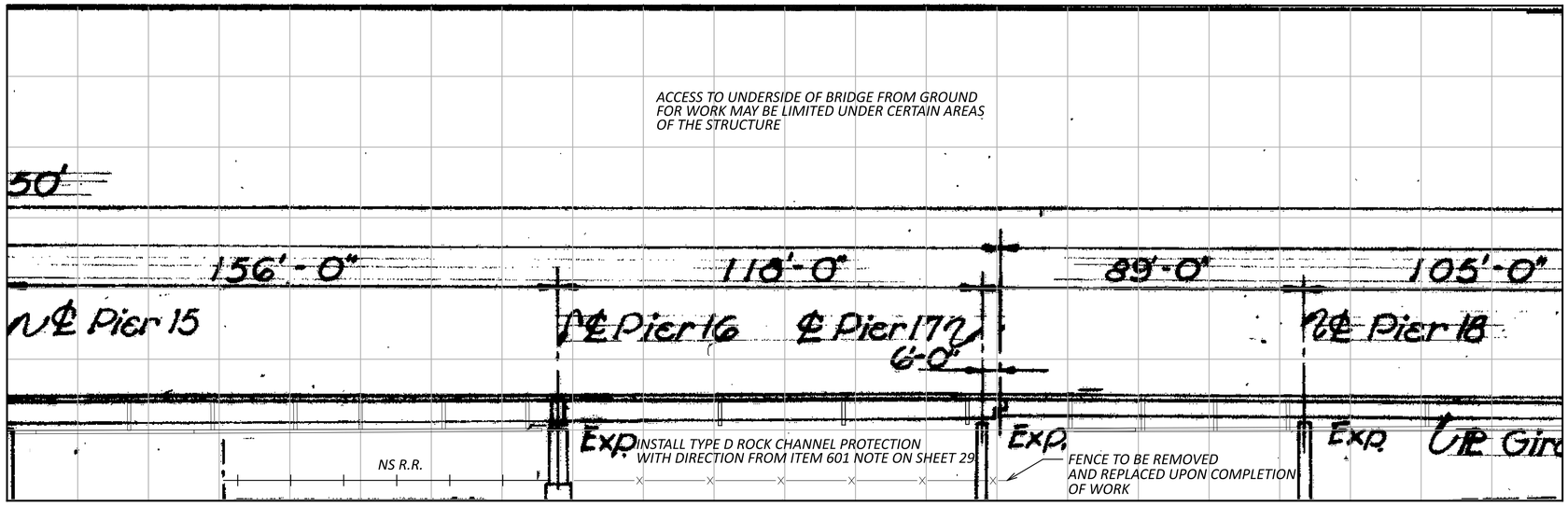

PROFILE

NOTES

1) PATCH THE DETERIORATED PORTIONS OF THE WEARING SURFACE PER PROPOSAL NOTE 512, TYPE B
2) REMOVE AND REPLACE DETERIORATED PORTIONS OF THE BARRIER
3) DETAILS ON THIS SHEET ARE TAKEN FROM EXISTING PLANS AND SHOULD BE USED FOR INFORMATION PURPOSES ONLY

HORIZONTAL SCALE IN FEET
0 10 20 40

DESIGN TRAFFIC:

HAM-75-1192 (NB)

2026 ADT = 126,000 2038 ADT = 126,000
DHV = 15,000 2024 ADTT = 20,152
DESIGN SPEED = 65 MPH LEGAL SPEED = 65 MPH
DESIGN FUNCTIONAL CLASSIFICATION: 01-PRINCIPAL ARTERIAL INTERSTATE
NHS ROUTE ..... YES

LEGEND

- TYPE B CONCRETE PATCHING
- REMOVE AND REPLACE THE DETERIORATED PORTIONS OF THE TOP 1'-7" OF THE BARRIER
- REPLACE FACING AND CORE FOR FULL THICKNESS OF BARRIER
- EXISTING BRIDGE SCUPPERS (TO REMAIN)
- BRIDGE SCUPPERS TO BE EXTENDED

EXISTING STRUCTURE

TYPE: CONTINUOUS ROLLED BEAM AND WELDED PLATE GIRDER WITH REINFORCED CONCRETE DECK AND SUBSTRUCTURE

SPANS: 56'-6"-70'-0"-61'-6"; 93'-0"-111'-3"-111'-3"-99'-0"; 113'-6"-113'-6" 126'-0"-145'-9"156'-0"-124'-0"; 120'-0"-145'-9"-156'-0"-118'-0"; 89'-0"-105'-0"-129'-0"-100'-0"-70'-0"

ROADWAY: 50' F/F OF 1'-0" SAFETY CURBS

LOADING: CF = 2000 (57) ADEQUATE FOR AASHTO ALTERNATE LOADING

SKEW: 0°

WEARING SURFACE: MONOLITHIC CONCRETE

APPROACH SLABS: 25'0" LONG (STD A-1-72)

ALIGNMENT: 1°45' CURVE TO LEFT, 350'-0" SPIRAL TO TANGENT

CROWN: SUPERELEVATED

STRUCTURE FILE NUMBER: 3110656

DATE BUILT: JAN 1985

DISPOSITION: SEE PROPOSED WORK

PROPOSED WORK

1) REPAIR OUT-OF-PLANE BENDING CRACKS AT THE TOP OF CROSS -FRAME STIFFENERS
2) WELD THE CROSS FRAME STIFFENER TO THE TOP AND BOTTOM FLANGES TO MITIGATE FURTHER CRACKING AT ALL INTERMEDIATE CROSS FRAME LOCATIONS IN SPANS 4 THROUGH SPAN 22
3) PAINT REPAIRED/ DAMAGED AREAS OF PAINT, PER 514
4) REMOVE AND REPLACE THE DETERIORATED PORTIONS OF THE TOP 1' - 7" OF THE BARRIER FACING THE FULL THICKNESS OF THE BARRIER REFACING
5) PATCH DETERIORATED PORTIONS OF THE WEARING SURFACE WITH PROPOSAL NOTE 512, TYPE B PATCH
6) REMOVE HORIZONTAL DRAINAGE PIPES AND EXTEND SCUPPERS TO BE 8" BELOW THE BOTTOM FLANGE. INSTALL TYPE D ROCK CHANNEL PROTECTION WITH FILTER FABRIC UNDER EACH NEW SCUPPER LOCATION TO PREVENT EROSION
7) REMOVE TREES UNDERNEATH AND WITHIN ROW LIMITS
8) ZONE PAINT STRUCTURAL STEEL WITHIN 10 FEET OF EITHER SIDE OF EACH INTERMEDIATE JOINT (5 LOCATIONS)

SITE PLAN - 5

BRIDGE NO: HAM-75-1192R
OVER WEST FORK MILL CREEK, NS RR, & SHEPHARD LN
I-75 NB BRIDGE OVER WE

SFN 3110656
DESIGN AGENCY
DESIGNER BCP | CHECKER AS
REVIEWER AS 12-20-24
PROJECT ID 120341
SUBSET 5 | TOTAL 6
SHEET 40 | TOTAL 52

HAM-75-10.15

MODEL: Sheet_SurvFt PAPERSIZE: 34x22 (in.) DATE: 8/22/2025 TIME: 10:55:02 AM PLTDRV: OHDOT_PDF.pltcfg PENTBL: OHDOT_Pen.tbl USER: Benjamin.Peters@dot.ohio.gov WORKSPACE: OHDOTCEv02 WORKSET: 120341 PRODUCT: OpenRoadsDesigner 24.00.00.205
pw:\\ohiodot-pw.bentley.com:ohiodot-pw-02\Documents\01 Active Projects\District 08\Hamilton\120341\400-Engineering\Structures\SFN_3110656\Sheets\120341_SP005.dgn

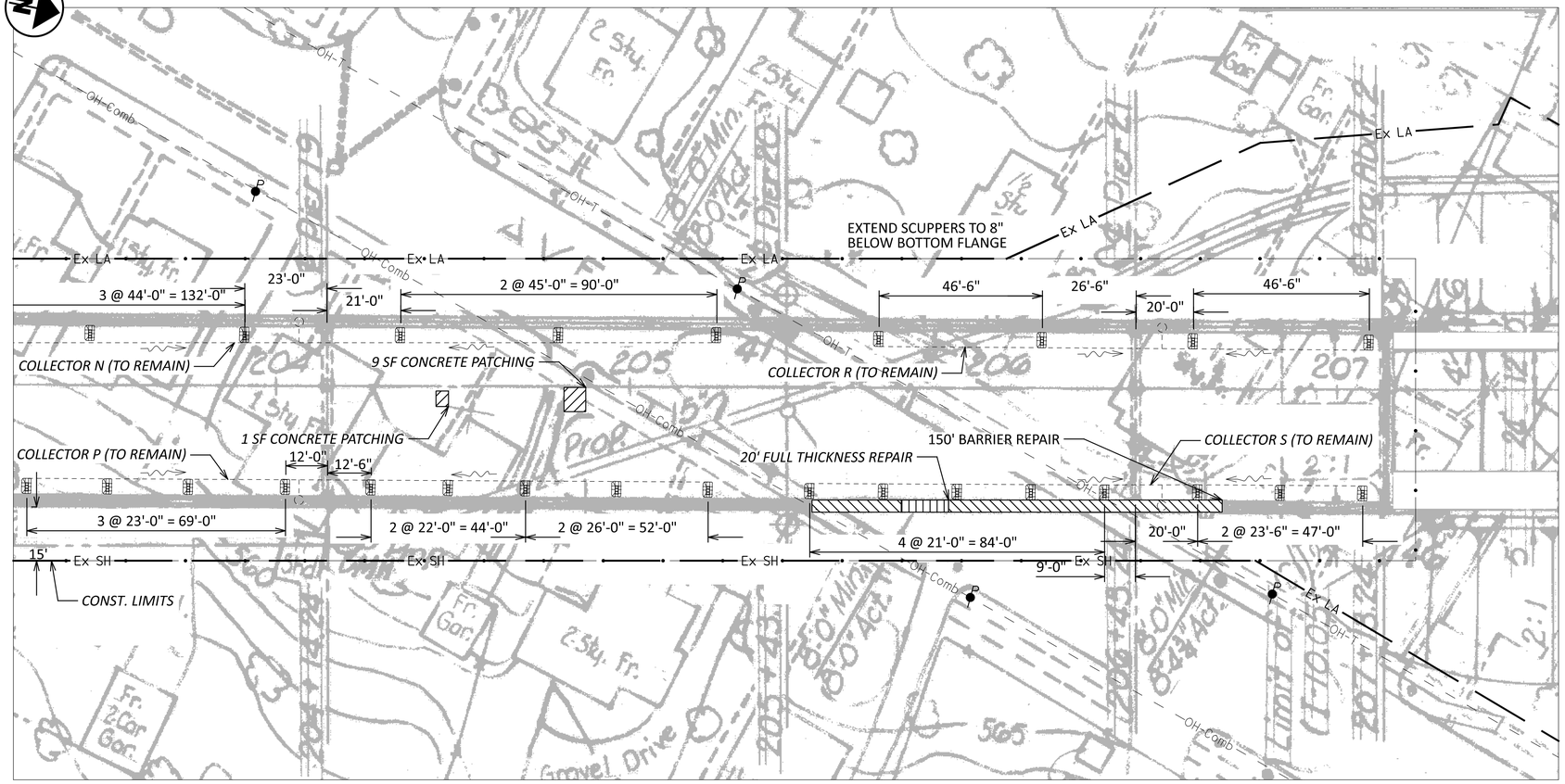

PLAN

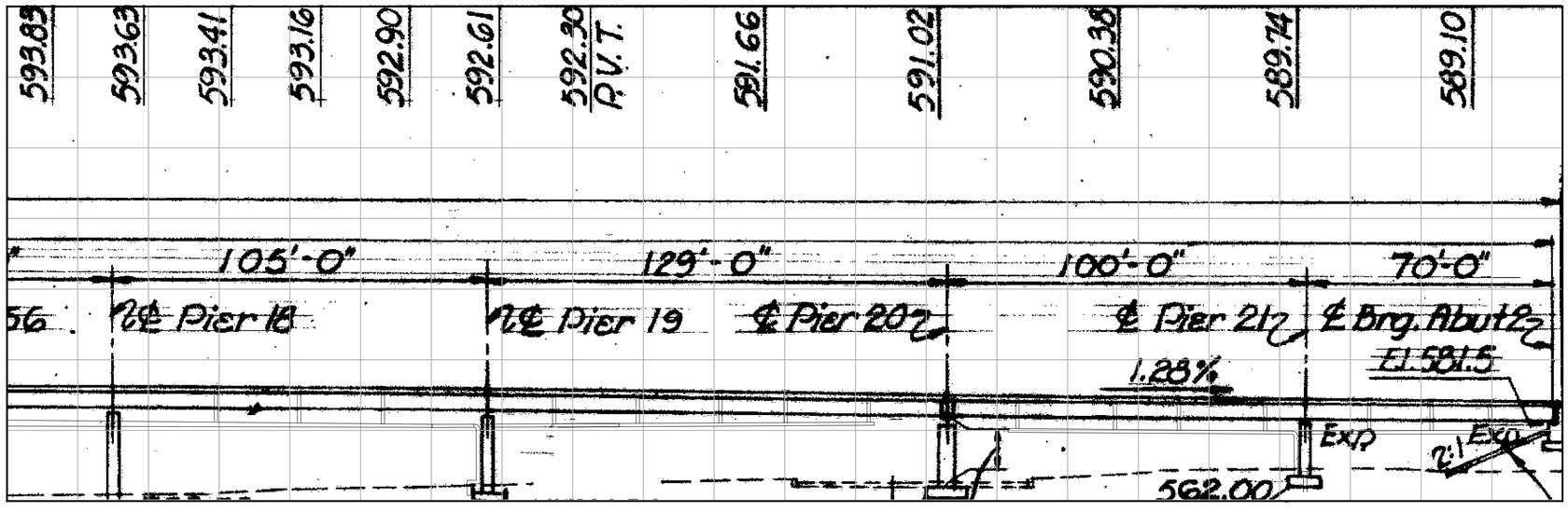

PROFILE

NOTES

1) PATCH THE DETERIORATED PORTIONS OF THE WEARING SURFACE PER PROPOSAL NOTE 512, TYPE B
2) REMOVE AND REPLACE DETERIORATED PORTIONS OF THE BARRIER
3) DETAILS ON THIS SHEET ARE TAKEN FROM EXISTING PLANS AND SHOULD BE USED FOR INFORMATION PURPOSES ONLY

DESIGN TRAFFIC:

HAM-75-1192 (NB)

2026 ADT = 126,000 2038 ADT = 126,000
DHV = 15,000 2024 ADTT = 20,152
DESIGN SPEED = 65 MPH LEGAL SPEED = 65 MPH
DESIGN FUNCTIONAL CLASSIFICATION: 01-PRINCIPAL ARTERIAL INTERSTATE
NHS ROUTE ..... YES

SHEPHARD AVE

2024 ADT = 2,298 2024 ADTT = 275
DHV = 6,200
DESIGN SPEED = 25 MPH LEGAL SPEED = 25 MPH
DESIGN FUNCTIONAL CLASSIFICATION: 03-PRINCIPAL ARTERIAL OTHER
NHS ROUTE ..... YES

LEGEND

- TYPE B CONCRETE PATCHING
- REMOVE AND REPLACE THE DETERIORATED PORTIONS OF THE TOP 1'-7" OF THE BARRIER
- REPLACE FACING AND CORE FOR FULL THICKNESS OF BARRIER
- EXISTING BRIDGE SCUPPERS (TO REMAIN)

EXISTING STRUCTURE

TYPE: CONTINUOUS ROLLED BEAM AND WELDED PLATE GIRDER WITH REINFORCED CONCRETE DECK AND SUBSTRUCTURE

SPANS: 56'-6"-70'-0"-61'-6"; 93'-0"-111'-3"-111'-3"-99'-0"; 113'-6"-113'-6" 126'-0"-145'-9"156'-0"-124'-0"; 120'-0"-145'-9"-156'-0"-118'-0"; 89'-0"-105'-0"-129'-0"-100'-0"-70'-0"

ROADWAY: 50' F/F OF 1'-0" SAFETY CURBS

LOADING: CF = 2000 (57) ADEQUATE FOR AASHTO ALTERNATE LOADING

SKEW: 0°

WEARING SURFACE: MONOLITHIC CONCRETE

APPROACH SLABS: 25'0" LONG (STD A-1-72)

ALIGNMENT: 1°45' CURVE TO LEFT, 350'-0" SPIRAL TO TANGENT

CROWN: SUPERELEVATED

STRUCTURE FILE NUMBER: 3110656

DATE BUILT: JAN 1985

DISPOSITION: SEE PROPOSED WORK

PROPOSED WORK

1) REPAIR OUT-OF-PLANE BENDING CRACKS AT THE TOP OF CROSS -FRAME STIFFENERS
2) WELD THE CROSS FRAME STIFFENER TO THE TOP AND BOTTOM FLANGES TO MITIGATE FURTHER CRACKING AT ALL INTERMEDIATE CROSS FRAME LOCATIONS IN SPANS 4 THROUGH SPAN 22
3) PAINT REPAIRED/ DAMAGED AREAS OF PAINT, PER 514
4) REMOVE AND REPLACE THE DETERIORATED PORTIONS OF THE TOP 1' - 7" OF THE BARRIER FACING THE FULL THICKNESS OF THE BARRIER REFACING
5) PATCH DETERIORATED PORTIONS OF THE WEARING SURFACE WITH PROPOSAL NOTE 512, TYPE B PATCH
6) REMOVE HORIZONTAL DRAINAGE PIPES AND EXTEND SCUPPERS TO BE 8" BELOW THE BOTTOM FLANGE. INSTALL TYPE D ROCK CHANNEL PROTECTION WITH FILTER FABRIC UNDER EACH NEW SCUPPER LOCATION TO PREVENT EROSION
7) REMOVE TREES UNDERNEATH AND WITHIN ROW LIMITS
8) ZONE PAINT STRUCTURAL STEEL WITHIN 10 FEET OF EITHER SIDE OF EACH INTERMEDIATE JOINT (5 LOCATIONS)

HORIZONTAL SCALE IN FEET
0 10 20 40

SITE PLAN - 6

BRIDGE NO: HAM-75-1192R
I-75 NB BRIDGE OVER WEST FORK MILL CREEK, NS RR, & SHEPHARD LN

SFN	3110656
DESIGN AGENCY	
DESIGNER	BCP
CHECKER	AS
REVIEWER	AS 12-20-24
PROJECT ID	120341
SUBSET	6
TOTAL	6
SHEET	41
TOTAL	52

HAM-75-10.15

MODEL: Sheet_SurvFt PAPERSIZE: 34x22 (in.) DATE: 5/28/2025 TIME: 10:43:26 AM USER: bpeters1
pw:\\ohiodot-pw.bentley.com:ohiodot-pw-02\Documents\01 Active Projects\District 08\Hamilton\120341\400-Engineering\Structures\SFN_3110656\Sheets\120341_SP006.dgn

REMOVE 8" OF ALL EXISTING VERTICAL SCUPPERS
AND REPLACE AND EXTEND TO 8" BELOW BOTTOM FLANGE

LEGEND:
Std 1 = Standard Scupper (Type 1 Modified)
Std 2 = Standard Scupper (Type 2 Modified)
S-1 thru S-17 = Special Scuppers

* Note:
The dimensions shown in parenthesis at each scupper on the Bridge Drainage Plan (curved portion only) are measured radially from the exterior beam or girder to the fascia line.

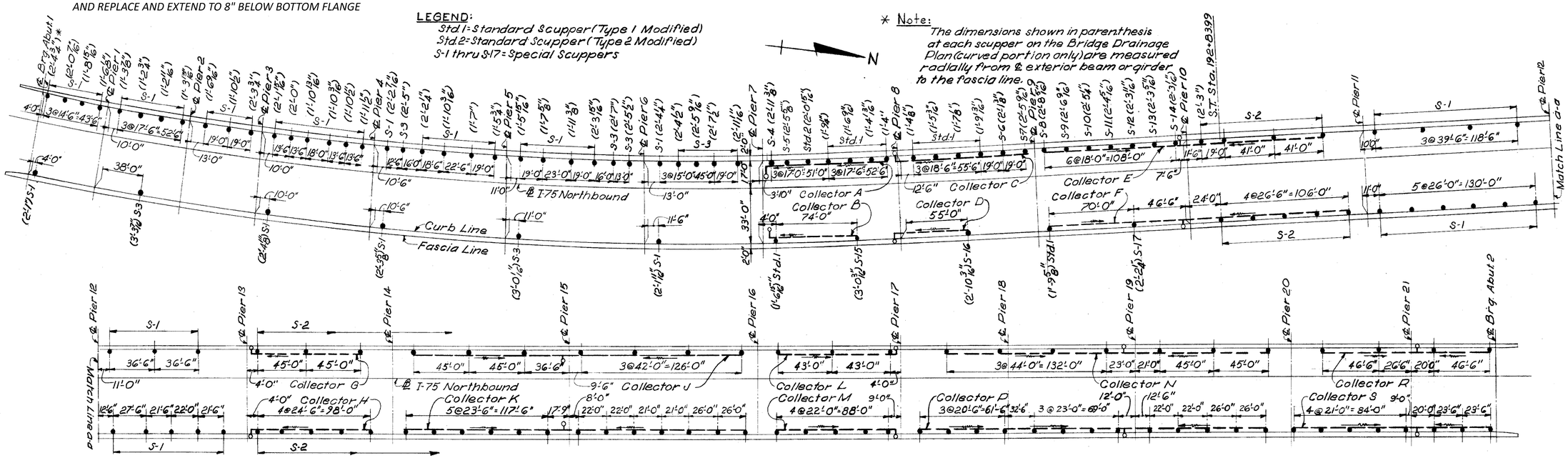

EXISTING DRAINAGE PLANS

ADD VERTICAL EXTENSION TO SCUPPERS
TO BE 8" BELOW BRIDGE DECK

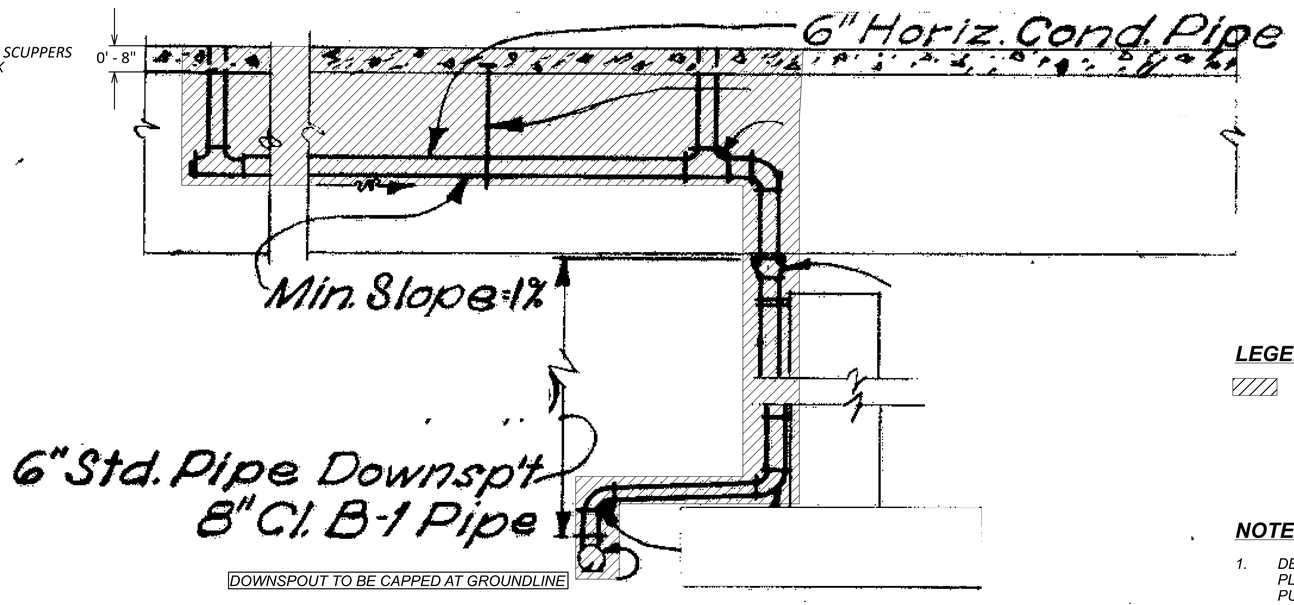

COLLECTOR L REMOVAL PLAN

LEGEND

▨ - REMOVE ALL HORIZONTAL DRAINAGE PIPES BELOW BRIDGE DECK

NOTES

1. DETAILS ON THIS SHEET ARE TAKEN FROM EXISTING PLANS AND SHOULD BE USED FOR INFORMATION PURPOSES ONLY. PERFORM ONLY THE WORK INDICATED IN THE BOXED TEXT, LEGEND, AND/OR DESCRIBED IN THE GENERAL NOTES

REMOVAL DETAILS - 1
BRIDGE NO: HAM-75-1192R
I-75 NB BRIDGE OVER WEST FORK MILL CREEK, NS RR, & SHEPHARD LN

SFN 3110656
DESIGN AGENCY
DESIGNER BCP | CHECKER AS
REVIEWER AS 12-20-24
PROJECT ID 120341
SUBSET 1 | TOTAL 1
SHEET 39 | TOTAL 49

HAM-75-10.15

MODEL: Sheet_SurvFt PAPERSIZE: 34x22 (in.) DATE: 5/28/2025 TIME: 10:43:54 AM USER: bpeters1
pw:\\ohiodot-pw.bentley.com:ohiodot-pw-02\Documents\01 Active Projects\District 08\Hamilton\120341\400-Engineering\Structures\SFN_3110656\Sheets\1203556\Sheets\120341_SM0003.dgn

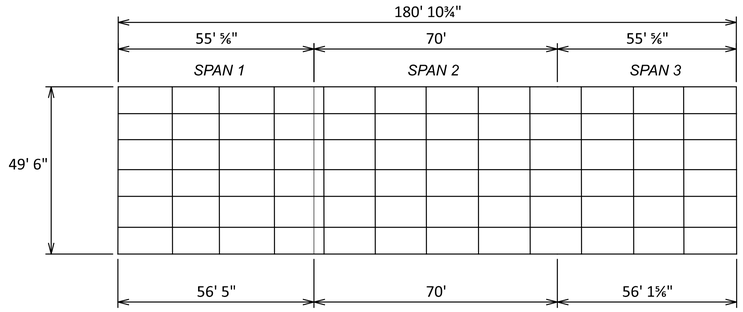

BRIDGE FRAMING PLAN - SPANS 1, 2, AND 3

LEGEND

● - *OUT -OF-PLANE BENDING CRACK REPAIR*

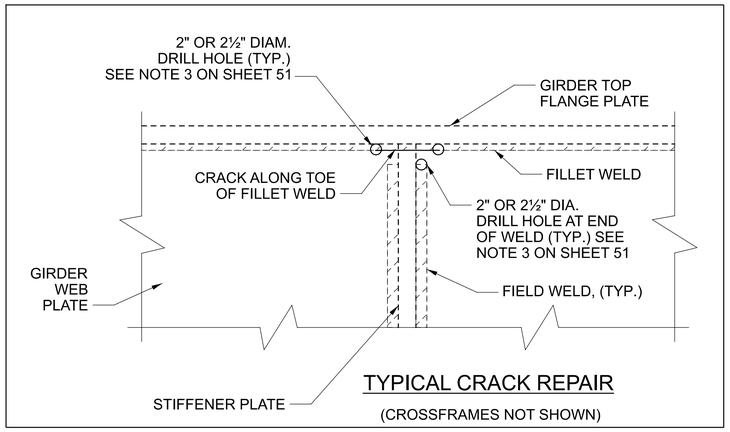

TYPICAL CRACK REPAIR

(CROSSFRAMES NOT SHOWN)

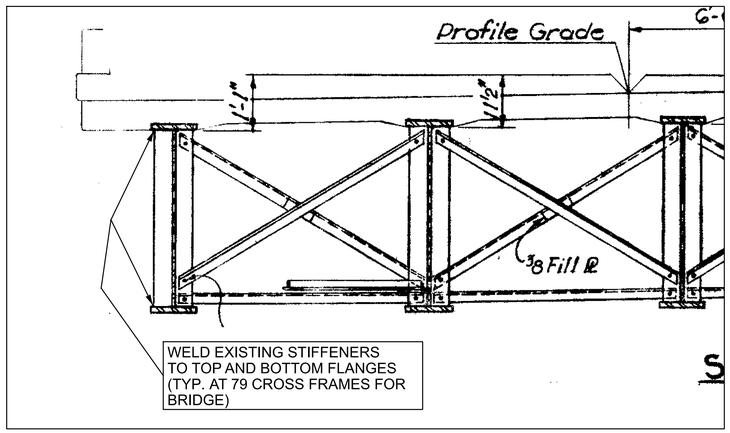

CRACK REPAIR WORK:

1. AT LOCATIONS SHOWN ON THE PLAN AND APPROVED BY THE ENGINEER, LOCATE THE ENDS OF THE CRACK BY PERFORMING PENCIL ABRASIVE BLASTING, GRINDING AND NDT AS PER PLAN NOTE.
2. USING THE PROCEDURE DESCRIBED IN THE PLAN NOTE, DETERMINE THE APPROPRIATE DIAMETER HOLE AND LOCATE THE HOLE TO COMPLETELY REMOVE THE DEFECT OR ARREST THE CRACK PROPAGATION.
3. DRILL REPAIR HOLE. GRIND AND PERFROM NDT TO ASSURE THE CRACK END HAS BEEN REMOVED. DO NOT, IN ANY CASE, DRILL OR GRIND THE TOP OR BOTTOM FLANGE PLATE.
4. REPAIR THE AREA OF DAMAGED COATING IN ACCORDANCE WITH THE PLAN NOTE.

NOTES:

1. DETAILS ON THIS SHEET ARE TAKEN FROM EXISTING PLANS AND SHOULD BE USED FOR INFORMATION PURPOSES ONLY.

2. PERFORM ONLY THE WORK AS INDICATED IN THE FRAMED TEXT AND/OR DESCRIBED IN THE GENERAL NOTES.

3. AT ALL INTERMEDIATE & D-2 CROSS FRAMES, FIELD WELD THE EXISTING STIFFENERS TO THE TOP AND BOTTOM GIRDER FLANGES USING 5/16" FILLET WELD. WELD ONE SIDE OF EACH STFFENER ONLY. (1125 CROSS FRAME LOCATIONS. TWO STIFFENERS PER CROSS FRAME LOCATION).

4. PAINT PORTIONS OF CROSSFRAME STIFFENERS AND GIRDERS DAMAGED BY WELDING THE STIFFENERS TO THE FLANGES AND CRACK DRILLING. THREE DRILL HOLES PER REPAIR LOCATION PLUS TWO STIFFENERS PER CROSS FRAME LOCATION. OZEU PAINT COLOR SHALL MATCH EXISTING. PAINT AND SURFACE PREPARATION SHALL BE PAID FOR UNDER ITEM 514 - FIELD PAINTING, MISC.: FIELD PAINTING OF DAMAGES STRUCTURAL STEEL (THREE COAT OZEU SPOT PAINTING) (EACH) PER INTERMEDIATE AND D-2 CROSS FRAME LOCATION.

5. CRACK REPAIR DRILLING AND WELDING SHALL BE PAID BY LOCATION. TOTAL = 237 CRACK REPAIRS (ASSUMING 3 CRACK REPAIRS AT EACH REPAIR LOCATION) DRILLING SHALL BE PAID FOR UNDER ITEM 513 - STRUCTURAL STEEL, MISC.: DRILLING STRUCTURAL STEEL (EACH).

HORIZONTAL SCALE IN FEET

0

BRIDGE REHAB DETAILS
STA. 182+98.00 TO STA. 184+78.83

DESIGN AGENCY

DESIGNER BCP

REVIEWER AS 12-20-24

PROJECT ID 120341

SHEET 43 TOTAL 52

HAM-75-10.15

MODEL: Sheet_SurvFt PAPERSIZE: 34x22 (in.) DATE: 8/22/2025 TIME: 3:01:13 PM PLTDRV: OHDOT_PDF.pltcfg PENTBL: OHDOT_Pen.tbl USER: Benjamin.Peters@dot.ohio.gov WORKSPACE: OHDOTCEv02 WORKSET: 120341 PRODUCT: OpenRoadsDesigner 24.00.00.205
pw:\\ohiodot-pw.bentley.com:ohiodot-pw-02\Documents\01 Active Projects\District 08\Hamilton\120341\400-Engineering\Structures\SFN_3110656\Sheets\120341_SFN_3110656_SW001.dgn

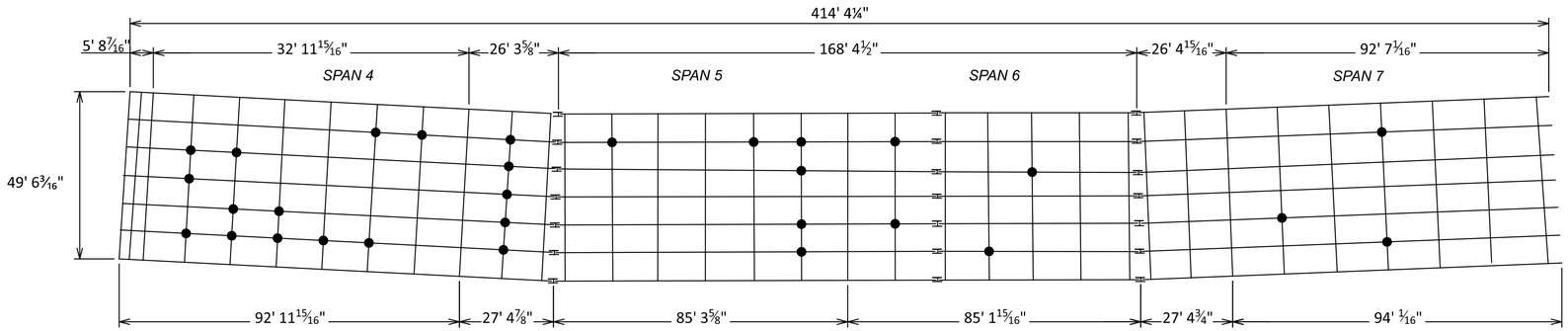

BRIDGE FRAMING PLAN - SPANS 4, 5, 6, AND 7

LEGEND

● - OUT -OF-PLANE BENDING CRACK REPAIR

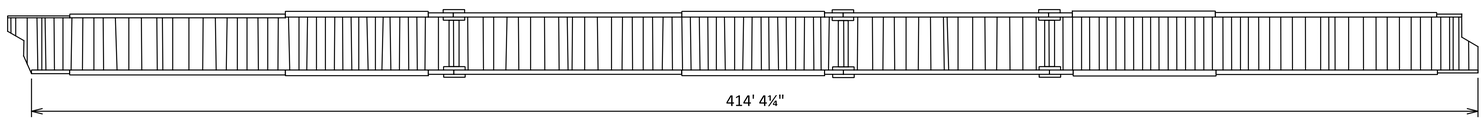

BRIDGE FRAMING PROFILE

CRACK REPAIR LOCATIONS			
	SPAN/GIRDER	ABUT./PIER	CROSSFRAME
LOCATION 1	SPAN 4/GIRDER 1	PIER 3	THIRD
LOCATION 2	SPAN 4/GIRDER 1	PIER 3	FOURTH
LOCATION 3	SPAN 4/GIRDER 1	PIER 3	SIXTH
LOCATION 4	SPAN 4/GIRDER 2	PIER 3	THIRD
LOCATION 5	SPAN 4/GIRDER 2	PIER 3	FIFTH
LOCATION 6	SPAN 4/GIRDER 2	PIER 3	SIXTH
LOCATION 7	SPAN 4/GIRDER 3	PIER 3	FIFTH
LOCATION 8	SPAN 4/GIRDER 3	PIER 3	SIXTH
LOCATION 9	SPAN 4/GIRDER 4	PIER 3	SIXTH
LOCATION 10	SPAN 4/GIRDER 5	PIER 3	SECOND
LOCATION 11	SPAN 4/GIRDER 5	PIER 3	SIXTH
LOCATION 12	SPAN 4/GIRDER 6	PIER 3	SECOND
LOCATION 13	SPAN 5/GIRDER 1	PIER 4	FIRST
LOCATION 14	SPAN 5/GIRDER 1	PIER 4	SECOND
LOCATION 15	SPAN 5/GIRDER 1	PIER 4	THIRD
LOCATION 16	SPAN 5/GIRDER 1	PIER 4	FOURTH
LOCATION 17	SPAN 5/GIRDER 1	PIER 4	FIFTH
LOCATION 18	SPAN 5/GIRDER 1	PIER 4	SIXTH
LOCATION 19	SPAN 5/GIRDER 3	PIER 4	SECOND
LOCATION 20	SPAN 5/GIRDER 6	PIER 4	SECOND
LOCATION 21	SPAN 5/GIRDER 7	PIER 4	SECOND
LOCATION 22	SPAN 5/GIRDER 7	PIER 4	THIRD
LOCATION 23	SPAN 5/GIRDER 7	PIER 4	FIFTH
LOCATION 24	SPAN 5/GIRDER 7	PIER 4	SIXTH
LOCATION 25	SPAN 6/GIRDER 1	PIER 5	SECOND
LOCATION 26	SPAN 6/GIRDER 1	PIER 5	FIFTH

CRACK REPAIR LOCATIONS			
	SPAN/GIRDER	ABUT./PIER	CROSSFRAME
LOCATION 27	SPAN 6/GIRDER 3	PIER 5	SIXTH
LOCATION 28	SPAN 6/GIRDER 4	PIER 5	THIRD
LOCATION 29	SPAN 7/GIRDER 1	PIER 6	FIFTH
LOCATION 30	SPAN 7/GIRDER 3	PIER 6	SECOND
LOCATION 31	SPAN 7/GIRDER 3	PIER 6	SIXTH

HORIZONTAL SCALE IN FEET
0

BRIDGE REHAB DETAILS
STA. 184+78.83 TO STA. 188+93.16

DESIGN AGENCY

DESIGNER BCP
REVIEWER AS 12-20-24
PROJECT ID 120341
SHEET 44 TOTAL 52

HAM-75-10.15

MODEL: Sheet_SurvFt PAPERSIZE: 34x22 (in.) DATE: 5/28/2025 TIME: 10:44:59 AM USER: bpeters1
pw:\\ohiodot-pw.bentley.com:ohiodot-pw-02\Documents\01 Active Projects\District 08\Hamilton\120341\400-Engineering\Structures\SFN_3110656\Sheets\120341_SFN_3110656_SW002.dgn

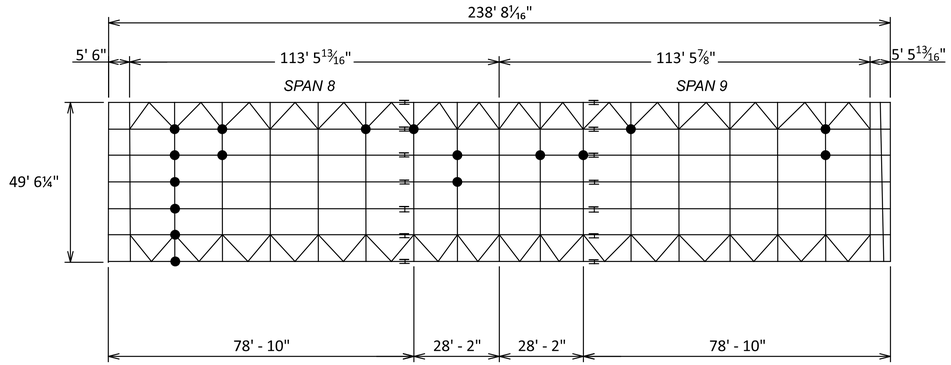

BRIDGE FRAMING PLAN - SPANS 8 AND 9

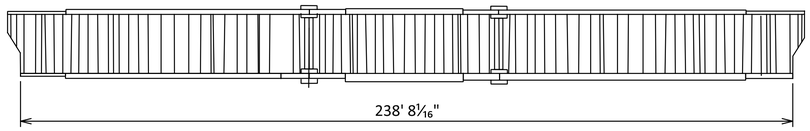

BRIDGE FRAMING PROFILE

LEGEND

● - OUT -OF-PLANE BENDING CRACK REPAIR

CRACK REPAIR LOCATIONS			
	SPAN/GIRDER	ABUT./PIER	CROSSFRAME
LOCATION 32	SPAN 8/GIRDER 1	PIER 7	SECOND
LOCATION 33	SPAN 8/GIRDER 1	PIER 7	THIRD
LOCATION 34	SPAN 8/GIRDER 1	PIER 7	FOURTH
LOCATION 35	SPAN 8/GIRDER 1	PIER 7	FIFTH
LOCATION 36	SPAN 8/GIRDER 1	PIER 7	SIXTH
LOCATION 37	SPAN 8/GIRDER 1	PIER 7	SEVENTH
LOCATION 38	SPAN 8/GIRDER 2	PIER 7	SECOND
LOCATION 39	SPAN 8/GIRDER 2	PIER 7	THIRD
LOCATION 40	SPAN 8/GIRDER 5	PIER 7	SECOND
LOCATION 41	SPAN 8/GIRDER 6	PIER 7	SECOND
LOCATION 42	SPAN 8/GIRDER 7	PIER 7	THIRD
LOCATION 42	SPAN 8/GIRDER 7	PIER 7	FOURTH
LOCATION 43	SPAN 9/GIRDER 1	PIER 8	THIRD
LOCATION 44	SPAN 9/GIRDER 2	PIER 8	THIRD
LOCATION 45	SPAN 9/GIRDER 3	PIER 8	SECOND
LOCATION 46	SPAN 9/GIRDER 7	PIER 8	SECOND
LOCATION 47	SPAN 9/GIRDER 7	PIER 8	THIRD

HORIZONTAL SCALE IN FEET
0

BRIDGE REHAB DETAILS
STA. 184+78.83 TO STA. 191+31.83

DESIGN AGENCY

DESIGNER BCP
REVIEWER AS 12-20-24
PROJECT ID 120341
SHEET 45 TOTAL 52

HAM-75-10.15

MODEL: Sheet_SurvFt PAPERSIZE: 34x22 (in.) DATE: 5/28/2025 TIME: 10:45:05 AM USER: bpeters1
pw:\\ohiodot-pw.bentley.com:ohiodot-pw-02\Documents\01 Active Projects\District 08\Hamilton\120341\400-Engineering\Structures\SFN_3110656\Sheets\120341_SFN_3110656_SW003.dgn

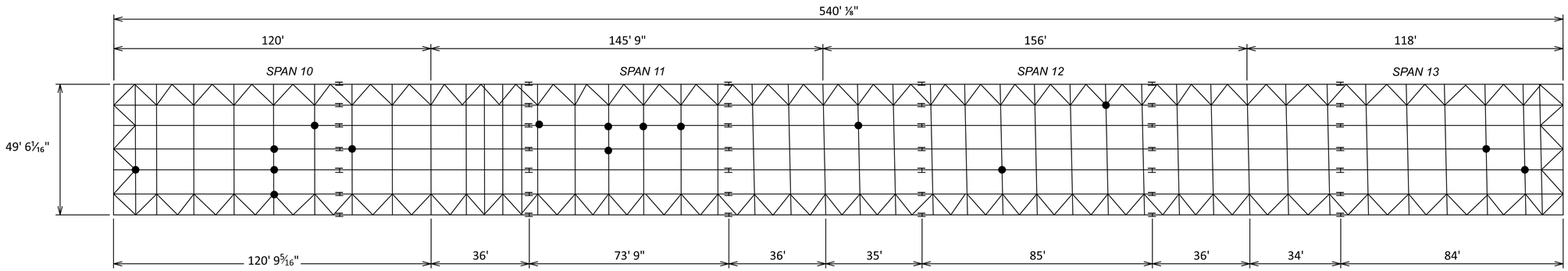

BRIDGE FRAMING PLAN - SPANS 10, 11, 12, AND 13

LEGEND

- OUT -OF-PLANE BENDING CRACK REPAIR
- LATERAL GUSSET / WEB WELD REPAIR

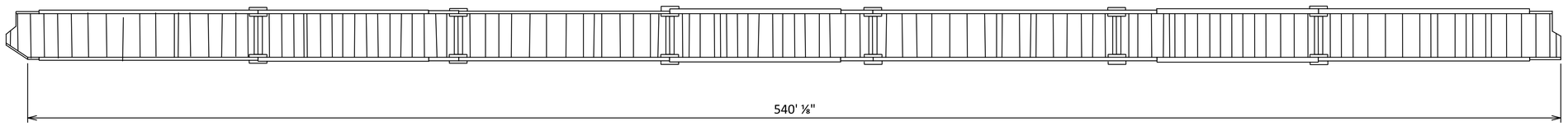

BRIDGE FRAMING PROFILE

CRACK REPAIR LOCATIONS			
	SPAN/GIRDER	ABUT./PIER	CROSSFRAME
LOCATION 48	SPAN 10/GIRDER 2	PIER 9	FIFTH
LOCATION 49	SPAN 10/GIRDER 6	PIER 9	FOURTH
LOCATION 50	SPAN 10/GIRDER 6	PIER 9	FIFTH
LOCATION 51	SPAN 10/GIRDER 6	PIER 9	SIXTH
LOCATION 52	SPAN 10/GIRDER 7	PIER 9	THIRD
LOCATION 53	SPAN 10/GIRDER 8	PIER 9	SIXTH
LOCATION 54	SPAN 11/GIRDER 3	PIER 10	THIRD
LOCATION 55	SPAN 11/GIRDER 5	PIER 10	THIRD
LOCATION 56	SPAN 11/GIRDER 5	PIER 10	FOURTH
LOCATION 57	SPAN 11/GIRDER 6	PIER 10	THIRD
LOCATION 58	SPAN 11/GIRDER 7	PIER 10	THIRD
LOCATION 59	SPAN 12/GIRDER 1	PIER 11	THIRD
LOCATION 60	SPAN 12/GIRDER 5	PIER 11	FIFTH
LOCATION 61	SPAN 12/GIRDER 8	PIER 11	SECOND
LOCATION 62	SPAN 13/GIRDER 6	PIER 12	FOURTH
LOCATION 63	SPAN 13/GIRDER 7	PIER 12	FIFTH

HORIZONTAL SCALE IN FEET
0

BRIDGE REHAB DETAILS
STA. 191+31.83 TO STA. 196+71.84

DESIGN AGENCY

DESIGNER BCP
REVIEWER AS 12-20-24
PROJECT ID 120341
SHEET 46 TOTAL 52

HAM-75-10.15

MODEL: Sheet_SurvFt PAPERSIZE: 34x22 (in.) DATE: 5/28/2025 TIME: 10:45:13 AM USER: bpeters1
pw:\\ohiodot-pw.bentley.com:ohiodot-pw-02\Documents\01 Active Projects\District 08\Hamilton\120341\400-Engineering\Structures\SFN_3110656\Sheets\120341_SFN_3110656_SW004.dgn

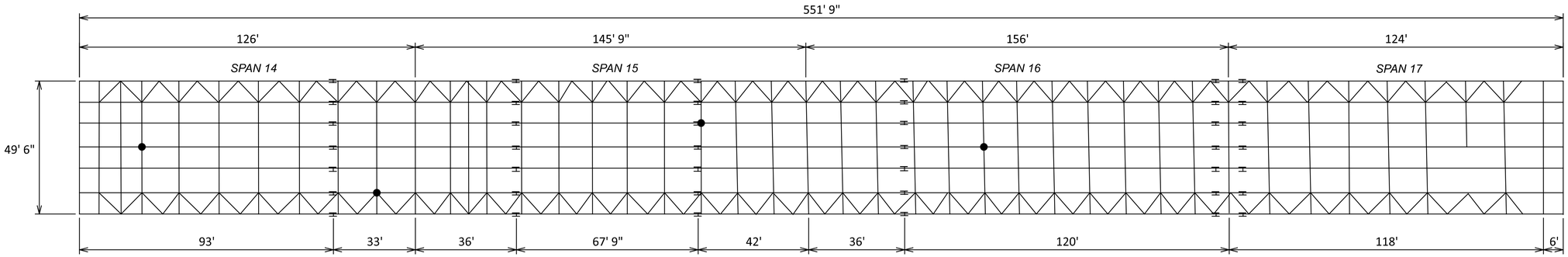

BRIDGE FRAMING PLAN - SPANS 14, 15, 16, AND 17

LEGEND

● - OUT -OF-PLANE BENDING CRACK REPAIR

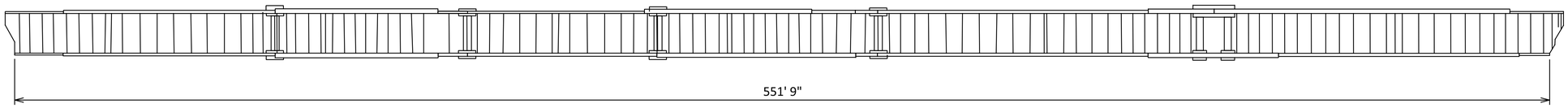

BRIDGE FRAMING PROFILE

CRACK REPAIR LOCATIONS			
	SPAN/GIRDER	ABUT./PIER	CROSSFRAME
LOCATION 64	SPAN 14/GIRDER 2	PIER 13	FOURTH
LOCATION 65	SPAN 14/GIRDER 7	PIER 13	SIXTH
LOCATION 66	SPAN 15/GIRDER 3	PIER 14	THIRD
LOCATION 67	SPAN 16/GIRDER 5	PIER 15	FOURTH

HORIZONTAL SCALE IN FEET
0

BRIDGE REHAB DETAILS
STA. 196+71.84 TO STA. 202+23.59

DESIGN AGENCY

DESIGNER BCP
REVIEWER AS 12-20-24
PROJECT ID 120341
SHEET 47 TOTAL 52

HAM-75-10.15

MODEL: Sheet_SurvFt PAPERSIZE: 34x22 (in.) DATE: 5/28/2025 TIME: 10:45:20 AM USER: bpeters1
pw:\\ohiodot-pw.bentley.com:ohiodot-pw-02\Documents\01 Active Projects\District 08\Hamilton\120341\400-Engineering\Structures\SFN_3110656\Sheets\120341_SFN_3110656_SW005.dgn
pw:\\ohiodot-pw.bentley.com:ohiodot-pw-02\Documents\01 Active Projects\District 08\Hamilton\120341\400-Engineering\Structures\SFN_3110656\Sheets\120341_SFN_3110656_SW005.dgn

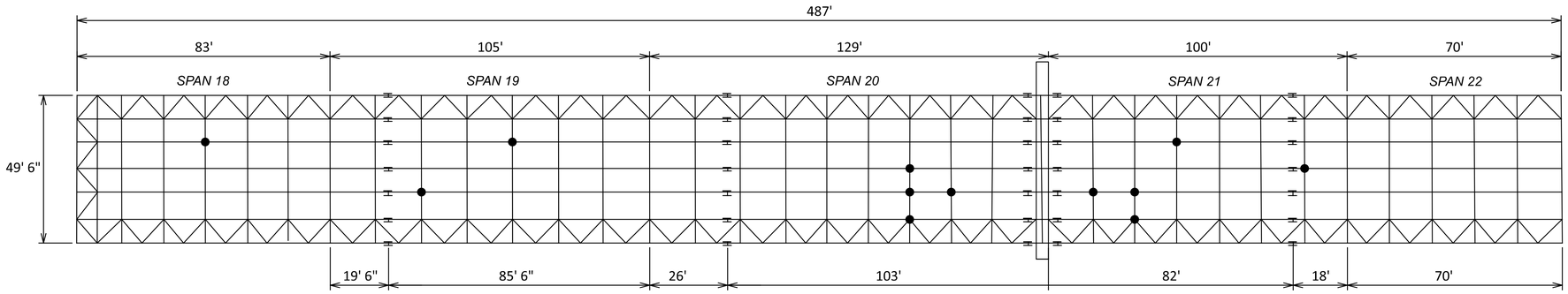

BRIDGE FRAMING PLAN - SPANS 18, 19, 20, AND 21

LEGEND

● - *OUT -OF-PLANE BENDING CRACK REPAIR*

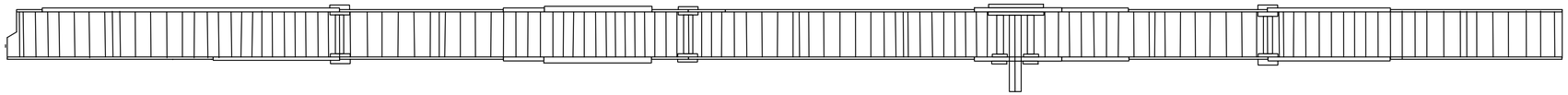

BRIDGE FRAMING PROFILE

CRACK REPAIR LOCATIONS			
	SPAN/GIRDER	ABUT./PIER	CROSSFRAME
LOCATION 68	SPAN 18/GIRDER 6	PIER 17	THIRD
LOCATION 69	SPAN 19/GIRDER 2	PIER 18	FIFTH
LOCATION 70	SPAN 19/GIRDER 4	PIER 18	THIRD
LOCATION 71	SPAN 20/GIRDER 6	PIER 19	FOURTH
LOCATION 72	SPAN 20/GIRDER 6	PIER 19	FIFTH
LOCATION 73	SPAN 20/GIRDER 6	PIER 19	SIXTH
LOCATION 74	SPAN 20/GIRDER 7	PIER 19	FIFTH
LOCATION 75	SPAN 21/GIRDER 1	PIER 20	FIFTH
LOCATION 76	SPAN 21/GIRDER 2	PIER 20	FIFTH
LOCATION 77	SPAN 21/GIRDER 2	PIER 20	SIXTH
LOCATION 78	SPAN 21/GIRDER 3	PIER 20	THIRD
LOCATION 79	SPAN 21/GIRDER 6	PIER 20	FOURTH

HORIZONTAL SCALE IN FEET
0

BRIDGE REHAB DETAILS
STA. 202+23.59 TO STA. 207+10.59

DESIGN AGENCY

DESIGNER BCP
REVIEWER AS 12-20-24
PROJECT ID 120341
SHEET 48 TOTAL 52

HAM-75-10.15

MODEL: Sheet_SurvFt PAPERSIZE: 34x22 (in.) DATE: 5/28/2025 TIME: 10:45:26 AM USER: bpeters1
pw:\\ohiodot-pw.bentley.com:ohiodot-pw-02\Documents\01 Active Projects\District 08\Hamilton\120341\400-Engineering\Structures\SFN_3110656\Sheets\120341_SFN_3110656_SW006.dgn
pw:\\ohiodot-pw.bentley.com:ohiodot-pw-02\Documents\01 Active Projects\District 08\Hamilton\120341\400-Engineering\Structures\SFN_3110656\Sheets\120341_SFN_3110656_SW006.dgn

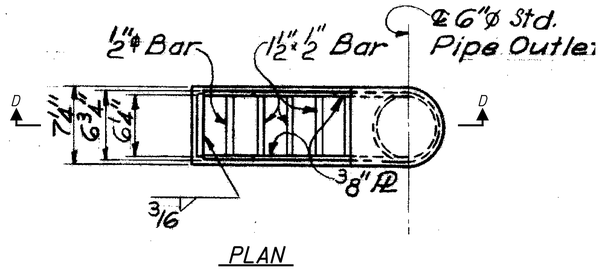

PLAN

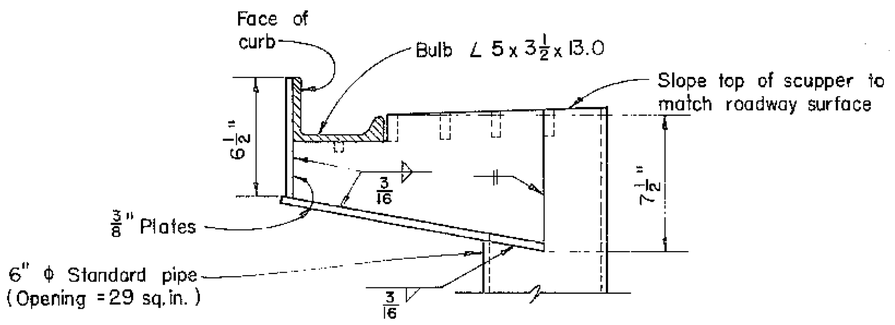

SCUPPER ELEVATION

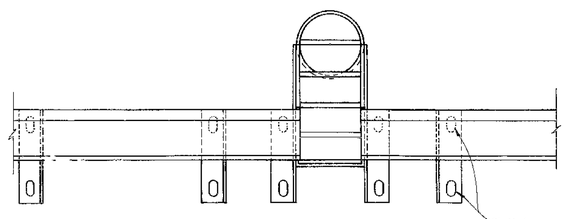

PART PLAN

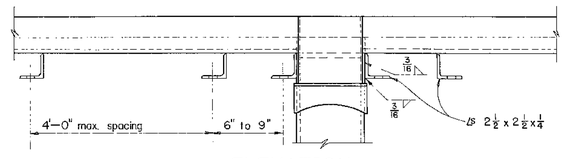

ELEVATION

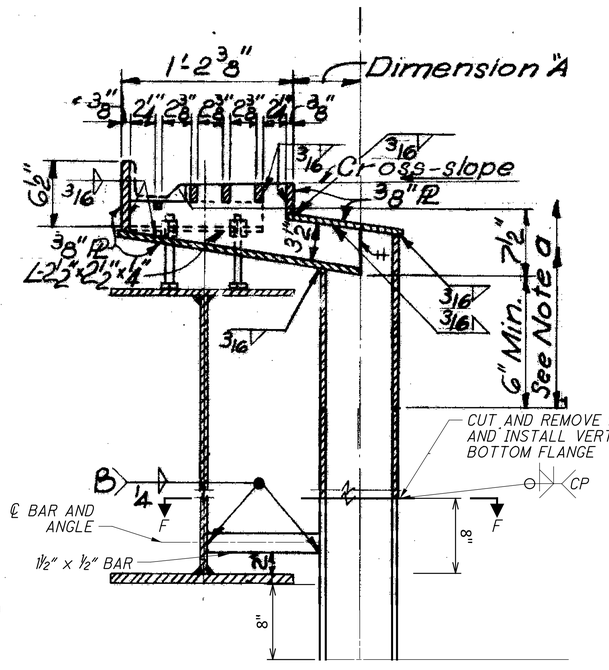

SECTION D-D

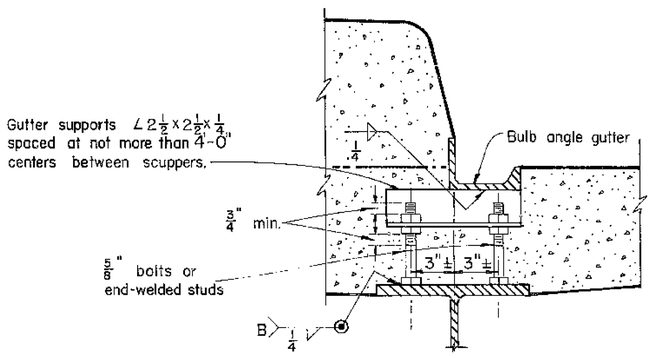

GUTTER SUPPORT

SCUPPER NOTES:

GENERAL:
THE DESIGNER SHALL SHOW THE LOCATION OF THE SCUPPERS IN A PLAN VIEW OF THE BRIDGE DECK ON THE CONTRACT DOCUMENTS.

SUPPLEMENTAL REINFORCEMENT:
REINFORCE THE CONCRETE DECK AT THE TWO SCUPPER CORNERS OPPOSITE THE CURB LINE WITH ONE #4 BAR, 3'-0" LONG ORIENTED AT 45° TO THE LONG AXIS OF THE SCUPPER AND LOCATED JUST BELOW THE TRANSVERSE BARS IN THE TOP MAT OF STEEL.

MATERIAL:
FURNISH STRUCTURAL STEEL TUBING ACCORDING TO C&MS 707.10. TOUGHNESS TESTING IN ACCORDANCE WITH ASTM E436 IS NOT REQUIRED. ALL OTHER MATERIAL SHALL BE ASTM A709 GRADE 36, 50 OR 50W. GALVANIZE SUPPORT ANGLES, BARS, BOLTS, NUTS AND WASHERS IN ACCORDANCE WITH C&MS 711.02

DECK CROWN/SUPERELEVATION:
CUT THE TOP OF THE STEEL TUBING SQUARE FOR CROSS SLOPES ½" PER FOOT AND LESS. CUT THE TOP OF THE TUBING PARALLEL TO THE DECK SURFACE FOR CROSS SLOPES GREATER THAN ½" PER FOOT.

FASTENER NOTES:

1. THE SIZE OF THE SLOTTED HOLES SHALL BE 11/16"x1 9/16". THE SLOT SHALL BE HORIZONTAL IN THE 3"x⅜" BAR AND VERTICAL IN THE ANGLE. BOLTS SHALL BE ⅝" DIAMETER A325 TYPE 1, GALVANIZED, WITH HEX NUT AND TWO WASHERS. TIGHTEN ACCORDING TO C&MS 513.

2. THE BOLTS SHALL BE ⅝" DIAMETER A325 TYPE 1 GALVANIZED FOR GALVANIZED, METALIZED OR PAINTED STRUCTURES OR A325 TYPE 3 FOR BARE WEATHERING STEEL STRUCTURES. EACH ASSEMBLY SHALL INCLUDE A BOLT, NUT AND TWO WASHERS. TIGHTEN ACCORDING TO C&MS 513. FOR WEATHERING STEEL STRUCTURES, PROVIDE A 3½"x3½"x⅛" PREFORMED BEARING PAD, C&MS 711.21, WITH A 13/16" DIAMETER HOLE, BETWEEN THE BEAM WEB AND THE ANGLE. AFTER THE DECK CONCRETE HAS BEEN POURED, FIELD DRILL THE 13/16" DIAMETER HOLE IN THE WEB.

BASIS OF PAYMENT:
THE DEPARTMENT WILL PAY FOR THE SUPPLEMENTAL REINFORCEMENT DESCRIBED ABOVE SEPARATELY UNDER ITEM 509.

Special Scupper	Dimension "A"
S-1	2 5/8"
S-2	2 5/8"
S-3	1'-3"
S-4	10 1/16"
S-5	4 5/16"
S-6	1/16"
S-7	4¼"
S-8	8"
S-9	6¼"
S-10	4 15/16"
S-11	4"
S-12	3 3/8"
S-13	3"
S-14	2 3/4"
S-15	10 7/8"
S-16	8 7/8"
S-17	1 15/16"

SPECIAL SCUPPER "A" DIMENSIONS

*SEE SHEET 50 FOR SPECIAL SCUPPER LOCATIONS

BRIDGE SCUPPER DETAILS
BRIDGE NO: HAM-75-1192R
I-75 NB BRIDGE OVER WEST FORK MILL CREEK, NS RR, & SHEPHARD LN

SFN 3110656
DESIGN AGENCY
DESIGNER BCP | CHECKER AS
REVIEWER AS 12-20-24
PROJECT ID 120341
SUBSET 1 | TOTAL 1
SHEET 49 | TOTAL 52

HAM-75-10.15

MODEL: Sheet_Surv.ft PAPERSIZE: 34x22 (in.) DATE: 8/20/2025 TIME: 2:09:47 PM PLTDRV: OHDOT_PDF.pltcfg PENTBL: OHDOT_Pen.tbl USER: Benjamin.Peters@dot.ohio.gov WORKSPACE: OHDOTCEv02 WORKSET: 120341 PRODUCT: OpenRoadsDesigner 24.00.00.205
pw:\\ohiodot-pw.bentley.com:ohiodot-pw-02\Documents\01 Active Projects\District 08\Hamilton\120341\400-Engineering\Structures\SFN_3110656\Sheets\120341_SM002.dgn
Benjamin.Peters@dot.ohio.gov

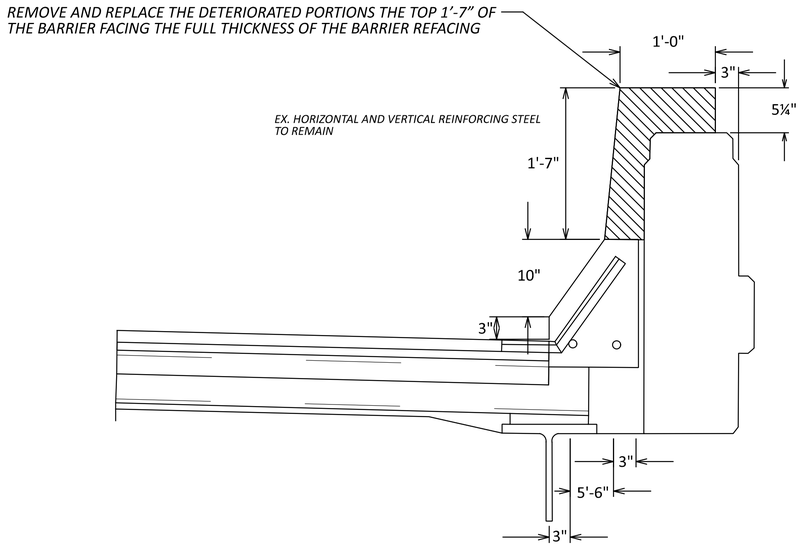

PARTIAL HEIGHT BRIDGE RAILING FACING REPAIR DETAIL

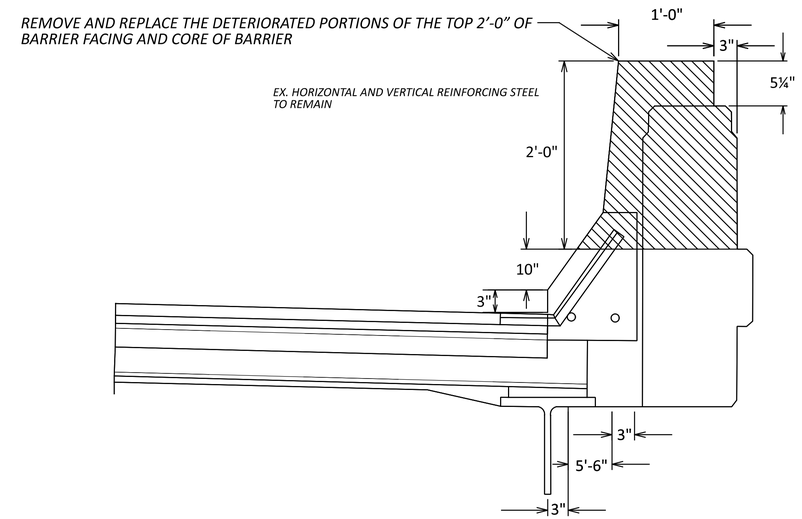

PARTIAL HEIGHT BRIDGE RAILING FACING & CORE REPAIR DETAIL

SUMMARY OF PARTIAL HEIGHT REPAIR			
LOCATION	MEASURED (CY)	CONTIGENCY	TOTAL (CY)
HAM-75-11.92R, WEST BRIDGE RAILING	8.5	100%	17.0
HAM-75-11.92R, EAST BRIDGE RAILING	3.6	100%	7.2
TOTAL	12.1	100%	24.2

LEGEND

▨ - AREA TO BE REPAIRED PARTIAL HEIGHT OF BRIDGE RAILING

NOTES

1) SEE SHEETS 9-14 FOR BARRIER REPLACEMENT LOCATIONS

2) AN ADDITIONAL 100% CONTIGENCY HAS BEEN ADDED TO THE FIELD MEASURED AREAS TO ALLOW FOR ADDITIONAL AREAS OF DETERIORATION. THE FINAL DIMENSIONS AND LOCATION OF THE DETERIORATED AREAS TO BE REPAIRED SHALL BE DETERMINED BY CONTRACTOR AND APPROVED BY THE ENGINEER IN THE FIELD FOR FINAL PAYMENT.

3) EXISTING REINFORCING STEEL SHALL BE CLEANED AND PRESERVED WITHOUT DAMAGE TO THE SATISFACTION OF THE ENGINEER. DAMAGED REINFORCEMENT SHALL BE REPLACED IN KIND AS DIRECTED BY THE ENGINEER.

MISCELLANEOUS DETAILS
BRIDGE NO: HAM-75-1192R
I-75 BRDGE OVER EAST FORK MILL CREEK

SFN 3110656
DESIGN AGENCY
DESIGNER BCP | CHECKER AS
REVIEWER AS 12-20-24
PROJECT ID 120341
SUBSET 1 | TOTAL 1
SHEET 50 | TOTAL 52

HAM-75-10.15

MODEL: Sheet_SurvFt PAPERSIZE: 34x22 (in.) DATE: 5/28/2025 TIME: 10:46:03 AM USER: bpeters1
pw:\\ohiodot-pw.bentley.com:ohiodot-pw-02\Documents\01 Active Projects\District 08\Hamilton\120341\400-Engineering\Structures\SFN_3110656\Sheets\120341_SM001.dgn

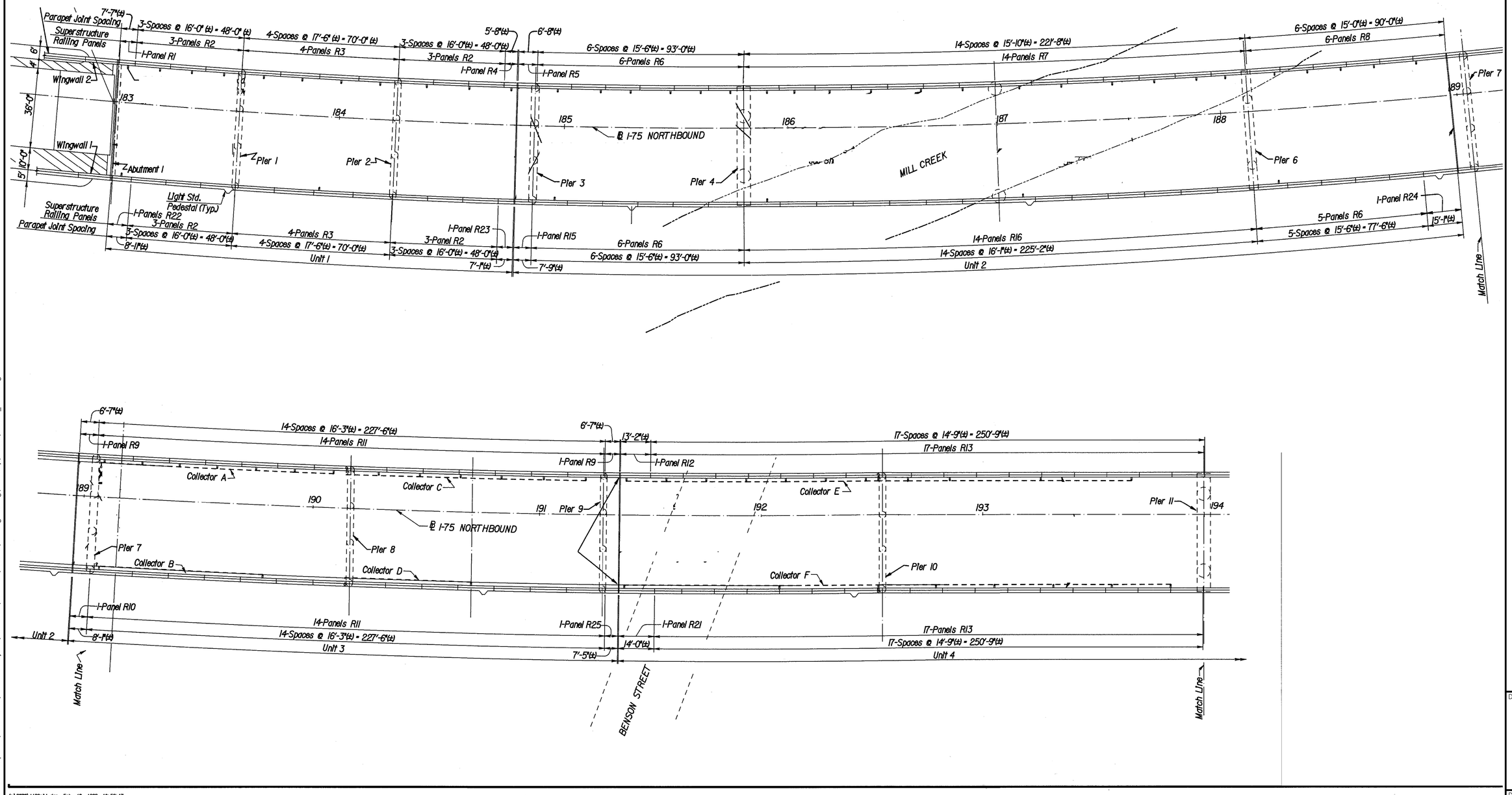

HORIZONTAL SCALE IN FEET
0 10 20 40

EXISTING SCUPPER LOCATIONS
HAM-75-1192R

DESIGN AGENCY

DESIGNER BCP
REVIEWER AS 12-20-24
PROJECT ID 120341
SHEET 51 TOTAL 52

HAM-75-10.15

MODEL: Sheet_Survft PAPERSIZE: 34x22 (in.) DATE: 8/12/2025 TIME: 9:40:22 AM USER: bpeters1
pw:\\ohiodot-pw.bentley.com:ohiodot-pw-02\Documents\01 Active Projects\District 08\Hamilton\120341\400-Engineering\Roadway\Sheets\120341_GP001.dgn

f:\8272\1192p11.dgn Feb. 12, 1993 10:58:17

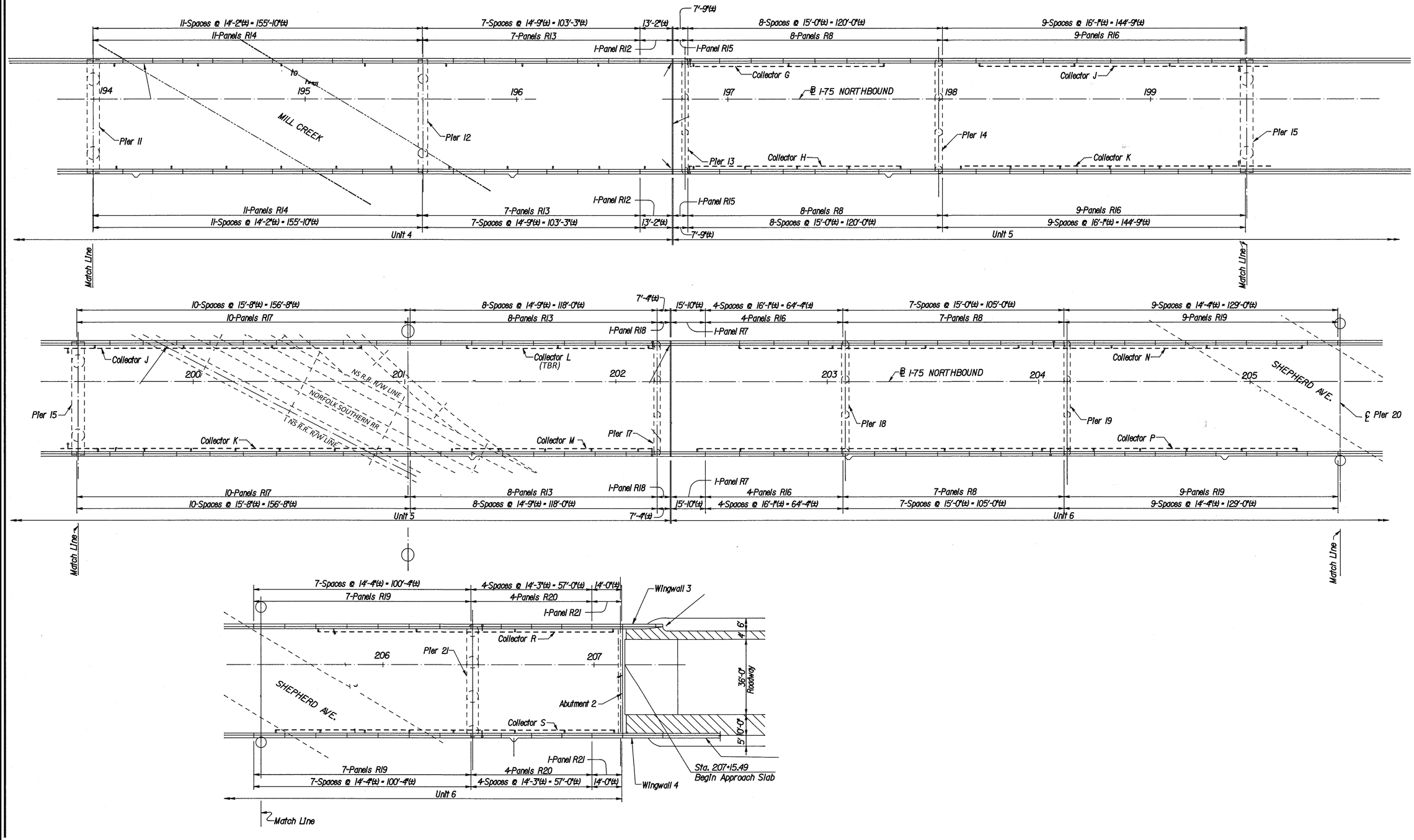

HORIZONTAL SCALE IN FEET
0 10 20 40

EXISTING SCUPPER LOCATIONS
HAM-75-1192R

DESIGN AGENCY

DESIGNER BCP

REVIEWER AS 12-20-24

PROJECT ID 120341

SHEET 52 TOTAL 52

HAM-75-10.15

MODEL: Sheet_Survft PAPERSIZE: 34x22 (in.) DATE: 8/12/2025 TIME: 9:40:54 AM USER: bpeters1
pw:\\ohiodot-pw.bentley.com:ohiodot-pw-02\Documents\01 Active Projects\District 08\Hamilton\120341\400-Engineering\Roadway\Sheets\120341_GP002.dgn