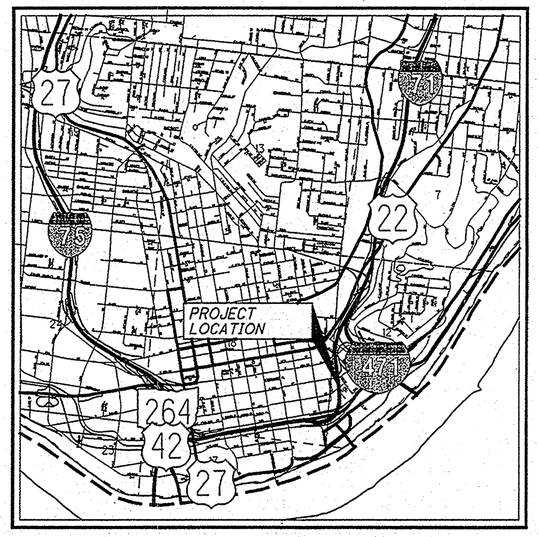

LOCATION MAP

LATITUDE: 39° 06′ 01″ LONGITUDE: 84° 30′ 14″

SCALE IN MILES
0 0.5 1

N

PORTION TO BE IMPROVED
INTERSTATE HIGHWAY
FEDERAL ROUTES
STATE ROUTES
COUNTY & TOWNSHIP ROADS
OTHER ROADS

DESIGN DESIGNATION

	I.R.-71 NORTH OF TUNNEL	I.R.-71 SOUTH OF TUNNEL	I.R.-71 SB RAMP E
CURRENT ADT (2016)	72,120	65,110	7,010
DESIGN YEAR ADT (2036)	79,540	71,810	7,730
DESIGN HOURLY VOLUME (2036)	7,950	6,460	1,550
DIRECTIONAL DISTRIBUTION	55%	55%	100%
TRUCKS (24 HOUR B&C)	14%	14%	6%
DESIGN SPEED	55 MPH	55 MPH	55 MPH
LEGAL SPEED	55 MPH	55 MPH	55 MPH

DESIGN FUNCTIONAL CLASSIFICATION:
URBAN INTERSTATE
NHS PROJECT _____ YES

DESIGN EXCEPTIONS

NONE

PLANS PREPARED BY:

Hatch Mott MacDonald
10013 CLEVELAND PARKWAY DRIVE, SUITE 200, CLEVELAND, OHIO 44135
PHONE: (216) 535-3040
FAX: (216) 265-2816

ENGINEERS SEAL: STRUCTURAL	ENGINEERS SEAL: LIGHTING
STATE OF OHIO · BRIAN T. FREDERICKS 78929 · REGISTERED PROFESSIONAL ENGINEER	STATE OF OHIO · MICHAEL T. KELLY 75939 · REGISTERED PROFESSIONAL ENGINEER
259 - 346	187 - 251
SIGNED: [signature]	SIGNED: Michael T. Kelly
DATE: 10/27/14	DATE: 10/27/14

ENGINEERS SEAL: ROADWAY	ENGINEERS SEAL: MECHANICAL	ENGINEERS SEAL: ELECTRICAL
STATE OF OHIO · CHRISTOPHER W. FRITO 69222 · REGISTERED PROFESSIONAL ENGINEER	STATE OF OHIO · MORRIS A. HARVEY 78345 · REGISTERED PROFESSIONAL ENGINEER	STATE OF OHIO · ROBERT J. FEATHERSTONE 60692 · REGISTERED PROFESSIONAL ENGINEER
1 - 109, 138 - 186 252 - 258, 555	110 - 137,347 - 420	421 - 554
SIGNED: Chris Frito	SIGNED: [signature]	SIGNED: [signature]
DATE: 10/27/14	DATE: 10/27/14	DATE: 10/27/14

STATE OF OHIO
DEPARTMENT OF TRANSPORTATION

HAM-71-1.34

CITY OF CINCINNATI
HAMILTON COUNTY

INDEX OF SHEETS:

TITLE SHEET	1
SCHEMATIC PLAN	2 - 3
TYPICAL SECTIONS	4 - 13
GENERAL NOTES	14 - 22, 20A
MAINTENANCE OF TRAFFIC	23 - 58, 58A-J
GENERAL SUMMARY	59 - 66
SUBSUMMARIES	67 - 80
PLAN - I.R.-71	81
PLAN AND PROFILE - I.R.-71	82 - 85
PLAN AND PROFILE - I.R.-71 RAMP E	86 - 87
PLAN - PIKE AND E. FOURTH STREET	88
PLAN AND PROFILE - LYTLE STREET	89
CROSS SECTIONS - I.R.-71 RAMP E	90 - 91
CROSS SECTIONS - LYTLE STREET	92 - 93
INTERSECTION DETAILS	94
STORM SEWER PROFILES	95
DRAINAGE DETAILS	96 - 99
PUMP STATION DETAILS	100 - 109
WATER WORK	110 - 137
MISCELLANEOUS DETAILS	138 - 162
TRAFFIC CONTROL	163 - 174
TRAFFIC SURVEILLANCE	175 - 186
LIGHTING	187 - 251
LANDSCAPING	252 - 258
STRUCTURES (20′ AND OVER)	
HAM-71-0134	259 - 554,337A
RIGHT-OF-WAY	555
SOIL PROFILES	

PROJECT DESCRIPTION

REHABILITATE THE LYTLE TUNNEL (BRIDGE HAM-71-0134) BY REPLACING THE LIGHTING, VENTILATION SYSTEM, CONSTRUCTING NEW VENTILATION ROOM AND PERFORMING OTHER RELATED MAINTENANCE ITEMS.

EARTH DISTURBED AREAS

PROJECT EARTH DISTURBED AREA: 0.65 ACRES
ESTIMATED CONTRACTOR EARTH DISTURBED AREA: 1.00 ACRES
NOTICE OF INTENT EARTH DISTURBED AREA: N/A - COMBINED SEWER

LIMITED ACCESS

THIS IMPROVEMENT IS ESPECIALLY DESIGNED FOR THROUGH TRAFFIC AND HAS BEEN DECLARED A LIMITED ACCESS HIGHWAY OR FREEWAY BY ACTION OF THE DIRECTOR IN ACCORDANCE WITH THE PROVISIONS OF SECTION 5511.02 OF THE OHIO REVISED CODE.

2013 SPECIFICATIONS

THE STANDARD SPECIFICATIONS OF THE STATE OF OHIO, DEPARTMENT OF TRANSPORTATION, INCLUDING CHANGES AND SUPPLEMENTAL SPECIFICATIONS LISTED IN THE PROPOSAL SHALL GOVERN THIS IMPROVEMENT.

UNDERGROUND UTILITIES

CONTACT BOTH SERVICES
CALL TWO WORKING DAYS
BEFORE YOU DIG

CALL
1-800-362-2764
(TOLL FREE)
OHIO UTILITIES PROTECTION SERVICE
NON-MEMBERS
MUST BE CALLED DIRECTLY

OIL & GAS PRODUCERS UNDERGROUND PROTECTION SERVICE CALL: **1-800-925-0988**

I HEREBY APPROVE THESE PLANS AND DECLARE THAT THE MAKING OF THIS IMPROVEMENT WILL NOT REQUIRE THE CLOSING TO TRAFFIC OF THE HIGHWAY EXCEPT AS NOTED ON SHEETS 57,58, AND 58A-J, AND THAT PROVISIONS FOR THE MAINTENANCE AND SAFETY OF TRAFFIC WILL BE AS SET FORTH ON THE PLANS AND ESTIMATES.

APPROVED Steve Mary
DATE 11/20/14 DISTRICT DEPUTY DIRECTOR

APPROVED Jerry Wray
DATE 11-21-14 DIRECTOR, DEPARTMENT OF TRANSPORTATION

STANDARD CONSTRUCTION DRAWINGS

BP-1.1	7-28-00	MGS-1.1	7-19-13	HL-20.11	1-17-14	TC-41.30	10-18-13	MT-95.40	7-18-14	800	1-16-15
BP-2.1	7-19-13	MGS-2.1	7-19-13	HL-30.11	1-17-14	TC-41.40	10-18-13	MT-95.50	7-19-13	804	4-18-14
BP-2.2	7-18-08	MGS-3.2	1-18-13	HL-30.21	1-17-14	TC-41.41	10-18-13	MT-97.10	7-18-14	809	7-18-14
BP-2.5	7-19-13	MGS-4.1	7-19-13	HL-30.22	1-17-14	TC-41.50	10-18-13	MT-98.29	7-19-13	813	7-18-14
BP-3.1	7-18-14	MGS-4.3	1-18-13	HL-30.31	1-17-14	TC-42.20	10-18-13	MT-99.20	7-19-13	818	4-18-14
BP-5.1	7-19-03	MGS-6.1	7-19-13	HL-40.10	1-17-14	TC-51.11	10-18-13	MT-99.30	7-19-13	821	4-20-12
BP-7.1	7-18-14			HL-50.21	1-17-14	TC-52.10	1-17-14	MT-99.50	7-19-13	832	1-17-14
BP-9.1	7-19-13	RM-2.1	7-19-03	HL-60.31	1-17-14	TC-52.20	10-18-13	MT-101.60	7-19-13	866	10-19-12
		RM-4.2	4-18-14			TC-65.10	1-17-14	MT-101.70	1-17-14	878	10-18-13
CB-4.2	1-18-13	RM-4.3	7-18-14	TC-9.30	1-17-14	TC-65.11	7-18-14	MT-101.90	7-18-14	902	12-31-12
		RM-4.4	7-18-14	TC-15.115	10-18-13	TC-71.10	1-17-14	MT-102.10	7-18-14	904	4-18-14
DM-1.1	1-18-13	RM-4.5	7-18-14	TC-21.10	10-18-13	TC-72.20	7-18-14	MT-102.20	7-18-14	913	7-18-14
DM-1.4	1-18-13	RM-4.6	7-19-03	TC-21.20	10-18-13	TC-83.10	1-17-14	MT-102.30	7-19-13	918	4-18-14
DM-4.3	7-19-13	RM-5.1	7-18-14	TC-22.10	10-18-13	TC-83.20	1-17-14	MT-105.10	7-19-13	921	4-20-12
DM-4.4	7-20-12			TC-22.20	10-18-13			MT-110.10	7-19-13	992	4-18-14
		LA-1.1	10-15-10	TC-41.20	10-18-13	MT-95.30	7-18-14	PCB-91	7-19-02	847	4-18-14

SUPPLEMENTAL SPECIFICATIONS

848	4-18-14

FEDERAL PROJECT NO. NON-FEDERAL
PID NO. 87268
CONSTRUCTION PROJECT NO.
RAILROAD INVOLVEMENT NONE
HAM-71-1.34
1 / 555

HAM - IR 71-1.34
150085 PID - 87268
Dist 8 3/19/2015

Contract Proposal Available @ www.contracts.dot.state.oh.us/home

c:\pwworking\hmm\external\tyn61470\dms72884\87268GT001.dgn 10/27/2014 12:26:03 PM TYN61470

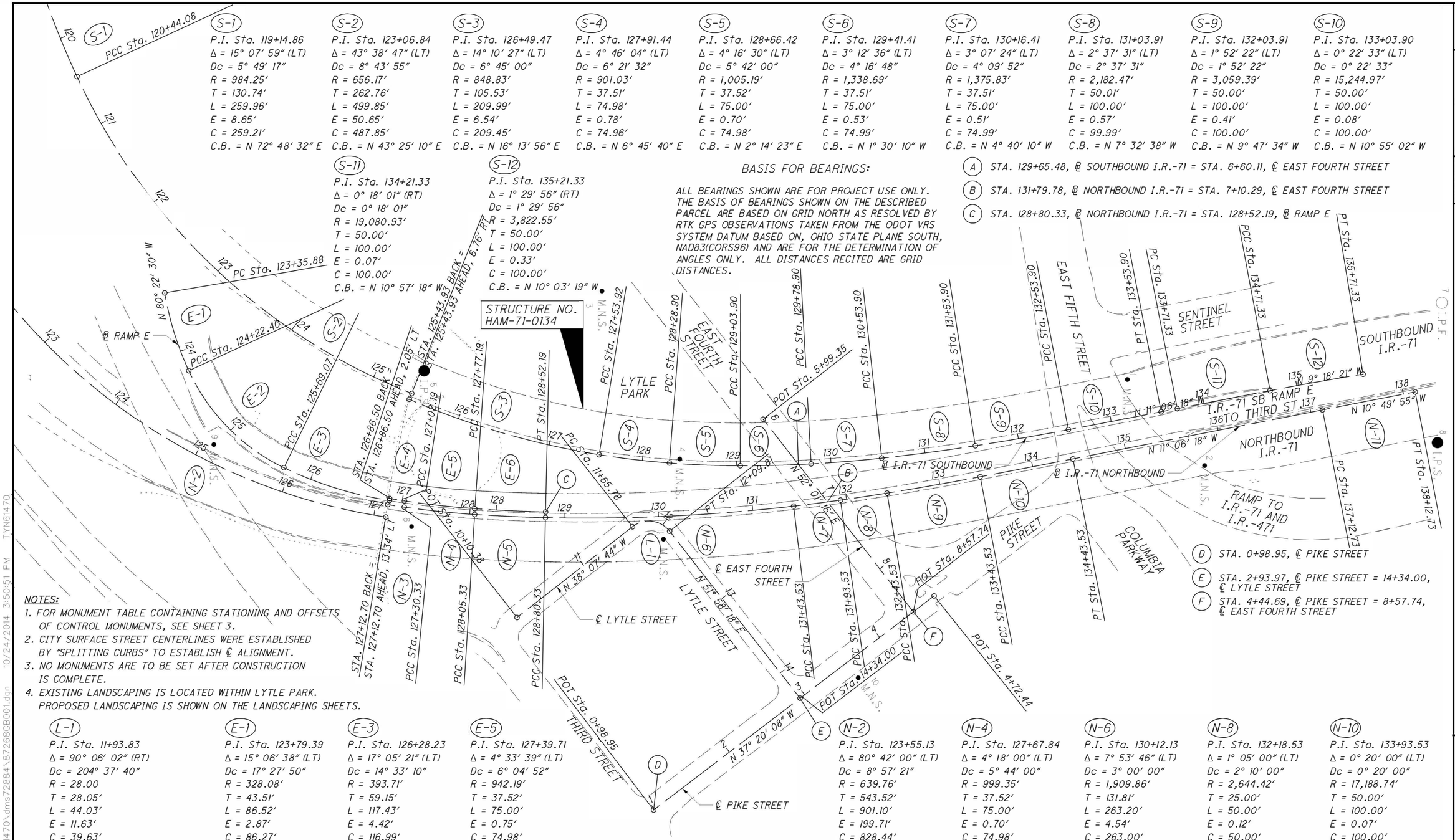

S-1
P.I. Sta. 119+14.86
Δ = 15° 07' 59" (LT)
Dc = 5° 49' 17"
R = 984.25'
T = 130.74'
L = 259.96'
E = 8.65'
C = 259.21'
C.B. = N 72° 48' 32" E

S-2
P.I. Sta. 123+06.84
Δ = 43° 38' 47" (LT)
Dc = 8° 43' 55"
R = 656.17'
T = 262.76'
L = 499.85'
E = 50.65'
C = 487.85'
C.B. = N 43° 25' 10" E

S-3
P.I. Sta. 126+49.47
Δ = 14° 10' 27" (LT)
Dc = 6° 45' 00"
R = 848.83'
T = 105.53'
L = 209.99'
E = 6.54'
C = 209.45'
C.B. = N 16° 13' 56" E

S-4
P.I. Sta. 127+91.44
Δ = 4° 46' 04" (LT)
Dc = 6° 21' 32"
R = 901.03'
T = 37.51'
L = 74.98'
E = 0.78'
C = 74.96'
C.B. = N 6° 45' 40" E

S-5
P.I. Sta. 128+66.42
Δ = 4° 16' 30" (LT)
Dc = 5° 42' 00"
R = 1,005.19'
T = 37.52'
L = 75.00'
E = 0.70'
C = 74.98'
C.B. = N 2° 14' 23" E

S-6
P.I. Sta. 129+41.41
Δ = 3° 12' 36" (LT)
Dc = 4° 16' 48"
R = 1,338.69'
T = 37.51'
L = 75.00'
E = 0.53'
C = 74.99'
C.B. = N 1° 30' 10" W

S-7
P.I. Sta. 130+16.41
Δ = 3° 07' 24" (LT)
Dc = 4° 09' 52"
R = 1,375.83'
T = 37.51'
L = 75.00'
E = 0.51'
C = 74.99'
C.B. = N 4° 40' 10" W

S-8
P.I. Sta. 131+03.91
Δ = 2° 37' 31" (LT)
Dc = 2° 37' 31"
R = 2,182.47'
T = 50.01'
L = 100.00'
E = 0.57'
C = 99.99'
C.B. = N 7° 32' 38" W

S-9
P.I. Sta. 132+03.91
Δ = 1° 52' 22" (LT)
Dc = 1° 52' 22"
R = 3,059.39'
T = 50.00'
L = 100.00'
E = 0.41'
C = 100.00'
C.B. = N 9° 47' 34" W

S-10
P.I. Sta. 133+03.90
Δ = 0° 22' 33" (LT)
Dc = 0° 22' 33"
R = 15,244.97'
T = 50.00'
L = 100.00'
E = 0.08'
C = 100.00'
C.B. = N 10° 55' 02" W

S-11
P.I. Sta. 134+21.33
Δ = 0° 18' 01" (RT)
Dc = 0° 18' 01"
R = 19,080.93'
T = 50.00'
L = 100.00'
E = 0.07'
C = 100.00'
C.B. = N 10° 57' 18" W

S-12
P.I. Sta. 135+21.33
Δ = 1° 29' 56" (RT)
Dc = 1° 29' 56"
R = 3,822.55'
T = 50.00'
L = 100.00'
E = 0.33'
C = 100.00'
C.B. = N 10° 03' 19" W

BASIS FOR BEARINGS:

ALL BEARINGS SHOWN ARE FOR PROJECT USE ONLY. THE BASIS OF BEARINGS SHOWN ON THE DESCRIBED PARCEL ARE BASED ON GRID NORTH AS RESOLVED BY RTK GPS OBSERVATIONS TAKEN FROM THE ODOT VRS SYSTEM DATUM BASED ON, OHIO STATE PLANE SOUTH, NAD83(CORS96) AND ARE FOR THE DETERMINATION OF ANGLES ONLY. ALL DISTANCES RECITED ARE GRID DISTANCES.

(A) STA. 129+65.48, ℄ SOUTHBOUND I.R.-71 = STA. 6+60.11, ℄ EAST FOURTH STREET

(B) STA. 131+79.78, ℄ NORTHBOUND I.R.-71 = STA. 7+10.29, ℄ EAST FOURTH STREET

(C) STA. 128+80.33, ℄ NORTHBOUND I.R.-71 = STA. 128+52.19, ℄ RAMP E

(D) STA. 0+98.95, ℄ PIKE STREET

(E) STA. 2+93.97, ℄ PIKE STREET = 14+34.00, ℄ LYTLE STREET

(F) STA. 4+44.69, ℄ PIKE STREET = 8+57.74, ℄ EAST FOURTH STREET

NOTES:

1. FOR MONUMENT TABLE CONTAINING STATIONING AND OFFSETS OF CONTROL MONUMENTS, SEE SHEET 3.
2. CITY SURFACE STREET CENTERLINES WERE ESTABLISHED BY "SPLITTING CURBS" TO ESTABLISH ℄ ALIGNMENT.
3. NO MONUMENTS ARE TO BE SET AFTER CONSTRUCTION IS COMPLETE.
4. EXISTING LANDSCAPING IS LOCATED WITHIN LYTLE PARK. PROPOSED LANDSCAPING IS SHOWN ON THE LANDSCAPING SHEETS.

L-1
P.I. Sta. 11+93.83
Δ = 90° 06' 02" (RT)
Dc = 204° 37' 40"
R = 28.00
T = 28.05'
L = 44.03'
E = 11.63'
C = 39.63'
C.B. = N 06° 55' 17" E

E-1
P.I. Sta. 123+79.39
Δ = 15° 06' 38" (LT)
Dc = 17° 27' 50"
R = 328.08'
T = 43.51'
L = 86.52'
E = 2.87'
C = 86.27'
C.B. = N 72° 49' 11" E

E-2
P.I. Sta. 124+98.77
Δ = 39° 24' 22" (LT)
Dc = 26° 52' 04"
R = 213.25'
T = 76.37'
L = 146.67'
E = 13.26'
C = 143.79'
C.B. = N 45° 33' 42" E

E-3
P.I. Sta. 126+28.23
Δ = 17° 05' 21" (LT)
Dc = 14° 33' 10"
R = 393.71'
T = 59.15'
L = 117.43'
E = 4.42'
C = 116.99'
C.B. = N 17° 15' 10" E

E-4
P.I. Sta. 126+94.34
Δ = 1° 09' 31" (LT)
Dc = 7° 22' 59"
R = 776.04'
T = 7.85'
L = 15.69'
E = 0.04'
C = 15.69'
C.B. = N 9° 10' 25" E

E-5
P.I. Sta. 127+39.71
Δ = 4° 33' 39" (LT)
Dc = 6° 04' 52"
R = 942.19'
T = 37.52'
L = 75.00'
E = 0.75'
C = 74.98'
C.B. = N 6° 18' 50" E

E-6
P.I. Sta. 128+14.70
Δ = 2° 44' 33" (LT)
Dc = 3° 39' 24"
R = 1,566.89'
T = 37.51'
L = 75.00'
E = 0.45'
C = 74.99'
C.B. = N 2° 39' 44" E

N-1
P.I. Sta. 113+03.39
Δ = 8° 58' 49" (RT)
Dc = 2° 29' 41"
R = 2,296.59'
T = 180.35'
L = 359.95'
E = 7.07'
C = 359.58'
C.B. = N 84° 52' 04" E

N-2
P.I. Sta. 123+55.13
Δ = 80° 42' 00" (LT)
Dc = 8° 57' 21"
R = 639.76'
T = 543.52'
L = 901.10'
E = 199.71'
C = 828.44'
C.B. = N 49° 00' 28" E

N-3
P.I. Sta. 127+21.51
Δ = 1° 07' 33" (LT)
Dc = 6° 23' 20"
R = 896.80'
T = 8.81'
L = 17.62'
E = 0.04'
C = 17.62'
C.B. = N 8° 40' 14" E

N-4
P.I. Sta. 127+67.84
Δ = 4° 18' 00" (LT)
Dc = 5° 44' 00"
R = 999.35'
T = 37.52'
L = 75.00'
E = 0.70'
C = 74.98'
C.B. = N 5° 57' 28" E

N-5
P.I. Sta. 128+42.83
Δ = 2° 31' 00" (LT)
Dc = 3° 21' 20"
R = 1,707.49'
T = 37.51'
L = 75.00'
E = 0.41'
C = 74.99'
C.B. = N 2° 32' 58" E

N-6
P.I. Sta. 130+12.13
Δ = 7° 53' 46" (LT)
Dc = 3° 00' 00"
R = 1,909.86'
T = 131.81'
L = 263.20'
E = 4.54'
C = 263.00'
C.B. = N 2° 39' 25" W

N-7
P.I. Sta. 131+68.53
Δ = 1° 25' 00" (LT)
Dc = 2° 50' 00"
R = 2,022.20'
T = 25.00'
L = 50.00'
E = 0.15'
C = 50.00'
C.B. = N 7° 18' 48" W

N-8
P.I. Sta. 132+18.53
Δ = 1° 05' 00" (LT)
Dc = 2° 10' 00"
R = 2,644.42'
T = 25.00'
L = 50.00'
E = 0.12'
C = 50.00'
C.B. = N 8° 33' 48" W

N-9
P.I. Sta. 132+93.53
Δ = 1° 40' 00" (LT)
Dc = 1° 40' 00"
R = 3,437.75'
T = 50.00'
L = 100.00'
E = 0.36'
C = 100.00'
C.B. = N 9° 56' 18" W

N-10
P.I. Sta. 133+93.53
Δ = 0° 20' 00" (LT)
Dc = 0° 20' 00"
R = 17,188.74'
T = 50.00'
L = 100.00'
E = 0.07'
C = 100.00'
C.B. = N 10° 56' 18" W

N-11
P.I. Sta. 137+62.73
Δ = 0° 16' 23" (RT)
Dc = 0° 16' 23"
R = 20,983.20'
T = 50.00'
L = 100.00'
E = 0.06'
C = 100.00'
C.B. = N 10° 58' 07" W

HORIZONTAL SCALE IN FEET
0 25 50 100

CALCULATED CAL
CHECKED WCL

GEOMETRIC PLAN

HAM-71-01.34

2
555

c:\pwworking\hmm\external\tyn61470\dms72884\8726868001.dgn 10/24/2014 3:50:51 PM TYN61470

MONUMENT TABLE

℄ of INTERSTATE 71 NORTHBOUND		PROJECT COORDINATES (GRID) SEE SURVEY CERTIFICATION			MONUMENTS TO BE SET DURING CONSTRUCTION		R/W MON. EXPECTED TO BE DISTURBED	
STATION	OFFSET	NORTHING (Y)	EASTING (X)	ELEV. (Z)	MON. ASSY.	REF. MON.	R/W MON.	DESCRIPTION
135+16.28	71.40' LT	407903.2887	1399760.0887	539.0004				PT. #1 - MAGS
135+78.93	33.81' RT	407985.0302	1399851.2577	537.7600				PT. #2 - MAGS
129+42.92	240.66' LT	407347.3527	1399666.1350	541.7354				PT. #3 - MAGS
130+25.77	59.89' LT	407429.3796	1399844.2770	542.7241				PT. #4 - MAGS
127+30.95	145.92' LT	407158.8297	1399750.8965	542.1107				PT. #5 - IPINS
127+40.70	19.30' RT	407145.4848	1399915.8192	541.5665				PT. #6 - MAGS
138+12.73	57.43' LT	408236.0505	1399678.9006	531.2153				PT. #7 - IPIN
138+12.73	57.16' RT	408234.5347	1399826.9718	528.3408				PT. #8 - IPINS
125+12.39	18.33' LT	406936.2430	1399828.9763	507.7821				PT. #9 - MAGS
131+86.57	188.64' RT	407618.3135	1400075.6880	539.6434				PT. #10 - MAGS
130+04.25	24.04' RT	407412.1372	1399929.1880	539.2459				PT. #11- MAGS
TOTAL CARRIED TO GENERAL SUMMARY SHEET								

MONUMENT TABLE

℄ of PIKE STREET		PROJECT COORDINATES (GRID) SEE SURVEY CERTIFICATION			MONUMENTS TO BE SET DURING CONSTRUCTION		R/W MON. EXPECTED TO BE DISTURBED	
STATION	OFFSET	NORTHING (Y)	EASTING (X)	ELEV. (Z)	MON. ASSY.	REF. MON.	R/W MON.	DESCRIPTION
4+72.44	58.02' LT	407903.2887	1399760.0887	539.0004				PT. #1 - MAGS
4+72.44	64.05' RT	407985.0302	1399851.2577	537.7600				PT. #2 - MAGS
3+88.95	469.88' LT	407347.3527	1399666.1350	541.7354				PT. #3 - MAGS
3+46.13	278.49' LT	407429.3796	1399844.2770	542.7241				PT. #4 - MAGS
1+87.65	516.82' LT	407158.8297	1399750.8965	542.1107				PT. #5 - IPINS
0+98.95	393.79' LT	407145.4848	1399915.8192	541.5665				PT. #6 - MAGS
4+72.44	79.25' RT	408236.0505	1399678.9006	531.2153				PT. #7 - IPIN
4+72.44	194.24' RT	408234.5347	1399826.9718	528.3408				PT. #8 - IPINS
0+98.95	589.74' LT	406936.2430	1399828.9763	507.7821				PT. #9 - MAGS
3+56.01	20.09' RT	407618.3135	1400075.6880	539.6434				PT. #10 - MAGS
2+80.92	221.44' LT	407412.1372	1399929.1880	539.2459				PT. #11- MAGS
TOTAL CARRIED TO GENERAL SUMMARY SHEET								

MONUMENT TABLE

℄ of INTERSTATE 71 SOUTHBOUND		PROJECT COORDINATES (GRID) SEE SURVEY CERTIFICATION			MONUMENTS TO BE SET DURING CONSTRUCTION		R/W MON. EXPECTED TO BE DISTURBED	
STATION	OFFSET	NORTHING (Y)	EASTING (X)	ELEV. (Z)	MON. ASSY.	REF. MON.	R/W MON.	DESCRIPTION
133+25.34	40.45' LT	407903.2887	1399760.0887	539.0004				PT. #1 - MAGS
133+88.13	64.72' RT	407985.0302	1399851.2577	537.7600				PT. #2 - MAGS
127+23.36	171.45' LT	407347.3527	1399666.1350	541.7354				PT. #3 - MAGS
128+39.46	4.96' LT	407429.3796	1399844.2770	542.7241				PT. #4 - MAGS
125+46.59	34.05' LT	407158.8297	1399750.8965	542.1107				PT. #5 - IPINS
125+92.44	124.27' RT	407145.4848	1399915.8192	541.5665				PT. #6 - MAGS
135+71.33	61.14' LT	408236.0505	1399678.9006	531.2153				PT. #7 - IPIN
135+71.33	84.25' RT	408234.5347	1399826.9718	528.3408				PT. #8 - IPINS
123+99.85	146.59' RT	406936.2430	1399828.9763	507.7821				PT. #9 - MAGS
130+11.09	229.00' RT	407618.3135	1400075.6880	539.6434				PT. #10 - MAGS
128+28.69	80.91' RT	407412.1372	1399929.1880	539.2459				PT. #11- MAGS
TOTAL CARRIED TO GENERAL SUMMARY SHEET								

MONUMENT TABLE

℄ of LYTLE STREET		PROJECT COORDINATES (GRID) SEE SURVEY CERTIFICATION			MONUMENTS TO BE SET DURING CONSTRUCTION		R/W MON. EXPECTED TO BE DISTURBED	
STATION	OFFSET	NORTHING (Y)	EASTING (X)	ELEV. (Z)	MON. ASSY.	REF. MON.	R/W MON.	DESCRIPTION
13+81.79	480.69' LT	407903.2887	1399760.0887	539.0004				PT. #1 - MAGS
14+34.00	488.91' LT	407985.0302	1399851.2577	537.7600				PT. #2 - MAGS
11+79.39	248.29' LT	407347.3527	1399666.1350	541.7354				PT. #3 - MAGS
11+93.82	71.27' LT	407429.3796	1399844.2770	542.7241				PT. #4 - MAGS
10+94.24	266.01' LT	407158.8297	1399750.8965	542.1107				PT. #5 - IPINS
10+10.38	144.52' LT	407145.4848	1399915.8192	541.5665				PT. #6 - MAGS
14+34.00	792.83' LT	408236.0505	1399678.9006	531.2153				PT. #7 - IPIN
14+34.00	698.05' LT	408234.5347	1399826.9718	528.3408				PT. #8 - IPINS
10+10.38	342.02' LT	406936.2430	1399828.9763	507.7821				PT. #9 - MAGS
14+34.00	61.79' LT	407618.3135	1400075.6880	539.6434				PT. #10 - MAGS
12+12.42	10.37' RT	407412.1372	1399929.1880	539.2459				PT. #11- MAGS
TOTAL CARRIED TO GENERAL SUMMARY SHEET								

MONUMENT TABLE

℄ of INTERSTATE 71 RAMP "E"		PROJECT COORDINATES (GRID) SEE SURVEY CERTIFICATION			MONUMENTS TO BE SET DURING CONSTRUCTION		R/W MON. EXPECTED TO BE DISTURBED	
STATION	OFFSET	NORTHING (Y)	EASTING (X)	ELEV. (Z)	MON. ASSY.	REF. MON.	R/W MON.	DESCRIPTION
126+86.50	59.51' LT	407903.2887	1399760.0887	539.0004				PT. #1 - MAGS
126+86.50	167.16' LT	407985.0302	1399851.2577	537.7600				PT. #2 - MAGS
126+86.50	253.60' LT	407347.3527	1399666.1350	541.7354				PT. #3 - MAGS
126+86.50	89.93' LT	407429.3796	1399844.2770	542.7241				PT. #4 - MAGS
126+86.50	141.28' LT	407158.8297	1399750.8965	542.1107				PT. #5 - IPINS
126+86.50	23.77' RT	407145.4848	1399915.8192	541.5665				PT. #6 - MAGS
126+86.50	375.54' LT	408236.0505	1399678.9006	531.2153				PT. #7 - IPIN
126+86.50	228.49' LT	408234.5347	1399826.9718	528.3408				PT. #8 - IPINS
124+98.00	23.28' RT	406936.2430	1399828.9763	507.7821				PT. #9 - MAGS
126+86.50	110.21' RT	407618.3135	1400075.6880	539.6434				PT. #10 - MAGS
126+86.50	3.39' LT	407412.1372	1399929.1880	539.2459				PT. #11- MAGS
TOTAL CARRIED TO GENERAL SUMMARY SHEET								

MONUMENT TABLE

℄ of EAST 4TH STREET		PROJECT COORDINATES (GRID) SEE SURVEY CERTIFICATION			MONUMENTS TO BE SET DURING CONSTRUCTION		R/W MON. EXPECTED TO BE DISTURBED	
STATION	OFFSET	NORTHING (Y)	EASTING (X)	ELEV. (Z)	MON. ASSY.	REF. MON.	R/W MON.	DESCRIPTION
8+03.43	329.94' LT	407903.2887	1399760.0887	539.0004				PT. #1 - MAGS
8+57.74	338.27' LT	407985.0302	1399851.2577	537.7600				PT. #2 - MAGS
5+99.35	50.46' RT	407347.3527	1399666.1350	541.7354				PT. #3 - MAGS
5+99.35	95.42' RT	407429.3796	1399844.2770	542.7241				PT. #4 - MAGS
5+99.35	251.21' RT	407158.8297	1399750.8965	542.1107				PT. #5 - IPINS
5+99.35	363.22' RT	407145.4848	1399915.8192	541.5665				PT. #6 - MAGS
8+57.74	642.20' LT	408236.0505	1399678.9006	531.2153				PT. #7 - IPIN
8+57.74	547.52' LT	408234.5347	1399826.9718	528.3408				PT. #8 - IPINS
5+99.35	474.72' RT	406936.2430	1399828.9763	507.7821				PT. #9 - MAGS
8+57.74	88.90' RT	407618.3135	1400075.6880	539.6434				PT. #10 - MAGS
6+34.48	161.27' RT	407412.1372	1399929.1880	539.2459				PT. #11- MAGS
TOTAL CARRIED TO GENERAL SUMMARY SHEET								

NOTES:

1. ALL COORDINATES SHOWN HEREON ARE GRID VALUES. NO SCALE FACTOR WAS ESTABLISHED FOR THIS PROJECT.
2. NO MONUMENTS ARE TO BE SET AFTER CONSTRUCTION IS COMPLETE.
3. CITY SURFACE STREET CENTERLINES WERE ESTABLISHED BY "SPLITTING CURBS" TO ESTABLISH ℄ ALIGNMENT.

PLATS AND INFORMATION USED TO ESTABLISH ℄ AND ℗ ALIGNMENTS

1) John C. Symmes Subdivision, Deed Book 1, Page 458
2) Henry Olmstead Subdivision, Deed Book 105, Page 496
3) William Thomas Subdivision, Deed Book 41, Page 284
4) Martin Baum Heirs Subdivision, Deed Book 76. Page 99
5) City of Cincinnati Ordnance No. 1838 (East Fourth Street)
6) ODOT R/W Plan for Northeast Expressway HAM-71-0.93, dated 3-8-1967

HORIZONTAL SCALE IN FEET
0 25 50 100

CALCULATED CAL CHECKED WCL

CENTERLINE SCHEMATIC PLAN

HAM-71-01.34

c:\pwworking\hmm\external\tyn61470\dms72884\e726e6b602.dgn 10/24/2014 3:50:53 PM TYN61470

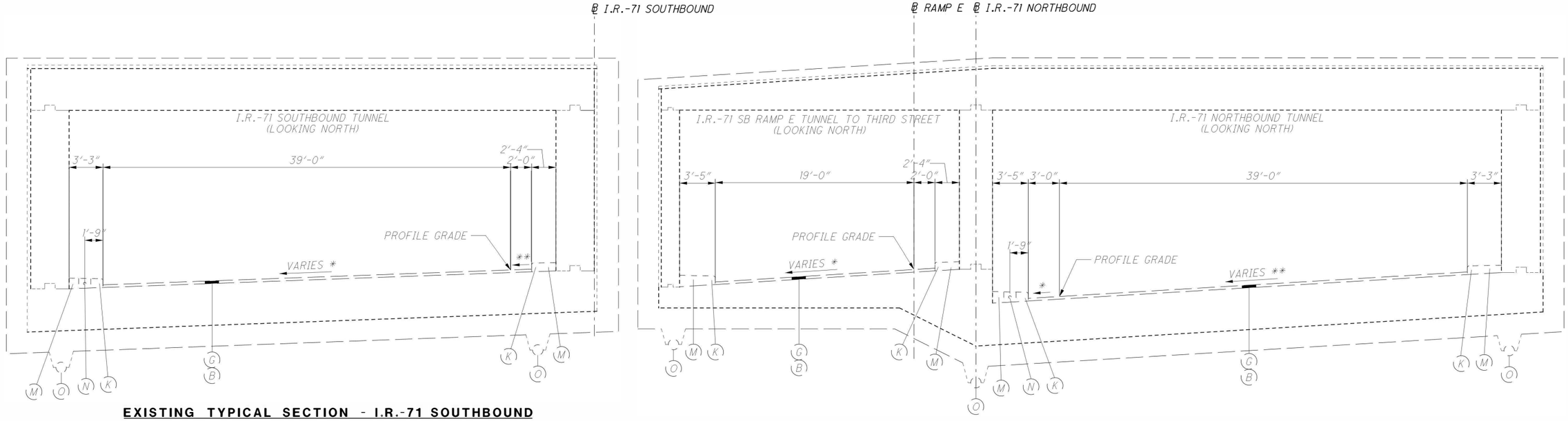

EXISTING TYPICAL SECTION - I.R.-71 SOUTHBOUND

STA. 125+42.12 TO STA. 129+54.72 = 412.60 FT

* SUPERELEVATION VARIES FROM 5.30% TO 5.60% FROM STA. 125+42.12 TO STA. 129+54.72
** SHOULDER CROSS SLOPE VARIES FROM 8.00% TO 5.50% FROM STA. 125+42.12 TO STA. 129+54.72

EXISTING TYPICAL SECTION - I.R.-71 RAMP E

STA. 127+10.45 TO STA. 131+41.99 = 431.54 FT
(I.R.-71 NORTHBOUND STATIONING)

* SUPERELEVATION VARIES FROM 6.36% TO 4.88% FROM STA. 127+10.45 TO STA. 131+41.99

EXISTING TYPICAL SECTION - I.R.-71 NORTHBOUND

STA. 127+10.45 TO STA. 131+41.99 = 431.54 FT

* SHOULDER CROSS SLOPE VARIES FROM 6.67% TO 4.78% FROM STA. 127+10.45 TO STA. 131+41.99
** SUPERELEVATION VARIES FROM 6.83% TO 4.83% FROM STA. 127+10.45 TO STA. 131+41.99

EXISTING LEGEND

(A) 1.5" ASPHALT CONCRETE SURFACE COURSE
(B) 1.75" ASPHALT CONCRETE INTERMEDIATE COURSE
(C) 12.8" BITUMINOUS AGGREGATE BASE
(D) 9.8" AGGREGATE BASE
(E) 6" PIPE UNDERDRAIN
(F) EXISTING CONCRETE BARRIER
(G) 1.25" ASPHALT CONCRETE SURFACE COURSE
(H) 2" ASPHALT CONCRETE SURFACE COURSE
(I) 8" PORTLAND CEMENT CONCRETE BASE
(J) 6" SUBBASE
(K) CONCRETE CURB
(L) 5" CONCRETE SIDEWALK
(M) 10" CONCRETE SIDEWALK
(N) 4" DRY FIRE PIPE
(O) 12" PIPE UNDERDRAIN
(P) 2.5" ASPHALT CONCRETE INTERMEDIATE COURSE
(Q) 6" BITUMINOUS AGGREGATE BASE
(R) VARIABLE DEPTH AGGREGATE BASE
(S) 3" ASPHALT CONCRETE INTERMEDIATE COURSE
(T) 3" BITUMINOUS AGGREGATE BASE
(U) 6" AGGREGATE BASE
(V) POROUS BACKFILL
(W) 4" PLAIN CONCRETE PAVEMENT

NOTES:

1. SUPERELEVATION RATES AND SHOULDER CROSS SLOPES WERE DETERMINED FROM EXISTING PLANS.

PROPOSED LEGEND

(1) ITEM 202 - PAVEMENT REMOVED
(2) ITEM 202 - WALK REMOVED
(3) ITEM 202 - CURB REMOVED
(4) ITEM 203 - EXCAVATION
(5) ITEM 202 - 2" WEARING COURSE REMOVED
(6) ITEM 441 - 2" ASPHALT CONCRETE SURFACE COURSE, TYPE 1, (448), PG64-22
(7) ITEM 407 - TACK COAT, 702.13 (0.075 GAL/SY)
(8) ITEM 305 - 8" CONCRETE BASE, CLASS QC1
(9) ITEM 304 - 6" AGGREGATE BASE
(10) ITEM 204 - SUBGRADE COMPACTION
(11) ITEM 609 - CURB, MISC.: 6" CITY OF CINCINNATI TYPE B-1 BATTERED
(12) ITEM 659 - SEEDING AND MULCHING
(13) ITEM 608 - 5" CONCRETE WALK, AS PER PLAN
(14) ITEM 451 - 8" REINFORCED CONCRETE PAVEMENT, CLASS QC1, AS PER PLAN
(15) ITEM 203 - EMBANKMENT, AS PER PLAN, TYPE 4 PERENNIAL MIX
(16) ITEM 609 - CURB, MISC.: 6" CITY OF CINCINNATI TYPE S-1 BATTERED
(17) ITEM 638 - WATER WORK, MISC.: STANDPIPE DEMOLITION
(18) ITEM 204 - PROOF ROLLING
(19) ITEM 202 - CONCRETE BARRIER REMOVED
(20) ITEM 638 - WATER WORK MISC.: STANDPIPE CONSTRUCTION
(21) ITEM 622 - CONCRETE BARRIER, SINGLE SLOPE, TYPE D, AS PER PLAN
(22) ITEM 442 - ASPHALT CONCRETE SURFACE COURSE, 12.5 MM, TYPE A (448) - 3", AS PER PLAN
(23) ITEM 622 - BARRIER TRANSITION, AS PER PLAN
(24) ITEM 304 - 12" AGGREGATE BASE
(25) ITEM 442 - ASPHALT CONCRETE SURFACE COURSE, 12.5 MM, TYPE A (448) - 4", AS PER PLAN
(26) ITEM 407 - TACK COAT (0.075 GAL/SY)
(27) ITEM 302 - 6" ASPHALT CONCRETE BASE, PG64-22
(28) ITEM 304 - AGGREGATE BASE (DEPTH VARIES)
(29) ITEM 609 - 6" CURB, TYPE 6
(30) NOT USED
(31) ITEM 442 - ASPHALT CONCRETE SURFACE COURSE, 12.5 MM, TYPE A (448) - 4.25", AS PER PLAN
(32) NOT USED
(33) ITEM 530 - SPECIAL - STRUCTURE, MISC.: FIRE RESISTANT COATING SYSTEM - WALL INSTALLATION
(34) ITEM 530 - SPECIAL - STRUCTURE, MISC.: FIRE RESISTANT COATING SYSTEM - CEILING INSTALLATION

TYPICAL SECTIONS - I.R.-71

HAM-71-1.34

c:\pwworking\hmm\external\tyn61470\dms72884\87268GY001.dgn 10/24/2014 3:50:55 PM TYN61470

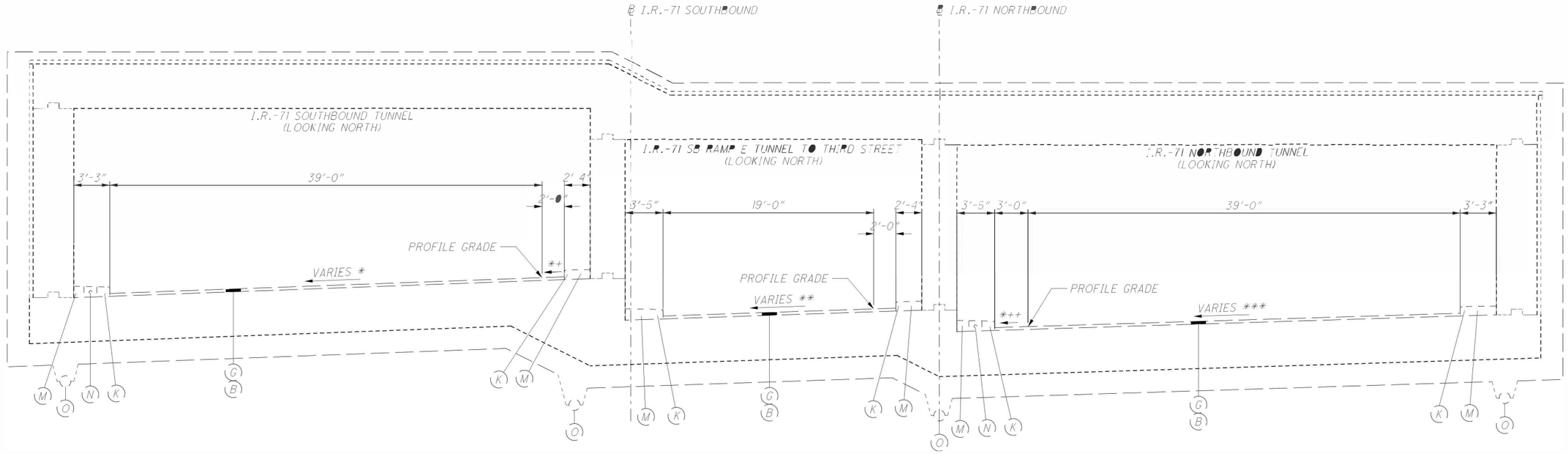

EXISTING TYPICAL SECTION - I.R.-71 SOUTHBOUND, RAMP E, AND I.R.-71 NORTHBOUND

I.R.-71 SOUTHBOUND STA. 129+54.72 TO STA. 133+57.77 = 403.05 FT
RAMP E STA. 131+41.99 TO STA. 135+66.91 = 424.92 FT
I.R.-71 NORTHBOUND STA. 131+41.99 TO STA. 135+66.91 = 424.92 FT

* SUPERELEVATION VARIES FROM 5.60% TO 0.22% FROM STA. 129+54.72 TO STA. 133+57.77
** SUPERELEVATION VARIES FROM 4.88% TO 0.23% FROM STA. 131+41.99 TO STA. 135+66.91
*** SUPERELEVATION VARIES FROM 4.83% TO 0.61% FROM STA. 131+41.99 TO STA. 135+66.91
*+ SHOULDER CROSS SLOPE VARIES FROM 5.50% TO 0.50% FROM STA. 129+54.72 TO STA. 133+57.77
*++ SHOULDER CROSS SLOPE VARIES FROM 4.78% TO 0.33% FROM STA. 131+41.99 TO STA. 135+66.91

NOTES:

1. FOR TYPICAL SECTION LEGEND, SEE SHEET 4
2. SUPERELEVATION RATES AND SHOULDER CROSS SLOPES WERE DETERMINED FROM EXISTING PLANS.

TYPICAL SECTIONS - I.R.-71

HAM-71-1.34

c:\pwworking\hmm\external\tyn61470\dms72884\87268GY002.dgn 10/24/2014 3:50:57 PM TYN61470

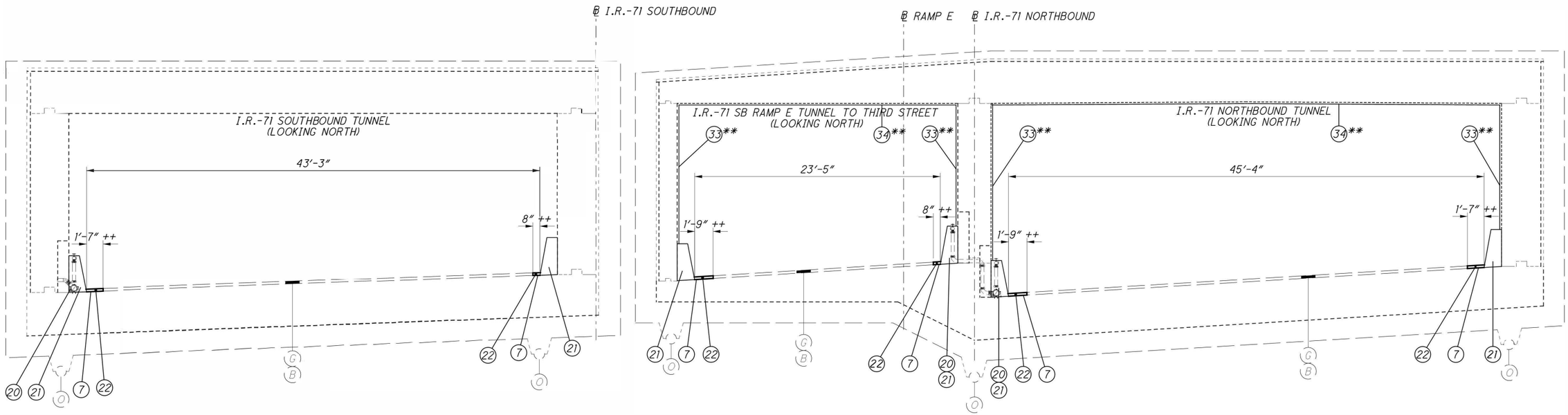

PROPOSED TYPICAL SECTION - I.R.-71 SOUTHBOUND

STA. 125+42.12 TO STA. 129+54.72 = 412.60 FT

++ NEW PAVEMENT SHALL MATCH EXISTING SUPERELEVATIONS. REFER TO SHEETS 68 AND 71 FOR NEW PAVEMENT AND BARRIER STATION RANGES RESPECTIVELY.

PROPOSED TYPICAL SECTION - I.R.-71 RAMP E

STA. 127+10.45 TO STA. 131+41.99 = 431.54 FT
(I.R.-71 NORTHBOUND STATIONING)

++ NEW PAVEMENT SHALL MATCH EXISTING SUPERELEVATIONS. REFER TO SHEETS 68 AND 71 FOR NEW PAVEMENT AND BARRIER STATION RANGES RESPECTIVELY.
** FROM STA. 130+46.00 TO 131+41.99 (I.R.-71 NORTHBOUND STATIONING)

PROPOSED TYPICAL SECTION - I.R.-71 NORTHBOUND

STA. 127+10.45 TO STA. 131+41.99 = 431.54 FT

++ NEW PAVEMENT SHALL MATCH EXISTING SUPERELEVATIONS. REFER TO SHEETS 68 AND 71 FOR NEW PAVEMENT AND BARRIER STATION RANGES RESPECTIVELY.
** FROM STA. 130+46.00 TO 131+41.99

NOTES:

1. HEIGHT OF BARRIER WILL BE REDUCED IN AREAS OF DOORS, HYDRANTS, AND FAN EXHAUSTS. BARRIER WILL VARY FROM 8" TO 10" THICK IN THE LOCATION OF DOORS TO MATCH EXISTING ELEVATIONS. REFER TO SHEETS 154- 161 FOR BARRIER DETAILS AND SHEET 71 TO 77 FOR STATION RANGES.
2. FOR TYPICAL SECTION LEGEND, SEE SHEET 4
3. SUPERELEVATION RATES AND SHOULDER CROSS SLOPES WERE DETERMINED FROM EXISTING PLANS.

TYPICAL SECTIONS - I.R.-71

HAM-71-1.34

c:\pwworking\hmm\external\tyn61470\dms72884\87268GY003.dgn 10/24/2014 3:50:59 PM TYN61470

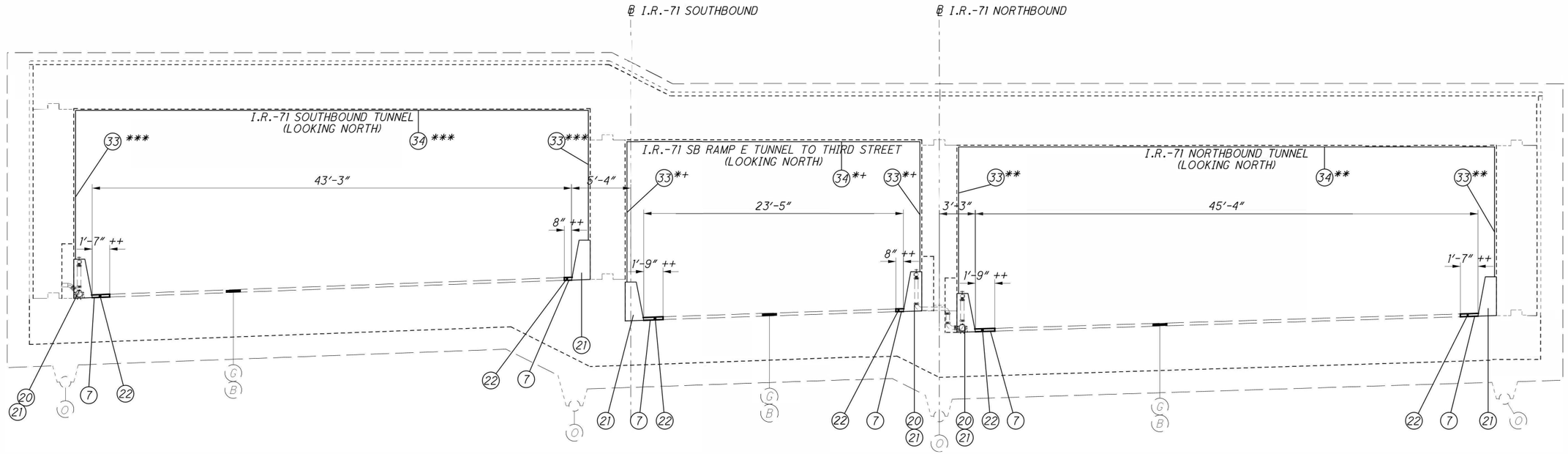

PROPOSED TYPICAL SECTION - I.R.-71 SOUTHBOUND, RAMP E, AND I.R.-71 NORTHBOUND

I.R.-71 SOUTHBOUND STA. 129+54.72 TO STA. 133+57.77 = 403.05 FT
RAMP E STA. 131+41.99 TO STA. 135+66.91 = 424.92 FT
I.R.-71 NORTHBOUND STA. 131+41.99 TO STA. 135+66.91 = 424.92 FT

++ NEW PAVEMENT SHALL MATCH EXISTING SUPERELEVATIONS.
REFER TO SHEETS 68 AND 71 FOR NEW PAVEMENT AND BARRIER
STATION RANGES RESPECTIVELY.
** FROM STA. 132+34.00 TO STA. 133+26.00 (I.R.-71 NORTHBOUND TUNNEL)
*+ FROM STA. 131+88.00 TO STA. 133+26.00 (I.R.-71 RAMP E TUNNEL, I.R.-71 NORTHBOUND STATIONING)
*** FROM STA. 129+99.25 TO STA. 130+89.75 (I.R.-71 SOUTHBOUND TUNNEL)

NOTES:

1. HEIGHT OF BARRIER WILL BE REDUCED IN AREAS OF DOORS, HYDRANTS, AND FAN EXHAUSTS. BARRIER WILL VARY FROM 8" TO 10" THICK IN THE LOCATION OF DOORS TO MATCH EXISTING ELEVATIONS. REFER TO SHEETS 154- 161 FOR BARRIER DETAILS AND SHEET 71 TO 77 FOR STATION RANGES.
2. FOR TYPICAL SECTION LEGEND, SEE SHEET 4
3. SUPERELEVATION RATES AND SHOULDER CROSS SLOPES WERE DETERMINED FROM EXISTING PLANS.

TYPICAL SECTIONS - I.R.-71

HAM-71-1.34

c:\pwworking\hmm\externd\tyn61470\dms7266\A_8726BGY004.dgn 10/24/2014 3:51:00 PM TYN61470

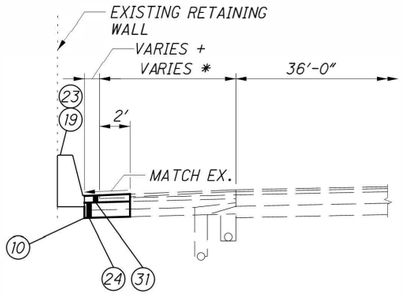

PROPOSED TYPICAL SECTION - I.R.-71 SOUTHBOUND

I.R.-71 SOUTHBOUND STA. 133+28.71 TO 133+38.71 = 10 FT

* FROM STA. 133+28.71 TO 133+38.71 = 8 FT TO 9 FT
+ FROM STA. 133+28.71 TO 133+38.71 = 3.85 FT TO 2 FT

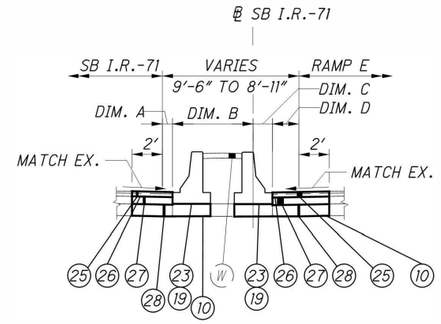

PROPOSED BARRIER WALL DETAIL - S.B.I.R.-71 & RAMP E

I.R.-71 SOUTHBOUND STA. 133+54.20 TO STA. 133+65.73 = 11.53 FT
RAMP E STA. 135+49.59 TO STA. 135+56.59 (NORTHBOUND STATIONING) = 7 FT

DIM. A FROM SB STA. 133+54.20 TO STA. 133+65.73 = 0.67 FT TO 0 FT
DIM. B FROM SB STA. 133+54.20 TO STA. 133+65.73 = 5.20 FT TO 5.87 FT
DIM. C FROM NB STA. 135+49.59 TO STA. 135+56.59 = 1.83 FT TO 3.02 FT
DIM. D FROM NB STA. 135+49.59 TO STA. 135+56.59 = 1.75 FT TO 0 FT

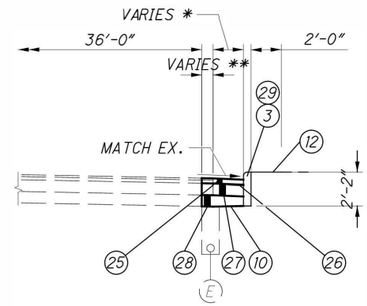

PROPOSED TYPICAL SECTION - I.R.-71 NORTHBOUND

I.R.-71 NORTHBOUND STA. 135+93.72 TO 136+07.72 = 14 FT

* FROM STA. 135+93.72 TO 136+07.72 = 1.5' TO 0'
** FROM STA. 135+93.72 TO 136+07.72 = 0.5' TO 2'

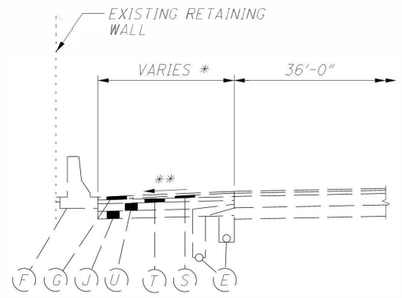

EXISTING TYPICAL SECTION - I.R.-71 SOUTHBOUND

I.R.-71 SOUTHBOUND STA. 133+28.71 TO 133+38.71 = 10 FT

* FROM STA. 133+28.71 TO 133+38.71 = 8 FT TO 9 FT
** FROM STA. 133+28.71 TO 133+38.71 = 1.36% TO 0.53%

NOTES:

1. FOR TYPICAL SECTION LEGEND, SEE SHEET 4
2. FOR PLAN VIEW OF BARRIER TRANSITIONS, SEE SHEET 157

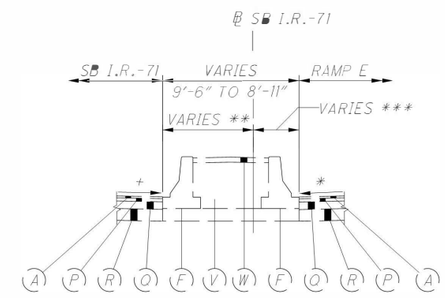

EXISTING BARRIER WALL DETAIL - S.B.I.R.-71 & RAMP E

I.R.-71 SOUTHBOUND STA. 133+54.20 TO STA. 133+65.73 = 11.53 FT
RAMP E STA. 135+49.59 TO STA. 135+56.59 (NORTHBOUND STATIONING) = 6.97 FT

* FROM NB STA. 135+49.59 TO STA. 135+56.59 = 0% TO -0.8%
** FROM SB STA. 133+54.20 TO STA. 133+65.73 = 5.98 FT TO 5.87 FT
*** FROM NB STA. 135+49.59 TO STA. 135+56.59 = 3.47 FT TO 3.02 FT
+ FROM SB STA. 133+54.20 TO STA. 133+65.73 = -0.16% TO 0.05%

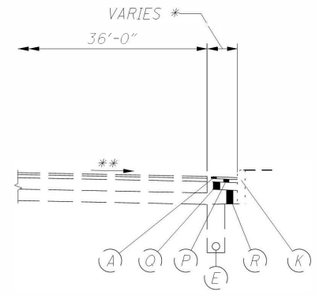

EXISTING TYPICAL SECTION - I.R.-71 NORTHBOUND

I.R.-71 NORTHBOUND STA. 135+93.72 TO 136+07.72 = 14 FT

* FROM STA. 135+93.72 TO 136+07.72 = 0' TO 2'
** FROM STA. 135+93.72 TO 136+07.72 = 1.51% TO 1.88%

TYPICAL SECTIONS - I.R.-71

HAM-71-1.34

c:\pwworking\hmm\external\tyn61470\dms72884\B726BGY005.dgn 10/24/2014 3:51:02 PM TYN61470

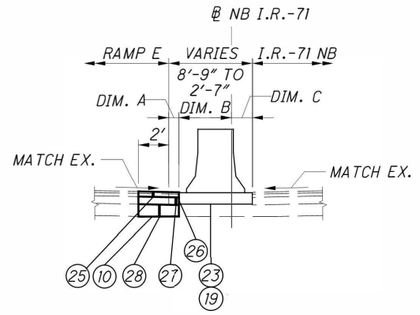

BARRIER WALL DETAIL - N.B. I.R.-71 & RAMP E

RAMP E STA. 135+63.50 TO STA. 135+83.50 (NORTHBOUND STATIONING) = 20 FT
I.R.-71 NORTHBOUND STA. 135+66.91 TO STA. 135+83.50 = 16.59 FT

DIM. A FROM STA. 135+63.50 TO 135+83.50 = 0.67 FT TO 0 FT
DIM. B FROM STA. 135+63.50 TO 135+83.50 = 5.82 FT TO 5.21 FT
DIM. C FROM STA. 135+66.91 TO STA. 135+83.50 = 0.75 FT TO -2.61 FT

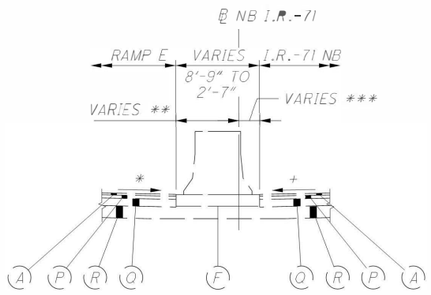

BARRIER WALL DETAIL - N.B. I.R.-71 & RAMP E

RAMP E STA. 135+63.50 TO STA. 135+83.50 (NORTHBOUND STATIONING)
I.R.-71 NORTHBOUND STA. 135+66.91 TO STA. 135+83.50

** FROM STA. 135+63.50 TO STA. 135+83.50 = 4.3% TO -1.4%*
*** FROM STA. 135+63.50 TO STA. 135+83.50 = 6.50 FT TO 5.21 FT*
**** FROM STA. 135+66.91 TO STA. 135+83.50 = 2.47 FT TO -2.61 FT*
+ FROM STA. 135+66.91 TO STA. 135+83.50 = 2.2% TO -2.1%

NOTES:

1. *FOR TYPICAL SECTION LEGEND, SEE SHEET 4*
2. *FOR PLAN VIEW OF BARRIER TRANSITIONS, SEE SHEET 157*

TYPICAL SECTIONS - I.R.-71

HAM-71-1.34

c:\pwworking\hmm\external\tyn61470\dms72884\87268GY006.dgn 10/24/2014 3:51:04 PM TYN61470

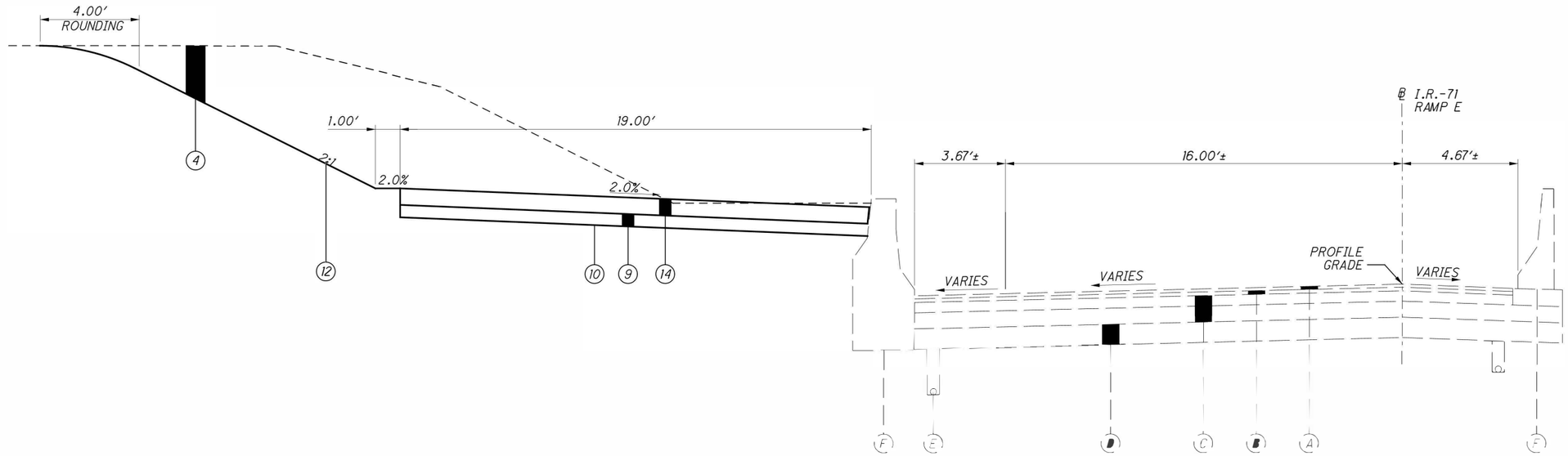

PROPOSED SECTION - I.R.-71 RAMP E

STA. 125+21.80 TO STA. 125+61.90 = 40.10 FT

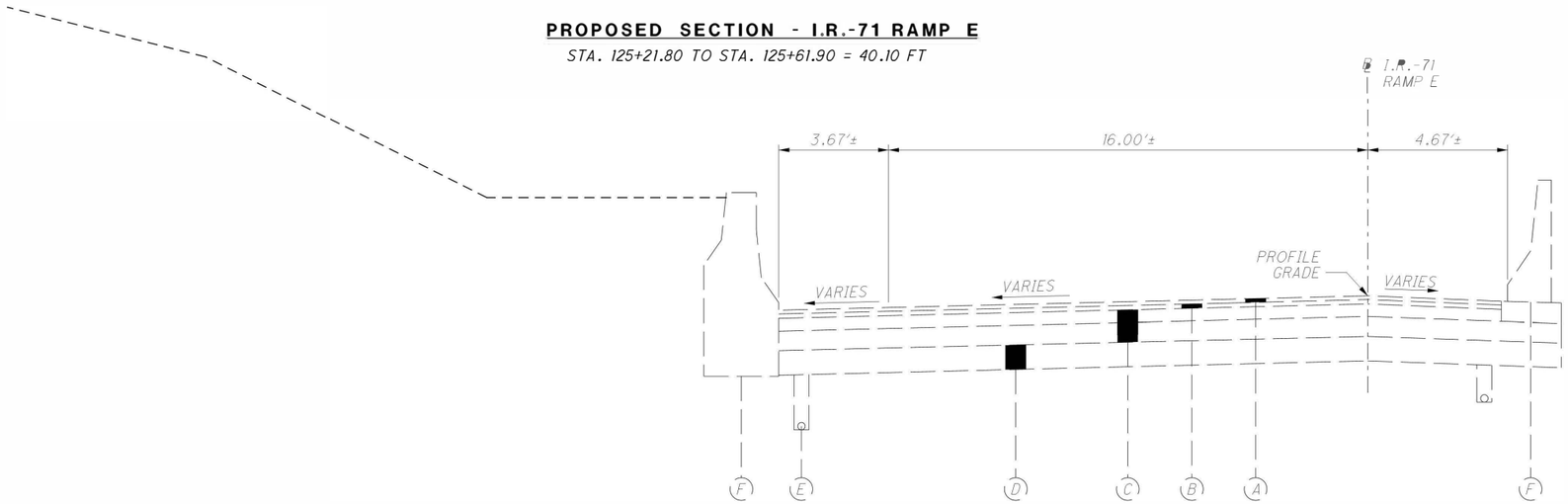

EXISTING SECTION - I.R.-71 RAMP E

NOTES:

1. FOR TYPICAL SECTION LEGEND, SEE SHEET 4

c:\pwworking\tmm\external\tyn61470\dms728684\8726861007.dgn 10/24/2014 3:51:06 PM TYN61470

TYPICAL SECTIONS - I.R.-71 RAMP E

HAM-71-1.34

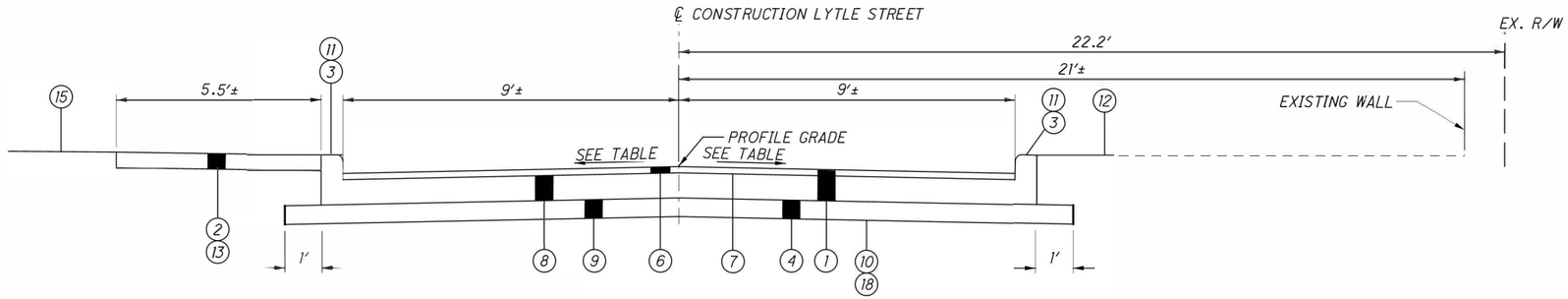

FULL DEPTH REPLACEMENT SECTION - LYTLE STREET

STA. 12+09.81 TO STA. 14+19.22 = 209.41 FT

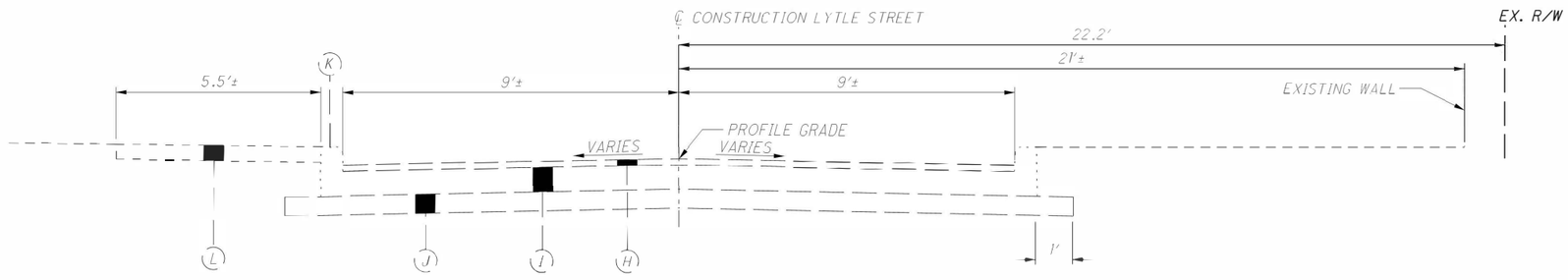

EXISTING NORMAL SECTION - LYTLE STREET

STA. 12+09.81 TO STA. 14+19.22

TABLE		
STREET	STA.	CROSS SLOPE (%)
LYTLE	12+09.81	2.33
LYTLE	12+25.00	2.00
LYTLE	12+50.00	2.00
LYTLE	12+75.00	2.00
LYTLE	13+00.00	2.00
LYTLE	13+25.00	2.00
LYTLE	13+50.00	2.00
LYTLE	13+75.00	2.00
LYTLE	14+00.00	SEE NOTE 2
LYTLE	14+19.22	SEE NOTE 2

NOTES:

1. FOR TYPICAL SECTION LEGEND, SEE SHEET 4
2. REFERENCE INTERSECTION DETAIL ON SHEET 94

TYPICAL SECTIONS - LYTLE STREET

HAM-71-1.34

c:\pwworking\hmm\external\tyn61470\dms72884\87268GY008.dgn 10/24/2014 3:51:08 PM TYN61470

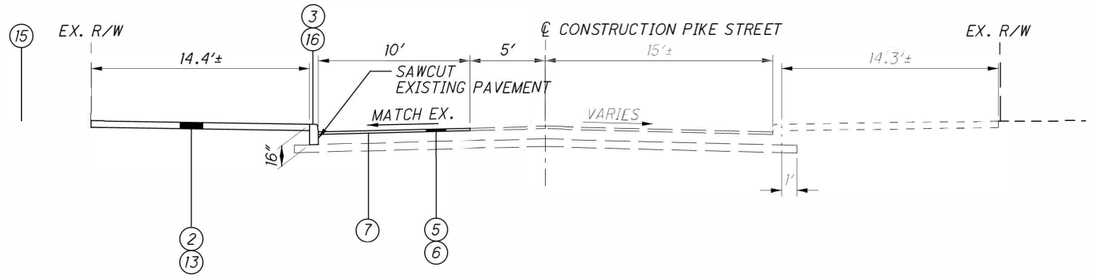

RESURFACING SECTION - PIKE STREET

STA. 3+17.61 TO STA. 4+36.63 = 119.02 FT

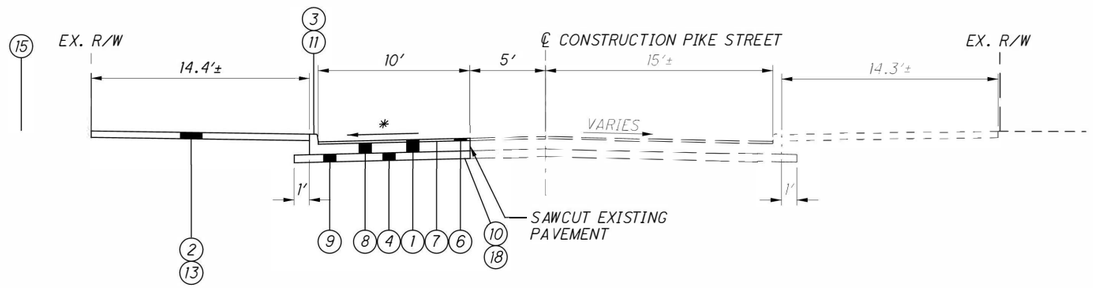

FULL DEPTH REPLACEMENT SECTION - PIKE STREET

STA. 2+69.60 TO STA. 3+17.61 = 48.01 FT

** - SEE SHEET 94 FOR INTERSECTION DETAIL.*

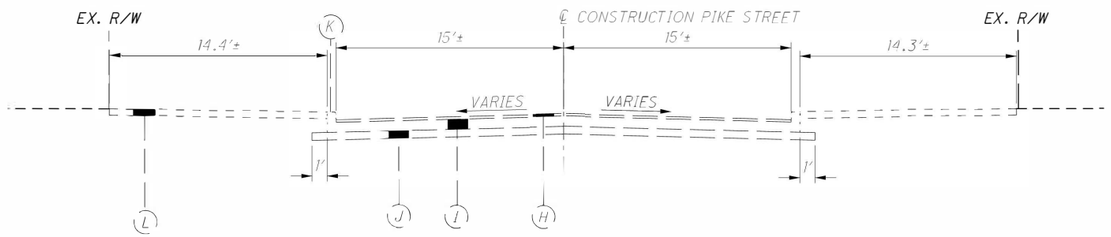

EXISTING NORMAL SECTION - PIKE STREET

NOTES:

1. FOR TYPICAL SECTION LEGEND, SEE SHEET 4

TYPICAL SECTIONS - PIKE STREET

HAM-71-1.34

12
555

c:\pwworking\hmm\external\tyn61470\dms72884\87268GY009.dgn 10/24/2014 3:51:09 PM TYN61470

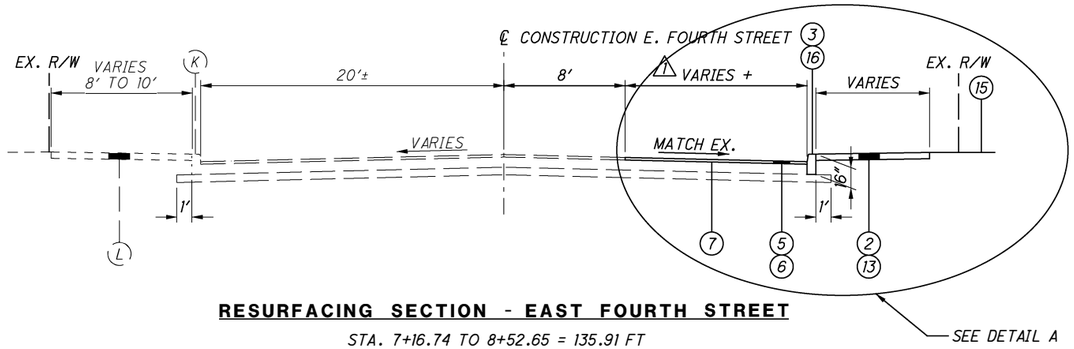

+ STA. 7+16.74 TO STA. 7+69.78 = 12'
STA. 7+69.78 TO STA. 7+74.78 = 12' TO 10.83'
STA. 7+74.78 TO STA. 8+16.78 = 10.83'
STA. 8+16.78 TO STA. 8+20.78 = 10.83' TO 12'
STA. 8+20.78 TO STA. 8+52.65 = 12'

++ STA. 7+69.78 TO STA. 7+74.78 = 0' TO 1.17'
STA. 8+16.78 TO STA. 8+20.78 = 1.17' TO 0'

RESURFACING SECTION - EAST FOURTH STREET

STA. 7+16.74 TO 8+52.65 = 135.91 FT

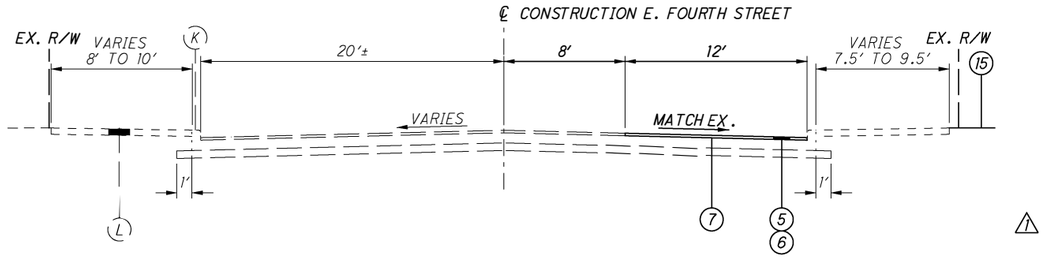

RESURFACING SECTION - EAST FOURTH STREET

STA. 6+25.48 TO 7+16.74 = 91.26 FT

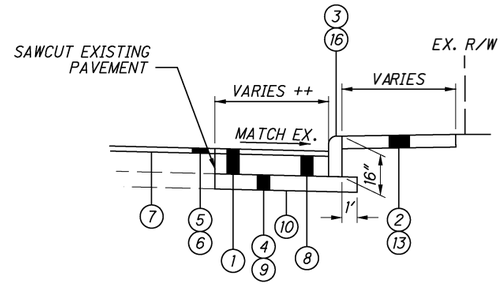

DETAIL A

STA. 7+69.78 TO STA. 7+74.78 = 5 FT
STA. 8+16.78 TO STA. 8+20.78 = 4 FT

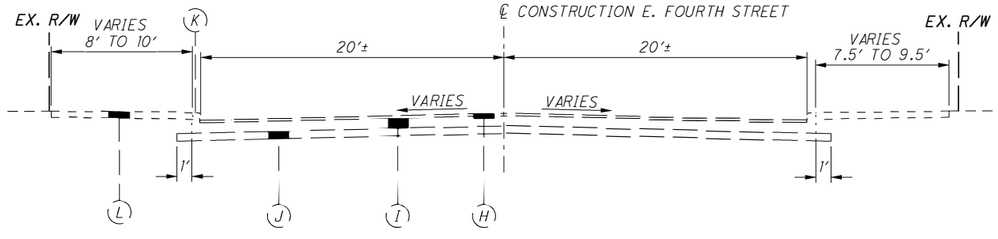

EXISTING NORMAL SECTION - EAST FOURTH STREET

NOTES:

1. FOR TYPICAL SECTION LEGEND, SEE SHEET 4

NO.	DATE	REVISION DESCRIPTION
1	11/3/15	REVISED TRANSFORMER VAULTS

TYPICAL SECTIONS - EAST FOURTH STREET

HAM-71-1.34

13
555

c:\pwworking\hmm\external\pre47802\dms72884\87268GY010.dgn 11/3/2015 5:09:51 PM PRE47802

GENERAL NOTES

ROUNDING

THE ROUNDING AT SLOPE BREAKPOINTS SHOWN ON THE TYPICAL SECTIONS APPLIES TO ALL CROSS-SECTIONS EVEN THOUGH OTHERWISE SHOWN.

UTILITIES

LISTED BELOW ARE ALL UTILITIES LOCATED WITHIN THE PROJECT LIMITS TOGETHER WITH THEIR RESPECTIVE OWNERS:

ELECTRIC AND TRANSMISSIONS:

DUKE ENERGY
139 EAST 4th ST.,
ROOM 467A
CINCINNATI, OH 45202
ATTN: AARON WRIGHT
PHONE: (513) 287-3674

DUKE ENERGY
424 GEST ST.
CINCINNATI, OH 45203
ATTN: KEVIN GEIMAN
PHONE: (513) 419-1507

GAS:

DUKE ENERGY
139 EAST 4th ST.,
ROOM 460A
CINCINNATI, OH 45202
ATTN: LAURA MATE
PHONE: (513) 287-2594

TELECOMMUNICATIONS:

CINCINNATI BELL TELEPHONE
221 EAST 4th ST., BLDG. 343
CINCINNATI, OH 45201
ATTN: MARK CONNER
PHONE: (513) 565-7043

TIME WARNER CABLE
11252 CORNELL PARK DR.
CINCINNATI, OH 45242
ATTN: KENT RIEGER
PHONE: (513) 386-5499

LEVEL 3 COMMUNICATIONS
(CORPORATE) REF. 41870 OH
1025 ELDORADO BLVD.
BROOMFIELD, CO 80021
Relo@Level3.com

LEVEL 3 COMMUNICATIONS
(LOCAL) REF. 41870 OH
226 NORTH 5th ST.
COLUMBUS, OH 43215
ATTN: JARAMIE MYERS
PHONE: (614) 796-1972

MCI/VERIZON – FIBER OPTIC
120 RAVINE ST.
AKRON, OH 44303
ATTN: AL GUEST
PHONE: (330) 253-8267

AT&T – FIBER OPTICS
(AT&T LONG DISTANCE)
HLG CONSULTING
5980-G WILCOX PLACE
DUBLIN, OH 43016
ATTN: TONY LYLE
PHONE: (614) 760-8320

WINDSTREAM
65 E. WINNERLINE RD.
EATON, OH 45320
ATTN: LEON TAYLOR
PHONE: (937) 260-3062

XO COMMUNICATIONS
10 WEST BROAD STREET
SUITE 300
COLUMBUS, OH 43215
ATTN: JEREMY JOHNSON
PHONE: (614) 416-1473

WATER:

CINCINNATI WATER WORKS
4747 SPRING GROVE AVE.
CINCINNATI, OH 45232
ATTN: JON HUNSEDER
PHONE: (513) 591-6856

SANITARY SEWER:

CINCINNATI MSD
1600 GEST ST.
CINCINNATI, OH 45204
ATTN: ROB FRANKLIN
PHONE: (513) 557-7188

CINCINNATI MSD
1600 GEST ST.
CINCINNATI, OH 45204
ATTN: SCOTT MARING
PHONE: (513) 244-5131

TRAFFIC SURVEILLANCE:

ODOT OFFICE OF TRAFFIC OPERATIONS
1980 WEST BROAD ST.,
MAIL STOP 5160
COLUMBUS, OH 43223
ATTN: JASON YERAY
PHONE: (614) 466-2168

STORM WATER:

CINCINNATI STORM WATER MANAGEMENT
225 WEST GALBRAITH RD.
CINCINNATI, OH 45215
ATTN: JEFF OXENHAM
PHONE: (513) 352-4246

AGENCIES:

CITY OF CINCINNATI
ROOM 410, CITY HALL
801 PLUM ST.
CINCINNATI, OH 45202
ATTN: JOHN BRAZINA
PHONE: (513) 352-6249

CINCINNATI PARK BOARD
950 EDEN PARK DR.
CINCINNATI, OH 45202
ATTN: STEVE SCHUCKMAN
PHONE: (513) 475-9600

THE LOCATION OF THE UNDERGROUND UTILITIES SHOWN ON THE PLANS ARE AS OBTAINED FROM THE OWNERS AS REQUIRED BY SECTION 153.64 O.R.C.

SURVEYING PARAMETERS

PRIMARY PROJECT CONTROL MONUMENTS GOVERN ALL POSITIONING ON ODOT PROJECTS. SEE SHEET 3 OF THE PLANS FOR A TABLE CONTAINING PROJECT CONTROL INFORMATION.

USE THE FOLLOWING PROJECT CONTROL, VERTICAL POSITIONING AND HORIZONTAL POSITIONING PARAMETERS FOR ALL SURVEYING:

PROJECT CONTROL
POSITIONING METHOD: ODOT VRS
MONUMENT TYPE: B OR LESS

VERTICAL POSITIONING
ORTHOMETRIC HEIGHT DATUM: NAVD 88
GEOID: GEOID09

HORIZONTAL POSITIONING
REFERENCE FRAME: NAD83 (CORS96)
ELLIPSOID: GRS80
MAP PROJECTION: LAMBERT CONFORMAL CONIC
COORDINATE SYSTEM: OHIO STATE PLANE (SOUTH ZONE)
COMBINED SCALE FACTOR: N/A-PROJECT IS ON GRID
ORIGIN OF COORDINATE SYSTEM: 0,0

USE THE POSITIONING METHODS AND MONUMENT TYPE USED IN THE ORIGINAL SURVEY TO RESTORE ALL MONUMENTS RELATED TO PRIMARY PROJECT CONTROL THAT ARE DAMAGED OR DESTROYED BY CONSTRUCTION ACTIVITIES. RESTORE THE DAMAGED OR DESTROYED MONUMENTS IN ACCORDANCE WITH SUPPLEMENTAL SPECIFICATION 823.

UNITS ARE IN U.S. SURVEY FEET. USE THE FOLLOWING CONVERSION FACTOR: 1 METER=3.280833333 U.S. SURVEY FEET.

WORK LIMITS

THE WORK LIMITS SHOWN ON THESE PLANS ARE FOR PHYSICAL CONSTRUCTION ONLY. PROVIDE THE INSTALLATION AND OPERATION OF ALL WORK ZONE TRAFFIC CONTROL AND WORK ZONE TRAFFIC CONTROL DEVICES REQUIRED BY THESE PLANS WHETHER INSIDE OR OUTSIDE THESE WORK LIMITS.

PROTECTION OF RIGHT-OF-WAY LANDSCAPING

PRIOR TO BEGINNING WORK, THE CONTRACTOR, THE PROJECT ENGINEER, AND A REPRESENTATIVE OF THE MAINTAINING AGENCY WILL REVIEW AND RECORD ALL LANDSCAPING ITEMS WITHIN THE RIGHT OF WAY (BOTH WITHIN AND OUTSIDE THE CONSTRUCTION LIMITS) A RECORD OF THIS REVIEW WILL BE KEPT IN THE PROJECT ENGINEER'S FILES. PRIOR TO FINAL ACCEPTANCE, A FINAL REVIEW OF LANDSCAPING ITEMS WILL BE MADE.

CONSTRICT ALL ACTIVITIES, EQUIPMENT STORAGE, AND STAGING TO WITHIN THE CONSTRUCTION LIMITS. UNLESS OTHERWISE IDENTIFIED IN THE PLANS OR PROPOSAL, THE CONSTRUCTION LIMITS ARE IDENTIFIED AS 30 FEET FROM THE EDGE OF PAVEMENT.

SUBMIT A WRITTEN REQUEST TO THE PROJECT ENGINEER TO USE ANY AREA OUTSIDE THESE LIMITS. THE DOCUMENT SUBMITTED MUST CLEARLY IDENTIFY THE AREA AND EXPLAIN THE PROPOSED USE AND RESTORATION OF THE AREA. USE OF THESE AREAS FOR DISPOSAL OF WASTE MATERIAL AND CONSTRUCTION DEBRIS, EXCAVATION OF BORROW MATERIAL AND PLACEMENT OF PORTABLE PLANTS IS PROHIBITED. THE REQUEST MUST BE APPROVED, IN WRITING, BEFORE THE CONTRACTOR HAS PERMISSION TO USE THE AREA.

ANY ITEMS DAMAGED BEYOND THE CONSTRUCTION LIMITS AS DEFINED ABOVE WILL BE REPLACED IN KIND OR AS APPROVED BY THE PROJECT ENGINEER.

CLEARING AND GRUBBING

REMOVE ALL TREES AND STUMPS SPECIFICALLY MARKED FOR REMOVAL WITHIN THE CONSTRUCTION LIMITS UNDER THE LUMP SUM BID FOR ITEM 201, CLEARING AND GRUBBING. THE FOLLOWING IS AN APPROXIMATE ESTIMATE OF THE NUMBER OF TREES AND STUMPS TO BE REMOVED.

SIZES	*NO. TREES*	*NO. STUMPS*	*TOTAL*
18"	*1*	*0*	*1*
30"	*2*	*0*	*2*

ITEM 204 - PROOF ROLLING

THE FOLLOWING QUANTITY IS PROVIDED IN THE GENERAL SUMMARY TO ADDRESS LOCATIONS REQUIRING PROOF ROLLING.

ITEM 204 - PROOF ROLLING 1 HOUR.

FENCE LENGTHS

THE LENGTHS OF FENCE SHOWN IN THE PLANS ARE HORIZONTAL DIMENSIONS. MEASUREMENTS OF THE FINAL QUANTITIES WILL BE IN ACCORDANCE WITH ITEM 607.

CONNECTION BETWEEN EXISTING AND PROPOSED GUARDRAIL

WHEN IT IS NECESSARY TO SPLICE PROPOSED GUARDRAIL TO EXISTING GUARDRAIL, ONLY THE EXISTING GUARDRAIL SHALL BE CUT, DRILLED, OR PUNCHED. THE CONNECTION SHALL BE MADE USING A "W-BEAM RAIL SPLICE" AS SHOWN IN AASHTO M 180. PAYMENT SHALL BE INCLUDED IN THE CONTRACT PRICE FOR THE RESPECTIVE GUARDRAIL ITEMS.

CONSTRUCTION NOTIFICATION

THE CONTRACTOR WILL ADVISE THE PROJECT ENGINEER A MINIMUM OF:
- FOURTEEN (14) DAYS PRIOR TO THE START OF CONSTRUCTION ACTIVITIES, AND/OR ROAD CLOSURES.
- SEVEN (7) DAYS PRIOR TO LANE CLOSURES AND/OR SHIFTS IN TRAFFIC PATTERNS.
THE PROJECT ENGINEER WILL FORWARD THIS INFORMATION TO THE FOLLOWING:

DISTRICT PUBLIC INFORMATION OFFICER (PIO) BY FAX AT (513) 933-9472 OR EMAIL AT D08.PIO.FORM@DOT.STATE.OH.US
DISTRICT PERMIT SECTION BY FAX AT (513) 933-9472 OR EMAIL AT TOM.MAKRIS@DOT.STATE.OH.US
CENTRAL OFFICE SPECIAL HAUL PERMITS SECTION BY FAX AT (614) 728-4099 OR EMAIL AT HAULING.PERMITS@DOT.STATE.OH.US

THE PIO WILL, IN TURN, NOTIFY THE PUBLIC, THE LOCAL EMERGENCY SERVICES, AFFECTED SCHOOLS AND BUSINESSES, AND ANY OTHER IMPACTED LOCAL PUBLIC AGENCY OF ANY OF THE ABOVE MENTIONED ITEMS, VIA MEDIA SOURCES.

PROFILE AND ALIGNMENT

PLACE THE PROPOSED PAVEMENT ON I-71, I-71 RAMP E, PIKE STREET AND FOURTH STREET TO FOLLOW THE ALIGNMENT AND PROFILE OF THE EXISTING PAVEMENT. PLACE THE PROPOSED ASPHALT CONCRETE OVERLAY AS SHOWN ON THE TYPICAL SECTIONS.

CONTRACTION AND/OR EXPANSION JOINTS

ALTHOUGH SPECIFIC LOCATIONS OF CERTAIN CONTRACTION AND EXPANSION JOINTS HAVE BEEN DETAILED ON THIS PLAN, NO WAIVER OF THE SPECIFICATIONS IS INTENDED. IN ALL CASES,

c:\pwworking\hmm\external\pre47802\dms72884\87268GN001.dgn 2/24/2015 4:26:12 PM PRE47802

THE PROVISION OF EXPANSION JOINTS AT ALL MAJOR STRUCTURES INCLUDING THE MAXIMUM SPACING BETWEEN CONTRACTION JOINTS IS IN ACCORDANCE WITH STANDARD CONSTRUCTION DRAWING BP-2.2 AND THE SPECIFICATIONS.

CONTRACTION JOINTS IN CONCRETE PAVEMENT OR BASE WIDENING

WHERE NEW CONCRETE IS PLACED ADJACENT TO AND TIED TO EXISTING CONCRETE, THE CONTRACTION JOINT SPACING REQUIRED IN STANDARD CONSTRUCTION DRAWING BP-2.2 WILL BE WAIVED. CONSTRUCT CONTRACTION JOINTS IN THE NEW CONCRETE PAVEMENT TO FORM A CONTINUOUS LINE WITH ALL CONTRACTION JOINTS IN THE EXISTING CONCRETE PAVEMENT. INSTALL EXPANSION JOINTS IN THE NEW CONCRETE PAVEMENT TO FORM A CONTINUOUS LINE WITH ALL EXPANSION JOINTS IN THE EXISTING CONCRETE PAVEMENT.

PAVEMENT RESTORATION FOR PIPE INSTALLATIONS AND/OR REMOVALS

THE FOLLOWING QUANTITIES HAVE BEEN PROVIDED FOR PAVEMENT RESTORATION FOLLOWING INSTALLATION AND/OR REMOVAL OF PIPES.

BELOW IS A LIST OF PIPES TO BE INSTALLED AND THEIR LOCATIONS:

STREET	STATION	STATION	LENGTH	REFERENCE
PIKE	4+17.32	4+09.61	74 FT	D9

ITEM 202 PAVEMENT REMOVED 17 SQ YDS.
ITEM 202 CURB REMOVED 2 FT.
ITEM 203 EXCAVATION 3 CU. YDS.
ITEM 252 FULL DEPTH PAVEMENT SAWING 63 FT.
ITEM 304 6" AGGREGATE BASE 1 CU. YDS.
ITEM 305 8" CONCRETE BASE, CLASS QC1 17 SQ. YDS.
ITEM 407 TACK COAT, 702.13 3 GAL.
ITEM 441 2" ASPHALT CONCRETE SURFACE COURSE, TYPE 1, (448), PG64-22 1 CU. YDS.
ITEM 609 CURB, MISC.: CITY OF CINCINNATI TYPE B-1 BATTERED 2 FT.

THE ABOVE QUANTITIES ARE BASED ON A 441 THICKNESS OF 2 INCHES, A 305 THICKNESS OF 8 INCHES, AND 304 THICKNESS OF 6 INCHES AND A PAVEMENT RESTORATION WIDTH THAT INCLUDES THE TRENCH WIDTH PLUS TWO FEET ON EACH SIDE OF THE TRENCH.

PROVIDE ANY MATERIALS USED OUTSIDE THE LIMITS STATED ABOVE AT NO ADDITIONAL COST.

ITEM 442 – ASPHALT CONCRETE SURFACE COURSE, 12.5 MM, TYPE A (448), AS PER PLAN

THE MAXIMUM LIFT THICKNESS OF ITEM 442 IS 2 INCHES AND PG64-22 BINDER SHALL BE USED. PRIOR TO PLACING THE NEW PAVEMENT, ANY DAMAGE TO THE CONCRETE TUNNEL CAUSED DURING THE CURB REMOVAL OPERATIONS SHALL BE REPAIRED IN ACCORDANCE WITH CMS 519, PATCHING CONCRETE STRUCTURES.

ITEM 203 - EXCAVATION

THE EXCAVATION QUANTITIES ARE SUMMARIZED AS FOLLOWS:

NB I-71 AT NEW CURB NORTH OF TUNNEL	2 CU YD
PUMP STATION (FROM CROSS SECTIONS)	214 CU YD
LYTLE STREET (FROM CROSS SECTIONS)	68 CU YD
LYTLE/PIKE STREET INTERSECTION	18 CU YD

THE FOLLOWING QUANTITY IS CARRIED TO THE GENERAL SUMMARY

ITEM 203 - EXCAVATION 302 CU YD

ITEM 203 - EMBANKMENT

THE EMBANKMENT QUANTITIES ARE SUMMARIZED AS FOLLOWS:

NB I-71 AT NEW CURB NORTH OF TUNNEL	0 CU YD
PUMP STATION (FROM CROSS SECTIONS)	0 CU YD
LYTLE STREET (FROM CROSS SECTIONS)	68 CU YD
LYTLE/PIKE STREET INTERSECTION	18 CU YD
LYTLE PARK	1568 CU YD

THE FOLLOWING QUANTITY IS CARRIED TO THE GENERAL SUMMARY

ITEM 203 - EMBANKMENT 1654 CU YD

ITEM SPECIAL - FILL AND PLUG EXISTING CONDUIT

THIS ITEM SHALL CONSIST OF THE CONSTRUCTION OF BULKHEADS IN AN EXISTING CONDUIT AND FILLING THE AREA THUS SEALED OFF WITH ITEM 613, SAND OR OTHER MATERIAL APPROVED BY THE ENGINEER.

BULKHEADS SHALL BE LOCATED AT THE LIMITS OF THE AREA TO BE FILLED AS INDICATED ON THE PLANS. THE BULKHEADS SHALL CONSIST OF BRICK OR CONCRETE MASONRY WITH A MINIMUM THICKNESS OF 12 INCHES.

THE FILL MATERIAL SHALL BE PUMPED INTO PLACE, OR PLACED BY OTHER MEANS APPROVED BY THE ENGINEER, SO THAT, AFTER SETTLEMENT, AT LEAST 90 PERCENT OF THE CROSS-SECTIONAL AREA OF THE CONDUIT, FOR ITS ENTIRE LENGTH, SHALL BE FILLED. THE LENGTH OF FILLED AND PLUGGED CONDUIT TO BE PAID FOR SHALL BE THE ACTUAL NUMBER OF FEET (MEASURED ALONG THE CENTERLINE OF EACH CONDUIT FROM OUTER FACE TO OUTER FACE OF BULKHEADS) FILLED AND PLUGGED AS DESCRIBED ABOVE.

IN LIEU OF FILLING AND PLUGGING THE EXISTING CONDUIT, THE PIPE MAY BE CRUSHED AND BACKFILLED IN ACCORDANCE WITH THE PROVISIONS OF 203, OR IT MAY BE REMOVED. THE LENGTH, MEASURED AS PROVIDED ABOVE, SHALL BE PAID FOR AT THE CONTRACT PRICE PER FOOT FOR, ITEM SPECIAL, FILL AND PLUG EXISTING CONDUIT.

CROSSINGS AND CONNECTIONS TO EXISTING PIPES AND UTILITIES

WHERE PLANS PROVIDE FOR A PROPOSED CONDUIT TO BE CONNECTED TO, OR CROSS OVER OR UNDER AN EXISTING SEWER OR UNDERGROUND UTILITY, THE CONTRACTOR SHALL LOCATE THE EXISTING PIPES OR UTILITIES BOTH AS TO LINE AND GRADE BEFORE STARTING TO LAY THE PROPOSED CONDUIT.

IF IT IS DETERMINED THAT THE ELEVATION OF THE EXISTING CONDUIT, OR EXISTING APPURTENANCE TO BE CONNECTED, DIFFERS FROM THE PLAN ELEVATION OR RESULTS IN A CHANGE IN THE PLAN CONDUIT SLOPE, THE ENGINEER SHALL BE NOTIFIED BEFORE STARTING CONSTRUCTION OF ANY PORTION OF THE PROPOSED CONDUIT WHICH WILL BE AFFECTED BY THE VARIANCE IN THE EXISTING ELEVATIONS.

IF IT IS DETERMINED THAT THE PROPOSED CONDUIT WILL INTERSECT AN EXISTING SEWER OR UNDERGROUND UTILITY IF CONSTRUCTED AS SHOWN ON THE PLAN, THE ENGINEER SHALL BE NOTIFIED BEFORE STARTING CONSTRUCTION OF ANY PORTION OF THE PROPOSED CONDUIT WHICH WOULD BE AFFECTED BY THE INTERFERENCE WITH AN EXISTING FACILITY.

PAYMENT FOR ALL THE OPERATIONS DESCRIBED ABOVE SHALL BE INCLUDED IN THE CONTRACT PRICE FOR THE PERTINENT 611 CONDUIT ITEM.

REVIEW OF DRAINAGE FACILITIES

BEFORE ANY WORK IS STARTED ON THE PROJECT AND AGAIN BEFORE FINAL ACCEPTANCE BY THE STATE, REPRESENTATIVES OF THE STATE AND THE CONTRACTOR, ALONG WITH LOCAL REPRESENTATIVES, SHALL MAKE AN INSPECTION OF ALL EXISTING SEWERS WHICH ARE TO REMAIN IN SERVICE AND WHICH MAY BE AFFECTED BY THE WORK. THE CONDITION OF THE EXISTING CONDUITS AND THEIR APPURTENANCE SHALL BE DETERMINED FROM FIELD OBSERVATIONS. RECORDS OF THE INSPECTION SHALL BE KEPT IN WRITING BY THE STATE.

ALL NEW CONDUITS, INLETS, CATCH BASINS, AND MANHOLES CONSTRUCTED AS A PART OF THE PROJECT SHALL BE FREE OF ALL FOREIGN MATTER AND IN A CLEAN CONDITION BEFORE THE PROJECT WILL BE ACCEPTED BY THE STATE.

ALL EXISTING SEWERS INSPECTED INITIALLY BY THE ABOVE MENTIONED PARTIES SHALL BE MAINTAINED AND LEFT IN A CONDITION REASONABLY COMPARABLE TO THAT DETERMINED BY THE ORIGINAL INSPECTION. ANY CHANGE IN THE CONDITION RESULTING FROM THE CONTRACTOR'S OPERATIONS SHALL BE CORRECTED BY THE CONTRACTOR TO THE SATISFACTION OF THE ENGINEER.

PAYMENT FOR ALL OPERATIONS DESCRIBED ABOVE SHALL BE INCLUDED IN THE CONTRACT PRICE FOR THE PERTINENT 611 CONDUIT ITEMS.

ITEM SPECIAL - PIPE CLEANOUT

THIS WORK SHALL CONSIST OF REMOVING SEDIMENT AND DEBRIS FROM THE EXISTING DRAINAGE CONDUITS SPECIFIED IN THE PLANS. ALL MATERIAL REMOVED SHALL BE DISPOSED OF AS PER 105.16 AND 105.17. ALL SEWERS SHALL BE CLEANED OUT TO THE SATISFACTION OF THE ENGINEER.

CLEANOUT OF THE PIPE SHALL BE PAID FOR AT THE UNIT PRICE BID FOR ITEM SPECIAL - PIPE CLEANOUT. THIS PRICE SHALL INCLUDE THE COST FOR MATERIAL, EQUIPMENT, LABOR, AND ALL INCIDENTALS REQUIRED TO COMPLETE THE CLEANOUT.

THE ESTIMATED QUANTITIES FOR THE ABOVE NOTED WORK ARE SHOWN ON SHEET 77.

ITEM 611 - 6" CONDUIT, TYPE B, AS PER PLAN
ITEM 611 - 6" CONDUIT, TYPE E, AS PER PLAN

PRIOR TO BEGINNING WORK ON THE DRAINAGE FOR THE TRANSFORMER VAULTS, THE CONTRACTOR WILL NEED TO OBTAIN THE MSD PERMIT THROUGH MSD'S TAP RECORDS DIVISION. TAP RECORDS CAN BE CONTACTED AT (513) 244-1330. THE PERMIT CAN BE VIEWED HERE: HTTP://WWW.MSDGC.ORG/DOWNLOADS/CUSTOMER_CARE/PERMITS_AND_RECORDS/SEWER_TAP_APPLICATION.PDF

THERE IS NO COST FOR THIS PERMIT BUT THE CONTRACTOR WILL NEED TO BE LICENSED BY MSD.

THE REQUIREMENTS OF ITEM 611 AND 707.45 APPLY EXCEPT AS FOLLOWS:
REFER TO METROPOLITAN SEWER DISTRICT OF GREATER CINCINNATI STANDARD DRAWING ACC. NO. 49060 AS SHOWN ON SHEET 96 FOR SPECIFIC REQUIREMENTS PERTAINING TO INSTALLATION OF SEWER LATERALS FOR TRANSFORMER VAULT DRAINAGE. THE 6" CONDUIT SHALL MEET REQUIREMENTS OF ASTM D 3034, SDR 35. A 2-WAY CLEANOUT WILL NOT BE REQUIRED. PAYMENT WILL BE INCLUDED WITH ITEM 611 – 6" CONDUIT, TYPE B, AS PER PLAN.

ITEM 611 - DRAINAGE STRUCTURE, MISC.: TRANSFORMER VAULT FLOOR DRAIN

THE FLOOR DRAINS LOCATED IN THE TRANSFORMER VAULTS SHALL BE PER ITEM 611 AND BE ZURN FD-2380 OR APPROVED EQUAL. SEE DETAIL ON SHEET 99.

PAYMENT WILL BE INCLUDED WITH ITEM 611 – DRAINAGE STRUCTURE, MISC.: TRANSFORMER VAULT FLOOR DRAIN.

SEEDING AND MULCHING

THE FOLLOWING QUANTITIES ARE PROVIDED TO PROMOTE GROWTH AND CARE OF PERMANENT SEEDED AREAS:

659, SOIL ANALYSIS TEST 4 EACH

659, TOPSOIL 233 CU. YD.

659, SEEDING AND MULCHING 2091 SQ. YD.

659, REPAIR SEEDING AND MULCHING 105 SQ. YD

659, INTER-SEEDING 105 SQ. YD.

659, COMMERCIAL FERTILIZER 0.29 TON

659, LIME 0.43 ACRES

659, WATER 12 M. GAL.

659, MOWING 5 M. SQ. FT.

CALCULATED RMS
CHECKED CWP

GENERAL NOTES

HAM-71-1.34

c:\pwworking\hmm\external\pre47802\dms72884\87268GN002.dgn 11/3/2015 4:03:15 PM PRE47802

SEEDING AND MULCHING SHALL BE APPLIED TO ALL AREAS OF EXPOSED SOIL BETWEEN THE RIGHT-OF-WAY LINES, AND WITHIN THE CONSTRUCTION LIMITS FOR AREAS OUTSIDE THE RIGHT-OF-WAY LINES COVERED BY WORK AGREEMENT OR SLOPE EASEMENT. QUANTITY CALCULATIONS FOR SEEDING AND MULCHING ARE BASED ON THESE LIMITS.

ITEM 607 – FENCE, MISC.: CONSTRUCTION FENCE

THE LYTLE PARK CONSTRUCTION AREA SHOULD BE SECURED VIA CONSTRUCTION BARRICADES. FOR THIS PROJECT, THE BARRICADE SHALL BE A 6' HIGH CHAIN LINK FENCING (OR APPROVED EQUIVALENT) WITH PROPER REFLECTIVE STRIPING PER ODOT STANDARDS AND THE OMUTCD. FENCING MATERIALS MAY BE ANY TYPE PERMITTED BY CMS 710.03. THE FENCING SHOULD BE LOCATED WITHIN THE EXISTING SIDEWALK OR WITHIN THE EXISTING CURB LANE.

THE CONSTRUCTION FENCE SHALL BE SECURELY ERECTED INDEPENDENT OF ANY STREET ROADWAY, SIDEWALK OR PAVED SURFACE SO IT CAN BE EASILY MOVED TO ACCOMMODATE DELIVERIES. SINCE THERE IS A POTENTIAL SAFETY CONCERN WITH THE FENCE BEING MAINTAINED IN AN UPRIGHT MANNER THROUGHOUT THE PROJECT DURATION, IT SHOULD BE SECURELY MOUNTED INTO THE PAVED AREA. MEANS AND METHODS OF ANCHORING FENCE TO THE PAVEMENT MUST BE APPROVED BY ODOT. ALL CONSTRUCTION FENCES SHALL BE MAINTAINED IN AN UNDAMAGED AND CLEAN CONDITION. NO OTHER PAINT, SIGN OR MATERIALS SHALL BE APPLIED TO THE BARRICADE FENCE EXCEPT FOR APPROVED TRAFFIC CONTROL AIDS AND APPROPRIATE PROJECT IDENTIFICATION SIGN (3.0' X 7.0' MAXIMUM SIZE). THE PROJECT SIGN IS FOR INFORMATION ONLY AND CANNOT INCLUDE ANY BUSINESS ADVERTISING. NO OTHER BUSINESS ADVERTISING IS ALLOWED TO BE ATTACHED ON THE FENCE.

IF THE FENCE IS LOCATED WITHIN THE ROADWAY, THE FENCE MUST BE PLACED ONE FOOT (1') INSIDE OF THE LANE LINE AS TO NOT INTERFERE WITH THE MOVEMENT OF VEHICULAR TRAFFIC IN THE ADJACENT TRAVEL LANE.

GATES (SWINGING IN OR SLIDERS) MUST BE PLACED AT AN ODOT APPROVED LOCATION.

FIRE HYDRANTS MUST BE KEPT OUTSIDE OF FENCING UNLESS APPROVED BY THE CINCINNATI FIRE DEPARTMENT.

TRAFFIC CONTROL, INCLUDING ARROW BOARDS AND SIGNAGE IS TO BE INSTALLED PER THE APPROVED PLANS. SHOULD ODOT REQUIRE CHANGES BE MADE TO THE MOT PLAN DURING CONSTRUCTION, THE CONTRACTOR WILL BE REQUIRED TO MAKE THE CHANGES. IF THE CONTRACTOR WISHES TO REVISE THE MOT PLANS TO ACCOMMODATE THE PROJECT NEEDS DURING CONSTRUCTION, PRIOR APPROVAL IS NEEDED BY ODOT.

ANY DISTURBED CITY EQUIPMENT, INCLUDING PARKING METERS, MUST BE REMOVED AND SAFELY STORED DURING CONSTRUCTION.

WITH THE LENGTH OF THIS PROJECT SPANNING 1.5 YEARS, LARGER DOWNTOWN EVENTS (TASTE OF CINCINNATI, OKTOBERFEST, OPENING DAY, ETC.) MAY LIMIT DELIVERIES OR THE USE OF ADDITIONAL LANES.

SHOULD TRAFFIC/LIGHT POLES NEED TO BE REMOVED, CONTRACTOR MUST COORDINATE WORK WITH ODOT. SHOULD POLES WITH LIGHTS BE REMOVED OR TEMPORARILY TAKEN OUT OF SERVICE, THE CONTRACTOR IS RESPONSIBLE TO INSTALLING TEMPORARY LIGHTING.

PAYMENT FOR ALL OF THE ABOVE IS TO BE INCLUDED IN THE LUMP SUM BID FOR ITEM 607 – FENCE, MISC.: CONSTRUCTION FENCE.

ITEM SPECIAL - MISC.: CONSULTANT FOR CONCRETE QUALITY CONTROL INCLUDING TESTING AND INSPECTION

ALL CONCRETE SHALL BE TESTED. ALL TESTING, INSPECTION AND QUALITY CONTROL FOR CONCRETE, NOT INCLUDED UNDER SUPPLEMENTAL SPECIFICATIONS 888 AND 898, SHALL BE THE RESPONSIBILITY OF THE CONTRACTOR. THE CONTRACTOR SHALL PROVIDE A CONCRETE TESTING CONSULTANT WITH PREVIOUS EXPERIENCE AND FAMILIARITY IN ODOT PROCEDURES, CONCRETE TESTING REQUIREMENTS AND CONCRETE TESTING DOCUMENTATION. AT LEAST 30 DAYS PRIOR TO CONCRETE PLACEMENT, SUBMIT TO THE ENGINEER FOR APPROVAL, THE PROPOSED CONCRETE TESTING CONSULTANT ALONG WITH THE RESUMES OF THE PROPOSED TESTING PERSONNEL.

TESTING CONCRETE FOR STRUCTURES AND PORTLAND CEMENT CONCRETE PAVEMENT SHALL BE PERFORMED AS OUTLINED IN SUPPLEMENTAL SPECIFICATIONS 898 AND 888 RESPECTIVELY.

THROUGH THE CONTRACTOR, THE CONSULTANT SHALL BE RESPONSIBLE FOR ENSURING THAT ALL CONCRETE PLACED IS IN ACCORDANCE WITH THE SPECIFICATIONS. SUCH WORK SHALL BE IN ACCORDANCE WITH THE APPLICABLE CONSTRUCTION AND MATERIAL SPECIFICATIONS AND THE ODOT CONSTRUCTION INSPECTION MANUAL OF PROCEDURES FOR CONCRETE. THE CONCRETE CONSULTANT SHALL PROVIDE THE NECESSARY TRAINED TECHNICIANS AND EQUIPMENT AND SHALL FURNISH THE PROJECT ENGINEER WITH TWO (2) COPIES OF ALL TEST RESULTS WITHIN 24 HOURS AFTER COMPLETION OF CONCRETE PLACEMENT.

THE TECHNICIANS SHALL BE ACI LEVEL 1 CERTIFIED AND WILL BE REQUIRED TO DEMONSTRATE HIS/HER COMPETENCE AND EXPERIENCE LEVELS TO THE ENGINEER PRIOR TO BEGINNING WORK. THE ENGINEER WILL ORDER THE CONTRACTOR TO REPLACE ANY TECHNICIAN THAT IS NOT VERSED IN THE REQUIRED TESTING PROCEDURE.

THE TECHNICIAN SHALL VERBALLY NOTIFY THE ODOT PROJECT ENGINEER OF ANY FAILING TESTS AND SHALL SUBMITFOLLOW-UP WRITTEN NOTIFICATION TO THE PROJECT ENGINEER OF REMEDIAL ACTION(S) TAKEN TESTS SHALL BE TAKEN AS SPECIFIED WITHIN THE CONSTRUCTION AND MATERIAL SPECIFICATIONS, CONCRETE MANUAL OR APPROPRIATE SUPPLEMENTAL SPECIFICATION AS LISTED IN THE PROPOSAL GOVERNING THE PROJECT. IT SHALL BE THE SOLE RESPONSIBILITY OF THE CONTRACTOR TO MAKE IMMEDIATE CORRECTIONS OR ADJUSTMENTS TO THE CONCRETE MIX VIA DIRECT COMMUNICATION WITH THE CONCRETE SUPPLIER'S PLANT PERSONNEL TO MAINTAIN UNINTERRUPTED COMPLIANCE WITH THE SPECIFICATIONS UPON NOTIFICATION OF CONCRETE MIX NON-COMPLIANCE BY THE CONSULTANT TECHNICIAN. THE PROJECT ENGINEER MAY REQUIRE MORE FREQUENT TESTING AS CONDITIONS WARRANT.

UPON COMPLETION OF DAILY CONCRETE PLACEMENT(S), THE CONCRETE CONSULTANT SHALL PROVIDE THE PROJECT ENGINEER WITH DAILY TEST REPORTS, TE-45'S, INSPECTORS DAILY REPORT AND SUPPORTING DOCUMENTATION FOR EACH ITEM OF CONCRETE WORK PERFORMED SEPARATED BY MIX DESIGN. SUBSEQUENTLY, UPON COMPLETION OF AN ENTIRE CONCRETE SPECIFICATION ITEM, THE CONCRETE CONSULTANT SHALL ALSO PROVIDE THE PROJECT ENGINEER WITH TWO (2) COPIES OF AN ADDITIONAL INSPECTION REPORT BY A REGISTERED PROFESSIONAL ENGINEER, STATE OF OHIO, WHICH CONTAINS THE TESTING- RESULTS SUMMARY FOR EACH ITEM BY CONTRACT REFERENCE NUMBER AND THE CONSULTANT'S CONCLUSIONS RELATIVE TO SPECIFICATION COMPLIANCE FOR ALL CONCRETE TESTING WORK.

THE ODOT PROJECT ENGINEER RESERVES THE RIGHT TO MAKE UNANNOUNCED QUALITY-CONTROL TESTS TO VERIFY PROCEDURES USED AND RESULTS BEING OBTAINED BY THE CONTRACTOR. THE CONCRETE TECHNICIAN SHALL WORK UNDER THE DIRECTION OF A REGISTERED PROFESSIONAL ENGINEER, STATE OF OHIO, WHO WILL MONITOR THE CONCRETE TEST RESULTS. THE FINAL INSPECTION REPORTS FOR EACH COMPLETED ITEM SHALL BE SIGNED BY A REGISTERED PROFESSIONAL ENGINEER, STATE OF OHIO, CERTIFYING THAT ALL CONCRETE TESTS PROVIDED BY THE CONTRACTOR MET APPLICABLE CONTRACT REQUIREMENTS. A FINAL REPORT ISSUED BY THE CONSULTING FIRM SHALL CONTAIN A CERTIFIED STATEMENT OF COMPLIANCE WITH ODOT SPECIFICATIONS AND ANY OTHER CONCLUSIONS REGARDING THE CONCRETE MATERIALS INCORPORATED INTO THE PROJECT. SUCH STATEMENT SHALL BE SIGNED BY A REGISTERED PROFESSIONAL ENGINEER, STATE OF OHIO. AND, THE CONCRETE CONSULTANT SHALL BE REQUIRED TO ATTEND MONTHLY PROGRESS MEETINGS AS REQUIRED BY THE PROJECT ENGINEER.

ADDITIONALLY, THE CONTRACTOR SHALL BE REQUIRED TO KEEP A POSTED LIST OF BEAM AND CYLINDER IDENTIFICATION NUMBERS FOR THE PURPOSE OF IDENTIFYING THE CORRESPONDING PLACEMENT LOCATION AND CONCRETE SPECIFICATION ITEM.

PAYMENT SHALL BE BID AS LUMP SUM FOR ITEM SPECIAL MISC.: CONSULTANT FOR CONCRETE QUALITY CONTROL INCLUDING TESTING AND INSPECTION. THE ITEM WILL BE PAID FOR AS FOLLOWS:

UPON APPROVAL OF CONSULTANT 20%
PROGRESSIVE EQUIVALENT PAYMENTS 50%
UPON SUBMISSION OF FINAL REPORT 30%

PAYMENT FOR TESTING, INSPECTION AND QUALITY CONTROL WILL BE INCLUDED WITH THE APPROPRIATE LUMP-SUM CONCRETE ITEM.

THE FOLLOWING ESTIMATED QUANTITIES HAVE BEEN INCLUDED IN THE GENERAL SUMMARY FOR USE TO COMPLETE THE WORK NOTED ABOVE:

690, SPECIAL - MISC.: CONSULTANT QUALITY CONTROL INCLUDING TESTING AND INSPECTION — LUMP

THE TECHNICIAN SHALL HAVE THE FULL EFFECT AND AUTHORITY OF AN ODOT PROJECT INSPECTOR IN DETERMINING ACCEPTABILITY OF MATERIAL AND CONCRETE PLACEMENT PRACTICES.

CITY OF CINCINNATI NOTES

CONCRETE WALK
ITEM 608 – 4" CONCRETE WALK, AS PER PLAN
ITEM 608 – 5" CONCRETE WALK, AS PER PLAN
THE WALKS ON PIKE STREET, LYTLE STREET, AND EAST FOURTH STREET ARE TO BE CONSTRUCTED PER ITEM 608 EXCEPT FOR THE FOLLOWING CHANGES AS NOTED BELOW:

608.01 DESCRIPTION. ADD AFTER THE WORDS "CURB RAMPS" THE WORDS "DETECTABLE WARNING STRIPS".

608.02 MATERIALS. ADD:

BASE COURSE CONCRETE WALK 608
EDGE RESTRAINT (CONCRETE WALK) 608
BEDDING AND JOINT SAND 703.02.A
TYPE "F" FLAT PLATE..... 712.14

608.03 CONCRETE WALKS.

A. EXCAVATION. ADD:

SAW AND TRIM THE EXISTING SIDEWALK (AT A JOINT) TO A NEAT LINE WHEREVER THE PROPOSED CONCRETE SIDEWALK ADJOINS OR ABUTS AN EXISTING SIDEWALK.

C. PLACING AND FINISHING. REVISE AS FOLLOWS:

IMMEDIATELY BEFORE PLACING CONCRETE, THOROUGHLY MOISTEN THE SUBGRADE. DEPOSIT CONCRETE IN A SINGLE LAYER; STRIKE IT OFF WITH A TEMPLATE. PROVIDE AN EVEN AND UNIFORM BROOM FINISH PLACED PERPENDICULAR TO THE CURB LINE. DO NOT PLASTER THE CONCRETE.

IN LOCATIONS SUCH AS THE CENTRAL BUSINESS DISTRICT, NEIGHBORHOOD BUSINESS DISTRICTS, AND HISTORIC OVER-THE-RHINE AND PENDLETON NEIGHBORHOODS, EDGE FIRST THEN BROOM FINISH FOR THE FINAL FINISH. LEAVE NO RIBBONS. IN ALL OTHER LOCATIONS, BROOM FINISH AND MATCH ADJACENT WALK EDGE CONDITION.

USE A 1/4-INCH (6 MM) RADIUS EDGING TOOL TO EDGE ALL OUTSIDE EDGES AND JOINTS. DIVIDE THE SURFACE OF THE WALKS INTO EQUALLY SPACED RECTANGULAR BLOCKS AT APPROXIMATELY 5-FOOT (1.5 M) INTERVALS. SAW OR FORM TRANSVERSE JOINTS TO A DEPTH OF NOT

CALCULATED RMS CHECKED CWP

GENERAL NOTES

HAM-71-1.34

16
555

c:\pwworking\hmm\external\tyn61470\dms72884\87268GN003.dgn 10/24/2014 3:51:41 PM TYN61470

LESS THAN ONE-FOURTH THE THICKNESS OF THE SLAB AND TO A WIDTH OF APPROXIMATELY 1/8 INCH (3 MM). INSTALL 1/2-INCH (13 MM) THICK EXPANSION JOINT FILLER BETWEEN THE WALK AND ANY FIXED STRUCTURE THAT EXTENDS THE FULL DEPTH OF THE WALK. INSTALL 1-INCH (25 MM) THICK EXPANSION JOINT FILLER BETWEEN THE WALK AND THE BACK OF CURB THAT IS ON A 250-FOOT (75 M) OR SMALLER RADIUS, SUCH AS AT STREET INTERSECTIONS. INSTALL 1/2-INCH THICK EXPANSION JOINT FILLER AT DRIVEWAYS AS SHOWN IN THE CITY STANDARD DRAWINGS. EXPANSION JOINTS SHALL BE PROVIDED IN SIDEWALKS AT SUCH INTERVALS, NOT EXCEEDING 30 FEET, AS THE ENGINEER MAY DIRECT. THESE EXPANSION JOINTS SHALL BE MADE OF 1/2-INCH THICK AND 5 INCH WIDE PREFORMED MATERIAL.

EXPANSION JOINT FILLER SHALL BE PLACED FLUSH WITH THE SURFACE OF THE WALK.

CURB RAMPS
ITEM 608 – CURB RAMP, MISC.: CITY OF CINCINNATI CURB RAMP TYPE P
ITEM 608 – CURB RAMP, MISC.: CITY OF CINCINNATI CURB RAMP TYPE Q
ITEM 608 – CURB RAMP, MISC.: CITY OF CINCINNATI CURB RAMP TYPE V
THE CURB RAMPS ON PIKE STREET, LYTLE STREET, AND EAST FOURTH STREET ARE TO BE CONSTRUCTED PER THE CITY OF CINCINNATI STANDARD DRAWINGS AS SHOWN IN THESE PLANS.

THE CONCRETE CURB NEXT LANDING FOR THE CURB RAMP TYPE V IS INCIDENTAL TO THE COST OF THE CURB RAMP.

DETECTABLE WARNING STRIPS
ITEM 608 - DETECTABLE WARNING, AS PER PLAN (CITY OF CINCINNATI TYPE "F")
THE DETECTABLE WARNING STRIPS FOR CURB RAMPS ON PIKE STREET, LYTLE STREET, AND EAST FOURTH STREET ARE TO BE CONSTRUCTED PER THE FOLLOWING SPECIFICATIONS AND CITY OF CINCINNATI STANDARD DRAWINGS AS SHOWN IN THESE PLANS.

608.071 DETECTABLE WARNING STRIP.
FURNISH ALL LABOR, MATERIAL AND EQUIPMENT NECESSARY FOR THE PLACEMENT OF DETECTABLE WARNING DEVICES AT CURB RAMPS OR OTHER WALKING SURFACES, COMPLETE AND READY FOR SERVICE AT THE LOCATIONS SHOWN ON THE PLANS. THE WORK INCLUDES BUT IS NOT BE LIMITED TO:
LAYOUT, MAINTENANCE OF PEDESTRIAN TRAFFIC, SAW-CUTTING, REMOVALS, CONCRETE AND CEMENT BASE MATERIALS, BEDDING, SURFACE PREPARATION, SURFACE SEALANT, AND REPAIR OF ADJOINING AREAS DISTURBED BY THE INSTALLATION OF THE DETECTABLE WARNING SURFACE.

ENSURE ALL DETECTABLE WARNING MATERIALS CONFORM TO ANSI A117.1—1998 SPECIFICATIONS. SUBMIT MANUFACTURER'S CERTIFICATION OF COMPLIANCE WITH ALL APPLICABLE STANDARDS AND DRAWINGS AND/OR CATALOG CUTSHEETS TO ODOT AT LEAST THREE WORKING DAYS PRIOR TO INSTALLATION. SUBMIT FOUR COPIES OF THE MANUFACTURER'S TECHNICAL DATA FOR EACH MANUFACTURED PRODUCT.

DETECTABLE WARNING SURFACES SHALL CONTRAST VISUALLY WITH ADJACENT WALKING SURFACES EITHER LIGHT-ON-DARK, OR DARK-ON-LIGHT. FURNISH TEXTURED SURFACES TO PROVIDE SLIP RESISTANCE. SUBMIT COLOR SAMPLES FOR APPROVAL BY THE ENGINEER AT LEAST THREE WORKING DAYS PRIOR TO INSTALLATION. COLOR SUBMITTALS INCLUDE MANUFACTURER'S STATEMENT OF PERCENTAGE OF VISUAL CONTRAST PROVIDED ACCORDING TO ADAAG A4.29.2. SUBMIT THREE SAMPLES MADE UP OF ACTUAL UNIT PAVERS – COLOR AND TEXTURE REQUIRED. INCLUDE IN EACH SET OF SAMPLES THE FULL RANGE OF EXPOSED COLOR AND TEXTURE THAT TO BE EXPECTED IN THE COMPLETED WORK. BRICK RED IS THE COLOR OF A DETECTABLE WARNING USED WITH A LIGHT BACKGROUND.

PROTECT UNIT PAVERS AND AGGREGATE DURING STORAGE AND CONSTRUCTION AGAINST WETTING BY RAIN, SNOW OR GROUND WATER AND AGAINST SOILAGE OR INTERMIXTURE WITH EARTH OR OTHER TYPES OF MATERIALS.

A. TYPES. MATERIAL TYPE OF DETECTABLE WARNINGS INCLUDES THE FOLLOWING CLASSIFICATIONS:

TYPE "F" (FIBERGLASS) — FLAT PLATES APPLIED TO WET CONCRETE.

B. SUB-BASE COURSE. COMPACT SUB-BASE TO 8-1/2 INCHES (216 MM) BELOW FINAL GRADE. PROVIDE BASE COURSE MATERIAL TO BRING THE SUB-BASE UP TO THE APPROPRIATE LEVEL.

C. BASE COURSE. THE BASE COURSE CONSISTS OF FIVE-INCH (125 MM) THICK PLAIN CONCRETE WALK. CONSTRUCT THE TOP OF CONCRETE BASE COURSE 3-1/2 INCHES (89 MM) BELOW FINAL GRADE. SHAPE THE BASE COURSE TO GRADE AND CROSS SECTION WITH AN ALLOWABLE LOCAL TOLERANCE OF 1/4 INCH (6 MM). PROVIDE SMOOTH TROWELLED FINISH AND AT LEAST TWO WEEP HOLES AT THE LOW POINTS IN THE DEPRESSION. FILL WEEP HOLES WITH PEA GRAVEL AND COVER WITH FILTER FABRIC TO PREVENT SAND MIGRATION OUT OF THE DEPRESSION.

D. EDGE RESTRAINT. RESTRAIN TYPE B DETECTABLE WARNING STRIP BRICKS ON ALL EDGES BY SIX INCH THICK BY NINE INCH WIDE (150 MM BY 225 MM) CAST-IN-PLACE CONCRETE WALK CONFORMING TO THE REQUIREMENTS OF 608. DO NOT PLACE EXPANSION JOINTS IMMEDIATELY ADJACENT TO BRICK PAVERS OR THROUGH THE EDGE RESTRAINT. TAPER THE TRANSITION BETWEEN 9 INCHES (225 MM) THICK WALK AND FIVE INCHES (150 MM) THICK WALK OVER A DISTANCE OF FIVE INCHES (150 MM) AS SHOWN ON THE STANDARD DRAWINGS.

E. SIZE, LOCATION AND ALIGNMENT. DETECTABLE WARNING SURFACES EXTEND 24 INCHES (610 MM) MINIMUM IN THE DIRECTION OF TRAVEL AND THE FULL WIDTH OF THE CURB RAMP, LANDING, OR BLENDED TRANSITION. LOCATE THE DETECTABLE WARNING SURFACE SO THAT THE EDGE NEAREST THE CURB LINE IS SIX INCHES (150 MM) MINIMUM AND EIGHT INCHES (205 MM) MAXIMUM FROM THE FACE OF THE CURB LINE. ALIGN THE DOMES ON A SQUARE GRID, IN ROWS PARALLEL AND PERPENDICULAR TO THE PREDOMINANT DIRECTION OF TRAVEL. DO NOT SKEW DOMES DIAGONALLY TO THE DIRECTION OF TRAVEL.

F. APPLICATION. PREPARE THE SURFACE OF EXISTING CONFORMING RAMPS AND INSTALL THE DETECTABLE WARNING DEVICES IN ACCORDANCE WITH MANUFACTURER'S SPECIFICATIONS AND IN ACCORDANCE WITH THIS SPECIFICATION, OR AS OTHERWISE SPECIFIED ON THE PLANS. THE FINISHED SURFACE IS UNIFORMLY PROFILED TO COMPLETELY MATCH THE ADJOINING SURFACES WITHOUT LIPS, OBSTRUCTIONS AND DRAINS COMPLETELY.

IF THERE IS A DELAY OF MORE THAN 24 HOURS IN INSTALLING THE PAVERS, BEFORE THE DEPRESSED BASE IS OPEN TO PEDESTRIAN TRAFFIC, FILL THE HOLE WITH CLEAN STONE CONFORMING TO ODOT ITEM 304. REMOVE ALL STONE PRIOR TO PLACEMENT OF THE SAND BEDDING COURSE.

OBTAIN APPROVAL OF THE FINISHED BASE COURSE BEFORE PLACEMENT OF THE SAND BEDDING COURSE. COVER THE WEEP HOLES WITH FILTER FABRIC TO PREVENT MIGRATION OF SAND BEDDING. SPREAD THE SAND BEDDING EVENLY OVER THE AREAS TO BE PAVED AND SCREENED TO A LEVEL THAT WILL PRODUCE THE REQUIRED 2-1/4 INCHES (56 MM) THICKNESS WHEN THE PAVING BRICKS HAVE BEEN PLACED AND VIBRATED. DO NOT DISTURB THE SAND BEDDING COURSE ONCE IT HAS BEEN SCREENED AND LEVELED.

LAY THE PAVER UNITS IN THE APPROVED PATTERN. LAY THE BRICKS IN SUCH A MANNER THAT THE DESIRED PATTERN IS MAINTAINED AND THE JOINTS BETWEEN THE BRICKS DO NOT EXCEED 1/8 INCH (3 MM). FILL THE GAPS AT THE EDGE OF THE PAVED SURFACE WITH STANDARD EDGE PIECES OR CUT THE BRICKS TO FIT. CUT THE BRICKS TO A STRAIGHT EVEN SURFACE WITHOUT CRACKS OR CHIPS. ALL CUTS TO BE WITHIN 1/16 INCH (1.5 MM).

PROTECT THE PAVING BRICKS WITH MECHANICAL PROTECTION (CARPET, RUBBER MATERIAL, ETC.) AND VIBRATE TO THEIR FINAL LEVEL BY TWO OR THREE PASSES OF A VIBRATING PLATE COMPACTOR. AFTER THE FIRST VIBRATION, BRUSH SAND CONTAINING AT LEAST 30 PERCENT 1/16 INCH (1.5 MM) PARTICLES OVER THE SURFACE AND VIBRATE IT INTO THE JOINTS WITH ADDITIONAL PASSES OF THE PLATE VIBRATOR SO AS TO COMPLETELY FILL THE JOINTS. SWEEP THE SURPLUS MATERIAL FROM THE SURFACE AND LEAVE THE ENTIRE SITE CLEAN. AFTER THE FINAL VIBRATING, TEST THE SURFACE WITH A FOUR FOOT (1.2 M) BOARD TO VERIFY THAT THE SURFACE IS TRUE TO GRADE AND DOES NOT VARY BY MORE THAN 1/4 INCH (6 MM) AT ANY LOCATION.

DETECTABLE WARNING, TYPE F. INSTALL TYPE "F" DETECTABLE WARNING INSTALLATIONS IN NEW, WET CONCRETE IN ACCORDANCE WITH THE MANUFACTURER'S PUBLISHED INSTALLATION INSTRUCTIONS.

608.08 METHOD OF MEASUREMENT.
THE DEPARTMENT WILL MEASURE THE ACTUAL SQUARE FEET OF DETECTABLE WARNING DEVICES, FURNISHED AND IN PLACE, COMPLETE AND ACCEPTED MEASURED FROM CENTER-TO-CENTER OF THE OUTER-MOST DOMES PARALLEL AND PERPENDICULAR TO THE RAMP CENTERLINE, WITH BOTH MEASUREMENTS EACH INCREASED BY TWO INCHES AND THEN MULTIPLIED TOGETHER. ROUND THE SQUARE FOOTAGE CALCULATION TO THE NEAREST ONE-TENTH SQUARE FOOT. COMPLETE THIS ITEM AND INCLUDE ALL WORK NECESSARY TO PROVIDE A COMPLETE AND USEABLE DETECTABLE WARNING DEVICE.

608.09 BASIS OF PAYMENT.

ITEM	UNIT	DESCRIPTION
608	SF	DETECTABLE WARNING, AS PER PLAN (CITY OF CINCINNATI TYPE "F")

ITEM 609 - CURB, MISC.: CITY OF CINCINNATI TYPE B-1 BATTERED
ITEM 609 – CURB, MISC.: CITY OF CINCINNATI TYPE S-1 BATTERED
THE CURBS ON PIKE STREET, LYTLE STREET, AND EAST FOURTH STREET ARE TO BE CONSTRUCTED PER THE CITY OF CINCINNATI STANDARD DRAWINGS AS SHOWN IN THESE PLANS.

ITEM SPECIAL - BOLLARD

PERMANENT BOLLARDS ARE REQUIRED TO PROTECT FDC#1 LOCATED IN THE RETAINING WALL ON LUDLOW STREET. THE PERMANENT BOLLARDS SHALL BE LOCATED IN THE CENTER OF THE EASTERN LUDLOW STREET SIDEWALK. THE CONTRACTOR SHALL CONTACT THE OHIO UTILITY PROTECTION SERVICE (OUPS) AND OHIO OIL AND GAS PRODUCERS UNDERGROUND PROTECTION SERVICE (OGPUPS) TO VERIFY LOCATION OF UNDERGROUND UTILITIES INCLUDING SERVICE LINES PRIOR TO INSTALLING THE BOLLARDS. THE ENGINEER SHALL APPROVE THE LOCATION OF THE BOLLARDS PRIOR TO INSTALLATION. THE BOLLARDS SHALL BE PER SCD RM-5.1.

THE DEPARTMENT SHALL MEASURE THE QUANTITY PER EACH BOLLARD INSTALLED IN PLACE INCLUDING ALL OF THE ITEMS NEEDED TO COMPLETE THE WORK INCLUDING BUT NOT LIMITED TO EXCAVATION, CONCRETE FOUNDATION, STEEL POST, AND SIDEWALK RESTORATION. THE DEPARTMENT WILL PAY FOR ACCEPTED QUANTITIES OF BOLLARDS AT THE CONTRACT PRICE FOR ITEM SPECIAL – BOLLARD. THIS PRICE PAID SHALL INCLUDE ALL NECESSARY LABOR, MATERIALS, TOOLS, AND EQUIPMENT NECESSARY TO COMPLETE THE WORK TO THE SATISFACTION OF THE ENGINEER.

THE FOLLOWING ESTIMATED QUANTITIES HAVE BEEN INCLUDED IN THE GENERAL SUMMARY FOR USE TO COMPLETE THE WORK NOTED ABOVE:

690,	SPECIAL - BOLLARD	2 EACH

CALCULATED RMS CHECKED CWP

GENERAL NOTES

HAM-71-1.34

c:\pwworking\hmm\external\tyn61470\dms72884\87268GN004.dgn 10/24/2014 3:51:53 PM TYN61470

I:\projects\HAM\ir071\01.34_PID87268\Design\docs\Plan Package\Current CADD Files\Roadway\Sheets\87268GN005.dgn 3/3/2015 1:18:50 PM akoenig

CALCULATED RMS CHECKED CWP

GENERAL NOTES

ITEM SPECIAL – STRUCTURE, MISC.: PRECONSTRUCTION CONDITION SURVEY AND EXPERT PERSONNEL REQUIREMENTS

BEFORE CONSTRUCTION BEGINS, CONDUCT A CONDITION SURVEY OF THE TAFT MUSEUM OF ART, 316 PIKE ST. THE PURPOSE OF THE SURVEY IS TO DOCUMENT THE CONDITION OF THE BUILDING, STRUCTURES, AND ARTWORK ALONG THE WESTERN SIDE OF THE MUSEUM. THE CONTRACTOR IS TO RETAIN AN EXPERIENCED VIBRATION SPECIALIST AND A MUSEUM CONSERVATION EXPERT TO PERFORM OR SUPERVISE THE PRECONSTRUCTION CONDITION SURVEY.

THE VIBRATION SPECIALIST SHALL BE AN EXPERT IN THE INTERPRETATION OF VIBRATION DATA, AND SHALL MEET ONE OF THE FOLLOWING QUALIFICATION REQUIREMENTS:

- *A. A REGISTERED ENGINEER WITH AT LEAST TWO YEARS OF PROVEN EXPERIENCE IN MONITORING VIBRATIONS ON SIMILAR CONSTRUCTION PROJECTS NEAR MUSEUMS WITH VIBRATION SENSITIVE ARTWORK;*
- *B. HAS AT LEAST FIVE YEARS OF PROVEN EXPERIENCE IN MONITORING VIBRATIONS ON SIMILAR CONSTRUCTION PROJECTS NEAR MUSEUMS WITH VIBRATION SENSITIVE ARTWORK.*

THE VIBRATION SPECIALIST HIRED SHALL NOT BE A CURRENT EMPLOYEE OF THE CONTRACTOR.

THE MUSEUM CONSERVATION EXPERT SHALL BE A FELLOW WITH THE AMERICAN INSTITUTE FOR CONSERVATION OF HISTORIC AND ARTISTIC WORKS (WWW.CONSERVATION-US.ORG), AND HAVE EXPERIENCE WITH MURALS ON PLASTER, PAINTINGS, AND PORCELAINS.

THE MUSEUM CONSERVATION EXPERT HIRED SHALL NOT BE A CURRENT EMPLOYEE OF THE CONTRACTOR OR THE TAFT MUSEUM OF ART.

THE CONTRACTOR IS TO SUBMIT A RESUME TO THE ENGINEER WITH THE CREDENTIALS OF THE PROPOSED VIBRATION SPECIALIST AT OR BEFORE THE PRECONSTRUCTION CONFERENCE. INCLUDE IN THE RESUME A LIST OF AT LEAST 3 CONSTRUCTION PROJECTS ON WHICH THE VIBRATION SPECIALIST WAS RESPONSIBLY IN CHARGE OF MONITORING THE VIBRATIONS. LIST A DESCRIPTION OF THE PROJECTS, WITH DETAILS OF THE VIBRATION INTERPRETATIONS MADE ON THE PROJECT. LIST THE NAMES AND TELEPHONE NUMBERS OF PROJECT OWNERS WITH SUFFICIENT KNOWLEDGE OF THE PROJECTS TO VERIFY THE SUBMITTED INFORMATION. OBTAIN APPROVAL OF THE VIBRATION SPECIALIST BEFORE BEGINNING ANY WORK. ALLOW 30 DAYS FOR THE REVIEW OF THIS DOCUMENTATION.

THE CONTRACTOR IS TO SUBMIT A RESUME TO THE ENGINEER WITH THE CREDENTIALS OF THE PROPOSED MUSEUM CONSERVATION EXPERT AT OR BEFORE THE PRECONSTRUCTION CONFERENCE. INCLUDE A RESUME WITH REFERENCES. OBTAIN APPROVAL OF THE MUSEUM CONSERVATION EXPERT BEFORE BEGINNING ANY WORK. ALLOW 30 DAYS FOR THE REVIEW OF THIS DOCUMENTATION.

THE VIBRATION SPECIALIST IS TO RECORD THE CONDITION OF EXISTING STRUCTURES AND BUILDING MATERIALS USING WRITTEN TEXT, PHOTOGRAPHS, AND VIDEO RECORDINGS. THE VIBRATION SPECIALIST WILL NEED TO COORDINATE INSPECTION ACTIVITIES WITH TAFT MUSEUM STAFF TO MINIMIZE DISRUPTIONS TO DAILY OPERATIONS AND SPECIAL EVENTS. INTERIOR WALLS, CEILINGS, AND FLOORS THAT ARE ACCESSIBLE ARE TO BE INSPECTED. THE VIBRATION SPECIALIST WILL BE REQUIRED TO INSPECT THE EXTERIOR OF THE BUILDING THAT IS VISIBLE FROM GROUND LEVEL. RECORD THE LOCATION, SIZE (LENGTH, WIDTH AND DEPTH), AND TYPE OF ALL CRACKS AND OTHER STRUCTURAL DEFICIENCIES. THE VIBRATION SPECIALIST WILL NEED TO ESTABLISH REPEATABLE SURVEY POINTS AND PERFORM AN ELEVATION SURVEY OF THE WEST EXTERIOR WALL OF THE TAFT MUSEUM. THE ELEVATION SURVEY AND INTERIOR INSPECTION IS TO BE PERFORMED EVERY THREE MONTHS, AND THE CONTRACTOR AND ENGINEER ARE TO BE NOTIFIED OF ANY CHANGES OR CONCERNS. THE VIBRATION SPECIALIST IS TO REPEAT THE ELEVATION SURVEY AND INTERIOR INSPECTION IF VIBRATION LIMITS ARE EXCEEDED, AND AT THE COMPLETION OF THE PROJECT.

THE MUSEUM CONSERVATION EXPERT SHALL EXAMINE THE ART OBJECTS ALONG THE WEST SIDE OF THE MUSEUM USING WRITTEN TEXT, PHOTOGRAPHS, VIDEO RECORDINGS, AND OTHER MEANS RECOMMENDED BY THE CONSERVATOR.

IF THE OWNERS OR OCCUPANTS FAIL TO ALLOW ACCESS TO THE PROPERTY FOR THE PRECONSTRUCTION CONDITION SURVEY, THE CONTRACTOR IS TO SEND A CERTIFIED LETTER TO THE OWNER OR OCCUPANT. THE CONTRACTOR IS TO DOCUMENT THE NOTIFICATION EFFORT AND CERTIFIED LETTER IN THE REPORTS.

THE VIBRATION SPECIALIST AND CONSERVATION EXPERT ARE TO SUBMIT A PRECONSTRUCTION CONDITION REPORT TO THE ENGINEER AND THE TAFT MUSEUM THAT SUMMARIZES THE PRECONSTRUCTION CONDITION OF THE BUILDINGS, STRUCTURES, AND ARTWORK. THE PRECONSTRUCTION REPORT MUST IDENTIFY ANY AREAS OF CONCERN. THE VIBRATION SPECIALIST AND CONSERVATION EXPERT ARE REQUIRED TO SUBMIT THREE COPIES OF THE REPORT.

THE DEPARTMENT WILL PAY FOR THIS ITEM AT THE CONTRACT LUMP SUM PRICE FOR ITEM SPECIAL – STRUCTURE MISC.: PRECONSTRUCTION CONDITION SURVEY AND EXPERT PERSONNEL REQUIREMENTS.

ITEM SPECIAL – STRUCTURE, MISC.: VIBRATION MONITORING AND CONTROL REQUIREMENTS

CONDUCT WORK AND MONITOR GROUND VIBRATIONS CAUSED BY ALL CONSTRUCTION ACTIVITY FROM ANY LOCATION, SO THAT WORK CAN BE SUSPENDED IF THE VIBRATIONS EXCEED THE SPECIFIED VIBRATION LIMITS AT THE TAFT MUSEUM OF ART, 316 PIKE ST.

THE VIBRATION SPECIALIST SHALL WORK WITH THE MUSEUM CONSERVATION EXPERT TO ADJUST ACCEPTABLE VIBRATION AND TO PERFORM THE VIBRATION MONITORING. THE VIBRATION LIMIT AT THE SITE CONSTRUCTION LIMITS (SML3, SML4 ON SHEET 279) SHALL NOT EXCEED THE ABSOLUTE MAXIMUM 0.5 IN/SEC PEAK PARTICLE VELOCITY AND AT THE TAFT MUSEUM OF ART BUILDING (SML1, SML2 ON SHEET 279) SHALL NOT EXCEED ABSOLUTE MAXIMUM 0.12 IN/SEC PEAK PARTICLE VELOCITY, AND MAY BE LOWERED BASED THE RESULTS OF THE PRECONSTRUCTION CONDITION SURVEY, CONSTRUCTION FIELD TRIALS, AND THE REQUIREMENTS OF THIS NOTE.

THE CONTRACTOR IS TO INSTALL SEISMOGRAPHS THAT ARE CAPABLE OF CONTINUOUSLY RECORDING THE PEAK PARTICLE VELOCITY AND ASSOCIATED FREQUENCY FOR THREE MUTUALLY PERPENDICULAR COMPONENTS OF VIBRATION, WHILE PROVIDING A PERMANENT RECORD OF THE ENTIRE VIBRATION EVENT. USE A SUFFICIENT NUMBER OF SEISMOGRAPHS TO PROVIDE REDUNDANCY IN CASE ONE DEVICE SHOULD FAIL. THE SEISMOGRAPHS SHALL BE PART OF A MONITORING SYSTEM THAT IS REMOTELY ACCESSIBLE IN REALTIME, AND PROVIDES IMMEDIATE NOTIFICATION TO THE FIELD CREWS, THE ENGINEER, AND THE VIBRATION SPECIALIST OF ANY ABOVE LIMIT MEASUREMENTS. SUBMIT A MONITORING PLAN THAT INCLUDES THE PROPOSED SEISMOGRAPH LOCATIONS TO THE ENGINEER FOR REVIEW AND ACCEPTANCE. A MINIMUM OF FIVE SEISMOGRAPHS SHALL BE PROVIDED. TWO SEISMOGRAPHS SHALL BE PLACED INSIDE THE TAFT MUSEUM OF ART, 316 PIKE STREET. PLACE ONE SEISMOGRAPH IN THE BASEMENT LEVEL OF THE BUILDING, BELOW THE ORIGINAL FRONT ENTRANCE. THE SECOND SEISMOGRAPH SHALL BE PLACED ON THE FIRST FLOOR, ALONG THE WESTERN WALL, NEAR THE EXISTING MURALS. THE THIRD SEISMOGRAPH SHALL BE LOCATED ON THE EAST SIDE OF PIKE STREET AT THE SIDEWALK ENTRANCE TO THE FRONT OF THE TAFT MUSEUM. THE FOURTH SEISMOGRAPH SHALL BE LOCATED ADJACENT TO THE ANNA LOUISE INN BUILDING (300 LYTLE STREET). THE LOCATION OF THE FINAL REQUIRED SEISMOGRAPH SHALL BE IDENTIFIED BY THE VIBRATION SPECIALIST.

THE VIBRATION SPECIALIST SHALL PERFORM THE FOLLOWING:

1. *MEASURE THE AMBIENT GROUND VIBRATIONS BEFORE CONSTRUCTION BEGINS;*
2. *CONDUCT CONSTRUCTION FIELD TRIALS TO VERIFY THAT ACTUAL VIBRATIONS WILL NOT EXCEED THE ESTABLISHED VIBRATION LIMITS TO PREVENT DAMAGE TO EXISTING STRUCTURES AND ARTWORK. PROVIDE DOCUMENTATION AND EXPLAIN THE RATIONALE AND LOGIC USED TO DETERMINE THE VIBRATION LIMITS AT A MEETING WITH THE ENGINEER BEFORE CONSTRUCTION ACTIVITIES BEGIN; THE CONSTRUCTION FIELD TRIALS WILL ESTABLISH THE BASELINE FOR THE EQUIPMENT AND METHODS TO BE USED TO COMPLY WITH THE VIBRATION CONTRACT REQUIREMENTS AND WILL SERVE AS THE BASIS FOR DETERMINING ADDITIONAL COSTS DUE TO VIBRATION LIMIT REVISIONS.*
3. *MONITOR THE GROUND VIBRATIONS FOR THE DURATION OF THE PROJECT, AND DURING THE CONSTRUCTION FIELD TRIALS;*
4. *ATTEND REGULAR PROGRESS MEETINGS DURING VIBRATION CAUSING ACTIVITIES.*
5. *IF THE VIBRATION LIMITS ARE REACHED OR EXCEEDED, THE CONTRACTOR IS TO IMMEDIATELY SUSPEND WORK. THE ENGINEER IS TO INFORM THE DIRECTOR OF THE TAFT MUSUEM. PROVIDE ALL CALCULATIONS AND SUPPORTING DOCUMENTATION USED TO EVALUATE THE CONDITION OF THE TAFT MUSEUM, ASSOCIATED FACILITIES, AND CONTENTS. PROVIDE A CORRECTIVE ACTION PLAN TO DEMONSTRATE THAT ADJUSTMENTS HAVE BEEN MADE TO REDUCE THE LEVELS OF VIBRATION PRIOR TO RESUMING WORK.*
6. *FOR ALL VIBRATION REPORTING INCLUDING CORRECTIVE ACTION PLANS, FURNISH THE DATA RECORDED AND INCLUDE THE FOLLOWING:*
   - *A. IDENTIFICATION OF SEISMOGRAPH.*
   - *B. DISTANCE AND DIRECTION OF SEISMOGRAPH FROM WORK ACTIVITIES.*
   - *C. START TIME AND DURATION OF WORK ACTIVITIES.*
   - *D. LIST OF WORK DURING EACH MONITORING INTERVAL.*
7. *SUBMIT A PRECONSTRUCTION CONDITION REPORT, AN INTERIM REPORT AT THE COMPLETION OF THE CONSTRUCTION FIELD TRIALS, CORRECTIVE ACTION PLANS, AND A FINAL REPORT AFTER COMPLETION OF CONSTRUCTION ACTIVITIES. EACH REPORT SHALL CONTAIN ALL MEASUREMENTS, INTERPRETATIONS, AND RECCOMENDATIONS TO THE ENGINEER. SUBMIT THREE HARD COPIES AND AN ELECTRONIC PDF OF THE REPORT.*
8. *PROVIDE A WEEKLY SUMMARY OF ALL VIBRATION DATA AND EVENTS TO THE ENGINEER AND THE TAFT MUSEUM.*

SUSPENSION OF WORK: THE CONTRACTOR SHALL IMMEDIATELY SUSPEND ALL ACTIVITIES IF THE MONITORING EQUIPMENT SENDS AN ALERT THAT THE VIBRATION LIMITS HAVE BEEN EXCEEDED, OR IF ORDERED BY THE VIBRATION SPECIALIST. WORK SHALL NOT RECOMMENCE UNTIL THE VIBRATION SPECIALIST AND THE MUSEUM CONSERVATION EXPERT REPORT TO THE ENGINEEER THAT NO DAMAGE HAS OCCURRED, OR WILL OCCUR, AND THAT CORRECTIVE ACTION HAS BEEN TAKEN TO LOWER THE VIBRATION.

FOR EMPHASIS WITH RESPECT TO THE TAFT MUSEUM OF ART, ALL WORK PERFORMED ASSOCIATED WITH THIS PROJECT IS SUBJECT TO THE PROVISION OF C&MS 107.10 - PROTECTION AND RESTORATION OF PROPERTY, THIS NOTE, AND OTHER PERTINENT CONTRACT TERMS AND CONDITIONS. THE CONTRACTOR IS RESPONSIBLE FOR ALL DAMAGE RESULTING FROM CONSTRUCTION ACTIVITIES. THE CONTRACTOR SHALL CONTROL VIBRATION AND MONITOR ALL BUILDINGS, STRUCTURES, AND ARTWORK AND OTHER AREAS THAT MAY BE SUBJECT TO DAMAGE FROM CONSTRUCTION-INDUCED VIBRATION.

THE DEPARTMENT WILL PAY FOR THIS ITEM AT THE CONTRACT LUMP SUM PRICE FOR ITEM SPECIAL – STRUCTURE MISC.: VIBRATION MONITORING AND CONTROL REQUIREMENTS. THE DEPARTMENT WILL PAY TWENTY FIVE (25%) UPON APPROVAL OF THE VIBRATION AND MUSEUM CONSERVATION SPECIALISTS, TWENTY FIVE PERCENT (25%) UPON INSTALLATION OF THE REQUIRED VIBRATION MOINTORING INSTRUMENTATION, TWENTY FIVE PERCENT (25%) UPON COMPLETION OF THE CONSTRUCTION FIELD TRIALS AND SUBMISSION OF THE INTERIM REPORT, AND THE FINAL TWENTY FIVE PERCENT

C:\projects\HAM\ir071\01.34_PID87268\Design\docs\Plan Package\Current CADD Files\Roadway\Sheets\87268GN006.dgn 2/9/2015 10:23:22 AM akoenig

GENERAL NOTES

(25%) OF THE BID PRICE FOLLOWING COMPLETION OF THE POST CONSTRUCTION CONDITION SURVEY.

ALL WORK AND COSTS INCURRED TO PROVIDE THE REQUIRED VIBRATION MONITORING AND RESUME WORK AS A RESULT OF EXCEEDANCE OF THE ORIGINAL OR SUBSEQUENT REVISIONS TO THE VIBRATION LIMITS SHALL BE INCLUDED IN THE LUMP SUM PRICE FOR ITEM SPECIAL – STRUCTURE MISC.: VIBRATION MONITORING AND CONTROL REQUIREMENTS.

THE DEPARTMENT WILL COMPENSATE THE CONTRACTOR FOR ADJUSTMENTS ASSOCIATED WITH VIBRATION LIMIT REVISIONS ONLY IN THE EVENT THAT DOCUMENTATED ADDITIONAL COSTS EXCEED TWENTY FIVE PERCENT (25%) OF THE LUMP SUM BID AMOUNT. THE CONTRACTOR WILL BE COMPENSATED ACCORDING TO C&MS SECTION 109.05 ONLY FOR THE PORTION OF DOCUMENTED ADDITIONAL COSTS EXCEEDING TWENTY FIVE PERCENT (25%) OF THE LUMP SUM BID AMOUNT FOR REVISIONS TO THE CONTRACT DOCUMENTS SET FORTH IN C&MS SECTION 104.02 WITH TIME ADJUSTMENTS ACCORDING TO C&MS SECTION 108.06. COMPENSATION WITH REGARD TO ALTERNATIVE CONSTRUCTION PROCEDURES WILL ONLY BE PROVIDED FOR REVISIONS THAT THE ENGINEER DETERMINES ARE REQUIRED AND ACCEPTABLE TO REDUCE VIBRATIONS.

ITEM SPECIAL – MISC.: COORDINATION WITH THE TAFT MUSEUM OF ART

CONTACT THE DIRECTOR/CEO OF THE MUSEUM AT LEAST FOURTEEN (14) DAYS PRIOR TO COMMENCING THE PRECONSTRUCTION SURVEY, VIBRATION MONITORING INSTALLATION, AND CONSTRUCTION ACTIVITIES, INCLUDING ANY CONSTRUCTION FIELD TRIALS. NOTIFICATION SHALL ALSO BE PROVIDED AT LEAST FOURTEEN (14) DAYS PRIOR TO ANY MAJOR CHANGES IN PLANNED CONSTRUCTION ACTIVITIES.

CONTACT INFORMATION:

DEBORAH EMONT SCOTT, DIRECTOR/CEO
TAFT MUSEUM OF ART
316 PIKE STREET
CINCINNATI, OH 45202
513-684-4511
DSCOTT@TAFTMUSEUM.ORG

ITEM SPECIAL – MISC.: COORDINATION WITH THE CITY OF CINCINNATI PARK BOARD

CONTACT THE SUPERINTENDENT, DIVISION OF PLANNING AND DESIGN, OF THE CINCINNATI PARK BOARD AT LEAST (14) DAYS PRIOR TO COMMENCING CONSTRUCTION ACTIVITIES INCLUDING ANY CONSTRUCTION FIELD TRIALS. NOTIFICATION SHALL ALSO BE PROVIDED AT LEAST FOURTEEN (14) DAYS PRIOR TO ANY MAJOR CHANGES IN PLANNED CONSTRUCTION ACTIVITIES.

CONTACT INFORMATION:

DIVISION OF PLANNING AND DESIGN/PROGRAM SERVICES
STEVE SCHUCKMAN, SUPERINTENDENT
(513) 475-9600
STEVEN.SCHUCKMAN@CINCINNATI-OH.GOV

ITEM SPECIAL – STRUCTURE, MISC.: CONSTRUCTION FIELD TRIALS

PRIOR TO COMMENCING PRODUCTION WORK, THE CONTRACTOR UNDER THE DIRECT SUPERVISION AND CONTROL OF THE VIBRATION SPECIALIST SHALL COMPLETE CONSTRUCTION FIELD TRIALS USING THE PROPOSED CONSTRUCTION EQUIPMENT AND METHODS. THE FIELD TRIALS SHALL BE PERFORMED UTILIZING ACTUAL EQUIPMENT AND METHODS TO BE USED DURING CONSTRUCTION. THE CONSTRUCTION FIELD TRIALS SHALL BE CONDUCTED IN A MANNER THAT ALLOWS FOR THE ACTIVITY TO BEGIN AT A LOW LEVEL OF AGRESSIVENESS, AND INCREMENTALLY INCREASE TO THE ALLOWABLE MAXIMUM EFFORT NOT EXCEEDING THE ABSOLUTE MAXIMUM 0.12 IN/SEC PEAK PARTICLE VELOCITY AT THE TAFT MUSEUM.

FIELD TRIALS SHALL BE COMPLETED FOR THE FOLLOWING ACTIVITIES:

1. TEMPORARY SHORING INSTALLATION
2. PAVEMENT DEMOLITION AND REMOVAL
3. EXCAVATION
4. PAVEMENT CONSTRUCTION (INCLUDING ANY VIBRATORY COMPACTION OF SUBGRADE / SUB-BASE)

THE FIELD TRIALS SHALL BE MONITORED IN ACCORDANCE WITH THE VIBRATION MONITORING AND CONTROL REQUIREMENTS AND REPORTED ON BY THE VIBRATION SPECIALIST.

IF THE TRIAL METHODS EXCEED THE ALLOWED VIBRATION LIMIT, THE CONTRACTOR SHALL SELECT AN ALTERNATIVE EQUIPMENT OR METHOD. THESE ALTERNATIVES SHALL BE SUBJECTED TO SUBSEQUENT CONSTRUCTION FIELD TRIALS. IT IS ANTICIPITATED THAT THE PEAK PARTICLE VELOCITY WILL EXCEED OR APPROACH THE MAXIMUM LIMITS DURING CONSTRUCTION ACTIVITIES SUCH AS VIBRATORY SHEET PILE INSTALLATION, PILE DRIVING, AND HEAVY DEMOLITION ADJACENT TO PIKE STREET. IT IS ADVISED THAT THE CONTRACTOR AVOID THESE ACTIVITIES TO PREVENT EXCEEDING THE MAXIMUM PEAK PARTICLE VELOCITY.

THE DEPARTMENT WILL PAY FOR CONSTRUCTION FIELD TRIALS AT THE CONTRACT LUMP SUM PRICE FOR ITEM SPECIAL – STRUCTURE MISC.: CONSTRUCTION FIELD TRIALS.

THE DEPARTMENT WILL COMPENSATE THE CONTRACTOR FOR ADDITIONAL CONSTRUCTION FIELD TRIALS ASSOCIATED WITH VIBRATION LIMIT REVISIONS ONLY IN THE EVENT THAT DOCUMENTATED ADDITIONAL COSTS EXCEED TWENTY FIVE PERCENT (25%) OF THE LUMP SUM BID AMOUNT. THE CONTRACTOR WILL BE COMPENSATED ACCORDING TO C&MS SECTION 109.05 ONLY FOR THE PORTION OF DOCUMENTED ADDITIONAL COSTS EXCEEDING TWENTY FIVE PERCENT (25%) OF THE LUMP SUM BID AMOUNT FOR REVISIONS TO THE CONTRACT DOCUMENTS SET FORTH IN C&MS SECTION 104.02 WITH TIME ADJUSTMENTS ACCORDING TO C&MS SECTION 108.06. COMPENSATION WITH REGARD TO ADDITIONAL CONSTRUCTION FIELD TRIALS WILL ONLY BE PROVIDED FOR ADDITIONAL TRIALS THAT THE ENGINEER DETERMINES ARE REQUIRED TO REDUCE VIBRATIONS.

ITEM 690 – SPECIAL - MISC.: CLEANING AND SWEEPING OF ROADWAYS

THE CONTRACTOR SHALL FURNISH ALL MATERIAL, EQUIPMENT, LABOR AND INCIDENTAL ITEMS NECESSARY TO PROPERLY REMOVE AND DISPOSE OF ALL DEBRIS AND OTHER FOREIGN MATERIAL BY POWER SWEEPING USING STREET SWEEPER SINGLE UNITS CAPABLE OF SWEEPING, CAPTURING, AND STORING DEBRIS WITHOUT EMITTING OR RELEASING PARTICULATES; SHOVELING; SCRAPING; ETC. ON PIKE STREET, LYLTE STREET AND FOURTH STREET AROUND THE PROJECT WORK ZONE. STREET CLEANING AND SWEEPING SHALL BE PERFORMED AS DIRECTED BY THE ENGINEER TO CONTROL DUST AND DEBRIS DURING CONSTRUCTION.

STREET SWEEPING EQUIPMENT SHALL BE EQUIPPED WITH SUFFICIENT WATER FOR USE AS DUST CONTROL AS DETERMINED BY THE ENGINEER.

NO DEBRIS WILL BE ALLOWED TO BE DUMPED OR STOCKPILED WITHIN THE PROJECT CONSTRUCTION LIMITS, OR ON ANY PUBLIC OR PRIVATE PROPERTY SURROUNDING THE JOB SITE. ALL DEBRIS REMOVED BY THE CONTRACTOR BECOMES THE PROPERTY OF THE CONTRACTOR AND SHALL BE THE CONTRACTOR'S RESPONSIBILITY FOR DISPOSAL.

THIS WORK IS IN ADDITION TO THAT REQUIRED OF THE CONTRACTOR IN THE CONSTRUCTION AND MATERIAL SPECIFICATIONS AND CITY OF CINCINNATI MUNICIPAL CODE. PAYMENT FOR ALL OF THE ABOVE WILL BE MADE AT THE CONTRACT BID PRICE FOR ITEM 690 – SPECIAL - MISC.: CLEANING AND SWEEPING OF ROADWAYS, LANE MILE ROADWAY SWEPT.

NIGHT TIME CONSTRUCTION

THE CONTRACTOR SHALL BE AWARE OF SECTION 909-7 OF THE CINCINNATI MUNICIPAL CODE AND PLAN THEIR WORK ACCORDINGLY. THE FOLLOWING IS AN EXCERPT OF THE MUNICIPAL CODE:

NIGHT TIME CONSTRUCTION FOR LOCAL STREETS AND BRIDGES LISTED BELOW

NO PERSON OTHER THAN IN THE EVENT OF EMERGENCY, SHALL, BETWEEN THE HOURS FROM 9:00 P.M. TO 7:00 A.M. THE FOLLOWING DAY, ENGAGE IN OR UNDERTAKE ANY CONSTRUCTION OR DEMOLITION ACTIVITY OR THE OPERATION OF ANY MECHANICAL, ELECTRICAL OR BATTERY-OPERATED APPARATUS WHICH PRODUCES LOUD SOUND WHICH DISTURBS THE PEACE AND QUIET OF THE NEIGHBORHOOD WITHIN 500 FEET OF PLACES OF RESIDENCE, HOSPITALS OR OTHER RESIDENTIAL INSTITUTIONS, WITHOUT FIRST OBTAINING A SPECIAL PERMIT FROM THE DIRECTOR OF BUILDINGS AND INSPECTIONS OR THE CITY ENGINEER FOR SUCH NIGHTTIME CONSTRUCTION. FOR PURPOSES OF THIS SECTION, CONSTRUCTION SHALL INCLUDE EVERY OPERATION REGULATED BY THE CINCINNATI - OHIO BASIC BUILDING CODE.

THE CONTRACTOR SHALL BE RESPONSIBLE FOR ANY AND ALL FINES ASSESSED DUE TO NONCOMPLIANCE WITH THE CITY NOISE ORDINANCE.

REFER TO CINCINNATI MUNICIPAL CODE 909-7 FOR ADDITIONAL INFORMATION.

ITEM SPECIAL – STRUCTURE, MISC.: POST CONSTRUCTION CONDITION SURVEY AND FINAL REPORT

UPON COMPLETION OF CONSTRUCTION, CONDUCT A CONDITION SURVEY OF THE TAFT MUSEUM OF ART, 316 PIKE ST. THE PURPOSE OF THE SURVEY IS TO DOCUMENT THE CONDITION OF THE BUILDING, STRUCTURES, AND ARTWORK ALONG THE WESTERN SIDE OF THE MUSEUM. THE VIBRATION SPECIALIST AND THE MUSEUM CONSERVATION EXPERT SHALL PERFORM OR SUPERVISE THE POST CONSTRUCTION CONDITION SURVEY.

THE VIBRATION SPECIALIST IS TO RECORD THE CONDITION OF EXISTING STRUCTURES AND BUILDING MATERIALS, USING WRITTEN TEXT, PHOTOGRAPHS, AND VIDEO RECORDINGS. INSPECT INTERIOR WALLS, CEILINGS, AND FLOORS THAT ARE ACCESSIBLE. INSPECT THE EXTERIOR OF THE BUILDING THAT IS VISIBLE FROM GROUND LEVEL. RECORD THE LOCATION, SIZE, AND TYPE OF ALL CRACKS AND OTHER STRUCTURAL DEFICIENCIES.

THE MUSEUM CONSERVATION EXPERT IS TO EXAMINE THE ART OBJECTS ALONG THE WEST SIDE OF THE MUSEUM USING WRITTEN TEXT, PHOTOGRAPHS, VIDEO RECORDINGS, AND ANY OTHER METHOD DEEMED APPROPRIATE BY THE CONSERVATOR.

IF OWNERS OR OCCUPANTS FAIL TO ALLOW ACCESS TO THE PROPERTY FOR THE PRECONSTRUCTION CONDITION SURVEY, THE VIBRATION SPECIALIST AND THE MUSEUM CONSERVATION EXPERT ARE TO SEND A CERTIFIED LETTER TO THE OWNER OR OCCUPANT. DOCUMENT THE NOTIFICATION EFFORT AND THE CERTIFIED LETTER IN THE REPORT.

THE VIBRATION SPECIALIST AND MUSEUM CONSERVATION EXPERT ARE TO EACH SUBMIT A FINAL REPORT TO THE ENGINEER AND THE TAFT MUSEUM THAT SUMMARIZES THE POST CONSTRUCTION CONDITION OF THE BUILDINGS, STRUCTURES, AND ARTWORK. THE REPORT SHALL INCLUDE A STATEMENT OF WHETHER ANY CONDITIONS HAVE CHANGED DURING THE CONSTRUCTION PERIOD, AND SHALL DESCRIBE ANY SUCH CHANGES. SUBMIT THREE COPIES OF THE FINAL REPORT.

THE DEPARTMENT WILL PAY FOR THIS ITEM AT THE CONTRACT LUMP SUM PRICE FOR ITEM SPECIAL – STRUCTURE MISC.: POST CONSTRUCTION CONDITION SURVEY AND FINAL REPORT.

PERMISSIBLE CONSTRUCTION WORK TIMES

WORK ON LYTLE ST., PIKE ST., FOURTH ST., AND WITHIN LYTLE PARK IS ALLOWED MONDAY THROUGH FRIDAY, 7:00 A.M. TO 6:00 P.M. HOWEVER, ON MAY 14, 2015 AND MAY 12, 2016 WORK AT THESE LOCATIONS IS ONLY PERMITTED BETWEEN 7:00 A.M. AND 4:00 P.M.

CALCULATED RMS
CHECKED CWP

GENERAL NOTES

ITEM 530 - SPECIAL - STRUCTURE, MISC.: CONSTRUCTION INSTRUMENTATION AND MONITORING – INSTALLATION OF INCLINOMETERS

ITEM 530 - SPECIAL - STRUCTURE, MISC.: CONSTRUCTION INSTRUMENTATION AND MONITORING – INSTALLATION OF SURFACE MONITORING POINTS

ITEM 530 - SPECIAL - STRUCTURE, MISC.: CONSTRUCTION INSTRUMENTATION AND MONITORING – CONSTRUCTION INSTALLATION OF SHALLOW SUBSURFACE MONITORING POINTS

ITEM 530 - SPECIAL - STRUCTURE, MISC.: CONSTRUCTION INSTRUMENTATION AND MONITORING – CONSTRUCTION INSTALLATION OF TILTMETERS

ITEM 530 - SPECIAL - STRUCTURE, MISC.: CONSTRUCTION INSTRUMENTATION AND MONITORING – INSTALLATION OF UTILITY MONITORING POINTS

ITEM 530 - SPECIAL - STRUCTURE, MISC.: CONSTRUCTION INSTRUMENTATION AND MONITORING – MONITORING

DESCRIPTION:

THIS PAY ITEM SHALL INCLUDE INSTALLING GEOTECHNICAL INSTRUMENTATION AND MONITORING DEVICES AS SHOWN IN THE PLANS AND HEREIN SPECIFIED.

THIS PAY ITEM INCLUDES ALL THE MONITORING ACTIVITIES NECESSARY TO COMPLETE THE MONITORING PROGRAM AS SHOWN IN THE PLANS AND HEREIN SPECIFIED.

INSTRUMENT MATERIALS, BOREHOLE CONSTRUCTION AND PREPARATION, INSTALLATION AND SEALING OF BOREHOLES SHALL BE IN COMPLIANCE WITH ODOT - SPECIFICATIONS FOR GEOTECHNICAL EXPLORATIONS, 2013, UNLESS OTHERWISE NOTED OR SHOWN ON THE PLANS OR SPECIFICATIONS.

PROTECTIVE COVERS FOR INSTRUMENTS IN BOREHOLES SHALL BE FLUSH MOUNTED.

LOCATIONS OF INSTRUMENTS INDICATED ON THE PLANS ARE APPROXIMATE. THE CONTRACTOR SHALL VERIFY THE POSITION OF EXISTING UTILITIES AND ANY OTHER OBSTRUCTIONS AND RELOCATE AS NEAR AS POSSIBLE ANY INSTRUMENTS IN CONFLICT WITH INDICATED POSITION.

A PRE-CONSTRUCTION CONDITION SURVEY OF THE TWO BUILDINGS NOTED BELOW, AS WELL AS THE EXISTING TUNNELS, SHALL BE PERFORMED BY THE CONTRACTOR WITH THE ENGINEER PRESENT TO RECORD AND DOCUMENT PRE-EXISTING CONDITIONS.
CRACK GAGES WILL BE INSTALLED TO MONITOR ANY PRE-EXISTING CONDITIONS REVEALED DURING THE SURVEY.

BUILDINGS REQUIRING PRE-CONSTRUCTION SURVEYS:

550 EAST 4TH STREET APARTMENTS
311 PIKE STREET

THE CONTRACTOR SHALL PROTECT ALL INSTRUMENTS AND WIRING FROM DAMAGE DURING CONSTRUCTION. THE CONTRACTOR SHALL REPLACE ANY DAMAGED OR INOPERABLE INSTRUMENTS WITHIN 48 HOURS, AT NO ADDITIONAL EXPENSE TO THE OWNER.

THE ENGINEER MAY IMPOSE A WORK STOPPAGE IN THE VICINITY OF ANY DAMAGED OR INOPERABLE INSTRUMENT UNTIL MADE FUNCTIONAL, AT NO ADDITIONAL EXPENSE TO THE ENGINEER.

OBTAIN THREE SETS OF INSTRUMENT READINGS WITH EACH SET OBTAINED ON SEPARATE DATES WITHIN ONE WEEK OF INSTRUMENT INSTALLATION AND PRIOR TO INSTALLATION OF THE SUPPORT OF EXCAVATION.

A BASELINE READING SHALL BE TAKEN AS THE READING THAT IS CLOSEST TO THE AVERAGE OF THE THREE READINGS AND SHALL BE USED TO COMPARE ALL SUBSEQUENT READINGS WITH AND DETERMINE LEVELS OF CHANGE.

INSTRUMENTATION RESPONSE LEVELS AND IMPLEMENTATION OF PLANS OF ACTION SHALL BE IN ACCORDANCE WITH THE FOLLOWING TABLE UNLESS OTHERWISE DIRECTED BY THE ENGINEER:

RESPONSE LEVELS		
INSTRUMENT	THRESHOLD LEVEL	LIMITING LEVEL
SOE MONITORING POINTS (EMP)	0.50"	1.00"
UTILITY MONITORING POINTS (UMP)	0.50"	1.00"
INCLINOMETER (INC)	0.50"	1.00"
SURFACE MONITORING POINT (SMP)	0.50"	1.00"
SHALLOW SUBSURFACE MONITORING POINT (SSMP)	0.50"	1.00"
TILTMETER (TM)	0.1	0.2
CRACK GAGE	1/16"	1/8"

IF A THRESHOLD LEVEL IS REACHED, THE CONTRACTOR SHALL IMMEDIATELY NOTIFY THE ENGINEER, ADJUST CONSTRUCTION METHODS, DOUBLE THE FREQUENCY OF READINGS AND DISCUSS WITH THE ENGINEER THE NEED FOR RESPONSE ACTIONS. SUBMIT WITHIN 24 HOURS OF THE MEETING A DETAILED PLAN OF ACTION FOR MITIGATING FURTHER MOVEMENTS AND IMPLEMENTING CONTINGENCY REMEDIAL MEASURES IN THE EVENT MOVEMENTS CONTINUE AND THE LIMITING LEVEL IS REACHED.

IF A LIMITING LEVEL IS REACHED, THE CONTRACTOR SHALL STOP PRODUCTION WORK AND IMMEDIATELY PERFORM CONTINGENCY REMEDIAL MEASURES TO HALT MOVEMENTS AND AVOID DAMAGE TO EXISTING STRUCTURES.

ANY COSTS ASSOCIATED WITH REMEDIAL MEASURES AND WORK STOPPAGES SHALL BE BORNE SOLELY BY THE CONTRACTOR.

INSTRUMENT MONITORING AND REPORTING OF DATA FROM INSTRUMENTS SHALL BE IN ACCORDANCE WITH THE FOLLOWING SCHEDULE:

FREQUENCY OF READING		
	INSTRUMENT	
CONSTRUCTION OPERATION	UMP, INC, SMP, SSMP, TM	CRACK GAGE
SOE INSTALLATION AND EXCAVATION	DAILY WITHIN 100 FT OF SOE INSTALLATION OR EXCAVATION. WEEKLY ELSEWHERE.	WEEKLY
AFTER EXCAVATION UNTIL COMPLETION OF BASE SLAB	DAILY FOR FIRST WEEK THEN WEEKLY.	MONTHLY
DURING DE-TENSIONING OF TIEBACKS & WALER REMOVAL	DAILY WITHIN 100 FT OF DE-TENSIONING & WALER REMOVAL AND FIRST WEEK THEREAFTER. WEEKLY ELSEWHERE.	WEEKLY

MEASUREMENT AND PAYMENT:

PAYMENT FOR ACCEPTED QUANTITIES OF INCLINOMETERS, COMPLETE IN PLACE, SHALL BE MADE AT THE CONTRACT PRICE BID EACH FOR ITEM 530 - STRUCTURE, MISC.: CONSTRUCTION INSTRUMENTATION AND MONITORING – INSTALLATION OF INCLINOMETERS THIS SHALL INCLUDE ALL NECESSARY TOOLS, LABOR, EQUIPMENT, AND MATERIALS NECESSARY TO COMPLETE THIS ITEM OF WORK AS DESCRIBED AND TO THE SATISFACTION OF THE ENGINEER.

PAYMENT FOR ACCEPTED QUANTITIES OF SURFACE MONITORING POINTS, COMPLETE IN PLACE, SHALL BE MADE AT THE CONTRACT PRICE BID EACH FOR ITEM 530 - STRUCTURE, MISC.: CONSTRUCTION INSTRUMENTATION AND MONITORING – INSTALLATION OF SURFACE MONITORING POINTS THIS SHALL INCLUDE ALL NECESSARY TOOLS, LABOR, EQUIPMENT, AND MATERIALS NECESSARY TO COMPLETE THIS ITEM OF WORK AS DESCRIBED AND TO THE SATISFACTION OF THE ENGINEER.

PAYMENT FOR ACCEPTED QUANTITIES OF SHALLOW SUBSURFACE MONITORING POINTS COMPLETE IN PLACE, SHALL BE MADE AT THE CONTRACT PRICE BID EACH FOR ITEM 530 - STRUCTURE, MISC.: CONSTRUCTION INSTRUMENTATION AND MONITORING – INSTALLATION OF SHALLOW SUBSURFACE MONITORING POINTS THIS SHALL INCLUDE ALL NECESSARY TOOLS, LABOR, EQUIPMENT, AND MATERIALS NECESSARY TO COMPLETE THIS ITEM OF WORK AS DESCRIBED AND TO THE SATISFACTION OF THE ENGINEER.

PAYMENT FOR ACCEPTED QUANTITIES OF TILTMETERS COMPLETE IN PLACE, SHALL BE MADE AT THE CONTRACT PRICE BID EACH FOR ITEM 530 - STRUCTURE, MISC.: CONSTRUCTION INSTRUMENTATION AND MONITORING – INSTALLATION OF TILTMETERS THIS SHALL INCLUDE ALL NECESSARY TOOLS, LABOR, EQUIPMENT, AND MATERIALS NECESSARY TO COMPLETE THIS ITEM OF WORK AS DESCRIBED AND TO THE SATISFACTION OF THE ENGINEER.

PAYMENT FOR ACCEPTED QUANTITIES OF UTILITY MONITORING POINTS COMPLETE IN PLACE, SHALL BE MADE AT THE CONTRACT PRICE BID EACH FOR ITEM 530 - STRUCTURE, MISC.: CONSTRUCTION INSTRUMENTATION AND MONITORING – INSTALLATION OF UTILITY MONITORING POINTS THIS SHALL INCLUDE ALL NECESSARY TOOLS, LABOR, EQUIPMENT, AND MATERIALS NECESSARY TO COMPLETE THIS ITEM OF WORK AS DESCRIBED AND TO THE SATISFACTION OF THE ENGINEER.

CRACK GAUGES SHOULD BE HUMBOLDT H-2936A STANDARD CRACK GAUGE OR APPROVED EQUAL. THE NUMBER OF CRACK GAUGES WILL DEPEND ON THE NUMBER OF CRACKS IDENTIFIED IN THE PRE-CONDITION SURVEY. ONE GAUGE PER CRACK SHOULD SUFFICE, UNLESS THE CRACK LENGTH IS EXCEPTIONALLY LONG. PAYMENT FOR CRACK GAUGES SHOULD BE INCLUDED IN THE CONTRACT LUMP SUM BID FOR ITEM 530 – STRUCTURE, MISC.: CONSTRUCTION INSTRUMENTATION AND MONITORING – MONITORING.

PAYMENT FOR MONITORING SHALL BE MADE AT THE CONTRACT LUMP SUMP BID PRICE FOR ITEM 530 - STRUCTURE, MISC.: CONSTRUCTION INSTRUMENTATION AND MONITORING – MONITORING THIS SHALL INCLUDE ALL NECESSARY TOOLS, LABOR, EQUIPMENT, AND MATERIALS NECESSARY TO COMPLETE THIS ITEM OF WORK AS DESCRIBED AND TO THE SATISFACTION OF THE ENGINEER.

INTERIM COMPLETION DATE

COMPLETION OF STAGE 2, PHASE 2 SHALL CONSTITUTE AN INTERIM COMPLETION DATE FOR WORK IN LYTLE PARK. THIS WORK INCLUDES BACKFILL IN LYTLE PARK TO PROPOSED GRADE, INSTALLATION OF GRATINGS AND HATCHES AND COMPLETION OF THE ELECTRICAL WORK AS NOTED IN THE MAJOR CONSTRUCTION ACTIVITIES IN THE MAINTENANCE OF TRAFFIC SEQUENCE OF CONSTRUCTION. THIS INTERIM COMPLETION DATE IS SEPTEMBER 13, 2016.

HAM-71-1.34

c:\pwworking\hmm\external\pre47802\dms72884\87268GN007.dgn 3/3/2015 2:41:52 PM PRE47802

I:\projects\HAM\ir071\01.34_PID87268\Design\docs\Plan Package\Current CADD Files\Roadway\Sheets\87268GN010.dgn 3/10/2015 2:49:46 PM okoenig

CALCULATED RLD CHECKED CWP

GENERAL NOTES

UTILITY COORDINATION – WATER SERVICE DISCONNECT

ONE MONTH PRIOR TO DISCONNECTING THE WATER SERVICE TO THE PARK, THE CONTRACTOR MUST COORDINATE WITH THE GREATER CINCINNATI WATER WORKS (GCWW) TO SEND A FERRULE ORDERED DRAWN (FOD) FORM TO THE CITY OF CINCINNATI PARK BOARD. UPON ACCEPTANCE OF THE FOD, THE CONTRACTOR WILL COORDINATE TO HAVE GCWW REMOVE THE WATER SERVICE METER FROM THE PIT.

THE CITY OF CINCINNATI PARK BOARD CONTACT FOR REVIEWING AND SIGNING THE FOD FORM IS STEVE SCHUCKMAN. CONTACT INFORMATION IS FOUND BELOW:

STEVE SCHUCKMAN
DIVISION OF PLANNING AND DESIGN/PROGRAM SERVICES
950 EDEN PARK DR.
CINCINNATI, OH 45202
(513) 475-9600
STEVEN.SCHUCKMAN@CINCINNATI-OH.GOV

COOPERATION BETWEEN CONTRACTORS

DURING THE CONSTRUCTION OF THE NEW VENTILATION ROOM, MULTIPLE CONTRACTORS MAY BE WITHIN THE VICINITY OF THE PROJECT AREA. WESTERN AND SOUTHERN FINANCIAL GROUP MAY HAVE CONTRACTORS WORKING ON THE BUILDING LOCATED ADJACENT TO, AND SOUTH OF, THE VENTILATION ROOM CONSTRUCTION, AND THE CITY OF CINCINNATI PARKS MAY BE PERFORMING WORK IN THE LYTLE PARK, OUTSIDE OF THE LIMITS OF THE VENTILATION ROOM CONSTRUCTION. PER CMS 105.08, ALL CONTRACTORS SHALL CONDUCT THEIR WORK WITHOUT INTERFERING OR HINDERING THE PROGRESS OR COMPLETION OF WORK BEING PERFORMED BY OTHER CONTRACTORS, AND SHALL COOPERATE WITH EACH OTHER AS DIRECTED BY THE ENGINEER.

FULL DEPTH CONCRETE DECK REPAIRS ON HAM-71-0159

THIS WORK INCLUDES FULL DEPTH REPLACEMENT OF THE DETERIORATED PORTIONS OF THE 11" CONCRETE DECK ON THE STRUCTURE HAM-71-0159. THIS STRUCTURE IS LOCATED 400' NORTH OF THE LYTLE TUNNEL. THROUGHOUT THE PROJECT, THERE MAY BE FULL DEPTH REPAIRS AS DIRECTED BY THE ENGINEER. THE CONTRACTOR WILL HAVE 30 DAYS FROM NOTIFICATION BY THE ENGINEER TO PERFORM THIS WORK. THE CONTRACTOR IS TO PERFORM THE FULL DEPTH REPLACEMENT AT THE LOCATIONS DIRECTED BY THE ENGINEER PER THIS NOTE AND SUPPLEMENTAL SPECIFICATION 847.

CONTRACTOR IS TO SETUP MAINTENANCE OF TRAFFIC FOR EACH FULL DEPTH REPAIR OPERATION IN CONFORMANCE WITH THE OHIO MANUAL OF UNIFORM TRAFFIC CONTROL DEVICES (OMUTCD, JAN 2012), THE ODOT MAINTAINING TRAFFIC STANDARD CONSTRUCTION DRAWINGS, AND THE ODOT CONSTRUCTION AND MATERIAL SPECIFICATIONS (2013). FULL DEPTH BRIDGE DECK REPAIRS WILL REQUIRE ONE AND TWO LANE INTERSTATE CLOSURES, RAMP CLOSURES, AND CLOSURES OF THE LOCAL ROADS BENEATH THE BRIDGE DECK REPAIRS (CULVERT ST., EGGLESTON AVE, ETC).

THESE CLOSURES ARE TO BE PERFORMED ON THE WEEKEND, STARTING ON FRIDAY AT 9:00 PM THROUGH MONDAY 6:00 AM. COMPLY WITH ANY MAINTENANCE OF TRAFFIC RESTRICTION SET FORTH ON SHEET 23. SHOULD THE CONTRACTOR FAIL TO MEET ANY OF THESE REQUIREMENTS, THE CONTRACTOR SHALL BE ASSESSED A DISINCENTIVE IN THE AMOUNT OF $125 FOR EACH MINUTE ABOVE THE DESCRIBED RESTRICTIONS. THE FOLLOWING ITEMS HAVE BEEN CARRIED TO THE GENERAL SUMMARY FOR THE MAINTENANCE OF TRAFFIC REQUIRED TO PERFORM THE DECK REPAIRS:

ITEM 614 MAINTAINING TRAFFIC, MISC.: FULL DEPTH REPAIR MOT (1 LANE INTERSTATE CLOSURE) – 3 EACH

ITEM 614 MAINTAINING TRAFFIC, MISC.: FULL DEPTH REPAIR MOT (2 LANE INTERSTATE CLOSURE) – 3 EACH

ITEM 614 MAINTAINING TRAFFIC, MISC.: FULL DEPTH REPAIR MOT (RAMP CLOSURE) – 3 EACH

ITEM 614 MAINTAINING TRAFFIC, MISC.: FULL DEPTH REPAIR MOT (LOCAL ROAD CLOSURE) – 3 EACH

ITEM 614 LAW ENFORCEMENT OFFICER WITH PATROL CAR FOR ASSISTANCE – 360 HOURS

THE DETERIORATED CONCRETE SURFACE SHALL BE REMOVED BY CHIPPING, HYDRO DEMOLITION (PER SUPPLEMENTAL SPEC 848), OR IN CASES IN WHICH CHIPPING OR HYDRO DEMOLITION CAN ABSOLUTELY NOT REMOVE THE CONCRETE DECK, POWER DRIVEN SCARIFIERS MAY BE USED. CHIPPING HAMMERS SHALL NOT BE HEAVIER THAN THE NOMINAL 35 POUND CLASS AND SHALL BE OPERATED AT AN ANGLE OF LESS THAN 45 DEGREES WITH RESPECT TO THE SURFACE OF THE DECK. CONCRETE SHALL BE REMOVED IN A MANNER THAT PREVENTS CUTTING, ELONGATING, OR DAMAGING THE REINFORCING STEEL. WHILE REMOVING THE CONCRETE, ADEQUATELY SUPPORT ANY REINFORCEMENT THAT IS LOOSENED, AND TIE IT BACK INTO PLACE. ANY REINFORCEMENT THAT IS DAMAGED DURING THE REMOVAL OF CONCRETE SHALL BE REPLACED.

AFTER REMOVING ALL OF THE DISINTEGRATED AND LOOSE CONCRETE THE ENTIRE DEPTH, PROPERLY SHAPE THE AREA WHERE FULL DEPTH CONCRETE WILL BE INSTALLED. THOROUGHLY CLEAN THE SURFACE OF THE AREA IN WHICH CONCRETE WILL BE PLACED AND ALL EXPOSED REINFORCING STEEL OF ALL DIRT, DUST, OR OTHER FOREIGN MATERIALS WITH WATER, AIR UNDER PRESSURE, OR ANY OTHER METHOD THAT PRODUCES SATISFACTORY RESULTS, AS DETERMINED BY THE ENGINEER. BEFORE PLACING THE CONCRETE, ALLOW THE SURFACE TO DRY TO A DAMP CONDITION.

PLACE AND FINISH CLASS QC2 CONCRETE ACCORDING TO ITEMS 449 AND 511. HAND VIBRATORS ARE TO BE USED TO ENSURE UNIFORM PLACEMENT. REMOVE ANY FORMS USED WITHIN 24 HOURS OF THE PLACEMENT OF CONCRETE, AND FINISH ALL EXPOSED SURFACES BY RUBBING TO MATCH THE SURROUNDING CONCRETE.

ALL LABOR, EQUIPMENT, AND MATERIALS NECESSARY TO PERFORM THE ABOVE REFERENCED FULL DEPTH REPAIR WORK SHALL BE INCLUDED IN THE GENERAL SUMMARY AS THE FOLLOWING ITEM:

ITEM 511 CONCRETE MISC.: FULL DEPTH DECK REPAIRS HAM-71-0159 – 100 CU YD

EXISTING BRIDGE PLANS FOR STRUCTURE HAM-71-0159 CAN BE FOUND AT THE FOLLOWING LOCATION:

ftp://ftp.dot.state.oh.us/pub/Districts/D08/HAM-71-0159%20EXISTING%20PLANS/

FULL DEPTH CONCRETE DECK REPAIRS ON HAM-71-0159 (FULL INTERSTATE CLOSURE)

ONCE THE PROJECT HAS BEEN AWARDED, THE ENGINEER WILL NOTIFY THE CONTRACTOR AT LEAST 30 DAYS IN ADVANCE TO PERFORM A FULL CLOSURE OF INTERSTATE 71 IN ORDER TO PERFORM REPAIRS ON THE DETERIORATING HAM-71-0159 SOUTHBOUND BRIDGE DECK. THE CONTRACTOR IS TO PERFORM THE FULL DEPTH REPAIR WORK AS DESCRIBED IN THE "FULL DEPTH CONCRETE DECK REPAIRS ON HAM-71-0159" NOTE. THE FULL INTERSTATE CLOSURE WORK IS TO BEGIN ON A FRIDAY AT 9:00 PM THROUGH MONDAY 6:00 AM. THE CONTRACTOR SHALL BE ASSESSED A DISINCENTIVE IN THE AMOUNT OF $125 FOR EACH MINUTE ABOVE THE DESCRIBED RESTRICTIONS. THE FULL INTERSTATE CLOSURE IS TO BE PERFORMED WHEN THERE ARE NO ADDITIONAL LANE CLOSURES ON INTERSTATE 75, BETWEEN INTERSTATE 275 AND INTERSTATE 71. LOCAL DETOURS AND INTERSTATE DETOURS ARE TO BE PERFORMED AS SHOWN ON SHEETS 58A TO 58J. THE MAINTENANCE OF TRAFFIC WORK IS TO BE IN CONFORMANCE WITH THE OHIO MANUAL OF UNIFORM TRAFFIC CONTROL DEVICES (OMUTCD, JAN 2012), THE ODOT MAINTAINING TRAFFIC STANDARD CONSTRUCTION DRAWINGS, AND THE ODOT CMS (2013). THE FOLLOWING PAY ITEM HAS BEEN CARRIED TO THE GENERAL SUMMARY FOR ALL LABOR, EQUIPMENT, AND MATERIALS NECESSARY TO PERFORM THE MAINTENANCE OF TRAFFIC FULL INTERSTATE CLOSURE:

ITEM 614 MAINTAINING TRAFFIC, MISC.: FULL DEPTH REPAIR MOT (FULL INTERSTATE CLOSURE) – 1 EACH

IN ORDER TO ASSIST IN PERFORMING THE FULL INTERSTATE CLOSURE, THE FOLLOWING ITEM HAS BEEN CARRIED TO THE GENERAL SUMMARY:

ITEM 614 LAW ENFORCEMENT OFFICER WITH PATROL CAR FOR ASSISTANCE – 80 HOURS

ALL LABOR, EQUIPMENT, AND MATERIALS NECESSARY TO PERFORM THE FULL DEPTH REPAIR WORK IS INCLUDED IN THE GENERAL SUMMARY AS THE FOLLOWING ITEM:

ITEM 511 CONCRETE MISC.: FULL DEPTH DECK REPAIRS HAM-71-0159 – 50 CU YD

LINEAR GRADING

LINEAR GRADING IS REQUIRED AT THE FOLLOWING LOCATIONS:
LYTLE STREET – 3 STA
PIKE STREET – 2 STA
FOURTH STREET – 3 STA
RAMP E AT THE PUMP STATION – 1 STA

ALL LABOR, EQUIPMENT, AND MATERIALS NECESSARY TO PERFORM THE ABOVE REFERENCED WORK SHALL BE INCLUDED IN THE GENERAL SUMMARY AS:

ITEM 209 – LINEAR GRADING – 9 STA

FENCE, MISC.: TEMPORARY CONSTRUCTION FENCE

ALL FULL DEPTH CONCRETE DECK REPAIRS ON HAM-71-0159 THAT ARE LOCATED ABOVE FIDO PARK (DOG PARK LOCATED ADJACENT TO EGGLESTON AVE.) WILL REQUIRE THE CLOSURE OF PORTIONS OF THE PARK LOCATED BELOW THE STRUCTURE. THE CONTRACTOR IS TO INSTALL A TEMPORARY CONSTRUCTION FENCE OF AT LEAST 4' IN HEIGHT AND APPROXIMATELY 200' IN LENGTH TO PREVENT ANIMALS FROM ENTERING ONGOING WORK AREAS. UPON COMPLETION OF THE FULL DEPTH CONCRETE DECK REPAIRS, THE CONTRACTOR IS TO REMOVE THE TEMPORARY FENCE FROM FIDO PARK WITHIN 24 HOURS. THE FOLLOWING PAY ITEM HAS BEEN CARRIED TO THE GENERAL SUMMARY FOR ALL LABOR, EQUIPMENT, AND MATERIALS NECESSARY TO COMPLETE THIS WORK:

ITEM 607 FENCE MISC.: TEMPORARY CONSTRUCTION FENCE – 800' (ASSUMING 4 CLOSURES)

HAM-71-1.34

I:\projects\HAM\ir071\01.34_PID87268\Design\docs\Plan Package\Current CADD Files\Roadway\Sheets\87268GN008.dgn 2/19/2015 8:46:29 AM akoenig

ITEM 638 SPECIAL - GENERAL PROVISIONS (CIN. 1100)

638.01 GENERAL
638.02 MATERIALS
638.03 PLANS AND STANDARD DRAWING
638.04 CONSTRUCTION

638.01 GENERAL. *BEFORE BEGINNING ANY WORK UNDER THE CONTRACT, THE GREATER CINCINNATI WATER WORKS (GCWW) WILL FURNISH PLANS TO THE CONTRACTOR SHOWING APPROXIMATE LOCATION OF EXISTING WATER MAINS AND/OR STANDPIPES, CHAMBERS, SERVICE BRANCHES, AND OTHER EXISTING GCWW INSTALLATIONS PERTINENT TO THE CONTRACT. EXAMINE THE SITE WITH THE ENGINEER AND NOTE THE CONDITION OF ALL GCWW APPURTENANCES.*

THE CONTRACTOR IS RESPONSIBLE FOR THE PROPER CARE AND MAINTENANCE OF ALL GCWW APPURTENANCES THAT ARE FOUND TO BE IN GOOD CONDITION, AND FOR THOSE REPAIRED OR REPLACED DURING CONSTRUCTION.

OBTAIN ALL LICENSES AND PERMITS NECESSARY TO COMPLETE THE WORK UNLESS OTHERWISE NOTED ON THE APPROVED GCWW CONTRACT PLANS.

MAINTAIN TRAFFIC IN A METHOD APPROVED BY THE AUTHORITY HAVING JURISDICTION, OR AS SPECIFIED IN THE CONTRACT PLANS. MAINTAIN PROPER AND ADEQUATE ACCESS ACROSS ALL ROADWAYS, SIDEWALKS, AND DRIVEWAYS SERVING BUSINESS CONCERNS IN THE CONSTRUCTION AREA. INSTALL TEMPORARY SIDEWALKS, WOODEN RAMPS, OR BRIDGES TO ALLOW THE MOVEMENT OF PEDESTRIAN TRAFFIC AT ALL TIMES, TAKING SPECIAL CONSIDERATION REGARDING THE SAFETY OF SCHOOL CHILDREN.

FOR ALL WATER MAIN AND STANDPIPE WORK, LABOR, AND MATERIAL CONFORM TO THE STANDARD DRAWINGS, SPECIFICATIONS, AND SUPPLEMENTS WHICH ARE THE MOST CURRENT AT THE TIME OF THE OPENING OF THE PROPOSALS. PURCHASE COPIES OF THESE ITEMS FROM THE GREATER CINCINNATI WATER WORKS (GCWW), 4747 SPRING GROVE AVENUE.

638.02 MATERIALS. *FURNISH ALL MATERIAL, UNLESS OTHERWISE SPECIFIED IN THE ITEM ITSELF OR ON THE APPROVED GCWW PLANS. MATERIAL TO CONFORM TO THE APPLICABLE CITY OF CINCINNATI DEPARTMENT OF PURCHASING SPECIFICATION AND/OR GCWW STANDARD DRAWINGS. ALL MATERIAL MUST BE INSPECTED AND APPROVED BY GCWW BEFORE INSTALLATION. PAY ALL CHARGES FOR SHOP AND FIELD INSPECTION BY GCWW PERSONNEL, WHERE APPLICABLE.*

638.03 PLANS AND STANDARD DRAWINGS. *THE UNDERGROUND UTILITIES WHICH ARE PART OF THE CONTRACT DRAWING HAVE BEEN SHOWN IN ACCORDANCE WITH SECTION 153.64 OF THE OHIO REVISED CODE. IN ACCORDANCE WITH THIS SECTION, NOTIFY THE OHIO UTILITIES PROTECTION SERVICE (OUPS) AND/OR THE AFFECTED UTILITIES TWO WORKING DAYS PRIOR TO COMMENCING CONSTRUCTION OPERATIONS.*

THE PROPOSED LOCATIONS OF MAINS, VALVES, CONNECTIONS, FIRE HYDRANTS, AND WATER SERVICES, AS SHOWN ON CONTRACT DRAWINGS, ARE DIAGRAMMATICAL ONLY. THE FINAL LOCATIONS ARE SUBJECT TO FIELD CONDITIONS AND WILL BE DETERMINED BY THE GCWW INSPECTOR AS WORK PROCEEDS.

STANDARD DRAWINGS CONCERNING CONSTRUCTION AND INSTALLATION DETAILS FOR WATER MAIN WORK ARE ON FILE IN THE ENGINEERING DIVISION OF THE GREATER CINCINNATI WATER WORKS, 4747 SPRING GROVE AVENUE, OR THE CITY PURCHASING DEPARTMENT, AND ARE AVAILABLE FOR REFERENCE OR PURCHASE.

638.04 CONSTRUCTION. *THE AMOUNT AND EXTENT OF NEW WATER MAIN WORK WILL BE SHOWN ON THE PLANS.*

ALL WATER MAIN WORK SHALL BE DONE IN STRICT ACCORDANCE WITH THE SPECIFICATIONS OF THE GCWW AND UNDER THEIR DIRECTION, SUPERVISION, AND INSPECTION.

ADJUST ALL CHAMBER CASTINGS, VALVE BOXES, FIRE HYDRANTS, AND WATER SERVICE BOXES AS INDICATED ON THE PLANS. THOSE ITEMS TO BE SALVAGED OR RELOCATED WILL BE SO INDICATED ON THE PLANS.

ALL VALVES IN THE GREATER CINCINNATI WATER WORKS SYSTEM WILL BE OPERATED BY QUALIFIED GCWW PERSONNEL ONLY.

THE GCWW CANNOT, HOWEVER, GUARANTEE THAT ALL OPERATED VALVES WILL PROVIDE A WATERTIGHT SHUTDOWN. EVERY EFFORT WILL BE MADE TO MAKE A SHUT-DOWN AS QUICKLY AND EFFECTIVELY AS POSSIBLE. NO ALLOWANCE WILL BE MADE TO THE CONTRACTOR FOR ANY DELAY IN CLOSING A VALVE.

PROVIDE SUFFICIENT NOTICE WHEN A SHUTDOWN OF VALVES WILL BE REQUIRED FOR ANY WORK ACTIVITY.

BEFORE THE GCWW WILL SCHEDULE A SHUT DOWN FOR TIE-IN PURPOSES, THE CONTRACTOR WILL BE REQUIRED TO HAVE ALL THE NECESSARY MATERIALS REQUIRED TO COMPLETE THE TIE-IN ON SITE TO BE APPROVED BY THE GCWW INSPECTOR. A SHUT DOWN WILL NOT BE SCHEDULED IF THE CONTRACTOR DOES NOT HAVE ALL THE REQUIRED APPROVED MATERIALS ON SITE.

INCLUDE ALL COSTS AND CHARGES FOR THE RESTORATION OF STREET PAVING, SIDEWALKS, OR OTHER AREAS OPENED OR DISTURBED IN THE PURSUANCE OF WATER MAIN IN ACCORDANCE WITH THE PLANS, IN THE UNIT BID PRICES OF THE VARIOUS ITEMS IN THE PROPOSAL.

ITEM 638 SPECIAL – FURNISHING AND INSTALLING VALVE BOX, COMPLETE (CIN. 1116)

638.01 DESCRIPTION
638.02 CONSTRUCTION
638.03 MEASUREMENT
638.04 BASIS OF PAYMENT

638.01 DESCRIPTION. *THIS ITEM COVERS THE INSTALLATION OF VALVE BOX HOODS, LIDS, AND TELESCOPES, WHERE SHOWN ON THE PLANS OR DIRECTED BY THE ENGINEER.*

638.02 CONSTRUCTION. *MAKE THE NECESSARY EXCAVATION AND INSTALL THE TELESCOPES IN A VERTICAL POSITION DIRECTLY OVER THE VALVE STEM.*

BACKFILL THE EXCAVATION TO THE PROPER ELEVATION SO THAT THE VALVE BOX HOOD CAN BE SET TO THE PROPER GRADE.

SET THE VALVE BOX HOOD ON A WOOD BLOCK OR BRICK FOUNDATION TO PREVENT THE TRANSFERRING OF ANY LOADS FROM THE HOOD TO THE VALVE.

INSTALL ONLY 3-PIECE IRON STYLE VALVE BOXES IN GRASS OR PAVEMENT. AT GCWW'S DISCRETION, INSTALL PLASTIC VALVE BOXES IN SIDEWALK INSTALLATIONS ONLY.

INCORPORATE THE INSTALLATION OF A "FROST PLUG" DEVICE INTO ALL VALVE BOXES.

638.03 MEASUREMENT. *ODOT WILL MEASURE VALVE BOXES COMPLETE BY THE NUMBER COMPLETED AND ACCEPTED.*

638.04 BASIS OF PAYMENT. *PAYMENT IS FULL COMPENSATION FOR ALL LABOR, TOOLS, MATERIAL, AND EQUIPMENT NECESSARY TO INSTALL VALVE BOXES AS HEREIN SPECIFIED.*

ODOT WILL PAY FOR ACCEPTED QUANTITIES AT THE CONTRACT PRICES AS FOLLOWS:

ITEM UNIT DESCRIPTION

638 EACH SPECIAL - FURNISHING AND INSTALLING VALVE BOX, COMPLETE (CIN. 1116)

ITEM 638 SPECIAL - RESETTING EXISTING VALVE BOXES COMPLETE (CIN. 1125)

638.01 DESCRIPTION
638.02 CONSTRUCTION
638.03 MEASUREMENT
638.04 BASIS OF PAYMENT

638.01 DESCRIPTION. *THIS ITEM COVERS RESETTING OF EXISTING VALVE BOX HOODS, LIDS, AND TELESCOPES, WHERE NECESSARY TO CONFORM TO THE ESTABLISHED LINES AND GRADES OF THE PAVEMENT.*

638.02 CONSTRUCTION. *MAKE THE NECESSARY EXCAVATION AND RESET THE TELESCOPE AND HOOD TO CONFORM TO ITEM 638 SPECIAL - INSTALLING VALVE BOXES COMPLETE (CIN. 1116.02).*

DO NOT RESET EXISTING VALVE BOXES THAT ARE NOT IN GOOD CONDITION, AS DETERMINED BY THE ENGINEER. INSTALL A NEW VALVE BOX IN ACCORDANCE WITH ITEM 638 SPECIAL – FURNISHING AND INSTALLING VALVE BOX, COMPLETE (CIN. 1116).

WHEN IT IS NECESSARY TO RAISE THE HOOD OVER SIX INCHES (152 MM), REMOVE THE HOOD AND PLACE A NEW TELESCOPE, OR PORTION THEREOF, OVER THE EXISTING TELESCOPE.

WHEN IT IS NECESSARY TO LOWER THE HOOD OVER SIX INCHES (152 MM), REMOVE THE HOOD AND CUT OFF THE TELESCOPE AS DIRECTED.

IF ANY PART OF THE VALVE BOX ASSEMBLY IS DAMAGED OR BROKEN BY THE CONTRACTOR'S OPERATIONS, REPLACE THE DAMAGED PORTION AT NO COST TO ODOT.

638.03 MEASUREMENT. *ODOT WILL MEASURE RESETTING VALVE BOXES COMPLETE BY THE NUMBER OF EACH COMPLETED AND ACCEPTED.*

638.04 BASIS OF PAYMENT. *PAYMENT IS FULL COMPENSATION FOR ALL LABOR, MATERIALS, AND EQUIPMENT REQUIRED TO COMPLETE THE WORK AS HEREIN SPECIFIED.*

ODOT WILL PAY FOR ACCEPTED QUANTITIES AT THE CONTRACT PRICES AS FOLLOWS:

ITEM UNIT DESCRIPTION

638 EACH SPECIAL - RESETTING EXISTING VALVE BOXES COMPLETE (CIN. 1125)

ITEM 638 SPECIAL - DISCONNECTING EXISTING 2" SERVICE BRANCH (CIN. 1130)

638.01 DESCRIPTION
638.02 CONSTRUCTION
638.03 SERVICE BRANCHES WITH SERVICE SADDLES
638.04 MEASUREMENT
638.05 BASIS OF PAYMENT

638.01 DESCRIPTION. *THIS ITEM COVERS DISCONNECTING OF EXISTING SERVICE BRANCHES WHERE REQUIRED, REMOVAL OF EXISTING CURB, ROADWAY, OR VALVE BOXES, BACKFILLING, AND RESTORATION OF ALL SURFACES. BRANCHES TO BE DISCONNECTED ARE SHOWN ON THE PLANS OR INDICATED BY THE ENGINEER.*

638.02 CONSTRUCTION. *THE ENGINEER WILL FACILITATE A SCHEDULED SHUT DOWN OF THE WATER MAIN. EXCAVATE DOWN TO THE FERRULE AT THE WATER MAIN. ONCE THE WATER MAIN IS SHUT DOWN, DISCONNECT THE SERVICE LINE AT THE FERRULE. REMOVE THE FERRULE FROM THE WATER MAIN AND INSTALL A TAPERED BRASS PLUG SUPPLIED BY THE CONTRACTOR.*

638.03 SERVICE BRANCHES WITH SERVICE SADDLES. *IN THOSE INSTANCES WHERE A SERVICE SADDLE IS PART OF THE SERVICE BRANCH, EXPOSE THE CONNECTION TO THE WATER MAIN, REMOVE THE SERVICE SADDLE, AND FURNISH AND INSTALL A STAINLESS STEEL LEAK CLAMP. AFTER THE SERVICE LINE HAS BEEN DISCONNECTED, BACKFILL THE EXCAVATION AND PERFORM PERMANENT RESTORATION.*

REMOVE OR BREAK OUT EXISTING CURB, ROADWAY, OR VALVE BOX. IF THE BOX IS IN A CONCRETE WALK, OR IN PERMANENT ROADWAY, REMOVE THE LID AND PLACE A

PATCH OF CONCRETE OVER THE OPENING. IF THE BOX IS LOCATED IN A DIRT OR SOD AREA, REMOVE OR BREAK OUT THE ENTIRE TOP SECTION OF THE BOX AND BACKFILL WITH EARTH.

PERFORM RESTORATION OF THE AREA SURROUNDING THE VALVE BOX CONFORMING TO THE STREET RESTORATION REQUIREMENTS OF THE APPROPRIATE POLITICAL AGENCY OR AS INDICATED ON THE PLANS.

638.04 MEASUREMENT. *ODOT WILL MEASURE DISCONNECTING SERVICE BRANCHES BY THE ACTUAL NUMBER OF EACH COMPLETED AND ACCEPTED.*

638.05 BASIS OF PAYMENT. *PAYMENT IS FULL COMPENSATION FOR ALL LABOR, AND EQUIPMENT REQUIRED TO PERFORM THE WORK AS HEREIN SPECIFIED.*

ODOT WILL PAY FOR ACCEPTED QUANTITIES AT THE CONTRACT PRICES AS FOLLOWS:

ITEM UNIT DESCRIPTION

638 EACH SPECIAL - DISCONNECTING EXISTING 2-INCH SERVICE BRANCH (CIN. 1130)

CALCULATED RLD CHECKED CWP

GENERAL NOTES (CINCINNATI WATER WORKS)

HAM-71-1.34

c:\pwworking\hmm\external\tyn61470\dms72664\872680N009.dgn 10/24/2014 3:53:16 PM TYN61470

CALCULATED RLD CHECKED CWP

MAINTENANCE OF TRAFFIC GENERAL NOTES

ITEM 614, MAINTAINING TRAFFIC

THE PURPOSE OF THIS PROJECT IS TO REPLACE THE LIGHTING IN LYTLE TUNNEL AND IMPROVE THE VENTILATION OF THE LYTLE TUNNEL BY CONSTRUCTING A NEW VENTILATION BUILDING ADJACENT TO THE EXISTING VENTILATION BUILDING IN LYTLE PARK. LYTLE STREET WILL HAVE VENTILATION GRATING CONSTRUCTED IN THE SIDEWALK. PORTIONS OF LYTLE STREET, PIKE STREET, AND EAST FOURTH STREET WILL BE RECONSTRUCTED OR RESURFACED. THE EXISTING AIR OPENINGS IN THE SOUTHBOUND INTERSTATE 71 WALL IN LYTLE TUNNEL, NORTHBOUND INTERSTATE 71 CEILING, AND INTERSTATE 71 RAMP "E" WILL BE ENLARGED. ANCILLARY WORK INCLUDES STANDPIPE REPLACEMENT, REMOVING THE PUMP STATION SOUTH OF THE LYTLE TUNNEL AND REPLACING IT WITH A CONCRETE PAD FOR RENTAL OF PORTABLE PUMPS.

THE PERMITTED LANE CLOSURE NOTE WILL DICTATE THE NUMBER OF LANE(S) OF TRAFFIC TO BE MAINTAINED IN EACH DIRECTION ON INTERSTATE 71 AND THE RAMPS. TRAFFIC SHALL BE MAINTAINED AT ALL TIMES BY USE OF THE EXISTING PAVEMENT, THE COMPLETED PAVEMENT, ITEM 615 PAVEMENT FOR MAINTAINING TRAFFIC, ITEM 615 ROADS FOR MAINTAINING TRAFFIC, AND TEMPORARY SURFACES USING ITEMS 410, AND 614.

LENGTH AND DURATION OF LANE CLOSURES AND RESTRICTIONS SHALL BE AT THE APPROVAL OF THE ENGINEER. IT IS THE INTENT TO MINIMIZE THE IMPACT TO THE TRAVELING PUBLIC. LANE CLOSURES OR RESTRICTIONS OVER SEGMENTS OF THE PROJECT IN WHICH NO WORK IS ANTICIPATED WITHIN A REASONABLE TIME FRAME, AS DETERMINED BY THE ENGINEER, SHALL NOT BE PERMITTED. THE LEVEL OF UTILIZATION OF MAINTENANCE OF TRAFFIC DEVICES SHALL BE COMMENSURATE WITH THE WORK IN PROGRESS.

NOTICE OF CLOSURE SIGNS, AS DETAILED IN THESE PLANS, SHALL BE ERECTED BY THE CONTRACTOR AT LEAST ONE WEEK IN ADVANCE OF THE SCHEDULED ROAD OR RAMP CLOSURE. THE SIGNS SHALL BE ERECTED ON THE RIGHT-HAND SIDE OF THE ROAD/RAMP FACING TRAFFIC. THEY SHALL BE PLACED SO AS NOT TO INTERFERE WITH THE VISIBILITY OF ANY OTHER TRAFFIC CONTROL SIGNS. ON ROADWAYS, THEY SHOULD BE ERECTED AT THE POINT OF CLOSURE. THE SIGNS MAY BE ERECTED ANYWHERE ON RAMPS AS LONG AS THEY ARE VISIBLE TO THE MOTORISTS USING THE RAMP. ON ENTRANCE RAMPS, THE SIGN SHALL BE ERECTED WELL IN ADVANCE OF THE MERGE AREA TO AVOID DISTRACTING MOTORISTS.

THE CONTRACTOR SHALL PROVIDE, ERECT AND MAINTAIN STANDARD 48 X 30 INCH ROAD CLOSED SIGNS, SIGN SUPPORTS, BARRICADES AND LIGHTS, AS DETAILED IN SCD MT-101.60 AT THE FOLLOWING LOCATIONS DURING PERIODS IN WHICH THE AFFECTED ROADS ARE CLOSED TO TRAFFIC.

LYTLE STREET AT PIKE STREET
LYTLE STREET AT THE TUNNEL ENTRANCE BUILDING

THE CONTRACTOR SHALL PROVIDE, ERECT AND MAINTAIN SIGNS AND SIGN SUPPORTS, AS DETAILED IN THE OHIO MANUAL OF UNIFORM TRAFFIC CONTROL DEVICES, AND TYPE III BARRICADES OF THE TYPE AND LOCATION AS SHOWN IN THE PLANS.

ALL WORK AND TRAFFIC CONTROL DEVICES SHALL BE IN ACCORDANCE WITH CMS 614 AND OTHER APPLICABLE PORTIONS OF THE SPECIFICATIONS, AS WELL AS THE OHIO MANUAL OF UNIFORM TRAFFIC CONTROL DEVICES. PAYMENT FOR ALL LABOR, EQUIPMENT AND MATERIALS SHALL BE INCLUDED IN THE LUMP SUM CONTRACT PRICE FOR ITEM 614, MAINTAINING TRAFFIC, UNLESS SEPARATELY ITEMIZED IN THE PLAN.

ITEM 614, MAINTAINING TRAFFIC (LANES OPEN DURING HOLIDAYS OR SPECIAL EVENTS)

NO WORK SHALL BE PERFORMED AND ALL EXISTING LANES ON INTERSTATE 71, THE SECOND STREET RAMP, AND THE THIRD STREET RAMP SHALL BE OPEN TO TRAFFIC DURING THE FOLLOWING DESIGNATED HOLIDAYS OR EVENTS:

CHRISTMAS	FOURTH OF JULY
NEW YEARS	LABOR DAY
MEMORIAL DAY	THANKSGIVING
EASTER	

THE PERIOD OF TIME THAT THE LANES ARE TO BE OPEN DEPENDS ON THE DAY OF THE WEEK ON WHICH THE HOLIDAY OR EVENT FALLS. THE FOLLOWING SCHEDULE SHALL BE USED TO DETERMINE THIS PERIOD:

DAY OF HOLIDAY OR EVENT	TIME ALL LANES MUST BE OPEN TO TRAFFIC
SUNDAY	6 AM FRIDAY THROUGH 10 PM MONDAY
MONDAY	6 AM FRIDAY THROUGH 10 PM TUESDAY
TUESDAY	6 AM MONDAY THROUGH 10 PM WEDNESDAY
WEDNESDAY	6 AM TUESDAY THROUGH 10 PM THURSDAY
THURSDAY	6 AM WEDNESDAY THROUGH 10 PM FRIDAY
THANKSGIVING	6 AM WEDNESDAY THROUGH 6 AM MONDAY
FRIDAY	6 AM THURSDAY THROUGH 10 PM MONDAY
SATURDAY	6 AM FRIDAY THROUGH 10 PM MONDAY

IN ADDITION, NO WORK SHALL BE PERFORMED AND ALL EXISTING LANES ON INTERSTATE 71, THE SECOND STREET RAMP, AND THE THIRD STREET RAMP SHALL BE OPEN TO TRAFFIC FROM 7/6/15 THROUGH 7/15/15 FOR THE 2015 MAJOR LEAGUE BASEBALL ALL STAR GAME.

SHOULD THE CONTRACTOR FAIL TO MEET ANY OF THESE REQUIREMENTS, THE CONTRACTOR SHALL BE ASSESSED A DISINCENTIVE IN THE AMOUNT OF $125 FOR EACH MINUTE THE ABOVE DESCRIBED LANE CLOSURE RESTRICTIONS ARE VIOLATED.

SHORT TERM CLOSURES

SHORT TERM LANE CLOSURES ARE THOSE WHICH ARE PERMITTED BY THE PERMITTED LANE CLOSURE NOTE. THESE TIMES SHALL NOT BE REVISED WITHOUT PRIOR APPROVAL FROM THE DISTRICT 8 WORK ZONE TRAFFIC CONTROL MANAGER. SHORT TERM LANE CLOSURES SHALL ONLY BE IMPLEMENTED WHEN WORK IS BEING CONTINUOSLY PERFORMED IN THE LANE. THE CLOSURE SHALL BE REMOVED AS SOON AS POSSIBLE AFTER WORK HAS STOPPED. PERMITTED LANE CLOSURES SHALL ONLY BE ALLOWED DURING THE TIMES SPECIFIED IN THE DISTRICT 8, PERMITTED LANE CLOSURE SCHEDULE WHICH IS LOCATED ON THE ODOT WEBSITE:
http://plcm.dot.state.oh.us//plcm/plcm_web.jsp
THE LATEST REVISION, 14 DAYS PRIOR TO THE BID, SHALL BE IN EFFECT FOR THIS PROJECT. NO LANE OR SHOULDER CLOSURE SHALL BE IN PLACE WHEN NO WORK IS BEING PERFORMED.

LANE VALUE CONTRACT TABLE

DESCRIPTION OF CRITICAL LANE/RAMP TO BE MAINTAINED	RESTRICTED TIME PERIOD	TIME UNIT	DISINCENTIVE $ PER TIME UNIT
ALL LANES/RAMPS OPEN TO TRAFFIC	SEE PERMITTED LANE CLOSURE SCHEDULE	1 MINUTE PERIOD	$125

CLOSURES ARE DELAYED FOR 2 HOURS BEFORE AND 2 HOURS AFTER EVENTS AT US BANK ARENA, GREAT AMERICAN BALLPARK AND PAUL BROWN STADIUM.

NO SHORT-TERM SHOULDER CLOSURE BETWEEN THE HOURS OF 6AM TO 9AM AND 3PM TO 7PM MONDAY THROUGH FRIDAY.

THE SECOND STREET AND THIRD STREET RAMPS WILL NOT BE CLOSED TO TRAFFIC WHEN THE FOLLOWING SPECIAL EVENTS (HEART MINI-MARATHON, FLYING PIG RACE, RIVERFEST AND OKTOBERFEST) OCCUR IN THE DOWNTOWN DISTRICT.

SCHEDULE OF RAMPS TO BE MAINTAINED

THE NORTHBOUND ENTRANCE FROM SECOND STREET MAY BE CLOSED FOR UP TO 60 CONSECUTIVE CALENDAR DAYS. DURING THIS TIME, TWO LANES OF I.R.-71 TRAFFIC SHALL BE MAINTAINED WITH THE SECOND STREET RAMP CLOSURE.

THE SOUTHBOUND TUNNEL RAMP TO THIRD STREET MAY BE CLOSED FOR UP TO 20 CONSECUTIVE CALENDAR DAYS EACH FOR STAGE 1 AND FOR STAGE 2, PHASE 4A.

THE SECOND AND THIRD STREET RAMPS CANNOT BE CLOSED AT THE SAME TIME, EXCEPT DURING THE 48 HOUR WEEKEND CLOSURE FOR PRE-PHASE 3C.

SHOULD THE CONTRACTOR FAIL TO MEET ANY OF THESE REQUIREMENTS, THE CONTRACTOR SHALL BE ASSESSED A DISINCENTIVE IN THE AMOUNT OF $125 FOR EACH MINUTE THE ABOVE DESCRIBED LANE CLOSURE RESTRICTIONS ARE VIOLATED.

ADDITIONAL LANE CLOSURES ON PIKE STREET AND FOURTH STREET

AN ADDITIONAL LANE ON PIKE STREET FROM FOURTH STREET TO LYTLE STREET AND/OR FOURTH STREET FROM PIKE STREET TO LUDLOW STREET MAY BE CLOSED FOR DELIVERIES. THE CONTRACTOR IS TO FOLLOW OMUTCD, ODOT TEM, AND ODOT STANDARD DRAWINGS FOR THIS TEMPORARY CLOSURE. THE CLOSURE IS LIMITED TO NON-PEAK PERIODS AND NON-EVENT TIMES. THE PEAK HOURS ARE DEFINED AS 6AM-9AM AND 4PM – 7PM.

SUGGESTED SEQUENCE OF CONSTRUCTION

THE STAGES AND PHASES OF THE MAJOR WORK DURING EACH STAGE AND PHASE ARE LISTED BELOW.

STAGE 1 – PUMP STATION RENOVATION
I.R.-71 NORTHBOUND:
TO OPERATE IN EXISTING CONFIGURATION.
NO TRAFFIC IMPACTS.
I.R.-71 SOUTHBOUND:
TO OPERATE IN EXISTING CONFIGURATION.
NO TRAFFIC IMPACTS.
I.R.-71 EXIT RAMP "E" TO THIRD STREET:
DETOUR RAMP "E" TRAFFIC PER THE MAINTENANCE OF TRAFFIC DETAILS.
SECOND STREET RAMP TO INTERSTATE 71 NORTHBOUND:
TO OPERATE IN EXISTING CONFIGURATION.
NO TRAFFIC IMPACTS.

MAJOR CONSTRUCTION ACTIVITIES
1. INSTALL BYPASS PUMPING.
2. ABANDON EXISTING PUMP STATION.
3. DISCONNECT AND REMOVE EXISTING FEEDERS FROM THE EXISTING SWITCHBOARDS (#1, 2 AND 3) IN THE TUNNEL VENTILATION FACILITY TO THE PUMP STATION.
4. CUT AND GRADE FOR PROPOSED CONCRETE SLAB.
5. INSTALL CONCRETE SLAB AND APPURTENANCES.
6. SEED DISTURBED AREA.

STAGE 2 – CONSTRUCT PROPOSED VENTILATION ROOM AND TUNNEL IMPROVEMENTS
PHASE 1
LYTLE STREET:
CLOSE A SECTION OF LYTLE STREET TO VEHICULAR AND PEDESTRIAN TRAFFIC USING BARRICADES BETWEEN THE EXISTING TUNNEL ENTRANCE BUILDING AND PIKE STREET. THE OPEN SECTION OF LYTLE STREET WILL BE TEMPORARILY CONVERTED TO TWO-WAY TRAFFIC AND ALL PARKING WILL BE PROHIBITED ON LYTLE STREET.
THIRD STREET:
THIRD STREET FROM PIKE STREET TO LYTLE STREET WILL BE TEMPORARILY CONVERTED TO TWO-WAY TRAFFIC AND ALL PARKING WILL BE PROHIBITED ON THIRD STREET FROM PIKE STREET TO LYTLE STREET.

HAM-71-1.34

c:\pwworking\hmm\external\tyn61470\dms72866\872660MN001.dgn 10/25/2014 12:13:53 PM TYN61470

PIKE STREET:
ON PIKE STREET, TWO-WAY TRAFFIC WILL BE MAINTAINED AT ALL TIMES, AND ALL PARKING WILL BE PROHIBITED ON PIKE STREET FROM EAST FOURTH STREET TO LYTLE STREET. TRAFFIC WILL BE SHIFTED PER THE MAINTENANCE OF TRAFFIC DETAILS.

EAST FOURTH STREET:
ON EAST FOURTH STREET, ONE-WAY TRAFFIC WILL BE MAINTAINED AT ALL TIMES, AND ALL PARKING WILL BE PROHIBITED AND PARKING METERS COVERED ON THE SOUTH SIDE OF EAST FOURTH STREET FROM PIKE STREET TO THE EXISTING SIDEWALK IN LYTLE PARK. TRAFFIC WILL BE SHIFTED PER THE MAINTENANCE OF TRAFFIC DETAILS.

EAST FIFTH STREET:
TO OPERATE IN EXISTING CONFIGURATION.
NO TRAFFIC IMPACTS.

SENTINEL STREET:
TO OPERATE IN EXISTING CONFIGURATION.
NO TRAFFIC IMPACTS.

LYTLE PARK:
THE EAST HALF OF LYTLE PARK WILL BE CLOSED. PEDESTRIAN TRAFFIC WILL BE MAINTAINED IN THE WEST HALF OF THE PARK PER THE MAINTENANCE OF TRAFFIC DETAILS.

I.R.-71 NORTHBOUND:
TO OPERATE IN EXISTING CONFIGURATION.
NO TRAFFIC IMPACTS.

I.R.-71 SOUTHBOUND:
TO OPERATE IN EXISTING CONFIGURATION.
NO TRAFFIC IMPACTS.

I.R.-71 EXIT RAMP "E" TO THIRD STREET:
TO OPERATE IN EXISTING CONFIGURATION.
NO TRAFFIC IMPACTS.

SECOND STREET RAMP TO INTERSTATE 71 NORTHBOUND:
TO OPERATE IN EXISTING CONFIGURATION.
NO TRAFFIC IMPACTS.

MAJOR CONSTRUCTION ACTIVITIES
1. REMOVE AND SALVAGE PARK FURNISHINGS.
2. EXCAVATE ABOVE NORTHBOUND TUNNEL AND RAMP "E" TUNNEL FOR ROOF WORK.
3. CONSTRUCT ROOF.
4. BACKFILL EXCAVATION.
5. REGRADE DISTURBED PORTION OF LYTLE PARK.

PHASE 1A

LYTLE STREET:
SAME AS PHASE 1.

THIRD STREET:
SAME AS PHASE 1.

PIKE STREET:
SAME AS PHASE 1.

EAST FOURTH STREET:
SAME AS PHASE 1.

EAST FIFTH STREET:
TO OPERATE IN EXISTING CONFIGURATION.
NO TRAFFIC IMPACTS.

SENTINEL STREET:
TO OPERATE IN EXISTING CONFIGURATION.
NO TRAFFIC IMPACTS.

LYTLE PARK:
SAME AS PHASE 1.

I.R.-71 NORTHBOUND:
TO OPERATE IN EXISTING CONFIGURATION.
NO TRAFFIC IMPACTS.

I.R.-71 SOUTHBOUND:
TO OPERATE IN EXISTING CONFIGURATION.
NO TRAFFIC IMPACTS.

I.R.-71 EXIT RAMP "E" TO THIRD STREET:
TO OPERATE IN EXISTING CONFIGURATION.
NO TRAFFIC IMPACTS.

SECOND STREET RAMP TO INTERSTATE 71 NORTHBOUND:
TO OPERATE IN EXISTING CONFIGURATION.
NO TRAFFIC IMPACTS.

MAJOR CONSTRUCTION ACTIVITIES
1. EXCAVATE FOR PROPOSED VENTILATION ROOM.
2. CONSTRUCT NEW BASE SLAB AND WALLS.
3. SET NEW FANS IN PLACE.
4. CONSTRUCT ROOF.
5. BACKFILL EXCAVATION.
6. REGRADE LYTLE PARK.

PHASE 2

LYTLE STREET:
SAME AS PHASE 1.

THIRD STREET:
SAME AS PHASE 1

PIKE STREET:
SAME AS PHASE 1 EXCEPT THAT FLAGGERS WILL BE NEEDED FOR THE INSTALLATION OF THE TRANSFORMER DRAINAGE. FLAGGING TRAFFIC WILL BE LIMITED TO OFF-PEAK HOURS.

EAST FOURTH STREET:
SAME AS PHASE 1.

EAST FIFTH STREET:
TO OPERATE IN EXISTING CONFIGURATION.
NO TRAFFIC IMPACTS.

SENTINEL STREET:
TO OPERATE IN EXISTING CONFIGURATION.
NO TRAFFIC IMPACTS.

LYTLE PARK:
SAME AS PHASE 1.

I.R.-71 NORTHBOUND:
TO OPERATE IN EXISTING CONFIGURATION.
NO TRAFFIC IMPACTS.

I.R.-71 SOUTHBOUND:
TO OPERATE IN EXISTING CONFIGURATION.
NO TRAFFIC IMPACTS.

I.R.-71 EXIT RAMP "E" TO THIRD STREET:
TO OPERATE IN EXISTING CONFIGURATION.
NO TRAFFIC IMPACTS.

SECOND STREET RAMP TO INTERSTATE 71 NORTHBOUND:
TO OPERATE IN EXISTING CONFIGURATION.
NO TRAFFIC IMPACTS.

MAJOR CONSTRUCTION ACTIVITIES
1. CONSTRUCT TRANSFORMER VAULTS AND TRANSFORMER VAULT DRAINAGE.
2. INSTALL TRANSFORMERS (BY OTHERS).
3. INSTALL SWITCHGEAR AND MOTOR CONTROL CENTERS (MCCs).
4. FINISH INSTALLATION OF FANS (FROM PHASE 1A) AND INSTALL CONTROLS.
5. INSTALL ELECTRICAL CABLE AND CONDUIT.
6. INSTALL GRATINGS AND HATCHES
7. DEMOLISH WALL BETWEEN EXISTING BUILDING AND NEW BUILDING AND CONNECT NEW FANS TO OLD EXHAUST.

PHASE 3

LYTLE STREET:
SAME AS PHASE 1.

THIRD STREET:
SAME AS PHASE 1.

PIKE STREET:
SAME AS PHASE 1.

EAST FOURTH STREET:
SAME AS PHASE 1.

EAST FIFTH STREET:
TO OPERATE IN EXISTING CONFIGURATION.
NO TRAFFIC IMPACTS.

SENTINEL STREET:
TO OPERATE IN EXISTING CONFIGURATION.
NO TRAFFIC IMPACTS.

LYTLE PARK:
SAME AS PHASE 1.

I.R.-71 NORTHBOUND:
TO OPERATE IN EXISTING CONFIGURATION.
NO TRAFFIC IMPACTS.

I.R.-71 SOUTHBOUND:
TO OPERATE IN EXISTING CONFIGURATION.
NO TRAFFIC IMPACTS.

I.R.-71 EXIT RAMP "E" TO THIRD STREET:
TO OPERATE IN EXISTING CONFIGURATION.
NO TRAFFIC IMPACTS.

SECOND STREET RAMP TO INTERSTATE 71 NORTHBOUND:
TO OPERATE IN EXISTING CONFIGURATION.
NO TRAFFIC IMPACTS.

MAJOR CONSTRUCTION ACTIVITIES
1. REMOVE EXISTING FANS FOR NORTHBOUND TUNNEL
2. DEMOLISH PORTION OF EXISTING WALLS IN VENTILATION ROOM ABOVE NORTHBOUND TUNNEL (UNIT 17) - EAST WALL.
3. DEMOLISH PORTION OF EXISTING WALLS IN VENTILATION ROOM ABOVE NORTHBOUND TUNNEL (UNIT 17) - CENTER WALL.

PRE-PHASE 3A

LYTLE STREET:
SAME AS PHASE 1.

THIRD STREET:
SAME AS PHASE 1.

PIKE STREET:
SAME AS PHASE 1.

EAST FOURTH STREET:
SAME AS PHASE 1.

EAST FIFTH STREET:
TO OPERATE IN EXISTING CONFIGURATION.
NO TRAFFIC IMPACTS.

SENTINEL STREET:
TO OPERATE IN EXISTING CONFIGURATION.
NO TRAFFIC IMPACTS.

LYTLE PARK:
SAME AS PHASE 1.

I.R.-71 NORTHBOUND:
NORTHBOUND INTERSTATE 71 WILL BE MAINTAINED PER ODOT'S PERMITTED LANE CLOSURES, THE OMUTCD, TEM, AND STANDARD CONSTRUCTION DRAWINGS.

I.R.-71 SOUTHBOUND:
TO OPERATE IN EXISTING CONFIGURATION.
NO TRAFFIC IMPACTS.

I.R.-71 EXIT RAMP "E" TO THIRD STREET:
TO OPERATE IN EXISTING CONFIGURATION.
NO TRAFFIC IMPACTS.

SECOND STREET RAMP TO INTERSTATE 71 NORTHBOUND:
THE SECOND STREET RAMP TO INTERSTATE 71 NORTHBOUND WILL BE CLOSED AND TRAFFIC DETOURED.

MAJOR CONSTRUCTION ACTIVITIES
1. FILL RUMBLE STRIPS.

PHASE 3A

LYTLE STREET:
SAME AS PHASE 1.

THIRD STREET:
SAME AS PHASE 1.

PIKE STREET:
SAME AS PHASE 1.

EAST FOURTH STREET:
SAME AS PHASE 1.

EAST FIFTH STREET:
TO OPERATE IN EXISTING CONFIGURATION.
NO TRAFFIC IMPACTS.

SENTINEL STREET:
TO OPERATE IN EXISTING CONFIGURATION.
NO TRAFFIC IMPACTS.

LYTLE PARK:
SAME AS PHASE 1.

I.R.-71 NORTHBOUND:
THE CONSTRUCTION WILL BE PHASED SO THAT TWO (2) LANES OF TRAFFIC ON NORTHBOUND INTERSTATE 71 ARE MAINTAINED AT ALL TIMES. TRAFFIC WILL BE SHIFTED PER THE MAINTENANCE OF TRAFFIC DETAILS.

I.R.-71 SOUTHBOUND:
TO OPERATE IN EXISTING CONFIGURATION.
NO TRAFFIC IMPACTS.

I.R.-71 EXIT RAMP "E" TO THIRD STREET:
TO OPERATE IN EXISTING CONFIGURATION.
NO TRAFFIC IMPACTS.

SECOND STREET RAMP TO INTERSTATE 71 NORTHBOUND:
THE SECOND STREET RAMP TO INTERSTATE 71 NORTHBOUND WILL BE CLOSED AND TRAFFIC DETOURED.

MAJOR CONSTRUCTION ACTIVITIES
1. ENLARGE NORTHBOUND CEILING INTAKE OVER EAST SIDE OF TUNNEL.
2. REMOVE CURB AND WALK.
3. REMOVE EXISTING LIGHTING
4. CONSTRUCT FIRE PROTECTION COATING.
5. PERFORM WATER INFILTRATION MITIGATION, EXPANSION JOINT REPAIR, AND TILING ACTIVITIES.
6. CONSTRUCT NEW LIGHTING.

CALCULATED RLD CHECKED CWP

MAINTENANCE OF TRAFFIC GENERAL NOTES

HAM-71-1.34

c:\pwworking\hmm\external\tyn61470\dms72866\d72866MN002.dgn 10/25/2014 12:14:06 PM TYN61470

7. CONSTRUCT AUTOMATIC FIRE DETECTION SYSTEM.
8. CONSTRUCT NEW CCTVS AND ITS CONDUIT.
9. CONSTRUCT NEW CURB, WALK, BARRIER, AND PAVEMENT.
10. CONSTRUCT THE NEW TUNNEL CLOSED AHEAD SIGN.

PRE-PHASE 3B

LYTLE STREET:
SAME AS PHASE 1.

THIRD STREET:
SAME AS PHASE 1.

PIKE STREET:
SAME AS PHASE 1.

EAST FOURTH STREET:
SAME AS PHASE 1.

EAST FIFTH STREET:
TO OPERATE IN EXISTING CONFIGURATION. NO TRAFFIC IMPACTS.

SENTINEL STREET:
TO OPERATE IN EXISTING CONFIGURATION. NO TRAFFIC IMPACTS.

LYTLE PARK:
SAME AS PHASE 1.

I.R.-71 NORTHBOUND:
NORTHBOUND INTERSTATE 71 WILL BE MAINTAINED PER ODOT'S PERMITTED LANE CLOSURES, THE OMUTCD, TEM, AND STANDARD CONSTRUCTION DRAWINGS.

I.R.-71 SOUTHBOUND:
TO OPERATE IN EXISTING CONFIGURATION. NO TRAFFIC IMPACTS.

I.R.-71 EXIT RAMP "E" TO THIRD STREET:
TO OPERATE IN EXISTING CONFIGURATION. NO TRAFFIC IMPACTS.

SECOND STREET RAMP TO INTERSTATE 71 NORTHBOUND:
THE SECOND STREET RAMP TO INTERSTATE 71 NORTHBOUND WILL BE CLOSED AND TRAFFIC DETOURED.

MAJOR CONSTRUCTION ACTIVITIES
1. FILL RUMBLE STRIPS.
2. CONSTRUCT TEMPORARY PAVEMENT ON I.R.-71 NORTHBOUND SOUTH OF THE TUNNEL.

PHASE 3B

LYTLE STREET:
SAME AS PHASE 1.

THIRD STREET:
SAME AS PHASE 1.

PIKE STREET:
SAME AS PHASE 1.

EAST FOURTH STREET:
SAME AS PHASE 1.

EAST FIFTH STREET:
TO OPERATE IN EXISTING CONFIGURATION. NO TRAFFIC IMPACTS.

SENTINEL STREET:
TO OPERATE IN EXISTING CONFIGURATION. NO TRAFFIC IMPACTS.

LYTLE PARK:
SAME AS PHASE 1.

I.R.-71 NORTHBOUND:
THE CONSTRUCTION WILL BE PHASED SO THAT TWO (2) LANES OF TRAFFIC ON NORTHBOUND INTERSTATE 71 ARE MAINTAINED AT ALL TIMES. TRAFFIC WILL BE SHIFTED PER THE MAINTENANCE OF TRAFFIC DETAILS.

I.R.-71 SOUTHBOUND:
TO OPERATE IN EXISTING CONFIGURATION. NO TRAFFIC IMPACTS.

I.R.-71 EXIT RAMP "E" TO THIRD STREET:
TO OPERATE IN EXISTING CONFIGURATION. NO TRAFFIC IMPACTS.

SECOND STREET RAMP TO INTERSTATE 71 NORTHBOUND:
THE SECOND STREET RAMP TO INTERSTATE 71 NORTHBOUND WILL BE CLOSED AND TRAFFIC DETOURED.

MAJOR CONSTRUCTION ACTIVITIES
1. ENLARGE NORTHBOUND CEILING INTAKE OVER CENTER OF TUNNEL.
2. CONSTRUCT FIRE PROTECTION COATING.
3. PERFORM WATER INFILTRATION MITIGATION, EXPANSION JOINT REPAIR, AND TILING ACTIVITIES.
4. CONSTRUCT AUTOMATIC FIRE DETECTION SYSTEM.
5. CONSTRUCT NEW ITS CONDUIT.

PRE-PHASE 3C

LYTLE STREET:
SAME AS PHASE 1.

THIRD STREET:
SAME AS PHASE 1.

PIKE STREET:
SAME AS PHASE 1.

EAST FOURTH STREET:
SAME AS PHASE 1.

EAST FIFTH STREET:
TO OPERATE IN EXISTING CONFIGURATION. NO TRAFFIC IMPACTS.

SENTINEL STREET:
TO OPERATE IN EXISTING CONFIGURATION. NO TRAFFIC IMPACTS.

LYTLE PARK:
SAME AS PHASE 1.

I.R.-71 NORTHBOUND:
NORTHBOUND INTERSTATE 71 WILL BE MAINTAINED PER ODOT'S PERMITTED LANE CLOSURES, THE OMUTCD, TEM, AND STANDARD CONSTRUCTION DRAWINGS.

I.R.-71 SOUTHBOUND:
TO OPERATE IN EXISTING CONFIGURATION. NO TRAFFIC IMPACTS.

I.R.-71 EXIT RAMP "E" TO THIRD STREET:
THE INTERSTATE 71 SOUTHBOUND EXIT RAMP "E" TO THIRD STREET WILL BE CLOSED AND TRAFFIC DETOURED. NO VEHICULAR TRAFFIC WILL BE IN THE RAMP "E" TUNNEL.

SECOND STREET RAMP TO INTERSTATE 71 NORTHBOUND:
THE SECOND STREET RAMP TO INTERSTATE 71 NORTHBOUND WILL BE CLOSED AND TRAFFIC DETOURED.

MAJOR CONSTRUCTION ACTIVITIES
1. CONSTRUCT TEMPORARY STANDPIPE AND TEMPORARY HOSE CONNECTIONS ON THE CURB ON THE WEST WALL IN I.R.-71 RAMP "E" TUNNEL.
2. DEMOLISH PORTIONS OF CURB ON EAST WALL IN I.R.-71 RAMP "E" TUNNEL IN FRONT OF ALL HOSE CONNECTIONS. SEE STANDPIPE PLANS.
3. REMOVE ALL EXISTING RAMP "E" HOSE CONNECTION RISERS. SEE STANDPIPE PLANS.
4. INSTALL PORTABLE BARRIER TO PROTECT STANDPIPE IN RAMP "E" WEST SHOULDER. THE PORTABLE BARRIER WILL REMAIN THROUGHOUT NORTHBOUND STANDPIPE CONSTRUCTION.

PHASE 3C

LYTLE STREET:
SAME AS PHASE 1.

THIRD STREET:
SAME AS PHASE 1

PIKE STREET:
SAME AS PHASE 1.

EAST FOURTH STREET:
SAME AS PHASE 1.

EAST FIFTH STREET:
TO OPERATE IN EXISTING CONFIGURATION. NO TRAFFIC IMPACTS.

SENTINEL STREET:
TO OPERATE IN EXISTING CONFIGURATION. NO TRAFFIC IMPACTS.

LYTLE PARK:
SAME AS PHASE 1.

I.R.-71 NORTHBOUND:
THE CONSTRUCTION WILL BE PHASED SO THAT TWO (2) LANES OF TRAFFIC ON NORTHBOUND INTERSTATE 71 ARE MAINTAINED AT ALL TIMES. TRAFFIC WILL BE SHIFTED PER THE MAINTENANCE OF TRAFFIC DETAILS.

I.R.-71 SOUTHBOUND:
TO OPERATE IN EXISTING CONFIGURATION. NO TRAFFIC IMPACTS.

I.R.-71 EXIT RAMP "E" TO THIRD STREET:
TO OPERATE IN EXISTING CONFIGURATION. NO TRAFFIC IMPACTS.

SECOND STREET RAMP TO INTERSTATE 71 NORTHBOUND:
THE SECOND STREET RAMP TO INTERSTATE 71 NORTHBOUND WILL BE CLOSED AND TRAFFIC DETOURED.

MAJOR CONSTRUCTION ACTIVITIES
1. ENLARGE NORTHBOUND CEILING INTAKE OVER WEST SIDE OF TUNNEL.
2. REMOVE EXISTING LIGHTING.
3. REMOVE CURB AND WALK.
4. REMOVE STANDPIPE.
5. CONSTRUCT NEW STANDPIPE.
6. CONSTRUCT FIRE PROTECTION COATING.
7. PERFORM WATER INFILTRATION MITIGATION, EXPANSION JOINT REPAIR, AND TILING ACTIVITIES.
8. CONSTRUCT NEW LIGHTING.
9. CONSTRUCT AUTOMATIC FIRE DETECTION SYSTEM.
10. CONSTRUCT NEW ITS CONDUIT.
11. CONSTRUCT NEW CURB, WALK, BARRIER, AND PAVEMENT.

POST-PHASE 3C

LYTLE STREET:
SAME AS PHASE 1.

THIRD STREET:
SAME AS PHASE 1.

PIKE STREET:
SAME AS PHASE 1.

EAST FOURTH STREET:
SAME AS PHASE 1.

EAST FIFTH STREET:
TO OPERATE IN EXISTING CONFIGURATION. NO TRAFFIC IMPACTS.

SENTINEL STREET:
TO OPERATE IN EXISTING CONFIGURATION. NO TRAFFIC IMPACTS.

LYTLE PARK:
SAME AS PHASE 1.

I.R.-71 NORTHBOUND:
NORTHBOUND INTERSTATE 71 WILL BE MAINTAINED PER ODOT'S PERMITTED LANE CLOSURES, THE OMUTCD, TEM, AND STANDARD CONSTRUCTION DRAWINGS.

I.R.-71 SOUTHBOUND:
TO OPERATE IN EXISTING CONFIGURATION. NO TRAFFIC IMPACTS.

I.R.-71 EXIT RAMP "E" TO THIRD STREET:
TO OPERATE IN EXISTING CONFIGURATION. NO TRAFFIC IMPACTS.

SECOND STREET RAMP TO INTERSTATE 71 NORTHBOUND:
THE SECOND STREET RAMP TO INTERSTATE 71 NORTHBOUND WILL BE CLOSED AND TRAFFIC DETOURED.

MAJOR CONSTRUCTION ACTIVITIES
1. REMOVE TEMPORARY PAVEMENT ON I.R.-71 NORTHBOUND SOUTH OF THE TUNNEL.
2. INSTALL NORTHBOUND PAVEMENT MARKINGS.

PHASE 3D

LYTLE STREET:
SAME AS PHASE 1.

THIRD STREET:
SAME AS PHASE 1.

PIKE STREET:
SAME AS PHASE 1.

EAST FOURTH STREET:
SAME AS PHASE 1.

EAST FIFTH STREET:
TO OPERATE IN EXISTING CONFIGURATION. NO TRAFFIC IMPACTS.

SENTINEL STREET:
TO OPERATE IN EXISTING CONFIGURATION. NO TRAFFIC IMPACTS.

LYTLE PARK:
SAME AS PHASE 1.

I.R.-71 NORTHBOUND:
TO OPERATE IN EXISTING CONFIGURATION. NO TRAFFIC IMPACTS.

CALCULATED RLD
CHECKED CWP

MAINTENANCE OF TRAFFIC GENERAL NOTES

HAM-71-1.34

c:\pwworking\hmm\external\tyn61470\dms72868\87268MN003.dgn 10/25/2014 12:14:13 PM TYN61470

I.R.-71 SOUTHBOUND:
TO OPERATE IN EXISTING CONFIGURATION.
NO TRAFFIC IMPACTS.
I.R.-71 EXIT RAMP "E" TO THIRD STREET:
TO OPERATE IN EXISTING CONFIGURATION.
NO TRAFFIC IMPACTS.
SECOND STREET RAMP TO INTERSTATE 71 NORTHBOUND:
TO OPERATE IN EXISTING CONFIGURATION.
NO TRAFFIC IMPACTS.

MAJOR CONSTRUCTION ACTIVITIES
1. INSTALL NORTHBOUND TUNNEL DAMPERS.

PHASE 4
LYTLE STREET:
SAME AS PHASE 1.
THIRD STREET:
SAME AS PHASE 1.
PIKE STREET:
SAME AS PHASE 1.
EAST FOURTH STREET:
SAME AS PHASE 1.
EAST FIFTH STREET:
TO OPERATE IN EXISTING CONFIGURATION.
NO TRAFFIC IMPACTS.
SENTINEL STREET:
TO OPERATE IN EXISTING CONFIGURATION.
NO TRAFFIC IMPACTS.
LYTLE PARK:
SAME AS PHASE 1.
I.R.-71 NORTHBOUND:
TO OPERATE IN EXISTING CONFIGURATION.
NO TRAFFIC IMPACTS.
I.R.-71 SOUTHBOUND:
TO OPERATE IN EXISTING CONFIGURATION.
NO TRAFFIC IMPACTS.
I.R.-71 EXIT RAMP "E" TO THIRD STREET:
TO OPERATE IN EXISTING CONFIGURATION.
NO TRAFFIC IMPACTS.
SECOND STREET RAMP TO INTERSTATE 71 NORTHBOUND:
TO OPERATE IN EXISTING CONFIGURATION.
NO TRAFFIC IMPACTS.

MAJOR CONSTRUCTION ACTIVITIES
1. REMOVE EXISTING FANS FOR I.R.-71 RAMP "E" TUNNEL.
2. DEMOLISH PORTION OF EXISTING WALLS IN VENTILATION ROOM ABOVE RAMP "E" TUNNEL (UNIT 17) – WEST WALL.

PHASE 4A
LYTLE STREET:
SAME AS PHASE 1.
THIRD STREET:
SAME AS PHASE 1.
PIKE STREET:
SAME AS PHASE 1.
EAST FOURTH STREET:
SAME AS PHASE 1.
EAST FIFTH STREET:
TO OPERATE IN EXISTING CONFIGURATION.
NO TRAFFIC IMPACTS.
SENTINEL STREET:
TO OPERATE IN EXISTING CONFIGURATION.
NO TRAFFIC IMPACTS.
LYTLE PARK:
SAME AS PHASE 1.
I.R.-71 NORTHBOUND:
TO OPERATE IN EXISTING CONFIGURATION.
NO TRAFFIC IMPACTS.
I.R.-71 SOUTHBOUND:
THE INTERSTATE 71 SOUTHBOUND EXIT RAMP "E" TO THIRD STREET WILL BE CLOSED AND TRAFFIC DETOURED. NO VEHICULAR TRAFFIC WILL BE IN THE RAMP "E" TUNNEL.
SECOND STREET RAMP TO INTERSTATE 71 NORTHBOUND:
TO OPERATE IN EXISTING CONFIGURATION.
NO TRAFFIC IMPACTS.

MAJOR CONSTRUCTION ACTIVITIES
1. REMOVE PORTABLE BARRIER.
2. REMOVE TEMPORARY STANDPIPE AND TEMPORARY HOSE CONNECTIONS.
3. ENLARGE I.R.-71 RAMP "E" CEILING INTAKE.
4. REMOVE CURB AND WALK.
5. REMOVE STANDPIPE.
6. REMOVE EXISTING LIGHTING.
7. CONSTRUCT FIRE PROTECTION COATING.
8. PERFORM WATER INFILTRATION MITIGATION, EXPANSION JOINT REPAIR, AND TILING ACTIVITIES.
9. CONSTRUCT NEW LIGHTING.
10. CONSTRUCT AUTOMATIC FIRE DETECTION SYSTEM.
11. CONSTRUCT NEW CCTVS AND ITS CONDUIT.
12. CONSTRUCT NEW STANDPIPE.
13. CONSTRUCT NEW CURB, WALK, BARRIER, AND PAVEMENT.
14. INSTALL I.R.-71 RAMP "E" PAVEMENT MARKINGS AND RUMBLE STRIPS.

PHASE 4B
LYTLE STREET:
SAME AS PHASE 1.
THIRD STREET:
SAME AS PHASE 1.
PIKE STREET:
SAME AS PHASE 1.
EAST FOURTH STREET:
SAME AS PHASE 1.
EAST FIFTH STREET:
TO OPERATE IN EXISTING CONFIGURATION.
NO TRAFFIC IMPACTS.
SENTINEL STREET:
TO OPERATE IN EXISTING CONFIGURATION.
NO TRAFFIC IMPACTS.
LYTLE PARK:
SAME AS PHASE 1.
I.R.-71 NORTHBOUND:
TO OPERATE IN EXISTING CONFIGURATION.
NO TRAFFIC IMPACTS.
I.R.-71 SOUTHBOUND:
TO OPERATE IN EXISTING CONFIGURATION.
NO TRAFFIC IMPACTS.
I.R.-71 EXIT RAMP "E" TO THIRD STREET:
TO OPERATE IN EXISTING CONFIGURATION.
NO TRAFFIC IMPACTS.
SECOND STREET RAMP TO INTERSTATE 71 NORTHBOUND:
TO OPERATE IN EXISTING CONFIGURATION.
NO TRAFFIC IMPACTS.

MAJOR CONSTRUCTION ACTIVITIES
1. INSTALL I.R.-71 RAMP "E" TUNNEL DAMPERS.

PHASE 5
LYTLE STREET:
SAME AS PHASE 1.
THIRD STREET:
SAME AS PHASE 1.
PIKE STREET:
SAME AS PHASE 1.
EAST FOURTH STREET:
SAME AS PHASE 1.
EAST FIFTH STREET:
TO OPERATE IN EXISTING CONFIGURATION.
NO TRAFFIC IMPACTS.
SENTINEL STREET:
TO OPERATE IN EXISTING CONFIGURATION.
NO TRAFFIC IMPACTS.
LYTLE PARK:
SAME AS PHASE 1.
I.R.-71 NORTHBOUND:
TO OPERATE IN EXISTING CONFIGURATION.
NO TRAFFIC IMPACTS.
I.R.-71 SOUTHBOUND:
TO OPERATE IN EXISTING CONFIGURATION.
NO TRAFFIC IMPACTS.
I.R.-71 EXIT RAMP "E" TO THIRD STREET:
TO OPERATE IN EXISTING CONFIGURATION.
NO TRAFFIC IMPACTS.
SECOND STREET RAMP TO INTERSTATE 71 NORTHBOUND:
TO OPERATE IN EXISTING CONFIGURATION.
NO TRAFFIC IMPACTS.

MAJOR CONSTRUCTION ACTIVITIES
1. REMOVE EXISTING FANS FOR SOUTHBOUND TUNNEL

PHASE 5A
LYTLE STREET:
SAME AS PHASE 1.
THIRD STREET:
SAME AS PHASE 1.
PIKE STREET:
SAME AS PHASE 1.
EAST FOURTH STREET:
SAME AS PHASE 1.
EAST FIFTH STREET:
TO OPERATE IN EXISTING CONFIGURATION.
NO TRAFFIC IMPACTS.
SENTINEL STREET:
TO OPERATE IN EXISTING CONFIGURATION.
NO TRAFFIC IMPACTS.
LYTLE PARK:
SAME AS PHASE 1.
I.R.-71 NORTHBOUND:
TO OPERATE IN EXISTING CONFIGURATION.
NO TRAFFIC IMPACTS.
I.R.-71 SOUTHBOUND:
SOUTHBOUND INTERSTATE 71 WILL BE SHIFTED WEST. TWO (2) LANES OF TRAFFIC WILL BE MAINTAINTED AT ALL TIMES AND TRAFFIC WILL BE SHIFTED PER THE MAINTENANCE OF TRAFFIC DETAILS.
I.R.-71 EXIT RAMP "E" TO THIRD STREET:
TO OPERATE IN EXISTING CONFIGURATION.
NO TRAFFIC IMPACTS.
SECOND STREET RAMP TO INTERSTATE 71 NORTHBOUND:
TO OPERATE IN EXISTING CONFIGURATION.
NO TRAFFIC IMPACTS.

MAJOR CONSTRUCTION ACTIVITIES
1. FILL RUMBLE STRIPS.
2. ENLARGE SOUTHBOUND WALL INTAKE (UNIT 8) – EAST WALL.
3. REINFORCE EXISTING WALLS IN SOUTHBOUND TUNNEL (UNIT 8) – EAST WALL.
4. REMOVE CURB AND WALK.
5. REMOVE EXISTING LIGHTING.
6. CONSTRUCT FIRE PROTECTION COATING.
7. PERFORM WATER INFILTRATION MITIGATION, EXPANSION JOINT REPAIR, AND TILING ACTIVITIES.
8. CONSTRUCT NEW LIGHTING.
9. CONSTRUCT AUTOMATIC FIRE DETECTION SYSTEM.
10. CONSTRUCT NEW CCTVS AND ITS CONDUIT.
11. CONSTRUCT NEW CURB, WALK, BARRIER, AND PAVEMENT.

PHASE 5B
LYTLE STREET:
SAME AS PHASE 1.
THIRD STREET:
SAME AS PHASE 1.
PIKE STREET:
SAME AS PHASE 1.
EAST FOURTH STREET:
SAME AS PHASE 1.
EAST FIFTH STREET:
TO OPERATE IN EXISTING CONFIGURATION.
NO TRAFFIC IMPACTS.
SENTINEL STREET:
TO OPERATE IN EXISTING CONFIGURATION.
NO TRAFFIC IMPACTS.
LYTLE PARK:
SAME AS PHASE 1.
I.R.-71 NORTHBOUND:
TO OPERATE IN EXISTING CONFIGURATION.
NO TRAFFIC IMPACTS.
I.R.-71 SOUTHBOUND:
SOUTHBOUND INTERSTATE 71 WILL BE SHIFTED TO CREATE A CENTER WORK ZONE. TWO (2) LANES OF TRAFFIC WILL BE MAINTAINTED AT ALL TIMES AND TRAFFIC WILL BE SHIFTED PER THE MAINTENANCE OF TRAFFIC DETAILS.
I.R.-71 EXIT RAMP "E" TO THIRD STREET:
TO OPERATE IN EXISTING CONFIGURATION.
NO TRAFFIC IMPACTS.

CALCULATED RLD
CHECKED CWP

MAINTENANCE OF TRAFFIC GENERAL NOTES

HAM-71-1.34

c:\pwworking\hmm\external\tyn61470\dms72868\87268MN004.dgn 10/25/2014 12:14:21 PM T:\N61470

SECOND STREET RAMP TO INTERSTATE 71
NORTHBOUND:
TO OPERATE IN EXISTING CONFIGURATION.
NO TRAFFIC IMPACTS.

MAJOR CONSTRUCTION ACTIVITIES
1. FILL RUMBLE STRIPS.
2. CONSTRUCT FIRE PROTECTION COATING.
3. PERFORM WATER INFILTRATION MITIGATION, EXPANSION JOINT REPAIR, AND TILING ACTIVITIES.
4. CONSTRUCT NEW ITS CONDUIT.

PHASE 5C
LYTLE STREET:
SAME AS PHASE 1.
THIRD STREET:
SAME AS PHASE 1.
PIKE STREET:
SAME AS PHASE 1.
EAST FOURTH STREET:
SAME AS PHASE 1.
EAST FIFTH STREET:
TO OPERATE IN EXISTING CONFIGURATION.
NO TRAFFIC IMPACTS.
SENTINEL STREET:
TO OPERATE IN EXISTING CONFIGURATION.
NO TRAFFIC IMPACTS.
LYTLE PARK:
SAME AS PHASE 1.
I.R.-71 NORTHBOUND:
TO OPERATE IN EXISTING CONFIGURATION.
NO TRAFFIC IMPACTS.
I.R.-71 SOUTHBOUND:
SOUTHBOUND INTERSTATE 71 WILL BE SHIFTED EAST. TWO (2) LANES OF TRAFFIC WILL BE MAINTAINTED AT ALL TIMES AND TRAFFIC WILL BE SHIFTED PER THE MAINTENANCE OF TRAFFIC DETAILS.
I.R.-71 EXIT RAMP "E" TO THIRD STREET:
TO OPERATE IN EXISTING CONFIGURATION.
NO TRAFFIC IMPACTS.
SECOND STREET RAMP TO INTERSTATE 71
NORTHBOUND:
TO OPERATE IN EXISTING CONFIGURATION.
NO TRAFFIC IMPACTS.

MAJOR CONSTRUCTION ACTIVITIES
1. REMOVE EXISTING LIGHTING.
2. REMOVE CURB AND WALK.
3. REMOVE STANDPIPE.
4. CONSTRUCT NEW STANDPIPE.
5. CONSTRUCT FIRE PROTECTION COATING.
6. PERFORM WATER INFILTRATION MITIGATION, EXPANSION JOINT REPAIR, AND TILING ACTIVITIES.
7. CONSTRUCT NEW LIGHTING.
8. CONSTRUCT AUTOMATIC FIRE DETECTION SYSTEM.
9. CONSTRUCT NEW ITS CONDUIT.
10. CONSTRUCT NEW CURB, WALK, BARRIER, AND PAVEMENT.

POST-PHASE 5C
LYTLE STREET:
SAME AS PHASE 1.
THIRD STREET:
SAME AS PHASE 1.
PIKE STREET:
SAME AS PHASE 1.
EAST FOURTH STREET:
SAME AS PHASE 1.
EAST FIFTH STREET:
TO OPERATE IN EXISTING CONFIGURATION.
NO TRAFFIC IMPACTS.
SENTINEL STREET:
TO OPERATE IN EXISTING CONFIGURATION.
NO TRAFFIC IMPACTS.
LYTLE PARK:
SAME AS PHASE 1.
I.R.-71 NORTHBOUND:
TO OPERATE IN EXISTING CONFIGURATION.
NO TRAFFIC IMPACTS.
I.R.-71 SOUTHBOUND:
SOUTHBOUND INTERSTATE 71 WILL BE MAINTAINED PER ODOT'S PERMITTED LANE CLOSURES, THE OMUTCD, TEM, AND STANDARD CONSTRUCTION DRAWINGS.
I.R.-71 EXIT RAMP "E" TO THIRD STREET:
TO OPERATE IN EXISTING CONFIGURATION.
NO TRAFFIC IMPACTS.
SECOND STREET RAMP TO INTERSTATE 71
NORTHBOUND:
TO OPERATE IN EXISTING CONFIGURATION.
NO TRAFFIC IMPACTS.

MAJOR CONSTRUCTION ACTIVITIES
1. INSTALL SOUTHBOUND PAVEMENT MARKINGS AND RUMBLE STRIPS.

PHASE 5D
LYTLE STREET:
SAME AS PHASE 1.
THIRD STREET:
SAME AS PHASE 1.
PIKE STREET:
SAME AS PHASE 1.
EAST FOURTH STREET:
SAME AS PHASE 1.
EAST FIFTH STREET:
TO OPERATE IN EXISTING CONFIGURATION.
NO TRAFFIC IMPACTS.
SENTINEL STREET:
TO OPERATE IN EXISTING CONFIGURATION.
NO TRAFFIC IMPACTS.
LYTLE PARK:
SAME AS PHASE 1
I.R.-71 NORTHBOUND:
TO OPERATE IN EXISTING CONFIGURATION.
NO TRAFFIC IMPACTS.
I.R.-71 SOUTHBOUND:
TO OPERATE IN EXISTING CONFIGURATION.
NO TRAFFIC IMPACTS.
I.R.-71 EXIT RAMP "E" TO THIRD STREET:
TO OPERATE IN EXISTING CONFIGURATION.
NO TRAFFIC IMPACTS.

SECOND STREET RAMP TO INTERSTATE 71
NORTHBOUND:
TO OPERATE IN EXISTING CONFIGURATION.
NO TRAFFIC IMPACTS.

MAJOR CONSTRUCTION ACTIVITIES
1. INSTALL SOUTHBOUND TUNNEL DAMPERS.

PHASE 6
LYTLE STREET:
SAME AS PHASE 1.
THIRD STREET:
SAME AS PHASE 1.
PIKE STREET:
SAME AS PHASE 1.
EAST FOURTH STREET:
SAME AS PHASE 1.
EAST FIFTH STREET:
TRAFFIC WILL BE SHIFTED PER THE MAINTENANCE OF TRAFFIC DETAILS.
SENTINEL STREET:
TRAFFIC WILL BE SHIFTED PER THE MAINTENANCE OF TRAFFIC DETAILS.
LYTLE PARK:
SAME AS PHASE 1.
I.R.-71 NORTHBOUND:
TO OPERATE IN EXISTING CONFIGURATION.
NO TRAFFIC IMPACTS.
I.R.-71 SOUTHBOUND:
TO OPERATE IN EXISTING CONFIGURATION.
NO TRAFFIC IMPACTS.
I.R.-71 EXIT RAMP "E" TO THIRD STREET:
TO OPERATE IN EXISTING CONFIGURATION.
NO TRAFFIC IMPACTS.
SECOND STREET RAMP TO INTERSTATE 71
NORTHBOUND:
TO OPERATE IN EXISTING CONFIGURATION.
NO TRAFFIC IMPACTS.

MAJOR CONSTRUCTION ACTIVITIES
1. RELOCATE FDC#3.

PHASE 6A
LYTLE STREET:
SAME AS PHASE 1.
THIRD STREET:
SAME AS PHASE 1.
PIKE STREET:
SAME AS PHASE 1.
EAST FOURTH STREET:
SAME AS PHASE 1.
EAST FIFTH STREET:
TO OPERATE IN EXISTING CONFIGURATION.
NO TRAFFIC IMPACTS.
SENTINEL STREET:
TO OPERATE IN EXISTING CONFIGURATION.
NO TRAFFIC IMPACTS.
LYTLE PARK:
SAME AS PHASE 1
I.R.-71 NORTHBOUND:
TO OPERATE IN EXISTING CONFIGURATION.
NO TRAFFIC IMPACTS.
I.R.-71 SOUTHBOUND:
TO OPERATE IN EXISTING CONFIGURATION.
NO TRAFFIC IMPACTS.
I.R.-71 EXIT RAMP "E" TO THIRD STREET:
TO OPERATE IN EXISTING CONFIGURATION.
NO TRAFFIC IMPACTS.
SECOND STREET RAMP TO INTERSTATE 71
NORTHBOUND:
TO OPERATE IN EXISTING CONFIGURATION.
NO TRAFFIC IMPACTS.

MAJOR CONSTRUCTION ACTIVITIES
1. REMOVE EXISTING TRANSFORMERS (BY OTHERS).
2. CONSTRUCT EAST FOURTH STREET PAVEMENT.
3. CONSTRUCT PIKE STREET PAVEMENT
4. CONSTRUCT LYTLE STREET PAVEMENT.

PLACEMENT OF ASPHALT CONCRETE

TWO-WAY TRAFFIC SHALL BE MAINTAINED AT ALL TIMES EXCEPT THAT ONE-WAY TRAFFIC WILL BE PERMITTED FOR MINIMUM PERIODS OF TIME CONSISTENT WITH THE REQUIREMENTS OF THE SPECIFICATIONS FOR PROTECTION OF COMPLETED ASPHALT CONCRETE COURSES.

TRENCH FOR WIDENING

TRENCH EXCAVATION FOR BASE WIDENING SHALL BE ONLY ON ONE SIDE OF THE PAVEMENT AT A TIME. THE OPEN TRENCH SHALL BE ADEQUATELY MAINTAINED AND PROTECTED WITH DRUMS OR BARRICADES AT ALL TIMES. PLACEMENT OF PROPOSED SUBBASE AND BASE MATERIAL SHALL FOLLOW AS CLOSELY AS POSSIBLE BEHIND EXCAVATION OPERATIONS. THE LENGTH OF WIDENING TRENCH WHICH IS OPEN AT ANY ONE TIME SHALL BE HELD TO A MINIMUM AND SHALL AT ALL TIMES BE SUBJECT TO APPROVAL OF THE ENGINEER.

OVERNIGHT TRENCH CLOSING

THE BASE WIDENING SHALL BE COMPLETED TO A DEPTH OF NO MORE THAN 1.5 INCHES BELOW THE EXISTING PAVEMENT BY THE END OF EACH WORK DAY. NO TRENCH SHALL BE LEFT OPEN OVERNIGHT EXCEPT FOR A SHORT LENGTH (25 FEET OR LESS) OF A WORK SECTION AT THE END OF THE TRENCH. IN CASE WORK MUST BE SUSPENDED BECAUSE OF INCLEMENT WEATHER OR OTHER REASONS, THE TRENCH FOR THE UNCOMPLETED BASE WIDENING SHALL BE BACKFILLED AT THE DIRECTION OF THE ENGINEER.

CONCRETE MEDIAN BARRIER REPLACEMENT

WHEN IN AN UNPROTECTED WORK ZONE, REMOVING, GRADING AND INSTALLING THE REPLACEMENT BARRIER IN A CONTINUOUS OPERATION SHALL BE LIMITED TO 20 LINEAR FEET AND SHALL AT ALL TIMES BE SUBJECT TO THE APPROVAL OF THE ENGINEER. THE ENGINEER SHALL BE SATISFIED THAT ALL INSTALLATIONS WILL AFFORD MAXIMUM PROTECTION FOR TRAFFIC.

CALCULATED RLD CHECKED CWP

MAINTENANCE OF TRAFFIC GENERAL NOTES

HAM-71-1.34

c:\pwworking\hmm\external\tyn61470\dms72868\87268MN005.dgn 10/25/2014 12:14:28 PM TYN61470

ITEM 614, WORK ZONE SPEED LIMIT SIGN

THE CONTRACTOR SHALL FURNISH, INSTALL, MAINTAIN, COVER DURING SUSPENSION OF WORK, AND SUBSEQUENTLY REMOVE WORK ZONE SPEED LIMIT (R2-1) (45 MPH SPEED LIMIT) SIGNS AND SUPPORTS WITHIN THE WORK LIMITS IN ACCORDANCE WITH THE FOLLOWING REQUIREMENTS:

THE CONTRACTOR SHALL COVER OR REMOVE ANY EXISTING SPEED LIMIT SIGNS WITHIN THE REDUCED SPEED ZONE(S). THESE SIGNS SHALL BE RESTORED DURING SUSPENSION OR TERMINATION OF THE REDUCED SPEED LIMIT. THE EXPENSE OF COVERING OR REMOVAL AND RESTORATION OF EXISTING SPEED LIMIT OR MINIMUM SPEED LIMIT SIGNS SHALL BE INCLUDED IN THE PAY ITEM FOR THE WORK ZONE SPEED LIMIT SIGNS.

THE WORK ZONE SPEED LIMIT SIGNS MAY BE ERECTED OR UNCOVERED NO MORE THAN FOUR HOURS BEFORE THE ACTUAL START OF WORK THAT CAUSES THE WARRANTING CONDITION(S) TO OCCUR. THE SIGNS SHALL BE REMOVED OR COVERED NO LATER THAN FOUR HOURS FOLLOWING REMOVAL OF THE WARRANTING CONDITION(S), OR SOONER AS DIRECTED BY THE ENGINEER. TEMPORARY SIGN COVERING AND UNCOVERING DUE TO TEMPORARY REMOVAL OF WARRANTING CONDITION(S) SHALL BE GUIDED BY THE FOUR-HOUR LIMITATIONS STATED ABOVE.

CONSTRUCTION AND MATERIAL SPECIFICATIONS ITEM 614, PARAGRAPH 614.02(B), INDICATES THAT THE TWO DIRECTIONS OF A DIVIDED HIGHWAY ARE CONSIDERED SEPARATE HIGHWAY SECTIONS. THEREFORE, IF THE WORK ON A MULTI-LANE DIVIDED HIGHWAY IS LIMITED TO ONLY ONE DIRECTION, A SPEED REDUCTION IN THE DIRECTION OF THE WORK DOES NOT AUTOMATICALLY CONSTITUTE A SPEED REDUCTION IN THE OPPOSITE DIRECTION. A SPEED LIMIT REDUCTION IN THE OPPOSITE DIRECTION, IN SUCH CASE, IS APPROPRIATE ONLY IF CONDITIONS ARE EXPECTED TO HAVE AN IMPACT ON THE DIRECTIONAL TRAFFIC FLOW, AS DIRECTED BY THE ENGINEER.

THE CONTRACTOR SHALL ERECT A WORK ZONE SPEED LIMIT SIGN IN ADVANCE OF THE WARRANTING CONDITION, AS DETAILED IN THE PLANS OR AS DIRECTED BY THE ENGINEER. THE SIGN SHALL BE MOUNTED ON BOTH SIDES OF A DIRECTIONAL ROADWAY OF DIVIDED HIGHWAYS. THE FIRST WORK ZONE SPEED LIMIT SIGN SHALL BE PLACED APPROXIMATELY 500 FEET IN ADVANCE OF THE LANE REDUCTION, SHIFT TAPER, OR OTHER ROADWAY OR SHOULDER RESTRICTION THAT WARRANTED THE WORK ZONE SPEED ZONE. ON UNDIVIDED HIGHWAYS THE SIGN SHALL BE MOUNTED ON THE RIGHT SIDE, APPROXIMATELY 250 FEET IN ADVANCE OF SUCH RESTRICTIONS. THE SIGN SHALL BE REPEATED EVERY 1 MILE FOR 55 MPH ZONES AND EVERY ONE-HALF MILE FOR 50 MPH AND 45 MPH ZONES. THESE SIGNS SHALL ALSO BE ERECTED IMMEDIATELY AFTER EACH OPEN ENTRANCE RAMP WITHIN THE ZONE.

THE SPEED LIMIT REDUCTION SHALL BE LIMITED TO ONLY THE PORTION OF THE PROJECT AND THE WORK THAT WARRANTED THE WORK ZONE SPEED LIMIT REDUCTION.

SPEED REDUCTION (SPEED ZONE AHEAD SYMBOL) SIGNS (W3-5) SHALL BE ERECTED IN ADVANCE OF THE SPEED REDUCTION, APPROXIMATELY 1250 FEET ON MULTI-LANE HIGHWAYS AND 500 FEET ON TWO-LANE HIGHWAYS.

A SIGN(S) TO INDICATE THE RESUMPTION OF THE STATUTORY SPEED LIMIT SHALL BE ERECTED AT THE END OF ANY REDUCED SPEED ZONE. THE CONTRACTOR MAY USE SIGNS AND SUPPORTS IN USED, BUT GOOD CONDITION, PROVIDED THE SIGNS MEET CURRENT ODOT SPECIFICATIONS. SIGN FACES SHALL BE RETROREFLECTORIZED WITH TYPE G SHEETING COMPLYING WITH THE REQUIREMENTS OF CMS 730.19.

WORK ZONE SPEED LIMIT SIGNS SHALL BE MOUNTED ON TWO ITEM 630, GROUND MOUNTED SUPPORTS, NO. 3 POSTS, UNLESS MOUNTED ON A TEMPORARY SIGN SUPPORT PER SCD MT 105.10.

WORK ZONE SPEED LIMIT AND RELATED SIGN SIZES, PLACEMENT, SUPPORTS, ETC. SHALL BE PER THE OMUTCD, WITH TWO EXCEPTIONS: 1) EXPRESSWAY SIZE SPEED LIMIT SIGNS MAY BE USED ON FREEWAYS AND EXPRESSWAYS, IF NECESSARY; 2) THE HEIGHT OF SIGNS MOUNTED ON PORTABLE SUPPORTS SHOULD BE THE HEIGHT REQUIRED FOR GROUND-MOUNTED SIGNS BUT SHALL NOT BE MORE THAN 1 FOOT LOWER THAN THE HEIGHT REQUIRED BY THE OMUTCD, OR AS DIRECTED BY THE ENGINEER. PORTABLE SUPPORTS SHOULD NOT BE USED FOR A DURATION OF MORE THAN 3 DAYS.

WORK ZONE SPEED LIMIT SIGNS AND SUPPORTS WILL BE MEASURED AS THE NUMBER OF SIGN INSTALLATIONS, INCLUDING THE SIGNS AND NECESSARY SUPPORTS. IF A SIGN AND SUPPORT COMBINATION IS REMOVED AND REERECTED AT ANOTHER LOCATION WITHIN THE PROJECT DUE TO CHANGES IN THE SPEED ZONE AS DETAILED IN THE PLANS OR AS DIRECTED BY THE ENGINEER, IT SHALL BE CONSIDERED ANOTHER UNIT.

PAYMENT FOR ACCEPTED QUANTITIES, COMPLETE IN PLACE, WILL BE MADE AT THE CONTRACT UNIT PRICE. PAYMENT SHALL BE FULL COMPENSATION FOR ALL MATERIALS, LABOR, INCIDENTALS AND EQUIPMENT FOR FURNISHING, ERECTING, MAINTAINING, COVERING DURING SUSPENSION OF WORK, AND REMOVING THE SIGNS AND SUPPORTS. SPEED LIMIT SIGNING FOR THE POINT OF RESUMPTION OF THE STATUTORY SPEED LIMIT SHALL BE PAID FOR AS WORK ZONE SPEED LIMIT SIGNS. THE FOLLOWING ESTIMATED QUANTITY HAS BEEN CARRIED TO THE GENERAL SUMMARY.

ITEM 614, WORK ZONE SPEED LIMIT SIGN 18 EACH
ITEM 614, SPEED ZONE AHEAD SYMBOL SIGN 12 EACH

THE FOLLOWING TABLE PROVIDES DETAILS ON WORK ZONE SPEED ZONES APPROVED FOR USE ON THIS PROJECT:

WZSZ REVISION NUMBER
WZ-45034

COUNTY & ROUTE
HAMILTON I.R.-71

SLM	FROM	TO
	1.10	1.75

PHASE/PART & DIRECTION
PHASE 3A, 3B, AND 3C NORTHBOUND,
PHASE 5A, 5B, AND 5C SOUTHBOUND

APPROVED SPEED LIMIT (MPH)
45

SPECIFIC WARRANTING CONDITIONS & FACTORS
EXISTING 40 MPH SPEED LIMIT APPROACHING TUNNEL

THIS SPEED LIMIT REDUCTION IS TO BE IN PLACE ONLY DURING THE TIME OF THE ACTIVITIES OR CONDITIONS THAT WARRANTED THE REDUCTION.

WORK ZONE INCREASED PENALTIES SIGN (R11-H5A)

R11-H5A-48 SIGNS SHALL BE FURNISHED, ERECTED, AND MAINTAINED IN GOOD CONDITION AND/OR REPLACED AS NECESSARY AND SUBSEQUENTLY REMOVED BY THE CONTRACTOR. SIGNS SHALL BE MOUNTED AT THE APPROPRIATE OFFSETS AND ELEVATIONS AS PRESCRIBED BY THE OHIO MANUAL OF UNIFORM TRAFFIC CONTROL DEVICES. THEY SHALL BE MAINTAINED ON SUPPORTS MEETING CURRENT SAFETY CRITERIA.

THE SIGNS MAY BE ERECTED OR UNCOVERED NO MORE THAN FOUR HOURS BEFORE THE ACTUAL START OF WORK. THE SIGNS SHALL BE REMOVED OR COVERED NO LATER THAN FOUR HOURS FOLLOWING RESTORATION OF ALL LANES TO TRAFFIC WITH NO RESTRICTIONS, OR SOONER AS DIRECTED BY THE ENGINEER. TEMPORARY SIGN COVERING AND UNCOVERING DUE TO TEMPORARY LANE RESTORATIONS SHALL BE GUIDED BY THE FOUR-HOUR LIMITATIONS STATED ABOVE. SUCH LANE RESTORATIONS SHOULD BE EXPECTED TO REMAIN IN EFFECT FOR 30 OR MORE CONSECUTIVE CALENDAR DAYS, SUCH AS DURING WINTER SHUTDOWNS.

THE SIGNS ON THE MAINLINE SHALL BE DUAL MOUNTED UNLESS NOT PHYSICALLY POSSIBLE. THE FIRST SIGN SHALL BE PLACED BETWEEN THE ROAD WORK AHEAD (W20-1) SIGN AND THE NEXT SIGN IN THE SEQUENCE. SIGNS SHALL BE ERECTED ON EACH ENTRANCE RAMP AND EVERY 2 MILES THROUGH THE CONSTRUCTION WORK LIMITS. SIGNS ON THE MAINLINE SHALL BE R11-H5A-48. SIGNS USED ON THE RAMPS SHALL BE R11-H5A-24. R11-H5A-24 SIGNS MAY BE USED IN THE MEDIAN IN LIEU OF R11-H5A-48 SIGNS IF IT IS NOT PHYSICALLY POSSIBLE TO PROVIDE R11-H5A-48 SIGNS IN THE MEDIAN.

THE CONTRACTOR MAY USE SIGNS AND SUPPORTS IN USED, BUT GOOD, CONDITION PROVIDED THE SIGNS MEET CURRENT ODOT SPECIFICATIONS. SIGN FACES SHALL BE RETROREFLECTORIZED WITH TYPE G SHEETING COMPLYING WITH THE REQUIREMENTS OF C&MS 730.19.

WORK ZONE INCREASED PENALITIES SIGNS AND SUPPORTS WILL BE MEASURED AS THE NUMBER OF SIGN INSTALLATIONS, INCLUDING THE SIGN AND NECESSARY SUPPORTS. IF A SIGN AND SUPPORT COMBINATION IS REMOVED AND REERECTED AT ANOTHER LOCATION AS DIRECTED BY THE ENGINEER, IT SHALL BE CONSIDERED ANOTHER UNIT.

PAYMENT FOR ACCEPTED QUANTITIES, COMPLETE, IN PLACE WILL BE MADE AT THE CONTRACT UNIT PRICE. PAYMENT SHALL BE FULL COMPENSATION FOR ALL MATERIALS, LABOR, INCIDENTALS AND EQUIPMENT FOR FURNISHING, ERECTING, MAINTAINING, COVERING DURING SUSPENSION OF WORK, AND REMOVAL OF THE SIGN AND SUPPORT.

ITEM 614, WORK ZONE INCREASED PENALITIES SIGN 12 EACH

FLOODLIGHTING

FLOODLIGHTING OF THE WORK SITE FOR OPERATIONS CONDUCTED DURING NIGHTTIME PERIODS SHALL BE ACCOMPLISHED SO THAT THE LIGHTS DO NOT CAUSE GLARE TO THE DRIVERS ON THE ROADWAY. TO ENSURE THE ADEQUACY OF THE FLOODLIGHT PLACEMENT, THE CONTRACTOR AND THE ENGINEER SHALL DRIVE THROUGH THE WORK SITE EACH NIGHT WHEN THE LIGHTING IS IN PLACE AND OPERATIVE PRIOR TO COMMENCING ANY WORK. IF GLARE IS DETECTED, THE LIGHT PLACEMENT AND SHIELDING SHALL BE ADJUSTED TO THE SATISFACTION OF THE ENGINEER BEFORE WORK PROCEEDS.

PAYMENT FOR ALL LABOR, EQUIPMENT AND MATERIALS SHALL BE INCLUDED IN THE LUMP SUM CONTRACT PRICE FOR ITEM 614, MAINTAINING TRAFFIC (PLAN NOTE 642-2).

ITEM 614, WORK ZONE IMPACT ATTENUATOR FOR 24" WIDE HAZARDS (UNIDIRECTIONAL OR BIDIRECTIONAL)

THIS ITEM SHALL CONSIST OF FURNISHING AND INSTALLING A NON-GATING IMPACT ATTENUATOR. FURNISH AN IMPACT ATTENUATOR FROM THE OFFICE OF ROADWAY ENGINEERING APPROVED LIST FOR WORK ZONE IMPACT ATTENUATORS. THE APPROVED LIST IS AVAILABLE AT THE "ROADWAY STANDARDS: PROPRIETARY ROADSIDE SAFETY DEVICES" WEB PAGE ON THE OFFICE OF ROADWAY ENGINEERING WEBSITE.

INSTALLATION SHALL BE AT THE LOCATIONS SPECIFIED IN THE PLANS IN ACCORDANCE WITH THE MANUFACTURER'S SPECIFICATIONS.

THE CONTRACTOR SHALL REPAIR OR REPLACE A DAMAGED UNIT WITHIN 24 HOURS OF A DAMAGING IMPACT.

WHEN BIDIRECTIONAL DESIGNS ARE SPECIFIED, THE CONTRACTOR SHALL SUPPLY APPROPRIATE TRANSITIONS.

WHEN GATING IMPACT ATTENUATORS ARE DESIRED, THE CONTRACTOR SHALL SUBMIT DOCUMENTATION TO THE ENGINEER FOR ACCEPTANCE.

c:\pwworking\hmm\externel\tyn61470\dms72866\$72866MN006.dgn 10/25/2014 12:14:37 PM TYN61470

THE COST FOR THE ADDITIONAL BARRIER REQUIRED FOR A GATING IMPACT ATTENUATOR SHALL BE INCLUDED IN THE COST OF THE GATING IMPACT ATTENUATOR.

PAYMENT FOR THE ABOVE WORK SHALL BE MADE AT THE UNIT PRICE BID AND SHALL INCLUDE ALL LABOR, TOOLS, EQUIPMENT AND MATERIALS NECESSARY TO CONSTRUCT AND MAINTAIN A COMPLETE AND FUNCTIONAL IMPACT ATTENUATOR SYSTEM, INCLUDING ALL RELATED BACKUPS, TRANSITIONS, LEVELING PADS, HARDWARE AND GRADING, NOT SEPARATELY SPECIFIED, AS REQUIRED BY THE MANUFACTURER.

ITEM 614, PORTABLE CHANGEABLE MESSAGE SIGNS, AS PER PLAN

THE CONTRACTOR SHALL FURNISH, INSTALL, MAINTAIN AND REMOVE, WHEN NO LONGER NEEDED, A CHANGEABLE MESSAGE SIGN. THE SIGN SHALL BE OF A TYPE SHOWN ON A LIST OF APPROVED PCMS UNITS AVAILABLE ON THE (OFFICE OF MATERIALS MANAGEMENT WEB PAGE). THE LIST CONTAINS CLASS A AND B UNITS WITH MINIMUM LEGIBILITY DISTANCES OF 650 FEET AND 475 FEET, RESPECTIVELY.

EACH SIGN SHALL BE TRAILER-MOUNTED AND EQUIPPED WITH A FUNCTIONAL DIMMING MECHANISM, TO DIM THE SIGN DURING DARKNESS, AND A TAMPER AND VANDAL PROOF ENCLOSURE. EACH SIGN SHALL BE PROVIDED WITH APPROPRIATE TRAINING AND OPERATION INSTRUCTIONS TO ENABLE ON-SITE PERSONNEL TO OPERATE AND TROUBLESHOOT THE UNIT. THE SIGN SHALL ALSO BE CAPABLE OF BEING POWERED BY AN ELECTRICAL SERVICE DROP FROM A LOCAL UTILITY COMPANY. THE PCMS SHALL BE DELINEATED IN ACCORDANCE WITH C&MS 614.03.

THE PROBABLE PCMS LOCATIONS AND WORK LIMITS FOR THOSE LOCATIONS ARE TO BE DETERMINED BY THE ENGINEER. PLACEMENT, OPERATION, MAINTENANCE AND ALL ACTIVATION OF THE SIGNS BY THE CONTRACTOR SHALL BE AS DIRECTED BY THE ENGINEER. THE PCMS SHALL BE LOCATED IN A HIGHLY VISIBLE POSITION YET PROTECTED FROM TRAFFIC. THE CONTRACTOR SHALL, AT THE DIRECTION OF THE ENGINEER, RELOCATE THE PCMS TO IMPROVE VISIBILITY OR ACCOMMODATE CHANGED CONDITIONS. WHEN NOT IN USE, THE PCMS SHALL BE TURNED OFF. ADDITIONALLY, WHEN NOT IN USE FOR EXTENDED PERIODS OF TIME, THE PCMS SHALL BE TURNED AWAY FROM ALL TRAFFIC.

THE ENGINEER SHALL BE PROVIDED ACCESS TO EACH SIGN UNIT AND SHALL BE PROVIDED WITH APPROPRIATE TRAINING AND OPERATION INSTRUCTIONS TO ENABLE ODOT PERSONNEL TO OPERATE AND TROUBLESHOOT THE UNIT, AND TO REVISE SIGN MESSAGES, IF NECESSARY.

ALL MESSAGES TO BE DISPLAYED ON THE SIGN WILL BE PROVIDED BY THE ENGINEER. A LIST OF ALL REQUIRED PRE-PROGRAMMED MESSAGES WILL BE GIVEN TO THE CONTRACTOR AT THE PROJECT PRECONSTRUCTION CONFERENCE. THE SIGN SHALL HAVE THE CAPABILITY TO STORE UP TO 99 MESSAGES. MESSAGE MEMORY OR PRE-PROGRAMMED DISPLAYS SHALL NOT BE LOST AS A RESULT OF POWER FAILURES TO THE ON-BOARD COMPUTER. THE SIGN LEGEND SHALL BE CAPABLE OF BEING CHANGED IN THE FIELD. THREE-LINE PRESENTATION FORMATS WITH UP TO SIX MESSAGE PHASES SHALL BE SUPPORTED. PCMS FORMAT SHALL PERMIT THE COMPLETE MESSAGE FOR EACH PHASE TO BE READ AT LEAST TWICE. THE PCMS SHALL CONTAIN AN ACCURATE CLOCK AND PROGRAMMING LOGIC WHICH WILL ALLOW THE SIGN TO BE ACTIVATED, DEACTIVATED OR MESSAGES CHANGED AUTOMATICALLY AT DIFFERENT TIMES OF THE DAY FOR DIFFERENT DAYS OF THE WEEK.

THE PCMS UNIT SHALL BE MAINTAINED IN GOOD WORKING ORDER BY THE CONTRACTOR IN ACCORDANCE WITH THE PROVISIONS OF C&MS 614.07. THE CONTRACTOR SHALL, PRIOR TO ACTIVATING THE UNIT, MAKE ARRANGEMENTS, WITH AN AUTHORIZED SERVICE AGENT FOR THE PCMS, TO ASSURE PROMPT SERVICE IN THE EVENT OF FAILURE. ANY FAILURE SHALL NOT RESULT IN THE SIGN BEING OUT OF SERVICE FOR MORE THAN 12 HOURS, INCLUDING WEEKENDS. FAILURE TO COMPLY MAY RESULT IN AN ORDER TO STOP WORK AND OPEN ALL TRAFFIC LANES AND/OR IN THE DEPARTMENT TAKING APPROPRIATE ACTION TO SAFELY CONTROL TRAFFIC. THE ENTIRE COST TO CONTROL TRAFFIC, ACCRUED BY THE DEPARTMENT DUE TO THE CONTRACTOR'S NONCOMPLIANCE, WILL BE DEDUCTED FROM MONEYS DUE, OR TO BECOME DUE THE CONTRACTOR ON HIS CONTRACT.

THE CONTRACTOR SHALL BE RESPONSIBLE FOR 24-HOUR-PER-DAY OPERATION AND MAINTENANCE OF THESE SIGNS ON THE PROJECT FOR THE DURATION OF THE PHASES WHEN THE PLAN REQUIRES THEIR USE.

PAYMENT FOR THE ABOVE DESCRIBED ITEM SHALL BE AT THE CONTRACT UNIT PRICE. PAYMENT SHALL INCLUDE ALL LABOR, MATERIALS, EQUIPMENT, FUELS, LUBRICATING OILS, SOFTWARE, HARDWARE AND INCIDENTALS TO PERFORM THE ABOVE DESCRIBED WORK.

ITEM 614, PORTABLE CHANGEABLE MESSAGE SIGN, AS PER PLAN 6 SIGN MONTH

ITEM 614 - WORK ZONE RAISED PAVEMENT MARKER, AS PER PLAN

WORK ZONE RAISED PAVEMENT MARKERS, AS PER PLAN, AND THEIR INSTALLATION SHALL CONFORM TO CMS 614 OR CMS 621 AS SPECIFIED HEREIN.

RAISED PAVEMENT MARKERS IN USE DURING THE SNOW-PLOWING SEASON SHALL CONFORM TO 621.

RAISED PAVEMENT MARKERS IN USE DURING THE NON-SNOW-PLOW SEASON SHALL CONFORM TO EITHER 614 OR TO 621.

THE SNOW-PLOWING SEASON SHALL RUN FROM OCTOBER 15 THROUGH APRIL 1.

IF PROJECT DELAYS, NOT THE FAULT OF ODOT, CAUSE THE WORK TO EXTEND INTO THE SNOW-PLOWING SEASON, THE CONTRACTOR SHALL BE RESPONSIBLE FOR REPLACING WORK ZONE RAISED PAVEMENT MARKERS (WZRPMS) CONFORMING TO CMS 614, WITH RAISED PAVEMENT MARKERS CONFORMING TO 621, AS DETERMINED BY THE ENGINEER, AT THE CONTRACTOR'S EXPENSE.

THIS ITEM SHALL INCLUDE PURCHASE, INSTALLATION AND REMOVAL OF ITEM 614 WORK ZONE RAISED PAVEMENT MARKER, AS PER PLAN, INCLUDING FILLING OF ANY DEPRESSIONS CREATED IN THE PAVEMENT AS PER CMS 621.08.

RESURFACING OF THE TRANSITION AREAS SHALL BE PERFORMED AT THE TIME THAT THE SURFACE COURSE IS BEING APPLIED TO THE ENTIRE PROJECT. PRIOR TO APPLICATION OF THE SURFACE COURSE ON THE PROJECT, THE EXISTING PAVEMENT WITHIN THE TRANSITION AREA SHALL BE REMOVED TO A DEPTH NECESSARY TO REACH THE LEVEL OF THE INTERMEDIATE COURSE OF THE PAVEMENT, AS DETERMINED BY THE ENGINEER.

THE FOLLOWING BID ITEMS SHOULD BE INCLUDED IN THE PLANS:

ITEM 254 PAVEMENT PLANING, ASPHALT CONCRETE
150 SQUARE YARDS
ITEM 614 WORK ZONE RAISED PAVEMENT MARKER, AS PER PLAN 2552 EACH

PAYMENT FOR RESURFACING WITHIN THE TRANSITION AREA SHALL BE PAID FOR UNDER THE APPROPRIATE BID ITEMS FOR THE WORK REQUIRED, AS PROVIDED FOR IN THE PLANS.

DELINEATION OF PORTABLE AND PERMANENT BARRIER

BARRIER REFLECTORS AND OBJECT MARKERS SHALL BE INSTALLED ON ALL PORTABLE BARRIER (PB) USED FOR TRAFFIC CONTROL AND ON PERMANENT CONCRETE BARRIER (INCLUDING BRIDGE PARAPETS) LOCATED WITHIN 5 FEET OF THE EDGE OF THE ADJACENT TRAVEL LANE.

BARRIER REFLECTORS SHALL CONFORM TO C&MS 626, EXCEPT THAT THE SPACING SHALL BE AS PER TRAFFIC SCD MT-101.70. OBJECT MARKERS AND THEIR INSTALLATION SHALL CONFORM TO C&MS 614.03 AND SCD MT-101.70. WHEN THE PB CONTAINS GLARE SCREEN, ONE SET OF THREE VERTICAL STRIPES OF SHEETING SHALL BE CONSIDERED EQUIVALENT TO AN OBJECT MARKER, ONE-WAY.

INCREASED BARRIER DELINEATION, AS SPECIFIED HEREIN, SHALL BE INSTALLED ON ALL PB AND CONCRETE PERMANENT BARRIER LOCATED WITHIN 5 FEET OF THE EDGE OF THE TRAVELED LANE ALONG TAPERS AND TRANSITION AREAS AND ALONG CURVES (OUTSIDE ONLY) WITH DEGREE OF CURVATURE GREATER THAN OR EQUAL TO 3 DEGREES.

THE INCREASED BARRIER DELINEATION SHALL CONSIST OF EITHER DELINEATION PANELS OR THE TRIPLE STACKING OF WORK ZONE BARRIER REFLECTORS.

DELINEATION PANELS SHALL CONSIST OF PANELS OF DELINEATION, APPROXIMATELY 34 INCHES LONG AND 6 INCHES WIDE AND SHALL BE "CRIMPED." PANELS SHALL BE INSTALLED AND SPACED PER TRAFFIC SCD MT-101.70.

TRIPLE-STACKED BARRIER REFLECTORS SHALL CONSIST OF ALIGNING THREE BARRIER REFLECTORS VERTICALLY, AT LOCATIONS WHERE A SINGLE BARRIER REFLECTOR WOULD BE OTHERWISE ATTACHED. THERE SHALL BE NO OPEN SPACE BETWEEN THE ADJACENT BARRIER REFLECTORS. THE TRIPLE-STACKED BARRIER REFLECTORS SHALL CONFORM TO C&MS 626, EXCEPT THAT THEY SHALL BE SPACED AND ALIGNED PER TRAFFIC SCD MT-101.70.

THE FOLLOWING ESTIMATED QUANTITIES HAVE BEEN INCLUDED IN THE PLANS AND CARRIED TO THE GENERAL SUMMARY:

ITEM 614, BARRIER REFLECTOR, TYPE B 317 EACH
ITEM 614, OBJECT MARKER, ONE-WAY 317 EACH
ITEM 614, INCREASED BARRIER DELINEATION 14927 FEET

PAYMENT SHALL BE FULL COMPENSATION FOR ALL MATERIAL, LABOR, INCIDENTALS AND EQUIPMENT NECESSARY FOR FURNISHING, INSTALLING, MAINTAINING AND REMOVING EACH OF THE ABOVE ITEMS.

ALONG RUNS OF INCREASED BARRIER DELINEATION WHERE THIS ITEM IS PROVIDED, THE QUANTITY SHALL BE MEASURED AS THE ENTIRE LENGTH OF THE RUN OF INCREASED BARRIER DELINEATION, INCLUDING THE SPACES BETWEEN THE INDIVIDUAL DELINEATION PANELS OR STACKS OF BARRIER REFLECTORS.

GUARDRAIL DELINEATION

OBJECT MARKERS SHALL BE INSTALLED ON ALL GUARDRAIL LOCATED WITHIN 5 FEET OF THE EDGE OF THE ADJACENT TRAVEL LANE. GUARDRAIL-MOUNTING OF OBJECT MARKERS SHALL BE MADE BY INSTALLING THE OBJECT MARKERS ON THE EXTENSION BLOCKS RATHER THAN DIRECTLY ONTO THE GUARDRAIL ITSELF. OBJECT MARKER SPACING SHALL BE APPROXIMATELY 50 FEET.

PAYMENT SHALL BE FULL COMPENSATION FOR ALL MATERIAL, LABOR, INCIDENTALS AND EQUIPMENT NECESSARY FOR FURNISHING, INSTALLING, MAINTAINING AND REMOVING OBJECT MARKERS.

AN ESTIMATED QUANTITY OF 12 EACH OF ITEM 614 OBJECT MARKERS, ONE-WAY HAS BEEN PROVIDED AND CARRIED TO THE GENERAL SUMMARY.

ITEM 614 - LAW ENFORCEMENT OFFICER (WITH PATROL CAR) FOR ASSISTANCE DURING CONSTRUCTION OPERATIONS

USE OF LAW ENFORCEMENT OFFICERS (LEOS) BY CONTRACTORS OTHER THAN THE USES SPECIFIED BELOW WILL NOT BE PERMITTED AT PROJECT COST. LEOS SHOULD NOT BE USED WHERE THE OMUTCD INTENDS THAT FLAGGERS BE USED.

c:\pwworking\hmm\external\tyn61470\dms72666\872666MN007.dgn 10/21/2014 3:54:27 PM TYN61470

I:\projects\HAM\ir071\01.34_PID87268\Design\docs\Plan Package\Current CADD Files\MOT\Sheets\87268MN008.dgn 2/9/2015 11:33:33 AM dkoenig

MAINTENANCE OF TRAFFIC GENERAL NOTES

IN ADDITION TO THE REQUIREMENTS OF C&MS 614 AND THE OMUTCD, A UNIFORMED LEO WITH AN OFFICIAL PATROL CAR (CAR WITH TOP-MOUNTED EMERGENCY FLASHING LIGHTS AND COMPLETE MARKINGS OF THE APPROPRIATE LAW ENFORCEMENT AGENCY) SHALL BE PROVIDED FOR THE FOLLOWING TRAFFIC CONTROL TASKS:

DURING THE ENTIRE ADVANCE PREPARATION AND CLOSURE SEQUENCE WHERE COMPLETE BLOCKAGE OF TRAFFIC IS REQUIRED ON INTERSTATE 71 AND SECOND AND THIRD STREET RAMPS ONLY.

IN ADDITION TO THE REQUIREMENT OF C&MS 614 AND THE OMUTCD, A UNIFORMED LEO WITH AN OFFICIAL PATROL CAR (CAR WITH TOP-MOUNTED EMERGENCY FLASHING LIGHTS AND COMPLETE MARKINGS OF THE APPROPRIATE LAW ENFORCEMENT AGENCY) SHOULD BE PROVIDED FOR THE FOLLOWING TRAFFIC CONTROL TASKS:

FOR LANE CLOSURES ON INTERSTATE 71 AND SECOND AND THIRD STREET RAMPS ONLY: DURING INITIAL SET-UP PERIODS, TEAR DOWN PERIODS, SUBSTANTIAL SHIFTS OF A CLOSURE POINT OR WHEN NEW LANE CLOSURE ARRANGEMENTS ARE INITIATED FOR LONG-TERM LANE CLOSURES/SHIFTS (FOR THE FIRST AND LAST DAY OF MAJOR CHANGES IN TRAFFIC CONTROL SETUP). IN GENERAL, LEOS SHOULD BE POSITIONED AT THE POINT OF LANE RESTRICTION OR ROAD CLOSURE AND TO MANUALLY CONTROL TRAFFIC MOVEMENTS THROUGH INTERSECTIONS IN WORK ZONES.

WHEN CONSTRUCTION VEHICLES ARE ENTERING/EXITING THE ZONE DIRECTLY FROM/INTO AN OPEN LANE OF TRAFFIC. IF A LANE HAS BEEN CLOSED TO PROVIDE AN ACCELERATION/DECELERATION LANE FOR THE VEHICLE, THE LEO WILL NOT BE REQUIRED.

LEOS SHOULD NOT FORGO THEIR TRAFFIC CONTROL RESPONSIBILITIES TO APPREHEND MOTORISTS FOR ROUTINE TRAFFIC VIOLATIONS. HOWEVER, IF A MOTORIST'S ACTIONS ARE CONSIDERED TO BE RECKLESS, THEN PURSUIT OF THE MOTORIST IS APPROPRIATE.

THE LEOS WORK AT THE DIRECTION OF THE CONTRACTOR. THE CONTRACTOR IS RESPONSIBLE FOR SECURING THE SERVICES OF THE LEOS WITH THE APPROPRIATE AGENCIES AND COMMUNICATING THE INTENTIONS OF THE PLANS WITH RESPECT TO DUTIES OF THE LEOS. THE ENGINEER SHALL HAVE FINAL CONTROL OVER THE LEOS' DUTIES AND PLACEMENT, AND WILL RESOLVE ANY ISSUES THAT MAY ARISE BETWEEN THE TWO PARTIES.

THE LEO SHALL REPORT IN TO THE CONTRACTOR PRIOR TO THE START OF THE SHIFT, IN ORDER TO RECEIVE INSTRUCTIONS REGARDING SPECIFIC WORK ASSIGNMENTS DURING HIS/HER SHIFT. THE LEO IS EXPECTED TO STAY AT THE PROJECT SITE FOR THE MAINTENANCE OF TRAFFIC SETUP AND TEAR DOWN PERIODS. THE LEO SHALL REPORT TO THE CONTRACTOR AT THE END OF HIS/HER SHIFT. SHOULD IT BE NECESSARY TO LEAVE THE PROJECT SITE, THE LEO SHALL NOTIFY THE ENGINEER. THE CONTRACTOR SHALL PROVIDE THE LEO WITH A TWO-WAY COMMUNICATION DEVICE WHICH SHALL BE RETURNED TO THE CONTRACTOR AT THE END OF HIS/HER SHIFT.

LEOS (WITH PATROL CAR) REQUIRED BY THE TRAFFIC MAINTENANCE TASKS ABOVE SHALL BE PAID FOR ON A UNIT PRICE (HOURLY) BASIS UNDER ITEM 614, LAW ENFORCEMENT OFFICER (WITH PATROL CAR) FOR ASSISTANCE. THE FOLLOWING ESTIMATED QUANTITIES HAVE BEEN CARRIED TO THE GENERAL SUMMARY.

ITEM 614, LAW ENFORCEMENT OFFICER WITH PATROL CAR FOR ASSISTANCE 4000 HOURS

THE DEPARTMENT WILL PAY A MAXIMUM OF 2 LEO HOURS FOR ASSISTANCE OF THE CONTRACTOR IN SETUP OR TEAR DOWN OF THE MAINTENANCE OF TRAFFIC OPERATIONS.

ANY ADDITIONAL COSTS (ADMINISTRATIVE OR OTHERWISE) INCURRED BY THE CONTRACTOR TO OBTAIN THE SERVICES OF AN LEO ARE INCLUDED WITH THE BID UNIT PRICE FOR ITEM 614, LAW ENFORCEMENT OFFICER WITH PATROL CAR FOR ASSISTANCE.

TRUCK MOUNTED ATTENUATOR

WHEN THE CONTRACTOR IS SETTING SHORT TERM WORK ZONES, A TMA MUST TRAIL THE OPERATION OF SETTING THE ADVANCE WARNING SIGNS UP OR TAKING THEM DOWN. THIS SAME TRUCK MUST HAVE A TYPE B FLASHING ARROW PANEL MOUNTED ON IT FACING THE REAR OF THE TRUCK.

THE CONTRACTOR SHALL USE A TMA FOR ANY APPLICATION WHERE THE OMUCTD OR STANDARD COSNTRUCTION DRAWING USES THE PHRASE "OPTIONAL" OR "WHEN SPECIFIED IN THE PLAN".

THE T.M.A. MUST BRING A VEHICLE WEIGHING 1800 TO 4500 LBS. AND TRAVELING AT 60 MPH TO A SAFE, CONTROLLED STOP, PER NCHRP 350 CRITERIA. THE MANUFACTURER'S SPECIFICATION MUST BE FOLLOWED CONCERNING THE SIZE OF THE TRUCK AND THE CONNECTIONS TO THE T.M.A.

ITEM 632, SIGNALIZATION, MISC.: PORTABLE HIGHWAY ADVISORY RADIO (HAR).

THE EQUIPMENT SPECIFICATIONS IN SUPPLEMENTAL SPECIFICATION 809.08 A. SHALL BE MODIFIED FOR THIS PROJECT AS FOLLOWS:

1. THE COMPLETE HAR UNIT SHALL BE MOUNTED TO A TRAILER SO THAT IT IS PORTABLE AND CAN BE EASILY MOVED WITH A VEHICLE.
2. THE HAR UNIT SHALL BE SUPPLIED WITH DRTXM4-AM TRANSMITTER AND A DRPSM1-POWER SUPPLY.
3. THE HAR UNIT SHALL BE CAPABLE OF NETWORK CONTROL THROUGH A DIGITAL MODEM (TO BE PROVIDED UNDER A SEPARATE ITEM.)

THE CONTRACTOR SHALL LOCATE THIS UNIT AS DIRECTED BY THE ENGINEER AND ALSO INSURE THAT THE POWER SUPPLY AND CHARGING SYSTEM ARE WORKING PROPERLY. THE ENGINEER OR HIS REPRESENTATIVE SHALL BE RESPONSIBLE FOR PROGRAMMING THE MESSAGES TO BE BROADCAST BY THE UNIT.

THE DEPARTMENT WILL MEASURE "SIGNALIZATION, MISC.: PORTABLE HIGHWAY ADVISORY RADIO (HAR), " BY THE NUMBER OF COMPLETE UNITS FURNISHED AND RECEIVED BY THE PROJECT.

ITEM 632, SIGNALIZATION, MISC.: CDMA MODEM, FURNISH ONLY

FURNISH A CDMA MODEM, ANTENNA, CABLES, AND ETHERNET CABLE FOR REMOTE WIRELESS CELLULAR COMMUNICATION. FOR NETWORK CONSISTENCY, CDMA MODEMS SHALL BE SIERRA WIRELESS (RAVEN X) OR GETWIRELESS (AIRLINK GX400).

THE CDMA MODEM EQUIPMENT SHALL BE DELIVERED TO THE ODOT ITS LAB FOR PROGRAMMING AND INSTALLATION.

ODOT ITS LAB
ATTN: PAUL LUNDSTROM
1606 W. BROAD STREET
COLUMBUS, OH 43223

THE CONTRACTOR SHALL PROVIDE THE MODEM SERIAL NUMBERS AND NECESSARY ESN NUMBERS FOR ODOT TO ESTABLISH WIRELESS SERVICE.

THE DEPARTMENT WILL MEASURE "SIGNALIZATION, MISC.: CDMA MODEM, FURNISH ONLY" BY THE NUMBER OF COMPLETE UNITS FURNISHED AND RECEIVED BY THE ODOT ITS LAB.

ITEM 690 – SPECIAL – MISC.: RUMBLE STRIPS

PRIOR TO PHASES 3A, 3B, 5A, AND 5B MAINTENANCE OF TRAFFIC, WHERE THERE ARE EXISTING RUMBLE STRIPS IN THE SHOULDER AND WHERE TRAFFIC WILL BE REQUIRED TO PASS OVER THEM, THE DEPRESSIONS SHALL BE MILLED AND FILLED PRIOR TO ALLOWING TRAFFIC ON THE AFFECTED SHOULDER. AFTER ALL PHASE 3A, 3B, 5A, AND 5B WORK IS COMPLETE AND TRAFFIC HAS BEEN RESTORED TO ITS NORMAL PATTERN, THE ASPHALT CONCRETE SHALL BE REMOVED FROM THE EXISTING RUMBLE STRIPS.

THE APPROXIMATE LOCATION OF RUMBLE STRIPS ARE:

PHASE 3A – I.R.-71 NORTHBOUND (INSIDE SHOULDER)
STA. 123+80 TO STA. 127+10 = 330 FT
STA. 135+71 TO STA. 137+73 = 202 FT

PHASE 3B – I.R.-71 NORTHBOUND (OUTSIDE SHOULDER)
STA. 121+93 TO STA. 124+70 = 277 FT

PHASE 3B – I.R.-71 NORTHBOUND (INSIDE SHOULDER)
STA. 121+93 TO STA. 123+80 = 187 FT
STA. 137+06 TO STA. 139+31 = 225 FT

PHASE 5A – I.R.-71 SOUTHBOUND (OUTSIDE SHOULDER)
STA. 123+27 TO STA. 125+43 = 216 FT
STA. 133+49 TO STA. 137+51 = 402 FT

PHASE 5B – I.R.-71 SOUTHBOUND (INSIDE SHOULDER)
STA. 123+27 TO STA. 125+43 = 216 FT

PAYMENT FOR THE ITEM WILL INCLUDE ALL MATERIAL, LABOR, EQUIPMENT, AND MAINTENANCE REQUIRED TO COMPLETE THE WORK DESCRIBED ABOVE.
THE FOLLOWING QUANTITY WILL BE CARRIED TO THE GENERAL SUMMARY:

ITEM 690 - SPECIAL – MISC.: RUMBLE STRIPS – 2055 FT

CITY OF CINCINNATI NOTES

614.02 TRAFFIC FACILITIES. ADD AFTER THE SECOND SENTENCE IN SUBSECTION "A":

MAINTAIN POLICE AND FIRE ACCESS AT ALL TIMES.

ADD:

614.031 NOTIFICATIONS. NOTIFY THE FOLLOWING, FIVE WORKING DAYS PRIOR TO THE START OF WORK AND ANY LOCAL STREET CLOSURE WITH THE APPROVAL OF THE CITY TRAFFIC ENGINEER OR HIS OR HER DESIGNEE AND THE ENGINEER:

A. LOCAL POLICE DISTRICT
B. LOCAL FIREHOUSES
C. QUEEN CITY METRO/SORTA
D. TANK (FOR WORK IN THE CBD)
E. LOCAL SCHOOLS
F. LOCAL HOSPITALS
G. ABUTTING PROPERTY OWNERS
H. ADDITIONAL CONTACTS AS REQUIRED BY THE ENGINEER.

IF TEMPORARY SIGNS TO RESTRICT PARKING ARE INSTALLED, NOTIFY THE LOCAL POLICE DISTRICT 24 HOURS PRIOR TO INSTALLATION AND POST THE SIGNS AT LEAST 14 HOURS BEFORE THE PARKING RESTRICTION LISTED ON THE SIGNS. USE PROPERLY WORDED TEMPORARY SIGNS WITH LEGIBLE DATES AND TIMES.

CONTACT THE TRAFFIC & ROAD OPERATIONS DIVISION SUPERVISOR AT 200-5212 OR TSB (TRAFFIC SERVICES BUREAU) CONTROLLER SERVICE SECTION AT 352-4391 OR 378-6200 AT LEAST ONE WEEK PRIOR TO ANY GRINDING OR CURB REPAIR OPERATIONS NEAR VEHICLE LOOP DETECTORS. COORDINATE AN ACCEPTABLE DATE WITH THEM TO BEGIN GRINDING WORK IN ORDER TO SAVE THE EXISTING LOOPS OR TO ARRANGE FOR PROPER SIGNAL OPERATION IF THE LOOPS MUST BE DESTROYED. COORDINATE WITH THEM TO ENSURE THAT THE EXISTING PAVEMENT MARKINGS ARE DOCUMENTED AND THE PROPOSED PAVEMENT MARKING DRAWING IS READY PRIOR TO BEGINNING GRINDING OPERATIONS AND/OR PAVING OPERATIONS.

ITEM NO.								614	614	614	614	614	614	614	614	614	614	622	622		
SHEET NO.	REFERENCE NO.	PHASE	LOCATION	STATION FROM	STATION TO	SIDE	LENGTH	WORK ZONE IMPACT ATTENUATOR (UNIDIRECTIONAL), 24"	WORK ZONE RAISED PAVEMENT MARKER, WHITE	WORK ZONE RAISED PAVEMENT MARKER, YELLOW	WORK ZONE LANE LINE, CLASS I, 740.06, TYPE I	WORK ZONE CENTER LINE, CLASS I, 740.06, TYPE I (DOUBLE SOLID)	WORK ZONE EDGE LINE, CLASS I, 740.06, TYPE I (4" WHITE)	WORK ZONE EDGE LINE, CLASS I, 740.06, TYPE I (4" YELLOW)	WORK ZONE CHANNELIZING LINE, CLASS I, 740.06, TYPE I	WORK ZONE STOP LINE, CLASS I, 740.06, TYPE I	WORK ZONE PAVEMENT MARKING, MISC.; CHEVRON MARKING, CLASS I, 740.06, TYPE I	PORTABLE BARRIER, 32"	PORTABLE BARRIER, 32", BRIDGE MOUNTED		
				FROM	TO		FT	EACH	EACH	EACH	MILE	MILE	MILE	MILE	FT	FT	FT	FT	FT		
		STAGE 1																			
48	EY-1		I.R.-71 SOUTHBOUND	NA	NA	LT	660							0.13							
		STAGE 2																			
		PHASE 1																			
40	CL-1		LYTLE STREET	10+10.38	11+68.00	CL	158					0.03									
40			THIRD STREET	NA	NA	CL	187					0.04									
40	SL-1			NA	NA	LT	10									10					
40	SL-2		PIKE STREET	01+12.74	01+12.74	LT	19									19					
40	EW-1			02+21.29	02+69.60	LT	49						0.01								
40				02+69.60	04+34.88	LT	165						0.04								
40	CL-2			02+21.29	02+69.60	CL	48					0.01									
40				02+69.60	04+03.89	CL	134					0.03									
40	SL-3			04+03.89	04+03.89	RT	10									10					
40	EW-2		FOURTH STREET	NA	NA	RT	51						0.01								
40				06+25.08	08+17.75	RT	199						0.04								
40	LL-1			NA	NA	LT	321				0.07										
		PHASE 3A																			
42 - 43	EW-3		I.R.-71 NORTHBOUND	120+80.00	NA	RT	1993		101				0.38								
42 - 43	CH-1			120+80.00	NA	RT	1993		101						1993						
42 - 43	EY-2			120+80.00	NA	RT	1993			101				0.38							
42 - 43	PB-1			122+26.00	127+10.00	RT	484											484			
42 - 43				127+10.00	136+93.00	RT	983											983			
		PRE-PHASE 3B																			
			I.R.-71 NORTHBOUND	117+00.00	127+10.00	RT	1010							0.20							
				117+00.00	127+10.00	RT	1010						0.20								
				117+00.00	127+10.00	RT	1010								1010						
				118+50.00	121+93.00	RT	343	1											343		
				121+93.00	125+00.00	RT	307											307			
		PHASE 3B																			
44 - 45	EY-3		I.R.-71 NORTHBOUND	113+50.00	136+36.00	RT	2286			115				0.44							
44 - 45				136+36.00	NA	RT	500			26				0.1							
44 - 45	CH-2			113+50.00	127+10.00	RT	1360		69						1360						
44 - 45	EW-4			127+10.00	136+36.00	RT	926		47				0.18								
44 - 45				136+36.00	NA	RT	500		26				0.1								
44 - 45	CH-3			116+50.00	127+10.00	RT	1060		54						1060						
44 - 45	CM-1			116+50.00	127+10.00	RT	NA										331				
44 - 45	EW-5			127+10.00	NA	RT	1426		72				0.28								
44 - 45	EW-6			113+50.00	127+10.00	RT	1360		69				0.26								
44 - 45	PB-2			126+25.00	136+36.00	RT	1011											1011			
44 - 45	PB-3			126+25.00	136+36.00	RT	1011	1										1011			
		PRE-PHASE 3C																			
				NA	NA	LT	660							0.13							
	PB-4		RAMP E	127+10.00	135+75.00	LT	865	1										865			
		PHASE 3C																			
46 - 47	EY-4		I.R.-71 NORTHBOUND	114+00.00	NA	RT	2692			136				0.51							
46 - 47	CH-4			114+00.00	NA	RT	2692		136						2692						
46 - 47	EW-7			114+00.00	127+10.00	RT	1310		67				0.25								
46 - 47	PB-5			118+50.00	121+93.00	RT	343	1											343		
46 - 47	PB-6			121+93.00	125+00.00	RT	307											307			
46 - 47	PB-7			125+00.00	136+92.00	RT	1192	1										1192			
		POST-PHASE 3C																			
			I.R.-71 NORTHBOUND	117+00.00	127+10.00	RT	1010							0.20							
				117+00.00	127+10.00	RT	1010						0.20								
				117+00.00	127+10.00	RT	1010								1010						
				118+50.00	121+93.00	RT	343	1											343		
				121+93.00	125+00.00	RT	307											307			
SUBTOTAL 1								6	1120		0.07	0.11	1.95	2.09	9125	39	331	6467	1029		

CALCULATED SJT CHECKED SJB

MAINTENANCE OF TRAFFIC SUBSUMMARY

HAM-71-1.34

c:\pwworking\hmm\externol\tyn61470\dms72868\87268MS001.dgn 10/24/2014 3:54:50 PM TYN61470

ITEM NO.								614	614	614	614	614	614	614	614	614	614	622	622		
SHEET NO.	REFERENCE NO.	PHASE	LOCATION	STATION FROM	STATION TO	SIDE	LENGTH	WORK ZONE IMPACT ATTENUATOR (UNIDIRECTIONAL), 24"	WORK ZONE RAISED PAVEMENT MARKER, WHITE	WORK ZONE RAISED PAVEMENT MARKER, YELLOW	WORK ZONE LANE LINE, CLASS I, 740.06, TYPE I	WORK ZONE CENTER LINE, CLASS I, 740.06, TYPE I (DOUBLE SOLID)	WORK ZONE EDGE LINE, CLASS I, 740.06, TYPE I (4" WHITE)	WORK ZONE EDGE LINE, CLASS I, 740.06, TYPE I (4" YELLOW)	WORK ZONE CHANNELIZING LINE, CLASS I, 740.06, TYPE I	WORK ZONE STOP LINE, CLASS I, 740.06, TYPE I	WORK ZONE PAVEMENT MARKING, MISC.: CHEVRON MARKING, CLASS I, 740.06, TYPE I	PORTABLE CONCRETE BARRIER, 32"	PORTABLE BARRIER, 32", BRIDGE MOUNTED		
							FT	EACH	EACH	EACH	MILE	MILE	MILE	MILE	FT	FT	FT	FT	FT		
		PHASE 4A																			
48	EY-1		I.R.-71 SOUTHBOUND	NA	NA	LT	660							0.13							
		STAGE 2																			
		PHASE 5A																			
50 - 51	EW-8		I.R.-71 SOUTHBOUND	NA	133+49.00	LT	1665		84				0.32								
50 - 51				133+49.00	NA	LT	1345		68				0.26								
50 - 51	EW-9			NA	NA	LT	467						0.09								
50 - 51	EY-5			NA	133+49.00	LT	1665			84				0.32							
50 - 51				133+49.00	NA	LT	1345			68				0.26							
50 - 51	CH-5			NA	133+49.00	LT	1665		84						1665						
50 - 51				133+49.00	NA	LT	1345		68						1345						
50 - 51	CM-2			NA	NA	LT	NA										386				
50 - 51	PB-8			125+34.00	135+70.00	LT	1036	1										1036			
		PHASE 5B																			
52 - 53	EW-10		I.R.-71 SOUTHBOUND	NA	133+42.00	LT	1610		82				0.31								
52 - 53				133+42.00	NA	LT	1445		73				0.28								
52 - 53	CH-6			NA	124+93.00	LT	761		39						761						
52 - 53	EW-11			124+93.00	133+42.00	LT	849		43				0.17								
52 - 53	CH-7			133+42.00	NA	LT	1445		73						1445						
52 - 53	CH-8			120+32.00	124+93.00	LT	461		24						461						
52 - 53	EW-12			124+93.00	133+42.00	LT	849		43				0.17								
52 - 53	CH-9			133+42.00	NA	LT	1145		58						1145						
52 - 53	CM-3			NA	NA	LT	NA										304				
52 - 53	EY-6			NA	133+42.00	LT	1610			82				0.31							
52 - 53				133+42.00	NA	LT	660			34				0.13							
52 - 53	EW-13			NA	NA	LT	785						0.15								
52 - 53	PB-9			124+93.00	134+52.00	LT	959											959			
52 - 53	PB-10			124+93.00	134+52.00	LT	959	1										959			
		PHASE 5C																			
54 - 55	EW-14		I.R.-71 SOUTHBOUND	NA	133+39.50	LT	1647		83				0.32								
54 - 55				133+39.50	NA	LT	1395		71				0.27								
54 - 55	CH-9			NA	133+39.50	LT	1647		83						1647						
54 - 55				133+39.50	NA	LT	1395		71						1395						
54 - 55	EY-7			NA	133+39.50	LT	1647			83				0.32							
54 - 55				133+39.50	NA	LT	655			34				0.13							
54 - 55	EW-15			NA	NA	LT	740						0.15								
54 - 55	PB-11			125+43.00	133+39.50	LT	797											797			
54 - 55				133+39.50	135+23.50	LT	184	1										184			
		PHASE 6																			
56	EW-16		E. FIFTH STREET	NA	NA	LT	297						0.06								
56	SL-4			NA	NA	LT	12									12					
56	CH-10			NA	NA	LT	113								113						
56	EW-17		SENTINEL STREET	NA	NA	RT	220						0.05								
SUBTOTAL THIS SHEET								3	1432		0.00	0.00	2.6	1.6	9977	13	690	3935	0		
SUBTOTAL 1								6	1120		0.07	0.11	1.95	2.09	9125	39	331	6467	1029		
TOTALS CARRIED TO GENERAL SUMMARY								9	2552		0.07	0.11	8.24		19102	52	1021	10402	1029		

CALCULATED SJT
CHECKED SJB

MAINTENANCE OF TRAFFIC SUBSUMMARY

HAM-71-1.34

c:\pwworking\hmm\external\tyn61470\dms72868\87268MS002.dgn 10/24/2014 3:54:52 PM TYN61470

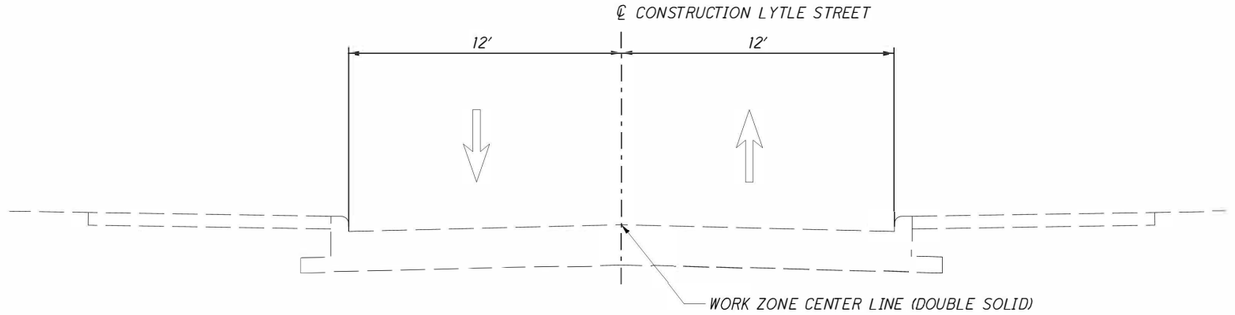

STAGE 2 CONSTRUCTION - LYTLE STREET

STA. 10+10.38 TO STA. 11+68.00 = 157.62 FT

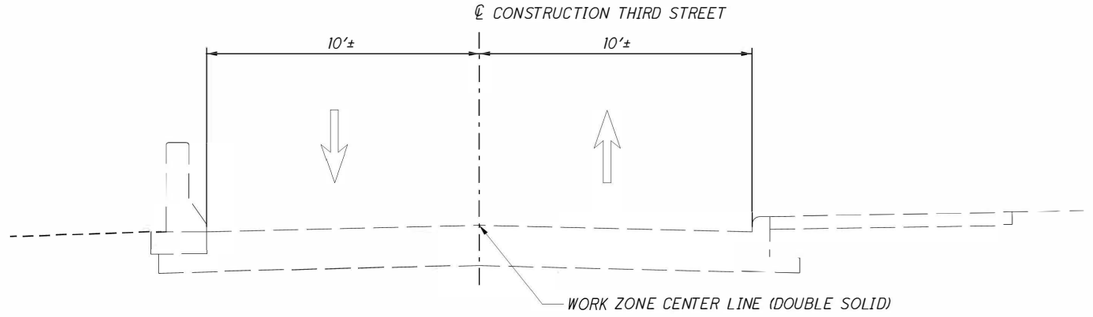

STAGE 2 CONSTRUCTION - THIRD STREET

PIKE STREET TO LYTLE STREET

CALCULATED RLD
CHECKED CWP

MAINTENANCE OF TRAFFIC - TYPICAL SECTIONS

HAM-71.1.34

33
555

c:\pwworking\hmm_external\tyn61470\dms72668\72668MY001.dgn 10/24/2014 3:54:54 PM TYN61470

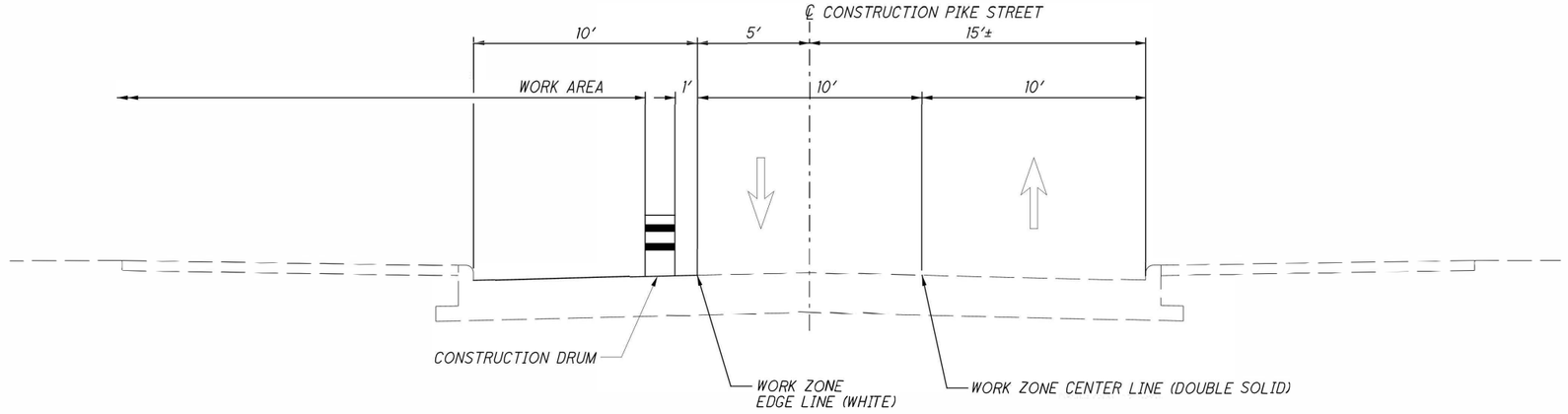

STAGE 2 CONSTRUCTION - PIKE STREET

STA. 2+21.29 TO STA. 4+03.89 = 182.60 FT

CALCULATED RLD
CHECKED CWP

MAINTENANCE OF TRAFFIC - TYPICAL SECTIONS

HAM-71.1.34

c:\pwworking\hmm\external\tyn61470\dms72868\87268MOT002.dgn 10/24/2014 3:54:55 PM TYN61470

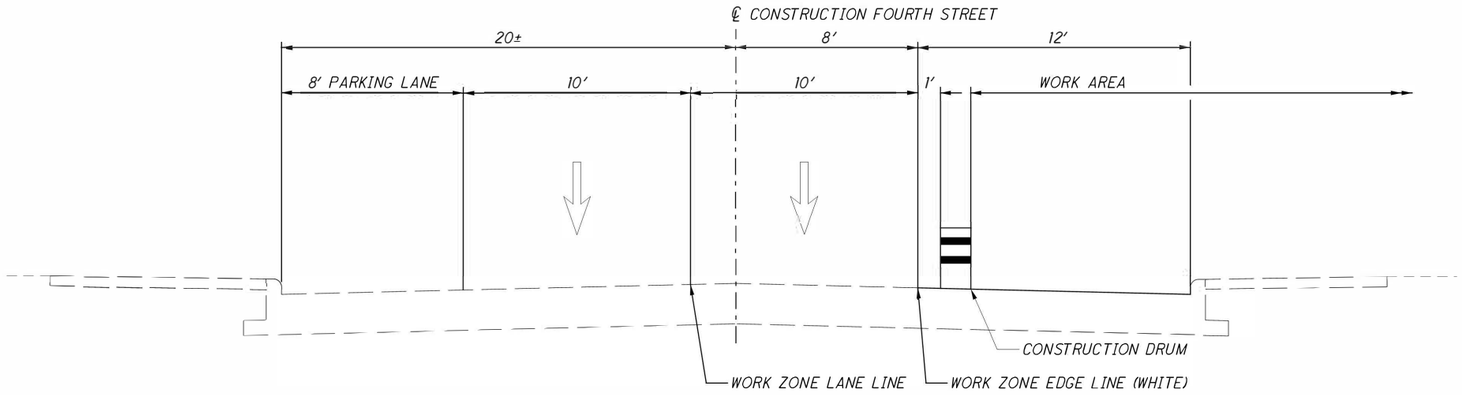

STAGE 2 CONSTRUCTION - FOURTH STREET

STA. 5+75.08 TO 8+32.40 = 257.32 FT

c:\pwworking\hmm\external\tyn61470\dms72868\87268MY003.dgn 10/24/2014 3:54:57 PM TYN61470

CALCULATED RLD
CHECKED CWP

MAINTENANCE OF TRAFFIC - TYPICAL SECTIONS

HAM-71.1.34

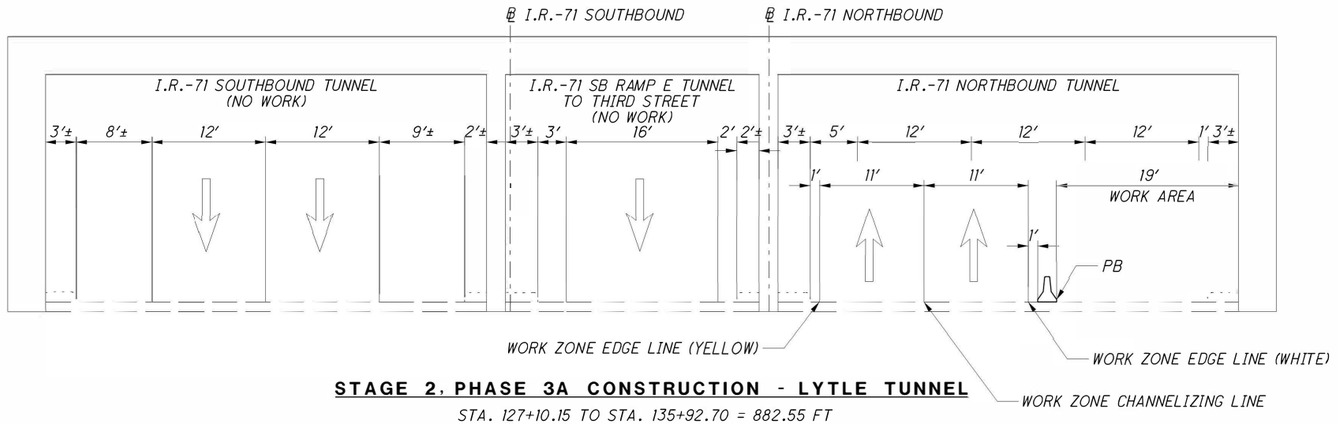

STAGE 2, PHASE 3A CONSTRUCTION - LYTLE TUNNEL

STA. 127+10.15 TO STA. 135+92.70 = 882.55 FT

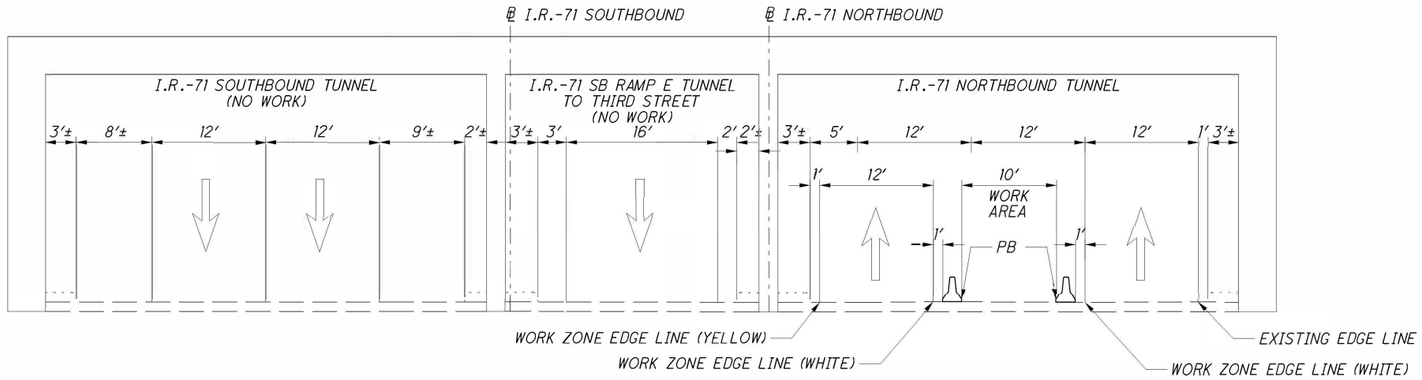

STAGE 2, PHASE 3B CONSTRUCTION - LYTLE TUNNEL

STA. 127+10.15 TO STA. 135+92.70 = 882.55 FT

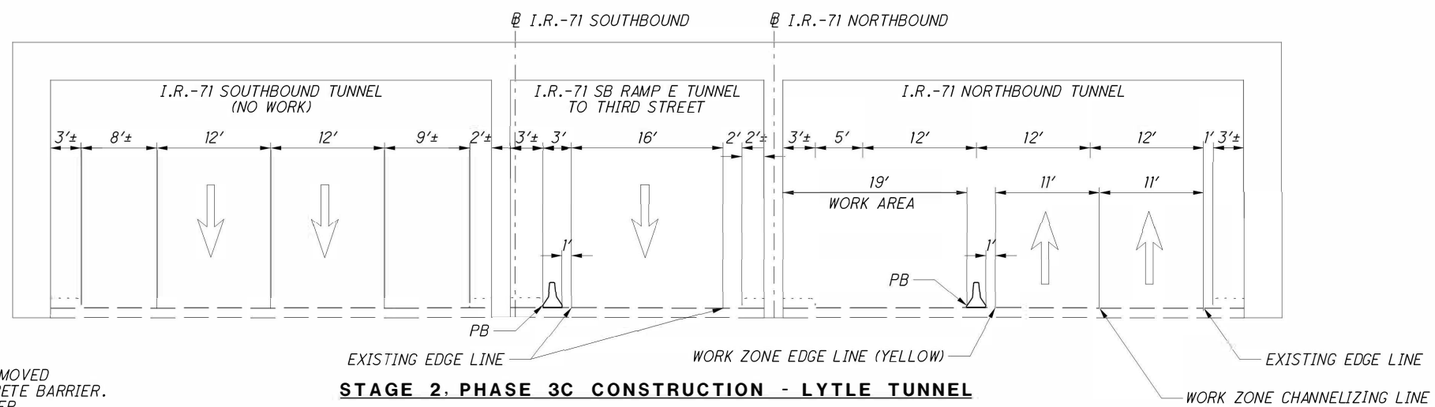

STAGE 2, PHASE 3C CONSTRUCTION - LYTLE TUNNEL

STA. 127+10.15 TO STA. 135+92.70 = 882.55 FT

NOTE:

1. EXISTING SIDEWALK AND CURB WILL BE REMOVED AND REPLACED WITH SINGLE SLOPE CONCRETE BARRIER. MODIFIED SINGLE SLOPE CONCRETE BARRIER WILL BE LOCATED IN AREAS OF DOORS, HYDRANTS, AND FAN EXHAUSTS. SEE SHEETS 154 - 161 FOR DETAILS.

CALCULATED RLD CHECKED CWP

MAINTENANCE OF TRAFFIC - TYPICAL SECTIONS

HAM-71.1.34

c:\pwworking\hmm\external\tyn61470\dms72868\87268MY004.dgn 10/24/2014 3:54:58 PM TYN61470

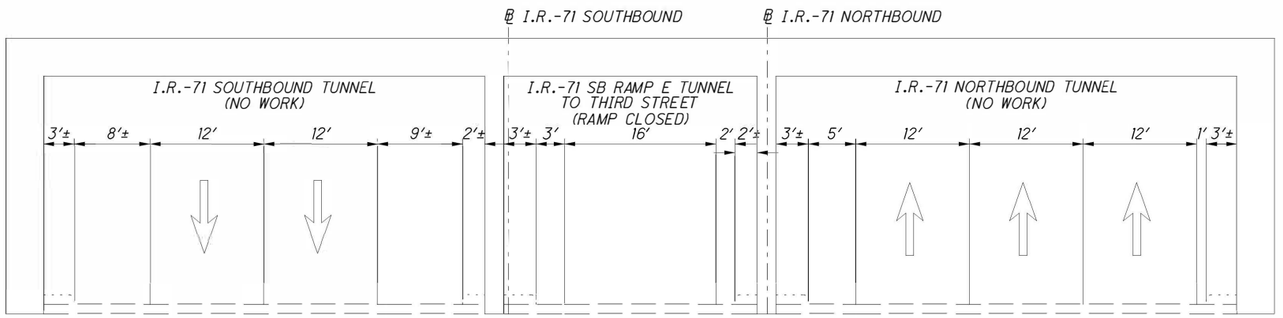

STAGE 1, STAGE 2, PHASE 4A CONSTRUCTION - LYTLE TUNNEL

STA. 126+83.19 TO STA. 135+32.22 = 849.03 FT

NOTE:

1. *EXISTING SIDEWALK AND CURB WILL BE REMOVED AND REPLACED WITH SINGLE SLOPE CONCRETE BARRIER. MODIFIED SINGLE SLOPE CONCRETE BARRIER WILL BE LOCATED IN AREAS OF DOORS, HYDRANTS, AND FAN EXHAUSTS. SEE SHEETS 154 - 161 FOR DETAILS.*

CALCULATED RLD
CHECKED CWP

MAINTENANCE OF TRAFFIC - TYPICAL SECTIONS

HAM-71.1.34

37
555

c:\pwworking\mm\external\yr61470\dms72666\87266MY005.dgn 10/24/2014 3:55:00 PM T:\N61470

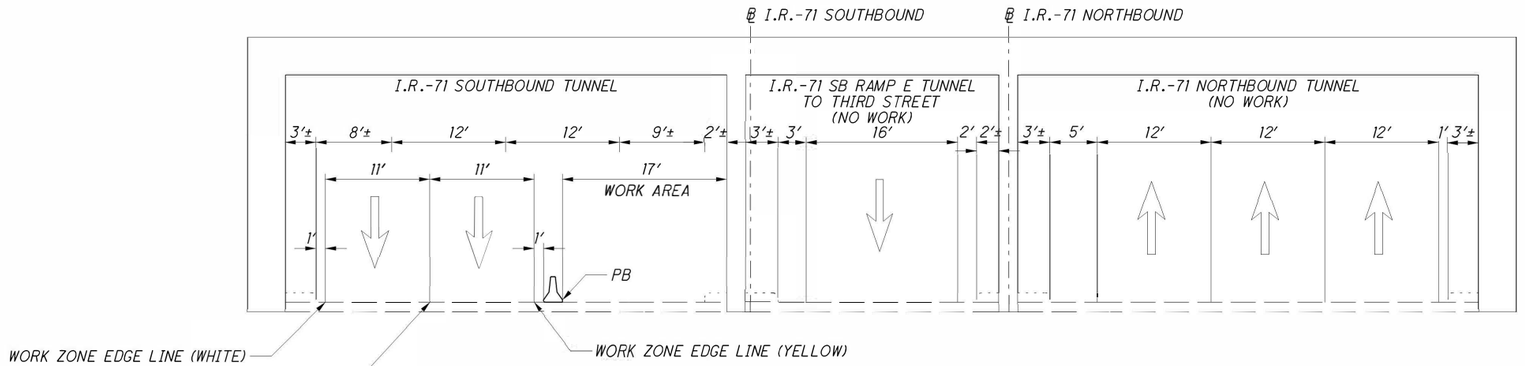

STAGE 2, PHASE 5A CONSTRUCTION - LYTLE TUNNEL

STA. 125+42.01 TO STA. 133+57.91 = 815.90 FT

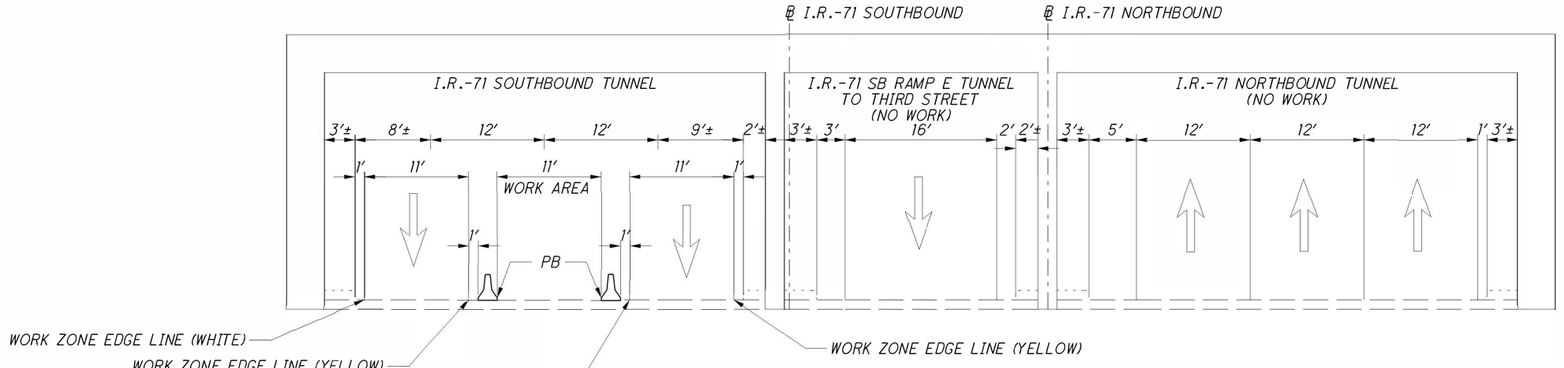

STAGE 2, PHASE 5B CONSTRUCTION - LYTLE TUNNEL

STA. 125+42.01 TO STA. 133+57.91 = 815.90 FT

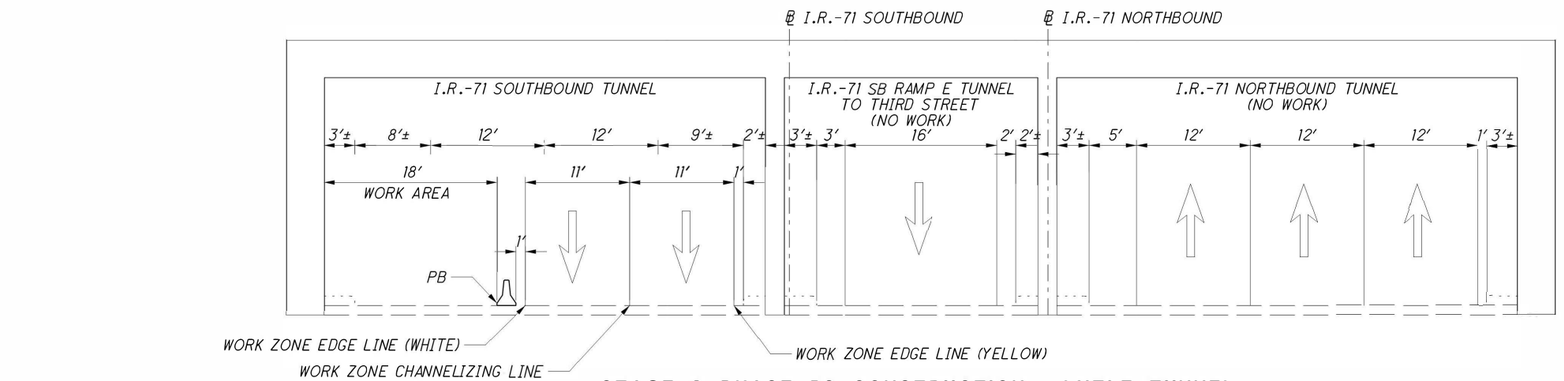

STAGE 2, PHASE 5C CONSTRUCTION - LYTLE TUNNEL

STA. 125+42.01 TO STA. 133+57.91 = 815.90 FT

NOTE:

1. EXISTING SIDEWALK AND CURB WILL BE REMOVED AND REPLACED WITH SINGLE SLOPE CONCRETE BARRIER. MODIFIED SINGLE SLOPE CONCRETE BARRIER WILL BE LOCATED IN AREAS OF DOORS, HYDRANTS, AND FAN EXHAUSTS. SEE SHEETS 154 - 161 FOR DETAILS.

CALCULATED RLD CHECKED CWP

MAINTENANCE OF TRAFFIC - TYPICAL SECTIONS

HAM-71.1.34

c:\pwworking\hmm\external\tyn61470\dms72868\87268WY006.dgn 10/24/2014 3:55:02 PM TYN61470

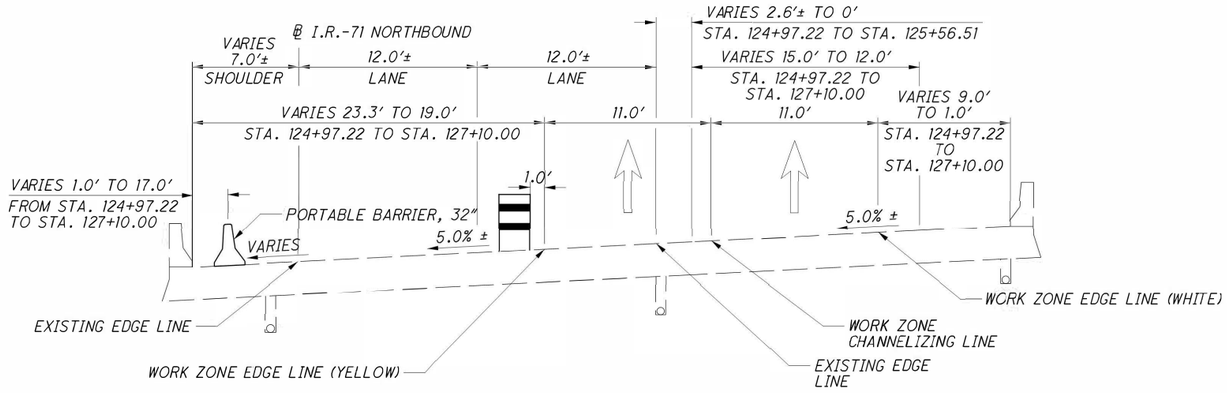

STAGE 2, PHASE 3C - I.R.-71 NORTHBOUND

STA. 124+97.22 TO STA. 127+10.00 = 212.78 FT

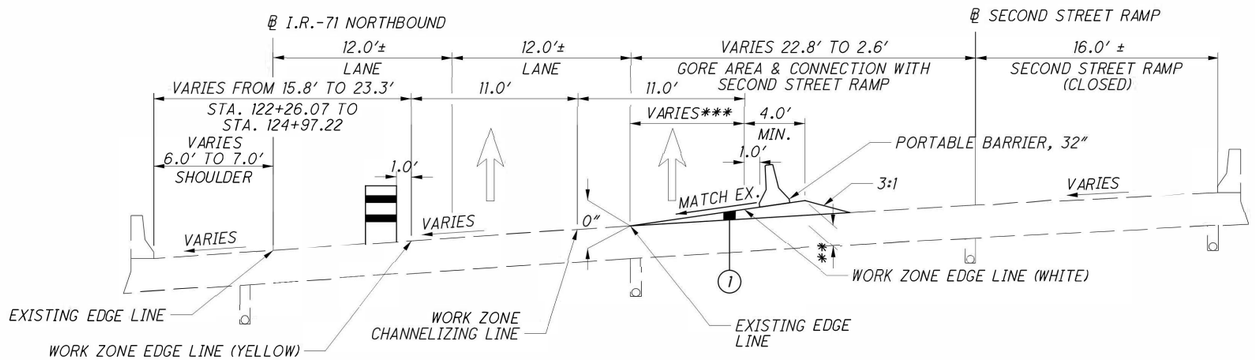

** WEDGE THICKNESS VARIES FROM 11.63" TO 0" FROM STA. 122+26.07 TO STA. 124+97.22

*** 8' TO 14.2' FROM STA. 122+26.07 TO 124+97.22

STAGE 2, PHASE 3C - I.R.-71 NORTHBOUND

STA. 122+26.07 TO STA. 124+97.22 = 271.15 FT

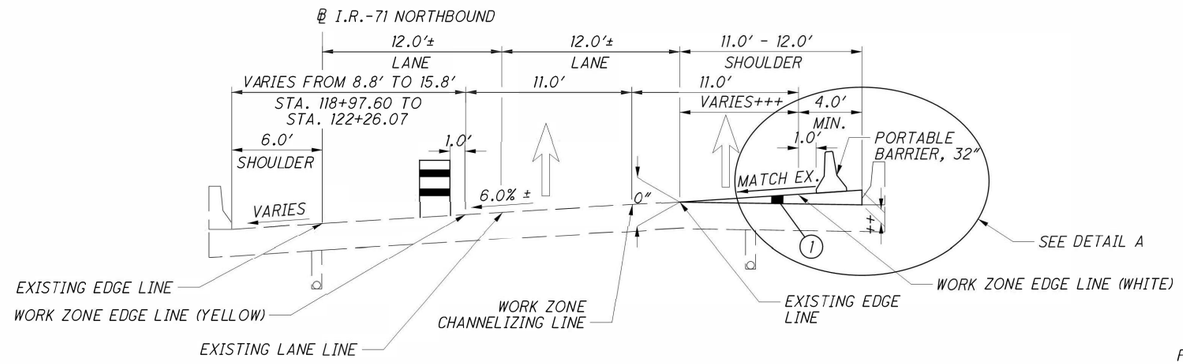

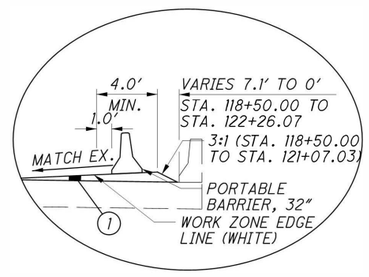

DETAIL A

NOTES:

1. THE PORTABLE BARRIER, 32", BRIDGE MOUNTED WILL REQUIRE 2 ANCHORS PER SEGMENT.

++ WEDGE THICKNESS VARIES FROM 0" TO 11.63" FROM STA. 118+50.00 TO STA. 122+26.07

+++ 0' TO 8' FROM STA. 118+50.00 TO STA. 122+26.07

STAGE 2, PHASE 3C - I.R.-71 NORTHBOUND

STA. 118+50.00 TO STA. 122+26.07 = 376.07 FT

PROPOSED LEGEND

(1) ITEM 614 - ASPHALT CONCRETE FOR MAINTAINING TRAFFIC (THICKNESS VARIES), MINIMUM 0".

CALCULATED RLD CHECKED CWP

MAINTENANCE OF TRAFFIC - TYPICAL SECTIONS

HAM-71.1.34

c:\pwworking\hmm\external\tyn61470\dms72868\87268MY007.dgn 10/24/2014 3:55:04 PM TYN61470

LEGEND

- CONSTRUCTION DRUM (SPACING PER ODOT STD. CONSTRUCTION DWGS.)
- EXISTING SIGN
- PROPOSED SIGN
- WORK ZONE - ROADWAY (AREA CLOSED)
- PROPOSED MOT SIGN
- EXISTING SIGN
- EXISTING SIGN TO BE COVERED
- EXISTING SIGN TO BE TEMPORARILY REMOVED
- (CL) WORK ZONE CENTER LINE, (DOUBLE SOLID), CLASS I, 642 PAINT
- (CH) WORK ZONE CHANNELIZING LINE, CLASS I, 642 PAINT
- (CM) WORK ZONE CHEVRON MARKING, CLASS I, 642 PAINT
- (LL) WORK ZONE LANE LINE, CLASS I, 642 PAINT
- (SL) WORK ZONE STOP LINE, CLASS I, 642 PAINT
- (EY) WORK ZONE EDGE LINE (YELLOW), CLASS I, 642 PAINT
- (EW) WORK ZONE EDGE LINE (WHITE), CLASS I, 642 PAINT
- (PB) PORTABLE BARRIER, 32"
- —x— CONSTRUCTION FENCE
- TYPE 3 BARRICADE WITH SIGN
- TYPE 1 BARRICADE WITH SIGN
- WORK ZONE IMPACT ATTENUATOR
- DIRECTION OF TRAFFIC

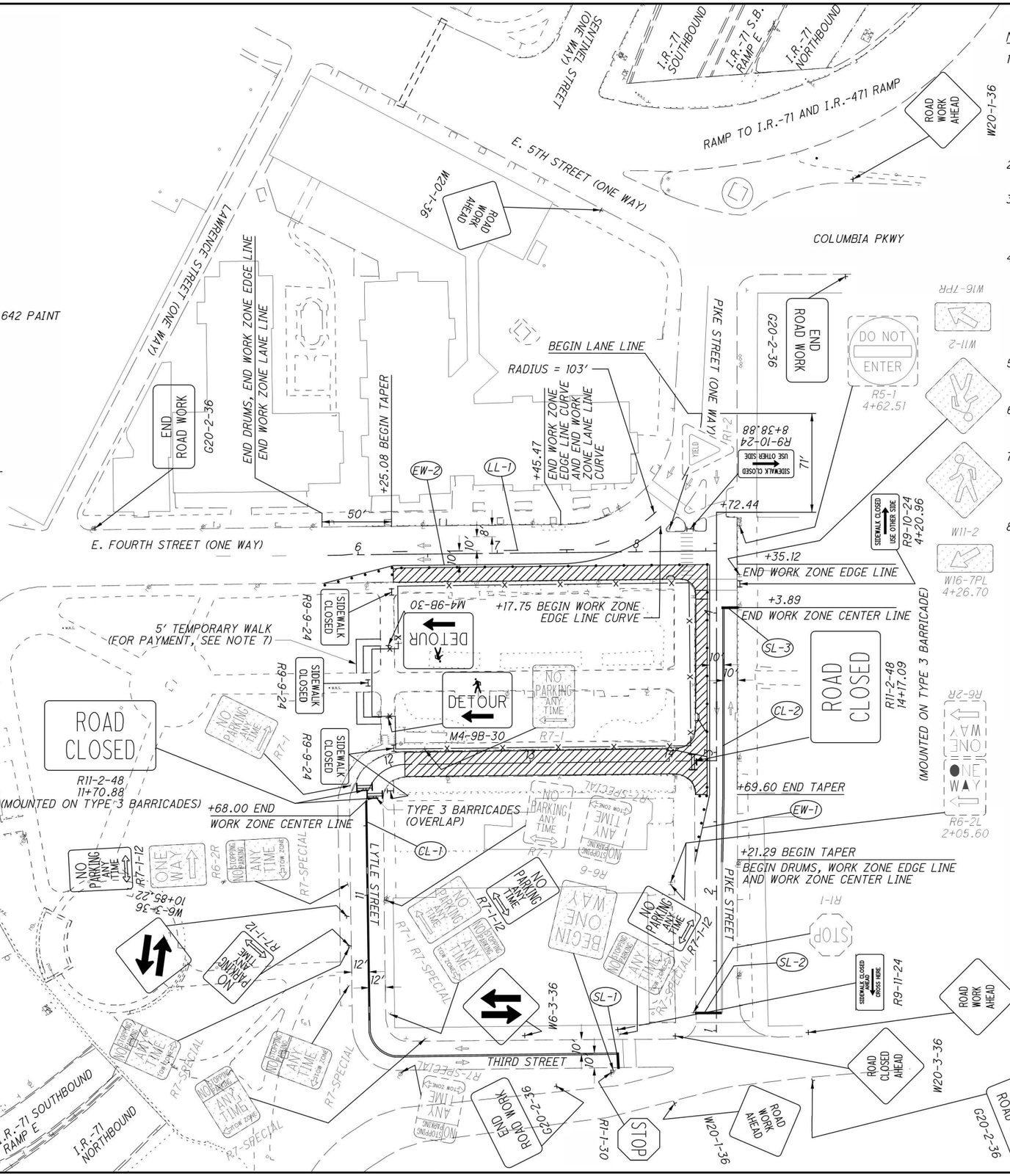

NOTES:

1. ALL PARKING METERS ARE TO BE COVERED ON THIRD STREET FROM PIKE STREET TO LYTLE STREET, LYTLE STREET, PIKE STREET FROM STA. 2+21.33 TO FOURTH STREET AND THE SOUTH SIDE OF FOURTH STREET FROM PIKE STREET TO STA. 5+75.28. PAYMENT TO BE INCLUDED IN THE LUMP SUM BID FOR ITEM 614 - MAINTAINING TRAFFIC.
2. CONSTRUCTION FENCING TO BE INSTALLED AROUND THE WORK AREA PER THE GENERAL NOTES.
3. CONSTRUCTION ACCESS TO LYTLE STREET IS LIMITED TO ACCESS FROM PIKE STREET ONLY. CONSTRUCTION VEHICLES ARE PROHIBITED TO ENTER LYTLE STREET FROM THIRD STREET.
4. THIRD STREET TRAFFIC FROM LYTLE STREET TO PIKE STREET IS TO BE TWO-WAY TRAFFIC DURING CONSTRUCTION. LYTLE STREET TRAFFIC FROM THIRD STREET TO THE BARRICADES IS TO BE TWO-WAY TRAFFIC DURING CONSTRUCTION. ANY EXISTING CONFLICTING SIGNS AND PAVEMENT MARKINGS ARE TO BE COVERED. PAYMENT TO BE INCLUDED IN THE LUMP SUM BID FOR ITEM 614 - MAINTAINING TRAFFIC.
5. ACCESS TO ALL DRIVEWAYS ON FOURTH STREET, PIKE STREET, LYTLE STREET, AND THIRD STREET ARE TO BE MAINTAINED THROUGHOUT CONSTRUCTION.
6. CONTRACTOR TO COVER EXISTING CONFLICTING SIGNS AND REMOVE CONFLICTING PAVEMENT MARKINGS. PAYMENT TO BE INCLUDED IN LUMP SUM BID FOR ITEM 614 - MAINTAINING TRAFFIC.
7. 4" TEMPORARY WALK TO BE CONSTRUCTED FOR THIS PHASE ONLY. AT THIS COMPLETION OF THIS PHASE, THE WALK IS TO BE REMOVED AND REPLACED WITH 5" CONCRETE WALK OR BACKFILLED AND RESEEDED. PAYMENT TO BE INCLUDED IN LUMP SUM BID FOR ITEM 614 - MAINTAINING TRAFFIC.
8. THE CONTRACTOR SHALL PROVIDE 3 WEEK NOTICE TO THE LOCALS PRIOR TO THE ROAD CLOSING AND REMOVAL OF PARKING TO ENSURE THE VEHICLES ARE REMOVED IN ADVANCE OF THE CONSTRUCTION ACTIVITIES AND IN ORDER TO NOTIFY THEM WELL IN ADVANCE SO THEY CAN PLAN ACCORDINGLY FOR ALTERNATIVE PARKING SOLUTIONS.

HORIZONTAL SCALE IN FEET
0 20 40 80
CALCULATED RLD
CHECKED CWP

MAINTENANCE OF TRAFFIC - STAGE 2, PHASE 1
LYTLE ST, PIKE ST, FOURTH ST, AND THIRD ST

HAM-71-1.34

40
555

c:\pwworking\hmm\external\tyn61470.dms72868\87268MP001.dgn 10/24/2014 3:55:07 PM TYN61470

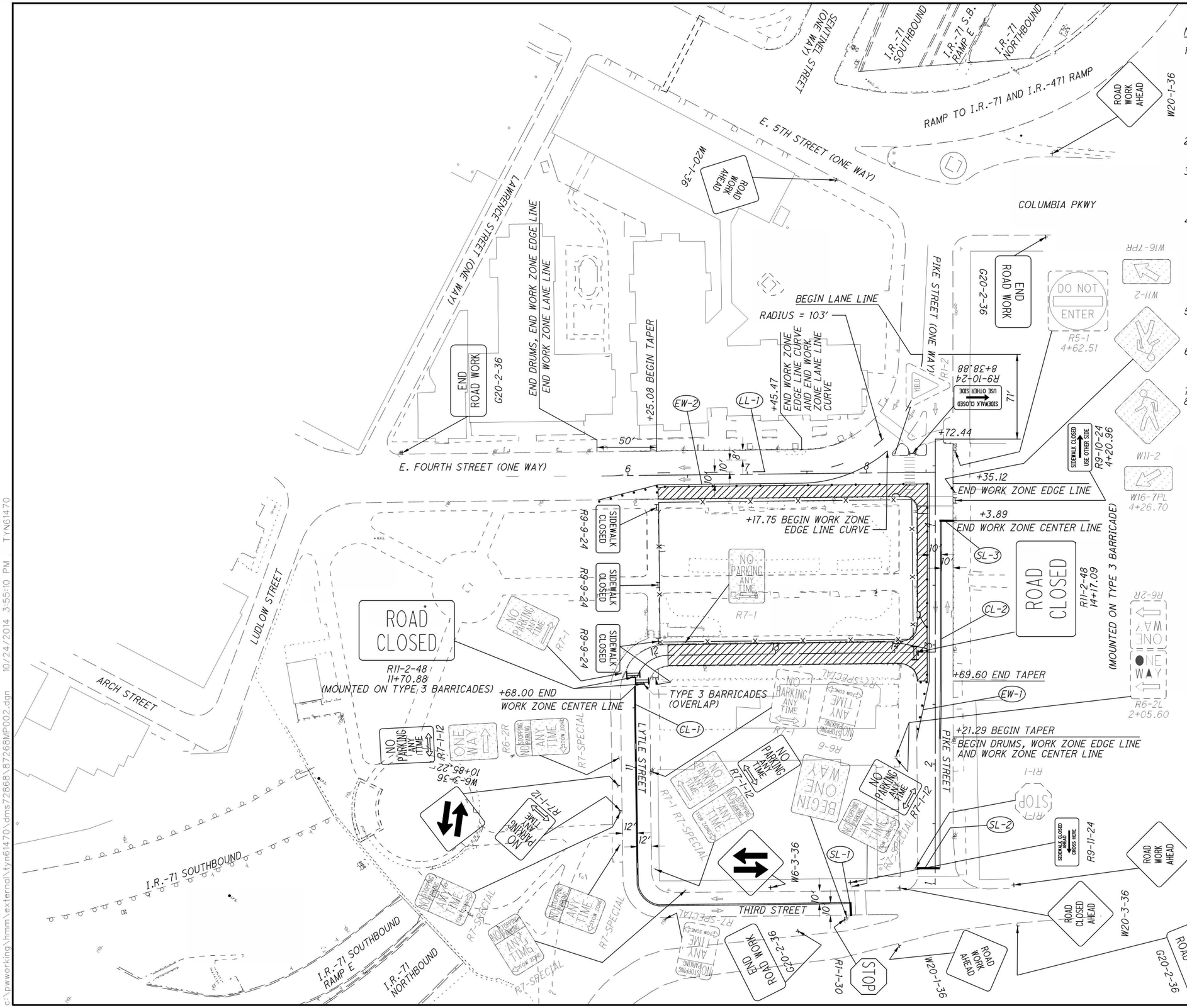

NOTES:

1. ALL PARKING METERS ARE TO BE COVERED ON THIRD STREET FROM PIKE STREET TO LYTLE STREET, LYTLE STREET, PIKE STREET FROM STA. 2+21.33 TO FOURTH STREET AND THE SOUTH SIDE OF FOURTH STREET FROM PIKE STREET TO STA. 5+75.28. PAYMENT TO BE INCLUDED IN THE LUMP SUM BID FOR ITEM 614 - MAINTAINING TRAFFIC.
2. CONSTRUCTION FENCING TO BE INSTALLED AROUND THE WORK AREA PER THE GENERAL NOTES.
3. CONSTRUCTION ACCESS TO LYTLE STREET IS LIMITED TO ACCESS FROM PIKE STREET ONLY. CONSTRUCTION VEHICLES ARE PROHIBITED TO ENTER LYTLE STREET FROM THIRD STREET.
4. THIRD STREET TRAFFIC FROM LYTLE STREET TO PIKE STREET IS TO BE TWO-WAY TRAFFIC DURING CONSTRUCTION. LYTLE STREET TRAFFIC FROM THIRD STREET TO THE BARRICADES IS TO BE TWO-WAY TRAFFIC DURING CONSTRUCTION. ANY EXISTING CONFLICTING SIGNS AND PAVEMENT MARKINGS ARE TO BE COVERED. PAYMENT TO BE INCLUDED IN THE LUMP SUM BID FOR ITEM 614 - MAINTAINING TRAFFIC.
5. ACCESS TO ALL DRIVEWAYS ON FOURTH STREET, PIKE STREET, LYTLE STREET, AND THIRD STREET ARE TO BE MAINTAINED THROUGHOUT CONSTRUCTION.
6. CONTRACTOR TO COVER EXISTING CONFLICTING SIGNS AND REMOVE CONFLICTING PAVEMENT MARKINGS. PAYMENT TO BE INCLUDED IN THE LUMP SUM BID FOR ITEM 614 - MAINTAINING TRAFFIC.
7. FOR MOT LEGEND, SEE SHEET 40
8. THE CONTRACTOR SHALL PROVIDE 3 WEEK NOTICE TO THE LOCALS PRIOR TO THE ROAD CLOSING AND REMOVAL OF PARKING TO ENSURE THE VEHICLES ARE REMOVED IN ADVANCE OF THE CONSTRUCTION ACTIVITIES AND IN ORDER TO NOTIFY THEM WELL IN ADVANCE SO THEY CAN PLAN ACCORDINGLY FOR ALTERNATIVE PARKING SOLUTIONS.

HORIZONTAL SCALE IN FEET
0 20 40 80

CALCULATED RLD
CHECKED CWP

MAINTENANCE OF TRAFFIC - STAGE 2, PHASES 2-6
LYTLE ST, PIKE ST, FOURTH ST, AND THIRD ST

HAM-71-1.34

41
555

c:\pwworking\hmm\external\tyn61470\dms72868\87268MP002.dgn 10/24/2014 3:55:10 PM TYN61470

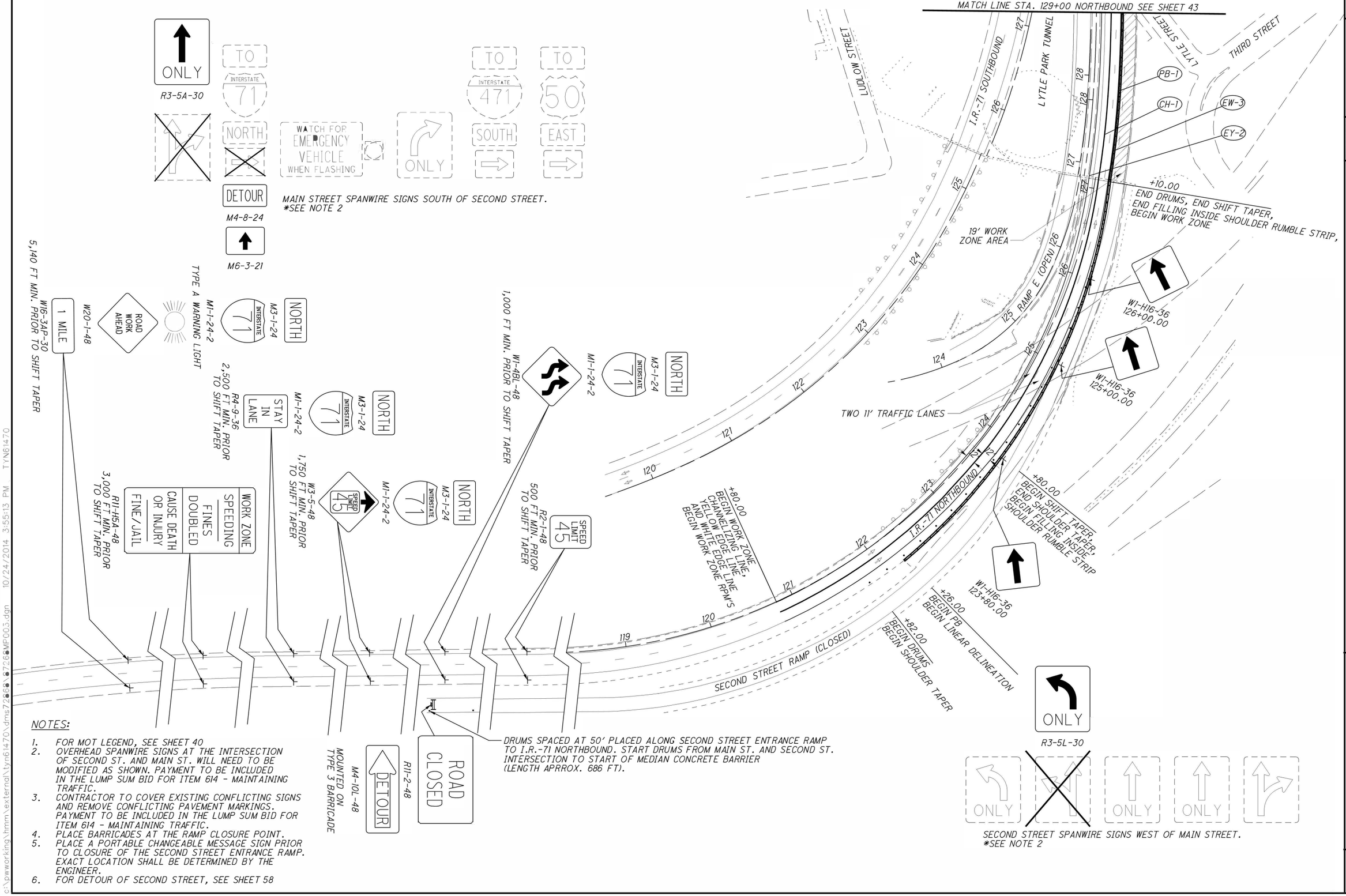

NOTES:

1. FOR MOT LEGEND, SEE SHEET 40
2. OVERHEAD SPANWIRE SIGNS AT THE INTERSECTION OF SECOND ST. AND MAIN ST. WILL NEED TO BE MODIFIED AS SHOWN. PAYMENT TO BE INCLUDED IN THE LUMP SUM BID FOR ITEM 614 - MAINTAINING TRAFFIC.
3. CONTRACTOR TO COVER EXISTING CONFLICTING SIGNS AND REMOVE CONFLICTING PAVEMENT MARKINGS. PAYMENT TO BE INCLUDED IN THE LUMP SUM BID FOR ITEM 614 - MAINTAINING TRAFFIC.
4. PLACE BARRICADES AT THE RAMP CLOSURE POINT.
5. PLACE A PORTABLE CHANGEABLE MESSAGE SIGN PRIOR TO CLOSURE OF THE SECOND STREET ENTRANCE RAMP. EXACT LOCATION SHALL BE DETERMINED BY THE ENGINEER.
6. FOR DETOUR OF SECOND STREET, SEE SHEET 58

HORIZONTAL SCALE IN FEET
0 25 50 100
CALCULATED RLD
CHECKED CWP

MAINTENANCE OF TRAFFIC- STAGE 2, PHASE 3A
I.R.-71 NORTHBOUND

HAM-71-1.34

42
555

c:\pwworking\hmm\external\ty-f61470\dms72668\8766MP003.dgn 10/24/2014 3:55:13 PM TYNG147

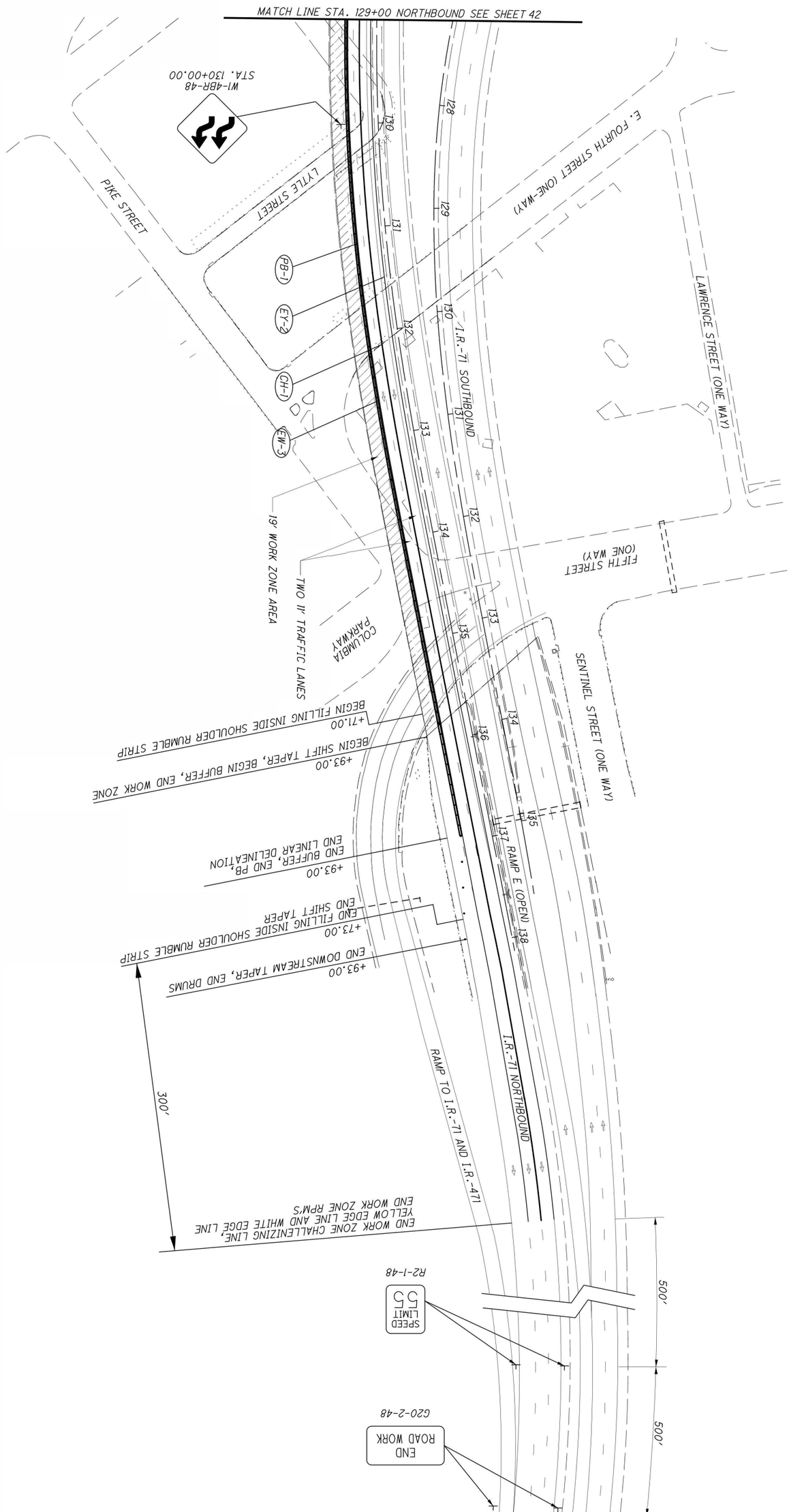

NOTES:

1. FOR MOT LEGEND, SEE SHEET 40
2. CONTRACTOR TO COVER EXISTING CONFLICTING SIGNS AND REMOVE CONFLICTING PAVEMENT MARKINGS. PAYMENT TO BE INCLUDED IN THE LUMP SUM BID FOR ITEM 614 - MAINTAINING TRAFFIC.
3. FOR DETOUR OF SECOND STREET, SEE SHEET 58

43 / 555	HAM-71-1.34	MAINTENANCE OF TRAFFIC- STAGE 2, PHASE 3A I.R.-71 NORTHBOUND	CALCULATED RLD CHECKED CWP	0 50 25 100 HORIZONTAL SCALE IN FEET

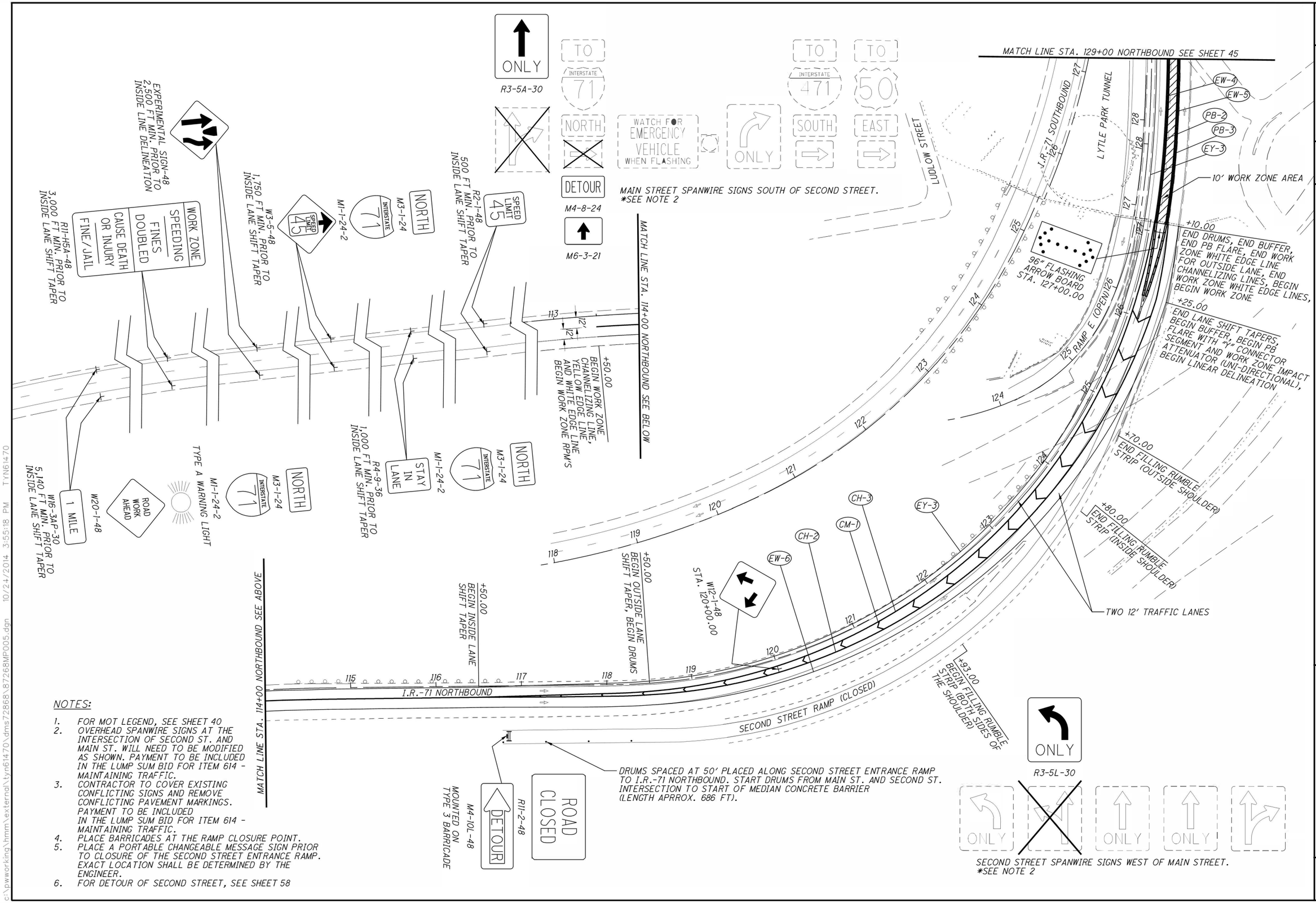

NOTES:

1. FOR MOT LEGEND, SEE SHEET 40
2. OVERHEAD SPANWIRE SIGNS AT THE INTERSECTION OF SECOND ST. AND MAIN ST. WILL NEED TO BE MODIFIED AS SHOWN. PAYMENT TO BE INCLUDED IN THE LUMP SUM BID FOR ITEM 614 - MAINTAINING TRAFFIC.
3. CONTRACTOR TO COVER EXISTING CONFLICTING SIGNS AND REMOVE CONFLICTING PAVEMENT MARKINGS. PAYMENT TO BE INCLUDED IN THE LUMP SUM BID FOR ITEM 614 - MAINTAINING TRAFFIC.
4. PLACE BARRICADES AT THE RAMP CLOSURE POINT.
5. PLACE A PORTABLE CHANGEABLE MESSAGE SIGN PRIOR TO CLOSURE OF THE SECOND STREET ENTRANCE RAMP. EXACT LOCATION SHALL BE DETERMINED BY THE ENGINEER.
6. FOR DETOUR OF SECOND STREET, SEE SHEET 58

HORIZONTAL SCALE IN FEET
0 25 50 100
CALCULATED RLD
CHECKED CWP

MAINTENANCE OF TRAFFIC- STAGE 2, PHASE 3B
I.R.-71 NORTHBOUND

HAM-71-1.34

c:\pwworking\hmm\external\tyn61470\dms72868\87268MP005.dgn 10/24/2014 3:55:18 PM TYN61470

c:\pwworking\hmm\external\tyn61470\dms72868\87268MP006.dgn 10/24/2014 3:55:21 PM TYN61470

NOTES:

1. FOR MOT LEGEND, SEE SHEET 40.
2. CONTRACTOR TO COVER EXISTING CONFLICTING SIGNS AND REMOVE CONFLICTING PAVEMENT MARKINGS. PAYMENT TO BE INCLUDED IN THE LUMP SUM BID FOR ITEM 614 - MAINTAINING TRAFFIC.
3. FOR DETOUR OF SECOND STREET, SEE SHEET 58

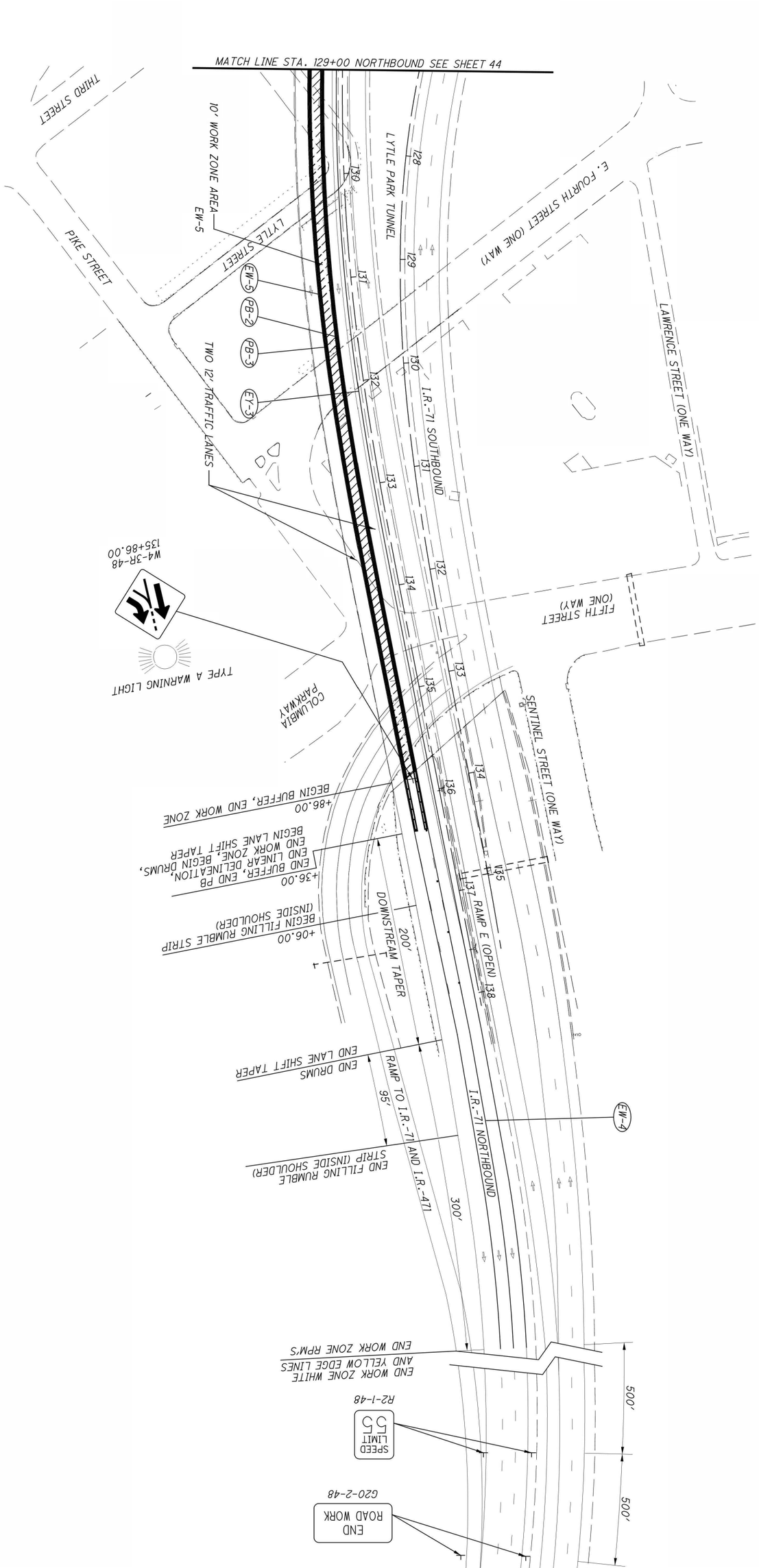

45 / 555	HAM-71-1.34	MAINTENANCE OF TRAFFIC- STAGE 2, PHASE 3B I.R.-71 NORTHBOUND	CALCULATED RLD CHECKED CWP	0 50 25 100 HORIZONTAL SCALE IN FEET	N

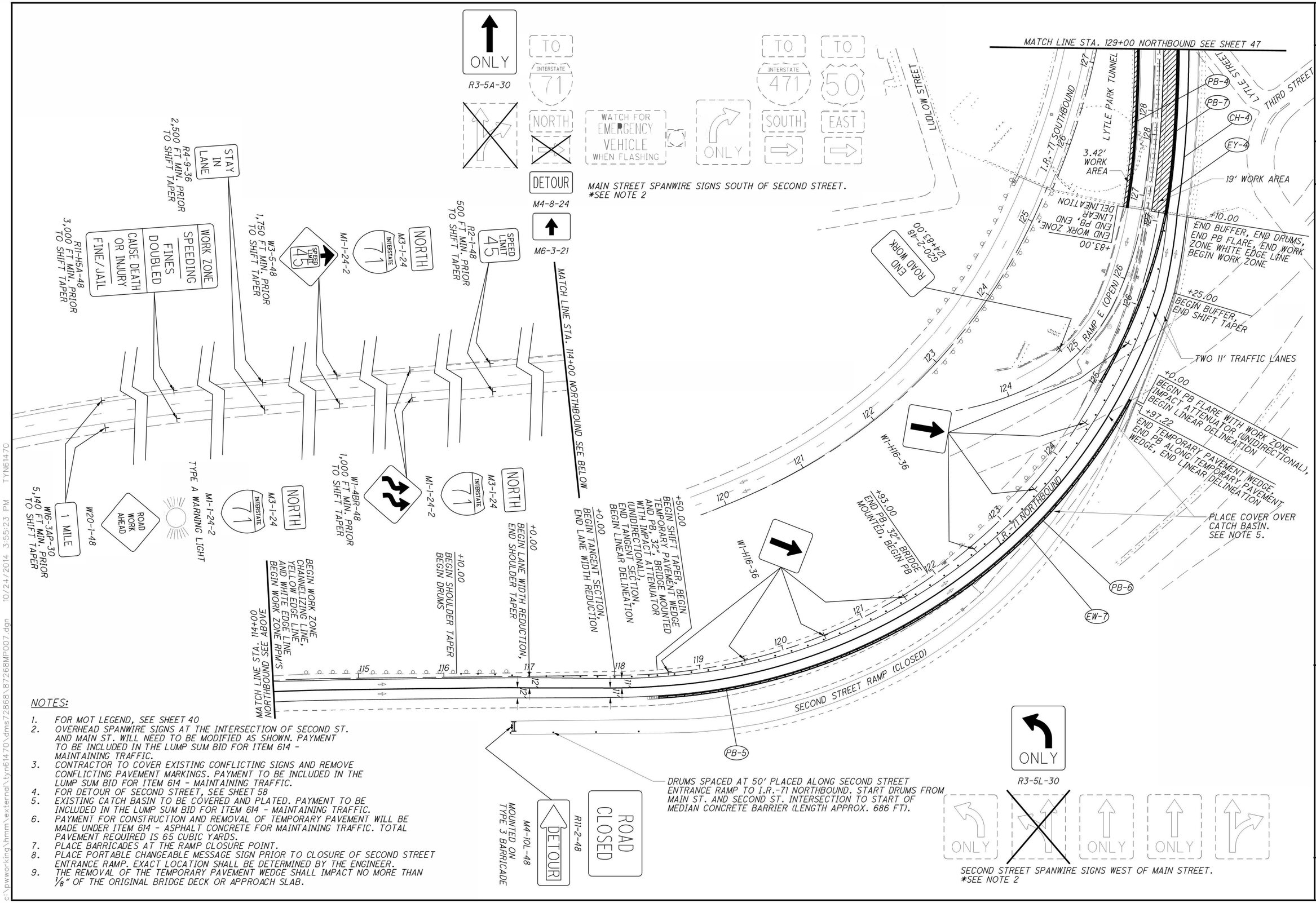

NOTES:

1. FOR MOT LEGEND, SEE SHEET 40
2. OVERHEAD SPANWIRE SIGNS AT THE INTERSECTION OF SECOND ST. AND MAIN ST. WILL NEED TO BE MODIFIED AS SHOWN. PAYMENT TO BE INCLUDED IN THE LUMP SUM BID FOR ITEM 614 - MAINTAINING TRAFFIC.
3. CONTRACTOR TO COVER EXISTING CONFLICTING SIGNS AND REMOVE CONFLICTING PAVEMENT MARKINGS. PAYMENT TO BE INCLUDED IN THE LUMP SUM BID FOR ITEM 614 - MAINTAINING TRAFFIC.
4. FOR DETOUR OF SECOND STREET, SEE SHEET 58
5. EXISTING CATCH BASIN TO BE COVERED AND PLATED. PAYMENT TO BE INCLUDED IN THE LUMP SUM BID FOR ITEM 614 - MAINTAINING TRAFFIC.
6. PAYMENT FOR CONSTRUCTION AND REMOVAL OF TEMPORARY PAVEMENT WILL BE MADE UNDER ITEM 614 - ASPHALT CONCRETE FOR MAINTAINING TRAFFIC. TOTAL PAVEMENT REQUIRED IS 65 CUBIC YARDS.
7. PLACE BARRICADES AT THE RAMP CLOSURE POINT.
8. PLACE PORTABLE CHANGEABLE MESSAGE SIGN PRIOR TO CLOSURE OF SECOND STREET ENTRANCE RAMP. EXACT LOCATION SHALL BE DETERMINED BY THE ENGINEER.
9. THE REMOVAL OF THE TEMPORARY PAVEMENT WEDGE SHALL IMPACT NO MORE THAN 1/8" OF THE ORIGINAL BRIDGE DECK OR APPROACH SLAB.

HORIZONTAL SCALE IN FEET
0 25 50 100
CALCULATED RLD
CHECKED CWP

MAINTENANCE OF TRAFFIC - STAGE 2, PHASE 3C
I.R.-71 NORTHBOUND

HAM-71-1.34

c:\pw working\hmm\external\tyn61470\dms72868\87268MP007.dgn 10/24/2014 3:55:23 PM TYN61470

NOTES:

1. FOR MOT LEGEND, SEE SHEET 40.
2. CONTRACTOR TO COVER EXISTING CONFLICTING SIGNS AND REMOVE CONFLICTING PAVEMENT MARKINGS. PAYMENT TO BE INCLUDED IN THE LUMP SUM BID FOR ITEM 614 - MAINTAINING TRAFFIC.
3. FOR DETOUR OF SECOND STREET, SEE SHEET 58

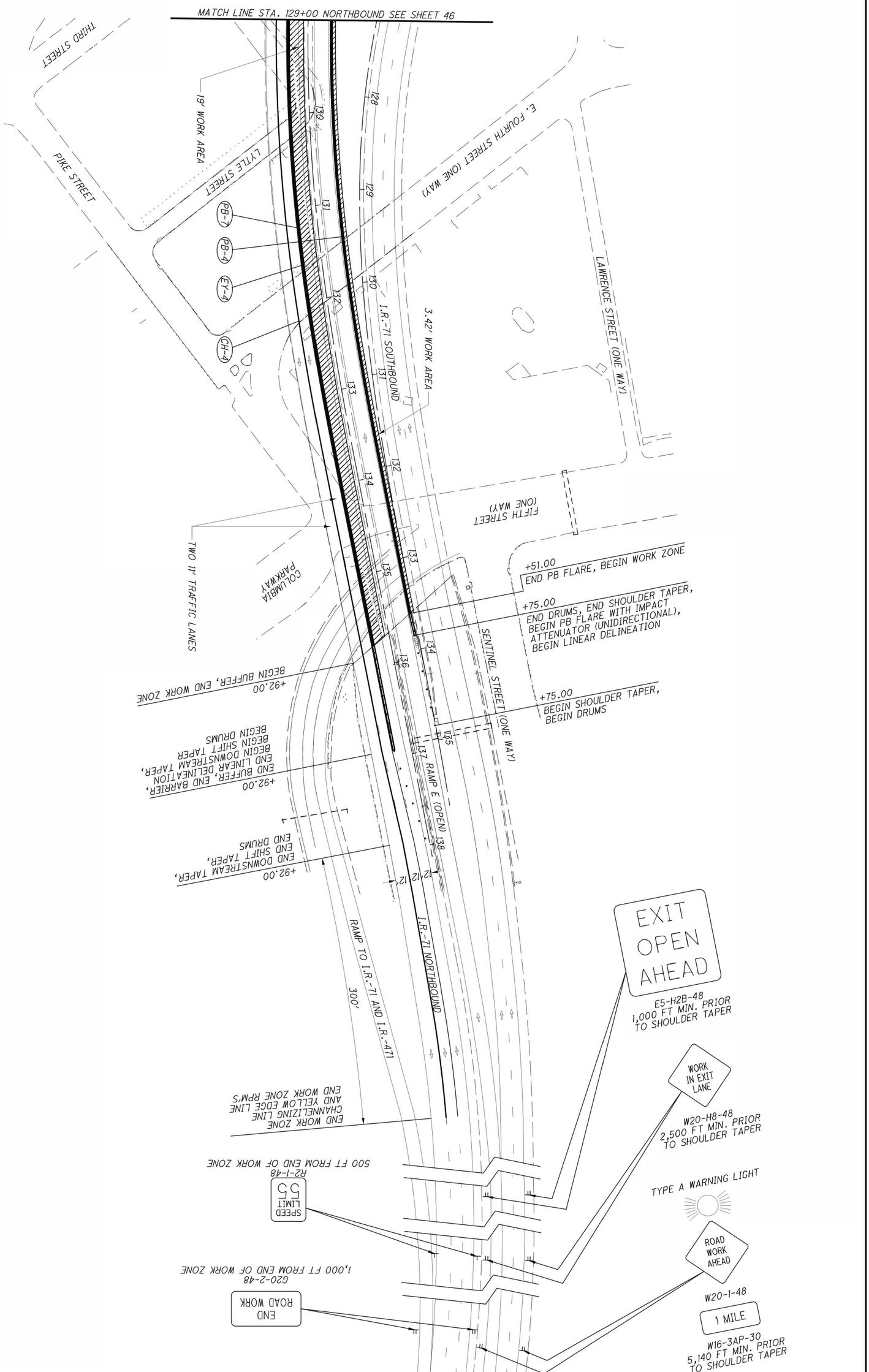

47 / 555	HAM-71-1.34	MAINTENANCE OF TRAFFIC - STAGE 2, PHASE 3C I.R.-71 NORTHBOUND	CALCULATED RLD CHECKED CWP	0 50 25 100 HORIZONTAL SCALE IN FEET

c:\pwworking\hmm\external\tyn61470\dms72868\87268MP009.dgn 10/24/2014 3:55:29 PM TYN61470

NOTES:

1. FOR MOT LEGEND, SEE SHEET 40
2. CONTRACTOR TO COVER EXISTING CONFLICTING SIGNS AND REMOVE CONFLICTING PAVEMENT MARKINGS. PAYMENT TO BE INCLUDED IN THE LUMP SUM BID FOR ITEM 614 - MAINTAINING TRAFFIC.
3. FOR DETOUR OF RAMP E, SEE SHEET 57
4. ADD "EXIT CLOSED" OVERLAY AS SHOWN ON GUIDE SIGNS BETWEEN FLORENCE AVE. AND BEGINNING OF RAMP E. OVERLAY SIGN LETTER SIZE SHALL BE A MINIMUM OF 18".

MATCH LINE STA. 134+00 SOUTHBOUND SEE SHEET 49

SENTINEL STREET (ONE WAY)

+71.00 END DRUMS

136 135 137 138

W1-2AR

40 MPH W13-1P

EXIT CLOSED

E5-2A-48
STA. 137+50.00 (NB)
(MOUNTED ON TYPE 3 BARRICADE)

40 MPH

INTERSTATE 75 NORTH

Dayton
KEEP LEFT

40 MPH

INTERSTATE 71 INTERSTATE 75 SOUTH

Louisville
Lexington
KEEP RIGHT

40 MPH

EXIT 25 MPH
Downtown
Riverfront
Third St
EXIT ONLY

RAMP TO I.R.-71 AND I.R.-471

I.R.-71 SOUTHBOUND

RAMP E "CLOSED"

I.R.-71 NORTHBOUND

EXIT CLOSED
15' X 3' BLACK ON ORANGE OVERLAY
SEE NOTE 4 FOR ADDITIONAL INFORMATION

Downtown
Riverfront
Third St
EXIT ONLY

JUNCTION
INTERSTATE 75
1 1/2 MILES

EXIT CLOSED
15' X 3' BLACK ON ORANGE OVERLAY
SEE NOTE 4 FOR ADDITIONAL INFORMATION

I-71 SOUTHBOUND OVERHEAD SIGNS - SEE NOTE 4.

EXIT CLOSED
E5-2A-48
(MOUNTED ON TYPE 3 BARRICADE)

EXIT 25 MPH
Downtown
Riverfront
Third St
EXIT ONLY

OVERHEAD SIGN

EXIT CLOSED
15' X 3'
BLACK ON ORANGE OVERLAY
SEE NOTE 4 FOR ADDITIONAL INFORMATION

EY-1

96" FLASHING ARROW BOARD

END SHOULDER TAPER

127'

BEGIN SHOULDER TAPER
BEGIN DRUMS

MERGING TAPER LENGTH 660'

BEGIN MERGING TAPER
BEGIN WORK ZONE EDGE LINE

END MERGING TAPER
END WORK ZONE EDGE LINE
MEET EXISTING EDGE LINE

Downtown
Riverfront
Third St
1/2 MILE

INTERSTATE 471 SOUTH
Newport KY

I-71 SOUTHBOUND OVERHEAD SIGNS - SEE NOTE 4.

EXIT CLOSED
14' X 3' BLACK ON ORANGE OVERLAY
SEE NOTE 4 FOR ADDITIONAL INFORMATION

Riverfront
Cincinnati
Covington
KEEP LEFT

EXIT CLOSED
12' X 3' BLACK ON ORANGE OVERLAY
SEE NOTE 4 FOR ADDITIONAL INFORMATION

I-71 SOUTHBOUND OVERHEAD SIGN - SEE NOTE 4.

TYPE A WARNING LIGHT

ROAD WORK AHEAD
W20-1-48
1 MILE
W16-3AP-30
5,140 FT MIN. PRIOR TO MERGING TAPER

W4-2L-48
1,000 FT MIN. PRIOR TO MERGING TAPER

LEFT LANE CLOSED AHEAD
W20-5-48
2,500 FT MIN. PRIOR TO MERGING TAPER

TYPE A WARNING LIGHT

EXIT CLOSED AHEAD
E5-H2C-48
2,100 FT MIN. PRIOR TO MERGING TAPER

Downtown
Riverfront
Third St
3/4 MILE

INTERSTATE 471 SOUTH
Newport KY
NEXT RIGHT

I-71 SOUTHBOUND OVERHEAD SIGNS - SEE NOTE 4.

EXIT CLOSED
14' X 3' BLACK ON ORANGE OVERLAY
SEE NOTE 4 FOR ADDITIONAL INFORMATION

48 / 555	HAM-71-1.34	MAINTENANCE OF TRAFFIC - STAGE 1, STAGE 2, PHASE 4A I.R.-71 SOUTHBOUND RAMP E	CALCULATED RLD CHECKED CWP 0 50 25 100 HORIZONTAL SCALE IN FEET N

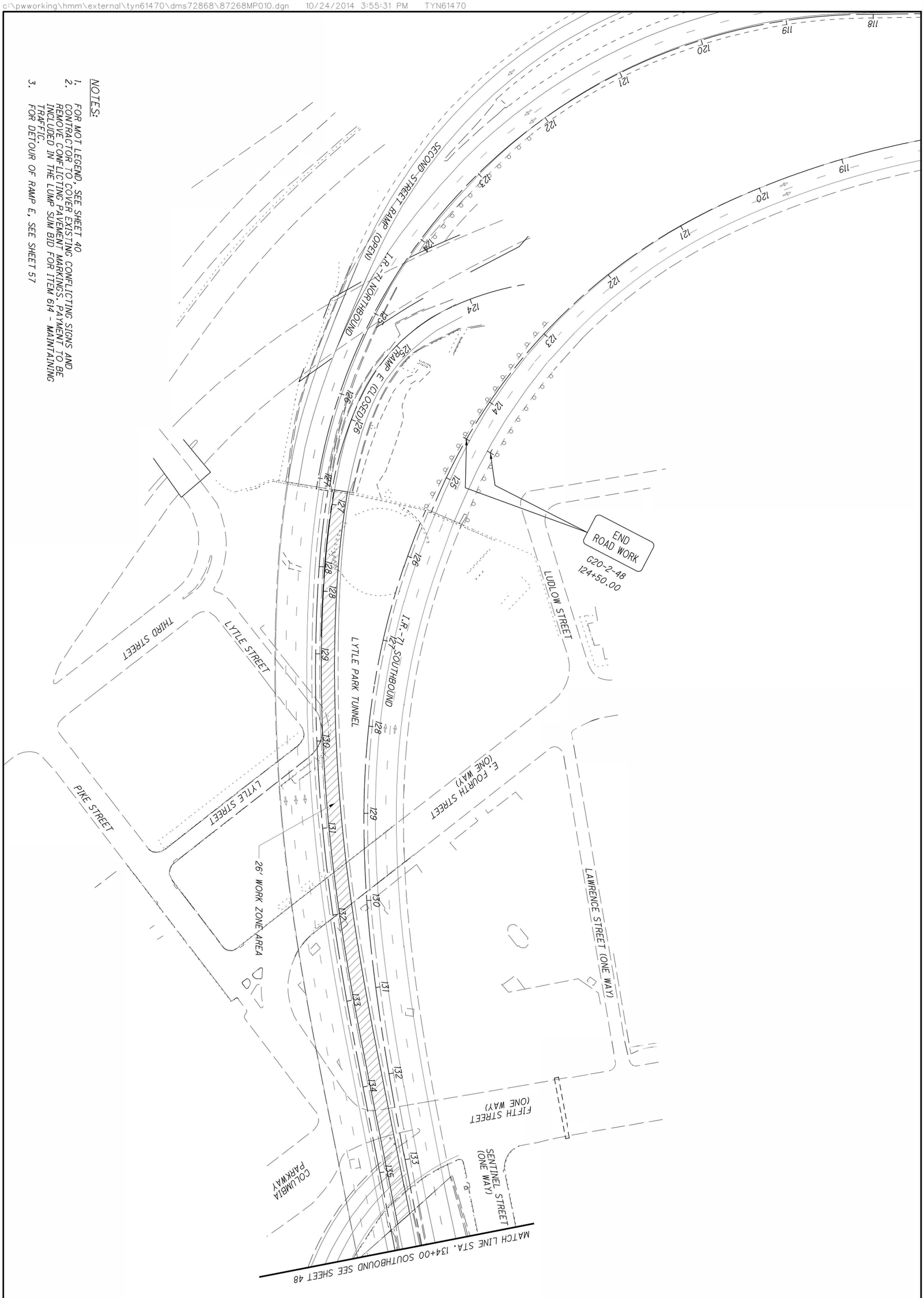
NOTES:
1. FOR MOT LEGEND, SEE SHEET 40.
2. CONTRACTOR TO COVER EXISTING CONFLICTING SIGNS AND REMOVE CONFLICTING PAVEMENT MARKINGS. PAYMENT TO BE INCLUDED IN THE LUMP SUM BID FOR ITEM 614 - MAINTAINING TRAFFIC.
3. FOR DETOUR OF RAMP E, SEE SHEET 57
SECOND STREET RAMP (OPEN)
I.R.-71 NORTHBOUND
RAMP E (CLOSED)
END ROAD WORK
G20-2-48
124+50.00
LUDLOW STREET
I.R.-71 SOUTHBOUND
LYTLE PARK TUNNEL
THIRD STREET
LYTLE STREET
LYTLE STREET
PIKE STREET
E. FOURTH STREET (ONE WAY)
26' WORK ZONE AREA
LAWRENCE STREET (ONE WAY)
FIFTH STREET (ONE WAY)
SENTINEL STREET (ONE WAY)
COLUMBIA PARKWAY
MATCH LINE STA. 134+00 SOUTHBOUND SEE SHEET 48

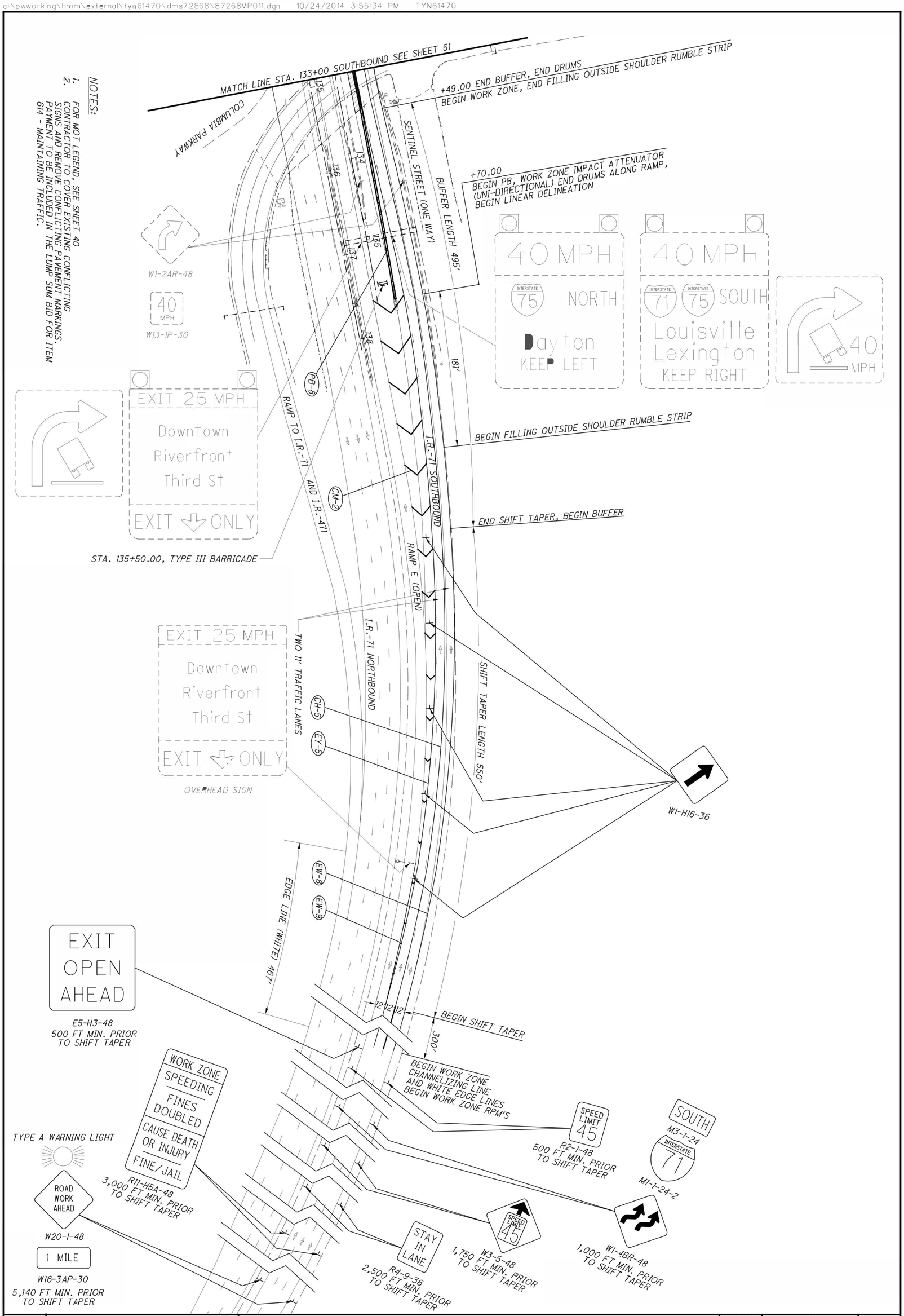

50 555	HAM-71-1.34	MAINTENANCE OF TRAFFIC - STAGE 2, PHASE 5A I.R.-71 SOUTHBOUND	CALCULATED RLD CHECKED CWP	0 50 25 100 HORIZONTAL SCALE IN FEET

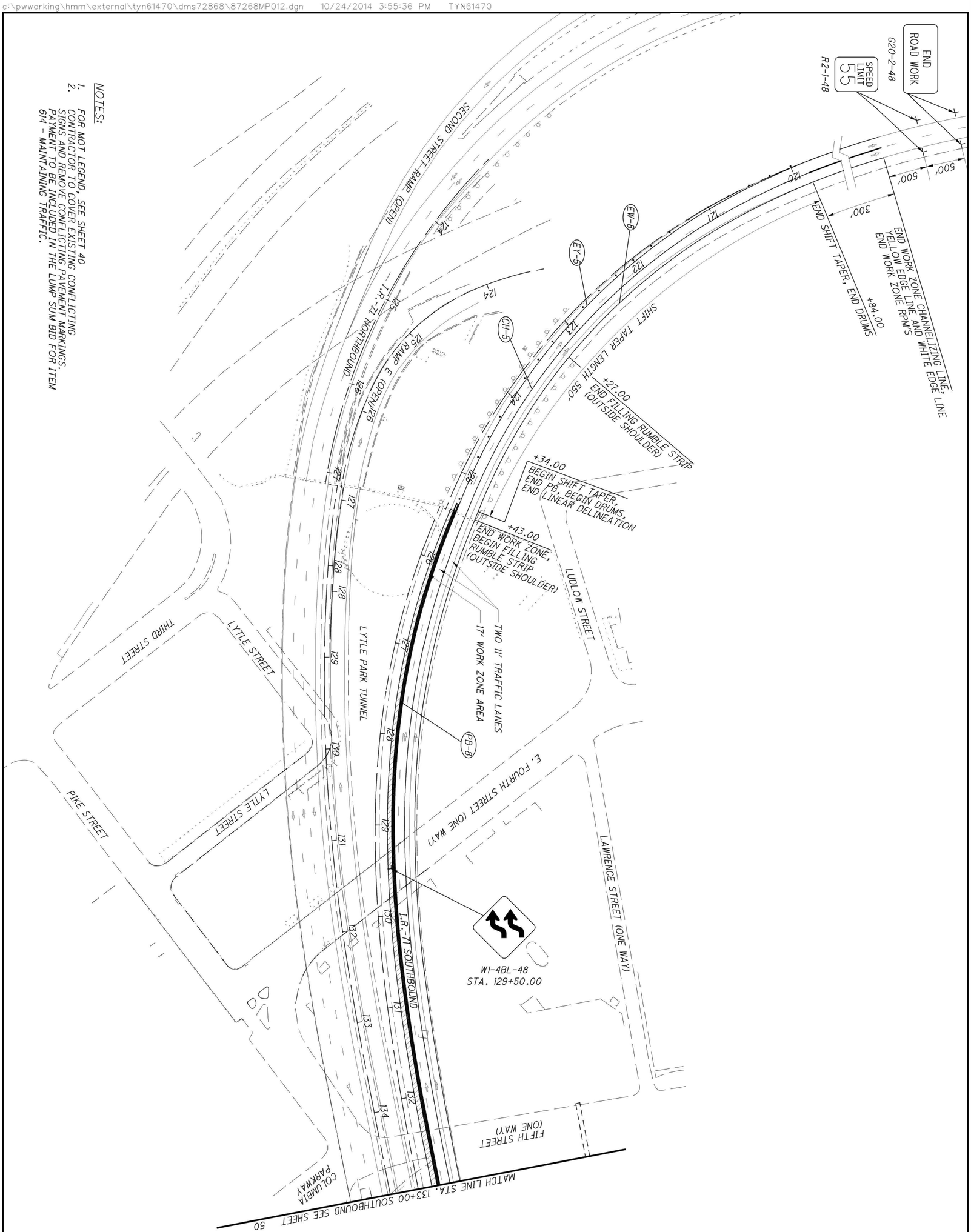

HAM-71-1.34

MAINTENANCE OF TRAFFIC - STAGE 2, PHASE 5A
I.R.-71 SOUTHBOUND

CALCULATED RLD
CHECKED CWP

0 50
25 100
HORIZONTAL SCALE IN FEET

N

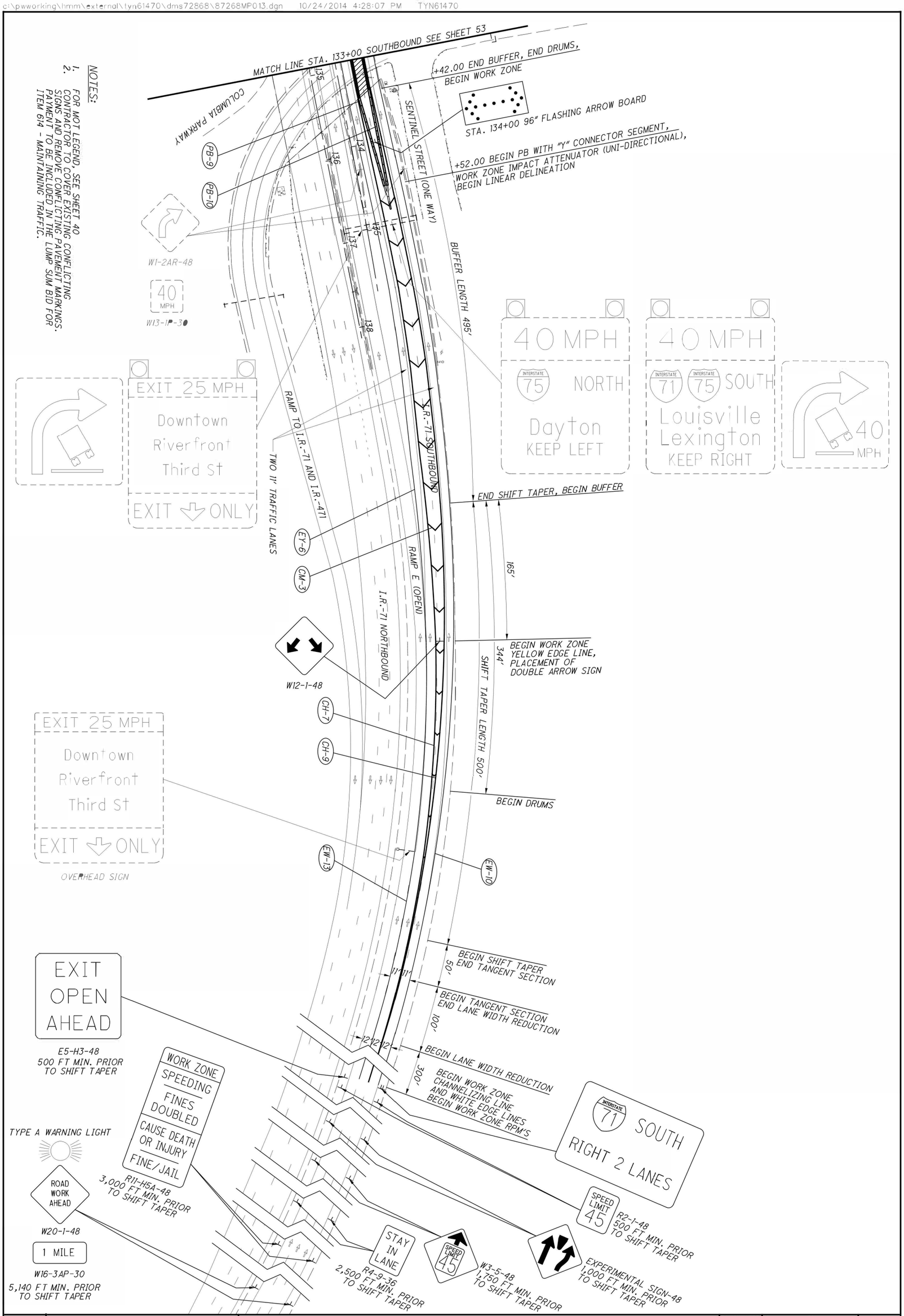
NOTES:
1. FOR MOT LEGEND, SEE SHEET 40
2. CONTRACTOR TO COVER EXISTING CONFLICTING SIGNS AND REMOVE CONFLICTING PAVEMENT MARKINGS. PAYMENT TO BE INCLUDED IN THE LUMP SUM BID FOR ITEM 614 - MAINTAINING TRAFFIC.
MATCH LINE STA. 133+00 SOUTHBOUND SEE SHEET 53
COLUMBIA PARKWAY
+42.00 END BUFFER, END DRUMS, BEGIN WORK ZONE
STA. 134+00 96" FLASHING ARROW BOARD
+52.00 BEGIN PB WITH "Y" CONNECTOR SEGMENT, WORK ZONE IMPACT ATTENUATOR (UNI-DIRECTIONAL), BEGIN LINEAR DELINEATION
SENTINEL STREET (ONE WAY)
PB-9
PB-10
W1-2AR-48
40 MPH
W13-1P-30
BUFFER LENGTH 495'
40 MPH
INTERSTATE 75 NORTH
Dayton
KEEP LEFT
40 MPH
INTERSTATE 71 INTERSTATE 75 SOUTH
Louisville
Lexington
KEEP RIGHT
40 MPH
EXIT 25 MPH
Downtown
Riverfront
Third St
EXIT ONLY
RAMP TO I.R.-71 AND I.R.-471
TWO 11' TRAFFIC LANES
I.R.-71 SOUTHBOUND
END SHIFT TAPER, BEGIN BUFFER
EY-6
CW-3
RAMP E (OPEN)
I.R.-71 NORTHBOUND
165'
BEGIN WORK ZONE YELLOW EDGE LINE, PLACEMENT OF DOUBLE ARROW SIGN
344'
SHIFT TAPER LENGTH 500'
W12-1-48
CH-7
CH-9
BEGIN DRUMS
EXIT 25 MPH
Downtown
Riverfront
Third St
EXIT ONLY
OVERHEAD SIGN
EW-13
EW-10
EXIT OPEN AHEAD
E5-H3-48
500 FT MIN. PRIOR TO SHIFT TAPER
BEGIN SHIFT TAPER END TANGENT SECTION
50'
11'
BEGIN TANGENT SECTION END LANE WIDTH REDUCTION
100'
12' 12' 12'
BEGIN LANE WIDTH REDUCTION
150'
BEGIN WORK ZONE CHANNELIZING LINE AND WHITE EDGE LINES BEGIN WORK ZONE RPM'S
WORK ZONE SPEEDING FINES DOUBLED CAUSE DEATH OR INJURY FINE/JAIL
R11-H5A-48
3,000 FT MIN. PRIOR TO SHIFT TAPER
TYPE A WARNING LIGHT
ROAD WORK AHEAD
W20-1-48
1 MILE
W16-3AP-30
5,140 FT MIN. PRIOR TO SHIFT TAPER
INTERSTATE 71 SOUTH RIGHT 2 LANES
SPEED LIMIT 45
R2-1-48
500 FT MIN. PRIOR TO SHIFT TAPER
STAY IN LANE
R4-9-36
2,500 FT MIN. PRIOR TO SHIFT TAPER
SPEED LIMIT 45
W3-5-48
1,750 FT MIN. PRIOR TO SHIFT TAPER
EXPERIMENTAL SIGN-48
1,000 FT MIN. PRIOR TO SHIFT TAPER

c:\pwworking\hmm\external\tyn61470\dms72868\87268MP014.dgn 10/24/2014 3:55:42 PM TYN61470

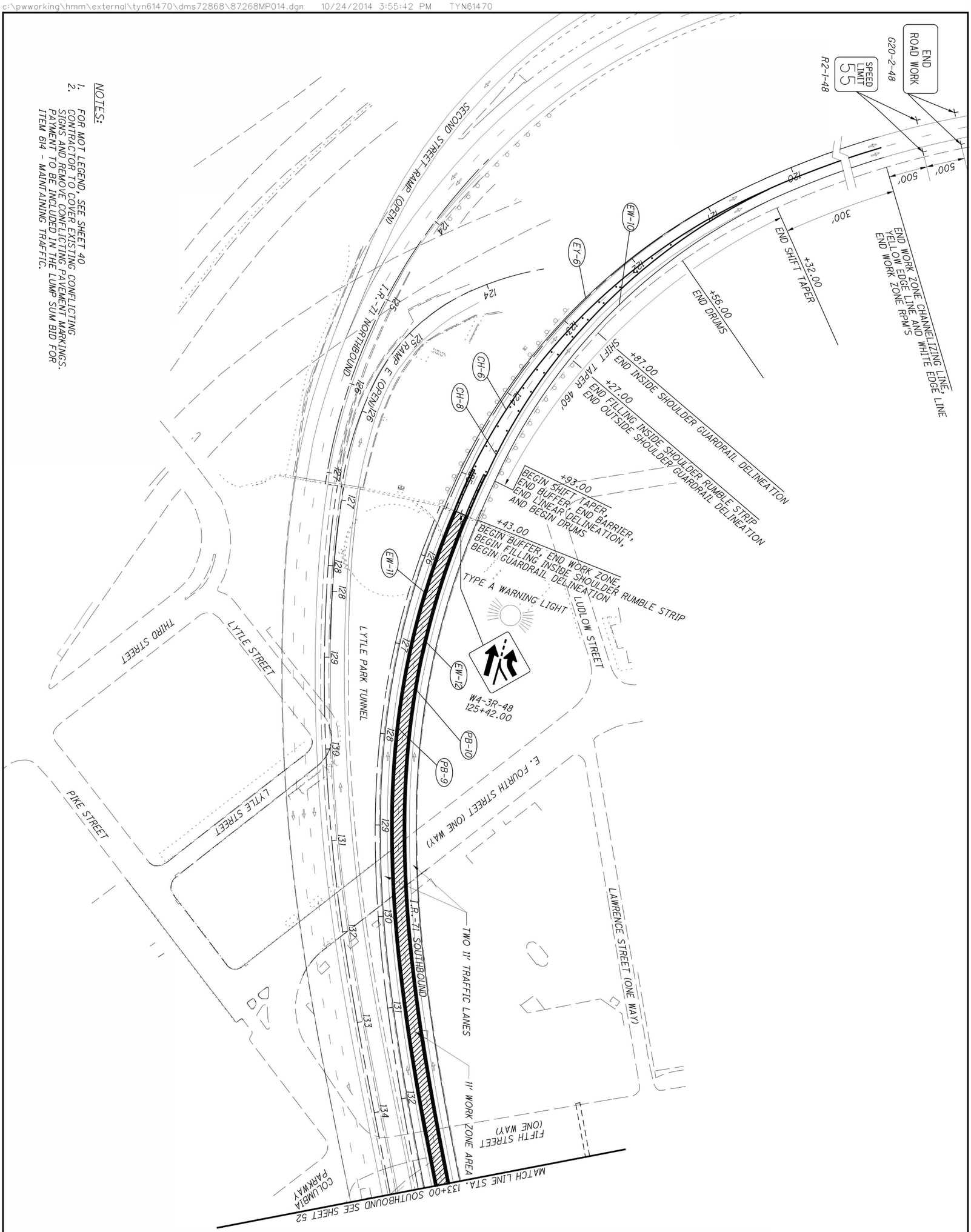

53 / 555	HAM-71-1.34	MAINTENANCE OF TRAFFIC - STAGE 2, PHASE 5B I.R.-71 SOUTHBOUND	CALCULATED RLD CHECKED CWP	0 50 25 100 HORIZONTAL SCALE IN FEET

c:\pwworking\hmm\external\tyn61470\dms72868\87268MP015.dgn 10/25/2014 8:50:14 AM TYN61470

NOTES:

1. FOR MOT LEGEND, SEE SHEET 40
2. CONTRACTOR TO COVER EXISTING CONFLICTING SIGNS AND REMOVE CONFLICTING PAVEMENT MARKINGS. PAYMENT TO BE INCLUDED IN THE LUMP SUM BID FOR ITEM 614 - MAINTAINING TRAFFIC.

MATCH LINE STA. 133+00 SOUTHBOUND SEE SHEET 55

COLUMBIA PARKWAY

+39.50 END BUFFER, END DRUMS, BEGIN WORK ZONE

SENTINEL STREET BUFFER LENGTH (ONE WAY) 495'

PB-11

+23.50 BEGIN BARRIER
WORK ZONE IMPACT ATTENUATOR (UNIDIRECTIONAL)
END DRUMS ALONG RAMP, BEGIN LINEAR DELINEATION

W1-2AR-48

40 MPH
W13-1P-30

EXIT 25 MPH
Downtown
Riverfront
Third St
EXIT ONLY

40 MPH
INTERSTATE 75 NORTH
Dayton
KEEP LEFT

40 MPH
INTERSTATE 71 INTERSTATE 75 SOUTH
Louisville
Lexington
KEEP RIGHT

40 MPH

RAMP TO I.R.-71 AND I.R.-471

TWO 11' TRAFFIC LANES

I.R.-71 SOUTHBOUND

RAMP E (OPEN)

I.R.-71 NORTHBOUND

END SHIFT TAPER, BEGIN BUFFER

160'

EY-7

BEGIN WORK ZONE YELLOW EDGE LINE

EXIT 25 MPH
Downtown
Riverfront
Third St
EXIT ONLY
OVERHEAD SIGN

SHIFT TAPER LENGTH 440'

CH-9

EW-14

EW-15

BEGIN SHIFT TAPER
END TANGENT SECTION

50'

BEGIN TANGENT SECTION,
END LANE WIDTH REDUCTION

110'

12 12 12

BEGIN LANE WIDTH REDUCTION
END SHOULDER TAPER

180' 300'

BEGIN SHOULDER TAPER
BEGIN DRUMS

EXIT
OPEN
AHEAD
E5-H3-48
500 FT MIN. PRIOR
TO SHIFT TAPER

WORK ZONE
SPEEDING
FINES
DOUBLED
CAUSE DEATH
OR INJURY
FINE/JAIL
R11-H5A-48
3,000 FT MIN. PRIOR
TO SHIFT TAPER

TYPE A WARNING LIGHT

ROAD
WORK
AHEAD
W20-1-48

1 MILE
W16-3AP-30
5,140 FT MIN. PRIOR
TO SHIFT TAPER

SPEED LIMIT 45
R2-1-48
500 FT MIN. PRIOR
TO SHIFT TAPER

BEGIN WORK ZONE
CHANNELIZING LINE
AND WHITE EDGE LINES
BEGIN WORK ZONE RPM'S

SOUTH
M3-1-24
INTERSTATE 71
M1-1-24-2

STAY
IN
LANE
R4-9-36
2,500 FT MIN. PRIOR
TO SHIFT TAPER

SPEED LIMIT 45
W3-5-48
1,750 FT MIN. PRIOR
TO SHIFT TAPER

W1-4BL-48
1,000 FT MIN. PRIOR
TO SHIFT TAPER

54 555	HAM-71-1.34	MAINTENANCE OF TRAFFIC - STAGE 2, PHASE 5C I.R.-71 SOUTHBOUND	CALCULATED RLD CHECKED CWP	0 50 100 25 HORIZONTAL SCALE IN FEET

c:\pwworking\hmm\external\tyn61470\dms72868\87268MP016.dgn 10/24/2014 3:55:47 PM TYN61470

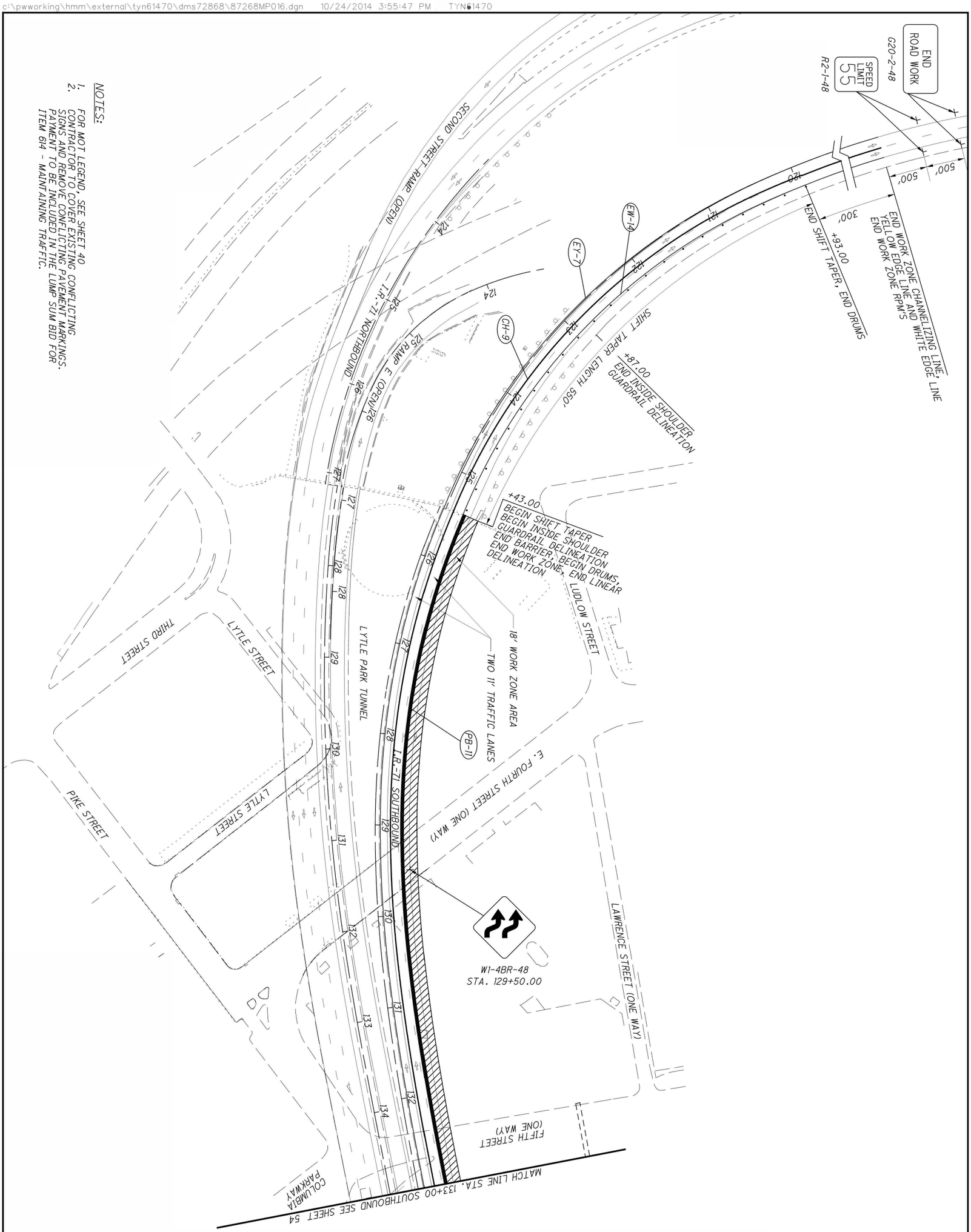

55 / 555	HAM-71-1.34	MAINTENANCE OF TRAFFIC - STAGE 2, PHASE 5C I.R.-71 SOUTHBOUND	CALCULATED RLD CHECKED CWP	0 50 25 100 HORIZONTAL SCALE IN FEET

NOTES:

1. ALL PARKING METERS ARE TO BE COVERED WITHIN WORK ZONE ON SENTINEL STREET, INCLUDING THE TWO PARKING METERS IN DOWNSTREAM TAPER. PAYMENT TO BE INCLUDED IN THE LUMP SUM BID FOR ITEM 614 - MAINTAINING TRAFFIC.
2. CONTRACTOR TO COVER EXISTING CONFLICTING SIGNS AND REMOVE CONFLICTING PAVEMENT MARKINGS. PAYMENT TO BE INCLUDED IN THE LUMP SUM BID FOR ITEM 614 - MAINTAINING TRAFFIC.
3. FOR MOT LEGEND, SEE SHEET 40
4. PLACE SIGN AT CROSSWALK LOCATION AT THE INTERSECTION OF CULVERT ST. AND SENTINEL ST. APPROX. 430 FT FROM DOWNSTREAM TAPER ON SENTINEL ST.
5. THE CONTRACTOR SHALL PROVIDE 3 WEEK NOTICE TO THE LOCALS PRIOR TO THE ROAD CLOSING AND REMOVAL OF PARKING TO ENSURE THE VEHICLES ARE REMOVED IN ADVANCE OF THE CONSTRUCTION ACTIVITIES AND IN ORDER TO NOTIFY THEM WELL IN ADVANCE SO THEY CAN PLAN ACCORDINGLY FOR ALTERNATIVE PARKING SOLUTIONS.

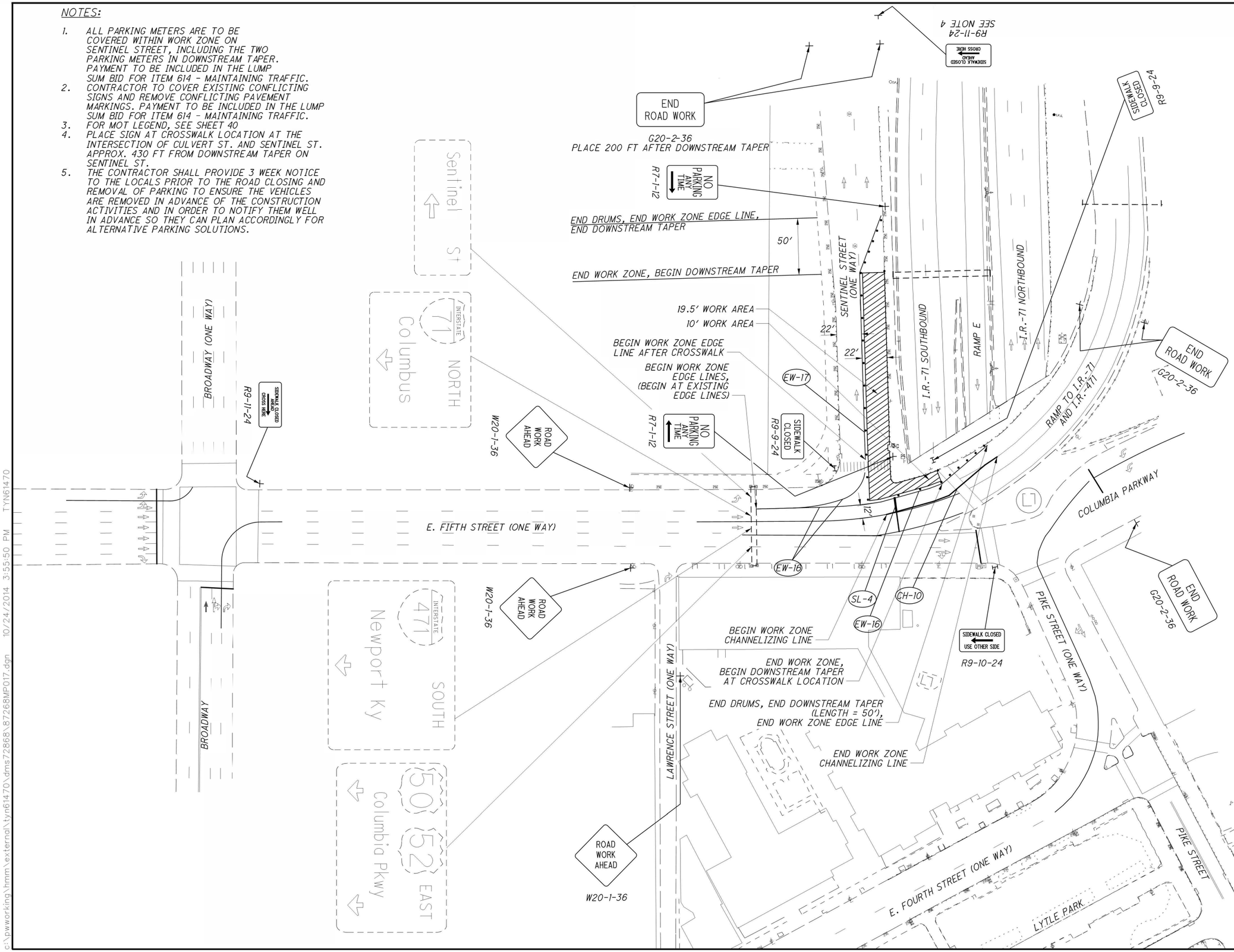

c:\pwworking\hmm\external\tyn61470\dms72868\87268MP017.dgn 10/24/2014 3:55:50 PM TYN61470

HORIZONTAL SCALE IN FEET
0 20 40 80

CALCULATED RLD
CHECKED CWP

MAINTENANCE OF TRAFFIC - STAGE 2, PHASE 6
E. FIFTH ST AND SENTINEL ST.

HAM-71-1.34

DETOUR NO. 1
I-71 SOUTHBOUND TO THIRD STREET
STAGE 1,
STAGE 2, PHASE 4A

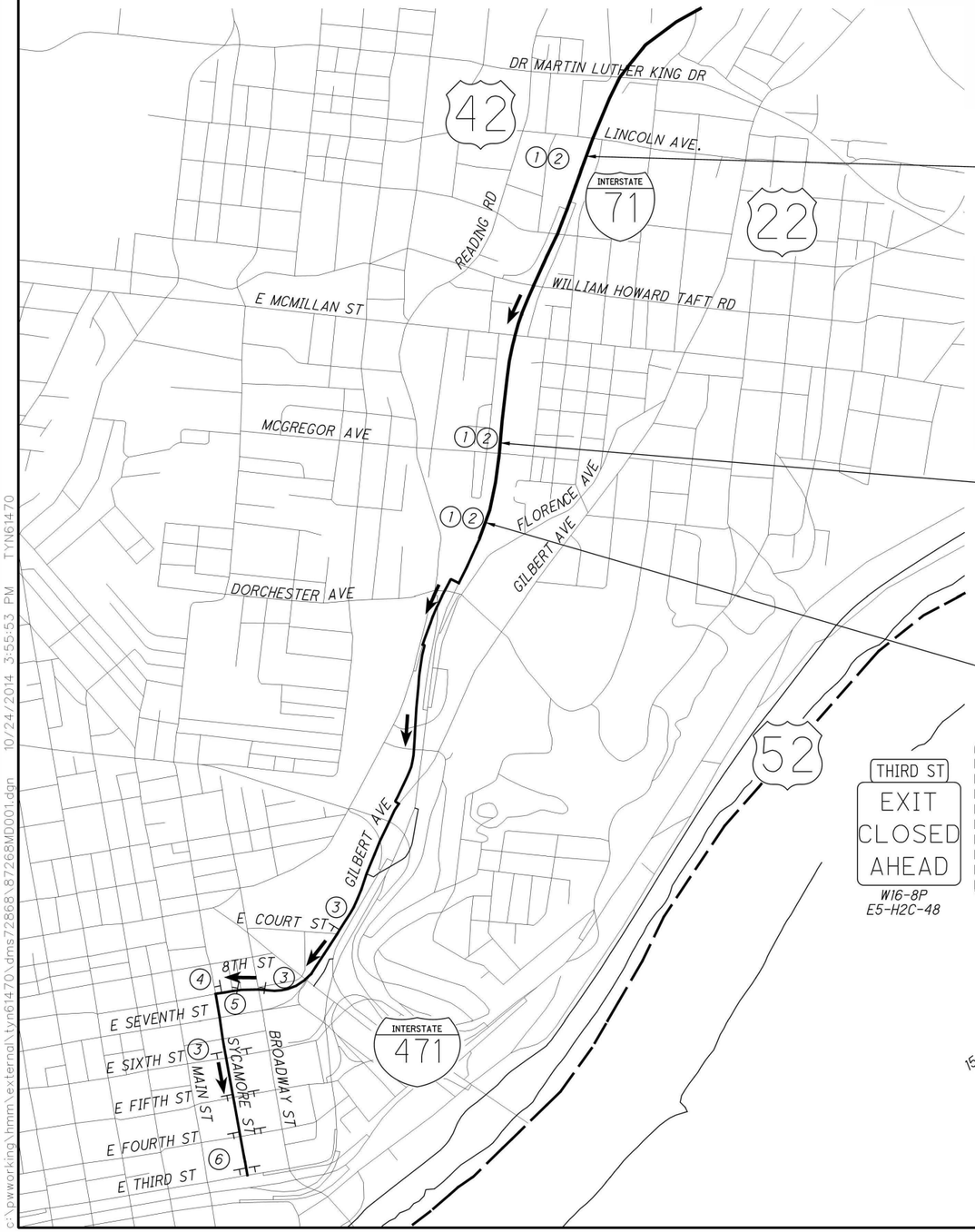

① THIRD ST — EXIT CLOSED AHEAD
W16-8P
E5-H2C-48
*SEE NOTE 1

② THIRD ST — DETOUR
W16-8P
M4-8-30

③ THIRD ST — DETOUR ↑
W16-8P
M4-8-24
M6-3-21

④ THIRD ST — DETOUR ←
W16-8P
M4-9L-30

⑤ THIRD ST — DETOUR ↰
W16-8P
M4-8-24
M5-1-21

⑥ THIRD ST — →
W16-8P
M6-1-21

OVERHEAD SIGNS - SOUTHBOUND

THIRD ST — EXIT CLOSED AHEAD
W16-8P
E5-H2C-48

INTERSTATE 71 SOUTH

EXIT 2 — 42 — Reading Rd — Gilbert Ave — 3/4 MILE

EXIT 3 — Taft Rd — EXIT ONLY

GILBERT AVE
THIRD ST
OVERLAY

OVERHEAD SIGNS - SOUTHBOUND

THIRD ST — EXIT CLOSED AHEAD
W16-8P
E5-H2C-48

INTERSTATE 71 SOUTH — CENTER 2 LANES

EXIT 2 — Stadium Coliseum — Gilbert Ave — 1/4 MILE

EXIT 2 — 42 SOUTH — Reading Rd — EXIT ONLY

GILBERT AVE
THIRD ST
OVERLAY

OVERHEAD SIGNS - SOUTHBOUND

THIRD ST — EXIT CLOSED AHEAD
W16-8P
E5-H2C-48

Riverfront
Cincinnati
Covington
LEFT LANE

INTERSTATE 71 SOUTH

INTERSTATE 471 SOUTH — Newport KY — ½ MILE

EXIT 2 — Stadium Coliseum — Gilbert Ave — EXIT ONLY

EXIT 2 — 42 SOUTH — Reading Rd — EXIT ONLY

GILBERT AVE
THIRD ST
OVERLAY

EXIT CLOSED
15" X 3' BLACK ON ORANGE OVERLAY

NOTES:

1. PROPOSED SIGN CONFIGURATION SHALL BE INSTALLED ON THE LEFT SUPPORT OF THE SIGN STRUCTURE. PAYMENT TO BE INCLUDED IN THE LUMP SUM BID FOR ITEM 614 - MAINTAINING OF TRAFFIC.
2. CONTRACTOR TO COVER EXISTING CONFLICTING SIGNS AND REMOVE CONFLICTING PAVEMENT MARKINGS. PAYMENT TO BE INCLUDED IN THE LUMP SUM BID FOR ITEM 614 - MAINTAINING TRAFFIC.
3. PORTABLE CHANGEABLE MESSAGE SIGNS WILL BE PLACED IN ADVANCE OF THE DETOUR SIGNS, AT AN APPROPRIATE LOCATION AS DETERMINED BY THE ENGINEER. PAYMENT WILL BE INCLUDED IN THE LUMP SUM BID FOR ITEM 614 - MAINTAINING TRAFFIC.
4. PAYMENT FOR SIGN OVERLAYS USED FOR DETOURS WILL BE INCLUDED IN THE LUMP SUM BID FOR ITEM 614 - MAINTAINING TRAFFIC.

CALCULATED RLD
CHECKED CWP

MAINTENANCE OF TRAFFIC DETOUR PLAN - RAMP E

HAM-71-1.34

c:\pwworking\hmm\external\tyn61470\dms72868\87268MD001.dgn 10/24/2014 3:55:53 PM TYN61470

DETOUR NO. 2
SECOND ST. E. TO I-71 NORTHBOUND
STAGE 2, PHASE 3A, 3B, AND 3C

① NORTH / INTERSTATE 71 / ROAD WORK AHEAD
M3-1-24
M1-1-24-2
W20-1-36

② NORTH / INTERSTATE 71 / RAMP CLOSED AHEAD
M3-1-24
M1-1-24-2
W20-3-36

③ NORTH / INTERSTATE 71 / DETOUR AHEAD
M3-1-24
M1-1-24-2
W20-2-36

④ NORTH / INTERSTATE 71 / DETOUR
M3-1-24
M1-1-24-2
M4-8-24
M6-3-21

⑤ NORTH / INTERSTATE 71 / DETOUR
M3-1-24
M1-1-24-2
M4-8-24
M5-1-21

⑥ NORTH / INTERSTATE 71 / DETOUR
M3-1-24
M1-1-24-2
M4-8-24
M6-1-21

⑦ NORTH / INTERSTATE 71 / ROAD CLOSED / DETOUR
M3-1-24
M1-1-24-2
R11-2-48
M4-10L-48

⑧ NORTH / INTERSTATE 71 / DETOUR
M3-1-24
M1-1-24-2
M4-8-24
M5-1-21

⑨ ROAD CLOSED
R11-2-48

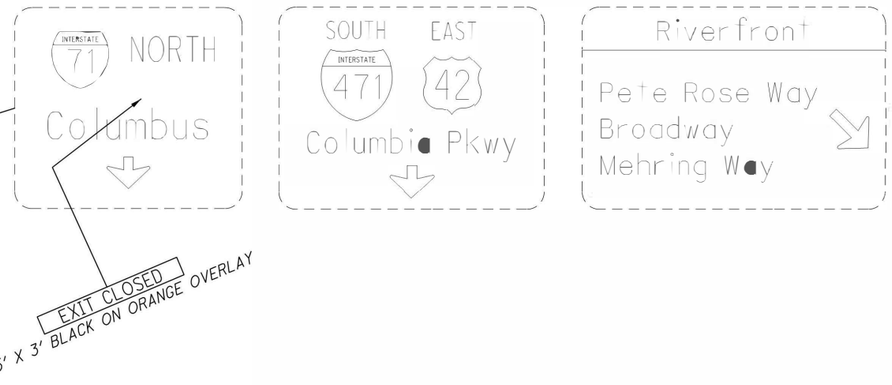

NOTES:

1. SEE SHEET 42 FOR DETAILS AT THE SECOND STREET ENTRANCE RAMP CLOSURE.

CALCULATED RLD
CHECKED CWP

MAINTENANCE OF TRAFFIC DETOUR PLAN - SECOND ST

HAM-71-1.34

58
555

c:\pwworking\hmm\external\tyn61470\dms72868\87268MD002.dgn 10/24/2014 3:55:55 PM TYN61470

NOTE: FOR SIGN REFERENCES SEE SHEET 58J

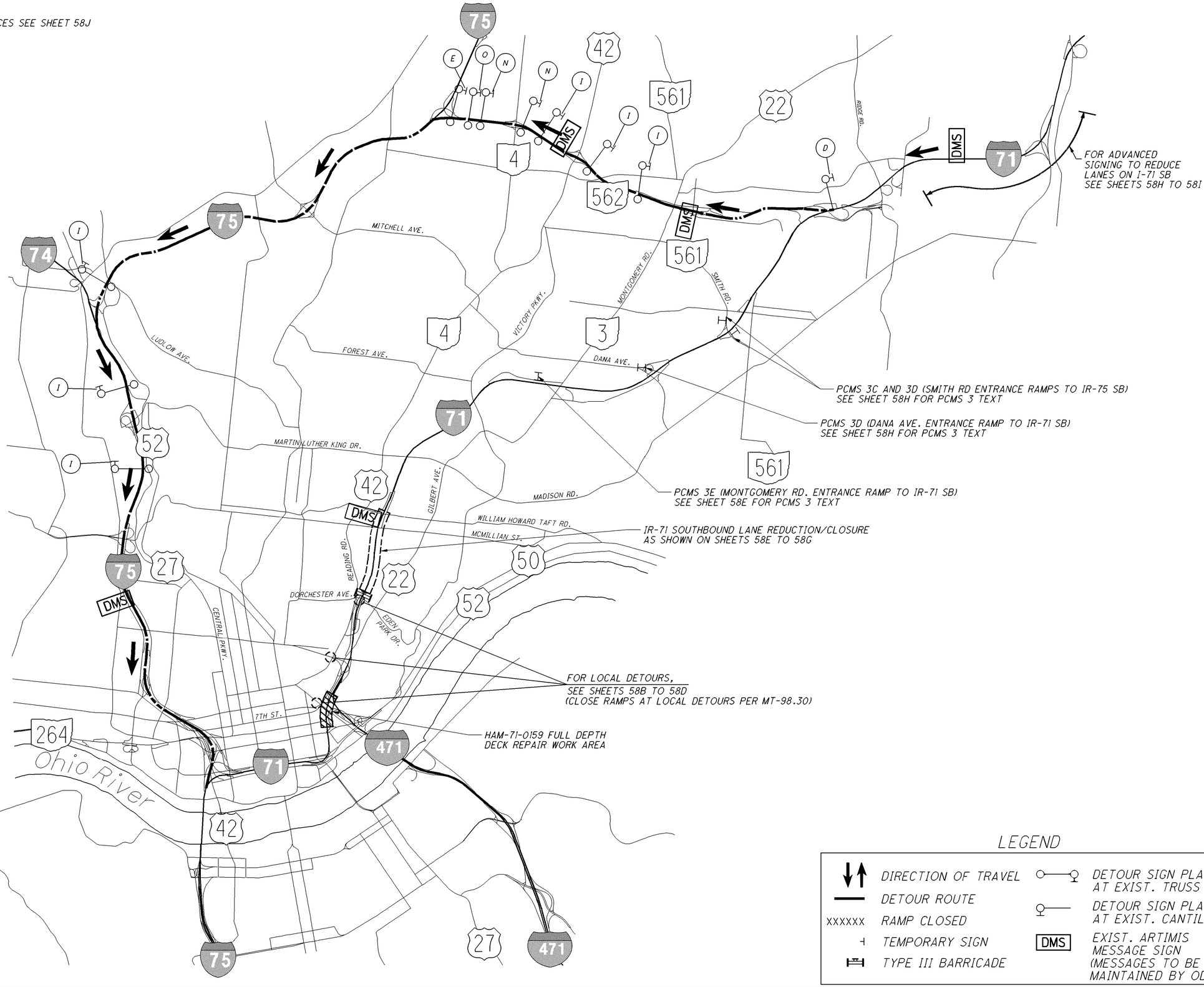

LEGEND

DIRECTION OF TRAVEL	DETOUR SIGN PLACED AT EXIST. TRUSS
DETOUR ROUTE	DETOUR SIGN PLACED AT EXIST. CANTILEVER
XXXXXX RAMP CLOSED	DMS EXIST. ARTIMIS MESSAGE SIGN (MESSAGES TO BE MAINTAINED BY ODOT)
TEMPORARY SIGN	
TYPE III BARRICADE	

HORIZONTAL SCALE IN FEET
0 1000 2000 4000

CALCULATED AHK
CHECKED SRK

MAINTENANCE OF TRAFFIC - DECK REPAIR
IR-71 SOUTHBOUND DETOUR

HAM-71-1.34

58A
555

I:\projects\HAM\ir071\01.34_PID87268\Design\docs\Plan Package\Current CADD Files\MOT for full depth replacement\87268MD011.dgn 10-MAR-2015 2:29PM akoenig

DETAIL A

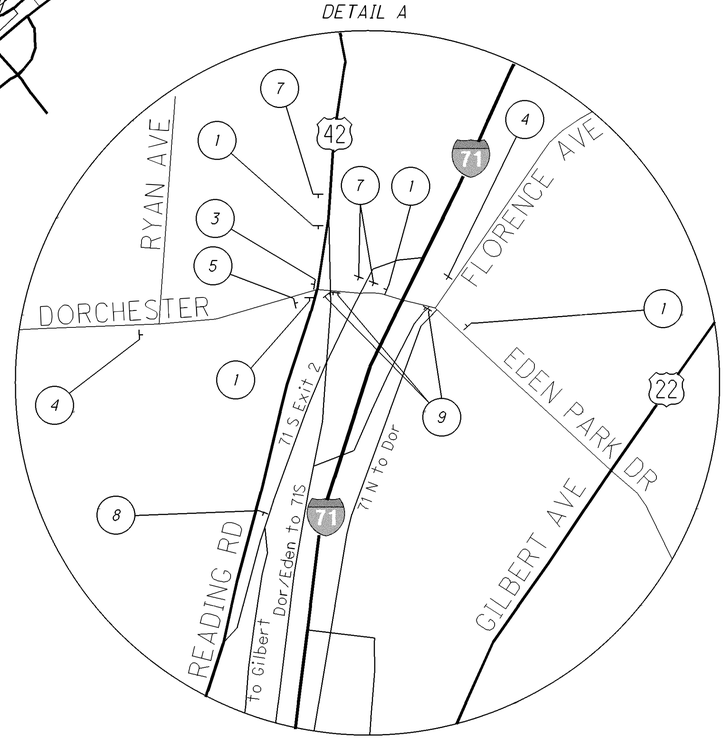

NOT TO SCALE

1

M4-8-12
M3-3-24
M1-1-24-2

M6-3-12

2

M4-8-12
M3-3-24
M1-1-24-2

M5-1-12

3

M4-8-12
M3-3-24
M1-1-24-2

M6-1-12

4

M4-8-12
M3-3-24
M1-1-24-2

M5-1-12

5

M4-8-12
M3-3-24
M1-1-24-2

M6-1-12

6

M4-8-12
M3-3-24
M1-1-24-2

M5-2-12

7

M4-8-12
M3-3-24
M1-1-24-2

M5-H6A-24

8

M4-8-12
M3-3-24
M1-1-24-2

M6-2-12

9

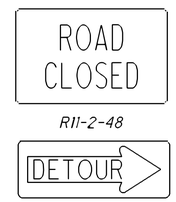

R11-2-48

M4-10R-48
ON TYPE III BARRICADES
W/ 1 TYPE-B FLASHING
WARNING LIGHT (PER SIGN)

NOTES:
1. CONFORM TO SCD MT-98.30.
2. COVER ANY CONFLICTING EXISTING GUIDE SIGNS DIRECTING TRAFFIC TO THESE ENTERANCE RAMPS.
3. ALL SIGNS LOCATED ON MULTI-LANE SINGLE DIRECTION STREETS SHALL BE DUAL MOUNTED.
4. FOR OVERLAPPING DETOUR SIGNS, NORTH OF 6TH STREET, IT IS PERMISSIBLE TO COMBINE THE I-71 AND I-471 SIGNS INTO A SINGLE STACKED DETOUR SIGN. IF COMBINED, THE I-71 ROUTE SHIELD IS TO BE ABOVE THE I-471 ROUTE SHIELD.

CALCULATED PMM
CHECKED SRK

MAINTENANCE OF TRAFFIC - DECK REPAIR
DORCHESTER RD AND EDEN PARK DR RAMP DETOUR

HAM-71-1.34

58B
555

I:\projects\HAM\ir071\01.34_PID87268\Design\docs\Plan Package\Current CADD Files\MOT for full depth replacement\87268MD004.dgn 10-MAR-2015 2:30PM okoenig

1	2	3	4	5	6
DETOUR	DETOUR	DETOUR	DETOUR	DETOUR	DETOUR
M4-8-12	M4-8-12	M4-8-12	M4-8-12	M4-8-12	M4-8-12
SOUTH	SOUTH	SOUTH	SOUTH	SOUTH	SOUTH
M3-3-24	M3-3-24	M3-3-24	M3-3-24	M3-3-24	M3-3-24
INTERSTATE 471	INTERSTATE 471	INTERSTATE 471	INTERSTATE 471	INTERSTATE 471	INTERSTATE 471
M1-1-24-3	M1-1-24-3	M1-1-24-3	M1-1-24-3	M1-1-24-3	M1-1-24-3
M6-3-12	M5-1-12	M6-1-12	M5-1-12	M6-1-12	CENTER LANE
					M5-5-24

7

ROAD CLOSED

R11-2-48

DETOUR

M4-10R-48
ON TYPE III BARRICADES
W/ 1 TYPE-B FLASHING
WARNING LIGHT (PER SIGN)

NOTES:
1. CONFORM TO SCD MT-98.30 AND OMUTCD FIGURE 6H-21.
2. COVER ANY CONFLICTING EXISTING GUIDE SIGNS DIRECTING TRAFFIC TO THESE ENTERANCE RAMPS.
3. ALL SIGNS LOCATED ON MULTI-LANE SINGLE DIRECTION STREETS SHALL BE DUAL MOUNTED.
4. FOR OVERLAPPING DETOUR SIGNS, NORTH OF 6TH STREET, IT IS PERMISSIBLE TO COMBINE THE I-71 AND I-471 SIGNS INTO A SINGLE STACKED DETOUR SIGN. IF COMBINED, THE I-71 ROUTE SHIELD IS TO BE ABOVE THE I-471 ROUTE SHIELD.

CALCULATED PMM
CHECKED SRK

MAINTENANCE OF TRAFFIC - DECK REPAIR
LIBERTY ST RAMP DETOUR

HAM-71-1.34

58C
555

I:\projects\HAM\ir071\01.34_PID87268\Design\docs\Plan Package\Current CADD Files\MOT for full depth replacement\87268MD004.dgn 10-MAR-2015 2:30PM okoenig

I:\projects\HAM\ir071\01.34_PID87268\Design\docs\Plan Package\Current CADD Files\MOT for full depth replacement\87268MD004.dgn 10-MAR-2015 2:30PM okoenig

LOCATION MAP

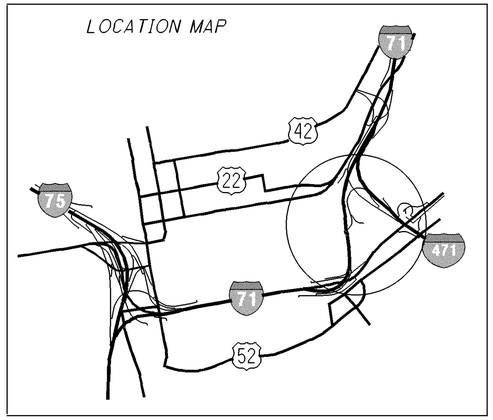

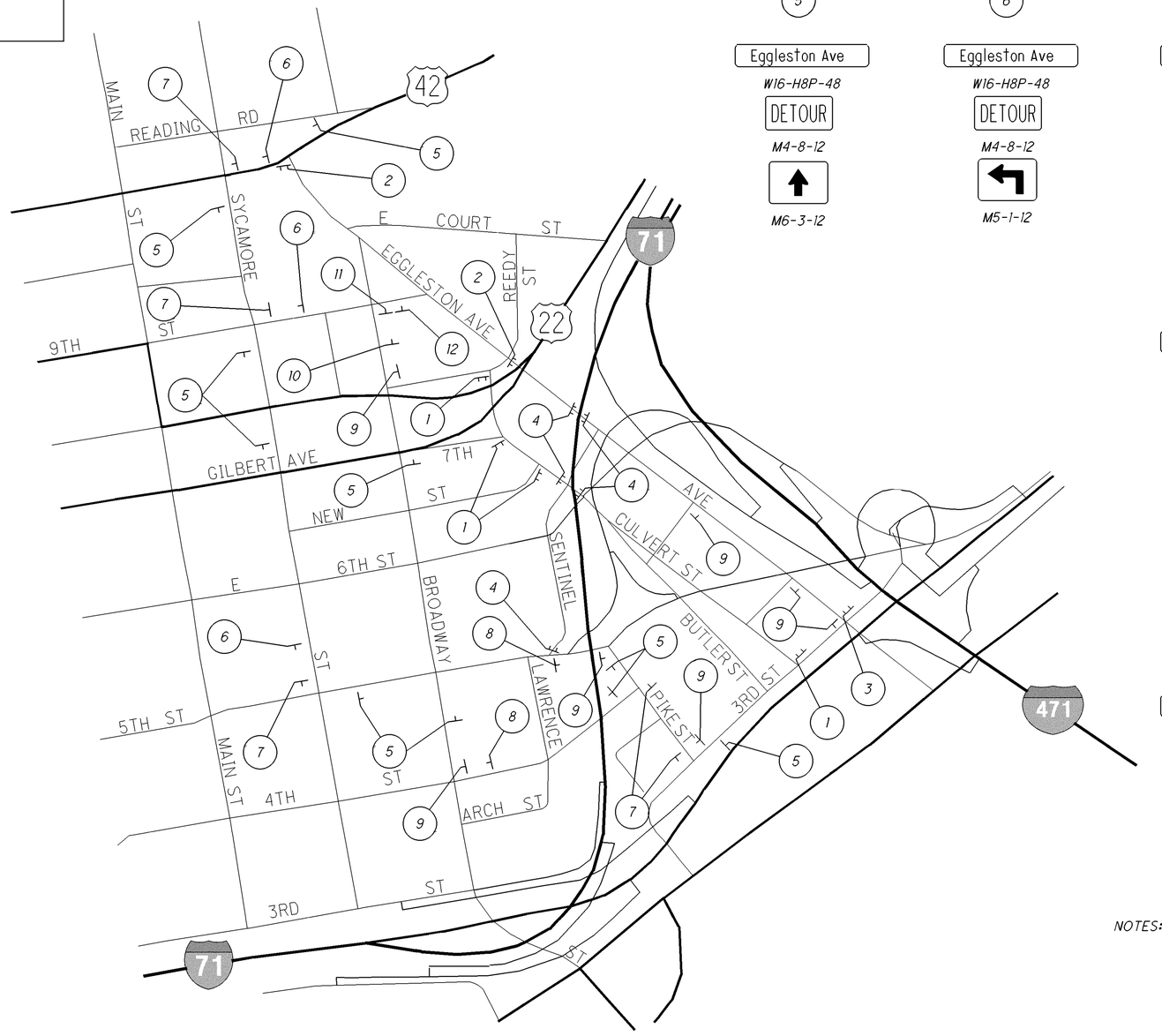

(1)

ROAD CLOSED TO THRU TRAFFIC

R11-4-60

(2)

ROAD CLOSED

R11-2-48

DETOUR

M4-10R-48

(3)

ROAD CLOSED

R11-2-48

DETOUR

M4-10L-48

(4)

ROAD CLOSED

R11-2-48

(5)

Eggleston Ave

W16-H8P-48

DETOUR

M4-8-12

M6-3-12

(6)

Eggleston Ave

W16-H8P-48

DETOUR

M4-8-12

M5-1-12

(7)

Eggleston Ave

W16-H8P-48

DETOUR

M4-9L-30

(8)

Eggleston Ave

W16-H8P-48

DETOUR

M4-8-12

M5-1-12

(9)

Eggleston Ave

W16-H8P-48

DETOUR

M4-9R-30

(10)

SOUTH

M3-3-24

Eggleston Ave

W16-H8P-48

DETOUR

M4-8-12

M5-1-12

(11)

SOUTH

M3-3-24

Eggleston Ave

W16-H8P-48

DETOUR

M4-9L-30

(12)

NORTH

M3-1-24

Eggleston Ave

W16-H8P-48

DETOUR

M4-8-12

M6-3-12

NOTES:

1. PROVIDE SUFFICIENT TYPE III BARRICADES AT CLOSURE SO AS TO OBSTRUCT TRAFFIC FROM ATTMEPTING TO ENTER THE WORK ZONE.
2. ANY LANE CLOSURES SHOULD FOLLOW ODOT SCD AND OMUTCD.
3. ALL SIGNS LOCATED ON MULTI-LANE SINGLE DIRECTION STREETS SHALL BE DUAL MOUNTED.

CALCULATED PMM
CHECKED SRK

MAINTENANCE OF TRAFFIC - DECK REPAIR LOCAL STREET AND EGGLESTON AVE DETOUR

HAM-71-1.34

I:\projects\HAM\ir071\01.34_PID87268\Design\docs\Plan Package\Current CADD Files\MOT for full depth replacement\87268MD003.dgn 10-MAR-2015 2:30PM akoenig

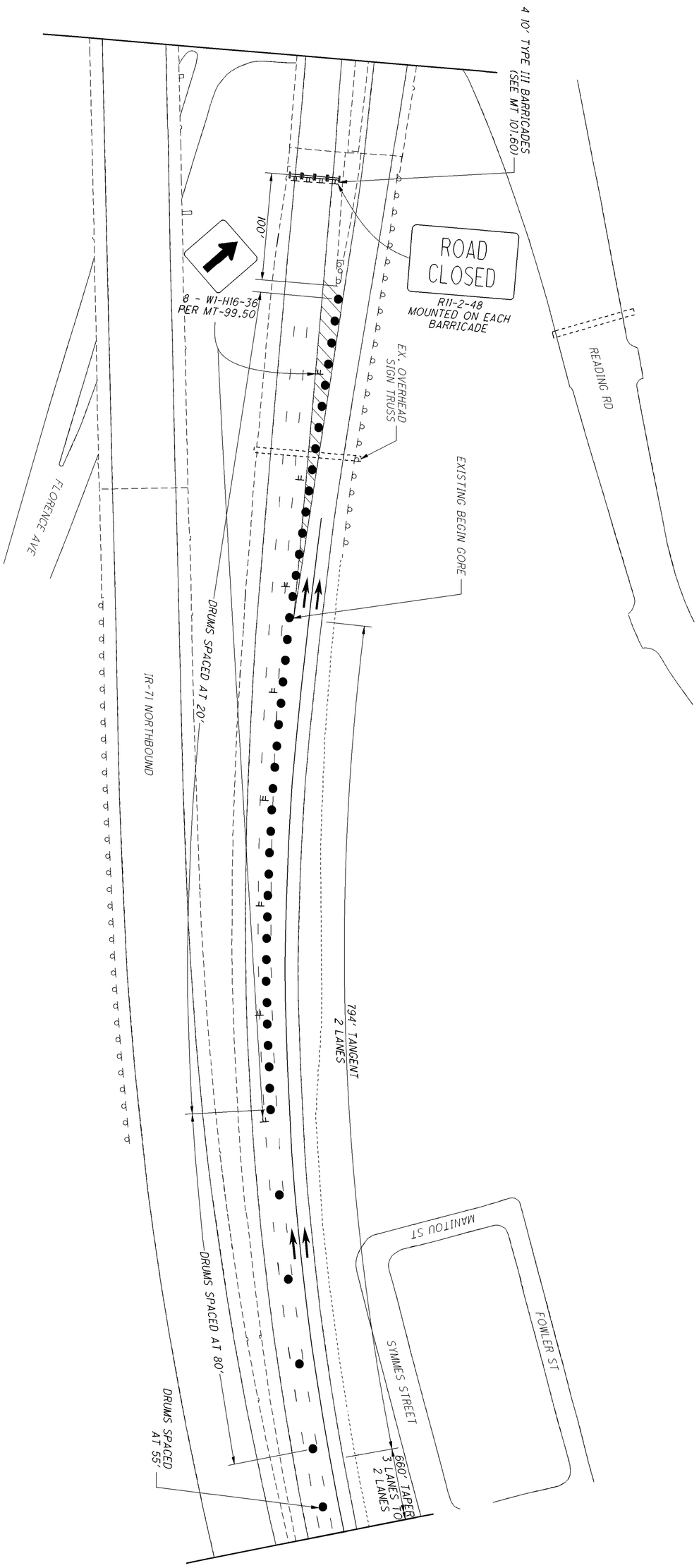

58E 555	HAM-71-1.34	MAINTENANCE OF TRAFFIC - DECK REPAIR IR-71 SOUTHBOUND CLOSURE	CALCULATED AHK CHECKED SRK	0 50 25 100 HORIZONTAL SCALE IN FEET

I:\projects\HAM\ir071\01.34_PID87268\Design\docs\Plan Package\Current CADD Files\MOT for full depth replacement\87268MD003.dgn 10-MAR-2015 2:31PM akoenig

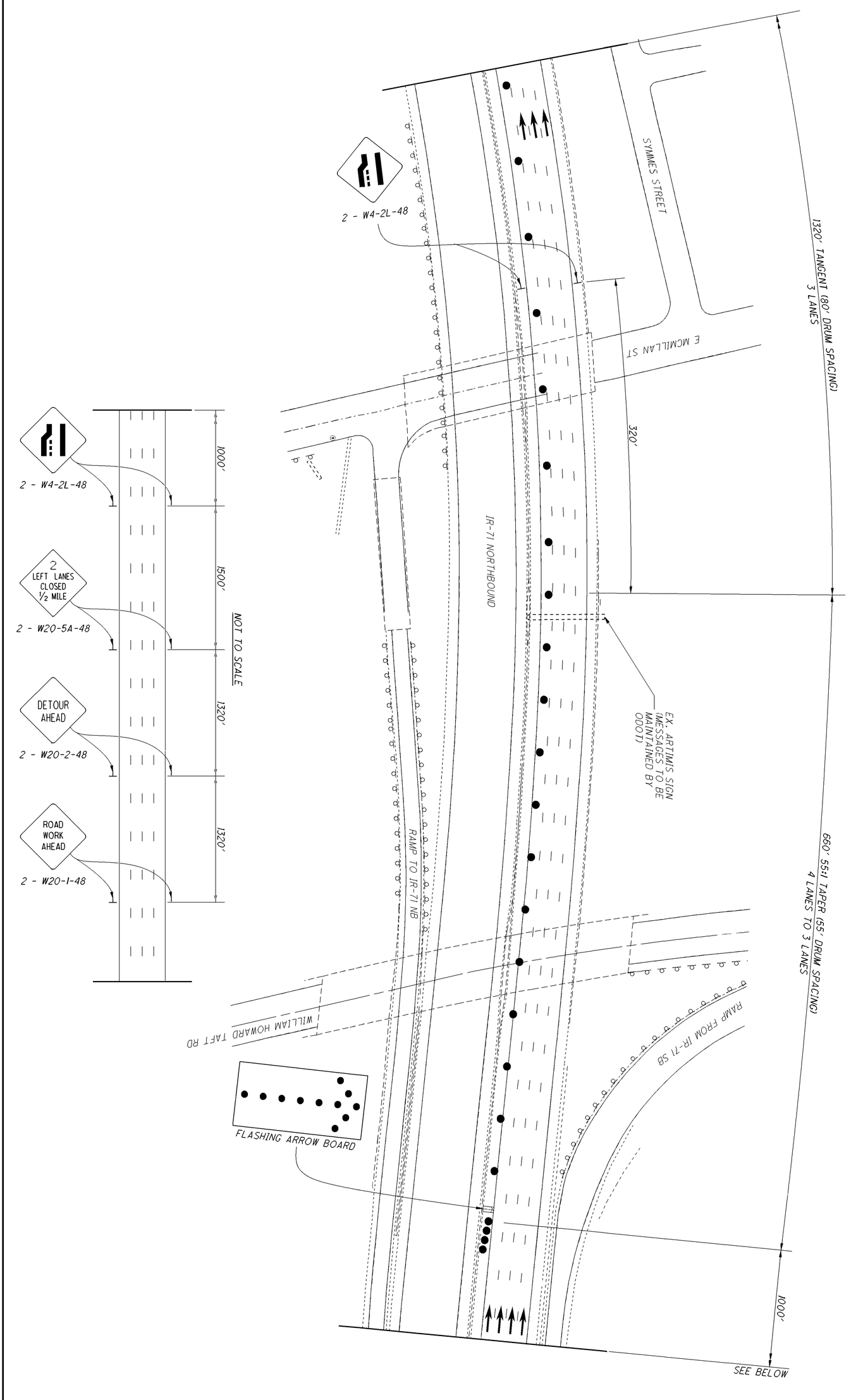

555 58G	**HAM-71-1.34**	**MAINTENANCE OF TRAFFIC - DECK REPAIR** **IR-71 SOUTHBOUND CLOSURE**	CALCULATED AHK CHECKED SRK	0 50 25 100 HORIZONTAL SCALE IN FEET

NOTE: FOR SIGN REFERENCES SEE SHEET 58G

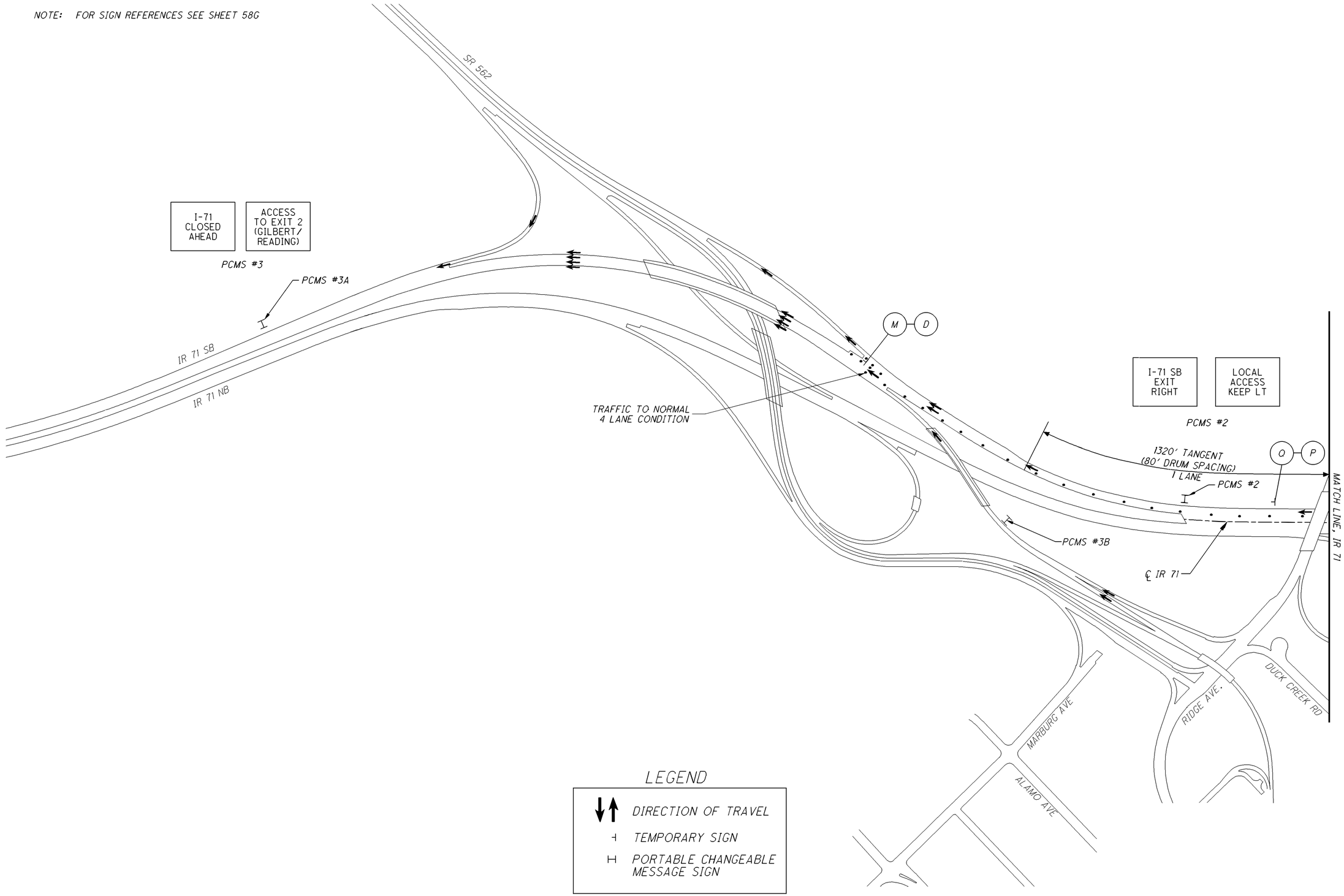

LEGEND

↓↑	DIRECTION OF TRAVEL
⊣	TEMPORARY SIGN
⊢	PORTABLE CHANGEABLE MESSAGE SIGN

HORIZONTAL SCALE IN FEET
0 100 200 400

CALCULATED AHK
CHECKED SRK

MAINTENANCE OF TRAFFIC - DECK REPAIR
IR-71 SOUTHBOUND LANE REDUCTION

HAM-71-1.34

58H
555

I:\projects\HAM\ir071\01.34_PID87268\Design\docs\Plan Package\Current CADD Files\MOT for full depth replacement\87268MD017.dgn 10-MAR-2015 2:32PM akoenig

NOTE: FOR SIGN REFERENCES SEE SHEET 58J

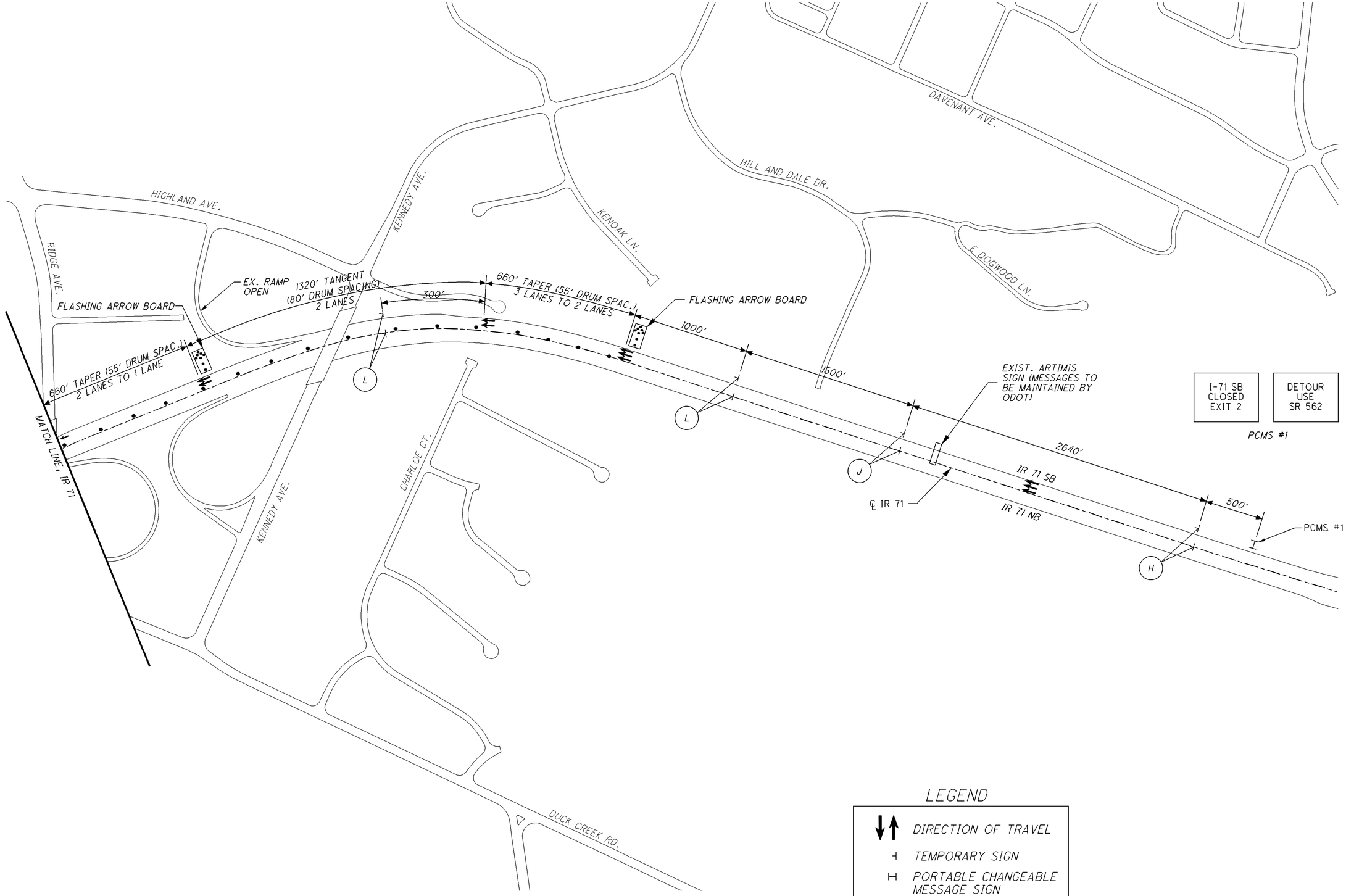

LEGEND

- DIRECTION OF TRAVEL
- TEMPORARY SIGN
- PORTABLE CHANGEABLE MESSAGE SIGN

HORIZONTAL SCALE IN FEET
0 100 200 400

CALCULATED AHK
CHECKED SRK

MAINTENANCE OF TRAFFIC - DECK REPAIR
IR-71 SOUTHBOUND LANE REDUCTION

HAM-71-1.34

581
555

I:\projects\HAM\ir071\01.34_PID87268\Design\docs\Plan Package\Current CADD Files\MOT for full depth replacement\87268MD018.dgn 10-MAR-2015 2:32PM akoenig

I:\projects\HAM\ir071\01.34_PID87268\Design\docs\Plan Package\Current CADD Files\MOT for full depth replacement\87268MD016.dgn 10-MAR-2015 2:40PM akoenig

TRAFFIC DECK REPAIR SIGNING DETAILS

CALCULATED AHK
CHECKED SRK

Ⓐ

M4-8-30
M1-1-48-2
M3-3-36
M6-3-30

Ⓑ

M4-8-30
M1-1-48-2
M3-3-36
M6-1L-30

Ⓒ

M4-8-30
M1-1-48-2
M3-3-36
M6-1R-30

Ⓓ

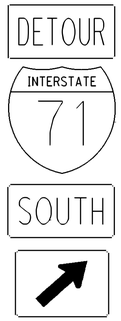

M4-8-30
M1-1-48-2
M3-3-36
M6-2R-30

Ⓔ

M4-8-30
M1-1-48-2
M3-3-36
M6-2L-30

Ⓕ

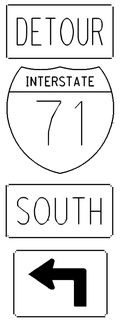

M4-8-30
M1-1-48-2
M3-3-36
M5-1L-30

Ⓖ

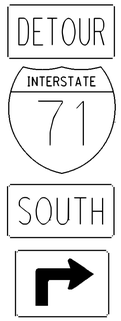

M4-8-30
M1-1-48-2
M3-3-36
M5-1R-30

Ⓗ

W20-2-48

Ⓘ

M4-8-30
M1-1-48-2
M3-3-36

Ⓙ

W20-5aL-48

Ⓚ

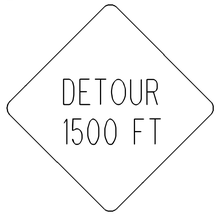

W20-2-48

Ⓛ

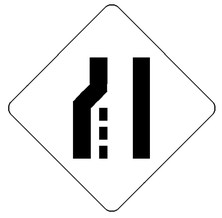

W4-2L-48

Ⓜ

SPECIAL
M6-2L-30

Ⓝ

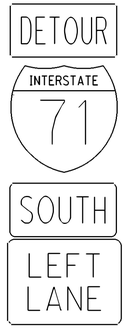

M4-8-30
M1-1-48-2
M3-3-36
M5-4-36

Ⓞ

M4-8-30
M3-3-36
M3-3-36
M5-2-30

Ⓟ

M4-8-30
M1-1-48-2
M3-3-36
M5-2R-30

Ⓠ

SPECIAL
M5-2L-30

HAM-71-1.34

58J
555

SHEET NUMBER												PARTICIPATION		ITEM	ITEM EXT	GRAND TOTAL	UNIT	DESCRIPTION	SEE SHEET NO.
14 - 22	23 - 32	67 - 68	69 - 77	78 - 79	80	149 - 150	164 - 165	166 - 167	175 - 178	194 - 197	252 - 256	01/IMS/BR	02/IMS/BR						
																		ROADWAY	
LS												LS		201	11000	LS		CLEARING AND GRUBBING	
					1							1		201	21800	1	EACH	TREE REMOVED, 18" SIZE	
2												2		201	23000	2	EACH	TREE REMOVED, 30" SIZE	
17		484										501		202	23000	501	SY	PAVEMENT REMOVED	
		427										427		202	23500	427	SY	WEARING COURSE REMOVED	
			7810		78							7888		202	30000	7888	SF	WALK REMOVED	
			86									86		202	30700	86	FT	CONCRETE BARRIER REMOVED	
2		5743										5745		202	32001	5745	FT	CURB REMOVED, AS PER PLAN	154
			74									74		202	35101	74	FT	PIPE REMOVED, 24" AND UNDER, AS PER PLAN	138
			37									37		202	38000	37	FT	GUARDRAIL REMOVED	
			1									1		202	58101	1	EACH	CATCH BASIN REMOVED, AS PER PLAN	138
				58	69							127		SPECIAL	20270000	127	FT	FILL AND PLUG EXISTING CONDUIT	15
				1287								1287		SPECIAL	20270100	1287	FT	PIPE CLEANOUT	15
			LS									LS		202	98000	LS		REMOVAL MISC.: PARK ELECTRICAL SYSTEM REMOVED	138
			1									1		202	98100	1	EACH	REMOVAL MISC.: EXISTING GRATING REMOVED	138
			1									1		202	98100	1	EACH	REMOVAL MISC.: DRINKING FOUNTAIN REMOVED	138
			2									2		202	98100	2	EACH	REMOVAL MISC.: PARKING METER REMOVED AND STORED	138
			3									3		202	98100	3	EACH	REMOVAL MISC.: PARKING METER REMOVED, STORED, AND REERECTED	138
						31106						31106		202	98400	31106	SF	REMOVAL MISC.: CERAMIC WALL TILE	150
						25829						25829		202	98400	25829	SF	REMOVAL MISC.: CERAMIC CEILING TILE	150
305												305		203	10000	305	CY	EXCAVATION	
1654												1654		203	20000	1654	CY	EMBANKMENT	
		71			76							147		204	10000	147	SY	SUBGRADE COMPACTION	
		506										506		204	10000	506	SY	SUBGRADE COMPACTION, LYTLE STREET	
1												1		204	45000	1	HOUR	PROOF ROLLING	
9												9		209	60200	9	STA	LINEAR GRADING	20A
			2300									2300		510	10000	2300	EACH	DOWEL HOLES WITH NONSHRINK, NONMETALLIC GROUT	
						735						735		512	10100	735	SY	SEALING OF CONCRETE SURFACES (EPOXY-URETHANE)	150
LS												LS		SPECIAL	53000200	LS		STRUCTURE, MISC.: PRECONSTRUCTION CONDITION SURVEY AND EXPERT PERSONNEL REQUIREMENTS	18
LS												LS		SPECIAL	53000200	LS		STRUCTURE, MISC.: VIBRATION MONITORING AND CONTROL REQUIREMENTS	18
LS												LS		SPECIAL	53000200	LS		STRUCTURE, MISC.: CONSTRUCTION FIELD TRIALS	19
LS												LS		SPECIAL	53000200	LS		STRUCTURE, MISC.: POST CONSTRUCTION CONDITION SURVEY AND FINAL REPORT	19
						LS						LS		SPECIAL	53000200	LS		STRUCTURE, MISC.: CLEANING OF CERAMIC WALL TILES	149
LS												LS		SPECIAL	53000200	LS		STRUCTURE, MISC.: INSTRUMENTATION AND MONITORING - MONITORING	20
												3		SPECIAL	53000400	3	EACH	STRUCTURE, MISC.: INSTRUMENTATION AND MONITORING - INSTALLATION OF INCLINOMETERS	20
												6		SPECIAL	53000400	6	EACH	STRUCTURE, MISC.: INSTRUMENTATION AND MONITORING - INSTALLATION OF SURFACE MONITORING POINTS	20
												16		SPECIAL	53000400	16	EACH	STRUCTURE, MISC.: INSTRUMENTATION AND MONITORING - INSTALLATION OF SHALLOW SUBSURFACE	20
																		MONITORING POINTS	
												3		SPECIAL	53000400	3	EACH	STRUCTURE, MISC.: INSTRUMENTATION AND MONITORING - INSTALLATION OF TILTMETERS	20
												8		SPECIAL	53000400	8	EACH	STRUCTURE, MISC.: INSTRUMENTATION AND MONITORING - INSTALLATION OF UTILITY MONITORING POINTS	20
						16211						16211		SPECIAL	69098200	16211	SF	MISC.: GLAZED CERAMIC WALL TILE	148
			25									25		606	15050	25	FT	GUARDRAIL, TYPE MGS	
			100									100		606	15550	100	FT	GUARDRAIL, BARRIER DESIGN, TYPE MGS	
			1									1		606	25600	1	EACH	ANCHOR ASSEMBLY, BARRIER DESIGN, MGS TYPE A	
			3									3		606	35102	3	EACH	MGS BRIDGE TERMINAL ASSEMBLY, TYPE 2	
800													800	607	98000	800	FT	FENCE, MISC.: TEMPORARY CONSTRUCTION FENCE	20A
LS												LS		607	98200	LS		FENCE, MISC.: CONSTRUCTION FENCE	16
					17							17		608	10001	17	SF	4" CONCRETE WALK, AS PER PLAN	109
			4560									4560		608	12001	4560	SF	5" CONCRETE WALK, AS PER PLAN	16
			235									235		608	12001	235	SF	5" CONCRETE WALK, AS PER PLAN, PIKE STREET	16
					8							8		608	40001	8	FT	CONCRETE STEPS, TYPE A, AS PER PLAN	109
			28									28		608	53021	28	SF	DETECTABLE WARNING, AS PER PLAN (CITY OF CINCINNATI TYPE F)	17
			8									8		608	53021	8	SF	DETECTABLE WARNING, AS PER PLAN (CITY OF CINCINNATI TYPE F), PIKE STREET	17
			1									1		608	97200	1	EACH	CURB RAMP, MISC.: CITY OF CINCINNATI CURB RAMP TYPE P	17
			1									1		608	97200	1	EACH	CURB RAMP, MISC.: CITY OF CINCINNATI CURB RAMP TYPE Q	17
			2									2		608	97200	2	EACH	CURB RAMP, MISC.: CITY OF CINCINNATI CURB RAMP TYPE V	17
			3313									3313		622	10161	3313	FT	CONCRETE BARRIER, SINGLE SLOPE, TYPE D, AS PER PLAN	154
			1									1		622	10200	1	EACH	BARRIER TRANSITION	
			6									6		622	10201	6	EACH	BARRIER TRANSITION, AS PER PLAN	158
			10									10		622	23400	10	FT	CONCRETE BARRIER, TYPE B	

CALCULATED RLD
CHECKED CWP

GENERAL SUMMARY

HAM-71-1.34

I:\????ec??\HAM\??07\01.34_PID87268\De????\d??c?\P??? Pac?a?e\C???e?? CADD F??e?\R?ad??\S?ee?
3/10/2015 12:41:52 PM o??e???

SHEET NUMBER												PARTICIPATION		ITEM	ITEM EXT	GRAND TOTAL	UNIT	DESCRIPTION	SEE SHEET NO.
14 - 22	23 - 32	67 - 68	69 - 77	78 - 79	80	100	164- 165	166- 167	175- 178	194- 197	252 -256	01/IMS/BR	02/IMS/BR						
			1									1		622	25000	1	EACH	CONCRETE BARRIER END SECTION, TYPE D	
			111									111		622	25051	111	EACH	CONCRETE BARRIER, END ANCHORAGE, REINFORCED, TYPE D, AS PER PLAN	155
			208									208		625	24400	208	FT	DUCT CABLE, MISC.: LIGHTING DUCT REMOVED	138
			3									3		625	75402	3	EACH	LIGHT POLE REMOVED FOR STORAGE	
			3									3		625	75500	3	EACH	LIGHT POLE FOUNDATION REMOVED	
			12									12		625	75504	12	EACH	LUMINAIRE REMOVED FOR STORAGE	
			1									1		625	75800	1	EACH	DISCONNECT CIRCUIT	
2												2		SPECIAL	69050600	2	EACH	BOLLARD	17
												32		SPECIAL	69098000	32	EACH	MISC.: WALL JOINT DRAIN	147
												615		SPECIAL	69098100	615	FT	MISC.: WATER INFILTRATION MITIGATION	146
LS												LS		SPECIAL	69098400	LS		MISC.: CONSULTANT FOR CONCRETE QUALITY CONTROL INCLUDING TESTING AND INSPECTION	16
												15		SPECIAL	69098500	15	MILE	MISC.: CLEANING AND SWEEPING OF ROADWAYS, LANE MILE ROADWAY SWEPT	19
												LS		878	25000	LS		INSPECTION AND COMPACTION TESTING OF UNBOUND MATERIALS	
																		EROSION CONTROL	
4												4		659	00100	4	EACH	SOIL ANALYSIS TEST	
233												233		659	00300	233	CY	TOPSOIL	
2091												2091		659	10000	2091	SY	SEEDING AND MULCHING	
105												105		659	14000	105	SY	REPAIR SEEDING AND MULCHING	
105												105		659	15000	105	SY	INTER-SEEDING	
0.29												0.29		659	20000	0.29	TON	COMMERCIAL FERTILIZER	
0.43												0.43		659	31000	0.43	ACRE	LIME	
12												12		659	35000	12	MGAL	WATER	
5												5		659	40000	5	MSF	MOWING	
												30000		832	30000	30000	EACH	EROSION CONTROL	
																		DRAINAGE	
				248								248		605	05211	248	FT	4" UNCLASSIFIED PIPE UNDERDRAINS, WITH FABRIC WRAP, AS PER PLAN	258
				58								58		611	00400	58	FT	4" CONDUIT, TYPE E	
				64								64		611	00410	64	FT	4" CONDUIT, TYPE F FOR UNDERDRAIN OUTLET	
				71								71		611	00901	71	FT	6" CONDUIT, TYPE B, AS PER PLAN	15
				4								4		611	01401	4	FT	6" CONDUIT, TYPE E, AS PER PLAN	15
				4								4		611	98630	4	EACH	CATCH BASIN ADJUSTED TO GRADE	
				5								5		611	98700	5	EACH	INLET, SIDE DITCH	
				2								2		611	99900	2	EACH	DRAINAGE STRUCTURE, MISC.: TRANSFORMER VAULT FLOOR DRAIN	15
						1						1		SPECIAL	69098000	1	EACH	MISC.: INSTALL HATCH LOCK FOR WETWELL	100
						1						1		SPECIAL	69098000	1	EACH	MISC.: INSTALL HATCH LOCK FOR SURGE TANK	100
						1						1		SPECIAL	69098000	1	EACH	MISC.: SURGE TANK SLUICE GATE	100
						1						1		SPECIAL	69098000	1	EACH	MISC.: WETWELL SLUICE GATE	100
						LS						LS		SPECIAL	69098400	LS		MISC.: ABANDONMENT OF EXISTING PUMP CHAMBER	100
						LS						LS		SPECIAL	69098400	LS		MISC.: DISCONNECTION AND REMOVAL OF EXISTING ELECTRICAL EQUIPMENT FOR PUMP STATION	100
						LS						LS		SPECIAL	69098400	LS		MISC.: PUMP STATION SLUICE GATES AND APPURTENANCES REMOVED	100
						LS						LS		SPECIAL	69098400	LS		MISC.: REMOVE BAR SCREEN AND CONDUIT FROM WETWELL	100
						LS						LS		SPECIAL	69098400	LS		MISC.: INSTALL STEEL GRATING AND LIFTING CHAIN	100
																		PAVEMENT	
63		88										151		252	01500	151	FT	FULL DEPTH PAVEMENT SAWING	
		3										3		302	46000	3	CY	ASPHALT CONCRETE BASE, PG64-22	
1		18			13							32		304	20000	32	CY	AGGREGATE BASE	
		87										87		304	20000	87	CY	AGGREGATE BASE, LYTLE STREET	
17		54										71		305	12010	71	SY	8" CONCRETE BASE, CLASS QC1	
		430										430		305	12010	430	SY	8" CONCRETE BASE, CLASS QC1, LYTLE STREET	
		2										2		407	10000	2	GAL	TACK COAT	
3		95										98		407	13900	98	GAL	TACK COAT, 702.13	
		34										34		407	13900	34	GAL	TACK COAT, 702.13, LYTLE STREET	
1		28										29		441	50000	29	CY	ASPHALT CONCRETE SURFACE COURSE, TYPE 1, (448), PG64-22	
		25										25		441	50000	25	CY	ASPHALT CONCRETE SURFACE COURSE, TYPE 1, (448), PG64-22, LYTLE STREET	
		66										66		442	20001	66	CY	ASPHALT CONCRETE SURFACE COURSE, 12.5 MM, TYPE A (448), AS PER PLAN	15
					76							76		451	13011	76	SY	8" REINFORCED CONCRETE PAVEMENT, CLASS QC1, AS PER PLAN	109
		14										14		609	26000	14	FT	CURB, TYPE 6	
2		47										49		609	98000	49	FT	CURB, MISC.: CITY OF CINCINNATI TYPE B-1 BATTERED	15
		388										388		609	98000	388	FT	CURB, MISC.: CITY OF CINCINNATI TYPE B-1 BATTERED, LYTLE STREET	15
		244										244		609	98000	244	FT	CURB, MISC.: CITY OF CINCINNATI TYPE S-1 BATTERED	15

CALCULATED RLD
CHECKED CWP

GENERAL SUMMARY

HAM-71-1.34

c:\pwworking\hmm\external\pre47802\dms72884\87268GC002.dgn 2/17/2015 10:42:04 AM PRE47802

SHEET NUMBER												PARTICIPATION		ITEM	ITEM EXT	GRAND TOTAL	UNIT	DESCRIPTION	SEE SHEET NO.
14 - 22	23 - 32	67 - 68	69 - 77	78 - 79	80	115 - 117	164- 165	166- 167	175- 178	194- 197	252 -256	01/IMS/BR	02/IMS/BR						
																		WATER WORK	
						37.2						37.2		630	97800	37.2	SF	SIGNING, MISC.: STANDPIPE SIGNAGE	115
			1									1		SPECIAL	63886300	1	EACH	FURNISHING AND INSTALLING VALVE BOX, COMPLETE (CIN. 1116)	21
			3									3		SPECIAL	63887100	3	EACH	RESETTING EXISTING VALVE BOX, COMPLETE (CIN. 1125)	21
			1									1		SPECIAL	63888500	1	EACH	DISCONNECTING EXISTING SERVICE BRANCH (CIN. 1130)	21
						29						29		638	98000	29	EACH	WATER WORK, MISC.: HOSE CONNECTION DEMOLITION	115
						26						26		638	98000	26	EACH	WATER WORK, MISC.: HOSE CONNECTION CONSTRUCTION	115
						2						2		638	98000	2	EACH	WATER WORK, MISC.: ELECTRICAL ROOM HOSE CONNECTION CONSTRUCTION	115
						6						6		638	98000	6	EACH	WATER WORK, MISC.: CHECK VALVES	115
						6						6		638	98000	6	EACH	WATER WORK, MISC.: ISOLATION VALVES	115
						LS						LS		638	98100	LS		WATER WORK, MISC.: RELOCATION OF FDC#3	115
						LS						LS		638	98100	LS		WATER WORK, MISC.: TESTING AND INSPECTION	115
						LS						LS		638	98100	LS		WATER WORK, MISC.: AS-BUILT DRAWINGS	115
						LS						LS		638	98100	LS		WATER WORK, MISC.: REPLACEMENT OF FDC#1	115
						LS						LS		638	98100	LS		WATER WORK, MISC.: REPLACEMENT OF FDC#2	115
						LS						LS		638	98100	LS		WATER WORK, MISC.: TESTING OF FDC#1	115
						1930						1930		638	98600	1930	FT	WATER WORK, MISC.: STANDPIPE DEMOLITION	115
						830						830		638	98600	830	FT	WATER WORK, MISC.: TEMPORARY STANDPIPE	115
						1835						1835		638	98600	1835	FT	WATER WORK, MISC.: STANDPIPE CONSTRUCTION	115
																		LIGHTING	
										217345		217345		625	23308	217345	FT	DISTRIBUTION CABLE, MISC.: NO. 8 AWG, 277 VOLT, RHW-2, LSZH	190
										73515		73515		625	23308	73515	FT	DISTRIBUTION CABLE, MISC.: NO. 10 AWG, 277 VOLT, RHW-2, LSZH	190
										72715		72715		625	23308	72715	FT	DISTRIBUTION CABLE, MISC.: NO. 10 AWG, 277 VOLT, RHW-2, LSZH, GND	190
										3672		3672		625	23308	3672	FT	DISTRIBUTION CABLE, MISC.: NO. 3/0 AWG, 277 VOLT, RHW-2, LSZH	190
										1836		1836		625	23308	1836	FT	DISTRIBUTION CABLE, MISC.: NO. 6 AWG, 277 VOLT, RHW-2, LSZH, GND	190
										5160		5160		625	25000	5160	FT	CONDUIT, 3/4", 725.04	
										8092		8092		625	25100	8092	FT	CONDUIT, 1", 725.04	
										8485		8485		625	25200	8485	FT	CONDUIT, 1-1/4", 725.04	
										3564		3564		625	25300	3564	FT	CONDUIT, 1-1/2", 725.04	
										2286		2286		625	25400	2286	FT	CONDUIT, 2", 725.04	
										7556		7556		625	25404	7556	FT	CONDUIT, 2-1/2", 725.04	
										16633		16633		625	25920	16633	FT	CONDUIT, MISC.: REMOVE 2" EMT CONDUIT	190
										4914		4914		625	25920	4914	FT	CONDUIT, MISC.: 3/4" LFMC	190
										4815		4815		625	25920	4815	FT	CONDUIT, MISC.: 3/4" EMERGENCY LIGHTING CONDUIT	
										1836		1836		625	25920	1836	FT	CONDUIT, MISC.: 2" EMT CONDUIT	190
										144		144		625	27600	144	EACH	LUMINAIRE, MISC.: 32W, T8 LINEAR FLOURESCENT	190
										26		26		625	27600	26	EACH	LUMINAIRE, MISC.: EXIT SIGN 34W, LED	190
										605		605		625	27602	605	EACH	LUMINAIRE, SOLID-STATE (LED), MISC.: TYPE A, 74W	190
										321		321		625	27602	321	EACH	LUMINAIRE, SOLID-STATE (LED), MISC.: TYPE B, 270W	190
										493		493		625	27602	493	EACH	LUMINAIRE, SOLID-STATE (LED), MISC.: TYPE C, 135W	190
										183		183		625	27602	183	EACH	LUMINAIRE, SOLID-STATE (LED), MISC.: TYPE D, 270W	190
										505		505		625	27602	505	EACH	LUMINAIRE, SOLID-STATE (LED), MISC.: TYPE E, 74W	190
										350		350		625	27602	350	EACH	LUMINAIRE, SOLID-STATE (LED), MISC.: TYPE F, 270W	190
										1229		1229		625	29901	1229	EACH	JUNCTION BOX, AS PER PLAN (NEMA 4X S.S. 20"X12"X6")	190
										1319		1319		625	29901	1319	EACH	JUNCTION BOX, AS PER PLAN (LIGHTING CONTROL NEMA 4X S.S. 6"X6"X3")	190
										24		24		625	29901	24	EACH	JUNCTION BOX, AS PER PLAN (LIGHTING CONTROL NEMA 4X S.S. 8"X8"X6")	190
												LS		625	38000	LS		HIGH VOLTAGE TEST	
												LS		SPECIAL	62540000	LS		MAINTAIN EXISTING LIGHTING	
										727		727		625	75506	727	EACH	LUMINAIRE REMOVED	
										2		2		625	75510	2	EACH	POWER SERVICE REMOVED	
										727		727		625	75520	727	EACH	LUMINAIRE SUPPORT REMOVED	
										69784		69784		625	75550	69784	FT	DISTRIBUTION CABLE REMOVED	
										93		93		625	75800	93	EACH	DISCONNECT CIRCUIT	
												30		625	98000	30	EACH	LIGHTING, MISC.:REPLACEMENT LUMINAIRE UNITS	190
										18		18		625	98000	18	EACH	LIGHTING, MISC.: LIGHTING DISTRIBUTION PANELS REMOVED	190

CALCULATED RLD
CHECKED CWP

GENERAL SUMMARY

HAM-71-1.34

c:\pwworking\hmm\external\pre47802\dms72884\B7268GC003.dgn 3/15/2015 3:29:17 PM PRE47802

SHEET NUMBER													PARTICIPATION		ITEM	ITEM EXT	GRAND TOTAL	UNIT	DESCRIPTION	SEE SHEET NO.
14 - 22	23 - 32	67 - 68	69 - 77	78 - 79	80	115 - 117	164 - 165	166 - 167	175 - 178	194 - 197	252 - 256		01/IMS/BR	02/IMS/BR						
										1			1		625	98000	1	EACH	LIGHTING, MISC.: LIGHTING CONTROL PANEL REMOVED	190
										2			2		625	98000	2	EACH	LIGHTING, MISC.: PHOTOMETER REMOVED	193
										6			6		625	98000	6	EACH	LIGHTING, MISC.: CABLE TROUGH, AS PER PLAN (NEMA 3R 78"X12"X6")	190
										2			2		625	98000	2	EACH	LIGHTING, MISC.: PANEL (NEMA 3R, 3P/4W, 600A MCB)	190
										18			18		625	98000	18	EACH	LIGHTING, MISC.: PANEL (NEMA 3R, 3P/4W, MLO)	190
										3			3		625	98000	3	EACH	LIGHTING, MISC.: PANEL (NEMA 3R, 3P/4W, 60A MCB)	190
										24			24		625	98000	24	EACH	LIGHTING, MISC.: REMOTE DIMMING ENCLOSURE (NEMA 4X S.S. 16"X14"X6")	193
										2			2		625	98000	2	EACH	LIGHTING, MISC.: LIGHTING CONTROL PANEL	193
										2			2		625	98000	2	EACH	LIGHTING, MISC.: PHOTOMETRIC CAMERA	193
										12			12		625	98000	12	EACH	LIGHTING, MISC.: CONTACTORS, 480V, 3 PH, 3 POLE, 100A	193
										33180			33180		625	98100	33180	FT	LIGHTING, MISC.: S.S. CHANNEL (1-5/8"X1-5/8")	190
										600			600		625	98100	600	FT	LIGHTING, MISC.: S.S. CHANNEL (1-5/8"X3-1/4")	190
										5760			5760		625	98100	5760	FT	LIGHTING, MISC.: 2/C NO. 12 AWG BELDEN 3103S LIGHTING CONTROL CABLE	193
										2578			2578		625	98600	2578	SF	LIGHTING, MISC.: SPRAY-APPLIED FIREPROOFING	190
										LS			LS		625	98200	LS		LIGHTING, MISC.: TESTING AND COMMISSIONING	190
																			TRAFFIC SURVEILLANCE	
									1553				1553		625	25300	1553	FT	CONDUIT, 1-1/2", 725.04	
									50				50		625	25304	50	FT	CONDUIT, 1-1/2", 725.051	
									114				114		625	25750	114	FT	CONDUIT, 4", MULTICELL, 725.20 , EPC-40	
									195				195		625	29000	195	FT	TRENCH	
									46				46		625	29600	46	FT	TRENCH IN PAVED AREA, TYPE B	
									20				20		625	29900	20	EACH	JUNCTION BOX, 6"x6"x3"	
									12				12		625	29900	12	EACH	JUNCTION BOX, 8"x8"x6"	
									3				3		625	29901	3	EACH	JUNCTION BOX, AS PER PLAN, 8"X6"x6"	175
									8				8		625	30700	8	EACH	PULL BOX, 725.08, 18"	
									2				2		625	30711	2	EACH	PULL BOX, 725.08, 32", AS PER PLAN	186
									241				241		625	36000	241	FT	PLASTIC CAUTION TAPE	
									702				702		632	43300	702	FT	SIGNAL CABLE, MISC.: CAT-6 STP	175
									1510				1510		632	69350	1510	FT	POWER CABLE, MISC.: 2 CONDUCTOR, NO. 12 AWG	175
									6				6		632	90020	6	EACH	REMOVAL OF MISCELLANEOUS TRAFFIC SIGNAL ITEM: EXISTING CCTV ASSEMBLY	175
									3				3		632	90400	3	EACH	SIGNALIZATION, MISC.: SECURITY CAMERA UNIT	175
									9				9		809	60010	9	EACH	CCTV IP-CAMERA SYSTEM, TYPE HD, WALL/TUNNEL	
									2				2		809	65000	2	EACH	ITS CABINET - GROUND MOUNTED	
								106					106		621	00301	106	EACH	TRAFFIC CONTROL RPM REFLECTOR, AS PER PLAN	163
									2				2		625	32000	2	EACH	GROUND ROD	
								112					112		626	00100	112	EACH	BARRIER REFLECTOR	
									57.8				57.8		630	02101	57.8	FT	GROUND MOUNTED SUPPORT, NO. 2 POST, AS PER PLAN	163
									26.9				26.9		630	03101	26.9	FT	GROUND MOUNTED SUPPORT, NO. 3 POST, AS PER PLAN	163
									11.9				11.9		630	08511	11.9	FT	STREET NAME SIGN SUPPORT, NO. 2 POST, AS PER PLAN	163
									4				4		630	08600	4	EACH	SIGN POST REFLECTOR	
									1				1		630	30400	1	EACH	OVERHEAD SIGN SUPPORT, TYPE TC-9.30, DESIGN 4	
									1				1		630	66501	1	EACH	OVERHEAD SIGN SUPPORT, TYPE TC-15.115, AS PER PLAN	163
									2				2		630	79501	2	EACH	SIGN SUPPORT ASSEMBLY, POLE MOUNTED, AS PER PLAN	163
									52.3				52.3		630	80100	52.3	SF	SIGN, FLAT SHEET	
									1169.2				1169.2		630	80225	1169.2	SF	SIGN, OVERHEAD EXTRUSHEET, AS PER PLAN	163
									52.3				52.3		630	81101	52.3	SF	SIGN ERECTED, FLAT SHEET, AS PER PLAN	163
									1169.2				1169.2		630	81200	1169.2	SF	SIGN ERECTED, EXTRUSHEET	
									3				3		630	84510	3	EACH	RIGID OVERHEAD SIGN SUPPORT FOUNDATION	
									12				12		630	84900	12	EACH	REMOVAL OF GROUND MOUNTED SIGN AND DISPOSAL	
									2				2		630	85000	2	EACH	REMOVAL OF GROUND MOUNTED SIGN AND STORAGE	
									1				1		630	85100	1	EACH	REMOVAL OF GROUND MOUNTED SIGN AND REERECTION	
									8				8		630	86002	8	EACH	REMOVAL OF GROUND MOUNTED POST SUPPORT AND DISPOSAL	
									5				5		630	87400	5	EACH	REMOVAL OF OVERHEAD MOUNTED SIGN AND DISPOSAL	

CALCULATED RLD
CHECKED CWP

GENERAL SUMMARY

HAM-71-1.34

I:\projects\HAM\vir071\01.34_PID87268\Design\docs\Plan Package\Current CADD Files\Roadway\Sheets\87268GG004.dgn 2/13/2015 3:15:07 PM okoenig

SHEET NUMBER												PARTICIPATION		ITEM	ITEM EXT	GRAND TOTAL	UNIT	DESCRIPTION	SEE SHEET NO.
14 - 22	23 - 32	67 - 68	69 - 77	78 - 79	80	115 - 117	164 - 165	166 - 167	175 - 178	252 - 256	260 - 271	01/IMS/BR	02/IMS/BR						
								1				1		630	87500	1	EACH	REMOVAL OF POLE MOUNTED SIGN AND DISPOSAL	
								1				1		630	89703	1	EACH	REMOVAL OF OVERHEAD SIGN SUPPORT AND DISPOSAL, AS PER PLAN	163
								1				1		631	92001	1	EACH	SIGN FLASHER ASSEMBLY, AS PER PLAN	163
								9				9		631	94250	9	EACH	REMOVAL OF LUMINAIRE	
								1				1		631	94350	1	EACH	REMOVAL OF DISCONNECT SWITCH	
								5				5		631	94406	5	EACH	REMOVAL OF SIGNS WIRED	
								5				5		631	94450	5	EACH	REMOVAL OF BALLAST	
								1				1		631	94470	1	EACH	REMOVAL OF SIGN SERVICE	
								1				1		631	94480	1	EACH	REMOVAL OF PHOTOELECTRIC CONTROL	
							0.03					0.03		642	00190	0.03	MILE	LANE LINE, 4"	
							0.05					0.05		642	00290	0.05	MILE	CENTER LINE	
							48					48		642	00490	48	FT	STOP LINE	
							219					219		642	00590	219	FT	CROSSWALK LINE	
							5035					5035		642	00790	5035	FT	CURB MARKING	
							2.49					2.49		644	00104	2.49	MILE	EDGE LINE, 6"	
							1.28					1.28		644	00204	1.28	MILE	LANE LINE, 6"	
							1267					1267		644	00404	1267	FT	CHANNELIZING LINE, 12"	
							2760					2760		644	00701	2760	FT	TRANSVERSE/DIAGONAL LINE, AS PER PLAN	168
							241					241		644	00720	241	FT	CHEVRON MARKING	
							2					2		644	01400	2	EACH	WORD ON PAVEMENT, 72"	
																		LANDSCAPING	
										1424		1424		203	20001	1424	CY	EMBANKMENT, AS PER PLAN, TYPE 2 ROOTZONE MIX	255
										282		282		203	20001	282	CY	EMBANKMENT, AS PER PLAN, TYPE 4 PERENNIAL MIX	256
										95		95		607	98000	95	FT	FENCE, MISC.: TREE PRESERVATION FENCING	253
										0.01		0.01		659	20001	0.01	TON	COMMERCIAL FERTILIZER, AS PER PLAN	253
										1		1		661	00501	1	CY	MULCH, AS PER PLAN	253
										1		1		666	10001	1	EACH	PRUNING EXISTING TREE, 8 TO 16-INCH DIAMETER, AS PER PLAN	253
										1		1		666	10011	1	EACH	PRUNING EXISTING TREE, 16 TO 24-INCH DIAMETER, AS PER PLAN	253
										LS		LS		SPECIAL	69098400	LS		MISC.: CERTIFIED ARBORIST	253
										LS		LS		SPECIAL	69098400	LS		MISC.: TREE PRESERVATION	253
																		STRUCTURE REPAIR (HAM-71-0134)	
											LS	LS		202	11201	LS		PORTIONS OF STRUCTURE REMOVED, AS PER PLAN	260
											LS	LS		503	11101	LS		COFFERDAMS AND EXCAVATION BRACING, AS PER PLAN	266
											LS	LS		503	21301	LS		UNCLASSIFIED EXCAVATION, AS PER PLAN	266
											1095400	1095400		509	10000	1095400	LB	EPOXY COATED REINFORCING STEEL	
											502	502		510	10000	502	EACH	DOWEL HOLES WITH NON-SHRINK, NONMETALLIC GROUT	
											4950	4950		511	50212	4950	CY	CLASS QC1 CONCRETE WITH QC/QA, SUBSTRUCTURE	
											4120	4120		512	10100	4120	SY	SEALING OF CONCRETE SURFACES (EPOXY-URETHANE)	
											80	80		512	33000	80	SY	TYPE 2 WATERPROOFING	
											2210	2210		512	33010	2210	SY	TYPE 3 WATERPROOFING	
											19000	19000		513	10201	19000	LB	STRUCTURAL STEEL MEMBERS, LEVEL UF, AS PER PLAN	260
											66	66		516	13000	66	SF	1/4" PREFORMED EXPANSION JOINT FILLER	
											110	110		518	21200	110	CY	POROUS BACKFILL WITH FILTER FABRIC	
											85	85		518	39900	85	FT	4" NON-PERFORATED CORRUGATED PLASTIC PIPE, INCLUDING SPECIALS	
											375	375		518	40000	375	FT	6" PERFORATED CORRUGATED PLASTIC PIPE	
											LS	LS		SPECIAL	53000200	LS		STRUCTURE, MISC.:DAMPER DOOR SYSTEM	358
											LS	LS		SPECIAL	53000200	LS		STRUCTURE, MISC.:CARBON MONOXIDE DETECTION SYSTEM	384
											LS	LS		SPECIAL	53000200	LS		STRUCTURE, MISC.:WATERPROOFING INCIDENTALS	264
											2	2		SPECIAL	53000400	2	EACH	STRUCTURE, MISC.:EQUIPMENT ACCESS HATCH	262
											2	2		SPECIAL	53000400	2	EACH	STRUCTURE, MISC.:EMERGENCY ACCESS HATCH	262
											8	8		SPECIAL	53000400	8	EACH	STRUCTURE, MISC.:METAL DOORS, SINGLE	261
											4	4		SPECIAL	53000400	4	EACH	STRUCTURE, MISC.:METAL DOORS, DOUBLE	261
											1	1		SPECIAL	53000400	1	EACH	STRUCTURE, MISC.:DOUBLE DOOR WITH REMOVABLE PANEL	261
											3	3		SPECIAL	53000400	3	EACH	STRUCTURE, MISC.:STAIRS	263
											1	1		SPECIAL	53000400	1	EACH	STRUCTURE, MISC.:FIRE DEPARTMENT KEY BOX	262
											1	1		SPECIAL	53000400	1	EACH	STRUCTURE, MISC.:REPLACE EXISTING METAL DOOR	261
											2	2		SPECIAL	53000400	2	EACH	STRUCTURE, MISC.:LADDERS	263

CALCULATED RLD CHECKED CWP

GENERAL SUMMARY

HAM-71-1.34

63
555

c:\pwworking\hmm\external\pre47802\dms72884\87266GC005.dgn 3/16/2015 4:32:53 PM PRE47802

SHEET NUMBER												PARTICIPATION		ITEM	ITEM EXT	GRAND TOTAL	UNIT	DESCRIPTION	SEE SHEET NO.
14 - 22	23 - 32	67 - 68	69 - 77	78 - 79	80	115 - 117	164 - 165	166 - 167	175 - 178	252 - 256	260 - 271	01/IMS/BR	02/IMS/BR						
											3300	3300		SPECIAL	53000600	3300	SF	STRUCTURE, MISC.:SOUNDPROOFING FOR WALLS	366
											3700	3700		SPECIAL	53000600	3700	SF	STRUCTURE, MISC.:SOUNDPROOFING FOR CEILING	366
											7000	7000		SPECIAL	53000600	7000	SF	STRUCTURE, MISC.:1"x1" 14 GAUGE GALVANIZED WELDED WIRE MESH	366
											830	830		SPECIAL	53000600	830	SF	STRUCTURE, MISC.:CONCRETE MASONRY 8 INCH WALL	260
											2070	2070		SPECIAL	53000600	2070	SF	STRUCTURE, MISC.:CONCRETE MASONRY 12 INCH WALL	260
											220	220		SPECIAL	53000600	220	SF	STRUCTURE, MISC.:BRICK MASONRY WALL	260
											720	720		SPECIAL	53000600	720	SF	STRUCTURE, MISC.:GRATING	263
											950	950		SPECIAL	53000600	950	SF	STRUCTURE, MISC.:FIBER REINFORCED POLYMER	264
											19615	19615		SPECIAL	53000600	19615	SF	STRUCTURE, MISC.:FIRE RESISTANT COATING SYSTEM, CEILING INSTALLATION	262
											17450	17450		SPECIAL	53000600	17450	SF	STRUCTURE, MISC.:FIRE RESISTANT COATING SYSTEM, WALL INSTALLATION	262
											13	13		SPECIAL	53001200	12.5	CF	STRUCTURE, MISC.:GROUT	264
											500	500		SPECIAL	53001300	500	FT	STRUCTURE, MISC.:P1000 GALVANIZED UNISTRUT WALL MOUNTED	366
											700	700		SPECIAL	53001300	700	FT	STRUCTURE, MISC.:P1000 GALVANIZED UNISTRUT CEILING MOUNTED	366
											950	950		SPECIAL	53001300	950	FT	STRUCTURE, MISC.:BENTONITE WATERPROOFING	263
											9072	9072		625	25000	9072	FT	CONDUIT, 3/4", 725.04	
											720	720		625	25100	720	FT	CONDUIT, 1", 725.04	
											395	395		625	25300	395	FT	CONDUIT, 1-1/2", 725.04	
											1255	1255		625	25400	1255	FT	CONDUIT, 2", 725.04	
											400	400		625	25404	400	FT	CONDUIT, 2-1/2", 725.04	
											470	470		625	25500	470	FT	CONDUIT, 3", 725.04	
											40	40		625	25550	40	FT	CONDUIT, 3-1/2", 725.04	
											3515	3515		625	25600	3515	FT	CONDUIT, 4", 725.04	
											20	20		625	25920	20	FT	CONDUIT, MISC.:4" PVC MULTICELL	446
											4	4		625	29901	4	EACH	JUNCTION BOX, AS PER PLAN(NEMA 4X. 30" X 24" X 12")	446
											4	4		625	29901	4	EACH	JUNCTION BOX, AS PER PLAN(NEMA 4X. 16" X 16" X 6")	446
											1	1		625	34001	1	EACH	POWER SERVICE, AS PER PLAN	428
											3	3		625	98000	3	EACH	LIGHTING, MISC.:SOFT STARTER WITH TWO SPEED AND REVERSING CONTACTORS	460
											1	1		625	98000	1	EACH	LIGHTING, MISC.:480VAC SWITCHGEAR	453
											3	3		625	98000	3	EACH	LIGHTING, MISC.:LV TRANSFORMERS	450
											1	1		625	98000	1	EACH	LIGHTING, MISC.:30KVA UPS	462
											27	27		625	98000	27	EACH	LIGHTING, MISC.:SUPPLEMENTAL GROUNDED LOOP 4-WAY TAP	509
											180	180		625	98100	180	FT	LIGHTING, MISC.:2 CONDUCTOR, NO. 10 AWG, 1 CONDUCTOR NO. 12G, CIC, FPLR	484
											2300	2300		625	98100	2300	FT	LIGHTING, MISC.:2 CONDUCTOR, NO. 12 AWG, CIC, FPLR △1 △1	484
											20	20		625	98100	20	FT	LIGHTING, MISC.:2 CONDUCTOR, NO. 12 AWG, 1/C #12G, CIC, FPLR △1	484
																		△1	
											2025	2025		625	98100	2025	FT	LIGHTING, MISC.:1 CONDUCTOR, NO. 12 AWG 'TRAY CABLE' LSZH	484
											10610	10610		625	98100	10610	FT	LIGHTING, MISC.:1 CONDUCTOR, NO. 10 AWG 'TRAY CABLE' LSZH △1	484
											1350	1350		625	98100	1350	FT	LIGHTING, MISC.:1 PAIR, NO. 16 AWG SHIELDED 'TRAY CABLE' LSZH	484
											220	220		625	98100	220	FT	LIGHTING, MISC.:1 CONDUCTOR, 4 PAIR, NO. 16 AWG SHIELDED 'TRAY CABLE' LSZH	484
											320	320		625	98100	320	FT	LIGHTING, MISC.:1 CONDUCTOR, 8 PAIR, NO. 16 SHIELDED 'TRAY CABLE' LSZH	484
											400	400		625	98100	400	FT	LIGHTING, MISC.:1 CONDUCTOR, 12 PAIR, NO. 16 AWG, SHIELDED 'TRAY CABLE' LSZH	484
											675	675		625	98100	675	FT	LIGHTING, MISC.:1 CONDUCTOR, 24 PAIR, NO. 16 AWG, SHIELDED 'TRAY CABLE' LSZH	484
											250	250		625	98100	250	FT	LIGHTING, MISC.:1 CONDUCTOR, 36 PAIR, NO. 16 AWG, SHIELDED 'TRAY CABLE' LSZH	484
											2250	2250		625	98100	2250	FT	LIGHTING, MISC.:1 CONDUCTOR, 1-TRIAD NO. 16 AWG, SHIELDED 'TRAY CABLE' LSZH	484
											2700	2700		625	98100	2700	FT	LIGHTING, MISC.:1 CONDUCTOR, NO. 8 AWG 'TRAY CABLE' LSZH	484
											200	200		625	98100	200	FT	LIGHTING, MISC.:1 CONDUCTOR, NO. 8 AWG W/GROUND 'TRAY CABLE' LSZH	484
											12600	12600		625	98100	12600	FT	LIGHTING, MISC.:1 CONDUCTOR, NO. 6 AWG 'TRAY CABLE' LSZH	484
											1150	1150		625	98100	1150	FT	LIGHTING, MISC.:1 CONDUCTOR, NO. 6 AWG W/GROUND 'TRAY CABLE' LSZH	484
																			484
											380	380		625	98100	380	FT	LIGHTING, MISC.:1 CONDUCTOR, NO. 2 AWG W/GROUND 'TRAY CABLE' LSZH	484
											30	30		625	98100	30	FT	LIGHTING, MISC.:10 CONDUCTOR, NO. 14 AWG, CIC, FPLR	484
											50	50		625	98100	50	FT	LIGHTING, MISC.:24 CONDUCTOR, SINGLE MODE FIBER OPTIC, LSZH △1	484
											3000	3000		625	98100	3000	FT	LIGHTING, MISC.:1 CONDUCTOR, NO. 3/0 AWG, RHW-2, LSZH	484

NO.	DATE	REVISION DESCRIPTION
△1	5/6/16	CABLE CHANGES (RFI 148, 167)

CALCULATED RLD CHECKED CWP

GENERAL SUMMARY

HAM-71-1.34

c:\pwworking\hmm\external\pre47802\dms72884\87266GC006.dgn 5/17/2016 10:31:58 AM PRE47802

SHEET NUMBER												PARTICIPATION		ITEM	ITEM EXT	GRAND TOTAL	UNIT	DESCRIPTION	SEE SHEET NO.
14 - 22	23 - 32	67 - 68	69 - 77	78 - 79	80	115 - 117	164 - 165	166 - 167	175 - 178	252 - 256	260 - 271	01/IMS/BR	02/IMS/BR						
											160	160		625	98100	160	FT	LIGHTING, MISC.:1 CONDUCTOR, NO. 4/0 AWG, RHW-2, LSZH	484
											5	5		625	98100	5	FT	LIGHTING, MISC.:4 CONDUCTOR, NO. 14 AWG, RHW-2, LSZH	484
											100	100		625	98100	100	FT	LIGHTING, MISC.:6 CONDUCTOR, NO. 12 AWG, RHW-2, LSZH	484
											5	5		625	98100	5	FT	LIGHTING, MISC.:6 CONDUCTOR, NO. 14 AWG, RHW-2, LSZH	484
											3200	3200		625	98100	3200	FT	LIGHTING, MISC.:1 CONDUCTOR, 400KCMIL, RHW-2, LSZH	484
											4600	4600		625	98100	4600	FT	LIGHTING, MISC.:1 CONDUCTOR, 500KCMIL, RHW-2, LSZH	484
											2400	2400		625	98100	2400	FT	LIGHTING, MISC.:1 CONDUCTOR, 750KCMIL, RHW-2, LSZH	484
											300	300		625	98100	300	FT	LIGHTING, MISC.:1 CONDUCTOR, NO. 12 AWG, RHW-2, LSZH	484
											100	100		625	98100	100	FT	LIGHTING, MISC.:2 CONDUCTOR, NO. 12 AWG, CIC	484
											5250	5250		625	98100	5250	FT	LIGHTING, MISC.:1 CONDUCTOR, NO. 14 AWG, CIC	484
											2700	2700		625	98100	2700	FT	LIGHTING, MISC.:1 CONDUCTOR, NO. 8 AWG, CIC	484
											2700	2700		625	98100	2700	FT	LIGHTING, MISC.:1 CONDUCTOR, NO. 6 AWG, CIC	484
											400	400		625	98100	400	FT	LIGHTING, MISC.:CABLE 2/C NO. 10 CIC-FPLR (BELDEN, SAFE-T-LINE CABLE OR APPROVED EQUAL)	499
											350	350		625	98100	350	FT	LIGHTING, MISC.:CABLE 2/C NO. 12 CIC-FPLR (BELDEN, SAFE-T-LINE CABLE OR APPROVED EQUAL)	499
											560	560		625	98100	560	FT	LIGHTING, MISC.:CABLE 2/C NO. 14 CIC-FPLR (BELDEN, SAFE-T-LINE CABLE OR APPROVED EQUAL)	499
											10	10		625	98100	10	FT	LIGHTING, MISC.:750 KCMIL MBJ	509
											138	138		625	98100	138	FT	LIGHTING, MISC.:750 KCMIL SSBJ	509
											45	45		625	98100	45	FT	LIGHTING, MISC.:750 KCMIL GEC CABLE	509
											6	6		625	98100	6	FT	LIGHTING, MISC.:NO. 8 AWG GEC CABLE	509
											271	271		625	98100	271	FT	LIGHTING, MISC.:NO. 3/0 AWG SEGC CABLE	509
											109	109		625	98100	109	FT	LIGHTING, MISC.:NO. 1/0 AWG SEGC TAP CABLE	509
											20	20		625	98100	20	FT	LIGHTING, MISC.:NO. 4 AWG GEC CABLE	509
											1	1		625	98100	1	FT	LIGHTING, MISC.:COPPER BUS BAR	509
											2500	2500		625	98600	2500	SF	LIGHTING, MISC.:FIREPROOFING	446
											100	100		632	30500	100	FT	MESSENGER WIRE, MISC.:MESSENGER WIRE, 7 STRANDS, 1/8" DIAMETER WITH ACCESSORIES	511
											20	20		632	90400	20	EACH	SIGNALIZATION, MISC.:FASTENERS FOR MESSENGER WIRE	511
											2	2		633	99000	2	EACH	CONTROLLER ITEM, MISC.:CONTROLLER NEMA 1, 4-CHANNEL, 3,280FT RANGE	511
											1	1		633	99000	1	EACH	CONTROLLER ITEM, MISC.:CONTROLLER NEMA 1, 4-CHANNEL, 6,560FT RANGE	511
											3	3		633	99000	3	EACH	CONTROLLER ITEM, MISC.:CONTROLLER INTEGRATED BUS MOD-BUS TCP/IP	511
											3	3		633	99000	3	EACH	CONTROLLER ITEM, MISC.:CONTROLLER INTERFACE BOX FOR MOD-BUS RS235 MIB-8000	511
											LS	LS		633	99300	LS		CONTROLLER ITEM, MISC.:FIBER OPTIC FIRE DETECTION CONTROLLER SOFTWARE	511
											LS	LS		633	99300	LS		CONTROLLER ITEM, MISC.:TRAINING AND COMMISSIONING	511
											LS	LS		633	99300	LS		CONTROLLER ITEM, MISC.:COMMUNICATION MEDIUM	521
											LS	LS		633	99300	LS		CONTROLLER ITEM, MISC.:MAIN NETWORK CABINET	521
											LS	LS		633	99300	LS		CONTROLLER ITEM, MISC.:MAIN PLC CABINET	521
											LS	LS		633	99300	LS		CONTROLLER ITEM, MISC.:SOUTH PORTAL COMM. RACK	521
											LS	LS		633	99300	LS		CONTROLLER ITEM, MISC.:NORTH PORTAL COMM. RACK	521
											LS	LS		633	99300	LS		CONTROLLER ITEM, MISC.:SCADA PROGRAMMING AND CONFIGURATION PLC/HMI	521
											LS	LS		633	99300	LS		CONTROLLER ITEM, MISC.:DOCUMENTATION SUBMITTALS AND TRAINING	521
											LS	LS		633	99300	LS		CONTROLLER ITEM, MISC.:HMI/PLC (HUMAN MACHINE INTERFACE/PROGRAMMABLE LOGIC CONTROLLER)	521
																		TESTING AND COMMISSIONING	
											2	2		SPECIAL	69098000	2	EACH	MISC.:TRANSFORMER VAULT	427
											7	7		SPECIAL	69098000	7	EACH	MISC.:PANELBOARDS	456
											1	1		SPECIAL	69098000	1	EACH	MISC.:FIRE ALARM CONTROL PANEL (HONEYWELL, NOTIFIER NFS2-3030 OR APPROVED EQUAL)	499
											40	40		SPECIAL	69098000	40	EACH	MISC.:HEAT DETECTOR PANEL (HONEYWELL, NOTIFIER FST-851(A) OR APPROVED EQUAL)	499
											34	34		SPECIAL	69098000	34	EACH	MISC.:SMOKE DETECTOR (HONEYWELL, NOTIFIER FSP-851(A) SERIES OR APPROVED EQUAL)	499
											30	30		SPECIAL	69098000	30	EACH	MISC.:STROBE LIGHT (HONEYWELL, NOTIFIER SPECTRALERT ADVANCED P2RHKA OR APPROVED EQUAL)	499
											8	8		SPECIAL	69098000	8	EACH	MISC.:MANUAL PULL STATION (HONEYWELL, NOTIFIER NBG-12 SERIES OR APPROVED EQUAL)	499
											5	5		SPECIAL	69098000	5	EACH	MISC.:DUCT SMOKE DETECTOR (HONEYWELL, NOTIFIER DNR(A) OR APPROVED EQUAL)	499
											8	8		SPECIAL	69098000	8	EACH	MISC.:RELAY MODULE (HONEYWELL, NOTIFIER FRM-1 RELAY MODULE OR APPROVED EQUAL)	499
											9	9		SPECIAL	69098000	9	EACH	MISC.:DEMOLITION EXHAUST FANS	389
											3	3		SPECIAL	69098000	3	EACH	MISC.:DEMOLITION PLENUM ACOUSTIC PANELS	389
											2	2		SPECIAL	69098000	2	EACH	MISC.:DEMOLITION PLENUM SOUND ATTENUATORS	389
											12	12		SPECIAL	69098000	12	EACH	MISC.:DEMOLITION TUNNEL ISOLATION DAMPERS	389
											3	3		SPECIAL	69098000	3	EACH	MISC.:DEMOLITION PNEUMATIC CONTROL PANEL	389
											1	1		SPECIAL	69098000	1	EACH	MISC.:DEMOLITION CARBON MONOXIDE DETECTOR PANEL	389

CALCULATED RLD
CHECKED CWP

GENERAL SUMMARY

HAM-71-1.34

I:\projects\HAM\Vir071\01.34_PID87268\Design\docs\Plan Package\Current CADD Files\Roadway\Sheets\87268GG007.dgn 2/13/2015 3:19:52 PM okoenig

SHEET NUMBER												PARTICIPATION		ITEM	ITEM EXT	GRAND TOTAL	UNIT	DESCRIPTION	SEE SHEET NO.
14 - 22	23 - 32	67 - 68	69 - 77	78 - 79	80	115 - 117	164 - 165	166 - 167	175 - 178	252 - 256	260 - 271	01/IMS/BR	02/IMS/BR						
											160	160		625	98100	160	FT	LIGHTING, MISC.:1 CONDUCTOR, NO. 4/0 AWG, RHW-2, LSZH	484
											5	5		625	98100	5	FT	LIGHTING, MISC.:4 CONDUCTOR, NO. 14 AWG, CIC, FPLR	484
											100	100		625	98100	100	FT	LIGHTING, MISC.:6 CONDUCTOR, NO. 12 AWG, CIC, FPLR	484
											5	5		625	98100	5	FT	LIGHTING, MISC.:6 CONDUCTOR, NO. 14 AWG, CIC, FPLR	484
											3200	3200		625	98100	3200	FT	LIGHTING, MISC.:1 CONDUCTOR, 400KCMIL, RHW-2, LSZH △1	484
											4600	4600		625	98100	4600	FT	LIGHTING, MISC.:1 CONDUCTOR, 500KCMIL, RHW-2, LSZH	484
											2400	2400		625	98100	2400	FT	LIGHTING, MISC.:1 CONDUCTOR, 750KCMIL, RHW-2, LSZH	484
											300	300		625	98100	300	FT	LIGHTING, MISC.:1 CONDUCTOR, NO. 12 AWG, RHW-2, LSZH	484
											100	100		625	98100	100	FT	LIGHTING, MISC.:2 CONDUCTOR, NO. 12 AWG, CIC	484
											5250	5250		625	98100	5250	FT	LIGHTING, MISC.:1 CONDUCTOR, NO. 14 AWG, CIC	484
											2700	2700		625	98100	2700	FT	LIGHTING, MISC.:1 CONDUCTOR, NO. 8 AWG, CIC	484
											2700	2700		625	98100	2700	FT	LIGHTING, MISC.:1 CONDUCTOR, NO. 6 AWG, CIC	484
											10	10		625	98100	10	FT	LIGHTING, MISC.:4 CONDUCTOR, NO. 12 AWG, 'TRAY CABLE' LSZH	484
											1943	1943		625	98100	1943	FT	LIGHTING, MISC.:1 CONDUCTOR, NO. 14 AWG, RHW-2, LSZH	484
											2762	2762		625	98100	2762	FT	LIGHTING, MISC.:1 CONDUCTOR, NO. 2 AWG, RHW-2, LSZH	484
											2213	2213		625	98100	2213	FT	LIGHTING, MISC.:1 CONDUCTOR, NO. 1/0 AWG, RHW-2, LSZH	484
											122	122		625	98100	122	FT	LIGHTING, MISC.:1 CONDUCTOR, NO. 8 AWG, 'TRAY CABLE' LSZH	484
											1330	1330		625	98100	1330	FT	LIGHTING, MISC.:2 CONDUCTOR, NO. 16 AWG, BELDEN 1609	484
											1987	1987		625	98100	1987	FT	LIGHTING, MISC.:3 CONDUCTOR, NO. 14 AWG, 'TRAY CABLE' LSZH	484
											400	400		625	98100	400	FT	LIGHTING, MISC.::CABLE 2/C NO. 10 CIC-FPLR (BELDEN, SAFE-T-LINE CABLE OR APPROVED EQUAL)	499
										△1	350	350		625	98100	350	FT	LIGHTING, MISC.::CABLE 2/C NO. 12 CIC-FPLR (BELDEN, SAFE-T-LINE CABLE OR APPROVED EQUAL)	499
											560	560		625	98100	560	FT	LIGHTING, MISC.::CABLE 2/C NO. 14 CIC-FPLR (BELDEN, SAFE-T-LINE CABLE OR APPROVED EQUAL)	499
											10	10		625	98100	10	FT	LIGHTING, MISC.:750 KCMIL MBJ	509
											138	138		625	98100	138	FT	LIGHTING, MISC.:750 KCMIL SSBJ	509
											45	45		625	98100	45	FT	LIGHTING, MISC.:750 KCMIL GEC CABLE	509
											6	6		625	98100	6	FT	LIGHTING, MISC.::NO. 8 AWG GEC CABLE	509
											271	271		625	98100	271	FT	LIGHTING, MISC.::NO. 3/0 AWG SEGC CABLE	509
											109	109		625	98100	109	FT	LIGHTING, MISC.::NO. 1/0 AWG SEGC TAP CABLE	509
											20	20		625	98100	20	FT	LIGHTING, MISC.::NO. 4 AWG GEC CABLE	509
											1	1		625	98100	1	FT	LIGHTING, MISC.::COPPER BUS BAR	509
											2500	2500		625	98600	2500	SF	LIGHTING, MISC.::FIREPROOFING	446
											100	100		632	30500	100	FT	MESSENGER WIRE, MISC.::MESSENGER WIRE, 7 STRANDS, 1/8" DIAMETER WITH ACCESSORIES	511
											20	20		632	90400	20	EACH	SIGNALIZATION, MISC.:FASTENERS FOR MESSENGER WIRE	511
											2	2		633	99000	2	EACH	CONTROLLER ITEM, MISC.:CONTROLLER NEMA 1, 4-CHANNEL, 3,280FT RANGE	511
											1	1		633	99000	1	EACH	CONTROLLER ITEM, MISC.:CONTROLLER NEMA 1, 4-CHANNEL, 6,560FT RANGE	511
											3	3		633	99000	3	EACH	CONTROLLER ITEM, MISC.:CONTROLLER INTEGRATED BUS MOD-BUS TCP/IP	511
											3	3		633	99000	3	EACH	CONTROLLER ITEM, MISC.:CONTROLLER INTERFACE BOX FOR MOD-BUS RS235 MIB-8000	511
											LS	LS		633	99300	LS		CONTROLLER ITEM, MISC.:FIBER OPTIC FIRE DETECTION CONTROLLER SOFTWARE	511
											LS	LS		633	99300	LS		CONTROLLER ITEM, MISC.:TRAINING AND COMMISSIONING	511
											LS	LS		633	99300	LS		CONTROLLER ITEM, MISC.:COMMUNICATION MEDIUM	521
											LS	LS		633	99300	LS		CONTROLLER ITEM, MISC.:MAIN NETWORK CABINET	521
											LS	LS		633	99300	LS		CONTROLLER ITEM, MISC.:MAIN PLC CABINET	521
											LS	LS		633	99300	LS		CONTROLLER ITEM, MISC.:SOUTH PORTAL COMM. RACK	521
											LS	LS		633	99300	LS		CONTROLLER ITEM, MISC.:NORTH PORTAL COMM. RACK	521
											LS	LS		633	99300	LS		CONTROLLER ITEM, MISC.:SCADA PROGRAMMING AND CONFIGURATION PLC/HMI	521
											LS	LS		633	99300	LS		CONTROLLER ITEM, MISC.:DOCUMENTATION SUBMITTALS AND TRAINING	521
											LS	LS		633	99300	LS		CONTROLLER ITEM, MISC.:HMI/PLC (HUMAN MACHINE INTERFACE/PROGRAMMABLE LOGIC CONTROLLER)	521
																			TESTING AND COMMISSIONING
											2	2		SPECIAL	69098000	2	EACH	MISC.:TRANSFORMER VAULT	427
											7	7		SPECIAL	69098000	7	EACH	MISC.:PANELBOARDS	456
											1	1		SPECIAL	69098000	1	EACH	MISC.:FIRE ALARM CONTROL PANEL (HONEYWELL, NOTIFIER NFS2-3030 OR APPROVED EQUAL)	499
											40	40		SPECIAL	69098000	40	EACH	MISC.:HEAT DETECTOR PANEL (HONEYWELL, NOTIFIER FST-851(A) OR APPROVED EQUAL)	499
											34	34		SPECIAL	69098000	34	EACH	MISC.:SMOKE DETECTOR (HONEYWELL, NOTIFIER FSP-851(A) SERIES OR APPROVED EQUAL)	499
											30	30		SPECIAL	69098000	30	EACH	MISC.:STROBE LIGHT (HONEYWELL, NOTIFIER SPECTRALERT ADVANCED P2RHKA OR APPROVED EQUAL)	499
											8	8		SPECIAL	69098000	8	EACH	MISC.:MANUAL PULL STATION (HONEYWELL, NOTIFIER NBG-12 SERIES OR APPROVED EQUAL)	499
											5	5		SPECIAL	69098000	5	EACH	MISC.:DUCT SMOKE DETECTOR (HONEYWELL, NOTIFIER DNR(A) OR APPROVED EQUAL)	499
											8	8		SPECIAL	69098000	8	EACH	MISC.:RELAY MODULE (HONEYWELL, NOTIFIER FRM-1 RELAY MODULE OR APPROVED EQUAL)	499
											9	9		SPECIAL	69098000	9	EACH	MISC.:DEMOLITION EXHAUST FANS	389
											3	3		SPECIAL	69098000	3	EACH	MISC.:DEMOLITION PLENUM ACOUSTIC PANELS	389
											2	2		SPECIAL	69098000	2	EACH	MISC.:DEMOLITION PLENUM SOUND ATTENUATORS	389
											12	12		SPECIAL	69098000	12	EACH	MISC.:DEMOLITION TUNNEL ISOLATION DAMPERS	389
											3	3		SPECIAL	69098000	3	EACH	MISC.:DEMOLITION PNEUMATIC CONTROL PANEL	389
											1	1		SPECIAL	69098000	1	EACH	MISC.:DEMOLITION CARBON MONOXIDE DETECTOR PANEL	389

NO.	DATE	REVISION DESCRIPTION
△1	5/6/16	CABLE CHANGES (RFI 148, 167)

CALCULATED RLD
CHECKED CWP

GENERAL SUMMARY

HAM-71-1.34

c:\pwworking\hmm\external\pre47802\dms72884\87268GC007.dgn 5/17/2016 10:54:22 AM PRE47802

SHEET NUMBER												PARTICIPATION		ITEM	ITEM EXT	GRAND TOTAL	UNIT	DESCRIPTION	SEE SHEET NO.
14 - 22	23 - 32	67 - 68	69 - 77	78 - 79	80	115 - 117	164- 165	166- 167	175- 178	194- 197	267 - 271	01/IMS/BR	02/IMS/BR						
											LS	LS		SPECIAL	69098400	LS		MISC.:FIRE ALARM - TRAINING AND COMMISSIONING	499
											LS	LS		SPECIAL	69098400	LS		MISC.:ELECTRICAL DEMOLITION	463
											LS	LS		SPECIAL	69098400	LS		MISC.:PENETRATION FIRESTOPPING	440
											LS	LS		SPECIAL	69098400	LS		MISC.:ELECTRICAL AS-BUILT DRAWINGS	427
											LS	LS		SPECIAL	69098400	LS		MISC.:ELECTRICAL TESTING AND COMMISSIONING	436
											LS	LS		SPECIAL	69098400	LS		MISC.:PROTECTIVE COORDINATION AND ARC FLASH STUDY	448
											LS	LS		SPECIAL	69098400	LS		MISC.:AXIAL FANS	354
											LS	LS		SPECIAL	69098400	LS		MISC.:FAN DUCT WORK TRANSITIONS	368
											LS	LS		SPECIAL	69098400	LS		MISC.:SOUND ATTENUATORS	364
											LS	LS		SPECIAL	69098400	LS		MISC.:FAN ISOLATION DAMPERS	362
											LS	LS		SPECIAL	69098400	LS		MISC.:SOUTHBOUND TUNNEL ISOLATION DAMPERS	362
											LS	LS		SPECIAL	69098400	LS		MISC.:TESTING, ADJUSTING, AND BALANCING	388
											LS	LS		SPECIAL	69098400	LS		MISC.:PLUMBING SYSTEM	373
											LS	LS		SPECIAL	69098400	LS		MISC.:HVAC SYSTEM	380
											8572	8572		804	98000	8572	FT	FIBER OPTIC CABLE, MISC.:FIBER OPTIC SENSOR CABLE, TYPE PFS 654 MF	511
											1468	1468		804	98100	1468	EACH	FIBER OPTIC CABLE, MISC.:FIBER OPTIC CABLE INSULATED STANDOFF EVERY 5FT	511
																		STRUCTURE REPAIR (HAM-71-0159)	
150													150	511	71100	150	CY	CONCRETE, MISC.: FULL DEPTH DECK REPAIRS HAM-71-0159	20A
																		MAINTENANCE OF TRAFFIC	
	150											150		254	01000	150	SY	PAVEMENT PLANING, ASPHALT CONCRETE	29
440	4000											4440		614	11110	4440	HOUR	LAW ENFORCEMENT OFFICER WITH PATROL CAR FOR ASSISTANCE	30
	14927											14927		614	11630	14927	FT	INCREASED BARRIER DELINEATION	29
	9											9		614	12336	9	EACH	WORK ZONE IMPACT ATTENUATOR (UNIDIRECTIONAL)	
	12											12		614	12410	12	EACH	SPEED ZONE AHEAD SYMBOL SIGN	28
	LS											LS		614	12420	LS		DETOUR SIGNING	
	18											18		614	12470	18	EACH	WORK ZONE SPEED LIMIT SIGN	28
	12											12		614	12484	12	EACH	WORK ZONE INCREASED PENALTIES SIGN	28
	2552											2552		614	12800	2552	EACH	WORK ZONE RAISED PAVEMENT MARKER	30
	65											65		614	13000	65	CY	ASPHALT CONCRETE FOR MAINTAINING TRAFFIC	
	317											317		614	13300	317	EACH	BARRIER REFLECTOR, TYPE B	29
	329											329		614	13350	329	EACH	OBJECT MARKER, ONE WAY	29
3													3	614	18000	3	EACH	MAINTAINING TRAFFIC, MISC.: FULL DEPTH REPAIR MOT (1 LANE INTERSTATE CLOSURE)	20A
3													3	614	18000	3	EACH	MAINTAINING TRAFFIC, MISC.: FULL DEPTH REPAIR MOT (2 LANE INTERSTATE CLOSURE)	20A
3													3	614	18000	3	EACH	MAINTAINING TRAFFIC, MISC.: FULL DEPTH REPAIR MOT (RAMP CLOSURE)	20A
3													3	614	18000	3	EACH	MAINTAINING TRAFFIC, MISC.: FULL DEPTH REPAIR MOT (LOCAL ROAD CLOSURE)	20A
1													1	614	18000	1	EACH	MAINTAINING TRAFFIC, MISC.: FULL DEPTH REPAIR MOT (FULL INTERSTATE CLOSURE)	20A
	6											6		614	18601	6	SNMT	PORTABLE CHANGEABLE MESSAGE SIGN, AS PER PLAN	29
	0.07											0.07		614	20200	0.07	MILE	WORK ZONE LANE LINE, CLASS I, 740.06, TYPE I	
	0.11											0.11		614	21200	0.11	MILE	WORK ZONE CENTER LINE, CLASS I, 740.06, TYPE I (DOUBLE SOLID)	
	8.24											8.24		614	22200	8.24	MILE	WORK ZONE EDGE LINE, CLASS I, 740.06, TYPE I	
	19102											19102		614	23400	19102	FT	WORK ZONE CHANNELIZING LINE, CLASS I, 740.06, TYPE I	
	52											52		614	26400	52	FT	WORK ZONE STOP LINE, CLASS I, 740.06, TYPE I	
	1021											1021		614	98100	1021	FT	WORK ZONE PAVEMENT MARKING, MISC.:CHEVRON MARKING, CLASS I, 740.06, TYPE I	
	10402											10402		622	41000	10402	FT	PORTABLE BARRIER, 32"	
	1029											1029		622	41020	1029	FT	PORTABLE BARRIER, 32", BRIDGE MOUNTED	
	2055											2055		SPECIAL	69013000	2055	FT	RUMBLE STRIPS	30
												1		632	90400	1	EACH	SIGNALIZATION, MISC.: PORTABLE HIGHWAY ADVISORY RADIO (HAR)	30
												1		632	90400	1	EACH	SIGNALIZATION, MISC.: CDMA MODEM, FURNISH ONLY	30
																		INCIDENTALS	
	LS											LS		614	11000	LS		MAINTAINING TRAFFIC	
												LS		623	10000	LS		CONSTRUCTION LAYOUT STAKES AND SURVEYING	
												LS		624	10000	LS		MOBILIZATION	

CALCULATED RLD
CHECKED CWP

GENERAL SUMMARY

HAM-71-1.34

I:\????ec??\HAM\2?07\01.34_PID87268\De????\d?c?\P?s? Pac?s?e\C??e?? CADD F??e?\R?ad?s?\S?ee?\87268GC008.d?? 3/10/2015 12:46:54 PM s??e???

ITEM NO.								202	202	202	204	204	252	304	304	305	305	407	407	441	441	609	609	609
SHEET NO.	REFERENCE NO.	LOCATION	STATION FROM	STATION TO	SIDE	LENGTH	WIDTH	AREA	PAVEMENT REMOVED	WEARING COURSE REMOVED	CURB REMOVED	SUBGRADE COMPACTION	SUBGRADE COMPACTION, LYTLE STREET	FULL DEPTH PAVEMENT SAWING	6" AGGREGATE BASE	6" AGGREGATE BASE, LYTLE STREET	8" CONCRETE BASE, CLASS QC1	8" CONCRETE BASE, CLASS QC1, LYTLE STREET	TACK COAT, 702.13 (0.075 GAL/SY)	TACK COAT, 702.13 (0.075 GAL/SY), LYTLE STREET	2" ASPHALT CONCRETE SURFACE COURSE, TYPE 1, (448), PG64-22	2" ASPHALT CONCRETE SURFACE COURSE, TYPE 1, (448), PG64-22, LYTLE STREET	CURB, MISC.: 6" CITY OF CINCINNATI CURB TYPE B-1 BATTERED	CURB, MISC.: 6" CITY OF CINCINNATI CURB TYPE B-1 BATTERED, LYTLE STREET	CURB, MISC.: 6" CITY OF CINCINNATI CURB TYPE S-1 BATTERED
			FROM	TO		FT	FT	SQ FT	SQ YD	SQ YD	FT	SQ YD	SQ YD	FT	CU YD	CU YD	SQ YD	SQ YD	GAL	GAL	CU YD	CU YD	FT	FT	FT
88		LYTLE STREET	12+09.81	14+04.29	BOTH	194	18	3492	388				388	19.17		65		388		30		22			
88			12+09.81	14+04.29	LT	194	0.583	114			194		13			3								194	
88			12+09.81	14+04.29	LT	194	1	194					22			4									
88			12+09.81	14+04.29	RT	194	0.583	114			194		13			3								194	
88			12+09.81	14+04.29	RT	194	1	194					22			4									
88			14+04.30	14+18.90	BOTH			378	42									42		4		3			
88			14+04.30	14+18.90	BOTH			429					48			8									
88		PIKE STREET	02+69.60	03+17.61	LT	48	10	480	54		47	54		68	9		54		4		3		47		
88			03+17.61	04+14.40	LT	97	10	970		108	97								9		6				97
88			04+14.40	04+24.40	LT	10					15														15
88			04+10.82	04+26.82	RT	16					16														16
88		EAST FOURTH STREET	06+25.48	08+33.10	RT	208	12	2496		278									21		16				
88			07+16.74	08+33.10	RT	116					116														116
88			08+33.10	08+52.57	RT			366		41									4		3				
TOTALS CARRIED TO GENERAL SUMMARY									484	427	679	54	506	88	9	87	54	430	38	34	28	25	47	388	244

CALCULATED RLD
CHECKED CWP

PAVEMENT SUBSUMMARY

HAM-71-1.34

67
555

I:\projects\HAM\ir071\01.34_PID87268\Design\docs\Plan Package\Current CADD Files\Roadway\Sheets\87268GS001.dgn 2/6/2015 12:17:35 PM okoenig

ITEM NO.									202	204	302	304	304	407	407	442	442	442	609			
SHEET NO.	REFERENCE NO.	LOCATION	STATION FROM	STATION TO	SIDE	LENGTH	WIDTH	AREA	CURB REMOVED	SUBGRADE COMPACTION	6" ASPHALT CONCRETE BASE, PG64-22	12" AGGREGATE BASE	AGGREGATE BASE (VARIABLE DEPTH)	TACK COAT (0.075 GAL/SY)	TACK COAT, 702.13 (0.075 GAL/SY)	ASPHALT CONCRETE SURFACE COURSE, 12.5 MM, TYPE A (448) - 3", PG64-22, AS PER PLAN	ASPHALT CONCRETE SURFACE COURSE, 12.5 MM, TYPE A (448) - 4", PG64-22, AS PER PLAN	ASPHALT CONCRETE SURFACE COURSE, 12.5 MM, TYPE A (448) - 4.25", PG64-22, AS PER PLAN	CURB, TYPE 6			
			FROM	TO		FT	FT	SQ FT	FT	SY	CU YD	CU YD	CU YD	GAL	GAL	CU YD	CU YD	CU YD	FT			
84 - 85		I.R.-71 SOUTHBOUND	125+43.44	133+29.67	LT	786.00	1.58	1241.88	786						10.4	11.5						
157			133+28.71	133+38.71	LT	10.00		27.90		3.1		1.0						0.4				
84 - 85			125+42.00	133+54.13	RT	812.00	0.67	544.04	812						4.6	5.1						
157			133+54.13	133+65.73	RT	11.50		26.85			0.5			0.3			0.4					
157			133+54.13	133+65.73	RT	11.50		55.60		6.2			2.1									
82 - 83		I.R.-71 NORTHBOUND	127+10.40	135+67.30	LT	857.00	1.75	1499.75	857						12.5	13.9						
82 - 83			127+10.45	135+93.71	RT	883.00	1.58	1395.14	883						11.7	13.0						
157	B10		135+93.72	136+07.83	RT	14.00	2.00	28.00	14	3.1	0.5		1.0	0.3			0.3		14			
157	B11	RAMP E	126+69.79	126+83.07	LT	13.28			13													
86 - 87		(NORTHBOUND STATIONING	127+10.57	135+49.70	LT	839.00	1.75	1468.25	839						12.3	13.6						
157		USED, EXCEPT FOR CURB	135+49.59	135+56.59	LT	7.00		20.13			0.4			0.2			0.3					
157		REMOVAL LENGTHS WHICH	135+49.59	135+56.59	LT	7.00		37.63		4.2			1.4									
157	B12	USE RAMP E STATIONING)	126+77.20	126+82.99	RT	6.00			6													
86 - 87			127+10.14	135+63.09	RT	853.00	0.67	571.51	853						4.8	5.3						
157			135+63.50	135+83.50	RT	20.00		46.70			0.9		1.7	0.4			0.6					
SUBTOTAL THIS SHEET																63	2	1				
TOTALS CARRIED TO GENERAL SUMMARY									5064	17	3	2	7	2	57	66			14			

CALCULATED RLD CHECKED CWP

PAVEMENT SUBSUMMARY (TUNNEL)

HAM-71-1.34

68
555

c:\pwworking\hmm\external\tyn61470\dms72884\872685S003.dgn 10/24/2014 3:56:11 PM TYN61470

I:\projects\HAM\ir071\01.34_PID87268\Design\docs\Plan Package\Current CADD Files\Roadway\Sheets\87268GS002.dgn 2/6/2015 11:55:30 AM akoenig

ITEM NO.			202	202	202	202	202	202	202	608	608	608	608	608	608	SPECIAL	SPECIAL
SHEET NO.	REFERENCE NO.	LOCATION	STATION FROM	STATION TO	SIDE	LENGTH FT	WIDTH FT	AREA SQ FT	WALK REMOVED SQ FT	PIPE REMOVED, 24" AND UNDER, AS PER PLAN FT	CATCH BASIN REMOVED, AS PER PLAN EACH	REMOVAL MISC.: PARK ELECTRICAL SYSTEM REMOVED LUMP	REMOVAL MISC.: EXISTING GRATING REMOVED EACH	REMOVAL MISC.: DRINKING FOUNTAIN REMOVED EACH	REMOVAL MISC.: PARKING METER REMOVED AND STORED EACH	REMOVAL MISC.: PARKING METER REMOVED, STORED, AND REERECTED EACH	5" CONCRETE WALK, AS PER PLAN SQ FT	5" CONCRETE WALK, AS PER PLAN, PIKE STREET SQ FT	DETECTABLE WARNING, AS PER PLAN (CITY OF CINCINNATI TYPE F) SQ FT	DETECTABLE WARNING, AS PER PLAN (CITY OF CINCINNATI TYPE F), PIKE STREET SQ FT	CURB RAMP, MISC.: CITY OF CINCINNATI CURB RAMP TYPE P EACH	CURB RAMP, MISC.: CITY OF CINCINNATI CURB RAMP TYPE Q EACH	CURB RAMP, MISC.: CITY OF CINCINNATI CURB RAMP TYPE V EACH	SPECIAL - RESETTING EXISTING VALVE BOX, COMPLETE (CIN. 1125) EACH	SPECIAL - DISCONNECTING 2" EXISTING SERVICE BRANCH (CIN. 1130) EACH
88	SW1	LYTLE STREET	12+06.55	13+06.14	LT	96.33	5	477.28																	
88	SW2	LYTLE STREET	12+09.81	13+06.14	LT	96.33	5.25	505.68																	
88	SW3	LYTLE STREET	14+04.37	14+17.98	RT			151.00																	
88	SW4	PIKE STREET	03+03.20	04+23.76	LT	120.56		1676.00																	
88	SW5	EAST FOURTH STREET	07+16.74	08+27.51	RT	110.77	7.5	830.78																	
88	SW6	LYTLE STREET	12+01.72	12+06.55	LT	6	10	623.89																	
88	SW7	LYTLE STREET	11+97.81	12+03.81	LT	6		293.46																	
88	SW8	PIKE STREET	04+10.82	04+26.82	RT			235.00																	
138	R1	LYTLE STREET	12+09.81	14+04.12	LT	194.31	5.25	1020.13	1021																
138	R2	LYTLE STREET	14+04.37	14+17.98	RT			151.00	151																
138	R3	PIKE STREET	03+03.20	04+23.76	LT			1673.11	1674																
138	R4	LYTLE STREET	11+97.82	14+04.33	LT	206.51		3199.00	3199																
138	R5	LYTLE STREET	12+01.72	12+06.55	LT			493.89	494																
138	R6	EAST FOURTH STREET	07+16.74	08+27.42	RT			1044.13	1045																
138	R7	PIKE STREET	04+10.82	04+26.82	RT			225.45	226																
138	R8	LYTLE STREET	12+10.74	12+39.67	LT																				
138	R9	LYTLE STREET	12+09.50	12+09.50	LT																				
138	R10	LYTLE STREET	13+97.10		LT																				
138	R13	LYTLE STREET	12+01.55	13+87.65	LT	430				74															
138	R14	EAST FOURTH STREET	07+90.83		RT																				
138	R15	EAST FOURTH STREET	08+13.08		RT																				
138	R16	PIKE STREET	03+49.72		LT																				
138	R17	PIKE STREET	03+71.28		LT																				
138	R18	PIKE STREET	03+93.57		LT																				
138	R19	LYTLE STREET	11+94.51	12+09.17	LT	74				74															
138	R20	LYTLE STREET	12+01.74	14+31.31	LT																				
88	CR1	PIKE STREET	4+14.40		LT																				
88	CR2	LYTLE STREET	14+10.15		LT																				
88	CR3	LYTLE STREET	14+10.39		RT																				
88	CR4	PIKE STREET	04+16.35		RT																				
88	U1	EAST FOURTH STREET	06+57.60		RT																				
88	U2	EAST FOURTH STREET	08+26.05		RT																				
88	U3	PIKE STREET	04+23.80		LT																				
TOTALS CARRIED TO GENERAL SUMMARY			7810						74	1	LUMP	1	1	2	3	4560	235	28	8	1	1	2	3	1
											1		1	1	1	478								
																506								
																151								
																1676								
																831								
																624								
																294								
																	235							
																		8						
																		10						
																		10						
																			8					
																				1				
																					1			
																						1		
																							1	
																								1

69 555	HAM-71-1.34	ROADWAY SUBSUMMARY	CALCULATED RLD / CHECKED CWP

ITEM NO.									625	625	625	625	625										
SHEET NO.	REFERENCE NO.	LOCATION	STATION		SIDE	LENGTH	WIDTH	AREA	DUCT CABLE, MISC.; LIGHTING DUCT REMOVED	LIGHT POLE REMOVED FOR STORAGE	LIGHT POLE FOUNDATION REMOVED	LUMINAIRE REMOVED FOR STORAGE	DISCONNECT CIRCUIT										
			FROM	TO		FT	FT	SQ FT	FT	EACH	EACH	EACH	EACH										
138	R11	LYTLE STREET	12+02.16	12+03.04	LT	13			13	1	1	4	1										
138	R12	LYTLE STREET	12+03.04	13+84.53	LT	195			195	2	2	8											
TOTALS CARRIED TO GENERAL SUMMARY									208	3	3	12	1										

CALCULATED RLD
CHECKED CWP

ROADWAY SUBSUMMARY

HAM-71-1.34

70
555

c:\pwworking\lmm\external\tyn61470\dms726841\87268GS005.dgn 10/24/2014 3:56:15 PM TYN61470

ITEM NO.								202	510	622	622											
SHEET NO.	REFERENCE NO.	LOCATION	STATION FROM	STATION TO	SIDE	LENGTH	WIDTH	AREA	WALK REMOVED	DOWEL HOLES WITH NONSHRINK, NONMETALLIC GROUT	CONCRETE BARRIER, SINGLE SLOPE, TYPE D, AS PER PLAN	CONCRETE BARRIER, END ANCHORAGE, REINFORCED, TYPE D, AS PER PLAN										
						FT	FT	SQ FT	SQ FT	EACH	FT	EACH										
		RAMP E	UNIT 10																			
86			127+10.59	127+25.59	LT	15.00	3.42	51.30		20		1										
86			127+25.59	127+33.26	LT	7.67	3.42	26.23			8											
86			127+33.26	127+48.26	LT	15.00	3.42	51.30		20		1										
86			127+48.26	127+57.94	LT	9.68	3.42	33.11			10											
86			127+10.38	127+25.38	RT	15.00	2.33	34.95		20		1										
86			127+25.38	127+26.79	RT	1.41	2.33	3.29			2											
86			127+26.79	127+41.79	RT	15.00	2.33	34.95		20		1										
86			127+41.79	127+57.97	RT	16.18	2.33	37.70			17											
86			127+10.38	127+57.97	RT	47.59	2.33	110.88														
			UNIT 11																			
86			127+57.94	128+05.98	LT	48.04	3.42	164.30			49											
86			127+57.97	128+05.99	RT	48.02	2.33	111.89			49											
			UNIT 12																			
86			128+05.98	128+38.99	LT	33.01	3.42	112.89			34											
86			128+38.99	128+53.99	LT	15.00	3.42	51.30		20		1										
86			128+05.98	128+09.45	RT	3.47	2.33	8.09			4											
86			128+09.45	128+24.45	RT	15.00	2.33	34.95		18		1										
86			128+24.45	128+26.61	RT	2.16	2.33	5.03			3											
86			128+26.61	128+53.99	RT	27.38	2.33	63.80		36		1										
			UNIT 13																			
86			128+53.99	128+68.99	LT	15.00	3.42	51.30		20		1										
86			128+68.99	129+01.99	LT	33.00	3.42	112.86			33											
86			128+53.99	128+68.99	RT	15.00	2.33	34.95		20		1										
86			128+68.99	129+01.99	RT	33.00	2.33	76.89			33											
			UNIT 14																			
86			129+01.99	129+49.99	LT	48.00	3.42	164.16			48											
86			129+01.99	129+09.62	RT	7.63	2.33	17.78			8											
86			129+09.62	129+24.62	RT	15.00	2.33	34.95		18		1										
86			129+24.62	129+26.78	RT	2.16	2.33	5.03			3											
86			129+26.78	129+41.78	RT	15.00	2.33	34.95		20		1										
86			129+41.78	129+49.99	RT	8.21	2.33	19.13			9											
			UNIT 15																			
86			129+49.99	129+82.99	LT	33.00	3.42	112.86			33											
86			129+82.99	129+97.99	LT	15.00	3.42	51.30		20		1										
86			129+49.99	129+82.99	RT	33.00	2.33	76.89			33											
86			129+82.99	129+97.99	RT	15.00	2.33	34.95		20		1										
			UNIT 16																			
86			129+97.99	130+12.99	LT	15.00	3.42	51.30		20		1										
86			130+12.99	130+45.99	LT	33.00	3.42	112.86			33											
86			129+97.99	130+24.92	RT	26.93	2.33	62.75		36		1										
86			130+24.92	130+27.08	RT	2.16	2.33	5.03			3											
86			130+27.08	130+42.08	RT	15.00	2.33	34.95		20		1										
86			130+42.08	130+45.99	RT	3.91	2.33	9.11			4											
			UNIT 17																			
86			130+45.99	130+93.99	LT	48.00	3.42	164.16			48											
86			130+45.99	130+93.99	RT	48.00	2.33	111.84			48											
			UNIT 18																			
86			130+93.99	131+26.99	LT	33.00	3.42	112.86			33											
86			131+26.99	131+41.99	LT	15.00	3.42	51.30		18		1										
86			130+93.98	131+04.73	RT	10.75	2.33	25.05			11											
86			131+04.73	131+19.73	RT	15.00	2.33	34.95		18		1										
86			131+19.73	131+21.89	RT	2.16	2.33	5.03			3											
86			131+21.89	131+41.99	RT	20.10	2.33	46.83		30		1										
SUBTOTAL 1									0	414	559	19										

CALCULATED RLD
CHECKED CWP

ROADWAY SUBSUMMARY (TUNNEL)

HAM-71-1.34

71
555

c:\pwworking\hmm\external\tyn61470\dms72884\872668GS004.dgn 2/11/2015 10:39:53 AM TYN61470

ITEM NO.								202	202	510	622	622	622										
SHEET NO.	REFERENCE NO.	LOCATION	STATION FROM	STATION TO	SIDE	LENGTH	WIDTH	AREA	WALK REMOVED	CONCRETE BARRIER REMOVED	DOWEL HOLES WITH NONSHRINK, NONMETALLIC GROUT	CONCRETE BARRIER, SINGLE SLOPE, TYPE D, AS PER PLAN	BARRIER TRANSITION, AS PER PLAN	CONCRETE BARRIER, END ANCHORAGE, REINFORCED, TYPE D, AS PER PLAN									
						FT	FT	SQ FT	SQ FT	FT	EACH	FT	EACH	EACH									
		RAMP E	UNIT 19																				
87		CONT'D	131+41.99	131+48.76	LT	6.77	3.42	23.15				7											
87			131+48.76	131+63.76	LT	15.00	3.42	51.30			20			1									
87			131+63.76	131+87.96	LT	24.20	3.42	82.76				25											
87			131+41.99	131+48.76	RT	6.77	2.33	15.77				7											
87			131+48.76	131+63.76	RT	15.00	2.33	34.95			20			1									
87			131+63.76	131+87.98	RT	24.22	2.33	56.43				25											
			UNIT 20																				
87			131+87.96	132+34.17	LT	46.21	3.42	158.04				47											
87			131+87.98	132+09.81	RT	21.83	2.33	50.86				22											
87			132+09.81	132+24.81	RT	15.00	2.33	34.95			18			1									
87			132+24.81	132+26.97	RT	2.16	2.33	5.03				3											
87			132+26.97	132+41.97	RT	15.00					20			1									
87			132+26.97	132+33.98	RT	7.01	2.33	16.33															
			UNIT 21																				
87			132+34.17	132+80.01	LT	45.84	3.42	156.77				46											
87			132+33.99	132+41.97	RT	7.98	2.33	18.59															
87			132+41.97	132+79.99	RT	38.02	2.33	88.59				39											
			UNIT 22																				
87			132+80.01	133+10.97	LT	30.96	3.42	105.88				31											
87			133+10.97	133+25.97	LT	15.00	3.42	51.30			20			1									
87			132+79.98	132+99.66	RT	19.68	2.33	45.85				20											
87			132+99.66	133+14.66	RT	15.00	2.33	34.95			18			1									
87			133+14.66	133+16.82	RT	2.16	2.33	5.03				3											
87			133+16.82	133+25.98	RT	9.16	2.33	21.34			20			1									
			UNIT 23																				
87			133+25.97	133+40.97	LT	15.00	3.42	51.30			20			1									
87			133+40.97	133+75.98	LT	35.01	3.42	119.73				36											
87			133+25.98	133+40.98	RT	15.00	2.33	34.95			20			1									
87			133+40.98	133+75.98	RT	35.00	2.33	81.55				35											
			UNIT 24																				
87			133+75.98	134+10.99	LT	35.01	3.42	119.73				36											
87			134+10.99	134+25.99	LT	15.00	3.42	51.30			20			1									
87			133+75.98	134+00.17	RT	24.19	2.33	56.36				25											
87			134+00.17	134+15.17	RT	15.00	2.33	34.95			18			1									
87			134+15.17	134+17.33	RT	2.16	2.33	5.03				3											
87			134+17.33	134+25.99	RT	8.66	2.33	20.18			20			1									
			UNIT 25																				
87			134+25.99	134+40.99	LT	15.00	3.42	51.30			20			1									
87			134+40.99	134+75.98	LT	34.99	3.42	119.67				35											
87			134+25.99	134+40.99	RT	15.00	2.33	34.95			20			1									
87			134+40.99	134+75.98	RT	34.99	2.33	81.53				35											
			UNIT 26																				
87			134+75.98	135+14.58	LT	38.60	3.42	132.01				39											
87			135+14.58	135+29.58	LT	15.00	3.42	51.30			18			1									
87			135+29.58	135+33.58	LT	4.00	3.42	13.68				4											
87			135+33.58	135+48.58	LT	15.00	3.42	51.30			20			1									
157	B1		135+49.59	135+56.59	LT	7.00				7			1										
87			134+75.98	135+05.06	RT	29.08	2.33	67.76				30											
87			135+05.06	135+20.06	RT	15.00	2.33	34.95			18			1									
87			135+20.06	135+22.22	RT	2.16	2.33	5.03				3											
87			135+22.22	135+37.22	RT	15.00	2.33	34.95			20			1									
87			135+37.22	135+48.10	RT	10.88	2.33	25.35				11											
87			135+48.10	135+63.10	RT	15.00	2.33	34.95			20			1									
157	B2		135+63.50	135+83.50	RT	20.00				20			1										
SUBTOTAL 2									0	27	370	567	2	19									

CALCULATED RLD
CHECKED CWP

ROADWAY SUBSUMMARY (TUNNEL)

HAM-71-1.34

72
555

c:\pwworking\hmm\external\tyn61470\dms72884\B7268GS006.dgn 2/11/2015 10:37:37 AM TYN61470

ITEM NO.								202	202	510	606	606	606	622	622	622						
SHEET NO.	REFERENCE NO.	LOCATION	STATION FROM	STATION TO	SIDE	LENGTH	WIDTH	AREA	WALK REMOVED	CONCRETE BARRIER REMOVED	DOWEL HOLES WITH NONSHRINK, NONMETALLIC GROUT	GUARDRAIL, BARRIER DESIGN, TYPE MGS	ANCHOR ASSEMBLY, BARRIER DESIGN, MGS TYPE A	MGS BRIDGE TERMINAL ASSEMBLY, TYPE 2	CONCRETE BARRIER, SINGLE SLOPE, TYPE D, AS PER PLAN	BARRIER TRANSITION, AS PER PLAN	CONCRETE BARRIER, END ANCHORAGE, REINFORCED, TYPE D, AS PER PLAN						
			FROM	TO		FT	FT	SQ FT	SQ FT	FT	EACH	FT	EACH	EACH	FT	EACH	EACH						
81	GR1	I.R.-71 NB	122+26.00	122+98.00	RT	72.00						100	1	2									
			UNIT 10																				
157	B3		126+90.40	127+10.40	LT	20.00				20						1							
82			127+10.36	127+25.36	LT	15.00	3.42	51.30			20						1						
82			127+25.36	127+26.19	LT	0.83	3.42	2.84							1								
82			127+26.19	127+41.19	LT	15.00	3.42	51.30			20						1						
82			127+41.19	127+57.97	LT	16.78	3.42	57.39							17								
82			127+10.36	127+57.97	LT	47.61	3.42	162.83															
82			127+10.45	127+25.45	RT	15.00	3.25	48.75			20						1						
82			127+25.45	127+27.12	RT	1.67	3.25	5.43							2								
82			127+27.12	127+42.12	RT	15.00	3.25	48.75			20						1						
82			127+42.12	127+58.02	RT	15.90	3.25	51.67							16								
			UNIT 11																				
82			127+58.00	128+06.00	LT	48.00	3.42	164.16							48								
82			127+58.00	128+06.00	RT	48.00	3.25	156.00							48								
			UNIT 12																				
82			128+06.00	128+08.95	LT	2.95	3.42	10.09							3								
82			128+08.95	128+23.95	LT	15.00	3.42	51.30			20						1						
82			128+23.95	128+26.11	LT	2.16	3.42	7.39							3								
82			128+26.11	128+53.99	LT	27.88	3.42	95.35			38						1						
82			128+06.00	128+38.99	RT	32.99	3.25	107.22							33								
82			128+38.99	128+53.99	RT	15.00	3.25	48.75			20						1						
			UNIT 13																				
82			128+53.99	128+68.99	LT	15.00	3.42	51.30			20						1						
82			128+68.99	129+01.98	LT	32.99	3.42	112.83							33								
82			128+53.99	128+68.99	RT	15.00	3.25	48.75			20						1						
82			128+68.99	129+01.98	RT	32.99	3.25	107.22							33								
			UNIT 14																				
82			129+01.99	129+09.12	LT	7.13	3.42	24.38							8								
82			129+09.12	129+24.12	LT	15.00	3.42	51.30			20						1						
82			129+24.12	129+26.28	LT	2.16	3.42	7.39							3								
82			129+26.28	129+41.28	LT	15.00	3.42	51.30			18						1						
82			129+41.28	129+49.99	LT	8.71	3.42	29.79							9								
82			129+01.98	129+49.98	RT	48.00	3.25	156.00							48								
			UNIT 15																				
82			129+49.99	129+82.99	LT	33.00	3.42	112.86							33								
82			129+82.99	129+97.99	LT	15.00	3.42	51.30			20						1						
82			129+49.98	129+82.99	RT	33.01	3.25	107.28							34								
82			129+82.99	129+97.99	RT	15.00	3.25	48.75			20						1						
			UNIT 16																				
82			129+97.99	130+24.42	LT	26.43	3.42	90.39			38						1						
82			130+24.42	130+26.58	LT	2.16	3.42	7.39							3								
82			130+26.58	130+41.58	LT	15.00	3.42	51.30			18						1						
82			130+41.58	130+45.98	LT	4.40	3.42	15.05							5								
82			129+97.98	130+12.98	RT	15.00	3.25	48.75			20						1						
82			130+12.98	130+45.98	RT	33.00	3.25	107.25							33								
			UNIT 17																				
82			130+45.98	130+93.98	LT	48.00	3.42	164.16							48								
82			130+45.98	130+93.98	RT	48.00	3.25	156.00							48								
			UNIT 18																				
82			130+93.98	131+04.22	LT	10.24	3.42	35.02							11								
82			131+04.22	131+19.22	LT	15.00	3.42	51.30			20						1						
82			131+19.22	131+21.38	LT	2.16	3.42	7.39							3								
82			131+21.38	131+41.98	LT	20.60	3.42	70.45			32						1						
82			130+93.98	131+26.98	RT	33.00	3.25	107.25							33								
82			131+26.98	131+41.98	RT	15.00	3.25	48.75			20						1						
SUBTOTAL 3									0	20	424	100	1	2	556	1	19						

CALCULATED RLD
CHECKED CWP

ROADWAY SUBSUMMARY (TUNNEL)

HAM-71-1.34

c:\pwworking\hmm\external\tyn61470\dms72884\B7268GS007.dgn 2/11/2015 10:41:39 AM TYN61470

ITEM NO.								202	202	510	622	622	622										
SHEET NO.	REFERENCE NO.	LOCATION	STATION FROM	STATION TO	SIDE	LENGTH	WIDTH	AREA	WALK REMOVED	CONCRETE BARRIER REMOVED	DOWEL HOLES WITH NONSHRINK, NONMETALLIC GROUT	CONCRETE BARRIER, SINGLE SLOPE, TYPE D, AS PER PLAN	BARRIER TRANSITION, AS PER PLAN	CONCRETE BARRIER, END ANCHORAGE, REINFORCED, TYPE D, AS PER PLAN									
			FROM	TO		FT	FT	SQ FT	SQ FT	FT	EACH	FT	EACH	EACH									
		I.R.-71 NB	UNIT 19																				
83		CONT'D	131+41.98	131+48.76	LT	6.78	3.42	23.19				7											
83			131+48.76	131+63.76	LT	15.00	3.42	51.30			18			1									
83			131+63.76	131+87.98	LT	24.22	3.42	82.83				25											
83			131+41.98	131+56.98	RT	15.00	3.25	48.75			20			1									
83			131+56.98	131+88.01	RT	31.03	3.25	100.85				32											
			UNIT 20																				
83			131+87.98	132+09.31	LT	21.33	3.42	72.95				22											
83			132+09.31	132+24.31	LT	15.00	3.42	51.30			20			1									
83			132+24.31	132+26.47	LT	2.16	3.42	7.39				3											
83			132+26.47	132+41.47	LT	15.00					18			1									
83			132+26.47	132+33.98	LT	7.51	3.42	25.68															
83			131+88.01	132+33.98	RT	45.97	3.25	149.40				46											
			UNIT 21																				
83			132+33.98	132+41.47	LT	7.49	3.42	25.62															
83			132+41.47	132+79.98	LT	38.51	3.42	131.70				39											
83			132+33.98	132+79.98	RT	46.00	3.25	149.50				46											
			UNIT 22																				
83			132+79.98	132+99.16	LT	19.18	3.42	65.60				20											
83			132+99.16	133+14.16	LT	15.00	3.42	51.30			20			1									
83			133+14.16	133+16.32	LT	2.16	3.42	7.39				3											
83			133+16.32	133+25.98	LT	9.66	3.42	33.04			20			1									
83			132+79.98	133+11.00	RT	31.02	3.25	100.82				32											
83			133+11.00	133+26.00	RT	15.00	3.25	48.75			20			1									
			UNIT 23																				
83			133+26.00	133+41.00	LT	15.00	3.42	51.30			20			1									
83			133+41.00	133+75.99	LT	34.99	3.42	119.67				35											
83			133+26.00	133+41.00	RT	15.00	3.25	48.75			20			1									
83			133+41.00	133+75.99	RT	34.99	3.25	113.72				35											
			UNIT 24																				
83			133+75.99	133+99.67	LT	23.68	3.42	80.99				24											
83			133+99.67	134+14.67	LT	15.00	3.42	51.30			20			1									
83			134+14.67	134+16.83	LT	2.16	3.42	7.39				3											
83			134+16.83	134+25.99	LT	9.16	3.42	31.33			20			1									
83			133+75.99	134+11.00	RT	35.01	3.25	113.78				36											
83			134+11.00	134+26.00	RT	15.00	3.25	48.75			20			1									
			UNIT 25																				
83			134+25.98	134+40.98	LT	15.00	3.42	51.30			20			1									
83			134+40.98	134+75.98	LT	35.00	3.42	119.70				35											
83			134+25.98	134+40.98	RT	15.00	3.25	48.75			20			1									
83			134+40.98	134+75.98	RT	35.00	3.25	113.75															
			UNIT 26																				
83			134+75.98	135+04.56	LT	28.58	3.42	97.74				29											
83			135+04.56	135+19.56	LT	15.00	3.42	51.30			20			1									
83			135+19.56	135+21.72	LT	2.16	3.42	7.39				3											
83			135+21.72	135+36.72	LT	15.00	3.42	51.30			18			1									
83			135+36.72	135+51.91	LT	15.19	3.42	51.95				16											
83			135+51.91	135+66.91	LT	15.00	3.42	51.30			20			1									
157	B4		135+66.91	135+83.50	LT	16.59				17			1										
83			134+75.98	135+49.48	RT	73.50	3.25	238.88				74											
83			135+49.48	135+64.48	RT	15.00	3.25	48.75			20			1									
83			135+64.48	135+79.00	RT	14.52	3.25	47.19				15											
83			135+79.00	135+94.00	RT	15.00	3.25	48.75			20			1									
SUBTOTAL 4									0	17	374	580	1	19									

CALCULATED RLD
CHECKED CWP

ROADWAY SUBSUMMARY (TUNNEL)

HAM-71-1.34

74
555

c:\pwworking\hmm\external\tyn61470\dms72884\87268GS008.dgn 2/11/2015 10:45:09 AM TYN61470

ITEM NO.								202	202	510	606	606	622	622	622								
SHEET NO.	REFERENCE NO.	LOCATION	STATION FROM	STATION TO	SIDE	LENGTH	WIDTH	AREA	WALK REMOVED	GUARDRAIL REMOVED	DOWEL HOLES WITH NONSHRINK, NONMETALLIC GROUT	GUARDRAIL, TYPE MGS	MGS BRIDGE TERMINAL ASSEMBLY, TYPE 2	CONCRETE BARRIER, SINGLE SLOPE, TYPE D, AS PER PLAN	CONCRETE BARRIER, END SECTION, TYPE D	CONCRETE BARRIER, END ANCHORAGE, REINFORCED, TYPE D, AS PER PLAN							
			FROM	TO		FT	FT	SQ FT	SQ FT	FT	EACH	FT	EACH	EACH	EACH	EACH							
		I.R.-71 SB	UNIT 1																				
84			125+43.44	125+64.02	LT	20.58	3.25	66.88						21									
84			125+64.02	125+79.02	LT	15.00	3.25	48.75			18					1							
84			125+79.02	125+81.18	LT	2.16	3.25	7.02						3									
84			125+81.18	125+96.18	LT	15.00					20					1							
84			125+81.18	125+87.85	LT	6.67	3.25	21.68															
157	B5		125+05.02	125+42.00	RT	36.98				37													
157	B6		125+05.02	125+30.02	RT	25.00						25	1										
157	B7		125+27.96	125+41.96	RT	14.00									1								
84			125+41.96	125+87.75	RT	45.79	2.33	106.69						46									
			UNIT 2																				
84			125+87.85	125+96.18	LT	8.33	3.25	27.07															
84			125+96.18	126+33.72	LT	37.54	3.25	122.00						38									
84			125+87.75	126+33.62	RT	45.87	2.33	106.88						46									
			UNIT 3																				
84			126+33.72	126+64.58	LT	30.86	3.25	100.30						31									
84			126+64.58	126+79.58	LT	15.00	3.25	48.75			20					1							
84			126+33.62	126+64.49	RT	30.87	2.33	71.93						31									
84			126+64.49	126+79.49	RT	15.00	2.33	34.95			20					1							
			UNIT 4																				
84			126+79.58	126+89.35	LT	9.77	3.25	31.75			20					1							
84			126+89.35	126+91.51	LT	2.16	3.25	7.02						3									
84			126+91.51	127+06.51	LT	15.00	3.25	48.75			20					1							
84			127+06.51	127+25.43	LT	18.92	3.25	61.49						19									
84			126+79.49	126+94.49	RT	15.00	2.33	34.95			20					1							
84			126+94.49	127+25.35	RT	30.86	2.33	71.90						31									
			UNIT 5																				
84			127+25.43	127+71.27	LT	45.84	3.25	148.98						46									
84			127+25.35	127+71.21	RT	45.86	2.33	106.85						46									
			UNIT 6																				
84			127+71.27	127+80.00	LT	8.73	3.25	28.37						9									
84			127+80.00	127+95.00	LT	15.00	3.25	48.75			18					1							
84			127+95.00	127+97.16	LT	2.16	3.25	7.02						3									
84			127+97.16	128+17.13	LT	19.97	3.25	64.90			30					1							
84			127+71.21	128+02.07	RT	30.86	2.33	71.90						31									
84			128+02.07	128+17.07	RT	15.00	2.33	34.95			20					1							
			UNIT 7																				
84			128+17.13	128+32.13	LT	15.00	3.25	48.75			20					1							
84			128+32.13	128+62.97	LT	30.84	3.25	100.23															
84			128+17.07	128+32.07	RT	15.00	2.33	34.95			20					1							
84			128+32.07	128+50.54	RT	18.47	2.33	43.04						19									
84			128+50.54	128+62.93	RT	12.39	2.33	28.87															
			UNIT 8																				
84			128+62.97	129+08.85	LT	45.88	3.25	149.11															
84			128+62.97	128+84.47	LT	21.50	3.25	69.88						22									
84			128+84.47	128+99.47	LT	15.00	3.25	48.75			18					1							
84			128+99.47	129+01.63	LT	2.16	3.25	7.02						3									
84			129+01.63	129+16.63	LT	15.00					20					1							
84			129+01.63	129+08.85	LT	7.22	3.25	23.47															
84			128+50.54	128+65.54	RT	15.00	2.33	34.95			18					1							
84			128+62.93	128+65.54	RT	2.61	2.33	6.08															
84			128+65.54	129+08.82	RT	43.28	2.33	100.84						44									
SUBTOTAL 5									0	37	302	25	1	492	1	15							

CALCULATED RLD CHECKED CWP

ROADWAY SUBSUMMARY (TUNNEL)

HAM-71-1.34

c:\pwworking\hmm\external\tyn61470\dms72884\B7268GS009.dgn 2/11/2015 10:47:19 AM TYN61470

ITEM NO.								202	510	622	622										
SHEET NO.	REFERENCE NO.	LOCATION	STATION FROM	STATION TO	SIDE	LENGTH	WIDTH	AREA	WALK REMOVED	DOWEL HOLES WITH NONSHRINK, NONMETALLIC GROUT	CONCRETE BARRIER, SINGLE SLOPE, TYPE D, AS PER PLAN	CONCRETE BARRIER, END ANCHORAGE, REINFORCED, TYPE D, AS PER PLAN										
			FROM	TO		FT	FT	SQ FT	SQ FT	EACH	FT	EACH										
		I.R.-71 SB	UNIT 9																			
84		CONT'D	129+08.85	129+16.63	LT	7.78	3.25	25.28														
84			129+16.63	129+39.75	LT	23.12	3.25	75.14			24											
84			129+39.75	129+54.75	LT	15.00	3.25	48.75		20.00		1										
84			129+08.82	129+15.66	RT	6.84	2.33	15.94			7											
84			129+15.66	129+30.66	RT	15.00	2.33	34.95		20		1										
84			129+30.66	129+39.73	RT	9.07	2.33	21.13			10											
84			129+39.73	129+54.73	RT	15.00	2.33	34.95		18		1										
			UNIT 19																			
85			129+54.75	129+69.75	LT	15.00	3.25	48.75		20		1										
85			129+69.75	129+90.78	LT	21.03	3.25	68.35			22											
85			129+90.78	129+99.90	LT	9.12	3.25	29.64														
85			129+54.73	129+61.48	RT	6.75	2.33	15.73			7											
85			129+61.48	129+76.48	RT	15.00	2.33	34.95		20		1										
85			129+76.48	129+99.88	RT	23.40	2.33	54.52			24											
			UNIT 20																			
85			129+99.90	130+05.78	LT	5.88	3.25	19.11														
85			129+90.78	130+05.78	LT	15.00				18		1										
85			130+05.78	130+07.94	LT	2.16	3.25	7.02			3											
85			130+07.94	130+22.94	LT	15.00	3.25	48.75		20		1										
85			130+22.94	130+45.03	LT	22.09	3.25	71.79			23											
85			129+99.88	130+45.03	RT	45.15	2.33	105.20			46											
			UNIT 21																			
85			130+45.03	130+90.22	LT	45.19	3.25	146.87			46											
85			130+45.03	130+90.22	RT	45.19	2.33	105.29			46											
			UNIT 22																			
85			130+90.22	130+93.49	LT	3.27	3.25	10.63			4											
85			130+93.49	131+08.49	LT	15.00	3.25	48.75		18		1										
85			131+08.49	131+10.65	LT	2.16	3.25	7.02			3											
85			131+10.65	131+33.64	LT	22.99	3.25	74.72		34		1										
85			130+90.22	131+20.29	RT	30.07	2.33	70.06			31											
85			131+20.29	131+35.29	RT	15.00	2.33	34.95		20		1										
			UNIT 23																			
85			131+33.64	131+48.64	LT	15.00	3.25	48.75		20		1										
85			131+48.64	131+83.99	LT	35.35	3.25	114.89			36											
85			131+35.29	131+50.29	RT	15.00	2.33	34.95		20		1										
85			131+50.29	131+85.13	RT	34.84	2.33	81.18			35											
			UNIT 24																			
85			131+83.99	131+96.84	LT	12.85	3.25	41.76			13											
85			131+96.84	132+11.84	LT	15.00	3.25	48.75		18		1										
85			132+11.84	132+14.00	LT	2.16	3.25	7.02			3											
85			132+14.00	132+34.58	LT	20.58	3.25	66.88		32		1										
85			131+85.21	132+20.13	RT	34.92	2.33	81.36			35											
85			132+20.13	132+35.13	RT	15.00	2.33	34.95		20		1										
			UNIT 25																			
85			132+34.61	132+49.61	LT	15.00	3.25	48.75		20		1										
85			132+49.61	132+84.90	LT	35.29	3.25	114.69			36											
85			132+35.15	132+50.15	RT	15.00	2.33	34.95		20		1										
85			132+50.15	132+85.10	RT	34.95	2.33	81.43			35											
SUBTOTAL 6									0	358	489	17										

CALCULATED RLD CHECKED CWP

ROADWAY SUBSUMMARY (TUNNEL)

HAM-71-1.34

c:\pwworking\hmm\external\tyn61470\dms72884\87268GS010.dgn 2/11/2015 10:49:08 AM TYN61470

ROADWAY SUBSUMMARY (TUNNEL)

CALCULATED RLD | CHECKED CWP

ITEM NO.								202	202	202	510	606	606	606	606	622	622	622	622	622	622		
SHEET NO.	REFERENCE NO.	LOCATION	STATION FROM	STATION TO	SIDE	LENGTH	WIDTH	AREA	WALK REMOVED	CONCRETE BARRIER REMOVED	GUARDRAIL REMOVED	DOWEL HOLES WITH NONSHRINK, NONMETALLIC GROUT	GUARDRAIL, TYPE MGS	GUARDRAIL, BARRIER DESIGN, TYPE MGS	ANCHOR ASSEMBLY, BARRIER DESIGN, MGS TYPE A	MGS BRIDGE TERMINAL ASSEMBLY, TYPE 2	CONCRETE BARRIER, SINGLE SLOPE, TYPE D, AS PER PLAN	BARRIER TRANSITION	BARRIER TRANSITION, AS PER PLAN	CONCRETE BARRIER, TYPE B	CONCRETE BARRIER END SECTION, TYPE D	CONCRETE BARRIER, END ANCHORAGE, REINFORCED, TYPE D, AS PER PLAN		
						FT	FT	SQ FT	SQ FT	FT	FT	EACH	FT	FT	EACH	EACH	FT	EACH	EACH	FT	EACH	EACH		
		I.R.-71 SB	UNIT 26																				
85		CONT'D	132+84.90	132+89.79	LT	4.89	3.25	15.89									5						
85			132+89.79	133+04.79	LT	15.00						18										1	
85			133+04.79	133+13.71	LT	8.92	3.25	28.99									9						
85			133+13.71	133+28.71	LT	15.00						20										1	
85			132+84.94	133+28.71	LT	43.77	3.25	142.25															
157	B8		133+28.71	133+38.71	LT	10.00				10									1				
85			132+85.10	133+40.57	RT	55.47	2.33	129.25									56						
85			133+40.57	133+55.57	RT	15.00	2.33	34.95				20										1	
157	B9		133+54.20	133+65.73	RT	11.53				12									1				
85			134+41.00	135+01.00	RT	60.00												1		10			
SUBTOTAL THIS SHEET									0	22	0	58	0	0	0	0	70	1	2	10	0	3	
SUBTOTAL 1									0	0	0	414	0	0	0	0	559	0	0	0	0	19	
SUBTOTAL 2									0	27	0	370	0	0	0	0	567	0	2	0	0	19	
SUBTOTAL 3									0	20	0	424	0	100	1	2	556	0	1	0	0	19	
SUBTOTAL 4									0	17	0	374	0	0	0	0	580	0	1	0	0	19	
SUBTOTAL 5									0	0	37	302	25	0	0	1	492	0	0	0	1	15	
SUBTOTAL 6									0	0	0	358	0	0	0	0	489	0	0	0	0	17	
TOTALS CARRIED TO GENERAL SUMMARY									0	86	37	2300	25	100	1	3	3313	1	6	10	1	111	

HAM-71-1.34

c:\pwworking\hmm\external\tyn61470\dms72884\87268GS011.dgn 2/11/2015 10:51:06 AM TYN61470

ITEM NO.					SPECIAL	605	611	611			611	611	SPECIAL										
SHEET NO.	REF NO.	STATION		SIDE	FILL AND PLUG EXISTING CONDUIT	4" UNCLASSIFIED UNDERDRAINS, WITH FABRIC WRAP, AS PER PLAN	4" CONDUIT, TYPE E	4" CONDUIT, TYPE F FOR UNDERDRAIN OUTLET			CATCH BASIN ADJUSTED TO GRADE	INLET, SIDE DITCH	DRAINAGE STRUCTURE, MISC.: TRANSFORMER VAULT FLOOR DRAIN									
		FROM	TO		FT	FT	FT	FT			EACH	EACH	EACH										
89	D1	12+53.21	13+31.10	LT		68		10				1											
89	D2	12+67.04	13+79.33	LT		102		10				1											
89	D3	13+31.10	13+77.79	LT		70		10				1											
89	D4	13+77.79	13+79.33	LT		8		10				1											
89	D5	13+79.33	14+02.23	LT				24				1											
89	D6	13+91.62	14+01.90	LT			23																
89	D7	14+02.23	14+02.23	LT							1												
89	D8	14+03.39	14+03.39	RT							1												
89	D9	03+25.47	03+25.47	LT							1												
89	D10	07+31.35	07+57.21	BOTH	58																		
89	D11	07+93.79		RT									1										
89	D12	07+97.79		RT									1										
89	D13	08+13.47	08+24.16	RT			35																
89	D14	08+24.51	08+24.51	RT							1												
TOTALS CARRIED TO GENERAL SUMMARY					58	248	58	64	0	0	4	5	2										

CALCULATED RLD
CHECKED CWP

DRAINAGE SUBSUMMARY

HAM-71-1.34

78
555

c:\pwworking\hmm\external\pre47802\dms72894\87268DS001.dgn 11/2/2015 9:26:29 AM PRE47802

ITEM NO.							202																
SHEET NO.	REF NO.	STATION FROM	STATION TO	SIDE	SIDE	LENGTH	SPECIAL - PIPE CLEANOUT																
						FT	FT																
82	D21	127+02.78	128+48.00	I.R.-71 NB	BOTH	145.22	146																
82	D22	128+48.00	128+49.05	RAMP E	BOTH	30.00	30																
82	D23	128+48.00	130+04.00	I.R.-71 NB	RT	156.00	156																
82	D24	130+04.00	130+04.00	RAMP E	BOTH	30.00	30																
82	D25	127+46.22	128+58.94	I.R.-71 SB	LT	112.72	113																
82	D26	128+58.94	129+50.77	I.R.-71 SB	LT	91.83	92																
82	D27	129+49.49	129+50.77	I.R.-71 SB	BOTH	63.40	64																
82	D28	131+36.00	131+36.00	RAMP E	BOTH	30.00	30																
82	D29	130+04.00	131+36.00	I.R.-71 NB	RT	132.00	132																
83	D30	131+36.00	132+90.00	I.R.-71 NB	RT	154.00	154																
83	D31	132+90.00	132+90.00	RAMP E	BOTH	30.00	30																
83	D32	131+00.24	131+01.11	I.R.-71 SB	BOTH	54.00	54																
83	D33	132+44.76	132+45.21	I.R.-71 SB	BOTH	50.00	50																
83	D34	134+36.00	134+36.00	RAMP E	BOTH	30.00	30																
83	D35	134+36.00	136+11.66	I.R.-71 NB	RT	175.66	176																
TOTALS CARRIED TO GENERAL SUMMARY							1287																

CALCULATED RLD
CHECKED CWP

DRAINAGE SUBSUMMARY (LYTLE TUNNEL)

HAM-71-1.34

c:\pwworking\lmm\external\tyn61470\dms728934\8726DS002.dgn 10/24/2014 3:56:32 PM TYN61470

ITEM NO.								201	202	202	204	304	451	608	608								
SHEET NO.	REF NO.	STATION		SIDE	LENGTH	WIDTH	AREA	TREE REMOVED, 18" SIZE	WALK REMOVED	SPECIAL - FILL AND PLUG EXISTING CONDUIT	SUBGRADE COMPACTION	6" AGGREGATE BASE	8" REINFORCED CONCRETE PAVEMENT, CLASS QC1, AS PER PLAN	4" CONCRETE WALK, AS PER PLAN	CONCRETE STEPS, TYPE A, AS PER PLAN								
		FROM	TO		FT	FT	SQ FT	EACH	SQ FT	FT	SQ YD	CU YD	SQ YD	SQ FT	FT								
102	D-1	124+92.06	125+22.71	LT	30.65		77.48		78														
102	D-2	125+06.18		LT				1															
105	C-1	125+08.72	125+16.02	LT	7.3										8								
105	C-2	125+21.89	125+60.76	LT	38.87	19	683				76	13	76										
105	C-3	125+17.16	125+21.47	LT			16.71							17									
102	D-3	125+06.02	125+08.13	LT	18					18													
102	D-4	125+10.34	125+12.11	LT	16					16													
102	D-5	125+14.68	125+16.31	LT	15					15													
102	D-6	124+96.29	125+07.99	LT	20					20													
TOTALS CARRIED TO GENERAL SUMMARY								1	78	69	76	13	76	17	8								

CALCULATED SAB
CHECKED KN

DRAINAGE SUBSUMMARY (PUMP STATION)

HAM-71-1.34

80
555

c:\pwworking\hmm\external\tyn61470\dms72894\87268DS003.dgn 10/24/2014 3:56:34 PM TYN61470

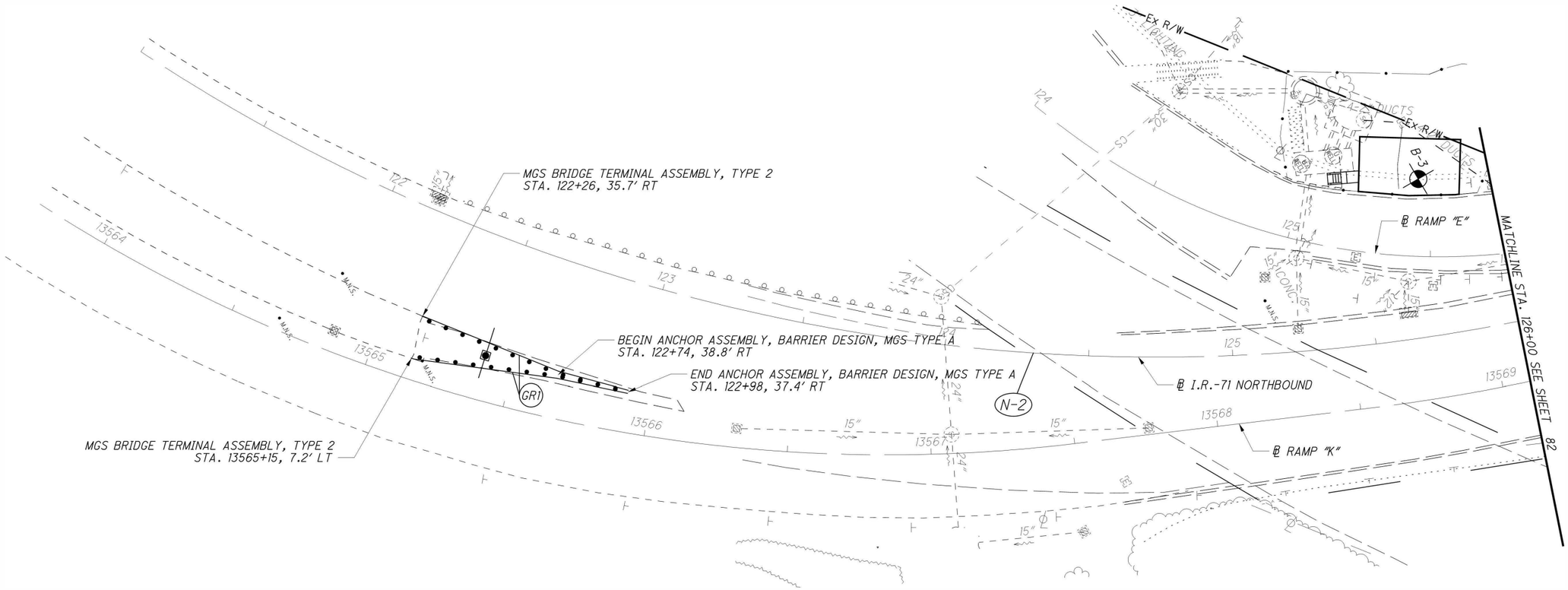

CROSS REFERENCES	
SHEET NO.	DESCRIPTION
2-3	BENCHMARK AND REFERENCE POINTS
59 - 80	ESTIMATED QUANTITIES
168-171	TRAFFIC CONTROL PLANS
179 - 180	ITS PLANS
204-206	LIGHTING PLANS
124 -125	WATER WORK PLANS
259 - 554	STRUCTURE PLANS

(N-2)
P.I. Sta. 123+55.13
Δ = 80° 42' 00" (LT)
Dc = 8° 57' 21"
R = 639.76'
T = 543.52'
L = 901.10'
E = 199.71'
C = 828.44'
C.B. = N 49° 00' 28" E

HORIZONTAL SCALE IN FEET
0 10 20 40

CALCULATED SJT
CHECKED CWP

PLAN - I.R.-71 NORTHBOUND
STA. 121+00 TO STA. 126+00

HAM-71-1.34

81
555

c:\pwworking\hmm\external\tyn61470\dms7288\a8726CGP001.dgn 10/24/2014 3:56:39 PM TYN61470

N-2
P.I. Sta. 123+55.13
Δ = 80° 42′ 00″ (LT)
Dc = 8° 57′ 21″
R = 639.76′
T = 543.52′
L = 901.10′
E = 199.71′
C = 828.44′
C.B. = N 49° 00′ 28″ E

N-3
P.I. Sta. 127+21.51
Δ = 1° 07′ 33″ (LT)
Dc = 6° 23′ 20″
R = 896.80′
T = 8.81′
L = 17.62′
E = 0.04′
C = 17.62′
C.B. = N 8° 40′ 14″ E

N-4
P.I. Sta. 127+67.84
Δ = 4° 18′ 00″ (LT)
Dc = 5° 44′ 00″
R = 999.35′
T = 37.52′
L = 75.00′
E = 0.70′
C = 74.98′
C.B. = N 5° 57′ 28″ E

N-5
P.I. Sta. 128+42.83
Δ = 2° 31′ 00″ (LT)
Dc = 3° 21′ 20″
R = 1,707.49′
T = 37.51′
L = 75.00′
E = 0.41′
C = 74.99′
C.B. = N 2° 32′ 58″ E

N-6
P.I. Sta. 130+12.13
Δ = 7° 53′ 46″ (LT)
Dc = 3° 00′ 00″
R = 1,909.86′
T = 131.81′
L = 263.20′
E = 4.54′
C = 263.00′
C.B. = N 2° 39′ 25″ W

MATCHLINE STA. 126+00 SEE SHEET 81
MATCHLINE STA. 131+50 SEE SHEET 83
STRUCTURE NO. ∅ HAM-71-0134
PC Sta. 127+12.70
PCC Sta. 127+30.33
PCC Sta. 128+05.33
PCC Sta. 128+80.33
PCC Sta. 131+43.53
℄ RAMP "E"
℄ I.R.-71 SOUTHBOUND
℄ I.R.-71 NORTHBOUND
STA. 127+12.70 BACK = STA. 127+12.70 AHEAD, 13.34′ LT
EAST FOURTH STREET
LYTLE STREET
Ex LA
Ex R/W
LIGHTING
D21 D22 D23 D24 D25 D26 D27 D28 D29
N-2 N-3 N-4 N-5 N-6 N-7

CROSS REFERENCES	
SHEET NO.	DESCRIPTION
2-3	BENCHMARK AND REFERENCE POINTS
59 - 80	ESTIMATED QUANTITIES
168- 171	TRAFFIC CONTROL PLANS
179 - 180	ITS PLANS
204- 206	LIGHTING PLANS
124 -125	WATER WORK PLANS
259 - 554	STRUCTURE PLANS

EXISTING GROUND
SOUTH PORTAL TUNNEL WALL
EXISTING GROUND ELEVATION, 535 FT AND ABOVE
EXISTING GROUND ELEVATION, 520 FT AND BELOW
EX. MH
STA. 127+02.66, 17′ LT
T/RIM EX. = 505.80′
12″ E = 496.65′ (N)
12″ E = 496.65′ (W)
EX. CB
STA. 128+48, 51′ RT
T/GRATE EX. = 506.61′
12″ E = 497.54′ (N)
12″ E = 497.54′ (S)
12″ E = 497.54′ (W)
EX. CB
STA. 130+04, 5′ RT
T/GRATE EX. = 507.71′
12″ E = 498.48′ (N)
12″ E = 498.48′ (S)
12″ E = 498.48′ (W)
EX. CB
STA. 131+36, 5′ RT
T/GRATE EX. = 508.63′
12″ E = 499.14′ (N)
12″ E = 499.14′ (S)
12″ E = 499.14′ (W)
EX. 4″ FIRE PIPE
PR. 6″ STANDPIPE
EXISTING PAVEMENT (FROM RECORD PLANS)
EX. 12″ STM.
EX. 12″ UNDERDRAIN
505.65 505.76 506.25 506.60 506.95 507.30 507.65 508.00 508.35 508.70 509.05
127+00 128+00 129+00 130+00 131+00

HORIZONTAL SCALE IN FEET
0 10 20 40
CALCULATED RLD
CHECKED CWP

PLAN AND PROFILE - I.R.-71 NORTHBOUND
STA. 126+00 TO STA. 131+50

HAM-71-1.34

82
555

c:\pwworking\hmm\external\tyn61470\dms7288*7268CP002.dgn 10/24/2014 3:56:43 PM TYN61470

N-7
P.I. Sta. 131+68.53
Δ = 1° 25′ 00″ (LT)
Dc = 2° 50′ 00″
R = 2,022.20′
T = 25.00′
L = 50.00′
E = 0.15′
C = 50.00′
C.B. = N 7° 18′ 48″ W

N-8
P.I. Sta. 132+18.53
Δ = 1° 05′ 00″ (LT)
Dc = 2° 10′ 00″
R = 2,644.42′
T = 25.00′
L = 50.00′
E = 0.12′
C = 50.00′
C.B. = N 8° 33′ 48″ W

N-9
P.I. Sta. 132+93.53
Δ = 1° 40′ 00″ (LT)
Dc = 1° 40′ 00″
R = 3,437.75′
T = 50.00′
L = 100.00′
E = 0.36′
C = 100.00′
C.B. = N 9° 56′ 18″ W

N-10
P.I. Sta. 133+93.53
Δ = 0° 20′ 00″ (LT)
Dc = 0° 20′ 00″
R = 17,188.74′
T = 50.00′
L = 100.00′
E = 0.07′
C = 100.00′
C.B. = N 10° 56′ 18″ W

CROSS REFERENCES	
SHEET NO.	DESCRIPTION
2-3	BENCHMARK AND REFERENCE POINTS
59 - 80	ESTIMATED QUANTITIES
168 -171	TRAFFIC CONTROL PLANS
179 - 180	ITS PLANS
204- 206	LIGHTING PLANS
124 -125	WATER WORK PLANS
259 - 554	STRUCTURE PLANS

HORIZONTAL SCALE IN FEET
0 10 20 40
CALCULATED RLD
CHECKED CWP

PLAN AND PROFILE - I.R.-71 NORTHBOUND STA. 131+50 TO STA. 136+50

HAM-71-1.34

83
555

c:\pwworking\mm\external\yr61470\dms7288\87268CP003.dgn 10/24/2014 3:56:47 PM T:\N61470

S-2
P.I. Sta. 123+06.84
Δ = 43° 38′ 47″ (LT)
Dc = 8° 43′ 55″
R = 656.17′
T = 262.76′
L = 499.85′
E = 50.65′
C = 487.85′
C.B. = N 43° 25′ 10″ E

S-3
P.I. Sta. 126+49.47
Δ = 14° 10′ 27″ (LT)
Dc = 6° 45′ 00″
R = 848.83′
T = 105.53′
L = 209.99′
E = 6.54′
C = 209.45′
C.B. = N 16° 13′ 56″ E

S-4
P.I. Sta. 127+91.44
Δ = 4° 46′ 04″ (LT)
Dc = 6° 21′ 32″
R = 901.03′
T = 37.51′
L = 74.98′
E = 0.78′
C = 74.96′
C.B. = N 6° 45′ 40″ E

S-5
P.I. Sta. 128+66.42
Δ = 4° 16′ 30″ (LT)
Dc = 5° 42′ 00″
R = 1,005.19′
T = 37.52′
L = 75.00′
E = 0.70′
C = 74.98′
C.B. = N 2° 14′ 23″ E

LUDLOW STREET
ARCH STREET
E. FOURTH STREET
LINCOLN STATUE
LIGHTING DUCT
4" ITS
STRUCTURE NO. HAM-71-0134
MATCHLINE STA. 124+00
MATCHLINE STA. 129+50 SEE SHEET 85
PCC STA. 125+43.96
PCC STA. 127+53.92
PCC STA. 128+28.90
PCC STA. 128+03.90
STA. 125+43.93 BACK = STA. 125+43.93 AHEAD, 6.76′ RT
℄ I.R.-71 SOUTHBOUND
℄ I.R.-71 NORTHBOUND
℄ RAMP E
℄ RAMP "E"
PROPOSED CONCRETE PAVEMENT SLAB
B-3
EX R/W
EX LA
EX RAMP

CROSS REFERENCES	
SHEET NO.	DESCRIPTION
2-3	BENCHMARK AND REFERENCE POINTS
59 - 80	ESTIMATED QUANTITIES
168 - 171	TRAFFIC CONTROL PLANS
179 - 180	ITS PLANS
204-206	LIGHTING PLANS
124 -125	WATER WORK PLANS
259 - 554	STRUCTURE PLANS

EXISTING GROUND
EXISTING GROUND ELEVATION, 540 FT AND ABOVE
EXISTING GROUND ELEVATION, 530 FT AND BELOW
SOUTH PORTAL TUNNEL WALL
EXISTING PAVEMENT (FROM RECORD PLANS)
EX. 4" FIRE PIPE
PR. 6" STANDPIPE
EX. 12" UNDERDRAIN
EX. 12" STM.
EX. CB
STA. 127+44.50, 47′ LT
T/GRATE EX. = 515.85′
12" E = 507.84′ (N)
EX. CB
STA. 128+57.50, 47′ LT
T/GRATE EX. = 514.92′
12" E = 506.35′ (N)
12" E = 506.35′ (S)
EX. CB
STA. 129+49.50, 47′ LT
T/GRATE EX. = 514.17′
12" E = 505.61′ (S)
12" E = 505.61′ (E)

545 540 530 525 520 515 510 505
525.44 523.71 522.21 521.91 521.24 520.57 519.90 519.23 518.56 517.89 517.22 516.55
124+00 125+00 126+00 127+00 128+00 129+00

HORIZONTAL SCALE IN FEET
0 10 20 40
CALCULATED RLD
CHECKED CWP

PLAN AND PROFILE - I.R.-71 SOUTHBOUND
STA. 124+00 TO STA. 129+50

HAM-71-1.34

84
555

c:\pwworking\hmm\external\tyn61470\dms72884\87268GP004.dgn 10/24/2014 3:56:51 PM TYN61470

S-6	S-7	S-8	S-9	S-10	S-11
P.I. Sta. 129+41.41	P.I. Sta. 130+16.41	P.I. Sta. 131+03.91	P.I. Sta. 132+03.91	P.I. Sta. 133+03.90	P.I. Sta. 134+21.33
Δ = 3° 12′ 36″ (LT)	Δ = 3° 07′ 24″ (LT)	Δ = 2° 37′ 31″ (LT)	Δ = 1° 52′ 22″ (LT)	Δ = 0° 22′ 33″ (LT)	Δ = 0° 18′ 01″ (RT)
Dc = 4° 16′ 48″	Dc = 4° 09′ 52″	Dc = 2° 37′ 31″	Dc = 1° 52′ 22″	Dc = 0° 22′ 33″	Dc = 0° 18′ 01″
R = 1,338.69′	R = 1,375.83′	R = 2,182.47′	R = 3,059.39′	R = 15,244.97′	R = 19,080.93′
T = 37.51′	T = 37.51′	T = 50.01′	T = 50.00′	T = 50.00′	T = 50.00′
L = 75.00′	L = 75.00′	L = 100.00′	L = 100.00′	L = 100.00′	L = 100.00′
E = 0.53′	E = 0.51′	E = 0.57′	E = 0.41′	E = 0.08′	E = 0.07′
C = 74.99′	C = 74.99′	C = 99.99′	C = 100.00′	C = 100.00′	C = 100.00′
C.B. = N 1° 30′ 10″ W	C.B. = N 4° 40′ 10″ W	C.B. = N 7° 32′ 38″ W	C.B. = N 9° 47′ 34″ W	C.B. = N 10° 55′ 02″ W	C.B. = N 10° 57′ 18″ W

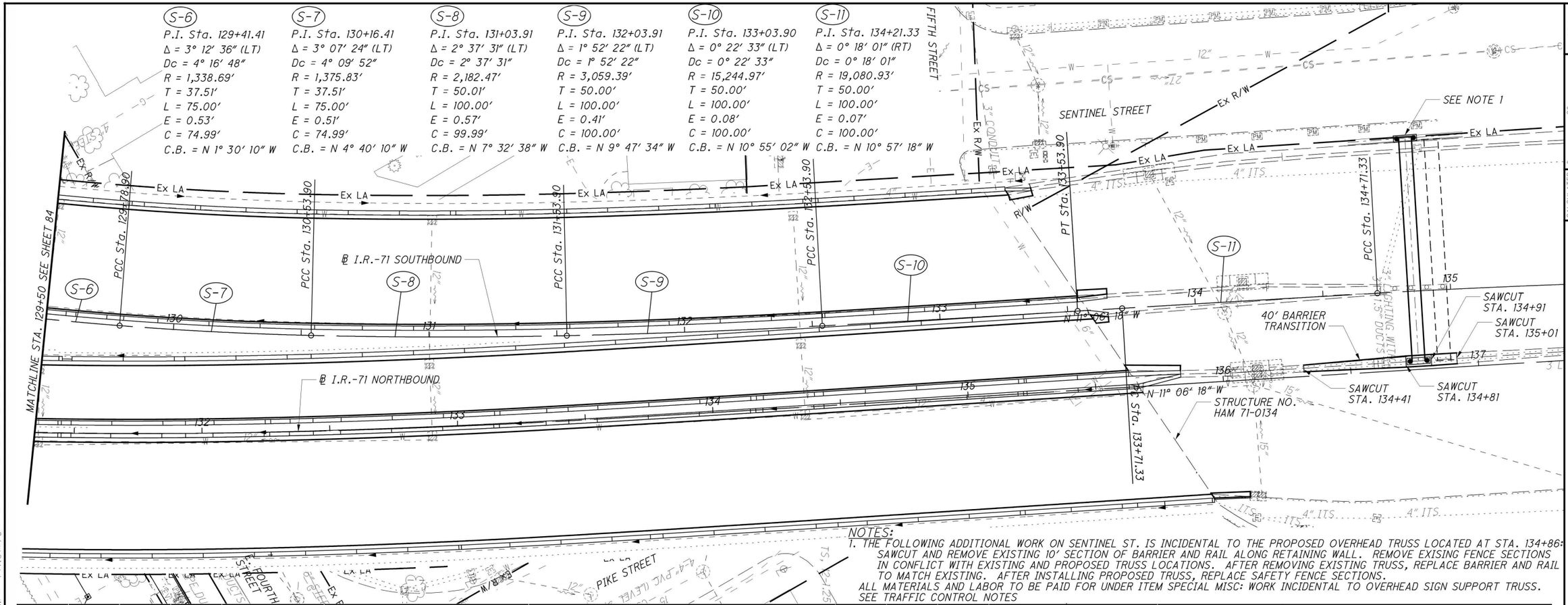

NOTES:

1. THE FOLLOWING ADDITIONAL WORK ON SENTINEL ST. IS INCIDENTAL TO THE PROPOSED OVERHEAD TRUSS LOCATED AT STA. 134+86: SAWCUT AND REMOVE EXISTING 10′ SECTION OF BARRIER AND RAIL ALONG RETAINING WALL. REMOVE EXISING FENCE SECTIONS IN CONFLICT WITH EXISTING AND PROPOSED TRUSS LOCATIONS. AFTER REMOVING EXISTING TRUSS, REPLACE BARRIER AND RAIL TO MATCH EXISTING. AFTER INSTALLING PROPOSED TRUSS, REPLACE SAFETY FENCE SECTIONS.

ALL MATERIALS AND LABOR TO BE PAID FOR UNDER ITEM SPECIAL MISC: WORK INCIDENTAL TO OVERHEAD SIGN SUPPORT TRUSS.

SEE TRAFFIC CONTROL NOTES

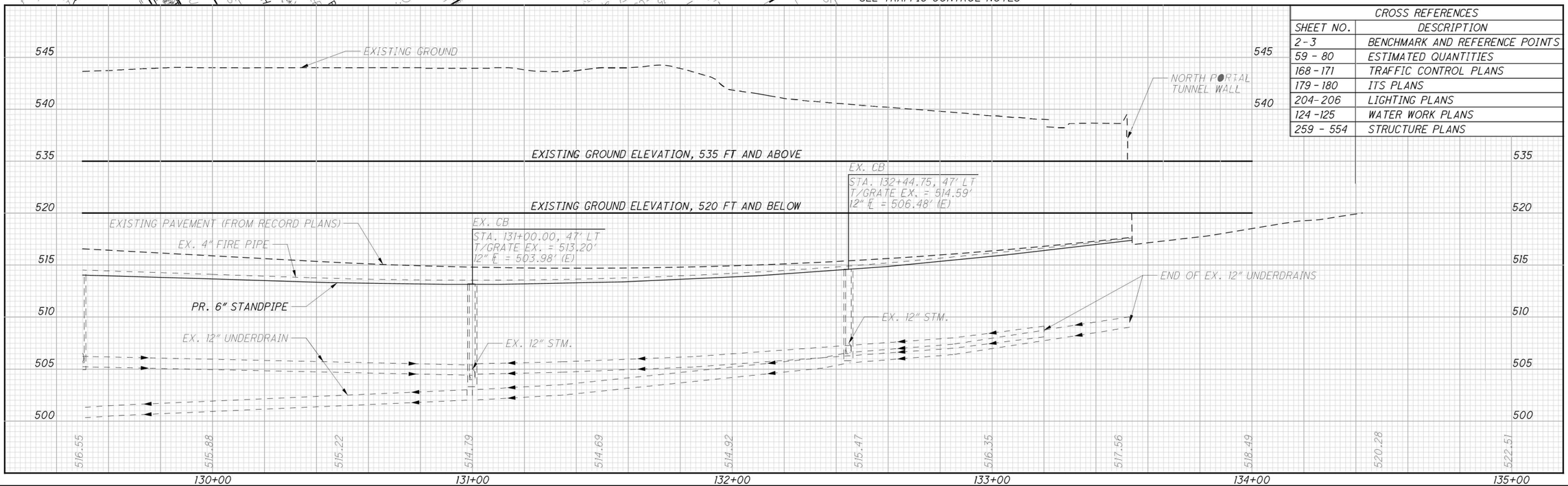

CROSS REFERENCES	
SHEET NO.	DESCRIPTION
2 - 3	BENCHMARK AND REFERENCE POINTS
59 - 80	ESTIMATED QUANTITIES
168 - 171	TRAFFIC CONTROL PLANS
179 - 180	ITS PLANS
204 - 206	LIGHTING PLANS
124 - 125	WATER WORK PLANS
259 - 554	STRUCTURE PLANS

HORIZONTAL SCALE IN FEET
0 10 20 40

CALCULATED RLD
CHECKED CWP

PLAN AND PROFILE - I.R.-71 SOUTHBOUND
STA. 129+50 TO STA. 135+00

HAM-71-1.34

85
555

TYN61470

c:\pwworking\hmm\external\tyn61470\dms72884\87268GP005.dgn 10/24/2014 3:56:55 PM

CROSS REFERENCES	
SHEET NO.	DESCRIPTION
2-3	BENCHMARK AND REFERENCE POINTS
59 - 80	ESTIMATED QUANTITIES
168 - 171	TRAFFIC CONTROL PLANS
179 - 180	ITS PLANS
204- 206	LIGHTING PLANS
124 -125	WATER WORK PLANS
259 - 554	STRUCTURE PLANS

E-3
P.I. Sta. 126+28.23
Δ = 17° 05′ 21″ (LT)
Dc = 14° 33′ 10″
R = 393.71′
T = 59.15′
L = 117.43′
E = 4.42′
C = 116.99′
C.B. = N 17° 15′ 10″ E

E-4
P.I. Sta. 126+94.34
Δ = 7° 09′ 31″ (LT)
Dc = 7° 22′ 59″
R = 776.04′
T = 7.85′
L = 15.69′
E = 0.04′
C = 15.69′
C.B. = N 9° 10′ 25″ E

E-5
P.I. Sta. 127+39.71
Δ = 4° 33′ 39″ (LT)
Dc = 6° 04′ 52″
R = 942.19′
T = 37.52′
L = 75.00′
E = 0.75′
C = 74.98′
C.B. = N 6° 18′ 50″ E

E-6
P.I. Sta. 128+14.70
Δ = 2° 44′ 33″ (LT)
Dc = 3° 39′ 24″
R = 1,566.89′
T = 37.51′
L = 75.00′
E = 0.45′
C = 74.99′
C.B. = N 2° 39′ 44″ E

STA. 126+86.50 BACK =
STA. 126+86.50 AHEAD, 2.05′ LT.

STA. 128+52.19 RAMP E =
STA. 128+80.33,
℄ NORTHBOUND I-71

PCC Sta. 127+02.19
PCC Sta. 127+77.19

℄ RAMP "E"
℄ I.R.-71 SOUTHBOUND
℄ I.R.-71 NORTHBOUND

MATCHLINE STA. 126+00 (RAMP E) 105
MATCHLINE STA. 131+50 (N.B.) SEE SHEET 87

STRUCTURE NO.
HAM-71-0134

LYTLE STREET
4TH ST

EXISTING GROUND
EXISTING GROUND ELEVATION, 535 FT AND ABOVE
EXISTING GROUND ELEVATION, 525 FT AND BELOW
EXISTING PAVEMENT (FROM RECORD PLANS)
SOUTH PORTAL TUNNEL WALL

EX. CB
STA. 128+21.00, 19′ LT
T/GRATE EX. = 508.17′
12″ ℄ = 498.31′ (E)

EX. CB
STA. 130+04.00, 25′ LT (NB STATIONING)
T/GRATE EX. = 508.94′
12″ ℄ = 501.95′ (E)

EX. CB
STA. 131+36.00, 25′ LT (NB STATIONING)
T/GRATE EX. = 509.61′
12″ ℄ = 499.90′ (E)
12″ ℄ = 499.90′ (W)

EX. 12″ UNDERDRAIN
EX. 12″ STM.
EX. 12″ UNDERDRAIN
EX. 12″ STM.
EX. 12″ STM.

126+00 127+00 128+00

HORIZONTAL SCALE IN FEET
CALCULATED RLD CHECKED CWP

PLAN AND PROFILE
STA. 126+00 TO STA. 131+50 - I.R.-71 RAMP "E"
HAM-71-1.34

86
555

c:\pwworking\hmm\external\tyn61470\dms72884\87268GP006.dgn 10/24/2014 3:56:58 PM TYN61470

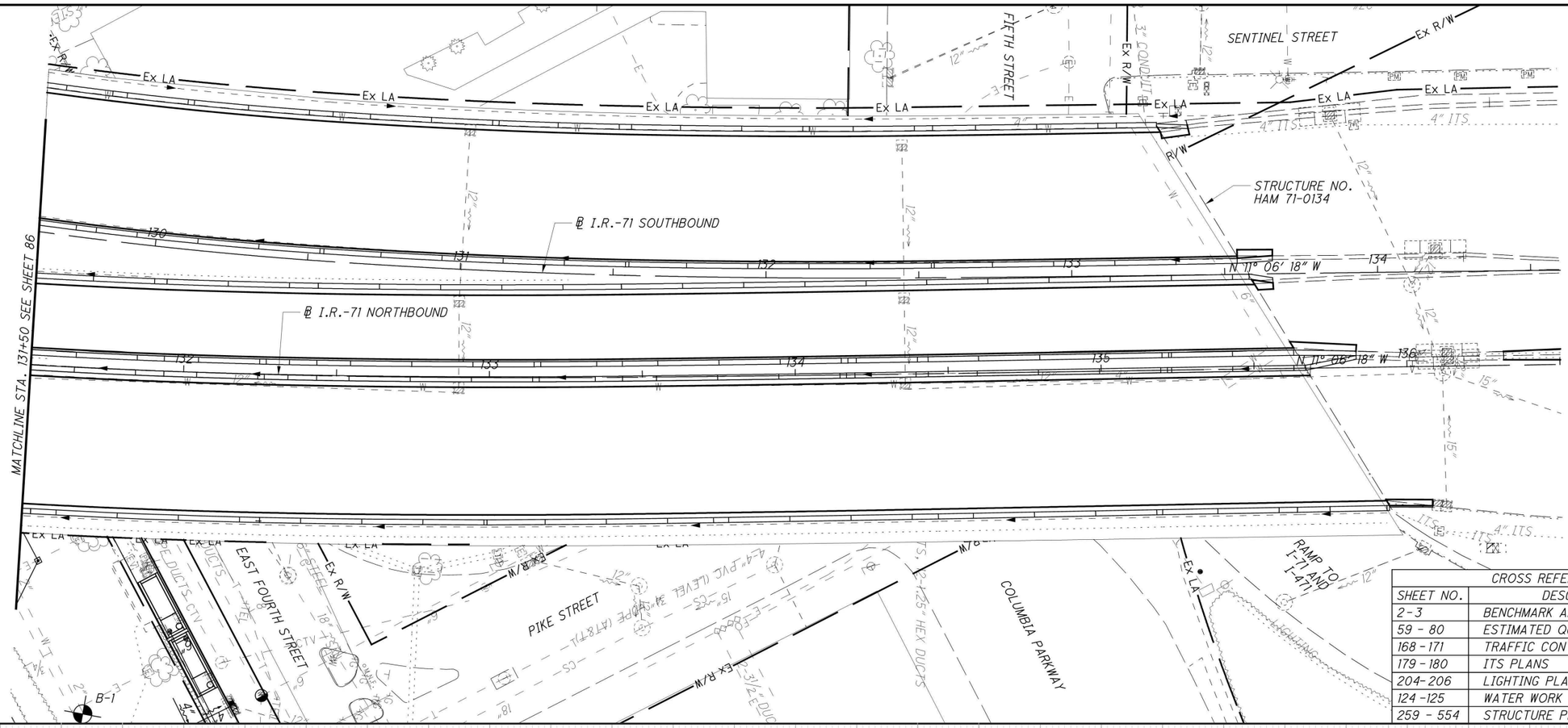

CROSS REFERENCES	
SHEET NO.	DESCRIPTION
2-3	BENCHMARK AND REFERENCE POINTS
59 - 80	ESTIMATED QUANTITIES
168 - 171	TRAFFIC CONTROL PLANS
179 - 180	ITS PLANS
204-206	LIGHTING PLANS
124 -125	WATER WORK PLANS
259 - 554	STRUCTURE PLANS

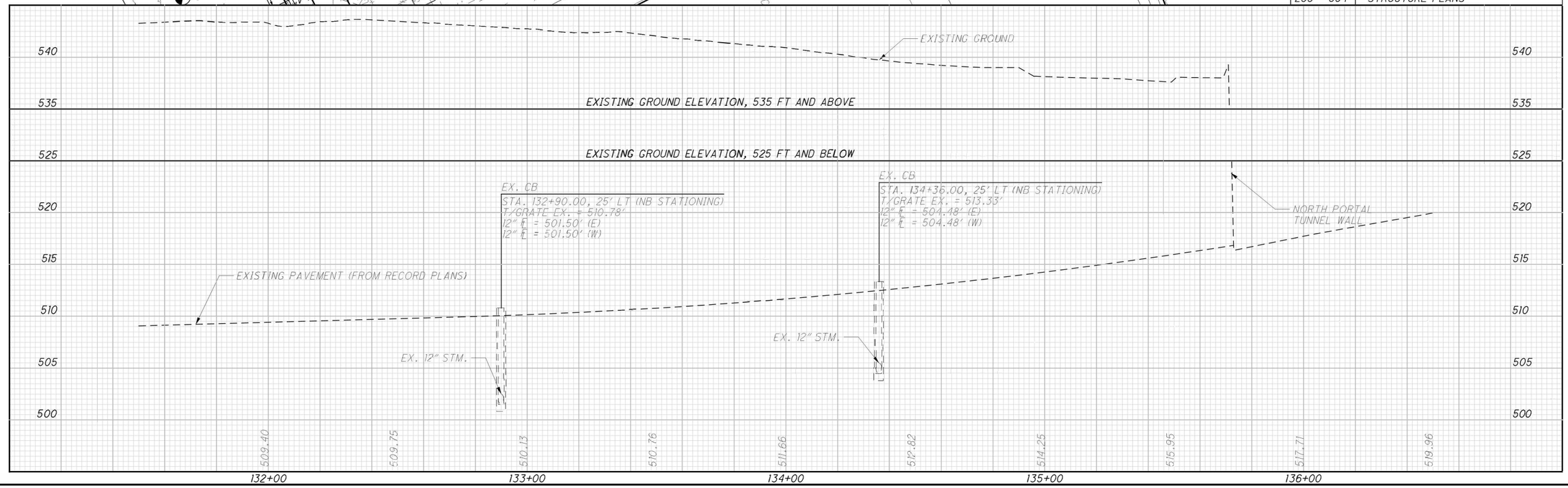

HORIZONTAL SCALE IN FEET
0 10 20 40

CALCULATED RLD
CHECKED CWP

PLAN AND PROFILE
STA. 131+50 TO STA. 136+50 - I.R.-71 RAMP "E"

HAM-71-1.34

87
555

c:\pwworking\lmm\external\tyn61470.dms72884\872680PD07.dgn 10/24/2014 3:57:02 PM TYN61470

POINT REFERENCES			
POINT #	STATION	OFFSET	DESCRIPTION
1	7+69.78	20.00' RT	BEGIN CURB TAPER
2	7+74.28	18.83' RT	END CURB TAPER
3	8+16.78	18.83' RT	BEGIN CURB TAPER
4	8+20.78	20.00' RT	END CURB TAPER

⚠

CROSS REFERENCES	
SHEET NO.	DESCRIPTION
2-3	BENCHMARK AND REFERENCE POINTS
59 -80	ESTIMATED QUANTITIES
89	LYTLE STREET PLAN AND PROFILE
94	INTERSECTION DETAIL
95	STORM SEWER PROFILES
259-554	STRUCTURE PLANS

NO.	DATE	REVISION DESCRIPTION
⚠	10/13/15	REVISED TRANSFORMER VAULTS

c:\pwworking\hmm\external\pre47802\dms72884\87268GP008.dgn 10/16/2015 11:28:07 AM PRE47802

THE CITY OF CINCINNATI
D.B. _____, Pg. ___
084-0003-0105 TH 0119 (CONS.)

THE CITY OF CINCINNATI
D.B. 4111, Pg. 458
084-0003-0135 TH 0135 (CONS.

THE WESTERN AND SOUTHERN LIFE INSURANCE COMPANY
O.R. 06892, Pg. 1553
084-0003-0129, 0130

THE STATE OF OHIO
(PARCEL 5220-WL)
D.B. 3617, Pg. 884
084-0003-0196

CINCINNATI UNION BETHEL
D.B. _____, Pg. ___
084-0003-0120 TH 128 (CONS.)

NOTES:

1. FOR BUILDING DETAILS, SEE STRUCTURES SHEETS.
2. FOR LYTLE STREET CURVE DATA, SEE SHEET 2.
3. FOR DRAINAGE CALLOUTS, SEE SHEET 89.

HORIZONTAL SCALE IN FEET
0 10 20 40

CALCULATED RLD | CHECKED CWP

PLAN AND PROFILE OF EAST FOURTH STREET PIKE STREET AND LYTLE STREET

HAM-71-1.34

88
555

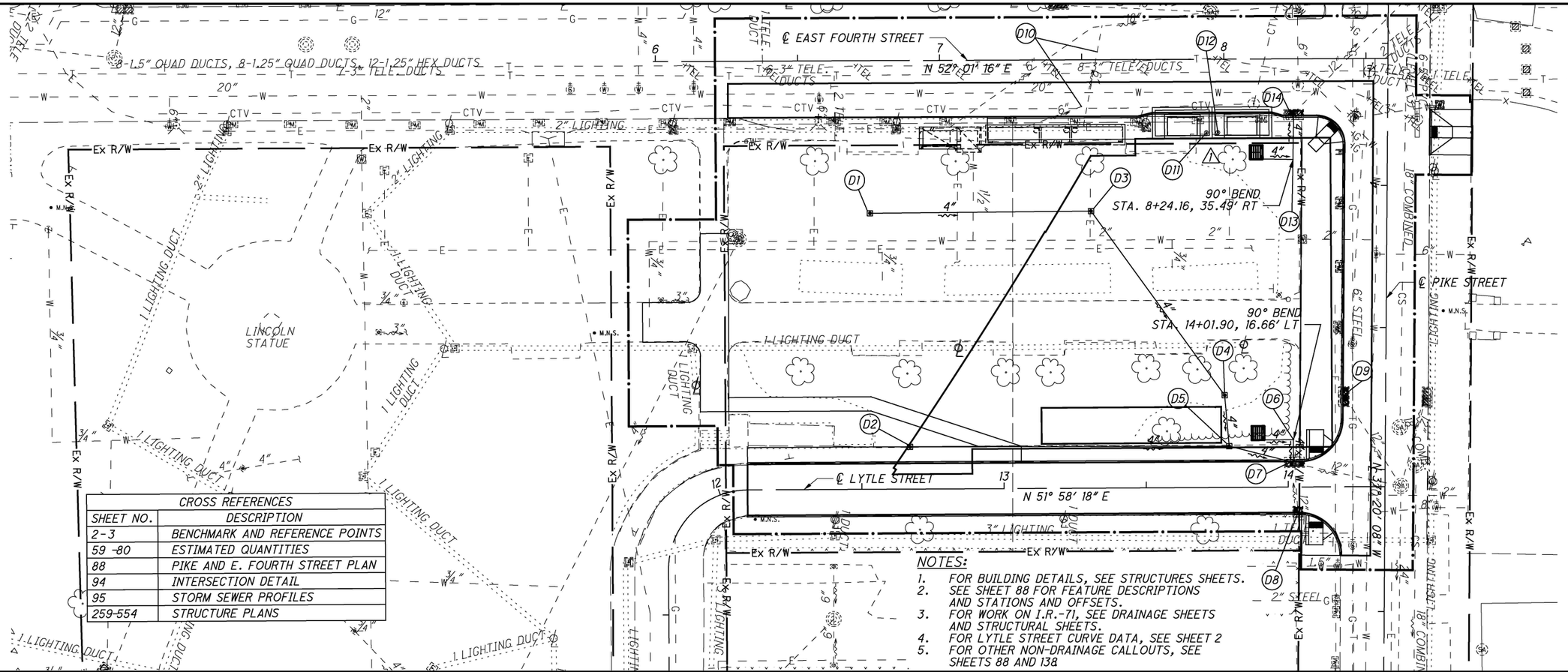

CROSS REFERENCES	
SHEET NO.	DESCRIPTION
2-3	BENCHMARK AND REFERENCE POINTS
59 -80	ESTIMATED QUANTITIES
88	PIKE AND E. FOURTH STREET PLAN
94	INTERSECTION DETAIL
95	STORM SEWER PROFILES
259-554	STRUCTURE PLANS

NOTES:

1. FOR BUILDING DETAILS, SEE STRUCTURES SHEETS.
2. SEE SHEET 88 FOR FEATURE DESCRIPTIONS AND STATIONS AND OFFSETS.
3. FOR WORK ON I.R.-71, SEE DRAINAGE SHEETS AND STRUCTURAL SHEETS.
4. FOR LYTLE STREET CURVE DATA, SEE SHEET 2
5. FOR OTHER NON-DRAINAGE CALLOUTS, SEE SHEETS 88 AND 138

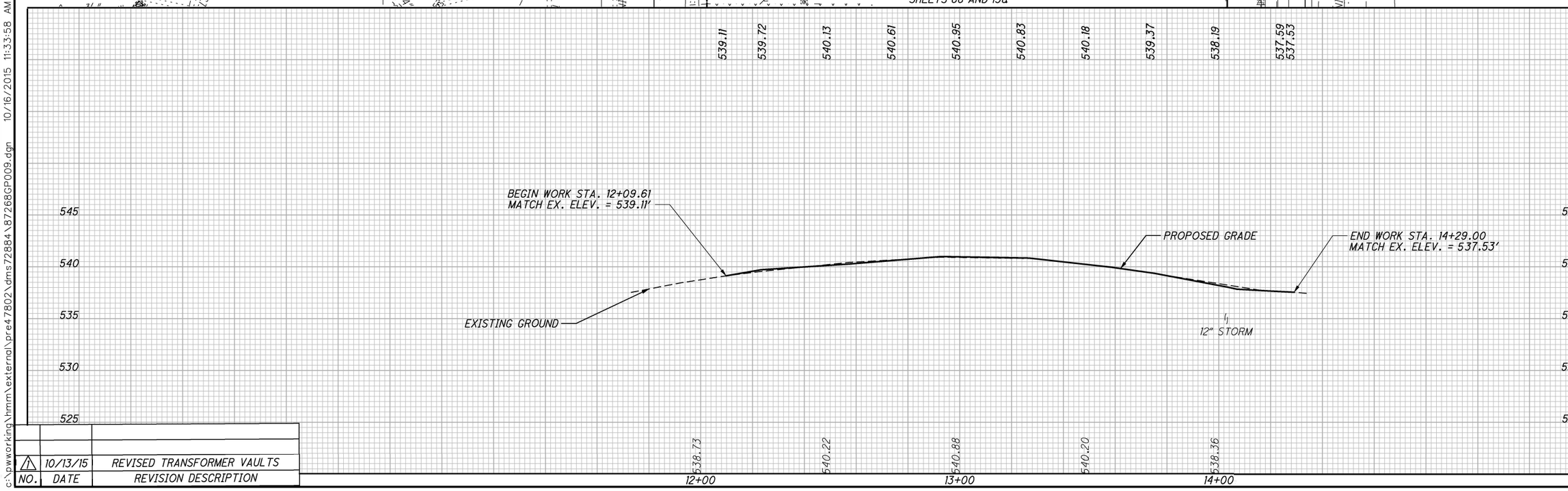

NO.	DATE	REVISION DESCRIPTION
1	10/13/15	REVISED TRANSFORMER VAULTS

HORIZONTAL SCALE IN FEET
0 10 20 40

CALCULATED RLD
CHECKED CWP

PLAN AND PROFILE - LYTLE STREET
STA. 11+73.19 TO STA 14+34.00

HAM-71-1.34

89
555

c:\pwworking\hmm\external\pre47802\dms72884\87268GP009.dgn 10/16/2015 11:33:58 AM PRE47802

c:\pwworking\hmm\external\tyn61470\dms72●●4\●7268XS001.dgn 10/24/2014 3:57:13 PM TYN61470

90 555	HAM-71-1.34	CROSS SECTIONS - I.R.-71 RAMP E STA. 125+08.19 TO STA. 125+42.07	CALCULATED RLD CHECKED CWP

SEEDING END WIDTH	SEEDING SQ. YDS.
0	8
22	40
26	48
	96

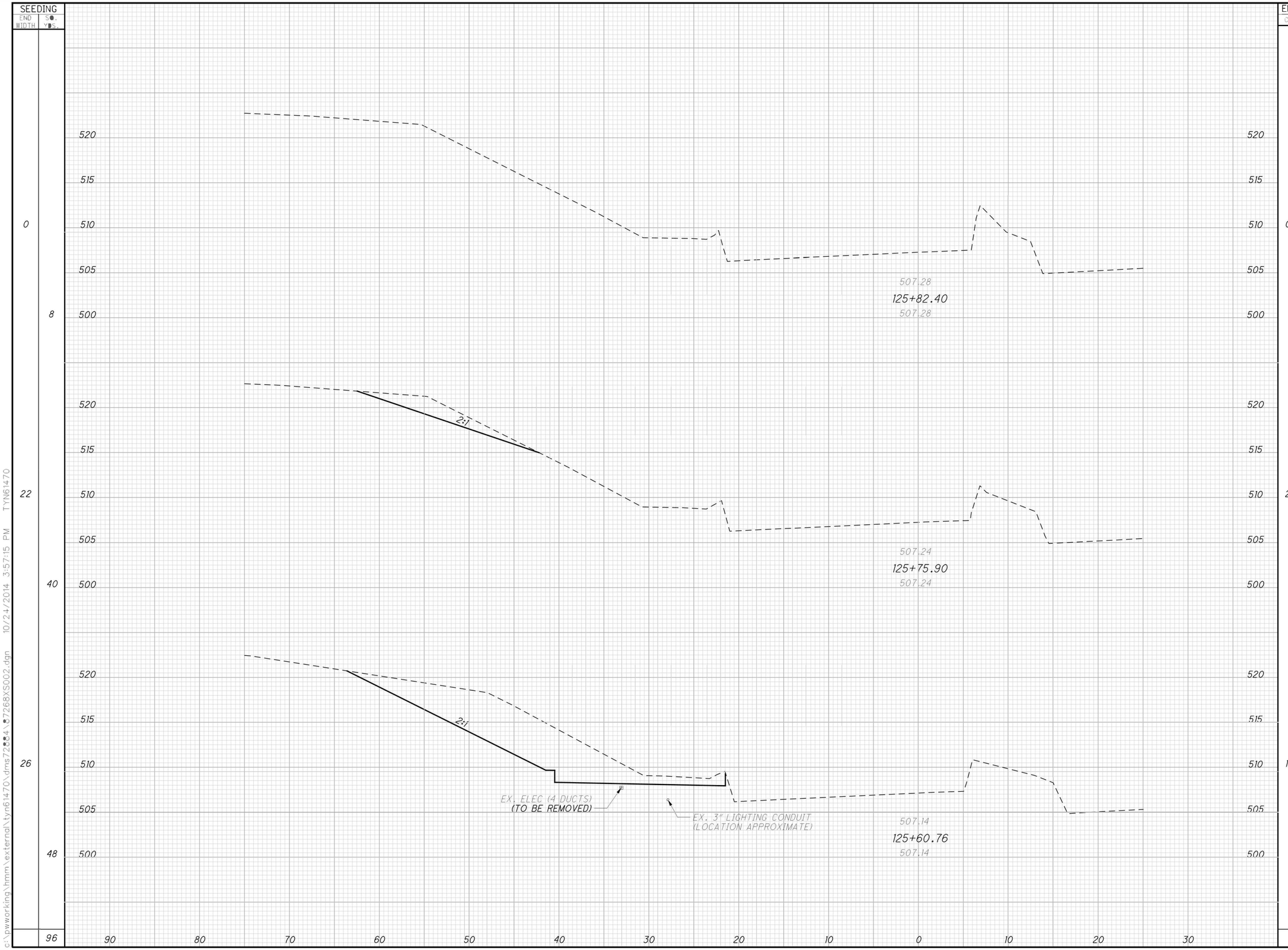

END AREA CUT	END AREA FILL	VOLUME CUT	VOLUME FILL
0	0	2	0
21	0	41	0
125	0	79	0
		123	0

CALCULATED RLD
CHECKED CWP

CROSS SECTIONS - I.R.-71 RAMP E
STA. 125+60.76 TO STA. 125+82.40

HAM-71-1.34

91
555

c:\pwworking\hmm\external\tyn61470\dms72884\87268XS002.dgn 10/24/2014 3:57:15 PM TYN61470

SEEDING END WIDTH	SEEDING SQ. YDS.
2	11
	11
2	9
2	11
*31	

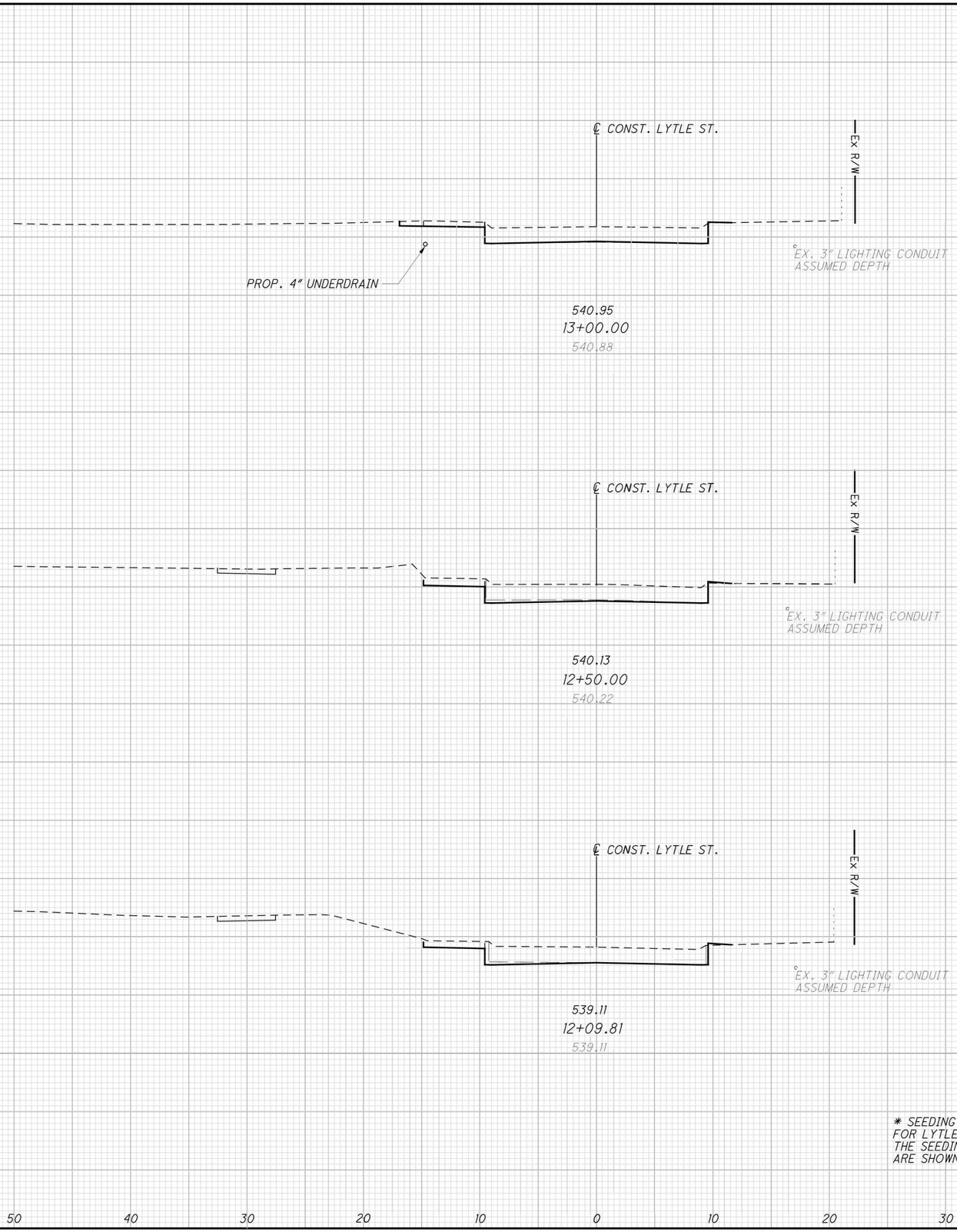

END AREA CUT	END AREA FILL	VOLUME CUT	VOLUME FILL
		20	20
11	11		
		20	20
11	11		
		16	16
11	11		
11	11	*56	*56

* SEEDING AND EARTHWORK QUANTITIES ARE ONLY SHOWN FOR LYTLE STREET AND THE AREA SOUTH OF LYTLE STREET. THE SEEDING AND EARTHWORK QUANTITIES INSIDE LYTLE PARK ARE SHOWN IN THE GENERAL NOTES.

CALCULATED RLD
CHECKED CWP

CROSS SECTIONS - LYTLE STREET STA. 12+09.81 TO STA. 13+00.00

HAM-71.1.34

92
555

c:\pwworking\hmm\external\tyn61470\dms72884*87268XS003.dgn 10/24/2014 3:57:17 PM TYN61470

SEEDING	
END WIDTH	SQ. YDS.
2	11
	*11

END AREA		VOLUME	
CUT	FILL	CUT	FILL
11	11		
		20	20
		*20	*20

CALCULATED RLD
CHECKED CWP

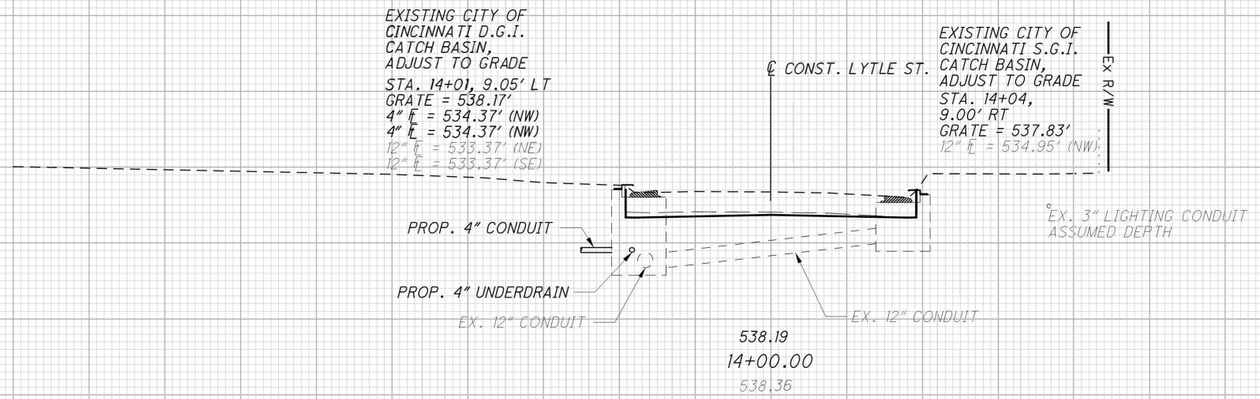

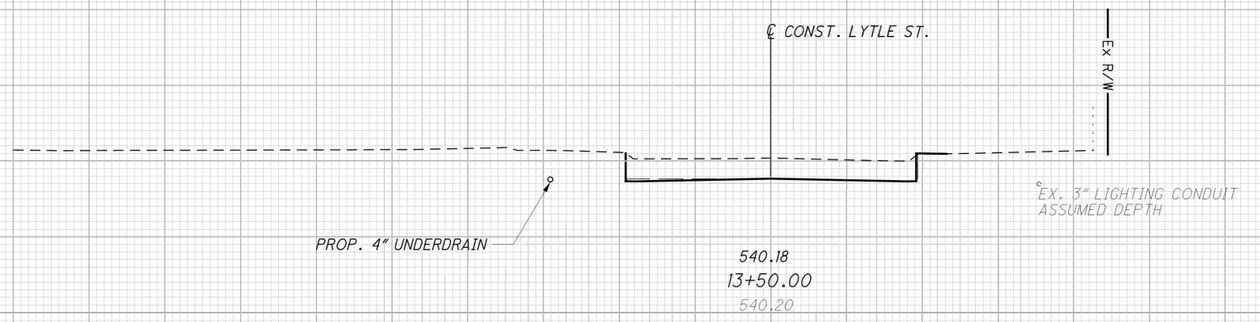

* SEEDING AND EARTHWORK QUANTITIES ARE ONLY SHOWN FOR LYTLE STREET AND THE AREA SOUTH OF LYTLE STREET. THE SEEDING AND EARTHWORK QUANTITIES INSIDE LYTLE PARK ARE SHOWN IN THE GENERAL NOTES.

60 50 40 30 20 10 0 10 20 30 40 50 60

CROSS SECTIONS - LYTLE STREET STA. 13+50.00 TO 14+00.00

HAM-71-1.34

93
555

c:\pwworking\hmm\external\tyn61470\dms72884*7268XS004.dgn 10/24/2014 3:57:27 PM TYN

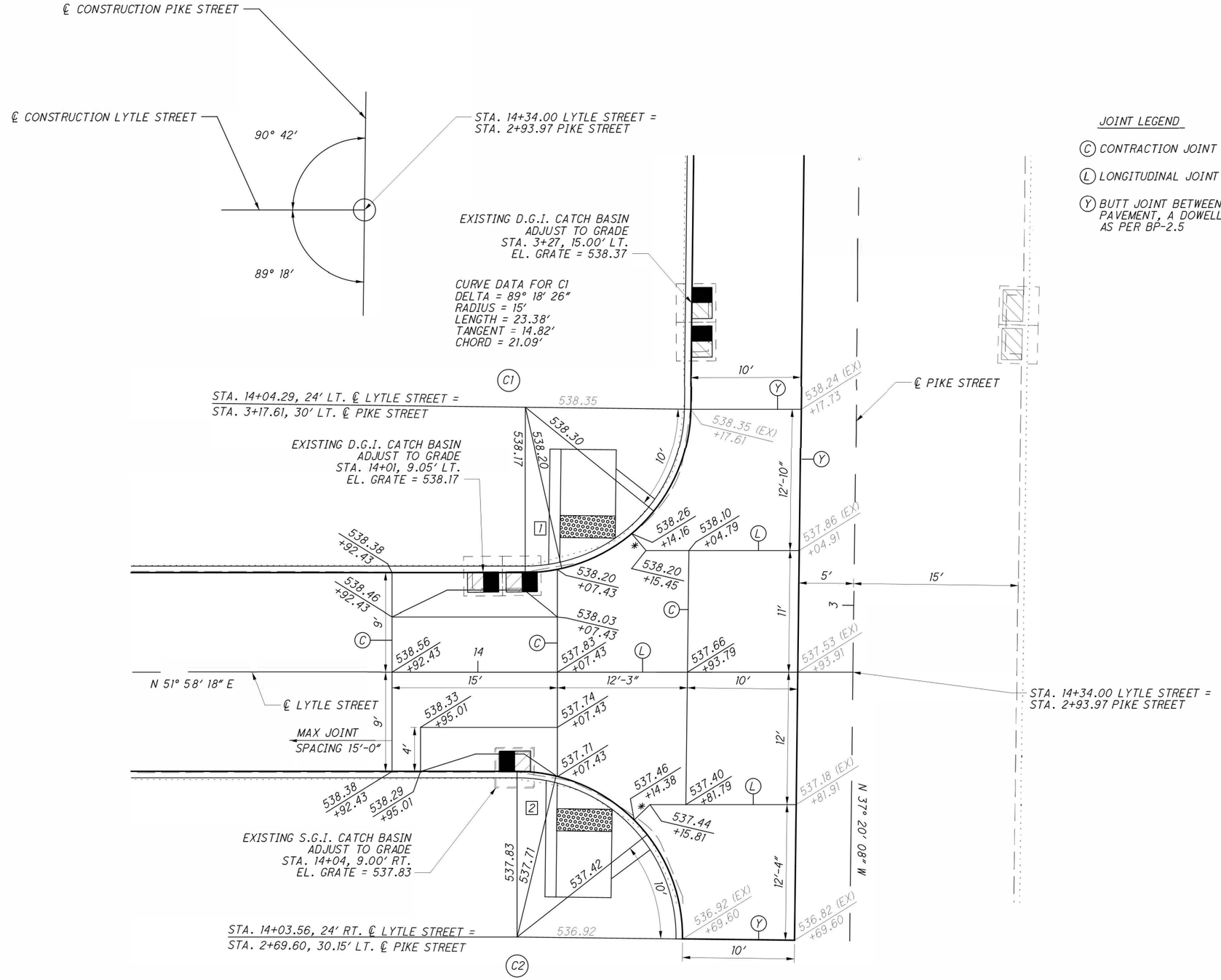

JOINT LEGEND

(C) CONTRACTION JOINT AS PER BP-2.2

(L) LONGITUDINAL JOINT WITH TIE BARS AS PER BP-2.1

(Y) BUTT JOINT BETWEEN EXISTING AND PROPOSED PAVEMENT, A DOWELLED TYPE Y JOINT, AS PER BP-2.5

CURVE DATA FOR C2
DELTA = 90° 41′ 34″
RADIUS = 15′
LENGTH = 23.74′
TANGENT = 15.18′
CHORD = 21.34′

[1] - 3.38′

[2] - 3.74′

* - 2′ TYP

CROSS REFERENCES	
SHEET NO.	DESCRIPTION
88	PIKE AND E. FOURTH STREET PLAN
89	LYTLE STREET PLAN AND PROFILE
96-99	DRAINAGE DETAILS

HORIZONTAL SCALE IN FEET
0 2.5 5 10

CALCULATED RLD CHECKED CWP

INTERSECTION DETAIL
LYTLE STREET AND PIKE STREET

HAM-71-1.34

94
555

c:\pwworking\hmm\external\tyn61470\dms72884\8726BG1001.dgn 10/24/2014 3:57:31 PM TYN61470

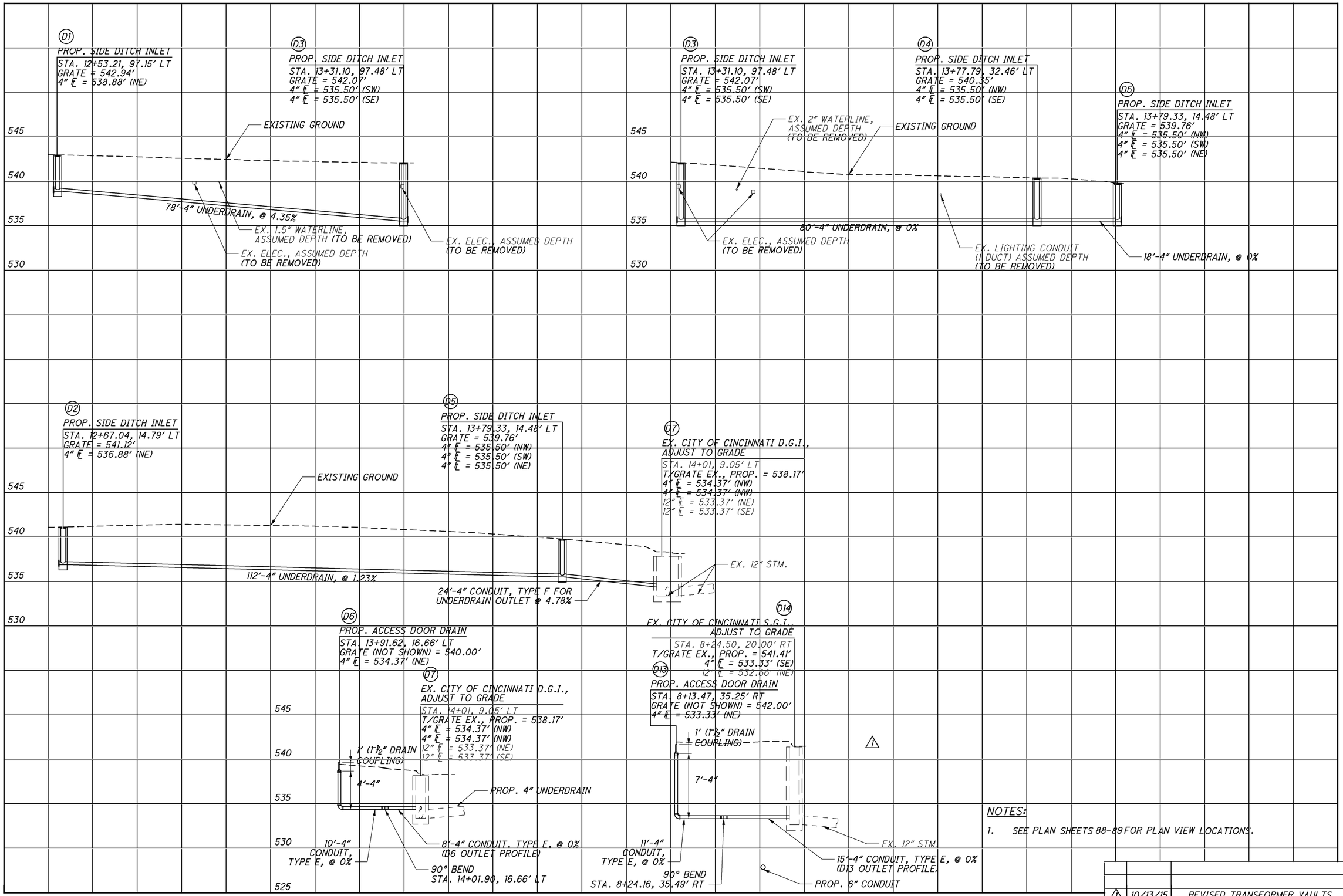
(D1)
PROP. SIDE DITCH INLET
STA. 12+53.21, 97.15' LT
GRATE = 542.94'
4" ℄ = 538.88' (NE)
(D3)
PROP. SIDE DITCH INLET
STA. 13+31.10, 97.48' LT
GRATE = 542.07'
4" ℄ = 535.50' (SW)
4" ℄ = 535.50' (SE)
EXISTING GROUND
545
540
535
530
78'-4" UNDERDRAIN, @ 4.35%
EX. 1.5" WATERLINE, ASSUMED DEPTH (TO BE REMOVED)
EX. ELEC., ASSUMED DEPTH (TO BE REMOVED)
EX. ELEC., ASSUMED DEPTH (TO BE REMOVED)
(D3)
PROP. SIDE DITCH INLET
STA. 13+31.10, 97.48' LT
GRATE = 542.07'
4" ℄ = 535.50' (SW)
4" ℄ = 535.50' (SE)
(D4)
PROP. SIDE DITCH INLET
STA. 13+77.79, 32.46' LT
GRATE = 540.35'
4" ℄ = 535.50' (NW)
4" ℄ = 535.50' (SE)
(D5)
PROP. SIDE DITCH INLET
STA. 13+79.33, 14.48' LT
GRATE = 539.76'
4" ℄ = 535.50' (NW)
4" ℄ = 535.50' (SW)
4" ℄ = 535.50' (NE)
EX. 2" WATERLINE, ASSUMED DEPTH (TO BE REMOVED)
EXISTING GROUND
80'-4" UNDERDRAIN, @ 0%
EX. ELEC., ASSUMED DEPTH (TO BE REMOVED)
EX. LIGHTING CONDUIT (1 DUCT) ASSUMED DEPTH (TO BE REMOVED)
18'-4" UNDERDRAIN, @ 0%
(D2)
PROP. SIDE DITCH INLET
STA. 12+67.04, 14.79' LT
GRATE = 541.12'
4" ℄ = 536.88' (NE)
(D5)
PROP. SIDE DITCH INLET
STA. 13+79.33, 14.48' LT
GRATE = 539.76'
4" ℄ = 535.50' (NW)
4" ℄ = 535.50' (SW)
4" ℄ = 535.50' (NE)
(D7)
EX. CITY OF CINCINNATI D.G.I., ADJUST TO GRADE
STA. 14+01, 9.05' LT
T/GRATE EX., PROP. = 538.17'
4" ℄ = 534.37' (NW)
4" ℄ = 534.37' (NW)
12" ℄ = 533.37' (NE)
12" ℄ = 533.37' (SE)
EXISTING GROUND
112'-4" UNDERDRAIN, @ 1.23%
24'-4" CONDUIT, TYPE F FOR UNDERDRAIN OUTLET @ 4.78%
EX. 12" STM.
(D6)
PROP. ACCESS DOOR DRAIN
STA. 13+91.62, 16.66' LT
GRATE (NOT SHOWN) = 540.00'
4" ℄ = 534.37' (NE)
(D7)
EX. CITY OF CINCINNATI D.G.I., ADJUST TO GRADE
STA. 14+01, 9.05' LT
T/GRATE EX., PROP. = 538.17'
4" ℄ = 534.37' (NW)
4" ℄ = 534.37' (NW)
12" ℄ = 533.37' (NE)
12" ℄ = 533.37' (SE)
1' (1½" DRAIN COUPLING)
4'-4"
PROP. 4" UNDERDRAIN
10'-4" CONDUIT, TYPE E, @ 0%
8'-4" CONDUIT, TYPE E, @ 0% (D6 OUTLET PROFILE)
90° BEND STA. 14+01.90, 16.66' LT
(D14)
EX. CITY OF CINCINNATI S.G.I., ADJUST TO GRADE
STA. 8+24.50, 20.00' RT
T/GRATE EX., PROP. = 541.41'
4" ℄ = 533.33' (SE)
(D13)
12" ℄ = 532.66' (NE)
PROP. ACCESS DOOR DRAIN
STA. 8+13.47, 35.25' RT
GRATE (NOT SHOWN) = 542.00'
4" ℄ = 533.33' (NE)
1' (1½" DRAIN COUPLING)
7'-4"
11'-4" CONDUIT, TYPE E, @ 0%
90° BEND STA. 8+24.16, 35.49' RT
EX. 12" STM.
15'-4" CONDUIT, TYPE E, @ 0% (D13 OUTLET PROFILE)
PROP. 6" CONDUIT
NOTES:
1. SEE PLAN SHEETS 88-89 FOR PLAN VIEW LOCATIONS.
STORM SEWER PROFILES
LYTLE PARK
HAM-71-1.34
CALCULATED RLD
CHECKED CWP
NO. DATE REVISION DESCRIPTION
1 10/13/15 REVISED TRANSFORMER VAULTS
95
555
c:\pwworking\hmm\external\pre47802\dms72894\87268DF001.dgn 10/16/2015 11:37:04 AM PRE47802

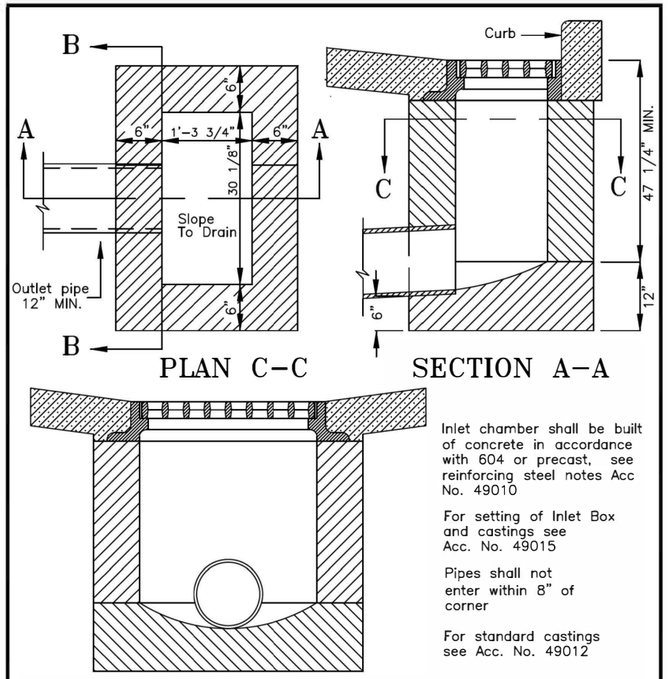

CITY OF CINCINNATI
METROPOLITAN SEWER DISTRICT
STORMWATER MANAGEMENT UTILITY

STANDARD
SINGLE GUTTER INLET
PLAN S.G.I.

NO SCALE DEC., 2006
APPROVED Ralph Jahnstone
SMU CHIEF ENGINEER

A.D.J.

ACC. NO. 49011

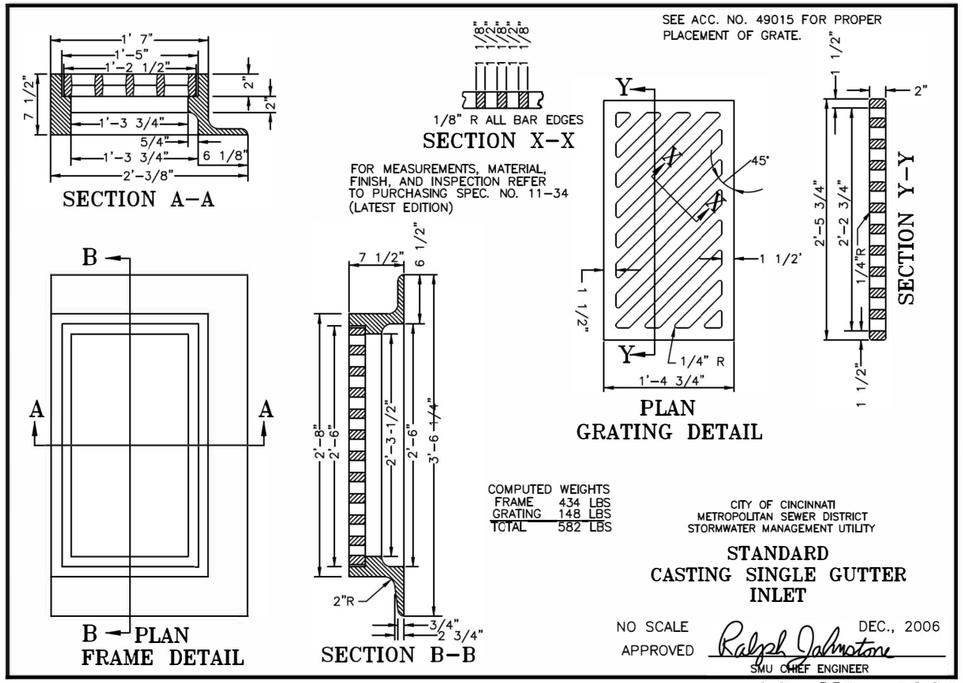

COMPUTED WEIGHTS
FRAME 434 LBS
GRATING 148 LBS
TOTAL 582 LBS

CITY OF CINCINNATI
METROPOLITAN SEWER DISTRICT
STORMWATER MANAGEMENT UTILITY

STANDARD
CASTING SINGLE GUTTER INLET

NO SCALE DEC., 2006
APPROVED Ralph Jahnstone
SMU CHIEF ENGINEER

A.D.J.

ACC. NO. 49012

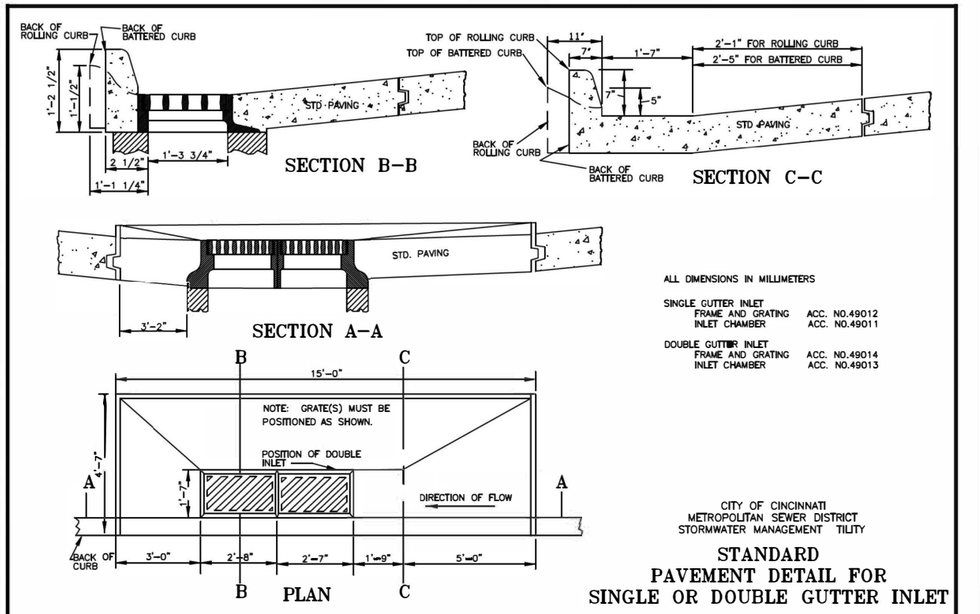

ALL DIMENSIONS IN MILLIMETERS

SINGLE GUTTER INLET	
FRAME AND GRATING	ACC. NO.49012
INLET CHAMBER	ACC. NO.49011
DOUBLE GUTTER INLET	
FRAME AND GRATING	ACC. NO.49014
INLET CHAMBER	ACC. NO.49013

CITY OF CINCINNATI
METROPOLITAN SEWER DISTRICT
STORMWATER MANAGEMENT TILITY

STANDARD
PAVEMENT DETAIL FOR
SINGLE OR DOUBLE GUTTER INLET

NO SCALE DEC., 2006
APPROVED Ralph Jahnstone
SMU CHIEF ENGINEER

A.D.J.

ACC. NO. 49015

CALCULATED RLD CHECKED CWP

DRAINAGE DETAILS

HAM-71-1.34

96
555

c:\pwworking\hmm\external\tyn61470\dms72894\87268D002.dgn 10/24/2014 3:57:36 PM TYN61470

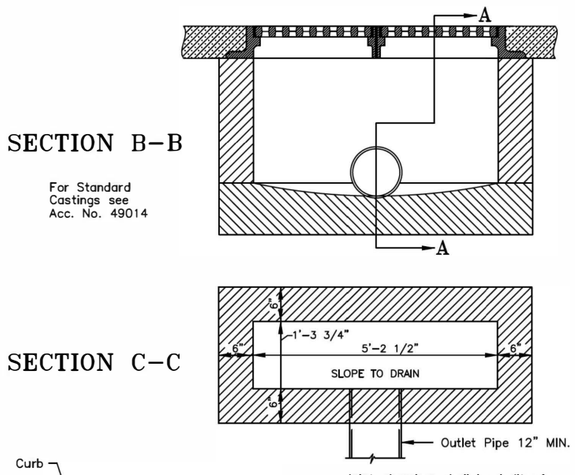

Inlet chamber shall be built of concrete in accordance with 604 or precast, see reinforcing steel notes Acc. No. 49010

For setting of Inlet Box and castings see Acc. 49015

For Std. Coatings see Acc. No. 49012

Pipes shall not enter within 8" of corner

CITY OF CINCINNATI
METROPOLITAN SEWER DISTRICT
STORMWATER MANAGEMENT UTILITY

STANDARD
DOUBLE GUTTER INLET
PLAN D.G.I

NO SCALE DEC., 2006
APPROVED Ralph Johnstone
SMU CHIEF ENGINEER

A.D.J.

ACC. NO. 49013

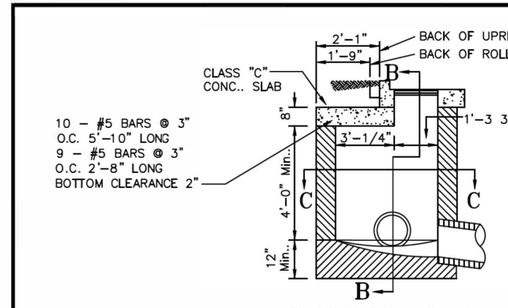

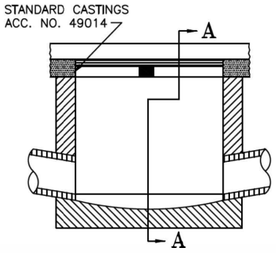

NOTES

CONCRETE SLAB MAY BE PRECAST WITH LIFT HOLES 12" FROM EACH END. MARK TOP OF SLAB.

INLET CHAMBER SHALL BE BUILT OF CONCRETE OR BRICK MASONRY IN ACCORDANCE WITH 604 OR PRECAST USING REINFORCING STEEL CHART.

FOR PAVEMENT DETAIL SEE ACC. NO. 49015 PIPES SHALL NOT ENTER WITHIN 8" OF CORNER.

ALL BARS SHALL CLEAR INTERIOR FACE OF WALL BY 2". BOX LENGTHS SHALL BE 5'–10" FOR THE LONGER SIDE AND 4'–7" FOR THE SHORTER SIDE. VERTICAL REINFORCING BARS SHALL BE #5 AND PLACE 22" O.C. FOUR OF THESE BARS SHALL BE LOCATED AT THE CORNERS OF THE CHAMBER.

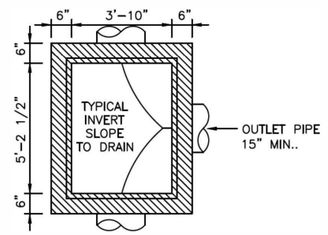

WALL HORIZONTAL REINFORCING STEEL	
DEPTH	BAR SPACING
4' TO 8'	#5 @ 16"
8' TO 12'	#5 @ 12"
12' TO 16'	#5 @ 8"

CITY OF CINCINNATI
METROPOLITAN SEWER DISTRICT
STORMWATER MANAGEMENT UTILITY

STANDARD
DOUBLE GUTTER INLET M.H.
PLAN D.G.I.M.H.

NO SCALE DEC., 2006
APPROVED Ralph Johnstone
SMU CHIEF ENGINEER

A.D.J.

ACC. NO. 49010

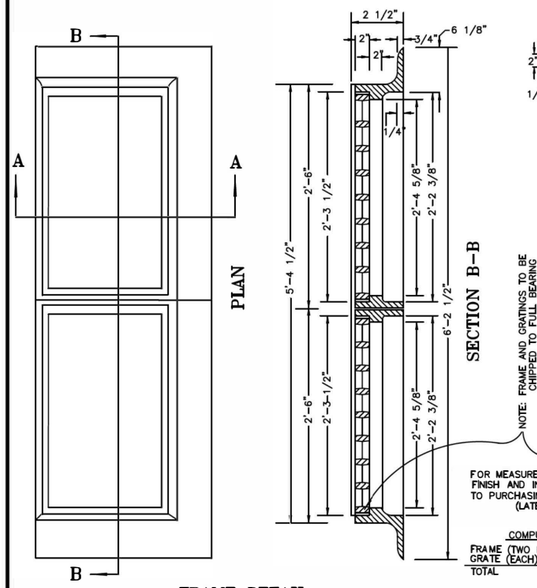

FOR MEASUREMENTS, MATERIALS, FINISH AND INSPECTION REFER TO PURCHASING SPEC. NO.11–34 (LATEST EDITION)

COMPUTED WEIGHTS

FRAME (TWO PIECES)	734 LBS
GRATE (EACH)	296 LBS
TOTAL	1030 LBS

CITY OF CINCINNATI
METROPOLITAN SEWER DISTRICT
STORMWATER MANAGEMENT UTILITY

STANDARD
CASTINGS DOUBLE
GUTTER INLET

NO SCALE DEC., 2006
APPROVED Ralph Johnstone
SMU CHIEF ENGINEER

A.D.J.

ACC. NO. 49014

CALCULATED RLD CHECKED CWP

DRAINAGE DETAILS

HAM-71-1.34

c:\pwworking\hnm\external\tyn61470.dms72894.c7268BD003.dgn 10/24/2014 3:57:53 PM TYN61470

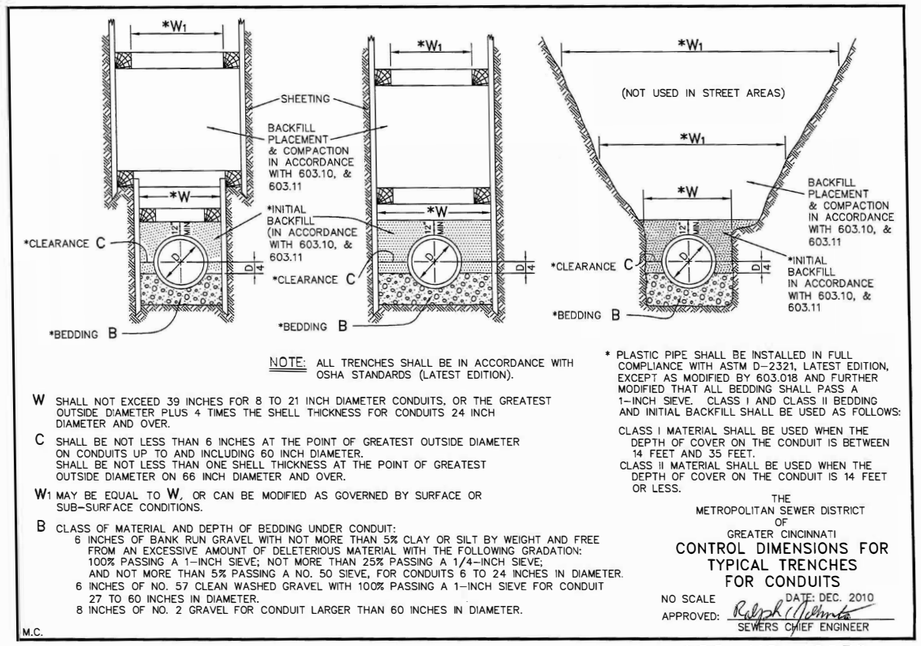

NOTE: ALL TRENCHES SHALL BE IN ACCORDANCE WITH OSHA STANDARDS (LATEST EDITION).

W SHALL NOT EXCEED 39 INCHES FOR 8 TO 21 INCH DIAMETER CONDUITS, OR THE GREATEST OUTSIDE DIAMETER PLUS 4 TIMES THE SHELL THICKNESS FOR CONDUITS 24 INCH DIAMETER AND OVER.

C SHALL BE NOT LESS THAN 6 INCHES AT THE POINT OF GREATEST OUTSIDE DIAMETER ON CONDUITS UP TO AND INCLUDING 60 INCH DIAMETER. SHALL BE NOT LESS THAN ONE SHELL THICKNESS AT THE POINT OF GREATEST OUTSIDE DIAMETER ON 66 INCH DIAMETER AND OVER.

W1 MAY BE EQUAL TO W, OR CAN BE MODIFIED AS GOVERNED BY SURFACE OR SUB-SURFACE CONDITIONS.

B CLASS OF MATERIAL AND DEPTH OF BEDDING UNDER CONDUIT:
- 6 INCHES OF BANK RUN GRAVEL WITH NOT MORE THAN 5% CLAY OR SILT BY WEIGHT AND FREE FROM AN EXCESSIVE AMOUNT OF DELETERIOUS MATERIAL WITH THE FOLLOWING GRADATION: 100% PASSING A 1-INCH SIEVE; NOT MORE THAN 25% PASSING A 1/4-INCH SIEVE; AND NOT MORE THAN 5% PASSING A NO. 50 SIEVE, FOR CONDUITS 6 TO 24 INCHES IN DIAMETER.
- 6 INCHES OF NO. 57 CLEAN WASHED GRAVEL WITH 100% PASSING A 1-INCH SIEVE FOR CONDUIT 27 TO 60 INCHES IN DIAMETER.
- 8 INCHES OF NO. 2 GRAVEL FOR CONDUIT LARGER THAN 60 INCHES IN DIAMETER.

* PLASTIC PIPE SHALL BE INSTALLED IN FULL COMPLIANCE WITH ASTM D-2321, LATEST EDITION, EXCEPT AS MODIFIED BY 603.018 AND FURTHER MODIFIED THAT ALL BEDDING SHALL PASS A 1-INCH SIEVE. CLASS I AND CLASS II BEDDING AND INITIAL BACKFILL SHALL BE USED AS FOLLOWS:

CLASS I MATERIAL SHALL BE USED WHEN THE DEPTH OF COVER ON THE CONDUIT IS BETWEEN 14 FEET AND 35 FEET.

CLASS II MATERIAL SHALL BE USED WHEN THE DEPTH OF COVER ON THE CONDUIT IS 14 FEET OR LESS.

THE METROPOLITAN SEWER DISTRICT OF GREATER CINCINNATI

CONTROL DIMENSIONS FOR TYPICAL TRENCHES FOR CONDUITS

NO SCALE DATE: DEC. 2010

APPROVED: Ralph Mehmke SEWERS CHIEF ENGINEER

M.C.

ACC. NO. 49032

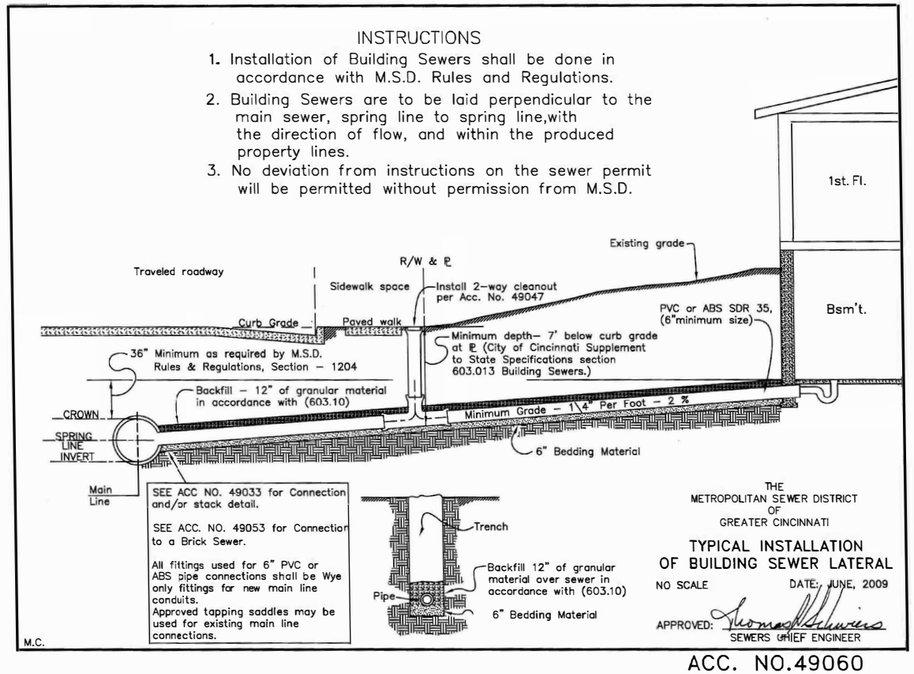

THE METROPOLITAN SEWER DISTRICT OF GREATER CINCINNATI

TYPICAL INSTALLATION OF BUILDING SEWER LATERAL

NO SCALE DATE: JUNE, 2009

APPROVED: Thomas N. Schwiers SEWERS CHIEF ENGINEER

ACC. NO.49060

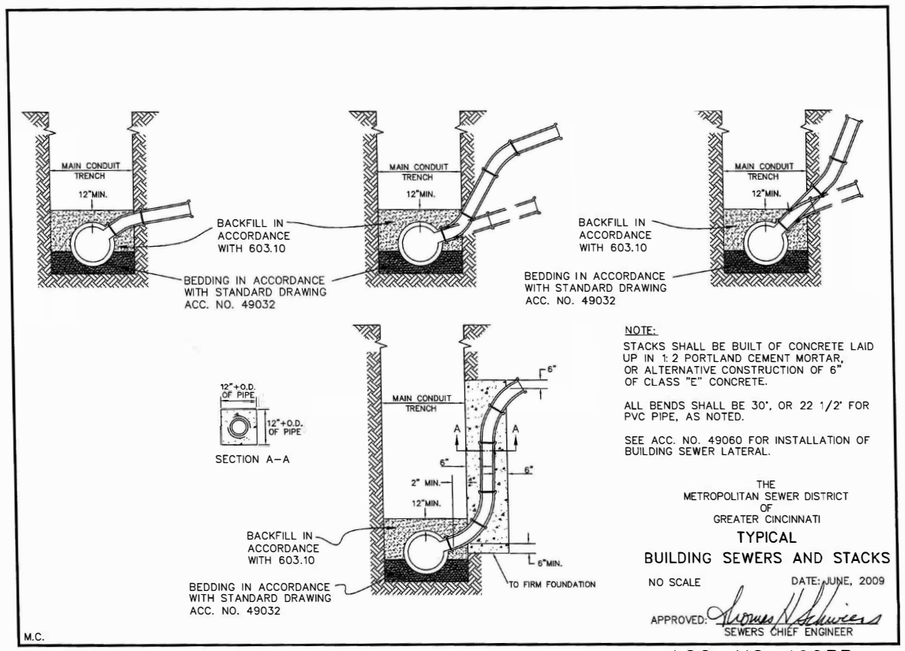

NOTE:

STACKS SHALL BE BUILT OF CONCRETE LAID UP IN 1:2 PORTLAND CEMENT MORTAR, OR ALTERNATIVE CONSTRUCTION OF 6" OF CLASS "E" CONCRETE.

ALL BENDS SHALL BE 30°, OR 22 1/2° FOR PVC PIPE, AS NOTED.

SEE ACC. NO. 49060 FOR INSTALLATION OF BUILDING SEWER LATERAL.

THE METROPOLITAN SEWER DISTRICT OF GREATER CINCINNATI

TYPICAL BUILDING SEWERS AND STACKS

NO SCALE DATE: JUNE, 2009

APPROVED: Thomas N. Schwiers SEWERS CHIEF ENGINEER

M.C.

ACC. NO. 49033

CALCULATED RLD CHECKED CWP

DRAINAGE DETAILS

HAM-71-1.34

98 555

c:\pwworking\hmm\external\tyn61470\dms72894\726DD004.dgn 10/24/2014 3:58:09 PM TYN61470

c:\pwworking\hmm\external\pre47802\dms72894\87268DD006.dgn 10/19/2015 3:17:26 PM PRE47802

CALCULATED RLD
CHECKED CWP

DRAINAGE DETAILS

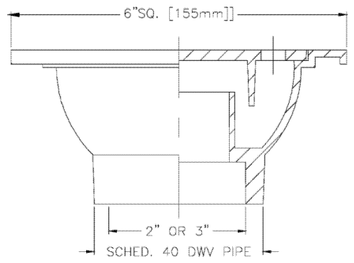

⚠1

DRAINAGE STRUCTURE, MISC.: TRANSFORMER VAULT FLOOR DRAIN
NOT TO SCALE

NOTES:

⚠1 *1. TRANSFORMER VAULT FLOOR DRAIN SHALL BE ZURN FD-2380 OR APPROVED EQUAL.*
2. THE TRANSFORMER VAULT FLOOR DRAIN SHALL HAVE A 6" SQUARE TOP BELL TRAP DRAIN WITH A PVC OR ABS DRAIN BODY.

NO.	DATE	REVISION DESCRIPTION
⚠1	10/19/15	UPDATED DRAIN

HAM-71-1.34

PUMP STATION DRAINAGE PLAN GENERAL NOTES

1. CONTRACTOR TO CHECK AND VERIFY ALL DIMENSIONS AND REPORT ANY DISCREPANCIES TO THE ENGINEER PRIOR TO ANY CONSTRUCTION ACTIVITY.

2. THE CONTRACTOR SHALL MAINTAIN FLOW AT ALL TIMES DURING THE LENGTH OF CONSTRUCTION. PAYMENT IS INCLUDED IN THE LUMP SUM BID FOR ITEM 690 - SPECIAL- MISC.: ABANDONMENT OF EXISTING PUMP CHAMBER.

3. CONTRACTOR TO PROVIDE A GATED ENCLOSURE FOR CONSTRUCTION AND A TEMPORARY COVER FOR PUMP CHAMBER AND COVER PUMP CHAMBER AT ALL TIMES WHEN CONTRACTOR IS NOT ON SITE. COVER SHALL BE SUFFICIENTLY CONSTRUCTED AND PROPERLY SECURED TO PREVENT ENTRY WHEN NOT IN USE. PAYMENT FOR ALL OF THE ABOVE IS INCLUDED IN THE LUMP SUM BID FOR ITEM 690 – SPECIAL - MISC.: ABANDONMENT OF EXISTING PUMP CHAMBER.

4. CONTRACTOR TO INSTALL TEMPORARY PLUG IN UPSTREAM SEWER AND TEMPORARY BYPASS PUMPING SYSTEM TO ALLOW FOR SAFE WORKING CONDITIONS TO COMPLETE WORK AS REQUIRED. PAYMENT IS INCLUDED IN THE LUMP SUM BID FOR ITEM 690 - SPECIAL- MISC.: ABANDONMENT OF EXISTING PUMP CHAMBER.

5. ALL ITEMS ARE EXISTING UNLESS OTHERWISE NOTED.

6. CONTRACTOR TO PROTECT EXISTING ELECTRICAL AND LIGHTING CONDUIT AT ALL TIMES DURING CONSTRUCTION.

7. SUGGESTED SEQUENCE OF WORK:
 A. INSTALL BYPASS PUMPING.
 B. ABANDON EXISTING PUMP CHAMBER. DEMOLISH PIPING, ELECTRICAL, COMPONENTS, AND SLUICE GATES AS NOTED.
 C. REPLACE SLUICE GATES.
 D. CUT AND GRADE FOR PROPOSED CONCRETE SLAB.
 E. INSTALL CONCRETE SLAB AND APPURTENANCES.
 F. SEED DISTURBED AREA.

PUMP STATION DRAINAGE PLAN DEMOLITION NOTES

1. FACTORY-BUILT PUMP CHAMBER IS TO BE ABANDONED IN PLACE. REMOVE ALL PUMPS, MOTORS, CABINETS, LIFT, AND ANY OTHER APPURTENANCES FROM WITHIN THE PUMP CHAMBER. PUNCTURE SIDES OF PUMP STATION AFTER EQUIPMENT REMOVAL TO ALLOW ADEQUATE DRAINAGE. PAYMENT FOR ALL OF THE ABOVE TO BE MADE UNDER THE LUMP SUM BID FOR ITEM 690 – SPECIAL – MISC.: ABANDONMENT OF EXISTING PUMP CHAMBER.

2. REMOVE ALL CONDUIT AND APPURTENANCES BETWEEN THE ELECTRICAL PULL BOX AND THE PUMP STATION. CONTRACTOR TO DISCONNECT THE ELECTRICAL FEEDERS FROM EXISTING MAIN SWITCH BOARD SERVICE NO. 1, NO. 2 & NO. 3. MAIN SWITCH BOARD SERVICE IS LOCATED IN THE MAIN TUNNEL EQUIPMENT ROOM. PAYMENT FOR ALL OF THE ABOVE TO BE MADE UNDER THE LUMP SUM BID FOR ITEM 690 – SPECIAL - MISC.: DISCONNECTION AND REMOVAL OF EXISTING ELECTRICAL EQUIPMENT FOR PUMP STATION.

3. CUT AND REMOVE TOP FOUR FEET OF THE EXISTING PUMP STATION INCLUDING THE EXHAUST VENT. PAYMENT FOR THE ABOVE IS INCLUDED IN THE LUMP SUM BID FOR ITEM 690 – SPECIAL - MISC.: ABANDONMENT OF EXISTING PUMP CHAMBER.

4. BACKFILL ABANDONED PUMP STATION TO GRADE WITH AASHTO #57 AGGREGATE. PAYMENT TO BE INCLUDED WITH THE LUMP SUM BID FOR ITEM 690 – SPECIAL - MISC.: ABANDONMENT OF EXISTING PUMP CHAMBER.

4. EXISTING RODNEY HUNT SLUICE GATES AND APPURTENANCES ARE TO BE REMOVED. SEE PUMP STATIONS SHEETS FOR INFORMATION. PAYMENT TO BE MADE UNDER LUMP SUM BID FOR ITEM 690 - SPECIAL- MISC.: PUMP STATION SLUICE GATES AND APPURTENANCES REMOVED.

5. REMOVE BAR SCREEN AND CONDUIT FROM WETWELL AS NOTED ON THE DRAWINGS. PAYMENT TO BE MADE UNDER LUMP SUM BID ITEM FOR ITEM 690 – SPECIAL – MISC.: REMOVE BAR SCREEN AND CONDUIT FROM WETWELL.

6. CUT AND PLUG THREE 12-INCH DIAMETER PIPES AT WETWELL AND PUMP STATION. CUT AND PLUG ONE 16-INCH DIAMETER PIPE AT SURGE TANK AND PUMP STATION. PAYMENT TO BE MADE BY LINEAR FOOT FOR ITEM 202 – SPECIAL – FILL AND PLUG EXISTING CONDUIT.

PUMP STATION DRAINAGE PLAN SLUICE GATE REPLACEMENT NOTES

1. SAWCUT OPENING IN WETWELL AS SHOWN ON DRAWINGS. INSTALL STEEL GRATE AND LIFTING CHAIN IN WETWELL. PAYMENT TO BE MADE UNDER THE LUMP SUM BID FOR ITEM 690 – SPECIAL – MISC.: INSTALL STEEL GRATING AND LIFTING CHAIN.

2. INSTALL HATCH LOCKS FOR EXISTING WETWELL AND SURGE TANK HATCHES. PAYMENT TO BE MADE PER EACH HATCH LOCK UNDER ITEM 690 – SPECIAL – MISC.: INSTALL HATCH LOCK FOR WETWELL AND ITEM 690 – SPECIAL – MISC.: INSTALL HATCH LOCK FOR SURGE TANK.

3 INSTALLATION OF SLUICE GATES SHALL INCLUDE ALL LABOR, MATERIAL, EQUIPMENT, AND INCIDENTAL ITEMS NECESSARY TO FURNISH AND INSTALL TWO SLUICE GATES AS FOLLOWS:

SLUICE GATE 1 (WETWELL)
24"X24" WITH 16' HEAD
RODNEY HUNT SERIES HY-Q WITH A REMOVABLE FLOOR STAND.

SLUICE GATE 2 (SURGE TANK)
18" DIAMETER WITH 25' HEAD
RODNEY HUNT SERIES HY-Q WITH A REMOVABLE FLOOR STAND. INSTALLATION IN A ROUND MANHOLE.

PAYMENT TO BE MADE PER EACH SLUICE GATE UNDER ITEM 690 – SPECIAL – MISC.: SURGE TANK SLUICE GATE AND ITEM 690 – SPECIAL – MISC.: WETWELL SLUICE GATE.

CALCULATED SAB
CHECKED KN

DRAINAGE GENERAL NOTES (PUMP STATION)

HAM-71-1.34

100
555

c:\pwworking\hmm\external\tyn61470\dms72894\872668DN001.dgn 10/24/2014 3:59:08 PM TYN61470

c:\pwworking\hmm\external\tyn61470\dms72894\87268DM001.dgn 10/24/2014 3:59:18 PM TYN61470

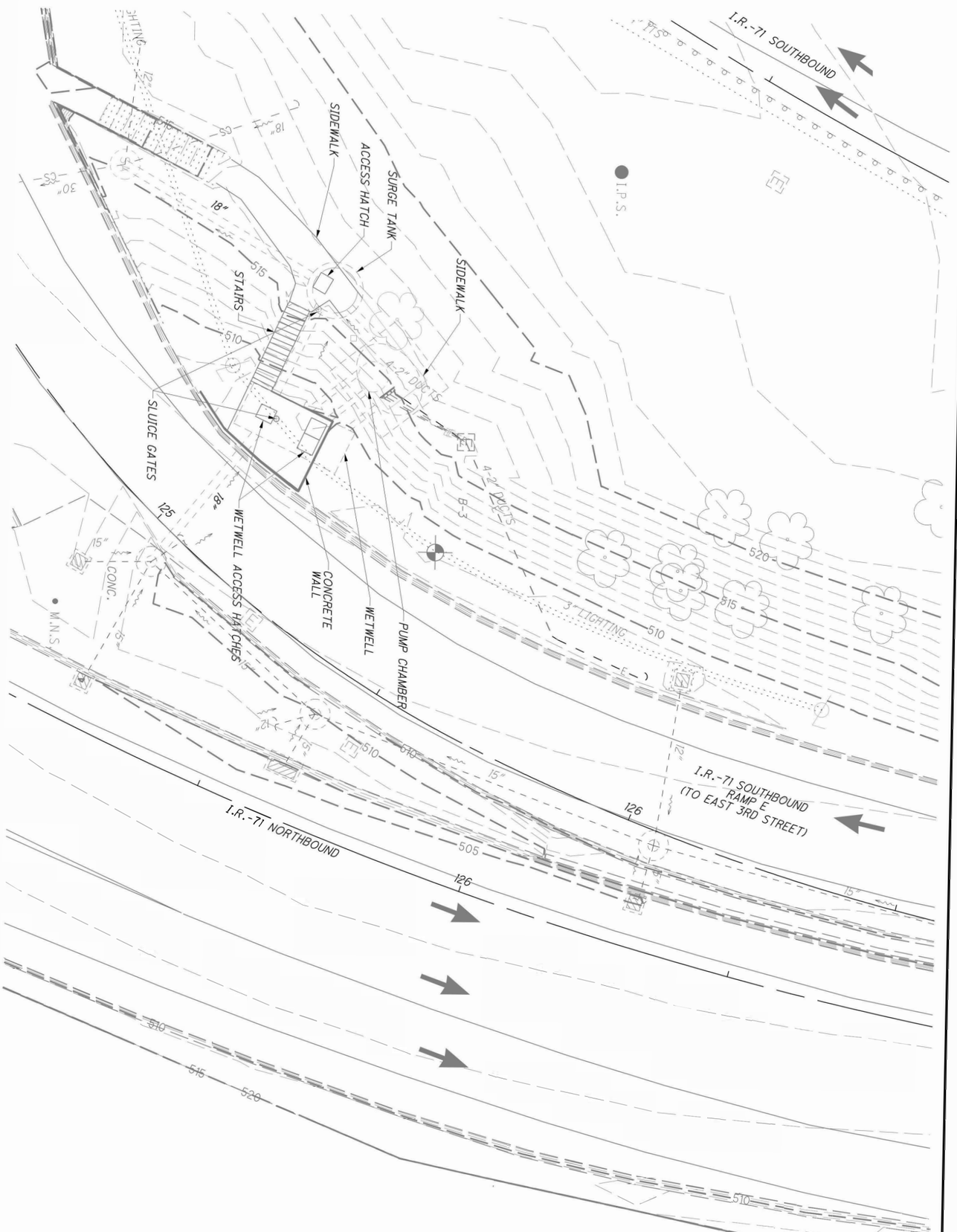

EXISTING SITE PLAN
SCALE: 1"=10'

101 555	HAM-71-1.34	DRAINAGE DETAILS PUMP STATION IMPROVEMENTS EXISTING SITE PLAN	CALCULATED SAB CHECKED KN	0 10 20 HORIZONTAL SCALE IN FEET	N

KEYED NOTES:

1. REMOVE METAL PUMP CHAMBER TO 4 FEET BELOW GRADE. REMOVE ALL PUMPS, VALVES, AND EQUIPMENT. PLUG ALL CONDUITS AND PIPES WITH NON-SHRINK GROUT OR INSTALL BLIND FLANGE. PUNCTURE SIDES OF CHAMBER OR DRILL HOLES, BACK FILL CHAMBER WITH AGGREGATE.

2. REMOVE EXISTING SLUICE GATE, STEM, AND OPERATOR. REMOVE ALL ANCHOR BOLTS AND GROUND FLUSH TO WALL.

3. ABANDON PIPE IN PLACE. REMOVE PIPE AT NEAREST WALL FLANGE. PLUG WITH NON-SHRINK GROUT.

4. REMOVE VENT TO 4 FEET BELOW GRADE. PLUG WITH NON-SHRINK GROUT.

5. REMOVE ELECTRICAL PULLBOX AND CONDUIT DUCTS TO PUMP CHAMBER. SEE SHEET 104, DETAIL 1 AND SHEET 166/296

6. REMOVE TREE.

LEGEND

TO BE REMOVED/ABANDONED, SEE KEYED NOTES

CONSTRUCTION LIMITS

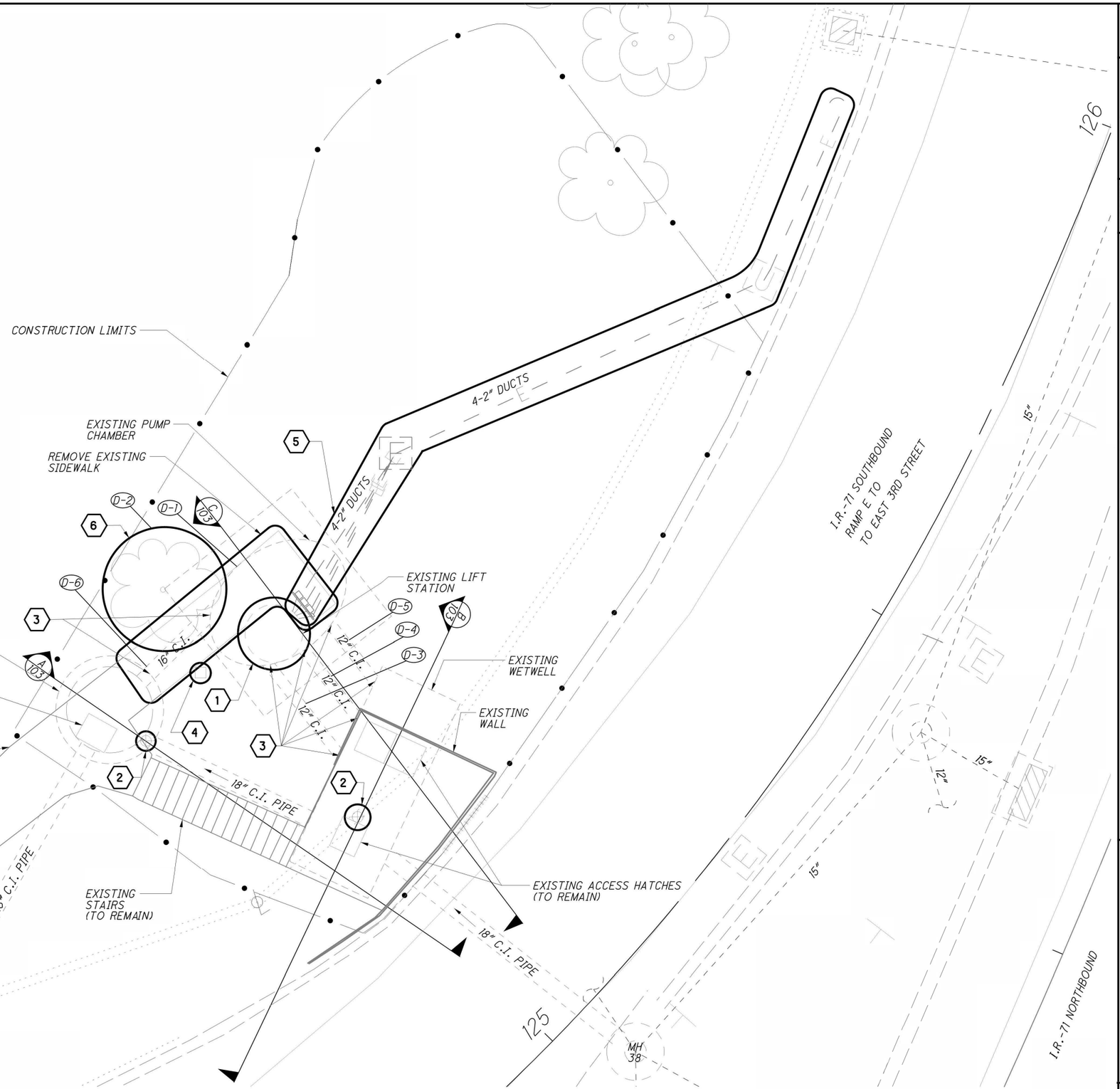

DEMOLITION PLAN
SCALE: 1"=5'

HORIZONTAL SCALE IN FEET
0 2.5 5 10

CALCULATED SAB
CHECKED KN

DRAINAGE DETAILS
PUMP STATION IMPROVEMENTS
DEMOLITION PLAN

HAM-71-1.34

102
555

c:\pwworking\imm\external\tyn61470\dms72894*.72694W002.dgn 10/24/2014 3:59:22 PM TYN61470

KEYED NOTES

1. REMOVE TOP 4 FEET OF METAL PUMP CHAMBER. REMOVE ALL PUMPS, VALVES, AND EQUIPMENT. PLUG ALL CONDUITS AND PIPES WITH NON-SHRINK GROUT OR INSTALL BLIND FLANGE. PUNCTURE SIDES OF CHAMBER OR DRILL HOLES, BACK FILL WITH AGGREGATE.
2. REMOVE EXISTING SLUICE GATE, STEM, AND OPERATOR. REMOVE ALL ANCHOR BOLTS AND GROUND FLUSH TO WALL.
3. ABANDON PIPE IN PLACE. REMOVE PIPE AT NEAREST WALL FLANGE. PLUG WITH NON-SHRINK GROUT.
4. REMOVE ELECTRICAL PULLBOX AND CONDUIT DUCTS TO PUMP CHAMBER. SEE DETAIL 1 ON SHEET 104
5. REMOVE 3/8" BUBBLER PIPE AND 1 1/4" SUMP PUMP PIPING. PLUG ALL OPENINGS WITH NON-SHRINK GROUT AT WALL.
6. SAW CUT 4'X2' OPENING IN EXISTING CONCRETE.

LEGEND

- TO BE REMOVED/ABANDONED
- NON-SHRINK GROUT PLUG FOR PIPE
- SAWCUT

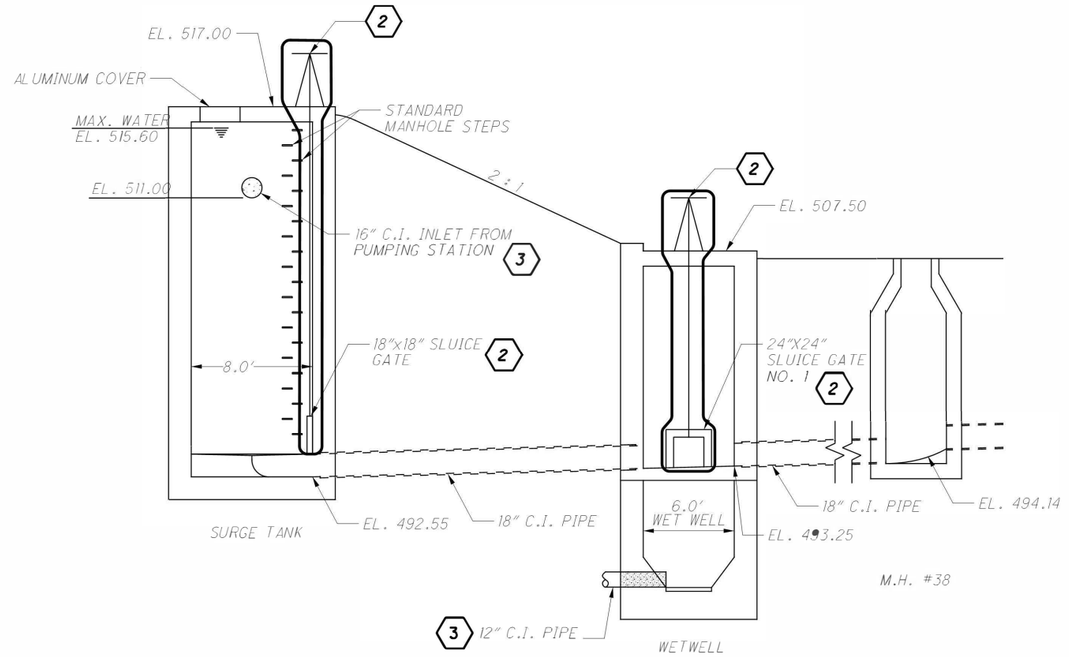

SURGE TANK TO WETWELL SECTION (A/102)
SCALE: 1" = 5'

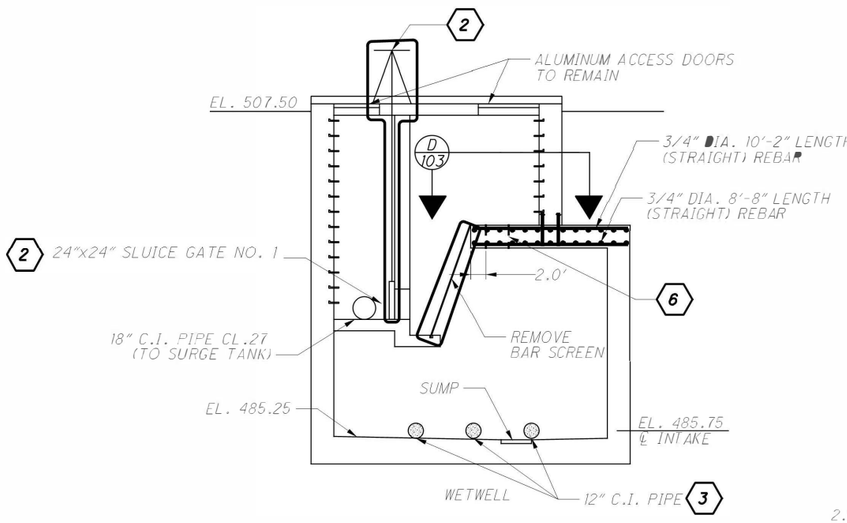

WETWELL SECTION (B/102)
SCALE: 1" = 5'

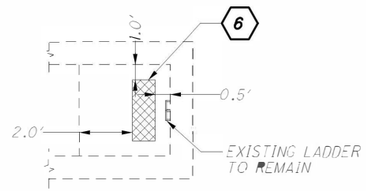

SECTION (D/103)
SCALE: NOT TO SCALE

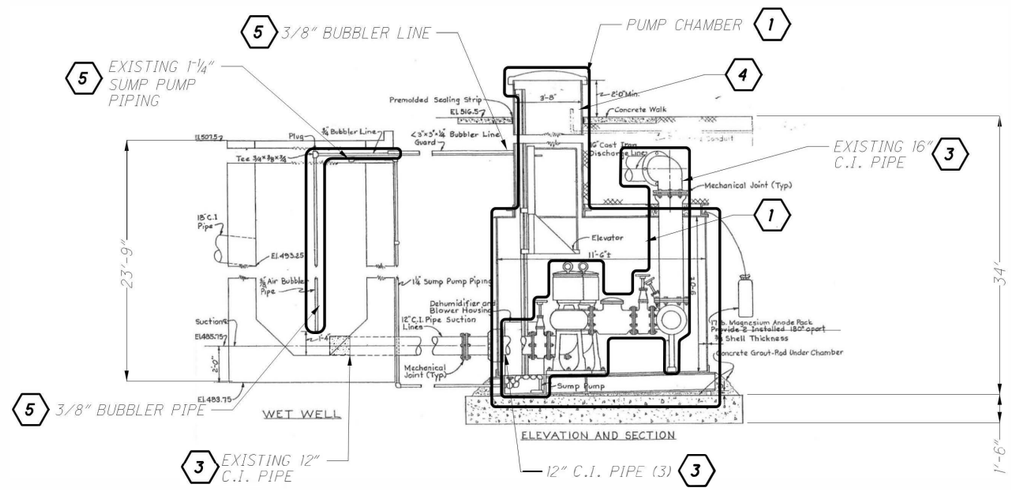

WETWELL TO PUMP CHAMBER SECTION (C/102)
SCALE: NOT TO SCALE

NOTES:

1. REFER TO SHEET 102 FOR KEYED NOTES.

DRAINAGE DETAILS
SCALE: AS NOTED

CALCULATED SAB
CHECKED KN

DRAINAGE DETAILS
PUMP STATION IMPROVEMENTS
DEMOLITION PLAN AND SECTIONS

HAM-71-1.34

103
555

c:\pwworking\hmm\external\tyn61470\dms72894\87268DM003.dgn 10/24/2014 3:59:24 PM TYN61470

KEYED NOTES:

(1) REMOVE ALL CONDUIT AND APPURTENANCES BETWEEN THE ELECTRICAL PULL BOX AND TUNNEL, SEE SHEET 166/296

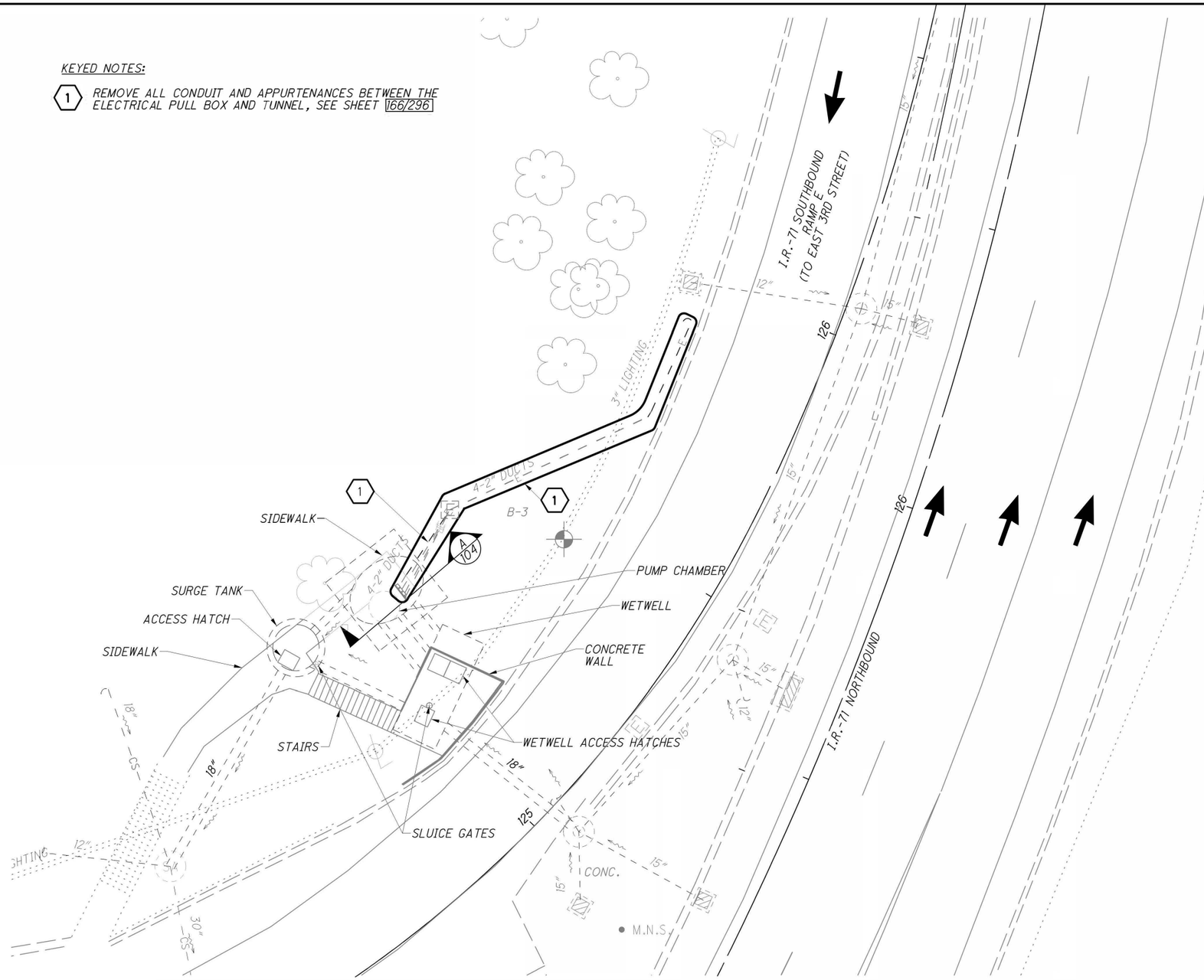

EXISTING SITE PLAN
SCALE: 1"=10'

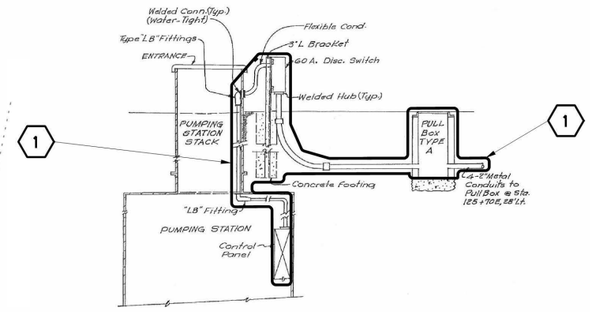

EXISTING ELECTRICAL PROFILE (A/104)
SCALE: NOT TO SCALE

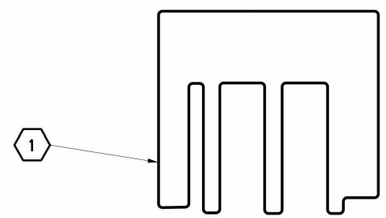

ELECTRICAL SECTION (B/104)
SCALE: NOT TO SCALE

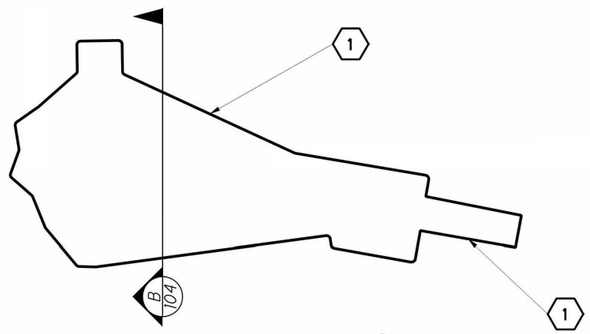

ELECTRICAL PLAN (1/102)
SCALE: NOT TO SCALE

HORIZONTAL SCALE IN FEET
0 5 10 20

CALCULATED SAB
CHECKED KN

DRAINAGE DETAILS
PUMP STATION IMPROVEMENTS
ELECTRICAL DEMOLITION

HAM-71-1.34

104/555

c:\pwworking\hmm\external\tyn61470\dms72894\87268DM004.dgn 10/24/2014 3:59:29 PM TYN61470

CROSS REFERENCES	
SHEET NO.	DESCRIPTION
59 - 80	ESTIMATED QUANTITIES
168 - 171	TRAFFIC CONTROL PLANS

I.R.-71 SOUTHBOUND

GRASS

4" ITS

ITEM 451 - 35'x19'
CONSTRUCTION LIMITS
STA. 125+62.2, 40.5'LT (RAMP E)
ELEV=509.66

I.P.S.

MATCHLINE STA.126+00 (RAMP E) 86

3" LIGHTING

STA. 125+60.8, 21.5'LT (RAMP E)
ELEV=509.28

C-2

STA. 125+19.1, 39.4'LT (RAMP E)
ELEV=509.58

STA. 125+21.2, 25.7'LT (RAMP E)
ELEV=509.30

STA. 125+21.9, 20.5'LT (RAMP E)
ELEV=509.20

C-3

STA. 125+14.4, 24.1'LT (RAMP E)
ELEV=509.21

C-1

B-3

2:1 SLOPE

ITEM 608 - CONCRETE STEPS, TYPE A, AS PER PLAN (FOUR RISERS)

I.R.-71 NORTHBOUND

CONC.

M.N.S.

I.R.-71 SOUTHBOUND RAMP E TO (TO EAST 3RD STREET)

DRAINAGE DETAILS
PUMP STATION IMPROVEMENTS
PROPOSED SITE PLAN

HAM-71-1.34

105
555

HORIZONTAL SCALE IN FEET
0 5 10 20

CALCULATED XXX
CHECKED XXX

c:\pwworking\hmm\external\tyn61470\dms72894\87268DM009.dgn 10/24/2014 3:59:39 PM TYN61470

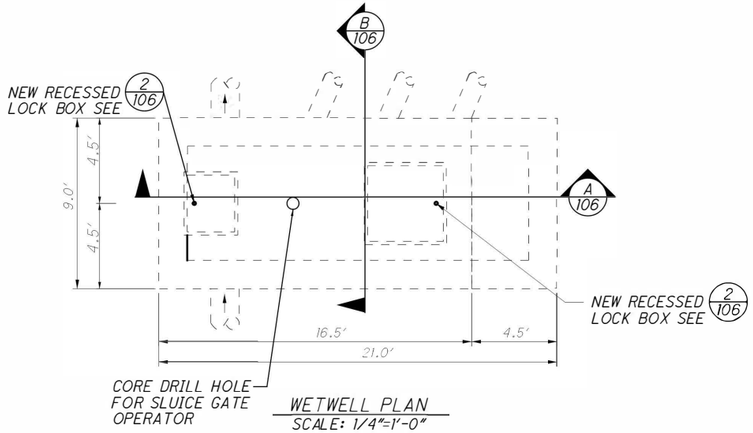

WETWELL PLAN
SCALE: 1/4"=1'-0"

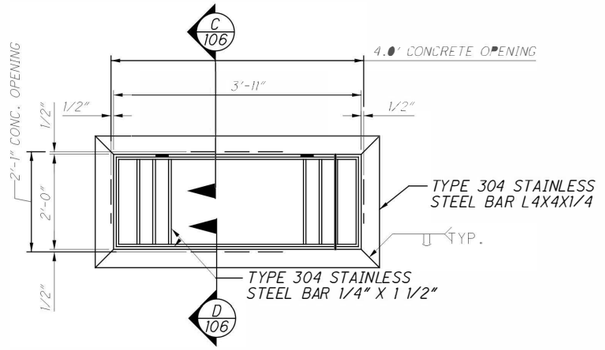

STAINLESS STEEL GRATE DETAIL 1 106
SCALE: NOT TO SCALE

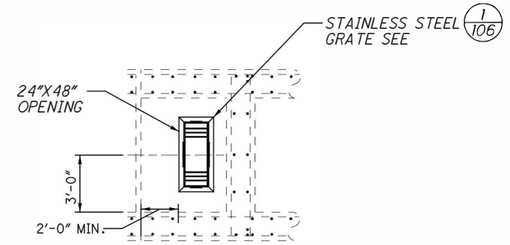

WETWELL SECTION E 106
SCALE: NOT TO SCALE

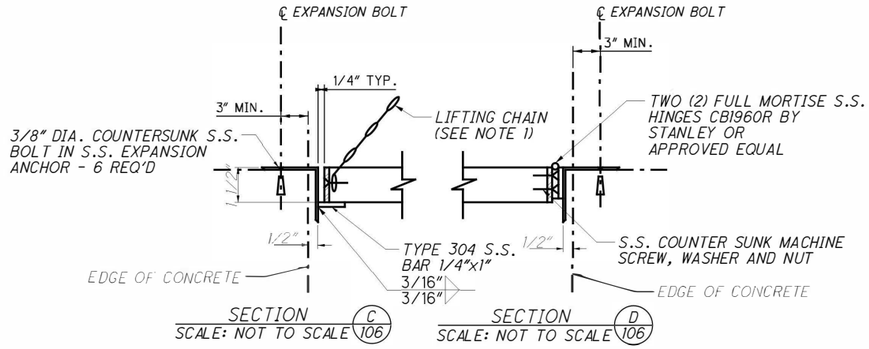

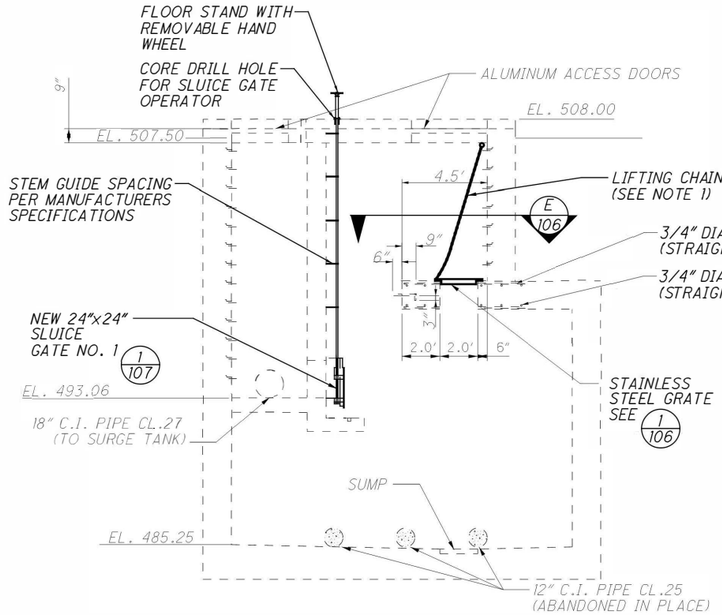

WETWELL ELEVATION A 106
SCALE: 1/4"=1'-0"

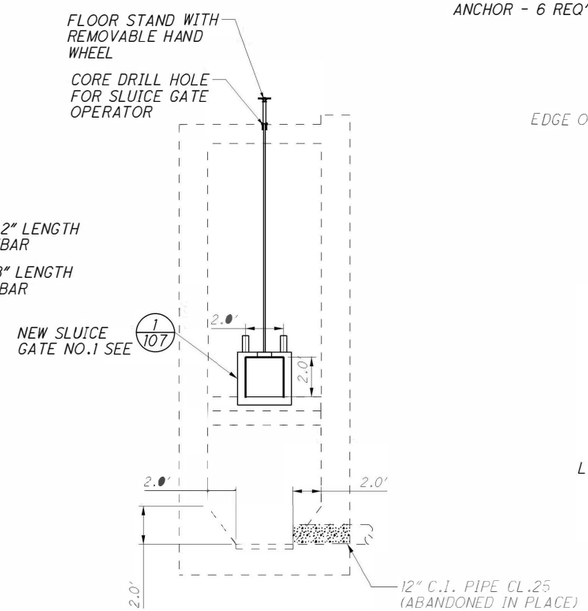

WETWELL SECTION B 106
SCALE: 1/4"=1'-0"

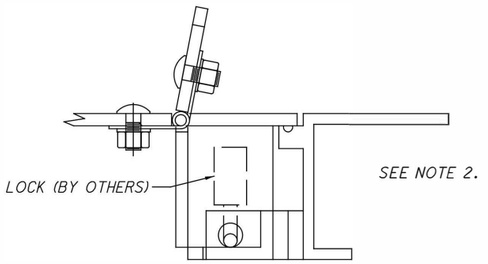

RECESSED LOCK BOX 2 106
SCALE: NOT TO SCALE

NOTES:

1. STAINLESS STEEL CHAIN: TYPE, MIN. 1/8" DIA. LINK BY IST CHAIN SUPPLY OR APPROVED EQUAL. LENGTH TO NOT IMPEDE USE OF LADDER RUNGS. PROVIDE S.S. RAPID LINK AT TOP FOR ATTACHMENT TO LADDER RUNG.
2. INSTALL NEW RETROFIT RECESSED LOCK BOX IN HATCH. LOCK BOX BY HALLIDAY OR APPROVED EQUAL.

WETWELL MODIFICATIONS
SCALE: AS NOTED

LEGEND:

C.I.	- CAST IRON
CL.	- CLASS
CONC.	- CONCRETE
EL.	- ELEVATION
MIN.	- MINIMUM
REQ'D	- REQUIRED
S.S.	- STAINLESS STEEL
TYP.	- TYPICAL

CALCULATED SAB
CHECKED KN

DRAINAGE DETAILS
PUMP STATION IMPROVEMENTS
WET WELL MODIFICATIONS

HAM-71-1.34

106
555

c:\pwworking\hmm\external\tyn61470\dms72894\87268DM005.dgn 10/24/2014 3:59:43 PM TYN61470

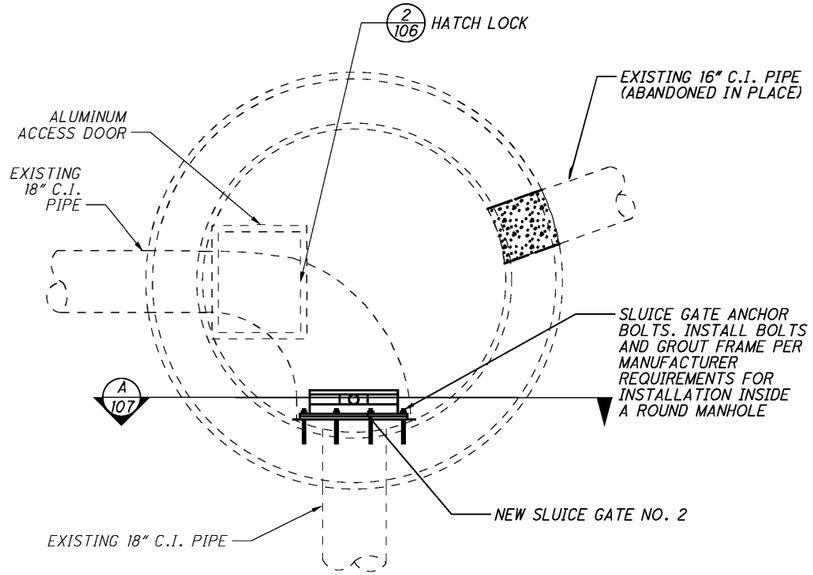

SURGE TANK PLAN
SCALE: 1/2" = 1'

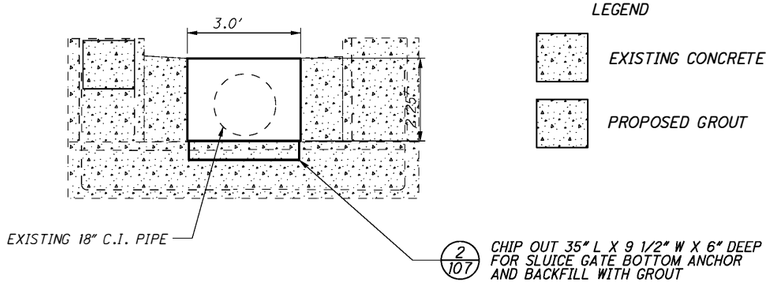

SURGE TANK SECTION A/107
SCALE: 1" = 4'

LEGEND

EXISTING CONCRETE

PROPOSED GROUT

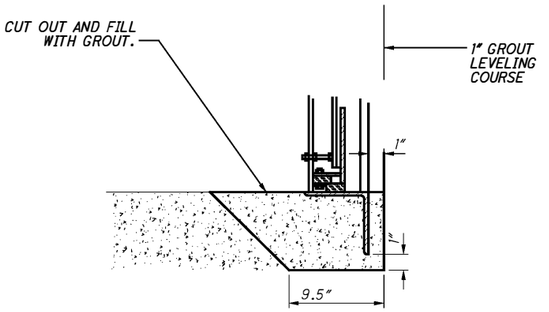

SLUICE GATE BOTTOM ANCHOR 2/107
SCALE: NOT TO SCALE

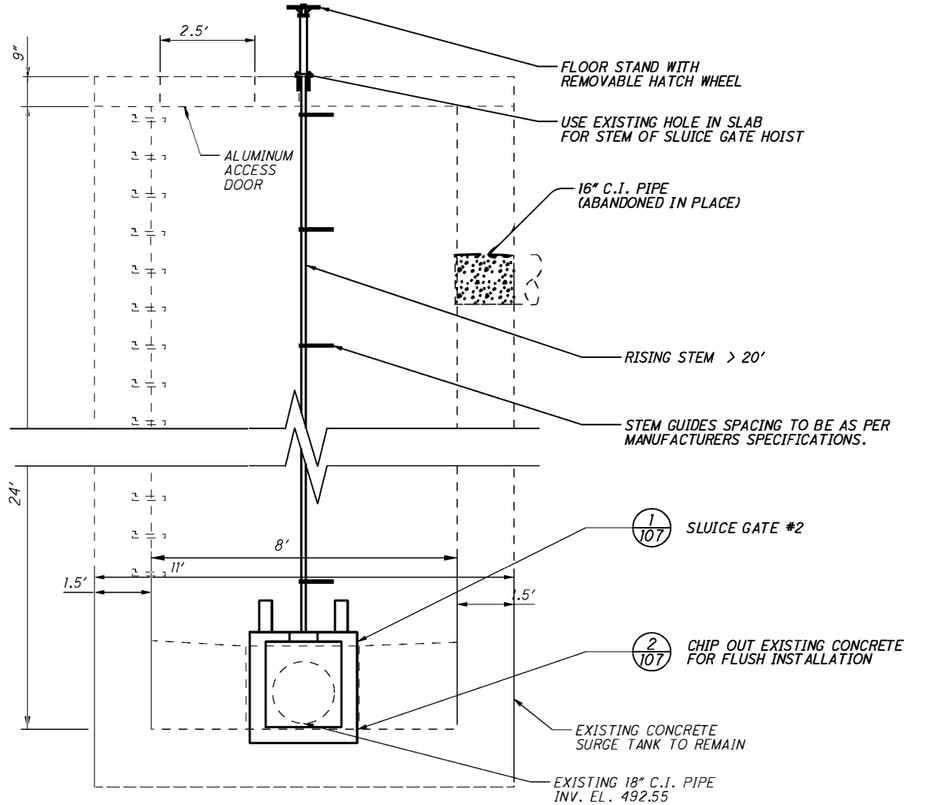

SURGE TANK ELEVATION
SCALE: 1/2" = 1'

SLUICE GATE DETAIL 1/107
SCALE: NOT TO SCALE

SLUICE GATE SECTION
SCALE: NOT TO SCALE

SURGE TANK MODIFICATIONS
SCALE: AS NOTED

CALCULATED SAB
CHECKED KN

DRAINAGE DETAILS
PUMP STATION IMPROVEMENTS
SURGE TANK MODIFICATIONS

HAM-71-1.34

107
555

c:\pwworking\hmm\external\pre47802\dms72894\87268DM006.dgn 5/26/2015 1:25:18 PM PRE47802

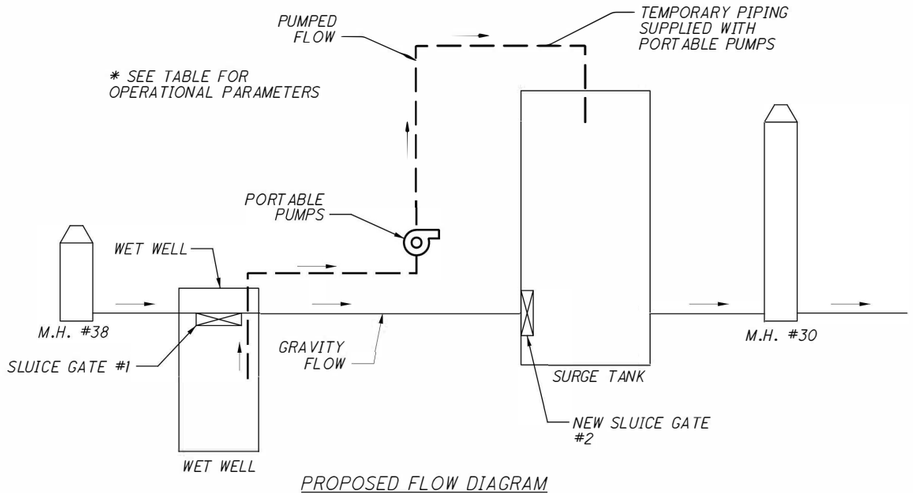

PROPOSED FLOW DIAGRAM
NOT TO SCALE

OPERATIONAL PARAMETERS		
FLOW CONDITION	SLUICE GATE #1	SLUICE GATE #2
GRAVITY	CLOSED	OPEN
PUMPED	OPEN	CLOSED

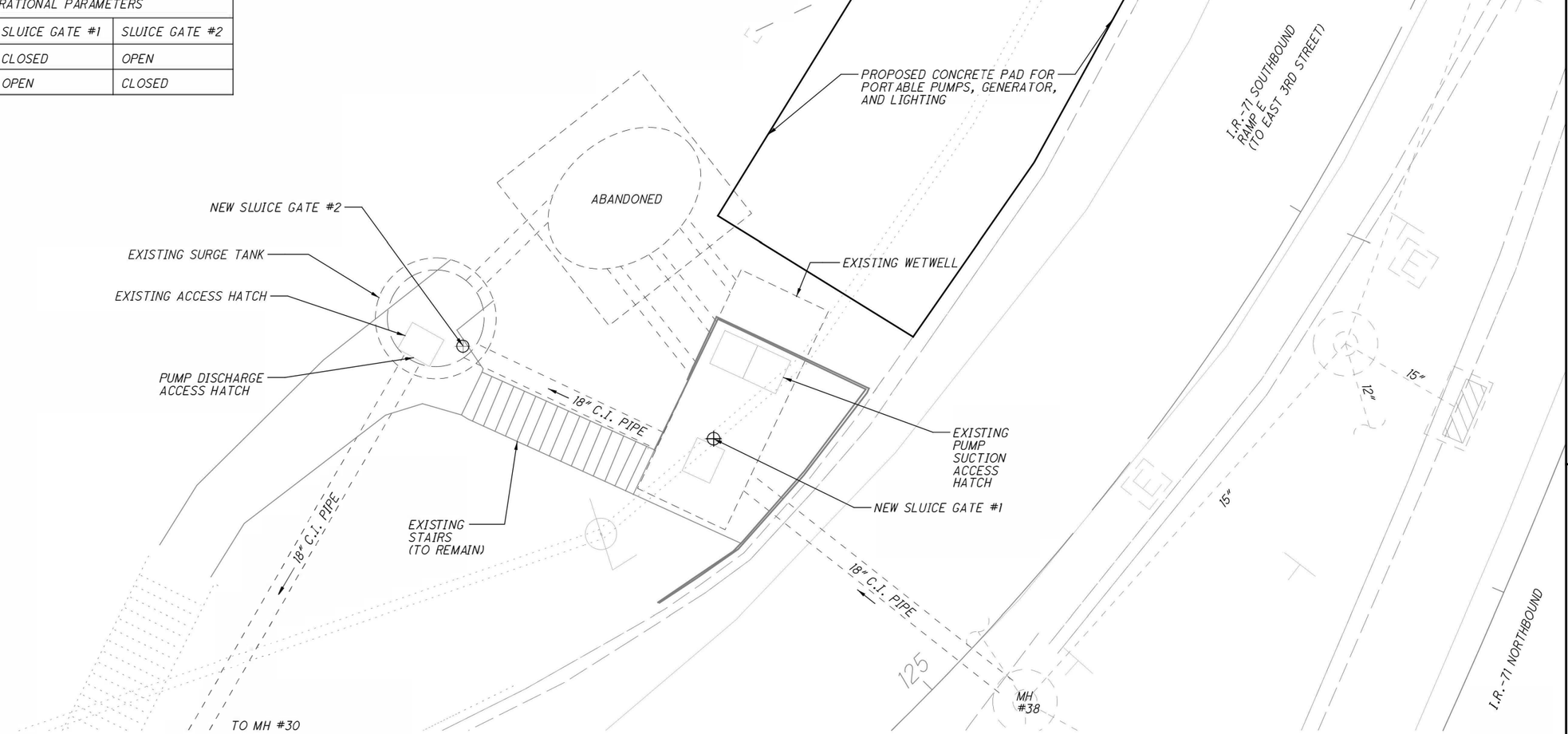

PUMP STATION IMPROVEMENTS-PUMP PROCESS FLOW DIAGRAM AND PLAN
SCALE: 1"=5'

HORIZONTAL SCALE IN FEET
0 2.5 5 10

CALCULATED SAB
CHECKED KN

DRAINAGE DETAILS - TEMPORARY
PUMP STATION IMPROVEMENTS
PUMPING PROCESS FLOW DIAGRAM AND PLAN

HAM-71-1.34

108
555

c:\pwworking\hnm\external\tyn61470\dms72894\c7268d007.dgn 10/24/2014 3:59:48 PM TYN61470

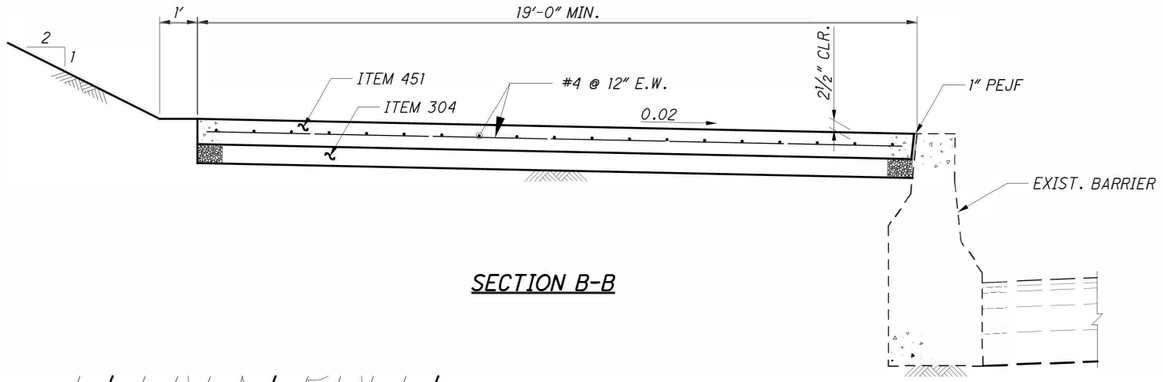

SECTION B-B

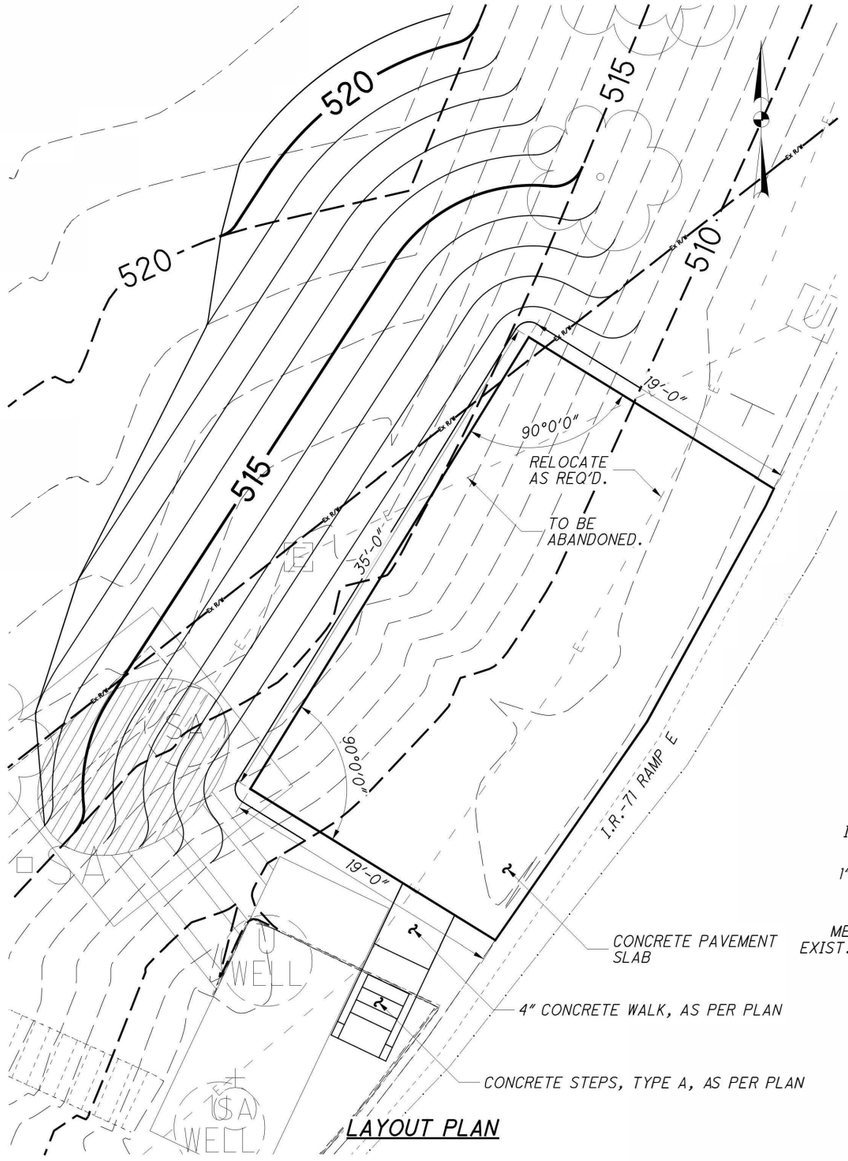

LAYOUT PLAN

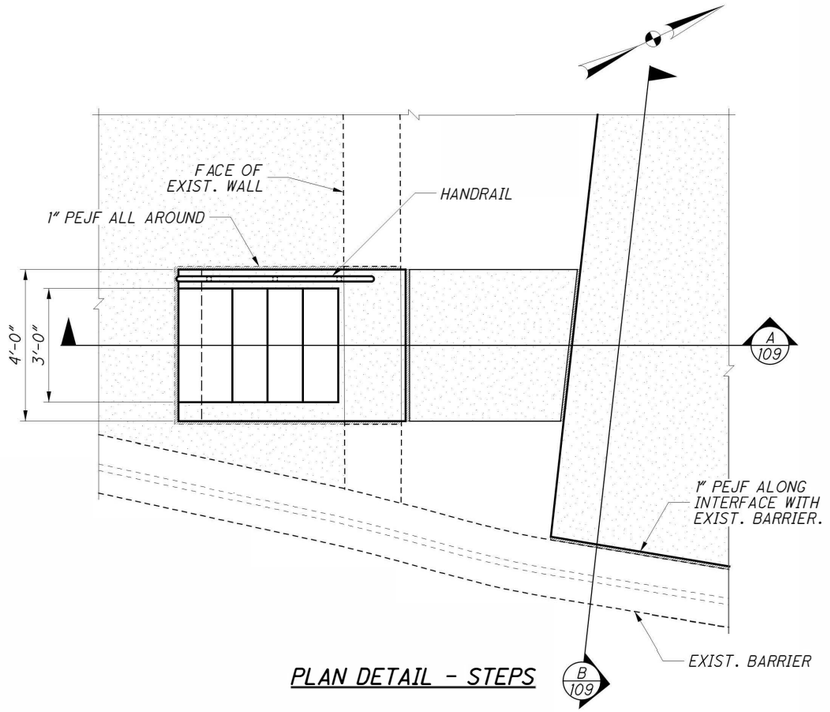

PLAN DETAIL - STEPS

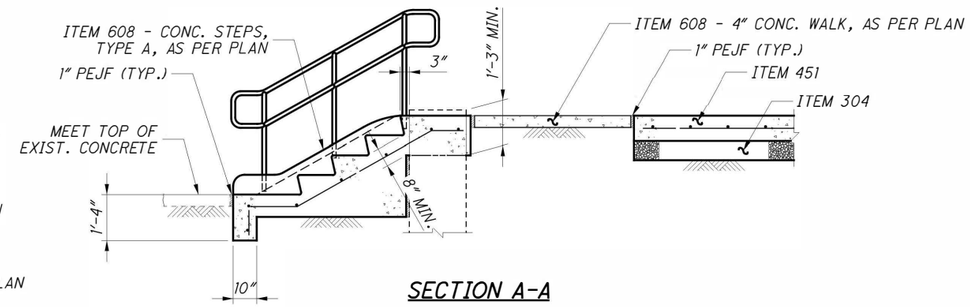

SECTION A-A

NOTES:

1. *ITEM 451 - 8" REINFORCED CONCRETE PAVEMENT, CLASS QC1, AS PER PLAN:*

CONCRETE PAVEMENT SLAB SHALL BE REINFORCED AS SHOWN.

INSTALL PREFORMED EXPANSION JOINT FILLER (PEJF) PER 705.03 ALONG THE INTERFACE BETWEEN THE PAVEMENT SLAB AND THE EXISTING BARRIER.

PAYMENT FOR PEJF, AND ALL OTHER LABOR, MATERIALS, TOOLS, AND EQUIPMENT NECESSARY TO COMPLETE THE WORK TO THE SATISFACTION OF THE ENGINEER SHALL BE INCLUDED WITH ITEM 451 - 8" REINFORCED CONCRETE PAVEMENT, CLASS QC1, AS PER PLAN.

2. *ITEM 608 - 4" CONCRETE WALK, AS PER PLAN:*

INSTALL PREFORMED EXPANSION JOINT FILLER (PEJF) PER 705.03 ALONG THE VERTICAL INTERFACES BETWEEN THE WALK AND ADJOINING CONCRETE FLATWORK.

PAYMENT FOR PEJF, AND ALL OTHER LABOR, MATERIALS, TOOLS, AND EQUIPMENT NECESSARY TO COMPLETE THE WORK TO THE SATISFACTION OF THE ENGINEER SHALL BE INCLUDED WITH ITEM 608 - 4" CONCRETE WALK, AS PER PLAN.

3. *ITEM 608 - CONCRETE STEPS, TYPE A, AS PER PLAN:*

REMOVE PORTIONS OF THE EXISTING WALL INTERFERING WITH THE NEW WORK AS PER C&MS 202.03. SAW CUT ALL LINES EXPOSED TO VIEW WHEN THE WORK IS COMPLETE.

REMOVE PORTIONS OF THE EXISTING PAVEMENT AND WALKS INTERFERING WITH THE NEW WORK PER C&MS 202.05. SAW CUT WHERE POSSIBLE ALL LINES EXPOSED TO VIEW WHEN THE WORK IS COMPLETE.

INSTALL PREFORMED EXPANSION JOINT FILLER (PEJF) PER 705.03 ALONG THE VERTICAL INTERFACE BETWEEN THE STEPS AND EXISTING CONCRETE TO REMAIN.

REFER TO SCD RM-2.1 FOR ADDITIONAL DETAILS NOT SHOWN.

PAYMENT FOR HANDRAIL, REMOVALS, PEJF, AND ALL OTHER LABOR, MATERIALS, TOOLS, AND EQUIPMENT NECESSARY TO COMPLETE THE WORK TO THE SATISFACTION OF THE ENGINEER SHALL BE INCLUDED WITH ITEM 608 - CONCRETE STEPS, TYPE A, AS PER PLAN.

REFERENCES:

SEE SHEET 102 FOR PLAN LOCATION, LAYOUT, AND ADDITIONAL NOTES.

LEGEND:

CLR.	- CLEAR
CONC.	- CONCRETE
EL.	- ELEVATION
E.W.	- EACH WAY
EXIST.	- EXISTING
MIN.	- MINIMUM
PEJF	- PREFORMED EXPANSION JOINT FILLER
REQ'D	- REQUIRED
TYP.	- TYPICAL

CALCULATED MAR
CHECKED CWP

PUMP STATION DETAILS

HAM-71-1.34

109
555

c:\pwworking\hmm\external\tyn61470\dms72894\8726BD0001.dgn 10/24/2014 3:59:53 PM TYN61470

ITEM 638 SPECIAL - FIRE SUPPRESSION/STANDPIPE SYSTEMS

638.01 GENERAL
638.0101 DESIGN REQUIREMENTS
638.0102 SCOPE OF WORK
638.0103 REFERENCES, CODES, AND ORDINANCES
638.0104 SUBMITTALS
638.0105 CLOSEOUT SUBMITTALS
638.0106 QUALITY ASSURANCE
638.0107 NOT USED
638.0108 COORDINATION OF WORK
638.0109 EQUIPMENT AND MATERIALS
638.0110 PROTECTION
638.0111 RECORD DRAWINGS/AS-BUILT DRAWINGS
638.0112 SHOP DRAWING SUBMITTALS
638.0113 WATERPROOFING, AND MISCELLANEOUS IRON AND STEEL
638.0114 FIRE STOPPING AND SMOKE STOPPING
638.0115 DEMOLITION AND MAINTENANCE OF EXISTING SERVICES
638.0116 IDENTIFICATION OF MATERIALS
638.0117 VALVE TAGS AND CHARTS
638.0118 CONNECTIONS TO EXISTING SYSTEMS
638.0119 TEMPORARY STANDPIPES
638.02 PRODUCTS
638.0201 PIPE AND FITTINGS
638.0202 VALVES
638.0203 PIPE HANGERS AND SUPPORTS
638.0204 PAINTING
638.0205 PIPE SLEEVES AND ESCUTCHEONS
638.0206 FIRE DEPARTMENT CONNECTION
638.0207 FIRE DEPARTMENT HOSE VALVES AND RELATED EQUIPMENT
638.0208 SIGNAGE
638.03 EXECUTION
638.0301 COOPERATION AND WORK PROGRESS
638.0302 INSTALLATION
638.0303 MATERIALS AND WORKMANSHIP
638.0304 FINAL INSPECTION
638.0305 SHOP DRAWING CHECKLIST
638.0306 TESTING AND INSPECTION
638.0307 IDENTIFICATION OF MATERIALS
638.0308 VALVE TAGS AND CHARTS
638.04 PAYMENT

638.01 GENERAL.

638.0101 DESIGN REQUIREMENTS. *FIRE SUPPRESSION AND STANDPIPE SYSTEM: CONFORM TO THE FOLLOWING CRITERIA:*

(1) COVERAGE FOR ENTIRE TUNNEL.

(2) DESIGN SYSTEM HYDRAULICALLY TO NFPA 502 2014 EDITION, NFPA 14 2013 EDITION, NFPA 24 2013 EDITION, NFPA 25 2011 EDITION, AND NFPA 101 2012 EDITION.

(3) DESIGN REQUIREMENTS: NFPA 502 2014 EDITION, NFPA 14 2013 EDITION, NFPA 24 2013 EDITION, NFPA 25 2011 EDITION, AND NFPA 101 2012 EDITION.

(4) FM GLOBAL: APPROVAL GUIDE, A GUIDE TO EQUIPMENT, MATERIALS & SERVICES APPROVED BY FACTORY MUTUAL RESEARCH FOR PROPERTY CONSERVATION.

VERIFY THAT FLEXIBLE RADIUS GROOVED COUPLINGS SUFFICIENTLY ALLOW FOR EXPANSION AND CONTRACTION OF THE PIPE.

638.0102 SCOPE OF WORK. *THE WORK UNDER THIS SECTION SHALL CONSIST OF FURNISHING ALL LABOR, MATERIALS, EQUIPMENT, SUPERVISION, TRANSPORTATION, CONSTRUCTION, FACILITIES, DEVICES, AND INCIDENTALS NECESSARY TO PROVIDE COMPLETE STANDPIPE SYSTEM AS HEREINAFTER DESCRIBED AND AS INDICATED ON THE DRAWINGS, INCLUDING BUT NOT LIMITED TO THE FOLLOWING:*

(1) UNDERGROUND PIPE CONNECTIONS, PIPING, FITTINGS, ETC.

(2) DEMOLITION OF EXISTING PIPING AS SHOWN AND/OR REQUIRED.

(3) EXTENDING EXISTING STANDPIPE.

(4) COMPLETE MANUAL DRY STANDPIPE SYSTEM.

(5) SIGNAGE

(6) INSERTS AND HANGERS.

(7) STAGING AND PLANKING.

(8) TESTING AND CERTIFICATES.

(9) VALVE TAGS AND CHARTS.

(10) HOISTING, RIGGING, AND SETTING OF ALL PIPING AND EQUIPMENT.

(11) FEES, PERMITS, ROYALTIES, GUARANTEES, SUBMITTALS TO AND APPROVALS FROM DEPARTMENT, AND ALL OTHER STATE AND LOCAL AUTHORITIES EXERCISING JURISDICTION OVER THIS PROJECT.

(12) CONNECTION TO EXISTING SYSTEM PIPING.

(13) PROTECTION OF NEW AND EXISTING PIPING AND EQUIPMENT AGAINST DAMAGE WHERE SUBJECT TO EARTHQUAKES.

(14) CLEANING, TESTING AND ADJUSTMENT OF EQUIPMENT.

(15) PHASING OF CONSTRUCTION.

(16) PERMIT FEES, ETC.

(17) HANGERS, SUPPORTS, MECHANICAL CHANNELS, SUPPLEMENTAL STEEL AND ALL APPURTENANCES REQUIRED FOR INSTALLATION OF FIRE PROTECTION EQUIPMENT.

(18) SHOP DRAWING SUBMITTALS.

(19) RECORD AS-BUILT DRAWINGS.

(20) ALL FIRE PROTECTION SYSTEM ACCEPTANCE TESTS.

(21) OPERATION AND MAINTENANCE MANUALS.

(22) SYSTEM START-UP, DEMONSTRATION AND TRAINING.

(23) CONTRACTOR'S CERTIFICATE OF COMPLETION.

638.0103 REFERENCES, CODES, AND ORDINANCES. *ALL MATERIALS AND WORKMANSHIP SHALL COMPLY WITH ALL APPLICABLE CODES, SPECIFICATIONS, LOCAL AND STATE ORDINANCES, INDUSTRY STANDARDS AND ALL OTHER REGULATIONS, LATEST EDITIONS.*

IN CASE OF DIFFERENCE BETWEEN BUILDING CODES, STATE LAWS, LOCAL ORDINANCES, INDUSTRY STANDARDS AND ALL OTHER REGULATIONS AND THE CONTRACT DOCUMENTS, THE CONTRACTOR SHALL PROMPTLY NOTIFY THE PROJECT ENGINEER AND PROJECT MANAGER IN WRITING OF ANY SUCH DIFFERENCE.

IN CASE OF CONFLICT BETWEEN THE CONTRACT DOCUMENTS AND THE REQUIREMENTS OF ANY CODE OR AUTHORITIES HAVING JURISDICTION, THE MOST STRINGENT REQUIREMENTS OF THE AFOREMENTIONED SHALL GOVERN.

APPLICABLE CODES AND STANDARDS SHALL INCLUDE ALL STATE LAWS, LOCAL ORDINANCES, AND ALL OTHER REGULATIONS, AND THE APPLICABLE REQUIREMENTS OF THE LATEST ADOPTED EDITION OF THE FOLLOWING CODES AND STANDARDS, WITHOUT LIMITING THE NUMBER, AS FOLLOWS:

(1) NFPA 502 2014 EDITION

(2) NFPA 14 2013 EDITION

(3) NFPA 13 2007 EDITION

(4) NFPA 24 2013 EDITION

(5) NFPA 25 2011 EDITION

(6) NFPA 101 2012 EDITION

(7) NFPA 170 2012 EDITION

(8) LOCAL AND STATE BUILDING, PLUMBING, MECHANICAL, ELECTRICAL, FIRE AND HEALTH DEPARTMENT CODES.

(9) NATIONAL FIRE PROTECTION ASSOCIATION (NFPA)

(10) FM GLOBAL (FM)

(11) UNDERWRITERS' LABORATORIES (UL)

(12) OCCUPATIONAL SAFETY AND HEALTH STANDARDS

(13) ENVIRONMENTAL PROTECTION AGENCY

(14) OHIO ENVIRONMENTAL PROTECTION AGENCY

(15) BUILDING OFFICIALS CODE ASSOCIATION (BOCA)

(16) OHIO BUILDING CODE

(17) OHIO AND CINCINNATI FIRE PROTECTION CODE

(18) ALL OTHER STANDARDS APPLICABLE TO STATE OF OHIO.

IN THESE SPECIFICATIONS, REFERENCES MADE TO THE FOLLOWING INDUSTRY STANDARDS AND CODE BODIES ARE INTENDED TO INDICATE THE LATEST VOLUME OR PUBLICATION OF THE STANDARD. ALL EQUIPMENT, MATERIALS AND DETAILS OF INSTALLATION SHALL COMPLY WITH THE REQUIREMENTS AND LATEST REVISIONS OF THE FOLLOWING BODIES, AS APPLICABLE:

(1) ANSI: AMERICAN NATIONAL STANDARDS INSTITUTE

(2) ASME: AMERICAN SOCIETY OF MECHANICAL ENGINEERS

(3) ASTM: AMERICAN SOCIETY FOR TESTING AND MATERIALS

(4) AWWA: AMERICAN WATER WORKS ASSOCIATION

(5) FM: FM GLOBAL (FACTORY MUTUAL)

(6) NEMA: NATIONAL ELECTRICAL MANUFACTURERS ASSOCIATION

(7) UL: UNDERWRITERS LABORATORIES

(8) NEC: NATIONAL ELECTRICAL CODE

(9) IEEE: INSTITUTE OF ELECTRICAL AND ELECTRONICS ENGINEERS

SPECIFIC REFERENCE IS MADE TO THE FOLLOWING FM DATA SHEETS WHICH SHALL GOVERN PROVISION OF WORK AS SPECIFIED:

(1) FM 2-8: EARTHQUAKE PROTECTION FOR WATER BASED FIRE PROTECTION SYSTEMS

(2) FM 2-0: INSTALLATION OF SPRINKLER SYSTEMS (NFPA)

(3) FM 3-10: INSTALLATION/MAINTENANCE OF FIRE SERVICE MAINS

(4) FM 4-4N: STANDPIPE AND HOSE SYSTEMS (NFPA)

THE CONTRACTOR FOR THE WORK IN HIS SCOPE OF WORK SHALL GIVE ALL NECESSARY NOTICES, OBTAIN ALL PERMITS, PAY ALL GOVERNMENTAL TAXES, FEES AND OTHER COSTS IN CONNECTION WITH HIS WORK; FILE FOR NECESSARY APPROVALS WITH THE JURISDICTION UNDER WHICH THE WORK IS TO BE PERFORMED. CONTRACTOR SHALL OBTAIN ALL REQUIRED CERTIFICATES OF INSPECTION FOR HIS RESPECTIVE WORK AND DELIVER SAME TO THE ENGINEER BEFORE REQUEST FOR ACCEPTANCE OF HIS PORTION OF WORK IS MADE AND BEFORE FINAL PAYMENT.

638.0104 SUBMITTALS. *SHOP DRAWINGS: REQUIRED. INDICATE SUPPORTS, COMPONENTS, ACCESSORIES, SIZES, LAYOUT OF PIPING SYSTEMS, INCLUDING FLEXIBLE CONNECTORS, EXPANSION JOINTS, AND EXPANSION COMPENSATORS. SUBMIT SHOP DRAWINGS SEALED BY A REGISTERED PROFESSIONAL ENGINEER IN THE STATE OF OHIO.*

c:\pwworking\hmm\external\tyn61470\dms72752\87268UN001.dgn 10/24/2014 12:25:36 PM TYN61470

PRODUCT DATA: REQUIRED. SUBMIT MANUFACTURER'S CATALOG SHEET FOR EQUIPMENT INDICATING ROUGH-IN SIZE, FINISH, AND ACCESSORIES.

FIELD TEST REPORTS: INDICATE COMPLIANCE WITH SPECIFIED PERFORMANCE.

MANUFACTURER'S CERTIFICATE: CERTIFY PRODUCTS MEET OR EXCEED SPECIFIED REQUIREMENTS.

HYDRAULIC CALCULATIONS: REQUIRED.

SAMPLES: REQUIRED.

MANUFACTURER'S CERTIFICATE: REQUIRED.

MANUFACTURER'S INSTALLATION INSTRUCTIONS: SUBMIT SPECIAL PROCEDURES.

MANUFACTURER'S CERTIFICATE: CERTIFY PRODUCTS MEET OR EXCEED SPECIFIED REQUIREMENTS.

WELDERS' CERTIFICATE: INCLUDE WELDERS' CERTIFICATION OF COMPLIANCE WITH ASME SECTION IX.AWS D1.1.

MANUFACTURER'S FIELD REPORTS: INDICATE RESULTS OF INSPECTION BY MANUFACTURER'S REPRESENTATIVE.

638.0105 CLOSEOUT SUBMITTALS. PROJECT RECORD DOCUMENTS: REQUIRED.

OPERATION AND MAINTENANCE DATA: REQUIRED.

638.0106 QUALITY ASSURANCE. PERFORM WORK IN ACCORDANCE WITH:

(1) STANDPIPE AND HOSE SYSTEMS: NFPA 502 2014 EDITION, NFPA 14 2013 EDITION.

PERFORM WORK IN ACCORDANCE WITH ASME B31.9, OHIO CODE FOR INSTALLATION OF PIPING SYSTEMS, AND ASME SECTION IX FOR WELDING MATERIALS AND PROCEDURES.

ANY SYSTEM DESIGN WORK SHALL BE PERFORMED UNDER DIRECT SUPERVISION OF PROFESSIONAL ENGINEER EXPERIENCED IN DESIGN OF THIS WORK AND LICENSED IN THE STATE OF OHIO.

638.0107 NOT USED.

638.0108 COORDINATION OF WORK. LOCATIONS OF PIPING, EQUIPMENT, SYSTEMS, ETC. SHALL BE ADJUSTED TO ACCOMMODATE THE WORK WITH INTERFERENCES ANTICIPATED AND ENCOUNTERED. THE CONTRACTOR SHALL DETERMINE THE EXACT ROUTING AND LOCATION OF HIS SYSTEMS PRIOR TO FABRICATION OR INSTALLATION OF ANY SYSTEM COMPONENT. ACCURATE MEASUREMENTS AND COORDINATION DRAWINGS SHALL BE COMPLETED TO VERIFY DIMENSIONS AND CHARACTERISTICS OF THE VARIOUS SYSTEMS INSTALLATIONS.

LINES WHICH PITCH SHALL HAVE THE RIGHT OF WAY OVER THOSE WHICH DO NOT PITCH. LINES WHOSE ELEVATIONS CANNOT BE CHANGED SHALL HAVE THE RIGHT OF WAY OVER LINES WHOSE ELEVATIONS CAN BE CHANGED.

OFFSETS, TRANSITIONS AND CHANGES OF DIRECTION IN ALL SYSTEMS SHALL BE MADE AS REQUIRED TO MAINTAIN PROPER HEADROOM AND PITCH OF SLOPING LINES WHETHER OR NOT INDICATED ON THE DRAWINGS.

ALL WORK SHALL BE INSTALLED IN A WAY TO PERMIT REMOVAL (WITHOUT DAMAGE TO OTHER PARTS) OF ALL FIRE PROTECTION AND OTHER SYSTEM COMPONENTS PROVIDED UNDER THIS CONTRACT REQUIRING PERIODIC REPLACEMENT OR MAINTENANCE. ALL FIRE PROTECTION EQUIPMENT AND PIPING SHALL BE ARRANGED IN A MANNER TO CLEAR THE OPENINGS OF SWINGING OVERHEAD ACCESS DOORS AS WELL AS CEILING TILES. ALL WORK SHALL BE DONE TO ALLOW EASY ACCESS FOR MAINTAINING EQUIPMENT.

THE CONTRACT DRAWINGS ARE DIAGRAMMATIC ONLY INTENDING TO SHOW GENERAL RUNS AND LOCATIONS OF CONDUITS, DISTRIBUTION EQUIPMENT, LIGHTING FIXTURES, SYSTEMS EQUIPMENT, ETC. AND NOT NECESSARILY SHOWING ALL REQUIRED OFFSETS, DETAILS AND ACCESSORIES AND EQUIPMENT TO BE CONNECTED.

FIRE PROTECTION CONNECTIONS ARE TO BE PROVIDED BY THIS CONTRACTOR TO ANY CONNECTED EQUIPMENT SHOWN ON THE FIRE PROTECTION AND/OR OTHER TRADES' DRAWINGS THAT IS TO BE PROVIDED WITH SERVICES, SHALL BE INCLUDED UNDER THIS CONTRACT AS APPLICABLE, INCLUDING ALL CONDUIT AND WIRING CONNECTIONS TO SYSTEMS, TO MAKE EQUIPMENT COMPLETE AND OPERABLE. ADDITIONAL PIPING, EQUIPMENT, ETC., SHALL BE PROVIDED TO ACCOMPLISH THE ABOVE REQUIREMENT, AS REQUIRED, ALL AS PART OF THIS CONTRACT.

638.0109 EQUIPMENT AND MATERIALS. MANUFACTURER'S DIRECTIONS SHALL BE FOLLOWED COMPLETELY IN THE DELIVERY, STORAGE, PROTECTION AND INSTALLATION. PROMPTLY NOTIFY THE ENGINEER IN WRITING OF ANY CONFLICT BETWEEN ANY REQUIREMENTS OF THE CONTRACT DOCUMENTS AND THE MANUFACTURER'S DIRECTIONS. OBTAIN THE ENGINEER'S WRITTEN INSTRUCTIONS BEFORE PROCEEDING WITH THE WORK.

THE CONTRACTOR SHALL FURNISH AND INSTALL ALL EQUIPMENT, ACCESSORIES, CONNECTIONS AND INCIDENTAL ITEMS NECESSARY TO FULLY COMPLETE THE WORK UNDER HIS CONTRACT FOR USE, OCCUPANCY AND OPERATION BY THE ENGINEER.

638.0110 PROTECTION. MATERIALS, PIPING, HOSE VALVES, EQUIPMENT, ETC., SHALL BE PROPERLY PROTECTED DURING CONSTRUCTION AND ALL OPENINGS SHALL BE TEMPORARILY CLOSED SO AS TO PREVENT OBSTRUCTION AND DAMAGE.

638.0111 RECORD DRAWINGS/AS-BUILT DRAWINGS. THE CONTRACTOR SHALL MAINTAIN CURRENT AT THE SITE A SET OF HIS DRAWINGS ON WHICH HE SHALL ACCURATELY SHOW THE ACTUAL INSTALLATION OF ALL WORK PROVIDED UNDER HIS CONTRACT INDICATING HEREON ANY VARIATION FROM THE CONTRACT DRAWINGS, IN ACCORDANCE WITH THE GENERAL CONDITIONS. CHANGES, WHETHER RESULTING FROM FORMAL CHANGE ORDERS OR OTHER INSTRUCTIONS ISSUED BY THE ENGINEER, SHALL BE RECORDED. INCLUDE CHANGES IN SIZES, LOCATION, AND DIMENSIONS OF PIPING, EQUIPMENT, FIXTURES, ETC.

THE CONTRACTOR SHALL INDICATE PROGRESS BY COLORING IN VARIOUS PIPING, EQUIPMENT AND ASSOCIATED APPURTENANCES EXACTLY AS THEY ARE ERECTED. THIS PROCESS SHALL INCORPORATE BOTH THE CHANGES NOTED ABOVE AND ALL OTHER DEVIATIONS FROM THE ORIGINAL DRAWINGS WHETHER RESULTING FROM JOB CONDITIONS ENCOUNTERED OR FROM ANY OTHER CAUSES.

THE MARKED-UP AND COLORED-UP PRINTS WILL BE USED AS A GUIDE FOR DETERMINING THE PROGRESS OF THE WORK INSTALLED. THEY SHALL BE INSPECTED PERIODICALLY BY THE ENGINEER AND THEY SHALL BE CORRECTED IMMEDIATELY IF FOUND EITHER INACCURATE OR INCOMPLETE. THIS PROCEDURE IS MANDATORY.

FAILURE TO COMPLY WITH THIS REQUIREMENT COULD RESULT IN A REDUCTION OF THE MONTHLY PAYMENT REQUISITION RECOMMENDED.

AT THE COMPLETION OF THE JOB, THESE PRINTS SHALL BE SUBMITTED TO THE ENGINEER FOR FINAL REVIEW AND COMMENT. THE PRINTS WILL BE RETURNED WITH APPROPRIATE COMMENTS AND RECOMMENDATIONS. THESE CORRECTED PRINTS, TOGETHER WITH CORRECTED PRINTS INDICATING ALL THE REVISIONS, ADDITIONS AND DELETIONS OF WORK, SHALL FORM THE BASIS FOR PREPARING A SET OF AS-BUILT RECORD DRAWINGS.

THE CONTRACTOR SHALL BE RESPONSIBLE FOR GENERATING AS-BUILT RECORD DRAWINGS UTILIZING CAD-BASED DOCUMENTS IN MICROSTATION FORMAT. A BOUND SET OF PLANS, AS WELL AS THE COMPUTER FILES, ON DISK, SHALL BE TURNED OVER TO THE ENGINEER FOR REVIEW. AFTER ACCEPTANCE OF THE AS-BUILT DOCUMENTS BY THE ENGINEER, THE CONTRACTOR SHALL MAKE ANY CORRECTIONS NECESSARY TO THE AS-BUILT DOCUMENTS FOR DISTRIBUTION TO THE ENGINEER. SUBMIT ELECTRONICALLY PER ODOT CADD MANUAL, SECTION 500 "ELECTRONIC SUBMISSIONS."

IT SHALL BE THE CONTRACTOR'S RESPONSIBILITY TO UPDATE THE AS-BUILT DOCUMENTS TO INCLUDE ALL CHANGES BROUGHT FORTH TO THE PROJECT RESULTING FROM BULLETINS, REQUESTS FOR INFORMATION (RFI), CHANGE ORDERS, ETC.

INCLUDED WITH THE ABOVE SHALL BE A COMPLETE DRAWING LIST.

THE AS-BUILT MICROSTATION DOCUMENTS REQUIRED SHALL BE IN ADDITION TO OTHER REQUIREMENTS STATED ELSEWHERE.

638.0112 SHOP DRAWING SUBMITTALS. PREPARE AND SUBMIT SHOP DRAWINGS IN ACCORDANCE WITH THE REQUIREMENTS HEREINBEFORE SPECIFIED.

(1) SHOP DRAWINGS AND HYDRAULIC CALCULATIONS SHALL BE SUBMITTED BY THIS CONTRACTOR FOR REVIEW AND APPROVAL BY THE FIRE DEPARTMENT PRIOR TO SUBMITTAL TO THE ENGINEER FOR REVIEW.

ALL SHOP DRAWINGS SHALL HAVE CLEARLY MARKED THE APPROPRIATE SPECIFICATION NUMBER OF DRAWING DESIGNATION, FOR IDENTIFICATION OF THE SUBMITTAL.

ALL FINAL APPROVED SHOP DRAWINGS SHALL BE INCLUDED IN THE REQUIRED O & M MANUALS.

A HARD COPY OF THE FIRE PROTECTION SYSTEM LAYOUT(S) SHALL BE SUBMITTED FOR REVIEW IN ADDITION TO THE ELECTRONIC SUBMISSION. IF ELECTRONIC SYSTEM LAYOUTS ARE NOT SUBMITTED, SUBMIT 5 COPIES OF THE LAYOUTS FOR REVIEW.

SHOP DRAWINGS SHALL INCLUDE BUT SHALL NOT BE LIMITED TO THE FOLLOWING:
(1) FIRE PROTECTION WORK LAYOUT, INCLUDING LOCATION AND SIZES OF ALL PIPING, VALVES, EQUIPMENT, CONNECTIONS, DRAINS, AND ALL OTHER APPURTENANCES AND/OR ACCESSORIES.

(2) EQUIPMENT CUTS AND MANUFACTURER'S DOCUMENTATION FOR, BUT NOT LIMITED TO:

(A) ALL TYPES OF PIPE AND FITTINGS.

(B) ALL TYPES OF HANGERS AND SUPPORTS.

(C) ALL TYPES OF VALVES, INCLUDING BUT NOT LIMITED TO, CONTROL VALVES, CHECK VALVES, DRAIN VALVES, ETC.

(D) FIRE DEPARTMENT CONNECTIONS.

(E) FIRE DEPARTMENT HOSE VALVES AND RELATED EQUIPMENT.

(F) PIPE SLEEVES, WALL PLATES AND ESCUTCHEONS.

(G) FIRE STOPPING AND SMOKE STOPPING.

(H) ACCESS PANELS.

(I) VALVE TAGS, PIPE IDENTIFICATION.

(J) SIGNAGE.

STANDPIPE SYSTEM SHOP DRAWINGS SHALL INCLUDE LOCATION AND SIZES OF PIPING, HOSE CONNECTIONS, VALVES, FIRE DEPARTMENT CONNECTIONS, DRAINS, AND ALL OTHER ITEMS AS LISTED IN NFPA 13, NFPA 14, AND FM DATA SHEETS.

PIPING DRAWINGS SHOWING LAYOUTS OF PIPING SYSTEMS SHALL CONTAIN SUFFICIENT PLANS, ELEVATIONS, SECTIONS, DETAILS AND SCHEMATICS TO CLEARLY INDICATE THE WORK. THEY SHALL BE 1/8" = 1'-0" SCALE (MINIMUM) UNLESS SPECIFIED OTHERWISE ELSEWHERE. PROVIDE LARGER SCALE DETAILS AS NECESSARY OR AS REQUESTED. DRAWINGS SHALL SHOW ALL ELEMENTS OF ENGINEER'S EXPOSED DUCTWORK, WALLS, PARTITIONS, SLEEVES AND OTHER ASPECTS OF CONSTRUCTION AS NECESSARY FOR COORDINATION.

CALCULATED EEB
CHECKED NAH

WATER WORK - DRY STANDPIPE - GENERAL NOTES

HAM-71-1.34

c:\pwworking\hmm\external\tyn61470\dms732752\ 87268UN002.dgn 10/24/2014 12:26:01 PM TYN61470

HYDRAULIC CALCULATIONS SHALL BE PER APPLICABLE NFPA STANDARDS AND FM DATA SHEETS. CALCULATIONS SHALL INCLUDE ALL ITEMS LISTED IN NFPA 13 2007 EDITION, NFPA 14 2013 EDITION, AND NFPA 502 2014 EDITION AS THE MINIMUM REQUIREMENT AND ALL HYDRAULICALLY REMOTE AREAS CALCULATED SHALL BE CLEARLY INDICATED ON THE DRAWINGS SUBMITTED FOR REVIEW.

638.0113 WATERPROOFING, AND MISCELLANEOUS IRON AND STEEL. ALL FLASHING REQUIRED FOR PIPING PENETRATIONS SHALL BE FORMED BY SHEET METAL PAN COMPATIBLE WITH THE SURROUNDING/CONTACTING SURFACES.

ALL SUPPORTS SHALL BE CUT, ASSEMBLED, WELDED AND FINISHED. WELDS SHALL BE GROUND SMOOTH. STANDS, BRACKETS AND FRAMEWORK SHALL BE PROPERLY SIZED AND STRONGLY CONSTRUCTED.
MEASUREMENTS SHALL BE TAKEN ON THE JOB AND WORKED OUT TO SUIT ADJOINING AND CONNECTING WORK. ALL WORK SHALL BE PERFORMED BY EXPERIENCED METAL WORKING MECHANICS. MEMBERS SHALL BE STRAIGHT AND TRUE AND ACCURATELY FITTED.

DRILLING, CUTTING AND FITTING SHALL BE DONE AS REQUIRED TO PROPERLY INSTALL THE WORK AND ACCOMMODATE THE WORK OF OTHER TRADES AS DIRECTED BY THEM.

MEMBERS SHALL BE GENERALLY WELDED EXCEPT THAT BOLTING MAY BE USED FOR FIELD ASSEMBLY WHERE WELDING WOULD BE IMPRACTICAL.

ALL SHOP AND FIELD FABRICATED IRON AND STEEL WORK SHALL BE CLEANED AND DRIED AND GIVEN A COAT OF RUST INHIBITING PAINT ON ALL SURFACES AND IN ALL OPENINGS AND CREVICES.

638.0114 FIRE STOPPING AND SMOKE STOPPING. CONTRACTOR SHALL PROVIDE FIRE-STOPPING AND SMOKE-STOPPING OF ALL FIRE PROTECTION PENETRATIONS WHERE REQUIRED BY CODE.

WHERE PIPES ARE INSTALLED THROUGH SLEEVES, THE SLEEVES SHALL BE OF SUFFICIENT SIZE TO PROVIDE 1/2" AIR SPACE AROUND THE PIPE PASSING THROUGH THE SLEEVE AND ALL OPENINGS SHALL BE SEALED, SMOKE-STOPPED AND MADE TIGHT.

WHERE CORE DRILLING HAS BEEN PROVIDED, THE CORE SHALL BE OF SUFFICIENT SIZE TO PROVIDE 1/2" AIR SPACE AROUND THE PIPE PASSING THROUGH THE CORE HOLE AND ALL OPENINGS SHALL BE SEALED, SMOKE-STOPPED AND MADE TIGHT.

WHERE SLEEVES ARE INSTALLED FOR FUTURE PIPE INSTALLATION, ALL SLEEVES SHALL BE SEALED, SMOKE-STOPPED AND MADE TIGHT.

638.0115 DEMOLITION AND MAINTENANCE OF EXISTING SERVICES. THE ENGINEER WILL REQUIRE CONTINUOUS OPERATION OF THE EXISTING SYSTEMS, WHILE DEMOLITION, RELOCATION WORK OR NEW TIE-INS WILL BE PERFORMED. OUTAGES REQUIRED FOR CONSTRUCTION PURPOSES SHALL BE SCHEDULED FOR THE SHORTEST PRACTICAL PERIODS OF TIME, IN COORDINATION WITH THE ENGINEER'S DESIGNATED REPRESENTATIVE, FOR SPECIFIED, MUTUALLY AGREEABLE PERIODS OF TIME, AFTER EACH OF WHICH THE INTERRUPTION SHALL CEASE AND THE SERVICE SHALL BE RESTORED. ANY OUTAGES OF SERVICE SHALL BE APPROVED BY THE ENGINEER, PRIOR TO COMMENCING THE WORK. NO OUTAGES OR SHUTDOWNS OF SERVICE SHALL OCCUR WITHOUT THE WRITTEN AUTHORIZATION OF THE ENGINEER, PRIOR TO COMMENCING THE WORK. GIVE NOTICE OF ANY SCHEDULED SHUTDOWNS, A MINIMUM OF TWO (2) WEEKS IN ADVANCE.

PRIOR TO ANY DEACTIVATION AND RELOCATION OR DEMOLITION WORK, CONSULT THE DRAWINGS AND ARRANGE A CONFERENCE WITH THE ENGINEER IN THE FIELD TO INSPECT EACH OF THE ITEMS TO BE DEACTIVATED, REMOVED OR RELOCATED. CARE SHALL BE TAKEN TO PROTECT ALL EQUIPMENT DESIGNATED TO REMAIN IN OPERATION AND BE INTEGRATED WITH THE NEW SYSTEMS.

CONTRACTOR SHALL BE RESPONSIBLE TO DISCONNECT, MAKE SAFE AND LOWER TO GROUND ALL PIPING, FIXTURES EQUIPMENT INDICATED FOR REMOVAL. PIPING AND ALL ASSOCIATED SUPPORTS SHALL BE REMOVED IN THEIR ENTIRETY, UNLESS OTHERWISE NOTED ON THE DRAWINGS.

WHERE EXISTING PIPING AND EQUIPMENT ARE EMBEDDED IN CONCRETE WALLS OR CEILINGS, THE PIPING SHALL BE CUT BACK FLUSH TO THE SURFACE, ALL PIPING SHALL BE DISCONNECTED. EQUIPMENT SHALL BE REMOVED FOR THE CONTRACTOR TO PATCH THE EXISTING OPENING.

638.0116 IDENTIFICATION OF MATERIALS. ALL EQUIPMENT USED IN THE FIRE PROTECTION SYSTEMS SHALL HAVE A PERMANENTLY ATTACHED NAMEPLATE IDENTIFYING THE MANUFACTURER, SERVICE, SIZE, SERIAL NUMBER OR MODEL NUMBER, ETC. THE NAMEPLATES SHALL BE KEPT CLEAN AND READABLE AT ALL TIMES.

A LEGEND SHOWING THE SERVICE SHALL BE APPLIED ON EACH PIPE INSTALLED BY THE CONTRACTOR. THIS SHALL NOT BE REQUIRED ON SECTIONS OF PIPE WHICH ARE TO BE BURIED OR ENCASED IN CONCRETE.

638.0117 VALVE TAGS AND CHARTS. ALL VALVES ON PIPES OF EVERY DESCRIPTION SHALL BE PROVIDED WITH VALVE TAGS. TAGS SHALL BE PROVIDED BY THE CONTRACTOR FOR THE WORK UNDER THEIR CHARGE.

ALL VALVES ON EQUIPMENT SHALL BE PROVIDED WITH VALVE TAGS.

THE CONTRACTOR SHALL PROVIDE FOR HIS WORK VALVE CHARTS OF ALL SYSTEMS.

638.0118 CONNECTION TO EXISTING SERVICES. SHUTDOWNS OF EXISTING SYSTEMS SHALL BE SCHEDULED WELL IN ADVANCE WITH THE ENGINEER. BEFORE CONNECTION OF INTERIOR FIRE PROTECTION PIPING TO UNDERGROUND SUPPLY PIPING, THE CONTRACTOR SHALL FURNISH A COMPLETELY EXECUTED COPY OF REQUIRED TEST CERTIFICATE AS OUTLINED IN NFPA 24.

638.0119 TEMPORARY STANDPIPES. A TEMPORARY STANDPIPE SHALL BE PROVIDED AS DIRECTED IN THE PLANS IN THE RAMP E TUNNEL AT SPECIFIED PERIODS DURING CONSTRUCTION. THIS TEMPORARY STANDPIPE WILL NOT BE INTERCONNECTED WITH THE TUNNEL STANDPIPE SYSTEM. THE TEMPORARY STANDPIPE SHALL BE SUPPLIED THROUGH ONE TEMPORARY SIAMESE INLET AT THE ROADWAY LEVEL AT EACH PORTAL, OR WHERE DIRECTED BY THE LOCAL FIRE DEPARTMENT. ACCESS TO TEMPORARY SIAMESE INLET FIRE DEPARTMENT CONNECTIONS SHALL BE KEPT CLEAR AND ACCESSIBLE AT ALL TIMES.

638.02 PRODUCTS.

638.0201 PIPE AND FITTINGS. PIPING SHALL MEET APPLICABLE ANSI OR ASTM STANDARDS REQUIREMENTS AND SHALL HAVE MANUFACTURER'S NAME AND STANDARD MARKED ON EACH LENGTH. UNLESS SPECIFIED OTHERWISE BELOW, JOINTS SHALL MEET APPLICABLE ANSI AND ASTM STANDARDS REQUIREMENTS. WHERE ANSI AND ASTM STANDARD DOES NOT EXIST, JOINTS AND FITTINGS SHALL BEAR UL LISTING AND FM APPROVAL SYMBOLS.

PIPING, FITTINGS, JOINTS:

(1) DUCTILE IRON, WHERE SHOWN, PER AWWA C151, THICKNESS CLASS 52, ANSI A21-51 AND AWWA C150 WITH CEMENT LINING PER ANSI A21.4. FITTINGS SHALL BE DUCTILE IRON 250 PSI RATING PER ANSI A21.10 WITH CEMENT LINING PER ANSI A21.4.

(2) HOT-DIPPED GALVANIZED STEEL, WHERE SHOWN, PER ASTM A53, SCHEDULE 40.

PIPE JOINTS SHALL BE GROOVED JOINTS PER STANDARD AWWA C606. ALL MATERIALS AND INSTALLATION SHALL CONFORM TO NFPA 24 AS THE MINIMUM.

CONNECTIONS BETWEEN TWO PIPES, FITTINGS, OR VALVES OF AWWA DUCTILE IRON OUTER DIAMETER SHALL BE MADE WITH AWWA DUCTILE IRON GROOVED COUPLINGS AS MANUFACTURED BY VICTAULIC (STYLE 31), TYCO SHURJOINT (A505), STAR PIPE PRODUCTS (AC-9), OR APPROVED EQUAL.

DUCTILE IRON PIPE TO BE CUT AND GROOVED SHALL BE GROOVED WITH FLEXIBLE RADIUS GROOVES WHERE REQUIRED TO CONFORM TO TUNNEL CURVATURE. RIGID RADIUS GROOVES SHALL BE PROVIDED AT ALL FITTINGS AND VALVES.

CONNECTIONS BETWEEN ONE PIPE, FITTING, OR VALVE OF AWWA DUCTILE IRON OUTER DIAMETER AND ONE PIPE, FITTING, OR VALVE OF IRON/NOMINAL PIPE SIZE SHALL BE MADE WITH GROOVED TRANSITION COUPLINGS AS MANUFACTURED BY VICTAULIC (STYLE 307), TYCO SHURJOINT (A507), STAR PIPE PRODUCTS (AC-7), OR APPROVED EQUAL.

CONNECTIONS BETWEEN TWO PIPES, FITTINGS, OR VALVES OF IRON/NOMINAL PIPE SIZE OUTER DIAMETER SHALL BE MADE WITH RIGID GROOVED COUPLINGS AS MANUFACTURED BY VICTAULIC (STYLE 07), TYCO SHURJOINT (Z07), ANVIL GRUVLOK (7401), OR APPROVED EQUAL.

CONNECTIONS BETWEEN ONE PIPE, FITTING, OR VALVE OF AWWA DUCTILE IRON OUTER DIAMETER AND ONE FLANGED PIPE, FITTING, OR VALVE SHALL BE MADE WITH GROOVED FLANGE ADAPTERS AS MANUFACTURED BY VICTAULIC (STYLE 341), TYCO SHURJOINT (A512), STAR PIPE PRODUCTS (AF-4), OR APPROVED EQUAL.

THREADED REDUCER FITTINGS (3" OR 4" NPS GROOVED X 2-1/2" MALE NPT) SHALL BE AS MANUFACTURED BY VICTAULIC (NO. 52), TYCO SHURJOINT (7150M), ANVIL GRUVLOK (7076), OR APPROVED EQUAL.
ALL PIPE, FITTINGS, VALVES, DEVICES AND ASSOCIATED APPURTENANCES SHALL BE RATED FOR PRESSURES THAT MAY BE DEVELOPED.

638.0202 VALVES. WITH THE EXCEPTION OF DRAIN VALVES, ALL VALVES SHALL BE UL LISTED AND FM APPROVED AND FROM ONE MANUFACTURER.

ISOLATION AND/OR CONTROL VALVES SHALL BE:

(1) OUTSIDE SCREW AND YOKE VALVE. DUCTILE IRON BODY, BRONZE MOUNTED, GROOVED ENDS, RESILIENT WEDGE, 200 PSI, 6" IN SIZE, AS MANUFACTURED BY VICTAULIC (SERIES 771H), KENNEDY VALVE (KS-RW 7093A), OR APPROVED EQUAL.

CHECK VALVES SHALL BE:

(1) GROOVED END, IRON BODY, SPRING ACTIVATED, 250 PSI, 6" IN SIZE, AS MANUFACTURED BY VICTAULIC (SERIES 717), KENNEDY VALVE (426), OR APPROVED EQUAL.

DRAIN VALVES SHALL BE:

(1) BRASS BALL TYPE CORPORATION VALVES WITH 2" AWWA/CC INLET AND 2" MALE NPT/MIP THREAD OUTLET AS MANUFACTURED BY MUELLER (B-2996N), FORD METER BOX (FB400-7-NL), A. Y. MCDONALD (73148B), OR APPROVED EQUAL.

COMBINATION AIR RELIEF-VACUUM VALVES SHALL BE:

(1) DESIGNED TO EXHAUST LARGE AMOUNTS OF AIR DURING SYSTEM FILLING, TO RELEASE SMALL AMOUNTS OF ACCUMULATED AIR DURING OPERATION, AND TO ADMIT LARGE AMOUNTS OF AIR UPON IMPENDING VACUUM DURING DRAINING. THE INLET SHALL BE 1/2" FEMALE NPT, TO BE FITTED WITH A 1/2" NIPPLE AND INSTALLED AS DIRECTED ON THE SYSTEM (DOWNSTREAM) SIDE OF ALL CHECK VALVES, WHICH SHOULD COME PRE-TAPPED AT SUCH POINTS FOR COMBINATION AIR RELIEF-VACUUM VALVES. COMBINATION AIR RELIEF-VACUUM VALVES SHALL ALSO BE INSTALLED AT ALL ADDITIONAL POINTS AS INDICATED ON THE DRAWINGS AND AT ALL SYSTEM HIGH POINTS AS REQUIRED BY NFPA 502. COMBINATION AIR RELIEF-VACUUM VALVES SHALL BE AS

c:\pwworking\hmm\external\tyn61470\dms72752\872681UN003.dgn 10/24/2014 12:26:12 PM T*N61470

MANUFACTURED BY GA INDUSTRIES (945) OR APPROVED EQUAL.

BALL DRIPS SHALL BE:

(1) DESIGNED TO AUTOMATICALLY DRAIN WATER FROM PIPE THAT IS TO BE MAINTAINED NORMALLY DRY. BALL DRIPS SHALL BE NORMALLY OPEN AND SHALL CLOSE AT PRESSURES OF APPROXIMATELY 7 PSI TO REOPEN AT PRESSURES OF APPROXIMATELY 5 PSI. BALL DRIPS SHALL BE AS MANUFACTURED BY ELKHART (702), CROKER (6780 OR 6781), GUARDIAN (6430 OR 6432), POTTER ROEMER (5981 OR 5982), OR APPROVED EQUAL. BALL DRIPS SHALL BE INSTALLED IN A HORIZONTAL POSITION ONLY, ON THE FIRE DEPARTMENT CONNECTION (FDC/UPSTREAM) SIDE OF ALL CHECK VALVES AND ISOLATION VALVES, WHICH SHOULD COME PRE-TAPPED AT SUCH POINTS FOR BALL DRIPS. BALL DRIPS SHALL ALSO BE INSTALLED AT ALL ADDITIONAL POINTS AS INDICATED ON THE DRAWINGS.

ALL VALVES THAT ARE INSTALLED AS A PART OF THE STANDPIPE SYSTEM SHALL BE PROVIDED WITH PRESSURE RATINGS SUITABLE FOR THEIR INTENDED SERVICE.

ALL VALVES EXPOSED TO THE WEATHER SHALL BE FULLY PROTECTED TO PREVENT CORROSION REGARDLESS OF SIZE AND/OR TYPE.

638.0203 PIPE HANGERS AND SUPPORTS. CONFORM TO NFPA 13.

PIPE HANGERS ARE TO BE INSTALLED WHERE PIPE IS TO BE HUNG FROM THE CEILING AND SHALL BE APPROVED TRAPEZE-STYLE HANGERS SUPPORTED FROM CONCRETE BY APPROVED THREADED RODS HUNG FROM ROD HANGERS. HUNG ON AND SECURED TO THESE THREADED RODS SHALL BE 3-1/4" X 1-5/8" CHANNEL STRUT OF 12-GAUGE STEEL WITH HOLES OR ELONGATED HOLES AS MANUFACTURED BY UNISTRUT (P5000HS), ANVIL-STRUT (AS 100), OR FLORIDA STRUT (FS12314). THE PIPE SHALL BE SECURED TO THE CHANNEL STRUT BY PIPE CLAMPS SIZED FOR THE PIPE IN QUESTION (E.G. 6-7/8" PIPE CLAMPS FOR 6" AWWA DUCTILE IRON PIPE) AS MANUFACTURED BY UNISTRUT (P2000 SERIES), FLORIDA STRUT (SCO SERIES), OR THOMAS & BETTS (701 SERIES). THE ROD HANGERS SHALL BE 1/2" ZINC-PLATED CARBON STEEL VERTIGO MECHANICAL ANCHORS AS MANUFACTURED BY POWERS FASTENERS (7175) OR APPROVED EQUAL.

PIPE SUPPORTS ARE TO BE INSTALLED WHERE PIPE IS TO BE SUPPORTED FROM THE FLOOR. PIPE SUPPORTS SHALL BE ANCHORED TO THE CONCRETE FLOOR BY APPROVED ANCHOR BOLTS AND SHALL BE 1-5/8" X 1-5/8" CHANNEL STRUT OF 12-GAUGE STEEL WITH HOLES OR ELONGATED HOLES AS MANUFACTURED BY UNISTRUT (P1000HS), ANVIL-STRUT (AS 200), FLORIDA STRUT (FS12158), OR APPROVED EQUAL. THE PIPE SHALL BE SECURED TO THE CHANNEL STRUT BY PIPE CLAMPS, AS NOTED ABOVE.

VERTICAL RUNS OF PIPE SHALL BE SUPPORTED BY RISER CLAMPS, AS INDICATED IN THE PLANS.

ALL COMPONENTS OF PIPE HANGERS SHALL BE CAPABLE OF WITHSTANDING TEMPERATURES OF 250 DEGREES CELSIUS FOR A PERIOD OF TWO (2) HOURS WITHOUT ANY LOSS IN STRENGTH. ALL HANGER COMPONENTS SHALL MEET ASTM A153 (HOT-DIP GALVANIZATION) AS A MINIMUM FOR CORROSION RESISTANCE. IF HOT-DIP GALVANIZATION IS NOT AVAILABLE, ALL HANGER COMPONENTS SHALL MEET ASTM B633, SC1, OR SC3 AS A MINIMUM FOR CORROSION RESISTANCE.

PIPING AT ALL EQUIPMENT AND CONTROL VALVES SHALL BE SUPPORTED TO PREVENT STRAINS OR DISTORTIONS IN THE HANGERS, CONNECTED EQUIPMENT AND CONTROL VALVES.

ALL PIPING INSTALLED SHALL BE INDEPENDENTLY SUPPORTED FROM THE STRUCTURE STEEL AND/OR CONCRETE AND NOT FROM THE PIPING, ROOF DUCTWORK, RACK HANGERS OR CONDUIT OF THIS AND/OR ANY OTHER TRADES.
PIPE SUPPORTS, VERTICAL AND HORIZONTAL, SHALL NOT BEAR ON SLEEVES, EXCEPT AS SHOWN IN THE PLANS.

638.0204 PAINTING. ALL EXPOSED PIPE SHALL BE PAINTED RED.

ALL HANDWHEELS SHALL BE PAINTED RED.

NO PARTS SHALL BE PAINTED IN SUCH A MANNER AS TO INHIBIT THEIR USUAL AND PROPER FUNCTION OR MAINTENANCE.

638.0205 PIPE SLEEVES AND ESCUTCHEONS.
CONTRACTOR SHALL DETERMINE THE DIAMETER OF EACH INDIVIDUAL WALL OPENING OR SLEEVE BEFORE ORDERING, FABRICATION, OR INSTALLATION.

SLEEVES AND INSERTS SHALL NOT BE USED IN ANY PORTIONS OF THE TUNNEL WHERE THEIR USE WOULD IMPAIR THE STRENGTH OR CONSTRUCTION FEATURES OF THE TUNNEL. ELIMINATION OF SLEEVES MUST BE APPROVED BY THE ENGINEER.

WALL SLEEVES SHALL BE MADE WATER TIGHT BY THE USE OF MECHANICAL LINK SEAL.

PIPE SLEEVES SHALL BE REQUIRED ON ALL PIPES PASSING THROUGH ALL WALLS AND SHALL BE SCHEDULE 40.

638.0206 FIRE DEPARTMENT CONNECTION. FIRE DEPARTMENT CONNECTION (FDC) SHALL BE SIAMESE FREE-STANDING (SIDEWALK) TYPE, 6" X 2-1/2" X 2-1/2", 500 GPM CAPACITY, CHROME PLATE, WITH NAME PLATE BRANDED "DRY STANDPIPE SYSTEM." TWO WAY CLAPPER INLETS, ADAPTERS AND PLUGS WITH CHAINS, AS MANUFACTURED BY ELKHART (15-2W), CROKER (6512), GUARDIAN (6226), POTTER ROEMER (5763), OR APPROVED EQUAL.

COORDINATE TYPE WITH LOCAL FIRE DEPARTMENT PRIOR TO INSTALLATION.

ALL HOSE THREADS SHALL CONFORM TO THE REQUIREMENTS OF THE CINCINNATI FIRE DEPARTMENT.

638.0207 FIRE DEPARTMENT HOSE VALVES AND RELATED EQUIPMENT. PROVIDE FIRE DEPARTMENT VALVE HOSE CONNECTIONS (HC) WHERE NOTED ON THE DRAWINGS. FIRE DEPARTMENT VALVE HOSE CONNECTIONS (HC) SHALL BE 2-1/2" FEMALE NPT INLET BY 2-1/2" CINCINNATI THREAD MALE OUTLET, 300PSI WORKING PRESSURE, COMPLETE WITH CAP AND CHAIN. ALL COMPONENTS TO BE CHROME PLATED FINISH.

FIRE DEPARTMENT VALVE HOSE CONNECTIONS (HC) SHALL BE AS MANUFACTURED BY ELKHART (U-25-2.5), CROKER (5015), GUARDIAN (5015), POTTER ROEMER (4065), OR APPROVED EQUAL.

ALL HOSE THREADS SHALL CONFORM TO THE REQUIREMENTS OF THE CINCINNATI FIRE DEPARTMENT.

638.0208 SIGNAGE. PROVIDE SIGNAGE FOR EACH FIRE DEPARTMENT CONNECTION, HOSE CONNECTION, AND DRAIN.
NO SIGN OR POST SHALL BE INSTALLED IN SUCH A MANNER AS TO IMPEDE OR AFFECT THE NORMAL OPERATION OR MAINTENANCE OF THE ASSOCIATED FIRE DEPARTMENT CONNECTION OR HOSE CONNECTION.

THE SIGNS SHALL MEET THE REQUIREMENTS OF ITEM 630 WITH THE FOLLOWING EXCEPTIONS:

SIGNS FOR FIRE DEPARTMENT CONNECTIONS SHALL AS FOLLOWS: 24" WIDE BY 18" HIGH FIELD, WITH ROUNDED CORNERS AND A 1/2" WHITE BORDER ON ALL SIDES. THE BACKGROUND SHALL BE SAFETY RED WITH WHITE TEXT. THE SIGN SHALL BE OF ENGINEERING-GRADE RETROREFLECTIVE ALUMINUM. THE FONT SHALL BE CONDENSED HIGHWAY TYPE, WITH TEXT CENTERED. THE TOP LINE SHALL BE 2" TALL TO READ "SERVES LYTLE TUNNEL", THE MIDDLE LINE SHALL BE 8" TALL TO READ "F D C", AND THE BOTTOM LINE SHALL BE 2" TALL TO READ "MANUAL DRY STANDPIPE". FIRE DEPARTMENT CONNECTION SIGNS SHALL BE INSTALLED BESIDE OR ABOVE EACH FIRE DEPARTMENT CONNECTION BY MOUNTING ON A POST OR HANGING FROM A WALL BY MEANS OF SUFFICIENT ANCHORS.

SIGNS FOR HOSE CONNECTIONS SHALL BE AS FOLLOWS: 12" SQUARE FIELD, WITH ROUNDED CORNERS. THE BACKGROUND SHALL BE SAFETY RED WITH THE NFPA 170 HOSE CONNECTION SYMBOL IN WHITE. THE SIGN SHALL BE OF ENGINEERING-GRADE RETROREFLECTIVE ALUMINUM. HOSE CONNECTION SIGNS SHALL BE INSTALLED CENTERED ABOVE EACH HOSE CONNECTION NICHE; THE BOTTOM EDGE OF THE SIGN ALIGNED 1" ABOVE THE TOP EDGE OF THE HOSE CONNECTION NICHE. HOSE CONNECTION SIGNS IN FAN AND ELECTRICAL ROOMS SHALL BE INSTALLED BESIDE EACH PAIR OF HOSE CONNECTIONS. ALL SIGNS SHALL BE INSTALLED BY MEANS OF SUFFICIENT ANCHORS.

SIGNS FOR DRAINS SHALL BE AS FOLLOWS: 6" WIDE BY 2" HIGH FIELD, WITH SQUARE CORNERS. THE BACKGROUND SHALL BE SAFETY RED WITH WHITE TEXT. THE SIGN SHALL BE OF ENGINEERING-GRADE ALUMINUM. THE TEXT SHALL BE CENTERED, TO READ "DRAIN". DRAIN SIGNS SHALL BE INSTALLED ABOVE EACH DRAIN CONNECTION AT 48" UP THE WALL. ALL SIGNS SHALL BE INSTALLED BY HANGING FROM A WALL BY MEANS OF SUFFICIENT ANCHORS.

638.03 EXECUTION.

638.0301 COOPERATION AND WORK PROGRESS. PRIOR TO INSTALLATION, THE CONTRACTOR HAS THE RESPONSIBILITY TO COORDINATE THE EXACT MOUNTING ARRANGEMENT AND LOCATION OF FIRE PROTECTION EQUIPMENT TO ALLOW PROPER SPACE REQUIREMENTS AS INDICATED IN THE NEC. PARTICULAR ATTENTION SHALL BE GIVEN IN THE FIELD TO GROUP INSTALLATIONS.

638.0302 INSTALLATION. THIS SECTION COVERS PARTICULAR INSTALLATION METHODS AND REQUIREMENTS PECULIAR TO CERTAIN ITEMS AND CLASSES OR MATERIAL AND EQUIPMENT.

THE CONTRACTOR SHALL OBTAIN DETAILED INFORMATION FROM MANUFACTURERS OF EQUIPMENT AS TO PROPER METHODS OF INSTALLATION.

THE CONTRACTOR SHALL COORDINATE THE INSTALLATIONS WITH LOCAL AUTHORITIES, THE CITY BUILDING DEPARTMENT, THE CITY FIRE DEPARTMENT, THE ENGINEER, ETC.

ALL MISCELLANEOUS HARDWARE AND SUPPORT ACCESSORIES, INCLUDING SUPPORT RODS, NUTS, BOLTS, SCREWS AND OTHER SUCH ITEMS, SHALL BE OF A GALVANIZED OR CADMIUM PLATED FINISH OR OF ANOTHER APPROVED RUST-INHIBITING COATING.

INSTALL SYSTEM IN ACCORDANCE WITH NFPA 14, STATE OF OHIO, CITY OF CINCINNATI, HIGHWAYS, AND PUBLIC WORKS STANDARDS, AND MANUFACTURERS' RECOMMENDATIONS.

PIPE HANGERS AND SUPPORTS: INSTALL IN ACCORDANCE WITH NFPA 13.

CALCULATED EEB
CHECKED NAH

HAM-71-1.34 WATER WORK - DRY STANDPIPE - GENERAL NOTES

c:\pwworking\hmm_external\tyn61470\dms72752\87268UN004.dgn 10/24/2014 12:26:25 PM TYN61470

RIGIDLY ANCHOR PIPE TO BUILDING STRUCTURE. DIRECT MOVEMENT ONLY ALONG AXIS OF PIPE. ERECT PIPING SO STRAIN AND WEIGHT IS NOT ON CAST CONNECTIONS OR APPARATUS.

PROVIDE SUPPORT AND ANCHORS FOR CONTROLLING EXPANSION AND CONTRACTION OF PIPING.

INSTALL OS&Y ISOLATION VALVES FOR SHUT-OFF OR ISOLATING SERVICE.

INSTALL DRAIN VALVES AT LOW POINTS OF PIPING AS SHOWN ON THE PLANS.

FLUSH ENTIRE PIPING SYSTEM OF FOREIGN MATTER.

HYDROSTATICALLY TEST ENTIRE SYSTEM. SCHEDULE TEST TO BE WITNESSED BY FIRE MARSHAL, AUTHORITY HAVING JURISDICTION, AND ENGINEER.

638.0303 MATERIALS AND WORKMANSHIP. ALL MATERIALS AND EQUIPMENT SHALL BE NEW AND UNUSED AND SHALL MEET REQUIREMENTS OF THE LATEST STANDARDS OF NFPA, FM GLOBAL, ASTM, ANSI AND IEEE. EQUIPMENT SHALL HAVE COMPONENTS REQUIRED OR RECOMMENDED BY OSHA, APPLICABLE NFPA DOCUMENTS AND SHALL BE UL LISTED AND LABELED AND FM GLOBAL APPROVED WHERE REQUIRED. DESPITE REFERENCES IN THE SPECIFICATIONS OR ON THE DRAWINGS TO MATERIALS OR PIECES OF EQUIPMENT BY NAME, MAKE OR CATALOG NUMBER, SUCH REFERENCES SHALL BE INTERPRETED AS ESTABLISHING STANDARDS OF QUALITY FOR MATERIALS AND PERFORMANCE.

FINISH OF MATERIALS, COMPONENTS AND EQUIPMENT SHALL NOT BE LESS THAN INDUSTRY GOOD PRACTICE. WHEN MATERIAL OR EQUIPMENT IS VISIBLE OR SUBJECT TO CORROSIVE OR ATMOSPHERIC CONDITIONS, THE FINISH SHALL BE AS APPROVED BY THE ENGINEER.

PROVIDE PROPER ACCESS TO MATERIAL OR EQUIPMENT THAT REQUIRES INSPECTION, REPLACEMENT, REPAIR OR SERVICE. IF PROPER ACCESS CANNOT BE PROVIDED, CONFER WITH THE ENGINEER AS TO THE BEST METHOD OF APPROACH TO MINIMIZE EFFECTS OF REDUCED ACCESS.

ODOT WILL NOT BE RESPONSIBLE FOR MATERIAL, EQUIPMENT OR THE INSTALLATION OF SAME BEFORE TESTING AND ACCEPTANCE.

638.0304 FINAL INSPECTION. WHEN ALL STANDPIPE WORK ON THE PROJECT HAS BEEN COMPLETED AND IS READY FOR FINAL INSPECTION, SUCH AN INSPECTION SHALL BE MADE. AT THIS TIME, AND IN ADDITION TO ALL OTHER REQUIREMENTS IN THE CONTRACT DOCUMENTS, THE CONTRACTOR, FOR THE WORK UNDER THIS CONTRACT, SHALL DEMONSTRATE THAT THE REQUIREMENTS OF THESE SPECIFICATIONS HAVE BEEN MET TO THE ENGINEER'S SATISFACTION.

THIS INCLUDES, BUT IS NOT LIMITED TO, THE SUCCESSFUL COMPLETION OF HYDROSTATIC TESTING AS SET OUT IN NFPA 24 10.10.2 "ACCEPTANCE REQUIREMENTS." THE 200 PSI PRESSURE SHALL GOVERN SUCH TESTING. PRIOR TO HYDROSTATIC TESTING, THE SYSTEM SHALL BE COMPLETELY FLUSHED AS REQUIRED IN THE SAME SECTION OF NFPA 24.

638.0305 SHOP DRAWING CHECKLIST. THE FOLLOWING IS A CHECKLIST OF JOB SPECIFIC ITEMS THAT SHALL BE SUBMITTED AS SHOP DRAWINGS BY THE CONTRACTOR FOR REVIEW AND APPROVAL BY ENGINEER.

THE SHOP DRAWING SUBMITTALS SHALL CONTAIN ALL INFORMATION AS STATED BELOW AND AS STATED IN EACH SPECIFICATION SECTION.
THE FOLLOWING LIST IS NOT ALL-INCLUSIVE; THE CONTRACTOR SHALL BE RESPONSIBLE TO SUBMIT ALL REQUIRED SHOP DRAWINGS FOR ALL MATERIALS THAT WILL BE INSTALLED IN THE PROJECT:

PRODUCT/ CATEGORY	SUBMITTAL REQUIREMENTS
HYDRAULIC CALCULA-TIONS	HYDRAULIC CALCULATIONS CORRESPONDING TO THE SHOP DRAWING HEAD LAYOUT.
VIBRATION ISOLATION	CUT SHEETS OF ALL ITEMS AND MATERIALS, STAMPED AND SIGNED DESIGN DRAWINGS.
PIPING	CUT SHEETS OF ALL ITEMS AND MATERIALS INCLUDING JOINING METHODS; SCHEDULE OF MATERIALS.
VALVES	CUT SHEETS OF ALL ITEMS AND MATERIALS, SCHEDULE OF VALVES.
EQUIPMENT: -PIPE SLEEVES, INSERTS AND HANGERS.	CUT SHEETS OF ALL ITEMS AND MATERIALS, OPERATION SEQUENCES ETC.
IDENTIFI-CATION	CUT SHEETS OF ALL ITEMS AND MATERIALS
HANGERS AND SUP-PORTS	CUT SHEETS OF ALL ITEMS AND MATERIALS
FIRESTOP-PING AND SMOKESTOPP ING	CUT SHEETS OF ALL ITEMS AND MATERIALS
DRAINS	CUT SHEETS OF ALL ITEMS AND MATERIALS
TESTING REPORTS	TESTING REPORT INCLUDING PROCEDURE AND RESULTS FOR EACH SYSTEM OR SECTION OF EACH SYSTEM. INCLUDE MULTIPLE ITERATIONS AS PERFORMED.
RECORD AS-BUILT DRAWINGS	FULL SET OF DRAWINGS INDICATING AS-BUILT CONDITIONS. VALVE TAGS AND CHARTS.
OPERATION AND MAINTE-NANCE MANUALS (O&M)	COMPLETE BOUND AND TABBED BINDERS OF ALL EQUIPMENT MAINTENANCE MANUALS AND RECOMMENDED MAINTENANCE SCHEDULE, WARRANTIES, LETTER OF COMPLETION.

638.0306 TESTING AND INSPECTION. THE CONTRACTOR SHALL OBTAIN AND PAY FOR ALL THE INSPECTION AND TESTS REQUIRED FOR THIS SECTION OF THE WORK. DEFECTS DISCOVERED IN WORK, MATERIALS AND/OR EQUIPMENT SHALL BE REPLACED AT NO COST TO THE ENGINEER, AND THE INSPECTION AND TESTING SHALL BE REPEATED. WHEN WORK IS COMPLETED, THE CONTRACTOR SHALL FURNISH ALL CERTIFICATES OF INSPECTION AND APPROVAL TO THE ENGINEER BEFORE FINAL PAYMENT OF THE CONTRACT WILL BE ALLOWED.

TEST STANDPIPE PIPING AND MAKE WATERTIGHT BEFORE ANY PAINTING AND CONCEALMENT. MAKE PARTIAL TESTS AS REQUIRED, DURING THE PROGRESS OF THE WORK. ALL TESTS SHALL BE WITNESSED BY THE AUTHORITY HAVING JURISDICTION AND A REPRESENTATIVE OF THE ENGINEER.

STANDPIPE SYSTEM SHALL BE TESTED TO A HYDROSTATIC TEST OF 200 PSI FOR TWO (2) HOURS IN ACCORDANCE WITH NFPA 13 AND NFPA 24 AS A MINIMUM TESTING REQUIREMENT. IF SYSTEM WORKING PRESSURES IN EXCESS OF 175 PSI ARE EXPECTED, THOSE PORTIONS OF THE PIPING SYSTEM SHALL BE TESTED AT A PRESSURE 50 PSI IN EXCESS OF THE EXPECTED SYSTEM WORKING PRESSURE. CONTRACTOR SHALL TEST STANDPIPE SYSTEM FOR MINIMUM 500 GPM OF FLOW FOR THE HYDRAULICALLY MOST REMOTE STANDPIPE THROUGH THE MOST REMOTE 2-1/2" OUTLETS, FROM EACH OF THE FIRE DEPARTMENT CONNECTIONS.

THE CONTRACTOR SHALL, WITH THE PARTIES NOTED HEREIN, ESTABLISH PROCEDURES TO WITNESS TESTING THAT ARE ACCEPTABLE TO THE PARTIES NOTED HEREIN. ALL PARTIES NOTED HEREIN SHALL BE NOTIFIED IN WRITING OF THE ACCEPTED TESTING PROCEDURE PRIOR TO ANY TESTING. THE CONTRACTOR SHALL NOTIFY PARTIES DESIGNATED TO WITNESS TESTING AT LEAST 30 DAYS IN ADVANCE OF SCHEDULED TESTING.

CONDITIONS REQUIRING TESTING IN EXCESS OF THE MINIMUM REQUIREMENTS NOTED HEREIN SHALL BE PERFORMED IN ACCORDANCE WITH NFPA STANDARDS AND FM DATA SHEETS AND THE REQUIREMENTS OF THE AUTHORITIES HAVING JURISDICTION.

DISPOSE OF TEST WATER AND WASTES AFTER TESTS ARE COMPLETE IN A MANNER SATISFACTORY TO THE LOCAL AUTHORITIES.

FURNISH TO THE ENGINEER COMPLETELY EXECUTED TEST CERTIFICATES WITH SIGNATURES OF THOSE REQUIRED TO WITNESS TESTING. TEST CERTIFICATE FORMS SHALL FOLLOW NFPA AND FM FORMATS AS A MINIMUM REQUIREMENT.

THE CONTRACTOR SHALL GIVE ALL NECESSARY NOTICES, OBTAIN AND PAY FOR ALL PERMITS, PAY ALL TAXES, FEES AND OTHER COSTS IN CONNECTION WITH HIS WORK; FILE FOR NECESSARY APPROVALS WITH THE JURISDICTION UNDER WHICH THE WORK IS TO BE PERFORMED. THE CONTRACTOR SHALL OBTAIN ALL CERTIFICATES OF INSPECTION AND DELIVER SAME TO THE ENGINEER BEFORE REQUEST FOR ACCEPTANCE OF HIS PORTION OF WORK IS MADE AND BEFORE FINAL PAYMENT. ALL CERTIFICATES AND INSPECTIONS SHALL BE IN ACCORDANCE WITH NFPA STANDARDS AND FM DATA SHEETS AS A MINIMUM FOR ALL THE FIRE PROTECTION WORK INSTALLED.

CARE SHALL BE EXERCISED IN PLACING THE STANDPIPE IN OPERATION AND/OR INTRODUCING HIGH PRESSURE WATER INTO THE STANDPIPE PIPING SYSTEMS. OPEN VALVES SLOWLY AND MAINTAIN WATCH FOR LEAKS IN ALL SYSTEMS FOR MINIMUM OF ONE (1) ENTIRE WORK DAY.

ANY LEAKS DEVELOPED SHALL BE REPAIRED AT NO EXTRA COST TO THE ENGINEER.

638.0307 IDENTIFICATION OF MATERIALS. BEFORE NAMEPLATES AND MARKERS ARE APPLIED, THE EQUIPMENT AND PIPING SHALL BE CLEANED AND PAINTED.

NAME PLATE SHALL BE MADE OF BLACK SURFACE, WHITE CORE LAMINATED BAKELITE WITH 1" HIGH INDENTED LETTERS. NAMEPLATES SHALL BE MINIMUM 5" LONG BY 3" WIDE AND BEAR THE EQUIPMENT NAME AS DESIGNATED IN THE SPECIFICATIONS. NAMEPLATES SHALL BE AS FABRICATED BY SETON NAMEPLATE CO., ATLANTIC ENGRAVING CO., W.H. BRADY CO., OR APPROVED EQUAL. ATTACH WITH SCREWS OR RIVETS.

A LEGEND SHOWING THE SERVICE SHALL BE APPLIED ON EACH PIPE INSTALLED BY THE CONTRACTOR. THE PIPING OF EACH SYSTEM SHALL BE IDENTIFIED IN THE FOLLOWING LOCATIONS AND WHERE DIRECTED BY THE ENGINEER.

(1) PIPE MAINS AND BRANCHES – EVERY 10'-0'

(2) AT EACH VALVE.

(3) EACH WALL PENETRATION (BOTH SIDES)

(4) EACH RISER INCLUDING BRANCH RISERS FROM MAINS.

(5) AT EACH CHANGE OF DIRECTION

THE IDENTIFICATION OF PIPING SHALL BE COORDINATED WITH THE ENGINEER AND COMPLY WITH OSHA AND ANSI A13.1 STANDARDS FOR THE IDENTIFICATION OF SYSTEMS. OBTAIN APPROVAL OF ENGINEER PRIOR TO INSTALLATION. THE LETTER SIZE AND BACKGROUND COLOR SHALL CONFORM TO THE ANSI SCHEME FOR THE IDENTIFICATION OF PIPING SYSTEMS.

OUTSIDE PIPE DIAMETER (INCHES)	LETTER HEIGHT (INCHES)
2-1/2" TO 6"	1-1/4"

PROVIDE ALL LABELS ON ALL CAPPED PIPING.

THE PIPE MARKERS SHALL BE INSTALLED ON THE APPARATUS IN FULL VIEW AND SHALL BE A COLOR THAT IS IN SHARP CONTRAST WITH THE BACKGROUND. ALL COLOR CODING SHALL BE IN ACCORDANCE WITH ASME A13.1, LATEST EDITION.

PIPING SYSTEMS SHALL BE IDENTIFIED WITH APPROVED SNAP-ON COVERS DESIGNATING SERVICES. LOCATION OF IDENTIFICATION COVERS SHALL BE NEAR ACCESS PANELS WHEREVER POSSIBLE ON BOTH SIDES OF VALVES. THE MARKERS SHALL BE AS MANUFACTURED BY W.H. BRADY COMPANY, WESTLINE PRODUCTS, SETON NAMEPLATE COMPANY OR APPROVED EQUAL.

CALCULATED EEB CHECKED NAH

HAM-71-1.34 WATER WORK - DRY STANDPIPE - GENERAL NOTES

c:\pwworking\hmm\external\tyn61470\dms72752\87268UN005.dgn 10/24/2014 12:26:38 PM T:\N61470

638.0308 VALVE TAGS AND CHARTS. *PROVIDE NEAT CIRCULAR BRASS VALVE TAGS OF AT LEAST 1-1/2" IN DIAMETER, ATTACHED WITH BRASS HOOK TO EACH VALVE STEM OR HANDLE AS DETERMINED BY ENGINEER. STAMP ON THESE VALVE TAGS, IN LETTERS AS LARGE AS PRACTICAL, THE NUMBER OF THE VALVE AND THE SERVICE, SUCH AS "FP", "SP", "D", FOR FIRE PROTECTION, STANDPIPE, DRY PIPE, ETC. THE NUMBERS OF EACH SERVICE SHALL BE CONSECUTIVE. OBTAIN APPROVAL OF ENGINEER PRIOR TO INSTALLATION.*

THESE NUMBERS SHALL CORRESPOND TO NUMBERS INDICATED FOR VALVES ON THE DRAWINGS AND ON TWO (2) PRINTED DETAILED LISTS. THESE PRINTED LISTS SHALL STATE THE NUMBERS AND LOCATIONS OF EACH VALVE AND THE EQUIPMENT OR SYSTEM WHICH IT CONTROLS AND OTHER NECESSARY INFORMATION SUCH AS REQUIRING THE OPENING OR CLOSING OF ANOTHER VALVE OR VALVES WHEN ANY ONE VALVE IS TO BE OPENED AND CLOSED.

THESE PRINTED LISTS SHALL BE PREPARED IN FORM TO MEET APPROVAL OF THE ENGINEER. PROVIDE VALVE LISTS IN BOOKLET FORM ALSO AND SUBMIT EIGHT (8) COPIES TO THE ENGINEERS.

TAG NUMBERS SHALL CORRESPOND TO NUMBERS INDICATED FOR VALVES ON THE DRAWINGS AND ON THREE PRINTED DETAILED LISTS. THESE PRINTED LISTS SHALL STATE THE NUMBER AND LOCATION OF EACH VALVE AND THE AREA WHICH IT CONTROLS AND OTHER NECESSARY INFORMATION, SUCH AS REQUIRING THE OPENING OR CLOSING OF ANOTHER VALVE OR VALVES, WHEN ANY ONE VALVE IS TO BE OPENED OR CLOSED.

VALVE CHARTS SHALL INCLUDE THE CONTRACTOR'S NAME AND PHONE NUMBER, DATE OF CHART, NAME AND TELEPHONE NUMBER OF CONSULTING ENGINEERING FIRM AND THE ENGINEER'S REPRESENTATIVE.

638.04 PAYMENT. *PAYMENT IS FULL COMPENSATION FOR ALL LABOR, MATERIAL, EQUIPMENT REQUIRED TO CONSTRUCT THE STANDPIPE SYSTEM.*

ODOT WILL PAY FOR ACCEPTED QUANTITIES AT THE CONTRACT PRICES AS FOLLOWS:

ITEM	UNIT	DESCRIPTION
630	SF	SIGNING, MISC.: STANDPIPE SIGNAGE PAYMENT FOR SIGNING, MISC.: STANDPIPE SIGNAGE IS FULL COMPENSATION FOR ALL LABOR, MATERIAL, AND EQUIPMENT NECESSARY TO COMPLETE THE WORK AND INCLUDES ALL SIGNS, SIGNPOSTS, AND BOLTS FOR FIRE DEPARTMENT CONNECTIONS, HOSE CONNECTIONS, AND DRAINS AT THE ROADWAY LEVEL, ABOVE THE ROADWAY LEVEL, AND AT GROUND LEVEL.
638	FT	WATER WORK, MISC.: STANDPIPE DEMOLITION PAYMENT FOR WATER WORK, MISC.: STANDPIPE DEMOLITION IS FULL COMPENSATION FOR ALL LABOR, MATERIAL, AND EQUIPMENT NECESSARY TO COMPLETE THE WORK AND INCLUDES THE STAGED DEMOLITION AND REMOVAL OF ALL 6" AND 4" PIPE AND FITTINGS WITHIN THE DEMOLITION LIMITS, OF ALL EXPANSION JOINTS, AND OF ALL PIPE SUPPORTS, ANCHORS, AND HANGERS, AND THE DISCONNECTION OF ALL ELECTRICAL GROUND CONNECTIONS TO THE STANDPIPE.
638	EACH	WATER WORK, MISC.: HOSE CONNECTION DEMOLITION PAYMENT FOR WATER WORK, MISC.: HOSE CONNECTION DEMOLITION IS FULL COMPENSATION FOR ALL LABOR, MATERIAL, AND EQUIPMENT NECESSARY TO COMPLETE THE WORK AND INCLUDES THE STAGED DEMOLITION AND REMOVAL OF ALL 2-1/2" BLACK STEEL PIPE, ANGLE HOSE VALVES, AND MISCELLANEOUS FITTINGS AS WELL AS THE TEMPORARY CAPPING AND SEALING OF THE EXISTING STANDPIPE PER THE PLANS.
638	FT	WATER WORK, MISC.: TEMPORARY STANDPIPE PAYMENT FOR WATER WORK, MISC.: TEMPORARY STANDPIPE IS FULL COMPENSATION FOR ALL LABOR, MATERIAL, AND EQUIPMENT NECESSARY TO COMPLETE THE WORK AND INCLUDES ALL PIPE, COUPLINGS, FITTINGS, HOSE CONNECTIONS, FIRE DEPARTMENT CONNECTIONS, SUPPORT BRACKETS, DRAINS, PIPE SUPPORTS, STRAPS, AND ANCHORS FOR THE TEMPORARY PROVISION OF STANDPIPE TO THE I.R.-71 SB RAMP E TUNNEL TO THIRD STREET DURING CONSTRUCTION PER THE NOTES AND PLANS.
638	FT	WATER WORK, MISC.: STANDPIPE CONSTRUCTION PAYMENT FOR WATER WORK, MISC.: STANDPIPE CONSTRUCTION IS FULL COMPENSATION FOR ALL LABOR, MATERIAL, AND EQUIPMENT NECESSARY TO COMPLETE THE WORK AND INCLUDES ALL PIPE, COUPLINGS, FITTINGS, SUPPORT BRACKETS, DRAINS, PIPE SUPPORTS, PIPE HANGERS, STRAPS, ANCHORS, AND RISER CLAMPS AT THE ROADWAY LEVEL AND ABOVE THE ROADWAY LEVEL PER THE PLANS, EXCLUDING ANY CONSTRUCTION COVERED UNDER HOSE CONNECTION CONSTRUCTION OR ELECTRICAL ROOM HOSE CONNECTION CONSTRUCTION.
638	EACH	WATER WORK, MISC.: HOSE CONNECTION CONSTRUCTION PAYMENT FOR WATER WORK, MISC.: HOSE CONNECTION CONSTRUCTION IS FULL COMPENSATION FOR ALL LABOR, MATERIAL, AND EQUIPMENT NECESSARY TO COMPLETE THE WORK AND INCLUDES ALL PIPE, COUPLINGS, FITTINGS, AND HOSE VALVES LOCATED BEYOND A REDUCING TEE ON THE ROADWAY LEVEL.
638	EACH	WATER WORK, MISC.: ELECTRICAL ROOM HOSE CONNECTION CONSTRUCTION PAYMENT FOR WATER WORK, MISC.: ELECTRICAL ROOM HOSE CONNECTION CONSTRUCTION IS FULL COMPENSATION FOR ALL LABOR, MATERIAL, AND EQUIPMENT NECESSARY TO COMPLETE THE WORK AND INCLUDES ALL PIPE, COUPLINGS, FITTINGS, HOSE VALVES, PIPE HANGERS, STRAPS, AND ANCHORS LOCATED BEYOND A REDUCING TEE ABOVE THE ROADWAY LEVEL.
638	EACH	WATER WORK, MISC.: CHECK VALVES PAYMENT FOR WATER WORK, MISC.: CHECK VALVES IS FULL COMPENSATION FOR ALL LABOR, MATERIAL, AND EQUIPMENT NECESSARY TO COMPLETE THE WORK AND INCLUDES ALL CHECK VALVES, TRANSITION COUPLINGS SECURED TO SUCH VALVES, BALL DRIPS, AND COMBINATION AIR-VACUUM VALVES.
638	EACH	WATER WORK, MISC.: ISOLATION VALVES PAYMENT FOR WATER WORK, MISC.: ISOLATION VALVES IS FULL COMPENSATION FOR ALL LABOR, MATERIAL, AND EQUIPMENT NECESSARY TO COMPLETE THE WORK AND INCLUDES ALL OS&Y (CONTROL) VALVES, TRANSITION COUPLINGS SECURED TO SUCH VALVES, PIPE SUPPORT BRACKETS, AND RISER CLAMPS.
638	LUMP	WATER WORK, MISC.: RELOCATION OF FDC#3 PAYMENT FOR WATER WORK, MISC.: RELOCATION OF FDC#3 IS FULL COMPENSATION FOR ALL LABOR, MATERIAL, AND EQUIPMENT NECESSARY TO COMPLETE THE WORK AND INCLUDES ALL SIDEWALK DEMOLITION, EXCAVATION, DEMOLITION OF PIPE AND EXISTING FIRE DEPARTMENT CONNECTION, GROOVING OF EXISTING PIPE, PIPE, COUPLINGS, FITTINGS, ANCHORS, FIRE DEPARTMENT CONNECTION, BACKFILL, AND SIDEWALK.
638	LUMP	WATER WORK, MISC.: TESTING AND INSPECTION PAYMENT FOR WATER WORK, MISC.: TESTING AND INSPECTION IS FULL COMPENSATION FOR ALL LABOR, MATERIAL, AND EQUIPMENT NECESSARY TO COMPLETE THE WORK AND INCLUDES THE ACCEPTANCE TESTING AND INSPECTION OF THE ENTIRE STANDPIPE SYSTEM PER THE NOTES.
638	LUMP	WATER WORK, MISC.: AS-BUILT DRAWINGS PAYMENT FOR WATER WORK, MISC.: AS-BUILT DRAWINGS IS FULL COMPENSATION FOR ALL LABOR, MATERIAL, AND EQUIPMENT NECESSARY TO COMPLETE THE WORK AND INCLUDES A COMPLETE SET OF AS-BUILT DRAWINGS FOR THE ENTIRE STANDPIPE SYSTEM PER THE NOTES.
638	LUMP	WATER WORK, MISC.: REPLACEMENT OF FDC#1 PAYMENT FOR WATER WORK, MISC.: REPLACEMENT OF FDC#1 IS FULL COMPENSATION FOR ALL LABOR, MATERIAL, AND EQUIPMENT NECESSARY TO COMPLETE THE WORK AND INCLUDES FDC#1 REMOVAL, EXCAVATION, GROOVING OF EXISTING PIPE, PIPE, COUPLINGS, FITTINGS, ANCHORS, FIRE DEPARTMENT CONNECTION, BACKFILL, AND WALL RESTORATION.
638	LUMP	WATER WORK, MISC.: REPLACEMENT OF FDC#2 PAYMENT FOR WATER WORK, MISC.: REPLACEMENT OF FDC#2 IS FULL COMPENSATION FOR ALL LABOR, MATERIAL, AND EQUIPMENT NECESSARY TO COMPLETE THE WORK AND INCLUDES DEMOLITION OF EXISTING FIRE CONNECTION, COUPLINGS, FITTINGS AND FIRE DEPARTMENT CONNECTION.
638	LUMP	WATER WORK, MISC.: TESTING OF FDC #1 UPON COMPLETION OF THE INSTALLATION OF FDC #1, THE CONTRACTOR IS TO PERFORM A HYDROSTATIC TEST AT BOTH CONNECTIONS TO TEST THE PORTIONS OF THE STANDPIPE SYSTEM TO REMAIN AS SHOWN ON SHEET 119. THE HYDROSTATIC TEST IS TO BE CONDUCTED WITH WATER IN THE SYSTEM AT A MINIMUM PRESSURE OF 200 PSI. APPLY THE 200 PSI PRESSURE FOR TWO CONSECUTIVE HOURS. OVER THE TWO HOUR PERIOD, THERE IS TO BE NO PRESSURE LOSS IN THE SYSTEM. TESTING IS TO BE PERFORMED PRIOR TO THE INSTALLATION OF THE NEW STANDPIPE SYSTEM. IF THE SYSTEM FAILS THE TEST, THE CONTRACTOR IS TO IMMEDIATELY NOTIFY THE ENGINEER. ANY REPAIRS NEEDED AS A RESULT OF THIS TESTING SHALL BE COMPENSATED IN ACCORDANCE WITH C&MS 109.05. PAYMENT FOR ALL LABOR, MATERIALS, AND EQUIPMENT IN ORDER TO PERFORM THE TESTING IS INCLUDED IN THE LUMP SUM PRICE BID.

c:\pwworking\hmm\external\tyn61470\dms72752\872681UN006.dgn 10/24/2014 12:26:51 PM T^N61470

SYMBOLS:

EXISTING DRY STANDPIPE

EXISTING FIRE DEPARTMENT CONNECTION - FREESTANDING TYPE

EXISTING FIRE DEPARTMENT CONNECTION - FLUSH TYPE

EXISTING HOSE CONNECTION

HC19X — EXISTING HOSE CONNECTION TAG

EXISTING EXPANSION JOINT

EXISTING REDUCER

EXISTING FILL

EXISTING CONCRETE

ITEM TO BE REMOVED

NEW DRY STANDPIPE

NEW HOSE CONNECTION

HC19 — NEW HOSE CONNECTION TAG

NEW FIRE DEPARTMENT CONNECTION - FREESTANDING TYPE

PIPE UP

PIPE DOWN

PIPE TEE UP

PIPE TEE DOWN

DRAIN VALVE

CHECK VALVE

OUTSIDE SCREW AND YOKE (OS&Y) GATE VALVE

COMBINATION AIR RELIEF / VACUUM VALVE

NEW REDUCER

CUT POINT

CONNECT TO EXISTING

ABBREVIATIONS:

AWWA	AMERICAN WATER WORKS ASSOCIATION
B/	BOTTOM OF
℄	BASELINE
C/C	CENTER TO CENTER
℄	CENTERLINE
CTE	CONNECT TO EXISTING
D.I.	DUCTILE IRON
FDC	FIRE DEPARTMENT CONNECTION (SIAMESE)
FM	FACTORY MUTUAL LISTED
GA.	GAUGE
GPM	GALLONS PER MINUTE
HC	HOSE CONNECTION (VALVE)
I.R.	INTERSTATE ROUTE
LF	LINEAR FEET
MAX.	MAXIMUM
MIN.	MINIMUM
N.B.	NORTHBOUND
NFPA	NATIONAL FIRE PROTECTION ASSOCIATION
NPS	NOMINAL PIPE SIZE
NPT	NATIONAL PIPE THREAD
O.D.	OUTSIDE DIAMETER
ODOT	OHIO DEPARTMENT OF TRANSPORTATION
OS&Y	OUTSIDE SCREW AND YOKE
PSI	POUNDS PER SQUARE INCH GAUGE
S.B.	SOUTHBOUND
STA.	STATION
T/	TOP OF
TYP.	TYPICAL
UL	UNDERWRITERS LABORATORY LISTED

CALCULATED EEB
CHECKED NAH

WATER WORK - DRY STANDPIPE
SYMBOLS AND ABBREVIATIONS LEGENDS

HAM-71-1.34

c:\pwworking\hmm\external\tyn61470\dms72752\87268UN007.dgn 10/24/2014 12:27:01 PM TYN61470

ITEM NO.					630	638	638	638	638	638	638	638	638								
SHEET NO.	REFERENCE NO.	LOCATION	SIDE	LENGTH	SIGNING, MISC.: STANDPIPE SIGNAGE	WATER WORK, MISC.: HOSE CONNECTION DEMOLITION	WATER WORK, MISC.: HOSE CONNECTION CONSTRUCTION	WATER WORK, MISC.: ELECTRICAL ROOM HOSE CONNECTION CONSTRUCTION	WATER WORK, MISC.: CHECK VALVES	WATER WORK, MISC.: ISOLATION VALVES	WATER WORK, MISC.: STANDPIPE DEMOLITION	WATER WORK, MISC.: TEMPORARY STANDPIPE	WATER WORK, MISC.: STANDPIPE CONSTRUCTION								
					SF	EACH	EACH	EACH	EACH	EACH	FT	FT	FT								
121	EXISTING STANDPIPE	I.R.-71 NORTHBOUND	LT	437							437										
121	HC1, HC2, HC3, HC4, HC5	I.R.-71 NORTHBOUND	LT			5															
121	HC10, HC11, HC12, HC13, HC14	I.R.-71 SOUTHBOUND RAMP E	LT			5															
121	EXISTING STANDPIPE	I.R.-71 SOUTHBOUND	RT	390							390										
121	HC19, HC20, HC21, HC22	I.R.-71 SOUTHBOUND	RT			4															
122	EXISTING STANDPIPE	I.R.-71 NORTHBOUND	LT	410							410										
122	HC6, HC7, HC8, HC9	I.R.-71 NORTHBOUND	LT			4															
122	HC15, HC16, HC17, HC18	I.R.-71 SOUTHBOUND RAMP E	LT			4															
122	EXISTING STANDPIPE	I.R.-71 SOUTHBOUND	RT	356							356										
122	HC23, HC24, HC25, HC26	I.R.-71 SOUTHBOUND	RT			4															
123	EXISTING STANDPIPE	EXISTING FAN ROOM		215							215										
123	HC1X, HC2X, HC3X	EXISTING FAN ROOM				3															
124	PROPOSED STANDPIPE	I.R.-71 NORTHBOUND	LT	437									437								
124	HC1, HC2, HC3, HC4, HC5	I.R.-71 NORTHBOUND	LT				5														
124	HC10, HC11, HC12, HC13, HC14	I.R.-71 SOUTHBOUND RAMP E	LT				5														
124	PROPOSED STANDPIPE	I.R.-71 SOUTHBOUND	RT	390									390								
124	HC19, HC20, HC21, HC22	I.R.-71 SOUTHBOUND	RT				4														
125	PROPOSED STANDPIPE	I.R.-71 NORTHBOUND	LT	410									410								
125	HC6, HC7, HC8, HC9	I.R.-71 NORTHBOUND	LT				4														
125	HC15, HC16, HC17, HC18	I.R.-71 SOUTHBOUND RAMP E	LT				4														
125	PROPOSED STANDPIPE	I.R.-71 SOUTHBOUND	RT	356									356								
125	HC23, HC24, HC25, HC26	I.R.-71 SOUTHBOUND	RT				4														
126	PROPOSED STANDPIPE	PROPOSED FAN ROOM		120									120								
126	HC1F, HC2F	PROPOSED FAN ROOM						2													
126	CHECK VALVES	PROPOSED FAN ROOM							2												
126	ISOLATION VALVES	PROPOSED FAN ROOM								1											
128	END RISER #1	I.R.-71 NORTHBOUND	LT						1	1	27		27								
128	END RISER #3	I.R.-71 NORTHBOUND	LT						1	1	15		15								
128	END RISER #4	I.R.-71 SOUTHBOUND	RT						1	1	18		18								
128	END RISER #6	I.R.-71 SOUTHBOUND	RT						1	1	16		16								
128	INLINE RISER #2	I.R.-71 NORTHBOUND	LT								25		25								
128	INLINE RISER #5	I.R.-71 SOUTHBOUND	RT							1	21		21								
	TEMPORARY STANDPIPE	I.R.-71 SOUTHBOUND RAMP E	RT	830								830									
	SIGNS AT HC1 THRU HC9	I.R.-71 NORTHBOUND	LT		9																
	SIGNS AT HC10 THRU HC 18	I.R.-71 SOUTHBOUND RAMP E	LT		9																
	SIGNS AT HC19 THRU HC26	I.R.-71 SOUTHBOUND	RT		8																
	SIGNS AT HC1F AND HC2F				2																
	SIGN AT FDC#1				3																
	SIGN AT FDC#2				3																
	SIGN AT FDC#3				3																
	SIGN AT DRAIN	I.R.-71 NORTHBOUND	LT		0.1																
	SIGN AT DRAIN	I.R.-71 SOUTHBOUND	RT		0.1																
TOTALS CARRIED TO GENERAL SUMMARY					37.2	29	26	2	6	6	1930	830	1835								

CALCULATED EEB
CHECKED NAH

WATER WORK - DRY STANDPIPE - SUBSUMMARY

HAM-71-1.34

c:\pwworking\hmm\external\tyn61470\dms72752\87268US001.dgn 10/24/2014 12:27:03 PM TYN61470

NOTE:

1. FOR SYMBOLS AND ABBREVIATIONS LEGENDS, SEE SHEET 116 .

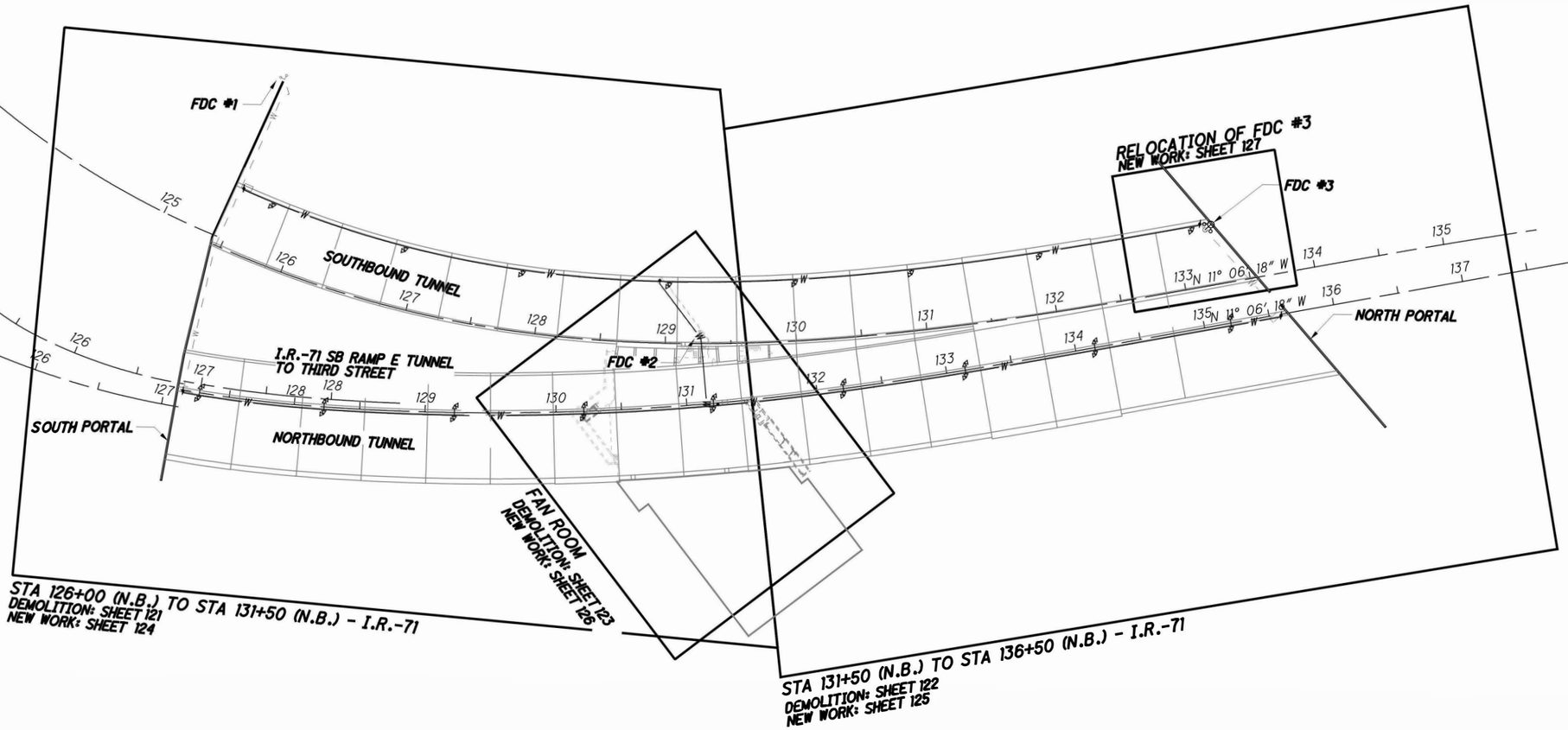

KEY PLAN
SCALE: 1" = 50'

CALCULATED: EEB
CHECKED: NAH

HORIZONTAL SCALE IN FEET
0 50 100

WATER WORK - DRY STANDPIPE
KEY PLAN

HAM-71-1.34

118
555

c:\pwworking\hmm\external\tyn61470\dms727752\87268UM001.dgn 10/24/2014 12:27:07 PM TYN61470

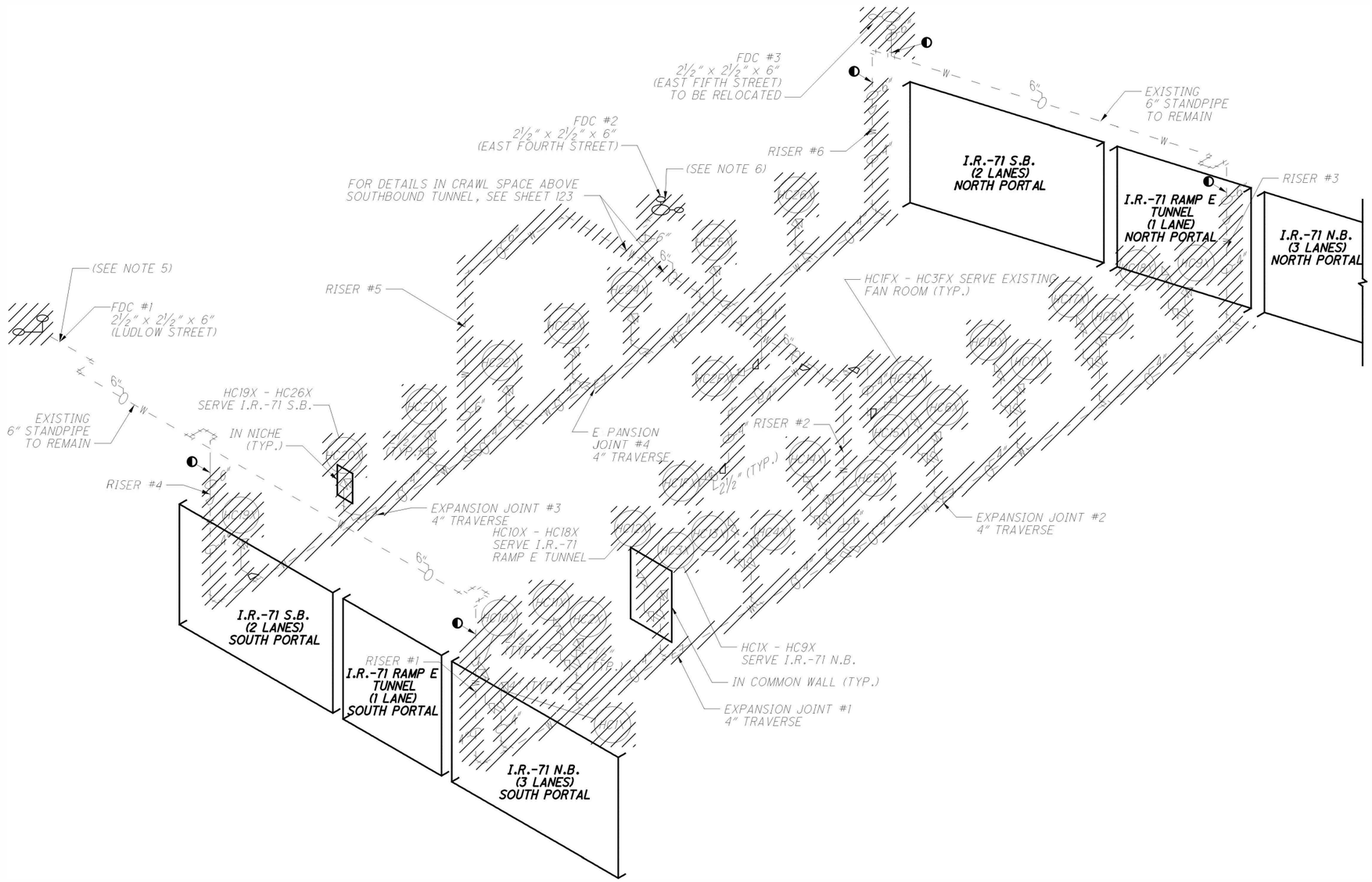

DEMOLITION RISER DIAGRAM

NO SCALE

NOTES:

1. FOR SYMBOLS AND ABBREVIATIONS LEGENDS, SEE SHEET 116.
2. DRY STANDPIPE TO BE REPLACED EXCEPT WHERE INDICATED.
3. ACTIVE ROADWAY REQUIRES FUNCTIONAL STANDPIPE AT ALL TIMES.
4. ALL NEW PIPE AND FITTINGS TO BE DUCTILE IRON RATED FOR AT LEAST 200 PSI.
5. AT FDC #1 REMOVE AND REPLACE BOTH 2 1/2" PLUGS, CHAINS, RUBBER GASKETS, FEMALE SWIVELS, SET-SCREWS AND BRASS BALLS. ALL NEW PARTS SHALL MATCH THE EXISTING FDC FINISH. THE REMAINDER OF THE STANDPIPE CONNECTION SHALL NOT BE REPLACED.
6. AT FDC #2 REMOVE AND REPLACE BOTH 2 1/2" PLUGS, CHAINS, RUBBER GASKETS, FEMALE SWIVELS, SET-SCREWS, BRASS BALLS AND FEEDING PIPE. ALL NEW PARTS SHALL MATCH THE EXISTING FDC FINISH.

NO SCALE

CALCULATED EEB
CHECKED NAH

WATER WORK - DRY STANDPIPE DEMOLITION RISER DIAGRAM

HAM-71-1.34

c:\pwworking\hmm\external\tyn61470\dms72752\87268UM002.dgn 10/24/2014 12:27:09 PM TYN61470

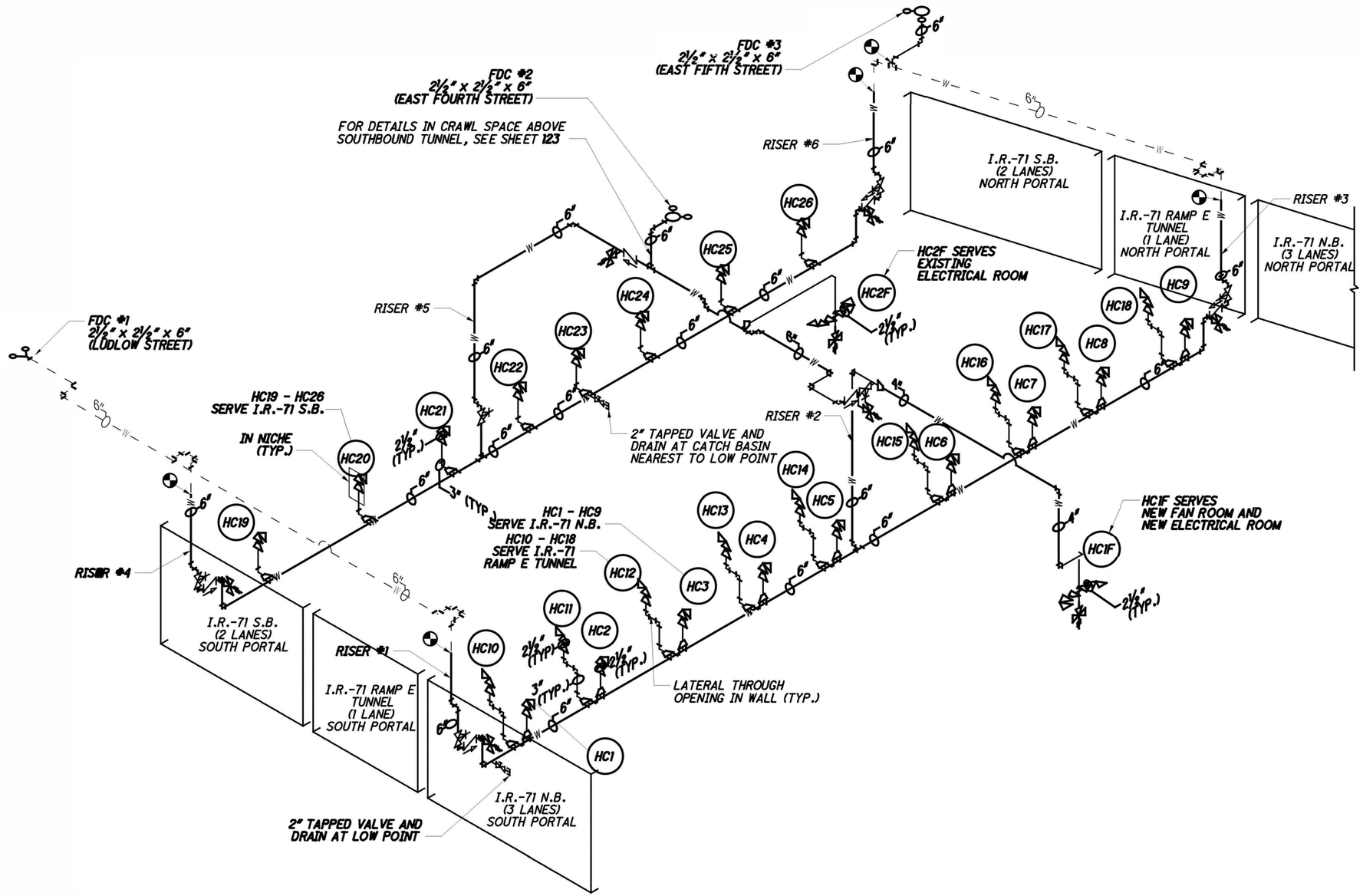

NEW WORK RISER DIAGRAM

NO SCALE

NOTES:

1. FOR SYMBOLS AND ABBREVIATIONS LEGENDS, SEE SHEET 116 .
2. ALL NEW PIPE AND FITTINGS TO BE DUCTILE IRON RATED FOR AT LEAST 200 PSI.
3. BALL DRIPS (NOT SHOWN) SHALL BE INSTALLED AT THE FDC/UPSTREAM SIDE OF ALL CHECK VALVES AND ISOLATION VALVES.
4. A BALL DRIP SHALL BE INSTALLED WITH THE COMBINATION AIR RELIEF-VACUUM VALVE AT HC1F AND HC2F.
5. AT FDC #1 REMOVE AND REPLACE BOTH 2 1/2" PLUGS, CHAINS, RUBBER GASKETS, FEMALE SWIVELS, SET-SCREWS AND BRASS BALLS. ALL NEW PARTS SHALL MATCH THE EXISTING FDC FINISH. THE REMAINDER OF THE STANDPIPE CONNECTION SHALL NOT BE REPLACED.
6. AT FDC #2 REMOVE AND REPLACE BOTH 2 1/2" PLUGS, CHAINS, RUBBER GASKETS, FEMALE SWIVELS, SET-SCREWS, BRASS BALLS AND FEEDING PIPE. ALL NEW PARTS SHALL MATCH THE EXISTING FDC FINISH.

NO SCALE

CALCULATED EEB
CHECKED NAH

WATER WORK - DRY STANDPIPE
NEW WORK RISER DIAGRAM

HAM-71-1.34

120
555

c:\pwworking\hmm\external\tyn61470\dms72752\87268UM003.dgn 10/24/2014 12:27:11 PM TYN61470

NOTES:

1. FOR SYMBOLS AND ABBREVIATIONS LEGENDS, SEE SHEET 116 .
2. ACTIVE ROADWAY REQUIRES FUNCTIONING STANDPIPE AT ALL TIMES. SEE SHEETS 134 AND 135 FOR SUGGESTED CONSTRUCTION PHASING.
3. CONTRACTOR SHALL DISCONNECT ALL GROUND CONNECTS.

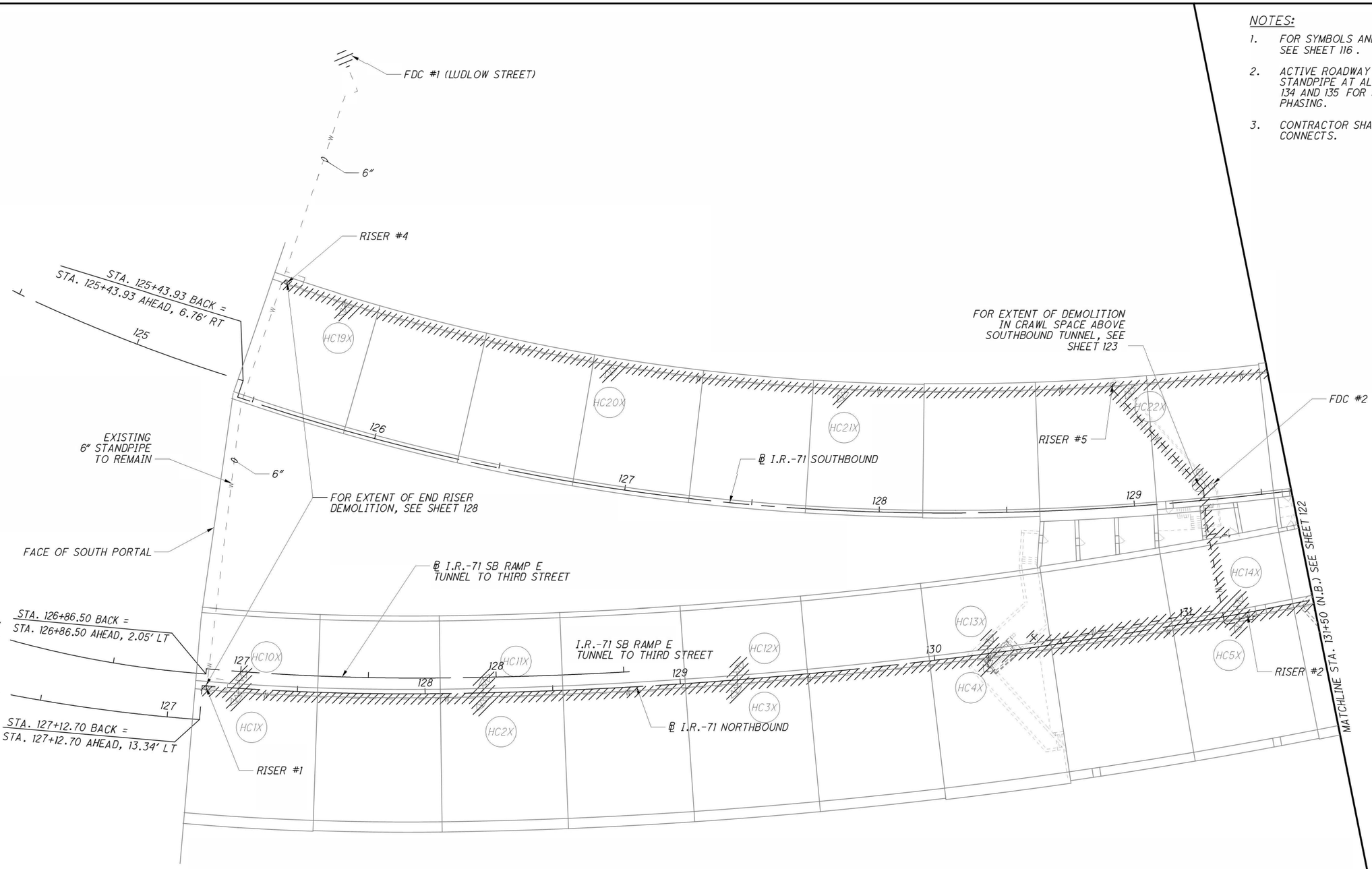

DEMOLITION PLAN - STA. 126+00 N.B. TO STA. 131+50 N.B.

SCALE: 1" = 20'

HORIZONTAL SCALE IN FEET
0 10 20 40

CALCULATED EEB
CHECKED NAH

WATER WORK - DRY STANDPIPE - DEMOLITION PLAN
STA. 126+00 TO STA. 131+50 - I.R.-71

HAM-71-1.34

121
555

c:\pwworking\hmm\external\tyn61470\dms72752\87268UM004.dgn 10/24/2014 12:27:15 PM TYN61470

NOTES:

1. FOR SYMBOLS AND ABBREVIATIONS LEGENDS, SEE SHEET 116 .
2. ACTIVE ROADWAY REQUIRES FUNCTIONING STANDPIPE AT ALL TIMES. SEE SHEETS 134 AND 135 FOR SUGGESTED CONSTRUCTION PHASING.
3. CONTRACTOR SHALL DISCONNECT ALL GROUND CONNECTS.

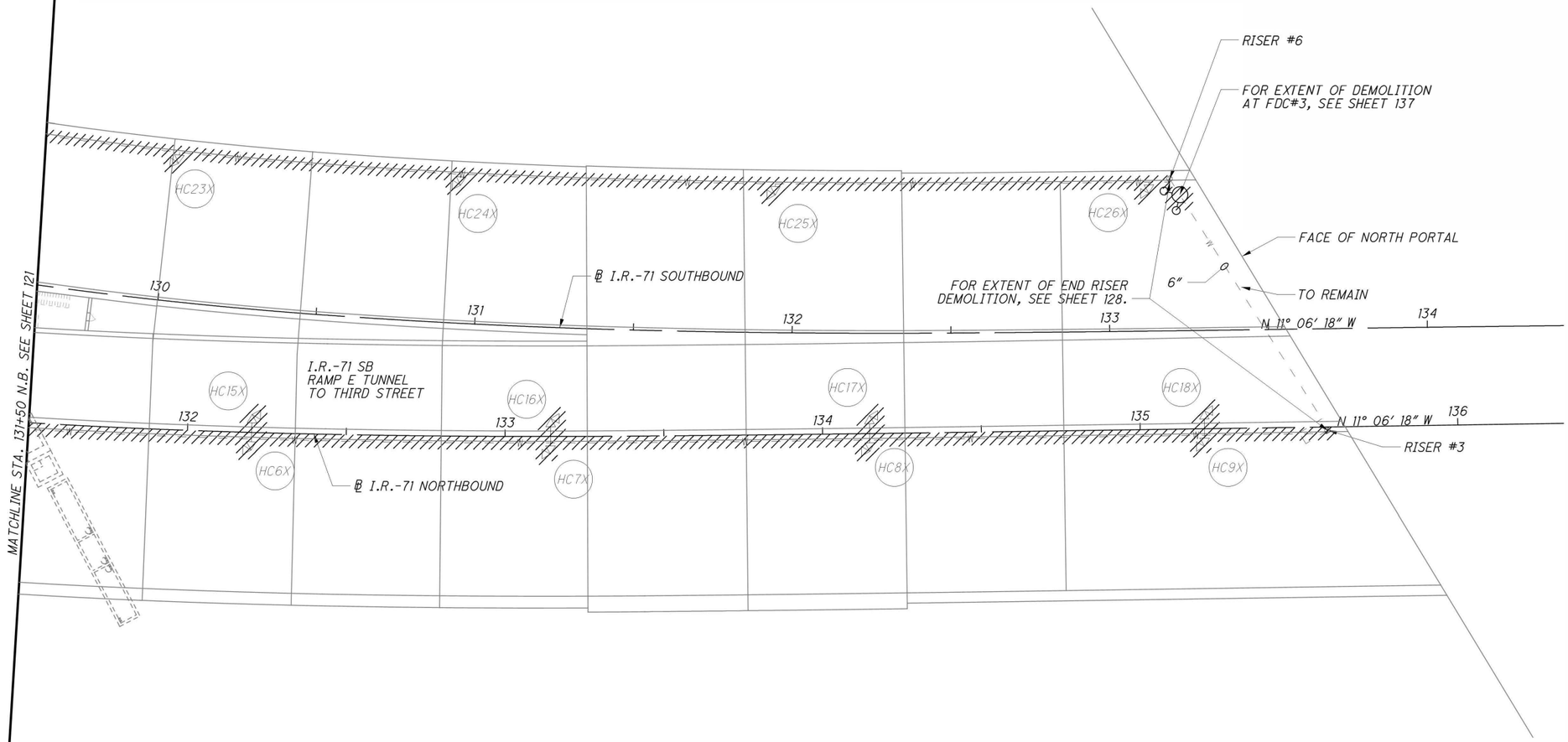

DEMOLITION PLAN - STA. 131+50 N.B. TO STA. 136+50 N.B.

SCALE: 1" = 20'

HORIZONTAL SCALE IN FEET
0 10 20 40

CALCULATED EEB
CHECKED NAH

WATER WORK - DRY STANDPIPE - DEMOLITION PLAN
STA. 131+50 TO STA. 136+50 - I.R.-71

HAM-71-1.34

122
555

c:\pwworking\hmm\external\tyn61470\dms72752\87268UM005.dgn 10/24/2014 12:27:17 PM TYN61470

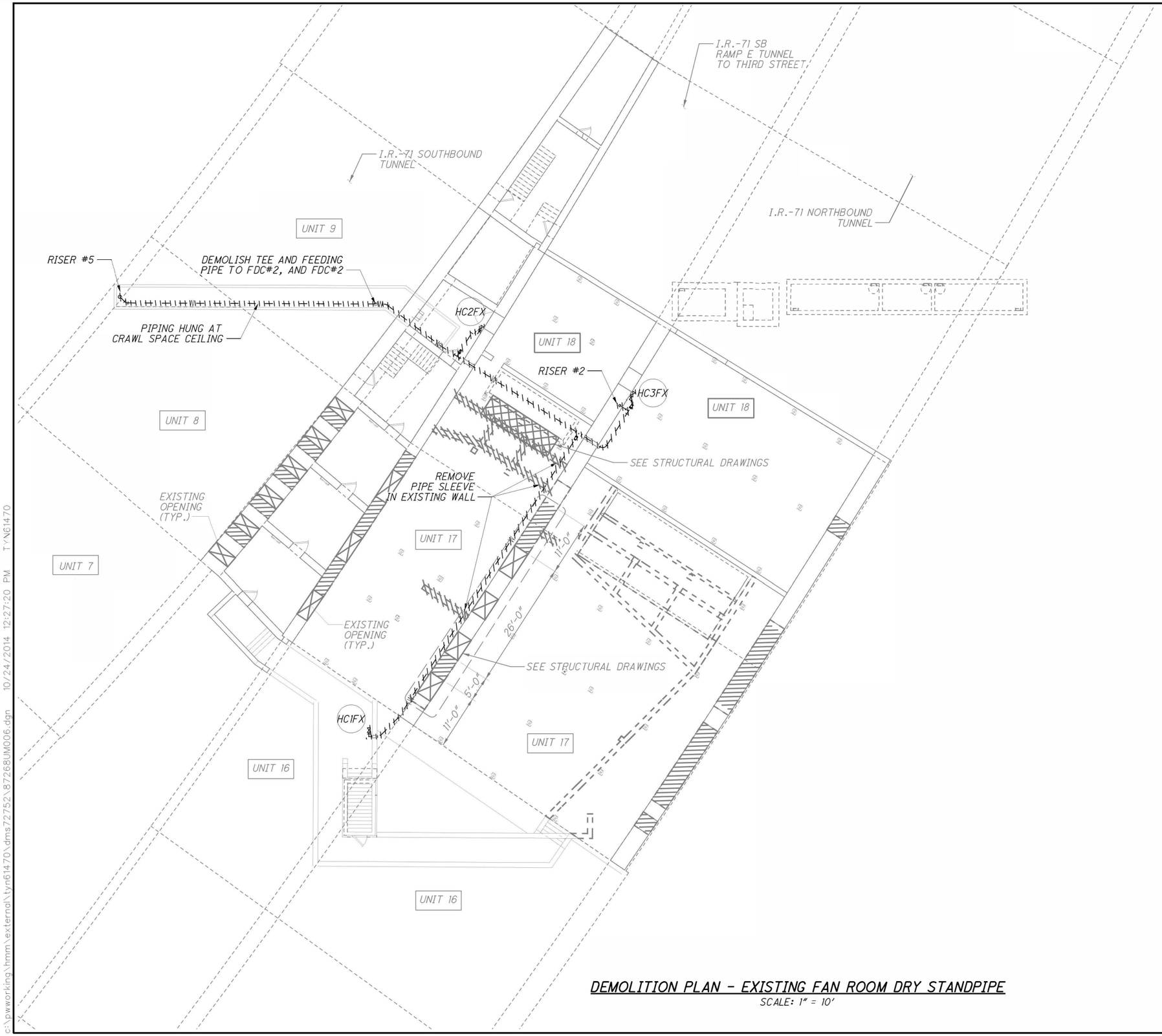

DEMOLITION PLAN - EXISTING FAN ROOM DRY STANDPIPE

SCALE: 1" = 10'

NOTES:

1. FOR SYMBOLS AND ABBREVIATIONS LEGENDS, SEE SHEET 116 .
2. DEMOLITION OF PIPING WHICH PASSES THROUGH WALLS TO BE DEMOLISHED SHALL BE COORDINATED BY CONTRACTOR.
3. ACTIVE ROADWAY REQUIRES FUNCTIONING STANDPIPE AT ALL TIMES.
4. FOR WALL DEMOLITION DETAILS, SEE SHEET 282.
5. CONTRACTOR SHALL DISCONNECT ALL GROUND CONNECTS.

LEGEND:

- PIPING TO BE REMOVED
- INTERNAL WALL TO BE REMOVED. SEE STRUCTURAL DRAWINGS.
- STRUCTURAL WALL TO BE REMOVED. SEE STRUCTURAL DRAWINGS.
- EXISTING STRUCTURAL WALL OPENING
- EXISTING FLOOR SLAB TO BE REMOVED. SEE STRUCTURAL DRAWINGS.

HORIZONTAL SCALE IN FEET
0 5 10 20

CALCULATED EEB
CHECKED NAH

WATER WORK - DRY STANDPIPE - DEMOLITION PLAN
EXISTING FAN ROOM

HAM-71-1.34

123
555

c:\pwworking\hmm\external\tyn61470\dms72752\87268UM006.dgn 10/24/2014 12:27:20 PM T:\N61470

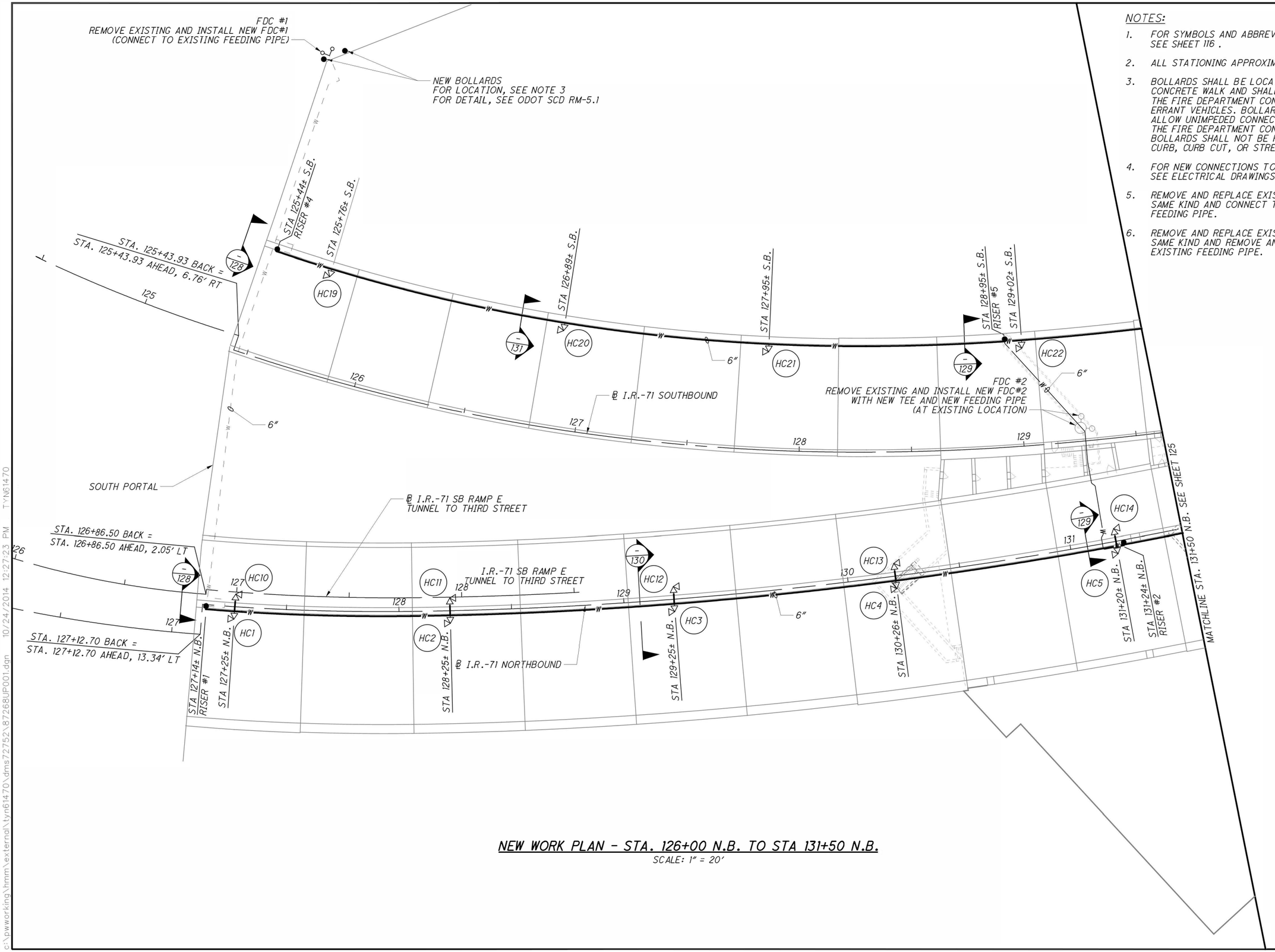

NEW WORK PLAN - STA. 126+00 N.B. TO STA 131+50 N.B.

SCALE: 1" = 20'

NOTES:

1. FOR SYMBOLS AND ABBREVIATIONS LEGENDS, SEE SHEET 116 .
2. ALL STATIONING APPROXIMATE.
3. BOLLARDS SHALL BE LOCATED ON THE CONCRETE WALK AND SHALL FULLY PROTECT THE FIRE DEPARTMENT CONNECTION FROM ERRANT VEHICLES. BOLLARD PLACEMENT SHALL ALLOW UNIMPEDED CONNECTION OF HOSES TO THE FIRE DEPARTMENT CONNECTION. BOLLARDS SHALL NOT BE PLACED IN THE CURB, CURB CUT, OR STREET.
4. FOR NEW CONNECTIONS TO GROUNDING GRID, SEE ELECTRICAL DRAWINGS.
5. REMOVE AND REPLACE EXISTING FDC#1 WITH SAME KIND AND CONNECT TO EXISTING FEEDING PIPE.
6. REMOVE AND REPLACE EXISTING FDC#2 WITH SAME KIND AND REMOVE AND REPLACE EXISTING FEEDING PIPE.

HORIZONTAL SCALE IN FEET
0 10 20 40

CALCULATED EEB
CHECKED NAH

WATER WORK - DRY STANDPIPE - PLAN
STA. 126+00 TO STA. 131+50 - I.R.-71

HAM-71-1.34

124
555

10/24/2014 12:27:23 PM TYN61470
c:\pwworking\hmm\external\tyn61470\dms72752\87268UP001.dgn

NOTES:

1. FOR SYMBOLS AND ABBREVIATIONS LEGENDS, SEE SHEET 116 .
2. ALL STATIONING APPROXIMATE.
3. FOR NEW CONNECTIONS TO GROUNDING GRID, SEE ELECTRICAL DRAWINGS.
4. FOR FDC#3 RELOCATION, SEE SHEETS 127, 136 AND 137.

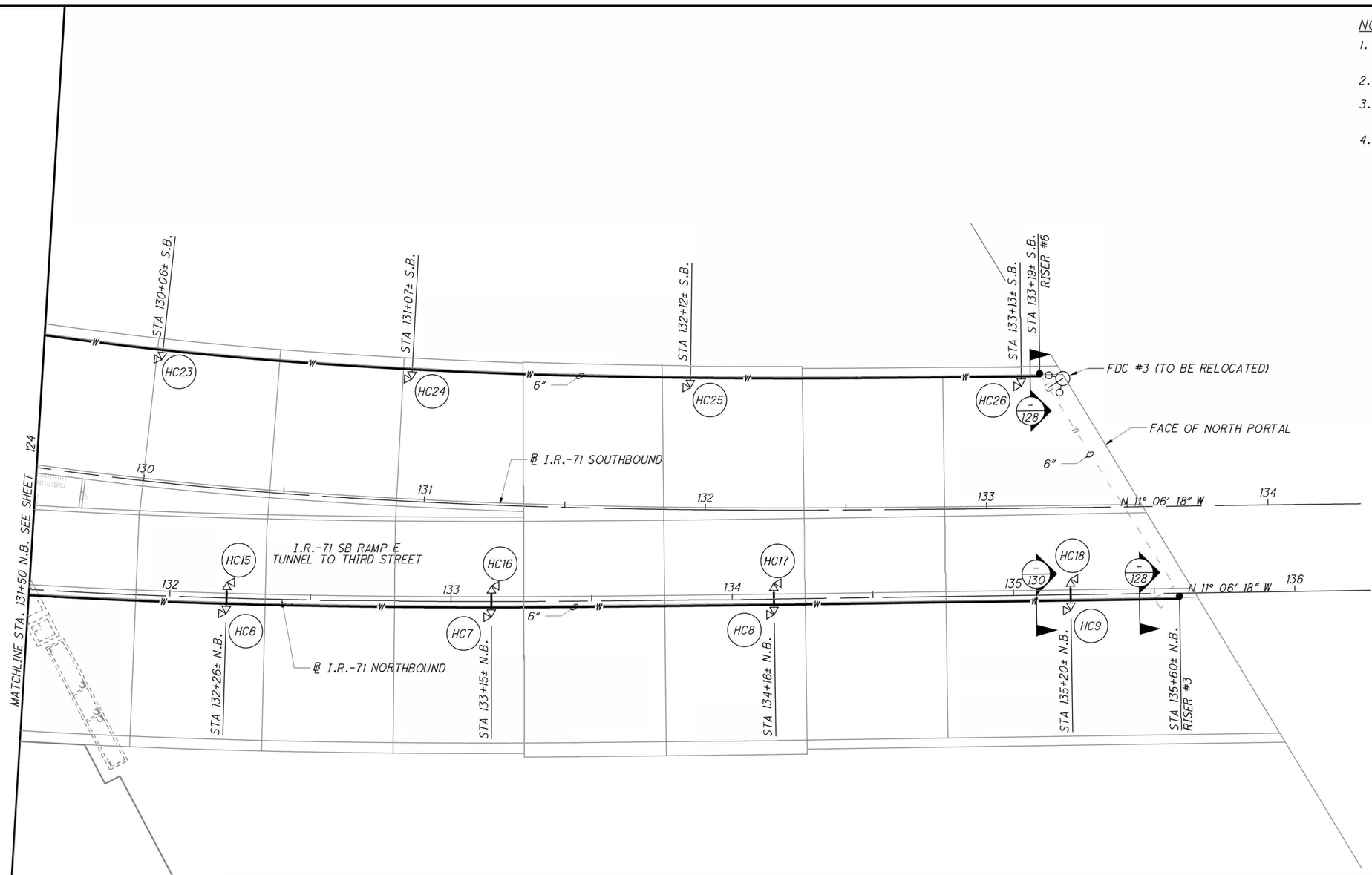

NEW WORK PLAN - STA. 131+50 N.B. TO STA. 136+50 N.B.

SCALE: 1" = 20'

HORIZONTAL SCALE IN FEET
0 10 20 40

CALCULATED EEB
CHECKED NAH

WATER WORK - DRY STANDPIPE - PLAN
STA. 131+50 TO STA. 136+50 - I.R.-71

HAM-71-1.34

125
555

c:\pwworking\hmm\external\tyn61470\dms72752\87268UP002.dgn 10/24/2014 12:27:26 PM T:\N61470

NOTES:

1. FOR SYMBOLS AND ABBREVIATIONS LEGENDS, SEE SHEET 116 .
2. PENETRATIONS REQUIRE FIRE STOPPING.
3. SLOPE NEW STANDPIPE IN CRAWL SPACE TO DRAIN TO RISER #5.
4. SLOPE NEW STANDPIPE IN REMAINDER OF FAN ROOM TO DRAIN TO RISER #2.
5. THE 4" NEW STANDPIPE LINE TO HC1F MAY PITCH EITHER TO RISER #2 OR TO HC1F AT THE CONTRACTOR'S DISCRETION.

I.R.-71 SOUTHBOUND TUNNEL

I.R.-71 SB RAMP E TUNNEL TO THIRD STREET

I.R.-71 NORTHBOUND TUNNEL

UNIT 7
UNIT 8
UNIT 9
UNIT 10
UNIT 15
UNIT 16
UNIT 17
UNIT 18
UNIT 19
UNIT 20

90° ELBOW DOWN THROUGH EXISTING 10" CONDUIT IN CRAWL SPACE FLOOR TO 90° ELBOW AND ACROSS FAN ROOM CEILING

INSTALL TEE AND NEW FEEDING PIPE TO NEW FDC#2 AT EXISTING LOCATION

6"

ELBOW DOWN TO RISER #5 SEE SHEET 129

HC2F

NEW HOSE CONNECTION FOR EXISTING ELECTRICAL ROOM SEE SHEET 131

ROUTE NEW STANDPIPE THROUGH EXISTING WALL PENETRATIONS

4"

ENSURE DOOR CLEARS HOSE CONNECTIONS

ELBOW DOWN TO RISER #2 SEE SHEET 129

HC1F

NEW HOSE CONNECTION FOR NEW ELECTRICAL ROOM SEE SHEET 131

WALL PENETRATIONS INTO NEW FAN ROOM TO BE COORDINATED WITH STRUCTURAL DRAWINGS

HANG NEW STANDPIPE AT CEILING TO AVOID DAMPER CHAINS, SHAFTS, AND ACTUATORS

FOR CONNECTION TO SUPPLEMENTAL EQUIPMENT GROUND, SEE SHEET 504

RISER DOWN TO CEILING OF LOWER CORRIDOR

NEW WORK PLAN - FAN ROOM DRY STANDPIPE

SCALE: 1" = 10'

HORIZONTAL SCALE IN FEET 0 5 10 20

CALCULATED EEB CHECKED NAH

WATER WORK - DRY STANDPIPE - PLAN FAN ROOM

HAM-71-1.34

126 555

c:\pwworking\hnm\external\pre47802\dms72752\87268UP003.dgn 9/8/2015 4:04:45 PM PRE47802

NOTE:

1. FOR SYMBOLS AND ABBREVIATIONS LEGENDS, SEE SHEET 116 .

SENTINEL STREET

FIFTH STREET

"NO PARKING ANY TIME" SIGN

"ONE WAY" SIGN

SEE DETAIL SHEET 136

RISER #6

EXISTING LOCATION OF FDC #3 (TO BE REMOVED)

NEW LOCATION OF FDC #3

REPLACE EXISTING FDC#3 WITH SAME KIND AND RELOCATE TO NEW LOCATION. EXTEND FEEDING PIPE TO NEW LOCATION.

3" CONDUIT

6-4½" DUCTS

4" ITS

FACE OF NORTH PORTAL

SOUTHBOUND I.R.-71

RAMP TO I.R.-71 AND I.R.-471

COLUMBIA PARKWAY

133

N 11° 06' 18" W

NEW WORK PLAN - RELOCATION OF FDC#3

SCALE: 1" = 5'

HORIZONTAL SCALE IN FEET

CALCULATED EEB

CHECKED NAH

WATER WORK - DRY STANDPIPE - PLAN RELOCATION OF FDC#3

HAM-71-1.34

127
555

c:\pw working\hmm\external\tyn61470\dms72752\87268UP004.dgn 10/24/2014 12:27:33 PM TYN61470

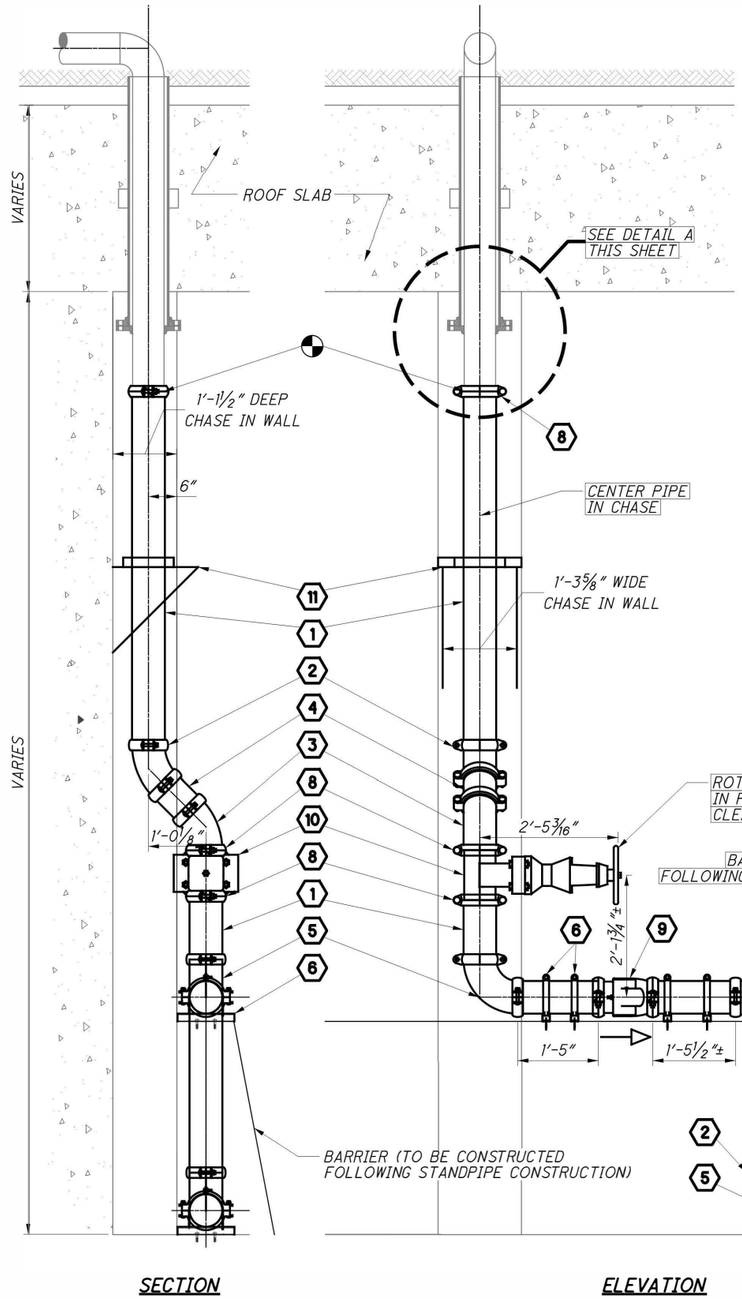

SECTION ELEVATION

END RISER (RISERS #1, 3) (#4, 6 OPPOSITE HAND)

SCALE: ¾" = 1'-0"

0 1
0.5 2
SCALE IN FEET

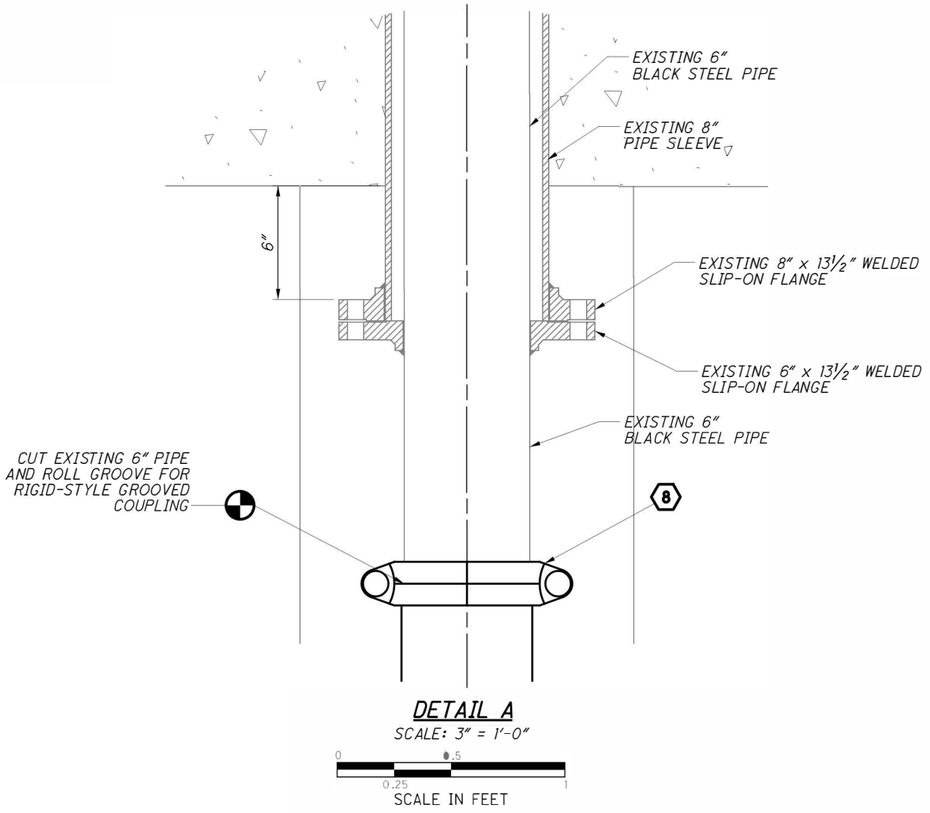

DETAIL A

SCALE: 3" = 1'-0"

0 .5
0.25 1
SCALE IN FEET

NOTE:

1. FOR SYMBOLS AND ABBREVIATIONS LEGENDS, SEE SHEET 116 .

KEYNOTE LEGEND:

1. NEW 6" AWWA D.I. PIPE WITH GROOVED ENDS
2. NEW 6" AWWA D.I. GROOVED COUPLING
3. NEW 6" AWWA D.I. GROOVED 45° ELBOW
4. NEW 6" AWWA D.I. GROOVED NIPPLE
5. NEW 6" AWWA D.I. GROOVED 90° ELBOW
6. NEW 1⅝" x 1⅝" 12 GA. STEEL CHANNEL STRUT WITH 10 GA. STEEL PIPE STRAP FOR 6⅞" O.D. TUBING AND ANCHOR BOLTS TO FLOOR
7. (RESERVED)
8. NEW 6" AWWA D.I. TO 6" NPS GROOVED TRANSITION COUPLING
9. NEW 6" UL/FM CHECK VALVE
10. NEW 6" UL/FM OS&Y VALVE
11. NEW BRACKET TO SUPPORT RISER CLAMP, WITH RISER CLAMP

CALCULATED EEB CHECKED NAH

WATER WORK - DRY STANDPIPE - DETAILS
END RISERS

HAM-71-1.34

128
555

c:\pwworking\hmm\external\tyn61470\dms72752\$72752UD001.dgn 10/24/2014 12:27:36 PM TYN61470

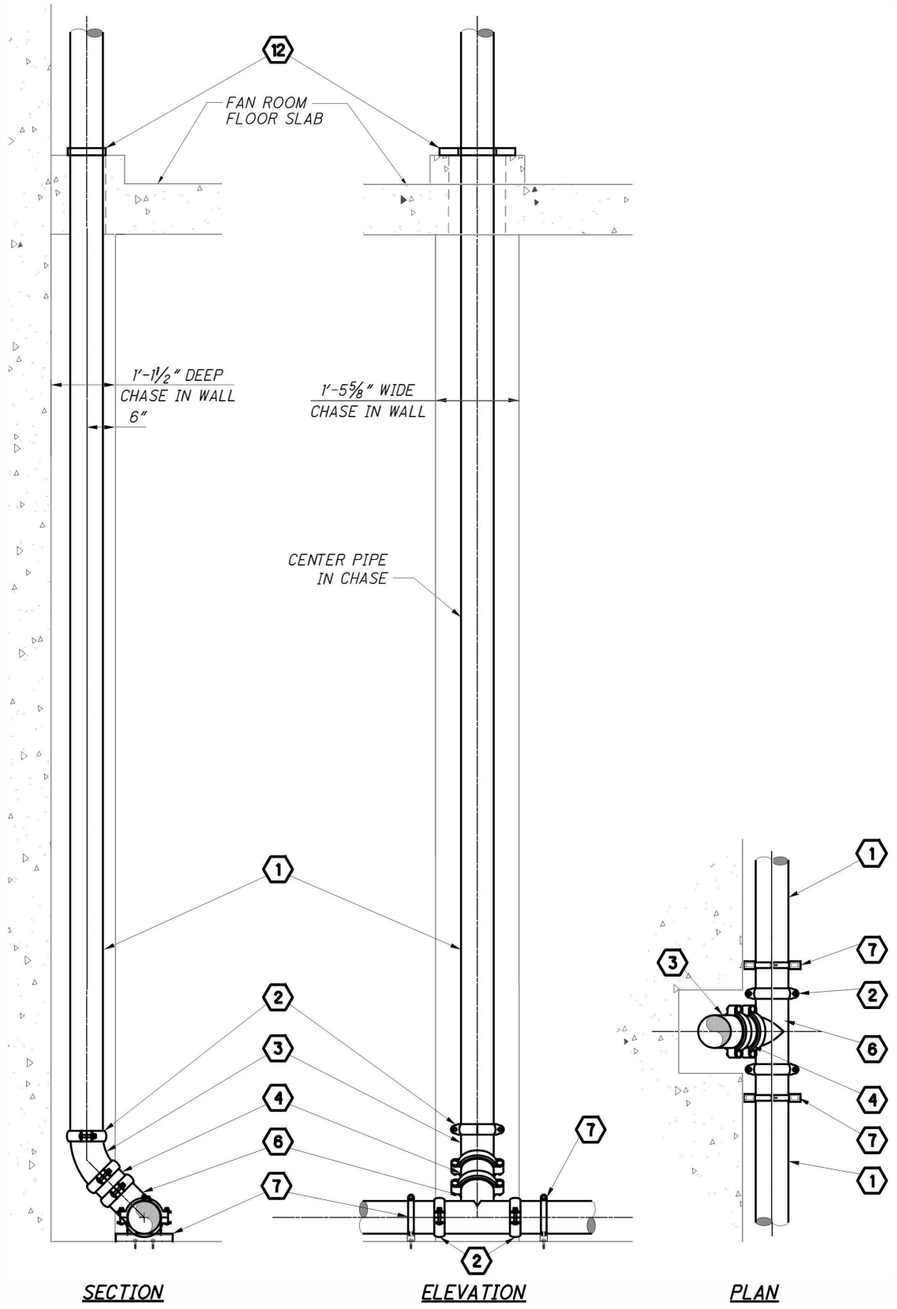

INLINE RISER (RISER #2)

SCALE: ¾" = 1'-0"

SCALE IN FEET

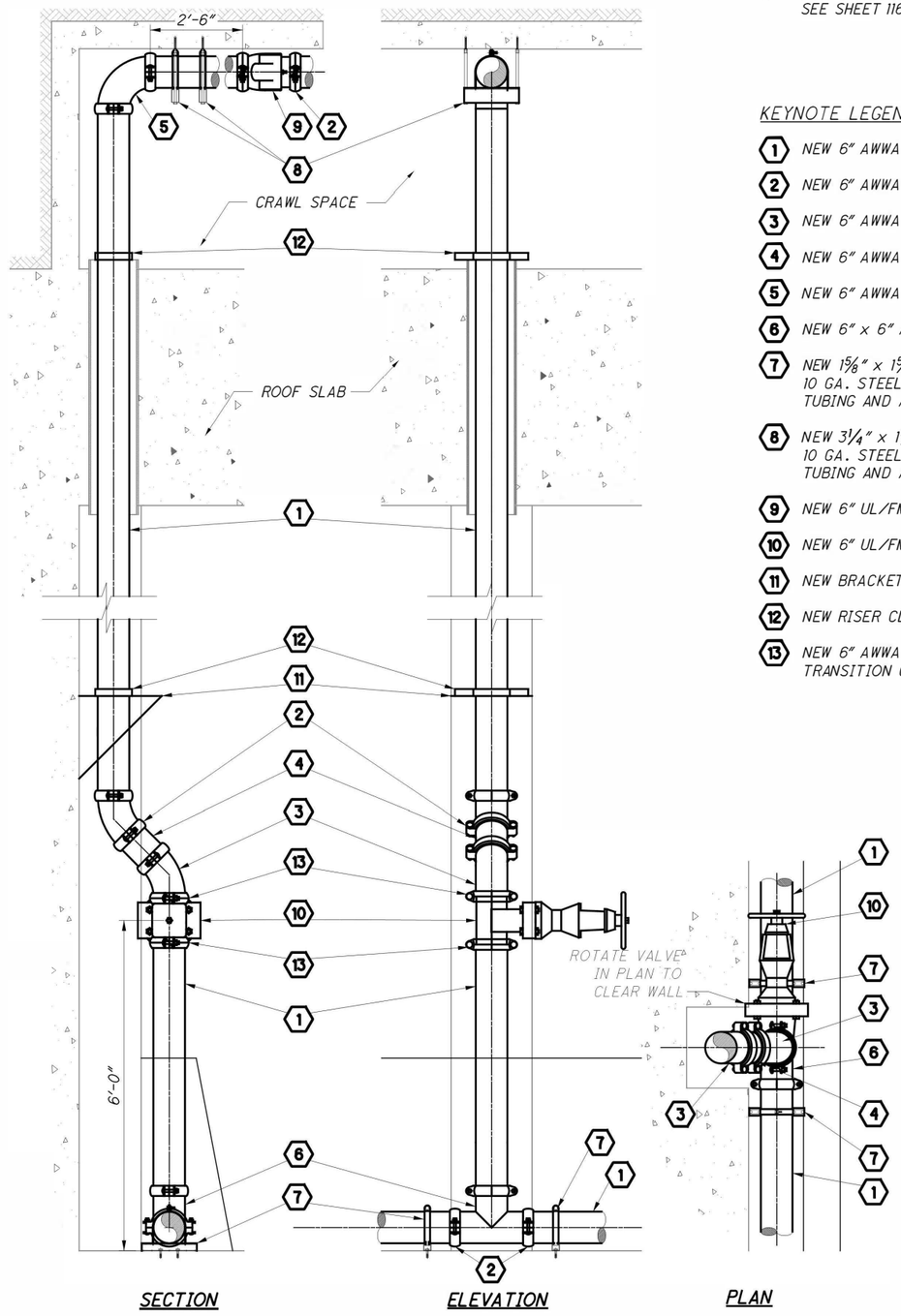

INLINE RISER (RISER #5)

SCALE: ¾" =1'-0"

SCALE IN FEET

NOTE:

1. FOR SYMBOLS AND ABBREVIATIONS LEGENDS, SEE SHEET 116 .

KEYNOTE LEGEND:

1. NEW 6" AWWA D.I. PIPE WITH GROOVED ENDS
2. NEW 6" AWWA D.I. GROOVED COUPLING
3. NEW 6" AWWA D.I. GROOVED 45° ELBOW
4. NEW 6" AWWA D.I. GROOVED NIPPLE
5. NEW 6" AWWA D.I. GROOVED 90° ELBOW
6. NEW 6" x 6" AWWA D.I. GROOVED TEE
7. NEW 1⅝" x 1⅝" STEEL CHANNEL STRUT WTIH 10 GA. STEEL PIPE STRAP FOR 6⅞" O.D. TUBING AND ANCHOR BOLTS TO FLOOR
8. NEW 3¼" x 1⅝" STEEL CHANNEL STRUT WTIH 10 GA. STEEL PIPE STRAP FOR 6⅞" O.D. TUBING AND ANCHOR RODS TO CEILING
9. NEW 6" UL/FM CHECK VALVE
10. NEW 6" UL/FM OS&Y VALVE
11. NEW BRACKET TO SUPPORT RISER CLAMP
12. NEW RISER CLAMP
13. NEW 6" AWWA D.I. TO 6" NPS GROOVED TRANSITION COUPLING

CALCULATED EEB
CHECKED NAH

WATER WORK - DRY STANDPIPE - DETAILS
INLINE RISERS

HAM-71-1.34

129
555

c:\pwworking\hmm\external\tyn61470\dms72752\87268UD002.dgn 10/24/2014 12:27:38 PM TYN61470

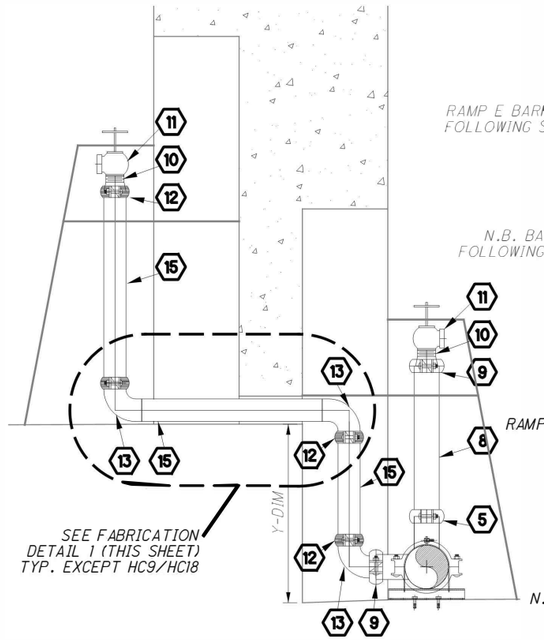

SECTION

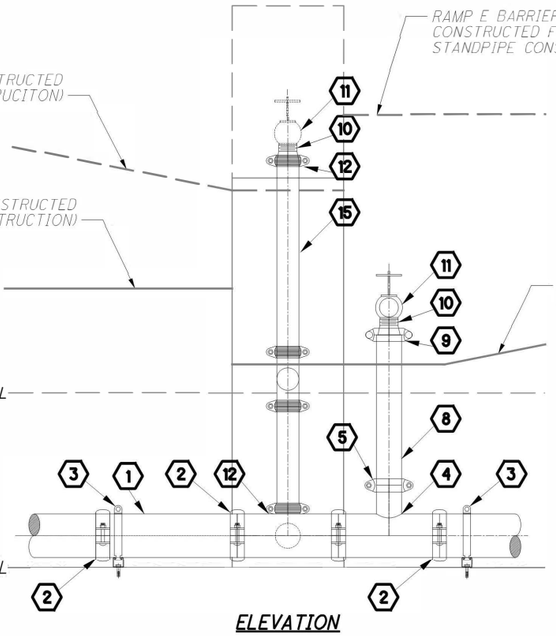

ELEVATION

TYPICAL HOSE CONNECTION (NORTHBOUND/RAMP E) EXCEPT HC9/HC18

SCALE: 1" = 1'-0"

SCALE IN FEET

Y-DIM SCHEDULE:	
HOSE CONNECTION	Y-DIM
HC1/HC10	3.31' = 3'-3¾"
HC2/HC11	2.94' = 2'-11¼"
HC3/HC12	2.71' = 2'-8½"
HC4/HC13	2.51' = 2'-6⅛"
HC5/HC14	2.35' = 2'-4¼"
HC6/HC15	1.99' = 2'-0"
HC7/HC16	1.78' = 1'-9⅜"
HC8/HC17	1.50' = 1'-6"
HC9/HC18	1.07' = 1'-0¾"

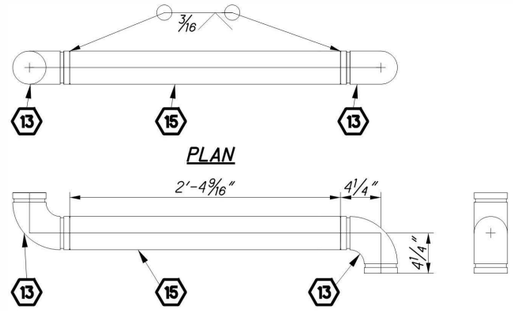

FABRICATION DETAIL 1 - TYP. EXCEPT HC9/HC18

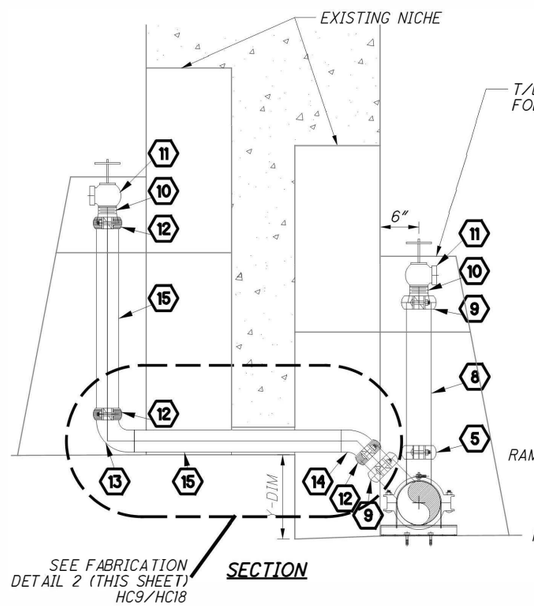

SECTION

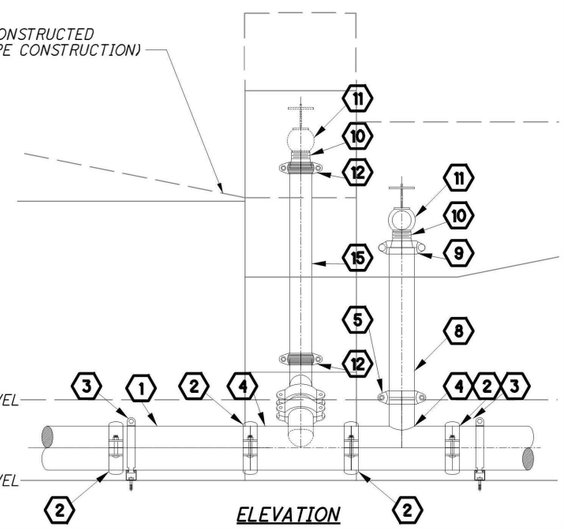

ELEVATION

HOSE CONNECTION HC9/HC18 (NORTHBOUND/RAMP E)

SCALE: 1" = 1'-0"

SCALE IN FEET

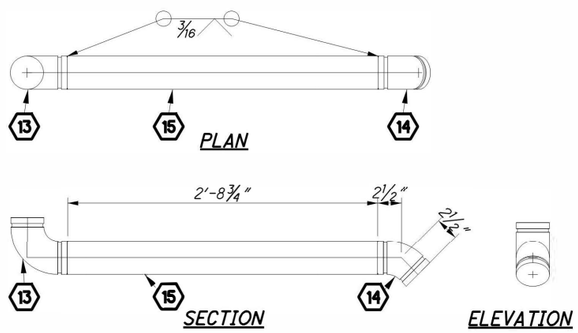

FABRICATION DETAIL 2 - HC9/HC18

FABRICATION DETAIL FOR LATERALS THROUGH NORTHBOUND/RAMP E WALL

SCALE: 1½" = 1'-0"

SCALE IN FEET

NOTES:

1. FOR SYMBOLS AND ABBREVIATIONS LEGENDS, SEE SHEET 116 .
2. ALL HOSE CONNECTIONS SHALL BE ANGLE HOSE VALVES AND MOUNTED AT LEAST 3'-3" BUT LESS THAN 5'-3" ABOVE T/SLAB.
3. VERIFY THE SIZE AND TYPE OF ALL HOSE CONNECTIONS WITH FIRE DEPARTMENT BEFORE COMMENCING WORK.
4. ALL STEEL PIPE SHALL BE SCHEDULE 40, HOT-DIPPED GALVANIZED. ALL WELDS SHALL BE PAINTED WITH ZINC-RICH PAINT, TO AN EQUAL ZINC THICKNESS AS THE HOT-DIPPED COATING, IF THEY ARE NOT WELDED BEFORE HOT-DIPPING. PIPE AND WELDS SHALL NOT SIT DIRECTLY ON FLOOR.
5. ALL DIMENSIONS SHALL BE VERIFIED IN THE FIELD.

KEYNOTE LEGEND:

1. NEW 6" AWWA D.I. PIPE WITH GROOVED ENDS
2. NEW 6" AWWA D.I. GROOVED COUPLING
3. NEW 1⅝" x 1⅝" 12 GA. STEEL CHANNEL STRUT WITH 10 GA. STEEL PIPE STRAP FOR 6⅞" O.D. TUBING AND ANCHOR BOLTS TO FLOOR
4. NEW 6" x 3" AWWA D.I. REDUCING TEE
5. NEW 3" AWWA D.I. GROOVED COUPLING
8. NEW 3" AWWA D.I. GROOVED 90° ELBOW
7. (RESERVED)
8. NEW 3" AWWA D.I. PIPE WITH GROOVED ENDS
9. NEW 3" AWWA D.I. TO 3" NPS GROOVED TRANSITION COUPLING
10. NEW THREADED REDUCER 3" NPS GROOVED x 2½" MALE NPT
11. NEW 2½" ANGLE HOSE VALVE. 2½" FEMALE NPT x 2½" MALE CITY OF CINCINNATI NEW HOSE THREAD FITTED WITH CAP AND CHAIN (CAP AND CHAIN NOT SHOWN)
12. NEW 3" GALVANIZED STEEL GROOVED COUPLING
13. NEW 3" GALVANIZED STEEL GROOVED 90° ELBOW
14. NEW 3" GALVANIZED STEEL GROOVED 45° ELBOW
15. NEW 3" GALVANIZED STEEL PIPE WITH GROOVED ENDS

CALCULATED EEB
CHECKED NAH

WATER WORK - DRY STANDPIPE - DETAILS HOSE CONNECTIONS - 1 OF 2

HAM-71-1.34

130
555

c:\pwworking\hmn\external\tyn61470\dms72752\87268UD003.dgn 10/24/2014 12:27:41 PM TYN61470

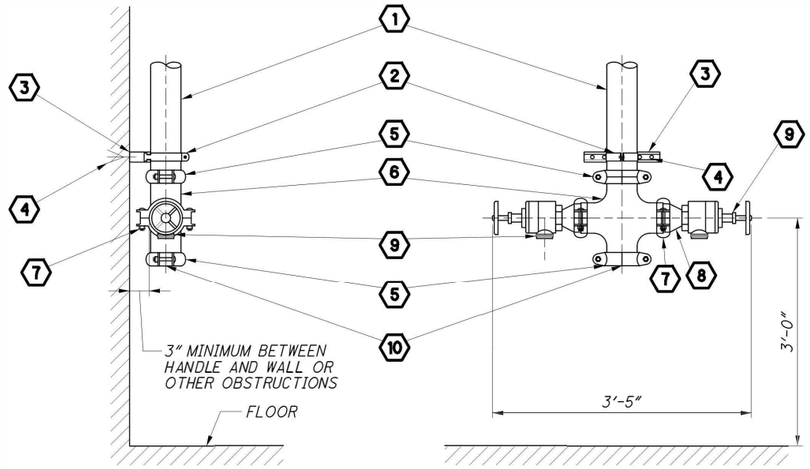

SECTION ELEVATION

ELECTRICAL ROOM HOSE CONNECTION DETAIL

SCALE: 1" = 1'-0"

SCALE IN FEET

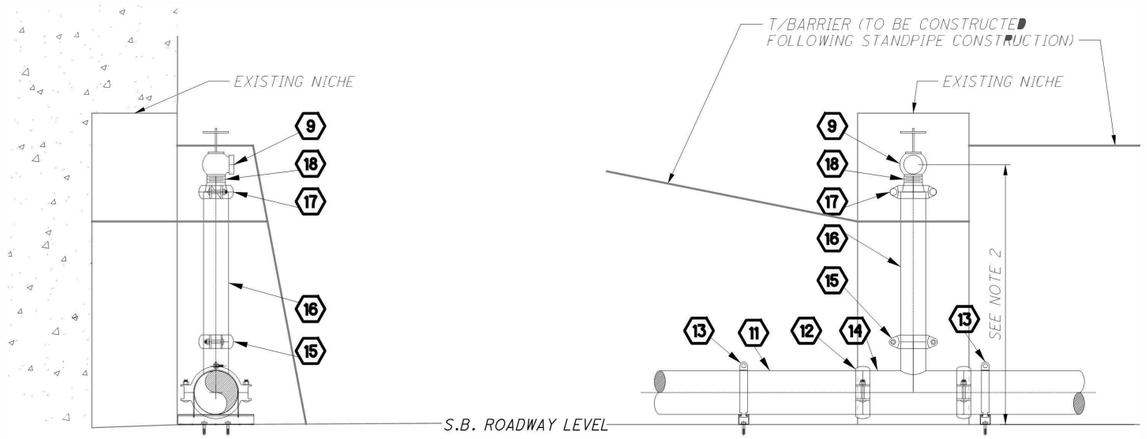

SECTION ELEVATION

HOSE CONNECTION SECTION AND ELEVATION (SOUTHBOUND)

SCALE: 1" = 1'-0"

SCALE IN FEET

NOTES:

1. *FOR SYMBOLS AND ABBREVIATIONS LEGENDS, SEE SHEET 116 .*
2. *ALL HOSE CONNECTIONS SHALL BE ANGLE HOSE VALVES AND MOUNTED AT LEAST 3'-3" BUT LESS THAN 5'-3" ABOVE T/SLAB.*
3. *VERIFY THE SIZE AND TYPE OF ALL HOSE CONNECTIONS WITH FIRE DEPARTMENT BEFORE COMMENCING WORK.*

KEYNOTE LEGEND:

1. *NEW 4" AWWA D.I. PIPE WITH GROOVED ENDS*
2. *NEW 11 GA. STEEL PIPE STRAP FOR 4¾" O.D. TUBING*
3. *NEW 3¼" x 1⅝" 12 GA. STEEL CHANNEL STRUT*
4. *NEW ½" x 3" STAINLESS STEEL SCREW ANCHORS*
5. *NEW 4" AWWA D.I. GROOVED COUPLING*
8. *NEW 4" x 4" AWWA D.I. GROOVED CROSS*
7. *NEW 4" AWWA D.I. TO 4" NPS GROOVED TRANSITION COUPLING*
8. *NEW THREADED REDUCER 4" NPS GROOVED x 2½" MALE NPT*
9. *NEW 2½" ANGLE HOSE VALVE. 2½" FEMALE NPT x 2½" MALE CITY OF CINCINNATI NEW HOSE THREAD FITTED WITH CAP AND CHAIN (CAP AND CHAIN NOT SHOWN)*
10. *NEW 4" AWWA D.I. GROOVED CAP DRILLED AND TAPPED FOR AND WITH NEW AUTOMATIC BALL DRIP AND AIR-VACUUM VALVE*
11. *NEW 6" AWWA D.I. PIPE WITH GROOVED ENDS*
12. *NEW 6" AWWA D.I. GROOVED COUPLING*
13. *NEW 1⅝" x 1⅝" 12 GA. STEEL CHANNEL STRUT WITH 10 GA. STEEL PIPE STRAP FOR 6⅞" O.D. TUBING AND ANCHOR BOLTS TO FLOOR*
14. *NEW 6" x 3" AWWA D.I. REDUCING TEE*
15. *NEW 3" AWWA D.I. GROOVED COUPLING*
16. *NEW 3" AWWA D.I. PIPE WITH GROOVED ENDS*
17. *NEW 3" AWWA D.I. TO 3" NPS GROOVED TRANSITION COUPLING*
18. *NEW THREADED REDUCER 3" NPS GROOVED x 2½" MALE NPT*

CALCULATED EEB CHECKED NAH

WATER WORK - DRY STANDPIPE - DETAILS HOSE CONNECTIONS - 2 OF 2

HAM-71-1.34

131 555

c:\pwworking\hmm\external\tyn61470\dms72752\87268UD004.dgn 10/24/2014 12:27:43 PM TYN61470

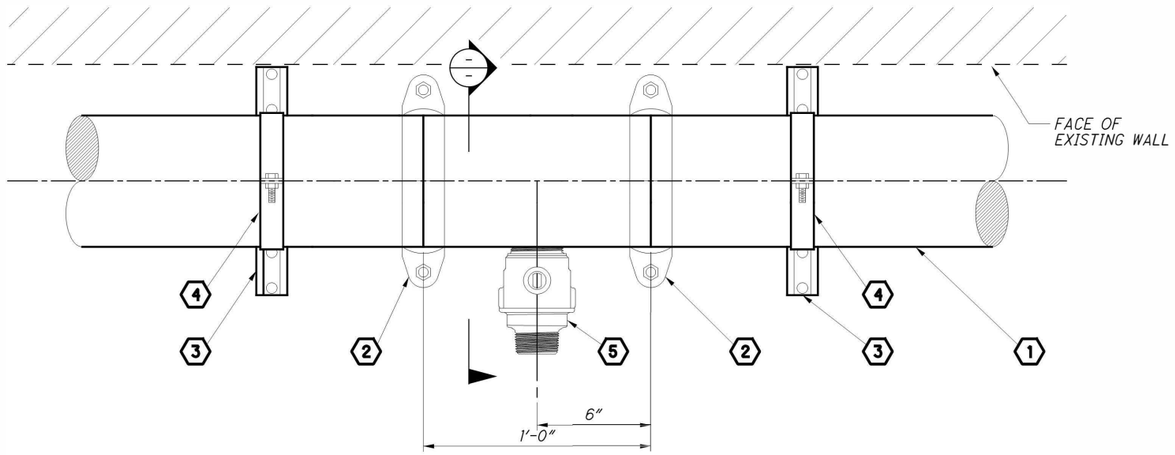

PLAN

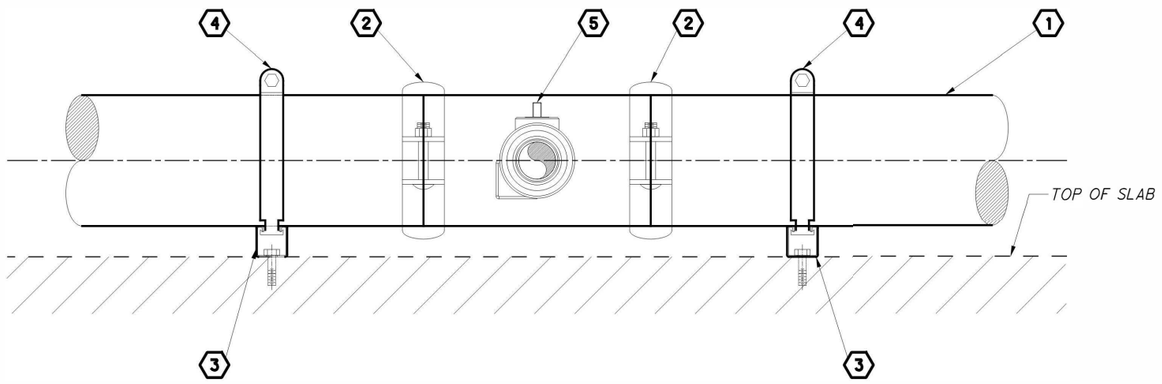

ELEVATION

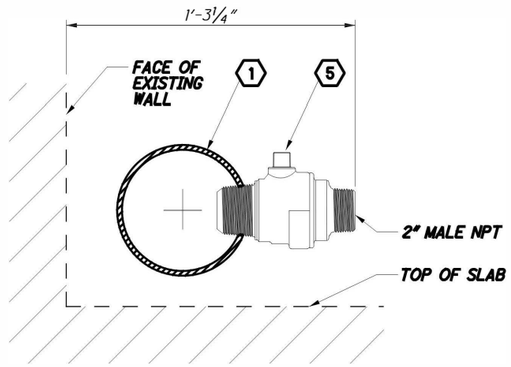

SECTION

STANDPIPE DRAIN

SCALE: 3" = 1'-0"

0 0.5
0.25 1
SCALE IN FEET

NOTES:

1. FOR SYMBOLS AND ABBREVIATIONS LEGENDS, SEE SHEET 116 .
2. FOR DETAILS OF DRAIN IN BARRIER, SEE BARRIER DRAWINGS.

KEYNOTE LEGEND:

1. NEW 6" AWWA D.I. PIPE WITH GROOVED ENDS
2. NEW 6" AWWA D.I. GROOVED COUPLING
3. NEW 1⅝" x 1⅝" 12 GA. STEEL CHANNEL STRUT
4. NEW 10 GA. STEEL PIPE STRAP FOR 6⅞" O.D. TUBING
5. NEW 2" STANDARD AWWA CORPORATION STOP INLET THREAD, 2" MALE NPT OUTLET BALL CORPORATION STOP TAPPED INTO D.I. PIPE

CALCULATED EEB
CHECKED NAH

WATER WORK - DRY STANDPIPE - DETAILS
DRAINS

HAM-71-1.34

132
555

c:\pwworking\hmm\external\tyn61470\dms72752*726UD005.dgn 10/24/2014 12:27:45 PM TYN61470

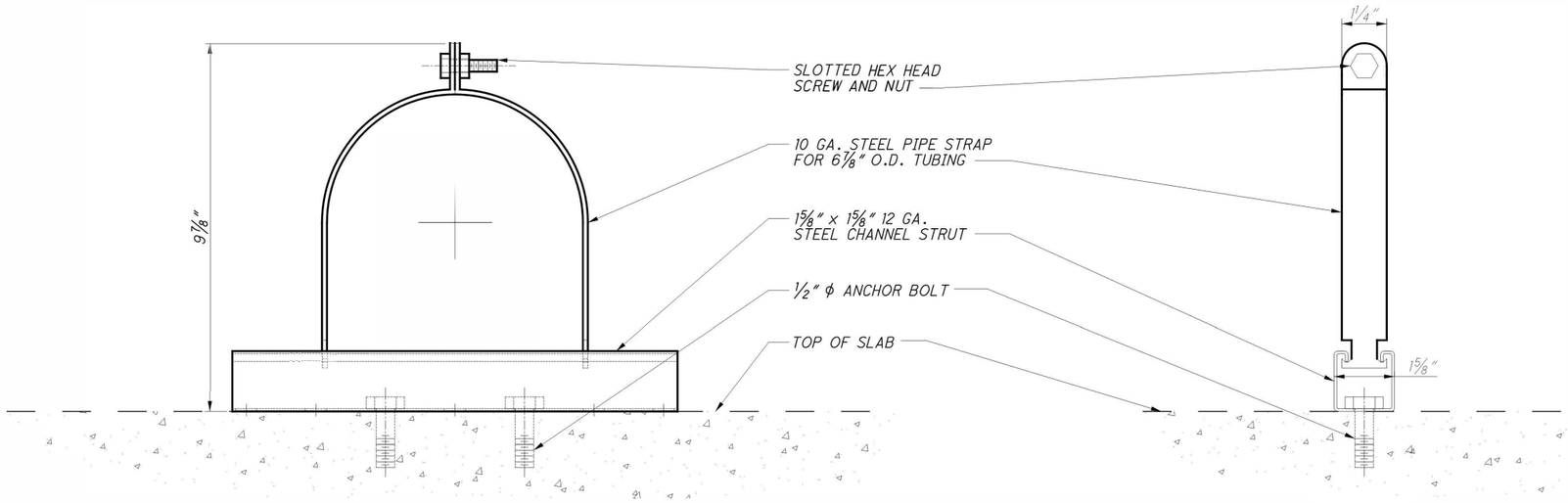

SECTION

ELEVATION

PIPE SUPPORT

SCALE: 6" = 1'

SCALE IN INCHES

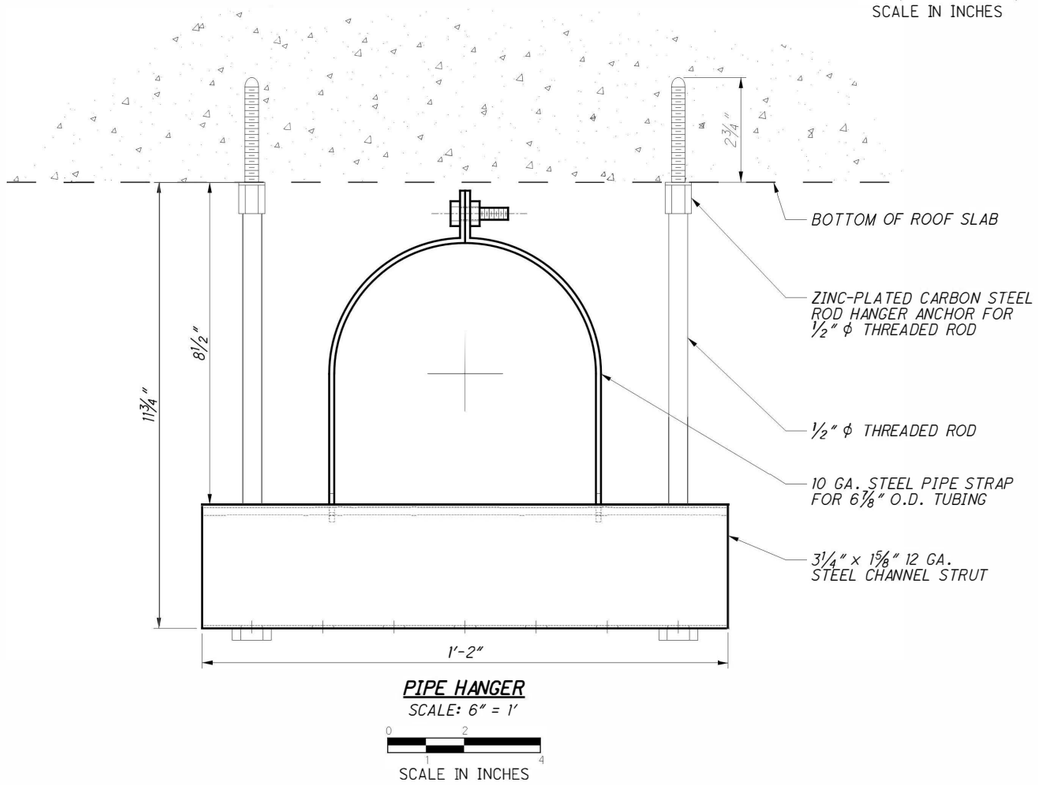

PIPE HANGER

SCALE: 6" = 1'

SCALE IN INCHES

NOTES:

1. FOR SYMBOLS AND ABBREVIATIONS LEGENDS, SEE SHEET 116 .
2. ALL STANDPIPE RISERS AND STANDPIPE PIPING AT THE CEILING MUST BE SUPPORTED IN ACCORDANCE WITH NFPA 13. PIPE HUNG AT THE CEILING MUST BE SUPPORTED AT 10-FOOT INTERVALS, OR MORE FREQUENTLY IF HEAVY POINT LOADS (ELLS, TEES, VALVES, OR HOSE CONNECTIONS) ARE PRESENT. RISERS MUST BE SUPPORTED BY APPROVED RISER CLAMPS.
3. NO ADHESIVE ANCHORS TO BE USED.
4. SIMILAR HANGER DETAIL TO BE USED FOR HANGING 4" AWWA D.I. PIPE, IN WHICH CASE 10 GA. STEEL PIPE STRAP FOR 6⅞" O.D. TUBING SHALL BE REPLACED BY 11 GA. PIPE STRAP FOR 4¾" O.D. TUBING.

CALCULATED EEB
CHECKED NAH

WATER WORK - DRY STANDPIPE - DETAILS
HANGERS AND PIPE SUPPORTS

HAM-71-1.34

133
555

c:\pwworking\hmm\external\tyn61470\dms72752*726UD006.dgn 10/24/2014 12:27:48 PM TYN61470

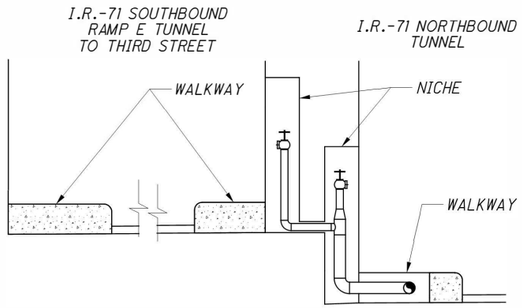

STEP 1

EXISTING

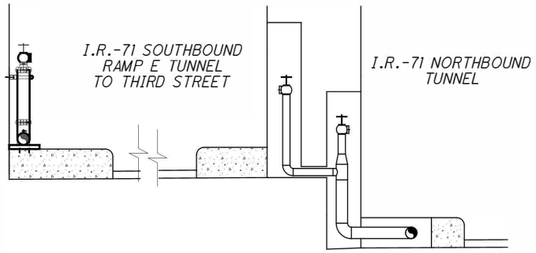

STEP 2

INSTALL TEMPORARY STANDPIPE IN RAMP E TUNNEL

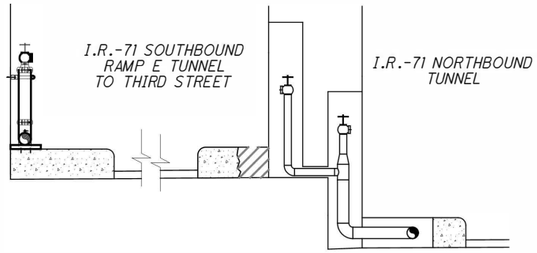

STEP 3

DEMOLISH CURB SECTION IN RAMP E TUNNEL

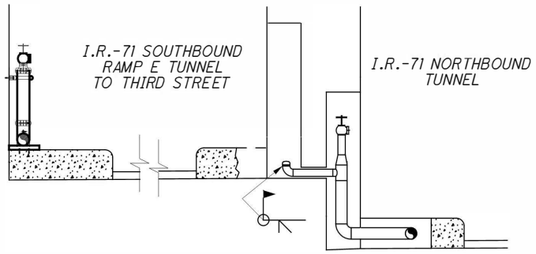

STEP 4

REMOVE & CAP HOSE CONNECTION RISERS IN RAMP E TUNNEL

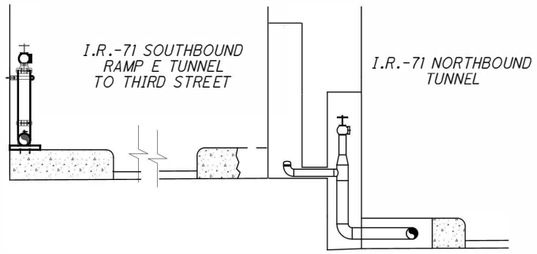

STEP 5

INSTALL TEMPORARY BARRIER IN RAMP E TUNNEL

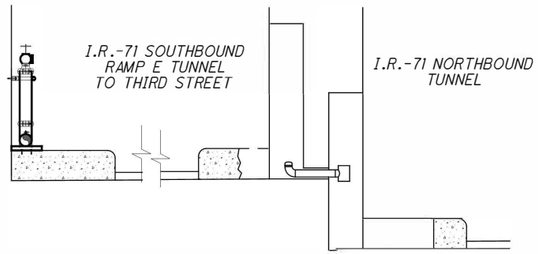

STEP 6

ISOLATE 100' - 200' OF PIPE

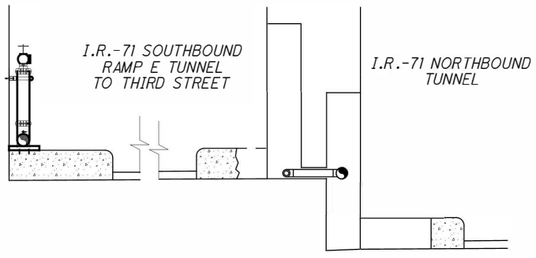

STEP 7

ROTATE LATERAL

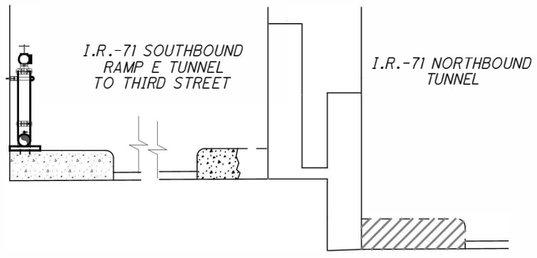

STEP 8

REMOVE LATERAL AND DEMOLISH CURB

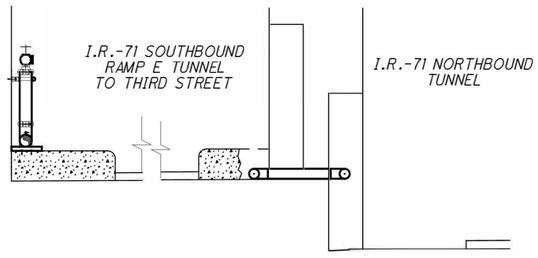

STEP 9

INSERT NEW LATERAL

SUGGESTED CONSTRUCTION SEQUENCING STEPS 1 THROUGH 9

NO SCALE

NOTES:

1. FOR SYMBOLS AND ABBREVIATIONS LEGENDS, SEE SHEET 116 .
2. INSTALL TEMPORARY STANDPIPE FIRE DEPARTMENT CONNECTIONS IN RAMP TUNNEL AT BOTH PORTALS.

SUGGESTED CONSTRUCTION SEQUENCING:

STEP

1. EXISTING.
2. INSTALL AT WEST WALL OF RAMP E A 4" TEMPORARY D.I. STANDPIPE WITH AT LEAST 5 HOSE CONNECTIONS SPACED NO MORE THAN 150' C/C.
3. DEMOLISH THE SMALL SECTION OF CURB WITHIN 12" OF THE WALL AND 18" IN WIDTH IN FRONT OF ALL HOSE CONNECTION NICHES ON EAST WALL OF RAMP E.
4. REMOVE ALL RAMP E HOSE CONNECTION RISERS. IF CONNECTIONS ARE THREADED, PLUG EXPOSED ELBOWS. IF CONNECTIONS ARE NOT THREADED, WELD ON CAPS (OPTION SHOWN). NOTE THAT EACH TIME A HOSE CONNECTION RISER IS REMOVED, THE ENTIRE STANDPIPE SYSTEM IS TEMPORARILY COMPROMISED.
5. INSTALL TEMPORARY PORTABLE BARRIER TO CLOSE OFF WESTERNMOST LANE OF NORTHBOUND TUBE.
6. ISOLATE SECTION OF PIPE BETWEEN 100' AND 200' IN LENGTH, INCLUDING ONLY ONE HOSE CONNECTION. CUT AND CAP USING WELDS AND/OR GROOVED COUPLINGS AS REQUIRED. REMOVE ALL PIPE, FITTINGS, EXPANSION JOINTS, PIPE GUIDES, ANCHOR BOLTS, ETC.
7. ROTATE LATERAL ASSEMBLY 90° ABOUT ℄.
8. REMOVE LATERAL ASSEMBLY FROM WALL. DEMOLISH CURB ON WEST WALL OF NORTHBOUND TUBE. PREFABRICATE NEW LATERAL ASSEMBLY (FOR LATERAL ASSEMBLY FABRICATION DETAIL, SEE SHEET 130.
9. SLIDE NEW LATERAL ASSEMBLY THROUGH OPENING.

CALCULATED EEB
CHECKED NAH

WATER WORK - DRY STANDPIPE - DETAILS
CONSTRUCTION PHASING - 1 OF 2

HAM-71-1.34

134
555

c:\pwworking\hmm\external\tyn61470\dms72752\87268UD007.dgn 10/24/2014 12:27:51 PM TYN61470

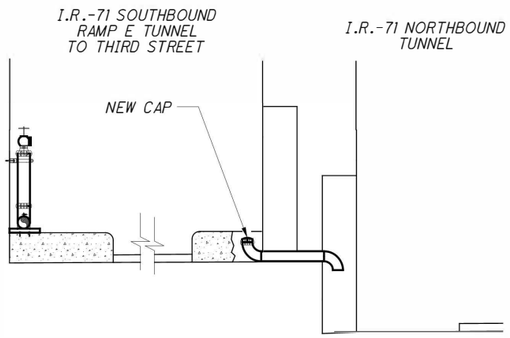

STEP 10

ROTATE NEW LATERAL
THEN CAP

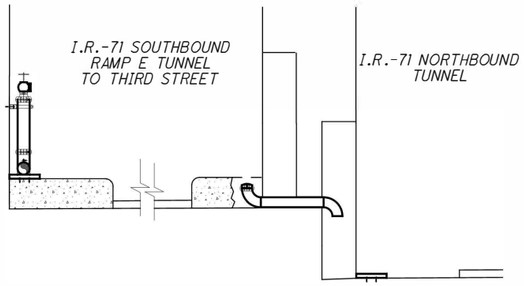

STEP 11

NEW CHANNEL STRUT IN NORTHBOUND TUNNEL

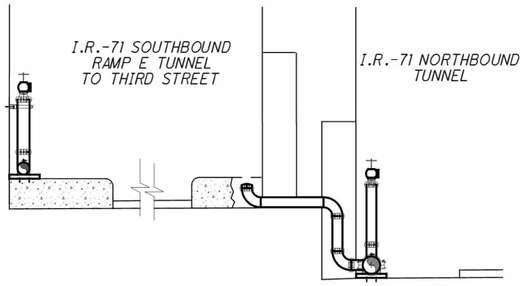

STEP 12

INSTALL NEW PIPING IN NORTHBOUND TUNNEL

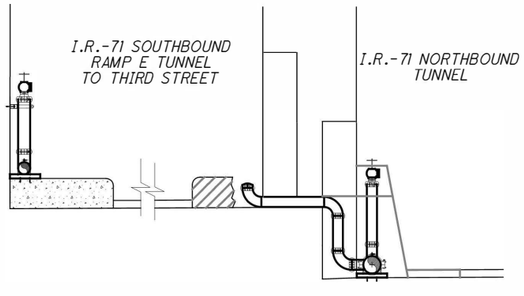

STEP 13

REPEAT 8x

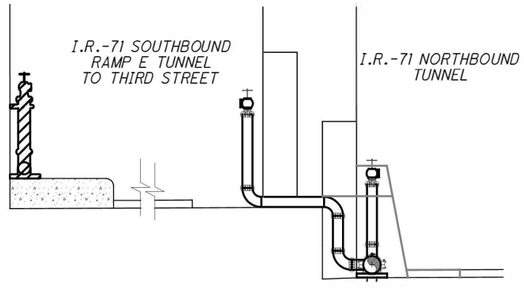

STEP 14

REMOVE TEMPORARY STANDPIPE FROM
RAMP E TUNNEL.
INSTALL HOSE CONNECTIONS IN RAMP E
TUNNEL

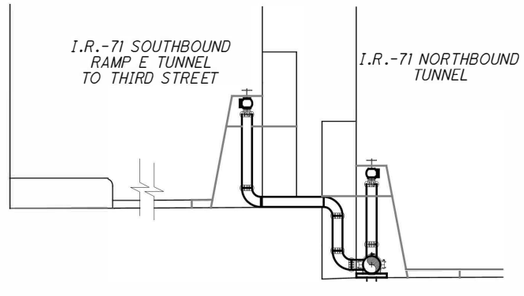

STEP 15

INSTALL BARRIER IN RAMP E TUNNEL

SUGGESTED CONSTRUCTION SEQUENCING STEPS 10 THROUGH 15

NO SCALE

NOTE:

1. FOR SYMBOLS AND ABBREVIATIONS LEGENDS, SEE SHEET 116 .

SUGGESTED CONSTRUCTION SEQUENCING (CONT.):

STEP

10 ROTATE NEW LATERAL ASSEMBLY 90° ABOUT ℄ AND SIMULTANEOUSLY INSTALL A CAP ON THE RAMP E STUB.

11 INSTALL NEW CHANNEL STRUT WITH ANCHOR BOLTS AT WEST WALL OF NORTHBOUND TUBE.

12 FIT OUT NORTHBOUND TUBE PIPING.

13 REPEAT STEPS 6 THROUGH 12 FOR REMAINING SECTIONS OF PIPE IN NORTHBOUND TUBE. EACH REQUIRES A TEMPORARY POLICE CLOSURE IN RAMP E. INSTALL NEW BARRIER ON WEST WALL OF NORTHBOUND TUBE, PAVE NORTHBOUND TUBE, AND REMOVE TEMPORARY NORTHBOUND BARRIER.

14 REMOVE TEMPORARY RAMP E STANDPIPE. DEMOLISH EAST WALL RAMP E CURB. FIT OUT RAMP E HOSE CONNECTIONS.

15 INSTALL EAST WALL RAMP E BARRIER AND PAVEMENT.

16 DEMOLISH EXISTING AND INSTALL NEW STANDPIPE IN SOUTHBOUND TUBE (NOT SHOWN). ADJUST AND FOLLOW STEPS 6-11-12-13 IN ORDER TO MAINTAIN STANDPIPE SERVICE.

CALCULATED EEB
CHECKED NAH

WATER WORK - DRY STANDPIPE - DETAILS
CONSTRUCTION PHASING - 2 OF 2

HAM-71-1.34

135
555

c:\pwworking\hmm\external\tyn61470\dms72752\8726d008.dgn 10/24/2014 12:27:55 PM TYN61470

NOTES:

1. FOR SYMBOLS AND ABBREVIATIONS LEGENDS, SEE SHEET 116 .
2. ALL DIMENSIONS SHALL BE VERIFIED IN THE FIELD.
3. ACTIVE ROADWAY REQUIRES FUNCTIONAL STANDPIPE AT ALL TIMES. TO ACHIEVE THIS, IT IS RECOMMENDED THAT FDC#3 BE REPLACED FOLLOWING THE REPLACEMENT OF RISERS #3 AND #6 AND ALL WORK ON FDC#3 BE DONE WITH THOSE ISOLATION VALVES FULLY SHUT.
4. CONTRACTOR SHALL COORDINATE CONSTRUCTION TO AVOID EXISTING TRAFFIC SIGNAL CONDUIT. SUCH CONDUIT IS TYPICALLY LOCATED AT A DEPTH OF 18" TO 24".

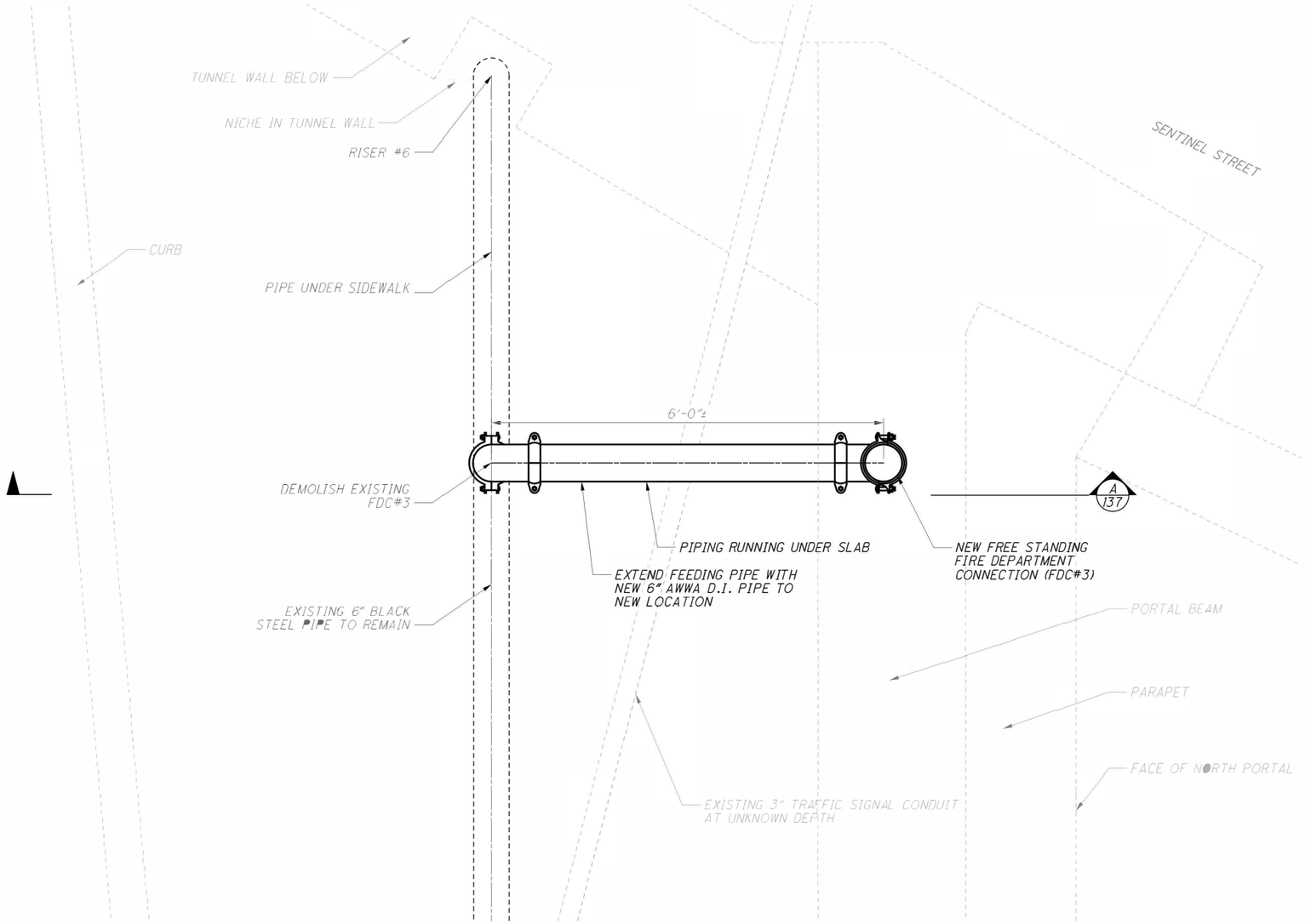

RELOCATION OF FDC #3

FOR SECTION A-A, SEE SHEET 137

SCALE: 1" = 1'-0"

0 1
0.5 2
SCALE IN FEET

HORIZONTAL SCALE IN FEET
0 0.5 1 2

CALCULATED EEB
CHECKED NAH

WATER WORK - DRY STANDPIPE - DETAILS
RELOCATION OF FDC#3 - 1 OF 2

HAM-71-1.34

136
555

c:\pwworking\hmm\external\tyn61470\dms72752\87268UD009.dgn 10/24/2014 12:27:57 PM TYN61470

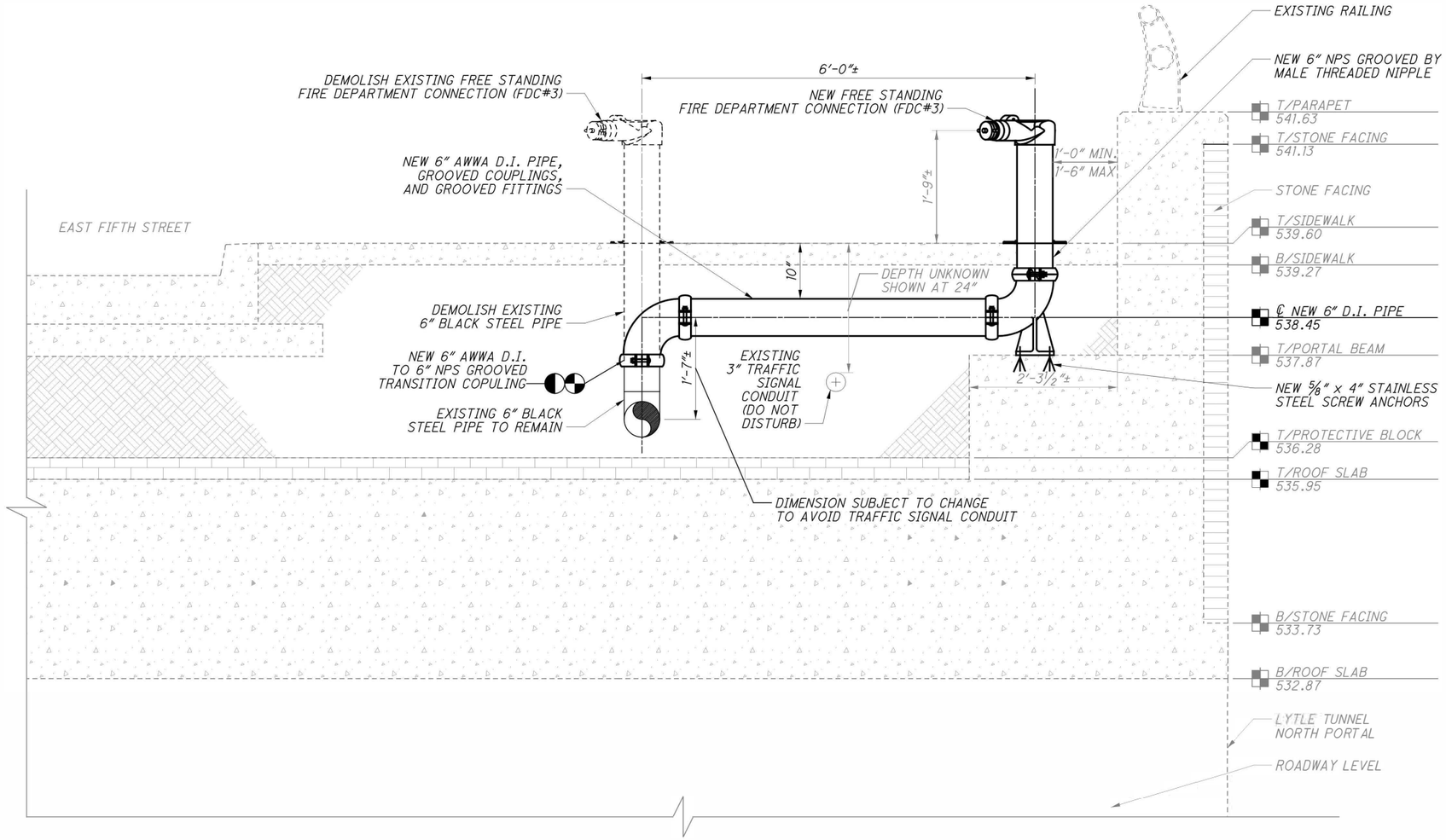

SECTION A-A
FOR LOCATION, SEE SHEET 136

RELOCATION OF FDC #3
SCALE: 1" = 1'-0"

0 1
0.5 2
SCALE IN FEET

NOTES:

1. FOR SYMBOLS AND ABBREVIATIONS LEGENDS, SEE SHEET 116.
2. ALL DIMENSIONS TO BE VERIFIED IN THE FIELD.
3. ACTIVE ROADWAY REQUIRES FUNCTIONAL STANDPIPE AT ALL TIMES. TO ACHIEVE THIS, IT IS RECOMMENDED THAT FDC#3 BE REPLACED FOLLOWING THE REPLACEMENT OF RISERS #3 AND #6 AND ALL WORK ON FDC#3 BE DONE WITH THOSE ISOLATION VALVES FULLY SHUT.
4. CONTRACTOR TO COORDINATE CONSTRUCTION TO AVOID EXISTING TRAFFIC SIGNAL CONDUIT. SUCH CONDUIT IS TYPICALLY LOCATED AT A DEPTH OF 18" TO 24".
5. SLOPE ALL NEW PIPE AT ¼" PER FOOT TO DRAIN.

CALCULATED EEB
CHECKED NAH

WATER WORK - DRY STANDPIPE - DETAILS
RELOCATION OF FDC #3 - 2 OF 2

HAM-71-1.34

137
555

c:\pwworking\hmm\external\tyn61470\dms72752\87268UD010.dgn 10/24/2014 12:27:59 PM TYN61470

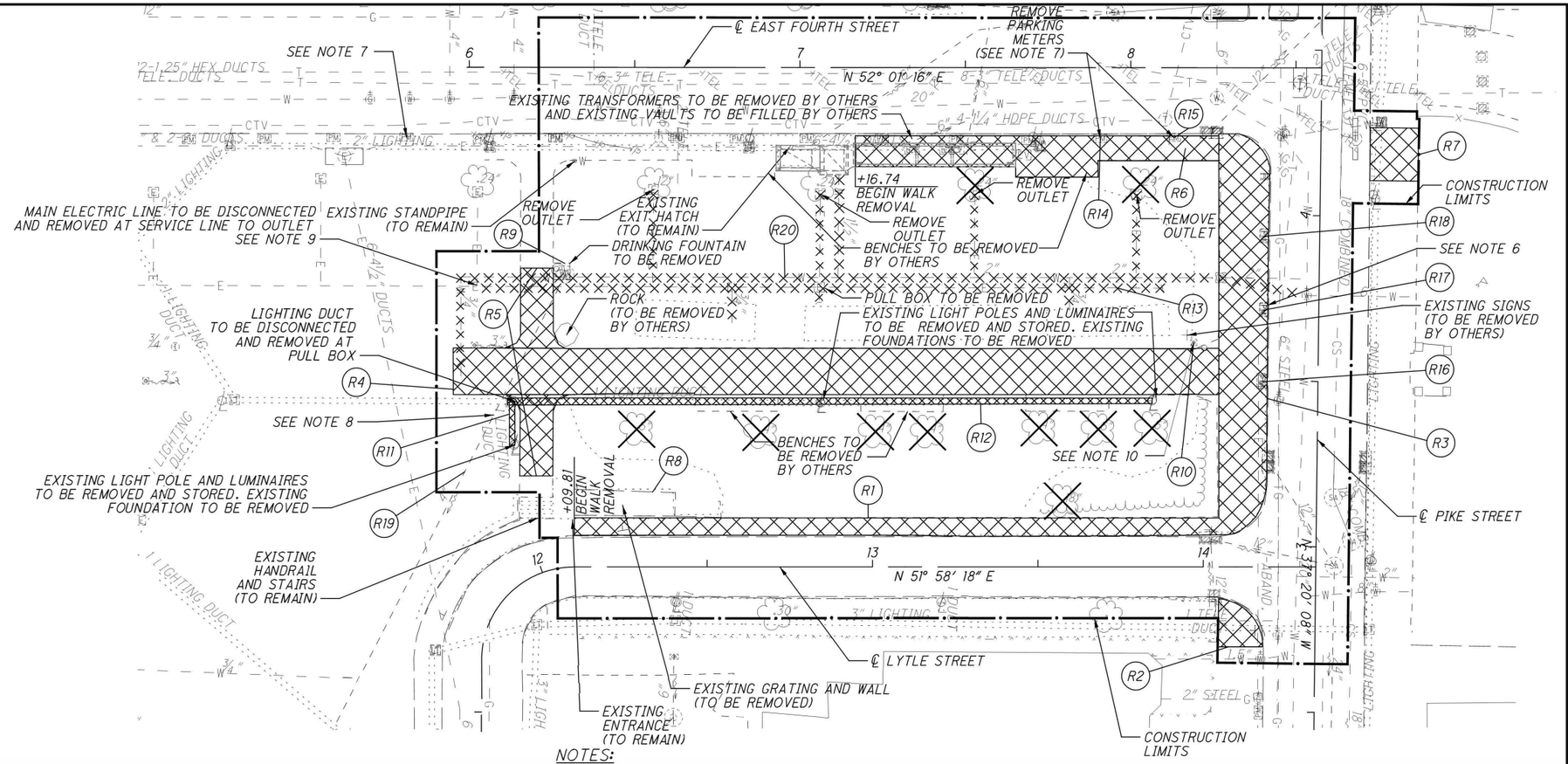

NOTES:

1. THE CONTRACTOR IS TO MAINTAIN THE EXISTING LIGHTING CIRCUIT AT ALL TIMES. THE CONTRACTOR IS TO COORDINATE WITH THE CITY TO STORE THE LUMINAIRES AND POLES TEMPORARILY UNTIL THEY CAN BE REMOVED BY CITY FORCES.
2. THE LIGHT POLES ON FOURTH STREET, LYTLE STREET, AND PIKE STREET ARE NOT TO BE DISTURBED.
3. THE TREES MARKED AS REMOVED WILL BE TRANSPLANTED BY CINCINNATI PARKS PRIOR TO CONSTRUCTION. THE PARK BOARD (STEVE SCHUCKMAN, PHONE (513) 475-9600) IS TO BE CONTACTED THREE WEEKS PRIOR TO DEMOLITION.
4. CINCINNATI PARKS WILL REMOVE ALL GARBAGE CANS, MUTT DISPENSERS, ROCKS WITH PLAQUES, SIGNS, AND BENCHES PRIOR TO CONSTRUCTION. THE PARK BOARD (STEVE SCHUCKMAN, PHONE (513) 475-9600) IS TO BE CONTACTED THREE WEEKS PRIOR TO DEMOLITION.
5. THE WATERLINE SHOWN TO BE REMOVED WILL BE REMOVED AT THE WATER MAIN ON PIKE STREET. THE CONNECTION TO THE WATERLINE NEEDS TO BE MAINTAINED FOR FUTURE USE BY THE PARK. THE EXISTING WATERLINES ON PIKE STREET ARE TO REMAIN IN SERVICE AT ALL TIMES. PAYMENT TO BE UNDER ITEM SPECIAL - DISCONNECTING 2" EXISTING SERVICE BRANCH (CIN. 1130).
6. THE PARKING METERS ON THE WEST SIDE OF PIKE STREET FROM FOURTH ST. TO LYTLE ST. ARE TO BE REMOVED AND STORED PRIOR TO SETTING UP THE CONSTRUCTION WORK ZONE. THE PARKING METERS WILL BE REINSTALLED AFTER CONSTRUCTION IS COMPLETE. PAYMENT TO BE UNDER ITEM 202 - REMOVAL MISC.: PARKING METER REMOVED, STORED, AND REERECTED.
7. THE TWO EASTERNMOST PARKING METERS ON THE SOUTH SIDE OF FOURTH STREET ARE TO BE REMOVED AND STORED FOR PICKUP BY CITY FORCES. PAYMENT TO BE UNDER ITEM 202 - REMOVAL MISC.: PARKING METER REMOVED AND STORED. THE NEXT NINE PARKING METERS ARE TO BE COVERED PRIOR TO SETTING UP THE CONSTRUCTION WORK ZONE.
8. 4" PIPE IS TO BE REMOVED WITHIN THE LIMITS OF EXCAVATION. PLUG SOUTH END AT LIMIT OF REMOVAL. PAYMENT TO BE UNDER ITEM 202 - PIPE REMOVED, 24" AND UNDER, AS PER PLAN.
9. THE EXISTING ELECTRIC CABLE AND CONDUITS IN LYTLE PARK ARE TO BE LOCATED AND DISCONNECTED PRIOR TO REMOVAL. THE CABLE AND CONDUIT, PULL BOXES, AND OUTLETS WILL BE REMOVED WITHIN THE EXCAVATION LIMITS. PAYMENT TO BE UNDER ITEM 202 - REMOVAL MISC.: PARK ELECTRICAL SYSTEM REMOVED.
10. THE EXISTING CATCH BASIN AND OUTLETTING STORM SEWER ARE TO BE REMOVED. THE STORM SEWER OUTLET IS UNKNOWN. PAYMENT TO BE UNDER ITEM 202 - CATCH BASIN REMOVED, AS PER PLAN.
11. THE LIGHTING DUCT CABLE IS TO BE REMOVED BETWEEN THE LIGHT POLES THAT ARE BEING REMOVED. PAYMENT TO BE UNDER ITEM 625 - DUCT CABLE, MISC.: LIGHTING DUCT REMOVED.

LEGEND

- WALK REMOVED
- ×W× WATERLINE AND APPURTENANCES REMOVED
- LIGHTING DUCT TO BE REMOVED
- ×E× ELECTRIC LINE REMOVED

CROSS REFERENCES	
SHEET NO.	DESCRIPTION
2-3	BENCHMARK AND REFERENCE POINTS
59-80	ESTIMATED QUANTITIES
87	PLAN SHEET
88	LYTLE STREET PLAN AND PROFILE
257	LANDSCAPE PLAN
259-554	STRUCTURE PLANS

HORIZONTAL SCALE IN FEET
0 10 20 40
CALCULATED RLD
CHECKED CWP

DEMOLITION PLAN - LYTLE PARK

HAM-71-1.34

138
555

c:\pwworking\hmm\external\tyn61470\dms728841.e726GM001.dgn 10/24/2014 4:04:01 PM TYN61470

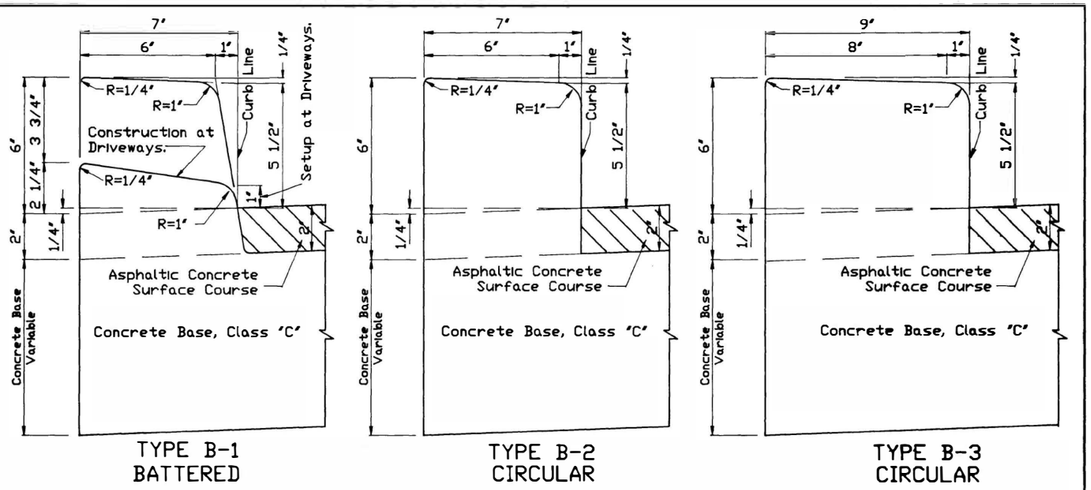

TYPE B-1
BATTERED

TYPE B-2
CIRCULAR

TYPE B-3
CIRCULAR

NOTE:
After the Standard Concrete Curb Integral with Concrete Base, has been constructed, a minimum time period of two weeks must elapse before the Asphaltic Concrete Surface Course is placed on the Concrete Base.

NOTE:
The Construction of Type B-2 and B-3 Curb shall apply only to radii less than one hundred (100) feet and shall not be used on larger radii curves.

CITY OF CINCINNATI
DEPARTMENT OF PUBLIC WORKS
DIVISION OF ENGINEERING

CONCRETE CURBS INTEGRAL WITH CONCRETE BASE

SCALE: 5/16"= 1' FEBRUARY, 1991

Tefforma 4-3-91
CITY ENGINEER

ACC. NO. 21431

PAGE 007

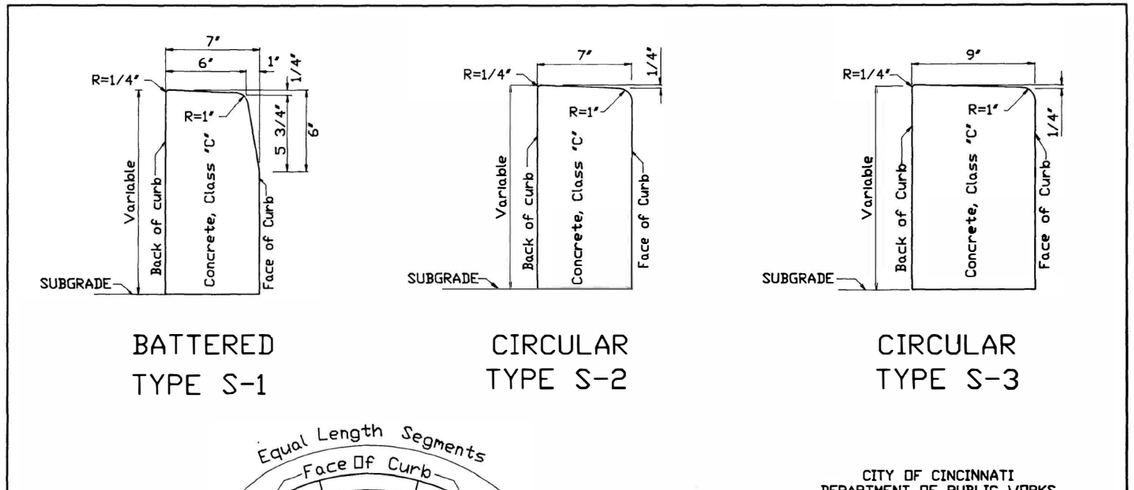

BATTERED
TYPE S-1

CIRCULAR
TYPE S-2

CIRCULAR
TYPE S-3

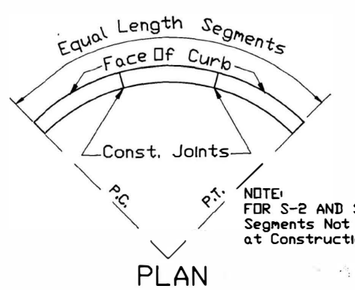

PLAN

NOTE:
FOR S-2 AND S-3 CURBS Segments Not to be Bonded at Construction Joints.

CITY OF CINCINNATI
DEPARTMENT OF PUBLIC WORKS
DIVISION OF ENGINEERING

STANDARD SEPARATE CONCRETE CURBS

SCALE: 3/16"= 1' FEBRUARY, 1991

APPROVED: Tefforma 4-3-91
CITY ENGINEER

ACC. NO. 21435

PAGE 010

CALCULATED RLD
CHECKED CWP

CURB DETAILS

HAM-71-1.34

139
555

c:\pwworking\hmm\external\tyn61470\dms728841\872681M002.dgn 10/24/2014 4:04:04 PM TYN61470

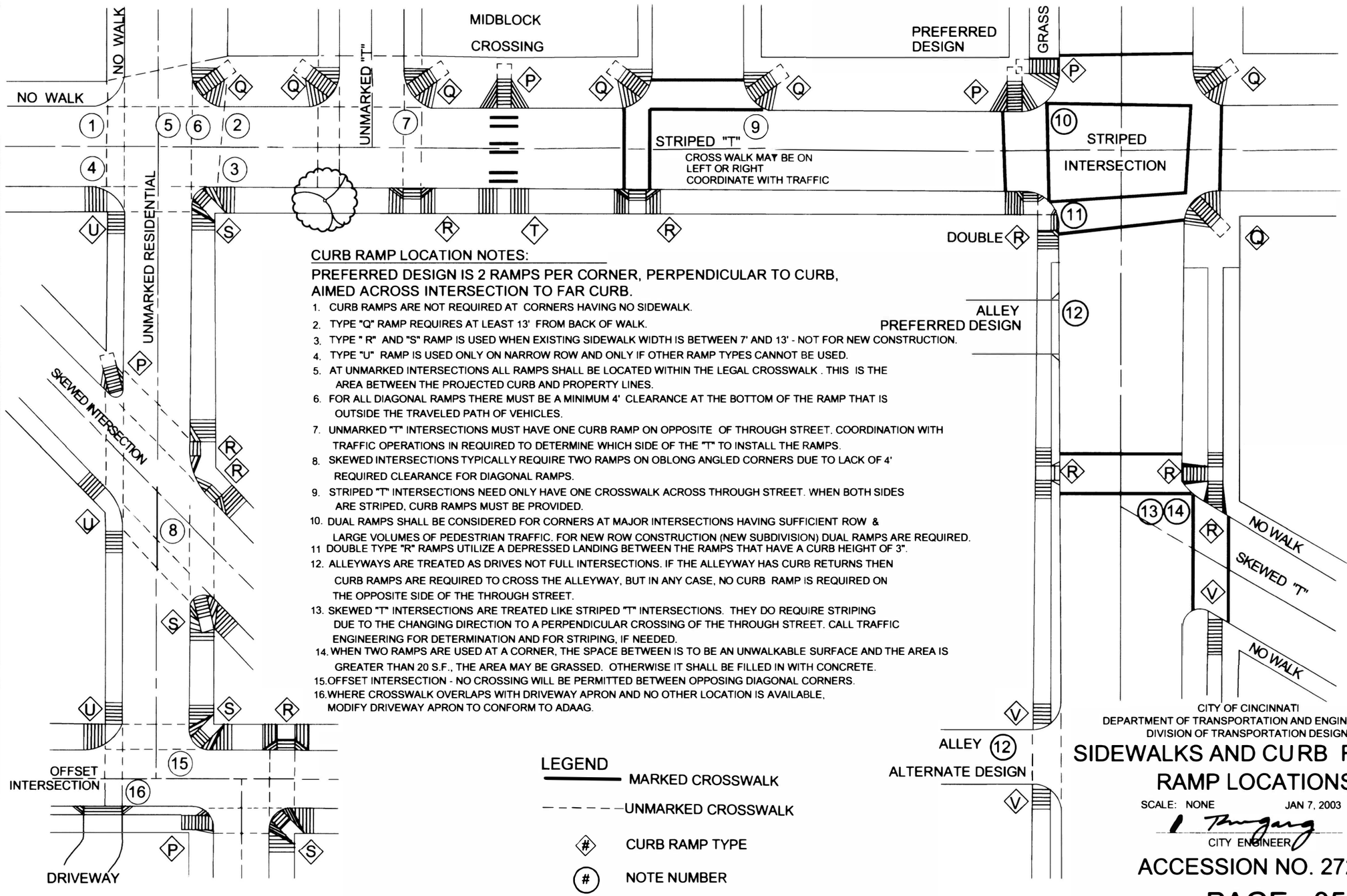

CURB RAMP LOCATION NOTES:

PREFERRED DESIGN IS 2 RAMPS PER CORNER, PERPENDICULAR TO CURB, AIMED ACROSS INTERSECTION TO FAR CURB.

1. CURB RAMPS ARE NOT REQUIRED AT CORNERS HAVING NO SIDEWALK.
2. TYPE "Q" RAMP REQUIRES AT LEAST 13' FROM BACK OF WALK.
3. TYPE " R" AND "S" RAMP IS USED WHEN EXISTING SIDEWALK WIDTH IS BETWEEN 7' AND 13' - NOT FOR NEW CONSTRUCTION.
4. TYPE "U" RAMP IS USED ONLY ON NARROW ROW AND ONLY IF OTHER RAMP TYPES CANNOT BE USED.
5. AT UNMARKED INTERSECTIONS ALL RAMPS SHALL BE LOCATED WITHIN THE LEGAL CROSSWALK . THIS IS THE AREA BETWEEN THE PROJECTED CURB AND PROPERTY LINES.
6. FOR ALL DIAGONAL RAMPS THERE MUST BE A MINIMUM 4' CLEARANCE AT THE BOTTOM OF THE RAMP THAT IS OUTSIDE THE TRAVELED PATH OF VEHICLES.
7. UNMARKED "T" INTERSECTIONS MUST HAVE ONE CURB RAMP ON OPPOSITE OF THROUGH STREET. COORDINATION WITH TRAFFIC OPERATIONS IN REQUIRED TO DETERMINE WHICH SIDE OF THE "T" TO INSTALL THE RAMPS.
8. SKEWED INTERSECTIONS TYPICALLY REQUIRE TWO RAMPS ON OBLONG ANGLED CORNERS DUE TO LACK OF 4' REQUIRED CLEARANCE FOR DIAGONAL RAMPS.
9. STRIPED "T" INTERSECTIONS NEED ONLY HAVE ONE CROSSWALK ACROSS THROUGH STREET. WHEN BOTH SIDES ARE STRIPED, CURB RAMPS MUST BE PROVIDED.
10. DUAL RAMPS SHALL BE CONSIDERED FOR CORNERS AT MAJOR INTERSECTIONS HAVING SUFFICIENT ROW & LARGE VOLUMES OF PEDESTRIAN TRAFFIC. FOR NEW ROW CONSTRUCTION (NEW SUBDIVISION) DUAL RAMPS ARE REQUIRED.
11. DOUBLE TYPE "R" RAMPS UTILIZE A DEPRESSED LANDING BETWEEN THE RAMPS THAT HAVE A CURB HEIGHT OF 3".
12. ALLEYWAYS ARE TREATED AS DRIVES NOT FULL INTERSECTIONS. IF THE ALLEYWAY HAS CURB RETURNS THEN CURB RAMPS ARE REQUIRED TO CROSS THE ALLEYWAY, BUT IN ANY CASE, NO CURB RAMP IS REQUIRED ON THE OPPOSITE SIDE OF THE THROUGH STREET.
13. SKEWED "T" INTERSECTIONS ARE TREATED LIKE STRIPED "T" INTERSECTIONS. THEY DO REQUIRE STRIPING DUE TO THE CHANGING DIRECTION TO A PERPENDICULAR CROSSING OF THE THROUGH STREET. CALL TRAFFIC ENGINEERING FOR DETERMINATION AND FOR STRIPING, IF NEEDED.
14. WHEN TWO RAMPS ARE USED AT A CORNER, THE SPACE BETWEEN IS TO BE AN UNWALKABLE SURFACE AND THE AREA IS GREATER THAN 20 S.F., THE AREA MAY BE GRASSED. OTHERWISE IT SHALL BE FILLED IN WITH CONCRETE.
15. OFFSET INTERSECTION - NO CROSSING WILL BE PERMITTED BETWEEN OPPOSING DIAGONAL CORNERS.
16. WHERE CROSSWALK OVERLAPS WITH DRIVEWAY APRON AND NO OTHER LOCATION IS AVAILABLE, MODIFY DRIVEWAY APRON TO CONFORM TO ADAAG.

LEGEND

- MARKED CROSSWALK
- UNMARKED CROSSWALK
- (#) CURB RAMP TYPE
- (#) NOTE NUMBER

CITY OF CINCINNATI
DEPARTMENT OF TRANSPORTATION AND ENGINEERING
DIVISION OF TRANSPORTATION DESIGN

SIDEWALKS AND CURB RAMPS
RAMP LOCATIONS

SCALE: NONE JAN 7, 2003

CITY ENGINEER

ACCESSION NO. 27256

PAGE 053A

CALCULATED RLD CHECKED CWP

CURB RAMP DETAILS

HAM-71-1.34

140
555

c:\pwworking\tnm\external\tyn61470\dms72884\87268GM003.dgn 10/24/2014 4:04:12 PM TYN61470

GENERAL NOTES FOR
CURB RAMPS AND DETECTABLE WARNINGS

GENERAL

1. ALL AREAS, ELEMENTS, AND FACILITIES FOR PEDESTRIANS ACCESS, CIRCULATION AND USE THAT ARE CONSTRUCTED, INSTALLED OR ALTERED IN THE PUBLIC RIGHT-OF-WAY AND WHICH ARE SUBJECT TO TITLE II OF THE AMERICANS WITH DISABILITIES ACT (ADA) SHALL COMPLY WITH ALL CURRENT FEDERAL REGULATIONS INCLUDING THE ADA ACCESSIBLITY GUIDELINES (ADAAG).
2. NEWLY CONSTRUCTED AND ALTERED STREETS OR PEDESTRIAN WALKWAYS MUST CONTAIN CURB RAMPS AT INTERSECTIONS. (28 CFR 35.151(d)) ALTERATIONS INCLUDE RESURFACING AND ANY WORK THAT IMPACTS THE MAJORITY OF THE STREET OR WALKWAY. THE ENTIRE INTERSECTION EFFECTED MUST BE BROUGHT INTO COMPLIANCE.
3. ALL MATERIALS SHALL CONFORM TO THE CITY OF CINCINNATI SUPPLEMENT TO THE OHIO DEPARTMENT OF TRANSPORTATION "CONSTRUCTION AND MATERIAL SPECIFICATIONS, CURRENT EDITION.
4. ALL SLOPES REFERRED TO ARE REFERENCED TO A HORIZONTAL PLANE.
5. FOR SIDESWALKS, CURB RAMPS, AND DRIVEWAYS THE "PREFERRED" DIMENSION SHALL BE THE NORMAL STANDARD TO BE MET, UNLESS EXISTING RIGHT OF WAY OR FEATURES MAKE COMPLIANCE INFEASABLE. IN THIS CASE THE "MINIMUM" STANDARD MUST BE MET.

PUBLIC SIDEWALKS

1. MINIMUM WIDTH OF NEW SIDEWALKS SHALL BE FIVE FEET.
2. PREFERRED CLEAR WIDTH OF A CONTINUOUS PASSAGE SHALL BE 48 INCHES; FOR ALTERATIONS TO EXISTING RIGHTS OF WAY, WHERE THE PREFERRED CLEAR WIDTH CANNOT BE MET, THE MINIMUM CLEAR WIDTH OF A CONTINUOUS PASSAGE SHALL BE 36 INCHES.
3. IN NEW CONSTRUCTION, SIDEWALK CROSS SLOPE SHALL NOT EXCEED 2%. IN ALTERATIONS, STEEPER SIDEWALK CROSS SLOPES MAY BE USED AT THE DIRECTION OF THE ENGINEER FOR SHORT DISTANCES, TO MEET EXISTING DOORSTEPS.

CURB RAMPS

1. A TYPICAL CURB RAMP IS COMPOSED OF THE FOLLOWING ELEMENTS: RAMP, LANDING, SIDES, SURFACE, AND INTERSECTIONS WITH THE ROADWAY.
2. RAMP. THE CURB RAMP MUST HAVE A SLOPE OF NO GREATER THAN 12:1 IN THE DIRECTION OF TRAVEL AND A CROSS SLOPE OF NO MORE THAN 2%. IF THE LONGITUDINAL SLOPE OF THE ACCESSIBLE ROUTE IS 5% OR LESS AND SPACE FOR A LANDING IS LIMITED, THE SIDEWALK LANDING MAY BE OMITTED. THE MINIMUM WIDTH FOR A RAMP IS 48-INCHES (NOT INCLUDING SIDES).
3. THE LANDING IS THE LEVEL AREA AT THE TOP OF A RAMP AND MUST NOT HAVE A SLOPE OF MORE THAN 2% IN ANY DIRECTION. THE LANDING AREA IS USED FOR TURNING AND MUST MAINTAIN A PREFERRED LENGTH AND WIDTH OF 60"X60" FOR ALTERATIONS IN EXISTING RIGHTS OF WAY WHERE PREFERRED CLEAR WIDTH CANNOT BE MET. THE MINIMUM LENGTH AND WIDTH SHALL BE 48"X48". IN ALL CASES, TYPE T CURB RAMP MUST HAVE A LANDING LENGTH OF 60-INCHES.
4. SIDES. THE CURB RAMP SHALL BE FLARED WHEN PEDESTRIANS ARE TO CROSS THE RAMP, OR HAVE CURBING IF THE ADJACENT AREA IS A NON-PEDESTRIAN SURFACE SUCH AS A LAWN STRIP, BRICKWORK, OR OBSTACLE. MAXIMUM FLARE SLOPES ARE 10:1 OR AS DIRECTED BY THE ENGINEER, DIAGONAL CURB RAMPS MUST HAVE WELL DEFINED EDGES THAT ARE TO BE PARALLEL TO THE DIRECTION OF PEDESTRIAN FLOW. A DIAGONAL CURB RAMP MAY ALSO HAVE A MINIMUM 36-INCH SEGMENT OF FULL HEIGHT CURB ON EACH SIDE OF THE RAMP WHICH IS WITHIN THE CROSSWALK LINES OR PEDESTRIAN RIGHT-OF-WAY.
5. FLARE TREATMENTS. VARIOUS FLARE TREATMENTS ARE SHOWN IN THE DRAWINGS. IN GENERAL A 10:1 FLARE IS PREFERRED. THIS PROVIDES A CONCRETE WALKING SURFACE FOR THE ENTIRE SIDEWALK WIDTH IN THE DIRECTION OF TRAVEL. WALK CURB TYPE W-1 OR RW-1 MAY BE USED WHERE A RAMP IS ADJACENT TO A LAWN STRIP, BRICKWORK OR OBSTACLE .
6. SURFACE. THE CURB RAMP SURFACE MUST BE STABLE, FIRM, AND SLIP-RESISTANT. CHANGE IN LEVEL UP TO 0.25-INCH MAY BE VERTICAL WITHOUT EDGE TREATMENT. CHANGES BETWEEN 0.25 AND 0.5-INCHES MUST BE BEVELED WITH A SLOPE OF NO GREATER THAN 12:1. CHANGES IN LEVEL ABOVE 0.5-INCH MUST BE ACCOMPLISHED BY A RAMP.
7. LIP. THE INTERSECTION OF THE RAMP WITH THE ROADWAY SHALL BE PERPENDICULAR AND EDGES SHALL BE FLUSH. THE COUNTER SLOPE FROM THE END OF RAMP UP THE CROSS SLOPE OF THE ROADWAY SHALL BE NO MORE THAN 20:1 FOR THE FIRST 24-INCHES.
8. NO OBSTACLES OR PROTRUSIONS SHALL BE PLACED WITHIN THE CURB RAMP AREA. EXISTING MANHOLE COVERS, VALVE BOXES SHALL BE FLUSH MOUNTED WITH WALKING SURFACE.
9. THE THICKNESS OF ALL NEW CURB RAMPS SHALL BE 5-INCHES.
10. TRANSITIONAL SECTIONS OF SIDEWALK SHALL BE INSTALLED TO CONNECT NEW OR REPLACED CURB RAMPS WITH EXISTING SIDEWALKS THAT DO NOT MEET CURRENT STANDARDS AND SPECIFICATIONS. THESE TRANSITION SEGMENTS OF SIDEWALK SHALL PROVIDE A SMOOTH TRANSITION BETWEEN EXISTING AND NEW CONCRETE. MAXIMUM WARPING (ROTATION) RATE SHALL BE 1/8" VERTICAL CHANGE PER LINEAR FOOT. HORIZONTAL DISTANCE TRAVELLED AND MINIMUM DISTANCE SHALL BE ONE FULL SIDEWALK BLOCK OR 5 (FIVE) FEET.
11. FOR PARALLEL AND COMBINATION RAMPS WHERE A RAMP IS LOCATED WITHIN THE PUBLIC SIDEWALK, THE MINIMUM LENGTH FOR THE RAMPS SHALL BE ONE SIDEWALK BLOCK LENGTH OR FIVE FEET, AND THE MAXIMUM LENGTH SHALL BE WHAT IS REQUIRED TO MAINTAIN A 12:1 SLOPE TO MEET EXISTING SIDEWALK GRADE. WHEN THIS IS DETERMINED UNFEASIBLE DUE TO STEEP PITCH OF EXISTING ROADWAY, IN NO CASE SHALL THE RAMP BE MORE THAN 15 FEET.
12. STEEP SLOPES. ALL RAMPS LOCATED ON STREETS WITH A RUNNING PROFILE GRADE GREATER THAN 5% MUST BE REVIEWED AND APPROVED BY THE ENGINEER.
13. RAMP SHALL BE CONSTRUCTED WITHIN THE CROSSWALK AND NOT BEHIND AN EXISTING INLET.
14. JOINTS SHALL BE PROVIDED IN THE CURB RAMP AS EXTENSIONS OF THE WALK JOINTS AND CONSISTENT WITH 608.03 REQUIREMENTS FOR FOR NEW CONCRETE WALK. A 1/2" 705.03 EXPANSION JOINT FILLER SHALL BE PROVIDED WHERE NEW CONCRETE MEETS THE EXISTING CONCRETE WALK. LINES SHOWN ON THIS DRAWING TO INDICATE THE RAMP EDGE AND SLOPE CHANGES ARE NOT NECESSARY JOINT LINES.
15. DIMENSIONS, LOCATIONS AND TYPE OF CURB RAMP MAY BE MODIFIED TO ACCOMMODATE EXISTING CONDITIONS, WITH APPROVAL OF THE CITY ENGINEER.
16. SLOPE AND CROSS-SLOPE CONVERSION TABLE:

RATIO	PERCENT	INCH/FOOT	DEGREES	WHERE UTILIZED
1:12	8.3	1	4.8	MAXIMUM SLOPE FOR RAMPS
1:10	10.0	1 1/4	5.7	MAXIMUM SLOPE FOR FLARES
1:48	2.0	1/4	1.1	MAXIMUM SLOPE FOR LANDING AND CROSS-SLOPE OF LANDINGS, RAMPS AND SIDEWALK

17. FOR CURB RAMP STANDARD DRAWINGS TYPICAL DIMENSIONS ARE USED BASED ON A FULL CURB HEIGHT OF 6-INCHES. ADJUSTMENTS MAY BE MADE TO LENGTH OF RAMPS AND FLARES BASED ON ACTUAL CURB REVEAL HEIGHT. REQUIRED SLOPES MUST BE MAINTAINED.
18. WHEN TWO RAMPS ARE USED AT A CORNER IF THE SPACE BETWEEN IS TO BE AN UNWALKABLE SURFACE IT MAY BE GRASSED IF GREATER THAN 20 S.F., OTHERWISE IT SHALL BE FILLED IN CONCRETE.
19. TYPES R & T RAMPS. INSTALL CURB TYPE W-1 AT THE BACK OF WALK UNLESS DETAILED ON PLAN SHEETS. THE PURPOSE OF THIS CURB IS TO CONTAIN STORMWATER WITHIN RIGHT OF WAY, MEET EXISTING CONDITIONS OR CONTROL ACCESS.
20. DETECTABLE WARNING IS REQUIRED FOR ALL CURB RAMPS. TRUNCATED DOMES SHALL HAVE A DIAMETER OF 0.9 INCH AT THE BOTTOM, A DIAMETER OF 0.4 INCH AT THE TOP, A HEIGHT OF 0.2 INCH AND A CENTER-TO-CENTER SPACING OF 2.35 INCHES MEASURED ALONG ONE SIDE OF A SQUARE ARRANGEMENT.
21. DOME ALIGNMENT. DOMES SHALL BE ALIGNED ON A SQUARE GRID IN THE PREDOMINANT DIRECTION OF TRAVEL TO PERMIT WHEELS TO ROLL BETWEEN DOMES.
22. DRAINAGE. ALL CURB RAMPS SHALL BE DESIGNED AND CONSTRUCTED TO PROVIDE POSITIVE DRAINAGE SO AS TO PREVENT PONDING. PARTICULAR ATTENTION IS TO BE GIVEN TO RAMPS LOCATED IN EITHER FLAT OR STEEP AREAS, AND CURB RAMP TYPES R, S, & V THAT HAVE LANDINGS AT STREET LEVEL.

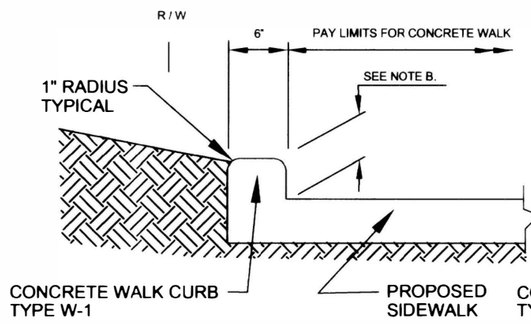

CONCRETE WALK CURB
TYPE W - 1

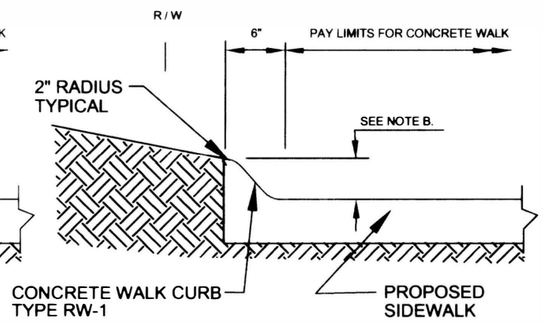

CONCRETE WALK CURB
TYPE RW - 1

A. SEE NOTE 17 ABOVE.
B. CURB HEIGHT VARIES FROM 0" TO 6". 6" MAXIMUM.
C. 608 CONCRETE WALK WILL BE MEASURED TO THE FACE OF CURB TYPE W OR RW-1 WILL BE CONSIDERED UNIFORMLY 5" THICK. MEASUREMENT FOR ITEM 609 WALK CURB TYPE W-1 OR RW-1 WILL BE THE ACTUAL NUMBER OF LINEAR FEET OF CURB. PAYMENT AT THE PRICE BID PER LINEAR FOOT SHALL COVER THE NECESSARY FURNISHING, FORMING AND PLACING OF CONCRETE WHICH SHALL BE CONSIDERED TO BE ALL OF THE CONCRETE UNDER THE CURB.

CITY OF CINCINNATI
DEPARTMENT OF TRANSPORTATION AND ENGINEERING
DIVISION OF TRANSPORTATION DESIGN

SIDEWALKS AND CURB RAMPS
GENERAL NOTES

SCALE: NONE JAN 7, 2003

Premgarg
CITY ENGINEER

ACCESSION NO. 27256

PAGE 053B

CALCULATED RLD CHECKED CWP

CURB RAMP GENERAL NOTES

HAM-71-1.34

141
555

c:\pwworking\hmm_external\tyn61470\dms72884\8726CM004.dgn 10/24/2014 4:04:50 PM TYN61470

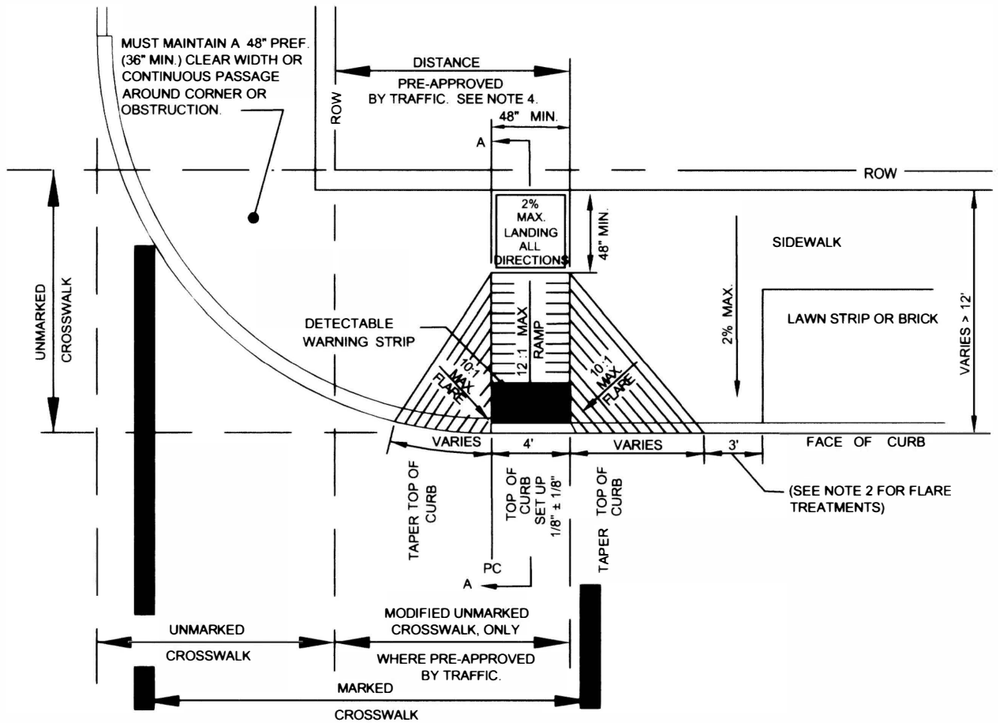

CURB RAMP TYPE P

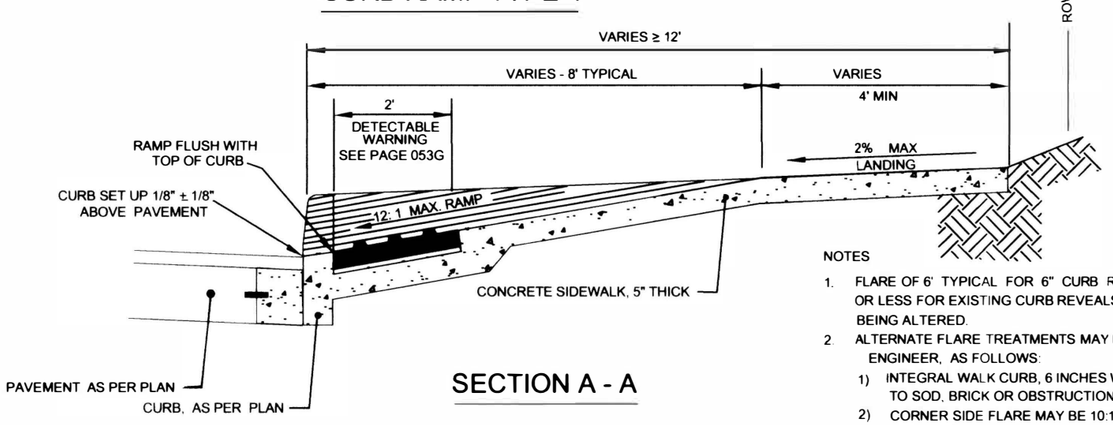

SECTION A - A

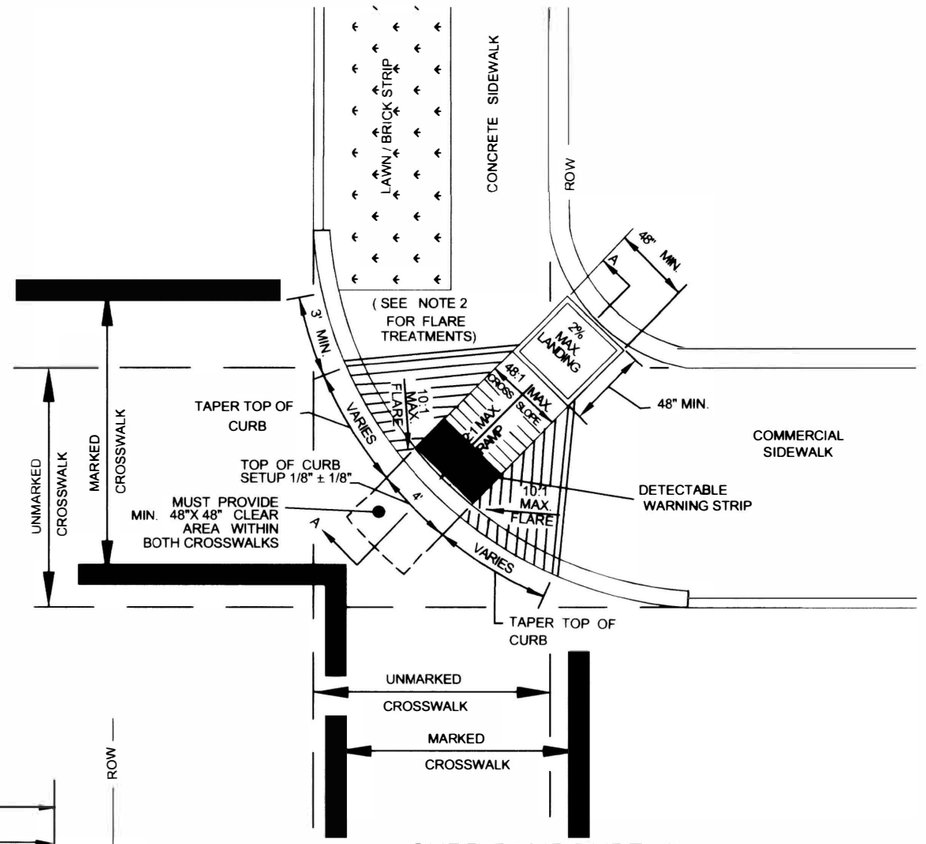

CURB RAMP TYPE Q

NOTES

1. FLARE OF 6' TYPICAL FOR 6" CURB REVEAL AND 12:1 SLOPE, MAY BE MORE OR LESS FOR EXISTING CURB REVEALS WHEN CURB REVEAL HEIGHT IS NOT BEING ALTERED.
2. ALTERNATE FLARE TREATMENTS MAY BE USED UPON APPROVAL BY THE ENGINEER, AS FOLLOWS:
   1) INTEGRAL WALK CURB, 6 INCHES WIDE, IF RAMP IS ADJACENT TO SOD, BRICK OR OBSTRUCTION .
   2) CORNER SIDE FLARE MAY BE 10:1 TO CONCRETE WALK; PROVIDE MIN. 3' CONCRETE AT THE TOP OF FLARE TO EXTENDED SIDEWALK LINE
   3) ON ALTERATIONS, FLARES STEEPER THAN 10:1 MAY BE CONSTRUCTED IF PRE-APPROVED BY THE ENGINEER.
3. FOR DETECTABLE WARNING DETAILS, SEE PAGE 053G
4. WHERE EXISTING R/W WIDTH IS NOT SUFFICIENT FOR LANDING AND RAMP, CURB HEIGHT MAY BE REDUCED TO 4" AND CROSS SLOPE REDUCED TO 1% TO REDUCE RAMP LENGTHS.
4. RAMP MAY BE MOVED OUTSIDE THE LIMITS OF THE UNMARKED CROSSWALK BUT ONLY IF PRE-APPROVED BY TRAFFIC ENGINEERING.

CITY OF CINCINNATI
DEPARTMENT OF TRANSPORTATION AND ENGINEERING
DIVISION OF TRANSPORTATION DESIGN

CURB RAMPS
TYPES P, Q - HIGH LANDING

SCALE: NONE JAN 7, 2003

CITY ENGINEER

ACCESSION NO. 27256

PAGE 053C

CALCULATED RLD CHECKED CWP

CURB RAMP DETAILS

HAM-71-1.34

142
555

c:\pwworking\hmm\external\tyn61470\dms72884\872686M005.dgn 10/24/2014 4:05:29 PM TYN61470

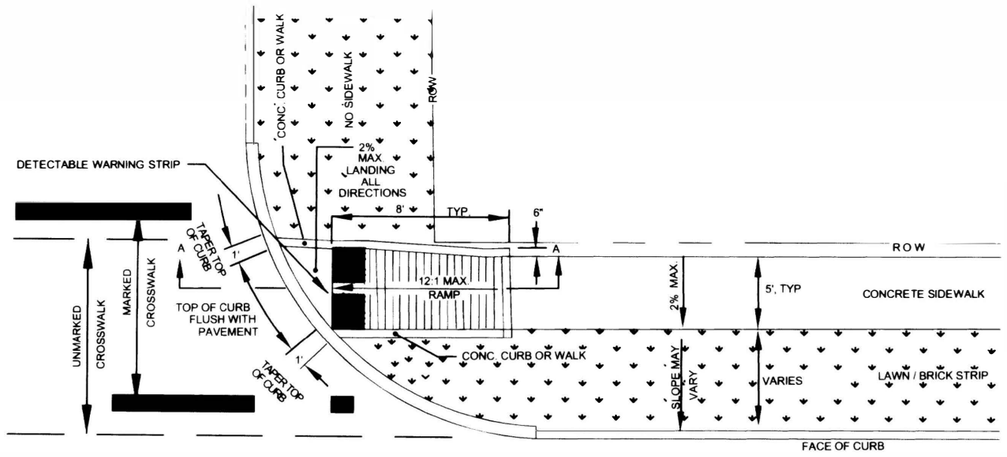

CURB RAMP TYPE V

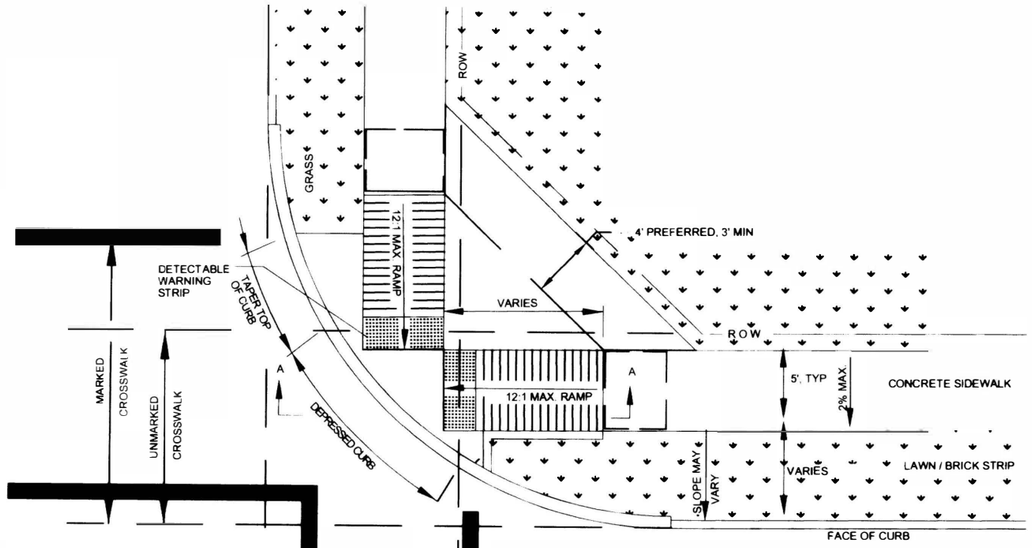

CURB RAMP TYPE W

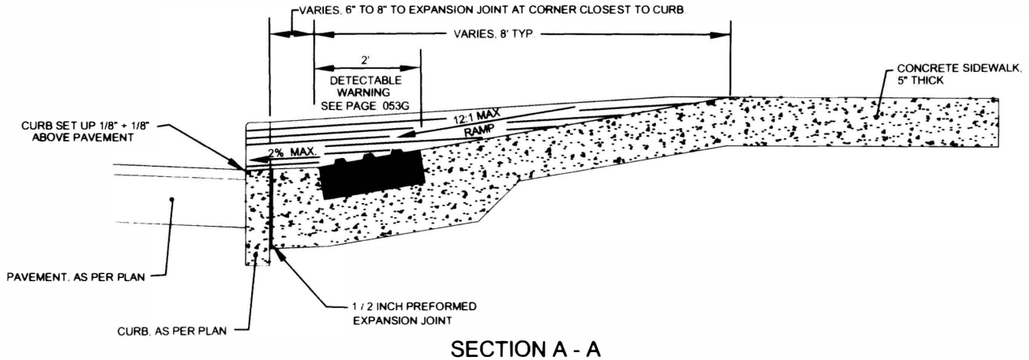

SECTION A - A

CITY OF CINCINNATI
DEPARTMENT OF TRANSPORTATION AND ENGINEERING
DIVISION OF TRANSPORTATION DESIGN

SIDEWALKS AND CURB RAMPS TYPE V AND W, LOW LANDING

SCALE: NONE JAN 7, 2003

CITY ENGINEER

ACCESSION NO. 27256

PAGE 053F

CALCULATED RLD
CHECKED CWP

CURB RAMP DETAILS

HAM-71-1.34

143
555

c:\pwworking\hmm\external\tyn61470\dms72684\872683GM006.dgn 10/24/2014 4:06:05 PM TYNG

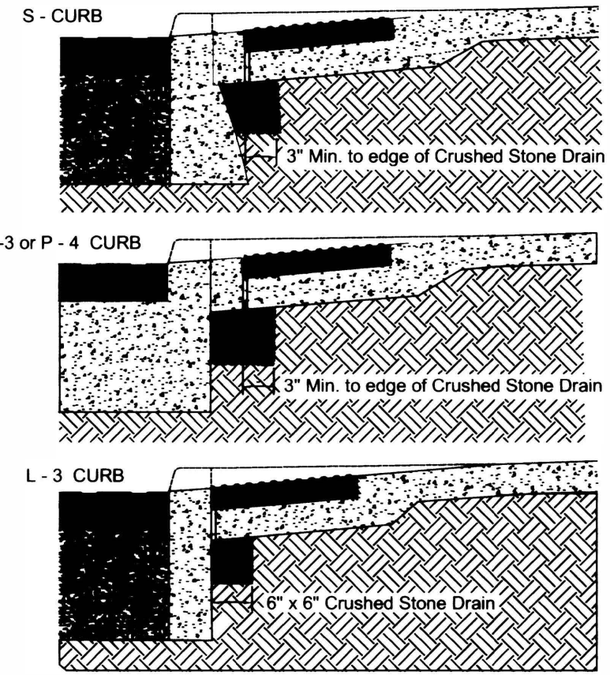

NEW CONSTRUCTION DETECTABLE WARNING TYPE B

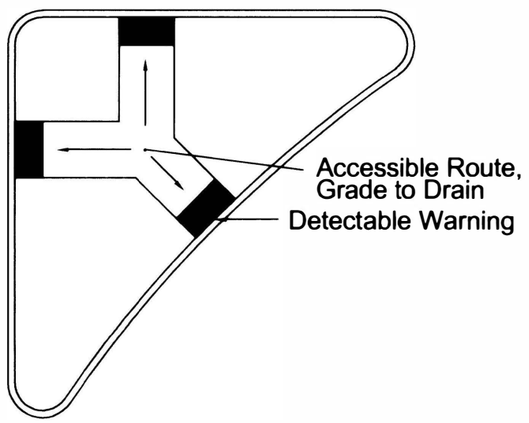

DETECTABLE WARNING AT MEDIAN ISLANDS

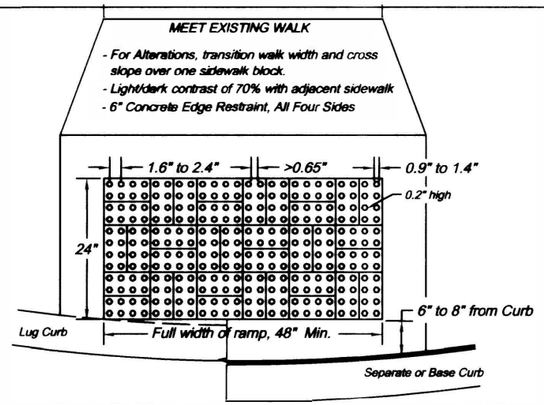

Based on Draft Guidelines for Accessible Public Rights-of-way (June 17, 2002)

TRUNCATED DOME SPACING

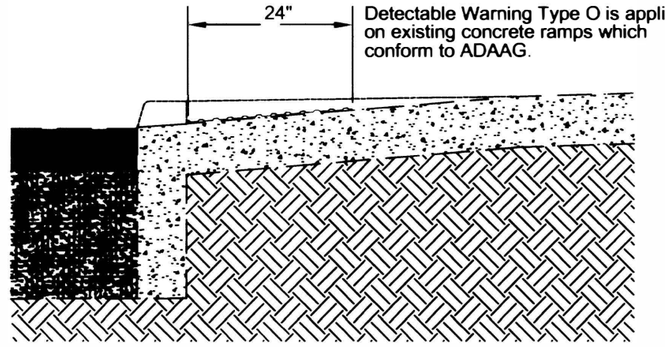

ALTERATION DETECTABLE WARNING TYPE O

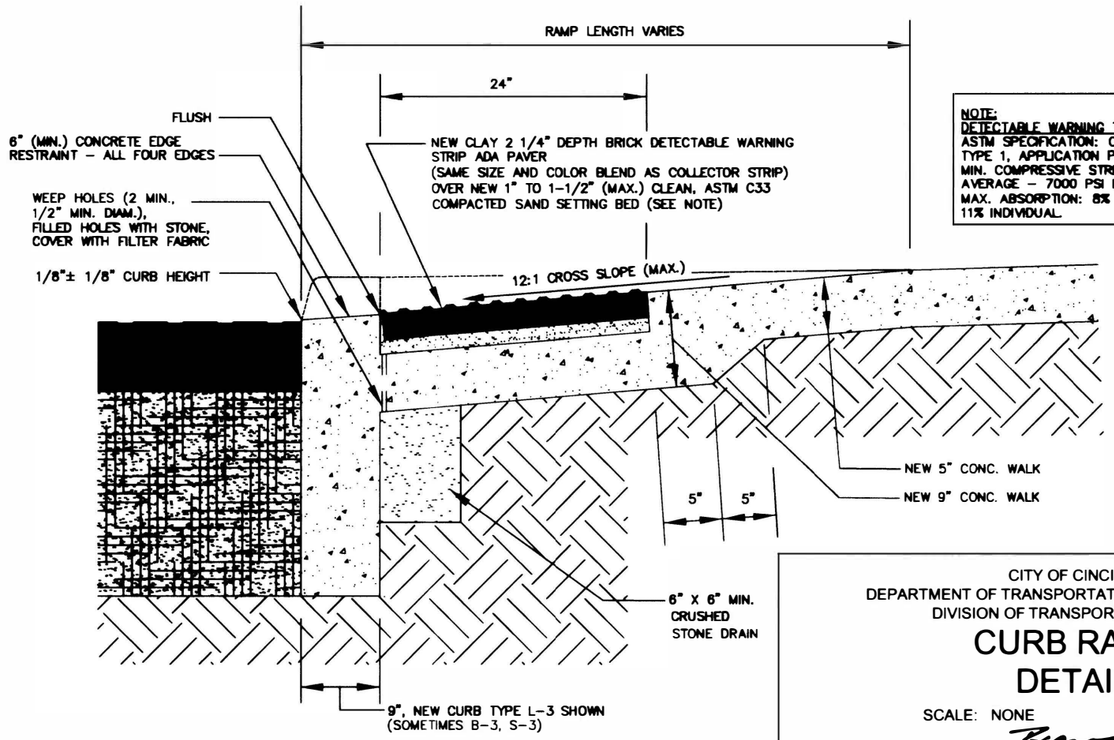

NOTE:
DETECTABLE WARNING TYPE B:
ASTM SPECIFICATION: C 902, CLASS SX, TYPE 1, APPLICATION PS.,
MIN. COMPRESSIVE STRENGTH: 8000 PSI, AVERAGE – 7000 PSI INDIVIDUAL.
MAX. ABSORPTION: 8% AVERAGE 11% INDIVIDUAL.

BRICK DETAILS

CITY OF CINCINNATI
DEPARTMENT OF TRANSPORTATION AND ENGINEERING
DIVISION OF TRANSPORTATION DESIGN

CURB RAMPS DETAILS

SCALE: NONE JAN 7, 2003

CITY ENGINEER

ACCESSION NO. 27256

PAGE 053G

CALCULATED RLD CHECKED CWP

CURB RAMP DETAILS

HAM-71-1.34

144
555

c:\pwworking\hmm\external\tyn61470\dms72884\87268CM007.dgn 10/24/2014 4:06:40 PM TYN61470

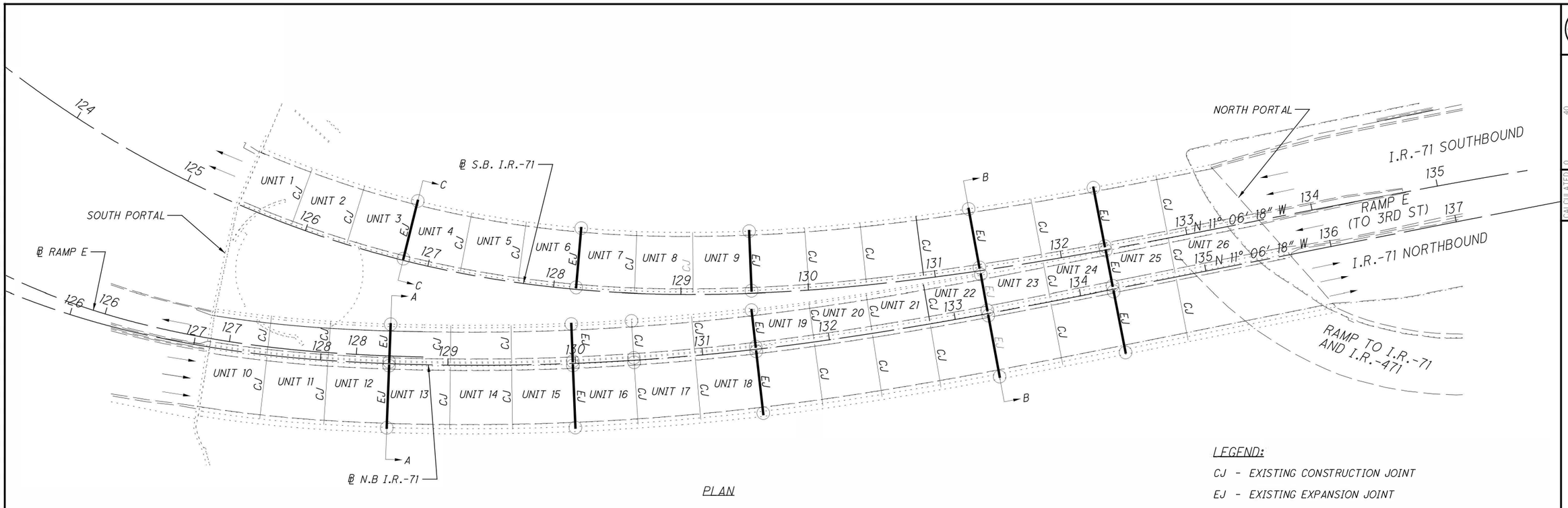

PLAN

LEGEND:

- CJ - EXISTING CONSTRUCTION JOINT
- EJ - EXISTING EXPANSION JOINT
- ━ - PROPOSED EXPANSION JOINT REPAIR
- ○ - PROPOSED TUNNEL WALL JOINT DRAIN
- ← - DIRECTION OF TRAFFIC

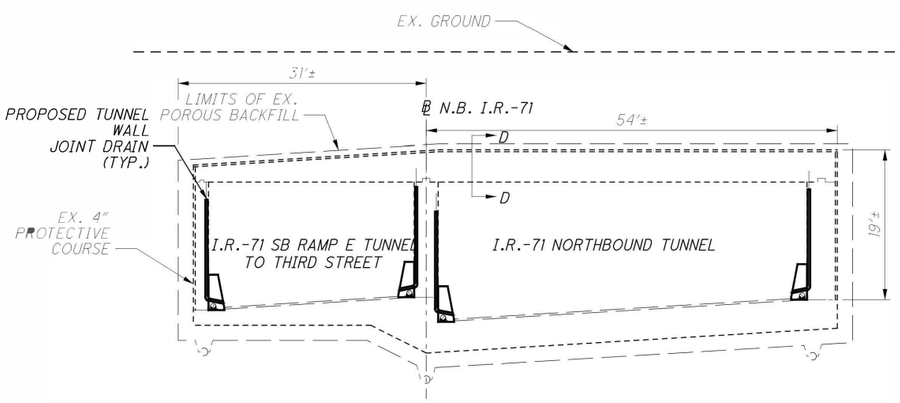

SECTION A-A

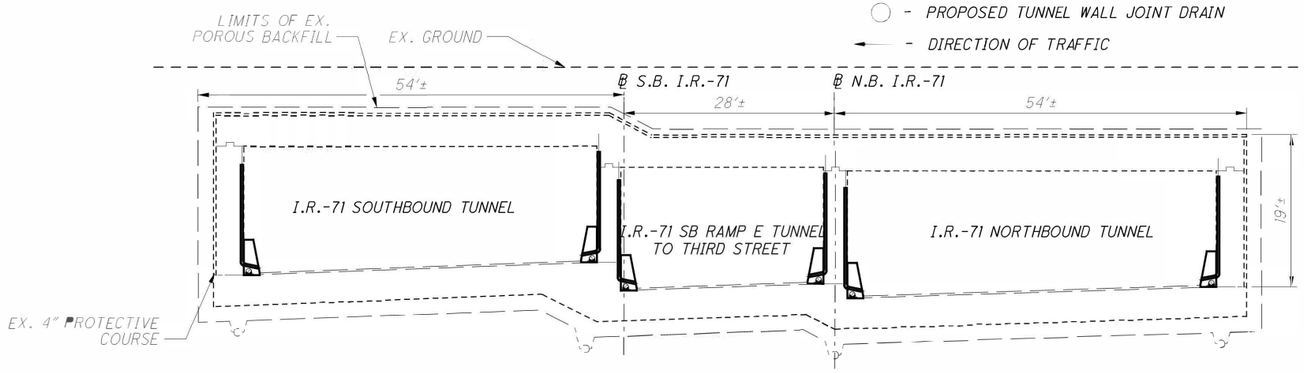

SECTION B-B

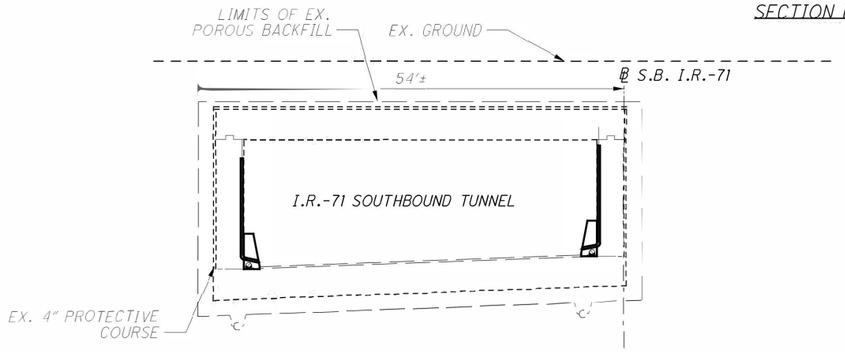

SECTION C-C

NOTES:

1. FOR SECTION D-D, SEE SHEET 146.

HORIZONTAL SCALE IN FEET
0 20 40 80

CALCULATED MAR
CHECKED CWP

JOINT REPAIR

HAM-71-1.34

145
555

c:\pwworking\hmm\external\tyn61470\dms72884\87266GM009.dgn 10/24/2014 4:07:22 PM TYN61470

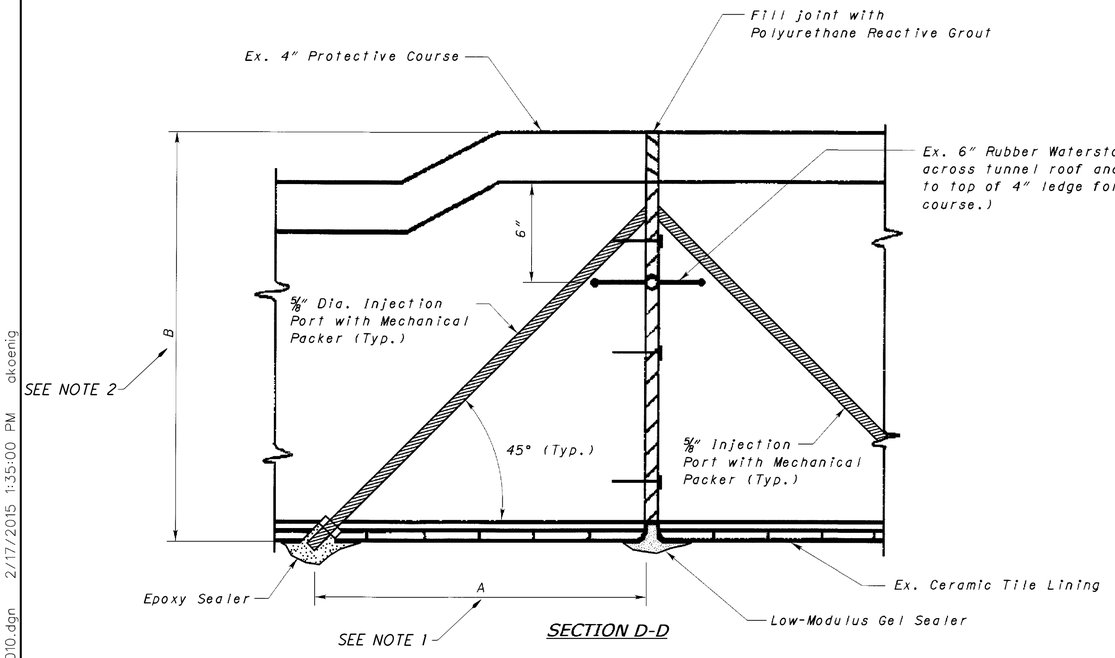

SECTION D-D

Note:

1. Injection ports to be staggered at 1' spacing.

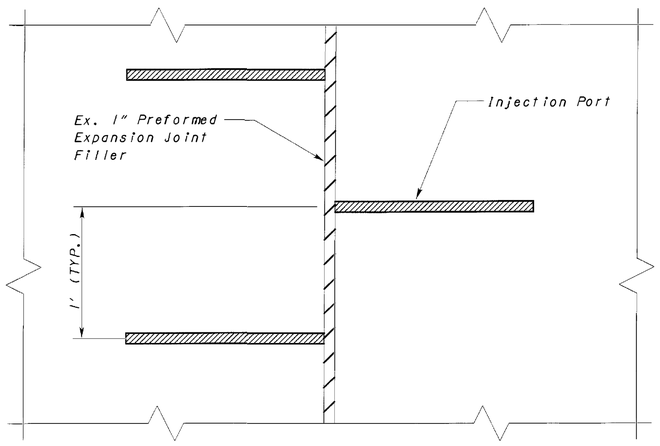

INJECTION PORT SPACING

NOTES:

1. THE "A" DIMENSION VARIES FROM 2'-8" MIN. TO 3'-0" MAX.
2. THE "B" DIMENSION VARIES BASED ON THE THICKNESS OF THE EXISTING WALLS. SEE EXISTING PLANS FOR DIMENSIONS.

ITEM 690 - SPECIAL - MISC.: WATER INFILTRATION MITIGATION:

DESCRIPTION:

THIS WORK SHALL CONSIST OF DRILLING HOLES FROM INSIDE THE TUNNEL INTO THE JOINTS FOLLOWED BY INJECTION OF HYDROPHILIC POLYURETHANE OR ACRYLIC RESIN CHEMICAL GROUT INTO THE JOINT AND OUTSIDE THE TUNNEL LINING IN THE VICINITY OF THE TUNNEL CEILING TRANSVERSE JOINTS AS DETAILED IN THE PLANS AND HEREIN SPECIFIED, AND AS DIRECTED BY THE ENGINEER.

LOCATIONS IDENTIFIED IN THE PLANS ARE BASED ON FIELD SURVEY AT THE TIME THE PLANS WERE PREPARED. THE CONTRACTOR AND ENGINEER SHALL REVIEW THE CONDITIONS PRIOR TO THE START OF THE CONTRACT TO DETERMINE IF CHANGES IN THE LISTED REPAIRS SHOULD BE MADE. FINAL DETERMINATION OF LOCATIONS AND EXTENTS OF THE REPAIRS SHALL BE DETERMINED IN THE FIELD BY THE ENGINEER.

CHEMICAL GROUT:

THE CHEMICAL GROUT USED FOR THE JOINT INJECTION SHALL BE ONE OF THE FOLLOWING PRODUCTS OR AN ODOT APPROVED HYDROPHILIC POLYURETHANE OR ACRYLIC RESIN FORMULATED FOR SEALING WET CRACKS OR JOINTS IN UNDERGROUND STRUCTURES.

PRODUCT: PRIME FLEX 900XLV
MANUFACTURER: PRIME RESINS
2291 PLUNKETT RD.
CONYERS, GA 30012
TEL: 1-800-321-7212
WWW.PRIMERESINS.COM

PRODUCT: WEBAC FLEXGEL
MANUFACTURER: WEBAC CORPORATION
1669 E. WILSHIRE AVE.
SANTA ANA, CA 92705
TEL: 1-877-932-2293
WWW.SEALBOSS.COM

MATERIALS, HANDLING, AND INSTALLATION:

MIXING, HANDLING AND INSTALLATION OF THE CHEMICAL GROUT SHALL BE IN ACCORDANCE WITH THE RECOMMENDATIONS OF THE MANUFACTURER, ALL APPLICABLE SAFETY CODES, AND THESE DOCUMENTS AND PERFORMED IN SUCH A MANNER AS TO MINIMIZE HAZARD TO PERSONNEL. IT IS THE RESPONSIBILITY OF THE CONTRACTOR TO PROVIDE APPROPRIATE PROTECTIVE MEASURES TO ENSURE THAT CHEMICALS OR BYPRODUCTS PRODUCED BY SAID CHEMICALS ARE UNDER CONTROL OF THE CONTRACTOR AT ALL TIMES.

ALL CHEMICAL GROUTING MATERIALS SHALL BE DELIVERED TO THE SITE IN UNDAMAGED, UNOPENED CONTAINERS BEARING THE MANUFACTURER'S ORIGINAL LABELS. IMMEDIATELY UPON RECEIPT AT THE WORK SITE, ALL CHEMICAL GROUTING MATERIALS SHALL BE STORED IN A SECURED, DRY, WEATHER-TIGHT STRUCTURE. A SUFFICIENT QUANTITY OF ALL CHEMICAL GROUTING MATERIALS SHALL BE STORED AT OR NEAR THE WORK SITE TO ENSURE THAT GROUTING OPERATIONS WILL NOT BE DELAYED BY SHORTAGES.

MONITOR QUANTITIES OF GROUT BEING INJECTED TO MINIMIZE GROUT LEAKAGE INTO THE DRAINAGE STONE AROUND THE STRUCTURE AND TO PREVENT ANY LEAKAGE INTO THE DRAINAGE PIPING. MONITOR DRAINAGE PIPING FOR GROUT INFILTRATION AND REMOVE ANY GROUT INTRUSIONS.

SUBMIT THE INJECTION PROCEDURE TO THE ENGINEER FOR APPROVAL PRIOR TO COMMENCING WORK PER C&MS 501.

DAMAGED TILE:

TILE THAT INTERFERES WITH INSTALLING INJECTION PORTS IN THE CEILING ARE TO BE CAREFULLY REMOVED, AND ARE NOT TO BE REPLACED. SEAL EXPOSED CONCRETE WITH EPOXY URETHANE SEALER PER C&MS 512. THE COLOR SHALL MATCH THAT OF THE TUNNEL WALL AND CEILING TILES THAT WILL REMAIN. TILE REMOVAL SHALL BE PER ITEM 202 - REMOVAL MISC.: CERAMIC CEILING TILES. TILE REMOVAL AND CONCRETE SEALING INCIDENTAL TO THIS WORK IS INCLUDED WITH THIS ITEM FOR PAYMENT.

INCLUDED WORK

ALL WORK SHOWN IN "ITEM 690 - SPECIAL - MISC.: WATER INFILTRATION MITIGATION", INCLUDING DRILLING INJECTION PORTS, TILE REMOVAL, FURNISHING AND INSTALLING CHEMICAL GROUT, SEALING GROUT PORTS, SEALING CONCRETE SURFACES, ETC. IS INCLUDED IN THAT ITEM FOR PAYMENT.

MEASUREMENT & PAYMENT:

THE DEPARTMENT WILL MEASURE THE QUANTITY ON A LINEAR FOOT BASIS OF JOINT GROUTED IN PLACE. THE DEPARTMENT WILL PAY FOR THE ACCEPTED QUANTITIES OF GROUTED JOINT AT THE CONTRACT PRICE FOR ITEM 690 - SPECIAL - MISC.: WATER INFILTRATION MITIGATION. THIS PRICE PAID SHALL INCLUDE ALL NECESSARY LABOR, MATERIALS, TOOLS, AND EQUIPMENT NECESSARY TO COMPLETE THE WORK TO THE SATISFACTION OF THE ENGINEER.

THE FOLLOWING ESTIMATED QUANTITY HAS BEEN CARRIED TO THE GENERAL SUMMARY FOR THE WORK NOTED ABOVE:

ITEM 690 - SPECIAL - MISC.: WATER INFILTRATION MITIGATION 615 FT

LEGEND:

DIA. - DIAMETER
EX. - EXISTING
TYP. - TYPICAL

CALCULATED MAR CHECKED CWP

JOINT DETAILS

HAM-71-1.34

I:\projects\HAM\ir071\01.34_PID87268\Design\docs\Plan Package\Current CADD Files\Roadway\Sheets\87268GM010.dgn 2/17/2015 1:35:00 PM akoenig

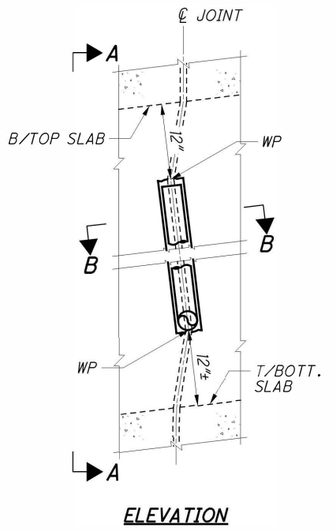

ELEVATION

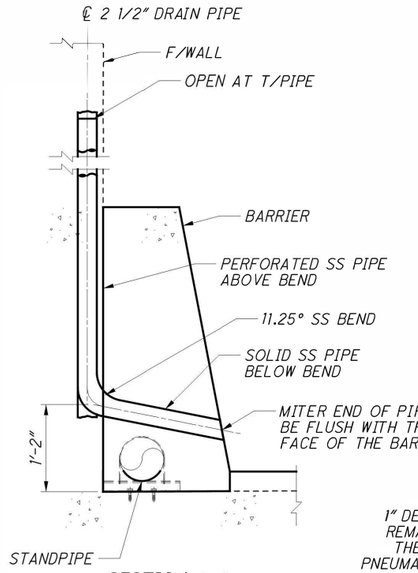

SECTION A-A

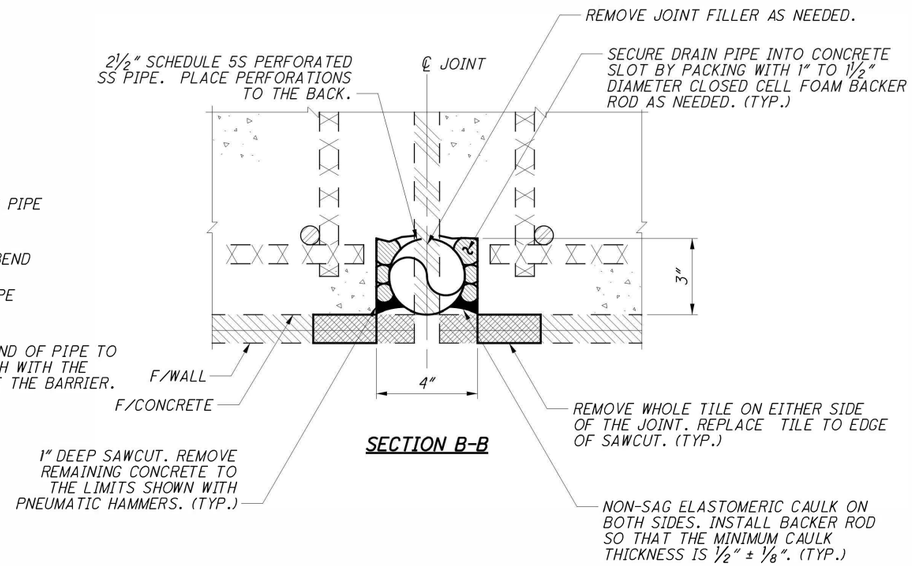

SECTION B-B

ITEM 690 - SPECIAL - MISC.: WALL JOINT DRAIN

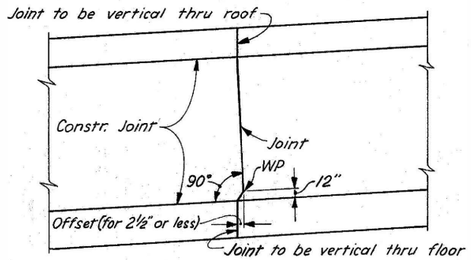

TREATMENT OF WALL JOINTS
(Tile on one side & WP at bottom)

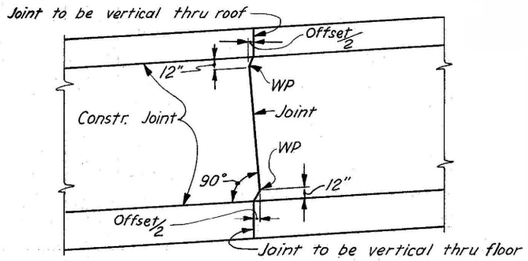

TREATMENT OF WALL JOINTS
(Tile on one side & WP at top & bottom)
(Used where total offset is greater than 2½")

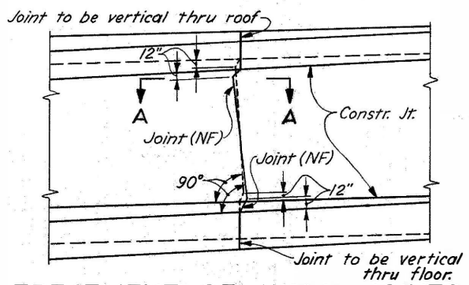

TREATMENT OF WALL JOINTS
(Common wall with tile on both sides)

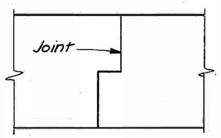

SECTION A-A

FOR REFERENCE ONLY

ITEM 690 - SPECIAL - MISC.: WALL DRAIN:

DESCRIPTION:

THIS WORK SHALL CONSIST OF INSTALLING PERFORATED STAINLESS STEEL PIPE DRAINS AT WALL JOINTS, AND SHALL INCLUDE REMOVALS, SAWCUTTING, PROVIDING PIPE, PIPE FITTINGS, BACKER ROD, AND SEALANT AT VERTICAL JOINTS IN TUNNEL WALLS AS DETAILED IN THE PLANS AND HEREIN SPECIFIED, AND AS DIRECTED BY THE ENGINEER.

LOCATIONS IDENTIFIED IN THE PLANS ARE BASED ON FIELD SURVEY AT THE TIME THE PLANS WERE PREPARED. THE CONTRACTOR AND ENGINEER SHALL REVIEW THE CONDITIONS PRIOR TO THE START OF THE CONTRACT TO DETERMINE IF CHANGES IN THE LISTED REPAIRS SHOULD BE MADE. FINAL DETERMINATION OF LOCATIONS AND EXTENTS OF THE REPAIRS SHALL BEDETERMINED IN THE FIELD BY THE ENGINEER.

STAINLESS STEEL PIPE:

PROVIDE AISI 316 STAINLESS STEEL PIPE AND FITTINGS PER C&MS 730.09 AND ASTM A312.

PERFORATIONS IN DESIGNATED PIPE SHALL BE ¼" DIAMETER AT ½" PITCH. ALTERNATIVELY, PROVIDE SLOTS, ¼" WIDE AND 4" LONG, AT 8" PITCH. EACH END OF THE SLOTS SHALL BE DRILLED TO ¼" DIAMETER PROVIDING ROUNDED ENDS FOR EACH SLOT.

CAULK:

PROVIDE NON-SAG ELASTOMERIC CAULK MEETING FEDERAL SPECIFICATIONS TT-S-001543A, AND COMPATIBLE WITH BOTH CONCRETE AND METAL SUBSTRATES.

INCLUDED WORK

ALL WORK SHOWN IN " ITEM 690 - SPECIAL - MISC.: WALL JOINT DRAIN", INCLUDING SAW CUTTING, CONCRETE REMOVAL, PIPE, BACKER ROD, SEALANT, ETC. IS INCLUDED IN THAT ITEM FOR PAYMENT.

MEASUREMENT & PAYMENT:

THE DEPARTMENT WILL MEASURE THE QUANTITY OF PIPE DRAIN INSTALLED IN PLACE AT EACH LOCATION. THE DEPARTMENT WILL PAY FOR THE ACCEPTED QUANTITIES OF DRAIN AT THE CONTRACT PRICE FOR ITEM 690 - SPECIAL - MISC.: WALL JOINT DRAIN. THIS PRICE PAID SHALL INCLUDE ALL NECESSARY LABOR, MATERIALS, TOOLS, AND EQUIPMENT NECESSARY TO COMPLETE THE WORK TO THE SATISFACTION OF THE ENGINEER.

THE FOLLOWING QUANTITY HAS BEEN CARRIED TO THE GENERAL SUMMARY FOR PAYMENT:

ITEM 690 - SPECIAL - MISC.: WALL JOINT DRAIN
32 EACH

LEGEND:

BOTT. -	BOTTOM
B/ -	BOTTOM OF
CONSTR. -	CONSTRUCTION
F/ -	FACE OF
JT. -	JOINT
NF -	NEAR FACE
SS -	STAINLESS STEEL
TYP. -	TYPICAL
T/ -	TOP OF
WP -	WORK POINT

CALCULATED MAR
CHECKED CWP

JOINT DETAILS

HAM-71-1.34

147
555

c:\pwworking\hmm\external\tyn61470\dms72884\87268GM011.dgn 10/24/2014 4:07:30 PM TYN61470

CALCULATED MAR
CHECKED CWP

ITEM 202 – REMOVAL MISC.: CERAMIC CEILING TILE
ITEM 202 – REMOVAL MISC.: CERAMIC WALL TILE

DESCRIPTION:

THIS WORK CONSISTS OF THE REMOVAL OF CERAMIC TILES, MORTAR, AND GROUT AS SHOWN IN THE PLANS, AT THE DIRECTION OF THE ENGINEER, AND NOT OTHERWISE LISTED FOR PAYMENT.

THE PROVISIONS OF ITEM 202 APPLY EXCEPT AS SPECIFIED BY THE FOLLOWING NOTES.

REMOVAL METHODS:

REMOVE TILES, ETC., TO THE SURFACE OF THE CONCRETE LEAVING IT CLEAN OF MORTAR AND GROUT.

PERFORM WORK CAREFULLY DURING REMOVALS TO PROTECT ALL PORTIONS AND APPURTENANCES OF THE TUNNEL THAT ARE TO REMAIN. ELEMENTS DAMAGED BY CONTRACTOR SHALL BE REPAIRED OR REPLACED AT NO COST TO THE STATE.

EXCLUSIONS:

TILE LOCATED ON PORTIONS OF THE STRUCTURE THAT ARE TO BE REMOVED, OR OTHERWISE MODIFIED, SHALL NOT BE INCLUDED WITH THIS ITEM, AND SHALL BE INCLUDED WITH THE APPROPRIATE REMOVAL ITEMS FOR PAYMENT.

MEASUREMENT & PAYMENT:

THE DEPARTMENT WILL MEASURE THE QUANTITY OF REMOVALS ON A SQUARE FOOT BASIS. THE DEPARTMENT WILL PAY FOR THE ACCEPTED QUANTITIES AT THE CONTRACT PRICE FOR ITEM 202 – REMOVAL MISC.: CERAMIC WALL TILE, OR ITEM 202 – REMOVAL MISC.: CERAMIC CEILING TILE, AS APPROPRIATE. THIS PRICE PAID SHALL INCLUDE ALL NECESSARY LABOR, MATERIALS, TOOLS, AND EQUIPMENT NECESSARY TO COMPLETE THE WORK TO THE SATISFACTION OF THE ENGINEER.

ITEM 690 – SPECIAL – MISC.: GLAZED CERAMIC WALL TILE

DESCRIPTION:

THIS WORK SHALL CONSIST OF INSTALLING GLAZED CERAMIC TILE AS DETAILED IN THE PLANS AND HEREIN SPECIFIED, AT THE DIRECTION OF THE ENGINEER, AND NOT OTHERWISE LISTED FOR PAYMENT.

LOCATIONS IDENTIFIED IN THE PLANS ARE BASED ON FIELD SURVEY AT THE TIME THE PLANS WERE PREPARED. THE CONTRACTOR AND ENGINEER SHALL REVIEW THE CONDITION OF THE TILE PRIOR TO THE START OF THE CONTRACT TO DETERMINE IF CHANGES IN THE LISTED REPAIRS SHOULD BE MADE. FINAL DETERMINATION OF LOCATIONS AND EXTENTS OF THE REPAIRS SHALL BE DETERMINED IN THE FIELD BY THE ENGINEER.

REFERENCES:

IN ADDITION TO THE PROVISIONS OF THE C&MS, THE FOLLOWING STANDARDS ARE INCORPORATED BY REFERENCE. THE LATEST EDITION AVAILABLE AS OF THE CONTRACT DATE SHALL APPLY.

AMERICAN NATIONAL STANDARDS INSTITUTE (ANSI):
- A108.5 CERAMIC TILE INSTALLED WITH DRY-SET PORTLAND CEMENT MORTAR OR LATEX-PORTLAND CEMENT MORTAR
- A118.4 LATEX-PORTLAND CEMENT MORTAR
- A137.1 AMERICAN NATIONAL STANDARD SPECIFICATIONS FOR CERAMIC TILE

AMERICAN SOCIETY FOR TESTING AND MATERIALS (ASTM):
- C373 TEST METHOD FOR WATER ABSORPTION, BULK DENSITY, APPARENT POROSITY, AND APPARENT SPECIFIC GRAVITY OF FIRED WHITE WARE PRODUCTS
- C482 TEST METHOD FOR BOND STRENGTH OF CERAMIC TILE TO PORTLAND CEMENT
- C648 TEST METHOD FOR BREAKING STRENGTH OF CERAMIC TILE
- C650 TEST METHOD FOR RESISTANCE OF CERAMIC TILE TO CHEMICAL SUBSTANCES
- C1026 TEST METHOD FOR MEASURING THE RESISTANCE OF CERAMIC TILE TO FREEZE-THAW CYCLING

TILE COUNCIL OF NORTH AMERICA (TCNA):
- TCNA HANDBOOK FOR CERAMIC, GLASS, AND STONE TILE INSTALLATION

SUBMITTALS:

SUBMIT THE FOLLOWING FOR APPROVAL PER C&MS 501.

SAMPLES FOR INITIAL SELECTION PURPOSES: SUBMIT MANUFACTURER'S COLOR CHARTS CONSISTING OF ACTUAL TILES OR SECTIONS OF TILE SHOWING FULL RANGE OF COLORS, TEXTURES, AND PATTERNS AVAILABLE FOR THE TILE TO BE REPLACED. INCLUDE SAMPLES OF GROUT AND ACCESSORIES INVOLVING COLOR SELECTION. TILE COLOR AND GROUT ARE TO CLOSELY MATCH THE EXISTING WORK.

INSTALLATION PLAN: SUBMIT AN INSTALLATION PLAN CONSISTING OF DETAILED PROCEDURES FOR SUBSTRATE PREPARATION, MORTAR PLACEMENT, TILE INSTALLATION, AND GROUTING. THIS PLAN SHALL BE COMPATIBLE WITH INSTALLING TILE INTO THE EXISTING WORK. PROVIDE COPIES OF THE PROPOSED ANSI AND TCNA INSTALLATION METHOD(S) PROPOSED FOR APPROVAL.

PRODUCT DATA: SUBMIT MANUFACTURER'S TECHNICAL INFORMATION AND INSTALLATION INSTRUCTIONS FOR MATERIALS PROPOSED.

SUBMIT CERTIFIED TEST REPORTS FROM A QUALIFIED INDEPENDENT TESTING LABORATORY EVIDENCING COMPLIANCE OF TILE AND TILE SETTING PRODUCTS WITH REQUIREMENTS SPECIFIED, BASED ON COMPREHENSIVE TESTING OF CURRENT PRODUCTS. INCLUDE IN REPORTS TESTING LABORATORY'S INTERPRETATION OF TEST RESULTS RELATIVE TO THE CONTRACT REQUIREMENTS.

ASBESTOS FREE AND LEAD FREE CERTIFICATION: SUBMIT MANUFACTURER'S WRITTEN CERTIFICATION THAT ALL MATERIALS ARE FREE OF ASBESTOS AND LEAD.

QUALITY ASSURANCE:

SOURCE OF MATERIALS: PROVIDE MATERIALS OBTAINED FROM ONE SOURCE FOR EACH TYPE AND COLOR OF TILE, GROUT, AND SETTING MATERIALS.

DELIVERY, STORAGE, AND HANDLING:

DELIVER AND STORE PACKAGED MATERIALS IN MANUFACTURER'S ORIGINAL UNOPENED CONTAINERS WITH SEALS UNBROKEN AND LABELS INTACT UNTIL TIME OF USE. STORE MATERIALS OFF THE GROUND AND UNDER COVER TO PREVENT DAMAGE OR CONTAMINATION TO MATERIALS BY WATER, FREEZING, FOREIGN MATTER OR OTHER CAUSES. PROMPTLY REMOVE FROM SITE ANY MATERIALS THAT SHOW EVIDENCE OF DAMAGE.

PROJECT CONDITIONS:

TEMPERATURES OF 50° F OR MORE ARE TO BE MAINTAINED IN TILED AREAS DURING INSTALLATION AND FOR SEVEN (7) DAYS AFTER COMPLETION, UNLESS HIGHER TEMPERATURES ARE REQUIRED BY REFERENCED INSTALLATION STANDARD OR MANUFACTURER'S INSTRUCTIONS.

SCHEDULE THE WORK, OR PROVIDE THE EQUIPMENT NECESSARY TO MAINTAIN ENVIRONMENTAL CONDITIONS, AND PROTECT THE WORK DURING AND AFTER INSTALLATION TO COMPLY WITH REFERENCED STANDARDS AND MANUFACTURER'S PRINTED RECOMMENDATIONS.

PRODUCT STANDARDS:

GENERAL: ALL TILE PRODUCTS, GROUTS, TRIMS, MORTARS, CLEANERS, ETC. SHALL BE CHECKED FOR COMPATIBILITY WITH SUBSTRATE AND ADJACENT MATERIALS BY THE CONTRACTOR PRIOR TO PURCHASING MATERIAL.

COLOR, TEXTURES, PATTERNS, AND ACCESSORIES: PROVIDE TILE, TILE TRIM, AND TILE ACCESSORIES THAT MATCH COLOR AND FINISH OF ADJOINING FLAT TILE.

TILE PRODUCTS:

GLAZED WALL TILE: PROVIDE PREMIUM GRADE TILE IN COMPLIANCE WITH ANSI A137.1 AND SUITABLE FOR GENERAL COMMERCIAL USE AND COMPLYING WITH THE FOLLOWING REQUIREMENTS:
1. COMPOSITION: GLAZED WALL TILE
2. NOMINAL FACE DIMENSIONS: 4¼"x4¼"
3. NOMINAL THICKNESS: ½"
4. GROUT DIMENSION: ⅛"
5. SURFACE: SMOOTH
6. COLOR: AS SELECTED IN THE APPROVED SUBMITTAL
7. TRIM UNITS: PROVIDE TILE TRIM UNITS TO MATCH CHARACTERISTICS OF ADJOINING FLAT TILE AND TRIM UNITS.

SETTING MATERIALS:

LATEX-PORTLAND CEMENT MORTAR: PROVIDE APPROVED PRODUCT COMPLYING WITH ANSI A118.4 AND THE FOLLOWING REQUIREMENT FOR COMPOSITION:
- PREPACKAGED DRY MORTAR MIX INCORPORATING DRY POLYMER ADDITIVE IN THE FORM OF A RE-EMULSIFIABLE POWDER TO WHICH ONLY WATER IS ADDED AT JOB SITE.

GROUTING MATERIALS:

LATEX-PORTLAND-CEMENT GROUT: PROVIDE PRE-BLENDED COMPOUND OF PORTLAND CEMENT, SELECTED AND GRADED AGGREGATES, COLOR PIGMENTS AND CHEMICAL ADDITIVES GAUGED WITH LATEX ADDITIVE TO COMPLY WITH MANUFACTURER'S DIRECTIONS.

USE LATEX ADDITIVE IN GROUT THAT IS COMPATIBLE WITH LATEX ADDITIVE IN THE APPROVED LATEX-PORTLAND CEMENT MORTAR.

GROUT COLOR: AS SELECTED AT TIME OF SUBMITTALS.

MISCELLANEOUS MATERIALS:

TILE CLEANER: PRODUCT SPECIFICALLY ACCEPTABLE TO MANUFACTURER OF TILE AND GROUP MANUFACTURER FOR APPLICATION INDICATED.

TILE NOTES

HAM-71-1.34

c:\pwworking\hmm\external\tyn61470\dms72884\87268GM013.dgn 10/24/2014 4:07:33 PM TYN61470

INSTALLATION - GENERAL:

ANSI TILE INSTALLATION STANDARDS: COMPLY WITH THE APPROVED APPLICABLE PARTS OF ANSI A108.

TILE COUNCIL OF NORTH AMERICA INSTALLATION GUIDELINES: COMPLY WITH THE APPROVED TCNA INSTALLATION METHODS AND THE FOLLOWING:

1. *ACCURATELY FORM INTERSECTIONS AND RETURNS. PERFORM CUTTING AND DRILLING OF TILE WITHOUT MARRING VISIBLE SURFACES. CAREFULLY GRIND CUT EDGES OF TILE ABUTTING TRIM, FINISH OR BUILT-IN ITEMS FOR STRAIGHT ALIGNED JOINTS. FIT TILE CLOSELY TO ELECTRICAL OUTLETS, PIPING, FIXTURES AND OTHER PENETRATIONS SO THAT PLATES, COLLARS, OR COVERS OVERLAP TILE.*

2. *JOINTING PATTERNS: LAY TILE IN GRID PATTERN. ALIGN JOINTS WITH ADJOINING EXISTING TILE WORK. LAY OUT TILE WORK AND CENTER TILE FIELDS IN BOTH DIRECTIONS IN EACH SPACE OR ON EACH AREA. ADJUST TO MINIMIZE TILE CUTTING. PROVIDE UNIFORM JOINT WIDTHS, UNLESS OTHERWISE SHOWN.*

3. *GROUT TILE TO COMPLY WITH THE APPROVED REFERENCED INSTALLATION STANDARDS, USING GROUT MATERIALS INDICATED. MIX AND INSTALL PROPRIETARY COMPONENTS TO COMPLY WITH GROUT MANUFACTURER'S DIRECTIONS.*

CLEANING AND PROTECTION:

CLEANING: UPON COMPLETION OF PLACEMENT AND GROUTING, CLEAN ALL CERAMIC TILE SURFACES SO THEY ARE FREE OF FOREIGN MATTER.

UNGLAZED TILE MAY BE CLEANED WITH ACID SOLUTIONS ONLY WHEN PERMITTED BY TILE AND GROUT MANUFACTURER'S PRINTED INSTRUCTIONS, BUT NOT SOONER THAN 14 DAYS AFTER INSTALLATION. PROTECT METAL SURFACES, CAST IRON AND VITREOUS PLUMBING FIXTURES FROM EFFECTS OF ACID CLEANING. FLUSH SURFACES WITH CLEAN WATER BEFORE AND AFTER CLEANING.

FINISHED TILE WORK: LEAVE FINISHED INSTALLATION CLEAN AND FREE OF CRACKED, CHIPPED, BROKEN, UN-BONDED OR OTHERWISE DEFECTIVE TILE WORK.

BEFORE CONSTRUCTION IS COMPLETE, REMOVE PROTECTIVE COVERINGS, AND RINSE TILE WITH NEUTRAL CLEANER COMPATIBLE FOR USE WITH TILE AND APPROVED BY TILE AND GROUT MANUFACTURERS.

MEASUREMENT & PAYMENT:

THE DEPARTMENT WILL MEASURE THE QUANTITY ON A SQUARE FOOT BASIS OF TILE INSTALLED IN PLACE. THE DEPARTMENT WILL PAY FOR THE ACCEPTED QUANTITIES OF TILE AT THE CONTRACT PRICE FOR ITEM 530 – STRUCTURE, MISC.: GLAZED CERAMIC WALL TILE. THIS PRICE PAID SHALL INCLUDE ALL NECESSARY LABOR, MATERIALS, TOOLS, AND EQUIPMENT NECESSARY TO COMPLETE THE WORK.

ITEM 530 – SPECIAL - STRUCTURE MISC.: CLEANING OF CERAMIC WALL TILES

UPON THE COMPLETION OF ALL TUNNEL INTERIOR (LIGHTING, TILES, ETC) AND ROADWAY WORK, POWERWASH/CLEAN ALL CERAMIC WALL TILES TO REMOVE ANY DIRT/DUST FROM THE SURFACE. THE TILES ARE TO BE POWERWASHED AT A MAXIMUM PRESSURE OF 1000 PSI. PRIOR TO PERFORMING THIS WORK, SUBMIT TO THE ENGINEER FOR APPROVAL ALL METHODS THAT WILL BE UTILIZED TO CLEAN THE TILE SURFACES OF THE TUNNEL. PAYMENT FOR ALL LABOR, EQUIPMENT, AND MATERIALS IS TO BE INCLUDED IN THE LUMP SUM CONTRACT PRICE.

c:\pwworking\hmm\external\tyn61470\dms72884\87268GM014.dgn 10/24/2014 4:07:36 PM TYN61470

CALCULATED MAR
CHECKED CWP

TILE NOTES

HAM-71-1.34

LOCATION	TILE QUANTITIES								SEALING OF CONCRETE SURFACES QUANTITIES	
ITEM NUMBER	ITEM 202			ITEM 202		ITEM 690			ITEM 512	
DESCRIPTION	REMOVAL MISC.: CERAMIC WALL TILES			REMOVAL MISC.: CERAMIC CEILING TILES		SPECIAL – MISC.: GLAZED CERAMIC WALL TILE			SEALING OF CONCRETE SURFACES (EPOXY-URETHANE)	
UNIT	SQ FT			SQ FT		SQ FT			SQ YD	
CONDITION	DAMAGED	BEHIND BARRIER	AT FIRE RESISTANT COATING	DAMAGED	AT FIRE RESISTANT COATING	DAMAGED	AT TUNNEL LIGHTING	AT FIRE RESISTANT COATING	DAMAGED	AT TUNNEL LIGHTING
NB – EAST WALL	321	1575	3505	NA	NA	321	2515	NA	NA	NA
NB – CEILING	NA	NA	NA	101	11391	NA	NA	NA	24	232
NB – WEST WALL	321	1572	3968	NA	NA	321	2515	NA	NA	NA
RAMP E – WEST WALL	198	1575	3733	NA	NA	198	2515	NA	NA	NA
RAMP E – CEILING	NA	NA	NA	132	5559	NA	NA	NA	15	232
RAMP E – EAST WALL	198	1596	3478	NA	NA	198	2516	NA	NA	NA
SB – EAST WALL	151	1522	2683	NA	NA	151	2405	NA	NA	NA
SB – CEILING	NA	NA	NA	101	8432	NA	NA	NA	12	222
SB – WEST WALL	151	1504	3055	NA	NA	151	2405	NA	NA	NA
SUBSUMMARY	1340	9344	20422	447	25382	1340	14871	NA	51	686
TOTALS CARRIED TO THE GENERAL SUMMARY	31106			25829		16211			735	

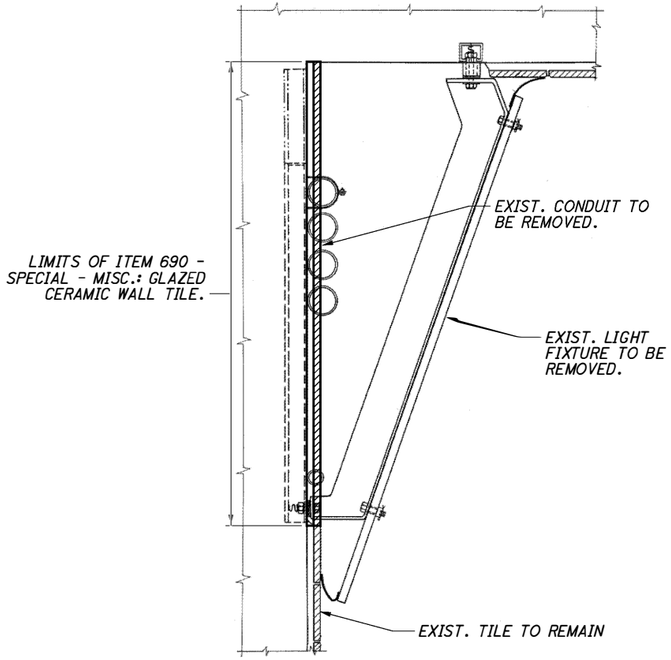

DETAIL - WALL TILE INSTALLED AT EXISTING LIGHT FIXTURES

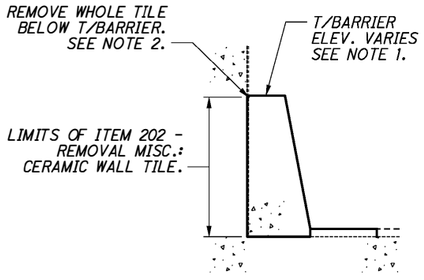

DETAIL - WALL TILE REMOVALS AT BARRIERS

NOTES:

1. THE BARRIER HEIGHT VARIES. SEE THE BARRIER PLANS FOR DETAILS.
2. REMOVE WHOLE TILES BELOW THE TOP OF THE PROPOSED BARRIER. TILES PARTIALLY EMBEDDED BY THE BARRIER ARE TO REMAIN. THE FINAL CONFIGURATION SHALL HAVE THE TOP OF THE BARRIER ABOVE THE BOTTOM OF THE REMAINING TILE.

LEGEND:

ELEV. - ELEVATION
EXIST. - EXISTING
T/ - TOP OF

CALCULATED MAR
CHECKED CWP

TILE NOTES

HAM-71-1.34

150
555

c:\pwworking\hmm\external\pre47802\dms72884\87266GM015.dgn 2/4/2015 11:55:44 AM PRE47802

MAR 18 1968

FED. RD. DIV.	STATE	PROJECT	FISCAL YEAR
2	OHIO		

421
588

HAMILTON COUNTY
HAM-71-0.93

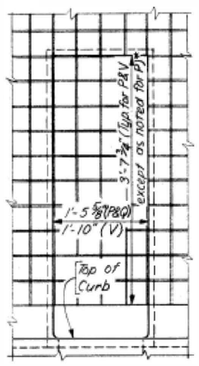

ELEVATION A-A
(Types P & V shown)
(Type Q width noted and its height is from top of curb to ceiling.)

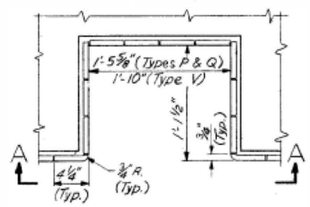

SECTIONAL PLAN
TYPES P, Q, & V

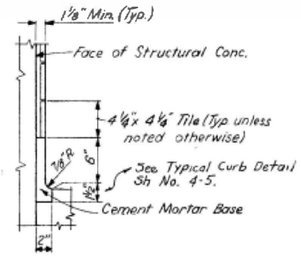

TYPICAL SECTION
AT CURB

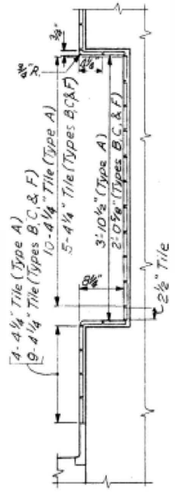

SECTION C-C

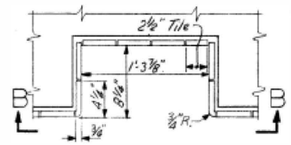

SECTIONAL PLAN
TYPES A, B, & C

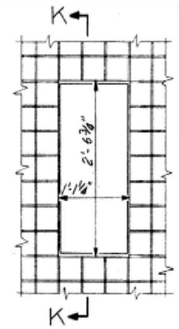

ELEVATION H-H

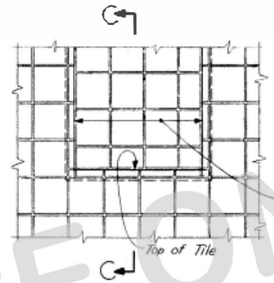

1'-3⅜" (Elevation B-B as shown)
2'-0⅝" (Elevation J-J similar except 2 additional rows of tile)

ELEVATION B-B (AS SHOWN)
ELEVATION J-J (SIMILAR)

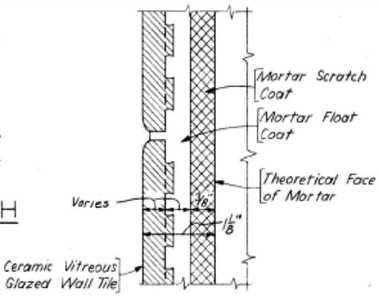

TYPICAL TREATMENT
OF WALL

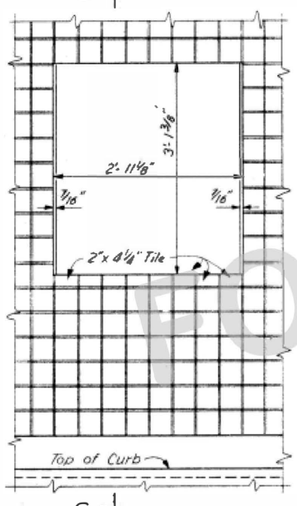

ELEVATION F-F

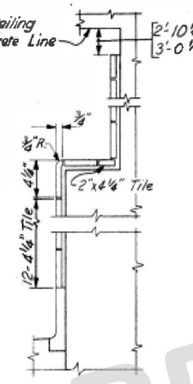

SECTION E-E

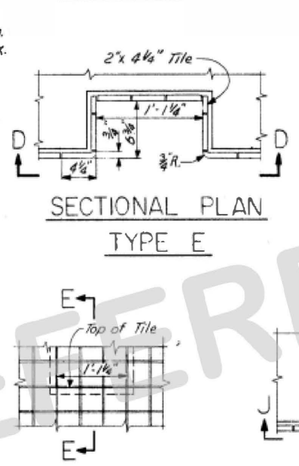

SECTIONAL PLAN
TYPE E

ELEVATION D-D

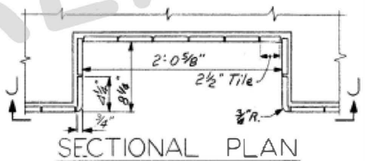

SECTIONAL PLAN
TYPE F

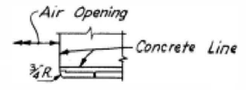

TYPICAL SECTION
At Air Openings in East Wall, Unit 8, S.B. Expressway; and at Ceiling Air Inlet, Unit 18, N.B. Expressway & Ramp E.

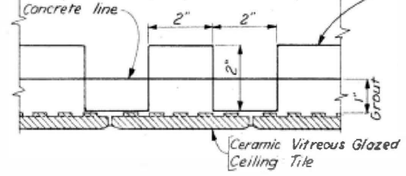

TYPICAL TREATMENT
OF CEILING

**Included in the cost of Item Special "Ceramic Glazed Ceiling Tile" for payment.

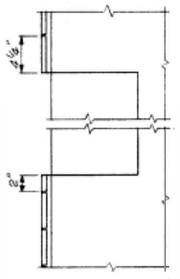

SECTION G-G

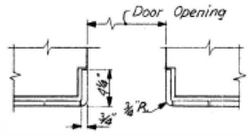

SECTIONAL PLAN
TYPE R
(For Doors #1, #19, #20, & #21)
Section thru Head of Door Opening same as shown for side of Door Opening in Plan

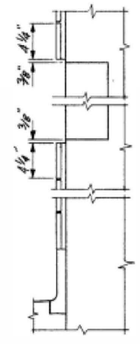

SECTION K-K

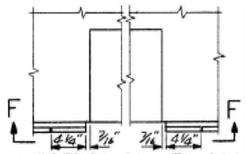

SECTIONAL PLAN
TYPE D

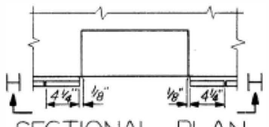

SECTIONAL PLAN
TYPES G & H

*Note:
F.H. #1, Unit 10, N.B. Rdwy. - 4'-8⅜" (P)
F.H. #2, Unit 12, N.B. Rdwy and
F.H. #3, Unit 14, N.B. Rdwy - 4'-4½" (P)
F.H. #4, Unit 16, N.B. Rdwy - 4'-0⅛" (P)

Note:
For Tile Details at Expansion & Construction Joints see Sh. No. 4-13.

H & E Sheet No. 4-125

HAZELET & ERDAL
CONSULTING ENGINEERS
CINCINNATI, OHIO

TILE DETAILS

STRUCTURE No. HAM-71-0111
TUNNEL UNDER LYTLE PARK
H&E STRUCTURE No. 4

DESIGNED	DRAWN	TRACED	CHECKED	REVIEWED DATE	REVISED
	S.C.C.		JHO	2-14-67	

FOR REFERENCE ONLY

EXISTING TILE DETAILS

HAM-71-00.93

151
555

c:\pwworking\hmm\external\tyn61470\dms72884\B726CM016.dgn 10/24/2014 4:07:45 PM TYN61470

FED. RD. DIV.	STATE	PROJECT	FISCAL YEAR
2	OHIO		

422
588

HAMILTON COUNTY
HAM-71- 0.93

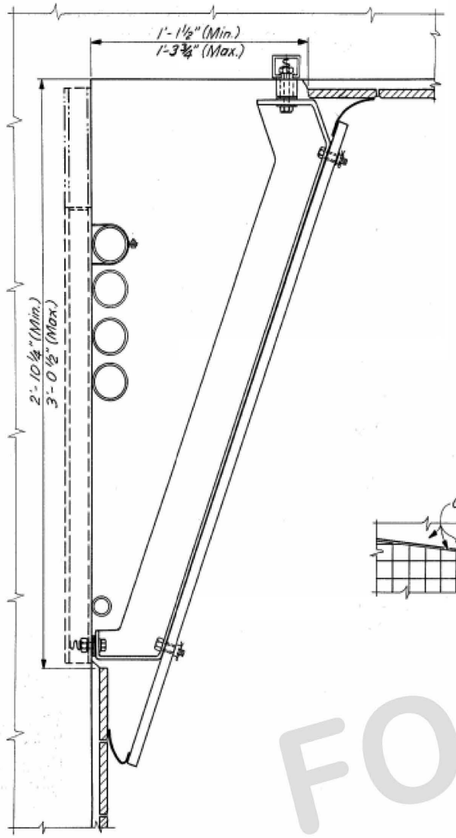

SECTION A-A

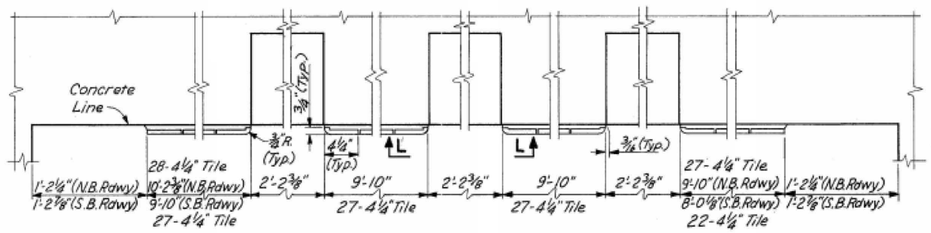

SECTIONAL ELEVATION
TYPE J
LOOKING NORTH

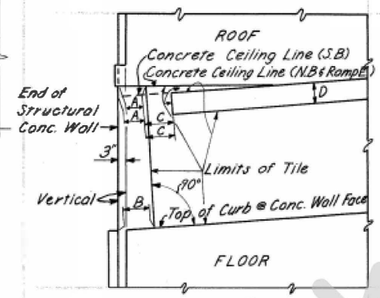

ELEVATION OF WALLS AT SOUTH PORTAL

LOCATION	A	B	C	D
S.B. Rdwy. West Wall	2'-4"	2'-1"	3'-7⅜"	2'-10⅜"
S.B. Rdwy. East Wall	2'-4"	2'-1⅜"	6'-6⅝"	2'-11⅛"
N.B. Rdwy. West Wall	2'-2⅜"	2'-4⅜"	3'-1⅛"	2'-10⅜"
N.B. Rdwy. East Wall	2'-2⅜"	2'-2⅝"	3'-10⅛"	2'-10⅛"
Ramp E West Wall	2'-3⅜"	2'-5⅛"	5'-3⅛"	2'-11½"
Ramp E East Wall	2'-3⅜"	2'-4⅝"	6'-9⅛"	2'-11⅛"

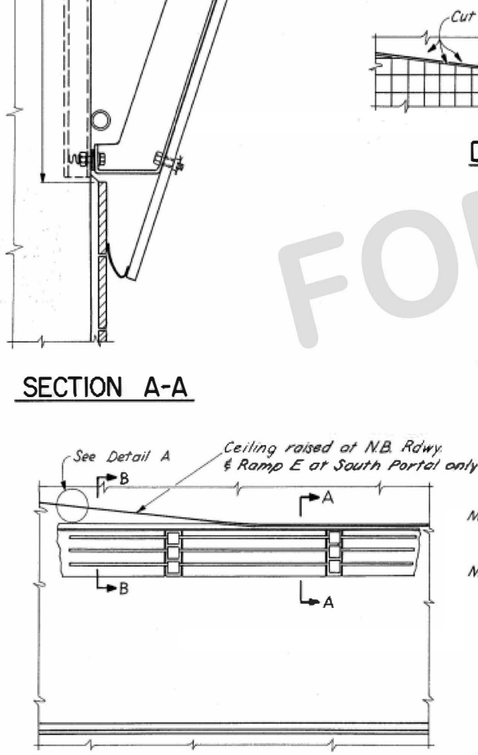

WALL ELEVATION
(SOUTH PORTAL, N.B. Rdwy. & Ramp E Only as Shown)
(Others, ceiling not raised so Sect. A-A will be typical for Sec. B-B)

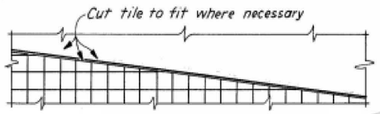

DETAIL A

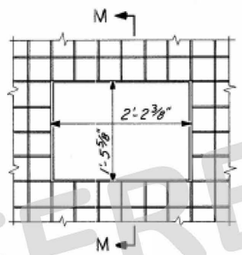

VIEW L-L

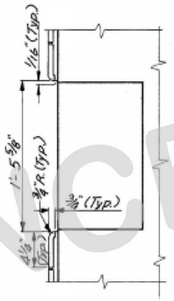

SECTION M-M

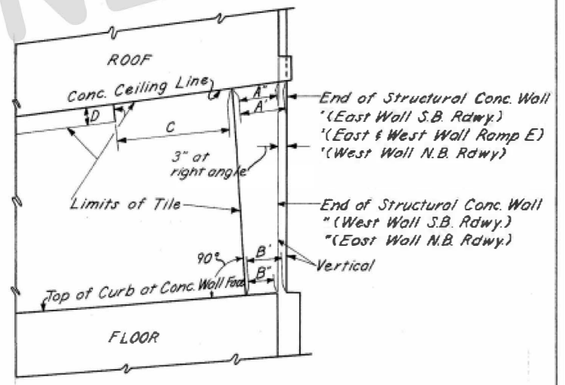

ELEVATION OF WALLS AT NORTH PORTAL

LOCATION	A'	A"	B'	B"	C	D
S.B. Rdwy. West Wall		2'-4¾"		2'-0¼"	10'-2⅜"	2'-10½"
S.B. Rdwy. East Wall	2'-8¼"		2'-5"		12'-6¾"	2'-10⅜"
N.B. Rdwy. West Wall	2'-9⅜"		2'-4½"		9'-7⅜"	2'-10⅜"
N.B. Rdwy. East Wall		2'-6¼"		2'-2¼"	4'-8⅜"	2'-11½"
Ramp E West Wall	2'-9⅛"		2'-3⅞"		4'-0"	2'-11⅜"
Ramp E East Wall	2'-9⅛"		2'-4⅜"		2'-9⅜"	2'-11⅜"

Note: Cement Mortar End Finish is not paid for separately but is included in the cost for Item "Special Ceramic Glazed Wall Tile."

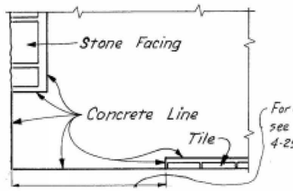

SECTION THRU CEILING

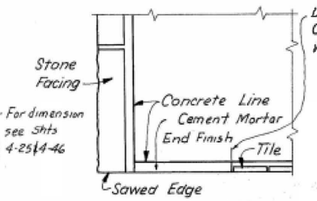

SECTION THRU WALLS

TYPICAL SOUTH PORTAL DETAILS

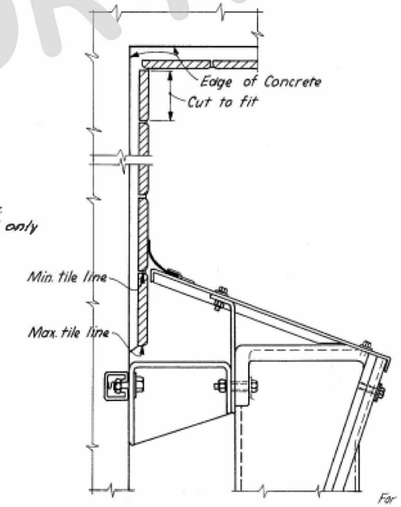

SECTION B-B

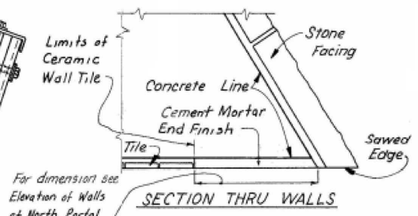

SECTION THRU WALLS

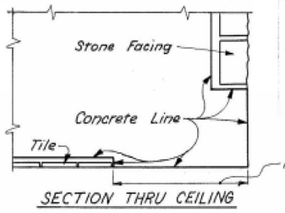

SECTION THRU CEILING

TYPICAL NORTH PORTAL DETAILS

H & E Sheet No. 4-126

HAZELET & ERDAL
CONSULTING ENGINEERS
CINCINNATI, OHIO

TILE DETAILS
STRUCTURE No. HAM.-71-0111
TUNNEL UNDER LYTLE PARK
H&E STRUCTURE No. 4

Designed	Drawn	Traced	Checked	Reviewed Date	Revised
	S.C.C.	S.C.C.	M.A.Z.	JHO 2-14-67	

EXISTING TILE DETAILS

HAM-71-00.93

152
555

FOR REFERENCE ONLY

c:\pwworking\hmm\external\tyn61470\dms72884\872GCM017.dgn 10/24/2014 4:08:00 PM TYN61470

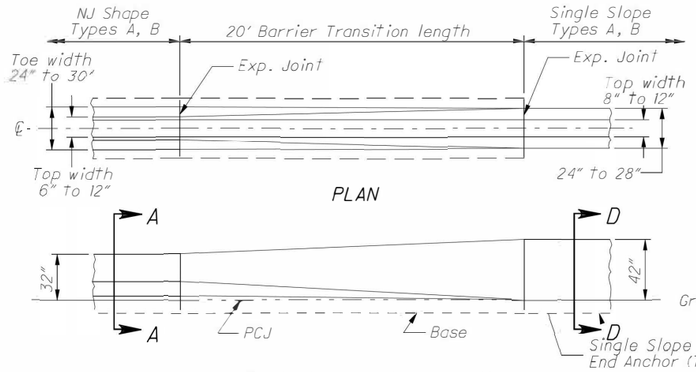

Standard low barrier connection

ELEVATION

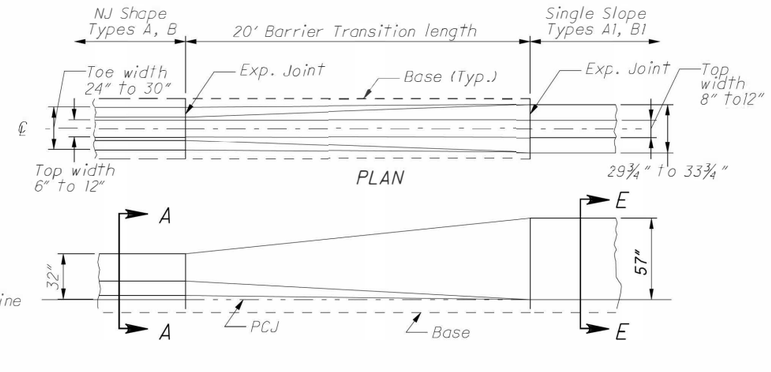

Atypical use

ELEVATION

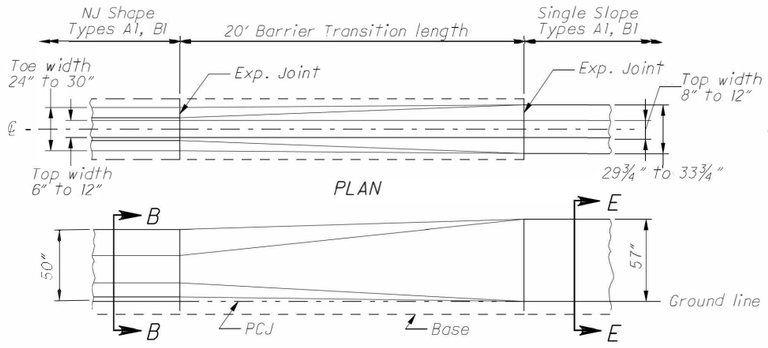

Standard tall barrier connection

ELEVATION

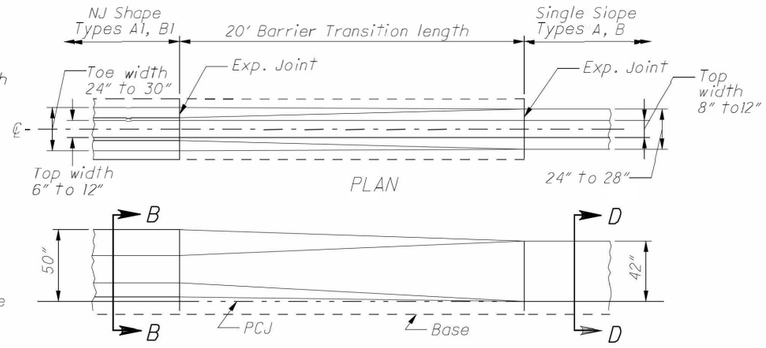

Atypical use

ELEVATION

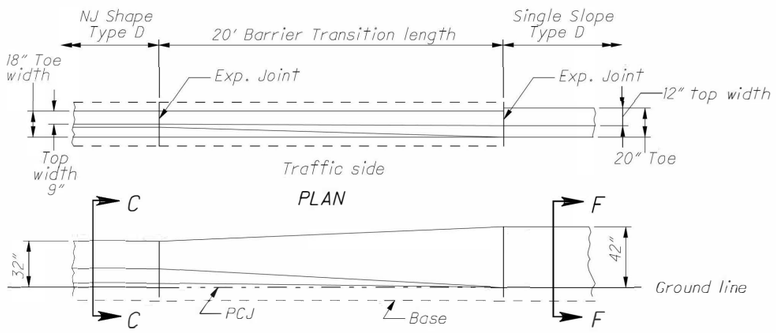

Standard Roadside barrier connection

ELEVATION

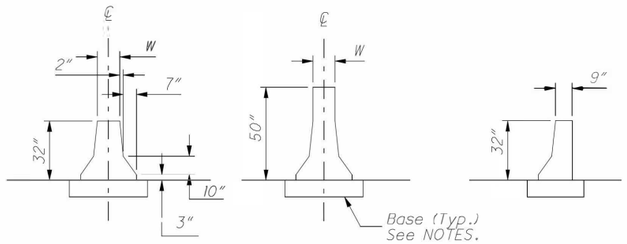

NJ SHAPE SECTIONS

See Plan Insert sheets for specific NJ Shape Concrete barrier details.

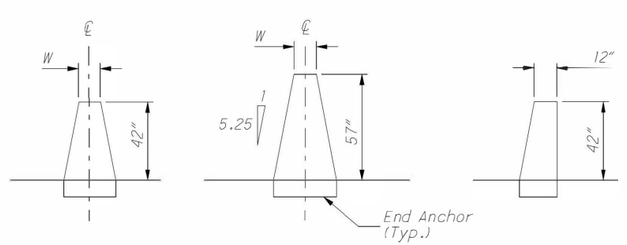

SINGLE SLOPE SECTIONS

See SCD RM-4.3 and RM-4.5 for specific Single Slope concrete barrier details.

NOTES

GENERAL: This insert details the Barrier Transition, to connect existing NJ Concrete Barrier (safety shape) to a new run of Single Slope Concrete Barrier at locations sho n on the plans. For NJ barrier shape and other details see the respective plan insert sheets. For Single Slope barrier details, see SCD RM-4.3 (RM-4.5 for Type D).

ADJACENT CONCRETE BARRIER RUNS: Remove any tapered end sections, Impact attenuators, or other guardrail hardware from existing barrier end. The barrier to barrier transition is not intended to be used at transition sections (those shown on SCD RM-4.4), Inlets, or on Type C or CI Barrier. If proposed adjacent single slope barrier is Type A or A1, the Barrier Transiton should contain horizontal reinforcing steel similiar to that required in the respective single slope barrier. Reinforcement is not shown and should be detailed separately. The adjacent single slope end should be terminated with a reinforced End Anchor as detailed on the SCDs.

BARRIER FACE TRANSITION: To prevent vehicle snagging, a smooth transition from the safety shape face to the single slope face is made over a 20' length. The actual shape of the Transition is dependent on both the adjacent NJ barrier and the single slope barrier Types, as detailed on the plans. The contractor and Engineer will agree on a construction method to ensure a smooth barrier face.

MATERIALS: Materials are same for those shown on RM-4.3 and RM-4.5, except that cast-in-place is the only acceptable method. Edges may be chamfered or radiused as shown on those drawings.

CONCRETE BASE: Construct base as shown on the NJ shape insert sheets, including the methods detailing the footing joint, Permissible Construction Joint (PCJ), and Dowelling requirements. The width of the base matches the existing NJ barrier.

JOINTS: Construct joints as shown on respective barrier drawings.

RACEWAYS: When specified, place raceway(s) to match raceway elevation in adjoining segments. Place to obtain maximum concrete cover.

METRIC UNITS: Refer to respective barrier drawings or inserts for metric dimensions.

PAYMENT: This Barrier Transiton shall include all material and labor needed to construct this 20' section, including any raceways, reinforcing steel, dowels and other necessary incidentals. Payment shall be made at the unit price for Item 622 - Barrier Transition, Each.

OFFICE OF ROADWAY ENGINEERING

DESIGNED | REVIEWED

REVISION DATE 10-20-06 | CHECKED

PTS NUMBER

PLAN INSERT SHEET

NJ SHAPE TO SINGLE SLOPE BARRIER TRANSITION

HAM-71-1.34

1 / 1

153
555

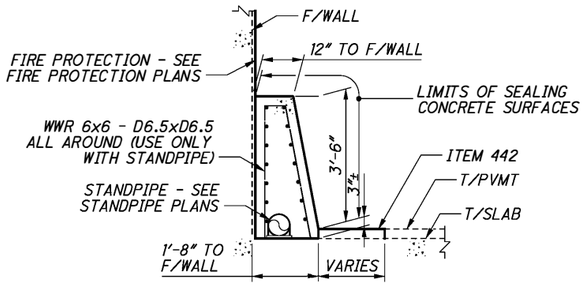

DETAIL AT FIRE PROTECTION

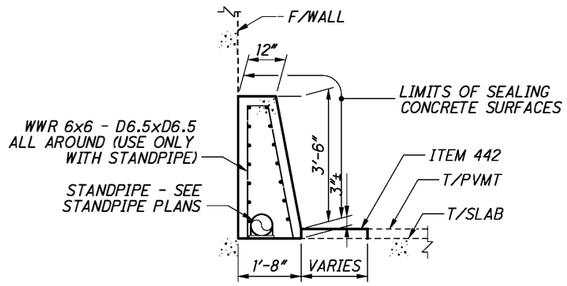

DETAIL AT FULL HEIGHT

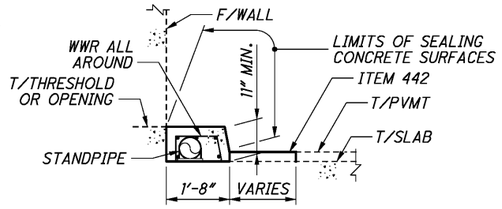

DETAIL AT REDUCED HEIGHT SECTIONS

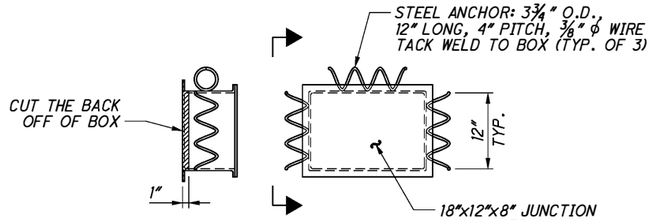

DETAIL - DRAIN COVER

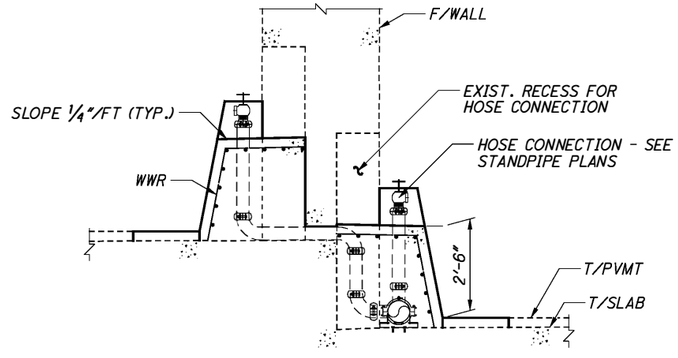

DETAIL AT STANDPIPE HOSE CONNECTIONS

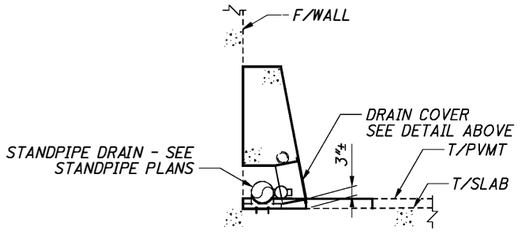

DETAIL - STANDPIPE DRAIN ACCESS

INCLUDED WITH ITEM 622 - CONCRETE BARRIER, SINGLE SLOPE, TYPE D, AS PER PLAN FOR PAYMENT

DETAIL - ITEM 622 - CONCRETE BARRIER, SINGLE SLOPE, TYPE D, AS PER PLAN

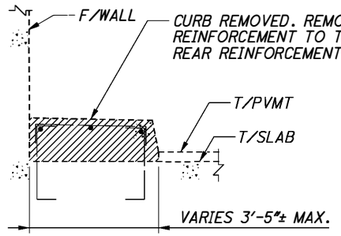

CURB DETAIL W/O STANDPIPE

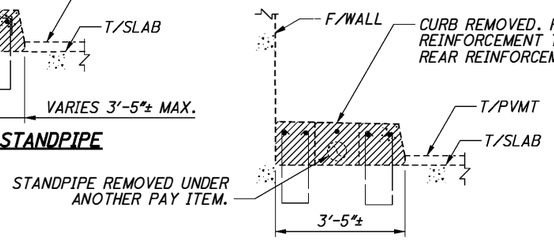

CURB DETAIL W/ STANDPIPE

DETAIL - ITEM 202 - CURB REMOVED, AS PER PLAN

ITEM 202 - CURB REMOVED, AS PER PLAN:

DESCRIPTION:

THIS WORK CONSISTS OF THE REMOVAL OF TUNNEL CURB AS SHOWN IN THE PLANS.

THE PROVISIONS OF ITEM 202 APPLY EXCEPT AS SPECIFIED BY THE FOLLOWING NOTES.

ALL WORK SHOWN IN "DETAIL - ITEM 202 - CURB REMOVED, AS PER PLAN", IS INCLUDED IN THAT ITEM FOR PAYMENT.

MEASUREMENT & PAYMENT:

THE DEPARTMENT WILL MEASURE THE QUANTITY OF REMOVALS ON A LINEAR FOOT BASIS. THE DEPARTMENT WILL PAY FOR THE ACCEPTED QUANTITIES AT THE CONTRACT PRICE FOR ITEM 202 - CURB REMOVED, AS PER PLAN. THIS PRICE PAID SHALL INCLUDE ALL NECESSARY LABOR, MATERIALS, TOOLS, AND EQUIPMENT NECESSARY TO COMPLETE THE WORK TO THE SATISFACTION OF THE ENGINEER.

ITEM 622 - CONCRETE BARRIER, SINGLE SLOPE, TYPE D, AS PER PLAN:

THIS ITEM IS TO BE USED FOR ALL BARRIER LOCATED IN THE TUNNEL THAT IS NOT OTHERWISE CALLED OUT.

PROVIDE UNCOATED DEFORMED WELDED WIRE REINFORCING (WWR) CONFORMING TO ITEM 509 & 709.09 OF THE C&MS IN ALL BARRIER WHERE THE STANDPIPE IS PRESENT. (SEE THE STANDPIPE PLANS FOR LOCATIONS.)

PROVIDE UN-REINFORCED SECTIONS IN THOSE BARRIERS WITHOUT FIRE PROTECTION STANDPIPE.

THE CONTRACTOR MAY USE WWR 4x4 - D5xD5 AS AN ALTERNATE TO THE REINFORCEMENT SHOWN.

PROVIDE 3" MINIMUM CLEAR COVER TO ALL EXPOSED FACES OF THE BARRIER.

BEND REINFORCING STEEL IN THE FIELD AS REQUIRED TO ACHEIVE REQUIRED CLEARANCES.

THE STANDPIPE MAY BE USED TO PROVIDE TEMPORARY SUPPORT, PROVIDED THAT NO DIRECT METAL-TO-METAL CONTACT IS MADE BETWEEN THESE ITEMS. USE POLYMER SPACERS AND EPOXY COATED WIRE TIES.

SEE SCD RM-4.5 FOR ADDITIONAL DETAILS NOT SHOWN.

APPLY ITEM 512 - SEALING CONCRETE SURFACES (EPOXY - URETHANE) COLOR TO BE FEDERAL STANDARD 595B-17925 "WHITE".

ALL WORK SHOWN IN "DETAIL - ITEM 622 - CONCRETE BARRIER, SINGLE SLOPE, TYPE D, AS PER PLAN", INCLUDING REINFORCING STEEL, FIELD BENDING, ETC. IS INCLUDED IN THAT ITEM FOR PAYMENT, EXCEPT FOR WORK ASSOCIATED WITH THE STANDPIPE.

LEGEND:

DIM - DIMENSION
EXIST. - EXISTING
F/ - FACE OF
F.F. - FAR FACE
MIN. - MINIMUM
MAX. - MAXIMUM
N.F. - NEAR FACE
O.D. - OUTSIDE DIAMETER
SCD - STANDARD CONSTRUCTION DRAWING
TYP. - TYPICAL
T/ - TOP OF
WWR - WELDED WIRE REINFORCEMENT
W/ - WITH
W/O - WITHOUT

CALCULATED MAR
CHECKED CWP

BARRIER NOTES & DETAILS

HAM-71-1.34

c:\pwworking\hmm\external\pre47802\dms72884\B7268GR001.dgn 2/17/2015 12:23:26 PM PRE47802

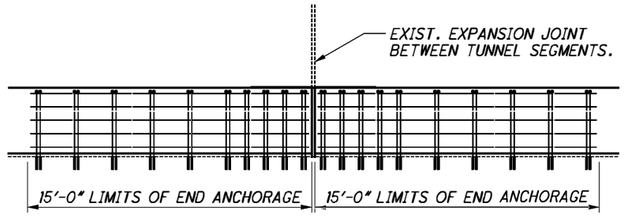

DETAIL - END ANCHORAGES AT TUNNEL EXPANSION JOINTS

END ANCHORAGES ARE TO BE INSTALLED ON EITHER SIDE OF TUNNEL EXPANSION JOINTS.

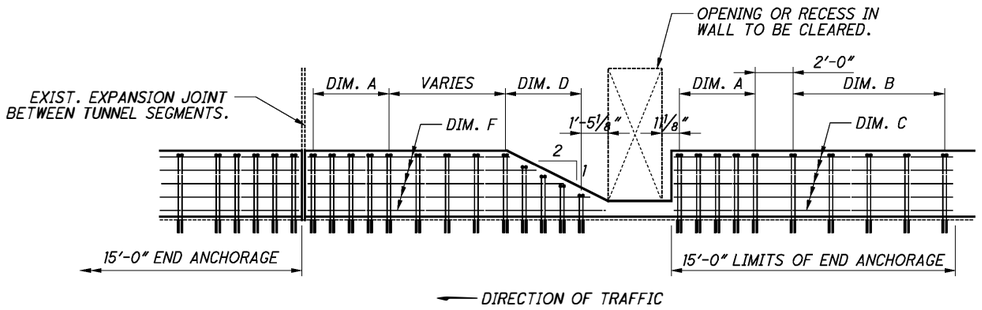

DETAIL - END ANCHORAGES AT TUNNEL EXP. JOINT AND ADJACENT RECESSES

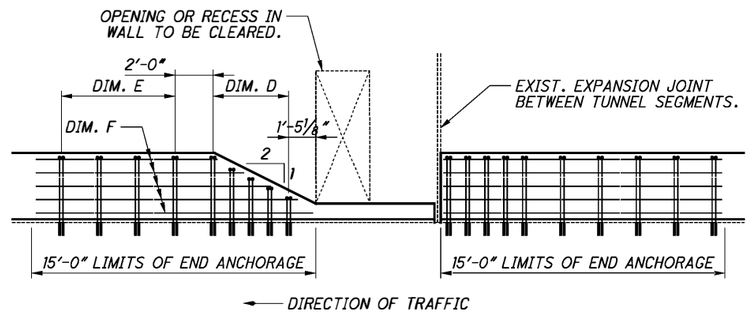

DETAIL - END ANCHORAGES AT TUNNEL EXP. JOINT AND ADJACENT DOOR

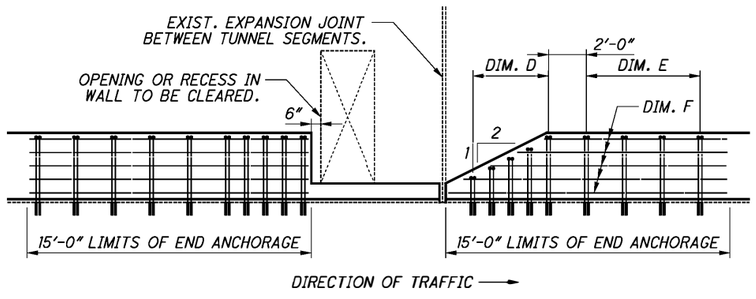

DETAIL - END ANCHORAGES AT TUNNEL EXP. JOINT AND ADJACENT DOOR

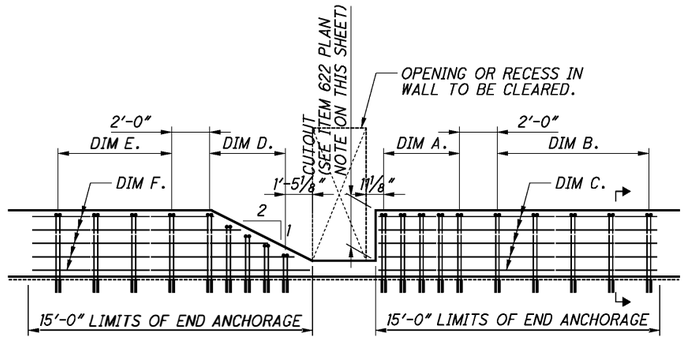

DETAIL - ITEM 622 - CONCRETE BARRIER, END ANCHORAGE, REINFORCED, TYPE D, AS PER PLAN

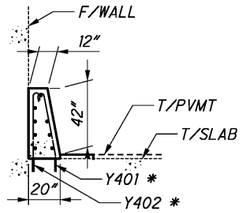

SECTION

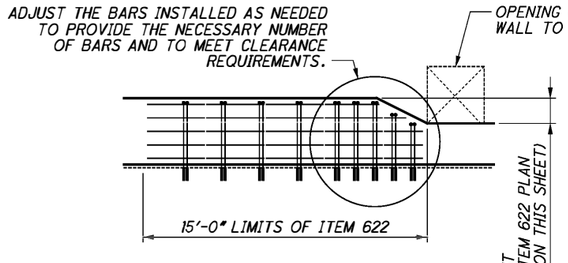

DETAIL 1

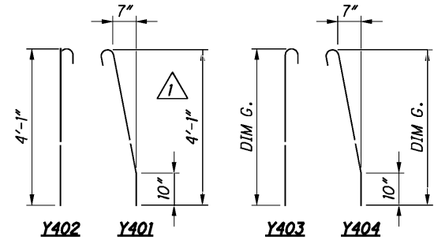

REINFORCING STEEL DETAILS

LEGEND:

DIM - DIMENSION
EXIST. - EXISTING
F/ - FACE OF
F.F. - FAR FACE
MIN. - MINIMUM
MAX. - MAXIMUM
N.F. - NEAR FACE
SCD - STANDARD CONSTRUCTION DRAWING
T/ - TOP OF
W/ - WITH
W/O - WITHOUT

ITEM 510 - DOWEL HOLES

PROVIDE DOWEL HOLES WITH NONSHRINK, NONMETALLIC GROUT PER C&MS ITEM 510.

ITEM 622 - CONCRETE BARRIER, END ANCHORAGE, REINFORCED, TYPE D, AS PER PLAN:

PROVIDE ITEM 622 - ITEM 622 - CONCRETE BARRIER, END ANCHORAGE, REINFORCED, TYPE D, AS PER PLAN, AS SHOWN, AT THE FOLLOWING LOCATIONS:
- ALL PORTALS OF TUNNEL,
- ON EACH SIDE OF OPENINGS OR RECESSES IN WALLS WHERE THE TOP OF THE BARRIER HAS TO BE CUT BY 12" OR MORE, AND
- ON EITHER SIDE OF TUNNEL EXPANSION JOINTS.

END ANCHORAGES ARE NOT REQUIRED AT LOCATIONS WHERE THE TOP CUTOUT IS LESS THAN 12". (SEE DETAIL 1.)

PROVIDE REINFORCING STEEL PER C&MS ITEM 509.

SEE SCD RM-4.5 FOR ADDITIONAL DETAILS NOT SHOWN.

ALL WORK SHOWN ON THIS SHEET, INCLUDING PROVIDING REINFORCING STEEL, ETC., EXCEPT DOWEL HOLES, IS INCLUDED IN ITEM 622 - CONCRETE BARRIER, END ANCHORAGE, REINFORCED, TYPE D, AS PER PLAN, ITEM FOR PAYMENT.

MISCELLANEOUS DIMENSIONS:

A - 5-Y401 (N.F.) & Y402 (F.F.) SPACED AT 1'-0" MAX. *

B - 5-Y401 (N.F.) & Y402 (F.F.) SPACED AT 2'-0" MAX. *

C - 9-X501 SPACED AS SHOWN IN SCD RM-4.5.

D - SERIES OF 5-Y403 (N.F.) & Y404 (F.F.) SPACED @ 1'-0" MAX. ADJUST BARS AS SHOWN IN DETAIL 1. *

E - 4-Y401 (N.F.) & Y402 (F.F.) SPACED @ 2'-0" MAX. *

F - 9-X501 SPACED AS SHOWN IN SCD RM-4.5 & CUT TO FIT THE SLOPE AS REQUIRED.

G - 41", 33", 25" OR 17".

* - DRILL AND GROUT 8" INTO EXISTING SLAB PER C&MS 510 - DOWEL HOLES.

NOTES:

1. FOR CUTOUT DETAILS, SEE SHEET 156

NO.	DATE	REVISION DESCRIPTION
1	04/21/16	RFI 162 - REVISED REINFORCING

CALCULATED MAR CHECKED CWP

BARRIER NOTES & DETAILS

HAM-71-1.34

155
555

c:\pwworking\hmm\external\pre47802\dms72884\87268GR002.dgn 4/21/2016 4:24:36 PM PRE47802

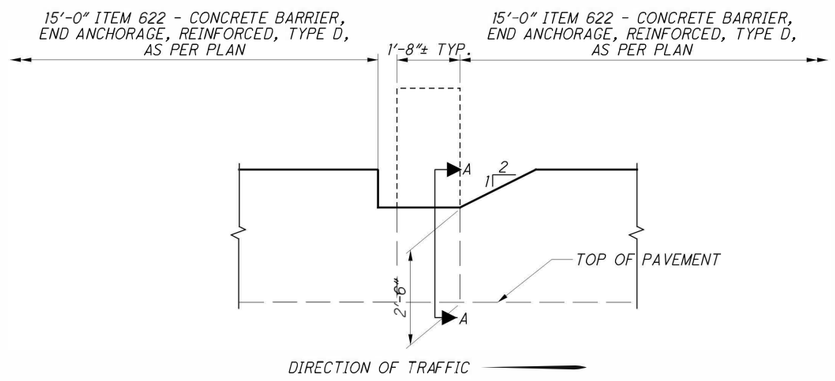

DETAIL - BARRIER AT STANDPIPE HOSE CONNECTION

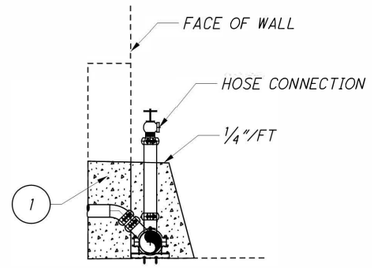

SECTION A-A

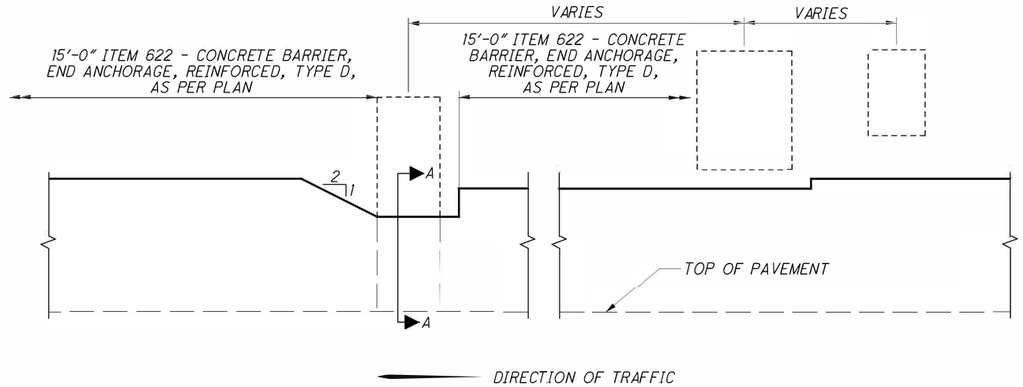

DETAIL - BARRIER AT STANDPIPE HOSE CONNECTION RECESSES

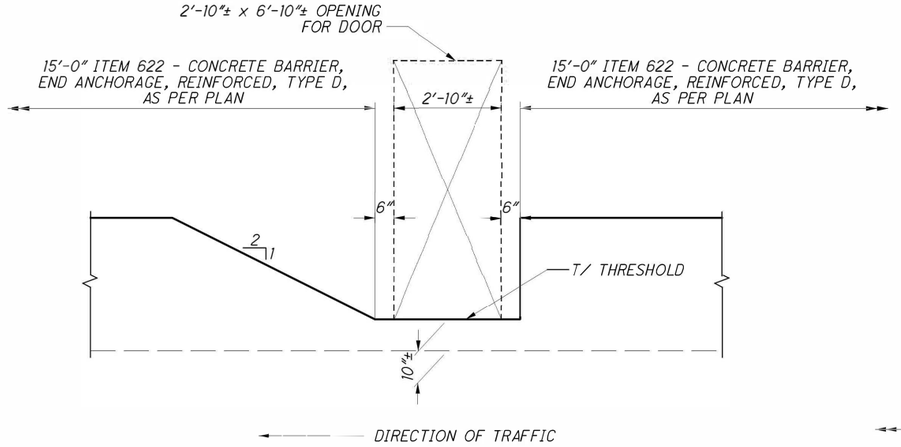

DETAIL - BARRIER AT DOORS

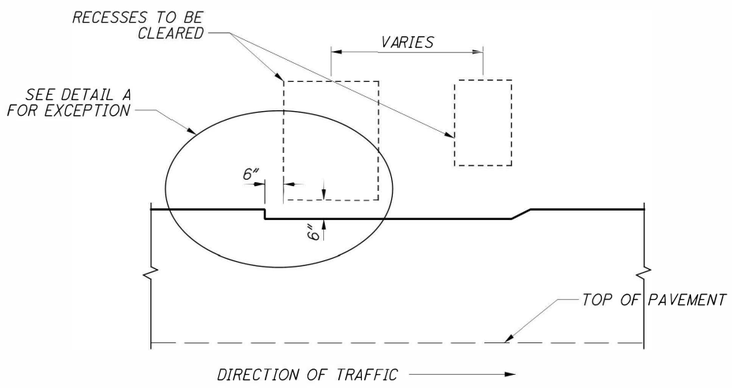

DETAIL - TYPICAL BARRIER CLEARANCE REQUIREMENTS

(1) FILL RECESS WITH CONCRETE. TYPICAL AT STANDPIPE HOSE CONNECTION AND RISERS. (SEE NOTE 1)

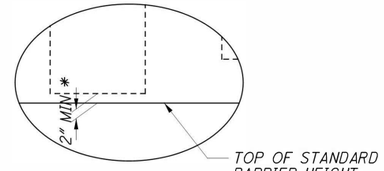

DETAIL A

* WHERE THERE IS A MINIMUM OF 2" CLEARANCE BETWEEN THE TOP OF THE STANDARD BARRIER AND BOTTOM OF THE RECESS IN THE TUNNEL WALL, THE BARRIER RUN CAN CONTINUE AT STANDARD HEIGHT AS SHOWN.

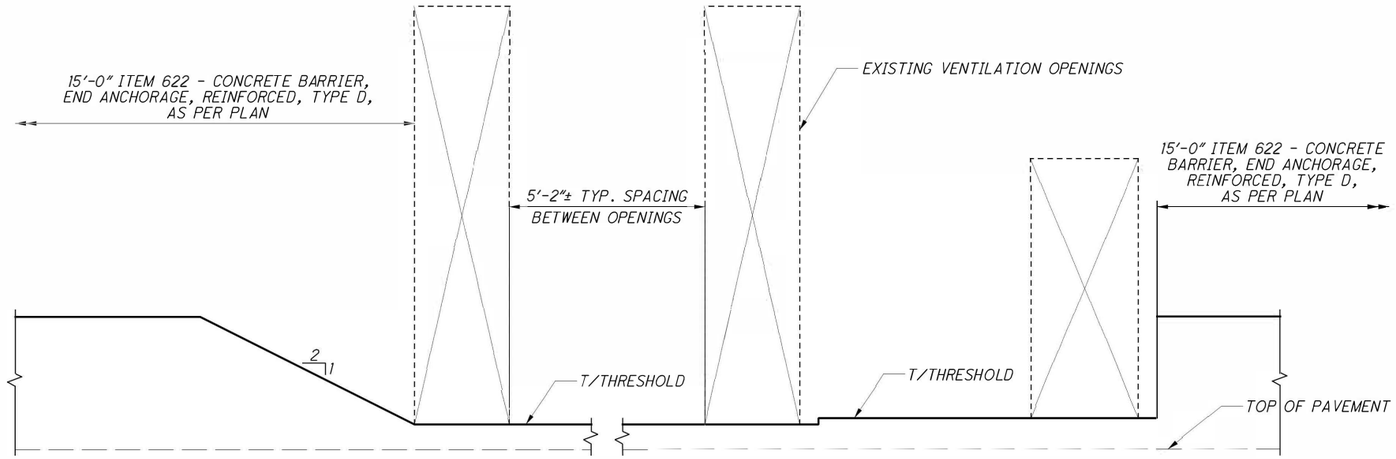

DETAIL - BARRIER AT VENTILATION OPENINGS IN SOUTHBOUND TUNNEL

NOTES:

1. ALL WORK SHOWN ON THIS SHEET IS INCLUDED WITH ITEM 622 - CONCRETE BARRIER, SINGLE SLOPE, TYPE D, AS PER PLAN FOR PAYMENT UNLESS NOTED OTHERWISE.
2. FOR REINFORCEMENT DETAILS, SEE SHEET 155

CALCULATED RD/JR CHECKED MAR

BARRIER TYPICAL DETAILS

HAM-71-1.34

156
555

c:\pwworking\mm\external\tyn61470\dms72884\87268GR003.dgn 10/24/2014 4:11:35 PM TYN61470

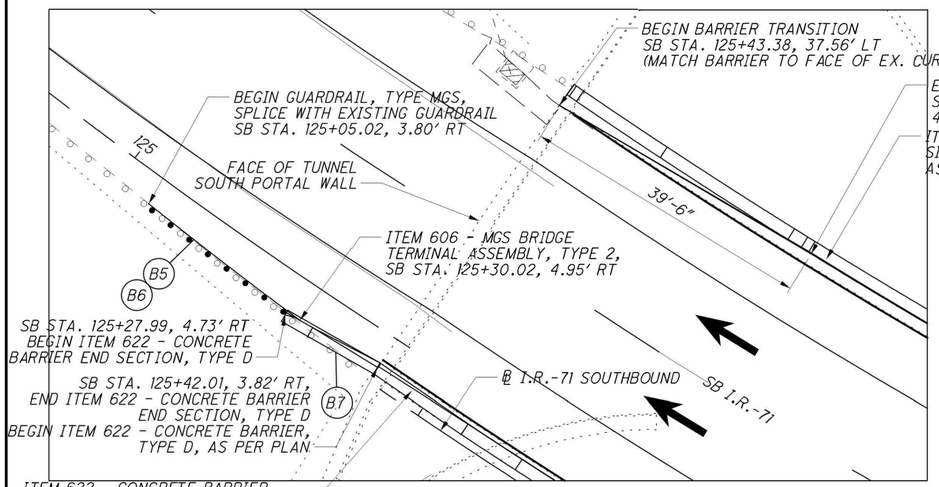

TRANSITIONS AT SB EXIT (SOUTH PORTAL)

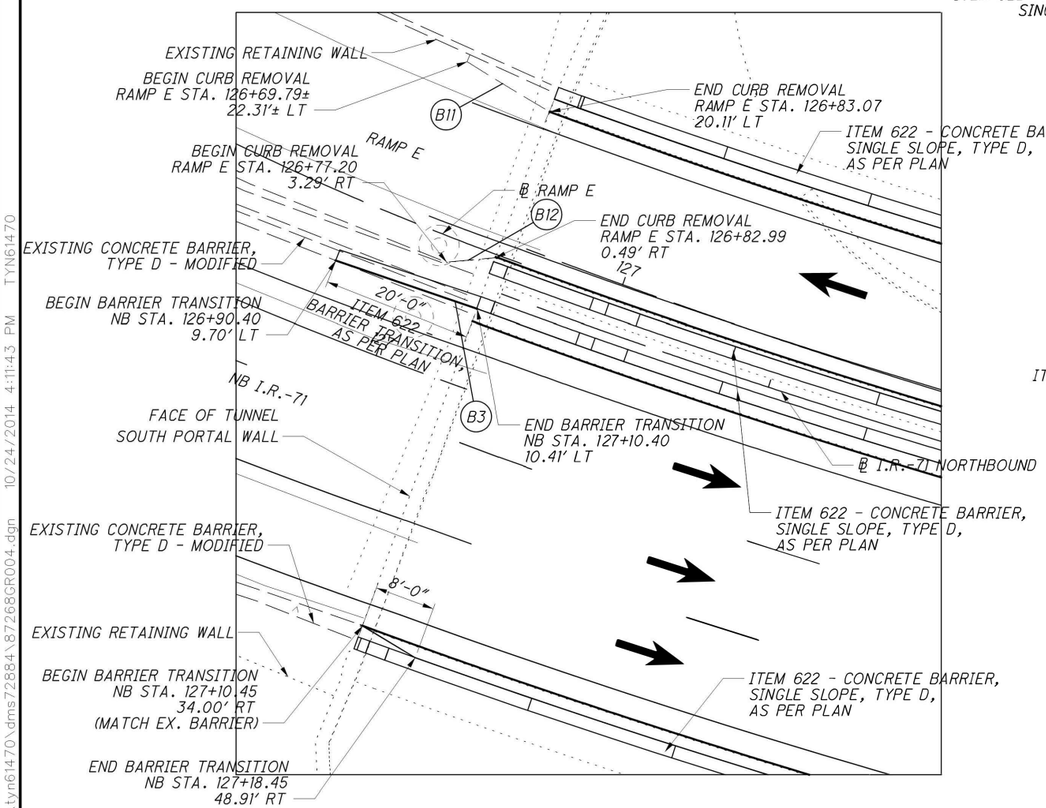

TRANSITIONS AT RAMP E EXIT AND NB ENTRANCE (SOUTH PORTAL)

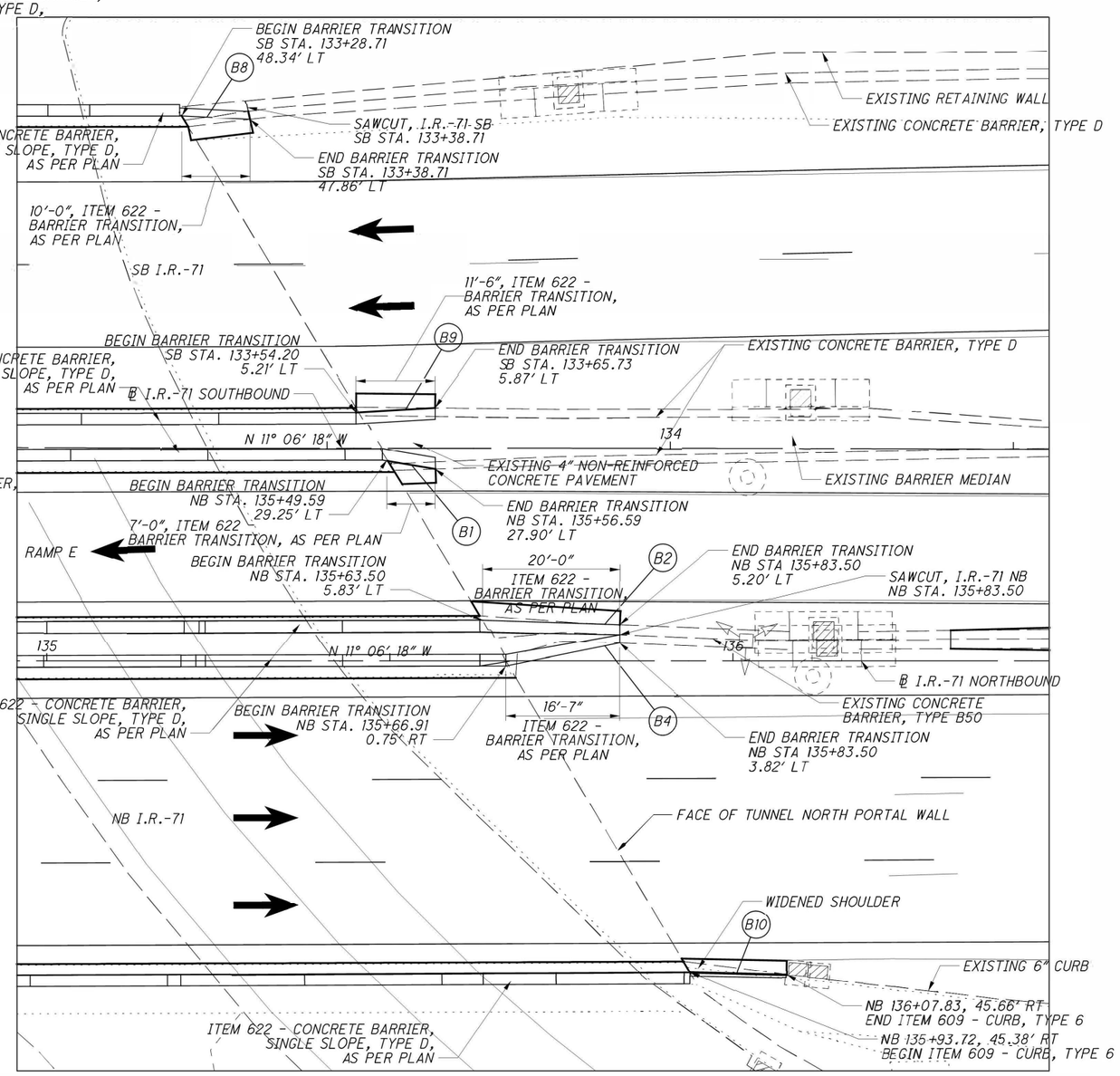

TRANSITIONS AT SB AND RAMP E ENTRANCE AND NB EXIT (NORTH PORTAL)

NOTES:

1. FOR BARRIER TRANSITION DETAILS, SEE SHEET 158
2. FOR TYPICAL SECTIONS, SEE SHEETS 4 - 10

HORIZONTAL SCALE IN FEET
0 5 10 20

CALCULATED RLD/JAR
CHECKED MAR

GUARDRAIL / BARRIER DETAILS

HAM-71-1.34

157
555

c:\pwworking\hmm\external\tyn61470\dms72884\87268GR004.dgn 10/24/2014 4:11:43 PM TYN61470

ITEM 622 - BARRIER TRANSITION, AS PER PLAN:

DESCRIPTION:

THIS ITEM IS TO BE USED FOR ALL BARRIER TRANSITION LOCATIONS AS SHOWN IN THE PLANS, AND NOT OTHERWISE LISTED FOR PAYMENT.

THE BARRIER FOOTING WIDTH ON THE FACE OF THE BARRIER SHALL TRANSITION FROM 6" TO 0", WITHIN SPECIFIED TRANSITION LENGTH, AS IT APPROACHES TUNNEL.

ALL WORK SHOWN IN "ITEM 622 - BARRIER TRANSITION, AS PER PLAN" IS INCLUDED IN THAT ITEM FOR PAYMENT.

MEASUREMENT & PAYMENT:

THE DEPARTMENT WILL PAY FOR THE ACCEPTED QUANTITIES AT THE CONTRACT PRICE FOR ITEM 622 - BARRIER TRANSITION, AS PER PLAN. THIS PRICE PAID SHALL INCLUDE ALL NECESSARY LABOR, MATERIALS, TOOLS, AND EQUIPMENT NECESSARY TO COMPLETE THE WORK TO THE SATISFACTION OF THE ENGINEER.

NOTES:

1. SEE SHEET 157 FOR BARRIER TRANSITIONS IN PLAN VIEW.
2. FOR TRANSITION DETAILS NOT SHOWN, REFERENCE SHEET 153

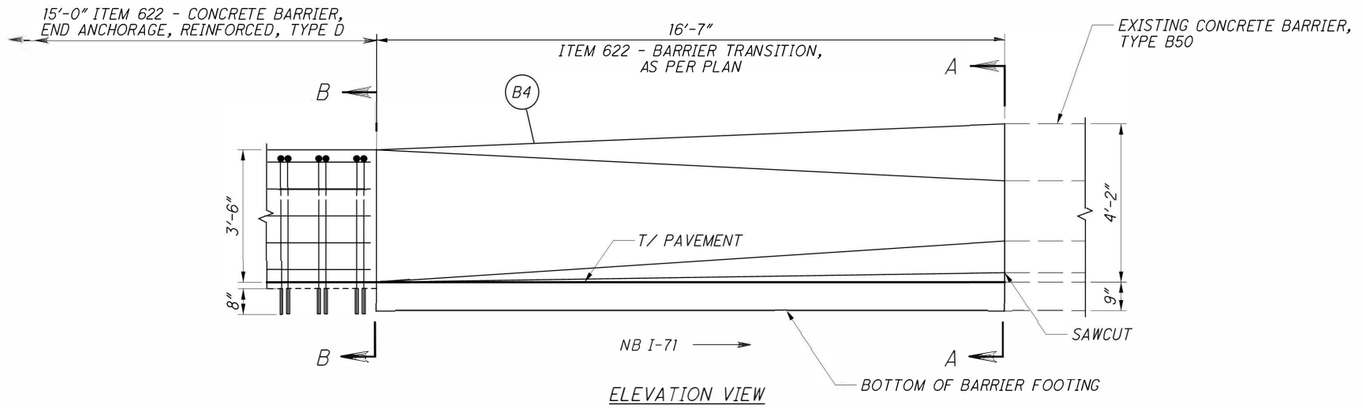

ELEVATION VIEW

BARRIER TRANSITION BETWEEN RAMP E (RT) & NB I-71 (LT) - EAST SIDE

I-71 NORTHBOUND STA. 135+66.91 TO STA. 135+83.50 = 16.58 FT

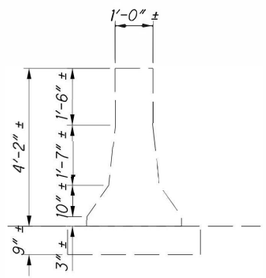

SECTION A-A
TYPE B50

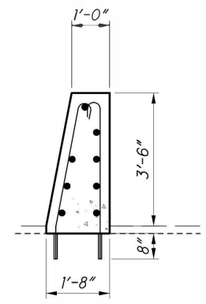

SECTION B-B
TYPE D - SINGLE SLOPE

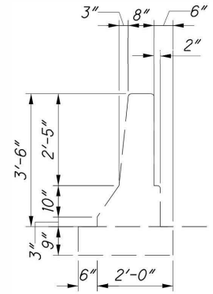

SECTION C-C
TYPE D - MODIFIED

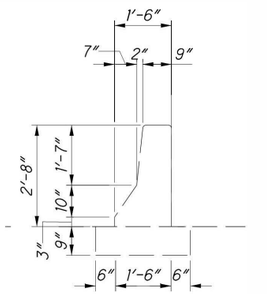

SECTION D-D
TYPE D - NJ SHAPE BARRIER

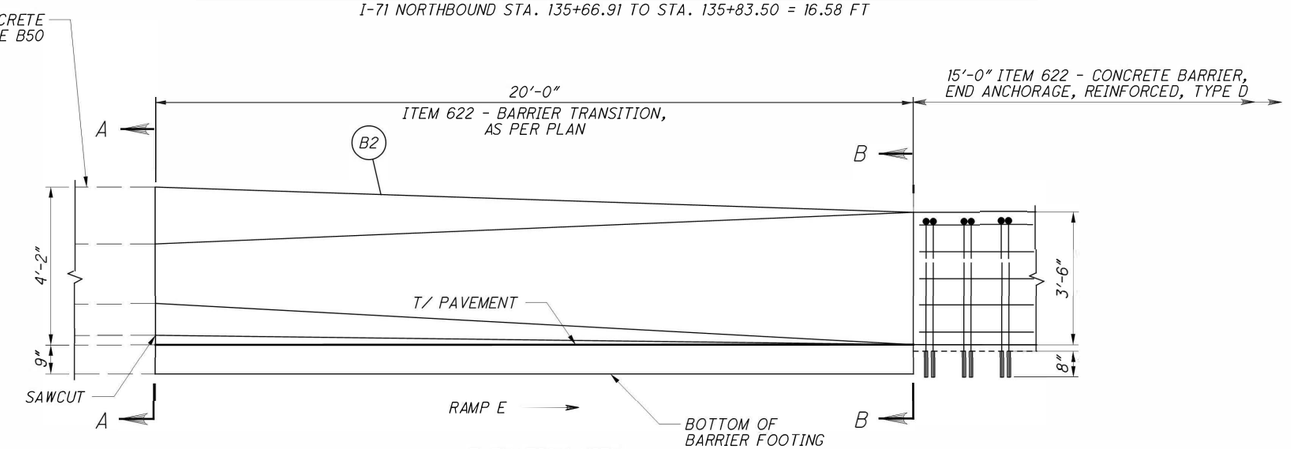

ELEVATION VIEW

BARRIER TRANSITION BETWEEN RAMP E (RT) & NB I-71 (LT) - WEST SIDE

I-71 NORTHBOUND STA. 135+63.50 TO STA. 135+83.50 = 20 FT

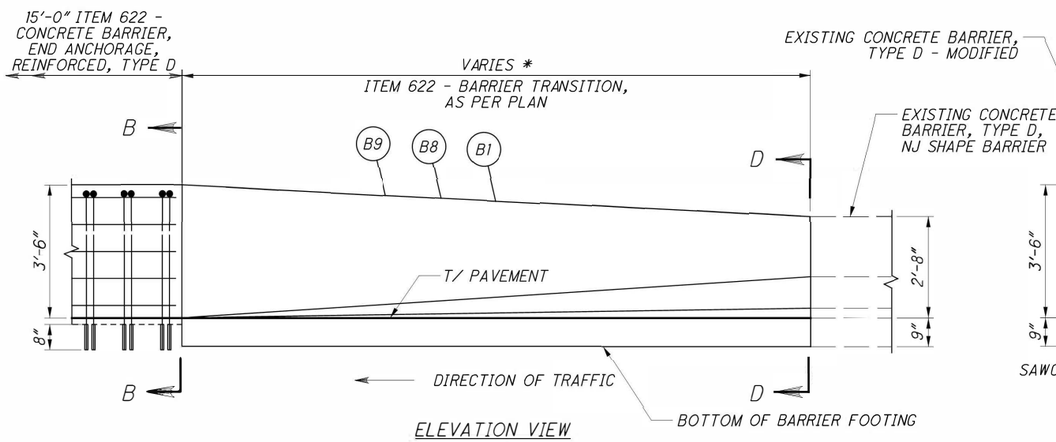

ELEVATION VIEW

BARRIER TRANSITION ON RAMP E & SB I-71

* I-71 SOUTHBOUND STA. 133+28.71 TO STA. 133+38.71 = 10 FT
I-71 SOUTHBOUND STA. 133+54.20 TO STA. 133+65.73 = 11.5 FT (SIMILAR DETAIL)
RAMP E (I-71 NORTHBOUND STATIONING) STA. 135+49.59 TO 135+56.59 = 7 FT

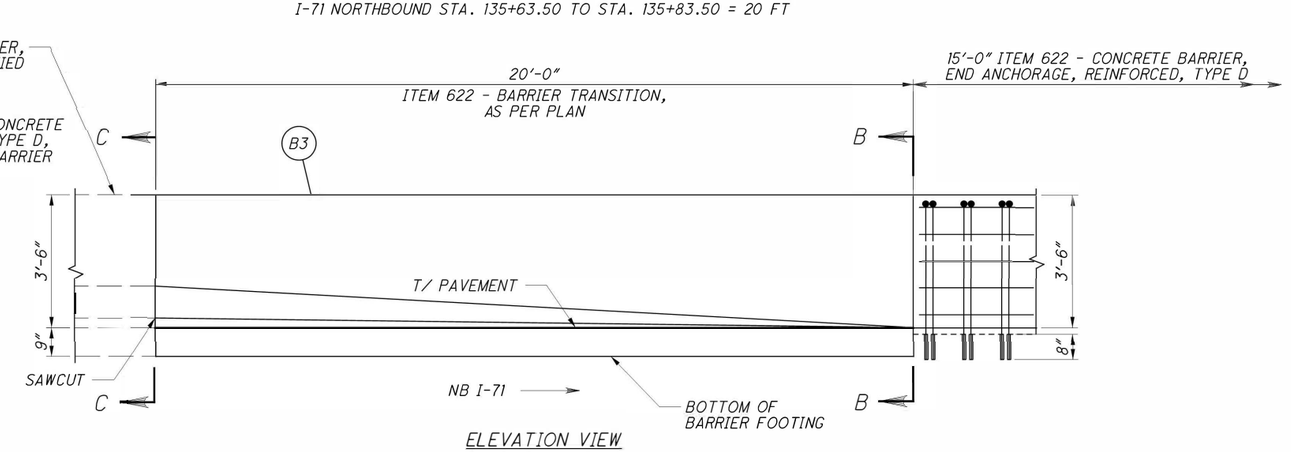

ELEVATION VIEW

BARRIER TRANSITION ON NB I-71 (LT)

I-71 NORTHBOUND STA. 126+90.40 TO STA. 127+10.40 = 20 FT

CALCULATED JAR
CHECKED MAR

BARRIER TRANSITION DETAILS

HAM-71-1.34

158
555

c:\pwworking\mm\external\tyn61470\dms72884\87268CR005.dgn 10/24/2014 4:11:45 PM TYN61470

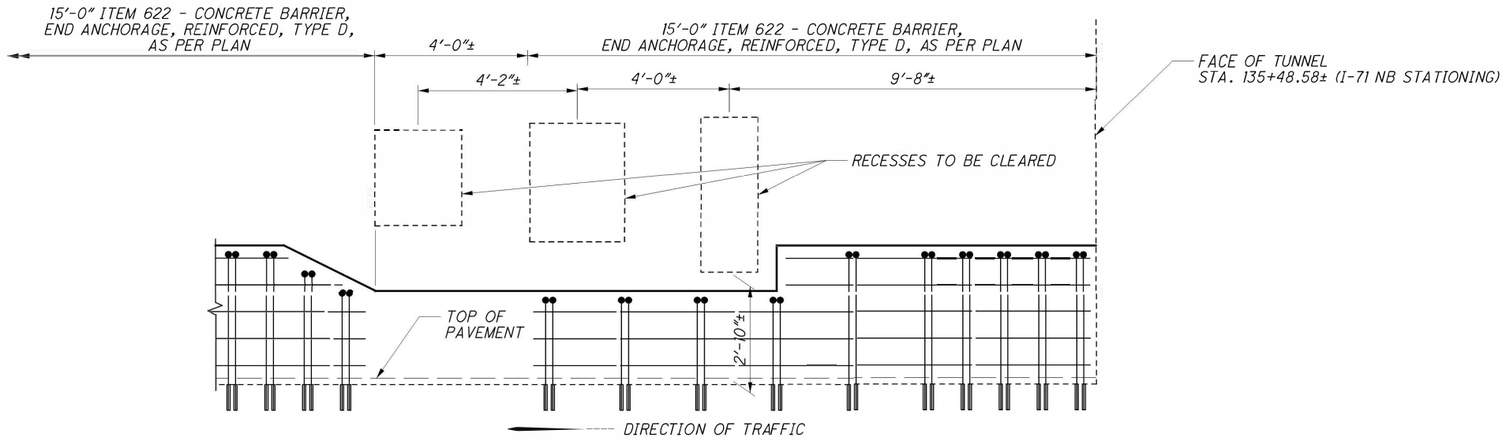

SPECIAL DETAIL - RAMP E ENTRY RT

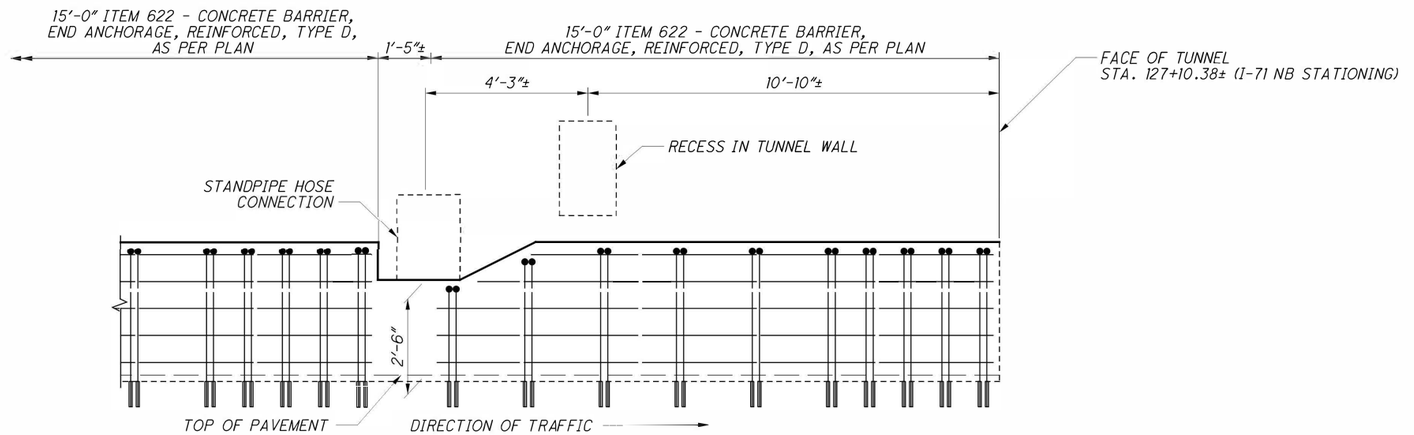

SPECIAL DETAIL - RAMP E EXIT LT

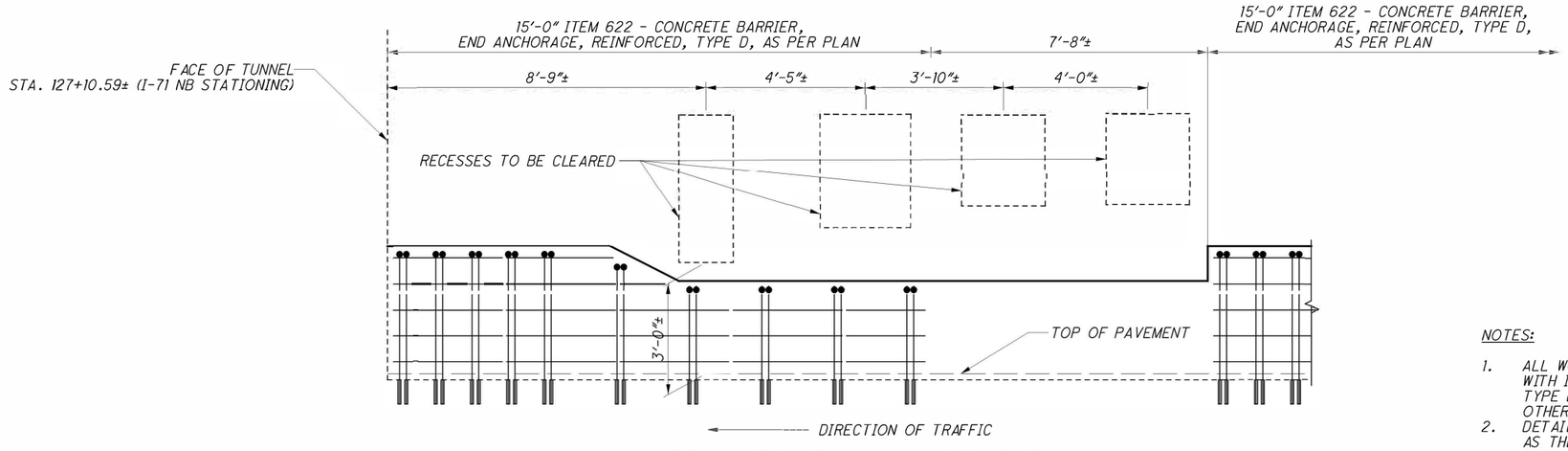

SPECIAL DETAIL - RAMP E EXIT RT

NOTES:

1. ALL WORK SHOWN ON THIS SHEET IS INCLUDED WITH ITEM 622 - CONCRETE BARRIER, SINGLE SLOPE, TYPE D, AS PER PLAN FOR PAYMENT UNLESS NOTED OTHERWISE.
2. DETAILS FOR RAMP E ENTRANCE LEFT ARE NOT SHOWN AS THERE ARE NO SPECIAL CONDITIONS. PROVIDE A STANDARD END ANCHORAGE AT THIS LOCATION WITH REINFORCEMENT DETAILS PER SHEET 155
3. FOR REINFORCEMENT DETAILS, SEE SHEET 155
4. FOR OTHER DETAILS NOT SHOWN, SEE SHEET 156

CALCULATED RD/JR
CHECKED MAR

BARRIER DETAILS

HAM-71-1.34

c:\pwworking\hmm\external\tyn61470\dms72884\87268GR006.dgn 10/24/2014 4:11:46 PM TYNG1470

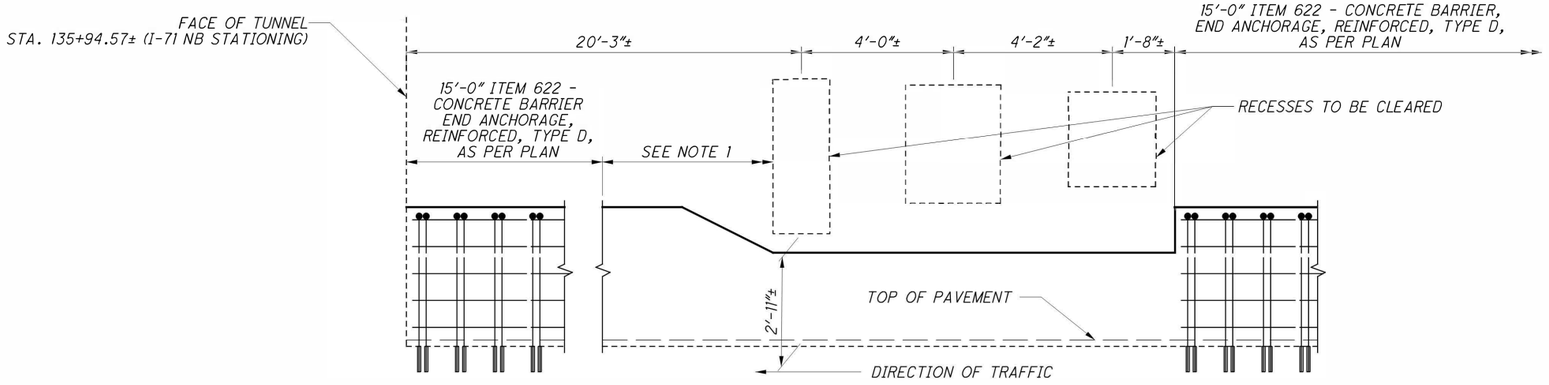

SPECIAL DETAIL - I-71 NB EXIT RT

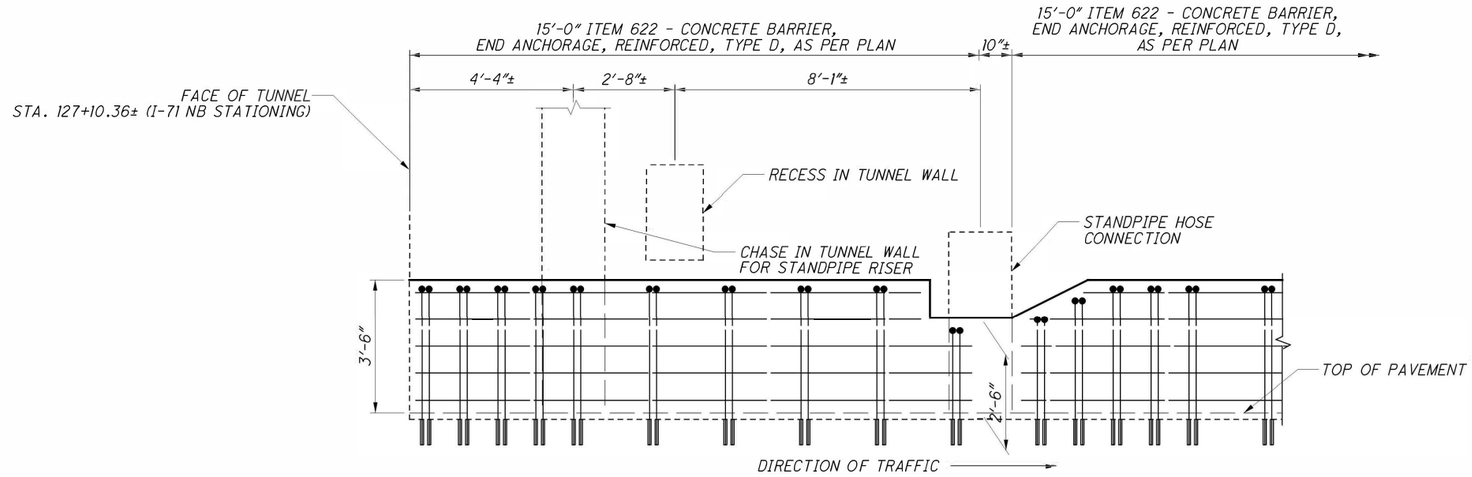

SPECIAL DETAIL - I-71 NB ENTRANCE LT

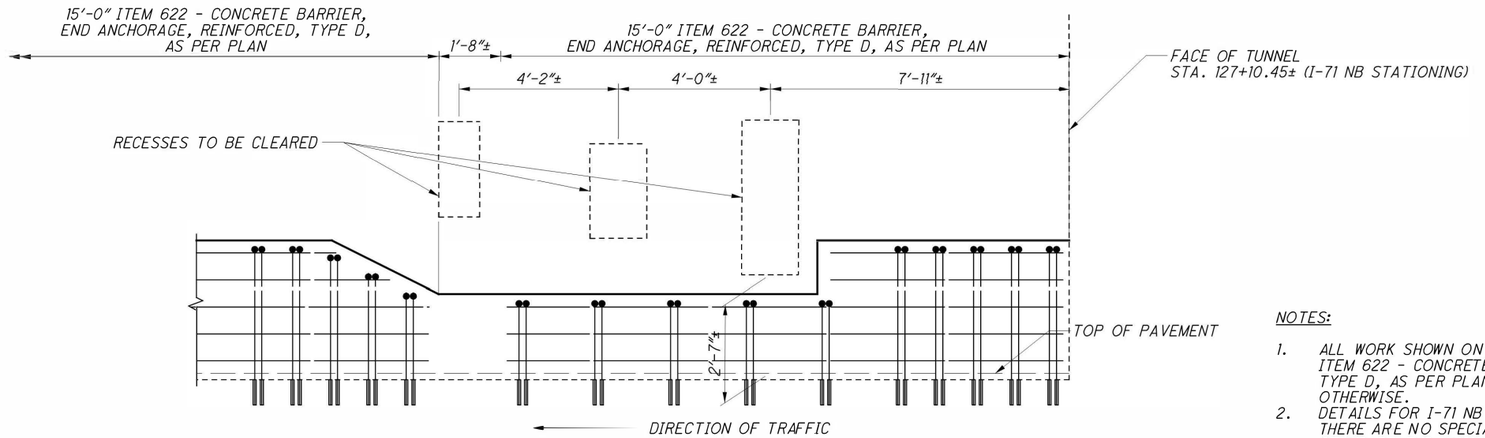

SPECIAL DETAIL - I-71 NB ENTRANCE RT

NOTES:

1. ALL WORK SHOWN ON THIS SHEET IS INCLUDED WITH ITEM 622 - CONCRETE BARRIER, SINGLE SLOPE, TYPE D, AS PER PLAN FOR PAYMENT UNLESS NOTED OTHERWISE.
2. DETAILS FOR I-71 NB EXIT LEFT ARE NOT SHOWN AS THERE ARE NO SPECIAL CONDITIONS. PROVIDE A STANDARD END ANCHORAGE AT THIS LOCATION WITH REINFORCEMENT DETAILS PER SHEET 155
3. FOR REINFORCEMENT DETAILS, SEE SHEET 155
4. FOR OTHER DETAILS NOT SHOWN, SEE SHEET 156

CALCULATED RD/JR
CHECKED MAR

BARRIER DETAILS

HAM-71-1.34

160
555

c:\pwworking\hmm\externa\tyn61470\dms7288\87268CR007.dgn 10/24/2014 4:11:48 PM TYN61470

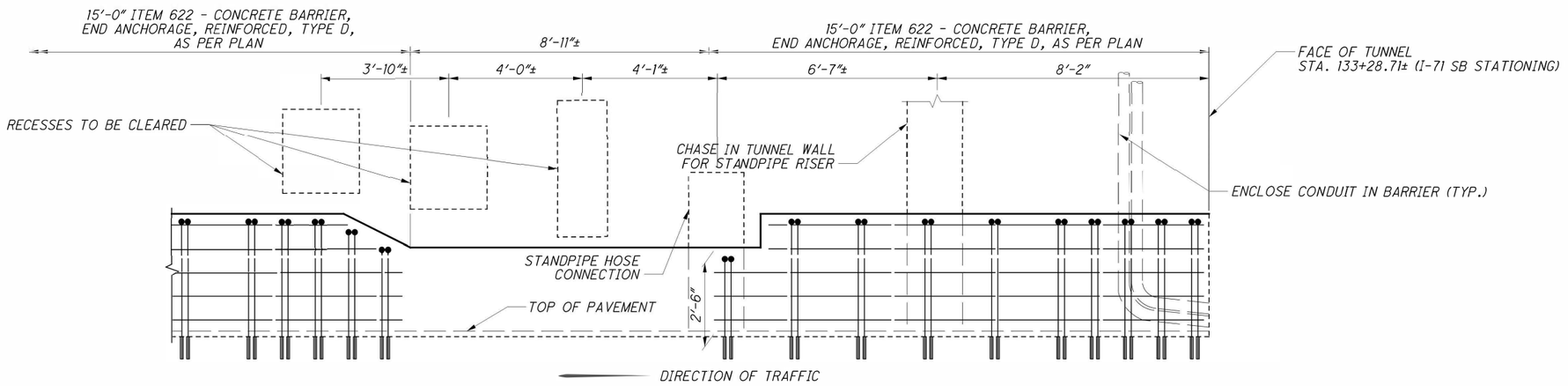

SPECIAL DETAIL - I-71 SB ENTRANCE RT

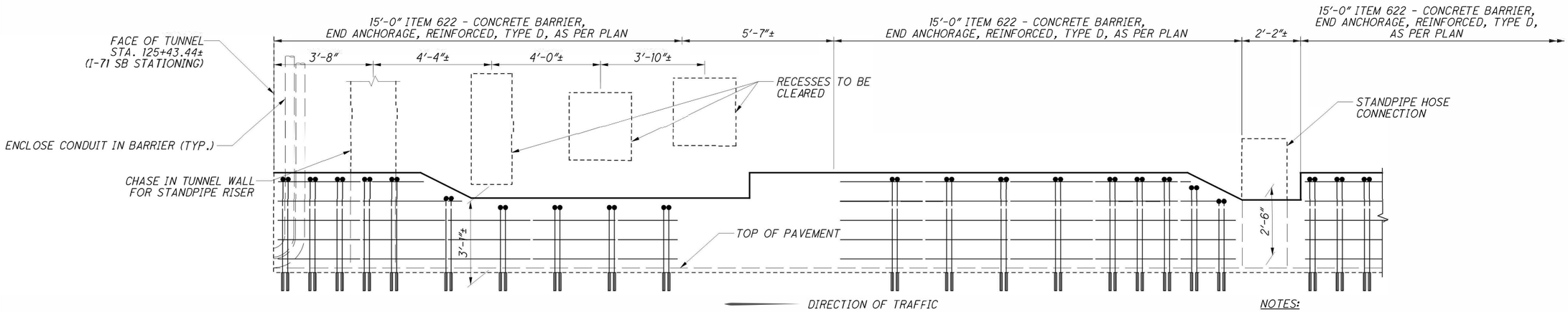

SPECIAL DETAIL - I-71 SB EXIT RT

NOTES:

1. ALL WORK SHOWN ON THIS SHEET IS INCLUDED WITH ITEM 622 - CONCRETE BARRIER, SINGLE SLOPE, TYPE D, AS PER PLAN FOR PAYMENT UNLESS NOTED OTHERWISE.
2. DETAILS FOR I-71 SB ENTRANCE/EXIT LEFT ARE NOT SHOWN AS THERE ARE NO SPECIAL CONDITIONS. PROVIDE A STANDARD END ANCHORAGE AT THE ENTRANCE AND A STANDARD END SECTION AT THE EXIT LOCATION WITH REINFORCEMENT DETAILS PER SHEET 155
3. FOR REINFORCEMENT DETAILS, SEE SHEET 155
4. FOR OTHER DETAILS NOT SHOWN, SEE SHEET 156

CALCULATED RD/JR
CHECKED MAR

BARRIER DETAILS

HAM-71-1.34

c:\pwworking\hmm\external\ty-61470\dms-728841\728868R008.dgn 10/24/2014 4:11:50 PM TYN61470

c:\pwworking\hmm\external\pre47802\dms72884\87268XG001.dgn 9/8/2015 2:23:58 PM PRE47802

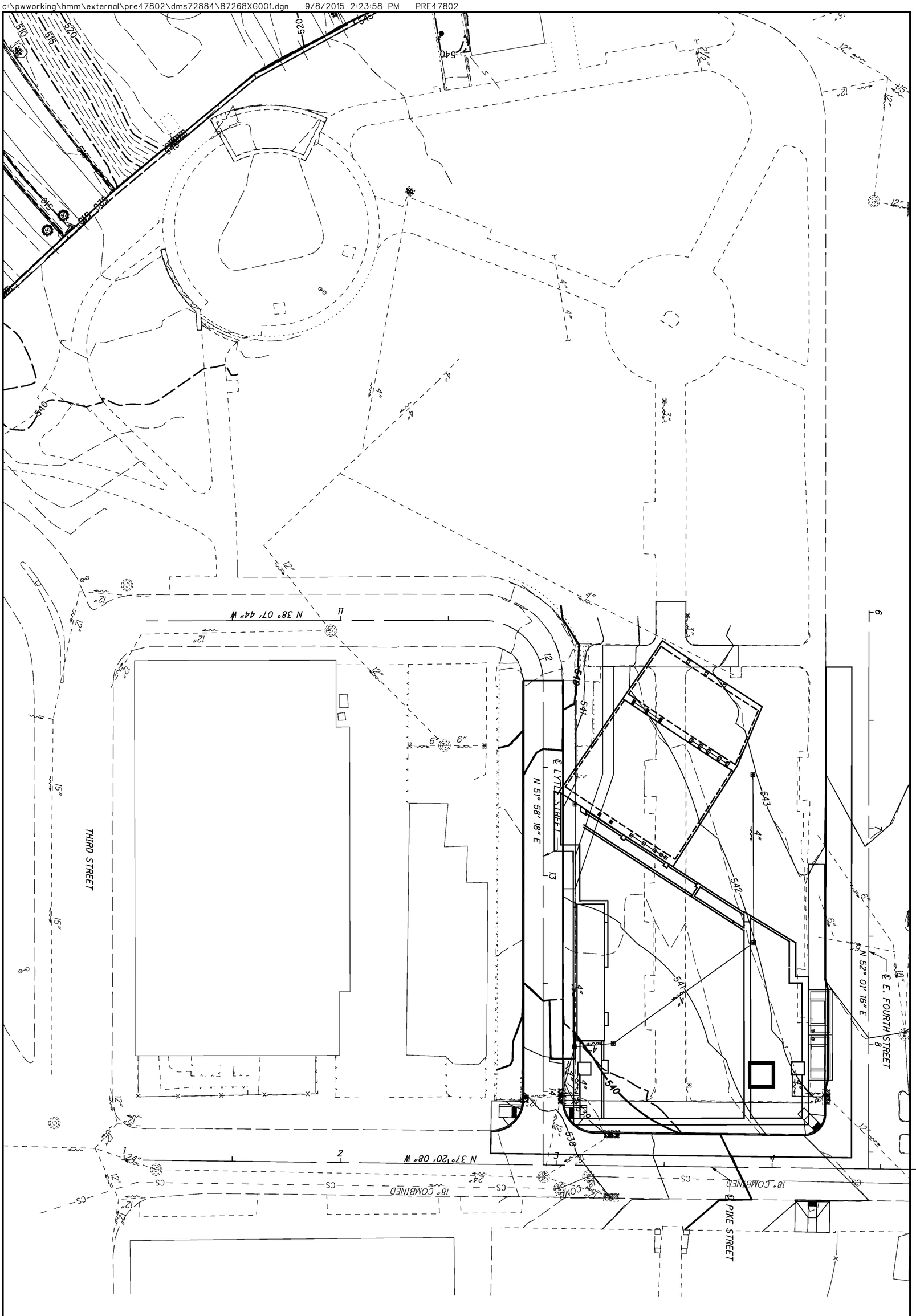

162 / 555	HAM-71-1.34	GRADING PLAN - LYTLE PARK	CALCULATED RLD / CHECKED CWP	0 10 20 40 HORIZONTAL SCALE IN FEET

TRAFFIC CONTROL GENERAL NOTES

HAM-71-1.34

ITEM 621 – RPM REFLECTOR, AS PER PLAN

THIS ITEM SHALL INCLUDE REMOVING AND REPLACING RAISED PAVEMENT MARKER REFLECTORS IN ACCORDANCE WITH ITEM 621. REFLECTORS FOR RPM'S WITHIN THE LIMITS OF MAINTENANCE OF TRAFFIC OPERATIONS FOR THIS PROJECT SHALL BE REMOVED FROM RPM CASTINGS IN THE PAVEMENT PRIOR TO MAINTENANCE OF TRAFFIC OPERATIONS. REFLECTORS SHALL BE REPLACED AT THE CONCLUSION OF MAINTENANCE OF TRAFFIC OPERATIONS.

PAYMENT FOR THIS WORK SHALL BE MEASURED BY THE NUMBER OF EACH AND SHALL BE INCLUDED IN ITEM 621 – RPM REFLECTOR, AS PER PLAN

ITEM 630 - SIGN, OVERHEAD EXTRUSHEET, AS PER PLAN

THIS ITEM SHALL INCLUDE THE FURNISHING AND ERECTING OF OVERHEAD EXTRUSHEET SIGNS IN ACCORDANCE WITH ITEM 630. THE SIGNS SHALL BE DESIGNED ACCORDING TO THE STANDARD SIGN DESIGN MANUAL, LEVEL 1 (216" X 96") DUE TO THE EMERGENCY NATURE OF THE SIGN. THE SIGNS SHALL BE WHITE WITH BLACK LETTERS AND THE LEGEND SHALL STATE:

TUNNEL CLOSED
DO NOT ENTER
WHEN FLASHING

THE SIGNS SHALL HAVE THREE (3) FLASHING RED BEACONS WHICH ARE CONNECTED AND ACTIVATED BY THE FIRE DETECTION SYSTEM. THE SIGN FLASHER ASSEMBLY, IN ACCORDANCE WITH ITEM 631, SHALL CONSIST OF FLASHING BEACONS, A FLASHER CONTROL UNIT WITH ENCLOSURE, AND MOUNTING HARDWARE. THREE BEACONS, WHICH FLASH SIMULTANEOUSLY WHEN ACTIVATED BY THE FIRE SUPPRESSION SYSTEM IN THE TUNNEL, SHALL BE MOUNTED ON TOP OF EACH SIGN.

THE BEACON SHALL BE A SINGLE TRAFFIC SIGNAL SECTION WITH A 12" LENS AND HIGH INTENSITY RED LIGHT EMITTING DIODE LAMP MODULES (LED). THE FLASHER CONTROL UNIT SHALL FLASH THE BEACON AT A RATE OF BETWEEN 50 TO 60 TIMES PER MINUTE WITH THE LIGHT PERIOD FROM ONE-HALF TO TWO-THIRDS OF THE TOTAL CYCLE. FLASHER CONTROL UNIT SHALL HAVE ALL SOLID STATE COMPONENTS AND SHALL MEET NEMA TS-1, PART 6. CONTROL UNIT SHALL BE HOUSED WITHIN A WEATHERPROOF CORROSION RESISTANT ENCLOSURE WITH A LOCKABLE DOOR. THE BEACONS SHALL FLASH AT ALL TIMES WHEN THIS ELECTRICAL SUPPLY IS ENERGIZED. DISCONNECT SWITCHES AND PADLOCKS SHALL BE PER 631.06.

POWER SHALL BE SUPPLIED FROM THE TUNNEL POWER SYSTEM. ALL POWER AND CABLE SHALL BE INSTALLED ACCORDING TO ITEM 631.

ITEM 630 – OVERHEAD SIGN SUPPORT, TYPE TC-15.115, AS PER PLAN

THIS ITEM SHALL INCLUDE THE FURNISHING AND ERECTING OF A SPAN-TYPE SIGN SUPPORT, END FRAMES, AND FOUNDATIONS IN ACCORDANCE WITH ITEM 630 FOR THE OVERHEAD SIGN SUPPORT AT IR 71 SOUTHBOUND STA 134+86.

IN ADDITION, WORK SHALL INCLUDE REMOVAL OF CONCRETE BARRIER, AND BARRIER RAIL, AND FENCE AS NECESSARY TO INSTALL THE END FRAME ON THE WESTERN SIDE OF IR 71 NEAR SENTINEL STREET. FENCE SHALL BE REPLACED AS NECESSARY AND SHALL MATCH EXISTING. PAYMENT FOR THIS WORK SHALL BE INCLUDED IN ITEM 630 – OVERHEAD SIGN SUPPORT, TYPE TC-15.115, AS PER PLAN.

ITEM 630 – REMOVAL OF OVERHEAD SIGN SUPPORT AND DISPOSAL, AS PER PLAN

THIS ITEM SHALL INCLUDE REMOVAL AND DISPOSAL OF THE OVERHEAD SIGN SUPPORT AT I.R.-71 SOUTHBOUND STA 134+96 IN ACCORDANCE WITH ITEM 630. THIS ITEM ALSO INCLUDES THE REMOVAL AND DISPOSAL OF SIGN FLASHERS AND FLASHER CONTROLLERS IN ACCORDANCE WITH ITEM 631.

IN ADDITION, WORK SHALL INCLUDE REPLACING CONCRETE BARRIER, BARRIER RAIL, AND FENCE AS NECESSARY IN THE AREA WHERE THE EXISTING WESTERN END FRAME IS REMOVED. PAYMENT FOR THIS WORK SHALL BE INCLUDED IN ITEM 630 – REMOVAL OF OVERHEAD SIGN SUPPORT AND DISPOSAL, AS PER PLAN.

ITEM 631 – SIGN FLASHER ASSEMBLY, AS PER PLAN

THIS ITEM SHALL INCLUDE THE FURNISHING AND INSTALLATION OF BEACONS, FLASHER CONTROL UNIT WITH ENCLOSURE, AND 12" LED LAMP MODULES IN ACCORDANCE WITH ITEM 631 AND ITEM 731.06. FLASHER CONTROL UNIT SHALL CONTROL TWO (2) PAIRS OF FLASHING YELLOW BEACONS, ONE PAIR MOUNTED ON PROPOSED OVERHEAD SIGN OS-2A AND ONE MOUNTED ON PROPOSED OVERHEAD SIGN OS-2F.

CITY OF CINCINNATI NOTES

GROUND MOUNTED SUPPORTS

ITEM 630 – GROUND MOUNTED SUPPORT, NO. 2 POST, AS PER PLAN
ITEM 630 – GROUND MOUNTED SUPPORT, NO. 3 POST, AS PER PLAN
THE GROUND MOUNTED SUPPORTS ON PIKE STREET, LYTLE STREET, AND EAST FOURTH STREET ARE TO BE CONSTRUCTED PER ITEM 630 EXCEPT FOR THE FOLLOWING CHANGES AS NOTED BELOW:

MEET THE REQUIREMENTS OF ITEM 630 INCLUDING THE EXCEPTIONS SHOWN ON CITY STANDARD DRAWING NUMBER ES-6-2 SHOWN IN THESE PLANS FOR THE GROUND MOUNTED SUPPORTS.

STREET NAME SIGNS AND SUPPORTS

ITEM 630 – STREET NAME SIGN SUPPORT, NO. 2 POST, AS PER PLAN
THE STREET NAME SIGN SUPPORTS ON PIKE STREET, LYTLE STREET, AND EAST FOURTH STREET ARE TO BE CONSTRUCTED PER ITEM 630 EXCEPT FOR THE FOLLOWING CHANGES AS NOTED BELOW:

STREET NAME SIGN ERECTION. *MAINTAIN AND KEEP ERECT ALL EXISTING STREET SIGNS DURING CONSTRUCTION. WHEN NECESSARY DUE TO CONSTRUCTION CONFLICTS OR ACTIVITIES, RELOCATE THE EXISTING IF POSSIBLE OR REMOVE THE EXISTING FOR STORAGE AND PICK-UP BY CITY FORCES. PROVIDE A MINIMUM OF THIRTY (30) DAYS NOTICE TO THE DIVISION OF TRAFFIC ENGINEERING PRIOR TO THE FINAL TRAFFIC SIGN INSTALLATIONS TO ARRANGE FOR CITY FORCES TO ERECT THE FINAL STREET NAME SIGNS UNLESS OTHERWISE NOTED ON THE PLANS. PAYMENT FOR THE ABOVE WORK SHALL BE INCLUDED IN THE LUMP SUM PRICE FOR ITEM 614 MAINTENANCE OF TRAFFIC.*

SIGNS

ITEM 630 – SIGN ERECTED, FLAT SHEET, AS PER PLAN
THE SIGNS THAT ARE TO BE ERECTED ON PIKE STREET, LYTLE STREET, AND EAST FOURTH STREET ARE TO BE CONSTRUCTED PER ITEM 630 EXCEPT FOR THE FOLLOWING CHANGES AS NOTED BELOW:

CURB CONTROL (PARKING) SIGN ERECTION.
MOUNT ALL CURB CONTROL SIGNS AT A 45 DEGREE ANGLE FROM THE CURB EXCEPT FOR CITY #34 (STREET CLEANING) AND CITY #133 (SNOW EMERGENCY) SIGNS. MOUNT ALL OTHER SIGNS AT A 90 DEGREE ANGLE FROM THE CURB (PERPENDICULAR). SEE CITY STANDARD DRAWINGS ES-6-1 AND ES-6-2 FOR SIGN MOUNTING AND POST INSTALLATION DETAILS.

SIGN SUPPORT ASSEMBLIES

ITEM 630 – SIGN SUPPORT ASSEMBLY, POLE MOUNTED, AS PER PLAN
THE SIGN SUPPORT ASSEMBLIES, POLE MOUNTED, ON PIKE STREET, LYTLE STREET, AND EAST FOURTH STREET ARE TO BE CONSTRUCTED PER ITEM 630 EXCEPT FOR THE FOLLOWING CHANGES AS NOTED BELOW:

PARKING METER/POST ERECTION. *PARKING METER HEADS SHALL BE REMOVED AND INSTALLED BY CITY FORCES ONLY AS DIRECTED BY THE ENGINEER. DO NOT REMOVE ANY METER POSTS UNTIL CITY FORCES HAVE REMOVED THE METER HEADS. SEE PLANS OR CITY STANDARD DRAWING ES-6-2 FOR SIGN MOUNTING AND POST SPECIFICATIONS AND INSTALLATION REQUIREMENTS.*

POLE MOUNTED SIGN ERECTION. *MEET THE REQUIREMENTS OF ITEM 630 INCLUDING THE EXCEPTIONS SHOWN ON CITY STANDARD DRAWING ES-6-1 FOR THE POLE MOUNTED SIGN SUPPORT ASSEMBLY. INCLUDE IN THE UNIT BID PRICE THE NECESSARY LABOR, BRACKETS, BANDING, HARDWARE AND EQUIPMENT TO MOUNT EACH ASSEMBLY.*

c:\pwworking\hmm\external\tyn61470\dms72726\87268TN001.dgn 10/24/2014 4:11:56 PM TYN61470

ITEM NO.						642	642	642	642													
SHEET NO.	REFERENCE NO.	LOCATION	STATION FROM	STATION TO	SIDE	LENGTH	LANE LINE, 4"	CENTER LINE: SOLID, DOUBLE (YELLOW)	STOP LINE	CROSSWALK LINE												
						FT	MILE	MILE	FT	FT												
		LYTLE STREET																				
171	SL-1		14+02.25	14+02.25	BOTH	18.00			18													
171	CW-1		14+06.25	14+14.25	BOTH	44.59				45												
		PIKE STREET																				
171	SL-2		01+12.71	01+12.71	BOTH	17.50			18													
171	CL-1		01+12.71	02+69.65	RT	156.94		0.03														
			03+11.84	04+05.20	RT	93.36		0.02														
171	SL-3		04+05.20	04+05.20	RT	12.00			12													
171	CW-2		04+16.35	04+24.35	BOTH	61.50				62												
		EAST FOURTH STREET																				
171	LL-1		06+00.00	07+50.00	CENTER	150.00	0.03															
171	CW-3		08+34.00	08+42.00	BOTH	112.00				112												
TOTALS CARRIED TO GENERAL SUMMARY							0.03	0.05	48	219												

CALCULATED RLD
CHECKED CWP

PAVEMENT MARKING SUBSUMMARY

HAM-71-1.34

164
555

c:\pwworking\hmm\external\tyn61470\dms72726\87268TS001.dgn 10/24/2014 4:12:14 PM TYN61470

ITEM NO.						621	621	621	642	642	644	644	644	644	644	644	626	626	
SHEET NO.	REFERENCE NO.	LOCATION	STATION FROM	STATION TO	SIDE	LENGTH	RPM REFLECTOR (WHITE), AS PER PLAN	RPM REFLECTOR (WHITE / RED), AS PER PLAN	RPM REFLECTOR (YELLOW / RED), AS PER PLAN	CURB MARKING (WHITE)	CURB MARKING (YELLOW)	EDGE LINE, 6" (WHITE)	EDGE LINE, 6" (YELLOW)	LANE LINE, 6"	CHANNELIZING LINE, 12"	WORD ON PAVEMENT, 72"	CHEVRON MARKING (WHITE)	TRANSVERSE / DIAGONAL LINE (WHITE), AS PER PLAN	BARRIER REFLECTOR, TYPE A	BARRIER REFLECTOR, TYPE B	
						FT	EACH	EACH	EACH	FT	FT	MILE	MILE	MILE	FT	EACH	FT	FT	EACH	EACH	
168	EY-1	I.R.-71 NORTHBOUND	114+50.00	129+00.00	BOTH	1450							0.27								
168	EW-1	I.R.-71 NORTHBOUND	114+50.00	127+10.00	RIGHT	1260						0.24								3	
168	LL-1	I.R.-71 NORTHBOUND	114+50.00	129+00.00	RIGHT	1450	13							0.27							
168	LL-2	I.R.-71 NORTHBOUND	127+10.00	129+00.00	RIGHT	190	3							0.04							
168	CY-1	I.R.-71 NORTHBOUND	127+10.00	129+00.00	RIGHT	190					190									4	
168	CW-1	I.R.-71 NORTHBOUND	127+10.00	129+00.00	RIGHT	190				190										4	
169	EY-5	I.R.-71 NORTHBOUND	129+00.00	138+00.00	RIGHT	900							0.17								
169	EW-5	I.R.-71 NORTHBOUND	129+00.00	138+00.00	RIGHT	900						0.17									
169	LL-4	I.R.-71 NORTHBOUND	129+00.00	138+00.00	RIGHT	900	9							0.17							
169	LL-5	I.R.-71 NORTHBOUND	129+00.00	138+00.00	RIGHT	900	9							0.17							
169	CY-4	I.R.-71 NORTHBOUND	129+00.00	135+68.00	RIGHT	668					668									14	
169	CW-4	I.R.-71 NORTHBOUND	129+00.00	135+94.00	RIGHT	694				694										14	
170	EY-8	I.R.-71 NORTHBOUND	138+00.00		RIGHT	250							0.05								
170	EW-8	I.R.-71 NORTHBOUND	138+00.00		RIGHT	250						0.05									
170	LL-7	I.R.-71 NORTHBOUND	138+00.00		RIGHT	250	3							0.05							
170	LL-8	I.R.-71 NORTHBOUND	138+00.00		RIGHT	250	3							0.05							
168	EY-4	I.R.-71 SOUTHBOUND	119+50.00	127+00.00	LEFT	750							0.14								
168	EW-4	I.R.-71 SOUTHBOUND	119+50.00	127+00.00	LEFT	750						0.14									
168	LL-3	I.R.-71 SOUTHBOUND	119+50.00	127+00.00	LEFT	750	7							0.14							
168	CY-3	I.R.-71 SOUTHBOUND	125+42.00	127+00.00	LEFT	158					158									4	
168	CW-3	I.R.-71 SOUTHBOUND	125+42.00	127+00.00	LEFT	158				158										4	
168	RUMBLE	I.R.-71 SOUTHBOUND	126+50.00		LEFT													360			
169	EY-7	I.R.-71 SOUTHBOUND	127+00.00	134+75.00	LEFT	775							0.15								
169	EW-7	I.R.-71 SOUTHBOUND	127+00.00		LEFT	900						0.17									
169	LL-6	I.R.-71 SOUTHBOUND	127+00.00		LEFT	900	9							0.17							
169	CY-6	I.R.-71 SOUTHBOUND	127+00.00	133+54.00	LEFT	654					654									14	
169	CW-6	I.R.-71 SOUTHBOUND	127+00.00	133+29.00	LEFT	629				629										13	
169	RUMBLE	I.R.-71 SOUTHBOUND	127+50.00		LEFT													360			
169	RUMBLE	I.R.-71 SOUTHBOUND	128+75.00		LEFT													360			
169	RUMBLE	I.R.-71 SOUTHBOUND	129+50.00		LEFT													360			
169	RUMBLE	I.R.-71 SOUTHBOUND	130+75.00		LEFT													360			
169	CH-2	I.R.-71 SOUTHBOUND	134+75.00		LEFT	135		4							135						
169	CM-1	I.R.-71 SOUTHBOUND				107											107				
170	EY-9	I.R.-71 SOUTHBOUND				891							0.17								
170	EW-9	I.R.-71 SOUTHBOUND				891						0.17									
170	LL-9	I.R.-71 SOUTHBOUND				891	8							0.17							
170	CH-3	I.R.-71 SOUTHBOUND				619		16							619						
170	CH-4	I.R.-71 SOUTHBOUND				379		10							379						
170	CM-2	I.R.-71 SOUTHBOUND				134											134				
170	LL-10	I.R.-71 SOUTHBOUND				272	3							0.05							
168	EY-2	SECOND STREET RAMP	13565+00.00	13568+52.00	LEFT	352			5				0.07							3	
168	EW-2	SECOND STREET RAMP	13565+00.00	129+00 (I.R.-71 NB)	RIGHT	730						0.14									
168	EY-3	RAMP E	127+00 (I.R.-71 NB)	129+00 (I.R.-71 NB)	LEFT	200							0.04								
168	EW-3	RAMP E	127+00 (I.R.-71 NB)	129+00 (I.R.-71 NB)	LEFT	200						0.04									
168	CY-2	RAMP E	127+10 (I.R.-71 NB)	129+00 (I.R.-71 NB)	LEFT	190					190									4	
168	CW-2	RAMP E	127+10 (I.R.-71 NB)	129+00 (I.R.-71 NB)	LEFT	190				190										4	
169	EY-6	RAMP E	129+00 (I.R.-71 NB)	138+00 (I.R.-71 NB)	LEFT	900							0.17								
169	EW-6	RAMP E	129+00 (I.R.-71 NB)	136+66 (I.R.-71 NB)	LEFT	766						0.15									
169	CY-5	RAMP E	129+00 (I.R.-71 NB)	135+64 (I.R.-71 NB)	LEFT	664					664									14	
169	CW-5	RAMP E	129+00 (I.R.-71 NB)	135+50 (I.R.-71 NB)	LEFT	650				650										13	
169	RUMBLE	RAMP E	129+50 (I.R.-71 NB)		LEFT													240			
169	RUMBLE	RAMP E	130+50 (I.R.-71 NB)		LEFT													240			
169	WP-1	RAMP E	131+00 (I.R.-71 NB)		LEFT											1					
169	RUMBLE	RAMP E	131+50 (I.R.-71 NB)		LEFT													240			
169	WP-2	RAMP E	131+85 (I.R.-71 NB)		LEFT											1					
169	RUMBLE	RAMP E	133+50 (I.R.-71 NB)		LEFT													240			
169	CH-1	RAMP E	136+66 (I.R.-71 NB)	138+00 (I.R.-71 NB)	LEFT	134		4							134						
TOTALS CARRIED TO GENERAL SUMMARY							67	34	5	2511	2524	1.26	1.23	1.28	1267	2	241	2760	6	106	
							106			5035		2.49							112		

CALCULATED SJT CHECKED SJB

PAVEMENT MARKING SUBSUMMARY (TUNNEL)

HAM-71-1.34

165
555

c:\pwworking\hmm\externgl\ty61470\dms72726\8728TS004.dgn 10/24/2014 4:12:16 PM TY1614 70

ITEM NO.							SIZE (INCHES)		630	630	630	630	630	630	630	630	630	630	630	
SHEET NO.	REFERENCE NO.	LOCATION	STATION	SIDE	CODE	DESCRIPTION	WIDTH	HEIGHT	GROUND MOUNTED SUPPORT, NO. 2 POST, AS PER PLAN	GROUND MOUNTED SUPPORT, NO. 3 POST, AS PER PLAN	STREET NAME SIGN SUPPORT, NO. 2 POST, AS PER PLAN	SIGN POST REFLECTOR	SIGN SUPPORT ASSEMBLY, POLE MOUNTED, AS PER PLAN	SIGN, FLAT SHEET	SIGN ERECTED, FLAT SHEET, AS PER PLAN	REMOVAL OF GROUND MOUNTED SIGN AND DISPOSAL	REMOVAL OF GROUND MOUNTED SIGN AND STORAGE	REMOVAL OF GROUND MOUNTED SIGN AND REERECTION	REMOVAL OF GROUND MOUNTED POST SUPPORT AND DISPOSAL	REMOVAL OF POLE MOUNTED SIGN AND DISPOSAL	
									FT	FT	FT	EACH	EACH	SQ FT	SQ FT	EACH	EACH	EACH	EACH	EACH	
171	S-1	LYTLE STREET	12+24.40	LT	R7-1	NO PARKING	12	18	11.4					1.5	1.5	1			1		
171	S-2	LYTLE STREET	12+40.86	RT	R7-1	NO PARKING	12	18					1	1.5	1.5						
171	S-3	LYTLE STREET	13+20.85	RT	R7-1	NO PARKING	12	18					1	1.5	1.5					1	
171	S-4	LYTLE STREET	13+73.37	RT	R7-1	NO PARKING	12	18	11.4					1.5	1.5	1			1		
171	S-5	LYTLE STREET	13+73.37	RT	R7-SPECIAL	NO PARKING	12	18						1.5	1.5	1					
171	S-6	LYTLE STREET	14+01.91	LT	R6-2R	ONE WAY	24	30	12.3					5.0	5.0	1			1		
171	S-7	LYTLE STREET	14+01.91	LT	R6-2L	ONE WAY	24	30						5.0	5.0	1					
171	S-8	LYTLE STREET	14+02.25	RT	R1-1	STOP SIGN	36	36		12.8		1		9.0	9.0						
171	S-9	LYTLE STREET	14+02.25	RT	R5-1	DO NOT ENTER	30	30				1		6.3	6.3						
171	S-10	LYTLE STREET	14+03.83	RT	R1-1	STOP SIGN										1			1		
171	S-11	LYTLE STREET	14+03.83	RT	R5-1	DO NOT ENTER										1					
171	S-12	LYTLE STREET	14+15.67	RT	D3-1	STREET NAME SIGN	36	12			11.9										
171	S-13	LYTLE STREET	14+15.67	RT	D3-1	STREET NAME SIGN	36	12													
171	S-14	PIKE STREET	03+48.52	LT	R7-1	NO PARKING	12	18	11.4					1.5	1.5	1			1		
171	S-15	PIKE STREET	04+08.56	LT	W11-2	PED X-ING	30	30		14.1		1		6.3	6.3						
171	S-16	PIKE STREET	04+08.56	LT	W16-7PR	ARROW	24	12						2.0	2.0						
171	S-17	PIKE STREET	04+08.56	LT	W11-2	PED X-ING	30	30				1		6.3	6.3						
171	S-18	PIKE STREET	04+08.56	LT	W16-7PL	ARROW	24	12						2.0	2.0						
171	S-19	PIKE STREET	04+11.49	LT	W11-2	PED X-ING										1			1		
171	S-20	PIKE STREET	04+11.49	LT	W16-7PR	ARROW										1					
171	S-21	PIKE STREET	04+11.49	LT	W11-2	PED X-ING										1					
171	S-22	PIKE STREET	04+11.49	LT	W16-7PL	ARROW										1					
171	S-23	PIKE STREET	03+63.41	LT	SPECIAL	PARK SIGN											1		1		
171	S-24	PIKE STREET	03+63.41	LT	SPECIAL	PARK SIGN											1				
171	S-25	EAST FOURTH STREET	08+11.65	RT	SPECIAL	HEALTH/ FITNESS	12	18	11.4					1.5	1.5			1	1		
TOTALS CARRIED TO GENERAL SUMMARY									57.8	26.9	11.9	4	2	52.3	52.3	12	2	1	8	1	

CALCULATED RLD
CHECKED CWP

SIGNING SUBSUMMARY

HAM-71-1.34

166
555

c:\pwworking\hnm\external\tyn61470\dms72726\87268TS002.dgn 10/24/2014 4:12:17 PM TYN61470

ITEM NO.							625	630	630	630	630	630	630	630	631	631	631	631	631	631		
SHEET NO.	REFERENCE NO.	LOCATION	STATION	SIDE	SIZE (INCHES)		GROUND ROD	OVERHEAD SIGN SUPPORT, TYPE TC-9.30, DESIGN 4	OVERHEAD SIGN SUPPORT, TYPE TC-15.115, AS PER PLAN	SIGN, OVERHEAD EXTRUSHEET, AS PER PLAN	SIGN, ERECTED, EXTRUSHEET	RIGID OVERHEAD SIGN SUPPORT FOUNDATION	REMOVAL OF OVERHEAD MOUNTED SIGN AND DISPOSAL	REMOVAL OF OVERHEAD SIGN SUPPORT AND DISPOSAL, AS PER PLAN	SIGN FLASHER ASSEMBLY, AS PER PLAN	REMOVAL OF LUMINAIRE	REMOVAL OF DISCONNECT SWITCH	REMOVAL OF SIGNS WIRED	REMOVAL OF BALLAST	REMOVAL OF SIGN SERVICE	REMOVAL OF PHOTOELECTRIC CONTROL		
					WIDTH	HEIGHT	EACH	EACH	EACH	SQ FT	SQ FT	EACH	EACH	EACH	EACH	EACH	EACH	EACH	EACH	EACH	EACH		
168	OS-1	I.R.-71 NORTHBOUND	122+50	RT	216	96	1	1		144.0	144.0	1										
169	SR-1	I.R.-71 SOUTHBOUND	134+96	BOTH	111	126							1	1		1	1	1	1	1		
169	SR-2	I.R.-71 SOUTHBOUND	134+96	BOTH	192	180							1			2		1	1			
169	SR-3	I.R.-71 SOUTHBOUND	134+96	BOTH	144	162							1			2		1	1			
169	SR-4	I.R.-71 SOUTHBOUND	134+96	BOTH	192	192							1			2		1	1			
169	SR-5	I.R.-71 SOUTHBOUND	134+96	BOTH	144	126							1			2		1	1			
169	OS-2A	I.R.-71 SOUTHBOUND	134+86	BOTH	111	126	1		1	97.1	97.1	2			1							
169	OS-2B	I.R.-71 SOUTHBOUND	134+86	BOTH	192	180				240.0	240.0											
169	OS-2C	I.R.-71 SOUTHBOUND	134+86	BOTH	216	96				144.0	144.0											
169	OS-2D	I.R.-71 SOUTHBOUND	134+86	BOTH	144	162				162.0	162.0											
169	OS-2E	I.R.-71 SOUTHBOUND	134+86	BOTH	192	192				256.0	256.0											
169	OS-2F	I.R.-71 SOUTHBOUND	134+86	BOTH	144	126				126.0	126.0											
TOTALS CARRIED TO GENERAL SUMMARY							2	1	1	1169.2	1169.2	3	5	1	1	9	1	5	5	1	1	

CALCULATED SJT
CHECKED SJB

SIGNING SUBSUMMARY (INTERSTATE 71)

HAM-71-1.34

167
555

c:\pwworking\hmm\external\tyn61470\dms7276\8728TS005.dgn 10/24/2014 4:12:19 PM TYN61470

SIGNING LEGEND

- EXISTING GROUND MTD. SIGN SUPPORT
- BACK TO BACK EXISTING GROUND MTD. SIGN SUPPORT
- PROPOSED GROUND MTD. SIGN SUPPORT
- BACK TO BACK PROPOSED GROUND MTD. SIGN SUPPORT
- EXISTING SIGN
- PROPOSED SIGN
- EXISTING SIGN TO BE REMOVED
- EXISTING SIGN TO BE REMOVED AND REERECTED
- EXISTING SIGN TO BE RELOCATED

PAVEMENT MARKING LEGEND

- (CW) ITEM 642, CURB MARKING, WHITE
- (CY) ITEM 642, CURB MARKING, YELLOW
- (EW) ITEM 644, EDGE LINE (WHITE), 6"
- (EY) ITEM 644, EDGE LINE (YELLOW), 6"
- (LL) ITEM 644, LANE LINE, 6"
- (CH) ITEM 644, CHANNELIZING LINE, 12"
- (CM) ITEM 644, CHEVRON MARKING (WHITE)
- (WP) ITEM 644, WORD ON PAVEMENT, 72"
- ITEM 644, TRANSVERSE RUMBLE STRIPS

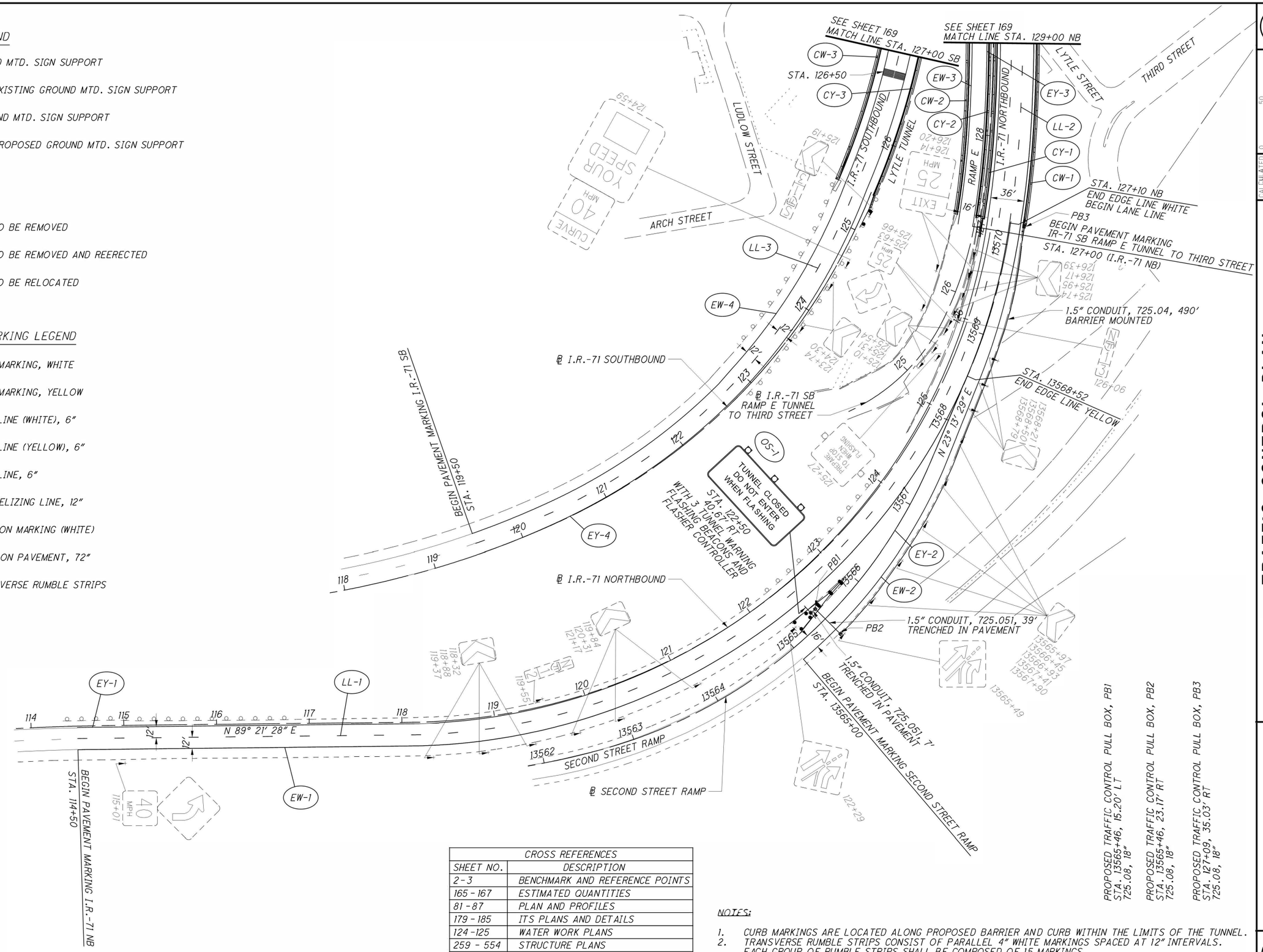

CROSS REFERENCES	
SHEET NO.	DESCRIPTION
2-3	BENCHMARK AND REFERENCE POINTS
165-167	ESTIMATED QUANTITIES
81-87	PLAN AND PROFILES
179-185	ITS PLANS AND DETAILS
124-125	WATER WORK PLANS
259-554	STRUCTURE PLANS

NOTES:

1. CURB MARKINGS ARE LOCATED ALONG PROPOSED BARRIER AND CURB WITHIN THE LIMITS OF THE TUNNEL.
2. TRANSVERSE RUMBLE STRIPS CONSIST OF PARALLEL 4" WHITE MARKINGS SPACED AT 12" INTERVALS. EACH GROUP OF RUMBLE STRIPS SHALL BE COMPOSED OF 15 MARKINGS.
3. FOR OVERHEAD SIGN DETAILS, SEE SHEET 172

HORIZONTAL SCALE IN FEET
0 25 50 100

CALCULATED SJT
CHECKED SJB

TRAFFIC CONTROL PLAN
I.R.-71 STA. 114+50 TO 127+00 NB, STA. 119+50 TO 129+00 SB

HAM-71-1.34

168
555

c:\pwworking\hmm\external\tyn61470\dms72726\87268TP001.dgn 10/24/2014 4:12:23 PM TYN61470

CROSS REFERENCES	
SHEET NO.	DESCRIPTION
2-3	BENCHMARK AND REFERENCE POINTS
165 -167	ESTIMATED QUANTITIES
81 - 87	PLAN AND PROFILES
179 - 185	ITS PLANS AND DETAILS
124 -125	WATER WORK PLANS
259 - 554	STRUCTURE PLANS

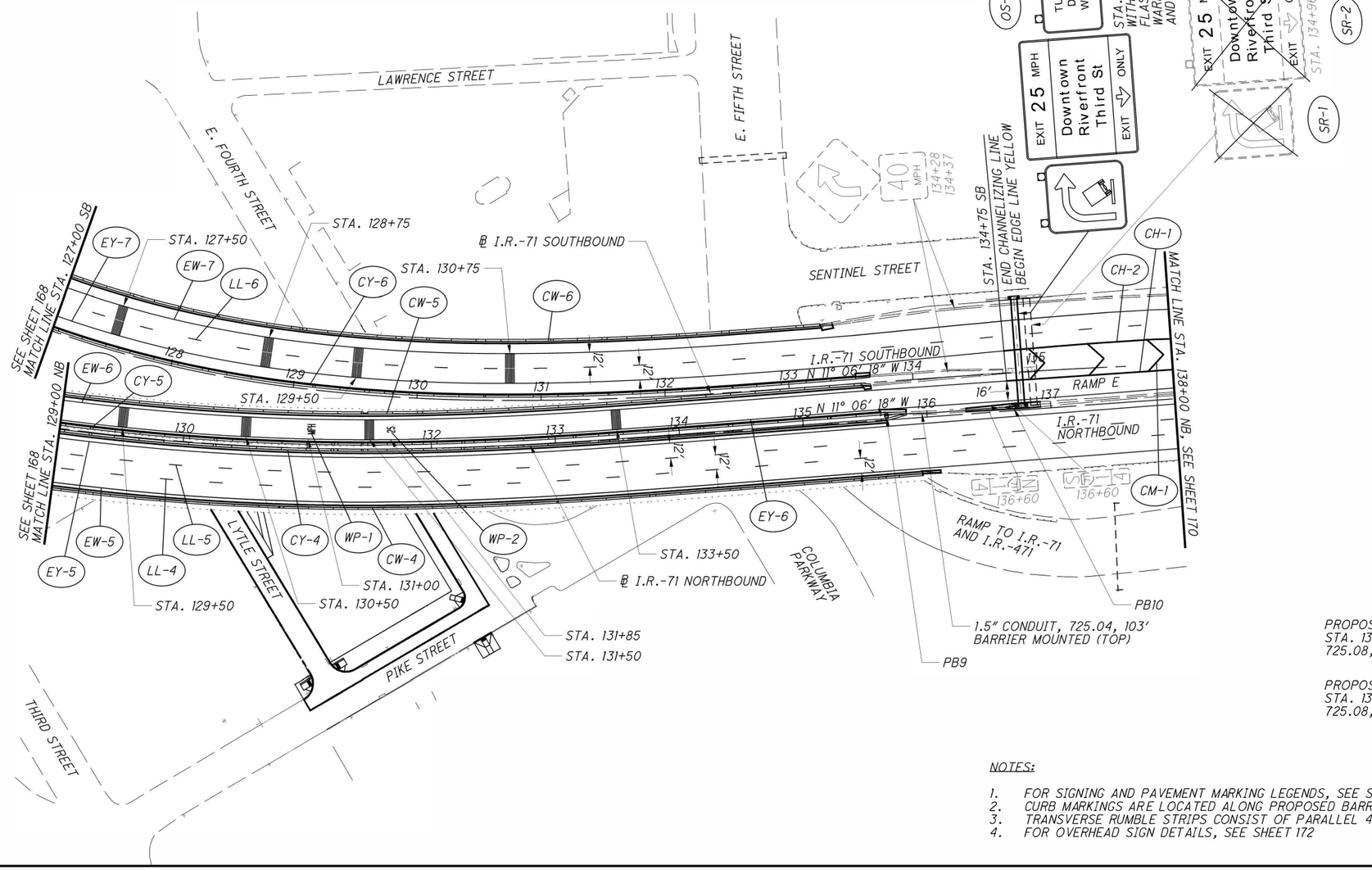

PROPOSED TRAFFIC CONTROL PULL BOX, PB9
STA. 135+67 NB, 3.52′ LT
725.08, 18″

PROPOSED TRAFFIC CONTROL PULL BOX, PB10
STA. 136+70 NB, 3.24′ LT
725.08, 18″

NOTES:

1. FOR SIGNING AND PAVEMENT MARKING LEGENDS, SEE SHEET 168.
2. CURB MARKINGS ARE LOCATED ALONG PROPOSED BARRIER AND CURB WITHIN THE LIMITS OF THE TUNNEL.
3. TRANSVERSE RUMBLE STRIPS CONSIST OF PARALLEL 4″ WHITE MARKINGS SPACED AT 12″ INTERVALS.
4. FOR OVERHEAD SIGN DETAILS, SEE SHEET 172

TRAFFIC CONTROL PLAN
I.R.-71 STA. 129+00 NB TO 138+00 NB

CALCULATED SJT
CHECKED SJB

0 25 50 100 HORIZONTAL SCALE IN FEET

HAM-71-1.34

169
555

c:\pwworking\hmm\external\yn61470\dms72726\8726STP002.dgn 10/24/2014 4:12:26 PM TYN61470

CROSS REFERENCES	
SHEET NO.	DESCRIPTION
2-3	BENCHMARK AND REFERENCE POINTS
165-167	ESTIMATED QUANTITIES
81-87	PLAN AND PROFILES
179-185	ITS PLANS AND DETAILS
124-125	WATER WORK PLANS
259 - 554	STRUCTURE PLANS

NOTES:

1. FOR SIGNING AND PAVEMENT MARKING LEGENDS, SEE SHEET 168.

c:\pwworking\hmm\exlocal\tyn61470\dms72726\87268TP003.dgn 10/24/2014 4:12:29 PM TYN61470

N

0 50 100
HORIZONTAL SCALE IN FEET

CALCULATED SJT
CHECKED SJB

TRAFFIC CONTROL PLAN
I.R.-71

HAM-71-1.34

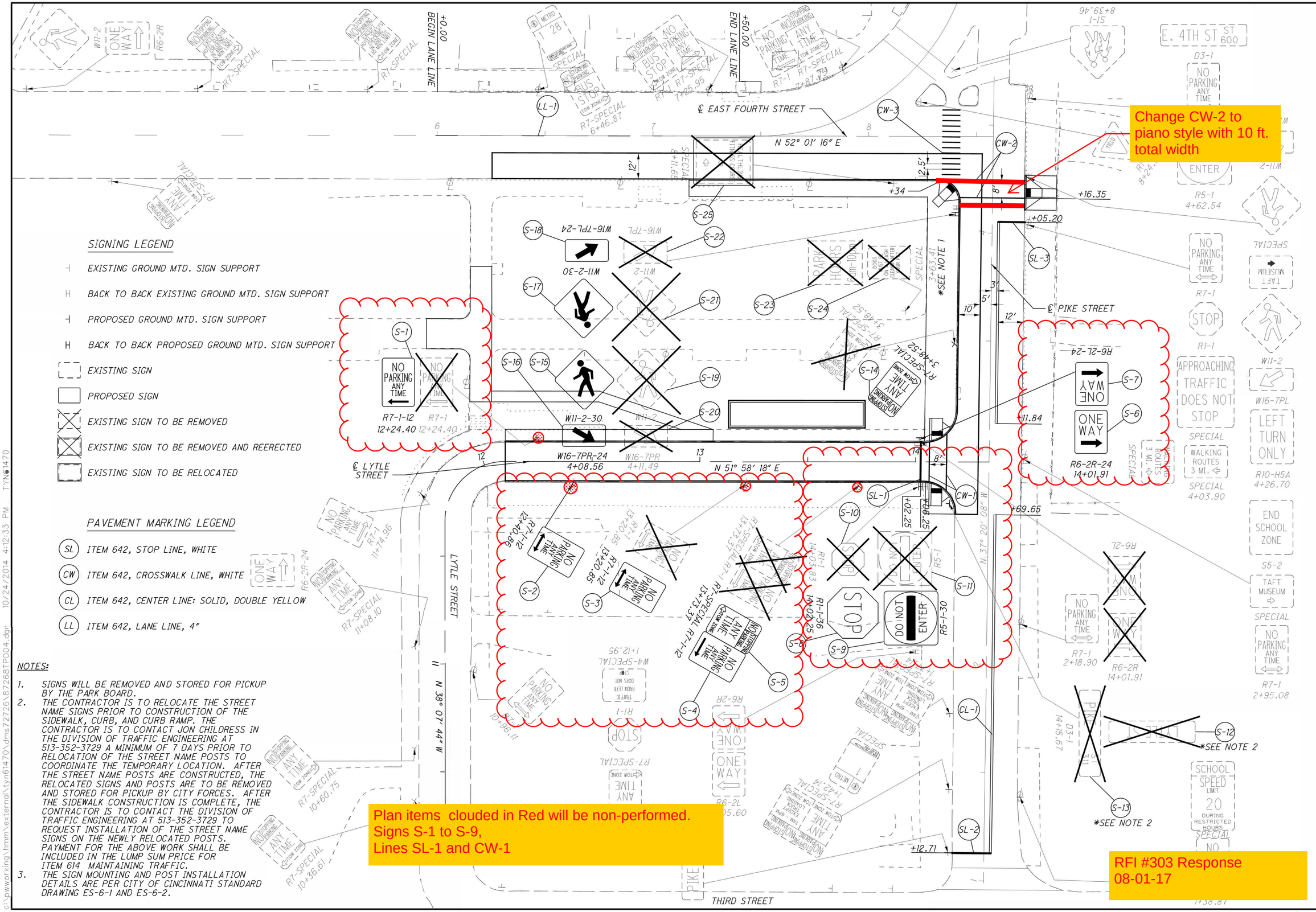
SIGNING LEGEND
EXISTING GROUND MTD. SIGN SUPPORT
BACK TO BACK EXISTING GROUND MTD. SIGN SUPPORT
PROPOSED GROUND MTD. SIGN SUPPORT
BACK TO BACK PROPOSED GROUND MTD. SIGN SUPPORT
EXISTING SIGN
PROPOSED SIGN
EXISTING SIGN TO BE REMOVED
EXISTING SIGN TO BE REMOVED AND REERECTED
EXISTING SIGN TO BE RELOCATED
PAVEMENT MARKING LEGEND
SL ITEM 642, STOP LINE, WHITE
CW ITEM 642, CROSSWALK LINE, WHITE
CL ITEM 642, CENTER LINE: SOLID, DOUBLE YELLOW
LL ITEM 642, LANE LINE, 4"
NOTES:
1. SIGNS WILL BE REMOVED AND STORED FOR PICKUP BY THE PARK BOARD.
2. THE CONTRACTOR IS TO RELOCATE THE STREET NAME SIGNS PRIOR TO CONSTRUCTION OF THE SIDEWALK, CURB, AND CURB RAMP. THE CONTRACTOR IS TO CONTACT JON CHILDRESS IN THE DIVISION OF TRAFFIC ENGINEERING AT 513-352-3729 A MINIMUM OF 7 DAYS PRIOR TO RELOCATION OF THE STREET NAME POSTS TO COORDINATE THE TEMPORARY LOCATION. AFTER THE STREET NAME POSTS ARE CONSTRUCTED, THE RELOCATED SIGNS AND POSTS ARE TO BE REMOVED AND STORED FOR PICKUP BY CITY FORCES. AFTER THE SIDEWALK CONSTRUCTION IS COMPLETE, THE CONTRACTOR IS TO CONTACT THE DIVISION OF TRAFFIC ENGINEERING AT 513-352-3729 TO REQUEST INSTALLATION OF THE STREET NAME SIGNS ON THE NEWLY RELOCATED POSTS. PAYMENT FOR THE ABOVE WORK SHALL BE INCLUDED IN THE LUMP SUM PRICE FOR ITEM 614 MAINTAINING TRAFFIC.
3. THE SIGN MOUNTING AND POST INSTALLATION DETAILS ARE PER CITY OF CINCINNATI STANDARD DRAWING ES-6-1 AND ES-6-2.
E. 4TH ST
℄ EAST FOURTH STREET
N 52° 01′ 16″ E
℄ LYTLE STREET
LYTLE STREET
N 38° 07′ 44″ W
℄ PIKE STREET
N 37° 20′ 08″ W
THIRD STREET
BEGIN LANE LINE +0.00
END LANE LINE +50.00
Change CW-2 to piano style with 10 ft. total width
Plan items clouded in Red will be non-performed.
Signs S-1 to S-9,
Lines SL-1 and CW-1
RFI #303 Response
08-01-17
*SEE NOTE 1
*SEE NOTE 2
HORIZONTAL SCALE IN FEET
CALCULATED RLD
CHECKED CWP
TRAFFIC CONTROL PLAN
LYTLE ST., PIKE ST., AND EAST FOURTH ST.
HAM-71-1.34
171
555
c:\pwworking\hmm\external\tyn61470\dms72726\87268TP004.dgn 10/24/2014 4:12:33 PM TYN61470

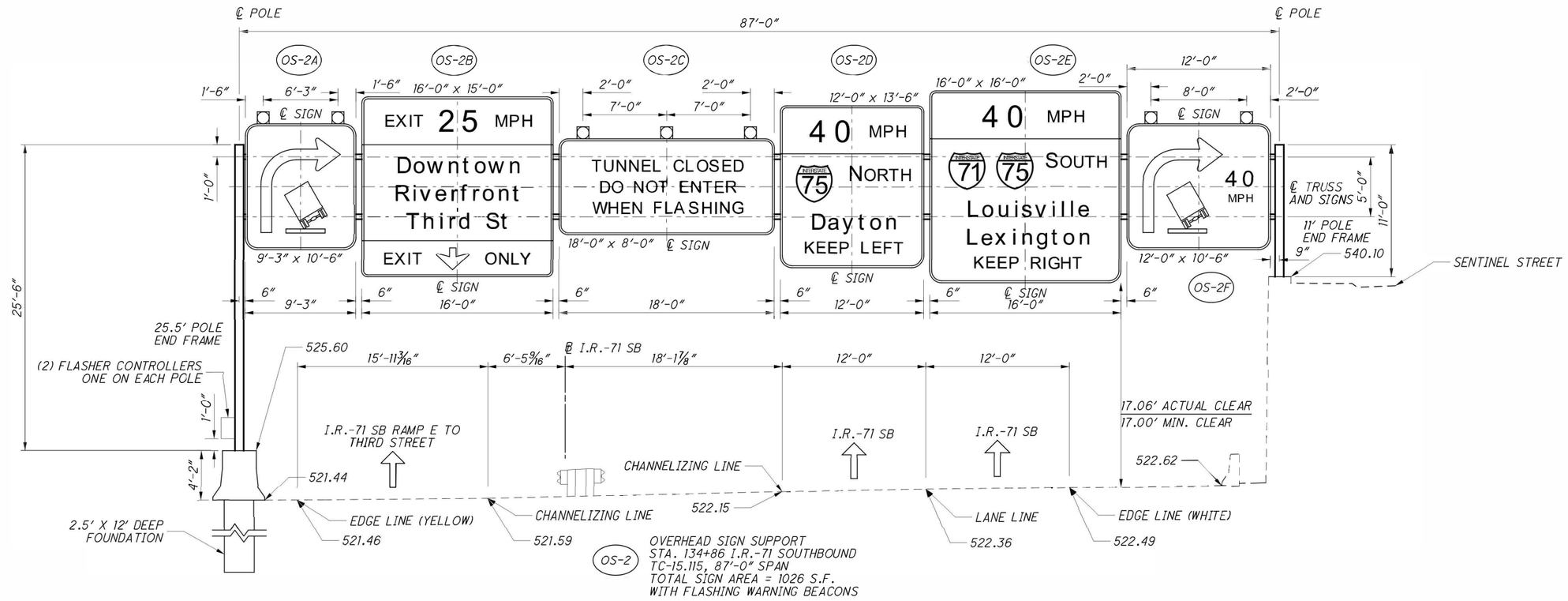

OS-2 OVERHEAD SIGN SUPPORT
STA. 134+86 I.R.-71 SOUTHBOUND
TC-15.115, 87'-0" SPAN
TOTAL SIGN AREA = 1026 S.F.
WITH FLASHING WARNING BEACONS

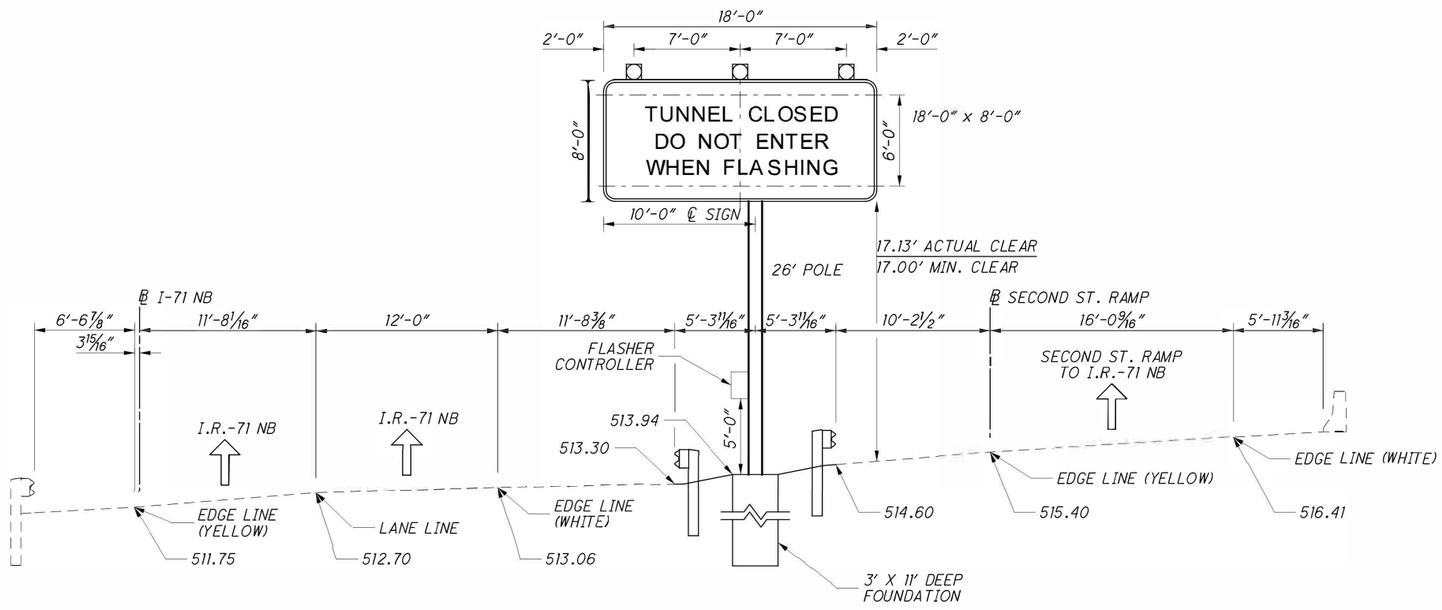

OS-1 OVERHEAD SIGN SUPPORT
*STA. 122+50 I.R.-71 NORTHBOUND
TC-9.30, DESIGN 4
TOTAL SIGN AREA = 144 S.F.
WITH FLASHING WARNING BEACONS

*SIGN FACE ROTATED 2°30'00"

NOTES:

1. FOR ESTIMATED QUANTITIES, SEE SHEET 167

CALCULATED SJT
CHECKED SJB

OVERHEAD SIGN DETAILS

HAM-71-1.34

172
555

c:\pwworking\hmm\external\tyn61470\dms72726\87268TE001.dgn 10/24/2014 4:12:35 PM TYN61470

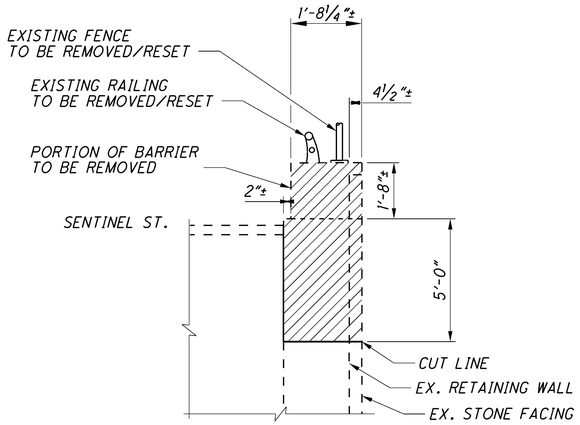

SECTION A-A
(REMOVAL)

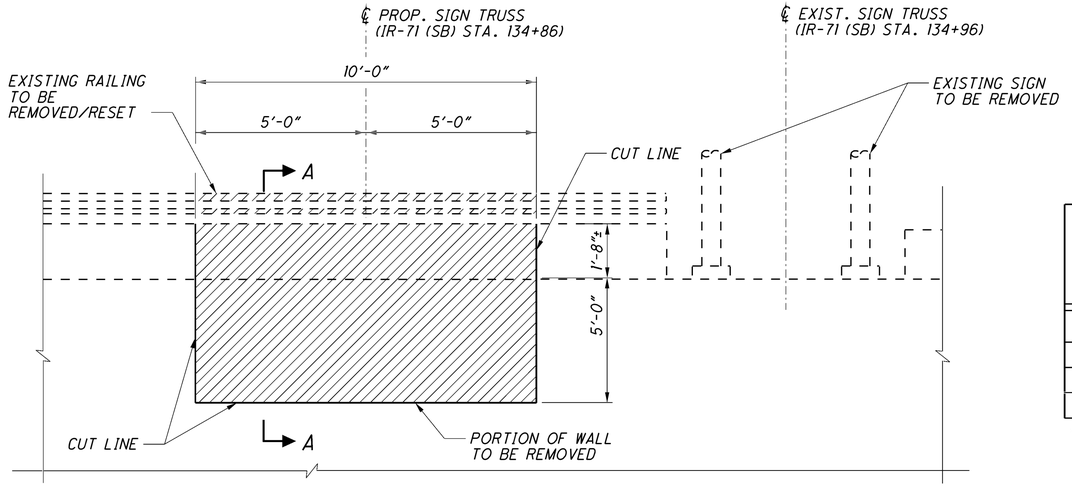

ELEVATION
(REMOVAL)

MARK	NUMBER	LENGTH	WEIGHT	TYPE
REINFORCING STEEL LIST				
R501	48	2'-6"	125	STR.
R502	14	9'-8"	141	STR.
R503*	8	2'-6"	20	STR.

* R503 BARS ARE SMOOTH DOWELS

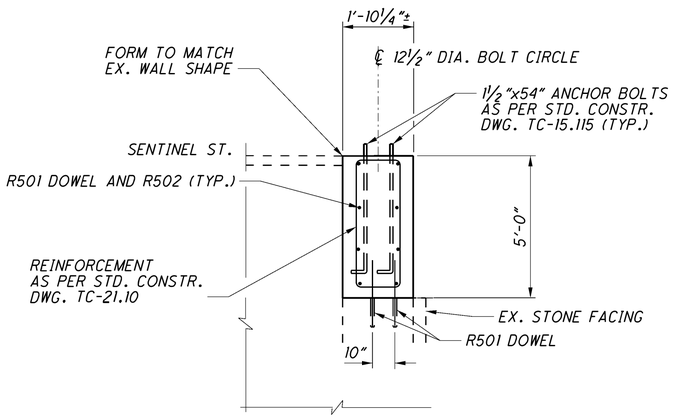

SECTION A-A
(PROPOSED)

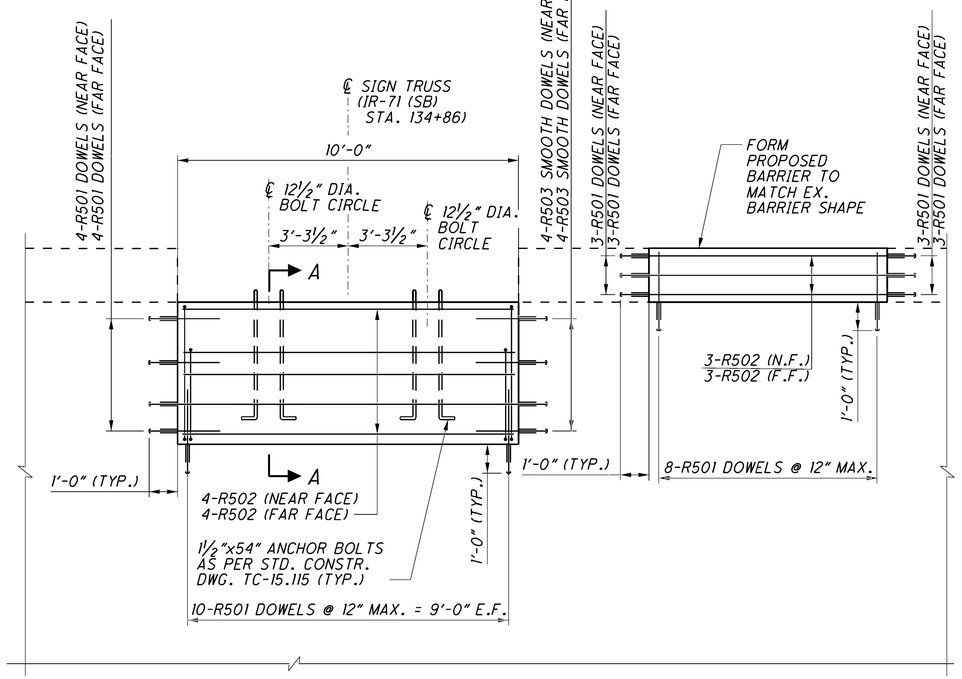

ELEVATION
(PROPOSED)

NOTES:

1. ALL REINFORCING STEEL TO BE EPOXY COATED.
2. SEE SCD TC-21.10 AND TC-21.50 FOR REINFORCING STEEL UNLESS OTHERWISE INDICATED.
3. THE BAR SIZE NUMBER IS SPECIFIED ON THE PLANS IN THE BAR MARK COLUMN. THE FIRST NUMBER WHERE THREE NUMBERS ARE USED INDICATES THE BAR SIZE NUMBER. R501 IS A NUMBER 5 BAR. BAR DIMENSIONS ARE OUT TO OUT UNLESS OTHERWISE INDICATED. R INDICATES INSIDE RADIUS UNLESS OTHERWISE NOTED.
4. SEAL ALL NEW CONCRETE SURFACES PER ITEM 512 WITH A CLEAR SILANE BASED NON-EPOXY SEALER.
5. SALVAGE ALL OF THE STEEL RAILING THAT WILL REQUIRE REMOVAL IN ORDER TO INSTALL THE NEW TRUSS, AND RE-INSTALL THE RAILING AT THE LOCATIONS DIRECTED BY THE CONSTRUCTION PROJECT ENGINEER.
6. REMOVE THE EXISTING VANDAL PROTECTION FENCE LOCATED AT THE EXISTING SIGN TRUSS AND RE-INSTALL TO THE EXISTING LIMITS. IF THE EXISTING FENCE IS DAMAGED DURING REMOVAL, PROVIDE ITEM 607 - 6 FT STRAIGHT VANDAL PROTECTION FENCE WITH COATED FABRIC.

CALCULATED SJB
CHECKED CWP

RETAINING WALL MOUNTED SIGN SUPPORT DETAIL

HAM-71-1.34

172A
555

I:\projects\HAM\Vr07\01.34_PID87268\Design\docs\Plan Package\Current CADD Files\Roadway\Sheets\87268TD001.dgn 5/18/2015 3:14:44 PM akoenig

FED. RD. DIV.	STATE	PROJECT	FISCAL YEAR
5	OHIO		

CALCULATED SJB
CHECKED CWP

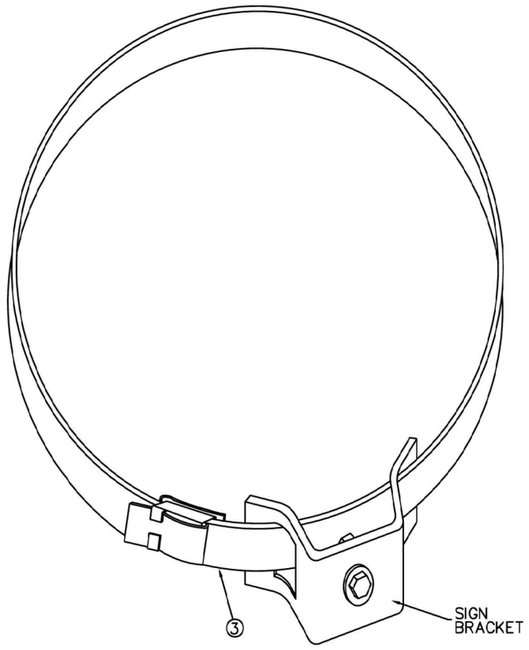

TYPICAL POLE STRAPPING HARDWARE

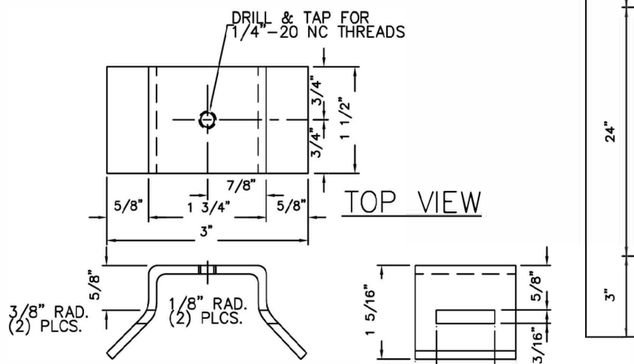

MATERIAL: STAINLESS STEEL

SIGN BRACKET BANDING STANDOFF
SCALE: FULL

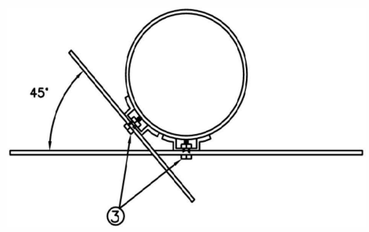

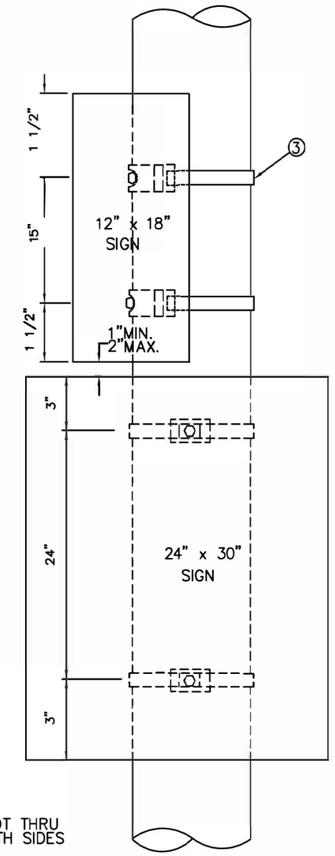

POLE MOUNTING

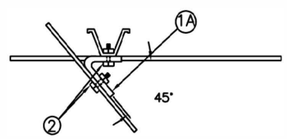

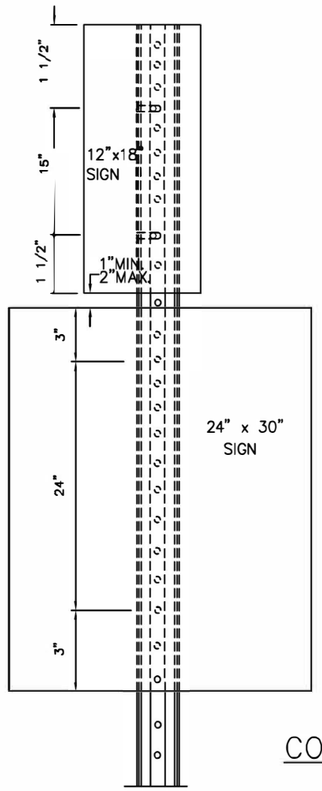

POST MOUNTING

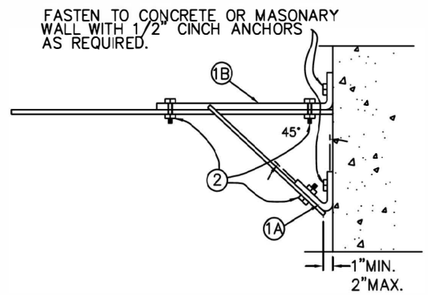

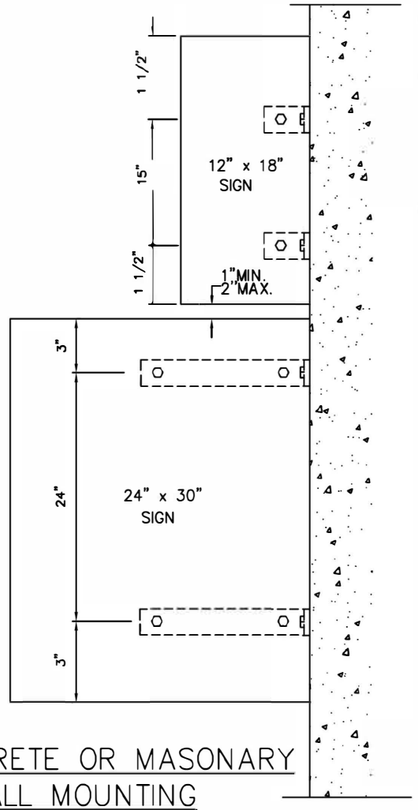

CONCRETE OR MASONARY WALL MOUNTING

NOTES

1A BRACKET FOR ANGLED SIGN POST OR WALL (SEE 1B) SHALL BE 1/4"x1"x6" LOW CARBON STEEL BENT ⌀ CENTER TO EITHER 45° OR 90° AS REQUIRED.

1B BRACKET FOR ANGLED SIGN GREATER THAN 12" IN WIDTH SHALL HAVE A LENGTH OF AT LEAST 1/2 OF SIGN WIDTH PLUS THE 3" MOUNTING LENGTH BENT AT EITHER 45° OR 90° AS REQUIRED. BRACKET SHALL BE 1/4"x1"x (REQUIRED LENGTH) LOW CARBON STEEL.

2 BOLTS, HEX NUTS & LOCK WASHERS SHALL BE 5/16" x 1" OR 5/16" x 2-1/2 " STAINLESS STEEL. FLAT NYLON WASHERS SHALL BE 5/16" & USED ON SIGN FACE ONLY.

3 POLE STRAPPING SHALL BE 1/32"x3/4" STAINLESS STEEL WITH STAINLESS STEEL CLIP; STAINLESS STEEL SIGN BRACKET; 5/16" x 3/4" STAINLESS STEEL BOLT, HEXNUT & 5/16" FLAT NYLON WASHER WHICH SHALL BE USED ON SIGN FACE ONLY.

4 ALL BRACKETS, ANCHORS, BOLTS, HEX NUTS & WASHERS SHOWN ARE INCIDENTAL TO THE BID ITEMS WHERE APPLICABLE. POLE STRAPPING & ACCESSORIES ARE A SEPARATE BID ITEM WHERE APPLICABLE.

5 SIGN SIZES SHOWN ARE TYPICAL & SHALL BE THE SIZE AS SHOWN IN THE PLANS OR IN THE CITY STANDARD SIGN LISTING.

6 VERTICAL CLEARANCE FROM BOTTOM OF SIGN TO GRADE LINE SHALL BE A MINIMUM OF 7' EXCEPT FOR LOW MOUNTED SIGNS (AS NOTED) WHICH SHALL BE A MINIMUM OF 4'.

HORIZONTAL CLEARANCE FROM SIDE OF SIGN TO CURB FACE SHALL BE FROM A MINIMUM OF 12" TO A MAXIMUM OF 24" EXCEPT AS NOTED.

IN ORDER TO MAINTAIN THE HORIZONTAL CLEARANCE, SOME SIGNS MAY HAVE TO BE MOUNTED OFF CENTER FROM SIGN POST.

7 GENERALLY, ALL PARKING AND/OR LOADING RELATED SIGNS ARE MOUNTED ⌀ 45° ANGLE WITH THE CURB. ALL OTHER TYPE SIGNS ARE MOUNTED ⌀ 90° ANGLE WITH THE CURB. SEE THE PLANS FOR SPECIFIC SIGN ORIENTATION.

STATE OF OHIO
STEVEN GERALD BAILEY
49331
REGISTERED
PROFESSIONAL ENGINEER

S.C.H.	Steve Bailey	9/2/04	UPDATE
T.E.		3/1/98	

DESIGN	REVISION APPROVED	DATE	WO #
		12/13/94	

PAVEMENT MARKINGS & SIGNING (ES-6)

SIGN MOUNTING DETAIL

CITY OF CINCINNATI
DEPT. OF TRANSPORTATION & ENGINEERING
DIV. OF TRAFFIC ENGR.

APPROVED Steve Bailey DATE 3-4-99

SCALE	SOURCE	DRAWN	FILE NO.
–		VGRD	ES-6-1

SIGN MOUNTING DETAIL

HAM-71-1.34

173
555

c:\pwworking\hmm\external\tyn61470\dms727261\87268TM001.dgn 10/24/2014 4:12:37 PM TYN61470

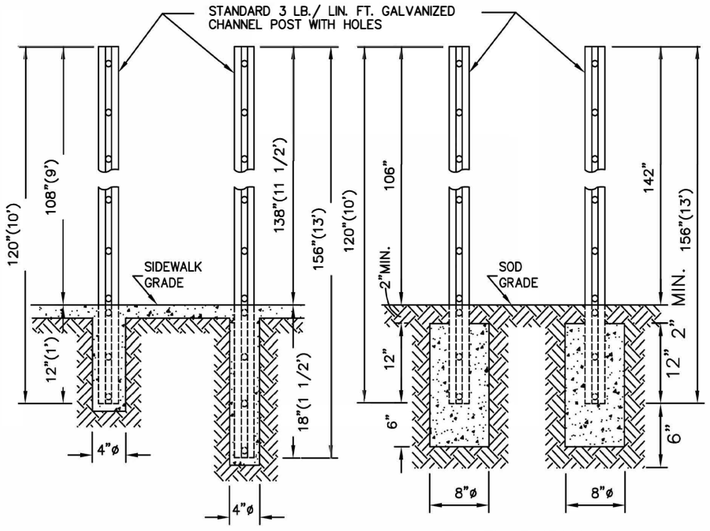

CONCRETE BURIAL EARTH BURIAL

1. THE CONCRETE SHALL BE POURED INTO THE HOLE OR MOLD, THEN THE CHANNEL POST SHALL BE WORKED INTO THE CONCRETE TO THE REQUIRED DEPTH.
2. THE CHANNEL SHALL BE INSTALLED A MIN. OF 24" FROM THE CURB FACE.
3. UNLESS OTHERWISE SPECIFIED IN THE PLANS, THE 10' CHANNEL POST SHALL BE USED FOR A SINGLE 24" LENGTH SIGN OR SMALLER. THE 13' CHANNEL POST SHALL BE USED FOR SIGNS WITH GREATER THAN 24" LENGTH OR MORE THAN ONE (1) SIGN ON THE SAME SIDE PER CHANNEL POST.
4. THE CHANNEL POST SHALL BE POSITIONED AS TO EITHER 45° OR 90° DEPENDING ON THE TYPE OF SIGN OR SIGNS TO BE INSTALLED. SEE DRAWING ES-6-1.

CHANNEL POLE INSTALLATION

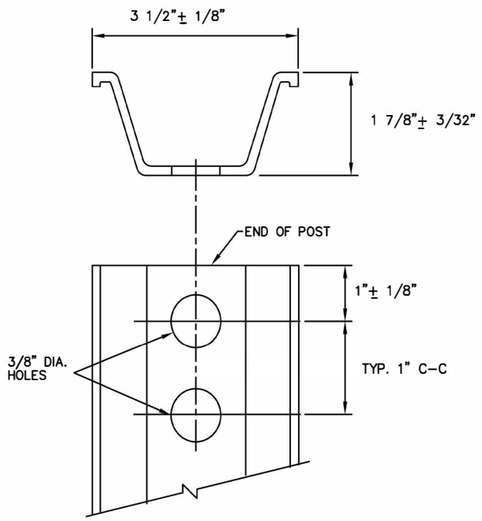

CHANNEL POST DETAIL
3 LB./ LIN.FT. GALVANIZED

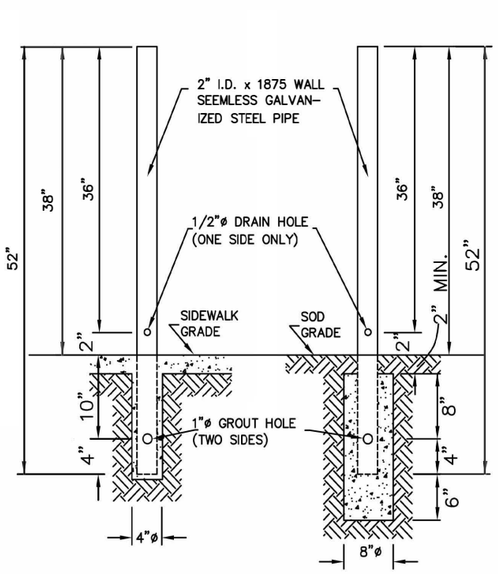

CONCRETE BURIAL EARTH BURIAL

1. THE CONCRETE SHALL BE POURED INTO THE HOLE OR MOLD, THEN THE METER POST SHALL BE WORKED INTO THE CONCRETE TO THE REQUIRED DEPTH.
2. THE METER POST SHALL BE INSTALLED A MIN. OF 18" FROM THE CURB FACE.

PARKING METER POST INSTALLATION

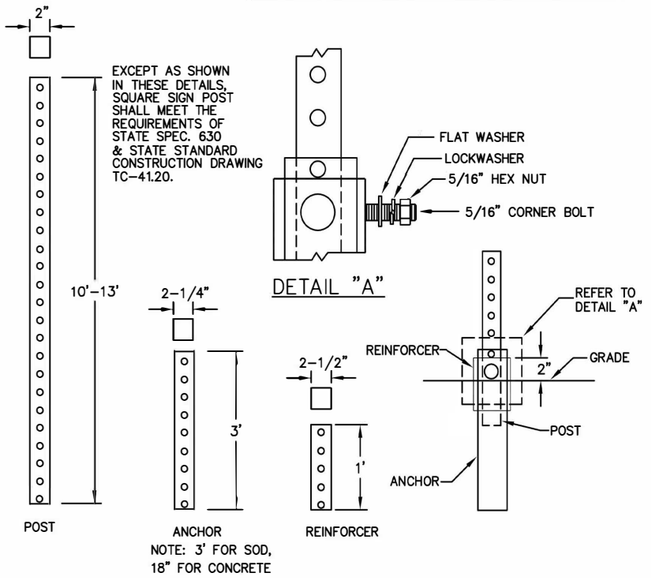

TYPICAL SQUARE SIGN POST INSTALLATION

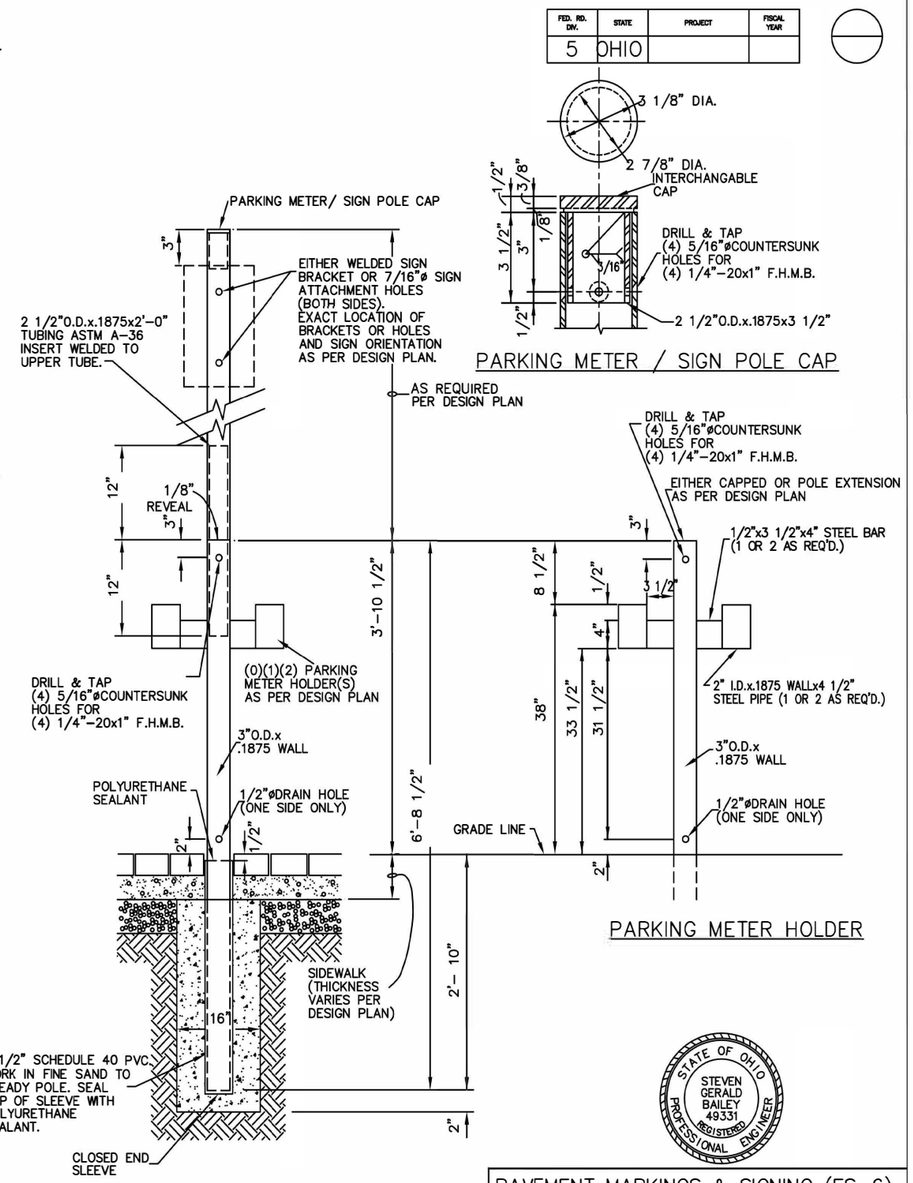

PARKING METER / SIGN POLE

PARKING METER HOLDER

STATE OF OHIO
STEVEN GERALD BAILEY
49331
REGISTERED
PROFESSIONAL ENGINEER

FED. RD. DIV.	STATE	PROJECT	FISCAL YEAR
5	OHIO		

S.C.H.	Steve Bailey	3/29/05	UPDATE
T.E.		3/1/98	

DESIGN	REVISION / APPROVED	DATE	WO #
		12/09/94	

SCALE	SOURCE	DRAWN	FILE NO.
–		VGRD	ES-6-2

PAVEMENT MARKINGS & SIGNING (ES-6)
CHANNEL POST & METER POST INSTALLATION DETAILS
(CITY SPECIFICATIONS)

CITY OF CINCINNATI
DEPT. OF TRANSPORTATION & ENGINEERING
DIV. OF TRAFFIC ENGR.

APPROVED Steve Bailey DATE 3-4-99

CALCULATED SJB CHECKED CWP

CHANNEL POST & METER POST INSTALLATION DETAILS

HAM-71-1.34

174
555

c:\pwworking\hmm\external\tyn61470\dms72726\87268TM002.dgn 10/24/2014 4:12:51 PM TYN61470

GENERAL

ANY WORK INVOLVING RELOCATING OR NEW ITS EQUIPMENT (I.E. CCTV, DMS, SFRVD) NEEDS TO BE COORDINATED WITH ODOT OFFICE OF TRAFFIC ENGINEERING/ITS SECTION AT LEAST 10 WORKING DAYS PRIOR. THE CONTRACTOR SHALL SUBMIT TWO (2) COMPLETE SETS OF CATALOG CUTS, DIAGRAMS, BROCHURES OR OTHER DESCRIPTIVE DATA FOR THE ITEMS THAT THE CONTRACTOR INTENDS TO FURNISH FOR THE ITS EQUIPMENT AT THE PRECONSTRUCTION MEETING. ONE SET IS FOR THE PROJECT ENGINEER AND ONE SET IS TO BE SENT TO THE ODOT OFFICE OF TRAFFIC OPERATIONS, SIGNAL AND ITS SECTION, FOR APPROVAL PRIOR TO ANY EQUIPMENT BEING ORDERED.

UTILITY NOTIFICATION

THE OHIO DEPARTMENT OF TRANSPORTATION HAS UTILITY FACILITIES (HIGHWAY LIGHTING, TRAFFIC CONTROL, ITS) WITHIN THE LIMITS OF THIS PROJECT.

THE CONTRACTOR ON THIS PROJECT IS REQUIRED TO CONTACT ODOT, DISTRICT 8, TRAFFIC DEPARTMENT, AND ITS DIRECTLY SO THAT THE ODOT UTILITIES, LOCATED WITHIN THIS PROJECT, ARE MARKED. THE CONTRACTOR SHALL NOTIFY DISTRICT 8, TRAFFIC AT 513-933-6689, ITS AT CEN.ITS.LAB@DOT.STATE.OH.US, AND THE PROJECT ENGINEER, FOURTEEN (14) CALENDAR DAYS IN ADVANCE OF ANY WORK, FOR THE NEED TO MARK ODOT OWNED UTILITIES.

THE ABOVE REQUIREMENTS ARE IN ADDITION TO SECTION 105.07 & 107.16 OF THE CONSTRUCTION AND MATERIAL SPECIFICATIONS.

THE CONTRACTOR SHALL NOTIFY OTHER UTILITIES THROUGH OUPS OR DIRECTLY A MINIMUM OF FORTY-EIGHT (48) HOURS IN ADVANCE OF ANY WORK. THE COST FOR THE ABOVE DESCRIBED WORK IS INCIDENTAL TO THE OVERALL BID PRICE OF THE PROJECT.

REMOVAL OF EQUIPMENT / CABLE

ALL EXISTING TRAFFIC SURVEILLENCE EQUIPMENT THAT IS TO BE REMOVED AS SHOWN IN THE PLANS SHALL BE TURNED OVER TO THE ODOT ITS ENGINEER. THE CONTRACTOR SHALL SECURELY STORE THE EQUIPMENT AND CONTACT THE ODOT ITS ENGINEER (CEN.ITS.LAB@DOT.STATE.OH.US) TO SCHEDULE PICKUP. THE ODOT ITS ENGINEER SHALL PROVIDE THE CONTRACTOR WITH WRITTEN DOCUMENTATION OF ANY ITEMS THAT ARE TO BE DISPOSED OF BY THE CONTRACTOR.

ALL FIBER OPTIC CABLE THAT IS REMOVED FROM THE PROJECT SHALL BE REMOVED WITH CARE SO AS TO NOT DAMAGE THE CABLE DURING REMOVAL. THE FIBER SHALL BE COILED ON WOODEN REELS AND TURNED OVER TO THE ODOT ITS ENGINEER. CARE SHALL BE TAKEN AND THE FIBER OPTIC CABLE SHALL BE REMOVED IN SUCH A MANNER THAT THE CABLE REMAINS IN THE LONGEST COMPLETE SECTIONS AS POSSIBLE.

BEFORE ANY EQUIPMENT IS REMOVED CONTRACTOR SHALL REVIEW THE ITS DOWNTIME NOTES IN THESE PLANS TO ENSURE THAT THEY ARE IN COMPLIANCE WITH THE NOTIFICATION REQUIREMENTS.

TRACER WIRE

TRACER WIRE SHALL BE PHYSICALLY SECURED DIRECTLY ABOVE THE TOP CONDUIT OF ALL INSTALLED CONDUIT RUNS USING WIRE PLASTIC ZIP TIES SPACED 10 FEET APART. TRACER WIRE SHALL BE NO SMALLER THAN #12 AWG WIRE. THE WIRE SHALL BE HDPE INSULATED, ORANGE IN COLOR, AND CONSTRUCTED OF COPPER CLAD STEEL. APPROXIMATELY 10 FT. OF SLACK OF THE TRACER WIRE SHALL BE LEFT INSIDE THE ADJACENT PULL-BOXES CONNECTING THE CONDUIT RUNS. IN SITUATIONS WHERE A TYPE 2 FIBER OPTIC CABLE MARKER IS TO BE INSTALLED IN CONJUNCTION WITH THE TRACER WIRE, THE TRACER WIRE SHALL BE RUN THROUGH THE MARKER AND CONNECTED TO TERMINALS AT THE TOP OF THE MARKER.

PAYMENT FOR ALL TRACER WIRE SHALL BE INCLUDED IN THE BID ITEM FOR THE FIBER OPTIC CABLE PAY ITEM.

FIBER OPTIC CABLE MARKERS

FIBER OPTIC CABLE MARKERS SHALL BE INSTALLED AS DIRECTED BY THE ODOT ENGINEER AND/OR AT EVERY PULLBOX CONTAINING FIBER OPTIC CABLE AND SHALL BE ONE (1) OF TWO (2) TYPES:

- TYPE 1 – COTTMARK 511, FRICK FLEXPOST, OR CARSONITE CURV-FLEX MARKER
- TYPE 2 – COTT BIGFINK, FRICK TESTPOST, OR RHINODOME TEST STATION

THE FIBER OPTIC CABLE MARKERS SHALL BE 6 FEET IN LENGTH AND SHALL BE SECURELY PLACED IN THE GROUND AT A DEPTH OF TWO (2) FEET. CARE SHALL BE TAKEN DURING INSTALLATION NOT TO DAMAGE ANY UNDERGROUND CONDUIT IN THE VICINITY. THE CONTRACTOR SHALL USE A TYPE 2 MARKER WHEN THE PATH OF THE FIBER CROSSES UNDERNEATH A ROADWAY AND WHEN CAPABLE SHALL PLACE A MARKER ON BOTH SIDES OF THE ROADWAY AT CROSSING. THE CONTRACTOR SHALL CONNECT TRACER WIRE TO TERMINAL AT TOP OF TYPE 2 MARKER. TYPE 1 MARKERS SHALL ONLY BE PLACED ON STRAIGHT FIBER RUNS BETWEEN PULL-BOXES IN THE SHOULDER AND THE CONTRACTOR SHALL BE LIMITED TO THE USE OF TYPE 1 MARKERS SO THAT A TYPE 2 MARKER SHALL BE PLACED BETWEEN ANY TWO (2) TYPE 1 MARKERS. TYPE 1 MARKERS SHALL NOT BE PLACED IN SUCCESSION DOWN A FIBER PATH.

THE MARKERS SHALL BE ORANGE IN COLOR AND SHALL HAVE THE FOLLOWING INFORMATION LOCATED ON THE UPPER PORTION OF THE MARKER IN A READABLE FORMAT:

WARNING
CONTACT OUPS 48 HRS BEFORE DIGGING
"NAME OF OWNING AGENCY" FIBER OPTIC CABLE
"OWNING AGENCY CONTACT #"

PAYMENT FOR ALL FIBER OPTIC CABLE MARKERS SHALL BE INCLUDED IN THE BID ITEM FOR THE FIBER OPTIC CABLE PAY ITEM.

ITEM 632E43300: SIGNAL CABLE, MISC.: CAT-6 STP

THIS ITEM SHALL MEET THE SPECIFICATIONS AS DESCRIBED IN SUPPLEMENTAL SPECIFICATION 809 AND SHALL BE MEASURED AND PAID FOR ACCORDING TO THE CONSTRUCTION AND MATERIAL SPECIFICATIONS ITEM 632 SIGNAL CABLE.

ITEM 632E69350: POWER CABLE, MISC.: 2 CONDUCTOR, NO. 12 AWG

FURNISH AND INSTALL ACCORDING TO THE CONSTRUCTION AND MATERIAL SPECIFICATIONS ITEM 632 POWER CABLE.

ITEM 632E90020: REMOVAL OF MISCELLANEOUS TRAFFIC SIGNAL ITEM: EXISTING CCTV ASSEMBLY

THIS ITEM SHALL INCLUDE REMOVAL OF EXISTING CCTV CAMERAS AS WELL AS ALL ASSOCIATED CONDUIT, CABLE, AND JUNCTION BOXES.

ITEM 632: REMOVAL OF MISCELLANEOUS TRAFFIC SIGNAL ITEM: EXISTING CCTV ASSEMBLY WILL BE PAID FOR AT THE CONTRACT UNIT PRICE FOR:

ITEM 632 EACH - REMOVAL OF MISCELLANEOUS TRAFFIC SIGNAL ITEM: EXISTING CCTV ASSEMBLY

ITEM 632E90400: SIGNALIZATION, MISC.: SECURITY CAMERA UNIT

SECURITY CAMERAS SHALL BE LOCATED, ONE EACH, IN THE TUNNEL CONTROL ROOM, ELECTRICAL ROOM AND FAN PLENUM. CAMERAS SHALL BE PAN/TILT/ZOOM DOME INDOOR UNITS AND SHALL INCLUDE CAMERA UNIT WITH COVER, CONDUIT BACK BOX, AND ANY NECESSARY MOUNTING BRACKETS AND HARDWARE. CAMERA UNITS MAY BE WALL OR CEILING MOUNTED. POWER (NON-POE) AND COMMUNICATION SHALL COME FROM THE TUNNEL CONTROL ROOM.

THE SECURITY CAMERA UNIT WILL BE CAPABLE OF INDIVIDUAL OR LOCAL CAMERA SITE CONTROL BY WAY OF A LAPTOP COMPUTER. COMMUNICATIONS TO THE IP-CAMERA WILL BE ETHERNET I/O PROTOCOL FOR REMOTE COMMUNICATIONS. THE LOCAL CAMERA CONTROL UNIT SHALL BE A UNIT CAPABLE OF PROVIDING PTZ CONTROL AND VIDEO LOCALLY AT THE TUNNEL CONTROL ROOM. THE SECURITY CAMERA UNIT WILL BE COMPATIBLE WITH MILESTONE CORPORATE MANAGEMENT SOFTWARE.

THE SECURITY CAMERA UNIT WILL INCLUDE, BUT NOT BE LIMITED TO, THE FOLLOWING COMPONENTS AND FEATURES:

- INDOOR VANDAL RESISTANT
- VIDEO RESOLUTION 1280 x 960, 1.3 MEGAPIXEL
- HDTV 720p, RGB CMOS 1/3" IMAGE SENSOR
- H.264 BASELINE AND MAIN PROFILE VIDEO COMPRESSION (MPEG-4 PARK 10/AVC), MOTION JPEG
- MULTIPLE, INDIVIDUALLY CONFIGURABLE VIDEO STREAMS IN H.264 AND MOTION JPEG
- 3-9 MM, 84-30 DEGREE VIEW, F1.2 LENS
- I/O PORTS
- WIDE DYNAMIC RANGE – DYNAMIC CAPTURE UP TO 120dB, COLOR: 0.5 LUX, F1.2, B/W: 0.08 LUX, F1.2
- 1/192 TO 1/37 SECOND SHUTTER WITH POWER LINE FREQUENCY 50 HZ, 1/231 TO 1/44 SECOND SHUTTER WITH POWER LINE FREQUENCY 60 HZ
- 25/30 FRAMES PER SECOND
- REMOTE BACK FOCUS
- REMOTE ZOOM, REMOTE FOCUS
- PAN 360 DEGREES, TILE 160 DEGREES, ROTATION 340 DEGREES
- TWO-WAY AUDIO
- CONFIGURABLE AUDIO COMPRESSION BIT RATE
- AUDIO INPUT/OUTPUT, EXTERNAL MICROPHONE
- VIDEO MOTION DETECTION
- ACTIVE TAMPERING ALARM
- VIDEO EVENT TRIGGERS
- EVENT FILE UPLOAD: FTP, HTTP, NETWORK AND EMAIL, NOTIFICATION VIA EMAIL, HTTP AND TCP
- PASSWORD PROTECTED
- COMMUNICATION CABLE SHALL BE CAT-6

SECURITY CAMERA UNITS SHALL BE MODEL P3384 FROM AXIS COMMUNICATIONS OR APPROVED EQUAL.

ADDITIONAL JUNCTION BOXES REQUIRED FOR SECURITY CAMERA INSTALLATION SHALL BE FURNISHED AND INSTALLED ACCORDING TO ITEM 625 JUNCTION BOX, 8"X8"X6". THE FOLLOWING QUANTITY HAS BEEN CARRIED TO THE GENERAL SUMMARY:

ITEM 625 JUNCTION BOX, 8"X8"X6" – 3 EACH

SECURITY CAMERA UNIT WILL BE PAID FOR AT THE CONTRACT UNIT PRICE FOR:

ITEM 632 SIGNALIZATION, MISC.: SECURITY CAMERA UNIT – 3 EACH

CALCULATED SJB
CHECKED CWP

GENERAL NOTES (ITS)

HAM-71-1.34

c:\pwworking\hmm\external\tyn61470\dms72726\87268TN101.dgn 10/24/2014 4:14:07 PM TYN61470

CALCULATED SJB
CHECKED CWP

ITEM 809 CCTV IP-CAMERA SYSTEM, TYPE HD WALL/ TUNNEL

GENERAL DESCRIPTION

CLOSED CIRCUIT TELEVISION (CCTV) STRUCTURE MOUNTED CAMERA ASSEMBLY, HEREAFTER REFERRED TO AS CCTV IP-CAMERA SYSTEM, TYPE HD WALL/TUNNEL, SHALL INCLUDE THE CAMERA, MOUNTING BRACKET, WALL MOUNT ARM ASSEMBLY, UNPRESSURIZED HOUSING, PTZ UNIT, CAMERA CONTROLLER, LOCAL CAMERA CONTROL UNIT, AND ALL MATERIALS, LABOR, WORKMANSHIP, EQUIPMENT, TESTING, DOCUMENTATION, AND INCIDENTAL ITEMS REQUIRED TO DELIVER A FULLY OPERATIONAL CCTV IP-CAMERA SYSTEM, TYPE HD WALL/TUNNEL IN ACCORDANCE WITH THESE SPECIAL PROVISIONS AND THE PLANS.

THE CONTRACTOR SHALL SUPPLY THE FOLLOWING SOFTWARE OPTIONS FOR THE MILESTONE CAMERA MANAGEMENT SOFTWARE WITH EACH CAMERA PROVIDED AND SHALL PROVIDE ALL LICENSING DOCUMENTATION TO THE ODOT TRAFFIC OPERATIONS ITS/SIGNALS SECTION (2 HARD-COPIES AND 1 ELECTRONIC COPY):

- ONE MILESTONE XPROTECT CORPORATE DEVICE CHANNEL PER CAMERA
- ONE MILESTONE FIVE YEAR PMA FOR XPROTECT CORPORATE DEVICE CHANNEL LICENSE PER CAMERA

FURNISH AND INSTALL ALL EQUPMENT PER ODOT SUPPLEMENTAL SPECIFICATION 809.05.

IP-CAMERA ASSEMBLY ELECTRICAL PROVISIONS

THE IP-CAMERA ASSEMBLY WILL BE FURNISHED WITH ANY AND ALL EQUIPMENT REQUIRED FOR A FULLY FUNCTIONAL SYSTEM, INCLUDING ALL APPROPRIATE POWER AND COMMUNICATION CABLES AS DEFINED BY THE MANUFACTURER. THE POWER CABLES WILL BE SIZED TO MEET THE APPLICABLE NATIONAL ELECTRICAL CODE (NEC) REQUIREMENTS. THE COMMUNICATION CABLES FROM THE IP-CAMERA ASSEMBLY TO THE NETWORK COMMUNICATION DEVICES WILL BE APPROPRIATE FOR THE TECHNOLOGY EMPLOYED (E.G., FIBER OPTIC, TWISTED PAIR,) AND WILL MEET THE MINIMUM SIZE AND/OR BANDWIDTH REQUIREMENTS DEFINED BY THE MANUFACTURER. THE EXTERIOR CAMERA CAT-6 STP OR EQUAL COMPOSITE CABLE WILL BE OUTDOOR NEC RATED AND ARMORED. ANY COUPLERS NEEDED TO CONNECT THE CCTV CAMERA TO THE ARMORED NETWORK CABLE SHALL BE CATEGORY 5 CERTIFIED, WEATHER-TIGHT, AND SHALL PROVIDE STRAIN-RELIEF FOR THE RJ45 CONNECTORS.

ALL DEVICES SUPPLIED AS SYSTEM COMPONENTS WILL ACCEPT, AS A PRIMARY POWER SOURCE, OF 120 VOLTS ALTERNATING CURRENT (VAC)/60 HERTZ (HZ) INPUT, EXCLUDING CAMERAS. ANY DEVICE THAT REQUIRES SOURCE INPUT OTHER THAN 120 VAC/60 HZ, SUCH AS CAMERAS, PTU'S, AND HEATERS/BLOWERS THAT OPERATE AT 24 VOLTS, WILL BE FURNISHED WITH THE APPROPRIATE MEANS OF CONVERSION.

CCTV ASSEMBLY, TYPE CONSTRUCTION PROVISIONS

FURNISH ALL TOOLS, EQUIPMENT, MATERIALS, SUPPLIES, AND MANUFACTURED ARTICLES, AND PERFORM ALL OPERATIONS AND EQUIPMENT INTEGRATION NECESSARY TO PROVIDE A COMPLETE, FULLY OPERATIONAL IPCAMERA SITE AS DEPICTED HEREIN, WITHIN THE PLAN SET, AND/OR IN THE CONTRACT.

PROVIDE THE DEPARTMENT WITH A WRITTEN INVENTORY BY LOCATION INCLUDING SERIAL NUMBERS OF ITEMS RECEIVED AND THE CONDITION IN WHICH THEY WERE RECEIVED. ONCE RECEIVED, THE EQUIPMENT BECOMES THE CONTRACTOR'S RESPONSIBILITY. PROVIDE ALL LABOR AND EQUIPMENT NECESSARY TO MOVE INVENTORY OUT OF THE DESIGNATED STORAGE FACILITY AND TO TRANSPORT IT TO THE INSTALLATION LOCATION. ALL ITEMS WILL BE INSTALLED IN ACCORDANCE WITH THE MANUFACTURER'S INSTRUCTIONS OR AS DIRECTED BY THE DEPARTMENT. IF IT IS DETERMINED THAT RADIO FREQUENCY INTERFERENCE (RFI) IS INDUCING NOISE AND DEGRADING THE QUALITY OF THE VIDEO IMAGES BEING TRANSMITTED BY THE IP-CAMERA ASSEMBLY OR ITS COMPONENTS, IF REQUIRED BY THE DEPARTMENT, FURNISH AND INSTALL FERRITE COILS OR OTHER RADIO FREQUENCY (RF) SUPPRESSION DEVICES FOR RFI DAMPENING. THIS INSTALLATION AND THE PLACEMENT OF THESE RF SUPPRESSION DEVICES WILL BE AS RECOMMENDED BY THE MANUFACTURER. THE FURNISHING AND INSTALLATION OF THESE DEVICES WILL BE AN ANCILLARY COST TO THE IP-CAMERA ASSEMBLY PAY ITEM.

VENDOR AND MANUAL PROVISIONS

SUPPLY A MINIMUM OF TWO DAYS OF TRAINING FOR OPERATIONS AND MAINTENANCE PERSONNEL REGARDING ALL FUNCTIONAL, OPERATIONAL, AND MECHANICAL ASPECTS OF THE IP-CAMERA ASSEMBLY AND THE SUPPORTING NETWORK COMMUNICATION DEVICES.

THE VENDOR SHALL SUPPLY TO ODOT COPIES OF THE COMPUTER SOFTWARE FOR SETUP, TESTING, AND CONTROL OF THE CCTV LOCALLY.

METHOD OF MEASUREMENT

MEASUREMENT OF CCTV IP-CAMERA SYSTEM, TYPE HD WALL/TUNNEL INCLUDES ALL MATERIALS AND WORK AS DESCRIBED WITHIN THIS SECTION THAT LEADS TO A COMPLETE INSTALLATION ACCEPTED BY THE ENGINEER.

BASIS OF PAYMENT

COMMUNICATION MUST BE COMPLETED AND ACCEPTED PRIOR TO FINAL PAYMENT OF THIS ITEM. CCTV IP-CAMERA SYSTEM, TYPE HD WALL/TUNNEL WILL BE PAID FOR AT THE CONTRACT UNIT PRICE FOR:

ITEM 809 EACH CCTV IP-CAMERA SYSTEM, TYPE HD WALL/TUNNEL

ITEM 809 ITS CABINET – GROUND-MOUNTED

FURNISH AND INSTALL ALL EQUIPMENT PER ODOT SUPPLEMENTAL SPECIFICATION 809.09.

1600 DISTRICT 8 (ITS) FIBER OPTIC CABLE GENERAL NOTE

THE FIBER TERMINATION PANEL ENCLOSURE SHALL CONSIST OF A SELF-CONTAINED ENCLOSURE INCLUDING LC STYLE FIBER OPTIC CONNECTORS FOR SINGLE-MODE AND ST STYLE FIBER OPTIC CONNECTORS FOR MULTI-MODE.

THE CABLE(S) ENTERING THE CABINET SHALL BE SECURED TO THE TERMINATION PANEL VIA AN EXTERNAL STRAIN RELIEF BRACKET.

THE FIBER TRUNK CABLES SHALL BE PULLED DIRECTLY INTO THE ITS CABINETS.

THE USE OF SPLICE ENCLOSURES IS PROHIBITED, EXCEPT AT THE DIRECTION/APPROVAL OF THE ODOT OFFICE OF TRAFFIC OPERATIONS.

1601 FIBER OPTIC SPLICE TRAYS AND ASSOCIATED CABINET WORK

SPLICE TRAYS SHALL BE ONE OF THE FOLLOWING TYPES, OR APPROVED EQUAL:

MANUFACTURER	MODEL	PART #
CORNING	UST-024	4A
3M	2425	80610616874
3M	2523	80610859912
TE CONNECTIVITY	FOSC	TYPE A
TE CONNECTIVITY	FOSC	TYPE B

ALL FIBER OPTIC CABLE, BUFFER TUBES, MTP PIGTAILS, PATCH CORDS, AND SPLICE TRAYS SHALL BE INSTALLED IN A NEAT AND ORDERLY FASHION AND SECURED TO ELIMINATE AND INTERFERENCE WITH THE REMOVAL, REPLACEMENT, OPERATION, AND MAINTENANCE OF ALL OTHER ITEMS LOCATED IN THE CABINET.

ALL PERMANENT SPLICING TO BE PERFORMED BASED ON FIBER TERMINATION DRAWINGS FOUND IN PLAN SET.

ALL OTHER SPECIFICATIONS INCLUDED IN THE ODOT SUPPLEMENTAL SPECIFICATIONS SECTION 804 & 904 SHALL BE ADHERED TO.

1602 FIBER OPTIC TERMINATION PANEL

THE TERMINATION PANEL SHALL HOUSE ALL FIBER OPTIC MTP PIGTAILS, FIBER OPTIC CONNECTORS, FIBER OPTIC PATCH CORDS, AND SPLICE TRAYS.

TERMINATION PANELS SHALL BE MOUNTED IN A LOCATION IN GROUND MOUNTED CABINETS SUCH THAT THE BOTTOM OF THE PANEL IS 36" FROM THE TOP OF THE CABINET RISER OR 48" FROM GROUND LEVEL.

ALL FIBER OPTIC MTP PIGTAILS, FIBER OPTIC CONNECTORS, FIBER OPTIC PATCH CORDS, SPLICE TRAYS, AND PIGTAIL FUSION SPLICES SHALL BE INCIDENTAL TO THE UNIT COST OF THE FIBER OPTIC TERMINATION PANEL. THE CONTRACTOR SHALL PROVIDE THREE METER PATCH CORDS OF THE APPROPRIATE FIBER TYPE AND FIBER CONNECTORS IN A QUANTITY THAT IS HALF OF THE NUMBER OF FIBER OPTIC CONNECTORS AVAILABLE ON THE TERMINATION PANEL, OR AS DIRECTED BY THE ENGINEER.

ALL OTHER SPECIFICATIONS INCLUDED IN THE ODOT SUPPLEMENTAL SPECIFICATIONS SECTION 804 & 904 SHALL BE ADHERED TO.

2200 DOWNTIME FOR ITS DEVICES

2200.0 GENERAL DESCRIPTION

THE FOLLOWING SPECIFIES THE DURATION ALLOWED FOR OUTAGES COMMUNICATION AND POWER FOR ITS DEVICES LOCATED THROUGHOUT THE STATE OF OHIO. THE CONTRACTOR SHALL BE REQUIRED TO ABIDE BY THESE MAXIMUM DOWNTIMES AND SHALL HAVE ADEQUATE MEANS TO ENSURE THAT ANY NECESSARY TEMPORARY LINES/DEVICES ARE INSTALLED PRIOR TO THE REMOVAL/DE-ENERGIZING OF ANY CABLE TO THE SPECIFIED DEVICE. THE ODOT OFFICE OF TRAFFIC OPERATIONS REQUIRES NOTIFICATION OF ANY OUTAGE A MINIMUM OF 7 WORKINGS DAYS IN ADVANCE SO THAT ANY ADDITIONAL WORK ON ODOT'S PART MAY BE COORDINATED. NOTIFICATION SHALL BE EMAILED TO CEN.FMS@DOT.STATE.OH.US. ODOT TRAFFIC OPERATIONS SHALL BE THE SOLE DETERMINING PARTY IN DEEMING IF A CIRCUMSTANCE IS UNUSUAL AND SHALL BE GRANTED ADDITIONAL DOWNTIME. ALL WORK SHALL BE PERFORMED ON THE WEEKEND, UNLESS IT HAS BEEN DETERMINED OTHERWISE BY ODOT TRAFFIC OPERATIONS.

GENERAL NOTES (ITS)

HAM-71-1.34

c:\pwworking\hmm\external\tyn61470\dms7726\87268TN102.dgn 10/24/2014 4:14:19 PM TYN61470

2200.2 CCTV CAMERAS:

CCTV CAMERAS SHALL BE LIMITED TO A DOWNTIME OF 72 HOURS. THE CONTRACTOR SHALL MAKE ARRANGEMENTS WHEN HAVING TO RELOCATE THESE DEVICES SO THAT THE NEW INFRASTRUCTURE IS IN PLACE BEFORE TAKING THE EXISTING SITE EQUIPMENT OFFLINE.

DISINCENTIVE: $400/DAY OR $17/HOUR – BEGINNING AFTER THE ALLOWABLE DOWNTIME

2200.7 FIBER OPTIC CABLE

ALL FIBER OPTIC CABLE SHALL BE LIMITED TO A 24 HOUR MAXIMUM DOWNTIME, EXCEPT THE 24 STRAND SINGLEMODE FIBER OPTIC CABLE LOCATED IN THE DISTRICT 6 REGION ALONG I-71 (DOWNTOWN TO THE NORTH OUTERBELT), WHICH SHALL BE LIMITED TO A MAXIMUM DOWNTIME OF 12 HOURS. ALL TEMPORARY FIBER OPTIC CABLE SHALL BE INSTALLED AND READY FOR SPLICING PRIOR TO ANY EXISTING FIBER OPTIC CABLES ON THE PROJECT BEING SEVERED. THE CONTRACTOR SHALL BE REQUIRED TO PROVIDE A TEMPORARY FIBER OPTIC CABLE HAVING THE EXACT SAME FIBER COUNT AND BUFFER TUBE ORIENTATION AS THE EXISTING, SO AS NOT TO CONFUSE ANY MAINTENANCE ACTIVITIES THAT MAY OCCUR DURING THE CONSTRUCTION PROJECT. ALL FIBERS OF THE TEMPORARY CABLE SHALL BE CORE-ALIGNED FUSION SPLICED TO THE LIKE FIBER (BUFFER-TUBE TO BUFFER-TUBE, COLOR TO COLOR) REGARDLESS IF THEY ARE ACTIVE.

DISINCENTIVE: $400/HOUR– BEGINNING AFTER THE ALLOWABLE DOWNTIME

c:\pwworking\hmm\external\tyn61470\dms72726\87268TN103.dgn 10/24/2014 4:14:34 PM TYN61470

CALCULATED SJB | CHECKED CWP

GENERAL NOTES (ITS)

HAM-71-1.34

ITEM NO.			625	625	625	625	625	625	625	625	625	625		632	632	632		809	809	
SHEET NO.	REFERENCE		CONDUIT, 1.5", 725.04	CONDUIT, 1.5", 725.051	CONDUIT, 4" MULTICELL, 725.20, EPC-40	TRENCH	TRENCH IN PAVED AREA, TYPE B	JUNCTION BOX, 6"x6"x3"	JUNCTION BOX, 8"x8"x6"	PULL BOX, 725.08, 18"	PULL BOX, 725.08, 32", AS PER PLAN	PLASTIC CAUTION TAPE		SIGNAL CABLE, MISC.: CAT6 STP	POWER CABLE, MISC.: 2 CONDUCTOR, NO. 12 AWG	REMOVAL OF MISC. TRAFFIC SIGNAL ITEM: EXISTING CCTV ASSEMBLY, APP		CCTV IP-CAMERA SYSTEM, TYPE HD, WALL/TUNNEL	ITS CABINET - GROUND-MOUNTED	
	FROM	TO	FT	FT	FT	FT	FT	EACH	EACH	EACH	EACH	FT		FT	FT	EACH		EACH	EACH	
	SOUTH PORTAL																			
168	WARNING SIGN	PB1	7				7			1		7			12					
168	PB1	PB2	39				39			1		39			44					
168	PB2	PB3	490							1					495					
181 - 182	PB3	JB1	3					1							4					
181 - 182	JB1	JB2	15					1							16					
181 - 182	JB2	JB3	10					1						6	6					
181 - 182	JB3	JB4 (CAMERA 1)	6					1						4	4	1		1		
181 - 182	JB2	JB5	96					1						49	96					
181 - 182	JB5	JB6		20					1					12	12					
181 - 182	JB6	JB7	10					1						6	6					
181 - 182	JB7	JB8 (CAMERA 2)	6					1						4	4	1		1		
181 - 182	JB6	JB9	52						1					54	54					
181 - 182	JB9	JB10	32						1					34	34					
181 - 182	JB10	PB4	14			7				1		7		10	24					
181 - 182	PB4	PB5	78			39					1	39		10	88					
179	EX CONTROLLER	PB5			16	7						7								
179	PB5	PROP CONTROLLER			10	9						9		15	56				1	
181 - 182	PB5	PB6	82			41				1		41		5	46					
181 - 182	PB6	JB11	12			6			1			6		1	7					
181 - 182	JB11	JB12	20			10			1			10		1	11					
181 - 182	JB12	JB13	30						1					16	16					
181 - 182	JB13	JB14	10						1					6	6					
181 - 182	JB14	JB15 (CAMERA 1)	6					1						4	4	1		1		
	MIDTUNNEL																			
179	CAMERA 1							1										1		
179	CAMERA 2							1										1		
179	CAMERA 3							1										1		
	NORTH PORTAL																			
180	EX CONTROLLER	PROP CONTROLLER			30	15						15							1	
180	PROP CONTROLLER	PB7			**12**	12					1	12		51	51					
180	PB7	PB8			**46**	46				1		46		153	153					
180	PB8	JB25	18			3			1			3		12	12					
184 - 185	JB25	JB26	90						1					60	60					
184 - 185	JB26	JB27	20					1						12	12					
184 - 185	JB27	JB28 (CAMERA 1)	6					1						4	4	1		1		
184 - 185	JB26	JB29	192						1					106	106					
184 - 185	JB29	JB30		8					1					6	6					
184 - 185	JB30	JB31	12					1												
184 - 185	JB31	PB9	3							1										
184 - 185	PB9	PB10	103							1										
184 - 185	PB10	OVERHEAD SIGN	7																	
184 - 185	JB30	JB32		12					1					8	8					
184 - 185	JB32	JB33	10					1						6	6					
184 - 185	JB33	JB34 (CAMERA 2)	6					1						4	4	1		1		
184 - 185	JB32	JB35	52					1						27	27					
184 - 185	JB35	JB36		10				1						6	6					
184 - 185	JB36	JB37	10					1						6	6					
184 - 185	JB37	JB38 (CAMERA 3)	6					1						4	4	1		1		
TOTALS CARRIED TO GENERAL SUMMARY			1553	50	114	195	46	20	12	8	2	241		702	1510	6		9	2	

CALCULATED SJT
CHECKED SJB

ITS SUBSUMMARY

HAM-71-1.34

c:\pwworking\hnm\external\tyf61470\dms72726\87268TS101.dgn 10/24/2014 4:14:39 PM TYf61470

CROSS REFERENCES	
SHEET NO.	DESCRIPTION
2-3	BENCHMARK AND REFERENCE POINTS
81-86	PLAN AND PROFILES
169-170	TRAFFIC CONTROL PLANS
178	ESTIMATED QUANTITIES
187 - 251	LIGHTING PLANS
475 - 484	CABLE AND CONDUIT SCHEDULES

LUDLOW STREET

ARCH STREET

4" EXISTING CONDUIT (TO REMAIN)

STA. 125+43.93 BACK = STA. 125+43.93 AHEAD, 6.76' RT

EXISTING PULL BOX (TO REMAIN)

4" EXISTING CONDUIT (TO REMAIN)

(2) 1.5" CONDUIT, 725.04, 12'

C-712 L-721

C-712 L-721

C-736 C-737

(2) 4" MULTI-CELL CONDUIT, 725.20, 8'

(2) 4" MULTI-CELL CONDUIT, 725.20, 5'

O-731 O-732

PROPOSED GROUND MOUNTED ITS CABINET WORK PAD AND PULL BOX STA. 125+27, 55.43' RT

(2) 1.5" CONDUIT, 725.04
(1) 2" CONDUIT, 725.04
(1) 2.5" CONDUIT, 725.04
39' EACH

SOUTH PORTAL CABINET

PB5

PB6

SOUTH PORTAL CAMERA 3
STA. 125+46, 1.08' LT
SEE SHEET 181/555

EXISTING CCTV CAMERA (TO BE REMOVED)

F-706 L-107

(2) 1.5" CONDUIT, 725.04, 41'

4" EXISTING CONDUIT (TO REMAIN)

EXISTING GROUND MOUNTED CCTV CABINET STA. 125+41 SB, 51.84' RT (TO REMAIN)

EXISTING GROUND MOUNTED FIBER CABINET STA. 126+76 NB, 62.20' LT (TO REMAIN)

(1) 2" CONDUIT, 725.04
(1) 2.5" CONDUIT, 725.04
12' EACH

(1) 2" CONDUIT, 725.04
(1) 2.5" CONDUIT, 725.04
41' EACH

(2) 4" EXISTING CONDUIT MOUNTED ON TUNNEL WALL (TO REMAIN)

LINCOLN STATUE

EAST FOURTH STREET

I.R.-71 SOUTHBOUND TUNNEL

℄ I.R.-71 SOUTHBOUND

TO CONTROL ROOM VIA PENETRATION #5 SEE SHEET 244/555

MID TUNNEL CAMERA 3
STA. 128+75, 1.77' LT
SEE SHEET 183/555

C-715 L-724

STA. 128+52.19 RAMP E = STA. 128+80.33, 6' LT ℄ NORTHBOUND I-71

℄ I.R.-71 NORTHBOUND

TO CONTROL ROOM VIA PENETRATION #9 SEE SHEET 242/555

MID TUNNEL CAMERA 2
STA. 130+65, 2.85' LT
SEE SHEET 183/555

I.R.-71 SOUTHBOUND RAMP E TUNNEL TO THIRD STREET

C-714 L-723

TO CONTROL ROOM VIA PENETRATION #3 SEE SHEET 242/555

F-705 L-108

C-713 L-722

MID TUNNEL CAMERA 1
STA. 130+90, 49.08' RT
SEE SHEET 183/555

MATCHLINE STA.131+50 (N.B.) SEE SHEET 180

STA. 126+86.50 BACK = STA. 126+86.50 AHEAD, 2.05' LT

℄ RAMP "E"

EXISTING PULL BOX (TO REMAIN)

EXISTING PULL BOX (TO REMAIN)

(2) 4" EXISTING CONDUIT (TO REMAIN)

(2) 4" EXISTING CONDUIT (TO REMAIN)

EXISTING CCTV CAMERA (TO BE REMOVED)

SOUTH PORTAL CAMERA 2
STA. 127+15, 2.00' LT
SEE SHEET 181/555

C-711 L-720

C-710 L-719

STRUCTURE NO. HAM-71-0134

EXISTING PULL BOX (TO REMAIN)

I.R.-71 NORTHBOUND TUNNEL

FOR CONDUIT SIZE, TYPE, AND LENGTH SEE SHEET 181/555

PROPOSED TRAFFIC CONTROL CONDUIT AND PULL BOX SEE SHEET 168

SOUTH PORTAL CAMERA 1
STA. 127+14, 50.61' RT
SEE SHEET 181/555

EXISTING CCTV CAMERA (TO BE REMOVED)

C-710 L-719

C-711 L-720

PB4

EXISTING PULL BOX (TO REMAIN)

STA. 126+77, 26.36' LT
125.08, 18"

PROPOSED ITS PULL BOX, PB4

STA. 125+35, 54.52' RT
125.08, 32"

PROPOSED ITS PULL BOX, PB5

STA. 125+37, 14.18' RT
125.08, 18"

PROPOSED ITS PULL BOX, PB6

LYTLE STREET

THIRD STREET

2-4" DUCTS

4-4" DUCTS

10-4" DUCTS

4½" & 12-2" DUCTS

8-4½" & 2-2" DUCTS

4-ABAND.

TYN61470

c:\pwworking\hmm\externol\tyn61470\dms72726\87268TP102.dgn 10/24/2014 4:14:43 PM

N

0 10 20 40 HORIZONTAL SCALE IN FEET

CALCULATED SJT CHECKED SJB

ITS PLAN

STA. 126+00 TO STA. 131+50 - I.R.-71

HAM-71-1.34

179 555

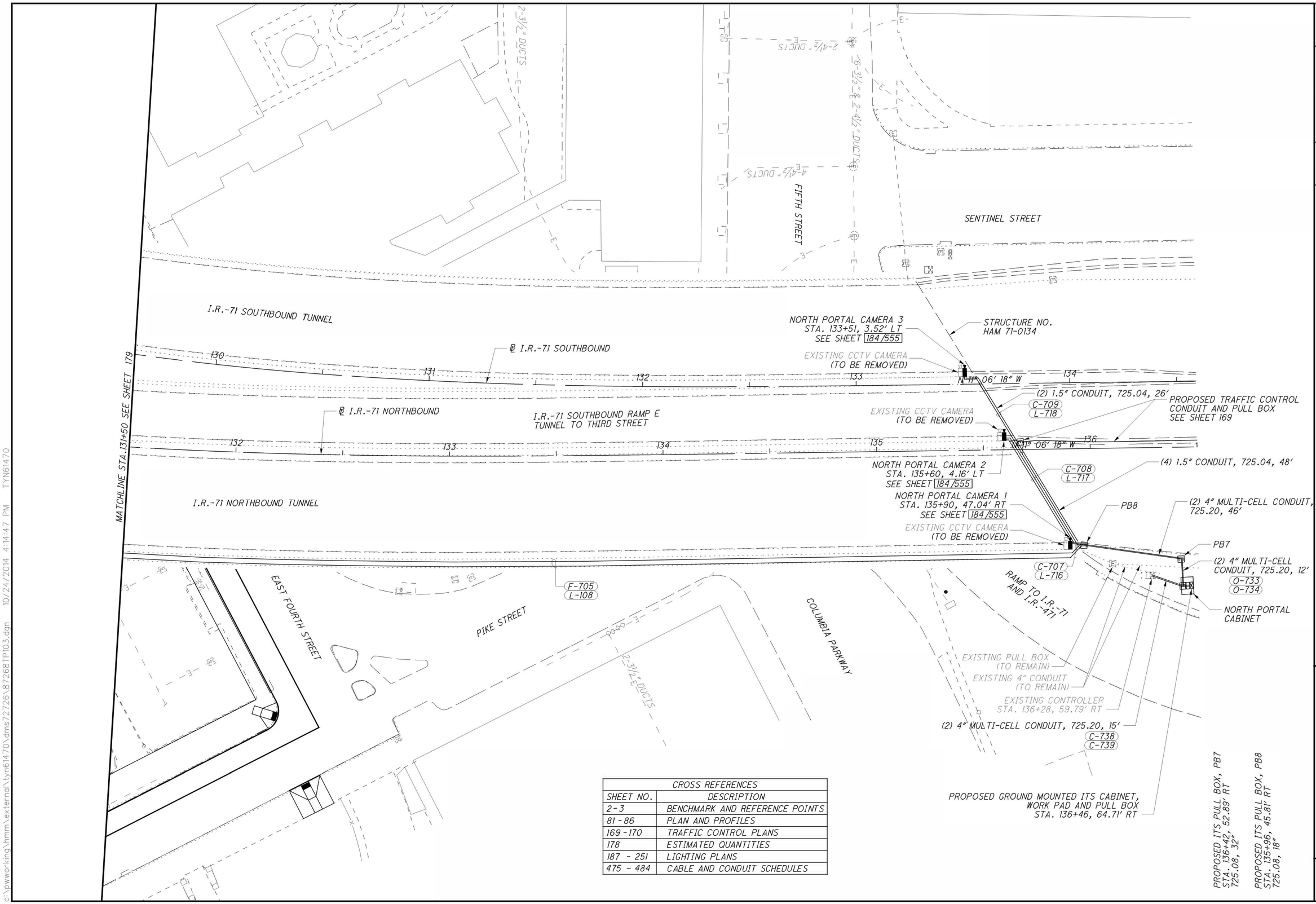

CROSS REFERENCES	
SHEET NO.	DESCRIPTION
2-3	BENCHMARK AND REFERENCE POINTS
81-86	PLAN AND PROFILES
169-170	TRAFFIC CONTROL PLANS
178	ESTIMATED QUANTITIES
187 - 251	LIGHTING PLANS
475 - 484	CABLE AND CONDUIT SCHEDULES

HORIZONTAL SCALE IN FEET
0 10 20 40

CALCULATED SJT
CHECKED SJB

ITS PLAN
STA. 131+50 TO STA. 136+50 - I.R.-71

HAM-71-1.34

180
555

c:\pwworking\hmm\external\tyn61470\dms72726\87268TP103.dgn 10/24/2014 4:14:47 PM TYN61470

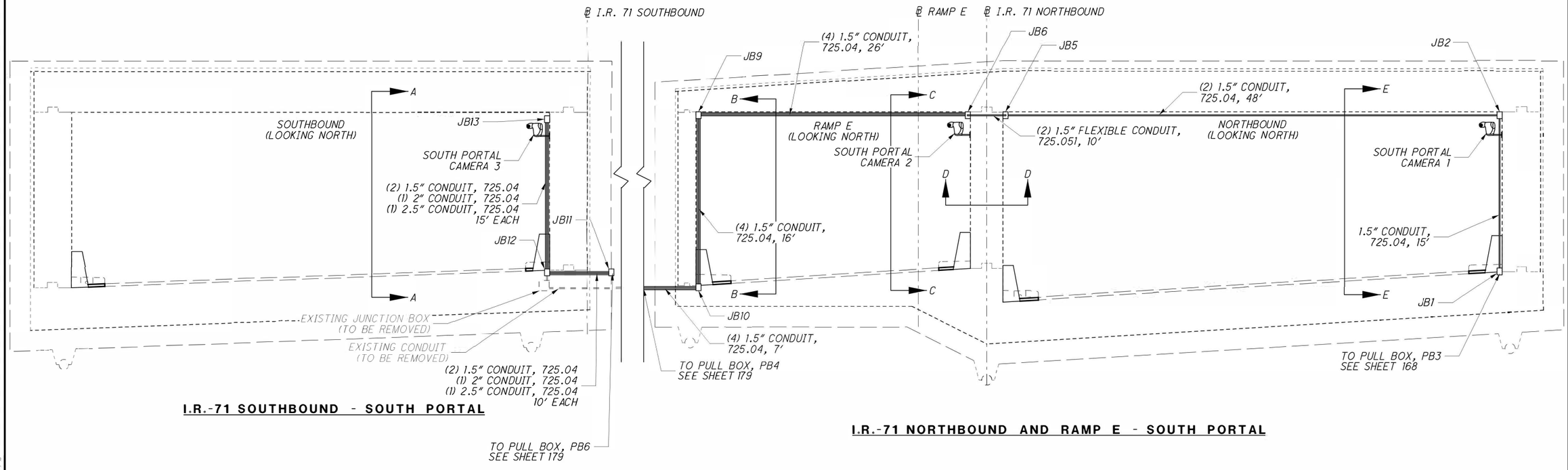

NOTES:

1. FOR SECTION DETAILS, SEE SHEET 182

CALCULATED SJT
CHECKED SJB

ITS DETAILS - SOUTH PORTAL

HAM-71-1.34

c:\pwworking\hmm\external\tyn61470\dms72726\87268TD101.dgn 10/24/2014 4:14:49 PM TYN61470

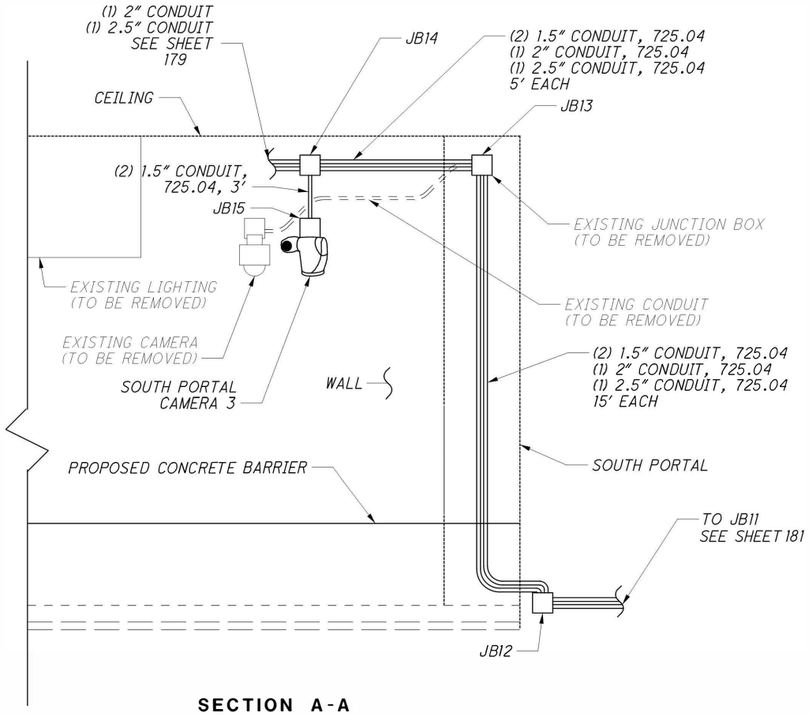

SECTION A-A

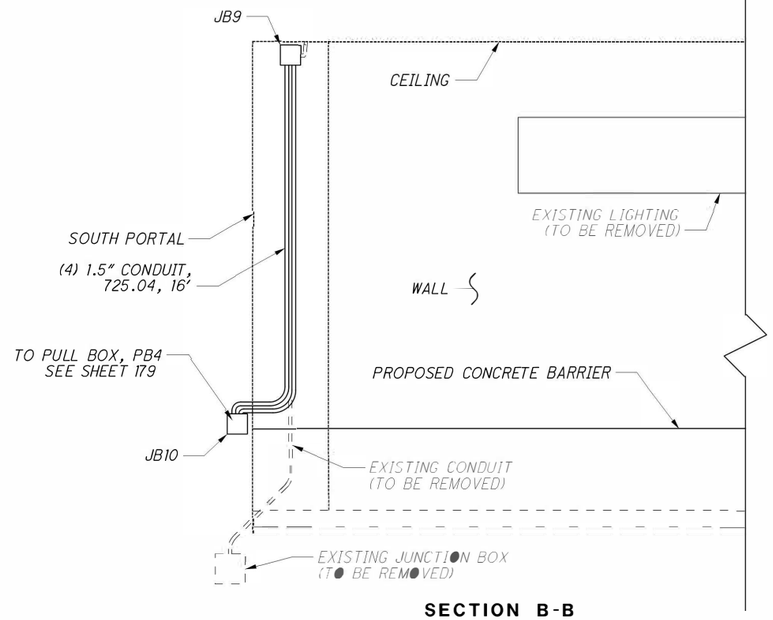

SECTION B-B

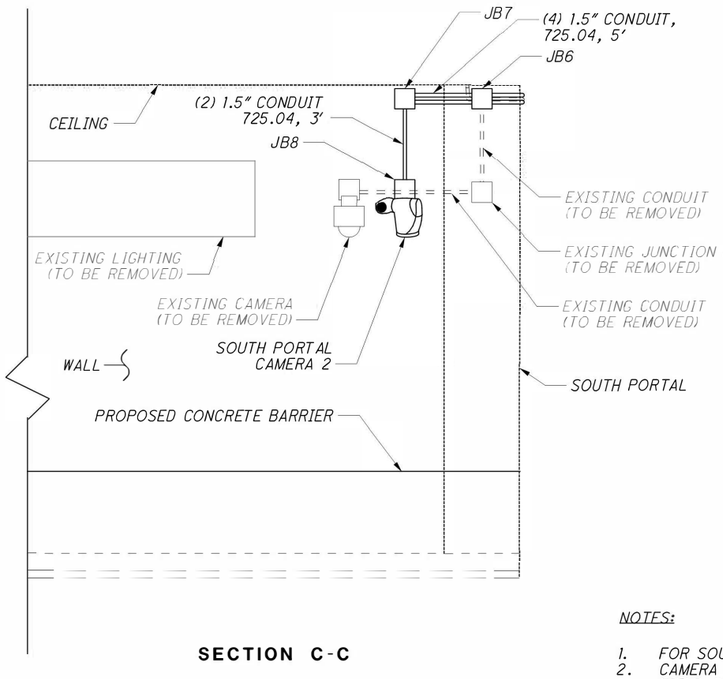

SECTION C-C

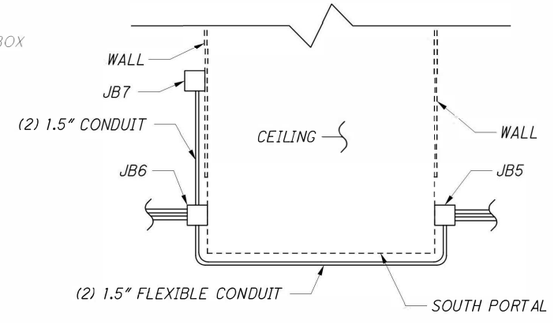

SECTION D-D

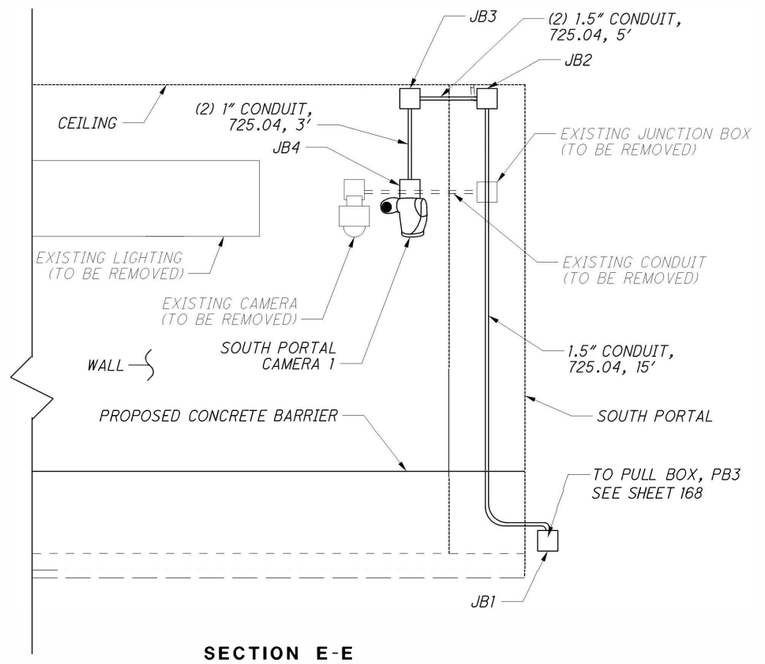

SECTION E-E

NOTES:

1. FOR SOUTH PORTAL DETAILS, SEE SHEET 181
2. CAMERA MOUNTING HEIGHTS SHALL BE DETERMINED BASED ON MAXIMIZING THE FIELD OF VIEW. CAMERAS SHALL BE MOUNTED AT LEAST AS HIGH AS EXISTING CAMERAS.

CALCULATED SJT
CHECKED SJB

ITS DETAILS - SOUTH PORTAL

HAM-71-1.34

c:\pwworking\hmm\external\tyn61470\dms72726\87268TD102.dgn 10/24/2014 4:14:51 PM TYN61470

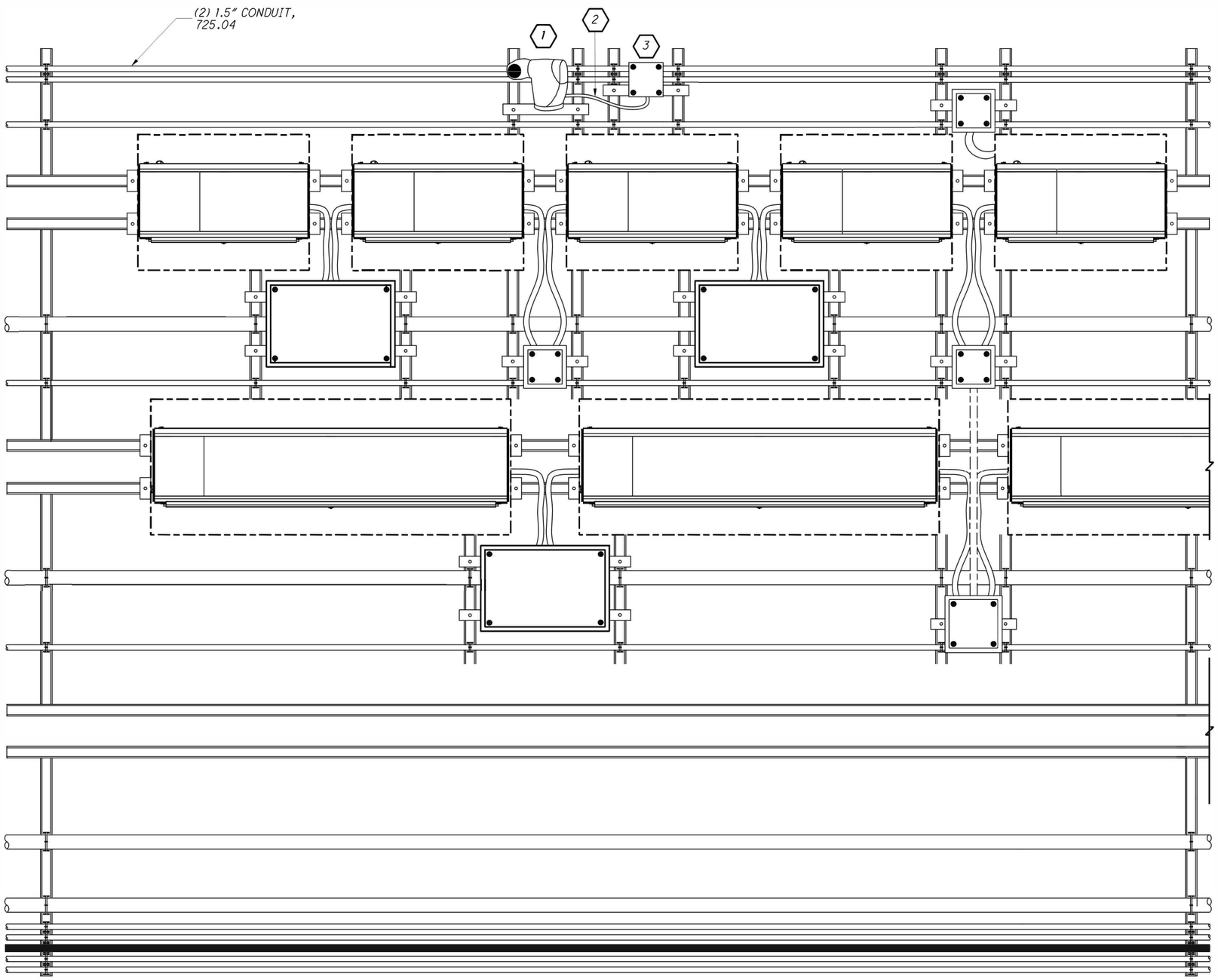

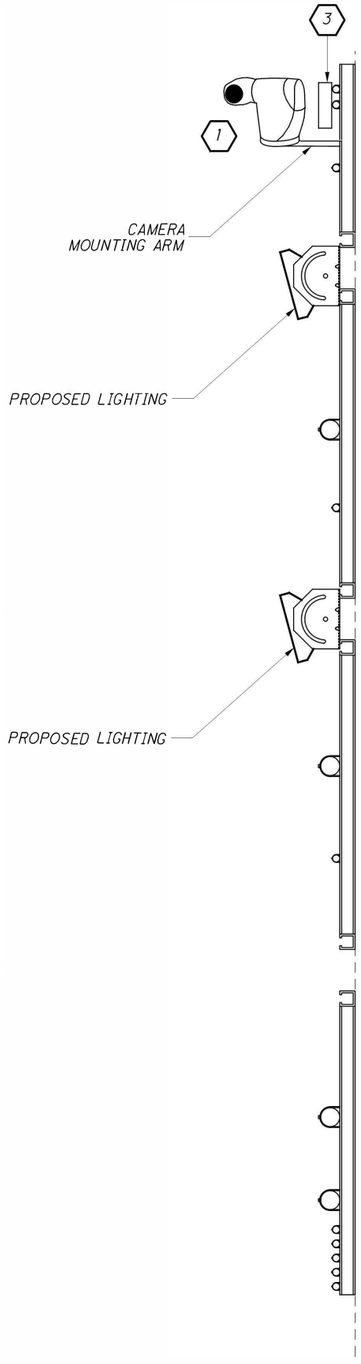

NOTES:

1. MID TUNNEL CAMERA. FOR ADDITIONAL CAMERA DETAILS, SEE SHEETS 175 THROUGH STN104
2. FLEXIBLE CONDUIT SHALL BE USED FOR CONNECTIONS BETWEEN JUNCTION BOXES AND CAMERAS
3. CAMERA JUNCTION BOX, 6"x6"x3" (TYP.)
4. MID TUNNEL CAMERAS SHALL BE MOUNTED BETWEEN TUNNEL CEILING AND TOP ROW OF LIGHT FIXTURES
5. DETAIL ABOVE INDICATES A TYPICAL MOUNTING ARRANGEMENT FOR MID TUNNEL CAMERAS
6. FOR LIGHTING MOUNTING HEIGHTS, SEE SHEET 187
7. FOR LIGHTING MOUNTING DETAILS, SEE SHEET 238

TYPICAL SECTION VIEW OF MID TUNNEL EAST WALLS (LOOKING NORTH)

CALCULATED SJT
CHECKED SJB

ITS DETAILS - MID TUNNEL

HAM-71-1.34

c:\pwworking\hmm\external\tyn6147O\dms72726\87268TD104.dgn 10/24/2014 4:14:53 PM TYN6147O

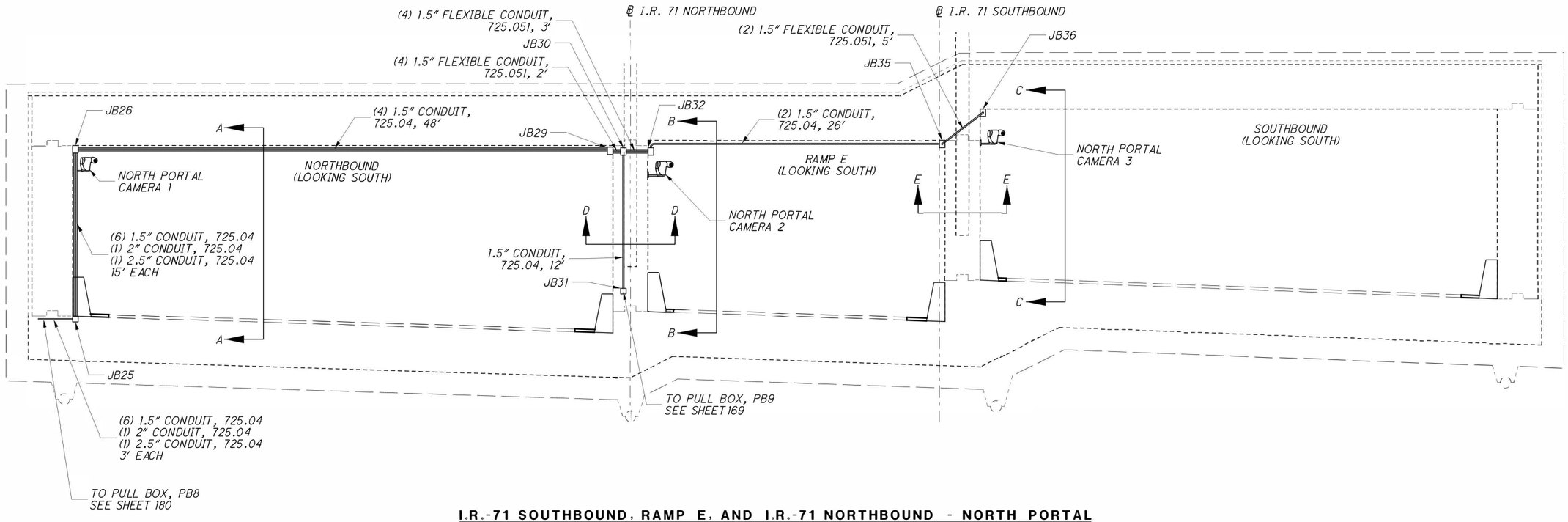

I.R.-71 SOUTHBOUND, RAMP E, AND I.R.-71 NORTHBOUND - NORTH PORTAL

NOTES:

1. *FOR SECTION DETAILS, SEE SHEET 185*

CALCULATED SJT
CHECKED SJB

ITS DETAILS - NORTH PORTAL

HAM-71-1.34

184
555

c:\pwworking\hmm\external\tyn61470\dms72726\87268TD105.dgn 10/24/2014 4:14:55 PM TYN61470

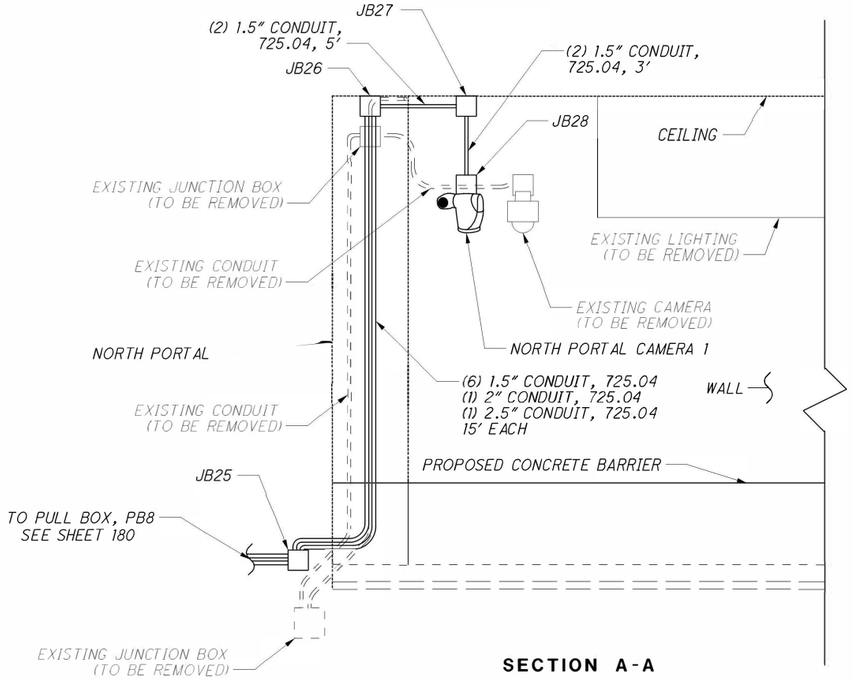

SECTION A-A

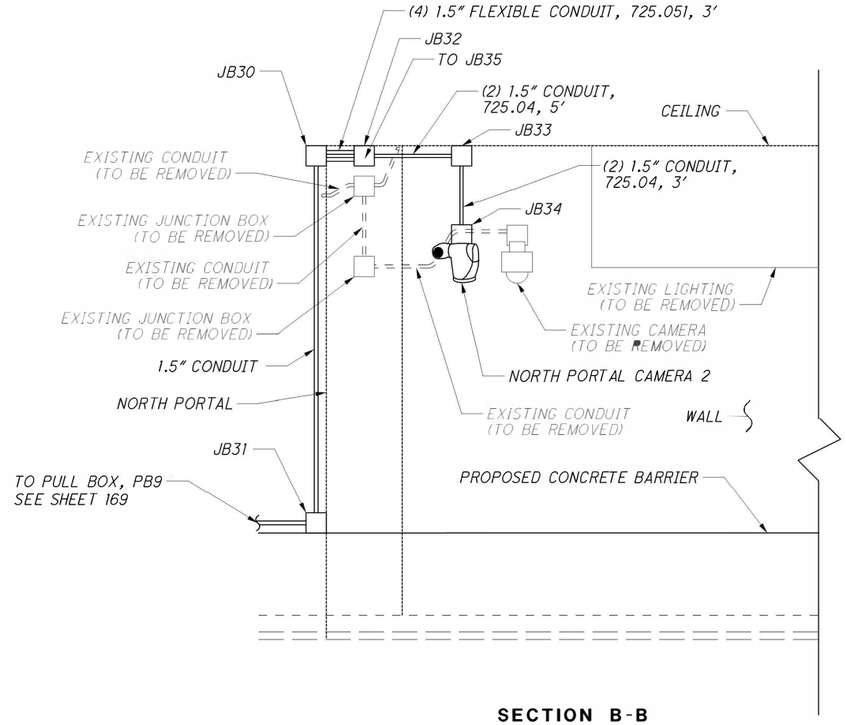

SECTION B-B

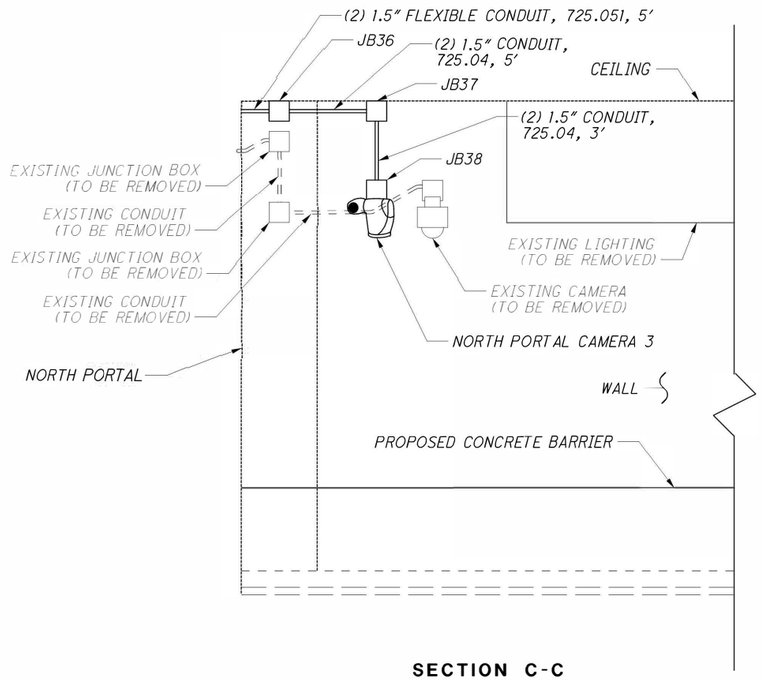

SECTION C-C

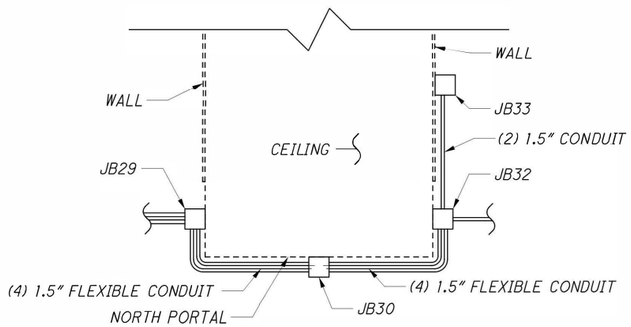

SECTION D-D

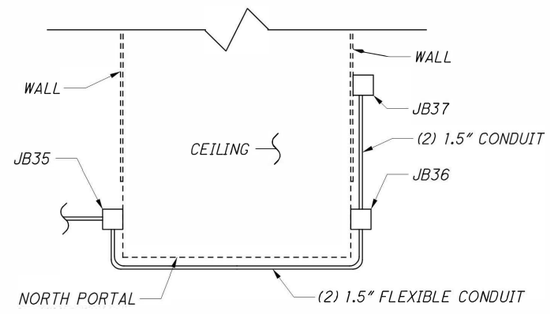

SECTION E-E

NOTES:
1. FOR SOUTH PORTAL DETAILS, SEE SHEET 184
2. FOR CAMERA MOUNTING NOTES, SEE SHEET 182

CALCULATED SJT
CHECKED SJB

ITS DETAILS - NORTH PORTAL

HAM-71-1.34

185
555

c:\pwworking\hmm\external\tyn61470\dms72726\87268TD106.dgn 10/24/2014 4:14:57 PM TYN61470

ITEM 625 - PULL BOX, 725.08, 32", AS PER PLAN

32" ROUND PULL BOX DETAIL

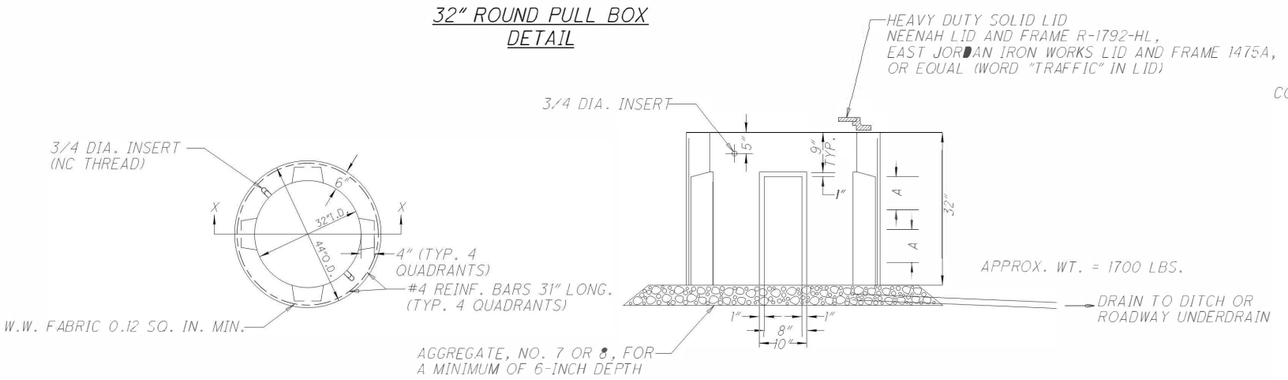

PLAN VIEW **SECTION X-X**

32" PULL BOX PAD

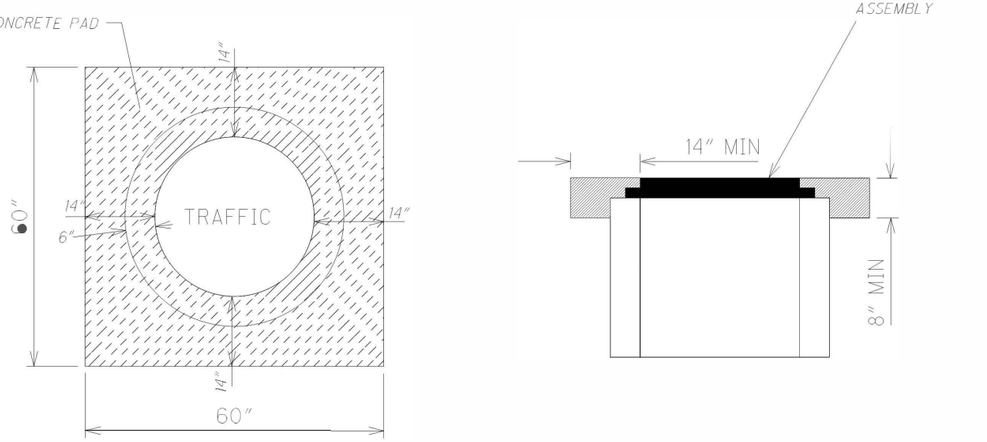

TOP VIEW **SIDE VIEW**

32" ROUND PULL BOX NOTES:

1. "A" CUT OUT 4 WIRES IN THE AREA OF THE REDUCED WALL SECTION. ALSO INCLUDE THE VERTICAL WIRE FOR REMOVAL.

2. CONCRETE COMP. STRENGTH 4000 PSI MIN. DESIGN

3. CONCRETE AIR ENTRAINMENT TO BE 6% + 1 1/2%

4. COATING OF PROTECTIVE ACRYLIC IS TO BE APPLIED TO THE TOP OF 12" OF THE OUTSIDE FACE AND TOTAL INSIDE FACE.

5. LID RING LOAD TRANSFER IS TO BE DISTRIBUTED BY THE USE OF A PREFORMED MOSTIC JOIN MATERIAL.

6. EACH PULL BOX SHALL HAVE A DRAIN, INDEPENDENTLY DRAINING TO A DITCH OR TO A ROADWAY UNDERDRAIN (SHOWN IN STANDARD CONSTRUCTION DRAWING HL-30.11).

7. SLOPE THE PROPOSED 4" RACEWAY (PVC CONDUIT) TO DRAIN INTO 32" PULL BOX ON EITHER SIDE OF THE FREEWAY SHOULDER, WHERE APPLICABLE. THE 4" CONDUIT SHALL REMAIN ABOVE THE UNDERDRAIN.

8. MINIMUM BEND RADIUS OF 4-INCH PVC IS 24 INCHES.

9. CONTRACTOR SHALL INSTALL A PULL BOX PAD AS DETAILED ON THIS PAGE. THE PULL BOX PAD SHALL BE INCIDENTAL TO THIS PAY ITEM AND WILL NOT BE PAID FOR SEPARATELY.

CONTRACTOR SHALL MAKE NECESSARY PROVISIONS TO ENSURE THAT THE LID AND RING (FRAME ASSEMBLY) ARE SECURE BEFORE POURING CONCRETE. EXPANSION MATERIAL SHALL BE PLACED BETWEEN LID AND RING (FRAME ASSEMBLY). CONTRACTOR SHALL INSPECT THE FRAME ASSEMBLY FOR ANY DEFICIENCIES AND/OR VOIDS PRIOR TO POURING CONCRETE. ALL VOIDS SHALL BE FILLED PRIOR TO POURING PAD. ALL DEFICIENCIES SHALL BE REPORTED TO ODOT PERSONNEL ON SCENE SO THAT PROMPT CORRECTIONS CAN BE MADE. WORKPAD SHALL BE SLOPED SO THAT ALL SIDES ARE EVEN WITH THE GROUND. CONTRACTOR SHALL ENSURE THAT ALL DEBRIS AND EXCESS CONCRETE IS REMOVED FROM THE INSIDE OF THE RING SO THAT THE LID CAN BE EASILY BE REMOVED AND REPLACED.

CALCULATED SJT
CHECKED SJB

PULL BOX AND CONDUIT DETAIL

HAM-71-1.34

c:\pwworking\hmm\external\tyn61470\dms72726\87268TD107.dgn 10/24/2014 4:14:59 PM TYN61470

ITEM 625 - TUNNEL LIGHTING

PART 1 – GENERAL

1.01 SECTION INCLUDES

A. REQUIREMENTS FOR THE CONTRACTOR TO PROVIDE:
   1. TUNNEL LUMINAIRES WITH LED LAMPS AND DRIVERS.
   2. TUNNEL LIGHTING CONTROL SYSTEM TO BE INTEGRATED INTO THE PROPOSED SCADA SYSTEM.
   3. POLE-MOUNTED PHOTOMETERS.

B. WORK SHALL INCLUDE SUPPLY, INSTALLATION, TESTING AND COMMISSIONING OF A COMPLETE LIGHTING SYSTEM WITHIN THE TUNNEL: FIXTURES AND DRIVERS, WIRING CONDUCTORS AND CONDUITS, JUNCTION AND PULL BOXES, SUPPORTS, BRACKETS, PANELBOARDS, LIGHTING CONTROL SYSTEMS INCLUDING PHOTOMETERS AND INTEGRATION WITH THE PROPOSED SCADA SYSTEM.

C. CALCULATIONS TO VERIFY THAT THE LUMINANCE AND UNIFORMITY LEVELS CONFORM TO DESIGN REQUIREMENTS AND ARE IN ACCORDANCE WITH ANSI/IES RP-22-11.

D. INDEPENDENT LABORATORY FACTORY PERFORMANCE AND FIELD VERIFICATION TESTING.

E. SUBMITTAL OF SHOP DRAWINGS, TEST REPORTS, SAMPLES AND OTHER ITEMS AS INDICATED HEREIN.

1.02 STANDARDS

A. AMERICAN NATIONAL STANDARDS INSTITUTE (ANSI)

B. AMERICAN SOCIETY FOR TESTING AND MATERIALS (ASTM)

C. ILLUMINATING ENGINEERING SOCIETY (IES) RP-22, STANDARD PRACTICE FOR TUNNEL LIGHTING

D. INTERNATIONAL ELECTROTECHNICAL COMMISSION (IEC)

E. NATIONAL ELECTRICAL MANUFACTURERS ASSOCIATION (NEMA).

F. NATIONAL FIRE PROTECTION ASSOCIATION (NFPA)
   1. 70, NATIONAL ELECTRICAL CODE, 2014.
   2. 70E, STANDARD FOR ELECTRICAL SAFETY IN THE WORKPLACE, 2012.
   3. 502, STANDARDS FOR ROAD TUNNELS, BRIDGES, AND OTHER LIMITED ACCESS HIGHWAYS, 2014.

G. UNDERWRITERS' LABORATORIES, INC. (UL)

1.04 SUBMITTALS

A. PRODUCT DATA

B. SHOP DRAWINGS AND AS BUILT DRAWINGS: INCLUDE PLANS, ELEVATIONS, SECTIONS, DETAILS AND ATTACHMENTS TO OTHER WORK, WIRING DIAGRAMS

C. PROVIDE COMPLETE OPERATIONS AND MAINTENANCE INSTRUCTION MANUALS AND ENGINEERING SERVICES FOR INITIAL AND CONTINUING SET-UP OF TUNNEL LIGHTING CONTROL SYSTEM, INCLUDING TRAINING OF TUNNEL OPERATION PERSONNEL.

D. PROVIDE OPERATION AND MAINTENANCE MANUALS FOR THE COMPLETE TUNNEL LIGHTING SYSTEM.

E. INCLUDE PHOTOMETER POLE AND SUPPORT COMPONENT CERTIFICATES SIGNED BY MANUFACTURERS

F QUALIFICATION DATA FOR QUALIFIED AGENCIES PROVIDING PHOTOMETRIC DATA FOR LIGHTING FIXTURES.

G. FIELD QUALITY-CONTROL REPORTS.

H. WARRANTY: SAMPLE OF SPECIAL WARRANTY.

I. FURNISH EXTRA MATERIALS THAT MATCH PRODUCTS INSTALLED AND THAT ARE PACKAGED WITH PROTECTIVE COVERING FOR STORAGE AND IDENTIFIED WITH LABELS DESCRIBING CONTENTS.

J. ALL FACTORY ACCEPTANCE TESTING AND SITE ACCEPTANCE TEST CERTIFICATES

K. COMPREHENSIVE LIST OF ALL COMPONENTS

L. RECOMMENDED LIST OF SPARE PARTS

M. SET OF MANUFACTURER'S DESCRIPTIVE LITERATURE OF ALL ELECTRICAL COMPONENTS

N. UL LISTING

PART 2 – PRODUCTS – LED LUMINAIRES

2.01 GENERAL

A. LED LUMINAIRE PRODUCTS: SUBJECT TO COMPLIANCE WITH REQUIREMENTS, MODEL NUMBERS AS PER TUNNEL LIGHTING SCHEDULE:

1. HOLOPHANE.
   a. TYPE "A" – TUNNELPASS 79W
   b. TYPE 'B" – TUNNELPASS 365W
   c. TYPE "C" – TUNNELPASS 157W
   d. TYPE "D" – TUNNELPASS 365W
   e. TYPE "E" – TUNNELPASS 79W
   f. TYPE "F" – TUNNELPASS 365W

2. SCHREDER.
   a. TYPE "A" – FV-32 74W
   b. TYPE 'B" – FV-32 270W
   c. TYPE "C" – FV-32 135W
   d. TYPE "D" – FV-32 270W
   e. TYPE "E" – FV-32 74W
   f. TYPE "F" – FV-32 270W

3. KENALL.
   a. TYPE "A" – LUXTRAN LTSI 104W
   b. TYPE 'B" – LUXTRAN LTSI 216W
   c. TYPE "C" – LUXTRAN LTSI 104W
   d. TYPE "D" – LUXTRAN LTSI 310W
   e. TYPE "E" – LUXTRAN LTSI 104W
   f. TYPE "F" – LUXTRAN LTSI 216W

4. OR APPROVED EQUAL.

B. TUNNEL LIGHTING CONTROL PRODUCTS: SUBJECT TO COMPLIANCE WITH REQUIREMENTS,
   1. PLC MULTIPOINT, INC, EVERETT WA – T51 SERIES TUNNEL CONTROLLER.
   2. NYX-HEMERA, QUEBEC CANADA.
      OR APPROVED EQUAL.

2.02 TUNNEL LUMINAIRES

A. THIS SECTION IS APPLICABLE TO LED TUNNEL LUMINAIRES.

B. ALL LUMINAIRES, COMPLETE WITH THE ASSOCIATED COMPONENTS REQUIRED, MUST PROVIDE SAFE OPERATION AND MAINTENANCE.

C. ALL ASSOCIATED SUPPORTS, HANGERS, BRACKETS AND FIXINGS NECESSARY TO SUPPORT THE LUMINAIRES.

D. LUMINAIRES SHALL COMPLY WITH UL 1598 AND BE LISTED AND LABELED FOR INSTALLATION IN WET LOCATIONS BY A NATIONALLY RECOGNIZED TESTING LABORATORY (NRTL) ACCEPTABLE TO AUTHORITIES HAVING JURISDICTION. LUMINAIRES SHALL BE UL 1598 LISTED FOR THE LOCATION AND APPLICATION INDICATED.

E. LOCATIONS OF LUMINAIRES ARE SHOWN DIAGRAMMATICALLY ON THE DRAWINGS; CONTRACTOR TO VERIFY EXACT LOCATIONS AND NOTIFY THE ENGINEER ABOUT FIELD CONDITIONS AT VARIANCE WITH PLANS BEFORE INSTALLATION OF LUMINAIRES. NO OTHER MODIFICATIONS WILL BE CONSIDERED.

F. THE LUMINAIRES SHALL BE INSTALLED AT A FIXED HEIGHT BELOW THE CEILING LEVEL OF EACH TUNNEL ALLOWING SUFFICIENT SPACE FOR MOUNTING HARDWARE, CONDUITS AND JUNCTION BOXES. THE CENTERLINE OF EACH ROW SHALL BE INSTALLED AT THE FOLLOWING DISTANCES BELOW CEILING LEVEL:

   1. TOP ROW 2' - 4"
   2. MIDDLE ROW 5' – 6"
   3. BOTTOM ROW 8' – 8"

MOUNTING HEIGHTS MAY BE ADJUSTED DEPENDING ON THE LUMINAIRE SELECTED, SUBJECT TO ENGINEERS APPRROVAL OF A ROADWAY LUMINANCE STUDY CARRIED OUT IN COMPLIANCE WITH RP-22-11.

G. THE LUMINAIRES SHALL HAVE AN INGRESS PROTECTION OF IP66 OR BETTER AND BE SUITABLE FOR WET LOCATIONS (NEMA 4X). THE LUMINAIRES SHALL BE RATED TO WITHSTAND THE CORROSIVE ATMOSPHERE OF THE ROAD TUNNEL CAUSED BY VEHICLE EXHAUST EMISSIONS AND ROAD SALTS.

H. ALL TUNNEL LUMINAIRES SHALL BE FREE OF LIGHT LEAKS AND SHALL BE DESIGNED TO PROVIDE SUFFICIENT HEAT DISSIPATION FOR LAMPS AND DRIVERS FOR THE INTENDED MOUNTING APPLICATION AND LOCATIONS.

I. METAL PARTS: FREE OF BURRS AND SHARP CORNERS AND EDGES.

J. THE HOUSING SHALL BE OF ALUMINUM ALLOY OR STAINLESS STEEL CONSTRUCTION AND SHALL BE DESIGNED TO PREVENT ACCUMULATION OF DIRT AND TO FACILITATE CLEANING BY THE TUNNEL WASHING MACHINE. DURABLE FINISHES SHALL BE PROVIDED TO ALL METALWORK TO RESIST MECHANICAL STRESS DUE TO MOISTURE, TRAFFIC EXHAUST FUMES

K. THE LUMINAIRE HARDWARE MATERIAL AND SUPPORT BRACKET SHALL BE DESIGNED TO AVOID THE CONTACTS BETWEEN DISSIMILAR METALS TO AVOID THE FORMATION OF ELECTROLYTIC CORROSION. NEOPRENE PADS, ISOLATION WASHERS OR GASKETS SHALL BE USED TO SEPARATE ANY DISSIMILAR METALS SUBJECTED TO CORROSION BY GALVANIC ACTION. THIS INCLUDES ANY AND ALL LOCATIONS WHERE THE STAINLESS STEEL HARDWARE MAY COME INTO CONTACT WITH THE ALUMINUM FIXTURE HOUSING. THE SUPPLIER SHALL OBTAIN APPROVAL OF THE MOUNTING ARRANGEMENT WITH THE ENGINEER.

L. FERROUS MOUNTING HARDWARE AND ACCESSORIES SHALL BE FINISHED USING EITHER A GALVANIC OR PHOSPHATE PRIMER AND BAKED PAINT PROCESS, UNLESS OTHERWISE NOTED.

M. PLASTIC PARTS: NO PLASTIC OR MATERIALS THAT EMIT TOXIC SMOKE UNDER FIRE CONDITIONS SHALL BE PERMITTED.

N. THE REFLECTOR FIXING SHALL BE ARRANGED FOR QUICK ACCESS WITHOUT THE NEED FOR ADDITIONAL HAND TOOLS TO ACCESS THE GEAR TRAY.

O. A MECHANISM SHALL BE PROVIDED TO PREVENT THE FRAME INADVERTENTLY FALLING ON THE ROAD DURING COMPONENT REPLACEMENT OR CLEANING.

P. LIGHT SHIELDS: METAL BAFFLES, FACTORY INSTALLED AND FIELD ADJUSTABLE, ARRANGED TO BLOCK LIGHT DISTRIBUTION TO INDICATED PORTION OF NORMALLY ILLUMINATED AREA OR FIELD.

Q. GLASS FOR LENSES SHALL BE OF TEMPERED BOROSILICATE ROLLED GLASS, MINIMUM 1/4 INCH THICK UNLESS OTHERWISE NOTED.

R. LENSES AND REFRACTORS GASKETS: USE HEAT- AND AGING-RESISTANT RESILIENT GASKETS TO SEAL AND CUSHION LENSES AND REFRACTORS IN LUMINAIRE DOORS. THE GASKETS SHALL BE OF THE HIGH TEMPERATURE TYPE WHICH RESISTS PERMANENT DEFORMATION, FORMED FROM SILICONE RUBBER OR AS INDICATED.

S. A PLUG AND RECEPTACLE DISCONNECT DEVICE SHALL BE PROVIDED TO ALLOW GEAR TRAY OR LED DRIVER REMOVAL WITHOUT DISCONNECTING ANY WIRES.

T. FACTORY-APPLIED LUMINAIRE LABELS: INCLUDE MANUFACTURER'S NAME AND CATALOG NUMBER, VOLTAGE, AND LABEL FOR INTENDED USE (WET LOCATION, OUTDOOR USE). LABELS SHALL BE LOCATED WHERE THEY WILL BE

c:\pwworking\hmm\external\tyn61470\dms72803\8726ELN001.dgn 10/24/2014 12:30:22 PM TYN61470

READILY VISIBLE TO SERVICE PERSONNEL, BUT NOT SEEN FROM NORMAL VIEWING ANGLES WHEN LAMPS ARE IN PLACE.

U. LUMINAIRE GROUNDING: UNLESS OTHERWISE SPECIFIED, PROVIDE THE HOUSING OF EACH LUMINAIRE WITH A SEPARATE, FACTORY INSTALLED GROUNDING DEVICE. THE GROUNDING DEVICE SHALL BE USED FOR CONNECTING A SEPARATE GROUNDING CONDUCTOR TO THE LUMINAIRE HOUSING.

2.03 LED LUMINAIRES SPECIFICATIONS

A. LED MANUFACTURER SHALL HAVE A MINIMUM OF FOUR YEARS EXPERIENCE IN PROVIDING ROAD TUNNEL LUMINAIRES.

B. LED MANUFACTURER SHALL HAVE A MINIMUM OF 15 YEARS EXPERIENCE IN PROVIDING LEDS.

C. LED SHALL MEET THE FOLLOWING REQUIREMENTS:
1. MINIMUM OF 150,000H AT 70% OF INITIAL LUMEN OUTPUT.
2. COLOR RATED TEMPERATURE (CCT) 4000K (+/- 500K).
3. MINIMUM COLOR RENDERING INDEX (CRI) 70.

D. LED DRIVERS SHALL MEET THE FOLLOWING REQUIREMENTS:
1. MINIMUM 90% EFFICIENCY.
2. MINIMUM 90% POWER FACTOR AT ALL DRIVER CURRENTS.
3. UNIVERSAL 277V-480V (NOMINAL) VOLTAGE TO ACCOMMODATE THE POTENTIAL LOSS OF NEUTRAL ON A 277V SYSTEM.
4. 0-10V DIMMING VOLTAGE.
5. UL RATED 1012 CLASS A SOUND RATING.
6. MINIMUM OPERATING TEMPERATURE MINUS 40 DEGREES F, MAXIMUM +131 DEGREES F (MINUS 40 DEGREES C, MAXIMUM +50 DEGREES C).
7. LIFE EXPECTANCY 100,000H AT 65 DEGREES C CASE TEMPERATURE.
8. MAXIMUM TOTAL HARMONIC DISTORTION (THD) 20% OF FULL LOAD.

E. 10 KV OVERLOAD/OVERCURRENT SURGE PROTECTION (ANSI C62.41 CATEGORY C)

F. IESNA LM-71, PHOTOMETRIC MEASUREMENTS OF TUNNEL LIGHTING INSTALLATIONS

G. IESNA LM-79, PHOTOMETRIC MEASUREMENTS OF SOLID STATE LIGHTING PRODUCTS

H. IESNA LM-80, MEASURING LUMEN MAINTENANCE OF LED SOURCES

I. IESNA LM-82, APPROVED METHOD OF CHARACTERIZATION OF LED LIGHT ENGINES AND INTEGRATED LED LAMPS FOR ELECTRICAL AND PHOTOMETRIC PROPERTIES AS A FUNCTION OF TEMPERATURE

J. IESNA TM-21, PROJECTING LONG TERM LUMEN MAINTENANCE OF LED LIGHT SOURCES.

2.04 TUNNEL LUMINAIRE TESTING

A. DUST AND WATER INGRESS TESTS – MANUFACTURER SHALL PROVIDE DOCUMENTATION TO VERIFY THAT THE LUMINAIRES HAVE BEEN TESTED AND PASSED IP 66 CLASSIFICATION.

B. WATER SPRAY TESTS - THE LUMINAIRE SHALL BE DESIGNED TO WITHSTAND THE REGULAR MAINTENANCE CLEANING DURING THE OPERATIONAL LIFE. CLEANING IS PERFORMED WITH LUMINAIRES IN PLACE. WATER SPRAY TESTS PER ANSI C135.27 SHALL BE CONDUCTED ON FIVE LUMINAIRES OF EACH TYPE SELECTED AT RANDOM BY THE ENGINEER, BY AN INDEPENDENT TESTING LABORATORY ENGAGED BY THE LUMINAIRE MANUFACTURER. THE TESTS SHALL BE WITNESSED BY THE ENGINEER OR A REPRESENTATIVE. THE TEST PROCEDURE AND RESULTS SHALL BE SUBMITTED TO THE ENGINEER FOR REVIEW.

C. PAINT ADHESION TESTS - MANUFACTURER SHALL SUBMIT SAMPLE PIECE OF EACH LUMINAIRE TYPE WITH SAME PREPARATION TREATMENT, SAME PAINT AND SAME METHOD OF PAINT APPLICATION FOR TESTING.

D. PAINT TEST - A PAINT TEST SHALL BE CONDUCTED BY AN INDEPENDENT LABORATORY AND SUBMITTED TO THE ENGINEER. THE MANUFACTURER SHALL SUBMIT A SINGLE 12 INCH BY 12 INCH BY 0.32 INCH THICK PANEL OF 5050 OR 5052 ALUMINUM TO THE INDEPENDENT TESTING LABORATORY. THE MANUFACTURER SHALL USE THE SAME PREPARATION TREATMENT, SAME POLYESTER POWDER PAINT AND THE SAME APPLICATION METHOD AS THE HOUSING SHALL RECEIVE.

E. CAST ALUMINUM TESTS - THE FOLLOWING TESTS SHALL BE PERFORMED ON CAST ALUMINUM PARTS:
1. ASTM 3359 TEST METHOD B, RATING 5B OF HOUSING LATCHES AND DOOR FRAMES.
2. ASTM D2247, ASTM D714, ASTM B117, ASTM D1654.
3. AAMA 2604 – 7.7 CHEMICAL RESISTANCE.
4. AAMA 2604 – 7.8 CORROSION RESISTANCE.

F. EXTRUDED ALUMINUM TESTS - THE FOLLOWING TESTS SHALL BE PERFORMED ON EXTRUDED ALUMINUM PARTS:
1. AAMA 2604 – 7.4 FILM ADHESION.
2. AAMA 2604 – 7.5 IMPACT RESISTANCE.
3. AAMA 2604 – 7.7 CHEMICAL RESISTANCE.
4. AAMA 2604 – 7.8 CORROSION RESISTANCE.

G. FABRICATED STEEL TESTS - THE FOLLOWING TESTS SHALL BE PERFORMED ON FABRICATED AND STEEL PARTS:
1. AAMA 2605 – 7.4 FILM ADHESION.
2. AAMA 2605 – 7.5 IMPACT RESISTANCE.
3. AAMA 2605 – 7.7 CHEMICAL RESISTANCE.
4. AAMA 2605 – 7.8 CORROSION RESISTANCE.
5. ASTM D522 – FINISH SHALL WITHSTAND A 180 DEGREE BEND OVER ¼" MANDREL DIA WITHOUT LOSS OF ADHESION OR CRACKING.

H. VIBRATION TEST - MANUFACTURER SHALL PROVIDE DOCUMENTATION TO VERIFY THAT THE LUMINAIRES HAVE BEEN TESTED AND PASSED ANSI 136.31 BRIDGE/OVERPASS APPLICATION VIBRATION TEST CLASSIFICATION.

I. PHOTOMETRIC TEST REPORTS: THE CONTRACTOR SHALL SUBMIT PHOTOMETRIC TEST REPORTS IN IESNA FORMAT FOR EACH LUMINAIRE TYPE. THE TEST REPORT SHALL INCLUDE:
1. ISO ILLUMINANCE DIAGRAM.
2. CANDELA DISTRIBUTION TABULATION.
3. COEFFICIENT OF UTILIZATION AND FLUX DISTRIBUTION ANALYSIS.
4. MAXIMUM PLANE AND MAXIMUM CONE OF CANDELA.

J. PHOTOMETER CALIBRATION: MANUFACTURER SHALL PROVIDE DOCUMENTATION TO VERIFY THAT THE PHOTOMETER LUMINANCE METERS HAVE BEEN CALIBRATED TO ACCURATELY REPORT MEASURED LIGHTING LEVELS.

2.05 TUNNEL ROADWAY LIGHTING DESIGN CRITERIA

A. DESIGN STANDARD: ANSI/IES RP-22-11, RECOMMENDED PRACTICE FOR TUNNEL LIGHTING.

B. DESIGN PARAMETERS:

	NB	SB	SB RAMP
DESIGN SPEED	50 MPH	55 MPH	50 MPH
AVERAGE ANNUAL DAILY TRAFFIC	72,000	65,000	7,000
SAFE SIGHT STOPPING DISTANCE	474 FT	553 FT	474 FT
LIGHT LOSS FACTOR	0.74		
ROADWAY UNIFORMITY (AVE/MIN)	2.0 TO 1		
ROADWAY UNIFORMITY (MAX/MIN)	3.5 TO 1		
WALL UNIFORMITY (ROAD AVE/WALL AVE)	2.5 TO 1		

C. DESIGN LUMINANCE LEVELS – NORTHBOUND TUNNEL:

ZONE	LENGTH (FT)	LUMINANCE (CD/M²)
THRESHOLD ZONE #1	270	202
THRESHOLD ZONE #2	147	125
TRANSITION ZONE #1	220	82
TRANSITION ZONE #2	219	22
INTERIOR ZONE (NIGHT)	856	6

D. DESIGN LUMINANCE LEVELS – SOUTHBOUND TUNNEL:

ZONE	LENGTH (FT)	LUMINANCE (CD/M²)
THRESHOLD ZONE #1	366	242
THRESHOLD ZONE #2	161	142
TRANSITION ZONE #1	241	99
TRANSITION ZONE #2	49	26
INTERIOR ZONE (NIGHT)	817	6

E. DESIGN LUMINANCE LEVELS – SOUTHBOUND EXIT RAMP:

ZONE	LENGTH (FT)	LUMINANCE (CD/M²)
THRESHOLD ZONE #1	287	249
THRESHOLD ZONE #2	161	154
TRANSITION ZONE #1	242	101
TRANSITION ZONE #2	150	27
INTERIOR ZONE (NIGHT)	840	6

2.06 EMERGENCY LIGHTING DESIGN CRITERIA

A. DESIGN STANDARD: NFPA-502, STANDARD FOR ROAD TUNNELS, BRIDGES, AND OTHER LIMITED ACCESS HIGHWAYS, 2014

B. THE EMERGENCY LIGHTING LUMINAIRES SHALL REMAIN ON AT ALL TIMES.

C. THE EMERGENCY LIGHTING LUMINAIRES SHALL BE ON UPS BACKUP AT TIMES, SUPPLIED FROM THE EMERGENCY LIGHTING PANELS, 'N-EM', 'S-EM' AND 'R-EM'. THERE SHALL BE NO INTERRUPTION OF THE LIGHTING LEVELS FOR GREATER THAN 0.5 SECONDS. THE UPS SHALL PROVIDE POWER TO EMERGENCY LUMINAIRES FOR A MINIMUM OF 2 HOURS.

D. THE EMERGENCY ILLUMINATION LEVEL TO BE PROVIDED FOR THE ROADWAY AND WALKWAY SURFACES SHALL BE A MINIMUM AVERAGE MAINTAINED VALUE OF 10 LUX (1 FOOT CANDLE), AND AT ANY POINT NOT LESS THAN 1 LUX (0.1 FOOT CANDES), MEASURED AT THE ROADWAY AND WALKWAY SURFACE.

E. A MAXIMUM TO MINIMUM ILLUMINATION UNIFORMITY OF 40:1 SHALL NOT BE EXCEEDED.

PART 3 – EXECUTION

3.01. GENERAL

A. THE CONTRACTOR SHALL MAINTAIN THE EXISTING TUNNEL LIGHTING DURING INSTALLATION OF THE NEW TUNNEL LIGHTING SYSTEM. EXISTING ROADWAYS WHICH ARE TO REMAIN OPEN TO TRAFFIC DURING CONSTRUCTION OF THIS PROJECT SHALL HAVE THE LIGHTING MAINTAINED AS DESCRIBED HEREIN.
BEFORE ANY WORK IS STARTED IN THE IMMEDIATE VICINITY OF THE EXISTING LIGHTING CIRCUITS, REPRESENTATIVES OF ODOT, THE MAINTAINING AGENCY AND THE CONTRACTOR SHALL MAKE A VISUAL INSPECTION OF THE EXISTING ROADWAY LIGHTING CIRCUITS TO BE MAINTAINED. DURING THIS INSPECTION, A WRITTEN RECORD OF THE CONDITION OF EXISTING LIGHTING SHALL BE MADE BY ODOT'S REPRESENTATIVE. THIS WRITTEN REPORT SHALL NOTE

CALCULATED DGC CHECKED MK

LIGHTING GENERAL NOTES

HAM-71-01.34

c:\pwworking\hmm\external\tyn61470\dms72803\87268LIN002.dgn 10/24/2014 12:30:36 PM T:\N61470

INDIVIDUAL LUMINAIRES AND INDIVIDUAL CIRCUITS WHICH ARE NOT IN WORKING ORDER. THE COMPLETED REPORT SHALL BE SIGNED BY THE REPRESENTATIVES OF ODOT, THE MAINTAINING AGENCY AND THE CONTRACTOR.
IF, AS A RESULT OF THIS INSPECTION, IT IS DETERMINED THAT THE CONDITION OF THE EXISTING SYSTEM IS BELOW THAT REQUIRED FOR THE SAFETY OF THE TRAVELING PUBLIC, THEN THE MAINTAINING AGENCY SHALL MAKE THE REPAIRS NECESSARY TO RETURN THE SYSTEM TO AN ACCEPTABLE CONDITION. FOLLOWING THESE REPAIRS, THE SYSTEM SHALL AGAIN BE INSPECTED AND A REPORT SHALL BE MADE AND SIGNED AS OUTLINED HEREIN.
WHEN THE EXISTING SYSTEM IS IN AN ACCEPTABLE CONDITION, IT SHALL BE TURNED OVER TO THE CONTRACTOR WHO SHALL THEN BE REQUIRED TO MAINTAIN THE EXISTING LIGHTING TO THE CONDITION OUTLINED IN THIS REPORT WITH THE EXCEPTION OF KNOCKDOWNS DUE TO TRAFFIC ACCIDENTS.

B. REPLACEMENT OF KNOCKED DOWNED UNITS SHALL BE DONE ONLY WHEN THE ENGINEER HAS DETERMINED THAT THE REPLACEMENT OF THE KNOCKED DOWN UNIT IS NECESSARY AND SHALL BE PAID SEPARATELY ON A UNIT BASIS.

3.02 NOTUSED

3.03 PHOTOMETRIC TESTING REQUIREMENTS FOR TUNNEL LUMINAIRES

A. SUBMIT APPROVED INDEPENDENT TESTING LABORATORY PHOTOMETRICS FOR EACH FIXTURE AND LAMP WATTAGE. NO PRORATING OF LAMP WATTAGES SHALL BE PERMITTED. PHOTOMETRIC DATA SHALL BE SUBMITTED IN IES FORMAT.

3.04 ELECTRICAL TESTING OF LIGHTING SYSTEM

A. CHECK ALL LIGHTING CIRCUITS FOR PROPER OPERATION UPON INSTALLATION OF REPLACEMENT LUMINAIRES ALONG ONE FULL WALL OF EACH TUNNEL.

B. CARRY OUT THE FOLLOWING STEPS FOR THE EAST WALL OF THE NORTHBOUND TUNNEL.

1. OPEN ALL BREAKERS IN PANELS NE-DN, NE-LP1, NE-LP2 AND N-EM.
2. CLOSE THE EAST WALL BRANCH CIRCUIT BREAKERS IN PANEL 'N-EM'. CONFIRM THAT THE EMERGENCY FIXTURES AS DETAILED IN THE DESIGN DRAWINGS ARE ALL WIRED CORRECTLY AND TURNED ON.
3. OPEN BOTH BREAKERS SUPPLYING EITHER SIDE OF THE ATS ABOVE THE UPS. CONFIRM THAT THE EMERGENCY FIXTURES REMAIN ON. RETURN THE UPS TO NORMAL OPERATIONS.
4. CLOSE THE BREAKERS IN PANEL NE-DN. CONFIRM THAT THE DAY/NIGHT FIXTURES AS DETAILED IN THE DESIGN DRAWINGS ARE ALL WIRED CORRECTLY AND TURNED ON.
5. CLOSE THE BREAKERS IN PANEL NE-LP1. CONFIRM THAT THE THRESHOLD/TRANSITION ZONE BOOST FIXTURES AS DETAILED IN THE DESIGN DRAWINGS ARE ALL WIRED CORRECTLY AND TURNED ON.
6. CLOSE THE BREAKERS IN PANEL NE-LP2. CONFIRM THAT THE THRESHOLD/TRANSITION ZONE BOOST FIXTURES AS DETAILED IN THE DESIGN DRAWINGS ARE ALL WIRED CORRECTLY AND TURNED ON.
7. A WRITTEN RECORD OF THE TEST RESULTS NOTING INDIVIDUAL LUMINAIRES WHICH ARE NOT WORKING OR NOT WIRED CORRECTLY SHALL BE SUBMITTED TO THE ENGINEER. THE REPORT SHALL DETAIL THE CORRECTIVE ACTIONS TAKEN.

C. REPEAT STEPS 1 THROUGH 6 FOR EACH WALL.

D. REFER TO THE GENERAL NOTES ON LIGHTING CONTROL FOR TEST PROCEDURES FOR THE LIGHTING CONTROL SYSTEM.

3.05 MAINTAIN EXISTING LIGHTING

EXISTING ROADWAYS WHICH ARE TO REMAIN OPEN TO TRAFFIC DURING CONSTRUCTION OF THIS PROJECT AND WHICH ARE LIGHTED SHALL HAVE THE LIGHTING MAINTAINED AS DESCRIBED HEREIN.

BEFORE ANY WORK IS STARTED IN THE IMMEDIATE VICINITY OF THE EXISTING LIGHTING CIRCUITS, REPRESENTATIVES OF ODOT, THE MAINTAINING AGENCY AND THE CONTRACTOR SHALL MAKE A VISUAL INSPECTION OF THE EXISTING ROADWAY LIGHTING CIRCUITS TO BE MAINTAINED. DURING THIS INSPECTION, A WRITTEN RECORD OF THE CONDITION OF EXISTING LIGHTING SHALL BE MADE BY ODOT'S REPRESENTATIVE. THIS WRITTEN REPORT SHALL NOTE INDIVIDUAL LUMINAIRES WHICH ARE NOT IN WORKING ORDER AND INDIVIDUAL CIRCUITS WHICH ARE NOT IN WORKING ORDER. THE COMPLETED REPORT SHALL BE SIGNED BY THE REPRESENTATIVES OF ODOT, THE MAINTAINING AGENCY AND THE CONTRACTOR.

AS A RESULT OF THIS INSPECTION, THE MAINTAINING AGENCY WILL REPLACE ANY DEFECTIVE LAMPS AND PERFORM MINOR REPAIRS TO RESTORE AS MANY FIXTURES AS POSSIBLE. FOLLOWING THESE REPAIRS, THE SYSTEM AGAIN SHALL BE INSPECTED AND A REPORT SHALL BE MADE AND SIGNED AS OUTLINED HEREIN.

WHEN THE EXISTING SYSTEM IS IN AN ACCEPTABLE CONDITION, IT SHALL BE TURNED OVER TO THE CONTRACTOR WHO SHALL THEN BE REQUIRED TO MAINTAIN THE EXISTING LIGHTING TO THE CONDITION OUTLINED IN THIS REPORT WITH THE EXCEPTION OF KNOCKDOWNS DUE TO TRAFFIC ACCIDENTS.

DURING THE LIFE OF THE CONTRACT, THE CONTRACTOR WILL BE REQUIRED TO KEEP IN OPERATION AT LEAST 95% OF THE LIGHT FIXTURES IN EACH TUNNEL THAT WERE IN WORKING CONDITION WHEN THE LIGHTING SYSTEMS WERE TURNED OVER. IN ADDITION TO THE 95% REQUIREMENT, THE CONTRACTOR SHALL NOT BE PERMITTED TO ALLOW MORE THAN 3 CONSECUTIVE BANKS OF LIGHT FIXTURES TO BE OUT PER SIDE PER TUNNEL. THE CONTRACTOR SHALL MEET THE 95% REQUIREMENT BY MAINTAINING THE EXISTING LIGHTING, PROVIDING TEMPORARY LIGHTING, OR A COMBINATION OF BOTH. THE TEMPORARY LIGHTING SHALL BE SIMILAR IN TYPE AND WATTAGE TO THE FIXTURES THAT ARE BEING TAKEN OUT OF SERVICE, AND THE NUMBER OF TEMPORARY FIXTURES INSTALLED SHALL EQUAL THE NUMBER OF WORKING FIXTURES TAKEN OUT OF SERVICE. THE CONTRACTOR SHALL MAKE ANY REPAIRS WITHIN 7 DAYS OF BEING NOTIFIED OF AN OUTAGE.

REPLACEMENT OF KNOCKED DOWN OR INOPERABLE UNITS SHALL BE DONE ONLY WHEN THE ENGINEER HAS DETERMINED THAT THE REPLACEMENT OF THE UNIT IS NECESSARY AND SHALL BE PAID SEPARATELY ON A UNIT BASIS. AN ESTIMATED QUANTITY OF 30 EACH OF LIGHTING, MISC.: REPLACEMENT LUMINAIRE UNITS HAS BEEN CARRIED TO THE GENERAL SUMMARY.

BETTERMENTS SHALL BE COVERED IN ITEMS OF WORK PERTAINING TO THE CONSTRUCTION OF PERMANENT IMPROVEMENT.

ALL MATERIALS NECESSARY TO COMPLETE THE TEMPORARY LIGHTING SHALL BE FURNISHED AND INSTALLED BY THE CONTRACTOR. WHEN NO LONGER NEEDED, THE TEMPORARY LIGHTING INSTALLATION SHALL BE REMOVED AND PROPERLY DISPOSED OF BY THE CONTRACTOR.

THE MAINTAINING AGENCY WILL PAY FOR ELECTRICAL ENERGY CONSUMED BY EXISTING POWER SERVICES AND BY PROPOSED PERMANENT POWER SERVICES AFTER ACCEPTANCE OF THE LIGHTING WORK. THE CONTRACTOR WILL PAY FOR ELECTRICAL ENERGY, INSTALLATION, REMOVAL AND MAINTENANCE OF ANY TEMPORARY POWER SERVICES.

THE LUMP SUM PRICE BID FOR ITEM SPECIAL "MAINTAIN EXISTING LIGHTING" SHALL INCLUDE PAYMENT FOR ALL LABOR, EQUIPMENT, MATERIALS AND INCIDENTALS NECESSARY TO MAINTAIN THE EXISTING LIGHTING AS SPECIFIED HEREIN.

3.06 LUMINAIRE INSTALLATION

A. INSTALL LUMINAIRES IN ACCORDANCE WITH THE MANUFACTURER'S INSTRUCTIONS, COMPLETE WITH LAMPS, HANGERS, BRACKETS, FITTINGS AND ACCESSORIES, READY FOR OPERATION AS INDICATED AND AS SHOWN ON THE CONTRACT DRAWINGS.

B. ALIGN, MOUNT, AND LEVEL LUMINAIRES UNIFORMLY AND AS INDICATED ON THE DRAWINGS.

C. ADJUST LUMINAIRES THAT REQUIRE FIELD ADJUSTMENT OR AIMING.

D. CORROSION PREVENTION AND CLEANING:

1. THE CLEANING PROCEDURES RECOMMENDED BY THE LUMINAIRE MANUFACTURER SHALL BE FOLLOWED. THE BOTTOMS, TRIM, REFLECTING SURFACES, LENSES, BAFFLES, LOUVERS AND REFLECTOR CONES OF LUMINAIRES DURING INSTALLATION SHALL BE CLEANED SO AS TO RENDER THEM FREE OF ANY MATERIAL, SUBSTANCE, OR FILM ON THE LUMINAIRE.
2. THE TRIMS AND BOTTOMS OF LUMINAIRES SHALL BE MASKED IF NECESSARY TO PROTECT THE LUMINAIRE DURING INSTALLATION.
3. THE CONTRACTOR SHALL ASCERTAIN AND MAKE SURE THAT LAMPS INSTALLED ARE EXACTLY AS SPECIFIED FOR EACH LUMINAIRE TYPE.

F. REPLACE FAULTY LED BOARDS AND DRIVERS AT NO ADDITIONAL COST TO THE DEPARTMENT.

3.07 GROUNDING

A. GROUND NON-CURRENT CARRYING PARTS OF LUMINAIRES AND ASSOCIATED EQUIPMENT. WHERE THE COPPER GROUNDING CONDUCTOR IS CONNECTED TO A METAL OTHER THAN COPPER, PROVIDE SPECIFICALLY TREATED OR LINED CONNECTORS SUITABLE FOR THIS PURPOSE TO MITIGATE CORROSION BETWEEN THE FAYING SURFACES OF DISSIMILAR METALS.

3.08 FIELD QUALITY CONTROL

A. INSPECT LUMINAIRES, LAMPS, AND ASSOCIATED HARDWARE BEFORE AND AFTER INSTALLATION TO ENSURE THAT THEY ARE OF THE QUALITY AND TYPE SPECIFIED HEREIN AND INDICATED ON THE CONTRACT DRAWINGS, AND ARE FREE OF DEFECTS AND DAMAGE. REPLACE DAMAGED FIXTURES AND COMPONENTS.

B. DELIVER LUMINAIRES AND LIGHTING EQUIPMENT TO THE PROJECT SITE COMPLETE WITH RELATED ITEMS, COMPLETELY WIRED AND ASSEMBLED.

C. WHENEVER PRACTICABLE, TEST LIGHTING SYSTEMS AT THE SAME TIME THAT THE DISTRIBUTION PANELBOARD OR SWITCHBOARD IS TESTED.

D. REPLACE LUMINAIRES THAT FAIL BEFORE 90 DAYS AFTER SUBSTANTIAL PROJECT COMPLETION WITHOUT COST TO THE DEPARTMENT.

E. ILLUMINATION OBSERVATIONS: VERIFY NORMAL OPERATION OF LIGHTING UNITS AFTER INSTALLING LUMINAIRES AND ENERGIZING CIRCUITS WITH NORMAL POWER SOURCE.

1. VERIFY OPERATION OF PHOTOELECTRIC CONTROLS – REFER TO GENERAL NOTES ON LIGHTING CONTROLS FOR TESTING DETAILS.

CALCULATED DGC CHECKED MK

LIGHTING GENERAL NOTES

HAM-71-01.34

E:\projects\HAM\ir071\01.34_PID87268\Design\docs\Plan Package\Current CADD Files\Lighting\Sheets\87268LN003.dgn 3/13/2015 3:52:24 PM akoenig

3.09 TESTING

A. THE LUMINAIRE MANUFACTURER SHALL UNDERTAKE THE FOLLOWING TESTS ON THE LUMINAIRES:

1. DEMONSTRATION TO PROVE THE SATISFACTORY OPERATION OF THE LUMINAIRE INCLUDING DIMMING, BALLAST, LED AND LAMP.

B. THE LIGHTING CONTROLLER MANUFACTURER SHALL TEST THE CONTROL SYSTEM TO ENSURE THE COMPLETED INSTALLATION CONFORMS TO ALL PERFORMANCE AND FUNCTIONAL REQUIREMENTS OF THEIR EQUIPMENT AND ADDITIONAL REQUIREMENTS PLACED ON THE SYSTEM BY THESE SPECIFICATIONS.

C. OPERATING TESTS: UPON COMPLETION OF THE INSTALLATION OF THE TUNNEL ROADWAY LIGHTING ALONG EACH WALL OF EACH TUNNELE, AN OPERATING TEST SHALL BE CONDUCTED TO DEMONSTRATE THAT THE LIGHTING SYSTEM AND ASSOCIATED EQUIPMENT OPERATE IN ACCORDANCE WITH THE REQUIREMENTS OF THIS SECTION. EACH LEVEL SHALL BE INDIVIDUALLY CYCLED ON/OFF FROM THE LUMINANCE METER, CONTACTOR CABINET AND INTERFACE CABINET. THE SYSTEM SHALL BE OPERATED FROM THE INTERFACE CABINET USING JUMPER CABLES. ALL TESTING SHALL BE WITNESSED BY THE ENGINEER.

3.10 SPARE PARTS

A. THE FOLLOWING SPARE PARTS, AT A MINIMUM, SHALL BE ON HAND AT THE FACILITY, STORED AS DIRECTED BY THE ENGINEER:

1. FIVE PERCENT OF EACH TYPE OF LAMP.

2. TWO SETS OF EACH TYPE OF FUSE.

3. TEN PERCENT OF EACH TYPE OF RELAY.

4. FIVE PERCENT OF EACH TYPE OF LED DRIVER.

PART 4 - METHOD OF PAYMENT AND ITEMS

4.01 METHOD OF PAYMENT AND ITEMS

A. PAYMENT FOR LIGHTING ITEMS SHALL BE MADE AT THE CONTRACT UNIT PRICE, INCLUDING BUT NOT LIMITED TO ALL WORK, LABOR, EQUIPMENT, AND MATERIALS NECESSARY THEREFORE OR INCIDENTAL THERETO, AS FOLLOWS:

ITEM NO.	DESCRIPTION	UNIT
625	LUMINAIRE, SOLID-STATE (LED), MISC.: (TYPE 'A')	EACH
625	LUMINAIRE, SOLID-STATE (LED), MISC.: (TYPE 'B')	EACH
625	LUMINAIRE, SOLID-STATE (LED), MISC.: (TYPE 'C')	EACH
625	LUMINAIRE, SOLID-STATE (LED), MISC.: (TYPE 'D')	EACH
625	LUMINAIRE, SOLID-STATE (LED), MISC.: (TYPE 'E')	EACH
625	LUMINAIRE, SOLID-STATE (LED), MISC.: (TYPE 'F')	EACH
625	LUMINAIRE, FLOURESCENT, MISC: (32W, T8 LINEAR FLOURESCENT)	EACH
625	LUMINAIRE, EXIT SIGN, MISC: (34W, LED)	EACH
625	LIGHTING, MISC.: PANEL (NEMA 3R,3P/4W,600A MCB)	EACH
625	LIGHTING, MISC.: PANEL (NEMA 3R,3P/4W,MLO)	EACH
625	LIGHTING, MISC.: PANEL (NEMA 3R,3P/4W,60A MCB)	EACH
625	LIGHTING, MISC.: LIGHTING DISTRIBUTION PANELS REMOVED	EACH
625	LIGHTING, MISC.: LIGHTING CONTROL PANEL REMOVED	EACH
625	JUNCTION BOX, AS PER PLAN (NEMA 4X S.S.20"X12"X6")	EACH
625	JUNCTION BOX, AS PER PLAN (NEMA 4X S.S. 8"X8"X3")	EACH
625	JUNCTION BOX, AS PER PLAN (NEMA 4X S.S. 6"X6"X3")	EACH
625	LIGHTING, MISC. CABLE TROUGH, AS PER PLAN (NEMA 3R 78"X12"X6")	EACH
625	LIGHTING, MISC.: S.S. CHANNEL (1 5/8" X 1 5/8")	FT
625	LIGHTING, MISC.: S.S. CHANNEL (1 5/8" X 3 1/4")	FT
625	LIGHTING, MISC.: SPRAY-APPLIED FIREPROOFING	SF
625	CONDUIT, MISC.: 2" EMT CONDUIT	FT
625	CONDUIT, MISC.: REMOVE 2" EMT CONDUIT	FT
625	CONDUIT, MISC.: ¾" LFMC	FT
625	DISTRIBUTION CABLE, MISC.: NO. 10 AWG, 600 VOLT, RHW-2, LSZH, GND	FT
625	DISTRIBUTION CABLE, MISC.: NO. 10 AWG, 600 VOLT, RHW-2, LSZH	FT
625	DISTRIBUTION CABLE, MISC.: NO. 8 AWG, 600 VOLT, RHW-2, LSZH	FT
625	DISTRIBUTION CABLE MISC.: NO. 6 AWG, 600 VOLT, RHW-2, LSZH, GND	FT
625	DISTRIBUTION CABLE, MISC.: NO. 3/0 AWG, 600 VOLT, RHW-2, LSZH	FT
625	CONDUIT, ¾", 725.04	FT
625	CONDUIT, 1", 725.04	FT
625	CONDUIT, 1-¼", 725.04	FT
625	CONDUIT, 1-½", 725.04	FT
625	CONDUIT, 2", 725.04	FT
625	CONDUIT, 2-½", 725.04	FT
625	LIGHTING, MISC.: TESTING AND COMMISSIONING	LUMP
625	LIGHTING, MISC.: REPLACEMENT LUMINAIRE UNITS	EACH

B. REFER TO THE GENERAL NOTES ON LIGHTING CONTROL, RACEWAYS AND BOXES, CONDUCTORS AND CABLES, HANGERS AND SUPPORTS FOR FURTHER DETAILS.

C. THE FOLLOWING ESTIMATED QUANTITY HAS BEEN CARRIED TO THE GENERAL SUMMARY:

ITEM 625 LIGHTING, MISC.: REPLACEMENT LUMINAIRE UNITS 30 EACH

CALCULATED DGC CHECKED MK

LIGHTING GENERAL NOTES

HAM-71-01.34

190
555

c:\pwworking\hmm\external\pre47802\dms72803\87268LN004.dgn 8/13/2015 3:10:33 PM PRE47802

ITEM 625 - LIGHTING CONTROL

PART 1 – TUNNEL LIGHTING CONTROL

1.01 GENERAL

A. THE CONTRACTOR SHALL SUPPLY, INSTALL, TEST AND SET TO WORK A COMPLETE TUNNEL LIGHTING CONTROL SYSTEM THAT INCLUDES ALL CONTROL CABLING, COMPONENTS, HARDWARE AND SOFTWARE REQUIRED TO CONNECT THE PHOTOMETERS TO THE TUNNEL CONTROL PANEL IN THE MAINTENANCE BUILDING, ALL TUNNEL LIGHTING CABLING FROM THE LIGHTING PANELBOARD AND CONTROL PANEL TO THE LUMINAIRE. THE TUNNEL LUMINANCE LEVELS SHALL BE DETERMINED USING NEW PHOTOMETERS MOUNTED ON EXISTING POLES AT EACH TUNNEL PORTAL, AS SPECIFIED ON THE DRAWINGS.

B. COMPLETE AUTOMATIC LIGHTING CONTROL SYSTEM REQUIRED TO AUTOMATICALLY CONTROL THE TUNNEL LUMINANCE INSIDE THE TUNNEL AND ADJUST TO SUIT THE VARYING LUMINANCE ON THE TUNNEL APPROACH. PROVIDE ALL CONTROL CABLING AND COMPONENTS REQUIRED TO CONNECT THE MAIN CONTROL PANEL TO THE LUMINAIRES. PROVIDE ALL ASSOCIATED HARDWARE AND SOFTWARE REQUIRED TO CONNECT THE MAIN CONTROL PANEL TO THE LUMINAIRES.

C. CONTROL CABLE SHALL BE LOW SMOKE ZERO HALOGEN BELDEN 3103S OR APPROVED EQUAL.

1.02 LIGHTING CONTROL DESIGN CRITERIA

A. THE TUNNEL LIGHTING CONTROL SYSTEM SHALL BE USED TO EFFICIENTLY ACHIEVE THE REQUIRED LIGHTING LEVELS WITHIN THE TUNNEL. THE CONTROL SYSTEM SHALL ADJUST THE LIGHTING LEVEL BY MEANS OF 0-10V DIMMING OF LED DRIVERS AND BY UTILIZING CONTACTORS TO SWITCH ON AND OFF BANKS OF LIGHTS.

B. INPUTS TO THE TUNNEL LIGHTING CONTROL SYSTEM SHALL INCLUDE PHOTOMETRIC CAMERAS MOUNTED OUTSIDE THE TUNNEL DIRECTED AT THE NORTH AND SOUTHBOUND PORTALS, AND SOLID STATE SOLAR TIME CLOCKS WITHIN THE LIGHTING CONTROL PANELS.

C. POWER FOR LED DRIVERS WILL BE PROVIDED BY DEDICATED LIGHTING PANELBOARDS.

D. THE TUNNEL LIGHTING CONTROL SYSTEM SHALL BE CAPABLE OF REDUCING THE LIGHTING LEVELS WITHIN THE TUNNEL THROUGH SIX STAGES.

1. THE ROADWAY LUMINANCE LEVELS DETAILED IN SECTION 2.05 OF THE TUNNEL LIGHTING GENERAL NOTES EQUATE TO STAGE 6 LIGHTING, THE MAXIMUM LEVELS REQUIRED WITHIN EACH TUNNEL ON A SUNNY DAY.
2. AS THE EXTERNAL LUMINANCE DETECTED BY THE PHOTOMETRIC CAMERA CHANGES THROUGHOUT THE DAY, THE TUNNEL LIGHTING CONTROL SHALL REDUCE ROADWAY LIGHTING LEVELS THROUGH STAGES 5, 4 & 3. STAGES 5, 4 & 3 LIGHTING SHALL BE ACHIEVED BY UTILIZING THE CONTACTORS TO SWITCH ON AND OFF LIGHTING DISTRIBUTION PANELS 'LP-1' AND 'LP-2', AND APPLYING 0-10V DIMMING TO THE LED DRIVES.
3. STAGE 2 IS THE BASIC DAY TIME LIGHTING LEVEL. STAGE 2 LIGHTING SHALL BE PROVIDED BY THE DAY/NIGHT (DN) AND EMERGENCY (EM) PANELS ONLY. 0-10V DIMMING THE LED DRIVERS MAY BE USED TO ACHIEVE STAGE 1 LUMINANCE LEVELS.
4. STAGE 1 IS THE NIGHTTIME LEVEL, INITIATED BY THE SOLID STATE SOLAR TIME CLOCK IN THE LIGHTING CONTROL PANEL. STAGE 1 LIGHTING SHALL BE PROVIDED BY THE DAY/NIGHT (DN) AND EMERGENCY (EM) PANELS ONLY. 0-10V DIMMING THE LED DRIVERS MAY BE USED TO ACHIEVE STAGE 1 LUMINANCE LEVELS.

E. THE FOLLOWING LIGHTING LEVELS SHALL BE USED FOR EACH LIGHTING STAGE – NORTHBOUND TUNNEL:

	PHOTOMETER SETTING (CD/M²)	THRESHOLD #1 (CD/M²)	THRESHOLD #2 (CD/M²)	TRANSITION #1 (CD/M²)	TRANSITION #2 (CD/M²)
1	100 & BELOW	6	6	6	6
2	101 – 250	10	10	10	10
3	250 – 1,500	50	31	20	10
4	1,500 – 3,000	90	55	37	10
5	3,000 – 6,000	130	80	53	14
6	6,000 & ABOVE	202	125	85	22

F. THE FOLLOWING LIGHTING LEVELS SHALL BE USED FOR EACH LIGHTING STAGE – SOUTHBOUND TUNNEL:

	PHOTOMETER SETTING (CD/M²)	THRESHOLD #1 (CD/M²)	THRESHOLD #2 (CD/M²)	TRANSITION #1 (CD/M²)	TRANSITION #2 (CD/M²)
1	100 & BELOW	6	6	6	6
2	101 – 250	10	10	10	10
3	250 – 1,500	50	31	20	10
4	1,500 – 3,000	100	59	41	10
5	3,000 – 6,000	150	88	61	16
6	6,000 & ABOVE	242	142	99	26

G. THE FOLLOWING LIGHTING LEVELS SHALL BE USED FOR EACH LIGHTING STAGE – SOUTHBOUND EXIT RAMP:

	PHOTOMETER SETTING (CD/M²)	THRESHOLD #1 (CD/M²)	THRESHOLD #2 (CD/M²)	TRANSITION #1 (CD/M²)	TRANSITION #2 (CD/M²)
1	100 & BELOW	6	6	6	6
2	101 – 250	10	10	10	10
3	250 – 1,500	50	31	20	10
4	1,500 – 3,000	100	62	41	10
5	3,000 – 6,000	150	93	61	16
6	6,000 & ABOVE	249	154	101	27

H. FOR EACH THRESHOLD ZONE #1 SETPOINT, THE LUMINANCE VALUES IN THE OTHER ZONES ARE CALCULATED FROM THE LUMINANCE REDUCTION CURCE IN RP-22-11.

I. THE TUNNEL LIGHTING CONTROL SYSTEM SHALL NOT UTILIZE 0-10V LED DRIVER DIMMING TO SWITCH OFF LUMINAIRES.

J. IN THE EVENT OF A FAILURE OF THE TUNNEL LIGHTING CONTROL SYSTEM, ALL LUMINAIRES SHALL FAIL SAFE TO FULL LUMINAINCE OUTPUT.

1.03 LIGHTING CONTROL PANEL

A. TWO LIGHTING CONTROL PANELS SHALL BE PROVIDED, ONE FOR THE NORTHBOUND TUNNEL AND ONE FOR BOTH SOUTHBOUND AND SOUTHBOUND RAMP E TUNNELS TO THIRD STREET.

B. EACH LIGHTING CONTROL PANEL SHALL INCORPORATE THE FOLLOWING COMPARTMENTS:

1. ELECTRICAL SUPPLY COMPARTMENT; AND THE
2. CONTROL AND MONITORING COMPARTMENT.

C. CONTROL PANEL POWER DISTRIBUTION: INPUT POWER SHALL BE 277VAC AND TERMINATE INSIDE CONTROL PANEL. LOW VOLTAGE CONTROL POWER SHALL BE 24VDC AND 120VAC. CONTROL POWER SUPPLY SHALL BE APPROPRIATELY FUSED. ALL HIGH AND LOW VOLTAGE COMPONENTS SHALL BE SEPARATED BY A BARRIER. POWER DISTRIBUTION WIRING SHALL BE NOT LESS THAN #14 AWG.

D. EACH LIGHTING CONTROL PANEL COMPARTMENT SHALL INCLUDE ANTI-CONDENSATION HEATER AND THERMOSTAT.

E. THE LIGHTING CONTROL PANEL SHALL BE CAPABLE OF FIELD ADJUSTING THE SIX LIGHT LEVEL OPERATING POINTS FROM 2 TO 10,000 CD/M² IN STEPS OF 2 CD/M². TIME DELAYS FOR TURN OFF/ON FOR EACH LEVEL SHALL BE SET AT 10 MINUTES AND SHALL BE SELECTABLE IN ONE MINUTE STEPS FROM 2 TO 30 MINUTES. THE LIGHTING PARAMETERS SHALL BE PRE-PROGRAMMED AND STORED IN NON-VOLATILE MEMORY.

F. LIGHTING CONTROLLER OUTPUTS: EACH RELAY OUTPUT CIRCUIT SHALL HAVE A 2 AMP INDUCTIVE LOAD RATING; CAPABLE OF OPERATING LOW VOLTAGE ELECTRICALLY HELD CONTACTORS. SINGLE POLE 15A INTERPOSING RELAYS SHALL DRIVE HIGH VOLTAGE LIGHTING CONTACTORS. INDICATION SHALL DISPLAY INDIVIDUAL CIRCUIT STATUS, POWER ON, AND SENSOR CONDITION.

G. PROVIDE NEMA 12 ENCLOSURES, MINIMUM OF TEN GAGUE. PROVIDE CABINET WITH HINGED FRONT DOOR AND LOUVERS AS REQUIRED.

H. PROVIDE A SEALED GEL CELL BATTERY BACK-UP WITHIN THE ENCLOSURE. BATTERY SHALL PROVIDE POWER FOR 90 MINUTES.

I. THE CONTROLLER SHALL ALSO HAVE BATTERY BACKED MEMORY FOR FUNCTIONS SUCH AS TIME SCHEDULING. A 10 MINUTE CAPACITIVE BATTERY SHALL BE PROVIDED FOR UNPOWERED BATTERY REPLACEMENT.

J. PROVIDE A TOUCHSCREEN DISPLAY ON THE CONTROL PANEL TO DISPLAY THE STATUS OF EACH LEVEL, LUMINANCE METER STATUS, SYSTEM STATUS, AUTOMATIC OR MANUAL OPERATION, AND SYSTEM MALFUNCTION. MAKE ADJUSTMENTS BY MEANS OF PANEL MOUNTED PUSHBUTTONS. FUNCTIONS SHALL INCLUDE ALPHA-NUMERIC KEYPAD, NAVIGATION ARROW KEYS AND FUNCTION KEYS. THE OPERATOR INTERFACE SHALL ALLOW VIEWING AND EDITING OF OPERATING PARAMETERS OF BOTH THE SWITCHING AND DIMMING CONTROL SYSTEMS.

K. PROVIDE HAND/OFF/AUTO SELECTOR SWITCHES WITH AN INTEGRAL RED LED PILOT LIGHT FOR EACH CONTROLLER CHANNEL FOR MANUAL OPERATOR. THE HAND POSITION SWITCHES THE LED CHANNEL'S POWER ON AND SIGNALS THE LED DRIVER TO PROVIDE FULL OUTPUT. THE OFF POSITION SWITCHES THE LED CHANNEL'S POWER OFF. THE AUTO POSITION ALLOWS THE CONTROLLER TO OPERATE THE LED CHANNEL. OPERATOR LEGEND AND INDICATION NAMEPLATES SHALL BE PROVIDED. A SEPARATE PUSHBUTTON AND ISOLATION REALY IS REQUIRED FOR THE PUSH-TO-TEST FUNCTION.

L. IN CASE OF POWER FAILURE, THE CONTROL PANEL SHALL GRADUALLY RESTORE THE LIGHT LEVELS ACCORDING TO THE TIME DELAY SETTINGS FOR EACH LEVEL WHEN POWER IS RESTORED. IF THE UNIT FAILS, ALL TUNNEL LIGHTING CONTACTORS SHALL REMAIN IN THEIR LAST LATCHED POSITION. LIGHTING WILL BE PROVIDED BY TUNNEL EMERGENCY LIGHT CIRCUITS FED FROM AN UNINTERRUPTIBLE POWER SUPPLY (UPS).

M. CONTROLLER NETWORKING: EACH CONTROLLER SHALL HAVE A FIBER OPTIC TO COPPER CABLE ETHERNET SWITCH.

N. SCADA INTERFACE: THE TUNNEL LIGHTING CONTROL SYSTEM SHALL BE ABLE TO COMMUNICATE WITH THE SCADA SERVERS USING THE NATIVE TCP/IP PROTOCOL OF CONTROLLER PLATFORM, USING THE CORRESPONDING I/O DRIVER. THE EQUIPMENT SUPPLIERS SHALL COORDINATE TO ENSURE EFFECTIVE INTEROPERABILITY. FOR MONITORING AND ALARMING PURPOSES ONLY, AS A MINIMUM, THE SCADA/HMI SHALL DISPLAY THE FOLLOWING INFORMATION:
- HAND/OFF/AUTO SELECTOR SWITCH STATUS
- CONTACTOR OUTPUT
- CONTACTOR STATUS

c:\pwworking\hmm\external\tyn61470\dms72803\8726LLN005.dgn 10/24/2014 12:31:20 PM TYN61470

- LOCAL TUNNEL LIGHTING SWITCHING OUTPUT
- LOCAL TUNNEL LIGHTING DIMMING OUTPUT
- LUMINANCE SENSOR STATUS
- LUMINANCE SENSOR READING

THE SCADA SYSTEM SHALL NOT OVERRIDE THE CONTROLLERS.

O. LIGHTING CONTACTORS: ALL LOW VOLTAGE CONTROLLER OUTPUTS SHALL BE CONVERTED TO HIGH VOLTAGE OUTPUTS THROUGH INTERPOSING RELAYS. EACH INTERPOSING RELAY SHALL HAVE A SINGLE POLE 15A CONTACT.

P. EACH LIGHTING CONTACTOR SHALL BE RATED FOR 480V, 3 PHASE, 3 POLE, 100A AMP. THE CONTACTOR POLES SHALL BE FED AT 480V. THE CONTROL PANEL INTERNAL VOLTAGES ARE EITHER 24VDC FOR SENSOR, CONTROLLER AND COMMUNICATION EQUIPMENT OR 120VAC FOR INTERPOSING RELAYS, CONTACTOR COILS, AUXILIARY CONTACTS AND HOA SWITCHES. NO ADDITIONAL DEVICES ARE REQUIRED; VOLTAGE IS REDUCED INTERNALLY BY A SERIES OF TRANSFORMERS. PROVIDE EACH LIGHTING CONTACTOR WITH AUXILIARY CONTACT FOR STATUS INDICATION.

Q. REMOTE DIMMING ENCLOSURE: THE 4-20MA OUTPUTS OF THE TUNNEL LIGHTING CONTROLLER ARE TRANSLATED TO THE LOCAL CIRCUIT GROUPS USING A REMOTE DIMMING ENCLOSURE. THE REMOTE DIMMING ENCLOSURE IS POWERED BY 277V. THE OUTPUTS OF THE REMOTE DIMMING ENCLOSURE ARE AMPLIFIED 0-10VDC CONTROL CIRCUITS EACH CAPABLE OF SINKING 50MA CIRCUITS OF LED DRIVERS. ADDITIONAL DIMMING AMPLIFIERS CAN BE USED TO CONTROL ADDITIONAL LED CIRCUITS. THE DIMMING AMPLIFIER SHALL INCORPORATE OVERRIDE SWITCHES TO ALLOW MANUAL CONTROL OF FULL DIMMING OUTPUT. EAST AND WEST WALL LED DRIVERS ARE CONTROLLED FROM THE SAME REMOTE DIMMING ENCLOSURE WITHIN A CONTROL ZONE.

R. LIGHTING CONTROL PANELS SHALL BE UL LISTED AS UL508A INDUSTRIAL CONTROL EQUIPMENT.

S. LOCAL HMI: SHALL BE A WINDOWS CE7 TOUCHSCREEN INTEGRATED WITH THE TUNNEL LIGHTING CONTROL SYSTEM. THE HMI SHALL ALSO BE A WEB SERVER WHICH ALLOWS THE MAIN SCADA SYSTEM TO VIEW THE LOCAL HMI VIA A WEB BROWSER.

T. MANUFACTURER SHALL PROVIDE THE SOFTWARE LICENSE FOR THE APPLICATION THAT SHOULD BE OWNED BY THE CUSTOMER.

U. MANUFACTURER SHALL PROVIDE A SUBMITTAL INCLUDING TYPICAL SCREENS, VARIABLE DATABASE AND SEQUENCE OF OPERATION.

V. THE PROGRAM APPLICATION FILES AND SOFTWARE LICENSE SHOULD BE OWNED BY THE CUSTOMER AND BE WARRANTED FOR 2 YEARS.

W. CONTROLLER NETWORKING: SINGLE MODE FIBER OPTIC COMMUNICATION CABLES SHALL CONNECT THE TWO CONTROLLERS. CONTRACTOR SHALL SUPPLY AND INSTALL NETWORK CISCO TYPE IE-2000-BTC PLUS 2X GLC-LX-SM-RGD SWITCH (OR APPROVED EQUAL) FOR ALL CONTROLERS.

PART 2 – LIGHTING CONTROL MODES

2.01 GENERAL

A. THE CONTROL SYSTEM SHALL OPERATE UNDER THREE CONTROL MODES:

1. AUTOMATIC MODE, THE TUNNEL LIGHTING SHALL BE CONTROLLED BASED UPON THE LUMINANCE MEASURED BY A PAIR OF PHOTOMETERS MOUNTED OUTSIDE THE TUNNEL;
2. LOCAL MANUAL MODE FROM THE LIGHTING CONTROL PANEL.
3. OFF MODE.

2.02 AUTOMATIC MODE

A. AS THE MEASURED LUMINANCE LEVEL RISES AND REACHES THE SET THRESHOLD POINT, THE CONTROL SYSTEM SHALL SWITCH ADDITIONAL REINFORCED LIGHTING STAGES ON. AS THE LUMINANCE LEVEL FALLS AND REACHES SET THRESHOLD POINTS, THE CONTROL SYSTEM SHALL SWITCH REINFORCED LIGHTING STAGES OFF.

B. TUNNEL ROADWAY LIGHTING - LEVEL 1 "NIGHT": THE SELECTOR SWITCH IN THE TUNNEL LIGHTING CONTROL PANEL SHALL BE IN THE "AUTO" POSITION. THE LUMINANCE METER LOCATED IN EACH PORTAL SENSES AMBIENT LIGHT LEVELS BELOW 100 CD/M^2. ALL LATCHING CONTACTORS AND RELAYS FOR THE TUNNEL LIGHTING SYSTEM ARE DE-ENERGIZED. NIGHTTIME LUMINANCE LEVELS WILL BE PROVIDED FOR THE TUNNEL FROM PORTAL TO PORTAL.

C. TUNNEL ROADWAY LIGHTING - LEVEL 2 "DAY" THROUGH LEVEL 6 "SUNNY": THE SELECTOR SWITCH IN THE TUNNEL LIGHTING CONTROL PANEL SHALL BE IN THE "AUTO" POSITION. THE LUMINANCE METER LOCATED AT THE PORTAL SENSES AMBIENT LIGHT LEVELS ABOVE 101CD/M^2. AS THE AMBIENT LIGHT LEVEL INCREASES OR DECREASES FROM "DAY" TO "SUNNY", LIGHTING CONTACTORS 'C1' AND 'C2' ENERGIZED OR DE-ENERGIZED DEPENDING ON THE REQUIRED PREDETERMINED LEVEL. ONCE ALL OF THE TUNNEL LIGHTING CONTACTORS FOR A LEVEL HAVE BEEN ENERGIZED, THE "WHITE" INDICATING LIGHT WILL BE ENERGIZED.

D. THE PHOTOMETERS PROVIDE A 4mA TO 20mA SIGNAL DIRECTLY PROPORTIONAL TO THE MEASURED LUMINANCE. THE CONTROL SYSTEM SHALL MONITOR BOTH INPUTS AND CHECK THEY ARE PRODUCING A SIGNAL LEVEL WITHIN ACCEPTABLE PARAMETERS. IF THE OUTPUT FROM PHOTOMETERS IS OUTSIDE OF NORMAL OPERATING PARAMETERS AN ALARM SHALL BE RAISED TO SCADA AT THE TRAFFIC CONTROL CENTER.

E. AUTOMATIC LIGHTING CONTROL MODE SHALL OPERATE AS FOLLOWS:

1. AUTOMATIC CONTROL IS ACTIVE DURING DAYLIGHT HOURS AND WHEN THE ENTRANCE LIGHTING CONTROL PANEL IS SET TO 'AUTO'.
2. WHEN THE EXTERNAL LUMINANCE, AS DETECTED BY THE EXTERNAL PHOTOMETERS, EXCEEDS A LUMINANCE THRESHOLD FOR A TIME GREATER THAN THE MINIMUM LEVEL DURATION, A NEW LIGHTING STAGE DEMAND IS SET (I.E. STAGE NUMBER SHALL INCREMENT). THE MINIMUM LEVEL DURATION ENABLES FLUCTUATIONS IN THE PHOTOMETER READINGS TO STABILIZE BEFORE SWITCHING TO THE NEXT LEVEL.
3. THE REQUIRED LIGHTING STAGES SHALL BE SWITCHED ON TO MEET THE LIGHTING DEMAND, PROVIDED THE MINIMUM STAGE DURATION TIME HAS EXPIRED FOR THE PREVIOUS STAGE. THIS PREVENTS RAPID CHANGES OF LIGHTING STAGES.
4. FURTHER INCREASE IN EXTERNAL LUMINANCE SHALL INCREASE THE STAGE DEMAND FURTHER, PROVIDING THE MINIMUM LEVEL DURATION HAS EXPIRED. THE APPROPRIATE LIGHTING STAGES SHALL THEN BE SWITCHED ON PROVIDING THE MINIMUM STAGE DURATION TIME FOR THE PREVIOUS STAGE HAS EXPIRED. THIS SHALL REPEAT UNTIL THE HIGHEST LIGHTING STAGE IS ACHIEVED, SHOULD THE EXTERNAL LUMINANCE DEMAND IT.
5. SHOULD THE EXTERNAL LUMINANCE REDUCE BELOW A LUMINANCE THRESHOLD FOR A TIME GREATER THAN THE MINIMUM LEVEL DURATION, THE LIGHTING STAGE DEMAND SHALL BE REDUCED. PROVIDING THE MINIMUM STAGE DURATION TIME HAS EXPIRED, THE LIGHTING STAGE DEMAND SHALL DECREMENT AND SWITCH LIGHTING STAGES OFF AS APPROPRIATE TO MEET THE STAGE DEMAND. THIS SHALL REPEAT UNTIL STAGE 2 IS ACHIEVED, SHOULD THE EXTERNAL LUMINANCE DEMAND IT.
6. ALL THE ABOVE LIGHTING STAGES SHALL BE ACHIEVED USING THE SWITCHING AND/OR DIMMING OF THE LAMPS AS APPROPRIATE.
7. OPERATION OF AUTOMATIC MANUAL CONTROL SHALL BE INDICATED ON THE SCADA SYSTEM.

2.03 LOCAL MANUAL CONTROL MODE

A. LOCAL MANUAL CONTROL SHALL BE PROVIDED ON THE LIGHTING CONTROL PANEL TO ENABLE THE LIGHTING STAGE DEMAND TO BE INCREMENTED OR DECREMENTED AS REQUIRED.

B. THE LOCAL CONTROL UNIT SHALL HAVE A SELECTOR SWITCH TO ENABLE "LOCAL MANUAL" MODE TO BE SELECTED.

C. THE MINIMUM STAGE DURATION FOR THE LIGHTING CONTROL PANEL SHALL NEED TO BE SATISFIED BEFORE SWITCHING ON OR OFF SUBSEQUENT LIGHTING STAGES.

D. OPERATION OF LOCAL MANUAL CONTROL SHALL BE INDICATED ON THE SCADA SYSTEM.

E. THIS SYSTEM SHALL ALSO HAVE ADEQUATE LOGIC SET UP THAT IN CASE OF FAILURE OF PART OR COMPLETE CONTROL SYSTEM, THE LIGHTING LEVEL IN THE TUNNEL CAN BE CONFIGURED TO REMAIN AT THE PREVIOUS OR MAXIMUM LEVEL.

2.04 OFF MODE

A. A SYSTEM OFF MODE SHALL BE PROVIDED ON THE LIGHTING CONTROL PANEL TO DISABLE THE SYSTEM AS REQUIRED.

B. THE OFF MODE SHALL DISABLE LED DRIVER DIMMING, RETURNING THE LUMINAIRES TO FULL LUMINOUS OUTPUT. ALL TUNNEL LIGHTING CONTACTORS SHALL REMAIN IN THEIR LAST LATCHED POSITION.

C. SWITCHING THE TUNNEL LIGHTING CONTROL SYSTEM TO 'OFF' SHALL BE INDICATED ON THE SCADA SYSTEM.

PART 3 - PHOTOELECTRIC CONTROL

3.01 GENERAL

A. THE REINFORCED LIGHTING STAGES SHALL BE SWITCHED ON AND TURNED OFF AUTOMATICALLY IN SEQUENCE AS THE DAY LIGHT INTENSITY INCREASES OR DECREASES. THE AUTOMATIC OPERATION FOR THESE STAGES SHALL BE CONTROLLED BY PHOTOMETERS MOUNTED ON POLES AT EACH PORTAL, USING THE AVERAGE VALUE.

B. THE EXISTING PHOTOMETER CAMERAS WILL BE REMOVED AND THE NEW CAMERAS SHALL BE MOUNTED 13-16 FEET ABOVE THE ROAD, ON THE EXISTING POLES.

C. EACH PHOTOMETER SHALL BE ADJUSTED, DEPENDENT ON ITS LOCATION, TO REPLICATE THE REQUIRED 20° ANGLE OF VIEW AS RECOMMENDED IN RP-22. EACH PHOTOMETER SHALL BE HOUSED IN A MINIMUM WEATHERPROOF HOUSING TO IP66 OR NEMA 4 ENCLOSURE COMPLETE WITH WASH AND WIPE UNIT AND INTEGRAL ANTI-CONDENSATION HEATER. EQUIP THE PHOTOMETER HOUSING WITH A LINE VOLTAGE RESISTANCE HEATER ELEMENT AND TEMPERATURE SENSOR TO PREVENT SNOW AND ICE FROM OBSCURING THE SENSOR LENS. THE WASH AND WIPE FUNCTION SHALL BE ACTIVATED AUTOMATICALLY ONCE A DAY AT A PRE-DETERMINED TIME, WHICH SHALL BE AGREED WITH THE ENGINEER.

D. THE PHOTOMETERS SHALL TRANSMIT LUMINANCE VALUES TO THE TUNNEL LIGHTING CONTROL SYSTEM WHICH SHALL SWITCH OR DIM THE LUMINAIRES TO ACHIEVE THE REQUIRED LUMINANCE LEVEL. THE PHOTOMETERS SHALL BE SWITCHED

c:\pwworking\hmm\external\pre47802\dms72803\87268LN006.dgn 8/13/2015 3:05:24 PM PRE47802

ON AND OFF AT SUNRISE AND SUNSET RESPECTIVELY BY THE SOLAR TIME CLOCK.

E. THE PHOTOMETERS SHALL BE SUITABLE TO MEASURE THE AMBIENT LIGHT LEVEL WITHIN THE RANGE 1 CD/M^2 TO 10,000 CD/M^2.

F. THE PHOTOMETERS SHALL BE OF SOLID STATE DESIGN AND SHALL COMPRISE A SILICON PHOTODIODE WITH OPTICAL SYSTEM FOR LUMINANCE MEASUREMENT, A RAIN AND SUN HOOD, A THERMOSTATICALLY CONTROLLED HEATED GLASS SCREEN, AN AMPLIFIER WITH A 4-20MA CURRENT OUTPUT CHARACTERISTIC. ACCURACY SHALL BE BETTER THAN ± 3%WITH FACILITY FOR CALIBRATION AT LOWER AND UPPER LUMINANCE VALUES. THE PHOTOMETER 4-20MA SIGNAL SHALL BE SENT TO THE TUNNEL LIGHTING CONTROLLER. THE CONTROLLER SHALL HAVE CONTROL OF THE LED FIXTURES WITH SEPARATE NIGHT AND DAY OUTPUT LEVELS. THE CONTROLLER ALSO ADDITIVELY CONTROLS DAYTIME THRESHOLD AND TRANSITION LIGHTING BY SWITCHING FEEDER CONTACTOR TO ENERGIZE ENTIRE PANELBOARDS.

G. THE MOUNTING BRACKET SHALL BE, EPOXY COATED (FOUR MILS THICK) STEEL BRACKET ARM WHICH SHALL BE ADJUSTABLE TO ALLOW FOR THE AIMING OF THE LUMINANCE METER IN AT LEAST TWO ANGLES OF ROTATION.

H. THE PHOTOMETER POLES SHALL HAVE A HOT DIPPED GALVANIZED FINISH. ALL EXTRANEOUS CONDUCTIVE PARTS OF THE POLE SHALL BE BONDED TO GROUND IN ACCORDANCE WITH NEC70.

I. PROVIDE SURGE PROTECTION AT THE VOLTAGE INPUTS OF THE PHOTOMETER AND CONTROLLER TO PROTECT THE UNIT FROM LIGHTNING STRIKES AND VOLTAGE SPIKES.

1. 120VAC CONTROL POWER IS PROTECTED AT 330V PEAK, WITH 5KA SURGE FOR 850MICROSECONDS AND <5NANOSECOND REPONSE TIME.
2. 24VDC.POWER IS PROTECTED AT 32VDC PEAK WITH 50V@134V MAXIMUM BASED ON 10MICROSECOND SPIKE IN 1 SECOND PERIOD.

J. TESTING: THE PHOTO LIGHTING CONTROL SYSTEM SHALL BE FACTORY TESTED TO ENSURE PROPER OPERATION OF ALL SWITCHING CONTROLS, ANALOG AND DIGITAL TRANSMISSIONS, AND OPERATOR INTERFACE. THE SYSTEM SHALL BE MODEL T57-6 AS MANUFACTURED BY PLC-MULTIPOINT INC. OR APPROVED EQUAL.

K. CERTIFICATION: THE PHOTO LIGHTING CONTROL SYSTEM SHALL BE ETL CERTIFIED TO COMPLY WITH THE STANDARDS OF UL/ANSI 508A FOR INDUSTRIAL CONTROL EQUIPMENT.

L. START-UP: A FACTORY AUTHORIZED TECHNICIAN SHALL PERFORM SYSTEM STARTUP INCLUDING: SENSOR CALIBRATION, LOOP CHECKOUT, AND COMMISSIONING.

M. WARRANTY: THE PHOTOMETERS AND LIGHTING CONTROL SYSTEM SHALL BE WARRANTED FOR TWO YEARS.

N. THE EXISTING CAMERAS AND ALL THE CABLES AND CONDUITS THAT ARE PART OF THE PHOTOELECTRIC CONTROL SYSTEM WILL BE REMOVED AND NEW CAMERAS AND APPROPRIATE CABLES WILL BE INSTALLED. CONTRACTOR SHALL SUBMIT THE SEQUENCE OF OPERATIONS AND A SCHEDULE TO BE APPROVED BY THE ENGINEER.

PART 4 - METHOD OF PAYMENT AND ITEMS

4.01 METHOD OF PAYMENT AND ITEMS

A. PAYMENT FOR LIGHTING CONTROL ITEMS SHALL BE MADE AT THE CONTRACT UNIT PRICE, INCLUDING BUT NOT LIMITED TO ALL WORK, LABOR, EQUIPMENT, AND MATERIALS NECESSARY THEREFORE OR INCIDENTAL THERETO AS FOLLOWS:

ITEM NO.	DESCRIPTION	UNIT
625	LIGHTING, MISC.: LIGHTING CONTROL PANEL	EACH
625	LIGHTING, MISC.: REMOTE DIMMING ENCLOSURE	EACH
625	LIGHTING, MISC.: NO. 12 AWG BELDEN 3103S CONTROL CABLE	FT
625	LIGHTING, MISC.: CONTACTORS, 480V, 3 PH, 3 POLE, 100A	EACH
625	LIGHTING, MISC.: PHOTOMETRIC CAMERA	EACH
625	LIGHTING, MISC.: PHOTOMETER REMOVED	EACH

B. REFER TO THE GENERAL NOTES ON TUNNEL LIGHTING, RACEWAYS AND BOXES, CONDUCTORS AND CABLES, HANGERS AND SUPPORTS, AND ELECTRICAL DEMOLITION FOR OTHER PAY ITEMS ASSOCIATED WITH THE INSTALLATION OF THE TUNNEL LIGHTING SYSTEM.

CALCULATED DGC
CHECKED MK

LIGHTING GENERAL NOTES

HAM-71-01.34

c:\pwworking\hmm\external\tyn6l470\dms72803\8726LN007.dgn 10/24/2014 12:32:16 PM TYN6l470

ITEM NO.						625	625	625	625	625	625	625	625	625	625	625	625	625	625	625	625
SHEET NO.	SIDE	ROADWAY	STATION FROM	STATION TO	DISTANCE	CONDUIT, 3/4", 725.04	CONDUIT, 1", 725.04	CONDUIT, 1-1/4", 725.04	CONDUIT, 1-1/2", 725.04	CONDUIT, 2", 725.04	CONDUIT, 2-1/2", 725.04	CONDUIT, MISC.: 3/4" LFMC	CONDUIT, MISC.: 3/4" EMERGENCY LIGHTING CONDUIT	CONDUIT, MISC.: 2" EMT CONDUIT	LUMINAIRE, MISC.: 32W, T8 LINEAR FLOURESCENT	LUMINAIRE, MISC.: EXIT SIGN 34W, LED	LUMINAIRE, SOLID-STATE (LED), MISC.: TYPE A	LUMINAIRE, SOLID-STATE (LED), MISC.: TYPE B	LUMINAIRE, SOLID-STATE (LED), MISC.: TYPE C	LUMINAIRE, SOLID-STATE (LED), MISC.: TYPE D	LUMINAIRE, SOLID-STATE (LED), MISC.: TYPE E	LUMINAIRE, SOLID-STATE (LED), MISC.: TYPE F
			FROM	TO	FT	FT	FT	FT	FT	FT	FT	FT	FT	FT	EACH	EACH	EACH	EACH	EACH	EACH	EACH	EACH
208	EW	NB	127+00.00	129+32.30	232	278	278	278	557		278	368	232				92	92				
209	EW	NB	129+32.30	131+62.25	230	276	276	414	552		278	288	230				92	52				
210	EW	NB	131+62.25	133+92.73	230	276	276	552			276	202	230				83	18				
211	EW	NB	133+92.73	135+94.50	202	120	242	120			242	80	202				40					
212	WW	NB	127+00.00	129+32.45	232	240	278	240	554		554	368	232				92	92				
213	WW	NB	129+32.45	131+62.77	230	276	276	534	276		276	284	230				92	50				
214	WW	NB	131+62.77	133+93.40	231	277	554	277			277	194	231				80	17				
215	WW	NB	133+93.40	135+74.00	181	120	217	120			217	68	181				34					
219	EW	SBR	135+64.51	134+13.49	151		360	120	181		181	158	151								50	29
218	EW	SBR	134+13.49	131+83.00	230		552	276	276		276	230	230								77	38
217	EW	SBR	131+83.00	129+52.27	231		554	277	60		277	170	231								77	13
216	EW	SBR	129+52.27	126+86.00	266		319	180			181	100	242								48	2
220	WW	SBR	126+86.00	129+52.27	266		300	276			319	134	151								45	2
221	WW	SBR	129+52.27	127+22.30	230		516	480	60		276	178	230								76	13
222	WW	SBR	127+22.30	124+91.11	231		554	277	277		277	228	231								77	37
223	WW	SBR	135+64.51	134+17.25	147		176	120	176		176	154	105								48	29
227	EW	SB	133+57.00	132+48.18	109	60	102	60		204	102	156	85						36	42		
226	EW	SB	132+48.18	130+15.80	232	278	278	278		557	278	338	232						77	92		
225	EW	SB	130+15.80	127+87.75	228	274	274	516		120	274	204	228						76	26		
224	EW	SB	127+87.75	125+40.00	248	264	298	444			298	172	248						70	16		
231	WW	SB	133+57.00	132+75.24	82	96	60			197	98	116	12						26	32		
230	WW	SB	132+75.24	130+44.76	230	552		276		552	276	338	230						77	92		
229	WW	SB	130+44.76	128+15.72	229	552		414		275	275	218	229						74	35		
228	WW	SB	128+15.72	125+40.00	276	360		540			331	168	210						69	15		
200	ER													1836								
242	ER					430	674	707	297	190	630											
243	ER					215	337	354	149	95	315											
244	ER					215	337	354	149	95	315											
464	ER														144	26						
TOTALS CARRIED TO GENERAL SUMMARY						5160	8092	8485	3564	2286	7556	4914	4815	1836	144	26	605	321	505	350	498	163

LEGEND

SB	Southbound
NB	Northbound
SBR	Southbound Ramp
ER	Equipment Room
WW	West Wall
EW	East Wall

CALCULATED DGC CHECKED MK

LIGHTING SUBSUMMARY

HAM-71-1.34

I:\projects\HAM\ir071\01.34_PID87268\Design\docs\Plan Package\Current CADD Files\Lighting\Sheets\87268LS001.dgn 3/24/2015 9:04:16 AM akgenig

ITEM NO.						625	625	625	625	625	625	625	625	625	625	625	625	625	625	625	
SHEET NO.	SIDE	ROADWAY	STATION FROM	STATION TO	DISTANCE	JUNCTION BOX, AS PER PLAN (NEMA 4X S.S. 20"X12"X6")	JUNCTION BOX, AS PER PLAN (LIGHTING CONTROL NEMA 4X S.S. 6"X6"X3")	JUNCTION BOX, AS PER PLAN (LIGHTING CONTROL NEMA 4X S.S. 8"X8"X6")	LIGHTING, MISC.: CABLE TROUGH (NEMA 3R 78"x12"x6")	LIGHTING, MISC.: PANEL (NEMA 3R, 3P/4W, 600A MCB)	LIGHTING, MISC.: PANEL (NEMA 3R, 3P/4W, MLO)	LIGHTING, MISC.: PANEL (NEMA 3R, 3P/4W, 60A MCB)	LIGHTING, MISC.: S.S. CHANNEL (1 5/8" X 1 5/8")	LIGHTING, MISC.: S.S. CHANNEL (1 5/8" X 3 1/4")	DISTRIBUTION CABLE, MISC.: NO. 8 AWG, 277 VOLT, RHW-2, LSZH	DISTRIBUTION CABLE, MISC.: NO. 10 AWG, 277 VOLT, RHW-2, LSZH	DISTRIBUTION CABLE, MISC.: NO. 10 AWG, 277 VOLT, RHW-2, LSZH, GND	DISTRIBUTION CABLE, MISC.: NO. 3/0 AWG, 277 VOLT, RHW-2, LSZH	DISTRIBUTION CABLE, MISC.: NO. 6 AWG, 277 VOLT, RHW-2, LSZH GND	LIGHTING, MISC.: SPRAY-APPLIED FIREPROOFING	LIGHTING, MISC.: TESTING AND COMMISSIONING	
					FEET	EACH	EACH	EACH	EACH	EACH	EACH	EACH	FT	FT	FT	FT	FT	FT	FT	SF	LUMP	
208	EW	NB	127+00.00	129+32.30	232	92	98	1					1975		28380	13134	10379			116		
209	EW	NB	129+32.30	131+62.25	230	72	78	1					1539							115		
210	EW	NB	131+62.25	133+92.73	230	51	57	1					1396							115		
211	EW	NB	133+92.73	135+94.50	202	20	25	1					908							101		
212	WW	NB	127+00.00	129+32.45	232	92	98	1					1976		28710	8540	9313			116		
213	WW	NB	129+32.45	131+62.77	230	71	76	1					1536							115		
214	WW	NB	131+62.77	133+93.40	231	49	54	1					1377							115		
215	WW	NB	133+93.40	135+74.00	181	17	21	1					813							90		
219	EW	SBR	135+64.51	134+13.49	151	40	42	1					982		24530	12628	9290			76		
218	EW	SBR	134+13.49	131+83.00	230	58	62	1					1498							115		
217	EW	SBR	131+83.00	129+52.27	231	43	46	1					1500							115		
216	EW	SBR	129+52.27	126+86.00	266	25	27	1					1294							133		
220	WW	SBR	126+86.00	129+52.27	266	34	36	1					1287		20741	5500	6560			133		
221	WW	SBR	129+52.27	127+22.30	230	45	48	1					1495							115		
222	WW	SBR	127+22.30	124+91.11	231	57	60	1					1503							116		
223	WW	SBR	135+64.51	134+17.25	147	39	41	1					957							74		
227	EW	SB	133+57.00	132+48.18	109	39	40	1					925		39578	14960	13635			54		
226	EW	SB	132+48.18	130+15.80	232	85	89	1					1975							116		
225	EW	SB	130+15.80	127+87.75	228	51	53	1					1482							114		
224	EW	SB	127+87.75	125+40.00	248	43	47	1					1507							124		
231	WW	SB	133+57.00	132+75.24	82	29	30	1					695		39182	6500	11421			41		
230	WW	SB	132+75.24	130+44.76	230	85	88	1					1959							115		
229	WW	SB	130+44.76	128+15.72	229	55	58	1					1494							115		
228	WW	SB	128+15.72	125+40.00	276	42	45	1					1109							138		
200	ER																	3672	1836			
242	ER								6	2	18	3		600	18112	6126	6060					
243	ER														9056	3063	3030					
244	ER														9056	3063	3030					
464	ER																					
TOTALS CARRIED TO GENERAL SUMMARY						1229	1319	24	6	2	18	3	33180	600	217345	73515	72715	3672	1836	2578	LUMP	

LEGEND	
SB	Southbound
NB	Northbound
SBR	Southbound Ramp
ER	Equipment Room
WW	West Wall
EW	East Wall

CALCULATED DGC
CHECKED MK

LIGHTING SUBSUMMARY

HAM-71-1.34

I:\projects\HAM\ir071\01.34_PID87268\Design\docs\Plan Package\Current CADD Files\Lighting\Sheets\87268_LS004.dgn 1/27/2015 9:43:52 AM akoenig

ITEM NO.						625	625	625	625	625	625	625	625	625								
SHEET NO.	SIDE	ROADWAY	STATION		DISTANCE	CONDUIT, MISC.: REMOVE 2" EMT CONDUIT	LUMINAIRE REMOVED	POWER SERVICE REMOVED	LUMINAIRE SUPPORT REMOVED	DISTRIBUTION CABLE REMOVED	DISCONNECT CIRCUIT	LIGHTING, MISC.: LIGHTING DISTRIBUTION PANELS REMOVED	LIGHTING, MISC.: LIGHTING CONTROL PANEL REMOVED	LIGHTING, MISC.: PHOTOMETER REMOVED								
			FROM	TO	FEET	FT	EACH	EACH	EACH	FT	EACH	EACH	EACH	EACH								
202-203	EW	NB	127+00.00	135+74.00	874	2622	70		70	13515	15			1								
202-203	WW	NB	127+00.00	135+74.00	874	2622	66		66	13515	15											
202-203	EW	SBR	135+64.51	126+86.00	879	2636	151		151	8312	9											
202-203	WW	SBR	135+64.51	126+86.00	879	2636	150		150	8312	9											
202-203	EW	SB	133+57.00	125+40.00	817	2451	148		148	12255	15			1								
202-203	WW	SB	133+57.00	125+40.00	817	2451	142		142	12660	15											
201		ER			0	1215	84	2		1215	15	18	1									
TOTALS CARRIED TO GENERAL SUMMARY					5139	16633	811	2	727	69784	93	18	1	2								

LEGEND	
SB	Southbound
NB	Northbound
SBR	Southbound Ramp
ER	Equipment Room
WW	West Wall
EW	East Wall

CALCULATED DGC
CHECKED MK

LIGHTING DEMOLITION SUBSUMMARY

HAM-71-1.34

196
555

c:\pwworking\hmm\externol\pre47802\dms72803\87268LS002.dgn 10/22/2015 11:25:03 AM PRE47802

SHEET NO.	REFERENCE NO.	SIDE	ROADWAY	ITEM NO. STATION FROM	TO	DISTANCE	625 LIGHTING MISC.: REMOTE DIMMING ENCLOSURE (NEMA 4X S.S. 16"x14"x6")	625 LIGHTING, MISC.: LIGHTING CONTROL PANEL	625 LIGHTING, MISC.: PHOTOMETRIC CAMERA	625 LIGHTING, MISC.: CONTACTORS, 480V, 3 PH, 3 POLE, 100A	625 LIGHTING, MISC.: 2/C #12 AWG BELDEN 3103S LIGHTING CONTROL CABLE
				FROM	TO	FT	EACH	EACH	EACH	EACH	FT
208		EW	NB	127+00.00	129+32.30	232.30	1				
209		EW	NB	129+32.30	131+62.25	229.95	1				894
210		EW	NB	131+62.25	133+92.73	230.48	1				
211		EW	NB	133+92.73	135+94.50	201.76	1				
212		WW	NB	127+00.00	129+32.45	232.45	1				
213		WW	NB	129+32.45	131+62.77	230.32	1				874
214		WW	NB	131+62.77	133+93.40	230.64	1				
215		WW	NB	133+93.40	135+74.00	180.60	1				
	I.R.-71 NORTHBOUND SUBTOTAL TO GENERAL SUMMARY						8	0	0	0	1768
219		EW	SBR	135+64.51	134+13.49	151.02	1				
218		EW	SBR	134+13.49	131+83.00	230.50	1				879
217		EW	SBR	131+83.00	129+52.27	230.73	1				
216		EW	SBR	129+52.27	126+86.00	266.27	1				
223		WW	SBR	135+64.51	134+17.25	147.27	1				
222		WW	SBR	134+17.25	131+86.05	231.19	1				879
221		WW	SBR	131+86.05	129+56.08	229.97	1				
220		WW	SBR	129+56.08	126+86.00	270.08	1				
	I.R.-71 SOUTHBOUND RAMP E SUBTOTAL TO GENERAL SUMMARY						8	0	0	0	1757
227		EW	SB	133+57.00	132+48.18	108.82	1				
226		EW	SB	132+48.18	130+15.80	232.38	1				817
225		EW	SB	130+15.80	127+87.75	228.05	1				
224		EW	SB	127+87.75	125+40.00	247.75	1				
231		WW	SB	133+57.00	132+75.24	81.76	1				
230		WW	SB	132+75.24	130+44.76	230.48	1				817
229		WW	SB	130+44.76	128+15.72	229.03	1				
228		WW	SB	128+15.72	125+40.00	275.72	1				
	I.R.-71 SOUTHBOUND SUBTOTAL TO GENERAL SUMMARY						8	0	0	0	1634
		NB	ER					1		4	
		SB	ER					1		4	600
		SBR	ER							4	
		NB	TE						1		
		SB	TE						1		
		SBR	TE								
	EQUIPMENT ROOM AND TUNNEL ENTRANCE SUBTOTAL						0	2	2	12	600
	TOTALS CARRIED TO GENERAL SUMMARY						24	2	2	12	5760

LEGEND	
SB	Southbound
NB	Northbound
SBR	Southbound Ramp
ER	Equipment Room
TE	Tunnel Entrance
WW	West Wall
EW	East Wall

CALCULATED DGC
CHECKED MK

LIGHTING CONTROL SUBSUMMARY

HAM-71-1.34

e:\pwworking\hmm\external\tyn61470\dms72803\8726PLS003.dgn 10/24/2014 12:32:47 PM T:N61470

c:\pwworking\hmm\external\tyn61470\dms72803\87268LB001.dgn 10/24/2014 5:00:42 PM TYN61470

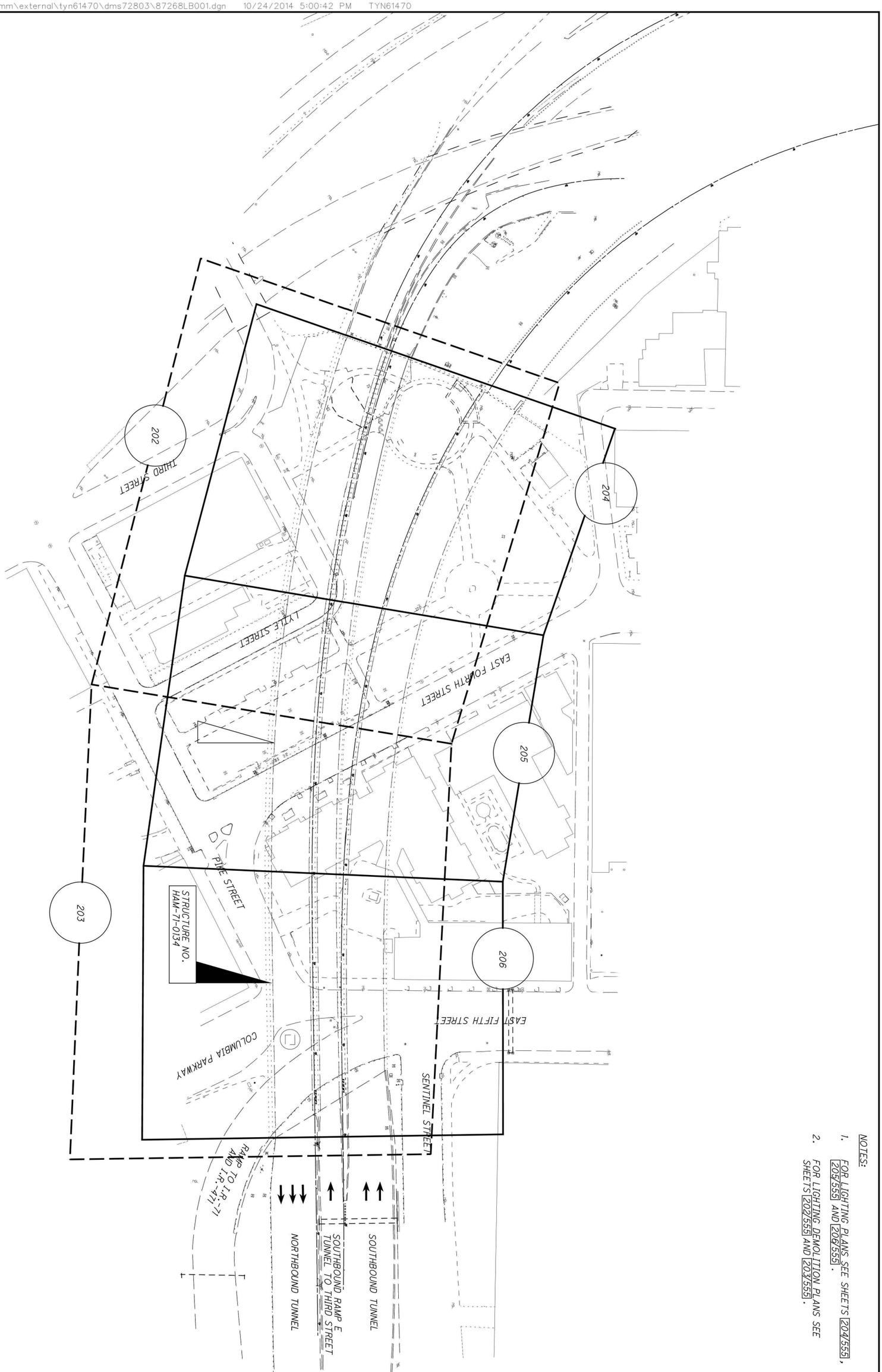

NOTES:

1. FOR LIGHTING PLANS SEE SHEETS 204/555, 205/555 AND 206/555.
2. FOR LIGHTING DEMOLITION PLANS SEE SHEETS 202/555 AND 203/555.

198 555	HAM-71-1.34	LIGHTING SCHEMATIC PLAN INTERSTATE 71	CALCULATED MK / CHECKED DGC	0 50 / 25 100 HORIZONTAL SCALE IN FEET	N

ABBREVIATIONS:

A OR AMP	AMPERES
ACT	ABOVE COUNTER TOP (6")
AF	AMP FRAME
AFF	ABOVE FINISHED FLOOR
AHU	AIR HANDLING UNIT
AI	ANALOG INPUT
AIC	AMPERE INTERRUPTING CAPACITY
AM	AMMETER
ANSI	AMERICAN NATIONAL STANDARDS INSTITUTE
AO	ANALOG OUTPUT
APPROX	APPROXIMATELY
AS	AMMETER SELECTION SWITCH
ASYM	ASYMMETRICAL
AT	AMP TRIP
ATS	AUTOMATIC TRANSFER SWITCH
AUX	AUXILIARY
AWG	AMERICAN WIRE GAUGE
BLDG	BUILDING
C, CDT	CONDUIT
CB	CIRCUIT BREAKER
CKT	CIRCUIT
CLF	CURRENT LIMITING FUSE
CO	COMPANY
COL	COLUMN
CNTL	CONTROL
CPU	CENTRAL PROCESSING UNIT
CS	COMBINATION STARTER
CT	CURRENT TRANSFORMER
Cu	COPPER
DA4	DIGITAL-TO-ANALOG CONVERTER
DI	DIGITAL INPUT
DIA	DIAMETER
DN	DAY/NIGHT
DO	DIGITAL OUTPUT
DS OR DISC	DISCONNECT SWITCH
DWG(S)	DRAWING(S)
EG	EQUIPMENT GROUND
EGC	EQUIPMENT GROUND CONDUCTOR
EKI-7559SI	FIBER OPTIC & ETHERNET PORT
ELEC	ELECTRIC, ELECTRICAL
EM	EMERGENCY
EMT	ELECTRICAL METALLIC TUBING
EOL	END OF LINE
ESTOP	EMERGENCY STOP
EX	EXISTING
EXP	EXPLOSION PROOF
F	FUSE
F/C	FIBER-TO-COPPER ETHERNET SWITCH
FCR	FLOAT CONTROL RELAY
FL OR FLR	FLOOR
FT	FEET
G OR GND	GROUND
GA	GAUGE
GALV	GALVANIZED
GEC	GROUNDING ELECTRODE CONDUCTOR
GEN	GENERATOR
GF	GROUND FAULT
GFCI	GROUND FAULT CIRCUIT INTERRUPTER
GFI	GROUND FAULT INTERRUPTER
HMI	HUMAN MACHINE INTERFACE
HOA	HAND-OFF-AUTOMATIC
HP	HORSEPOWER
HVAC	HEATING, VENTILATION & AIR CONDITIONING
IES	ILLUMINATING ENGINEERING SOCIETY
IESNA	ILLUMINATING ENGINEERING SOCIETY OF NORTH AMERICA
IG	ISOLATED GROUND
ISBR	INTRINSICALLY SAFE BARRIER RELAY
IMC	INTERMEDIATE METAL CONDUIT
IN	INCH
IR	INFRARED
ISCA	INSTANTANEOUS SHORT CIRCUIT AVAILABLE
IV	CURRENT-VOLTAGE CONVERTER
JB OR J	JUNCTION BOX
kVA	KILOVOLT - AMPS
kW	KILOWATTS
kWH	KILOWATT-HOUR
L	LENGTH
LA	LIGHTNING ARRESTOR
LED	LIGHT EMITTING DIODE
LFMC	LIQUIDTIGHT FLEXIBLE METAL CONDUIT
LP	LIGHTING PANEL
LTG	LIGHTING
MAX	MAXIMUM
MCB OR MB	MAIN CIRCUIT BREAKER
MCC	MOTOR CONTROL CENTER
MECH	MECHANICAL
MER	MECHANICAL EQUIPMENT ROOM
MFR	MANUFACTURER
MH OR MTG	MOUNTING HEIGHT
MIN	MINIMUM
MLO	MAIN LUGS ONLY
MS	MANUAL SWITCH
MTD	MOUNTED
N	NEUTRAL

ABBREVIATIONS (CONT.):

NC	NORMALLY CLOSED
NEC	NATIONAL ELECTRICAL CODE
NEMA	NATIONAL ELECTRICAL MANUFACTURERS ASSOCIATION
NF	NON-FUSIBLE
NFPA	NATIONAL FIRE PROTECTION ASSOCIATION
No.	NUMBER
NO	NORMALLY OPEN
NTS	NOT TO SCALE
O.C.	ON CENTER
OCPD	OVERCURRENT PROTECTIVE DEVICE
O/F	OVERFILL
OHE	OVERHEAD ELECTRICAL
OSHA	OCCUPATIONAL SAFETY & HEALTH ADMINISTRATION
P	POLE
PERM	PERMANENT
PFC	POWER FACTOR CAPACITOR
PH OR ϕ	PHASE
PLC	PROGRAMMABLE LOGIC CONTROLLER
PNL	PANEL
PR	PAIR
PS	POWER SUPPLY
PTT	PUSH-TO-TEST BUTTON
PVC	POLYVINYL CHLORIDE CONDUIT
PWR	POWER
R&R	REMOVE AND RELOCATE
R	RELOCATE
RDE	REMOTE DIMMING ENCLOSURE
RE	RELOCATED
RECEPT	RECEPTACLE
REF	REFERENCE
RGS	RIGID GALVANIZED STEEL
RMS	ROOT MEAN SQUARE
SF	SEAL FITTING
SH	SHIELDED
SS	STAINLESS STEEL
SPD	SURGE PROTECTION DEVICE
SPH-OIP	SINGLE PANEL HOUSING (PROTECTION & TERMINATION OF FIBER OPTIC)
SW	SWITCH
SWBD	SWITCHBOARD
SYM	SYMMETRICAL
TB	TERMINAL BLOCK
TEL	TELEPHONE
TLCP	TUNNEL LIGHTING CONTROL PANEL
TWIS	TWISTED INDIVIDUAL SHIELD
TWOS	TWISTED OUTER SHIELD
TYP	TYPICAL
UG	UNDERGROUND
UL	UNDERWRITER'S LABORATORIES
UPS	UNINTERRUPTIBLE POWER SUPPLY
UV	ULTRAVIOLET
V	VOLTS
VA	VOLT AMPS
VAC	VOLTS ALTERNATING CURRENT
VDC	VOLTS DIRECT CURRENT
VFD	VARIABLE FREQUENCY DRIVE
VM	VOLTMETER
VMS	VOLTMETER SELECTOR SWITCH
W	WATT
W/	WITH
W/O	WITHOUT
WM	WATTMETER
WP	WEATHER PROOF
XFMR	TRANSFORMER

LIGHTING LEGEND:

LED TUNNEL LIGHTING FIXTURE
WALL MOUNTED
TYPES 'A', 'C' OR 'E'
(PLAN VIEW)

LED TUNNEL LIGHTING FIXTURE
WALL MOUNTED
TYPES 'B', 'D' OR 'F'
(PLAN VIEW)

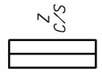

LED TUNNEL LIGHTING FIXTURE
WALL MOUNTED
TYPES 'A', 'C' OR 'E'
(PROFILE VIEW)

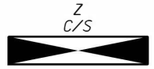

LED TUNNEL LIGHTING FIXTURE
WALL MOUNTED
TYPES 'B', 'D' OR 'F'
(PROFILE VIEW)

FIXTURE TAG, DESIGNATIONS:
FOR 'Z':
XEM - EMERGENCY LIGHTING
XLP1 - LIGHTING PANEL 1
XLP2 - LIGHTING PANEL 2
XDN - DAY/NIGHT LIGHTING
FOR 'X':
N - NORTHBOUND TUNNEL
S - SOUTHBOUND TUNNEL
R - SOUTHBOUND RAMP E TUNNEL TO 3RD STREET
NE - NORTHBOUND EAST TUNNEL WALL
NW - NORTHBOUND WEST TUNNEL WALL
SE - SOUTHBOUND EAST TUNNEL WALL
SW - SOUTHBOUND WEST TUNNEL WALL
RE - SOUTHBOUND RAMP EAST TUNNEL WALL
RW - SOUTHBOUND RAMP WEST TUNNEL WALL

FOR 'C':
CIRCUIT NUMBER

FOR 'S':
SEQUENTIAL REFERENCE

CAMERA RECEPTACLE

LIGHTING CONTROLS:

LUMINANCE CAMERA

LIGHTING CONTACTOR

REMOTE DIMMING ENCLOSURE

POWER CIRCUITS

CONTROL CIRCUITS

RACEWAYS:

CONDUIT RUN CONCEALED ABOVE CEILING OR IN WALLS

CONDUIT RUN BELOW GRADE OR IN SLAB

HOMERUN TO PANELBOARD. MINIMUM CONDUIT SIZE SHALL BE 3/4".
'XX-XX' PANELBOARD NAME
'YY' CIRCUIT NAME

FLEXIBLE CONDUIT

CONDUIT TURNING DOWN

CONDUIT TURNING UP

CONDUIT CAP

PROPOSED PULL BOX OR JUNCTION BOX

CABLE TRAY (DRAWN TO SCALE ON PLANS)
'XX-XX' PANELBOARD NAME

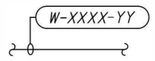

CABLE TAG, DESIGNATIONS:
FOR 'W':
H - POWER (>5kVAC)
M - POWER (601-4999VAC)
P - POWER (241-600VAC)
L - POWER (51-240VAC)
D - DC POWER
C - CONTROL (TO A STARTER)
I - INSTRUMENTATION (TO A PLC)
E - EMERGENCY SHUT DOWN
F - FIBER OPTIC COMMUNICATIONS
O - OTHER COMMUNICATIONS
G - GROUNDING
FOR 'XXXX':
EQUIPMENT REFERENCE
FOR 'YY':
ALPHANUMERIC SUFFIX AS NEEDED

CONDUIT TAG, DESIGNATIONS:
FOR 'W':
H - POWER (>5kVAC)
M - POWER (601-4999VAC)
P - POWER (241-600VAC)
L - POWER (51-240VAC)
D - DC POWER
C - CONTROL
I - INSTRUMENTATION (TO A PLC)
E - EMERGENCY SHUT DOWN
F - FIBER OPTIC COMMUNICATIONS
O - OTHER COMMUNICATIONS
G - GROUNDING
T - TEMPORARY
FOR 'YYY':
ALPHANUMERIC SUFFIX AS NEEDED

CALCULATED DGC
CHECKED MK

LIGHTING LEGEND AND ABBREVIATIONS

LIGHTING

HAM-71-1.34

c:\pwworking\hmm\external\ty16470\dms728031\8768LW001.dgn 10/24/2014 12:32:54 PM TYN6470

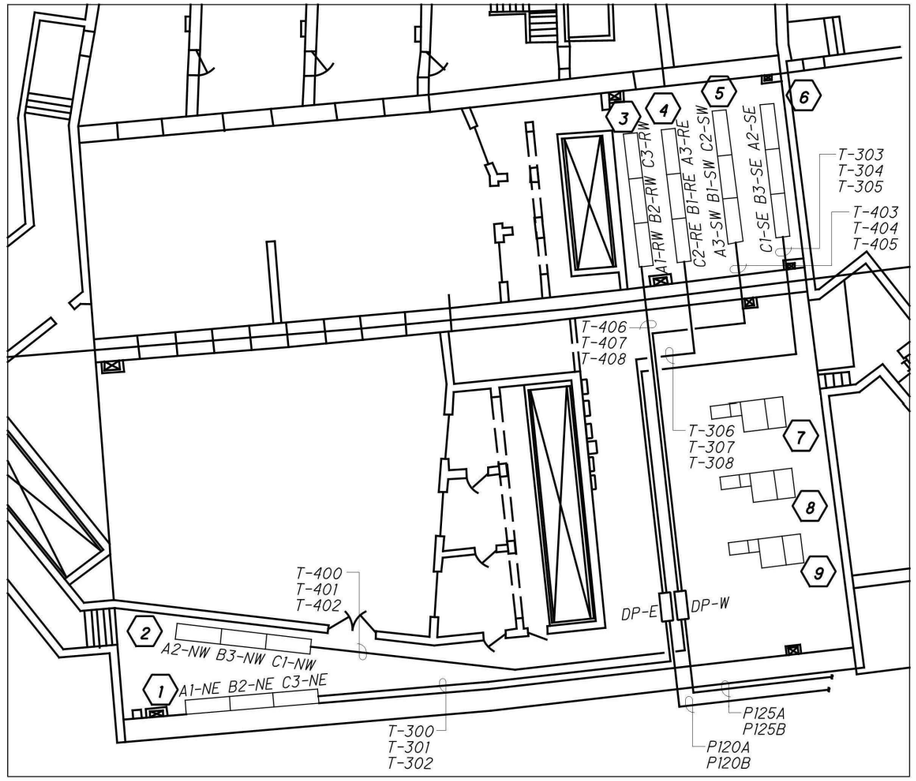

TEMPORARY LIGHTING - EXISTING MAINTENANCE BUILDING PLAN

SCALE: N.T.S.

KEYNOTE LEGEND:

1. LIGHTING DISTRIBUTION BOARDS, NORTHBOUND - EAST WALL
2. LIGHTING DISTRIBUTION BOARDS, NORTHBOUND - WEST WALL
3. LIGHTING DISTRIBUTION BOARDS, SOUTHBOUND RAMP - WEST WALL
4. LIGHTING DISTRIBUTION BOARDS, SOUTHBOUND RAMP - EAST WALL
5. LIGHTING DISTRIBUTION BOARDS, SOUTHBOUND - WEST WALL
6. LIGHTING DISTRIBUTION BOARDS, SOUTHBOUND - EAST WALL
7. MAIN SERVICE SWITCHBOARD NO. 1, 460Y/265V-3PH-4W
8. MAIN SERVICE SWITCHBOARD NO. 2, 460Y/265V-3PH-4W
9. MAIN SERVICE SWITCHBOARD NO. 2, 460Y/265V-3PH-4W

TEMPORARY SEQUENCING:

1. TUNNEL ROADWAY LIGHTING IS TO BE MAINTAINED AT ALL TIMES THROUGHOUT THE CONSTRUCTION PHASE. THE FOLLOWING NOTES DETAIL A SUGGESTED CONSTRUCTION SEQUENCE, CONTRACTOR TO SUBMIT THE PROPOSED CONSTRUCTION PROCEDURE FOR ENGINEERS APPROVAL.
2. INSTALL NEW LIGHTING DISTRIBUTION PANELS 'DP-E' AND 'DP-W'. REFER TO SHEETS 241/555 THROUGH 244/555 FOR PLANS.
3. DISTRIBUTION PANELS TO BE SUPPLIED WITH 480/277V FROM SWITCHGEAR IN NEW ELECTRICAL ROOM. FOR ONE LINE DIAGRAM SEE SHEET 469/555
4. DISTRIBUTION PANELS TO BE INSTALLED WITH NEW PERMANENT THREE-PHASE BRANCH CIRCUIT BREAKERS FOR FUTURE LIGHTING PANELS AND NEW SINGLE-PHASE BRANCH CIRCUIT BREAKERS FOR TEMPORARY CONNECTION TO EXISTING LIGHTING PANELS.
5. CONTRACTOR TO INSTALL TEMPORARY EMT CONDUIT AND CABLES FROM 'DP-E' AND 'DP-W' TO THE EXISTING TUNNEL LIGHTING DISTRIBUTION BOARDS. FOR CONDUIT AND CABLE SCHEDULES SEE SHEETS 475/555 THROUGH 484/555
6. CONTRACTOR TO PERFORM PHASED TRANSFER OF LIGHTING LOADS FROM THE EXISTING MAIN SERVICE SWITCHBOARDS TO THE NEW ELECTRICAL SWITCHGEAR, VIA PANELS 'DP-E' AND 'DP-W'. CONTRACTOR TO COORDINATE TRANSFER WITH ODOT TO ENSURE THAT ONE WALL IN EACH TUNNEL IS LIT AT ALL TIMES.
7. CONTRACTOR TO SURVEY THE THREE MAIN SWITCHBOARDS PRIOR TO DEMOLITION TO ENSURE THAT ALL LOADS HAVE BEEN TRANSFERRED.

PERMANENT SEQUENCING:

1. INSTALL REMAINING LIGHTING DISTRIBUTION PANELS. FOR DETAILS SEE SHEETS 239/555 AND 240/555
2. COORDINATE THE DEMOLITION OF NORTHBOUND EAST WALL TUNNEL LIGHTING FIXTURES WITH ODOT TUBE CLOSURES. DEMOLITION TO INCLUDE LIGHTING FIXTURES, MOUNTING HARDWARE, CABLES AND CONDUITS FROM THE TUNNEL BECK TO THE LIGHTING DISTRIBUTION BOARDS. FOR LIGHTING DEMOLITION TUNNEL PLANS SEE SHEETS 202/555 AND 203/555
3. INSTALL NEW LED LIGHTING FIXTURE, MOUNTING HARDWARE, JUNCTION BOXES, CONDUITS, CABLES AND LIGHTING CONTROL SYSTEM EQUIPMENT ALONG THE NORTHBOUND EAST WALL. SEE SHEET 238/555
4. ENERGIZE, TEST AND COMMISSION THE NEW LED LIGHTING FIXTURES PRIOR TO THE DEMOLITION OF EXISTING NORTHBOUND WEST WALL FIXTURES.
5. REPEAT THE PROCEDURE FOR EACH REMAINING TUNNEL WALL.
6. CONTRACTOR TO DEMOLISH EXISTING LIGHTING DISTRIBUTION BOARDS AND TEMPORARY EMT CONDUIT AND CABLE UPON FINAL COMMISSIONING OF THE NEW LED TUNNEL LIGHTING SYSTEM. SINGLE-PHASE BREAKERS IN 'DP-E' AND 'DP-W' TO BE RETAINED AS SPARES.

PANEL NAME: DP-E (TEMP) — SERVICE: 480/277(V) 3P/4W — MAINS: 600 (A) 3P MCB — ENCLOSURE: NEMA 3R — MOUNTING: SURFACE — ENTRANCE: TOP — EXISTING EQUIP. ROOM — GROUND BUS: CU - SOLID — NEUTRAL: CU - 200% — CABLE TAG: P-SWGR/DPE-A/B — MAIN CB INTERRUPTING RATING: 65KA SYM — BRANCH CB INTERRUPTING RATING: 35KA SYM

CKT NO.	SERVES	LOAD (VA) ØA	LOAD (VA) ØB	LOAD (VA) ØC	BREAKER TRIP	BREAKER POLE					BREAKER POLE	BREAKER TRIP	LOAD (VA) ØA	LOAD (VA) ØB	LOAD (VA) ØC	SERVES	CKT NO.
1								X									2
3	NE-DN				100	3			X		)3					SE-DN	4
5										X							6
7								X									8
9	NE-LP1				100	3			X		)3					SE-LP1	10
11										X							12
13								X									14
15	NE-LP2				100	3			X		)3					SE-LP2	16
17										X							18
19								X			1	150	29,412			EXISTING LIGHTING PANEL 'A1/NE'	20
21	RE-DN				100	3			X		1	150		29,412		EXISTING LIGHTING PANEL 'B2/NE'	22
23										X	1	150			29,412	EXISTING LIGHTING PANEL 'C3/NE'	24
25								X			1	150	29,412			EXISTING LIGHTING PANEL 'A3/RE'	26
27	RE-LP1				100	3			X		1	150		29,412		EXISTING LIGHTING PANEL 'B1/RE'	28
29										X	1	150			29,412	EXISTING LIGHTING PANEL 'C2/RE'	30
31								X			1	150	29,412			EXISTING LIGHTING PANEL 'A2/SE'	32
33	RE-LP2				100	3			X		1	150		29,412		EXISTING LIGHTING PANEL 'B3/SE'	34
35										X	1	150			29,412	EXISTING LIGHTING PANEL 'C1/SE'	36
SUB-TOTAL CONNECTED		0	0	0									88235	88235	88235	SUB-TOTAL CONNECTED	

SUB-TOTAL CONNECTED: ØA VA 88235
SUB-TOTAL CONNECTED: ØB VA 88235
SUB-TOTAL CONNECTED: ØC VA 88235
TOTAL CONNECTED: VA 264706

PANEL NAME: DP-W (TEMP) — SERVICE: 480/277(V) 3P/4W — MAINS: 600 (A) 3P MCB — ENCLOSURE: NEMA 3R — MOUNTING: SURFACE — ENTRANCE: TOP — EXISTING EQUIP. ROOM — GROUND BUS: CU - SOLID — NEUTRAL: CU - 200% — CABLE TAG: P-SWGR/DPE-A/B — MAIN CB INTERRUPTING RATING: 65KA SYM — BRANCH CB INTERRUPTING RATING: 35KA SYM

CKT NO.	SERVES	LOAD (VA) ØA	LOAD (VA) ØB	LOAD (VA) ØC	BREAKER TRIP	BREAKER POLE					BREAKER POLE	BREAKER TRIP	LOAD (VA) ØA	LOAD (VA) ØB	LOAD (VA) ØC	SERVES	CKT NO.
1								X									2
3	NW-DN				100	3			X		)3					SW-DN	4
5										X							6
7								X									8
9	NW-LP1				100	3			X		)3					SW-LP1	10
11										X							12
13								X									14
15	NW-LP2				100	3			X		)3					SW-LP2	16
17										X							18
19								X			1	150	29412			EXISTING LIGHTING PANEL 'A2/NW'	20
21	RW-DN				100	3			X		1	150		29412		EXISTING LIGHTING PANEL 'B3/NW'	22
23										X	1	150			29412	EXISTING LIGHTING PANEL 'C1/NW'	24
25								X			1	150	29412			EXISTING LIGHTING PANEL 'A1/RW'	26
27	RW-LP1				100	3			X		1	150		29412		EXISTING LIGHTING PANEL 'B2/RW'	28
29										X	1	150			29412	EXISTING LIGHTING PANEL 'C3/RW'	30
31								X			1	150	29412			EXISTING LIGHTING PANEL 'A3/SW'	32
33	RW-LP2				100	3			X		1	150		29412		EXISTING LIGHTING PANEL 'B1/SW'	34
35										X	1	150			29412	EXISTING LIGHTING PANEL 'C2/SW'	36
SUB-TOTAL CONNECTED		0	0	0									88235	88235	88235	SUB-TOTAL CONNECTED	

SUB-TOTAL CONNECTED: ØA VA 88235
SUB-TOTAL CONNECTED: ØB VA 88235
SUB-TOTAL CONNECTED: ØC VA 88235
TOTAL CONNECTED: VA 264706 318.40

CALCULATED MK CHECKED DGC

LIGHTING CONSTRUCTION SEQUENCE

HAM-71-1.34

200 555

c:\pwworking\hmm\external\tyn61470\dms72803\8726LM004.dgn 10/24/2014 12:32:56 PM TYN61470

LEGEND:

DEMOLITION WORK REQUIRED

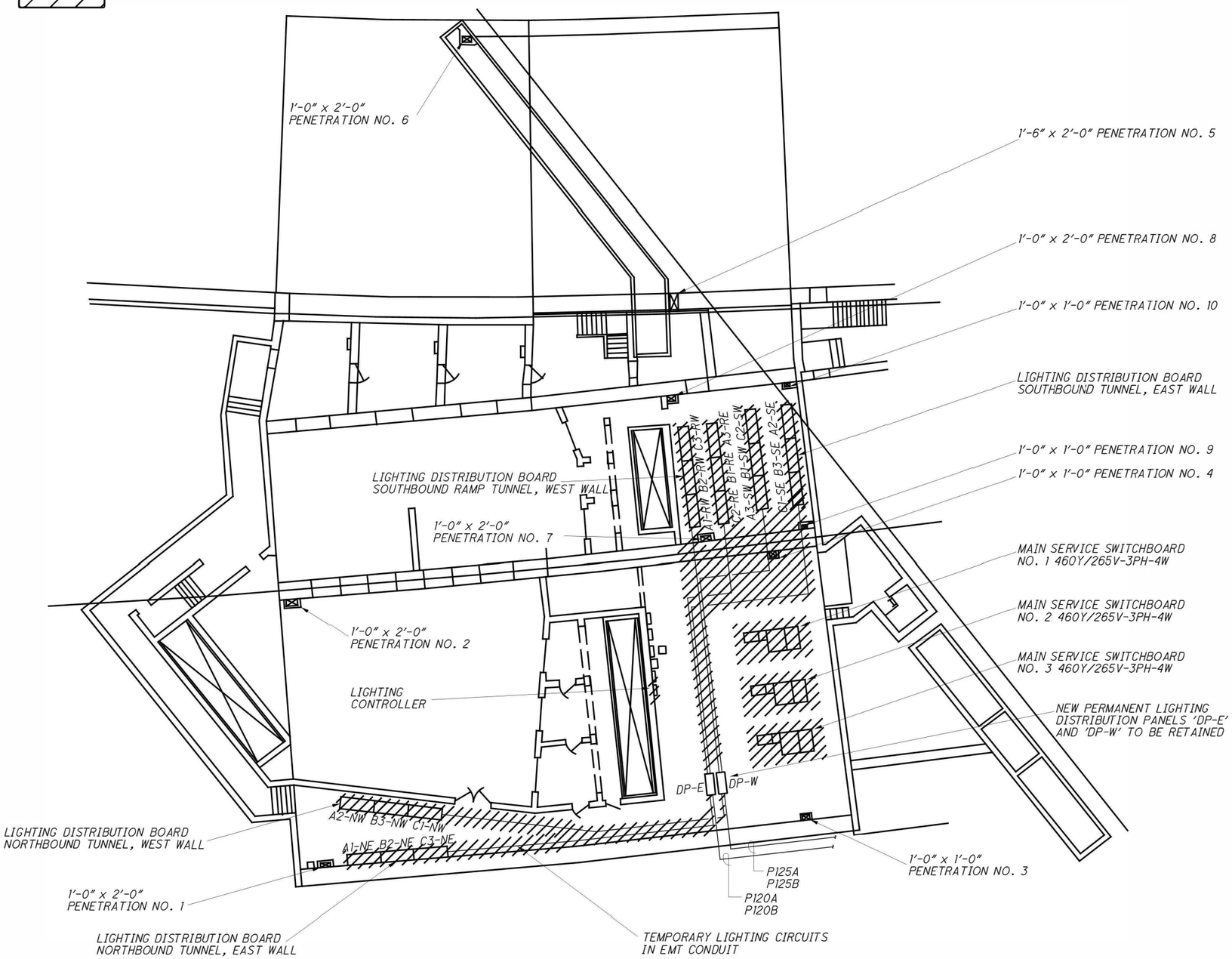

LIGHTING DEMOLITION - EXISTING MAINTENANCE BUILDING PLAN

SCALE: N.T.S.

NOTES:

1. ALL LIGHTING DEMOLITION WORK TO BE COORDINATED WITH POWER (SWITCHBOARDS) REPLACEMENT STAGES. FOR ELECTRICAL DEMOLITION SINGLE LINE DIAGRAM SEE SHEET 421/555
2. ALL EXISTING LIGHTING SHALL BE KEPT FUNCTIONAL EXCEPT FOR SHORT PERIODS OF TIME WHEN COMPONENTS ARE BEING REPLACED, ONE WALL AT A TIME.
3. DEMOLITION OF THE EQUIPMENT AND FEEDERS/RACEWAYS SHALL BE COORDINATED WITH ODOT AND DUKE ENERGY.
4. DEMOLITION WORKS INCLUDE THE REMOVAL OF POWER AND CONTROL CONDUITS AND CABLES BETWEEN THE MAINTENANCE BUILDING DISTRIBUTION PANELS AND THE TUNNELS. ALL CONDUITS ENTER THE TUNNEL VIA ONE OF THE TEN PENETRATIONS INDICATED. REFER TO THE TABLE BELOW FOR THE QUANTITY AND SIZE OF CONDUITS.

PENET. NO.	NO. OF CONDUITS	DESCRIPTION
#1	6 1	1 1/2" CONDUIT #2 GND. CABLE
#2	6 1	1 1/2" CONDUIT #2 GND. CABLE
#3	9	1 1/2" CONDUIT
#4	6	1 1/2" CONDUIT
#5	14 1	1 1/2" CONDUIT #2 GND. CABLE
#6	12 1	1 1/2" CONDUIT #2 GND. CABLE
#7	6	1 1/2" CONDUIT
#8	6	1 1/2" CONDUIT
#9	7 1	1 1/2" CONDUIT #2 GND. CABLE
#10	7 1	1 1/2" CONDUIT #2 GND. CABLE

CALCULATED DGC
CHECKED MK

LIGHTING DEMOLITION
EXISTING MAINTENANCE BUILDING

HAM-71-1.34

201
555

c:\pwworking\hnm\external\tyn61470\dms72803\8726BLM003.dgn 10/24/2014 12:33:01 PM TYN61470

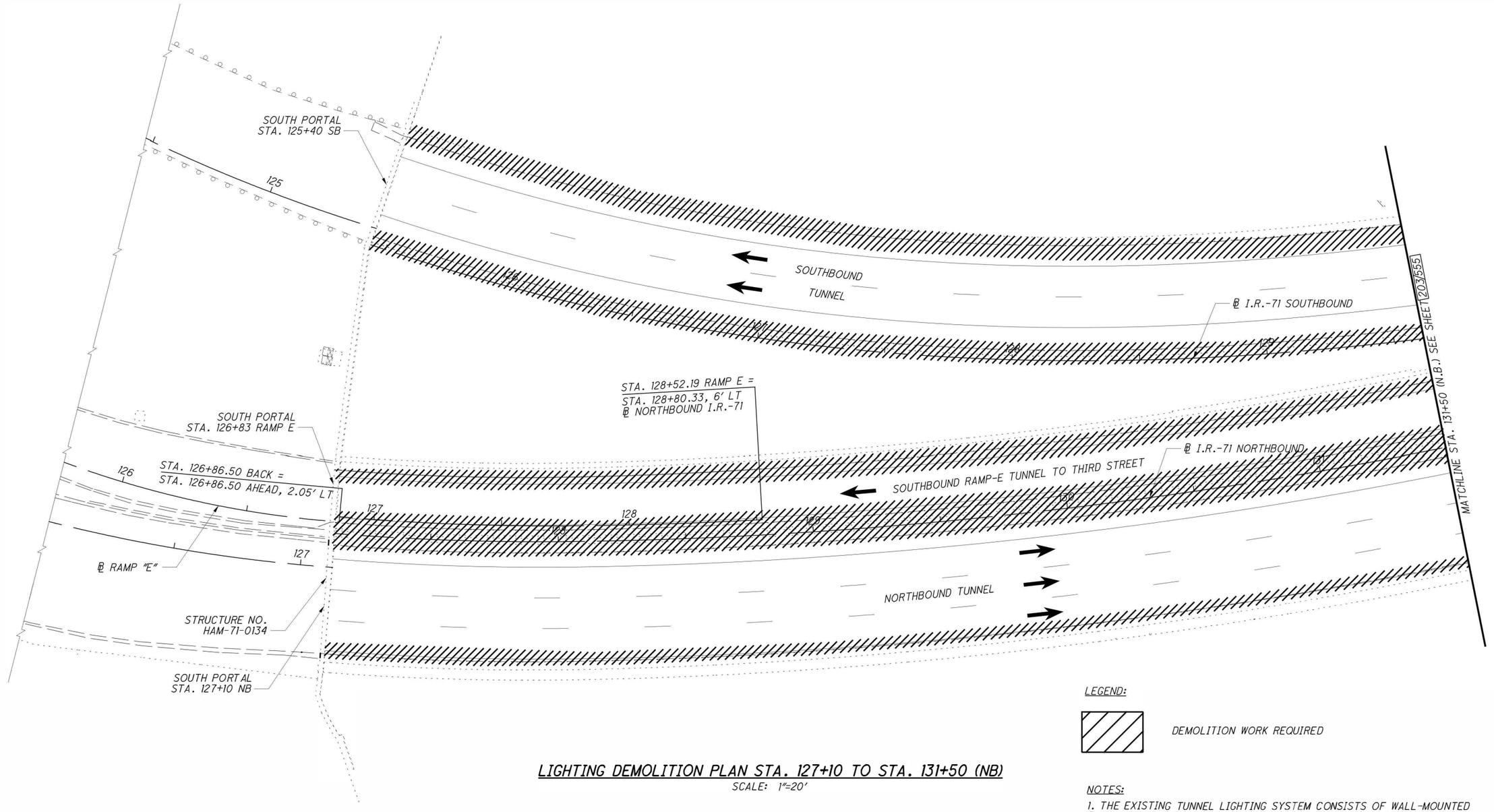

LIGHTING DEMOLITION PLAN STA. 127+10 TO STA. 131+50 (NB)

SCALE: 1"=20'

LEGEND:

DEMOLITION WORK REQUIRED

NOTES:

1. THE EXISTING TUNNEL LIGHTING SYSTEM CONSISTS OF WALL-MOUNTED FLOURESCENT AND METAL HALIDE LUMINAIRES LOCATED ON BOTH SIDE WALLS OF EACH TUBE.

2. DEMOLITION OF TUNNEL LIGHTING EQUIPMENT, FEEDERS AND RACEWAYS SHALL BE COORDINATED WITH ODOT.

3. FOR LEGEND AND ABBREVIATIONS, SEE SHEET 199/555

N

HORIZONTAL SCALE IN FEET
0 10 20 40

CALCULATED MK
CHECKED LL

LIGHTING DEMOLITION PLAN SHEET 1 OF 2
STA. 127+10 (NB) TO STA. 131+50 (NB) - I.R.-71

HAM-71-1.34

202
555

c:\pwworking\hmm\external\tyn61470\dms72603\8726LM005.dgn 10/24/2014 12:33:04 PM TYN61470

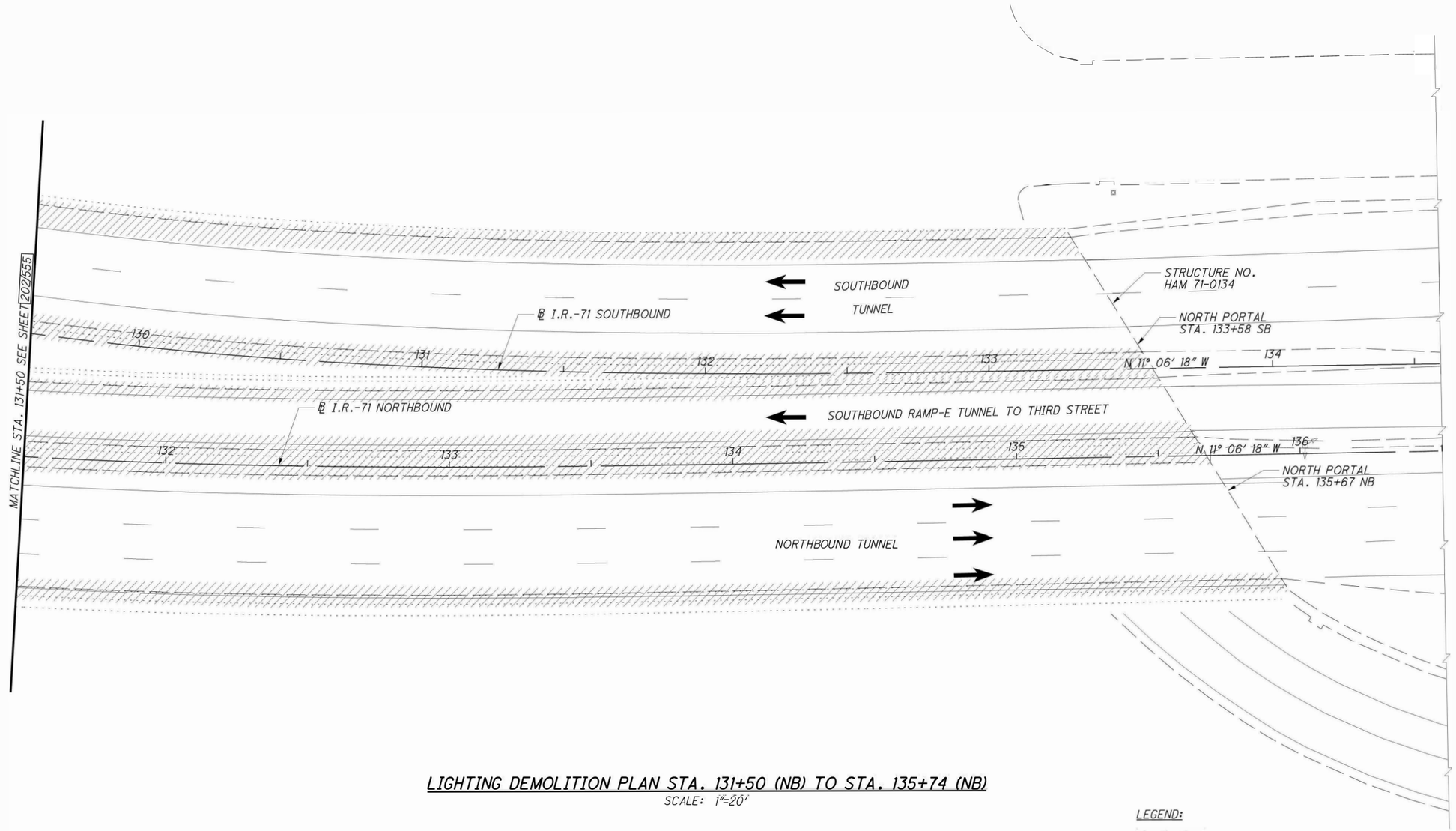

LIGHTING DEMOLITION PLAN STA. 131+50 (NB) TO STA. 135+74 (NB)

SCALE: 1"=20'

LEGEND:

DEMOLITION WORK REQUIRED

NOTES:

1. THE EXISTING TUNNEL LIGHTING SYSTEM CONSISTS OF WALL-MOUNTED FLOURESCENT AND METAL HALIDE LUMINAIRES LOCATED ON BOTH SIDE WALLS OF EACH TUBE.

2. DEMOLITION OF TUNNEL LIGHTING EQUIPMENT, FEEDERS AND RACEWAYS SHALL BE COORDINATED WITH ODOT.

3. FOR LEGEND AND ABBREVIATIONS, SEE SHEET 199/555

HORIZONTAL SCALE IN FEET 0 20 40

CALCULATED MK CHECKED LL

LIGHTING DEMOLITION PLAN SHEET 2 OF 2
STA. 131+50 (NB) TO STA. 135+74 (NB) - I.R.-71

HAM-71-1.34

203 555

c:\pwworking\hmm\external\tyn61470\d0ms72603\x87266LM006.dgn 10/24/2014 12:33:06 PM TYN61470

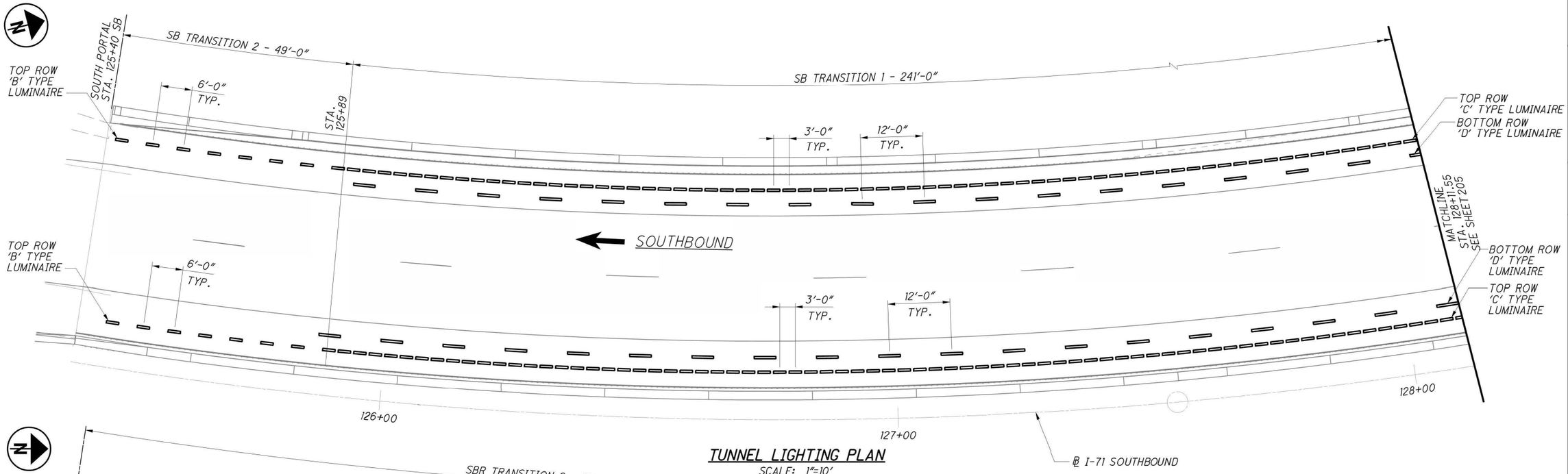

TUNNEL LIGHTING PLAN

SCALE: 1"=10'

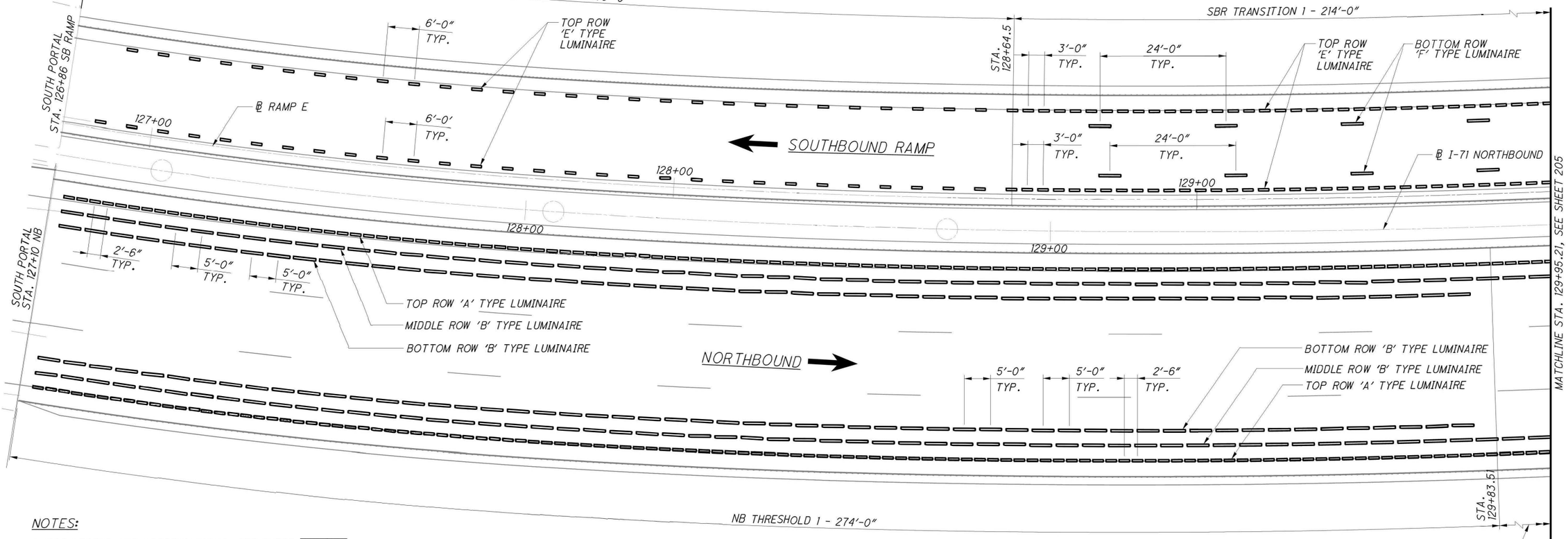

NOTES:

1. FOR LEGEND AND ABBREVIATIONS, SEE SHEET 199/555
2. FOR DESIGN LUMINANCE LEVELS, LUMINAIRE DETAILS AND QUANTITIES, SEE SHEET 207/555

TUNNEL LIGHTING PLAN

SCALE: 1"=10'

HORIZONTAL SCALE IN FEET

CALCULATED DGC CHECKED MK

TUNNEL LIGHTING PLAN SHEET 1 OF 3

HAM-71-1.34

204 555

c:\pwworking\hmm\external\tyn61470\dms726035\8726BLP001.dgn 10/24/2014 12:33:10 PM TYN61470

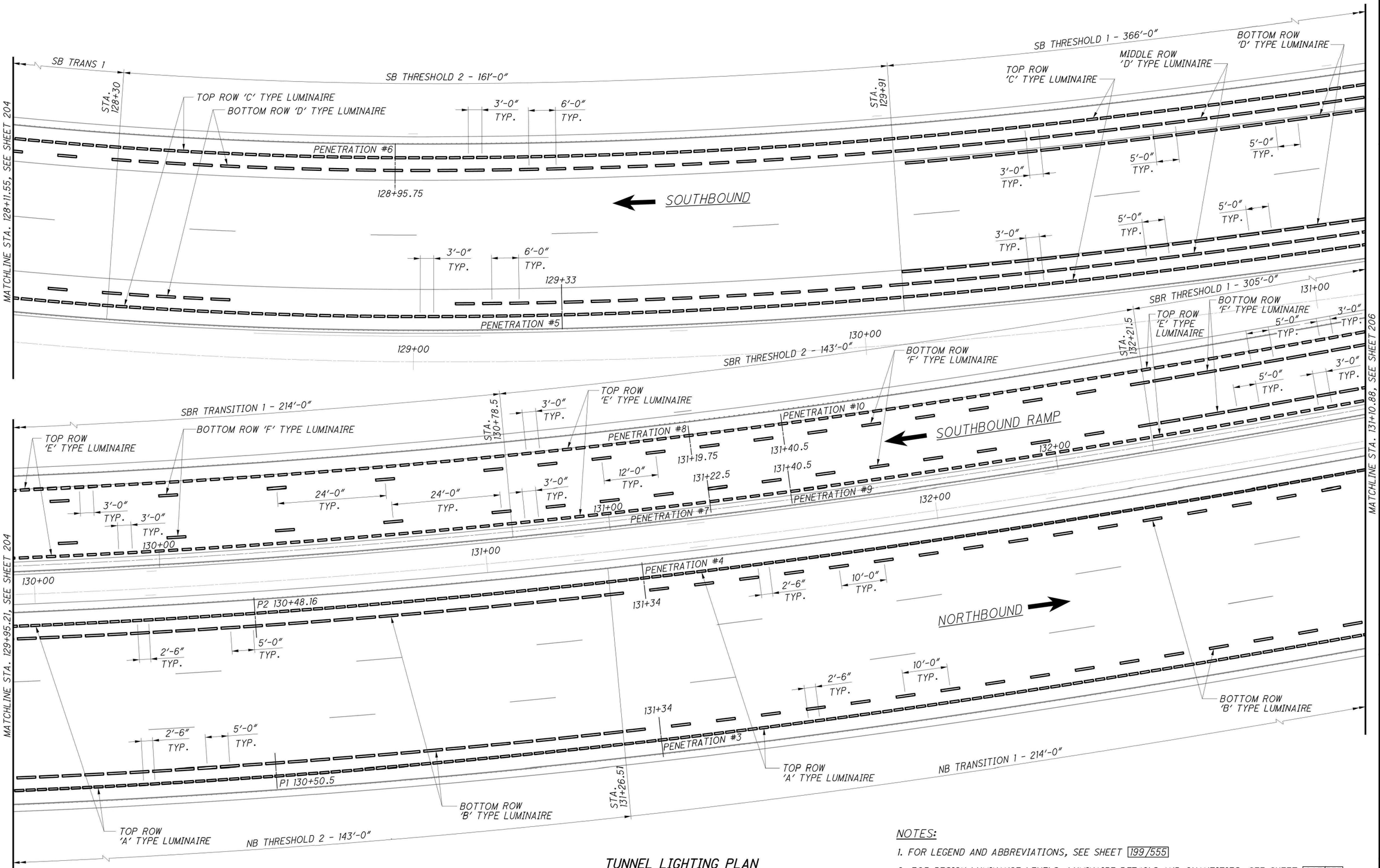

TUNNEL LIGHTING PLAN

SCALE: 1"=10'

NOTES:

1. FOR LEGEND AND ABBREVIATIONS, SEE SHEET 199/555
2. FOR DESIGN LUMINANCE LEVELS, LUMINAIRE DETAILS AND QUANTITIES, SEE SHEET 207/555

HORIZONTAL SCALE IN FEET
0 5 10 20

CALCULATED DGC
CHECKED MK

TUNNEL LIGHTING PLAN
SHEET 2 OF 3

HAM-71-1.34

205
555

c:\pwworking\hmm\external\tyn61470\dms72803\87268LP002.dgn 10/24/2014 12:33:13 PM TYN61470

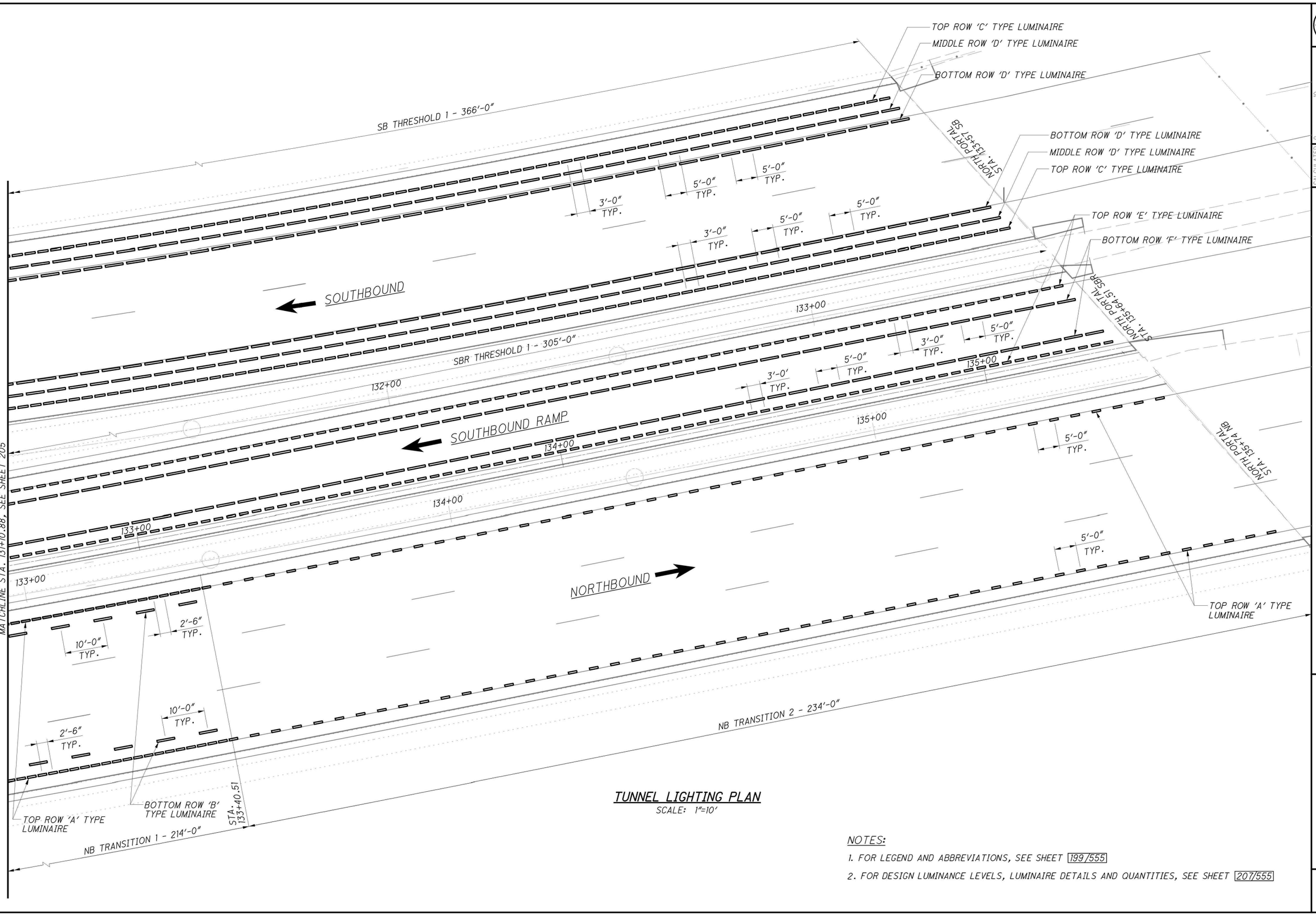

TUNNEL LIGHTING PLAN

SCALE: 1"=10'

NOTES:

1. FOR LEGEND AND ABBREVIATIONS, SEE SHEET 199/555
2. FOR DESIGN LUMINANCE LEVELS, LUMINAIRE DETAILS AND QUANTITIES, SEE SHEET 207/555

HORIZONTAL SCALE IN FEET
0 5 10 20

CALCULATED DGC
CHECKED MK

TUNNEL LIGHTING PLAN SHEET 3 OF 3

HAM-71-1.34

206
555

c:\pwworking\hmm\external\tyn61470\dms72803\872681LP003.dgn 10/24/2014 12:33:16 PM TYN61470

TUNNEL LIGHTING DESIGN CRITERIA - NORTHBOUND TUNNEL

LOCATION	DESIGN SPEED	ZONE LENGTH	FROM STATION	TO STATION	DAYTIME LUMINANCE	NIGHTTIME LUMINANCE	UNIFORMITY ROADWAY (AVE/MIN)	UNIFORMITY ROADWAY (MAX/MIN)	UNIFORMITY (ROAD AVE/WALL AVE)	FIXTURE QUANTITY TYPE 'A'	FIXTURE QUANTITY TYPE 'B'
THRESHOLD ZONE 1	50 MPH	270 FEET	127+10	129+80	202 CD/SQM	6 CD/SQM	2.0 TO 1	3.5 TO 1	2.5 TO 1	221	220
THRESHOLD ZONE 2	50 MPH	147 FEET	129+80	131+27	125 CD/SQM	6 CD/SQM	2.0 TO 1	3.5 TO 1	2.5 TO 1	115	57
TRANSITION ZONE 1	50 MPH	220 FEET	131+27	133+47	82 CD/SQM	6 CD/SQM	2.0 TO 1	3.5 TO 1	2.5 TO 1	173	44
TRANSITION ZONE 2	50 MPH	227 FEET	133+47	135+74	22 CD/SQM	6 CD/SQM	2.0 TO 1	3.5 TO 1	2.5 TO 1	96	-

TUNNEL LIGHTING DESIGN CRITERIA - SOUTHBOUND TUNNEL

LOCATION	DESIGN SPEED	ZONE LENGTH	FROM STATION	TO STATION	DAYTIME LUMINANCE	NIGHTTIME LUMINANCE	UNIFORMITY ROADWAY (AVE/MIN)	UNIFORMITY ROADWAY (MAX/MIN)	UNIFORMITY (ROAD AVE/WALL AVE)	FIXTURE QUANTITY TYPE 'C'	FIXTURE QUANTITY TYPE 'D'
THRESHOLD ZONE 1	55 MPH	366 FEET	133+57	129+91	242 CD/SQM	6 CD/SQM	2.0 TO 1	3.5 TO 1	2.5 TO 1	217	260
THRESHOLD ZONE 2	55 MPH	161 FEET	129+91	128+30	142 CD/SQM	6 CD/SQM	2.0 TO 1	3.5 TO 1	2.5 TO 1	116	51
TRANSITION ZONE 1	55 MPH	241 FEET	128+30	125+89	99 CD/SQM	6 CD/SQM	2.0 TO 1	3.5 TO 1	2.5 TO 1	157	39
TRANSITION ZONE 2	55 MPH	49 FEET	125+89	125+40	26 CD/SQM	6 CD/SQM	2.0 TO 1	3.5 TO 1	2.5 TO 1	15	-

TUNNEL LIGHTING DESIGN CRITERIA - SOUTHBOUND RAMP E TUNNEL

LOCATION	DESIGN SPEED	ZONE LENGTH	FROM STATION	TO STATION	DAYTIME LUMINANCE	NIGHTTIME LUMINANCE	UNIFORMITY ROADWAY (AVE/MIN)	UNIFORMITY ROADWAY (MAX/MIN)	UNIFORMITY (ROAD AVE/WALL AVE)	FIXTURE QUANTITY TYPE 'E'	FIXTURE QUANTITY TYPE 'F'
THRESHOLD ZONE 1	50 MPH	301 FEET	135+64	132+63	249 CD/SQM	6 CD/SQM	2.0 TO 1	3.5 TO 1	2.5 TO 1	204	121
THRESHOLD ZONE 2	50 MPH	147 FEET	132+63	130+78	154 CD/SQM	6 CD/SQM	2.0 TO 1	3.5 TO 1	2.5 TO 1	94	24
TRANSITION ZONE 1	50 MPH	220 FEET	130+78	128+58	101 CD/SQM	6 CD/SQM	2.0 TO 1	3.5 TO 1	2.5 TO 1	141	18
TRANSITION ZONE 2	50 MPH	172 FEET	128+58	126+86	27 CD/SQM	6 CD/SQM	2.0 TO 1	3.5 TO 1	2.5 TO 1	59	-

TUNNEL LIGHTING SCHEDULE

FIXTURE TYPE	TUBE	DESCRIPTION	SYMBOL (PLAN)	SYMBOL (PROFILE)	VOLTAGE	MOUNTING	SCHREDER (FV-32)		HOLOPHANE (TUNNELPASS)		KENALL (LUXTRAN-LTSI)	
'A'	NORTHBOUND	LED			277V	WALL	FV32-24"-64LED-5102-ASYM	74W	TNLED-3-4K-7-AS-WCR-DGRA-L-DM	79W	LTSI-A2-W-SM-2-8-100L40K-DCC-DV	104W
'B'	NORTHBOUND	LED			277V	WALL	FV32-50"-240LED-5096-ASYM	270W	TNLED-9-4K-1-AS-WCR-DGRA-L-DM	365W	LTSI-A2-W-SM-2-8-216L40K-DCC-DV	216W
'C'	SOUTHBOUND	LED			277V	WALL	FV32-29"-120LED-5096-ASYM	135W	TNLED-6-4K-7-AS-WCR-DGRA-L-DM	157W	LTSI-A2-W-SM-2-8-100L40K-DCC-DV	104W
'D'	SOUTHBOUND	LED			277V	WALL	FV32-50"-240LED-5096-ASYM	270W	TNLED-9-4K-1-AS-WCR-DGRA-L-DM	365W	LTSI-A2-W-SM-2-8-300L40K-DCC-DV	310W
'E'	SOUTHBOUND RAMP	LED			277V	WALL	FV32-24"-64LED-5102-ASYM	74W	TNLED-3-4K-7-AS-WCR-DGRA-L-DM	79W	LTSI-A2-W-SM-2-8-100L40K-DCC-DV	104W
'F'	SORTHBOUND RAMP	LED			277V	WALL	FV32-50"-240LED-5096-ASYM	270W	TNLED-9-4K-1-AS-WCR-DGRA-L-DM	365W	LTSI-A2-W-SM-2-8-216L40K-DCC-DV	216W

NOTES:

1. FOR LEGEND AND ABBREVIATIONS, SEE SHEET 199/555
2. FOR LIGHTING LAYOUT PLANS SEE SHEETS 204/555 THROUGH 206/555
3. FOR LIGHTING ELEVATIONS SEE SHEETS 208/555 THROUGH 231/555

CALCULATED DGC
CHECKED MK

LIGHTING LUMINAIRE TABLES

HAM-71-01.34

207
555

c:\pwworking\hmm\external\tyn61470\dms72803\8726LP004.dgn 10/24/2014 12:33:18 PM TYN61470

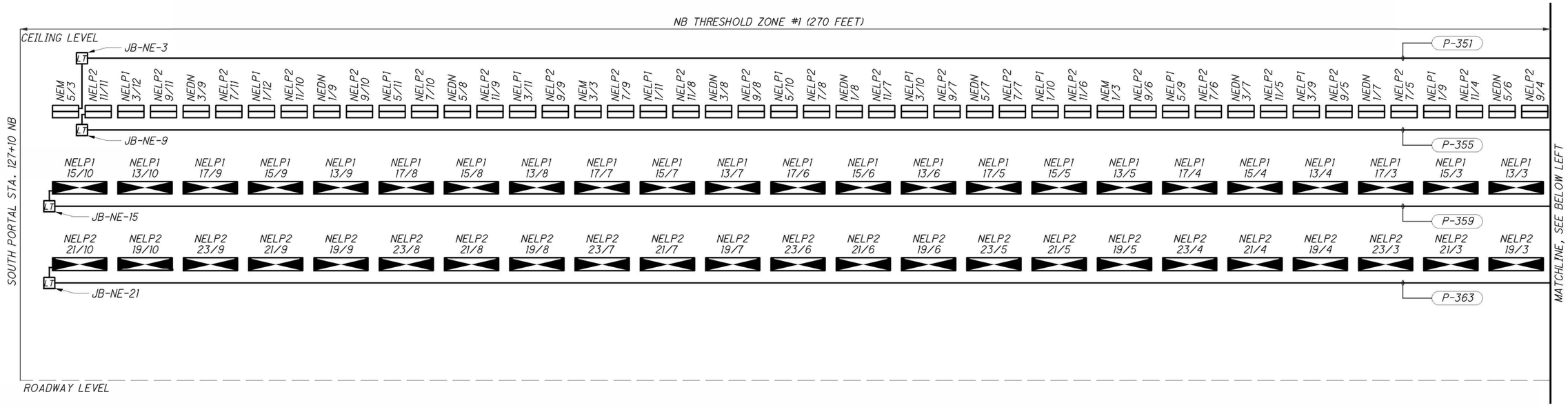

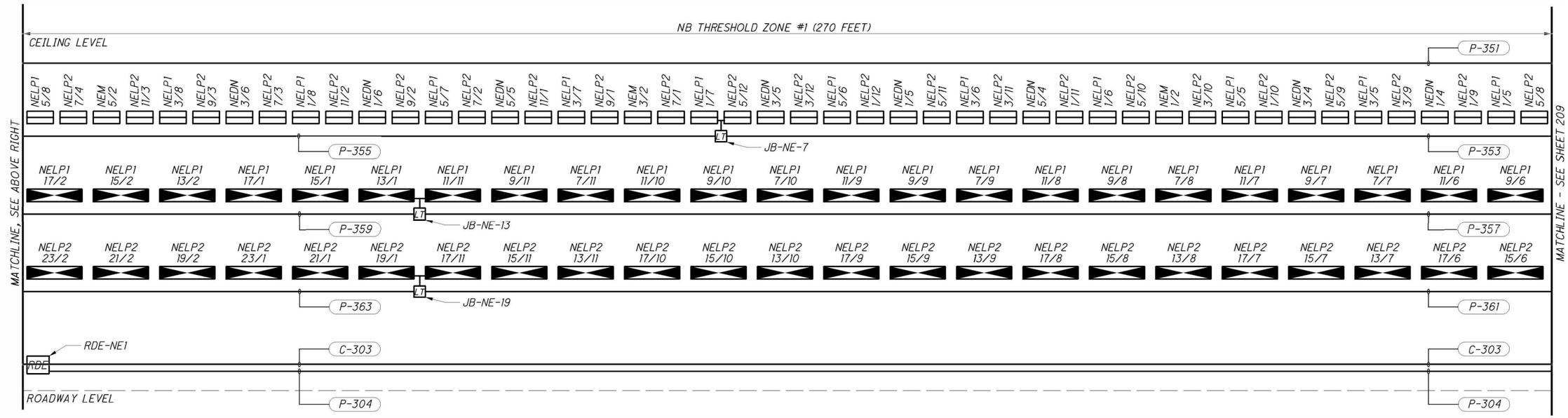

NOTES:

1. FOR LEGEND AND ABBREVIATIONS, SEE SHEET 199/555
2. FOR LIGHTING SCHEDULES, SEE SHEET 207/555
3. FOR TYPICAL MOUNTING ARRANGEMENT, SEE SHEET 238/555
4. MOUNTING HEIGHTS SHOWN ARE NOT TO SCALE. AS WALL HEIGHTS VARY BETWEEN TUBES, LIGHTING TO BE INSTALLED AT A FIXED DISTANCE BELOW THE CEILING LEVEL. FOR MOUNTING HEIGHTS SEE SHEET 187/555
5. FOR CONDUIT AND CABLE SCHEDULES SEE SHEETS 475/555 THROUGH 484/555

NORTHBOUND TUNNEL EAST WALL ELEVATION

HORIZONTAL SCALE: 1/4"=1'-0"
VERTICAL SCALE: N.T.S.

CALCULATED CML
CHECKED MK

LIGHTING ELEVATION - NB EAST WALL - SHEET 1 OF 4

HAM-71-1.34

208
555

c:\pwworking\hmm\external\tyn61470\dms72603\8726LP005.dgn 10/24/2014 12:33:20 PM T:\N61470

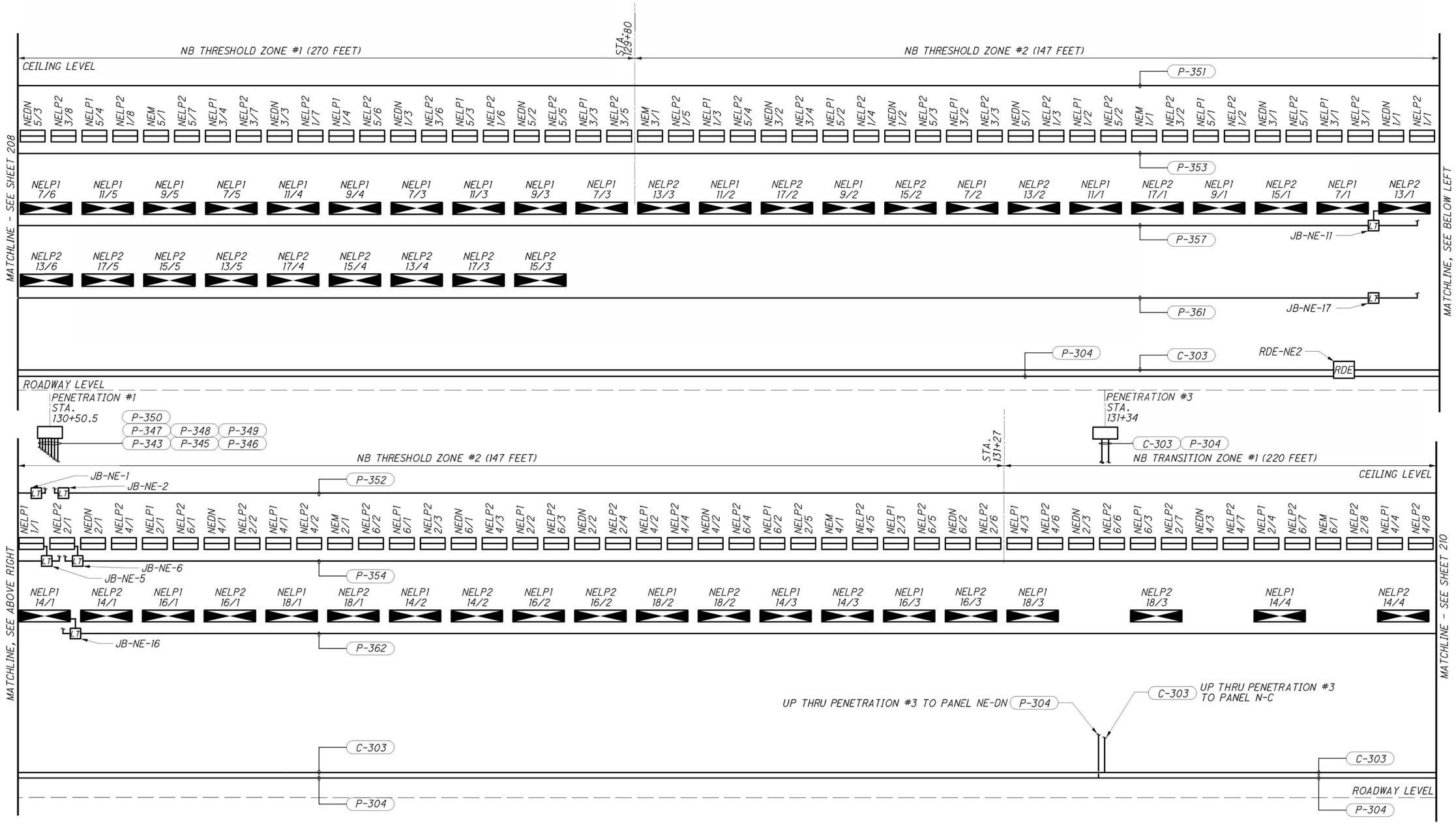

NOTES:

1. FOR LEGEND AND ABBREVIATIONS, SEE SHEET 199/555
2. FOR LIGHTING SCHEDULES, SEE SHEET 207/555
3. FOR TYPICAL MOUNTING ARRANGEMENT, SEE SHEET 238/555
4. MOUNTING HEIGHTS SHOWN ARE NOT TO SCALE. AS WALL HEIGHTS VARY BETWEEN TUBES, LIGHTING TO BE INSTALLED AT A FIXED DISTANCE BELOW THE CEILING LEVEL. FOR MOUNTING HEIGHTS SEE SHEET 187/555
5. FOR CONDUIT AND CABLE SCHEDULES SEE SHEETS 475/555 THROUGH 484/555

NORTHBOUND TUNNEL EAST WALL ELEVATION

HORIZONTAL SCALE: 1/4"=1'-0"
VERTICAL SCALE: N.T.S.

CALCULATED CML
CHECKED MK

LIGHTING ELEVATION - NB EAST WALL - SHEET 2 OF 4

HAM-71-1.34

209
555

c:\pwworking\hnm\external\tyn61470\dms72603\87268LP006.dgn 10/24/2014 12:33:22 PM TYN61470

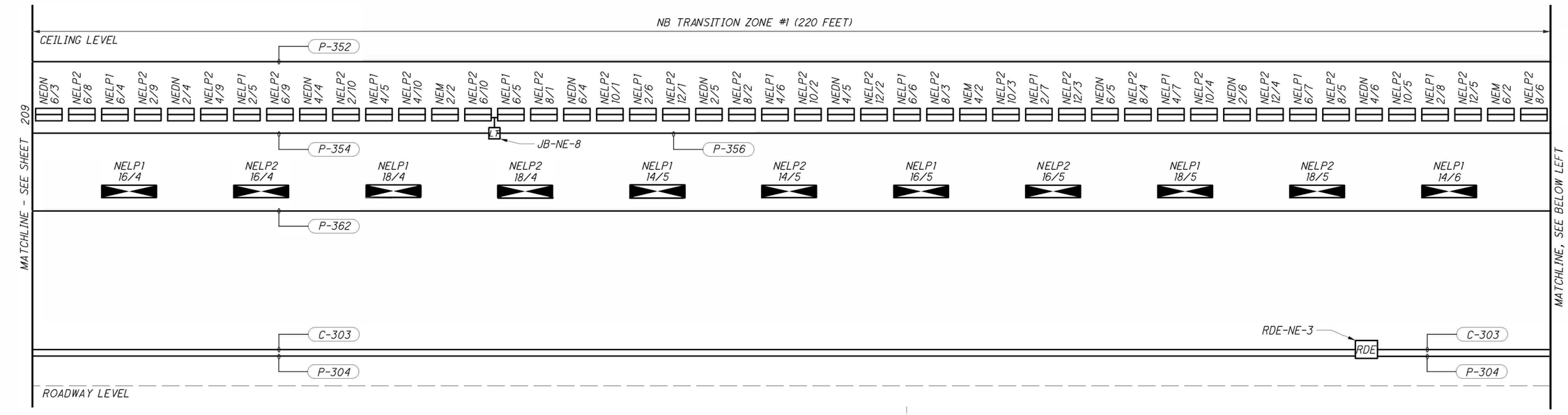

NOTES:

1. FOR LEGEND AND ABBREVIATIONS, SEE SHEET 199/555
2. FOR LIGHTING SCHEDULES, SEE SHEET 207/555
3. FOR TYPICAL MOUNTING ARRANGEMENT, SEE SHEET 238/555
4. MOUNTING HEIGHTS SHOWN ARE NOT TO SCALE. AS WALL HEIGHTS VARY BETWEEN TUBES, LIGHTING TO BE INSTALLED AT A FIXED DISTANCE BELOW THE CEILING LEVEL. FOR MOUNTING HEIGHTS SEE SHEET 187/555
5. FOR CONDUIT AND CABLE SCHEDULES SEE SHEETS 475/555 THROUGH 484/555

NORTHBOUND TUNNEL EAST WALL ELEVATION

HORIZONTAL SCALE: 1/4"=1'-0"
VERTICAL SCALE: N.T.S.

CALCULATED DGC
CHECKED MK

LIGHTING ELEVATION - NB EAST WALL - SHEET 3 OF 4

HAM-71-1.34

210
555

c:\pwworking\hnm\external\tyn61470\dms72803\87268LP007.dgn 10/24/2014 12:33:24 PM TYN61470

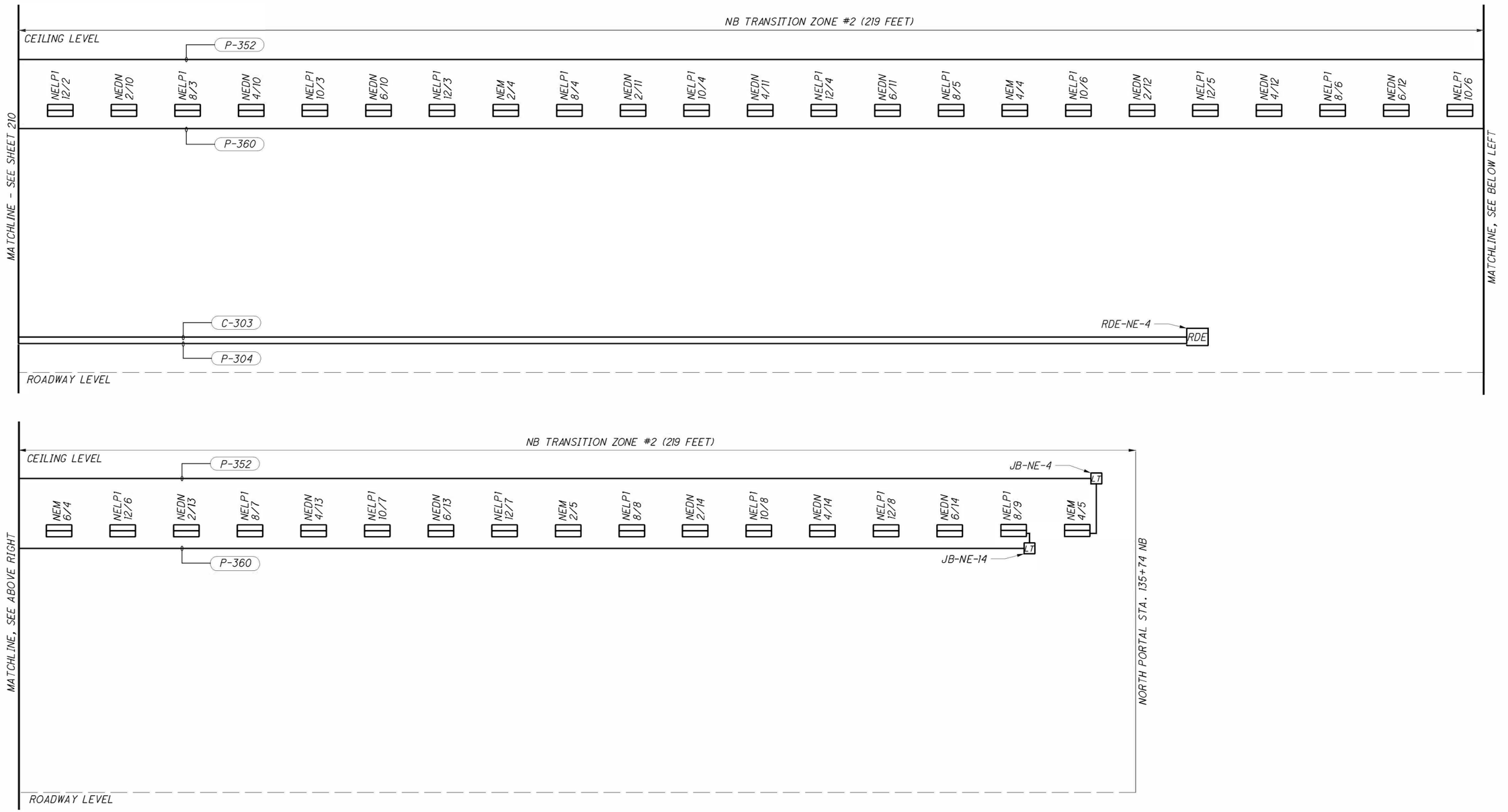

NOTES:

1. FOR LEGEND AND ABBREVIATIONS, SEE SHEET 199/555
2. FOR LIGHTING SCHEDULES, SEE SHEET 207/555
3. FOR TYPICAL MOUNTING ARRANGEMENT, SEE SHEET 238/555
4. MOUNTING HEIGHTS SHOWN ARE NOT TO SCALE. AS WALL HEIGHTS VARY BETWEEN TUBES, LIGHTING TO BE INSTALLED AT A FIXED DISTANCE BELOW THE CEILING LEVEL. FOR MOUNTING HEIGHTS SEE SHEET 187/555
5. FOR CONDUIT AND CABLE SCHEDULES SEE SHEETS 475/555 THROUGH 484/555

NORTHBOUND TUNNEL EAST WALL ELEVATION

HORIZONTAL SCALE: 1/4"=1'-0"
VERTICAL SCALE: N.T.S.

CALCULATED CML
CHECKED MK

LIGHTING ELEVATION - NB EAST WALL - SHEET 4 OF 4

HAM-71-1.34

211
555

c:\pwworking\hnm\external\tyn61470\dms72803\87268LP008.dgn 10/24/2014 12:33:26 PM TYN61470

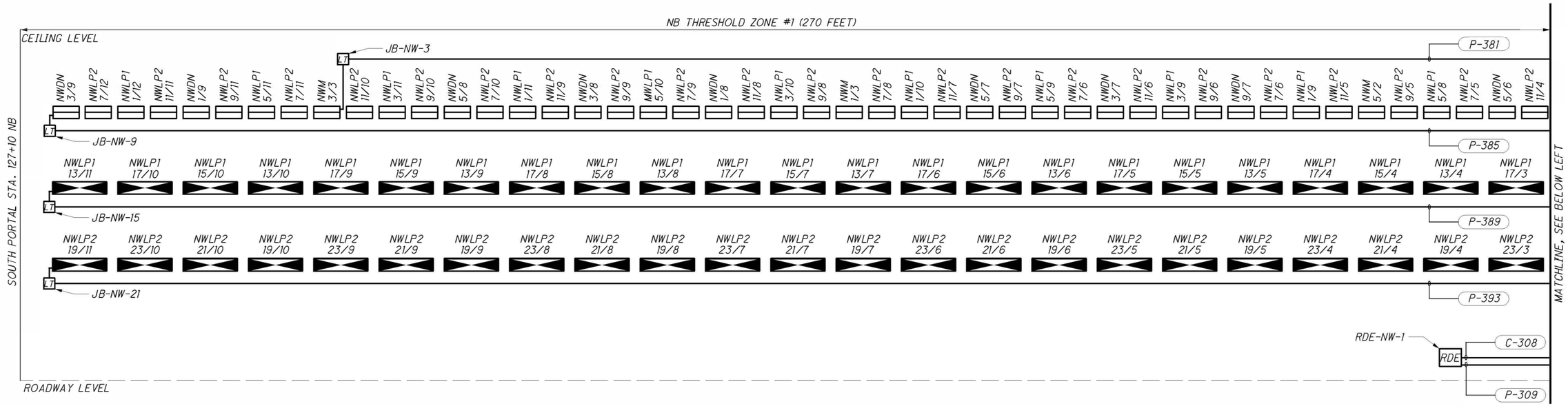

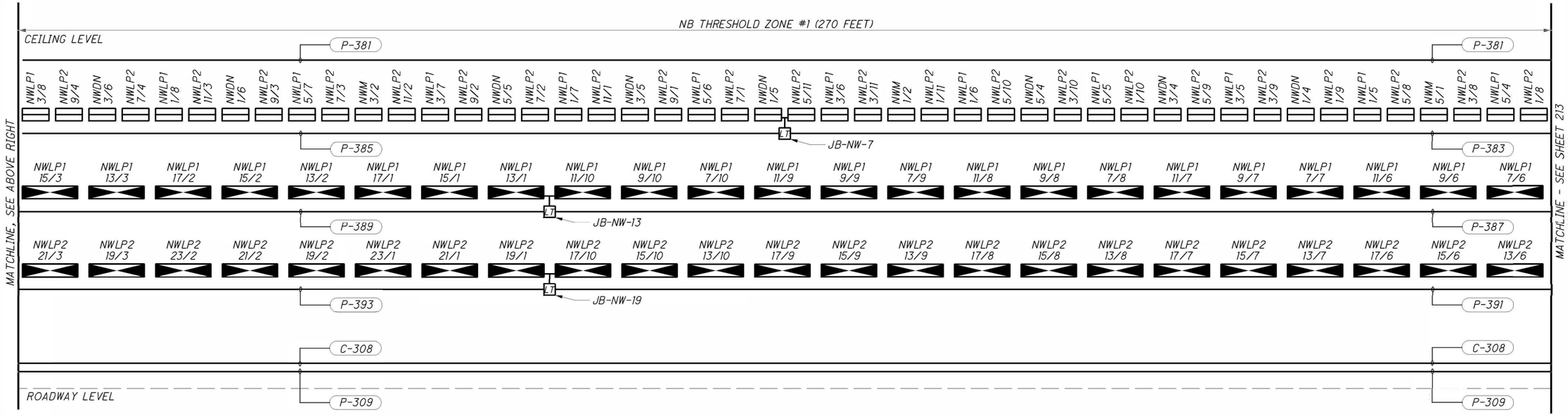

NOTES:

1. FOR LEGEND AND ABBREVIATIONS, SEE SHEET 199/555
2. FOR LIGHTING SCHEDULES, SEE SHEET 207/555
3. FOR TYPICAL MOUNTING ARRANGEMENT, SEE SHEET 238/555
4. MOUNTING HEIGHTS SHOWN ARE NOT TO SCALE. AS WALL HEIGHTS VARY BETWEEN TUBES, LIGHTING TO BE INSTALLED AT A FIXED DISTANCE BELOW THE CEILING LEVEL. FOR MOUNTING HEIGHTS SEE SHEET 187/555
5. FOR CONDUIT AND CABLE SCHEDULES SEE SHEETS 475/555 THROUGH 484/555

NORTHBOUND TUNNEL WEST WALL ELEVATION

HORIZONTAL SCALE: 1/4"=1'-0"
VERTICAL SCALE: N.T.S.

CALCULATED DGC
CHECKED MK

LIGHTING ELEVATION - NB WEST WALL - SHEET 1 OF 4

HAM-71-1.34

212
555

c:\pwworking\hnm\external\tyn61470\dms72603\87268LP009.dgn 10/24/2014 12:33:28 PM TYN61470

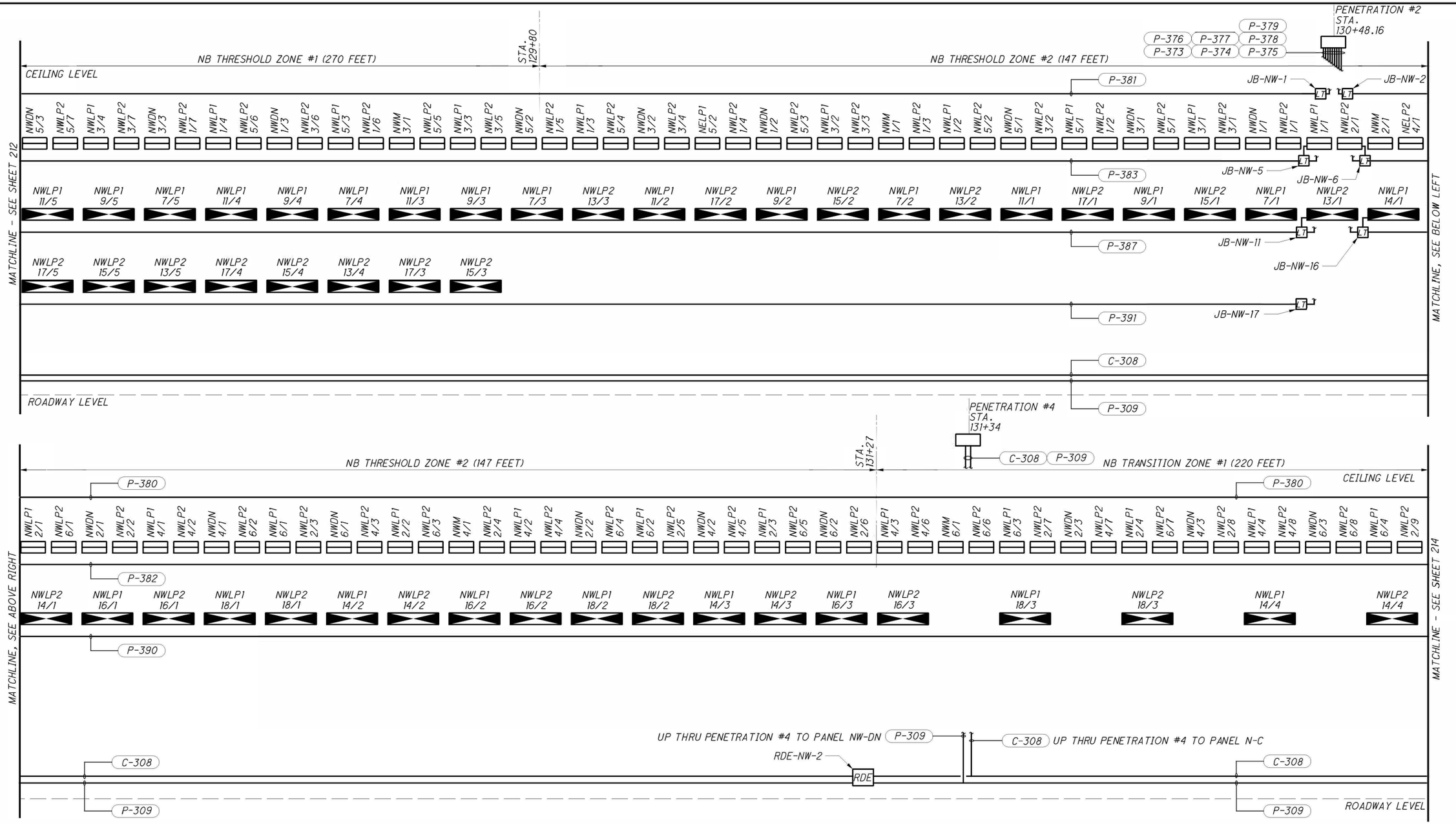

NOTES:

1. FOR LEGEND AND ABBREVIATIONS, SEE SHEET 199/555
2. FOR LIGHTING SCHEDULES, SEE SHEET 207/555
3. FOR TYPICAL MOUNTING ARRANGEMENT, SEE SHEET 238/555
4. MOUNTING HEIGHTS SHOWN ARE NOT TO SCALE. AS WALL HEIGHTS VARY BETWEEN TUBES, LIGHTING TO BE INSTALLED AT A FIXED DISTANCE BELOW THE CEILING LEVEL. FOR MOUNTING HEIGHTS SEE SHEET 187/555
5. FOR CONDUIT AND CABLE SCHEDULES SEE SHEETS 475/555 THROUGH 484/555

NORTHBOUND TUNNEL WEST WALL ELEVATION

HORIZONTAL SCALE: 1/4"=1'-0"
VERTICAL SCALE: N.T.S.

CALCULATED DGC
CHECKED MK

LIGHTING ELEVATION

HAM-71-1.34

c:\pwworking\hnm\external\tyn61470\dms728035\872681P010.dgn 10/24/2014 12:33:30 PM TYN61470

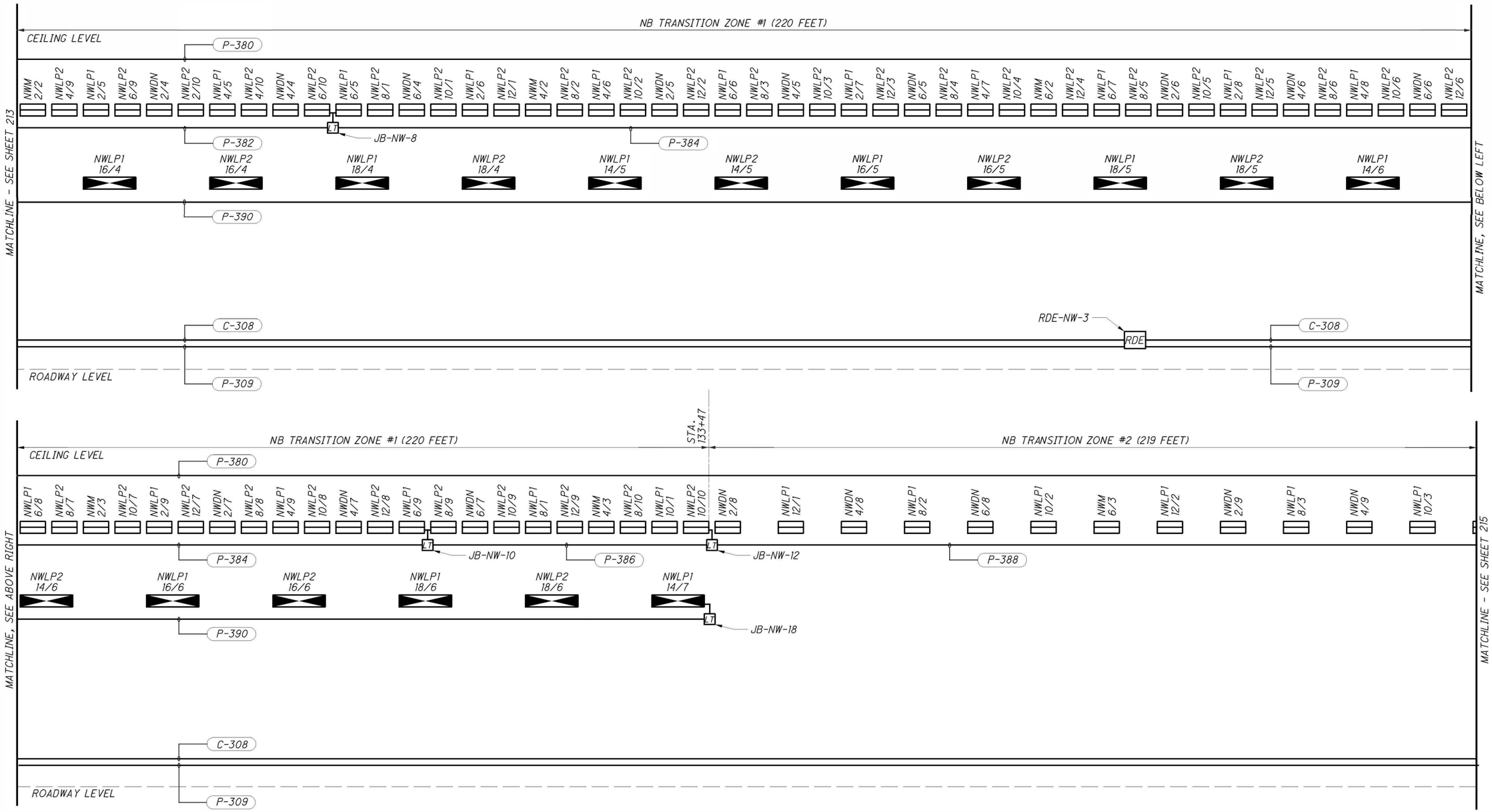

NOTES:

1. FOR LEGEND AND ABBREVIATIONS, SEE SHEET 199/555
2. FOR LIGHTING SCHEDULES, SEE SHEET 207/555
3. FOR TYPICAL MOUNTING ARRANGEMENT, SEE SHEET 238/555
4. MOUNTING HEIGHTS SHOWN ARE NOT TO SCALE. AS WALL HEIGHTS VARY BETWEEN TUBES, LIGHTING TO BE INSTALLED AT A FIXED DISTANCE BELOW THE CEILING LEVEL. FOR MOUNTING HEIGHTS SEE SHEET 187/555
5. FOR CONDUIT AND CABLE SCHEDULES SEE SHEETS 475/555 THROUGH 484/555

NORTHBOUND TUNNEL WEST WALL ELEVATION

HORIZONTAL SCALE: 1/4"=1'-0"
VERTICAL SCALE: N.T.S.

CALCULATED DGC
CHECKED MK

LIGHTING ELEVATION - NB WEST WALL - SHEET 3 OF 4

HAM-71-1.34

214
555

c:\pwworking\hnm\external\tyn61470\dms72803\8726BLP011.dgn 10/24/2014 12:33:32 PM TYN61470

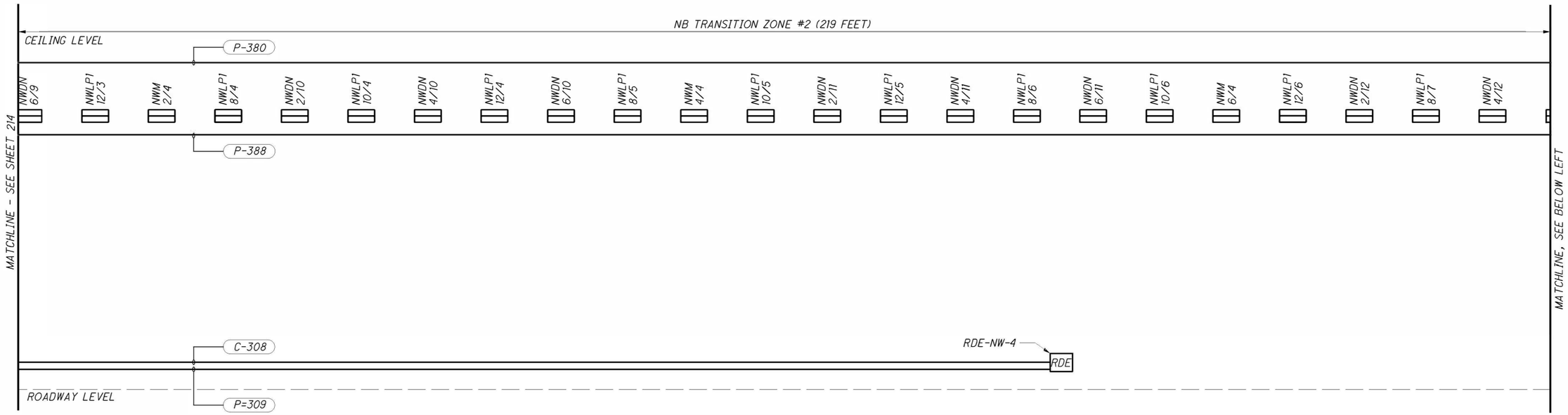

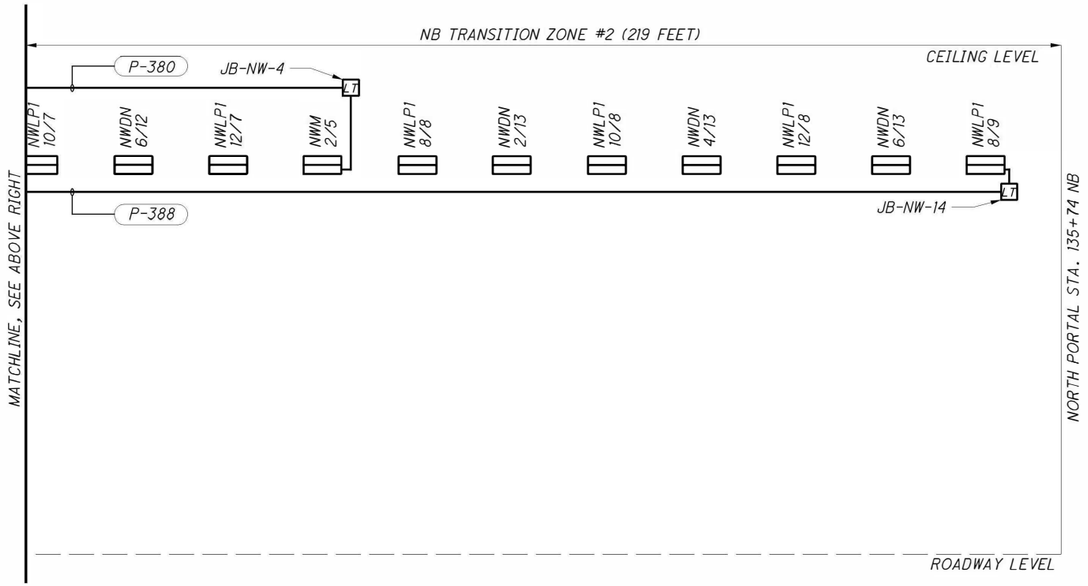

NOTES:

1. FOR LEGEND AND ABBREVIATIONS, SEE SHEET 199/555
2. FOR LIGHTING SCHEDULES, SEE SHEET 207/555
3. FOR TYPICAL MOUNTING ARRANGEMENT, SEE SHEET 238/555
4. MOUNTING HEIGHTS SHOWN ARE NOT TO SCALE. AS WALL HEIGHTS VARY BETWEEN TUBES, LIGHTING TO BE INSTALLED AT A FIXED DISTANCE BELOW THE CEILING LEVEL. FOR MOUNTING HEIGHTS SEE SHEET 187/555
5. FOR CONDUIT AND CABLE SCHEDULES SEE SHEETS 475/555 THROUGH 484/555

NORTHBOUND TUNNEL WEST WALL ELEVATION

HORIZONTAL SCALE: 1/4"=1'-0"
VERTICAL SCALE: N.T.S.

CALCULATED DGC
CHECKED MK

LIGHTING ELEVATION - NB WEST WALL - SHEET 4 OF 4

HAM-71-1.34

215
555

c:\pwworking\hmm\external\ty+61470\dms72803\8726LP012.dgn 10/24/2014 12:33:35 PM TYN61470

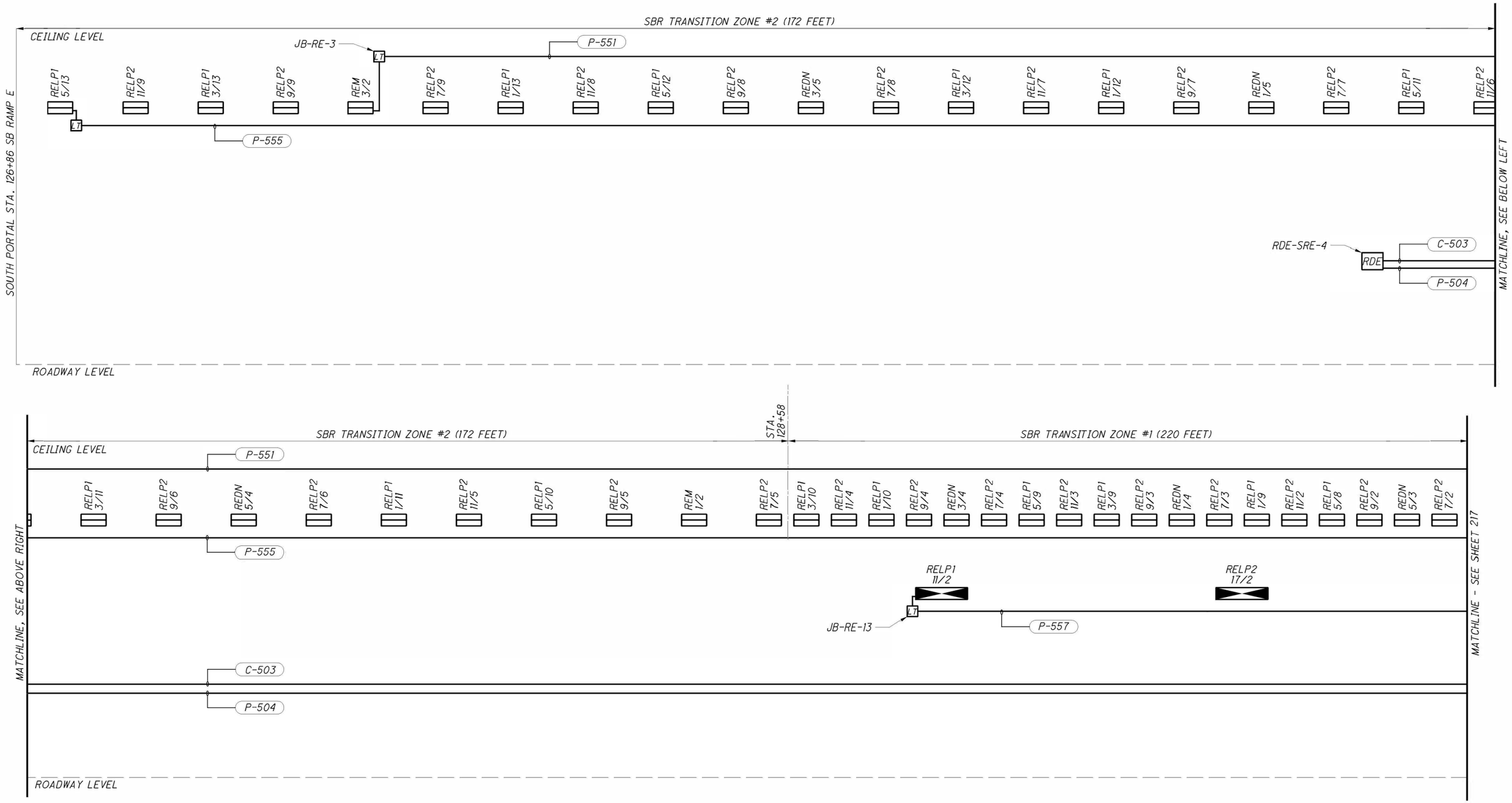

NOTES:

1. FOR LEGEND AND ABBREVIATIONS, SEE SHEET 199/555
2. FOR LIGHTING SCHEDULES, SEE SHEET 207/555
3. FOR TYPICAL MOUNTING ARRANGEMENT, SEE SHEET 238/555
4. MOUNTING HEIGHTS SHOWN ARE NOT TO SCALE. AS WALL HEIGHTS VARY BETWEEN TUBES, LIGHTING TO BE INSTALLED AT A FIXED DISTANCE BELOW THE CEILING LEVEL. FOR MOUNTING HEIGHTS SEE SHEET 187/555
5. FOR CONDUIT AND CABLE SCHEDULES SEE SHEETS 475/555 THROUGH 484/555

SOUTHBOUND RAMP E TUNNEL TO 3RD STREET EAST WALL ELEVATION

HORIZONTAL SCALE: 1/4"=1'-0"
VERTICAL SCALE: N.T.S.

CALCULATED CML
CHECKED DGC

LIGHTING ELEVATION - SBR EAST WALL - SHEET 1 OF 4

HAM-71-1.34

216
555

c:\pwworking\hmm\external\tyr61470\dms72803\87268LP013.dgn 10/24/2014 12:33:37 PM TYN61470

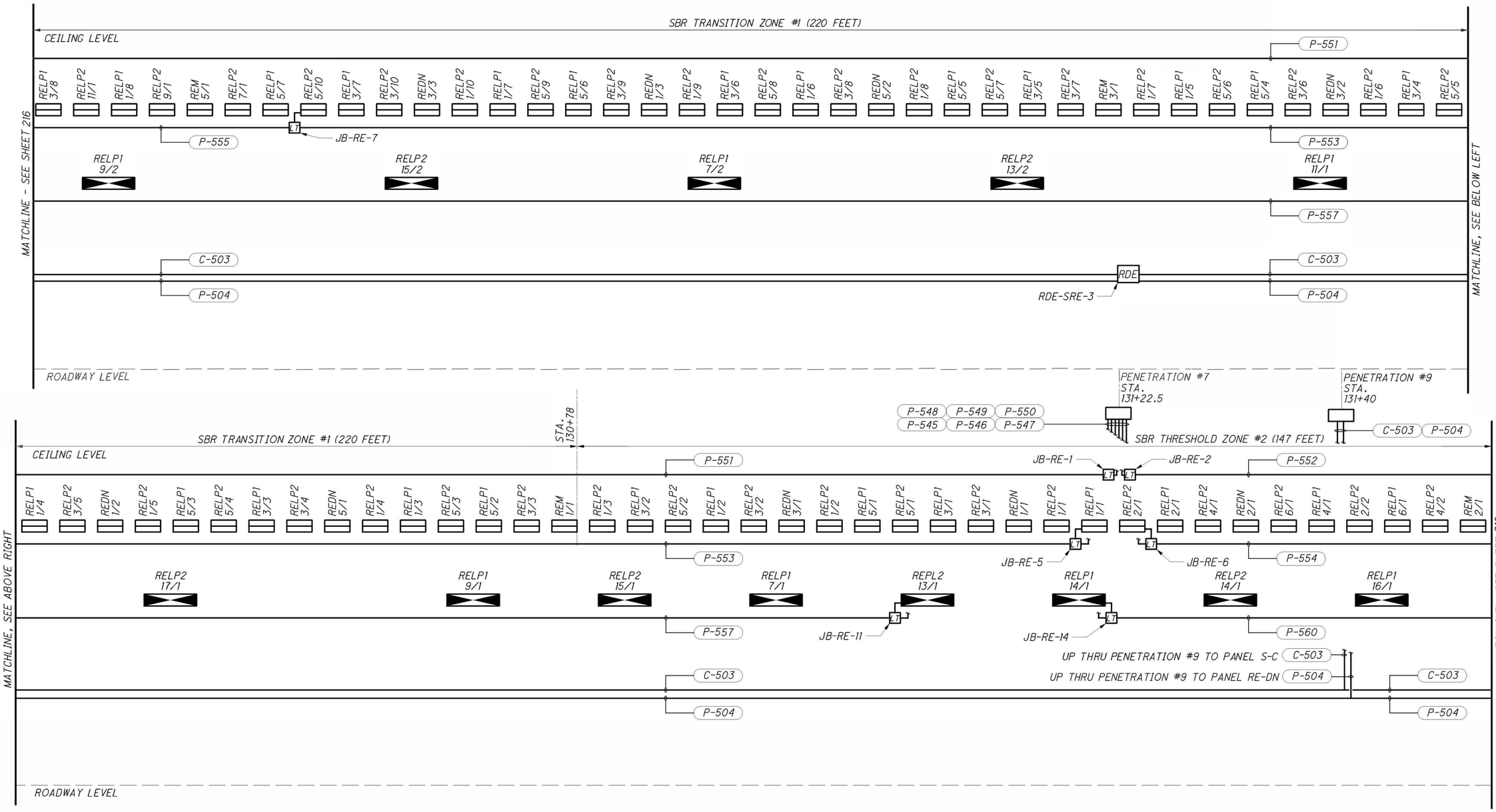

NOTES:

1. FOR LEGEND AND ABBREVIATIONS, SEE SHEET 199/555
2. FOR LIGHTING SCHEDULES, SEE SHEET 207/555
3. FOR TYPICAL MOUNTING ARRANGEMENT, SEE SHEET 238/555
4. MOUNTING HEIGHTS SHOWN ARE NOT TO SCALE. AS WALL HEIGHTS VARY BETWEEN TUBES, LIGHTING TO BE INSTALLED AT A FIXED DISTANCE BELOW THE CEILING LEVEL. FOR MOUNTING HEIGHTS SEE SHEET 187/555
5. FOR CONDUIT AND CABLE SCHEDULES SEE SHEETS 475/555 THROUGH 484/555

SOUTHBOUND RAMP E TUNNEL TO 3RD STREET EAST WALL ELEVATION

HORIZONTAL SCALE: 1/4"=1'-0"
VERTICAL SCALE: N.T.S.

CALCULATED CML
CHECKED DGC

LIGHTING ELEVATION - SBR EAST WALL - SHEET 2 OF 4

HAM-71-1.34

c:\pwworking\hmm\external\tyn61470\dms72803\87268LP014.dgn 10/24/2014 12:33:39 PM TYN61470

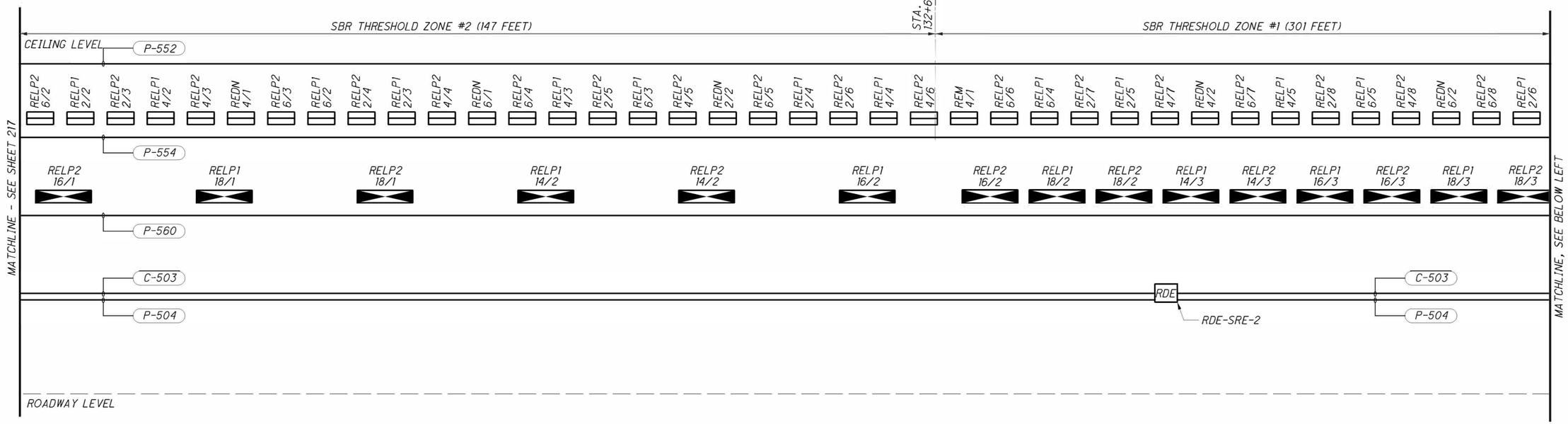

NOTES:

1. FOR LEGEND AND ABBREVIATIONS, SEE SHEET 199/555
2. FOR LIGHTING SCHEDULES, SEE SHEET 207/555
3. FOR TYPICAL MOUNTING ARRANGEMENT, SEE SHEET 238/555
4. MOUNTING HEIGHTS SHOWN ARE NOT TO SCALE. AS WALL HEIGHTS VARY BETWEEN TUBES, LIGHTING TO BE INSTALLED AT A FIXED DISTANCE BELOW THE CEILING LEVEL. FOR MOUNTING HEIGHTS SEE SHEET 187/555
5. FOR CONDUIT AND CABLE SCHEDULES SEE SHEETS 475/555 THROUGH 484/555

SOUTHBOUND RAMP E TUNNEL TO 3RD STREET
EAST WALL ELEVATION

HORIZONTAL SCALE: 1/4"=1'-0"
VERTICAL SCALE: N.T.S.

CALCULATED DGC
CHECKED MK

LIGHTING ELEVATION - SBR EAST WALL - SHEET 3 OF 4

HAM-71-1.34

c:\pwworking\hmm\external\tyn61470\dms72803\8726LP015.dgn 10/24/2014 12:33:41 PM TYN61470

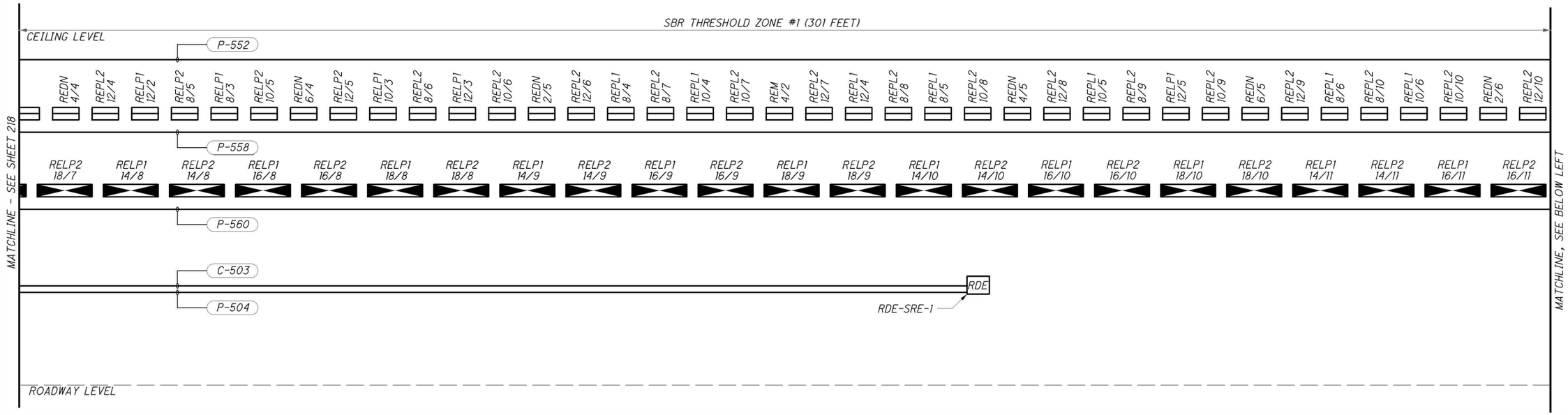

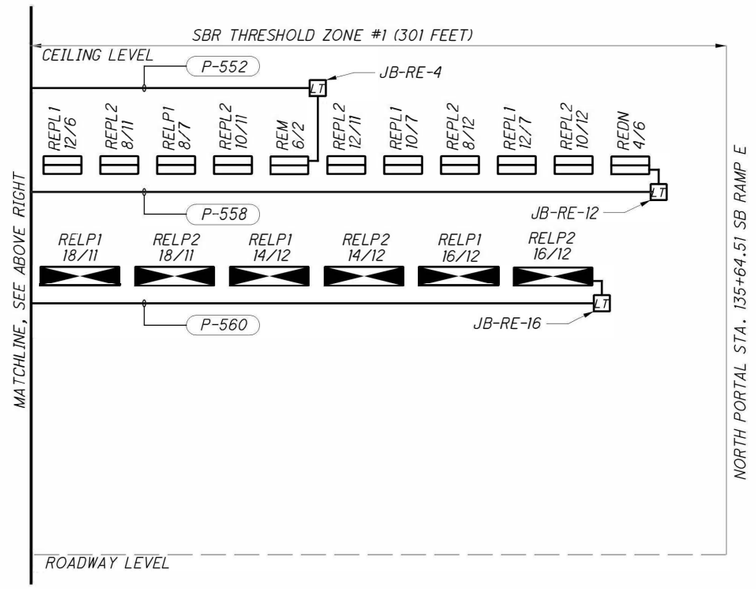

NOTES:

1. FOR LEGEND AND ABBREVIATIONS, SEE SHEET 199/555
2. FOR LIGHTING SCHEDULES, SEE SHEET 207/555
3. FOR TYPICAL MOUNTING ARRANGEMENT, SEE SHEET 238/555
4. MOUNTING HEIGHTS SHOWN ARE NOT TO SCALE. AS WALL HEIGHTS VARY BETWEEN TUBES, LIGHTING TO BE INSTALLED AT A FIXED DISTANCE BELOW THE CEILING LEVEL. FOR MOUNTING HEIGHTS SEE SHEET 187/555
5. FOR CONDUIT AND CABLE SCHEDULES SEE SHEETS 475/555 THROUGH 484/555

SOUTHBOUND RAMP E TUNNEL TO 3RD STREET
EAST WALL ELEVATION

HORIZONTAL SCALE: 1/4"=1'-0"
VERTICAL SCALE: N.T.S.

CALCULATED CML
CHECKED DGC

LIGHTING ELEVATION - SBR EAST WALL - SHEET 4 OF 4

HAM-71-1.34

219
555

c:\pwworking\jnnn\external\tyn61470\dms72803\8726LP016.dgn 10/24/2014 12:33:43 PM TYN61470

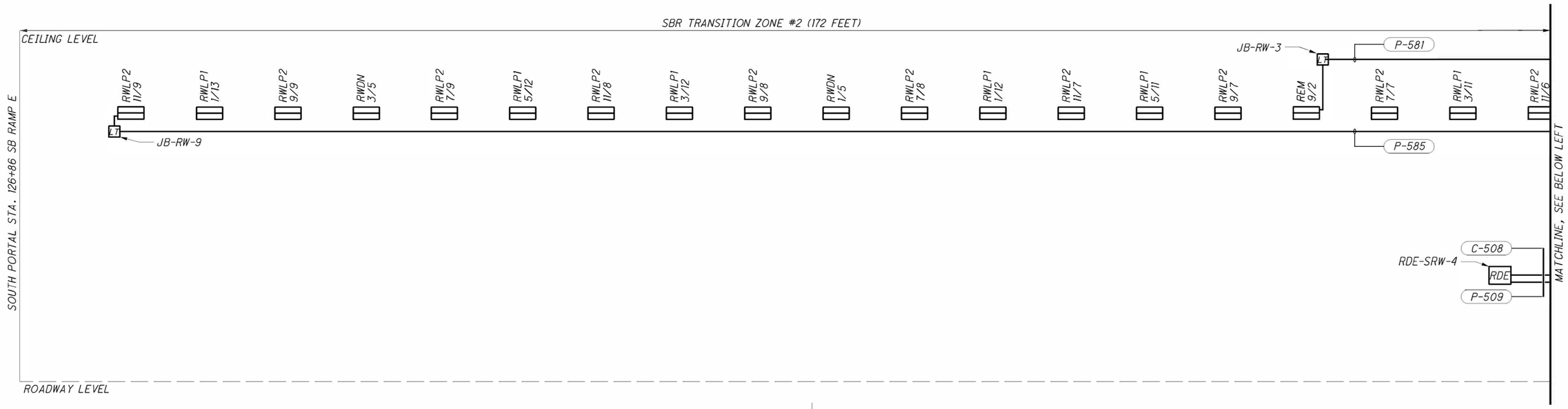

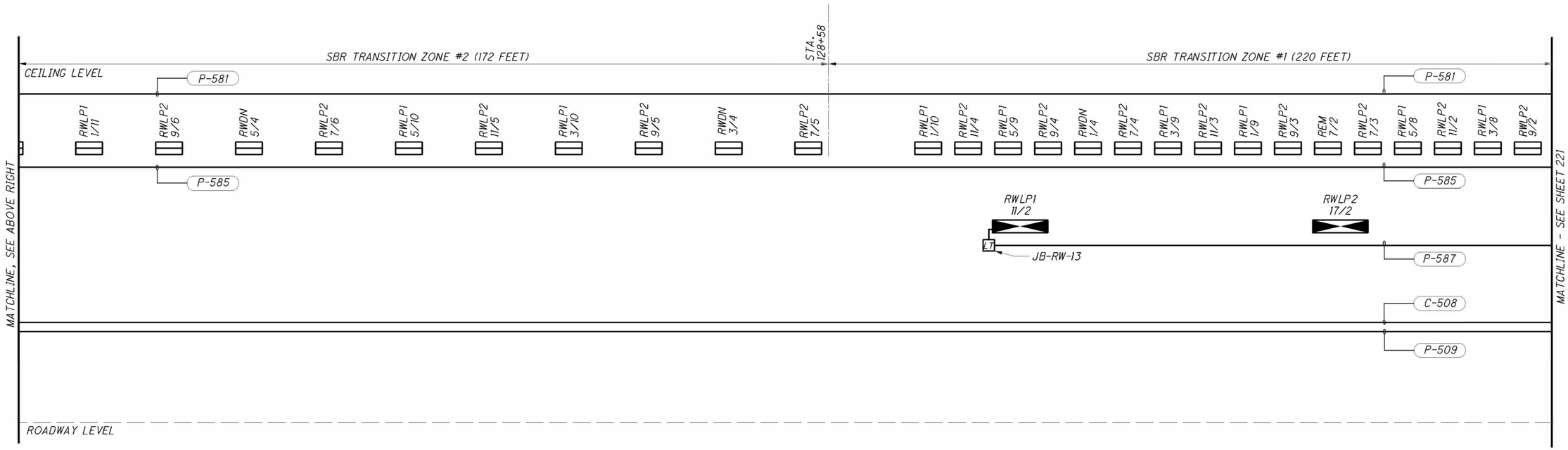

NOTES:

1. FOR LEGEND AND ABBREVIATIONS, SEE SHEET 199/555
2. FOR LIGHTING SCHEDULES, SEE SHEET 207/555
3. FOR TYPICAL MOUNTING ARRANGEMENT, SEE SHEET 238/555
4. MOUNTING HEIGHTS SHOWN ARE NOT TO SCALE. AS WALL HEIGHTS VARY BETWEEN TUBES, LIGHTING TO BE INSTALLED AT A FIXED DISTANCE BELOW THE CEILING LEVEL. FOR MOUNTING HEIGHTS SEE SHEET 187/555
5. FOR CONDUIT AND CABLE SCHEDULES SEE SHEETS 475/555 THROUGH 484/555

SOUTHBOUND RAMP E TUNNEL TO 3RD STREET
WEST WALL ELEVATION

HORIZONTAL SCALE: 1/4"=1'-0"
VERTICAL SCALE: N.T.S.

CALCULATED DGC
CHECKED MK

LIGHTING ELEVATION - SBR WEST WALL - SHEET 1 OF 4

HAM-71-1.34

220
555

e:\pwworking\hmm\external\tyn61470\dms72803\8726LP017.dgn 10/24/2014 12:33:45 PM TYN61470

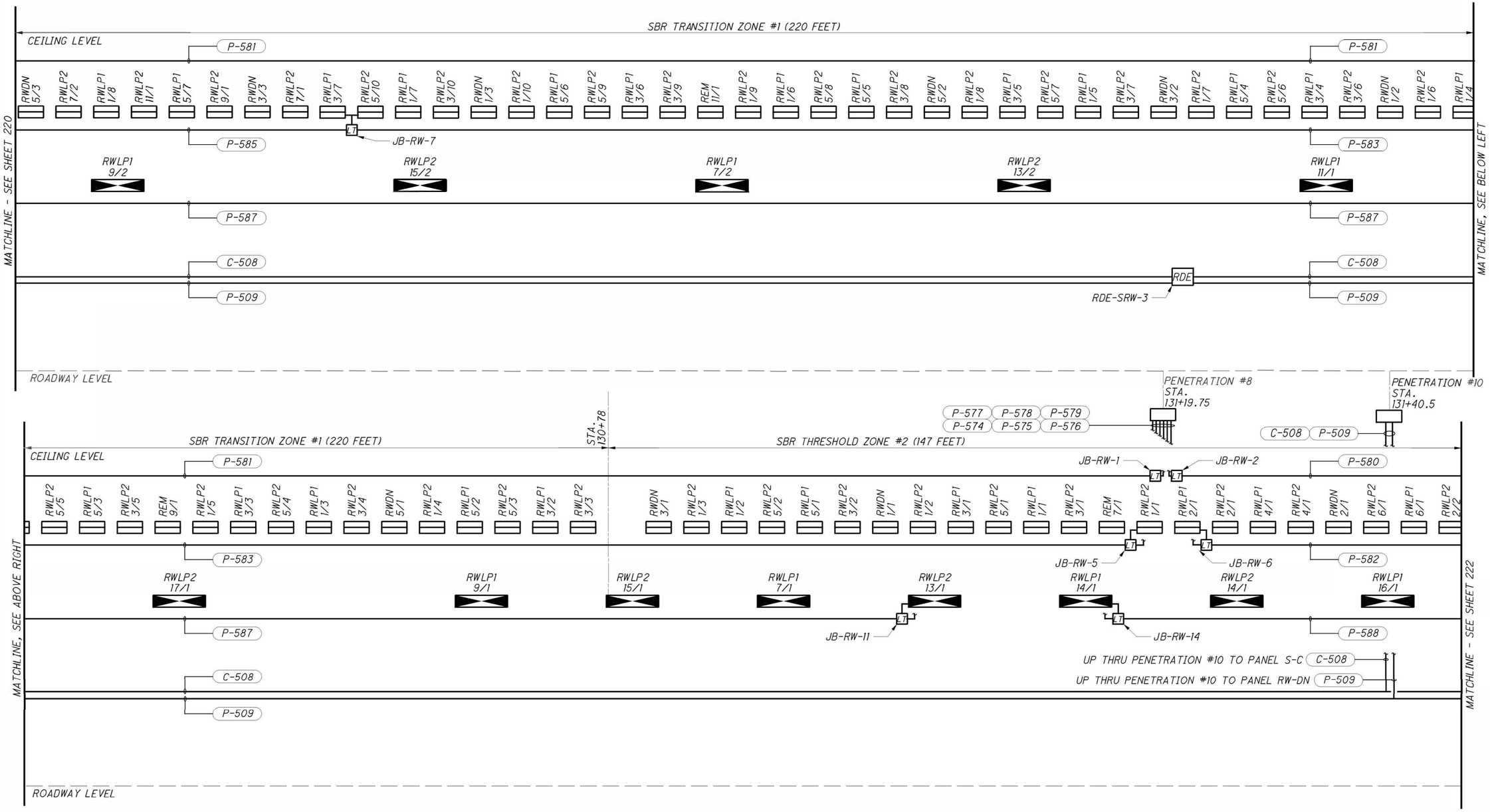

NOTES:

1. FOR LEGEND AND ABBREVIATIONS, SEE SHEET 199/555
2. FOR LIGHTING SCHEDULES, SEE SHEET 207/555
3. FOR TYPICAL MOUNTING ARRANGEMENT, SEE SHEET 238/555
4. MOUNTING HEIGHTS SHOWN ARE NOT TO SCALE. AS WALL HEIGHTS VARY BETWEEN TUBES, LIGHTING TO BE INSTALLED AT A FIXED DISTANCE BELOW THE CEILING LEVEL. FOR MOUNTING HEIGHTS SEE SHEET 187/555
5. FOR CONDUIT AND CABLE SCHEDULES SEE SHEETS 475/555 THROUGH 484/555

SOUTHBOUND RAMP E TUNNEL TO 3RD STREET
WEST WALL ELEVATION

HORIZONTAL SCALE: 1/4"=1'-0"
VERTICAL SCALE: N.T.S.

CALCULATED DGC
CHECKED MK

LIGHTING ELEVATION - SBR WEST WALL - SHEET 2 OF 4

HAM-71-1.34

221
555

e:\pwworking\hmm\external\tyn61470\dms72803\8726LP018.dgn 10/24/2014 12:33:47 PM TYN61470

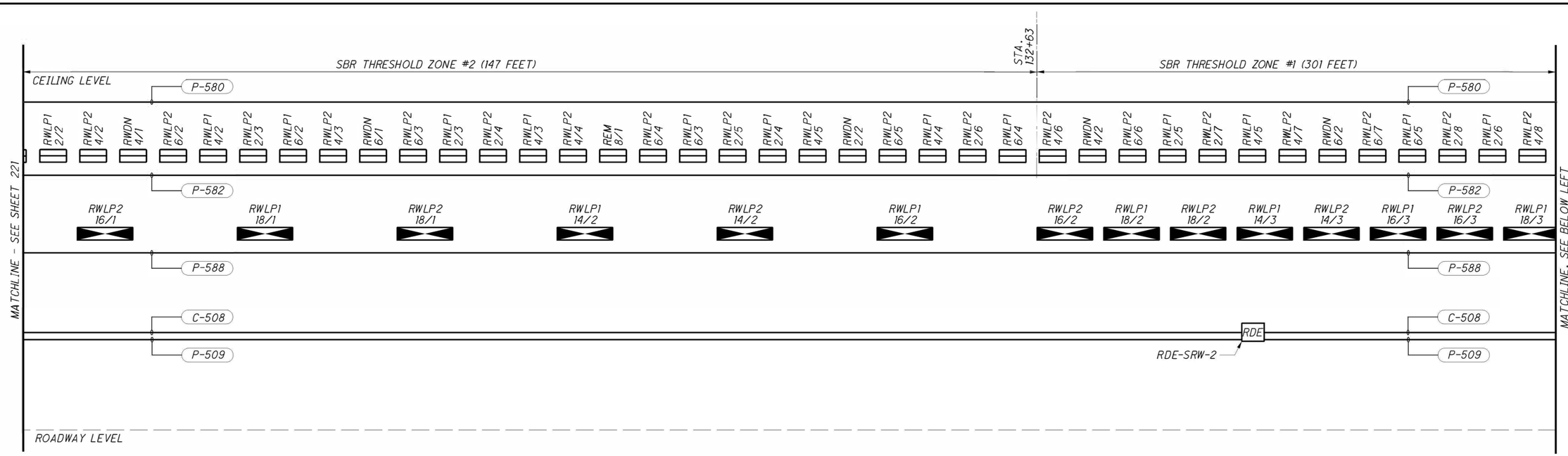

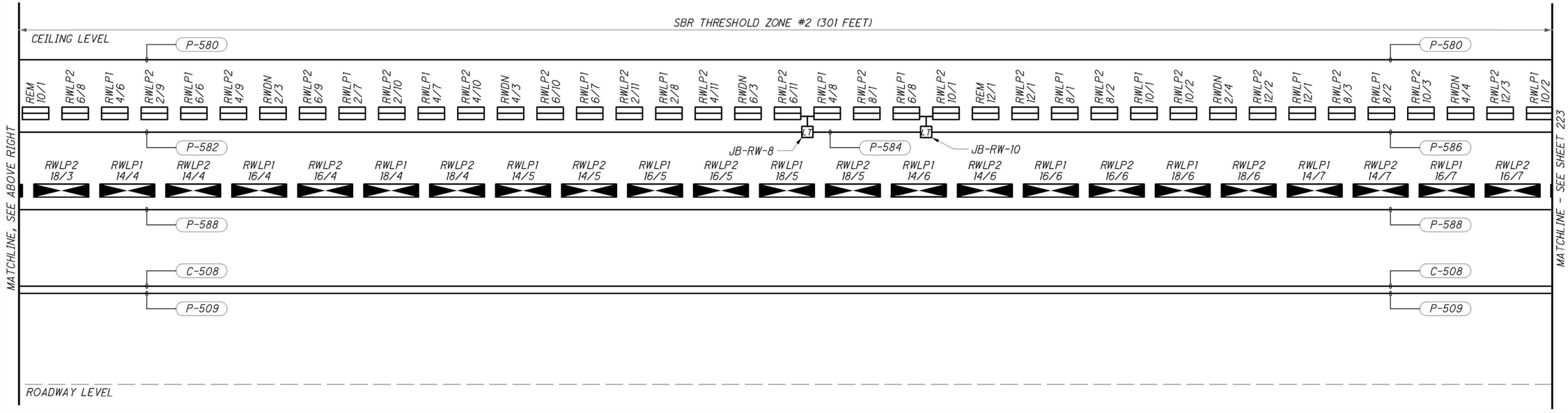

NOTES:

1. FOR LEGEND AND ABBREVIATIONS, SEE SHEET 199/555
2. FOR LIGHTING SCHEDULES, SEE SHEET 207/555
3. FOR TYPICAL MOUNTING ARRANGEMENT, SEE SHEET 238/555
4. MOUNTING HEIGHTS SHOWN ARE NOT TO SCALE. AS WALL HEIGHTS VARY BETWEEN TUBES, LIGHTING TO BE INSTALLED AT A FIXED DISTANCE BELOW THE CEILING LEVEL. FOR MOUNTING HEIGHTS SEE SHEET 187/555
5. FOR CONDUIT AND CABLE SCHEDULES SEE SHEETS 475/555 THROUGH 484/555

SOUTHBOUND RAMP E TUNNEL TO 3RD STREET
WEST WALL ELEVATION

HORIZONTAL SCALE: 1/4"=1'-0"
VERTICAL SCALE: N.T.S.

CALCULATED DGC
CHECKED MK

LIGHTING ELEVATION - SBR WEST WALL - SHEET 3 OF 4

HAM-71-1.34

222
555

e:\pwworking\hnm\external\tyn61470\dms72803\8726LP019.dgn 10/24/2014 12:33:49 PM TYN61470

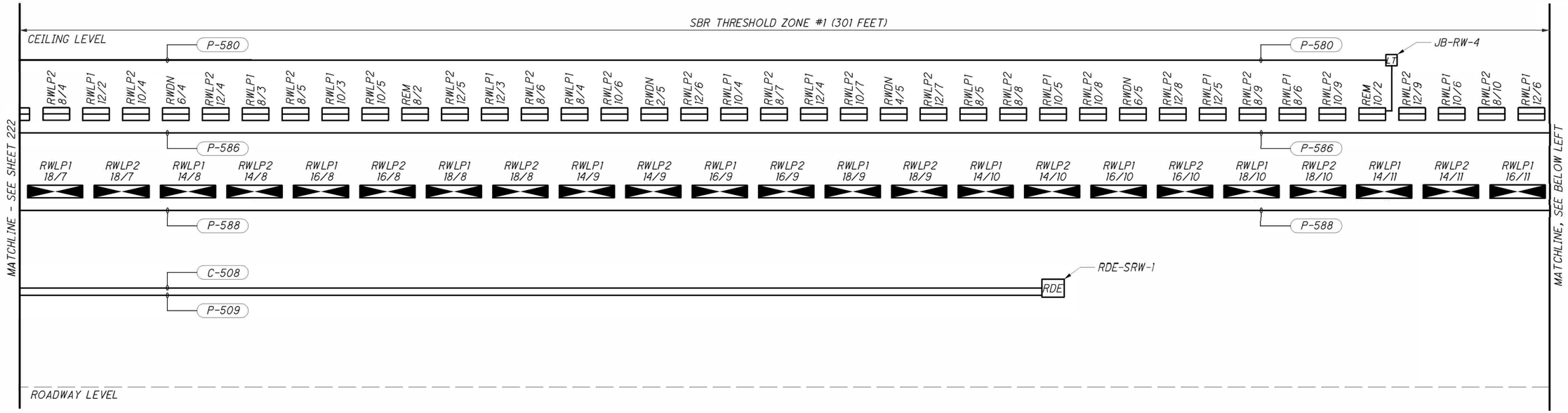

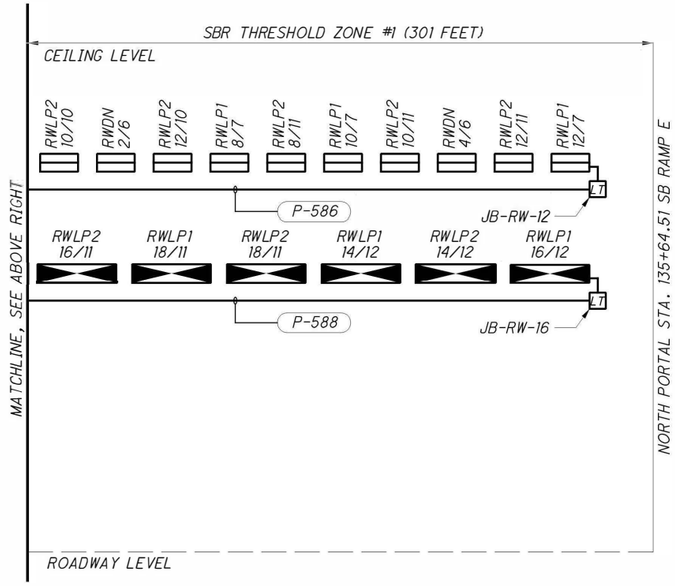

NOTES:

1. FOR LEGEND AND ABBREVIATIONS, SEE SHEET 199/555
2. FOR LIGHTING SCHEDULES, SEE SHEET 207/555
3. FOR TYPICAL MOUNTING ARRANGEMENT, SEE SHEET 238/555
4. MOUNTING HEIGHTS SHOWN ARE NOT TO SCALE. AS WALL HEIGHTS VARY BETWEEN TUBES, LIGHTING TO BE INSTALLED AT A FIXED DISTANCE BELOW THE CEILING LEVEL. FOR MOUNTING HEIGHTS SEE SHEET 187/555
5. FOR CONDUIT AND CABLE SCHEDULES SEE SHEETS 475/555 THROUGH 484/555

SOUTHBOUND RAMP E TUNNEL TO 3RD STREET WEST WALL ELEVATION

HORIZONTAL SCALE: 1/4"=1'-0"
VERTICAL SCALE: N.T.S.

CALCULATED DGC
CHECKED MK

LIGHTING ELEVATION - SBR WEST WALL - SHEET 4 OF 4

HAM-71-1.34

223
555

c:\pwworking\hmm\external\tyn61470\dms72803\8726LP020.dgn 10/24/2014 12:33:52 PM TYN61470

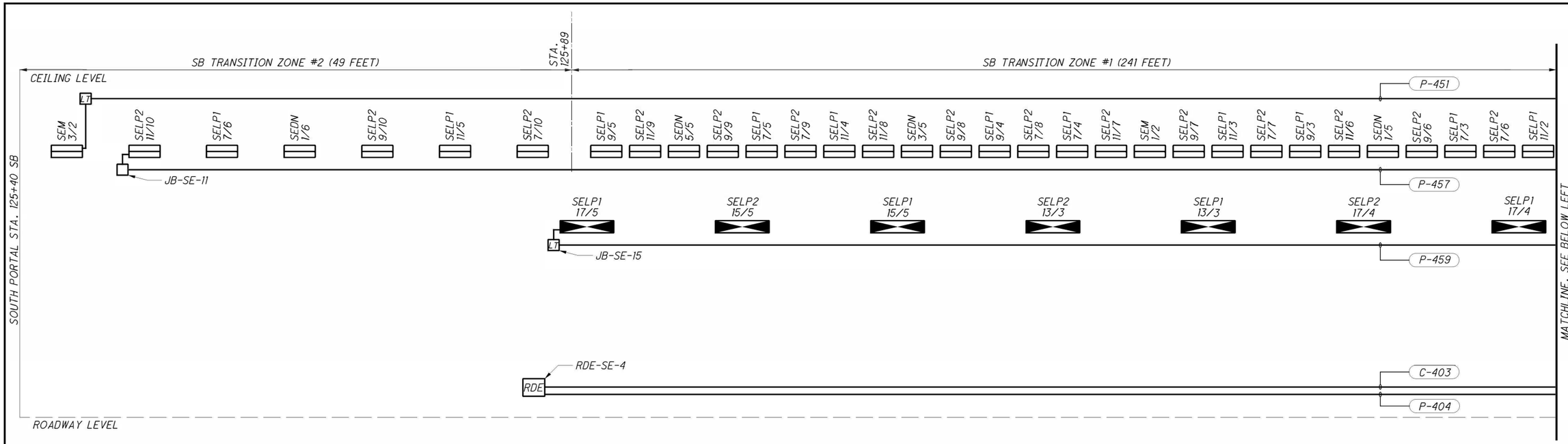

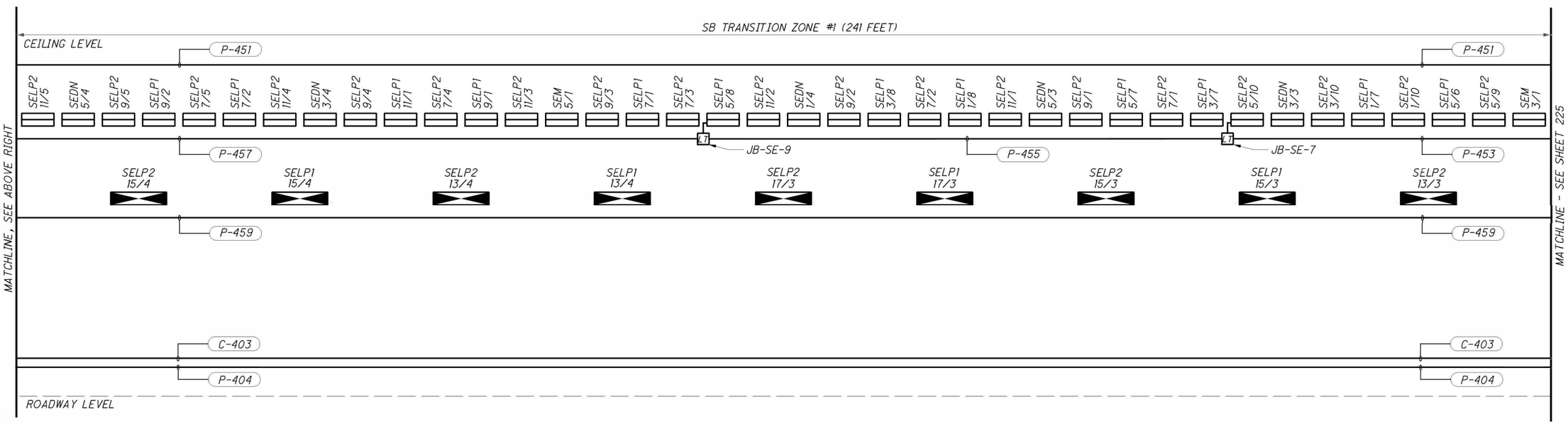

NOTES:

1. FOR LEGEND AND ABBREVIATIONS, SEE SHEET 199/555
2. FOR LIGHTING SCHEDULES, SEE SHEET 207/555
3. FOR TYPICAL MOUNTING ARRANGEMENT, SEE SHEET 238/555
4. MOUNTING HEIGHTS SHOWN ARE NOT TO SCALE. AS WALL HEIGHTS VARY BETWEEN TUBES, LIGHTING TO BE INSTALLED AT A FIXED DISTANCE BELOW THE CEILING LEVEL. FOR MOUNTING HEIGHTS SEE SHEET 187/555
5. FOR CONDUIT AND CABLE SCHEDULES SEE SHEETS 475/555 THROUGH 484/555

SOUTHBOUND TUNNEL EAST WALL ELEVATION

HORIZONTAL SCALE: 1/4"=1'-0"
VERTICAL SCALE: N.T.S.

CALCULATED CML
CHECKED DGC

LIGHTING ELEVATION - SB EAST WALL - SHEET 1 OF 4

HAM-71-1.34

c:\pwworking\hmm\external\tyn61470\dms72803\87266LP021.dgn 10/24/2014 12:33:54 PM TYN61470

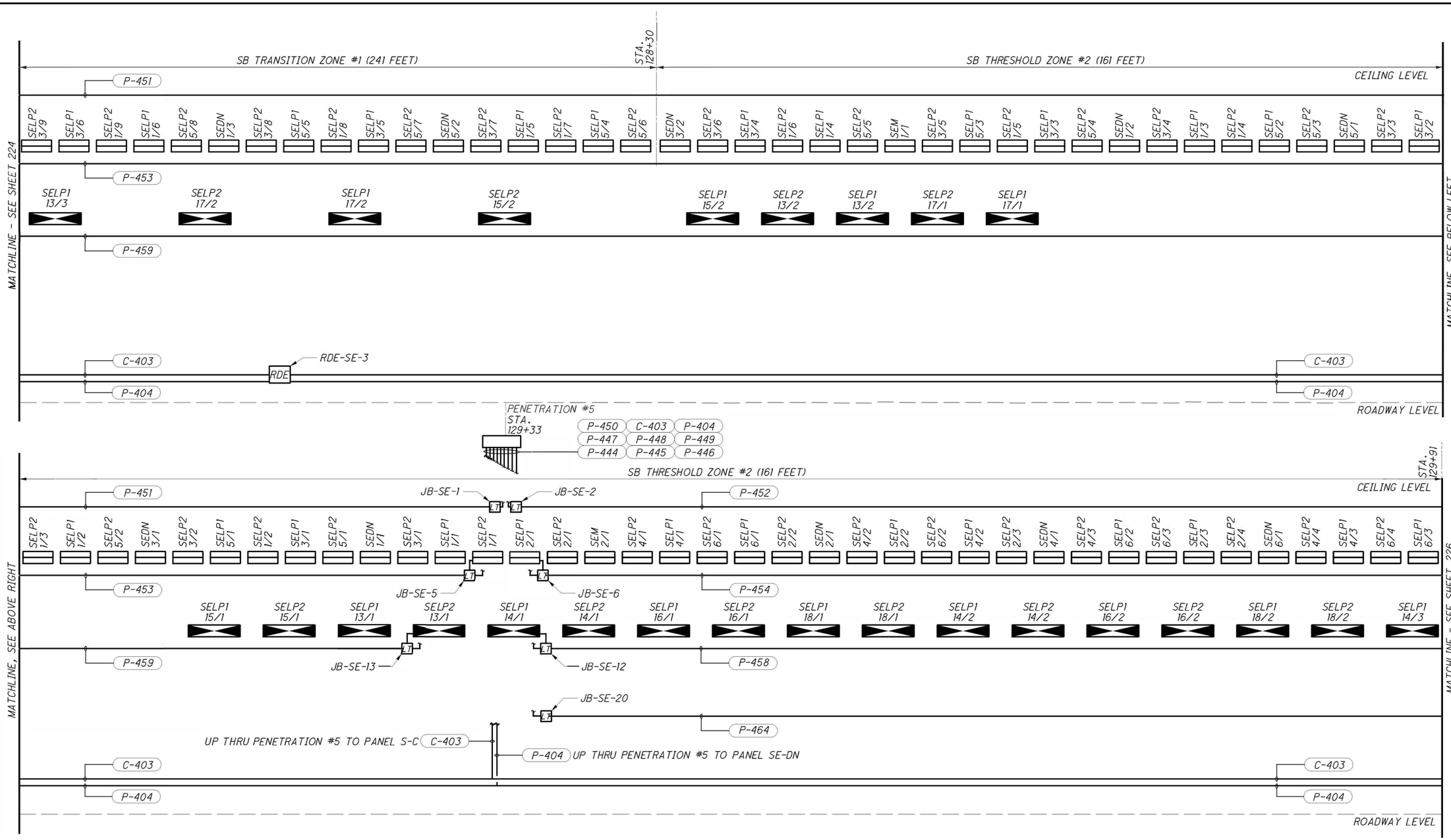

NOTES:

1. FOR LEGEND AND ABBREVIATIONS, SEE SHEET 199/555
2. FOR LIGHTING SCHEDULES, SEE SHEET 207/555
3. FOR TYPICAL MOUNTING ARRANGEMENT, SEE SHEET 238/555
4. MOUNTING HEIGHTS SHOWN ARE NOT TO SCALE. AS WALL HEIGHTS VARY BETWEEN TUBES, LIGHTING TO BE INSTALLED AT A FIXED DISTANCE BELOW THE CEILING LEVEL. FOR MOUNTING HEIGHTS SEE SHEET 187/555
5. FOR CONDUIT AND CABLE SCHEDULES SEE SHEETS 475/555 THROUGH 484/555

SOUTHBOUND TUNNEL EAST WALL ELEVATION

HORIZONTAL SCALE: 1/4"=1'-0"
VERTICAL SCALE: N.T.S.

CALCULATED DGC
CHECKED MK

LIGHTING ELEVATION - SB EAST WALL - SHEET 2 OF 4

HAM-71-1.34

225
555

c:\pwworking\hnm\external\tyn61470\dms72803\8726BLP022.dgn 10/24/2014 12:33:56 PM TYN61470

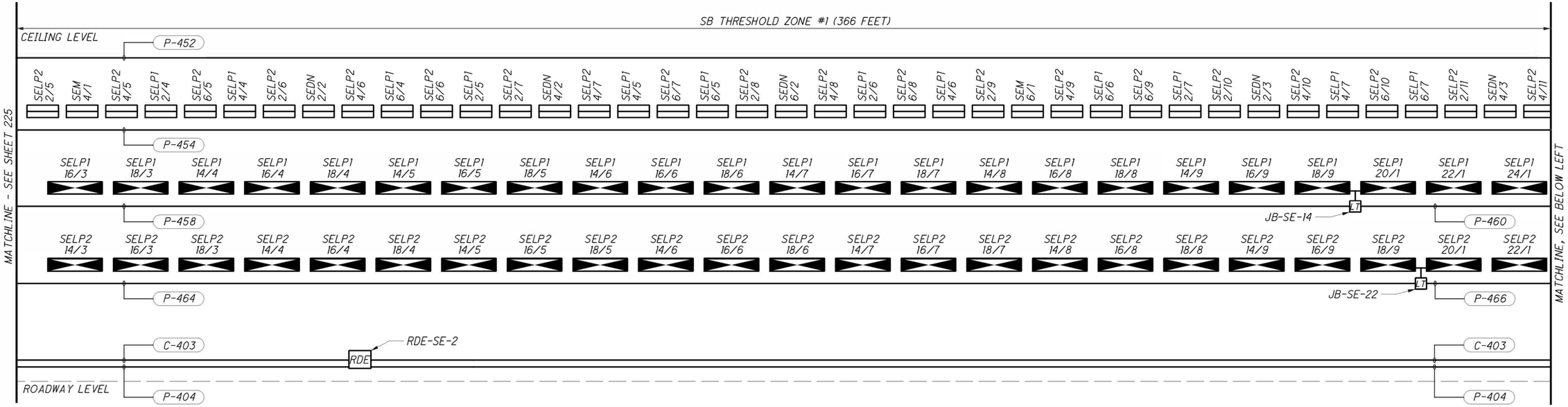

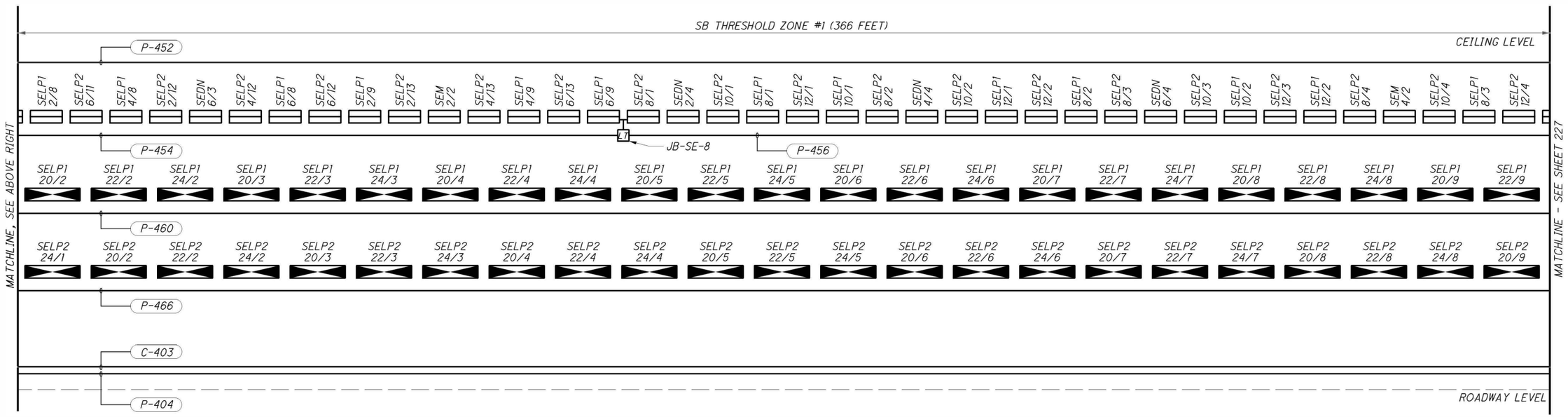

NOTES:

1. FOR LEGEND AND ABBREVIATIONS, SEE SHEET 199/555
2. FOR LIGHTING SCHEDULES, SEE SHEET 207/555
3. FOR TYPICAL MOUNTING ARRANGEMENT, SEE SHEET 238/555
4. MOUNTING HEIGHTS SHOWN ARE NOT TO SCALE. AS WALL HEIGHTS VARY BETWEEN TUBES, LIGHTING TO BE INSTALLED AT A FIXED DISTANCE BELOW THE CEILING LEVEL. FOR MOUNTING HEIGHTS SEE SHEET 187/555
5. FOR CONDUIT AND CABLE SCHEDULES SEE SHEETS 475/555 THROUGH 484/555

SOUTHBOUND TUNNEL EAST WALL ELEVATION

HORIZONTAL SCALE: 1/4"=1'-0"
VERTICAL SCALE: N.T.S.

CALCULATED DGC
CHECKED MK

LIGHTING ELEVATION - SB EAST WALL - SHEET 3 OF 4

HAM-71-1.34

226
555

c:\pwworking\hmm\external\tyn61470\dms72803\87268LP023.dgn 10/24/2014 12:33:56 PM TYN61470

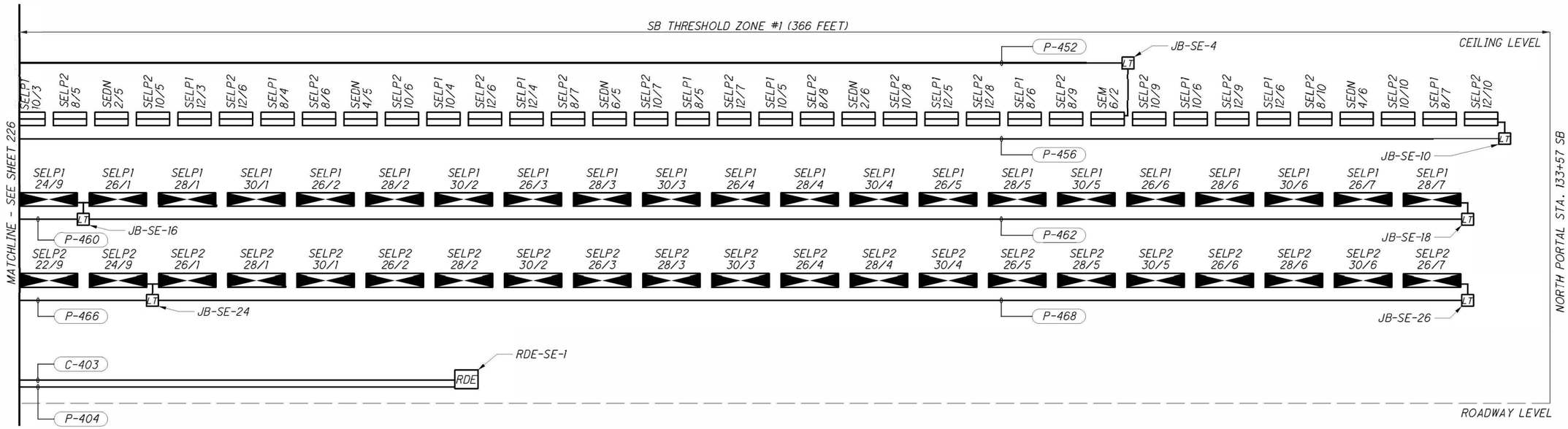

SOUTHBOUND TUNNEL
EAST WALL ELEVATION

HORIZONTAL SCALE: 1/4"=1'-0"
VERTICAL SCALE: N.T.S.

NOTES:

1. FOR LEGEND AND ABBREVIATIONS, SEE SHEET 199/555
2. FOR LIGHTING SCHEDULES, SEE SHEET 207/555
3. FOR TYPICAL MOUNTING ARRANGEMENT, SEE SHEET 238/555
4. MOUNTING HEIGHTS SHOWN ARE NOT TO SCALE. AS WALL HEIGHTS VARY BETWEEN TUBES, LIGHTING TO BE INSTALLED AT A FIXED DISTANCE BELOW THE CEILING LEVEL. FOR MOUNTING HEIGHTS SEE SHEET 187/555
5. FOR CONDUIT AND CABLE SCHEDULES SEE SHEETS 475/555 THROUGH 484/555

CALCULATED CML
CHECKED DGC

LIGHTING ELEVATION - SB EAST WALL - SHEET 4 OF 4

HAM-71-1.34

c:\pwworking\hmm\external\tyn61470\dms72803\8726LP024.dgn 10/24/2014 12:34:00 PM TYN61470

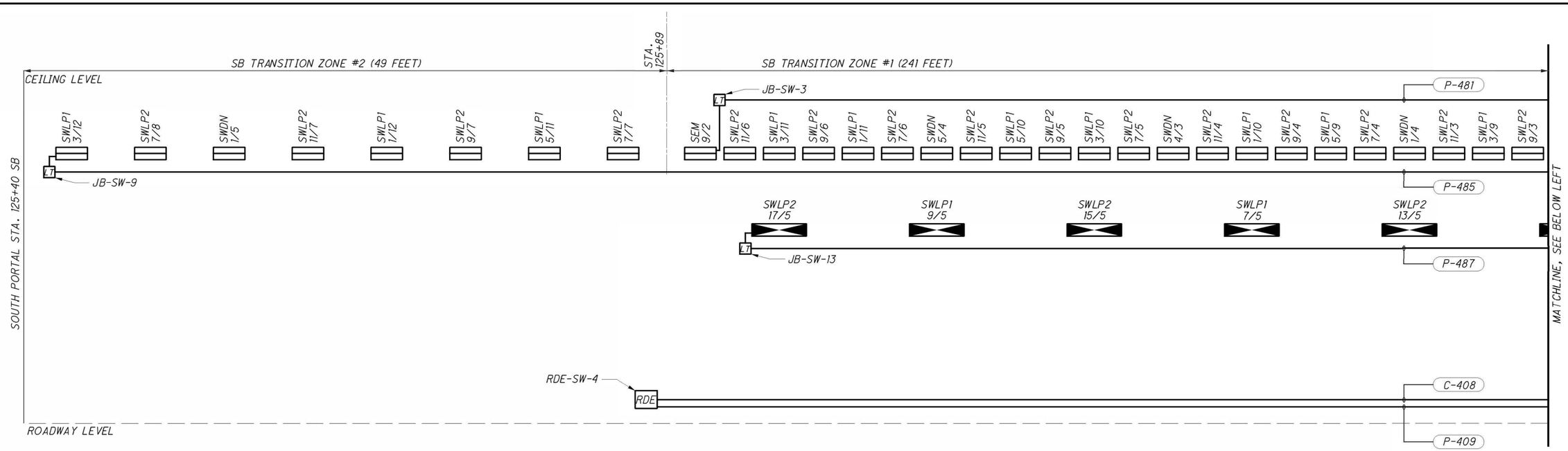

NOTES:

1. FOR LEGEND AND ABBREVIATIONS, SEE SHEET 199/555
2. FOR LIGHTING SCHEDULES, SEE SHEET 207/555
3. FOR TYPICAL MOUNTING ARRANGEMENT, SEE SHEET 238/555
4. MOUNTING HEIGHTS SHOWN ARE NOT TO SCALE. AS WALL HEIGHTS VARY BETWEEN TUBES, LIGHTING TO BE INSTALLED AT A FIXED DISTANCE BELOW THE CEILING LEVEL. FOR MOUNTING HEIGHTS SEE SHEET 187/555
5. FOR CONDUIT AND CABLE SCHEDULES SEE SHEETS 475/555 THROUGH 484/555

SOUTHBOUND TUNNEL WEST WALL ELEVATION

HORIZONTAL SCALE: 1/4"=1'-0"
VERTICAL SCALE: N.T.S.

CALCULATED DGC
CHECKED MK

LIGHTING ELEVATION - SB WEST WALL - SHEET 1 OF 4

HAM-71-1.34

228
555

c:\pwworking\hmm\external\tyn61470\dms72803\87268LP025.dgn 10/24/2014 12:34:02 PM T:\N61470

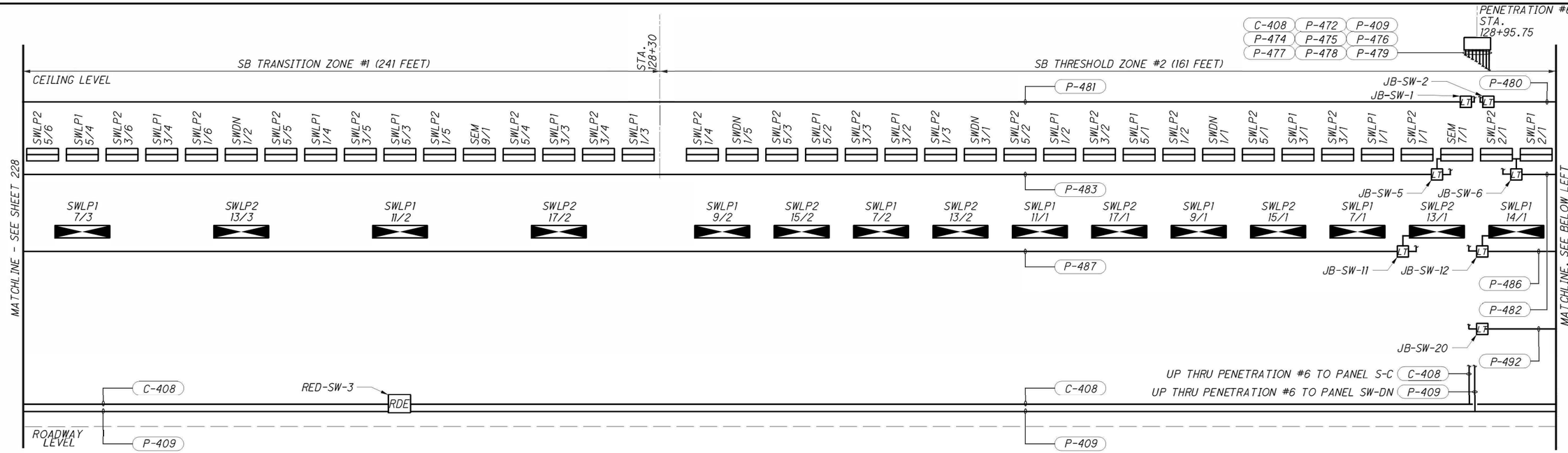

NOTES:

1. FOR LEGEND AND ABBREVIATIONS, SEE SHEET 199/555
2. FOR LIGHTING SCHEDULES, SEE SHEET 207/555
3. FOR TYPICAL MOUNTING ARRANGEMENT, SEE SHEET 238/555
4. MOUNTING HEIGHTS SHOWN ARE NOT TO SCALE. AS WALL HEIGHTS VARY BETWEEN TUBES, LIGHTING TO BE INSTALLED AT A FIXED DISTANCE BELOW THE CEILING LEVEL. FOR MOUNTING HEIGHTS SEE SHEET 187/555
5. FOR CONDUIT AND CABLE SCHEDULES SEE SHEETS 475/555 THROUGH 484/555

SOUTHBOUND TUNNEL WEST WALL ELEVATION

HORIZONTAL SCALE: 1/4"=1'-0"
VERTICAL SCALE: N.T.S.

CALCULATED DGC CHECKED MK

LIGHTING ELEVATION - SB WEST WALL - SHEET 2 OF 4

HAM-71-1.34

229
555

c:\pwworking\hmm\external\tyn61470\dms72803\8726LP026.dgn 10/24/2014 12:34:04 PM T:\N61470

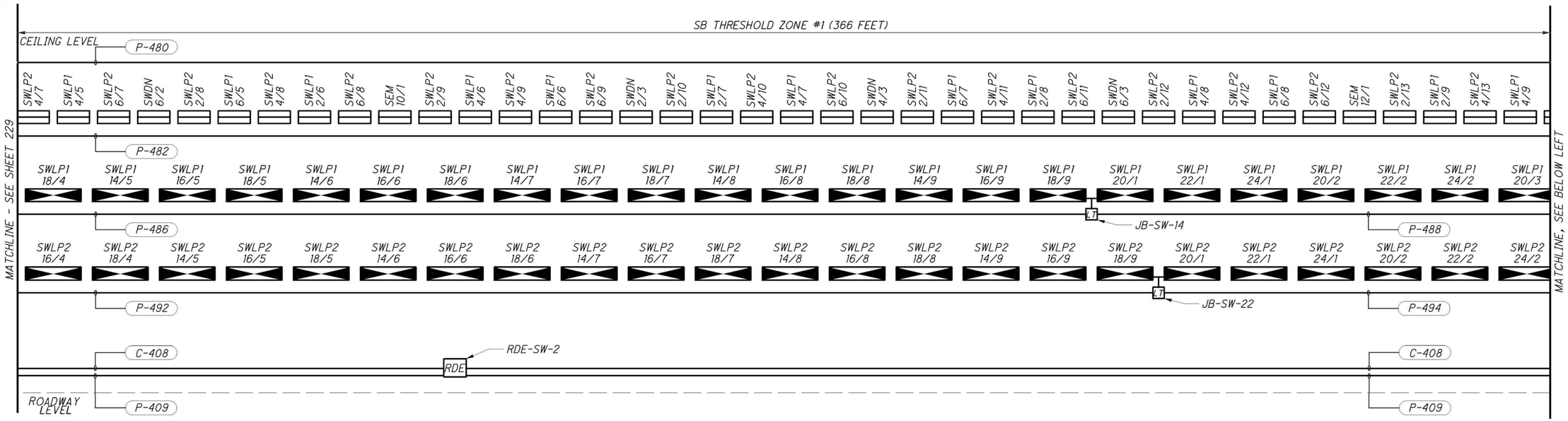

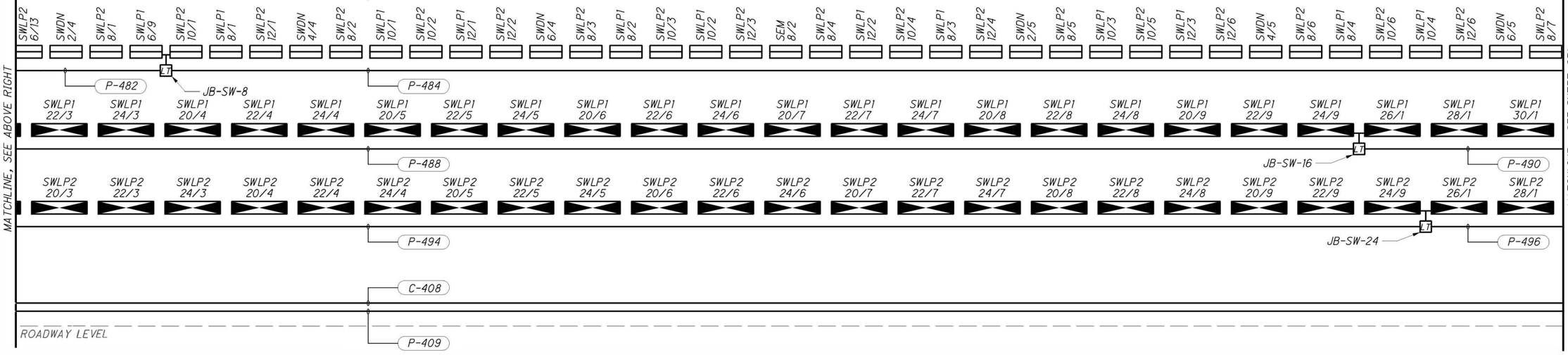

NOTES:

1. FOR LEGEND AND ABBREVIATIONS, SEE SHEET 199/555
2. FOR LIGHTING SCHEDULES, SEE SHEET 207/555
3. FOR TYPICAL MOUNTING ARRANGEMENT, SEE SHEET 238/555
4. MOUNTING HEIGHTS SHOWN ARE NOT TO SCALE. AS WALL HEIGHTS VARY BETWEEN TUBES, LIGHTING TO BE INSTALLED AT A FIXED DISTANCE BELOW THE CEILING LEVEL. FOR MOUNTING HEIGHTS SEE SHEET 187/555
5. FOR CONDUIT AND CABLE SCHEDULES SEE SHEETS 475/555 THROUGH 484/555

SOUTHBOUND TUNNEL WEST WALL ELEVATION

HORIZONTAL SCALE: 1/4"=1'-0"
VERTICAL SCALE: N.T.S.

CALCULATED DGC
CHECKED MK

LIGHTING ELEVATION - SB WEST WALL - SHEET 3 OF 4

HAM-71-1.34

230
555

c:\pwworking\hnm\external\ty61470\dms72803\8726LP027.dgn 10/24/2014 12:34:06 PM TYN61470

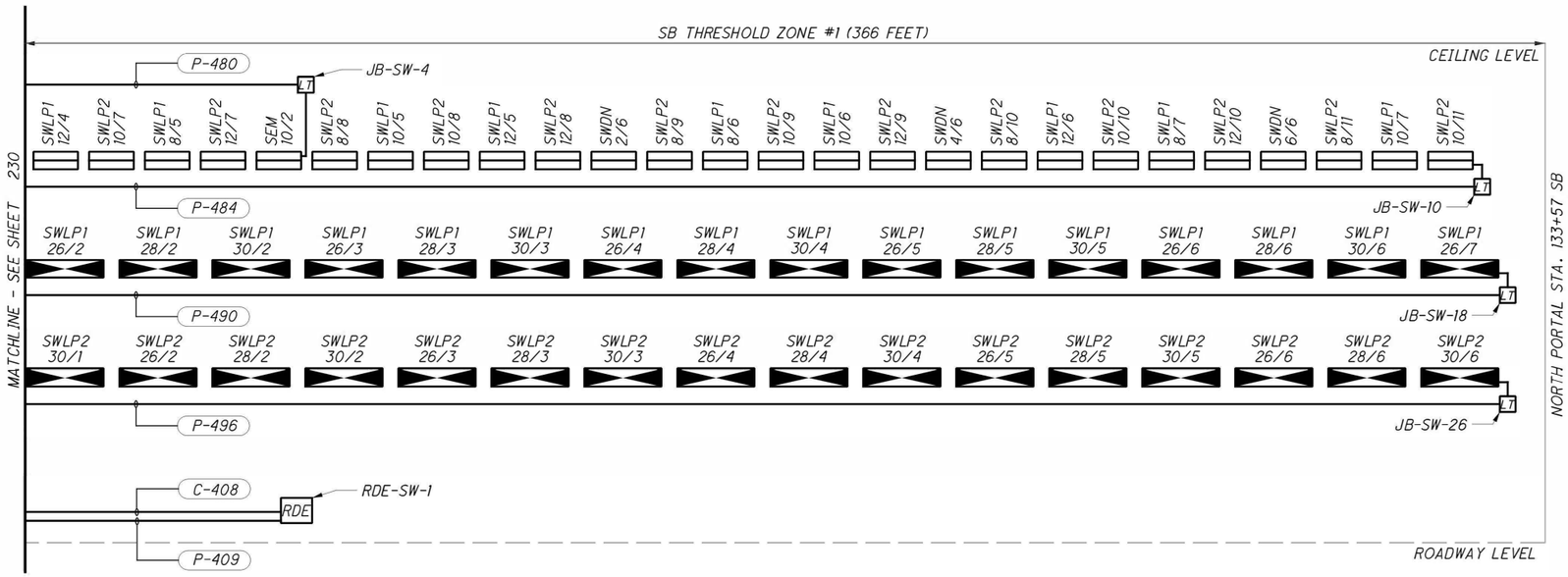

SOUTHBOUND TUNNEL
WEST WALL ELEVATION

HORIZONTAL SCALE: 1/4"=1'-0"
VERTICAL SCALE: N.T.S.

NOTES:

1. FOR LEGEND AND ABBREVIATIONS, SEE SHEET 199/555
2. FOR LIGHTING SCHEDULES, SEE SHEET 207/555
3. FOR TYPICAL MOUNTING ARRANGEMENT, SEE SHEET 238/555
4. MOUNTING HEIGHTS SHOWN ARE NOT TO SCALE. AS WALL HEIGHTS VARY BETWEEN TUBES, LIGHTING TO BE INSTALLED AT A FIXED DISTANCE BELOW THE CEILING LEVEL. FOR MOUNTING HEIGHTS SEE SHEET 187/555
5. FOR CONDUIT AND CABLE SCHEDULES SEE SHEETS 475/555 THROUGH 484/555

CALCULATED CML
CHECKED DGC

LIGHTING ELEVATION - SB WEST WALL - SHEET 4 OF 4

HAM-71-1.34

231
555

c:\pwworking\hmm\external\tyn61470\dms72803\8726LP028.dgn 10/24/2014 12:34:08 PM TYN61470

PANEL NAME: DP-E

SERVICE: 480/277(V) 3P/4W | MAINS: 600 (A) 3P MCB | ENCLOSURE: NEMA 3R | MOUNTING: SURFACE | ENTRANCE: TOP | EXISTING EQUIP. ROOM | GROUND BUS: CU - SOLID | NEUTRAL: CU - 200% | CABLE TAG: P-SWGR/DPE-A/B | MAIN CB INTERRUPTING RATING: 65KA SYM | BRANCH CB INTERRUPTING RATING: 35KA SYM

CKT NO.	SERVES	LOAD (VA) ØA	LOAD (VA) ØB	LOAD (VA) ØC	BREAKER TRIP	BREAKER POLE	BREAKER POLE	BREAKER TRIP	LOAD (VA) ØA	LOAD (VA) ØB	LOAD (VA) ØC	SERVES	CKT NO.
1							1						2
3	NE-DN	2,787	2,787	2,666	100	3	1	100	2,993	2,744	2,494	SE-DN	4
5							1						6
7							1						8
9	NE-LP1	15,780	15,229	14,679	100	3	1	100	20,365	19,866	19,436	SE-LP1	10
11							1						12
13							1						14
15	NE-LP2	17,113	16,684	16,254	100	3	1	100	23,607	23,178	23,178	SE-LP2	16
17							1						18
19							1	150				SPARE	20
21	RE-DN	1,333	1,333	1,091	100	3	1	150				SPARE	22
23							1	150				SPARE	24
25							1	150				SPARE	26
27	RE-LP1	9,405	9,405	8,975	100	3	1	150				SPARE	28
29							1	150				SPARE	30
31							1	150				SPARE	32
33	RE-LP2	11,101	11,101	10,551	100	3	1	150				SPARE	34
35							1	150				SPARE	36
SUB-TOTAL CONNECTED		57,519	56,539	54,215					46,965	45,787	45,108	SUB-TOTAL CONNECTED	

SUB-TOTAL CONNECTED:	ØA	VA	104,484
SUB-TOTAL CONNECTED:	ØB	VA	102,326
SUB-TOTAL CONNECTED:	ØC	VA	99,324
TOTAL CONNECTED:		VA	306,133

PANEL NAME: DP-W

SERVICE: 480/277(V) 3P/4W | MAINS: 600 (A) 3P MCB | ENCLOSURE: NEMA 3R | MOUNTING: SURFACE | ENTRANCE: TOP | EXISTING EQUIP. ROOM | GROUND BUS: CU - SOLID | NEUTRAL: CU - 200% | CABLE TAG: P-SWGR/DPE-A/B | MAIN CB INTERRUPTING RATING: 65KA SYM | BRANCH CB INTERRUPTING RATING: 35KA SYM

CKT NO.	SERVES	LOAD (VA) ØA	LOAD (VA) ØB	LOAD (VA) ØC	BREAKER TRIP	BREAKER POLE	BREAKER POLE	BREAKER TRIP	LOAD (VA) ØA	LOAD (VA) ØB	LOAD (VA) ØC	SERVES	CKT NO.
1							1						2
3	NW-DN	2,666	2,666	2,424	100	3	1	100	2,744	2,494	2,494	SW-DN	4
5							1						6
7							1						8
9	NW-LP1	15,659	14,558	14,558	100	3	1	100	19,866	19,436	18,508	SW-LP1	10
11							1						12
13							1						14
15	NW-LP2	16,375	16,254	16,133	100	3	1	100	22,928	22,679	22,000	SW-LP2	16
17							1						18
19							1	150				SPARE	20
21	RW-DN	1,333	1,333	1,091	100	3	1	150				SPARE	22
23							1	150				SPARE	24
25							1	150				SPARE	26
27	RW-LP1	9,405	9,284	8,854	100	3	1	150				SPARE	28
29							1	150				SPARE	30
31							1	150				SPARE	32
33	RW-LP2	11,101	10,551	10,551	100	3	1	150				SPARE	34
35							1	150				SPARE	36
SUB-TOTAL CONNECTED		56,539	54,645	53,609					45,538	44,609	43,002	SUB-TOTAL CONNECTED	

SUB-TOTAL CONNECTED:	ØA	VA	102,076
SUB-TOTAL CONNECTED:	ØB	VA	99,254
SUB-TOTAL CONNECTED:	ØC	VA	96,612
TOTAL CONNECTED:		VA	297,942

PANEL NAME: NE-DN

SERVICE: 480/277(V) 3P/4W | MAINS: 100 (A) MLO | ENCLOSURE: NEMA 3R | MOUNTING: SURFACE | ENTRANCE: TOP | EXISTING EQUIP. ROOM | GROUND BUS: CU - SOLID | NEUTRAL: CU - 200% | CABLE TAG: L-DPE-01 | BRANCH CB INTERRUPTING RATING: 25KA SYM

CKT NO.	SERVES	LOAD (VA) ØA	LOAD (VA) ØB	LOAD (VA) ØC	BREAKER TRIP	BREAKER POLE	BREAKER POLE	BREAKER TRIP	LOAD (VA) ØA	LOAD (VA) ØB	LOAD (VA) ØC	SERVES	CKT NO.
1	(9) LED - ROW 1 - (STA. 130+50.5 - 127+10)	1,091					1		1,696			(14) LED - ROW 1 - (STA. 130+50.5 - 135+74)	2
3	(9) LED - ROW 1 - (STA. 130+50.5 - 127+10)		1,091		20	3	1	20		1,696		(14) LED - ROW 1 - (STA. 130+50.5 - 135+74)	4
5	(8) LED - ROW 1 - (STA. 130+50.5 - 127+10)			969			1				1,696	(14) LED - ROW 1 - (STA. 130+50.5 - 135+74)	6
7	SPARE						1	20				SPARE	8
9	SPARE				20	3	1	20				SPARE	10
11	SPARE						1	20				SPARE	12
13	SPACE											SPACE	14
15	SPACE											SPACE	16
17	SPACE											SPACE	18
SUB-TOTAL CONNECTED		1,091	1,091	969					1,696	1,696	1,696	SUB-TOTAL CONNECTED	

SUB-TOTAL CONNECTED:	ØA	VA	2,787
SUB-TOTAL CONNECTED:	ØB	VA	2,787
SUB-TOTAL CONNECTED:	ØC	VA	2,666
TOTAL CONNECTED:		VA	8,240

PANEL NAME: NE-LP1

SERVICE: 480/277(V) 3P/4W | MAINS: 100 (A) MLO | ENCLOSURE: NEMA 3R | MOUNTING: SURFACE | ENTRANCE: TOP | EXISTING EQUIP. ROOM | GROUND BUS: CU - SOLID | NEUTRAL: CU - 200% | CABLE TAG: L-DPE-02 | BRANCH CB INTERRUPTING RATING: 25KA SYM

CKT NO.	SERVES	LOAD (VA) ØA	LOAD (VA) ØB	LOAD (VA) ØC	BREAKER TRIP	BREAKER POLE	BREAKER POLE	BREAKER TRIP	LOAD (VA) ØA	LOAD (VA) ØB	LOAD (VA) ØC	SERVES	CKT NO.
1	(12) LED - ROW 1 - (STA. 130+50.5 - 127+10)	1,454					1		1,212			(10) LED - ROW 1 - (STA. 130+50.5 - 133+40)	2
3	(12) LED - ROW 1 - (STA. 130+50.5 - 127+10)		1,454		20	3	1	20		1,212		(10) LED - ROW 1 - (STA. 130+50.5 - 133+40)	4
5	(11) LED - ROW 1 - (STA. 130+50.5 - 127+10)			1,333			1				1,212	(10) LED - ROW 1 - (STA. 130+50.5 - 133+40)	6
7	(11) LED - ROW 2 - (STA. 130+50.5- 128+60)	4,724					1		1,091			(9) LED - ROW 1 - (STA. 133+40 - 135+74)	8
9	(11) LED - ROW 2 - (STA. 130+50.5 - 128+60)		4,724		20	3	1	20		969		(8) LED - ROW 1 - (STA. 133+40 - 135+74)	10
11	(11) LED - ROW 2 - (STA. 130+50.5- 128+60)			4,724			1				969	(8) LED - ROW 1 - (STA. 133+40 - 135+74)	12
13	(10) LED - ROW 2 - (STA. 128+60- 127+10)	4,294					1		3,006			(7) LED - ROW 2 - (STA. 130+50.5 - 133+40)	14
15	(10) LED - ROW 2 - (STA. 128+60 - 127+10)		4,294		20	3	1	20		2,576		(6) LED - ROW 2 - (STA. 130+50.5 - 133+40)	16
17	(9) LED - ROW 2 - (STA. 128+60- 127+10)			3,865			1				2,576	(6) LED - ROW 2 - (STA. 130+50.5 - 133+40)	18
19	SPARE						1	20				SPARE	8
21	SPARE				20	3	1	20				SPARE	10
23	SPARE						1	20				SPARE	12
25	SPACE											SPACE	26
27	SPACE											SPACE	28
29	SPACE											SPACE	30
SUB-TOTAL CONNECTED		10,472	10,472	9,921					5,308	4,758	4,758	SUB-TOTAL CONNECTED	

SUB-TOTAL CONNECTED:	ØA	VA	15,780
SUB-TOTAL CONNECTED:	ØB	VA	15,229
SUB-TOTAL CONNECTED:	ØC	VA	14,679
TOTAL CONNECTED:		VA	45,688

NOTES:

1. *FOR PANEL MOUNTING LOCATIONS AND DETAILS SEE SHEETS 239/555 THROUGH 242/555*
2. *FOR LEGENDS AND ABBREVIATIONS SEE SHEET 199/555*

CALCULATED DGC CHECKED MK

LIGHTING PANEL SCHEDULE - SHEET 1 OF 6

HAM-71-01.34

232/555

c:\pwworking\hmm\external\tyn61470\dms72803\8726LD006.dgn 10/24/2014 12:34:11 PM TYN61470

PANEL NAME	SERVICE:	480/277(V) 3P/4W	MOUNTING: SURFACE	GROUND BUS:	CU - SOLID	
NE-LP2	MAINS:	100 (A) MLO	ENTRANCE: TOP	NEUTRAL:	CU - 200%	BRANCH CB INTERRUPTING RATING: 25KA SYM
	ENCLOSURE:	NEMA 3R	EXISTING EQUIP. ROOM	CABLE TAG:	L-DPE-03	

CKT NO.	SERVES	LOAD (VA) ØA	LOAD (VA) ØB	LOAD (VA) ØC	BREAKER TRIP	BREAKER POLE						BREAKER POLE	BREAKER TRIP	LOAD (VA) ØA	LOAD (VA) ØB	LOAD (VA) ØC	SERVES	CKT NO.
1	(12) LED - ROW 1 - (STA. 130+50.5 - 128+70)	1,454					-/-	X			-/-			1,212			(10) LED - ROW 1 - (STA. 130+50.5 - 132+00)	2
3	(12)LED - ROW 1 - (STA. 130+50.5 - 128+70)		1,454		20	3(	-/-		X		-/-	)3	20		1,212		(10) LED - ROW 1 - (STA. 130+50.5 - 132+00)	4
5	(12)LED - ROW 1 - (STA. 130+50.5 - 128+70)			1,454			-/-			X	-/-					1,212	(10) LED - ROW 1 - (STA. 130+50.5 - 132+00)	6
7	(11) LED - ROW 1 - (STA. 128+70 - 127+10)	1,333					-/-	X			-/-			1,091			(9) LED - ROW 1 - (STA. 132+00 - 133+30)	8
9	(11) LED - ROW 1 - (STA. 128+70 - 127+10)		1,333		20	3(	-/-		X		-/-	)3	20		1,091		(9) LED - ROW 1 - (STA. 132+00 - 133+30)	10
11	(11) LED - ROW 1 - (STA. 128+70 - 127+10)			1,333			-/-			X	-/-					1,091	(9) LED - ROW 1 - (STA. 132+00 - 133+30)	12
13	(3)ROW 2 - (8)ROW 3 - (STA. 130+50.5 - 128+50)	4,724					-/-	X			-/-			3,006			(7)LED - ROW 2- (STA. 130+50.5 - 133+30)	14
15	(2)ROW 2 - (9)ROW 3 - (STA. 130+50.5 - 128+50)		4,724		20	3(	-/-		X		-/-	)3	20		2,576		(6) LED - ROW 2- (STA. 130+50.5 - 133+30)	16
17	(2)ROW 2 - (9)ROW 3 - (STA. 130+50.5 - 128+50)			4,724			-/-			X	-/-					2,576	(6) LED - ROW 2- (STA. 130+50.5 - 133+30)	18
19	(10) LED - ROW 3 - (STA. 128+50 - 127+10)	4,294					-/-	X			-/-	1	20				SPARE	20
21	(10)LED - ROW 3 - (STA. 128+50 - 127+10)		4,294		20	3(	-/-		X		-/-	1	20				SPARE	22
23	(9) LED - ROW 3- (STA. 128+50 - 127+10)			3,865			-/-			X	-/-	1	20				SPARE	24
25	SPARE						-/-	X			-/-						SPACE	26
27	SPARE				20	3(	-/-		X		-/-						SPACE	28
29	SPARE						-/-			X	-/-						SPACE	30
SUB-TOTAL CONNECTED		11,805	11,805	11,375										5,308	4,879	4,879	SUB-TOTAL CONNECTED	

SUB-TOTAL CONNECTED:	ØA	VA	17,113	
SUB-TOTAL CONNECTED:	ØB	VA	16,684	
SUB-TOTAL CONNECTED:	ØC	VA	16,254	
TOTAL CONNECTED:		VA	50,051	

PANEL NAME	SERVICE:	480/277(V) 3P/4W	MOUNTING: SURFACE	GROUND BUS:	CU - SOLID	
NW-DN	MAINS:	100 (A) MLO	ENTRANCE: TOP	NEUTRAL:	CU - 200%	BRANCH CB INTERRUPTING RATING: 25KA SYM
	ENCLOSURE:	NEMA 3R	EXISTING EQUIP. ROOM	CABLE TAG:	L-DPW-01	

CKT NO.	SERVES	LOAD (VA) ØA	LOAD (VA) ØB	LOAD (VA) ØC	BREAKER TRIP	BREAKER POLE						BREAKER POLE	BREAKER TRIP	LOAD (VA) ØA	LOAD (VA) ØB	LOAD (VA) ØC	SERVES	CKT NO.
1	(9) LED - ROW 1 - (STA. 130+48.16 - 127+10)	1,091					-/-	X			-/-			1,575			(13) LED - ROW 1 - (STA. 130+48.16 - 135+74)	2
3	(9) LED - ROW 1 - (STA. 130+48.16 - 127+10)		1,091		20	3(	-/-		X		-/-	)3	20		1,575		(13) LED - ROW 1 - (STA. 130+48.16 - 135+74)	4
5	(8) LED - ROW 1 - (STA. 130+48.16 - 127+10)			969			-/-			X	-/-					1,454	(12) LED - ROW 1 - (STA. 130+48.16 - 135+74)	6
7	SPARE						-/-	X			-/-	1	20				SPARE	8
9	SPARE				20	3(	-/-		X		-/-	1	20				SPARE	10
11	SPARE						-/-			X	-/-	1	20				SPARE	12
13	SPACE						-/-	X			-/-						SPACE	14
15	SPACE						-/-		X		-/-						SPACE	16
17	SPACE						-/-			X	-/-						SPACE	18
SUB-TOTAL CONNECTED		1,091	1,091	969										1,575	1,575	1,454	SUB-TOTAL CONNECTED	

SUB-TOTAL CONNECTED:	ØA	VA	2,666	
SUB-TOTAL CONNECTED:	ØB	VA	2,666	
SUB-TOTAL CONNECTED:	ØC	VA	2,424	
TOTAL CONNECTED:		VA	7,755	

PANEL NAME	SERVICE:	480/277(V) 3P/4W	MOUNTING: SURFACE	GROUND BUS:	CU - SOLID	
NW-LP1	MAINS:	100 (A) MLO	ENTRANCE: TOP	NEUTRAL:	CU - 200%	BRANCH CB INTERRUPTING RATING: 25KA SYM
	ENCLOSURE:	NEMA 3R	EXISTING EQUIP. ROOM	CABLE TAG:	L-DPW-02	

CKT NO.	SERVES	LOAD (VA) ØA	LOAD (VA) ØB	LOAD (VA) ØC	BREAKER TRIP	BREAKER POLE						BREAKER POLE	BREAKER TRIP	LOAD (VA) ØA	LOAD (VA) ØB	LOAD (VA) ØC	SERVES	CKT NO.
1	(12) LED - ROW 1 - (STA. 130+48.16 - 127+10)	1,454					-/-	X			-/-			1,091			(9)LED - ROW 1 -(STA. 130+48.16 - 133+20)	2
3	(11) LED - ROW 1 - (STA. 130+48.16 - 127+10)		1,333		20	3(	-/-		X		-/-	)3	20		1,091		(9)LED - ROW 1 -(STA. 130+48.16 - 133+20)	4
5	(11) LED - ROW 1 - (STA. 130+48.16 - 127+10)			1,333			-/-			X	-/-					1,091	(9) LED - ROW 1 -(STA. 130+48.16 - 133+20)	6
7	(10) LED - ROW 2 - (STA. 130+50.5 - 128+60)	4,294					-/-	X			-/-			1,091			(9) LED - ROW 1 - (STA. 133+20 - 135+74)	8
9	(10)LED - ROW 2 - (STA. 130+50.5 - 128+60)		4,294		20	3(	-/-		X		-/-	)3	20		969		(8) LED - ROW 1 - (STA. 133+20 - 135+74)	10
11	(10)LED - ROW 2 - (STA. 130+50.5 - 128+60)			4,294			-/-			X	-/-					969	(8) LED - ROW 1 - (STA. 133+20 - 135+74)	12
13	(11) LED - ROW 2 - (STA. 128+60 - 127+10)	4,724					-/-	X			-/-			3,006			(7) LED - ROW 2- (STA. 130+48.16 - 133+30)	14
15	(10)LED - ROW 2 - (STA. 128+60 - 127+10)		4,294		20	3(	-/-		X		-/-	)3	20		2,576		(6) LED - ROW 2- (STA. 130+48.16 - 133+30)	16
17	(10) LED - ROW 2 - (STA. 128+60 - 127+10)			4,294			-/-			X	-/-					2,576	(6) LED - ROW 2- (STA. 130+48.16 - 133+30)	18
19	SPARE						-/-	X			-/-	1	20				SPARE	20
21	SPARE				20	3(	-/-		X		-/-	1	20				SPARE	22
23	SPARE						-/-			X	-/-	1	20				SPARE	24
25	SPACE						-/-	X			-/-						SPACE	26
27	SPACE						-/-		X		-/-						SPACE	28
29	SPACE						-/-			X	-/-						SPACE	30
SUB-TOTAL CONNECTED		10,472	9,921	9,921										5,187	4,636	4,636	SUB-TOTAL CONNECTED	

SUB-TOTAL CONNECTED:	ØA	VA	15,659	
SUB-TOTAL CONNECTED:	ØB	VA	14,558	
SUB-TOTAL CONNECTED:	ØC	VA	14,558	
TOTAL CONNECTED:		VA	44,774	

PANEL NAME	SERVICE:	480/277(V) 3P/4W	MOUNTING: SURFACE	GROUND BUS:	CU - SOLID	
NW-LP2	MAINS:	100 (A) MLO	ENTRANCE: TOP	NEUTRAL:	CU - 200%	BRANCH CB INTERRUPTING RATING: 25KA SYM
	ENCLOSURE:	NEMA 3R	EXISTING EQUIP. ROOM	CABLE TAG:	L-DPW-03	

CKT NO.	SERVES	LOAD (VA) ØA	LOAD (VA) ØB	LOAD (VA) ØC	BREAKER TRIP	BREAKER POLE						BREAKER POLE	BREAKER TRIP	LOAD (VA) ØA	LOAD (VA) ØB	LOAD (VA) ØC	SERVES	CKT NO.
1	(12) LED - ROW 1 - (STA. 130+48.16 - 128+40)	1,454					-/-	X			-/-			1,212			(10) LED - ROW 1 - (STA. 130+48.16 - 132+20)	2
3	(12) LED - ROW 1 - (STA. 130+48.16 - 128+40)		1,454		20	3(	-/-		X		-/-	)3	20		1,212		(10) LED - ROW 1 - (STA. 130+48.16 - 132+20)	4
5	(12) LED - ROW 1 - (STA. 130+48.16 - 128+40)			1,454			-/-			X	-/-					1,212	(10) LED - ROW 1 - (STA. 130+48.16 - 132+20)	6
7	(11) LED - ROW 1 - (STA. 128+40 - 127+10)	1,333					-/-	X			-/-			1,212			(10) LED - ROW 1 -(STA. 132+20 - 133+30)	8
9	(10) LED - ROW 1 - (STA. 128+40 - 127+10)		1,212		20	3(	-/-		X		-/-	)3	20		1,212		(10) LED - ROW 1 -(STA. 132+20 - 133+30)	10
11	(10) LED - ROW 1 - (STA. 128+40 - 127+10)			1,212			-/-			X	-/-					1,091	(9) LED - ROW 1 -(STA. 132+20 - 133+30)	12
13	(10) LED - ROW 3 -(STA. 130+48.16 - 128+20)	4,294					-/-	X			-/-			2,576			(6) LED - ROW 2 - (STA. 130+48.16 - 133+30)	14
15	(10) LED - ROW 3 -(STA. 130+48.16 - 128+20)		4,294		20	3(	-/-		X		-/-	)3	20		2,576		(6) LED - ROW 2 - (STA. 130+48.16 - 133+30)	16
17	(10) LED - ROW 3 -(STA. 130+48.16 - 128+20)			4,294			-/-			X	-/-					2,576	(6) LED - ROW 2- (STA. 130+48.16 - 133+30)	18
19	(10) LED - ROW 3 - (STA. 128+20 - 127+10)	4,294					-/-	X			-/-	1	20				SPARE	20
21	(10) LED - ROW 3 -(STA. 128+20 - 127+10)		4,294		20	3(	-/-		X		-/-	1	20				SPARE	22
23	(10) LED - ROW 3 -(STA. 128+20 - 127+10)			4,294			-/-			X	-/-	1	20				SPARE	24
25	SPARE						-/-	X			-/-						SPACE	26
27	SPARE				20	3(	-/-		X		-/-						SPACE	28
29	SPARE						-/-			X	-/-						SPACE	30
SUB-TOTAL CONNECTED		11,375	11,254	11,254										5,000	5,000	4,879	SUB-TOTAL CONNECTED	

SUB-TOTAL CONNECTED:	ØA	VA	16,375	
SUB-TOTAL CONNECTED:	ØB	VA	16,254	
SUB-TOTAL CONNECTED:	ØC	VA	16,133	
TOTAL CONNECTED:		VA	48,762	

NOTES:

1. *FOR PANEL MOUNTING LOCATIONS AND DETAILS SEE SHEETS 239/555 THROUGH 242/555*
2. *FOR LEGENDS AND ABBREVIATIONS SEE SHEET 199/555*

CALCULATED DGC CHECKED MK

LIGHTING PANEL SCHEDULE - SHEET 2 OF 6

HAM-71-01.34

233/555

c:\pwworking\hnm\external\tyn61470\dms72603\8726LD007.dgn 10/24/2014 12:34:20 PM T/N61470

PANEL NAME: N-EM

SERVICE: 480/277(V) 3P/4W | MAINS: 60 (A) 3P MCB | ENCLOSURE: NEMA 3R
MOUNTING: SURFACE | ENTRANCE: TOP | EXISTING EQUIP. ROOM
GROUND BUS: CU - SOLID | NEUTRAL: CU - 200% | CABLE TAG: P-480UPS/N-EM
MAIN CB INTERRUPTING RATING: 25KA SYM
BRANCH CB INTERRUPTING RATING: 25KA SYM

CKT NO.	SERVES	LOAD (VA) ØA	LOAD (VA) ØB	LOAD (VA) ØC	BREAKER TRIP	BREAKER POLE						BREAKER POLE	BREAKER TRIP	LOAD (VA) ØA	LOAD (VA) ØB	LOAD (VA) ØC	SERVES	CKT NO.
1	(3) LED - ROW 1 EAST - (STA. 130+50.5 - 127+10)	364					-/-	X			-/-			606			(5) LED - ROW 1 EAST- (STA. 130+50.5 - 135+74)	2
3	(3) LED - ROW 1 EAST - (STA. 130+50.5 - 127+10)		364		20	3(	-/-		X		-/-	)3	20		606		(5)LED - ROW 1 EAST- (STA. 130+50.5 - 135+74)	4
5	(3) LED - ROW 1 EAST - (STA. 130+50.5 - 127+10)			364			-/-			X	-/-					485	(4)LED - ROW 1 EAST- (STA. 130+50.5 - 135+74)	6
7	(3) LED - ROW 1 WEST- (STA. 130+48.16 - 127+10)	364					-/-	X			-/-			606			(5)LED - ROW 1 WEST- (STA. 130+48.16 - 135+74)	8
9	(3) LED - ROW 1 WEST- (STA. 130+48.16 - 127+10)		364		20	3(	-/-		X		-/-	)3	20		606		(5) LED - ROW 1 WEST- (STA. 130+48.16 - 135+74)	10
11	(2) LED - ROW 1 WEST- (STA. 130+48.16 - 127+10)			242			-/-			X	-/-					485	(4) LED - ROW 1 WEST- (STA. 130+48.16 - 135+74)	12
13	LIGHTING CONTROL PANEL 'N-C'	249			20	1	-/-	X			-/-	1	20				SPARE	14
15	EAST WALL REMOTE DIMMING ENCLOSURES		249		20	1	-/-		X		-/-	1	20				SPARE	16
17	WEST WALL REMOTE DIMMING ENCLOSURES			249	20	1	-/-			X	-/-	1	20				SPARE	18
	SUB-TOTAL CONNECTED	727	727	606										1,212	1,212	969	SUB-TOTAL CONNECTED	

SUB-TOTAL CONNECTED: ØA VA 1,939
SUB-TOTAL CONNECTED: ØB VA 1,939
SUB-TOTAL CONNECTED: ØC VA 1,575
TOTAL CONNECTED: VA 5,453

PANEL NAME: SE-DN

SERVICE: 480/277(V) 3P/4W | MAINS: 100 (A) MLO | ENCLOSURE: NEMA 3R
MOUNTING: SURFACE | ENTRANCE: TOP | EXISTING EQUIP. ROOM
GROUND BUS: CU - SOLID | NEUTRAL: CU - 200% | CABLE TAG: L-DPE-07
BRANCH CB INTERRUPTING RATING: 25KA SYM

CKT NO.	SERVES	LOAD (VA) ØA	LOAD (VA) ØB	LOAD (VA) ØC	BREAKER TRIP	BREAKER POLE						BREAKER POLE	BREAKER TRIP	LOAD (VA) ØA	LOAD (VA) ØB	LOAD (VA) ØC	SERVES	CKT NO.
1	(6) LED - ROW 1 - (STA. 129+33 - 125+40)	1,496					-/-	X			-/-			1,496			(6) LED - ROW 1 - (STA. 129+33 - 133+57)	2
3	(5) LED - ROW 1 - (STA. 129+33 - 125+40)		1,247		20	3(	-/-		X		-/-	)3	20		1,496		(6) LED - ROW 1 - (STA. 129+33 - 133+57)	4
5	(5) LED - ROW 1 - (STA. 129+33 - 125+40)			1,247			-/-			X	-/-					1,247	(6) LED - ROW 1 - (STA. 129+33 - 133+57)	6
7	SPARE						-/-	X			-/-						SPARE	8
9	SPARE				20	3(	-/-		X		-/-	1	20				SPARE	10
11	SPARE						-/-			X	-/-						SPARE	12
13	SPACE						-/-	X			-/-						SPACE	14
15	SPACE						-/-		X		-/-						SPACE	16
17	SPACE						-/-			X	-/-						SPACE	18
	SUB-TOTAL CONNECTED	1,496	1,247	1,247										1,496	1,496	1,247	SUB-TOTAL CONNECTED	

SUB-TOTAL CONNECTED: ØA VA 2,993
SUB-TOTAL CONNECTED: ØB VA 2,744
SUB-TOTAL CONNECTED: ØC VA 2,494
TOTAL CONNECTED: VA 8,231

PANEL NAME: SE-LP1

SERVICE: 480/277(V) 3P/4W | MAINS: 100 (A) MLO | ENCLOSURE: NEMA 3R
MOUNTING: SURFACE | ENTRANCE: TOP | EXISTING EQUIP. ROOM
GROUND BUS: CU - SOLID | NEUTRAL: CU - 200% | CABLE TAG: L-DPE-08
BRANCH CB INTERRUPTING RATING: 25KA SYM

CKT NO.	SERVES	LOAD (VA) ØA	LOAD (VA) ØB	LOAD (VA) ØC	BREAKER TRIP	BREAKER POLE						BREAKER POLE	BREAKER TRIP	LOAD (VA) ØA	LOAD (VA) ØB	LOAD (VA) ØC	SERVES	CKT NO.
1	(8) LED - ROW 1 - (STA. 129+33 - 127+10)	1,995					-/-	X			-/-			2,245			(9)LED - ROW 1 - (STA. 129+33 - 131+70)	2
3	(8) LED - ROW 1 - (STA. 129+33 - 127+10)		1,995		20	3(	-/-		X		-/-	)3	20		2,245		(9)LED - ROW 1 - (STA. 129+33 - 131+70)	4
5	(8) LED - ROW 1 - (STA. 129+33 - 127+10)			1,995			-/-			X	-/-					2,245	(9) LED - ROW 1 - (STA. 129+33 - 131+70)	6
7	(6) LED - ROW 1 - (STA. 127+10 - 125+40)	1,496					-/-	X			-/-			1,746			(7) LED - ROW 1 - (STA. 131+70 - 133+57)	8
9	(5) LED - ROW 1 - (STA. 127+10 - 125+40)		1,247		20	3(	-/-		X		-/-	)3	20		1,496		(6) LED - ROW 1 - (STA. 131+70 - 133+57)	10
11	(5) LED - ROW 1 - (STA. 127+10 - 125+40)			1,247			-/-			X	-/-					1,496	(6) LED - ROW 1 - (STA. 131+70 - 133+57)	12
13	(5) LED - ROW 2 - (STA. 129+33 - 125+90)	2,147					-/-	X			-/-			3,865			(9) LED - ROW 2 - (STA. 129+33 - 130+70)	14
15	(5) LED - ROW 2 - (STA. 129+33 - 125+90)		2,147		20	3(	-/-		X		-/-	)3	20		3,865		(9) LED - ROW 2 - (STA. 129+33 - 130+70)	16
17	(5) LED - ROW 2 - (STA. 129+33 - 125+90)			2,147			-/-			X	-/-					3,865	(9) LED - ROW 2 - (STA. 129+33 - 130+70)	18
19	SPARE						-/-	X			-/-			3,865			(9) LED - ROW 2 - (STA. 130+70 - 132+30)	20
21	SPARE				20	3(	-/-		X		-/-	)3	20		3,865		(9)LED - ROW 2 - (STA. 130+70 - 132+30)	22
23	SPARE						-/-			X	-/-					3,865	(9)LED - ROW 2 - (STA. 130+70 - 132+30)	24
25	SPARE				20	1	-/-	X			-/-			3,006			(8) LED - ROW 2 - (STA. 132+30 - 133+57)	26
27	SPARE				20	1	-/-		X		-/-	)3	20		3,006		(8) LED - ROW 2 - (STA. 132+30 - 133+57)	28
29	SPARE				20	1	-/-			X	-/-					2,576	(8) LED - ROW 2 - (STA. 132+30 - 133+57)	30
	SUB-TOTAL CONNECTED	5,639	5,389	5,389										14,726	14,476	14,047	SUB-TOTAL CONNECTED	

SUB-TOTAL CONNECTED: ØA VA 20,365
SUB-TOTAL CONNECTED: ØB VA 19,866
SUB-TOTAL CONNECTED: ØC VA 19,436
TOTAL CONNECTED: VA 59,667

PANEL NAME: SE-LP2

SERVICE: 480/277(V) 3P/4W | MAINS: 100 (A) MLO | ENCLOSURE: NEMA 3R
MOUNTING: SURFACE | ENTRANCE: TOP | EXISTING EQUIP. ROOM
GROUND BUS: CU - SOLID | NEUTRAL: CU - 200% | CABLE TAG: L-DPE-09
BRANCH CB INTERRUPTING RATING: 25KA SYM

CKT NO.	SERVES	LOAD (VA) ØA	LOAD (VA) ØB	LOAD (VA) ØC	BREAKER TRIP	BREAKER POLE						BREAKER POLE	BREAKER TRIP	LOAD (VA) ØA	LOAD (VA) ØB	LOAD (VA) ØC	SERVES	CKT NO.
1	(10) LED - ROW 1 - (STA. 129+33 - 127+45)	2,494					-/-	X			-/-			3,242			(13) LED - ROW 1 - (STA. 129+33 - 131+70)	2
3	(10) LED - ROW 1 - (STA. 129+33 - 127+45)		2,494		20	3(	-/-		X		-/-	)3	20		3,242		(13) LED - ROW 1 - (STA. 129+33 - 131+70)	4
5	(10) LED - ROW 1 - (STA. 129+33 - 127+45)			2,494			-/-			X	-/-					3,242	(13) LED - ROW 1 - (STA. 129+33 - 131+70)	6
7	(10) LED - ROW 1 - (STA. 127+45 - 125+40)	2,494					-/-	X			-/-			2,494			(10) LED - ROW 1 - (STA. 131+70 - 133+57)	8
9	(10) LED - ROW 1 - (STA. 127+45 - 125+40)		2,494		20	3(	-/-		X		-/-	)3	20		2,494		(10) LED - ROW 1 - (STA. 131+70 - 133+57)	10
11	(10) LED - ROW 1 - (STA. 127+45 - 125+40)			2,494			-/-			X	-/-					2,494	(10) LED - ROW 1 - (STA. 131+70 - 133+57)	12
13	(5) LED - ROW 2 - (STA. 129+33 - 125+90)	2,147					-/-	X			-/-			3,865			(1)ROW 2 (8)ROW 3 - (STA. 129+33 - 131+10)	14
15	(5) LED - ROW 2 - (STA. 129+33 - 125+90)		2,147		20	3(	-/-		X		-/-	)3	20		3,865		(1)ROW 2 (8)ROW 3 - (STA. 129+33 - 131+10)	16
17	(5) LED - ROW 2 - (STA. 129+33 - 125+90)			2,147			-/-			X	-/-					3,865	(1)ROW 2 (8)ROW 3 - (STA. 129+33 - 131+10)	18
19	SPARE				20	3(	-/-	X			-/-			3,865			(9) LED - ROW 3 - (STA. 131+10 - 132+30)	20
21	SPARE						-/-		X		-/-	)3	20		3,865		(9) LED - ROW 3 - (STA. 131+10 - 132+30)	22
23	SPARE						-/-			X	-/-					3,865	(9) LED - ROW 3 - (STA. 131+10 - 132+30)	24
25	SPARE				20	1	-/-	X			-/-			3,006			(7) LED - ROW 3 - (STA. 132+30 - 133+57)	26
27	SPARE				20	1	-/-		X		-/-	)3	20		2,576		(6) LED - ROW 3 - (STA. 132+30 - 133+57)	28
29	SPARE				20	1	-/-			X	-/-					2,576	(6) LED - ROW 3 - (STA. 132+30 - 133+57)	30
	SUB-TOTAL CONNECTED	7,135	7,135	7,135										16,472	16,042	16,042	SUB-TOTAL CONNECTED	

SUB-TOTAL CONNECTED: ØA VA 23,607
SUB-TOTAL CONNECTED: ØB VA 23,178
SUB-TOTAL CONNECTED: ØC VA 23,178
TOTAL CONNECTED: VA 69,962

NOTES:

1. *FOR PANEL MOUNTING LOCATIONS AND DETAILS SEE SHEETS 239/555 THROUGH 242/555*
2. *FOR LEGENDS AND ABBREVIATIONS SEE SHEET 199/555*

CALCULATED DGC | CHECKED MK

LIGHTING PANEL SCHEDULE - SHEET 3 OF 6

HAM-71-01.34

c:\pwworking\hnm\external\tyn61470\dms72803\8726LD008.dgn 10/24/2014 12:34:30 PM TYN61470

PANEL NAME	SERVICE:	480/277(V) 3P/4W	MOUNTING: SURFACE	GROUND BUS:	CU - SOLID	
SW-DN	MAINS:	100 (A) MLO	ENTRANCE: TOP	NEUTRAL:	CU - 200%	BRANCH CB INTERRUPTING RATING: 25KA SYM
	ENCLOSURE:	NEMA 3R	EXISTING EQUIP. ROOM	CABLE TAG:	L-DPW-07	

CKT NO.	SERVES	LOAD (VA) ØA	LOAD (VA) ØB	LOAD (VA) ØC	BREAKER TRIP	BREAKER POLE						BREAKER POLE	BREAKER TRIP	LOAD (VA) ØA	LOAD (VA) ØB	LOAD (VA) ØC	SERVES	CKT NO.
1	(5) LED - ROW 1 - (STA. 128+95.75 - 125+40)	1,247					-\-	X			-\-			1,496			(6) LED - ROW 1 - (STA. 128+95.75 - 133+57)	2
3	(4) LED - ROW 1 - (STA. 128+95.75 - 125+40)		998		20	3(	-\-		X		-\-	)3	20		1,496		(6) LED - ROW 1 - (STA. 128+95.75 - 133+57)	4
5	(4) LED - ROW 1 - (STA. 128+95.75 - 125+40)			998			-\-			X	-\-					1,496	(6) LED - ROW 1 - (STA. 128+95.75 - 133+57)	6
7	SPARE						-\-	X			-\-	1	20				SPARE	8
9	SPARE				20	3(	-\-		X		-\-	1	20				SPARE	10
11	SPARE						-\-			X	-\-	1	20				SPARE	12
13	SPACE						-\-	X			-\-						SPACE	14
15	SPACE						-\-		X		-\-						SPACE	16
17	SPACE						-\-			X	-\-						SPACE	18
SUB-TOTAL CONNECTED		1,247	998	998										1,496	1,496	1,496	SUB-TOTAL CONNECTED	

SUB-TOTAL CONNECTED:	ØA	VA	2,744	
SUB-TOTAL CONNECTED:	ØB	VA	2,494	
SUB-TOTAL CONNECTED:	ØC	VA	2,494	
TOTAL CONNECTED:		VA	7,732	

PANEL NAME	SERVICE:	480/277(V) 3P/4W	MOUNTING: SURFACE	GROUND BUS:	CU - SOLID	
SW-LP1	MAINS:	100 (A) MLO	ENTRANCE: TOP	NEUTRAL:	CU - 200%	BRANCH CB INTERRUPTING RATING: 25KA SYM
	ENCLOSURE:	NEMA 3R	EXISTING EQUIP. ROOM	CABLE TAG:	L-DPW-08	

CKT NO.	SERVES	LOAD (VA) ØA	LOAD (VA) ØB	LOAD (VA) ØC	BREAKER TRIP	BREAKER POLE						BREAKER POLE	BREAKER TRIP	LOAD (VA) ØA	LOAD (VA) ØB	LOAD (VA) ØC	SERVES	CKT NO.
1	(12) LED - ROW 1 - (STA. 128+95.75 - 125+40)	2,993					-\-	X			-\-			2,245			(9) LED - ROW 1 - (STA. 128+95.75 - 131+50)	2
3	(12) LED - ROW 1 - (STA. 128+95.75 - 125+40)		2,993		20	3(	-\-		X		-\-	)3	20		2,245		(9) LED - ROW 1 - (STA. 128+95.75 - 131+50)	4
5	(11) LED - ROW 1 - (STA. 128+95.75 - 125+40)			2,744			-\-			X	-\-					2,245	(9) LED - ROW 1 - (STA. 128+95.75 - 131+50)	6
7	(5) LED - ROW 2 - (STA. 128+95.75 - 125+80)	2,147					-\-	X			-\-			1,746			(7) LED - ROW 1 - (STA. 131+50 - 133+57)	8
9	(5) LED - ROW 2 - (STA. 128+95.75 - 125+80)		2,147		20	3(	-\-		X		-\-	)3	20		1,746		(7) LED - ROW 1 - (STA. 131+50 - 133+57)	10
11	(4) LED - ROW 2 - (STA. 128+95.75 - 125+80)			1,718			-\-			X	-\-					1,496	(6) LED - ROW 1 - (STA. 131+50 - 133+57)	12
13	SPARE						-\-	X			-\-			3,865			(9) LED - ROW 2- (STA. 128+95.75 - 130+90)	14
15	SPARE				20	3(	-\-		X		-\-	)3	20		3,865		(9) LED - ROW 2 - (STA. 128+95.75 - 130+90)	16
17	SPARE						-\-			X	-\-					3,865	(9) LED - ROW 2- (STA. 128+95.75 - 130+90)	18
19	SPARE						-\-	X			-\-			3,865			(9) LED - ROW 2- (STA. 130+90 - 132+40)	20
21	SPARE				20	1	-\-		X		-\-	)3	20		3,865		(9) LED - ROW 2- (STA. 130+90- 132+40)	22
23	SPARE						-\-			X	-\-					3,865	(9) LED - ROW 2- (STA. 130+90- 132+40)	24
25	SPACE						-\-	X			-\-			3,006			(7) LED - ROW 2- (STA. 132+40 - 133+57)	26
27	SPACE						-\-		X		-\-	)3	20		2,576		(6) LED - ROW 2- (STA. 132+40 - 133+57)	28
29	SPACE						-\-			X	-\-					2,576	(6) LED - ROW 2- (STA. 132+40 - 133+57)	30
SUB-TOTAL CONNECTED		5,140	5,140	4,461										14,726	14,296	14,047	SUB-TOTAL CONNECTED	

SUB-TOTAL CONNECTED:	ØA	VA	19,866	
SUB-TOTAL CONNECTED:	ØB	VA	19,436	
SUB-TOTAL CONNECTED:	ØC	VA	18,508	
TOTAL CONNECTED:		VA	57,811	

PANEL NAME	SERVICE:	480/277(V) 3P/4W	MOUNTING: SURFACE	GROUND BUS:	CU - SOLID	
SW-LP2	MAINS:	100 (A) MLO	ENTRANCE: TOP	NEUTRAL:	CU - 200%	BRANCH CB INTERRUPTING RATING: 25KA SYM
	ENCLOSURE:	NEMA 3R	EXISTING EQUIP. ROOM	CABLE TAG:	L-DPW-09	

CKT NO.	SERVES	LOAD (VA) ØA	LOAD (VA) ØB	LOAD (VA) ØC	BREAKER TRIP	BREAKER POLE						BREAKER POLE	BREAKER TRIP	LOAD (VA) ØA	LOAD (VA) ØB	LOAD (VA) ØC	SERVES	CKT NO.
1	(10) LED - ROW 1 - (STA. 128+95.75 - 127+10)	2,494					-\-	X			-\-			3,242			(13) LED - ROW 1 - (STA. 128+95.75 - 131+50)	2
3	(10)LED - ROW 1 - (STA. 128+95.75 - 127+10)		2,494		20	3(	-\-		X		-\-	)3	20		3,242		(13) LED - ROW 1 - (STA. 128+95.75 - 131+50)	4
5	(10) LED - ROW 1 - (STA. 128+95.75 - 127+10)			2,494			-\-			X	-\-					3,242	(13) LED - ROW 1 - (STA. 128+95.75 - 131+50)	6
7	(8) LED - ROW 1 - (STA. 125+40 - 127+10)	1,995					-\-	X			-\-			2,744			(11) LED - ROW 1 - (STA. 131+50 - 133+57)	8
9	(7) LED - ROW 1 - (STA. 125+40 - 127+10)		1,746		20	3(	-\-		X		-\-	)3	20		2,744		(11) LED - ROW 1 - (STA. 131+50 - 133+57)	10
11	(7) LED - ROW 1 - (STA. 125+40 - 127+10)			1,746			-\-			X	-\-					2,494	(10) LED - ROW 1 - (STA. 131+50 - 133+57)	12
13	(5) LED - ROW 2 - (STA. 128+95.75 - 125+80)	2,147					-\-	X			-\-			3,865			(9) LED - ROW 3 - (STA. 128+95.75 - 130+90)	14
15	(5) LED - ROW 2 - (STA. 128+95.75 - 125+80)		2,147		20	3(	-\-		X		-\-	)3	20		3,865		(9) LED - ROW 3- (STA. 128+95.75 - 130+90)	16
17	(4) LED - ROW 2 - (STA. 128+95.75 - 125+80)			1,718			-\-			X	-\-					3,865	(9) LED - ROW 3 - (STA. 128+95.75 - 130+90)	18
19	SPARE						-\-	X			-\-			3,865			(9) LED - ROW 3 - (STA. 130+90 - 132+40)	20
21	SPARE				20	3(	-\-		X		-\-	)3	20		3,865		(9)LED - ROW 3- (STA. 130+90 - 132+40)	22
23	SPARE						-\-			X	-\-					3,865	(9)LED - ROW 3- (STA. 130+90 - 132+40)	24
25	SPARE				20	1	-\-	X			-\-			2,576			(6) LED - ROW 3- (STA. 132+40 - 133+57)	26
27	SPARE				20	1	-\-		X		-\-	)3	20		2,576		(6) LED - ROW 3 - (STA. 132+40 - 133+57)	28
29	SPARE				20	1	-\-			X	-\-					2,576	(6) LED - ROW 3 - (STA. 132+40 - 133+57)	30
SUB-TOTAL CONNECTED		6,636	6,387	5,958										16,292	16,292	16,042	SUB-TOTAL CONNECTED	

SUB-TOTAL CONNECTED:	ØA	VA	22,928	
SUB-TOTAL CONNECTED:	ØB	VA	22,679	
SUB-TOTAL CONNECTED:	ØC	VA	22,000	
TOTAL CONNECTED:		VA	67,607	

PANEL NAME	SERVICE:	480/277(V) 3P/4W	MOUNTING: SURFACE	GROUND BUS:	CU - SOLID	
S-EM	MAINS:	60 (A) 3P MCB	ENTRANCE: TOP	NEUTRAL:	CU - 200%	MAIN CB INTERRUPTING RATING: 25KA SYM BRANCH CB INTERRUPTING RATING: 25KA SYM
	ENCLOSURE:	NEMA 3R	EXISTING EQUIP. ROOM	CABLE TAG:	P-480UPS/S-EM	

CKT NO.	SERVES	LOAD (VA) ØA	LOAD (VA) ØB	LOAD (VA) ØC	BREAKER TRIP	BREAKER POLE						BREAKER POLE	BREAKER TRIP	LOAD (VA) ØA	LOAD (VA) ØB	LOAD (VA) ØC	SERVES	CKT NO.
1	(2) LED - EAST WALL (STA. 129+33 - 125+40)	499					-\-	X			-\-			499			(2) LED - EAST WALL (STA. 129+33- 133+57)	2
3	(2) LED - EAST WALL (STA. 129+33 - 125+40)		499		20	3(	-\-		X		-\-	)3	20		499		(2) LED - EAST WALL (STA. 129+33 - 133+57)	4
5	(1) LED - EAST WALL (STA. 129+33 - 125+40)			249			-\-			X	-\-					499	(2) LED - EAST WALL (STA. 129+33 - 133+57)	6
7	(2) LED - WEST WALL (STA. 128+95 - 125+40)	499					-\-	X			-\-			499			(2) LED - WEST WALL (STA. 128+95- 133+57)	8
9	(2) LED - WEST WALL (STA. 128+95 - 125+40)		499		20	3(	-\-		X		-\-	)3	20		499		(2) LED - WEST WALL (STA. 128+95- 133+57)	10
11	(1) LED - WEST WALL (STA. 128+95 - 125+40)			249			-\-			X	-\-					249	(1) LED - WEST WALL (STA. 128+95 - 133+57)	12
13	LIGHTING CONTROL PANEL 'N-C'	249			20	1	-\-	X			-\-	1	20				SPARE	14
15	EAST WALL REMOTE DIMMING ENCLOSURES		249		20	1	-\-		X		-\-	1	20				SPARE	16
17	WEST WALL REMOTE DIMMING ENCLOSURES			249	20	1	-\-			X	-\-	1	20				SPARE	18
SUB-TOTAL CONNECTED		998	998	499										998	998	748	SUB-TOTAL CONNECTED	

SUB-TOTAL CONNECTED:	ØA	VA	1,995	
SUB-TOTAL CONNECTED:	ØB	VA	1,995	
SUB-TOTAL CONNECTED:	ØC	VA	1,247	
TOTAL CONNECTED:		VA	5,238	

NOTES:

1. *FOR PANEL MOUNTING LOCATIONS AND DETAILS SEE SHEETS 239/555 THROUGH 242/555*
2. *FOR LEGENDS AND ABBREVIATIONS SEE SHEET 199/555*

CALCULATED DGC CHECKED MK

LIGHTING PANEL SCHEDULE - SHEET 4 OF 6

HAM-71-01.34

c:\pwworking\hmm\external\tyn61470\dms72803\8726LD009.dgn 10/24/2014 12:34:40 PM TYN61470

PANEL NAME: RE-DN

SERVICE: 480/277(V) 3P/4W | MAINS: 100 (A) MLO | ENCLOSURE: NEMA 3R | MOUNTING: SURFACE | ENTRANCE: TOP | EXISTING EQUIP. ROOM | GROUND BUS: CU - SOLID | NEUTRAL: CU - 200% | CABLE TAG: L-DPE-04 | BRANCH CB INTERRUPTING RATING: 25KA SYM

CKT NO.	SERVES	LOAD (VA) ØA	LOAD (VA) ØB	LOAD (VA) ØC	BREAKER TRIP	BREAKER POLE						BREAKER POLE	BREAKER TRIP	LOAD (VA) ØA	LOAD (VA) ØB	LOAD (VA) ØC	SERVES	CKT NO.
1	(5) LED - ROW 1 - (STA. 131+22.5 - 126+86)	606					-/-	X			-/-			727			(6) LED - ROW 1 - (STA. 131+22.5 - 135+64.51)	2
3	(5) LED - ROW 1 - (STA. 131+22.5 - 126+86)		606		20	3(	-/-		X		-/-	)3	20		727		(6)LED - ROW 1 - (STA. 131+22.5 - 135+64.51)	4
5	(4) LED - ROW 1 - (STA. 131+22.5 - 126+86)			485			-/-			X	-/-					606	(5)LED - ROW 1 - (STA. 131+22.5 - 135+64.51)	6
7	SPARE						-/-	X			-/-	1	20				SPARE	8
9	SPARE				20	3(	-/-		X		-/-	1	20				SPARE	10
11	SPARE						-/-			X	-/-	1	20				SPARE	12
13	SPACE						-/-	X			-/-						SPACE	14
15	SPACE						-/-		X		-/-						SPACE	16
17	SPACE						-/-			X	-/-						SPACE	18
SUB-TOTAL CONNECTED		606	606	485										727	727	606	SUB-TOTAL CONNECTED	

SUB-TOTAL CONNECTED:	ØA	VA	1,333	
SUB-TOTAL CONNECTED:	ØB	VA	1,333	
SUB-TOTAL CONNECTED:	ØC	VA	1,091	
TOTAL CONNECTED:		VA	3,756	

PANEL NAME: RE-LP1

SERVICE: 480/277(V) 3P/4W | MAINS: 100 (A) MLO | ENCLOSURE: NEMA 3R | MOUNTING: SURFACE | ENTRANCE: TOP | EXISTING EQUIP. ROOM | GROUND BUS: CU - SOLID | NEUTRAL: CU - 200% | CABLE TAG: L-DPE-05 | BRANCH CB INTERRUPTING RATING: 25KA SYM

CKT NO.	SERVES	LOAD (VA) ØA	LOAD (VA) ØB	LOAD (VA) ØC	BREAKER TRIP	BREAKER POLE						BREAKER POLE	BREAKER TRIP	LOAD (VA) ØA	LOAD (VA) ØB	LOAD (VA) ØC	SERVES	CKT NO.
1	(13) LED - ROW 1 - (STA. 131+22.5 - 126+86)	1,575					-/-	X			-/-			969			(8) LED - ROW 1 - (STA. 131+22.5 - 133+18.5)	2
3	(13) LED - ROW 1 - (STA. 131+22.5 - 126+86)		1,575		20	3(	-/-		X		-/-	)3	20		969		(8) LED - ROW 1 - (STA. 131+22.5 - 135.18.5)	4
5	(13) LED - ROW 1 - (STA. 131+22.5 - 126+86)			1,575			-/-			X	-/-					969	(8) LED - ROW 1 - (STA. 131+22.5 - 135+18.5)	6
7	(2) LED - ROW 2 - (STA. 131+22.5 - 128+80.5)	859					-/-	X			-/-			848			(7) LED - ROW 1 - (STA. 135+18.5 - 135+64.51)	8
9	(2) LED - ROW 2 - (STA. 131+22.5 - 128+80.5)		859		20	3(	-/-		X		-/-	)3	20		848		(7) LED - ROW 1 - (STA. 135+18.5 - 135+64.51)	10
11	(2) LED - ROW 2 - (STA. 131+22.5 - 128+80.5)			859			-/-			X	-/-					848	(7) LED - ROW 1 - (STA. 135+18.5 - 135+64.51)	12
13	SPARE						-/-	X			-/-			5,153			(12) LED - ROW 2 - (STA. 131+22.5 - 135+64.51)	14
15	SPARE				20	3(	-/-		X		-/-	)3	20		5,153		(12) LED - ROW 2 - (STA. 131+22.5 - 135+64.51)	16
17	SPARE						-/-			X	-/-					4,724	(11) LED - ROW 2 - (STA. 131+22.5 - 135+64.51)	18
19	SPACE						-/-	X			-/-	1	20				SPARE	20
21	SPACE						-/-		X		-/-	1	20				SPARE	22
23	SPACE						-/-			X	-/-	1	20				SPARE	24
25	SPACE						-/-	X			-/-						SPACE	26
27	SPACE						-/-		X		-/-						SPACE	28
29	SPACE						-/-			X	-/-						SPACE	30
SUB-TOTAL CONNECTED		2,434	2,434	2,434										6,971	6,971	6,541	SUB-TOTAL CONNECTED	

SUB-TOTAL CONNECTED:	ØA	VA	9,405	
SUB-TOTAL CONNECTED:	ØB	VA	9,405	
SUB-TOTAL CONNECTED:	ØC	VA	8,975	
TOTAL CONNECTED:		VA	27,785	

PANEL NAME: RE-LP2

SERVICE: 480/277(V) 3P/4W | MAINS: 100 (A) MLO | ENCLOSURE: NEMA 3R | MOUNTING: SURFACE | ENTRANCE: TOP | EXISTING EQUIP. ROOM | GROUND BUS: CU - SOLID | NEUTRAL: CU - 200% | CABLE TAG: L-DPE-06 | BRANCH CB INTERRUPTING RATING: 25KA SYM

CKT NO.	SERVES	LOAD (VA) ØA	LOAD (VA) ØB	LOAD (VA) ØC	BREAKER TRIP	BREAKER POLE						BREAKER POLE	BREAKER TRIP	LOAD (VA) ØA	LOAD (VA) ØB	LOAD (VA) ØC	SERVES	CKT NO.
1	(10) LED - ROW 1 - (STA. 131+22.5 - 129+42.5)	1,212					-/-	X			-/-			1,333			(11) LED - ROW 1 - (STA. 131+22.5 - 133+44)	2
3	(10) LED - ROW 1 - (STA. 131+22.5 - 129+42.5)		1,212		20	3(	-/-		X		-/-	)3	20		1,333		(11) LED - ROW 1 - (STA. 131+22.5 - 133+44)	4
5	(10) LED - ROW 1 - (STA. 131+22.5 - 129+42.5)			1,212			-/-			X	-/-					1,333	(11) LED - ROW 1 - (STA. 131+22.5 - 133+44)	6
7	(9) LED - ROW 1 - (STA. 129+42.5 - 126+86)	1,091					-/-	X			-/-			1,454			(12) LED - ROW 1 - (STA. 133+44 - 135+64.51)	8
9	(9) LED - ROW 1 - (STA. 129+42.5 - 126+86)		1,091		20	3(	-/-		X		-/-	)3	20		1,454		(12) LED - ROW 1 - (STA. 133+44 - 135+64.51)	10
11	(9) LED - ROW 1 - (STA. 129+42.5 - 126+86)			1,091			-/-			X	-/-					1,333	(11) LED - ROW 1 - (STA. 133+44 - 135+64.51)	12
13	(2) LED - ROW 2 - (STA. 131+22.5 - 129+5)	859					-/-	X			-/-			5,153			(12) LED - ROW 2 - (STA. 131+22.5 - 135+64.51)	14
15	(2) LED - ROW 2 - (STA. 131+22.5 - 129+5)		859		20	3(	-/-		X		-/-	)3	20		5,153		(12) LED - ROW 2 - (STA. 131+22.5 - 135+64.51)	16
17	(2) LED - ROW 2 - (STA. 131+22.5 - 129+5)			859			-/-			X	-/-					4,724	(11) LED - ROW 2 - (STA. 131+22.5 - 135+64.51)	18
19	SPARE						-/-	X			-/-	1	20				SPARE	20
21	SPARE				20	3(	-/-		X		-/-	1	20				SPARE	22
23	SPARE						-/-			X	-/-	1	20				SPARE	24
25	SPACE						-/-	X			-/-						SPACE	26
27	SPACE						-/-		X		-/-						SPACE	28
29	SPACE						-/-			X	-/-						SPACE	30
SUB-TOTAL CONNECTED		3,161	3,161	3,161										7,940	7,940	7,389	SUB-TOTAL CONNECTED	

SUB-TOTAL CONNECTED:	ØA	VA	11,101	
SUB-TOTAL CONNECTED:	ØB	VA	11,101	
SUB-TOTAL CONNECTED:	ØC	VA	10,551	
TOTAL CONNECTED:		VA	32,753	

PANEL NAME: RW-DN

SERVICE: 480/277(V) 3P/4W | MAINS: 100 (A) MLO | ENCLOSURE: NEMA 3R | MOUNTING: SURFACE | ENTRANCE: TOP | EXISTING EQUIP. ROOM | GROUND BUS: CU - SOLID | NEUTRAL: CU - 200% | CABLE TAG: L-DPW-04 | BRANCH CB INTERRUPTING RATING: 25KA SYM

CKT NO.	SERVES	LOAD (VA) ØA	LOAD (VA) ØB	LOAD (VA) ØC	BREAKER TRIP	BREAKER POLE						BREAKER POLE	BREAKER TRIP	LOAD (VA) ØA	LOAD (VA) ØB	LOAD (VA) ØC	SERVES	CKT NO.
1	(5) LED - ROW 1 - (STA. 131+19.75 - 126+86)	606					-/-	X			-/-			727			(6) LED - ROW 1 - (STA. 131+19.75 - 135+64.51)	2
3	(5) LED - ROW 1 - (STA. 131+19.75 - 126+86)		606		20	3(	-/-		X		-/-	)3	20		727		(6) LED - ROW 1 - (STA. 131+19.75 - 135+64.51)	4
5	(4) LED - ROW 1 - (STA. 131+19.75 - 126+86)			485			-/-			X	-/-					606	(5) LED - ROW 1 - (STA. 131+19.75 - 135+64.51)	6
7	SPARE						-/-	X			-/-	1	20				SPARE	8
9	SPARE				20	3(	-/-		X		-/-	1	20				SPARE	10
11	SPARE						-/-			X	-/-	1	20				SPARE	12
13	SPACE						-/-	X			-/-						SPACE	14
15	SPACE						-/-		X		-/-						SPACE	16
17	SPACE						-/-			X	-/-						SPACE	18
SUB-TOTAL CONNECTED		606	606	485										727	727	606	SUB-TOTAL CONNECTED	

SUB-TOTAL CONNECTED:	ØA	VA	1,333	
SUB-TOTAL CONNECTED:	ØB	VA	1,333	
SUB-TOTAL CONNECTED:	ØC	VA	1,091	
TOTAL CONNECTED:		VA	3,756	

NOTES:

1. *FOR PANEL MOUNTING LOCATIONS AND DETAILS SEE SHEETS 239/555 THROUGH 242/555*
2. *FOR LEGENDS AND ABBREVIATIONS SEE SHEET 199/555*

CALCULATED DGC CHECKED MK

LIGHTING PANEL SCHEDULE - SHEET 5 OF 6

HAM-71-01.34

c:\pwworking\hnm\external\tyn61470\dms72803\8726LD010.dgn 10/24/2014 12:34:50 PM TYN61470

PANEL NAME: RW-LP1		SERVICE: 480/277(V) 3P/4W			MOUNTING: SURFACE			GROUND BUS: CU - SOLID			BRANCH CB INTERRUPTING RATING: 25KA SYM				
		MAINS: 100 (A) MLO			ENTRANCE: TOP			NEUTRAL: CU - 200%							
		ENCLOSURE: NEMA 3R			EXISTING EQUIP. ROOM			CABLE TAG: L-DPW-05							
CKT NO.	SERVES	LOAD (VA)			BREAKER			BREAKER		LOAD (VA)			SERVES	CKT NO.
		ØA	ØB	ØC	TRIP	POLE		POLE	TRIP	ØA	ØB	ØC		
1	(13) LED - ROW 1 - (STA. 131+19.75- 126+88)	1,575			20	3(	-\- X -\-	)3	20	969			(8) LED - ROW 1 - (STA. 131+19.75 - 133+29)	2
3	(12)LED - ROW 1 - (STA. 131+19.75 - 126+86)		1,454				-\- X -\-				969		(8)LED - ROW 1 - (STA. 131+19.75 - 133+29)	4
5	(12)LED - ROW 1 -(STA. 131+19.75- 126+86)			1,454			-\- X -\-					969	(8)LED - ROW 1 - (STA. 131+19.75 - 133+29)	6
7	(2) LED - ROW 2 - (STA. 131+19.75- 128+79)	859			20	3(	-\- X -\-	)3	20	848			(7)LED - ROW 1 - (STA. 133+29 - 135+64.51)	8
9	(2) LED - ROW 2 - (STA. 131+19.75- 128+79)		859				-\- X -\-				848		(7) LED - ROW 1 - (STA. 133+29 - 135+64.51)	10
11	(2) LED - ROW 2 - (STA. 131+19.75 - 128+79)			859			-\- X -\-					848	(7) LED - ROW 1 - (STA. 133+29 - 135+64.51)	12
13	SPARE				20	3(	-\- X -\-	)3	20	5,153			(12) LED - ROW 2 - (STA. 131+19.75- 135+64.51)	14
15	SPARE						-\- X -\-				5,153		(12) LED - ROW 2 - (STA. 131+19.75- 135+64.51)	16
17	SPARE						-\- X -\-					4,724	(11) LED - ROW 2- (STA. 131+19.75- 135+64.51)	18
19	SPACE						-\- X -\-	1	20				SPARE	20
21	SPACE						-\- X -\-	1	20				SPARE	22
23	SPACE						-\- X -\-	1	20				SPARE	24
25	SPACE						-\- X -\-						SPACE	26
27	SPACE						-\- X -\-						SPACE	28
29	SPACE						-\- X -\-						SPACE	30
SUB-TOTAL CONNECTED		2,434	2,313	2,313						6,971	6,971	6,541	SUB-TOTAL CONNECTED	
SUB-TOTAL CONNECTED: ØA VA 9,405														
SUB-TOTAL CONNECTED: ØB VA 9,284														
SUB-TOTAL CONNECTED: ØC VA 8,854														
TOTAL CONNECTED: VA 27,542														

PANEL NAME: RW-LP2		SERVICE: 480/277(V) 3P/4W			MOUNTING: SURFACE			GROUND BUS: CU - SOLID			BRANCH CB INTERRUPTING RATING: 25KA SYM				
		MAINS: 100 (A) MLO			ENTRANCE: TOP			NEUTRAL: CU - 200%							
		ENCLOSURE: NEMA 3R			EXISTING EQUIP. ROOM			CABLE TAG: L-DPW-06							
CKT NO.	SERVES	LOAD (VA)			BREAKER			BREAKER		LOAD (VA)			SERVES	CKT NO.
		ØA	ØB	ØC	TRIP	POLE		POLE	TRIP	ØA	ØB	ØC		
1	(10) LED - ROW 1 - (STA. 131+19.75 - 129+42.5)	1,212			20	3(	-\- X -\-	)3	20	1,333			(11) LED - ROW 1 - (STA. 131+19.75- 133+23)	2
3	(10) LED - ROW 1 - (STA. 131+19.75- 129+42.5)		1,212				-\- X -\-				1,333		(11) LED - ROW 1 - (STA. 131+19.75 - 133+23)	4
5	(10) LED - ROW 1 -(STA. 131+19.75 - 129+42.5)			1,212			-\- X -\-					1,333	(11) LED - ROW 1 - (STA. 131+19.75- 133+23)	6
7	(10) LED - ROW 1 - (STA. 129+42.5- 126+86)	1,212			20	3(	-\- X -\-	)3	20	1,333			(11) LED - ROW 1 - (STA. 133+23- 135+64.51)	8
9	(9) LED - ROW 1 - (STA. 129+42.5 - 126+86)		1,091				-\- X -\-				1,333		(11) LED - ROW 1 - (STA. 133+23- 135+64.51)	10
11	(9) LED - ROW 1 - (STA. 129+42.5 - 126+86)			1,091			-\- X -\-					1,333	(11) LED - ROW 1 - (STA. 133+23- 135+64.51)	12
13	(2) LED - ROW 2 - (STA. 131+19.75- 129+03)	859			20	3(	-\- X -\-	)3	20	5,153			(12) LED - ROW 2 - (STA. 131+19.75- 135+64.51)	14
15	(2) LED - ROW 2 - (STA. 131+19.75 - 129+03)		859				-\- X -\-				4,724		(11) LED - ROW 2 - (STA. 131+19.75- 135+64.51)	16
17	(2) LED - ROW 2 - (STA. 131+19.75- 129+03)			859			-\- X -\-					4,724	(11) LED - ROW 2- (STA. 131+19.75- 135+64.51)	18
19	SPARE				20	3(	-\- X -\-	1	20				SPARE	20
21	SPARE						-\- X -\-	1	20				SPARE	22
23	SPARE						-\- X -\-	1	20				SPARE	24
25	SPACE						-\- X -\-						SPACE	26
27	SPACE						-\- X -\-						SPACE	28
29	SPACE						-\- X -\-						SPACE	30
SUB-TOTAL CONNECTED		3,282	3,161	3,161						7,819	7,389	7,389	SUB-TOTAL CONNECTED	
SUB-TOTAL CONNECTED: ØA VA 11,101														
SUB-TOTAL CONNECTED: ØB VA 10,551														
SUB-TOTAL CONNECTED: ØC VA 10,551														
TOTAL CONNECTED: VA 32,202														

PANEL NAME: R-EM		SERVICE: 480/277(V) 3P/4W			MOUNTING: SURFACE			GROUND BUS: CU - SOLID			MAIN CB INTERRUPTING RATING: 25KA SYM BRANCH CB INTERRUPTING RATING: 25KA SYM				
		MAINS: 60 (A) 3P MCB			ENTRANCE: TOP			NEUTRAL: CU - 200%							
		ENCLOSURE: NEMA 3R			EXISTING EQUIP. ROOM			CABLE TAG: P-480UPS/R-EM							
CKT NO.	SERVES	LOAD (VA)			BREAKER			BREAKER		LOAD (VA)			SERVES	CKT NO.
		ØA	ØB	ØC	TRIP	POLE		POLE	TRIP	ØA	ØB	ØC		
1	(2) LED - EAST WALL (STA. 131+22.5 - 126+86)	242			20	3(	-\- X -\-	)3	20	242			(2)LED - EAST WALL (STA. 131+22.5 - 135+64.51)	2
3	(2) LED - EAST WALL (STA. 131+22.5- 126+86)		242				-\- X -\-				242		(2)LED - EAST WALL (STA. 131+22.5 - 135+64.51)	4
5	(1) LED - EAST WALL (STA. 131+22.5- 126+86)			121			-\- X -\-					242	(2) LED - EAST WALL (STA. 131+22.5- 135+64.51)	6
7	(2) LED - WEST WALL (STA. 131+19.75 - 126+86)	242			20	3(	-\- X -\-	)3	20	242			(2) LED - WEST WALL (STA. 131+19.75- 135+64.51)	8
9	(2) LED - WEST WALL (STA. 131+19.75 - 126+86)		242				-\- X -\-				242		(2) LED - WEST WALL (STA. 131+19.75- 135+64.51)	10
11	(1) LED - WEST WALL (STA. 131+19.75 - 126+86)			121			-\- X -\-					121	(1) LED - WEST WALL (STA. 131+19.75- 135+64.51)	12
13	SPACE						-\- X -\-						SPACE	14
15	SPACE						-\- X -\-						SPACE	16
17	SPACE						-\- X -\-						SPACE	18
SUB-TOTAL CONNECTED		485	485	242						485	485	364	SUB-TOTAL CONNECTED	
SUB-TOTAL CONNECTED: ØA VA 969														
SUB-TOTAL CONNECTED: ØB VA 969														
SUB-TOTAL CONNECTED: ØC VA 606														
TOTAL CONNECTED: VA 2,545														

NOTES:

1. *FOR PANEL MOUNTING LOCATIONS AND DETAILS SEE SHEETS 239/555 THROUGH 242/555*
2. *FOR LEGENDS AND ABBREVIATIONS SEE SHEET 199/555*

CALCULATED DGC CHECKED MK

LIGHTING PANEL SCHEDULES - SHEET 6 OF 6

HAM-71-01.34

c:\pwworking\hmm\external\tyn61470\dms72803\8726LD011.dgn 10/24/2014 12:34:59 PM TYN61470

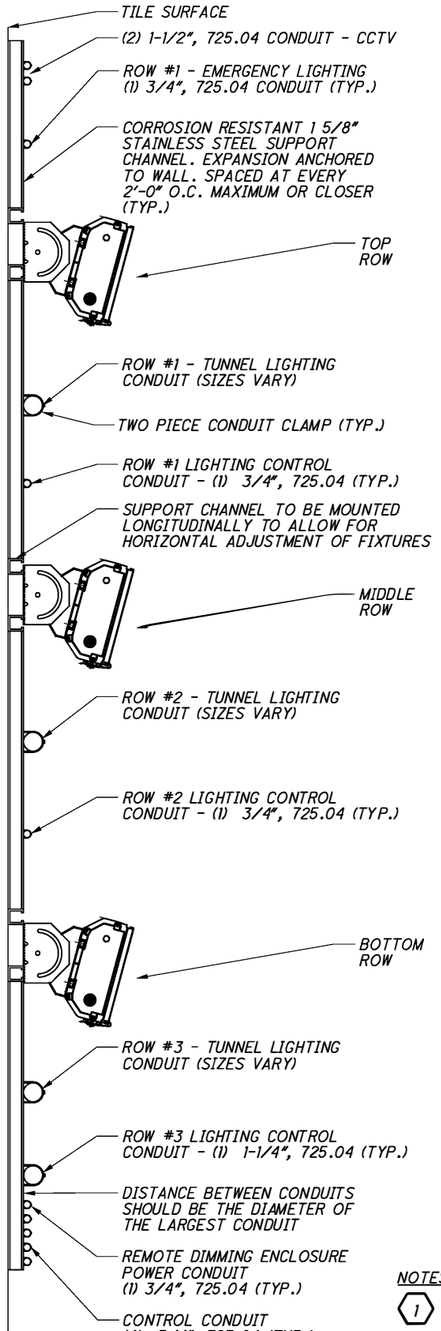

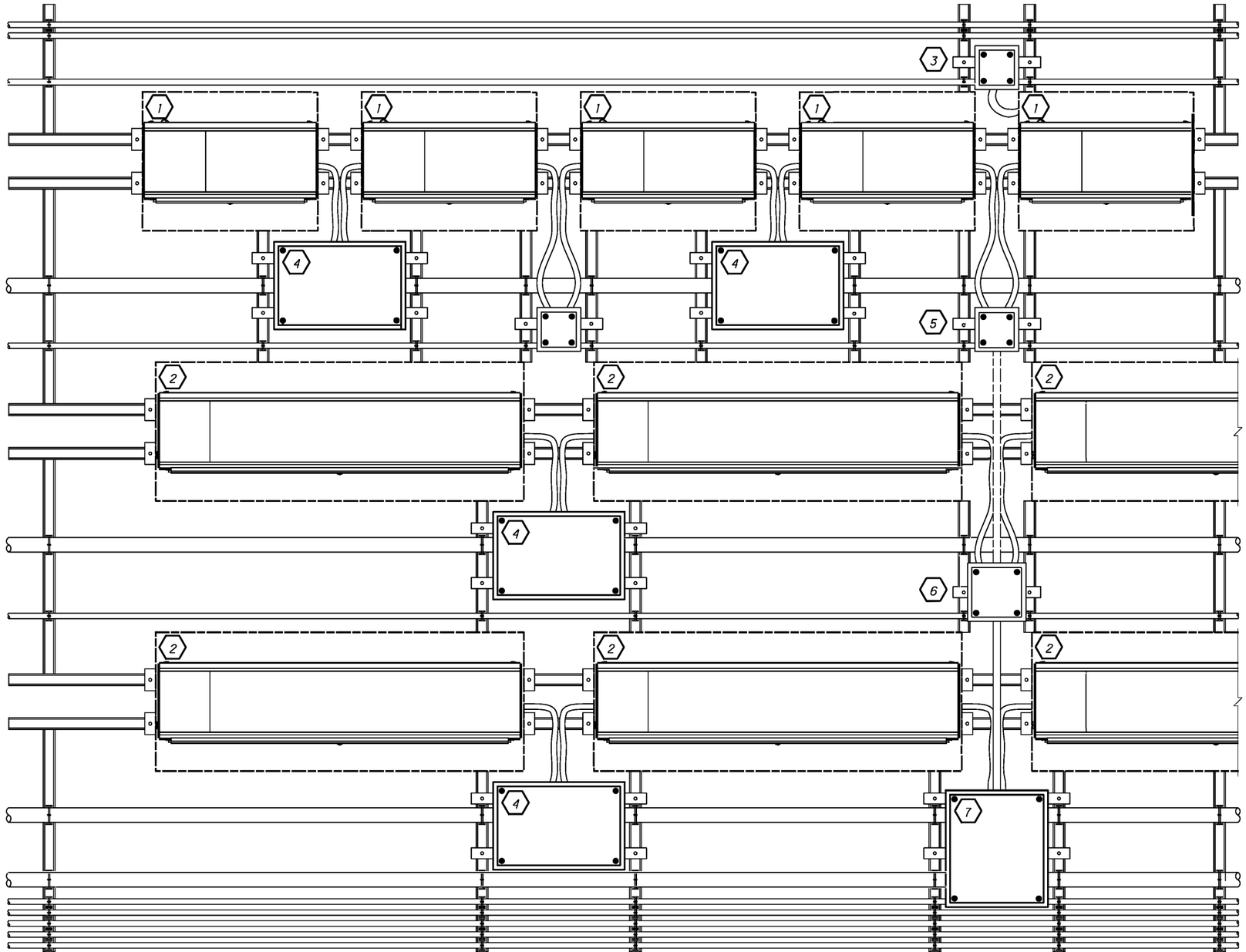

NOTES:

1. AREA MEASURING 24" X 19" SIZED TO ACCOMMODATE FIXTURE TYPES 'A', 'C' AND 'E'. FOR DETAILS SEE SHEET 207/555
2. AREA MEASURING 54" X 19" SIZED TO ACCOMMODATE FIXTURE TYPES 'B', 'D' AND 'F'. FOR DETAILS SEE SHEET 207/555
3. EMERGENCY LIGHTING JUNCTION BOX NEMA 4X, S.S. 6"x6"x3" (TYP.)
4. LIGHTING POWER JUNCTION BOX NEMA 4X, S.S. 20"x12"x6" (TYP.)
5. LIGHTING CONTROL JUNCTION BOX NEMA 4X, S.S. 6"x6"x3" (TYP.)
6. LIGHTING CONTROL JUNCTION BOX NEMA 4X, S.S. 8"x8"x6" (TYP.)
7. REMOTE DIMMING ENCLOSURE NEMA 4X, S.S. 16"x14"x6" (TYP.)
8. DETAIL ABOVE INDICATES A TYPICAL MOUNTING ARRANGEMENT FOR TUNNEL LIGHTING FIXTURES. AS WALL HEIGHTS VARY BETWEEN TUBES, LIGHTING TO BE INSTALLED AT A FIXED DISTANCE BELOW THE CEILING. FOR MOUNTING HEIGHTS SEE SHEET 187/555
9. ALL FIXTURES, IRRESPECTIVE OF MANUFACTURER SELECTED, TO BE INSTALLED ON CENTER AT SPACING SPECIFIED IN SHEETS 204/555 205/555 206/555
10. ALL CHANNEL AND MOUNTING HARDWARE TO BE STAINLESS STEEL. PHYSICAL SEPARATION OF DISSIMILAR METALS TO BE MAINTAINED.
11. ALL LONGITUDINAL CONDUITS TO BE RIGID GALVANIZED STEEL.
12. FLEXIBLE METAL CONDUIT MAY BE USED FOR CONNECTIONS BETWEEN POWER AND CONTROL JUNCTION BOXES AND THE FIXTURES.
13. SPRAY-ON FIREPROOFING TO BE APPLIED TO POWER CONDUITS AND JUNCTIONS BOXES FOR EMERGENCY LIGHTING FIXTURES. FIREPROOFING TO BE APPLIED PER MANUFACTURERS INSTRUCTIONS TO ACHIEVE A MINIMUM 2-HOUR FIRE RATING.
14. FOR CAMERA CCTV CAMERA LOCATIONS AND MOUNTING DETAILS SEE SHEETS 181/555 THROUGH 185/555
15. EACH LUMINAIRE SHALL BE PROVIDED WITH TWO TYPE KTK (OR APPROVED EQUAL) FUSES FITTED TO A FUSIBLE TERMINAL BLOCK, RATED 600V.
16. FOR LEGEND AND ABBREVIATIONS SEE SHEET 199/555

CALCULATED MK
CHECKED LL

LIGHTING MOUNTING DETAIL

HAM-71-1.34

c:\pwworking\hnm\external\pre47802\dms72803\87268LD014.dgn 1/15/2015 12:15:37 PM PRE47802

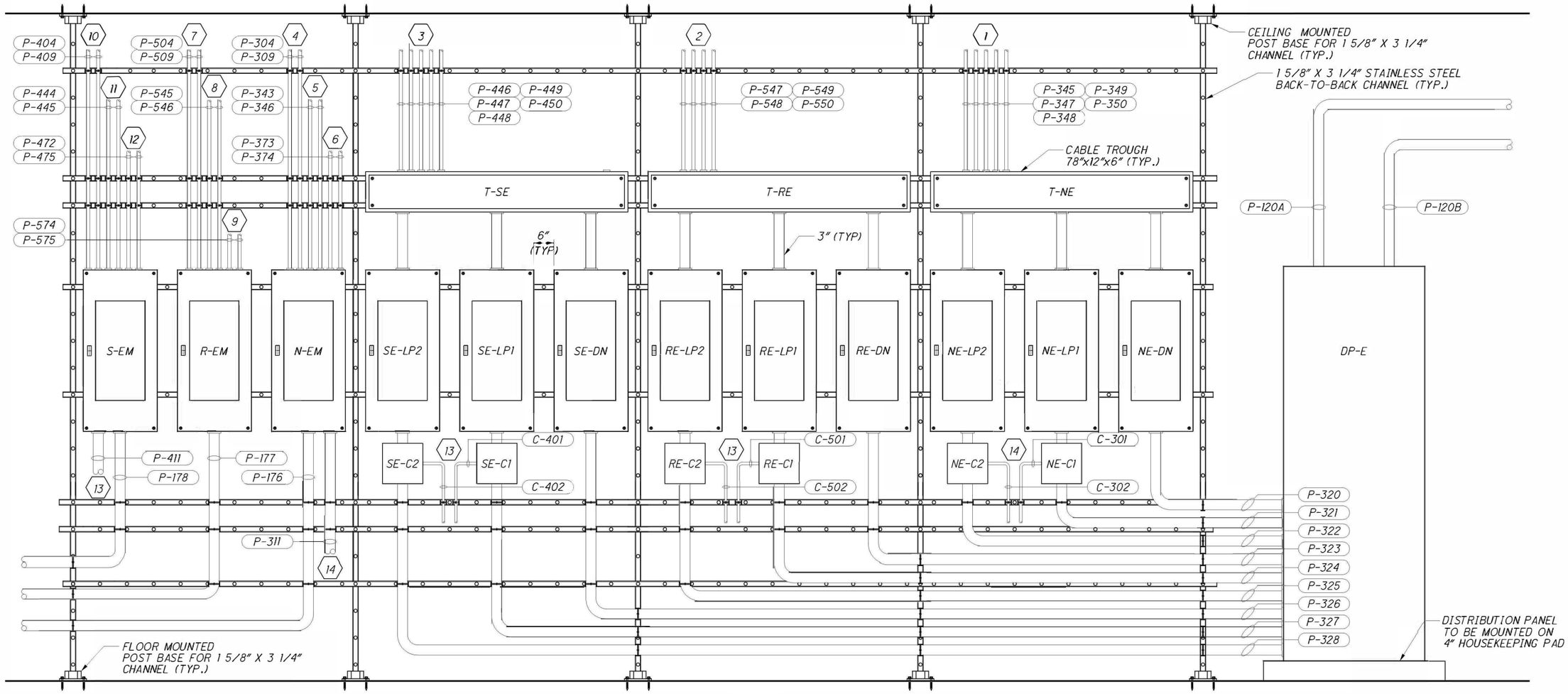

SECTION A-A

SEE SHEET 241/555 FOR LOCATION

KEYNOTE LEGEND

1. CONDUITS TO NORTHBOUND EAST WALL VIA PENETRATION #1
2. CONDUITS TO SOUTHBOUND RAMP EAST WALL VIA PENETRATION #7
3. CONDUITS TO SOUTHBOUND EAST WALL VIA PENETRATION #5
4. CONDUITS TO NORTHBOUND REMOTE DIMMING ENCLOSURES VIA PENETRATIONS #3 & #4
5. CONDUITS TO NORTHBOUND EAST WALL EMERGENCY FIXTURES VIA PENETRATION #1
6. CONDUITS TO NORTHBOUND WEST WALL EMERGENCY FIXTURES VIA PENETRATION #2
7. CONDUITS TO SOUTHBOUND RAMP REMOTE DIMMING ENCLOSURES VIA PENETRATIONS #9 & #10
8. CONDUITS TO SOUTHBOUND RAMP EAST WALL EMERGENCY FIXTURES VIA PENETRATION #7
9. CONDUITS TO SOUTHBOUND RAMP WEST WALL EMERGENCY FIXTURES VIA PENETRATION #8
10. CONDUITS TO SOUTHBOUND REMOTE DIMMING ENCLOSURES VIA PENETRATIONS #5 & #6
11. CONDUITS TO SOUTHBOUND EAST WALL EMERGENCY FIXTURES VIA PENETRATION #5
12. CONDUITS TO SOUTHBOUND WEST WALL EMERGENCY FIXTURES VIA PENETRATION #6
13. CONDUITS TO LIGHTING CONTROL PANEL 'S-C'
14. CONDUITS TO LIGHTING CONTROL PANEL 'N-C'

NOTES

1. FOR LEGEND AND ABBREVIATIONS SEE SHEET 199/555
2. FOR EQUIPMENT AND PENETRATION LOCATIONS SEE SHEET 241/555
3. FOR PANEL SCHEDULES SEE SHEETS 232/555 THROUGH 237/555
4. FOR CONDUIT AND CABLE SCHEDULES SEE SHEETS 475/555 THROUGH 484/555
5. FOR SYSTEM ONE LINE DIAGRAM SEE SHEET 469/555
6. ALL PANELS TO BE NEMA 3R RATED WITH A MINIMUM SEPARATION OF 6".
7. ALL CONDUITS TO BE RIGID GALVANIZED STEEL.
8. ALL CHANNEL TO BE 1⅝" X 3¼", 12-GAGE, BACK-TO-BACK STAINLESS STEEL.
9. POST BASES TO BE USED AT FLOOR AND CEILING MOUNTING LOCATIONS.
10. CONTACTORS 'NE-C1' AND 'NE-C2' TO BE OPERATED BY 120V SIGNAL FROM LIGHTING CONTROL PANEL 'N-C'. CONTACTORS 'RE-C1', 'RE-C2', 'SE-C1' AND 'SE-C2' TO BE OPERATED BY 120V SIGNAL FROM LIGHTING CONTROL PANEL 'S-C'. FOR SCHEMATIC DETAILS SEE SHEETS 247/555 AND 248/555
11. EQUIPMENT SHOWN IS FOR IDENTIFICATION PURPOSES ONLY AND IS NOT TO SCALE.

CALCULATED MK
CHECKED DGC

TUNNEL LIGHTING PANELS - SHEET 1 OF 2

HAM-71-01.34

239
555

c:\pwworking\hmm\external\tyn61470\dms72803\87268L0015.dgn 10/24/2014 12:35:10 PM TYN61470

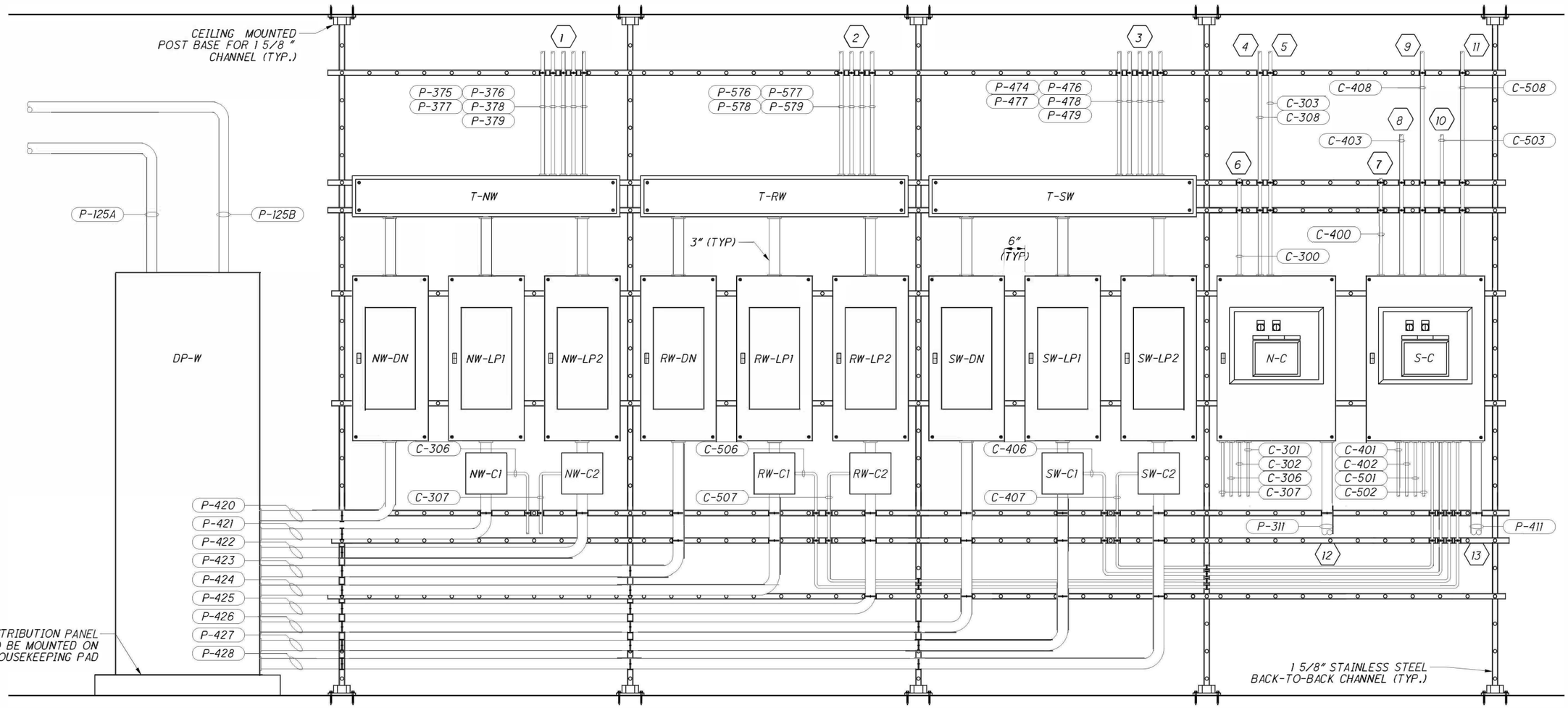

SECTION B-B

SEE SHEET 241/555 FOR LOCATION

KEYNOTE LEGEND

1. CONDUITS TO NORTHBOUND WEST WALL VIA PENETRATION #2
2. CONDUITS TO SOUTHBOUND RAMP WEST WALL VIA PENETRATION #8
3. CONDUITS TO SOUTHBOUND WEST WALL VIA PENETRATION #6
4. CONDUIT TO NORTHBOUND WEST WALL REMOTE DIMMING ENCLOSURES VIA PENETRATION #4
5. CONDUIT TO NORTHBOUND EAST WALL REMOTE DIMMING ENCLOSURES VIA PENETRATION #3
6. CONDUIT TO NORTHBOUND PORTAL PHOTOMETER VIA PENETRATION #3
7. CONDUIT TO SOUTHBOUND PORTAL PHOTOMETER VIA PENETRATION #6
8. CONDUIT TO SOUTHBOUND EAST WALL REMOTE DIMMING ENCLOSURES VIA PENETRATION #5
9. CONDUIT TO SOUTHBOUND WEST WALL REMOTE DIMMING ENCLOSURES VIA PENETRATION #6
10. CONDUIT TO SOUTHBOUND RAMP EAST WALL REMOTE DIMMING ENCLOSURES VIA PENETRATION #9
11. CONDUIT TO SOUTHBOUND RAMP WEST WALL REMOTE DIMMING ENCLOSURE VIA PENETRATION #10
12. CONDUIT TO PANEL 'N-EM'
13. CONDUIT TO PANEL 'S-EM'

NOTES

1. FOR LEGEND AND ABBREVIATIONS SEE SHEET 199/555
2. FOR EQUIPMENT AND PENETRATION LOCATIONS SEE SHEET 241/555
3. FOR PANEL SCHEDULES SEE SHEETS 232/555 THROUGH 237/555
4. FOR CONDUIT AND CABLE SCHEDULES SEE SHEETS 475/555 THROUGH 484/555
5. FOR SYSTEM ONE LINE DIAGRAM SEE SHEET 469/555
6. ALL PANELS TO BE NEMA 3R RATED WITH A MINIMUM SEPARATION OF 6".
7. ALL CONDUITS TO BE RIGID GALVANIZED STEEL.
8. ALL CHANNEL TO BE 1⅝" X 3¼", 12-GAGE, BACK-TO-BACK STAINLESS STEEL.
9. POST BASES TO BE USED AT FLOOR AND CEILING MOUNTING LOCATIONS.
10. CONTACTORS 'NE-C1' AND 'NE-C2' TO BE OPERATED BY 120V SIGNAL FROM LIGHTING CONTROL PANEL 'N-C'. CONTACTORS 'RE-C1', 'RE-C2', 'SE-C1' AND 'SE-C2' TO BE OPERATED BY 120V SIGNAL FROM LIGHTING CONTROL PANEL 'S-C'. FOR SCHEMATIC DETAILS SEE SHEETS 247/555 AND 248/555
11. EQUIPMENT SHOWN IS FOR IDENTIFICATION PURPOSES ONLY AND IS NOT TO SCALE.

CALCULATED MK
CHECKED DGC

TUNNEL LIGHTING PANELS - SHEET 2 OF 2

HAM-71-01.34

c:\pwworking\hmm\external\tyn61470\dms72803\87268LD016.dgn 10/27/2014 12:26:23 PM T'NG1470

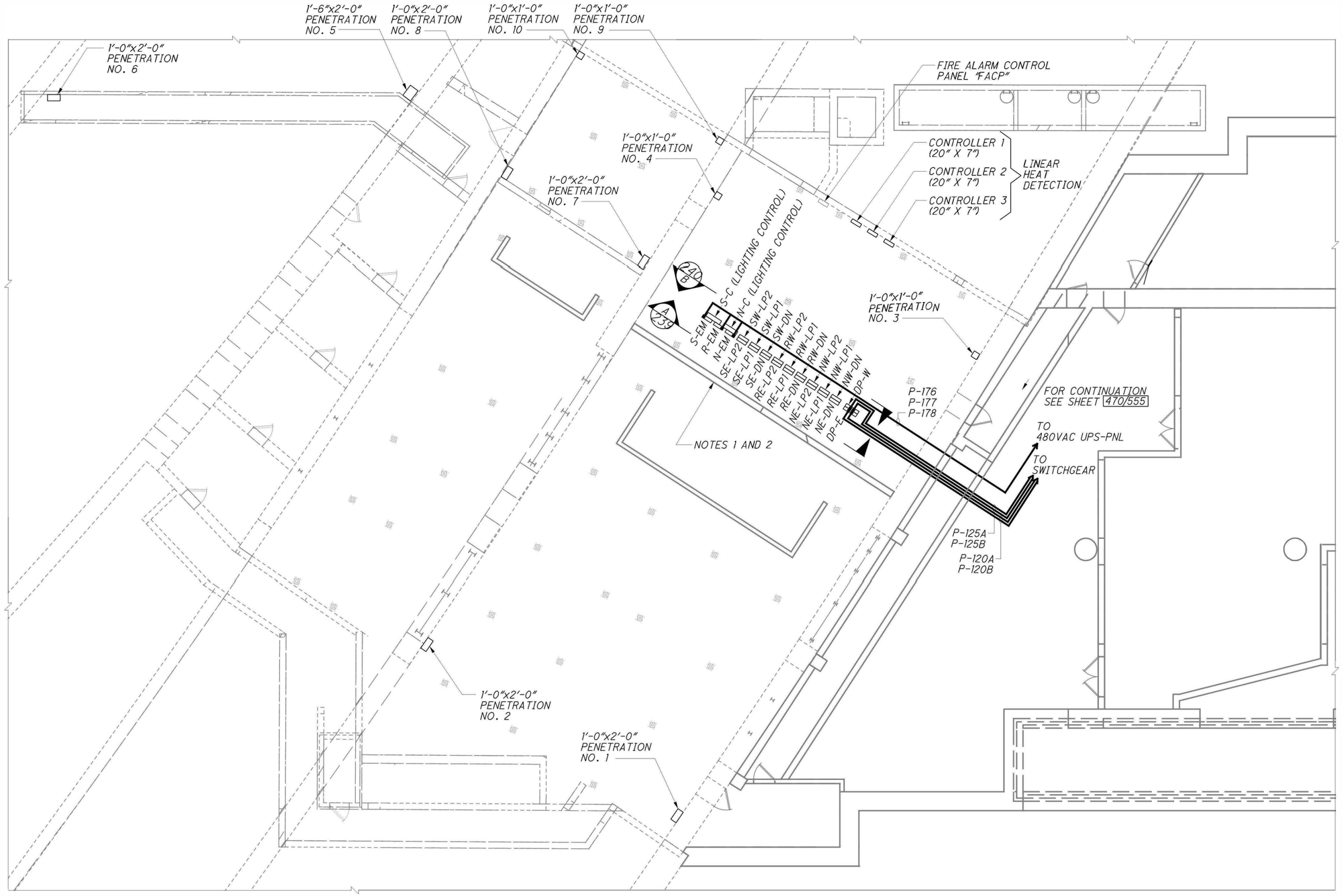

LIGHTING EQUIPMENT LAYOUT/CONDUIT ROUTING
SCALE: 1/8"=1'-0"

NOTES:

1. FOR PANEL DETAILS OF SECTION A AND LIGHTING CONTACTORS LOCATION SEE SHEET 239/555
2. FOR PANEL DETAILS OF SECTION B AND LIGHTING CONTACTORS LOCATION SEE SHEET 240/555
3. FOR LEGEND AND ABBREVIATIONS SEE SHEET 199/555

HORIZONTAL SCALE IN FEET
0 4 8 16

CALCULATED DGC
CHECKED MK

LIGHTING EQUIPMENT LAYOUT
CONDUIT ROUTING

HAM-71-01.34

241
555

c:\pwworking\hmm\external\tyn61470\dms72803\872801D020.dgn 10/24/2014 12:35:17 PM TYN61470

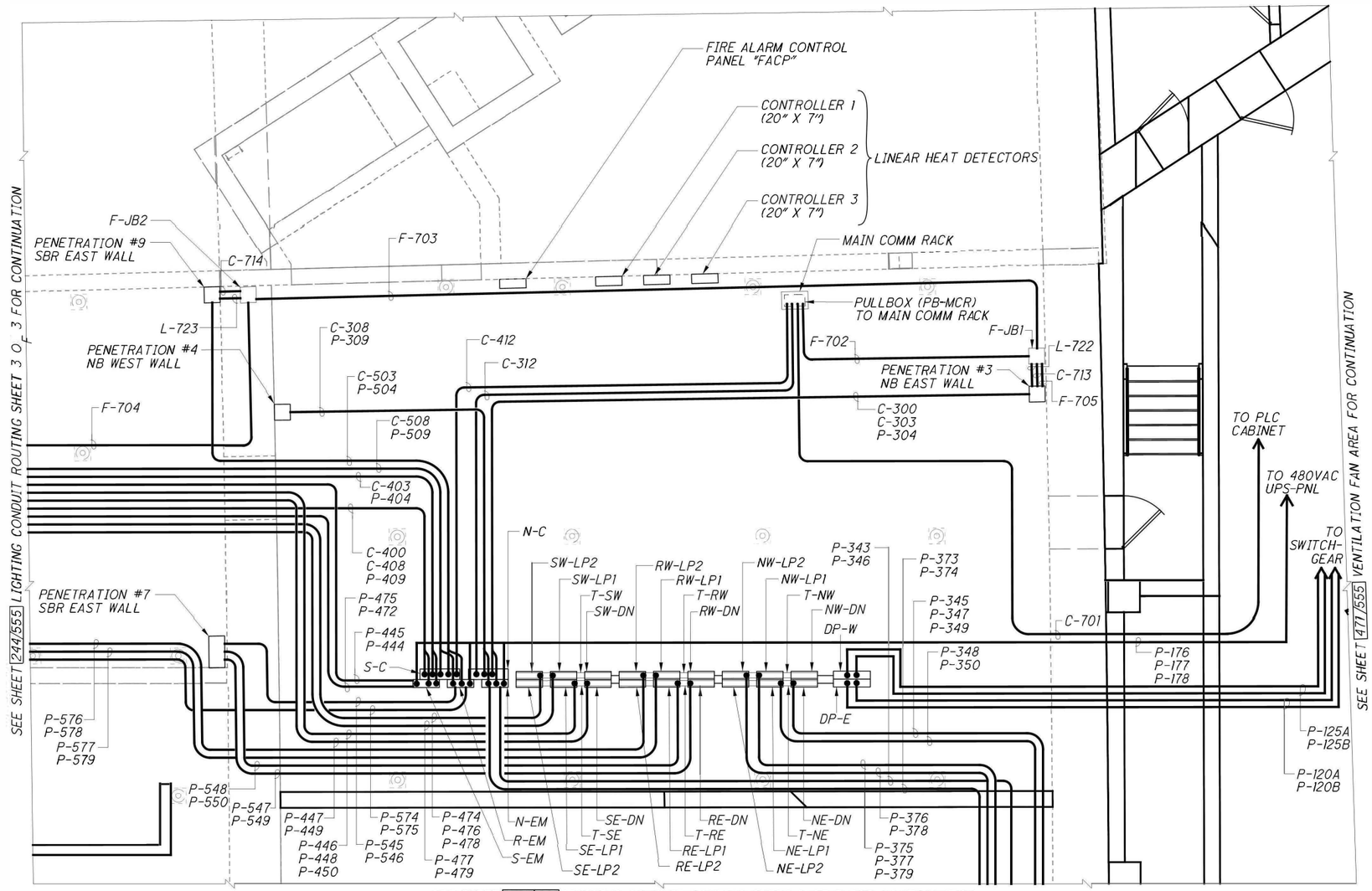

EQUIPMENT ROOM LAYOUT

SCALE: 1/4"=1'-0"

NOTES:

1. FOR LIGHTING LEGEND AND ABBREVIATIONS SEE SHEET 199/555
2. FOR LIGHTING PANELS ELEVATION 'A' SEE SHEET 240/555
3. FOR LIGHTING PANELS ELEVATION 'B' SEE SHEET 239/555
4. FOR TUNNEL LIGHTING ELEVATIONS SEE SHEETS 208/555 THROUGH 231/555
5. FOR LUMINANCE CAMERA LOCATIONS AND ROUTING SEE SHEETS 245/555 AND 246/555
6. FOR CONDUIT AND CABLE TAGS SEE SHEETS 475/555 THROUGH 484/555
7. FOR ELECTRICAL ONE-LINE DIAGRAM SEE SHEET 469/555
8. FOR SWITCHGEAR ROOM PLAN SEE SHEET 470/555
9. FOR LIGHTING PANEL SCHEDULES SEE SHEETS 232/555 THROUGH 237/555
10. FOR CONTINUATION OF LIGHTING CONDUIT ROUTING SEE SHEETS 243/555 AND 244/555

HORIZONTAL SCALE IN FEET
0 2 4 8

CALCULATED DGC
CHECKED MK

LIGHTING CONDUIT ROUTING SHEET 1 OF 3

HAM-71-01.34

242
555

c:\pwworking\hmm\externa\tyn61470\dms72803*7268_D021.dgn 10/25/2014 9:06:01 AM TYNG1470

SEE SHEET 242/555 LIGHTING CONDUIT ROUTING SHEET 1 OF 3 FOR CONTINUATION

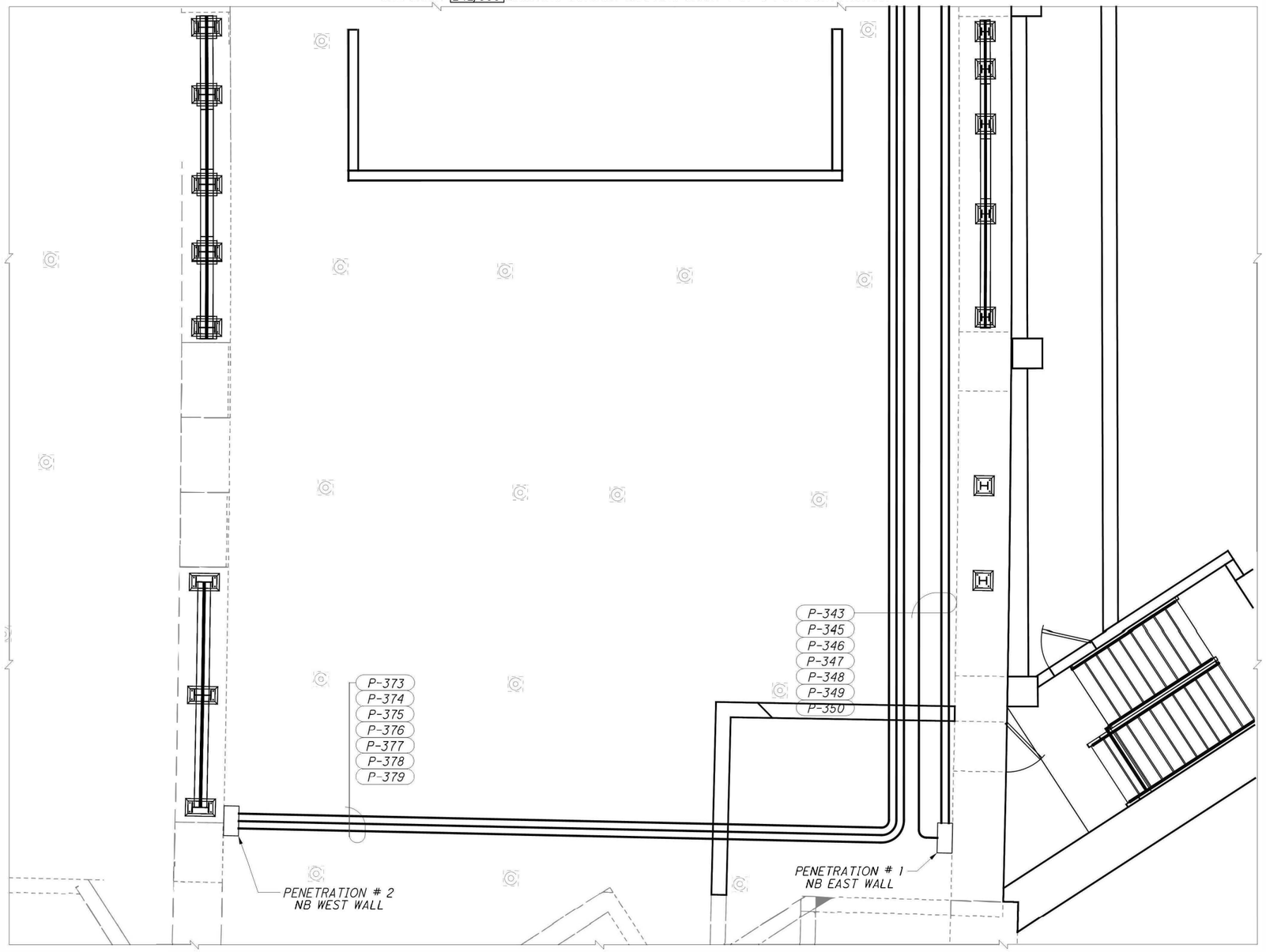

NOTES:

1. FOR LIGHTING LEGEND AND ABBREVIATIONS SEE SHEET 199/555
2. FOR LIGHTING PANELS ELEVATION 'A' SEE SHEET 240/555
3. FOR LIGHTING PANELS ELEVATION 'B' SEE SHEET 239/555
4. FOR TUNNEL LIGHTING ELEVATIONS SEE SHEETS 208/555 THROUGH 231/555
5. FOR LUMINANCE CAMERA LOCATIONS AND ROUTING SEE SHEETS 245/555 AND 246/555
6. FOR CONDUIT AND CABLE TAGS SEE SHEETS 475/555 THROUGH 484/555
7. FOR ELECTRICAL ONE-LINE DIAGRAM SEE SHEET 469/555
8. FOR SWITCHGEAR ROOM PLAN SEE SHEET 470/555
9. FOR LIGHTING PANEL SCHEDULES SEE SHEETS 232/555 THROUGH 237/555
10. FOR CONTINUATION OF LIGHTING CONDUIT ROUTING SEE SHEETS 242/555 AND 244/555

EQUIPMENT ROOM LAYOUT

SCALE: 1/4"=1'-0"

HORIZONTAL SCALE IN FEET
0 2 4 8

CALCULATED DGC
CHECKED MK

LIGHTING CONDUIT ROUTING SHEET 2 OF 3

HAM-71-01.34

243
555

c:\pwworking\hmm\external\tyn61470\dms72803\872681D022.dgn 10/25/2014 9:07:01 AM TYN61470

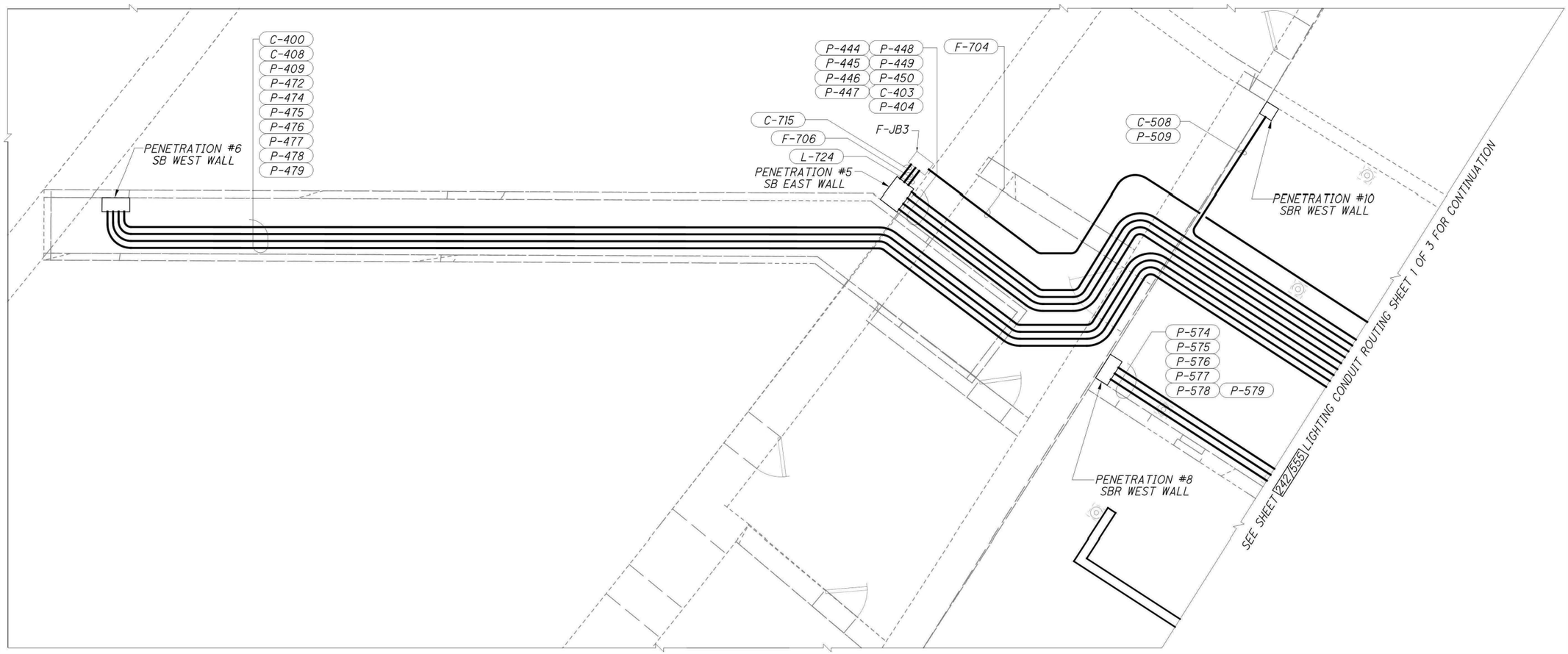

NOTES:

1. FOR LIGHTING LEGEND AND ABBREVIATIONS SEE SHEET 199/555
2. FOR LIGHTING PANELS ELEVATION 'A' SEE SHEET 240/555
3. FOR LIGHTING PANELS ELEVATION 'B' SEE SHEET 239/555
4. FOR TUNNEL LIGHTING ELEVATIONS SEE SHEETS 208/555 THROUGH 231/555
5. FOR LUMINANCE CAMERA LOCATIONS AND ROUTING SEE SHEETS 245/555 AND 246/555
6. FOR CONDUIT AND CABLE TAGS SEE SHEETS 475/555 THROUGH 484/555
7. FOR ELECTRICAL ONE-LINE DIAGRAM SEE SHEET 469/555
8. FOR SWITCHGEAR ROOM PLAN SEE SHEET 470/555
9. FOR LIGHTING PANEL SCHEDULES SEE SHEETS 232/555 THROUGH 237/555
10. FOR CONTINUATION OF LIGHTING CONDUIT ROUTING SEE SHEETS 242/555 AND 243/555

EQUIPMENT ROOM LAYOUT

SCALE: 1/4"=1'-0"

HORIZONTAL SCALE IN FEET
0 2 4 8

CALCULATED DGC
CHECKED MK

LIGHTING CONDUIT ROUTING SHEET 3 OF 3

HAM-71-01.34

244
555

c:\pwworking\hmm\external\tyn61470\dms72803\8726LD023.dgn 10/24/2014 12:35:27 PM TYN61470

NOTES:

1. NEW LUMINANCE CAMERA TO REPLACE THE EXISTING METER AT THE CURRENT LOCATION.
2. INSTALL NEW CONDUCTORS AND CONDUITS FOLLOWING THE EXISTING ROUTES.
3. NEMA 4X ENCLOSURE IS REQUIRED FOR WEATHER PROTECTION.
4. FOR LEGEND AND ABBREVIATIONS SEE SHEET 199/555
5. FOR CONDUIT AND CABLE SCHEDULES SEE SHEETS 475/555 THROUGH 484/555

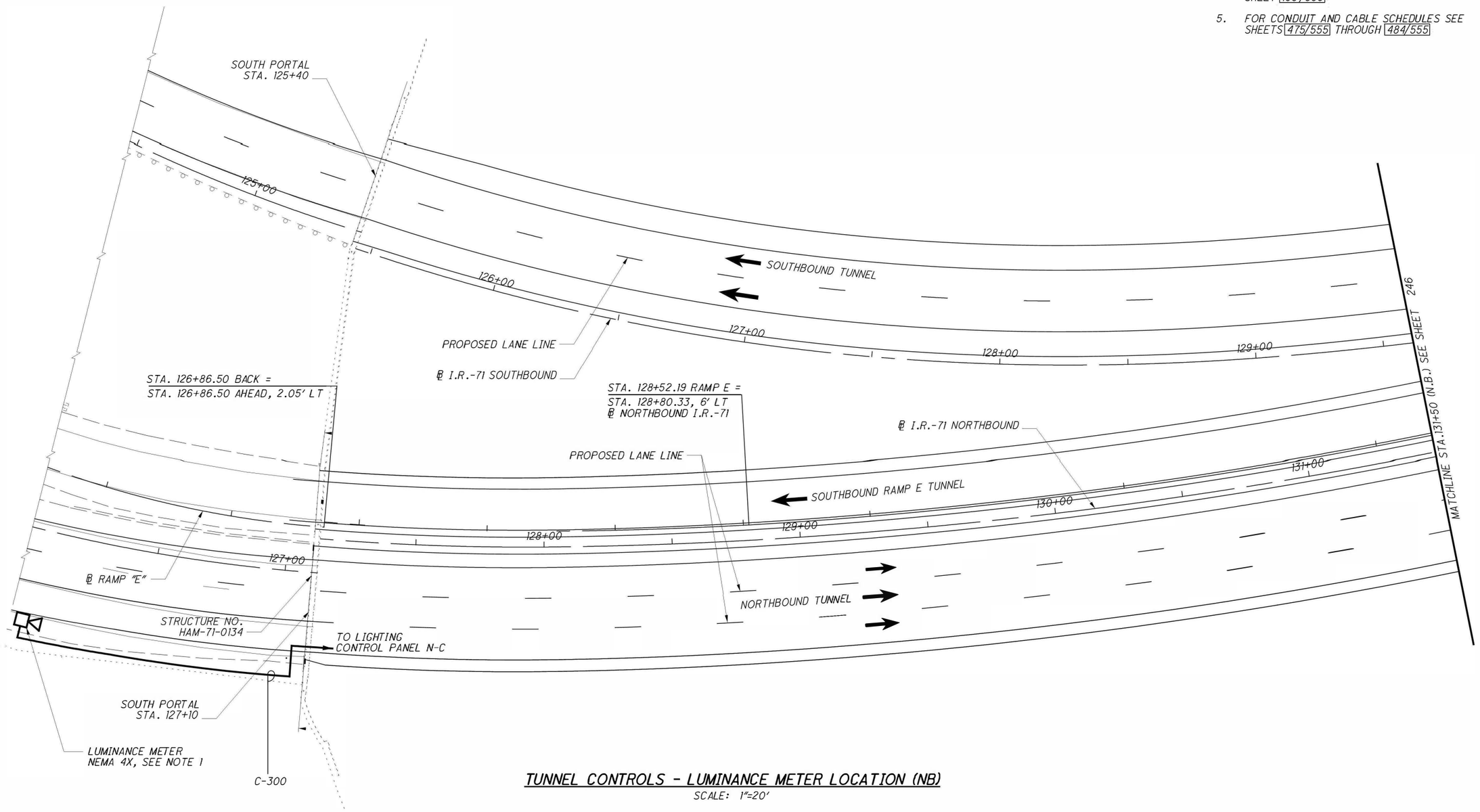

TUNNEL CONTROLS - LUMINANCE METER LOCATION (NB)

SCALE: 1"=20'

HORIZONTAL SCALE IN FEET
0 20 40

CALCULATED DGC
CHECKED MK

TUNNEL LIGHTING CONTROL SYSTEM
LUMINANCE METER LOCATION - SHEET 1 OF 2

HAM-71-01.34

245
555

c:\pwworking\hmm\eexternal\tyn61470\dms72803\8726LD025.dgn 10/24/2014 12:35:31 PM TYN61470

NOTES:

1. NEW LUMINANCE CAMERA TO REPLACE THE EXISTING METER AT THE CURRENT LOCATION.
2. INSTALL NEW CONDUCTORS AND CONDUITS FOLLOWING THE EXISTING ROUTES.
3. NEMA 4X ENCLOSURE IS REQUIRED FOR WEATHER PROTECTION.
4. FOR LEGEND AND ABBREVIATIONS SEE SHEET 199/555
5. FOR CONDUIT AND CABLE SCHEDULES SEE SHEETS 475/555 THROUGH 484/555

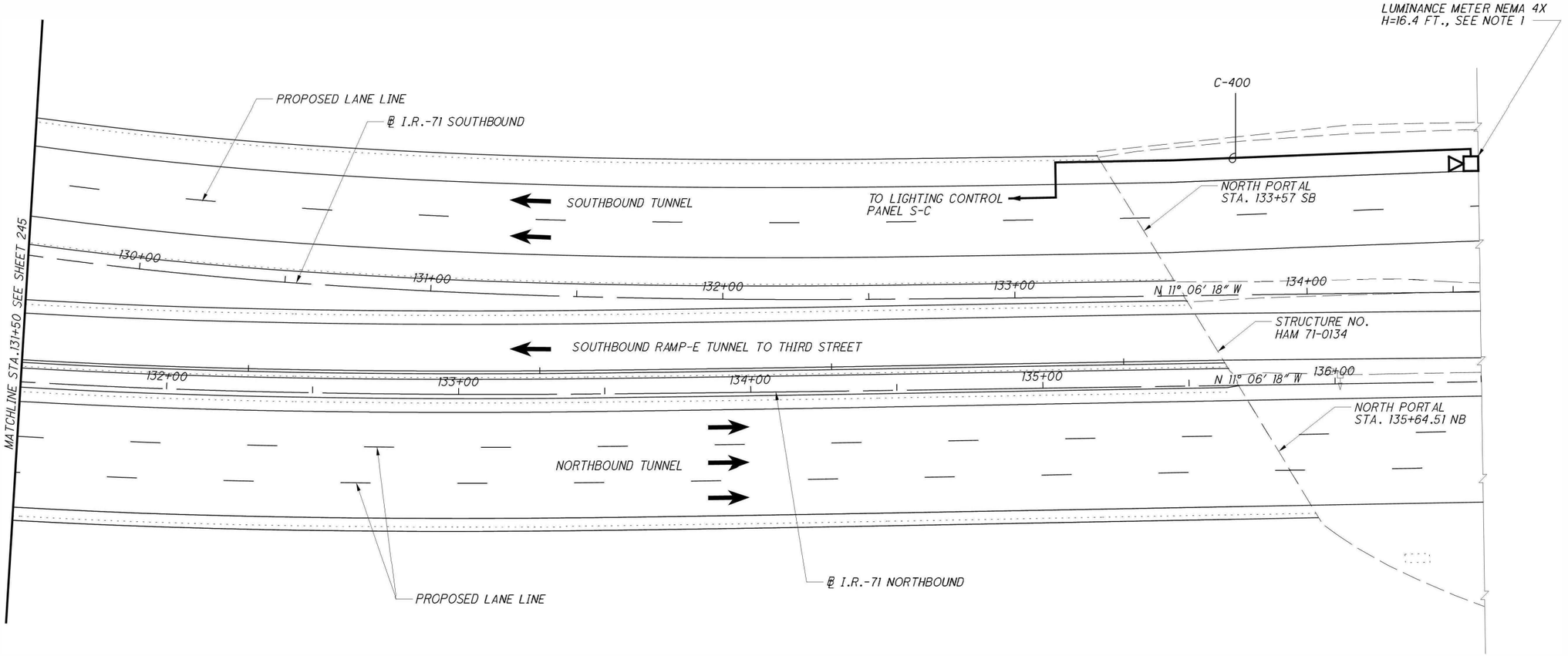

TUNNEL CONTROLS - LUMINANCE METER LOCATION
SOUTHBOUND AND SOUTH RAMP-E

SCALE: 1"=20'

HORIZONTAL SCALE IN FEET
0 10 20 40

CALCULATED DGC
CHECKED MK

TUNNEL LIGHTING CONTROL SYSTEM
LUMINANCE METER LOCATION - SHEET 2 OF 2

HAM-71-01.34

246
555

c:\pwworking\hmm\external\tyn61470\dms72803\8726B.D026.dgn 10/21/2014 12:35:34 PM T:\N61470

SB EAST WALL

SB WEST WALL

RDE-SE4 — 277V — RDE-SE3 — LT — RDE-SE2 — 277V — RDE-SE1

RDE-SW4 — 277V — RDE-SW3 — LT — RDE-SW2 — 277V — RDE-SW1

110′-0″ — 220′-0″ — 220′-0″ — 110′-0″

277V 277V S-EM 277V

480V SE-DN — SE-C1 — SE-LP1 — SE-C2 — SE-LP2

480V SW-DN — SW-C1 — SW-LP1 — SW-C2 — SW-LP2

120V

DP-E

S-C SOUTHBOUND AND RAMP-E

277V POWER FROM PANEL S-EM

DP-W

480V RE-DN — RE-C1 — RE-LP1 — RE-C2 — RE-LP2

480V RW-DN — RW-C1 — RW-LP1 — RW-C2 — RW-LP2

120V

277V R-EM 277V

110′-0″ — 220′-0″ — 220′-0″ — 110′-0″

RDE-RE4 — 277V — RDE-RE3 — LT — RDE-RE2 — 277V — RDE-RE1

R EAST WALL

RDE-RW4 — 277V — RDE-RW3 — LT JB — RDE-RW2 — 277V — RDE-RW1

R WEST WALL

NOTES:

1. FOR LEGEND AND ABBREVIATIONS, SEE SHEET 199/555

CALCULATED DGC
CHECKED MK

TUNNEL LIGHTING CONTROL SCHEMATIC - SOUTHBOUND AND RAMP-E TUNNELS SHEET 1 OF 2

HAM-71-1.34

247
555

c:\pwworking\hmm\external\tyn61470\dms72803\8726LD027.dgn 10/24/2014 12:35:36 PM TYN61470

NOTES:

1. FOR LEGEND AND ABBREVIATIONS, SEE SHEET 199/555

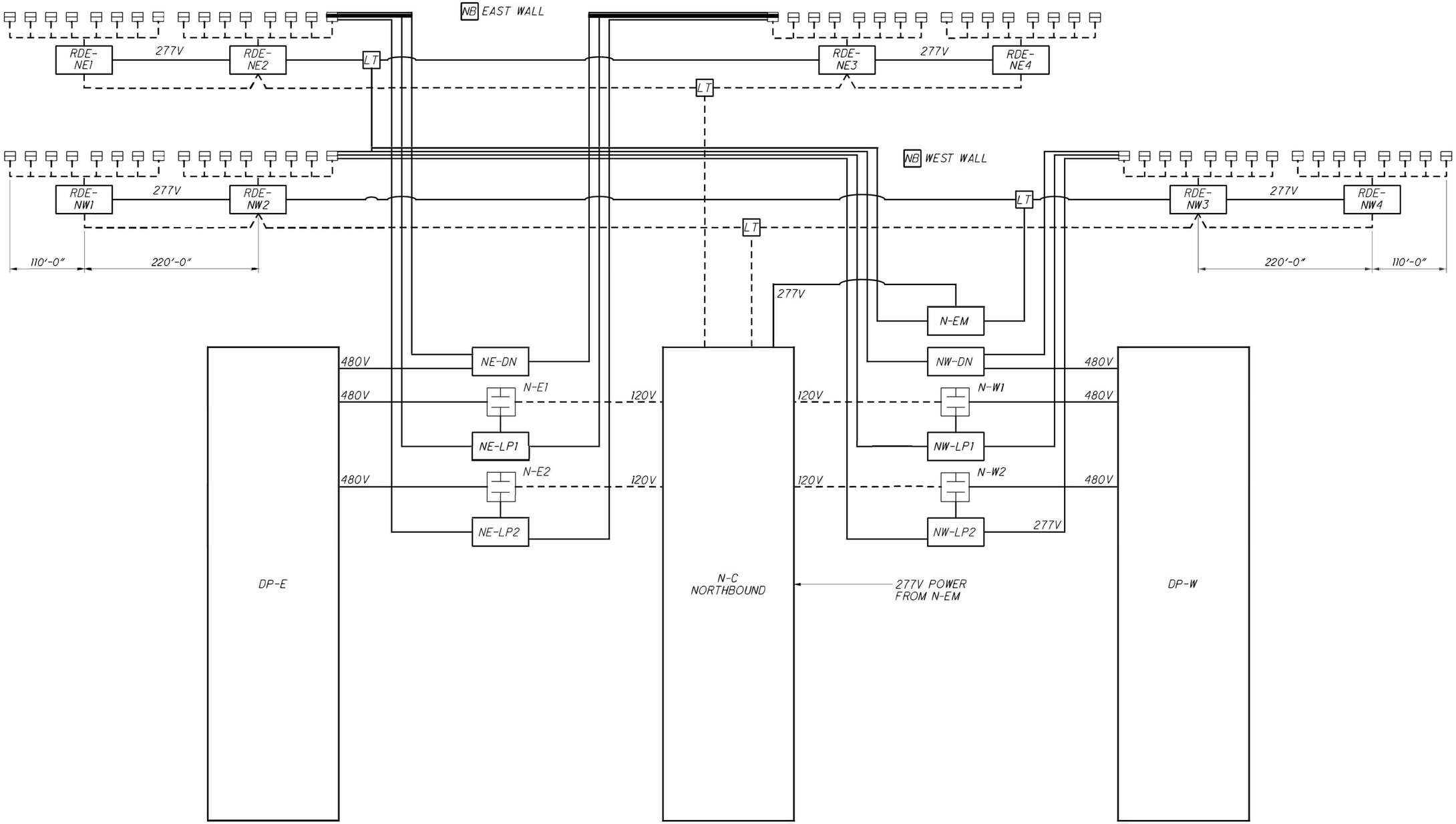

CALCULATED DGC
CHECKED MK

TUNNEL LIGHTING CONTROL SCHEMATIC - NORTHBOUND
SHEET 2 OF 2

HAM-71-1.34

248
555

c:\pwworking\hmm\external\tyn61470\dms72803\872268_D028.dgn 10/24/2014 12:35:38 PM TYNG1470

480V FROM DP-E
TO FIXTURES SOUTHBOUND EAST WALL
SE-DN
SE-LP1
SE-LP2
SE-C1
SE-C2
C-401
C-402
PHOTOMETER
C-400
S-C SOUTHBOUND AND RAMP-E
480V FROM DP-W
C-406
C-407
SW-C2
SW-C1
S-EM
SW-DN
SW-LP1
SW-LP2
277V
TO NEXT RDE
C-403
REMOTE DIMMING ENCLOSURE (RDE-SE1 / RDE-SE4)
PS
IV
DA4
0-10V
TB
G
4-20mA
C-405
TO NEXT DRIVER
L-404
277V
LED FIXTURES
+ - DIMMING DRIVER
+ - DIMMING DRIVER
P-404
REMOTE INTERFACE TERMINAL
PS
CPU
ETHERNET
AI
DI
DO
AO
MAIN
HOA
TB
TO FIXTURES SOUTHBOUND WEST WALL
TO NEXT RDE
REMOTE DIMMING ENCLOSURE (RDE-SW1 / RDE-SW4)
C-408
PS
IV
DA4
0-10V
TB
G
4-20mA
C-410
TO NEXT DRIVER
L-409
277V
LED FIXTURES
+ - DIMMING DRIVER
+ - DIMMING DRIVER
P-409
TO FIXTURES RAMP-E EAST WALL
C-501/C-502
R-EM
RE-DN
RE-LP1
RE-LP2
RE-C2
RE-C1
480V FROM DP-E
C-506
C-507
RW-C1
RW-C2
480V FROM DP-W
TO FIXTURES RAMP-E WEST WALL
RW-DN
RW-LP1
RW-LP2
TO NEXT RDE
C-503
REMOTE DIMMING ENCLOSURE (RDE-RE1 / RDE-RE4)
PS
IV
DA4
0-10V
TB
G
4-20mA
C-505
TO NEXT DRIVER
L-504
277V
LED FIXTURES
+ - DIMMING DRIVER
+ - DIMMING DRIVER
P-504
TO NEXT RDE
C-508
REMOTE DIMMING ENCLOSURE (RDE-RW1 / RDE-RW4)
PS
IV
DA4
0-10V
TB
G
4-20mA
C-510
TO NEXT DRIVER
L-509
277V
LED FIXTURES
+ - DIMMING DRIVER
+ - DIMMING DRIVER
P-509

NOTES:

1. FOR LEGEND AND ABBREVIATIONS, SEE SHEET 199/555

CALCULATED DGC
CHECKED MK

TUNNEL LIGHTING CONTROL NETWORK CONNECTION SOUTHBOUND AND RAMP-E TUNNELS - SHEET 1 OF 2

HAM-71-01.34

249
555

c:\pwworking\hmm\external\tyn61470\dms72803\8726LD029.dgn 10/24/2014 12:35:49 PM TYN61470

NOTES:

1. FOR LEGEND AND ABBREVIATIONS, SEE SHEET 199/555

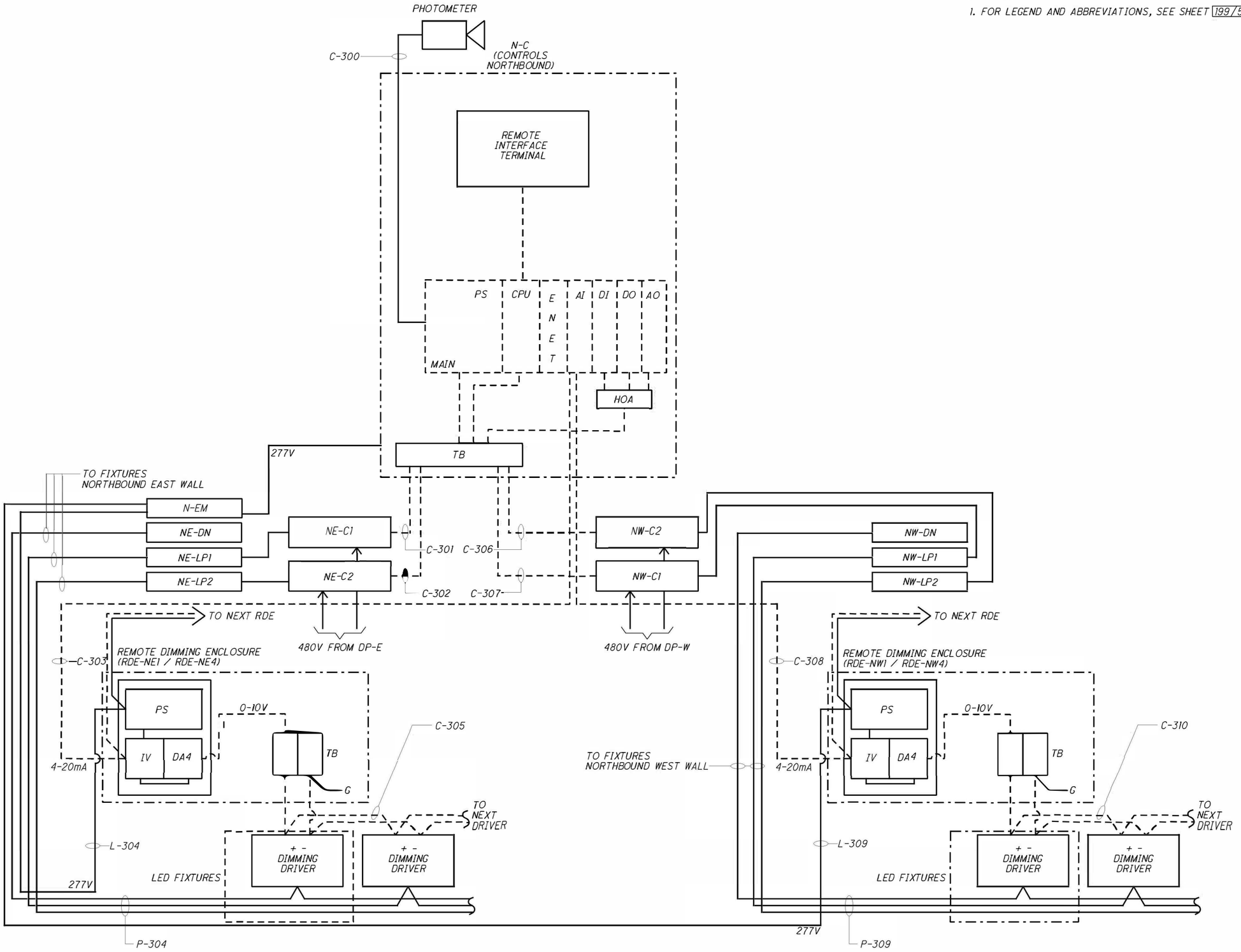

c:\pwworking\hmm\external\tyn61470\d=ns7280sv\s7268d030.dgn 10/24/2014 12:35:52 PM TYN61470

CALCULATED DGC
CHECKED MK

TUNNEL LIGHTING CONTROL NETWORK CONNECTION NORTHBOUND - SHEET 2 OF 2

HAM-71-1.34

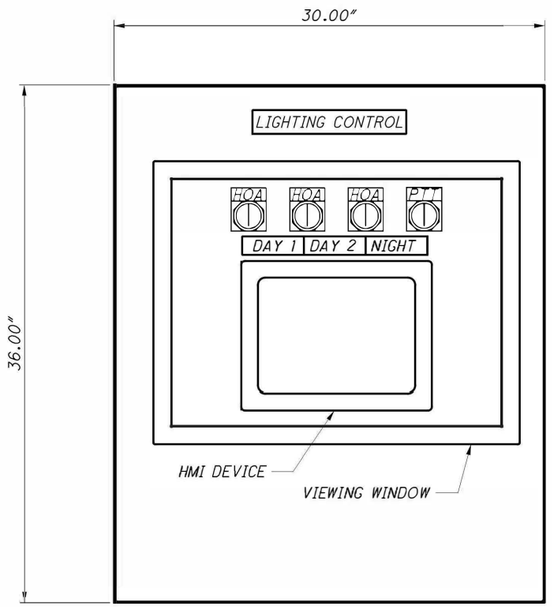

EXTERIOR VIEW
PANEL DEPTH: 12"

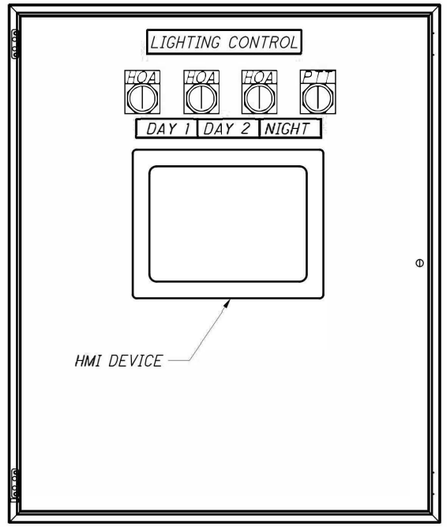

INTERIOR VIEW W/ SWING PANEL

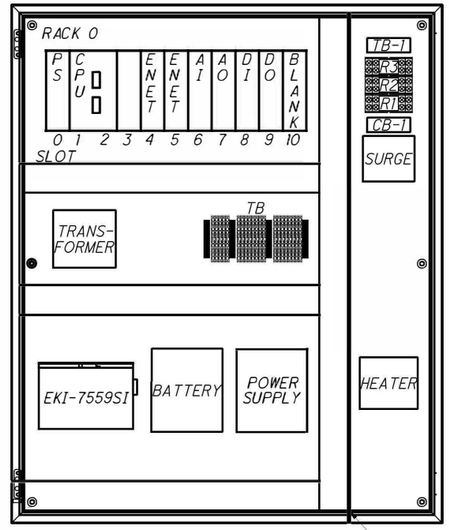

INTERIOR VIEW

TUNNEL LIGHTING CONTROL PANEL (TYP.) (NOTE 2)
N.T.S.

NOTES:

1. FOR LEGEND AND ABBREVIAT ONS SEE SHEET. 199/555
2. TYPICAL TUNNEL LIGHT NG CONTROL PANEL FOR 'N-C' AND 'S-C'.
3. REFER TO GENERAL NOTES ON SHEETS 190/555 AND 191/555 FOR CONTROL SPECIFICAT ONS.
4. REMOTE DIMMING ENCLOSURE AND LIGHT NG CONTROL PANEL CONFIGURATIONS BASED ON PLC MULT POINT PRODUCTS, OTHER EQUIPMENT WILL BE ACCEPTED IF APPROVED EQUAL.

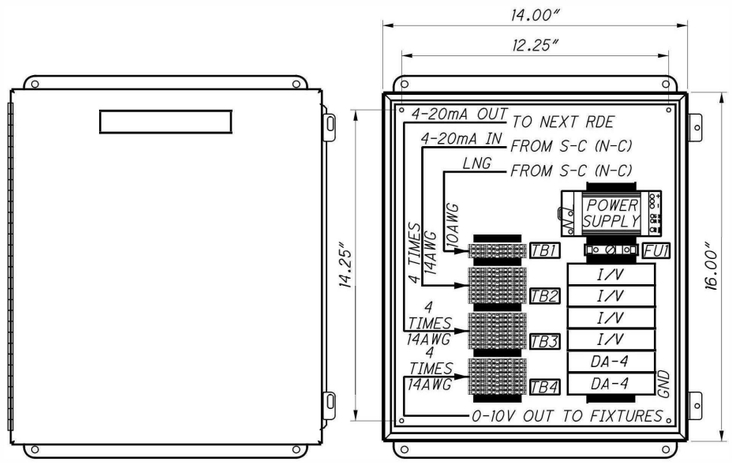

EXTERIOR VIEW
16"Hx14"Wx6"D

INTERIOR VIEW

REMOTE DIMMING ENCLOSURE (NOTE 4)
N.T.S.

CALCULATED DGC
CHECKED MK

TUNNEL LIGHTING CONTROL PANEL AND RDE ASSEMBLY

HAM-71-01.34

251
555

c:\pwworking\hmm\external\tyn61470\dms728031\8726LD031.dgn 10/24/2014 12:35:54 PM TYN61470

ITEM 690, SPECIAL – MISC.: CERTIFIED ARBORIST, TREE PRESERVATION, AND DAMAGE RESTORATION

A CERTIFIED ARBORIST IS REQUIRED FOR THIS PROJECT. THE FOLLOWING SPECIFICATIONS OUTLINE THE REQUIREMENTS OF THE CERTIFIED ARBORIST, TREE PRESERVATION, AND DAMAGE RESTORATION.

PART 1 GENERAL

1.01 RELATED DOCUMENTS
A. DRAWINGS AND GENERAL PROVISIONS OF THE CONTRACT, INCLUDING GENERAL AND SUPPLEMENTARY CONDITIONS APPLY TO THIS SECTION.

1.02 DEFINITIONS
A. DIAMETER SHALL BE DEFINED AT BREAST HEIGHT (DBH) WHICH IS THE AVERAGE TREE DIAMETER AT 4.5 FEET FROM THE GROUND ON THE UPHILL SIDE OF THE TREE.

B. CALIPER SHALL BE DEFINED AS THE DIAMETER OF THE TRUNK AT 6 INCHES ABOVE THE SOIL FOR TREES UP TO 6 INCHES IN CALIPER AND DIAMETER AT 12 INCHES ABOVE THE SOIL FOR TREES UP TO 12-INCH CALIPER.

C. ROOT ZONE SHALL BE DEFINED AS 1 FOOT OF RADIUS AROUND TRUNK FOR EVERY INCH OF TRUNK DIAMETER AT 4.5 FEET ABOVE GROUND LEVEL ON THE UPHILL SIDE OF THE TREE.

D. DRIP LINE SHALL BE DEFINED AS THE OUTER LIMITS OF THE TREE CANOPY FOR EACH TREE PROJECTED DOWNWARD ONTO THE GROUND AS SHOWN IN THE DRAWINGS.

E. TREE PRESERVATION AREA SHALL BE DEFINED AS ALL AREAS WHICH CONTAIN TREES AND ALL EXISTING TREES NOTED TO REMAIN AND BE PROTECTED WITHIN THE LIMITS OF CONSTRUCTION. PROTECTIVE FENCING SHALL BE ERECTED AS SHOWN IN THE DRAWINGS AND AS DIRECTED BY THE CERTIFIED ARBORIST AND PARK BOARD IN THE FIELD.

F. DAMAGE SHALL BE DEFINED AS ANY NEGATIVE PHYSICAL IMPACT, AS DETERMINED BY THE CERTIFIED ARBORIST AND PARK BOARD, TO AN EXISTING TREE TRUNK, CANOPY, AND/OR ROOTS CAUSED BY ACCIDENTAL OR NEGLIGENT CONSTRUCTION ACTIVITIES, ALSO INCLUDING UNAUTHORIZED ENCROACHMENT INTO THE TREE PRESERVATION AREAS PROTECTED BY FENCING OR FAILURE TO COMPLY WITH SPECIFICATIONS AND DRAWINGS WHETHER FENCING IS PRESENT OR NOT, AT ANY TIME DURING THE CONSTRUCTION PROCESS, INCLUDING THE FINISHING STEPS OF LANDSCAPE INSTALLATION AND FINE GRADING OPERATIONS.

G. CERTIFIED ARBORIST SHALL BE DEFINED AS A THIRD PARTY ARBORIST HIRED AND PROVIDED BY THE CONTRACTOR FOR TECHNICAL REVIEW, INPUT AND OVERSIGHT DURING THE CONSTRUCTION PROCESS.

1.03 QUALITY ASSURANCE
A. A PRECONSTRUCTION MEETING SHALL BE HELD WITH THE GENERAL CONTRACTOR SO THAT THE ENGINEER, CINCINNATI PARK BOARD, AND CERTIFIED ARBORIST MAY EXPLAIN TREE PRESERVATION OBJECTIVES, REQUIREMENTS AND PROCEDURES DURING THE CONSTRUCTION PROCESS.
B. THE CONTRACTOR WILL PROVIDE A CERTIFIED ARBORIST WITH CURRENT CERTIFICATION FROM THE INTERNATIONAL SOCIETY OF ARBORICULTURE. THIS PERSON SHALL BE RESPONSIBLE FOR EVALUATING TREES BEFORE AND DURING CONSTRUCTION WITHIN THE WORK LIMITS, EVALUATING DAMAGE THAT MAY HAVE OCCURRED DURING CONSTRUCTION, ADVISING THE ENGINEER AND CONTRACTORS DURING CONSTRUCTION REGARDING ALL WORK AROUND EXISTING TREES AND SEEING THAT WORK IS PERFORMED TO STANDARDS IN A SAFE, PROFESSIONAL, AND TIMELY MANNER THAT PROVIDES EXISTING TREES WITH THE BEST POTENTIAL CHANCES FOR MINIMIZING IMPACTS, SURVIVAL AND OPTIMAL HEALTH AFTER CONSTRUCTION.

C. NO SITE PREPARATION WORK, INCLUDING DEMOLITION, STAGING OR ANY DELIVERY/STORAGE OF MATERIALS, SHALL BEGIN IN AREAS WHERE TREES ARE DESIGNATED TO REMAIN AND BE PROTECTED UNTIL PROTECTION AND TREATMENT MEASURES HAVE BEEN AGREED UPON AND COMPLETED.

D. TREE PRESERVATION MEASURES, ALONG WITH TREATMENT MEASURES AND MATERIALS, WILL BE REVIEWED AND APPROVED BY THE CERTIFIED ARBORIST AND PARK BOARD PRIOR TO INSTALLATION. PROTECTION OF TREES OR WOODY SHRUBS IDENTIFIED TO REMAIN MEANS MAINTENANCE OF THE PLANTS IN GOOD HEALTH AND VITALITY, INCLUDING PERFORMING PREVENTION METHODS, USING REMEDIAL TECHNIQUES, WATERING, AS WELL AS PROVIDING APPROPRIATE PROTECTION FROM PHYSICAL DAMAGE AND DISEASE.

E. PUBLICATIONS LISTED HEREIN ARE PART OF THIS SPECIFICATION TO EXTENT REFERENCED:
1. TREE CARE INDUSTRY ASSOCIATION (FORMERLY NATIONAL ARBORIST ASSOCIATION) STANDARDS.
2. ISA - INTERNATIONAL SOCIETY OF ARBORICULTURE
3. AMERICAN NATIONAL STANDARD FOR TREE CARE OPERATIONS.
A. ANSI Z133.1 - 1994.
B. ANSI A300 - 1995.
4. AMERICAN NURSERYMAN ASSOCIATION STANDARDS.

F. TREE SERVICE CONTRACTOR QUALIFICATIONS:
1. THE CONTRACTOR (OR ONE OF HIS SUBCONTRACTORS) SHALL HAVE THE FOLLOWING QUALIFICATIONS:
A. STAFF THAT ARE ISA CERTIFIED ARBORISTS.

G. TREATMENT PROCEDURES:
1. TREES ON SITE WHICH ARE TO BE PRESERVED SHALL BE PREPARED AND TREATED TO INCREASE THEIR POTENTIAL FOR SURVIVAL AND IMPROVE THEIR HEALTH AND CONDITION. CONTRACTOR SHALL MEET OR EXCEED MOST RECENTLY PUBLISHED TREE CARE INDUSTRY ASSOCIATION (FORMERLY NATIONAL ARBORIST ASSOCIATION) STANDARDS FOR ALL WORK. ALL WORK IS TO BE PERFORMED COMPLETELY AS SPECIFIED OR RECOMMENDED BY THE CERTIFIED ARBORIST AND PARK BOARD UNLESS CHANGES ARE AGREED UPON IN WRITING DUE TO UNFORESEEN AND/OR LIMITING CIRCUMSTANCES.

H. EQUIPMENT AND SAFETY:
1. EQUIPMENT SHALL BE MODERN AND WELL MAINTAINED. ANY INSTRUMENTS USED TO CUT ROOTS AND LIMBS SHALL BE SHARPENED WELL ENOUGH TO MAKE CLEAN CUTS.

1.04 PERFORMANCE STANDARD
A. DAMAGED TREES, AS DETERMINED BY THE CERTIFIED ARBORIST AND AGREED UPON BY THE ENGINEER AND CINCINNATI PARK BOARD, LESS THAN 8 INCHES IN DIAMETER SHALL BE REPLACED WITH TREES OF EQUAL CALIPER OR THE LARGEST COMMERCIALLY AVAILABLE TREES OF THE SAME SPECIES.

B. DAMAGED TREES, AS DETERMINED BY THE CERTIFIED ARBORIST AND AGREED UPON BY THE ENGINEER AND CINCINNATI PARK BOARD, GREATER THAN 8 INCHES IN DIAMETER SHALL BE COMPENSATED FOR BY THE CONTRACTOR AT $500.00 PER INCH OF DIAMETER, I.E. A DAMAGED 18 INCH TREE = $9,000.00.

C. CONTRACTOR SHALL BE RESPONSIBLE FOR ALL EXPENSES RELATED TO THE REPLACEMENT OF DAMAGED TREES INCLUDING: LOCATING REPLACEMENT TREES AT NURSERIES, TAGGING, REVIEW/APPROVAL OF REPLACEMENTS, PURCHASING, TRANSPORTING, INSTALLING, MAINTENANCE FOR ONE YEAR, AND ANY OTHER ASSOCIATED EXPENSES.

D. DIAMETERS OF DAMAGED TREES, IF ANY, SHALL BE DETERMINED BY THE CERTIFIED ARBORIST FOR THE ASSESSMENT OF DAMAGES.

1.05 SUBMITTALS
A. LIST PRODUCTS TO BE USED AND COMPANIES/PERSONNEL, INCLUDING THEIR QUALIFICATIONS, THAT WILL BE PERFORMING THE REQUIRED WORK.

B. CONTRACTOR SHALL SUBMIT A TREE PRESERVATION PLAN IN COORDINATION WITH CONSTRUCTION SEQUENCE, SCHEDULE AND THE CERTIFIED ARBORIST. SUBMIT PLAN FOR REVIEW BY ENGINEER, CERTIFIED ARBORIST AND CINCINNATI PARK BOARD.

1.06 SUMMARY
A. FURNISH ALL LABOR, MATERIALS, SUPPLIES, EQUIPMENT AND TOOLS TO PERFORM ALL OPERATIONS IN CONNECTION WITH AND REASONABLY INCIDENTAL TO PRESERVE OR REPAIR TREES DAMAGED BY CONSTRUCTION. THE WORK SHALL INCLUDE BUT NOT BE LIMITED TO, THE FOLLOWING:
1. ERECTING AND MAINTAINING TREE PROTECTION FENCES.
2. ROOT PRUNING AS INDICATED ON DRAWINGS.
3. FERTILIZATION, INSECT AND DISEASE TREATMENTS, CABLING AND BRACING, CORE AERATION OR RADIAL TRENCHING, IRRIGATION.
4. SPECIAL HARDSCAPE EXCAVATION AND INSTALLATION METHODS AS DIRECTED BY THE CERTIFIED ARBORIST AND PARK BOARD.
5. ADDITIONAL PROTECTION MEASURES AS RECOMMENDED BY THE CERTIFIED ARBORIST AND PARK BOARD.
6. REPAIR OPERATIONS RECOMMENDED BY THE CERTIFIED ARBORIST AND PARK BOARD.
7. PAYMENTS OR REPLACEMENTS FOR DAMAGED TREES.

B. CONSTRUCTION ACTIVITY WITHIN THE ROOT ZONE OF EXISTING TREES TO REMAIN AND BE PROTECTED SHALL BE PROHIBITED AND CAN BE CONSIDERED DAMAGE TO THE TREE. THIS SHALL INCLUDE BUT IS NOT LIMITED TO THE FOLLOWING ACTIVITIES:
1. REMOVING TREE PRESERVATION FENCING.
2. PARKING OR DRIVING EQUIPMENT, MACHINERY OR VEHICLES.
3. STORING CONSTRUCTION MATERIALS, EQUIPMENT, STOCKPILING, EXCAVATION OR FILL, SOIL, GRAVEL, ETC.
4. DUMPING CHEMICALS, (I.E., PAINT THINNER FROM CLEANING BRUSHES), WASH-OUT MATERIALS FROM CLEANING EQUIPMENT, CONCRETE OR MORTAR REMAINDER, TRASH, GARBAGE, OR DEBRIS.
5. BURNING WITHIN OR IN PROXIMITY TO PROTECTED AREAS.
6. TRENCHING OR GRADING WITHIN THE DRIPLINES OF PROTECTED TREES WITHOUT NOTIFYING THE CERTIFIED ARBORIST AND ENGINEER IN WRITING 10 DAYS IN ADVANCE OF OPERATION. THIS INCLUDES UTILITIES, LIGHTING, IRRIGATION, DRAINAGE, PAVING, STRUCTURES, ETC.
7. TRENCHING OR GRADING WITHOUT ROOT PRUNING.
8. ANY CONSTRUCTION ACTIVITY WITHIN THE DRIP LINE OF AN EXISTING TREE NOT COORDINATED WITH AND APPROVED BY THE CERTIFIED ARBORIST, THE PARK BOARD, AND THE ENGINEER.

C. TIMING: IF DISTURBANCE IS REQUIRED DURING THE ACTIVE GROWING SEASON (APRIL 1ST TO THE END OF NOVEMBER), ADDITIONAL MEASURES SHALL BE PROVIDED TO PROTECT THE TREE AND SHALL BE DONE SO IN ACCORDANCE WITH THE CERTIFIED ARBORIST'S AND PARK BOARD'S RECOMMENDATIONS. THESE MEASURES MAY INCLUDE BUT ARE NOT LIMITED TO: MULCHING/PROTECTION OF DISTURBED ROOTS AND TEMPORARY IRRIGATION OF DISTURBED TREES.

PART 2 PRODUCTS

2.01 MATERIALS
A. EVERY EFFORT SHALL BE MADE TO UTILIZE CHEMICALS OF AN ORGANIC OR BIODEGRADABLE NATURE IN ORDER TO OFFER LEAST IMPACT TO THE NATURAL ENVIRONMENT. CONTRACTOR IS RESPONSIBLE FOR MIXING, APPLYING AND DISPOSAL OF ALL CHEMICALS IN ACCORDANCE WITH STRICT ADHERENCE TO MANUFACTURERS' DIRECTIONS. PROTECT ADJACENT STRUCTURES, VEHICLES, PEDESTRIANS, PAVEMENT AND PLANTS FROM EXPOSURE TO ANY CHEMICALS.

B. TREE PROTECTION FENCING: POSTS TO BE STEEL FENCE POSTS SPACED 6'-0" O.C. WITH STANDARD SNOW FENCING OR ORANGE POLYETHYLENE CONSTRUCTION FENCING, EXPOSED HEIGHT ABOVE GRADE 4' - 0". SIGNS SHALL BE AFFIXED TO THE FENCING EVERY 100 FEET WITH APPROPRIATE LANGUAGE, SUCH AS "TREE PROTECTION AREA - DO NOT ENTER".

CALCULATED RLD CHECKED CWP

LANDSCAPE GENERAL NOTES

HAM-71-1.34

c:\pwworking\hmn\external\tyn61470\dms72761*726PN001.dgn 10/25/2014 12:14:52 PM TYN61470

I:\projects\HAM\Vir071\01.34_PID87268\Design\docs\Plan Package\Current CADD Files\Landscape\Sheets\87268PN002.dgn 1/28/2015 1:34:44 PM okoenig

CALCULATED RLD CHECKED CWP

LANDSCAPE GENERAL NOTES

HAM-71-1.34

PART 3 EXECUTION

3.01 TREE IDENTIFICATION
INDIVIDUAL TREES, UNIQUE IDENTIFICATION NUMBERS, AND TREE PROTECTION AREAS ARE AS SHOWN ON SHEET 257/555.

3.02 COORDINATION
TREE PRESERVATION FENCING SHALL GO UP PRIOR TO BEGINNING ANY AND ALL SITE WORK. ONCE THE FENCING IS IN PLACE, IT SHALL NOT BE MOVED OR CROSSED ANY TIME DURING CONSTRUCTION. IF A CONFLICT ARISES DURING CONSTRUCTION BETWEEN PROPOSED PLANS AND TREE PRESERVATION FENCING, THE CERTIFIED ARBORIST, CINCINNATI PARK BOARD, AND ENGINEER SHALL BE CONTACTED IMMEDIATELY BEFORE ANY WORK IS DONE IN THE CONFLICTED AREA.

3.03 TREE WORK AGENDA
A. THE CONTRACTOR SHALL NOTIFY THE CERTIFIED ARBORIST, THE PARK BOARD, AND ENGINEER OF ANY TREES WHICH MAY INTERFERE WITH PROJECT ACCESS OR WORK AT ANY TIME DURING CONSTRUCTION, A MINIMUM OF FOURTEEN DAYS PRIOR TO THE START OF THE PROPOSED WORK. ANY SPECIAL PROVISIONS OR ADJUSTMENTS TO THE TREE PRESERVATION STRATEGIES MUST BE APPROVED BY THE CERTIFIED ARBORIST AND ENGINEER PRIOR TO EXECUTION OF THE WORK.

3.04 PRE-CONSTRUCTION PRUNING
A. ASSESSMENT BY THE CONTRACTOR IS REQUIRED PER AREA OF WORK TO ENSURE THERE IS ADEQUATE CLEARANCE TO DO WORK UNDER EXISTING TREES TO REMAIN. REVIEW ANY CLEARANCE ISSUES WITH THE CERTIFIED ARBORIST AND PARK BOARD. ALL REQUIRED TRIMMING SHALL BE PERFORMED BY A CERTIFIED ARBORIST AS NEEDED AND COORDINATED WITH THE CINCINNATI PARK BOARD.

3.05 GENERAL
A. ANY WORK REQUIRED BY PLANS WHICH IS IN A TREE PRESERVATION AREA SHALL BE PERFORMED BY HAND OR METHOD(S) OTHERWISE APPROVED BY CERTIFIED ARBORIST, ENGINEER, AND CINCINNATI PARK BOARD. ALL WORK WILL BE PERFORMED IN A MANNER TO PREVENT COMPACTION, SILTATION, AND DISTURBANCE OF THE ROOT ZONE OF ALL TREES DESIGNATED FOR PRESERVATION.

B. IN AREAS WHERE TREE ROOTS ARE EXPOSED TO DAMAGE BY DEMOLITION OR CONSTRUCTION ACTIVITY, THE EXPOSED ROOTS SHALL BE KEPT MOIST AT ALL TIMES. EXPOSED ROOTS SHALL BE COVERED WITH A 3" LAYER OF WOOD CHIPS. CONTRACTOR IS RESPONSIBLE FOR REMOVING PROTECTIVE MEASURES AT THE COMPLETION OF THE PROJECT OR AT SUCH TIME THE FINAL LANDSCAPE INSTALLATIONS MUST BE INSTALLED, INCLUDING BUT NOT LIMITED TO REMOVAL OF PROTECTIVE WOOD CHIP MATERIALS.

C. CONTRACTOR SHALL BE RESPONSIBLE FOR INSURING THAT ALL SUBCONTRACTORS ARE AWARE OF, AND ADHERE TO, TREE PRESERVATION REQUIREMENTS.

3.06 DAMAGES AND PENALTIES
A. ALL TREES MARKED ON PLANS AND/OR DESIGNATED IN THE FIELD WITHIN THE FENCE LINES SHALL BE PRESERVED BY THE CONTRACTOR.
1. DAMAGED TREES, AS DETERMINED BY THE CERTIFIED ARBORIST AND AGREED UPON BY THE CINCINNATI PARK BOARD AND ENGINEER, SHALL BE COMPENSATED FOR BY THE CONTRACTOR AT $500.00 PER INCH OF DIAMETER, I.E. A DAMAGED 18 INCH TREE = $9,000.00.
2. DAMAGE TO ANY PART OF THE TREE SYSTEM SHALL BE CONSIDERED TREE DAMAGE AND ASSESSED ACCORDING TO THE LIQUIDATED DAMAGES SPECIFIED. THIS INCLUDES BUT IS NOT LIMITED TO BRANCHES AND TREE ROOTS.
3. CONTRACTOR IS RESPONSIBLE FOR ALL COSTS OF REMOVING DAMAGED TREE, INCLUDING STUMP AND RESTORATION OF SITE.

B. THE CONTRACTOR SHALL BE RESPONSIBLE FOR MAINTAINING TREE PRESERVATION MEASURES THROUGHOUT THE DURATION OF THE PROJECT.

3.07 SITE MONITORING:
A. THE CERTIFIED ARBORIST SHALL CONDUCT MONTHLY SITE VISITS TO ENSURE COMPLIANCE WITH TREE PRESERVATION REQUIREMENTS. PROMPT RESPONSE SHALL BE MADE TO REQUESTS BY ARBORIST WHICH AFFECT THE SURVIVAL OF TREES TO BE PRESERVED.

B. IN ADDITION TO THE CERTIFIED ARBORIST'S PERIODIC AND REGULAR SITE VISITS, THE TREES WILL BE INSPECTED AT THREE TIMES TO EVALUATE THE TREES CONDITION AND DAMAGES. THESE TIMES WILL INCLUDE: 1) AT THE BEGINNING OF CONSTRUCTION TO DOCUMENT PRE-CONSTRUCTION CONDITION OF TREES, 2) AT SUBSTANTIAL COMPLETION TO DOCUMENT ANY CHANGE IN CONDITION DURING CONSTRUCTION, AND 3) ONE YEAR AFTER CONSTRUCTION TO DOCUMENT SIGNS OF LOSS OR DECLINE.

3.08 TREE PRUNING:
A. PRUNING FOR ADEQUATE CLEARANCE TO FACILITATE EQUIPMENT USE AND CONSTRUCTION ACTIVITIES WILL BE PERFORMED PRIOR TO THE WORK COMMENCING.

B. PRUNING FOR WORKER AND PUBLIC SAFETY AND FOR THE HEALTH AND VIGOR OF PRESERVED TREES IS ALSO REQUIRED PRIOR TO CONSTRUCTION WORK COMMENCING.

3.09 ROOT PRUNING
A. WHERE EXCAVATION OR CONSTRUCTION WITHIN THE DRIPLINE OF A TREE IS NECESSARY OR AS NOTED ON DRAWINGS, A ROOT CUT SHALL BE MADE AS DESCRIBED BELOW. BLADE SHALL BE SHARPENED PRIOR TO USE.
1. ROOT CUTS SHALL BE MARKED IN THE FIELD BY THE CONTRACTOR AND REVIEWED BY THE CERTIFIED ARBORIST PRIOR TO CUTTING.
2. ONCE REVIEWED BY THE OWNER'S CERTIFIED ARBORIST, THE CONTRACTOR SHALL FOLLOW HIS/HER RECOMMENDATIONS TO CUT ALONG THE APPROVED MARKS PRIOR TO ANY EXCAVATION.
3. THE ARBORIST SHALL ALSO MAKE ANY RECOMMENDATIONS RELATED TO PRESERVING ANY CRITICAL STRUCTURAL ROOTS DURING THE CUTTING PROCESS. (THIS IS THE CLOSEST POINT TO THIS PARTICULAR TREE THAT THE SOIL CAN BE DISTURBED.)
4. THE CONTRACTOR SHALL PRUNE ALL ROOTS AS DIRECTED WITH CIRCULAR SAWS OF VARYING TYPES AND/OR A ROTARY TYPE STUMP GRINDER TO A DEPTH OF 18" OR TO THE MAXIMUM DEPTH OF THE REQUIRED GRADING CUT, WHICHEVER IS LESS.
5. ROOT PRUNING SHALL BE COORDINATED WITH THE TREE PROTECTION FENCING. IN SOME CASES THAT FENCE LINE IS ON THE ROOT CUT AND PROVISIONS FOR ROOT PRUNING NEED TO BE ACCOMMODATED BEFORE THE FENCE IS ERECTED.
6. DURING THE EXCAVATION PROCESS, IF ROOTS GREATER THAN 3" IN DIAMETER THAT HAVE NOT BEEN ROOT PRUNED ARE ENCOUNTERED, THEY SHALL BE CUT WITH A SAW OR SHARP AXE AND NOT RIPPED WITH THE EARTH MOVING EQUIPMENT, AS DIRECTED BY THE CERTIFIED ARBORIST AND PARK BOARD. THE ARBORIST IS TO REVIEW ANY ROOTS OVER 3" ENCOUNTERED, TO DETERMINE STRUCTURAL STABILITY OF THE TREE.

3.10 FERTILIZATION
A. ALL TREES DESIGNATED FOR PRESERVATION WILL BE FERTILIZED IMMEDIATELY FOLLOWING THE ERECTION OF THE TREE PROTECTION FENCING. THE FERTILIZER AND DELIVERY METHOD MUST BE APPROVED BY THE CERTIFIED ARBORIST AND PARK BOARD BUT SHALL BE A SLOW-RELEASE, BALANCED FORMULA DELIVERED BY SOIL INJECTION. MACRO AND MICRONUTRIENTS ARE REQUIRED; NUTRIENT SOLUTIONS WITH MYCORRHIZAE COMPONENTS ARE REQUIRED. FERTILIZER SHALL BE COMPATIBLE WITH TREE SPECIES.

3.11 TREE PROTECTION FENCING:
A. TREE PROTECTION FENCING SHALL BE INSTALLED IN THE LOCATIONS SHOWN IN THE DRAWINGS.

B. INSTALL APPROVED PROTECTIVE FENCING AROUND EACH TREE DESIGNATED TO REMAIN AND BE PROTECTED. MAINTAIN FENCING THROUGHOUT DURATION OF PROJECT. TEMPORARY REMOVAL OF FENCING SHALL REQUIRE APPROVAL OF THE CERTIFIED ARBORIST AND THE ENGINEER.

C. TREE PROTECTION FENCING SHALL BE AS SPECIFIED AND INCLUDE APPROVED SIGNAGE AS DESCRIBED IN SECTION 2.01 B.

D. NO ACCESS TO FENCED AREAS SHALL BE PERMITTED BY ANYONE OTHER THAN THE ARBORIST WITHOUT PRIOR APPROVAL BY THE ENGINEER AND PARK BOARD.

E. CONTRACTOR SHALL PROVIDE MAINTENANCE, REPAIR, AND REMOVAL OF FENCE DURING DURATION OF THIS CONTRACT.

F. TREE PROTECTION FENCING SHALL BE IN-PLACE AND IN GOOD CONDITION UPON THE COMPLETION OF THE CONSTRUCTION PROCESS.

G. CONTRACTOR SHALL REMOVE TREE PROTECTION FENCING AT THE END OF THE PROJECT AND REMOVE ALL SUCH MATERIALS.

3.12 MULCHING:
A. THE FOLLOWING TREES (ID #1 AND ID #2) SHALL BE MULCHED WITH A 3 INCH DEPTH OF WOOD CHIPS.

3.13 CLEANUP:
A. REMOVE FROM SITE ALL EXCESS MATERIALS, SOIL, DEBRIS, AND EQUIPMENT DIRECTLY RELATED TO TREE PRESERVATION ACTIVITIES.

3.14 PAYMENT:
PAYMENT FOR ALL LABOR, EQUIPMENT AND MATERIALS SHALL BE INCLUDED IN THE FOLLOWING ITEMS TO BE CARRIED TO THE GENERAL SUMMARY:

ITEM 690, SPECIAL - CERTIFIED ARBORIST – LUMP SUM

ITEM 607, FENCE, MISC.: TREE PRESERVATION FENCING – 95 FT

ITEM 659, COMMERCIAL FERTILIZER, AS PER PLAN – 0.01 TON

ITEM 661, MULCH, AS PER PLAN – 1 CU YD

ITEM 666, PRUNING EXISTING TREE, 8 TO 16-INCH DIAMETER, AS PER PLAN – 1 EACH

ITEM 666, PRUNING EXISTING TREE, 16 TO 24-INCH DIAMETER, AS PER PLAN – 1 EACH

ITEM 690, SPECIAL – TREE PRESERVATION – LUMP SUM

ITEM 203, EMBANKMENT, AS PER PLAN, TYPE 2 ROOTZONE MIX

THE FOLLOWING SPECIFICATIONS OUTLINE THE REQUIREMENTS FOR TYPE 2 ROOTZONE MIX TO BE PLACED IN LYTLE PARK.

PART 1 - GENERAL

1.1 SUMMARY
A. FURNISH ALL LABOR, MATERIALS, FACILITIES, TRANSPORTATION, AND SERVICES TO COMPLETE ALL PLANTING, SOILS TESTING, CONSTRUCTION AND RELATED WORK AS SHOWN ON THE DRAWINGS AND SPECIFIED HEREIN.

B. SCOPE OF WORK: THE GENERAL EXTENT OF THE PARK PLANTING AREAS IS SHOWN ON THE DRAWINGS AND INCLUDES THE FOLLOWING:
1. PLACEMENT OF A UNIFORM DEPTH OF PLANTING SOIL MIXES.
2. ESTABLISHING FINAL (FINISH) GRADE.

1.2 REFERENCES AND REGULATORY REQUIREMENTS
A. AMERICAN SOCIETY FOR TESTING AND MATERIALS

1. ASTM D4427-92 – STANDARD CLASSIFICATION OF PEAT SAMPLES BY LABORATORY TESTING
2. ASTM C136 – SIEVE ANALYSIS OF FINE & COARSE AGGREGATES
3. ASTM D3665 – RANDOM SAMPLING OF CONSTRUCTION MATERIALS
4. ASTM D2487-00 – STANDARD PRACTICE FOR CLASSIFICATION OF SOILS FOR ENGINEERING

PURPOSES (UNIFIED SOIL CLASSIFICATION SYSTEM)
5. ASTM D854-02 – STANDARD TEST METHODS FOR SPECIFIC GRAVITY OF SOIL SOLIDS BY WATER PYCNOMETER
6. ASTM D2974-00 – STANDARD TEST METHODS FOR MOISTURE, ASH AND ORGANIC MATTER OF PEAT AND OTHER ORGANIC SOILS
7. ASTM F1632-02 – STANDARD TEST METHOD FOR PARTICLE SIZE ANALYSIS AND SAND SHAPE GRADING OF GOLF COURSE PUTTING GREENS AND SPORTS FIELD ROOTZONE MIXES
8. ASTM F1647-02 – STANDARD TEST METHODS FOR ORGANIC MATTER CONTENT OF PUTTING GREENS AND SPORTS FIELD ROOT ZONE MIXES (METHOD A & B)

B. DEPARTMENT OF AGRICULTURE (DOA)

1. DOA SSIR – SOIL SURVEY LABORATORY METHODS AND PROCEDURES FOR COLLECTING SOIL SAMPLES, 1984.

C. A2LA ACCREDITED TEST BASED ON AMERICAN SOCIETY OF AGRONOMY (ASA) METHODS OF SOIL ANALYSIS.

1. WATER RELEASE CHARACTERIZATION
2. INFILTRATION RATE

1.3 DEFINITIONS
A. WHEN USED WITHIN THIS SPECIFICATION, THE FOLLOWING DEFINITIONS SHALL APPLY:

1. TESTING AGENT – AN INDEPENDENT TESTING LABORATORY, MEETING A2LA CERTIFICATION AND CAPABLE OF ANALYSIS AND SOIL BLEND SPECIFYING AS DESCRIBED HEREIN.
2. BLENDING OPERATOR – A QUALIFIED INDIVIDUAL OR RAW MATERIAL SUPPLIER, HAVING THE NECESSARY EQUIPMENT AND EXPERIENCE TO BLEND ORGANIC MATERIALS AND SAND TO SPECIFIED RATIOS, AND CAPABLE OF MAINTAINING CONSISTENT QUALITY THROUGHOUT THE MIXING OPERATOR
3. ROOTZONE MIX – A SAND-BASED SOIL MANUFACTURED BY THE BLENDING OPERATOR, HAVING CERTAIN PERFORMANCE CHARACTERISTICS AS SPECIFIED HEREIN.

1.4 SUBMITTALS
A. PRE-CONSTRUCTION SUBMITTALS: PRIOR TO CONSTRUCTION THE CONTRACTOR SHALL SUBMIT THE FOLLOWING:

1. MATERIAL SAMPLES: CONTRACTOR SHALL SUBMIT TO THE TESTING AGENT A ONE-GALLON SAMPLE OF PROCESSED SAND, ORGANIC AMENDMENTS, TOPSOIL AND DRAINAGE AGGREGATE. THESE SAMPLES SHALL BE SUBMITTED CONCURRENTLY AND SHALL BE COMPOSITE SAMPLES TAKEN FROM THE RESPECTIVE MATERIAL STOCKPILES ALLOCATED FOR THIS WORK BY THE SUPPLIER. THE TESTING AGENT WILL EVALUATE THIS MATERIAL USING THE APPROPRIATE TESTING PROTOCOLS. THIS PRE-CONSTRUCTION SAMPLE SHALL BE USED FOR COMPARISON WITH ALL SUBSEQUENT QUALITY ASSURANCE SAMPLES SUBMITTED FOR APPROVAL DURING CONSTRUCTION. PLANTING SOILS MIX BLENDING RECOMMENDATIONS WILL BE SUPPLIED BASED ON LANDSCAPE ARCHITECT'S APPROVAL OF TEST RESULTS.

B. CERTIFICATES: SUBMIT "CUT-SHEETS" OR OTHER PRODUCT LITERATURE SHOWING CERTIFIED CHEMICAL ANALYSIS OF THE FOLLOWING:
1. ALL SOIL AMENDMENTS.

1.5 SOURCE/QUALITY ASSURANCE
A. TESTING DURING CONSTRUCTION: TO ENSURE THAT THE QUALITY OF MATERIAL USED FOR GROWING MEDIA COMPONENTS REMAINS CONSTANT FROM POINT OF SUPPLY TO JOBSITE, THE FOLLOWING PROTOCOL SHALL BE FOLLOWED:

1. ROOTZONE MIX
A. PRIOR TO BLENDING OF THE SAND AND ORGANIC MATERIALS, ALL COMPONENT MATERIALS, INCLUDING BUT NOT LIMITED TO, SAND, PEAT, AND TURFGRIDS, WILL BE SUBMITTED AND BE PREQUALIFIED ACCORDING TO PARTICLE SIZE DISTRIBUTION ANALYSES. NO SAND OR SOIL COMPONENT MATERIALS ARE TO BE BLENDED UNTIL ALL MATERIALS ARE TESTED AND APPROVED ACCORDING TO THE CRITERIA SET FORTH HEREIN.

B. THEREAFTER, PRIOR TO SHIPPING, THE CONTRACTOR SHALL SUBMIT A ONE-GALLON COMPOSITE SAMPLE REPRESENTING EVERY 750 TONS OF BLENDED MATERIAL TO BE SHIPPED TO THE SITE TO BE COMPARED WITH THE ORGANIC MATTER CONCENTRATION OF THE PRE-CONSTRUCTION SUBMITTAL. THE RESULTS OF EACH SUBSEQUENT TEST WILL BE PROVIDED TO THE ENGINEER, AND UPON APPROVAL, THAT REPRESENTATIVE AMOUNT OF MATERIAL MAY BE SHIPPED TO THE SITE. INCLUDED WITH THE COMPOSITE SAMPLE SHALL BE THE TEST RESULTS OF THE SOIL DEMONSTRATING CONFORMANCE WITH SPECIFICATIONS. SAMPLE MUST BE PROVIDED A MINIMUM OF 45 DAYS BEFORE MATERIAL IS ANTICIPATED TO BE DELIVERED ON THE SITE.
C. PAYMENT FOR TESTING OF EACH SAMPLE IS THE RESPONSIBILITY OF THE CONTRACTOR, AND IS INCLUDED WITH THE CUBIC YARD PRICE FOR ITEM 203, EMBANKMENT, AS PER PLAN, TYPE 2 ROOTZONE MIX.

D. IF VISUAL ANALYSIS OF SHIPPED MATERIALS SUGGESTS A CHANGE IN MATERIAL QUALITY, ADDITIONAL TESTING IS REQUIRED. IF AN ON-SITE SAMPLE FAILS, IMMEDIATELY STOP ALL PLACEMENT ACTIVITIES UNTIL AUTHORIZED TO CONTINUE BY THE OWNER'S REPRESENTATIVE.

1.6 DELIVERY, STORAGE AND HANDLING
A. GENERAL:
1. HANDLE AND STORE ALL PRODUCTS OF THIS SECTION IN SUCH A MANNER AS TO PROTECT THEM FROM DAMAGE AT ALL TIMES.
2. STORAGE OF PRODUCTS ON-SITE SHALL BE COORDINATED BY THE CONTRACTOR IN AN ORDERLY MANNER SO AS NOT TO UNNECESSARILY IMPEDE THE WORK OR REASONABLE USE OF THE PROJECT SITE.

B. BULK MATERIAL:
1. COORDINATE DELIVERY AND STORAGE OF BULK MATERIAL WITH OWNER'S REPRESENTATIVE.
2. CONFINE MATERIALS TO NEAT PILES IN AREAS ACCEPTABLE TO THE ENGINEER.

1.7 PROJECT/SITE CONDITIONS
PLANTING AREAS CONSTRUCTION OPERATIONS SHALL NOT BE CONDUCTED UNDER THE FOLLOWING CONDITIONS:
1. FREEZING WEATHER
2. HIGH WINDS
3. EXCESSIVELY WET CONDITIONS.

PART 2 – PRODUCTS

2.1 TYPE 2 SOILS (TOPSOIL)
A. TOPSOIL SHALL COME FROM A SOURCE WITHIN THE OHIO VALLEY REGION OR SIMILAR.

B. TOPSOIL SHALL BE A NATURAL FRIABLE SOIL, POSSESSING CHARACTERISTICS OF REPRESENTATIVE PRODUCTIVE SOILS IN THE VICINITY FROM WHICH IT IS OBTAINED.

C. TOPSOIL SHALL BE CLASSIFIED ACCORDING TO THE USDA SOIL TEXTURAL CLASSIFICATION. USDA DEFINITIONS ARE AS FOLLOWS:

SAND – 270 MESH (0.05MM) TO 18 MESH (1.0MM)
SILT – 0.002MM TO 0.05MM
CLAY – < 0.002MM

D. SOIL SHALL MEET CLASSIFICATION REQUIREMENTS FOR A SANDY LOAM TEXTURE. SOILS APPROVED FOR USE IN SPECIFIC PLANTING AREAS SHALL REMAIN CONSISTENT IN SAND, SILT, AND CLAY COMPOSITION. COMPOSITION REQUIREMENTS FOR SANDY LOAM SOIL SHALL MEET THE FOLLOWING STANDARD:

1. SAND CONTENT SHALL BE A MINIMUM OF 70%.
2. CLAY AND SILT CONTENTS SHALL BE WITHIN RANGE OF A SANDY LOAM SOIL TEXTURE AS DEFINED BY USDA.

E. THE TOPSOIL SHALL BE FREE FROM SUBSOIL, CLAY LUMPS, STONES OR SIMILAR OBJECTS LARGER THE 3/8" IN GREATEST DIAMETER, BRUSH, STUMPS, ROOTS, OBJECTIONABLE WEEDS OR LITTER, EXCESS ACID OR ALKALI OR ANY OTHER MATERIAL OR SUBSTANCE WHICH MAY BE HARMFUL TO PLANT GROWTH OR A HINDRANCE TO SUBSEQUENT SMOOTH GRADING, PLANTING AND MAINTENANCE OPERATIONS. FOREIGN MATERIAL SHALL NOT EXCEED 2% BY VOLUME OR WEIGHT. TEXTURE TO BE DEFINED BY % SAND, % CLAY, AND % SILT TAKEN FROM SAMPLE MATERIAL PROVIDED FOR TESTING.

F. THE SOURCE OF TOPSOIL SHALL BE MADE KNOWN TO THE ENGINEER AT LEAST 2 WEEKS PRIOR TO DELIVERY. THE TOPSOIL SHALL BE STOCKPILED AND TESTED AND APPROVED PRIOR TO PLACEMENT ON THE SITE. CONSISTENT COMPOSITION OF TOPSOIL WILL BE REQUIRED THROUGHOUT THE ENTIRE PROJECT.

2.2 PHYSICAL PERFORMANCE EVALUATION OF TYPE 2 ROOTZONE MIX
A. SOIL CRITERIA SHALL BE AS FOLLOWS:

1. PLACE APPROVED SANDY LOAM TOPSOIL PER CRITERIA DESCRIBED IN SECTION 2.1 OF THIS SPECIFICATION SECTION.

B. PRIOR TO SEEDING:

1. APPLY LIQUID SOIL MICROBIAL INOCULANT AND PRE-PLANT BIO-FERTILIZER TO ALL PLANTING SOIL SURFACES IMMEDIATELY PRIOR TO INSTALLATION OF PLANT MATERIAL. APPLY AT LABEL RATES.

2.3 INOCULANT/BIO-FERTILIZER
A. LIQUID SOIL MICROBIAL INOCULANT:

1. THIS MICROBIAL INOCULANT SHALL CONTAIN 20% VEGETATIVE MYCORRHIZAE AND 40% VEGETATIVE BACTERIA.

B. PRE-PLANT BIO-FERTILIZER:

1. THIS BIO-FERTILIZER SHALL BE MADE UP OF 48% CHICKEN MANURE AND 52% EARTHWORM CASTINGS. THE CHEMICAL ANALYSIS SHALL SHOW A TOTAL NITROGEN CONTENT OF 0.783%, A PHOSPHATE CONTENT OF 0.044% AND SOLUBLE POTASH CONTENT OF 0.161%.

PART 3 – EXECUTION

3.1 PLACING PLANTING SOIL MIXES
A. PORTIONS OF THIS WORK AREA ARE OVER AN UNDERGROUND BUILDING.

B. SUBGRADE SHALL BE GRADED TO FORM A SMOOTH, CLEAN BASIN FREE OF ANY DEBRIS AND/OR LOOSE SOIL TO THE TOLERANCES SPECIFIED. THE PLANTING SOIL MIXES SHALL NOT BE INSTALLED UNTIL ALL SUBGRADE SURFACES, IRRIGATION, AND DRAINAGE ARE COMPLETED AND APPROVED, IN ORDER TO AVOID THE CROSSCONTAMINATION OF OTHER SUBGRADE AND OTHER SUBSURFACE MATERIALS WITH THE PLANTING SOIL MIX MATERIAL.

C. FILTER FABRIC FOLDED OVER SUBDRAINAGE TRENCHES SHOULD BE UNFOLDED AND ALLOWED TO REST ON THE SUBGRADE. THE FABRIC SHOULD EXTEND 24 INCHES BEYOND THE EDGE OF THE TRENCH. PIN AS NECESSARY TO HOLD FABRIC IN PLACE DURING SPREADING OPERATIONS.

D. PLANTING SOIL MIXES SHALL BE DUMPED AT THE EDGE OF THE PLANTING AREA AND PUSHED TO THE CENTER WITH PRE-APPROVED EQUIPMENT THAT IS RATED WITHIN LOADING CAPACITIES OF THE

CALCULATED RLD CHECKED CWP

LANDSCAPE GENERAL NOTES

HAM-71-1.34

c:\pwworking\hmm\external\tyn61470\d-ns72761\872608PN003.dgn 10/25/2014 12:15:17 PM TYN61470

STRUCTURE. UNDER NO CIRCUMSTANCES WILL LOADED RUBBER-TIRED VEHICLES OR EQUIPMENT WITH A LOADING RATE IN EXCESS OF 5 LBS/IN² BE ALLOWED ON THE SUBGRADE PRIOR TO OR DURING THE SPREADING OF THE PLANTING SOIL MIXES. DO NOT LEAVE ANY WHEEL RUTS. THE SUBGRADE MUST BE SMOOTH. PREVENT CONTAMINATION OR MIXING OF PLANTING SOIL MIXES AND SUBGRADE SOIL MATERIAL. REMOVE CONTAMINATED MATERIALS AS DIRECTED BY THE OWNER'S REPRESENTATIVE. MATERIALS TRUCKED INTO THE SITE MUST BE DONE IN SUCH A MANNER AS NOT TO ALTER THE SUBGRADE AND/OR DAMAGE DRAINAGE AND IRRIGATION DITCHES AND SYSTEMS. MATERIALS SHALL BE HANDLED IN A FASHION TO PREVENT THE MIXING OF OTHER SOIL AND MATERIALS WITH THE PLANTING SOIL MIXES.

E. PLANTING SOIL MIXES THROUGHOUT THE PLANTING AREAS ON-SITE SHALL THEN BE CAREFULLY SMOOTHED AND COMPACTED TO THE FINISHED GRADE BY ALTERNATELY RAKING, WATERING AND ROLLING. THE PLANTING AREAS SHALL THEN BE CHECKED FOR IRREGULARITIES AND ADJUSTED TO A UNIFORM GRADE. COMPACTION OF THE PLANTING MIXES SHALL BE WITHIN THE RANGE OF 85% TO 90% OF MAXIMUM DRY DENSITY AS DETERMINED BY A FIELD TEST SECTION PER ODOT SUPPLEMENT 1015.

3.2 FINAL REVIEW

A. CONFORMANCE SURVEYING: THE CONTRACTOR WILL PERFORM A CONFORMANCE SURVEY ON A 20-FOOT GRID OVER THE DESIGNATED PLANTING AREAS. CONTRACTOR SHALL PROVIDE AT LEAST 48 HOURS NOTICE TO OWNER'S REPRESENTATIVE OF THE SURVEY BEING SCHEDULED AND PERFORMED BY THE CONTRACTOR. CONTRACTOR SHALL PROVIDE A COPY OF THE CONFORMANCE SURVEY TO THE OWNER'S REPRESENTATIVE AS A SUBMITTAL FOR REVIEW. OWNER'S REPRESENTATIVE WILL REQUIRE FIVE (5) WORKING DAYS TO REVIEW SURVEY FOR ACCURACY. AFTER REVIEW, THE SURVEY WILL BE RETURNED TO CONTRACTOR WITH AREAS OUT OF TOLERANCE NOTED FOR CORRECTION. CONTRACTOR WILL BE REQUIRED TO CORRECT AREAS OUT OF TOLERANCE AND CERTIFY THAT CORRECTIONS HAVE BEEN MADE PRIOR TO ANY PLANT MATERIAL AND TURF INSTALLATION.

B. TOLERANCE FOR FINISH GRADE: FINISH GRADES SHALL BE VERIFIED USING LASER-OPERATION SURVEY INSTRUMENTS. FINISHED GRADE OF THE PLANTING SOIL MIXES SHALL BE WITHIN ½ INCH PLUS OR MINUS FROM THE ELEVATIONS SHOWN ON THE PLANS. IN ADDITION, THE PLANTING SOIL MIXES SHALL BE MEASURED SO THAT NO POINT WITHIN THE DESIGNATED GRID DEVIATES MORE THAN ½ INCH FROM ANY OTHER POINT WITHIN THE GRID.

C. PAYMENT FOR ALL LABOR, EQUIPMENT AND MATERIALS SHALL BE INCLUDED IN THE CONTRACT PRICE FOR ITEM 203, EMBANKMENT, AS PER PLAN, TYPE 2 ROOTZONE MIX.

THE FOLLOWING ITEM IS CARRIED TO THE GENERAL SUMMARY:

ITEM 203, EMBANKMENT, AS PER PLAN, TYPE 2 ROOTZONE MIX – 1424 CU YD

ITEM 203, EMBANKMENT, AS PER PLAN, TYPE 4 PERENNIAL MIX

THE FOLLOWING SPECIFICATIONS OUTLINE THE REQUIREMENTS FOR TYPE 4 PERENNIAL MIX TO BE PLACED IN LYTLE PARK.

PART 1 - GENERAL

1.1 SUMMARY

A. FURNISH ALL LABOR, MATERIALS, FACILITIES, TRANSPORTATION, AND SERVICES TO COMPLETE ALL PLANTING, SOILS TESTING, CONSTRUCTION AND RELATED WORK AS SHOWN ON THE DRAWINGS AND SPECIFIED HEREIN.

B. SCOPE OF WORK: THE GENERAL EXTENT OF THE PARK PLANTING AREAS IS SHOWN ON THE DRAWINGS AND INCLUDES THE FOLLOWING:

1. PLACEMENT OF A UNIFORM DEPTH OF PLANTING SOIL MIXES.
2. ESTABLISHING FINAL (FINISH) GRADE.

1.2 REFERENCES AND REGULATORY REQUIREMENTS

A. AMERICAN SOCIETY FOR TESTING AND MATERIALS

1. ASTM D4427-92 – STANDARD CLASSIFICATION OF PEAT SAMPLES BY LABORATORY TESTING
2. ASTM C136 – SIEVE ANALYSIS OF FINE & COARSE AGGREGATES
3. ASTM D3665 – RANDOM SAMPLING OF CONSTRUCTION MATERIALS
4. ASTM D2487-00 – STANDARD PRACTICE FOR CLASSIFICATION OF SOILS FOR ENGINEERING PURPOSES (UNIFIED SOIL CLASSIFICATION SYSTEM)
5. ASTM D854-02 – STANDARD TEST METHODS FOR SPECIFIC GRAVITY OF SOIL SOLIDS BY WATER PYCNOMETER
6. ASTM D2974-00 – STANDARD TEST METHODS FOR MOISTURE, ASH AND ORGANIC MATTER OF PEAT AND OTHER ORGANIC SOILS
7. ASTM F1632-02 – STANDARD TEST METHOD FOR PARTICLE SIZE ANALYSIS AND SAND SHAPE GRADING OF GOLF COURSE PUTTING GREENS AND SPORTS FIELD ROOTZONE MIXES
8. ASTM F1647-02 – STANDARD TEST METHODS FOR ORGANIC MATTER CONTENT OF PUTTING GREENS AND SPORTS FIELD ROOT ZONE MIXES (METHOD A & B)

B. DEPARTMENT OF AGRICULTURE (DOA)

1. DOA SSIR – SOIL SURVEY LABORATORY METHODS AND PROCEDURES FOR COLLECTING SOIL SAMPLES, 1984.

C. A2LA ACCREDITED TEST BASED ON AMERICAN SOCIETY OF AGRONOMY (ASA) METHODS OF SOIL ANALYSIS.

1. WATER RELEASE CHARACTERIZATION
2. INFILTRATION RATE

1.3 DEFINITIONS

A. WHEN USED WITHIN THIS SPECIFICATION, THE FOLLOWING DEFINITIONS SHALL APPLY:

1. TESTING AGENT – AN INDEPENDENT TESTING LABORATORY, MEETING A2LA CERTIFICATION AND CAPABLE OF ANALYSIS AND SOIL BLEND SPECIFYING AS DESCRIBED HEREIN.
2. BLENDING OPERATOR – A QUALIFIED INDIVIDUAL OR RAW MATERIAL SUPPLIER, HAVING THE NECESSARY EQUIPMENT AND EXPERIENCE TO BLEND ORGANIC MATERIALS AND SAND TO SPECIFIED RATIOS, AND CAPABLE OF MAINTAINING CONSISTENT QUALITY THROUGHOUT THE MIXING OPERATOR

1.4 SUBMITTALS

A. PRE-CONSTRUCTION SUBMITTALS: PRIOR TO CONSTRUCTION THE CONTRACTOR SHALL SUBMIT THE FOLLOWING:

1. MATERIAL SAMPLES: CONTRACTOR SHALL SUBMIT TO THE TESTING AGENT A ONE-GALLON SAMPLE OF PROCESSED SAND, ORGANIC AMENDMENTS, TOPSOIL AND DRAINAGE AGGREGATE. THESE SAMPLES SHALL BE SUBMITTED CONCURRENTLY AND SHALL BE COMPOSITE SAMPLES TAKEN FROM THE RESPECTIVE MATERIAL STOCKPILES ALLOCATED FOR THIS WORK BY THE SUPPLIER. THE TESTING AGENT WILL EVALUATE THIS MATERIAL USING THE APPROPRIATE TESTING PROTOCOLS. THIS PRE-CONSTRUCTION SAMPLE SHALL BE USED FOR COMPARISON WITH ALL SUBSEQUENT QUALITY ASSURANCE SAMPLES SUBMITTED FOR APPROVAL DURING CONSTRUCTION. PLANTING SOILS MIX BLENDING RECOMMENDATIONS WILL BE SUPPLIED BASED ON LANDSCAPE ARCHITECT'S APPROVAL OF TEST RESULTS.

B. CERTIFICATES: SUBMIT "CUT-SHEETS" OR OTHER PRODUCT LITERATURE SHOWING CERTIFIED CHEMICAL ANALYSIS OF THE FOLLOWING:

1. ALL SOIL AMENDMENTS.

1.5 SOURCE/QUALITY ASSURANCE

A.TESTING DURING CONSTRUCTION: TO ENSURE THAT THE QUALITY OF MATERIAL USED FOR GROWING MEDIA COMPONENTS REMAINS CONSTANT FROM POINT OF SUPPLY TO JOBSITE, THE FOLLOWING PROTOCOL SHALL BE FOLLOWED:

1. PERENNIAL MIX

A PRIOR TO BLENDING OF THE SAND AND ORGANIC MATERIALS, ALL COMPONENT MATERIALS, INCLUDING BUT NOT LIMITED TO, SAND, PEAT, AND TURFGRIDS, WILL BE SUBMITTED AND BE PREQUALIFIED ACCORDING TO PARTICLE SIZE DISTRIBUTION ANALYSES. NO SAND OR SOIL COMPONENT MATERIALS ARE TO BE BLENDED UNTIL ALL MATERIALS ARE TESTED AND APPROVED ACCORDING TO THE CRITERIA SET FORTH HEREIN.

B. THEREAFTER, PRIOR TO SHIPPING, THE CONTRACTOR SHALL SUBMIT A ONE-GALLON COMPOSITE SAMPLE REPRESENTING EVERY 750 TONS OF BLENDED MATERIAL TO BE SHIPPED TO THE SITE TO BE COMPARED WITH THE ORGANIC MATTER CONCENTRATION OF THE PRE-CONSTRUCTION SUBMITTAL. THE RESULTS OF EACH SUBSEQUENT TEST WILL BE PROVIDED TO THE ENGINEER, AND UPON APPROVAL, THAT REPRESENTATIVE AMOUNT OF MATERIAL MAY BE SHIPPED TO THE SITE. INCLUDED WITH THE COMPOSITE SAMPLE SHALL BE THE TEST RESULTS OF THE SOIL DEMONSTRATING CONFORMANCE WITH SPECIFICATIONS. SAMPLE MUST BE PROVIDED A MINIMUM OF 45 DAYS BEFORE MATERIAL IS ANTICIPATED TO BE DELIVERED ON THE SITE.

C. PAYMENT FOR TESTING OF EACH SAMPLE IS THE RESPONSIBILITY OF THE CONTRACTOR, AND IS INCLUDED WITH THE CUBIC YARD PRICE FOR ITEM 203, EMBANKMENT, AS PER PLAN, TYPE 4 PERENNIAL MIX.

D. IF VISUAL ANALYSIS OF SHIPPED MATERIALS SUGGESTS A CHANGE IN MATERIAL QUALITY, ADDITIONAL TESTING IS REQUIRED. IF AN ON-SITE SAMPLE FAILS, IMMEDIATELY STOP ALL PLACEMENT ACTIVITIES UNTIL AUTHORIZED TO CONTINUE BY THE OWNER'S REPRESENTATIVE.

1.6 DELIVERY, STORAGE AND HANDLING

A. GENERAL:

1. HANDLE AND STORE ALL PRODUCTS OF THIS SECTION IN SUCH A MANNER AS TO PROTECT THEM FROM DAMAGE AT ALL TIMES.
2. STORAGE OF PRODUCTS ON-SITE SHALL BE COORDINATED BY THE CONTRACTOR IN AN ORDERLY MANNER SO AS NOT TO UNNECESSARILY IMPEDE THE WORK OR REASONABLE USE OF THE PROJECT SITE.

B. BULK MATERIAL:

1. COORDINATE DELIVERY AND STORAGE OF BULK MATERIAL WITH OWNER'S REPRESENTATIVE.
2. CONFINE MATERIALS TO NEAT PILES IN AREAS ACCEPTABLE TO THE ENGINEER.

1.7 PROJECT/SITE CONDITIONS

PLANTING AREAS CONSTRUCTION OPERATIONS SHALL NOT BE CONDUCTED UNDER THE FOLLOWING CONDITIONS:

1. FREEZING WEATHER
2. HIGH WINDS
3. EXCESSIVELY WET CONDITIONS.

CALCULATED RLD CHECKED CWP

LANDSCAPE GENERAL NOTES

HAM-71-1.34

c:\pwworking\hmm\external\tyn61470\dms72761\87268PN004.dgn 10/25/2014 12:15:29 PM TYN61470

CALCULATED RLD CHECKED CWP

PART 2 – PRODUCTS

2.1 TYPE 4 PERENNIAL MIX

A. THIS MIX SHALL BE A BLEND OF THE FOLLOWING: LEAF COMPOST, MUSHROOM COMPOST, MICHIGAN PEAT, SPHAGNUM PEAT, AND PINE SOIL CONDITIONER. EACH ITEM SHALL COMPRISE 20% OF THE MIX BY VOLUME.

B. PRIOR TO SEEDING:

1. APPLY LIQUID SOIL MICROBIAL INOCULANT AND PRE-PLANT BIO-FERTILIZER TO ALL PLANTING SOIL SURFACES IMMEDIATELY PRIOR TO INSTALLATION OF PLANT MATERIAL. APPLY AT LABEL RATES.

2.2 INOCULANT/BIO-FERTILIZER

A. LIQUID SOIL MICROBIAL INOCULANT:

1. THIS MICROBIAL INOCULANT SHALL CONTAIN 20% VEGETATIVE MYCORRHIZAE AND 40% VEGETATIVE BACTERIA.

B. PRE-PLANT BIO-FERTILIZER:

1. THIS BIO-FERTILIZER SHALL BE MADE UP OF 48% CHICKEN MANURE AND 52% EARTHWORM CASTINGS. THE CHEMICAL ANALYSIS SHALL SHOW A TOTAL NITROGEN CONTENT OF 0.783%, A PHOSPHATE CONTENT OF 0.044% AND SOLUBLE POTASH CONTENT OF 0.161%.

PART 3 – EXECUTION

3.1 PLACING PLANTING SOIL MIXES

A. PORTIONS OF THIS WORK AREA ARE OVER AN UNDERGROUND BUILDING.

B. SUBGRADE SHALL BE GRADED TO FORM A SMOOTH, CLEAN BASIN FREE OF ANY DEBRIS AND/OR LOOSE SOIL TO THE TOLERANCES SPECIFIED. THE PLANTING SOIL MIXES SHALL NOT BE INSTALLED UNTIL ALL SUBGRADE SURFACES, IRRIGATION, AND DRAINAGE ARE COMPLETED AND APPROVED, IN ORDER TO AVOID THE CROSSCONTAMINATION OF OTHER SUBGRADE AND OTHER SUBSURFACE MATERIALS WITH THE PLANTING SOIL MIX MATERIAL.

C. FILTER FABRIC FOLDED OVER SUBDRAINAGE TRENCHES SHOULD BE UNFOLDED AND ALLOWED TO REST ON THE SUBGRADE. THE FABRIC SHOULD EXTEND 24 INCHES BEYOND THE EDGE OF THE TRENCH. PIN AS NECESSARY TO HOLD FABRIC IN PLACE DURING SPREADING OPERATIONS.

D. PLANTING SOIL MIXES SHALL BE DUMPED AT THE EDGE OF THE PLANTING AREA AND PUSHED TO THE CENTER WITH PRE-APPROVED EQUIPMENT THAT IS RATED WITHIN LOADING CAPACITIES OF THE STRUCTURE. UNDER NO CIRCUMSTANCES WILL LOADED RUBBER-TIRED VEHICLES OR EQUIPMENT WITH A LOADING RATE IN EXCESS OF 5 LBS/IN² BE ALLOWED ON THE SUBGRADE PRIOR TO OR DURING THE SPREADING OF THE PLANTING SOIL MIXES. DO NOT LEAVE ANY WHEEL RUTS. THE SUBGRADE MUST BE SMOOTH. PREVENT CONTAMINATION OR MIXING OF PLANTING SOIL MIXES AND SUBGRADE SOIL MATERIAL. REMOVE CONTAMINATED MATERIALS AS DIRECTED BY THE OWNER'S REPRESENTATIVE. MATERIALS TRUCKED INTO THE SITE MUST BE DONE IN SUCH A MANNER AS NOT TO ALTER THE SUBGRADE AND/OR DAMAGE DRAINAGE AND IRRIGATION DITCHES AND SYSTEMS. MATERIALS SHALL BE HANDLED IN A FASHION TO PREVENT THE MIXING OF OTHER SOIL AND MATERIALS WITH THE PLANTING SOIL MIXES.

E. PLANTING SOIL MIXES THROUGHOUT THE PLANTING AREAS ON-SITE SHALL THEN BE CAREFULLY SMOOTHED AND COMPACTED TO THE FINISHED GRADE BY ALTERNATELY RAKING, WATERING AND ROLLING. THE PLANTING AREAS SHALL THEN BE CHECKED FOR IRREGULARITIES AND ADJUSTED TO A UNIFORM GRADE. COMPACTION OF THE PLANTING MIXES SHALL BE WITHIN THE RANGE OF 85% TO 90% OF MAXIMUM DRY DENSITY AS DETERMINED BY A FIELD TEST SECTION PER ODOT SUPPLEMENT 1015.

3.2 FINAL REVIEW

A. CONFORMANCE SURVEYING: THE CONTRACTOR WILL PERFORM A CONFORMANCE SURVEY ON A 20-FOOT GRID OVER THE DESIGNATED PLANTING AREAS. CONTRACTOR SHALL PROVIDE AT LEAST 48 HOURS NOTICE TO OWNER'S REPRESENTATIVE OF THE SURVEY BEING SCHEDULED AND PERFORMED BY THE CONTRACTOR. CONTRACTOR SHALL PROVIDE A COPY OF THE CONFORMANCE SURVEY TO THE OWNER'S REPRESENTATIVE AS A SUBMITTAL FOR REVIEW. OWNER'S REPRESENTATIVE WILL REQUIRE FIVE (5) WORKING DAYS TO REVIEW SURVEY FOR ACCURACY. AFTER REVIEW, THE SURVEY WILL BE RETURNED TO CONTRACTOR WITH AREAS OUT OF TOLERANCE NOTED FOR CORRECTION. CONTRACTOR WILL BE REQUIRED TO CORRECT AREAS OUT OF TOLERANCE AND CERTIFY THAT CORRECTIONS HAVE BEEN MADE PRIOR TO ANY PLANT MATERIAL AND TURF INSTALLATION.

B. TOLERANCE FOR FINISH GRADE: FINISH GRADES SHALL BE VERIFIED USING LASER-OPERATION SURVEY INSTRUMENTS. FINISHED GRADE OF THE PLANTING SOIL MIXES SHALL BE WITHIN ½ INCH PLUS OR MINUS FROM THE ELEVATIONS SHOWN ON THE PLANS. IN ADDITION, THE PLANTING SOIL MIXES SHALL BE MEASURED SO THAT NO POINT WITHIN THE DESIGNATED GRID DEVIATES MORE THAN ½ INCH FROM ANY OTHER POINT WITHIN THE GRID.

C. PAYMENT FOR ALL LABOR, EQUIPMENT AND MATERIALS SHALL BE INCLUDED IN THE CONTRACT PRICE FOR ITEM 203, EMBANKMENT, AS PER PLAN, TYPE 4 PERENNIAL MIX.

THE FOLLOWING ITEM IS CARRIED TO THE GENERAL SUMMARY:

ITEM 203, EMBANKMENT, AS PER PLAN, TYPE 4 PERENNIAL MIX – 282 CU FT

LANDSCAPE GENERAL NOTES

HAM-71-1.34

c:\pwworking\hmm\external\tyn61470\d-ns72761\87268PN005.dgn 10/25/2014 12:15:40 PM TYN61470

NEW ELECTRIC VAULTS
11'-0" W X 21'-0" L X 14'-0" H

4'X4' ACCESS DOOR

℄ FOURTH STREET

TREE PRESERVATION FENCING
(SEE TABLE FOR STATIONING
AND OFFSETS)

ID #1

ID #2

+08.06, 73.40' LT

+16.26, 30' LT PIKE =
+27.42, 28.08' RT FOURTH

+66.90, +50.15' LT

+38.35, +49.78' LT

+07.36, 45.23' LT

+10.08, 14.85' LT

CONSTRUCTION
LIMITS

+03.19, 30' LT PIKE =
+04.12, 9.58' LT LYTLE

℄ PIKE
STREET

LINCOLN
STATUE

℄ LYTLE STREET

GRATING

EXISTING GRATING
(TO BE REMOVED)

4'X4' ACCESS DOOR

EXISTING
ENTRANCE
(TO REMAIN)

CONSTRUCTION
LIMITS

N 37° 20' 08" W

TREE PRESERVATION FENCING		
POINT	FOURTH ST. STATIONING	OFFSET RT (FT)
1	6+25.46	43.01
2	6+38.42	43.03
3	6+56.67	43.24
4	6+83.02	42.41
5	7+10.96	40.13
6	7+10.93	31.34

NOTES:

1. FOR LANDSCAPE NOTES AND DETAILS, SEE SHEETS 252-256 AND 258.
2. FOR WALK LOCATION STATIONING, SEE SHEET 88.
3. TREES WITH ID #1 AND #2 ARE LONDON PLANE SPECIES.

GROUND SURFACE LEGEND

- ITEM 203 - EMBANKMENT, AS PER PLAN: TYPE 2 ROOTZONE MIX
- ITEM 203 - EMBANKMENT, AS PER PLAN: TYPE 4 PERENNIAL MIX
- ITEM 659 - SEEDING AND MULCHING
- ITEM 608 - 5" CONCRETE WALK, AS PER PLAN

THIRD STREET

HORIZONTAL SCALE IN FEET
0 10 20 40

CALCULATED RLD
CHECKED CWP

LANDSCAPE PLAN
LYTLE PARK

HAM-71-1.34

257
555

NO.	DATE	REVISION DESCRIPTION
1	10/13/15	REVISED TRANSFORMER VAULTS

c:\pwworking\hmm\external\pre47802\dms7276\87268PP001.dgn 10/16/2015 10:32:37 AM PRE47802

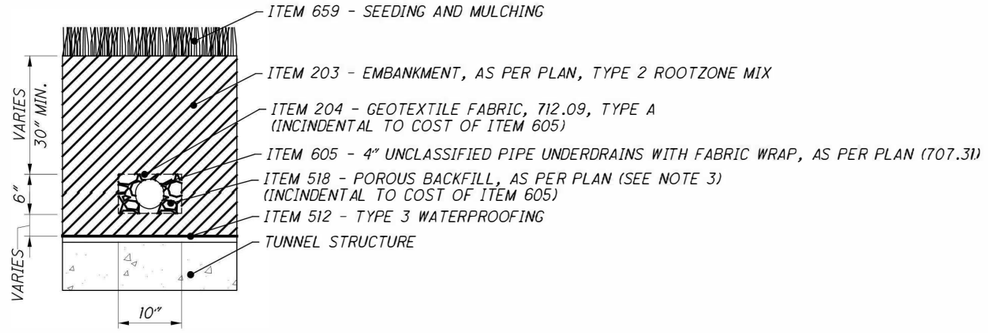

ITEM 203, EMBANKMENT, AS PER PLAN, TYPE 2 ROOTZONE MIX
SCALE : N.T.S.

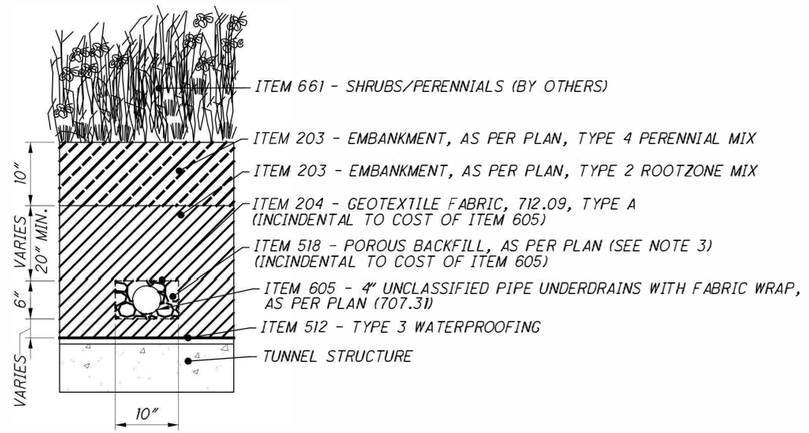

ITEM 203, EMBANKMENT, AS PER PLAN, TYPE 4 PERENNIAL MIX
SCALE : N.T.S.

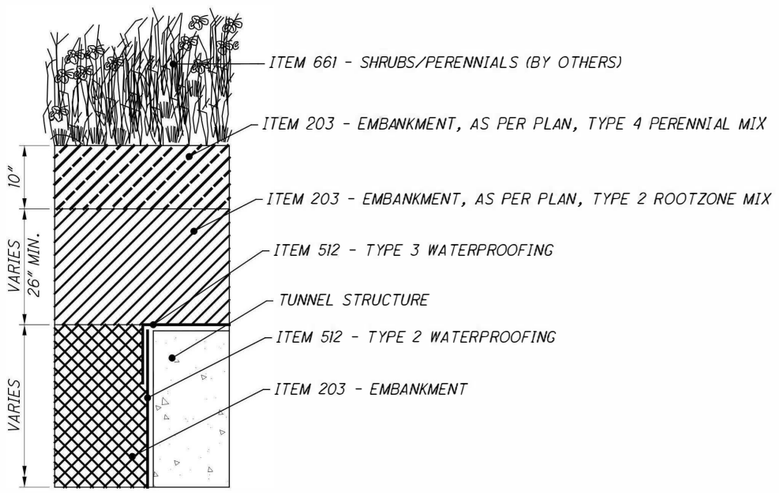

ITEM 203, EMBANKMENT, AS PER PLAN, TYPE 4 PERENNIAL MIX
SCALE : N.T.S.

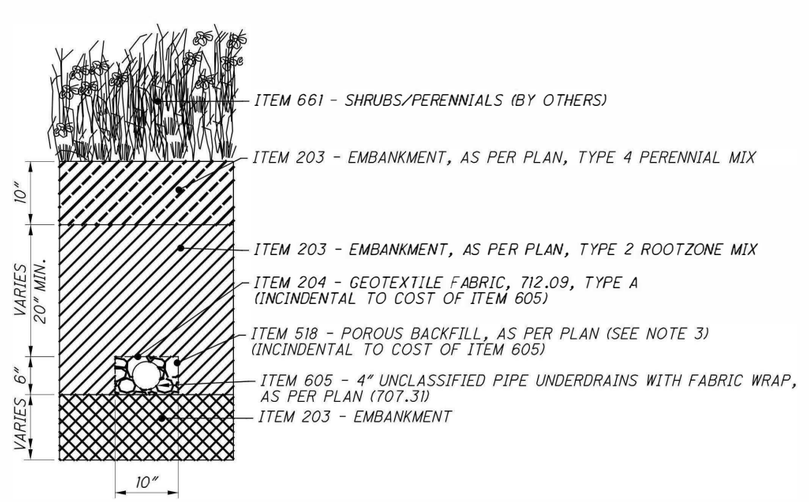

ITEM 203, EMBANKMENT, AS PER PLAN, TYPE 4 PERENNIAL MIX
SCALE : N.T.S.

NOTES:

1. QUANTITIES AND DETAILS FOR ITEM 512 ARE INCLUDED WITH THE STRUCTURE PLAN SHEETS. DETAILS FOR ITEM 605 ARE INCLUDED WITH THE STORM SEWER PROFILES.
2. SEE SHEETS 252-256 FOR TYPE 2 ROOTZONE MIX AND TYPE 4 PERENNIAL MIX SOIL REQUIREMENTS.
3. THE GRANULAR MATERIAL COMPRISING THE POROUS BACKFILL SHALL CONSIST OF CRUSHED CARBONITE STONE OR GRAVEL MEETING THE GRADATION REQUIREMENTS OF NO. 57 STONE.
4. ITEMS 518 AND ITEM 204 ARE INCLUDED WITH PAYMENT FOR ITEM 605 - 4" UNCLASSIFIED PIPE UNDERDRAINS WITH FABRIC WRAP, AS PER PLAN (707.31).

LANDSCAPE DETAILS - PLANTING DETAIL

HAM-71-1.34

c:\pwworking\hmm\external\tyn61470\d0ns72761\s8726sPD001.dgn 10/24/2014 4:18:09 PM TYN61470

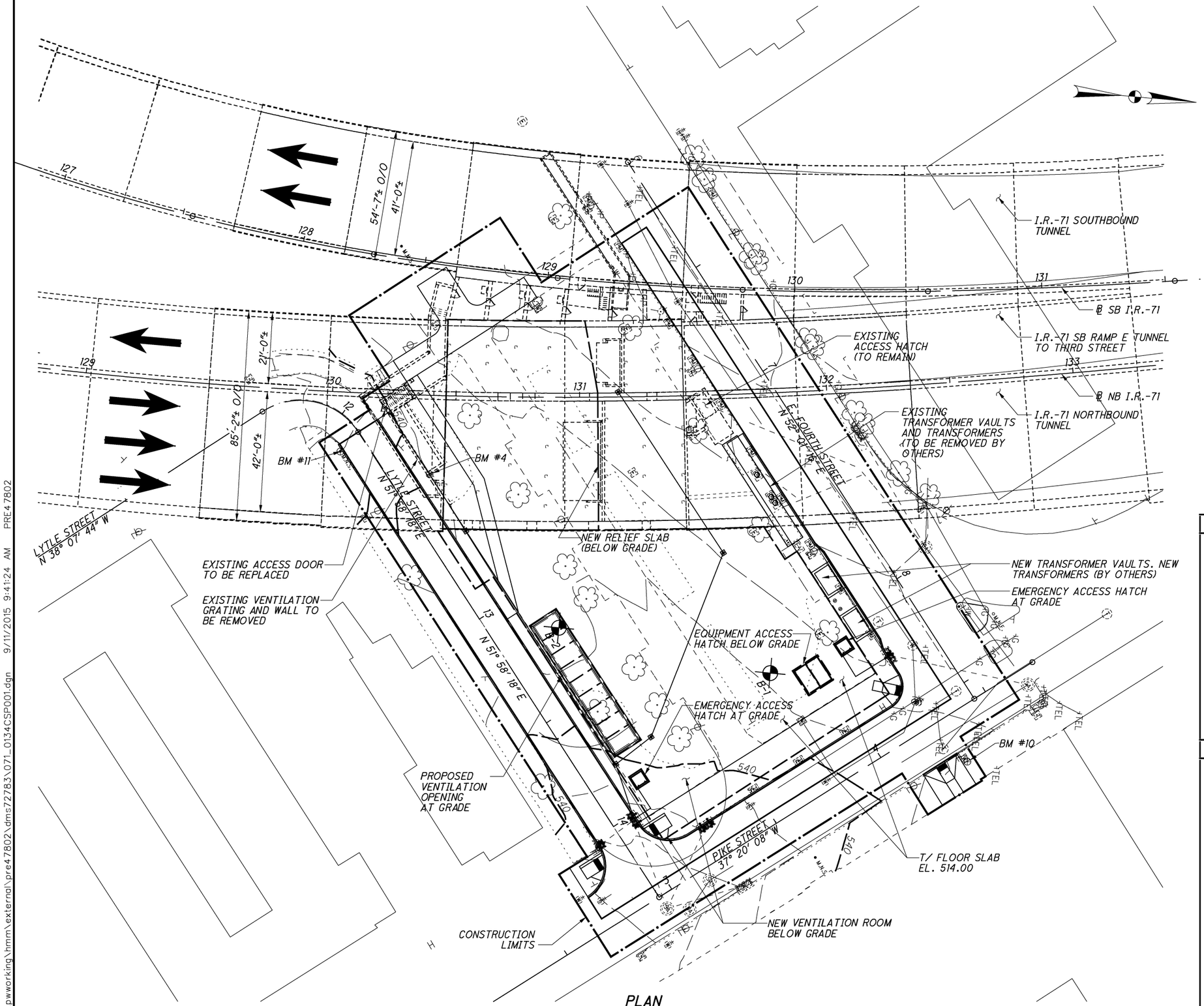

PLAN

BENCHMARK DATA

BM #4 STA.	4+72.44,	194.24, RT, ELEV. 528.34
BM #10 STA.	3+56.01,	20.09', LT, ELEV. 539.64
BM #11 STA.	12+12.42,	10.37', RT, ELEV. 539.25

FOR ADDITIONAL BENCHMARK INFORMATION SEE ROADWAY PLAN SHEET 3 /555

NOTES

EARTHWORK LIMITS SHOWN ARE APPROXIMATE. ACTUAL SLOPES SHALL CONFORM TO PLAN CROSS SECTIONS.

DESIGN TRAFFIC:

2016 ADT:	65,110 (T1),	7,010 (RAMP E)
2036 ADT:	71,810 (T1),	7,730 (RAMP E)
2016 ADTT:	9,116 (T1),	421 (RAMP E)
2036 ADTT:	10,054 (T1),	464 (RAMP E)

DISTRIBUTION: 55% NB, 45% SB, 100% RAMP E

VERTICAL & HORIZONTAL CLEARANCES:

VERTICAL	HORIZONTAL
EXIST: 15.2'	EXIST: 6.25'
PROP: 15.2'	PROP: 6.25'
REQD: 15.0'	REQD: 6.00'

LEGEND

- ⊕ - BORING LOCATION
- EL. - ELEVATION
- NA - NOT APPLICABLE
- NB - NORTHBOUND
- SB - SOUTHBOUND
- T/ - TOP OF
- → - DIRECTION OF TRAFFIC
- ⊕ - BENCHMARK

EXISTING STRUCTURE

TYPE: CAST-IN-PLACE REINFORCED CONCRETE CUT-AND-COVER TUNNEL (RIGID CONCRETE FRAME).
TUNNEL WIDTHS: SB 46'-7"±, RAMP E VARIES 26'-9"± TO 27'-6"±, NB 48'-8"±, F/F WALLS.
RDWY WIDTHS: SB 24'-0", RAMP E 16'-0", NB 36'-0".
SIDEWALK WIDTH: NA
SKEW: NA
LOADING: HS-20-44 AND ALTERNATE MILITARY
DATE BUILT: 1971
SFN: 3106578
WEARING SURFACE: 3" ASPHALT CONCRETE
APPROACH SLAB: NA
DISPOSITION: TO BE EXPANDED AND MODIFIED TO ACCOMMODATE LARGER AIR HANDLING UNITS.

PROPOSED STRUCTURE

PROPOSED WORK: ADD CAST-IN-PLACE REINFORCED CONCRETE MECHANICAL AND ELECTRICAL ROOMS, EXPAND EXISTING PLENUM OPENINGS, AND REINFORCE EXISTING STRUCTURE TO PROVIDE FOR LARGER AND MORE EFFICIENT AIR HANDLING UNITS.
TYPE: CAST-IN-PLACE REINFORCED CONCRETE CUT-AND-COVER TUNNEL (RIGID CONCRETE FRAME).
TUNNEL WIDTHS: SB 46'-7"±, RAMP E VARIES 26'-9"± TO 27'-6"±, NB 48'-8"±, F/F WALLS.
RDWY WIDTHS: SB 24'-0", RAMP E 16'-0", NB 36'-0".
SIDEWALK WIDTH: NA
LOADING: HL-93 DESIGN TRUCK/TANDEM AND 60 PSF FWS
SKEW: NA
WEARING SURFACE: 3" ASPHALT CONCRETE
APPROACH SLAB: NA
ALIGNMENT: CURVED VARIES
CROWN: SB, RAMP E, AND NB: VARIES 0.083 FT/FT MAX.
LATITUDE: 39°06'00.9"N LONGITUDE: 84°30'14.2"W

DESIGN AGENCY
HATCH MOTT MacDONALD
18013 CLEVELAND PKWY.
SUITE 200
CLEVELAND, OH 44135

DESIGNED	DRAWN	REVIEWED	DATE
BTF	JMS	MAR	10/20/14
CHECKED	REVISED	STRUCTURE FILE NUMBER	
PEG		3106578	

HAMILTON COUNTY
STA. 127+10.00 NB
STA. 135+64.51 NB

SITE PLAN
BRIDGE NO. HAM-71-0134
I-71 LYTLE TUNNEL UNDER LYTLE PARK

HAM-71-01.34
PID No. 87268

1 /296
259 /555

c:\pwworking\hmm\external\pre47802\dms72783\071_0134CSP001.dgn 9/11/2015 9:41:24 AM PRE47802

STRUCTURE GENERAL NOTES

STANDARD DRAWINGS AND SUPPLEMENTAL SPECIFICATIONS:

REFER TO THE FOLLOWING STANDARD BRIDGE DRAWING(S):
PCB-91 REVISED 01-18-13

AND TO THE FOLLOWING SUPPLEMENTAL SPECIFICATION(S):
800 DATED 1-16-15
866 DATED 10-14-12
878 DATED 10-18-13

GOVERNING CODES AND SPECIFICATIONS:

GENERAL:
ODOT - BRIDGE DESIGN MANUAL, 2004
ODOT - CONSTRUCTION AND MATERIALS SPECIFICATIONS, 2013

EXISTING TUNNEL AND STRUCTURES:
AASHTO - STANDARD SPECIFICATIONS FOR HIGHWAY BRIDGES, 2002

PROPOSED VENTILATION BUILDING:
OBC - OHIO BUILIDNG CODE, 2011
ASCE 7-10 - MINIMUM DESIGN LOADS FOR BUILDINGS AND OTHER STRUCTURES, 2010
ACI 530 11 - BUILDING CODE REQUIREMENTS FOR MASONRY STRUCTURES, 2011
ACI 530.1 11 – SPECIFICATION FOR MASONRY STRUCTURES, 2011

OCCUPANCY DATA:

OCCUPANCY CLASS: GROUP U (UTILITY & MISCELLANEOUS)
RISK CATEGORY: IV

LIVE LOADS:

LOCATION	AREA LOAD
VENTILATION ROOM:	350 PSF
EXISTING EQUIPMENT ROOM:	70 PSF
CONSTRUCTION LIVE LOAD:	50 PSF
STAIRS:	100 PSF

SUBMITTALS:

WHERE SPECIFIED, PROVIDE SUBMITTALS AND SHOP DRAWINGS IN ACCORDANCE WITH CONSTRUCTION AND MATERIALS SPECIFICATIONS 501.04B, 501.04C, AND 501.06B.

AS-BUILTS:

WHERE SPECIFIED, PROVIDE AS-BUILTS IN ACCORDANCE WITH ODOT's CADD MANUAL, SECTION 500 ELECTRONIC SUBMISSIONS.

SPECIAL DESIGN SPECIFICATIONS:

THIS BUILDING REQUIRED THE USE OF A THREE DIMENSIONAL MODEL USING THE FINITE ELEMENT DESIGN METHOD TO ANALYZE THE STRUCTURE. THE COMPUTER PROGRAM USED FOR STRUCTURAL ANALYSIS WAS SAP2000 v16.

THE VENTILATION ROOM FLOOR, WALLS, CEILING, AND INTERIOR COLUMNS WERE DESIGNED BY THIS METHOD.

LATERAL EARTH PRESSURES FOR THE DESIGN ARE THE AT-REST CONDITION.

DESIGN DATA:

CONCRETE CLASS QC1 - COMPRESSIVE STRENGTH 4.0 KSI (SUBSTRUCTURE)

REINFORCING STEEL – ASTM A615 – YIELD STRENGTH 60 KSI

STRUCTURAL STEEL W-SHAPES AND PLATE - ASTM A709 GRADE 50 - YIELD STRENGTH 50 KSI

STEEL H-PILES - ASTM A572 - YIELD STRENGTH 50 KSI

TIEBACKS AND ANCHORS IN ACCORDANCE WITH SUPPLEMENTAL SPECIFICATION 866

MISCELLANEOUS STEEL ANGLES, CHANNELS, AND OTHER ROLLED SHAPES – ASTM A36 – YIELD STRENGTH 36 KSI

BRICK MASONRY – ACI-530.1-11 – F'M 1.0 KSI

CONCRETE MASONRY – ACI-530.1-11 – F'M 2.0 KSI

FIBER REINFORCED POLYMER (FRP) SYSTEM – ULTIMATE TENSILE STRENGTH – 121 KSI

EXPANSION ANCHORS SHALL BE HILTI KWIK BOLT 3, ICC ESR-1385 and ESR-2302, CARBON STEEL WITH HOT-DIPPED GALVANIZED COATING OR APPROVED EQUAL.

HIGH STRENGTH BOLTS:

ASTM A325, TYPE I GALVANIZED - CLASS B SC SLIP-CRTICICAL WITH THREADS INCLUDED IN THE SHEAR PLANE.

BOLTS SHALL BE 1" DIAMETER UNLESS NOTED OTHERWISE.

CHAMFER ON CONCRETE STRUCTURES:

PROVIDE A ¾ INCH X ¾ INCH CHAMFER ON ALL EXPOSED EDGES OF CONCRETE STRUCTURE UNLESS OTHERWISE SHOWN ON THE PLANS. THIS WORK SHALL BE INCLUDED WITH THE APPROPRIATE ITEM 511.

EXISTING STRUCTURE VERIFICATION:

DETAILS AND DIMENSIONS SHOWN ON THESE PLANS PERTAINING TO THE EXISTING STRUCTURE HAVE BEEN OBTAINED FROM PLANS OF THE EXISTING STRUCTURE AND FROM FIELD OBSERVATIONS AND MEASUREMENTS. CONSEQUENTLY, THEY ARE INDICATIVE OF THE EXISTING STRUCTURE AND THE PROPOSED WORK BUT THEY SHALL BE CONSIDERED TENTATIVE AND APPROXIMATE. THE CONTRACTOR IS REFERRED TO CMS SECTIONS 102.05, 105.02.

BASE CONTRACT BID PRICES UPON A RECOGNITION OF THE UNCERTAINTIES DESCRIBED ABOVE AND UPON A PREBID EXAMINATION OF THE EXISTING STRUCTURE. HOWEVER, THE DEPARTMENT WILL PAY FOR ALL PROJECT WORK BASED UPON ACTUAL DETAILS AND DIMENSIONS THAT HAVE BEEN VERIFIED IN THE FIELD.

REPLACEMENT OF EXISTING REINFORCING STEEL:

ANY EXISTING REINFORCING STEEL BARS WHICH ARE TO BE INCORPORATED INTO THE NEW WORK AND ARE MADE UNUSABLE BY CONCRETE REMOVAL OR OTHER CONTRACTOR OPERATIONS SHALL BE REPLACED WITH NEW EPOXY COATED REINFORCING STEEL OF THE SAME SIZE AT THE CONTRACTOR'S COST.

FOUNDATION BEARING PRESSURE:

VENTILATION ROOM SLAB, AS DESIGNED, WILL PRODUCE A MAXIMUM PRESSURE OF 5.0 KIPS PER SQUARE FOOT. THE PRESUMPTIVE ALLOWABLE BEARING PRESSURE IS 7.0 KIPS PER SQUARE FOOT. NOTIFY ENGINEER IF IN SITU CONDITIONS WILL NOT ACHIEVE THE PRESUMPTIVE BEARING PRESSURE.

SCHEDULES:

WHERE SPECIFIED, PROVIDE ITEMS OF WORK IN THE CONTRACTOR'S CPM SCHEDULE.

ITEM 202, PORTIONS OF STRUCTURE REMOVED, AS PER PLAN:

THIS ITEM SHALL INCLUDE THE ELEMENTS INDICATED IN THE PLANS AND GENERAL NOTES AND THAT ARE NOT SEPARATELY LISTED FOR PAYMENT, EXCEPT FOR WEARING COURSE REMOVAL. ITEMS TO BE REMOVED INCLUDE ALL EXISTING MATERIALS BEING REPLACED BY NEW CONSTRUCTION AND MISCELLANEOUS ITEMS THAT ARE NOT SHOWN TO BE INCORPORATED INTO THE FINAL CONSTRUCTION AND ARE DIRECTED TO BE REMOVED BY THE ENGINEER.

THE USE OF EXPLOSIVES, HEADACHE BALLS AND/OR HOE-RAMS WILL NOT BE PERMITTED. THE METHOD OF REMOVAL AND THE WEIGHT OF HAMMER SHALL BE APPROVED BY THE ENGINEER. PERFORM ALL WORK IN A MANNER THAT WILL NOT CUT, ELONGATE, OR DAMAGE THE EXISTING REINFORCING STEEL TO BE PRESERVED. CHIPPING HAMMERS SHALL NOT BE HEAVIER THAN THE NOMINAL 90 POUND CLASS. PNEUMATIC HAMMERS SHALL NOT BE PLACED IN DIRECT CONTACT WITH REINFORCING STEEL THAT IS TO BE RETAINED IN THE REBUILT STRUCTURE. SUBMIT CONSTRUCTION PLANS ACCORDING TO CMS 501.05.

SAWCUT LIMITS OF DEMOLITION TO PROVIDE A NEAT TRANSITION. AT LIMITS, USE CARE THAT SLABS AND WALLS TO REMAIN ARE UNDAMAGED.

REMOVE ALL DEMOLISHED MATERIALS FROM THE PROPERTY AS IT BECOMES AVAILABLE. STORAGE OF THE MATERIAL ON THE PROPERTY IS NOT PERMITTED.

VIBRATION LIMITS DURING DEMOLITION ACTIVITY SHALL NOT EXCEED THE ESTABLISHED VIBRATION LIMITS.

ITEM 513 – STRUCTURAL STEEL MEMBERS, LEVEL UF, AS PER PLAN:

DESCRIPTION:

THIS WORK INCLUDES ALL MISCELLANEOUS STRUCTURAL STEEL NOT OTHERWISE LISTED FOR PAYMENT UNDER OTHER PAY ITEMS. THIS WORK SHALL INCLUDE, BUT IS NOT LIMITED TO: INSTALLING LINTELS, COLUMNS, BASE PLATES, FAN AND SOUND ATTENUATOR SUPPORTS, COFFIN DAMPER EQUIPMENT SUPPORTS, HATCHWAY PANELS, VENTILATION OPENING SUPPORT BEAMS, AND THEIR CONNECTIONS AND ANCHORS - AS SHOWN IN THE PLANS AND HEREIN SPECIFIED.

STRUCTURAL STEEL MEMBERS SHALL BE GALVANIZED PER 711.02 AFTER FABRICATION.

COMPONENTS SHALL NOT BE PAINTED.

COST IS INCLUDED WITH THESE ITEMS FOR PAYMENT.

ITEM 530 – SPECIAL - STRUCTURE, MISC.: BRICK MASONRY WALL:
ITEM 530 – SPECIAL - STRUCTURE, MISC.: CONCRETE MASONRY, 8" WALLS:
ITEM 530 – SPECIAL - STRUCTURE, MISC.: CONCRETE MASONRY, 12" WALLS:

DESCRIPTION:

THIS WORK SHALL INCLUDE INSTALLING BRICK MASONRY AND PRECAST CONCRETE FINISHING UNITS, OR CONCRETE MASONRY UNITS AND APPURTENANCES, AS SHOWN IN THE PLANS AND HEREIN SPECIFIED.

BRICK MASONRY:

BRICK MASONRY STRENGTH SHALL BE PER ACI 530.1 1.4 B.2A "UNIT STRENGTH METHOD". CONTRACTOR MAY, AT NO ADDITIONAL COST AND WITH THE PRIOR APPROVAL OF THE ENGINEER, USE THE "PRISM TEST METHOD" OF ACI 530.1 1.4 B.3.

FACE BRICK SHALL BE GRADE SW, TYPE FBS, CONFORMING TO ASTM C216. BRICK SHALL BE RATED

DESIGN AGENCY
HATCH MOTT MacDONALD
8013 CLEVELAND PKWY.
SUITE 200
CLEVELAND, OH 44135

DESIGNED BTF | DRAWN JMS | CHECKED PEG | REVIEWED MAR | DATE 10/20/14 | REVISED | STRUCTURE FILE NUMBER 3106578

STRUCTURE GENERAL NOTES 1 OF 7
BRIDGE NO. HAM-71-0134
I-71 LYTLE TUNNEL UNDER LYTLE PARK

HAM-71-01.34 PID No. 87268

2 /296

260
555

c:\pwworking\hmm\external\pre47802\dms72783\071_0134CGN001.dgn 9/4/2015 2:01:37 PM PRE47802

STRUCTURE GENERAL NOTES

"NO EFFLORESCENCE" PER ASTM C67. UNITS' STRENGTH SHALL BE AS REQUIRED TO MEET MASONRY STRENGTH REQUIREMENTS.

PRECAST FINISHING UNITS SHALL BE 5-7% AIR-ENTRAINED, 4.0 KSI, PRECAST CONCRETE PER C&MS ITEM 514.

MORTAR FOR BRICK MASONRY SHALL BE TYPE S ON ANY EXTERIOR EXPOSURE BELOW THREE FEET ABOVE GRADE. ON ALL INTERIOR WALLS, AND ON EXTERIOR WALLS ABOVE THREE FEET ABOVE FINISHED GRADE, MORTAR FOR BRICK MASONRY MAY BY TYPE N, OTHERWISE USE TYPE S. ALL MORTAR FOR BRICK MASONRY SHALL BE PORTLAND CEMENT-LIME, CONFORMING TO ASTM C270 PROPORTION SPECIFICATION. LIME SHALL BE HYDRATED LIME CONFORMING TO ASTM C207.

CONCRETE MASONRY UNITS:

CONCRETE MASONRY STRENGTH SHALL BE PER ACI 530.1 1.4 B.2B "UNIT STRENGTH METHOD". CONTRACTOR MAY, AT NO ADDITIONAL COST AND WITH THE PRIOR APPROVAL OF THE ENGINEER, USE THE "PRISM TEST METHOD" OF ACI 530.1 1.4 B.3.

CONCRETE MASONRY UNITS SHALL BE GRADE N (NORMAL WEIGHT), TYPE I (MOISTURE CONTROLLED), CONFORMING TO ASTM C90. UNITS' STRENGTH SHALL BE AS REQUIRED TO MEET MASONRY STRENGTH REQUIREMENTS.

MORTAR FOR CONCRETE MASONRY UNITS SHALL BE TYPE S, PORTLAND CEMENT-LIME, CONFORMING TO ASTM C270 PROPORTION SPECIFICATION.

GROUT FOR MASONRY UNITS SHALL BE FINE GROUT CONFORMING TO ASTM C476, WITH A MNIMUM COMPRESSIVE STRENGTH OF 2,000 PSI AT 28 DAYS.

WALL REINFORCEMENT AND TIES:

HORIZONTAL WALL JOINT REINFORCEMENT FOR SINGLE WYTHE WALLS SHALL BE HOHMANN & BARNARD #120 TRUSS-MESH, #220 LADDER MESH REINFORCEMENT, 9 GAGE, HOT DIP GALVANIZED – OR APPROVED EQUAL, AT 16" VERTICAL CENTERS, UNLESS SHOWN OTHERWISE ON THE DRAWINGS.

SPLICED WIRE REINFORCEMENT SHALL BE LAPPED AT LEAST 6" AND CONTAIN AT LEAST ONE CROSS WIRE OF EACH PIECE OF REINFORCEMENT WITHIN THE 6 INCHES. LAP WITH PREFABRICATED "T" AND "L" SHAPED PIECES AT INTERSECTIONS AND CORNERS.

MASONRY DETAILS:

MAXIMUM SPACING OF CONTROL JOINTS IN MASONRY TO BE 24'-0" HORIZONTALLY.

SUBMITTALS:

PROVIDE SHOP DRAWINGS IN ACCORDANCE WITH CONSTRUCTION AND MATERIALS SPECIFICATION 501.04.

WORKMANSHIP:

ALL MASONRY CONSTRUCTION, AND GROUTING IF REQUIRED, SHALL CONFORM TO ACI 530.1 SPECIFICATION FOR MASONRY STRUCTURES. SUBMIT REPORTS TO THE ENGINEER.

STORE ALL MASONRY UNITS OFF THE GROUND AND UNDER COVER UNTIL READY TO INCORPORATE INTO THE WORK.

COVER THE TOP COURSE OF UNFINISHED WALLS THAT ARE EXPOSED TO THE ELEMENTS TO KEEP MOISTURE OUT OF THE WORK.

USE NO MORTAR ADMIXTURES IN THE FIELD.

USE NO CHLORIDE CONTAINING ADMIXTURES OR MATERIALS IN THE MORTAR OR GROUT.

USE NO ANTIFREEZE OR OTHER DEICING COMPOUNDS ON ANY EQUIPMENT THAT MAY COME IN CONTACT WITH MASONRY UNITS, MORTAR, OR GROUT.

MASONRY SHALL NOT BE CLEANED WITH MURIATIC (HYDROCHLORIC) ACID.

FINISH MORTAR JOINTS WITH A TOOLED CONCAVE PROFILE.

QUALITY ASSURANCE:

QUALITY ASSURANCE SHALL BE "LEVEL A" CONFORMING TO ACI 530.1 1.6.

MEASUREMENT AND PAYMENT:

PAYMENT FOR ACCEPTED QUANTITIES OF BRICK MASONRY, COMPLETE IN PLACE, SHALL BE MADE AT THE CONTRACT PRICE BID PER SQUARE FOOT FOR ITEM 530 – SPECIAL - STRUCTURE, MISC.: BRICK MASONRY. THIS SHALL INCLUDE ALL NECESSARY TOOLS, LABOR, MATERIALS AND EQUIPMENT NECESSARY TO COMPLETE THIS ITEM OF WORK AS DESCRIBED AND TO THE SATISFACTION OF THE ENGINEER.

PAYMENT FOR ACCEPTED QUANTITIES OF CONCRETE MASONRY WALLS, COMPLETE IN PLACE, SHALL BE MADE AT THE CONTRACT PRICE BID PER SQUARE FOOT FOR ITEM 530 – SPECIAL - STRUCTURE, MISC.: CONCRETE MASONRY, 8" WALL, OR ITEM 530 – SPECIAL - STRUCTURE, MISC.: CONCRETE MASONRY, 12" WALL, AS APPLICABLE. THIS SHALL INCLUDE ALL NECESSARY TOOLS, LABOR, MATERIALS AND EQUIPMENT NECESSARY TO COMPLETE THIS ITEM OF WORK AS DESCRIBED AND TO THE SATISFACTION OF THE ENGINEER.

ITEM 530 – SPECIAL - STRUCTURE, MISC.: METAL DOOR, SINGLE
ITEM 530 – SPECIAL - STRUCTURE, MISC.: METAL DOOR, DOUBLE
ITEM 530 – SPECIAL - STRUCTURE, MISC.: METAL DOOR, DOUBLE WITH REMOVABLE PANEL

DESCRIPTION:

THIS WORK SHALL INCLUDE INSTALLING METAL DOORS, FRAMES, HINGES, HANDLES, OTHER HARDWARE, LOCKSETS AS SCHEDULED, AND APPURTENANCES AS SHOWN IN THE PLANS AND HEREIN SPECIFIED.

MATERIALS:

DOORS SHALL BE HOLLOW STEEL PER ANSI/SDI A250.8-2003 (R2008) –MODEL 1 FULL FLUSH, AND PRIMED AND PAINTED. FINISH COLOR SHALL BE 595B-36628, GREY, IN ACCORDANCE WITH FEDERAL STANDARD NUMBER 595. CLASSIFICATION FOR DOORS AND FRAMES SHALL BE AS INDICATED.

FRAMES SHALL BE STEEL PER ANSI/SDI A250.8-2003 (R2008), AND PRIMED AND PAINTED. FINISH COLOR SHALL BE AS ABOVE.

HINGES SHALL BE STEEL AND GALVANIZED.

DOORS, FRAMES, AND HARDWARE SHALL BE FIRE RATED AS A SYSTEM FOR TWO HOURS PER NFPA 101 & NFPA 502.

HARDWARE: ANSI A156 STANDARD – GRADE TO MATCH DOORS

HINGES: FULL MORTISED
LOCKSETS: MORTISE LOCKSETS
EXIT DEVICES: CROSS BAR
CYLINDERS: PIN TYPE – KEY TO MATCH EXISTING.
CLOSERS: ANSI A156.4 MODERN TYPE WITH COVER

SUBMITTALS:

PROVIDE SHOP DRAWINGS IN ACCORDANCE WITH CONSTRUCTION AND MATERIALS SPECIFICATION 501.04.

INSTALLATION:

DOOR FRAMES SHALL BE SECURELY ANCHORED TO THE SUPPORTING WALLS.

MEASUREMENT AND PAYMENT:

PAYMENT FOR ACCEPTED QUANTITIES OF SINGLE HUNG DOORS, COMPLETE IN PLACE, SHALL BE MADE AT THE CONTRACT PRICE BID EACH FOR ITEM 530 – SPECIAL - STRUCTURE, MISC.: METAL DOOR, SINGLE. THIS SHALL INCLUDE ALL NECESSARY TOOLS, LABOR, MATERIALS AND EQUIPMENT NECESSARY TO COMPLETE THIS ITEM OF WORK AS DESCRIBED AND TO THE SATISFACTION OF THE ENGINEER.

PAYMENT FOR ACCEPTED QUANTITIES OF DOUBLE HUNG DOORS, COMPLETE IN PLACE, SHALL BE MADE AT THE CONTRACT PRICE BID EACH FOR ITEM 530 – SPECIAL - STRUCTURE, MISC.: METAL DOOR, DOUBLE. THIS SHALL INCLUDE ALL NECESSARY TOOLS, LABOR, MATERIALS AND EQUIPMENT NECESSARY TO COMPLETE THIS ITEM OF WORK AS DESCRIBED AND TO THE SATISFACTION OF THE ENGINEER.

PAYMENT FOR ACCEPTED QUANTITIES OF DOUBLE HUNG DOORS, COMPLETE IN PLACE, SHALL BE MADE AT THE CONTRACT PRICE BID EACH FOR ITEM 530 – SPECIAL - STRUCTURE, MISC.: METAL DOOR, DOUBLE, DOUBLE WITH REMOVABLE PANEL. THIS SHALL INCLUDE ALL NECESSARY TOOLS, LABOR, MATERIALS AND EQUIPMENT NECESSARY TO COMPLETE THIS ITEM OF WORK AS DESCRIBED AND TO THE SATISFACTION OF THE ENGINEER.

ITEM 530 – SPECIAL - STRUCTURE, MISC.: REPLACE EXISTING METAL DOOR

DESCRIPTION:

THIS WORK SHALL INCLUDE REMOVAL OF EXISTING DOOR AND FRAME AND NSTALLING METAL DOORS, FRAMES, HINGES, HANDLES, OTHER HARDWARE, LOCKSETS AS SCHEDULED, AND APPURTENANCES AS SHOWN IN THE PLANS AND HEREIN SPECIFIED.

MATERIALS:

DOORS SHALL BE HOLLOW STEEL PER ANSI/SDI A250.8-2003 (R2008) –MODEL 1 FULL FLUSH, AND PRIMED AND PAINTED. FINISH COLOR SHALL BE 595B-36628, GREY, IN ACCORDANCE WITH FEDERAL STANDARD NUMBER 595. CLASSIFICATION FOR DOORS AND FRAMES SHALL BE AS INDICATED.

FRAMES SHALL BE STEEL PER ANSI/SDI A250.8-2003 (R2008), AND PRIMED AND PAINTED. FINISH COLOR SHALL BE AS ABOVE.

HINGES SHALL BE STEEL AND GALVANIZED.

DOORS, FRAMES, AND HARDWARE SHALL BE FIRE RATED AS A SYSTEM FOR TWO HOURS PER NFPA 101 & NFPA 502.
HARDWARE: ANSI A156 STANDARD – GRADE TO MATCH DOORS

HINGES: FULL MORTISED
LOCKSETS: MORTISE LOCKSETS:
EXIT DEVICES: CROSS BAR
CYLINDERS: PIN TYPE – KEY TO MATCH EXISTING.
CLOSERS: ANSI A156.4 MODERN TYPE WITH COVER

SUBMITTALS:

PROVIDE SHOP DRAWINGS IN ACCORDANCE WITH CONSTRUCTION AND MATERIALS SPECIFICATION 501.04.

INSTALLATION:

DOOR FRAMES SHALL BE SECURELY ANCHORED TO THE SUPPORTING WALLS.

MEASUREMENT AND PAYMENT:

PAYMENT FOR ACCEPTED QUANTITIES OF SINGLE HUNG DOORS, COMPLETE IN PLACE, SHALL BE MADE AT THE CONTRACT PRICE BID EACH FOR ITEM 530 – SPECIAL - STRUCTURE, MISC.: REPLACE EXISTING METAL DOOR. THIS SHALL INCLUDE ALL NECESSARY TOOLS, LABOR, MATERIALS AND EQUIPMENT NECESSARY TO COMPLETE THIS ITEM OF WORK AS DESCRIBED AND TO THE SATISFACTION OF THE ENGINEER.

DESIGN AGENCY
HATCH MOTT MacDONALD
18013 CLEVELAND PKWY.
SUITE 200
CLEVELAND, OH 44135

DESIGNED BTF | DRAWN JMS | CHECKED PEG | REVIEWED MAR | DATE 10/20/14 | REVISED | STRUCTURE FILE NUMBER 3106578

STRUCTURE GENERAL NOTES 2 OF 7
BRIDGE NO. HAM-71-0134
I-71 LYTLE TUNNEL UNDER LYTLE PARK

HAM-71-01.34
PID No. 87268

c:\pwworking\hmm\external\pre47802\dms72783\071_0134CGN002.dgn 3/16/2015 3:45:45 PM PRE47802

STRUCTURE GENERAL NOTES

ITEM 530 – SPECIAL - STRUCTURE, MISC.: FIRE DEPARTMENT KEY BOX

DESCRIPTION:

THIS WORK SHALL INCLUDE INSTALLING FIRE DEPARTMENT KEY BOX, ANCHORS, OTHER HARDWARE, AND APPURTENANCES AS SHOWN IN THE PLANS AND HEREIN SPECIFIED.

THIS ITEM SHALL CONSIST OF FURNISHING ALL NECESSARY LABOR, MATERIALS, AND EQUIPMENT TO INSTALL ONE FIRE DEPARTMENT KEY BOX AS HEREIN DESCRIBED.

WORK LOCATION:

THE CONTRACTOR SHALL INSTALL ONE FIRE DEPARTMENT KEY BOX AT THE PERSONNEL ACCESS DOOR LOCATED ON LYTLE STREET.

HARDWARE:

KEY BOX SHALL BE SURFACE MOUNTED, HINGED, CLEARLY MARKED "FIRE", AS SPECIFIED BY THE CINCINNATI FIRE DEPARTMENT, AND CONFORMING TO:

PRODUCTS: MODEL 3261, 3263, OR 3265
MANUFACTURER: KNOX COMPANY
1601 WEST DEER VALLEY ROAD
PHOENIX, ARIZONA 857027
TEL: (623) 687-2300
WWW.KNOXBOX.COM

SUBSTITUTIONS WILL NOT BE ACCEPTED WITHOUT THE WRITTEN ACCEPTANCE OF THE CINCINNATI FIRE DEPARTMENT OBTAINED BY THE CONTRACTOR.

ANCHORS AS REQUIRED TO MOUNT THE KEY BOX SHALL BE 3/8 INCH DIAMETER BY 3 INCH LONG, STAINLESS STEEL, SLEEVE ANCHORS, ITEM HLC-HX 3/8" X 3" SS MC, AS MANUFACTURED BY HILTI, OR APPROVED EQUAL.

SUBMITTALS:

PROVIDE SHOP DRAWINGS IN ACCORDANCE WITH CONSTRUCTION AND MATERIALS SPECIFICATION 501.04.

INSTALLATION:

KEY BOXES SHALL BE MOUNTED 36 TO 60 INCHES ABOVE GRADE, WITHIN FIVE HORIZONTAL FEET FROM THE DOOR, NO CLOSER THAN SIX INCHES TO THE EDGE OR CORNER OF THE WALL, AND SHALL BE CLEARLY VISIBLE FROM THE DOOR. INSTALLATION SHALL FOLLOW THE MANUFACTURERS' INSTRUCTIONS FOR BOTH THE KEY BOX AND ANCHORS. THE CONTRACTOR SHALL USE A TEMPLATE FOR DRILLING INTO THE SUBSTRATE, BUT SHALL NOT USE THE KEY BOX ITSELF FOR THIS PURPOSE. THE CONTRACTOR SHALL TAKE CARE TO AVOID DAMAGE TO UNDERLYING REINFORCING, CONDUIT, ETC.; AND THE KEY BOX SHALL BE INSTALLED PLUMB AND LEVEL.

ONCE INSTALLED, THE CONTRACTOR SHALL INFORM THE ENGINEER IN WRITING THAT THE KEY BOX HAS BEEN INSTALLED SO THAT THE ENGINEER CAN COORDINATE WITH THE CINCINNATI FIRE DEPARTMENT FOR FINAL ACCEPTANCE.

MEASUREMENT AND PAYMENT:

PAYMENT FOR ACCEPTED QUANTITIES OF FIRE DEPARMENT KEY BOXES, COMPLETE IN PLACE, SHALL BE MADE AT THE CONTRACT PRICE BID EACH FOR ITEM 530 – SPECIAL - STRUCTURE, MISC.: FIRE DEPARTMENT KEY BOX. THIS SHALL INCLUDE ALL NECESSARY TOOLS, LABOR, EQUIPMENT, AND MATERIALS NECESSARY TO COMPLETE THIS ITEM OF WORK AS DESCRIBED AND TO THE SATISFACTION OF THE ENGINEER.

ITEM 530 – SPECIAL - STRUCTURE, MISC.: FIRE RESISTANT COATING SYSTEM, CEILING INSTALLATION:
ITEM 530 – SPECIAL - STRUCTURE, MISC.: FIRE RESISTANT COATING SYSTEM, WALL INSTALLATION:

DESCRIPTION:

THIS WORK SHALL INCLUDE INSTALLING FIRE PROTECTIVE COATING SYSTEM AND APPURTENANCES AS SHOWN IN THE PLANS AND HEREIN SPECIFIED.

SCOPE:

GENERALLY, THE FIRE RESISTANT COATING SYSTEM WILL BE INSTALLED ON THE CEILING AND WALLS IN THE FOLLOWING LOCATIONS:

UNIT 17 AND 18 (NORTHBOUND AND SOUTHBOUND RAMP E TUNNEL)
UNIT 20 AND 21 (NORTHBOUND, SOUTHBOUND AND SOUTHBOUND RAMP E TUNNEL)
UNIT 22 (NORTHBOUND AND SOUTHBOUND RAMP E TUNNEL)

MATERIALS:

SUPPLY FIRE PROTECTIVE COATING SYSTEMS THAT MEET OR EXCEED THE PROPERTIES OF THE FOLLOWING:

PRODUCT: FIRE BARRIER 135
MANUFACTURER: MORGAN THERMAL CERAMICS
2102 OLD SAVANNAH ROAD
AUGUSTA, GA 30906
TEL: (706) 796-4200
WWW.MORGANTHERMALCERAMICS.COM

OR

PRODUCT: MEYCO FIRESHIELD 1350
MANUFACTURER: BASF CONSTRUCTION CHEMICALS
23700 CHAGRIN BOULEVARD
BEACHWOOD, OH 44122
TEL: (503) 701-3677
WWW.MEYCO.BASF.COM

PROVIDE MANUFACTURER'S WRITTEN CERTIFICATION THAT SELECTED PRODUCTS, SYSTEMS, AND INSTALLATION PROCEDURES COMPLY WITH NFPA 502 7.3, AND THAT THE SYSTEM IS A FULLY FUNCTIONAL FIRE RESISTANT COATING SYSTEM PROVIDING COMPLIANCE FOR A 300 MW FIRE ACCORDING TO THE RWS TIME-TEMPERATURE CURVE.

SUBMITTALS:

PROVIDE SHOP DRAWINGS IN ACCORDANCE WITH CONSTRUCTION AND MATERIALS SPECIFICATION 501.04.

INSTALLATION:

INSTALL FIRE PROTECTIVE COATING SYSTEM AND OTHER APPURTENANCES IN ACCORDANCE WITH THE MANUFACTURER'S WRITTEN INSTRUCTIONS. SUBMIT A COPY OF THESE TO THE ENGINEER FOR THEIR RECORDS.

MEASUREMENT AND PAYMENT:

PAYMENT FOR ACCEPTED QUANTITIES OF FIRE RESISTANT COATING SYSTEM ON TUNNEL CEILING, COMPLETE IN PLACE, SHALL BE MADE AT THE CONTRACT PRICE BID PER SQUARE FOOT FOR ITEM 530 – SPECIAL - STRUCTURE, MISC.: FIRE RESISTANT COATING SYSTEM CEILING INSTALLATION. THIS SHALL INCLUDE ALL NECESSARY TOOLS, LABOR, MATERIALS AND EQUIPMENT NECESSARY TO COMPLETE THIS ITEM OF WORK AS DESCRIBED AND TO THE SATISFACTION OF THE ENGINEER.

PAYMENT FOR ACCEPTED QUANTITIES OF FIRE RESISTANT COATING SYSTEM ON TUNNEL WALLS, COMPLETE IN PLACE, SHALL BE MADE AT THE CONTRACT PRICE BID PER SQUARE FOOT FOR ITEM 530 – SPECIAL - STRUCTURE, MISC.: FIRE RESISTANT COATING SYSTEM, WALL INSTALLATION. THIS SHALL INCLUDE ALL NECESSARY TOOLS, LABOR, MATERIALS AND EQUIPMENT NECESSARY TO COMPLETE THIS ITEM OF WORK AS DESCRIBED AND TO THE SATISFACTION OF THE ENGINEER.

ITEM 530 – SPECIAL - STRUCTURE, MISC.: EMERGENCY ACCESS HATCH:

DESCRIPTION:

THIS WORK SHALL INCLUDE INSTALLING PERSONNEL ACCESS HATCH DOORS, FRAMES, HARDWARE, ANCHORAGES, AND APPURTENANCES AS SHOWN IN THE PLANS AND HEREIN SPECIFIED.

MATERIALS:

ACCESS HATCH SHALL BE MODEL JD-2ALH20, ALUMINUM MILL FINISH WITH TYPE 316 STAINLESS STEEL HARDWARE, AS MANUFACTURED BY:

THE BILCO COMPANY
P.O. BOX 1203
NEW HAVEN, CT 06505
PHONE: (203) 934-6363
WWW.BILCO.COM

OR APPROVED EQUAL.

SUBMITTALS:

PROVIDE SHOP DRAWINGS IN ACCORDANCE WITH CONSTRUCTION AND MATERIALS SPECIFICATION 501.04.

INSTALLATION:

INSTALL ACCESS HATCHES, HARDWARE, AND OTHER APPURTENANCES IN ACCORDANCE WITH THE MANUFACTURER'S WRITTEN INSTRUCTIONS. SUBMIT A COPY OF THESE TO THE ENGINEER FOR THEIR RECORDS.

MEASUREMENT AND PAYMENT:

PAYMENT FOR ACCEPTED QUANTITIES OF PERSONNEL ACCESS HATCH, COMPLETE IN PLACE, SHALL BE MADE AT THE CONTRACT PRICE BID EACH FOR ITEM 530 – SPECIAL - STRUCTURE, MISC.: EMERGENCY ACCESS HATCH. THIS SHALL INCLUDE ALL NECESSARY TOOLS, LABOR, MATERIALS AND EQUIPMENT NECESSARY TO COMPLETE THIS ITEM OF WORK AS DESCRIBED AND TO THE SATISFACTION OF THE ENGINEER.

ITEM 530 – SPECIAL - STRUCTURE, MISC.: EQUIPMENT ACCESS HATCH

DESCRIPTION:

THIS WORK SHALL INCLUDE INSTALLING EQUIPMENT ACCESS HATCH, WATERPROOFING SEAL, HARDWARE, AND APPURTENANCES AS SHOWN IN THE PLANS AND HEREIN SPECIFIED.

MATERIALS:

CONCRETE FOR ACCESS HATCH SHALL BE PRECAST, CLASS QC1 - COMPRESSIVE STRENGTH 4.0 KSI, PER C&MS 499.

STEEL APPURTENANCES SHALL BE ASTM A36 – YIELD STRENGTH 36 KSI, AND FABRICATED PER "LEVEL UF" PER C&MS 513.

SUBMITTALS:

PROVIDE SHOP DRAWINGS IN ACCORDANCE WITH CONSTRUCTION AND MATERIALS SPECIFICATION 501.04.

MEASUREMENT AND PAYMENT:

PAYMENT FOR ACCEPTED QUANTITIES OF EQUIPMENT ACCESS HATCH, COMPLETE IN PLACE, SHALL BE MADE AT THE CONTRACT PRICE BID EACH FOR ITEM 530 – SPECIAL - STRUCTURE, MISC.: EQUIPMENT ACCESS HATCH. THIS SHALL INCLUDE ALL NECESSARY TOOLS, LABOR, MATERIALS AND EQUIPMENT NECESSARY TO COMPLETE THIS ITEM OF WORK AS DESCRIBED AND TO THE SATISFACTION OF THE ENGINEER.

c:\pwworking\hmm\external\pre47802\dms72783\071_0134CGN003.dgn 2/4/2015 11:18:03 AM PRE47802

DESIGN AGENCY
HATCH MOTT MacDONALD
18013 CLEVELAND PKWY.
SUITE 200
CLEVELAND, OH 44135

DESIGNED	DRAWN	REVIEWED	DATE
BTF	JMS	MAR	10/20/14
CHECKED	REVISED	STRUCTURE FILE NUMBER	
PEG		3106578	

STRUCTURE GENERAL NOTES 3 OF 7
BRIDGE NO. HAM-71-0134
I-71 LYTLE TUNNEL UNDER LYTLE PARK

HAM-71-01.34
PID No. 87268

STRUCTURE GENERAL NOTES

ITEM 530 – SPECIAL - STRUCTURE, MISC.: LADDER
ITEM 530 – SPECIAL - STRUCTURE, MISC.: STAIR

DESCRIPTION:

THIS WORK SHALL INCLUDE INSTALLING LADDERS, STAIRS, ANCHORAGES, HANDRAILS, GUARDS, AND/OR OTHER APPURTENANCES AS SHOWN IN THE PLANS AND HEREIN SPECIFIED.

STEEL STAIR FRAME OF STRUCTURAL SECTIONS, WITH OPEN RISERS; OPEN GRATE STAIR TREADS AND LANDINGS; AND HANDRAILING.

MATERIALS:

STEEL SHALL BE ASTM A36 – YIELD STRENGTH 36 KSI, AND FABRICATED PER "LEVEL UF" PER C&MS 513.

ROUND HOLLOW STRUCTURAL SECTIONS: ASTM A500/A500M, GRADE B.

GRATINGS: NAAMM MBG 531, TYPE W.

EXPANSION ANCHORS SHALL BE HILTI KWIK BOLT 3, ICC ESR-1385 and ESR-2302, CARBON STEEL WITH GALVANIZED COATING, OR APPROVED EQUAL.

SUBMITTALS:

PROVIDE SHOP DRAWINGS IN ACCORDANCE WITH CONSTRUCTION AND MATERIALS SPECIFICATION 501.04.

INSTALLATION:

FIT AND SHOP ASSEMBLE COMPONENTS IN LARGEST PRACTICAL SECTIONS, FOR DELIVERY TO SITE. FABRICATE COMPONENTS WITH JOINTS TIGHTLY FITTED AND SECURED.

CONTINUOUSLY SEAL JOINED PIECES BY CONTINUOUS WELDS.

GRIND EXPOSED JOINTS FLUSH AND SMOOTH WITH ADJACENT FINISH SURFACE. MAKE EXPOSED JOINTS BUTT TIGHT, FLUSH, AND HAIRLINE. EASE EXPOSED EDGES TO SMALL UNIFORM RADIUS.

EXPOSED MECHANICAL FASTENINGS: FLUSH COUNTERSUNK SCREWS OR BOLTS; UNOBTRUSIVELY LOCATED; CONSISTENT WITH DESIGN OF COMPONENT, EXCEPT WHERE SPECIFICALLY NOTED OTHERWISE.

SUPPLY COMPONENTS REQUIRED FOR ANCHORAGE OF FABRICATIONS. FABRICATE ANCHORS AND RELATED COMPONENTS OF SAME MATERIAL AND FINISH AS FABRICATION, EXCEPT WHERE SPECIFICALLY NOTED OTHERWISE

FABRICATION:

FABRICATE TREADS IN ACCORDANCE WITH NAAMM MBG 531 WELDED STEEL BARS, BOLTED TO SUPPORTS; GALVANIZED FINISH.

FORM HOLLOW STRINGERS WITH ROLLED STEEL CHANNEL PRIME PAINT FINISH.

FORM LANDINGS IN ACCORDANCE WITH NAAMM MBG 531 SAME AS TREADS PRIME PAINT FINISH.

FORM BALUSTERS WITH 1 1/2" INCH DIAMETER STEEL SECTIONS, BOLTED TO STRINGERS; PRIME PAINT FINISH.

FINISH:

LADDERS, STAIRS, HANDRAILS, GUARDS, ETC. SHALL BE GALVANIZED PER 711.02 AFTER FABRICATION.

COMPONENTS SHALL NOT BE PAINTED.

COST IS INCLUDED WITH THESE ITEMS FOR PAYMENT.

LADDERS:

FABRICATE VERTICAL LADDERS CONFORMING TO SECTION 7 OF 29 CFR 1910.27.

USE 2 1/2 BY 3/8 INCH STEEL FLATS FOR STRINGERS AND 3/4 INCH DIAMETER STEEL RODS FOR RUNGS. RUNGS TO BE NOT LESS THAN 16 INCHES WIDE, SPACED ONE FOOT APART, PLUG WELDED OR SHOULDERED AND HEADED INTO STRINGERS.

INSTALL LADDERS SO THAT THE DISTANCE FROM THE RUNGS TO THE FINISHED WALL SURFACE WILL NOT BE LESS THAN 7 INCHES.

PROVIDE HEAVY CLIP ANGLES RIVETED OR BOLTED TO THE STRINGER AND DRILLED FOR NOT LESS THAN TWO 1/2 INCH DIAMETER EXPANSION BOLTS PROVIDE INTERMEDIATE CLIP ANGLES NOT OVER 48 INCHES ON CENTERS.

MEASUREMENT AND PAYMENT:

PAYMENT FOR ACCEPTED QUANTITIES OF LADDERS, COMPLETE IN PLACE, SHALL BE MADE AT THE CONTRACT PRICE BID EACH FOR ITEM 530 – SPECIAL - STRUCTURE, MISC.: LADDER. THIS SHALL INCLUDE ALL NECESSARY TOOLS, LABOR, MATERIALS AND EQUIPMENT NECESSARY TO COMPLETE THIS ITEM OF WORK AS DESCRIBED AND TO THE SATISFACTION OF THE ENGINEER.

PAYMENT FOR ACCEPTED QUANTITIES OF STAIRS, COMPLETE IN PLACE, SHALL BE MADE AT THE CONTRACT PRICE BID EACH FOR ITEM 530 – SPECIAL - STRUCTURE, MISC.: STAIR. THIS SHALL INCLUDE ALL NECESSARY TOOLS, LABOR, MATERIALS AND EQUIPMENT NECESSARY TO COMPLETE THIS ITEM OF WORK AS DESCRIBED AND TO THE SATISFACTION OF THE ENGINEER.

ITEM 530 – SPECIAL - STRUCTURE, MISC.: GRATING:

DESCRIPTION:

THIS WORK SHALL INCLUDE INSTALLING STEEL GRATING AND SUPPORTS, ANCHORAGES, HARDWARE, AND APPURTENANCES AS SHOWN IN THE PLANS AND HEREIN SPECIFIED.

MATERIALS:

THE STEEL USED IN THE BEARING BARS SHALL BE OF RECTANGULAR SECTION AND CONFORM TO ASTM A1011 HOT ROLLED CARBON STEEL SHEET AND STRIP. THE CROSS BARS SHALL BE OF ASTM A510 CARBON STEEL RODS AND COARSE ROUND WIRE.

MILL GALVANIZED STEEL: COMMERCIAL STEEL PER ASTM A 653 AND ASTM A 924 WITH G-90 COATING DESIGNATION, MINIMUM YIELD OF 33 KSI.

HOT-DIP GALVANIZED AFTER FABRICATION: COMMERCIAL STEEL PER ASTM A 1011, MINIMUM YIELD OF 33 KSI, HOT-DIP GALVANIZED AFTER FABRICATION PER ASTM A 123

VENTILATION GRATING

BEARING BARS: RECTANGULAR STEEL BARS 1 1/2" DEPTH AND 3/16" THICKNESS ON 1 3/16" CENTERS.

CROSS BARS: TWISTED WIRE ROD, AT 4" ON CENTER, RESISTANCE WELDED TO THE BEARING BARS AND AT RIGHT ANGLES TO THEM.

SURFACE: THE BEARING BARS SHALL HAVE A SERRATED TOP SURFACE

LOADING: AT A UNIFORM LOAD OF 100 POUNDS PER SQUARE FOOT, DEFLECTION SHALL NOT EXCEED 1/4 INCH OVER THE REQUIRED SPAN.

FINISH: MANUFACTURERS STANDARD GALVANIZED

FASTENERS: MANUFACTURERS STANDARD G-CLIP.

HATCHWAY GRATING

BEARING BARS: RECTANGULAR STEEL BARS 2 1/2" DEPTH AND 3/16" THICKNESS ON 7/16" CENTERS.

CROSS BARS: TWISTED WIRE ROD, AT 4" ON CENTER, RESISTANCE WELDED TO THE BEARING BARS AND AT RIGHT ANGLES TO THEM.

SURFACE: THE BEARING BARS SHALL HAVE A SERRATED TOP SURFACE

LOADING: AT A UNIFORM LOAD OF 100 POUNDS PER SQUARE FOOT, DEFLECTION SHALL NOT EXCEED 1/41NCH OVER THE REQUIRED SPAN.

FINISH: MANUFACTURERS STANDARD GALVANIZED

FASTHENERS: MANUFACTURERS STANDARD CLOSE MESH FASTENER.

SUBMITTALS:

PROVIDE SHOP DRAWINGS IN ACCORDANCE WITH CONSTRUCTION AND MATERIALS SPECIFICATION 501.04.

INSTALLATION:

INSTALL GRATING, AND OTHER APPURTENANCES IN ACCORDANCE WITH THE MANUFACTURER'S WRITTEN INSTRUCTIONS. SUBMIT A COPY OF THESE TO THE ENGINEER FOR THEIR RECORDS.

GRATING SHALL BE INSTALLED IN ACCORDANCE WITH THE APPROVED SHOP DRAWINGS AND THE INSTALLATION CLEARANCES CALLED FOR IN THE NAAMM METAL BAR GRATING MANUAL, INCLUDING THE USE OF THE PRESCRIBED ANCHOR SYSTEM.

MEASUREMENT AND PAYMENT:

PAYMENT FOR ACCEPTED QUANTITIES OF GRATING AND ANCHOR SYSTEM, COMPLETE IN PLACE, SHALL BE MADE AT THE CONTRACT PRICE BID PER SQUARE FOOT FOR ITEM 530 – SPECIAL - STRUCTURE, MISC.: GRATING. THIS SHALL INCLUDE ALL NECESSARY TOOLS, LABOR, MATERIALS AND EQUIPMENT NECESSARY TO COMPLETE THIS ITEM OF WORK AS DESCRIBED AND TO THE SATISFACTION OF THE ENGINEER.

ITEM 530 – SPECIAL - STRUCTURE, MISC.: BENTONITE WATERSTOP:

DESCRIPTION:

THIS WORK SHALL INCLUDE INSTALLING A STRIP APPLIED EXPANDING WATERSTOP, EMBEDDED IN CONCRETE AND SPANNING CONTRACTION (CONTROL) JOINTS AND/OR LIMITED MOVEMENT CONSTRUCTION JOINTS, TO CREATE A CONTINUOUS DIAPHRAGM FOR PREVENTION OF FLUID MIGRATION AS SHOWN IN THE PLANS AND HEREIN SPECIFIED.

DESIGN AGENCY
HATCH MOTT MacDONALD
8013 CLEVELAND PKWY.
SUITE 200
CLEVELAND, OH 44135

DESIGNED BTF | DRAWN JMS | CHECKED PEG | REVIEWED MAR | DATE 10/20/14 | REVISED | STRUCTURE FILE NUMBER 3106578

STRUCTURE GENERAL NOTES 4 OF 7

BRIDGE NO. HAM-71-0134
I-71 LYTLE TUNNEL UNDER LYTLE PARK

HAM-71-01.34
PID No. 87268

c:\pwworking\hmm\external\pre47802\dms727831\071_0134CGN004.dgn 9/8/2015 12:31:57 PM PRE47802

STRUCTURE GENERAL NOTES

MATERIALS:

PROVIDE STRIP APPLIED EXPANDING WATERSTOP COMPRISED OF BENTONITE CLAY, HYDROPHILIC POLYMERS, AND BUTYL RUBBER. SWELLSTOP, AS MANUFACTURED BY:

GREENSTREAK, INC.
3400 TREE COURT INDUSTRIAL BLVD.,
ST. LOUIS, MO 63122,
PHONE: 800-325-9400, FAX: 800-551-5145.
WWW.GREENSTREAK.COM

OR APPROVED EQUAL

SUBMITTALS:

PROVIDE SHOP DRAWINGS IN ACCORDANCE WITH CONSTRUCTION AND MATERIALS SPECIFICATION 501.04.

INSTALLATION:

INSTALL STRIP APPLIED EXPANDING WATERSTOP IN ACCORDANCE WITH THE MANUFACTURER'S WRITTEN INSTRUCTIONS. SUBMIT A COPY OF THESE TO THE ENGINEER FOR THEIR RECORDS.

CONTRACTOR SHALL COORDINATE THE WATERSTOP INSTALLATION AND CONCRETE PLACING OPERATIONS SO THAT THE WATERSTOP SHALL REMAIN PROPERLY IN PLACE.

MEASUREMENT AND PAYMENT:

PAYMENT FOR ACCEPTED QUANTITIES OF BENTONITE WATERSTOP, COMPLETE IN PLACE, SHALL BE MADE AT THE CONTRACT PRICE BID PER LINEAR FOOT (LF) FOR ITEM 530 – SPECIAL - STRUCTURE, MISC.: BENTONITE WATERSTOP. THIS SHALL INCLUDE ALL NECESSARY TOOLS, LABOR, MATERIALS AND EQUIPMENT NECESSARY TO COMPLETE THIS ITEM OF WORK AS DESCRIBED AND TO THE SATISFACTION OF THE ENGINEER.

ITEM 530 – SPECIAL - STRUCTURE, MISC.: GROUT:

DESCRIPTION:

THIS WORK SHALL INCLUDE INSTALLING GROUT UNDER BASEPLATES AND ABOVE LINTELS AND COLUMN AS SHOWN IN THE PLANS AND HEREIN SPECIFIED.

MATERIALS:

PROVIDE GROUT IN ACCORDANCE WITH ODOT MATERIAL SPECIFICATION 705.22 AND AS MODIFIED BELOW

SUBMITTALS:

PROVIDE SHOP DRAWINGS IN ACCORDANCE WITH CONSTRUCTION AND MATERIALS SPECIFICATION 501.04.

INSTALLATION:

INSTALL GROUT IN ACCORDANCE WITH THE MANUFACTURER'S WRITTEN INSTRUCTIONS. SUBMIT A COPY OF THESE TO THE ENGINEER FOR THEIR RECORDS.

ADJUST FLUIDITY TO ALLOW FOR PLACEMENT AS POURABLE, PUMPABLE OR DRY/DAMP PACK AS APPROPRIATE FOR THE INSTALLATION.

MEASUREMENT AND PAYMENT:

PAYMENT FOR ACCEPTED QUANTITIES OF GROUT, COMPLETE IN PLACE, SHALL BE MADE AT THE CONTRACT PRICE BID PER CUBIC FEET (CF) FOR ITEM 530 – SPECIAL - STRUCTURE, MISC.: GROUT. THIS SHALL INCLUDE ALL NECESSARY TOOLS, LABOR, MATERIALS AND EQUIPMENT NECESSARY TO COMPLETE THIS ITEM OF WORK AS DESCRIBED AND TO THE SATISFACTION OF THE ENGINEER.

ITEM 530 – SPECIAL - STRUCTURE, MISC.: FIBER REINFORCED POLYMER (FRP) SYSTEM:

DESCRIPTION:

THIS WORK SHALL INCLUDE INSTALLING EXTERNALLY BONDED FIBER REINFORCED POLYMER (FRP) COMPOSITE SYSTEM

SCOPE:

GENERALLY, THE FRP WRAP WILL BE INSTALLED ON THE EXISTING CONCRETE WALLS WITH ENLARGED OPENINGS AS NOTED IN THE PLANS.

MATERIALS:

FRP MATERIALS SHALL HAVE A CURRENT INTERNATIONAL CODE COUNCIL (ICC) EVALUATION SERVICE REPORT COMPLIANT WITH THE 2006 INTERNATIONAL BUILDING CODE (IBC). MATERIALS MUST PROVIDE STRUCTURAL AND DURABILITY TESTING DEFINED IN ICC AC 725. TO BE AN APPROVED EQUAL THE INSTALLER MUST PROVIDE A HISTORY OF A MINIMUM OF 50 INSTALLATIONS COMPLETED IN THE LAST 5 YEARS, DURABILITY TESTING, DESIGN EQUIVALEBNCE TO THE SPECIFIED SYSTEM AND ALL PROPOSED MATERIAL DATA. POLYESTER OR OTHER RESINS WILL NOT BE ALLOWED AS A SUBSTITUTE FOR EPOXY RESINS.

SUPPLY FRP WRAP SYSTEMS THAT MEET OR EXCEED THE PROPERTIES OF THE FOLLOWING:

PRODUCT: TYFO FIBRWRAP SCH-41 COMPOSITE SYSTEMS
MANUFACTURER: FYFE CO, LLC
8380 MIRALANI DRIVE
SAN DIEGO, CALIFORNIA
92126 USA
TEL: 858.642.0694

OR APPROVED EQUAL

PROVIDE MANUFACTURER'S WRITTEN CERTIFICATION THAT SELECTED PRODUCTS, SYSTEMS, AND INSTALLATION PROCEDURES COMPLY WITH ICC AC125, AND ACI 440.2R-08.

COMPOSITE FRP PROPERTIES		
PROPERTY	*DESIGN VALUE*	*ASTM TEST METHOD*
ULTIMATE TENSILE STRENGTH	*121,000 PSI*	*D3039*
ELONGATION AT BREAK	*0.85%*	*D3039*
TENSILE MODULUS	*11.9X10^6 PSI*	*D3039*
COEFFICIENT OF THERMAL EXPANSION	*3.6 PPM/DEG F*	*D696*

EPOXY MATERIAL PROPERTIES		
PROPERTY	*DESIGN VALUE*	*ASTM TEST METHOD*
TENSILE STRENGTH	*10,500 PSI*	*D638 TYPE 1*
TENSILE MODULUS	*461,000 PSI*	*D638 TYPE 1*
ELONGATION PERCENT	*5%*	*D638 TYPE 1*

SURFACE PREPARATION:

THE SURFACES SHALL BE CLEAN AND FREE OF FINS, DEPRESSIONS, OR OTHER CONDITIONS THAT MAY AFFECT THE INTENDED PERFORMANCE OF THE FRP SYSTEM. CORNERS PERPENDICULAR TO THE STRONG FIBER DIRECTION SHALL BE ROUNDED TO A MINIMUM RADIUS OF ¾". THE CERTIFIED AND EXPERIENCED INSTALLER RESPONSIBLE SHALL VERIFY THAT ALL REQUIRED SURFACE PREPARATION HAS BEEN COMPLETED PROPERLY AND THAT THE FRP SYSTEM IS CLEARED FOR INSTALLATION.

SUBMITTALS:

PROVIDE SHOP DRAWINGS IN ACCORDANCE WITH CONSTRUCTION AND MATERIALS SPECIFICATION 501.04.

INSTALLATION:

TEMPERATURES OF THE SUBSTRATE TO RECEIVE THE FRP SYSTEM, TEMPERATURE OF THE FRP SYSTEM AND THE AMBIENT TEMPERATURE SHALL BE BETWEEN 50^0 F AND 95^0 F AT THE TIME OF MIXING THE EPOXY. THE FRP SYSTEM SHALL BE APPLIED WHEN THE RELATIVE HUMIDITY IS LESS THAN 85% AND THE SUBSTRATE TEMPERATURE IS MORE THAN 5^0 ABOVE THE DEW POINT.APPLICATIONS OF THE FRP SHALL BEGIN WITHIN ONE HOUR OF MIXING THE EPOXY.

THE MANUFACTURER SHALL DESIGNATE THE PROPER MIXING PROCEDURE FOR THE EPOXY RESINS.

APPLY A PRIMER COATING OF EPOXY RESIN TO THE SURFACES OF THE SUBSTRATE TO RECEIVE THE FRP SYSTEM. SATURATE THE FIBER IN A DOCUMENTED SUCCESSFUL MANNER THAT ENSURES FULL SATURATIONOF THE FIBER PRIOR TO THE INSTALLATION OF THE FRP. STAURATION OF THE FIBER IN PLACE IS NOT ALLOWED.

APPLY THE FRP TO THE PREPARED AND PRIMERED SUBSTRATE USING METHODS THAT ENSURE A UNIFORM TENSILE FORCE OF THE WIDTH OF THE SATURATED FRP. STRONG FIBERS SHALL NOT DEVIATE FROM THE INTENDED FIBER DIRECTION BY MORE THAN ½" PER 12" OF LENGTH OF FRP. INSPECTION OF THE INSTALLED FRP SHALL BE COMPLETED PRIOR TO THE CURING OF THE FRP TO ENSURE THAT ALL EDGES, SEAMS, AND OTHER AREAS ARE PROPERLY ADHERED. DURING THIS INSPECTION PROCESS, RELEASING OF ENTRAPPED AIR AND OTHER IDENTIFIED DEFICIENCIES SHALL BE ADDRESSED.

AFTER THE FRP SYSTEM HAS BEEN INSTALLED, USE THICKENED EPOXY TO DETAIL ALL EDGES AND SEAMS TO PROVIDE A SMOOTH FINISH. APPLY A FINAL LAYER OF EPOXY TO THE INSTALLED FRP SYSTEM FOR PROTECTION.

MEASUREMENT AND PAYMENT:

PAYMENT FOR ACCEPTED QUANTITIES OF FIBER REINFORCED POLYMER (FRP) SYSTEM, COMPLETE IN PLACE, SHALL BE MADE AT THE CONTRACT PRICE BID PER SQUARE FOOT FOR ITEM 530 – SPECIAL - STRUCTURE, MISC.: FIBER REINFORCED POLYMER (FRP) SYSTEM. THIS SHALL INCLUDE ALL NECESSARY TOOLS, LABOR, MATERIALS AND EQUIPMENT NECESSARY TO COMPLETE THIS ITEM OF WORK AS DESCRIBED AND TO THE SATISFACTION OF THE ENGINEER.

ITEM 530 – SPECIAL - STRUCTURE, MISC.: WATERPROOFING INCIDENTALS

DESCRIPTION:

THIS WORK SHALL INCLUDE INSTALLING PROTECTION BOARD OVER TYPE 2 WATERPROOFING MEMBRANE, TERMINATION BARS, AND REMEDIAL GROUT PIPES AND GROUT PORTS.

MATERIALS:

PROTECTION BOARD

ASPHALT IMPREGNATED REINFORCED MAT MANUFACTURED IN ACCORDNACE WITH ASTM D6506 AND COMPATIBLE WITH THE WATERPROOFING MEMBRANE TO BE INSTALLED. THICKNESS AS PER MANUFACTURER'S RECOMMENDATION.

DESIGN AGENCY
HATCH MOTT MacDONALD
18013 CLEVELAND PKWY.
SUITE 200
CLEVELAND, OH 44135

DESIGNED BTF | DRAWN JMS | CHECKED PEG | REVIEWED MAR | DATE 10/20/14 | REVISED | STRUCTURE FILE NUMBER 3106578

STRUCTURE GENERAL NOTES 5 OF 7
BRIDGE NO. HAM-71-0134
I-71 LYTLE TUNNEL UNDER LYTLE PARK

HAM-71-01.34
PID No. 87268

c:\pwworking\hmm\external\tyn61470\dms72783\071_0134CGN005.dgn 10/24/2014 10:58:33 AM TYN61470

STRUCTURE GENERAL NOTES

TEMRINATION BAR

HIGH STRENGTH, PLASTIC COMPOSITE STRIP DESIGNED TO SUPPORT WATERPROOFING MEMBRANE SYSTEMS AT THEIR TERMINATION POINT. TERMINATION BAR SHALL HAVE PRE-DRILLED HOLES FOR EASY INSTALLATION AND BE COMPATIBLE WITH THE MEMBRANE SYSTEM TO BE INSTALLED.

REMEDIAL GROUT PIPE AND GROUT PORTS

REMEDIAL GROUTING PIPES: ¾ INCH NOMINAL PIPE SIZE POLYVINYL CHLORIDE (PVC) PIPE SCHEDULE 40; ASTM D1785, PROVIDED WITH INSIDE THREAD AND REMOVABLE PLUG.

MEASUREMENT AND PAYMENT:

PAYMENT FOR ACCEPTED QUANTITIES OF PROTECTION BOARD, COMPLETE IN PLACE, SHALL BE MADE AT THE CONTRACT LUMP SUM BID PRICE FOR ITEM 530 – SPECIAL - STRUCTURE, MISC.: WATERPROOFING INCIDENTALS. THIS SHALL INCLUDE ALL NECESSARY TOOLS, LABOR, MATERIALS AND EQUIPMENT NECESSARY TO COMPLETE THIS ITEM OF WORK AS DESCRIBED AND TO THE SATISFACTION OF THE ENGINEER.

REINFORCEMENT COVER AND SPACING:

MINIMUM CLEAR COVER TO REINFORCING BARS SHALL BE PER THE FOLLOWING TABLE, UNLESS NOTED:

- *CONCRETE CAST AGAINST AND PERMANENTLY EXPOSED TO GROUND: 3 INCHES*
- *ALL OTHER CASES: 2 INCHES*

CLEAR HORIZONTAL DISTANCE BETWEEN BARS IN A LAYER, INCLUDING THE PRESENCE OF LAP-SPLICES, SHALL NOT BE LESS THAN THE LESSER OF: 1.5 BAR DIAMETERS OR 1½ INCHES.

CLEAR VERTICAL DISTANCE BETWEEN LAYERS, INCLUDING THE PRESENCE OF LAP-SPLICES, SHALL NOT BE LESS THAN 1".

ALL SPLICES SHALL BE IN ACCORDANCE WITH ACI 318 – LATEST EDITION. UNLESS OTHERWISE NOTED SPLICES SHALL BE CLASS B.

REINFORCING DEVELOPMENT AND SPLICE LENGTHS						
		#7	#8	#9	#10	#11
SPLICE LENGTH	HORIZONTAL BARS WITH 12" OR MORE OF CONCRETE BELOW	7'-8"	8'-9"	9'-10"	11'-2"	
	OTHERS	6'-9"	7'-9"	8'-9"	9'-10"	11'-0"
DEVELOPMENT LENGTH	HORIZONTAL BARS WITH 12" OR MORE OF CONCRETE BELOW	6'-0"	6'-9"	7'-7"	8'-7"	
	OTHERS	5'-3"	6'-0"	6'-9"	7'-7"	8'-5"

c:\pwworking\hmm\external\tyn61470\dms72783\071_0134CGN006.dgn 10/24/2014 10:58:36 AM TYNG1470

DESIGN AGENCY
HATCH MOTT MacDONALD
18013 CLEVELAND PKWY.
SUITE 200
CLEVELAND, OH 44135

DESIGNED BTF | DRAWN JMS | CHECKED PEG | REVIEWED MAR | DATE 10/20/14 | REVISED | STRUCTURE FILE NUMBER 3106578

STRUCTURE GENERAL NOTES 6 OF 7
BRIDGE NO. HAM-71-0134
I-71 LYTLE TUNNEL UNDER LYTLE PARK

HAM-71-01.34
PID No. 87268

STRUCTURE GENERAL NOTES

ITEM 503 - COFFERDAMS AND EXCAVATION BRACING, AS PER PLAN

DESCRIPTION:

THIS ITEM SHALL INCLUDE ALL WORK NECESSARY TO INSTALL EXCAVATION BRACING AS REQUIRED TO CONSTRUCT NEW WORK IN THE EXCAVATION. THIS WORK SHALL ALSO INCLUDE GEOTECHNICAL MONITORING AND REPORTING TO THE ENGINEER.

TEMPORARY SUPPORT OF EXCAVATION:

THE DESIGN SHOWN ON THE PLANS FOR TEMPORARY SUPPORT OF EXCAVATION IS ONE REPRESENTATIVE DESIGN THAT MAY BE USED TO CONSTRUCT THE PROJECT, FOLLOWING THE SUGGESTED CONSTRUCTION SEQUENCE IDENTIFIED. THE CONTRACTOR MAY CONSTRUCT THE DESIGN SHOWN ON THE PLANS OR PREPARE AN ALTERNATE DESIGN TO SUPPORT THE EXCAVATIONS. IF CONSTRUCTING AN ALTERNATE DESIGN FOR TEMPORARY SUPPORT OF EXCAVATION, PREPARE AND PROVIDE PLANS IN ACCORDANCE WITH C&MS 501.05. THE DEPARTMENT WILL PAY FOR THE TEMPORARY SUPPORT OF EXCAVATION AT THE CONTRACT LUMP SUM PRICE FOR COFFERDAMS AND EXCAVATION BRACING, AS PER PLAN. NO ADDITIONAL PAYMENT WILL BE MADE FOR PROVIDING AN ALTERNATE DESIGN.

THE DESIGN SHOWN FOR THE TEMPORARY SUPPORT OF EXCAVATION IS BASED ON THE CONSTRUCTION SEQUENCE SHOWN ON SHEET 16 /296 AND AN ASSUMED SURCHARGE LOADING OF 250 PSF ADJACENT TO THE EXCAVATION. THE CONTRACTOR IS RESPONSIBLE FOR ENSURING CONSTRUCTION SURCHARGE LOADS ADJACENT TO THE EXCAVATION DO NOT EXCEED AN EQUIVALENT TO 250 PSF, OR OTHERWISE SHALL REDESIGN THE SUPPORT OF EXCAVATION SYSTEM TO SUIT ITS MEANS AND METHODS.

THE SUPPORT OF EXCAVATION PLANS DO NOT ADDRESS SAFETY ISSUES RELATED TO THE INSTALLATION OF SUPPORT SYSTEMS OR EXCAVATION. THE CONTRACTOR SHALL BE RESPONSIBLE FOR SITE SAFETY AND PROVIDE A SAFETY PLAN CONFORMING TO OSHA STANDARDS.

DETAILS AND DIMENSIONS SHOWN ON THESE PLANS PERTAINING TO EXISTING UTILITIES AND STRUCTURES HAVE BEEN OBTAINED FROM EXISTING AVAILABLE REFERENCE MATERIALS, FIELD OBSERVATIONS AND MEASUREMENTS. WHERE EXISTING UTILITY INFORMATION COULD NOT BE VERIFIED, INFORMATION SHOWN IS INDICATIVE OF COMMONLY USED INSTALLATION PRACTICE.

THE CONTRACTOR SHALL VERIFY AND COORDINATE ALL DIMENSIONS AND CHECK FOR CLEARANCES PRIOR TO START OF WORK. ACTUAL FIELD CONDITIONS MAY REQUIRE MODIFICATIONS TO THE CONSTRUCTION DETAILS SHOWN. CONFLICTS BETWEEN ACTUAL CONDITIONS AND DETAILS SHOWN SHALL BE BROUGHT TO THE ATTENTION OF THE ENGINEER.

INSTALL INSTRUMENTATION AS SHOWN ON THE PLANS AND OBTAIN BASELINE READINGS PRIOR TO EXCAVATION AND SUPPORT OF EXCAVATION INSTALLATION.

EXCAVATE FOR REINFORCED CONCRETE TOPPING SLAB ABOVE EXISTING TUNNEL UNITS 17 AND 18. SLOPE BACK EXCAVATION AT 1.5 HORIZONTAL TO 1.0 VERTICAL.

MATERIALS:

SOLDIER PILES:

STEEL H-PILES - ASTM A572 - YIELD STRENGTH 50 KSI

INSTALLATION:

STEEL SOLDIER PILES ILLUSTRATED IN THE PLAN SHORING DESIGN SHALL BE FURNISHED AND IN ACCORDANCE WITH THE GUIDELINES OF ITEM 524 – DRILLED SHAFTS. AN ACCEPTABLE ALTERNATIVE INSTALLATION METHOD FOR THE SOLDIER BEAMS IS THE USE OF A CONTINUOUS FLIGHT AUGERS (CFA). DRIVING OR VIBRATING PILES IS PROHIBITED.

THE FOLLOWING IS REQUIRED OF THE CONTRACTOR WHEN USING CFA INSTALLATION MEANS IN THE TEMPORARY SHORING SYSTEM:

THE CONTRACTOR SHALL SUBMIT THE CFA INSTALLATION PLAN IN LIEU OF THE DRILLED SHAFT INSTALLATION. THE CFA INSTALLATION PLAN SHALL INCLUDE THE PROVISIONS OUTLINED IN ITEM 524. WITH THE USE OF CFA METHODS, THE ENTIRE DRILLED SHAFT EXCAVATION FROM THE DESIGN TIP ELEVATION TO THE GROUND ELEVATION AT THE TIME OF DRILLING IS TO BE BACKFILLED WITH LOW STRENGTH MATERIAL (LSM).

THE CONTINUOUS FLIGHT AUGERS MUST BE HOLLOW, AND CONTINUOUS TO INDUCE PLACEMENT OF THE LSM UNDER PRESSURE AT THE BOTTOM OF THE DRILLED EXCAVATION.

ONCE THE DESIGN SHAFT TIP ELEVATION IS REACHED, PLACE THE LSM TO THE ELEVATIONS SHOWN IN THE PROJECT PLANS BY PUMPING. A MINIMUM 5 FT. OF PRESSURE HEAD MUST BE MAINTAINED DURING CASTING OF THE SHAFT. PROVIDE A CALIBRATED, AUTOMATED INLINE MONITORING SYSTEM TO DOCUMENT THE QUANTITY OF GROUT/LSM PLACED IN THE DRILLED EXCAVATION. SUBMIT THE FLOWMETER DOCUMENTATION FOR EACH DRILLED SHAFT TO THE ENGINEER THE DAY AFTER SHAFT CASTING.

IMMEDIATELY RE-DRILL ANY SHAFT (DO NOT PLACE SOLDIER BEAM) IN WHICH THE AMOUNT OF LSM UTILIZED IS LESS THAN THE THEORETICAL VOLUME.

PROVIDE PROOF OF INLINE FLOWMETER CALIBRATION WITH THE CFA INSTALLATION PLAN. THE INLINE FLOW METER MUST HAVE BEEN CALIBRATED BY AN INDEPENDENT THIRD PARTY WITHIN 12 MONTHS OF THE CFA CONSTRUCTION DATE. THE COST OF THE INLINE MONITORING SYSTEM IS INCIDENTAL TO THE COST OF THE DRILLED SHAFT. NO ADDITIONAL COMPENSATION WILL BE PERMITTED FOR SHAFTS RE-DRILLED WHEN THE INLINE FLOWMETER INDICATES THE INITIAL LSM VOLUME WAS LESS THAN THE THEORETICAL VOLUME.

WHEN UTILIZING A CFA INSTALLATION METHOD, PROVIDE TESTING OF THE GROUT MIX SAMPLES BY AN INDEPENDENT TESTING LAB. QUALITY CONTROL CUBES OR 3"X6" (OR LARGER) CYLINDERS ARE ACCEPTABLE. THE DEPARTMENT WILL OBTAIN 3"X6" CYLINDERS FOR EVERY 5TH SET OF CUBES OR CYLINDERS AS QUALITY ASSURANCE SAMPLES. THE COST FOR PROVIDING CUBE SAMPLES AND TESTING IS INCIDENTAL TO THE DRILLED SHAFT COST.

THE CONTRACTOR PROPOSING TO UTILIZE CFA METHODS OF DRILLED SHAFT INSTALLATION MUST BE ODOT PREQUALIFIED AND HAVE DEMONSTRATED 5 PREVIOUS PROJECTS IN WHICH CONTINUOUS FLIGHT AUGERS WERE SUCCESSFULLY UTILIZED FOR SOLDIER PILE INSTALLATION. INCLUDE THE PREVIOUS PROJECT INFORMATION, LOCATION, YEAR AND REFERENCE CONTACT WITH THE CFA INSTALLATION PLAN.

PAYMENT FOR THE CFA METHOD OF INSTALLATION WILL BE AN ALTERNATIVE TO CONVENTIONAL DRILLED SHAFT.

THE CONTRACTOR SHALL MONITOR THE VERTICAL PLUMBNESS OF THE SOLDIER PILES AT 25 FT INTERVALS FOLLOWING THE COMPLETE INSTALLATION OF THE OF THE TIMBER LAGGING. THE PLUMBNESS SHOULD BE MEASURED FROM THE TOP OF THE SOLDIER PILE TO THE BOTTOM OF THE LAGGING. CONSTRUCTION OF THE NEW FACILITY SHALL NOT COMMENCE UNTIL THE WALL DEFLECTION HAS STABILIZED TO BE LESS THAN 1/8" AT ALL MONITORING POINTS. PROVIDE WEEKLY READINGS TO THE ENGINEER AND DISTRICT GEOTECHNICAL ENGINEER FOR REVIEW. THE READING SHALL BE SUMMARIZED IN A TABLE PROVIDING THE LOCATION OF THE MONITORING POINT (SOLDIER PILE NUMBER), MEASURED COORDINATES AT THE BASE OF THE WALL, MEASURED COORDINATES AT THE TOP OF THE WALL, AND THE CALCULATED WALL DEFLECTION ALONG THE SOLDIER PILE LENGTH.

LOW STRENGTH MATERIAL (LSM):

LOW STRENGTH MATERIAL (LSM), CONCRETE, OR GROUT IN CFA APPLICATIONS, FOR BACKFILLING OF DRILLED PILES SHALL BE FLOWABLE FILL PER C&MS ITEM 613 WITH A COMPRESSIVE STRENGTH BETWEEN 50 PSI AND 150 PSI AT 28 DAYS.

TIMBER LAGGING:

LAGGING SHALL BE HARDWOOD TIMBER WITH NOMINAL THICKNESS AS SHOWN IN THE PLANS. LAGGING SHOULD BE PLACED IN A TOP DOWN MANNER AS EXCAVATION PROCEEDS DOWNWARD. AT NO TIME SHOULD MORE THAN 3 FEET OF UNSUPPORTED EXCAVATION BE PERMITTED. REDUCE THE UNSUPPORTED HEIGHT AS NECESSARY TO PREVENT CAVING AND SLOUGHING OF THE SOILS BETWEEN THE SOLDIER PILES. PROVIDE ¼" TO ½" HORIZONTAL JOINT SPACING BETWEEN THE BOARDS TO PERMIT DRAINAGE.

TIMBER LAGGING SHALL BE ROUGH CUT FULL SIZE WITH A MINIMUM ALLOWABLE BENDING STRESS OF 1,350 PSI AND AN ALLOWABLE HORIZONTAL SHEAR STRESS OF 175 PSI.

TIEBACKS:

TIEBACKS SHALL BE INSTALLED IN ACCORDANCE WITH ODOT SUPPLEMENTAL SPECIFICATION 866.

PERFORMANCE TEST 5 PERCENT OF TIEBACKS AT EACH TIEBACK LEVEL AT LOCATIONS SELECTED BY THE ENGINEER. ALL OTHER TIEBACKS SHALL BE PROOF TESTED. TESTING SHALL BE IN CONFORMANCE WITH THE RECOMMENDATIONS OF THE POST TENSIONING INSTITUTE (PTI) TO 133% OF DESIGN LOAD. TIEBACKS TO BE LOCKED-OFF TO 100% OF DESIGN LOAD AFTER TESTING.

ALL TIEBACKS SHALL REMAIN WITHIN THE RIGHT-OF-WAY FOR THE PROJECT OR EXISTING PUBLIC RIGHT-OF-WAY.

MUDMAT:

MUDMATS SHALL BE IN ACCORDANCE WITH C&MS ITEM 511 AND SHALL HAVE A COMPRESSIVE STRENGTH OF 2,000 PSI.

MEASUREMENT AND PAYMENT:

PAYMENT FOR ACCEPTED QUANTITIES, COMPLETE IN PLACE, SHALL BE MADE AT THE CONTRACT PRICE BID LUMP SUM FOR ITEM 503 - COFFERDAMS AND EXCAVATION BRACING, AS PER PLAN. THIS SHALL INCLUDE ALL NECESSARY TOOLS, LABOR, MATERIALS AND EQUIPMENT NECESSARY TO COMPLETE THIS ITEM OF WORK AS DESCRIBED AND TO THE SATISFACTION OF THE ENGINEER.

DESIGN AGENCY
HATCH MOTT MacDONALD
18013 CLEVELAND PKWY.
SUITE 200
CLEVELAND, OH 44135

DESIGNED PEG | DRAWN JMS | CHECKED BTF | REVIEWED MAR | DATE 10/20/14 | REVISED | STRUCTURE FILE NUMBER 3106578

STRUCTURE GENERAL NOTES 7 OF 7
BRIDGE NO. HAM-71-0134
I-71 LYTLE TUNNEL UNDER LYTLE PARK

HAM-71-01.34
PID No. 87268

c:\pwworking\hmm\external\tyn61470\dms72783\071_0134CGN007.dgn 10/24/2014 10:58:39 AM TYN61470

STRUCTURE NOTES

ITEM 530 – SPECIAL - STRUCTURE, MISC.: REPLACE EXISTING EXTERIOR METAL DOOR – EXTERIOR DOOR STEEL

DESCRIPTION:

THIS WORK SHALL INCLUDE REMOVAL OF EXISTING DOOR AND FRAME AND INSTALLING METAL DOORS, FRAMES, HINGES, HANDLES, OTHER HARDWARE, LOCKSETS AS SCHEDULED, AND APPURTENANCES AS SHOWN IN THE PLANS AND HEREIN SPECIFIED.

MATERIALS:

DOORS SHALL BE HOLLOW STEEL PER ANSI/SDI A250.8-2003 (R2008) –LEVEL 3, MODEL 2 FULL FLUSH, PRIMED AND PAINTED. FINISH COLOR SHALL BE 595B-36628, GREY, IN ACCORDANCE WITH FEDERAL STANDARD NUMBER 595.

FRAMES SHALL BE STEEL PER ANSI/SDI A250.8-2003 (R2008) – TO MATCH DOORS, AND PRIMED AND PAINTED. FINISH COLOR SHALL BE AS ABOVE.

DOORS, FRAMES, AND HARDWARE SHALL BE FIRE RATED AS A SYSTEM FOR ONE AND A HALF HOURS PER NFPA 101 & NFPA 502.

DOOR HARDWARE SHALL BE STEEL AND GALVANIZED.

HARDWARE: ANSI A156 STANDARD –GRADE TO MATCH DOORS

HINGES: FULL MORTISED; MINIMUM THREE HINGES
LOCK AND LOCKSETS: MATCH EXISTING
EXIT DEVICES: CROSS BAR – HARDWARE SET NO. 1 ONLY
CYLINDERS: PIN TYPE – KEY TO MATCH EXISTING.
CLOSERS: ANSI A156.4 MODERN TYPE WITH COVER; PROVIDE MANUAL DOOR HOLDER – HARDWARE SET NO. 2 ONLY

SUBMITTALS:

PROVIDE SHOP DRAWINGS IN ACCORDANCE WITH CONSTRUCTION AND MATERIALS SPECIFICATION 501.04.

INSTALLATION:

DOOR FRAMES SHALL BE SECURELY ANCHORED TO THE SUPPORTING WALLS USING COMPATABLE COUNTERSUNK MECHANICAL ANCHORS.

ITEM 530 – SPECIAL - STRUCTURE, MISC.: REPLACE EXISTING EXTERIOR METAL DOOR- EXTERIOR DOOR STAINLESS STEEL

DESCRIPTION:

THIS WORK SHALL INCLUDE REMOVAL OF EXISTING DOOR AND FRAME AND INSTALLING METAL DOORS, FRAMES, HINGES, HANDLES, OTHER HARDWARE, LOCKSETS AS SCHEDULED, AND APPURTENANCES AS SHOWN IN THE PLANS AND HEREIN SPECIFIED.

MATERIALS:

DOORS SHALL BE HOLLOW STAINLESS STEEL (ASTM A240, TYPE 304) PER ANSI/SDI A250.8-2003 (R2008) – LEVEL 3, MODEL 2 FULL FLUSH.

FRAMES SHALL BE STAINLESS STEEL (ASTM A240, TYPE 304) PER ANSI/SDI A250.8-2003 (R2008) – TO MATCH DOORS.

DOORS, FRAMES, AND HARDWARE SHALL BE FIRE RATED AS A SYSTEM FOR ONE AND A HALF HOURS PER NFPA 101 & NFPA 502.

DOOR HARDWARE SHALL BE STAINLESS STEEL.

HARDWARE: ANSI A156 STANDARD – GRADE TO MATCH DOORS

HINGES: FULL MORTISED; MINIMUM THREE HINGES
LOCK AND LOCKSETS: MATCH EXISTING
EXIT DEVICES: CROSS BAR – HARDWARE SET NO. 1 ONLY
CYLINDERS: PIN TYPE – KEY TO MATCH EXISTING.
CLOSERS: ANSI A156.4 MODERN TYPE WITH COVER; PROVIDE MANUAL DOOR HOLDER – HARDWARE SET NO. 2 ONLY

SUBMITTALS:

PROVIDE SHOP DRAWINGS IN ACCORDANCE WITH CONSTRUCTION AND MATERIALS SPECIFICATION 501.04.

INSTALLATION:

DOOR FRAMES SHALL BE SECURELY ANCHORED TO THE SUPPORTING WALLS USING COMPATABLE COUNTERSUNK MECHANICAL ANCHORS.

NO.	DATE	REVISION DESCRIPTION
1	04/21/16	(NEW SHEET)

pw:\\pirnspwise.hnmng.cc:pw_external\Documents\246924-ODOT I-71 TUNNEL REHAB\Design\HAM\87268\Structures\HAM071_0134C\Sheets\071_0134CGN008.dgn 4/21/2016 9:46:38 AM ced27612

DESIGN AGENCY
HATCH MOTT MacDONALD
18013 CLEVELAND PKWY.
SUITE 200
CLEVELAND, OH 44135

DESIGNED	DRAWN	REVIEWED	DATE
BTF	JMS	TCV	04/21/16
CHECKED	REVISED	STRUCTURE FILE NUMBER	
PSK		3106578	

STRUCTURE GENERAL NOTES 8 OF 8
BRIDGE NO. HAM-71-0134
I-71 LYTLE TUNNEL UNDER LYTLE PARK

HAM-71-01.34
PID No. 87268

						Calc	Date	Chk'd	Date
ESTIMATED STRUCTURAL QUANTITIES						CPB	10/17/14	BTF	10/17/2014
ITEM	**EXTENSION**	**TOTAL**	**UNIT**	**DESCRIPTION**	**ABUT.**	**PIERS**	**SUPER.**	**GEN.**	**SEE SHEET NO.**
202	11201	LUMP		PORTIONS OF STRUCTURE REMOVED, AS PER PLAN				LUMP	2 /296
503	11101	LUMP		COFFERDAMS AND EXCAVATION BRACING, AS PER PLAN				LUMP	4 /296
503	21301	LUMP		UNCLASSIFIED EXCAVATION, AS PER PLAN				LUMP	8 /296
509	10000	1,129,600	POUND	EPOXY COATED REINFORCING STEEL				1,129,600	
510	10000	502	EACH	DOWEL HOLES WITH NONSHRINK, NONMETALLIC GROUT				502	
511	50212	5,035	CU YD	CLASS QC1 CONCRETE WITH QC/QA, SUBSTRUCTURE				5,035	
512	10100	4,120	SQ YD	SEALING OF CONCRETE SURFACES (EPOXY-URETHANE)				4,120	
512	33000	270	SQ YD	TYPE 2 WATERPROOFING				270	
512	33010	2,210	SQ YD	TYPE 3 WATERPROOFING				2,210	
513	10201	20,700	POUND	STRUCTURAL STEEL MEMBERS, LEVEL UF, AS PER PLAN				20,700	2 /296
516	13000	66	SQ FT	1/4" PREFORMED EXPANSION JOINT FILLER				66	
518	21200	110	CU YD	POROUS BACKFILL WITH FILTER FABRIC				110	
518	39900	85	FT	4" NON-PERFORATED CORRUGATED PLASTIC PIPE, INCLUDING SPECIALS				85	
518	40000	375	FT	6" PERFORATED CORRUGATED PLASTIC PIPE				375	
530	00200	LUMP		SPECIAL - STRUCTURE, MISC.: WATERPROOFING INCIDENTALS				LUMP	6 /296
530	00400	2	EACH	SPECIAL - STRUCTURE, MISC.: EQUIPMENT ACCESS HATCH				2	4 /296
530	00400	2	EACH	SPECIAL - STRUCTURE, MISC.: EMERGENCY ACCESS HATCH				2	4 /296
530	00400	8	EACH	SPECIAL - STRUCTURE, MISC.: METAL DOORS, SINGLE				8	3 /296
530	00400	4	EACH	SPECIAL - STRUCTURE, MISC.: METAL DOORS, DOUBLE				4	3 /296
530	00400	1	EACH	SPECIAL - STRUCTURE, MISC.: DOUBLE DOOR WITH REMOVABLE PANEL				1	4 /296
530	00400	3	EACH	SPECIAL - STRUCTURE, MISC.: STAIRS				3	3 /296
530	00400	1	EACH	SPECIAL - STRUCTURE, MISC.: FIRE DEPARTMENT KEY BOX				1	3 /296
530	00400	1	EACH	SPECIAL - STRUCTURE, MISC.: REPLACE EXISTING METAL DOOR				1	4 /296
530	00400	2	EACH	SPECIAL - STRUCTURE, MISC.: LADDERS				2	
530	00600	830	SQ FT	SPECIAL - STRUCTURE, MISC.: CONCRETE MASONRY 8 INCH WALL				830	2 /296
530	00600	2,070	SQ FT	SPECIAL - STRUCTURE, MISC.: CONCRETE MASONRY 12 INCH WALL				2,070	2 /296
530	00600	220	SQ FT	SPECIAL - STRUCTURE, MISC.: BRICK MASONRY WALL				220	2 /296
530	00600	880	SQ FT	SPECIAL - STRUCTURE, MISC.: GRATING				880	5 /296
530	00600	950	SQ FT	SPECIAL - STRUCTURE, MISC.: FIBER REINFORCED POLYMER				950	6 /296
530	00600	19,615	SQ FT	SPECIAL - STRUCTURE, MISC.: FIRE RESISTANT COATING SYSTEM, CEILING INSTALLATION				19,615	4 /296
530	00600	17,450	SQ FT	SPECIAL - STRUCTURE, MISC.: FIRE RESISTANT COATING SYSTEM, WALL INSTALLATION				17,450	4 /296
530	01200	13	CU FT	SPECIAL - STRUCTURE, MISC.: GROUT				13	6 /296
530	01300	950	FT	SPECIAL - STRUCTURE, MISC.: BENTONITE WATERPROOFING				950	5 /296

DESIGN AGENCY
HATCH MOTT MacDONALD
18013 CLEVELAND PKWY.
SUITE 200
CLEVELAND, OH 44135

DESIGNED KMW | DRAWN JMS | REVIEWED MAR | DATE 10/20/14
CHECKED BTF | REVISED | STRUCTURE FILE NUMBER 3106578

ESTIMATED QUANTITIES
BRIDGE NO. HAM-71-0134
I-71 LYTLE TUNNEL UNDER LYTLE PARK

HAM-71-01.34
PID No. 87268

c:\pwworking\hmm\external\pre47802\dms72783\071_0134CEQ001.dgn 9/23/2015 9:44:38 AM PRE47802

ESTIMATED MECHANICAL QUANTITIES

						Calc	Date	Chk'd	Date
						HWW	7/16/14	NAH	8/18/14
ITEM	EXTENSION	TOTAL	UNIT	DESCRIPTION	ABUT.	PIERS	SUPER.	GEN.	SEE SHEET NO.
530	00200	LUMP		SPECIAL - STRUCTURE, MISC.: DAMPER DOOR SYSTEM				LUMP	100/296
530	00200	LUMP		SPECIAL - STRUCTURE, MISC.: CARBON MONOXIDE DETECTION SYSTEM				LUMP	126/296
530	00600	3,300	SQ FT	SPECIAL - STRUCTURE, MISC.: SOUNDPROOFING FOR WALLS				3,300	108/296
530	00600	3,700	SQ FT	SPECIAL - STRUCTURE, MISC.: SOUNDPROOFING FOR CEILING				3,700	108/296
530	00600	7,000	SQ FT	SPECIAL - STRUCTURE, MISC.: 1"x1" 14 GAUGE GALVANIZED WELDED WIRE MESH				7,000	108/296
530	01300	500	FT	SPECIAL - STRUCTURE, MISC.: P1000 GALVANIZED UNISTRUT WALL MOUNTED				500	108/296
530	01300	700	FT	SPECIAL - STRUCTURE, MISC.: P1000 GALVANIZED UNISTRUT CEILING MOUNTED				700	108/296
690	98000	9	EACH	SPECIAL - MISC.: DEMOLITION EXHAUST FANS				9	131/296
690	98000	3	EACH	SPECIAL - MISC.: DEMOLITION PLENUM ACOUSTIC PANELS				3	131/296
690	98000	2	EACH	SPECIAL - MISC.: DEMOLITION PLENUM SOUND ATTENUATORS				2	131/296
690	98000	12	EACH	SPECIAL - MISC.: DEMOLITION TUNNEL ISOLATION DAMPERS				12	131/296
690	98000	3	EACH	SPECIAL - MISC.: DEMOLITION PNEUMATIC CONTROL PANEL				3	131/296
690	98000	1	EACH	SPECIAL - MISC.: DEMOLITION CARBON MONOXIDE DETECTOR PANEL				1	131/296
690	98400	LUMP		SPECIAL - MISC.: AXIAL FANS				LUMP	96/296
690	98400	LUMP		SPECIAL - MISC.: FAN DUCT WORK TRANSITIONS				LUMP	110/296
690	98400	LUMP		SPECIAL - MISC.: SOUND ATTENUATORS				LUMP	106/296
690	98400	LUMP		SPECIAL - MISC.: FAN ISOLATION DAMPERS				LUMP	104/296
690	98400	LUMP		SPECIAL - MISC.: SOUTHBOUND TUNNEL ISOLATION DAMPERS				LUMP	104/296
690	98400	LUMP		SPECIAL - MISC.: TESTING, ADJUSTING, AND BALANCING				LUMP	130/296
690	98400	LUMP		SPECIAL - MISC.: PLUMBING SYSTEM				LUMP	115/296
690	98400	LUMP		SPECIAL - MISC.: HVAC SYSTEM				LUMP	122/296

c:\pwworking\hmm\external\tyn61470\dms72783\071_0134CEQ002.dgn 10/24/2014 4:45:55 PM TYN61470

DESIGN AGENCY
HATCH MOTT MacDONALD
18013 CLEVELAND PKWY.
SUITE 200
CLEVELAND, OH 44135

DESIGNED HWW | CHECKED NAH
DRAWN CWP | REVIEWED DGN | DATE 08/18/14
REVISED | STRUCTURE FILE NUMBER 3106578

ESTIMATED QUANTITIES
BRIDGE NO. HAM-71-0134
I-71 LYTLE TUNNEL UNDER LYTLE PARK

HAM-71-01.34
PID No. 87268

						Calc	Date	Chk'd	Date	
				ESTIMATED ELECTRICAL QUANTITIES		DGC	7/16/14	MK	8/11/14	
ITEM	**EXTENSION**	**TOTAL**	**UNIT**	**DESCRIPTION**	**ABUT.**	**PIERS**	**SUPER.**	**GEN.**	**SEE SHEET NO.**	
				ELECTRICAL						
625	25000	6,422	FT	CONDUIT, 3/4", 725.04				6,422		
625	25100	620	FT	CONDUIT, 1", 725.04				620		
625	25300	395	FT	CONDUIT, 1-1/2", 725.04				395		
625	25400	1,255	FT	CONDUIT, 2", 725.04				1,255		
625	25404	400	FT	CONDUIT, 2-1/2", 725.04				400		
625	25500	470	FT	CONDUIT, 3", 725.04				470		
625	25550	40	FT	CONDUIT, 3-1/2", 725.04				40		
625	25600	3,515	FT	CONDUIT, 4", 725.04				3,515		
625	25920	20	FT	CONDUIT, MISC.: 4" PVC MULTICELL				20	188/296	
625	29901	4	EACH	JUNCTION BOX, AS PER PLAN (NEMA 4X. 30" X 24" X 12")				4	170/296	
625	29901	4	EACH	JUNCTION BOX, AS PER PLAN (NEMA 4X. 16" X 16" X 6")				4	446	
625	34001	1	EACH	POWER SERVICE, AS PER PLAN				1	170/296	
625	98000	3	EACH	LIGHTING, MISC.: SOFT STARTER WITH TWO SPEED AND REVERSING CONTACTORS				3	202/296	
625	98000	1	EACH	LIGHTING, MISC.: 480VAC SWITCHGEAR				1	195/296	
625	98000	3	EACH	LIGHTING, MISC.: LV TRANSFORMERS				3	192/296	
625	98000	1	EACH	LIGHTING, MISC.: 30KVA UPS				1	204/296	
625	98100	180	FT	LIGHTING, MISC.: 2 CONDUCTOR, NO. 10 AWG, 1 CONDUCTOR NO. 12G, CIC, FPLR				180	226/296	
625	98100	2,300	FT	LIGHTING, MISC.: 2 CONDUCTOR, NO. 12 AWG, CIC, FPLR				2,300	226/296	
625	98100	20	FT	LIGHTING, MISC.: 2 CONDUCTOR, NO. 12 AWG, 1/C NO. 12G, CIC, FPLR				20	226/296	
625	98100	2,025	FT	LIGHTING, MISC.: 1 CONDUCTOR, NO. 12 AWG 'TRAY CABLE' LSZH				2,025	226/296	
625	98100	10,610	FT	LIGHTING, MISC.: 1 CONDUCTOR, NO. 10 AWG 'TRAY CABLE' LSZH				10,610	226/296	
625	98100	1,350	FT	LIGHTING, MISC.: 1 PAIR, NO. 16 AWG SHIELDED 'TRAY CABLE' LSZH				1,350	226/296	
625	98100	220	FT	LIGHTING, MISC.: 1 CONDUCTOR, 4 PAIR, NO. 16 AWG SHIELDED 'TRAY CABLE' LSZH				220	226/296	
625	98100	320	FT	LIGHTING, MISC.: 1 CONDUCTOR, 8 PAIR, NO. 16 SHIELDED 'TRAY CABLE' LSZH				320	226/296	
625	98100	400	FT	LIGHTING, MISC.: 1 CONDUCTOR, 12 PAIR, NO. 16 AWG, SHIELDED 'TRAY CABLE' LSZH				400	226/296	
625	98100	675	FT	LIGHTING, MISC.: 1 CONDUCTOR, 24 PAIR, NO. 16 AWG, SHIELDED 'TRAY CABLE' LSZH				675	226/296	
625	98100	250	FT	LIGHTING, MISC.: 1 CONDUCTOR, 36 PAIR, NO. 16 AWG, SHIELDED 'TRAY CABLE' LSZH				250	226/296	
625	98100	2,250	FT	LIGHTING, MISC.: 1 CONDUCTOR, 1-TRIAD NO. 16 AWG, SHIELDED 'TRAY CABLE' LSZH				2,250	226/296	
625	98100	2,700	FT	LIGHTING, MISC.: 1 CONDUCTOR, NO. 8 AWG 'TRAY CABLE' LSZH				2,700	226/296	
625	98100	200	FT	LIGHTING, MISC.: 1 CONDUCTOR, NO. 8 AWG W/GROUND 'TRAY CABLE' LSZH				200	226/296	
625	98100	12,600	FT	LIGHTING, MISC.: 1 CONDUCTOR, NO. 6 AWG 'TRAY CABLE' LSZH				12,600	226/296	
625	98100	1,150	FT	LIGHTING, MISC.: 1 CONDUCTOR, NO. 6 AWG W/GROUND 'TRAY CABLE' LSZH				1,150	226/296	
625	98100	380	FT	LIGHTING, MISC.: 1 CONDUCTOR, NO. 2 AWG W/GROUND 'TRAY CABLE' LSZH				380	226/296	
625	98100	30	FT	LIGHTING, MISC.: 10 CONDUCTOR, NO. 14 AWG, CIC, FPLR				30	226/296	
625	98100	50	FT	LIGHTING, MISC.: 24 CONDUCTOR, SINGLE MODE FIBER OPTIC, LSZH				50	226/296	
625	98100	3,000	FT	LIGHTING, MISC.: 1 CONDUCTOR, NO. 3/0 AWG, RHW-2, LSZH				3,000	226/296	
625	98100	160	FT	LIGHTING, MISC.: 1 CONDUCTOR, NO. 4/0 AWG, RHW-2, LSZH				160	226/296	
625	98100	5	FT	LIGHTING, MISC.: 4 CONDUCTOR, NO. 14 AWG, CIC, FPLR				5	226/296	
625	98100	100	FT	LIGHTING, MISC.: 6 CONDUCTOR, NO. 12 AWG, CIC, FPLR				100	226/296	
625	98100	5	FT	LIGHTING, MISC.: 6 CONDUCTOR, NO. 14 AWG, CIC, FPLR				5	226/296	
625	98100	3,200	FT	LIGHTING, MISC.: 1 CONDUCTOR, 400KCMIL, RHW-2, LSZH				3,200	226/296	
625	98100	4,600	FT	LIGHTING, MISC.: 1 CONDUCTOR, 500KCMIL, RHW-2, LSZH				4,600	226/296	
625	98100	2,400	FT	LIGHTING, MISC.: 1 CONDUCTOR, 750KCMIL, RHW-2, LSZH				2,400	226/296	
625	98100	300	FT	LIGHTING, MISC.: 1 CONDUCTOR, NO. 12 AWG, RHW-2, LSZH				300	226/296	
625	98100	5,250	FT	LIGHTING, MISC.: 1 CONDUCTOR, NO. 14 AWG, CIC				5,250	226/296	
625	98100	2,700	FT	LIGHTING, MISC.: 1 CONDUCTOR, NO. 8 AWG, CIC				2,700	226/296	
625	98100	2,700	FT	LIGHTING, MISC.: 1 CONDUCTOR, NO. 6 AWG, CIC				2,700	226/296	
625	98100	10	FT	LIGHTING, MISC.: 4 CONDUCTOR, NO. 12 AWG, 'TRAY CABLE' LSZH				10	226/296	
625	98100	1,943	FT	LIGHTING, MISC.: 1 CONDUCTOR, NO. 14 AWG, RHW-2, LSZH				1,943	226/296	
625	98100	2,762	FT	LIGHTING, MISC.: 1 CONDUCTOR, NO. 2 AWG, RHW-2, LSZH				2,762	226/296	
625	98100	2,213	FT	LIGHTING, MISC.: 1 CONDUCTOR, NO. 1/0 AWG, RHW-2, LSZH				2,213	226/296	
625	98100	122	FT	LIGHTING, MISC.: 1 CONDUCTOR, NO. 8 AWG, 'TRAY CABLE' LSZH				122	226/296	
625	98100	1,330	FT	LIGHTING, MISC.: 2 CONDUCTOR, NO. 16 AWG, BELDEN 1609				1,330	226/296	
625	98100	1,987	FT	LIGHTING, MISC.: 3 CONDUCTOR, NO. 14 AWG, 'TRAY CABLE' LSZH				1,987	226/296	

NO.	DATE	REVISION DESCRIPTION
1	5/10/16	CABLE CHANGES (RFI 148, 167)

c:\pwworking\hmm\external\pre47802\dms72783\071_0134CEQ003.dgn 5/10/2016 5:04:58 PM PRE47802

DESIGN AGENCY
HATCH MOTT MacDONALD
18013 CLEVELAND PKWY.
SUITE 200
CLEVELAND, OH 44135

DESIGNED DGC | DRAWN CWP | REVIEWED RF | DATE 08/11/14 | CHECKED MK | REVISED | STRUCTURE FILE NUMBER 3106578

ESTIMATED QUANTITIES
BRIDGE NO. HAM-71-0134
I-71 LYTLE TUNNEL UNDER LYTLE PARK

HAM-71-01.34
PID No. 87268

							Calc	Date	Chk'd	Date	
				ESTIMATED ELECTRICAL QUANTITIES			DGC	7/16/14	MK	8/11/14	
ITEM	**EXTENSION**	**TOTAL**	**UNIT**	**DESCRIPTION**	**ABUT.**	**PIERS**	**SUPER.**	**GEN.**	**SEE SHEET NO.**	
				ELECTRICAL						
625	98100	490	FT	LIGHTING, MISC.: 1 CONDUCTOR, NO. 1 AWG, RHW-2, LSZH				490	226/296	
625	98100	20	FT	LIGHTING, MISC.: 1 CONDUCTOR, NO. 2/0 AWG, RHW-2, LSZH				20	226/296	
625	98100	80	FT	LIGHTING, MISC.: NO. 4/0 AWG, RHW-2, LSZH				80	226/296	
625	98600	2,500	SQ FT	LIGHTING, MISC.: FIREPROOFING				2,500	188/296	
690	98000	2	EACH	SPECIAL - MISC.: TRANSFORMER VAULT				2	169/296	
690	98000	7	EACH	SPECIAL - MISC.: PANELBOARDS				7	198/296	
690	98400	LUMP		SPECIAL - MISC.: ELECTRICAL DEMOLITION				LUMP	205/296	
690	98400	LUMP		SPECIAL - MISC.: PENETRATION FIRESTOPPING				LUMP	182/296	
690	98400	LUMP		SPECIAL - MISC.: ELECTRICAL AS-BUILT DRAWINGS				LUMP	169/296	
690	98400	LUMP		SPECIAL - MISC.: ELECTRICAL TESTING AND COMMISSIONING				LUMP	178/296	
690	98400	LUMP		SPECIAL - MISC.: PROTECTIVE COORDINATION AND ARC FLASH STUDY				LUMP	190/296	
				FIRE ALARM						
625	25000	2,650	FT	CONDUIT, 3/4", 725.04				2,650		
625	25100	100	FT	CONDUIT, 1", 725.04				100		
625	98100	400	FT	LIGHTING, MISC.: CABLE 2/C NO. 10 CIC-FPLR (BELDEN, SAFE-T-LINE CABLE OR APPROVED EQUAL)				400	226/296	
625	98100	350	FT	LIGHTING, MISC.: CABLE 2/C NO. 12 CIC-FPLR (BELDEN, SAFE-T-LINE CABLE OR APPROVED EQUAL)				350	226/296	
625	98100	560	FT	LIGHTING, MISC.: CABLE 2/C NO. 14 CIC-FPLR (BELDEN, SAFE-T-LINE CABLE OR APPROVED EQUAL)				560	226/296	
690	98000	1	EACH	SPECIAL - MISC.: FIRE ALARM CONTROL PANEL (HONEYWELL, NOTIFIER NFS2-3030 OR APPROVED EQUAL)				1	241/296	
690	98000	40	EACH	SPECIAL - MISC.: HEAT DETECTOR PANEL (HONEYWELL, NOTIFIER FST-851(A) OR APPROVED EQUAL)				40	241/296	
690	98000	34	EACH	SPECIAL - MISC.: SMOKE DETECTOR (HONEYWELL, NOTIFIER FSP-851(A) SERIES OR APPROVED EQUAL)				34	241/296	
690	98000	30	EACH	SPECIAL - MISC.: STROBE LIGHT (HONEYWELL, NOTIFIER SPECTRALERT ADVANCED P2RHKA OR APPROVED EQUAL)				30	241/296	
690	98000	8	EACH	SPECIAL - MISC.: MANUAL PULL STATION (HONEYWELL, NOTIFIER NBG-12 SERIES OR APPROVED EQUAL)				8	241/296	
690	98000	5	EACH	SPECIAL - MISC.: DUCT SMOKE DETECTOR (HONEYWELL, NOTIFIER DNR(A) OR APPROVED EQUAL)				5	241/296	
690	98000	8	EACH	SPECIAL - MISC.: RELAY MODULE (HONEYWELL, NOTIFIER FRM-1 RELAY MODULE OR APPROVED EQUAL)				8	241/296	
690	98400	LUMP		SPECIAL - MISC.: FIRE ALARM - TRAINING AND COMMISSIONING				LUMP	241/296	
				TUNNEL GROUNDING						
625	98000	27	EACH	LIGHTING, MISC.: SUPPLEMENTAL GROUNDED LOOP 4-WAY TAP				27	251/296	
625	98100	10	FT	LIGHTING, MISC.: 750 KCMIL MBJ				10	251/296	
625	98100	138	FT	LIGHTING, MISC.: 750 KCMIL SSBJ				138	251/296	
625	98100	45	FT	LIGHTING, MISC.: 750 KCMIL GEC CABLE				45	251/296	
625	98100	6	FT	LIGHTING, MISC.: NO. 8 AWG GEC CABLE				6	251/296	
625	98100	271	FT	LIGHTING, MISC.: NO. 3/0 AWG SEGC CABLE				271	251/296	
625	98100	109	FT	LIGHTING, MISC.: NO. 1/0 AWG SEGC TAP CABLE				109	251/296	
625	98100	20	FT	LIGHTING, MISC.: NO. 4 AWG GEC CABLE				20	251/296	
625	98100	1	FT	LIGHTING, MISC.: COPPER BUS BAR				1	251/296	

NO.	DATE	REVISION DESCRIPTION
1	5/10/16	CABLE CHANGES (RFI 148, 167)

c:\pwworking\hmm\external\pre47802\dms72783\071_0134CEQ004.dgn 5/10/2016 5:19:46 PM PRE47802

DESIGN AGENCY
HATCH MOTT MacDONALD
18013 CLEVELAND PKWY.
SUITE 200
CLEVELAND, OH 44135

DESIGNED DGC | DRAWN CWP | CHECKED MK | REVIEWED RF | DATE 08/11/14 | REVISED | STRUCTURE FILE NUMBER 3106578

ESTIMATED QUANTITIES
BRIDGE NO. HAM-71-0134
I-71 LYTLE TUNNEL UNDER LYTLE PARK

HAM-71-01.34
PID No. 87268

						Calc	Date	Chk'd	Date	
				ESTIMATED ELECTRICAL QUANTITIES		DGC	7/16/14	MK	8/11/14	
ITEM	**EXTENSION**	**TOTAL**	**UNIT**	**DESCRIPTION**	**ABUT.**	**PIERS**	**SUPER.**	**GEN.**	**SEE SHEET NO.**	
				LINEAR HEAT DETECTION						
632	30500	100	FT	MESSENGER WIRE, MISC.: MESSENGER WIRE, 7 STRANDS, 1/8" DIAMETER WITH ACCESSORIES				100	253/296	
632	90400	20	EACH	SIGNALIZATION, MISC.: FASTENERS FOR MESSENGER WIRE				20	253/296	
633	99000	2	EACH	CONTROLLER ITEM, MISC.: CONTROLLER NEMA 1, 4-CHANNEL, 3,280FT RANGE				2	253/296	
633	99000	1	EACH	CONTROLLER ITEM, MISC.: CONTROLLER NEMA 1, 4-CHANNEL, 6,560FT RANGE				1	253/296	
633	99000	3	EACH	CONTROLLER ITEM, MISC.: CONTROLLER INTEGRATED BUS MOD-BUS TCP/IP				3	253/296	
633	99000	3	EACH	CONTROLLER ITEM, MISC.: CONTROLLER INTERFACE BOX FOR MOD-BUS RS235 MIB-8000				3	253/296	
633	99300	LUMP		CONTROLLER ITEM, MISC.: FIBER OPTIC FIRE DETECTION CONTROLLER SOFTWARE				LUMP	253/296	
633	99300	LUMP		CONTROLLER ITEM, MISC.: TRAINING AND COMMISSIONING				LUMP	253/296	
804	98000	8,572	FT	FIBER OPTIC CABLE, MISC.: FIBER OPTIC SENSOR CABLE, TYPE PFS 654 MF				8,572	253/296	
804	98100	1,468	EACH	FIBER OPTIC CABLE, MISC.: FIBER OPTIC CABLE INSULATED STANDOFF EVERY 5FT				1,468	253/296	
				SCADA						
633	99300	LUMP		CONTROLLER ITEM, MISC.: COMMUNICATION MEDIUM				LUMP	263/296	
633	99300	LUMP		CONTROLLER ITEM, MISC.: MAIN NETWORK CABINET				LUMP	263/296	
633	99300	LUMP		CONTROLLER ITEM, MISC.: MAIN PLC CABINET				LUMP	263/296	
633	99300	LUMP		CONTROLLER ITEM, MISC.: SOUTH PORTAL COMM. RACK				LUMP	263/296	
633	99300	LUMP		CONTROLLER ITEM, MISC.: NORTH PORTAL COMM. RACK				LUMP	263/296	
633	99300	LUMP		CONTROLLER ITEM, MISC.: SCADA PROGRAMMING AND CONFIGURATION PLC/HMI				LUMP	263/296	
633	99300	LUMP		CONTROLLER ITEM, MISC.: DOCUMENTATION SUBMITTALS AND TRAINING				LUMP	263/296	
633	99300	LUMP		CONTROLLER ITEM, MISC.: HMI/PLC (HUMAN MACHINE INTERFACE/PROGRAMMABLE LOGIC CONTROLLER) TESTING AND COMMISSIONING				LUMP	263/296	

DESIGN AGENCY
HATCH MOTT MacDONALD
18013 CLEVELAND PKWY.
SUITE 200
CLEVELAND, OH 44135

DESIGNED	DRAWN	REVIEWED	DATE
DGC	CWP	RF	08/11/14
CHECKED	REVISED	STRUCTURE FILE NUMBER	
MK		3106578	

ESTIMATED QUANTITIES
BRIDGE NO. HAM-71-0134
I-71 LYTLE TUNNEL UNDER LYTLE PARK

HAM-71-01.34
PID No. 87268

c:\pwworking\hmm\external\tyn61470\dms72783\071_0134CEQ005.dgn 10/24/2014 10:58:55 AM TYN61470

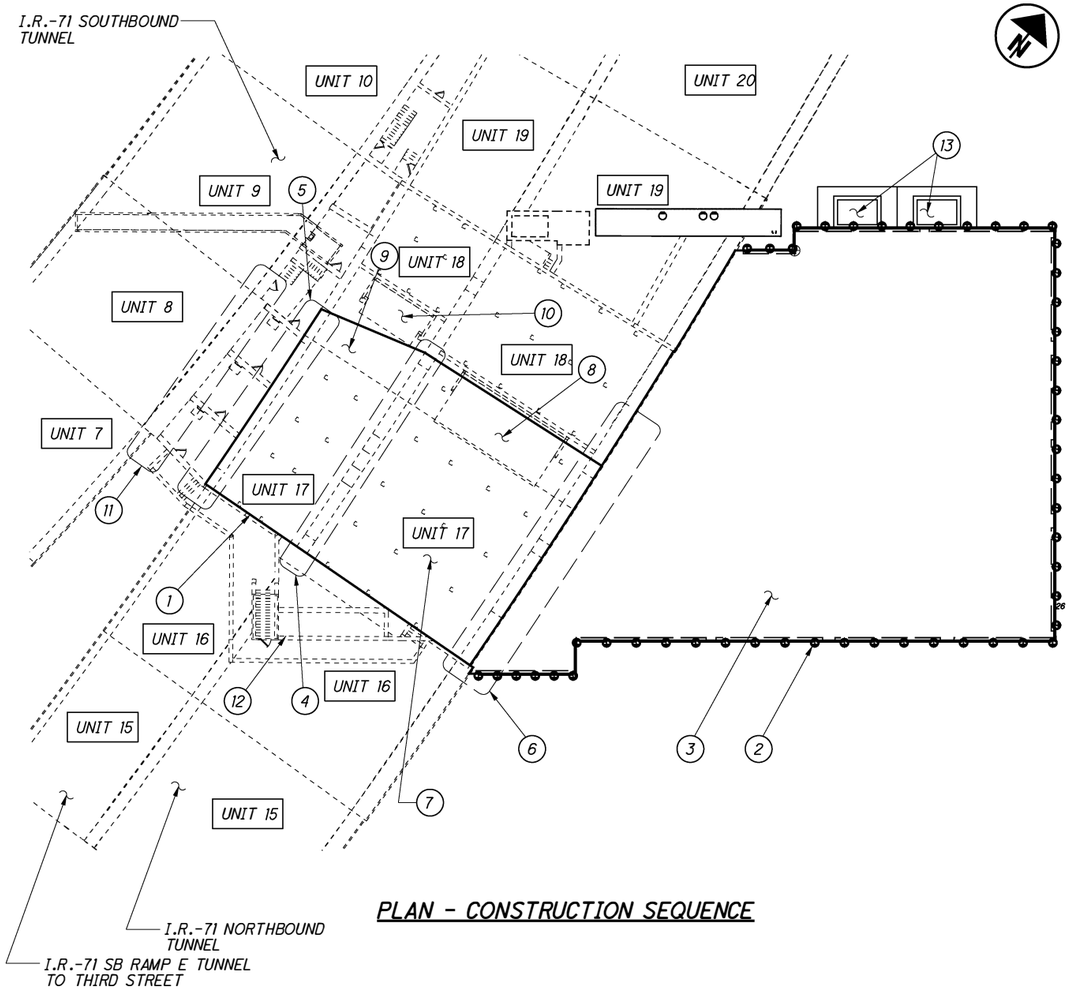

PLAN - CONSTRUCTION SEQUENCE

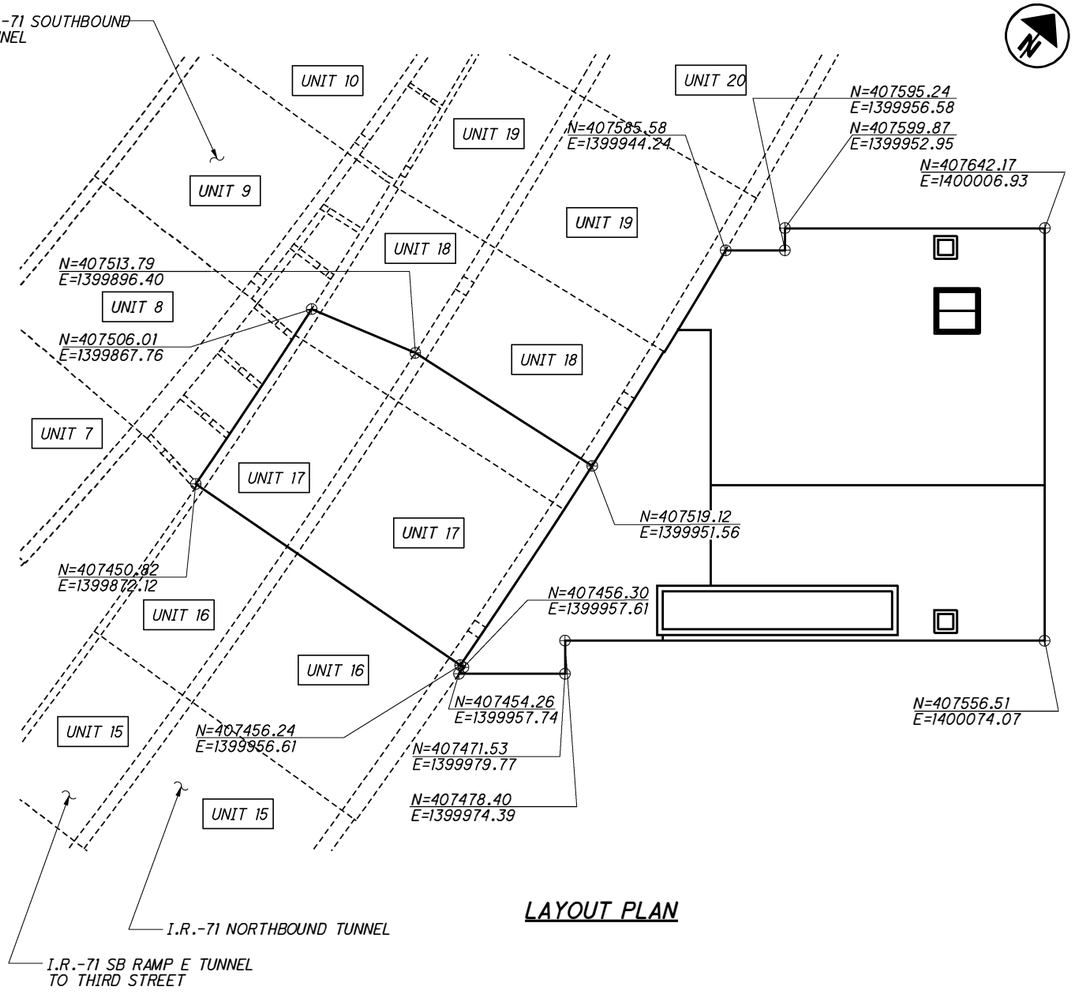

LAYOUT PLAN

CONSTRUCTION SEQUENCE:

1. EXCAVATE ABOVE NORTHBOUND AND SOUTHBOUND RAMP E TUNNEL SEGMENTS. CONSTRUCT NEW RELIEF SLAB STRUCTURE. PLACE FILL IN EXCAVATED AREA AND REGRADE.
2. INSTALLSUPPORT OF EXCAVATION SYSTEM.
3. EXCAVATE FOR NEW VENTILATION ROOM. CONSTRUCT NEW VENTILATION ROOM. PLACE FILL IN EXCAVATED AREA AND REGRADE.
4. DEMOLISH PORTION OF UNIT 17 CENTER WALL (BETWEEN SOUTHBOUND RAMP E TUNNEL AND NORTHBOUND TUNNEL). ERECT NEW SUPPORT STRUCTURE.
5. DEMOLISH PORTION OF UNIT 17 (SOUTHBOUND RAMP E TUNNEL) WEST WALL. ERECT NEW SUPPORT STRUCTURE.
6. DEMOLISH PORTION OF UNIT 17 (NORTHBOUND TUNNEL) EAST WALL. ERECT NEW SUPPORT STRUCTURE.
7. DEMOLISH INTERIOR MECHANICAL ROOM WALLS IN UNIT 17 AND UNIT 18 (NORTHBOUND TUNNEL SEGMENT ONLY).
8. ENLARGE EXISTING NORTHBOUND TUNNEL FAN ROOM FLOOR OPENING, UNIT 18.
9. DEMOLISH INTERIOR MECHANICAL ROOM WALLS IN UNIT 17 AND UNIT 18 (SOUTHBOUND RAMP E TUNNEL SEGMENT ONLY).

CONSTRUCTION SEQUENCE (CONTINUED):

10. ENLARGE EXISTING SOUTHBOUND RAMP E TUNNEL FAN ROOM FLOOR OPENING, UNIT 18.
11. DEMOLISH PORTIONS OF UNIT 8 (SOUTHBOUND TUNNEL) EAST WALL. STRENGTHEN UNIT 8 EAST WALL.
12. DEMOLISH EXISTING GRATING AND DEMOLISH PORTION OF EXISTING SHAFT WALLS. COVER OPENING, BACKFILL AND REGRADE. SEE DETAILS SHEET 68/296
13. EXCAVATE AND CONSTRUCT NEW TRANSFORMER VAULTS. PILES FOR VAULT EXCAVATION MAY BE INSTALLED CONCURRENT WITH VENTILATION ROOM PILES.
14. WORK NOT LISTED IN THE SEQUENCE MAY BE PERFORMED ACCORDING TO THE CONTRACTOR'S TIMING IN ACCORDANCE WITH CONTRACT PROVISIONS.

NOTES:

1. WORKPOINTS CALLED OUT ARE THE OUTSIDE CORNERS OF THE RELIEF SLAB OR THE VENTILATION ROOM, AND ARE IN STATE PLANE COORDINATES.

DESIGN AGENCY
HATCH MOTT MacDONALD
18013 CLEVELAND PKWY.
SUITE 200
CLEVELAND, OH 44135

DESIGNED	DRAWN	REVIEWED	DATE
BTF	JMS	MAR	10/20/14
CHECKED	REVISED	STRUCTURE FILE NUMBER	
KTO		3106578	

STRUCTURAL - CONSTRUCTION STAGING PLANS

BRIDGE NO. HAM-71-0134
I-71 LYTLE TUNNEL UNDER LYTLE PARK

HAM-71-01.34
PID No. 87268

c:\pwworking\hmm\external\pre47802\dms72783\071_0134CPC001.dgn 10/16/2015 11:45:48 AM PRE47802

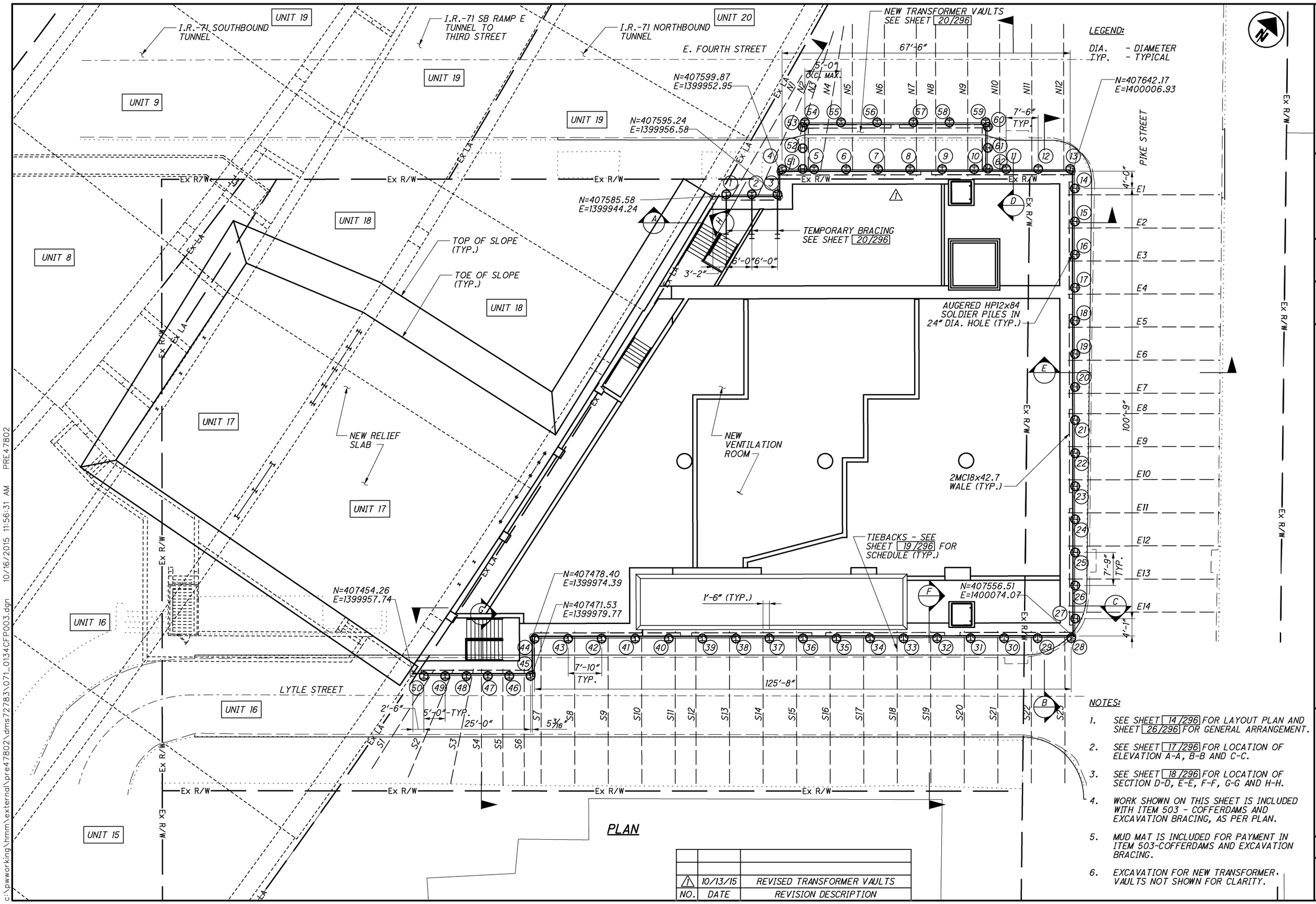

NOTES:

1. SEE SHEET 14/296 FOR LAYOUT PLAN AND SHEET 26/296 FOR GENERAL ARRANGEMENT.
2. SEE SHEET 17/296 FOR LOCATION OF ELEVATION A-A, B-B AND C-C.
3. SEE SHEET 18/296 FOR LOCATION OF SECTION D-D, E-E, F-F, G-G AND H-H.
4. WORK SHOWN ON THIS SHEET IS INCLUDED WITH ITEM 503 - COFFERDAMS AND EXCAVATION BRACING, AS PER PLAN.
5. MUD MAT IS INCLUDED FOR PAYMENT IN ITEM 503-COFFERDAMS AND EXCAVATION BRACING.
6. EXCAVATION FOR NEW TRANSFORMER VAULTS NOT SHOWN FOR CLARITY.

NO.	DATE	REVISION DESCRIPTION
1	10/13/15	REVISED TRANSFORMER VAULTS

DESIGN AGENCY
HATCH MOTT MacDONALD
18013 CLEVELAND PKWY.
SUITE 200
CLEVELAND, OH 44135

DESIGNED	DRAWN	REVIEWED	DATE
PEG	JMS	MAR	10/20/14
CHECKED	REVISED	STRUCTURE FILE NUMBER	
BTF		3106578	

STRUCTURAL-SUPPORT OF EXCAVATION-PLAN

BRIDGE NO. HAM-71-0134
I-71 LYTLE TUNNEL UNDER LYTLE PARK

HAM-71-01.34
PID No. 87268

15/296

273/555

c:\pwworking\hmm\external\pre47802\dms72783\071_0134CFP003.dgn 10/16/2015 11:56:31 AM PRE47802

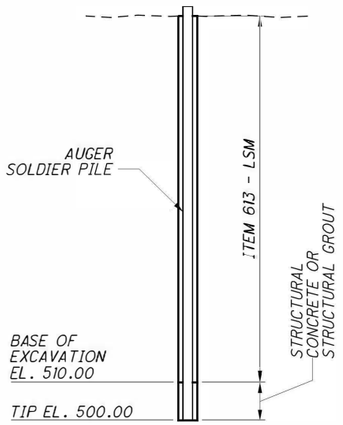

STAGE 1

- AUGER SOLDIER PILES.
- BACKFILL WITH STRUCTURAL CONCRETE OR STRUCTURAL GROUT UP TO BASE OF EXCAVATION.
- BACKFILL WITH ITEM 613-LSM TO SURFACE.

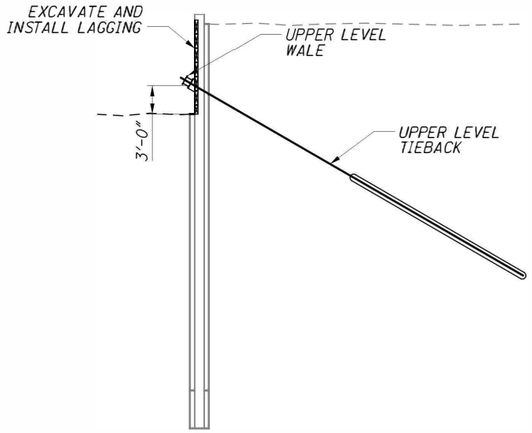

STAGE 2

- EXCAVATE AND INSTALL LAGGING TO TWO FEET BELOW UPPER TIEBACK LEVEL.
- INSTALL, TEST AND LOCK-OFF UPPER LEVEL TIEBACKS AND WALES.

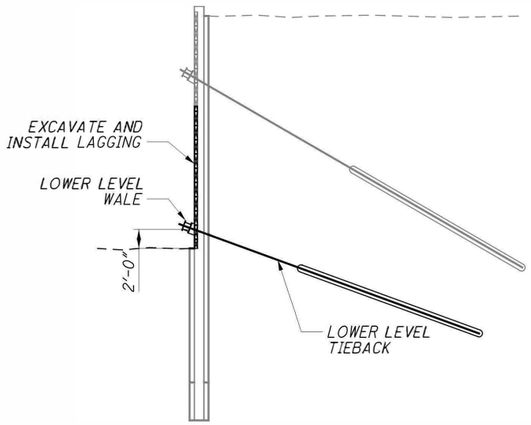

STAGE 3

- EXCAVATE AND INSTALL LAGGING TO TWO FEET BELOW LOWER TIEBACK LEVEL.
- INSTALL, TEST AND LOCK-OFF LOWER LEVEL TIEBACKS AND WALES.

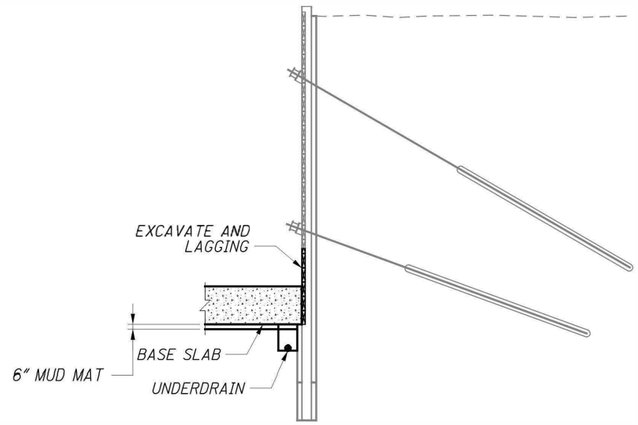

STAGE 4

- EXCAVATE AND INSTALL LAGGING TO BASE OF EXCAVATION.
- INSTALL UNDERDRAIN.
- INSTALL 6" MUD MAT.
- PLACE BASE SLAB.

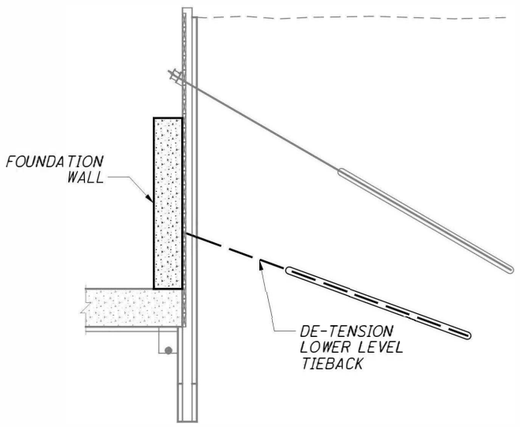

STAGE 5

- AFTER BASE SLAB ACHIEVES ITS 28-DAY DESIGN STRENGTH, DE-TENSION LOWER LEVEL TIEBACKS AND REMOVE LOWER LEVEL WALES.
- PLACE FOUNDATION WALL.

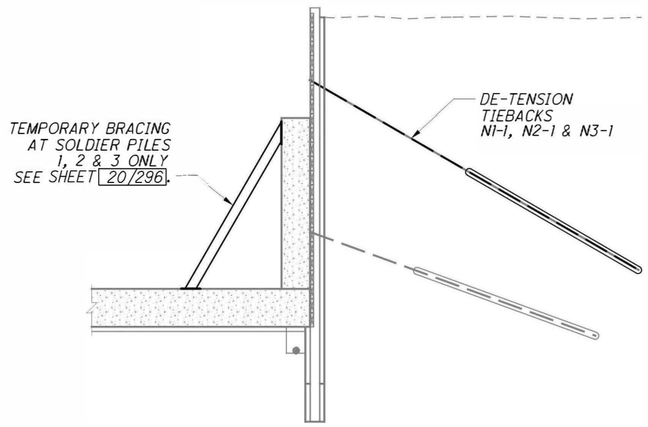

STAGE 6

- AFTER FOUNDATION WALL ACHIEVES ITS 28-DAY DESIGN STRENGTH, INSTALL TEMPORARY BRACING.
- DE-TENSION UPPER LEVEL TIEBACKS N1-1, N2-1 & N3-1, AND REMOVE UPPER LEVEL WALE BETWEEN SOLDIER PILES 1 THROUGH 3.

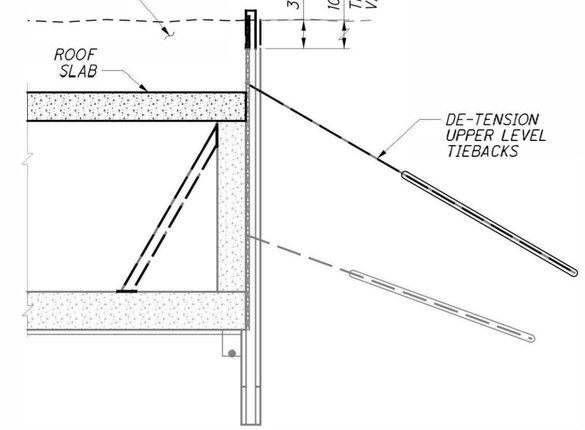

STAGE 7

- PLACE ROOF SLAB.
- AFTER ROOF SLAB ACHIEVES ITS 28-DAY DESIGN STRENGTH, DE-TENSION UPPER LEVEL TIEBACKS AND REMOVE TEMPORARY BRACING.
- REMOVE SOLDIER PILES AND LAGGING TO 3'-0" MAX. BELOW GRADE.
- PLACE COMPACTED BACKFILL AND RESTORE GRADE.

NOTES:

1. MUD MAT IS INCLUDED FOR PAYMENT IN ITEM 503-COFFERDAMS AND EXCAVATION BRACING.

LEGEND:

LSM - LOW STRENGTH MATERIAL
MAX. - MAXIMUM

STRUCTURAL-SUPPORT OF EXCAVATION-CONSTRUCTION SEQUENCE

BRIDGE NO. HAM-71-0134
I-71 LYTLE TUNNEL UNDER LYTLE PARK

HAM-71-01.34
PID No. 87268

16/296

274/555

DESIGN AGENCY
HATCH MOTT MacDONALD
18013 CLEVELAND PKWY.
SUITE 200
CLEVELAND, OH 44135

DESIGNED	DRAWN	REVIEWED	DATE
PEG	JMS	MAR	10/20/14
CHECKED	REVISED	STRUCTURE FILE NUMBER	
BTF		3106578	

c:\pw_working\hmm\exterrno\tyn61470\dms72785\071_0134CPC002.dgn 10/24/2014 10:59:08 AM TYN61470

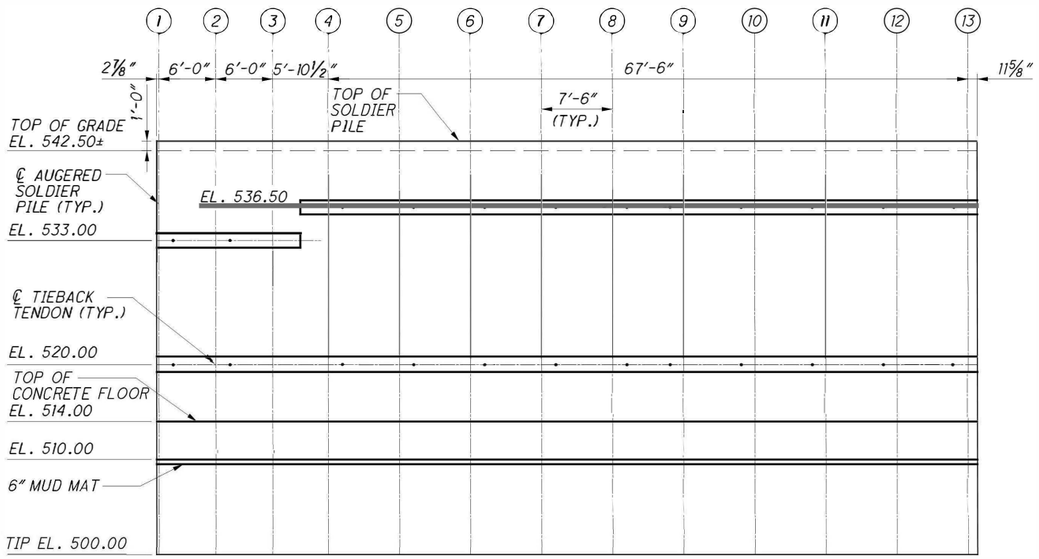

ELEVATION A-A - (NORTH EXTERIOR WALL - LOOKING NORTH)

SEE SHEET 15/296 FOR LOCATION

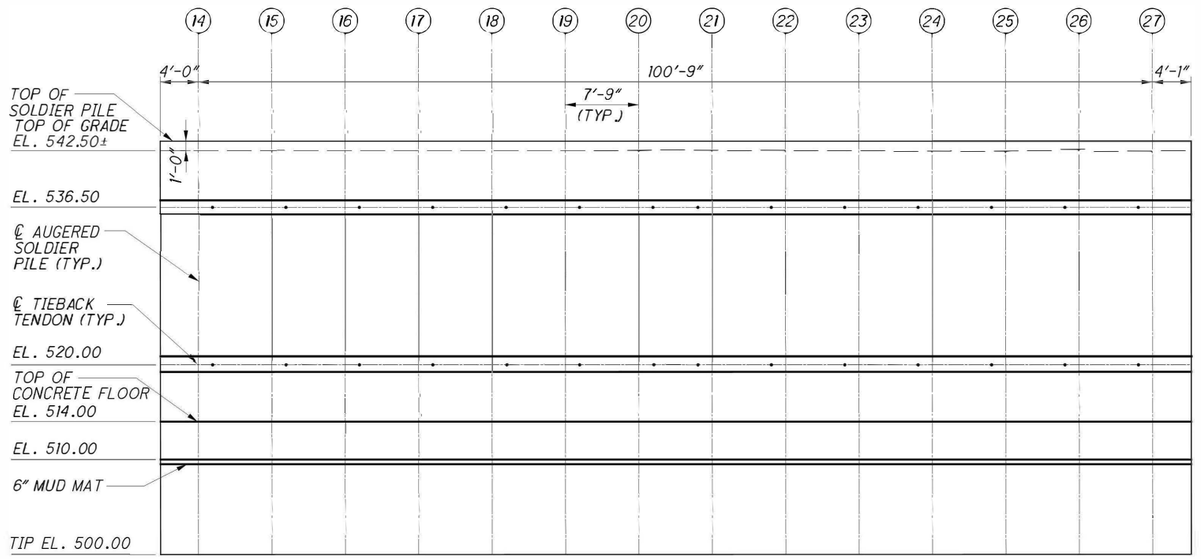

WALL ELEVATION B-B - (EAST EXTERIOR WALL - LOOKING EAST)

SEE SHEET 15/296 FOR LOCATION

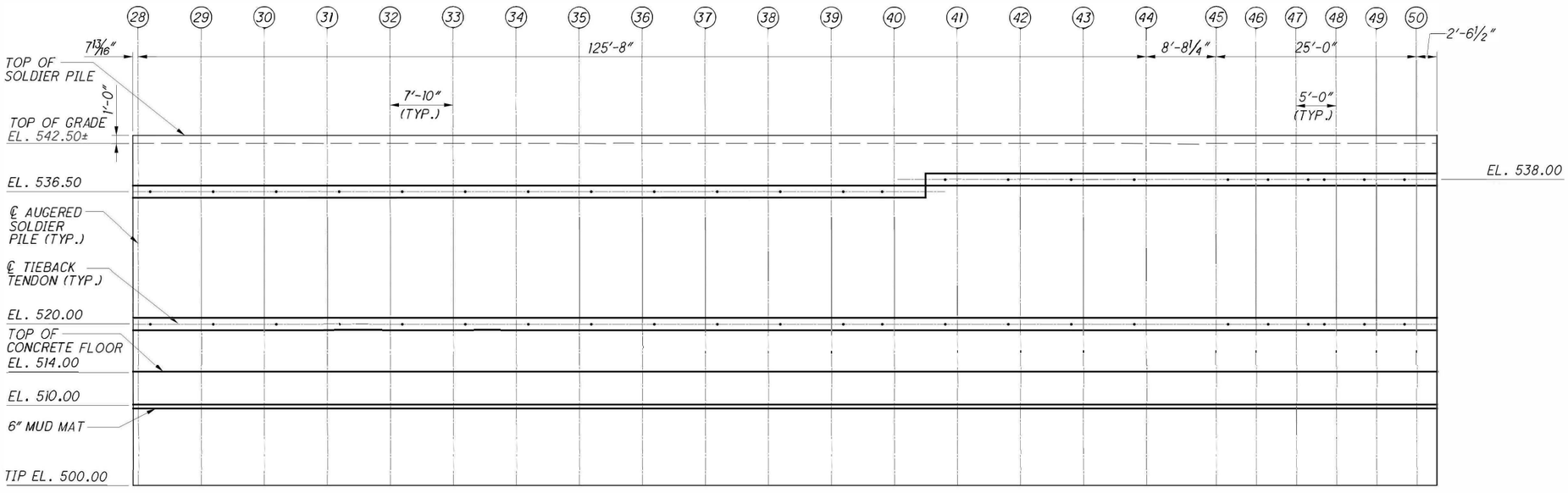

WALL ELEVATION C-C - (SOUTH EXTERIOR WALL - LOOKING SOUTH)

SEE SHEET 15/296 FOR LOCATION

LEGEND:

DIA. - DIAMETER
EL. - ELEVATION
TYP. - TYPICAL
(X) - SOLDIER PILE NUMBER

DESIGN AGENCY
HATCH MOTT MacDONALD
18013 CLEVELAND PKWY.
SUITE 200
CLEVELAND, OH 44135

DESIGNED PEG | DRAWN MJF | CHECKED BTF | REVIEWED MAR | DATE 10/20/14 | REVISED | STRUCTURE FILE NUMBER 3106578

STRUCTURAL - SUPPORT OF EXCAVATION - WALL ELEVATIONS

BRIDGE NO. HAM-71-0134
I-71 LYTLE TUNNEL UNDER LYTLE

HAM-71-01.34
PID No. 87268

17/296

275/555

c:\pwworking\hmm\external\tyn61470\dms72783\071_0134CMD025.dgn 10/24/2014 10:59:10 AM TYN61470

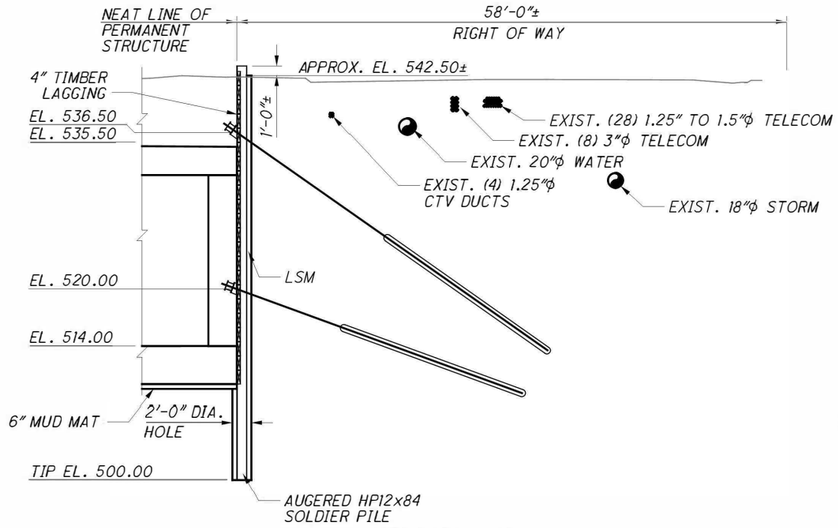

SECTION D-D

SEE SHEET 15/296 FOR LOCATION

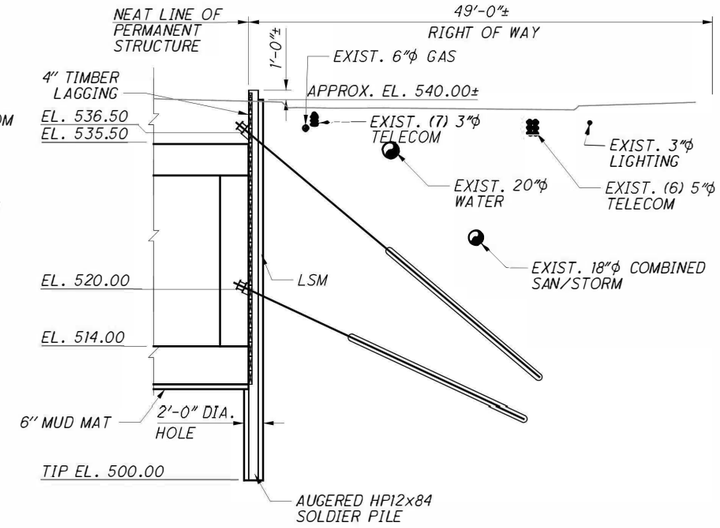

SECTION E-E

SEE SHEET 15/296 FOR LOCATION

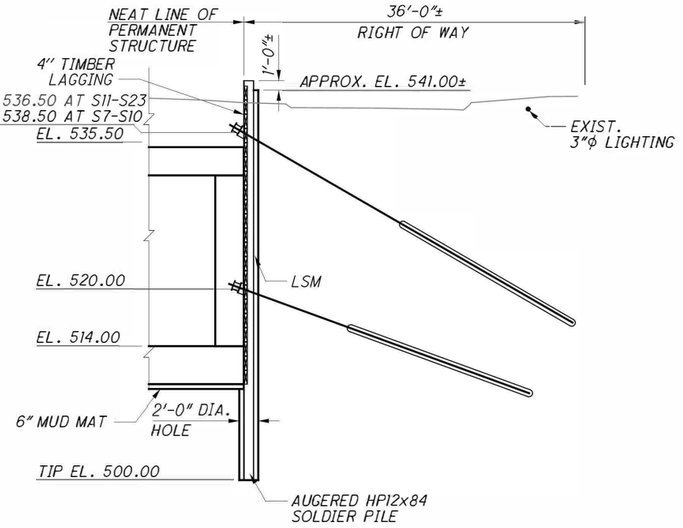

SECTION F-F

SEE SHEET 15/296 FOR LOCATION

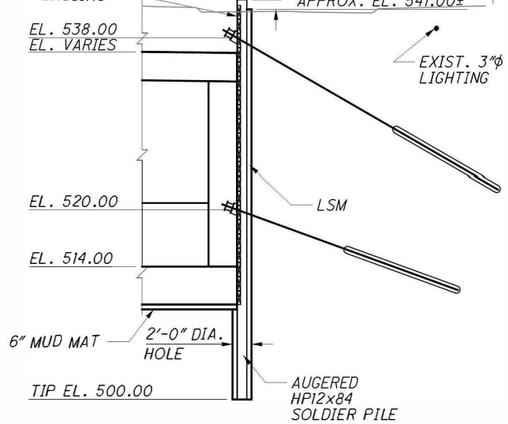

SECTION G-G

SEE SHEET 15/296 FOR LOCATION

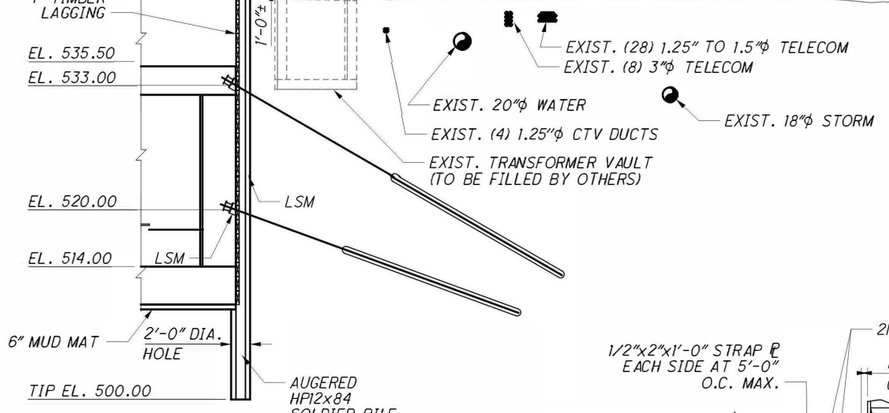

SECTION H-H

SEE SHEET 15/296 FOR LOCATION

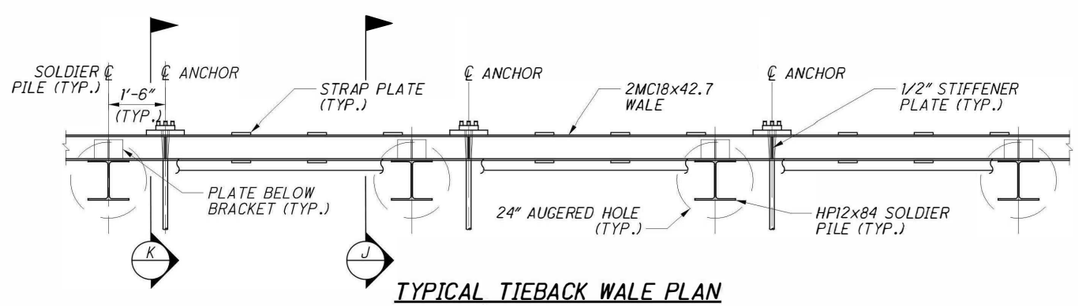

TYPICAL TIEBACK WALE PLAN

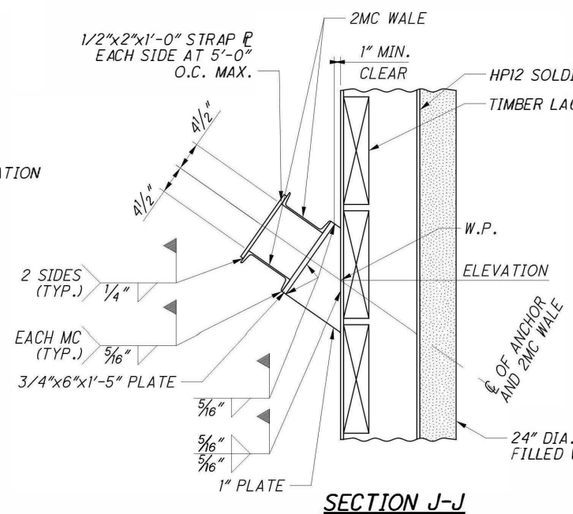

SECTION J-J

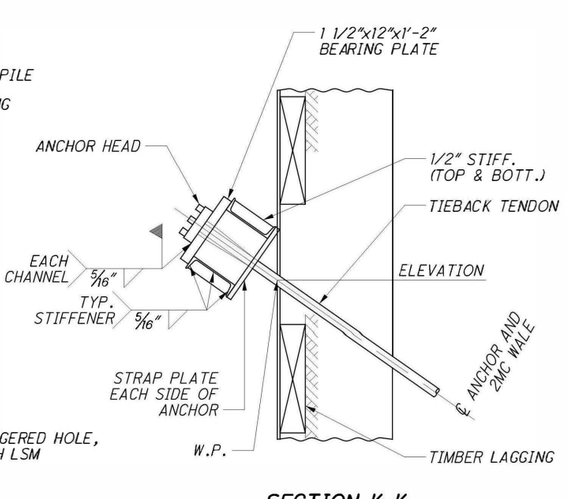

SECTION K-K

LEGEND:

APPROX.	- APPROXIMATE
BOTT.	- BOTTOM
DIA.	- DIAMETER
EL.	- ELEVATION
EXIST.	- EXISTING
LSM	- LOW STRENGTH MATERIAL
MAX.	- MAXIMUM
MIN.	- MINIMUM
O.C.	- ON CENTER
℄	- PLATE
TYP.	- TYPICAL
W.P.	- WORKING POINT
ϕ	- DIAMETER (EXIST. UTILITIES)

NOTES:

1. LOCATIONS OF UTILITIES SHOWN SCHEMATICALLY BASED ON AVAILABLE INFORMATION. THE CONTRACTOR SHALL CONFIRM LOCATION (PLAN AND ELEVATION) OF ALL UTILITIES PRIOR TO COMMENCING SUPPORT OF EXCAVATION INSTALLATION.
2. SEE SHEET 19/296 FOR TIEBACK FREE AND BONDED LENGTHS.

DESIGN AGENCY
HATCH MOTT MacDONALD
18013 CLEVELAND PKWY.
SUITE 200
CLEVELAND, OH 44135

DESIGNED PEG | DRAWN JMS | CHECKED BTF | REVIEWED MAR | DATE 10/20/14 | REVISED | STRUCTURE FILE NUMBER 3106578

STRUCTURAL-SUPPORT OF EXCAVATION-SECTIONS & DETAILS-1 OF 2

BRIDGE NO. HAM-71-0134
I-71 LYTLE TUNNEL UNDER LYTLE PARK

HAM-71-01.34
PID No. 87268

18/296

276/555

c:\pwworking\hmm\external\tyn61470\dms7278\3\071_0134CMD014.dgn 10/24/2014 10:59:16 AM TYN61470

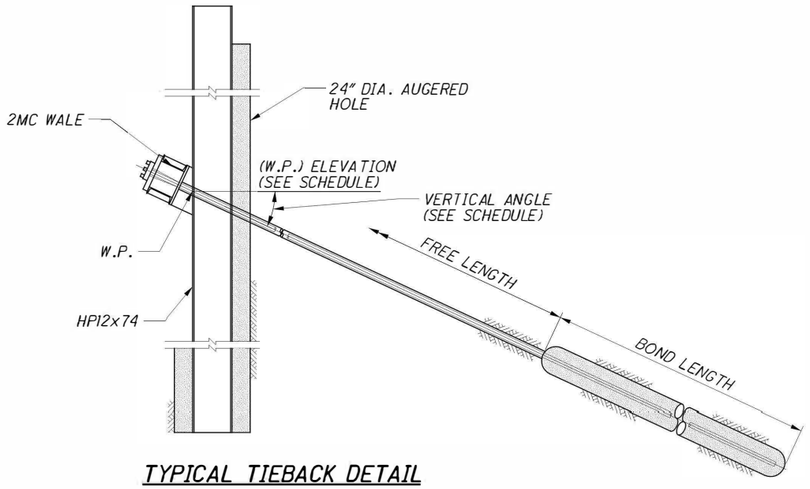

TYPICAL TIEBACK DETAIL

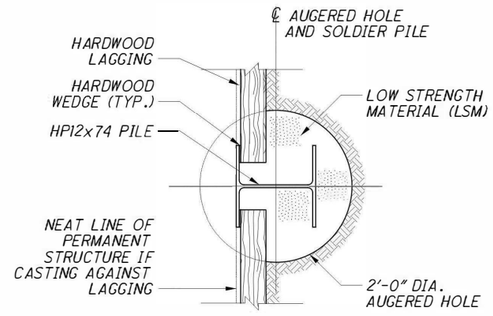

SOLDIER PILE AND LAGGING DETAIL

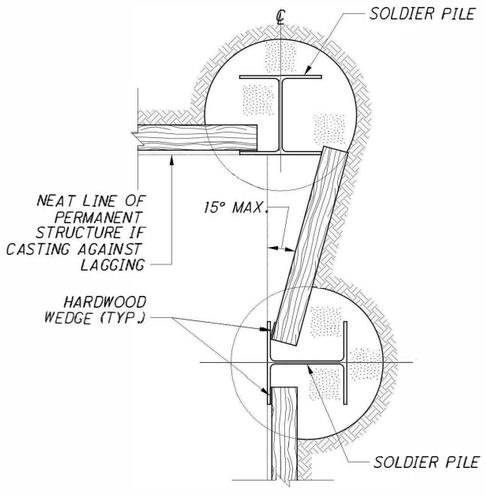

TYPICAL CORNER LAGGING DETAIL

NORTH WALL TIEBACK SCHEDULE

ANCHOR DESIGNATION	ANCHOR W.P. ELEVATION (FEET)	VERTICAL ANGLE (DEGREES)	HORIZONTAL ANGLE (DEGREES)	DESIGN LOAD, P (KIPS)	TEST LOAD 1.33xP (KIPS)	LOCK-OFF LOAD (KIPS)	MIN. FREE LENGTH (FEET)	WALE SIZE
UPPER LEVEL								
N1-1	533.00	30	30	104	138	104	19	2MC12x40
N2-1	533.00	30	24	119	158	119	19	2MC12x40
N3-1	533.00	30	18	76	101	76	19	2MC12x40
N4-1	536.50	35	9	117	156	117	21	2MC12x40
N5-1 TO N6-1	536.50	35	0	116	154	116	21	2MC12x40
N7-1 TO N8-1	536.50	35	0	93	124	93	21	2MC12x40
N9-1 TO N11-1	536.50	35	0	116	154	116	21	2MC12x40
N12-1	536.50	35	0	62	82	62	21	2MC12x40
LOWER LEVEL								
N1-2	520.00	20	30	88	117	88	12	2MC12x40
N2-2	520.00	20	24	100	133	100	12	2MC12x40
N3-2	520.00	20	18	64	85	64	12	2MC12x40
N4-2	520.00	20	9	142	189	142	12	2MC12x40
N5-2 TO N6-2	520.00	20	0	133	177	133	12	2MC12x40
N7-2 TO N8-2	520.00	20	0	107	142	107	12	2MC12x40
N9-2 TO N11-2	520.00	20	0	133	177	133	12	2MC12x40
N12-2	520.00	20	0	71	94	71	12	2MC12x40

EASTWALL TIEBACK SCHEDULE

ANCHOR DESIGNATION	ANCHOR W.P. ELEVATION (FEET)	VERTICAL ANGLE (DEGREES)	HORIZONTAL ANGLE (DEGREES)	DESIGN LOAD, P (KIPS)	TEST LOAD 1.33xP (KIPS)	LOCK-OFF LOAD (KIPS)	MIN. FREE LENGTH (FEET)	WALE SIZE
UPPER LEVEL								
E1-1 TO E6-1	536.50	40	0	100	133	100	20	2MC12x40
E7-1 TO E8-1	536.50	40	0	81	108	81	20	2MC12x40
E9-1 TO E14-1	536.50	40	0	100	133	100	20	2MC12x40
LOWER LEVEL								
E1-2 TO E6-2	520.00	25	0	135	180	135	12	2MC12x40
E7-2 TO E8-2	520.00	25	0	109	145	109	12	2MC12x40
E9-2 TO E14-2	520.00	25	0	135	180	135	12	2MC12x40

SOUTH WALL TIEBACK SCHEDULE

ANCHOR DESIGNATION	ANCHOR W.P. ELEVATION (FEET)	VERTICAL ANGLE (DEGREES)	HORIZONTAL ANGLE (DEGREES)	DESIGN LOAD, P (KIPS)	TEST LOAD 1.33xP (KIPS)	LOCK-OFF LOAD (KIPS)	MIN. FREE LENGTH (FEET)	WALE SIZE
UPPER LEVEL								
S1-1	538.50	30	33	71	94	71	21	2MC12x40
S2-1	538.50	30	22	64	85	64	21	2MC12x40
S3-1	538.50	30	11	60	80	60	21	2MC12x40
S4-1 TO S6-1	538.50	30	0	59	78	59	21	2MC12x40
S7-1	538.50	30	0	81	108	81	21	2MC12x40
S8-1 TO S10-1	538.50	30	0	99	132	99	21	2MC12x40
S11-1 TO S12-1	536.50	30	0	80	106	80	20	2MC12x40
S13-1 TO S22-1	536.50	30	0	99	132	99	20	2MC12x40
S23-1	536.50	30	0	51	68	51	20	2MC12x40
LOWER LEVEL								
S1-2	520.00	20	33	107	142	107	12	2MC12x40
S2-2	520.00	20	22	96	128	96	12	2MC12x40
S3-2	520.00	20	11	91	121	91	12	2MC12x40
S4-2 TO S6-2	520.00	20	0	89	118	89	12	2MC12x40
S7-2	520.00	20	0	110	146	110	12	2MC12x40
S8-2 TO S10-2	520.00	20	0	134	178	134	12	2MC12x40
S11-2 TO S12-2	520.00	20	0	109	145	109	12	2MC12x40
S13-2 TO S22-2	520.00	20	0	134	178	134	12	2MC12x40
S23-2	520.00	20	0	69	92	69	12	2MC12x40

LEGEND:

DIA. - DIAMETER
MAX. - MAXIMUM
O.C. - ON CENTER
TYP. - TYPICAL
W.P. - WORKING POINT

DESIGN AGENCY
HATCH MOTT MacDONALD
18013 CLEVELAND PKWY.
SUITE 200
CLEVELAND, OH 44135

DESIGNED PEG | DRAWN JMS | CHECKED BTF | REVIEWED MAR | DATE 10/20/14 | REVISED

STRUCTURE FILE NUMBER 3106578

STRUCTURAL SUPPORT OF EXCAVATION-SECTIONS & DETAILS-2 OF 2

BRIDGE NO. HAM-71-0134
I-71 LYTLE TUNNEL UNDER LYTLE PARK

HAM-71-01.34
PID No. 87268

19/296

277/555

c:\pwworking\hmm\exeternal\tyn61470\dms727803\071_0134CWD015.dgn 10/24/2014 10:59:19 AM TYN16470

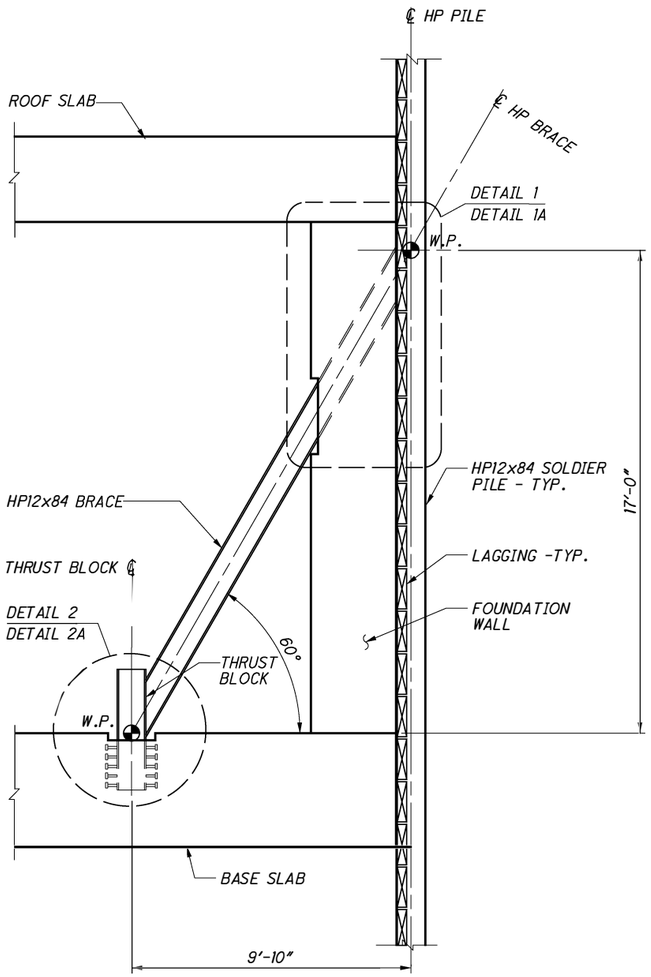

TYPICAL WALL BRACING SECTION
STAGE (6)

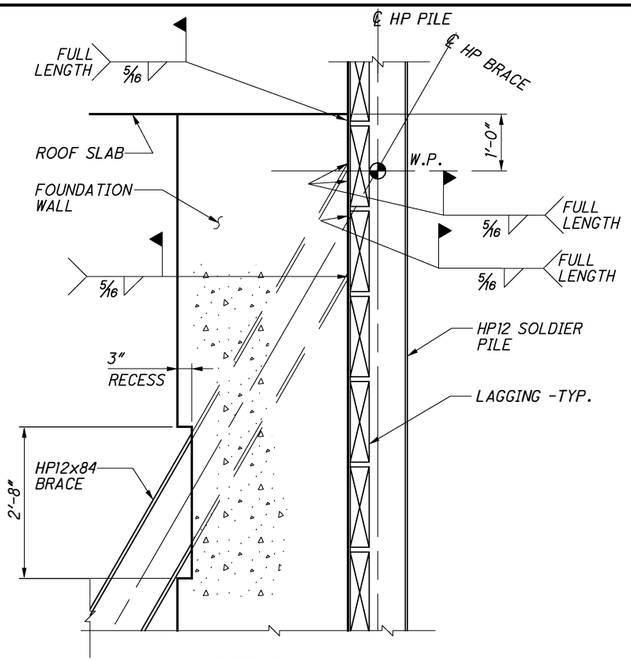

DETAIL 1
STAGE (6)

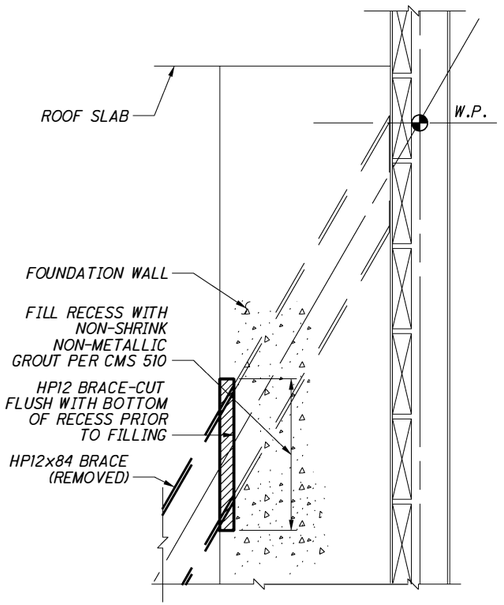

DETAIL 1A
STAGE (7)

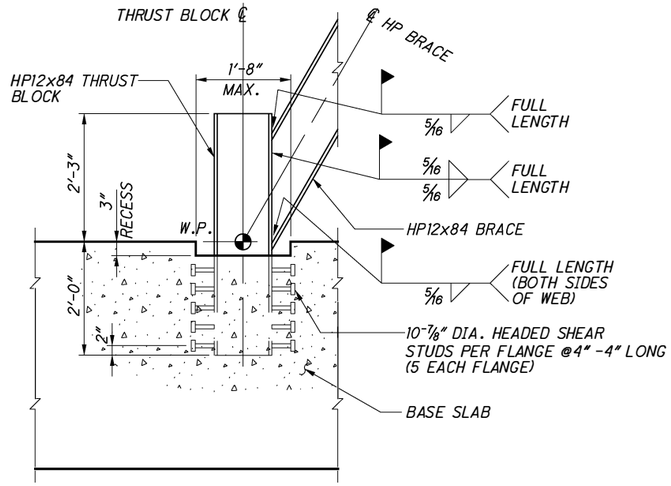

DETAIL 2
STAGE (6)

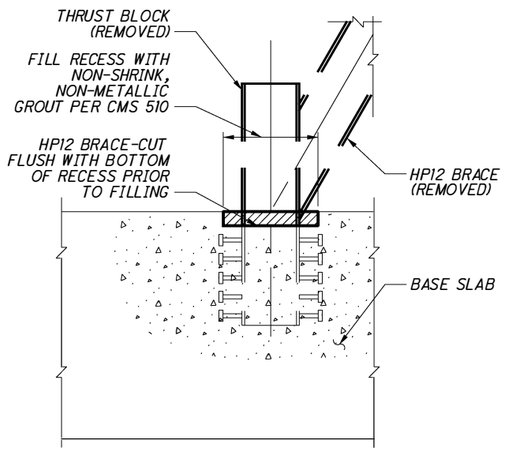

DETAIL 2A
STAGE (7)

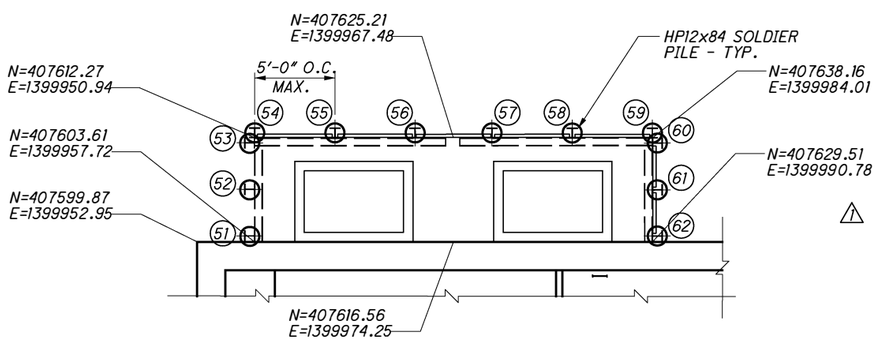

PLAN AT TRANSFORMER VAULT (SUPPORT OF EXCAVATION)
SEE SHEET 15/296 FOR LOCATION

LEGEND:

DIA.	- DIAMETER
EL.	- ELEVATION
EXIST.	- EXISTING
MAX.	- MAXIMUM
MIN.	- MINIMUM
O.C.	- ON CENTER
TYP.	- TYPICAL
W.P.	- WORKING POINT

NOTES:

1. SEE SHEET 15/296 FOR LOCATION(S) OF WALL BRACING.
2. ALL WORK SHOWN ON THIS SHEET IS INCLUDED WITH ITEM 503-COFFERDAMS AND EXCAVATED BRACING, AS PER PLAN, FOR PAYMENT.

NO.	DATE	REVISION DESCRIPTION
1	10/13/15	REVISED TRANSFORMER VAULTS

DESIGN AGENCY
HATCH MOTT MacDONALD
18013 CLEVELAND PKWY.
SUITE 200
CLEVELAND, OH 44135

DESIGNED	DRAWN	REVIEWED	DATE
PEG	JMS	MAR	10/20/14
CHECKED	REVISED	STRUCTURE FILE NUMBER	
BTF		3106578	

STRUCTURAL-SUPPORT OF EXCAVATION-SECTIONS & DETAILS-3 OF 3

BRIDGE NO. HAM-71-0134
I-71 LYTLE TUNNEL UNDER LYTLE PARK

HAM-71-01.34
PID No. 87268

20/296

278
555

c:\pwworking\hmm\external\pre47802\dms72783\071_0134CMD026.dgn 10/16/2015 12:22:55 PM PRE47802

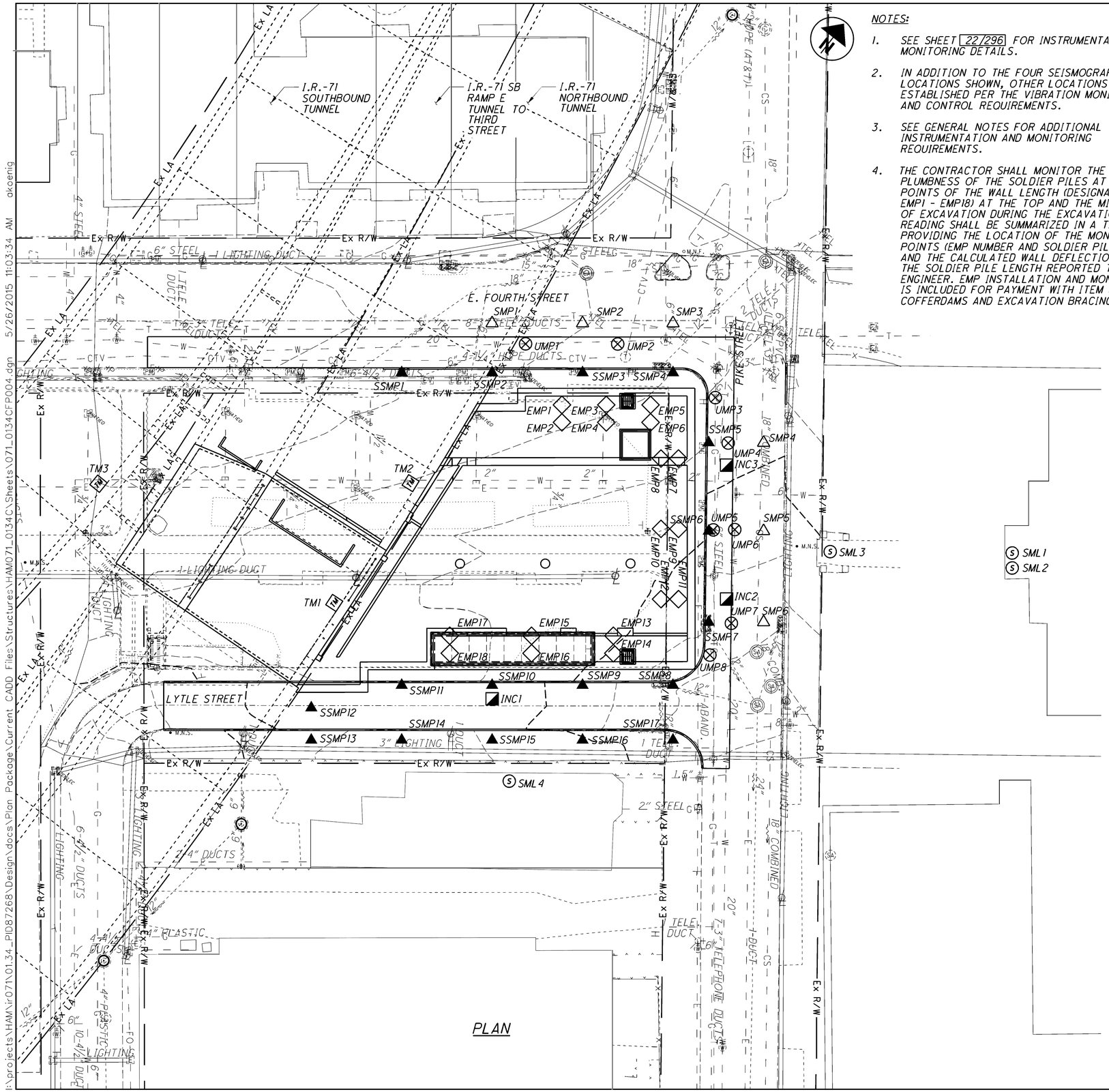

NOTES:

1. *SEE SHEET 22/296 FOR INSTRUMENTATION MONITORING DETAILS.*
2. *IN ADDITION TO THE FOUR SEISMOGRAPH LOCATIONS SHOWN, OTHER LOCATIONS SHALL BE ESTABLISHED PER THE VIBRATION MONITORING AND CONTROL REQUIREMENTS.*
3. *SEE GENERAL NOTES FOR ADDITIONAL INSTRUMENTATION AND MONITORING REQUIREMENTS.*
4. *THE CONTRACTOR SHALL MONITOR THE VERTICAL PLUMBNESS OF THE SOLDIER PILES AT 1/4 POINTS OF THE WALL LENGTH (DESIGNATED AS EMP1 - EMP18) AT THE TOP AND THE MID HEIGHT OF EXCAVATION DURING THE EXCAVATION. THE READING SHALL BE SUMMARIZED IN A TABLE PROVIDING THE LOCATION OF THE MONITORING POINTS (EMP NUMBER AND SOLDIER PILE NUMBER), AND THE CALCULATED WALL DEFLECTION ALONG THE SOLDIER PILE LENGTH REPORTED TO THE ENGINEER. EMP INSTALLATION AND MONITORING IS INCLUDED FOR PAYMENT WITH ITEM 503 - COFFERDAMS AND EXCAVATION BRACING.*

LEGEND:

- (S) *REQUIRED SEISMOGRAPH MONITORING LOCATION (SML)*
- ⊗ *UTILITY MONITORING POINT (UMP)*
- ◪ *INCLINOMETER (INC)*
- △ *SURFACE MONITORING POINT (SMP)*
- ▲ *SHALLOW SUBSURFACE MONITORING POINT (SSMP)*
- TM *TILTMETER (TM)*
- TIP *TIE IN POINT*
- ◇X *SUPPORT OF EXCAVATION MONITORING POINTS (EMP)*

INSTRUMENTATION AND MONITORING TABLE

INSTRUMENT	LOCATION		TIP ELEVATION
	NORTHING	EASTING	
INC1	407499.15	1400019.17	500.00
INC2	407585.49	1400066.87	500.00
INC3	407626.32	1400034.95	500.00
SML1	407667.59	1400142.95	
SML2	407663.01	1400146.54	
SML3	407624.62	1400087.15	
SML4	407478.09	1400043.95	
SMP1	407613.67	1399929.63	
SMP2	407635.23	1399957.20	
SMP3	407656.78	1399984.77	
SMP4	407641.95	1400040.88	
SMP5	407615.02	1400061.94	
SMP6	407587.23	1400083.67	
SSMP1	407577.04	1399913.83	
SSMP2	407598.60	1399941.41	
SSMP3	407620.16	1399968.98	
SSMP4	407641.72	1399996.55	
SSMP5	407628.87	1400024.15	
SSMP6	407601.92	1400045.21	
SSMP7	407574.15	1400066.93	
SSMP8	407546.41	1400071.07	
SSMP9	407524.85	1400043.50	
SSMP10	407503.29	1400015.93	
SSMP11	407481.73	1399988.36	
SSMP12	407453.31	1399966.17	
SSMP13	407443.46	1399973.86	
SSMP14	407465.02	1400001.43	
SSMP15	407486.58	1400029.00	
SSMP16	407508.13	1400056.57	
SSMP17	407529.69	1400084.14	
TM1	407490.78	1399948.17	
TM2	407545.50	1399942.90	
TM3	407470.93	1399847.88	
UMP1	407615.36	1399944.73	
UMP2	407637.28	1399972.87	
UMP3	407644.20	1400015.41	
UMP4	407633.42	1400030.16	
UMP5	407603.39	1400046.33	
UMP6	407608.60	1400052.79	
UMP7	407579.22	1400074.10	
UMP8	407564.41	1400075.12	

DESIGN AGENCY
HATCH MOTT MacDONALD
18013 CLEVELAND PKWY.
SUITE 200
CLEVELAND, OH 44135

DESIGNED	DRAWN	REVIEWED	DATE
PEG	JMS	MAR	10/20/14
CHECKED	REVISED	STRUCTURE FILE NUMBER	
BTF		3106578	

STRUCTURAL SUPPORT OF EXCAVATION-
INSTRUMENTATION & MONITORING-PLAN
BRIDGE NO. HAM-71-0134
I-71 LYTLE TUNNEL UNDER LYTLE PARK

HAM-71-01.34
PID No. 87268

21/296

279/555

I:\projects\HAM\ir071\01.34_PID87268\Design\docs\Plan Package\Current CADD Files\Structures\HAM071_0134\Sheets\071_0134CFP004.dgn 5/26/2015 11:03:34 AM akoenig

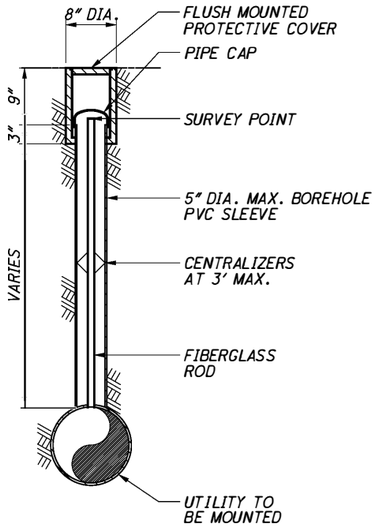

UTILITY MONITORING POINT (UMP) ⊗

SEE SHEET 21/296 FOR LOCATION

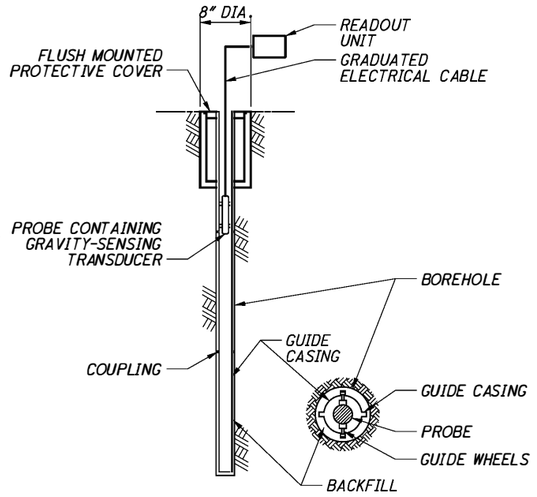

INCLINOMETER (INC) ◪

SEE SHEET 21/296 FOR LOCATION

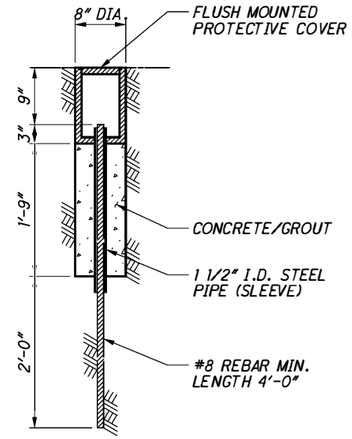

SHALLOW SUBSURFACE MONITORING POINT (SSMP) ▲

SEE SHEET 21/296 FOR LOCATION

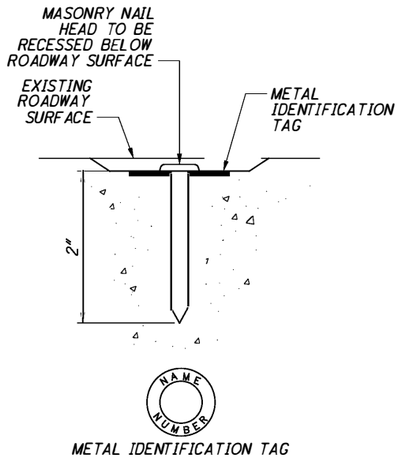

METAL IDENTIFICATION TAG
SCALE: N.T.S.

SURFACE MONITORING POINT (SMP) △

SEE SHEET 21/296 FOR LOCATION

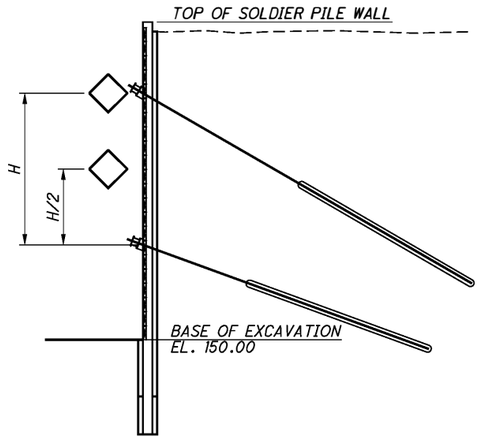

SUPPORT OF EXCAVATION MONITORING POINT (EMP) ◇

SEE SHEET 21/296 FOR LOCATION

VIBRATING WIRE TILTMETER

TRANSDUCER MOUNTED INSIDE A STAINLESS STEEL HOUSING EQUIPPED WITH A LUG FOR MOUNTING THE SENSOR TO AN ADJUSTABLE BRACKET. THE BRACKET WILL BE A UNIAXIAL BRACKET. GEOKON 6350 VIBRATING WIRE TILTMETER, OR APPROVED EQUAL.

RANGE	±10°
RESOLUTION	8 ARC SECONDS
ACCURACY	±8 ARC SECONDS
LINEARITY	±0.3% FSR
OPERATING TEMPERATURE	-40 TO 175°F

NOTES:

1. SURFACE ROADWAY BOXES SHALL BE CAST IRON IN ACCORDANCE WITH ASTM A48 CLASS 30B.

LEGEND:

DIA. - DIAMETER
EL. - ELEVATION
I.D. - INSIDE DIAMETER
MAX. - MAXIMUM
MIN. - MINIMUM
N.T.S. - NOT TO SCALE

DESIGN AGENCY
HATCH MOTT MacDONALD
18013 CLEVELAND PKWY.
SUITE 200
CLEVELAND, OH 44135

DESIGNED	DRAWN	REVIEWED	DATE
PEG	JMS	MAR	10/20/14
CHECKED	REVISED	STRUCTURE FILE NUMBER	
BTF		3106578	

STRUCTURAL SUPPORT OF EXCAVATION-
INSTRUMENTATION & MONITORING-DETAILS
BRIDGE NO. HAM-71-0134
I-71 LYTLE TUNNEL UNDER LYTLE PARK

HAM-71-01.34
PID No. 87268

c:\pwworking\hmm\external\pre47802\dms72783\071_0134CMD016.dgn 2/27/2015 2:56:34 PM PRE47802

I.R.-71 SOUTHBOUND TUNNEL BELOW GRADE

I.R.-71 SB RAMP E. TUNNEL TO THIRD STREET BELOW GRADE

I.R.-71 NORTHBOUND TUNNEL BELOW GRADE

EXISTING TRANSFORMERS TO BE REMOVED BY OTHERS AND EXISTING VAULTS TO REMAIN AND BE FILLED BY OTHERS

E. FOURTH STREET

LIGHT POLE TO REMAIN

NEW TRANSFORMER VAULTS

EXIST. ACCESS VAULT / HATCHWAY TO REMAIN FOR MODIFICATIONS SEE SHEET 68/296

EMERGENCY ACCESS HATCH AT GRADE

NEW RELIEF SLAB BELOW GRADE

EQUIPMENT ACCESS HATCH BELOW GRADE

PIKE STREET

NEW VENTILATION ROOM BELOW GRADE

REMOVE WALL AND GRATING SEE SHEET 68/296 FOR CAP DETAIL

STAIRWELL TO REMAIN

REMOVE WALL

EMERGENCY ACCESS HATCH AT GRADE

LYTLE STREET

EXISTING DOOR TO BE REPLACED SEE SCHEDULE SHEET 75/296

STAIRS AND HAND RAILING TO REMAIN

VENTILATION OPENING AT GRADE

LEGEND:

- STRUCTURAL WALL TO BE REMOVED

PLAN VIEW AT GRADE

c:\pwworking\hmm\external\pre47802\dms72783\071_0134CRE005.dgn 10/19/2015 4:14:00 PM PRE47802

DESIGN AGENCY
HATCH MOTT MacDONALD
18013 CLEVELAND PKWY.
SUITE 200
CLEVELAND, OH 44135

DESIGNED	DRAWN	REVIEWED	DATE
BTF	JMS	MAR	10/20/14
CHECKED	REVISED	STRUCTURE FILE NUMBER	
KTO		3106578	

STRUCTURAL DEMOLITON PLAN AT GRADE
BRIDGE NO. HAM-71-0134
I-71 LYTLE TUNNEL UNDER LYTLE PARK

HAM-71-01.34
PID No. 87268

MECHANICAL ROOM FLOOR PLAN - DEMOLITION

LEGEND:

TYP. - TYPICAL

- INTERNAL WALL TO BE REMOVED
- STRUCTURAL WALL TO BE REMOVED
- EXISTING STRUCTURAL WALL OPENING
- EXISTING FLOOR SLAB TO BE REMOVED

DESIGN AGENCY
HATCH MOTT MacDONALD
18013 CLEVELAND PKWY.
SUITE 200
CLEVELAND, OH 44135

DESIGNED	DRAWN	REVIEWED	DATE
BTF	JMS	MAR	10/20/14
CHECKED	REVISED	STRUCTURE FILE NUMBER	
KTO		3106578	

STRUCTURAL - FAN ROOM DEMOLITION
BRIDGE NO. HAM-71-0134
I-71 LYTLE TUNNEL UNDER LYTLE PARK

HAM-71-01.34
PID No. 87268

24/296

282/555

c:\pwworking\hmm\external\tyn61470\dms72783\071_0134CRE001.dgn 10/24/2014 10:59:39 AM TYN61470

EAST FOURTH STREET

PIKE STREET

LYTLE STREET

EXISTING ACCESS HATCH TO REMAIN

EXISTING VAULTS TO BE FILLED (BY OTHERS)

NEW TRANSFORMER VAULTS

NEW 4'x4' EMERGENCY ACCESS HATCH

NEW EQUIPMENT ACCESS HATCH BELOW GRADE

B-1

B-2

NEW VENTILATION OPENING

NEW 4'x4' EMERGENCY ACCESS HATCH

EXISTING DOOR TO BE REPLACED

EXISTING STAIRS TO REMAIN

EXISTING STAIRWELL TO REMAIN

CONSTRUCTION LIMITS

M.N.S.

12'-6" 8'-6" 12'-6" 29'-11"±

7" 7'-2" 6'-0" 2'-03¼" 7'-10" 12'-0"

12'-0" 21'-9"±

13'-0" 6'-0" 6'-6¾" 7'-0½"± 63'-6" 9'-9¼" 6'-0" 26'-10½"±

NOTES:

1. SEE SHEET 14/296 FOR LAYOUT PLAN.

PLAN AT GRADE

NO.	DATE	REVISION DESCRIPTION
1	10/13/15	REVISED TRANSFORMER VAULTS

c:\pwworking\hmm\external\pre47802\dms72783\071_0134CDP003.dgn 10/16/2015 12:36:01 PM PRE47802

DESIGN AGENCY
HATCH MOTT MacDONALD
18013 CLEVELAND PKWY.
SUITE 200
CLEVELAND, OH 44135

DESIGNED	DRAWN	REVIEWED	DATE
BTF	JMS	MAR	10/20/14
CHECKED	REVISED	STRUCTURE FILE NUMBER	
KTO		3106578	

STRUCTURAL PLAN AT GRADE
BRIDGE NO. HAM-71-0134
I-71 LYTLE TUNNEL UNDER LYTLE PARK

HAM-71-01.34
PID No. 87268

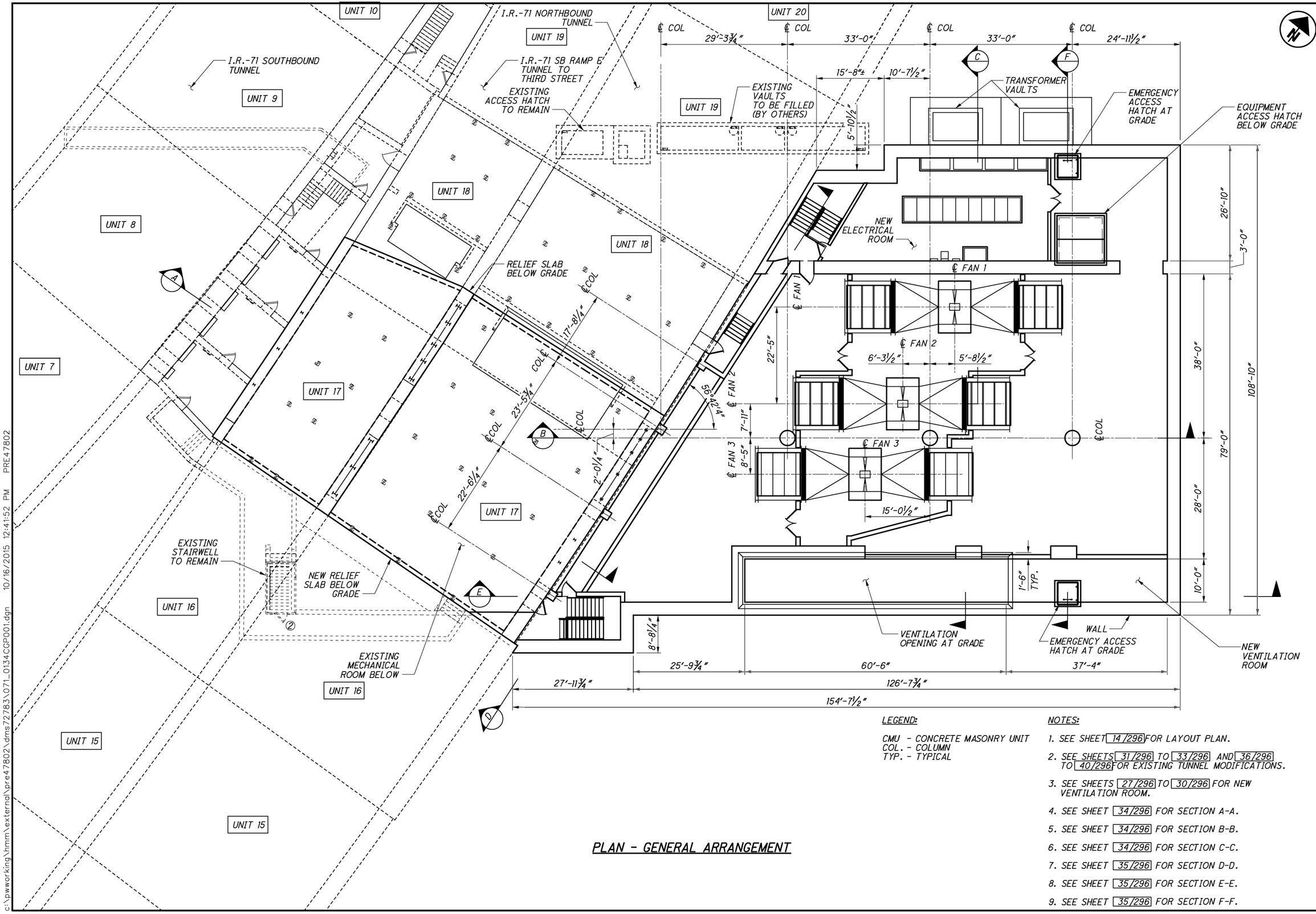

PLAN - GENERAL ARRANGEMENT

LEGEND:

CMU - CONCRETE MASONRY UNIT
COL. - COLUMN
TYP. - TYPICAL

NOTES:

1. SEE SHEET 14/296 FOR LAYOUT PLAN.
2. SEE SHEETS 31/296 TO 33/296 AND 36/296 TO 40/296 FOR EXISTING TUNNEL MODIFICATIONS.
3. SEE SHEETS 27/296 TO 30/296 FOR NEW VENTILATION ROOM.
4. SEE SHEET 34/296 FOR SECTION A-A.
5. SEE SHEET 34/296 FOR SECTION B-B.
6. SEE SHEET 34/296 FOR SECTION C-C.
7. SEE SHEET 35/296 FOR SECTION D-D.
8. SEE SHEET 35/296 FOR SECTION E-E.
9. SEE SHEET 35/296 FOR SECTION F-F.

DESIGN AGENCY
HATCH MOTT MacDONALD
18013 CLEVELAND PKWY.
SUITE 200
CLEVELAND, OH 44135

DESIGNED	DRAWN	REVIEWED	DATE
BTF	JMS	MAR	10/20/14
CHECKED	REVISED	STRUCTURE FILE NUMBER	
KTO		3106578	

STRUCTURAL GENERAL ARRANGEMENT PLAN

BRIDGE NO. HAM-71-0134
I-71 LYTLE TUNNEL UNDER LYTLE PARK

HAM-71-01.34
PID No. 87268

26/296

284/555

c:\pwworking\hmm\external\pre47802\dms72783\071_0134CGP001.dgn 10/16/2015 12:41:52 PM PRE47802

I.R.-71 SB RAMP E TUNNEL TO THIRD STREET

I.R.-71 NORTHBOUND TUNNEL

UNIT 19

UNIT 20

UNIT 18

℄ COL.

19'-8½"

33'-0"

33'-0"

21'-11½"

3'-0"

15'-8"±

10'-7½"

27'-3½"

4'-7½"

℄ LADDER

LADDER

8" CMU WALL

4" ELECTRICAL EQUIPMENT PAD SEE SHEET 58/296.

T/LANDING EL. 517.94

T/CONC. EL. 532.00

FOR STAIR DETAILS SEE SHEET 73/296.

5'-10½"

1'-3"

3'-0"

7¼"

4" TYP.

6'-2"

29'-8"

27'-8"

10'-0"

21'-01/4"

UP

BASE SLAB PERIMETER

1 - UPPER
6 - LOWER

8" CMU WEST WALL SEE SHEET 61/296.

4" ELECTRICAL EQUIPMENT PAD SEE SHEET 58/296.

INTERIOR WALL SEE DETAIL SHEET 57/296.

5'-8"

14'-0"

3'-3"

6'-4" DOOR

EXTERIOR WALL SEE DETAIL SHEET 57/296.

8" CMU EAST WALL SEE SHEET 61/296

11'-4"

3'-0"

SEE DETAIL 1 SHEET 57/296.

10'-0" DOOR

1'-0"

23'-10"

TOP CONCRETE EL. VARIES

3'-4" DOOR

T/CONC. EL. 532.00

5'-8½"

℄ FAN 1

12" CMU WALL SEE DETAIL-1 SHEET 59/296

12" CMU WALL SEE DETAIL-1 SHEET 59/296

1'-6"

SEE DETAIL 2 SHEET 57/296.

3'-0"

60'-0"

2

3'-4" DOOR

2'-9¾"

1'-3"

T/PLATFORM EL. 523.00

℄ FAN

14'-4"

40'-0"

12'-4"

37'-0"

21'-1½"

1

H

UP

56°42'4"

12" CMU WALL SEE DETAIL-2 SHEET 59/296.

6'-8"

6'-4" DOOR

4

FAN SUPPORT FOUNDATIONS SEE SHEET 66/296 TYP.

9'-8"

T/SLAB EL. 514.00

℄ FAN 2

6'-3½"

1'-4"

7'-7¼"

℄ FAN

17'-8¼"

℄ COL.

1'-0" NOM. CONCRETE WALL

G

5'-0"

1'-0"

T/CONC. VARIES

T/PLATFORM EL. 526.71 TO MATCH EXISTING

SEE DETAIL 5 SHEET 57/296 T/CONC VARIES

SEE SHEET 28/296

MATCHLINE - A-A; SEE SHEET 28/296

1'-0"

1'-0"

13'-0"

1'-0"

1'-0"

13'-0"

BASE SLAB PLAN

LEGEND:

CMU	- CONCRETE MASONRY UNIT
COL.	- COLUMN
CONC.	- CONCRETE
EL.	- ELEVATION
H	- HIGH
NOM.	- NOMINAL
T/	- TOP OF
TYP.	- TYPICAL
⟨X⟩	- DOOR No., SEE SCHEDULE SHEET 75/296

NOTES:

1. SEE SHEET 26/296 FOR GENERAL ARRANGEMENT PLAN.
2. SEE SHEET 34/296 FOR SECTION C-C.
3. SEE SHEET 35/296 FOR SECTION D-D.
4. SEE SHEET 35/296 FOR SECTION F-F.
5. SEE SHEET 58/296 FOR SECTION G-G.
6. SEE SHEET 58/296 FOR SECTION H-H.
7. SEE SHEET 46/296 AND SHEET 47/296 FOR BASE SLAB REINFORCING.

NO.	DATE	REVISION DESCRIPTION
1	02/03/16	RFI 115

c:\pwworking\hmm\external\pre47802\dms72783\071_0134CFP001.dgn 2/3/2016 11:26:05 AM PRE47802

DESIGN AGENCY
HATCH MOTT MacDONALD
18013 CLEVELAND PKWY.
SUITE 200
CLEVELAND, OH 44135

DESIGNED	DRAWN	REVIEWED	DATE
BTF	JMS	MAR	10/20/14
CHECKED	REVISED	STRUCTURE FILE NUMBER	
KTO		3106578	

STRUCTURAL PLAN AT BASE SLAB - 1 OF 2
BRIDGE NO. HAM-71-0134
I-71 LYTLE TUNNEL UNDER LYTLE PARK

HAM-71-01.34
PID No. 87268

27 / 296

285 / 555

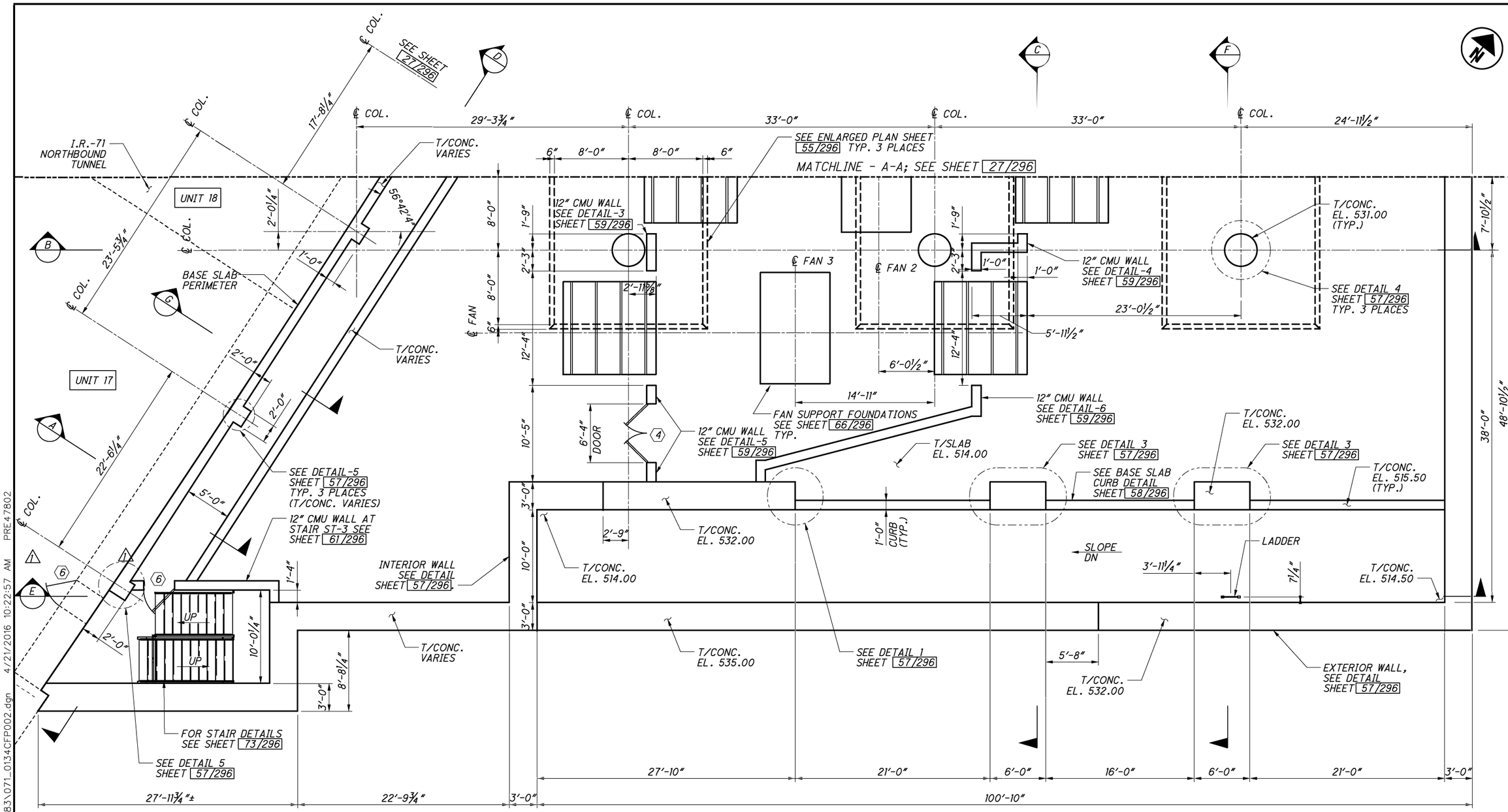

BASE SLAB PLAN

LEGEND:

CMU	- CONCRETE MASONRY UNIT
CONC.	- CONCRETE
DN	- DOWN
EL.	- ELEVATION
T/	- TOP OF
TYP.	- TYPICAL
⟨X⟩	- DOOR No., SEE SCHEDULE SHEET 75/296

NOTES:

1. SEE SHEET 26/296 FOR GENERAL ARRANGEMENT PLAN.
2. SEE SHEET 34/296 FOR SECTION A-A.
3. SEE SHEET 34/296 FOR SECTION B-B.
4. SEE SHEET 34/296 FOR SECTION C-C.
5. SEE SHEET 35/296 FOR SECTION D-D.
6. SEE SHEET 35/296 FOR SECTION E-E.
7. SEE SHEET 35/296 FOR SECTION F-F.
8. SEE SHEET 58/296 FOR SECTION G-G.
9. SEE SHEET 46/296 AND 47/296 FOR BASE SLAB REINFORCING.

NO.	DATE	REVISION DESCRIPTION
1	04/21/16	RFI 160 - REVISED DOORS

c:\pwworking\hmm\external\pre47802\dms72783\071_0134CFP002.dgn 4/21/2016 10:22:57 AM PRE47802

DESIGN AGENCY
HATCH MOTT MacDONALD
18013 CLEVELAND PKWY.
SUITE 200
CLEVELAND, OH 44135

DESIGNED	DRAWN	REVIEWED	DATE
BTF	MJF	MAR	10/20/14
CHECKED	REVISED	STRUCTURE FILE NUMBER	
KTO	BTF	3106578	

STRUCTURAL PLAN AT BASE SLAB - 2 OF 2
BRIDGE NO. HAM-71-0134
I-71 LYTLE TUNNEL UNDER LYTLE PARK

HAM-71-01.34
PID No. 87268

28/296

286/555

NOTES:

1. SEE SHEET 26/296 FOR GENERAL ARRANGEMENT PLAN.
2. SEE SHEET 34/296 FOR SECTION C-C.
3. SEE SHEET 35/296 FOR SECTION D-D.
4. SEE SHEET 35/296 FOR SECTION E-E.
5. SEE SHEET 35/296 FOR SECTION F-F.
6. SEE SHEET 58/296 FOR SECTION G-G.

NOTES: (CONTINUED):

7. SEE SHEET 36A/296 FOR SECTION H-H.
8. SEE SHEET 36A/296 FOR SECTION J-J.
9. SEE SHEET 36A/296 FOR SECTION K-K.
10. SEE SHEET 53/296 AND SHEET 54/296 FOR ROOF SLAB REINFORCING.

UNIT 19

UNIT 20

UNIT 19

UNIT 18

UNIT 17

I.R.-71 SB RAMP E TUNNEL TO THIRD STREET

I.R.-71 NORTHBOUND TUNNEL

℄ COL.

19'-8½"

33'-0"

15'-8"±

10'-7½"

33'-0"

24'-11½"

24'-0¾"

4'-0"

LADDER

5'-10½"

20'-11½"

21'-1½"

59'-11¼"

4'-0"

3'-0"

9'-10"

10'-0"

18'-0¾"

10'-0"

2'-11¼"

3'-0" NOMINAL

2'-9"

2'-9"

ROOF SLAB PERIMETER

DOWN

DOWN

8" CMU WALL BELOW

T/CONC. EL. 537.73

T/CONC. EL. 537.91

T/CONC. EL. 537.84

0" TYP.

1'-0" CONCRETE WALL

T/CONC. EL. 535.00

EMERGENCY ACCESS HATCH SEE SHEET 72/296

8" CMU WALL BELOW

EQUIPMENT ACCESS HATCH SEE SHEET 71/296

1'-0" CONCRETE WALL

BEAM NO. 1 SEE SHEET 63/296

FOR STAIR DETAILS SEE SHEET 73/296

BEAM NO. 4 SEE SHEET 65/296

BEAM NO. 3 SEE SHEET 64/296

MC18x42.7x13'-0" BELOW. SEE DETAIL 3 SHEET 66/296

MC18x42.7x13'-0" BELOW. SEE DETAIL 3 SHEET 66/296

12" CMU WALL BELOW

12" CMU WALL BELOW

T/SLAB EL. VARIES (MATCH U/S OF EXIST. SLAB)

MC18x42.7 BELOW. SEE DETAIL 3 SHEET 66/296

MC18x42.7 BELOW SEE DETAIL 3 SHEET 66/296

1'-0" CONC. WALL BELOW SEE DETAIL 1 SHEET 58/296

MATCHLINE - B-B; SEE SHEET 30/296

ROOF SLAB PLAN

LEGEND:

CMU	- CONCRETE MASONRY UNIT
CONC.	- CONCRETE
ELEV.	- ELEVATION
T/	- TOP OF
U/S	- UNDER SIDE

DESIGN AGENCY
HATCH MOTT MacDONALD
18013 CLEVELAND PKWY.
SUITE 200
CLEVELAND, OH 44135

DESIGNED	DRAWN	REVIEWED	DATE
BTF	JMS	MAR	10/20/14
CHECKED	REVISED	STRUCTURE FILE NUMBER	
KTO		3106578	

STRUCTURAL PLAN AT ROOF SLAB - 1 OF 2
BRIDGE NO. HAM-71-0134
I-71 LYTLE TUNNEL UNDER LYTLE PARK

HAM-71-01.34
PID No. 87268

29/296

287/555

c:\pwworking\hmm\external\pre47802\dms72783\071_0134CDP001.dgn 10/16/2015 12:45:33 PM PRE47802

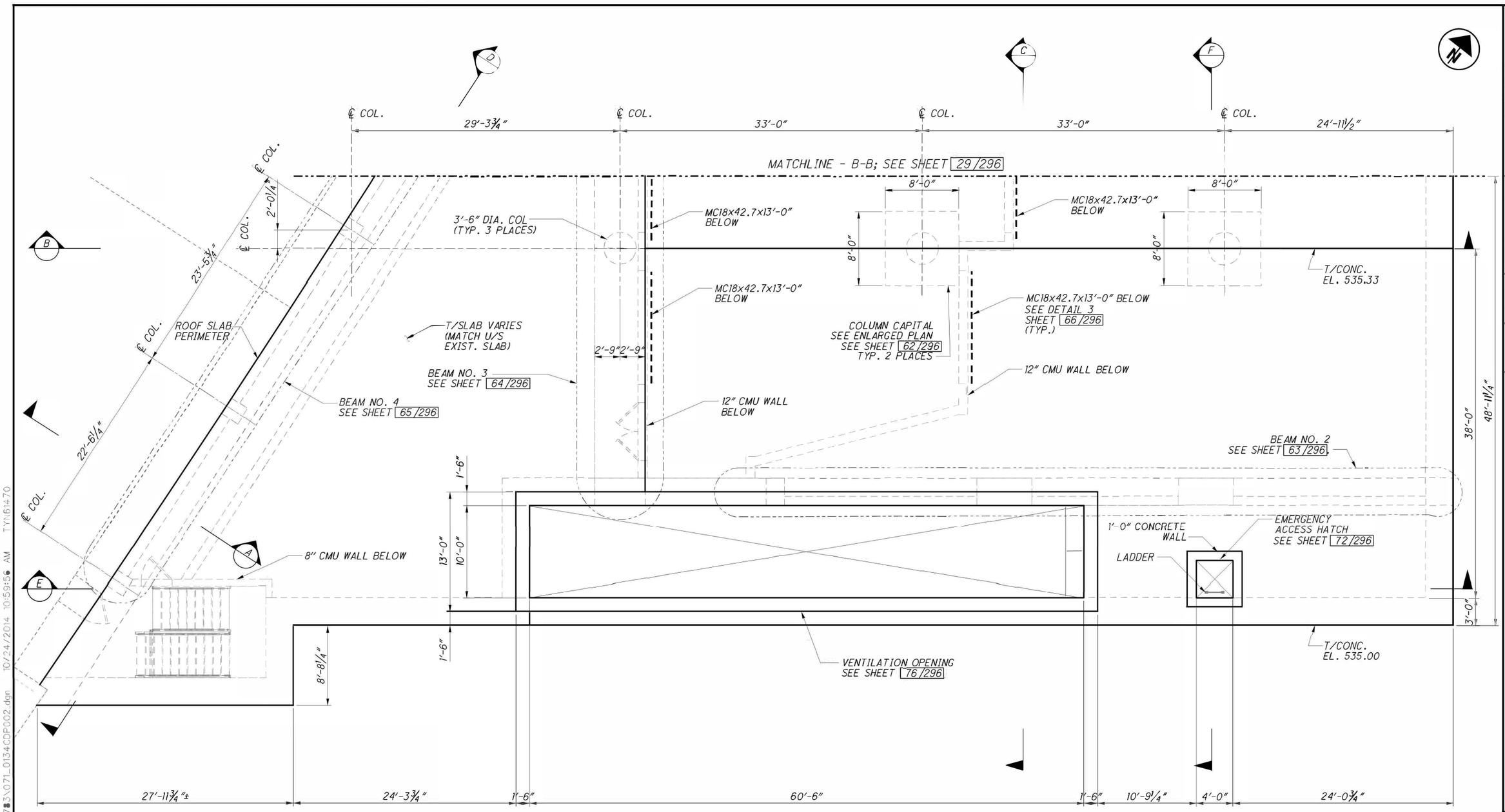

ROOF SLAB PLAN

LEGEND:

CMU	- CONCRETE MASONRY UNIT
COL.	- COLUMN
CONC.	- CONCRETE
EL.	- ELEVATION
EXIST.	- EXISTING
T/	- TOP OF
TYP.	- TYPICAL
U/S	- UNDERSIDE

NOTES:

1. SEE SHEET 26/296 FOR GENERAL ARRANGEMENT PLAN.
2. SEE SHEET 34/296 FOR SECTION A-A.
3. SEE SHEET 34/296 FOR SECTION B-B.
4. SEE SHEET 34/296 FOR SECTION C-C.
5. SEE SHEET 35/296 FOR SECTION D-D.
6. SEE SHEET 35/296 FOR SECTION E-E.
7. SEE SHEET 35/296 FOR SECTION F-F.
8. SEE SHEET 53/296 AND 54/296 FOR ROOF SLAB REINFORCING.

DESIGN AGENCY
HATCH MOTT MacDONALD
18013 CLEVELAND PKWY.
SUITE 200
CLEVELAND, OH 44135

DESIGNED BTF | DRAWN JMS | CHECKED KTO | REVIEWED MAR | DATE 10/20/14

STRUCTURE TILE NUMBER 3106578

STRUCTURAL PLAN AT ROOF SLAB - 2 OF 2
BRIDGE NO. HAM-71-0134
I-71 LYTLE TUNNEL UNDER LYTLE PARK

HAM-71-01.34
PID No. 87268

30/296

288/555

c:\pwworking\hmm\external\tyn61470\dms7278\071_0134CDP002.dgn 10/24/2014 10:59:56 AM TYN61470

RELIEF SLAB PLAN

LEGEND:

EL. - ELEVATION
SIM. - SIMILAR
T/ - TOP OF

NOTES:

1. *SEE SHEET 26/296 FOR GENERAL ARRANGEMENT.*
2. *SEE SHEET 43/296 FOR SECTION A-A.*
3. *SEE SHEET 43/296 FOR SECTION B-B.*
4. *SEE SHEET 43/296 FOR SECTION C-C.*
5. *SEE SHEET 43/296 FOR SECTION D-D.*

DESIGN AGENCY
HATCH MOTT MacDONALD
18013 CLEVELAND PKWY.
SUITE 200
CLEVELAND, OH 44135

DESIGNED	DRAWN	REVIEWED	DATE
BTF	JMS	MAR	10/20/14
CHECKED	REVISED	STRUCTURE FILE NUMBER	
KTO		3106578	

STRUCTURAL PLAN-EXISTING UNIT 17 & 18 MODIFICATIONS-1 OF 2
BRIDGE NO. HAM-71-0134
I-71 LYTLE TUNNEL UNDER LYTLE PARK

HAM-71-01.34
PID No. 87268

31/296

289
555

c:\pwworking\hmm\external\tyn61470\dms72783\071_0134CRE003.dgn 10/24/2014 10:59:58 AM TYN61470

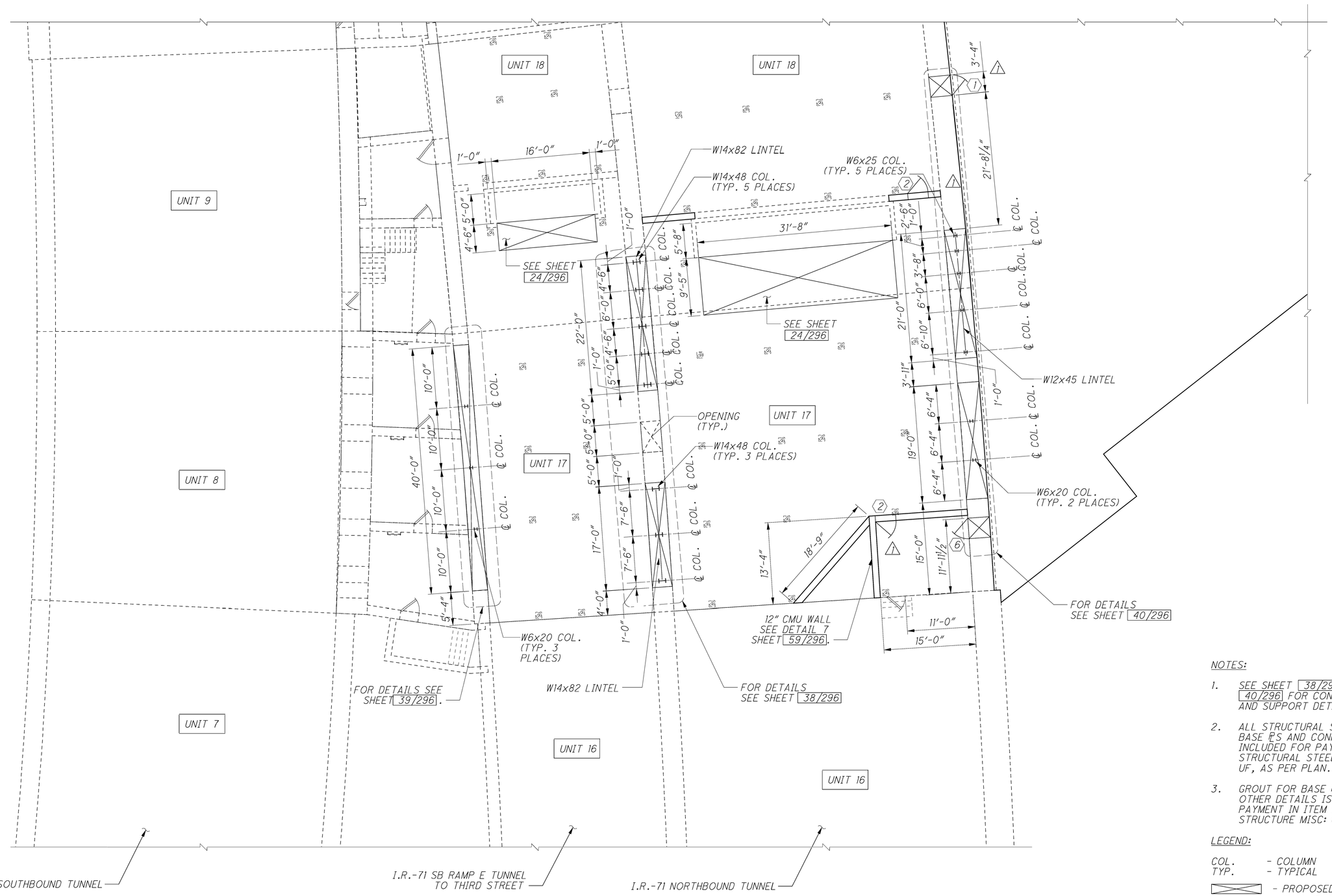

MECHANICAL ROOM FLOOR PLAN

NOTES:

1. SEE SHEET 38/296, 39/296 AND 40/296 FOR CONSTRUCTION PHASING AND SUPPORT DETAILS.
2. ALL STRUCTURAL STEEL, INCLUDING BASE PL'S AND CONNECTIONS IS INCLUDED FOR PAYMENT IN ITEM 513 - STRUCTURAL STEEL MEMBERS, LEVEL UF, AS PER PLAN.
3. GROUT FOR BASE PL, CAP PL, AND OTHER DETAILS IS INCLUDED FOR PAYMENT IN ITEM 530 - SPECIAL STRUCTURE MISC: GROUT.

LEGEND:

COL. - COLUMN
TYP. - TYPICAL
⊠ - PROPOSED STRUCTURAL WALL/FLOOR OPENING
EXISTING STRUCTURAL WALL OPENING
(2) - DOOR NO. SEE SCHEDULE SHEET 75/296

NO.	DATE	REVISION DESCRIPTION
1	04/21/16	RFI 160 - REVISED DOORS

DESIGN AGENCY
HATCH MOTT MacDONALD
18013 CLEVELAND PKWY.
SUITE 200
CLEVELAND, OH 44135

REVIEWED MAR DATE 10/20/14
DRAWN JMS REVISED BTF
DESIGNED BTF CHECKED KTO
STRUCTURE FILE NUMBER 3106578

STRUCTURAL PLAN-EXISTING UNIT 17 & 18 MODIFICATIONS-2 OF 2
BRIDGE NO. HAM-71-0134
I-71 LYTLE TUNNEL UNDER LYTLE PARK

HAM-71-01.34
PID No. 87268

32/296

290/555

c:\pwworking\hmm\external\pre47802\dms72783\071_0134CRE004.dgn 4/21/2016 10:18:01 AM PRE47802

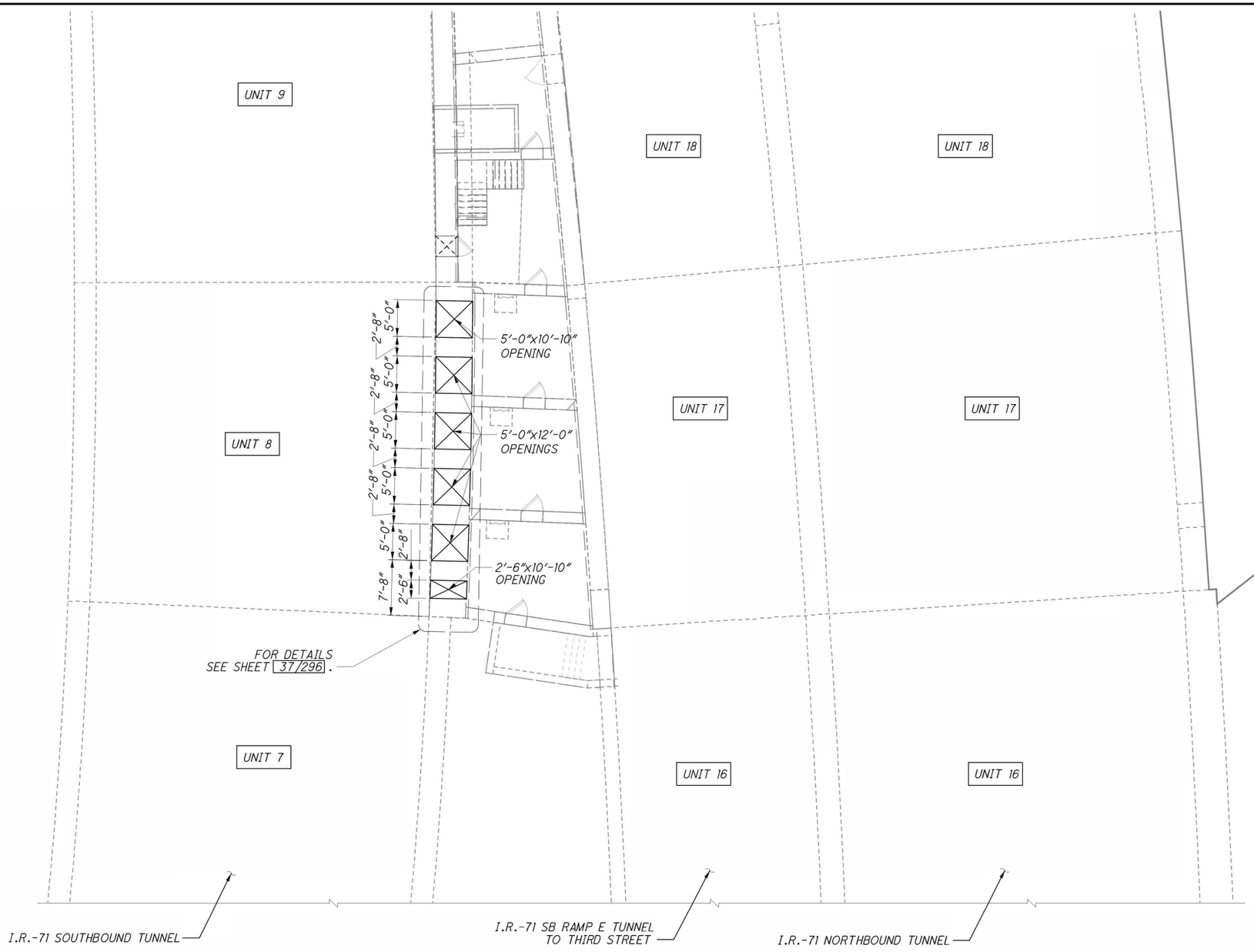

MECHANICAL ROOM FLOOR PLAN

LEGEND:

- PROPOSED STRUCTURAL WALL OPENING
- EXISTING STRUCTURAL WALL OPENING

DESIGN AGENCY
HATCH MOTT MacDONALD
18013 CLEVELAND PKWY.
SUITE 200
CLEVELAND, OH 44135

DESIGNED	DRAWN	REVIEWED	DATE
BTF	MJF	MAR	10/20/14
CHECKED	REVISED	STRUCTURE FILE NUMBER	
KTO		3106578	

STRUCTURAL PLAN - EXISTING UNIT 8 MODIFICATIONS

BRIDGE NO. HAM-71-0134
I-71 LYTLE TUNNEL UNDER LYTLE PARK

HAM-71-01.34
PID No. 87268

33/296

291/555

c:\pwworking\hmm\external\tyn61470\dms72783\071_0134CRE002.dgn 10/24/2014 11:00:04 AM TYN61470

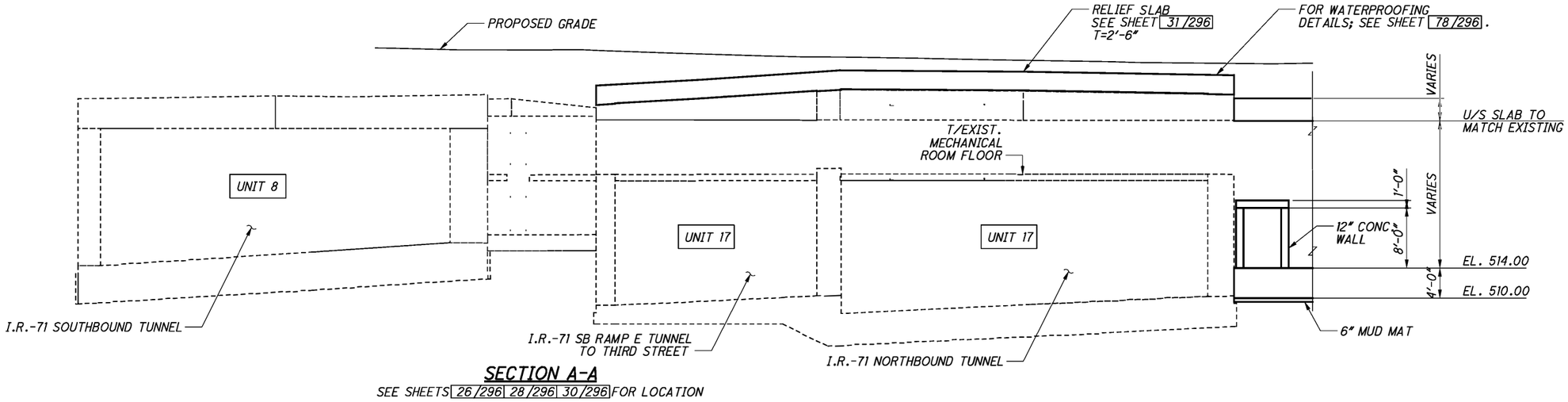

SECTION A-A

SEE SHEETS 26/296 28/296 30/296 FOR LOCATION

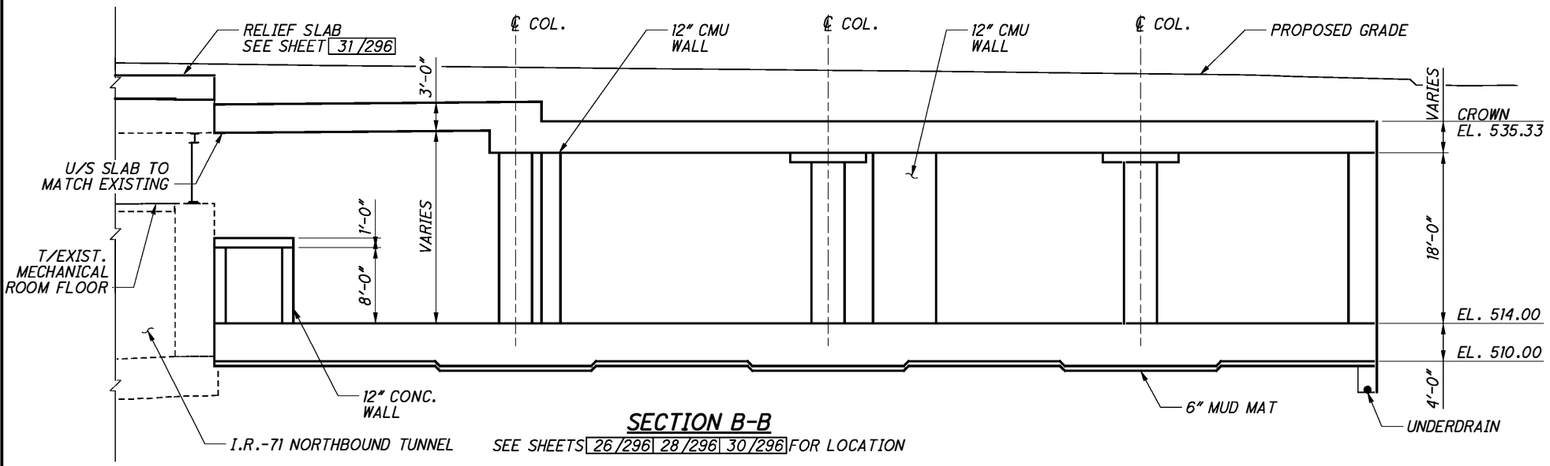

SECTION B-B

SEE SHEETS 26/296 28/296 30/296 FOR LOCATION

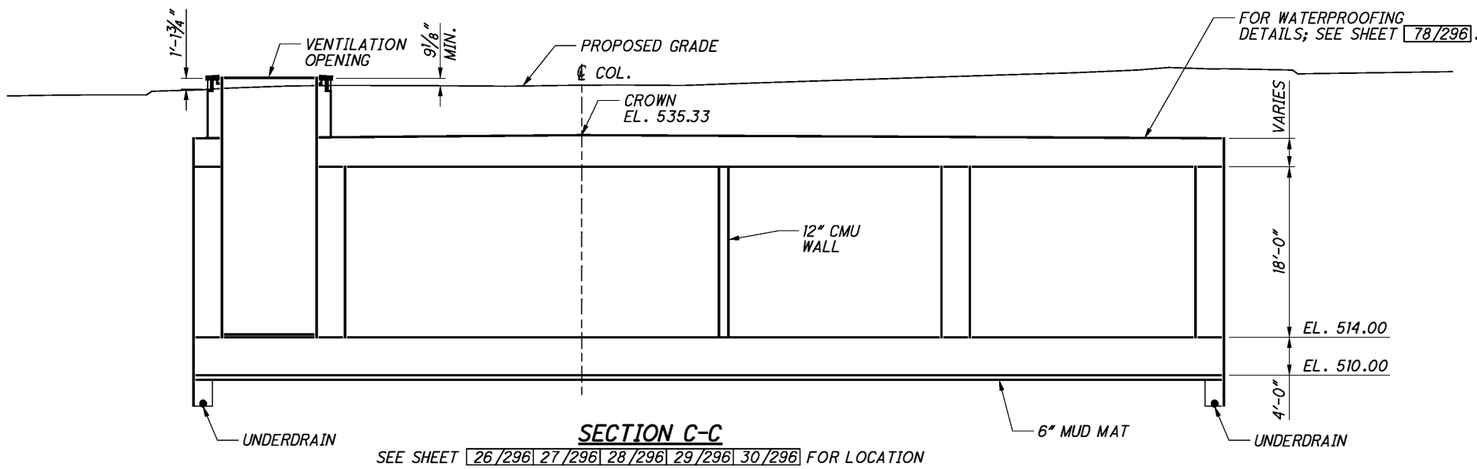

SECTION C-C

SEE SHEET 26/296 27/296 28/296 29/296 30/296 FOR LOCATION

NOTES:

1. EQUIPMENT AND FAN PADS NOT SHOWN FOR CLARITY.
2. FOR DRAINAGE DETAILS SEE SHEET 76/296 AND 77/296.

LEGEND:

CMU	- CONCRETE MASONRY UNIT
COL.	- COLUMN
CONC.	- CONCRETE
EL.	- ELEVATION
MAX.	- MAXIMUM
MIN.	- MINIMUM
T	- THICKNESS
U/S	- UNDERSIDE

DESIGN AGENCY
HATCH MOTT MacDONALD
18013 CLEVELAND PKWY.
SUITE 200
CLEVELAND, OH 44135

DESIGNED	DRAWN	REVIEWED	DATE
BTF	JMS	MAR	10/20/14
CHECKED	REVISED	STRUCTURE FILE NUMBER	
KTO		3106578	

STRUCTURAL SECTIONS - 1 OF 3
BRIDGE NO. HAM-71-0134
I-71 LYTLE TUNNEL UNDER LYTLE PARK

HAM-71-01.34
PID No. 87268

34/296

292/555

c:\pwworking\hmm\external\pre47802\dms72783\071_0134CTS001.dgn 7/20/2015 4:36:23 PM PRE47802

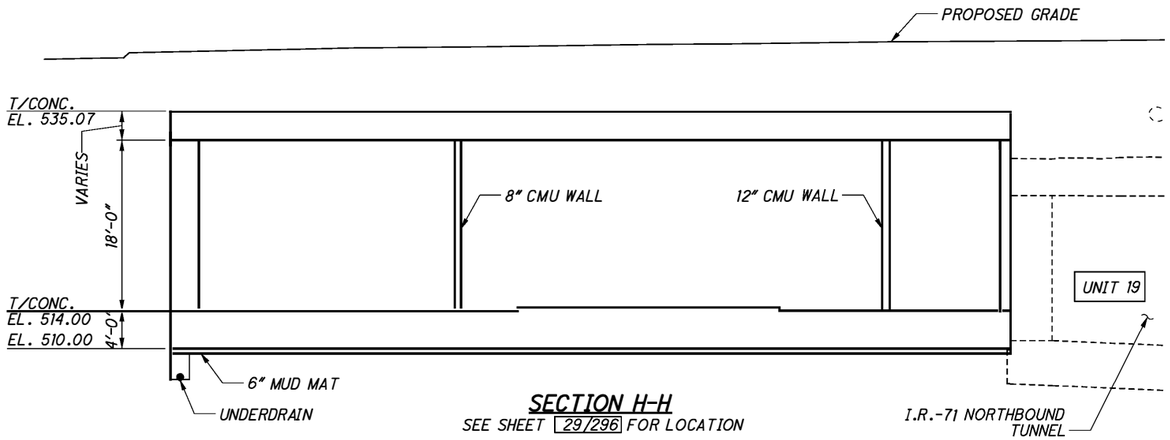

SECTION H-H

SEE SHEET 29/296 FOR LOCATION

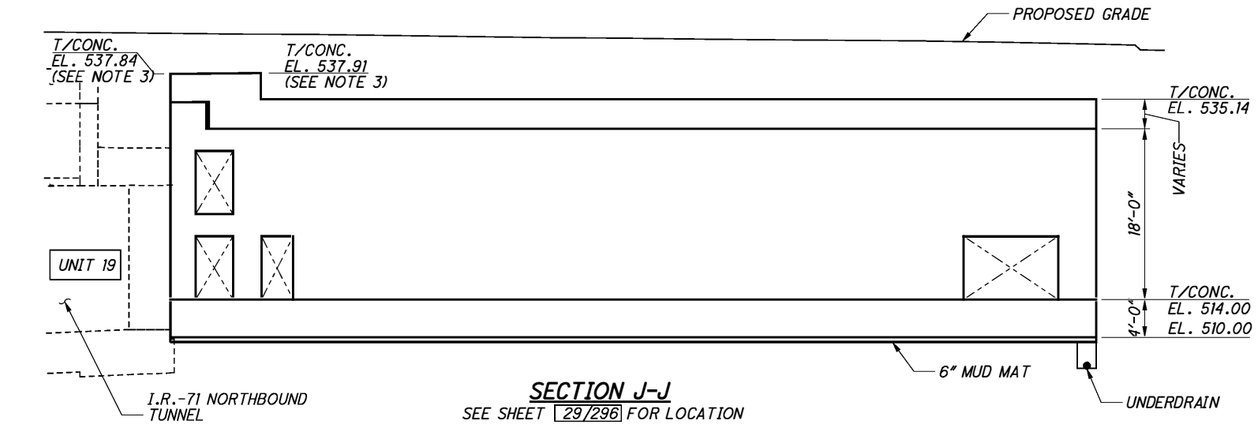

SECTION J-J

SEE SHEET 29/296 FOR LOCATION

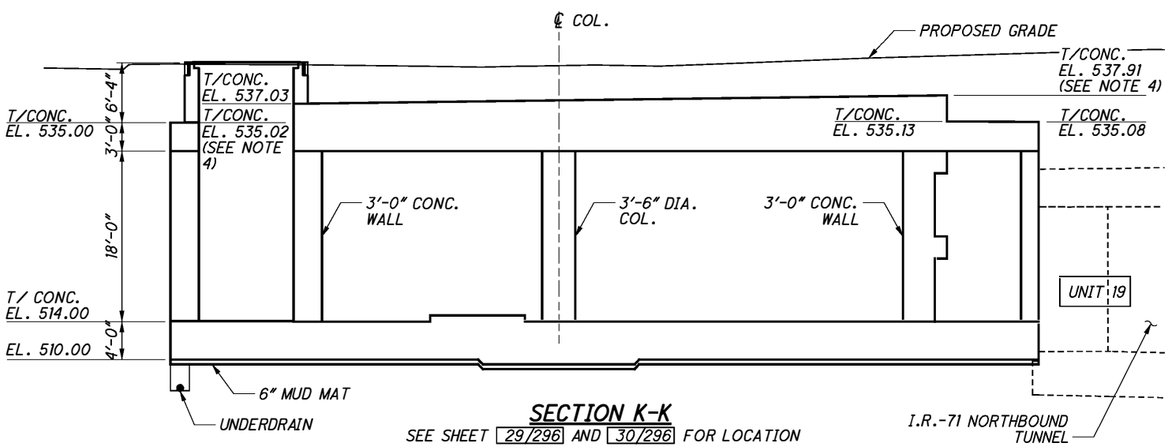

SECTION K-K

SEE SHEET 29/296 AND 30/296 FOR LOCATION

NOTES:

1. EQUIPMENT AND FAN PADS NOT SHOWN FOR CLARITY.
2. FOR DRAINAGE DETAILS SEE SHEET 76/296 AND 77/296.
3. ELEVATIONS SHOWN ARE AT NORTH EDGE OF ROOF SLAB.
4. ELEVATIONS SHOWN ARER AT EAST EDGE OF ROOF SLAB.

LEGEND:

CMU	- CONCRETE MASONRY UNIT
COL.	- COLUMN
CONC.	- CONCRETE
EL.	- ELEVATION
T/	- TOP OF

DESIGN AGENCY
HATCH MOTT MacDONALD
18013 CLEVELAND PKWY.
SUITE 200
CLEVELAND, OH 44135

DESIGNED	DRAWN	REVIEWED	DATE
BTF	JMS	MAR	10/20/14
CHECKED	REVISED	STRUCTURE FILE NUMBER	
KTO	BTF	3106578	

STRUCTURAL SECTIONS - 3 OF 3
BRIDGE NO. HAM-71-0134
I-71 LYTLE TUNNEL UNDER LYTLE PARK

HAM-71-01.34
PID No. 87268

36A/296

292A
555

c:\pwworking\hmm\external\pre47802\dms72783\071_0134CTS026.dgn 7/20/2015 4:18:59 PM PRE47802

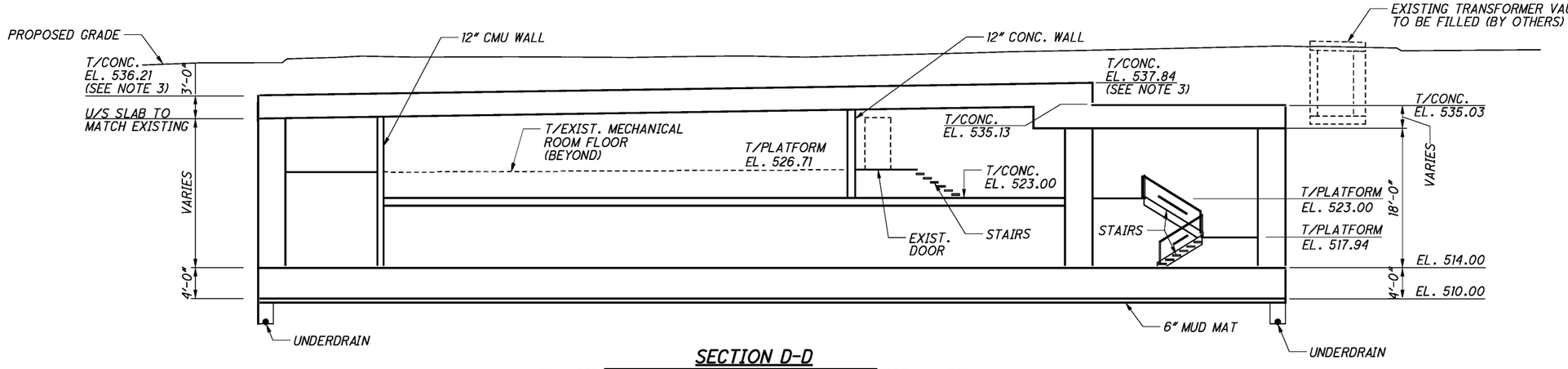

SECTION D-D

SEE SHEET 26/296 27/296 28/296 29/296 30/296 FOR LOCATION

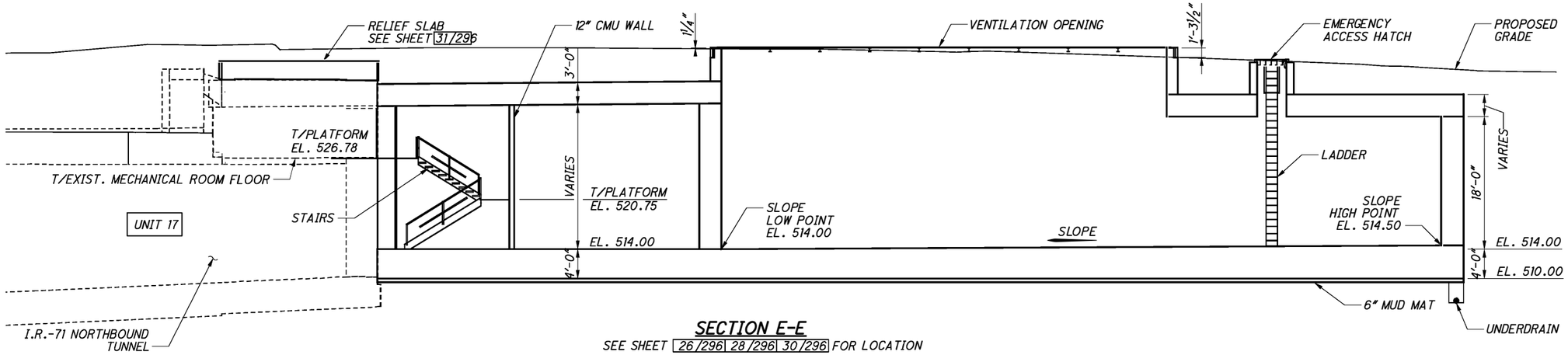

SECTION E-E

SEE SHEET 26/296 28/296 30/296 FOR LOCATION

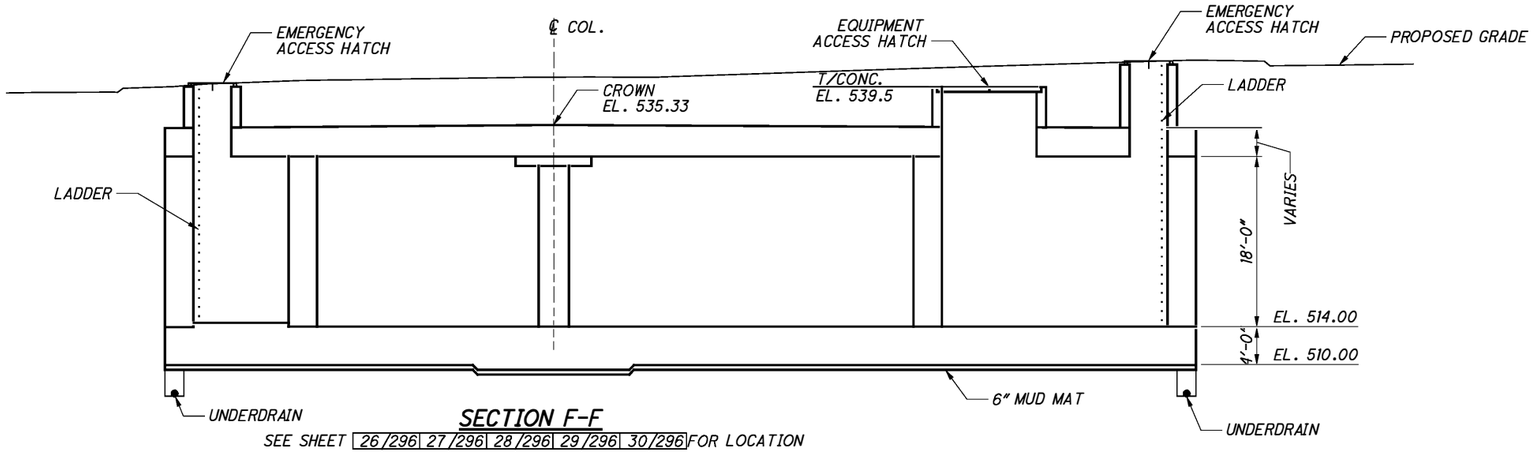

SECTION F-F

SEE SHEET 26/296 27/296 28/296 29/296 30/296 FOR LOCATION

NOTES:

1. EQUIPMENT AND FAN PADS NOT SHOWN FOR CLARITY.
2. FOR STAIR AND PLATFORM DETAILS; SEE SHEET 73/296
3. ELEVATIONS SHOWN AT FACE OF EXIST. TUNNEL WALL.

LEGEND:

CMU	- CONCRETE MASONRY UNIT
COL.	- COLUMN
CONC.	- CONCRETE
EL.	- ELEVATION
EXIST.	- EXISTING
MAX.	- MAXIMUM
MIN.	- MINIMUM
T/	- TOP OF

DESIGN AGENCY
HATCH MOTT MacDONALD
18013 CLEVELAND PKWY.
SUITE 200
CLEVELAND, OH 44135

DESIGNED	DRAWN	REVIEWED	DATE
BTF	JMS	MAR	10/20/14
CHECKED	REVISED	STRUCTURE FILE NUMBER	
KTO		3106678	

STRUCTURAL SECTIONS - 2 OF 3

BRIDGE NO. HAM-71-0134
I-71 LYTLE TUNNEL UNDER LYTLE PARK

HAM-71-01.34
PID No. 87268

35/296

293/555

c:\pwworking\hmm\external\pre47802\dms72783\071_0134CTS002.dgn 7/20/2015 4:16:26 PM PRE47802

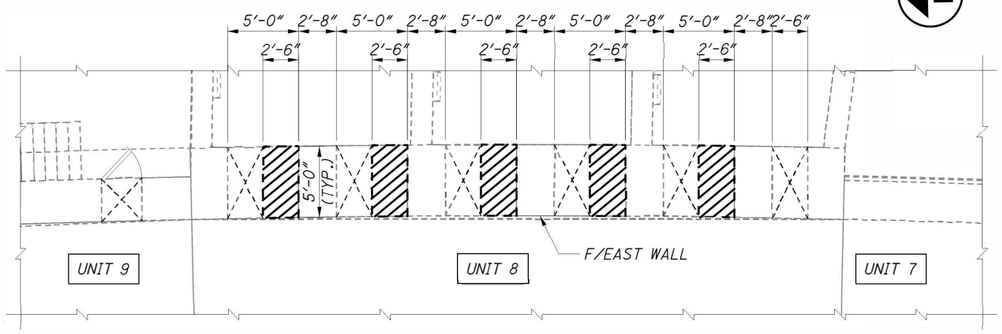

DEMOLITION PLAN AT ELEVATION 515.62±

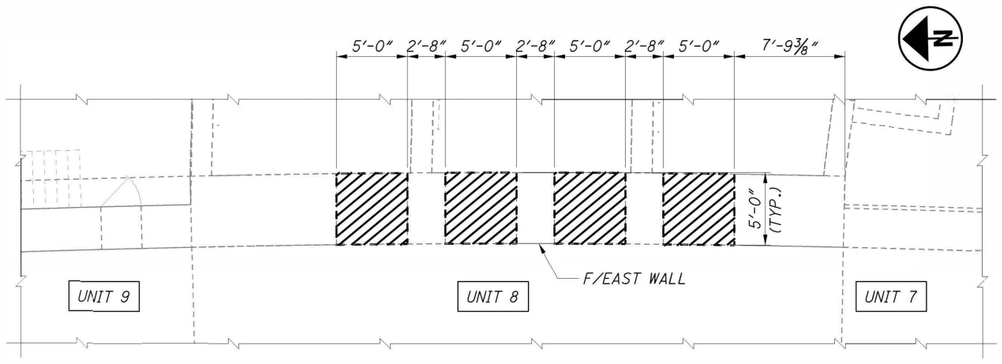

DEMOLITION PLAN AT ELEVATION 527.62±

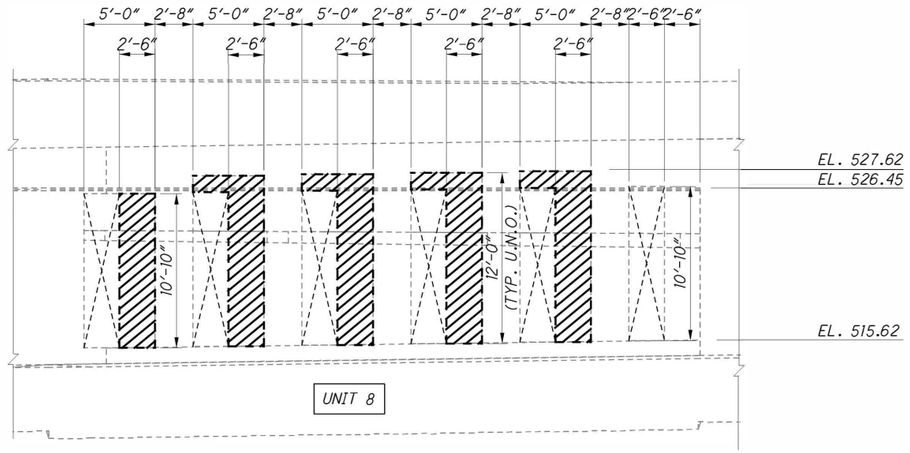

DEMOLITION ELEVATION - UNIT 8 EAST WALL

NOTES:

1. SEE SHEET 24/296 FOR LOCATION.

LEGEND:

EL. - ELEVATION
F/ - FACE OF
TYP. - TYPICAL
U.N.O. - UNLESS NOTED OTHERWISE

- STRUCTURAL WALL TO BE REMOVED
- EXISTING STRUCTURAL WALL OPENING

DESIGN AGENCY
HATCH MOTT MacDONALD
18013 CLEVELAND PKWY.
SUITE 200
CLEVELAND, OH 44135

DESIGNED	DRAWN	REVIEWED	DATE
BTF	JMS	MAR	10/20/14
CHECKED	REVISED	STRUCTURE FILE NUMBER	
KTO		3106578	

STRUCTURAL WALL ELEVATIONS - UNIT 8 DEMOLITION

BRIDGE NO. HAM-71-0134
I-71 LYTLE TUNNEL UNDER LYTLE PARK

HAM-71-01.34
PID No. 87268

c:\pwworking\hmm\external\tyn61470\dms727883\071_0134CRE006.dgn 10/24/2014 11:00:16 AM TYN61470

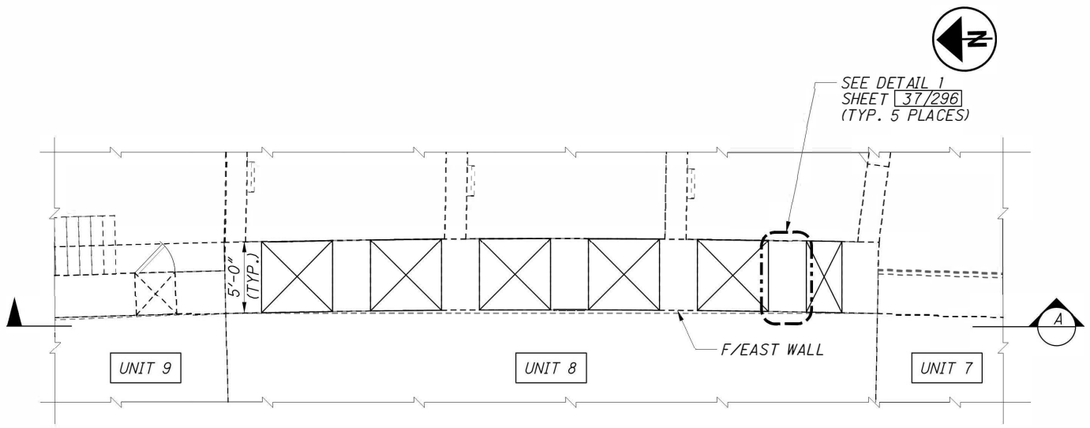

FLOOR PLAN AT UNIT 8

SEE SHEET 33/296 FOR LOCATION

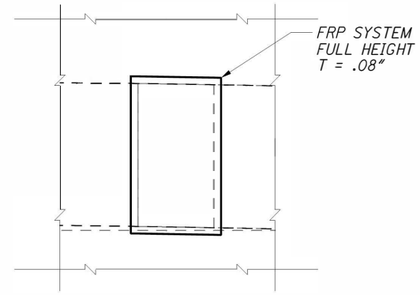

DETAIL 1 (TYP. 5 PLACES)

SEE SHEET 37/296 FOR LOCATION

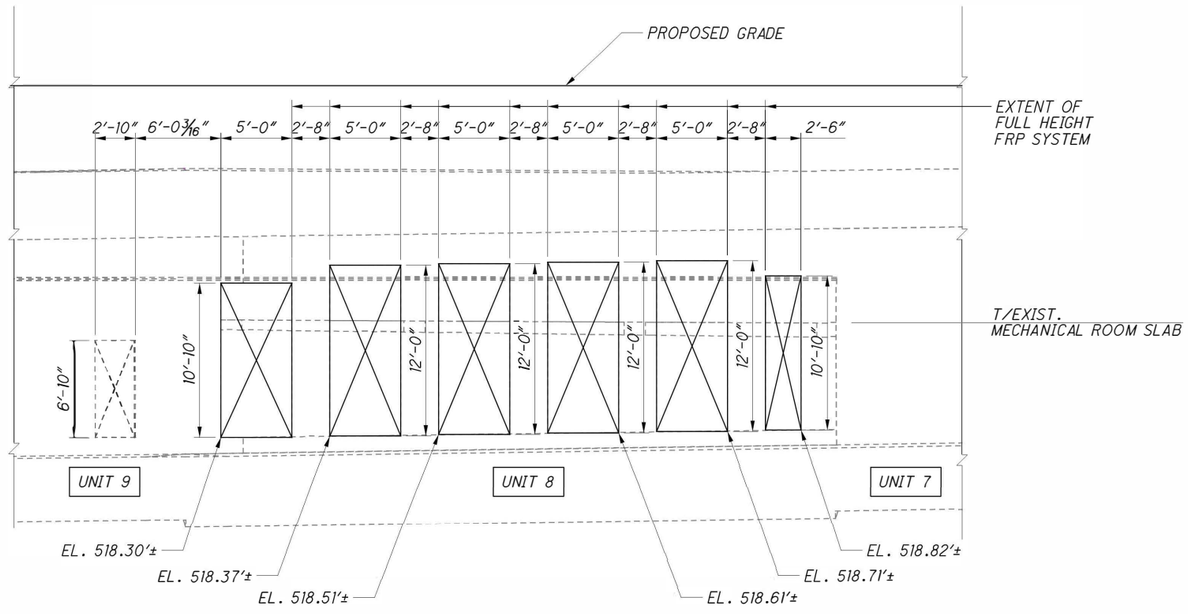

ELEVATION A - UNIT 8 EAST WALL

NOTES:

1. FRP SYSTEM IS INCLUDED FOR PAYMENT IN ITEM 530 - SPECIAL STRUCTURE, MISC: FIBER REINFORCED POLYMER (FRP) SYSTEM.

LEGEND:

EL.	- ELEVATION
EXIST.	- EXISTING
F/	- FACE OF
FRP	- FIBER REINFORCED POLYMER
T/	- TOP OF
TYP.	- TYPICAL
⊠	- PROPOSED STRUCTURAL WALL OPENING
▭	- EXISTING STRUCTURAL WALL OPENING

DESIGN AGENCY
HATCH MOTT MacDONALD
18013 CLEVELAND PKWY.
SUITE 200
CLEVELAND, OH 44135

DESIGNED BTF | DRAWN JMS | REVIEWED MAR | DATE 10/20/14
CHECKED KTO | REVISED | STRUCTURE FILE NUMBER 3106578

STRUCTURAL WALL ELEVATIONS - UNIT 8 MODIFICATIONS

BRIDGE NO. HAM-71-0134
I-71 LYTLE TUNNEL UNDER LYTLE PARK

HAM-71-01.34
PID No. 87268

37/296

295/555

c:\pwworking\hmm\external\tyn61470\dms72783\071_0134CMD001.dgn 10/24/2014 11:00:21 AM TYN61470

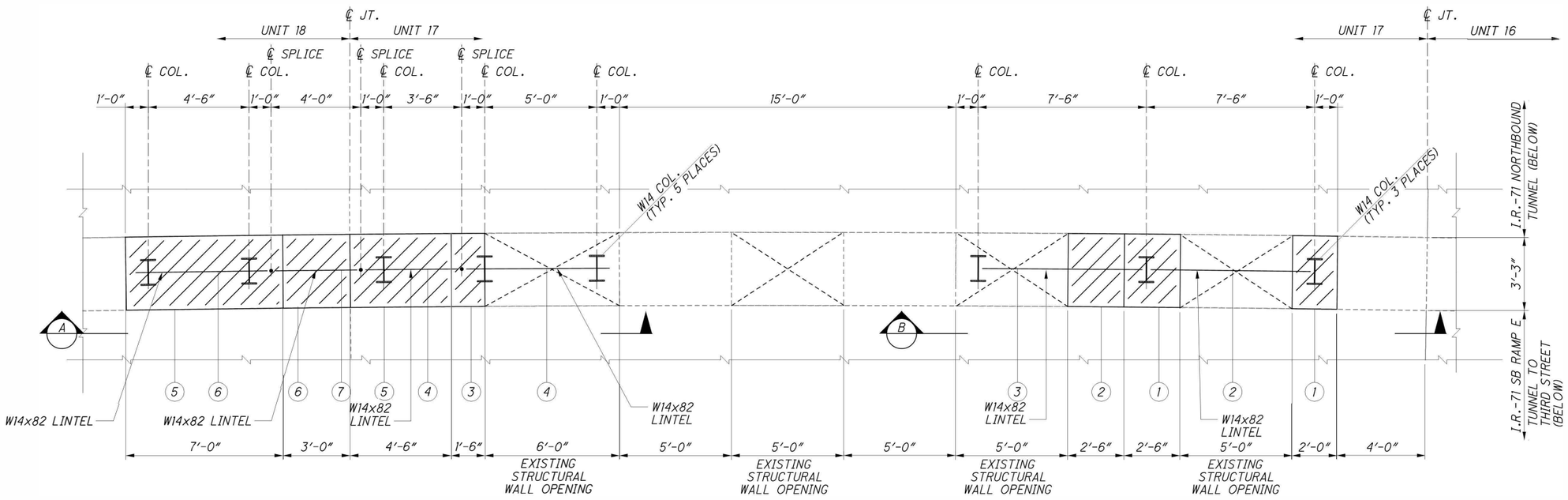

PLAN - CONSTRUCTION PHASING - UNIT 17 CENTER WALL

STAGE 1: (1)

- DEMOLISH PORTION OF EXISTING WALL AS INDICATED.

STAGE 2: (2)

- INSTALL NEW COLUMNS AND LINTEL AS INDICATED.
- DEMOLISH PORTION OF EXISTING WALL AS INDICATED.

STAGE 3: ●

- INSTALL NEW COLUMN AND LINTEL AS INDICATED.
- DEMOLISH PORTION OF EXISTING WALL AS INDICATED.

STAGE 4: (4)

- INSTALL NEW COLUMN AND LINTEL AS INDICATED.
- DEMOLISH PORTION OF EXISTING WALL AS INDICATED.

STAGE 5: (5)

- INSTALL NEW COLUMN AND LINTEL AS INDICATED.
- DEMOLISH PORTION OF EXISTING WALL AS INDICATED.

STAGE 6: (6)

- INSTALL NEW COLUMNS AND LINTEL AS INDICATED.
- DEMOLISH PORTION OF EXISTING WALL AS INDICATED.

STAGE 7: (7)

- INSTALL NEW LINTEL AS INDICATED.

LEGEND:

COL.	- COLUMN
JT.	- JOINT
TYP.	- TYPICAL
	- EXISTING STRUCTURAL WALL OPENING
	- WALL DEMOLITION
I	- COLUMN
	- SPLICE

NOTES:

1. SEE SHEET 24/296 FOR LOCATION.
2. SEE SHEET 44/296 FOR ELEVATION A-A.
3. SEE SHEET 44/296 FOR ELEVATION B-B.
4. SEE SHEET 32/296 FOR MEMBER SIZES.
5. ALL STRUCTURAL STEEL, INCLUDING BASE PLS AND CONNECTIONS IS INCLUDED FOR PAYMENT IN ITEM 513 - STRUCTURAL STEEL MEMBERS, LEVEL UF, AS PER PLAN.
6. GROUT FOR BASE PL, CAP PL, AND OTHER DETAILS IS INCLUDED FOR PAYMENT IN ITEM 530 - SPECIAL STRUCTURE MISC: GROUT.

DESIGN AGENCY
HATCH MOTT MacDONALD
18013 CLEVELAND PKWY.
SUITE 200
CLEVELAND, OH 44135

DESIGNED	DRAWN	REVIEWED	DATE
BTF	JMS	MAR	10/20/14
CHECKED	REVISED	STRUCTURE FILE NUMBER	
KTO		3106578	

STRUCTURAL WALL ELEVATIONS - UNIT 17 MODIFICATIONS - 1 OF 3

BRIDGE NO. HAM-71-0134
I-71 LYTLE TUNNEL UNDER LYTLE PARK

HAM-71-01.34
PID No. 87268

38/296

296/555

c:\pwworking\hmm\external\tyn61470\dms72783\071_0134CWD004.dgn 10/24/2014 11:00:23 AM TYN61470

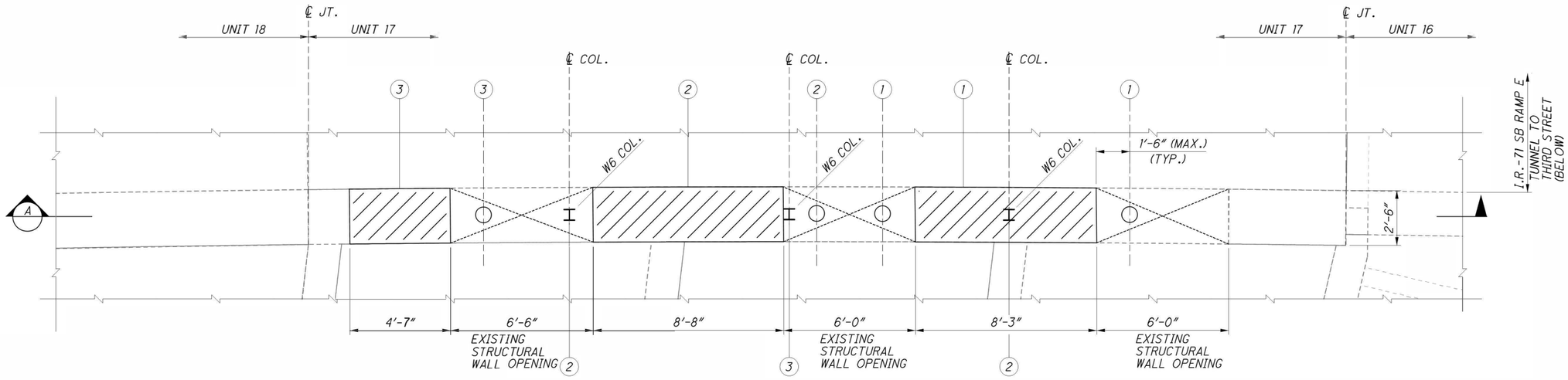

PLAN - CONSTRUCTION PHASING - UNIT 17 WEST WALL

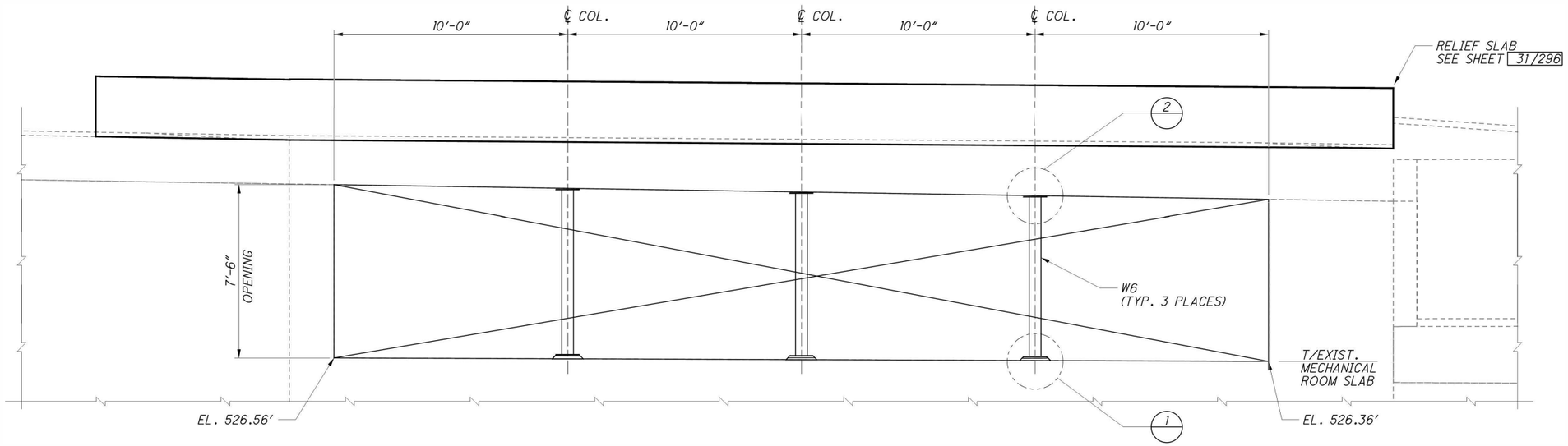

SECTION A-A

STAGE 1: (1)

- INSTALL TEMPORARY SUPPORT COLUMN CAPABLE OF A SERVICE LOAD OF P=80K.
- DEMOLISH PORTION OF EXISTING WALL INDICATED.

STAGE 2: (2)

- INSTALL NEW COLUMNS AS INDICATED.
- INSTALL TEMPORARY SUPPORT COLUMN CAPABLE OF A SERVICE LOAD P=80K.
- DEMOLISH PORTION OF EXISTING WALL INDICATED.
- REMOVE TEMPORARY SUPPORT COLUMNS INSTALLED IN STAGE 1.

STAGE 3: (3)

- INSTALL NEW COLUMN AS INDICATED.
- INSTALL TEMPORARY SUPPORT COLUMN CAPABLE OF A SERVICE LOAD P=80K.
- DEMOLISH PORTION OF EXISTING WALL INDICATED.
- REMOVE TEMPORARY SUPPORT COLUMNS INSTALLED IN STAGE 2.

STAGE 4: (4)

- REMOVE TEMPORARY SUPPORT COLUMNS INSTALLED IN STAGE 3.

LEGEND:

COL.	- COLUMN
JT.	- JOINT
TYP.	- TYPICAL
	- EXISTING STRUCTURAL WALL OPENING
	- WALL DEMOLITION
○	- TEMPORARY SUPPORT COLUMN
I	- COLUMN
EXIST.	- EXISTING
MAX.	- MAXIMUM
T/	- TOP OF

NOTES:

1. SEE SHEET 24/296 FOR LOCATION.
2. SEE SHEET 45/296 FOR DETAIL 1.
3. SEE SHEET 45/296 FOR DETAIL 2.
4. SEE SHEET 32/296 FOR MEMBER SIZES.
5. ALL STRUCTURAL STEEL, INCLUDING BASE PLS AND CONNECTIONS IS INCLUDED FOR PAYMENT IN ITEM 513 - STRUCTURAL STEEL MEMBERS, LEVEL UF, AS PER PLAN.
6. GROUT FOR BASE PL, CAP PL, AND OTHER DETAILS IS INCLUDED FOR PAYMENT IN ITEM 530 - SPECIAL STRUCTURE MISC: GROUT.

DESIGN AGENCY
HATCH MOTT MacDONALD
18013 CLEVELAND PKWY.
SUITE 200
CLEVELAND, OH 44135

DESIGNED	DRAWN	REVIEWED	DATE
BTF	JMS	MAR	10/20/14
CHECKED	REVISED	STRUCTURE FILE NUMBER	
KTO		3106578	

STRUCTURAL WALL ELEVATIONS - UNIT 17 MODIFICATIONS - 2 OF 3

BRIDGE NO. HAM-71-0134
I-71 LYTLE TUNNEL UNDER LYTLE PARK

HAM-71-01.34
PID No. 87268

39/296

297/555

c:\pwworking\hmm\external\tyn61470\dms72783\071_0134CWD003.dgn 10/24/2014 11:00:27 AM TYN61470

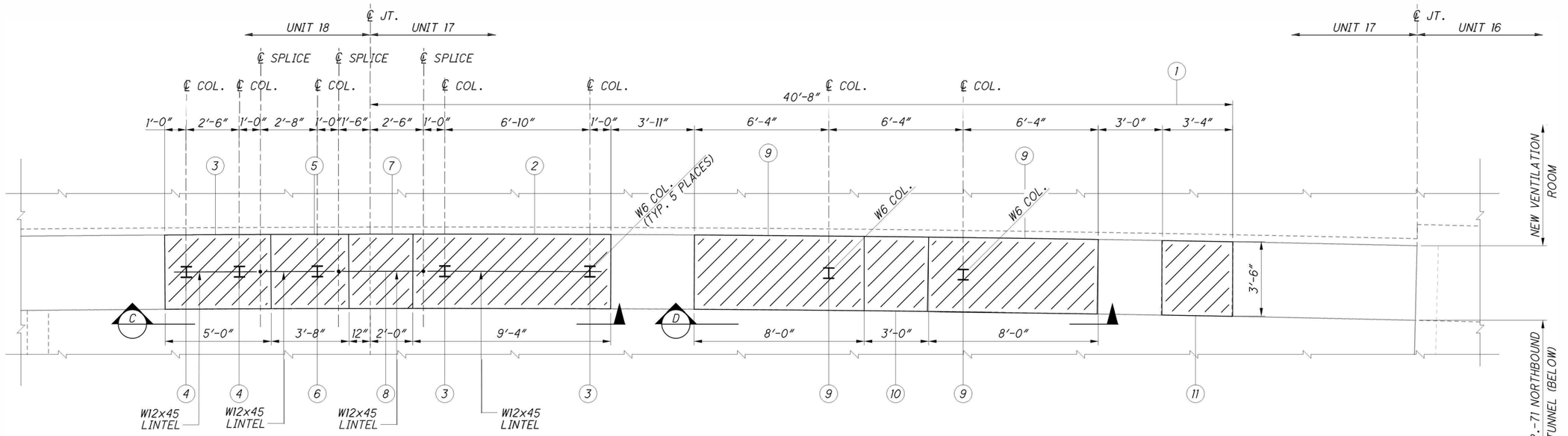

PLAN - CONSTRUCTION PHASING - UNIT 17 AND UNIT 18 EAST WALL

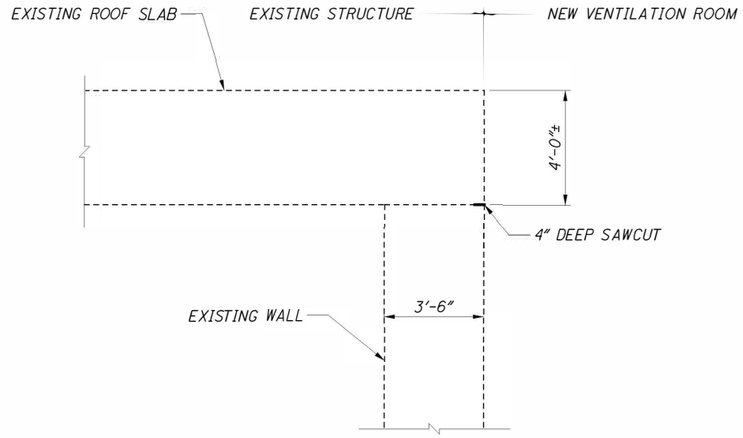

DETAIL 1

STAGE 1: (1)

- SAWCUT UNIT 17 AS INDICATED, SEE DETAIL 1.

STAGE 2: (2)

- DEMOLISH PORTION OF EXISTING WALL AS INDICATED.

STAGE 3: (3)

- INSTALL NEW COLUMNS AND LINTELS AS INDICATED.
- DEMOLISH PORTION OF EXISTING WALL AS INDICATED.

STAGE 4: (4)

- INSTALL NEW COLUMNS AND LINTEL AS INDICATED.

STAGE 5: (5)

- DEMOLISH PORTION OF EXISTING WALL AS INDICATED.

STAGE 6: (6)

- INSTALL NEW COLUMNS AND LINTEL AS INDICATED.

STAGE 7: (7)

- DEMOLISH PORTION OF EXISTING WALL AS INDICATED.

STAGE 8: ●

- INSTALL LINTEL AS INDICATED.

STAGE 9: (9)

- DEMOLISH PORTION OF EXISTING WALL AS INDICATED.
- INSTALL NEW COLUMNS AS INDICATED.

STAGE 10: (10)

- DEMOLISH PORTION OF EXISTING WALL AS INDICATED.

STAGE 11: (11)

- DEMOLISH EXISTING WALL FOR DOOR OPENINGS.

LEGEND:

COL.	- COLUMN
JT.	- JOINT
TYP.	- TYPICAL
▨	- WALL DEMOLITION
H	- COLUMN
⟝—•—⟞	- SPLICE

NOTES:

1. SEE SHEET 24/296 FOR LOCATION.
2. SEE SHEET 44/296 FOR SECTION C-C.
3. SEE SHEET 44/296 FOR SECTION D-D.
4. ALL STRUCTURAL STEEL, INCLUDING BASE PLS AND CONNECTIONS IS INCLUDED FOR PAYMENT IN ITEM 513 - STRUCTURAL STEEL MEMBERS, LEVEL UF, AS PER PLAN.
5. GROUT FOR BASE PL, CAP PL, AND OTHER DETAILS IS INCLUDED FOR PAYMENT IN ITEM 530 - SPECIAL STRUCTURE MISC: GROUT.

DESIGN AGENCY
HATCH MOTT MacDONALD
18013 CLEVELAND PKWY.
SUITE 200
CLEVELAND, OH 44135

DESIGNED	DRAWN	REVIEWED	DATE
BTF	JMS	MAR	10/20/14
CHECKED	REVISED	STRUCTURE FILE NUMBER	
KTO		3106578	

STRUCTURAL WALL ELEVATIONS-UNIT 17 & 18 MODIFICATIONS-3 OF 3
BRIDGE NO. HAM-71-0134
I-71 LYTLE TUNNEL UNDER LYTLE PARK

HAM-71-01.34
PID No. 87268

e:\pwworking\hmm\external\tyn61470\dms72783\071_0134CMD002.dgn 10/24/2014 11:00:30 AM TYN61470

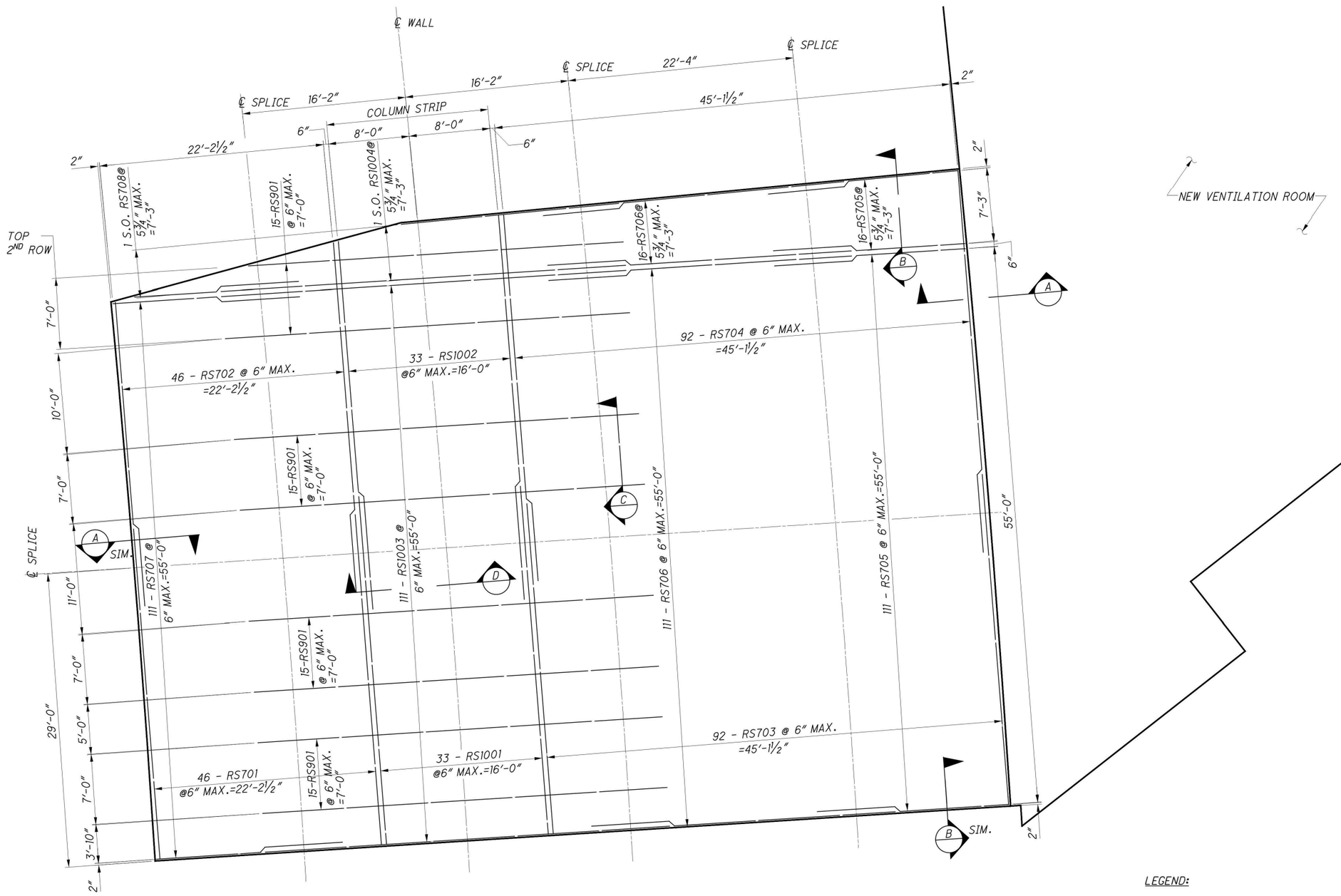

RELIEF SLAB - TOP REINFORCING PLAN

LEGEND:

1 S.O. - *ONE IN A SERIES OF*
MAX. - *MAXIMUM*
SIM. - *SIMILAR*

NOTES:

1. *SEE SHEET* 26/296 *FOR GENERAL ARRANGEMENT.*
2. *SEE SHEET* 43/296 *FOR SECTION A-A.*
3. *SEE SHEET* 43/296 *FOR SECTION B-B.*
4. *SEE SHEET* 43/296 *FOR SECTION C-C.*
5. *SEE SHEET* 43/296 *FOR SECTION D-D.*
6. *SEE SHEET* 82/296 *FOR REINFORCING SCHEDULE.*

DESIGN AGENCY
HATCH MOTT MacDONALD
18013 CLEVELAND PKWY.
SUITE 200
CLEVELAND, OH 44135

DESIGNED	DRAWN	REVIEWED	DATE
BTF	JMS	MAR	10/20/14
CHECKED	REVISED	STRUCTURE FILE NUMBER	
KTO		3106578	

STRUCT.-UNIT 17/18 MODIFICATIONS-TOP REINF. PLAN-RELIEF SLAB

BRIDGE NO. HAM-71-0134
I-71 LYTLE TUNNEL UNDER LYTLE PARK

HAM-71-01.34
PID No. 87268

41/296

299/555

c:\pwworking\hmm\external\tyn61470\dms72783\C71_0134CDP008.dgn 10/24/2014 11:00:32 AM TYNG1470

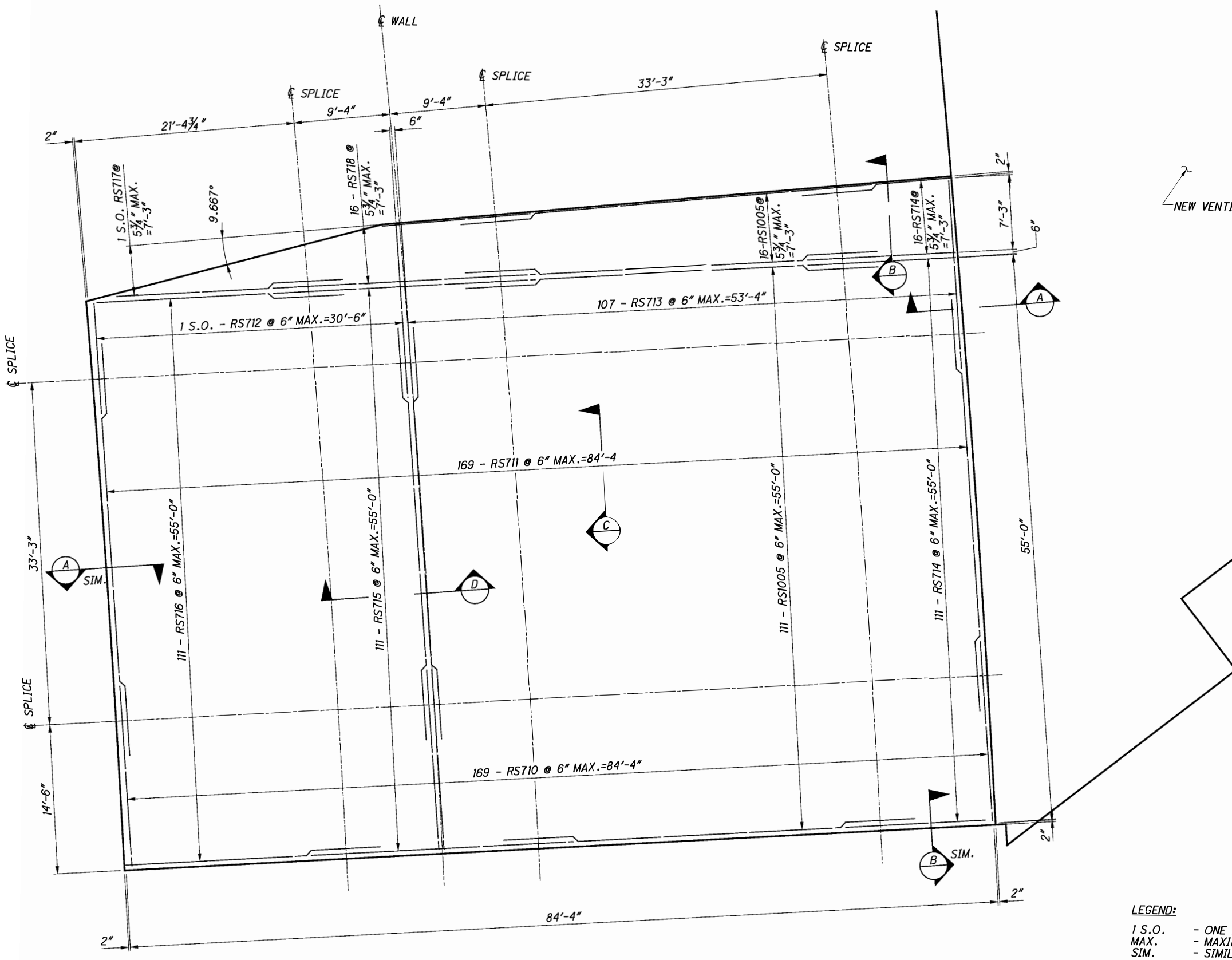

RELIEF SLAB - BOTTOM REINFORCING PLAN

LEGEND:

1 S.O. - *ONE IN A SERIES OF*
MAX. - *MAXIMUM*
SIM. - *SIMILAR*

NOTES:

1. *SEE SHEET* 26/296 *FOR GENERAL ARRANGEMENT.*
2. *SEE SHEET* 43/296 *FOR SECTION A-A.*
3. *SEE SHEET* 43/296 *FOR SECTION B-B.*
4. *SEE SHEET* 43/296 *FOR SECTION C-C.*
5. *SEE SHEET* 43/296 *FOR SECTION D-D.*
6. *SEE SHEET* 82/296 *FOR REINFORCING SCHEDULE.*

DESIGN AGENCY
HATCH MOTT MacDONALD
18013 CLEVELAND PKWY.
SUITE 200
CLEVELAND, OH 44135

DESIGNED	DRAWN	REVIEWED	DATE
BTF	JMS	MAR	10/20/14
CHECKED	REVISED	STRUCTURE FILE NUMBER	
KTO		3106578	

STRUCT.-UNIT 17/18 MODIFICATIONS-BOT. REINF.PLAN-RELIEF SLAB
BRIDGE NO. HAM-71-0134
I-71 LYTLE TUNNEL UNDER LYTLE PARK

HAM-71-01.34
PID No. 87268

42/296

300/555

c:\pwworking\hmm\external\pre47802\dms72783\071_0134CDP009.dgn 5/14/2015 10:52:10 AM PRE47802

NOTES:

1. BENTONITE WATERSTOP IS INCLUDED FOR PAYMENT IN ITEM 530-SPECIAL-STRUCTURE, MISC.: BENTONITE WATERSTOP.

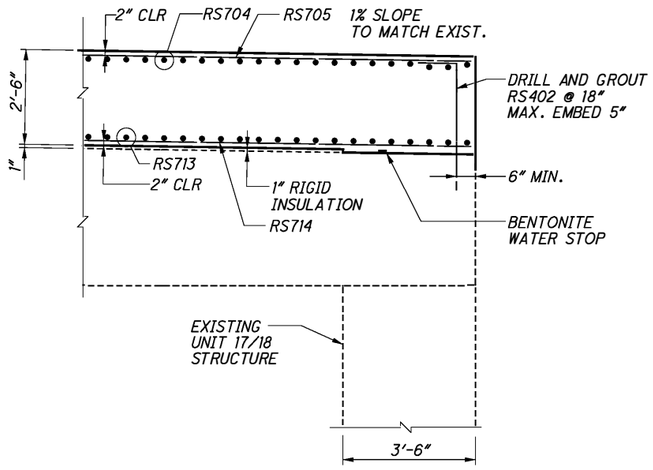

SECTION A-A

SEE SHEET 31/296 41/296 42/296 FOR LOCATION

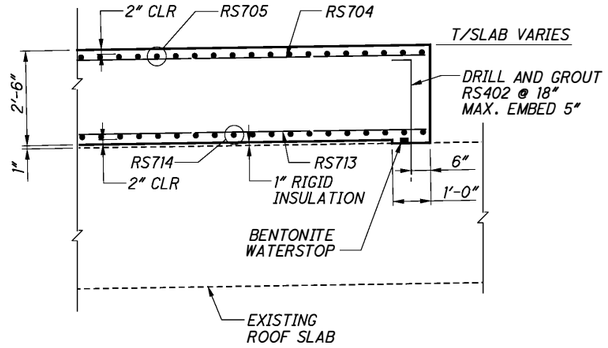

SECTION B-B

SEE SHEET 31/296 41/296 42/296 FOR LOCATION

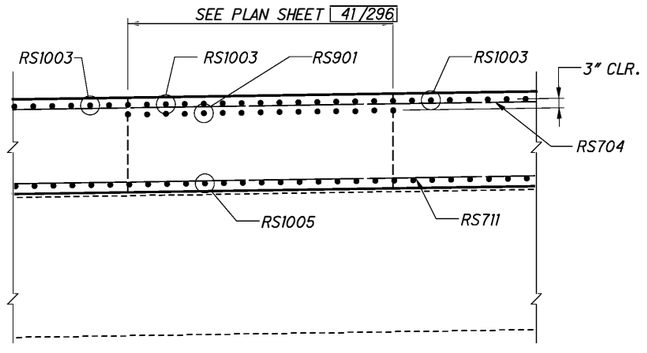

SECTION C-C

SEE SHEET 31/296 41/296 42/296 FOR LOCATION

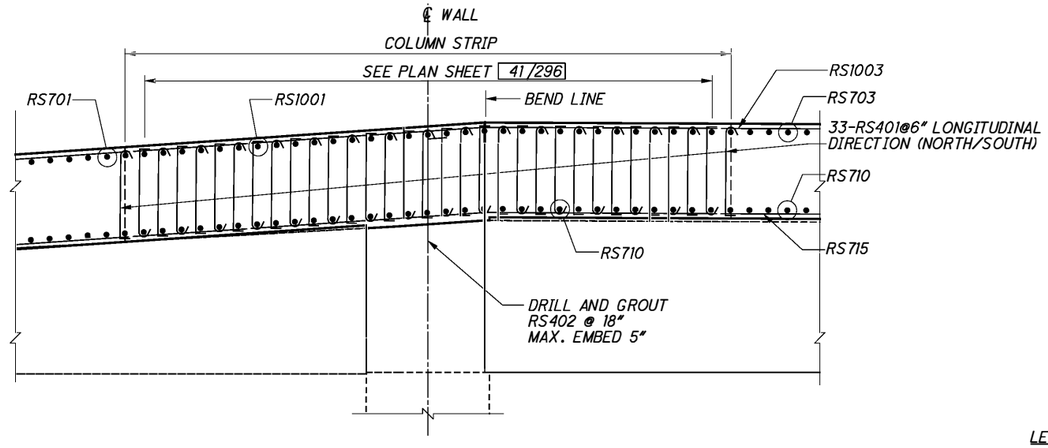

SECTION D-D

SEE SHEET 31/296 41/296 42/296 FOR LOCATION

LEGEND:

CLR.	- CLEAR
EMBED.	- EMBEDMENT
EXIST.	- EXISTING
MAX.	- MAXIMUM
MIN.	- MINIMUM
MISC.	- MISCELLANEOUS
T/	- TOP OF

DESIGN AGENCY
HATCH MOTT MacDONALD
18013 CLEVELAND PKWY.
SUITE 200
CLEVELAND, OH 44135

DESIGNED	DRAWN	REVIEWED	DATE
BTF	JMS	MAR	10/20/14
CHECKED	REVISED	STRUCTURE FILE NUMBER	
KTO		31066578	

STRUCTURAL UNIT 17/18 SECTIONS AND DETAILS 1 OF 3
BRIDGE NO. HAM-71-0134
I-71 LYTLE TUNNEL UNDER LYTLE PARK

HAM-71-01.34
PID No. 87268

43/296

301/555

c:\pwworking\hmm\external\pre47802\dms72783\071_0134CTS004.dgn 5/27/2015 1:55:26 PM PRE47802

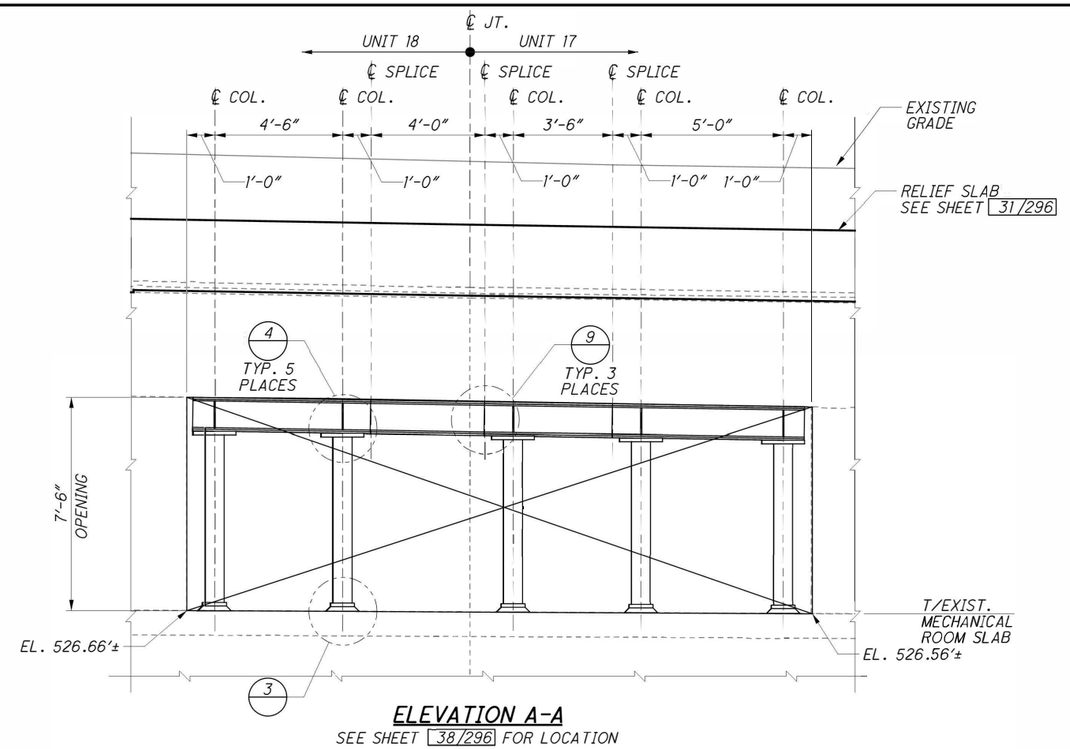

ELEVATION A-A

SEE SHEET 38/296 FOR LOCATION

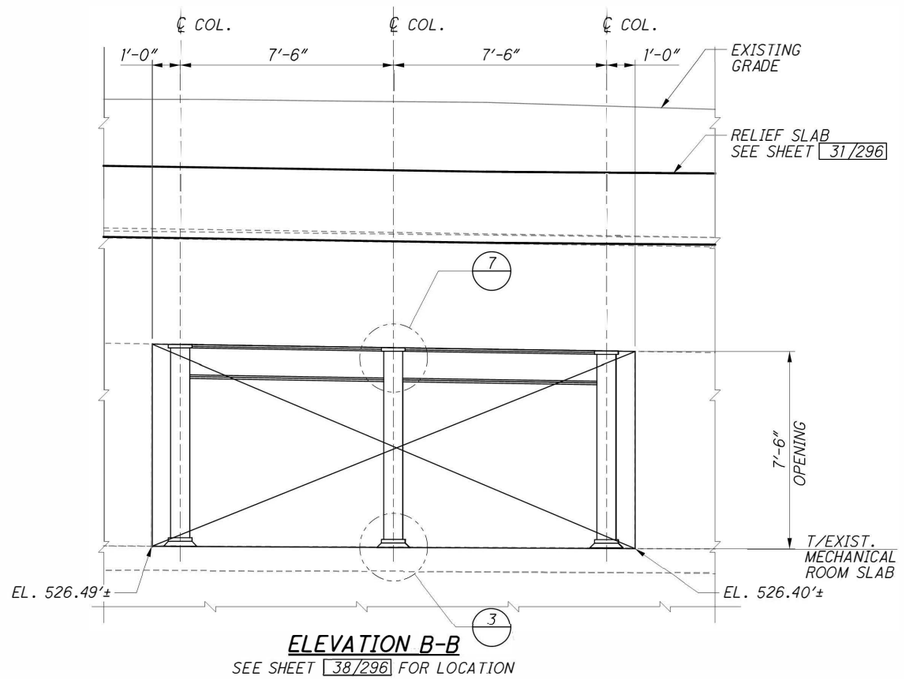

ELEVATION B-B

SEE SHEET 38/296 FOR LOCATION

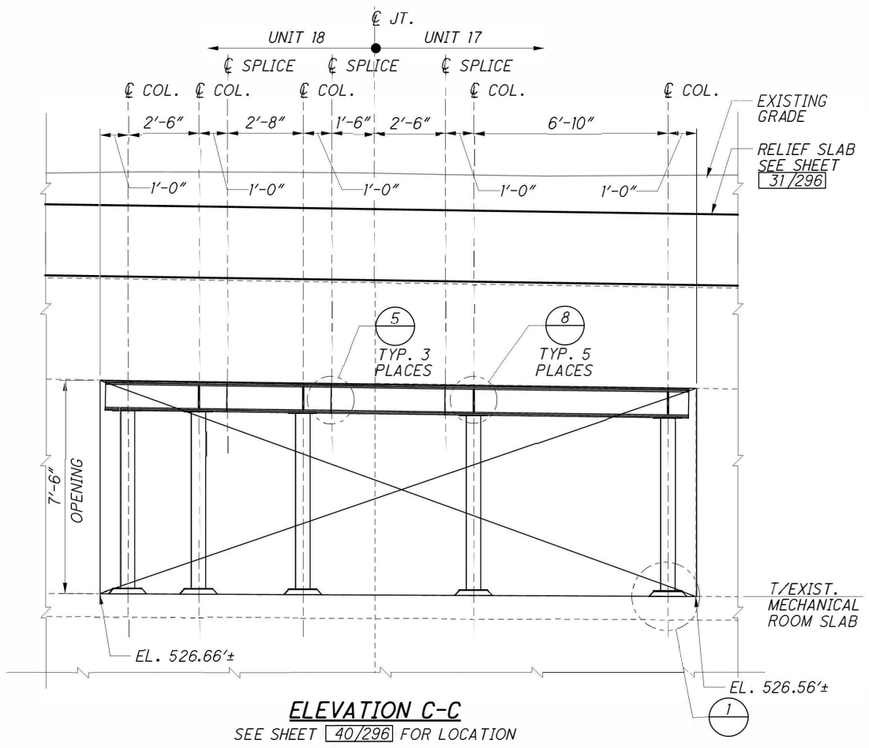

ELEVATION C-C

SEE SHEET 40/296 FOR LOCATION

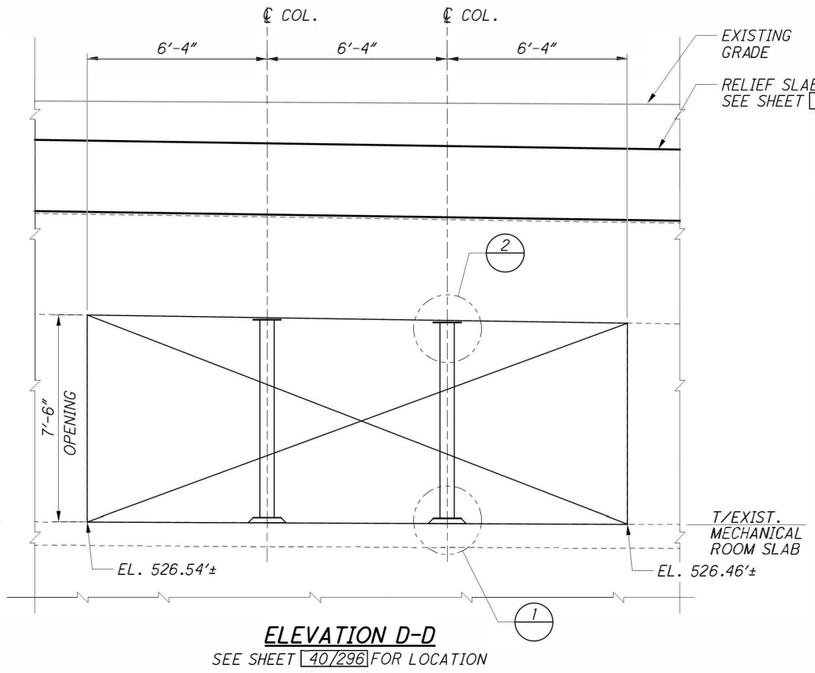

ELEVATION D-D

SEE SHEET 40/296 FOR LOCATION

LEGEND:

COL. - COLUMN
EL. - ELEVATION
EXIST. - EXISTING
JT. - JOINT
T/ - TOP OF

NOTES:

1. SEE SHEET 45/296 FOR DETAIL 1.
2. SEE SHEET 45/296 FOR DETAIL 2.
3. SEE SHEET 45/296 FOR DETAIL 3.
4. SEE SHEET 45/296 FOR DETAIL 4.
5. SEE SHEET 45/296 FOR DETAIL 5.
6. PROVIDE TOP FLANGE CONNECTION AT ALL LINTELS. SEE DETAIL 6, SHEET 45/296 .
7. SEE SHEET 45/296 FOR DETAIL 7.
8. SEE SHEET 32/296 FOR MEMBER SIZES.
9. SEE SHEET 45/296 FOR DETAIL 8.
10. SEE SHEET 45/296 FOR DETAIL 9.
11. ALL STRUCTURAL STEEL, INCLUDING BASE ℄S AND CONNECTIONS IS INCLUDED FOR PAYMENT IN ITEM 513 - STRUCTURAL STEEL MEMBERS, LEVEL UF, AS PER PLAN.
12. GROUT FOR BASE ℄, CAP ℄, AND OTHER DETAILS IS INCLUDED FOR PAYMENT IN ITEM 530 - SPECIAL STRUCTURE MISC: GROUT.

DESIGN AGENCY
HATCH MOTT MacDONALD
18013 CLEVELAND PKWY.
SUITE 200
CLEVELAND, OH 44135

DESIGNED	DRAWN	REVIEWED	DATE
BTF	JMS	MAR	10/20/14
CHECKED	REVISED	STRUCTURE FILE NUMBER	
KTO		3106578	

STRUCTURAL UNIT 17/18 SECTIONS AND DETAILS 2 OF 3
BRIDGE NO. HAM-71-0134
I-71 LYTLE TUNNEL UNDER LYTLE PARK

HAM-71-01.34
PID No. 87268

302/555

c:\pwworking\hmm\external\tyn61470\dms72783\071_0134CTS005.dgn 10/24/2014 11:00:41 AM TYN61470

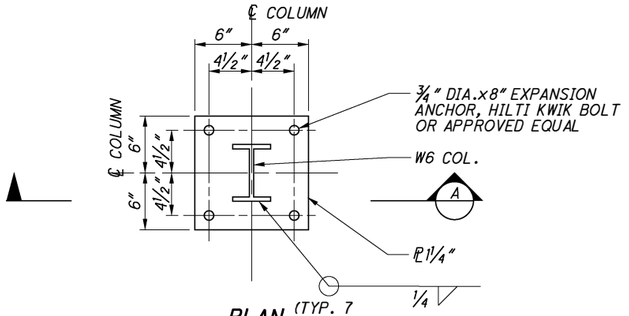

PLAN (TYP. 7 PLACES)

SEE SHEET 39/296 44/296 FOR LOCATION

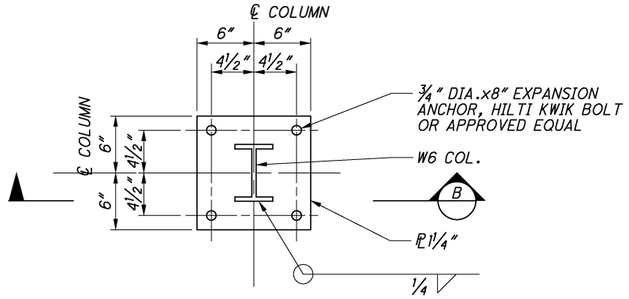

REFLECTED PLAN

SEE SHEET 39/296 44/296 FOR LOCATION

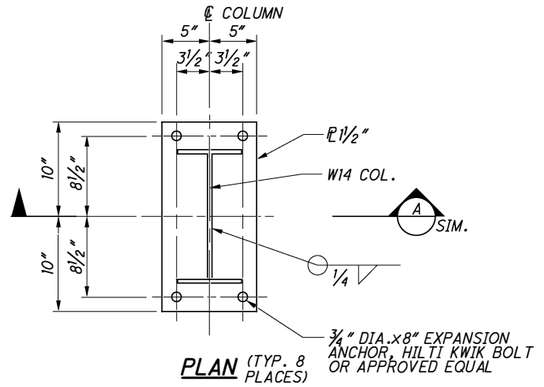

PLAN (TYP. 8 PLACES)

DETAIL 3

SEE SHEET 44/296 FOR LOCATION

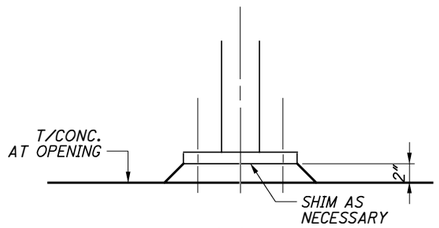

SECTION A-A

DETAIL 1

SEE SHEET 45/296 FOR LOCATION

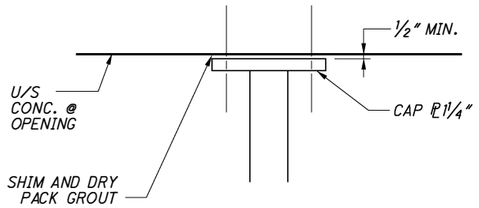

SECTION B-B

DETAIL 2

SEE SHEET 45/296 FOR LOCATION

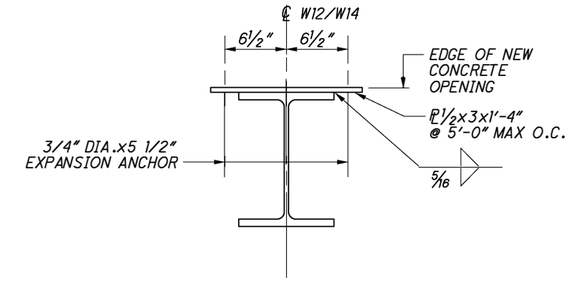

DETAIL 6

SEE SHEET 44/296 FOR LOCATION

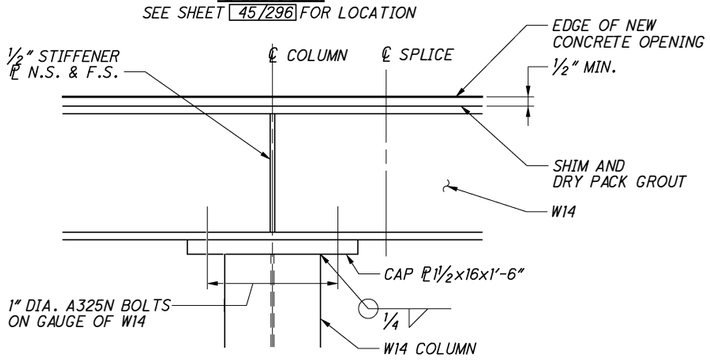

DETAIL 4

SEE SHEET 44/296 FOR LOCATION

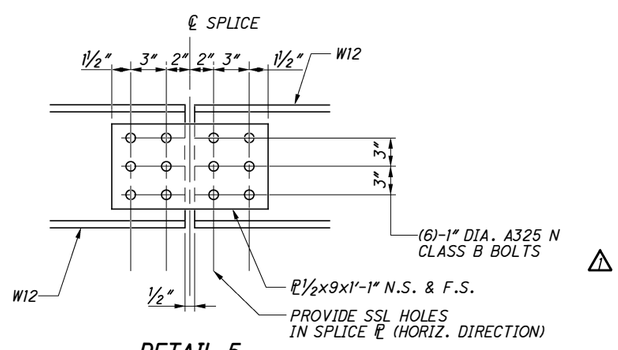

DETAIL 5

SEE SHEET 44/296 FOR LOCATION

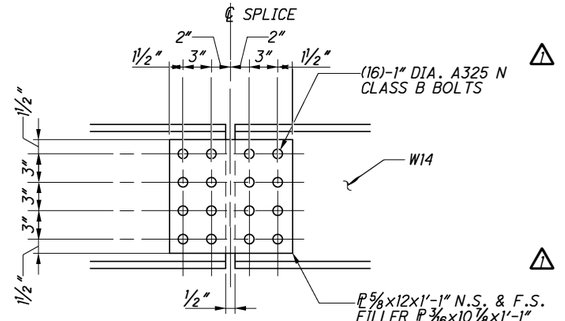

DETAIL 9

SEE SHEET 44/296 FOR LOCATION

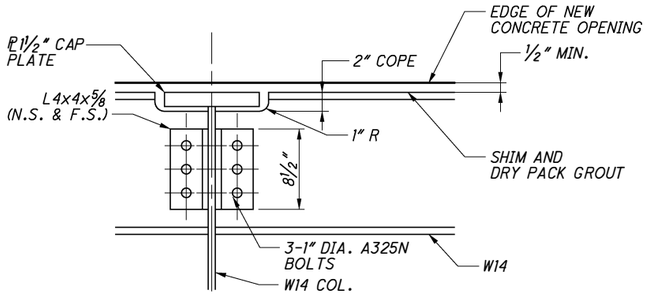

DETAIL 7

SEE SHEET 44/296 FOR LOCATION

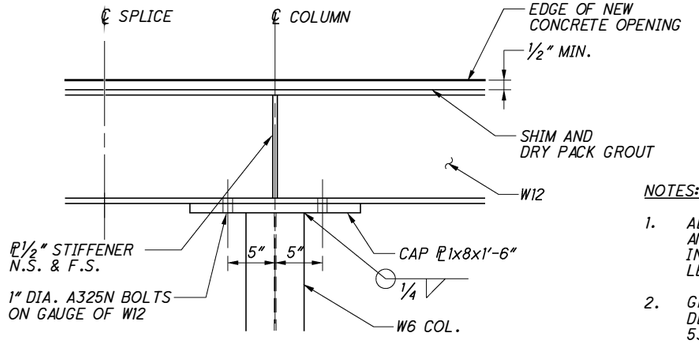

DETAIL 8

SEE SHEET 44/296 FOR LOCATION

NOTES:

1. ALL STRUCTURAL STEEL, INCLUDING BASE ℄S AND CONNECTIONS IS INCLUDED FOR PAYMENT IN ITEM 513 - STRUCTURAL STEEL MEMBERS, LEVEL UF, AS PER PLAN.
2. GROUT FOR BASE ℄, CAP ℄, AND OTHER DETAILS IS INCLUDED FOR PAYMENT IN ITEM 530 - SPECIAL STRUCTURE MISC: GROUT.

LEGEND:

COL.	- COLUMN
CONC.	- CONCRETE
DIA	- DIAMETER
F.S.	- FAR SIDE
MIN.	- MINIMUM
N.S.	- NEAR SIDE
℄	- PLATE
SIM.	- SIMILAR
SSL	- SHORT SLOTTED HOLES
T/	- TOP OF
U/S	- UNDER SIDE

NO.	DATE	REVISION DESCRIPTION
1	10/02/15	RFI 84 / 86

DESIGN AGENCY
HATCH MOTT MacDONALD
18013 CLEVELAND PKWY.
SUITE 200
CLEVELAND, OH 44135

DESIGNED	DRAWN	REVIEWED	DATE
BTF	JMS	MAR	10/20/14
CHECKED	REVISED	STRUCTURE FILE NUMBER	
KTO	BTF	3106578	

STRUCTURAL UNIT 17/18 SECTIONS AND DETAILS 3 OF 3

BRIDGE NO. HAM-71-0134
I-71 LYTLE TUNNEL UNDER LYTLE PARK

HAM-71-01.34
PID No. 87268

45/296

303/555

c:\pwworking\hmm\external\pre47802\dms72783\071_0134CTS006.dgn 10/6/2015 3:52:49 PM PRE47802

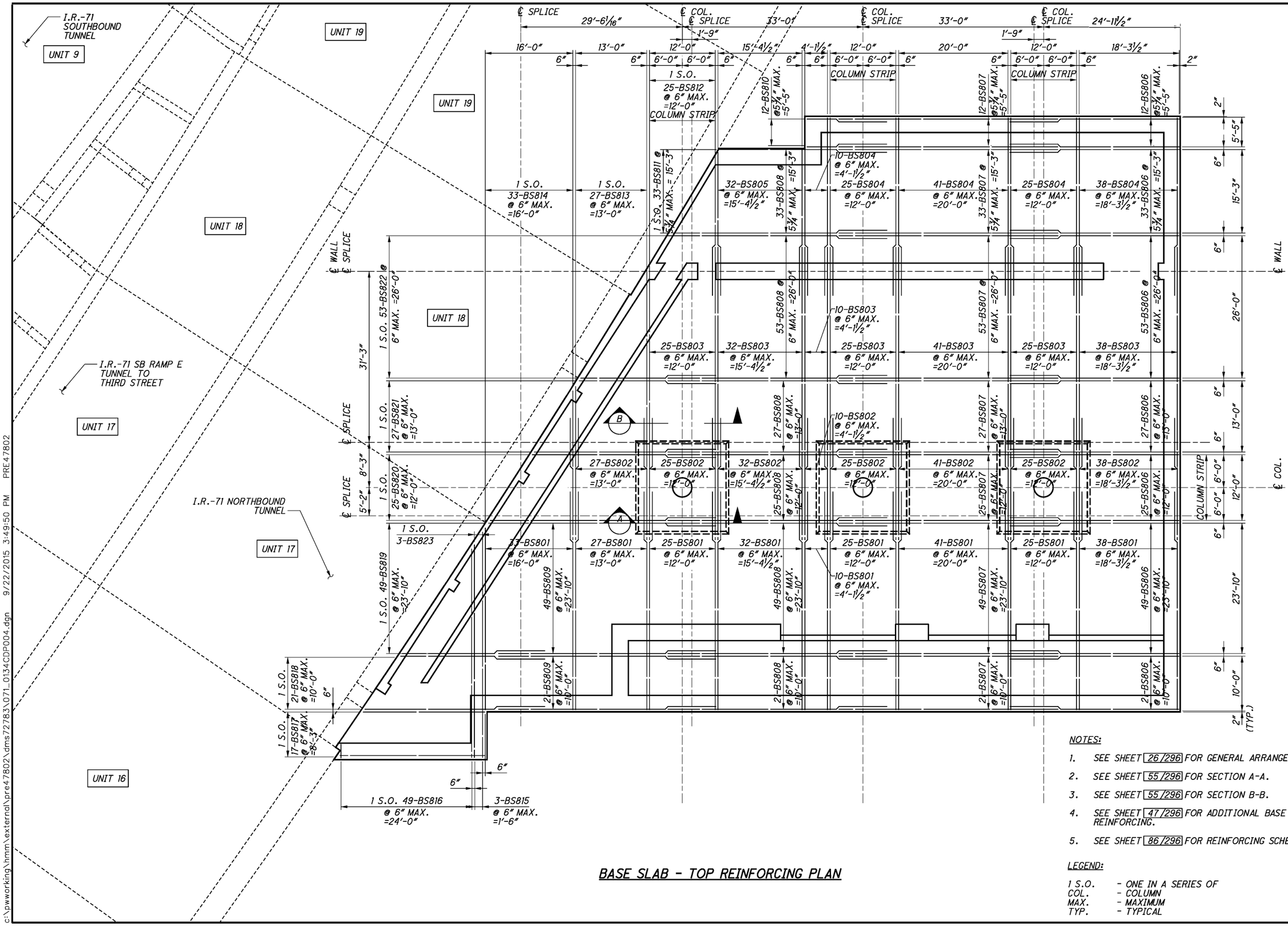

BASE SLAB - TOP REINFORCING PLAN

NOTES:

1. SEE SHEET 26/296 FOR GENERAL ARRANGEMENT.
2. SEE SHEET 55/296 FOR SECTION A-A.
3. SEE SHEET 55/296 FOR SECTION B-B.
4. SEE SHEET 47/296 FOR ADDITIONAL BASE SLAB REINFORCING.
5. SEE SHEET 86/296 FOR REINFORCING SCHEDULE.

LEGEND:

1 S.O.	- ONE IN A SERIES OF
COL.	- COLUMN
MAX.	- MAXIMUM
TYP.	- TYPICAL

STRUCTURAL VENT. ROOM REINFORCEMENT PLAN-BASE SLAB-1 OF 2

BRIDGE NO. HAM-71-0134
I-71 LYTLE TUNNEL UNDER LYTLE PARK

DESIGN AGENCY
HATCH MOTT MacDONALD
18013 CLEVELAND PKWY.
SUITE 200
CLEVELAND, OH 44135

DESIGNED	DRAWN	REVIEWED	DATE
BTF	JMS	MAR	10/20/14
CHECKED	REVISED	STRUCTURE FILE NUMBER	
KTO		3106578	

HAM-71-01.34
PID No. 87268

c:\pwworking\hmm\external\pre47802\dms72783\071_0134CDP004.dgn 9/22/2015 3:49:50 PM PRE47802

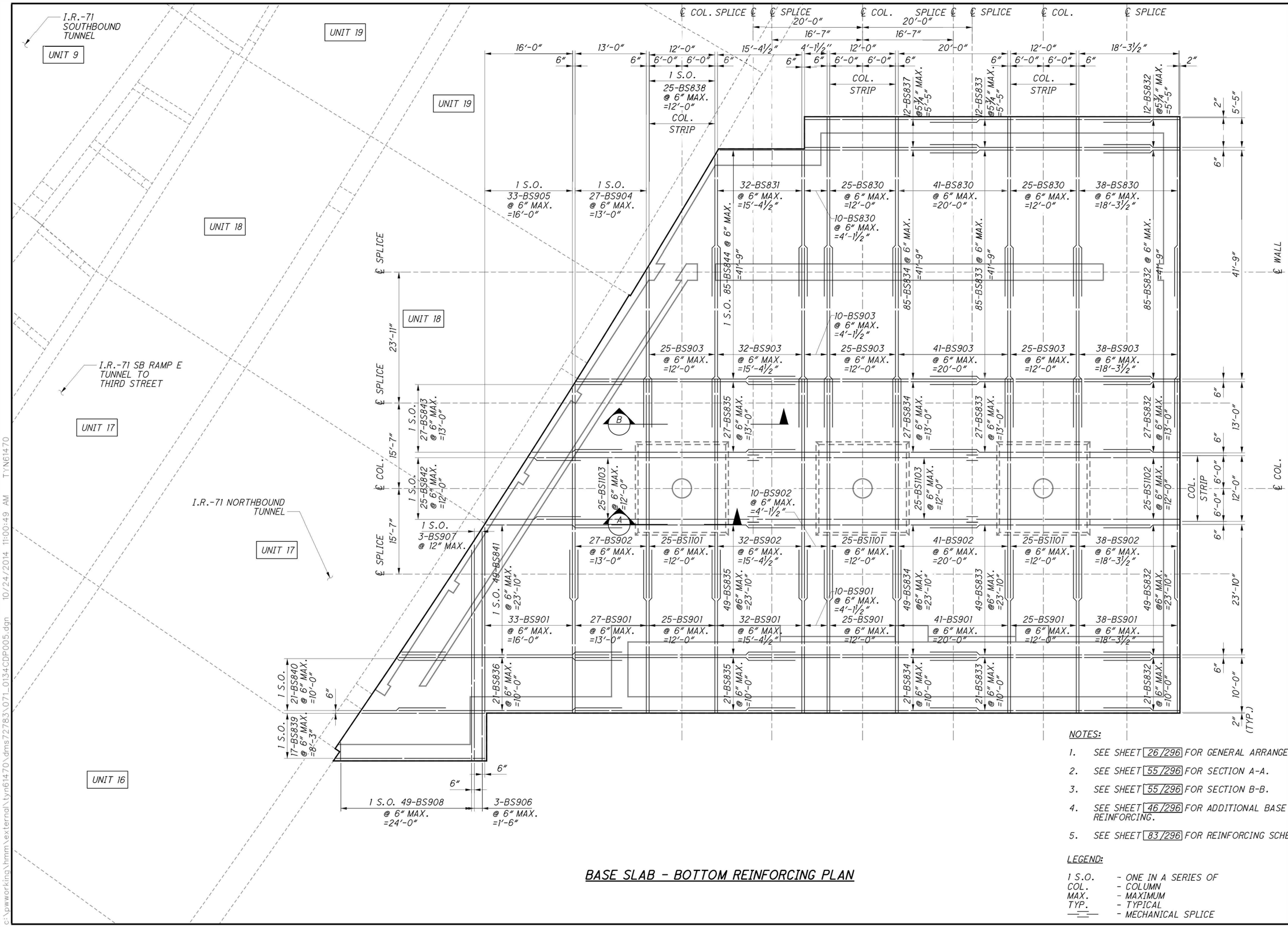

BASE SLAB - BOTTOM REINFORCING PLAN

NOTES:

1. SEE SHEET 26/296 FOR GENERAL ARRANGEMENT.
2. SEE SHEET 55/296 FOR SECTION A-A.
3. SEE SHEET 55/296 FOR SECTION B-B.
4. SEE SHEET 46/296 FOR ADDITIONAL BASE SLAB REINFORCING.
5. SEE SHEET 83/296 FOR REINFORCING SCHEDULE.

LEGEND:

1 S.O.	- ONE IN A SERIES OF
COL.	- COLUMN
MAX.	- MAXIMUM
TYP.	- TYPICAL
—=—	- MECHANICAL SPLICE

DESIGN AGENCY
HATCH MOTT MacDONALD
18013 CLEVELAND PKWY.
SUITE 200
CLEVELAND, OH 44135

DESIGNED	DRAWN	REVIEWED	DATE
BTF	JMS	MAR	10/20/14
CHECKED	REVISED	STRUCTURE FILE NUMBER	
KTO		3106578	

STRUCTURAL VENT. ROOM REINFORCEMENT PLAN-BASE SLAB-2 OF 2

BRIDGE NO. HAM-71-0134
I-71 LYTLE TUNNEL UNDER LYTLE PARK

HAM-71-01.34
PID No. 87268

47/296

305/555

c:\pwworking\hmm\external\tyn61470\dms72783\071_0134CDP005.dgn 10/24/2014 11:00:49 AM TYN61470

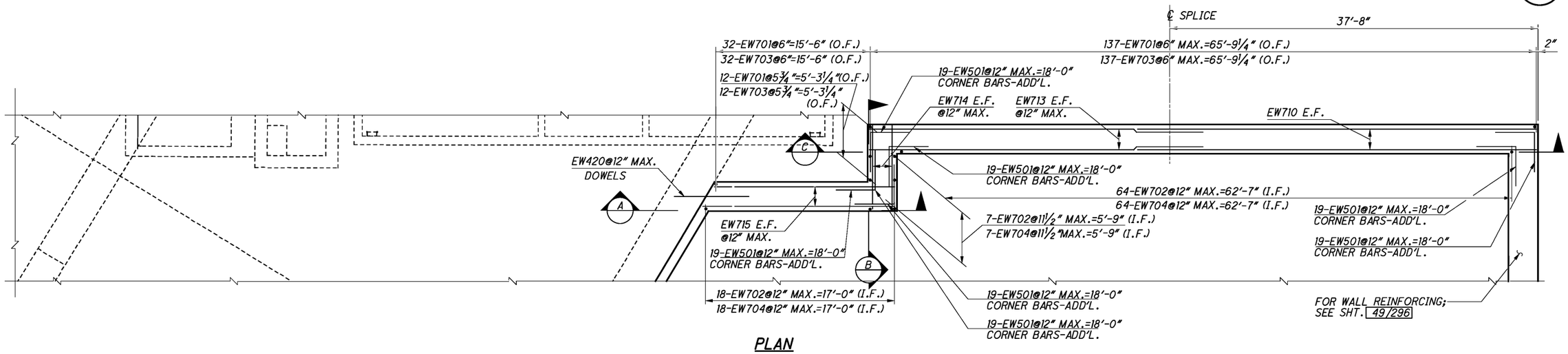

PLAN

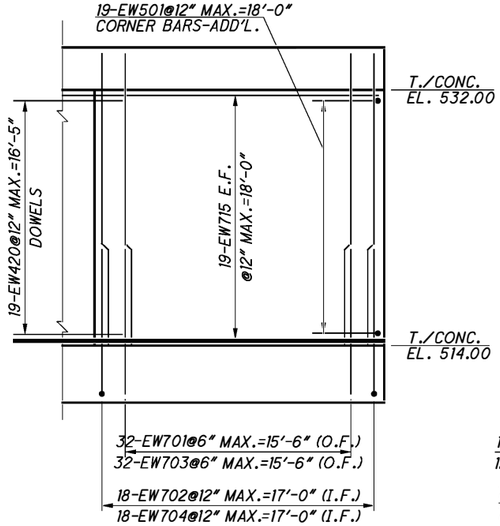

SECTION A-A

SEE SHEET 48/296 FOR LOCATION

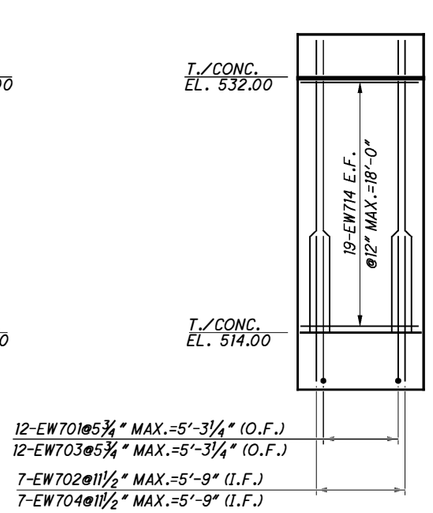

SECTION B-B

SEE SHEET 48/296 FOR LOCATION

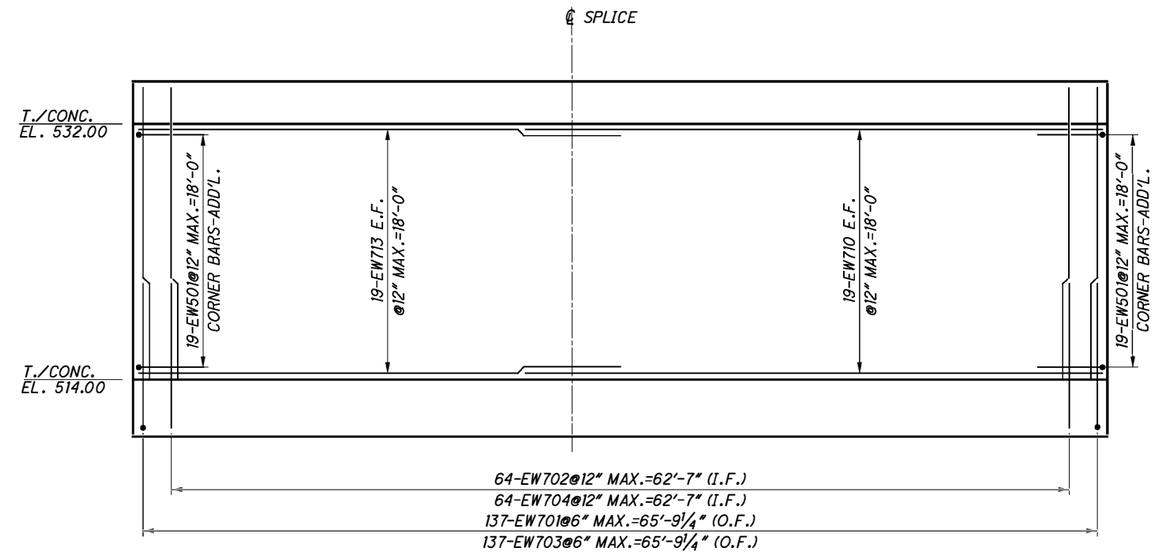

SECTION C-C

SEE SHEET 48/296 FOR LOCATION

NOTES:

1. SEE SHEET 26/296 FOR LOCATION.

LEGEND:

ADD'L.	- ADDITIONAL
CONC.	- CONCRETE
E.F.	- EACH FACE
I.F.	- INSIDE FACE
O.F.	- OUTSIDE FACE
T/	- TOP OF

DESIGN AGENCY
HATCH MOTT MacDONALD
18013 CLEVELAND PKWY.
SUITE 200
CLEVELAND, OH 44135

DESIGNED	DRAWN	REVIEWED	DATE
BTF	JMS	MAR	10/20/14
CHECKED	REVISED	STRUCTURE FILE NUMBER	
KTO	BTF	3106578	

STRUCTURAL-VENTILATION RM-REINFORCEMENT-WALL ELEV.-1 OF 5

BRIDGE NO. HAM-71-0134
I-71 LYTLE TUNNEL UNDER LYTLE PARK

HAM-71-01.34
PID No. 87268

48/296

306/555

c:\pwworking\hmm\external\pre47802\dms72783\071_0134CTS019.dgn 9/22/2015 3:02:42 PM PRE47802

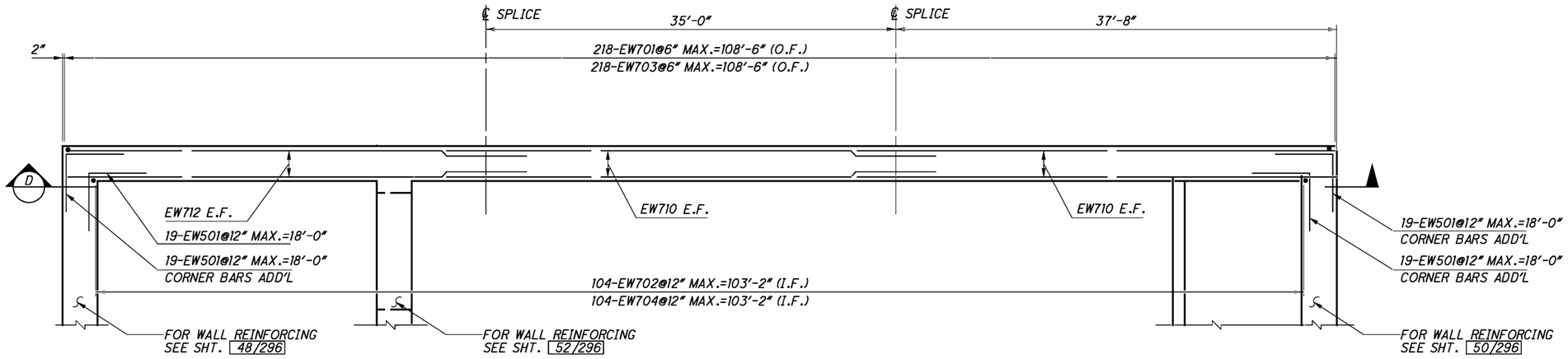

PLAN

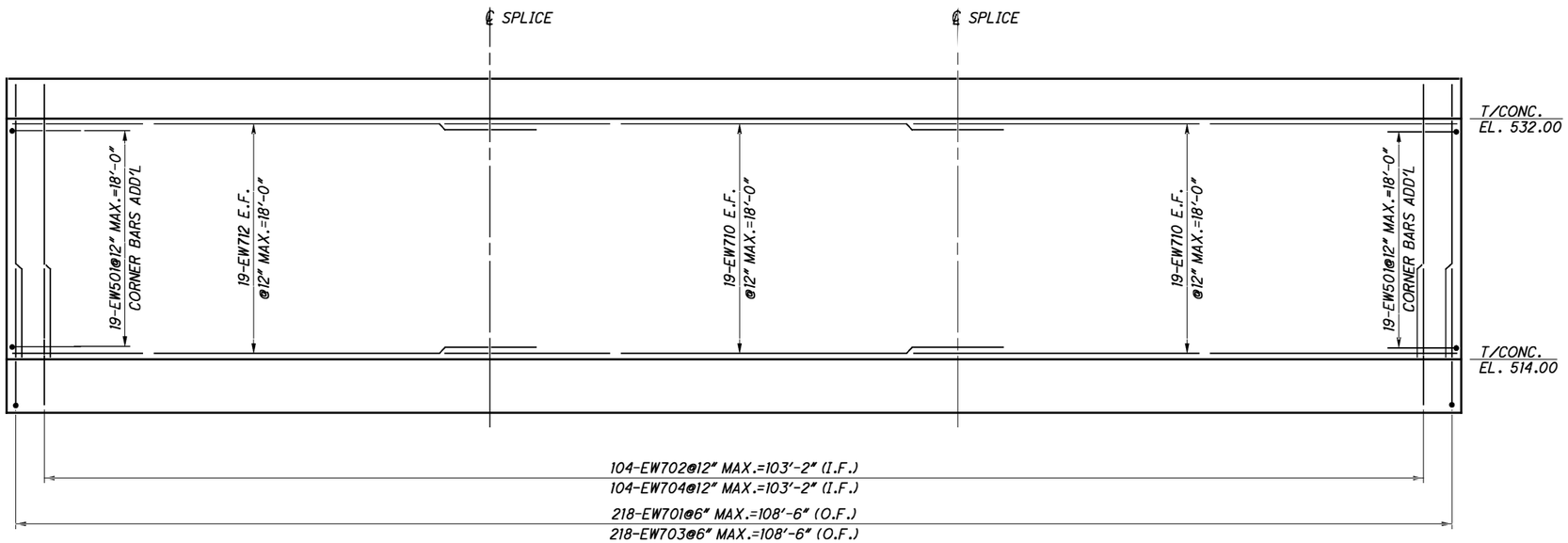

SECTION D-D

SEE SHEET 49/296 FOR LOCATION

NOTES:

1. SEE SHEET 26/296 FOR LOCATION.

LEGEND:

ADD'L.	- ADDITIONAL
CONC.	- CONCRETE
E.F.	- EACH FACE
I.F.	- INSIDE FACE
O.F.	- OUTSIDE FACE
T/	- TOP OF

DESIGN AGENCY
HATCH MOTT MacDONALD
18013 CLEVELAND PKWY.
SUITE 200
CLEVELAND, OH 44135

REVIEWED MAR DATE 10/20/14
STRUCTURE FILE NUMBER 3106578
DRAWN JMS
REVISED BTF
DESIGNED BTF
CHECKED KTO

STRUCTURAL-VENTILATION RM-REINFORCEMENT-WALL ELEV.-2 OF 5
BRIDGE NO. HAM-71-0134
I-71 LYTLE TUNNEL UNDER LYTLE PARK

HAM-71-01.34
PID No. 87268

49/296

307
555

c:\pwworking\hmm\external\pre47802\dms72783\071_0134CTS020.dgn 9/4/2015 2:10:43 PM PRE47802

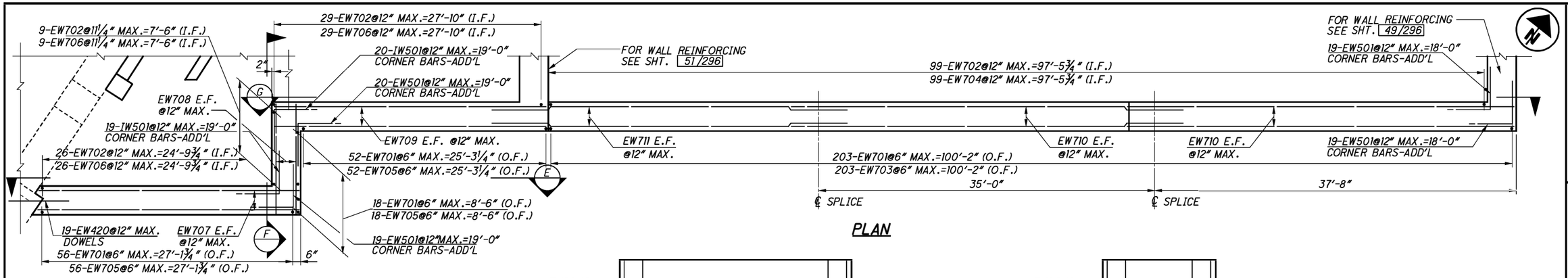

PLAN

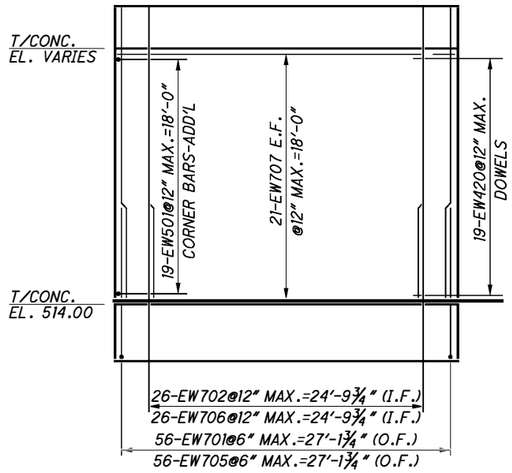

SECTION E-E

SEE SHEET 50/296 FOR LOCATION

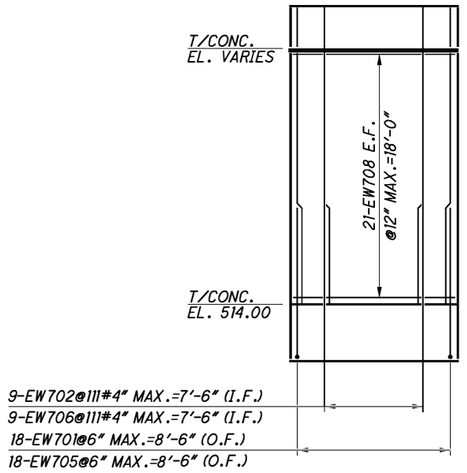

SECTION F-F

SEE SHEET 50/296 FOR LOCATION

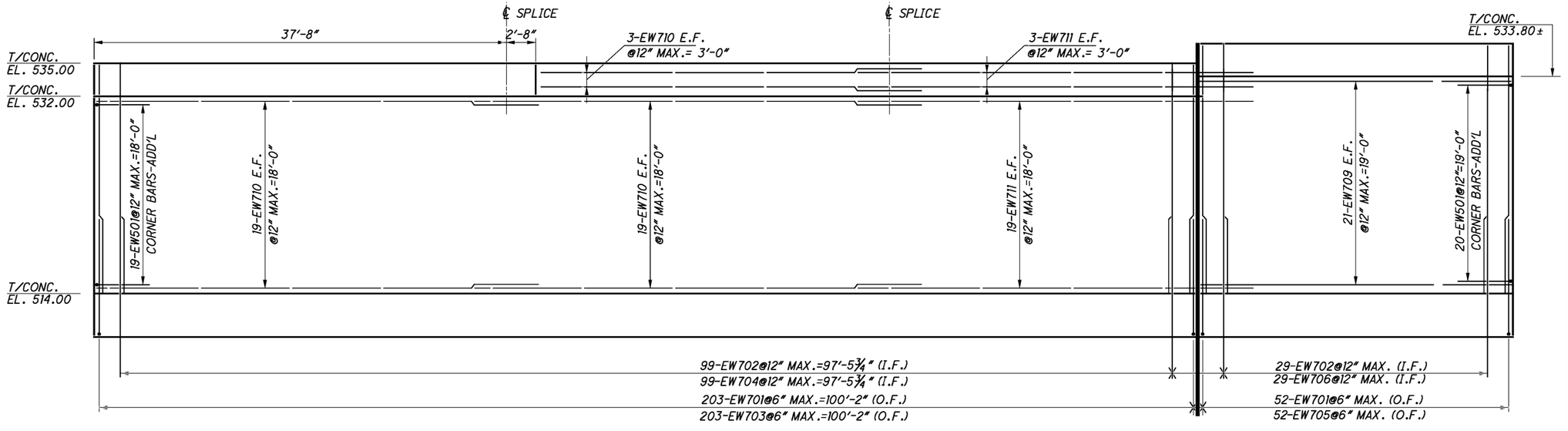

SECTION G-G

SEE SHEET 50/296 FOR LOCATION

NOTES:

1. SEE SHEET 26/296 FOR LOCATION.

LEGEND:

ADD'L.	- ADDITIONAL
CONC.	- CONCRETE
E.F.	- EACH FACE
I.F.	- INSIDE FACE
O.F.	- OUTSIDE FACE
T/	- TOP OF

DESIGN AGENCY
HATCH MOTT MacDONALD
1813 CLEVELAND PKWY.
SUITE 200
CLEVELAND, OH 44135

DESIGNED	DRAWN	REVIEWED	DATE
BTF	JMS	MAR	10/20/14
CHECKED	REVISED	STRUCTURE FILE NUMBER	
KTO		3106578	

STRUCTURAL-VENTILATION RM-REINFORCEMENT-WALL ELEV.-3 OF 5

BRIDGE NO. HAM-71-0134
I-71 LYTLE TUNNEL UNDER LYTLE PARK

HAM-71-01.34
PID No. 87268

50/296

308/555

c:\pwworking\hmm\external\pre47802\dms72783\071_0134CTS021.dgn 9/22/2015 3:58:59 PM PRE47802

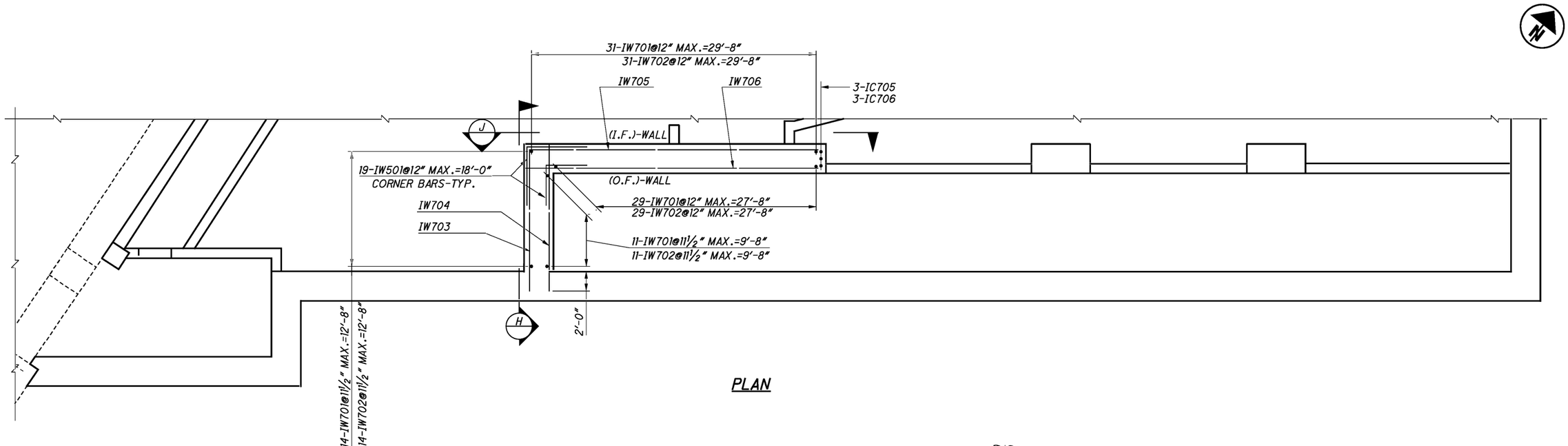

PLAN

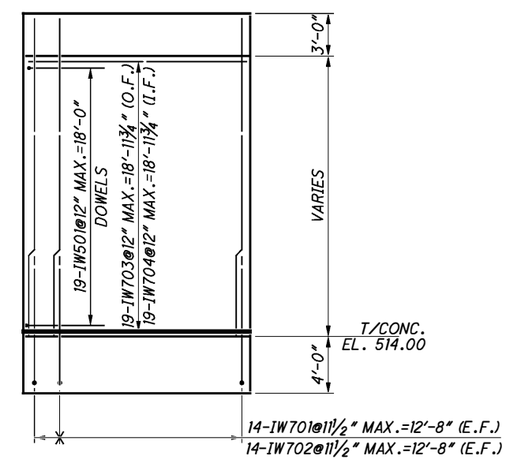

SECTION H-H

SEE SHEET 51/296 FOR LOCATION

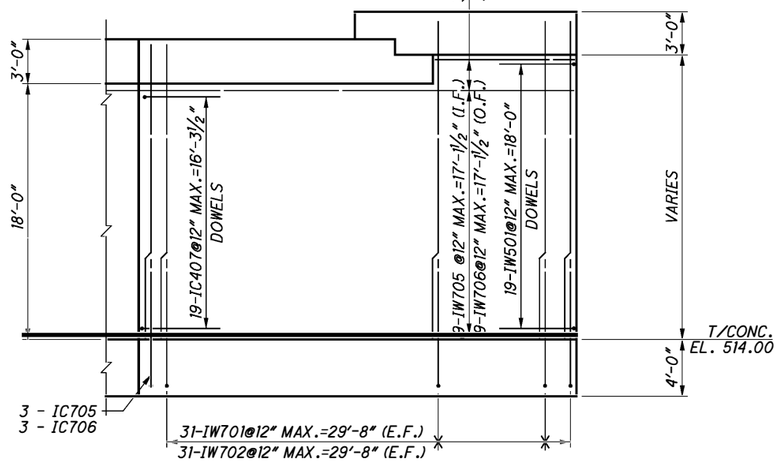

SECTION J-J

SEE SHEET 51/296 FOR LOCATION

NOTES:

1. SEE SHEET 26/296 FOR LOCATION.

LEGEND:

ADD'L.	- ADDITIONAL
CONC.	- CONCRETE
E.F.	- EACH FACE
EL.	- ELEVATION
I.F.	- INSIDE FACE
O.F.	- OUTSIDE FACE
T/	- TOP OF
TYP.	- TYPICAL

DESIGN AGENCY
HATCH MOTT MacDONALD
18013 CLEVELAND PKWY.
SUITE 200
CLEVELAND, OH 44135

DESIGNED	DRAWN	REVIEWED	DATE
BTF	JMS	MAR	10/20/14
CHECKED	REVISED	STRUCTURE FILE NUMBER	
KTO		3106578	

STRUCTURAL-VENTILATION RM-REINFORCEMENT-WALL ELEV.-4 OF 5

BRIDGE NO. HAM-71-0134
I-71 LYTLE TUNNEL UNDER LYTLE PARK

HAM-71-01.34
PID No. 87268

51/296

309/555

c:\pwworking\hmm\external\pre47802\dms72783\071_0134CTS022.dgn 9/23/2015 10:06:31 AM PRE47802

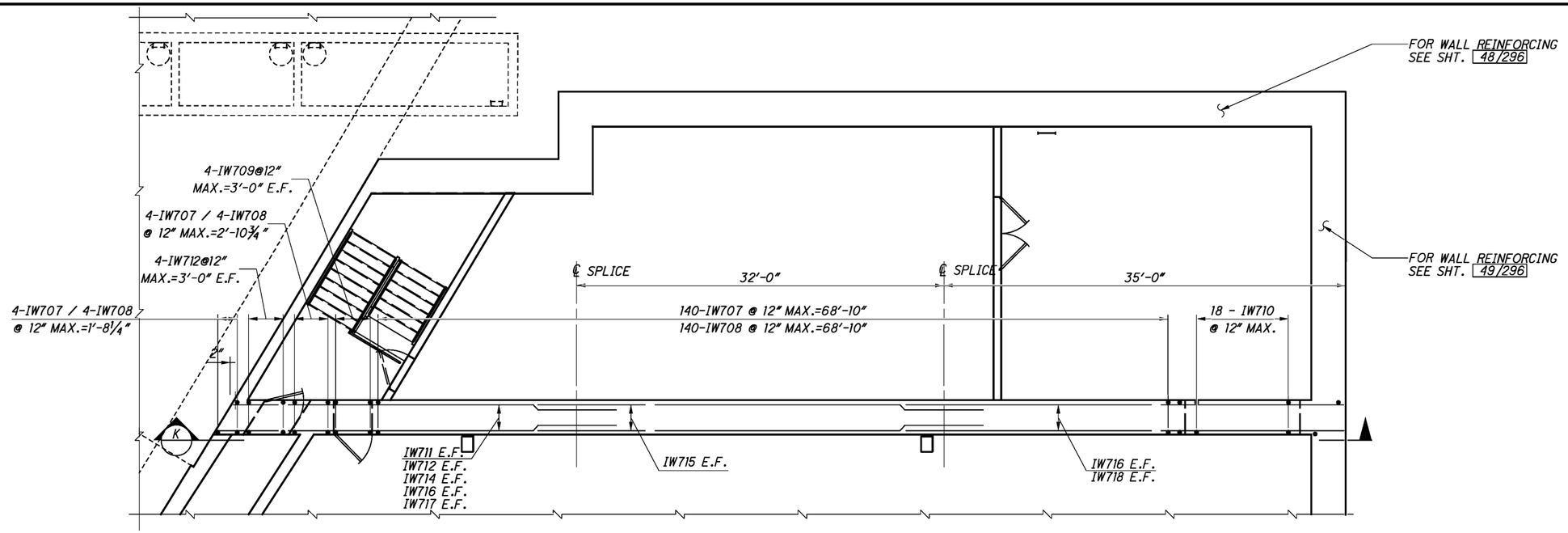

PLAN

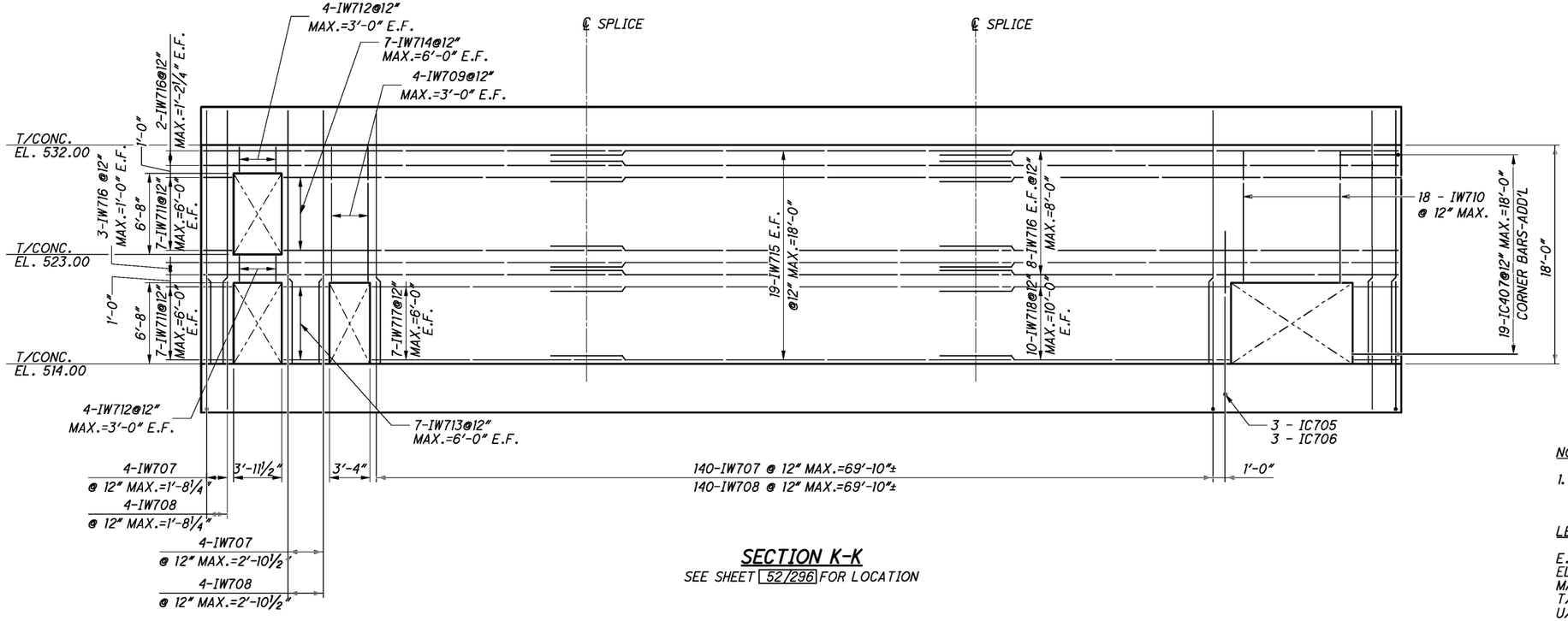

SECTION K-K

SEE SHEET 52/296 FOR LOCATION

NOTES:

1. SEE SHEET 26/296 FOR LOCATION.

LEGEND:

E.F.	- EACH FACE
ELEV.	- ELEVATION
MAX.	- MAXIMUM
T/	- TOP OF
U/S	- UNDERSIDE

DESIGN AGENCY
HATCH MOTT MacDONALD
18013 CLEVELAND PKWY.
SUITE 200
CLEVELAND, OH 44135

DESIGNED	DRAWN	REVIEWED	DATE
BTF	JMS	MAR	10/20/14
CHECKED	REVISED	STRUCTURE FILE NUMBER	
KTO	BTF	3106578	

STRUCTURAL-VENTILATION RM-REINFORCEMENT-WALL ELEV.-5 OF 5

BRIDGE NO. HAM-71-0134
I-71 LYTLE TUNNEL UNDER LYTLE PARK

HAM-71-01.34
PID No. 87268

c:\pwworking\hmm\external\pre47802\dms72783\071_0134CTS023.dgn 9/22/2015 4:08:59 PM PRE47802

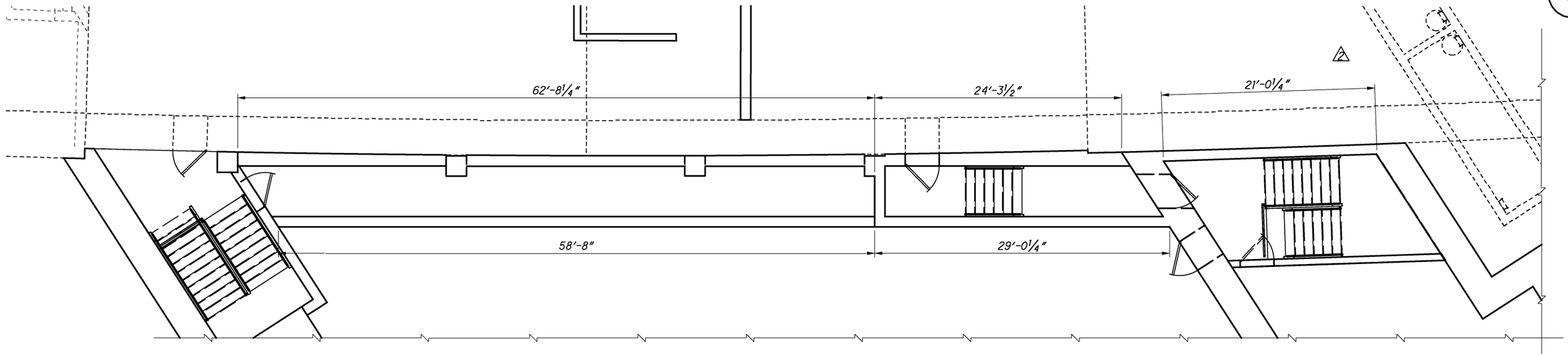

PLAN

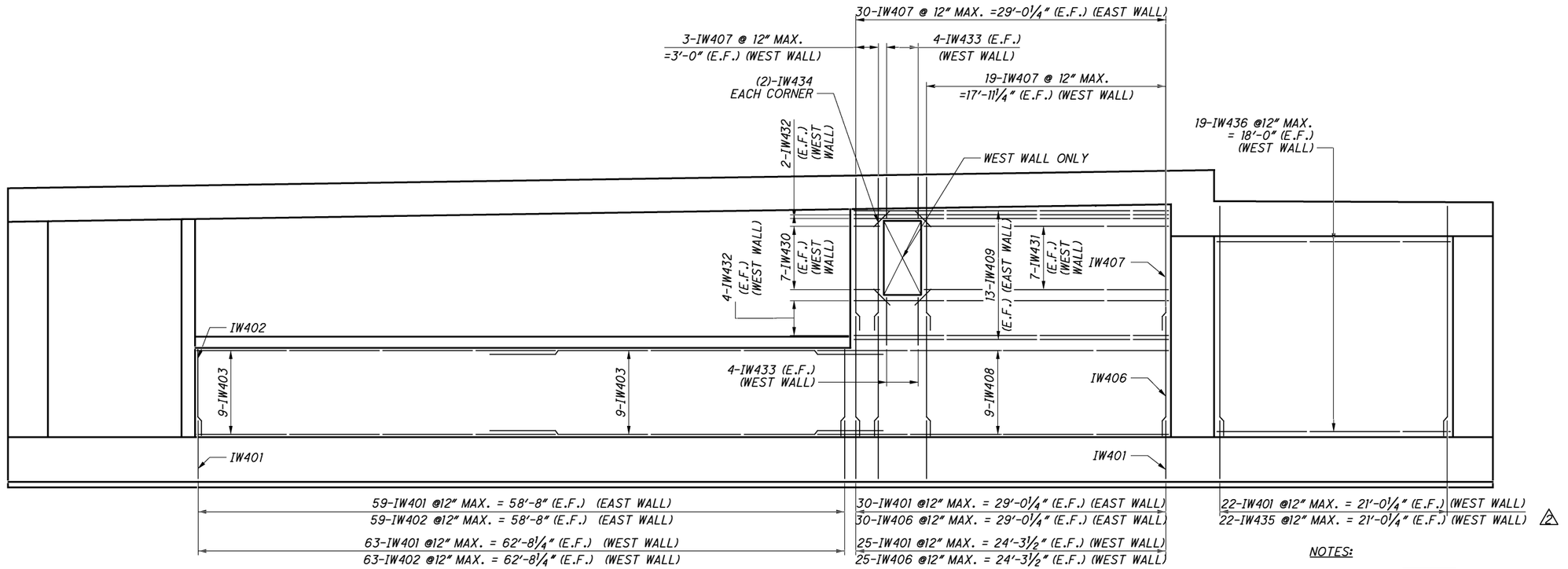

HALLWAY WALL - REINFORCING

NOTES:

1. SEE SHEET 26/296 FOR LOCATION.

LEGEND:

E.F.	- EACH FACE
ELEV.	- ELEVATION
MAX.	- MAXIMUM
T/	- TOP OF
U/S	- UNDERSIDE

NO.	DATE	REVISION DESCRIPTION
2	10/13/15	RFI 95
1	09/24/15	NEW SHEET (RFI 74)

c:\pwworking\hmm\external\pre47802\dms72783\071_0134CTS027.dgn 10/13/2015 2:47:37 PM PRE47802

DESIGN AGENCY
HATCH MOTT MacDONALD
18013 CLEVELAND PKWY.
SUITE 200
CLEVELAND, OH 44135

DESIGNED	DRAWN	REVIEWED	DATE
BTF	JMS	MAR	10/08/15
CHECKED	REVISED	STRUCTURE FILE NUMBER	
CPB	BTF	3106578	

STRUCTURAL-VENTILATION RM-REINFORCEMENT-WALL ELEV.-6 OF 6

BRIDGE NO. HAM-71-0134
I-71 LYTLE TUNNEL UNDER LYTLE PARK

HAM-71-01.34
PID No. 87268

52A/296

310A
555

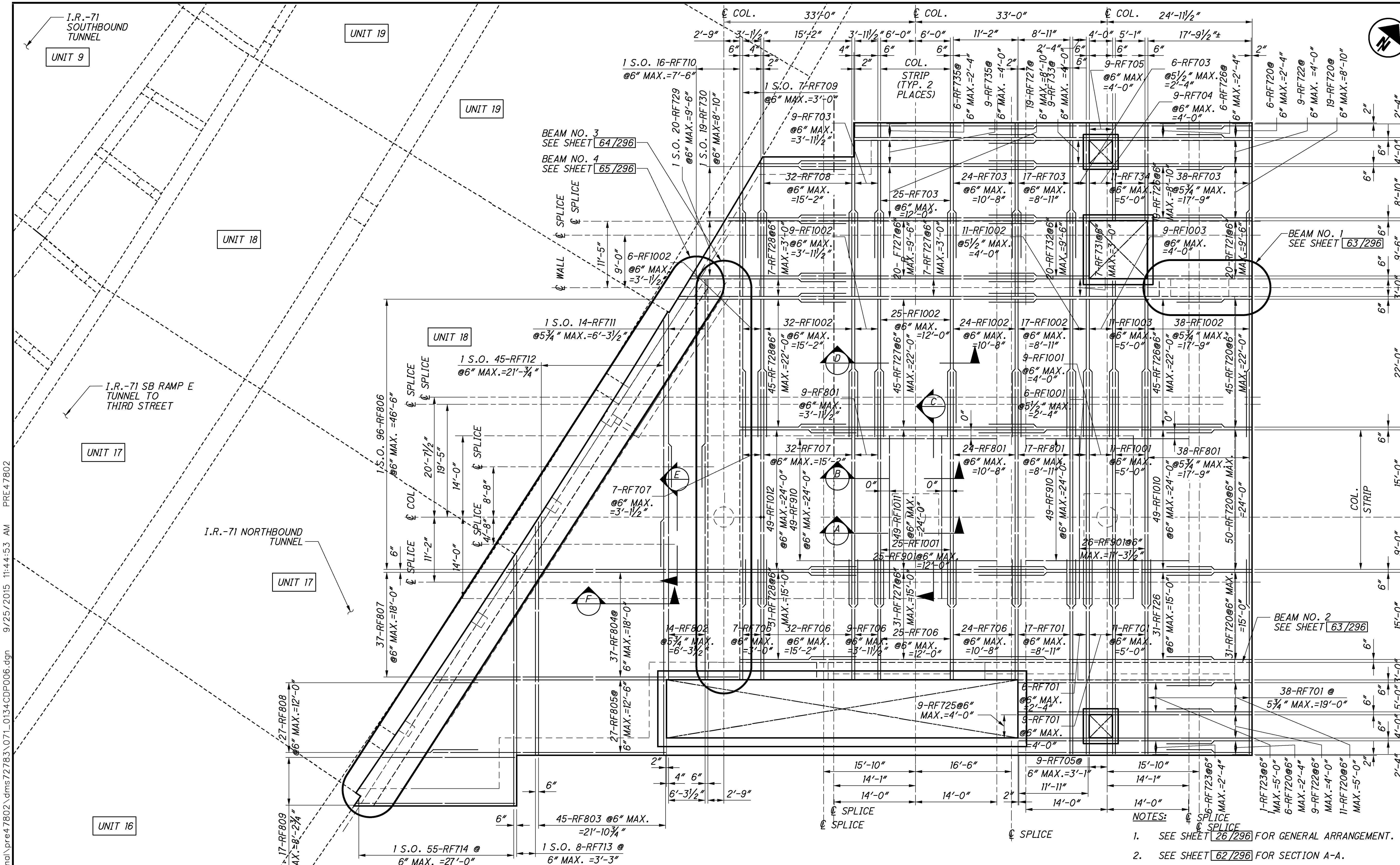

LEGEND:

1 S.O.	- ONE IN A SERIES OF
COL.	- COLUMN
MAX.	- MAXIMUM
TYP.	- TYPICAL

NOTES:

1. SEE SHEET 26/296 FOR GENERAL ARRANGEMENT.
2. SEE SHEET 62/296 FOR SECTION A-A.
3. SEE SHEET 62/296 FOR SECTION B-B.
4. SEE SHEET 62/296 FOR SECTION C-C.
5. SEE SHEET 62/296 FOR SECTION D-D.
6. SEE SHEET 62/296 FOR SECTION E-E.
7. SEE SHEET 62/296 FOR SECTION F-F.
8. SEE SHEET 86/296 FOR REINFORCING SCHEDULE.

NO.	DATE	REVISION DESCRIPTION
1	09/25/15	REVISED PER ENGINEER'S CHECK

DESIGN AGENCY: HATCH MOTT MacDONALD, 18013 CLEVELAND PKWY. SUITE 200, CLEVELAND, OH 44135

DESIGNED	DRAWN	REVIEWED	DATE
BTF	JMS	MAR	10/20/14
CHECKED KTO	REVISED	STRUCTURE FILE NUMBER 3106578	

STRUCTURAL VENT. ROOM REINFORCEMENT PLAN-ROOF SLAB 1 OF 2

BRIDGE NO. HAM-71-0134

I-71 LYTLE TUNNEL UNDER LYTLE PARK

HAM-71-01.34

PID No. 87268

c:\pwworking\hmm\external\pre47802\dms72783\071_0134CDP006.dgn 9/25/2015 11:44:53 AM PRE47802

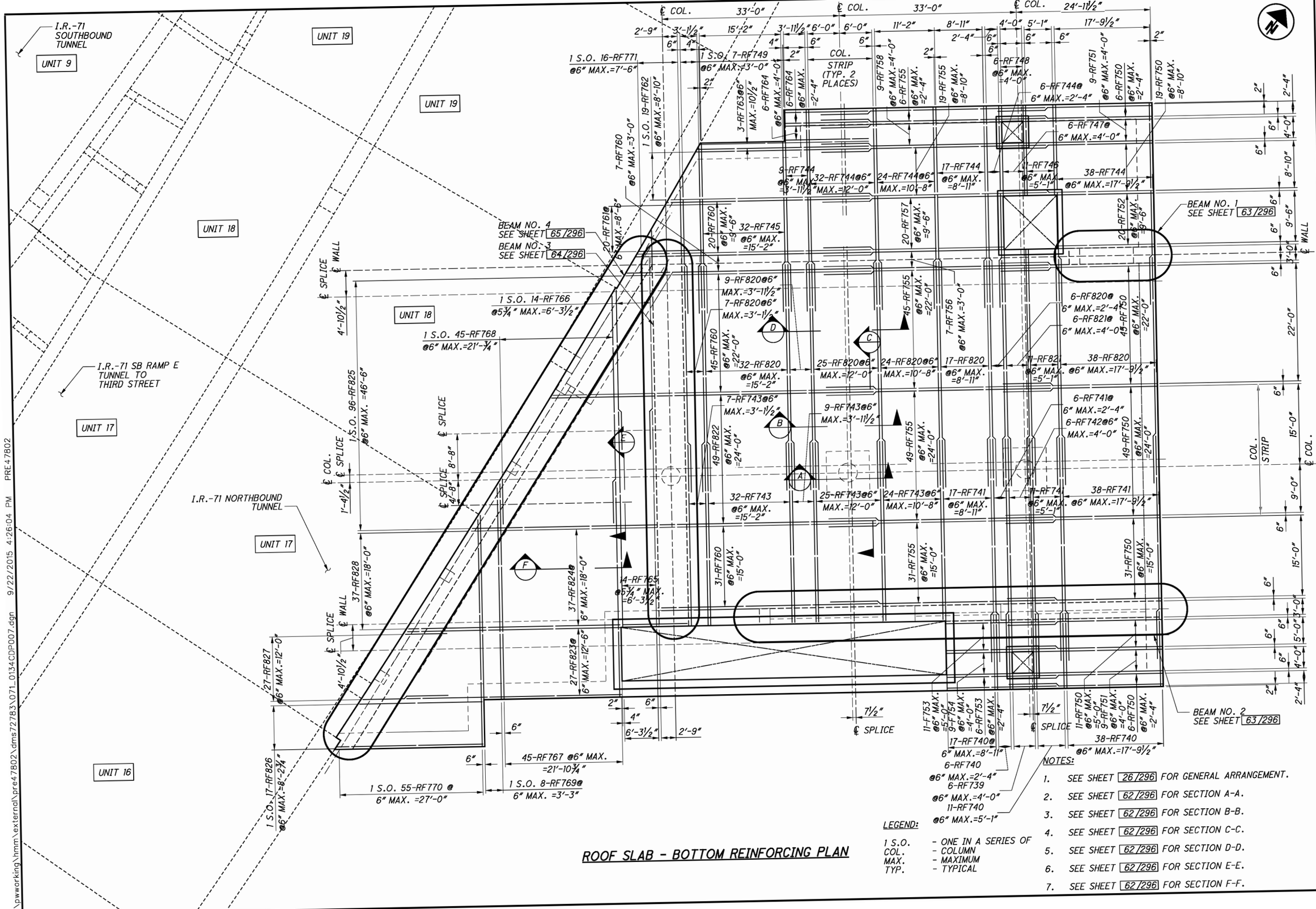

ROOF SLAB - BOTTOM REINFORCING PLAN

LEGEND:

1 S.O.	- ONE IN A SERIES OF
COL.	- COLUMN
MAX.	- MAXIMUM
TYP.	- TYPICAL

NOTES:

1. SEE SHEET 26/296 FOR GENERAL ARRANGEMENT.
2. SEE SHEET 62/296 FOR SECTION A-A.
3. SEE SHEET 62/296 FOR SECTION B-B.
4. SEE SHEET 62/296 FOR SECTION C-C.
5. SEE SHEET 62/296 FOR SECTION D-D.
6. SEE SHEET 62/296 FOR SECTION E-E.
7. SEE SHEET 62/296 FOR SECTION F-F.

DESIGN AGENCY
HATCH MOTT MacDONALD
18013 CLEVELAND PKWY.
SUITE 200
CLEVELAND, OH 44135

DESIGNED BTF | DRAWN JMS | CHECKED KTO | REVIEWED MAR | DATE 10/20/14 | STRUCTURE FILE NUMBER 3106578 | REVISED

STRUCTURAL VENT. ROOM REINFORCEMENT PLAN-ROOF SLAB 2 OF 2
BRIDGE NO. HAM-71-0134
I-71 LYTLE TUNNEL UNDER LYTLE PARK

HAM-71-01.34
PID No. 87268

54 / 296

312 / 555

c:\pwworking\hmm\external\pre47802\dms72783\071_0134CDP007.dgn 9/22/2015 4:26:04 PM PRE47802

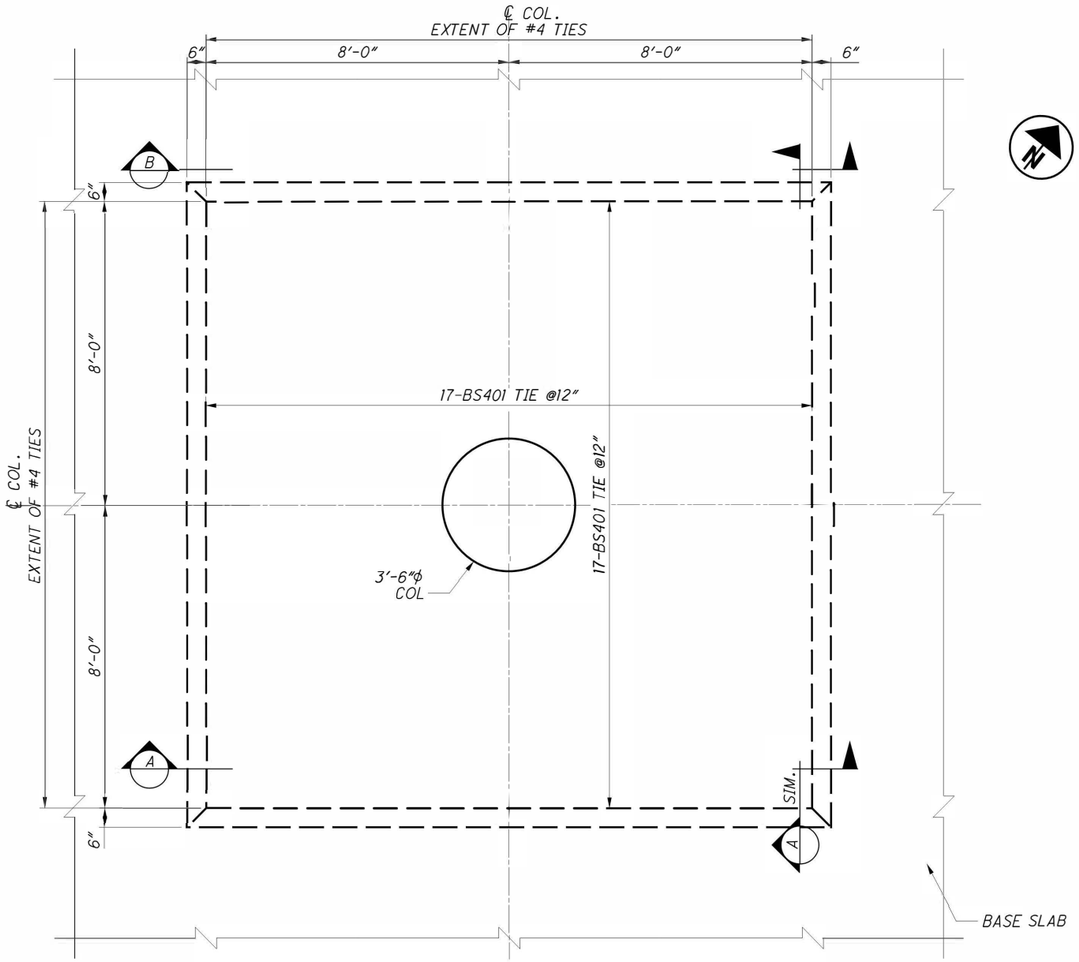

ENLARGED PLAN - BASE SLAB
(TYP. 3 PLACES)

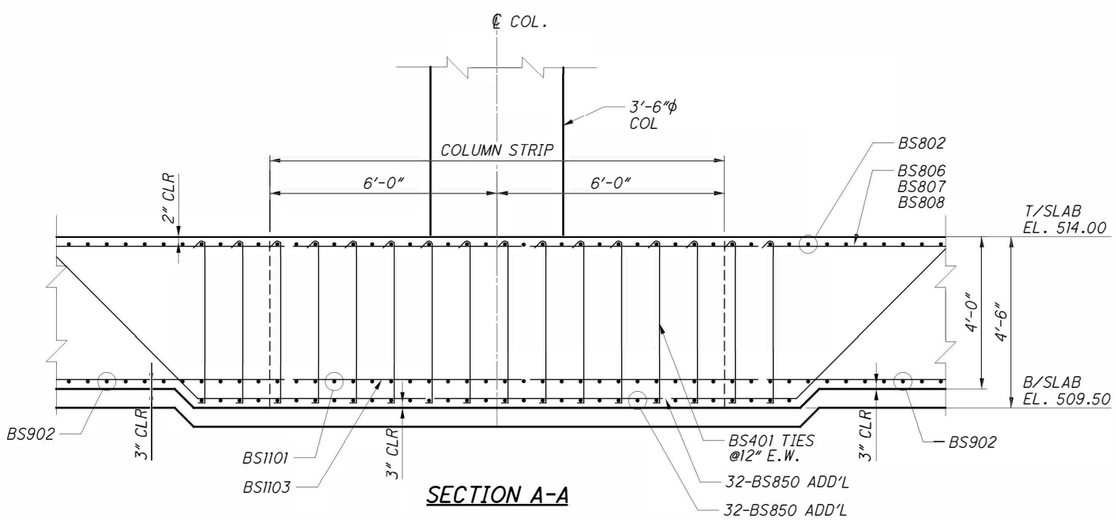

SECTION A-A

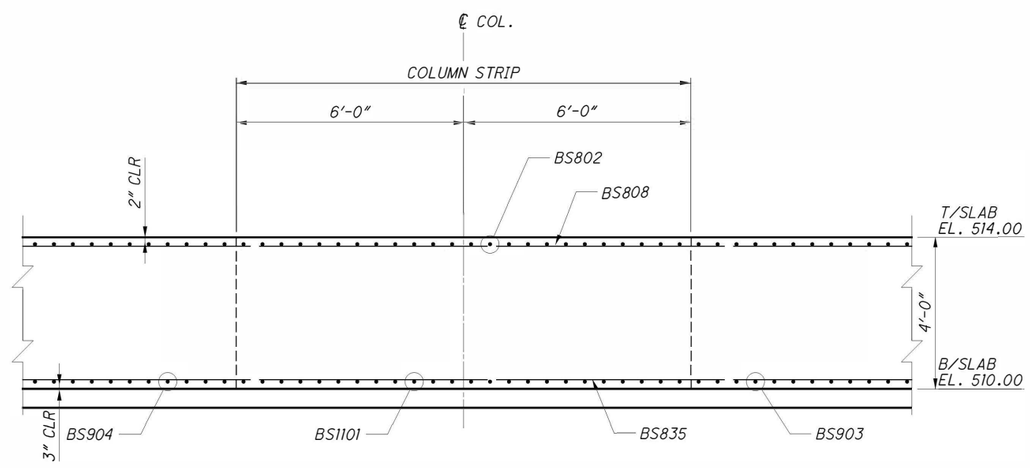

SECTION B-B

NOTES:

1. SEE SHEET 28/296 FOR LOCATION.
2. SEE SHEET 46/296 AND 47/296 FOR BASE SLAB REINFORCING.

LEGEND:

B/	- BOTTOM OF
CLR.	- CLEAR
COL.	- COLUMN
E.W.	- EACH WAY
EL.	- ELEVATION
T/	- TOP OF

DESIGN AGENCY
HATCH MOTT MacDONALD
18013 CLEVELAND PKWY.
SUITE 200
CLEVELAND, OH 44135

DESIGNED	DRAWN	REVIEWED	DATE
BTF	JMS	MAR	10/20/14
CHECKED	REVISED	STRUCTURE FILE NUMBER	
KTO		3106578	

STRUCTURAL-VENTILATION ROOM-SECTIONS AND DETAILS-1 OF 14

BRIDGE NO. HAM-71-0134
I-71 LYTLE TUNNEL UNDER LYTLE PARK

HAM-71-01.34
PID No. 87268

55/296

313/555

c:\pwworking\hmm\external\tyn61470\dms72783\071_0134CTS003.dgn 10/25/2014 9:11:02 AM TYN61470

c:\pwworking\hmm\external\pre47802\dms72783\071_0134CTS025.dgn 9/8/2015 12:46:54 PM PRE47802

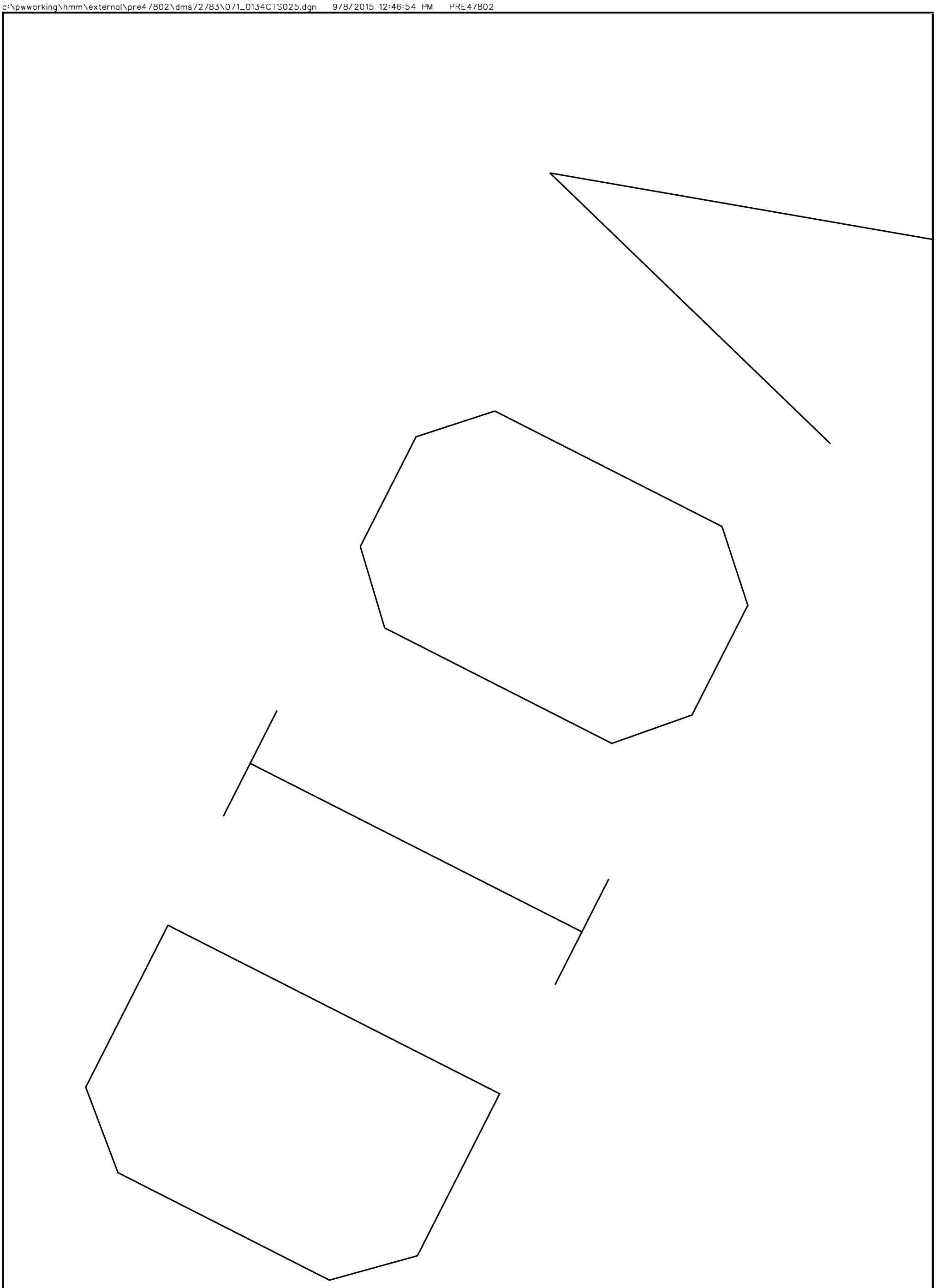

314 / 555	56 / 296	HAM-71-01.34 PID No. 87268	STRUCTURAL-VENTILATION ROOM-SECTIONS AND DETAILS-2 OF 14 BRIDGE NO. HAM-71-0134 I-71 LYTLE TUNNEL UNDER LYTLE PARK	DESIGNED BTF CHECKED KTO	DRAWN JMS REVISED	REVIEWED MAR DATE 10/20/14 STRUCTURE FILE NUMBER 3106578	DESIGN AGENCY HATCH MOTT MacDONALD 18013 CLEVELAND PKWY. SUITE 200 CLEVELAND, OH 44135

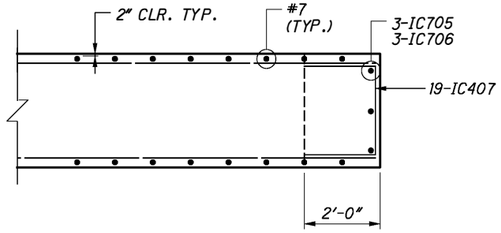

WALL DETAIL 1 (BEAM 1 / BEAM 2)
SEE SHEET 27/296 FOR LOCATION

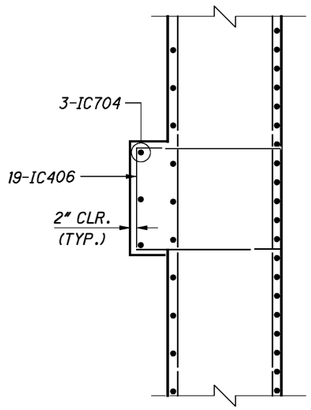

WALL DETAIL 2 (BEAM 1)
SEE SHEET 27/296 FOR LOCATION
SEE EXTERIOR WALL SECTION FOR TYP. DETAILS

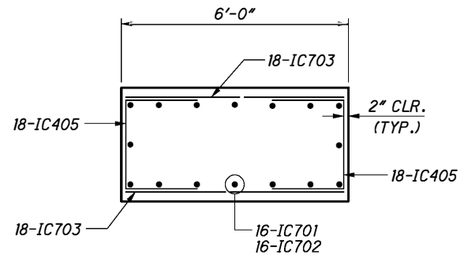

WALL DETAIL 3 (BEAM 2)
SEE SHEET 28/296 FOR LOCATION
SEE INTERIOR WALL SECTION FOR TYP. DETAILS

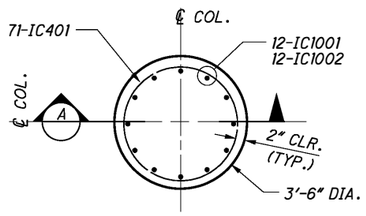

WALL DETAIL 4 (COLUMN)
SEE SHEET 28/296 FOR LOCATION

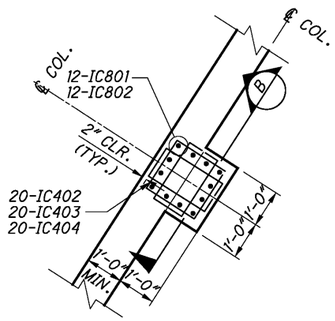

WALL DETAIL 5 (BEAM 4)
SEE SHEET 27/296 AND 28/296 FOR LOCATION

LEGEND:

ADD'L	- ADDITIONAL
B/	- BOTTOM OF
CLR.	- CLEAR
COL.	- COLUMN
DIA.	- DIAMETER
E.F.	- EACH FACE
EL.	- ELEVATION
T/	- TOP OF
TYP.	- TYPICAL

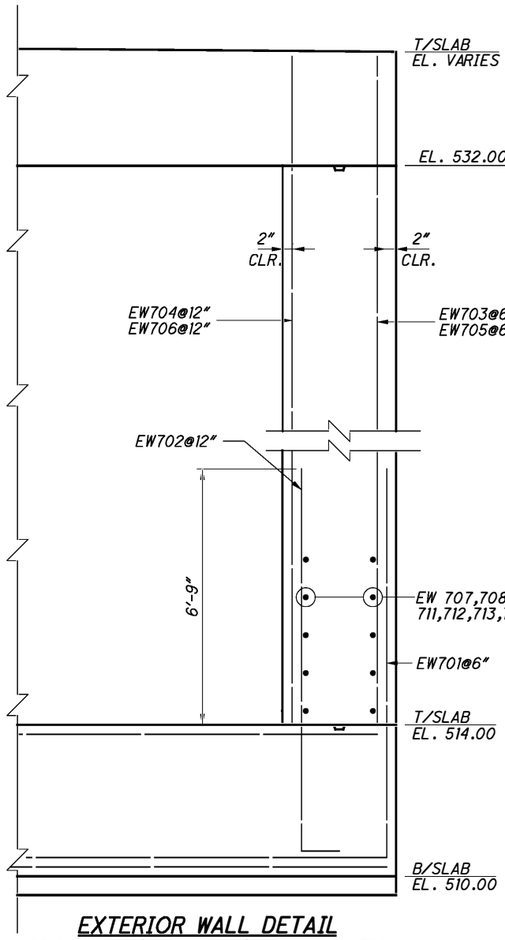

EXTERIOR WALL DETAIL
SEE SHEET 27/296 AND 28/296 FOR LOCATION
SEE SHEET 48/296 49/296 AND 50/296 FOR DETAILS

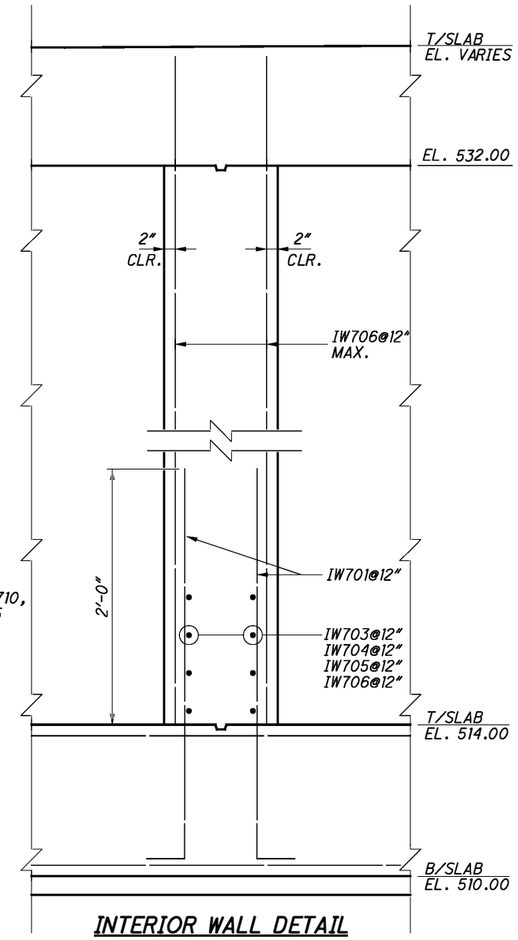

INTERIOR WALL DETAIL
SEE SHEET 27/296 AND 28/296 FOR LOCATION
SEE SHEET 51/296 AND 53/296 FOR DETAILS

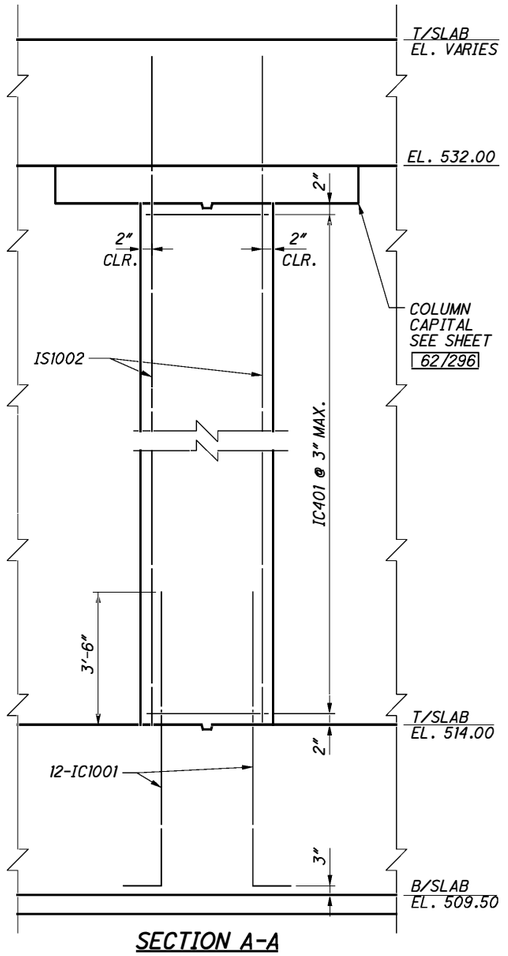

SECTION A-A

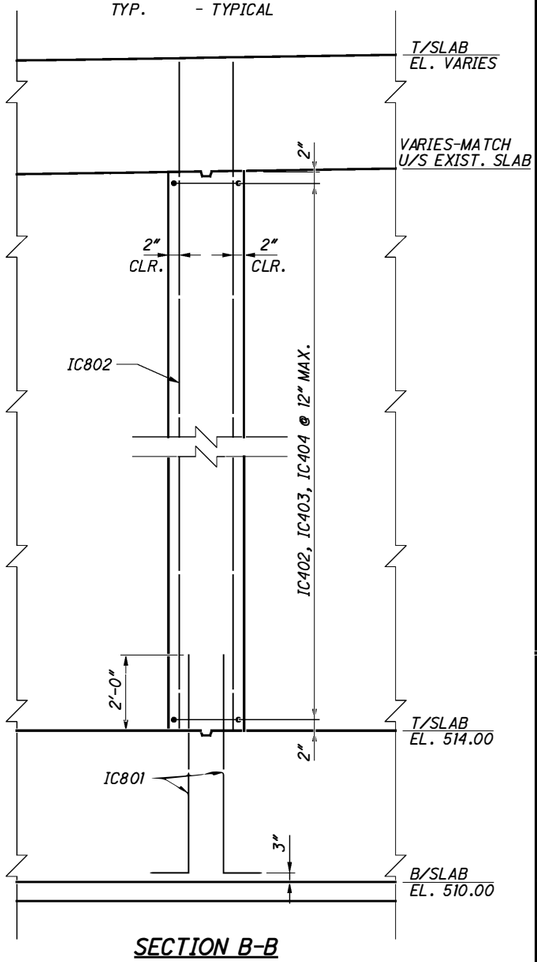

SECTION B-B

DESIGN AGENCY
HATCH MOTT MacDONALD
18013 CLEVELAND PKWY.
SUITE 200
CLEVELAND, OH 44135

DESIGNED	DRAWN	REVIEWED	DATE
BTF	JMS	MAR	10/20/14
CHECKED	REVISED	STRUCTURE FILE NUMBER	
KTO		3106578	

STRUCTURAL-VENTILATION ROOM-SECTIONS AND DETAILS-3 OF 14
BRIDGE NO. HAM-71-0134
I-71 LYTLE TUNNEL UNDER LYTLE PARK

HAM-71-01.34
PID No. 87268

c:\pwworking\hmm\external\pre47802\dms72783\071_0134CTS007.dgn 9/23/2015 9:38:50 AM PRE47802

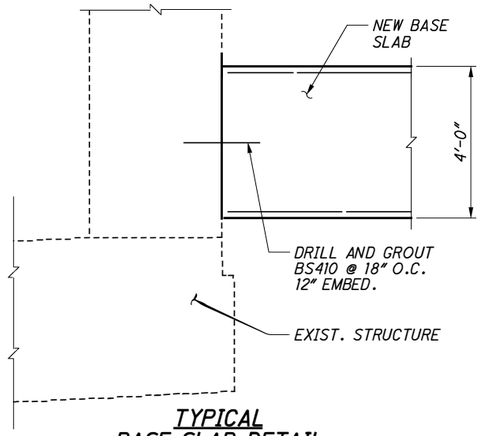

TYPICAL BASE SLAB DETAIL

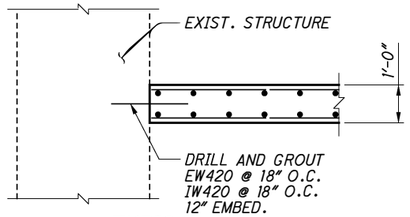

TYPICAL WALL DETAIL

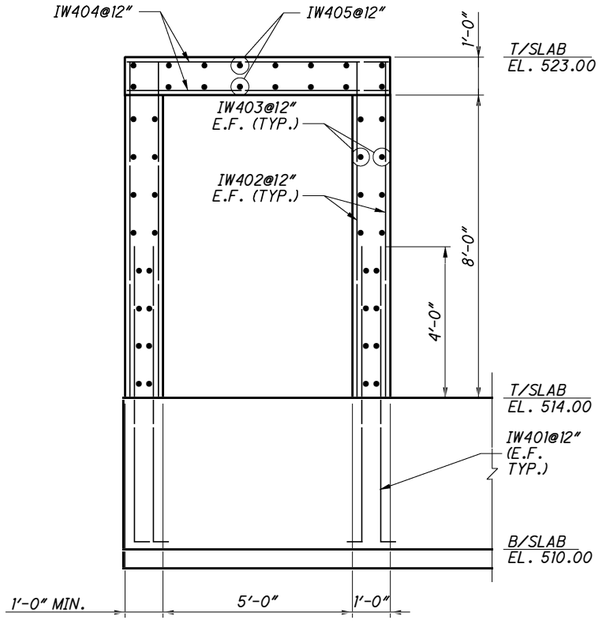

SECTION G-G

SEE SHEET 26/296 28/296 FOR LOCATION
29/296

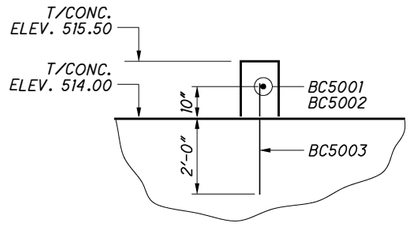

BASE SLAB CURB DETAIL AT VENTILATION OPENING

SEE SHEET 28/296 FOR LOCATION

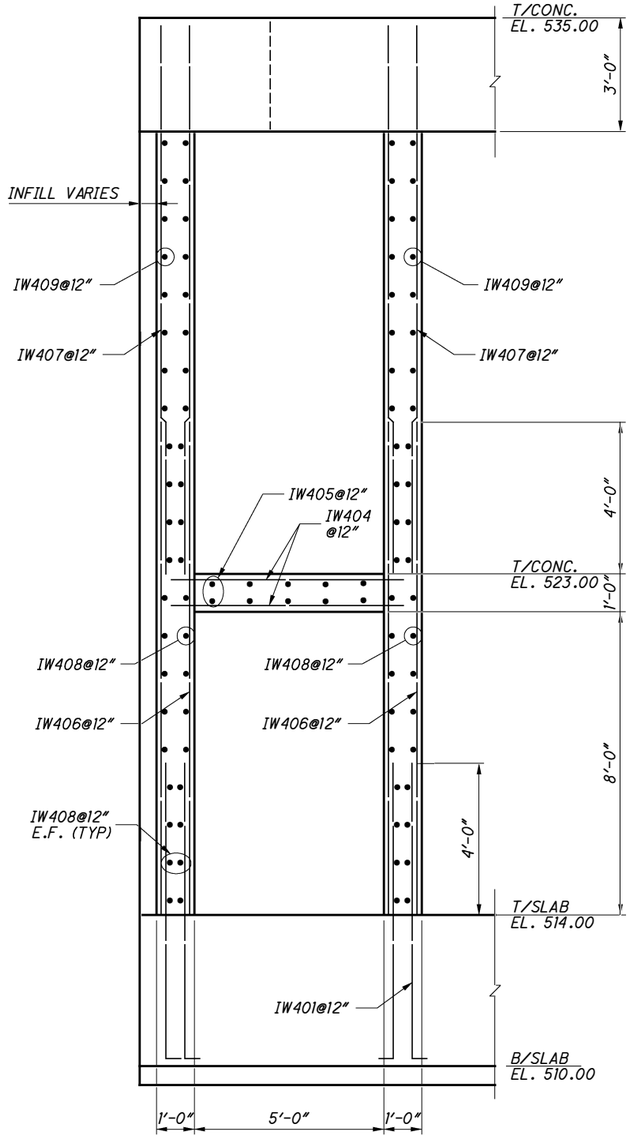

SECTION H-H

SEE SHEET 26/296 FOR LOCATION

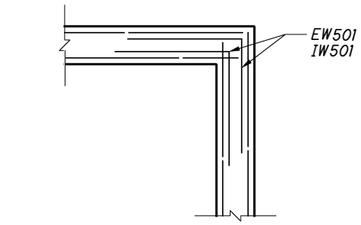

TYPICAL WALL CORNER DETAIL

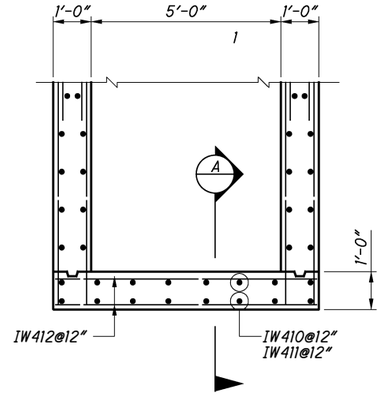

PLAN

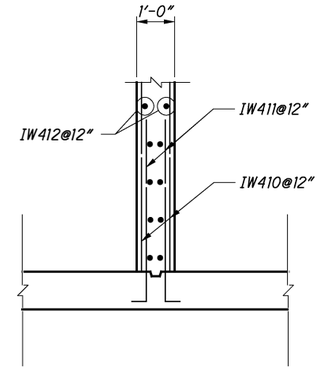

SECTION A-A

BACKWALL SECTION

DETAIL 1

SEE SHEET 29/296 FOR LOCATION

PAD SIZE	REINFORCING
3'-3"x5'-8"	7-EP4001 @ 10½" = 5'-3" 4-EP4002 @ 11½"= 2'-10½"
6'-2"x27'-8"	29-EP4003 @ 11¾" = 27'-5" 7-EP4004 @ 11½" = 5'-9"
3'-0"x29'-8"	31-EP4005 @ 11¾" = 29'-4½" 4-EP4006 @ 10½" = 2'-7½"

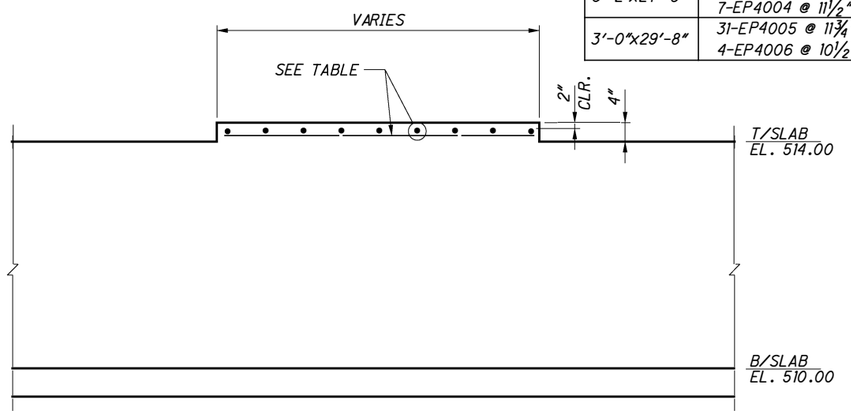

ELECTRICAL EQUIPMENT PADS

SEE SHEET 26/296 AND 27/296 FOR LOCATION

LEGEND:

B/	- BOTTOM OF
CLR.	- CLEAR
CONC.	- CONCRETE
E.F.	- EACH FACE
E.W.	- EACH WAY
EL.	- ELEVATION
EMBED.	- EMBEDMENT
EXIST.	- EXISTING
MIN.	- MINIMUM
O.C.	- ON CENTERS
T/	- TOP OF
TYP.	- TYPICAL

NO.	DATE	REVISION DESCRIPTION
1	10/01/15	RFI 74

c:\pwworking\hmm\external\pre47802\dms72783\071_0134CTS008.dgn 10/1/2015 4:18:34 PM PRE47802

DESIGN AGENCY
HATCH MOTT MacDONALD
18013 CLEVELAND PKWY.
SUITE 200
CLEVELAND, OH 44135

REVIEWED MAR DATE 10/20/14
STRUCTURE FILE NUMBER 3106578
DRAWN JMS REVISED
DESIGNED BTF CHECKED KTO

STRUCTURAL-VENTILATION ROOM-SECTIONS AND DETAILS-4 OF 14
BRIDGE NO. HAM-71-0134
I-71 LYTLE TUNNEL UNDER LYTLE PARK

HAM-71-01.34
PID No. 87268

58/296
316/555

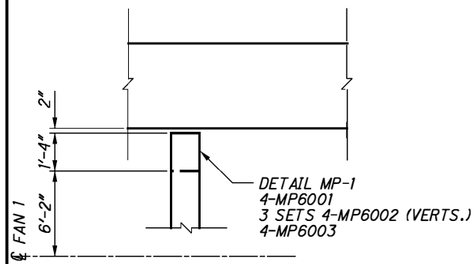

DETAIL 1 (2 REQ'D)
SEE SHEET 27/296 FOR LOCATION

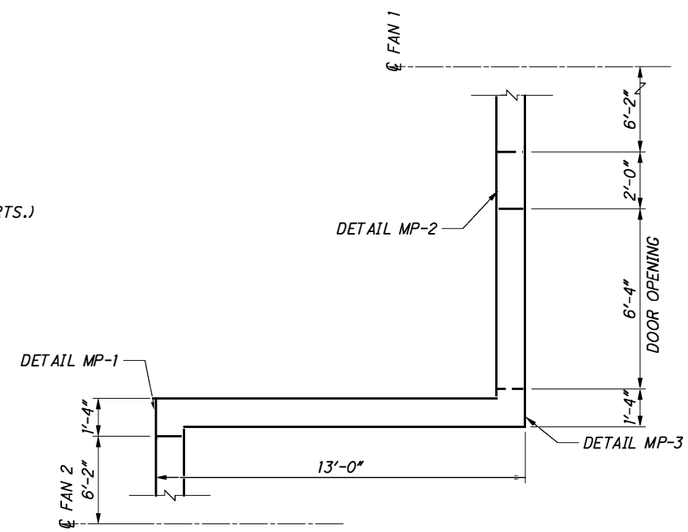

DETAIL 2 (2 REQ'D)
SEE SHEET 27/296 FOR LOCATIONS

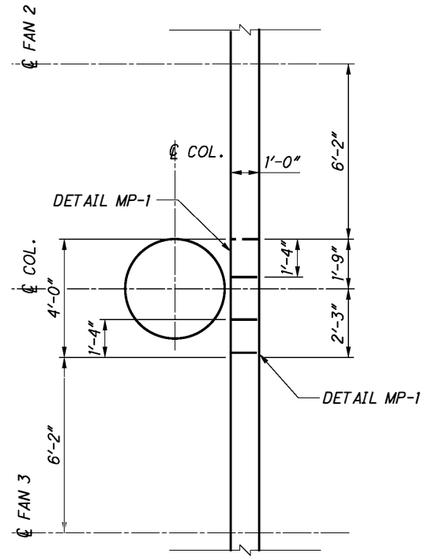

DETAIL 3
SEE SHEET 28/296 FOR LOCATION

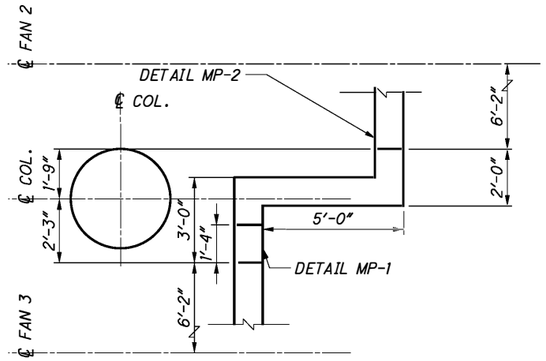

DETAIL 4
SEE SHEET 28/296 FOR LOCATION

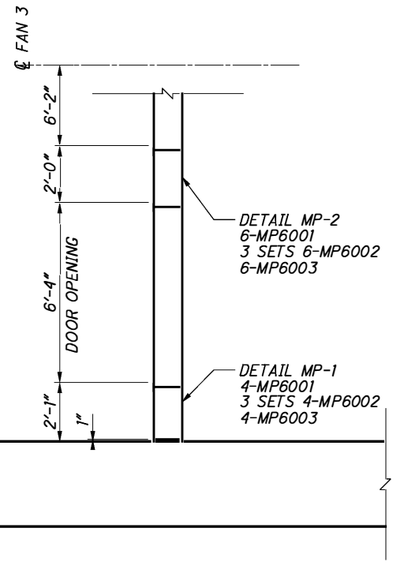

DETAIL 5
SEE SHEET 28/296 FOR LOCATION

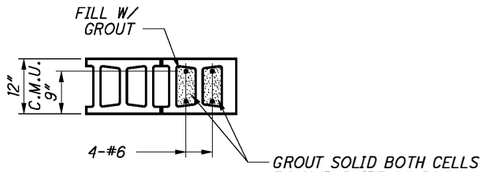

MASONRY PILASTER DETAIL MP-1

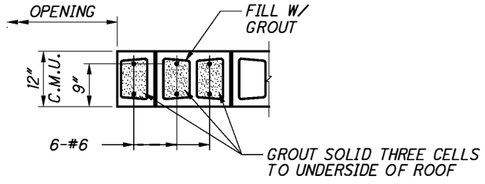

MASONRY PILASTER DETAIL MP-2

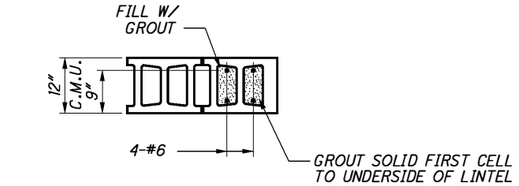

MASONRY PILASTER DETAIL MP-3

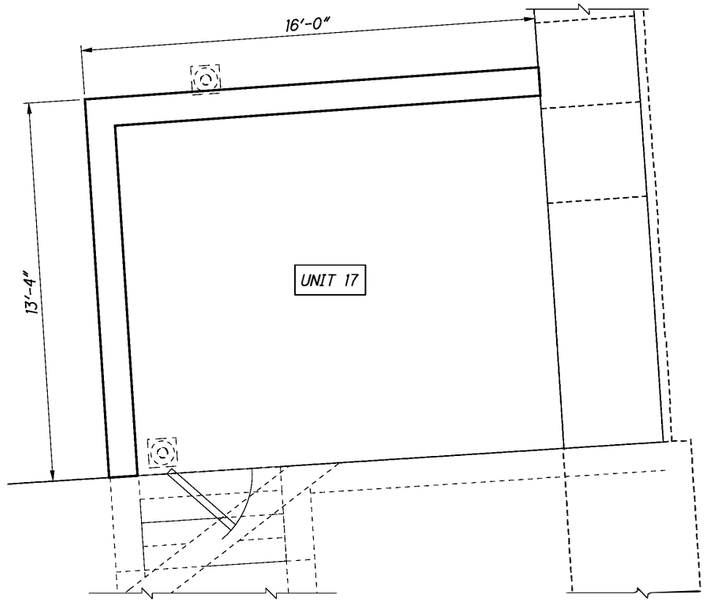

DETAIL 7
SEE SHEET 32/296 FOR LOCATION

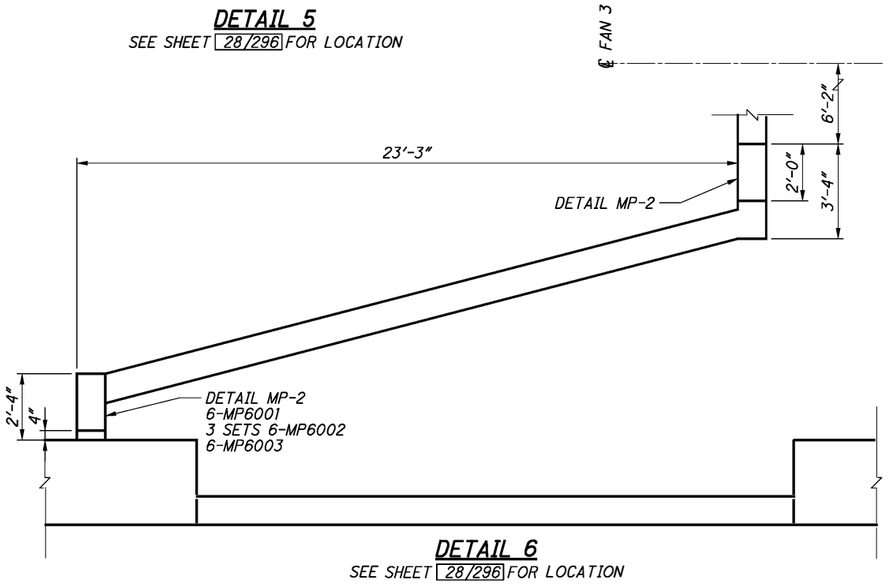

DETAIL 6
SEE SHEET 28/296 FOR LOCATION

LEGEND:

BOT.	- BOTTOM
CMU	- CONCRETE MASONRY UNIT
COL.	- COLUMN
CONT.	- CONTINUOUS
DIA.	- DIAMETER
DWLS.	- DOWELS
EQ.	- EQUAL
O.C.	- ON CENTER
T/	- TOP OF
VERTS.	- VERTICAL BARS
W/	- WITH

DESIGN AGENCY
HATCH MOTT MacDONALD
18013 CLEVELAND PKWY.
SUITE 200
CLEVELAND, OH 44135

DESIGNED	DRAWN	REVIEWED	DATE
BTF	JMS	MAR	10/20/14
CHECKED	REVISED	STRUCTURE FILE NUMBER	
KTO		31066578	

STRUCTURAL-VENTILATION ROOM-SECTIONS AND DETAILS-5 OF 14
BRIDGE NO. HAM-71-0134
I-71 LYTLE TUNNEL UNDER LYTLE PARK

HAM-71-01.34
PID No. 87268

59/296
317/555

c:\pwworking\hmm\external\pre47802\dms72783\071_0134CTS011.dgn 9/22/2015 3:23:53 PM PRE47802

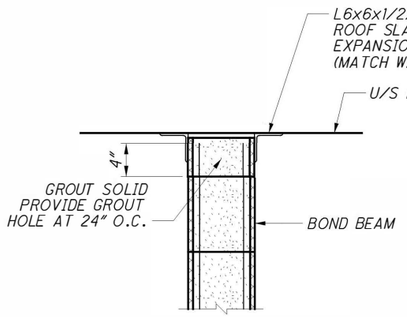

DETAIL AT ROOF SLAB
12" CMU WALL

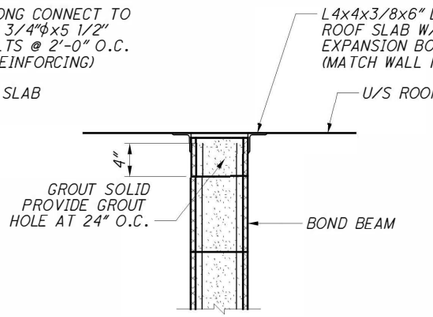

DETAIL AT ROOF SLAB
8" CMU WALL

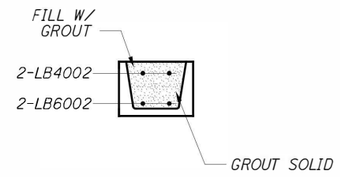

TYPICAL DETAIL - C.M.U. LINTEL (3'-4" OPENING)

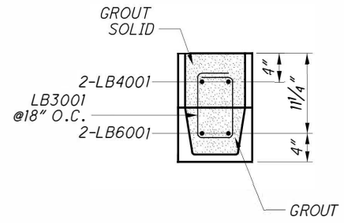

TYPICAL DETAIL - C.M.U. LINTEL (6'-4" OPENING)

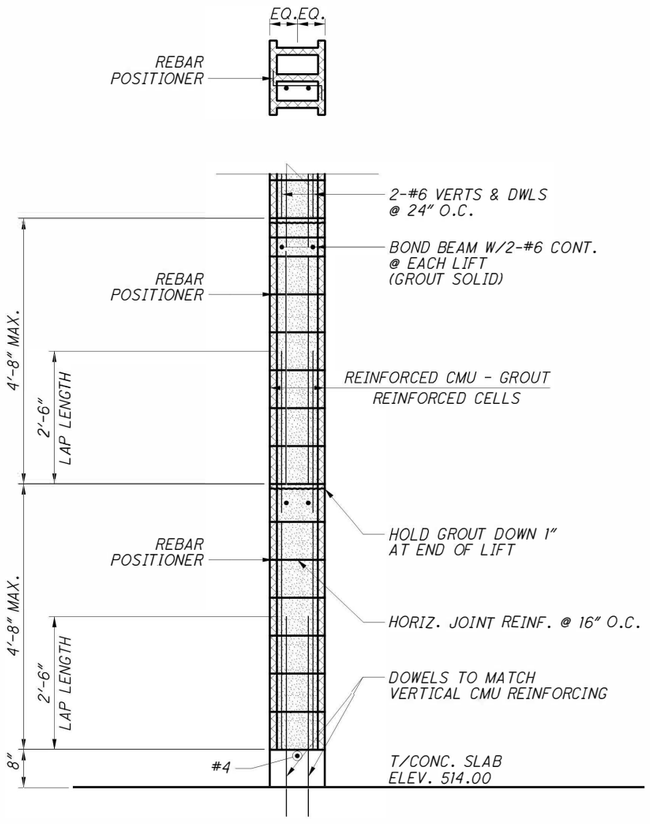

TYPICAL SECTION 12" REINFORCED MASONRY

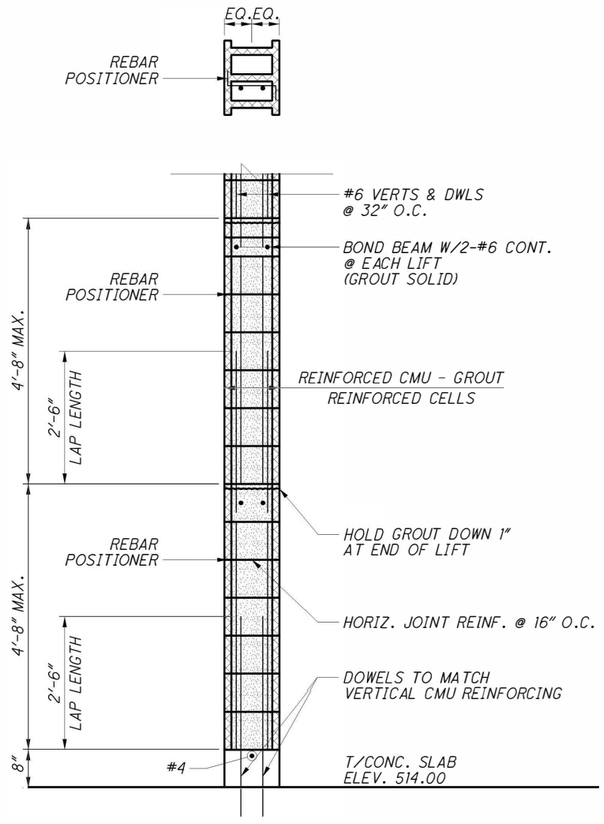

TYPICAL SECTION 8" REINFORCED MASONRY

LEGEND:

C.M.U.	- CONCRETE MASONRY UNIT
COL.	- COLUMN
EQ.	- EQUAL
HORIZ.	- HORIZONTAL
MAX.	- MAXIMUM
O/C	- ON CENTER
T/	- TOP OF
W/	- WITH

DESIGN AGENCY
HATCH MOTT MacDONALD
18013 CLEVELAND PKWY.
SUITE 200
CLEVELAND, OH 44135

REVIEWED	DATE
MAR	10/20/14

STRUCTURE FILE NUMBER 3106578

DRAWN	REVISED
JMS	

DESIGNED	CHECKED
BTF	KTO

STRUCTURAL-VENTILATION ROOM-SECTIONS AND DETAILS-6 OF 14
BRIDGE NO. HAM-71-0134
I-71 LYTLE TUNNEL UNDER LYTLE PARK

HAM-71-01.34
PID No. 87268

60/296

318/555

c:\pwworking\hmm\external\tyn61470\dms72783\071_0134CTS016.dgn 10/24/2014 11:02:18 AM TYN61470

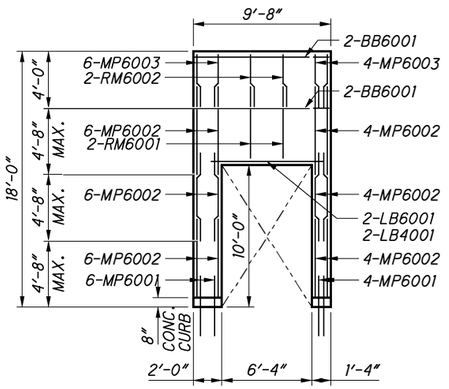

DETAIL 2 EAST/WEST WALLS (2 REQ'D)

SEE SHEET 59/296 FOR LOCATION
LOOKING EAST

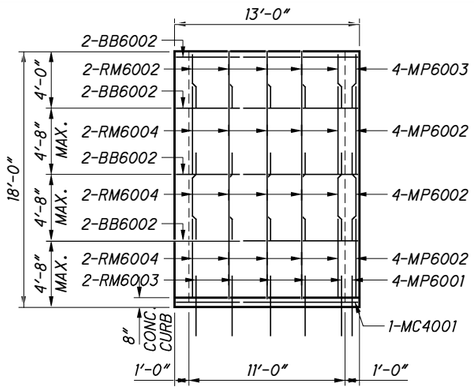

DETAIL 2 EAST/WEST WALLS (2 REQ'D)

SEE SHEET 59/296 FOR LOCATION
LOOKING SOUTH

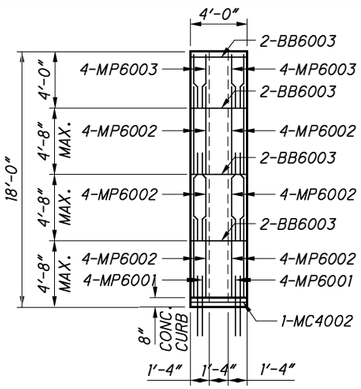

DETAIL 3 WEST WALL

SEE SHEET 59/296 FOR LOCATION
LOOKING EAST

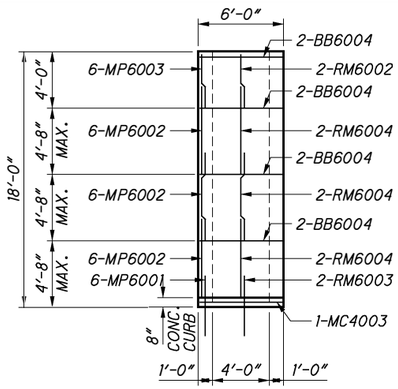

DETAIL 4 SOUTH WALL

SEE SHEET 59/296 FOR LOCATION
LOOKING SOUTH

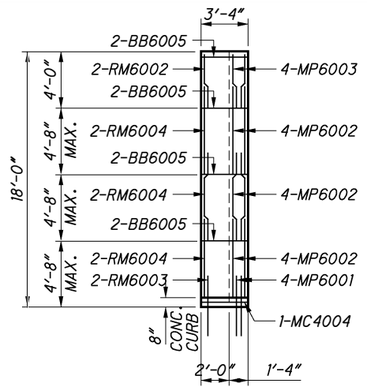

DETAIL 4 WEST WALL

SEE SHEET 59/296 FOR LOCATION
LOOKING EAST

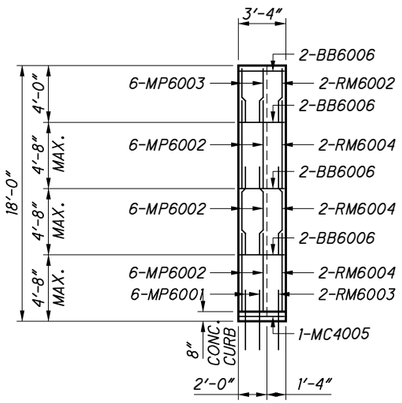

DETAIL 6 EAST WALL

SEE SHEET 59/296 FOR LOCATION
LOOKING EAST

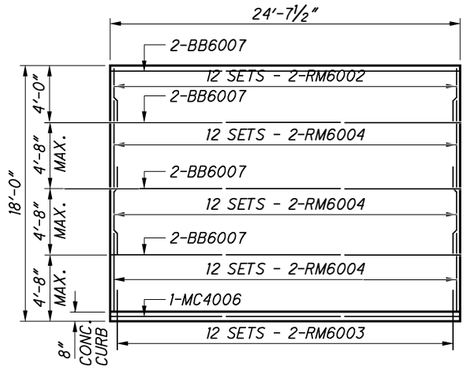

DETAIL 6 SOUTH WALL

SEE SHEET 59/296 FOR LOCATION
LOOKING SOUTH

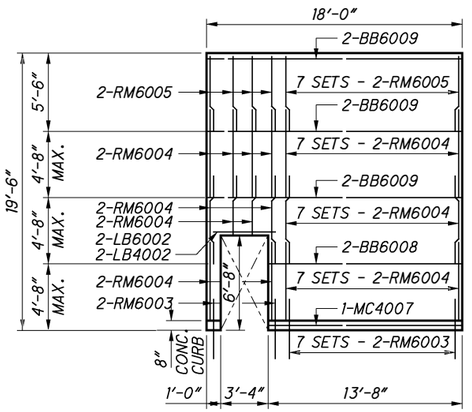

12" CMU WALL AT STAIR ST-3

SEE SHEET 28/296 FOR LOCATION
LOOKING SOUTH

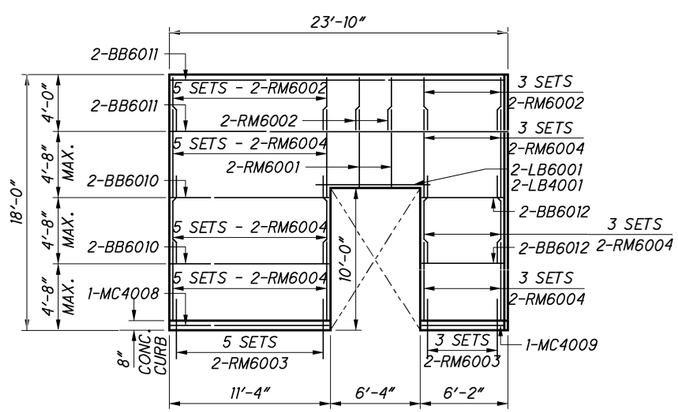

8" CMU EAST WALL

SEE SHEET 27/296 FOR LOCATION
LOOKING WEST

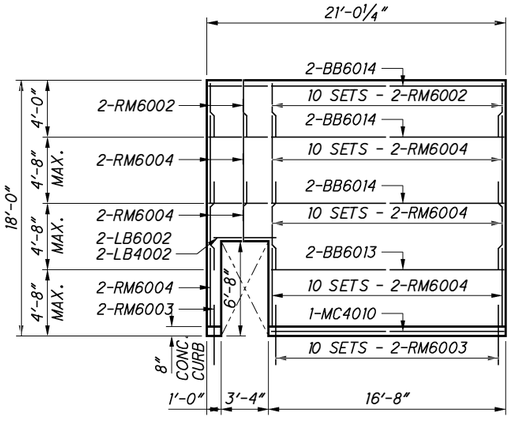

8" CMU WEST WALL

SEE SHEET 27/296 FOR LOCATION
LOOKING WEST

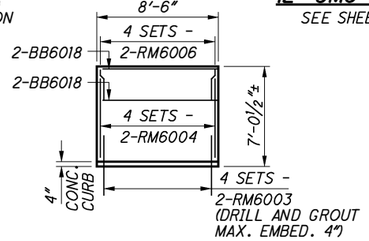

12" CMU WEST WALL AT EXISTING UNIT 18

SEE SHEET 32/296 FOR LOCATION
LOOKING EAST

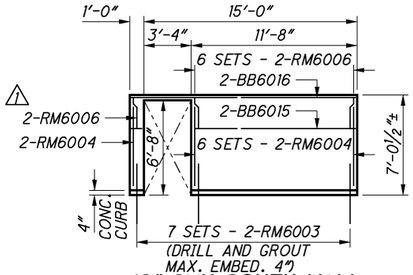

12" CMU SOUTH WALL AT EXISTING UNIT 17

SEE SHEET 32/296 FOR LOCATION
LOOKING NORTH

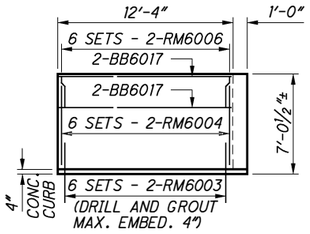

12" CMU WEST WALL AT EXISTING UNIT 17

SEE SHEET 32/296 FOR LOCATION
LOOKING EAST

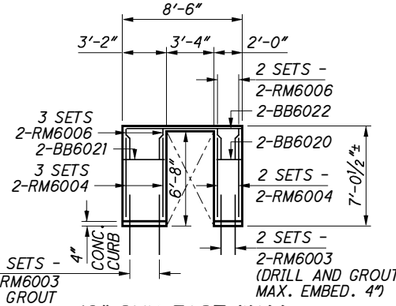

(DRILL AND GROUT MAX. EMBED. 4")

12" CMU EAST WALL AT EXISTING UNIT 18

SEE SHEET 32/296 FOR LOCATION
LOOKING NORTH

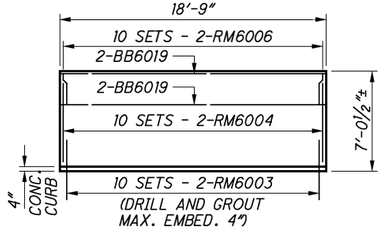

12" CMU WEST ANGLED WALL AT EXISTING UNIT 17

SEE SHEET 32/296 FOR LOCATION
LOOKING EAST

NO.	DATE	REVISION DESCRIPTION
1	10/01/15	RFI 90

LEGEND:

CMU	- CONCRETE MASONRY UNIT
CONC.	- CONCRETE
EMBED.	- EMBEDMENT
MAX.	- MAXIMUM
MIN.	- MINIMUM
No.	- NUMBER
REQ'D	- REQUIRED

DESIGN AGENCY
HATCH MOTT MacDONALD
18013 CLEVELAND PKWY.
SUITE 200
CLEVELAND, OH 44135

DESIGNED	DRAWN	REVIEWED	DATE
BTF	JMS	MAR	10/20/14
CHECKED	REVISED	STRUCTURE FILE NUMBER	
KTO		3106578	

STRUCTURAL-VENTILATION ROOM-SECTIONS AND DETAILS-7 OF 14
BRIDGE NO. HAM-71-0134
I-71 LYTLE TUNNEL UNDER LYTLE PARK

HAM-71-01.34
PID No. 87268

61/296
319/555

c:\pwworking\hmm\external\pre47802\dms72783\071_0134CTS024.dgn 10/5/2015 9:51:47 AM PRE47802

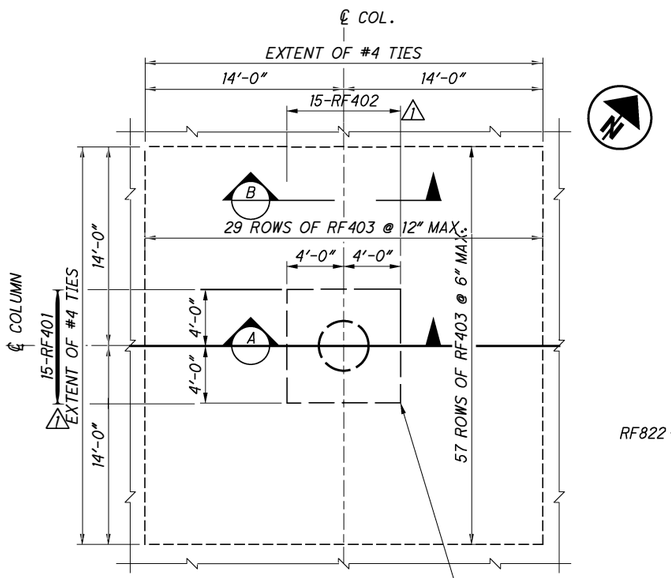

ENLARGED PLAN

SEE SHEET 30/296 FOR LOCATION

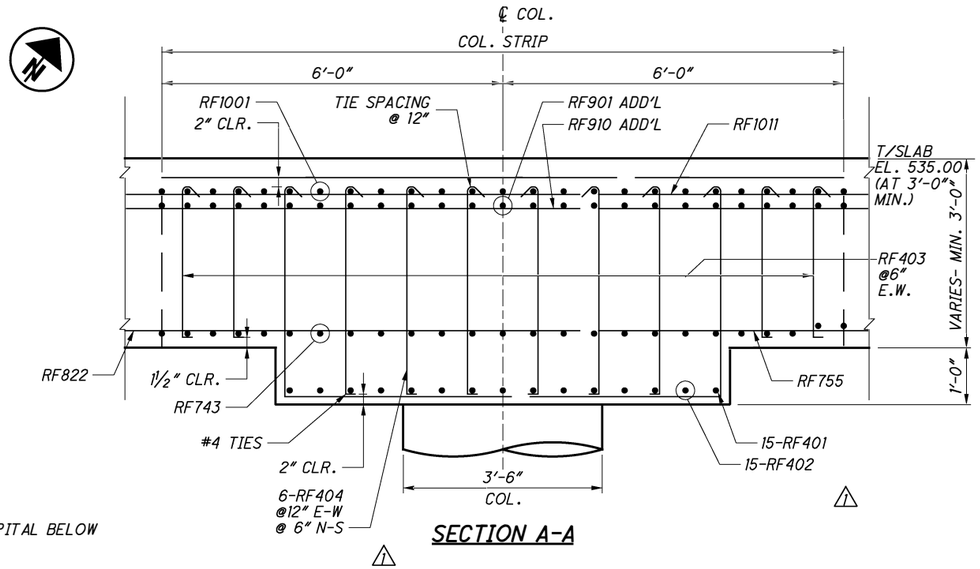

SECTION A-A

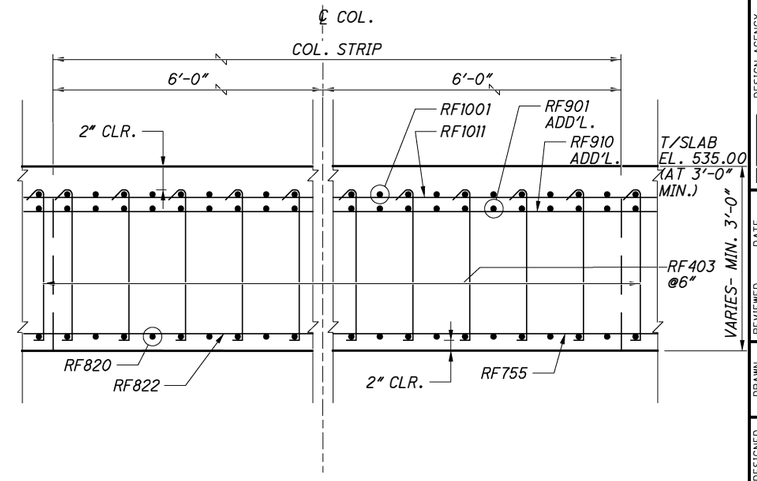

SECTION B-B

SECTION C-C

SEE SHEET 53/296 54/296 FOR LOCATION

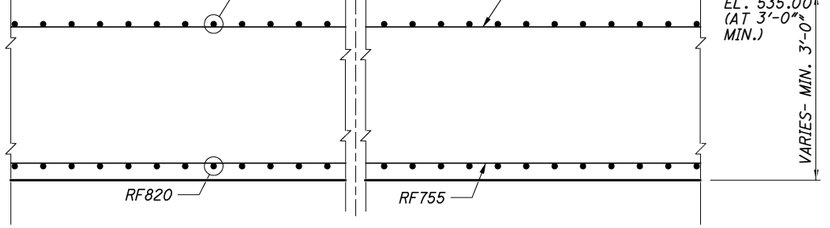

SECTION D-D

SEE SHEET 53/296 54/296 FOR LOCATION

SECTION E-E

SEE SHEET 53/296 54/296 FOR LOCATION

SECTION F-F

SEE SHEET 53/296 54/296 FOR LOCATION

LEGEND:

ADD'L.	- ADDITIONAL
COL.	- COLUMN
CLR.	- CLEARANCE
E.W.	- EACH WAY
E-W	- EAST - WEST
EL.	- ELEVATION
N-S	- NORTH - SOUTH
T/	- TOP OF
TYP.	- TYPICAL

NO.	DATE	REVISION DESCRIPTION
1	10/01/15	RFI 89

DESIGN AGENCY
HATCH MOTT MacDONALD
18013 CLEVELAND PKWY.
SUITE 200
CLEVELAND, OH 44135

DESIGNED	DRAWN	REVIEWED	DATE
BTF	JMS	MAR	10/20/14
CHECKED	REVISED	STRUCTURE FILE NUMBER	
KTO		3106578	

STRUCTURAL-VENTILATION ROOM-SECTIONS AND DETAILS-8 OF 14

BRIDGE NO. HAM-71-0134
I-71 LYTLE TUNNEL UNDER LYTLE PARK

HAM-71-01.34
PID No. 87268

62/296

320
555

c:\pwworking\hmm\external\pre47802\dms72783\071_0134CTS012.dgn 10/5/2015 9:35:18 AM PRE47802

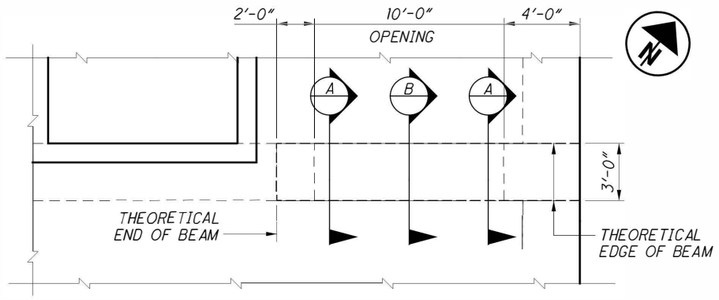

PLAN - BEAM 1

SEE SHEET 29/296 FOR LOCATION

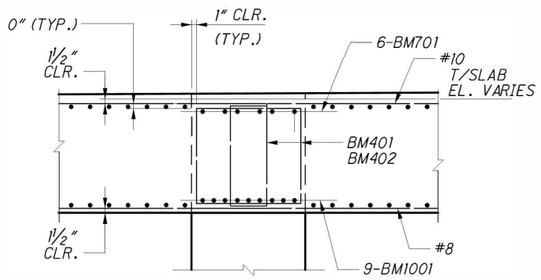

SECTION A-A

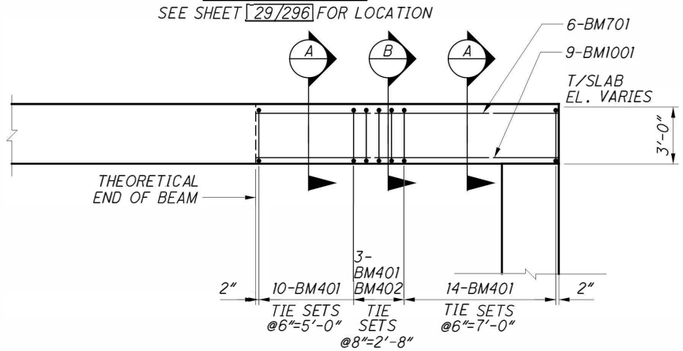

ELEVATION - BEAM 1

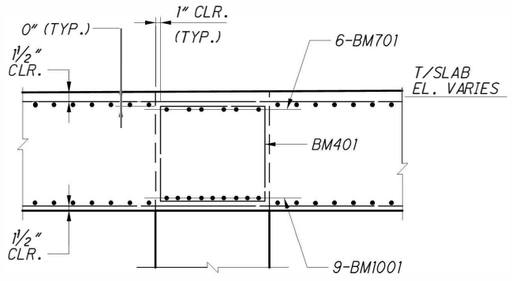

SECTION B-B

LEGEND:

CLR.	- CLEAR
COL.	- COLUMN
EL.	- ELEVATION
SIM.	- SIMILAR
T/	- TOP OF
TYP.	- TYPICAL

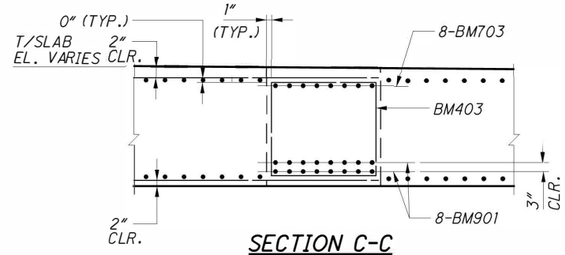

SECTION C-C

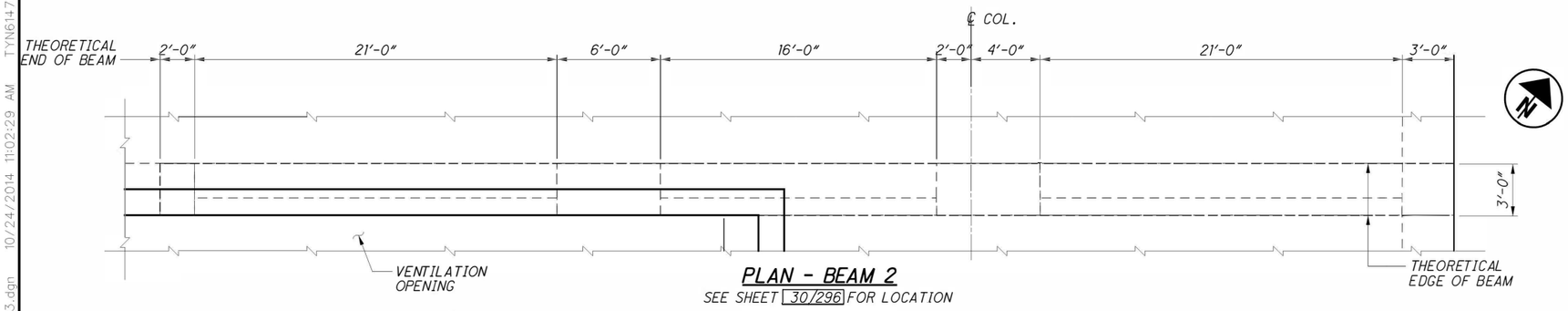

PLAN - BEAM 2

SEE SHEET 30/296 FOR LOCATION

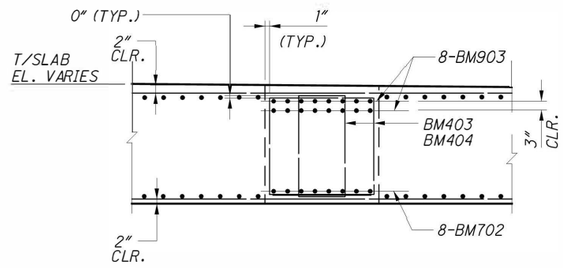

SECTION D-D

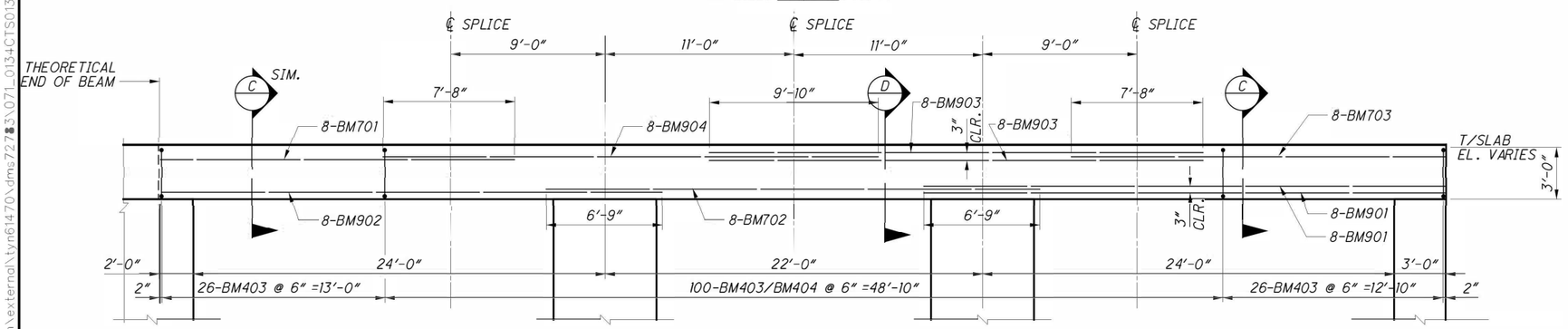

ELEVATION - BEAM 2

DESIGN AGENCY
HATCH MOTT MacDONALD
18013 CLEVELAND PKWY.
SUITE 200
CLEVELAND, OH 44135

DESIGNED BTF | DRAWN JMS | REVIEWED MAR | DATE 10/20/14 | CHECKED KTO | REVISED | STRUCTURE FILE NUMBER 3106578

STRUCTURAL-VENTILATION ROOM-SECTIONS AND DETAILS-9 OF 14

BRIDGE NO. HAM-71-0134
I-71 LYTLE TUNNEL UNDER LYTLE PARK

HAM-71-01.34
PID No. 87268

c:\pwworking\hmm\external\tyn61470\dms72783\071_0134CTS013.dgn 10/24/2014 11:02:29 AM TYN61470

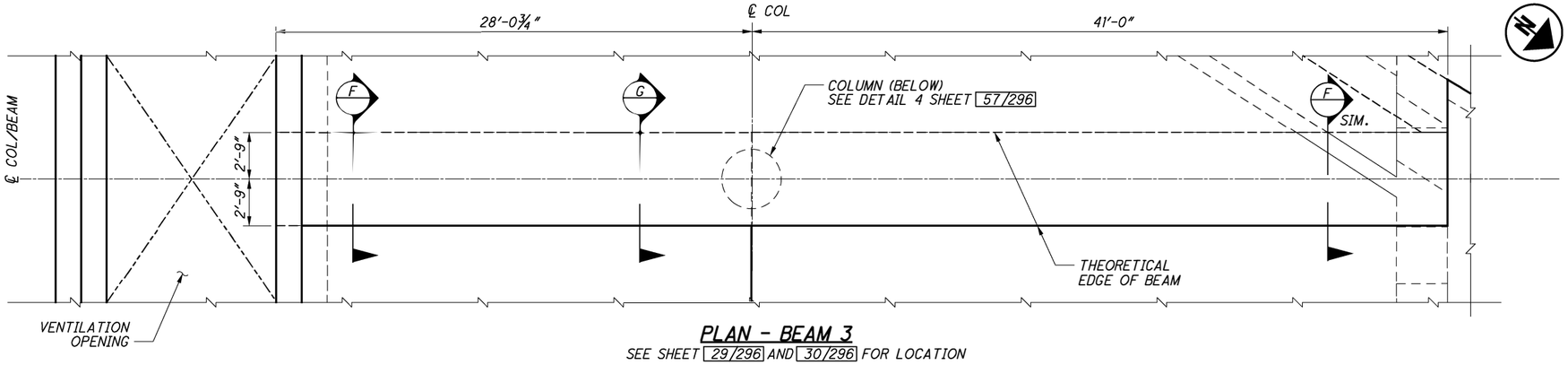

PLAN - BEAM 3

SEE SHEET 29/296 AND 30/296 FOR LOCATION

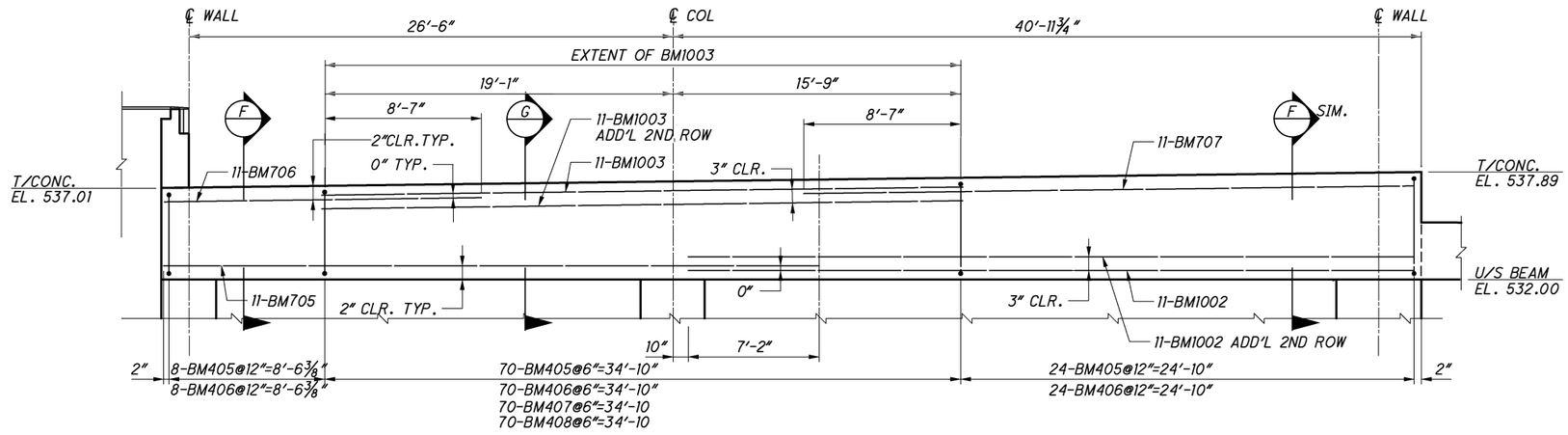

ELEVATION - BEAM 3

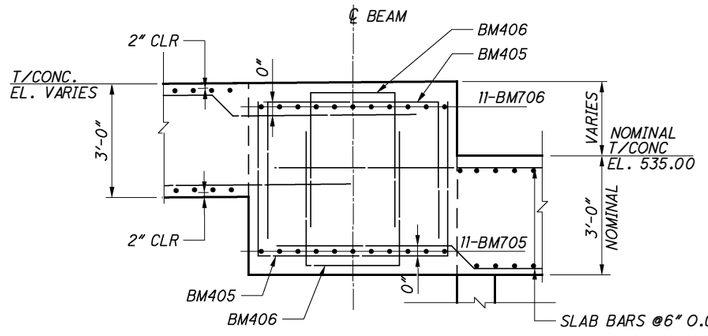

SECTION F-F

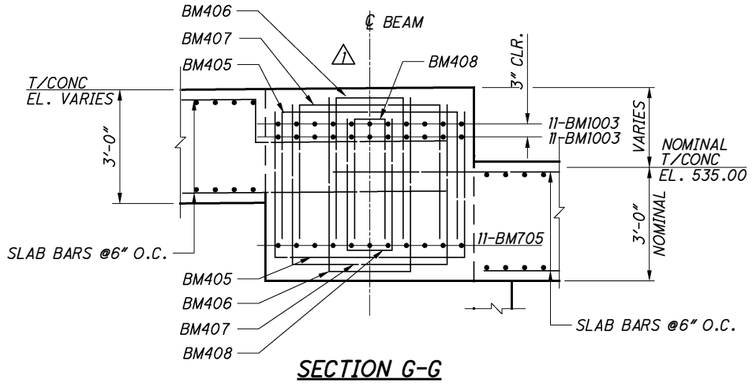

SECTION G-G

LEGEND:

ADD'L	- ADDITIONAL
CLR.	- CLR.
COL.	- COLUMN
CONC.	- CONCRETE
EL.	- ELEVATION
SIM.	- SIMILAR
T/	- TOP OF
TYP.	- TYPICAL
U/S	- UNDER SIDE

NOTES:

1. SEE SHEET 29/296 AND 30/296 FOR LOCATION.

NO.	DATE	REVISION DESCRIPTION
1	10/01/15	RFI 83

DESIGN AGENCY
HATCH MOTT MacDONALD
18013 CLEVELAND PKWY.
SUITE 200
CLEVELAND, OH 44135

DESIGNED	DRAWN	REVIEWED	DATE
BTF	JMS	MAR	10/20/14
CHECKED	REVISED	STRUCTURE FILE NUMBER	
KTO		3106578	

STRUCTURAL-VENTILATION ROOM-SECTIONS AND DETAILS-10 OF 14
BRIDGE NO. HAM-71-0134
I-71 LYTLE TUNNEL UNDER LYTLE PARK

HAM-71-01.34
PID No. 87268

64/296

322
555

c:\pwworking\hmm\external\pre47802\dms72783\071_0134CTS014.dgn 10/1/2015 3:12:25 PM PRE47802

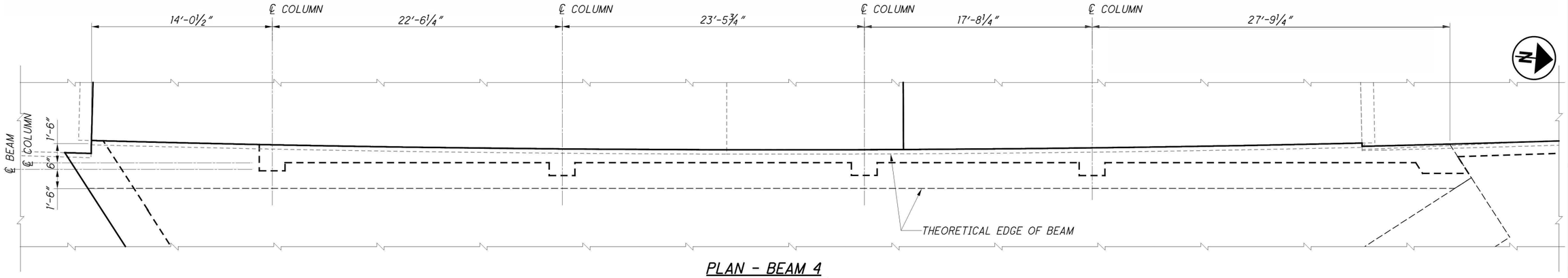

PLAN - BEAM 4

SEE SHEET 29/296 AND 30/296 FOR LOCATION

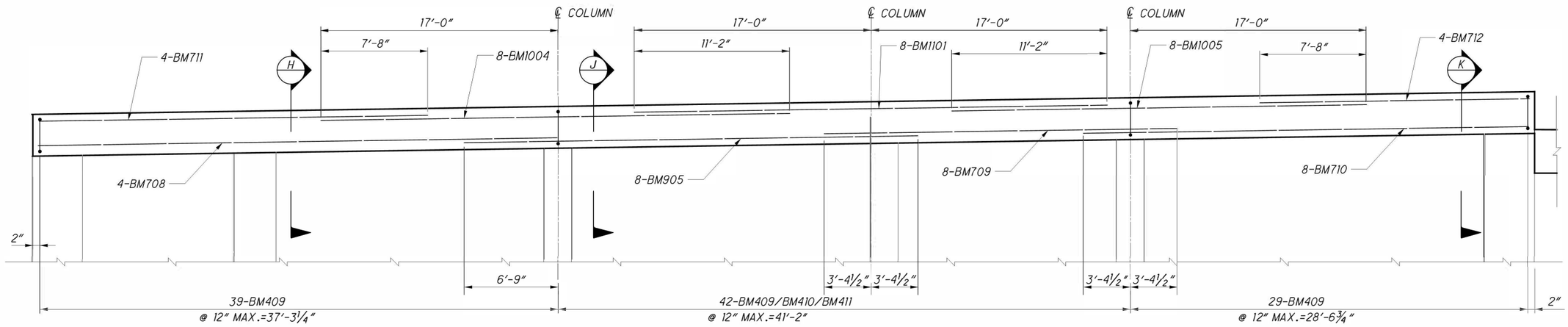

ELEVATION - BEAM 4

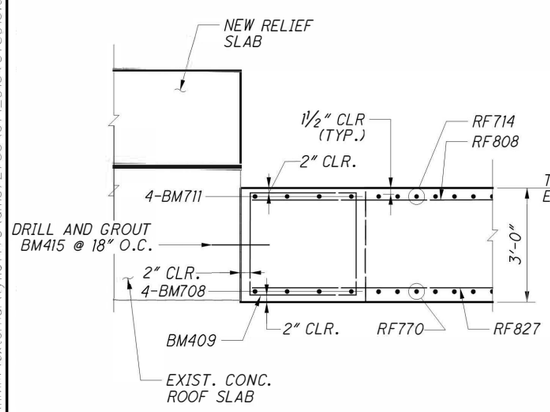

SECTION H-H

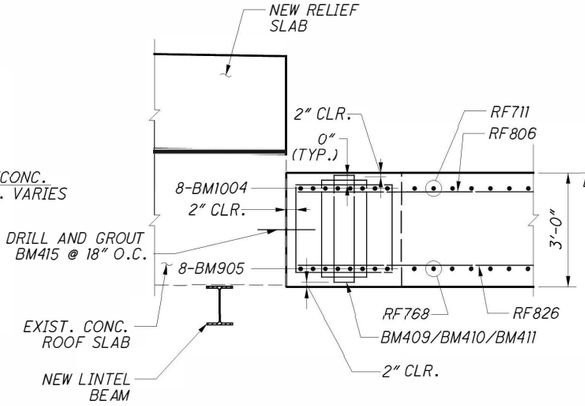

SECTION J-J

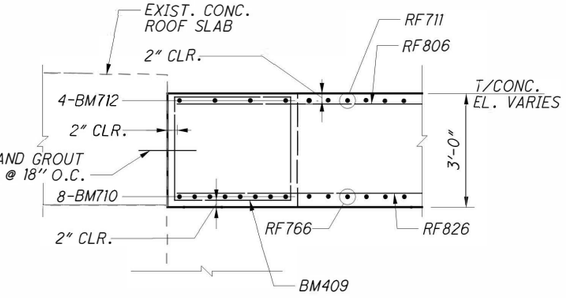

SECTION K-K

LEGEND:

CLR.	- CLEAR
CONC.	- CONCRETE
EL.	- ELEVATION
EXIST.	- EXISTING
T/	- TOP OF
TYP.	- TYPICAL

DESIGN AGENCY
HATCH MOTT MacDONALD
18013 CLEVELAND PKWY.
SUITE 200
CLEVELAND, OH 44135

DESIGNED	DRAWN	REVIEWED	DATE
BTF	JMS	MAR	10/20/14
CHECKED	REVISED	STRUCTURE FILE NUMBER	
KTO		3106578	

STRUCTURAL-VENTILATION ROOM-SECTIONS AND DETAILS-11 OF 14
BRIDGE NO. HAM-71-0134
I-71 LYTLE TUNNEL UNDER LYTLE PARK

HAM-71-01.34
PID No. 87268

c:\pwworking\hmm\externo\tyn61470\dms72783\071_0134CTS015.dgn 10/24/2014 11:02:35 AM TYN61470

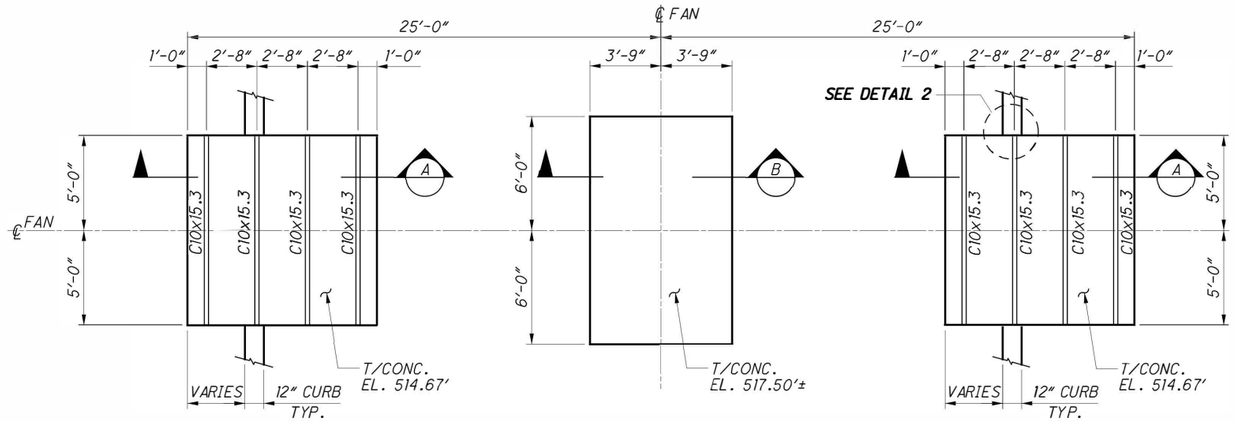

DETAIL - 1
TYPICAL FAN SUPPORT FOUNDATIONS PLAN

SEE SHEET 27/296 FOR LOCATION

NOTES:

1. ALL STRUCTURAL STEEL, INCLUDING BASE PLATES AND CONNECTIONS IS INCLUDED FOR PAYMENT IN ITEM 513 - STRUCTURAL STEEL MEMBERS, LEVEL UF, AS PER PLAN.

LEGEND:

CMU	- CONCRETE MASONRY UNIT
CONC.	- CONCRETE
EA.	- EACH
EL.	- ELEVATION
T/	- TOP OF
TYP.	- TYPICAL
U/S	- UNDERSIDE

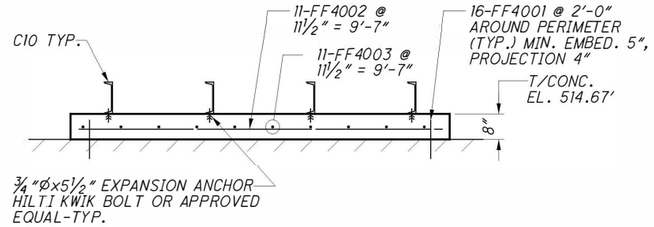

SECTION A-A

SEE SHEET 27/296 FOR LOCATION

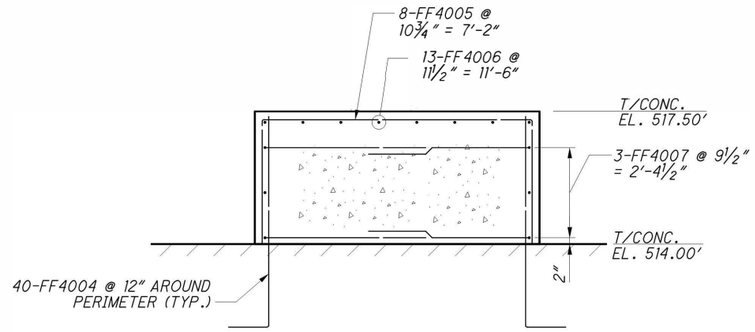

SECTION B-B

SEE SHEET 27/296 FOR LOCATION

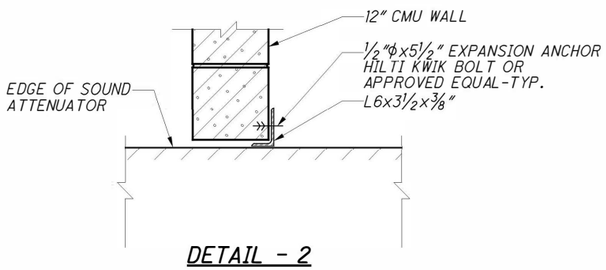

DETAIL - 2

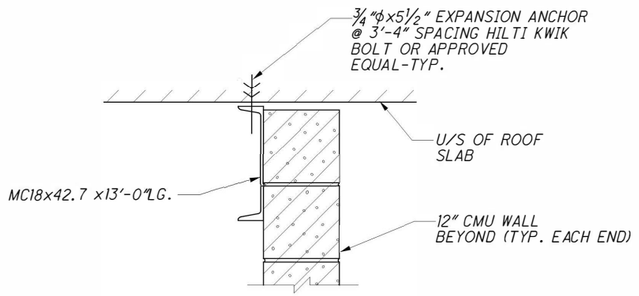

DETAIL - 3

SEE SHEET 29/296 FOR LOCATION

DESIGN AGENCY
HATCH MOTT MacDONALD
18013 CLEVELAND PKWY.
SUITE 200
CLEVELAND, OH 44135

DESIGNED BTF | DRAWN MJF | REVIEWED MAR | DATE 10/20/14 | CHECKED KTO | REVISED | STRUCTURE FILE NUMBER 3106578

STRUCTURAL-VENTILATION ROOM-SECTIONS AND DETAILS-12 OF 14

BRIDGE NO. HAM-71-0134
I-71 LYTLE TUNNEL UNDER LYTLE PARK

HAM-71-01.34
PID No. 87268

c:\pwworking\hmm\external\tyn61470\dms727873\071_0134CTS017.dgn 10/24/2014 11:02:37 AM TYN61470

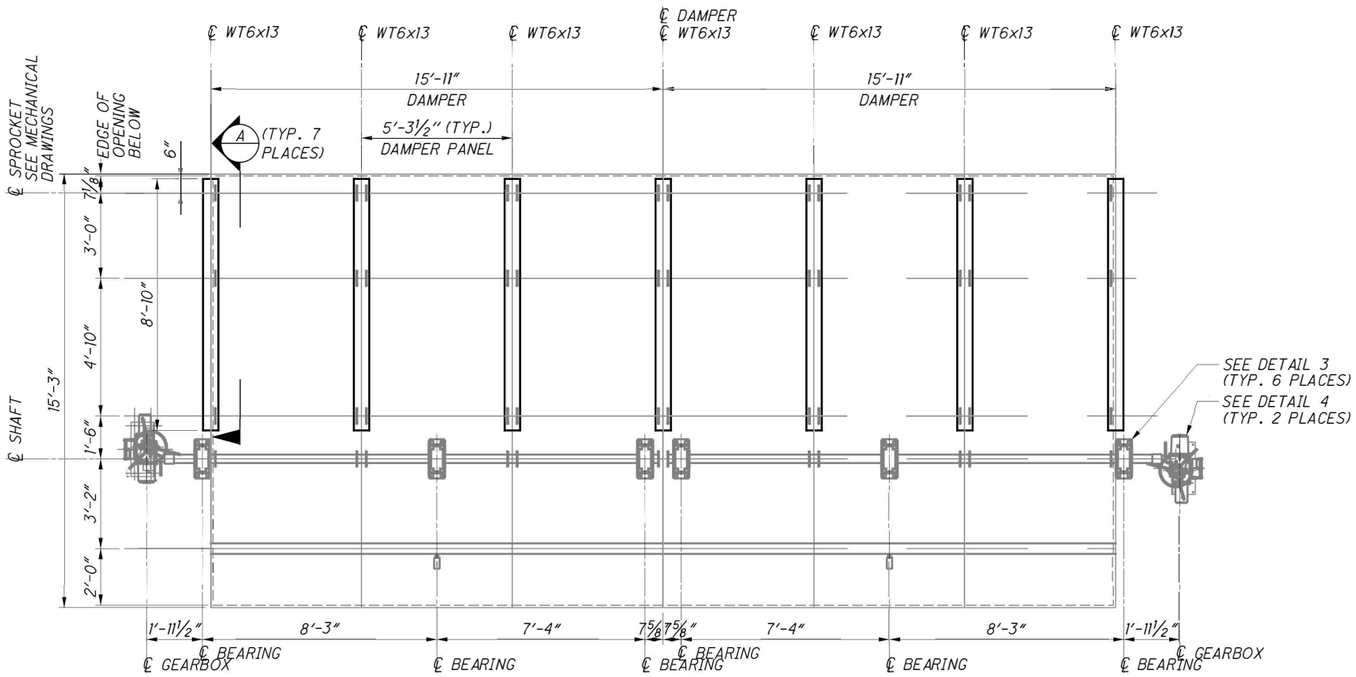

NB TUNNEL - COFFIN DAMPER REFLECTED CEILING PLAN

SEE SHEET 143/296 FOR LOCATION

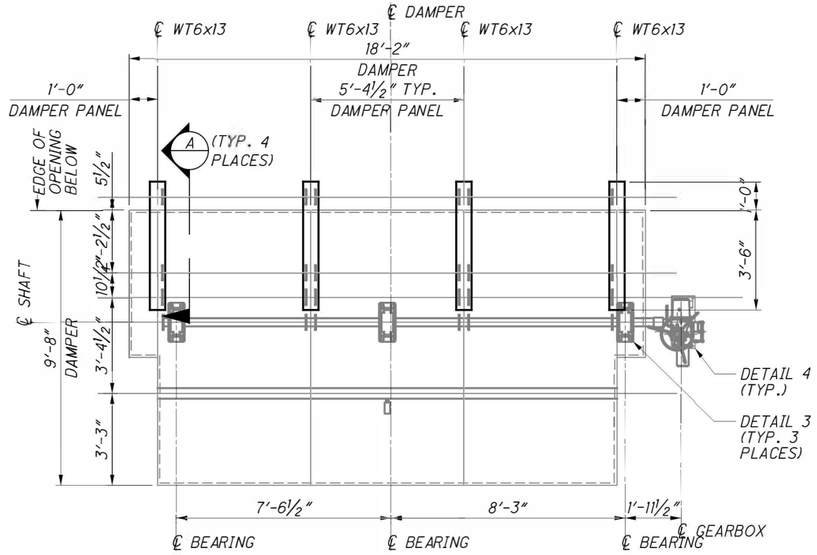

COFFIN DAMPER REFLECTED CEILING PLAN

SEE SHEET 143/296 FOR LOCATION

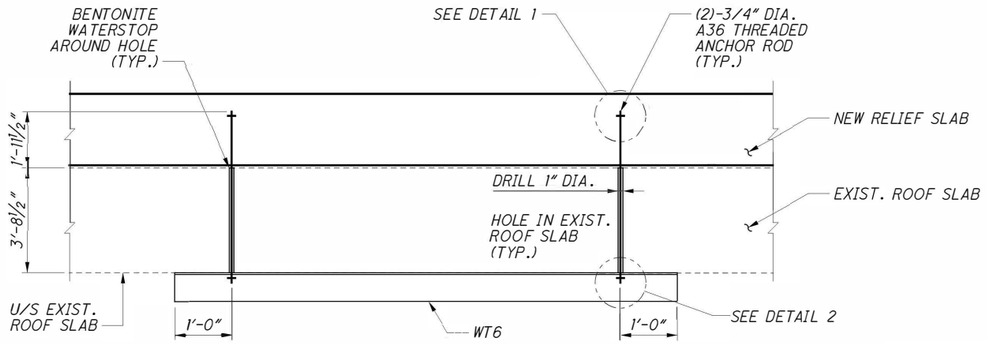

SECTION A-A

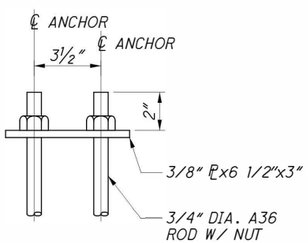

DETAIL 1

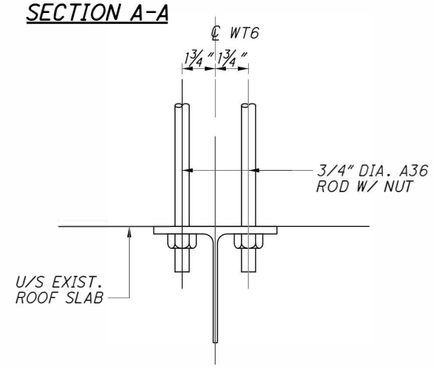

DETAIL 2

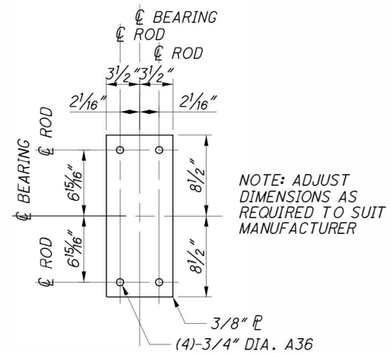

DETAIL 3

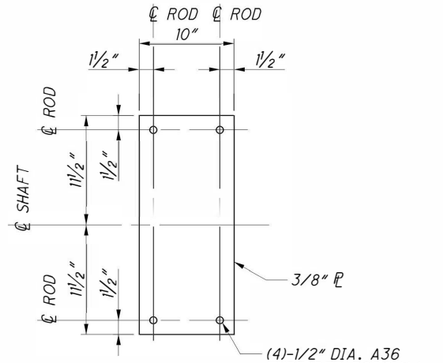

DETAIL 4

LEGEND:

DIA.	- DIAMETER
EXIST.	- EXISTING
MISC.	- MISCELLANEOUS
℄	- PLATE
SIM.	- SIMILAR
TYP.	- TYPICAL
U/S	- UNDERSIDE
W/	- WITH

NOTES:

1. COORDINATE WITH MECHANICAL DRAWINGS FOR INSTALLATION LOCATIONS AND ANCHOR LAYOUT AND SIZES.
2. ALL STRUCTURAL STEEL, INCLUDING BASE ℄S AND CONNECTIONS IS INCLUDED FOR PAYMENT IN ITEM 513 - STRUCTURAL STEEL MEMBERS, LEVEL UF, AS PER PLAN.
3. BENTONITE WATERSTOP IS INCLUDED FOR PAYMENT IN ITEM 530-SPECIAL-STRUCTURE, MISC.: BENTONITE WATERSTOP.

c:\pwworking\hmm\external\tyn61470\dms72783\071_0134CTS018.dgn 10/24/2014 11:02:48 AM TYN61470

DESIGN AGENCY
HATCH MOTT MacDONALD
18013 CLEVELAND PKWY.
SUITE 200
CLEVELAND, OH 44135

DESIGNED BTF
DRAWN JMS
CHECKED KTO
REVIEWED MAR
DATE 10/20/14
REVISED
STRUCTURE FILE NUMBER 3106578

STRUCTURAL-VENTILATION ROOM-SECTIONS AND DETAILS-13 OF 14

BRIDGE NO. HAM-71-0134
I-71 LYTLE TUNNEL UNDER LYTLE PARK

HAM-71-01.34
PID No. 87268

pw:\\pirnspwise.hmmg.ccipw_external\Documents\246924-ODOT I-71 TUNNEL REHAB\Design\HAM\87268\Structures\HAM071_0134C\Sheets\071_0134CMD030.dgn 3/23/2016 9:37:27 AM ced27612

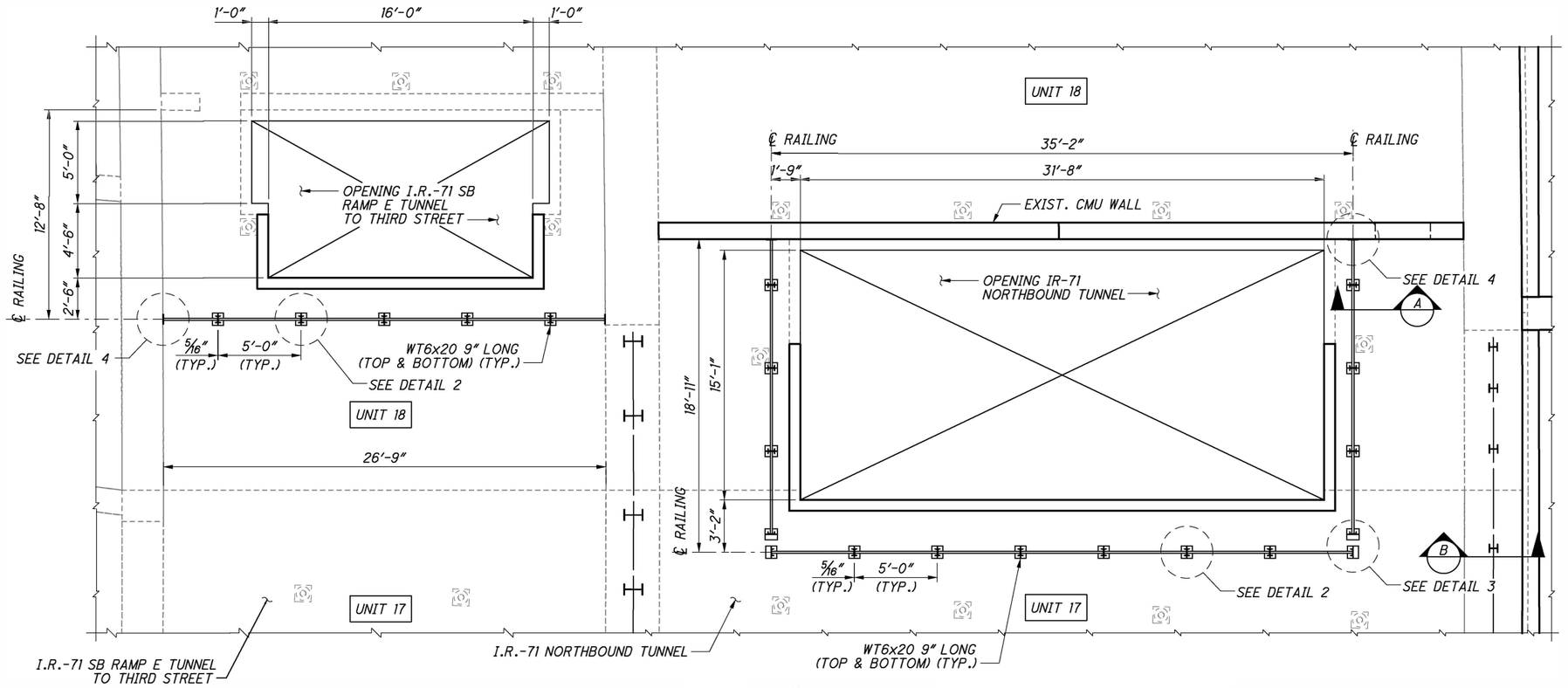

RAILING PLAN

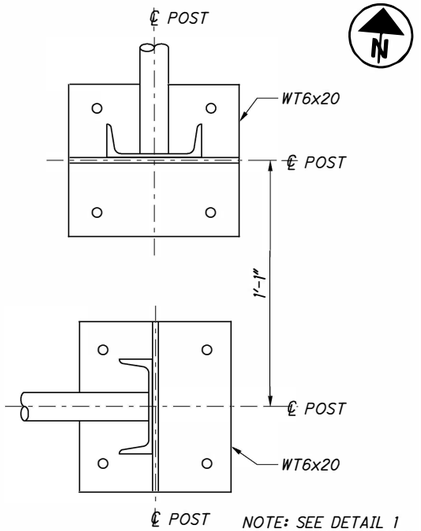

NOTE: SEE DETAIL 1 FOR ANCHOR DETAILS NOT SHOWN.

DETAIL 3

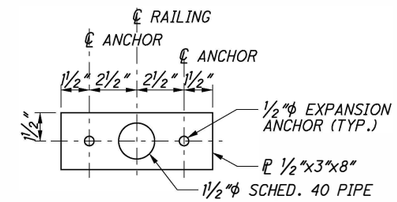

DETAIL 4

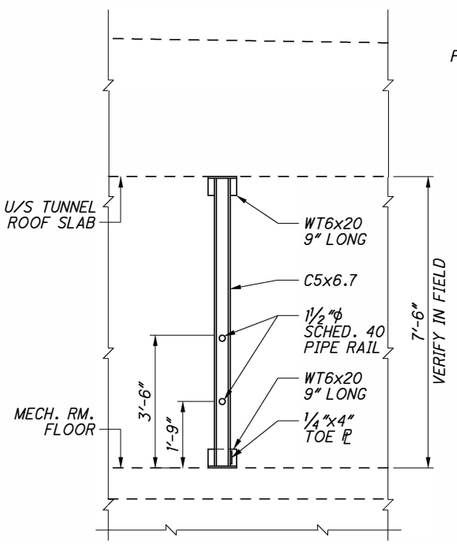

SECTION A-A

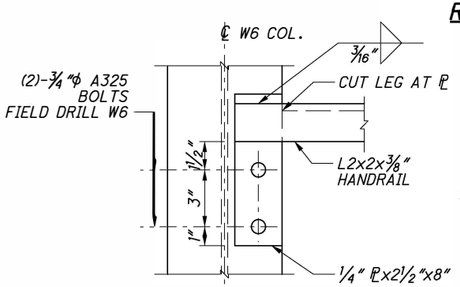

DETAIL 1

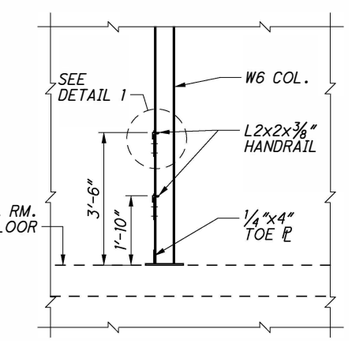

SECTION B-B

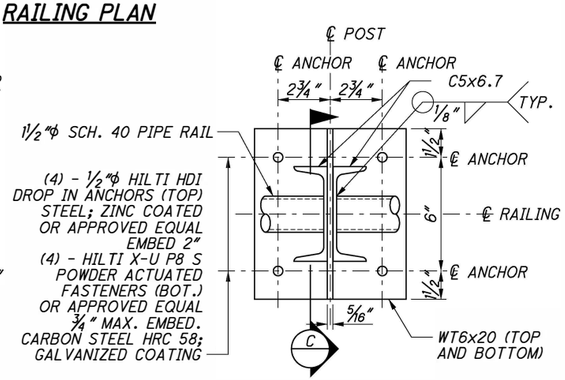

DETAIL 2

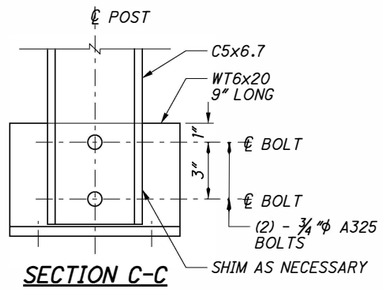

SECTION C-C

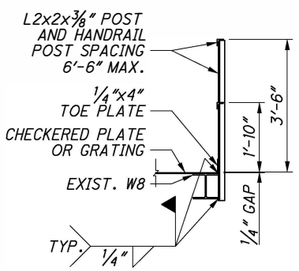

TYPICAL HANDRAIL DETAIL AT EQUIPMENT ROOM BETWEEN RAMP E AND SB TUNNEL

NOTES:

1. COORDINATE LOCATION OF POSTS WITH COFFIN DAMPER EQUIPMENT SUPPORTS.
2. ALL STRUCTURAL STEEL, INCLUDING ℄'S AND CONNECTIONS IS INCLUDED FOR PAYMENT IN ITEM 513 - STRUCTURAL STEEL MEMBERS, LEVEL UF, AS PER PLAN.
3. STRUCTURAL STEEL WT-SHAPES - ASTM A709 GRADE 50 - YIELD STRENGTH 50 KSI. STEEL ANGLES, CHANNELS, AND PLATES - ASTM A36 - YIELD STRENGTH 36 KSI. PIPES - ASTM A501 - YIELD STRENGTH 36 KSI.
4. ALL RAILING STEEL SHALL BE PAINTED YELLOW.

LEGEND:

BOT.	- BOTTOM
CMU	- CONCRETE MASONRY UNIT
COL.	- COLUMN
EXIST.	- EXISTING
MECH. RM.	- MECHANICAL ROOM
TYP.	- TYPICAL
U/S	- UNDERSIDE
▨	- STRUCTURAL FLOOR OPENING

NO.	DATE	REVISION DESCRIPTION
1	02/22/16	RAILING (NEW SHEET)

DESIGN AGENCY
HATCH MOTT MacDONALD
1801 CLEVELAND PKWY.
SUITE 200
CLEVELAND, OH 44135

DESIGNED BTF | DRAWN JMS | CHECKED PSK | REVIEWED TCV | DATE 03/18/16 | REVISED | STRUCTURE FILE NUMBER 3106578

STRUCTURAL RAILING PLAN, SECTIONS AND DETAIL

BRIDGE NO. HAM-71-0134
I-71 LYTLE TUNNEL UNDER LYTLE PARK

HAM-71-01.34
PID No. 87268

67A/296

325A/555

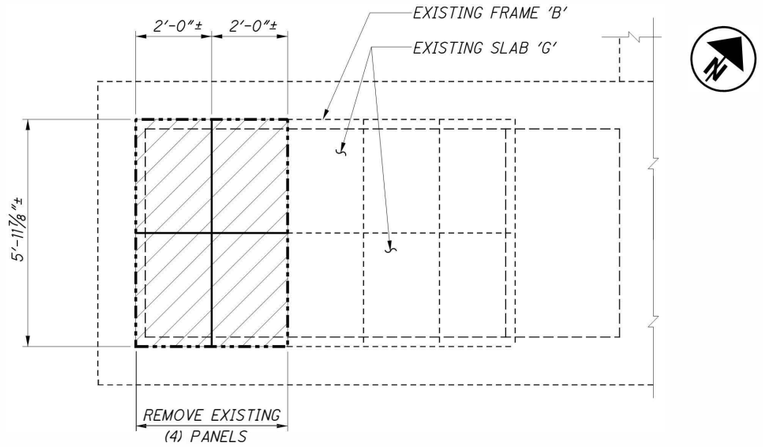

HATCH WAY - DEMOLITION PLAN

SEE SHEET 23/296 FOR LOCATION

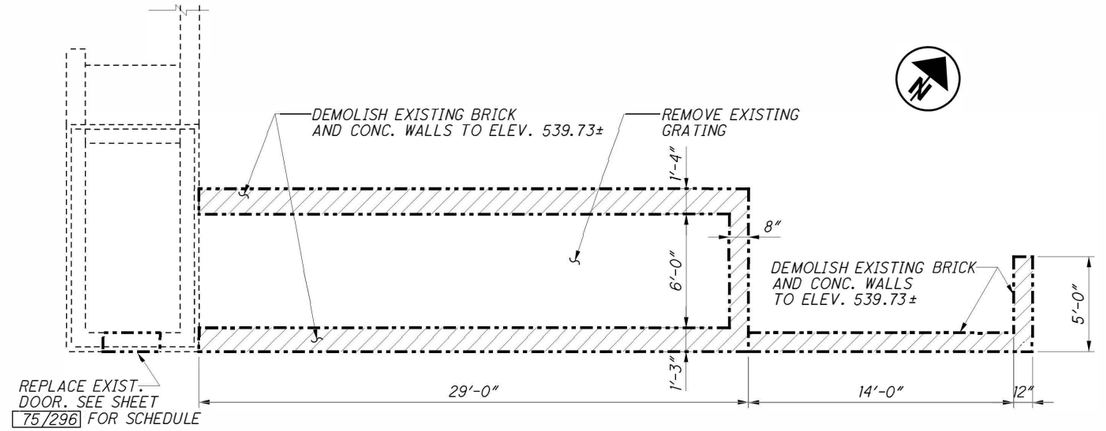

EQUIPMENT ROOM PASSAGEWAY-AIR DISCHARGE - DEMOLITION PLAN

SEE SHEET 23/296 FOR LOCATION

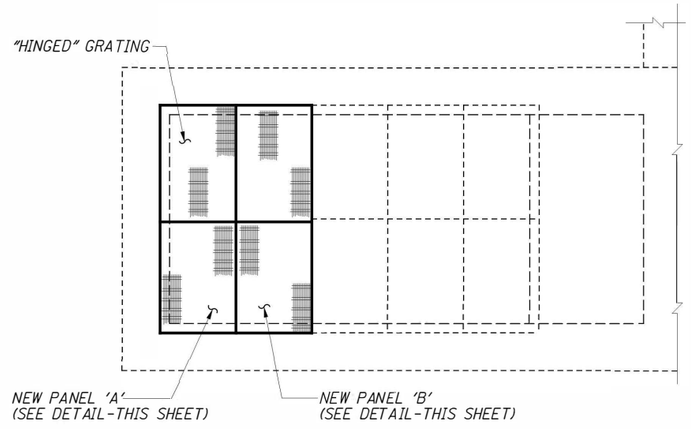

HATCH WAY - NEW PANEL(S) INSTALLATION PLAN

SEE SHEET 23/296 FOR LOCATION

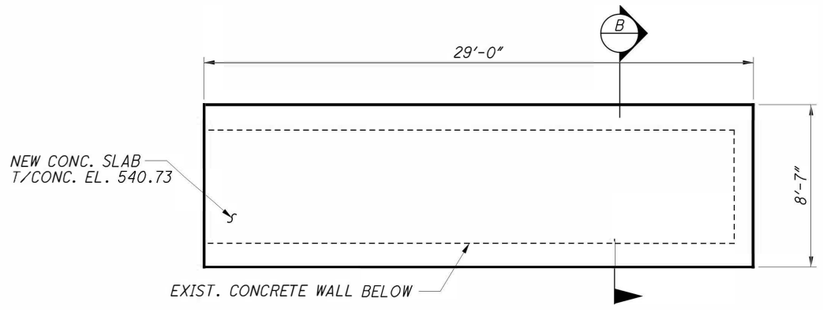

EQUIPMENT ROOM PASSAGEWAY-AIR DISCHARGE - SLAB PLAN

SEE SHEET 23/296 FOR LOCATION

NOTES:

1. ALL STRUCTURAL STEEL, INCLUDING BASE PLS AND CONNECTIONS IS INCLUDED FOR PAYMENT IN ITEM 513 - STRUCTURAL STEEL MEMBERS, LEVEL UF, AS PER PLAN.
2. GRATING IS INCLUDED FOR PAYMENT IN ITEM 530 - SPECIAL STRUCTURE, MISC.: GRATING.
3. BENTONITE WATERSTOP IS INCLUDED FOR PAYMENT IN ITEM 530-SPECIAL-STRUCTURE, MISC.: BENTONITE WATERSTOP.

LEGEND:

C/C	- CENTER TO CENTER
CONC.	- CONCRETE
ELEV.	- ELEVATION
EMBED.	- EMBEDMENT
EXIST.	- EXISTING
MAX.	- MAXIMUM
MISC.	- MISCELLANEOUS
O.C.	- ON CENTER
TYP.	- TYPICAL

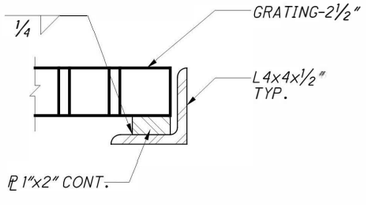

SECTION A-A

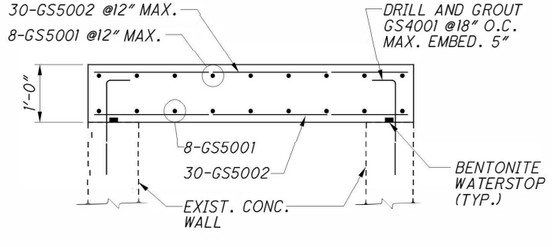

SECTION B-B

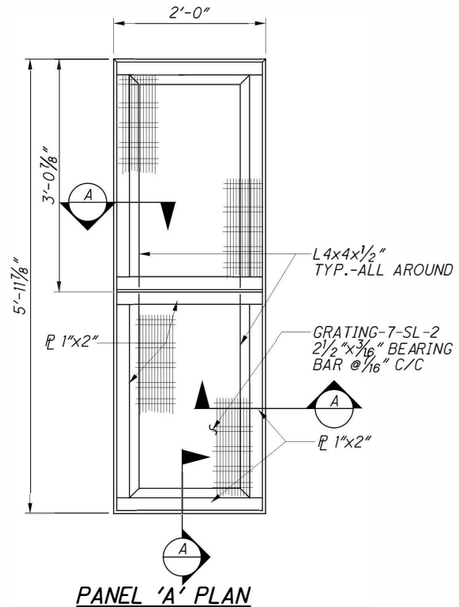

PANEL 'A' PLAN

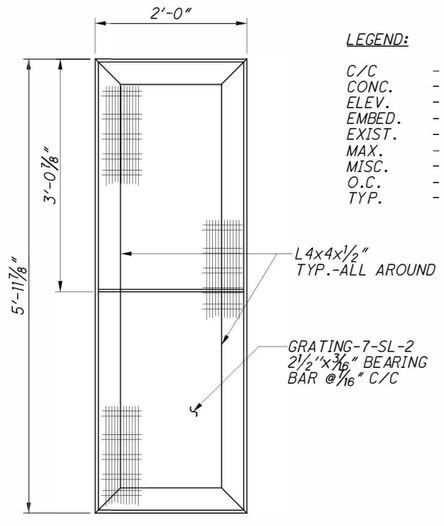

PANEL 'B' PLAN

DESIGN AGENCY
HATCH MOTT MacDONALD
18013 CLEVELAND PKWY.
SUITE 200
CLEVELAND, OH 44135

DESIGNED	DRAWN	REVIEWED	DATE
BTF	JMS	MAR	10/20/14
CHECKED	REVISED	STRUCTURE FILE NUMBER	
KTO		3106578	

STRUCTURAL-VENTILATION ROOM-SECTIONS AND DETAILS-14 OF 14

BRIDGE NO. HAM-71-0134
I-71 LYTLE TUNNEL UNDER LYTLE PARK

HAM-71-01.34
PID No. 87268

68/296
326/555

c:\pwworking\hmm\external\tyn61470\dms7278\071_0134CTS010.dgn 10/24/2014 11:02:50 AM TYN61470

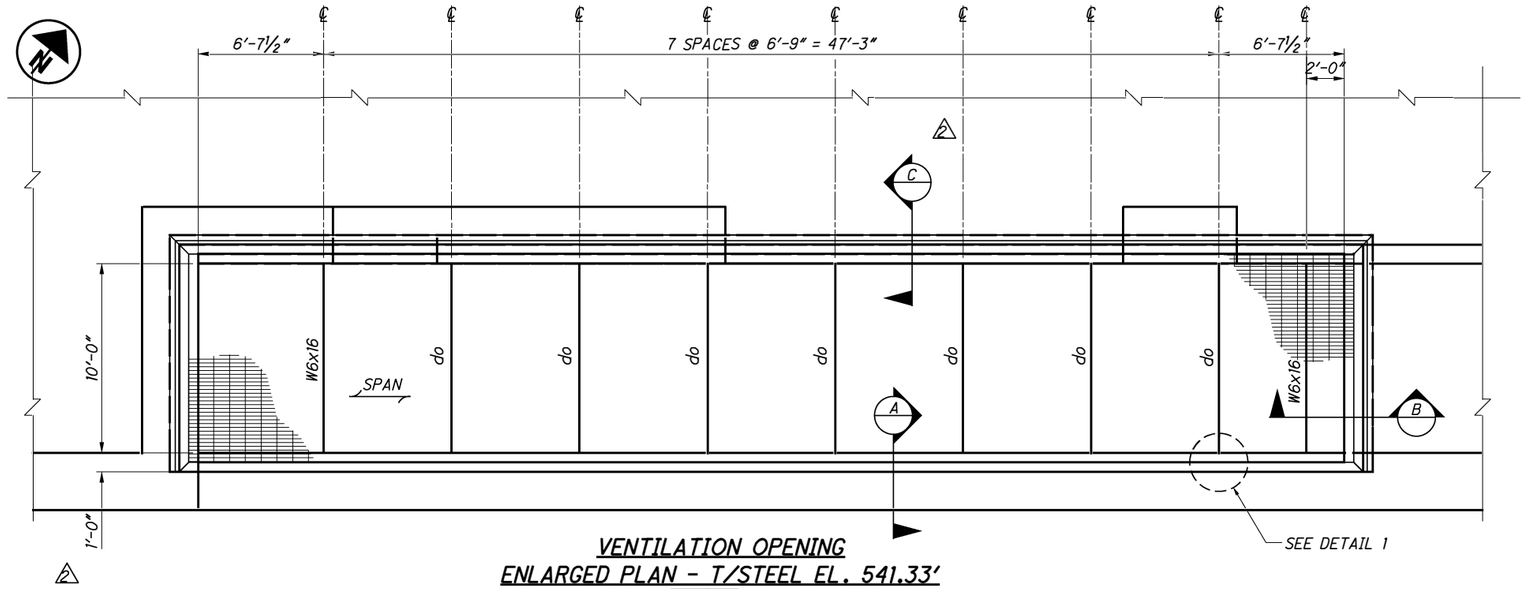

VENTILATION OPENING ENLARGED PLAN - T/STEEL EL. 541.33'

SEE SHEET 26/296 FOR LOCATION

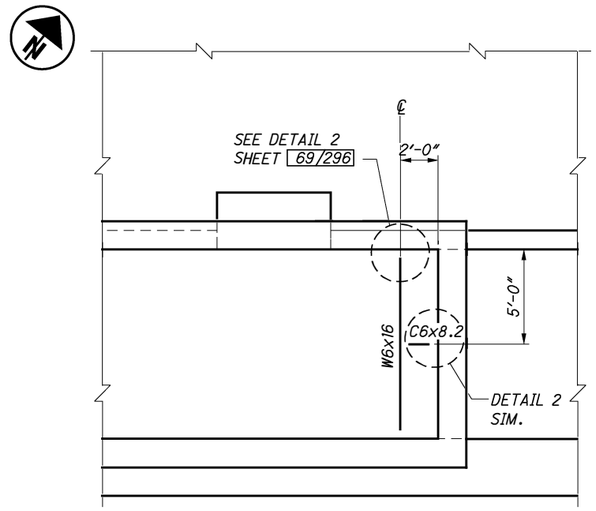

ENLARGED PLAN - T/STEEL EL. 536.83'

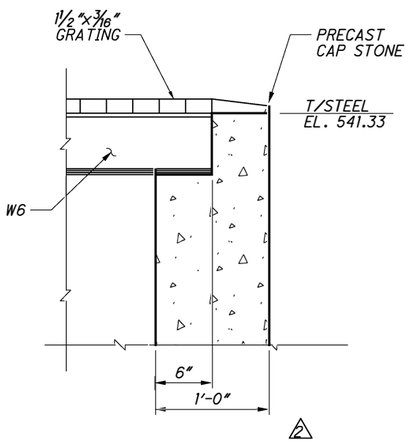

SECTION A-A

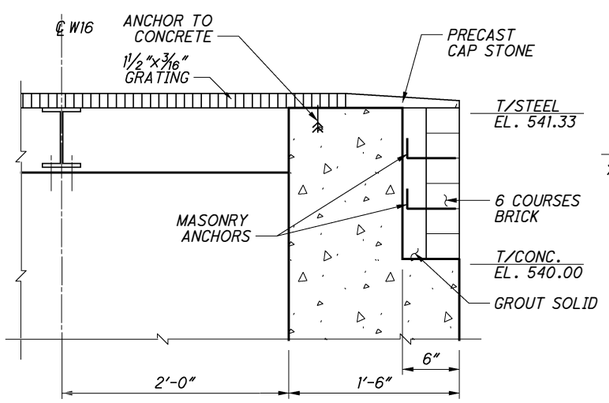

SECTION B-B

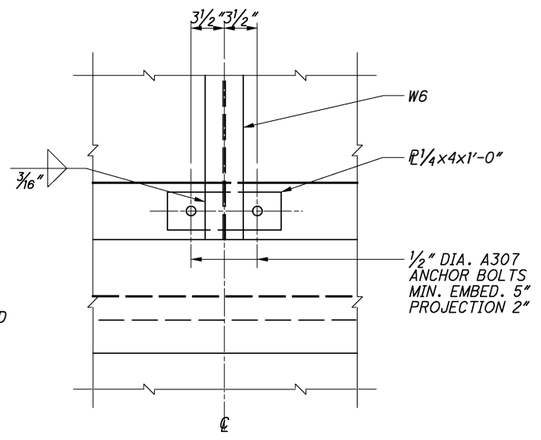

DETAIL 1

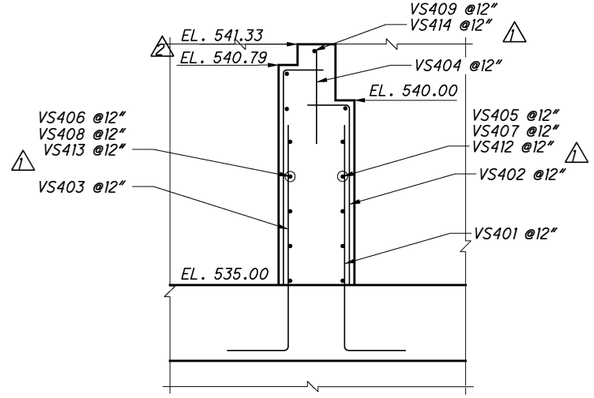

TYPICAL VENTILATION SHAFT WALL

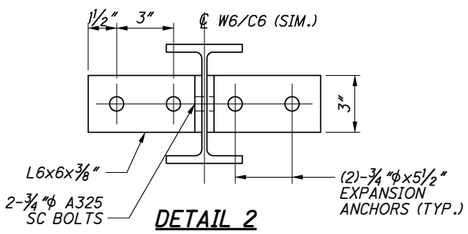

DETAIL 2

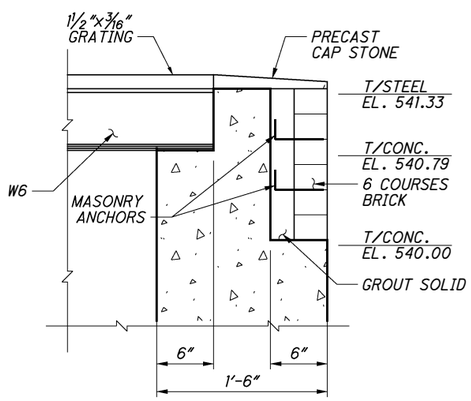

SECTION C-C

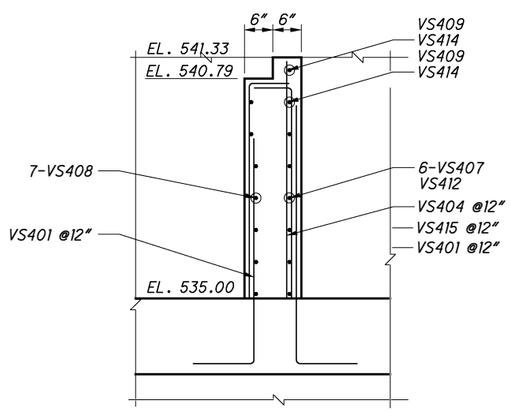

SOUTH VENTILATION SHAFT WALL

LEGEND:

CONC.	- CONCRETE
DIA.	- DIAMETER
do	- DITTO
EL.	- ELEVATION
EMBED.	- EMBEDMENT
MIN.	- MINIMUM
MISC.	- MISCELLANEOUS
℄	- PLATE
SIM.	- SIMILAR
T/	- TOP OF
TYP.	- TYPICAL

NOTES:

1. ALL STRUCTURAL STEEL, BASE ℄S, AND CONNECTIONS IS INCLUDED FOR PAYMENT IN ITEM 513 - STRUCTURAL STEEL MEMBERS, LEVEL UF, AS PER PLAN.
2. GRATING AND CONNECTIONS IS INCLUDED FOR PAYMENT IN ITEM 530-SPECIAL-STRUCTURE, MISC.: GRATING.
3. BRICK MASONRY SHALL BE INCLUDED FOR PAYMENT IN ITEM 530-SPECIAL-STRUCTURE, MISC.: BRICK MASONRY WALL.

NO.	DATE	REVISION DESCRIPTION
2	02/01/16	VENTILATION OPENING WALL WIDTH DECREASE
1	01/22/16	RFI 112

DESIGN AGENCY
HATCH MOTT MacDONALD
18013 CLEVELAND PKWY.
SUITE 200
CLEVELAND, OH 44135

DESIGNED BTF | DRAWN JMS | CHECKED KTO | REVIEWED MAR | DATE 10/20/14 | REVISED | STRUCTURE FILE NUMBER 3106578

STRUCTURAL DETAILS - GRATING PLAN AND SECTIONS

BRIDGE NO. HAM-71-0134
I-71 LYTLE TUNNEL UNDER LYTLE PARK

HAM-71-01.34
PID No. 87268

69/296

327/555

c:\pwworking\hmm\external\pre47802\dms72783\071_0134CMD012.dgn 2/3/2016 11:19:33 AM PRE47802

c:\pwworking\hmm\external\tyn61470\dms72783\071_0134CMD019.dgn 10/24/2014 11:02:56 AM TYN61470

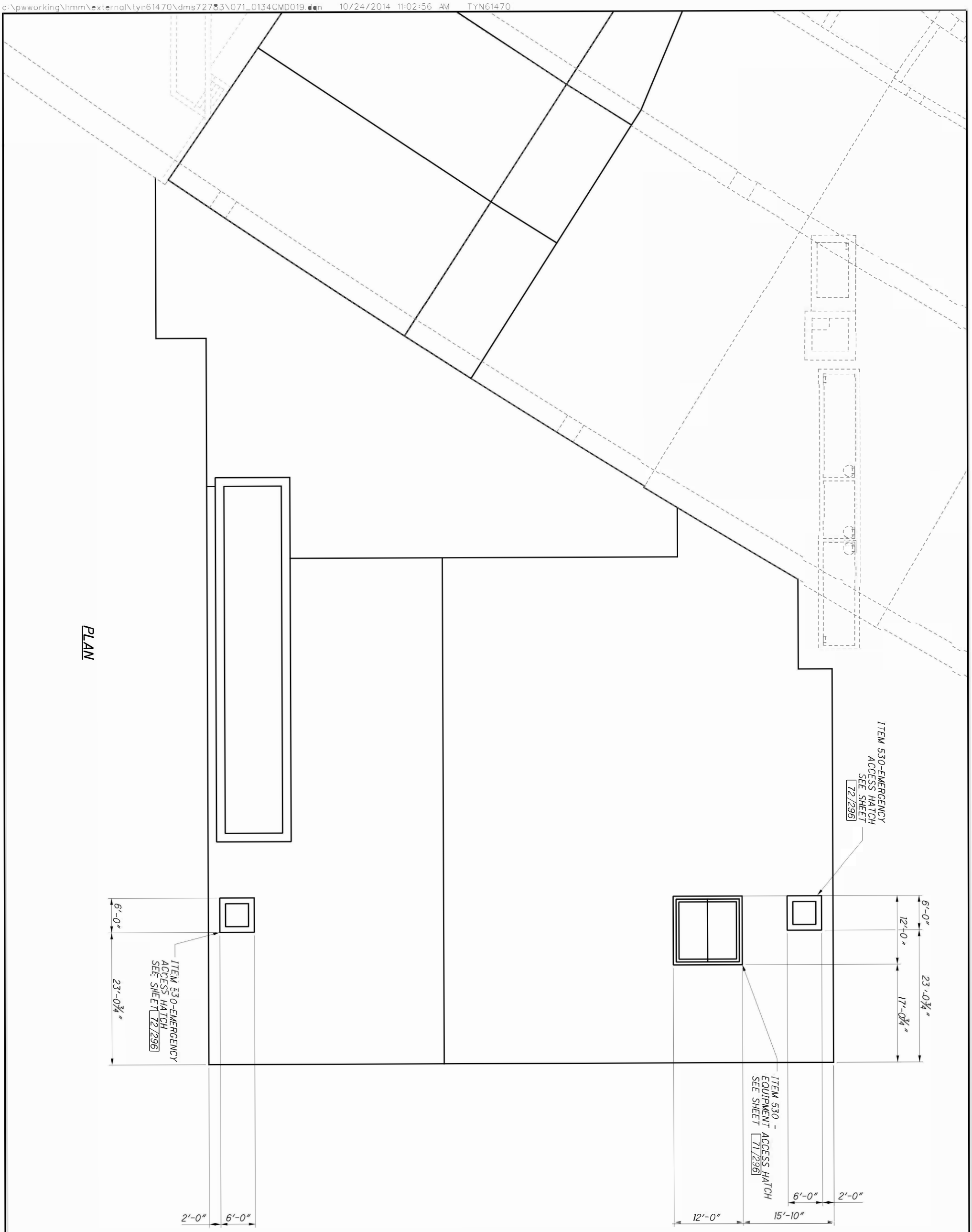

PLAN

HAM-71-01.34

PID No. 87268

STRUCTURAL-DETAILS-HATCHES SHEET 1 OF 3

BRIDGE NO. HAM-71-0134

I-71 LYTLE TUNNEL UNDER LYTLE PARK

DESIGNED	DRAWN	REVIEWED	DATE
BTF	JMS	MAR	10/20/14
CHECKED	REVISED	STRUCTURE FILE NUMBER	
KTO		3106578	

DESIGN AGENCY
HATCH MOTT MacDONALD
18013 CLEVELAND PKWY.
SUITE 200
CLEVELAND, OH 44135

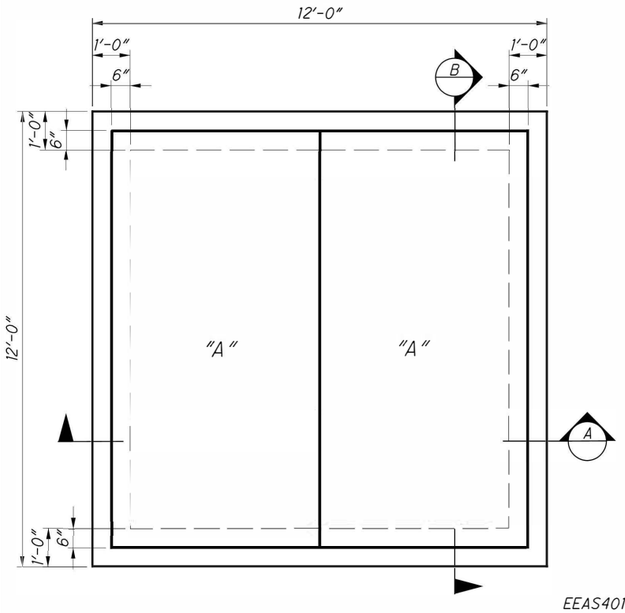

PLAN - ITEM 530 - EQUIPMENT ACCESS HATCH

SEE SHEET 70/296 FOR LOCATION

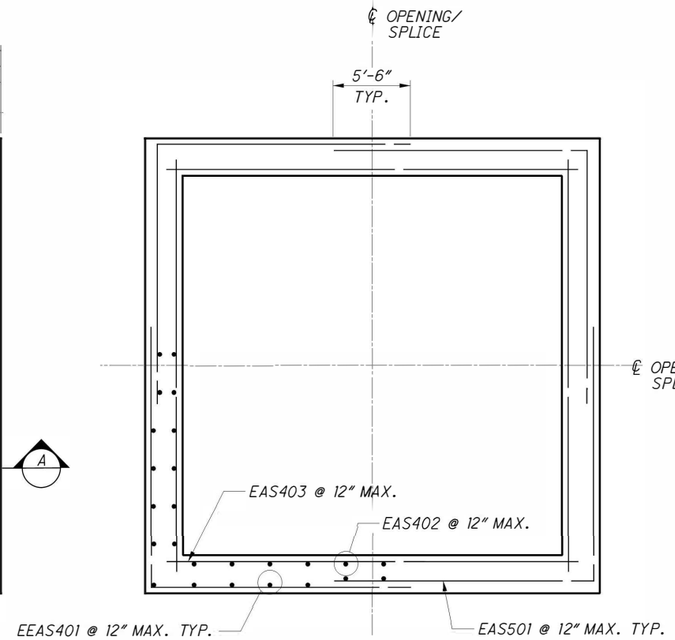

PLAN - ITEM 530 - EQUIPMENT ACCESS HATCH

SEE SHEET 70/296 FOR LOCATION

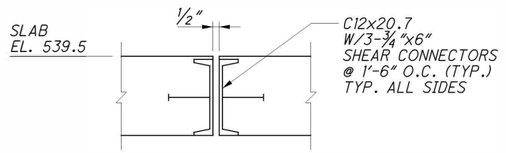

DETAIL 1

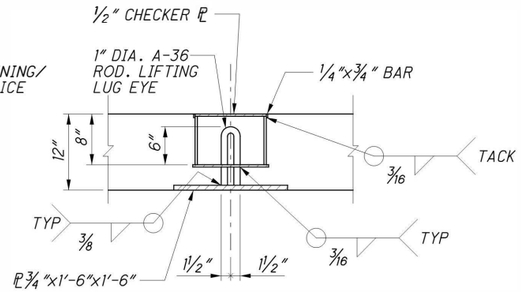

SECTION C-C

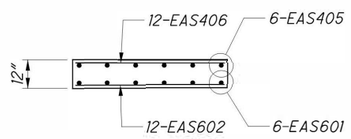

SECTION D-D

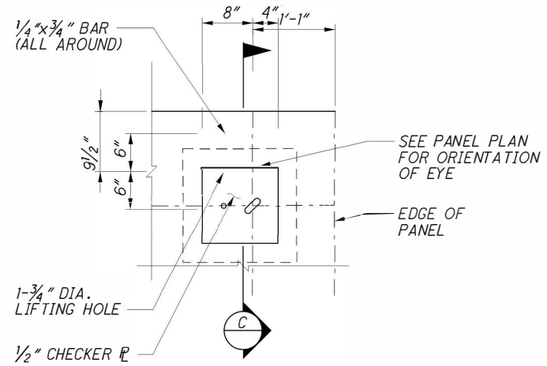

LIFTING EYE DETAIL

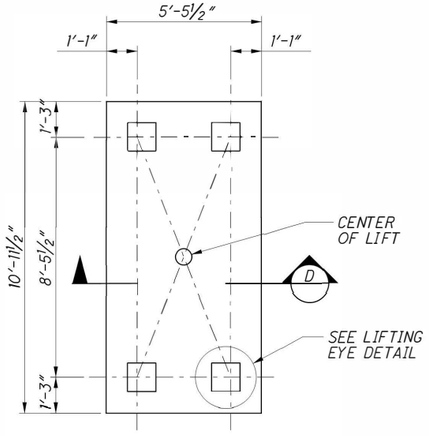

PANEL PLAN - "A"

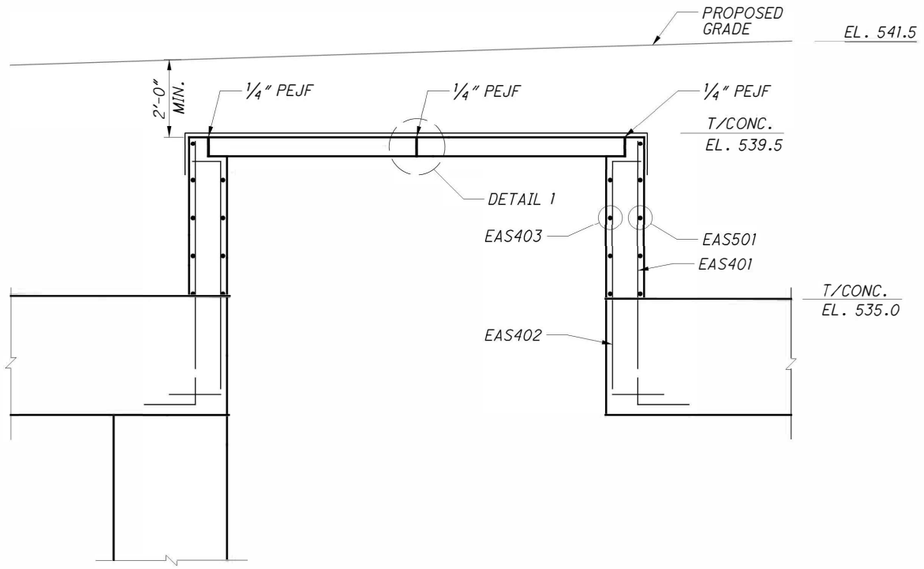

SECTION A-A

SEE SHEET 70/296 FOR LOCATION

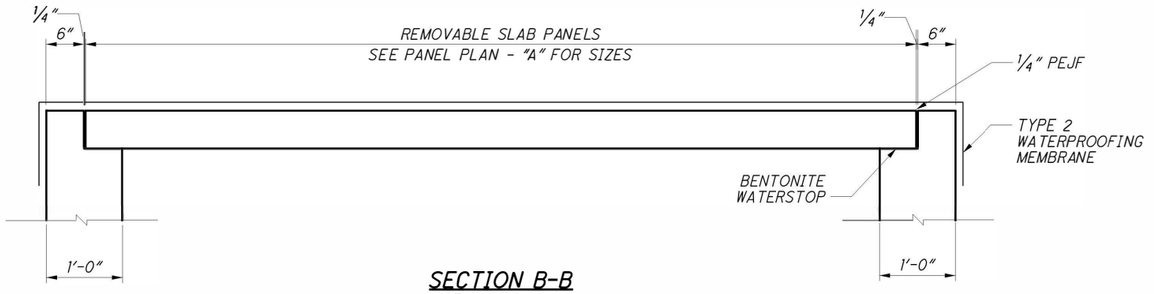

SECTION B-B

SEE SHEET 70/296 FOR LOCATION

NOTES:

1. REMOVABLE SLAB PANELS, HARDWARE AND JOINT FILLER ARE INCLUDED FOR PAYMENT IN ITEM 530-SPECIAL STRUCTURE, MISC.: EQUIPMENT ACCESS HATCH.
2. BENTONITE WATERSTOP IS INCLUDED FOR PAYMENT IN ITEM 530-SPECIAL-STRUCTURE, MISC.: BENTONITE WATERSTOP.

LEGEND:

DIA. - DIAMETER
EL. - ELEVATION
EW - EACH WAY
MAX. - MAXIMUM
MIN. - MINIMUM
MISC.- MISCELLANEOUS
PEJF - PREFORMED EXPANSION JOINT FILLER
O.C. - ON CENTER
TYP. - TYPICAL

DESIGN AGENCY
HATCH MOTT MacDONALD
18013 CLEVELAND PKWY.
SUITE 200
CLEVELAND, OH 44135

DESIGNED BTF | DRAWN JMS | REVIEWED MAR | DATE 10/20/14
CHECKED KTO | REVISED | STRUCTURE FILE NUMBER 3106578

STRUCTURAL-DETAILS-HATCHES SHEET 2 OF 3
BRIDGE NO. HAM-71-0134
I-71 LYTLE TUNNEL UNDER LYTLE PARK

HAM-71-01.34
PID No. 87268

71/296
329/555

c:\pwworking\hmm\external\tyn61470\dms72783\071_0134CWD020.dgn 10/24/2014 11:03:02 AM TYN61470

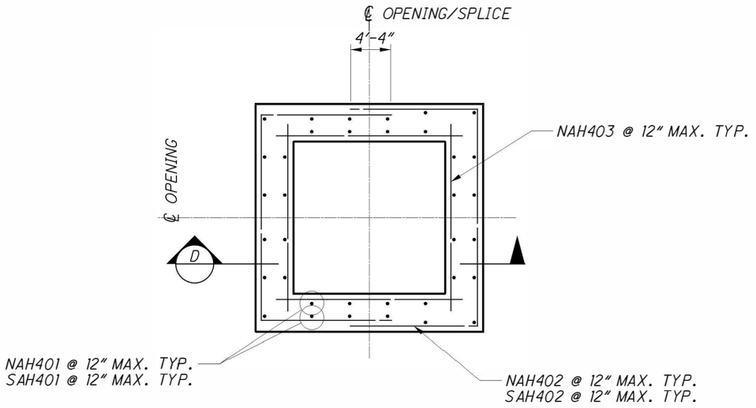

PLAN - ITEM 530 - EMERGENCY ACCESS HATCH

SEE SHEET 70/296 FOR LOCATION

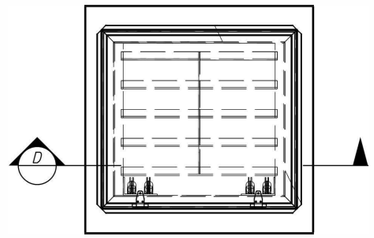

PLAN - ITEM 530 - EMERGENCY ACCESS HATCH

SEE SHEET 70/296 FOR LOCATION

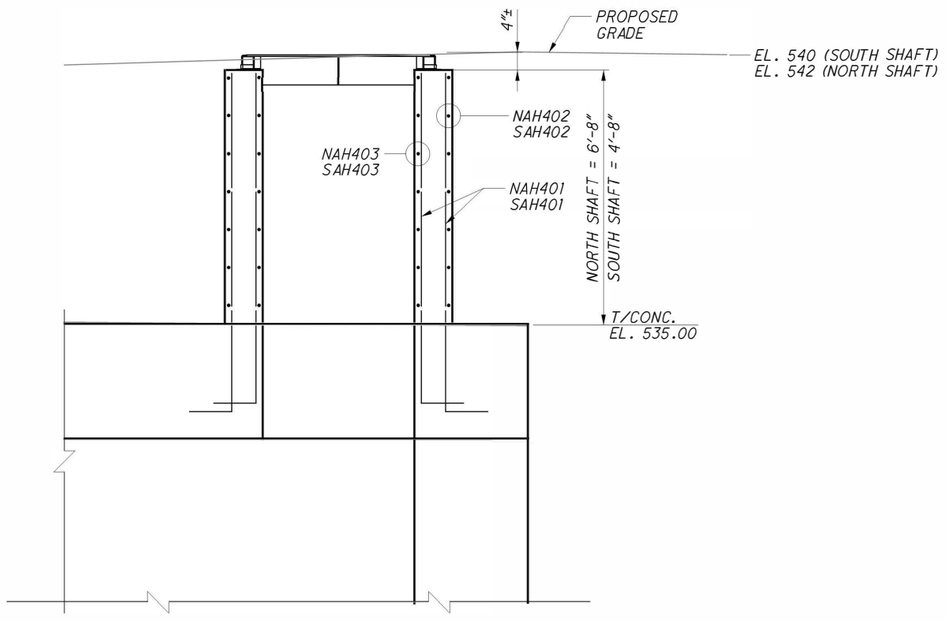

SECTION D-D

LEGEND:

CONC.	- CONCRETE
EL.	- ELEVATION
MAX.	- MAXIMUM
T/	- TOP OF
TYP.	- TYPICAL

c:\pwworking\hmm\external\tyn6147O\dms7278\071-0134CMD021.dgn 10/24/2014 11:03:05 AM TYN6147O

DESIGN AGENCY
HATCH MOTT MacDONALD
18013 CLEVELAND PKWY.
SUITE 200
CLEVELAND, OH 44135

DESIGNED	DRAWN	REVIEWED	DATE
BTF	JMS	MAR	10/20/14
CHECKED	REVISED	STRUCTURE FILE NUMBER	
KTO		3106578	

STRUCTURAL-DETAIL-HATCHES SHEET 3 OF 3

BRIDGE NO. HAM-71-0134

I-71 LYTLE TUNNEL UNDER LYTLE PARK

HAM-71-01.34

PID No. 87268

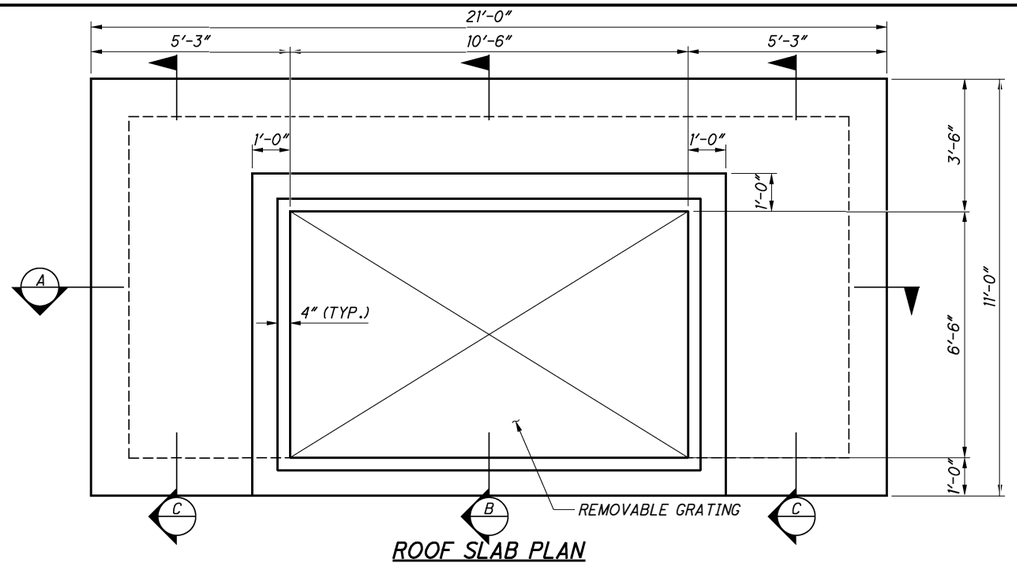

ROOF SLAB PLAN

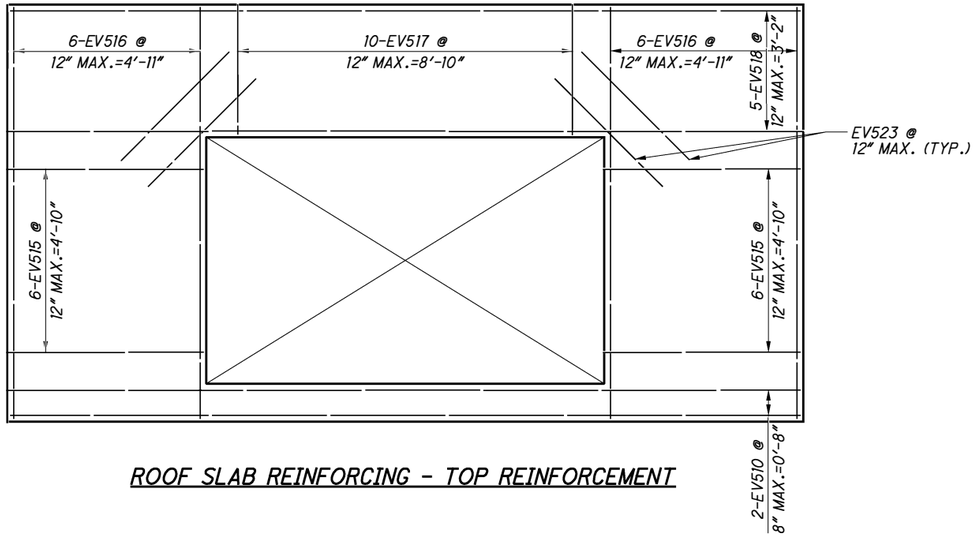

ROOF SLAB REINFORCING - TOP REINFORCEMENT

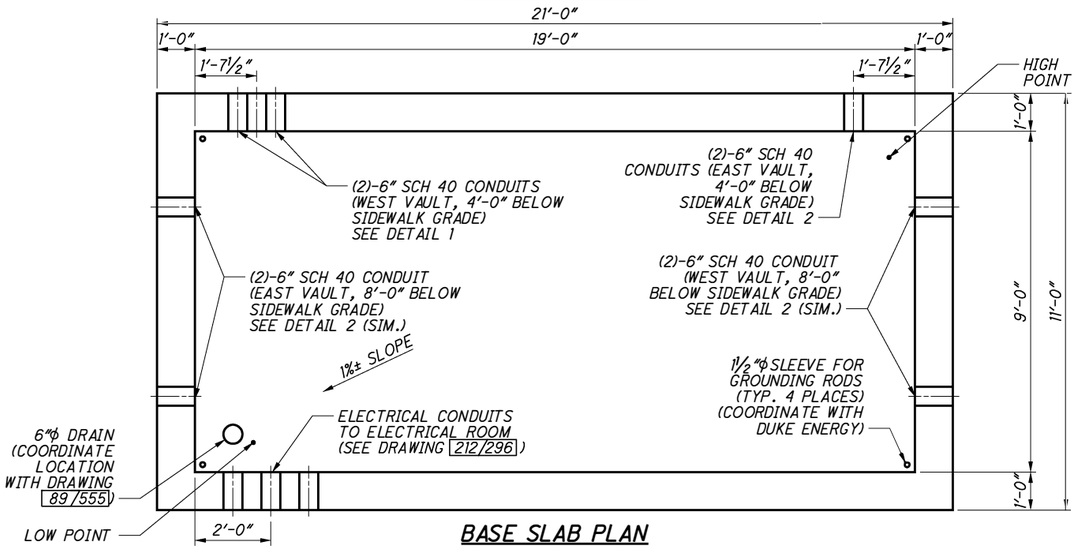

BASE SLAB PLAN

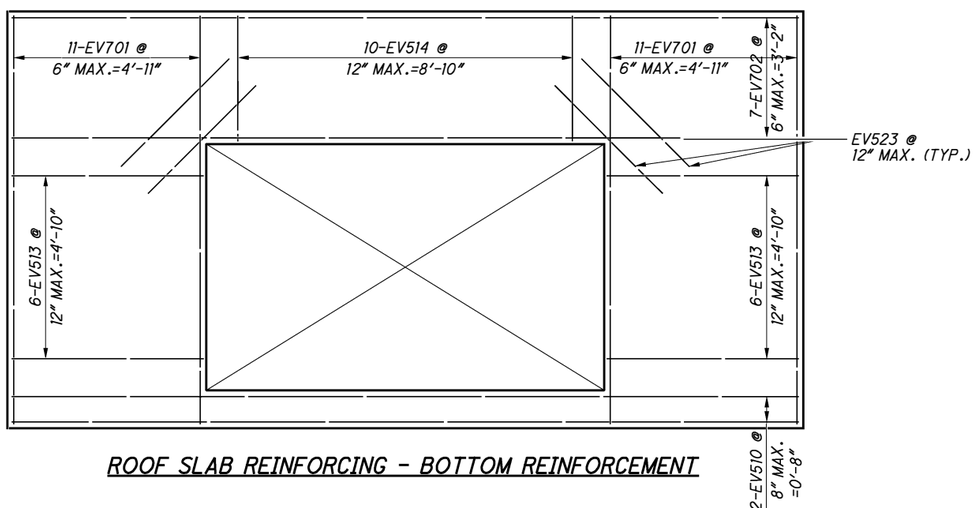

ROOF SLAB REINFORCING - BOTTOM REINFORCEMENT

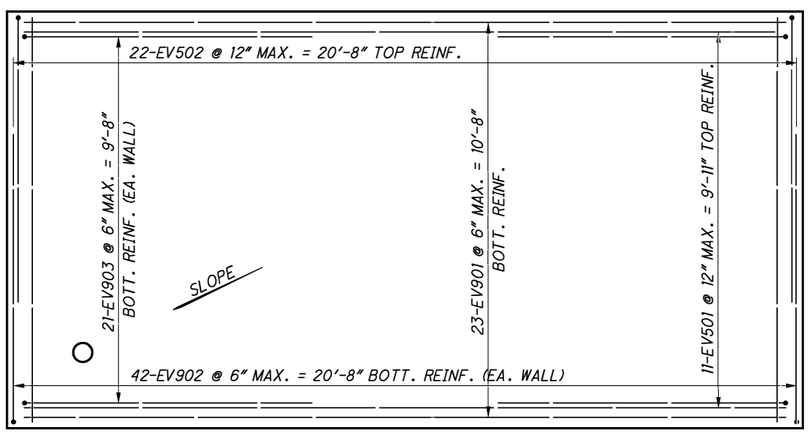

BASE SLAB PLAN - REINFORCING

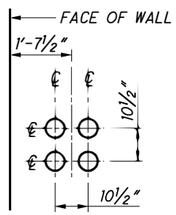

DETAIL 1

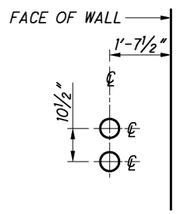

DETAIL 2

NOTES:

1. DETAILS TYPICAL FOR BOTH EAST AND WEST VAULTS.
2. SEE SHEET 72B/296 FOR SECTION A-A, SECTION B-B AND SECTION C-C.
3. COORDINATE INCOMING ELECTRICAL CONDUITS WITH DUKE ENERGY.
4. CONDUIT TO EXTEND 2" FROM FACE OF WALLS WITH BELL END ON THE INSIDE OF VAULT.
5. COORDINATE VAULT DRAINS WITH DRAWINGS 89/555 AND 99/555.
6. DUCTS SHOULD BE SPREAD OUT AS THEY ENTER THE MANHOLES SEPARATED FROM EACH OTHER BY 4" (OUTSIDE OF DUCT TO OUTSIDE OF DUCT). THE AREA BETWEEN DUCTS SHALL BE FILLED WITH CONCRETE AND FINISHED FLUSH TO THE WALL. ADJUST REINFORCING AS NECESSARY AROUND CONDUITS.

LEGEND:

BOTT.	- BOTTOM
EA.	- EACH
MAX.	- MAXIMUM
REINF.	- REINFORCEMENT
TYP.	- TYPICAL

NO.	DATE	REVISION DESCRIPTION
1	11/06/15	TRANFORMER VAULTS (NEW SHEET)

DESIGN AGENCY
HATCH MOTT MacDONALD
18013 CLEVELAND PKWY.
SUITE 200
CLEVELAND, OH 44135

DESIGNED BTF | DRAWN JMS | REVIEWED MAR | DATE 10/19/15
CHECKED PEG | REVISED | STRUCTURE FILE NUMBER 3106578

STRUCTURAL-DETAIL-VAULTS SHEET 1 OF 2
BRIDGE NO. HAM-71-0134
I-71 LYTLE TUNNEL UNDER LYTLE PARK

HAM-71-01.34
PID No. 87268

72A/296

330A
555

c:\pwworking\hmm\external\pre47802\dms72783\071_0134CMD028.dgn 11/6/2015 11:19:47 AM PRE47802

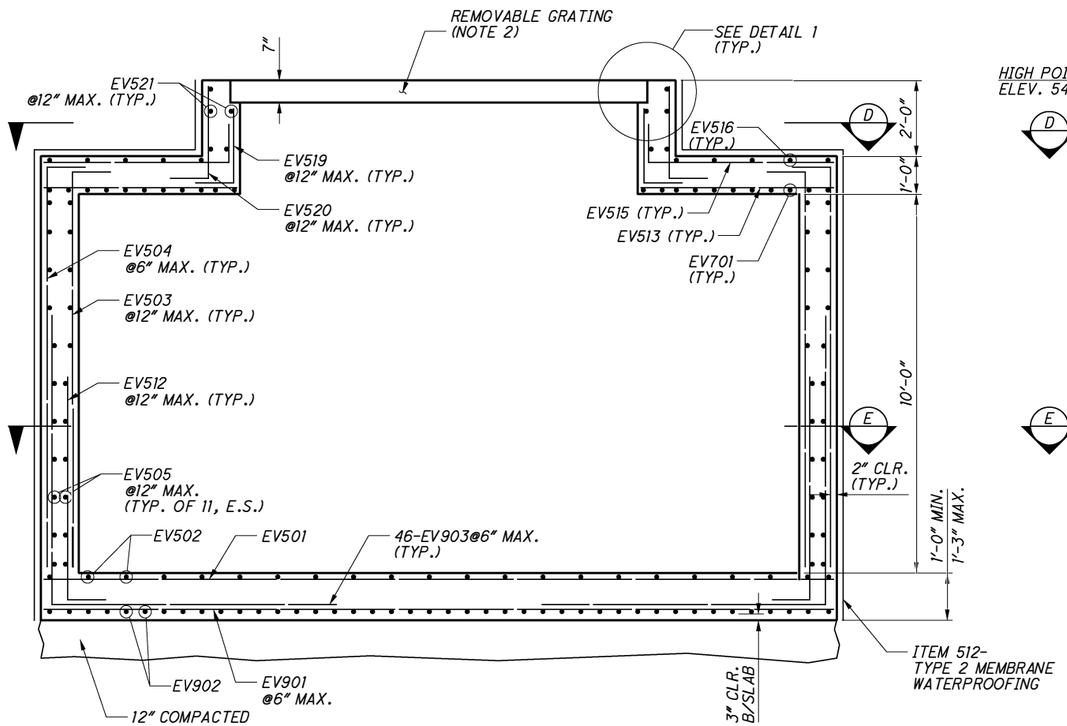

SECTION A-A

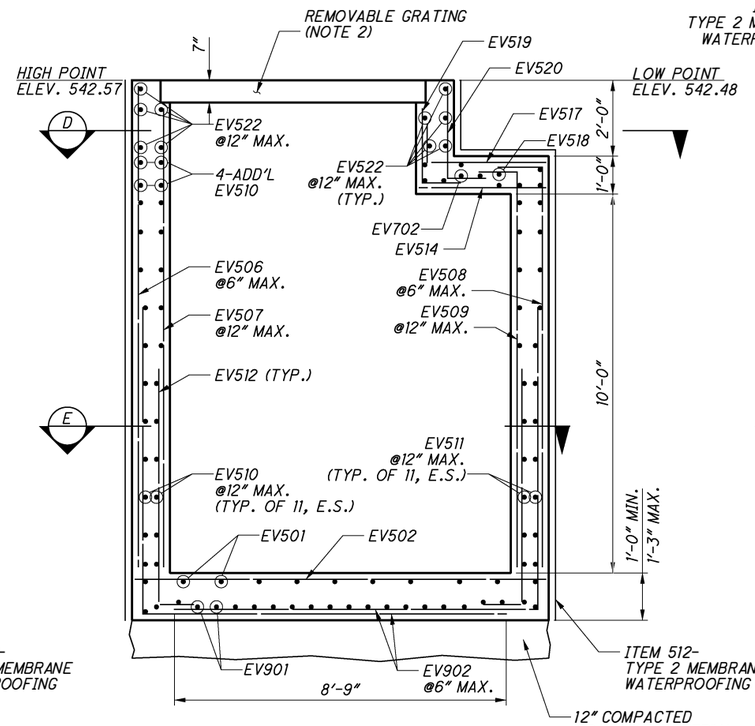

SECTION B-B

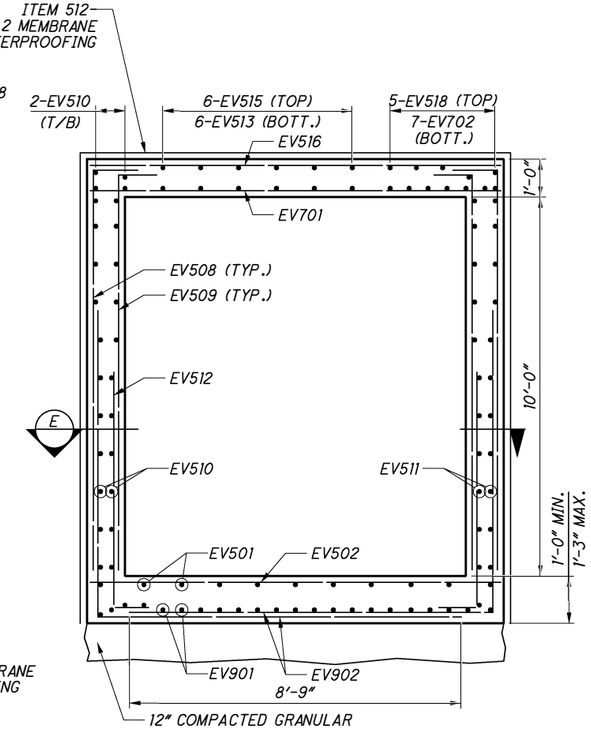

SECTION C-C

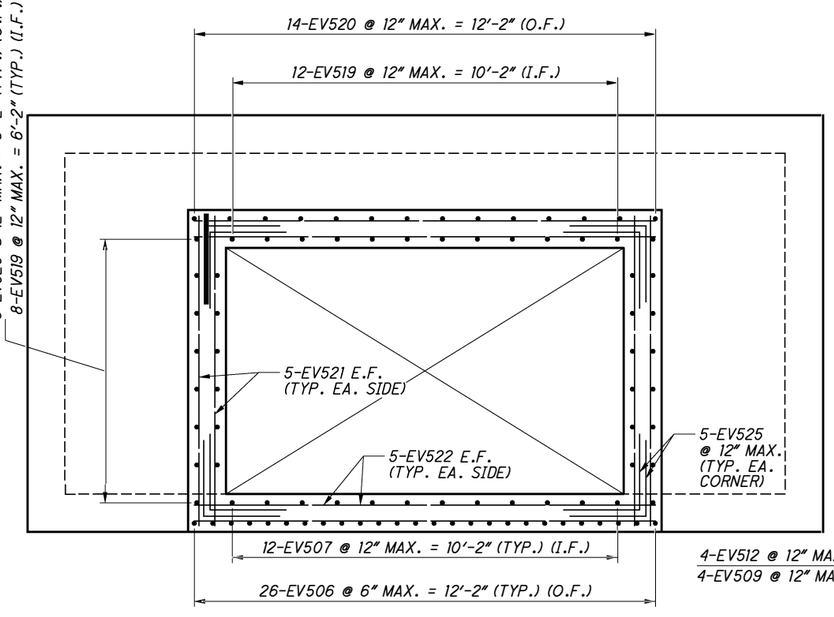

SECTION D-D

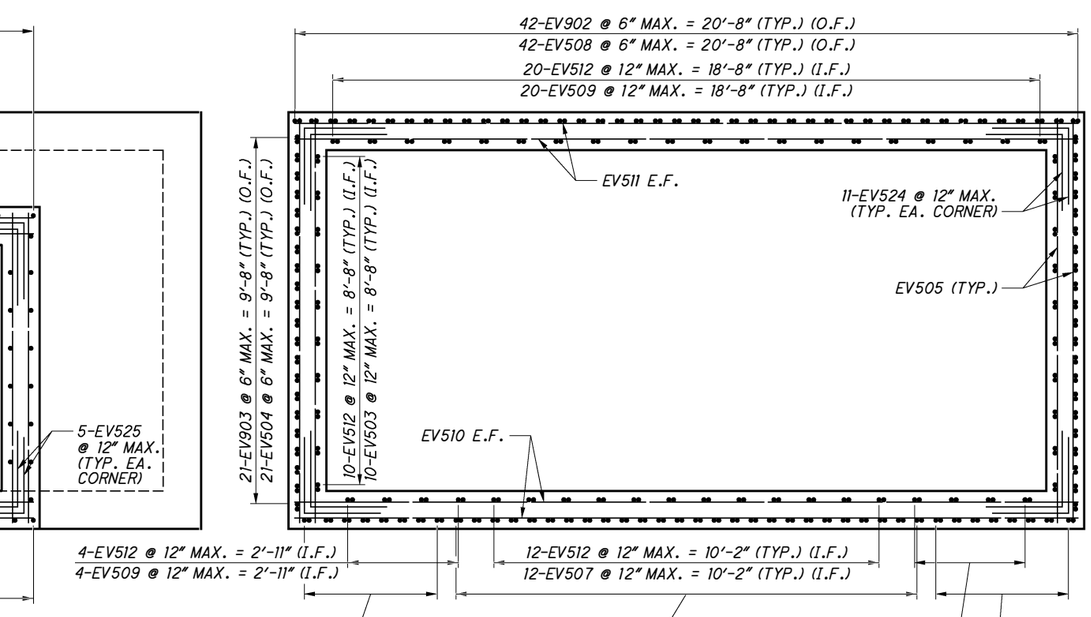

SECTION E-E

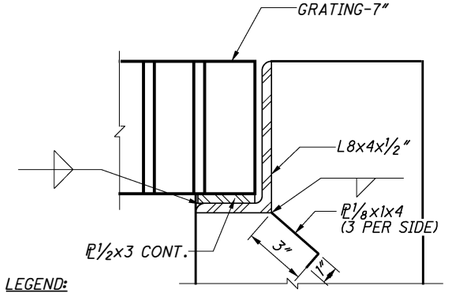

DETAIL 1

LEGEND:

B/	- BOTTOM OF
BOTT.	- BOTTOM
CLR.	- CLEAR
CONT.	- CONTINUOUS
EA.	- EACH
E.F.	- EACH FACE
E.S.	- EACH SIDE
ELEV.	- ELEVATION
I.F.	- INSIDE FACE
MAX.	- MAXIMUM
O.F.	- OUTSIDE FACE
T/B	- TOP, BOTTOM
TYP.	- TYPICAL

NOTES:

1. DETAILS TYPICAL FOR BOTH EAST AND WEST VAULTS.
2. SEE SHEET 72A/296 FOR SECTION A-A, SECTION B-B AND SECTION C-C.
3. REMOVABLE GRATING SHALL BE OHIO GRATING, INC. WHEELS 'N' HEELS METRO 44-WH-4 GR. 50 CARBON STEEL OR AN APPROVED EQUIVALENT.
4. INSTALL ITEM 512 - TYPE 2 MEMBRANE WATERPROOFING ON WALLS AND ROOF SLAB.

NO.	DATE	REVISION DESCRIPTION
1	10/13/15	TRANFORMER VAULTS (NEW SHEET)

DESIGN AGENCY
HATCH MOTT MacDONALD
18013 CLEVELAND PKWY.
SUITE 200
CLEVELAND, OH 44135

DESIGNED	DRAWN	REVIEWED	DATE
BTF	JMS	MAR	10/19/15
CHECKED	REVISED	STRUCTURE FILE NUMBER	
PEG		3106578	

STRUCTURAL-DETAIL-VAULTS SHEET 2 OF 2
BRIDGE NO. HAM-71-0134
I-71 LYTLE TUNNEL UNDER LYTLE PARK

HAM-71-01.34
PID No. 87268

72B/296

330B
555

pw:\\pinspwise.hmmg.cc:pw_external\Documents\246924-ODOT I-71 TUNNEL REHAB\Design\HAM\87268\Structures\HAM071_0134C\Sheets\071_0134CMD029.dgn 10/19/2015 2:03:48 PM ced27612

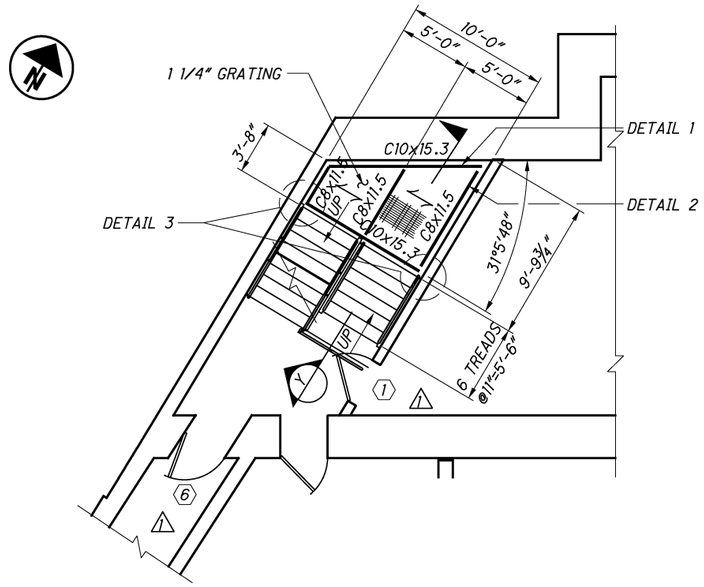

STAIR ST-1 PLAN AT EL. 514.00

SEE SHEET 27/296 FOR LOCATION

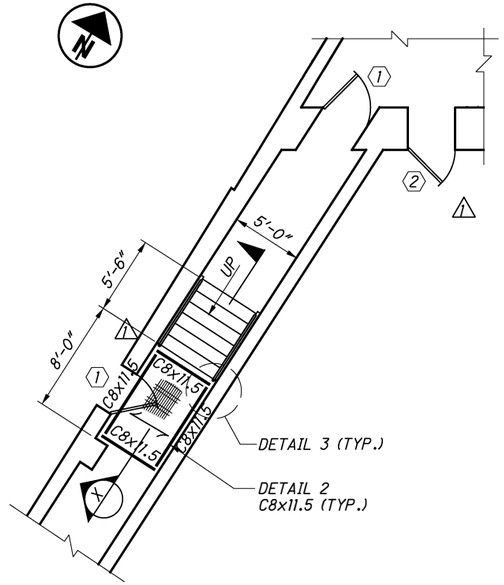

STAIR ST-2 PLAN

SEE SHEET 27/296 FOR LOCATION

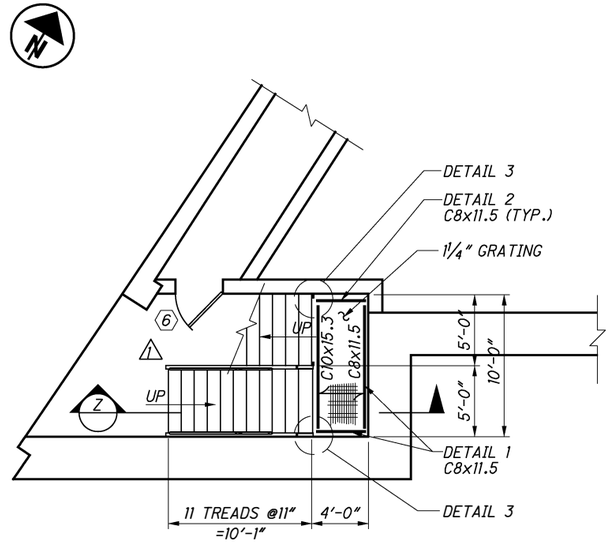

STAIR ST-3 PLAN AT EL. 514.00

SEE SHEET 27/296 FOR LOCATION

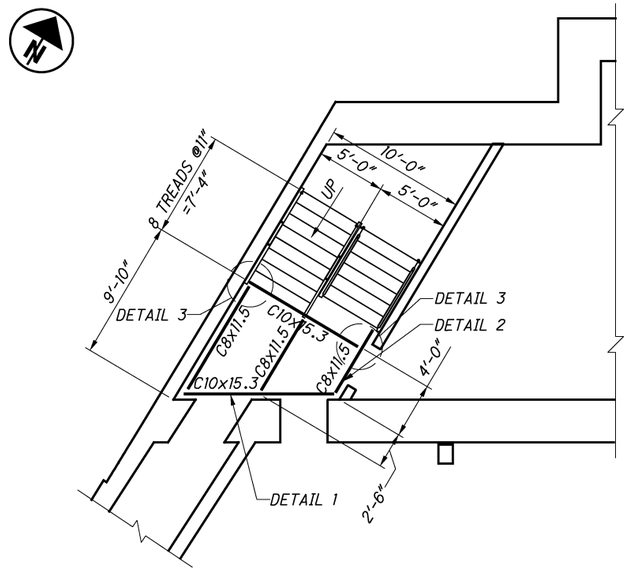

STAIR ST-1 PLAN AT EL. 523.00

SEE SHEET 27/296 FOR LOCATION

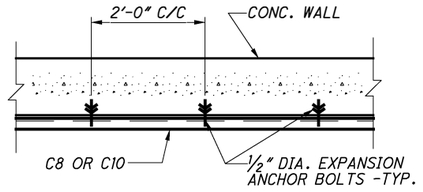

DETAIL 1

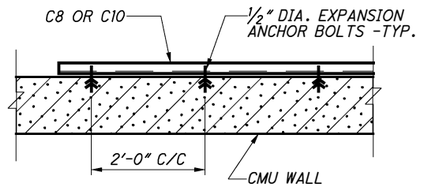

DETAIL 2

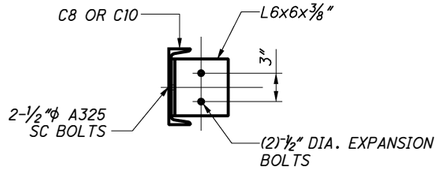

DETAIL 3

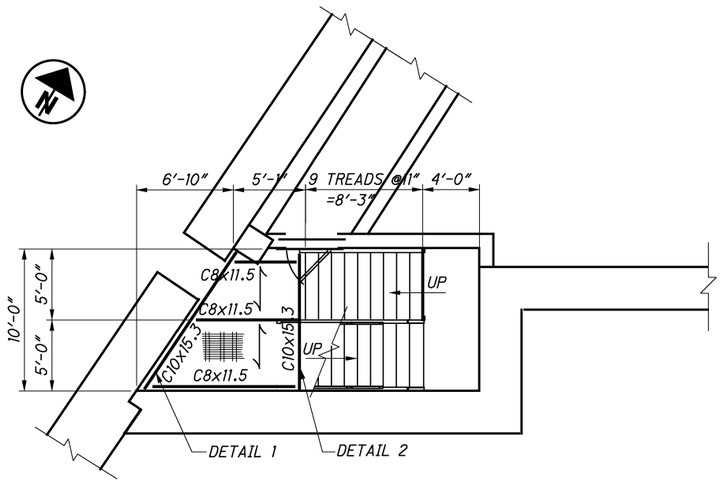

STAIR ST-3 PLAN AT EL. 526.38

SEE SHEET 28/296 FOR LOCATION

NOTES:

1. SEE SHEET 74/296 FOR SECTION X-X.
2. SEE SHEET 74/296 FOR SECTION Y-Y.
3. SEE SHEET 74/296 FOR SECTION Z-Z.

LEGEND:

CMU	- CONCRETE MASONRY UNIT
EL.	- ELEVATION
EXP.	- EXPANSION
EXIST.	- EXISTING
T	- TOP
TYP.	- TYPICAL
⊠	- PROPOSED STRUCTURAL WALL OPENING
⟷	- SPAN

NO.	DATE	REVISION DESCRIPTION
1	04/21/16	RFI 160 - REVISED DOORS

DESIGN AGENCY
HATCH MOTT MacDONALD
18013 CLEVELAND PKWY.
SUITE 200
CLEVELAND, OH 44135

DESIGNED	DRAWN	REVIEWED	DATE
BTF	JMS	MAR	10/20/14
CHECKED	REVISED	STRUCTURE FILE NUMBER	
KTO	BTF	3106578	

STRUCTURAL DETAILS - STAIRS - 1 OF 2

BRIDGE NO. HAM-71-0134
I-71 LYTLE TUNNEL UNDER LYTLE PARK

HAM-71-01.34
PID No. 87268

73/296

331/555

c:\pwworking\hmm\external\pre47802\dms72783\071_0134CMD010.dgn 4/21/2016 10:12:01 AM PRE47802

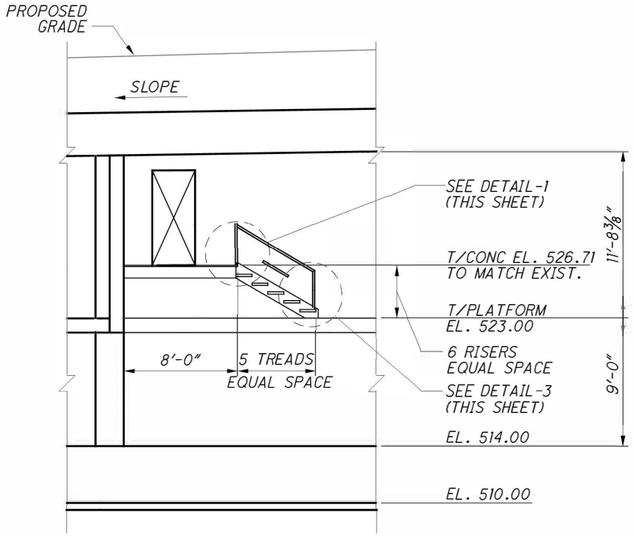

SECTION X-X

SEE SHEET 73/296 FOR LOCATION

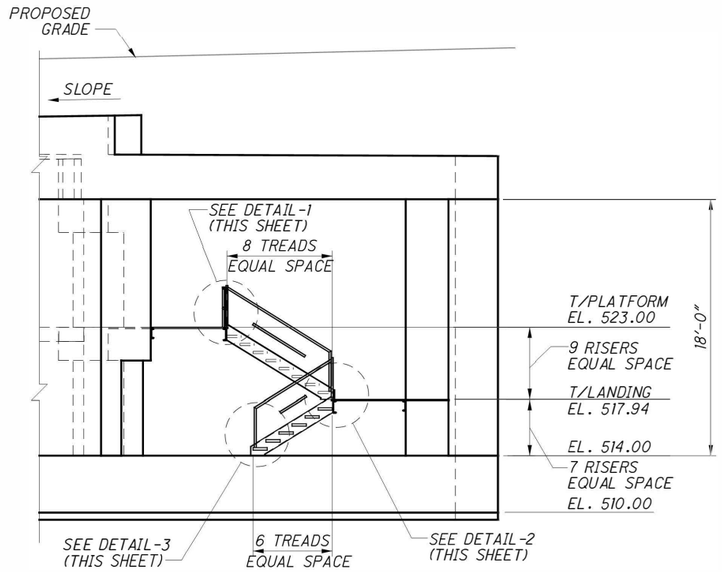

SECTION Y-Y

SEE SHEET 73/296 FOR LOCATION

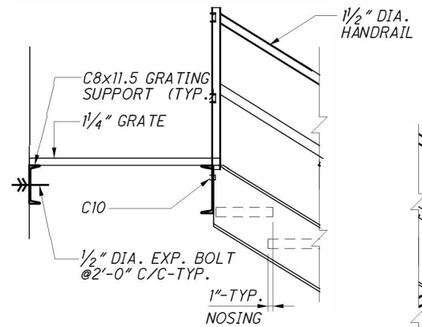

DETAIL - 1

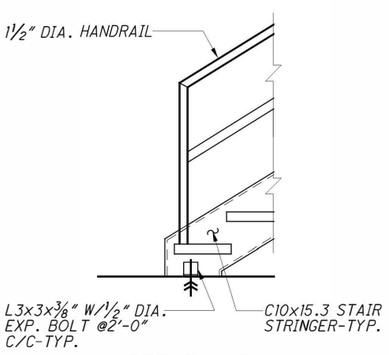

DETAIL - 3

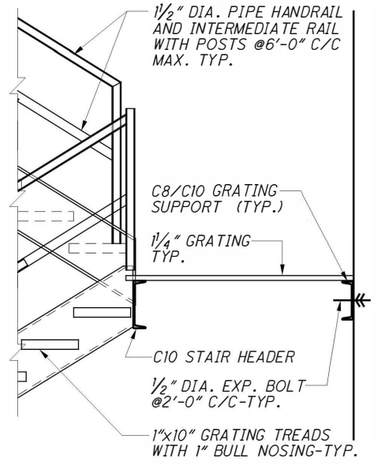

DETAIL - 2

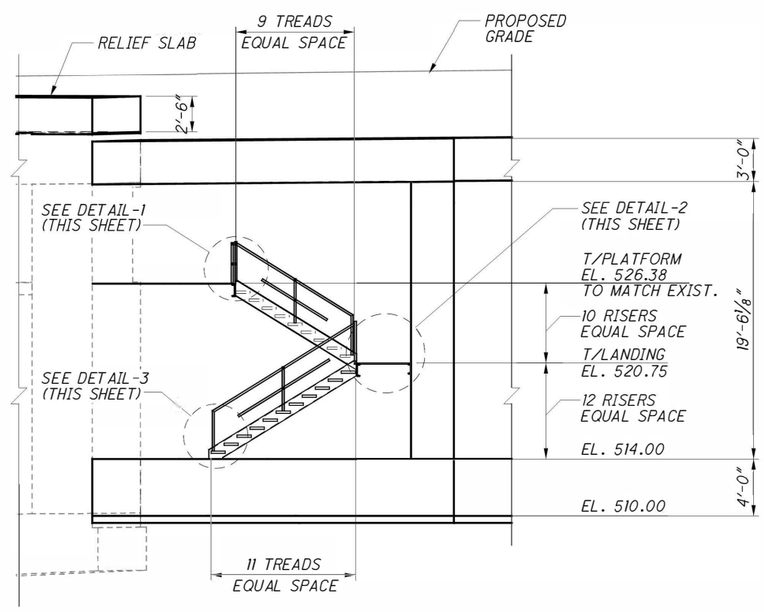

SECTION Z-Z

SEE SHEET 73/296 FOR LOCATION

LEGEND:

EL.	- ELEVATION
EXP.	- EXPANSION
EXIST.	- EXISTING
T	- TOP
TYP.	- TYPICAL
⊠	- PROPOSED STRUCTURAL WALL OPENING

DESIGN AGENCY
HATCH MOTT MacDONALD
18013 CLEVELAND PKWY.
SUITE 200
CLEVELAND, OH 44135

DESIGNED	DRAWN	REVIEWED	DATE
BTF	JMS	MAR	10/20/14
CHECKED	REVISED	STRUCTURE FILE NUMBER	
KTO		3106578	

STRUCTURAL DETAILS - STAIRS - 2 OF 2

BRIDGE NO. HAM-71-0134

I-71 LYTLE TUNNEL UNDER LYTLE PARK

HAM-71-01.34

PID No. 87268

74/296

332
555

c:\pwworking\hmm\external\tyn61470\dms72783\071_0134CMD011.dgn 10/24/2014 11:03:17 AM TYN61470

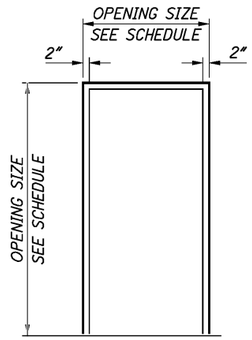

TYPE 1

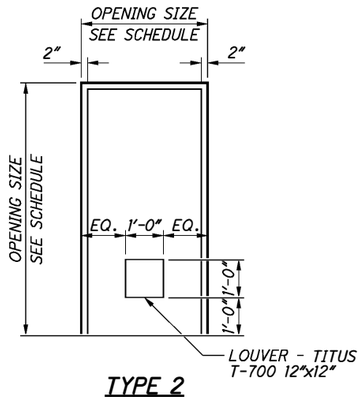

TYPE 2

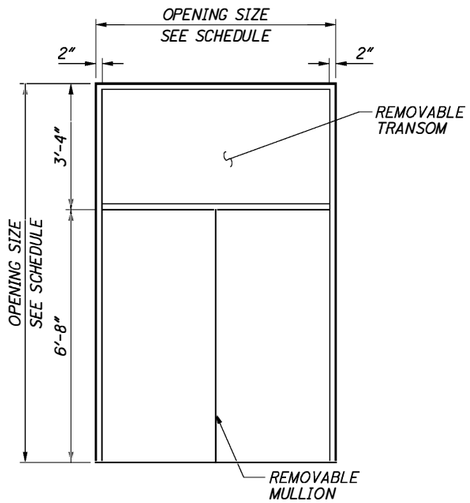

TYPE 3

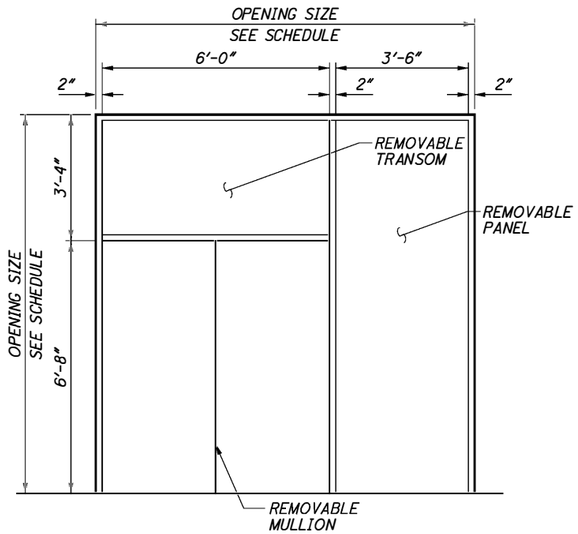

TYPE 4

DOOR SCHEDULE

DOOR NUMBER	OPENING SIZE		DOORS	DETAILS				NOTES
	WIDTH	HT	TYPE	HEAD	JAMB	JAMB	THRESHOLD	
⟨1⟩	3'-4"	6'-8"	LEVEL 1, TYPE 2	2	4		5	
⟨2⟩	3'-4"	6'-8"	LEVEL 4, TYPE 1	1	3		5	
⟨3⟩	6'-4"	10'-0"	LEVEL 1, TYPE 3	2	4		5	1, 2
⟨4⟩	6'-4"	10'-0"	LEVEL 4, TYPE 3	1	3		5	1, 2
⟨5⟩	10'-0"	10'-0"	LEVEL 4, TYPE 4	1	3		5	1, 2, 3
⟨6⟩	3'-4"	6'-8"	LEVEL 1, TYPE 1	2	4		5	
⟨7⟩	3'-4"	6'-8"	LEVEL 1, TYPE 1	2	4		5	4

NOTES:

1. PAIR OF EQUAL WIDTH DOOR PANELS.
2. REMOVABLE TRANSOM BAR AND MULLION.
3. REMOVABLE PANEL AND DOOR FRAME.
4. EXTERIOR DOOR. REMOVE EXISTING DOOR AND FRAME. FIELD VERIFY OPENING SIZE PRIOR TO PURCHASING DOOR.
5. DOORS SHALL HAVE A FACTORY APPLIED FINISH COATING IN ACCORDANCE WITH ANSI A250.

LEGEND:

ALUM.	- ALUMINUM
CMU	- CONCRETE MASONRY UNIT
CONC.	- CONCRETE
DIA.	- DIAMETER
DWGS.	- DRAWINGS
EA.	- EACH
EQ	- EQUAL
HM	- HOLLOW METAL
NOM.	- NOMINAL
O.C.	- ON CENTER
W/	- WITH
⟨X⟩	- DOOR No., SEE SHEET 27/296 28/296

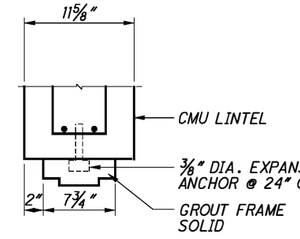

DOOR HEAD DETAIL 1

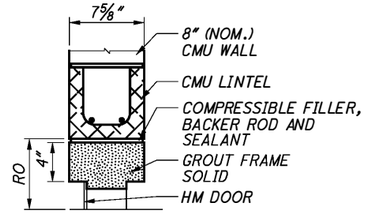

DOOR HEAD DETAIL 2

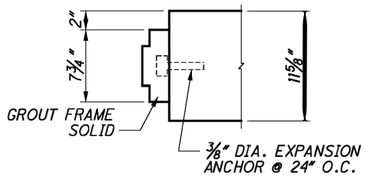

DOOR JAMB DETAIL 3

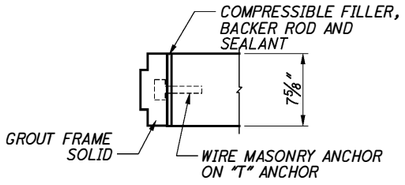

DOOR JAMB DETAIL 4

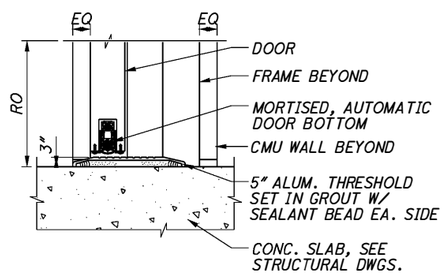

DOOR THRESHOLD DETAIL 5

DESIGN AGENCY
HATCH MOTT MacDONALD
18013 CLEVELAND PKWY.
SUITE 200
CLEVELAND, OH 44135

REVIEWED MAR DATE 10/20/14
STRUCTURE FILE NUMBER 3106578
DRAWN GM
REVISED
DESIGNED BTF
CHECKED KTO

STRUCTURAL - DETAILS - FINISH AND DOOR SCHEDULES

HAM-71-01.34
PID No. 87268

BRIDGE NO. HAM-71-0134
I-71 LYTLE TUNNEL UNDER LYTLE PARK

c:\pwworking\hmm\external\pre47802\dms72783\071_0134CMD013.dgn 3/16/2015 10:31:33 AM PRE47802

pw:\\pimspwise.hmmg.cc:pw_external\Documents\246924-ODOT I-71 TUNNEL REHAB\Design\HAM\87268\Structures\HAM071_0134C\Sheets\071_0134CMD031.dgn 4/21/2016 9:47:53 AM ced27612

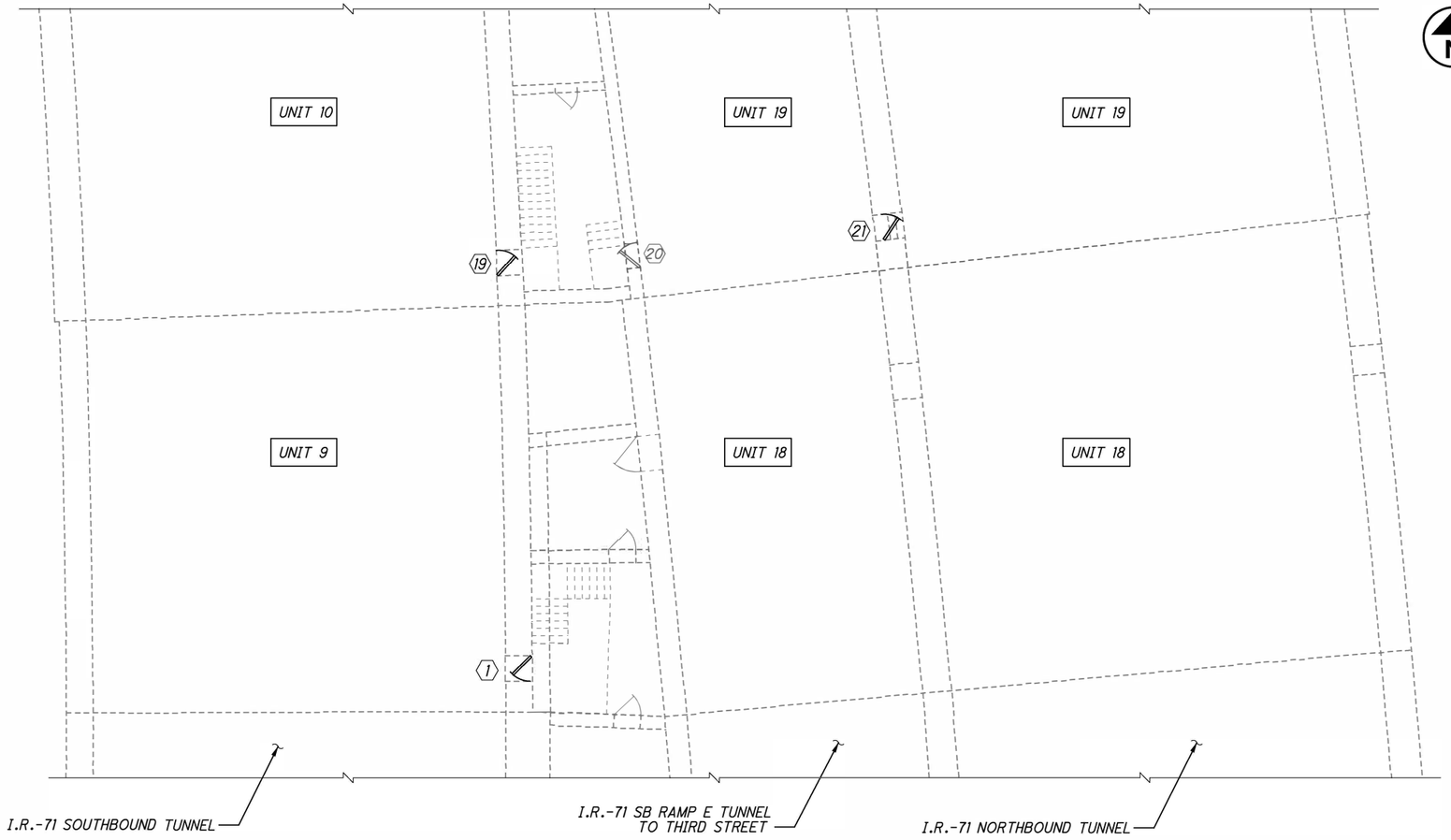

DOOR REPLACEMENT PLAN AT EXISTING TUNNEL

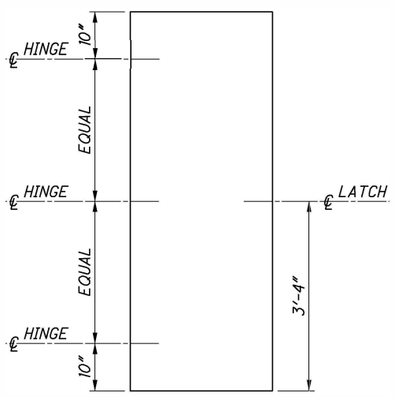

DOOR TYPE B

DOOR SCHEDULE

DOOR NUMBER	EXIST. OPENING SIZE		DOOR TYPE	FRAME TYPE	INSTALLATION DETAILS				HARD-WARE SET
	WIDTH	HT.			HEAD	STRIKE JAMB	HINGE JAMB	SILL	
⟨1⟩	3'-0 7/8"	6'-10 1/4"	B	2	15	15	15	16	1
⟨19⟩	2'-8"	6'-9 1/2"	B	2	15	15	15	16	2
⟨20⟩	2'-8"	6'-9 1/2"	B	2	15	15	15	16	2
⟨21⟩	2'-8"	6'-9 1/2"	B	2	15	15	15	16	3

HARDWARE SET #1:

3 - BUTT HINGES, PANIC BOLT, MORTISE TYPE
DOOR CLOSER WITH FUSIBLE LINK HOLD-OPEN FEATURE.

HARDWARE SET #2:

3 - BUTT HINGES, LOCK AND LATCH SET
DOOR CLOSER WITH FUSIBLE LINK HOLD-OPEN FEATURE.

HARDWARE SET #3:

3 - BUTT HINGES, LOCK AND LATCH SET
DOOR CLOSER WITH FUSIBLE LINK HOLD-OPEN FEATURE.

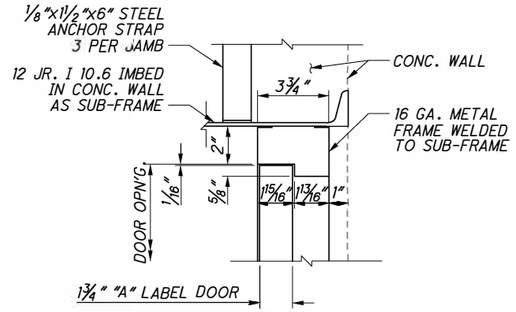

HEAD AND / OR JAMB 15

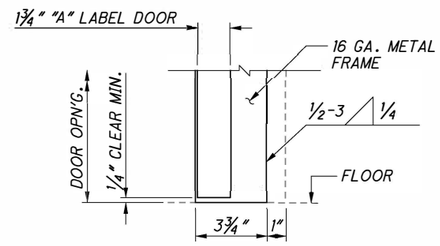

SILL DETAIL 16

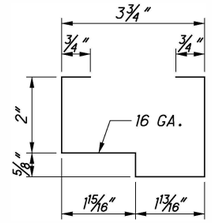

FRAME TYPE 2

NOTE: ALL FRAME INTERSECTIONS SHALL BE MITERED, WELDED AND GROUND SMOOTH.

LEGEND:

CONC.	CONCRETE
EXIST.	EXISTING
GA.	GAUGE
HT.	HEIGHT
JR.	JUNIOR
MIN.	MINIMUM
OPN'G.	OPENING
THK.	THICKNESS
U.L.	UNDERWRITERS LABORATORIES

NO.	DATE	REVISION DESCRIPTION
1	04/21/16	REPLACE EXIST. DOORS (NEW SHEET)

DESIGN AGENCY
HATCH MOTT MacDONALD
18013 CLEVELAND PKWY.
SUITE 200
CLEVELAND, OH 44135

DESIGNED	DRAWN	REVIEWED	DATE
BTF	JMS	TCV	04/21/16
CHECKED	REVISED	STRUCTURE FILE NUMBER	
PSK		3106578	

STRUCTURAL PLAN-EXISTING UNIT 9, 10, 18 & 19 MODIFICATIONS
BRIDGE NO. HAM-71-0134
I-71 LYTLE TUNNEL UNDER LYTLE PARK

HAM-71-01.34
PID No. 87268

75A/296

333A
555

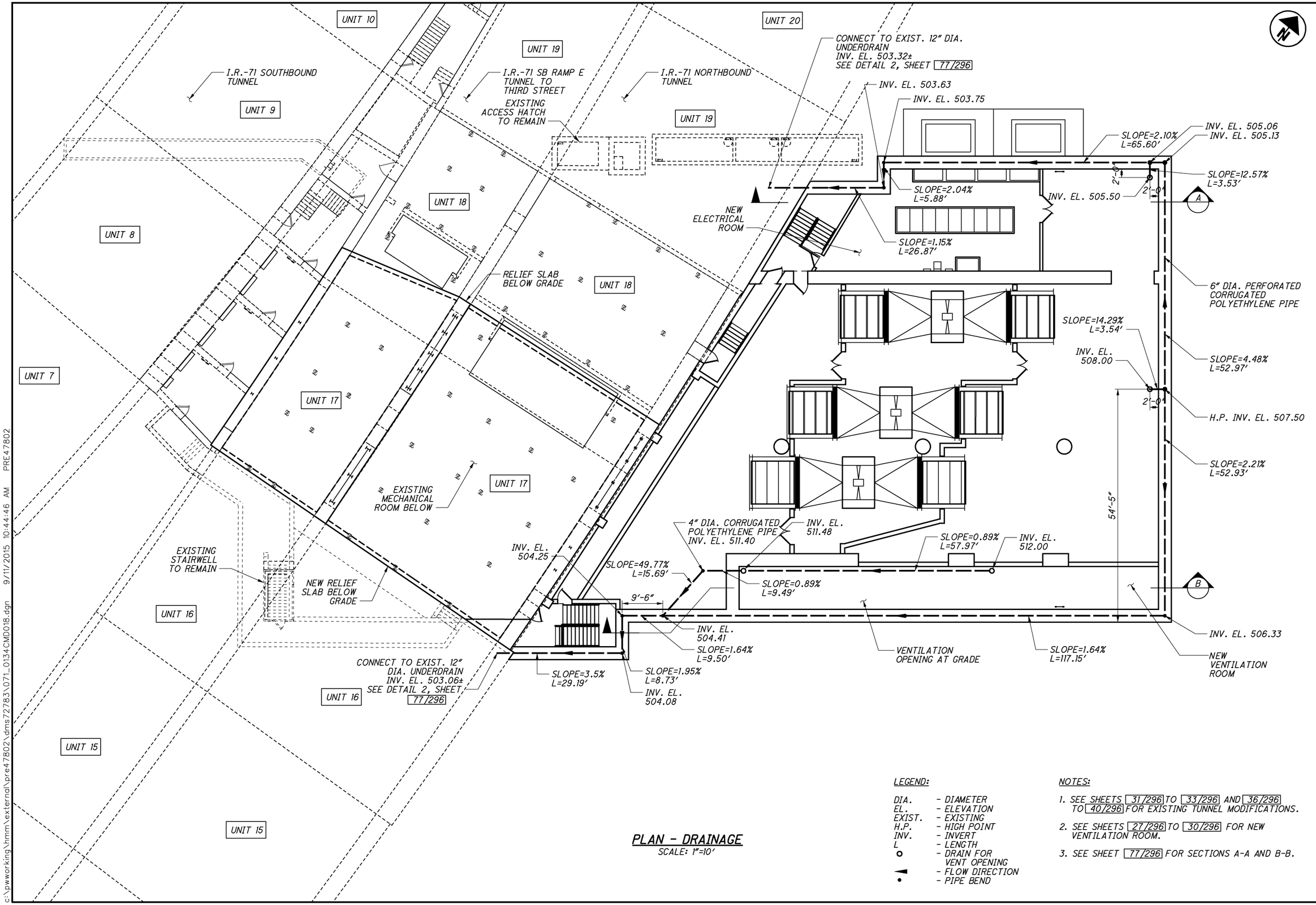

PLAN - DRAINAGE

SCALE: 1"=10'

LEGEND:

DIA.	- DIAMETER
EL.	- ELEVATION
EXIST.	- EXISTING
H.P.	- HIGH POINT
INV.	- INVERT
L	- LENGTH
o	- DRAIN FOR VENT OPENING
◄	- FLOW DIRECTION
•	- PIPE BEND

NOTES:

1. SEE SHEETS 31/296 TO 33/296 AND 36/296 TO 40/296 FOR EXISTING TUNNEL MODIFICATIONS.
2. SEE SHEETS 27/296 TO 30/296 FOR NEW VENTILATION ROOM.
3. SEE SHEET 77/296 FOR SECTIONS A-A AND B-B.

DESIGN AGENCY
HATCH MOTT MacDONALD
18013 CLEVELAND PKWY.
SUITE 200
CLEVELAND, OH 44135

DESIGNED	DRAWN	REVIEWED	DATE
BTF	JMS	MAR	10/20/14
CHECKED	REVISED	STRUCTURE FILE NUMBER	
KTO		3106578	

STRUCTURAL PLAN DRAINAGE - SHEET 1 OF 2

BRIDGE NO. HAM-71-0134
I-71 LYTLE TUNNEL UNDER LYTLE PARK

HAM-71-01.34
PID No. 87268

c:\pwworking\hmm\external\pre47802\dms72783\071_0134CMD018.dgn 9/11/2015 10:44:46 AM PRE47802

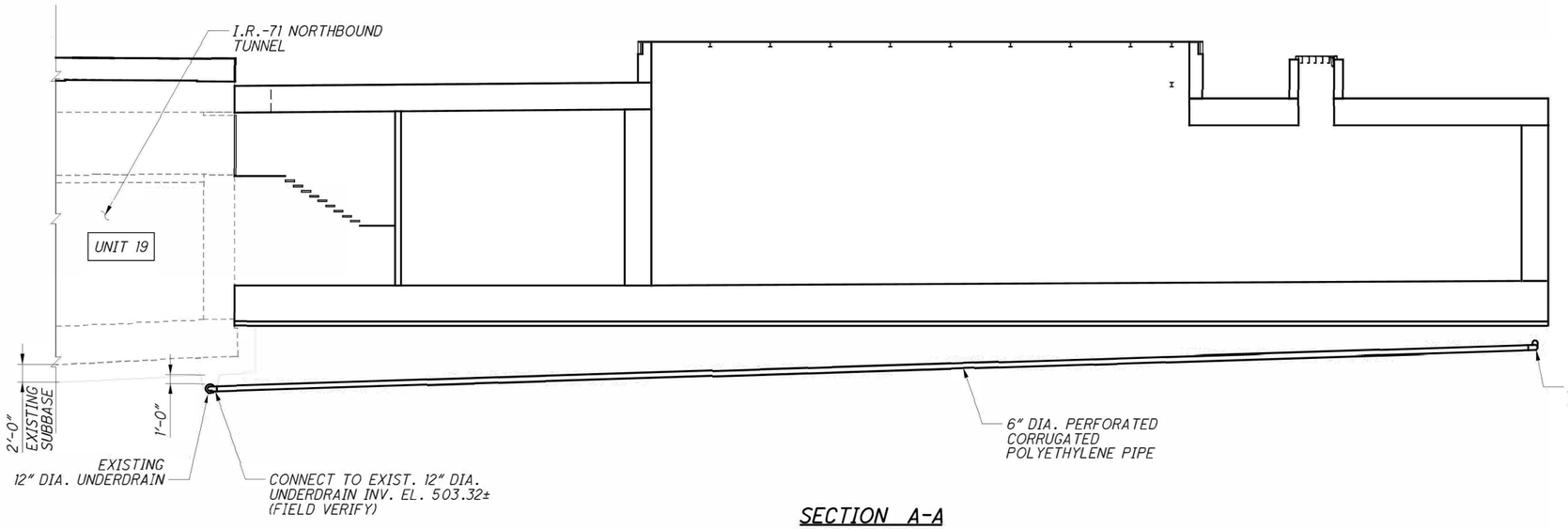

SECTION A-A
DETAIL 2

SEE SHEET 76/296 FOR LOCATION

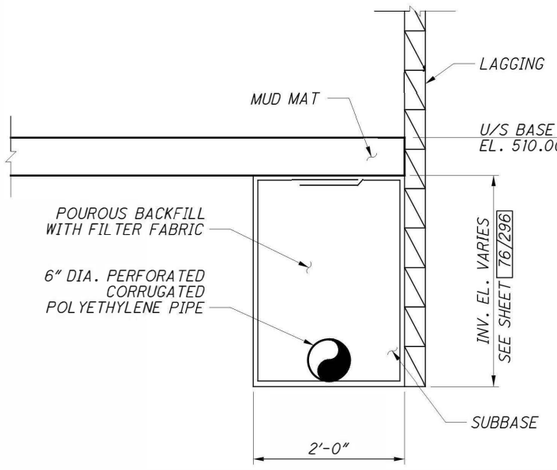

TYPICAL UNDERDRAIN DETAIL

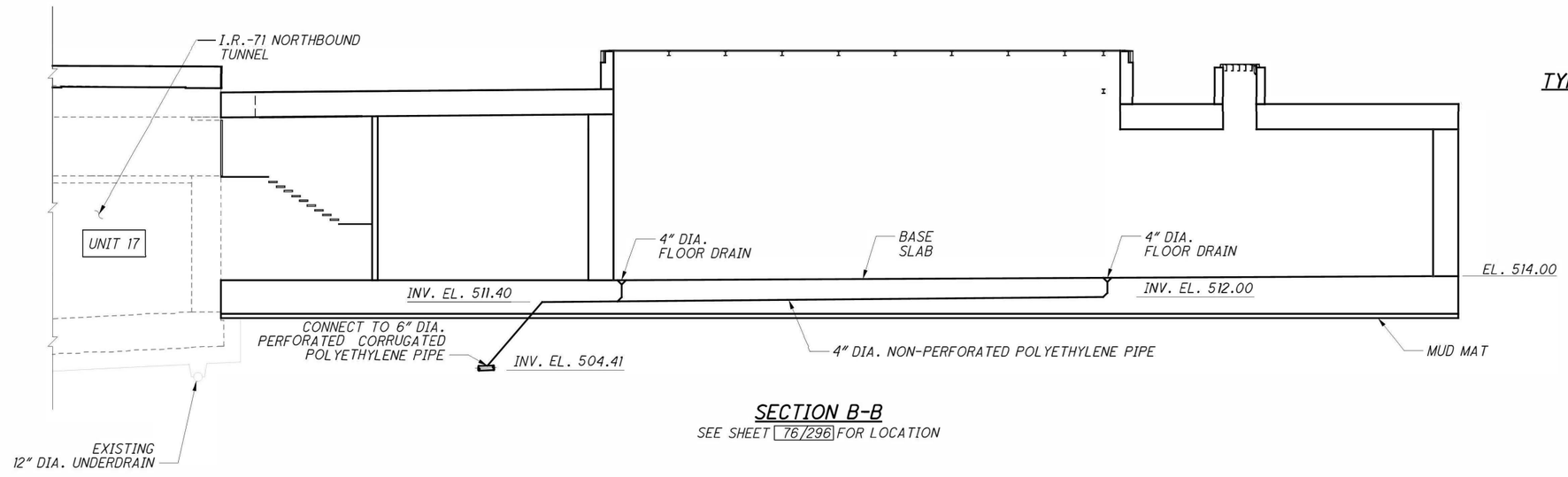

SECTION B-B

SEE SHEET 76/296 FOR LOCATION

LEGEND:

DIA.	- DIAMETER
EL.	- ELEVATION
EXIST.	- EXISTING
INV.	- INVERT
U/S	- UNDERSIDE

DESIGN AGENCY
HATCH MOTT MacDONALD
18013 CLEVELAND PKWY.
SUITE 200
CLEVELAND, OH 44135

DESIGNED	DRAWN	REVIEWED	DATE
BTF	JMS	MAR	10/20/14
CHECKED	REVISED	STRUCTURE FILE NUMBER	
KTO		3106578	

STRUCTURAL DETAILS DRAINAGE SHEET 2 OF 2
BRIDGE NO. HAM-71-0134
I-71 LYTLE TUNNEL UNDER LYTLE PARK

HAM-71-01.34
PID No. 87268

77/296

335
555

c:\pwworking\hmm\external\tyn61470\dms72783\071_0134CMD024.dgn 10/24/2014 11:03:26 AM TYN61470

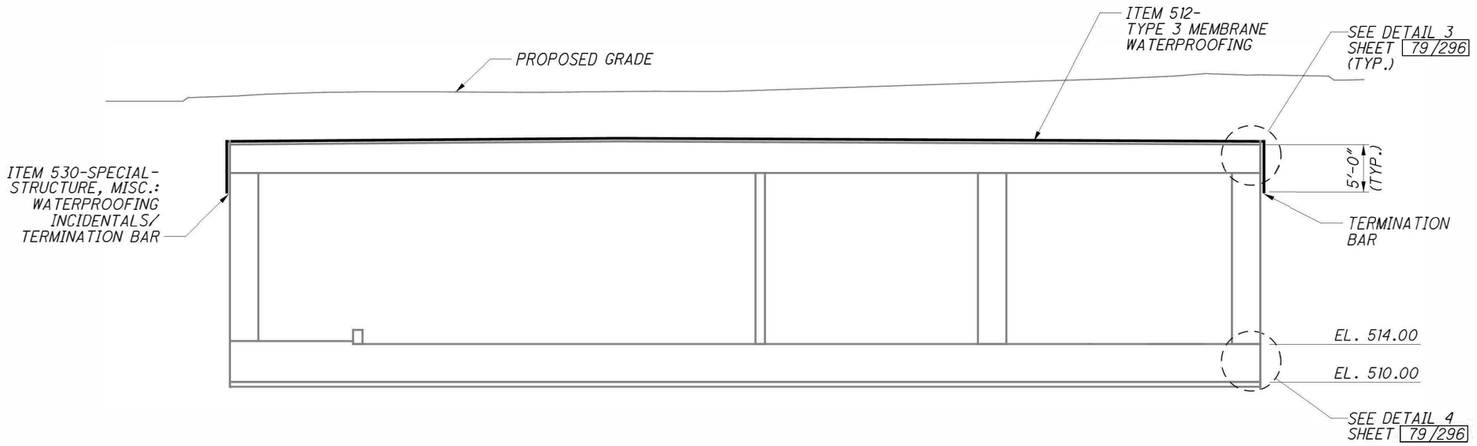

TYPICAL SECTION AT ROOF

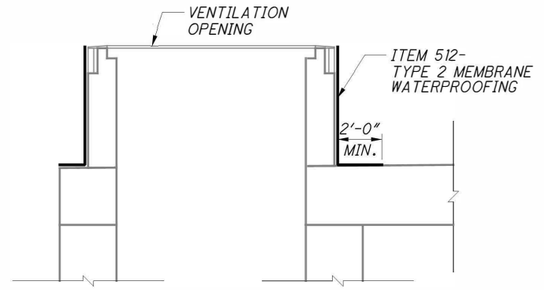

TYPICAL SECTION AT VENTILATION OPENING

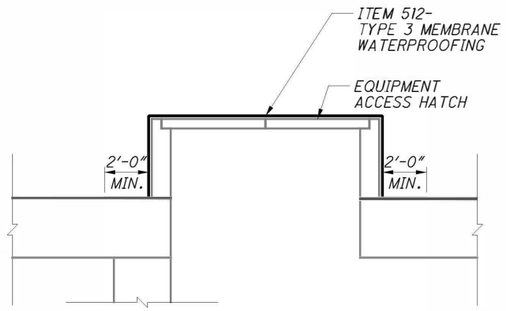

TYPICAL SECTION AT EQUIPMENT ACCESS HATCH

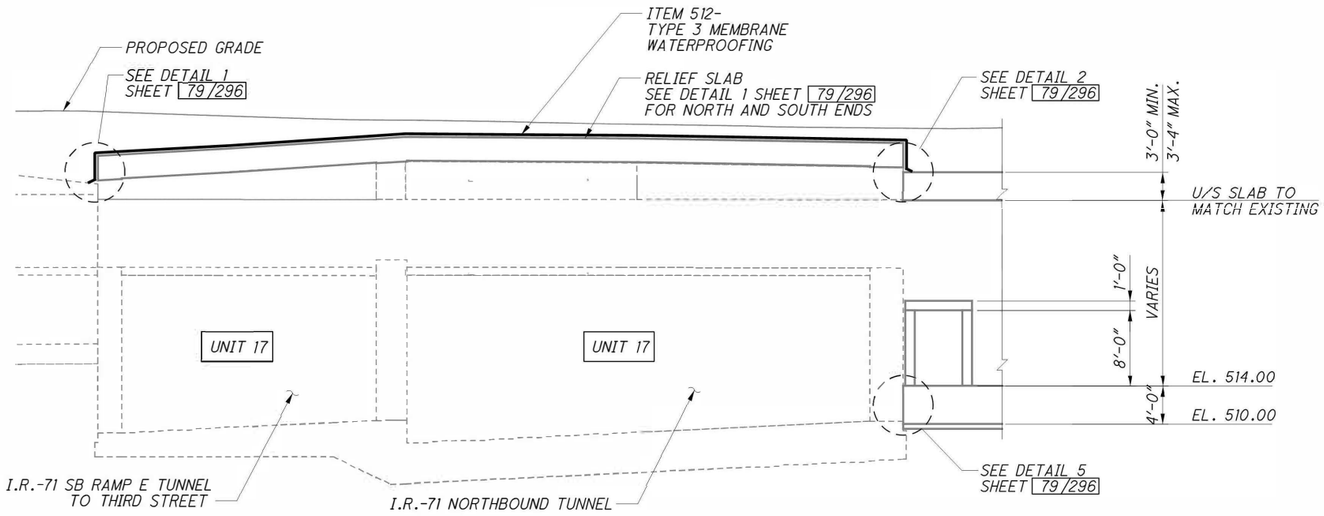

TYPICAL SECTION AT RELIEF SLAB

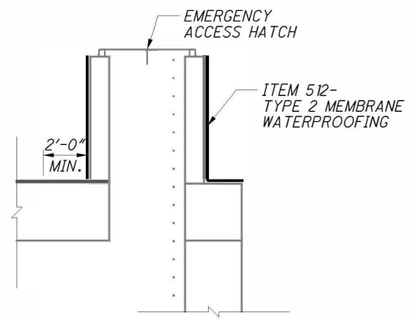

TYPICAL SECTION AT EMERGENCY ACCESS HATCH

LEGEND:

CMU	- CONCRETE MASONRY UNIT
CONC.	- CONCRETE
EL.	- ELEVATION
MIN.	- MINIMUM
U/S	- UNDERSIDE

DESIGN AGENCY
HATCH MOTT MacDONALD
18013 CLEVELAND PKWY.
SUITE 200
CLEVELAND, OH 44135

DESIGNED	DRAWN	REVIEWED	DATE
BTF	JMS	MAR	10/20/14
CHECKED	REVISED	STRUCTURE FILE NUMBER	
KTO		3106578	

STRUCTURAL DETAILS WATERPROOFING SHEET 1 OF 2
BRIDGE NO. HAM-71-0134
I-71 LYTLE TUNNEL UNDER LYTLE PARK

HAM-71-01.34
PID No. 87268

78/296

336
555

c:\pwworking\hmm\external\tyn61470\dms72782\071_0134GWD023.dgn 10/24/2014 11:03:28 AM TYN61470

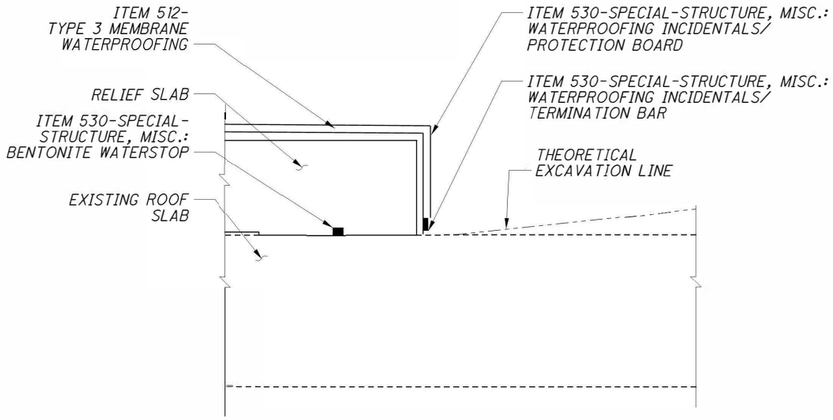

DETAIL - 1

SEE SHEET 78/296 FOR LOCATION

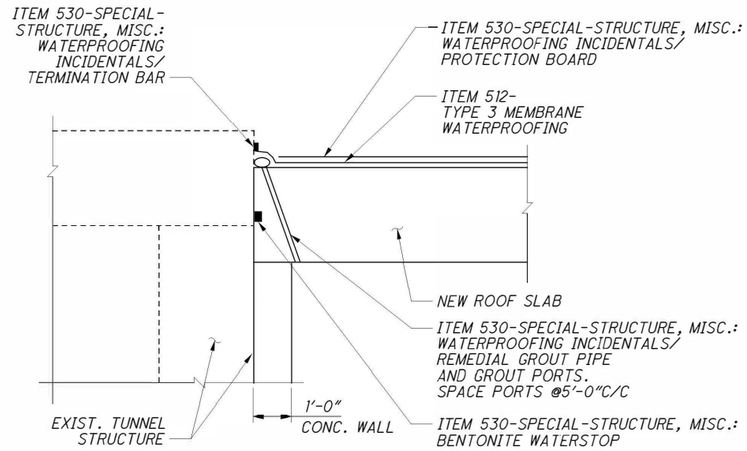

DETAIL - 2

SEE SHEET 78/296 FOR LOCATION (ROOF SLAB DETAIL -AT UNIT 17)

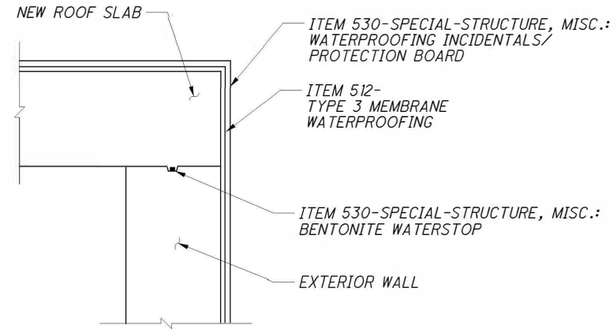

DETAIL - 3

SEE SHEET 78/296 FOR LOCATION

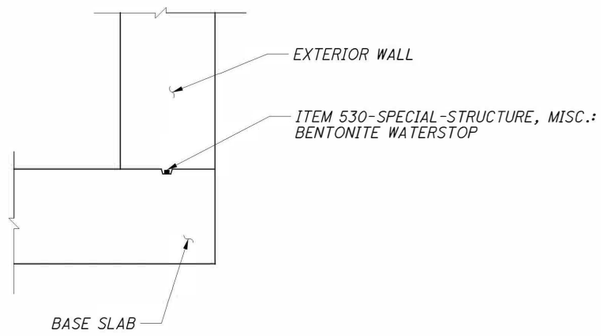

DETAIL - 4

SEE SHEET 78/296 FOR LOCATION

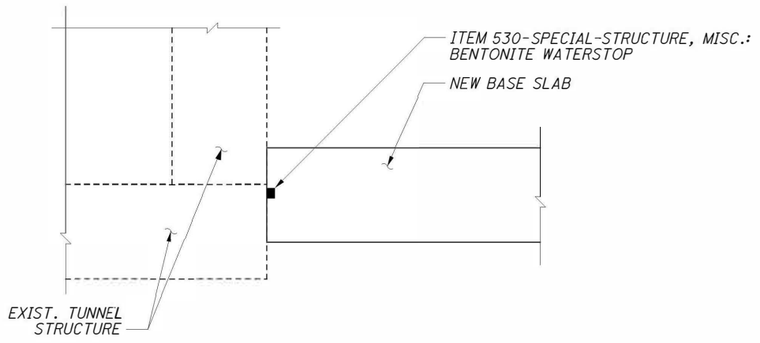

DETAIL - 5

SEE SHEET 78/296 FOR LOCATION

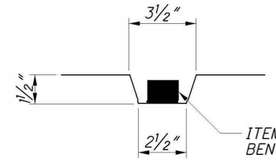

TYPICAL CONSTRUCTION JOINT

LEGEND:

C/C - CENTER TO CENTER
MISC. - MISCELLANEOUS

NOTES:

1. PROTECTION BOARD, TERMINATION BAR, REMEDIAL GROUT PIPES AND GROUT PORTS ARE INCLUDED FOR PAYMENT IN ITEM 530-SPECIAL STRUCTURE, MISC.: WATERPROOFING INCIDENTALS.
2. BENTONITE WATERSTOP IS INCLUDED FOR PAYMENT IN ITEM 530-SPECIAL-STRUCTURE, MISC.: BENTONITE WATERSTOP.

c:\pwworking\hmm\external\tyn61470\dms72785\071_0134CWD022.dgn 10/24/2014 11:03:31 AM TYN61470

DESIGN AGENCY
HATCH MOTT MacDONALD
18013 CLEVELAND PKWY.
SUITE 200
CLEVELAND, OH 44135

DESIGNED	DRAWN	REVIEWED	DATE
BTF	MJF	MAR	10/20/14
CHECKED	REVISED	STRUCTURE FILE NUMBER	
KTO		3106578	

STRUCTURAL DETAILS WATERPROOFING SHEET 2 OF 2

BRIDGE NO. HAM-71-0134
I-71 LYTLE TUNNEL UNDER LYTLE PARK

HAM-71-01.34
PID No. 87268

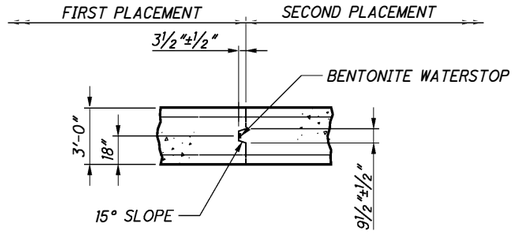

PLAN

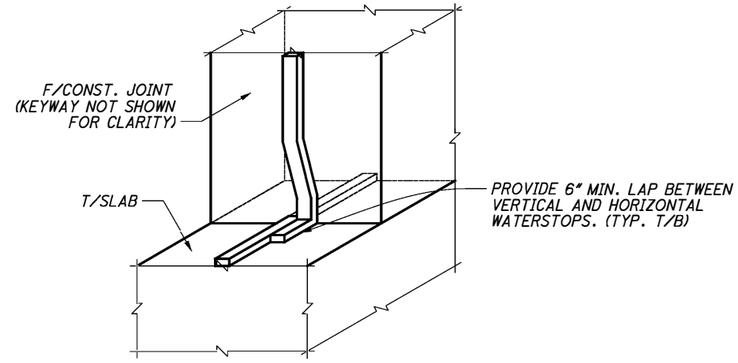

ISOMETRIC

DETAIL - VERTICAL CONSTRUCTION JOINT

NOTE:

THE CONTRACTOR MAY PLACE VERTICAL CONSTRUCTION JOINTS IN THE VENTILATION ROOM WALLS SPACED NO LESS THAN 30' APART, AND LOCATED NO LESS THAN 15' FROM THE INSIDE OF ANY CORNER.

VERTICAL CONSTRUCTION JOINTS SHALL BE THE FULL HEIGHT OF THE WALL.

ALL REINFORCMENT CROSSING THE SHEAR KEY SHALL BE CONTINUOUS THROUGH IT.

WATERSTOP MATERIAL AND INSTALLATION SHALL BE PER ITEM 530 - STRUCTURE, MISC.: BENTONITE WATERSTOP.

WATERSTOPS IN THE VERTICAL JOINTS SHALL LAP WITH THE WATERSTOPS ON THE SLABS. THE LAPPING LENGTH OF THE VERTICAL WATERSTOPS SHALL BE IN CONTACT WITH BOTH THE SLAB AND THE SLAB'S WATERSTOP.

COST OF ALL WORK ASSOCIATED WITH VERTICAL CONSTRUCTION JOINTS SHALL BE INCLUDED WITH ITEM 511 - CLASS QC1 CONCRETE WITH QC/QA, SUBSTRUCTURE FOR PAYMENT.

LEGEND:

CONST. - CONSTRUCTION
F/ - FACE OF
MIN. - MINIMUM
T/ - TOP OF
T/B - TOP AND BOTTOM
TYP. - TYPICAL

DESIGN AGENCY
HATCH MOTT MacDONALD
18013 CLEVELAND PKWY.
SUITE 200
CLEVELAND, OH 44135

DESIGNED	DRAWN	REVIEWED	DATE
MAR	MAR	BTF	02/10/15
CHECKED	REVISED	STRUCTURE FILE NUMBER	
TCV		3106578	

STRUCTURAL DETAILS - VENTILATION ROOM CONSTRUCTION JOINT

BRIDGE NO. HAM-71-0134
I-71 LYTLE TUNNEL UNDER LYTLE PARK

HAM-70-01.34
PID No. 87268

c:\pwworking\hmm\external\pre47802\dms72783\071_0134CMD027.dgn 2/10/2015 1:18:46 PM PRE47802

PLAN

NOTES:

1. SEE SHEET 81/296 FOR SECTION A-A.
2. SEE SHEET 81/296 FOR SECTION B-B.
3. SEE SHEET 81/296 FOR SECTION C-C.
4. SEE SHEET 81/296 FOR SECTION D-D.
5. SEE SHEET 81/296 FOR SECTION E-E.
6. FIRE RESISTANT COATING SYSTEM AND APPURTENANCES ARE INCLUDED FOR PAYMENT IN ITEM 530-SPECIAL STRUCTURE, MISCELLANEOUS: FIRE RESISTANT COATING SYSTEM. CEILING INSTALLATION ARE INCLUDED IN ITEM 530-SPECIAL STRUCTURE, MISCELLANEOUS: FIRE RESISTANT COATING SYSTEM, WALL INSTALLATION.

LEGEND:

- INSTALLATION OF FIRE RESISTANT COATING SYSTEM
- NB - NORTHBOUND
- SB - SOUTHBOUND
- STA. - STATION

DESIGN AGENCY
HATCH MOTT MacDONALD
18013 CLEVELAND PKWY.
SUITE 200
CLEVELAND, OH 44135

REVIEWED MAR DATE 10/20/14
STRUCTURE FILE NUMBER 3106578
DRAWN JMS REVISED
DESIGNED PSK CHECKED BTF

STRUCTURAL-FIRE RESISTANT COATING-PLANS

BRIDGE NO. HAM-71-0134
I-71 LYTLE TUNNEL UNDER LYTLE PARK

HAM-71-01.34
PID No. 87268

c:\pwworking\hmm\external\tyn61470\d-ns72783\071_0134CFP005.dgn 10/24/2014 11:03:33 AM TYN61470

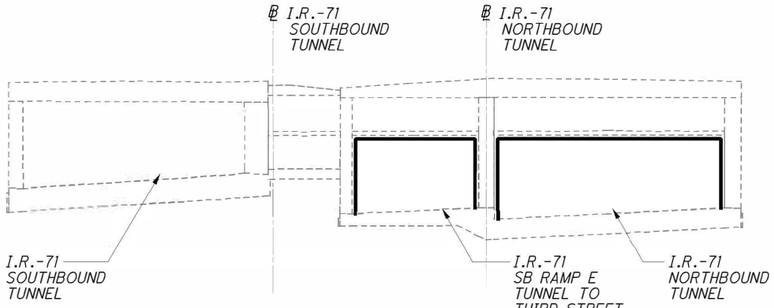

SECTION A-A
UNIT 8 AND UNIT 17

SEE SHEET 80/296 FOR LOCATION

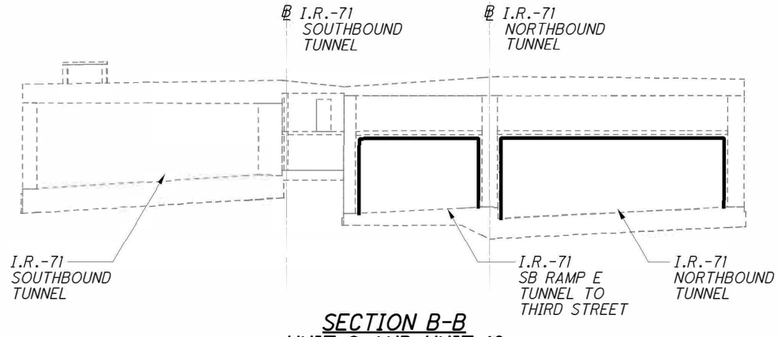

SECTION B-B
UNIT 9 AND UNIT 18

SEE SHEET 80/296 FOR LOCATION

NOTES:

1. REMOVE EXISTING TILES, LIGHTING FIXTURES AND ANY OTHER APPURTENANCES LOCATED IN THE AREAS OF THE WORK. CRITICAL TUNNEL SYSTEMS SHALL REMAIN IN SERVICE AT ALL TIMES.
2. PREPARE EXISTING CONCRETE SUBSTRATE IN ACCORDANCE WITH MANUFACTURER'S INSTRUCTIONS.
3. INSTALL STAINLESS STEEL MESH, 2 INCH OPENINGS. ANCHOR TO EXISTING WALL USING POWDER ACTUATED FASTENERS CAPABLE OF 200 LBS. TENSION ANCHORS SPACED AT 4'-0" O.C. FOR TUNNEL WALLS AND 2'-0" O.C. FOR TUNNEL ROOF. FASTENERS SHALL BE IN ACCORDANCE WITH ASTM E1190 HILTI X-CR STAINLESS STEEL OR EQUAL.
4. APPLY FIRE RESISTANT COATING SYSTEM IN ACCORDANCE WITH MANUFACTURER'S INSTRUCTIONS.
5. MANUFACTURER'S REPRESENTATIVE SHALL BE ON-SITE DURING THE INITIAL INSTALLATION OF THE FIRE RESISTANT COATING SYSTEM.
6. APPLY ITEM 512 - SEALING CONCRETE SURFACES (EPOXY - URETHANE) COLOR TO BE FEDERAL STANDARD 595B-17925 "WHITE".
7. FIRE RESISTANT COATING SYSTEM AND APPURTENANCES ARE INCLUDED FOR PAYMENT IN ITEM 530-SPECIAL STRUCTURE, MISCELLANEOUS: FIRE RESISTANT COATING SYSTEM. CEILING INSTALLATION ARE INCLUDED IN ITEM 530-SPECIAL STRUCTURE, MISCELLANEOUS: FIRE RESISTANT COATING SYSTEM, WALL INSTALLATION.

LEGEND:

℄	- BASELINE
———	- FIRE RESISTANT COATING
O.C.	- ON CENTER
SF	- SQUARE FOOT
SY	- SQUARE YARD

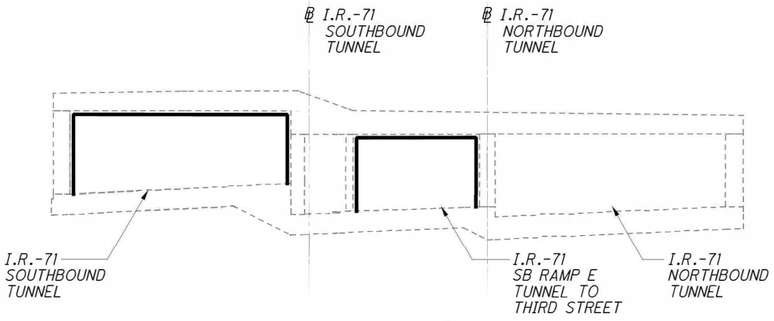

SECTION C-C - UNIT 20

SEE SHEET 80/296 FOR LOCATION

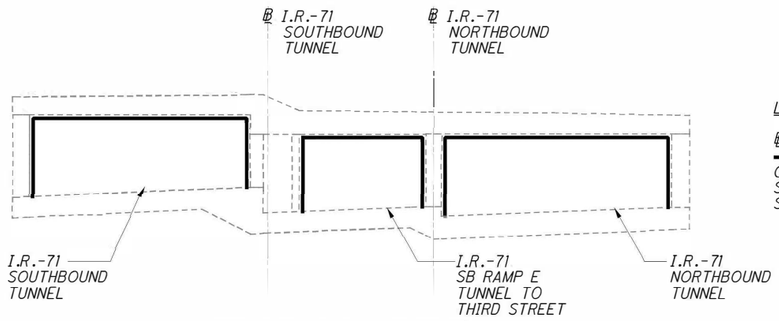

SECTION D-D - UNIT 21

SEE SHEET 80/296 FOR LOCATION

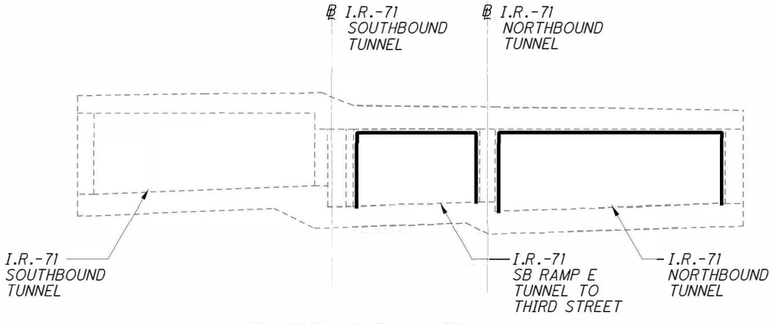

SECTION E-E - UNIT 22

SEE SHEET 80/296 FOR LOCATION

FIRE RESISTANT COATING TABLE

LOCATION	UNIT 17		UNIT 18		UNIT 20		UNIT 21		UNIT 22		TOTAL:	
	CEILING (SF)	WALL (SF)	CEILING (SF)	WALL (SF)	CEILING (SF)	WALL (SF)	CEILING (SF)	WALL (SF)	CEILING (SF)	WALL (SF)	CEILING (SF)	WALL (SF)
I.R.-71 SOUTHBOUND TUNNEL	-	-	-	-	2101	1768	2101	1711	-	-	4202	3479
I.R.-71 SB RAMP E TUNNEL	1284	1539	1284	1538	1231	1515	1231	1514	1231	1514	6261	7620
I.R.-71 NORTHBOUND TUNNEL	2337	1594	2337	1584	-	-	2239	1583	2239	1583	9152	6344
TOTAL:	3621	3133	3621	3122	3332	3283	5571	4808	3470	3097	19615	17443

SEALER COATING TABLE

LOCATION	UNIT 17		UNIT 18		UNIT 20		UNIT 21		UNIT 22		TOTAL:
	CEILING (SY)	WALL (SY)	CEILING (SY)	WALL (SY)	CEILING (SY)	WALL (SY)	CEILING (SY)	WALL (SY)	CEILING (SY)	WALL (SY)	(SY)
TOTAL:	403	349	403	347	371	365	619	535	386	345	4123

DESIGN AGENCY
HATCH MOTT MacDONALD
18013 CLEVELAND PKWY.
SUITE 200
CLEVELAND, OH 44135

DESIGNED	DRAWN	REVIEWED	DATE
PSK	JMS	MAR	10/20/14
CHECKED	REVISED	STRUCTURE FILE NUMBER	
BTF		3106578	

STRUCTURAL-FIRE RESISTANT COATING-SECTIONS
BRIDGE NO. HAM-71-0134
I-71 LYTLE TUNNEL UNDER LYTLE PARK

HAM-71-01.34
PID No. 87268

c:\pwworking\hmm\external\tyn61470\dms72783\071_0134CTS009.dgn 10/24/2014 11:03:36 AM TYN61470

RELIEF SLAB

ITEM 509E10000 EPOXY COATED REINFORCING STEEL (POUND)

MARK	TOTAL	LENGTH	WEIGHT LBS.	TYPE	DIMENSIONS								
					A	B	C	D	E	F	G	O	INC.
RS401	2,069	3'-6"	4,837	9	3 1/4"	3 1/4"	2'-2"	4 1/2"					
RS402	230	3'-3"	499	1	4 1/2"	2'-10 1/2"							
RS701	46	32'-8"	3,071	STR									
RS702	46	32'-8"	3,071	STR									
RS703	92	32'-8"	6,143	STR									
RS704	92	37'-9"	7,099	STR									
RS705	127	14'-5"	3,742	STR									
RS706	127	40'-0"	10,384	STR									
RS707	111	24'-9"	5,615	STR									
	1	8'-0"											
RS708	SO		400	STR									8"
	16	18'-0"											
RS710	169	17'-7"	6,074	STR									
RS711	169	40'-0"	13,817	STR									
	1	10'-9"											
RS712	SO		1,743	STR									4 1/2"
	62	16'-9"											
RS713	107	18'-8"	4,083	STR									
RS714	127	14'-5"	3,742	STR									
RS715	111	25'-6"	5,786	STR									
RS716	111	24'-9"	5,615	STR									
	1	8'-0"											
RS717	SO		400	STR									8"
	16	18'-0"											
RS718	16	25'-6"	834	STR									
RS901	60	40'-0"	8,160	STR									
RS1001	33	34'-5"	4,887	STR									
RS1002	33	36'-5"	5,171	STR									
RS1003	111	40'-0"	19,105	STR									
	1	22'-0"											
RS1004	SO		2,001	STR									1'-2"
	15	40'-0"											
RS1005	127	40'-0"	21,859	STR									
	TOTAL		148,138										

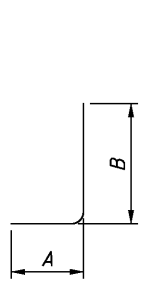

TYPE-1

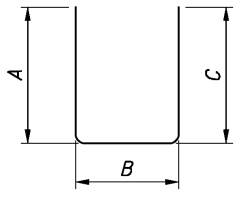

TYPE-2

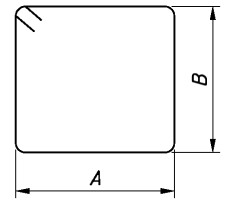

TYPE-3

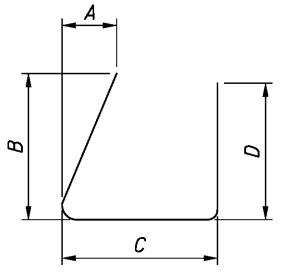

TYPE-9

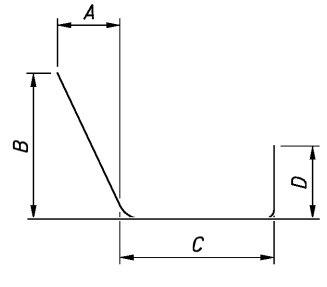

TYPE-10

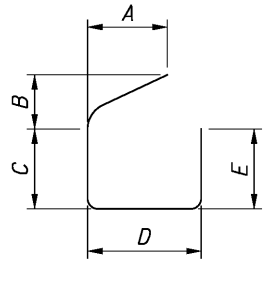

TYPE-12

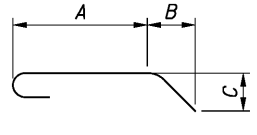

TYPE-18

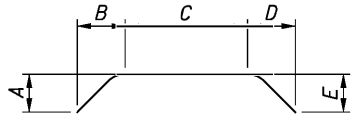

TYPE-20

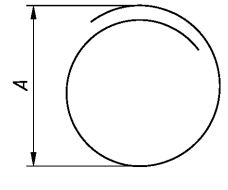

TYPE-34

DESIGN AGENCY
HATCH MOTT MacDONALD
18013 CLEVELAND PKWY.
SUITE 200
CLEVELAND, OH 44135

DESIGNED	DRAWN	REVIEWED	DATE
KMW	CM	MAR	10/20/14
CHECKED	REVISED	STRUCTURE FILE NUMBER	
BTF		3106578	

STRUCTURAL - UNIT 17/18 - REINFORCING SCHEDULE

BRIDGE NO. HAM-71-0134
I-71 LYTLE TUNNEL UNDER LYTLE PARK

HAM-71-01.34
PID No. 87268

c:\pwworking\hmm\external\pre47802\dms72783\071_0134CRL001.dgn 5/22/2015 11:39:16 AM PRE47802

BASE SLAB

ITEM 509E10000 EPOXY COATED REINFORCING STEEL (POUND)

MARK	TOTAL	LENGTH	WEIGHT LBS.	TYPE	DIMENSIONS								
					A	B	C	D	E	F	G	H	INC.
BS401	867	4'-10"	2,799	9		4 1/2"	4'-1"	4 1/2"					
BS410	86	2'-8"	153	STR									
BS801	256	40'-0"	27,341	STR									
BS802	223	22'-3"	13,248	STR									
BS803	196	40'-0"	20,933	STR									
BS804	139	32'-7"	12,093	STR									
BS805	32	26'-9"	2,286	STR									
BS806	220	31'-0"	18,209	STR									
BS807	220	40'-0"	23,496	STR									
BS808	208	40'-0"	22,214	STR									
BS809	70	40'-0"	7,476	STR									
BS810	12	15'-0"	481	STR									
	1	38'-0"											
BS811	SO		3,437	STR									
	33	40'-0"											
	1	5'-0"											9"
BS812	S.O.		1,001	STR									
	25	25'-0"											
	1	13'-0"											
BS813	S.O.		1,730	STR									9"
	27	35'-0"											
	1	1'-6"											
BS814	S.O.		609	STR									9"
	33	12'-4"											
BS815	3	40'-0"	320	STR									
	1	3'-0"											
BS816	S.O.		2,813	STR									9"
	49	40'-0"											
	1	23'-4"											
BS817	S.O.		1,139	STR									2 1/2"
	17	26'-10"											
	1	26'-4"											
BS818	S.O.		1,663	STR									4"
	21	33'-0"											
	1	23'-4"											
BS819	S.O.		3,282	STR									4"
	49	26'-10"											
	1	34'-4"											
BS820	S.O.		2,514	STR									4"
	25	41'-0"											
	1	25'-4"											
BS821	S.O.		2,139	STR									4"
	27	34'-0"											
	1	10'-0"											
BS822	S.O.		2,547	STR									4"
	53	26'-0"											
	1	38'-0"											
BS823	SO		3,437	STR									
	3	40'-0"											
BS830	139	32'-1"	11,907	STR									
BS831	32	26'-3"	2,243	STR									
BS832	194	13'-8"	7,079	STR									
BS833	194	40'-0"	20,719	STR									
BS834	182	40'-0"	19,438	STR									
BS835	97	40'-0"	10,360	STR									
BS836	21	40'-0"	2,243	STR									
BS837	12	31'-0"	993	STR									
	1	5'-0"											
BS838	S.O.		1,001	STR									9"
	25	25'-0"											
	1	23'-4"											
BS839	S.O.		1,139	STR									2 1/2"
	17	26'-10"											
	1	8'-0"											
BS840	S.O.		645	STR									4"
	21	15'-0"											

BASE SLAB

ITEM 509E10000 EPOXY COATED REINFORCING STEEL (POUND)

MARK	TOTAL	LENGTH	WEIGHT LBS.	TYPE	DIMENSIONS								
					A	B	C	D	E	F	G	H	INC.
	1	24'-0"											
BS841	S.O.		4,187	STR									4"
	49	40'-0"											
	1	9'-6"											
BS842	S.O.		884	STR									4"
	25	17'-0"											
	1	7'-0"											
BS843	S.O.		829	STR									4"
	27	16'-0"											
	1	14'-0"											
BS844	S.O.		6,128	STR									4"
	85	40'-0"											
BS850	192	26'-8"	13,670	20	3'-11"	5'-6"	15'-8"	5'-6"	3'-11"				
BS901	256	29'-8"	25,822	STR									
BS902	148	40'-0"	20,128	STR									
BS903	196	32'-3"	21,491	STR									
	1	9'-0"											
BS904	S.O.		1,698	STR									9"
	27	28'-0"											
	1	13'-0"											
BS905	S.O.		2,861	STR									9"
	33	38'-0"											
BS906	3	40'-0"	408	STR									
	1	38'-0"											
BS907	SO		3,437	STR									
	3	40'-0"											
	1	3'-0"											
BS908	S.O.		2,813	STR									9"
	49	40'-0"											
BS1101	75	40'-0"	15,939	STR									
BS1102	25	37'-9"	5,014	STR									
BS1103	50	40'-0"	10,626	STR									
BC5001	1	20'-10"	22	STR									
BC5002	1	15'-10"	17	STR									
BC5003	1	2'-10"	3	STR									
	TOTAL		391,103										

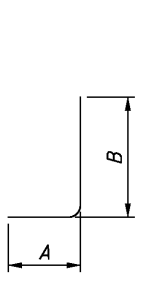

TYPE-1

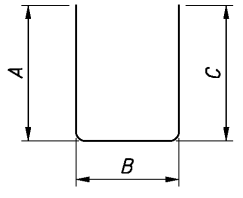

TYPE-2

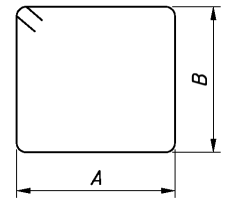

TYPE-3

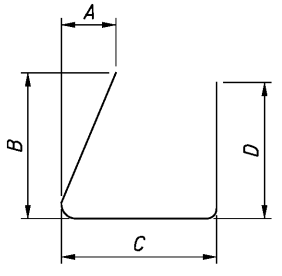

TYPE-9

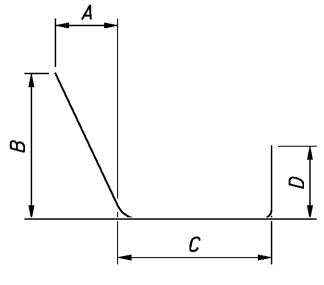

TYPE-10

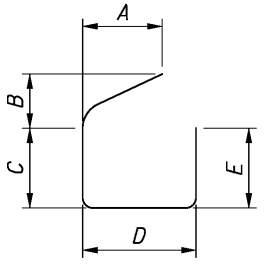

TYPE-12

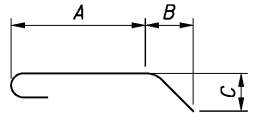

TYPE-18

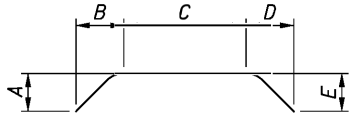

TYPE-20

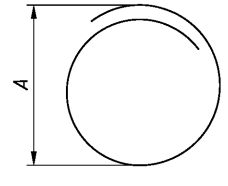

TYPE-34

DESIGN AGENCY
HATCH MOTT MacDONALD
18013 CLEVELAND PKWY.
SUITE 200
CLEVELAND, OH 44135

DESIGNED KMW | DRAWN CM | REVIEWED MAR | DATE 10/20/14
CHECKED BTF | REVISED | STRUCTURE FILE NUMBER 3106578

STRUCTURAL-VENTILATION ROOM-REINFORCING SCHEDULE 1 OF 6

BRIDGE NO. HAM-71-0134
I-71 LYTLE TUNNEL UNDER LYTLE PARK

HAM-71-01.34
PID No. 87268

83 / 296

341 / 555

c:\pwworking\hmm\external\pre47802\dms72783\071_0134CRL002.dgn 9/23/2015 9:34:17 AM PRE47802

COLUMNS

ITEM 509E10000 EPOXY COATED REINFORCING STEEL (POUND)

MARK	TOTAL	LENGTH	WEIGHT LBS.	TYPE	DIMENSIONS A	B	C	D	E	F	G	O	INC.
IC401	213	12'-0"	1,707	34	3'-2"								
IC402	80	7'-5"	396	3	1'-8"	1'-8"							
IC403	80	5'-6"	294	3	1'-8"	8 1/2"							
IC404	80	5'-6"	294	3	8 1/2"	1'-8"							
IC405	72	6'-8"	321	2	2'-0"	2'-8"	2'-0"						
IC406	19	9'-8"	123	2	3'-6"	2'-8"	3'-6"						
IC407	38	6'-8"	169	2	2'-0"	2'-8"	2'-0"						
IC701	32	6'-1"	398	1	1'-2"	4'-11"							
IC702	32	20'-9"	1,357	STR									
IC703	72	5'-8"	834	STR									
IC704	3	6'-1"	37	1	1'-2"	5'-9"							
IC705	6	20'-9"	83	STR									
IC706	6	6'-1"	75	1	1'-2"	5'-9"							
IC707	3	20'-9"	127	STR									
IC801	48	7'-1"	908	1	1'-4"	5'-9"							
IC802	48	22'-3"	2,852	STR									
IC1001	36	9'-1"	1,407	1	1'-10"	7'-3"							
IC1002	36	20'-9"	3,214	STR									
	TOTAL		14,596										

ELECTRICAL EQUIPMENT PADS

ITEM 509E10000 EPOXY COATED REINFORCING STEEL (POUND)

MARK	NUMBER TOTAL	LENGTH	WEIGHT LBS.	TYPE	DIMENSIONS A	B	C	D	E	F	G	O	INC.
EP4001	7	2'-11"	14	STR									
EP4002	4	5'-4"	14	STR									
EP4003	29	5'-10"	113	STR									
EP4004	7	27'-4"	128	STR									
EP4005	31	2'-8"	55	STR									
EP4006	4	29'-4"	78	STR									
	TOTAL		402										

FAN FOUNDATION

ITEM 509E10000 EPOXY COATED REINFORCING STEEL (POUND)

MARK	NUMBER TOTAL	LENGTH	WEIGHT LBS.	TYPE	DIMENSIONS A	B	C	D	E	F	G	O	INC.
FF4001	96	0'-9"	48	STR									
FF4002	66	9'-8"	426	STR									
FF4003	66	9'-8"	426	STR									
FF4004	120	8'-3 1/2"	664	1	4 1/2"	7'-11"							
FF4005	24	18'-4"	306	2	3'-4"	11'-8"	3'-4"						
FF4006	39	13'-10"	360	2	3'-4"	7'-2"	3'-4"						
FF4007	18	23'-2"	279	2	8'-0"	7'-2"	8'-0"						
	TOTAL		2,509										

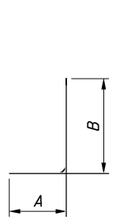

TYPE-1

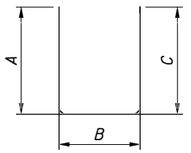

TYPE-2

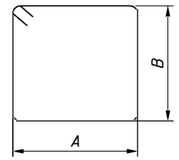

TYPE-3

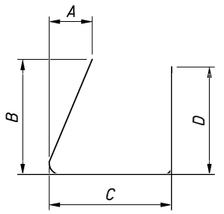

TYPE-9

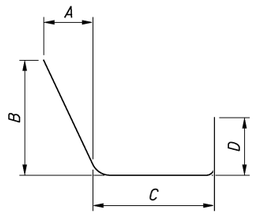

TYPE-10

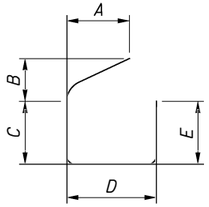

TYPE-12

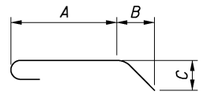

TYPE-18

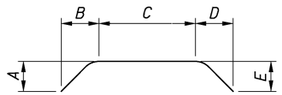

TYPE-20

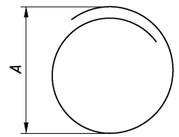

TYPE-34

NO.	DATE	REVISION DESCRIPTION
2	10/02/15	UPDATED COLUMN TABLE (RFI 90)
1	09/24/15	UPDATED COLUMN TABLE (RFI 80)

c:\pwworking\hmm\external\pre47802\dms72783\071_0134CRL003.dgn 10/5/2015 9:42:29 AM PRE47802

DESIGN AGENCY
HATCH MOTT MacDONALD
18013 CLEVELAND PKWY.
SUITE 200
CLEVELAND, OH 44135

DESIGNED	DRAWN	REVIEWED	DATE
KMW	MJF	MAR	10/20/14
CHECKED	REVISED	STRUCTURE FILE NUMBER	
BTF		3106578	

STRUCTURAL-VENTILATION ROOM-REINFORCING SCHEDULE 2 OF 6

BRIDGE NO. HAM-71-0134
I-71 LYTLE TUNNEL UNDER LYTLE PARK

HAM-71-01.34
PID No. 87268

EXTERIOR WALLS

ITEM 509E10000 EPOXY COATED REINFORCING STEEL (POUND)

MARK	TOTAL	LENGTH	WEIGHT LBS.	TYPE	DIMENSIONS A	B	C	D	E	F	G	O	INC.
EW420	38	2'-8"	68	STR									
EW501	230	6'-0"	1,439	1	3'-0"	3'-0"							
EW701	728	20'-1"	29,885	1	9'-7"	10'-6"							
EW702	356	11'-8"	8,489	1	1'-2"	10'-6"							
EW703	602	20'-9"	25,533	STR									
EW704	292	20'-9"	12,385	STR									
EW705	126	22'-3"	5,730	STR									
EW706	64	22'-3"	2,911	STR									
EW707	42	27'-7 1/2"	2,372	STR									
EW708	42	11'-4"	973	STR									
EW709	42	28'-5"	2,440	STR									
EW710	196 △2	40'-0"	16,025	STR									
EW711	44	33'-2"	2,983	STR									
EW712	38	38'-5"	2,984	STR									
EW713	38	33'-4"	2,589	STR									
EW714	38	8'-6"	660	STR									
EW715	38	18'-8"	1,450	STR									
TOTAL			118,848 △2										

INTERIOR WALLS

ITEM 509E10000 EPOXY COATED REINFORCING STEEL (POUND)

MARK	TOTAL △3	LENGTH	WEIGHT LBS.	TYPE	DIMENSIONS A	B	C	D	E	F	G	O	INC.
IW401	398	8'-5"	2,238	1	8"	7'-9"							
IW402	244	8'-9"	1,426	STR									
IW403	72	37'-0"	1,780	STR									
IW404	186	6'-8"	828	STR									
IW405	48	37'-0"	1,186	STR									
IW406	110	13'-0"	955	STR									
IW407	104	14'-0"	973	STR									
IW408	36	32'-0"	770	STR									
IW409	26	29'-0"	504	STR									
IW410	14	14'-0"	131	1	8"	4'-9"							
IW411	14	14'-0"	131	STR									
IW412	26	6'-8"	116	STR									
IW413	48	21'-6"	689	STR									
IW414	40	27'-0"	721	STR									
IW420	13	2'-8"	23	STR									
IW430	14	2'-6"	23	STR									
IW431	14	17'-6"	164	STR									
IW432	12	17'-6"	140	STR		△1							
IW433	8	3'-6"	19	STR									
IW434	8	2'-0"	11	STR	△2								
IW435	44	20'-0"	588	STR									
IW436	38	20'-8"	525	STR	△3								
IW501	38	6'-0"	238	1	3'-0"	3'-0"							
IW701	85	6'-11"	1,202	1	1'-2"	5'-9"							
IW702	85	20'-9"	3,605	STR									
IW703	19	14'-10"	576	STR									
IW704	19	14'-10"	576	STR									
IW705	19	30'-6"	1,184	STR									
IW706	19	30'-6"	1,184	STR									
IW707	148	△2 6'-11"	2,092	1	1'-2"	5'-9"							
IW708	148	△2 20'-9"	6,277	STR									
IW709	8	13'-9"	225	STR									
IW710	18	△2 10'-9"	396	STR									
IW711	28	△1 2'-6"	143	STR									
IW712	16	2'-2"	71	STR									
IW713	14	3'-8"	105	STR									
IW714	14	△2 34'-6"	987	STR									
IW715	38	37'-0"	2,874	STR									
IW716	26	△2 36'-6"	1,940	STR									
IW717	14	△2 20'-6"	587	STR									
IW718	20	23'-6"	961	STR									
IW719	6	9'-10"	121	STR									
TOTAL			39,285 △3										

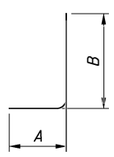

TYPE-1

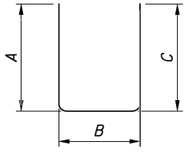

TYPE-2

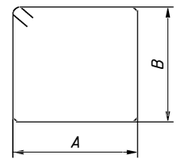

TYPE-3

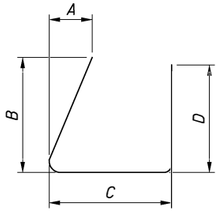

TYPE-9

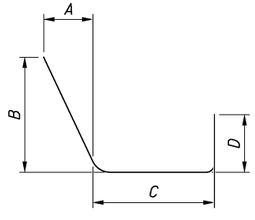

TYPE-10

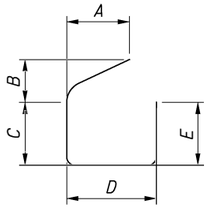

TYPE-12

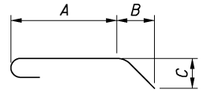

TYPE-18

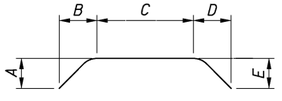

TYPE-20

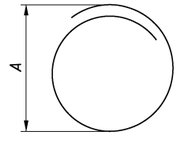

TYPE-34

NO.	DATE	REVISION DESCRIPTION
△3	10/13/15	UPDATED TABLE (RFI 95)
△2	10/01/15	UPDATED TABLE (RFI 90)
△1	09/24/15	UPDATED TABLE (RFI 74)

c:\pwworking\hmm\external\pre47802\dms72783\071_0134CRL004.dgn 10/13/2015 2:44:25 PM PRE47802

DESIGN AGENCY
HATCH MOTT MacDONALD
18013 CLEVELAND PKWY.
SUITE 200
CLEVELAND, OH 44135

DESIGNED KMW | DRAWN MJF | REVIEWED MAR | DATE 10/20/14
CHECKED BTF | REVISED | STRUCTURE FILE NUMBER 3106578

STRUCTURAL-VENTILATION ROOM-REINFORCING SCHEDULE 3 OF 6

BRIDGE NO. HAM-71-0134
I-71 LYTLE TUNNEL UNDER LYTLE PARK

HAM-71-01.34
PID No. 87268

ROOF SLAB

ITEM 509E10000 EPOXY COATED REINFORCING STEEL (POUND)

MARK	TOTAL	LENGTH	WEIGHT LBS.	TYPE	DIMENSIONS A	B	C	D	E	F	G	O	INC.
RF401	30	13'-10 1/4"	278	4	7'-1 1/4"	3'-8"							
RF402 △2	30	11'-4 1/2"	228	4	7'-1 1/4"	3'-6 1/4"							
RF403 △1	3,066	3'-5"	6,998	9		0'-4 1/2"	2'-8"	0'-4 1/2"					
RF404	156	4'-5"	460	9		0'-4 1/2"	3'-8"	0'-4 1/2"					
				△1									
RF701	81	34'-8"	5,740	STR									
RF703	119	24'-0"	5,838	STR									
RF704	9	9'-6"	175	STR									
RF705	18	2'-8"	98	STR									
RF706	97	33'-0"	6,543	STR									
RF707 △1	39	40'-0"	△1 3,189	STR									
RF708	32	17'-0"	1,112	STR									
	1	11'-0"											
RF709	S.0.		194	STR									9"
	7	16'-0"											
	1	4'-0"											
RF710	S.0.		327	STR									9"
	16	16'-0"											
	1	29'-0"											
RF711	S.0.		930	STR									9"
	14	36'-0"											
	1	10'-0"											
RF712	S.0.		2,230	STR									9"
	45	40'-0"											
	1	33'-0"											
RF713	S.0.		581	STR									9"
	8	38'-0"											
	1	4'-0"											
RF714	S.0.		2,473	STR									9"
	55	40'-0"											
RF720	168	17'-0"	5,838	STR									
RF721	20	17'-7"	719	STR									
RF722	18	24'-7"	904	STR									
RF723	17	33'-0"	1,147	STR									
RF725	9	11'-6"	212	STR									
RF726	101	40'-0"	8,258	STR									
RF727	122	40'-0"	9,975	STR									
RF728	83	25'-0"	4,241	STR									
	1	△1 21'-0"		△1									
RF729	S.0.		961	STR									4"
	20	26'-0"											
	1	15'-0"											
RF730	S.0.		689	STR									4"
	19	20'-6"											
RF731	7	40'-0"	572	STR									
RF732	20	17'-0"	695	STR									
RF733	9	17'-0"	313	STR									
RF734	11	16'-0"	360	STR									
RF735	15	33'-0"	1,012	STR									
RF739	6	2'-8"	33	STR									
RF740	72	13'-0"	1,913	STR									
RF741	72	40'-0"	5,887	STR									
RF742	6	39'-0"	478	STR									
RF743	97	33'-0"	6,543	STR									
RF744	126	38'-0"	9,787	STR									
RF745	32	32'-0"	2,093	STR									
RF746	11	15'-0"	337	STR									
RF747	6	9'-6"	117	STR									
RF748	6	2'-8"	△1 33	STR									
	1	26'-0"											
RF749	S.0.		415	STR									9"
	7	32'-0"											
RF750	167	28'-3"	9,643	STR									
RF751	18	24'-7"	904	STR									
RF752	20	17'-7"	719	STR									
RF753	17	20'-0"	695	STR									
RF754	9	11'-6"	212	STR									
RF755	150	40'-0"	12,264	STR									
RF756	7	40'-0"	572	STR									

ROOF SLAB

ITEM 509E10000 EPOXY COATED REINFORCING STEEL (POUND)

MARK	TOTAL	LENGTH	WEIGHT LBS.	TYPE	DIMENSIONS A	B	C	D	E	F	G	O	INC.
		△1											
RF757	20	33'-0"	1,349	STR									
RF758 △1	9	33'-0"	607	STR									
RF760	103	40'-0"	8,421	STR									
RF761	20	12'-0"	491	STR									
	1	33'-0"											
RF762	S.0.		1,378	STR									4"
	19	38'-0"											
RF763	3	33'-0"	202	STR									
RF764	12	16'-0"	392	STR									
RF765	14	40'-0"	1,145	STR									
	1	30'-0"											
RF766 △1	S.0.		608	STR									9"
	14	36'-0"											
RF767	45	40'-0"	3,679	STR									
	1	10'-0"											
RF768	S.0.		2,230	STR									9"
	45	40'-0"											
	1	33'-0"											
RF769	S.0.		581	STR									9"
	8	38'-0"											
	1	4'-0"											
RF770	S.0.		2,473	STR									9"
	55	40'-0"											
	1	4'-0"											
RF771	S.0.		327	STR									
	16	16'-0"											
RF801	88	40'-0"	9,398	STR									
RF802	14	40'-0"	1,495	STR									
RF803	45	40'-0"	4,806	STR									
RF804	37	40'-0"	3,952	STR									
RF805	27	40'-0"	2,884	STR									
	1	10'-0"											
RF806	S.0.		6,408	STR									4"
	96	40'-0"											
RF807	37	12'-0"	1,185	STR									
RF808	27	12'-0"	865	STR									
	1	22'-0"											
RF809	S.0.		1,089	STR △1									2 1/2"
	17	26'-0"											
RF820	158	40'-0"	16,874	STR									
RF821	17	43'-4"	1,970	STR									
RF822	49	40'-0"	5,233	STR									
RF823	27	40'-0"	2,884	STR									
RF824	37	40'-0"	3,952	STR									
	1	10'-0"											
RF825	S.0.		6,408	STR									4"
	96	40'-0"											
	1	22'-0"											
RF826	S.0.		1,089	STR									2 1/2"
	17	26'-0"											
RF827	27	12'-0"	865	STR									
RF828	37	12'-0"	1,185	STR									
RF901	51	28'-0"	3,813	STR									
RF910	98	28'-0"	7,326	STR									
RF1001	51	40'-0"	8,778	STR									
RF1002	162	40'-0"	27,883	STR									
RF1003	20	40'-0"	3,440	STR									
RF1010	49	40'-0"	8,434	STR									
RF1011	49	40'-0"	8,434	STR									
RF1012	49	28'-0"	5,904	STR									
	TOTAL		296,374										

△3

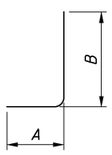

TYPE-1

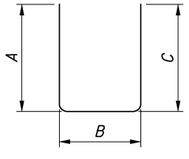

TYPE-2

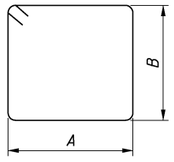

TYPE-3

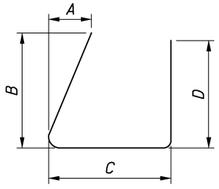

TYPE-9

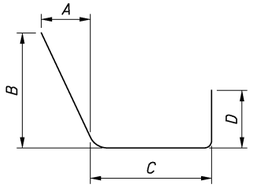

TYPE-10

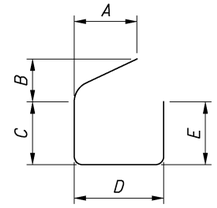

TYPE-12

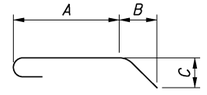

TYPE-18

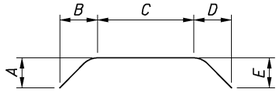

TYPE-20

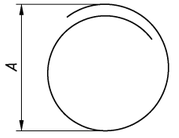

TYPE-34

NO.	DATE	REVISION DESCRIPTION
△3	01/22/16	UPDATED TABLE (RFI 112)
△2	10/01/15	UPDATED TABLE (RFI 89)
△1	09/25/15	REVISED PER ENGINEER'S CHECK

DESIGN AGENCY
HATCH MOTT MacDONALD
18013 CLEVELAND PKWY.
SUITE 200
CLEVELAND, OH 44135

DESIGNED	DRAWN	REVIEWED	DATE	STRUCTURE FILE NUMBER
KMW	CM	MAR	10/20/14	3106578
CHECKED	REVISED			
BTF				

STRUCTURAL-VENTILATION ROOM-REINFORCING SCHEDULE 4 OF 6

BRIDGE NO. HAM-71-0134
I-71 LYTLE TUNNEL UNDER LYTLE PARK

HAM-71-01.34
PID No. 87268

86/296

344/555

c:\pwworking\hmm\external\pre47802\dms72783\071_0134CRL005.dgn 1/22/2016 1:49:32 PM PRE47802

EMERGENCY ACCESS SHAFTS

ITEM 509E10000 EPOXY COATED REINFORCING STEEL (POUND)

MARK	TOTAL	LENGTH	WEIGHT LBS.	TYPE	DIMENSIONS A	B	C	D	E	F	G	H	INC.
NAH401	36	9'-8 1/2"	233	1	4 1/2"	9'-4"							
NAH402	14	14'-0"	131	2	4'-8"	5'-8"	4'-8"						
NAH403	28	4'-6"	84	STR									
SAH401	36	7'-8 1/2"	185	1	4 1/2"	7'-4"							
SAH402	14	14'-0"	131	2	4'-8"	5'-8"	4'-8"						
SAH403	28	4'-6"	84	STR									
TOTAL			848										

EQUIPMENT ACCESS SHAFT

ITEM 509E10000 EPOXY COATED REINFORCING STEEL (POUND)

MARK	TOTAL	LENGTH	WEIGHT LBS.	TYPE	DIMENSIONS A	B	C	D	E	F	G	H	INC.
EAS401	44	7'-6 1/2"	222	1	4 1/2"	7'-2"							
EAS402	40	6'-6 1/2"	175	1	4 1/2"	6'-2"							
EAS501	20	19'-2"	400	1	9'-7"	9'-7"							
EAS403	16	13'-0"	139	STR									
EAS405	12	10'-7"	85	STR									
EAS406	24	5'-1"	81	STR									
EAS601	12	10'-7"	191	STR									
EAS602	24	5'-1"	183	STR									
TOTAL			1,476										

VENTILATION SHAFT

ITEM 509E10000 EPOXY COATED REINFORCING STEEL (POUND)

MARK	TOTAL	LENGTH	WEIGHT LBS.	TYPE	DIMENSIONS A	B	C	D	E	F	G	H	INC.
VS401	300	7'-0 1/2"	1,411	1	4 1/2"	6'-8"							
VS402 △2	90	5'-10"	351	1	10"	4'-10"							
VS403	146	6'-5" △2	626	1	10"	5'-7"							
VS404	148	3'-9"	371	STR		△1							
				△1									
VS405	12	40'-0"	321	STR									
VS406	16	40'-0"	428	STR									
VS407	12	12'-8"	102	STR									
VS408	16	12'-8"	135	STR									
VS409	3 △1	40'-0"	80	STR									
VS410	2 △2	12'-8"	17	STR									
VS411	48	4'-0"	128	1	2'-0"	2'-0"							
VS412	12	28'-0"	224										
VS413	16	28'-0"	299					△1					
VS414	2	28'-0"	37										
VS415	64	6'-5"	274	1	10"	5'-7"							
TOTAL		△1	4,804	△2									

BEAMS

ITEM 509E10000 EPOXY COATED REINFORCING STEEL (POUND)

MARK	TOTAL	LENGTH	WEIGHT LBS.	TYPE	DIMENSIONS A	B	C	D	E	F	G	O	INC.
BEAM NO 1													
BM401	27	11'-9"	212	3	2'-8"	2'-10"							
BM402	3	7'-5 1/2"	15	3	2'-8"	8 1/4"							
BM701	6	15'-8"	192	STR									
BM1001	9	15'-8"	607	STR									
BEAM NO 2													
BM403	152	11'-9"	1,193	3	2'-8"	2'-10"							
BM404	100	8'-1"	540	3	2'-8"	1'-0"							
BM702	8	28'-9"	470	STR									
BM703	8	20'-8"	338	STR									
BM704	8	21'-8"	354	STR									
BM901	16	30'-3"	1,646	STR									
BM902	8	29'-3"	796	STR									
BM903	16	28'-9"	1,564	STR									
BM904	8	28'-9"	782	STR									
BEAM NO 3													
BM405	204	13'-6"	1,840	2	4'-2"	5'-2"	4'-2"						
BM406	204	10'-5"	1,420	2	4'-2"	2'-1"	4'-2"						
BM407	140	12'-5"	1,161	2	4'-2"	4'-1"	4'-2"						
BM408	140	9'-5"	881	2	4'-2"	1'-1"	4'-2"						
BM705	11	36'-0"	809	STR									
BM706	11	17'-4"	390	STR									
BM707	11	33'-10"	761	STR									
BM1002	22	40'-0"	3,787	STR									
BM1003	22	34'-10"	3,298	STR									
BEAM NO 4													
BM409	110	11'-9"	863	3	2'-8"	2'-10"							
BM410	42	8'-7 1/2"	242	3	2'-8"	1'-3 1/4"							
BM411	42	7'-1 1/2"	200	3	2'-8"	6 1/4"							
BM415	72	2'-8"	128	STR									
BM708	4	36'-6"	298	STR									
BM709	8	24'-5"	399	STR									
BM710	8	31'-1"	508	STR									
BM711	4	27'-2"	222	STR									
BM712	4	18'-1"	148	STR									
BM905	8	33'-8"	916	STR									
BM1004	8	34'-8"	1,193	STR									
BM1005	8	28'-11"	995	STR									
BM1101	8	34'-0"	1,445	STR									
TOTAL			30,613										

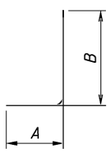

TYPE-1

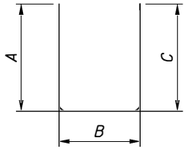

TYPE-2

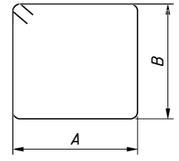

TYPE-3

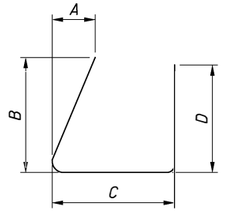

TYPE-9

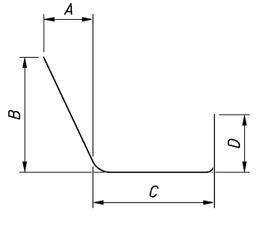

TYPE-10

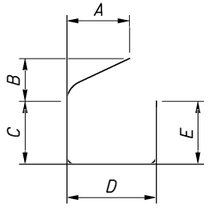

TYPE-12

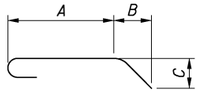

TYPE-18

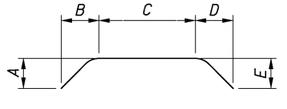

TYPE-20

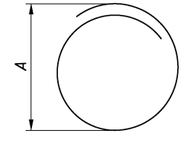

TYPE-34

NO.	DATE	REVISION DESCRIPTION
2	02/01/16	VENTILATION OPENING WALL WIDTH DECREASE
1	01/22/16	UPDATED TABLE (RFI 112)

DESIGN AGENCY
HATCH MOTT MacDONALD
18013 CLEVELAND PKWY.
SUITE 200
CLEVELAND, OH 44135

DESIGNED KMW | DRAWN CM | REVIEWED MAR | DATE 10/20/14 | CHECKED BTF | REVISED | STRUCTURE FILE NUMBER 3106578

STRUCTURAL-VENTILATION ROOM-REINFORCING SCHEDULE 5 OF 6

BRIDGE NO. HAM-71-0134
I-71 LYTLE TUNNEL UNDER LYTLE PARK

HAM-71-01.34
PID No. 87268

87 / 296

345
555

c:\pwworking\hmm\external\pre47802\dms72783\071_0134CRL006.dgn 2/3/2016 11:36:53 AM PRE47802

CONCRETE MASONRY UNITS

ITEM 509E10000 EPOXY COATED REINFORCING STEEL (POUND)

MARK	TOTAL	LENGTH	WEIGHT LBS.	TYPE	DIMENSIONS A	B	C	D	E	F	G	O	INC.
BB6001	8	9'-4"	112	STR									
BB6002	16	12'-8"	304	STR									
BB6003	8	3'-8"	44	STR									
BB6004	8	5'-8"	68	STR									
BB6005	8	3'-0"	36	STR									
BB6006	8	3'-0"	36	STR									
BB6007	8	24'-3"	291	STR									
BB6008	2	13'-4"	40	STR									
BB6009	6	17'-8"	159	STR									
BB6010	4	11'-0"	66	STR									
BB6011	4	23'-6"	141	STR									
BB6012	4	5'-10"	35	STR									
BB6013	2	16'-4"	49	STR									
BB6014	6	20'-8"	186	STR									
BB6015	2	11'-4"	34	STR									
BB6016	2	15'-8"	47	STR									
BB6017	4	12'-0"	72	STR									
BB6018	4	8'-2"	49	STR									
BB6019	4	18'-5"	111	STR									
BB6020	2	1'-8"	5	STR									
BB6021	2	2'-10"	9	STR									
BB6022	2	8'-2"	25	STR									
RM6001	12	7'-0"	126	STR									
RM6002	102	3'-8"	562	STR									
RM6003	166	7'-0"	1,766	STR									
RM6004	394	7'-0"	4,143	STR									
RM6005	22	5'-4"	176	STR									
RM6006	64	2'-0"	192	STR									
MP6001	76	4'-0"	457	STR									
MP6002	228	7'-2"	2,454	STR									
MP6003	76	4'-0"	457	STR									
LB3001	20	3'-2"	24	33	6 3/4"	8 3/4"							
LB4001	6	7'-0"	28	STR									
LB4002	4	4'-0"	11	STR									
LB6001	6	7'-0"	63	STR									
LB6002	4	4'-0"	24	STR									
MC4001	2	12'-8"	17	STR									
MC4002	1	3'-8"	2	STR									
MC4003	1	5'-8"	4	STR									
MC4004	1	3'-0"	2	STR									
MC4005	1	3'-0"	2	STR									
MC4006	1	24'-3"	16	STR									
MC4007	1	13'-4"	9	STR									
MC4008	1	11'-0"	7	STR									
MC4009	1	5'-10"	4	STR									
MC4010	1	16'-4"	11	STR									
TOTAL			12,477										

AIR DISCHARGE SLAB

ITEM 509E10000 EPOXY COATED REINFORCING STEEL (POUND)

MARK	TOTAL	LENGTH	WEIGHT LBS.	TYPE	DIMENSIONS A	B	C	D	E	F	G	H	INC.
GS501	16	28'-6"	476	STR									
GS502	60	8'-1"	506	STR									
GS401	45	1'-6 1/2"	46	1	4 1/2"	1'-2"							
TOTAL			1,028										

TRANSFORMER VAULTS

ITEM 509E10000 EPOXY COATED REINFORCING STEEL (POUND)

MARK	TOTAL	LENGTH	WEIGHT LBS.	TYPE	DIMENSIONS A	B	C	D	E	F	G	O	INC.
EV501	22	20'-8"	474	STR									
EV502	44	10'-8"	490	STR									
EV503	40	11'-7"	483	1	10'-8"	1'-0"							
EV504	84	11'-7"	1,015	1	10'-8"	1'-0"							
EV505	88	10'-8"	979	STR									
EV506	52	12'-8"	687	STR									
EV507	24	12'-1"	302	STR									
EV508	116	11'-7"	1,401	1	10'-8"	1'-0"							
EV509	56	11'-7"	677	1	10'-8"	1'-0"							
EV510	52	20'-8"	1,121	STR									
EV511	44	20'-8"	948	STR									
EV512	120	6'-9"	845	1	5'-10"	1'-0"							
EV513	24	4'-11"	123	STR									
EV514	20	3'-2"	66	STR									
EV515	24	4'-11"	123	STR									
EV516	24	10'-8"	267	STR									
EV517	20	3'-2"	66	STR									
EV518	10	20'-8"	216	STR									
EV519	56	3'-0"	175	1	2'-1"	1'-0"							
EV520	60	3'-7"	224	1	2'-8"	1'-0"							
EV521	20	8'-2"	170	STR									
EV522	20	12'-2"	254	STR									
EV523	16	4'-0"	67	STR									
EV524	176	3'-11"	719	1	2'-0"	2'-0"							
EV525	40	3'-11"	163	1	2'-0"	2'-0"							
EV701	44	10'-8"	959	STR									
EV702	14	20'-8"	591	STR									
EV901	46	20'-8"	3,232	STR									
EV902	168	17'-2"	9,806	1	9'-10"	7'-7"							
EV903	84	14'-11"	4,260	1	7'-7"	7'-7"							
TOTAL		30,905											

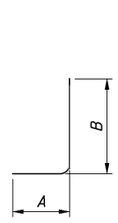

TYPE-1

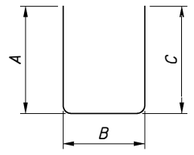

TYPE-2

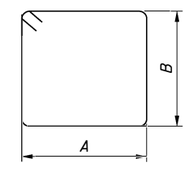

TYPE-3

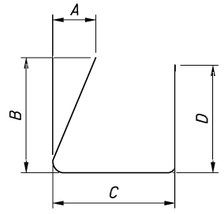

TYPE-9

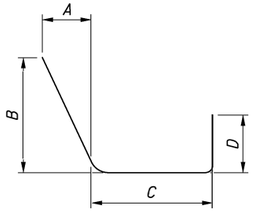

TYPE-10

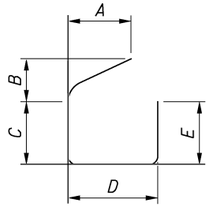

TYPE-12

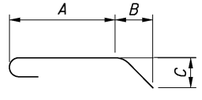

TYPE-18

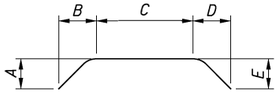

TYPE-20

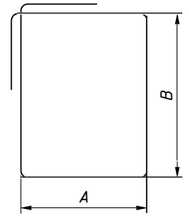

TYPE-33

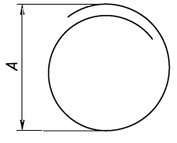

TYPE-34

NO.	DATE	REVISION DESCRIPTION
2	10/13/15	TRANSFORMER VAULT
1	10/01/15	UPDATED TABLE (RFI 90)

c:\pwworking\hmm\external\pre47802\dms72783\071_0134CRL007.dgn 10/19/2015 2:34:20 PM PRE47802

DESIGN AGENCY
HATCH MOTT MacDONALD
18013 CLEVELAND PKWY.
SUITE 200
CLEVELAND, OH 44135

DESIGNED	DRAWN	REVIEWED	DATE
KMW	JMS	MAR	10/20/14
CHECKED	REVISED	STRUCTURE FILE NUMBER	
BTF		3106578	

STRUCTURAL-VENTILATION ROOM-REINFORCING SCHEDULE 6 OF 6

BRIDGE NO. HAM-71-0134
I-71 LYTLE TUNNEL UNDER LYTLE PARK

HAM-71-01.34
PID No. 87268

ITEM SPECIAL – MISC.: TVS AXIAL FANS

PART 1 - GENERAL

1.01 SUMMARY

A. THE WORK OF THIS SECTION INCLUDES THE FURNISHING, INSTALLATION AND TESTING OF VANE AXIAL FLOW FANS.

B. COORDINATION

1. FAN GENERATED NOISE SHALL BE ATTENUATED BY SOUND ATTENUATION. THE AXIAL FANS AND SOUND ATTENUATORS SHALL BE COORDINATED TO ENSURE THE AMBIENT SOUND LEVEL CRITERION IN THE PARK ABOVE ARE NOT EXCEEDED.

2. DIRECTION OF FORWARD AIRFLOW SHALL FLOW PAST THE IMPELLER AND THEN PAST THE MOTOR, AND SHALL BE DESIGNATED AS EXHAUST MODE (AIR BEING EXHAUSTED FROM THE ROADWAY TO THE AMBIENT). REVERSE AIRFLOW DIRECTION SHALL BE DESIGNATED AS SUPPLY MODE (AIR BLOWING INTO THE ROADWAY FROM THE OUTSIDE).

3. FAN MANUFACTURER SHALL COORDINATE PURCHASE AND ASSEMBLY OF FAN DAMPERS, SOUND ATTENUATORS, TRANSITION PIECES, FLEXIBLE COUPLERS AND OTHER FAN TRAIN APPURTENANCES TO ASSURE A PROPERLY INSTALLED AND FUNCTIONING TUNNEL VENTILATION FAN.

1.02 PERFORMANCE REQUIREMENTS

A. OPERATING LIMITS: THE FANS SHALL BE DESIGNED FOR HORIZONTAL MOUNTING TO SERVE IN AN UNDERGROUND ROAD TUNNEL ENVIRONMENT, CHARACTERIZED BY A NORMAL TEMPERATURE RANGE OF 0°F TO 104°F, 0 TO 100% RELATIVE HUMIDITY, AND CONTAINING AIRBORNE CARBON DUST. FAN ASSEMBLY ARE EXPOSED TO TUNNEL AMBIENT CONDITIONS.

B. TUNNEL AXIAL FLOW FANS SHALL BE 100% REVERSIBLE.

1.03 SUBMITTALS

A. ALL SUBMITTALS SHALL INCLUDE THE PROJECT NAME, CONSECUTIVE PAGE NUMBER, DATE OF SUBMISSION, SUBMITTAL REVISION, AND SUBMITTAL NAME ON EACH PAGE OF THE SUBMITTAL.

B. MANUFACTURER SHALL SUBMIT A COMPLETE LIST OF PROJECTS ON WHICH SIMILAR FANS FOR UNDERGROUND ROADWAY OR FIXED GUIDEWAY PROJECTS HAVE BEEN PERFORMED. NAME OF FAN MANUFACTURER, TUNNEL OWNER AND THE DATE EQUIPMENT WAS PLACED INTO USE SHALL BE INCLUDED.

C. PRODUCT DATA: INCLUDE RATED CAPACITIES, FURNISHED SPECIALTIES, AND ACCESSORIES FOR EACH TYPE OF PRODUCT INDICATED AND INCLUDE THE FOLLOWING. NOTE THAT A DIFFERENT FAN OPERATING POINT SHALL CONSTITUTE A DIFFERENT PRODUCT:

1. CERTIFIED FAN PERFORMANCE CURVES FOR BOTH FORWARD AND REVERSE DIRECTIONS SUCH THAT PLOTS CAN BE ACCURATELY READ:

A. FAN PRESSURE-FLOW CURVE:

(1) X-AXIS: AIRFLOW FROM SHUT-OFF TO FREE DELIVERY IN CFM.

(2) Y-AXIS: PRESSURE, BOTH STATIC AND TOTAL IN INCHES OF WATER.

B. THE FAN PRESSURE-FLOW CURVE SHALL INCLUDE:

(1) SYSTEM RESISTANCE CURVE.

(2) FAN TOTAL PRESSURE VS. FLOW WITH MINIMUM BLADE PITCH ANGLE FOR INSTALLED MOTOR HORSEPOWER.

(3) FAN TOTAL PRESSURE VS. FLOW WITH MINIMUM BLADE PITCH ANGLE FOR INSTALLED MOTOR HORSEPOWER.

(4) FAN TOTAL PRESSURE FOR THREE INTERMEDIATE POINTS BETWEEN MAXIMUM AND MINIMUM BLADE PITCH ANGLE. INCLUDE THE PROPOSED BLADE PITCH FOR FAN OPERATION.

C. THE FOLLOWING SHALL BE PLOTTED AS A FUNCTION OF FAN FLOW (X-AXIS):

(1) HORSEPOWER AT THE IMPELLER, HP

(2) KILOWATT INPUT TO THE MOTOR, KW

(3) TOTAL EFFICIENCY, PERCENT

2. IN EACH FAN PERFORMANCE PLOT SUBMITTED, INCLUDE THE FOLLOWING INFORMATION:

A. FAN DESIGNATION NUMBER

B. FAN INSIDE DIAMETER IN INCHES

C. FAN OUTLET DIAMETER IN INCHES

D. FAN ROTOR HUB DIAMETER IN INCHES

E. FAN SPEED (RPM)

F. NUMBER OF FAN BLADES

G. DESIGN BLADE PITCH ANGLE

H. ROTATIONAL MOMENT OF INERTIA OF FAN ROTOR ASSEMBLY (LBS-FT^2)

I. AIR DENSITY (LBS/FT^3)

J. DIRECTION OF AIRFLOW (FORWARD OR REVERSE)

K. SHOW THE DESIGN FAN OPERATING POINT

L. FAN DESIGNATION NUMBER

3. CERTIFIED FAN SOUND-POWER RATINGS.

4. MOTOR RATINGS AND ELECTRICAL CHARACTERISTICS, PLUS MOTOR AND ELECTRICAL ACCESSORIES. INCLUDE:

A. RATED HORSEPOWER

B. SERVICE FACTOR

C. RATED AMPERAGE

D. POWER FACTOR

E. TERMINAL VOLTAGE

5. MATERIAL GAUGES AND FINISHES, INCLUDING COLOR CHARTS.

D. FACTORY TEST DATA: SUBMIT THE FOLLOWING FACTORY TEST REPORTS:

1. STEEL HUB TEST

2. RADIOGRAPHIC INSPECTIONS

3. FACTORY PROTOTYPE TESTS

4. AERODYNAMIC PERFORMANCE TESTS

5. REVERSAL TEST

6. SOUND TEST

7. STRESS TEST

8. PRODUCTION TESTS

9. FAN IMPELLER OVER-SPEED TEST

10. VIBRATION TESTS

11. RUN-IN TEST

12. MOTOR FACTORY TESTS INCLUDING:

A. FULL LOAD CURRENT

B. NO LOAD CURRENT

C. FULL LOAD INPUT

D. NO LOAD INPUT

E. LOCKED ROTOR CURRENT

F. LOCKED ROTOR INPUT

G. LOCKED ROTOR TORQUE

H. WINDING TESTS

I. LOSSES, NO LOAD AND FULL LOAD

J. DIELECTRIC TEST

K. VISUAL BEARING INSPECTION

E. SHOP DRAWINGS: DETAIL EQUIPMENT ASSEMBLIES AND INDICATE DIMENSIONS, WEIGHTS, LOADS, REQUIRED CLEARANCES, METHOD OF FIELD ASSEMBLY, COMPONENTS, AND LOCATION AND SIZE OF EACH FIELD CONNECTION.

1. WIRING DIAGRAMS: POWER, SIGNAL, AND CONTROL WIRING. DIFFERENTIATE BETWEEN MANUFACTURER-INSTALLED AND FIELD-INSTALLED WIRING.

2. DIMENSIONS, INTERNAL AND EXTERNAL CONSTRUCTION DETAILS, CLEARANCES, AND INSTALLATION DETAILS.

3. REQUIRED SUPPORT, MOUNTING DETAILS, SIZES AND LOCATION OF MOUNTING BOLT HOLES.

4. IMPELLER ASSEMBLY DRAWING.

5. MOTOR DIMENSION AND ARRANGEMENT DRAWING.

6. MOTOR TERMINAL ASSEMBLY DRAWING INCLUDING SIZE AND NUMBER OF TERMINALS.

7. DIAGRAM OF ELECTRICAL CONNECTIONS.

8. TEST RESULTS OF DRY PAINT THICKNESS.

9. DETAILS OF LOCAL CONTROLS INTERFACE WITH DESCRIPTIONS OF ALL CONTROL, SUPERVISION AND DIAGNOSTIC FEATURES.

10. SUBMIT CALCULATIONS FOR MAXIMUM DESIGN STRESS OF ROTATING COMPONENTS, AT MAXIMUM FAN SPEED IN THE AMBIENT TEMPERATURE OF 482°F.

11. SUBMIT CALCULATIONS FOR BLADE TIP CLEARANCE AT 482°F.

F. REPORTS/CERTIFICATES:

1. SUBMIT WRITTEN PRE-PRODUCTION, PRODUCTION, AND MOTOR FACTORY TEST DOCUMENTS.

c:\pwworking\hmm\external\tyn61470\dms72788\071_0134CMN001.dgn 10/24/2014 11:06:03 AM TYN61470

DESIGN AGENCY
HATCH MOTT MacDONALD
18013 CLEVELAND PKWY.
SUITE 200
CLEVELAND, OH 44135

DESIGNED	DRAWN	REVIEWED	DATE
HWW	CMN	DCN	08/07/14
CHECKED	REVISED	STRUCTURE FILE NUMBER	
NAH	HWW	3106578	

GENERAL NOTES TVS AXIAL FANS SHEET 1 OF 8
BRIDGE NO. HAM-71-0134
I-71 LYTLE TUNNEL UNDER LYTLE PARK

HAM-71-01.34
PID No. 87268

2. SUBMIT UNIT MANUFACTURER'S CERTIFIED PERFORMANCE CURVES FOR EACH FAN AT RATED CAPACITY IN ACCORDANCE WITH AMCA 210.

3. SUBMIT MANUFACTURER'S WRITTEN CERTIFICATION THAT EACH FAN WAS STATICALLY AND DYNAMICALLY BALANCED AT DESIGN SPEED AND FACTORY TESTED.

4. SUBMIT CERTIFIED UN-WEIGHTED SOUND LEVEL DATA FOR EACH FAN AT UNIT INLET, UNIT OUTLET AND HOUSING RADIATION IN DECIBELS FOR BOTH FORWARD AND REVERSE DIRECTIONS AT DESIGN TOP SPEED. REFERENCE DATA AS SOUND LEVEL TO THE 10-12 WATTS FROM 63 HZ TO 8000 HZ. OBTAIN SOUND POWER LEVELS FROM TESTS MADE IN ACCORDANCE WITH AMCA 300. HOUSING RADIATION TO BE PRESENTED AS THE MAXIMUM SOUND PRESSURE LEVEL AT 3 FT FROM HOUSING IN ACCORDANCE WITH AMCA 303 INSTALLATION TYPE D.

5. SUBMIT CURRENT-TIME CURVES FROM ZERO RPM TO FULL SPEED.

6. SUBMIT CURRENT-TIME CURVES FOR LINE VOLTAGE REVERSAL, AND LINE VOLTAGE REVERSAL AFTER A 10 SECOND POWER OFF DWELL.

7. SUBMIT MOTOR WINDING AND BEARING TEMPERATURE TESTS, AND MOTOR INSULATION RESISTANCE - TEMPERATURE TEST RESULTS.

8. SUBMIT WRITTEN FIELD TEST AND INSPECTION REPORTS.

G. OPERATION AND MAINTENANCE MANUAL:

1. THE OPERATION AND MAINTENANCE (O&M) MANUAL SHALL BE SUBMITTED FOR REVIEW 30 DAYS PRIOR TO THE DELIVERY OF THE AXIAL FLOW FAN TO THE PROJECT. THREE HARD COPIES SHALL BE SUBMITTED FOR REVIEW. UPON ACCEPTANCE OF THE OPERATION AND MAINTENANCE MANUAL, 5 HARD COPIES SHALL BE SUBMITTED IN ADDITION TO 5 DIGITAL COPIES ON ELECTRONIC STORAGE MEDIUM.

2. THE O&M MANUAL SHALL PROVIDE A CLEAR EXPLANATION OF THE THEORY, OPERATION AND MAINTENANCE OF THE AXIAL FLOW FANS. PHOTOS, SCHEMATIC, WIRING, AND MECHANICAL ASSEMBLY DIAGRAMS SHALL ALSO BE SUBMITTED AS REQUIRED.

3. A TABLE OF CONTENTS, INDEX TABS SHALL BE INCLUDED.

4. THE O&M MANUAL SHALL INCLUDE THE FOLLOWING AT A MINIMUM.

A. DESCRIPTION OF THE TUNNEL AND THE INTENT OF THE FUNCTION OF THE AXIAL FLOW FANS IN CONTEXT OF THE INSTALLATION.

B. THE FAN PERFORMANCE CURVES ACCEPTED DURING THE SUBMITTAL PROCESS.

C. MOTOR PERFORMANCE DATA & MOTOR WIRING DIAGRAM.

D. TROUBLE SHOOTING AND FAULT ISOLATION PROCEDURES.

E. FAN AND MOTOR REMOVAL AND REPLACEMENT PROCEDURES. INCLUDE DISASSEMBLY AND RE-ASSEMBLY INSTRUCTIONS.

F. A TEST PROCEDURE TO VERIFY THE ADEQUACY OF WORK PERFORMED TO THE FAN.

G. APPROVED SHOP DRAWINGS.

H. A MAINTENANCE SCHEDULE THAT INCLUDES OIL/GREASE CHANGE FREQUENCY, TYPE OF OIL/GREASE TO USE INCLUDING THE MANUFACTURER NAME.

1.04 REFERENCES

A. AMERICAN BEARING MANUFACTURERS ASSOCIATION (AFBMA) L-10, BEARING LIFE STANDARD.

B. AIR MOVEMENT AND CONTROL ASSOCIATION (AMCA) 210, LABORATORY METHODS OF TESTING FANS FOR RATING.

C. AIR MOVEMENT AND CONTROL ASSOCIATION (AMCA) 300, REVERBERANT ROOM METHOD OF SOUND TESTING OF FANS.

D. AIR MOVEMENT AND CONTROL ASSOCIATION (AMCA) 303, APPLICATION SOUND POWER LEVEL RATINGS FOR FANS.

E. AIR MOVEMENT AND CONTROL ASSOCIATION (AMCA) 311, CERTIFIED RATINGS PORGRAM – PRODUCT RATING MANUAL FOR FAN SOUND PERFORMANCE.

F. AMERICAN BEARING MANUFACTURERS ASSOCIATION (ABMA) 9, LOAD RATINGS AND FATIGUE LIFE FOR BALL BEARINGS.

G. AMERICAN BEARING MANUFACTURERS ASSOCIATION (ABMA) 11, LOAD RATINGS AND FATIGUE LIFE FOR ROLLER BEARINGS.

H. AMERICAN SOCIETY FOR TESTING AND MATERIALS (ASTM) A194, CARBON AND ALLOY STEEL NUTS FOR BOLTS FOR HIGH-PRESSURE AND HIGH TEMPERATURE SERVICE.

I. AMERICAN SOCIETY FOR TESTING AND MATERIALS (ASTM) A283, SPECIFICATION FOR LOW AND INTERMEDIATE TENSILE STRENGTH CARBON STEEL PLATES.

J. AMERICAN SOCIETY FOR TESTING AND MATERIALS (ASTM) A388, STANDARD PRACTICE FOR ULTRASONIC EXAMINATION OF HEAVY STEEL FORGINGS.

K. AMERICAN SOCIETY FOR TESTING AND MATERIALS (ASTM) A588, GRADE A AND A-151 1020 HOT ROLLED STEEL.

L. AMERICAN SOCIETY FOR TESTING AND MATERIALS (ASTM) A653, SPECIFICATION FOR STEEL SHEET, ZINC-COATED (GALVANIZED) BY THE HOT-DIP PROCESS.

M. AMERICAN SOCIETY FOR TESTING AND MATERIALS (ASTM) B108, ALUMINUM ALLOY CASTINGS, HIGH-STRENGTH.

N. AMERICAN SOCIETY FOR TESTING AND MATERIALS (ASTM) B247, ALUMINUM AND ALUMINUM-ALLOY DIE, HAND AND ROLLED RING FORGINGS.

O. AMERICAN SOCIETY FOR TESTING AND MATERIALS (ASTM) E155, REFERENCE RADIOGRAPHS FOR INSPECTION OF ALUMINUM AND MAGNESIUM CASTINGS.

P. AMERICAN SOCIETY FOR TESTING AND MATERIALS (ASTM) E165, STANDARD TEST METHOD FOR LIQUID PENETRANT EXAMINATION.

Q. AMERICAN SOCIETY FOR TESTING AND MATERIALS (ASTM) E1209, STANDARD TEST METHOD FOR FLUORESCENT LIQUID PENETRANT EXAMINATION USING THE WATER-WASHABLE PROCESS.

R. AMERICAN SOCIETY FOR TESTING AND MATERIALS (ASTM) A36 AND ASTM A572 STRUCTURAL STEEL AND PLATE.

S. AMERICAN SOCIETY FOR TESTING AND MATERIALS (ASTM) A123-89A, HOT DIP GALVANIZING OF IRREGULARLY SHAPED ARTICLES.

T. AMERICAN WELDING SOCIETY (AWS) D1.1, STRUCTURAL WELDING CODE – STEEL.

U. AMERICAN WELDING SOCIETY (AWS)D1.3, STRUCTURAL WELDING CODE – SHEET STEEL.

V. AMERICAN NATIONAL STANDARDS INSTITUTE (ANSI) C80.1-1994, RIGID METAL CONDUIT.

W. INSTITUTE OF ELECTRICAL AND ELECTRONICS ENGINEERS (IEEE) NO. 85, STANDARD TEST PROCEDURE FOR AIRBORNE SOUND MEASUREMENTS ON ROTATING ELECTRIC MACHINERY.

X. INSTITUTE OF ELECTRICAL AND ELECTRONICS ENGINEERS (IEEE) NO. 112, STANDARD TEST PROCEDURE FOR POLYPHASE INDUCTION MOTORS AND GENERATORS.

Y. INTERNATIONAL ORGANIZATION FOR STANDARDIZATION STANDARD (ISO) 13350, FOR FAN TESTING OF THRUST, NOISE AND VOLUME FLOW RATE.

Z. NATIONAL ELECTRICAL MANUFACTURERS ASSOCIATION (NEMA) MG 1, MOTORS AND GENERATORS.

AA. NATIONAL ELECTRICAL MANUFACTURERS ASSOCIATION (NEMA) MG 13, FRAME ASSIGNMENTS FOR ALTERNATING CURRENT INTEGRAL HORSEPOWER INDUCTION MOTORS.

BB. NATIONAL ELECTRICAL MANUFACTURERS ASSOCIATION (NEMA) 250, ENCLOSURES FOR ELECTRICAL EQUIPMENT.

CC. NATIONAL FIRE PROTECTION ASSOCIATION (NFPA) 70: NATIONAL ELECTRICAL CODE, LATEST EDITION.

DD. NATIONAL FIRE PROTECTION ASSOCIATION (NFPA) 502, STANDARD FOR ROAD TUNNELS, BRIDGES, AND OTHER LIMITED ACCESS HIGHWAYS.

EE. THE SOCIETY FOR PROTECTIVE COATINGS SSPC PA-1, NO. 1 SHOP, FIELD AND MAINTENANCE PAINTING.

FF. THE SOCIETY FOR PROTECTIVE COATINGS (SSPC) PA-2, METHOD FOR MEASUREMENT OF DRY PAINT THICKNESS WITH MAGNETIC GAUGES.

GG. THE SOCIETY FOR PROTECTIVE COATINGS (SSPC) SP-3, POWER TOOL CLEANING.

HH. THE SOCIETY FOR PROTECTIVE COATINGS (SSPC) SP-10, NEAR WHITE BLAST CLEANING.

II. UNDERWRITER'S LABORATORIES, INC. UL1, FLEXIBLE METAL CONDUIT AND LIQUID-TIGHT FLEXIBLE METAL CONDUIT.

1.05 QUALITY ASSURANCE

A. MANUFACTURER OF FANS SHALL SUBMIT REFERENCES FROM PREVIOUS INSTALLATIONS OF SIMILAR FANS IN ROAD AND FIXED GUIDEWAY APPLICATIONS. MANUFACTURER SHALL DEMONSTRATE 10 YEARS OF SUCCESSFUL FAN MANUFACTURE, WITH

c:\pwworking\hmm\external\tyn61470\dms72788\071_0134CWN002.dgn 10/24/2014 11:06:13 AM TYN61470

DESIGN AGENCY
HATCH MOTT MacDONALD
18013 CLEVELAND PKWY.
SUITE 200
CLEVELAND, OH 44135

DESIGNED	DRAWN	REVIEWED	DATE	STRUCTURE FILE NUMBER
HWW	CMN	DGN	08/07/14	3106578

CHECKED	REVISED
NAH	HWW

COMPARABLE FANS IN OPERATION FOR AT LEAST 5 YEARS.

B. MANUFACTURER SHALL COMPLY WITH NFPA 502 2014 EDITION AND ALL OTHER REFERENCED CODES AND STANDARDS COVERING THE DESIGN OF VENTILATION FAN ASSEMBLIES.

C. ALL TUNNEL VENTILATION AXIAL FLOW FANS SHALL BE THE PRODUCT OF A SINGLE MANUFACTURER. FAN MANUFACTURER'S NAME TO APPEAR ON ALL AXIAL FLOW FAN PERFORMANCE DATA SUBMITTED TO THE PROJECT.

D. ALL TUNNEL VENTILATION FAN MOTORS SHALL BE THE PRODUCT OF A SINGLE MANUFACTURER. MOTOR MANUFACTURER'S NAME TO APPEAR ON ALL MOTOR PERFORMANCE DATA SUBMITTED TO THE PROJECT.

E. MANUFACTURER SHALL WARRANTEE FANS, INCLUDING PARTS AND LABOR, FOR 12 MONTHS FROM DATE OF SUBSTANTIAL COMPLETION.

F. AMCA COMPLIANCE: PRODUCTS SHALL COMPLY WITH PERFORMANCE REQUIREMENTS AND SHALL BE LICENSED TO USE THE AMCA-CERTIFIED RATINGS SEAL.

G. NEMA COMPLIANCE: MOTORS AND ELECTRICAL ACCESSORIES SHALL COMPLY WITH NEMA STANDARDS.

H. ELECTRICAL COMPONENTS, DEVICES, AND ACCESSORIES: LISTED AND LABELED AS DEFINED IN NFPA 70, ARTICLE 100, BY A TESTING AGENCY ACCEPTABLE TO AUTHORITIES HAVING JURISDICTION, AND MARKED FOR INTENDED USE.

1.06 DELIVERY, STORAGE, AND HANDLING

A. DELIVER FANS AS FACTORY-ASSEMBLED UNITS, TO THE EXTENT ALLOWABLE BY SHIPPING LIMITATIONS, WITH PROTECTIVE CRATING AND COVERING.

B. AFTER DELIVERY OF AXIAL FLOW FAN AND PRIOR TO INSTALLATION, THE MOTOR SPACE HEATER SHALL BE CONNECTED TO THE CORRECT POWER SUPPLY AND ACTIVATED.

C. FANS SPECIFIED HEREIN SHALL NOT BE PLACED DIRECTLY ON THE FLOOR WHERE STORED. WOOD BLOCKS OR OTHER APPROPRIATE MEDIUM SHALL BE USED TO KEEP FANS OFF OF FLOOR.

D. DISASSEMBLE AND REASSEMBLE UNITS, AS REQUIRED FOR MOVING TO FINAL LOCATIONS, ACCORDING TO MANUFACTURER'S WRITTEN INSTRUCTIONS.

E. LIFT AND SUPPORT UNITS WITH MANUFACTURER'S DESIGNATED LIFTING OR SUPPORTING POINTS.

PART 2 - PRODUCTS

2.01 MANUFACTURERS

A. MANUFACTURERS: SUBJECT TO COMPLIANCE WITH REQUIREMENTS, PROVIDE PRODUCTS BY ONE OF THE FOLLOWING MANUFACTURERS OR OTHERS IN THE BUSINESS OF MANUFACTURING AXIAL FANS FOR USE IN HIGHWAY TUNNELS OR FIXED GUIDEWAY TRANSIT SYSTEMS:

1. CLARAGE
2. HOWDEN/BUFFALO
3. TLT BABCOCK
4. APPROVED EQUAL

2.02 FANS

A. GENERAL: FANS SHALL BE DIRECT DRIVEN, MANUALLY ADJUSTABLE PITCH BLADES, VANE AXIAL FLOW TYPE WITH AN INTERNALLY BASE MOUNTED ELECTRIC MOTOR. FANS SHALL BE FURNISHED COMPLETE WITH ALL MOUNTING AND VIBRATION ISOLATION DEVICES REQUIRED FOR A COMPLETE INSTALLATION.

1. FANS SHALL BE CAPABLE OF REVERSING FROM EITHER DIRECTION OF AIRFLOW AND ROTATION BY LINE VOLTAGE REVERSAL, DURING AN EMERGENCY, WITHOUT FAILURE OF ANY PART OF UNIT.

2. FAN POWER SHALL NOT EXCEED THE NAMEPLATE POWER OF THE FAN UNIT WHEN OPERATING BETWEEN 65 PERCENT OF AIRFLOW AND FREE DELIVERY, IN EITHER DIRECTION OF AIRFLOW.

3. FANS AND ASSOCIATED COMPONENTS SHALL BE CAPABLE OF OPERATING FOR A MINIMUM PERIOD OF ONE HOUR IN AN AMBIENT TEMPERATURE OF AT LEAST 482°F.

4. FAN PERFORMANCE, WHEN OPERATING IN THE REVERSE DIRECTION OF AIRFLOW, SHALL NOT DEVIATE BY MORE THAN TEN PERCENT IN AIRFLOW DELIVERED BASED ON THE FAN PERFORMANCE CURVES FOR OPERATION IN THE FORWARD DIRECTION OF AIRFLOW AT ANY POINT BETWEEN 65 PERCENT OF THE NOMINAL AIRFLOW RATE AND FREE DELIVERY. AIRFLOW IN REVERSE DIRECTION SHALL EQUAL SPECIFIED AIRFLOW.

5. THE COMPLETE TUNNEL VENTILATION SYSTEM SHALL BE RUNNING AT FULL SPEED WITHIN 3 MINUTES IN ACCORDANCE WITH NFPA 502.

6. FAN IMPELLER BRAKE HORSEPOWER SHALL NOT EXCEED THE MOTOR NAMEPLATE HORSEPOWER IN EITHER DIRECTION AT ANY TIME DURING OPERATION.

7. MINIMUM FAN TOTAL EFFICIENCY SHALL NOT BE LESS THAN 65 PERCENT IN FORWARD AND REVERSE FLOW WHEN OPERATING AT THE SPECIFIED NOMINAL FLOW RATE.

B. CONSTRUCTION:

1. FAN HOUSINGS, MOTOR MOUNTS, MOTOR SUPPORTS, AND FAN SUPPORTS SHALL BE FABRICATED OF HOT-ROLLED STEEL TO ASTM A283, AND BE HOT DIPPED GALVANIZED TO ASTM A123-89A.

2. FAN HOUSING METAL THICKNESS SHALL NOT BE LESS THAN ¼ INCH.

3. PROVIDE FAN HOUSINGS WITH A HORIZONTAL SPLIT JOINT AT THE CENTERLINE OF THE LONGITUDINAL AXIS, BOLTED AND GASKETED TO FACILITATE DISASSEMBLY AND REMOVAL OF MOTOR AND BLADE/HUB ASSEMBLY WITHOUT REMOVAL OF ENTIRE FAN UNIT OR ANY PART OF ADJACENT DUCTWORK. IMPELLER SECTION, IF PROVIDED AS A SEPARATE SECTION, MAY BE ONE-PIECE CONSTRUCTION. WELDS LOCATED IN THE AIR STREAM SHALL BE GROUND SMOOTH. PROVIDE FAN HOUSINGS WITH RING LOCATED IN THE BLADE TRACKING AREA.

4. DESIGN MOTOR MOUNTS AND MOTOR SUPPORTS TO SUPPORT THE ENTIRE WEIGHT OF THE IMPELLER AND THE MOTOR, AND TO MAINTAIN THE ALIGNMENT OF THE FAN UNIT ASSEMBLY IN THE SPECIFIED MOUNTING POSITION AND TO MAINTAIN VIBRATION LEVELS WITHIN THE SPECIFIED LIMITS. MOTOR SUPPORTS SHALL BE SUFFICIENT IN NUMBER TO PROVIDE THE REQUIRED STRENGTH AND RIGIDITY AND SHALL BE CONTINUOUSLY WELDED TO THE MOTOR MOUNT AND TO THE HOUSING.

5. INLET AND OUTLET FAN CONNECTIONS TO BE ¼ INCH THICK FLANGES NOT LESS THAN 3 INCHES IN DEPTH.

6. GASKETED ACCESS DOORS IN FAN HOUSING SHALL BE PROVIDED FOR EASY ACCESS TO BLADE LOCKING DEVICES. ACCESS DOORS TO BE OF BOLTED CONSTRUCTION. ACCESS DOOR FOR BLADE LOCKING DEVICES SHALL HAVE MINIMUM DIMENSIONS OF 12 INCHES WIDE BY 12 INCHES HIGH, LOCATED ON THE REMOVABLE FAN HOUSING SECTION.

7. GASKETS SHALL BE OF SILICONE MATERIAL, MINIMUM ¼ INCH THICK, AND SHALL BE PROVIDED BETWEEN ADJACENT COMPANION FLANGES OF DUCT TRANSITION COMPANION FLANGES AND ACCESS DOORS. THE WIDTH OF GASKET SHALL BE THE SAME AS THE FLANGE WIDTH. GASKETS SHALL BE CAPABLE OF WITHSTANDING AN AMBIENT TEMPERATURE OF 482°F FOR A PERIOD OF ONE HOUR WITHOUT DEGRADATION OF SEALING ABILITY AND WITHOUT EMITTING TOXIC OR NOXIOUS FUMES.

8. PROVIDE SUFFICIENT LIFTING LUGS ON EACH FAN UNIT TO FACILITATE FIELD INSTALLATION AND REMOVAL OF THE FANS, AND REMOVAL OF TOP HOUSING SECTION OF FAN.

9. BOLTS, NUTS, WASHERS AND LOCK WASHERS PROVIDED FOR COMPANION FLANGES OF DUCT TRANSITION COMPANION FLANGES AND SUPPORT ASSEMBLY SHALL BE OF 316 STAINLESS STEEL.

C. IMPELLER FABRICATION:

1. FABRICATE IMPELLER BLADES FROM ALUMINUM ALLOY CASTINGS IN ACCORDANCE WITH ASTM B108, SUITABLE FOR THE SPECIFIED PERFORMANCE AND ENVIRONMENT. STEEL BLADES ARE ALSO PERMITTED. FAN BLADES IN EACH IMPELLER SHALL NOT VARY IN WEIGHT BY MORE THAN 2 PERCENT. SECURE INDIVIDUAL BLADES TO THE HUB BY NOT LESS THAN FOUR BOLTS PER BLADE, OR BETWEEN SUITABLY DESIGNED AND MANUFACTURED CLAMP PLATES. BLADE BOLTS, HUB BOLTS OR CLAMP PLATE BOLTS SHALL BE READILY ACCESSIBLE. THE PITCH OF THE BLADES SHALL BE MANUALLY ADJUSTABLE WITHOUT REMOVING IMPELLER FROM FAN UNIT.

2. FABRICATE IMPELLER HUB OF ALUMINUM ALLOY CASTINGS IN ACCORDANCE WITH ASTM B108, FORGINGS IN ACCORDANCE WITH ASTM B247, OR STAINLESS STEEL, OR STEEL IN ACCORDANCE WITH ASTM A588 SUITABLE FOR THE SPECIFIED PERFORMANCE AND ENVIRONMENT. A STEEL HUB IS ALSO PERMITTED.

3. IMPELLER HUB TO HAVE INDEX MARKS EMBOSSED OR ENGRAVED TO SHOW DESIGN OPERATING BLADE SETTING AND ADDITIONAL SETTINGS FOR A MINIMUM OF FIVE ADDITIONAL INCREMENTS OF STAGGER ANGLE WITH NOT LESS THAN TWO ON EACH SIDE OF DESIGN BLADE SETTING.

4. FASTEN IMPELLER ASSEMBLY TO MOTOR SHAFT BY MEANS OF AN APPROVED KEYED POSITIVE LOCKING DEVICE. IMPELLER

c:\pwworking\hmm\external\tyn61470.dms:72788:071_0134CWN003.dgn 10/24/2014 11:06:22 AM TYN61470

DESIGN AGENCY
HATCH MOTT MacDONALD
18013 CLEVELAND PKWY.
SUITE 200
CLEVELAND, OH 44135

DESIGNED	DRAWN	REVIEWED	DATE	STRUCTURE FILE NUMBER
HWW	CMN	DGN	08/07/14	31065781
CHECKED	REVISED			
NAH	HWW			

CALCULATED STRESS LEVEL SHALL EXCEED 60 PERCENT OF THE COMPONENTS MATERIALS YIELD STRENGTH AT SPECIFIED PERFORMANCE AND ENVIRONMENT (0°F TO 482°F).

D. ELECTRICAL:

1. TERMINAL BOXES SHALL BE WATERPROOF TO NEMA 3R AND CONSTRUCTED OF CAST IRON OR STEEL. CONSTRUCT SHEET STEEL TERMINAL BOXES OF MINIMUM THICKNESS OF 1/8 INCH.

2. THE MAIN TERMINAL BOXES SHALL NOT RESTRICT THE VENTILATING AIRFLOW, NOR INTERFERE WITH OTHER MOTOR ACCESSORIES.

3. SEPARATE AUXILIARY CONDUIT BOXES, SUITABLY IDENTIFIED, SHALL BE PROVIDED FOR THE TERMINATION OF RESISTANCE THERMAL AND VIBRATION DETECTORS AND FOR TERMINATION OF HEATER LEADS.

4. ALL ELECTRICAL TERMINAL BOXES, ACCESS DOORS, INSTRUMENT PORTS, AND GREASE FITTINGS, SHALL BE LOCATED ON ONE SIDE OF THE FAN HOUSING FOR EASE OF MAINTENANCE ACCESS. RIGHT OR LEFT SIDE LOCATIONS SHALL BE INDICATED ON THE DRAWINGS.

2.03 MOTOR COMPONENTS AND CONSTRUCTION

A. MOTORS - GENERAL:

1. MOTORS SHALL BE OF THE TOTALLY ENCLOSED, AIR-OVER, CAST IRON OR STEEL ROUND FRAME, INDUCTION TYPE, CONTINUOUS DUTY, AND SHALL BE FOOT MOUNTED.

2. MOTORS SHALL BE THE PRODUCT OF A SINGLE MANUFACTURER, WHOSE NAME SHALL APPEAR ON THE MOTOR PERFORMANCE CURVES AND OTHER DATA SUBMITTED.

3. MOTORS SHALL NOT BE PROVIDED WITH THERMAL OVERLOAD PROTECTIVE DEVICES.

4. MOTOR SHALL BE SUITABLE TO OPERATE AT A TEMPERATURE OF 482°F FOR ONE HOUR.

5. FRAME DESIGNATION: IN ACCORDANCE WITH NEMA MG-1 FOR HORSEPOWER AND SPEED SPECIFIED.

B. PERFORMANCE:

1. MOTOR VOLTAGE SHALL BE AS SCHEDULED, WITH A MINIMUM EFFICIENCY RATING IN ACCORDANCE WITH NEMA MG-1, LESS THAN 3% SLIP, AND A MINIMUM 85% POWER FACTOR - ALL AT THE RATED LOAD. NAMEPLATE POWER RATING OF MOTOR SHALL BE ACTUAL CONTINUOUS BRAKE POWER DEVELOPED WITHOUT ANY CONSIDERATION OF THE "AIR OVER" FACTOR.

2. MOTOR TERMINAL VOLTAGE SHALL BE 460V AT 60 HZ.

3. MOTORS SHALL HAVE AS A MINIMUM TORQUE IN ACCORDANCE WITH REQUIREMENTS OF NEMA MG 1 AND IN COMPLIANCE WITH NEMA TYPE B DESIGN. MOTORS SHALL HAVE ADEQUATE TORQUE TO SUITABLY START, ACCELERATE AND OPERATE DRIVEN EQUIPMENT BASED ON DATA FOR DRIVEN EQUIPMENT UNDER VOLTAGE AND FREQUENCY CONDITIONS PERMITTED IN NEMA MG 1. MOTORS SHALL BE SIZED FOR SUFFICIENT TORQUE TO START AND ACCELERATE DRIVEN LOAD AT 80% RATED VOLTAGE AT MOTOR TERMINALS.

4. MOTORS SHALL BE RATED WITHIN NEMA CODE G SPECIFICATION FOR LOCKED ROTOR KVA PER KILOWATT RATING. MOTOR SHALL BE ELECTRICALLY AND MECHANICALLY DESIGNED FOR LINE VOLTAGE REVERSAL. MOTOR SHALL BE CAPABLE OF TWO SPEEDS 50% 60 HP AND 100% 500 HP. MOTORS SHALL HAVE A MINIMUM OF TYPE H INSULATION AND SHALL BE RATED FOR CLASS F TEMPERATURE RISE WHEN TESTED AT THE SERVICE FACTOR LOAD AS A MINIMUM REQUIREMENT. MOTOR SERVICE FACTOR SHALL BE 1.15.

5. MOTORS SHALL BE CAPABLE, UNDER THE SPECIFIED OPERATING CONDITIONS, OF ACCELERATING THE IMPELLER FROM A STANDSTILL TO RATED ROTATIONAL SPEED IN NOT MORE THAN 10 SECONDS AFTER BEING ENERGIZED AT THE RATED VOLTAGE - WITHOUT EXCEEDING THE RATED TEMPERATURE RISE. MOTORS SHALL ALSO BE CAPABLE OF DECELERATING THE IMPELLER AND ACCELERATING TO RATED ROTATIONAL SPEED IN THE OPPOSITE DIRECTION IN NOT MORE THAN 30 SECONDS AFTER BEING ENERGIZED FOR REVERSE ROTATION.

6. MOTORS SHALL BE CAPABLE OF A MINIMUM OF FOUR EQUALLY SPACED STARTS PER HOUR, RUNNING FOR FIVE MINUTES AFTER EACH START.

C. CONSTRUCTION:

1. MOTOR SHAFTS SHALL BE STEEL, DESIGNED AND CONSTRUCTED TO SUPPORT AND DRIVE THE FAN IMPELLER UNDER ALL SPECIFIED OPERATING CONDITIONS.

2. LIFTING LUGS SHALL BE PROVIDED ON THE EXTERIOR OF MOTORS.

3. EACH MOTOR SHALL HAVE AT LEAST TWO BALL OR ROLLER TYPE BEARINGS. THESE SHALL BE LUBRICATED AND NOISE TESTED BEARINGS SELECTED FOR THE SPECIFIED OPERATING CONDITIONS OF THE FAN UNIT. THE BEARINGS SHALL HAVE A MINIMUM AFBMA L-10 LIFE RATING OF 100,000 HOURS.

4. GREASE LINES SHALL BE BROUGHT FROM EACH BEARING TO ACCESSIBLE FITTINGS, EXTERNAL TO THE FAN HOUSING. THE LINES SHALL BE FABRICATED OF STAINLESS STEEL SEAMLESS TUBING. LINES PENETRATING THE HOUSING SHALL BE RIGIDLY SECURED TO THE HOUSINGS.

5. GREASE SUPPLY LINES SHALL TERMINATE IN STRAIGHT LUBRICATION FITTINGS ON EXTERIOR OF FAN HOUSING. GREASE RELIEF LINES SHALL TERMINATE IN SPRING-LOADED RELIEF FITTINGS ON EXTERIOR OF FAN HOUSING. ALEMITE GREASE FITTINGS SHALL BE PROVIDED COMPLETE WITH DUST CAPS. PROVIDE GREASE FITTINGS ON THE LOWER HALF OF THE FAN HOUSING SECTION.

6. BEARING LUBRICANT SHALL BE CAPABLE OF PROVIDING THE LUBRICATION PROPERTIES SPECIFIED BY THE BEARING MANUFACTURER UNDER CONDITIONS OF OPERATION FOR ONE HOUR WITH THE LUBRICANT AT A TEMPERATURE OF 482°F.

⚠ 7. MOTOR LEADS SHALL BE OF CABLE, SUITABLE FOR ALL OPERATING CONDITIONS SPECIFIED.

8. PROVIDE MOTORS WITH FACTORY INSTALLED RESISTANCE SPACE HEATERS WITHIN THE LOWER PART OF THE MOTOR ENCLOSURE TO PREVENT CONDENSATION OF MOISTURE IN THE MOTOR WINDINGS. HEATERS SHALL ENERGIZE WHENEVER MOTOR IS NOT IN OPERATION. HEATERS SHALL AUTOMATICALLY DE-ENERGIZE WHENEVER MOTOR IS IN OPERATION. HEATERS TO BE 120 VOLTS, SINGLE PHASE, 60 HZ.

A. MAKE HEATER ACCESSIBLE FOR MAINTENANCE PURPOSES AND FOR REPLACEMENT WITHOUT NEED FOR DISMANTLING MOTOR. MAXIMUM SHEATH TEMPERATURE OF SPACE HEATERS SHALL BE 300°F BASED ON 104°F AMBIENT TEMPERATURE.

9. CONDUIT AND FITTINGS WITHIN THE FAN HOUSING TO BE RIGID STEEL, HOT-DIPPED GALVANIZED IN ACCORDANCE WITH ANSI C80.1-1994; THREADED AT BOTH ENDS. RIGID CONDUIT OTHER THAN HOT DIP GALVANIZED RIGID STEEL IS NOT ACCEPTABLE.

D. MOTOR MONITORING:

1. PROVIDE EACH MOTOR BEARING WITH A SHOCK PULSE MEASURING BEARING DAMAGE DETECTOR FOR CONTINUOUS REMOTE MONITORING OF BEARING. DETECTOR TO BE PERMANENTLY ENCAPSULATED, COATED ELECTRONICS USING MICROPROCESSOR DIGITAL CIRCUITRY, WITH TRANSDUCER. ACCURACY OF THE DETECTOR TO BE A MAXIMUM OF 20 PERCENT OF DETECTOR LEVEL WITHIN TEMPERATURE RANGE.

2. PROVIDE MOTOR WINDINGS WITH A MINIMUM OF SIX (TWO PER PHASE) RESISTANCE THERMAL DETECTORS (RTD). PLATINUM RTD'S TO HAVE A NOMINAL RESISTANCE OF 1000 OHMS AND BE PLACED TO MOST EFFECTIVELY DETERMINE MAXIMUM WINDING TEMPERATURES. RTD ACCURACY SHALL BE AS RECOMMENDED BY THE MANUFACTURER AND SHALL BE INCLUDED IN THE SUBMITTAL.

3. PROVIDE MOTOR BEARINGS WITH RTD'S FOR BEARING TEMPERATURE MONITORING, SAME REQUIREMENTS AS FOR WINDING SENSORS ABOVE.

4. THE MOTOR MANUFACTURER SHALL FURNISH AND INSTALL APPROVED SPEED SENSING DEVICES TOGETHER WITH APPROPRIATE ELECTRICAL CONNECTIONS AND/OR LEADS, ALL SO AS TO PERMIT DETECTION AND INDICATION OF THE ACTUAL MOTOR SPEED. THE SPEED SENSOR TRANSMITTER (ST) SHALL BE ANALOG INPUT. FOR INSTALLATION OF SPEED SENSOR, THE MOTOR SHAFT SHALL BE EXTENDED FROM THE OPPOSITE DRIVE END OF THE MOTOR AND SUPPORT BRACKETS AND OTHER HARDWARE SHALL BE PROVIDED ALL AS REQUIRED. WHEN THE FANS AND MOTORS ARE SUBMITTED FOR APPROVAL, COMPLETE TECHNICAL DATA AND INFORMATION SHALL BE INCLUDED COVERING THE INSTALLATION, MAINTENANCE AND OPERATION OF THE DETECTION DEVICES. THE MOTOR MANUFACTURER SHALL PROVIDE AN ENCLOSURE AROUND THE SPEED SENSORS AT THE NON-DRIVE END OF THE MOTOR. THE SENSORS ARE TO BE FITTED WITH CONNECTORS WITHIN THE ENCLOSURE TO FACILITATE SENSOR REPLACEMENT WITHOUT HAVING TO PULL NEW CABLES TO THE I & C JUNCTION BOX. EXPANDED DETAILS OF THIS ENCLOSURE AND ASSOCIATED SENSOR SUPPORT STRUCTURE SHALL BE SUBMITTED FOR REVIEW. THE ARRANGEMENT AND INSTALLATION OF THESE DEVICES SHALL BE COORDINATED WITH, AND AS DIRECTED, BY THE FAN MANUFACTURER.

E. TERMINAL BOXES:

1. TERMINAL BOX TO HAVE SCREW TYPE PRESSURE TERMINALS STRIPS FOR

NO.	DATE	REVISION DESCRIPTION
⚠	11/09/15	VENTILATION FANS HP CHANGED

c:\pw working\hmm\external\pre47802\dms72788\071_0134CMN004.dgn 11/10/2015 1:44:07 PM PRE47802

DESIGN AGENCY
HATCH MOTT MacDONALD
18013 CLEVELAND PKWY.
SUITE 200
CLEVELAND, OH 44135

DESIGNED	DRAWN	REVIEWED	DATE
HWW	GMN	DGN	08/07/14
CHECKED	REVISED	STRUCTURE FILE NUMBER	
NAH	HWW	3106578	

GENERAL NOTES TVS AXIAL FANS SHEET 4 OF 8

BRIDGE NO. HAM-71-0134
I-71 LYTLE TUNNEL UNDER LYTLE PARK

HAM-71-01.34
PID No. 87268

TERMINATING WIRES, GROUND LUGS, FULL COVER GASKET, AND HINGED DOOR.

2. CONDUIT AND TERMINAL BOX TO BE RIGIDLY SECURED TO THE FAN HOUSING IN A MANNER, WHICH WILL PREVENT VIBRATION AND AIR LEAKAGE.

3. ORIENT TERMINAL BOX TO RECEIVE FEEDER CONDUITS FROM ANY DIRECTION. SUFFICIENT CABLE SLACK SHALL BE PROVIDED TO PERMIT TESTING OF CABLES WITHOUT DISCONNECTING ANY CONNECTIONS. TERMINAL BOX LOCATION SHALL BE ON THE LOWER HALF OF THE FAN HOUSING SECTION AND SUCH THAT NO PART OF THE TERMINAL BOX EXTENDS ABOVE THE SPLIT CASING HORIZONTAL FLANGE.

4. HEATER TERMINAL BOX SHALL HAVE SUITABLE NAMEPLATE GIVING HEATER RATING AND CONNECTION DETAILS.

2.04 FASTENERS

A. FASTENERS CONSIST OF BOLTING FAN CONNECTIONS, ANCHOR BOLTS AND ANY REQUIRED FAN CASING BOLTS.

B. FASTENERS SHALL BE HEXAGONAL. BOTH THE HEAD AND THE NUT SHALL BE HEXAGONAL.

C. BOLTS SHALL NOT BE LESS THAN ½ INCH IN DIAMETER.

D. FASTENERS SHALL BE TYPE 316 STAINLESS STEEL.

E. FASTENERS SHALL BE PROVIDED WITH HEAVY-DUTY TYPE 316 STAINLESS STEEL LOCK WASHERS.

2.05 NAMEPLATES

A. NAMEPLATES SHALL HAVE LETTERS THAT ARE A MINIMUM 3/8 INCH IN HEIGHT.

B. NAMEPLATES SHALL BE DESIGNED FOR A MINIMUM 40-YEAR LIFE.

C. EACH FAN SHALL BE PROVIDED WITH A STAINLESS STEEL NAMEPLATE THAT IS 316 GRADE. NAMEPLATE SHALL HAVE THE FOLLOWING INFORMATION AS A MINIMUM:

1. FAN DESIGNATION.
2. DESIGN POINT AIRFLOW.
3. DESIGN POINT TOTAL PRESSURE IN INCHES WATER GAUGE.
4. DESIGN POINT STATIC PRESSURE IN INCHES WATER GAUGE.
5. OUTLET VELOCITY OF AIRFLOW IN FPM.
6. REQUIRED BRAKE HORSEPOWER TO THE FAN AT THE DESIGN OPERATING POINT.
7. AN ARROW INDICATING FORWARD DIRECTION OF AIRFLOW.

A. FAN ID

B. MOTOR HORSEPOWER

C. RATED AMPERAGE

D. PHASES

E. MOTOR VOLTAGE

F. POWER FACTOR

G. SERVICE FACTOR

H. RPM

D. EACH MOTOR SHALL ALSO HAVE A NAMEPLATE THAT INCLUDES AS A MINIMUM:

1. FAN IDENTIFIER
2. FRAME SIZE AND TYPE (EG. 405T TEAO)
3. SPACE HEATER WATTAGE AND VOLTAGE
4. DUTY (CONTINUOUS AS SPECIFIED HEREIN)
5. NEMA DESIGN
6. MOTOR HORSEPOWER
7. MOTOR EFFICIENCY
8. RATED AMPERAGE
9. MOTOR PHASES
10. MOTOR VOLTAGE AT TERMINALS
11. POWER FACTOR
12. SERVICE FACTOR
13. MOTOR RPM
14. INSULATION CLASS

2.06 FACTORY FINISHES

A. AFTER FABRICATION AND PRIOR TO ASSEMBLY, PAINT ALL INSIDE AND OUTSIDE SURFACES OF FAN HOUSINGS, FAN STEEL HUBS, FAN DUCTWORK TRANSITIONS, FAN SUPPORTS, SILENCERS, AND FAN MOTORS. GALVANIZED FAN HOUSINGS AND COMPONENTS ARE NOT REQUIRED TO BE PAINTED.

B. PAINT FOR FANS AND FAN MOTORS SHALL BE HIGH TEMPERATURE RESISTANT - CAPABLE OF WITHSTANDING 482ºF FOR ONE HOUR WITHOUT DETERIORATING OR EMITTING TOXIC OR NOXIOUS FUMES.

C. ALL PAINT AND MATERIALS SHALL BE THE PRODUCT OF A SINGLE MANUFACTURER.

D. INTERIOR PAINT SCHEDULE:

1. PROVIDE COLORS AS DIRECTED BY THE ENGINEER.
2. MEASUREMENT OF DRY FILM THICKNESS SHALL BE ACCORDING TO SSPC PA-2.
3. SURFACES NOT REQUIRING PAINTING SHALL BE PAINTED WITH AN ANTI-CORROSION COMPOUND IN THE FACTORY.
4. FERROUS METAL: PROVIDE THE FOLLOWING FINISH SYSTEMS OVER FERROUS METAL IN ACCORDANCE WITH SSPC-10:

A. SEMIGLOSS, ALKYD-ENAMEL FINISH: ONE FINISH COAT OVER AN ENAMEL UNDERCOATER AND A PRIMER.

B. PRIMER: QUICK-DRYING, RUST-INHIBITIVE, ALKYD-BASED OR EPOXY-METAL PRIMER, TO ACHIEVE A TOTAL DRY FILM THICKNESS OF NOT LESS THAN 1.5 MILS.

C. UNDERCOAT: ALKYD, INTERIOR ENAMEL UNDERCOAT OR SEMIGLOSS, INTERIOR, ALKYD-ENAMEL FINISH COAT, TO ACHIEVE A TOTAL DRY FILM THICKNESS OF NOT LESS THAN 1.2 MILS.

D. FINISH COAT: ODORLESS, SEMIGLOSS, ALKYD, INTERIOR ENAMEL APPLIED TO ACHIEVE A TOTAL DRY FILM THICKNESS OF NOT LESS THAN 1.4 MILS.

E. APPLY PAINT IN ACCORDANCE WITH MANUFACTURERS INFORMATION.

F. EACH APPLIED COAT SHALL HAVE AN INDEPENDENT COLOR TO DIFFERENTIATE BETWEEN COATS.

2.07 SOURCE QUALITY CONTROL

A. SOUND-POWER LEVEL RATINGS: COMPLY WITH ISO 13350 OR AMCA 301, "METHODS FOR CALCULATING FAN SOUND RATINGS FROM LABORATORY TEST DATA." FACTORY TEST FANS ACCORDING TO ISO 13350 OR AMCA 300, "REVERBERANT ROOM METHOD FOR SOUND TESTING OF FANS." LABEL FANS WITH THE AMCA-CERTIFIED RATINGS SEAL.

B. FAN PERFORMANCE RATINGS: ESTABLISH FLOW RATE, PRESSURE, POWER, AIR DENSITY, SPEED OF ROTATION, AND EFFICIENCY BY FACTORY TESTS AND RATINGS ACCORDING TO ISO 13350 OR AMCA 210, "LABORATORY METHODS OF TESTING FANS FOR RATING."

C. STEEL HUB TESTING:

1. ULTRASONICALLY TEST IMPELLER HUB BOSS IN ACCORDANCE WITH ASTM A388 ON ONE HUNDRED PERCENT OF THE HUB BOSS CYLINDRICAL SURFACE. REJECTION CRITERIA: ONE OR MORE INDICATIONS ACCOMPANIED BY A COMPLETE LOSS OF BACK REFLECTION NOT ASSOCIATED WITH OR ATTRIBUTABLE TO THE GEOMETRIC CONFIGURATION.
2. AFTER ASSEMBLY AND OVERSPEED TESTING, FLUORESCENT PENETRANT TEST ONE HUNDRED PERCENT OF THE IMPELLER HUB. THE PROCEDURE AND TECHNIQUE FOR THE PENETRANT TEST TO BE IN ACCORDANCE WITH ASTM E1209 AND ASTM E165.

D. RADIOGRAPHIC INSPECTIONS:

1. PERFORM RADIOGRAPHIC INSPECTION IN ACCORDANCE WITH ASTM E155 ON ALL ALUMINUM HUB AND BLADES FOR EACH FAN UNIT. USE ASTM E155 QUALITY LEVELS FOR BLADES. BLADES SHALL COMPLY WITH GRADE B EXCEPT FOR THE OUTER THIRD OF THE LENGTH WHERE GRADE C IS ACCEPTABLE. ETCH OR ENGRAVE X-RAY IDENTIFICATION NUMBER ON EACH BLADE BEFORE ASSEMBLY OF THE IMPELLER.
2. SUBMIT CERTIFICATION OF VISUAL ACCEPTABILITY, AND X-RAY FILM. MANUFACTURER SHALL MAINTAIN FILE OF X-RAY FILM FOR MINIMUM PERIOD OF 5 YEARS.

E. FACTORY PROTOTYPE TESTS:

1. PERFORM SEPARATE FORWARD PERFORMANCE TEST AT 60 HP AND 100% SPEED.
2. RECORD OBSERVATIONS MADE DURING TESTS AND TEST RESULTS IN DOCUMENT FORM, CERTIFIED BY THE MANUFACTURER AND SUBMITTED TO THE ENGINEER FOR REVIEW. A MINIMUM OF THREE WEEKS NOTICE AND INFORMATION AS TO PROPOSED TEST PROCEDURE SHALL BE FURNISHED TO THE ENGINEER PRIOR TO THE FACTORY TESTS. ⚠1
3. TEST PROCEDURES SPECIFIED HEREIN SHALL BE SEQUENTIAL IN THE ORDER PRESCRIBED. TEST MOTORS IN ACCORDANCE WITH THE PRODUCTION TEST REQUIREMENTS. THE FAN OR ANY COMPONENT THEREOF WHICH FAILS TO SATISFACTORILY PERFORM ANY TEST AS SPECIFIED SHALL BE CONSIDERED DEFECTIVE. REPLACE DEFECTIVE PARTS AND THE ENTIRE UNIT SHALL BE RETESTED AT NO COST TO THE AUTHORITY.

NO.	DATE	REVISION DESCRIPTION
⚠1	11/09/15	VENTILATION FANS HP CHANGED

c:\pwworking\hmm\external\pre47802\dms72788\071_0134CMN005.dgn 11/10/2015 1:49:39 PM PRE47802

DESIGN AGENCY
HATCH MOTT MacDONALD
18013 CLEVELAND PKWY.
SUITE 200
CLEVELAND, OH 44135

DESIGNED	DRAWN	REVIEWED	DATE
HWW	GMN	DGN	08/07/14
CHECKED	REVISED	STRUCTURE FILE NUMBER	
NAH	HWW	3106578	

GENERAL NOTES TVS AXIAL FANS SHEET 5 OF 8

BRIDGE NO. HAM-71-0134
I-71 LYTLE TUNNEL UNDER LYTLE PARK

HAM-71-01.34
PID No. 87268

REPLACE DEFECTIVE PARTS AND THE ENTIRE UNIT SHALL BE RETESTED AT NO COST TO THE AUTHORITY.

4. BEFORE MANUFACTURE IS BEGUN ON ANY FAN UNIT TO BE FURNISHED, SUBMIT FULL DETAILS OF THE TYPE OF TEST PROCEDURES, SAMPLES OF ALL TEST REPORT FORMS, AND FULL DETAILS OF THE METHODS BY WHICH THE RAW TEST DATA HAS BEEN CALCULATED, TO THE ENGINEER FOR REVIEW.

F. AERODYNAMIC PERFORMANCE TEST:

1. THE PROTOTYPE TEST FAN UNIT, HAVING SATISFACTORILY PASSED THE MANUFACTURER'S STANDARD PRODUCTION TESTS AND INSPECTIONS SPECIFIED, SHALL BE TESTED IN ACCORDANCE WITH THE PROCEDURES SPECIFIED IN THE AMCA 210, USING A TEST SET-UP APPROVED BY THE ENGINEER AS APPROPRIATE FOR THE INTENDED INSTALLATION OF THE FANS.

2. THE FAN SHALL BE TESTED AT THE BLADE ANGLE WHICH SHALL PRODUCE THE REQUIRED VOLUME OF AIR AT THE REQUIRED SYSTEM PRESSURE. THIS BLADE ANGLE SHALL NOT BE AT ITS MAXIMUM SETTING. TEST DATA SHALL BE RECORDED ON AMCA DATA SUBMITTAL FORMS, OR THE EQUIVALENT THEREOF, AS APPROVED BY THE ENGINEER. CERTIFIED TEST DATA, AND CERTIFIED PERFORMANCE CURVES FOR ALL OF THE COORDINATES SPECIFIED SHALL BE SUBMITTED TO THE ENGINEER FOR APPROVAL.

3. PERFORMANCE TESTS SHALL COVER THE RANGE OF AIRFLOW RATES FROM NO FLOW TO FREE AIR DELIVERY IN BOTH DIRECTIONS OF AIRFLOW. CONVERT TEST MEASUREMENTS TO STANDARD TEMPERATURE & PRESSURE (STP).

4. IN THE EVENT THAT THE TESTS SHOW THAT THE FAN DOES NOT COMPLY WITH THE REQUIREMENTS AS TO CHARACTERISTICS AND PERFORMANCE, OR THAT THE BRAKE POWER WILL EXCEED BY FIVE PERCENT OR MORE, THE BRAKE POWER SHOWN IN THE THEORETICAL DATA SUBMITTED BY THE CONTRACTOR, THE FAN UNIT WILL BE CONSIDERED DEFECTIVE.

5. UPON THE COMPLETION OF THE FAN UNIT PERFORMANCE TESTS, THE CONTRACTOR SHALL SUBMIT TWO COPIES OF ALL RAW TEST DATA.

6. AFTER THE COMPLETION OF THE FAN PERFORMANCE TESTS, PERFORMANCE CURVES AND TABLES OF PERFORMANCE DATA CALCULATED FROM FACTORY TEST DATA, AT EACH OF THE TEST POINTS AT EACH ROTATIONAL DIRECTION, SHALL BE SUBMITTED.

7. TABLES SHALL CONSIST OF NUMERICAL VALUES AT EACH OF THE TEST POINTS FOR THE FOLLOWING:

A. VOLUME OF AIR DELIVERY (FT^3/MIN)
B. FAN STATIC PRESSURE (IN. WG.)
C. FAN TOTAL PRESSURE (IN WG.)
D. FAN OUTLET VELOCITY PRESSURE (IN WG)
E. FAN STATIC EFFICIENCY (%)
F. FAN TOTAL EFFICIENCY (%)
G. POWER INPUT TO FAN (KW/HP)
H. FAN SPEED (RPM)
I. RUNNING CURRENT INPUT (A)
J. VOLTAGE (V)
K. POWER INPUT TO MOTOR (KW/HP)
L. NUMBER OF PHASES AND FREQUENCY (N/HZ)
M. LOCKED ROTOR CURRENT RATING (A)
N. MOTOR POWER FACTOR IN PERCENTAGE (%)

8. SUBMIT FAN UNIT PERFORMANCE CURVES DERIVED FROM FACTORY TESTS VERIFYING THE THEORETICAL PERFORMANCE CURVES PREVIOUSLY SUBMITTED. INDICATE TEST POINTS ON PERFORMANCE CURVES.

G. REVERSAL TEST:

1. PERFORM REVERSAL TEST AT 50% SPEED AMD AT 100% SPEED.

2. THE PROTOTYPE TEST UNIT, HAVING SATISFACTORILY PASSED ALL PRECEDING TESTS AND INSPECTIONS SPECIFIED, SHALL BE SUBJECT TO REVERSAL TESTS. THESE TESTS SHALL REQUIRE OPERATION AT THE RATED OPERATING DESIGN AIRFLOW FOR THREE 30 MINUTE TIME INTERVALS WITH THE UNIT ORIENTED IN THE HORIZONTAL POSITION, AND SHALL REQUIRE THREE CYCLES OF ROTATION REVERSAL. A CYCLE OF ROTATION REVERSAL IS DEFINED AS REVERSAL FROM ONE DIRECTION OF MOTOR IMPELLER ROTATION TO THE OTHER DIRECTION OF ROTATION, AND THEN BACK TO THE FIRST DIRECTION OF ROTATION.

3. THE REVERSAL TEST SHALL BEGIN WITH THE FAN UNIT OPERATED IN THE FORWARD DIRECTION OF AIRFLOW FOR A PERIOD OF 30 MINUTES.

4. AT THE END OF THE FIRST 30-MINUTE PERIOD OF OPERATION IN THE FORWARD DIRECTION OF AIRFLOW, ELECTRICALLY REVERSE MOTOR WITH A ZERO SECOND TIME DELAY IMPOSED BETWEEN THE INTERRUPTION OF POWER AND RE-ENERGIZING OF THE MOTOR FOR REVERSED ROTATION, LINE VOLTAGE REVERSAL.

5. AFTER MOTOR HAS BEEN RE-ENERGIZED, OPERATE FAN UNIT IN THE REVERSE DIRECTION OF AIRFLOW FOR A PERIOD OF 30 MINUTES.

6. CONTINUE TEST WITH ALTERNATING 30-MINUTE PERIODS OF OPERATION IN THE FORWARD AND REVERSE DIRECTIONS OF AIRFLOW, UNTIL TWO CYCLES OF ROTATION REVERSALS HAVE BEEN PERFORMED.

7. AFTER THESE CYCLES OF ROTATION PERFORM AN ADDITIONAL TWO CYCLES OF ROTATION WITH A 10-SECOND TIME DELAY IMPOSED BETWEEN THE INTERRUPTION OF POWER AND RE-ENERGIZING THE MOTOR FOR REVERSAL.

8. AT THE END OF THE LAST 30 MINUTE PERIOD OF OPERATION, DE-ENERGIZE FAN AND PERMIT TO COAST TO A STANDSTILL.

9. MEASURE RESISTANCE OF THE COLD MOTOR WINDING INSULATION JUST PRIOR TO THE START OF THE REVERSAL TEST, AND IMMEDIATELY AFTER THE END OF THE TEST. IN ADDITION, THE TEMPERATURE OF THE MOTOR WINDINGS AND OF THE MOTOR FRAME SHALL BE CONTINUOUSLY RECORDED THROUGHOUT THE TEST.

10. ASSOCIATED WITH THE TEST, RECORD CURRENT VERSUS TIME AND RPM VERSUS TIME FOR ALL DIRECTION CHANGES AND COAST TO A STANDSTILL.

11. CERTIFICATION OF SUCCESSFUL PERFORMANCE OF THE REVERSAL TEST AND CERTIFIED TEST DATA SHALL BE SUBMITTED TO THE ENGINEER FOR REVIEW.

H. SOUND TEST:

1. THE TYPE TEST FAN UNIT, WHICH HAS SATISFACTORILY PASSED ALL PRECEDING TESTS AND INSPECTIONS SPECIFIED, SHALL BE TESTED IN ACCORDANCE WITH AMCA 300 TO OBTAIN SOUND POWER LEVEL DATA AT EIGHT-OCTAVE BAND CENTER FREQUENCIES FROM 63 HERTZ TO 8,000 HERTZ.

2. THE SOUND POWER MEASUREMENTS SHALL BE TAKEN WITH THE FAN OPERATING AT THE DESIGN DUTY POINTS. TEST FAN IN BOTH FORWARD AND REVERSE DIRECTIONS.

3. SUBMIT TEST DATA TO THE ENGINEER FOR REVIEW CLEARLY ADDRESSING INLET AND OUTLET SOUND POWER LEVELS AS WELL AS THE MAXIMUM SOUND PRESSURE LEVEL AT 3 FT FROM HOUSING IN ACCORDANCE WITH AMCA 303 INSTALLATION TYPE D.

4. TEST DATA SHALL BE COORDINATED BY THE CONTRACTOR BETWEEN THE FAN AND SOUND ATTENUATOR SUPPLIER TO CONFIRM THAT THE COMBINATION CAN ACHIEVE THE REQUIRED INSTALLED SOUND LEVELS. REFER TO SECTION "SOUND ATTENUATORS."

I. STRESS TEST:

1. APPLY TRIAXIAL STRAIN GAUGES TO TWO BLADES OF THE IMPELLER AND TO THE HUB OF UNLOADED IMPELLER OF THE FAN UNIT. TO ACCURATELY MEASURE THE STRAINS DEVELOPED IN EACH IMPELLER, APPLY ONE STRAIN GAUGE AT THE ROOT, ONE AT THE MIDPOINT, AND ONE AT THE TIP OF BLADES ON EACH SIDE. IN ADDITION, APPLY ONE STRAIN GAUGE ON THE IMPELLER HUB FOR EACH STRAIN-GAUGED BLADE. THE STRAINS DEVELOPED DURING TESTING AT THE RATED SPEED SHALL BE CONTINUOUSLY MONITORED AND MEASURED. THE MEASURED STRAINS PRODUCED UNDER THE TEST LOAD SHALL BE USED TO CALCULATE THE CORRESPONDING STRESSES. STRESSES SHALL NOT EXCEED 60 PERCENT OF THE COMPONENT MATERIAL YIELD STRENGTH. SUBMIT THE METHODS OF STRAIN MEASUREMENT AND STRESS CALCULATION TO THE ENGINEER FOR REVIEW. SUBMIT NOTARIZED CERTIFICATION THAT THE MEASURED STRAINS AND CALCULATED CORRESPONDING STRESSES REPRESENT THE STRESSES DEVELOPED IN ALL OTHER BLADES OF THE TYPE TEST FAN IMPELLER. THE CALCULATED MAXIMUM EXPECTED STRESSES, AND THE DESIGN PROPERTIES OF THE MATERIAL USED TO MAKE THE IMPELLER BLADES AND HUB, SHALL ALSO BE SUBMITTED TO THE ENGINEER FOR APPROVAL.

2. THE NATURAL FREQUENCY READINGS OF THE FAN BLADES SHALL BE RECORDED AND INCLUDED IN THE TEST REPORT. PROCEDURES USED TO DETERMINE NATURAL FREQUENCY SHALL BE SUBMITTED FOR APPROVAL.

J. PRODUCTION TESTS:

1. OBSERVATIONS MADE DURING ALL TESTS SHALL BE RECORDED IN A DOCUMENT FORM, CERTIFIED BY THE MANUFACTURER AND SUBMITTED TO THE ENGINEER FOR REVIEW. A MINIMUM OF THREE WEEKS NOTICE AND INFORMATION AS TO PROPOSED TEST PROCEDURE SHALL BE FURNISHED TO THE ENGINEER PRIOR TO THE FACTORY TESTS.

DESIGN AGENCY
HATCH MOTT MacDONALD
18013 CLEVELAND PKWY.
SUITE 200
CLEVELAND, OH 44135

REVIEWED DGN | DATE 08/07/14 | STRUCTURE FILE NUMBER 3106578
DRAWN GMN | REVISED HWW
DESIGNED HWW | CHECKED NAH

GENERAL NOTES TVS AXIAL FANS SHEET 6 OF 8
BRIDGE NO. HAM-71-0134
I-71 LYTLE TUNNEL UNDER LYTLE PARK

HAM-71-01.34
PID No. 87268

c:\pwworking\hmm\external\pre47802\dms72786\071_0134CMN006.dgn 2/26/2015 12:12:29 PM PRE47802

MINIMUM OF THREE WEEKS NOTICE AND INFORMATION AS TO PROPOSED TEST PROCEDURE SHALL BE FURNISHED TO THE ENGINEER PRIOR TO THE FACTORY TESTS.

2. TEST PROCEDURES SPECIFIED HEREIN SHALL BE SEQUENTIAL IN THE ORDER PRESCRIBED. ANY FAN TYPE OR SIZE OR COMPONENT THEREOF WHICH FAILS TO SATISFACTORILY PERFORM ANY TEST SPECIFIED SHALL BE CONSIDERED DEFECTIVE. REPLACE PARTS AND THE ENTIRE UNIT SHALL BE RETESTED AT NO COST TO ODOT.

3. BEFORE TESTING IS BEGUN ON ANY VENTILATION EQUIPMENT TO BE FURNISHED UNDER THIS SECTION, SUBMIT FULL DETAILS OF ALL TEST PROCEDURES, SAMPLES OF ALL TEST REPORT FORMS, AND FULL DETAILS OF THE METHODS BY WHICH THE RAW TEST DATA IS TO BE REDUCED, TO THE CONSTRUCTION COORDINATOR FOR REVIEW.

K. FAN IMPELLER OVER-SPEED TEST (ALL UNITS):

1. EACH FAN IMPELLER ASSEMBLY MANUFACTURED AND FURNISHED FOR THIS SECTION SHALL BE SUBJECTED TO AN OVER-SPEED TEST AT THE FACTORY AS SPECIFIED HEREIN PRIOR TO ASSEMBLY OF THE COMPLETE FANS. THE FAN BLADES MAY BE SET TO THEIR ZERO LIFT ANGLE FOR THE PURPOSES OF THE OVER-SPEED TEST.

2. AFTER RADIOGRAPHIC INSPECTION AND AFTER STATIC AND DYNAMIC BALANCING, SPIN TEST EACH COMPLETELY ASSEMBLED FAN IMPELLER. SPIN TESTING OF INDIVIDUAL COMPONENTS, SUCH AS BLADES AND IMPELLERS, IN LIEU OF TESTING COMPLETE IMPELLERS, IS NOT ACCEPTABLE. EACH FAN IMPELLER SHALL BE SPUN AT 125 PERCENT OF THE MAXIMUM DESIGN OPERATING SPEED FOR A PERIOD OF NOT LESS THAN THREE MINUTES IN BOTH DIRECTIONS OF ROTATION. FOLLOWING EACH SPIN TEST, A VISUAL INSPECTION FOR LOOSE BLADES AND SURFACE DEFECTS SHALL BE MADE BY THE MANUFACTURER. REPLACE DEFECTIVE PARTS AND REPEAT THE TEST BEFORE FURTHER TESTING. CERTIFICATES OF VISUAL ACCEPTABILITY SHALL BE SUBMITTED TO THE ENGINEER FOR REVIEW.

L. VIBRATION TESTS (ALL UNITS):

1. THE VIBRATION TEST SHALL BE PERFORMED BY THE CONTRACTOR AND UNDER THE SUPERVISION OF A MANUFACTURER'S REPRESENTATIVE.

2. AFTER ASSEMBLY CHECK EACH FAN UNIT FOR BEARING OPERATION IN BOTH DIRECTIONS OF ROTATION. REPLACE DEFECTIVE BEARINGS AND RECHECK FAN UNIT BEFORE FURTHER TESTING. MEASURE VIBRATION IN TWO RADIAL PLANES, 90 DEGREES APART AND IN THE AXIAL DIRECTION. MEASUREMENTS SHALL BE MADE FOR EACH RADIAL PLANE AT THE FRONT AND REAR OF THE FAN UNIT. MEASURED MAXIMUM VIBRATION SHALL NOT EXCEED 4.5 MM/S RMS (1.0 MILLS DOUBLE AMPLITUDE (.1 INCH/SEC. PEAK VELOCITY)) FOR FAN UNITS OPERATING AT THE MAXIMUM DESIGN OPERATING SPEED. MEASUREMENT SHALL BE IN ACCORDANCE WITH ISO 1940/1:1993.

3. IF MEASURED VIBRATION AMPLITUDE EXCEEDS THE SPECIFIED MAXIMUM, OR IF THE SPECIFIED VIBRATION MEASUREMENTS REVEAL UNACCEPTABLE VIBRATION AT ANY FREQUENCY OTHER THAN RATED DESIGN OPERATING SPEED, VIBRATION AMPLITUDE SHALL BE MEASURED AND RECORDED CONTINUOUSLY AS THE FAN UNIT IS ACCELERATED FROM A STANDSTILL TO RATED DESIGN OPERATING SPEED, AND AS THE UNIT COASTS DOWN FROM RATED DESIGN OPERATING SPEED TO A STANDSTILL. THE AMPLITUDE VERSUS FREQUENCY CHART SHALL BE ANALYZED BY THE FAN MANUFACTURER TO DETERMINE THE CAUSE(S) OF THE UNACCEPTABLE EXCESSIVE VIBRATION. RESONANT FREQUENCIES SHALL BE DETERMINED AND SHALL BE DEMONSTRATED AS NOT TO OCCUR WITHIN FAN OPERATING RANGES. THE ANALYSIS SHALL BE SUBMITTED TO THE ENGINEER FOR REVIEW AND THE CAUSE(S) SHALL BE CORRECTED. THE ENGINEER SHALL BE FURNISHED FINAL VIBRATION AMPLITUDE READINGS ON ALL FAN MOTOR BEARINGS.

M. RUN-IN TEST (ALL UNITS):

1. OPERATE EACH FAN UNIT CONTINUOUSLY FOR TWENTY-FOUR HOURS, A TOTAL OF 12 HOURS IN THE FORWARD (EXHAUST) MODE AND 12 HOURS IN THE REVERSE (SUPPLY) MODE OF ROTATION. DURING REVERSAL ALLOW FAN UNIT TO COAST FOR A PERIOD OF FIVE MINUTES BEFORE BEING RESTARTED IN THE REVERSE DIRECTION.

2. RECORD WINDING TEMPERATURE AND BEARING VIBRATION DATA DURING RUN-IN TESTS AND SUBMIT TO THE ENGINEER.

3. DURING THE TEST, THE MOTOR WINDINGS SHALL NOT SHOW ANY SIGN OF OVERHEATING, AND VIBRATION AMPLITUDE SHALL NOT EXCEED THE MAXIMUM RECOMMENDED BY MANUFACTURER.

4. THE TAFT MUSEUM AND THE PUBLIC SHALL BE NOTIFIED A MINIMUM OF SEVEN DAYS PRIOR TO THE RUN-IN TEST.

N. MOTOR FACTORY TESTS:

1. TEST MOTORS IN ACCORDANCE WITH THE PROCEDURES SPECIFIED IN IEEE PUBLICATION 112. A CERTIFIED TEST REPORT AND CERTIFIED PERFORMANCE CURVES FOR ALL OF THE COORDINATES SPECIFIED SHALL BE SUBMITTED TO THE ENGINEER FOR REVIEW. PLOT PERFORMANCE CURVES FOR EACH SIZE OF FAN MOTOR TO A SCALE WHICH WILL FACILITATE ACCURATE READINGS.

2. THE PROTOTYPE TEST MOTOR SHALL BE SUBJECT TO THE FOLLOWING TESTS AT THE RATED SYNCHRONOUS SPEED. THE ENGINEER MAY, AT HIS DISCRETION, WITNESS THE TESTS.

O. THE TESTS SHALL BE AS FOLLOWS:

1. TESTS TO OBTAIN ACTUAL FAN MOTOR PERFORMANCE CURVES VERIFYING THE THEORETICAL FAN MOTOR PERFORMANCE CURVES SUBMITTED AND OTHER DATA SPECIFIED HEREINAFTER.

   A. FULL LOAD CURRENT. (A)
   B. NO LOAD CURRENT. (A)
   C. FULL LOAD INPUT. (KW/HP)
   D. NO LOAD INPUT. (KW/HP)
   E. LOCKED ROTOR CURRENT. (A)
   F. LOCKED ROTOR INPUT. (KVA)
   G. LOCKED ROTOR TORQUE. (FT-LB)

2. TESTS TO DETERMINE:

   A. WINDING RESISTANCE.
   B. LOSSES, NO LOAD AND FULL LOAD.
   C. DIELECTRIC TESTS.
   D. VISUAL BEARING INSPECTION.

P. ALL MOTORS SHALL UNDERGO THE ABOVE TESTS AT THEIR RATED SYNCHRONOUS SPEED IN BOTH DIRECTIONS OF ROTATION.

PART 3 - EXECUTION

3.01 INSTALLATION

A. INSTALL AXIAL FANS LEVEL AND PLUMB.

B. SUPPORT FLOOR-MOUNTING UNITS USING NEOPRENE VIBRATION ISOLATOR PADS.

1. SECURE TO CONCRETE BASES USING ANCHOR BOLTS CAST IN CONCRETE BASE.

C. INSTALL FLOOR-MOUNTING UNITS ON CONCRETE BASES.

D. INSTALL UNITS WITH CLEARANCES FOR SERVICE AND MAINTENANCE.

E. LABEL FANS ACCORDING TO REQUIREMENTS SPECIFIED IN THIS SECTION.

3.02 CONNECTIONS

A. DUCT INSTALLATION AND CONNECTION REQUIREMENTS ARE SPECIFIED IN OTHER SECTIONS, "TUNNEL VENTILATION SYSTEM METAL DUCTS." DRAWINGS INDICATE GENERAL ARRANGEMENT OF DUCTS AND DUCT ACCESSORIES.

B. TIGHTEN ELECTRICAL CONNECTORS AND TERMINALS ACCORDING TO MANUFACTURER'S PUBLISHED TORQUE-TIGHTENING VALUES. IF MANUFACTURER'S TORQUE VALUES ARE NOT INDICATED, USE THOSE SPECIFIED IN UL 486A AND UL 486B.

3.03 ADJUSTING

A. ADJUST DAMPER LINKAGES FOR PROPER DAMPER OPERATION.

B. LUBRICATE BEARINGS.

3.04 CLEANING

A. ON COMPLETION OF INSTALLATION, INTERNALLY CLEAN FANS ACCORDING TO MANUFACTURER'S WRITTEN INSTRUCTIONS. REMOVE FOREIGN MATERIAL AND CONSTRUCTION DEBRIS. VACUUM FAN WHEEL AND CABINET.

B. AFTER COMPLETING SYSTEM INSTALLATION, INCLUDING OUTLET FITTING AND DEVICES, INSPECT EXPOSED FINISH. REMOVE BURRS, DIRT, AND CONSTRUCTION DEBRIS AND REPAIR DAMAGED FINISHES.

C. OPERATIONS AND MAINTENANCE MANUALS:

1. SUBMIT THE FOLLOWING FOR EACH PRODUCT INCORPORATED INTO THE WORK:

   A. IDENTIFICATION: MANUFACTURING NAME, TYPE, YEAR, SERIAL NUMBER, NUMBER OF UNITS, CAPACITY, AND IDENTIFICATION TO RELATED SYSTEMS.

   B. PERFORMANCE CRITERIA AND MAINTENANCE DATA.

   C. OPERATING INSTRUCTIONS AND PRECAUTIONS.

   D. SPARE PARTS LIST INCLUDING COMPONENT PARTS AVAILABILITY, NAMES AND ADDRESSES OF SPARE PART SUPPLIERS, AND A LIST OF SPECIALIZED TOOLS NECESSARY FOR MAINTENANCE.

   E. CONSUMABLES LIST INCLUDING COMPONENTS PARTS AVAILABILITY, NAMES AND ADDRESSES OF SUPPLIERS, AND RECOMMENDED MANUFACTURER SCHEDULES FOR ALL CONSUMABLES.

c:\pwworking\hnm\external\pre47802\dms72788\071_0134GMN007.dgn 2/4/2015 12:23:13 PM PRE47802

DESIGN AGENCY
HATCH MOTT MacDONALD
18013 CLEVELAND PKWY.
SUITE 200
CLEVELAND, OH 44135

DESIGNED HWW | DRAWN GMN | REVIEWED DGN | DATE 08/07/14
CHECKED NAH | REVISED HWW | STRUCTURE FILE NUMBER 31066578

F. LUBRICATION SCHEDULE INDICATING LUBRICATION POINTS AND TYPE OF LUBRICANT RECOMMENDED.

G. MATERIAL SAFETY AND DATA SHEETS FOR LUBRICANTS.

H. MAINTENANCE AND TROUBLESHOOTING PROCEDURES / GUIDELINES / PROTOCOL.

I. COMPLETE COMPONENT PARTS LIST.

J. INSTALLATION INSTRUCTIONS AND PRECAUTIONS.

K. ASSEMBLY INSTRUCTIONS AND PRECAUTIONS.

L. STORAGE INSTRUCTIONS AND PRECAUTIONS.

M. A WRITTEN PROCEDURE FOR PERFORMANCE TESTING OF FANS IN THE FIELD WITH PITOT TUBE AND MANOMETER.

N. PROCEDURES FOR SEPARATELY REMOVING AND REPLACING MOTOR, ROTOR AND BLADES.

O. TWO HEAVY GAUGE MYLAR TEMPLATES FOR EACH FAN FOR BLADE ANGLE SETTING IN THE FIELD. TEMPLATE SHALL INCLUDE DESIGN, MAXIMUM, INTERMEDIATE AND MINIMUM BLADE ANGLES.

P. A LIST OF PARTS TO BE REPLACED AND/OR TESTING PROCEDURES TO DETERMINE PARTS TO BE REPLACED AFTER A FAN HAS BEEN EXPOSED TO THE 482°F AS SPECIFIED, TO ALLOW FAN TO BE PUT BACK IN SERVICE SAFELY AND RELIABLY.

Q. TOLERANCE LIMITS FOR BEARING DAMAGE DETECTORS INCLUDING ALARM SETPOINTS, PROPOSED SHUTDOWN SETPOINTS, AND MAXIMUM RANGE OF DETECTION.

R. MINIMUM AND MAXIMUM BLADE TIP CLEARANCES.

S. MOTOR WINDING TEMPERATURE MONITOR PRE-ALARM AND ALARM OUTPUT SETPOINTS, AND PROPOSED TRIP OUTPUT SETPOINT.

T. RECOMMENDED INSPECTION CHECKLISTS FOR ALL COMPONENTS.

U. RECOMMENDED COMMISSIONING PROCEDURES.

3.05 DEMONSTRATION

A. ENGAGE A FACTORY-AUTHORIZED SERVICE REPRESENTATIVE TO TRAIN ODOT MAINTENANCE PERSONNEL TO ADJUST, OPERATE, AND MAINTAIN AXIAL FANS.

1. TRAIN THE ENGINEER'S MAINTENANCE PERSONNEL ON PROCEDURES AND SCHEDULES FOR STARTING AND STOPPING, TROUBLESHOOTING, SERVICING, AND MAINTAINING EQUIPMENT AND SCHEDULES.
2. REVIEW DATA IN MAINTENANCE MANUALS. REFER TO "OPERATION AND MAINTENANCE DATA."
3. SCHEDULE TRAINING WITH THE ENGINEER, WITH AT LEAST SEVEN CALENDAR DAYS' ADVANCE NOTICE.

PART 4 - CONTRACTOR QUALITY CONTROL

4.01 FIELD QUALITY CONTROL

A. THE FOLLOWING DESCRIBES THE MINIMUM INSPECTION AND TESTING REQUIRED IN THE CONTRACTOR'S QUALITY CONTROL (CQC) PLAN AND PROGRAM FOR THE WORK OF THIS SECTION AND IS FOR CQC ONLY. THE IMPLEMENTATION OF THE CONTRACTOR QUALITY CONTROL PROGRAM DOES NOT RELIEVE THE CONTRACTOR FROM THE RESPONSIBILITY TO PROVIDE THE WORK IN ACCORDANCE WITH THE CONTRACT DOCUMENTS, APPLICABLE CODES, REGULATIONS, AND GOVERNING AUTHORITIES. THE CQC PLAN AND PROGRAM SHALL INCLUDE, BUT NOT BE LIMITED TO, THE FOLLOWING TESTING AND INSPECTION ELEMENTS. THESE ELEMENTS ARE PROVIDED ONLY AS A MINIMUM STARTING POINT FOR THE CONTRACTOR TO USE TO GENERATE HIS COMPLETE CQC PROGRAM.

B. EQUIPMENT STARTUP CHECKS:

1. VERIFY THAT SHIPPING, BLOCKING, AND BRACING ARE REMOVED.
2. VERIFY THAT UNIT IS SECURE ON MOUNTINGS AND SUPPORTING DEVICES AND THAT CONNECTIONS TO DUCTS AND ELECTRICAL COMPONENTS ARE COMPLETE.
3. VERIFY THAT CLEANING AND ADJUSTING ARE COMPLETE.
4. VERIFY PROPER MOTOR ROTATION DIRECTION, AND VERIFY FAN WHEEL FREE ROTATION AND SMOOTH BEARING OPERATION.
5. VERIFY LUBRICATION FOR BEARINGS AND OTHER MOVING PARTS.
6. VERIFY THAT AUTOMATIC CONTROL DAMPERS IN CONNECTED DUCTWORK SYSTEMS ARE IN FULLY OPEN POSITION.

C. STARTING PROCEDURES:

1. ENERGIZE MOTOR.
2. MEASURE AND RECORD MOTOR VOLTAGE AND AMPERAGE.

D. OPERATIONAL TEST: AFTER ELECTRICAL CIRCUITRY HAS BEEN ENERGIZED, START UNITS TO CONFIRM PROPER MOTOR ROTATION AND UNIT OPERATION. REMOVE MALFUNCTIONING UNITS, REPLACE WITH NEW UNITS, AND RETEST.

E. TEST AND ADJUST CONTROLS AND SAFETIES. REPLACE DAMAGED AND MALFUNCTIONING CONTROLS AND EQUIPMENT.

F. SHUT UNIT DOWN AND RECONNECT AUTOMATIC CONTROL OPERATORS.

G. REPAIR OR REPLACE MALFUNCTIONING UNITS. RETEST AS SPECIFIED ABOVE AFTER REPAIRS OR REPLACEMENTS ARE MADE.

PART 5 - MEASUREMENT AND PAYMENT

5.01 MEASUREMENT

A. ALL OF THE WORK OF THIS SECTION SHALL BE MEASURED AS LUMP SUM.

5.02 PAYMENT

A. PAYMENT FOR ITEM SPECIAL – MISC.: AXIAL FANS SHALL BE MADE AT THE LUMP SUM CONTRACT PRICE IN THE PAYMENT SCHEDULE, INCLUDING ALL WORK, LABOR, EQUIPMENT AND MATERIALS NECESSARY TO COMPLETE THIS ITEM OF WORK DESCRIBED AND TO THE SATISFACTION OF THE ENGINEER.

c:\pwworking\hmm\externdl\pre47802\dms72788\071_0134CMN008.dgn 2/4/2015 12:21:34 PM PRE47802

DESIGN AGENCY
HATCH MOTT MacDONALD
18013 CLEVELAND PKWY.
SUITE 200
CLEVELAND, OH 44135

DESIGNED	DRAWN	REVIEWED	DATE
HWW	GMN	DGN	08/07/14
CHECKED	REVISED	STRUCTURE FILE NUMBER	
NAH	HWW	31066578	

GENERAL NOTES TVS AXIAL FANS SHEET 8 OF 8

BRIDGE NO. HAM-71-0134
I-71 LYTLE TUNNEL UNDER LYTLE PARK

HAM-71-01.34
PID No. 87268

ITEM SPECIAL – STRUCTURE, MISC.: DAMPER DOOR SYSTEM

PART 1 - GENERAL

1.01 GENERAL REQUIREMENTS

A. THE CONTRACTOR SHALL FURNISH ALL LABOR, EQUIPMENT AND MATERIALS, AND PERFORM ALL OPERATIONS REQUIRED TO INSTALL THE DAMPER DOOR SYSTEM AS INDICATED AND DESCRIBED HEREIN. THE CONTRACTOR SHALL FURNISH ALL CONDUIT, WIRING, OUTLET BOXES, JUNCTION BOXES, CABINETS, AND SIMILAR DEVICES NECESSARY FOR THE COMPLETE INSTALLATION. THE SYSTEM SHALL INCLUDE, BUT NOT BE LIMITED TO ALL CONTROL AND COMMUNICATION EQUIPMENT, POWER SUPPLIES, ACTUATORS, GEARBOXES, BEARINGS, SPROCKETS, AUDIBLE AND VISIBLE NOTIFICATION EQUIPMENT, CONDUITS, WIRES, FITTINGS, AND ALL OTHER ACCESSORIES REQUIRED TO PROVIDE A COMPLETE AND OPERABLE CONTROL SYSTEM.

B. THE CONTRACTOR SHALL FURNISH AND INSTALL BOTH DAMPER DOOR SYSTEMS; OVER RAMP AND NORTHBOUND ROADWAYS.

1.02 REFERENCES

A. REFERENCE STANDARDS SHALL INCLUDE AS A MINIMUM BUT NOT LIMITED TO:

1. AMERICAN INSTITUTE OF STEEL CONSTRUCTION (AISC):
   A. SPECIFICATIONS FOR STRUCTURAL STEEL BUILDINGS – ALLOWABLE STRESS DESIGN AND PLASTIC DESIGN.
2. AMERICAN SOCIETY FOR TESTING AND MATERIALS (ASTM):
   A. A 36 – CARBON STRUCTURAL STEEL.
   B. A 123, STANDARD SPECIFICATION FOR ZINC (HOT-DIP GALVANIZED) COATINGS ON IRON AND STEEL PRODUCTS.
   C. A 153, STANDARD SPECIFICATION FOR ZINC COATING (HOT-DIP) ON IRON AND STEEL HARDWARE.
   D. A 194 – CARBON AND ALLOY STEEL NUTS AND BOLTS FOR HIGH PRESSURE OR HIGH TEMPERATURE OR BOTH.
   E. A653, SPECIFICATION FOR STEEL SHEET, ZINC-COATED (HOT-GALVANIZED) BY THE HOT-DIP PROCESS.
   F. D 6386, STANDARD PRACTICE FOR PREPARATION OF ZINC (HOT-DIP GALVANIZED) COATED IRON AND STEEL PRODUCT AND HARDWARE SURFACES FOR PAINTING.
3. AMERICAN WELDING SOCIETY (AWS):
   A. D1.1 – STRUCTURAL WELDING CODE – STEEL.
   B. D1.3 – STRUCTURAL WELDING CODE – SHEET STEEL.
   C. A2.4 – SYMBOLS FOR WELDING AND NONDESTRUCTIVE TESTING.
4. NATIONAL FIRE PROTECTION ASSOCIATION (NFPA):
   A. 502: STANDARD FOR ROAD TUNNELS, BRIDGES AND OTHER LIMITED ACCESS HIGHWAYS.
5. THE SOCIETY OF PROTECTIVE COATINGS (SSPC):
   A. PA-1, NO. 1 SHOP, FIELD AND MAINTENANCE PAINTING.
   B. PA-2, METHOD FOR MEASUREMENT OF DRY PAINT THICKNESS WITH MAGNETIC GAUGES.
   C. PA-20, ZINC-RICH PRIMERS (TYPE I INORGANIC AND TYPE II ORGANIC).
   D. SP-3, POWER TOOL CLEANING.
   E. SP-10, NEAR WHITE BLAST CLEANING.

1.03 QUALITY CONTROL

A. THE SYSTEM SHALL COMPLY WITH ALL STATE AND LOCAL CODES WITH NO EXCEPTION.

B. THE INSTALLATION SHALL BE MADE IN ACCORDANCE WITH THE APPLICABLE PROVISIONS OF THE LATEST PUBLISHED EDITION OF THE REFERENCED STANDARDS AS WELL AS THE EQUIPMENT MANUFACTURERS' INSTALLATION INSTRUCTIONS.

C. SOURCE QUALITY CONTROL:

1. ALL TUNNEL VENTILATION DAMPERS SHALL BE THE PRODUCT OF A SINGLE MANUFACTURER.
2. ALL TUNNEL VENTILATION DAMPER ACTUATORS SHALL BE THE PRODUCT OF A SINGLE MANUFACTURER
3. ALL TUNNEL VENTILATION DAMPER LIMIT SWITCHES SHALL BE THE PRODUCT OF A SINGLE MANUFACTURER.

D. WELDING:

1. THE SHIELDED METAL ARC PROCESS SHALL BE USED ON THIS PROJECT IN ACCORDANCE WITH THE REQUIREMENTS OF AWS D1.1 UNLESS APPROVAL FROM THE ENGINEER IS OBTAINED.
2. WELDERS WORKING ON THIS PROJECT SHALL BE QUALIFIED IN ACCORDANCE WITH THE REQUIREMENTS OF AWS D1.1.

E. ALL ELECTRICAL COMPONENTS SHALL BE FACTORY MUTUAL APPROVED AND/OR LISTED UNDER THE APPROPRIATE CATEGORY BY UNDERWRITERS' LABORATORIES, INC. (UL), AND SHALL BEAR THE "FM" AND/OR "UL" LABELS.

F. THE MANUFACTURER SHALL WARRANTY AGAINST MANUFACTURER'S DEFECTS ALL NEW SYSTEM EQUIPMENT FOR A PERIOD OF ONE (1) YEAR FROM THE DATE OF PROJECT ACCEPTANCE. THE WARRANTEE SHALL INCLUDE; SERVICE, PARTS AND LABOR.

1.04 SUBMITTALS

A. ALL SUBMITTALS SHALL CONTAIN THE FOLLOWING INFORMATION ON EACH PAGE:

1. MANUFACTURER NAME.
2. PROJECT TITLE.
3. PAGINATION.
4. REVISION NUMBER.
5. SUBMITTAL DATE.

B. DAMPER ACTUATOR PERFORMANCE INFORMATION SHALL BE PROVIDED:

1. ACTUATOR POWER (HP).
2. INSTALLATION INSTRUCTIONS AND PRECAUTIONS.
3. OPERATING TEMPERATURE RANGE.
4. TYPE OF OUTPUT SIGNAL.
5. ENCLOSURE DIMENSIONS AND RATINGS.
6. OPERATION AND MAINTENANCE MANUALS.
7. SPACE HEATER VOLTAGE AND KILOWATT INPUT.
8. VOLTAGE/PHASE/FREQUENCY OF ACTUATOR.

C. COMPLETE TECHNICAL INFORMATION, CUT SHEETS, OPERATIONS AND MAINTENANCE MANUALS FOR LIMIT SWITCHES.

D. CERTIFICATIONS OF WELDERS AND WELDING PROCESSES TO BE USED IN THE FABRICATION PROCESS SHALL BE SUBMITTED IN ACCORDANCE WITH AWS D1.1, SECTION 5, PARTS A, C, D AND E.

E. MANUFACTURER'S CERTIFICATION OF MATERIALS.

F. MANUFACTURER'S QUALIFICATIONS, INDICATING YEARS IN BUSINESS, SERVICE CAPABILITIES AND POLICIES, WARRANTY COVERAGE AND DURATION, AND SPARE PARTS SUPPORT.

G. MANUFACTURER SHALL SUBMIT A CERTIFICATE OF COMPLIANCE STATING THAT THE EQUIPMENT FURNISHED UNDER THIS CONTRACT MEETS THE CONTRACT REQUIREMENTS.

H. A SCHEDULE INDICATING THE INSTALLATION SEQUENCE, THE TIME FRAME, AND DETAILS ON HOW THE DAMPER SYSTEM ACTIVATION AND WILL OCCUR. PROJECTED DATES OF DELIVERY OF THE EQUIPMENT TO BE SUPPLIED, INSTALLATION COMPLETION, DEMONSTRATION TEST AND FINAL TEST/ACCEPTANCE DATES SHALL BE INCLUDED.

I. UPON COMPLETION OF THE DEMONSTRATION TEST AND THE CORRECTION OF ANY DEFICIENCIES, THE CONTRACTOR SHALL SUBMIT "AS-BUILT" DRAWINGS. "AS-BUILT" DRAWINGS WHICH SHALL INCLUDE ORIGINAL MANUFACTURER'S SPECIFICATION AND INSTALLATION INSTRUCTION SHEETS.

PART 2 - PRODUCTS

2.01 MATERIALS

A. GENERAL: MANUFACTURED STEEL CLIPS AND ANGLES WILL BE ACCEPTED WHERE SUCH WILL MEET THE REQUIREMENTS OF THE CONTRACT DRAWINGS AND ARE SHOWN ON THE AS-BUILT DRAWINGS.

B. BOLTS, NUTS, AND POSITIVE LOCK WASHERS: BOLTS AND STUDS, NUTS, AND WASHERS SHALL CONFORM TO ASTM A 307, GRADE A, AND ASTM A 449, A 563, AND F 436, AS APPLICABLE. BOLTS AND STUDS, NUTS, AND POSITIVE LOCK WASHERS SHALL BE HOT-DIP GALVANIZED IN ACCORDANCE WITH ASTM A 153.

C. GROUT: PROVIDE HIGH-STRENGTH, NON-SHRINK GROUT FOR BASE PLATES.

D. ALL SPROCKETS SHALL BE ANSI STYLE A SS – STAINLESS STEEL MATERIAL.

E. ALL ROLLER CHAINS SHALL BE HARDENED STEEL.

c:\pwworking\hmm\external\tyn61470\dms72768\071_0134CWN014.dgn 10/24/2014 11:07:16 AM TYN61470

DESIGN AGENCY
HATCH MOTT MacDONALD
18013 CLEVELAND PKWY.
SUITE 200
CLEVELAND, OH 44135

DESIGNED	DRAWN	REVIEWED	DATE
KSK	CMN	DGN	08/07/14
CHECKED	REVISED	STRUCTURE FILE NUMBER	
NAH	KSK	3106578	

GENERAL NOTES DAMPER DOOR SYSTEM SHEET 1 OF 4
BRIDGE NO. HAM-71-0134
I-71 LYTLE TUNNEL UNDER LYTLE PARK

HAM-71-01.34
PID No. 87268

F. ALL ACTUATORS AND LIMIT SWITCHES ENCLOSURES SHALL BE NEMA 4X.

2.02 FABRICATION

A. MATERIALS OF THE TYPE, SIZE AND THICKNESS INDICATED SHALL BE USED. THE FABRICATOR SHALL WORK TO THE DIMENSIONS SHOWN ON THE CONTRACT DRAWINGS, USING PROVEN METHODS OF FABRICATION.

B. ALL STEEL PLATES AND ANGLES SHALL BE CARBON STEEL.

C. STRUCTURAL STEELWORK SHALL CONFORM TO THE APPLICABLE REQUIREMENTS OF THE AISC "SPECIFICATIONS FOR STRUCTURAL STEEL BUILDINGS -ALLOWABLE STRESS DESIGN AND PLASTIC DESIGN."

D. STEEL MEMBERS AND METAL FABRICATIONS SHALL BE PREFABRICATED AND PREASSEMBLED IN THE FACTORY OR SHOP AS FAR AS PRACTICABLE.

E. AFTER FABRICATION AND ASSEMBLY, PAINT ALL SURFACES OF BOTH THE EXIT RAMP AND NORTHBOUND ROADWAYS DAMPER DOOR SYSTEMS.

F. PAINT SHALL BE HIGH TEMPERATURE RESISTANT - CAPABLE OF WITHSTANDING 482ºF FOR ONE HOUR WITHOUT EMITTING TOXIC OR NOXIOUS FUMES.

G. ALL PAINT AND MATERIALS SHALL BE THE PRODUCT OF A SINGLE MANUFACTURER.

H. FERROUS METAL: PROVIDE THE FOLLOWING FINISH SYSTEMS OVER FERROUS METAL IN ACCORDANCE WITH SSPC-10:

1. SEMIGLOSS, ALKYD-ENAMEL FINISH: ONE FINISH COAT OVER AN ENAMEL UNDERCOATER AND A PRIMER.
2. PRIMER: QUICK-DRYING, RUST-INHIBITIVE, ALKYD-BASED OR EPOXY-METAL PRIMER, TO ACHIEVE A TOTAL DRY FILM THICKNESS OF NOT LESS THAN 1.5 MILS.
3. UNDERCOAT: ALKYD, INTERIOR ENAMEL UNDERCOAT OR SEMIGLOSS, INTERIOR, ALKYD-ENAMEL FINISH COAT, TO ACHIEVE A TOTAL DRY FILM THICKNESS OF NOT LESS THAN 1.2 MILS.
4. FINISH COAT: ODORLESS, SEMIGLOSS, ALKYD, INTERIOR ENAMEL APPLIED TO ACHIEVE A TOTAL DRY FILM THICKNESS OF NOT LESS THAN 1.4 MILS.
5. APPLY PAINT IN ACCORDANCE WITH MANUFACTURERS INFORMATION.
6. EACH APPLIED COAT SHALL HAVE AN INDEPENDENT COLOR TO DIFFERENTIATE BETWEEN COATS.

2.03 NEOPRENE GASKETS

A. ALL NEOPRENE GASKETS USED SHALL BE OF THE FLAME-RESISTANT OR SELF EXTINGUISHABLE TYPES.

B. ALL NEOPRENE GASKETS OF THE TYPE, SIZE AND THICKNESS INDICATED SHALL BE USED. THE FABRICATOR SHALL WORK TO THE DIMENSIONS SHOWN ON THE CONTRACT DRAWINGS, USING PROVEN METHODS OF FABRICATION.

C. NEOPRENE GASKETS SHALL SEAL EVENLY ALL AROUND THE DAMPER DOOR SYSTEM OVER RAMP AND NORTHBOUND ROADWAYS.

D. NEOPRENE SHALL BE ABLE TO OPERATE FOR ONE HOUR AT 482°F.

E. PRODUCTS AND THEIR MANUFACTURERS OF THE NEOPRENE GASKETS ARE:

1. AMERICAN SEAL & PACKING - NEOPRENE GASKETING, 1537 E. MCFADDEN AVE. SUITE A, SANTA ANA, CA. 92705
2. EVEREST RUBBER COMPANY LLC – FIRE RESISTANT RUBBER, 10634 GULFDALE, SUITE 1, SAN ANTONIO, TEXAS, 78215
3. OR APPROVED EQUAL.

2.04 ACTUATOR AND GEARBOX

A. ACTUATORS SHALL INCLUDE IN ONE INTEGRAL UNIT THE MOTOR, INTERNAL TORQUE SWITCHES, SPACE HEATER, INTERNAL TRAVEL LIMIT SWITCHES, POWER GEARING, MANUAL DRIVE, DAMPER ATTACHMENT, AND TERMINALS FOR ELECTRICAL CONNECTIONS. THE MODULAR DESIGN SHALL ALLOW REMOVAL OF MAJOR COMPONENTS.

B. ACTUATOR SHALL BE CAPABLE OF CHANGING THE POSITION OF THE DAMPERS FROM FULLY CLOSED TO FULLY OPEN, OR FROM FULLY OPEN TO FULLY CLOSED WITHIN A PERIOD OF NOT MORE THAN 180 SECONDS. ACTUATORS SHALL WORK IN UNISON, AND SHALL BE CAPABLE OF DRIVING THE DAMPER ASSEMBLY OPEN OR CLOSED UNDER THE REQUIRED OPERATING CONDITIONS.

C. SIZE ACTUATORS FOR 200% OF THE MAXIMUM DESIGN TORQUE.

D. ACTUATOR SHALL FAIL IN-PLACE AT POWER LOSS.

E. ACTUATOR AND ALL COMPONENTS TO BE SUITABLE FOR OPERATION IN AN AMBIENT AIR TEMPERATURE OF 482°F FOR A PERIOD OF ONE HOUR, AND CONTINUOUSLY AT A MINIMUM TEMPERATURE OF -12 °F. THIS DESIGN REQUIREMENT SHALL APPLY TO ALL ACTUATOR LUBRICANTS.

F. ACTUATOR ENCLOSURE TO BE IN ACCORDANCE WITH NEMA 4X CONSTRUCTION.

G. ACTUATOR TO BE UL APPROVED.

H. DAMPER ACTUATORS SHALL BE ADEQUATELY SUPPORTED ON THE DAMPER, TAKING INTO ACCOUNT BOTH THE TORQUE EXERTED AND THE ACTUATOR WEIGHT. ENSURE THAT THERE IS ADEQUATE CLEARANCE FOR SERVICE ACCESS TO THE DAMPER ACTUATOR AND FOR THE THERMAL INSULATION JACKET.

I. PRODUCTS AND THEIR MANUFACTURERS OF THE ACTUATOR AND GEARBOX ARE:

1. IQ 20 AND MTW 4 – ROTORK, 675 MILE CROSSING BLVD., NEW YORK 14624
2. OR APPROVED EQUAL.

2.05 LIMIT SWITCHES

A. LIMIT SWITCHES SHALL PROVIDE CONTACT CLOSURE TO CONFIRM DAMPER IN "OPEN" OR "CLOSED" POSITION.

B. PROVIDE EACH DAMPER PANEL WITH TWO LIMIT SWITCHES FOR REMOTE MONITORING OF THE DAMPER POSITION. ONE LIMIT SWITCH SHALL BE MOUNTED TO INDICATE A FULLY-CLOSED POSITION. ANOTHER LIMIT SWITCH SHALL BE MOUNTED TO INDICATE A FULLY-OPENED POSITION·

C. LIMIT SWITCHES ENCLOSURE SHALL BE IN ACCORDANCE WITH NEMA 4X CONSTRUCTION.

D. LIMIT SWITCHES SHALL BE UL APPROVED.

E. THERMAL INSULATION JACKET SHALL BE USED TO PROTECT THE LIMIT SWITCHES, AS TO OPERATE FOR ONE HOUR AT 482°F.

F. PRODUCTS AND THEIR MANUFACTURERS OF THE LIMIT SWITCHES ARE:

1. ALLEN-BRADLEY – 802XR-LEVER TYPE- SPRING RETURN, 1201 S 2ND STREET, MILWAUKEE, WI 53204.
2. HONEYWELL – HDLS, 1 EXECUTIVE CENTRE DR., ALBANY, NY 12203
3. OR APPROVED EQUAL.

2.06 WIRING

A. ALL SYSTEM WIRING SHALL BE AS DETERMINED SUITABLE BY THE MANUFACTURER AND IN COMPLIANCE WITH THE CURRENT CARRYING CAPACITIES AS SET FORTH BY THE NATIONAL ELECTRICAL CODE.

B. FIELD WIRING TERMINAL STRIPS SHALL BE CAPABLE OF ACCOMMODATING WIRE SIZES UP TO #12 AWG.

C. ALL SYSTEM WIRING SHALL BE OF THE MOISTURE-RESISTANT AND HEAT-RESISTANT TYPES WITH TEMPERATURE RATINGS FOR 482 DEGREES FAHRENHEIT FOR ONE HOUR.

D. ALL CABLES AND CONDUCTORS SHALL BE LISTED FOR USE IN WET LOCATIONS AS SPECIFIED BY NFPA – 502 STANDARD FOR ROAD TUNNELS, BRIDGES AND OTHER LIMITED ACCESS HIGHWAYS.

E. ALL CABLES AND CONDUCTORS USED SHALL EMIT LESS THAN 2 PERCENT ACID GAS WHEN TESTED IN ACCORDANCE WITH MIL-C-24643, GENERAL SPECIFICATION FOR CABLE AND CORDS, ELECTRICAL, LOW SMOKE, FOR SHIPBOARD USE.

F. ALL SYSTEM WIRING SHALL BE RESISTANT TO THE SPREAD OF FIRE, SHALL HAVE REDUCED SMOKE EMISSIONS AND SHALL BE IN FULL ACCORDANCE WITH THE CURRENT EDITION OF NFPA 502, STANDARD FOR ROAD TUNNELS, BRIDGES, AND OTHER LIMITED ACCESS HIGHWAYS. THIS IS BY COMPLYING TO ONE OF THE FOLLOWING METHODS:

1. WIRES AND CABLES LISTED AS HAVING FIRE-RESISTANT AND LOW SMOKE-PRODUCING CHARACTERISTICS, BY HAVING A CABLE CHAR HEIGHT OF NOT GREATER THAN 1.5 M (4.9 FT) WHEN MEASURED FROM THE LOWER EDGE OF THE BURNER FACE, A TOTAL SMOKE RELEASE OVER THE 20-MINUTE TEST PERIOD NO GREATER THAN 150M2, AND A PEAK SMOKE RELEASE RATE OF NO GREATER THAN 0.40 M2/S, WHEN TESTED AS A MINIMUM IN ACCORDANCE WITH EITHER THE FT4/ IEEE 1202 METHOD DESCRIBED IN ANSI/UL 1685, VERTICAL-TRAY FIRE PROPAGATION AND SMOKE-RELEASE TEST FOR ELECTRICAL AND OPTICAL- FIBER CABLES, OR THE CSA FT4, VERTICAL FLAME TEST, PER CSA C22.2 NO. 0.3, TEST METHODS FOR ELECTRICAL WIRES AND CABLES.
2. WIRES AND CABLES LISTED AS HAVING FIRE-RESISTANT AND LOW SMOKE-PRODUCING CHARACTERISTICS, BY HAVING A FLAME TRAVEL DISTANCE THAT DOES NOT EXCEED

c:\pwworking\hmm\external\tyn61470\dms72788\071_0134CWN015.dgn 10/24/2014 11:07:26 AM TYN61470

DESIGN AGENCY
HATCH MOTT MacDONALD
18013 CLEVELAND PKWY.
SUITE 200
CLEVELAND, OH 44135

DESIGNED	DRAWN	REVIEWED	DATE
KSK	CMN	DGN	08/07/14
CHECKED	REVISED	STRUCTURE FILE NUMBER	
NAH	KSK	3106578	

GENERAL NOTES DAMPER DOOR SYSTEM SHEET 2 OF 4
BRIDGE NO. HAM-71-0134
I-71 LYTLE TUNNEL UNDER LYTLE PARK

HAM-71-01.34
PID No. 87268

1.5 M (4.9 FT), GENERATING A MAXIMUM PEAK OPTICAL DENSITY OF SMOKE OF 0.5 AND A MAXIMUM AVERAGE OPTICAL DENSITY OF SMOKE OF 0.15 WHEN TESTED, AS A MINIMUM IN ACCORDANCE WITH THE METHODS DESCRIBED IN NFPA262 OR CSA FT6, HORIZONTAL FLAME AND SMOKE TEST, PER CSA C22.2 NO.0.3.

G. ALL SYSTEM WIRING SHALL BE RESISTANT TO THE SPREAD OF FIRE, SHALL HAVE REDUCED SMOKE EMISSIONS AND SHALL BE IN FULL ACCORDANCE WITH;

1. CURRENT EDITION OF NFPA 70, NATIONAL ELECTRICAL CODE.

2.07 ROLLER CHAINS AND SPROCKETS

A. ALL SPROCKETS SHALL BE ANSI STYLE A SS.

B. ALL SPROCKETS SHALL HAVE HARDENED TEETH.

C. ALL SPROCKETS SHALL HAVE A PITCH OF 0.625 (5/8) INCHES.

D. ALL SPROCKETS SHALL HAVE A SINGLE PITCH DIAMETER OF 5.979 INCHES.

E. ALL SPROCKETS SHALL HAVE 30 TEETH.

F. ALL SPROCKETS SHALL A TOOTH NOMINAL WIDTH OF 0.343 INCHES

G. ALL ROLLER CHAINS SHALL BE ANSI STANDARD ROLLER CHAIN SIZE 50.

H. SPROCKETS SHALL WORK WITH ROLLER CHAINS SEAMLESSLY.

I. ALL ROLLER CHAINS SHALL HAVE A SINGLE PITCH OF 0.625 (5/8) INCHES.

J. ALL ROLLER CHAINS SHALL HAVE A ROLLER DIAMETER OF 0.4 INCHES.

K. ALL ROLLER CHAINS SHALL HAVE A MINIMUM WORKING LOAD OF 1389 LBF.

L. ALL ROLLER CHAINS SHALL BE STAINLESS STEEL – 304 SERIES.

M. PRODUCTS AND THEIR MANUFACTURERS OF THE SPROCKETS ARE:

1. 50A30 – U.S. TSUBAKI POWER TRANSMISSION, LLC, 301 E. MARQUARDT DR.WHEELING, IL 60090

2. STANDARD SPROCKET 5/8 INCH PITCH - NO. 50 – ABL PRODUCTS, INC., 3726 RIDGE ROAD, CLEVELAND, OH 44144

3. EMERSON INDUSTRIAL, 705 N 6TH ST MONTICELLO, IN 47960

4. OR APPROVED EQUAL.

N. MANUFACTURERS OF THE CHAINS ARE:

1. OCM ROLLER 326 WAXING AVE, NAPERVILLE, IL 60565

2. U.S. TSUBAKI POWER TRANSMISSION, LLC, 301 E. MARQUARDT DR. WHEELING, IL 60090

3. TIMKEN, 1835 DUEBER AVE. SW, CANTON, OH 44706

4. OR APPROVED EQUAL.

2.08 BEARINGS AND HOUSINGS

A. EACH SHAFT SHALL HAVE THREE ROLLER OR SPHERICAL TYPE, ANTI-FRICTION, GREASE LUBRICATED BEARINGS.

B. ALL BEARINGS SHALL BE MOUNTED TO THE CEILING USING A PILLOW BLOCK MOUNTING ASSEMBLY.

C. THE BEARING UNIT CLOSEST TO THE ACTUATOR SHALL BE A FIXED END WITH A STABILIZING RING. THE OTHER TWO UNITS SHALL BE FLOATING END WITHOUT A STABILIZING RING.

D. THE BEARINGS SHALL HAVE A MINIMUM AFBMA L-10 LIFE RATING OF 100,000 HOURS.

E. BEARING LUBRICANT SHALL BE CAPABLE OF PROVIDING THE LUBRICATION PROPERTIES SPECIFIED BY THE BEARING MANUFACTURER UNDER CONDITIONS OF OPERATION FOR ONE HOUR WITH THE LUBRICANT AT A TEMPERATURE OF 482°F.

F. PRODUCTS AND THEIR MANUFACTURERS OF THE BEARINGS AND HOUSINGS ARE:

1. SDAF 22620X3.1/2 – SKF, 890 FORTY FOOT RD., LANSDALE, PA 19446

2. UCX18-56 – AMI BEARINGS, INC., 570 NORTH WHEELING ROAD, MOUNT PROSPECT, IL 60056

3. P4B-MM7-308 – DODGE, BALDOR DRIVES, 5711 R.S.BOREHAM, JR. ST., FORT SMITH, AR 72908

4. OR APPROVED EQUAL.

PART 3 - EXECUTION

3.01 INSTALLATION

A. CERTIFIED MILLWRIGHTS SHALL SUPERVISE THE INSTALLATION OF ALL EQUIPMENT AND MACHINERY.

B. THE ENTIRE EXISTING FIRE AND SMOKE CONTROL SYSTEM SHALL BE DEMOLISHED AND PROPERLY DISPOSED BY THE CONTRACTOR.

C. THE ENTIRE SYSTEM SHALL BE INSTALLED IN A WORKMANLIKE MANNER, IN ACCORDANCE WITH THE STANDARD INSTRUCTIONS AND RECOMMENDATIONS OF THE MANUFACTURER, AND IN ACCORDANCE WITH THE APPROVED MANUFACTURER'S WIRING DIAGRAMS. THE CONTRACTOR SHALL FOLLOW AND COMPLY WITH THE MANUFACTURER'S INSTALLATION INSTRUCTIONS FOR THE INSTALLATION OF ALL EQUIPMENT.

D. ENSURE THAT DAMPER OPERATION IS FREE OF INTERFERENCE AND BINDING.

E. CONNECT DAMPER ACTUATORS TO POWER WIRING IN ACCORDANCE WITH APPLICABLE CODES.

F. ALL ELECTRICAL EQUIPMENT SHALL BE GROUNDED.

G. THE MANUFACTURER'S TECHNICAL REPRESENTATIVE SHALL MONITOR THE START-UP AND TESTING OF THE SYSTEM TO ENSURE THAT THE SYSTEM IS PROGRAMMED AND WORKING AS REQUIRED.

3.02 WIRING

A. THE INSTALLATION OF ALL WIRING SHALL COMPLY WITH THIS SECTION.

B. NO PORTION OF THE EXISTING SYSTEM SHALL BE USED WITHIN THE NEW SYSTEM.

C. THE INTERIOR OF ALL CONDUITS SHALL BE CLEANED THOROUGHLY PRIOR TO INSTALLING ANY WIRING.

D. ALL WIRING SHALL BE TESTED FOR STRAY VOLTAGE, SHORT CIRCUITS, AND GROUND FAULTS PRIOR TO CONNECTION TO THE CONTROL PANEL AND ANY DEVICES.

E. ALL WIRING SHALL BE INSTALLED IN RGS CONDUIT THROUGHOUT.

3.03 SCHEDULING

A. PRIOR TO BEGINNING WORK, THE CONTRACTOR'S CPM SHALL INDICATE THE INSTALLATION SEQUENCE AND PROJECT TIME FRAME. THE SCHEDULE SHALL INDICATE;

1. THE INSTALLATION SEQUENCE AS PART OF THE CPM SCHEDULE.

2. THE TIME FRAME FOR THE ENTIRE SYSTEM INSTALLATION·

3.04 FIELD PAINTING

A. AFTER INSTALLATION OF STRUCTURAL STEELWORK, ABRADED AREAS, FIELD BOLTS, AND WELDS SHALL BE TOUCHED UP AND SPOT PAINTED WITH THE SAME CORROSION-INHIBITIVE PRIMER AS WAS USED FOR SHOP PAINTING. FIELD WELDS WHERE PERMITTED BY THE ENGINEER SHALL BE THOROUGHLY WIRE-BRUSHED OR DISC-SANDED BEFORE TOUCH-UP PAINTING.

B. STEEL TO RECEIVE SPRAYED-APPLIED FIREPROOFING SHALL NOT BE TOUCH-UP PAINTED.

C. FINAL FIELD PAINTING SHALL BE IN ACCORDANCE WITH SSPC PA-1, NO. 1 SHOP, FIELD AND MAINTENANCE PAINTING.

3.05 DEMONSTRATION TEST

A. THE CONTRACTOR SHALL BE RESPONSIBLE FOR COORDINATING AND CONDUCTING THE DEMONSTRATION TEST.

B. THE CONTRACTOR SHALL TEST THE ALL OF THE SMOKE AND FIRE DAMPER SYSTEM COMPONENTS, A MONTH PRIOR TO THE DEMONSTRATION TEST. THE SYSTEM SHALL BE CONSIDERED READY FOR THE DEMONSTRATION TEST ONLY AFTER ALL PRELIMINARY TESTS HAVE BEEN MADE BY THE CONTRACTOR AND THE MANUFACTURER'S TECHNICAL REPRESENTATIVE, AND ALL DEFICIENCIES HAVE BEEN FOUND AND CORRECTED.

C. UPON COMPLETION OF THE INSTALLATION OF THE SMOKE AND FIRE DAMPERS, THE CONTRACTOR SHALL PROVIDE A MINIMUM OF ONE MONTH NOTICE TO THE ENGINEER THAT THE DAMPER DOOR SYSTEM IS READY FOR THE DEMONSTRATION TEST.

D. AT THE TIME OF NOTIFICATION, THE CONTRACTOR SHALL SUBMIT "AS-BUILT" DRAWINGS AND A "DEMONSTRATION TEST PLAN" WHICH SHALL DESCRIBE HOW THE SYSTEM WILL BE TESTED.

1. THE DEMONSTRATION TEST PLAN SHALL INCLUDE A STEP-BY-STEP DESCRIPTION OF ALL TESTS TO BE PERFORMED AND SHALL INDICATE TYPE AND LOCATION OF TEST

c:\pwworking\hmm\external\tyn61470\dms72788\071_0134CMN016.dgn 10/24/2014 11:07:36 AM TYN61470

DESIGN AGENCY
HATCH MOTT MacDONALD
18013 CLEVELAND PKWY.
SUITE 200
CLEVELAND, OH 44135

DESIGNED KSK | DRAWN CMN | REVIEWED DCN | DATE 08/07/14
CHECKED NAH | REVISED KSK | STRUCTURE FILE NUMBER 3106578

GENERAL NOTES DAMPER DOOR SYSTEM SHEET 3 OF 4
BRIDGE NO. HAM-71-0134
I-71 LYTLE TUNNEL UNDER LYTLE PARK

HAM-71-01.34
PID No. 87268

APPARATUS TO BE EMPLOYED. THE TESTS SHALL DEMONSTRATE THAT THE OPERATING REQUIREMENTS OF THIS SPECIFICATION HAVE BEEN MET.

2. THE DEMONSTRATION TEST SHALL NOT BE CONDUCTED UNTIL THE "DEMONSTRATION TEST PLAN" IS APPROVED BY THE ENGINEER.

E. ALL TESTS SHALL BE CONDUCTED IN THE PRESENCE OF THE ENGINEER, ODOT FACILITIES SUPERVISOR, EMERGENCY RESPONSE PERSONNEL AND THE MANUFACTURER'S TECHNICAL REPRESENTATIVE.

F. THE CONTRACTOR SHALL PROVIDE ALL THE NECESSARY PERSONNEL AND EQUIPMENT REQUIRED TO CONDUCT THE TEST.

G. THE DEMONSTRATION TEST SHALL BE CONDUCTED BETWEEN THE HOURS OF 9:00 A.M. AND 5:00 P.M.

H. AT THE DEMONSTRATION TEST, THE MANUFACTURER'S TECHNICAL REPRESENTATIVE SHALL DELIVER TO THE ENGINEER AN INSPECTION AND TEST REPORT, WHICH SHALL BE COMPLETED IN CONJUNCTION WITH THE DEMONSTRATION TEST AND SHALL INDICATE THE FOLLOWING:

1. PROJECT INFORMATION, INCLUDING NAME, ADDRESS, AND CITY.

2. THE CONTRACTOR'S NAME, ADDRESS, CITY, AND TELEPHONE NUMBER.

3. ANY COMMENTS REGARDING THE INSTALLATION, OPERATION, TESTING, INSPECTING, OR OTHER ASPECTS OF THE SYSTEM.

4. THE MANUFACTURER'S TECHNICAL REPRESENTATIVE SHALL PRINT HIS/HER NAME AND AFFILIATION AND SIGN AND DATE THE DOCUMENT.

I. RESULTS OF THE DEMONSTRATION TEST SHALL BE SUBMITTED TO THE ENGINEER WITHIN 21 DAYS OF THE DEMONSTRATION TEST DATE.

PART 4 - CONTRACTOR QUALITY CONTROL

4.01 FIELD QUALITY CONTROL

A. SECTION "QUALITY REQUIREMENTS" SPECIFIES THE GENERAL REQUIREMENTS FOR THE CONTRACTOR'S QUALITY CONTROL PROGRAM.

B. THE ENGINEER SHALL BE NOTIFIED A MINIMUM OF 21 CALENDAR DAYS IN ADVANCE OF ANY TESTING. IF ODOT SO DESIRES, THE ENGINEER MAY WITNESS ANY OR ALL TESTS CONTAINED HEREIN.

C. THE FOLLOWING DESCRIBES THE MINIMUM INSPECTION AND TESTING REQUIRED IN THE CONTRACTOR'S QUALITY CONTROL (CQC) PLAN AND PROGRAM FOR THE WORK OF THIS SECTION AND IS FOR CQC ONLY. THE IMPLEMENTATION OF THE CONTRACTOR QUALITY CONTROL PROGRAM DOES NOT RELIEVE THE CONTRACTOR FROM THE RESPONSIBILITY TO PROVIDE THE WORK IN ACCORDANCE WITH THE CONTRACT DOCUMENTS, APPLICABLE CODES, REGULATIONS, AND GOVERNING AUTHORITIES. THE CQC PLAN AND PROGRAM SHALL INCLUDE, BUT NOT BE LIMITED TO, THE FOLLOWING TESTING AND INSPECTION ELEMENTS. THESE ELEMENTS ARE PROVIDED ONLY AS A MINIMUM STARTING POINT FOR THE CONTRACTOR TO USE TO GENERATE HIS COMPLETE CQC PROGRAM.

D. ALL TESTING AS NOTED WITHIN THIS SECTION THAT IS APPLICABLE TO THE WORK BEING PERFORMED.

E. INSPECT TO VERIFY THAT DAMPER FRAMES ARE INSTALLED SQUARE WITHOUT RACKING, AND THAT DAMPER BLADES MOVE SMOOTHLY FROM FULLY CLOSED TO FULLY OPEN POSITION.

F. INSPECT TO VERIFY THAT ACTUATORS ARE PROPERLY INSTALLED AND ADJUSTED, SO THAT THEY POSITION BLADES FULLY OPEN OR CLOSED AS COMMANDED.

G. REFER TO SECTION "TESTING, ADJUSTING AND BALANCING" FOR TESTING, ADJUSTING AND BALANCING PROCEDURES.

H. FIELD TESTING:

1. PROVIDE A WRITTEN TEST PLAN A MINIMUM OF 21 DAYS PRIOR TO TESTING.

2. THE AXIAL FLOW FANS SHALL BE IN SERVICE AT THE TIME OF THE TESTING.

3. THE PERMANENT ELECTRICAL CONNECTIONS SHALL BE IN PLACE AT THE TIME OF TESTING.

4. THE MANUFACTURER'S FIELD REPRESENTATIVE SHALL BE PRESENT AND HAVE SUPERVISORY DUTIES. QUALIFIED PERSONNEL SHALL PERFORM THE TESTING.

5. ANY DEFECTS RESULTING FROM FIELD TESTING SHALL BE THE CONTRACTOR'S RESPONSIBILITY TO CORRECT AT NO COST TO THE ENGINEER.

6. ROTATION TESTS: EACH DAMPER UNIT SHALL BE SUBJECT TO 10 FULLY OPEN/FULLY CLOSED REVERSALS

7. LOSS OF POWER TEST: POWER SHALL BE REMOVED WITH THE RESULTANT ACTION OF THE DAMPER TO FAIL IN POSITION.

8. LEAKAGE TEST: THE DAMPER MANUFACTURER SHALL CONDUCT A FIELD TEST TO MEASURE THE AIR LEAKAGE THROUGH EACH OF THE DAMPER MODULES INSTALLED ALONG THE ROADWAY. DAMPERS THAT FAIL SHALL BE REPLACED BY THE CONTRACTOR AND RETESTED.

9. DAMPER LEAKAGE SHALL BE LESS THAN AMCA 511 LEAKAGE FOR PRESSURE/CLASS 1. PERMISSIBLE LEAKAGE RATES AND ASSOCIATED PRESSURES ARE:

A. 8 CFM/FT2 @ 4 IN.W.G.

B. 11 CFM/FT2 @ 8 IN.W.G.

C. 14 CFM/FT2 @ 12 IN.W.G.

PART 5 - MEASUREMENT AND PAYMENT

5.01 MEASUREMENT

A. ALL OF THE WORK OF THIS SECTION SHALL BE MEASURED AS LUMP SUM

5.02 PAYMENT

A. PAYMENT IS FULL COMPENSATION FOR ALL LABOR, MATERIAL, AND EQUIPEMNT REQUIRED TO INSTALL THE DAMPER DOOR SYSTEM OVER RAMP AND NORTHBOUND ROADWAYS AS DESCRIBED AND TO THE SATISFACTION OF THE ENGINEER.

B. PAYMENT FOR ACCEPTED QUANTITIES SHALL BE AT CONTRACT PRICES AS FOLLOWS:

ITEM	UNIT	DESCRIPTION
530	LUMP	SPECIAL – STRUCTURE, MISC.: DAMPER DOOR SYSTEM

PAYMENT FOR SPECIAL - MISC.: DAMPER DOOR SYSTEM IS FULL COMPENSATION FOR ALL LABOR, MATERIAL, AND EQUIPMENT NECESSARY TO COMPLETE THE WORK AND INCLUDES THE INSTALLATION OF THE SPECIAL - MISC.: DAMPER DOOR SYSTEM AS SHOWN IN THE PLANS AND HEREIN SPECIFIED.

c:\pwworking\hmm\external\tyn61470\dms72788\071_0134CMN017.dgn 10/24/2014 11:07:46 AM TYN61470

DESIGN AGENCY
HATCH MOTT MacDONALD
18013 CLEVELAND PKWY.
SUITE 200
CLEVELAND, OH 44135

DESIGNED KSK | DRAWN CMN | REVIEWED DGN | DATE 08/07/14
CHECKED NAH | REVISED KSK | STRUCTURE FILE NUMBER 3106578

GENERAL NOTES DAMPER DOOR SYSTEM SHEET 4 OF 4

BRIDGE NO. HAM-71-0134
I-71 LYTLE TUNNEL UNDER LYTLE PARK

HAM-71-01.34
PID No. 87268

ITEM SPECIAL – MISC.: TVS FAN ISOLATION DAMPERS

ITEM SPECIAL – MISC.: TVS SOUTHBOUND TUNNEL ISOLATION DAMPERS

PART 1 - GENERAL

1.01 SUMMARY

A. PROVIDE THE NECESSARY MEANS FOR THE SUPPLY, INSTALLATION AND TESTING OF MOTORIZED DAMPERS AND APPURTENANCES.

B. ONLY PARALLEL BLADE DAMPERS OF THE FOLLOWING DESCRIPTION ARE COVERED UNDER THIS SPECIFICATION:

1. FAN ISOLATION DAMPERS (FID).
2. TUNNEL ISOLATION DAMPERS (TID).

1.02 SUBMITTALS

A. ALL SUBMITTALS SHALL CONTAIN THE FOLLOWING INFORMATION ON EACH PAGE:

1. GENERAL:
   - A. MANUFACTURER NAME
   - B. PROJECT TITLE
   - C. PAGINATION
   - D. REVISION NUMBER
   - E. SUBMITTAL DATE
2. PERFORMANCE CURVES SHALL CONTAIN:
   - A. REFERENCE AIR DENSITY
   - B. DAMPER FACE AREA
   - C. DAMPER ASSEMBLY NET FREE AREA
   - D. DAMPER ACTUATOR INFORMATION:
     - (1) ACUATOR POWER.
     - (2) SPACE HEATER VOLTAGE AND KILOWATT INPUT.
     - (3) VOLTAGE/PHASE/FREQUENCY OF ACTUATOR.
     - (4) MANUFACTURER NAME.

B. MANUFACTURER'S QUALIFICATIONS:

1. DAMPER MANUFACTURER'S QUALITY ASSURANCE PROGRAM.
2. SUBMIT A COMPLETE LIST OF PROJECTS WHICH HAVE BEEN INSTALLED IN THE PAST 10-YEARS. THE LIST SHALL ONLY CONTAIN PROJECTS WITH SIMILAR DAMPERS FOR HIGHWAY TUNNEL OR TRANSIT PROJECTS WITH HIGH TEMPERATURE REQUIREMENTS. THE LIST SHALL INCLUDE:
   - A. NAME OF CLIENT OR OWNER
   - B. CONTRACT NUMBER.
   - C. INSTALLATION AND ACCEPTANCE DATES.
   - D. DAMPER MATERIAL (STAINLESS STEEL, GALVANIZED, ETC.).
   - E. CURRENT CONDITION OF EQUIPMENT.

C. MANUFACTURER SHALL SUBMIT A CERTIFICATE OF COMPLIANCE STATING THAT THE EQUIPMENT FURNISHED UNDER THIS CONTRACT MEETS THE CONTRACT REQUIREMENTS.

D. PRODUCT DATA:

1. SUBMIT PRODUCT DATA INCLUDING THE FOLLOWING:
2. PERFORMANCE CURVES
   - A. DAMPER LEAKAGE: PRESSURE (X-AXIS, IN.W.G.) VERSUS LEAKAGE (Y-AXIS, CUBIC FEET PER MINUTE).
   - B. FACE VELOCITY (X-AXIS, FEET PER MINUTE) VERSUS PRESSURE DROP (Y-AXIS, IN.W.G.).
3. MANUFACTURER'S STORAGE, PREPARATION, HANDLING, LIFTING, AND INSTALLATION REQUIREMENTS INCORPORATED INTO AN INSTALLATION MANUAL.
4. CATALOG CUTS FOR DAMPER ACTUATOR, LIMIT SWITCHES, AND BEARINGS.
5. ACTUATOR POWER REQUIREMENTS FOR EACH DAMPER PANEL AND DAMPER ASSEMBLY, INCLUDING KILOWATTS OUTPUT, LOCKED ROTOR CURRENT, AND RATED TORQUE CURRENT.
6. GASKET DATA INCLUDING MATERIAL AND DOCUMENTATION OF HIGH TEMPERATURE CAPABILITY.
7. NET FREE FACE AREA CALCULATIONS OF EACH DAMPER ASSEMBLY.
8. TORQUE CALCULATIONS FOR EACH DAMPER ASSEMBLY CLEARLY IDENTIFYING ALL PARAMETERS, AND FORMULAE FOR TORQUE DUE TO BLADE WEIGHT, TORQUE DUE TO PRESSURE FORCE, TORQUE TO SEAT BLADE, TOTAL TORQUE PER BLADE, TOTAL TORQUE PER DAMPER, DESIGN TORQUE OF ACTUATOR.
9. BLADE DEFLECTION CALCULATIONS.
10. COMPLETE TECHNICAL INFORMATION ON BEARINGS, LIMIT SWITCHES, ACTUATORS, AND ACTUATOR LUBRICANTS.

E. SHOP DRAWINGS:

1. SUBMIT SHOP DRAWINGS INDICATING:
   - A. EQUIPMENT, POWER CONNECTION LOCATIONS, AUXILIARIES AND HARDWARE.
   - B. DIMENSIONS, CLEARANCES, ASSEMBLY, AND INSTALLATION DETAILS.
   - C. REQUIRED SUPPORT, MOUNTING DETAILS, SIZES AND LOCATION OF MOUNTING BOLT HOLES.
   - D. GENERAL ARRANGEMENT OF DAMPER ASSEMBLY.
   - E. ACTUATOR MOUNTING DETAILS.
   - F. LINKAGE ASSEMBLY DETAILS.
   - G. BEARING DETAILS.
   - H. DAMPER SEAL DETAILS.
   - I. LIMIT SWITCH INSTALLATION AND ADJUSTMENT DETAILS.
   - J. ACTUATOR DIMENSIONS AND GENERAL ARRANGEMENT.
   - K. ELECTRICAL CONNECTION DIAGRAMS FOR ACTUATOR AND LIMIT SWITCHES.
   - L. BILL OF MATERIALS.

F. TEST PROGRAM PLAN AND SCHEDULE INCLUDING FACTORY TESTS AND FIELD TESTS. SUBMIT A MINIMUM OF 30 DAYS PRIOR TO TEST PERFORMANCE. FACTORY AND FIELD TEST PROCEDURES SHALL BE INCLUDED. INCLUDE:

   - A. DESCRIPTION OF DAMPER TEST UNIT INCLUDING DIMENSIONS.
   - B. TEST SETUP.
   - C. TEST FORMS.
   - D. PASS-FAIL CRITERIA.

G. SUBMIT WITHIN 21 DAYS OF TEST PERFORMANCE THE CERTIFIED TEST RESULTS FOR ALL TESTS PERFORMED. INCLUDED PERFORMANCE CURVES FOR LEAKAGE AND PRESSURE DROP AS INDICATED ABOVE.

H. OPERATIONS AND MAINTENANCE (O&M) MANUALS SHALL BE SUBMITTED A MINIMUM OF 28 DAYS PRIOR TO THE SHIPMENT OF THE FIRST UNIT. SUBMIT THREE COPIES FOR APPROVAL. AFTER APPROVAL AND INCORPORATION OF ALL CORRECTIONS AND AMENDMENTS SUBMIT 5 COPIES IN ADDITION TO 5 DIGITAL COPIES. THE O&M MANUAL SHALL INCLUDE:

1. IDENTIFICATION: MANUFACTURING NAME, TYPE, YEAR, SERIAL NUMBER, NUMBER OF UNITS, CAPACITY, AND IDENTIFICATION TO RELATED SYSTEMS.
2. TABLE OF CONTENTS.
3. DESCRIPTION OF PURPOSE AND USE OF DAMPER.
4. PERFORMANCE CRITERIA AND MAINTENANCE DATA.
5. INSTALLATION INSTRUCTION AND PRECAUTIONS.
6. OPERATING INSTRUCTIONS AND PRECAUTIONS.
7. SPARE PARTS LIST INCLUDING COMPONENT PARTS AVAILABILITY, NAMES AND ADDRESSES OF SPARE PART SUPPLIERS, AND A LIST OF SPECIALIZED TOOLS NECESSARY FOR MAINTENANCE.
8. CONSUMABLES LIST INCLUDING COMPONENTS PARTS, NAMES AND ADDRESSES OF SUPPLIERS, AND RECOMMENDED MANUFACTURER SCHEDULES FOR ALL CONSUMABLES.
9. LUBRICATION SCHEDULE INDICATING LUBRICATION POINTS AND TYPE OF LUBRICANT RECOMMENDED.
10. MAINTENANCE AND TROUBLESHOOTING PROCEDURES/GUIDELINES/PROTOCOL.
11. COMMISSIONING PROCEDURES, INSTRUCTIONS AND PRECAUTIONS.
12. DAMPER AND DAMPER ACTUATOR REMOVAL AND REPLACEMENT PROCEDURES.
13. DAMPER AND DAMPER ACTUATOR DISASSEMBLY AND REASSEMBLY INSTRUCTIONS.
14. DAMPER BLADE DISASSEMBLY, REMOVAL, AND REASSEMBLY INSTRUCTIONS.
15. DAMPER BEARING REMOVAL AND REASSEMBLY INSTRUCTIONS.
16. LIMIT SWITCH ASSEMBLY, DISASSEMBLY, AND ADJUSTMENT PROCEDURES.
17. FACTORY AND TEST REPORTS.
18. APPROVED SHOP DRAWINGS.
19. RECOMMENDED INSPECTION CHECKLISTS.

1.03 REFERENCES

A. AIR MOVING AND CONTROL ASSOCIATION (AMCA):

c:\pwworking\hmm\external\tyn61470\dms727886\071_0134CMN025.dgn 10/24/2014 11:08:43 AM TYN61470

DESIGN AGENCY
HATCH MOTT MacDONALD
18013 CLEVELAND PKWY.
SUITE 200
CLEVELAND, OH 44135

DESIGNED	DRAWN	REVIEWED	DATE
HWW	CMN	DGN	08/07/14
CHECKED	REVISED	STRUCTURE FILE NUMBER	
NAH	HWW	3106578	

GENERAL NOTES TVS DAMPERS SHEET 1 OF 4

BRIDGE NO. HAM-71-0134
I-71 LYTLE TUNNEL UNDER LYTLE PARK

HAM-71-01.34
PID No. 87268

1. 500D: LABORATORY METHOD OF TESTING DAMPERS FOR RATING.

B. AMERICAN BEARINGS MANUFACTURERS ASSOCIATION (ABMA):

1. 9: LOAD RATINGS AND FATIGUE LIFE FOR BALL BEARINGS.

2. 11: LOAD RATINGS AND FATIGUE LIFE FOR ROLLER BEARINGS.

C. ASTM INTERNATIONAL (ASTM):

1. A36: STRUCTURAL STEEL.

2. A123-89A: HOT DIP GALVANIZING OF IRREGULARLY SHAPED ARTICLES.

3. A194: CARBON AND ALLOY STEEL NUTS FOR BOLTS FOR HIGH-PRESSURE OR HIGH-TEMPERATURE SERVICE, OR BOTH.

4. A572: STRUCTURAL PLATE.

5. A653: SPECIFICATION FOR STEEL SHEET, ZINC-COATED (HOT-GALVANIZED) BY THE HOT-DIP PROCESS.

D. AMERICAN WELDING SOCIETY (AWS):

1. D1.1: STRUCTURAL WELDING CODE – STEEL.

2. D1.3: STRUCTURAL WELDING CODE – SHEET STEEL.

E. NATIONAL FIRE PROTECTION ASSOCIATION (NFPA):

1. 502: STANDARD FOR ROAD TUNNELS, BRIDGES AND OTHER LIMITED ACCESS HIGHWAYS.

F. THE SOCIETY FOR PROTECTIVE COATINGS (SSPC), STEEL STRUCTURES PAINTING MANUAL, LATEST EDITION.

1.04 QUALITY ASSURANCE

A. COMPLY WITH NFPA 502 2014 EDITION, "STANDARD FOR ROAD TUNNELS, BRIDGES, AND OTHER LIMITED ACCESS HIGHWAYS".

B. SOURCE QUALITY CONTROL:

1. ALL TUNNEL VENTILATION DAMPERS SHALL BE THE PRODUCT OF A SINGLE MANUFACTURER.

2. ALL TUNNEL VENTILATION DAMPER ACTUATORS SHALL BE THE PRODUCT OF A SINGLE MANUFACTURER.

C. CONTINUOUS AND CURRENT EXPERIENCE IN THE MANUFACTURE OF TUNNEL VENTILATION DAMPERS SHALL BE DEMONSTRATED BY THE MANUFACTURER. THE DAMPER MANUFACTURER SHALL SUBMIT A MINIMUM OF 10 YEARS' EXPERIENCE IN THE DESIGN, MANUFACTURE, INSTALLATION AND TESTING OF TUNNEL VENTILATION DAMPERS.

D. WELDING:

1. THE SHIELDED METAL ARC PROCESS SHALL BE USED ON THIS PROJECT IN ACCORDANCE WITH THE REQUIREMENTS OF AWS D1.1 UNLESS APPROVAL FROM THE ENGINEER IS OBTAINED.

2. WELDERS WORKING ON THIS PROJECT SHALL BE QUALIFIED IN ACCORDANCE WITH THE REQUIREMENTS OF AWS D1.1.

E. PERFORMANCE TESTING:

1. SUBMIT WRITTEN PERFORMANCE TEST REPORTS.

2. SUBMIT CERTIFICATION THAT THE AERODYNAMIC PERFORMANCE OF DAMPERS AT RATED CAPACITY IS IN ACCORDANCE WITH AMCA 500. PROVIDE PERFORMANCE CURVES FOR DAMPERS TO THE ENGINEER FOR REVIEW AFTER THE COMPLETION OF TESTING. CURVES TO BE DERIVED EITHER FROM ACTUAL PERFORMANCE TESTS, WHERE SUCH DATA IS AVAILABLE, OR FROM ANALYTICAL DATA. PROVIDE ACTUAL PERFORMANCE CURVES AS PART OF THE PROTOTYPE DAMPER UNIT TEST RESULTS. PLOT PERFORMANCE CURVES TO SUCH SCALES AS WILL MAKE IT POSSIBLE TO READ THE DATA ACCURATELY.

3. DAMPER PERFORMANCE CURVES SHALL BE DAMPER CHARACTERISTIC CURVES AS FOLLOWS:

A. CURVE PLOTTED WITH ORDINATE AS PRESSURE DROP ACROSS FULLY OPEN DAMPER IN IN.WG. VERSUS VELOCITY IN FT/S.

B. CURVE PLOTTED WITH ORDINATE AS DUCT PRESSURE IN IN.WG. VERSUS LEAKAGE ACROSS CLOSED DAMPER IN FT^3/S.

C. IMPRINT FOLLOWING INFORMATION ON EACH PERFORMANCE CURVE:

(1) PROJECT TITLE.

(2) NAME AND ADDRESS OF DAMPER MANUFACTURER.

(3) DESIGNATED MECHANICAL EQUIPMENT IDENTIFICATION.

(4) AIR DENSITY.

(5) DAMPER FACE AREA.

PART 2 - PRODUCTS

2.01 MOTOR OPERATED DAMPER REQUIREMENTS

A. GENERAL: DESIGN DAMPERS TO BE MULTIPLE BLADE, PARALLEL BLADE ACTION, WITH A SINGLE INTEGRAL CHANNEL FRAME; AND BE FACTORY ASSEMBLED COMPLETE WITH FRAMES, BLADES, SHAFTS, BEARINGS, SEALS, INTERCONNECTING BLADE LINKAGE, ACTUATORS AND ALL ACCESSORIES REQUIRED.

1. EACH DAMPER PANEL TO HAVE A SINGLE INTEGRAL CHANNEL FRAME WITH THE BLADES IN EACH DAMPER INTERCONNECTED TO OPERATE IN UNISON THROUGH END-CONNECTED LINKAGE AS REQUIRED.

2. ARRANGE LINKAGES AND BEARINGS OF DAMPER UNITS SUCH THAT THEY ARE EASILY ACCESSIBLE FOR INSPECTION, MAINTENANCE, AND REMOVAL.

3. PROVIDE A NAMEPLATE FOR EACH DAMPER. NAMEPLATE SHALL BE LOCATED IN A READILY SEEN/LOCATED PLACE. IT SHALL HAVE THE FOLLOWING INFORMATION ON IT:

A. MANUFACTURER NAME AND ADDRESS.

B. ACTUATOR HORSEPOWER.

C. ACTUATOR VOLTAGE.

D. ACTUATOR PHASE/FREQUENCY/AMPERAGE (FULL LOAD CURRENT).

E. ACTUATOR INSULATION TYPE.

F. SPACE HEAT INFORMATION: VOLTAGE, AMPERAGE, WATTAGE.

G. ACTUATOR SPEED IN REVOLUTIONS PER MINUTE.

H. MOTOR TYPE WITH SERVICE FACTOR AND POWER FACTOR.

4. ARRANGE DAMPERS FOR ELECTRIC ACTUATOR OPERATION TO TWO BLADE POSITIONS: FULLY OPEN AND FULLY CLOSED. FURNISH EACH DAMPER PANEL WITH A ELECTRIC ACTUATOR SUFFICIENT IN CAPACITY TO OPERATE ALL BLADES ON THE PANEL UNDER THE OPERATING AND DESIGN CONDITIONS SPECIFIED.

B. DESIGN DAMPERS FOR SERVICE IN AN UNDERGROUND HIGHWAY TUNNEL ENVIRONMENT, CHARACTERIZED BY A NORMAL TEMPERATURE RANGE OF 0°F TO 104°F, 0 TO 100% RELATIVE HUMIDITY, AND CONTAINING AIRBORNE CARBON DUST.

1. DESIGN DAMPERS, INCLUDING DAMPER ACTUATOR SO THAT DAMPERS WILL BE FULLY OPERATIONAL IN ACCORDANCE WITH PERFORMANCE REQUIREMENTS SPECIFIED HEREIN, AFTER EXPOSURE FOR A PERIOD OF ONE HOUR TO AN AIR STREAM TEMPERATURE OF 482°F. DAMPERS SHALL BE TESTED TO UL555S AT 482°F.

2. CALCULATE DAMPER FATIGUE STRENGTH FOR 3 MILLION PRESSURE REVERSAL CYCLES AT 12.0 IN. WG.

3. WHEN THE DAMPERS ARE FULLY CLOSED AND HOLDING, LEAKAGE THROUGH THE DAMPER ASSEMBLY SHALL NOT EXCEED UL 555S LEAKAGE OF 14.0 CFM/SF AT 12.0 IN.WG.

4. WITH THE DAMPERS IN THE FULLY OPEN POSITION AND AIR FLOWING ACROSS THE DAMPER AT A UNIFORM DAMPER FACE VELOCITY OF 2,000 FPM, THE STATIC PRESSURE DROP ACROSS THE DAMPERS SHALL NOT EXCEED 0.15 IN.WG. PERFORMANCE REQUIREMENTS ARE BASED ON STANDARD AIR HAVING A DENSITY OF 0.081 LB/FT^3. A PERFORMANCE CURVE IS REQUIRED FOR SUBMITTAL.

5. MAXIMUM ALLOWABLE DAMPER BLADE LENGTH SHALL BE 60 INCHES. MAXIMUM DAMPER PANEL HEIGHT SHALL BE 120 INCHES.

6. DAMPER BLADE DEFLECTION, WITH BLADE SUPPORTED BY SHAFT, SHALL NOT EXCEED L/360 OF THE SPAN LENGTH BETWEEN CENTERS OF SHAFT BEARINGS WITH DAMPER IN CLOSED POSITION WHILE WITHSTANDING THE MAXIMUM COMBINED DIFFERENTIAL PRESSURE OF 12 IN.WG AND MAXIMUM TEMPERATURE OF 482°F.

7. DAMPERS SHALL HAVE A NET FREE AREA OF NOT LESS THAN 80 PERCENT MEASURED TO THE INSIDE OF THE DAMPER FRAME WHEN BLADES ARE FULLY OPEN.

8. DESIGN DAMPERS TO BE SUITABLE FOR INSTALLATION IN VERTICAL OR HORIZONTAL PLANES, AS INDICATED ON DRAWINGS, AND SHALL BE ABLE TO ACCEPT AIRFLOW AND DESIGN STATIC PRESSURE IN EITHER DIRECTION. DAMPER SIZES AS INDICATED SHALL BE UNDERSTOOD TO SIGNIFY THE DIMENSIONS INSIDE THE DAMPER FRAMES.

9. DAMPER SHALL BE DESIGNED FOR A MINIMUM OF 100,000 CYCLES, OPEN AND CLOSE, PRIOR TO FAILURE.

10. NOISE DUE TO RESONANCE OF SPRING-TYPE SEALS OR ANY OTHER SOURCE WILL BE CAUSE FOR REJECTION.

C. CONSTRUCTION: DAMPER BLADES SHALL HAVE AN AIRFOIL CROSS-SECTION, AND BE FABRICATED OF 14 GAUGE GALVANIZED STEEL. GALVANIZED STEEL SHALL CONFORM TO ASTM A653, COATING DESIGNATION TO BE G-90, APPLIED TO ALL SURFACES. DAMPER

c:\pwworking\hmm\external\tyn61470\dms72788\071_0134CMN02.dgn 10/24/2014 11:08:52 AM TYN61470

DESIGN AGENCY
HATCH MOTT MacDONALD
18013 CLEVELAND PKWY.
SUITE 200
CLEVELAND, OH 44135

DESIGNED HWW | DRAWN CMN | REVIEWED DCN | DATE 08/07/14 | STRUCTURE FILE NUMBER 3106578 | CHECKED NAH | REVISED HWW

GENERAL NOTES TVS DAMPERS SHEET 2 OF 4

BRIDGE NO. HAM-71-0134
I-71 LYTLE TUNNEL UNDER LYTLE PARK

HAM-71-01.34
PID No. 87268

360/555

BLADES SHALL HAVE A MINIMUM METAL-TO-METAL OVERLAP OF ¼ INCH IN THE CLOSED POSITION. BLADE EDGE SEALING STRIPS, REGARDLESS OF THEIR COMPOSITION, WILL NOT BE PERMITTED AS A SUBSTITUTE FOR A TRUE BLADE TO BLADE OVERLAP.

1. JAMB SEALS SHALL BE OF COMPRESSIBLE STAINLESS STEEL MATERIAL.

2. FABRICATE DAMPER BLADE SHAFTS OF STAINLESS STEEL, NOT LESS THAN 3/4 INCH IN DIAMETER OR SQUARE. DESIGN OF THE SHAFTS TO INCORPORATE THE DEVICES REQUIRED FOR MECHANICALLY INTERCONNECTING THE BLADES ONTO THE SHAFTS. DAMPER BLADE SHAFT AXIS SHALL ALWAYS BE HORIZONTAL. BLADES SHALL NOT BE WELDED TO THE SHAFTS.

3. SUPPORT DAMPER BLADE AND SHAFT ASSEMBLIES AT EACH END BY MEANS OF STAINLESS STEEL SLEEVE BEARINGS. BEARINGS SHALL BE SELF-LUBRICATED BRONZE, IN A STAINLESS STEEL HOUSING BOLTED TO THE FRAME, REMOVABLE AND REPLACEABLE FROM THE FRAME EXTERIOR.

4. FABRICATE DAMPER LINKAGE OF STAINLESS STEEL AND DESIGN FOR 150% OF THE RATED ACTUATOR OUTPUT TORQUE. MOUNT LINKAGE ARMS ON THE OUTSIDE OF DAMPER FRAME AND MECHANICALLY CONNECT TO DAMPER SHAFTS. GUIDE LINKAGES WHERE REQUIRED TO PREVENT SIDE LOADING AT LINKAGE CONNECTIONS. SIZE LINKAGE ELEMENTS SO THAT MAXIMUM DEFLECTION OF ANY ELEMENT DOES NOT EXCEED L/360, WHERE L IS THE DISTANCE BETWEEN INTERCONNECTING PIVOTS. LINKAGE BEARINGS TO BE SELF LUBRICATING AND MANUFACTURED FROM MATERIAL SUITABLE FOR THE SPECIFIED DESIGN AND OPERATING CONDITIONS. ALL LINKAGE PARTS AND ASSEMBLIES SHALL BE ACCESSIBLE FOR MAINTENANCE AND REPAIR AFTER FINAL ASSEMBLY. SET SCREWS AND WELDING SHALL NOT BE USED TO ATTACH LINKAGE ARMS TO THE DAMPER BLADE SHAFTS. LINKAGE DESIGN SHALL ENSURE PROTRUSION BEYOND THE FRAME ON ONE SIDE ONLY, THE SIDE CONTAINING THE ACTUATOR.

5. DAMPER FRAMES SHALL BE A CHANNEL CROSS-SECTION FABRICATED OF 6 GAUGE GALVANIZED STEEL CONFORMING TO ASTM A653, COATING DESIGNATION TO BE G-90. CORNERS OF THE FRAMES SHALL BE FULLY WELDED. DAMPER FRAMES SHALL BE HOT-DIPPED GALVANIZED AFTER FABRICATION.

6. DAMPERS SHALL BE PROVIDED WITH A MILL FINISH.

7. DAMPERS SHALL BE MAINTAINABLE IN THE FIELD. MAINTENANCE WORKERS SHALL BE ABLE TO ASSEMBLE AND DISASSEMBLE DAMPERS IN THE FIELD USING HAND TOOLS.

8. DAMPERS SHALL BE INSTALLED THROUGH BOLTING OF DAMPER TO COMPANION FLANGES.

   A. BOLTS SHALL NOT BE LESS THAN ½ INCH IN DIAMETER.

   B. BOLT SPACING SHALL NOT BE LESS THAN 12 INCHES ON CENTERS.

   C. POSITIVE LOCKING DEVICES SHALL BE USED.

   D. FASTENERS SHALL BE STAINLESS STEEL 316.

   E. FASTENERS SHALL BE HEXAGONAL HEAD BOLTS WITH HEXAGONAL NUTS. HEAVY DUTY LOCK WASHERS SHALL ALSO BE PROVIDED.

9. FABRICATE MULTIPLE SECTION DAMPERS AS NOTED, AND INTERCONNECT WITH BOLTED SPLICE PLAT LINKAGES AND BEARINGS OF ALL DAMPER MODULES SHALL BE ARRANGED SUCH THAT THEY ARE ACCESSIBLE WITHOUT THE REMOVAL OF THE DAMPER MODULE.

10. FURNISH DAMPER COMPLETE WITH ALL STRUCTURAL SUPPORT ELEMENTS NECESSARY FOR THE INSTALLATION OF THE DAMPERS, INCLUDING THE FOLLOWING: ALL MULLION SUPPORTS, BOTH HORIZONTAL AND VERTICAL, AND ALL CLIP ANGLES. PERIMETER AND EMBEDDED FRAMING MEMBERS SHALL BE BY CONTRACTOR. FABRICATE MULLION SUPPORTS, AND HARDWARE REQUIRED FOR ASSEMBLY OF THE DAMPERS OF GALVANIZED STEEL.

11. PROVIDE SILICONE GASKETING BETWEEN THE MOUNTING FLANGE AND THE MOUNTING STRUCTURE.

12. FABRICATE DAMPERS WITH A MEANS OF LIFTING THE DAMPER, I.E. LIFTING LUGS, EYEBOLTS. LIFTING DEVICE TO BE OF SUFFICIENT STRENGTH TO PREVENT DAMPER DEFORMATION WHEN SUSPENDED FROM CHAINS WITHOUT SPREADER BARS. HOLES IN THE DAMPER FRAME FOR LIFTING ARE NOT PERMITTED. LIFTING DEVICES TO BE GALVANIZED STEEL AND WELDED ON EXTERIOR OF DAMPER FRAME IN SUFFICIENT NUMBER TO FACILITATE SITE INSTALLATION AND REMOVAL. LIFTING DEVICES ON THE BOTTOM CHANNEL OF VERTICAL MOUNT DAMPERS TO BE REMOVABLE.

13. ELECTRICAL TERMINAL BOXES SHALL BE RATED NEMA 4X AS A MINIMUM. ALL ELECTRICAL COMPONENTS INCLUDING CONDUIT AND BOXES SHALL BE WEATHERPROOF.

14. TEMPORARY SUPPORTS AND BRACING IS PERMITTED TO MAINTAIN DAMPERS SQUARE AND RIGID AT ALL TIMES DURING HANDLING AND ERECTION.

15. ACTUATORS: SHALL INCLUDE IN ONE INTEGRAL UNIT THE MOTOR, INTERNAL TORQUE SWITCHES, SPACE HEATER, INTERNAL TRAVEL LIMIT SWITCHES, POWER GEARING, MANUAL DRIVE, DAMPER ATTACHMENT, AND TERMINALS FOR ELECTRICAL CONNECTIONS. THE MODULAR DESIGN SHALL ALLOW REMOVAL OF MAJOR COMPONENTS.

16. ACTUATOR SHALL BE CAPABLE OF CHANGING THE POSITION OF THE DAMPERS FROM FULLY CLOSED TO FULLY OPEN, OR FROM FULLY OPEN TO FULLY CLOSED WITHIN A PERIOD OF NOT MORE THAN 15 SECONDS. ACTUATORS SHALL WORK IN UNISON, AND SHALL BE CAPABLE OF DRIVING THE DAMPER ASSEMBLY OPEN OR CLOSED UNDER THE REQUIRED OPERATING CONDITIONS.

17. DAMPERS DESIGNATED WITH A FAIL-TO-SAFE POSITION SHALL HAVE ACTUATOR WITH A SPRING-POWERED CLOSER THAT WILL OPERATE WHEN POWER IS LOST. DAMPERS DESIGNATED FAIL-TO-CURRENT POSITION DO NOT REQUIRE SPRING-POWERED CLOSER.

18. SIZE ACTUATORS FOR 150% OF THE MAXIMUM DESIGN TORQUE.

19. ACTUATOR AND ALL COMPONENTS TO BE SUITABLE FOR OPERATION IN AN AMBIENT AIR TEMPERATURE OF 482 °F FOR A PERIOD OF ONE HOUR, AND CONTINUOUSLY AT A MINIMUM TEMPERATURE OF -12 °F. THIS DESIGN REQUIREMENT SHALL APPLY TO ALL ACTUATOR LUBRICANTS.

20. POWER WILL BE SUPPLIED AT 120 VOLT, SINGLE PHASE, 60 HZ.

21. THERMAL OVERLOAD PROTECTION DEVICES SHALL NOT PREVENT THE DAMPER ACTUATOR FROM OPERATING DURING EMERGENCY OPERATIONS.

22. ACTUATOR SHALL BE RATED FOR CONTINUOUS DUTY IN EITHER OPEN OR CLOSED POSITION AND SHALL HAVE CLASS H INSULATION.

23. ACTUATOR ENCLOSURE TO BE IN ACCORDANCE WITH NEMA 4X CONSTRUCTION.

24. ACTUATOR TO BE PROVIDED WITH SPACE HEATERS TO PREVENT CONDENSATION ON THE ACTUATOR WINDINGS, ETC… SPACE HEATER SHALL BE 120 V SINGLE PHASE.

25. ACTUATOR TO BE UL APPROVED AND ISO 9001 CERTIFIED.

26. DAMPER ACTUATORS SHALL BE ADEQUATELY SUPPORTED ON THE DAMPER, TAKING INTO ACCOUNT BOTH THE TORQUE EXERTED AND THE ACTUATOR WEIGHT. ENSURE THAT THERE IS ADEQUATE CLEARANCE FOR SERVICE ACCESS TO THE DAMPER ACTUATOR AND FOR THE THERMAL INSULATION JACKET.

27. DAMPER ACTUATOR SHALL BE MOUNTED SUCH THAT IT CAN BE REMOVED AND REPLACED. THE ACTUATOR SHALL BE EASILY REPLACED IN THE FIELD.

28. LIMIT SWITCHES: LIMIT SWITCHES SHALL PROVIDE CONTACT CLOSURE TO CONFIRM DAMPER IN "OPEN" OR "CLOSED" POSITION. PROVIDE EACH DAMPER PANEL WITH TWO LIMIT SWITCHES FOR REMOTE MONITORING OF THE BLADE POSITION. MOUNT LIMIT SWITCHES WITH INDEPENDENT CONTACTS TO DETECT FULL OPEN AND FULL CLOSED POSITIONS. MULTIPLE MODULE DAMPERS SHALL HAVE LIMIT SWITCHES WIRED IN SERIES SUCH THAT AN OPEN OR CLOSED SIGNAL WILL APPLY FOR THE ENTIRE DAMPER GROUP.

2.02 SHEET METAL MATERIALS

A. COMPLY WITH SMACNA'S "HVAC DUCT CONSTRUCTION STANDARDS--METAL AND FLEXIBLE" FOR ACCEPTABLE MATERIALS, MATERIAL THICKNESSES, AND DUCT CONSTRUCTION METHODS, UNLESS OTHERWISE INDICATED.

B. GALVANIZED SHEET STEEL: LOCK-FORMING QUALITY; COMPLYING WITH ASTM A653 AND HAVING G90 COATING DESIGNATION; DUCTS SHALL HAVE MILL-PHOSPHATIZED FINISH FOR SURFACES EXPOSED TO VIEW.

C. REINFORCEMENT SHAPES AND PLATES: GALVANIZED-STEEL REINFORCEMENT WHERE INSTALLED ON GALVANIZED SHEET METAL DUCTS; COMPATIBLE MATERIALS FOR ALUMINUM AND STAINLESS-STEEL DUCTS.

D. TIE RODS: GALVANIZED STEEL, 1/4-INCH MINIMUM DIAMETER FOR LENGTHS 36 INCHES OR LESS; 3/8-INCH MINIMUM DIAMETER FOR LENGTHS LONGER THAN 36 INCHES.

PART 3 - EXECUTION

3.01 APPLICATION AND INSTALLATION

A. INSTALL DAMPERS AND ACTUATORS ACCORDING TO APPLICABLE DETAILS IN SMACNA'S "HVAC DUCT CONSTRUCTION STANDARDS--METAL AND FLEXIBLE" FOR METAL DUCTS.

B. IN OPEN POSITION, DAMPER BLADES SHALL BE PARALLEL TO AIRFLOW PATH. IN CLOSED POSITION, DAMPER BLADES SHALL BE 90 DEGREES TO AIRFLOW PATH.

DESIGN AGENCY
HATCH MOTT MacDONALD
18013 CLEVELAND PKWY.
SUITE 200
CLEVELAND, OH 44135

DESIGNED HWW | DRAWN CMN | REVIEWED DGN | DATE 08/07/14 | CHECKED NAH | REVISED HWW | STRUCTURE FILE NUMBER 3106578

GENERAL NOTES TVS DAMPERS SHEET 3 OF 4

BRIDGE NO. HAM-71-0134
I-71 LYTLE TUNNEL UNDER LYTLE PARK

HAM-71-01.34
PID No. 87268

c:\pwworking\hmm\external\ty61470.dms/72788\071_0134CVN027.dgn 10/24/2014 11:09:00 AM T:N61470

C. *ENSURE THAT DAMPER FRAMES ARE INSTALLED SQUARE, WITHOUT RACKING OR BENDING.*

D. *USE ANTI-SEIZING PRODUCT DURING INSTALLATION TO ALL FASTENERS, PARTICULARLY STAINLESS STEEL FASTENERS.*

E. *ENSURE THAT DAMPER OPERATION IS FREE OF INTERFERENCE AND BINDING. LINKAGE BENDING OR FLEXURE IS CAUSE FOR REJECTION OF INSTALLATION.*

F. *A DAMPER INSTALLATION THAT GENERATES NOISE DURING FAN OPERATION SHALL BE REASON FOR REJECTION OF INSTALLATION. BLADE FLUTTER SHALL BE AVOIDED.*

G. *PRIOR TO ACTUATING THE DAMPER ELECTRICALLY, MANUALLY ACTUATE THE DAMPER FULLY OPEN TO FULLY CLOSED TO VERIFY THERE ARE NO BLOCKAGES OR OTHER IMPEDIMENTS IN THE INSTALLATION. THIS ACTION SHOULD SHOW THAT THE DAMPER LINKAGES AND OTHER COMPONENTS OPERATE SMOOTHLY AND PERFORM AS DESIGNED.*

H. *CONTRACTOR SHALL BE RESPONSIBLE FOR DAMPER SERVICE DURING THE ENTIRE PERIOD OF TIME THAT WORK IS PERFORMED IN THIS PROJECT.*

I. *CONNECT DAMPER ACTUATORS TO POWER WIRING IN ACCORDANCE WITH APPLICABLE CODES.*

3.02 ADJUSTING

A. *ADJUST DAMPERS AND ACTUATORS FOR PROPER OPERATION. ADJUST LIMIT SWITCHES TO SIGNAL "OPEN" AND "CLOSED" DAMPER POSITIONS.*

PART 4 - CONTRACTOR QUALITY CONTROL

4.01 FIELD QUALITY CONTROL

A. *ODOT SHALL BE NOTIFIED A MINIMUM OF 21 CALENDAR DAYS IN ADVANCE OF ANY TESTING. IF ODOT SO DESIRES, ODOT OR ODOT'S REPRESENTATIVE MAY WITNESS ANY OR ALL TESTS CONTAINED HEREIN.*

B. *THE FOLLOWING DESCRIBES THE MINIMUM INSPECTION AND TESTING REQUIRED IN THE CONTRACTOR'S QUALITY CONTROL (CQC) PLAN AND PROGRAM FOR THE WORK OF THIS SECTION AND IS FOR CQC ONLY. THE IMPLEMENTATION OF THE CONTRACTOR QUALITY CONTROL PROGRAM DOES NOT RELIEVE THE CONTRACTOR FROM THE RESPONSIBILITY TO PROVIDE THE WORK IN ACCORDANCE WITH THE CONTRACT DOCUMENTS, APPLICABLE CODES, REGULATIONS, AND GOVERNING AUTHORITIES. THE CQC PLAN AND PROGRAM SHALL INCLUDE, BUT NOT BE LIMITED TO, THE FOLLOWING TESTING AND INSPECTION ELEMENTS. THESE ELEMENTS ARE PROVIDED ONLY AS A MINIMUM STARTING POINT FOR THE CONTRACTOR TO USE TO GENERATE HIS COMPLETE CQC PROGRAM.*

1. *ALL TESTING AS NOTED WITH IN THIS SECTION THAT IS APPLICABLE TO THE WORK BEING PERFORMED.*
2. *INSPECT TO VERIFY THAT DAMPER FRAMES ARE INSTALLED SQUARE WITHOUT RACKING, AND THAT DAMPER BLADES MOVE SMOOTHLY FROM FULLY CLOSED TO FULLY OPEN POSITION.*
3. *INSPECT TO VERIFY THAT ACTUATORS ARE PROPERLY INSTALLED AND ADJUSTED, SO THAT THEY POSITION BLADES FULLY OPEN OR CLOSED AS COMMANDED.*
4. *FIELD TESTING:*

   A. *PROVIDE A WRITTEN TEST PLAN A MINIMUM OF 21 DAYS PRIOR TO TESTING.*

   B. *THE AXIAL FLOW FANS SHALL BE IN SERVICE AT THE TIME OF THE TESTING.*

   C. *THE PERMANENT ELECTRICAL CONNECTIONS SHALL BE IN PLACE AT THE TIME OF TESTING.*

   D. *THE MANUFACTURER'S FIELD REPRESENTATIVE SHALL BE PRESENT AND HAVE SUPERVISORY DUTIES. QUALIFIED PERSONNEL SHALL PERFORM THE TESTING.*

   E. *ANY DEFECTS RESULTING FROM FIELD TESTING SHALL BE THE CONTRACTOR'S RESPONSIBILITY TO CORRECT AT NO COST TO ODOT.*

   F. *ROTATION TESTS: EACH DAMPER UNIT SHALL BE SUBJECT TO 10 FULLY OPEN/FULLY CLOSED REVERSALS.*

   G. *LOSS OF POWER TEST: POWER SHALL BE REMOVED WITH THE RESULTANT ACTION OF THE DAMPER TO THE POWER OFF POSITION.*

PART 5 - MEASUREMENT AND PAYMENT

5.01 MEASUREMENT

A. *ALL OF THE WORK OF THIS SECTION SHALL BE MEASURED AS LUMP SUM.*

5.02 PAYMENT

A. *PAYMENT FOR ITEM SPECIAL – MISC.: FAN ISOLATION DAMPERS SHALL BE MADE AT THE LUMP SUM CONTRACT PRICE IN THE PAYMENT SCHEDULE, INCLUDING ALL WORK, LABOR, EQUIPMENT AND MATERIALS NECESSARY TO COMPLETE THIS ITEM OF WORK DESCRIBED AND TO THE SATISFACTION OF THE ENGINEER.*

B. *PAYMENT FOR ITEM SPECIAL – MISC.: SOUTHBOUND TUNNEL ISOLATION DAMPERS SHALL BE MADE AT THE LUMP SUM CONTRACT PRICE IN THE PAYMENT SCHEDULE, INCLUDING ALL WORK, LABOR, EQUIPMENT AND MATERIALS NECESSARY TO COMPLETE THIS ITEM OF WORK DESCRIBED AND TO THE SATISFACTION OF THE ENGINEER.*

TYN61470
c:\pwworking\hmm\external\tyn61470\dms72788\071_0134CMN02.dgn 10/24/2014 11:09:09 AM

DESIGN AGENCY
HATCH MOTT MacDONALD
18013 CLEVELAND PKWY.
SUITE 200
CLEVELAND, OH 44135

DESIGNED	DRAWN	REVIEWED	DATE
HWW	CMN	DGN	08/07/14
CHECKED	REVISED	STRUCTURE FILE NUMBER	
NAH	HWW	3106578	

GENERAL NOTES TVS DAMPERS SHEET 4 OF 4

BRIDGE NO. HAM-71-0134

I-71 LYTLE TUNNEL UNDER LYTLE PARK

HAM-71-01.34

PID No. 87268

ITEM SPECIAL – MISC.: SOUND ATTENUATORS

PART 1 - GENERAL

1.01 SUMMARY

A. THIS SECTION INCLUDES THE FOLLOWING WORK:

B. DESIGN, MANUFACTURE, PROVIDE LABOR, PRODUCTS, TOOLS, SUPERVISION AND SERVICES NECESSARY FOR THE SUPPLY, INSTALLATION AND TESTING OF SOUND ATTENUATORS FOR TUNNEL VENTILATION FAN ASSEMBLIES IN ACCORDANCE WITH THE CONTRACT DOCUMENTS.

1.02 SUBMITTALS

A. PRODUCT DATA:

1. SUBMIT PRODUCT DATA IN ACCORDANCE WITH SPECIFICATIONS, INCLUDING THE FOLLOWING:

   A. MANUFACTURER'S STORAGE, PREPARATION, HANDLING, LIFTING AND INSTALLATION REQUIREMENTS INCORPORATED INTO AN INSTALLATION MANUAL.

   B. COMPLETE, DETAILED ACOUSTIC AND AERODYNAMIC PERFORMANCE DATA

B. SHOP DRAWINGS:

1. SUBMIT SHOP DRAWINGS:

   A. GENERAL ARRANGEMENT DRAWINGS, INCLUDING DIMENSIONS, INTERNAL AND EXTERNAL CONSTRUCTION DETAILS, CLEARANCES AND INSTALLATION DETAILS.

   B. REQUIRED SUPPORT, MOUNTING DETAILS, WEIGHTS, SIZES AND LOCATION OF MOUNTING BOLT HOLES.

   C. ASSEMBLY, INSTALLATION AND CONNECTION DETAILS.

   D. TEST PROCEDURES AND FACILITIES.

C. REPORTS/CERTIFICATES:

1. SUBMIT WRITTEN TEST PROCEDURES AND TEST REPORTS.

2. SUBMIT WRITTEN FIELD INSPECTION REPORTS.

D. OPERATIONS AND MAINTENANCE MANUALS:

1. SUBMIT THE FOLLOWING FOR EACH PRODUCT:

   A. IDENTIFICATION: MANUFACTURING NAME, TYPE, YEAR, SERIAL NUMBER, NUMBER OF UNITS, CAPACITY, AND IDENTIFICATION TO RELATED SYSTEMS.

   B. PERFORMANCE CRITERIA.

   C. COMPLETE COMPONENT PARTS LIST.

   D. INSTALLATION INSTRUCTIONS AND PRECAUTIONS.

   E. A LIST OF PARTS TO BE REPLACED AND/OR TESTING PROCEDURES TO DETERMINE PARTS TO BE REPLACED AFTER THE SOUND ATTENUATOR ASSEMBLY HAS BEEN EXPOSED TO THE 482°F AS SPECIFIED, TO ALLOW THE INSTALLED FAN ASSEMBLY TO BE PUT BACK IN SERVICE SAFELY AND RELIABLY.

   F. SILENCER MODULE REMOVAL AND REPLACEMENT PROCEDURES.

   G. PROCEDURES FOR CLEANING OF THE SOUND ATTENUATOR INTERIOR.

1.03 REFERENCES

A. AMERICAN SOCIETY FOR TESTING AND MATERIALS (ASTM) A653, SPECIFICATION FOR STEEL SHEET, ZINC-COATED (GALVANIZED) BY THE HOT DIP PROCESS.

B. AMERICAN SOCIETY FOR TESTING AND MATERIALS (ASTM) E477-90, TEST METHOD FOR MEASURING ACOUSTICAL AND AIRFLOW PERFORMANCE OF DUCT LINER MATERIALS AND PREFABRICATED SILENCERS.

C. AMERICAN SOCIETY FOR TESTING AND MATERIALS (ASTM) A36 AND ASTM A572 STRUCTURAL STEEL AND PLATE.

D. AMERICAN SOCIETY FOR TESTING AND MATERIALS (ASTM) A123-89A, HOT DIP GALVANIZING OF IRREGULARLY SHAPED ARTICLES.

E. AMERICAN SOCIETY FOR TESTING AND MATERIALS (ASTM) E84-03B TEST METHOD FOR SURFACE BURNING CHARACTERISTICS OF BUILDING MATERIALS.

1.04 QUALITY ASSURANCE

A. MANUFACTURER SHALL SUBMIT REFERENCES FROM PREVIOUS INSTALLATIONS OF SIMILAR SOUND ATTENUATORS IN COMPARABLE SITUATIONS.

B. MANUFACTURER SHALL COMPLY WITH NFPA 520 2014 EDITION AND ALL OTHER REFERENCED CODES AND STANDARDS COVERING THE DESIGN OF VENTILATION SOUND ATTENUATOR ASSEMBLIES.

C. PRIOR TO FABRICATION, PROVIDE CERTIFIED FACTORY TEST REPORTS OF REPRESENTATIVE MODULES FOR REVIEW. FACTORY TESTING SHALL BE CONDUCTED IN ACCORDANCE WITH ASTM E477.

D. COMPLY WITH NATIONAL FIRE PROTECTION ASSOCIATION (NFPA) 90A, "INSTALLATION OF AIR CONDITIONING AND VENTILATING SYSTEMS," AND NFPA 90B, "INSTALLATION OF WARM AIR HEATING AND AIR CONDITIONING SYSTEMS."

PART 2 - PRODUCTS

2.01 SOUND ATTENUATORS - DESIGN REQUIREMENTS

A. THE SOUND ATTENUATORS SHALL BE OF THE SPLITTER TYPE, AND THE DESIGN AIRFLOW AT EACH SOUND ATTENUATOR WILL BE AS SHOWN ON THE DRAWINGS.

B. THE SOUND ATTENUATOR DYNAMIC INSERTION LOSS SHALL BE AS SCHEDULED.

C. AERODYNAMIC AND ACOUSTIC TESTING SHALL CONFORM TO ASTM E477.

D. THE CONTRACTOR SHALL COORDINATE THE ALLOWABLE PRESSURE DROP OF THE SOUND ATTENUATOR UNITS WITH THE OVERALL FAN PERFORMANCE TO MEET SPECIFIED DUTIES AS SCHEDULED. THE MAXIMUM ALLOWABLE PRESSURE DROP THROUGH THE SILENCER SHALL BE 0.50 INCH WATER GAUGE - IN EITHER AIRFLOW DIRECTION.

E. THE SELF-GENERATED NOISE OF ANY SILENCING MODULES (CORRECTED TO INCLUDE FACE AREAS ADJUSTMENT FACTORS) SHALL NOT EXCEED THE SOUND POWER LEVEL OF THE FAN UNIT MINUS THE DYNAMIC INSERTION LOSS OF THE ELEMENT IN ANY OCTAVE BAND.

F. THE SOUND ATTENUATORS SHALL BE FABRICATED WITH THE SPLITTERS INSTALLED IN A FREE-STANDING FABRICATED HOUSING. CONTRACTOR SHALL INSTALL PULLING RINGS, FIXED BEAMS AND ANY OTHER EQUIPMENT NECESSARY FOR THE INSTALLATION AND REMOVAL OF THE SOUND ATTENUATORS.

G. SILENCER INLETS SHALL BE PROVIDED WITH SAFETY SCREENS.

H. DETERMINE AERODYNAMIC PERFORMANCE DATA FOR THE IDENTICAL MODULES FOR WHICH ACOUSTIC PERFORMANCE IS DETERMINED, AND UNDER THE SAME CONDITIONS OF AIRFLOW.

I. MATERIALS AND METHODS USED TO FABRICATE THE SILENCING MODULES AND TO ASSEMBLE THEM INTO UNITS SHALL BE SELECTED AND DESIGNED TO PERMIT OPERATION FOR A MINIMUM OF ONE HOUR WITHOUT STRUCTURAL FAILURE WITH AN AIR STREAM TEMPERATURE OF AT LEAST 482°F.

J. ALL SPLITTERS SHALL HAVE AERODYNAMICALLY SHAPED NOSINGS TO MAINTAIN ACCEPTABLE PRESSURE LOSS CHARACTERISTICS FOR FLOWS IN EITHER DIRECTION.

2.02 SHEET METAL MATERIALS

A. COMPLY WITH SHEET METAL & AIR CONDITIONING NATIONAL CONTRACTORS' ASSOCIATION (SMACNA) "HVAC DUCT CONSTRUCTION STANDARDS--METAL AND FLEXIBLE" FOR ACCEPTABLE MATERIALS, MATERIAL THICKNESS, AND DUCT CONSTRUCTION METHODS, UNLESS OTHERWISE INDICATED.

B. GALVANIZED SHEET STEEL: COMPLYING WITH ASTM A653 AND HAVING G90 COATING DESIGNATION; DUCTS SHALL HAVE MILL-PHOSPHATIZED FINISH FOR SURFACES EXPOSED TO VIEW.

C. REINFORCEMENT SHAPES AND PLATES: GALVANIZED-STEEL REINFORCEMENT WHERE INSTALLED ON GALVANIZED SHEET METAL DUCTS; COMPATIBLE MATERIALS FOR ALUMINUM AND STAINLESS-STEEL DUCTS.

2.03 SOUND ATTENUATORS - FABRICATION

A. GENERAL: SOUND ATTENUATORS SHALL BE SPLITTER-TYPE, WITH REMOVABLE SPLITTERS INSTALLED IN A FREE-STANDING FABRICATED HOUSING. ATTENUATORS SHALL BE DESIGNED FOR AIRFLOW IN BOTH DIRECTIONS.

B. THE FAN/SOUND ATTENUATOR COMBINATION SHALL COMPLY WITH THE MAXIMUM INSTALLED SOUND LEVELS AS SPECIFIED, UNDER THE DESIGN OPERATING CONDITIONS. AERODYNAMIC AND ACOUSTIC TESTING SHALL CONFORM TO ASTM E477.

C. FABRICATE SOUND ATTENUATOR MODULES FROM MODULAR ACOUSTICAL PANELS. PANELS SHALL BE 4 INCHES THICK, PREFABRICATED, OF INTERLOCKING TONGUE AND GROOVE DESIGN. PANEL EXTERIOR AND INTERIOR SKINS SHALL BE 20 GAUGE GALVANIZED STEEL, WITH 18 GAUGE STEEL CHANNEL FRAMING - WELDED TO SKINS. PANELS SHALL BE PERFORATED ON THE SIDE/SIDES FACING FAN AIRFLOW. ACCESSORY ANGLES AND CHANNELS SHALL BE 18 GAUGE GALVANIZED STEEL. GALVANIZED STEEL TO CONFORM TO ASTM A653, COATING DESIGNATION TO BE G90, APPLIED TO ALL SURFACES.

D. OUTER CASING SHALL BE SUFFICIENTLY BRACED WITH REINFORCING ANGLES TO PREVENT OBJECTIONABLE VIBRATION DURING OPERATION. THERE SHALL BE NO MEASURABLE DRUMMING OR VIBRATION OF ATTENUATOR OR DUCTWORK DURING OPERATION. NO INTERNAL STIFFENING THAT INTRUDES INTO THE AIR STREAM IS PERMITTED.

E. FURNISH SOUND ATTENUATOR UNITS WITH COMPANION FLANGES AT FAN DUCTWORK TRANSITION CONNECTION ENDS, TO PERMIT

c:\pwworking\hmm\external\tyn61470\dms72788\071_0134CMN023.dgn 10/24/2014 11:09:17 AM TYN61470

DESIGN AGENCY
HATCH MOTT MacDONALD
18013 CLEVELAND PKWY.
SUITE 200
CLEVELAND, OH 44135

DESIGNED	DRAWN	REVIEWED	DATE	STRUCTURE FILE NUMBER
HWW	CMN	DGN	08/07/14	3106578
CHECKED	REVISED			
NAH	HWW			

UNITS TO BE BOLTED TO ADJACENT COMPONENTS.

F. STEEL FOR REINFORCEMENT, SECTION CONNECTION FLANGES AND COMPANION FLANGES TO BE STRUCTURAL ANGLES CONFORMING TO THE REQUIREMENT OF ASTM A36 AND A572. GALVANIZING SHALL CONFORM TO THE REQUIREMENT OF ASTM A123-89A.

G. FLANGES SHALL HAVE DRILLED HOLES EQUALLY SPACED NOT MORE THAN 6 INCH ON CENTERS TO PERMIT BOLTING TO ADJACENT COMPONENTS. HOLES IN FLANGES SHALL MATCH THE HOLES IN FAN DUCTWORK TRANSITION AND DUCTWORK SECTION FLANGES.

H. GASKETS FOR INTERCONNECTION OF MODULES AND SEALS AROUND FLANGED CONNECTIONS SHALL BE CAPABLE OF WITHSTANDING AN AMBIENT TEMPERATURE OF 482°F FOR A PERIOD OF ONE HOUR WITHOUT DEGRADATION OF SEALING ABILITY.

I. FILLER MATERIAL SHALL BE INORGANIC MINERAL OR GLASS FIBER OF A DENSITY SUFFICIENT TO OBTAIN THE REQUIRED ACOUSTIC PERFORMANCE, AND SHALL BE PACKED UNDER NOT LESS THAN 5 PERCENT COMPRESSION, TO ELIMINATE VOIDS DUE TO VIBRATION AND SETTLING. THE MATERIAL SHALL BE INERT, VERMIN-PROOF, AND RESISTANT TO HIGH HUMIDITY CONDITIONS. FILLER MATERIAL SHALL NOT IGNITE OR SUPPORT COMBUSTION IN A THERMAL ENVIRONMENT OF 482°F FOR ONE HOUR. COMBUSTION RATING OF THE FILLER MATERIAL, WHEN TESTED IN ACCORDANCE WITH ASTM E84-03B, SHALL NOT BE GREATER THAN THE FOLLOWING:

1. FLAME SPREAD CLASSIFICATION: 25

2. SMOKE-DEVELOPED RATING: 50

J. FABRICATE WIRE SAFETY INLET SCREENS OF 1/8-INCH THICK WIRE; WITH 1-INCH MESH OPENINGS AND A FRAME HAVING A MINIMUM THICKNESS OF 1/8 INCH. ALL MATERIALS SHALL BE GALVANIZED STEEL.

K. THE CONTRACTOR SHALL ENSURE THAT THE SPLITTERS ARE INSTALLED SUCH THAT THERE ARE NO PARALLEL PATHS THROUGH WHICH TONES MAY BE TRANSMITTED. ANY EDGE STRIPS THAT MAY BE USED TO SEAL THE GAPS AT THE ENDS OF SPLITTERS SHALL BE EASILY REMOVED FOR THE WITHDRAWAL OF A SPLITTER.

2.04 SOURCE QUALITY CONTROL

A. PRIOR TO FABRICATION, PROVIDE REPRESENTATIVE SPLITTER UNITS TO BE FACTORY TESTED FOR AIR LEAKAGE, AERODYNAMIC PERFORMANCE AND ACOUSTIC PERFORMANCE, AND FURNISH CERTIFIED TEST REPORTS OF PERFORMANCE TO THE ENGINEER FOR REVIEW. FACTORY TESTING OF SOUND ATTENUATORS SHALL BE IN ACCORDANCE WITH THE REQUIREMENTS OF ASTM E477 AND WILL BE BASED UPON A COMPLETE SOUND ATTENUATOR OR A REPRESENTATIVE MODULE. SUBMIT TEST PROCEDURES TO THE ENGINEER FOR APPROVAL.

B. DETERMINE THE ACOUSTIC-PERFORMANCE OF THE SOUND ATTENUATOR UNITS USING A DUCT-TO-REVERBERANT-ROOM TEST FACILITY, WHICH PROVIDES FOR AIRFLOW IN BOTH DIRECTIONS THROUGH THE SOUND ATTENUATOR UNIT DURING THE RATING PROCEDURE.

C. TEST FACILITY AND RATING PROCEDURE SHALL ENSURE THAT ALL EFFECTS DUE TO END REFLECTION, DIRECTIVITY, FLANKING TRANSMISSION, STANDING WAVES, AND TEST-CHAMBER SOUND ABSORPTION ARE ELIMINATED.

D. ACOUSTIC-PERFORMANCE RATINGS SHALL INCLUDE DYNAMIC INSERTION LOSS FOR BOTH FORWARD FLOW THROUGH THE SOUND ATTENUATOR (AIRFLOW AND SOUND TRANSMISSION IN THE SAME DIRECTION), AND FOR REVERSE FLOW THROUGH THE SOUND ATTENUATOR (AIRFLOW AND SOUND TRANSMISSION IN OPPOSITE DIRECTIONS).

E. THE RATINGS SHALL BE DETERMINED WITH AIR FLOWING UNIFORMLY OVER THE SOUND ATTENUATOR UNIT AT THE DESIGN FACE VELOCITY. ACOUSTIC-PERFORMANCE DATA SHALL BE PRESENTED IN TABULAR FORM SHOWING DECIBELS (DB RE: 10-12 WATT) AT 8 OCTAVE-BAND CENTER FREQUENCIES FROM 63-HERTZ TO 8,000-HERTZ.

F. ACOUSTICAL PERFORMANCE OF SOUND ATTENUATOR UNITS MAY BE DETERMINED IN A TEST FACILITY UTILIZING AN ANECHOIC CHAMBER; PROVIDED THAT THE MANUFACTURER IS ABLE TO SATISFY THE ENGINEER THAT BOTH THE TEST FACILITY AND TEST PROCEDURE ARE EQUAL OR SUPERIOR TO THOSE SPECIFIED.

G. DETERMINE AERODYNAMIC PERFORMANCE DATA FOR THE IDENTICAL SOUND ATTENUATOR UNITS FOR WHICH ACOUSTIC PERFORMANCE IS DETERMINED, AND UNDER THE SAME CONDITIONS OF AIRFLOW.

H. THE SELF-GENERATED NOISE OF ANY SOUND ATTENUATOR UNIT CORRECTED TO INCLUDE FACE-AREA ADJUSTMENT FACTORS, SHALL NOT EXCEED THE SOUND POWER OF THE VENTILATION FAN MINUS THE DYNAMIC INSERTION LOSS OF THE ELEMENT IN ANY OCTAVE BAND.

PART 3 - EXECUTION

3.01 APPLICATION AND INSTALLATION

A. INSTALL SOUND ATTENUATORS ACCORDING TO MANUFACTURER'S INSTRUCTIONS, AND APPLICABLE DETAILS IN SMACNA'S "HVAC DUCT CONSTRUCTION STANDARDS--METAL AND FLEXIBLE" FOR METAL DUCTS.

3.02 TESTING

A. ATTENUATORS SHALL BE TESTED IN ACCORDANCE WITH PROCEDURES OUTLINED IN SECTION "TESTING, ADJUSTING AND BALANCING."

PART 4 - CONTRACTOR QUALITY CONTROL

4.01 FIELD QUALITY CONTROL

A. THE FOLLOWING DESCRIBES THE MINIMUM INSPECTION AND TESTING REQUIRED IN THE CONTRACTOR'S QUALITY CONTROL (CQC) PLAN AND PROGRAM FOR THE WORK OF THIS SECTION AND IS FOR CQC ONLY. THE IMPLEMENTATION OF THE CONTRACTOR QUALITY CONTROL PROGRAM DOES NOT RELIEVE THE CONTRACTOR FROM THE RESPONSIBILITY TO PROVIDE THE WORK IN ACCORDANCE WITH THE CONTRACT DOCUMENTS, APPLICABLE CODES, REGULATIONS, AND GOVERNING AUTHORITIES. THE CQC PLAN AND PROGRAM SHALL INCLUDE, BUT NOT BE LIMITED TO, THE FOLLOWING TESTING AND INSPECTION ELEMENTS. THESE ELEMENTS ARE PROVIDED ONLY AS A MINIMUM STARTING POINT FOR THE CONTRACTOR TO USE TO GENERATE HIS COMPLETE CQC PROGRAM.

1. ALL TESTING AS NOTED WITH IN THIS SECTION THAT IS APPLICABLE TO THE WORK BEING PERFORMED.

2. REFER TO SECTION "TESTING, ADJUSTING AND BALANCING" FOR FIELD TESTING PROCEDURES.

PART 5 - MEASUREMENT AND PAYMENT

5.01 MEASUREMENT

A. ALL OF THE WORK OF THIS SECTION SHALL BE MEASURED AS LUMP SUM

5.02 PAYMENT

A. PAYMENT FOR ITEM SPECIAL – MISC.: SOUND ATTENUATORS SHALL BE MADE AT THE LUMP SUM CONTRACT PRICE IN THE PAYMENT SCHEDULE, INCLUDING ALL WORK, LABOR, EQUIPMENT AND MATERIALS NECESSARY TO COMPLETE THIS ITEM OF WORK DESCRIBED AND TO THE SATISFACTION OF THE ENGINEER.

c:\pwworking\hmm\external\tyn61470\dms727886\071_0134CVNC24.dgn 10/24/2014 11:09:28 AM TYN61470

DESIGN AGENCY
HATCH MOTT MacDONALD
18013 CLEVELAND PKWY.
SUITE 200
CLEVELAND, OH 44135

DESIGNED	DRAWN	REVIEWED	DATE
HWW	CMN	DGN	08/07/14
CHECKED	REVISED	STRUCTURE FILE NUMBER	
NAH	HWW	3106578	

GENERAL NOTES TVS SOUND ATTENUATORS SHEET 2 OF 2

BRIDGE NO. HAM-71-0134
I-71 LYTLE TUNNEL UNDER LYTLE PARK

HAM-71-01.34
PID No. 87268

ITEM 530 – SPECIAL – STRUCTURE MISC.: SOUNDPROOFING

PART 1 - GENERAL

1.01 GENERAL REQUIREMENTS

A. THE CONTRACTOR SHALL FURNISH ALL LABOR, EQUIPMENT AND MATERIALS, AND PERFORM ALL OPERATIONS REQUIRED TO INSTALL THE SOUNDPROOFING AS INDICATED AND DESCRIBED IN THIS SPECIFICATION AND CONTRACT DRAWINGS. THIS SECTION INCLUDES THE FOLLOWING WORK:

1.02 REFERENCES

A. REFERENCE STANDARDS SHALL INCLUDE AS A MINIMUM BUT NOT LIMITED TO:

1. AMERICAN SOCIETY FOR TESTING AND MATERIALS (ASTM):

A. A 123, STANDARD SPECIFICATION FOR ZINC (HOT-DIP GALVANIZED) COATINGS ON IRON AND STEEL PRODUCTS.

B. A 153, STANDARD SPECIFICATION FOR ZINC COATING (HOT-DIP) ON IRON AND STEEL HARDWARE.

C. A 194 – CARBON AND ALLOY STEEL NUTS AND BOLTS FOR HIGH PRESSURE OR HIGH TEMPERATURE OR BOTH.

D. A 307 STANDARD SPECIFICATION FOR CARBON STEEL BOLTS, STUDS, AND THREADED ROD 60 000 PSI TENSILE STRENGTH.

E. A 449 STANDARD SPECIFICATION FOR HEX CAP SCREWS, BOLTS AND STUDS, STEEL, HEAT TREATED, 120/105/90 KSI MINIMUM TENSILE STRENGTH, GENERAL USE.

F. A 563 STANDARD SPECIFICATION FOR CARBON AND ALLOY STEEL NUTS.

G. A 653 STANDARD SPECIFICATION FOR STEEL SHEET, ZINC-COATED (GALVANIZED) OR ZINC-IRON ALLOY-COATED (GALVANNEALED) BY THE HOT-DIP PROCESS.

H. C 423 STANDARD TEST METHOD FOR SOUND ABSORPTION AND SOUND ABSORPTION, COEFFICIENTS BY THE REVERBERATION ROOM METHOD.

I. C 665 STANDARD SPECIFICATION FOR MINERAL-FIBER BLANKET THERMAL INSULATION FOR LIGHT FRAME CONSTRUCTION AND MANUFACTURED HOUSING.

J. F 436 STANDARD SPECIFICATION FOR HARDENED STEEL WASHERS

K. E84-03B TEST METHOD FOR SURFACE BURNING CHARACTERISTICS OF BUILDING MATERIALS.

2. NATIONAL FIRE PROTECTION ASSOCIATION (NFPA):

A. 502: STANDARD FOR ROAD TUNNELS, BRIDGES AND OTHER LIMITED ACCESS HIGHWAYS

1.03 SUBMITTALS

A. PRODUCT DATA:

1. SUBMIT PRODUCT DATA IN ACCORDANCE WITH SPECIFICATIONS, INCLUDING THE FOLLOWING:

(1) MANUFACTURER'S STORAGE, PREPARATION, HANDLING, LIFTING AND INSTALLATION REQUIREMENTS INCORPORATED INTO AN INSTALLATION MANUAL.

(2) COMPLETE, DETAILED ACOUSTIC AND AERODYNAMIC PERFORMANCE DATA AS PER ASTM - C 423 STANDARD TEST METHOD FOR SOUND ABSORPTION AND SOUND ABSORPTION, COEFFICIENTS BY THE REVERBERATION ROOM METHOD.

B. SHOP DRAWINGS:

1. SUBMIT SHOP DRAWINGS IN ACCORDANCE WITH SECTION "SUBMITTALS" INDICATING:

(1) GENERAL ARRANGEMENT DRAWINGS, INCLUDING DIMENSIONS, INTERNAL AND EXTERNAL CONSTRUCTION DETAILS, CLEARANCES AND INSTALLATION DETAILS.

(2) REQUIRED SUPPORT, MOUNTING DETAILS, WEIGHTS, SIZES AND LOCATION OF MOUNTING BOLT HOLES.

(3) ASSEMBLY, INSTALLATION AND CONNECTION DETAILS.

C. OPERATIONS AND MAINTENANCE MANUALS:

1. SUBMIT THE FOLLOWING OPERATION AND MAINTENANCE DATA FOR EACH PRODUCT, AT LEAST 30 DAYS PRIOR TO THE BEGINNING OF CONSTRUCTION, IN ACCORDANCE WITH THIS SECTION:

(1) IDENTIFICATION: MANUFACTURING NAME, TYPE, YEAR, SERIAL NUMBER, AND IDENTIFICATION TO RELATED SYSTEMS.

(2) PERFORMANCE CRITERIA.

(3) INSTALLATION INSTRUCTIONS AND PRECAUTIONS.

(4) A LIST OF PARTS TO BE REPLACED AND/OR TESTING PROCEDURES TO DETERMINE PARTS TO BE REPLACED AFTER THE SOUNDPROOFING ASSEMBLY HAS BEEN EXPOSED TO THE 482 °F AS SPECIFIED, TO ALLOW THE INSTALLED FAN ASSEMBLY TO BE PUT BACK IN SERVICE SAFELY AND RELIABLY.

D. A SCHEDULE INDICATING THE INSTALLATION SEQUENCE AND THE TIME FRAME OF THE SOUNDPROOFING SYSTEM WILL OCCUR. PROJECTED DATES OF DELIVERY OF THE EQUIPMENT TO BE SUPPLIED, AND INSTALLATION COMPLETION DATES SHALL BE INCLUDED.

1.04 QUALITY ASSURANCE

A. MANUFACTURER SHALL SUBMIT REFERENCES FROM PREVIOUS INSTALLATIONS OF SIMILAR SOUNDPROOFING IN COMPARABLE SITUATIONS.

B. MANUFACTURER SHALL COMPLY WITH NFPA 502, LATEST EDITION, AND ALL OTHER REFERENCED CODES AND STANDARDS COVERING THE DESIGN OF VENTILATION SOUNDPROOFING WITH ASSEMBLY.

C. PRIOR TO INSTALLATION, PROVIDE CERTIFIED TEST REPORTS OF SOUNDPROOFING FOR REVIEW. TESTING SHALL BE CONDUCTED IN ACCORDANCE WITH ASTM C423.

1.05 COORDINATION

A. COORDINATE SIZE AND LOCATION OF STRUCTURAL-STEEL SUPPORT MEMBERS.

PART 2 - PRODUCTS

2.01 SOUNDPROOFING - DESIGN REQUIREMENTS

A. THE SOUNDPROOFING SHALL BE SELECTED AND DESIGNED TO PERMIT OPERATION FOR A MINIMUM OF ONE HOUR WITHOUT STRUCTURAL FAILURE WITH AN AIR STREAM TEMPERATURE OF AT LEAST 482 °F.

B. SOUNDPROOFING MATERIAL SHALL BE INERT, VERMIN-PROOF, AND RESISTANT TO HIGH HUMIDITY CONDITIONS.

C. SOUNDPROOFING MATERIAL SHALL NOT IGNITE OR SUPPORT COMBUSTION IN A THERMAL ENVIRONMENT OF 482 °F FOR ONE HOUR. COMBUSTION RATING OF THE FILLER MATERIAL, WHEN TESTED IN ACCORDANCE WITH ASTM E84-03B, SHALL NOT BE GREATER THAN THE FOLLOWING:

1. FLAME SPREAD CLASSIFICATION: 25

2. SMOKE-DEVELOPED RATING: 50

D. SOUNDPROOFING SHALL BE CORROSION RESISTANT AND CONFORM TO ASTM C 665.

E. SOUNDPROOFING SHALL BE MINIMUM 2 INCHES THICK.

F. SOUNDPROOFING ACOUSTICAL PERFORMANCE SHALL BE AS SCHEDULED.

G. SOUNDPROOFING SHALL BE INORGANIC MINERAL OR GLASS FIBER OF A DENSITY SUFFICIENT TO OBTAIN THE REQUIRED ACOUSTIC PERFORMANCE.

H. AERODYNAMIC AND ACOUSTIC TESTING SHALL CONFORM TO ASTM C 423.

2.02 MATERIALS

A. BOLTS, NUTS, SPACERS, AND POSITIVE LOCK WASHERS: BOLTS AND STUDS, NUTS, SPACERS AND WASHERS SHALL CONFORM TO ASTM A 307, GRADE A, AND ASTM A 449, A 563, AND F 436, AS APPLICABLE. BOLTS AND STUDS, NUTS, SPACERS AND POSITIVE LOCK WASHERS SHALL BE HOT-DIP GALVANIZED IN ACCORDANCE WITH ASTM A 153.

2.03 CHANNEL STRUT

A. CHANNEL STRUTS SHALL BE HOT-DIPPED GALVANIZED AND COMPLY WITH ASTM A653 AND HAVING G90 COATING DESIGNATION.

B. CHANNEL STRUTS SHALL BE 1.5/8" X 1.5/8" 12 GAUGE.

C. PRODUCTS AND THEIR MANUFACTURERS OF THE CHANNEL STRUT ARE:

1. P1000 – UNISTRUT, 2308 CLEMENTINE TRAIL, CLERMONT, FL 34714.

2. FS12158-HD - FLORIDA STRUT, LLC, 6100 SE 78TH ST, OCALA, FL 34472.

3. A1200 10HDG – THOMAS & BETTS CORP., 8155 T AND B BLVD, MEMPHIS, TN 38125

4. OR APPROVED EQUAL.

PART 3 - EXECUTION

3.01 APPLICATION AND INSTALLATION

A. THE CONTRACTOR SHALL ARRANGE FOR SECURE STORAGE OF THE MATERIALS AT THE PROJECT SITE. ALL MATERIALS SHALL BE STORED IN A MANNER THAT WILL KEEP THEM DRY, PROTECT THEM FROM REMOVAL AND DAMAGE PRIOR TO THEIR INSTALLATION.

B. THE CONTRACTOR SHALL FOLLOW AND COMPLY WITH THE MANUFACTURER'S INSTALLATION INSTRUCTIONS FOR THE INSTALLATION OF ALL EQUIPMENT.

DESIGN AGENCY
HATCH MOTT MacDONALD
18013 CLEVELAND PKWY.
SUITE 200
CLEVELAND, OH 44135

DESIGNED HWW | DRAWN MFW | REVIEWED DGN | DATE 08/07/14 | CHECKED NAH | REVISED HWW | STRUCTURE FILE NUMBER 3106578

GENERAL NOTES SOUNDPROOFING SHEET 1 OF 2

BRIDGE NO. HAM-71-0134
I-71 LYTLE TUNNEL UNDER LYTLE PARK

HAM-71-01.34
PID No. 87268

c:\pwworking\hmm\externo\tyn61470\dms727888\071_0134CMN045.dgn 10/25/2014 12:20:54 PM TYN61470

PART 4 - PAYMENT

4.01 PAYMENT

A. PAYMENT IS FULL COMPENSATION FOR ALL LABOR, MATERIAL, AND EQUIPEMNT REQUIRED TO INSTALL THE SOUNDPROOFING AS DESCRIBED AND TO THE SATISFACTION OF THE ENGINEER.

B. PAYMENT FOR ACCEPTED QUANTITIES SHALL BE AT CONTRACT PRICES AS FOLLOWS:

ITEM	UNIT	DESCRIPTION
530	SF	SPECIAL - STRUCTURE, MISC.: SOUNDPROOFING FOR WALLS PAYMENT FOR SPECIAL - STRUCTURE, MISC.: SOUNDPROOFING FOR WALLS IS FULL COMPENSATION FOR ALL LABOR, MATERIAL, AND EQUIPMENT NECESSARY TO COMPLETE THE WORK AND INCLUDES THE INSTALLATION OF SOUNDPROOFING TO THE WALLS OF THE FAN PLENUM AS SHOWN IN THE PLANS AND HEREIN SPECIFIED.

ITEM	UNIT	DESCRIPTION
530	SF	SPECIAL - STRUCTURE, MISC.: SOUNDPROOFING FOR CEILING PAYMENT FOR SPECIAL - STRUCTURE, MISC.: SOUNDPROOFING FOR CEILING IS FULL COMPENSATION FOR ALL LABOR, MATERIAL, AND EQUIPMENT NECESSARY TO COMPLETE THE WORK AND INCLUDES THE INSTALLATION OF SOUNDPROOFING TO THE CEILING OF THE FAN PLENUM AS SHOWN IN THE PLANS AND HEREIN SPECIFIED.

ITEM	UNIT	DESCRIPTION
530	FT	SPECIAL - STRUCTURE, MISC.: P1000 GALVANIZED UNISTRUT WALL MOUNTED PAYMENT FOR SPECIAL - STRUCTURE, MISC.: P1000 GALVANIZED UNISTRUT WALL MOUNTED IS FULL COMPENSATION FOR ALL LABOR, MATERIAL, AND EQUIPMENT NECESSARY TO COMPLETE THE WORK AND INCLUDES THE INSTALLATION OF GALVANIZED UNISTRUTS TO THE WALLS OF THE FAN PLENUM AS SHOWN IN THE PLANS AND HEREIN SPECIFIED.

ITEM	UNIT	DESCRIPTION
530	FT	SPECIAL - STRUCTURE, MISC.: P1000 GALVANIZED UNISTRUT CEILING MOUNTED PAYMENT FOR SPECIAL - STRUCTURE, MISC.: P1000 GALVANIZED UNISTRUT CEILING MOUNTED IS FULL COMPENSATION FOR ALL LABOR, MATERIAL, AND EQUIPMENT NECESSARY TO COMPLETE THE WORK AND INCLUDES THE INSTALLATION OF GALVANIZED UNISTRUTS TO THE CEILING OF THE FAN PLENUM AS SHOWN IN THE PLANS AND HEREIN SPECIFIED.

ITEM	UNIT	DESCRIPTION
530	SF	SPECIAL - STRUCTURE, MISC.: 1"X1" 14 GAUGE GALVANIZED WELDED WIRE MESH PAYMENT FOR SPECIAL - STRUCTURE, MISC.: 1"X1" 14 GAUGE GALVANIZED WELDED WIRE MESH IS FULL COMPENSATION FOR ALL LABOR, MATERIAL, AND EQUIPMENT NECESSARY TO COMPLETE THE WORK AND INCLUDES THE INSTALLATION OF WELDED WIRE MESH TO THE WALLS AND CEILING OF THE FAN PLENUM AS SHOWN IN THE PLANS AND HEREIN SPECIFIED.

c:\pwworking\hmm\external\tyn61470\dms72788\071_0134CWN046.dgn 10/25/2014 12:22:36 PM TYN61470

DESIGN AGENCY
HATCH MOTT MacDONALD
18013 CLEVELAND PKWY.
SUITE 200
CLEVELAND, OH 44135

DESIGNED	DRAWN	REVIEWED	DATE
HWW	MFW	DGN	08/07/14
CHECKED	REVISED	STRUCTURE FILE NUMBER	
NAH	HWW	3106578	

GENERAL NOTES SOUNDPROOFING SHEET 2 OF 2

BRIDGE NO. HAM-71-0134
I-71 LYTLE TUNNEL UNDER LYTLE PARK

HAM-71-01.34
PID No. 87268

ITEM SPECIAL – MISC.: FAN DUCTWORK TRANSITIONS

PART 1 - GENERAL

1.01 SUMMARY

A. THIS SECTION INCLUDES METAL DUCTS FOR SUPPLY, AND EXHAUST AIR-DISTRIBUTION SYSTEMS IN PRESSURE CLASSES FROM MINUS 10 TO PLUS 10-INCH WG. METAL DUCTS INCLUDE THE FOLLOWING:

1. FAN DUCTWORK TRANSITIONS

1.02 SUBMITTALS

A. ALL SUBMITTALS SHALL CONTAIN THE FOLLOWING INFORMATION ON EACH PAGE:

1. GENERAL:

(1) MANUFACTURER NAME

(2) PROJECT TITLE

(3) PAGINATION

(4) REVISION NUMBER

(5) SUBMITTAL DATE

B. MANUFACTURER'S QUALIFICATIONS:

1. MANUFACTURER'S QUALITY ASSURANCE PROGRAM.

2. SUBMIT A COMPLETE LIST OF PROJECTS WHICH HAVE BEEN INSTALLED IN THE PAST 10-YEARS. THE LIST SHALL ONLY CONTAIN PROJECTS WITH SIMILAR DAMPERS FOR HIGHWAY TUNNEL OR TRANSIT PROJECTS WITH HIGH TEMPERATURE REQUIREMENTS. THE LIST SHALL INCLUDE:

(1) NAME OF CLIENT OR OWNER

(2) CONTRACT NUMBER

(3) INSTALLATION AND ACCEPTANCE DATES

C. MANUFACTURER SHALL SUBMIT A CERTIFICATE OF COMPLIANCE STATING THAT THE EQUIPMENT FURNISHED UNDER THIS CONTRACT MEETS THE CONTRACT REQUIREMENTS.

D. SHOP DRAWINGS:

(1) FABRICATION, ASSEMBLY, AND INSTALLATION, INCLUDING PLANS, ELEVATIONS, SECTIONS, COMPONENTS, AND ATTACHMENTS TO OTHER WORK.

(2) DUCT LAYOUT INDICATING SIZES AND PRESSURE CLASSES.

(3) ELEVATIONS OF TOP AND BOTTOM OF DUCTS.

(4) FITTINGS.

(5) REINFORCEMENT AND SPACING.

(6) SEAM AND JOINT CONSTRUCTION.

(7) EQUIPMENT INSTALLATION BASED ON EQUIPMENT BEING USED ON PROJECT.

(8) DUCT ACCESSORIES, INCLUDING ACCESS DOORS AND PANELS.

(9) HANGERS AND SUPPORTS, INCLUDING METHODS FOR DUCT AND BUILDING ATTACHMENT, VIBRATION ISOLATION, AND SEISMIC RESTRAINTS.

E. WELDING CERTIFICATES.

F. FIELD QUALITY-CONTROL TEST REPORTS.

G. CHANGES TO THE LAYOUT OR CONFIGURATIONS OF THE DUCTWORK SYSTEM MUST BE SPECIFICALLY APPROVED IN WRITING BY THE ENGINEER. ACCOMPANY REQUESTS FOR LAYOUT MODIFICATIONS WITH CALCULATIONS SHOWING THAT PROPOSED LAYOUT WILL PROVIDE ORIGINAL DESIGN RESULTS WITHOUT INCREASING SYSTEM TOTAL PRESSURE.

1.03 REFERENCES

A. ASTM INTERNATIONAL (ASTM):

1. A36: STRUCTURAL STEEL

2. A123-89A: HOT DIP GALVANIZING OF IRREGULARLY SHAPED ARTICLES

3. A194: CARBON AND ALLOY STEEL NUTS FOR BOLTS FOR HIGH-PRESSURE OR HIGH-TEMPERATURE SERVICE, OR BOTH

4. A572: STRUCTURAL PLATE

5. A653: SPECIFICATION FOR STEEL SHEET, ZINC-COATED (HOT-GALVANIZED) BY THE HOT-DIP PROCESS

B. AMERICAN WELDING SOCIETY (AWS):

1. D1.1: STRUCTURAL WELDING CODE - STEEL

2. D1.3: STRUCTURAL WELDING CODE – SHEET STEEL

C. NATIONAL FIRE PROTECTION ASSOCIATION (NFPA):

1. 502: STANDARD FOR ROAD TUNNELS, BRIDGES AND OTHER LIMITED ACCESS HIGHWAYS

2. 90A: "INSTALLATION OF AIR CONDITIONING AND VENTILATING SYSTEMS."

3. NFPA 90B: "INSTALLATION OF WARM AIR HEATING AND AIR CONDITIONING SYSTEMS."

D. THE SOCIETY FOR PROTECTIVE COATINGS (SSPC), STEEL STRUCTURES PAINTING MANUAL, LATEST EDITION.

1.04 QUALITY ASSURANCE

A. COMPLY WITH NFPA 502 2014 EDITION, "STANDARD FOR ROAD TUNNELS, BRIDGES, AND OTHER LIMITED ACCESS HIGHWAYS".

B. COMPLY WITH NFPA 90A, "INSTALLATION OF AIR CONDITIONING AND VENTILATING SYSTEMS."

C. COMPLY WITH NFPA 90B, "INSTALLATION OF WARM AIR HEATING AND AIR CONDITIONING SYSTEMS."

D. WELDING:

1. THE SHIELDED METAL ARC PROCESS SHALL BE USED ON THIS PROJECT IN ACCORDANCE WITH THE REQUIREMENTS OF AWS D1.1 UNLESS APPROVAL FROM THE ENGINEER IS OBTAINED.

2. WELDERS WORKING ON THIS PROJECT SHALL BE QUALIFIED IN ACCORDANCE WITH THE REQUIREMENTS OF AWS D1.1.

PART 2 - PRODUCTS

2.01 SHEET METAL MATERIALS

A. COMPLY WITH SMACNA'S "HVAC DUCT CONSTRUCTION STANDARDS--METAL AND FLEXIBLE" FOR ACCEPTABLE MATERIALS, MATERIAL THICKNESSES, AND DUCT CONSTRUCTION METHODS, UNLESS OTHERWISE INDICATED. SHEET METAL MATERIALS SHALL BE FREE OF PITTING, SEAM MARKS, ROLLER MARKS, STAINS, DISCOLORATIONS, AND OTHER IMPERFECTIONS.

B. GALVANIZED SHEET STEEL: LOCK-FORMING QUALITY; COMPLYING WITH ASTM A653 AND HAVING G90 COATING DESIGNATION; DUCTS SHALL HAVE MILL-PHOSPHATIZED FINISH FOR SURFACES EXPOSED TO VIEW

C. CARBON-STEEL SHEETS: ASTM A366, COLD-ROLLED SHEETS; COMMERCIAL QUALITY; WITH OILED, MATTE FINISH FOR EXPOSED DUCTS.

D. REINFORCEMENT SHAPES AND PLATES: GALVANIZED-STEEL REINFORCEMENT WHERE INSTALLED ON GALVANIZED SHEET METAL DUCTS.

E. TIE RODS: GALVANIZED STEEL, 1/4-INCH MINIMUM DIAMETER FOR LENGTHS 36 INCHES OR LESS; 3/8-INCH MINIMUM DIAMETER FOR LENGTHS LONGER THAN 36 INCHES.

2.02 SEALANT MATERIALS

A. JOINT AND SEAM SEALANTS, GENERAL: THE TERM "SEALANT" IS NOT LIMITED TO MATERIALS OF ADHESIVE OR MASTIC NATURE BUT INCLUDES TAPES AND COMBINATIONS OF OPEN-WEAVE FABRIC STRIPS AND MASTICS. SEALANT MATERIALS SHALL CONFORM TO NFPA 502 REQIREMENTS.

B. FLANGED JOINT MASTIC: ONE-PART, ACID-CURING, SILICONE, ELASTOMERIC JOINT SEALANT COMPLYING WITH ASTM C920, TYPE S, GRADE NS, CLASS 25, USE O.

C. FLANGE GASKETS: BUTYL RUBBER OR EPDM POLYMER WITH POLYISOBUTYLENE PLASTICIZER.

2.03 FAN DUCTWORK TRANSITIONS

A. FABRICATE DUCTWORK TRANSITIONS OF GALVANIZED STEEL NOT LESS THAN 0.158 INCH THICK, HAVING COMPANION FLANGES ROLLED INTEGRALLY OR CONTINUOUSLY WELDED FOR CONNECTION TO SOUND ATTENUATOR ASSEMBLY. GALVANIZED STEEL TO CONFORM TO ASTM A653, COATING DESIGNATION TO BE G-90, APPLIED TO ALL SURFACES.

B. THE TRANSITIONS SHALL BE MANUFACTURED AND TAKEN TO SITE AS SUB-ASSEMBLIES, TO EASE HANDLING AND ACCESS TO THE MECHANICAL ROOMS. THE TRANSITIONS SHALL BE HORIZONTALLY SPLIT, WITH BOLTED AND GASKETED JOINTS, TO FACILITATE FIELD INSTALLATION. THE CONTRACTOR SHALL SUBMIT THE PROPOSALS FOR SUB-DIVISION TO THE ENGINEER FOR APPROVAL BEFORE MANUFACTURE COMMENCES. EACH SECTION SHALL BE FABRICATED AND ASSEMBLED, FLANGED, GASKETED AND BOLTED TOGETHER TO FORM AN AIRTIGHT SEAL. CONTINUOUSLY WELD COMPANION FLANGES AND REINFORCING ANGLES TO EACH DUCT SECTION. TERMINATING ENDS OF REINFORCING ANGLES TO BE ROUNDED AND BEVELED.

C. STEEL FOR DUCTWORK REINFORCEMENT AND SECTION CONNECTION FLANGES SHALL BE STRUCTURAL ANGLES CONFORMING TO ASTM

c:\pwworking\hmm\external\tyn61470\dms72788\071_0134CMN036.dgn 10/24/2014 11:09:57 AM TYN61470

DESIGN AGENCY
HATCH MOTT MacDONALD
18013 CLEVELAND PKWY.
SUITE 200
CLEVELAND, OH 44135

DESIGNED	DRAWN	REVIEWED	DATE	STRUCTURE FILE NUMBER
HWW	CMN	DGN	08/07/14	3106578
CHECKED	REVISED			
NAH	HWW			

GENERAL NOTES TVS METAL DUCTS SHEET 1 OF 2

BRIDGE NO. HAM-71-0134
I-71 LYTLE TUNNEL UNDER LYTLE PARK

HAM-71-01.34
PID No. 87268

A36 AND A572, AND HOT DIPPED GALVANIZED IN ACCORDANCE WITH ASTM A123-89A.

D. FLANGES SHALL HAVE DRILLED HOLES EQUALLY SPACED NOT MORE THAN 6 INCH ON CENTERS TO PERMIT BOLTING TO ADJACENT COMPONENTS. ENSURE HOLES IN FLANGES MATCH THE HOLES IN SOUND ATTENUATOR FLANGES.

E. ACCESS DOORS SHALL BE PROVIDED ON BOTH FAN DUCTWORK TRANSITIONS. ACCESS DOORS SHALL BE LOCATED ON THE SIDE OF THE FAN THAT IS ACCESSIBLE TO MAINTENANCE PERSONNEL. LOCATE ACCESS DOOR ON LOWER HALF OF THE SPLIT TRANSITION.

F. ACCESS DOORS SHALL BE OF STEEL CONSTRUCTION AND GASKETED. ACCESS DOOR SHALL HAVE MINIMUM DIMENSIONS OF 2.5 FEET WIDE BY 3.5 FEET HIGH, VERTICAL HINGE ON ONE SIDE, MINIMUM OF TWO HEAVY DUTY LEVER DOOR HANDLES, COMPLETE WITH HEAVY DUTY SAFETY CHAIN AND LATCH. A MEANS OF PAD LOCKING THE DOOR IN THE CLOSED POSITION SHALL BE PROVIDED.

G. EACH TRANSITION SHALL BE PROVIDED WITH A 1 INCH CAPPED PIPE NIPPLE INSTRUMENT PORT.

PART 3 - EXECUTION

3.01 DUCT APPLICATIONS AND INSTALLATION

A. STATIC-PRESSURE CLASSES: UNLESS OTHERWISE INDICATED, CONSTRUCT DUCTS ACCORDING TO THE FOLLOWING:

1. EXHAUST DUCTS (NEGATIVE PRESSURE): 12 INCH WG.
2. SUPPLY DUCTS (POSITIVE PRESSURE): 12 INCH WG.

B. ALL DUCTS SHALL BE GALVANIZED STEEL.

C. CONSTRUCT AND INSTALL DUCTS ACCORDING TO SMACNA'S "HVAC DUCT CONSTRUCTION STANDARDS--METAL AND FLEXIBLE," UNLESS OTHERWISE INDICATED.

D. INSTALL DUCTS WITH FEWEST POSSIBLE JOINTS.

E. INSTALL FABRICATED FITTINGS FOR CHANGES IN DIRECTIONS, SIZE, AND SHAPE AND FOR CONNECTIONS.

F. INSTALL COUPLINGS TIGHT TO DUCT WALL SURFACE WITH A MINIMUM OF PROJECTIONS INTO DUCT. SECURE COUPLINGS WITH SHEET METAL SCREWS. INSTALL SCREWS AT INTERVALS OF 12 INCHES, WITH A MINIMUM OF 3 SCREWS IN EACH COUPLING.

G. SEAL ALL JOINTS AND SEAMS. APPLY SEALANT TO MALE END CONNECTORS BEFORE INSERTION, AND AFTERWARD TO COVER ENTIRE JOINT AND SHEET METAL SCREWS.

H. NON-FIRE-RATED PARTITION PENETRATIONS: WHERE DUCTS PASS THROUGH INTERIOR PARTITIONS AND EXTERIOR WALLS AND ARE EXPOSED TO VIEW, CONCEAL SPACES BETWEEN CONSTRUCTION OPENINGS AND DUCTS OR DUCT INSULATION WITH SHEET METAL FLANGES OF SAME METAL THICKNESS AS DUCTS. OVERLAP OPENINGS ON 4 SIDES BY AT LEAST 1-1/2 INCHES.

I. INSTALL DUCTS WITH HANGERS AND BRACES DESIGNED TO WITHSTAND, WITHOUT DAMAGE TO EQUIPMENT, SEISMIC FORCE REQUIRED BY APPLICABLE BUILDING CODES. REFER TO SMACNA'S "SEISMIC RESTRAINT MANUAL: GUIDELINES FOR MECHANICAL SYSTEMS."

J. PROTECT DUCT INTERIORS FROM THE ELEMENTS AND FOREIGN MATERIALS UNTIL BUILDING IS ENCLOSED.

3.02 SEAM AND JOINT SEALING

A. SEAL DUCT SEAMS AND JOINTS ACCORDING TO SMACNA'S "HVAC DUCT CONSTRUCTION STANDARDS--METAL AND FLEXIBLE" FOR DUCT PRESSURE CLASS INDICATED. ALL DUCTS SHALL BE SEAL CLASS A.

B. SEALING SHALL COMPLY WITH REQUIREMENTS OF NFPA 502.

3.03 CLEANING NEW SYSTEMS

A. USE SERVICE OPENINGS, AS REQUIRED, FOR PHYSICAL AND MECHANICAL ENTRY AND FOR INSPECTION.

1. CREATE OTHER OPENINGS TO COMPLY WITH DUCT STANDARDS.

B. VENT VACUUMING SYSTEM TO THE OUTSIDE. INCLUDE FILTRATION TO CONTAIN DEBRIS REMOVED FROM HVAC SYSTEMS, AND LOCATE EXHAUST DOWN WIND AND AWAY FROM AIR INTAKES AND OTHER POINTS OF ENTRY INTO BUILDING.

C. CLEAN THE FOLLOWING METAL DUCT SYSTEMS BY REMOVING SURFACE CONTAMINANTS AND DEPOSITS:

1. EXHAUST FANS INCLUDING FAN HOUSINGS, PLENUMS (EXCEPT CEILING SUPPLY AND RETURN PLENUMS), SCROLLS, BLADES OR VANES, SHAFTS, BAFFLES, DAMPERS, AND DRIVE ASSEMBLIES.

D. MECHANICAL CLEANING METHODOLOGY:

1. CLEAN METAL DUCT SYSTEMS USING MECHANICAL CLEANING METHODS THAT EXTRACT CONTAMINANTS FROM WITHIN DUCT SYSTEMS AND REMOVE CONTAMINANTS FROM BUILDING.
2. USE VACUUM-COLLECTION DEVICES THAT ARE OPERATED CONTINUOUSLY DURING CLEANING. CONNECT VACUUM DEVICE TO DOWNSTREAM END OF DUCT SECTIONS SO AREAS BEING CLEANED ARE UNDER NEGATIVE PRESSURE.
3. USE MECHANICAL AGITATION TO DISLODGE DEBRIS ADHERED TO INTERIOR DUCT SURFACES WITHOUT DAMAGING INTEGRITY OF METAL DUCTS, DUCT LINER, OR DUCT ACCESSORIES.

E. CLEANLINESS VERIFICATION:

1. VISUALLY INSPECT METAL DUCTS FOR CONTAMINANTS.
2. WHERE CONTAMINANTS ARE DISCOVERED, RE-CLEAN AND REINSPECT DUCTS.

PART 4 - CONTRACTOR QUALITY CONTROL

4.01 FIELD QUALITY CONTROL

A. THE FOLLOWING DESCRIBES THE MINIMUM INSPECTION AND TESTING REQUIRED IN THE CONTRACTOR'S QUALITY CONTROL (CQC) PLAN AND PROGRAM FOR THE WORK OF THIS SECTION AND IS FOR CQC ONLY. THE IMPLEMENTATION OF THE CONTRACTOR QUALITY CONTROL PROGRAM DOES NOT RELIEVE THE CONTRACTOR FROM THE RESPONSIBILITY TO PROVIDE THE WORK IN ACCORDANCE WITH THE CONTRACT DOCUMENTS, APPLICABLE CODES, REGULATIONS, AND GOVERNING AUTHORITIES. THE CQC PLAN AND PROGRAM SHALL INCLUDE, BUT NOT BE LIMITED TO, THE FOLLOWING TESTING AND INSPECTION ELEMENTS. THESE ELEMENTS ARE PROVIDED ONLY AS A MINIMUM STARTING POINT FOR THE CONTRACTOR TO USE TO GENERATE HIS COMPLETE CQC PROGRAM.

(1) ALL TESTING AS NOTED WITH IN THIS SECTION THAT IS APPLICABLE TO THE WORK BEING PERFORMED.

PART 5 - MEASUREMENT AND PAYMENT

5.01 MEASUREMENT

A. ALL OF THE WORK OF THIS SECTION SHALL BE MEASURED AS LUMP SUM

5.02 PAYMENT

A. PAYMENT FOR ITEM SPECIAL – MISC.: FAN DUCTWORK TRANSITIONS SHALL BE MADE AT THE LUMP SUM CONTRACT PRICE IN THE PAYMENT SCHEDULE, INCLUDING ALL WORK, LABOR, EQUIPMENT AND MATERIALS NECESSARY TO COMPLETE THIS ITEM OF WORK DESCRIBED AND TO THE SATISFACTION OF THE ENGINEER.

c:\pwworking\hmm\external\tyn61470\dms72788\071_0134CMN037.dgn 10/24/2014 11:10:08 AM TYN61470

DESIGN AGENCY
HATCH MOTT MacDONALD
18013 CLEVELAND PKWY.
SUITE 200
CLEVELAND, OH 44135

DESIGNED	DRAWN	REVIEWED	DATE
HWW	CMN	DGN	08/07/14
CHECKED	REVISED	STRUCTURE FILE NUMBER	
NAH	HWW	3106578	

GENERAL NOTES TVS METAL DUCTS SHEET 2 OF 2

BRIDGE NO. HAM-71-0134
I-71 LYTLE TUNNEL UNDER LYTLE PARK

HAM-71-01.34
PID No. 87268

ITEM 690 – SPECIAL – MISC.: PLUMBING SYSTEM

DESCRIPTION:

THIS WORK SHALL INCLUDE FURNISHING AND INSTALLING PLUMBING SYSTEM(S) AS SHOWN IN THE PLANS AND HEREIN SPECIFIED, AND AT THE DIRECTION OF THE ENGINEER. INCLUDED ARE INCIDENTAL LAYOUT, ENGINEERING, AND DESIGN AS REQUIRED TO COMPLETE THE WORK.

MAKE NECESSARY SUBMITTALS PER SECTION 501 OF THE CONSTRUCTION AND MATERIALS SPECIFICATIONS.

PART 1 - GENERAL

1.01 SCOPE OF WORK

A. FURNISH AND INSTALL THE FOLLOWING ITEMS REQUIRED TO COMPLETE THE WORK OF THIS SECTION, AS SHOWN ON THE CONTRACT DRAWINGS AND SPECIFIED HEREIN:

1. STORM WATER CONDUCTOR PIPING.
2. AREA DRAIN.
3. TESTING.
4. IDENTIFICATION.
5. HANGERS, INSERTS, AND SUPPORTS.
6. RECORD DRAWINGS.
7. SHOP DRAWING SUBMITTALS FOR ALL SYSTEMS.
8. PERFORMANCE REQUIREMENTS.

B. CAREFULLY EXAMINE ALL OF THE CONTRACT DOCUMENTS, CRITERIA SHEETS AND ALL OTHER SECTIONS OF THE SPECIFICATIONS FOR REQUIREMENTS WHICH AFFECT WORK UNDER THIS SECTION, WHETHER OR NOT SUCH WORK IS SPECIFICALLY MENTIONED IN THIS SECTION.

C. THE WORK UNDER THIS CONTRACT SHALL INCLUDE ALL LABOR, MATERIALS, TOOLS, EQUIPMENT, TRANSPORTATION, INSURANCE, TEMPORARY PROTECTION, SUPERVISION AND INCIDENTAL ITEMS ESSENTIAL FOR PROPER INSTALLATION AND OPERATION, EVEN THOUGH NOT SPECIFICALLY MENTIONED OR INDICATED ON THE DRAWINGS, BUT WHICH ARE USUALLY PROVIDED OR ARE ESSENTIAL FOR PROPER INSTALLATION AND OPERATIONOF ALL SYSTEMS AS INDICATED ON THE DRAWINGS AND SPECIFIED HEREIN.

D. CONTRACTOR FOR THE WORK IN HIS SCOPE OF WORK SHALL GIVE ALL NECESSARY NOTICES, OBTAIN ALL PERMITS, PAY ALL GOVERNMENTAL TAXES, FEES AND OTHER COSTS IN CONNECTION WITH HIS WORK; FILE FOR NECESSARY APPROVALS WITH THE JURISDICTION UNDER WHICH THE WORK IS TO BE PERFORMED. CONTRACTOR SHALL OBTAIN ALL REQUIRED CERTIFICATES OF INSPECTION FOR HIS RESPECTIVE WORK AND DELIVER SAME TO THE ENGINEER BEFORE REQUEST FOR ACCEPTANCE OF HIS PORTION OF WORK IS MADE AND BEFORE FINAL PAYMENT.

1.02 REFERENCES

A. ALL MATERIALS AND WORKMANSHIP SHALL COMPLY WITH THE LATEST EDITION OF ALL APPLICABLE CODES, SPECIFICATIONS, LOCAL AND STATE ORDINANCES, INDUSTRY STANDARDS AND UTILITY COMPANY REGULATIONS.

B. IN CASE OF DIFFERENCE BETWEEN BUILDING CODES, STATE LAWS, LOCAL ORDINANCES, INDUSTRY STANDARDS AND UTILITY COMPANY REGULATIONS AND THE CONTRACT DOCUMENTS, THE CONTRACTOR SHALL PROMPTLY NOTIFY THE ENGINEER IN WRITING OF ANY SUCH DIFFERENCE.

C. IN CASE OF CONFLICT BETWEEN THE CONTRACT DOCUMENTS AND THE REQUIREMENTS OF ANY CODE OR AUTHORITIES HAVING JURISDICTION, THE MOST STRINGENT REQUIREMENTS OF THE AFOREMENTIONED SHALL GOVERN.

D. APPLICABLE CODES AND STANDARDS SHALL INCLUDE ALL STATE LAWS, LOCAL ORDINANCES, UTILITY COMPANY REGULATIONS, AND THE APPLICABLE REQUIREMENTS OF THE LATEST ADOPTED EDITION OF THE FOLLOWING CODES AND STANDARDS, WITHOUT LIMITING CERTIFIED FAN PERFORMANCE CURVES FOR BOTH FORWARD AND REVERSE DIRECTIONS SUCH THAT PLOTS CAN BE ACCURATELY READ:

1. NFPA 70: NATIONAL ELECTRICAL CODE.
2. NFPA 54: NATIONAL FUEL GAS CODE.
3. NFPA 101: LIFE SAFETY CODE.
4. ASSE: AMERICAN SOCIETY OF SANITARY ENGINEERS.
5. OCCUPATIONAL SAFETY AND HEALTH STANDARDS.
6. ENVIRONMENTAL PROTECTION AGENCY.
7. NATIONAL FIRE PROTECTION ASSOCIATION.
8. CINCINNATI DEPARTMENT OF ENVIRONMENTAL PROTECTION.
9. BUILDING OFFICIALS CODE ASSOCIATION (BOCA).
10. UNIFORM BUILDING CODE (UBC).
11. INTERNATIONAL BUILDING CODE (IBC).
12. OHIO BUILDING CODE.

E. IN THESE SPECIFICATIONS, REFERENCES MADE TO THE FOLLOWING INDUSTRY STANDARDS AND CODE BODIES ARE INTENDED TO INDICATE THE LATEST VOLUME OR PUBLICATION OF THE STANDARD. ALL EQUIPMENT, MATERIALS AND DETAILS OF INSTALLATION SHALL COMPLY WITH THE REQUIREMENTS AND LATEST REVISIONS OF THE FOLLOWING BODIES, AS APPLICABLE:

1. ANSI: AMERICAN NATIONAL STANDARDS INSTITUTE.
2. ASTM: AMERICAN SOCIETY OF TESTING MATERIALS.
3. FM: FACTORY MUTUAL.
4. ASSE: AMERICAN SOCIETY OF SANITARY ENGINEERS.
5. CS: COMMERCIAL STANDARDS, U.S. DEPARTMENT OF COMMERCE.
6. MSS: MANUFACTURER'S STANDARDIZATION SOCIETY OF THE VALVE AND FITTINGS INDUSTRY.
7. ASME: AMERICAN SOCIETY OF MECHANICAL ENGINEERING.
8. AWS: AMERICAN WELDING SOCIETY.
9. NEMA: NATIONAL ELECTRICAL MANUFACTURERS ASSOCIATION.
10. UL: UNDERWRITERS' LABORATORIES.

1.03 COORDINATION OF WORK

A. LOCATIONS OF PIPES AND EQUIPMENT, ETC. SHALL BE ADJUSTED TO ACCOMMODATE THE WORK WITH INTERFERENCES ANTICIPATED AND ENCOUNTERED. THE CONTRACTOR SHALL DETERMINE THE EXACT ROUTING AND LOCATION OF HIS SYSTEMS PRIOR TO FABRICATION OR INSTALLATION OF ANY SYSTEM COMPONENT. ACCURATE MEASUREMENTS AND COORDINATION DRAWINGS SHALL BE COMPLETED TO VERIFY DIMENSIONS AND CHARACTERISTICS OF THE VARIOUS SYSTEMS' INSTALLATIONS.

B. OFFSETS, TRANSITIONS, AND CHANGES OF DIRECTION IN ALL SYSTEMS SHALL BE MADE AS REQUIRED TO MAINTAIN PROPER HEADROOM AND PITCH OF SLOPING LINES WHETHER OR NOT INDICATED ON THE DRAWINGS.

C. THE CONTRACT DRAWINGS ARE DIAGRAMMATIC ONLY, INTENDING TO SHOW GENERAL RUNS AND LOCATIONS OF PIPING, EQUIPMENT, ETC. AND NOT NECESSARILY SHOWING ALL REQUIRED OFFSETS, DETAILS, ACCESSORIES, AND EQUIPMENT TO BE CONNECTED.

1.04 EQUIPMENT AND MATERIALS

A. MANUFACTURERS' DIRECTIONS SHALL BE FOLLOWED COMPLETELY IN THE DELIVERY, STORAGE, PROTECTION AND INSTALLATION. PROMPTLY NOTIFY THE ENGINEER IN WRITING OF ANY CONFLICT BETWEEN ANY REQUIREMENTS OF THE CONTRACT DOCUMENTS AND THE MANUFACTURER'S DIRECTIONS. OBTAIN THE ENGINEER'S WRITTEN INSTRUCTIONS BEFORE PROCEEDING WITH THE WORK. SHOULD THE CONTRACTOR PERFORM ANY WORK THAT DOES NOT COMPLY WITH THE MANUFACTURER'S DIRECTIONS OR WRITTEN INSTRUCTIONS FROM THE ENGINEER, HE SHALL BEAR ALL COSTS ARISING IN CORRECTING ANY DEFICIENCIES THAT SHOULD ARISE.

B. THE CONTRACTOR SHALL FURNISH AND INSTALL ALL EQUIPMENT, ACCESSORIES, CONNECTIONS AND INCIDENTAL ITEMS NECESSARY TO FULLY COMPLETE THE WORK UNDER HIS CONTRACT FOR USE, OCCUPANCY AND OPERATION BY THE OWNER.

1.05 PROTECTION

A. MATERIALS SUCH AS PIPES, FITTINGS, DRAINS, ETC., SHALL BE PROPERLY PROTECTED DURING CONSTRUCTION AND ALL PIPE OPENINGS SHALL BE TEMPORARILY CLOSED SO AS TO PREVENT OBSTRUCTION AND DAMAGE.

1.06 RECORD DRAWINGS/AS BUILT DRAWINGS

A. THE CONTRACTOR SHALL MAINTAIN CURRENT SET OF HIS DRAWINGS AT THE SITE ON WHICH HE SHALL ACCURATELY SHOW THE ACTUAL INSTALLATION OF ALL WORK PROVIDED INDICATING HEREON ANY VARIATION FROM THE CONTRACT DRAWINGS. CHANGES, WHETHER RESULTING FROM FORMAL CHANGE ORDERS OR OTHER INSTRUCTIONS ISSUED BY THE ENGINEER, SHALL BE RECORDED. INCLUDE CHANGES IN SIZES, LOCATION, AND DIMENSIONS OF PIPING, EQUIPMENT, FIXTURES, ETC.

B. AT THE COMPLETION OF THE JOB, THESE PRINTS SHALL BE SUBMITTED TO THE ENGINEER FOR FINAL REVIEW AND COMMENT. THE PRINTS WILL BE RETURNED WITH APPROPRIATE COMMENTS AND RECOMMENDATIONS. THESE CORRECTED PRINTS, TOGETHER WITH CORRECTED PRINTS INDICATING ALL THE REVISIONS, ADDITIONS AND DELETIONS OF WORK, SHALL FORM THE

DESIGN AGENCY
HATCH MOTT MacDONALD
18013 CLEVELAND PKWY.
SUITE 200
CLEVELAND, OH 44135

DESIGNED SCB | DRAWN CMN | REVIEWED DGN | DATE 08/08/14
CHECKED NAH | REVISED HWW | STRUCTURE FILE NUMBER 3106578

GENERAL NOTES PLUMBING SHEET 1 OF 5
BRIDGE NO. HAM-71-0134
I-71 LYTLE TUNNEL UNDER LYTLE PARK

HAM-71-01.34
PID No. 87268

c:\pwworking\hmm\external\tyn61470\dms72788\071_0134GWN030.dgn 10/24/2014 11:10:18 AM TYN61470

BASIS FOR PREPARING A SET OF AS BUILT RECORD DRAWINGS.

C. THE CONTRACTOR SHALL BE RESPONSIBLE FOR GENERATING AS BUILT RECORD DRAWINGS UTILIZING CAD BASED DOCUMENTS IN MICROSTATION (LATEST VERSION OF ODOT CADD STANDARDS MANUAL) FORMAT. A BOUND SET OF PLANS, AS WELL AS THE COMPUTER FILES, ON DISK, SHALL BE TURNED OVER TO THE ENGINEER FOR REVIEW. AFTER ACCEPTANCE OF THE AS BUILT DOCUMENTS BY THE ENGINEER, THE CONTRACTOR SHALL MAKE ANY CORRECTIONS NECESSARY TO THE AS BUILT DOCUMENTS FOR DISTRIBUTION TO THE ENGINEER.

D. IT SHALL BE THE CONTRACTOR'S RESPONSIBILITY TO UPDATE THE AS BUILT DOCUMENTS TO INCLUDE ALL CHANGES BROUGHT FORTH TO THE PROJECT RESULTING FROM BULLETINS, REQUEST FOR INFORMATION (RFI'S), CHANGE ORDERS, ETC.

E. INCLUDED WITH THE ABOVE SHALL BE A COMPLETE DRAWING LIST.

F. THE AS BUILT MICROSTATION (LATEST VERSION OF ODOT CADD STANDARDS) DOCUMENTS REQUIRED SHALL BE IN ADDITION TO OTHER REQUIREMENTS STATED ELSEWHERE.

1.07 SHOP DRAWING SUBMITTALS

A. PREPARE AND SUBMIT SHOP DRAWINGS IN ACCORDANCE WITH THE REQUIREMENTS HEREINSPECIFIED, ALONG WITH THE SHOP DRAWINGS, PRODUCT DATA AND SAMPLES IN THE MANNER DESCRIBED THEREIN, MODIFIED AS NOTED HEREINAFTER.

B. ALL SHOP DRAWINGS SHALL HAVE CLEARLY MARKED THE APPROPRIATE SPECIFICATION NUMBER OF DRAWING DESIGNATION, FOR IDENTIFICATION OF THE SUBMITTAL.

C. SHOP DRAWING DATA SHALL INCLUDE, BUT NOT BE LIMITED TO, THE FOLLOWING:

D. MANUFACTURER'S MODEL AND CATALOG DATA.

E. COMPLETE CONNECTION DIAGRAMS FOR ALL TRADES.

F. DIMENSIONS, CAPACITIES, RATINGS, MATERIALS, FINISHES, ETC.

G. EACH SHOP DRAWING IS REQUIRED TO BEAR THE REVIEW STAMP OF EACH CONTRACTOR ASSOCIATED WITH INSTALLING THE EQUIPMENT AND/OR PROCESSING THE DOCUMENT.

1.08 WATERPROOFING, FLASHING AND COUNTER-FLASHING

A. ANY LEAKS DEVELOPED DUE TO CONTRACTOR'S WORK SHALL BE REPAIRED AT THE CONTRACTOR'S EXPENSE, TO ENGINEER'S SATISFACTION.

B. ALL WATER PROOFING, FLASHING AND COUNTERFLASHING WORK SHALL BE PERFORMED IN A WORKMANLIKE MANNER TO ASSURE WEATHERPROOF INSTALLATION. ANY LEAKS DEVELOPED DUE TO THIS CONTRACTOR'S WORK SHALL BE REPAIRED AT HIS EXPENSE, TO THE ENGINEER'S SATISFACTION.

C. PIPES PASSING THROUGH SLABS SHALL HAVE THE SLEEVE EXTENDED ABOVE FLOORS AS HEREINAFTER SPECIFIED TO RETAIN ANY WATER AND THE SPACE BETWEEN THE PIPE AND SLEEVE CAULKED WITH FIRE PROOF AND SMOKE PROOF MATERIAL. THE TOP SHALL BE SEALED WITH LEAD AND THE BOTTOM SHALL BE SEALED WITH MONOLASTIC CAULKING COMPOUND. THE SPACE BETWEEN THE OUTSIDE OF THE SLEEVE AND THE FLOOR SLAB SHALL BE CAULKED WATERTIGHT SUFFICIENTLY TO HOLD 2 INCHES OF STANDING WATER.

D. ALL FLASHING REQUIRED FOR PIPING PENETRATIONS SHALL BE FORMED BY A SHEET COPPER PAN.

1.09 MISCELLANEOUS IRON AND STEEL

A. ALL SUPPORTS SHALL BE CUT, ASSEMBLED, WELDED AND FINISHED BY SKILLED MECHANICS. WELDS SHALL BE GROUND SMOOTH. STANDS, BRACKETS AND FRAMEWORK SHALL BE PROPERLY SIZED AND STRONGLY CONSTRUCTED.

B. MEASUREMENTS SHALL BE TAKEN ON THE JOB AND WORKED OUT TO SUIT ADJOINING AND CONNECTING WORK. ALL WORK SHALL BE PERFORMED BY EXPERIENCED METAL WORKING MECHANICS. MEMBERS SHALL BE STRAIGHT, TRUE, AND ACCURATELY FITTED.

C. DRILLING, CUTTING AND FITTING SHALL BE DONE AS REQUIRED TO PROPERLY INSTALL THE WORK AND ACCOMMODATE THE WORK OF OTHER TRADES AS DIRECTED BY THEM.

D. MEMBERS SHALL BE GENERALLY WELDED EXCEPT THAT BOLTING MAY BE USED FOR FIELD ASSEMBLY WHERE WELDING WOULD BE IMPRACTICAL.

E. ALL SHOP AND FIELD FABRICATED IRON AND STEEL WORK SHALL BE CLEANED AND DRIED AND GIVEN A COAT OF RUST INHIBITING PAINT ON ALL SURFACES AND IN ALL OPENINGS AND CREVICES.

1.10 PIPE SLEEVES AND ESCUTCHEONS

A. WHERE PIPES PASS THROUGH ALL WALL THE PLUMBING CONTRACTOR SHALL PROVIDE AND SET INDIVIDUAL SLEEVES FOR EACH PIPE AND ALL OTHER WORK UNDER HIS CHARGE, AS NECESSARY FOR PASSAGE OF ALL PIPES. SLEEVES SHALL BE OF SUFFICIENT SIZE TO PROVIDE ½ INCH AIR SPACE AROUND THE PIPE PASSING THROUGH IT. ALL OPENINGS SHALL BE SEALED, SMOKE PROOFED AND MADE TIGHT. THE PLUMBING CONTRACTOR SHALL BE RESPONSIBLE FOR THE EXACT LOCATION OF SLEEVES PROVIDED UNDER THIS CONTRACT AND SHALL COORDINATE ALL REQUIREMENTS FOR PIPING SLEEVES.

B. ALL EXPOSED PIPING PENETRATION OF WALLS, FLOORS, AND CEILINGS SHALL BE FITTED WITH ESCUTCHEONS.

1.11 IDENTIFICATION OF MATERIALS

A. ALL EQUIPMENT USED IN THE PLUMBING SYSTEMS SHALL HAVE A PERMANENTLY ATTACHED NAMEPLATE IDENTIFYING THE MANUFACTURER, SERVICE, SIZE, SERIAL NUMBER OR MODEL NUMBER, ETC. THE NAMEPLATES SHALL BE KEPT CLEAN AND READABLE AT ALL TIMES.

B. A LEGEND SHOWING THE SERVICE AND AN ARROW INDICATING THE DIRECTION OF FLOW SHALL BE APPLIED ON EACH PIPE INSTALLED BY THE CONTRACTOR.

PART 2 - PRODUCTS

2.01 DISCLAIMERS

A. NO MATERIALS USED IN THE PLUMBING SYSTEM SHALL CONTAIN ASBESTOS.

B. PRODUCTS TO BE USED SHALL BE SPECIFICALLY APPROVED BY THE STATE OF OHIO BOARD OF STATE EXAMINERS AND PLUMBERS AND GASFITTERS FOR USE IN OHIO.

C. AT THE REQUEST OF THE ENGINEER SUBMIT DOCUMENTATION OF THIS PRODUCT APPROVAL FOR ANY AND/OR ALL PRODUCTS TO BE USED.

2.02 HANGERS AND SUPPORTS

A. ALL HANGERS, SUPPORTS, CLAMPS AND RODS SHALL BE CORROSION RESISTANT (STAINLESS STEEL OR ELECTRO-GALVANIZED). ALL HANGERS SHALL BE UL LISTED.

B. ALL PIPING SHALL BE SUPPORTED FROM THE BUILDING STRUCTURE BY MEANS OF APPROVED HANGERS AND SUPPORTS. PIPING SHALL BE SUPPORTED TO MAINTAIN REQUIRED GRADING AND SLOPING OF LINES, TO PREVENT VIBRATION AND TO SECURE PIPING IN PLACE, AND SHALL BE SO ARRANGED AS TO PROVIDE FOR EXPANSION AND CONTRACTION.

C. MAXIMUM SPACING OF HANGERS ON RUNS OF STEEL, COPPER OR BRASS PIPING SHALL BE AS FOLLOWS:

SCHEDULE -HANGER SPACING IN FEET/PIPE MATERIAL

PIPE SIZE (INCHES)	STEEL	COPPER OR BRASS
4	12	10

D. MAXIMUM SPACING ON CAST IRON PIPE SHALL BE 5' AND HANGERS SHALL BE PROVIDED AT ALL CHANGES IN DIRECTION. HANGER RODS TO SUPPORT PIPING FROM THE STRUCTURE OR SUPPLEMENTARY STEEL SHALL NOT EXCEED 4' IN TOTAL LENGTH. WHERE PIPE SUPPORT ASSEMBLIES EXCEED 4' IN TOTAL LENGTH, THE CONTRACTOR SHALL FURNISH AND INSTALL FACTORY FABRICATED CHANNELS AND ASSOCIATED ACCESSORIES AS APPROVED.

E. WHERE CODES HAVING JURISDICTION REQUIRE CLOSER SPACING, THE HANGER SPACING SHALL BE AS REQUIRED BY CODE IN LIEU OF THE DISTANCES SPECIFIED HEREIN.

F. FRICTION CLAMPS SHALL BE INSTALLED AT THE BASE OF ALL PLUMBING RISERS AND AT EACH FLOOR. FRICTION CLAMPS SHALL NOT BE SUPPORTED FROM OR REST ON FLOOR SLEEVES. CLAMPS ON CONCEALED PIPING SHALL NOT BE EXPOSED IN OCCUPIED SPACE.

G. HANGERS FOR ALL HORIZONTAL CAST IRON PIPING SHALL BE CLEVIS TYPE HANGERS. THESE HANGERS SHALL BE SIZED TO PROVIDE FOR INSULATION PROTECTORS AS HEREINBEFORE SPECIFIED.

H. HANGERS FOR UNCOVERED (UNINSULATED) COPPER PIPING SHALL BE FACTORY APPLIED PLASTIC COATED STEEL BAND OR COPPER PLATED.

I. ALL VERTICAL DROPS AND RUNOUTS SHALL BE SUPPORTED BY EXTENSION TYPE SPLIT RING TYPE HANGERS. THESE HANGERS SHALL BE PLASTIC COATED WHEN USED ON UNCOVERED COPPER TUBING. SUPPORTS ON INSULATED PIPING SHALL BE SIZED TO FIT THE OUTSIDE DIAMETER OF THE PIPE INSULATION.

J. FIELD PAINTING OR SPRAYING OF HANGERS IN LIEU OF PLASTIC COATING WILL NOT BE ACCEPTED.

K. ALL HORIZONTAL PIPING SHALL BE SUSPENDED FROM THE BUILDING BY MILD STEEL ROD CONNECTING THE PIPE HANGER

c:\pwworking\hmm\external\ty-n61470\dms-72788\071_0134CVN031.dgn 10/24/2014 11:10:28 AM TYN61470

DESIGN AGENCY
HATCH MOTT MacDONALD
18013 CLEVELAND PKWY.
SUITE 200
CLEVELAND, OH 44135

DESIGNED SCB | DRAWN CMN | REVIEWED DGN | DATE 08/08/14
CHECKED NAH | REVISED HWW | STRUCTURE FILE NUMBER 3106578

GENERAL NOTES PLUMBING SHEET 2 OF 5
BRIDGE NO. HAM-71-0134
I-71 LYTLE TUNNEL UNDER LYTLE PARK

HAM-71-01.34
PID No. 87268

TO INSERTS, BEAM CLAMPS, ANGLE BRACKETS, AND LAG SCREWS AS REQUIRED BY THE BUILDING CONSTRUCTION IN ACCORDANCE WITH THE FOLLOWING:

L. ALL HANGERS ON INSULATED LINES SHALL BE SIZED TO FIT THE OUTSIDE DIAMETER OF THE PIPE INSULATION. PROVIDE PIPE COVERING PROTECTION SADDLES AT ALL HANGERS ON THE INSULATED LINES.

M. REMOVE RUST FROM ALL FERROUS HANGER EQUIPMENT (HANGERS, RODS AND BOLTS) AND APPLY ONE COAT OF RUST INHIBITOR WHICH DOES NOT CONTAIN LEAD IMMEDIATELY AFTER ERECTION.

N. ALL PIPING INSTALLED UNDER THIS SECTION OF THE SPECIFICATION SHALL BE INDEPENDENTLY SUPPORTED FROM THE BUILDING STRUCTURE AND NOT FROM THE PIPING, DUCTWORK, OR CONDUIT OF OTHER TRADES. ALL SUPPLEMENTARY STEEL, INCLUDING FACTORY FABRICATED CHANNELS, REQUIRED TO MEET THE REQUIREMENTS SPECIFIED HEREIN, SHALL BE FURNISHED AND INSTALLED BY THE CONTRACTOR.

O. ALL SUPPLEMENTARY STEEL, INCLUDING FACTORY FABRICATED CHANNELS AND ASSOCIATED ACCESSORIES THROUGHOUT THE PROJECT FOR THIS SECTION OF THE SPECIFICATIONS BOTH SUSPENDED AND FLOOR MOUNTED SHALL BE FURNISHED AND INSTALLED BY THE CONTRACTOR AND SHALL BE SUBJECT TO THE APPROVAL OF THE ENGINEER.

P. HANGER ASSEMBLIES (HANGER, PLATES, RODS, AND SCREWS) INSTALLED FOR CHROME PLATED PIPING SHALL ALSO BE CHROME PLATED.

Q. SAFETY STRAPS SHALL BE INSTALLED WITH ALL BEAM CLAMPS.

R. THERMAL EXPANSION OF ALL PIPING SYSTEMS SHALL BE ACCOMMODATED THROUGH THE OFFSETTING OF THE PIPING SYSTEM WHERE POSSIBLE AND NOT INSTALLING LONG STRAIGHT RUNS OF IN-LINE PIPING.

S. PIPING SHALL BE SUPPORTED ON BOTH SIDES OF BUILDING EXPANSION JOINTS AND LISTED FLEXIBLE FITTINGS/FLEXIBLE CONNECTIONS USED TO ALLOW FOR THE MOVEMENT OF THE BUILDING AND STRUCTURE WITHOUT IMPACT TO THE PIPING SYSTEMS TRAVERSING THE JOINT.

T. HANGER ATTACHMENT

1. THIS SECTION IS A PERFORMANCE SPECIFICATION.
2. ALL ANCHORS SHALL BE ICC LISTED FOR THEIR USE.
3. ALL HANGERS SHALL BE SECURED BY APPROVED INSERTS OR EXPANSION SHIELDS WHEREVER POSSIBLE AND PRACTICABLE, SELF-TAPPING INSERTS/ATTACHMENTS ARE NOT ALLOWED. INSERTS AND SHIELDS SHALL BE UL LISTED. POWDER, EXPLOSIVE OR PRESSURE-DRIVEN INSERTS, OR POWDER, EXPLOSIVE OR PRESSURE-ACTUATED INSTALLATION EQUIPMENT SHALL NOT BE ALLOWED.
4. POST-INSTALLED ANCHORS SHALL BE AS MANUFACTURED BY HILTI, POWERS OR STRONGTIE. CONTACT THE MANUFACTURER FOR PRODUCT RELATED QUESTIONS.
5. ANCHOR CAPACITY USED IN DESIGN SHALL BE BASED ON THE TECHNICAL DATA PUBLISHED BY THE MANUFACTURER OR SUCH OTHER METHOD AS APPROVED BY THE ENGINEER.
6. INSTALL ANCHORS PER THE MANUFACTURER INSTRUCTIONS, AS INCLUDED IN THE ANCHOR PACKAGING, AND PER THEIR ICC LISTING.
7. THE CONTRACTOR SHALL ARRANGE AN ANCHOR MANUFACTURER'S REPRESENTATIVE

STEEL AND CAST IRON PIPE SIZE (INCHES)	ROD DIAMETER
4"-5"	5/8"

TO PROVIDE ONSITE INSTALLATION TRAINING FOR ALL OF THEIR ANCHORING PRODUCTS SPECIFIED. THE ENGINEER MUST RECEIVE DOCUMENTED CONFIRMATION THAT ALL OF THE CONTRACTOR'S PERSONNEL WHO INSTALL ANCHORS ARE TRAINED PRIOR TO THE COMMENCEMENT OF INSTALLING ANCHORS.

8. ANCHOR CAPACITY IS DEPENDENT UPON SPACING BETWEEN ADJACENT ANCHORS AND PROXIMITY OF ANCHORS TO EDGE OF CONCRETE. INSTALL ANCHORS IN ACCORDANCE WITH SPACING AND EDGE CLEARANCES COORDINATED WITH THE HANGER MANUFACTURER AND THE ENGINEER.
9. REINFORCING BARS IN THE CONCRETE STRUCTURE MAY CONFLICT WITH SPECIFIC ANCHOR LOCATIONS. REINFORCING BARS SHALL NOT BE CUT UNDER ANY CIRCUMSTANCES. THE CONTRACTOR SHALL REVIEW THE DRAWINGS AND SHALL LOCATE THE POSITION OF THE REINFORCING BARS AT THE LOCATIONS OF THE CONCRETE ANCHORS, BY HILTI FERROSCAN, GPR, X-RAY, CHIPPING OR OTHER MEANS.

U. ALL BELOW SLAB PIPING SHALL BE SUPPORTED FROM THE SLAB ABOVE WITH STAINLESS STEEL HANGERS AND HARDWARE.

2.03 DRAINAGE SPECIALTIES

A. CLEANOUTS

1. CAST IRON SUPREME CLEANOUT TEE WITH TAPERED THREADED PLUG, ROUND STAINLESS STEEL ACCESS COVER WITH SECURING SCREW.

B. DRAINS

1. GENERAL

A. AREA DRAINS AND FLOOR DRAINS (AD AND FD) SHALL BE STAINLESS STEEL AND INCLUDE ALL OPTIONS AND ACCESSORIES AS FOLLOWED OR AS REQUIRED BY THE INSTALLATION CONDITIONS. THE AREA DRAIN SHALL BE INSTALLED IN STAINLESS STEEL ENCLOSURE. THE FLOOR DRAIN SHALL BE INSTALLED IN CONCRETE SLAB.

B. INSTALLATION CONDITION TO BE ANTICIPATED INCLUDE, BUT ARE NOT NECESSARILY LIMITED TO;

(1) SQUARE OR ROUND TOPS

(2) ADJUSTABLE GRATES

(3) LIGHT DUTY, MEDIUM DUTY AND HEAVY DUTY GRATES

(4) SOLID GRATES

(5) HINGED GRATES

(6) OBLIQUE GRATES

(7) FUNNELS

(8) SOLID OR PERFORATED EXTENSIONS

(9) SEDIMENT BUCKETS

(10) UNDER DECK CLAMPS

(11) FLASHING CLAMPS

(12) INSIDE CAULK, NO-HUB OR THREADED OUTLETS

(13) VERTICAL EXPANSION JOINTS

C. DRAINS CONNECTED TO STORM SYSTEMS, WHENEVER CONNECTED BELOW THE HIGHEST DRAIN IN THE BUILDING, SHALL BE PROVIDED WITH A MEANS OF PREVENTING BACKFLOW OF WATER FROM THE UPPER LEVEL, EITHER INTEGRAL TO THE DRAINS, OR A PIPE FITTING (BACK WATER VALVE) SUITABLE FOR THE INSTALLATION CONDITIONS.

2.04 PIPE MATERIALS

A. PIPING AND FITTINGS LOCATED IN AIR PLENUMS SHALL BE SMOKE-PROOF AND NON-COMBUSTIBLE, IN COMPLIANCE WITH THE FLAME AND SMOKE SPREAD RATINGS OF ASTM E84.

B. FURNISH DUCTILE IRON PIPE CONFORMING TO ANSI/AWWA C151/A21.51 AND TO ANSI/AWWA C150/A21.50 FOR THICKNESS DESIGN. FURNISH PIPE WITH A CEMENT MORTAR LINING CONFORMING TO ANSI/AWWA C104/A21.4. FURNISH GASKETS CONFORMING TO ANSI/AWWA FOR EACH LENGTH OF PIPE AND SUITABLE FOR THE TYPE OF JOINT OF THE PIPE. SHIP GASKETS IN A SEPARATE CONTAINER.

FURNISH PUSH-ON JOINTS, MECHANICAL JOINTS, AND BOLTLESS RESTRAINED JOINTS CONFORMING TO ANSI/AWWA C111/A21.11. FOR RESTRAINED JOINTS, ENSURE THAT THE RESTRAINT IS A DESIGN APPROVED BY THE OWNER OF THE UTILITY AND PROVIDES A POSITIVE LOCK DESIGNED TO PREVENT JOINT SEPARATION. STEEL LOCKING SEGMENTS MOLDED INTO A GASKET TO GRIP THE PIPE DO NOT MEET THE REQUIREMENTS FOR THIS JOINT.

MANUFACTURE FITTINGS FOR DUCTILE IRON PIPE ACCORDING TO ANSI/AWWA C110/A21.10 OR ANSI/AWWA C153/A21.53, AND ANSI/AWWA C111/A21.11.

2.05 VIBRATION ISOLATION

A. THE WORK UNDER THIS SECTION SHALL INCLUDE THE FURNISHING AND INSTALLATION OF ALL EQUIPMENT, APPLIANCES, MATERIALS, TOOLS, LABOR AND THE PERFORMING OF ALL OPERATIONS NECESSARY FOR THE COMPLETE EXECUTION OF THE INSTALLATION OF NOISE AND VIBRATION ISOLATION DEVICES AND/OR SYSTEMS AS MAY BE SPECIFIED UNDER THE EQUIPMENT SPECIFICATIONS ELSEWHERE CONTAINED IN THIS SECTION, AS MAY BE SCHEDULED ON THE DRAWINGS AND AS SPECIFIED HEREIN, INCLUDING BUT NOT NECESSARILY LIMITED TO THE FOLLOWING:

1. ALL PIPING OVER 1 INCH DIAMETER SHALL BE ISOLATED FROM THE BUILDING STRUCTURE BY MEANS OF NOISE AND VIBRATION ISOLATION HANGERS.
2. PIPING PENETRATIONS THROUGH FLOORS AND WALLS SHALL NOT BE RIGIDLY CONNECTED TO THE BUILDING STRUCTURE. PROVIDE SLEEVES WITH CLEARANCES AROUND THE OUTSIDE, AS RECOMMENDED BY THE VIBRATION MATERIALS MANUFACTURER. ALL SUCH PENETRATIONS SHALL BE SMOKE AND FIRESTOPPED IN AN APPROVED MANNER AS HEREINBEFORE SPECIFIED.
3. GENERALLY, ISOLATION FACILITIES SHALL BE DESIGNED TO LIMIT EQUIPMENT ROOM FLOOR OR ROOF LOADING TO A MAXIMUM OF 50 POUNDS PER SQUARE FOOT AND VIBRATION

c:\pwworking\hmm\external\tyn61470\dms72788\071_0134CMN032.dgn 10/24/2014 11:10:38 AM TYN61470

DESIGN AGENCY
HATCH MOTT MacDONALD
18013 CLEVELAND PKWY.
SUITE 200
CLEVELAND, OH 44135

DESIGNED	DRAWN	REVIEWED	DATE
SCB	CMN	DGN	08/08/14
CHECKED	REVISED	STRUCTURE FILE NUMBER	
NAH	HWW	3106578	

GENERAL NOTES PLUMBING SHEET 3 OF 5
BRIDGE NO. HAM-71-0134
I-71 LYTLE TUNNEL UNDER LYTLE PARK

HAM-71-01.34
PID No. 87268

ISOLATORS SHALL BE CAREFULLY AND SPECIFICALLY SELECTED FOR EACH PIECE OF EQUIPMENT.

4. PIPING FOUND TO HAVE AIR HAMMER OR OTHER OBJECTIONABLE VIBRATION OR NOISE WHICH CANNOT BE ELIMINATED BY PROPER GRADING OR OTHER NATURAL MEANS SHALL BE BRACED, TRAPPED, HUNG WITH VIBRATION ISOLATING HANGERS, EQUIPPED WITH AIR CHAMBERS OR MECHANICAL SHOCK ABSORBERS, FLEXIBLE PIPE CONNECTORS OR OTHERWISE SILENCED USING MEANS AS APPROVED BY THE ENGINEER.

5. THE VIBRATION MATERIALS MANUFACTURER SHALL BE RESPONSIBLE FOR THE PROPER SELECTION OF ALL ISOLATION MATERIALS, INCLUDING SELECTION OF SPRING RATES TO ACCOMPLISH THE SPECIFIED MINIMUM STATIC DEFLECTIONS FOR SPRING AND PAD TYPE ISOLATORS, BASED ON WEIGHT DISTRIBUTION AND LOCATION OF EQUIPMENT.

B. MATERIALS

1. THE USE OF NON-PERMANENT MATERIALS SUCH AS CORK, RUBBER, WOOD PULP PRODUCTS OR THERMAL TYPE FIBERGLASS WILL NOT BE ACCEPTABLE.

2. THE ISOLATION MATERIALS, UNLESS OTHERWISE SPECIFIED, SHALL BE THE STANDARD PRODUCTS OF MASON INDUSTRIES, VIBRATION ELIMINATOR COMPANY, CONSOLIDATED KINETICS CORPORATION, KORFUND DYNAMICS CORPORATION, OR APPROVED EQUAL. PROVIDE MINIMUM 4" THICK REINFORCED CONCRETE PADS BENEATH ALL FLOOR MOUNTED AND VIBRATION ISOLATED EQUIPMENT.

3. VIBRATION HANGERS FOR PIPING SHALL CONTAIN A STEEL SPRING AND 0.3 INCH DEFLECTION NEOPRENE ELEMENT IN SERIES. THE NEOPRENE ELEMENT SHALL BE MOLDED WITH A ROD ISOLATION BUSHING THAT PASSES THROUGH THE HANGER BOX. SPRING DIAMETERS AND HANGER BOX LOWER HOLE SIZES SHALL BE LARGE ENOUGH TO PERMIT THE HANGER ROD TO SWING THROUGH A 30 DEGREE ARC BEFORE CONTACTING THE HOLE AND SHORT CIRCUITING THE SPRING. SPRINGS SHALL HAVE A MINIMUM ADDITIONAL TRAVEL TO SOLID, EQUAL TO 50% OF THE RATE DEFLECTION. SUBMITTALS SHALL INCLUDE A SCALE DRAWING OF THE HANGER SHOWING THE 30 DEGREE CAPABILITY. HANGERS SHALL BE TYPE 30N AS MANUFACTURED BY MASON INDUSTRIES OR APPROVED EQUAL.

2.06 BRACING FOR HIGH PRESSURE IN THE PLENUM

A. THE CONTRACTOR SHALL PROVIDE ALL NECESSARY DESIGN AND MATERIALS FOR BRACING AND PROTECTION OF PIPING AND DEVICES AGAINST DAMAGE WHERE SUBJECT TO PRESSURE AS REQUIRED FOR THE ENTIRE PLUMBING SYSTEMS ON THE ROOF. DESIGN SHALL BE SUBMITTED BEFORE INSTALLATION OF WIND BRACING. ALL RESTRAINT DEVICES SHALL BE THE PRODUCT OF A SINGLE MANUFACTURER. PRODUCTS OF OTHER MANUFACTURERS ARE ACCEPTABLE PROVIDED THEIR SYSTEMS STRICTLY COMPLY WITH THIS SECTION OF THE SPECIFICATIONS. PROVIDE ISOLATION MATERIALS AND RESTRAINTS COMPLETE AND AS MANUFACTURED BY MASON INDUSTRIES, TOLCO OR APPROVED EQUAL.

B. ALL RAILS ARE TO BE BOLTED OR WELDED TO THE BUILDING STEEL OR CONCRETE DECK AND SHALL BE WIND RESTRAINED FOR 120 MPH WIND LOADS.

1. ROOFTOP SUPPORT STRUCTURES AS MANUFACTURED BY MIRO INDUSTRIES, OR APPROVED EQUAL, SHALL BE AN ACCEPTABLE PRODUCT FOR SEISMIC SUPPORTS.

C. SCOPE

1. THE WORK UNDER THIS SECTION SHALL INCLUDE THE DESIGN, FURNISHING AND INSTALLATION OF ALL BRACING DEVICES AND SYSTEMS AS REQUIRED FOR THE PLUMBING SYSTEM INCLUDING, BUT NOT NECESSARILY LIMITED TO, THE FOLLOWING:

A. ALL PLUMBING SYSTEM PIPING AS REQUIRED.

B. PIPING PENETRATIONS THROUGH CEILINGS AND WALLS.

C. SLEEVES WITH CLEARANCES AROUND THE OUTSIDE, AS RECOMMENDED.

D. CERTIFICATION OF WIND BRACING DESIGNS.

D. SUBMIT TEN (10) COPIES OF DESCRIPTIVE DATA FOR ALL PRODUCTS AND MATERIALS, INCLUDING THE FOLLOWING:

1. CATALOG CUTS AND DATA SHEETS FOR THE SPECIFIC ISOLATORS, BRACES AND ALL OTHER ITEMS TO BE UTILIZED.

2. DETAILS OF METHODS OF SLEEVING, SMOKE PROOFING AND ISOLATION FOR PIPES PENETRATING WALLS AND SLABS.

3. SPECIFIC DETAILS OF WIND BRACING AND ANCHORS, INCLUDING NUMBER, SIZE AND LOCATIONS FOR EACH PIECE OF EQUIPMENT.

4. CALCULATIONS TO SUPPORT WIND BRACING DESIGNS.

5. ALL CALCULATIONS, DETAILS AND OTHER SUBMITTAL MATERIALS SHALL BE SEALED AND SIGNED BY AN ENGINEER REGISTERED IN THE STATE OF OHIO AND QUALIFIED TO PERFORM WIND BRACING DESIGN CALCULATIONS.

6. A WIND BRACING DESIGN LIABILITY INSURANCE CERTIFICATE THAT MUST ACCOMPANY ALL SUBMITTALS.

E. CODE AND STANDARDS REQUIREMENTS SHALL INCLUDE, BUT NOT BE LIMITED TO:

1. APPLICABLE BOCA-NBC, MSBC WITH ANY ADDITIONAL STATE OR LOCAL REQUIREMENTS.

2. NFPA 99 AND OTHER APPLICABLE NFPA STANDARDS.

3. ALL STATE AND LOCAL CODES.

F. MANUFACTURERS WORKING IN THIS SECTION MUST PROVIDE A BRACING DESIGN LIABILITY INSURANCE CERTIFICATE AND CERTIFY THEIR ABILITY TO PROVIDE ENGINEERING AND DESIGN AS REQUIRED BY THIS SECTION. THIS CERTIFICATE SHALL BE SUBMITTED TO THE ENGINEER FOR REVIEW PRIOR TO ANY SUBMITTALS.

2.07 INSTALLATION

A. GENERAL

1. THIS SECTION COVERS PARTICULAR INSTALLATION METHODS AND REQUIREMENTS PECULIAR TO CERTAIN ITEMS AND CLASSES OR MATERIAL AND EQUIPMENT.

2. THE CONTRACTOR SHALL OBTAIN DETAILED INFORMATION FROM THE MANUFACTURERS OF EQUIPMENT AS TO PROPER METHODS OF INSTALLATION.

3. ALL MISCELLANEOUS HARDWARE AND SUPPORT ACCESSORIES, INCLUDING SUPPORT RODS, NUTS, BOLTS, SCREWS AND OTHER SUCH ITEMS, SHALL BE OF A GALVANIZED OR CADMIUM PLATED FINISH OR OF ANOTHER APPROVED RUST-INHIBITING COATING.

2.08 MATERIALS AND WORKMANSHIP

A. ALL MATERIALS AND EQUIPMENT SHALL BE NEW AND UNUSED AND SHALL MEET REQUIREMENTS OF THE LATEST STANDARDS OF NEMA, UL, ANSI AND ASTM. EQUIPMENT SHALL HAVE COMPONENTS REQUIRED OR RECOMMENDED BY OSHA, APPLICABLE NFPA DOCUMENTS AND SHALL BE UL LISTED AND LABELED.

2.09 FINAL INSPECTION

A. WHEN ALL PLUMBING WORK ON THE PROJECT HAS BEEN COMPLETED AND IS READY FOR FINAL INSPECTION, SUCH AN INSPECTION SHALL BE MADE. AT THIS TIME, AND IN ADDITION TO ALL OTHER REQUIREMENTS IN THE CONTRACT DOCUMENTS, THE CONTRACTOR, SHALL DEMONSTRATE THAT THE REQUIREMENTS OF THESE SPECIFICATIONS HAVE BEEN MET TO THE ENGINEER'S SATISFACTION.

2.10 TESTING OF PIPING SYSTEMS

A. GENERAL

1. ALL PIPING SYSTEMS SHALL BE SUBJECTED TO TESTING WATER AS NOTED AND SHALL HOLD TIGHT AT THE PRESSURE HEAD STATED FOR THE TIME INTERVAL REQUIRED WITHOUT ADDING AIR OR WATER. WHILE ANY SYSTEM IS BEING TESTED, REQUIRED HEAD OR PRESSURE SHALL BE MAINTAINED UNTIL ALL JOINTS ARE INSPECTED.

2. ANY POINTS OF THE DRAINAGE SYSTEMS TO BE TESTED WITH AIR INSTEAD OF WATER SHALL BE MADE BY ATTACHING AN AIR COMPRESSOR TESTING APPARATUS TO ANY SUITABLE OPENING AND AFTER CLOSING ALL OTHER INLETS OR OUTLETS, FORCING AIR INTO THE SYSTEMS UNTIL THERE IS A UNIFORM GAUGE PRESSURE OF 5 PSI OR SUFFICIENT TO BALANCE A COLUMN OF MERCURY 10" HIGH. THIS PRESSURE SHALL BE HELD WITHOUT THE INTRODUCTION OF ADDITIONAL AIR FOR A PERIOD OF AT LEAST 15 MINUTES.

3. ALL TESTS SHALL BE WITNESSED BY THE ENGINEER, WITH 48-HOUR NOTICE GIVEN THESE AUTHORITIES.

4. ALL TESTING REPORTS SHALL BE SUBMITTED FOR RECORD AND FOR REVIEW AS A PART OF THE SUBMITTAL PROCESS.

B. STORM WATER SYSTEMS:

1. WATER TEST SHALL BE APPLIED TO THESE DRAINAGE SYSTEMS EITHER IN THEIR ENTIRETY OR IN SECTIONS AS REQUIRED, AFTER PIPING HAS BEEN INSTALLED. IF APPLIED TO THE ENTIRE SYSTEM, ALL OPENINGS IN THE PIPING SYSTEM SHALL BE TIGHTLY CLOSED, EXCEPT THE HIGHEST OPENING, AND THE SYSTEM FILLED WITH WATER TO POINT OF OVERFLOW. IF THE SYSTEM IS TESTED IN SECTIONS, EACH OPENING SHALL BE TIGHTLY CLOSED EXCEPT THE HIGHEST OPENING IN THE SECTION UNDER TEST, AND EACH SECTION SHALL BE FILLED WITH WATER BUT NO SECTION SHALL BE TESTED WITH LESS THAN A 10' HEAD OF WATER. IN TESTING SUCCESSIVE SECTIONS

c:\pwworking\hmm\externo\tyn61470\dms72788\071_0134CWN033.dgn 10/24/2014 11:10:47 AM TYN61470

DESIGN AGENCY
HATCH MOTT MacDONALD
18013 CLEVELAND PKWY.
SUITE 200
CLEVELAND, OH 44135

DESIGNED	DRAWN	REVIEWED	DATE	STRUCTURE FILE NUMBER
SCB	CMN	DGN	08/08/14	3106578
CHECKED		REVISED		
NAH		HWW		

GENERAL NOTES PLUMBING SHEET 4 OF 5

BRIDGE NO. HAM-71-0134
I-71 LYTLE TUNNEL UNDER LYTLE PARK

HAM-71-01.34
PID No. 87268

AT LEAST THE UPPER 10' OF THE NEXT PRECEDING SECTION SHALL BE TESTED SO THAT NO JOINT OF PIPING IN THE BUILDING, EXCEPT THE UPPERMOST 10' OF THE SYSTEM, SHALL BE SUBMITTED TO A TEST OF LESS THAN A 10' HEAD OF WATER. THE WATER SHALL BE KEPT IN THE SYSTEM FOR AT LEAST 15 MINUTES BEFORE INSPECTION STARTS; THE SYSTEM SHALL THEN BE MADE TIGHT AT ALL POINTS.

2.11 IDENTIFICATION OF MATERIALS

A. BEFORE NAMEPLATES AND MARKERS ARE APPLIED, THE EQUIPMENT AND PIPING SHALL BE CLEANED AND PAINTED.

B. NAME PLATE SHALL BE MADE OF BLACK SURFACE, WHITE CORE LAMINATED BAKELITE WITH 1" HIGH INDENTED LETTERS. NAMEPLATES SHALL BE MINIMUM 5" LONG BY 3" WIDE AND BEAR THE EQUIPMENT NAME AS DESIGNATED IN THE SPECIFICATIONS. NAMEPLATES SHALL BE AS FABRICATED BY SETON NAMEPLATE CO., ATLANTIC ENGRAVING CO., W.H. BRADY CO., OR APPROVED EQUAL. ATTACH WITH SCREWS OR RIVETS ONLY.

C. A LEGEND SHOWING THE SERVICE AND AN ARROW INDICATING THE DIRECTION OF FLOW SHALL BE APPLIED ON EACH PIPE INSTALLED BY THE CONTRACTOR.

D. THE PIPING OF EACH SYSTEM SHALL BE IDENTIFIED IN THE FOLLOWING LOCATIONS AND WHERE DIRECTED BY THE ENGINEER.

1. PIPE MAINS AND BRANCHES – EVERY 15'-0'.
2. EACH WALL PENETRATION (BOTH SIDES).
3. EACH RISER INCLUDING BRANCH RISERS FROM MAINS.
4. AT EACH CHANGE OF DIRECTION.
5. NEAR EACH ACCESS PANEL.

2.12 STORM PIPING

A. PIPES SHALL BE PLUMB AND PARALLEL TO BUILDING WALLS, BEAMS, AND COLUMNS. ALL HORIZONTAL LINES ARE TO BE EVENLY PITCHED AND PROPERLY SECURED WITH IRON OR STEEL HANGERS. A PITCH OF ¼" PER LINEAR FOOT SHALL BE MAINTAINED ON ALL CONDUCTOR LINES, WHEREVER POSSIBLE.

B. THREADED JOINTS SHALL BE NATIONAL PIPE THREAD WITH PIPE THREAD COMPOUND APPLIED TO THE MALE THREADS.

C. PIPING IS TO BE RUN STRAIGHT AND PLUMB AND ALL OFFSETS SHALL BE MADE AT AN ANGLE OF NOT LESS THAN 45 DEGREES AND ALL THREADED JOINTS SHALL BE AS SPECIFIED ABOVE.

D. CAREFULLY LAYOUT THE WORK IN ADVANCE SO THAT THE PIPES WILL PASS THROUGH THE OPENING AND PERMIT THE PROPER PITCH TO THE PIPELINES.

2.13 CLEANOUTS

A. PROVIDE AND CONNECT CLEANOUTS WITH BRASS CAPS AND SCREWS SAME SIZE AS PIPE UP TO 4" AND NOT LESS THAN 4" FOR LARGER PIPING AT THE ENDS OF ALL BRANCHES ON STORM PIPING, AND IN SUCH OTHER PORTIONS OF THE PIPING WHERE RUN IS OVER 50 FEET. UNDER FLOOR CLEANOUTS SHALL BE INSTALLED AS DETAILED.

B. CLEANOUTS SHALL BE INSTALLED AND SPACED IN THE PIPING SYSTEMS PER CODE. CLEANOUT SHALL BE INSTALLED AT ALL CHANGES OF DIRECTION GREATER THAN 45 DEGREES AND AT ALL CHANGES IN DIRECTION WHERE THE TOTAL SUM OF FITTINGS TO MAKE THE CHANGE IN DIRECTION IS GREATER THAN 45 DEGREES.

C. WHERE STACKS ENTER DRAINS NEAR WALLS OR PIERS CAUSING DIFFICULT ACCESS TO END CLEANOUTS, THERE SHALL BE A VERTICAL CLEANOUT ON THE STACK JUST ABOVE THE FLOOR WITH A 1/4 BEND AT THE FOOT OF THE STACK.

D. BRASS CLEANOUTS SHALL BE SOLID NUT CONSTRUCTION.

E. CLEANOUTS SHALL BE PROVIDED AT THE BASE OF ALL STACKS AND AT ALL CHANGES OF DIRECTION IN THE DRAINAGE PIPING SYSTEM PER CODE. CLEANOUTS SHALL BE NO MORE THAN 50' APART ON PIPING 4" AND SMALLER AND NO MORE THAN 100' APART ON PIPING LARGER THAN 4".

2.14 MEASUREMENT AND PAYMENT:

A. THE DEPARTMENT WILL MEASURE THE QUANTITY OF PLUMBING ON A LUMP SUM BASIS. THE PRICE PAID SHALL INCLUDE ALL NECESSARY LABOR, MATERIAL, TOOLS, AND EQUIPMENT TO COMPLETE THE WORK.

c:\pwworking\hmm\external\tyn61470\dms72768\071_0134GWN034.dgn 10/24/2014 11:10:56 AM TYN61470

DESIGN AGENCY
HATCH MOTT MacDONALD
18013 CLEVELAND PKWY.
SUITE 200
CLEVELAND, OH 44135

DESIGNED	DRAWN	REVIEWED	DATE
SCB	CMN	DGN	08/08/14
CHECKED	REVISED	STRUCTURE FILE NUMBER	
NAH	HWW	3106578	

GENERAL NOTES PLUMBING SHEET SHEET 5 OF 5
BRIDGE NO. HAM-71-0134
I-71 LYTLE TUNNEL UNDER LYTLE PARK

HAM-71-01.34
PID No. 87268

ITEM 690 - SPECIAL - MISC: HEATING VENTILATION AND AIR CONDITIONING

PART 1 - GENERAL

1.01 SUMMARY

DESCRIPTION:

THIS WORK SHALL INCLUDE FURNISHING AND INSTALLING HEATING, VENTILATION, AND AIR CONDITIONING SYSTEM(S) AS SHOWN IN THE PLANS AND HEREIN SPECIFIED, AND AT THE DIRECTION OF THE ENGINEER. INCLUDED ARE INCIDENTAL LAYOUT, ENGINEERING, AND DESIGN AS REQUIRED TO COMPLETE THE WORK.

SUBMITTALS:

MAKE NECESSARY SUBMITTALS PER SECTION 501 OF THE CONSTRUCTION AND MATERIALS SPECIFICATIONS.

1.02 SCOPE

A. PERFORM WORK AND PROVIDE MATERIAL AND EQUIPMENT AS SHOWN ON DRAWINGS AND AS SPECIFIED.

B. WORK SHALL INCLUDE, BUT SHALL NOT BE LIMITED TO, THE FOLLOWING:

1. INSTALLATION OF NEW INLINE FAN, DUCT, GRILLES, THERMOSTAT, HUMIDISTAT, VOLUME DAMPERS, FIRE SMOKE DAMPERS, ELECTRIC UNIT HEATERS. HEAT PUMP, AUTOMATIC DAMPERS, INSULATION AND START TEST AND BALANCE OF SYSTEMS.

2. ALL CUTTING, PATCHING, RIGGING, PRIME PAINTING, BALANCING, ELECTRICAL CONTROL WIRING AND ALL OTHER WORK ASSOCIATED WITH A COMPLETE AND WORKING SYSTEM.

3. DUCT EXTERNAL INSULATION AND INTERNAL DUCT LINING AS WELL AS INSULATED FLEX DUCT AS REQUIRED.

4. AUTOMATIC TEMPERATURE/HUMIDITY CONTROLS. WORK NOT INCLUDED IS LIMITED TO THE FOLLOWING:

A. POWER WIRING.

B. FINISHED PAINTING.

C. MISCELLANEOUS STEEL FOR EQUIPMENT SUPPORT OR ROOF FRAMING.

1.03 CONTRACT DOCUMENTS

A. DRAWINGS ARE DIAGRAMMATIC. THEY ARE NOT INTENDED TO BE ABSOLUTELY PRECISE; OR TO SHOW EVERY OFFSET, FITTING, AND COMPONENT. THE CONTRACTOR SHALL PROVIDE ALL OTHER COMPONENTS AND MATERIALS NECESSARY TO MAKE THE SYSTEMS FULLY COMPLETE AND OPERATIONAL.

1.04 CODES, STANDARDS, AUTHORITIES AND PERMITS

A. PERFORM WORK STRICTLY AS REQUIRED BY RULES, REGULATIONS, STANDARDS, CODES, ORDINANCES, AND LAWS OF LOCAL, STATE, AND FEDERAL GOVERNMENTS, AND OTHER AUTHORITIES THAT HAVE LEGAL JURISDICTION OVER THE SITE, AS WELL AS THE REQUIREMENTS OF THE LANDLORD.

B. MOST RECENT EDITIONS OF APPLICABLE SPECIFICATIONS AND PUBLICATIONS OF THE FOLLOWING ORGANIZATIONS FORM PART OF CONTRACT DOCUMENTS:

1. LOCAL, STATE AND COUNTY BUILDING, PLUMBING, MECHANICAL, ELECTRICAL, FIRE AND HEALTH DEPARTMENT CODES.

2. NATIONAL FIRE PROTECTION ASSOCIATION (NFPA).

3. OCCUPATIONAL SAFETY AND HEALTH ACT (OSHA).

4. AMERICAN SOCIETY OF MECHANICAL ENGINEERS (ASME).

5. NATIONAL ELECTRIC MANUFACTURERS ASSOCIATION (NEMA).

6. AMERICAN SOCIETY FOR TESTING AND MATERIALS (ASTM).

7. AMERICAN SOCIETY FOR HEATING, REFRIGERATING AND AIR CONDITIONING ENGINEERS (ASHRAE).

8. SHEET METAL AND AIR CONDITIONING CONTRACTORS NATIONAL ASSOCIATION (SMACNA).

9. INTERNATIONAL CODE COUNCIL (ICC)

10. B.O.C.A.

11. NFPA 502.

1.05 RECORD DRAWINGS

A. AS WORK PROGRESSES AND FOR DURATION OF CONTRACT, MAINTAIN COMPLETE AND SEPARATE SET OF PRINTS OF CONTRACT DRAWINGS AT JOB SITE AT ALL TIME. RECORD WORK CONTRACT DRAWINGS AT JOB SITE AT ALL TIME. RECORD WORK DRAWINGS.

B. AT COMPLETION OF WORK PREPARE A COMPLETE SET OF RECORD DRAWINGS, SHOWING ALL SYSTEMS AS ACTUALLY INSTALLED.

C. THE ACCURACY OF THE RECORD DRAWINGS IS THE SOLE RESPONSIBILITY OF THE CONTRACTOR, AND SHALL BE CONSIDERED AS REQUIRED TO ALLOW FINAL PAYMENT.

1.06 SUBMITTALS

A. SUBMITTAL REQUIREMENTS:

1. COORDINATE SUBMITTAL PACKAGES, REVIEW FOR COMPLIANCE WITH CONTRACT DOCUMENTS AND SUBMIT TO PROJECT ENGINEER FOR REVIEW.

2. THE MECHANICAL DESIGN IS BASED ON THE MANUFACTURER PRODUCT DATA PACKAGE. WHEN SAMPLES ARE REQUIRED, SUBMIT ONE.

B. ACCEPTABLE MANUFACTURERS:

1. OTHER MANUFACTURERS ARE ACCEPTABLE IF THEIR PRODUCTS MEET ALL THE REQUIREMENTS OF THE SPECIFICATION AND HAVE PERFORMANCE AND CONSTRUCTION FEATURES AND DELIVERY CAPABILITIES LISTED IN THE SCHEDULE OR SHOWN ON THE DRAWINGS.

C. MATERIAL AND EQUIPMENT REQUIRING SHOP DRAWING AND PRODUCT DATA SUBMITTALS SHALL INCLUDE BUT NOT BE LIMITED TO:

1. AUTOMATIC CONTROLS WITH WRITTEN SEQUENCE OF OPERATION.

2. INSULATION FOR DUCT INTERNAL LINING AND INSULATED FLEX DUCT.

3. FLEX CONNECTORS.

4. SLEEVES AND INSERTS.

5. ACCESS PANELS IF REQUIRED.

6. DUCTWORK, SCREWS, HANGERS, FITTING SKETCHES, FLEX DUCT, GRILLES CESS DOORS AND FIRE DAMPERS.

7. FIRE DAMPERS, VOLUME DAMPERS.

8. EXHAUST AIR FANS

9. ELECTRIC UNIT HEATERS.

PART 2 - PRODUCTS:

2.01 DUCTWORK INSULATION AND LINING

A. FURNISH AND INSTALL OWENS-CORNING, MANVILLE, CERTAINTEED, OR APPROVED EQUAL, DUCT INSULATION AS SPECIFIED IN DETAIL HEREINAFTER.

B. COVER ALL RECTANGULAR SUPPLY AND EXHAUST AIR DUCTS WITH FIBERGLASS DUCT INSULATION WHICH SHALL HAVE VAPOR SEAL MEMBRANE OF ALUMINUM FOIL FACED KRAFTPAPER VAPOR SEAL 1.0" THICKNESS, 2.0 PCF DENSITY. DUCTWORK EXPOSED TO OUTSIDE WEATHER SHALL NOT HAVE INSULATION.

1. INSULATION SHALL BE ADHERED TO THE DUCT WITH FOSTER NO. 81-13 OR MINNESOTA MINING EC1329, OR APPROVED NO. 81-13 OR MINNESOTA MINING EC1329, OR APPROVED EQUAL, ADHESIVE APPLIED IN SIX (6) INCH WIDE STRIPS TWELVE (12) INCHES ON CENTER. BUTT ALL EDGES OF THE INSULATION AND SEAL ALL JOINTS OF VAPOR SEAL MEMBRANE WITH TAPE OF SAME MATERIAL AS THE MEMBRANE; APPLY TAPE WITH ADHESIVE AS SPECIFIED ABOVE TO PROVIDE A CONTINUOUS VAPOR SEAL. SEAL ALL HOLES FOR STICK CLIPS WITH TAPE AND ADHESIVE AS SPECIFIED ABOVE TO PROVIDE CONTINUOUS VAPOR SEAL.

2.02 SLEEVES AND PENETRATIONS

A. DUCT SLEEVES AND OPENINGS:

1. SLEEVES THROUGH FIRE-RATED CONSTRUCTION AND THROUGH SMOKE PARTITIONS THAT REQUIRE SMOKE DAMPERS SHALL BE SCHEDULE 40 GALVANIZED STEEL PIPE FOR ROUND DUCT AND SHALL MEET SMACNA FIRE DAMPER AND HEAT STOP GUIDE FOR RECTANGULAR AND FLAT OVAL DUCTS. FIREPROOF PACKING MATERIALS SHALL MAINTAIN THE FIRE RATING OF THE WALL, AND SHALL BE INSTALLED IN ACCORDANCE WITH THE SMACNA FIRE DAMPER AND HEAT STOP GUIDE.

2. OPENINGS IN WALLS, PARTITIONS AND OTHER NON ENCLOSURE AREAS THAT DO NOT REQUIRE SMOKE DAMPERS SHALL MEET NFPA 90A, SECTION 3-3.8, AND REQUIREMENTSOF SOUNDWALL PENETRATION DETAIL.

3. MATERIALS FOR PREPARED OPENINGS IN PARTITIONS SHALL MATCH CONSTRUCTION PENETRATED. DUCT AND PIPE CONDUIT SLEEVES IN WALL ENCLOSURES SHALL BE PROVIDED BY CONTRACTOR. THIS CONTRACTOR SHALL PROVIDE FINAL SIZE REQUIREMENTS FOR ALL PENETRATIONS TO CONTRACTOR PRIOR TO CONSTRUCTION. FINAL POSITION OF VERTICAL AND HORIZONTAL POINTS OF PENETRATIONS SHALL BE COORDINATED WITH FINAL LOCATIONS OF ALL OTHER TRADES AS WELL AS CONTRACTOR. THE CONTRACTOR SHALL PROVIDE THE ENCLOSURE CONTRACTOR THE SIZES AND QUANTITIES OF PENETRATIONS REQUIRED IN TIME TO MEET THE CONSTRUCTION SCHEDULE.

B. CONTROL CONDUIT SLEEVE PACKING:

1. PACKING BETWEEN THE CONDUIT AND THE SLEEVE IN FIRE RATED WALLS SHALL BE A COMBINATION OF FIREPROOF INSULATION

c:\pwworking\hmm\external\tyn61470\dms72788\071_0134CMN018.dgn 10/24/2014 11:11:03 AM TYN61470

DESIGN AGENCY
HATCH MOTT MacDONALD
18013 CLEVELAND PKWY.
SUITE 200
CLEVELAND, OH 44135

DESIGNED	DRAWN	REVIEWED	DATE	STRUCTURE FILE NUMBER
SCB	CMN	DCN	08/08/14	31065578
CHECKED	REVISED			
NAH	MFW			

GENERAL NOTES HVAC SHEET 1 OF 7
BRIDGE NO. HAM-71-0134
I-71 LYTLE TUNNEL UNDER LYTLE PARK

HAM-71-01.34
PID No. 87268

AND FIREPROOF CAULK WITH THE SAME FIRERATING, IN HOURS, AS THE WALL OR SLAB. FIBERGLASS SHALL NOT BE USED AS THE INSULATION.

2. ACCEPTABLE FIREPROOF INSULATION MATERIALS SHALL BE: KAOLIN (KAOWOOL BY BABCOCK AND WILCOX); CERAMIC FIBER BLANKET (FIBERFRAX BY STANDARD OIL) OR FIRE RATED MINERAL WOO (THERMAFIBER BY USG). ACCEPTABLE FIREPROOF CAULKS SHALL BE: SILICONE (FIRESTOP BY DOW CORNING); CERAMIC FIBER (FYREPUTTY BY STANDARD OIL) OR INTUMESCENT SYNTHETIC ELASTOMER (FIRE BARRIER CAULK BY 3M).

3. PACKING FOR SLEEVES THAT DO NOT REQUIRE MAINTENANCE OF FIRE RATING SHALL BE OAKUM, SILICATE FOAM, CERAMIC FIBRE OR MINERAL FIBRE WITH APPROVED SEALANT.

4. ALL MATERIALS MUST BE INSTALLED IN ACCORDANCE WITH MANUFACTURERS INSTRUCTIONS; ALL GAPS MUST BE SEALED. FINISH CAULK FLUSH WITH WALL OR SLAB SURFACE IF PIPING RUNS EXPOSED.

2.03 ESCUTCHEONS

A. PROVIDE ADJUSTABLE ESCUTCHEONS ON EXPOSED CONDUIT PIPING THAT PASSES THROUGH FINISHED FLOORS, WALLS AND CEILINGS. ESCUTCHEONS SHALL BE CHROMIUM-PLATED CAST BRASS, SIZED TO COVER SLEEVE OPENING AND TO ACCOMMODATE PIPE AND INSULATION.

2.04 AUTOMATIC TEMPERATURE CONTROL SYSTEM - ELECTRIC/ELECTRONIC

A. GENERAL:

1. THE TEMPERATURE CONTROL SYSTEM COMPONENTS SHALL BE BY HONEYWELL, JOHNSON CONTROLS, ROBERT SHAW OR APPROVED EQUAL. THIS SYSTEM SHALL BE INSTALLED BY SERVICE TECHNICIANS EMPLOYED BY THE CONTRACTOR, OR BY EMPLOYEE INSTALLERS OF THE COMPONENT MANUFACTURERS.

2. CONTROL SYSTEM SHALL BE INSTALLED BY COMPETENT CONTROL MECHANICS AND ELECTRICIANS REGULARLY EMPLOYED AS CONTROL SYSTEM INSTALLERS. CONTRACTOR SHALL HAVE RESPONSIBILITY FOR ALL CONTROL ELEMENTS WHETHER HE MANUFACTURES THE COMPONENTS OR NOT.

B. SCOPE:

1. CONTROL SYSTEM SHALL CONSIST OF ELECTRONIC OR ELECTRIC THERMOSTATS, TEMPERATURE TRANSMITTERS, CONTROLLERS, SENSORS CONTROL PANELS, ELECTRICAL WIRING, CONTROL/ALARM CABINETAND ALL OTHER COMPONENTS REQUIRED TO FILL INTENT OFSPECIFICATIONS AND PROVIDE FOR COMPLETE AND OPERABLESYSTEM. CONTROL EQUIPMENT SHALL BE FULLY PROPORTIONING, EXCEPT AS NOTED OTHERWISE.

2. PROVIDE THE SERVICES OF CONTROL CONTRACTORS REPRESENTATIVE TO BE ON SITE DURING THE STARTUP TESTING AND BALANCING PROCEDURES. REPRESENTATIVE SHALL BE PART OF CONTRACTOR'S SERVICE ORGANIZATION AND SHALL BE SKILLED IN THE ADJUSTMENT AND CALIBRATION OF ALL CONTROL DEVICES.

3. THE EXISTING ELECTRICAL SYSTEM SHALL BE TAPPED AND EXTENDED TO EQUIPMENT. SYSTEMS SHALL BE ELECTRIC/ELECTRONIC DEVICES AND SYSTEMS AS REQUIRED TO PROVIDE SYSTEM AS DESCRIBED.

4. ALL THE HVAC EQUIPMENT SHALL BE CONNECTED TO SCADA SYSTEM FOR MONITORING PURPOSES.

C. SEQUENCE OF OPERATION:

1. EXHAUST FAN: THE THERMOSTAT/HUMIDISTAT SHALL CYCLE THE FAN TO KEEPTHE SPACE BELOW 85 DEG. F (ADJ.)/50% R.H.. THE WALL MOUNTED THERMOSTAT/ HUMIDISTAT SHALL HAVE ADJUSTABLE SETTINGS AND BE MOUNTED IN A CLEAR LOCKING COVER.

2. HEAT PUMP: THE THERMOSTAT SHALL CONTINUOUSLY MONITOR SPACE TEMPERATURE SETTING OF 70 °F(ADJ.). THE UNIT SHALL RUN TO KEEP TARGET SPACE TEMPERATURE.

3. FIRE/SMOKE DAMPERS: TRIP ON TEMPERATURE. DAMPER SHALL CLOSE ON SIGNAL FROM A SMOKE DETECTOR LOCATED IN THE DUCT WITHIN 5 FEET OF THE DAMPER.THE FIRE ALARM SYSTEM SHALL BE CAPABLE OF OVERRIDING THIS CONTROL AND OPENING THE DAMPER REMOTELY.

4. ELECTRIC UNIT HEATERS: CONTRACTOR SHALL PROVIDE THERMOSTAT TO MODULATE ELECTRIC HEAT AND ENERGIZE THE FAN TO SATISFY THE ROOM TEMPERATURE SETTING.

D. PROVIDE SUPERVISION SERVICES FOR WORK PERFORMED UNDER THIS SECTION.

E. ELECTRIC WIRING:

1. 120V AND 24V ELECTRIC WIRING AND WIRING CONNECTIONS AND COMPONENTS REQUIRED FOR INSTALLATION OF TEMPERATURE CONTROL SYSTEM, AS HEREIN SPECIFIED, SHALL BE PROVIDED BY THE CONTRACTOR.

2. WIRING SHALL COMPLY WITH REQUIREMENTS OF ELECTRICAL WORK.

2.05 DUCTWORK

A. MATERIALS: ALL METAL DUCTWORK SHALL BE U.S. STEEL, ARMCO, OR APPROVED EQUAL OF THE FOLLOWING MATERIALS:

1. ALL EXHAUST AIR DUCTWORK BETWEEN OUTLET OF EXHAUST FAN AND DISCHARGE POINT SHALL BE STAINLESS STEEL AND SMACNA PRESSURE CLASS OF ± 10".

2. ALL INTAKE AIR DUCTWORK SHALL BE GALVANIZED SHEET METAL WITH SMACNA PRESSURE CLASS OF ±6".

B. ALL EXHAUST AIR DUCTWORK BETWEEN ELECTRIC ROOM AND INLET OF THE EXHAUST FAN SHALL BE GALVANIZED SHEET METAL WITH SMACNA PRESSURE CLASS OF ±6".SHOP DRAWINGS: DETAILED SHOP DRAWINGS OF ALL SHEET METAL DUCTWORK SHALL BE SUBMITTED FOR APPROVAL PRIOR TO INSTALLATION. SHOP DRAWINGS SHALL INCLUDE:

1. DETAILS OF CONSTRUCTION FOR DUCTWORK, FITTINGS, AND ACCESSORIES.

C. RECTANGULAR DUCTWORK CONSTRUCTION: MINIMUM GAUGE OF THE DUCTWORK SHALL BE 18. CONSTRUCTION DETAILS OF ALL RECTANGULAR SHEET METAL DUCTWORK SHALL BE IN CONFORMANCE WITH RECOMMENDATIONS AND PROCEDURES OUTLINED IN THE LATEST EDITION OF THE SMACNA DUCT CONSTRUCTION STANDARDS MANUAL FOR HVAC SYSTEMS.

D. JOINTS AND SEAMS:

1. ALL JOINTS AND SEAMS IN ALL DUCTWORK AND CASING SHALL BE SEALED TO SMACNA SEAL CLASS A WELDED. SEAL CLASS A WELDED MEANS ALL WELDED (I.E. TRANSVERSE JOINTS, LONGITUDINAL SEAMS, SPIRAL SEAMS, FIRE DAMPERS, VOLUME DAMPERS OR ANY ACCESSORIES) AND IN ADDITION IT MEANS CONTINUOUSLY WELDED.

2. EXPOSED STAINLESS STEEL DUCTWORK SHALL HAVE AN ASTM MILL ROLLED NO.2 B FINISH, OR HIGHER GRADE WITH ALL WELDS GROUND SMOOTH AND FINAL BRUSHED WITH STAINLESS STEEL WIRE BRUSHES.

E. ELBOWS AND TRANSITIONS IN RECTANGULAR DUCTWORK: ALL ELBOWS AND OFFSETS SHALL HAVE A CENTERLINE RADIUS OF 1 1/2 OF THE WIDTH OF THE DUCT. WHERE ELBOWS ARE REQUIRED TO HAVE A SHORTER THROAT RADIUS, THEY SHALL BE CONSTRUCTED WITH FULL CURVATURE TURNING VANES SPACED AS DETERMINED FROM SMACNA MANUAL, FIGURE 2.5 WITH THROAT RADIUS NOT LESS THAN 3 INCHES. WHERE VANED SQUARE ELBOWS ARE SHOWN ON THE DRAWINGS, THEY SHALL HAVE RADIUS THROATS WITH THE SAME RADIUS AS THE TURNING VANES AND SQUARE HEELS. TURNING VANES SHALL BE SINGLE WALL FOR DUCTS UP TO 18 INCHES WIDE AND DOUBLE WALL FOR DUCTS OVER 18 INCHES AND SHALL BE FABRICATED AS SHOWN IN SMACNA MANUAL, PLATE 22. TRANSITIONS SHALL BE MADE WITH SIDES SLOPING AT NOT MORE THAN 15 DEGREES TO THE LONGITUDINAL AXIS OF THE DUCT, UNLESS OTHERWISE APPROVED.

F. DUCT SUPPORTS: DUCTWORK SHALL BE SECURELY ATTACHED TO THE BUILDING CONSTRUCTION. THE HANGER DESIGN AND SPACING SHALL BE GOVERNED BY THE MAJOR DUCT DIMENSION AND SHALL BE IN ACCORDANCE WITH SMACNA DUCT MANUAL, EXCEPT AS MODIFIED HEREINBEFORE. VERTICAL DUCTWORK SHALL BE SUPPORTED AT 2' INTERVALS IN AN APPROVED MANNER USING ANGLES OR CHANNELS ATTACHED TO THE DUCTS. PROVIDE ADDITIONAL BRACING FOR HIGH PRESSURE AMBIANT AND ACCORDING TO SMACNA STANDARDS. THE INSTALLATION, WHEN COMPLETE AND UNDER OPERATING CONDITIONS, SHALL BE FREE FROM CHATTER OR VIBRATION. IF NECESSARY TO ACHIEVE THIS, ADDITIONAL SUPPORTS AND/OR BRACING SHALL BE FURNISHED WITHOUT EXTRA COST TO THE OWNER. SUPPORTS AND BARS AND SIMILAR ITEMS SHALL BE PRIMED AND PAINTED STRUCTURAL STEEL. TOUCH UP WITH ALUMINUM PAINT ANY SURFACES WHERE GALVANIZING IS DESTROYED ON INDOOR DUCTWORK, ZINC PRIMER ON EXPOSED DUCTWORK WITH A FINAL COAT OF ALUMINUM PAINT. ALL DUCTS SHALL BE SUPPORTED BY STRUCTURAL ANGLE AND STEEL RODS. ALL DUCTWORK SHALL BE RUN TIGHT TO THE CEILING AND STRUCTURAL WALL.

G. BALANCING DAMPERS: ALL SHALL BE SINGLE-BLADE QUADRANT TYPE FOR DUCT SIZES UP TO 24 INCH WIDTH AND 12 INCH DEPTH, AND MULTIPLE BLADE OPPOSED TYPE FOR LARGER DUCT SIZES. SINGLE BLADE DAMPERS WITH A SHAFT LENGTH OF 12 INCHES OR LESS SHALL BE EQUIPPED WITH VENTLOCK NO. 620-1/4 INCH DIAL REGULATORS; DAMPERS WITH SHAFT LENGTHS OF 12 INCHES TO 20 INCHES SHALL BE EQUIPPED WITH VENTLOCK NO. 635-3/8 INCH DIAL REGULATORS AND NO. 607 END BEARINGS. LARGER DAMPERS SHALL BE CONTROLLED WITH VENTLOCK SELF-LOCKING REGULATORS NO. 640-3/8 INCH OR NO. 641-3/8 INCH AND SHALL BE COMPLETE WITH NO. 607 END BEARINGS. MULTIPLE-BLADE BALANCING DAMPERS SHALL BE EQUIPPED WITH APPROPRIATE DIAL REGULATORS.

H. CLEANING: ALL NEW DUCT SECTION SHALL BE THOROUGHLY CLEANED INSIDE AND OUT AS THEY ARE ERECTED.

DESIGN AGENCY
HATCH MOTT MacDONALD
18013 CLEVELAND PKWY.
SUITE 200
CLEVELAND, OH 44135

DESIGNED	DRAWN	REVIEWED	DATE
SCB	CMN	DGN	08/08/14
CHECKED	REVISED	STRUCTURE FILE NUMBER	
NAH	MFW	3106578	

GENERAL NOTES HVAC SHEET 2 OF 7
BRIDGE NO. HAM-71-0134
I-71 LYTLE TUNNEL UNDER LYTLE PARK

HAM-71-01.34
PID No. 87268

c:\pwworking\hmm\external\tyn61470\dms727888\071_0134CMN019.dgn 10/24/2014 11:11:15 AM TYN61470

2.06 FIRE/SMOKE COMBINATION DAMPERS

A. PROVIDE FIRE/SMOKE COMBINATION DAMPERS THROUGHOUT AIR SUPPLY/EXHAUST SYSTEM AS SHOWN ON DRAWINGS AND AS RQUIRED BY APPLICABLE CODES, STANDARDS AND AUTHORITIES. PROVIDE ACCESS DOOR FOR EACH FIRE DAMPER OF SUFFICIENT SIZE TO REPAIR INTERNAL LINK.

B. DAMPERS SHALL BE APPROVED FUSED LINK SELF-CLOSING TYPE. FRAME SHALL BE FITTED WITH ANGLE IRON STOP AND STAINLESS STEEL SPRING LATCH, AND SHALL BE SECURELY FASTENED TO BUILDING CONSTRUCTION. SEAL SPACES BETWEEN DAMPER FRAMES AND WALLS WITH APPROVED FIRE-RETARDANT MATERIAL. BLADES OF DAMPERS SHALL BE OUT OF AIR STREAM. DAMPERS SHALL BEAR 2 HOUR UL RATING FIRE/SMOKE COMBINATION DAMPER LABEL AND SHALL BE CONSTRUCTED AND INSTALLED AS REQUIRED BY UL 555. FIRE/SMOKE COMBINATION DAMPERS SHALL BE AIR BALANCE, RUSKIN, PREFCO, OR APPROVED EQUAL FOR USE IN THE PROPER DUCT PRESSURE CLASSIFICATION.

2.07 AIR GRILLES

A. FURNISH AND INSTALL AIR REGISTERS, AND GRILLES OF THE SIZES, CAPACITIES, BLOW PATTERNS, AND STYLES CALLED FOR ON THE DRAWINGS AND AS SPECIFIED HEREINAFTER. ALL GRILLES SHALL BE ALUMINUM CONSTRUCTION.

B. FOR CEILING INSTALLATION, REGISTERS AND GRILLES SHALL BE FURNISHED WITH FRAMES WHICH ARE COMPATIBLE WITH THE CEILING SYSTEM IN WHICH THEY ARE TO BE PLACED. ALL REGISTERS GRILLES AND DIFFUSERS SHALL HAVE PAINT FINISH AS SCHEDULED.

C. THE INTAKE GRILLE SHALL HAVE STANDARD 1" FILTER.

2.08 EXHAUST FANS

A. PROVIDE INLINE EXHAUST FAN AS SCHEDULED ON THE DRAWINGS AND IN THE FOLLOWING.

B. DUCT MOUNTED SUPPLY, EXHAUST OR RETURN FANS SHALL BE OF THE CENTRIFUGAL, BELT DRIVEN, INLINE TYPE. THE FAN HOUSING SHALL BE OF A SQUARE DESIGN CONSTRUCTED OF HEAVY GAUGE GALVANIZED STEEL OR ALUMINUM AND SHALL INCLUDE SQUARE DUCT MOUNTING COLLARS.

C. FAN CONSTRUCTION SHALL INCLUDE TWO REMOVABLE ACCESS PANELS LOCATED PERPENDICULAR TO THE MOTOR MOUNTING PANEL. THE ACCESS PANELS MUST BE OF SUFFICIENT SIZE TO PERMIT EASY ACCESS TO ALL INTERIOR COMPONENTS.

D. THE FAN WHEEL SHALL BE CENTRIFUGAL BACKWARD INCLINED, CONSTRUCTED OF ALUMINUM AND SHALL INCLUDE A WHEEL.

E. CONE CAREFULLY MATCHED TO THE INLET CONE FOR PRECISE RUNNING TOLERANCES. WHEELS SHALL BE STATICALLY AND DYNAMICALLY BALANCED.

F. MOTORS SHALL BE HEAVY-DUTY BALL BEARING TYPE CAREFULLY MATCHED TO THE FAN LOAD AND FURNISHED AT THE SPECIFIED VOLTAGE, PHASE, AND ENCLOSURE. MOTORS AND DRIVES SHALL BE MOUNTED OUT OF THE AIRSTREAM.

G. MOTORS SHALL BE READILY ACCESSIBLE FOR MAINTENANCE. PRECISION GROUND AND POLISHED FAN SHAFTS SHALL BE MOUNTED IN PERMANENTLY SEALED, LUBRICATED PILLOW BLOCK BALL BEARINGS. BEARINGS SHALL BE SELECTED FOR A MINIMUM L10 LIFE IN EXCESS OF 100,000 HOURS (L50 AVERAGE LIFE IN EXCESS OF 500,000 HOURS) AT MAXIMUM CATALOGED OPERATING SPEED.

H. DRIVES SHALL BE SIZED FOR A MINIMUM OF 150 PERCENT OF DRIVEN HORSEPOWER.

I. PULLEYS SHALL BE OF THE FULLY MACHINED CAST IRON TYPE, KEYED AND SECURELY ATTACHED TO THE WHEEL AND MOTOR SHAFTS. MOTOR PULLEYS SHALL BE ADJUSTABLE FOR FINAL SYSTEM BALANCING.

J. A NEMA-1 DISCONNECT SWITCH SHALL BE PROVIDED AS STANDARD, EXCEPT WITH EXPLOSION RESISTANT MOTORS, WHERE DISCONNECTS ARE OPTIONAL. FACTORY WIRING SHALL BE PROVIDED FROM MOTOR TO THE HANDY BOX.

K. FAN SHALL BEAR THE AMCA CERTIFIED RATINGS SEAL FOR BOTH SOUND AND AIR PERFORMANCE.

L. FAN SHALL BEAR A PERMANENTLY AFFIXED MANUFACTURER'S NAMEPLATE CONTAINING THE MODEL NUMBER AND INDIVIDUAL SERIAL NUMBER FOR FUTURE IDENTIFICATION.

M. FAN SHALL BE MODEL BSQ AS MANUFACTURED BY GREENHECK FAN CORPORATION OF SCHOFIELD, WISCONSIN, USA OR APPROVED EQUAL.

N. FURNISH AND INSTALL WALL MOUNTED THERMOSTATS AND WIRE TO EF-1 VIA GREENHECK MODEL MSAC STARTER AND CONTROLLER AS SPECIFIED IN ITEM "O" BELOW.

O. FURNISH AND INSTALL GREENHECK STARTER, MODEL MSAC AND CONNECT TO NEW SCADA SYSTEM AND FAN MOTOR.

P. MAGNETIC MOTOR STARTERS FOR 3 PHASE MOTORS SHALL BE ENCLOSED IN A 16 GAUGE STEEL, INDUSTRIAL POLYURETHANE COATED ENCLOSURE WITH THE APPROPRIATE ENVIRONMENTAL RATING. STARTERS SHALL CONSIST OF A HORSEPOWER RATED MAGNETIC CONTACTOR, A MINIMUM OF ONE NORMALLY OPEN AND ONE NORMALLY CLOSED AUXILIARY CONTROL CONTACTS AND SOLID STATE ELECTRONIC OVERLOAD RELAY. OVERLOAD RELAY SHALL PROTECT ALL THREE PHASES WITH AN ADJUSTABLE CURRENT SETTING OF 1-40 AMPS TO ALLOW FIELD ADJUSTMENT FOR SPECIFIC MOTOR FULL LOAD AMPS (FLA). INTERCHANGEABLE HEATER ELEMENTS ARE NOT ACCEPTABLE.

Q. THE OVERLOAD RELAY MUST PROVIDE THE FOLLOWING MOTOR PROTECTION FEATURES:IF THE FLA ON THE OVERLOAD IS SET OUTSIDE AN ACCEPTABLE RANGE TO PROPERLY PROTECT THE MOTOR, THE OVERLOAD MUST TRIP AND CLOSE A CONTACT TO INDICATE FAULT EVENT. OVERLOAD RELAY SHALL PROVIDE PHASE FAILURE, PHASE LOSS, CYCLE FAULT AND STALL PROTECTION. OVERLOAD MUST DETECT A LOCKED ROTOR UPON STARTUP AND TRIP WITHIN 0.5 SECONDS IF SUCH CONDITION IS DETECTED. OVERLOAD MUST ALSO MONITOR MOTOR INRUSH CURRENT ON STARTUP AND IF DETECTED FLA DOES NOT REACH NOMINAL RUNNING AMPS WITHIN 10 SECONDS, TRIP AND STOP THE MOTOR. PROVIDE FIELD SELECTABLE MANUAL OR AUTOMATIC RESET OF OVERLOAD AS WELL AS RESET PUSHBUTTON ON THE STARTER COVER TO RESTORE NORMAL OPERATION AFTER A TRIP OR FAULT CONDITION. IN THE EVENT OF A POWER FAILURE, STARTER SHALL RESTART IN LAST KNOWN OPERATING MODE.

R. PROVIDE WITH DISCONNECT SWITCH·

S. THE STARTER SHALL INCLUDE REMOTE RUN TERMINALS WHICH ACCEPT BOTH A VOLTAGE INPUT SIGNAL AND A CONTACT CLOSURE. THE VOLTAGE RUN INPUT SHALL ACCEPT BOTH AC AND DC SIGNALS FROM 12-250V TO ALLOW DIRECT CONNECTION OF THE TRANSISTORIZED AUTOMATION SIGNAL TO THE STARTER. STARTER MUST CONTAIN AN INTEGRAL CURRENT SENSOR WITH NORMALLY OPEN CONTACT WHICH CLOSES TO INDICATE MOTOR RUN STATUS.

T. INSTALLED ACCESSORIES SHALL INCLUDE HAND-OFF-AUTO OPERATION SWITCH WITH LED PILOT LIGHT INDICATORS FOR HAND, OFF, AUTO, RUN AND OVERLOAD CONDITIONS. ALL PILOT DEVICES SHALL BE WATER TIGHT AND DUST TIGHT. MANUFACTURER SHALL PROVIDE AND INSTALL TAGS WITH ENGRAVED LETTERING TO DESIGNATE EQUIPMENT SERVED. ALL STARTERS MUST BE PROVIDED WITH A UNIVERSAL POWER SUPPLY CAPABLE OF A 200 TO 600 VOLT INPUT RANGE.

U. ENCLOSED COMBINATION STARTERS SHALL INCLUDE ALL OF THE MAGNETIC STARTER REQUIREMENTS IN ADDITION TO A DISCONNECTING METHOD IN ACCORDANCE WITH NATIONAL ELECTRICAL CODE. EACH DISCONNECT SHALL BE OF THE MOTOR CIRCUIT PROTECTOR TYPE, CARRY A UL 508F RATING AND PROVIDE A MINIMUM INTERRUPTING RATING OF 30,000 AVAILABLE INTERRUPTING CURRENT (AIC) FOR THE COMBINATION STARTER. ALL DISCONNECTS SHALL INCLUDE A LOCK-OUT MECHANISM WHEN IN THE OFF POSITION.

V. THE STARTER SHALL PROVIDE A PROVISION FOR FIREMAN'S OVERRIDE OPERATION WHEN ACTIVATED, THE STARTER MUST RUN THE MOTOR IN ANY MODE (HAND, OFF OR AUTO) REGARDLESS OF OTHER INPUTS OR LACK OF INPUTS EITHER MANUAL OR AUTO.

W. THE MOTOR IS INTERLOCKED WITH A DAMPER AND CONTROL SHALL BE AVAILABLE WITHIN THE STARTER ENCLOSURE. THE STARTER MUST BE ABLE TO PROVIDE A VOLTAGE OUTPUT TO OPERATE THE ACTUATOR TO OPEN THE DAMPER OR VALVE WITHOUT CLOSING THE MOTOR CIRCUIT. THE STARTER WILL ONLY CLOSE THE MOTOR CIRCUIT AND START THE MOTOR AFTER IT HAS RECEIVED A CONTACT CLOSURE FROM A LIMIT OR END SWITCH CONFIRMING THE DAMPER OR VALVE POSITION.

X. IN THE EVENT OF A POWER FAILURE, STARTER SHALL ALSO BE CAPABLE OF RESTART WITH 10 SECOND DELAY, OR RESTART IN "OFF" MODE.

Y. STARTER MUST CONTAIN A NORMALLY OPEN CONTACT WHICH CLOSES WHEN AN OVERLOAD TRIP CONDITION OCCURS.THE STARTER OR COMBINATION STARTER SHALL BE UL LISTED.

2.09 ELECTRIC UNIT HEATERS

A. GENERAL:

1. ALL TYPE HEATERS, AS APPLICABLE, SHALL BE HUNG WITH VIBRATION SPRING ISOLATORS AS HEREINBEFORE SPECIFIED.

2. THE CONTRACTOR SHALL PROVIDE UNIT MOUNTED THERMOSTATS AND WIRE TO FAN, TO CYCLE FAN "ON/OFF."

3. UNIT MANUFACTURER SHALL PROVIDE STARTERS AND DISCONNECT SWITCHES.

c:\pwworking\hmm\external\tyn61470\dms72788\071_0134CMN020.dgn 10/24/2014 11:11:24 AM TYN61470

DESIGN AGENCY
HATCH MOTT MacDONALD
18013 CLEVELAND PKWY.
SUITE 200
CLEVELAND, OH 44135

DESIGNED	DRAWN	REVIEWED	DATE
SCB	CMN	DCN	08/08/14
CHECKED	REVISED	STRUCTURE FILE NUMBER	
NAH	MFW	3106578	

GENERAL NOTES HVAC SHEET 3 OF 7
BRIDGE NO. HAM-71-0134
I-71 LYTLE TUNNEL UNDER LYTLE PARK

HAM-71-01.34
PID No. 87268

4. THERMOSTATS USED WITH ALL TYPE HEATERS SHALL BE COORDINATED WITH THE UNIT MANUFACTURER FOR COMPATIBILITY WITH EQUIPMENT.

B. TEMPERATURE CONTROL

1. THE THERMOSTAT SHALL HAVE A TEMPERATURE ADJUSTMENT RANGE BETWEEN 45°F AND 95°F. INTEGRAL THERMOSTATS SHALL HAVE TAMPERPROOF ADJUSTMENT THROUGH THE DISCHARGE GRILLE BY MEANS OF A HEX WRENCH.

2. THERMOSTAT SHALL OPERATE THE SINGLE-PHASE HOLDING COIL CIRCUIT OF THE INTEGRALLY MOUNTED POWER CONTROL RELAY(S). THIS SINGLE-PHASE RELAY HOLDING COIL CIRCUIT SHALL EITHER BE POWERED FROM THE CABINET UNIT HEATER MAIN POWER SUPPLY OR FROM A SEPARATE 120V OR 24V SINGLE-PHASE CIRCUIT.

3. AN INTEGRAL FAN DELAY SWITCH SHALL BE PROVIDED TO PREVENT DISCHARGE OF COLD AIR, BY DELAYING START-UP OF THE FAN MOTOR UNTIL HEATING ELEMENTS HAVE WARMED UP. THIS SAME FAN DELAY SWITCH SHALL MAINTAIN MOTOR OPERATION AFTER HEATING ELEMENTS HAVE BEEN DE-ENERGIZED TO DISSIPATE ANY RESIDUAL HEAT.

4. UNITS SHALL BE EQUIPPED AS STANDARD WITH A 2-SPEED/2-HEAT SELECTOR SWITCH WHICH WILL PERMIT SIMULTANEOUS TAMPERPROOF "HIGH/LOW" ADJUSTMENT OF FAN SPEED AND HEAT OUTPUT BY MEANS OF A HEX WRENCH THROUGH THE DISCHARGE GRILLE. CEILING MOUNTED UNITS SHALL BE WIRED FOR MEDIUM SPEED.

C. ELECTRIC PROPELLER TYPE UNIT HEATERS SHALL BE AS FOLLOWS:

1. PROVIDE ELECTRIC UNIT HEATERS OF THE TYPE, SIZE, CAPACITY AND VOLTAGE AS SPECIFIED ON THE DRAWINGS.

2. 2. ACCEPTABLE MANUFACTURERS SUBJECT TO

3. COMPLIANCE WITH THE SPECIFICATIONS SHALL BE AS FOLLOWS:

A. QMARK

B. CHROMALOX

C. SINGER

D. OR APPROVED EQUAL

4. ENCLOSURES SHALL BE FABRICATED FROM HEAVY GAUGE ZINC COATED STEEL, FINISHED IN HIGH GLOSS BEIGE ENAMEL. ENCLOSURES SHALL CONTAIN HEATING ELEMENTS, CONTACTORS AND CONTROL TRANSFORMERS WHERE REQUIRED. AIR SHALL BE DRAWN IN THE BACK OF THE HEATER AND DISCHARGED THROUGH INDEPENDENTLY ADJUSTABLE HORIZONTAL LOUVERS ON THE FRONT. IN THE LOW PORTION OF THE FRONT, A LARGE HINGED ACCESS DOOR EXTENDING THE WIDTH OF THE HEATER SHALL BE PROVIDED FOR EASY WIRING AND INSPECTION OF CONTROLS. HEATER AND SUPPLY WIRING DIAGRAM SHALL BE ATTACHED PERMANENTLY TO THE INSIDE OF THIS DOOR. MOTOR SHALL BE MOUNTED ON A HEAVY GAUGE FORMED WIRE PROTECTIVE GUARD. A CASTLE NUT WITH COTTER KEY SHALL BE SUPPLIED ON THE TOP OF THE UNIT AT CENTER OF GRAVITY TO ALLOW EASY SUPPORT AND ADJUSTMENT.

5. ELEMENTS SHALL CONSIST OF HELICALLY COILED NICKEL CHROMIUM ALLOY RESISTANCE WIRE EMBEDDED AND COMPLETELY SURROUNDED IN MAGNESIUM OXIDE, ENCLOSED AND SWAGED INTO CORROSION RESISTANT SHEATHS TO WHICH ARE PERMANENTLY ATTACHED CORROSION RESISTANT STEEL FINS. ELEMENT ASSEMBLIES SHALL BE CIRCULAR IN SHAPE AND ENCLOSED IN A CLOSELY FITTING CYLINDER CREATING A PRESSURE CHAMBER TO ASSURE UNIFORM AIRFLOW.

D. MOTORS SHALL BE TOTALLY ENCLOSED INDUSTRIAL RATED SINGLE-PHASE, PERMANENTLY LUBRICATED AND EQUIPPED WITH THERMAL OVERLOAD PROTECTION WITH AUTOMATIC RESET. UNITS RATED 20 KW AND LESS SHALL HAVE SHADED POLE MOTORS.

E. FAN BLADE SHALL BE OF THE AXIAL FLOW TYPE DESIGNED FOR HIGH EFFICIENCY AND QUIET OPERATION. FAN SPEED SHALL NOT EXCEED 1700 RPM.

F. ALL HEATERS SHALL BE EQUIPPED WITH A MANUAL RESET THERMAL CUTOUT WHICH DISCONNECTS ELEMENTS AND MOTORS IN THE EVENT NORMAL OPERATING TEMPERATURES ARE EXCEEDED.

G. HEATERS SHALL BE DESIGNED FOR A SINGLE SUPPLY CIRCUIT, WITH ELEMENTS, MOTOR AND CONTROL CIRCUITS SUBDIVIDED AND FUSED TO CONFORM TO THE NATIONAL ELECTRIC CODE, OCCUPATIONAL SAFETY AND HEALTH ACT (OSHA) AND UNDERWRITERS' LABORATORIES, INC., STANDARD 573-1968.

H. CONTACTORS AND CONTROL CIRCUIT TRANSFORMERS, WHERE REQUIRED, SHALL BE FACTORY ASSEMBLED AND WIRED WITH ONLY DIRECT LINE SUPPLY AND THERMOSTAT CONNECTIONS REQUIRED IN THE FIELD.

I. HEATERS ARE TO BE LISTED UNDER THE RE-EXAMINATION SERVICE OF UNDERWRITERS' LABORATORIES, INC. HEATERS SHALL BE GUARANTEED TO BE FREE FROM DEFECTIVE MATERIAL AND WORKMANSHIP FOR A PERIOD OF ONE (1) YEAR, WITH THE EXCEPTION OF THE HEATING ELEMENTS WHICH SHALL BE GUARANTEED FOR FIVE (5) YEARS.

2.10 HEAT PUMP

A. GENERAL

1. THE HEAT PUMP SYSTEM SHALL BE A MITSUBISHI ELECTRIC SPLIT SYSTEM WITH VARIABLE SPEED INVERTER COMPRESSOR TECHNOLOGY AS SCHEDULED ON THE DRAWINGS OR APPROVED EQUAL. THE SYSTEM SHALL CONSIST OF A HORIZONTAL DISCHARGE, A SINGLE PHASE CONDENSING UNIT, A MATCHED CAPACITY INDOOR SECTION THAT SHALL BE EQUIPPED WITH A WIRED WALL MOUNT AND A WIRELESS HANDHELD REMOTE CONTROLLER.

2. QUALITY ASSURANCE

A. ASSURANCE

B. THE UNITS SHALL BE TESTED BY A NATIONALLY RECOGNIZED TESTING LABORATORY (NRTL) AND SHALL BEAR THE ETL LABEL.

C. ALL WIRING SHALL BE IN ACCORDANCE WITH THE NATIONAL ELECTRICAL CODE (N.E.C.) AND LOCAL CODES AS REQUIRED.

D. THE UNITS SHALL BE RATED IN ACCORDANCE WITH AIR-CONDITIONING, HEATING, AND REFRIGERATION INSTITUTE'S (AHRI) STANDARD 240 AND BEAR THE ARI CERTIFICATION LABEL.

E. THE UNITS SHALL BE MANUFACTURED IN A FACILITY REGISTERED TO ISO 9001 AND ISO 14001, WHICH IS A SET OF STANDARDS APPLYING TO ENVIRONMENTAL PROTECTION SET BY THE INTERNATIONAL STANDARD ORGANIZATION (ISO).

F. A DRY AIR HOLDING CHARGE SHALL BE PROVIDED IN THE INDOOR SECTION.

G. THE OUTDOOR UNIT SHALL BE PRE-CHARGED WITH R-410A REFRIGERANT.

H. SYSTEM EFFICIENCY SHALL MEET OR EXCEED SEER / HSPF VALUES OF 14.0/8.9.

B. CONDENSING UNIT

1. THE OUTDOOR UNIT SHALL BE COMPATIBLE WITH THE FOUR DIFFERENT TYPES OF INDOOR UNITS (PCA - CEILING SUSPENDING, PEA / PEAD – DUCTED, PKA - WALL MOUNTED AND PLA - FOUR WAY RECESSED CEILING CASSETTE). THE CONNECTED INDOOR UNIT SHALL BE OF THE SAME CAPACITY AS THE OUTDOOR UNIT.

2. MODEL PUZ-HA24NHA SHALL HAVE THE OPTION TO CONNECT TO TWO, ONE-HALF CAPACITY, INDOOR UNITS.

3. THE CONDENSING UNIT SHALL BE EQUIPPED WITH AN ELECTRONIC CONTROL BOARD THAT INTERFACES WITH THE INDOOR UNIT TO PERFORM ALL NECESSARY OPERATION FUNCTIONS.

4. THE CONDENSING UNIT SHALL BE CAPABLE OF COOLING OPERATION DOWN TO 0°F AMBIENT TEMPERATURE WITHOUT ADDITIONAL LOW AMBIENT CONTROLS.

5. THE OUTDOOR UNIT SHALL BE ABLE TO OPERATE WITH A MAXIMUM HEIGHT DIFFERENCE OF 100 FEET BETWEEN INDOOR AND CONDENSING UNITS.

6. SYSTEM SHALL OPERATE AT UP TO A MAXIMUM REFRIGERANT TUBING LENGTH OF 265 FEET BETWEEN INDOOR AND CONDENSING UNITS WITHOUT THE NEED FOR LINE SIZE CHANGES, TRAPS OR ADDITIONAL OIL.

7. THE OUTDOOR UNIT SHALL BE COMPLETELY FACTORY ASSEMBLED, PIPED, AND WIRED. EACH UNIT MUST BE TEST RUN AT THE FACTORY.

8. OUTDOOR UNIT SOUND LEVEL SHALL NOT EXCEED 48 DB(A) FOR COOLING AND 50 DB(A) FOR HEATING.

9. CONDENSING UNIT SHALL HAVE WIND BAFFLE.

10. CABINET

A. THE CASING SHALL BE CONSTRUCTED FROM A GALVANIZED STEEL PLATE, FINISHED WITH AN ELECTROSTATICALLY APPLIED, THERMALLY FUSED ACRYLIC OR POLYESTER POWDER COATING FOR CORROSION PROTECTION AND HAVE A MUNSELL 3Y 7.8/1.1 FINISH.

B. MOUNTING FEET SHALL BE PROVIDED AND SHALL BE WELDED TO THE BASE OF THE CABINET AND BE OF SUFFICIENT SIZE TO AFFORD RELIABLE EQUIPMENT MOUNT AND STABILITY.

C. EASY ACCESS SHALL BE AFFORDED TO ALL SERVICEABLE PARTS BY MEANS OF REMOVABLE PANEL SECTIONS.

D. CABINET MOUNTING AND CONSTRUCTION SHALL BE SUFFICIENT TO WITHSTAND 155 MPH WIND SPEED CONDITIONS.

11. FAN

A. THE FAN BLADE(S) SHALL BE OF AERODYNAMIC DESIGN FOR QUIET OPERATION, AND THE FAN MOTOR

c:\pwworking\hmm\external\tyn61470\dms72788\071_0134CMN021.dgn 10/24/2014 11:11:32 AM TYN61470

DESIGN AGENCY
HATCH MOTT MacDONALD
18013 CLEVELAND PKWY.
SUITE 200
CLEVELAND, OH 44135

DESIGNED	DRAWN	REVIEWED	DATE
SCB	CMN	DGN	08/08/14
CHECKED	REVISED	STRUCTURE FILE NUMBER	
NAH	MFW	3106578	

GENERAL NOTES HVAC SHEET 4 OF 7
BRIDGE NO. HAM-71-0134
I-71 LYTLE TUNNEL UNDER LYTLE PARK

HAM-71-01.34
PID No. 87268

BEARINGS SHALL BE PERMANENTLY LUBRICATED.

B. THE CONDENSING UNIT SHALL HAVE HORIZONTAL DISCHARGE AIRFLOW. THE FAN SHALL BE MOUNTED IN FRONT OF THE COIL, PULLING AIR ACROSS IT FROM THE REAR AND DISPELLING IT THROUGH THE FRONT. THE FAN SHALL BE PROVIDED WITH A RAISED GUARD TO PREVENT EXTERNAL CONTACT WITH MOVING PARTS.

12. COIL

A. THE L SHAPED CONDENSER COIL SHALL BE OF COPPER TUBING WITH FLAT ALUMINUM FINS TO REDUCE DEBRIS BUILD UP AND ALLOW MAXIMUM AIRFLOW. THE COIL SHALL BE PROTECTED WITH AN INTEGRAL METAL GUARD.

B. REFRIGERANT FLOW FROM THE CONDENSER SHALL BE CONTROLLED BY MEANS OF AN ELECTRONIC LINEAR EXPANSION VALVE (LEV) METERING DEVICE. THE LEV SHALL BE CONTROLLED BY A MICROPROCESSOR CONTROLLED STEP MOTOR.

C. ALL REFRIGERANT LINES BETWEEN OUTDOOR AND INDOOR UNITS SHALL BE OF ANNEALED, REFRIGERATION GRADE COPPER TUBING, ARC TYPE, MEETING ASTM B280 REQUIREMENTS, INDIVIDUALLY INSULATED IN TWIN-TUBE, FLEXIBLE, CLOSED-CELL, CFC-FREE (OZONE DEPLETION POTENTIAL OF ZERO), ELASTOMERIC MATERIAL FOR THE INSULATION OF REFRIGERANT PIPES AND TUBES WITH THERMAL CONDUCTIVITY EQUAL TO OR BETTER THAN 0.27 BTU-INCH/HOUR PER SQ FT / °F, A WATER VAPOR TRANSMISSION EQUAL TO OR BETTER THAN 0.08 PERM-INCH AND SUPERIOR FIRE RATINGS SUCH THAT INSULATION WILL NOT CONTRIBUTE SIGNIFICANTLY TO FIRE AND UP TO 1" THICK INSULATION SHALL HAVE A - FLAME-SPREAD INDEX OF LESS THAN 25 AND A SMOKE-DEVELOPMENT INDEX OF LESS THAN 50 AS TESTED BY ASTM E 84 AND CAN / ULC S-102.

13. COMPRESSOR

A. THE COMPRESSOR SHALL BE A DC TWIN-ROTOR ROTARY COMPRESSOR WITH VARIABLE SPEED INVERTER DRIVE TECHNOLOGY.

B. THE COMPRESSOR SHALL BE DRIVEN BY INVERTER CIRCUIT TO CONTROL COMPRESSOR SPEED. THE COMPRESSOR SPEED SHALL DYNAMICALLY VARY TO MATCH THE ROOM LOAD FOR SIGNIFICANTLY INCREASING THE EFFICIENCY OF THE SYSTEM WHICH SHALL RESULT IN SIGNIFICANT ENERGY SAVINGS.

C. TO PREVENT LIQUID FROM ACCUMULATING IN THE COMPRESSOR DURING THE OFF CYCLE, A MINIMAL AMOUNT OF CURRENT SHALL BE AUTOMATICALLY, INTERMITTENTLY APPLIED TO THE COMPRESSOR MOTOR WINDINGS TO MAINTAIN SUFFICIENT HEAT TO VAPORIZE ANY REFRIGERANT. NO CRANKCASE HEATER IS TO BE USED.

D. THE OUTDOOR UNIT SHALL HAVE AN ACCUMULATOR AND HIGH PRESSURE SAFETY SWITCH. THE COMPRESSOR SHALL BE MOUNTED TO AVOID THE TRANSMISSION OF VIBRATION.

14. ELECTRICAL

A. THE ELECTRICAL POWER OF THE UNIT SHALL BE 208VOLTS, SINGLE PHASE, 60 HERTZ. THE UNIT SHALL BE CAPABLE OF SATISFACTORY OPERATION WITHIN VOLTAGE LIMITS OF 198 VOLTS TO 253 VOLTS.

B. POWER FOR THE INDOOR UNIT SHALL BE SUPPLIED FROM THE OUTDOOR UNIT VIA MITSUBISHI ELECTRIC A-CONTROL USING THREE (3) FOURTEEN (14) GAUGE AWG CONDUCTORS PLUS GROUND WIRE CONNECTING THE UNITS.

C. THE OUTDOOR UNIT SHALL BE CONTROLLED BY THE MICROPROCESSOR LOCATED IN THE INDOOR UNIT.

D. THE CONTROL SIGNAL BETWEEN THE INDOOR UNIT AND THE OUTDOOR UNIT SHALL BE PULSE SIGNAL 24 VOLTS DC.

E. THE UNIT SHALL HAVE PULSE AMPLITUDE MODULATION CIRCUIT TO UTILIZE 98% OF INPUT POWER SUPPLY.

C. INDOOR UNIT

1. PKA WALL MOUNTED TYPE

A. THE INDOOR UNIT SHALL BE FACTORY ASSEMBLED, WIRED AND TESTED. CONTAINED WITHIN THE UNIT SHALL BE ALL FACTORY WIRING AND INTERNAL PIPING, CONTROL CIRCUIT BOARD AND FAN MOTOR. THE UNIT, IN CONJUNCTION WITH THE WIRED, WALL MOUNTED CONTROLLER OR WIRELESS HANDHELD CONTROLLER, SHALL HAVE A SELF-DIAGNOSTIC FUNCTION, 3-MINUTE TIME DELAY MECHANISM, AN AUTO RESTART FUNCTION, AND A TEST RUN SWITCH. INDOOR UNIT AND REFRIGERANT PIPES SHALL BE PURGED WITH DRY NITROGEN BEFORE SHIPMENT FROM THE FACTORY.

2. UNIT CABINET

A. THE CABINET SHALL BE FORMED FROM HIGH STRENGTH MOLDED PLASTIC WITH SMOOTH FINISH, FLAT FRONT PANEL DESIGN WITH ACCESS FOR FILTER. CABINET COLOR SHALL BE WHITE – MUNSELL 1.0Y 9.2/0.2. THE UNIT SHALL BE WALL MOUNTED BY MEANS OF A FACTORY SUPPLIED, PRE-DRILLED, MOUNTING PLATE.

3. FAN

A. THE INDOOR UNIT FAN SHALL BE HIGH PERFORMANCE, DOUBLE INLET, FORWARD CURVE, DIRECT DRIVE SIROCCO FAN WITH A SINGLE MOTOR. THE FANS SHALL BE STATICALLY AND DYNAMICALLY BALANCED AND RUN ON A MOTOR WITH PERMANENTLY LUBRICATED BEARINGS. THE INDOOR FAN SHALL CONSIST OF THREE (3) SPEEDS: LOW, MID, AND HI AND AUTO. THE FAN SHALL HAVE A SELECTABLE AUTO FAN SETTING THAT WILL ADJUST THE FAN SPEED BASED ON THE DIFFERENCE BETWEEN CONTROLLER SET-POINT AND SPACE TEMPERATURE. INDOOR UNIT SOUND LEVEL SHALL NOT EXCEED 49 DB(A).

4. VANE

A. THERE SHALL BE A MOTORIZED HORIZONTAL VANE TO AUTOMATICALLY DIRECT AIR FLOW IN A HORIZONTAL AND DOWNWARD DIRECTION FOR UNIFORM AIR DISTRIBUTION. THE HORIZONTAL VANE SHALL SIGNIFICANTLY DECREASE DOWNWARD AIR RESISTANCE FOR LOWER SOUND LEVELS, AND SHALL CLOSE THE OUTLET PORT WHEN OPERATION IS STOPPED. THERE SHALL ALSO BE A SET OF VERTICAL VANES TO PROVIDE HORIZONTAL SWING AIRFLOW MOVEMENT.

5. FILTER

A. RETURN AIR SHALL BE FILTERED BY MEANS OF AN EASILY REMOVABLE WASHABLE FILTER.

6. COIL

A. THE EVAPORATOR COIL SHALL BE OF NONFERROUS CONSTRUCTION WITH PRE-COATED ALUMINUM STRAKE FINS ON COPPER TUBING. THE MULTI-ANGLED HEAT EXCHANGER SHALL HAVE A MODIFIED FIN SHAPE THAT REDUCES AIR RESISTANCE FOR A SMOOTHER, QUIETER AIRFLOW. ALL TUBE JOINTS SHALL BE BRAZED WITH PHOSCOPPER OR SILVER ALLOY. THE COILS SHALL BE PRESSURE TESTED AT THE FACTORY. A CONDENSATE PAN AND DRAIN SHALL BE PROVIDED UNDER THE COIL.

PROVIDE LITTLE GIANT MODEL VCM-15UL OR EQUAL CONDENSATE PUMP.

7. ELECTRICAL

A. THE ELECTRICAL POWER OF THE UNIT SHALL BE 208 VOLTS, 1 PHASE, 60 HERTZ. THE SYSTEM SHALL BE CAPABLE OF SATISFACTORY OPERATION WITHIN VOLTAGE LIMITS OF 198 VOLTS TO 253 VOLTS. THE POWER TO THE INDOOR UNIT SHALL BE SUPPLIED FROM THE OUTDOOR UNIT, USING THE MITSUBISHI ELECTRIC A-CONTROL SYSTEM. FOR A-CONTROL, A THREE (3) CONDUCTOR AWG-14 WIRE WITH GROUND SHALL PROVIDE POWER FEED AND BI-DIRECTIONAL CONTROL TRANSMISSION BETWEEN THE OUTDOOR AND INDOOR UNITS.

8. PERFORMANCE

A. THE SYSTEM SHALL PERFORM TO KEEP ELECTRICAL/CONTROL ROOM TEMPERATURE BETWEEN 60 AND 90 °F.

9. SYSTEM CONTROL

A. THE CONTROL SYSTEM SHALL CONSIST OF A MINIMUM OF TWO (2) MICROPROCESSORS, ONE ON EACH INDOOR AND OUTDOOR UNIT, INTERCONNECTED BY A SINGLE NON-POLAR TWO-WIRE CABLE. FIELD WIRING SHALL RUN DIRECTLY FROM THE INDOOR UNIT TO THE WALL MOUNTED CONTROLLER WITH NO SPLICES. THE MICROPROCESSOR LOCATED IN THE INDOOR UNIT SHALL HAVE THE CAPABILITY OF MONITORING RETURN AIR TEMPERATURE AND INDOOR COIL TEMPERATURE, RECEIVING AND PROCESSING COMMANDS FROM THE WIRED CONTROLLER, PROVIDING EMERGENCY OPERATION AND CONTROLLING THE OUTDOOR UNIT. THE CONTROL VOLTAGE FROM THE WIRED CONTROLLER TO THE INDOOR UNIT SHALL BE 12/24 VOLTS, DC. THE CONTROL SIGNAL BETWEEN THE INDOOR AND OUTDOOR UNIT SHALL BE PULSE SIGNAL 24 VOLTS DC. UP TO TWO WIRED CONTROLLERS SHALL BE ABLE TO BE USED TO CONTROL ONE UNIT.

B. FOR A-CONTROL, A THREE (3) CONDUCTOR 14 GA. AWG WIRE WITH GROUND SHALL PROVIDE POWER FEED AND BI-DIRECTIONAL CONTROL TRANSMISSION BETWEEN THE OUTDOOR AND INDOOR UNITS. IF CODE REQUIRES A DISCONNECT MOUNTED NEAR THE INDOOR UNIT, A TAZ-MS303 3-POLE DISCONNECT SHALL BE USED – ALL THREE CONDUCTORS MUST BE INTERRUPTED.

C. THE SYSTEM SHALL BE CAPABLE OF AUTOMATIC RESTART WHEN POWER IS RESTORED AFTER POWER INTERRUPTION.

c:\pwworking\hmm\externol\tyn61470\dms727888\071_013+CMN040.dgn 10/24/2014 11:11:40 AM TYN61470

DESIGN AGENCY
HATCH MOTT MacDONALD
18013 CLEVELAND PKWY.
SUITE 200
CLEVELAND, OH 44135

DESIGNED	DRAWN	REVIEWED	DATE
SCB	CMN	DGN	08/08/14
CHECKED	REVISED	STRUCTURE FILE NUMBER	
NAH	MFW	31065?8	

GENERAL NOTES HVAC SHEET 5 OF 7

BRIDGE NO. HAM-71-0134
I-71 LYTLE TUNNEL UNDER LYTLE PARK

HAM-71-01.34
PID No. 87268

THE SYSTEM SHALL HAVE SELF-DIAGNOSTICS ABILITY, INCLUDING TOTAL HOURS OF COMPRESSOR RUN TIME. DIAGNOSTIC CODES FOR INDOOR AND OUTDOOR UNITS SHALL BE DISPLAYED ON THE WIRED CONTROLLER PANEL.

D. THE INDOOR UNIT CONTROL BOARD SHALL HAVE AUXILIARY CONTROL CONTACT CONNECTORS TO PROVIDE:

Function / Model	PKA
CN-2L – Lossnay Control	X
CN-24(152) Back-up Heat	X
CN-32 – Remote Switch	X
CN-51 – Central Control	X
CN-105 – IP Terminal	X

X = INCLUDED

E. THE INDOOR UNIT SHALL BE CONNECTED TO A WALL MOUNTED WIRED CONTROLLER TO PERFORM INPUT FUNCTIONS NECESSARY TO OPERATE THE SYSTEM. THE WIRED CONTROLLER SHALL HAVE A LARGE MULTI-LANGUAGE DOT LIQUID CRYSTAL DISPLAY (LCD). THERE SHALL BE A BUILT-IN WEEKLY TIMER WITH UP TO EIGHT PATTERN SETTINGS PER DAY. THE CONTROLLER SHALL CONSIST OF AN ON/OFF BUTTON, INCREASE/DECREASE SET TEMPERATURE BUTTONS, A HEAT/COOL/AUTO/DRY MODE SELECTOR, A TIMER MENU BUTTON, A TIMER ON/OFF BUTTON, SET TIME BUTTONS, A FAN SPEED SELECTOR, A VENTILATION BUTTON, A TEST RUN BUTTON, AND A CHECK MODE BUTTON. THE CONTROLLER SHALL HAVE A BUILT-IN TEMPERATURE SENSOR. TEMPERATURE SHALL BE DISPLAYED IN FAHRENHEIT (°F). TEMPERATURE CHANGES SHALL BE BY INCREMENTS OF 1°F WITH A RANGE OF 67°F TO 87°F.

F. THE WIRED CONTROLLER SHALL DISPLAY OPERATING CONDITIONS SUCH AS SET TEMPERATURE, ROOM TEMPERATURE, PIPE TEMPERATURES (I.E. LIQUID, DISCHARGE, INDOOR AND OUTDOOR), COMPRESSOR OPERATING CONDITIONS (INCLUDING RUNNING CURRENT, FREQUENCY, INPUT VOLTAGE, ON/OFF STATUS AND OPERATING TIME), LEV OPENING PULSES, SUB COOLING AND DISCHARGE SUPER HEAT. NORMAL OPERATION OF THE WIRED CONTROLLER SHALL PROVIDE INDIVIDUAL SYSTEM CONTROL IN WHICH ONE WIRED CONTROLLER AND ONE INDOOR UNIT ARE INSTALLED IN THE SAME ROOM. THE CONTROLLER SHALL HAVE THE CAPABILITY OF CONTROLLING UP TO A MAXIMUM OF SIXTEEN SYSTEMS, AS A GROUP WITH THE SAME MODE AND SET-POINT FOR ALL, AT A MAXIMUM DEVELOPED CONTROL CABLE DISTANCE OF 1,500 FEET.

G. CONTROL SYSTEM SHALL PROVIDE ON/OFF AND MODE SWITCHING. THE CONTROLLER SHALL HAVE THE CAPABILITY TO PROVIDE SEQUENTIAL STARTING WITH UP TO FIFTY SECONDS DELAY.

H. THE UNIT SHALL HAVE A WIRELESS REMOTE CONTROLLER TO PERFORM INPUT FUNCTIONS NECESSARY TO OPERATE THE SYSTEM. WITH THE CONTROLLER, A WIRELESS RECEIVER ASSEMBLY MUST BE FURNISHED WHICH SHALL BE PLUG AND FIT COMPATIBLE WITH THE INDOOR UNIT.

(1) THE CONTROLLER SHALL HAVE A POWER ON/OFF SWITCH, MODE SELECTOR – COOL, DRY, HEAT, AUTO, AND POWERFUL MODES - TEMPERATURE SETTING, TIMER CONTROL, FAN SPEED SELECT AND HORIZONTAL AND VERTICAL VANE CONTROL SELECTOR. THERE SHALL BE AN I-SEE® SENSOR AREA SELECTOR CONTROL. THE INDOOR UNIT SHALL PERFORM SELF-DIAGNOSTIC FUNCTION AND CHECK MODE SWITCHING. TEMPERATURE CHANGES SHALL BE IN 1ºF INCREMENTS WITH A SETTING RANGE OF 61 TO 88ºF.

(2) THE MICROPROCESSOR LOCATED IN THE INDOOR UNIT SHALL HAVE THE CAPABILITY OF SENSING RETURN AIR TEMPERATURE AND INDOOR COIL TEMPERATURE, RECEIVING AND PROCESSING COMMANDS FROM THE WIRELESS OR A WIRED CONTROLLER, PROVIDING EMERGENCY OPERATION AND CONTROLLING THE OUTDOOR UNIT.

I. THE INDOOR UNIT SHALL SEND AN ALARM SIGNAL TO SCADA SYSTEM THROUGH A CONNECTOR.

2.11 AUTOMATIC DAMPERS

A. PROVIDE AUTOMATIC DAMPER AS SHOWN AND SIZED ON DRAWINGS

B. ALL AUTOMATIC DAMPERS SHALL BE FURNISHED BY THE CONTRACTOR. DAMPERS SHALL BE SINGLE OR MULTIPLE BLADES AS REQUIRED. ALL BLANK-OFF PLATES AND CONVERSIONS NECESSARY TO INSTALL SMALLER OR LARGER THAN DUCT SIZE DAMPERS SHALL BE THE RESPONSIBILITY OF THE CONTRACTOR. ALL DAMPERES SHALL BE RUSKING MODELS CD-50 OR APPROVED EQUAL.

C. ALL DAMPER FRAMES SHALL BE CONSTRUCTED OF EXTRUDED ALUMINUM WITH 5" X 1" X 1.25" EXTRUDED ALUMINUM AND SHALL HAVE FLANGES FOR DUCT MOUNTING. ALL MULTIPLE DAMPER SECTIONS MUST HAVE JACKSHAFTS.

D. DAMPER BLADES SHALL NOT EXCEED 6" IN WIDTH. ALL BLADES SHALL BE OF EXTRUDED ALUMINUM AIRFOIL TYPE CONSTRUCTION, FABRICATED FROM 6063-T5 ALUMINUM. BLADES SHALL BE SUITABLE FOR HIGH VELOCITY PERFORMANCE, ULTRA-LOW LEAKAGE TYPE, WITH LEAKAGE NOT GREATER THAN 6.2 CFM/SQ.FT. AT 4" W.G. PRESSURE DIFFERENTIAL FOR 48" X 48" DAMPER SIZE, AS PUBLISHED AND CERTIFIED UNDER AMCA CERTIFIED RATINGS PROGRAM. DAMPER LEAKAGE SHALL BE LESS THAN 0.1% OF TOTAL CFM AT MAXIMUM DAMPER SYSTEM VELOCITY.

E. ALL DAMPER BEARINGS SHALL BE MADE OF NYLON OR MOLDED SYNTHETIC. BUSHINGS THAT TURN IN THE BEARINGS ARE TO BE OIL IMPREGNATED SINTERED METAL.

F. REPLACEABLE BUTYL RUBBER SEALS SHALL BE PROVIDED WITH THE DAMPER. SEALS SHALL BE INSTALLED ALONG THE TOP, BOTTOM, AND SIDES OF THE FRAME AND ALONG EACH BLADE EDGE. SEALS SHALL PROVIDE A TIGHT CLOSING. LOW LEAKAGE DAMPER LEAKAGE AND FLOW CHARACTERISTIC CHARTS MUST BE SUBMITTED TO THE ENGINEER PRIOR TO APPROVAL OF DAMPERS.

G. THE HVAC CONTRACTOR SHALL PROVIDE AN ACCESS DOOR UPSTREAM AND DOWNSTREAM OF EACH AUTOMATIC DAMPER LOCATION.

H. AUTOMATIC DAMPER SHALL INTERLOCK WITH EXHAUST FAN (EF-1).

PART 3 - EXECUTION AND WORKMANSHIP

3.01 EQUIPMENT AND SYSTEMS

A. THE ENGINEER WILL CHECK THE COMPLETED INSTALLATION EITHER SEQUENTIALLY AS DIFFERENT PARTS ARE COMPLETED. ALL SYSTEM SHALL BE INSTALLED BASED ON HIGH PRESSURE PRESENT IN TUNNEL FAN PLENUM AREA. RUN DUCTWORK TIGHT TO THE BUILDING STRUCTURE FOR RIGID INSTALLATION.

3.02 SPECIAL RESPONSIBILITIES

A. COORDINATION:

1. OBTAIN & SUBMIT DETAILED INSTALLATION INFORMATION FROM MANUFACTURERS OF EQUIPMENT PROVIDED UNDER THIS SECTION.

2. MAINTAIN HVAC EQUIPMENT AND SYSTEMS UNTIL FINAL ACCEPTANCE. ENSURE ADEQUATE PROTECTION OF EQUIPMENT AND MATERIAL DURING DELIVERY, STORAGE AND INSTALLATION.

3.03 MATERIALS AND WORKMANSHIP

A. WORK SHALL BE NEAT AND RECTILINEAR. DUCTWORK AND PIPING SHALL RUN CONCEALED EXCEPT IN MECHANICAL ROOMS AND AREAS WHERE NO HUNG CEILING EXISTS. INSTALLATION SHALL OPERATE SAFELY AND WITHOUT LEAKAGE, UNDUE WEAR, NOISE, VIBRATION, CORROSION OR WATERHAMMER.

3.04 CONTINUITY OF SERVICES

A. DO NOT INTERRUPT EXISTING SERVICES WITHOUT OWNER'S APPROVAL.

B. SCHEDULE INTERRUPTIONS IN ADVANCE, ACCORDING TO OWNER'S INSTRUCTIONS. SUBMIT, IN WRITING, WITH REQUEST FOR INTERRUPTION, METHODS PROPOSED TOMINIMIZE LENGTH OF INTERRUPTION.

3.05 ACCESS AND ACCESS PANELS

A. PROVIDE PROPER ACCESS TO MATERIALS AND EQUIPMENT THAT REQUIRE INSPECTION, REPLACEMENT, REPAIR OR SERVICE AND COORIDINATE THEIR DELIVERY WITH THEINSTALLING TRADE.

B. COORDINATE AND PREPARE A LOCATION, SIZE, AND FUNCTION SCHEDULE OF ACCESS PANELS REQUIRED TO FULLY SERVICE EQUIPMENT AND DELIVER TO A REPRESENTATIVE OF THE INSTALLING TRADE.

C. FURNISH ACCESS PANELS FOR INSTALLATION UNDER OTHER SECTIONS WHERE FIRE DAMPERS, VOLUME DAMPERS, CONTROLS, SHUT-OFF VALVES, CONTROL VALVES, CHECK VALVES, OR OTHER ITEMS INSTALLED UNDER THIS SECTION REQUIRE ACCESS AND ARE CONCEALED IN FLOOR, WALL, FURRED SPACE OR ABOVE CEILING. ACCESS PANELS SHALLBE BY MILCOR, KNAPP, INLAND STEEL, OR APPROVED EQUAL.

D. PANELS SHALL BE AT LEAST 12 IN. X 12 IN.

3.06 PENETRATIONS AND SLEEVES

A. GENERAL

1. PROVIDE PIPE AND DUCT SLEEVES AND PACKING MATERIALS AS SPECIFIED AND AS SHOWN ON DRAWINGS.

2. SLEEVES FOR INSULATED PIPE AND DUCT IN NON-FIRE RATED CONSTRUCTION SHALL ACCOMMODATE CONTINUOUS INSULATION WITHOUT COMPRESSION.

3.07 ANCHORS

A. INSERTS SHALL BE IRON OR STEEL OF TYPE TO RECEIVE MACHINE BOLT HEAD OR NUT AFTER INSTALLATION. INSERTS SHALL

c:\pwworking\hmm\externo\tyn61470\dms72788\071_0134CMN04.dgn 10/24/2014 11:11:47 AM TYN61470

DESIGN AGENCY
HATCH MOTT MacDONALD
18013 CLEVELAND PKWY.
SUITE 200
CLEVELAND, OH 44135

DESIGNED SCB | DRAWN CMN | REVIEWED DGN | DATE 08/08/14 | CHECKED NAH | REVISED MFW | STRUCTURE FILE NUMBER 3106578

GENERAL NOTES HVAC SHEET 6 OF 7
BRIDGE NO. HAM-71-0134
I-71 LYTLE TUNNEL UNDER LYTLE PARK

HAM-71-01.34
PID No. 87268

PERMIT ADJUSTMENT OF BOLT IN ONE HORIZONTAL DIRECTION AND SHALL DEVELOP STRENGTH OF BOLT WHEN INSTALLED IN PROPERLY CURED CONCRETE.

B. PROVIDE ANCHORS AS NECESSARY FOR ATTACHMENT OF EQUIPMENT AND DUCT SUPPORTS AND HANGERS.

3.08 STARTUP, TESTING AND BALANCING

A. GENERAL

1. PROVIDE QUALIFIED PERSONNEL, EQUIPMENT, APPARATUS AND SERVICES FOR START-UP, TESTING AND BALANCING OF MECHANICAL SYSTEM, TO PERFORMANCE DATA SHOWNIN SCHEDULES, AS SPECIFIED, AND AS REQUIRED. NOTIFY ENGINEER AND AUTHORITIES INVOLVED AT LEAST TWO WEEKS BEFORE START-UP, TESTING AND BALANCING BEGINS.

2. THE SUBCONTRACTOR SHALL DO THE FOLLOWING PRIOR TO STARTING THE HVAC SYSTEM.

   A. CHECK EQUIPMENT ALIGNMENT.

   B. CHECK EQUIPMENT ROTATION.

   C. CHECK V-BELT DRIVES AND SHEAVES.

   D. CHECK OPERATION OF ALL MANUAL DAMPERS.

B. THE CONTRACTOR SHALL THEN START THE HVAC SYSTEM AND CHECK FOR PROPER OPERATION. ALL SAFETY CONTROLS SHALL BE TESTED. THE HVAC SYSTEM SHALL THEN BE ADJUSTED TO PROVIDE THE OPERATION CALLED FOR ON THE DRAWINGS AND IN THESE SPECIFICATIONS.

C. FINAL ACCEPTANCE OF THE HVAC SYSTEM AND ITS OPERATION SHALL BE SUBJECT TO APPROVAL OF SAME BY THE ENGINEER.

3.09 AIR BALANCING

A. THE HVAC SYSTEM SHALL BE ADJUSTED AND BALANCED AFTER ALL INSTALLATION WORK AND START-UP WORK IS COMPLETE. BALANCING WORK SHALL BE PERFORMED BY AN INDEPENDENT CERTIFIED BALANCING SUBCONTRACTOR WITH A MINIMUM OFFIVE (5) YEARS EXPERIENCE IN THE BALANCING OF AIR AND WATER SYSTEMS.

B. PRIOR TO BALANCING OF THE AIR SYSTEMS, THE CONTRACTOR SHALL PERFORM THE FOLLOWING WORK, AS APPLICABLE.

1. EXAMINE THE AIR SYSTEMS TO SEE THAT THEY ARE FREE OF OBSTRUCTIONS.

2. VERIFY THAT ALL DIFFUSERS AND REGISTERS ARE OPEN.

3. VERIFY THAT ALL MOTORIZED DAMPERS AND VALVES AREIN THE CORRECT POSITION.

4. CHECK FANS FOR PROPER ROTATION.

C. THE CONTRACTOR SHALL INFORM THE ENGINEER PROMPTLY IF, IN HIS OPINION, THE SYSTEM CANNOT BE MADE TO PERFORM AS SPECIFIED.

D. THE CONTRACTOR SHALL THEN PERFORM THE FOLLOWING WORK, AS APPLICABLE:

1. ADJUST DIFFUSERS AND REGISTERS BY MEANS OF DAMPERS TO DELIVER OR REMOVE THE SPECIFIED QUANTITIES. EACH DIFFUSER SHALL DELIVER THE DESIGNATED CFM IN THE PROPER PATTERN.

2. MEASURE AIR FLOWS AND PRESSURES AT BRANCH TAKE OFF POINTS TO ENSURE SPECIFIED AIR QUANTITIES ARE BEING DELIVERED TO AND REMOVED FROM ALL ZONES. AIR FLOWS SHALL BE BY THE DUCT TRAVERSE METHOD.

3. ADJUST FAN SPEEDS, AS APPLICABLE, AS REQUIRED TO MOVE THE SPECIFIED AIR QUANTITIES. THE CONTRACTOR SHALL CONTINUOUSLY MONITOR FAN MOTOR CURRENT DRAW DURING BALANCING AND ADJUSTING WORK TO INSURE THAT THE MOTOR IS NOT OVERLOADED.

4. TABULATE THE RESULTS OF BALANCING ON APPROVED AABC FORMS AND SUBMIT THREE (3) COPIES TO THE ENGINEER FOR APPROVAL AND RECORD.

5. PERFORM THIS WORK IN ACCORDANCE WITH THE LATEST PROCEDURES AND STANDARDS DESCRIBED IN THE AABC BALANCING AND ADJUSTING MANUAL.

3.10 OPERATING INSTRUCTIONS AND MAINTENANCE MANUALS

A. AT COMPLETION OF THE WORK OF THIS SECTION OF THE SPECIFICATIONS, THIS SUBCONTRACTOR SHALL GIVE DETAILED INSTRUCTIONS IN THE OPERATION AND MAINTENANCE OF ALL EQUIPMENT AND DEVICES INSTALLED UNDER THIS SECTION OF THE SPECIFICATIONS TO RESPONSIBLE PERSONNEL DESIGNATED BY THE OWNER. A LETTER CONTAINING THE NAME OF THE PERSON OR PERSONS TO WHOM THE INSTRUCTIONS WERE GIVEN AND THE DATES OF THE INSTRUCTION PERIOD SHALL BE SUBMITTED TO THE ENGINEER.

B. AT COMPLETION OF THE WORK OF THIS SECTION OF THE SPECIFICATIONS, THE CONTRACTOR SHALL PREPARE AND DELIVER TO THE ENGINEER THREE (3) COMPLETE MAINTENANCE MANUALS COVERING ALL EQUIPMENT AND DEVICES INSTALLED UNDER THIS SECTION OF THE SPECIFICATIONS. THE MANUALS SHALL CONTAIN, FOR EACH PIECE OF EQUIPMENT AND DEVICE, COMPLETE MANUFACTURER'S DESCRIPTIONS INCLUDING PHOTOGRAPHS, DIMENSIONED DRAWINGS, AND WIRING DIAGRAMS. THE MANUALS SHALL PROVIDE COMPLETE INSTRUCTIONS FOR THE PROPER OPERATION AND USE OF THE EQUIPMENT AND DEVICE, AND SHALL INCLUDE COPIES OF POSTED SPECIFIC INSTRUCTIONS. THE MANUALS SHALL CONTAIN ONLY THAT INFORMATION WHICH SPECIFICALLY APPLIES TO THIS PROJECTAND ALL UNRELATED MATERIAL SHALL BE DELETED. DURING THE INSTRUCTION PERIOD THIS MANUAL SHALL BE USED AND EXPLAINED. THE MANUALS SHALL BE BOUND IN NOTEBOOKFORM AND INDEXED.

C. THE SUBCONTRACTOR SHALL PROVIDE NAMES, ADDRESSES, AND TELEPHONE NUMBERS OF THE MANUFACTURER'S REPRESENTATIVES AND SERVICE COMPANIES FOR EACH PIECE OF EQUIPMENT AND DEVICE SO THAT REPLACEMENT PARTS AND SERVICE CAN BE READILY OBTAINED.

3.11 MEASUREMENT AND PAYMENT

A. THE DEPARTMENT WILL MEASURE THE QUANTITY OF HVAC ON A LUMP SUM BASIS. THE PRICE PAID SHALL INCLUDE ALL NECESSARY LABOR, MATERIAL, TOOLS, AND EQUIPMENT TO COMPLETE THE WORK.

ITEM	UNIT	DESCRIPTION
SPECIAL HVAC	LUMP	ITEM SPECIAL – MISC.:

c:\pwworking\hmm\external\tyn61470\dms72788\071_0134CVN042.dgn 10/24/2014 11:11:58 AM TYN61470

ITEM 530 – SPECIAL – STRUCTURE, MISC.: CARBON MONOXIDE DETECTION SYSTEM

PART 1 - GENERAL

1.01 GENERAL REQUIREMENTS

A. THE CONTRACTOR SHALL FURNISH ALL LABOR, EQUIPMENT AND MATERIALS, AND PERFORM ALL OPERATIONS REQUIRED TO INSTALL THE CARBON MONOXIDE DETECTION SYSTEM AS INDICATED AND DESCRIBED IN THE CONTRACT DRAWINGS. THE CONTRACTOR SHALL FURNISH ALL CONDUIT, WIRING, OUTLET BOXES, JUNCTION BOXES, CABINETS, AND SIMILAR DEVICES NECESSARY FOR THE COMPLETE INSTALLATION. THE SYSTEM SHALL INCLUDE, BUT NOT BE LIMITED TO ALL CONTROL AND COMMUNICATION EQUIPMENT, POWER SUPPLIES, CARBON MONOXIDE DETECTORS, AUDIBLE AND VISIBLE NOTIFICATION EQUIPMENT, CONDUITS, WIRES, FITTINGS, AND ALL OTHER ACCESSORIES REQUIRED TO PROVIDE A COMPLETE AND OPERABLE CONTROL SYSTEM.

B. THE WORK COVERED BY THIS SPECIFICATION WILL INCLUDE THE FOLLOWING WORK TO BE PERFORMED BY THE CONTRACTOR:

1. IT IS THE CONTRACTOR'S RESPONSIBILITY TO FIELD VERIFY ALL DIMENSIONS AND QUANTITIES.
2. TESTING OF THE COMPLETE CARBON MONOXIDE DETECTION SYSTEM FOR ALARM, TROUBLE, AND SUPERVISORY FUNCTIONS UPON COMPLETION OF THE INSTALLATION.
3. THE CONTRACTOR SHALL TRAIN ODOT'S MAINTENANCE PERSONNEL.
4. COMMUNICATION BETWEEN THE CARBON MONOXIDE DETECTION SYSTEM AND THE SCADA SYSTEM.

1.02 REFERENCES

A. REFERENCE STANDARDS SHALL INCLUDE AS A MINIMUM BUT NOT LIMITED TO:

1. NATIONAL FIRE PROTECTION ASSOCIATION STANDARD 720, STANDARD FOR THE INSTALLATION OF CARBON MONOXIDE (CO) DETECTION AND WARNING EQUIPMENT.
2. NATIONAL FIRE PROTECTION ASSOCIATION STANDARD 101, LIFE SAFETY CODE.
3. NATIONAL FIRE PROTECTION ASSOCIATION STANDARD 70, NATIONAL ELECTRICAL CODE.
4. ARTICLE 210, BRANCH CIRCUITS.
5. ARTICLE 760, FIRE PROTECTIVE SIGNALING SYSTEMS.
6. ARTICLE 500, HAZARDOUS AREAS.
7. NATIONAL FIRE PROTECTION ASSOCIATION STANDARD 72, NATIONAL FIRE ALARM CODE.
8. NATIONAL FIRE PROTECTION ASSOCIATION STANDARD 502, HIGHWAYS, TUNNELS, BRIDGES.

B. OTHER REFERENCES:

1. U.S. DEPARTMENT OF TRANSPORTATION MEMORANDUM 38, REVISED GUIDELINES FOR CONTROL OF CARBON MONOXIDE (CO) LEVELS IN TUNNELS – DATED MARCH 31 1989.

1.03 QUALITY CONTROL

A. EACH COMPONENT SHALL BE FACTORY MUTUAL APPROVED AND/OR LISTED UNDER THE APPROPRIATE CATEGORY BY UNDERWRITERS' LABORATORIES, INC. (UL), AND SHALL BEAR THE "FM" AND/OR "UL" LABELS.

B. THE SYSTEM SHALL COMPLY WITH ALL STATE AND LOCAL CODES WITH NO EXCEPTION.

C. THE INSTALLATION SHALL BE MADE IN ACCORDANCE WITH THE APPLICABLE PROVISIONS OF THE LATEST PUBLISHED EDITION OF THE REFERENCED STANDARDS AS WELL AS THE EQUIPMENT MANUFACTURERS' INSTALLATION INSTRUCTIONS.

D. THE SYSTEM SHALL BE TESTED IN ACCORDANCE WITH THE LATEST EDITION OF THE FOLLOWING:

1. NATIONAL FIRE PROTECTION ASSOCIATION STANDARD 720, STANDARD FOR THE INSTALLATION OF CARBON MONOXIDE (CO) DETECTION AND WARNING EQUIPMENT.
2. THE EQUIPMENT MANUFACTURER'S TESTING INSTRUCTIONS.

E. THE EQUIPMENT FURNISHED UNDER THIS SPECIFICATION SHALL BE PROVIDED BY A MANUFACTURER WHO HAS BEEN MANUFACTURING THIS TYPE OF EQUIPMENT FOR THE PAST FIVE YEARS WITH A SUCCESSFUL RECORD IN HIGHWAY TUNNELS INSTALLATION.

F. THE CONTRACTOR SHALL PROVIDE A SERVICE TECHNICIAN WITHIN 24-HOURS OF A REQUEST FOR ON-SITE SERVICE WITHIN TWO YEAR PAST PROJECT COMPLETION.

G. THE MANUFACTURER SHALL WARRANTY AGAINST MANUFACTURER'S DEFECTS ALL NEW SYSTEM EQUIPMENT FOR A PERIOD OF ONE (1) YEAR FROM THE DATE OF PROJECT ACCEPTANCE. THE WARRANTEE SHALL INCLUDE; SERVICE, PARTS AND LABOR.

1.04 QUALIFICATIONS OF THE CONTRACTOR

A. THE CONTRACTOR CONNECTED WITH THE PROJECT SHALL PROVIDE PROOF OF COMPETENCE OF BOTH THEIR COMPANY AND THE INDIVIDUAL FOREMAN ASSIGNED TO THIS PROJECT. THEY SHALL DEMONSTRATE, IN A MANNER ACCEPTABLE TO THE ENGINEER, PROFICIENCY IN INSTALLING CARBON MONOXIDE DETECTION, ALARM, AND CONTROL SYSTEMS FOR AT LEAST TWO YEARS.

1. THE CONTRACTOR SHALL PROVIDE DOCUMENTATION INDICATING RECENT PROJECTS OF SIMILAR SIZE WHERE THE CONTRACTOR WAS RESPONSIBLE FOR PROVIDING THE COMPLETE INSTALLATION OF CARBON MONOXIDE DETECTION, ALARM, AND CONTROL SYSTEMS.

1.05 RELATED DOCUMENTS

A. PRIOR TO COMMENCEMENT AND AFTER COMPLETION OF WORK, THE CONTRACTOR SHALL PROVIDE WRITTEN NOTIFICATION TO THE ENGINEER. THE CONTRACTOR SHALL PROVIDE TO THE ENGINEER A SIGNED WRITTEN STATEMENT, SUBSTANTIALLY IN FORM AS FOLLOWS:

1. "THE UNDERSIGNED, HAVING BEEN ENGAGED AS THE CONTRACTOR ON THE CARBON MONOXIDE DETECTION SYSTEM INSTALLATION ON THE PROJECT, CONFIRMS THAT THE CARBON MONOXIDE DETECTION EQUIPMENT WAS INSTALLED IN ACCORDANCE WITH THE WIRING DIAGRAMS, INSTRUCTIONS, DIRECTIONS, AND TECHNICAL SPECIFICATIONS PROVIDED TO US BY THE MANUFACTURER AND THE ENGINEER."

1.06 SUBMITTALS

A. THE CONTRACTOR SHALL NOT ORDER ANY EQUIPMENT, NOR PERFORM ANY INSTALLATIONS, PRIOR TO COMPLETION OF REVIEW OF THE SUBMITTALS BY THE ENGINEER.

B. ALL SUBMITTALS SHALL INCLUDE PROJECT NAME, DATE, REVISION NUMBER, MANUFACTURER AND PAGE NUMBER ON EACH PAGE.

C. THE CONTRACTOR SHALL SUBMIT TO THE ENGINEER SUFFICIENT INFORMATION TO DESCRIBE THEIR QUALIFICATIONS, THE WORK EFFORTS TO BE PERFORMED, AND THE MATERIALS TO BE PROVIDED. THE CONTRACTOR SHALL CERTIFY THAT HE/SHE HAS REVIEWED THE DOCUMENTATION TO VERIFY: DIMENSIONS; QUANTITIES; INSTALLATION AND FABRICATION TECHNIQUES, PROCEDURES, AND SEQUENCES; AND GOOD WORKMANSHIP AND SAFETY PRECAUTIONS; AND THAT THEY ARE IN CONFORMANCE WITH THIS SPECIFICATION. AS A MINIMUM, EACH CONTRACTOR SHALL INCLUDE THE FOLLOWING SUBMITTALS WITH THEIR BIDS.

1. MANUFACTURER'S QUALIFICATIONS, INDICATING YEARS IN BUSINESS, SERVICE CAPABILITIES AND POLICIES, WARRANTY COVERAGE AND DURATION, SPARE PARTS SUPPORT, AND A LIST OF SIMILAR INSTALLATIONS.
2. CONTRACTOR'S QUALIFICATIONS, INDICATING YEARS IN BUSINESS AND PRIOR EXPERIENCE WITH INSTALLATIONS THAT INCLUDE THE TYPE OF EQUIPMENT THAT IS TO BE SUPPLIED. CONTRACTORS SHALL DEMONSTRATE, IN A MANNER ACCEPTABLE TO THE ENGINEER, PROFICIENCY IN INSTALLING SIMILAR CARBON MONOXIDE DETECTION, ALARM, AND CONTROL SYSTEMS FOR AT LEAST TWO YEARS.

D. THE CONTRACTOR SHALL SUBMIT OPERATIONS AND MAINTENANCE MANUALS, THESE SHALL CONTAIN INFORMATION ON BUT NOT LIMITED TO:

1. TESTING OF THE CARBON MONOXIDE DETECTION SYSTEM EQUIPMENT.
2. FREQUENCY BY WHICH THE ELECTROCHEMICAL CELL SHALL BE REPLACED.
3. TROUBLESHOOTING OF THE CARBON MONOXIDE DETECTION SYSTEM.
4. A WIRING DIAGRAM OF THE COMPLETE CARBON MONOXIDE DETECTION SYSTEM.
5. A COMPLETE POINT-TO-POINT CARBON MONOXIDE SYSTEM EQUIPMENT INSTALLATION DIAGRAM.
6. RELIABILITY, RECALIBRATION, OPERATION AND MAINTENANCE OF THE EQUIPMENT TO BE SUPPLIED.

E. AS A MINIMUM, THE AWARDED CONTRACTOR SHALL SUBMIT FIVE (5) COPIES AND TWO (2) DIGITAL COPIES OF THE FOLLOWING PRIOR TO PERFORMING ANY WORK:

1. A SCHEDULE INDICATING THE INSTALLATION SEQUENCE, THE TIME FRAME, AND DETAILS ON HOW THE CARBON MONOXIDE DETECTION SYSTEM ACTIVATION AND SWITCH-OVER WILL OCCUR. THIS SCHEDULE SHALL ENSURE THAT

c:\pwworking\hmm\external\tyn61470.dms72788\071_0134CMN010.dgn 10/24/2014 11:12:07 AM TYN61470

DESIGN AGENCY
HATCH MOTT MacDONALD
18013 CLEVELAND PKWY.
SUITE 200
CLEVELAND, OH 44135

DESIGNED	DRAWN	REVIEWED	DATE
KSK	CMN	DCN	08/07/14
CHECKED	REVISED	STRUCTURE FILE NUMBER	
NAH	KSK	3106578	

CARBON MONOXIDE DETECTION SYSTEM – GENERAL NOTES SHEET 1 OF 4

BRIDGE NO. HAM-71-0134
I-71 LYTLE TUNNEL UNDER LYTLE PARK

HAM-71-01.34
PID No. 87268

SYSTEM DOWN-TIME IS KEPT TO A MINIMUM. PROJECTED DATES OF DELIVERY OF THE EQUIPMENT TO BE SUPPLIED, INSTALLATION COMPLETION, DEMONSTRATION TEST AND FINAL TEST/ACCEPTANCE DATES SHALL BE INCLUDED.

2. THE CONTRACTOR SHALL SUBMIT COMPLETE SETS OF MAINTENANCE INSTRUCTION MANUALS TO THE ENGINEER. MANUFACTURER'S ORIGINAL CATALOG DATA AND DESCRIPTIVE INFORMATION FOR ALL COMPONENTS OF THE SYSTEM.

3. A COMPLETE LIST OF ELECTRICAL CURRENT REQUIREMENTS DURING NORMAL, SUPERVISORY, TROUBLE, AND ALARM CONDITIONS FOR EACH COMPONENT OF THE SYSTEM.

4. SUFFICIENT INFORMATION SO THAT THE EXACT FUNCTION IS KNOWN OF EACH INSTALLED DEVICE.

F. UPON COMPLETION OF THE INSTALLATION OF THE CARBON MONOXIDE DETECTION SYSTEM, THE CONTRACTOR SHALL SUBMIT THE FOLLOWING;

1. THE CONTRACTOR SHALL SUBMIT A NOTICE TO THE ENGINEER THAT THE CARBON MONOXIDE SYSTEM HAS BEEN SATISFACTORILY TESTED BY THE CONTRACTOR AND THE MANUFACTURER'S REPRESENTATIVE AND IS READY FOR THE DEMONSTRATION TEST.

2. AT THE TIME OF NOTIFICATION, THE CONTRACTOR SHALL SUBMIT THE "DEMONSTRATION TEST PLAN" WHICH SHALL DESCRIBE HOW THE SYSTEM WILL BE TESTED. THE DEMONSTRATION TEST PLAN, PREPARED BY THE CONTRACTOR AND THE MANUFACTURER'S TECHNICAL REPRESENTATIVE AND SIGNED BY THEM, ATTESTING THAT THE SYSTEM IS IN COMPLETELY SATISFACTORY AND OPERABLE CONDITION, SHALL BE SUBMITTED TO THE ENGINEER PRIOR TO AGREEING TO SCHEDULE THE DEMONSTRATION TEST.

G. THE CONTRACTOR SHALL SUBMIT A TRAINING SCHEDULE TO ODOT'S MAINTENANCE PERSONNEL WITH AT LEAST A MONTH NOTICE.

H. UPON COMPLETION OF THE DEMONSTRATION TEST AND THE CORRECTION OF ANY DEFICIENCIES, THE CONTRACTOR SHALL SUBMIT "AS-BUILT" DRAWINGS. "AS-BUILT" DRAWINGS WHICH SHALL INCLUDE ORIGINAL MANUFACTURER'S SPECIFICATION AND INSTALLATION INSTRUCTION SHEETS.

PART 2 - PRODUCTS

2.01 CARBON MONOXIDE DETECTION

A. THE SYSTEM SHALL BE CONFIGURED SUCH THAT ALARM INDICATIONS OVERRIDE TROUBLE CONDITIONS.

B. THE SYSTEM SHALL PROVIDE CONTACTS TO INTERFACE WITH THE SYSTEM TRANSMITTING A SIGNAL TO THE CENTRAL RECEIVING STATION, SUPERVISE EACH SYSTEM FOR CONDITIONS WHICH WOULD IMPAIR PROPER SYSTEM OPERATION, ANNUNCIATE SUCH ABNORMAL CONDITIONS, AND CONTROL RELATED EQUIPMENT, AS INDICATED ON CONTRACT DOCUMENTS.

C. CARBON MONOXIDE DETECTION SENSORS SHALL HAVE A LOCAL DISPLAY SCREEN SHOWING REAL-TIME CARBON MONOXIDE VALUES.

D. CARBON MONOXIDE DETECTION SHALL USE ELECTROCHEMICAL DETECTION CELLS.

E. CARBON MONOXIDE DETECTION SENSORS SHALL NOT BE INSTALLED AT LOCATIONS CLOSE TO ANY ELECTROMAGNETIC INTERFERENCE.

F. CARBON MONOXIDE DETECTION SENSORS USED SHALL HAVE A MEASURING RANGE BETWEEN ZERO PPM AND 250 PPM AND AN ACCURACY OF +/- 5% OR LESS OF THE FULL SCALE.

G. CARBON MONOXIDE TRANSMITTERS SHALL HAVE A 4-20 MA ANALOG OUTPUT SIGNAL.

H. CARBON MONOXIDE DETECTION SENSORS AND TRANSMITTERS SHALL HAVE AN OPERATING TEMPERATURE RANGE SPANNING BETWEEN -4 AND 122 DEGREES FAHRENHEIT.

I. THE ENCLOSURE SHALL BE DESIGNED TO CONTAIN AND FUNCTIONALLY ACCOMMODATE ALL INPUT AND OUTPUT CIRCUITS, AND THE POWER SUPPLY. CARBON MONOXIDE DETECTION SENSORS AND TRANSMITTERS SHALL HAVE AN ENCLOSURE RATING OF NEMA 4X AND/OR IP 66 OR HIGHER.

J. PRODUCTS AND THEIR MANUFACTURERS OF THE CARBON MONOXIDE DETECTION AND CONTROL EQUIPMENT ARE:

1. MERIDIAN - SCOTT SAFETY, MONROE CORPORATE CENTER, P.O.BOX 569, MONROE, NC 28111.

2. SENSEPOINT XCD - HONEYWELL ANALYTICS, 405 BARCLAY BOULEVARD, LINCOLNSHIRE, IL 60069, 847-955-8200.

3. ULTIMA XE OR X3 GAS MONITOR - MSA, 1000 CRANBERRY WOODS DRIVE, CRANBERRY TOWNSHIP, PA 16066, 724-776-8600.

4. OR APPROVED EQUAL;

2.02 WIRING

A. ALL LOW VOLTAGE POWER, FOR EACH CARBON MONOXIDE SYSTEM DETECTOR, SHALL BE PROVIDED BY THE PLC.

B. ALL SYSTEM WIRING SHALL BE AS DETERMINED SUITABLE BY THE MANUFACTURER AND IN COMPLIANCE WITH THE CURRENT CARRYING CAPACITIES AS SET FORTH BY THE NATIONAL ELECTRICAL CODE.

C. FIELD WIRING TERMINAL STRIPS SHALL BE CAPABLE OF ACCOMMODATING WIRE SIZES UP TO #12 AWG.

D. ALL SYSTEM WIRING SHALL BE OF THE MOISTURE-RESISTANT AND HEAT-RESISTANT TYPES WITH TEMPERATURE RATINGS FOR 482 DEGREES FAHRENHEIT FOR ONE HOUR.

E. ALL CABLES AND CONDUCTORS SHALL BE LISTED FOR USE IN WET LOCATIONS AS SPECIFIED BY NFPA – 502 STANDARD FOR ROAD TUNNELS, BRIDGES AND OTHER LIMITED ACCESS HIGHWAYS.

F. ALL CABLES AND CONDUCTORS USED SHALL EMIT LESS THAN 2 PERCENT ACID GAS WHEN TESTED IN ACCORDANCE WITH MIL-C-24643, GENERAL SPECIFICATION FOR CABLE AND CORDS, ELECTRICAL, LOW SMOKE, FOR SHIPBOARD USE.

G. ALL SYSTEM WIRING SHALL BE RESISTANT TO THE SPREAD OF FIRE, SHALL HAVE REDUCED SMOKE EMISSIONS AND SHALL BE IN FULL ACCORDANCE WITH THE CURRENT EDITION OF NFPA 502, STANDARD FOR ROAD TUNNELS, BRIDGES, AND OTHER LIMITED ACCESS HIGHWAYS. THIS IS BY COMPLYING TO ONE OF THE FOLLOWING METHODS:

1. WIRES AND CABLES LISTED AS HAVING FIRE-RESISTANT AND LOW SMOKE-PRODUCING CHARACTERISTICS, BY HAVING A CABLE CHAR HEIGHT OF NOT GREATER THAN 1.5 M (4.9 FT) WHEN MEASURED FROM THE LOWER EDGE OF THE BURNER FACE, A TOTAL SMOKE RELEASE OVER THE 20-MINUTE TEST PERIOD NO GREATER THAN 150M2, AND A PEAK SMOKE RELEASE RATE OF NO GREATER THAN 0.40 M2/S, WHEN TESTED AS A MINIMUM IN ACCORDANCE WITH EITHER THE FT4/ IEEE 1202 METHOD DESCRIBED IN ANSI/UL 1685, VERTICAL-TRAY FIRE PROPAGATION AND SMOKE-RELEASE TEST FOR ELECTRICAL AND OPTICAL- FIBER CABLES, OR THE CSA FT4, VERTICAL FLAME TEST, PER CSA C22.2 NO. 0.3, TEST METHODS FOR ELECTRICAL WIRES AND CABLES.

2. WIRES AND CABLES LISTED AS HAVING FIRE-RESISTANT AND LOW SMOKE-PRODUCING CHARACTERISTICS, BY HAVING A FLAME TRAVEL DISTANCE THAT DOES NOT EXCEED 1.5 M (4.9 FT), GENERATING A MAXIMUM PEAK OPTICAL DENSITY OF SMOKE OF 0.5 AND A MAXIMUM AVERAGE OPTICAL DENSITY OF SMOKE OF 0.15 WHEN TESTED, AS A MINIMUM IN ACCORDANCE WITH THE METHODS DESCRIBED IN NFPA262 OR CSA FT6, HORIZONTAL FLAME AND SMOKE TEST, PER CSA C22.2 NO.0.3.

H. ALL SYSTEM WIRING SHALL BE RESISTANT TO THE SPREAD OF FIRE, SHALL HAVE REDUCED SMOKE EMISSIONS AND SHALL BE IN FULL ACCORDANCE WITH;

1. CURRENT EDITION OF NFPA 70, NATIONAL ELECTRICAL CODE.

2.03 CONDUITS

A. ALL CONDUITS, EQUIPMENT AND SUPPORTS SHALL BE MADE OF RIGID GALVANIZED STEEL (RGS) WITHOUT NONMETALLIC COVERING.

B. ALL CONDUITS SHALL BE SUPPORTED ON APPROVED TYPE HANGERS AS INDICATED ON THE DRAWINGS AND SHALL PRECLUDE THE COLLECTION OF CONDENSATE BY DRILLING.

C. ALL CONDUIT ENTRIES SHALL BE SEALED WITH A FIRE RATED CERTIFIED SEALING PLUG AND CABLE GLAND.

D. ALL CONDUITS SHALL COMPLY WITH SECTION 12.3.3 OF NFPA – 502 STANDARD FOR ROAD TUNNELS, BRIDGES AND OTHER LIMITED ACCESS HIGHWAYS.

2.04 CARBON MONOXIDE DETECTION CONTROL

A. CARBON MONOXIDE DETECTION SYSTEM SHALL BE COMPATIBLE WITH THE PLC TO BE USED;

1. THE CARBON MONOXIDE DETECTION SYSTEM AND PLC SHALL USE THE SAME COMMUNICATION PROTOCOL 4-20MA.

2. THE PLC SHALL BE ABLE TO POWER THE CARBON MONOXIDE DETECTION SYSTEM.

3. THE PLC SHALL CONTAIN ALL NECESSARY RELAYS REQUIRED TO PERFORM THE AUXILIARY AND ALARM FUNCTIONS REQUIRED OF THE SYSTEM.

c:\pwworking\hmm\external\tyi61470\dms72788\071_0134CMN011.dgn 10/24/2014 11:12:18 AM TYI61470

4. EACH RELAY SHALL HAVE CONTACTS RATED FOR THE PURPOSE INTENDED.

B. ALL COMMUNICATIONS AND COMMUNICATION WIRING SHALL COMPLY WITH MANUFACTURER'S INSTALLATION AND OPERATING INSTRUCTIONS.

C. ALL LIKE COMPONENTS SHALL BE FURNISHED BY A SINGLE MANUFACTURER.

D. THE PLC SHALL AVERAGE THE CO VALUE OVER A TIME PERIOD OF 3 MINUTES. A SINGLE TUNNEL VENTILATION FAN WILL ACTIVATE WHEN THERE IS A READING OF 25 PPM IN ANY CELL, ADDITIONAL FANS WILL ACTIVATE IF THE CO LEVEL READINGS CONTINUE TO RISE. AT 120PPM THE TRAFFIC WILL BE STOPPED FROM ENTERING THE CELL. THE TRAFFIC MANAGEMENT SYSTEM ACTIVATES THE SIGNAGE CLOSE TO THE ENTRANCE TO INFORM TRAFFIC THAT THE CELL IS CLOSED.

E. FOR DATA LOGGING REFER TO HISTORIAN IN SCADA SYSTEM.

F. THE HUMAN MACHINE INTERFACE (HMI), PART OF THE SCADA SYSTEM, WHICH IS LOCATED IN THE CONTROL ROOM SHALL DISPLAY CO CONCENTRATIONS IN PPM FOR EACH TUNNEL. THE HMI SHALL HAVE A SEPARATE INDICATION LIGHT FOR EACH TUNNEL TO INDICATE IF THE CO LEVEL IS ABOVE A SET POINT. SET POINTS ARE DEFINED IN THE TUNNEL VENTILATION SYSTEM OPERATIONS MODE TABLE.

PART 3 - EXECUTION

3.01 INSTALLATION

A. THE ENTIRE EXISTING CARBON MONOXIDE DETECTION SYSTEM SHALL BE DEMOLISHED AND PROPERLY DISPOSED BY THE CONTRACTOR.

B. THE ENTIRE SYSTEM SHALL BE INSTALLED IN A WORKMANLIKE MANNER, IN ACCORDANCE WITH THE STANDARD INSTRUCTIONS AND RECOMMENDATIONS OF THE MANUFACTURER, AND IN ACCORDANCE WITH THE APPROVED MANUFACTURER'S WIRING DIAGRAMS. THE CONTRACTOR SHALL FOLLOW AND COMPLY WITH THE MANUFACTURER'S INSTALLATION INSTRUCTIONS FOR THE INSTALLATION OF ALL EQUIPMENT.

C. ALL PENETRATIONS EXISTING OR NEW, REQUIRED BY THIS WORK, SHALL BE FIRE-STOPPED IN ACCORDANCE WITH ALL LOCAL CODES.

D. CARBON MONOXIDE DETECTION SENSORS SHALL BE INSTALLED AT HEAD-HEIGHT, 5 FEET MEASURED FROM THE ROADWAY SURFACE.

E. CARBON MONOXIDE DETECTION SENSORS SHALL BE ACCESSIBLE FOR MAINTENANCE PERSONNEL ON FOOT.

F. INSTALL SOFTWARE IN PLC AND CONTROL UNITS. IMPLEMENT ALL FEATURES OF PROGRAMS TO SPECIFIED REQUIREMENTS AND APPROPRIATE TO SEQUENCE OF OPERATION.

G. THE CONTRACTOR SHALL ADJUST, CALIBRATE, AND FINE TUNE THE SYSTEM CIRCUITS AND EQUIPMENT TO ACHIEVE THE SEQUENCE OF OPERATION SPECIFIED.

H. THE MANUFACTURER'S TECHNICAL REPRESENTATIVE SHALL MONITOR THE START-UP AND TESTING OF THE SYSTEM TO ENSURE THAT THE SYSTEM IS PROGRAMMED AND WORKING AS REQUIRED.

3.02 WIRING

A. THE INSTALLATION OF ALL WIRING SHALL COMPLY WITH THIS SECTION.

B. NO PORTION OF THE EXISTING SYSTEM SHALL BE USED WITHIN THE NEW SYSTEM.

C. THE INTERIOR OF ALL CONDUITS SHALL BE CLEANED THOROUGHLY PRIOR TO INSTALLING ANY WIRING.

D. ALL WIRING SHALL BE TESTED FOR STRAY VOLTAGE, SHORT CIRCUITS, AND GROUND FAULTS PRIOR TO CONNECTION TO THE PANEL AND ANY DEVICES.

E. ALL WIRING SHALL BE INSTALLED IN RGS CONDUIT THROUGHOUT.

3.03 SCHEDULING

A. PRIOR TO BEGINNING WORK, THE CONTRACTOR'S CPM SHALL INDICATE THE INSTALLATION SEQUENCE AND PROJECT TIME FRAME. THE SCHEDULE SHALL INDICATE;

1. THE INSTALLATION SEQUENCE.
2. THE TIME FRAME FOR THE ENTIRE SYSTEM INSTALLATION.
3. DETAILS ON HOW THE CARBON MONOXIDE DETECTION SYSTEM ACTIVATION AND SWITCH-OVER WILL OCCUR.
4. THIS SCHEDULE SHALL ENSURE THAT SYSTEM DOWN-TIME IS KEPT TO A MINIMUM. PROJECTED DATES OF DELIVERY OF THE EQUIPMENT TO BE SUPPLIED, INSTALLATION COMPLETION AND DEMONSTRATION TEST DATES SHALL BE INCLUDED.

3.04 TRAINING

A. THE CONTRACTOR SHALL PROVIDE THE SERVICES OF A FACTORY-AUTHORIZED SERVICE REPRESENTATIVE TO DEMONSTRATE AND TRAIN ODOT'S PERSONNEL AS SPECIFIED BELOW;

1. TRAIN ODOT'S PERSONNEL ON PROCEDURES AND SCHEDULES RELATED TO STARTUP AND SHUTDOWN, TROUBLESHOOTING, SERVICING, AND PREVENTIVE MAINTENANCE.
2. SCHEDULE TRAINING WITH ODOT'S PERSONNEL WITH AT LEAST A MONTH NOTICE.
3. PROVIDE OPERATOR TRAINING ON DATA DISPLAY, ALARM AND STATUS DESCRIPTORS, REQUESTING DATA, EXECUTION OF COMMANDS, AND REQUEST OF LOGS.

3.05 MAINTENANCE MANUALS

A. PRIOR TO FINAL ACCEPTANCE, THE CONTRACTOR SHALL PROVIDE FOUR (4) COMPLETE SETS OF MAINTENANCE INSTRUCTION MANUALS TO THE ENGINEER. MAINTENANCE INSTRUCTIONS SHALL BE COMPLETE AND SHALL PROVIDE THE FOLLOWING INFORMATION:

1. ALL ASPECTS OF THE SYSTEM OPERATION AND MAINTENANCE SHALL BE DETAILED, INCLUDING A WRITTEN DESCRIPTION OF THE SPECIFIC SYSTEM DESIGN.
2. INSTRUCTIONS ON REPLACING ANY COMPONENTS OF THE SYSTEM, INCLUDING INTERNAL PARTS.
3. INSTRUCTIONS ON PERIODIC CLEANING, RECALIBRATION AND ADJUSTMENT OF EQUIPMENT WITH A SCHEDULE OF THESE FUNCTIONS.
4. A COMPLETE LIST OF ALL EQUIPMENT AND COMPONENTS WITH INFORMATION AS TO THE ADDRESS AND PHONE NUMBER OF THE MANUFACTURER OF EACH ITEM.

3.06 DEMONSTRATION TEST

A. THE CONTRACTOR SHALL BE RESPONSIBLE FOR COORDINATING AND CONDUCTING THE DEMONSTRATION TEST.

B. THE CONTRACTOR SHALL TEST THE CARBON MONOXIDE DETECTION SYSTEM, A MONTH PRIOR TO THE DEMONSTRATION TEST. THE SYSTEM SHALL BE CONSIDERED READY FOR THE DEMONSTRATION TEST ONLY AFTER ALL PRELIMINARY TESTS HAVE BEEN MADE BY THE CONTRACTOR AND THE MANUFACTURER'S TECHNICAL REPRESENTATIVE, AND ALL DEFICIENCIES HAVE BEEN FOUND AND CORRECTED.

C. UPON COMPLETION OF THE INSTALLATION OF THE CARBON MONOXIDE DETECTION SYSTEM, THE CONTRACTOR SHALL PROVIDE A MINIMUM OF ONE MONTH NOTICE TO THE ENGINEER THAT THE CARBON MONOXIDE DETECTION SYSTEM IS READY FOR THE DEMONSTRATION TEST.

D. AT THE TIME OF NOTIFICATION, THE CONTRACTOR SHALL SUBMIT "AS-BUILT" DRAWINGS AND A "DEMONSTRATION TEST PLAN" WHICH SHALL DESCRIBE HOW THE SYSTEM WILL BE TESTED.

1. THE DEMONSTRATION TEST PLAN SHALL INCLUDE A STEP-BY-STEP DESCRIPTION OF ALL TESTS TO BE PERFORMED AND SHALL INDICATE TYPE AND LOCATION OF TEST APPARATUS TO BE EMPLOYED. THE TESTS SHALL DEMONSTRATE THAT THE OPERATING REQUIREMENTS OF THIS SPECIFICATION HAVE BEEN MET.
2. THE DEMONSTRATION TEST SHALL NOT BE CONDUCTED UNTIL THE "DEMONSTRATION TEST PLAN" IS APPROVED BY THE ENGINEER.

E. ALL TESTS SHALL BE CONDUCTED IN THE PRESENCE OF THE ENGINEER, ODOT MAINTENANCE PERSONNEL AND THE MANUFACTURER'S TECHNICAL REPRESENTATIVE.

F. THE CONTRACTOR SHALL PROVIDE ALL THE NECESSARY PERSONNEL AND EQUIPMENT REQUIRED TO CONDUCT THE TEST.

G. THE DEMONSTRATION TEST SHALL BE CONDUCTED BETWEEN THE HOURS OF 9:00 A.M. AND 5:00 P.M.

H. AT THE DEMONSTRATION TEST, THE MANUFACTURER'S TECHNICAL REPRESENTATIVE SHALL DELIVER TO THE ENGINEER AN INSPECTION AND TEST REPORT, WHICH SHALL BE COMPLETED IN CONJUNCTION WITH THE DEMONSTRATION TEST AND SHALL INDICATE THE FOLLOWING:

1. PROJECT INFORMATION, INCLUDING NAME, ADDRESS, AND CITY.
2. THE CONTRACTOR'S NAME, ADDRESS, CITY, AND TELEPHONE NUMBER.
3. THE TOTAL QUANTITY OF CARBON MONOXIDE DETECTION SENSORS AND TRANSMITTERS, INDICATE THE CARBON MONOXIDE READING OF EACH CARBON MONOXIDE DETECTOR AND ANY SUBSEQUENT ACTION TAKEN.

c:\pwworking\hmm\externol\tyn61470\dms72788\071_0134CWN012.dgn 10/24/2014 11:12:27 AM TYN61470

DESIGN AGENCY
HATCH MOTT MacDONALD
18013 CLEVELAND PKWY.
SUITE 200
CLEVELAND, OH 44135

DESIGNED	DRAWN	REVIEWED	DATE
KSK	CMN	DGN	08/07/14
CHECKED	REVISED	STRUCTURE FILE NUMBER	
NAH	KSK	31065781	

CARBON MONOXIDE DETECTION SYSTEM - GENERAL NOTES SHEET 3 OF 4

BRIDGE NO. HAM-71-0134
I-71 LYTLE TUNNEL UNDER LYTLE PARK

HAM-71-01.34
PID No. 87268

4. *ANY COMMENTS REGARDING THE INSTALLATION, OPERATION, TESTING, INSPECTING, OR OTHER ASPECTS OF THE SYSTEM.*

5. *THE MANUFACTURER'S TECHNICAL REPRESENTATIVE SHALL PRINT HIS/HER NAME AND AFFILIATION AND SIGN AND DATE THE DOCUMENT.*

I. *RESULTS OF THE DEMONSTRATION TEST SHALL BE SUBMITTED TO THE ENGINEER WITHIN 21 DAYS OF THE DEMONSTRATION TEST DATE.*

PART 4 - MEASUREMENT AND PAYMENT

4.01 MEASUREMENT

A. *ALL OF THE WORK OF THIS SECTION SHALL BE MEASURED AS LUMP SUM*

4.02 PAYMENT

A. *PAYMENT IS FULL COMPENSATION FOR ALL LABOR, MATERIAL, AND EQUIPEMNT REQUIRED TO INSTALL THE CARBON MONOXIDE DETECTION SYSTEM AS DESCRIBED AND TO THE SATISFACTION OF THE ENGINEER.*

B. *PAYMENT FOR ACCEPTED QUANTITIES SHALL BE AT CONTRACT PRICES AS FOLLOWS:*

ITEM	*DESCRIPTION*	*UNIT*
530	*SPECIAL - STRUCTURE, MISC.: CARBON MONOXIDE DETECTION SYSTEM* *PAYMENT FOR SPECIAL - STRUCTURE, MISC.: CARBON MONOXIDE DETECTION SYSTEM IS FULL COMPENSATION FOR ALL LABOR, MATERIAL, AND EQUIPMENT NECESSARY TO COMPLETE THE WORK AND INCLUDES THE INSTALLATION OF THE SPECIAL - MISC.: CARBON MONOXIDE DETECTION SYSTEM AS SHOWN IN THE PLANS AND HEREIN SPECIFIED.*	*LUMP*

c:\pwworking\hmm\external\tyn61470\dms72788\071_0134CMN013.dgn 10/24/2014 11:12:37 AM TYN61470

DESIGN AGENCY
HATCH MOTT MacDONALD
18013 CLEVELAND PKWY.
SUITE 200
CLEVELAND, OH 44135

DESIGNED	DRAWN	REVIEWED	DATE
KSK	GMN	DGN	08/07/14
CHECKED	REVISED	STRUCTURE FILE NUMBER	
NAH	KSK	31065578	

CARBON MONOXIDE DETECTION SYSTEM - GENERAL NOTES SHEET 4 OF 4

BRIDGE NO. HAM-71-0134
I-71 LYTLE TUNNEL UNDER LYTLE PARK

HAM-71-01.34
PID No. 87268

ITEM SPECIAL – MISC.: TESTING, ADJUSTING AND BALANCING

PART 1 - GENERAL

1.01 SUMMARY

A. THIS SECTION INCLUDES TESTING, ADJUSTING OF THE TUNNEL VENTILATION SYSTEM TO PRODUCE DESIGN OBJECTIVES, INCLUDING, BUT NOT LIMITED TO THE FOLLOWING:

1. BALANCING AIRFLOW FOR THE TUNNEL VENTILATION SYSTEM TO INDICATED QUANTITIES ACCORDING TO SPECIFIED TOLERANCES.
2. ADJUSTING TUNNEL VENTILATION SYSTEM TO PROVIDE INDICATED QUANTITIES.
3. MEASURING ELECTRICAL PERFORMANCE OF TUNNEL VENTILATION EQUIPMENT.
4. SETTING QUANTITATIVE PERFORMANCE OF TUNNEL VENTILATION EQUIPMENT.
5. VERIFYING THAT AUTOMATIC CONTROL DEVICES ARE FUNCTIONING PROPERLY.
6. MEASURING SOUND AND VIBRATION.
7. REPORTING RESULTS OF THE ACTIVITIES AND PROCEDURES SPECIFIED IN THIS SECTION.

B. RELATED SECTIONS INCLUDE THE FOLLOWING:

1. TESTING AND ADJUSTING REQUIREMENTS UNIQUE TO PARTICULAR SYSTEMS AND EQUIPMENT ARE INCLUDED IN THE SECTIONS THAT SPECIFY THOSE SYSTEMS AND EQUIPMENT.
2. FIELD QUALITY-CONTROL TESTING TO VERIFY THAT WORKMANSHIP QUALITY FOR SYSTEM AND EQUIPMENT INSTALLATION IS SPECIFIED.

1.02 DEFINITIONS

A. ADJUST: TO REGULATE FLUID FLOW RATE AND AIR PATTERNS AT THE TERMINAL EQUIPMENT, SUCH AS TO REDUCE FAN SPEED OR ADJUST A DAMPER.

B. BALANCE: TO PROPORTION FLOWS WITHIN THE DISTRIBUTION SYSTEM, INCLUDING SUB-MAINS, BRANCHES, AND TERMINALS, ACCORDING TO DESIGN QUANTITIES.

C. DRAFT: A CURRENT OF AIR, WHEN REFERRING TO LOCALIZED EFFECT CAUSED BY ONE OR MORE FACTORS OF HIGH AIR VELOCITY, LOW AMBIENT TEMPERATURE, OR DIRECTION OF AIRFLOW, WHEREBY MORE HEAT IS WITHDRAWN FROM A PERSON'S SKIN THAN IS NORMALLY DISSIPATED.

D. PROCEDURE: AN APPROACH TO AND EXECUTION OF A SEQUENCE OF WORK OPERATIONS TO YIELD REPEATABLE RESULTS.

E. REPORT FORMS: TEST DATA SHEETS FOR RECORDING TEST DATA IN LOGICAL ORDER.

F. SYSTEM EFFECT: A PHENOMENON THAT CAN CREATE UNDESIRED OR UNPREDICTED CONDITIONS THAT CAUSE REDUCED CAPACITIES IN ALL OR PART OF A SYSTEM.

G. SYSTEM EFFECT FACTORS: ALLOWANCES USED TO CALCULATE A REDUCTION OF THE PERFORMANCE RATINGS OF A FAN WHEN INSTALLED UNDER CONDITIONS DIFFERENT FROM THOSE PRESENTED WHEN THE FAN WAS PERFORMANCE TESTED.

H. TERMINAL: A POINT WHERE THE CONTROLLED MEDIUM, SUCH AS FLUID OR ENERGY, ENTERS OR LEAVES THE DISTRIBUTION SYSTEM.

I. TEST: A PROCEDURE TO DETERMINE QUANTITATIVE PERFORMANCE OF A SYSTEM OR EQUIPMENT.

J. TESTING, ADJUSTING, AND BALANCING AGENT: THE ENTITY RESPONSIBLE FOR PERFORMING AND REPORTING THE TESTING, ADJUSTING, AND BALANCING PROCEDURES.

K. AABC: ASSOCIATED AIR BALANCE COUNCIL.

L. AMCA: AIR MOVEMENT AND CONTROL ASSOCIATION.

M. NEBB: NATIONAL ENVIRONMENTAL BALANCING BUREAU.

N. SMACNA: SHEET METAL AND AIR CONDITIONING CONTRACTORS' NATIONAL ASSOCIATION.

1.03 SUBMITTALS

A. QUALITY-ASSURANCE SUBMITTALS: WITHIN 30 CALENDAR DAYS FROM THE NOTICE TO PROCEED, SUBMIT 2 COPIES OF EVIDENCE THAT THE TESTING, ADJUSTING, AND BALANCING AGENT AND THIS PROJECT'S TESTING, ADJUSTING, AND BALANCING TEAM MEMBERS MEET THE QUALIFICATIONS SPECIFIED IN THE "QUALITY ASSURANCE" ARTICLE BELOW.

B. STRATEGIES AND PROCEDURES PLAN: WITHIN 60 CALENDAR DAYS FROM THE NOTICE TO PROCEED, SUBMIT 2 COPIES OF THE TESTING, ADJUSTING, AND BALANCING STRATEGIES AND STEP-BY-STEP PROCEDURES AS SPECIFIED IN PART 3 "PREPARATION" ARTICLE BELOW. INCLUDE A COMPLETE SET OF REPORT FORMS INTENDED FOR USE ON THIS PROJECT.

C. CERTIFIED TESTING, ADJUSTING, AND BALANCING REPORTS: SUBMIT 2 COPIES OF REPORTS PREPARED, AS SPECIFIED IN THIS SECTION, ON APPROVED FORMS CERTIFIED BY THE TESTING, ADJUSTING, AND BALANCING AGENT.

D. SAMPLE REPORT FORMS: SUBMIT 2 SETS OF SAMPLE TESTING, ADJUSTING, AND BALANCING REPORT FORMS.

1.04 QUALITY ASSURANCE

A. AGENT QUALIFICATIONS: ENGAGE A TESTING, ADJUSTING, AND BALANCING AGENT CERTIFIED AS INDICATED:

1. FOR TUNNEL VENTILATION SYSTEM: CERTIFIED BY AABC.

B. TESTING, ADJUSTING, AND BALANCING CONFERENCE: MEET WITH THE ENGINEER ON APPROVAL OF THE TESTING, ADJUSTING, AND BALANCING STRATEGIES AND PROCEDURES PLAN TO DEVELOP A MUTUAL UNDERSTANDING OF THE DETAILS. ENSURE THE PARTICIPATION OF TESTING, ADJUSTING, AND BALANCING TEAM MEMBERS, EQUIPMENT MANUFACTURERS' AUTHORIZED SERVICE REPRESENTATIVES, TUNNEL VENTILATION CONTROLS INSTALLER, AND OTHER SUPPORT PERSONNEL. PROVIDE 7 CALENDAR DAYS' ADVANCE NOTICE OF SCHEDULED MEETING TIME AND LOCATION.

1. AGENDA ITEMS: INCLUDE AT LEAST THE FOLLOWING:
   A. SUBMITTAL DISTRIBUTION REQUIREMENTS.
   B. CONTRACT DOCUMENTS EXAMINATION REPORT.
   C. TESTING, ADJUSTING, AND BALANCING PLAN.
   D. WORK SCHEDULE AND PROJECT SITE ACCESS REQUIREMENTS.
   E. COORDINATION AND COOPERATION OF TRADES AND SUBCONTRACTORS.
   F. COORDINATION OF DOCUMENTATION AND COMMUNICATION FLOW.

C. CERTIFICATION OF TESTING, ADJUSTING, AND BALANCING REPORTS: CERTIFY THE TESTING, ADJUSTING, AND BALANCING FIELD DATA REPORTS. THIS CERTIFICATION INCLUDES THE FOLLOWING:

1. REVIEW FIELD DATA REPORTS TO VALIDATE ACCURACY OF DATA AND TO PREPARE CERTIFIED TESTING, ADJUSTING, AND BALANCING REPORTS.
2. CERTIFY THAT THE TESTING, ADJUSTING, AND BALANCING TEAM COMPLIED WITH THE APPROVED TESTING, ADJUSTING, AND BALANCING PLAN AND THE PROCEDURES SPECIFIED AND REFERENCED IN THIS SPECIFICATION.

D. TESTING, ADJUSTING, AND BALANCING REPORTS:

1. FOR TUNNEL VENTILATION SYSTEM: USE STANDARD FORMS FROM:
   A. AABC'S "NATIONAL STANDARDS FOR TESTING, ADJUSTING, AND BALANCING."

E. INSTRUMENTATION TYPE, QUANTITY, AND ACCURACY:

1. FOR TUNNEL VENTILATION SYSTEM: AS DESCRIBED IN:
   A. AABC NATIONAL STANDARDS.

F. INSTRUMENTATION CALIBRATION:

1. FOR TUNNEL VENTILATION SYSTEM: CALIBRATE INSTRUMENTS FOR THE DURATION OF THE PROJECT AT LEAST EVERY 6 MONTHS OR MORE FREQUENTLY IF REQUIRED BY THE INSTRUMENT MANUFACTURER.

1.05 COORDINATION

A. COORDINATE THE EFFORTS OF FACTORY-AUTHORIZED SERVICE REPRESENTATIVES FOR SYSTEMS AND EQUIPMENT, TUNNEL VENTILATION CONTROLS INSTALLERS, AND OTHER MECHANICS TO OPERATE TUNNEL VENTILATION SYSTEM AND EQUIPMENT TO SUPPORT AND ASSIST TESTING, ADJUSTING, AND BALANCING ACTIVITIES.

B. NOTICE: PROVIDE 7 CALENDAR DAYS' ADVANCE NOTICE FOR EACH TEST. INCLUDE SCHEDULED TEST DATES AND TIMES.

C. PERFORM TESTING, ADJUSTING, AND BALANCING AFTER LEAKAGE AND PRESSURE TESTS ON TUNNEL VENTILATION SYSTEM.

c:\pwworking\hmm\external\tyn61470\dms72788\071_0134CMN03.dgn 10/24/2014 11:13:25 AM TYN61470

DESIGN AGENCY
HATCH MOTT MacDONALD
18013 CLEVELAND PKWY.
SUITE 200
CLEVELAND, OH 44135

DESIGNED	DRAWN	REVIEWED	DATE
HWW	MFW	DGN	08/07/14
CHECKED	REVISED	STRUCTURE FILE NUMBER	
NAH	HWW	31065578	

GENERAL NOTES TVS TESTING, ADJUSTING, BALANCING SHEET 1 OF 4

BRIDGE NO. HAM-71-0134
I-71 LYTLE TUNNEL UNDER LYTLE PARK

HAM-71-01.34
PID No. 87268

PART 2 - PART 2 - PRODUCTS (NOT USED)

PART 3 - PART 3 - EXECUTION

3.01 EXAMINATION

A. EXAMINE CONTRACT DOCUMENTS TO BECOME FAMILIAR WITH PROJECT REQUIREMENTS AND TO DISCOVER CONDITIONS IN SYSTEMS' DESIGNS THAT MAY PRECLUDE PROPER TESTING, ADJUSTING, AND BALANCING OF SYSTEMS AND EQUIPMENT.

1. CONTRACT DOCUMENTS ARE DEFINED IN THE GENERAL AND SUPPLEMENTARY CONDITIONS OF THE CONTRACT.

2. VERIFY THAT BALANCING DEVICES, SUCH AS TEST PORTS, GAGE COCKS, THERMOMETER WELLS, FLOW-CONTROL DEVICES, BALANCING VALVES AND FITTINGS, AND MANUAL VOLUME DAMPERS, ARE REQUIRED BY THE CONTRACT DOCUMENTS. VERIFY THAT QUANTITIES AND LOCATIONS OF THESE BALANCING DEVICES ARE ACCESSIBLE AND APPROPRIATE FOR EFFECTIVE BALANCING AND FOR EFFICIENT SYSTEM AND EQUIPMENT OPERATION.

B. EXAMINE APPROVED SUBMITTAL DATA OF THE TUNNEL VENTILATION SYSTEM AND EQUIPMENT.

C. EXAMINE ARCHITECT'S AND ENGINEER'S DESIGN DATA, INCLUDING THE TUNNEL VENTILATION SYSTEM DESCRIPTIONS, STATEMENTS OF DESIGN ASSUMPTIONS FOR ENVIRONMENTAL CONDITIONS AND SYSTEMS' OUTPUT, AND STATEMENTS OF PHILOSOPHIES AND ASSUMPTIONS ABOUT TUNNEL VENTILATION SYSTEM AND EQUIPMENT CONTROLS.

D. EXAMINE EQUIPMENT PERFORMANCE DATA, INCLUDING FAN CURVES FOR THE TUNNEL VENTILATION SYSTEM. RELATE PERFORMANCE DATA TO PROJECT CONDITIONS AND REQUIREMENTS, INCLUDING SYSTEM EFFECTS THAT CAN CREATE UNDESIRED OR UNPREDICTED CONDITIONS THAT CAUSE REDUCED CAPACITIES IN ALL OR PART OF A SYSTEM. CALCULATE SYSTEM EFFECT FACTORS TO REDUCE THE PERFORMANCE RATINGS OF HVAC EQUIPMENT OR TUNNEL VENTILATION EQUIPMENT WHEN INSTALLED UNDER CONDITIONS DIFFERENT FROM THOSE PRESENTED WHEN THE EQUIPMENT WAS PERFORMANCE TESTED AT THE FACTORY. TO CALCULATE SYSTEM EFFECTS FOR AIR SYSTEMS, USE TABLES AND CHARTS FOUND IN AMCA 201, "FANS AND SYSTEMS," SECTIONS 7 THROUGH 10; OR IN SMACNA'S "HVAC SYSTEMS--DUCT DESIGN," SECTIONS 5 AND 6. COMPARE THIS DATA WITH THE DESIGN DATA AND INSTALLED CONDITIONS.

E. EXAMINE SYSTEM AND EQUIPMENT INSTALLATIONS TO VERIFY THAT THEY ARE COMPLETE AND THAT TESTING, CLEANING, ADJUSTING, AND COMMISSIONING SPECIFIED IN INDIVIDUAL SPECIFICATION SECTIONS HAVE BEEN PERFORMED.

F. EXAMINE SYSTEM AND EQUIPMENT TEST REPORTS.

G. EXAMINE TUNNEL VENTILATION SYSTEM AND EQUIPMENT INSTALLATIONS TO VERIFY THAT INDICATED BALANCING DEVICES, SUCH AS TEST PORTS, GAGE COCKS, THERMOMETER WELLS, FLOW-CONTROL DEVICES, BALANCING VALVES AND FITTINGS, AND MANUAL VOLUME DAMPERS, ARE PROPERLY INSTALLED, AND THEIR LOCATIONS ARE ACCESSIBLE AND APPROPRIATE FOR EFFECTIVE BALANCING AND FOR EFFICIENT SYSTEM AND EQUIPMENT OPERATION.

H. EXAMINE SYSTEMS FOR FUNCTIONAL DEFICIENCIES THAT CANNOT BE CORRECTED BY ADJUSTING AND BALANCING.

I. EXAMINE AIR-HANDLING EQUIPMENT TO ENSURE:

1. FOR TUNNEL VENTILATION SYSTEM:

A. BEARINGS GREASED

B. EQUIPMENT WITH FUNCTIONING CONTROLS IS READY FOR OPERATION.

J. EXAMINE EQUIPMENT FOR INSTALLATION AND FOR PROPERLY OPERATING SAFETY INTERLOCKS AND CONTROLS.

K. EXAMINE AUTOMATIC TEMPERATURE SYSTEM COMPONENTS AND AUTOMATIC CONTROL SYSTEM COMPONENTS FOR THE TUNNEL VENTILATION SYSTEM TO VERIFY THE FOLLOWING:

1. DAMPERS AND OTHER CONTROLLED DEVICES OPERATE BY THE INTENDED CONTROLLER.

2. DAMPERS ARE IN THE POSITION INDICATED BY THE CONTROLLER.

3. INTEGRITY OF DAMPERS FOR FREE AND FULL OPERATION AND FOR TIGHTNESS OF FULLY CLOSED AND FULLY OPEN POSITIONS.

4. SEQUENCE OF OPERATION FOR CONTROL MODES IS ACCORDING TO THE CONTRACT DOCUMENTS.

5. CONTROLLER SET POINTS ARE SET AT DESIGN VALUES. OBSERVE AND RECORD SYSTEM REACTIONS TO CHANGES IN CONDITIONS. RECORD DEFAULT SET POINTS IF DIFFERENT FROM DESIGN VALUES.

6. INTERLOCKED SYSTEMS ARE OPERATING.

L. REPORT DEFICIENCIES DISCOVERED BEFORE AND DURING PERFORMANCE OF TESTING, ADJUSTING, AND BALANCING PROCEDURES.

3.02 PREPARATION

A. PREPARE A TESTING, ADJUSTING, AND BALANCING PLAN THAT INCLUDES STRATEGIES AND STEP-BY-STEP PROCEDURES.

B. COMPLETE SYSTEM READINESS CHECKS AND PREPARE SYSTEM READINESS REPORTS. VERIFY THE FOLLOWING:

1. PERMANENT ELECTRICAL POWER WIRING IS COMPLETE.

2. EQUIPMENT AND DUCT ACCESS DOORS ARE SECURELY CLOSED.

3. DOORS CAN BE CLOSED SO DESIGN CONDITIONS FOR SYSTEM OPERATIONS CAN BE MET.

3.03 GENERAL TESTING AND BALANCING PROCEDURES

A. PERFORM TESTING AND BALANCING PROCEDURES ON EACH SYSTEM ACCORDING TO THE PROCEDURES CONTAINED IN THE FOLLOWING STANDARDS AND THIS SECTION AS INDICATED:

1. FOR TUNNEL VENTILATION SYSTEM:

A. AABC NATIONAL STANDARDS.

B. SMACNA'S "HVAC SYSTEMS--TESTING, ADJUSTING, AND BALANCING".

B. CUT INSULATION, DUCTS, AND EQUIPMENT CABINETS FOR INSTALLATION OF TEST PROBES TO THE MINIMUM EXTENT NECESSARY TO ALLOW ADEQUATE PERFORMANCE OF PROCEDURES. AFTER TESTING AND BALANCING, CLOSE PROBE HOLES AND PATCH INSULATION WITH NEW MATERIALS IDENTICAL TO THOSE REMOVED.

C. MARK EQUIPMENT SETTINGS WITH PAINT OR OTHER SUITABLE, PERMANENT IDENTIFICATION MATERIAL, INCLUDING DAMPER-CONTROL POSITIONS, FAN-SPEED-CONTROL LEVERS, AND SIMILAR CONTROLS AND DEVICES, TO SHOW FINAL SETTINGS.

3.04 FUNDAMENTAL AIR SYSTEMS' BALANCING PROCEDURES

A. PREPARE SCHEMATIC DIAGRAMS OF SYSTEMS' "AS-BUILT" DUCT LAYOUTS.

B. LOCATE START-STOP AND DISCONNECT SWITCHES, ELECTRICAL INTERLOCKS, AND MOTOR STARTERS.

C. CHECK DAMPERS FOR PROPER POSITION TO ACHIEVE DESIRED AIRFLOW PATH.

D. CHECK FOR AIRFLOW BLOCKAGES.

E. CHECK FOR PROPER SEALING OF:

1. SYSTEM COMPONENTS IN TUNNEL VENTILATION SYSTEM.

3.05 SYSTEMS' BALANCING PROCEDURES FOR TUNNEL VENTILATION SYSTEM

A. ADJUST FANS TO DELIVER TOTAL DESIGN AIRFLOWS WITHIN THE MAXIMUM ALLOWABLE BLADE PITCH LISTED BY THE FAN MANUFACTURER.

1. MEASURE FAN STATIC PRESSURES TO DETERMINE ACTUAL STATIC PRESSURE AS FOLLOWS:

A. MEASURE OUTLET STATIC PRESSURE AS FAR DOWNSTREAM FROM THE FAN AS PRACTICABLE AND UPSTREAM FROM RESTRICTIONS IN DUCTS SUCH AS ELBOWS AND TRANSITIONS.

B. MEASURE STATIC PRESSURE DIRECTLY AT THE FAN OUTLET OR THROUGH THE FLEXIBLE CONNECTION.

C. MEASURE INLET STATIC PRESSURE OF SINGLE-INLET FANS IN THE INLET DUCT AS NEAR THE FAN AS POSSIBLE, UPSTREAM FROM FLEXIBLE CONNECTION AND DOWNSTREAM FROM DUCT RESTRICTIONS.

B. COMPARE DESIGN DATA WITH INSTALLED CONDITIONS TO DETERMINE VARIATIONS IN DESIGN STATIC PRESSURES VERSUS ACTUAL STATIC PRESSURES. COMPARE ACTUAL SYSTEM EFFECT FACTORS WITH CALCULATED SYSTEM EFFECT FACTORS TO IDENTIFY WHERE VARIATIONS OCCUR. RECOMMEND CORRECTIVE ACTION TO ALIGN DESIGN AND ACTUAL CONDITIONS.

C. ADJUST FAN BLADE PITCH HIGHER OR LOWER THAN DESIGN WITH THE APPROVAL OF THE ENGINEER. MAKE REQUIRED ADJUSTMENTS TO ACCOMMODATE FAN-SPEED CHANGES.

D. DO NOT MAKE FAN-SPEED ADJUSTMENTS THAT RESULT IN MOTOR OVERLOAD. MEASURE FAN-MOTOR AMPERAGE TO ENSURE NO OVERLOAD WILL OCCUR. MEASURE AMPERAGE IN EXHAUST AND SUPPLY DIRECTIONS TO DETERMINE THE MAXIMUM REQUIRED BRAKE HORSEPOWER.

3.06 MOTORS

A. MOTORS, 1/2 HP AND LARGER: TEST AT FINAL BALANCED CONDITIONS AND RECORD THE FOLLOWING DATA:

c:\pwworking\hmm\external\tyn61470\dms72768\071_0134CWN039.dgn 10/24/2014 11:13:35 AM TYN61470

DESIGN AGENCY
HATCH MOTT MacDONALD
18013 CLEVELAND PKWY.
SUITE 200
CLEVELAND, OH 44135

DESIGNED	DRAWN	REVIEWED	DATE
HWW	MFW	DGN	08/07/14
CHECKED	REVISED	STRUCTURE FILE NUMBER	
NAH	HWW	31065578	

GENERAL NOTES TVS TESTING, ADJUSTING, BALANCING SHEET 2 OF 4

BRIDGE NO. HAM-71-0134
I-71 LYTLE TUNNEL UNDER LYTLE PARK

HAM-71-01.34
PID No. 87268

1. MANUFACTURER, MODEL, AND SERIAL NUMBERS.

2. MOTOR HORSEPOWER RATING.

3. MOTOR RPM.

4. EFFICIENCY RATING IF HIGH-EFFICIENCY MOTOR.

5. NAMEPLATE AND MEASURED VOLTAGE, EACH PHASE.

6. NAMEPLATE AND MEASURED AMPERAGE, EACH PHASE.

7. STARTER THERMAL-PROTECTION-ELEMENT RATING.

3.07 TOLERANCES

A. SET TUNNEL VENTILATION SYSTEM AIRFLOW FLOW RATES WITHIN THE FOLLOWING TOLERANCES:

B. TUNNEL VENTILATION FANS: PLUS 5 TO PLUS 10 PERCENT.

3.08 PERFORMANCE TESTS

A. THE EQUIPMENT THAT COMPRISES THE TUNNEL VENTILATION SYSTEM SHALL BE SET UP IN ITS CONTRACT CONDITION, INCLUDING THE FAN BLADES BEING SET TO THEIR DUTY ANGLE. THE PERFORMANCE TESTS SHALL INCLUDE, BUT NOT NECESSARILY BE LIMITED TO THE FOLLOWING:

1. THE SEQUENTIAL START-UP OF THE MAIN TUNNEL VENTILATION FANS SHALL BE DEMONSTRATED, FIRST IN SUPPLY MODE AND THEN IN EXHAUST MODE. THE STABILITY OF THE FANS DURING START-UP, HAND-OVER, AND SHUT DOWN SHALL BE DEMONSTRATED.

2. THE TIME TAKEN FOR THE TUNNEL VENTILATION SYSTEM TO BE CONFIGURED FROM NORMAL OPERATIONS TO INCIDENT OPERATIONS SHALL BE DEMONSTRATED FOR THE CORRECT OPERATION OF ALL EQUIPMENT. THE TIME TAKEN FROM INITIATION TO RECONFIGURE THE FAN ISOLATION AND CONTROL DAMPERS, AND FOR THE FANS TO RUN UP TO DUTY SPEED SHALL BE MEASURED. THE TIME TAKEN FOR THE FANS TO BE REVERSED SHALL ALSO BE MEASURED. THE TIME TAKEN FOR THE TUNNEL VENTILATION SYSTEM TO BE RETURNED TO THE CONFIGURATION FOR NORMAL OPERATIONS SHALL BE MEASURED. THE TESTS SHALL BE REPEATED UNTIL ALL THE CASES DESCRIBED ON THE VENTILATION MODE TABLE DRAWINGS HAVE BEEN DEMONSTRATED AND THE START-UP AND CHANGE-OVER TIMES ARE SHOWN TO BE IN ACCORDANCE WITH THE REQUIREMENTS OF SECTION "TVS AXIAL FANS." AT A TIME TO BE AGREED WITH THE ENGINEER, THE AIRFLOWS AT EACH FAN SHALL BE MEASURED FOR TWO TUNNEL VENTILATION MODES AND THE STATION INCIDENT MODE OF OPERATION. THE AIRFLOW MEASUREMENTS SHALL BE MADE IN ACCORDANCE WITH THE CURRENT REVISION OF AMCA-203.

3. THE FOLLOWING MEASUREMENTS SHALL ALSO BE MEASURED AND RECORDED FOR EACH FAN FOR ALL STAGES OF OPERATION DURING THE PERFORMANCE TESTS:

   A. VOLTAGE OF POWER SUPPLY (V)

   B. CURRENT OF POWER SUPPLY (A)

   C. ABSORBED POWER AT FAN (KW)

   D. POWER FACTOR AT FAN (%)

   E. ROTATIONAL SPEED OF FAN IMPELLER (RPM)

   TIME FROM COMMAND TO FULL FLOW CONDITIONS (S)

4. THE RESULTS OF THE TESTS SHALL BE RECORDED AND TABULATED, WITH SIMULTANEOUS RECORDS OF ATMOSPHERIC TEMPERATURE AND PRESSURE MEASURED AT GROUND LEVEL, 20FT FROM EITHER OF THE VENTILATION SHAFTS. THE CONTRACTOR SHALL ALSO RECORD GROUND-LEVEL WIND SPEED AND DIRECTION DURING THESE AIRFLOW TESTS. THE SUMMED ABSORBED POWERS OF THE FANS AT EACH MECHANICAL ROOM SHALL BE PLOTTED AGAINST THE TOTAL FAN AIRFLOWS AT EACH MECHANICAL ROOM, WITH POWER (KW) AS THE ORDINATE AND FAN AIRFLOW (CFM) AS THE ABSCISSA. THERE SHALL THEREFORE BE TWO SETS OF POWER/FLOW CURVES FOR EACH OPERATION, AND THE SUM OF THE POWER AND FLOW VALUES WILL CORRESPOND TO THE TOTAL INSTANTANEOUS POWER ABSORBED BY THE TUNNEL VENTILATION FANS AND THE TOTAL AIRFLOW HANDLED BY THE TUNNEL VENTILATION FANS. THE AIRFLOWS SHALL BE NORMALIZED TO STANDARD TEMPERATURE AND PRESSURE (STP).

5. THE CONTRACTOR SHALL PERFORM SOUND LEVEL MEASUREMENTS IN ACCORDANCE WITH THE FOLLOWING REQUIREMENTS.

   A. THE CONTROL SOUND LEVELS ARE REFERENCED TO THE SIMULTANEOUS OPERATION OF ALL DUTY FANS: AT THEIR DESIGN DUTY POINT, AT EACH MECHANICAL ROOM. STANDBY FANS SHALL NOT OPERATE. THE CONTROL SOUND LEVELS ARE DEFINED AS FOLLOWS:

      (1) AT A POINT 5 FT ABOVE THE ROADWAY IN THE RUNNING TUNNEL, TWO TUNNEL DIAMETERS FROM THE CENTERLINE OF THE OPEN TUNNEL VENTILATION DAMPER (PREFERRED SPEECH INTERFERENCE LEVEL, THE ARITHMETIC AVERAGE OF THE 500, 1000 AND 2000 HZ OCTAVE BAND SOUND PRESSURE LEVELS).

      (2) AT A RADIUS OF 15 FT FROM THE VENTILATION OPENING, MEASURED 5 FT ABOVE GROUND LEVEL, THE FAN RELATED SOUND LEVELS SHALL NOT EXCEED 80 DBA IN ANY DIRECTION. MEASUREMENTS SHALL BE MADE AT APPROXIMATELY 30 DEGREE INCREMENTS AND SHALL INCLUDE MEASUREMENTS DIRECTLY DOWNWIND OF THE VENTILATION OPENING. WIND SPEEDS SHALL BE LESS THAN 15 MPH DURING THE TEST.

      (3) AT LEAST 12 NOISE MEASUREMENTS SHALL BE MADE IN A CIRCULAR SPREAD AROUND THE SHAFT AND BACK POINT RECORDED.

      (4) FOR CASES A) AND B), THE CRITERIA APPLY FOR THE FANS OPERATING SUCCESSIVELY IN SUPPLY AND EXHAUST MODES.

   B. IN ANY OF THE FAN OPERATING CASES, THE FAN DEPENDENT SOUND LEVEL, MEASURED IN THE PLANE THAT PASSES HORIZONTALLY THROUGH THE CENTERLINE OF THE FANS, 3 FT FROM THE CASING OF ANY ONE OF THE FANS, ITS FLEXIBLE CONNECTIONS, TRANSITION PIECES, AND SILENCER HOUSINGS, SHALL NOT EXCEED 85DBA.

   C. THE CONTRACTOR SHALL ENSURE THAT ANY NON-RELATED SOUND LEVELS ARE AT LEAST 10DB BELOW THE TARGET FAN RELATED SOUND LEVELS WHILE THE FAN – RELATED SOUND MEASUREMENTS ARE BEING TAKEN.

   D. THE CONTRACTOR SHALL RECORD EQUIVALENT SOUND LEVELS WITH AND WITHOUT THE FANS OPERATING IF THERE IS ANY DOUBT ABOUT THE INFLUENCE OF BACKGROUND SOUND LEVELS. THE CONTRACTOR SHALL ALSO MEASURE THE WIND SPEED AND DIRECTION BEFORE AND AFTER THE MEASUREMENT OF SOUND AT GROUND LEVEL, AND AT LEAST EVERY 30 MINUTES DURING THE TEST.

B. THE RESULTS OF EACH OF THE TESTS SHALL BE SUBMITTED TO THE ENGINEER FOR ACCEPTANCE BEFORE THE CONTRACTOR PROCEEDS WITH THE NEXT SET OF TESTS. THE CONTRACTOR SHALL CORRECT ANY DEFICIENCY, AT NO COST TO THE ENGINEER, BEFORE PROCEEDING.

C. THE TESTS SHALL BE CARRIED OUT IN THE ORDER DESCRIBED IN THIS SUB-SECTION UNLESS PERMISSION IS GRANTED BY THE ENGINEER TO DO OTHERWISE. ALL REQUIRED PERFORMANCE TEST SHALL BE CONDUCTED IN ACCORDANCE WITH A TEST PROCEDURE APPROVED BY THE ENGINEER.

3.09 REPORTING

A. INITIAL CONSTRUCTION-PHASE REPORT: BASED ON EXAMINATION OF THE CONTRACT DOCUMENTS AS SPECIFIED IN "EXAMINATION" ARTICLE ABOVE, PREPARE A REPORT ON THE ADEQUACY OF DESIGN FOR SYSTEMS' BALANCING DEVICES. RECOMMEND CHANGES AND ADDITIONS TO SYSTEMS' BALANCING DEVICES TO FACILITATE PROPER PERFORMANCE MEASURING AND BALANCING. RECOMMEND CHANGES AND ADDITIONS TO THE TUNNEL VENTILATION SYSTEM AND GENERAL CONSTRUCTION TO ALLOW ACCESS FOR PERFORMANCE MEASURING AND BALANCING DEVICES.

B. STATUS REPORTS: AS WORK PROGRESSES, PREPARE REPORTS TO DESCRIBE COMPLETED PROCEDURES, PROCEDURES IN PROGRESS, AND SCHEDULED PROCEDURES. INCLUDE A LIST OF DEFICIENCIES AND PROBLEMS FOUND IN SYSTEMS BEING TESTED AND BALANCED.

3.10 FINAL REPORT

A. GENERAL: TYPEWRITTEN, OR COMPUTER PRINTOUT IN LETTER-QUALITY FONT, ON STANDARD BOND PAPER, IN 3-RING BINDER, TABULATED AND DIVIDED INTO SECTIONS BY TESTED AND BALANCED SYSTEMS.

   1. INCLUDE A CERTIFICATION SHEET IN FRONT OF BINDER SIGNED AND SEALED BY THE CERTIFIED TESTING AND BALANCING ENGINEER.

B. INCLUDE A LIST OF THE INSTRUMENTS USED FOR PROCEDURES, ALONG WITH PROOF OF CALIBRATION.

C. FINAL REPORT CONTENTS: IN ADDITION TO THE CERTIFIED FIELD REPORT DATA, INCLUDE THE FOLLOWING:

   1. FAN CURVES.

   2. MANUFACTURERS' TEST DATA.

   3. FIELD TEST REPORTS PREPARED BY SYSTEM AND EQUIPMENT INSTALLERS.

c:\pwworking\hmn\external\tyn61470\dms72788\071_0134CWN043.dgn 10/24/2014 11:13:46 AM TYN61470

DESIGN AGENCY
HATCH MOTT MacDONALD
18013 CLEVELAND PKWY.
SUITE 200
CLEVELAND, OH 44135

DESIGNED	DRAWN	REVIEWED	DATE
HWW	MFW	DCN	08/07/14
CHECKED	REVISED	STRUCTURE FILE NUMBER	
NAH	HWW	3106578	

GENERAL NOTES TVS TESTING, ADJUSTING, BALANCING SHEET 3 OF 4

BRIDGE NO. HAM-71-0134
I-71 LYTLE TUNNEL UNDER LYTLE PARK

HAM-71-01.34
PID No. 87268

4. OTHER INFORMATION RELATIVE TO EQUIPMENT PERFORMANCE, BUT DO NOT INCLUDE APPROVED SHOP DRAWINGS AND PRODUCT DATA.

D. GENERAL REPORT DATA: IN ADDITION TO THE FORM TITLES AND ENTRIES, INCLUDE THE FOLLOWING DATA IN THE FINAL REPORT, AS APPLICABLE:

1. TITLE PAGE.

2. NAME AND ADDRESS OF TESTING, ADJUSTING, AND BALANCING AGENT.

3. PROJECT NAME.

4. PROJECT LOCATION.

5. ENGINEER'S NAME AND ADDRESS.

6. CONTRACTOR'S NAME AND ADDRESS.

7. REPORT DATE.

8. SIGNATURE OF TESTING, ADJUSTING, AND BALANCING AGENT WHO CERTIFIES THE REPORT.

9. SUMMARY OF CONTENTS, INCLUDING THE FOLLOWING:

A. DESIGN VERSUS FINAL PERFORMANCE.

B. NOTABLE CHARACTERISTICS OF SYSTEMS.

C. DESCRIPTION OF SYSTEM OPERATION SEQUENCE IF IT VARIES FROM THE CONTRACT DOCUMENTS.

10. NOMENCLATURE SHEETS FOR EACH ITEM OF EQUIPMENT.

E. SYSTEM DIAGRAMS: INCLUDE SCHEMATIC LAYOUTS OF AIR FOR TUNNEL VENTILATION SYSTEM. PRESENT WITH SINGLE-LINE DIAGRAMS AND INCLUDE THE FOLLOWING:

1. FOR TUNNEL VENTILATION SYSTEM:

A. QUANTITIES OF INTAKE AND EXHAUST AIRFLOWS.

B. OUTLET AND INLET SIZES.

F. FAN TEST REPORTS:

1. FAN DATA: INCLUDE THE FOLLOWING:

A. SYSTEM IDENTIFICATION.

B. LOCATION.

C. MAKE AND TYPE.

D. MODEL NUMBER AND SIZE.

E. MANUFACTURER'S SERIAL NUMBER.

F. ARRANGEMENT AND CLASS.

2. MOTOR DATA: INCLUDE THE FOLLOWING:

A. MAKE AND FRAME TYPE AND SIZE.

B. HORSEPOWER AND RPM.

C. VOLTS, PHASE, AND HERTZ.

D. FULL-LOAD AMPERAGE AND SERVICE FACTOR.

3. TEST DATA: INCLUDE DESIGN AND ACTUAL VALUES FOR THE FOLLOWING:

A. TOTAL AIRFLOW RATE IN CFM.

B. AIRFLOW DIRECTION FOR TUNNEL VENTILATION SYSTEM.

C. TOTAL SYSTEM STATIC PRESSURE IN INCHES WG.

D. FAN RPM.

E. DISCHARGE STATIC PRESSURE IN INCHES WG.

F. SUCTION STATIC PRESSURE IN INCHES WG.

G. INSTRUMENT CALIBRATION REPORTS: FOR INSTRUMENT CALIBRATION, INCLUDE THE FOLLOWING:

1. REPORT DATA: INCLUDE THE FOLLOWING:

A. INSTRUMENT TYPE AND MAKE.

B. SERIAL NUMBER.

C. APPLICATION.

D. DATES OF USE.

E. DATES OF CALIBRATION.

3.11 COMMISSIONING OF TUNNEL VENTILATION SYSTEM

A. COMMISSIONING OF THE APM TUNNEL VENTILATION SYSTEM SHALL CONSIST OF OPERATING THE VENTILATION SYSTEM IN ACCORDANCE WITH THE INDICATED SCENARIOS AS INDICATED ON DGN "TUNNEL VENTILATION SYSTEM COMMISSIONING TEST PROGRAM".

B. THE EXECUTION OF THE "TUNNEL VENTILATION SYSTEM COMMISSIONING TEST PROGRAM" SHALL BE COORDINATED THROUGH THE ENGINEER AND SHALL NOT OCCUR UNTIL SUCH TIME AS THE CONSTRUCTION OF THE TUNNEL VENTILATION SYSTEM BUILDING FACILITY IS DETERMINED BY THE ENGINEER TO BE SUFFICIENTLY COMPLETE. AT THIS TIME THE VENTILATION CONTROL SYSTEM (VCS) WILL HAVE BEEN INSTALLED AND COMMISSIONED.

C. THE CONTRACTOR SHALL OPERATE THE VENTILATION SYSTEM AS INDICATED ON DGN. "TUNNEL VENTILATION SYSTEM COMMISSIONING TEST PROGRAM", AND PERFORM THE NECESSARY AIRFLOW MEASUREMENTS AT THE INDICATED LOCATIONS TO DETERMINE THAT THE VENTILATION SYSTEM MEETS OR EXCEEDS THE REQUIREMENTS AS SET FORTH.

D. AT THE COMPLETION OF THE COMMISSIONING PROGRAM THE CONTRACTOR SHALL SUBMIT A COMPREHENSIVE REPORT DOCUMENTING ALL PERTINENT INFORMATION RELATING TO THE TEST TO THE ENGINEER FOR APPROVAL.

E. THE VENTILATION SYSTEM SHALL EQUAL THE INDICATED AIRFLOW AT A MINIMUM, AND SHALL NOT EXCEED THE INDICATED AIRFLOW BY MORE THAN 15%. IN THE EVENT THAT TEST RESULTS INDICATE THAT THE VENTILATION SYSTEM DOES NOT MEET THE REQUIREMENTS, THE CONTRACTOR SHALL MEET WITH THE ENGINEER TO DISCUSS THE SYSTEM ADJUSTMENTS REQUIRED TO BRING THE VENTILATION SYSTEM INTO COMPLIANCE.

F. THE CONTRACTOR SHALL THEN PERFORM THE NECESSARY ADJUSTMENTS TO THE VENTILATION SYSTEM, AND RE-TEST UNTIL THE VENTILATION SYSTEM IS IN COMPLIANCE. THE CONTRACTOR SHALL ADJUST THE ANGLE OF THE FAN IMPELLER BLADES TO INCREASE (OR DECREASE) AIRFLOW UNTIL THE DESIGN REQUIREMENTS IS MET. CONCURRENTLY, THE CONTRACTOR SHALL MONITOR THE FAN MOTOR DEVELOPED HP TO ENSURE THAT IT DOES NOT EXCEED THE MOTOR RATING.

3.12 ADDITIONAL TESTS

A. WITHIN 90 CALENDAR DAYS OF COMPLETING TESTING, ADJUSTING, AND BALANCING, PERFORM ADDITIONAL TESTING AND BALANCING TO VERIFY THAT BALANCED CONDITIONS ARE BEING MAINTAINED THROUGHOUT AND TO CORRECT UNUSUAL CONDITIONS.

PART 4 - CONTRACTOR QUALITY CONTROL

4.01 FIELD QUALITY CONTROL

A. THE FOLLOWING DESCRIBES THE MINIMUM INSPECTION AND TESTING REQUIRED IN THE CONTRACTOR'S QUALITY CONTROL (CQC) PLAN AND PROGRAM FOR THE WORK OF THIS SECTION AND IS FOR CQC ONLY. THE IMPLEMENTATION OF THE CONTRACTOR QUALITY CONTROL PROGRAM DOES NOT RELIEVE THE CONTRACTOR FROM THE RESPONSIBILITY TO PROVIDE THE WORK IN ACCORDANCE WITH THE CONTRACT DOCUMENTS, APPLICABLE CODES, REGULATIONS, AND GOVERNING AUTHORITIES. THE CQC PLAN AND PROGRAM SHALL INCLUDE, BUT NOT BE LIMITED TO, THE FOLLOWING TESTING AND INSPECTION ELEMENTS. THESE ELEMENTS ARE PROVIDED ONLY AS A MINIMUM STARTING POINT FOR THE CONTRACTOR TO USE TO GENERATE HIS COMPLETE CQC PROGRAM.

1. FOR TUNNEL VENTILATION SYSTEM, THE CONTRACTOR SHALL DEMONSTRATE TO THE ENGINEER THAT TESTING RESULTS COMPLY WITH THE CONTRACT REQUIREMENTS BY VERIFYING TESTING DATA ON A RANDOM SAMPLING BASIS

PART 5 - MEASUREMENT AND PAYMENT

5.01 MEASUREMENT

A. ALL OF THE WORK OF THIS SECTION SHALL BE MEASURED AS LUMP SUM.

5.02 PAYMENT

A. PAYMENT FOR ITEM SPECIAL – MISC.: TESTING, ADJUSTING, AND BALANCING SHALL BE MADE AT THE LUMP SUM CONTRACT PRICE IN THE PAYMENT SCHEDULE, INCLUDING ALL WORK, LABOR, EQUIPMENT AND MATERIALS NECESSARY TO COMPLETE THIS ITEM OF WORK DESCRIBED AND TO THE SATISFACTION OF THE ENGINEER.

c:\pwworking\hmm\exterrol\tyn61470\dms727888\071_0134CMN044.dgn 10/24/2014 11:13:55 AM TYN61470

DESIGN AGENCY
HATCH MOTT MacDONALD
18013 CLEVELAND PKWY.
SUITE 200
CLEVELAND, OH 44135

DESIGNED	DRAWN	REVIEWED	DATE
HWW	MFW	DGN	08/07/14
CHECKED	REVISED	STRUCTURE FILE NUMBER	
NAH	HWW	3106578	

GENERAL NOTES TVS TESTING, ADJUSTING, BALANCING SHEET 4 OF 4

BRIDGE NO. HAM-71-0134
I-71 LYTLE TUNNEL UNDER LYTLE PARK

HAM-71-01.34
PID No. 87268

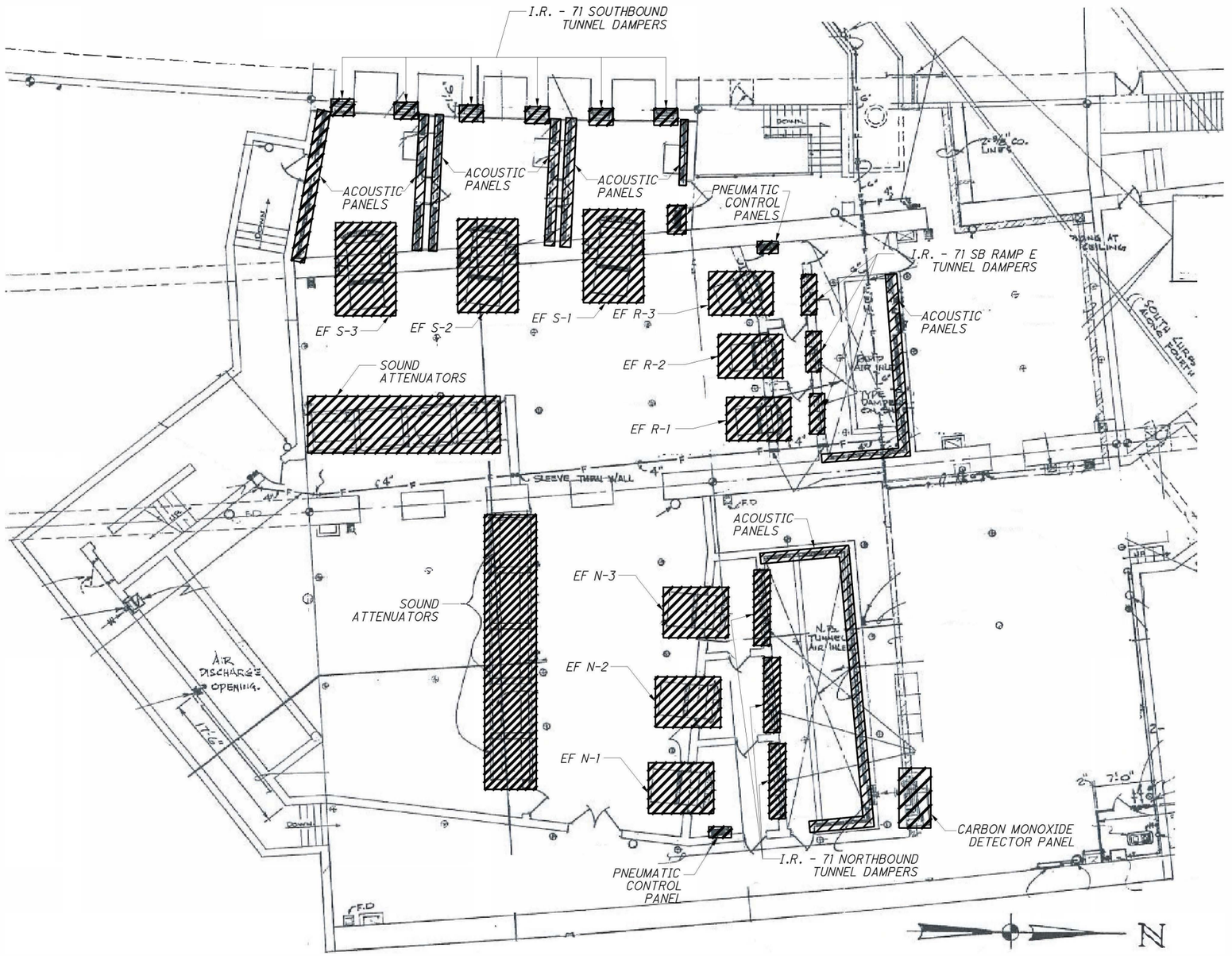

EXISTING TUNNEL VENTILATION EQUIPMENT ROOM

SCALE: NOT TO SCALE

NOTES:

THE FOLLOWING SUBMITTALS SHALL BE MADE A MINIMUM OF THIRTY (30) CALENDER DAYS PRIOR TO THE START OF RELEVANT WORK:

1) PROVIDE A METHOD AND SEQUENCE OF DEMOLITION FOR APPROVAL PRIOR TO BEGINNING ANY DEMOLITION WORK.
2) QUALIFICATIONS OF LICENSED CONTRACTORS CERTIFIED AND LICENSED FOR WORK WITH ENVIRONMENTAL HAZARDS.

DEMOLITION DRAWINGS ARE BASED ON FIELD OBSERVATION AND EXISTING RECORD DOCUMENTATIONS. THEREFORE THE ACCURACY OR EXACTNESS OF THE DRAWING IS NOT GUARANTEED. THE CONTRACTOR SHALL VERFIY THAT FIELD MEASUREMENTS ARE SHOWN ON DRAWINGS. THE CONTRACTOR SHALL BE RESPOSIBLE FOR REPORTING DISCREPANCIES TO THE ENGINEER BEFORE DISTURBING THE EXISTING INSTALLATION.

BEGINNING OF DEMOLION MEANS THE CONTRACTOR ACCEPTS EXISTING CONDITIONS.

THE CONTACTOR SHOULD FOLLOW THE CLEAN WORK POLICY AND SHALL INCLUDE THE REMOVAL OF TRASH AND DEMOLISHED MATERIAL FROM THE BUILDING OR WORK AREA AT THE END OF EACH DAY AND REMOVAL FROM SITE ONCE A WEEK.

DISPOSE OF MATERIAL NOT REQUIRED IN ACCORDANCE WITH APPLICABLE FEDERAL, STATE AND LOCAL LAWS AND REGULATIONS.

METHOD OF PAYMENT AND ITEMS

PAYMENT FOR ITEMS SHALL BE MADE AT THE CONTRACT UNIT PRICE INCLUDING BUT NOT LIMITED TO ALL WORK, LABOR, EQUIPMENT AND MATERIALS NECESSARY THEREFORE OR INCIDENTAL THERETO, AS FOLLOWS:

ITEM NO.	DESCRIPTION	UNIT
690	SPECIAL - MISC.: DEMOLITION EXHAUST FANS	EACH
690	SPECIAL - MISC.: DEMOLITION PLENUM ACOUSTIC PANELS	EACH
690	SPECIAL - MISC.: DEMOLITION PLENUM SOUND ATTENUATORS	EACH
690	SPECIAL - MISC.: DEMOLITION TUNNEL ISOLATION DAMPERS	EACH
690	SPECIAL - MISC.: DEMOLITION PNEUMATIC CONTROL PANEL	EACH
690	SPECIAL - MISC.: DEMOLITION CARBON MONOXIDE DETECTOR PANEL	EACH

DESIGN AGENCY
HATCH MOTT MacDONALD
18013 CLEVELAND PKWY.
SUITE 200
CLEVELAND, OH 44135

DESIGNED	DRAWN	REVIEWED	DATE
HWW	MFW	DGN	08/07/14
CHECKED	REVISED	STRUCTURE FILE NUMBER	
NAH	HWW	3106578	

TUNNEL VENTILATION SYSTEM - DEMOLITION PLAN

BRIDGE NO. HAM-71-0134
I-71 LYTLE TUNNEL UNDER LYTLE PARK

HAM-71-01.34
PID No. 87268

131/296

389/555

c:\pwworking\hmm\external\tyn61470\dms727888\071_0134CWS013.dgn 10/24/2014 11:14:05 AM TYN61470

NOTES:

1. AIR FLOW SHOWN IS EXHAUST DIRECTION, FANS ALSO OPERATE IN SUPPLY.

LEGEND:

- FAN
- ATTENUATOR
- DAMPER

FI-D1	FAN ISOLATION DAMPER
TS-A1	TUNNEL SIDE ATTENUATOR
TV-F1	TUNNEL VENTILATION FAN
AS-A1	AIR SIDE ATTENUATOR
TI-DS	TUNNEL ISOLATION DAMPER I.R.-71 SOUTHBOUND
TI-DR	TUNNEL ISOLATION DAMPER I.R.-71 SB RAMP E TUNNEL TO THIRD STREET
TI-DN	TUNNEL ISOLATION DAMPER I.R.-71 NORTHBOUND

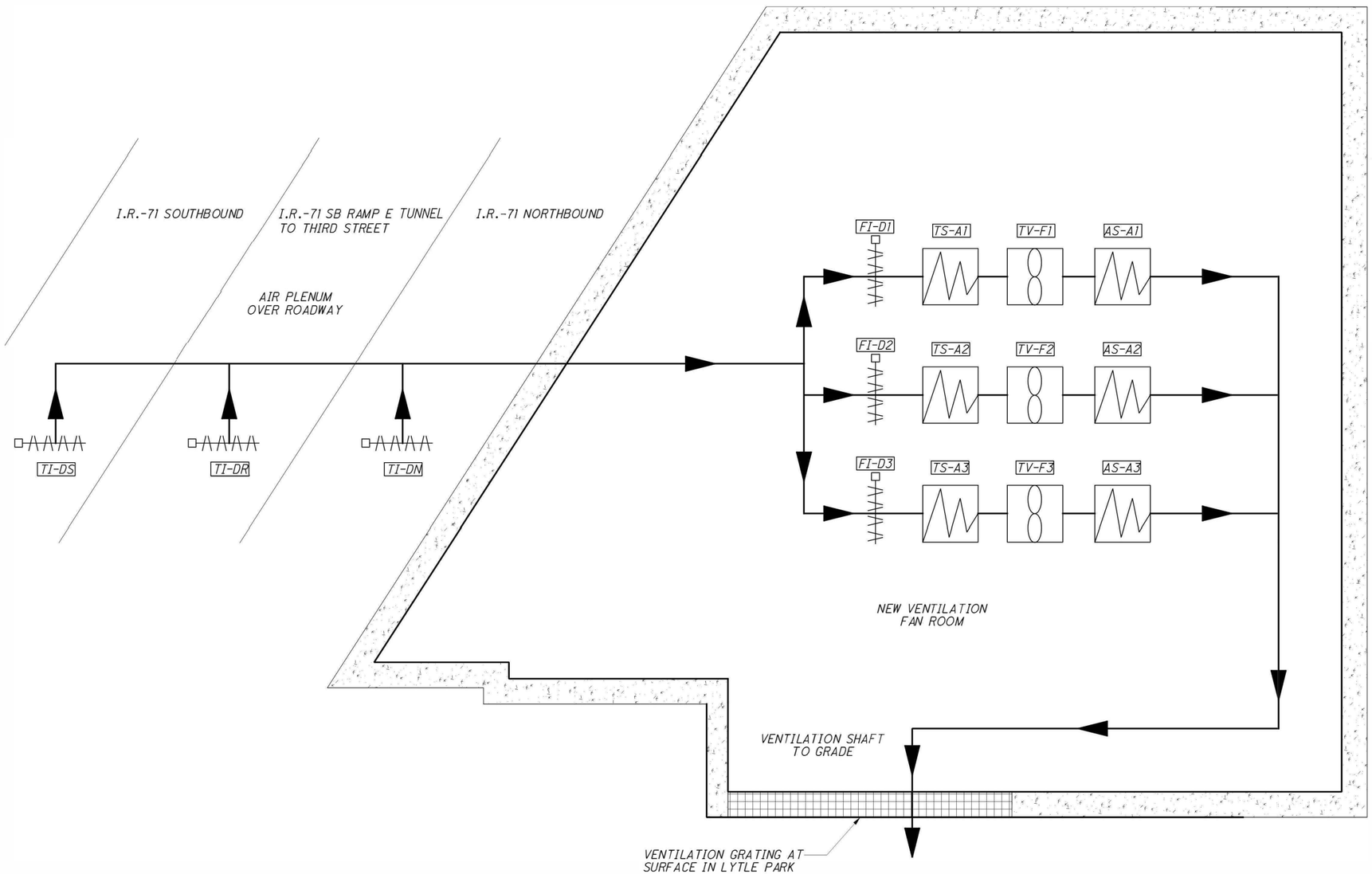

AIR FLOW ONE-LINE DIAGRAM

SCALE: NTS

DESIGN AGENCY
HATCH MOTT MacDONALD
18013 CLEVELAND PKWY.
SUITE 200
CLEVELAND, OH 44135

DESIGNED	DRAWN	REVIEWED	DATE
HWW	MFW	DGN	08/07/14
CHECKED	REVISED	STRUCTURE FILE NUMBER	
NAH	HWW	3106578	

TUNNEL VENTILATION SYSTEM - AIR FLOW ONE-LINE DIAGRAM

BRIDGE NO. HAM-71-0134

I-71 LYTLE TUNNEL UNDER LYTLE PARK

HAM-71-01.34

PID No. 87268

c:\pwworking\hmm\external\tyn61470\dms727[illegible]071_0134CMD005.dgn 10/24/2014 11:14:10 AM TYN61470

NORMAL OPERATIONS:

1. IF CO DETECTION ALARMS BETWEEN 25-49 PPM TURN ONE FAN ON AT LOW SPEED WITH AIR SUPPLIED TO AFFECTED ROADWAY.
2. IF CO DETECTION ALARMS BETWEEN 50-74 TURN SECOND FAN ON AT LOW SPEED WITH AIR SUPPLIED TO AFFECTED ROADWAY.
3. IF CO DETECTION ALARMS BETWEEN 75-99 TURN THIRD FAN ON AT LOW SPEED WITH AIR SUPPLIED TO AFFECTED ROADWAY.
4. IF MULTIPLE ROADWAYS HAVE HIGH CO DETECTION ALARMS, ACTIVATE FANS ACCORDING TO:

TUNNEL VENTILATION NORMAL OPERATION MODES					
MODE NO.	ROADWAYS	CO ALARM (PPM)	NO. FANS	FAN SPEED	TRAFFIC MANAGEMENT
101	1-3	0-24	0	OFF	NO CLOSURE
102	1-3	25-49	1	LOW	NO CLOSURE
103	1-3	50-74	2	LOW	NO CLOSURE
104	1-3	75-99	3	LOW	NO CLOSURE
105	1-3	100-119	3	HIGH	NO CLOSURE
106	1-3	>120	3	HIGH	ROAD CLOSURE

EMERGENCY OPERATIONS:

TUNNEL VENTILATION EMERGENCY OPERATION MODES							
MODE No.	CELL	INCIDENT LOCATION	EVACUATION DIRECTION	VENTILATION MODE *	TV-F1	TV-F2	TV-F3
201	I.R.-71 NORTHBOUND TUNNEL	ZONE 1	SOUTH	EXHAUST	E	E	E
202	I.R.-71 NORTHBOUND TUNNEL	ZONE 2	SOUTH	SUPPLY	S	S	S
203	I.R.-71 SB RAMP E TUNNEL	ZONE 3	NORTH	SUPPLY	OFF	S	S
204	I.R.-71 SB RAMP E TUNNEL	ZONE 4	NORTH	EXHAUST	OFF	E	E
205	I.R.-71 SOUTHBOUND TUNNEL	ZONE 5	NORTH	SUPPLY	S	S	S
206	I.R.-71 SOUTHBOUND TUNNEL	ZONE 6	NORTH	EXHAUST	E	E	E

*ALL FANS INDICATED RUN AT 100% CAPACITY IN INDICATED DIRECTION.

NOTES:

1. FANS SHOULD NOT BE RUN UNEVENLY. FOR EXAMPLE; ONE FAN AT HIGH SPEED AND ONE FAN AT LOW SPEED SHOULD BE AVOIDED. BOTH FANS SHOULD BE RUN AT LOW SPEED OR HIGH SPEED.
2. CO DETECTION ALARM TO BE BASED ON 3-MINUTE TIME WEIGHTED AVERAGE.
3. AT CO ALARM OF 120 PPM TRAFFIC SHALL BE STOPPED FROM ENTERING AFFECTED TUNNEL BY TRAFFIC MANAGEMENT.
4. FAN OPERATES IN SUPPLY FOR ALL MODES. DAMPER TO ROADWAY WITH CO ALARM OPENS.
5. CO ALARM REPRESENTS MAXIMUM ALARM. FAN OPERATION IS SAME IRRESPECTIVE OF NUMBER OF ALARMS.
6. UPON CO ALARM, DAMPER TO ROADWAY WITH ALARM OPENS.
7. IF MULTIPLE ROADWAYS HAVE ALARM, FANS OPERATE IN ACCORDANCE WITH THE HIGHEST ALARM.
8. TUNNEL ISOLATION DAMPER TO AFFECTED ROADWAY OPENS AT THE SAME TIME AS TUNNEL VENTILATION FANS ARE ACTIVATED.

LEGEND:

CO - CARBON MONOXIDE
E - EXHAUST
NO. - NUMBER
S - SUPPLY
TV-F# - TUNNEL VENTILATION - FAN NUMBER

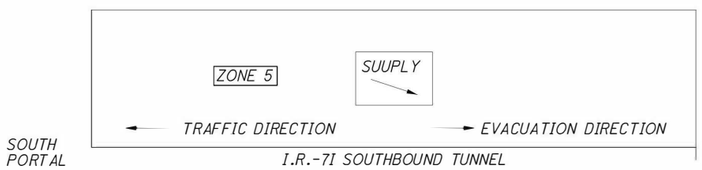

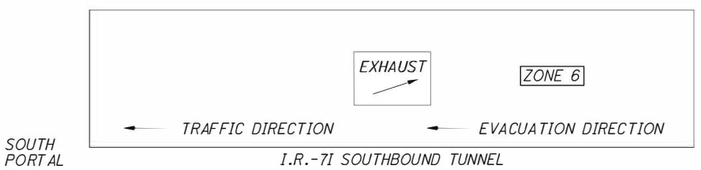

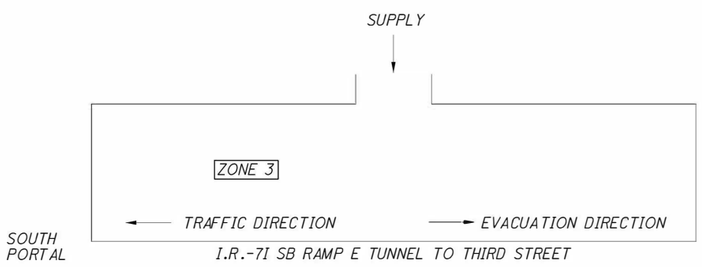

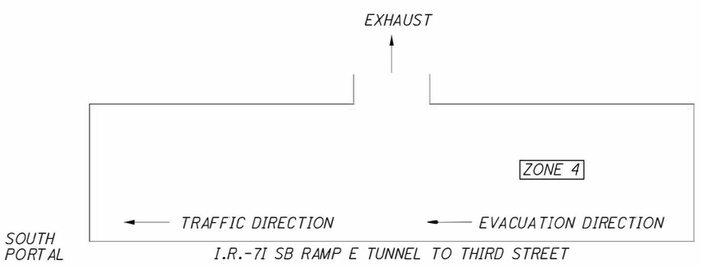

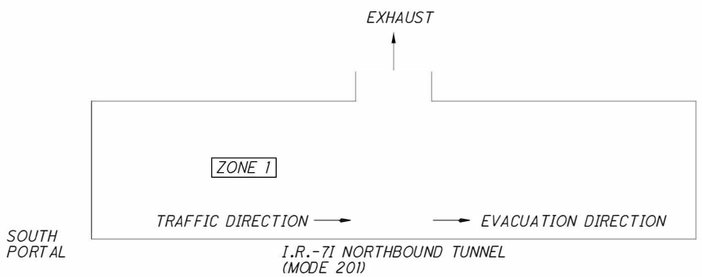

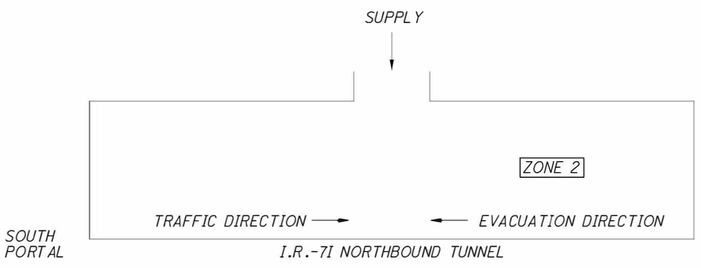

c:\pwworking\hmm\external\tyn61470\dms72788\071_0134GMD006.dgn 10/24/2014 11:14:12 AM TYN61470

DESIGN AGENCY
HATCH MOTT MacDONALD
18013 CLEVELAND PKWY.
SUITE 200
CLEVELAND, OH 44135

DESIGNED HWW | DRAWN MFW | REVIEWED DGN | DATE 08/07/14
CHECKED NAH | REVISED HWW | STRUCTURE FILE NUMBER 310578

TUNNEL VENTILATION SYSTEM - OPERATIONS MODE TABLE

HAM-71-01.34
PID No. 87268

BRIDGE NO. HAM-71-0134
I-71 LYTLE TUNNEL UNDER LYTLE PARK

SOUND ATTENTUATION PERFORMANCE								
MINIMUM SOUND POWER ATTENUATION IN DECIBELS								
OCTAVE BANDS	1	2	3	4	5	6	7	8
CENTER FREQUENCY (Hz)	63 HZ	123 HZ	250 HZ	500 HZ	1K HZ	2K HZ	4K HZ	8K HZ
INSERTION LOSS (dB)	7	13	24	46	47	45	35	24

SOUND ATTENUATOR SCHEDULE			
EQUIP ID.	WIDTH (FT)	HEIGHT (FT)	LENGTH (FT)
AS-A1, TS-A1	12	15	10
AS-A2, TS-A2	12	15	10
AS-A3, TS-A3	12	15	10

NOTES:

1. ALL EQUIPMENT SHALL COMPLY WITH NFPA 502.
2. ALL SOUND ATTENTUATORS ARE IDENTICAL.
3. AIR VELOCITY THROUGH FAN SHALL NOT EXCEED 5500 FPM.

LEGEND:

FI-D1 - FAN ISOLATION DAMPER

TS-A1 - TUNNEL SIDE ATTENUATOR

TV-F1 - TUNNEL VENTILATION FAN

AS-A1 - AIR SIDE ATTENUATOR

TI-DS - TUNNEL ISOLATION DAMPER I.R.-71 SOUTHBOUND

TI-DR - TUNNEL ISOLATION DAMPER I.R.-71 SB RAMP E TUNNEL TO THIRD STREET

TI-DN - TUNNEL ISOLATION DAMPER I.R.-71 NORTHBOUND

FAN SCHEDULE										
EQUIP ID.	PERFORMANCE DATA			PHYSICAL DATA	MOTOR DATA					
	AIRFLOW* (kcfm)	TOTAL PRESSURE (W.G)	OPERATION	DIAMETER (FT)	POWER (HP)	RPM	SERVICE FACTOR	P.F.	AMPS	PHASE
TV-F1	266	7.4	REVERSIBLE	8.0	500	1180	1.15	0.85	FULL LOAD	3
TV-F2	266	7.4	REVERSIBLE	8.0	500	1180	1.15	0.85	FULL LOAD	3
TV-F3	266	7.4	REVERSIBLE	8.0	500	1180	1.15	0.85	FULL LOAD	3

* MINIMUM IN EITHER FORWARD OR REVERSE

DAMPER SCHEDULE								
EQUIP ID.	DAMPER TYPE	FAILURE POSITION	ELECTRICAL (VOLTAGE/ PHASE)	ACTUATOR TYPE	POWER PER ACTUATOR (HP)	NO. OF ACTUATORS	WIDTH (FT)	HEIGHT (FT)
FI-D1	POWER OPEN/FAIL CLOSED	CLOSED	115V/1PH	ELECTRIC	1	4	10	15
FI-D2	POWER OPEN/FAIL CLOSED	CLOSED	115V/1PH	ELECTRIC	1	4	10	15
FI-D3	POWER OPEN/FAIL CLOSED	CLOSED	115V/1PH	ELECTRIC	1	4	10	15
TI-DS	POWER OPEN/FAIL CLOSED	CLOSED	115V/1PH	ELECTRIC	1	6	SEE SHEET	149/296
TI-DR	POWER OPEN/POWER CLOSE	IN PLACE	480V/3PH	ELECTRIC	1	1	SEE SHEET	145/296
TI-DN	POWER OPEN/POWER CLOSE	IN PLACE	480V/3PH	ELECTRIC	1	2	SEE SHEET	152/296

DESIGN AGENCY
HATCH MOTT MacDONALD
18013 CLEVELAND PKWY.
SUITE 200
CLEVELAND, OH 44135

DESIGNED HWW | DRAWN MFW | REVIEWED DGN | DATE 08/07/14 | CHECKED NAH | REVISED HWW | STRUCTURE FILE NUMBER 3106578

TUNNEL VENTILATION SYSTEM - EQUIPMENT SCHEDULES

BRIDGE NO. HAM-71-0134

I-71 LYTLE TUNNEL UNDER LYTLE PARK

HAM-71-01.34

PID No. 87268

c:\pwworking\hmm\external\tyn61470\dms72788\071_0134CMD009.dgn 10/27/2014 12:53:45 PM TYN61470

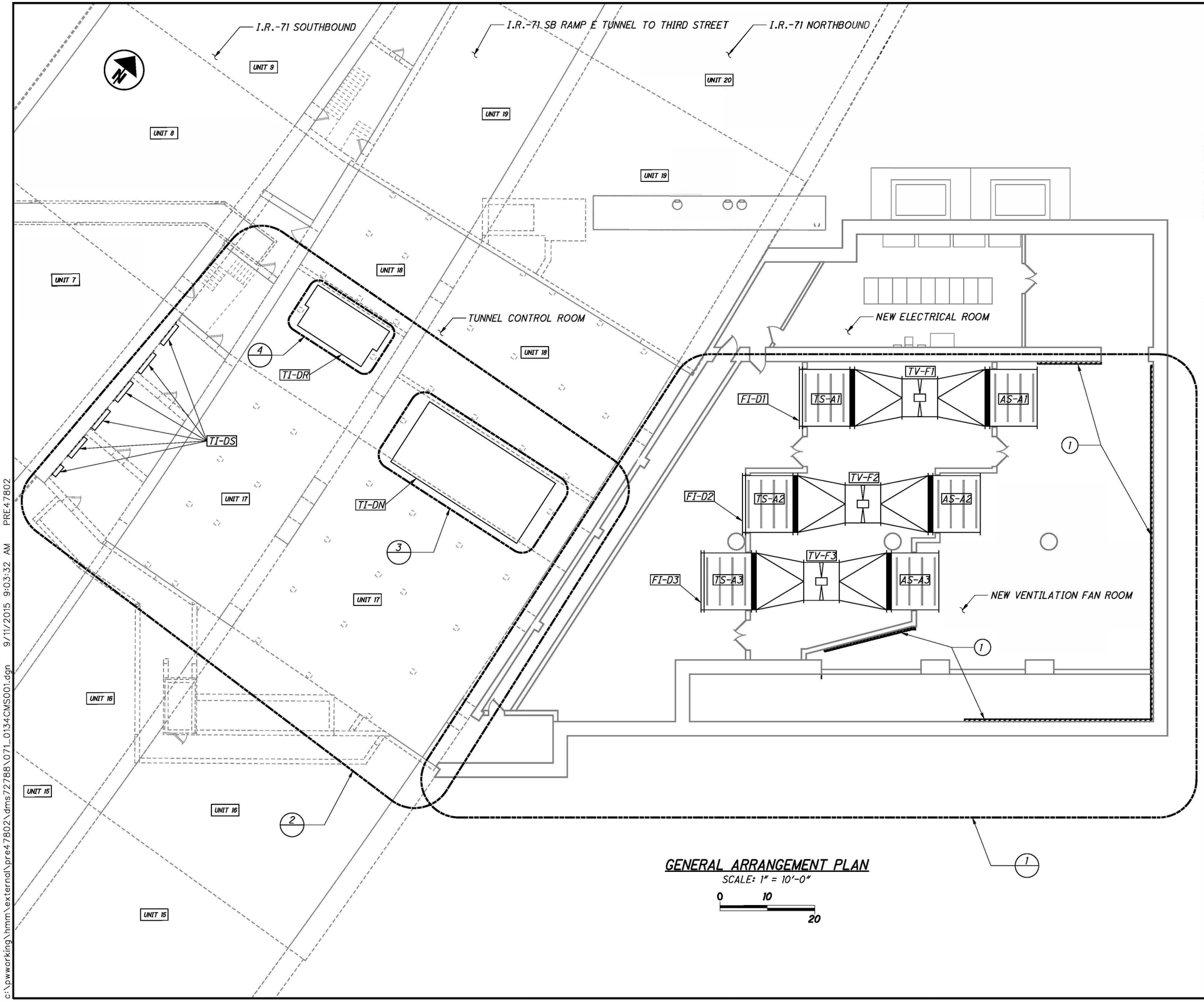

GENERAL ARRANGEMENT PLAN

SCALE: 1" = 10'-0"

0 10 20

NOTES:

1. SEE SHEET 136/296 FOR DETAIL 1.
2. SEE SHEET 143/296 FOR DETAIL 2.
3. SEE SHEET 145/296 FOR DETAIL 3.
4. SEE SHEET 149/296 FOR DETAIL 4.

LEGEND:

- FI-D1 - FAN ISOLATION DAMPER
- TS-A1 - TUNNEL SIDE ATTENUATOR
- TV-F1 - TUNNEL VENTILATION FAN
- AS-A1 - AIR SIDE ATTENUATOR
- TI-DS - TUNNEL ISOLATION DAMPER I.R.-71 SOUTHBOUND TUNNEL
- TI-DR - TUNNEL ISOLATION DAMPER I.R.-71 SB RAMP E TUNNEL
- TI-DM - TUNNEL ISOLATION DAMPER I.R.-71 NORTHBOUND TUNNEL
- (1) - SEE SHEET 140/296 FOR SOUNDPROOFING DETAIL.

DESIGN AGENCY
HATCH MOTT MacDONALD
18013 CLEVELAND PKWY.
SUITE 200
CLEVELAND, OH 44135

DESIGNED	DRAWN	REVIEWED	DATE
HWW	MFW	DGN	08/07/14
CHECKED	REVISED	STRUCTURE FILE NUMBER	
NAH	HWW	3106578	

TUNNEL VENTILATION SYSTEM - GENERAL ARRANGEMENT PLAN

BRIDGE NO. HAM-71-0134
I-71 LYTLE TUNNEL UNDER LYTLE PARK

HAM-71-01.34
PID No. 87268

135/296

393/555

c:\pwworking\hmm\external\pre47802\dms72788\071_0134CMS001.dgn 9/11/2015 9:03:32 AM PRE47802

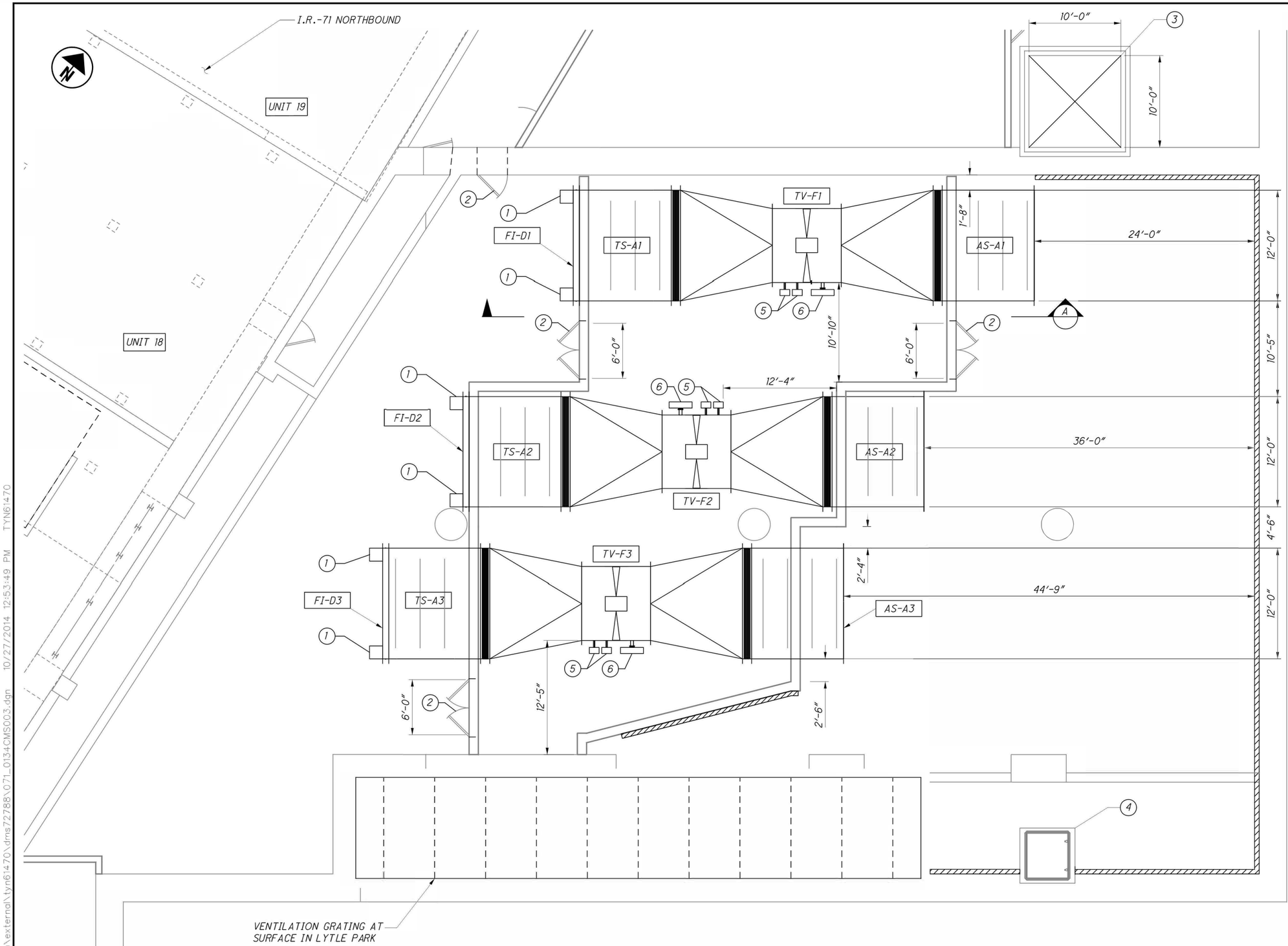

NOTES:

1. SEE SHEET 137/296 FOR LOCATION OF SECTION A-A.

LEGEND:

1. DAMPER ACTUATOR WITH INSULATING BLANKET.
2. DOORS SHALL BE PRESSURE RATED FOR MINIMUM 3 IN. W.G. DIFFERENTIAL PRESSURE (TYP.)
3. EQUIPMENT ACCESS HATCH.
4. EMERGENCY ACCESS HATCH.
5. ELECTRICAL JUNCTION BOXES FOR POWER AND CONTROLS.
6. MOTOR TERMINAL BOX.

SOUND PROOFING

FI-D1 - FAN ISOLATION DAMPER
TS-A1 - TUNNEL SIDE ATTENUATOR
TV-F1 - TUNNEL VENTILATION FAN
AS-A1 - AIR SIDE ATTENUATOR

TUNNEL VENTILATION SYSTEM - NEW VENTILATION FAN ROOM

SCALE: 3/16"=1'-0"

0 4 8
2 6
SCALE IN FEET

DESIGN AGENCY
HATCH MOTT MacDONALD
18013 CLEVELAND PKWY.
SUITE 200
CLEVELAND, OH 44135

DESIGNED	DRAWN	REVIEWED	DATE	STRUCTURE FILE NUMBER
HWW	MFW	DGN	08/07/14	3106578
CHECKED	REVISED			
NAH	HWW			

TUNNEL VENTILATION SYSTEM - NEW VENTILATION FAN ROOM
BRIDGE NO. HAM-71-0134
I-71 LYTLE TUNNEL UNDER LYTLE PARK

HAM-71-01.34
PID No. 87268

136/296

394/555

c:\pwworking\hmm\external\tyn61470\dms72788\071_0134CMS003.dgn 10/27/2014 12:53:49 PM TYN61470

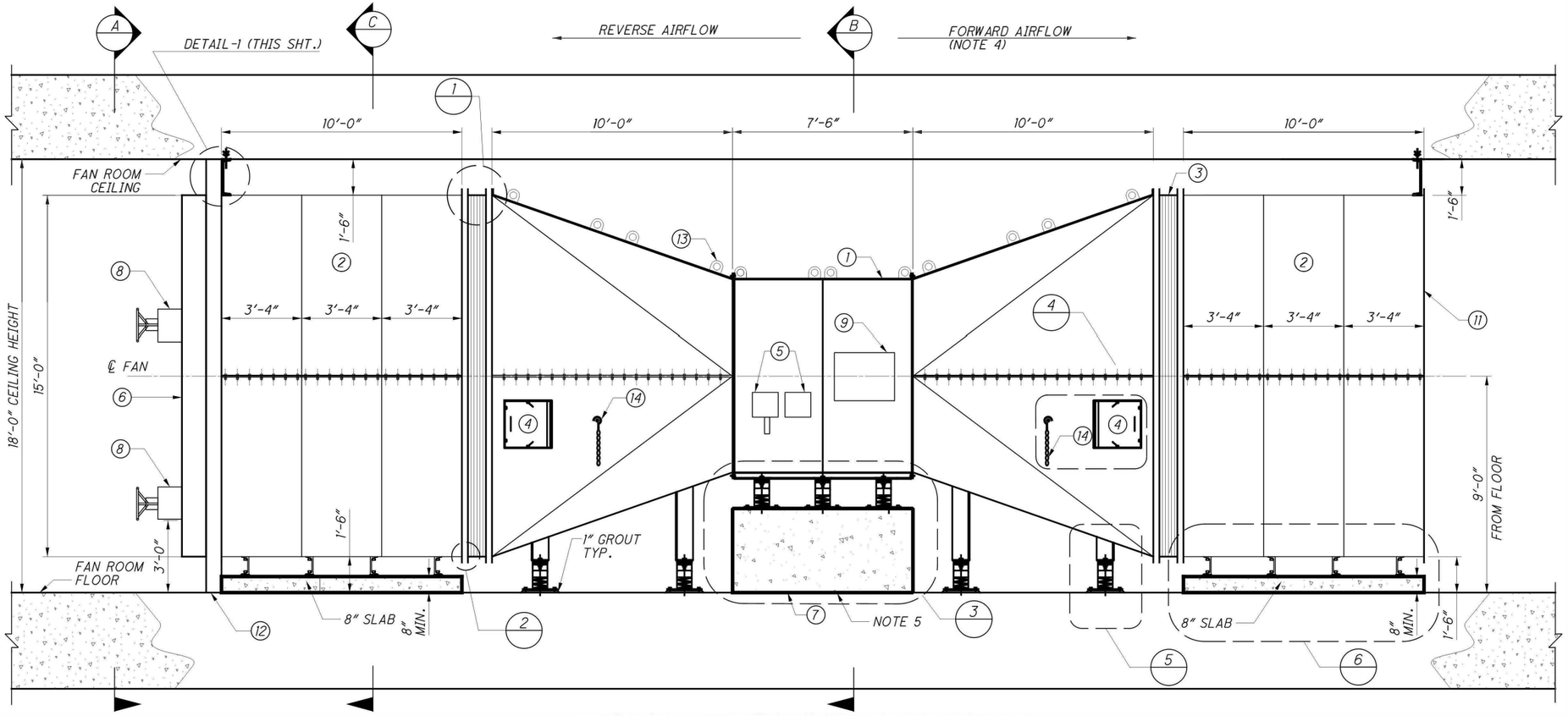

HORIZONTAL MOUNTED TUNNEL VENTILATION FAN ELEVATION A-A

SCALE: 3/8" = 1'-0"

SCALE IN FEET

SEE SHEET 136/296 FOR LOCATION

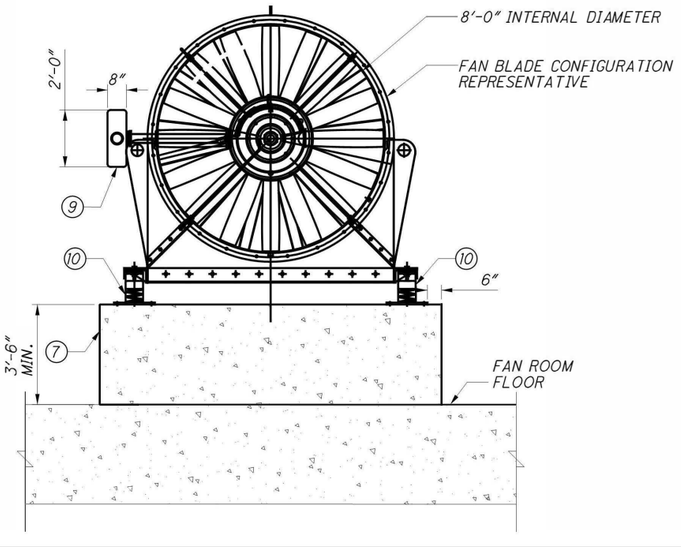

SECTION B-B

SCALE: 3/8" = 1'-0"

SCALE IN FEET

SEE SHEET 137/296 FOR LOCATION

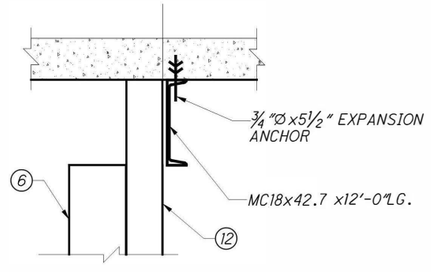

DETAIL 1

NTS

NOTES:

1. THIS DIAGRAM IS SCHEMATIC. LENGTH OF TRANSITION CAN BE ADJUSTED TO ACCOMODATE SPECIFIC FAN LENGTH. DO NOT FABRICATE PRIOR TO SHOP DRAWING APPROVAL.
2. SPACING OF FAN ASSEMBLY SUPPORT LEGS TO BE ESTABLISHED BY FAN MANUFACTURER.
3. OVERALL HOUSEKEEPING PAD SIZE SHALL BE A MINIMUM OF 6" LARGER THAN FAN BASE ON EACH SIDE.
4. FORWARD (EXHAUST) DIRECTION IS SHOWN FOR EXHAUST MODE.
5. MANUFACTURER TO COORDINATE ANCHOR BOLT SIZE AND SPACING REQUIREMENTS.
6. SEE SHEET 144/296 FOR LOCATION OF ELEVATION A-A
7. SEE SHEET 137/296 FOR LOCATION OF SECTION B-B.
8. SEE SHEET 138/296 FOR SECTION C-C.
9. SEE SHEET 138/296 FOR DETAIL 1.
10. SEE SHEET 138/296 FOR DETAIL 2.
11. SEE SHEET 138/296 FOR DETAIL 3.
12. SEE SHEET 138/296 FOR DETAIL 4.
13. SEE SHEET 138/296 FOR DETAIL 5.
14. JUNCTION BOXES AND MOTOR TERMINAL BOX SHALL BE ACCESSIBLE FROM GROUND

LEGEND:

1. AXIAL FAN
2. SOUND ATTENUATOR
3. FLEXIBLE CONNECTION
4. 24"W x 24"H TRANSITION ACCESS DOOR (TYP.)
5. ELECTRICAL JUNCTION BOXES FOR POWER AND CONTROLS
6. FAN ISOLATION DAMPER (SEE PLANS FOR LOCATIONS)
7. HOUSEKEEPING PAD (NOTE 3)
8. DAMPER ACTUATOR WITH INSULATING BLANKET
9. MOTOR TERMINAL BOX (SIZE) (30"WX24"HX8"D)
10. FAN ANTI-VIBRATION MOUNT
11. WIRE SAFETY INLET MESH SCREEN 1/8" THICK WITH 1" MESH OPENINGS.
12. DAMPER MOUNTING FRAME.
13. LIFTING EYE.
14. HEAVY DUTY SAFETY CHAIN.

DESIGN AGENCY
HATCH MOTT MacDONALD
18013 CLEVELAND PKWY.
SUITE 200
CLEVELAND, OH 44135

DESIGNED	DRAWN	REVIEWED	DATE
HWW	MFW	DCN	08/07/14
CHECKED	REVISED	STRUCTURE FILE NUMBER	
NAH	HWW	3106578	

TUNNEL VENTILATION SYSTEM - AXIAL FAN DETAILS 1 OF 2

BRIDGE NO. HAM-71-0134
I-71 LYTLE TUNNEL UNDER LYTLE PARK

HAM-71-01.34
PID No. 87268

137/296

395/555

c:\pwworking\hmm\external\tyn61470\dms727888.071_0134CMD007.dgn 10/24/2014 11:14:22 AM TYN61470

LEGEND:

1. SOUND ATTENUATOR
2. HOUSE KEEPING PAD
3. ANTI-VIBRATION MOUNT

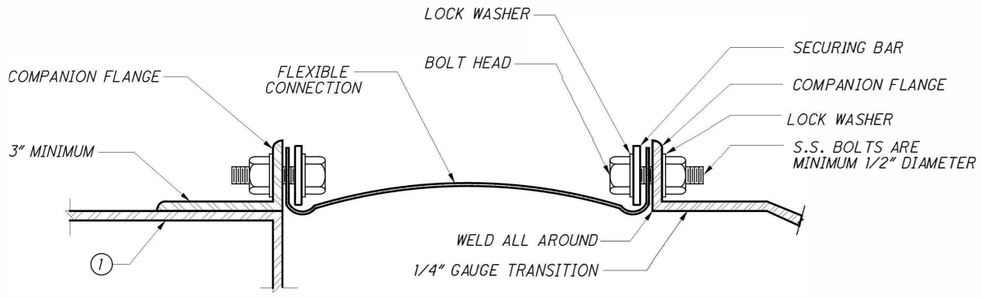

DETAIL 1 - FLEXIBLE CONNECTION

SCALE: 1/2" = 1'-0"

0 2 1 4

SCALE IN FEET

SEE SHEET 137/296 FOR LOCATION

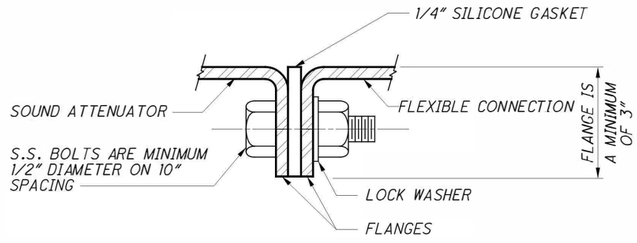

DETAIL 2 - TYPICAL BOLT CONNECTION

SCALE: 3/4" = 1'-0"

0 0.5 1 2

SCALE IN FEET

SEE SHEET 137/296 FOR LOCATION

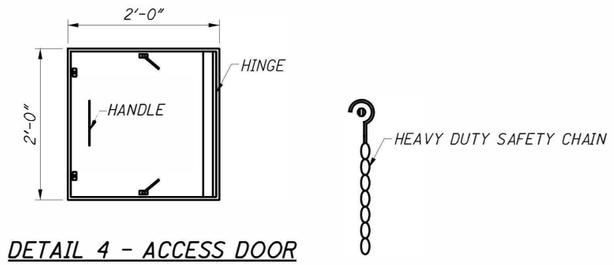

DETAIL 4 - ACCESS DOOR

SCALE: 1/4" = 1'-0"

0 2 4 6

SCALE IN FEET

SEE SHEET 137/296 FOR LOCATION

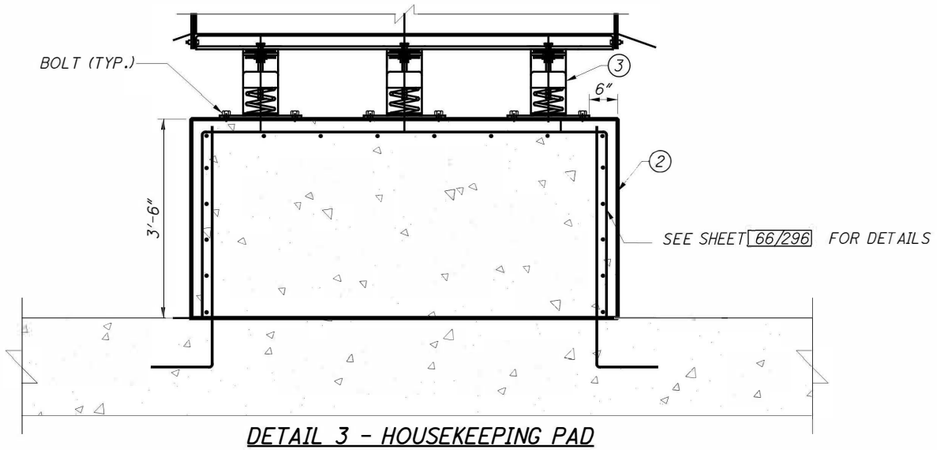

DETAIL 3 - HOUSEKEEPING PAD

SCALE: 3/4" = 1'-0"

0 0.5 1 2

SCALE IN FEET

SEE SHEET 137/296 FOR LOCATION

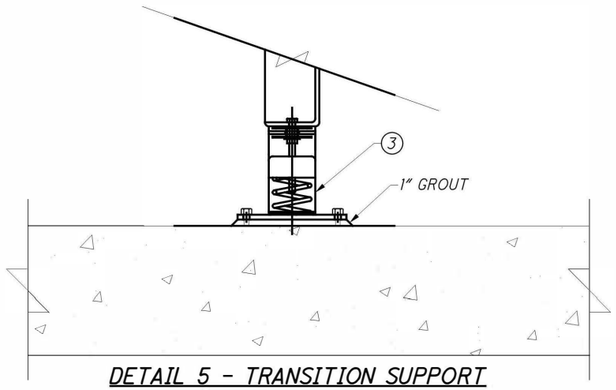

DETAIL 5 - TRANSITION SUPPORT

SCALE: 1/4" = 1'-0"

0 2 4 6

SCALE IN FEET

SEE SHEET 137/296 FOR LOCATION

DESIGN AGENCY
HATCH MOTT MacDONALD
18013 CLEVELAND PKWY.
SUITE 200
CLEVELAND, OH 44135

DESIGNED	DRAWN	REVIEWED	DATE
HWW	MFW	DGN	08/07/14
CHECKED	REVISED	STRUCTURE FILE NUMBER	
NAH	HWW	31065781	

TUNNEL VENTILATION SYSTEM - AXIAL FAN DETAILS 2 OF 2

BRIDGE NO. HAM-71-0134
I-71 LYTLE TUNNEL UNDER LYTLE PARK

HAM-71-01.34
PID No. 87268

c:\pwworking\hnm\external\tyn61470\dms727888\071_0134GMD111.dgn 10/24/2014 11:14:25 AM TYN61470

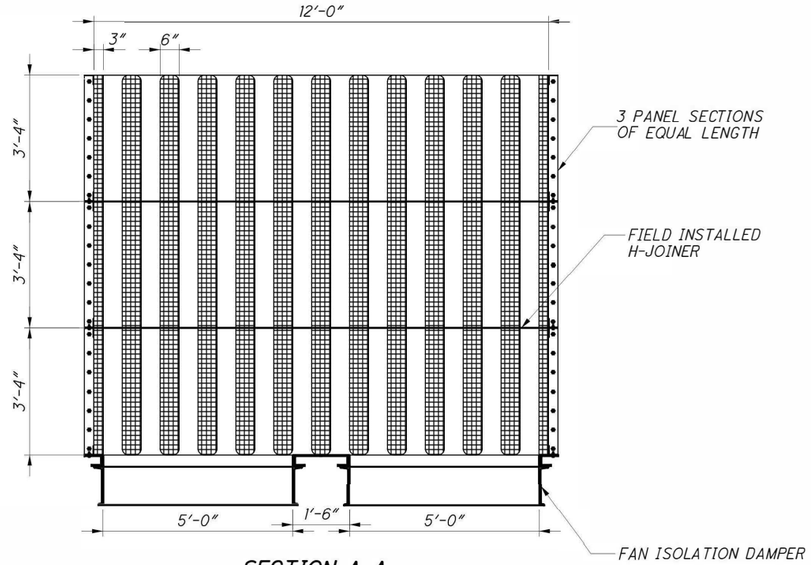

SECTION A-A

SCALE: 1/2"=1'-0"

SCALE IN FEET

SEE SHEET 139/296 FOR LOCATION

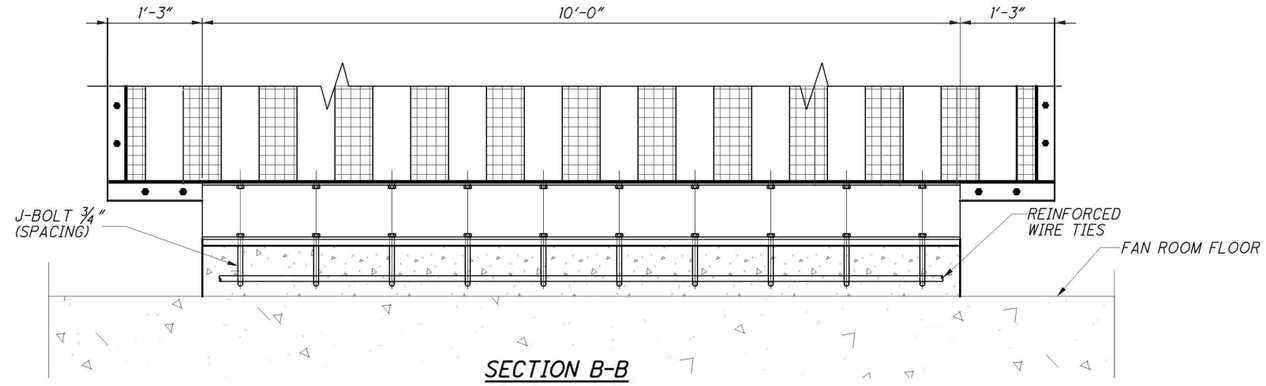

SECTION B-B

SCALE: 1/8"=1'-0"

SCALE IN FEET

SEE SHEET 139/296 FOR LOCATION

SECTION C-C

SCALE: 3/8"=1'-0"

SCALE IN FEET

SEE SHEET 137/296 FOR LOCATION

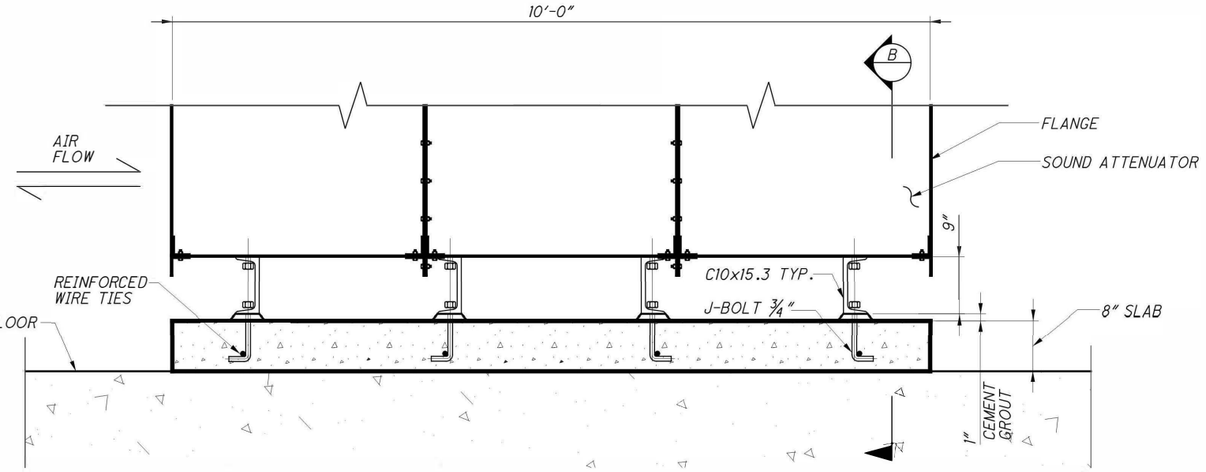

DETAIL 6 - FULLY SUPPORTED ATTENUATOR

SCALE: 1/8"=1'-0"

SCALE IN FEET

SEE SHEET 137/296 FOR LOCATION

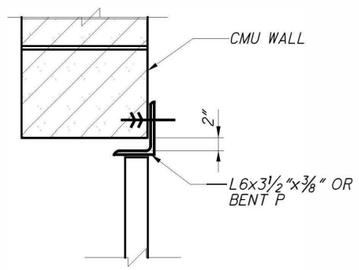

PLAN-CONNECTION TO CMU WALL

SCALE: NTS

c:\pwworking\hmm\external\tyn61470\dms72788\071_0134CWS005.dgn 10/24/2014 11:23:19 AM TYN61470

DESIGN AGENCY
HATCH MOTT MacDONALD
18013 CLEVELAND PKWY.
SUITE 200
CLEVELAND, OH 44135

DESIGNED	DRAWN	REVIEWED	DATE
HWW	MFW	DGN	08/07/14
CHECKED	REVISED	STRUCTURE FILE NUMBER	
NAH	HWW	3106578	

TUNNEL VENTILATION SYSTEM - SOUND ATTENUATOR DETAILS

BRIDGE NO. HAM-71-013.4
I-71 LYTLE TUNNEL UNDER LYTLE PARK

HAM-71-01.34
PID No. 87268

139/296

397/555

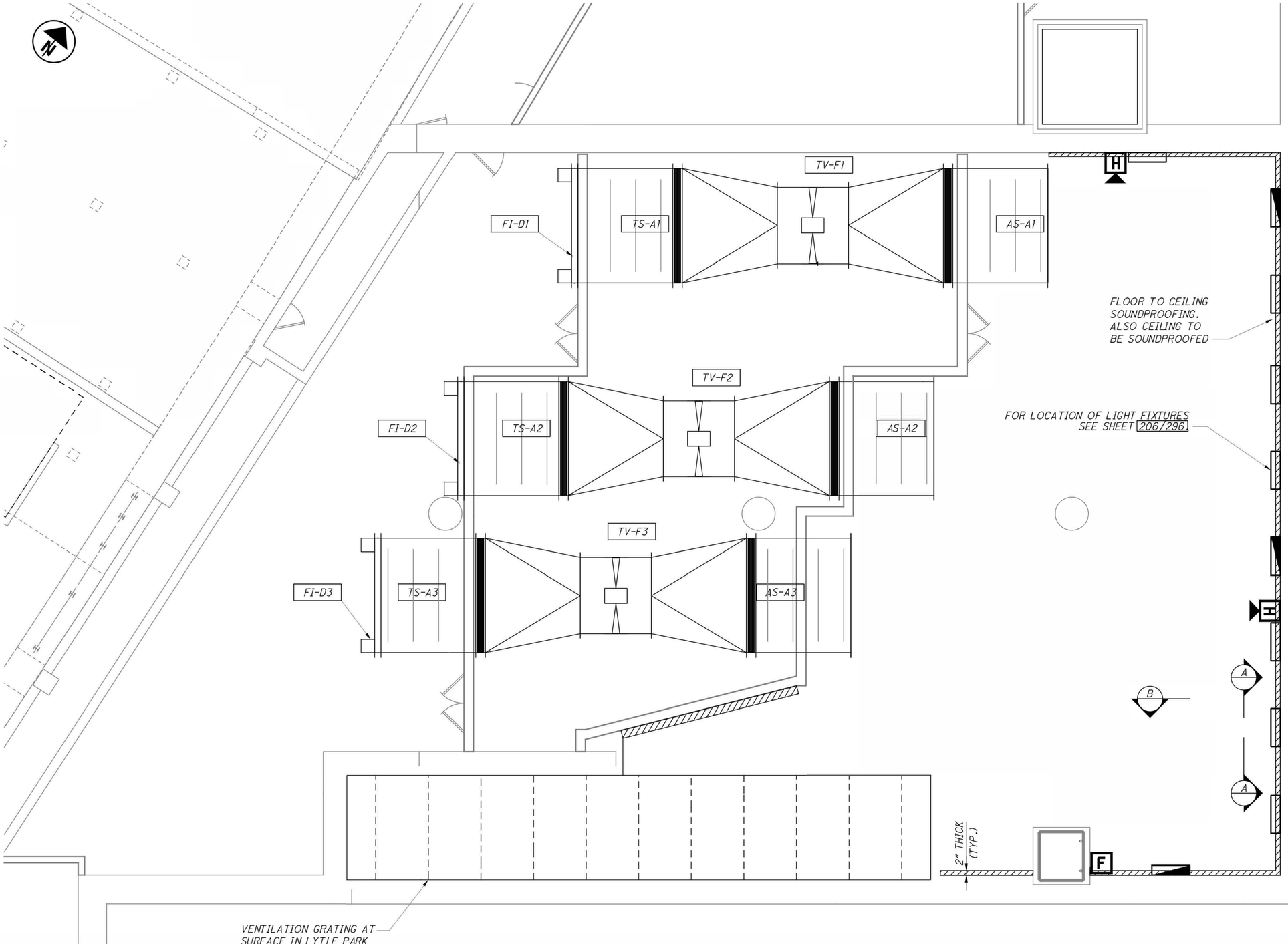

TUNNEL VENTILATION SYSTEM - SOUND ATTENUATION PLAN

NOT TO SCALE

NOTES:

1. SEE SHEET 141/296 FOR REFLECTED CEILING SOUNDPROOFING.
2. SEE SHEET 142/296 FOR SECTIONS A-A AND B-B
3. SOUNDPROOFING BASED ON ROXUL RHT80 2" THICK.
4. SOUNDPROOFING TO STOP 6" AWAY FROM DOOR FROM TOP AND SIDES.
5. SOUNDPROOFING TO STOP 6" ABOVE FAN ROOM FLOOR.
6. SOUNDPROOFING 2" THICK.
7. FOR SECTIONS A-A AND B-B, SEE SHEET 142/296

LEGEND:

- LINEAR FLUORESCENT FIXTURE
- LINEAR FLUORESCENT FIXTURE WITH EMERGENCY BALLAST FOR 90 MINUTES
- SOUNDPROOFING
- F — FIRE ALARM
- H — HEAT DETECTOR
- FI-D1 — FAN ISOLATION DAMPER
- TS-A1 — TUNNEL SIDE ATTENUATOR
- TV-F1 — TUNNEL VENTILATION FAN
- AS-A1 — AIR SIDE ATTENUATOR

DESIGN AGENCY
HATCH MOTT MacDONALD
18013 CLEVELAND PKWY.
SUITE 200
CLEVELAND, OH 44135

DESIGNED	DRAWN	REVIEWED	DATE
KSK	CMN	DGN	08/07/14
CHECKED	REVISED	STRUCTURE FILE NUMBER	
NAH	KSK	3106578	

TUNNEL VENTILATION SYSTEM - NEW VENTILATION FAN ROOM SOUNDPROOFING PLAN

BRIDGE NO. HAM-71-0134
I-71 LYTLE TUNNEL UNDER LYTLE PARK

HAM-71-01.34
PID No. 87268

c:\pwworking\hmm\external\tyn61470\dms72788\071_0134CMS011.dgn 10/24/2014 11:23:22 AM TYN61470

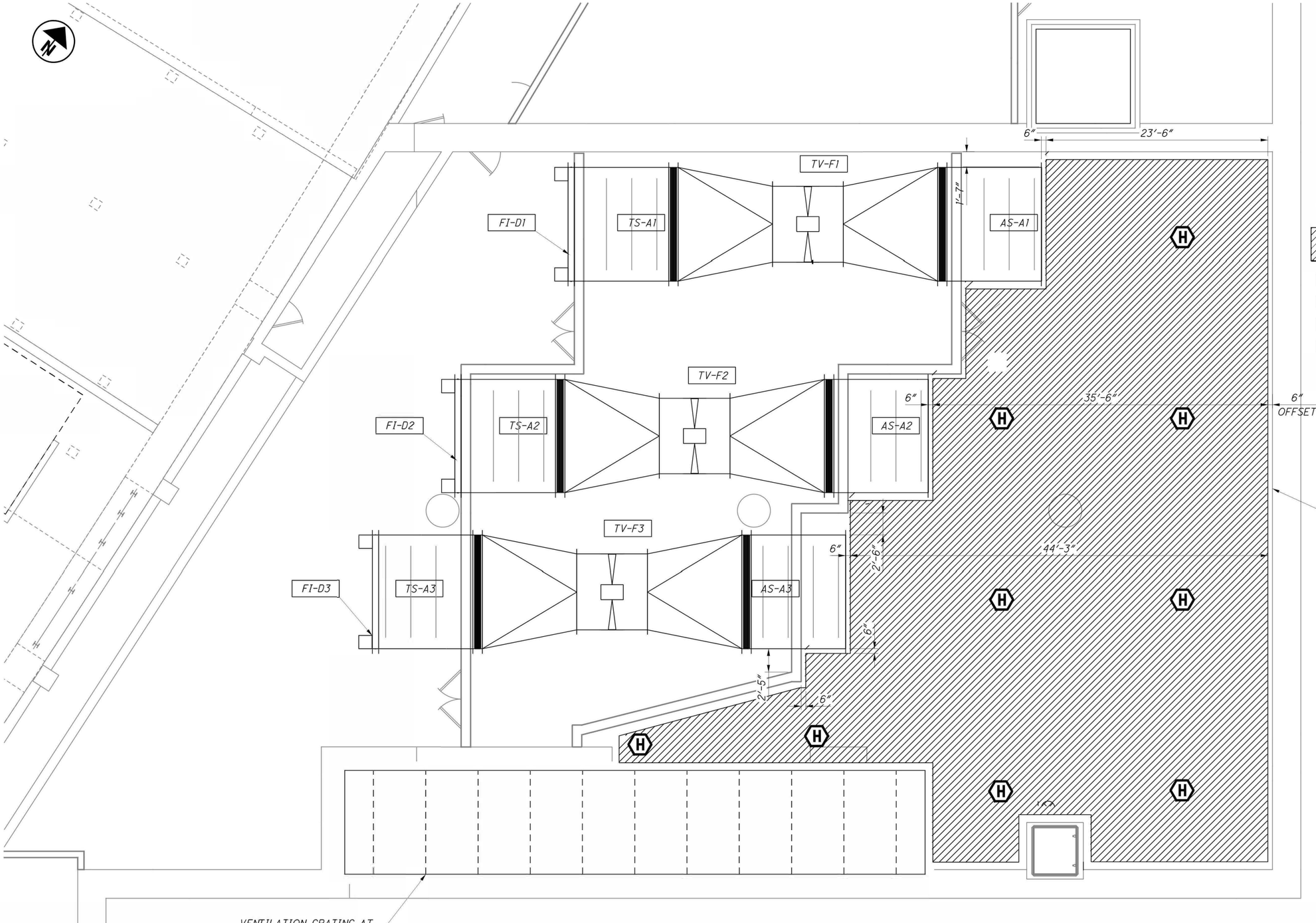

NOTES:

1. SEE SHEET 140/296 FOR WALL SOUNDPROOFING.
2. SEE SHEET 247/296 FOR HEAT DETECTOR LOCATIONS.

LEGEND:

- (H) HEAT DETECTOR
- SOUNDPROOFING
- FI-D1 FAN ISOLATION DAMPER
- TS-A1 TUNNEL SIDE ATTENUATOR
- TV-F1 TUNNEL VENTILATION FAN
- AS-A1 AIR SIDE ATTENUATOR

TUNNEL VENTILATION SYSTEM - SOUNDPROOFING REFLECTED CEILING

SCALE: 3/16"=1'-0"

0 6' 12' 32'

DESIGN AGENCY
HATCH MOTT MacDONALD
18013 CLEVELAND PKWY.
SUITE 200
CLEVELAND, OH 44135

DESIGNED	DRAWN	REVIEWED	DATE
KSK	GMN	DGN	08/07/14
CHECKED	REVISED	STRUCTURE FILE NUMBER	
NAH	KSK	3106578	

TUNNEL VENTILATION SYSTEM - NEW VENTILATION FAN ROOM SOUNDPROOFING REFLECTED CEILING

BRIDGE NO. HAM-71-0134
I-71 LYTLE TUNNEL UNDER LYTLE PARK

HAM-71-01.34
PID No. 87268

141/296

399
555

c:\pwworking\hmm\external\tyn61470\dms72788\071_0134CMS012.dgn 10/24/2014 11:23:25 AM TYN61470

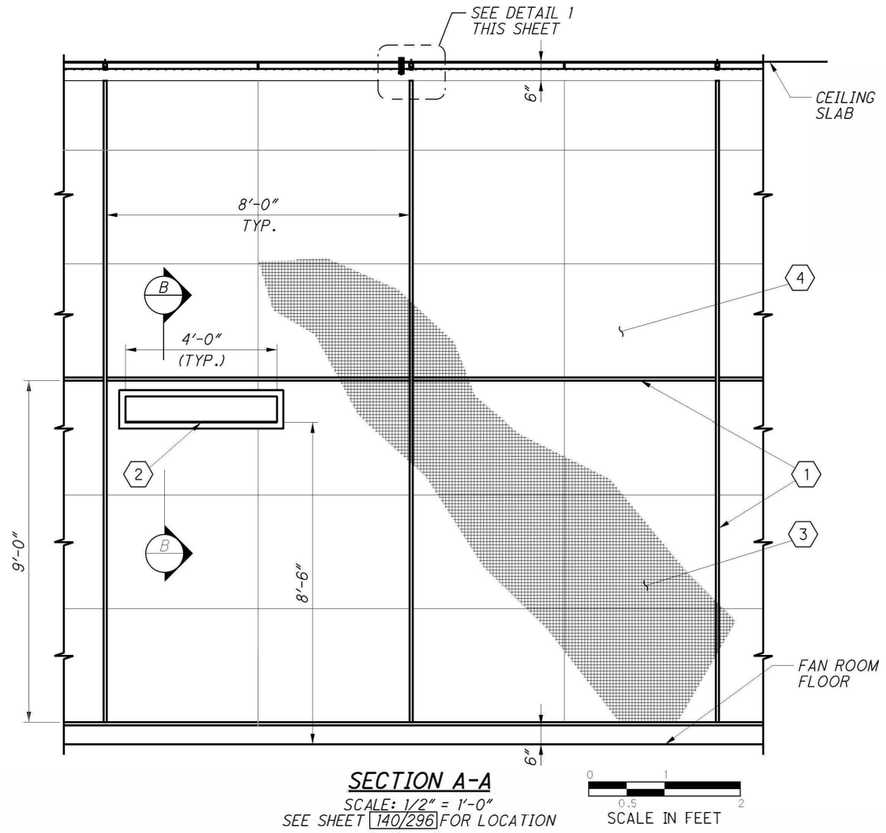

SECTION A-A

SCALE: 1/2" = 1'-0"

SEE SHEET 140/296 FOR LOCATION

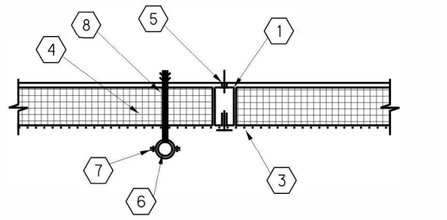

DETAIL 1

SCALE: 3" = 1'-0"

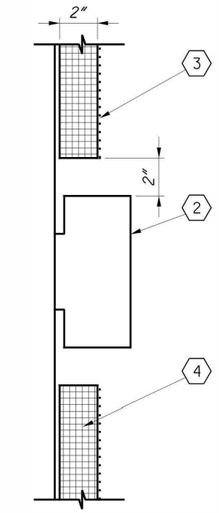

SECTION B-B

SCALE: 3" = 1'-0"

NOTES:

1. ALL DIMENSIONS SHALL BE FIELD-VERIFIED BY THE CONTRACTOR

LEGEND:

1. PRE-GALVANIZED P1000 UNISTRUT
2. TYPICAL LINEAR FLUORESCENT FIXTURE
3. 1"x1" 14 GAUGE GALVANIZED WELDED WIRE MESH
4. 2" THICK SOUNDPROOFING BASED ON ROXUL RHT80 - 2" THICK
5. 1/4" GALVANIZED STEEL SPACER
8. 3/4" CONDUIT 725.04
7. CLAMP
8. ANCHOR BOLT

DESIGN AGENCY
HATCH MOTT MacDONALD
18013 CLEVELAND PKWY.
SUITE 200
CLEVELAND, OH 44135

DESIGNED	DRAWN	REVIEWED	DATE
KSK	GMN	DGN	08/07/14
CHECKED	REVISED	STRUCTURE FILE NUMBER	
NAH	KSK	3106578	

TUNNEL VENTILATION SYSTEM - NEW VENTILATION FAN ROOM SOUNDPROOFING DETAILS

BRIDGE NO. HAM-71-0134
I-71 LYTLE TUNNEL UNDER LYTLE PARK

HAM-71-01.34
PID No. 87268

c:\pwworking\hnm\external\tyn61470\dms727851\071_0134CMD123.dgn 10/24/2014 11:23:28 AM T:\N61470

NOTES:

1. SEE SHEET 153/296 FOR DETAIL 1.
2. SEE SHEET 145/296 FOR DETAIL 2.
3. SEE SHEET 149/296 FOR DETAIL 3.

LEGEND:

FI-D1 - FAN ISOLATION DAMPER

TI-DS - TUNNEL ISOLATION DAMPER SOUTHBOUND

TI-DR - TUNNEL ISOLATION DAMPER RAMP E

TI-DN - TUNNEL ISOLATION DAMPER NORTHBOUND

- PROPOSED STRUCTURAL WALL OPENING

- EXISTING STRUCTURAL WALL OPENING

- DAMPER DOOR

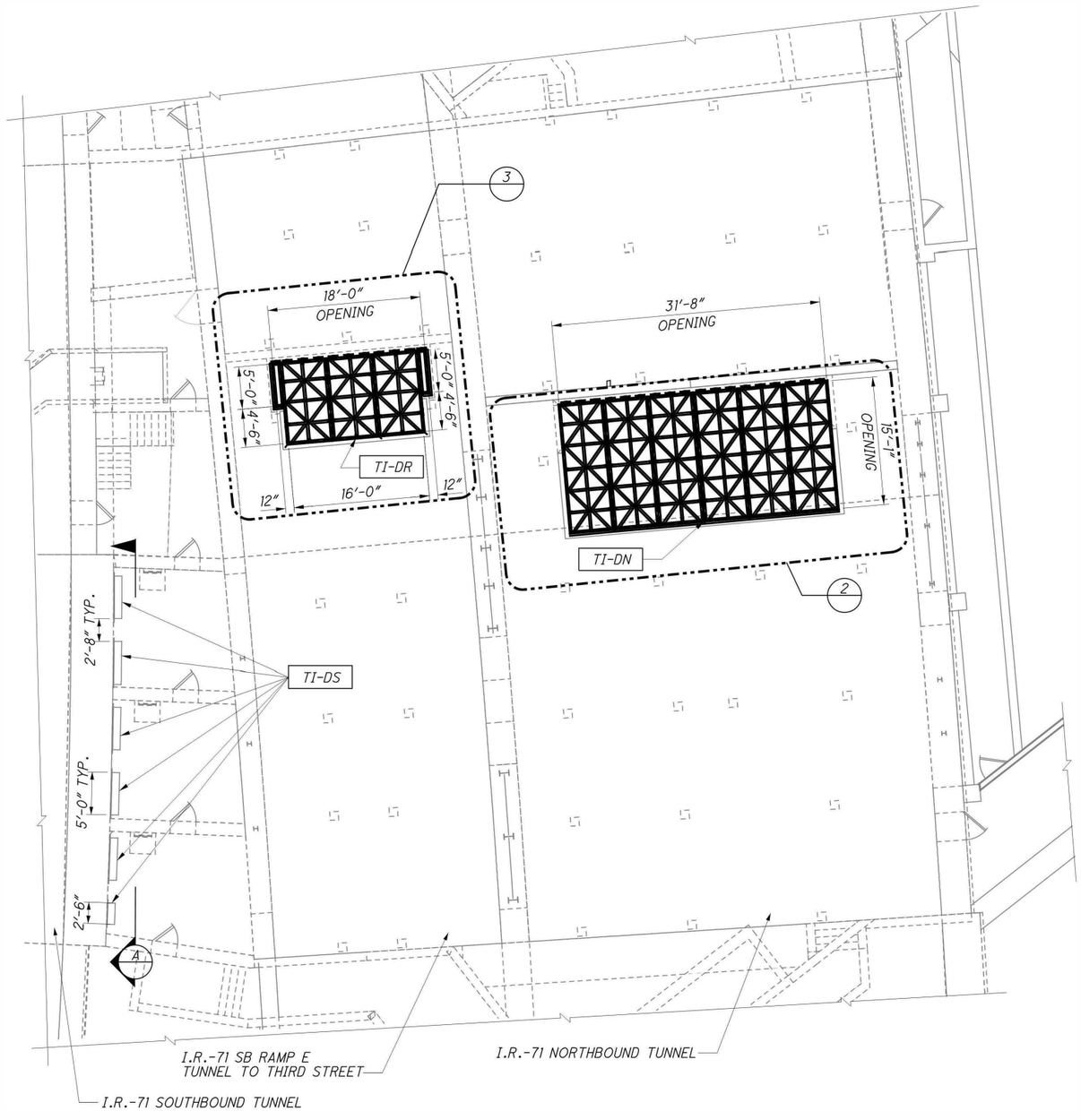

TUNNEL ISOLATION DAMPER OPENINGS

SCALE: 1/8"=1'-0"

0 8
4 16
SCALE IN FEET

SEE SHEET 135/296 FOR LOCATION

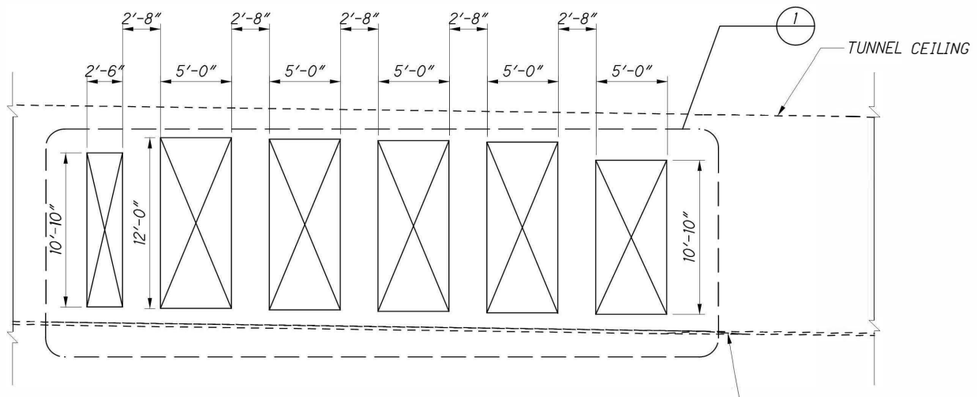

ELEVATION A - UNIT 8 EAST WALL

SCALE: 3/8" =1'-0"

0 2
1 4
SCALE IN FEET

SEE SHEET 143/296 FOR LOCATION

DESIGN AGENCY
HATCH MOTT MacDONALD
18013 CLEVELAND PKWY.
SUITE 200
CLEVELAND, OH 44135

DESIGNED	DRAWN	REVIEWED	DATE
HWW	MFW	DGN	08/07/14
CHECKED	REVISED	STRUCTURE FILE NUMBER	
NAH	HWW	3106578	

TUNNEL VENTILATION SYSTEM - TUNNEL ISOLATION DAMPERS

BRIDGE NO. HAM-71-0134

I-71 LYTLE TUNNEL UNDER LYTLE PARK

HAM-71-01.34

PID No. 87268

143/296

401/555

c:\pwworking\hmm\external\tyn61470\dms72788\071_0134CMS006.dgn 10/24/2014 11:23:32 AM TYN61470

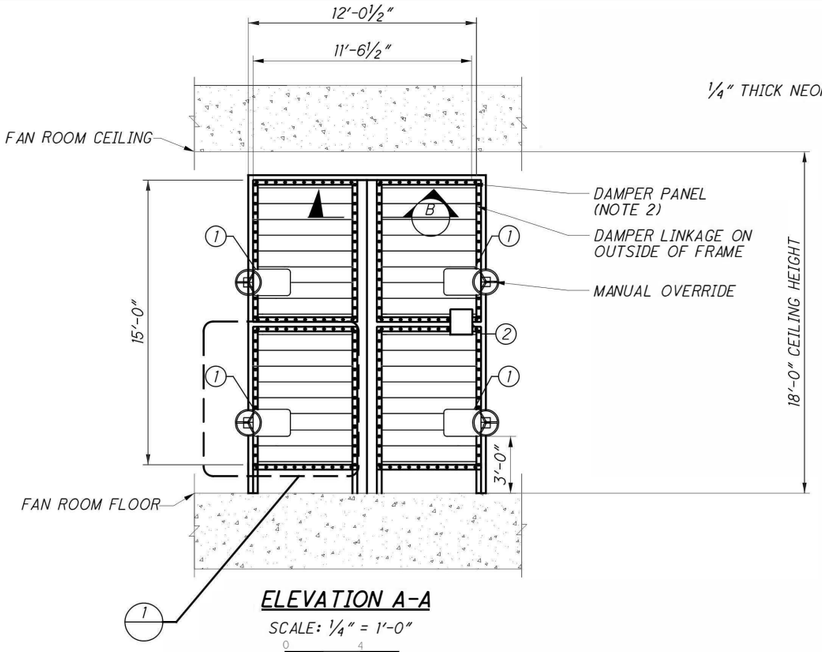

ELEVATION A-A

SCALE: ¼" = 1'-0"

SCALE IN FEET

SEE SHEET 137/296 FOR LOCATION

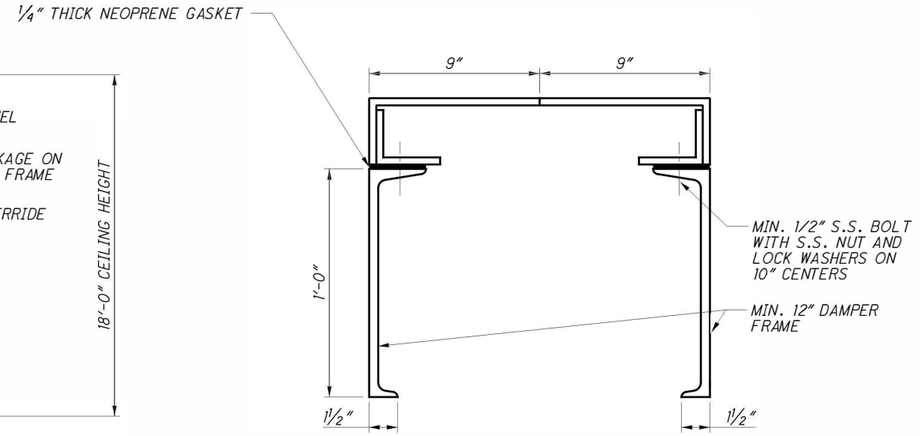

SECTION B-B

SCALE: 3" = 1'-0"

SCALE IN FEET

SEE SHEET 144/296 FOR LOCATION

NOTES:

1. LINKAGE TO DAMPER PANELS NOT SHOWN AND TO BE DESIGNED AND INSTALLED BY DAMPER MANUFACTURER.
2. ALIGN DAMPER FRAME WITH DAMPER COMPANION FLANGE. CENTER PUNCH OR DRILL AT HOLE LOCATION.
3. COORDINATE SIZE OF THE WALL MOUNTING COMPANION FLANGE WITH DAMPER AND ACTUATOR SUPPLIER.
4. GALVANIZED FINISH DESTROYED BY INSTALLATION PROCESS SHALL BE REFINISHED BY COATING WITH ZINC-RICH PAINT.
5. WELD SIZE TO BE DETERMINED BY MANUFACTURER.

LEGEND:

(1) DAMPER ACTUATOR WITH INSULATING BLANKET.

(2) JUNCTION BOX AND TERMINAL BLOCK. (16" X 14" X 4")

(3) LIMIT SWITCH FOR DAMPER OPEN/CLOSE SIGNAL.

ABBREVIATIONS:

TYP.	TYPICAL
MIN.	MINIMUM
S.S.	STAINLESS STEEL

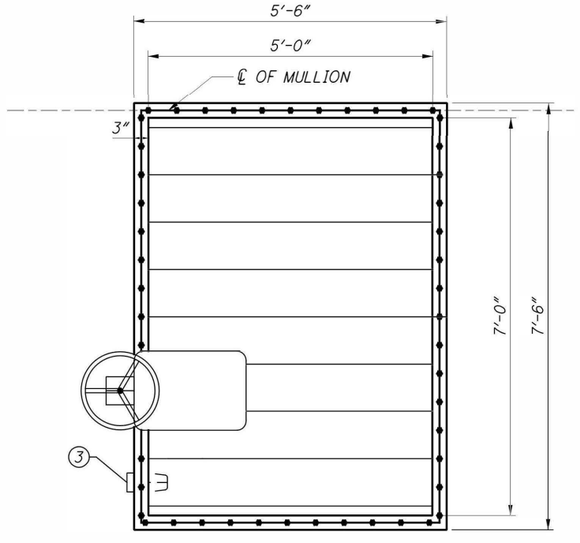

DETAIL 1 - SINGLE DAMPER PANEL

SCALE: 3/4" = 1'-0"

SCALE IN FEET

SEE SHEET 144/296 FOR LOCATION

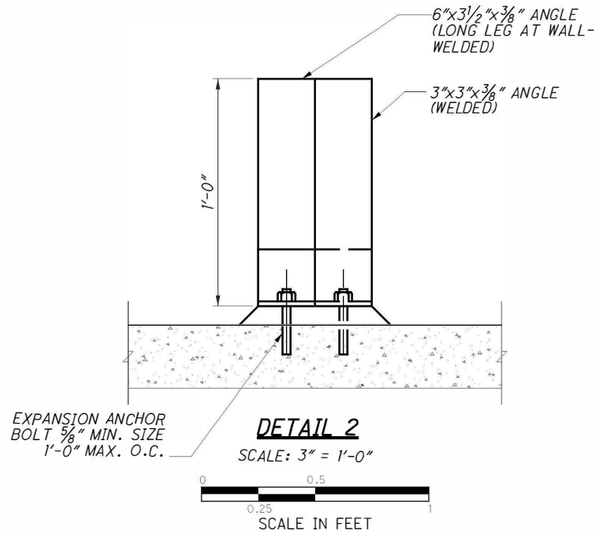

DETAIL 2

SCALE: 3" = 1'-0"

SCALE IN FEET

SEE SHEET 144/296 FOR LOCATION

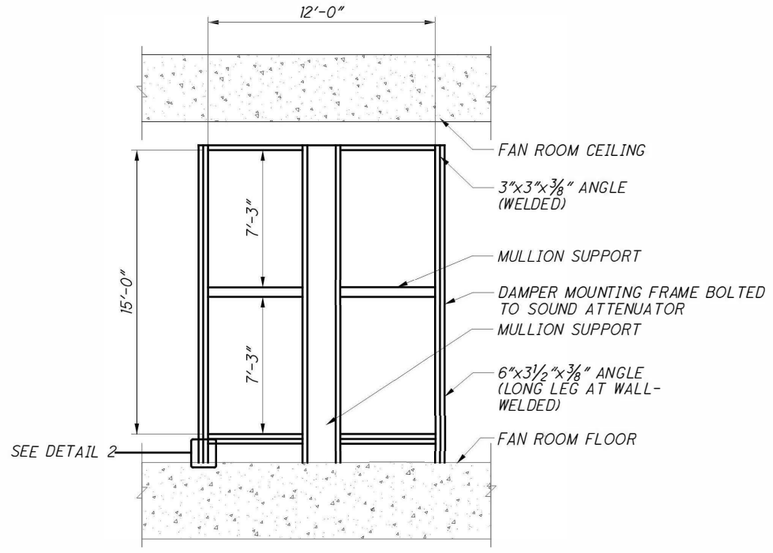

DETAIL 3 - MOUNTING FRAME

SCALE: ¼" = 1'-0"

SCALE IN FEET

SEE SHEET 137/296 FOR LOCATION

DESIGN AGENCY
HATCH MOTT MacDONALD
18013 CLEVELAND PKWY.
SUITE 200
CLEVELAND, OH 44135

DESIGNED	DRAWN	REVIEWED	DATE
HWW	MFW	DGN	08/07/14
CHECKED	REVISED	STRUCTURE FILE NUMBER	
NAH	HWW	3106578	

TUNNEL VENTILATION SYSTEM - FAN ISOLATION DAMPER DETAILS

BRIDGE NO. HAM-71-0134
I-71 LYTLE TUNNEL UNDER LYTLE PARK

HAM-71-01.34
PID No. 87268

c:\pwworking\hmm\external\tyn61470.dms72788\071_0134CMD008.dgn 10/24/2014 11:23:35 AM TYN61470

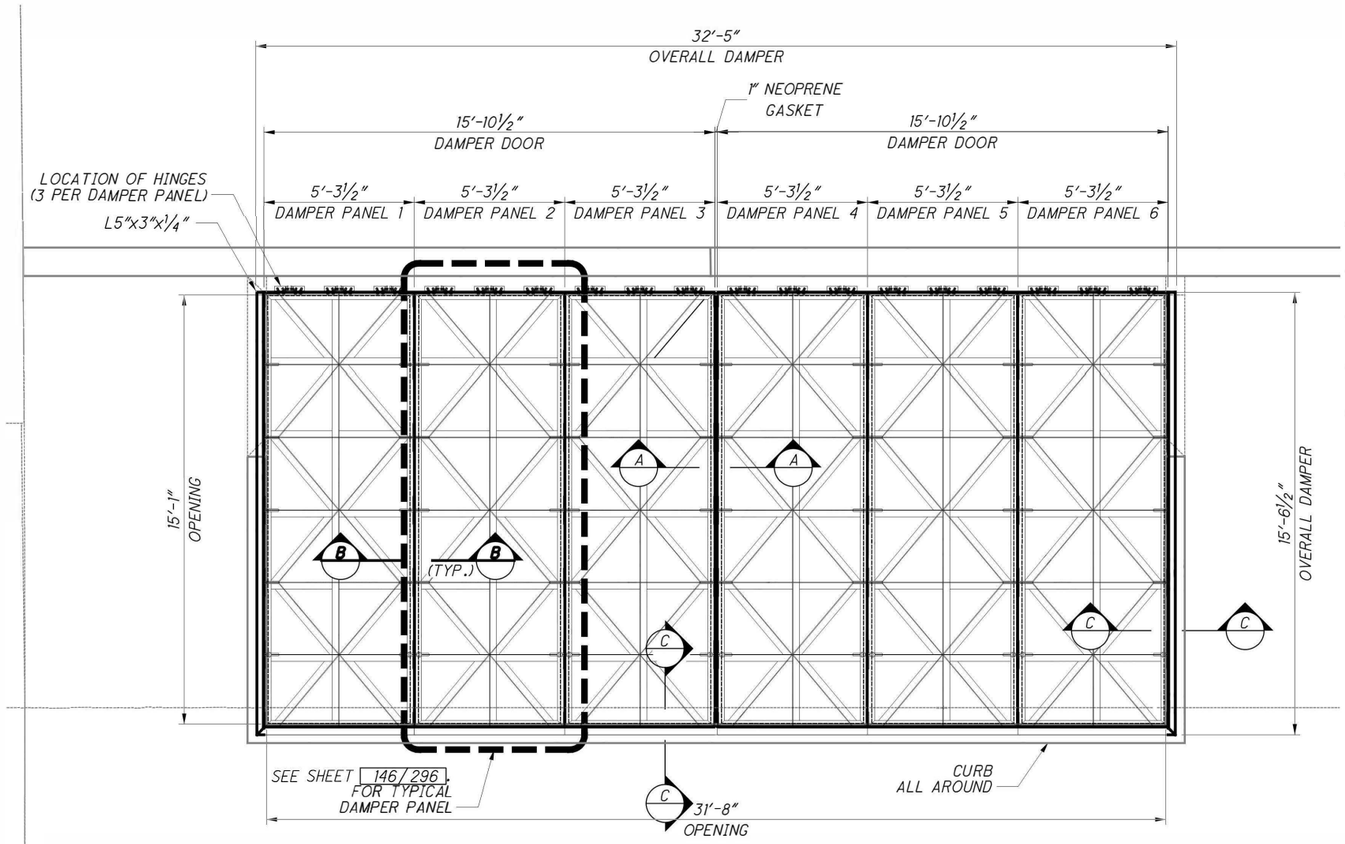

TUNNEL ISOLATION DAMPER PLAN - I.R.-71 NORTHBOUND

SCALE: 3/8" = 1'-0"

SCALE IN FEET

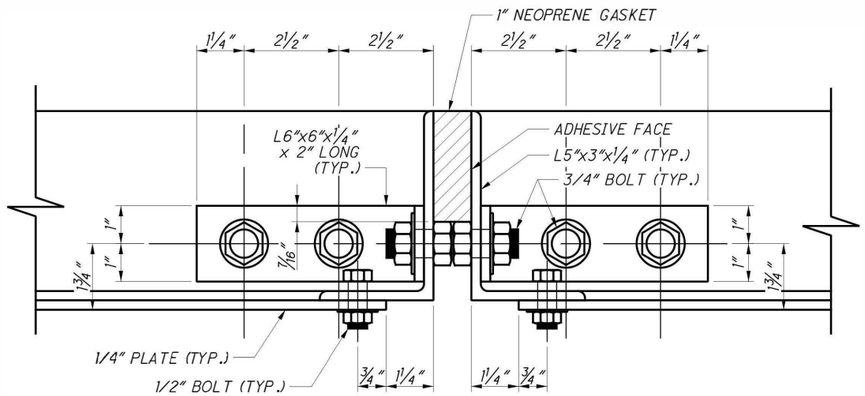

SECTION A-A (CONNECTION BETWEEN DAMPER PANEL 3 AND 4)

SCALE: 6" = 1'-0"

SCALE IN INCHES

NOTES:

1. DAMPER DOOR ARRANGEMENT IS SHOWN FOR GENERAL ARRANGEMENT AND FUNCTION. CONTRACTOR SHALL BE RESPONSIBLE FOR FURNISHING AND INSTALLING A COMPLETE AND FULLY FUNCTIONING DAMPER DOOR ASSEMBLY COMPLETE WITH ALL COMPONENTS INCLUDING, BUT NOT LIMITED TO: ACTUATORS, GEAR DRIVES, BEARINGS, CONTROLS, HARDWARE AND SUPPORTS, NECESSARY TO ACHIEVE THE REQUIRED OPERATION.
2. ALL DIMENSIONS SHALL BE FIELD-VERIFIED BY THE CONTRACTOR.
2. DAMPER PANELS 1, 2 AND 3 TO BE BOLTED TOGETHER.
3. DAMPER PANELS 4, 5 AND 6 TO BE BOLTED TOGETHER.
4. SEE SHEET 152/296 FOR SECTIONS B-B AND C-C.
5. GAP BETWEEN PANELS 3 AND 4 TO BE SEALED BY A 1" THICK NEOPRENE GASKET.
6. USE POSITIVE LOCK WASHERS ON THE NUTSIDE FOR ALL BOLTS.
7. DAMPER PANELS MUST SEAL EVENLY ALL AROUND.

DESIGN AGENCY
HATCH MOTT MacDONALD
18013 CLEVELAND PKWY.
SUITE 200
CLEVELAND, OH 44135

DESIGNED	DRAWN	REVIEWED	DATE
KSK	CMN	DGN	08/07/14
CHECKED	REVISED	STRUCTURE FILE NUMBER	
NAH	KSK	3106578	

TUNNEL ISOLATION DAMPER NORTHBOUND - DETAILS 1 OF 4

BRIDGE NO. HAM-71-0134
I-71 LYTLE TUNNEL UNDER LYTLE PARK

HAM-71-01.34
PID No. 87268

145/296

403
555

c:\pwworking\hmm\external\tyn61470\dms727888\071_0134CMD113.dgn 10/24/2014 11:23:39 AM TYN61470

NOTES:

1. ALL DIMENSIONS SHALL BE FIELD-VERIFIED BY THE CONTRACTOR.
2. SEE THIS SHEET FOR SECTION A-A
3. SEE SHEET 152/296 FOR DETAIL 1 AND 2, AND SECTION C-C

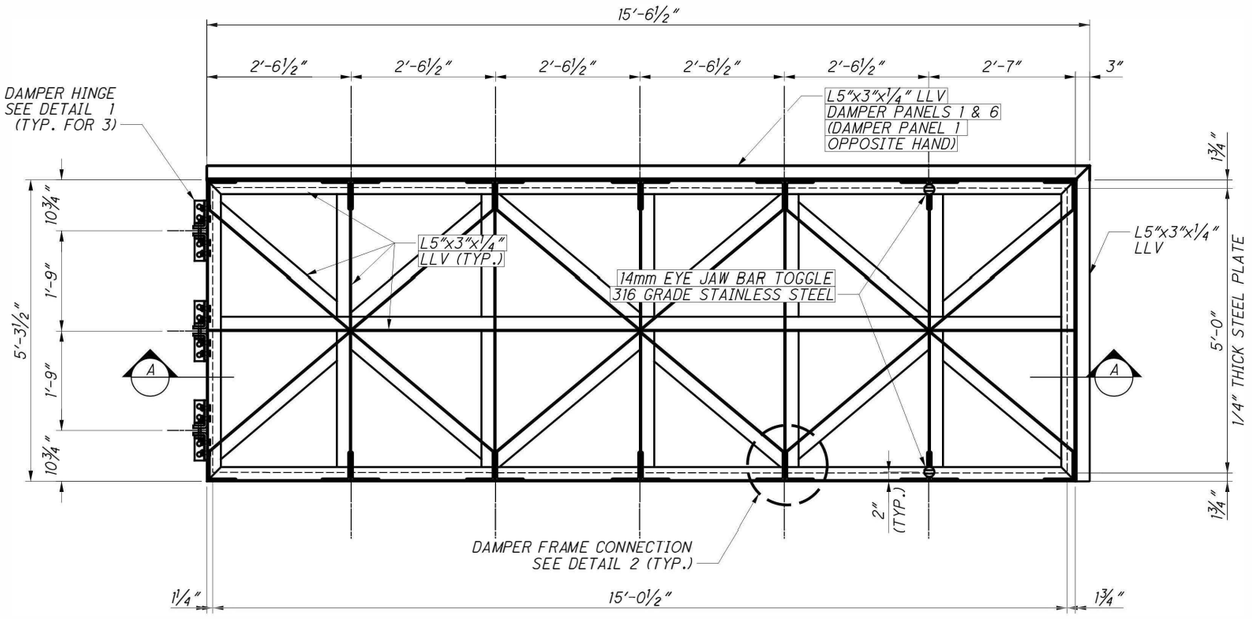

DAMPER PANELS 1, 2, 3, 4, 5 & 6 LAYOUT

SCALE: 3/4" = 1'-0"

0 1
0.5 2
SCALE IN FEET

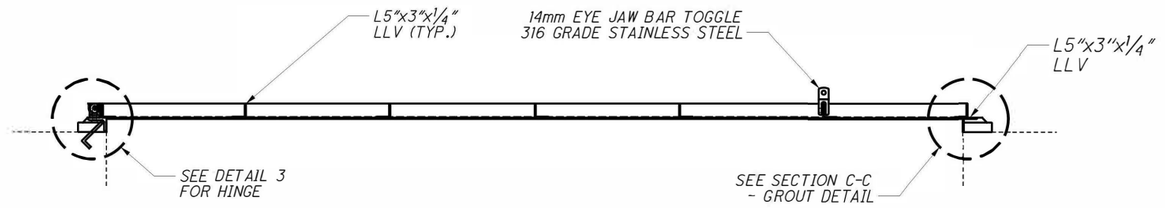

SECTION A-A

SCALE: 3/4" = 1'-0"

0 1
0.5 2
SCALE IN FEET

DESIGN AGENCY
HATCH MOTT MacDONALD
18013 CLEVELAND PKWY.
SUITE 200
CLEVELAND, OH 44135

DESIGNED	DRAWN	REVIEWED	DATE
KSK	CMN	DGN	08/07/14
CHECKED	REVISED	STRUCTURE FILE NUMBER	
NAH	KSK	3106578	

TUNNEL ISOLATION DAMPER NORTHBOUND - DETAILS 2 OF 4

BRIDGE NO. HAM-71-0134
I-71 LYTLE TUNNEL UNDER LYTLE PARK

HAM-71-01.34
PID No. 87268

146/296

404/555

c:\pwworking\hmm\external\tyn61470\dms72788\071_0134CMD121.dgn 10/24/2014 11:23:41 AM TYN61470

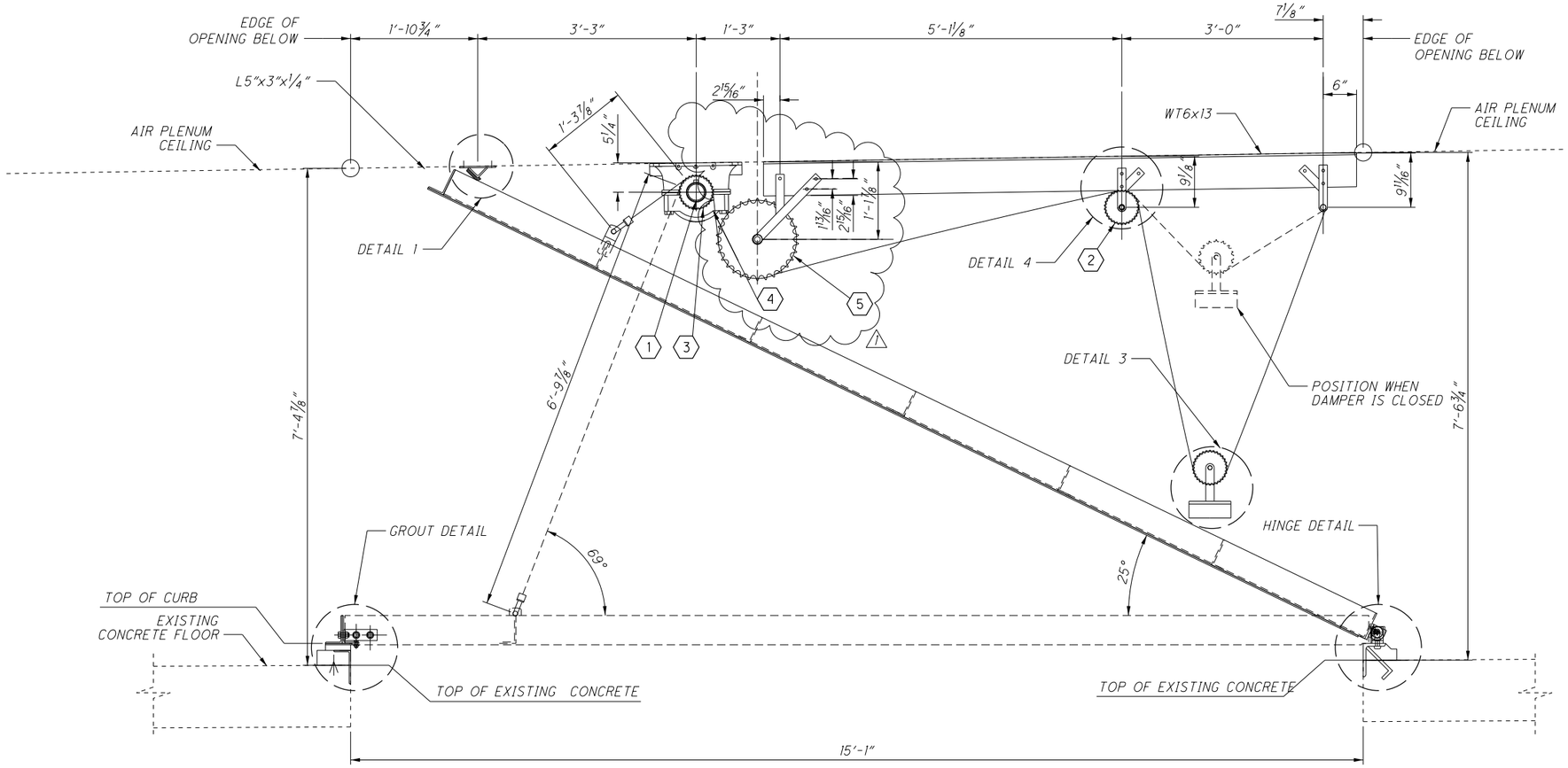

SECTION A

SCALE: 1" = 1'-0"

SEE SHEET 133/296 FOR LOCATION

0 1 0.5 2 SCALE IN FEET

NOTES:

1. ALL DIMENSIONS SHALL BE FIELD-VERIFIED BY THE CONTRACTOR.
2. DAMPER PANELS MUST SEAL EVENLY ALL AROUND.
3. SEE SHEET 150/296 FOR DETAILS 1, 3 AND 4.
4. SEE SHEET 152/296 FOR HINGE AND GROUT DETAILS

LEGEND:

1. 3½" SHAFT
2. SPROCKET - No. 50 - 5/8" PITCH PLAIN BORE AS MANUFACTURED BY U.S. TSUBAKI POWER TRANSMISSION, L.L.C., OR APPROVED EQUAL
3. SPROCKET - No. 50 - 5/8" PITCH PLAIN BORE AS MANUFACTURED BY U.S. TSUBAKI POWER TRANSMISSION, L.L.C., OR APPROVED EQUAL, WITH 3 1/2" BORE. SEE SHEET 150/296 FOR DETAIL
4. PILLOW BLOCK BEARING.
5. SPROCKET - No. 50 - 5/8" PITCH PLAIN BORE WITH A PITCH DIAMETER OF 13.931 INCHES. (1)

NO.	DATE	REVISION DESCRIPTION
1	04/11/2017	RFI #294

DESIGN AGENCY
HATCH MOTT MacDONALD
18013 CLEVELAND PKWY.
SUITE 200
CLEVELAND, OH 44135

DESIGNED	DRAWN	REVIEWED	DATE
KSK	GMN	DGN	08/07/14
CHECKED	REVISED	STRUCTURE FILE NUMBER	
NAH	KSK	3106578	

DETAILS 3 OF 4

TUNNEL ISOLATION DAMPER NORTHBOUND - DETAILS

BRIDGE NO. HAM-71-0134

I-71 LYTLE TUNNEL UNDER LYTLE PARK

HAM-71-01.34

PID No. 87268

\\pw_netapp02\ewr_pw_dcs\DCS02\dcs_working\48366\72788_19\071_0134CMD114.dgn 4/12/2017 10:03:36 AM EWR-PW-DCS02$

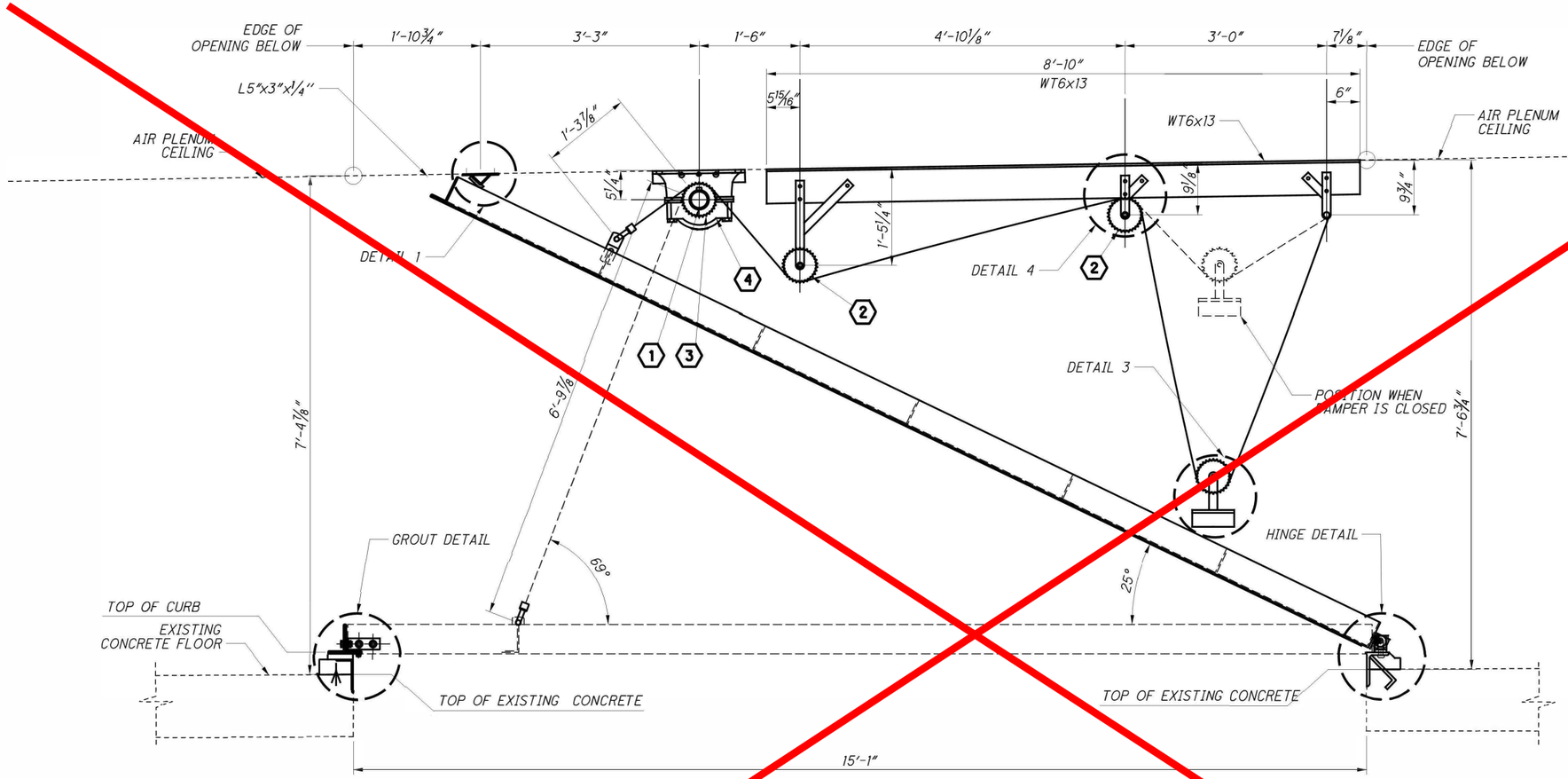

SECTION A

SCALE: 1" = 1'-0"

SEE SHEET 133/296 FOR LOCATION

0 1 0.5 2

SCALE IN FEET

Drawing replace with RFI #294, sprocket at #2 location increased in size due to chain drive issues.

NOTES:

1. ALL DIMENSIONS SHALL BE FIELD-VERIFIED BY THE CONTRACTOR.
2. DAMPER PANELS MUST SEAL EVENLY ALL AROUND.
3. SEE SHEET 150/296 FOR DETAILS 1, 3 AND 4.
4. SEE SHEET 152/296 FOR HINGE AND GROUT DETAILS

LEGEND:

1. 3½" SHAFT
2. SPROCKET - No. 50 - 5/8" PITCH PLAIN BORE AS MANUFACTURED BY U.S. TSUBAKI POWER TRANSMISSION, L.L.C., OR APPROVED EQUAL
3. SPROCKET - No. 50 - 5/8" PITCH PLAIN BORE AS MANUFACTURED BY U.S. TSUBAKI POWER TRANSMISSION, L.L.C., OR APPROVED EQUAL, WITH 3 1/2" BORE. SEE SHEET 150/296 FOR DETAIL
4. PILLOW BLOCK BEARING.

DESIGN AGENCY
HATCH MOTT MacDONALD
18013 CLEVELAND PKWY.
SUITE 200
CLEVELAND, OH 44135

DESIGNED	DRAWN	REVIEWED	DATE
KSK	CMN	DCN	08/07/14
CHECKED	REVISED	STRUCTURE FILE NUMBER	
NAH	KSK	3106578	

TUNNEL ISOLATION DAMPER NORTHBOUND - DETAILS 3 OF 4

BRIDGE NO. HAM-71-0134

I-71 LYTLE TUNNEL UNDER LYTLE PARK

HAM-71-01.34

PID No. 87268

147/296

405/555

c:\pwworking\hmm\external\tyn61470\dms72788\071_0134CWD114.dgn 10/24/2014 11:23:43 AM TYN61470

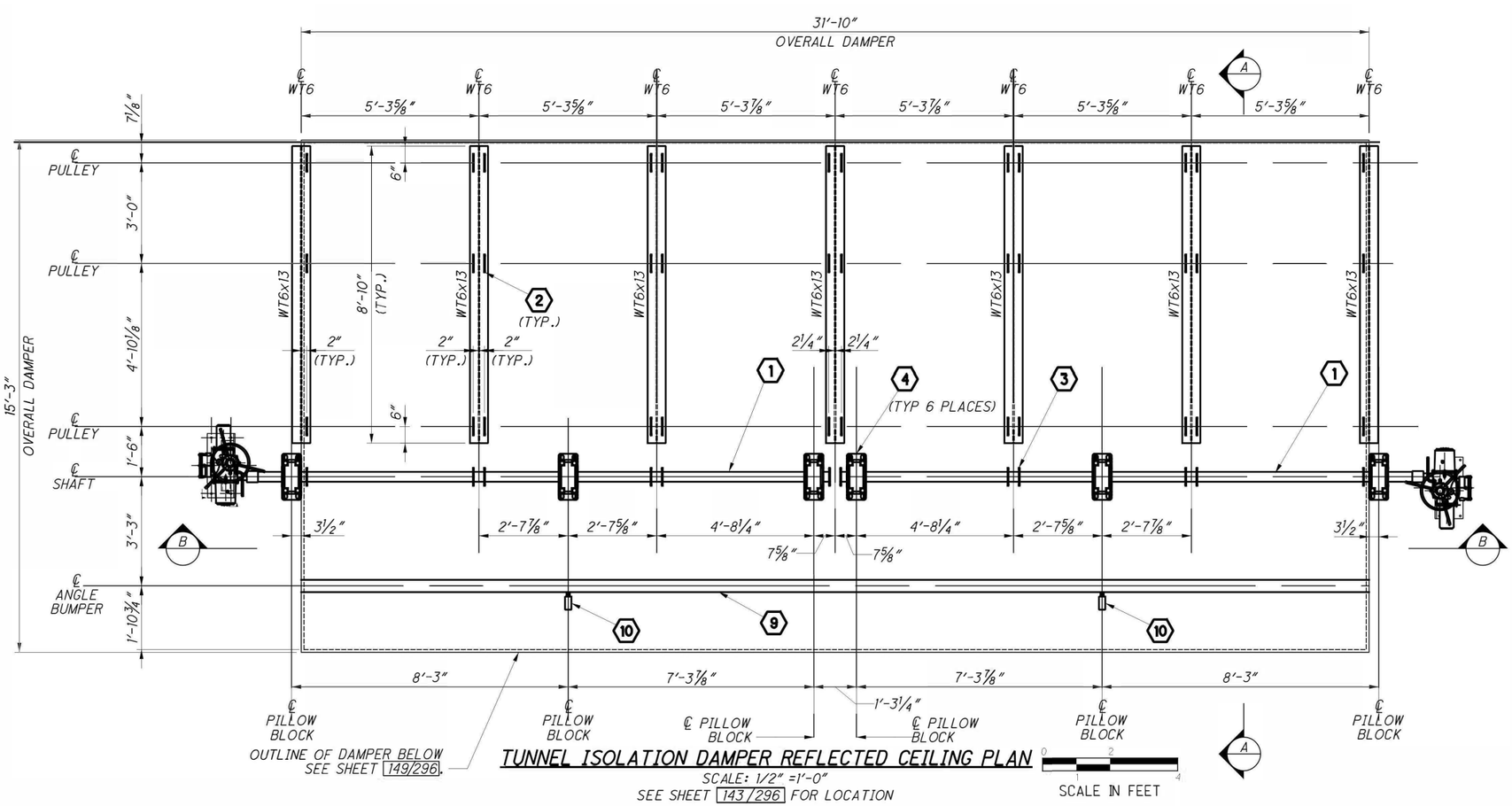

TUNNEL ISOLATION DAMPER REFLECTED CEILING PLAN

SCALE: 1/2" =1'-0"

SEE SHEET 143/296 FOR LOCATION

SCALE IN FEET

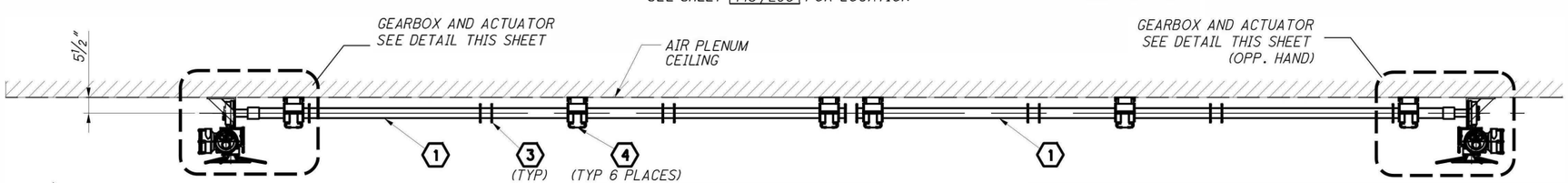

SECTION B-B

SCALE: 1/2" = 1'-0"

SCALE IN FEET

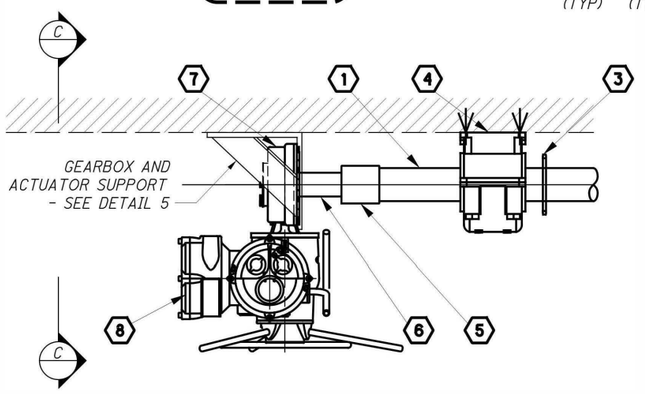

GEARBOX AND ACTUATOR DETAIL

SCALE: 1 1/2" = 1'-0"

SCALE IN FEET

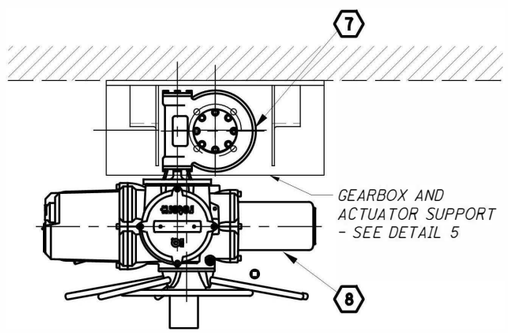

SECTION C-C

SCALE: 1 1/2" = 1'-0"

SCALE IN FEET

NOTES:

1. ALL DIMENSIONS SHALL BE FIELD-VERIFIED BY THE CONTRACTOR
2. SEE SHEET 147/296 FOR SECTION A-A.
3. SEE SHEET 151/296 FOR DETAIL 5

LEGEND:

1. 3½"ϕ SHAFT A36 STEEL
2. SPROCKET - No. 50 - 5/8" PITCH PLAIN BORE AS MANUFACTURED BY U.S. TSUBAKI POWER TRANSMISSION, L.L.C., OR APPROVED EQUAL
3. SPROCKET - No. 50 - 5/8" PITCH PLAIN BORE AS MANUFACTURED BY U.S. TSUBAKI POWER TRANSMISSION, L.L.C., OR APPROVED EQUAL, WITH 3 1/2" BORE
4. PILLOW BLOCK BEARING MOUNTING.
5. 3½" TO 2½" COUPLING
6. 2½"ϕ SHAFT A36 STEEL
7. MTW4 MOTORIZED GEARBOX ASN MANUFACTRED BY ROTORK CONTROLS, LTD., OR APPROVED EQUAL
8. ACTUATOR - IQ20-25 AS MANUFACTURED BY ROTORK CONTROLS, LTD., OR APPROVED EQUAL
9. CONTINUOUS BUMPER
10. LIMIT SWITCH FOR DAMPER OPEN/CLOSE SIGNAL

DESIGN AGENCY
HATCH MOTT MacDONALD
18013 CLEVELAND PKWY.
SUITE 200
CLEVELAND, OH 44135

DESIGNED KSK
DRAWN CMN
CHECKED NAH
REVIEWED DGN
DATE 08/07/14
REVISED KSK
STRUCTURE FILE NUMBER 3106578

TUNNEL ISOLATION DAMPER NORTHBOUND - DETAILS 4 OF 4
BRIDGE No. HAM-71-0134
I-71 LYTLE TUNNEL UNDER LYTLE PARK

HAM-71-01.34
PID No. 82768

148/296

406
555

c:\pwworking\hmm\external\tyn61470\dms727[illegible]\071_0134CWD115.dgn 10/24/2014 11:23:45 AM TYN61470

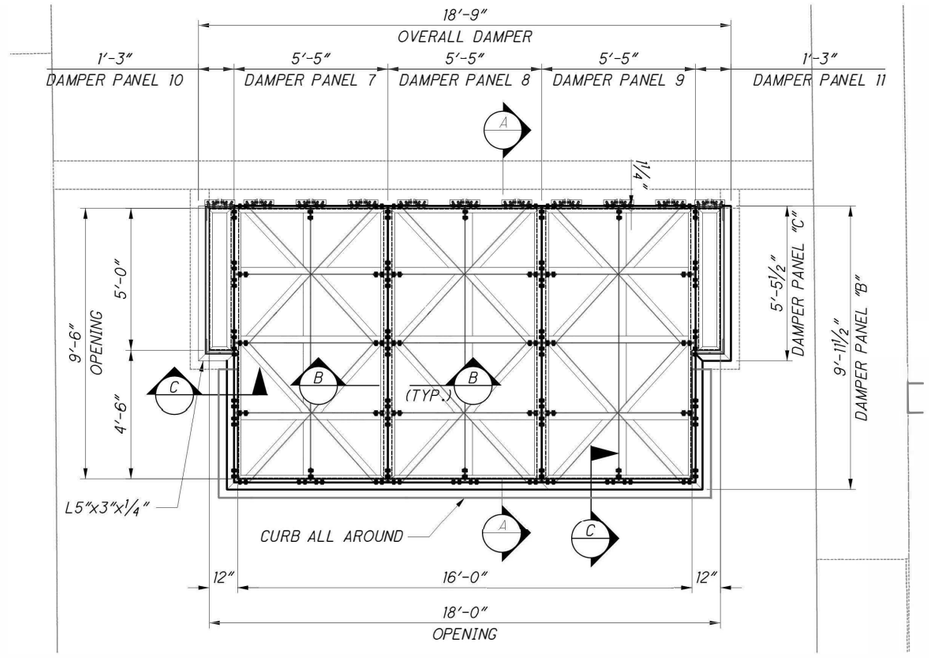

TUNNEL ISOLATION DAMPER PLAN - I.R.-71 SB RAMP E TUNNEL TO THIRD STREET

SCALE: 3/8" = 1'-0"

0 2
SCALE IN FEET

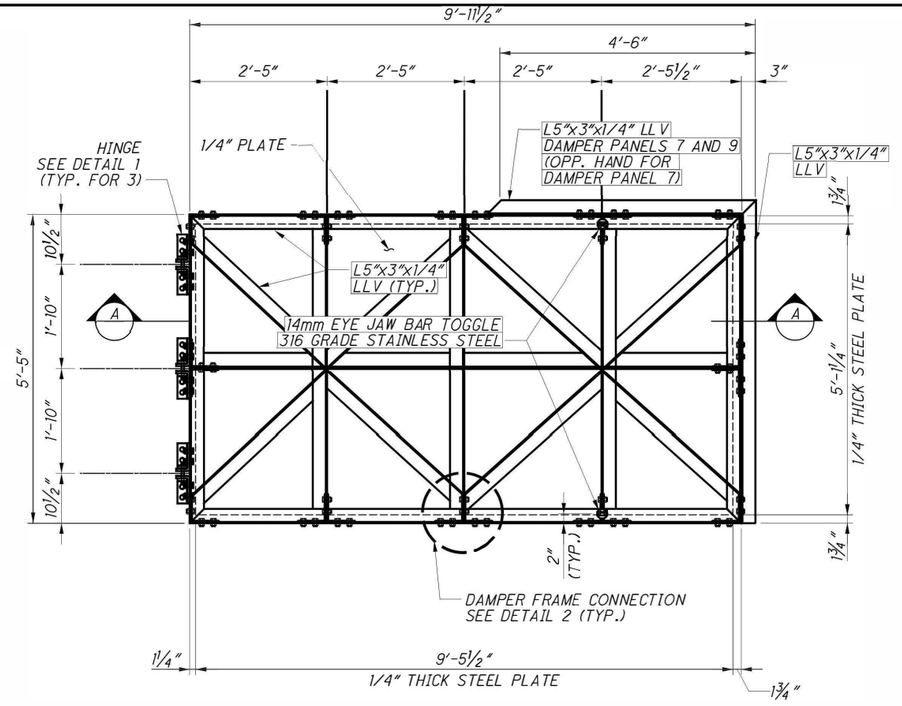

DAMPER PANELS 7, 8 & 9 LAYOUT

SCALE: 3/4" = 1'-0"

0 1
0.5 2
SCALE IN FEET

NOTES:

1. DAMPER DOOR ARRANGEMENT IS SHOWN FOR GENERAL ARRANGEMENT AND FUNCTION. CONTRACTOR SHALL BE RESPONSIBLE FOR FURNISHING AND INSTALLING A COMPLETE AND FULLY FUNCTIONING DAMPER DOOR ASSEMBLY COMPLETE WITH ALL COMPONENTS INCLUDING, BUT NOT LIMITED TO: ACTUATORS, GEAR DRIVES, BEARINGS, CONTROLS, HARDWARE AND SUPPORTS, NECESSARY TO ACHIEVE THE REQUIRED OPERATION.
2. ALL DIMENSIONS SHALL BE FIELD-VERIFIED BY THE CONTRACTOR.
3. SEE SHEET 152/296 FOR DETAILS 1, 2 AND 3, AND SECTIONS B-B AND C-C
4. USE POSITIVE LOCK WASHERS ON THE NUTSIDE FOR ALL BOLTS.

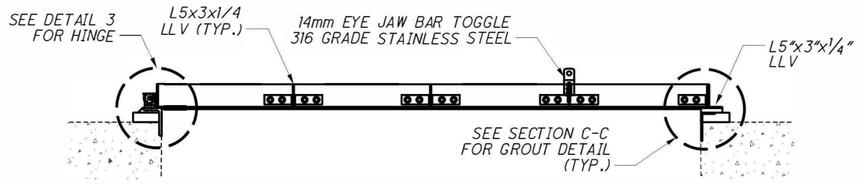

SECTION A-A

SCALE: 3/4" = 1'-0"

0 1
0.5 2
SCALE IN FEET

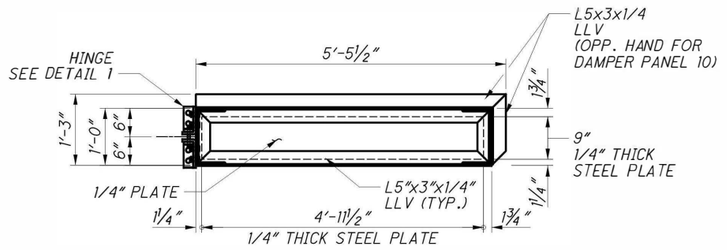

DAMPER PANELS 10 & 11 LAYOUT

SCALE: 3/4" = 1'-0"

0 1
0.5 2
SCALE IN FEET

DESIGN AGENCY
HATCH MOTT MacDONALD
18013 CLEVELAND PKWY.
SUITE 200
CLEVELAND, OH 44135

DESIGNED	DRAWN	REVIEWED	DATE
KSK	GMN	DGN	08/07/14
CHECKED	REVISED	STRUCTURE FILE NUMBER	
NAH	KSK	3106578	

TUNNEL ISOLATION DAMPER - RAMP E DETAILS 1 OF 3

BRIDGE NO. HAM-71-0134
I-71 LYTLE TUNNEL UNDER LYTLE PARK

HAM-71-01.34
PID No. 87268

c:\pwworking\hnm\external\ty-n61470\dms727888\071_0134CVD117.dgn 10/24/2014 11:23:49 AM TYNG1470

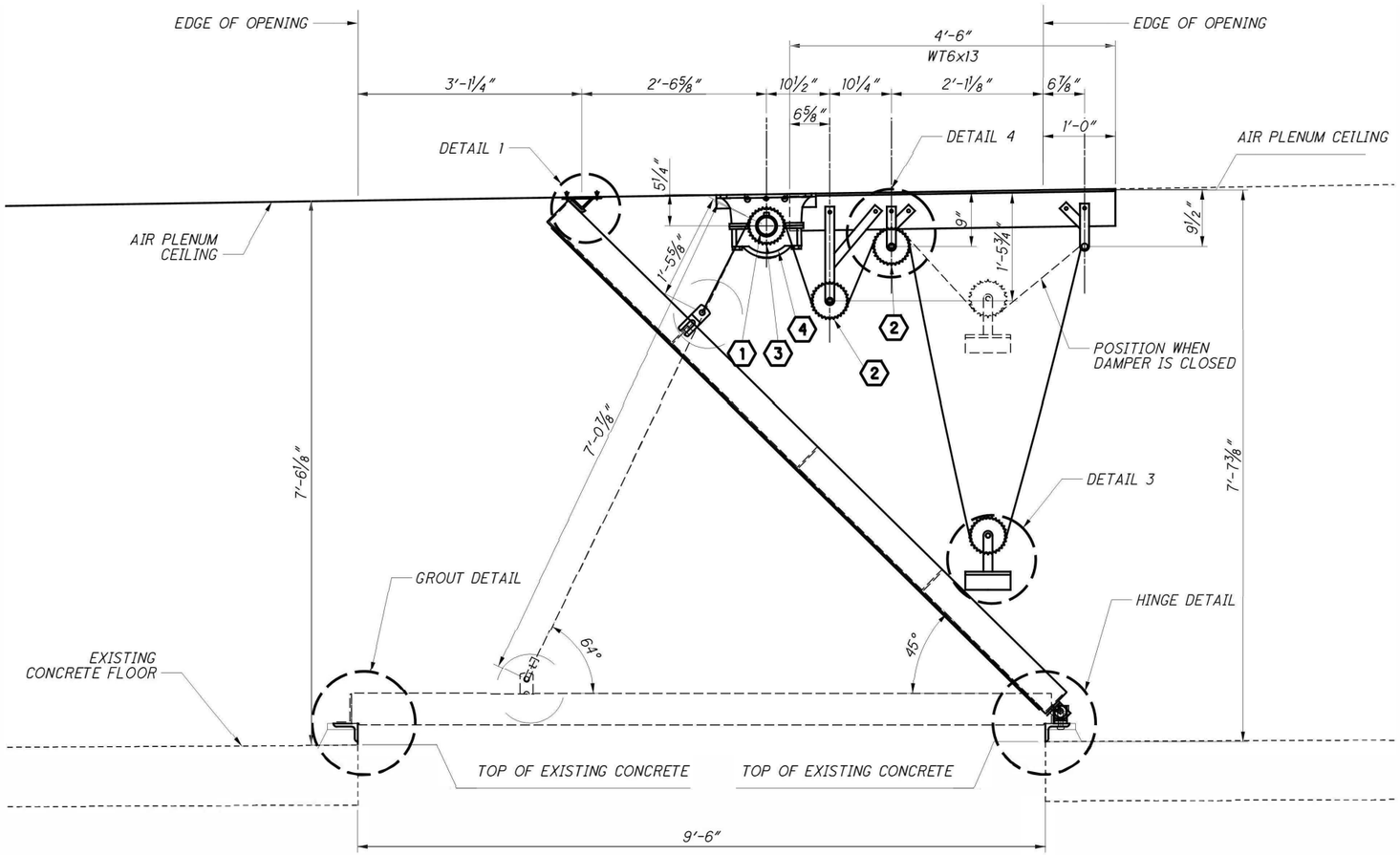

SECTION A-A

SCALE: 1" = 1'-0"

SEE SHEET 133/296 FOR LOCATION

SCALE IN FEET

0 1 0.5 2

NOTES:

1. ALL DIMENSIONS SHALL BE FIELD-VERIFIED BY THE CONTRACTOR.
2. DAMPER PANELS MUST SEAL EVENLY ALL AROUND.
3. SEE SHEET 152/296 FOR HINGE AND GROUT DETAILS.

LEGEND:

1. 3½"ϕ SHAFT A36 STEEL
2. SPROCKET - No. 50 - 5/8" PITCH PLAIN BORE AS MANUFACTURED BY U.S. TSUBAKI POWER TRANSMISSION, L.L.C., OR APPROVED EQUAL
3. SPROCKET - No. 50 - 5/8" PITCH PLAIN BORE AS MANUFACTURED BY U.S. TSUBAKI POWER TRANSMISSION, L.L.C., OR APPROVED EQUAL, WITH 3 1/2" BORE. SEE DETAIL 2 THIS SHEET.
4. PILLOW BLOCK BEARING.

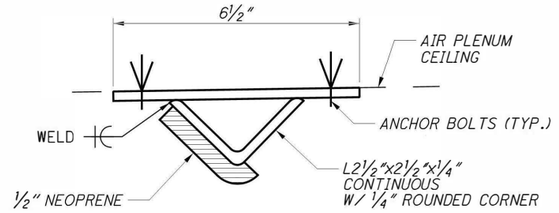

DETAIL 1 - CONTINUOUS BUMPER

SCALE: 6" = 1'-0"

0 2 1 4

SCALE IN INCHES

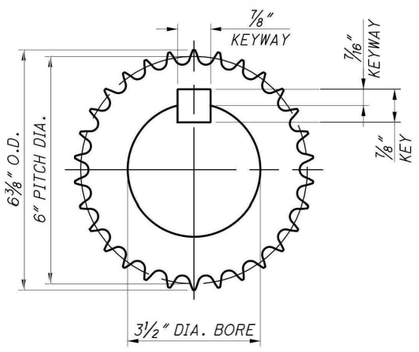

DETAIL 2 - SPROCKET

SCALE: 6" = 1'-0"

0 2 1 4

SCALE IN INCHES

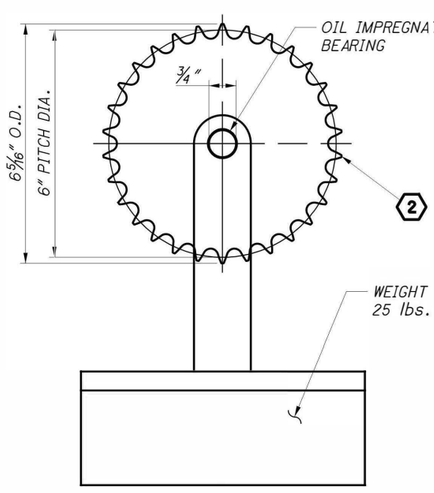

DETAIL 3 - COUNTERWEIGHT

SCALE: 6" = 1'-0"

0 2 1 4

SCALE IN INCHES

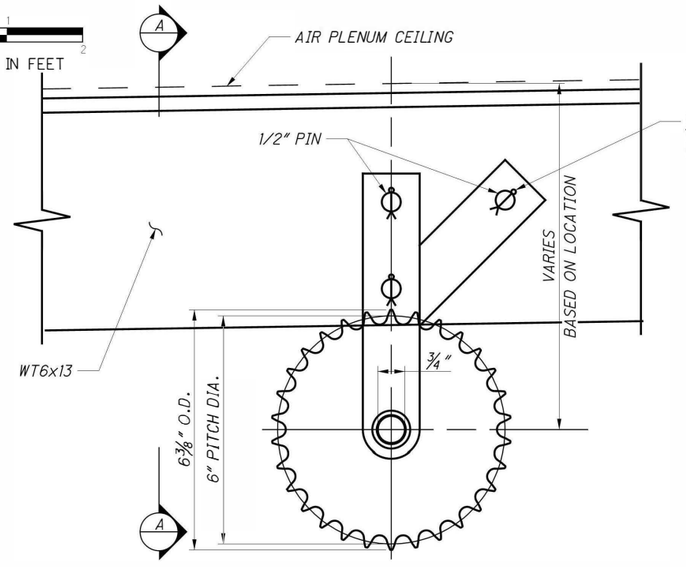

DETAIL 4 - PULLEY

SCALE: 6" = 1'-0"

0 2 1 4

SCALE IN INCHES

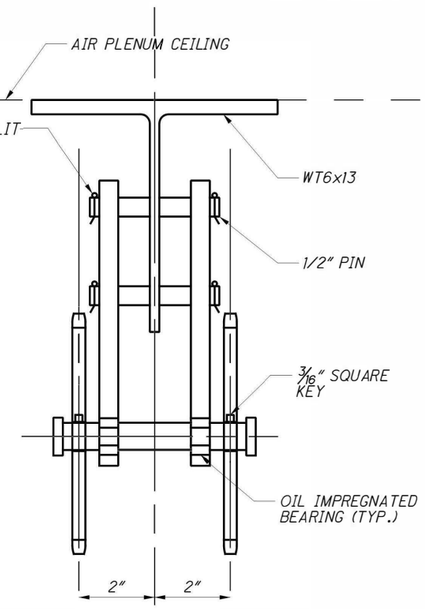

SECTION A-A

SCALE: 6" = '-0"

0 2 1 4

SCALE IN INCHES

DESIGN AGENCY
HATCH MOTT MacDONALD
18013 CLEVELAND PKWY.
SUITE 200
CLEVELAND, OH 44135

DESIGNED	DRAWN	REVIEWED	DATE
KSK	CMN	DGN	08/07/14
CHECKED	REVISED	STRUCTURE FILE NUMBER	
NAH	KSK	3106578	

TUNNEL ISOLATION DAMPER - RAMP E DETAILS 2 OF 3

BRIDGE NO. HAM-71-0134
I-71 LYTLE TUNNEL UNDER LYTLE PARK

HAM-71-01.34
PID No. 87268

150/296

408/555

c:\pwworking\hmm\external\tyn61470\dms727##\071_0134CWD1#.dgn 10/24/2014 11:23:52 AM TYN61470

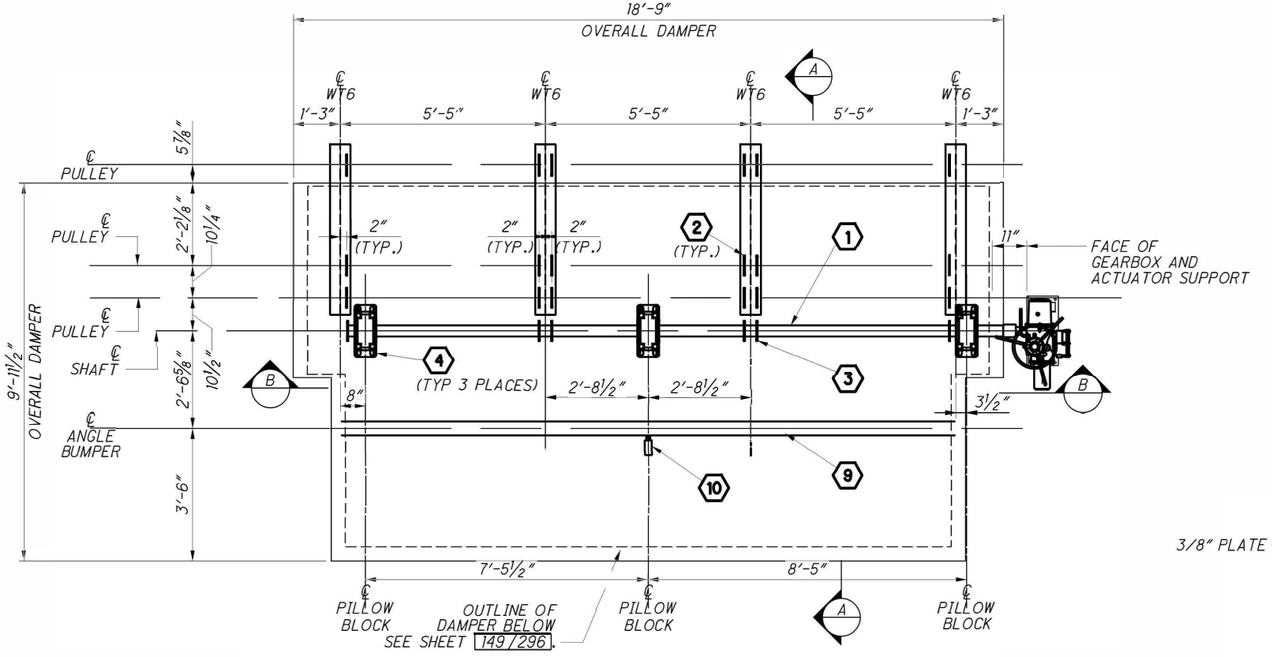

TUNNEL ISOLATION DAMPER REFLECTED CEILING PLAN

SCALE: 1/2" = 1'-0"
SEE SHEET 143/296 FOR LOCATION

SCALE IN FEET

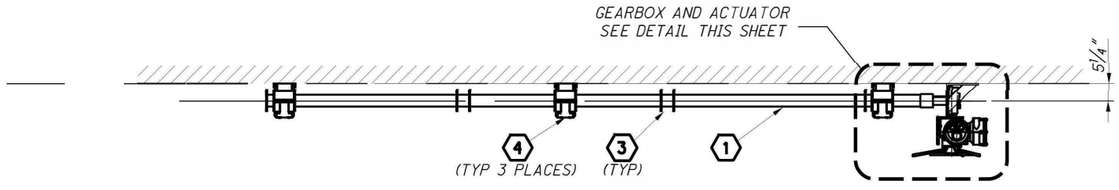

SECTION B-B

SCALE: 1/2" = 1'-0"

SCALE IN FEET

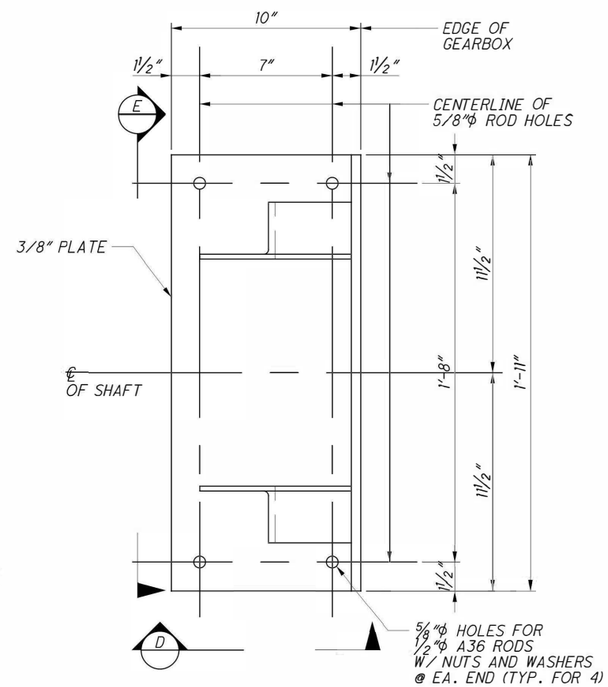

DETAIL 5 - GEARBOX AND ACTUATOR SUPPORT

SCALE: 3" =1'-0"

SCALE IN FEET

NOTES:

1. ALL DIMENSIONS SHALL BE FIELD-VERIFIED BY THE CONTRACTOR
2. COORDINATE OPENING AND BOLTHOLES FOR GEARBOX AND ACTUATOR SUPPORT WITH THE GEARBOX MANUFACTURER.
3. SEE SHEET 150/296 FOR SECTION A-A

LEGEND:

1. 3½"ϕ SHAFT
2. SPROCKET - No. 50 - 5/8" PITCH PLAIN BORE AS MANUFACTURED BY U.S. TSUBAKI POWER TRANSMISSION, L.L.C.
3. SPROCKET - No. 50 - 5/8" PITCH PLAIN BORE AS MANUFACTURED BY U.S. TSUBAKI POWER TRANSMISSION, L.L.C., WITH 3 1/2" BORE
4. PILLOW BLOCK BEARING MOUNTING.
5. 3½" TO 2½" COUPLING
6. 2½"ϕ SHAFT
7. MTW4 MOTORIZED GEARBOX ASN MANUFACTRED BY ROTORK CONTROLS, LTD.
8. ACTUATOR - IQ20-25 AS MANUFACTURED BY ROTORK CONTROLS, LTD.
9. CONTINUOUS BUMPER
10. LIMIT SWITCH FOR DAMPER OPEN / CLOSE SIGNAL

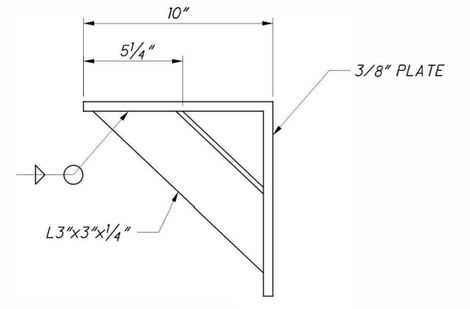

SECTION D

SCALE: 3" =1'-0"

SCALE IN FEET

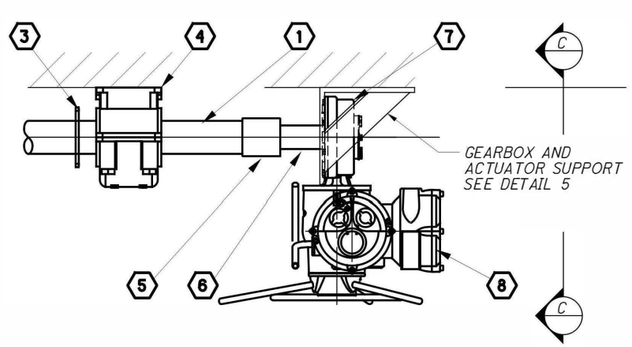

GEARBOX AND ACTUATOR DETAIL

SCALE: 1 1/2" = 1'-0"

SCALE IN FEET

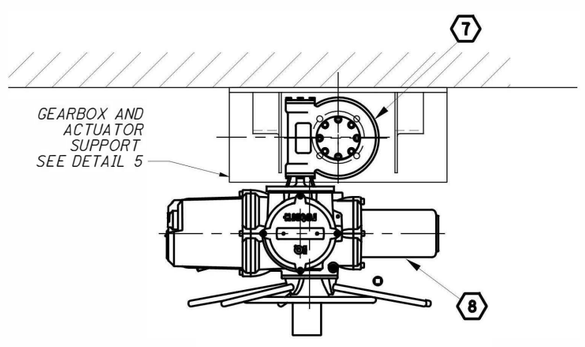

SECTION C-C

SCALE: 1 1/2" = 1'-0"

SCALE IN FEET

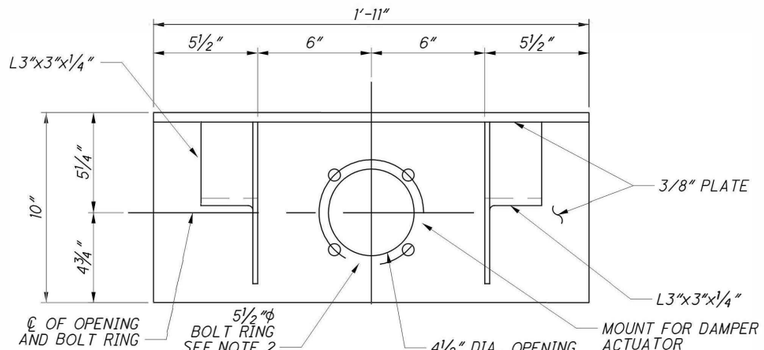

ELEVATION E

SCALE: 3" =1'-0"

SCALE IN FEET

DESIGN AGENCY
HATCH MOTT MacDONALD
18013 CLEVELAND PKWY.
SUITE 200
CLEVELAND, OH 44135

DESIGNED	DRAWN	REVIEWED	DATE
KSK	GMN	DGN	08/07/14
CHECKED	REVISED	STRUCTURE FILE NUMBER	
NAH	KSK	3106578	

TUNNEL ISOLATION DAMPER - RAMP E DETAILS 3 OF 3
BRIDGE No. HAM-71-0134
I-71 LYTLE TUNNEL UNDER LYTLE PARK

HAM-71-01.34
PID No. 87268

151/296

409/555

c:\pwworking\hmm\external\tyn61470\dms727881\071_0134CMD119.dgn 10/24/2014 11:23:55 AM TYN61470

NOTES:

1. ALL FASTENERS ARE S.S. TYPE 316.
2. USE POSITIVE LOCK WASHERS ON THE NUTSIDE FOR ALL BOLTS.

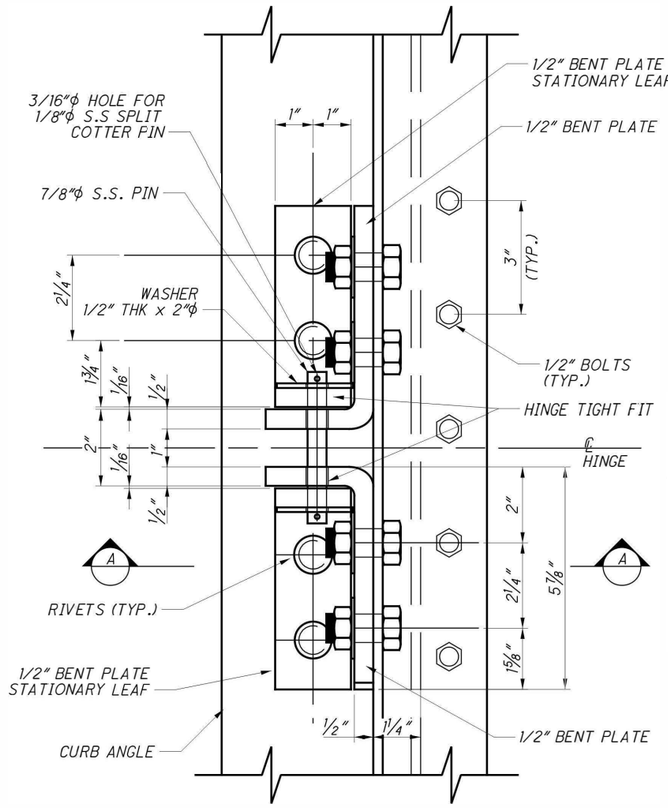

DETAIL 1 - DAMPER HINGE

SCALE: 6" = 1'-0"

SCALE IN INCHES

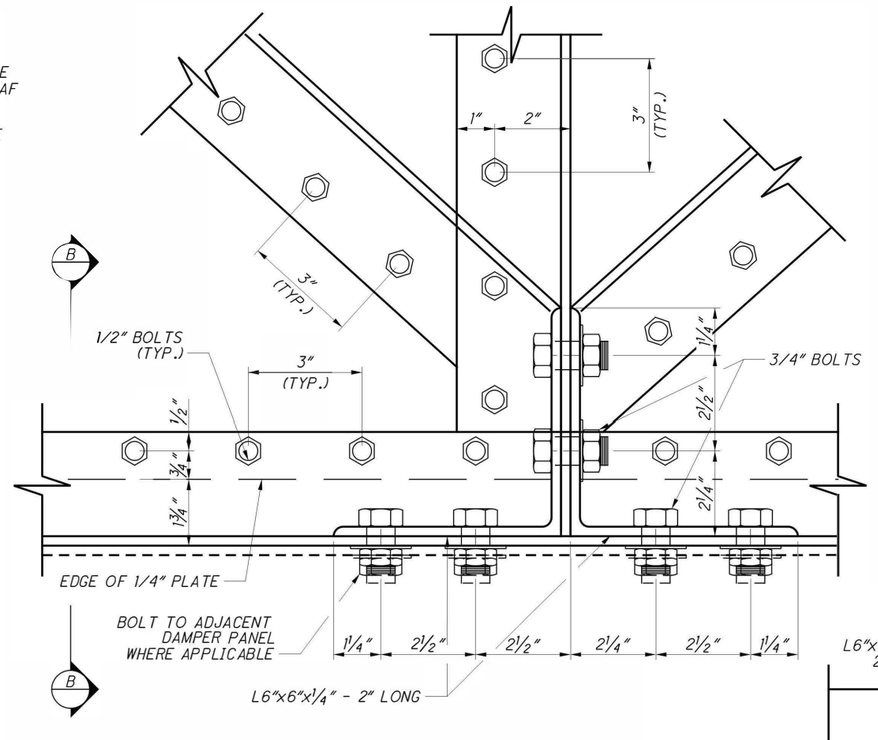

DETAIL 2 - DAMPER FRAME CONNECTION

SCALE: 6" = 1'-0"

SCALE IN INCHES

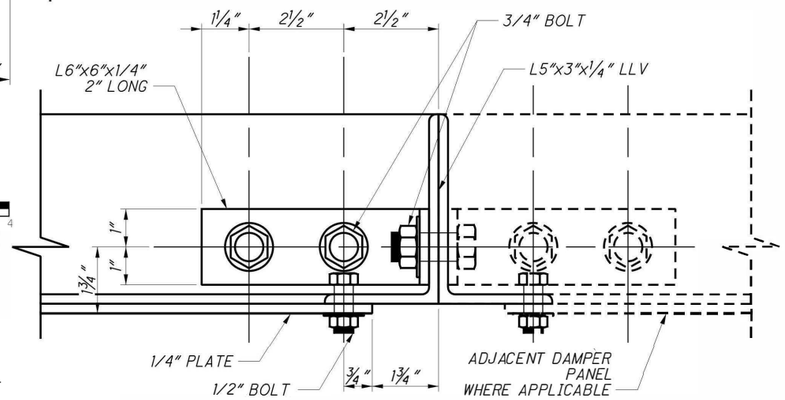

SECTION B-B - CONNECTION BETWEEN PANELS (TYP.)

SCALE: 6" = 1'-0"

SCALE IN INCHES

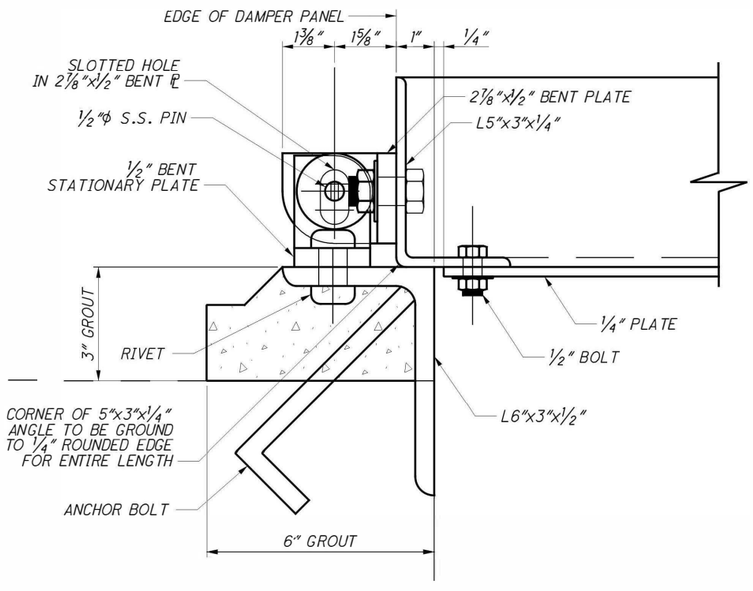

DETAIL 3 - HINGE

SCALE: 6" = 1'-0"

SCALE IN INCHES

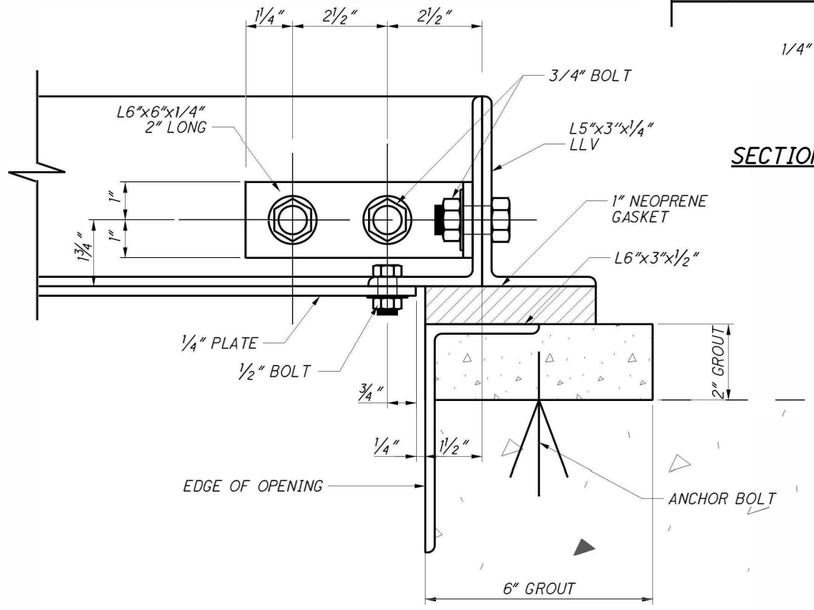

SECTION C-C - GROUT DETAIL

SCALE: 6" = 1'-0"

SCALE IN INCHES

DESIGN AGENCY
HATCH MOTT MacDONALD
18013 CLEVELAND PKWY.
SUITE 200
CLEVELAND, OH 44135

DESIGNED	DRAWN	REVIEWED	DATE
KSK	GMN	DGN	08/07/14
CHECKED	REVISED	STRUCTURE FILE NUMBER	
NAH	KSK	3106578	

TUNNEL ISOLATION DAMPERS - TYPICAL DAMPER PANEL DETAILS

BRIDGE NO. HAM-71-0134
I-71 LYTLE TUNNEL UNDER LYTLE PARK

HAM-71-01.34
PID No. 87268

152/296
410/555

c:\pwworking\hmm\external\tyn61470\dms72788\071_0134CMD116.dgn 10/24/2014 11:23:58 AM TYN61470

LEGEND:

1. DAMPER ACTUATOR WITH INSULATING BLANKET.
2. JUNCTION BOX AND TERMINAL BLOCK. (16" X 14" X 4")

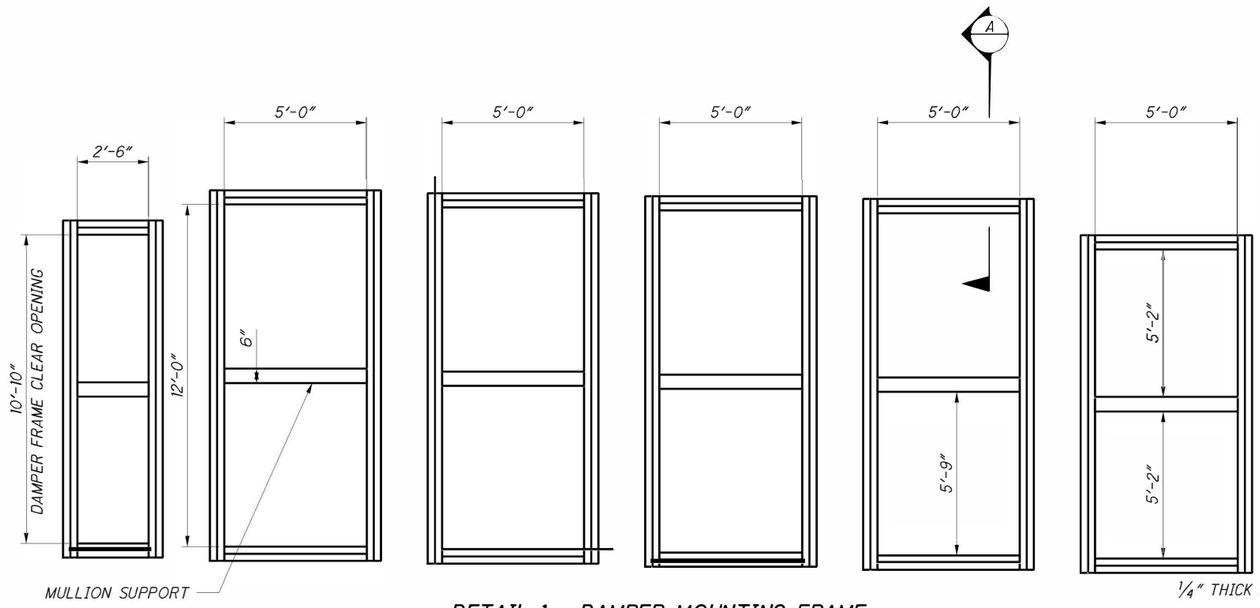

DETAIL 1 - DAMPER MOUNTING FRAME

SCALE: 3/8" = 1'-0"

SCALE IN FEET

SEE SHEET 143/296 FOR LOCATION

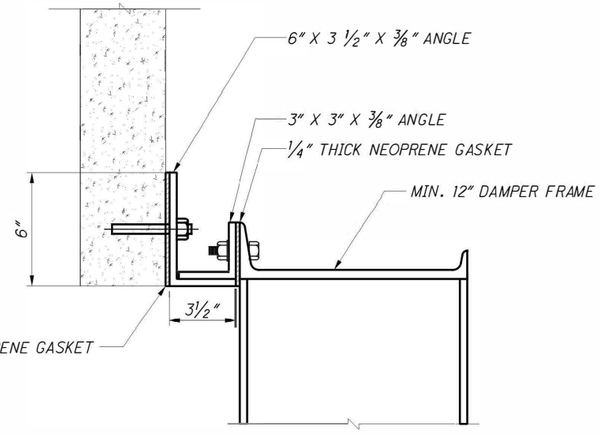

SECTION A-A

SCALE: 3" = 1'-0"

SCALE IN FEET

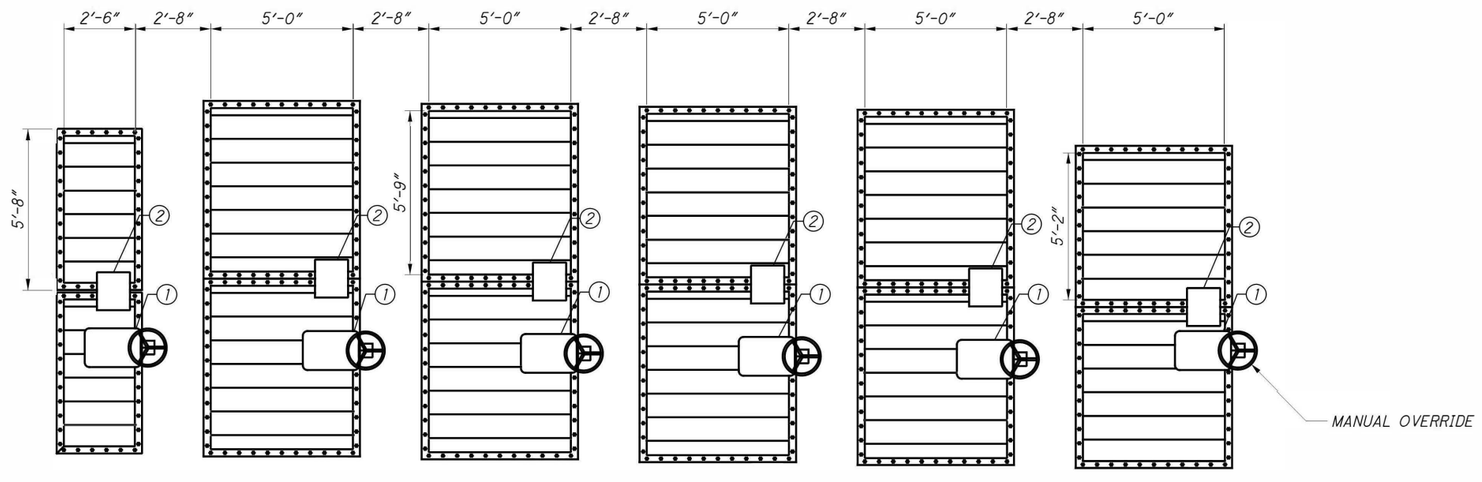

DETAIL 1 - DAMPERS

SCALE: 3/8" = 1'-0"

SCALE IN FEET

SEE SHEET 143/296 FOR LOCATION

DESIGN AGENCY
HATCH MOTT MacDONALD
18013 CLEVELAND PKWY.
SUITE 200
CLEVELAND, OH 44135

DESIGNED	DRAWN	REVIEWED	DATE
HWW	MFW	DGN	08/07/14
CHECKED	REVISED	STRUCTURE FILE NUMBER	
NAH	HWW	3106578	

TUNNEL VENTILATION SYSTEM - TUNNEL ISOLATION DAMPER SOUTHBOUND
BRIDGE NO. HAM-71-0134
I-71 LYTLE TUNNEL UNDER LYTLE PARK

HAM-71-01.34
PID No. 87268

153/296

411/555

c:\pwworking\hmm\external\tyn61470\dms72788\071_0134CVD112.dgn 10/27/2014 12:53:57 PM TYN61470

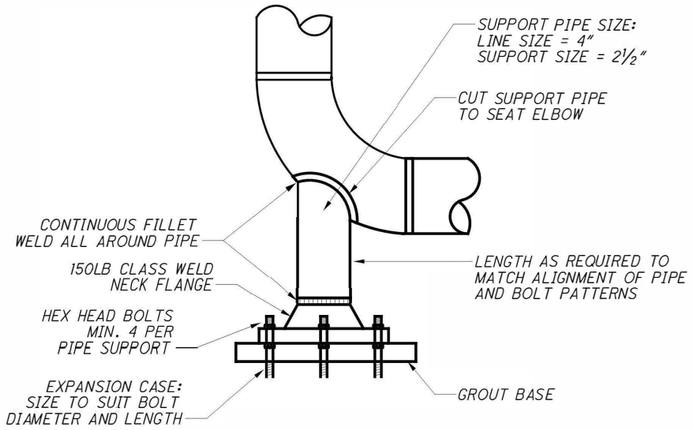

NOTES:

1. FOR VERTICAL SUPPORT, RISER CLAMPS MUST BE USED. THESE CLAMPS MUST BE ISOLATED FROM BLACK STEEL COMPONENTS BY RUBBER ISOLATORS

1 VERTICAL PIPE SUPPORT NTS

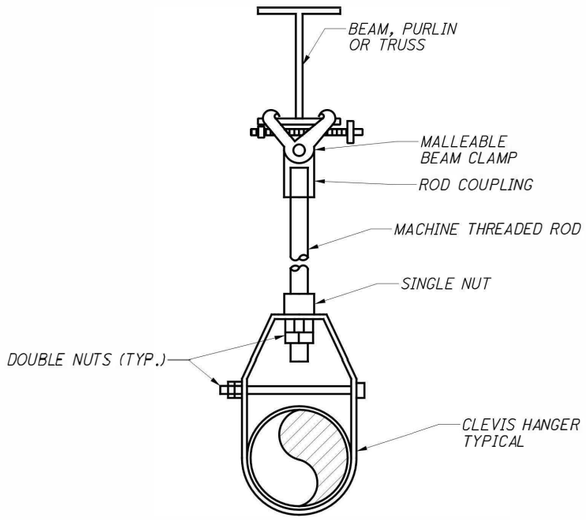

2 PIPE HANGER FROM BOTTOM OF BEAM PURLIN TRUSS NTS

NOTES:

1. GENERAL NOTES, SYMBOLS LIST AND DETAILS ARE APPLICABLE TO ALL DRAWINGS.
2. DRAWINGS ARE DIAGRAMMATIC: DETERMINE LOCATIONS OF SYSTEMS AND COMPONENTS IN FIELD.
3. ALL PLUMBING WORK SHALL BE IN ACCORDANCE WITH THE OHIO STATE PLUMBING AND BUILDING CODES AND DRAWINGS AND SPECIFICATIONS.
4. NO WORK SHALL BE INSTALLED IN VIOLATION OF ANY GOVERNING CODES. ANY WORK SHOWN ON THE DRAWINGS WHICH IS IN VIOLATION OF SUCH CODES SHALL BE BROUGHT TO THE ATTENTION OF THE ENGINEER AND SHALL BE RESOLVED PRIOR TO THE INSTALLATION OF THE WORK INVOLVED.
5. PRODUCT INSTALLATION SHALL ADHERE TO MANUFACTURERS' RECOMMENDATIONS.
6. ALL PLUMBING PIPING INSTALLED IN HVAC PLENUM SPACE SHALL MEET CODE REQUIREMENTS FOR SMOKE AND COMBUSTIBILITY.
7. RUN PIPING CONCEALED, UNLESS SPECIFIED OTHERWISE, AND CLEAR OF CEILING INSERTS.
8. PROVIDE CLAMPS, OFFSETS, EXPANSION JOINTS, ANCHORS AND GUIDES AS NECESSARY TO PREVENT STRESS ON PIPING.

PLUMBING LEGEND

SYMBOL	ABBR	DESCRIPTION
	S or W	SOIL or WASTE PIPING
	S or W	SOIL or WASTE PIPING (BURIED or BELOW SLAB)
	ST	STORM PIPING
	ST	STORM PIPING (BURIED or BELOW SLAB)
	CV	CHECK VALVE
	BLV	HOT WATER BALANCING VALVE
	NGBV	NATURAL GAS BALL VALVE
	DV	DRAIN VALVE
		UNION
		STRAINER
	FD	FLOOR DRAIN
	AD	AREA DRAIN
	HB	HOSE BIBB
	WH	WALL HYDRANT
	W&T	WASTE & TRAP
	CO	LINE CLEANOUT
	FCO	FLUSH FLOOR CLEANOUT
	FIN.	FINISHED
		PIPE CAP
		PIPE CONTINUATION
		PIPE UP THRU SLAB OF FLOOR ABOVE
		PIPE DOWN THRU FLOOR SHOWN
		PIPE DROP
		PIPE RISE
	SS	STAINLESS STEEL

c:\pwworking\hmm\external\tyn61470\drns72788\071_0134CMD202.dgn 10/24/2014 11:24:04 AM TYN61470

DESIGN AGENCY
HATCH MOTT MacDONALD
18013 CLEVELAND PKWY.
SUITE 200
CLEVELAND, OH 44135

DESIGNED	DRAWN	REVIEWED	DATE
SCB	CMN	DGN	07/17/14
CHECKED	REVISED	STRUCTURE FILE NUMBER	
NAH	MFW	3106578	

PLUMBING DETAILS
BRIDGE NO. HAM-71-0134
1-71 LYTLE TUNNEL UNDER LYTLE PARK

HAM-71-01.34
PID No. 87268

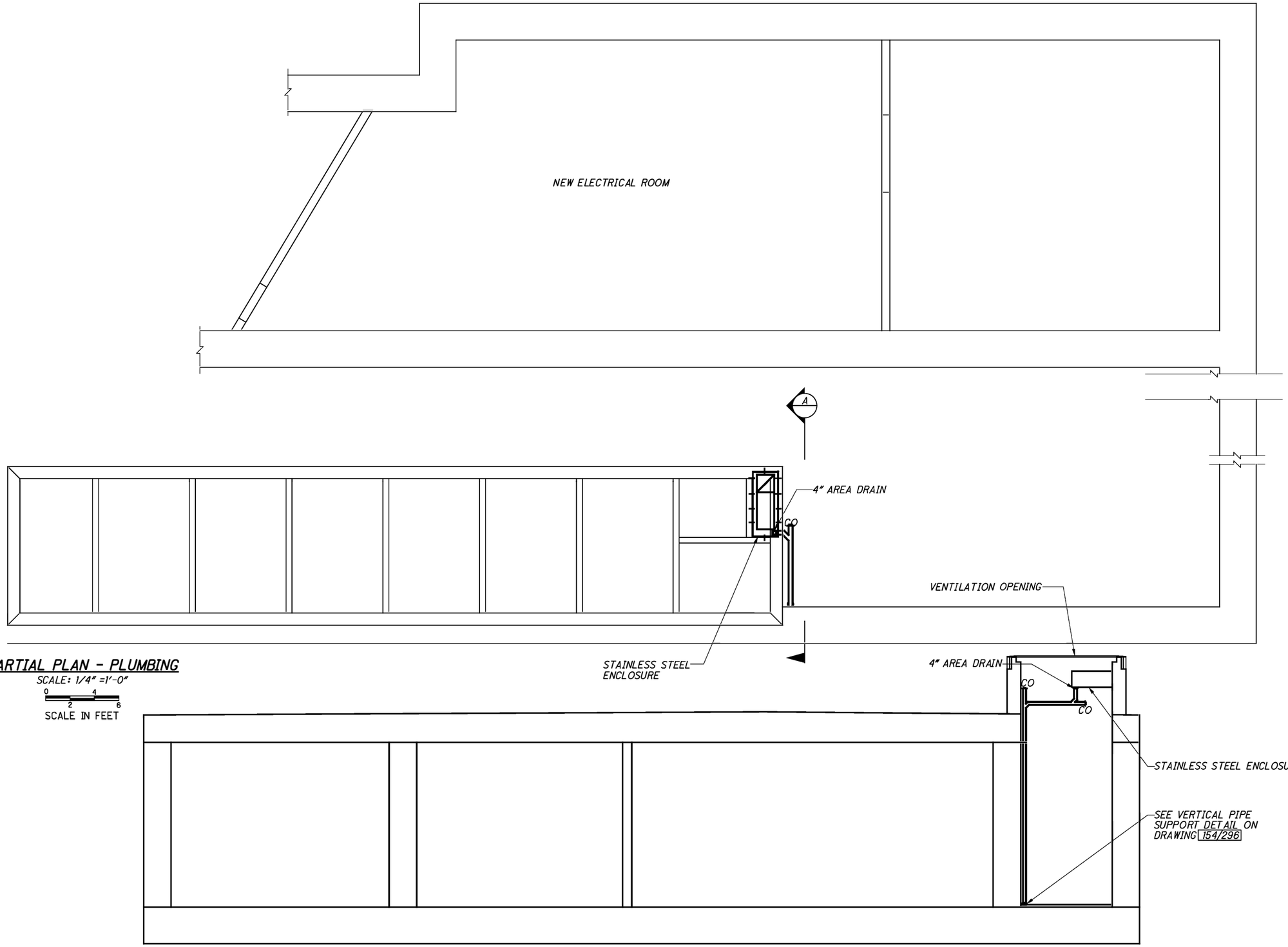

PARTIAL PLAN - PLUMBING

SCALE: 1/4" =1'-0"

0 4 2 6

SCALE IN FEET

SECTION A-A

SCALE: 3/16" =1'-0"

0 1 0.5 2

SCALE IN FEET

NOTES:
1. FOR PLUMBING LEGEND SEE SHEET 154/296 .

DESIGN AGENCY
HATCH MOTT MacDONALD
18013 CLEVELAND PKWY.
SUITE 200
CLEVELAND, OH 44135

DESIGNED	DRAWN	REVIEWED	DATE
SCB	GMN	DGN	07/17/14
CHECKED	REVISED	STRUCTURE FILE NUMBER	
NAH	MFW	3106578	

PLUMBING PLAN AND SECTION
BRIDGE NO. HAM-71-0134
I-71 LYTLE TUNNEL UNDER LYTLE PARK

HAM-71-01.34
PID No. 87268

155/296

413/555

c:\pwworking\hmm\external\pre47802\dms72788\071_0134CMD201.dgn 9/4/2015 4:12:02 PM PRE47802

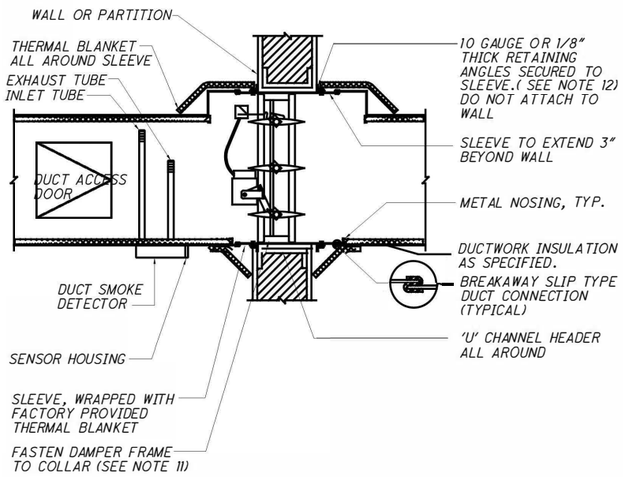

MOTOR OPERATED DAMPER NOTES:

1. FIRE DAMPERS SHALL BE U.L. LISTED AND LABELLED.
2. ALL FIRE AND SMOKE DAMPERS SHALL BE RATED TO MAINTAIN THE RATING OF THE FIRE SEPARATION.
3. TYPICAL INSTALLATION SHOWN. ACTUAL INSTALLATION SHALL COMPLY WITH REQUIREMENTS OF NFPA 90, NFPA 101, UL 555 AND WITH ALL MANUFACTURERS RECOMMENDATIONS.
4. LOCATE ACCESS DOOR FOR BEST ACCESS TO LINK.
5. RESETTABLE HEAT-RESPONSIVE DEVICE (RRL) SHALL BE RATED FOR 50 PERCENT ABOVE MAXIMUM OPERATING TEMPERATURE OF SYSTEM.
6. ALL DUCT CONNECTIONS SHALL COMPLY WITH UL 555 AND SMACNA CONNECTIONS BETWEEN COLLAR AND DUCTWORK SHALL BE BREAKAWAY TYPE SUCH AS "S" SLIP, CRIMP, OR OTHER SLIP TYPE IN ACCORDANCE WITH SMACNA PLATE 15A, 4TH EDITION AND PLATE 1, SMACNA FIRE DAMPER GUIDE, 1986 UNLESS OTHERWISE REQUIRED BY CODE.
7. GAUGES FOR COLLAR AND RECTANGULAR DUCT SHALL BE AS FOLLOWS:

   FIRE DAMPER COLLARS SHALL BE SAME GAUGE AS DUCTWORK WITH A MINIMUM OF 16 GAUGE FOR DUCTWORK UP TO 36" WIDE. FOR DUCTWORK ABOVE 36" WIDE, THE COLLAR SHALL BE 14 GAUGE.
8. PROVIDE STEEL STUD FRAMING AS REQUIRED, TO ACCEPT THE FIRE/SMOKE DAMPER ASSEMBLY (INCLUDING SLEEVES, ETC.).
9. AFTER THE INSTALLATION OF DAMPERS, THE CONTRACTOR SHALL SEAL AND TAPE ALL JOINTS FOR AIR TIGHTNESS. INSTALLATION SHALL BE MADE AVAILABLE FOR INSPECTION BY ENGINEER BEFORE TAPING.
10. TO ALLOW FOR EXPANSION, DAMPERS SHALL HAVE A CLEARANCE EQUAL TO 1/8" FOR EACH FOOT OF DAMPER HEIGHT. THE SIDE CLEARANCE SHALL BE 1/8" FOR EACH FOOT OF DAMPER WIDTH EQUALLY DIVIDED TO THE LEFT AND RIGHT OF THE COLLAR. THE MAXIMUM CLEARANCE FOR THE TOP AND THE TOTAL OF BOTH SIDES SHALL BE 1/2" EACH. THE RETAINING ANGLES SHALL BE 1/2" X 1 1/2" X 1/8" SO THAT THERE WILL BE A MINIMUM OF 1" OVERLAP ON THE FIRE SEPARATION.
11. DAMPERS SHALL BE SECURED TO COLLAR WITH EITHER 1/2" TACK WELDS, NO. 10 SHEET METAL SCREWS, 1/4" DIA. NUTS AND BOLTS, OR 3/16" STEEL POP RIVETS, ALL 6" ON CENTER.
12. RETAINING ANGLES SHALL BE SECURED TO COLLAR, SLEEVE OR PLATE WITH EITHER 1/2" TACK WELDS, NO. 10 SHEET METAL SCREWS, 1/4" DIA. NUTS AND BOLTS, OR 3/16" STEEL POP RIVETS, ALL 6" ON CENTER.
13. WHERE NO HUNG CEILING DOES NOT HAVE REMOVABLE TILES, AN ACCESS DOOR (FIRE RATED WHERE REQUIRED) SHALL BE INSTALLED IN CEILING OR WALL NEAR LOCATION OF FIRE DAMPER.
14. ALL RETAINING ANGLES SHALL BE GALVANIZED STEEL.
15. INSTALL FIRE DAMPERS SO THE LOCKING DEVICE CAN BE ACCESSED WHEN THE DAMPER IS CLOSED.
16. FIRE/SMOKE DAMPER ACCESS DOORS SHALL BE LABELED/STENCILED WITH MIN. 1" LETTERS FIRE/SMOKE DAMPER ACCESS DOORS ON SIDE AS SHOWN OR BOTTOM OF DUCT MINIMUM SIZE 18" X 14" IF DUCT SIZE PERMITS. FOR SMALL DUCTS MAKE DOOR 2" SMALLER THAN DUCT SIZE.
17. FIRE/SMOKE DAMPER TO BE PROVIDED WITH SMOKE DETECTOR INSTALLED IN ACCORDANCE WITH MANUFACTURERS RECOMMENDATIONS. WIRE SMOKE DETECTOR AND PROVIDE 120V ACTUATOR.
18. TUBES SHALL RUN PERPENDICULAR TO FLOOR.
19. PROVIDE ACCESS PANELS AT INACCESSIBLE CEILINGS.

1 MOTOR OPERATED FIRE/SMOKE DAMPER — NTS

HVAC GENERAL NOTES:

1. DRAWINGS ARE DIAGRAMMATIC ONLY, FINAL ROUTING OF DUCTWORK AND EQUIPMENT LOCATIONS SHALL BE DETERMINED IN THE FIELD. ADDITIONAL OFFSETS, ELBOWS, ETC. SHALL BE PROVIDED AND INSTALLED WITHOUT ADDITIONAL COST TO THE OWNER.
2. DIMENSIONS SHOWN ON THE PLAN ARE HORIZONTAL, DIMENSION SHOWN IN ELEVATION ARE VERTICAL EXCEPT THAT, IN WAY OF STRUCTURAL STEEL, DIMENSIONS ARE MEASURED PERPENDICULAR TO FLANGE.
3. ALL DUCTWORK SHALL BE CONSTRUCTED AND INSTALLED IN ACCORDANCE WITH THE LATEST EDITION OF SMACNA STANDARDS.
4. THE CONTRACTOR SHALL FURNISH AND INSTALL ALL INCIDENTAL ACCESSORIES NECESSARY TO MAKE THE HVAC WORK COMPLETE AND READY FOR OPERATION.
5. ALL WORK SHALL BE IN ACCORDANCE WITH APPLICABLE FEDERAL, STATE AND LOCAL CODES.
6. ALL HVAC EQUIPMENT SHALL BE INSTALLED IN ACCORDANCE WITH THE MANUFACTURERS RECOMMENDATIONS.
7. MANUFACTURERS MODEL NUMBERS ARE SPECIFIED SOLELY TO ESTABLISH STANDARDS OF QUALITY FOR PERFORMANCE AND MATERIAL.
8. DUCT SIZES SHOWN INDICATE INTERIOR CLEAR DIMENSIONS.
9. RUN DUCTS CONCEALED, UNLESS SPECIFIED OTHERWISE AND CLEAR OF CEILING INSERTS.
10. FIRE AND SMOKE DAMPERS AND ACCESS PANELS SHALL BE INSTALLED AT ALL FIRE RATED PARTITIONS AND WHERE REQUIRED BY NFPA 90A.

GENERAL ABBREVIATIONS:

AD	ACCESS DOOR
AFF	ABOVE FINISHED FLOOR
AP	ACCESS PANEL
BDD	BACKDRAFT DAMPER
CFM	CUBIC FEET PER MINUTE
CO	CLEAN OUT
DL	DOOR LOUVER
EF	EXHAUST FAN
ESP	EXTERNAL STATIC PRESSURE
FD	FIRE DAMPER
FPM	FEET PER MINUTE
FSD	FIRE & SMOKE DAMPER
HP	HORSEPOWER
HVAC	HEATING, VENTILATION & AIR CONDITIONING
KW	KILOWATT
KWH	KILOWATT HOUR
MD	MOTORIZED DAMPER
MTD	MOUNTED
MUA	MAKE-UP AIR
TYP.	TYPICAL

DUCTWORK SYMBOLS:

SUPPLY AIR DUCT TURN 90° UP

SUPPLY AIR DUCT TURN 90° DOWN

RET./EXH. AIR DUCT TURN 90° UP

RET./EXH. AIR DUCT TURN 90° DOWN

VOLUME DAMPER (VD)

FIRE SMOKE DAMPER (FSD)

BACKDRAFT DAMPER (BDD)

SPLIT SYSTEM HEAT PUMP SCHEDULE

INDOOR UNIT											CONDENSING UNIT											REMARKS
TAG	SERVICE	NOMINAL TONS	COOLING MBH	HEATING MBH	CFM	ELECTRICAL DATA V	PH	HZ	MCA	MANUFACTURER / MODEL NUMBER	TAG	LOCATION	REFRIGERANT TYPE	SEER	O.A. (°F)	ELECTRICAL DATA V	PH	HZ	MCA	MOCP	MANUFACTURER / MODEL NUMBER	
HP-1A	CONTROL/ELECTRIC ROOM	3	34.2	38	780-990	208	1	60	1	MITSUBISHI / PKA-A36FAL	HP-1B	SEE PLANS	R410A	16	95	208	1	60	28A	40A	MITSUBISHI / PUZ-HA36NHA	SEE NOTES

ACCESSORIES: 1. COMPRESSOR SHORT-CYCLE PROTECTION 2. MOUNT AIR HANDLING UNIT IN ACCORDANCE WITH MANUFACTURERS RECOMMENDATIONS 3. MATCHING REMOTE THERMOSTAT
4. AIR HANDLING UNIT/ CONDENSING UNIT INTERLOCK 5. CONDENSATE PUMP - LITTLE GIANT MODEL VCM-15UL, OR EQUAL. 6. REFRIGERANT PIPING KIT. 7. LOW AMBIENT OPERATION KIT

AIR DISTRIBUTION DEVICE SCHEDULE

TYPE	SERVICE	TYPE	NECK SIZE	AIR PATTERN/DEFLECTION	MANUFACTURER	OBD	REMARKS
A	INTAKE AIR	DUCT MOUNTED	SEE PLANS	-/EGGCRATE	TITUS-50FF	NO	(1)
B	EXHAUST	DUCT MOUNTED	SEE PLANS	-/EGGCRATE	TITUS-50F	NO	
C	EXHAUST	DUCT MOUNTED	SEE PLANS	-/0° DEFLECTION	TITUS-350ZRL	NO	

1. PROVIDE WITH FILTER

ELECTRIC UNIT HEATER SCHEDULE

UNIT NUMBER	TYPE	PERFORMANCE EAT	CFM	MBH	ELECTRICAL DATA KW	FAN (MHP)	V/*/HZ	DIMENSIONS (L x W x D)	MANUFACTURER/MODEL NUMBER	OPTIONS/REMARKS
EUH-1	CEILING MOUNTED	60	350	10	3	1/100	208/1/60	16"x14"x8"	QMARK / MUH03-81	①②③④
EUH-2	CEILING MOUNTED	60	350	10	3	1/100	208/1/60	16"x14"x8"	QMARK / MUH03-81	①②③④
EUH-3	CEILING MOUNTED	60	350	10	3	1/100	208/1/60	16"x14"x8"	QMARK / MUH03-81	①②③④

1. SELECTIONS BASED ON LOW SPEED FAN OPERATION. 2. PROVIDE MOUNTING BRACKET.
3. PROVIDE UNIT MOUNTED THERMOSTAT. 4. PROVIDE MOTOR STARTER AND DISCONNECT SWITCH.

FAN SCHEDULE

TAG	SERVICE	LOCATION	TYPE	CFM	S.P. (IN)	FAN RPM	ELEC. DATA HP	V	PH	HZ	MANUFACTURER/MODEL	OPTION/REMARKS
EF-1	ELEC. RM.	ELEC. RM.	INLINE	5200	2	1183	3	208	3	60	GREENHECK/BSQ-240HP-30	①②③④⑤

1. PROVIDE WITH MOTORIZED DAMPER. 2. PROVIDE WITH DISCONNECT SWITCH. 3. PROVIDE WITH HANGING SPRING ISOLATOR.
4. PROVIDE WITH BELT DRIVE MOTOR COVER AND BELT COVER. 5. PROVIDE WITH THERMOSTAT.
6. PROVIDE WITH GREENHECK MOTOR STARTER WITH DRY CONTACT START AND MODEL MSAC ADVANCED CONTROL FOR TWO THERMOSTAT CONTROL AND SCADA SYSTEM CONNETION.

DESIGN AGENCY
HATCH MOTT MacDONALD
18013 CLEVELAND PKWY.
SUITE 200
CLEVELAND, OH 44135

DESIGNED SCB | DRAWN MFW | CHECKED NAH | REVIEWED DCN | DATE 07/17/14 | REVISED MFW | STRUCTURE FILE NUMBER 3106578

HVAC DETAILS, SCHEDULES, SYMBOLS AND ABBREVIATIONS

BRIDGE NO. HAM 71-0134
I-71 LYTLE TUNNEL UNDER LYTLE PARK

HAM-71-01.34
PID No. 87268

156/296
414/555

TYN61470
10/24/2014 11:24:12 AM
c:\pwworking\hmm\external\tyn61470\dms72788\071_0134CMD120.dgn

UNIT 9
UNIT 8
UNIT 20
UNIT 19
UNIT 19
UNIT 18
UNIT 18
UNIT 17
UNIT 17
UNIT 16

I.R.-71 SOUTHBOUND
I.R.-71 SB RAMP E TUNNEL TO THIRD STREET
I.R.-71 NORTHBOUND

70" X 30" INTAKE AIR OPENING WITH WIRE MESH
OPEN ENDED DUCTWORK W/ WIRE MESH
DISCHARGE CONDENSATE TO TOILET. VERIFY THE LOCATION PRIOR TO ANY WORK.
70X30
A-70X20
70X20 DROP
VD
MD
EF-1 MOTOR STARTER CONTROLLER GREENHECK MODEL MSAC
18X12
CO
B-36X18
2000
HP-1A
24X12
REFRIGERANT SUCTION AND LIQUID LINES
EUH-3
CONDENSATE PUMP. RUN CONDENSATE TO THE TOILET.

DUCTWORK BEFORE THE EXHAUST FAN SHALL BE GALVANIZED STEEL, SEE NOTES/SPECIFICATIONS.
C-24X20
1500
EF
1
HP-1B
CONDENSING UNIT, ON 4" CONCRETE HOUSE PAD.
DUCTWORK AFTER THE EXHAUST FAN SHALL BE STAINLESS STEEL, SEE NOTES/SPECIFICATIONS.
VD
FSD
40X14
DL
FLEXIBLE DUCT (TYP.)
REFRIGERANT SUCTION AND LIQUID LINES
EUH-1
C-24X20
1500
EUH-2
RUN 24" X 22" DUCTWORK TIGHT TO THE CEILING AND WALL
24" X 22" UP TO THE GOOSENECK ABOVE. SEE PLANS AND SECTIONS ON SHEET 158/296

NOTES:

1. FOR GENERAL NOTES, LEGEND AND SCHEDULES SEE SHEET 156/296
2. MOTORIZED DAMPER SHALL BE INTERLOCKED WITH EXHAUST FAN, EF-1.
3. REFRIGERANT LINE SHALL BE SIZED PER MANUFACTURER'S RECOMMENDATION.
4. TEMPERATURE RATE FOR HEAT PUMP SHALL BE SET TO 60°F-95°F ADJUSTABLE.

HVAC PLAN

SCALE: 1/8" = 1'-0"

0 8
4 16
SCALE IN FEET

c:\pwworking\hmm\external\pre47802\dms72788\071_0134CMS009.dgn 9/10/2015 5:30:16 PM PRE47802

DESIGN AGENCY
HATCH MOTT MacDONALD
18013 CLEVELAND PKWY.
SUITE 200
CLEVELAND, OH 44135

DESIGNED SCB
DRAWN MFW
CHECKED NAH
REVISED MFW
REVIEWED DGN
DATE 07/17/14
STRUCTURE FILE NUMBER 3106578

HVAC PLAN
BRIDGE NO. HAM-71-0134
I-71 LYTLE TUNNEL UNDER LYTLE PARK

HAM-71-01.34
PID No. 87268

157/296
415/555

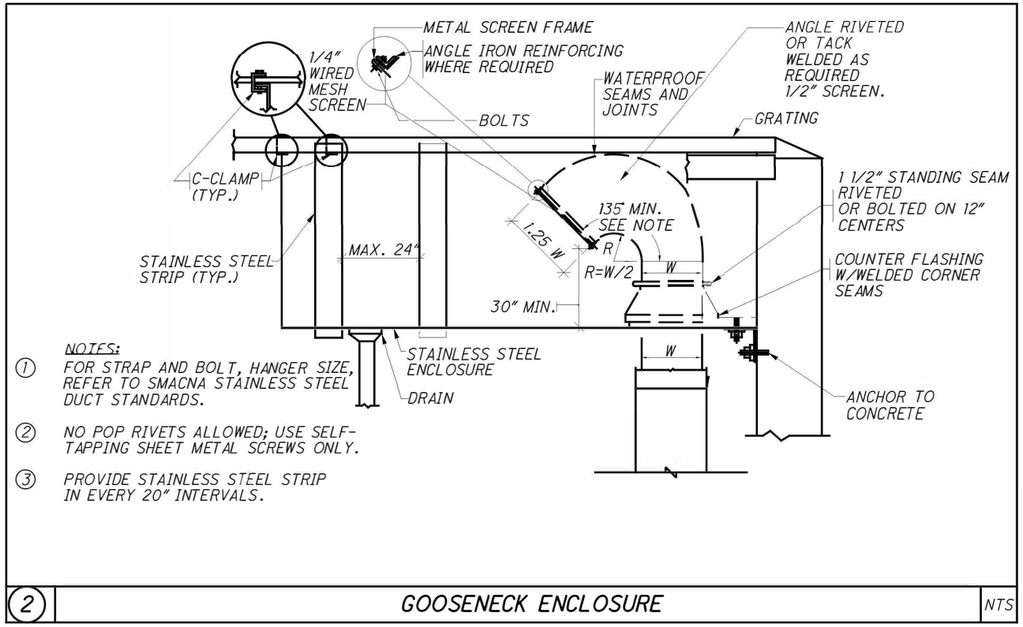

NOTES:

1. FOR STRAP AND BOLT, HANGER SIZE, REFER TO SMACNA STAINLESS STEEL DUCT STANDARDS.
2. NO POP RIVETS ALLOWED; USE SELF-TAPPING SHEET METAL SCREWS ONLY.
3. PROVIDE STAINLESS STEEL STRIP IN EVERY 20" INTERVALS.

2 GOOSENECK ENCLOSURE NTS

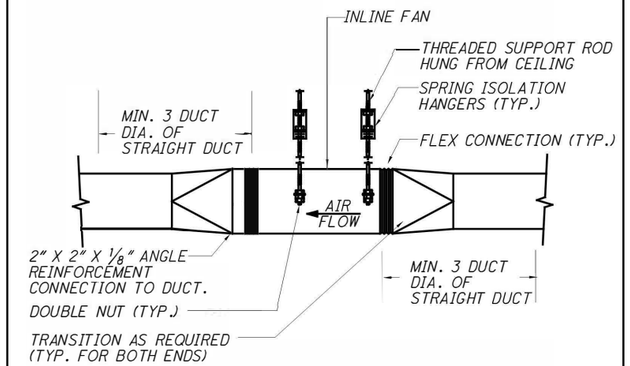

3 INLINE FAN NTS

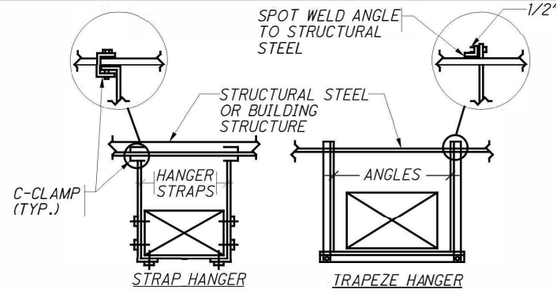

NOTES:

1. FOR STRAP AND TRAPEZE HANGER SIZE, REFER TO SMACHA DUCT STANDARDS.
2. NO POP RIVETS ALLOWED; USE SELF-TAPPING SHEET METAL SCREWS ONLY.
3. COORDINATE WITH STRUCTURAL.
4. TRAPEZE HANGER SHALL BE USED ONLY FOR SHEET METAL SECTION OF DUCTWORK.

4 DUCT HANGER DETAIL (LOW VELOCITY) NTS

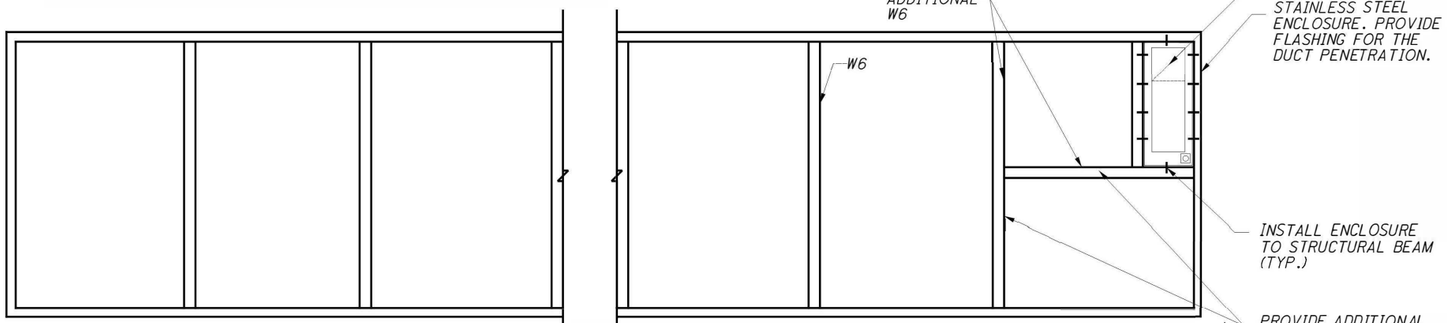

VENTILATION OPENING AT GRADE

SCALE: 3/8" = 1'-0"

0 2 1 4

SCALE IN FEET

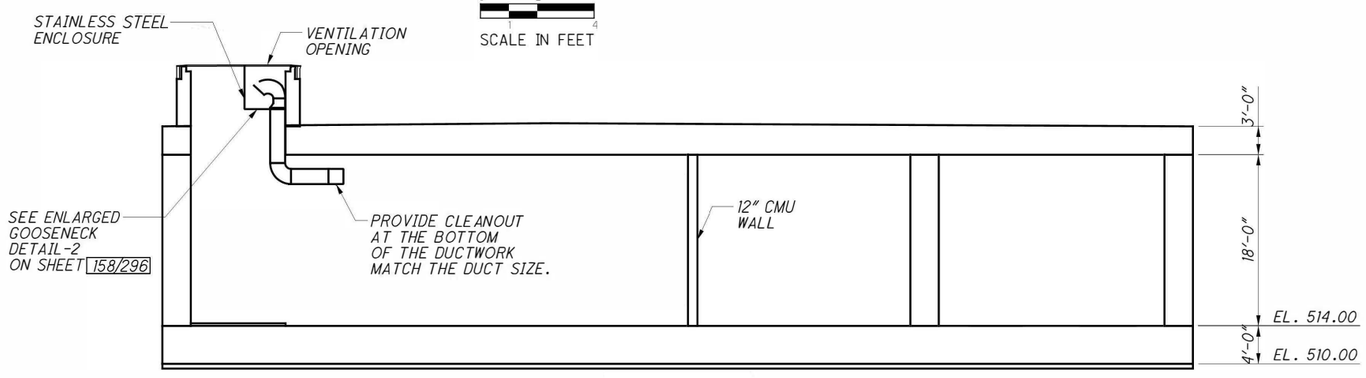

SECTION A-A

SCALE: 1/8" = 1'-0"

0 8 4 16

SCALE IN FEET

SEE SHEET 157/296 FOR LOCATION

ROUND BRANCH DUCT TAKE-OFFS

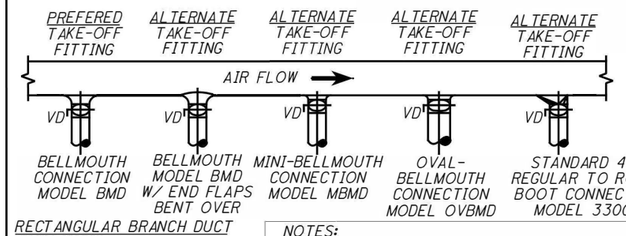

RECTANGULAR BRANCH DUCT TAKE-OFFS

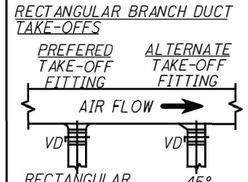

NOTES:

ALL ROUND AND RECTANGULAR BELLMOUTH FITTINGS SHALL BE INCLUDED WITH THE FOLLOWING FEATURES:

1. NEOPRENE GASKET TO MIN. AIR LEAKAGE.
2. PRE-DRILLED HOLES FOR QUICK MOUNTING.
3. CONSTRUCTED OF HEAVY DUTY GALVANIZED STEEL.
4. HEAVY DUTY HARDWARE IS AVAILABLE FOR APPLICATIONS WITH INCREASED STATIC PRESSURE.

5 BELL MOUTH CONNECTION DETAIL NTS

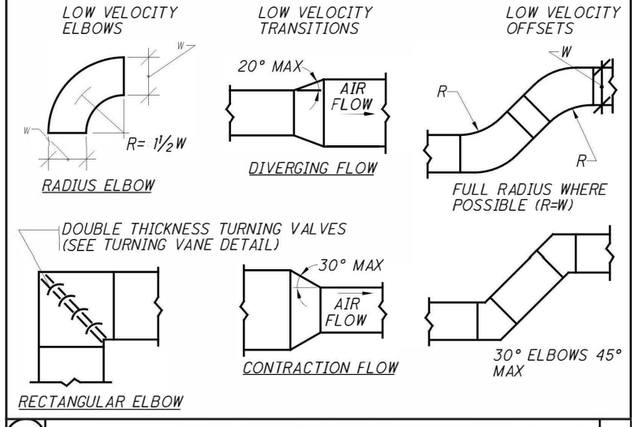

6 LOW VELOCITY TRANSITION TAKEOFFS & ELBOWS NTS

DESIGN AGENCY
HATCH MOTT MacDONALD
18013 CLEVELAND PKWY.
SUITE 200
CLEVELAND, OH 44135

DESIGNED	DRAWN	REVIEWED	DATE
SCB	MFW	DGN	07/17/14
CHECKED	REVISED	STRUCTURE FILE NUMBER	
NAH	MFW	3106578	

HVAC SECTIONS
BRIDGE NO. HAM-71-0134
I-71 LYTLE TUNNEL UNDER LYTLE PARK

HAM-71-01.34
PID No. 87268

158/296

416/555

c:\pwworking\hmm\external\ty-n61470\dms727883\071_0134CVD122.dgn 10/24/2014 11:24:20 AM TYN61470

NOTES:

1. SENSOR LOCATIONS ARE DIAGRAMMATIC ONLY.

LEGEND:

- CARBON MONOXIDE DETECTION SENSOR
- PROPOSED JUNCTION BOX (JB) AA FT X BB FT
- TRAFFIC DIRECTION

COSB1
- UNIQUE IDENTIFIER
- SOUTHBOUND TUNNEL
- CARBON MONOXIDE DETECTOR

CO - CARBON MONOXIDE
MA - MICROAMP
NB - NORTHBOUND TUNNEL
PLC - PROGRAMMABLE LOGIC CONTROLLER
SB - SOUTHBOUND TUNNEL
SR - SOUTHBOUND RAMP E TUNNEL TO THIRD STREET

SOUTHBOUND TUNNEL CO MONITORING STATION (COSB1)

SOUTHBOUND TUNNEL CO MONITORING STATION (COSB2)

I.R.-71 SOUTHBOUND TUNNEL

SOUTHBOUND RAMP E TUNNEL TO THIRD STREET CO MONITORING STATION (COSR1)

SOUTHBOUND RAMP E TUNNEL TO THIRD STREET CO MONITORING STATION (COSR2)

I.R.-71 SB RAMP E TUNNEL TO THIRD STREET

NORTHBOUND TUNNEL CO MONITORING STATION (CONB1)

I.R.-71 NORTHBOUND TUNNEL

NORTHBOUND TUNNEL CO MONITORING STATION (CONB2)

FAN PLENUM (COFP1)

ELECTRICAL ROOM (COER1)

CARBON MONOXIDE ANALOG SIGNALS TO PLC (4-20 mA) IN ELECTRICAL ROOM

CARBON MONOXIDE DETECTION BLOCK DIAGRAM

NOT TO SCALE

DESIGN AGENCY
HATCH MOTT MacDONALD
18013 CLEVELAND PKWY.
SUITE 200
CLEVELAND, OH 44135

DESIGNED	DRAWN	REVIEWED	DATE
KSK	JMS	DGN	08/07/14
CHECKED	REVISED	STRUCTURE FILE NUMBER	
NAH	KSK	3106578	

CARBON MONOXIDE DETECTION SYSTEM - BLOCK DIAGRAM
BRIDGE NO. HAM-71-0134
I-71 LYTLE TUNNEL UNDER LYTLE PARK

HAM-71-01.34
PID No. 87268

c:\pwworking\hmm\external\tyn61470\dms72788\071_0134CWS007.dgn 10/24/2014 11:24:23 AM TYN61470

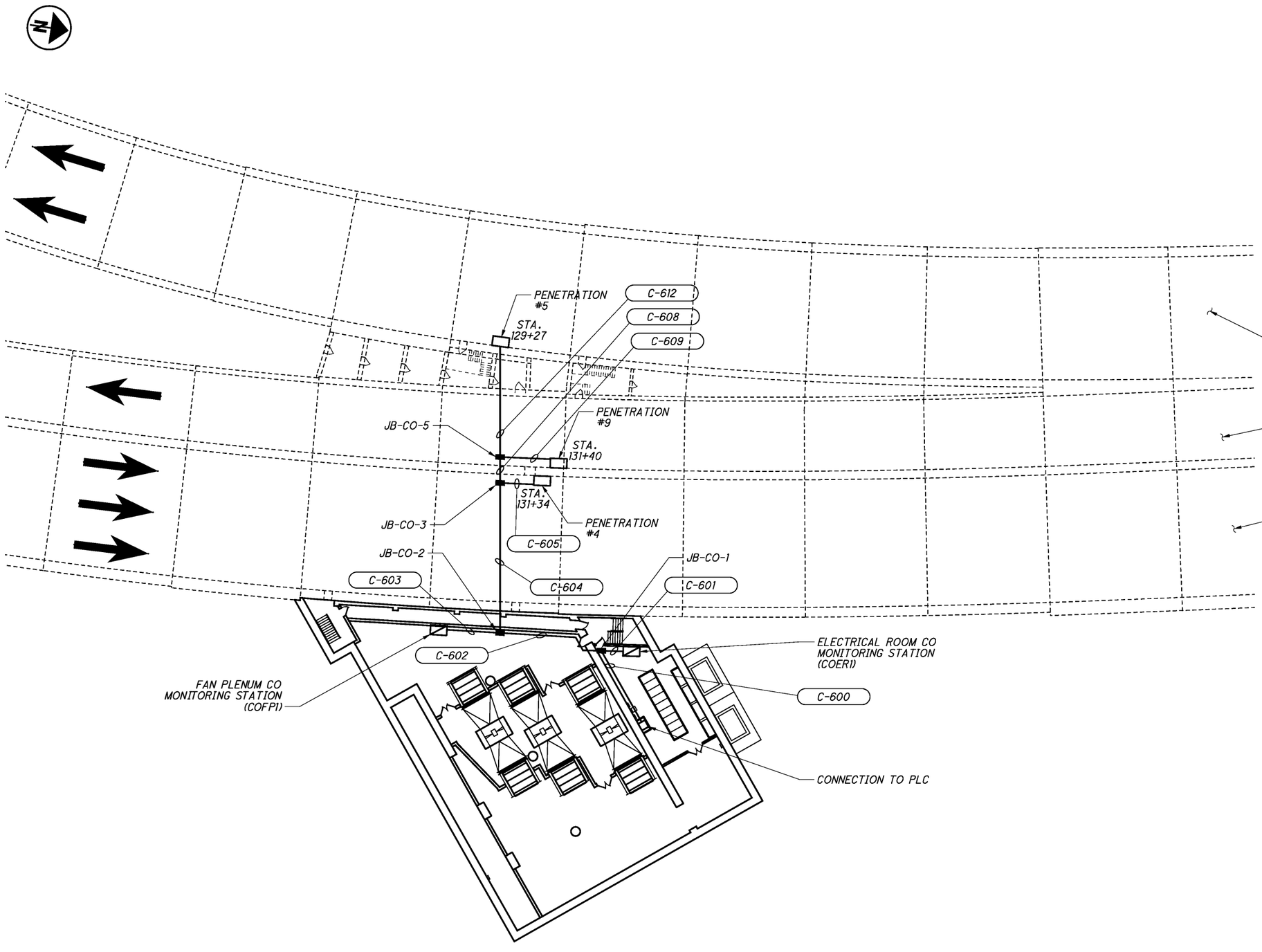

NOTES:

1. ALL DISTANCES SHALL BE FIELD VERIFIED BY THE CONTRACTOR.
2. SEE SHEET 218/296 FOR CONDUIT SIZES

LEGEND:

- ▨ - CARBON MONOXIDE DETECTION SENSOR
- ■ - PROPOSED JUNCTION BOX (JB)
- RGS - RIGID GALVANIZED STEEL
- ➡ - TRAFFIC DIRECTION

CO S B1
- B1 - UNIQUE IDENTIFIER
- S - SOUTHBOUND TUNNEL
- CO - CARBON MONOXIDE DETECTOR

CO - CARBON MONOXIDE
ER - ELECTRICAL ROOM
FP - FAN PLENUM
NB - NORTHBOUND TUNNEL
PLC - PROGRAMMABLE LOGIC CONTROLLER
SB - SOUTHBOUND TUNNEL
SR - SOUTHBOUND RAMP E TUNNEL TO THIRD STREET

CARBON MONOXIDE DETECTION SYSTEM - FAN PLENUM PLAN

SCALE: 1" = 20'

0 20' 40'

DESIGN AGENCY
HATCH MOTT MacDONALD
18013 CLEVELAND PKWY.
SUITE 200
CLEVELAND, OH 44135

DESIGNED	DRAWN	REVIEWED	DATE
KSK	JMS	DGN	08/07/14
CHECKED	REVISED	STRUCTURE FILE NUMBER	
NAH	KSK	3106578	

CARBON MONOXIDE DETECTION SYSTEM - FAN PLENUM PLAN
BRIDGE NO. HAM-71-0134
I-71 LYTLE TUNNEL UNDER LYTLE PARK

HAM-71-01.34
PID No. 87268

160/296

418/555

c:\pwworking\hmm\external\pre47802\dms72788\071_0134CMS008.dgn 9/10/2015 5:26:59 PM PRE47802

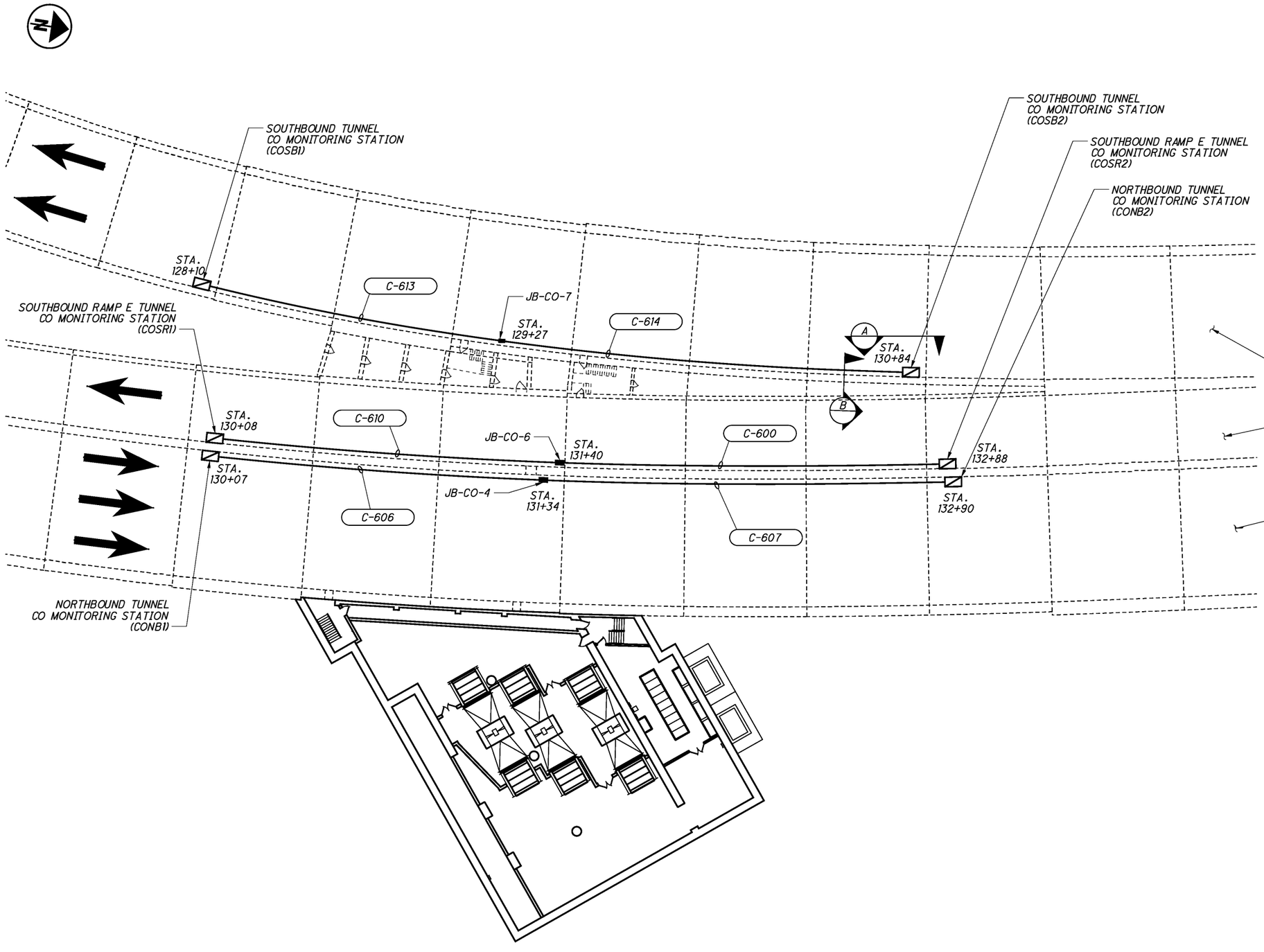

NOTES:

1. ALL DISTANCES SHALL BE FIELD VERIFIED BY THE CONTRACTOR
2. SEE SHEET 218/296 FOR CONDUIT SIZES
3. SEE SHEET 162/296 FOR ELEVATION A-A
4. SEE SHEET 162/296 FOR SECTION B-B

LEGEND:

- ▨ - CARBON MONOXIDE DETECTION SENSOR
- ■ - PROPOSED JUNCTION BOX (JB)
- RGS - RIGID GALVANIZED STEEL
- → - TRAFFIC DIRECTION

COSB1
- UNIQUE IDENTIFIER
- SOUTHBOUND TUNNEL
- CARBON MONOXIDE DETECTOR

CO - CARBON MONOXIDE
NB - NORTHBOUND TUNNEL
PLC - PROGRAMMABLE LOGIC CONTROLLER
SB - SOUTHBOUND TUNNEL
SR - SOUTHBOUND RAMP E TUNNEL TO THIRD STREET

CARBON MONOXIDE DETECTION SYSTEM - ROADWAY PLAN

SCALE: 1" = 20'

0 20' 40'

DESIGN AGENCY
HATCH MOTT MacDONALD
18013 CLEVELAND PKWY.
SUITE 200
CLEVELAND, OH 44135

REVIEWED	DATE	STRUCTURE FILE NUMBER
DGN	08/07/14	3106578

DRAWN	REVISED
JMS	KSK

DESIGNED	CHECKED
KSK	NAH

CARBON MONOXIDE DETECTION SYSTEM - ROADWAY PLAN
BRIDGE NO. HAM-71-0134
I-71 LYTLE TUNNEL UNDER LYTLE PARK

HAM-71-01.34
PID No. 87268

161/296

419/555

c:\pwworking\hmm\external\pre47802\dms72788\071_0134CMS010.dgn 9/11/2015 9:07:42 AM PRE47802

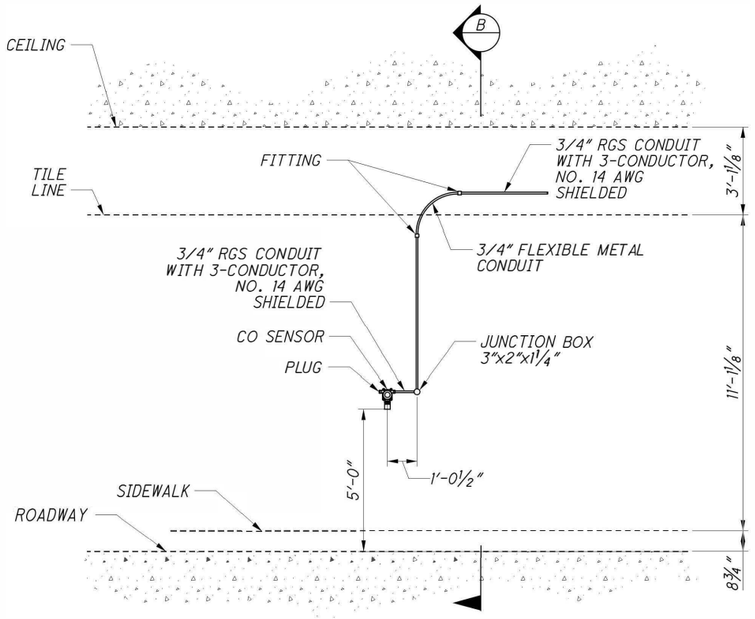

ELEVATION A

SEE SHEET 161/296 FOR LOCATION
SCALE: 3/8" = 1'-0"

SCALE IN FEET

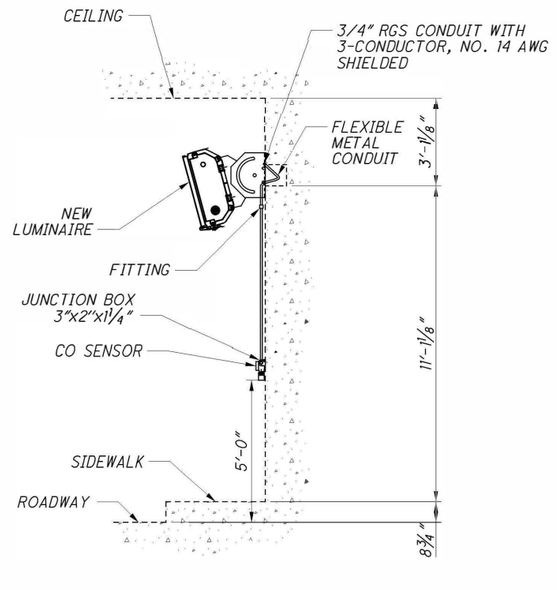

SECTION B

SEE SHEET 161/296 FOR LOCATION
SCALE: 3/8" = 1'-0"

SCALE IN FEET

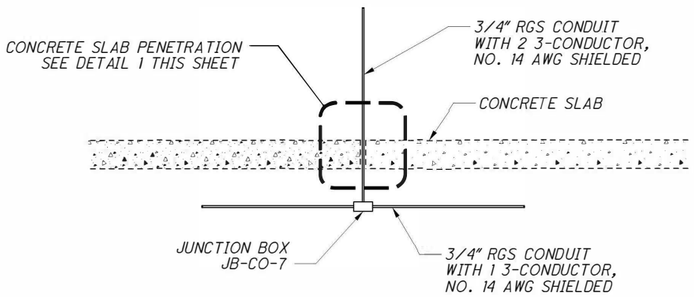

TYPICAL PENETRATION DETAIL

SCALE: 3/8" = 1'-0"

SCALE IN FEET

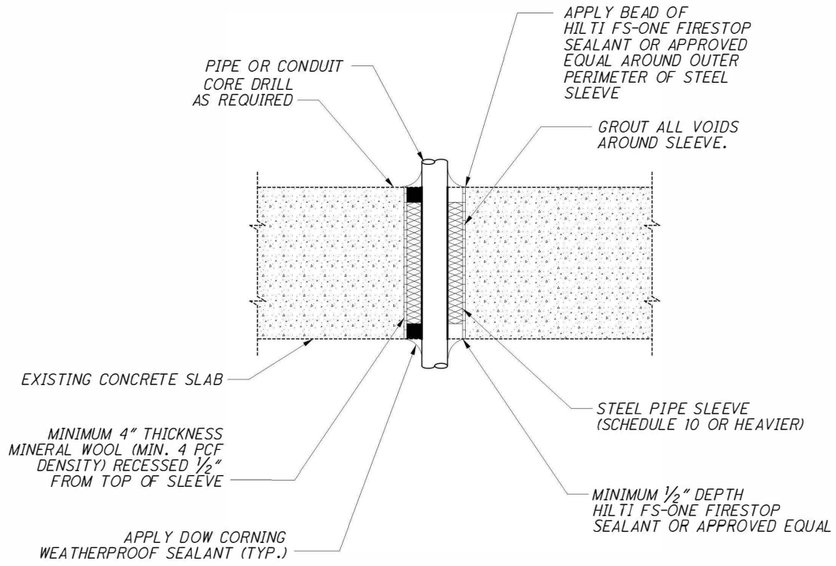

DETAIL 1

N.T.S.

NOTES:

1. SEE SHEET 161/296 FOR LOCATION OF SECTIONS
2. ALL DIMENSIONS SHALL BE FIELD VERIFIED BY THE CONTRACTOR.

LEGEND:

AWG - AMERICAN WIRE GAUGE
CO - CARBON MONOXIDE
JB - JUNCTION BOX
RGS - RIGID GALVANIZED STEEL

DESIGN AGENCY
HATCH MOTT MacDONALD
18013 CLEVELAND PKWY.
SUITE 200
CLEVELAND, OH 44135

DESIGNED	DRAWN	REVIEWED	DATE
KSK	JMS	DGN	08/07/14
CHECKED	REVISED	STRUCTURE FILE NUMBER	
NAH	KSK	31065781	

CARBON MONOXIDE DETECTION SYSTEM - DETAILS
BRIDGE NO. HAM-71-0134
I-71 LYTLE TUNNEL UNDER LYTLE PARK

HAM-71-01.34
PID No. 87268

c:\pwworking\hmm\external\tyn61470\dms727888\071_0134CMD110.dgn 10/24/2014 11:24:3? AM TYN61470

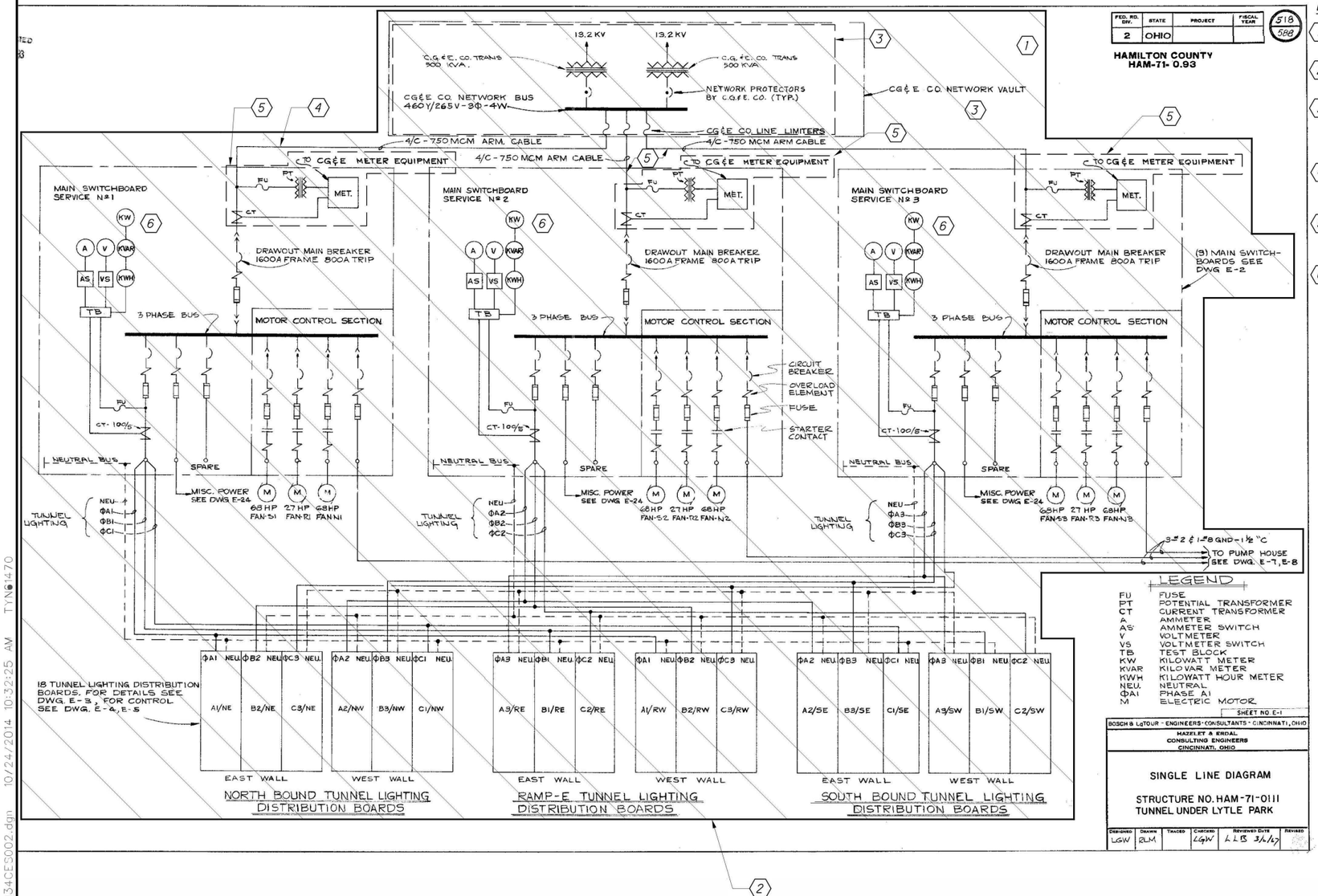

FED. RD. DIV.	STATE	PROJECT	FISCAL YEAR
2	OHIO		

518
588

HAMILTON COUNTY
HAM-71- 0.93

ELECTRICAL SINGLE LINE DIAGRAM - DEMOLITION:

1. *CONTRACTOR SHALL COORDINATE DEMOLITION OF THE EQUIPMENT AND FEEDERS/RACEWAYS IN THE AREA DENOTED WITH ODOT AND DUKE ENERGY.*
2. *DEMOLITION OF ALL THE EQUIPMENT AND FEEDERS/RACEWAYS IN THE AREA DENOTED SHALL BE THE RESPONSIBILITY OF THE CONTRACTOR.*
3. *DEMOLITION OF THE EXISTING 13.2KV LINE SIDE UTILITY FEEDERS, 500KVA UTILITY TRANSFORMERS, NETWORK PROTECTORS, NETWORK BUS, LINE LIMITERS AND THE NETWORK VAULTS SHALL BE PERFORMED BY DUKE ENERGY. CONTRACTOR SHALL COORDINATE THIS DEMOLITION WORK WITH DUKE ENERGY.*
4. *DEMOLITION OF THE EXISTING #750MCM CABLING AND RACEWAY FROM THE DUKE ENERGY NETWORK VAULTS TO THE LINE SIDE OF EACH SWITCHBOARD (NO. 1, 2 AND 3) SHALL BE PERFORMED BY THE CONTRACTOR.*
5. *DEMOLITION/RECLAMATION OF THE METER EQUIPMENT AND ASSOCIATED UTILITY OWNED DEVICES SHALL BE PERFORMED BY DUKE ENERGY.THE CONTRACTOR SHALL COORDINATE THE REMOVAL OF THIS EQUIPMENT WITH DUKE ENERGY.*
6. *DEMOLITION OF THE EXISTING FEEDER AND METER SECTIONS OF SWITCHBOARDS NO. 1, 2 AND 3 SHALL OCCUR ONCE THE EXISTING-TO-REMAIN LOADS INSTALLED IN THESE SECTIONS HAVE BEEN RELOCATED / CUTOVER TO THE NEW ELECTRICAL DISTRIBUTION SYSTEM.*

ABBREVIATIONS:

KV - KILOVOLT
KVA - KILOVOLT AMPERE
MCM - THOUSAND CIRCULAR MILS

LEGEND

DEMOLITION WORK REQUIRED

DEMOLITION-SINGLE LINE DIAGRAM
SCALE: NTS

DESIGN AGENCY
HATCH MOTT MacDONALD
18013 CLEVELAND PKWY.
SUITE 200
CLEVELAND, OH 44135

DESIGNED DMM | DRAWN BJG | REVIEWED RF | DATE 08/11/14
CHECKED PAP | REVISED MK | STRUCTURE FILE NUMBER 3106578

ELECTRICAL DEMOLITION SINGLE LINE DIAGRAM
BRIDGE NO. HAM-71-0134
1-71 LYTLE TUNNEL UNDER LYTLE PARK

HAM-71-01.34
PID No. 87268

163/296
421/555

c:\pwworking\hmm\external\tyn61470\dms7273\071_0134CE5002.dgn 10/24/2014 10:32:25 AM TYN61470

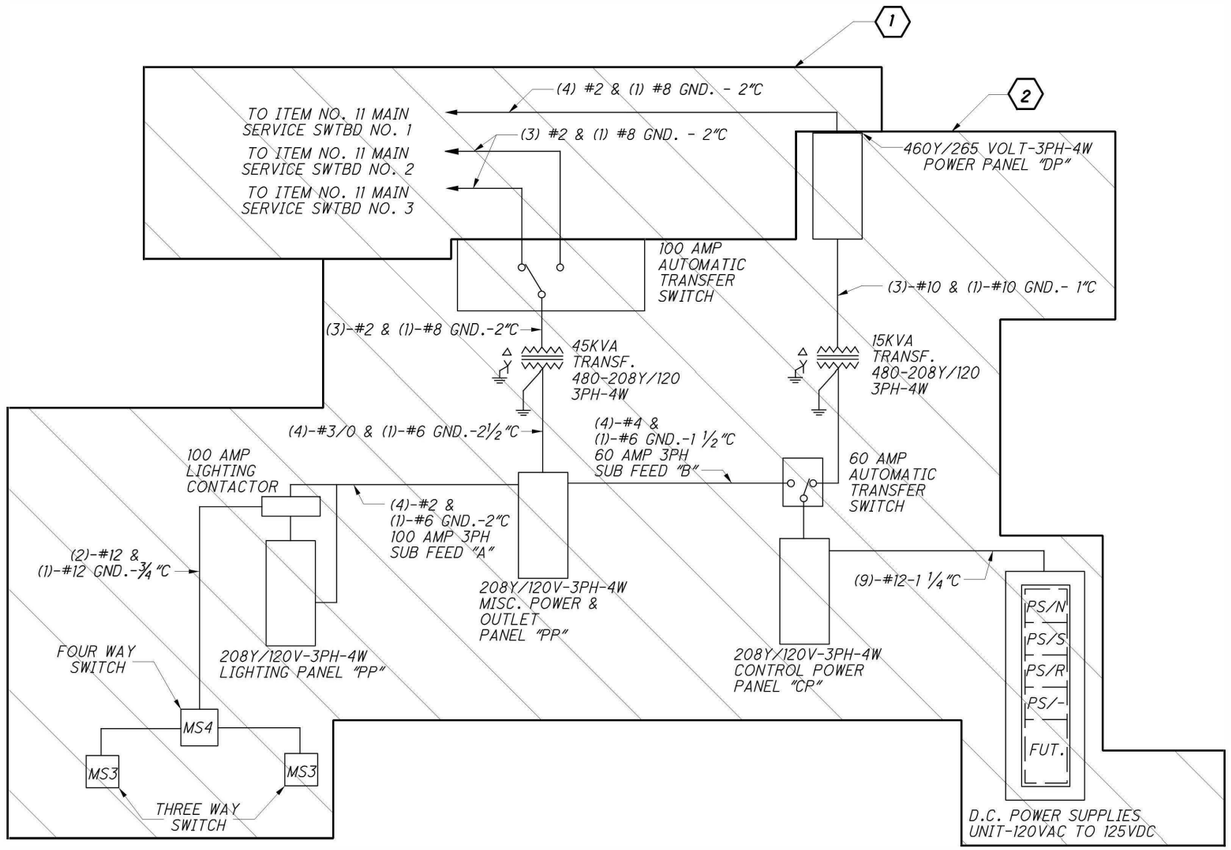

ELECTRICAL DEMOLITION-MISC. POWER SINGLE LINE DIAGRAM

SCALE: NOT TO SCALE

ELECTRICAL PLAN - DEMOLITION:

1. FEEDERS AND RACEWAYS DENOTED WILL BE REPLACED / MODIFIED AS PART OF A SEPARATE CONTRACT, AND WILL EVENTUALLY BE CUT OVER FROM THE EXISTING MAIN SERVICE SWITCHBOARDS #1, 2 & 3 TO PANELS 'DP-E' AND 'DP-W'. SEE DRAWING 211/296 FOR ADDITIONAL INFORMATION.

2. EXISTING DISTRIBUTION PANELBOARDS, TRANSFER SWITCHES, ETC. AND ASSOCIATED FEEDERS AND RACEWAYS DENOTED WILL BE REPLACED / MODIFIED . SEE DRAWINGS 165/296 FOR EXISTING LOCATIONS.

LEGEND

DEMOLITION WORK REQUIRED

DESIGN AGENCY
HATCH MOTT MacDONALD
18013 CLEVELAND PKWY.
SUITE 200
CLEVELAND, OH 44135

DESIGNED	DRAWN	REVIEWED	DATE
DMM	BJG	RF	08/11/14
CHECKED	REVISED	STRUCTURE FILE NUMBER	
PAP	CL	3106578	

ELECTRICAL - DEMOLITION POWER SINGLE LINE

BRIDGE NO. HAM-71-0134

I-71 LYTLE TUNNEL UNDER LYTLE PARK

HAM-71-01.34

PID No. 87268

164/296

422/555

c:\pwworking\hmm\external\tyn61470\dms727●3\071_0134CE5013.dgn 10/24/2014 10:32:29 AM TYN61470

LEGEND:

DEMOLITION WORK REQUIRED (2)

ELECTRICAL PLAN - DEMOLITION:

(1) DEMOLITION OF EXISTING EQUIPMENT AND FEEDERS/RACEWAYS DENOTED SHALL BE COORDINATED WITH ODOT AND DUKE ENERGY.

(2) DEMOLITION TO BE PERFORMED UNDER THIS CONTRACT. CONTRACTOR SHALL COORDINATE CUTOVERS AND MODIFICATIONS WITH ODOT TO MINIMIZE/ELIMINATE SERVICE INTERRUPTION.

(3) EXISTING CONDUITS TO BE DEMOLISHED. QUANTITY NOT SHOWN FOR CLARITY.

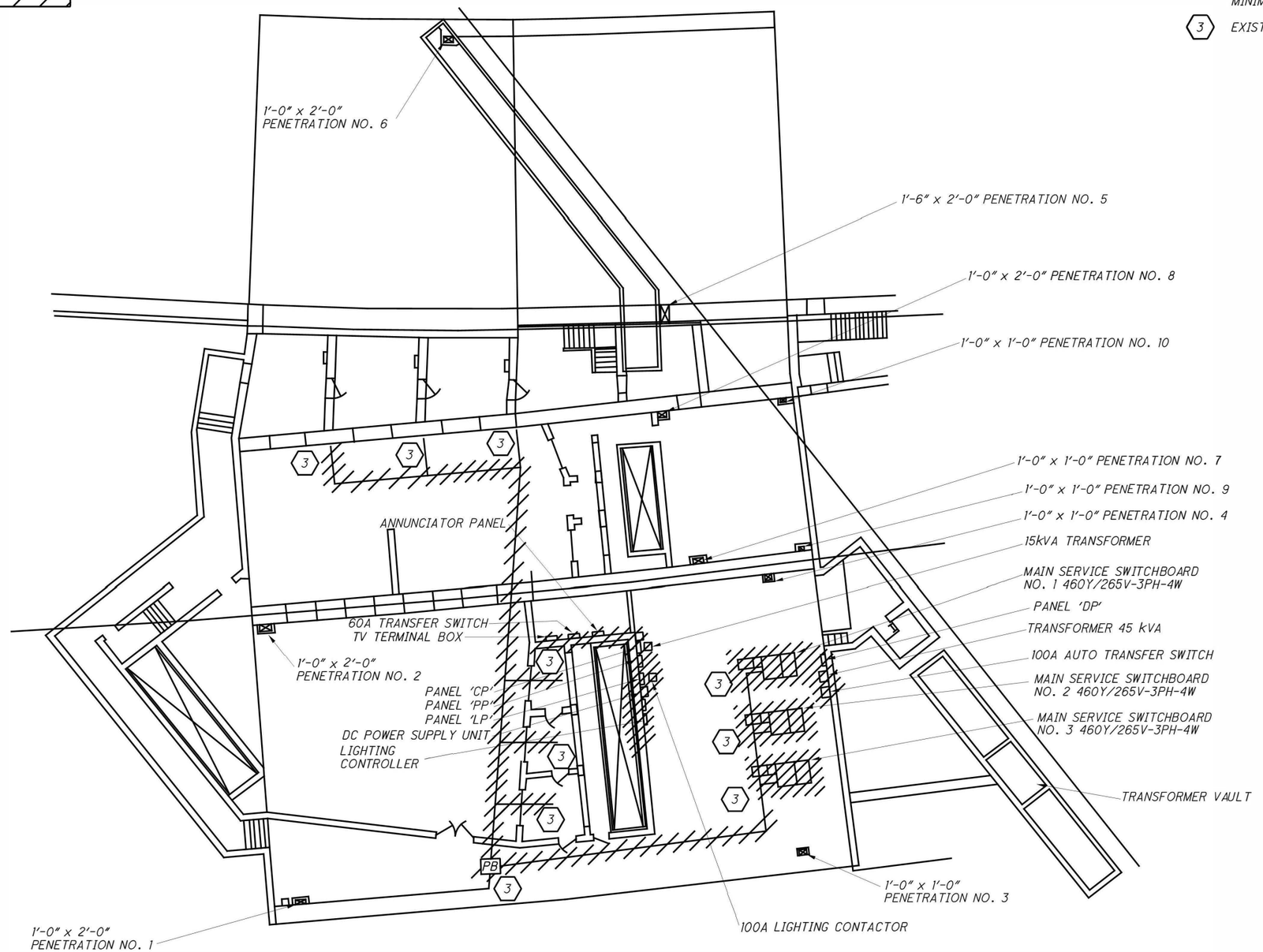

LIGHTING DEMOLITION - EXISTING MAINTENANCE BUILDING PLAN

SCALE: N.T.S.

c:\pwworking\hmm\external\tyn61470\dms727803\071_0134CES014.dgn 10/24/2014 10:32:31 AM TYN61470

DESIGN AGENCY
HATCH MOTT MacDONALD
18013 CLEVELAND PKWY.
SUITE 200
CLEVELAND, OH 44135

DESIGNED	DRAWN	REVIEWED	DATE
DMM	BJG	RF	08/11/14
CHECKED	REVISED	STRUCTURE FILE NUMBER	
PAP	CL	3106578	

ELECTRICAL - DEMOLITION ELECTRICAL ROOM PLAN
BRIDGE NO. HAM-71-0134
I-71 LYTLE TUNNEL UNDER LYTLE PARK

HAM-71-01.34
PID No. 87268

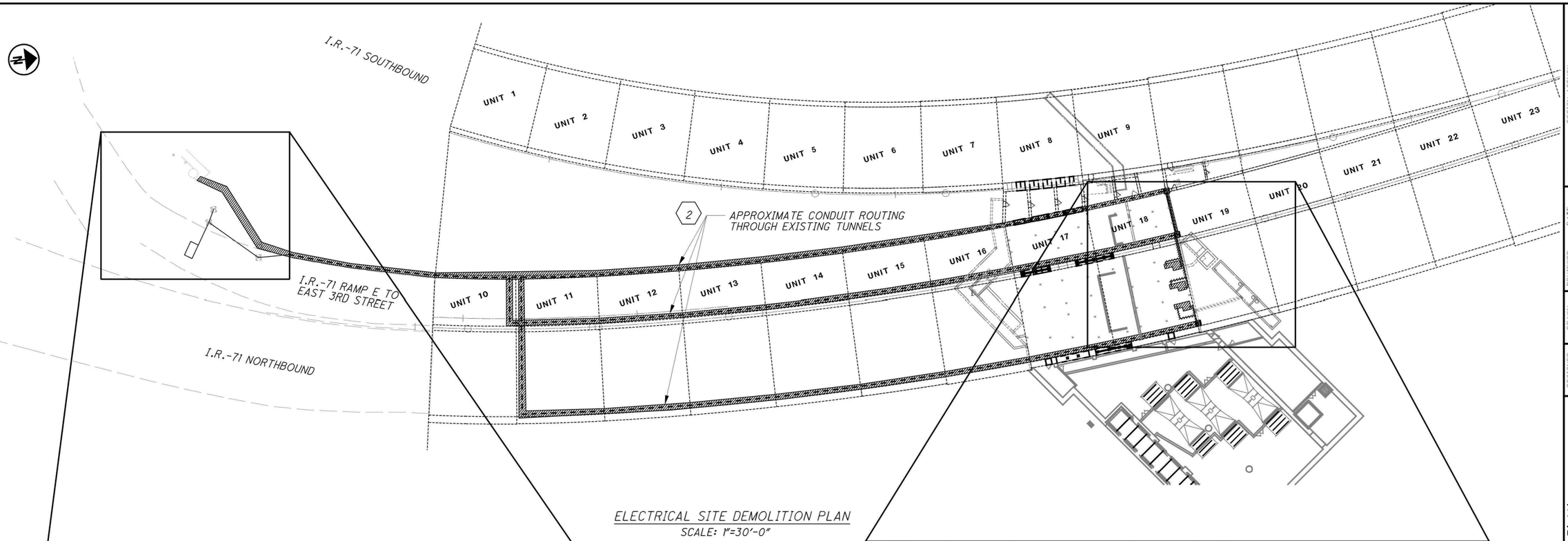

ELECTRICAL SITE DEMOLITION PLAN
SCALE: 1"=30'-0"

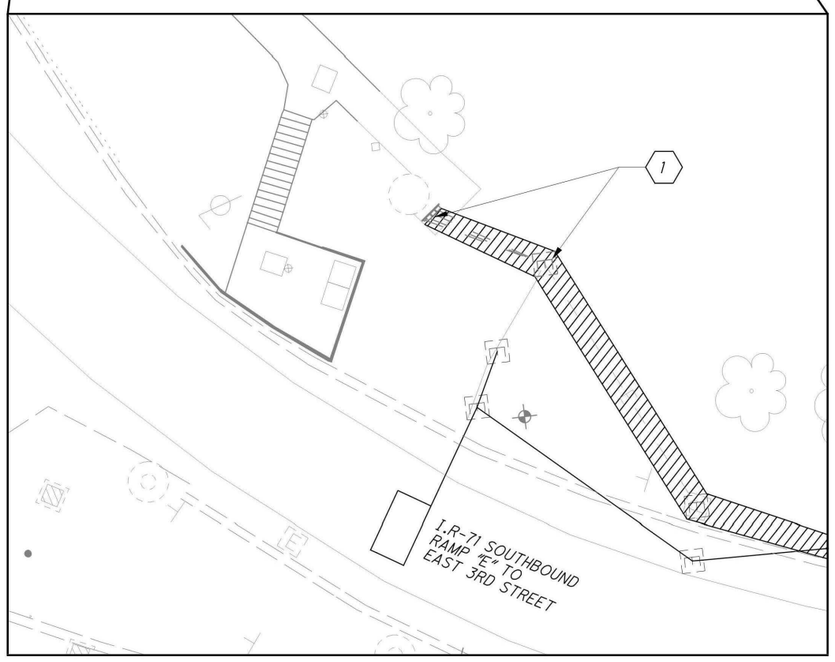

ELECTRICAL SITE DEMOLITION PLAN ENLARGEMENT
SCALE: 1"=10'-0"

KEYED NOTES:

1. SEE DETAILS ON SHEETS 102-104 FOR DEMO WORK TO OCCUR AT EXISTING PUMP STATION.
2. EXISTING EXPOSED CONDUITS ANTICIPATED TO BE PVC COATED RIGID. REMOVE PVC COATED CONDUITS WHERE EXPOSED; CUT OFF, CAP AND ABANDON IN PLACE WHERE EMBEDDED. ALL WIRING TO BE REMOVED FROM THE PUMP STATION BACK TO EXISTING SWITCHBOARDS #1, 2, AND 3.

LEGEND

ELECTRICAL CONDUIT AND APPURTENANCES TO BE REMOVED

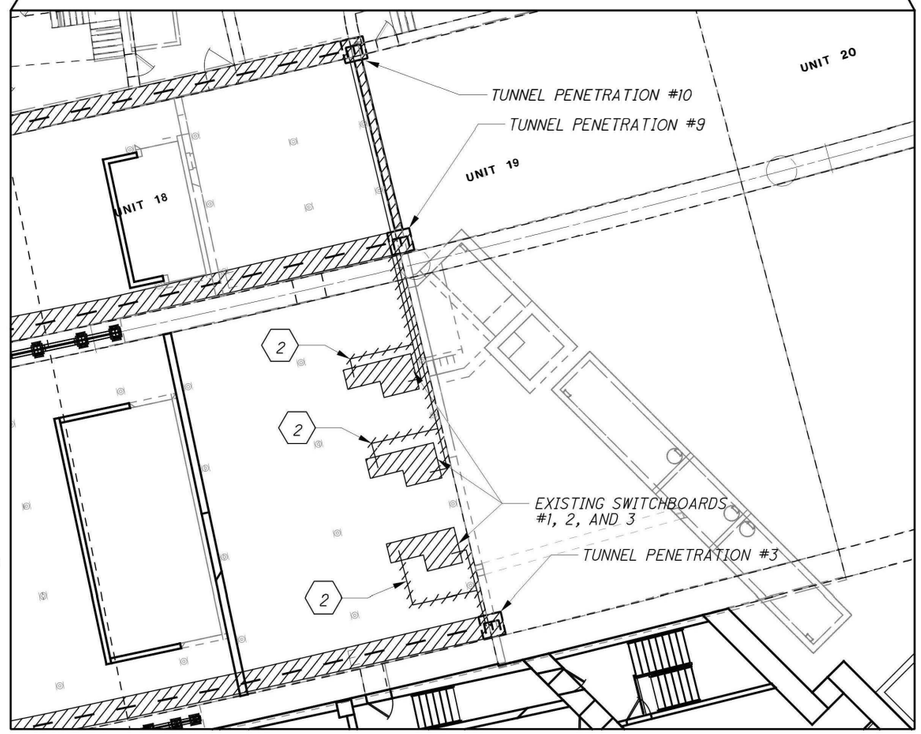

ELECTRICAL SITE DEMOLITION PLAN ENLARGEMENT
SCALE: 1"=10'-0"

DESIGN AGENCY
HATCH MOTT MacDONALD
18013 CLEVELAND PKWY.
SUITE 200
CLEVELAND, OH 44135

DESIGNED	DRAWN	REVIEWED	DATE
DMM	BJG	RF	08/11/14
CHECKED	REVISED	STRUCTURE FILE NUMBER	
PAP	CL	3106578	

ELECTRICAL - SITE DEMOLITION PLAN

BRIDGE NO. HAM-71-0134
I-71 LYTLE TUNNEL UNDER LYTLE PARK

HAM-71-01.34
PID No. 87268

c:\pwworking\hmm\external\tyn61470\dms727●3\071_0134CE5006.dgn 10/24/2014 10:32:44 AM TYN61470

ANTICIPATED CONSTRUCTION SEQUENCE:

THE FOLLOWING ANTICIPATED CONSTRUCTION SEQUENCES ARE INTENDED TO BE USED AS AN INITIAL OPINION REGARDING PROJECT PHASING AND SEQUENCING TO MINIMIZE OUTAGES AND IDENTIFY POTENTIAL INTERFACE AND STAGING ISSUES TO BE CONSIDERED DURING THE PREPARATION OF THE FINAL CONSTRUCTION WORK SCHEDULE AND PROJECT PATH. THE CONTRACTOR IS ENCOURAGED TO REVIEW THE FOLLOWING ITEMS AND OFFER ALTERNATIVE SEQUENCING AND SCHEDULING OPTIONS TO FURTHER REDUCE OR ELIMINATE POTENTIAL OUTAGES AND EQUIPMENT DOWNTIME. THESE SEQUENCES ARE RECOMMENDED AND ARE BY NO MEANS INTENDED TO BE THE FINAL MEANS AND METHODS REQUIREMENTS FOR COMPLETING THESE WORK ACTIVITIES.

THE ENGINEERS REPRESENTATIVE SHALL BE PRESENT WHEN DEACTIVATING ANY EXISTING ELECTRICAL DISTRIBUTION EQUIPMENT AND WHEN RE-ENERGIZING EACH PIECE OF EQUIPMENT TO MONITOR THE OPERATION AND START-UP OF THE EQUIPMENT SYSTEMS.

CARBON MONOXIDE SYSTEMS

1. THE EXISTING TUNNEL CARBON MONOXIDE SYSTEMS ARE NOT FULLY OPERATIONAL AT THIS POINT IN TIME. THE CONTRACTOR SHALL COORDINATE THE REMOVAL OF THE EXISTING CARBON MONOXIDE EQUIPMENT LOCATED THROUGHOUT THE THREE TUNNELS (SEE RECORD DRAWINGS FOR LOCATIONS AND ADDITIONAL DETAILS) WITH PARTIAL TUNNEL SHUTDOWN ACTIVITIES TO ACCOMPLISH OTHER WORK AND SHALL INSTALL A TOTAL OF EIGHT NEW CARBON MONOXIDE SENSORS THROUGHOUT THE FACILITY, TO BE TIED BACK TO THE NEW PLC CONTROL PANEL LOCATED IN THE EXISTING TUNNEL VENTILATION FACILITY. THE CONTROL PANEL SHALL BE USED TO CONTROL TUNNEL VENTILATION SYSTEM CONTROL.

2. ONCE THE EXISTING CARBON MONOXIDE SYSTEMS IN THE THREE TUNNELS HAVE BEEN DEMOLISHED, THE EXISTING CARBON MONOXIDE DETECTOR CONNECTIONS BACK TO THE EXISTING PLCS AND ASSOCIATED EQUIPMENT (WIRING AND RACEWAY, ETC.) CAN BE DISCONNECTED AND REMOVED.

TUNNEL LIGHTING SYSTEMS

THE EXISTING TUNNEL LIGHTING SYSTEMS ARE NOT FULLY OPERATIONAL AT THIS POINT IN TIME. THE EXISTING TUNNEL LIGHTING SYSTEM SHALL BE RETAINED THOUGHOUT CONSTRUCTION. THE CONTRACTOR SHALL COORDINATE THE REMOVAL OF THE EXISTING TUNNEL VENTILATION EQUIPMENT LOCATED THROUGHOUT THE THREE TUNNELS (SEE RECORD DRAWINGS FOR LOCATIONS AND ADDITIONAL DETAILS).

TUNNEL VENTILATION SYSTEMS

THE EXISTING TUNNEL VENTILATION SYSTEMS ARE FULLY OPERATIONAL AT THIS POINT IN TIME. THE EXISTING TUNNEL VENTILATION SYSTEMS NEED NOT BE RETAINED THOUGHOUT CONSTRUCTION. THE CONTRACTOR SHALL COORDINATE THE REMOVAL OF THE EXISTING LIGHTING EQUIPMENT LOCATED THROUGHOUT THE THREE TUNNELS (SEE RECORD DRAWINGS FOR LOCATIONS AND ADDITIONAL DETAILS).

UTILITY POWER SYSTEMS

1. THE NEW ELECTRICAL DISTIRBUTION PANELBOARDS (PANELS 'DP-E' AND 'DP-W') CAN BE INSTALLED IN THE EXISTING TUNNEL VENTILATION FACILITY.

2. FOLLOWING THE CONSTRUCTION OF THE NEW ELECTRICAL ROOM AND ELECTRICAL UTILITY TRANSFORMER VAULTS IN THE NEW VENTILATION FACILITY, INSTALL THE NEW DOUBLE ENDED SWITCHGEAR MSG-1 AND CONTACT DUKE ENERGY AND COORDINATE THE INSTALLATION OF THE NEW UTILITY TRANSFORMERS. NOTE: A 9 MONTH LEAD-TIME BETWEEN INITIAL DUKE ENERGY CONTACT AND TRANSFORMER INSTALLATION IS REQUIRED. A 6 MONTH LEAD-TIME BETWEEN THE OFFICIAL REQUEST FOR TRANSFORMER INSTALLATION AND FINAL INSTALLATION IS REQUIRED.

3. INSTALL THE WIRE AND RACEWAY SYSTEMS BETWEEN THE NEW DOUBLE ENDED SWITCHGEAR AND PANELS 'DP-E' AND 'DP-W', AND ROUGH-IN THE WIRE AND RACEWAY SYSTEMS BETWEEN THE EXISTING ELECTRICAL MAIN SERVICE SWTICHBOARDS (#1, 2, & 3) LOCATED IN THE EXISTING TUNNEL VENTILATION FACILITY AND PANELS 'DP-E' AND 'DP-W'. FEEDER CONNECTIONS TO PANELS 'DP-E' AND 'DP-W' CAN BE MADE AT THIS POINT IN TIME AND CAN BE ENERGIZED. THESE NEW FEEDERS WILL BE INSTALLED PARALLEL TO THE EXISTING CIRCUITS FROM THE EXISTING SWITCHBOARDS (#1, 2 & 3) AND MINIMIZE EQUIPMENT DOWNTIME.

4. INSTALL THE WIRE AND RACEWAY SYSTEMS BETWEEN THE NEW DOUBLE ENDED SWITCHGEAR AND ALL OF THE NEW DISTRIBUTION EQUIPMENT TO BE INSTALLED IN THE NEW TUNNEL VENTILATION FACILITY. FEEDER CONNECTIONS BETWEEN THE NEW SWITCHGEAR AND THESE NEW DEVICES CAN BE COMPLETED AND REMAIN DE-ENERGIZED.

5. ONCE THE NEW FEEDERS ARE COMPLETE FROM PANELS 'DP-E' AND 'DP-W' TO AREAS IMMEDIATELY ADJACENT TO THE EXISTING DISTRIBUTION EQUIPMENT IN THE EXISTING TUNNEL VENTILATION FACILITY AND THE NEW EQUIPMENT FEEDER CONNECTIONS ARE MADE BETWEEN THE NEW SWITCHGEAR AND THE NEW EQUIPMENT, COORDINATE THE INSTALLATION AND ENERGIZATION OF THE NEW UTILITY TRANSFORMERS FEEDING THE NEW DOUBLE ENDED SWITCHGEAR WITH DUKE ENERGY. NOTE: AT THIS POINT, THE TUNNEL WILL BE RUNNING OFF OF FOUR SEPARATE UTILITY TRANSFORMERS. THE EXISTING SWITCHBOARDS (#1, 2 & 3) WILL BE ENERGIZED FROM THE EXISTING UTILITY TRANSFORMERS AND WILL BE CARRYING THE MAJORITY OF THE TOTAL LOADS. THE NEW SWITCHGEAR WILL BE ENERGIZED FROM THE NEW UTILITY TRANSFORMERS BUT WILL HAVE MINIMAL FACILITY LOAD INITIALLY.

6. ONCE BOTH SERVICES HAVE BEEN ENERGIZED (IN PARALLEL), THE EXISTING DISTRIBUTION EQUIPMENT CAN BE CUTOVER FROM THE EXISTING SWITCHBOARDS (#1, 2 & 3) TO PANELS 'DP-E' AND 'DP-W'. THE TOTAL OVERALL DURATION AND TIME REQUIRED TO COMPLETE THESE CUTOVERS SHOULD BE MINIMIZED AS MUCH AS POSSIBLE IT IS ANTICIPATED THAT THERE WILL BE A PREMIUM COST ASSOCIATED WITH HAVING TWO SETS OF UTILITY TRANSFORMERS ENERGIZED CONCURRENTLY.

7. START-UP AND COMMISSIONING OF THE NEW VENTILATION SYSTEM EQUIPMENT SHOULD OCCUR IMMEDIATELY FOLLOWING ENERGIZATION OF THE NEW SWITCHGEAR. ONCE THIS EQUIPMENT IS AVAILABLE FOR SOME LEVEL OF FACILITY VENTILATION, THE EXISTING VENTILATION SYSTEM CAN BE DE-COMMISSIONED AND DISCONNECTED FOR FURTHER REMOVAL.

8. START-UP AND COMMISSIONING OF THE NEW LIGHTING & MISC. POWER FEEDS SHOULD OCCUR IMMEDIATELY FOLLOWING ENERGIZATION OF THE NEW SWITCHGEAR (#1, 2, & 3). ONCE THIS EQUIPMENT IS AVAILABLE FOR SOME LEVEL OF FACILITY LIGHTING AND SMALL POWER DISTRIBUTION, THE EXISTING SMALL LIGHTING AND POWER DISTRIBUTION SYSTEM CAN BE DE-COMMISSIONED AND DISCONNECTED FOR FURTHER REMOVAL.

ANTICIPATED CONSTRUCTION SEQUENCE (CONT.):

9. ONCE THE EXISTING SYSTEMS HAVE BEEN DE-COMMISSIONED, THE FEEDERS FOR THIS EQUIPMENT BACK TO EXISTING SWITCHBOARDS #1, 2 & 3 SHOULD BE DISCONNECTED AT THE SWITCHBOARDS AND DUKE ENERGY SHOULD BE CONTACTED TO DE-ENERGIZE AND DE-COMMISSION THE EXISTING UTILITY TRANSFORMERS AND VAULTS TO THE EXISTING TUNNEL VENTILATION FACILITY. AT THIS POINT, ALL NEW AND EXISTING-TO-REMAIN EQUIPMENT SYSTEMS THROUGHOUT THE ENTIRE TUNNEL VENTILATION FACILITY SHOULD BE FED FROM THE NEW DOUBLE ENDED SWITCHGEAR AND NO LOADS SHOULD REMAIN ON THE EXISTING SWITCHBOARDS.

10. FOLLOWING DUKE ENERGY'S DEMOLITION WORK ASSOCIATED WITH THE EXISTING UTILITY VAULTS AND METERING EQUIPMENT, THE EXISTING SWITCHBOARDS #1, 2 & 3 CAN BE DEMOLISHED IN THEIR ENTIRETY. THE REMAINING DEMOLITION WORK ASSOCIATED WITH THE EXISTING TUNNEL VENTILATION SYSTEMS CAN OCCUR CONCURRENTLY WITH THESE DEMOLITION ACTIVITIES.

REMOTE COMMUNICATIONS SYSTEMS

1. THE EXISTING REMOTE ANNUNCIATION, COMMUNICATION AND CONTROLS EQUIPMENT ASSOCIATED WITH THE EXISTING TUNNEL VENTILATION FACILITY SHALL REMAIN IN OPERATION THROUGHOUT THE PROJECT. THIS EQUIPMENT INCLUDES THE EXISTING ITS CABINET AT THE SOUTH PORTAL OF THE TUNNELS AND FIBER OPTIC CABLING RUN FROM THIS CABINET TO THE ITS AND CITY 911 CENTERS AND ASSOCIATED MONITORING SYSTEM EQUIPMENT INSTALLED AT EACH LOCATION.

2. A NEW VENTILATION SYSTEM CONTROL PANEL WILL BE INSTALLED AS PART OF THIS PROJECT. THE ALARMS TO BE TIED BACK TO THIS PANEL ARE SHOWN IN THE CONTRACT DOCUMENTS.

3. INSTALL NEW EQUIPMENT AT BOTH THE NEW TUNNEL VENTILATION FACILITY AND AT THE CITY 911 CENTER TO PROVIDE A VIRTUAL PRIVATE NETWORK (VPN) BETWEEN THE SITES AND TO ALLOW FOR REMOTE MONITORING AND CONTROL OF THE NEW VENTILATION SYSTEMS, THE TUNNEL VIDEO SYSTEM, THE FIRE ALARM CONTROL PANEL, AND THE NEW CARBON MONOXIDE MONITORING SYSTEM. THE VPN WILL UTILIZE EXISTING 'DARK FIBER' INSTALLED BETWEEN THE EXISTING ITS EQUIPMENT CABINET (LOCATED AT THE SOUTH PORTAL IN THE AREA BETWEEN THE SOUTHBOUND AND SOUTHBOUND RAMP TUNNELS), THE ITS CENTER AND THE CITY 911 CENTER FOR COMMUNICATIONS PURPOSES. THESE NEW SYSTEM COMPONENTS SHALL BE COMPATIBLE WITH THOSE EXISTING-TO-REMAIN MONITORING SYSTEMS INSTALLED AT THE ITS AND CITY 911 CENTERS.

c:\pwworking\hnm\external\tyn61470\dms72703\071_0134CES020.dgn 10/24/2014 10:32:46 AM TYN61470

DESIGN AGENCY
HATCH MOTT MacDONALD
18013 CLEVELAND PKWY.
SUITE 200
CLEVELAND, OH 44135

DESIGNED	DRAWN	REVIEWED	DATE
DMM	BJG	RF	08/11/14
CHECKED	REVISED	STRUCTURE FILE NUMBER	
PAP		3106578	

ELECTRICAL - CONSTRUCTION SEQUENCE NOTES

BRIDGE NO. HAM-71-0134
I-71 LYTLE TUNNEL UNDER LYTLE PARK

HAM-71-01.34
PID No. 87268

BASIC ELECTRICAL REQUIREMENTS

PART 1 - GENERAL

1.01 SCOPE

A. THE SCOPE COVERS THE FURNISHING, INSTALLATION, TESTING, ADJUSTING AND PLACING IN OPERATION ALL ELECTRICAL EQUIPMENT, DEVICES, FACILITIES, MATERIALS, AND AUXILIARY ITEMS NECESSARY FOR THE COMPLETE AND SUCCESSFUL OPERATION OF ALL ELECTRICAL EQUIPMENT AS HEREIN DESCRIBED, SHOWN ON THE PLANS, OR DEEMED NECESSARY FOR THE COMPLETION OF THE ELECTRICAL PORTION OF THE PROJECT. THE ELECTRICAL REQUIREMENTS OF THE CONTRACT SHALL PROVIDE THE INFORMATION NECESSARY FOR THE CONSTRUCTION OF A FULLY OPERATIONAL SYSTEM AS SHOWN ON THE PLANS AND AS HEREIN DESCRIBED. A COMPREHENSIVE ELECTRICAL SCOPE OF WORK IS AS FOLLOWS:

1. CONNECTION TO UTILITY POWER
2. POWER/ELECTRICAL SYSTEM, SWITCHBOARDS, PANELBOARDS, MOTOR STARTERS
3. UPS SYSTEMS & AUTOMATIC TRANSFER SWITCHES
4. LIGHTING & LIGHTING CONTROL SYSTEM
5. UTILITY WORK INTERFACE
6. CONNECTION OF ELECTRICALLY POWERED VENTILATION FANS
7. TEMPORARY CONSTRUCTION POWER
8. ALL INCIDENTALS NECESSARY FOR A COMPLETE AND FULLY OPERATIONAL ELECTRICAL SYSTEM.
9. THE ITEMS LISTED UNDER "TUNNEL ELECRICAL EQUIPMENT" SHALL CONSIST OF FURNISHING ALL MATERIALS AND LABOR REQUIRED FOR THE COMPLETE INSTALLATION OF TUNNEL ELECTRICAL FACILITIES MODIFICATIONS IN ACCORDANCE WITH THE DRAWINGS AND AS DESCRIBED IN THESE SPECIFICATIONS.

1.02 WORKING CLEARANCES

A. WORKING CLEARANCES AROUND EQUIPMENT REQUIRING ELECTRICAL SERVICES SHALL BE VERIFIED BY CONTRACTOR TO COMPLY WITH CODE REQUIREMENTS. SHOULD THERE BE APPARENT VIOLATIONS OF CLEARANCES; THE CONTRACTOR SHALL NOTIFY THE ENGINEER BEFORE PROCEEDING WITH CONNECTION OR PLACING OF EQUIPMENT.

B. IN THE CASE OF PANELBOARDS, SAFETY SWITCHES AND OTHER EQUIPMENT REQUIRING WIRE AND CABLE TERMINATIONS, THE CONTRACTOR SHALL ASCERTAIN THAT LUG SIZES AND WIRING GUTTERS OR SPACE ALLOWED FOR PROPER ACCOMMODATION AND TERMINATION OF THE WIRES AND CABLES ARE ADEQUATE.

1.03 WORKMANSHIP

A. WORKMANSHIP SHALL BE ACCOMPLISHED BY PERSONS SKILLED IN THE PERFORMANCE OF THE REQUIRED TASK. ALL WORK SHALL BE DONE IN KEEPING WITH CONVENTIONS OF THE TRADE. WORK SHALL BE CLOSELY COORDINATED WITH WORK OF OTHER TRADES TO AVOID CONFLICT AND INTERFERENCE.

1.04 PROTECTION OF ELECTRICAL EQUIPMENT

A. ELECTRICAL EQUIPMENT SHALL BE PROTECTED BY THE WEATHER, ESPECIALLY FROM WATER DRIPPING OR SPLASHING AT ALL TIMES DURING SHIPMENT, STORAGE AND AFTER INSTALLATION. SHOULD ANY APPARATUS BE SUBJECTED TO POSSIBLE INJURY BY WATER, IT SHALL BE THOROUGHLY DRIED OUT AND PUT THROUGH A DIELECTRIC TEST, AT THE EXPENSE OF THE CONTRACTOR, TO ASCERTAIN THE SUITABILITY OF THIS APPARATUS. THE RESULTS OF THE TEST SHALL BE SUBMITTED TO THE ENGINEER AND IF THE APPARATUS IS FOUND TO BE UNSUITABLE, THE CONTRACTOR SHALL REPLACE IT WITHOUT ADDITIONAL COST TO THE OHIO DEPARTMENT OF TRANSPORTATION (ODOT).

B. PAINTING

1. GENERAL:
   a. ALL SURFACES SHALL BE THOROUGHLY CLEANED AND FREE OF RUST, DIRT AND OIL BEFORE APPLICATION OF PAINT. ALL PAINTING SHALL BE PERFORMED BY EXPERIENCED WORKMEN AND CARE SHALL BE TAKEN TO PREVENT APPLICATION OR SPILLAGE OF PAINT ON WORKING PARTS OF EQUIPMENT
2. FACTORY PAINTED EQUIPMENT:
   a. ALL EQUIPMENT FACTORY-FINISHED-PAINTED SHALL BE PROTECTED TO PREVENT DAMAGE OR MARRING, SHOULD SUCH FINISH BECOME SCRATCHED, MARRED OR OTHERWISE DAMAGED DURING SHIPPING, HANDLING OR IN THE COURSE OF CONSTRUCTION, THE CONTRACTOR SHALL RETOUCH AND RESTORE THE FINISH. IF IN THE OPINION OF THE ENGINEER, RETOUCHING ONLY WILL NOT RESTORE THE ORIGINAL APPEARANCE, THE CONTRACTOR SHALL REPAINT THE ENTIRE UNIT, ALL EQUIPMENT RECEIVED FROM THE MANUFACTURER WITH PRIME COAT ONLY SHALL RECEIVE AN ADDITIONAL RUST-INHIBITOR PRIME COAT IN THE FIELD AND TWO FINISH COATS OF GREY ENAMAL.
3. MISCELLANEOUS STEEL AND UNPROTECTED OR UNPAINTED FERROUS METAL EQUIPMENT PARTS:
   a. CONTRACTOR SHALL PAINT ALL MISCELLANEOUS STEEL, SUPPORTS, BRACKETS, HANGERS, AND HARDWARE INSTALLED BY HIM WITH ONE PRIME COAT OF AN APPROVED RUST-INHIBITOR PAINT AND TWO FINISH COATS OF GREY ENAMEL.
4. THE ABOVE WORK ITEM IS INCIDENTAL AND INCLUDED WITH THE ASSOCIATED EQUIPMENT COSTS FOR THE LISTED ITEMS WHICH COVER ENCLOSURES, RACEWAYS, ETC.

1.05 UTILITIES

A. THE CONTRACTOR SHALL INTERFACE WITH THE UTILITY TO INSTALL A FULLY OPERATIONAL ELECTRICAL SERVICE AS DESCRIBED IN THE PLANS.

B. ARRANGE WITH THE UTILITY COMPANY FOR THE SERVICES AND INSTALL THE SERVICES IN ACCORDANCE WITH THEIR REQUIREMENTS, REGULATIONS AND RECOMMENDATIONS.

C. THE CONTRACTOR SHALL PROVIDE AND INSTALL TWO NEW UTILITY TRANSFORMER VAULTS AND ASSOCIATED APPURTENANCES PER UTILITY SPECIFICATION FOR USE WITH UL LISTED STEP-DOWN TRANSFORMERS (EACH TRANSFORMER ANTICIPATED TO BE RATED 2000KVA, 3-PHASE, 13.2 KV PRIMARY, 480V SECONDARY) UTILITY TO PROVIDE AND INSTALL TRANSFORMERS IN INSPECTED, COMMISSIONED TRANSFORMER VAULTS AND SHALL CONNECT TO CONTRACTOR PROVIDED SECONDARY FEEDERS. CONTRACTOR SHALL COVER ALL UP FRONT UTILITY COSTS THAT MUST BE PAID IN FULL PRIOR TO INSTALLATION. THE MATERIAL AND INSTALLATION COST OF THE TRANSFORMER UTILITY VAULTS AND TRANSFORMERS SHALL BE INCIDENTAL TO THIS PAY ITEM. NO SEPARATE PAYMENT WILL BE MADE TO MAKE THE SERVICE INSTALLATION FULLY OPERATIONAL.

D. THE INCOMING UTILITY SWITCHGEAR IS TO BE MAIN-TIE-MAIN CONSTRUCTION, UL LISTED FOR USE AS SERVICE ENTRANCE EQUIPMENT. THE SERVICE ENTRANCE SWITCHGEAR IS TO BE INSTALLED IN A NEMA 12 ENCLOSER WITH DRAW-OUT CIRCUIT BREAKERS. THE SWITCHGEAR CIRCUIT BREAKERS SHALL BE SIZED AS SHOWN IN THE PLANS. THE SWITCHGEAR IS CONSIDERED INCIDENTAL TO THE POWER SERVICE, AS PER PLAN.

1.06 TEMPORARY POWER AND LIGHTS DURING CONSTRUCTION

A. IT SHALL BE THE RESPONSIBILITY OF THE CONTRACTOR TO PROVIDE AND MAINTAIN ADEQUATE TEMPORARY POWER AND LIGHTING AT ALL TIMES DURING CONSTRUCTION.

B. THE EXISTING UTILITY SERVICE AT THE SITE CONSISTS OF TWO 500KVA TRANSFORMERS AND ASSOCIATED NETWORK EQUIPMENT SERVING A TOTAL OF THREE SWITCHBOARDS, WHICH CONTAIN THE EXISTING UTILITY METER EQUIPMENT. THIS EQUIPMENT SHALL BE REMOVED AFTER THE NEW UTILITY SERVICES HAVE BEEN INSTALLED AS DESCRIBED ABOVE. THE REMOVAL OF THIS EQUIPMENT SHALL BE COORDINATED WITH THE UTILITY AND SHALL BE STAGED SO THAT EXISTING LIGHTING, VENTILATION, MONITORING AND CONTROLS SYSTEMS, ETC. ASSOCIATED WITH THE EXISTING TUNNELS MAINTAIN CONTINUITY THROUGHOUT THE COURSE OF CONSTRUCTION. THE UTILITY WILL DISCONNECT THE EXISTING CONDUCTORS AT THE LOAD SIDE OF THE NETWORK EQUIPMENT AND SHALL REMOVE/DEMOLISH THE TRANSFORMERS AND THE NETWORK EQUIPMENT IN THE VAULTS AND WILL PROVIDE BACKFILL TO AN ELEVATION OF 6" BELOW THE TOP OF THE VAULT. THE CONTRACTOR SHALL REMOVE THE LOAD SIDE CABLING BACK TO THE SWITCHBOARDS AND CAP OFF/WATERPROOF THE EXISTING RACEWAYS RUN DOWN INTO THE TUNNEL EQUIPMENT FACILITY IN PREPARATION FOR THE VAULT DEMOLITION. THE CONTRACTOR SHALL COORDINATE THE REMOVAL OF THE UTILITY OWED METER EQUIPMENT IN THE SWITCHBOARDS WITH THE UTILITY PRIOR TO EQUIPMENT STRUCTURE DEMOLITION.

1.07 MATERIAL STANDARDS

A. MATERIAL SHALL BE NEW AND COMPLY WITH STANDARDS OF UNDERWRITERS' LABORATORIES, INC., WHERE STANDARDS HAVE BEEN ESTABLISHED FOR THE PARTICULAR PRODUCT AND THE VARIOUS NEMA, ANSI, ASTM, IEEE, AEIC, IPCEA OR OTHER PUBLICATIONS REFERENCED.

1.08 TEST EQUIPMENT

A. THE CONTRACTOR SHALL PROVIDE ALL TEST EQUIPMENT AND SUPPLIES DEEMED NECESSARY BY THE ENGINEER AT NO EXTRA COST TO ODOT. THESE SUPPLIES SHALL INCLUDE BUT NOT BE LIMITED TO THE FOLLOWING: VOLT METERS, AMP METERS, CLAMP-ON GROUND ROD TEST METER, LIGHT METERS, TEMPORARY CABLES, WATT METERS, HARMONIC DISTORTION TEST EQUIPMENT, THERMAL IMAGE CAMERA, MEGGER TESTER, HIGH POT TEST EQUIPMENT, POWER QUALITY ANALYZERS, RECORDING POWER METER, AND OSCILLOSCOPES.

1.09 REFERENCES

A. ANSI/NFPA 70 – NATIONAL ELECTRICAL CODE.
B. ANSIC2 – NATIONAL ELECTRICAL SAFETY CODE.
C. NEMA – NATIONAL ELECTRICAL MANUFACTURER'S ASSOC.
D. UL – UNDERWRITERS LABORATORIES
E. NFPA – NATIONAL FIRE PROTECTION ASSOC.
F. IEEE – THE INSTITUTE OF ELECTRICAL AND ELECTRONICS ENGINEERS
G. IESNA – THE ILLUMINATING ENGINEERING SOCIETY OF NORTH AMERICA
H. NETA – INTERNATIONAL ELECTRICAL TESTING ASSOCIATION
I. API – AMERICAN PETROLEUM INSTITUTE
J. AGA – AMERICAN GAS ASSOCIATION

1.10 SUBMITTAL

A. SUBMIT UNDER PROVISIONS OF THE GENERAL PROVISIONS.

1. THE CONTRACTOR SHALL SUBMIT ELECTRICAL SHOP DRAWINGS TO THE ENGINEER. THE INSTALLER SHALL CERTIFY THE FOLLOWING:

DESIGN AGENCY
HATCH MOTT MacDONALD
18013 CLEVELAND PKWY.
SUITE 200
CLEVELAND, OH 44135

DESIGNED DGC | DRAWN CM | CHECKED LL | REVIEWED RF | DATE 08/11/14 | REVISED DGC | STRUCTURE FILE NUMBER 3106578

ELECTRICAL NOTES-BASIC ELECTRICAL REQUIREMENTS-SHEET 1 OF 3

BRIDGE NO. HAM-71-0134
I-71 LYTLE TUNNEL UNDER LYTLE PARK

HAM-71-01.34
PID No. 87268

168/296

426/555

c:\pwworking\hnm\external\ty#61470\dms727●3\071_0134CE5400.dgn 10/24/2014 10:32:4● AM TYN61470

a. I HEREBY CERTIFY THAT THE (EQUIPMENT) (MATERIAL) (ARTICLE) SHOWN AND MARKED IN THIS SUBMITTAL IS IN COMPLIANCE WITH THE CONTRACT DRAWING AND SPECIFICATIONS, CAN BE INSTALLED IN THE ALLOCATED SPACE, WILL BE STORED IN ACCORDANCE WITH THE MANUFACTURERS RECOMMENDATION, WILL BE INSTALLED PER NEC, AND IS SUBMITTED FOR APPROVAL.

CERTIFIED BY: _____
DATE: _____

B. SUBMIT SHOP DRAWINGS AND PRODUCT DATA GROUPED TO INCLUDE COMPLETE SUBMITTAL OF RELATED SYSTEMS, PRODUCTS, AND ACCESSORIES IN A SINGLE SUBMITTAL. NO ELECTRICAL WORK MAY BE PERFORMED UNTIL SHOP DRAWINGS ARE APPROVED. SUBMIT SHOP DRAWINGS ON THE FOLLOWING SYSTEMS AS GROUPED BELOW:
1. HIGH VOLTAGE DISTRIBUTION SYSTEM (BY UTILITY COMPANY)
   a. TRANSFORMERS
   b. SWITCHES
   c. DISTRIBUTION EQUIPMENT
   d. HIGH VOLTAGE CABLE
   e. EQUIPMENT PADS
   f. UTILITY CONDUIT
   g. MISCELLANEOUS MATERIALS
   h. UTILITY WORK
2. LOW VOLTAGE POWER/ELECTRICAL SYSTEM
   a. CONDUIT AND CONDUIT FITTINGS
   b. WIRE
   c. PULL BOXES
   d. PANELBOARDS
   e. PANELBOARD LAYOUTS
   f. CIRCUIT BREAKERS
   g. DISCONNECTS
   h. FUSES
   i. CONDUIT SUPPORT SYSTEMS
   j. WIRING DEVICES
   k. SWITCHBOARDS
   l. MOTOR CONTROL STARTERS
   m. TRANSFORMERS
   n. SURGE PROTECTION EQUIPMENT
   o. INTELLIGENT MOTOR CONTROL CENTERS
   p. BREAKER COORDINATION STUDY (NO BREAKERS OR FUSES WILL BE APPROVED WITHOUT AN APPROVED COORDINATION STUDY)
3. LIGHTING SYSTEM
   a. ALL LIGHT FIXTURES
      1) COMPUTER PRINTOUT OF LIGHTING LAYOUT
      2) SAMPLE FIXTURE (AS DIRECTED BY ENGINEER)
      3) IES PHOTOMETRIC FILES
   b. FIXTURE MOUNTING DETAILS
4. MISCELLANEOUS ELECTRICAL EQUIPMENT
   a. MISCELLANEOUS ELECTRICAL PARTS
5. DRAWINGS
   a. COORDINATION DRAWING OF ALL ELECTRICAL ROOM
   b. CONDUIT LAYOUT DRAWINGS
   c. DUCT DRAWINGS
   d. AS-BUILT DRAWINGS
6. MARK DIMENSIONS AND VALUES IN UNITS TO MATCH THOSE SPECIFIED.

1.11 REGULATORY REQUIREMENTS

A. CONFORM TO APPLICABLE SECTIONS OF THE BUILDING CODE AND ALL LOCAL RULES, REGULATIONS AND ORDINANCES.

B. ELECTRICAL: CONFORM TO NFPA 70 & NATIONAL ELECTRIC SAFETY CODE

C. OBTAIN PERMITS, AND REQUEST INSPECTIONS FROM AUTHORITY HAVING JURISDICTION.

D. ALL CONSTRUCTION METHODS, MATERIALS AND WORKSMANSHIP, EXCEPT AS MODIFIED HEREIN OR ON THE DRAWINGS SHALL CONFORM TO THE GENERAL REQUIREMENTS AND OTHER APPLICABLE SECTIONS OF THE 2013 VERSION OF THE STATE OF OHIO DEPARTMENT OF TRANSPORTATION CONSTRUCTION AND MATERIAL SPECIFICATIONS.

1.12 FINAL INSPECTION AND TESTING

A. AFTER THE ELECTRICAL INSTALLATION IS COMPLETE, THE CONTRACTOR SHALL DELIVER TO THE ENGINEER THE FOLLOWING INFORMATION WITH HIS REQUEST FOR FINAL INSPECTION.
1. ONE SET OF CONTRACT DRAWINGS MARKED TO SHOW ALL SIGNIFICANT CHANGES IN EQUIPMENT RATINGS AND LOCATIONS, ALTERATIONS IN LOCATIONS OF CONDUIT RUNS, OR OF ANY DATA DIFFERING FROM THE CONTRACT DRAWINGS. THIS SHALL INCLUDE REVISED OR CHANGED PANELBOARD AND SWITCHGEAR SCHEDULES.
2. CERTIFICATES OF FINAL INSPECTION FROM LOCAL AUTHORITY.
3. A TABULATION OF ALL MOTORS LISTING THEIR RESPECTIVE MANUFACTURER, HORSEPOWER, NAMEPLATE VOLTAGE AND CURRENT, ACTUAL RUNNING CURRENT AFTER INSTALLATION AND OVERLOAD HEATER RATING.

B. THE ELECTRICAL WORK SHALL BE THOROUGHLY TESTED TO DEMONSTRATE THAT THE ENTIRE SYSTEM IS IN PROPER WORKING ORDER AND IN ACCORDANCE WITH THE PLANS AND SPECIFICATIONS. EACH MOTOR WITH ITS CONTROL SHALL BE RUN AS NEARLY AS POSSIBLE UNDER OPERATING CONDITIONS FOR A SUFFICIENT LENGTH OF TIME TO DEMONSTRATE CORRECT ALIGNMENT, WIRING CAPACITY, SPEED AND SATISFACTORY OPERATION. ALL MAIN SWITCHES AND CIRCUIT BREAKERS SHALL BE OPERATED, BUT NOT NECESSARILY AT FULL LOAD. CONTRACTOR MAY BE REQUIRED DURING FINAL INSPECTION, AT THE REQUEST OF THE ENGINEER TO FURNISH TEST INSTRUMENTS FOR USE DURING THE TESTING.

C. ALL WIRING SHALL BE GIVEN A MEGGER TEST USING A 1000 VOLT MEGGER. THIS TEST SHALL BE PERFORMED AFTER CONDUCTORS ARE PULLED, BUT BEFORE FINAL CONNECTIONS ARE MADE. THE ENGINEER SHALL BE GIVEN TWO (2) DAYS' WRITTEN NOTICE OF THE ANTICIPATED TEST DATE SO THAT HE MAY WITNESS THE TEST IF SO DESIRED. IN ANY EVENT, THE CONTRACTOR SHALL RECORD THE CIRCUIT DESIGNATION AND THE MEGGER READING ON EACH PHASE. THIS WRITTEN RECORD SHALL BE SUBMITTED TO THE ENGINEER. THE COST OF THIS TEST OR ANY RETEST CAUSED BY INSUFFICIENT MEGGER READINGS SHALL BE THE RESPONSIBILITY OF THE CONTRACTOR (ALL TESTS SHALL BE DONE IN ACCORDANCE WITH NETA STANDARDS).

1.13 AS-BUILT DRAWINGS

A. THE CONTRACTOR SHALL PROVIDE DETAILED AS-BUILT DRAWINGS FOR THE PROJECT INDICATING ALL POWER WIRING.

B. THE AS-BUILT DRAWINGS SHALL INCLUDE DETAILED DRAWINGS OF ALL DUCT BANKS, UNDERGROUND CONDUIT, ABOVE GROUND CONDUIT, MOTOR CONTROL CENTERS, PLC CONTROL PANELS, CONTROL DRAWINGS. THESE DRAWINGS SHALL INDICATE EXACT LOCATION OF ALL UNDERGROUND ELECTRICAL WIRING AND FIBER OPTIC CABLE.
1. THE LOCATION SHALL INDICATE THE FOLLOWING
   a. CENTERLINE LOCATION
   b. WIDTH / CROSS SECTION
   c. DEPTH

C. AS-BUILT DRAWINGS SHALL BE SUBMITTED ELECTRONICALLY PER THE ODOT CADD MANUAL, SECTION 500 "ELECTRONIC SUBMISSIONS,"

PART 2 - METHOD OF PAYMENT AND ITEMS

2.01 METHOD OF PAYMENT AND ITEMS

A. PAYMENT FOR ITEMS SHALL BE MADE AT THE CONTRACT UNIT PRICE, INCLUDING BUT NOT LIMITED TO ALL WORK, LABOR, EQUIPMENT, AND MATERIALS NECESSARY THEREFORE OR INCIDENTAL THERETO.

B. REFER TO THE ALL OTHER GENERAL NOTES FOR PAY ITEMS ASSOCIATED WITH THE INSTALLATION OF MATERIALS IN THIS SECTION.

ITEM NO.	DESCRIPTION	UNIT
690	SPECIAL - MISC.: ELECTRICAL AS-BUILT DRAWINGS	LUMP
690	SPECIAL - MISC.: TRANSFORMER VAULT	EACH
625	POWER SERVICE – AS PER PLAN	LUMP

POWER SERVICE, AS PER PLAN

IN ADDITION TO THE REQUIREMENTS OF THE SPECIFICATIONS, THE FOLLOWING IS ADDED.

THE POWER SUPPLYING AGENCY FOR THIS PROJECT IS:

POWER COMPANY	DUKE ENERGY
ADDRESS	424 GEST STREET
	CINCINNATI, OH 45203
PHONE #	(513) 419-1507
CONTACT NAME	BRET LITMER

THE ENGINEER SHALL ENSURE THAT EACH POWER SERVICE ELECTRICAL ENERGY ACCOUNT IS IN THE NAME OF AND THAT THE BILLING ADDRESS IS TO THE MAINTAINING AGENCY NOTED IN THE PLANS. THIS SHALL BE DONE NOT ONLY FOR EACH NEW POWER SERVICE ESTABLISHED BY THIS PROJECT BUT ALSO FOR EACH EXISTING POWER SERVICE, SINCE THERE MAY BE A REASSIGNMENT OF THE RESPONSIBILITY FOR AN EXISTING SERVICE AS A RESULT OF THE WORK PERFORMED BY THIS PROJECT.

THE ELECTRICAL SERVICES PROVIDED UNDER THIS ITEM SHALL BE METERED. ALL METER SOCKETS SHALL BE AS REQUIRED BY THE UTILITY. METERING SPACE/COMPARTMENTS SHALL BE PROVIDED IN THE CONTRACTOR PROVIDED SWITCHGEAR FOR UTILITY METERING EQUIPMENT. SWITCHGEAR STRUCTURES FOR THESE PURPOSES SHALL BE CONSTRUCTED TO UTILITY COMPANY SPECIFICATION. THE ELECTRICAL SERVICE SHALL BE PROVIDED BY THE UTILITY COMPANY AS INDICATED ON THE PLANS, AND SHALL BE CLOSELY COORDINATED WITH THE UTILITY'S REQUIREMENTS.

PAYMENT WILL BE MADE AT THE UNIT BID PRICE FOR EACH C&MS ITEM 625, "POWER SERVICE, AS PER PLAN" WHICH SHALL BE FULL COMPENSATION FOR ALL LABOR, MATERIALS AND INCIDENTALS REQUIRED TO COMPLETE THIS ITEM IN A SATISFACTORY AND WORKMANLIKE MANNER.

c:\pwworking\hmm\external\tyn61470\dms72703\071_0134CE5401.dgn 10/24/2014 10:32:59 AM TYNG14.70

DESIGN AGENCY
HATCH MOTT MacDONALD
18013 CLEVELAND PKWY.
SUITE 200
CLEVELAND, OH 44135

DESIGNED DGC | DRAWN CM | REVIEWED RF | DATE 08/11/14
CHECKED LL | REVISED DGC | STRUCTURE FILE NUMBER 3106578

ELECTRICAL NOTES-BASIC ELECTRICAL REQUIREMENTS-SHEET 2 OF 3
BRIDGE NO. HAM-71-0134
I-71 LYTLE TUNNEL UNDER LYTLE PARK

HAM-71-01.34
PID No. 87268

CONDUIT EXPANSION AND DEFLECTION

EXPANSION FITTINGS SHALL BE OZ TYPE AX, CROUSE HINDS TYPE XJG, APPLETON TYPE AX, OR EQUAL APPROVED BY THE ENGINEER. EACH EXPANSION FITTING SHALL PROVIDE EITHER 4 OR 8 INCHES TOTAL MOVEMENT AS SPECIFIED BY THE PLAN DETAILS AND SHALL HAVE AN EXTERNAL COPPER BONDING JUMPER, UNLESS SPECIFIED OTHERWISE BY THE PLAN DETAILS.

DEFLECTION COUPLINGS SHALL BE OZ TYPE DX, CROUSE HINDS TYPE XD, APPLETON TYPE DF, OR EQUAL APPROVED BY THE ENGINEER. EACH DEFLECTION COUPLING SHALL HAVE AN EXTERNAL COPPER BONDING JUMPER, UNLESS SPECIFIED OTHERWISE BY THE PLAN DETAILS.

c:\pwworking\hmm\external\tyn61470\dms72703\071_0134CES439.dgn 10/24/2014 10:33:09 AM T:\N61470

DESIGN AGENCY
HATCH MOTT MacDONALD
18013 CLEVELAND PKWY.
SUITE 200
CLEVELAND, OH 44135

DESIGNED	DRAWN	REVIEWED	DATE
DGC	CM	RF	08/11/14
CHECKED	REVISED	STRUCTURE FILE NUMBER	
LL	DGC	3106578	

ELECTRICAL NOTES-BASIC ELECTRICAL REQUIREMENTS-SHEET 3 OF 3

BRIDGE NO. HAM-71-0134
I-71 LYTLE TUNNEL UNDER LYTLE PARK

HAM-71-01.34
PID No. 87268

HANGERS AND SUPPORTS FOR ELECTRICAL SYSTEMS

PART 1 - GENERAL

1.1 DESCRIPTION OF WORK

A. THIS SECTION SPECIFIES THE FURNISHING AND INSTALLATION OF ELECTRICAL EQUIPMENT SUPPORTING DEVICES.

1.2 SUBMITTALS

A. SUBMIT PRODUCT DATA FOR EACH ELECTRICAL PRODUCT INDICATED.

PART 2 - PRODUCTS

2.1 MATERIALS

A. FASTENERS: FURNISH ALL FASTENERS AND HARDWARE COMPATIBLE WITH THE MATERIALS AND METHODS REQUIRED FOR ATTACHMENT OF SUPPORTING DEVICES.

B. SLOTTED - PVC COATED TYPE CONCRETE INSERTS: GALVANIZED PRESSED STEEL PLATE COMPLYING WITH ASTM A283; BOX-TYPE WELDED CONSTRUCTION WITH SLOT DESIGNED TO RECEIVE STEELNUT AND WITH KNOCKOUT COVER; HOT-DIPPED GALVANIZED IN COMPLIANCE WITH ASTM A386 AND PVC COATED.

C. MASONRY ANCHORAGE DEVICES: EXPANSION SHIELDS SHALL BE OF TYPE 316 STAINLESS STEEL AS FOLLOWS:
   1. FURNISH EXPANSION SHIELDS FOR MACHINE SCREWS AND BOLTS 1/4 INCH; HEAD-OUT EMBEDDED NUT TYPE, MULTIPLE UNIT CLASS, GROUP I, TYPE 1, CLASS 1.
   2. FURNISH EXPANSION SHIELDS FOR MACHINE SCREWS AND BOLTS LARGE THAN 1/4 INCH IN SIZE; HEAD-OUT EMBEDDED NUT TYPE, MULTIPLE UNIT CLASS, GROUP I, TYPE 1, CLASS 1.
   3. FURNISH BOLT ANCHOR EXPANSION SHIELD FOR LAG BOLTS, STAINLESS STEEL, LONG-SHIELD ANCHORS CLASS, GROUP II, TYPE 1, CLASS 1.
   4. FURNISH BOLT ANCHOR EXPANSION SHIELDS FOR BOLTS, CLOSED-END BOTTOM BEARING CLASS, GROUP II, TYPE 2, CLASS 1.
   5. TOGGLE BOLTS: TYPE 316 STAINLESS STEEL TUMBLEWING TYPE. TYPE, CLASS AND STYLE AS REQUIRED.

D. NUTS, BOLTS, SCREWS AND WASHERS:
   1. GENERAL: FURNISH TYPE 316 STAINLESS STEEL FASTENERS FOR EXTERIOR USE OR WHERE BUILT INTO EXTERIOR WALLS. FURNISH FASTENERS FOR THE TYPE, GRADE AND CLASS REQUIRED FOR THE PARTICULAR INSTALLATION.
   2. STANDARD NUTS AND BOLTS: REGULAR HEXAGON HEAD TYPE, COMPLYING WITH ASTM A307, GRADE A, TYPE 316 STAINLESS STEEL MATERIAL.
   3. LAG BOLTS: SQUARE HEAD TYPE OF TYPE 316 STAINLESS STEEL.
   4. MACHINE SCREWS: TYPE 316 STAINLESS STEEL.
   5. WOOD SCREWS: FLAT HEAD TYPE 316 STAINLESS STEEL.
   6. PLAIN WASHERS: ROUND, GENERAL ASSEMBLY GRADE TYPE 316 STAINLESS STEEL.
   7. LOCK WASHERS: HELICAL SPRING TYPE 316 STAINLESS STEEL.
   8. "C" BEAM CLAMPS: FOR CONDUIT SIZE AND LOADING, MALLEABLE IRON, PVC-COATED.
   9. PIPE STRAPS: 2 HOLE STEEL CONDUIT STRAPS TYPE 316 STAINLESS STEEL.
   10. PIPE CLAMPS: 1 HOLE MALLEABLE IRON TYPE CLAMPS WITH TYPE 316 STAINLESS STEEL CLAMP BACKS AND HARDWARE.
   11. CHANNEL SUPPORT SYSTEM AND ACCESSORIES: PROVIDE 12 GAGE TYPE 316 STAINLESS STEEL CHANNEL AND ACCESSORIES.
   12. "C" BEAM CLAMPS FOR HANGER RODS:
      A. FOR 3/8" HANGER RODS: CADDY/ERICO PRODUCTS INC.'S BC, KINDORF'S 231-3/8, 502, OR UNISTRUT CORP'S P1649AS, P2401S, P2675, P2576.
      B. FOR 1/2" RODS: APPLETON ELECTRIC CO., BH-500 SERIES, KINDORF'S 500 SERIES, 231-1/2, OZ/GEDNEY CO.S IS-500 SERIES, OR UNISTRUT CORP'S P1650AS, P2403S, P2676.
      C. FOR 5/8" RODS AND 3/4" RODS: BEAM CLAMPS AND ANCHOR CLIPS BY UNISTRUT, CADDY/ERICO PRODUCTS, INC., KINDORF, THOMAS INDUSTRIES, INC., APPLETON ELECTRIC CO., OZ/GEDNEY CO. SIZED AS REQUIRED BY LOAD.
      D. ALL CLAMPS SHALL BE PVC COATED WITH STAINLESS STEEL RODS.

2.2 HARDWARE FOR MOUNTING EQUIPMENT

A. HARDWARE FOR MOUNTING EQUIPMENT SHALL BE HIGH STRENGTH (100 PERCENT RUST RESISTANT) AND CONFORM WITH THE LATEST AMERICAN STANDARDS AND PRACTICES. SAMPLES SHALL BE SUBMITTED FOR APPROVAL. THE ENGINEER WILL DECIDE ON ONE OR MORE TYPES AND HE WILL DIRECT THE CONTRACTOR TO GUIDE HIMSELF ACCORDINGLY IN THE USAGE THEREOF AT SPECIFIC LOCATIONS.

B. ALL ANCHOR BOLTS SHALL BE "PHILLIPS RED HEAD STUD ANCHOR" TYPE, OR APPROVED EQUAL.

C. ALL SCREWS AND BOLTS SHALL BE STAINLESS STEEL WITH STAINLESS STEEL NUTS AND WASHERS WHERE REQUIRED.

D. BOLTS, NUTS AND WASHERS USED FOR MOUNTING FLUORESCENT FIXTURES SHALL BE STAINLESS STEEL AND INSTALLED WITH PROPRIETARY SCREWS TO REDUCE VANDALISM. HEAVY DUTY STAINLESS STEEL FLAT WASHERS AND LOCK WASHERS SHALL BE PROVIDED WITH ALL SCREWS AND BOLTS. IF REQUIRED, AND/OR AS SHOWN ON THE DRAWINGS, EQUIPMENT MOUNTED IN SIGNAL ENCLOSURES SHALL BE ATTACHED TO THE WALLS, CEILINGS, FLOORS, ETC., OF THE ENCLOSURES BY CLAMPS AS MANUFACTURED BY "KINDORF" OR "UNISTRUT" OR APPROVED EQUAL.

E. "EVERDUR 651", OR APPROVED EQUAL, HEXAGONAL HEAD MACHINE SCREWS, BOLTS AND NUTS WITH BRONZE FLAT WASHERS SHALL BE USED FOR INSTALLING COPPER GROUND BUS.

2.3 CONDUIT

A. RIGID HOT-DIPPED GALVANIZED STEEL CONFORMING TO THE FOLLOWING:
   1. RIGID GALVANIZED STEEL CONDUIT AND FITTINGS SHALL CONFORM TO THE REQUIREMENTS OF UL 6 AND UL 1242, FOR THREADED TYPE, RESPECTIVELY, CONFORMING TO NEMA RN1, TYPE A40, MANUFACTURED BY ALLIED TUBE AND CONDUIT OR WHEATLAND TUBE COMPANY, EXCEPT THAT HARDNESS SHALL BE NOMINAL 85 SHORE A DUROMETER, DIELECTRIC STRENGTH SHALL BE MINIMUM 400 VOLTS PER MIL AT 60 HZ, TENSILE STRENGTH SHALL BE MINIMUM 3500 PSI, AND AGING SHALL BE MINIMUM 1000 HOURS ATLAS WEATHEROMETER.

B. POLYVINYL CHLORIDE CONDUIT, CONFORMING TO THE FOLLOWING:
   1. POLYVINYL CONDUIT AND FITTINGS U.L. LISTED, RATED FOR USE WITH 90 DEGREE C CONDUCTORS AND BE SCHEDULE 40. MATERIALS SHALL CONFORM TO NEMA SPECIFICATIONS TC-2 (CONDUIT), TC-3 (FITTINGS) AND UL 651 (CONDUIT) AND 514B (FITTINGS). CONDUIT AND RACEWAY SHALL CARRY A UL LABEL STAMPED ON EACH 10 LENGTH; MARKINGS SHALL BE LEGIBLE AND PERMANENT.
   2. CONDUIT SHALL BE MADE FROM POLYVINYL CHLORIDE COMPOUND WHICH INCLUDES INERT MODIFIERS TO IMPROVE WEATHERABILITY AND HEAT DISTORTION. CONDUIT AND FITTINGS SHALL BE FREE OF CRACKS, HOLES OR FOREIGN MATTER.
   3. CONDUIT, FITTINGS AND CEMENT SHALL BE PRODUCED BY THE SAME MANUFACTURER TO ASSURE SYSTEM INTEGRITY.

2.4 MATERIALS FOR HANDHOLES

A. HANDHOLES ARE REFERRED TO THROUGHOUT THIS SECTION AS "STRUCTURES" OR "UNDERGROUND STRUCTURES". HANDHOLE FRAMES AND COVERS SHALL BE AS SHOWN ON THE CONTRACT DRAWINGS.

B. BRICK SHALL BE SEWER AND MANHOLE BRICK CONFORMING TO ASTM C 32, GRADE MS.

C. METAL FRAMES AND COVERS: PROVIDE CAST STEEL FRAMES AND COVERS CONFORMING TO FED. SPEC. RR-F-621 EXCEPT WHERE ROLLED STEEL FLOORPLATE IS INDICATED.

D. HANDHOLES: EXTERIOR HANDHOLES SHALL BE DESIGNED AND MANUFACTURED IN ACCORDANCE WITH ASTM C478 WITH ADDITIONAL STIPULATION THAT THE CONCRETE MIX DESIGN SHALL BE CLASS "A". WALLS AND BASE OF HANDHOLES SHALL BE REINFORCED CONCRETE. ROUND FRAME AND COVER SHALL BE #4.0 RATED. COVERS SHALL BE CAST WITH WORD "ELECTRIC" FOR POWER HANDHOLES AND "COMM" FOR LOW VOLTAGE HANDHOLES. COVERS SHALL BE PAINTED WITH STENCIL INDICATING HANDHOLE NUMBER. NUMBERING SYSTEM SHALL BE AS DIRECTED BY MNRR. HANDHOLES SHALL BE PROVIDED WITH KNOCKS ON EACH WALL. PROVIDE WITH 1" PVC DRAIN. HANDHOLES FOR ROADWAY LIGHTING SHALL BE ODOT STANDARD.

E. EXTERIOR PULLBOXES CAST INTO CONCRETE SHALL BE CAST IRON, SIZE AS INDICATED. HANDHOLES SHALL BE STANDARD CONFORMING TO ODOT STANDARD SPECIFICATIONS.

PART 3 - EXECUTION

3.1 INSTALLATION

A. ATTACHMENT OF CONDUIT SYSTEM:
   1. MASONRY CONSTRUCTION: ATTACH CONDUIT TO MASONRY CONSTRUCTION BY MEANS OF PIPE STRAPS OR PIPE CLAMPS AND MASONRY ANCHORAGE DEVICES.
   2. STEEL BEAMS: ATTACH CONDUIT TO STEEL BEAMS BY MEANS OF "C" BEAM CLAMPS AND HANGERS.

B. A BRACKET AND CHANNEL TYPE SUPPORT OF PVC COATED GALVANIZED STEEL CONSTRUCTION SHALL BE PROVIDED WHEREVER REQUIRED FOR THE SUPPORT OF STARTERS, SWITCHES, PANELS AND MISCELLANEOUS EQUIPMENT. SUCH SUPPORTS SHALL BE RIGIDLY BOLTED TOGETHER AND BRACED TO MAKE A SUBSTANTIAL SUPPORTING FRAMEWORK. WHERE POSSIBLE, CONTROL EQUIPMENT SHALL BE GROUPED TOGETHER AND MOUNTED ON A SINGLE FRAMEWORK. WHEREVER THIS OCCURS, A PRO VISION SHALL BE MADE FOR READY ACCESS TO THE WIRING FOR CONNECTIONS TO THE EQUIPMENT BY MEANS OF BOXES WITH SCREW COVERS.

C. CONTRACTOR IS RESPONSIBLE FOR THE DESIGN OF SUPPORTING STRUCTURES AND SHALL SUBMIT DESIGN DETAILS TO THE ENGINEER FOR ACCEPTANCE BEFORE PROCEEDING WITH THE FABRICATION.

D. PVC COATED GALVANIZED STEEL SUPPORT SYSTEMS SHALL BE UTILIZED IN ALL EXTERIOR AREAS.

E. THE CONTRACTOR SHALL BE RESPONSIBLE FOR THE FURNISHING AND INSTALLATION OF ALL CONDUIT SLEEVES, ANCHOR BOLTS, MASONRY INSERTS, AND SIMILAR DEVICES REQUIRED FOR INSTALLATION OF EQUIPMENT FURNISHED UNDER THIS CONTRACT.

F. IF A TIME DELAY FOR THE ARRIVAL OF ANY SPECIAL INSERTS, OR EQUIPMENT DRAWINGS, ETC., OCCURS, THE CONTRACTOR MAY, IF PERMITTED BY THE ENGINEER, MAKE ARRANGEMENTS FOR PROVIDING APPROVED RECESSES AND OPENINGS IN THE CONCRETE OR MASONRY AND UPON SUBSEQUENT INSTALLATION THE CONTRACTOR SHALL BE RESPONSIBLE FOR FILLING IN SUCH RECESSES AND OPENINGS. ANY ADDITIONAL COSTS THAT MAY BE INCURRED BY THIS PROCEDURE SHALL BE BORNE BY THE CONTRACTOR.

G. WHERE THE WEIGHT OF EQUIPMENT EXCEEDS 50 POUNDS AND IS SUPPORTED FROM WALLS, CEILINGS, COLUMNS AND/OR BEAMS, SUCH SUPPORTING STEEL SIZES, METHODS AND LOCATIONS SHALL BE APPROVED IN WRITING BY A PROFESSIONAL ENGINEER REGISTERED IN THE STATE OF OHIO.

DESIGN AGENCY
HATCH MOTT MacDONALD
18013 CLEVELAND PKWY.
SUITE 200
CLEVELAND, OH 44135

DESIGNED DGC | DRAWN CM | CHECKED LL | REVIEWED RF | REVISED DGC | DATE 08/11/14 | STRUCTURE FILE NUMBER 3106578

ELEC. NOTES-HANGERS AND SUPPORTS IDENTIFICATION-SHT. 1 OF 4

HAM-71-01.34
PID No. 87268

BRIDGE NO. HAM-71-0134
I-71 LYTLE TUNNEL UNDER LYTLE PARK

c:\pw_working\hmm\externo\tyn61470\dms727703\071_0134CE5402.dgn 10/24/2014 10:33:14 AM TYN61470

3.2 UNDERGROUND CONDUIT FOR SERVICE FEEDERS

A. UNDERGROUND CONDUIT FOR SERVICE FEEDERS TO SERVICE EQUIPMENT INTO BUILDING SHALL BE HOT-DIP RIGID GALVANIZED STEEL.

B. THE ENDS OF THE CONDUIT SHALL BE PROTECTED BY THREADED METAL CAPS OR BUSHINGS; THE THREADS SHALL BE COATED WITH GRAPHITE GREASE OR OTHER SUITABLE COATING.

C. CONDUIT SHALL BE CLEANED AND PLUGGED UNTIL CONDUCTORS ARE INSTALLED.

3.3 EARTHWORK

A. EXCAVATION FOR UNDERGROUND STRUCTURES SHALL BE TO DEPTHS INDICATED. IF HARD MATERIAL IS ENCOUNTERED, THE PROVISIONS OF THE CONTRACT RESPECTING AN ADJUSTMENT FOR CHANGED CONDITIONS SHALL APPLY, SUBJECT TO THE REQUIREMENTS OF NOTIFICATION THEREUNDER BEING GIVEN. HARD MATERIAL SHALL BE DEFINED AS SOLID ROCK, FIRMLY CEMENTED UNSTRATIFIED MASSES, OR CONGLOMERATE DEPOSITS POSSESSING THE CHARACTERISTICS OF SOLID ROCK NOT ORDINARILY REMOVED WITHOUT SYSTEMATIC DRILLING AND BLASTING, AND ANY BOULDER, MASONRY, OR CONCRETE (EXCEPT PAVEMENT) EXCEEDING 1/2 CUBIC YARD IN VOLUME.

B. EXCAVATED MATERIALS NOT REQUIRED OR SUITABLE FOR BACKFILL SHALL BE REMOVED FROM THE PROJECT SITE. PROVIDE SHEETING AND SHORING AS NECESSARY FOR PROTECTION OF WORK AND SAFETY OF PERSONNEL. REMOVE WATER FROM EXCAVATION BY PUMPING OR OTHER APPROVED METHOD.

C. BACKFILLING AROUND STRUCTURES SHALL CONSIST OF EARTH, LOAM, SAND-CLAY, OR SAND AND GRAVEL, FREE FROM LARGE CLODS OF EARTH OR STONES OVER 1 INCH IN SIZE. BACKFILL MATERIALS SHALL BE PLACED SYMMETRICALLY ON ALL SIDES IN LOOSE LAYERS NOT MORE THAN 9 INCHES DEEP. EACH LAYER COMPACTED WITH MECHANICAL OR HAND TAMPERS TO 90 PERCENT COMPACTION, ASTM D698 DENSITY.

D. BACKFILLING TRENCHES: BACKFILL SHALL BE PLACED IN LAYERS NOT MORE THAN 6 INCHES THICK AND EACH LAYER SHALL BE COMPACTED. BACKFILLING SHALL PROGRESS AS RAPIDLY AS THE CONSTRUCTION, TESTING, AND ACCEPTANCE OF THE WORK PERMITS. BACKFILL SHALL BE FREE FROM ROOTS, WOOD SCRAP MATERIAL, AND OTHER VEGETABLE MATTER AND REFUSE. COMPACTION OF BACKFILL SHALL BE TO 90 PERCENT OF ASTM D698 DENSITY. THE FIRST LAYER SHALL BE EARTH OR SAND, FREE FROM PARTICLES THAT WOULD BE RETAINED ON A 1/4-INCH SIEVE AND EXTENDING NOT LESS THAN 3-INCHES ABOVE THE TOP OF THE CABLES. THE SUCCEEDING LAYERS SHALL BE EXCAVATED MATERIAL HAVING STONES NO LARGER THAN WOULD PASS THROUGH A 4-INCH RING. THE BACKFILL SHALL BE LEVEL WITH THE ADJACENT SURFACE EXCEPT THAT IN SODDED AREAS A SPACE EQUAL TO THE THICKNESS OF THE SOD SHALL BE LEFT

3.4 CONDUIT INSTALLATION

A. CONDUIT EMBEDDED IN CONCRETE SHALL BE HOT DIP RIGID GALVANIZED STEEL.

B. EXPOSED CONDUIT AND FITTINGS SHALL BE HOT DIP RIGID GALVANIZED STEEL WITH 40 MIL PVC COATING, COLOR AS SELECTED BY THE ENGINEER.

PART 4 - PAYMENT

METHOD OF PAYMENT AND ITEMS

A. PAYMENT FOR HANGERS AND SUPPORTS SHALL BE INCIDENTAL TO THE ITEMS BEING HUNG OR SUPPORTED.

B. REFER TO THE GENERAL NOTES ON RACEWAYS AND BOXES, CONDUCTORS AND CABLES FOR PAY ITEMS ASSOCIATED WITH THE INSTALLATION OF MATERIALS IN THIS SECTION.

IDENTIFICATION FOR ELECTRICAL SYSTEMS

PART 1 - GENERAL

1.1 SUMMARY

A. THIS SECTION INCLUDES THE FOLLOWING:
1. IDENTIFICATION FOR RACEWAY AND CABLES.
2. IDENTIFICATION FOR CONDUCTORS, COMMUNICATION AND CONTROL CABLE.
3. UNDERGROUND-LINE WARNING TAPE.
4. WARNING LABELS AND SIGNS.
5. INSTRUCTION SIGNS.
6. EQUIPMENT IDENTIFICATION LABELS.
7. PROVIDE OSHA, IEEE STANDARD 1584 AND NFPA-70E COMPLIANT ARC FLASH AND SHOCK HAZARD SIGNAGE THAT INDICATES EQUIPMENT VOLTAGE, ALL APPROACH BOUNDARIES, INCIDENT ENERGY LEVELS, FAULT CURRENT LEVELS AVAILABLE AND PPE REQUIRED FOR ALL ELECTRICAL PANELBOARDS, SAFETY SWITCHES AND TRANSFORMERS.
8. MISCELLANEOUS IDENTIFICATION PRODUCTS.

1.2 SUBMITTALS

A. PRODUCT DATA: FOR EACH ELECTRICAL IDENTIFICATION PRODUCT INDICATED.

B. IDENTIFICATION SCHEDULE: AN INDEX OF NOMENCLATURE OF ELECTRICAL EQUIPMENT AND SYSTEM COMPONENTS USED IN IDENTIFICATION SIGNS AND LABELS.

C. SAMPLES: FOR EACH TYPE OF LABEL AND SIGN TO ILLUSTRATE SIZE, COLORS, LETTERING STYLE, MOUNTING PROVISIONS, AND GRAPHIC FEATURES OF IDENTIFICATION PRODUCTS.

1.3 QUALITY ASSURANCE

A. COMPLY WITH ANSI A13.1, ANSI C2, AND ANSI Z635.4.

B. COMPLY WITH NFPA 70.

C. COMPLY WITH 29 CFR 1910.145.

1.4 COORDINATION

A. COORDINATE IDENTIFICATION NAMES, ABBREVIATIONS, COLORS, AND OTHER FEATURES WITH REQUIREMENTS IN THE CONTRACT DOCUMENTS, SHOP DRAWINGS, ODOT REQUIREMENTS, MANUFACTURER'S WIRING DIAGRAMS, AND THE OPERATION AND MAINTENANCE MANUALS, AND WITH THOSE REQUIRED BY CODES, STANDARDS, AND 29 CFR 1910.145. USE CONSISTENT DESIGNATIONS THROUGHOUT PROJECT.

B. COORDINATE INSTALLATION OF IDENTIFYING DEVICES WITH COMPLETION OF COVERING AND PAINTING OF SURFACES WHERE DEVICES ARE TO BE APPLIED.

C. COORDINATE INSTALLATION OF IDENTIFYING DEVICES WITH LOCATION OF ACCESS PANELS AND DOORS.

D. INSTALL IDENTIFYING DEVICES BEFORE INSTALLING ACOUSTICAL CEILINGS AND SIMILAR CONCEALMENT.

E. INSTALL ALL SIGNS AND LABELS HORIZONTAL (LEVEL) AND CONSISTENT FOR SIMILAR EQUIPMENT AND PANELS.

PART 2 – PRODUCTS

2.1 RACEWAY AND METAL-CLAD CABLE IDENTIFICATION MATERIALS

A. COMPLY WITH ANSI A13.1 FOR MINIMUM SIZE OF LETTERS FOR LEGEND AND FOR MINIMUM LENGTH OF COLOR FIELD FOR EACH RACEWAY AND CABLE SIZE.

B. SELF-ADHESIVE VINYL LABELS: PREPRINTED, FLEXIBLE LABEL LAMINATED WITH A CLEAR, WEATHER AND CHEMICAL-RESISTANT COATING AND MATCHING WRAPAROUND ADHESIVE TAPE FOR SECURING ENDS OF LEGEND LABEL.

C. SNAP-AROUND LABELS: SLIT, PRETENSIONED, FLEXIBLE, PREPRINTED, COLOR-CODED ACRYLIC SLEEVES, WITH DIAMETER SIZED TO SUIT DIAMETER OF RACEWAY OR CABLE IT IDENTIFIES AND TO STAY IN PLACE BY GRIPPING ACTION.

D. SELF-ADHESIVE VINYL TAPE: COLORED, HEAVY DUTY, WATERPROOF, FADE RESISTANT; 2 INCHES WIDE; COMPOUNDED FOR OUTDOOR USE.

2.2 CONDUCTOR AND COMMUNICATION AND CONTROL CABLE IDENTIFICATION MATERIALS

A. ALUMINUM WRAPAROUND MARKER LABELS: CUT FROM 0.014-INCH-THICK ALUMINUM SHEET, WITH STAMPED, EMBOSSED, OR SCRIBED LEGEND, AND FITTED WITH TABS AND MATCHING SLOTS FOR PERMANENTLY SECURING AROUND WIRE OR CABLE JACKET OR AROUND GROUPS OF CONDUCTORS.

2.3 MISCELLANEOUS IDENTIFICATION PRODUCTS

A. CABLE TIES: FUNGUS-INERT, SELF-EXTINGUISHING, 1-PIECE, SELF-LOCKING, TYPE 6/6 NYLON CABLE TIES.
1. MINIMUM WIDTH: 3/16 INCH.
2. TENSILE STRENGTH: 50 LB, MINIMUM.
3. TEMPERATURE RANGE: MINUS 40 TO PLUS 185 DEG F.
4. COLOR: BLACK, EXCEPT WHERE USED FOR COLOR-CODING.

B. PAINT: PAINT MATERIALS AND APPLICATION REQUIREMENTS ARE SPECIFIED IN DIVISION 9 PAINTING SECTIONS.

PART 3 - EXECUTION

3.1 PREPARATION

A. ALL SURFACES TO RECEIVE LABELS SHALL BE CAREFULLY PREPARED IN ACCORDANCE WITH THE MANUFACTURER'S INSTRUCTIONS.

3.2 APPLICATION

A. ACCESSIBLE RACEWAYS AND METAL-CLAD CABLES, 600 V OR LESS, FOR SERVICE, FEEDER AND BRANCH CIRCUITS MORE THAN 30 A: IDENTIFY WITH SNAP-AROUND LABEL.
1. SNAP-AROUND LABELS: SLIT, PRETENSIONED, FLEXIBLE, PREPRINTED, COLOR-CODED ACRYLIC SLEEVES, WITH DIAMETER SIZED TO SUIT DIAMETER OF RACEWAY OR CABLE IT IDENTIFIES AND TO STAY IN PLACE BY GRIPPING ACTION.

B. ACCESSIBLE RACEWAYS AND CABLES OF AUXILIARY SYSTEMS: IDENTIFY THE FOLLOWING SYSTEMS WITH COLOR-CODED, SNAP-AROUND, COLOR-CODING BANDS:
1. SNAP-AROUND LABELS: SLIT, PRETENSIONED, FLEXIBLE, PREPRINTED, COLOR-CODED ACRYLIC SLEEVES, WITH DIAMETER SIZED TO SUIT DIAMETER OF RACEWAY OR CABLE IT IDENTIFIES AND TO STAY IN PLACE BY GRIPPING ACTION.
2. FIRE ALARM SYSTEM: RED.
3. FIRE-SUPPRESSION SUPERVISORY AND CONTROL SYSTEM: RED AND YELLOW.
4. COMBINED FIRE ALARM AND SECURITY SYSTEM: RED AND BLUE.
5. SECURITY SYSTEM: BLUE AND YELLOW.
6. MECHANICAL AND ELECTRICAL SUPERVISORY SYSTEM: GREEN AND BLUE.

c:\pwworking\hmm\external\tyn61470\dms727●.X\071_0134CES403.dgn 10/24/2014 10:33:23 AM TYN61470

DESIGN AGENCY
HATCH MOTT MacDONALD
18013 CLEVELAND PKWY.
SUITE 200
CLEVELAND, OH 44135

DESIGNED DGC | DRAWN CM | REVIEWED RF | DATE 08/11/14
CHECKED LL | REVISED DGC | STRUCTURE FILE NUMBER 3106578

ELEC. NOTES-HANGERS AND SUPPORTS IDENTIFICATION-SHT. 2 OF 4

BRIDGE NO. HAM-71-0134
I-71 LYTLE TUNNEL UNDER LYTLE PARK

HAM-71-01.34
PID No. 87268

7. TELECOMMUNICATION SYSTEM: GREEN AND YELLOW.
8. CONTROL WIRING: GREEN AND RED.

C. POWER-CIRCUIT CONDUCTOR IDENTIFICATION: FOR PRIMARY AND SECONDARY CONDUCTORS NO. 1/0 AWG AND LARGER IN VAULTS, PULL AND JUNCTION BOXES, MANHOLES, AND HANDHOLES USE METAL TAGS. IDENTIFY SOURCE AND CIRCUIT NUMBER OF EACH SET OF CONDUCTORS. FOR SINGLE CONDUCTOR CABLES, IDENTIFY PHASE IN ADDITION TO THE ABOVE.
1. METAL TAGS: BRASS OR ALUMINUM, 2 BY 2 BY 0.05 INCH, WITH STAMPED LEGEND, PUNCHED FOR USE WITH SELF-LOCKING NYLON TIE FASTENER.

D. BRANCH-CIRCUIT CONDUCTOR IDENTIFICATION: WHERE THERE ARE CONDUCTORS FOR MORE THAN THREE BRANCH CIRCUITS IN SAME JUNCTION OR PULL BOX, USE COLOR-CODING CONDUCTOR TAPE. IDENTIFY EACH UNGROUNDED CONDUCTOR ACCORDING TO SOURCE AND CIRCUIT NUMBER.
1. COLOR-CODING CONDUCTOR TAPE: COLORED, SELF-ADHESIVE VINYL TAPE NOT LESS THAN 3 MILS THICK BY 1 TO 2 INCHES WIDE.

E. CONDUCTORS TO BE EXTENDED IN THE FUTURE: ATTACH WRITE-ON TAGS TO CONDUCTORS AND LIST SOURCE AND CIRCUIT NUMBER.
1. WRITE-ON TAGS: POLYESTER TAG, 0.015 INCH THICK, WITH CORROSION-RESISTANT GROMMET AND POLYESTER OR NYLON TIE FOR ATTACHMENT TO CONDUCTOR OR CABLE.
2. MARKER FOR TAGS: PERMANENT, WATERPROOF, BLACK INK MARKER RECOMMENDED BY TAG MANUFACTURER.

F. AUXILIARY ELECTRICAL SYSTEMS CONDUCTOR IDENTIFICATION: IDENTIFY FIELD-INSTALLED ALARM, CONTROL, SIGNAL, SOUND, INTERCOMMUNICATIONS, VOICE, AND DATA CONNECTIONS.
1. IDENTIFY CONDUCTORS, CABLES, AND TERMINALS IN ENCLOSURES AND AT JUNCTIONS, TERMINALS, AND PULL POINTS. IDENTIFY BY SYSTEM AND CIRCUIT DESIGNATION.
2. USE SYSTEM OF MARKER TAPE DESIGNATIONS THAT IS UNIFORM AND CONSISTENT WITH SYSTEM USED BY MANUFACTURER FOR FACTORY-INSTALLED CONNECTIONS.
3. COORDINATE IDENTIFICATION WITH PROJECT DRAWINGS, MANUFACTURER'S WIRING DIAGRAMS, AND OPERATION AND MAINTENANCE MANUAL.
4. MARKER TAPES: VINYL OR VINYL-CLOTH, SELF-ADHESIVE WRAPAROUND TYPE, WITH CIRCUIT IDENTIFICATION LEGEND MACHINE PRINTED BY THERMAL TRANSFER OR EQUIVALENT PROCESS.

G. LOCATIONS OF UNDERGROUND LINES: IDENTIFY WITH UNDERGROUND-LINE WARNING TAPE FOR POWER, LIGHTING, COMMUNICATION, AND CONTROL WIRING AND OPTICAL FIBER CABLE. INSTALL UNDERGROUND-LINE WARNING TAPE FOR BOTH DIRECT-BURIED CABLES AND CABLES IN RACEWAY. DURING BACKFILLING OF TRENCHES INSTALL CONTINUOUS UNDERGROUND-LINE WARNING TAPE DIRECTLY ABOVE LINE AT 12 INCHES ABOVE DUCT. USE MULTIPLE TAPES WHERE WIDTH OF MULTIPLE LINES INSTALLED IN A COMMON TRENCH OR CONCRETE ENVELOPE EXCEEDS 16 INCHES OVERALL.
1. DESCRIPTION:
   a. PERMANENT, BRIGHT-COLORED, CONTINUOUS-PRINTED, POLYETHYLENE TAPE.
   b. NOT LESS THAN 6 INCHES WIDE BY 4 MILS THICK.
   c. COMPOUNDED FOR PERMANENT DIRECT-BURIAL SERVICE.
   d. EMBEDDED CONTINUOUS METALLIC STRIP OR CORE.
   e. PRINTED LEGEND SHALL INDICATE TYPE OF UNDERGROUND LINE.
   f. WARNING LABELS FOR INDOOR CABINETS, BOXES, AND ENCLOSURES FOR POWER AND LIGHTING: COMPLY WITH 29 CFR 1910.145 AND APPLY SELF-ADHESIVE WARNING LABELS. IDENTIFY SYSTEM VOLTAGE WITH BLACK LETTERS ON AN ORANGE BACKGROUND. APPLY TO EXTERIOR OF DOOR, COVER, OR OTHER ACCESS.

H. EQUIPMENT WITH MULTIPLE POWER OR CONTROL SOURCES: APPLY TO DOOR OR COVER OF EQUIPMENT INCLUDING, BUT NOT LIMITED TO, THE FOLLOWING:

I. POWER TRANSFER SWITCHES.

J. CONTROLS WITH EXTERNAL CONTROL POWER CONNECTIONS.EQUIPMENT REQUIRING WORKSPACE CLEARANCE ACCORDING TO NFPA 70: UNLESS OTHERWISE INDICATED, APPLY TO DOOR OR COVER OF EQUIPMENT BUT NOT ON FLUSH PANELBOARDS AND SIMILAR EQUIPMENT IN FINISHED SPACES.

K. COMPLY WITH NFPA 70 AND 29 CFR 1910.145.

L. SELF-ADHESIVE WARNING LABELS: FACTORY PRINTED, MULTICOLOR, PRESSURE-SENSITIVE ADHESIVE LABELS, CONFIGURED FOR DISPLAY ON FRONT COVER, DOOR, OR OTHER ACCESS TO EQUIPMENT, UNLESS OTHERWISE INDICATED.

M. BAKED-ENAMEL WARNING SIGNS: PREPRINTED ALUMINUM SIGNS, PUNCHED OR DRILLED FOR FASTENERS, WITH COLORS, LEGEND, AND SIZE REQUIRED FOR APPLICATION. 1/4-INCH GROMMETS IN CORNERS FOR MOUNTING. NOMINAL SIZE, 7 BY 10 INCHES.

N. METAL-BACKED, BUTYRATE WARNING SIGNS: WEATHER-RESISTANT, NONFADING, PREPRINTED, CELLULOSE-ACETATE BUTYRATE SIGNS WITH 0.0396-INCH GALVANIZED-STEEL BACKING; AND WITH COLORS, LEGEND, AND SIZE REQUIRED FOR APPLICATION. 1/4-INCH GROMMETS IN CORNERS FOR MOUNTING. NOMINAL SIZE, 10 BY 14 INCHES.

O. WARNING LABEL AND SIGN SHALL INCLUDE, BUT ARE NOT LIMITED TO, THE FOLLOWING LEGENDS:

P. MULTIPLE POWER SOURCE WARNING: "DANGER - ELECTRICAL SHOCK HAZARD - EQUIPMENT HAS MULTIPLE POWER SOURCES."

Q. "DANGER-HIGH-VOLTAGE" SIGNS SHALL BE SECURELY MOUNTED ON THE ENTRY DOORS OF ALL ELECTRICAL ROOMS AND ENCLOSURES.

R. WORKSPACE CLEARANCE WARNING: "WARNING - OSHA REGULATION - AREA IN FRONT OF ELECTRICAL EQUIPMENT MUST BE KEPT CLEAR FOR 36 INCHES."

S. INSTRUCTION SIGNS:
1. OPERATING INSTRUCTIONS: INSTALL INSTRUCTION SIGNS TO FACILITATE PROPER OPERATION AND MAINTENANCE OF ELECTRICAL SYSTEMS AND ITEMS TO WHICH THEY CONNECT. INSTALL INSTRUCTION SIGNS WITH ENGINEER/OWNER APPROVED INSTRUCTIONS WHERE NEEDED FOR SYSTEM OR EQUIPMENT OPERATION. INSTRUCTIONS ARE NEEDED FOR ALL EQUIPMENT UNLESS OTHERWISE NOTED.
2. SIGNS SHALL BE ENGRAVED, LAMINATED ACRYLIC OR MELAMINE PLASTIC, MINIMUM 1/16 INCH THICK FOR SIGNS UP TO 20 SQ. IN. AND 1/8 INCH THICK FOR LARGER SIZES.
3. THE ENGRAVED LEGEND SHALL BE ½" WHITE LETTERS ON BROWN FACE, AND PUNCHED OR DRILLED FOR MECHANICAL FASTENERS.
4. THE SIGNS SHALL BE INSTALLED WITH STAINLESS HARDWARE.
5. EMERGENCY OPERATING INSTRUCTIONS: INSTALL EMERGENCY OPERATING INSTRUCTION SIGNS AT EQUIPMENT USED FOR POWER TRANSFER, SAFETY SHUTDOWN, OR ANY OTHER LOCATIONS REQUIRING OPERATION IN AN EMERGENCY.
   a. SIGNS SHALL BE ENGRAVED, LAMINATED ACRYLIC OR MELAMINE PLASTIC, MINIMUM 1/16 INCH THICK FOR SIGNS UP TO 20 SQ. IN. AND 1/8 INCH THICK FOR LARGER SIZES.
   b. THE ENGRAVED LEGEND SHALL BE ½" WHITE LETTERS ON RED FACE, AND PUNCHED OR DRILLED FOR MECHANICAL FASTENERS.
   c. THE SIGNS SHALL BE INSTALLED WITH STAINLESS HARDWARE.

T. EQUIPMENT IDENTIFICATION LABELS: ON EACH UNIT OF EQUIPMENT, INSTALL UNIQUE DESIGNATION LABEL THAT IS CONSISTENT WITH WIRING DIAGRAMS, SCHEDULES, AND OPERATION AND MAINTENANCE MANUAL. APPLY LABELS TO DISCONNECT SWITCHES AND PROTECTION EQUIPMENT, CENTRAL OR MASTER UNITS, CONTROL PANELS, CONTROL STATIONS, TERMINAL CABINETS, AND RACKS OF EACH SYSTEM. SYSTEMS INCLUDE POWER, LIGHTING, CONTROL, COMMUNICATION, SIGNAL, MONITORING, AND ALARM SYSTEMS UNLESS EQUIPMENT IS PROVIDED WITH ITS OWN IDENTIFICATION.

LABELING INSTRUCTIONS:

A. INDOOR AND OUTDOOR EQUIPMENT: USE ENGRAVED, LAMINATED ACRYLIC OR MELAMINE LABELS, PUNCHED OR DRILLED FOR SCREW MOUNTING. IDENTIFICATION LABELS SHALL HAVE WHITE LETTERS ON A DARK-GRAY BACKGROUND. UNLESS OTHERWISE INDICATED, PROVIDE A SINGLE LINE OF TEXT WITH 1/2-INCH- HIGH LETTERS ON 1-1/2-INCH- HIGH LABEL; WHERE 2 LINES OF TEXT ARE REQUIRED, USE LABELS 2 INCHES HIGH. MOUNT LABELS WITH STAINLESS HARDWARE. (LABELS FOR FIELD MOUNTED EQUIPMENT SHALL INCLUDE THE NAME OF THE EQUIPMENT, AND THE LOCATION FROM WHICH POWER IS FED).

B. ELEVATED COMPONENTS: INCREASE THE SIZE OF THE LABELS AND LETTERS TO THOSE APPROPRIATE FOR VIEWING FROM THE FLOOR.

C. IDENTIFICATION LABELING OF SOME ITEMS LISTED BELOW MAY BE REQUIRED BY INDIVIDUAL SECTIONS OR BY NFPA 70.
   a. PANELBOARDS, ELECTRICAL CABINETS, AND ENCLOSURES.
   b. ACCESS DOORS AND PANELS FOR CONCEALED ELECTRICAL ITEMS.
   c. ELECTRICAL SWITCHGEAR AND SWITCHBOARDS.
   d. TRANSFORMERS.
   e. ELECTRICAL SUBSTATIONS.
   f. EMERGENCY SYSTEM BOXES AND ENCLOSURES.
   g. MOTOR-CONTROL CENTERS.
   h. DISCONNECT SWITCHES.
   i. ENCLOSED CIRCUIT BREAKERS.
   j. MOTOR STARTERS.
   k. PUSH-BUTTON STATIONS.
   l. POWER TRANSFER EQUIPMENT.
   m. CONTACTORS.
   n. BATTERY INVERTER UNITS.
   o. BATTERY RACKS.
   p. POWER-GENERATING UNITS.
   q. VOICE AND DATA CABLE TERMINAL EQUIPMENT.
   r. TELEVISION/AUDIO COMPONENTS, RACKS, AND CONTROLS.
   s. FIRE-ALARM CONTROL PANEL AND ANNUNCIATORS.
   t. SECURITY AND INTRUSION-DETECTION CONTROL STATIONS, CONTROL PANELS, TERMINAL CABINETS, AND RACKS.
   u. MONITORING AND CONTROL EQUIPMENT.
   v. UNINTERRUPTIBLE POWER SUPPLY EQUIPMENT.
   w. TERMINALS, RACKS, AND PATCH PANELS FOR VOICE AND DATA COMMUNICATION AND FOR SIGNAL AND CONTROL FUNCTIONS.
   x. CONTROL SYSTEMS
   y. FIELD MOUNTED CONTROL DEVICES
   z. FIELD MOUNTED INSTRUMENTS

c:\pwworking\hmm\externa\tyn61470\dms7270●S\071_0134CE5404.dgn 10/24/2014 10:33:36 AM TYN61470

DESIGN AGENCY
HATCH MOTT MacDONALD
18013 CLEVELAND PKWY.
SUITE 200
CLEVELAND, OH 44135

DESIGNED	DRAWN	REVIEWED	DATE
DGC	CM	RF	08/11/14
CHECKED	REVISED	STRUCTURE FILE NUMBER	
LL	DGC	3106578	

ELEC. NOTES-HANGERS AND SUPPORTS IDENTIFICATION-SHT. 3 OF 4

BRIDGE NO. HAM-71-0134
I-71 LYTLE TUNNEL UNDER LYTLE PARK

HAM-71-01.34
PID No. 87268

3.2 INSTALLATION PRACTICES

A. VERIFY IDENTITY OF EACH ITEM BEFORE INSTALLING IDENTIFICATION PRODUCTS.

B. LOCATION: INSTALL IDENTIFICATION MATERIALS AND DEVICES AT LOCATIONS FOR MOST CONVENIENT VIEWING WITHOUT INTERFERENCE WITH OPERATION AND MAINTENANCE OF EQUIPMENT.

C. ATTACH NONADHESIVE SIGNS AND PLASTIC LABELS WITH SCREWS AND AUXILIARY HARDWARE APPROPRIATE TO THE LOCATION AND SUBSTRATE.

D. COLOR-CODING FOR PHASE AND VOLTAGE LEVEL IDENTIFICATION, 600 V AND LESS: USE THE COLORS LISTED BELOW FOR UNGROUNDED SERVICE, FEEDER, AND BRANCH-CIRCUIT CONDUCTORS.

1. COLOR SHALL BE FACTORY APPLIED OR, FOR SIZES LARGER THAN NO. 10 AWG IF AUTHORITIES HAVING JURISDICTION PERMIT, FIELD APPLIED.
2. COLORS FOR 208/120V CIRCUITS:
    a. PHASE A: BLACK.
    b. PHASE B: RED.
    c. PHASE C: BLUE.
3. COLORS FOR 480/277V CIRCUITS:
    a. PHASE A: BROWN.
    b. PHASE B: ORANGE.
    c. PHASE C: YELLOW.
4. FIELD-APPLIED, COLOR-CODING CONDUCTOR TAPE: APPLY IN HALF-LAPPED TURNS FOR A MINIMUM DISTANCE OF 6 INCHES FROM TERMINAL POINTS AND IN BOXES WHERE SPLICES OR TAPS ARE MADE. APPLY LAST TWO TURNS OF TAPE WITH NO TENSION TO PREVENT POSSIBLE UNWINDING. LOCATE BANDS TO AVOID OBSCURING FACTORY CABLE MARKINGS.

E. ALUMINUM WRAPAROUND MARKER LABELS AND METAL TAGS: SECURE TIGHT TO SURFACE OF CONDUCTOR OR CABLE AT A LOCATION WITH HIGH VISIBILITY AND ACCESSIBILITY.

F. PAINTED IDENTIFICATION: PREPARE SURFACE AND APPLY PAINT ACCORDING TO DIVISION 9 PAINTING SECTIONS.

PART 3 - EXECUTION

3.1 APPLICATION

A. LABELS:
1. LABELS SHALL BE PAINTED AND STENCILED ON CLEAN DRY SURFACES.
2. ALL CONDUIT SYSTEMS SHALL REQUIRE IDENTIFICATION WHEN EXPOSED OR CONCEALED ABOVE ACCESSIBLE CEILINGS.

B. NAMEPLATES:
1. NAMEPLATES SHALL BE SECURED TO PAINTED SURFACE WITH SUITABLE TORX TAMPERPROOF STAINLESS STEEL SCREWS, LOCKWASHERS AND NUTS.
2. NAMEPLATES SHALL BE SECURED TO UNPAINTED SURFACES WITH EPOXY CEMENT. SURFACE SHALL BE PROPERLY CLEANED BEFORE APPLICATION.

C. DANGER SIGNS SHALL BE SECURED WITH TORX TAMPERPROOF STAINLESS STEEL SCREWS LOCKWASHERS AND NUTS.

PART 4 - PAYMENT

4.1 METHOD OF PAYMENT AND ITEMS

A. PAYMENT FOR ITEMS BEING IDENTIFIED SHALL BE INCIDENTAL TO THE COST OF THE ITEM.

B. REFER TO THE GENERAL NOTES ON LIGHTING, CONTROLS, RACEWAYS AND BOXES, CONDUCTORS AND CABLES, TRANSFORMERS, SWITCHGEARS FOR PAY ITEMS ASSOCIATED WITH THE INSTALLATION OF MATERIALS IN THIS SECTION.

c:\pwworking\hmm\external\ty61470\dms72703\071_0134CE5405.dgn 10/24/2014 10:33:43 AM TYN61470

DESIGN AGENCY
HATCH MOTT MacDONALD
18013 CLEVELAND PKWY.
SUITE 200
CLEVELAND, OH 44135

DESIGNED	DRAWN	REVIEWED	DATE
DGC	CM	RF	08/11/14
CHECKED	REVISED	STRUCTURE FILE NUMBER	
LL	DGC	31065578	

ELEC. NOTES-HANGERS AND SUPPORTS IDENTIFICATION-SHT. 4 OF 4

BRIDGE NO. HAM-71-0134
I-71 LYTLE TUNNEL UNDER LYTLE PARK

HAM-71-01.34
PID No. 87268

ITEM 690 – SPECIAL – MISC.: ELECTRICAL TESTING AND COMMISSIONING

PART 1 - GENERAL

1.01 SECTION INCLUDES

A. THE REQUIREMENTS OF THIS SECTION SHALL BE CONSISTED OF FACTORY TESTING, MANUFACTURER'S START-UP, ELECTRICAL SYSTEM TESTING, INTEGRATED SYSTEM COMMISSIONING, DOCUMENTATION AND TRAINING.

B. REQUIREMENTS FOR THE CONTRACTOR TO PERFORM ACCEPTANCE TESTING OF ELECTRICAL SYSTEM, WIRING, EQUIPMENT, AND GROUNDING.

C. PERFORM THE FOLLOWING TESTS IN ACCORDANCE WITH NETA STANDARDS 2009

1. LV & MV SWITCHGEAR AND SWITCHBOARD ASSEMBLIES
2. TRANSFORMERS, TRY-TYPE, AIR-COOLED, LOW-VOLTAGE, SMALL
3. TRANSFORMERS, DRY-TYPE, AIR-COOLED, LARGE (UTILITY)
4. CABLES, LOW-VOLTAGE, 600-VOLT MAXIMUM
5. CABLES, MEDIUM AND HIGH VOLTAGE
6. METAL-ENCLOSED BUSWAYS
7. CIRCUIT BREAKERS, AIR, LOW-VOLTAGE POWER
8. PROTECTIVE RELAYS, MICROPROCESSOR-BASED
9. INSTRUMENT TRANSFORMERS
10. METERING DEVICES
11. GROUNDING SYSTEMS
12. MOTOR CONTROL, MOTOR STARTERS, LOW-VOLTAGE
13. SURGE ARRESTERS, MEDIUM AND HIGH VOLTAGE
14. EMERGENCY SYSTEMS, UNINTERRUPTIBLE POWER SYSTEMS
15. EMERGENCY SYSTEMS, AUTOMATIC TRANSFER SWITCHES
16. FIBER-OPTIC CABLES
17. SYSTEM FUNCTION TESTS

1.02 CITED STANDARDS

A. NATIONAL ELECTRICAL TESTING ASSOCIATION (NETA):
1. ATS-2009 - ACCEPTANCE TESTING SPECIFICATIONS FOR ELECTRIC POWER DISTRIBUTION EQUIPMENT AND SYSTEMS.

B. NATIONAL FIRE PROTECTION ASSOCIATION (NFPA):
1. 70, NATIONAL ELECTRICAL CODE (NEC)
2. 70E STANDARD FOR ELECTRICAL SAFETY IN THE WORKPLACE 2012

C. OCCUPATIONAL SAFETY & HEALTH ADMINISTRATION (OSHA)
1. 29 CFR 1910.7 DEFINITION AND REQUIREMENTS FOR A NATIONALLY RECOGNIZED TESTING LABORATORY.

D. NATIONAL ELECTRICAL MANUFACTURERS ASSOCIATION (NEMA).

1.03 NOTED RESTRICTIONS

A. ELECTRICAL TESTING FIRM SHALL BE NETA CERTIFIED WITH A MINIMUM OF 15 YEARS' EXPERIENCE.

B. INTERRUPTION OF EXISTING ELECTRIC SERVICE: DO NOT INTERRUPT ELECTRIC SERVICE TO FACILITIES OCCUPIED BY OHIO DEPARTMENT OF TRANSPORTATION (ODOT) OR OTHERS UNLESS PERMITTED UNDER THE FOLLOWING CONDITIONS AND THEN ONLY AFTER ARRANGING A PLANNED SHUTDOWN OR PROVIDING TEMPORARY ELECTRIC SERVICE ACCORDING TO REQUIREMENTS INDICATED:
1. NOTIFY ODOT NO FEWER THAN 30 DAYS IN ADVANCE OF PROPOSED INTERRUPTION OF ELECTRIC SERVICE.
2. INDICATE METHOD OF PROVIDING TEMPORARY ELECTRIC SERVICE.
3. DO NOT PROCEED WITH INTERRUPTION OF ELECTRIC SERVICE WITHOUT ODOT'S WRITTEN PERMISSION.
4. COMPLY WITH NFPA 70E.

C. ODOT - OPERATIONS / MAINTENANCE DEPARTMENT
1. THE CONTRACTOR SHALL NOTIFY ODOT NO FEWER THAN 30 DAYS IN ADVANCE OF ALL COMMISSIONING AND SYSTEM INTEGRATION.
2. ODOT SHALL BE INVITED TO WITNESS AND PARTICIPATE IN THE ENTIRE COMMISSIONING AND SYSTEMS INTEGRATION PROCESS FROM THE PRE-DESIGN PLANNING PHASE THROUGH CONSTRUCTION, CERTIFICATION AND FINALLY THE TURNOVER PROCESS, WHEN IT ACCEPTS THE PROJECT AND TAKES OWNERSHIP OF THE ALL SYSTEMS, SUBSYSTEMS, EQUIPMENT AND COMPONENTS INSTALLED DURING THE PROJECT.

1.04 QUALITY CONTROL

A. TESTING FIRM QUALIFICATIONS:
1. OBTAIN THE SERVICES OF A NETA QUALIFIED AND AN INDEPENDENT TESTING SERVICE FIRM OR THE EQUIPMENT MANUFACTURER THAT MEETS THE FEDERAL OSHA CRITERIA FOR ACCREDITATION OF TESTING LABORATORIES, TITLE 29, PART 1910.7.
2. TESTING SERVICE OR TESTING PERSONNEL MAY BE ACCEPTED OR REJECTED BASED UPON, BUT NOT LIMITED TO, THE TESTING EQUIPMENT INTENDED TO BE USED, THE QUALIFICATIONS OF THE FIRM, AND PERSONNEL.

B. TEST EQUIPMENT TRACEABILITY:
1. TESTING FIRM SHALL HAVE A CALIBRATION PROGRAM WHICH MAINTAINS APPLICABLE TEST INSTRUMENTATION AND EQUIPMENT WITHIN RATED ACCURACY AND WITHIN THEIR CALIBRATION TIME LIMITS.
2. EQUIPMENT AND INSTRUMENTS USED TO EVALUATE ELECTRICAL PERFORMANCE SHALL BE CALIBRATED TO A SECONDARY STANDARD TRACEABLE TO THE NATIONAL INSTITUTE OF STANDARDS AND TECHNOLOGY.
3. TEST EQUIPMENT OPERATING INSTRUCTIONS AND PROCEDURES SHALL BE WITH THE TEST EQUIPMENT.
4. A COPY OF TEST EQUIPMENT CALIBRATION CERTIFICATE MUST BE WITH EQUIPMENT AT ALL TIMES TO BE AVAILABLE FOR INSPECTION.

1.05 SUBMITTALS

A. THE FOLLOWING SUBMITTALS SHALL BE MADE A MINIMUM OF THIRTY (30) CALENDAR DAYS PRIOR TO THE START OF RELEVANT WORK:
1. PRE-TEST SUBMITTALS
a. TESTING SERVICE QUALIFICATIONS WITH COMPANY RESUME.
b. LIST OF REFERENCES FOR TESTING COMPANY.
c. LIST OF TESTING WORK COMPLETED OF SIMILAR MAGNITUDE.
d. NUMBER OF PERMANENT EMPLOYEES WITH THEIR EMPLOYMENT DURATION.
e. LIST OF TEST EQUIPMENT OWNED OR LEASED WITH THEIR VALID CALIBRATION CERTIFICATES. SUBMIT A LIST OF THE PROPOSED PERSONNEL WITH THEIR RESUMES WHO SHALL PERFORM THE TESTING. TECHNICIAN SHALL BE NETA CERTIFIED WITH AT LEAST 10 YEARS EXPERIENCE.
f. SUBMIT A SAMPLE OF TEST RECORD FORMS TO BE USED FOR THE TESTING FOR ENGINEER'S APPROVAL. IF NOT ACCEPTED BY THE ENGINEER, THE TESTING FIRM SHALL RESUBMIT THE FORMS, WITH THE CHANGES, FOR THE ENGINEER'S APPROVAL.
g. THE TEST RECORD SHEET SHALL HAVE ALL TECHNICAL CHARACTERISTICS OF THE UNIT AND ALL IDENTIFICATION DATA INCLUDING EQUIPMENT/FEEDER NAME, LOCATION, NAMEPLATE INFORMATION, TEST DATE AND NAME OF TESTER. "AS FOUND" AND "AS LEFT" SETTINGS SHALL BE DOCUMENTED. ALL DISCREPANCIES ENCOUNTERED SHALL BE ITEMIZED AND CLEARLY DESCRIBED ON THE TEST SHEET. ALL TABULATIONS OF THE TEST DATA SHALL BE IN THE MICROSOFT EXCEL FORMAT AND SHALL BE SUPPLIED ON A DISK AS WELL AS TWO BOUND HARD COPIES.
h. SUBMIT TEST PROCEDURES, WITH SKETCHES TO ILLUSTRATE HOW THE TEST EQUIPMENT WILL BE CONNECTED TO THE EQUIPMENT TO BE TESTED, FOR ENGINEER'S APPROVAL.

2. ONCE ALL OF THE ABOVE ITEMS HAVE BEEN SATISFIED, THE TESTING FIRM SHALL SUBMIT EQUIPMENT TESTING PLAN AND SCHEDULE NO LATER THAN 30 DAYS PRIOR TO SCHEDULED DATE OF TESTING. THIS PLAN SHALL INDICATE WHEN THE TESTS SHALL BE PERFORMED.

3. POST-TEST SUBMITTALS: AFTER THE TESTING HAS BEEN COMPLETED, SUBMIT THREE (3) COPIES OF THE TEST REPORT WITHIN 15 CALENDAR DAYS OF THE COMPLETED TESTING TO THE ENGINEER FOR REVIEW. ALL TEST RESULTS AND VALUES SHALL BE RECORDED ON THE FORMS ACCEPTED BY THE ENGINEER.
a. A REPORT FOR EACH ALL EQUIPMENT/CABLES/SYSTEMS SHALL BE PROVIDED INDICATING NUMBER OF UNITS TESTED, NUMBER OF UNITS NOT AVAILABLE TO BE TESTED, DISCREPANCIES FOUND AND CROSS REFERENCES FOR MORE INFORMATION TO THE SPECIFIC TEST SHEET. A SUMMARY OF ALL REPORTS ALONG WITH THE TESTING FIRM'S RECOMMENDATION SHALL BE SUBMITTED. SUMMARY TEST REPORT CONSISTS OF THE FOLLOWING:
1) SUMMARY OF TESTING FOR THE PROJECT.
2) DESCRIPTION OF THE EQUIPMENT.
3) DESCRIPTION OF THE TEST AND TEST PROCEDURES.
4) TEST RESULT DATA.
5) CONCLUSIONS AND RECOMMENDATIONS.
6) COMPLETED TEST RECORD FORMS, INCLUDING WITNESS'S SIGNATURES.
7) LIST OF TEST EQUIPMENT AND CALIBRATION DOCUMENTS.
8) DATE AND TIME.
9) INCLUDE THE FOLLOWING DATA TABULATED, AS APPLICABLE FOR EACH PIECE OF EQUIPMENT:
a) CIRCUIT NUMBER.
b) EQUIPMENT OR MOTOR NAME OF CIRCUIT AND TAG NUMBER (WHERE APPLICABLE).
c) NAMEPLATE FULL-LOAD-AMPERE RATING.
d) MOTOR SERVICE FACTOR.
e) MOTOR AMBIENT TEMPERATURE RATING.
f) OVERLOAD RELAY RATING.
g) MEASURED FULL LOAD CURRENT.
h) MEASURED DISCHARGE PRESSURE (WHERE APPLICABLE).
i) MEASURED FLOW RATE (WHERE APPLICABLE).
j) PROJECT RECORD DOCUMENTS: NOTE OR INDICATE WIRING DEVIATIONS FROM CONTRACT DOCUMENTS ON PROJECT RECORD DOCUMENTS.

c:\pwworking\hmm\externo\tyn61470\dms727●3\071_0134CES406.dgn 10/24/2014 10:33:49 AM T:\N61470

DESIGN AGENCY
HATCH MOTT MacDONALD
18013 CLEVELAND PKWY.
SUITE 200
CLEVELAND, OH 44135

DESIGNED	DRAWN	REVIEWED	DATE
DGC	CM	RF	08/11/14
CHECKED	REVISED	STRUCTURE FILE NUMBER	
LL	DGC	3106578	

ELECTRICAL NOTES – ELECTRICAL TESTING – SHEET 1 OF 4

BRIDGE NO. HAM-71-0134
I-71 LYTLE TUNNEL UNDER LYTLE PARK

HAM-71-01.34
PID No. 87268

PART 2 - PRODUCTS

2.01 GENERAL

A. THE ELECTRICAL TESTING COMPANY RETAINED BY THE CONTRACTOR SHALL PROVIDE ALL MATERIAL, TEST INSTRUMENTS, EQUIPMENT, LABOR, AND TECHNICAL SUPERVISION TO PERFORM TESTS AND INSPECTIONS. THE NETA MEMBER COMPANY SHALL INSPECT POWER, CONTROL, SIGNALING, LOW-VOLTAGE CABLING, RACEWAY SYSTEMS AND GROUNDING OF EQUIPMENT.

B. CONTRACTOR SHALL SUBMIT THE TESTING COMPANY'S QUALIFICATIONS AND THE RESUMES OF THE PERSONNEL BEING ASSIGNED TO THIS PROJECT FOR ODOT APPROVAL PRIOR TO THE COMMENCEMENT OF WORK. AT LEAST ONE TECHNICIAN WITH CERTIFIED ETT SENIOR LEVEL IV SHALL BE ASSIGNED FOR THE DURATION OF ENTIRE TEST.

C. WHERE EQUIPMENT IS TO BE RETAINED BUT REWIRED THAT EQUIPMENT AND ASSOCIATED WIRING MUST PASS ALL TESTING PROCEDURES AS IF INSTALLED NEW.

D. ODOT DESIGNATED REPRESENTATIVES WILL WITNESS ALL INSPECTIONS, FACTORY AND FIELD TESTS AND INTEGRATED SYSTEM COMMISSIONING. NOTIFY ODOT A MINIMUM OF 30 WORKING DAYS IN ADVANCE OF INSPECTION OR TESTING DATE.

2.02 PRODUCT NAME

A. A PARTIAL LIST OF EQUIPMENT TO BE TESTED SHALL INCLUDE BUT NOT LIMITED TO:
1. LOW VOLTAGE WIRE AND CABLES (POWER AND CONTROL)
2. ALL INSTALLED CIRCUIT BREAKERS (LOW & MEDIUM VOLTAGE)
3. MOTOR CONTROL CENTERS AND COMBINATION MOTOR STARTERS
4. DISTRIBUTION PANELS AND SWITCHBOARDS
5. WIRING DEVICES
6. LUMINAIRES AND LIGHTING CONTROL SYSTEMS
7. PUMPS AND PUMP CONTROL SYSTEM
8. LIFE SAFETY SYSTEMS INCLUDING BUT NOT LIMITED TO EMERGENCY SIGNAGE, CO MONITORING SYSTEM, FIRE ALARM SYSTEM, AND EMERGENCY LIGHTING.
9. TUNNEL CONTROL SYSTEMS INCLUDING BUT NOT LIMITED TO CCTV SYSTEM, AND PORTAL INFORMATION SIGNS.

PART 3 - EXECUTION

3.01 GENERAL

A. ALL MATERIALS, SUPPLIES, TOOLS, EQUIPMENT, LABOR, AND SERVICES SHALL BE PROVIDED TO PERFORM ALL TESTS AS SPECIFIED IN THIS SECTION. SUBMIT A LIST OF INSTRUMENTS AND CERTIFICATION INDICATING THAT INSTRUMENTS THAT TO BE USED FOR TESTING HAVE BEEN CALIBRATED AND THEIR ACCURACY CERTIFIED WITHIN A PREVIOUS PERIOD OF NOT MORE THAN SIX MONTH. LIST TYPES OF INSTRUMENTS TO BE USED, MANUFACTURER, MODEL NUMBER, SERIAL NUMBER, LATEST DATE OF CALIBRATION, AND CALIBRATION ORGANIZATION.

B. THE TESTING COMPANY SHALL HAVE A CALIBRATION PROGRAM THAT MAINTAINS APPLICABLE TEST INSTRUMENTATION WITHIN RATED ACCURACY IN ACCORDANCE WITH MANUFACTURER'S RECOMMENDATIONS AND STANDARD INDUSTRY PRACTICE.

C. TEST REPORTS SHALL BE SUBMITTED TO THE ENGINEER.

D. ALL DEFICIENCIES REVEALED BY TESTS SHALL BE CORRECTED AT NO COST TO ODOT. ALL MATERIAL AND EQUIPMENT FOUND FAULTY BY TESTS SHALL BE REPLACED. RESOLUTION OF DEFICIENCIES SHALL BE THE RESPONSIBILITY OF THE CONTRACTOR. ALL CORRECTIVE ACTIONS IDENTIFIED BY THE TESTING COMPANY SHALL BE RECTIFIED BY THE CONTRACTOR WITHIN TEN (10) WORKING DAYS.

E. CONTRACTOR SHALL BE RESPONSIBLE FOR ANY DAMAGE TO EQUIPMENT OR MATERIAL DUE TO IMPROPER TEST PROCEDURES OR TEST APPARATUS HANDLING, AND SHALL REPLACE OR RESTORE TO ORIGINAL CONDITION ANY DAMAGED EQUIPMENT OR MATERIAL.

F. CONTRACTOR SHALL RETAIN THE SERVICES OF A NETA CERTIFIED INDEPENDENT THIRD PARTY TESTING COMPANY TO PERFORM ELECTRICAL EQUIPMENT INSPECTIONS, FIELD TESTING AND COMMISSIONING TO DEMONSTRATE MATERIAL, EQUIPMENT AND SYSTEM HAVE MET ALL TECHNICAL REQUIREMENTS OF RFP, SPECIFICATIONS AND WORKING DRAWINGS. ALL ELECTRICAL TESTING SHALL BE PERFORMED IN ACCORDANCE WITH NETA ATS, APPLICABLE IEEE STANDARDS, UTILITIES SPECIFICATIONS, AND MANUFACTURER'S RECOMMENDATIONS. THE INDEPENDENT TESTING FIRM SHALL BE THE COORDINATOR OF ACCEPTANCE TESTING/COMMISSIONING. THE TEAM LEADER SHALL BE NETA ETT LEVEL 4 AND WITH CREDENTIALS ACCEPTABLE TO ODOT. ALL ELECTRICAL TESTING SHALL BE CONDUCTED PRIOR TO FACILITY WIDE INTEGRATED SYSTEM TESTS.

G. TESTING OF ALL SYSTEMS LISTED TO INCLUDE BUT NOT BE LIMITED TO:
1. ALL WIRE, CABLE, EQUIPMENT, AND SYSTEMS INSTALLED OR CONNECTED UNDER ELECTRICAL CONTRACT SHALL BE TESTED TO ASSURE PROPER INSTALLATION, SETTING, CONNECTION, AND FUNCTIONING IN ACCORDANCE WITH THE DRAWINGS, SPECIFICATIONS, AND THE MANUFACTURER'S RECOMMENDATIONS. THE INTENT HEREIN IS THAT FIELD TESTING BE EXTENSIVE AND COMPLETE AS SPECIFIED, TO PROVIDE ASSURANCE OF CORRECT INSTALLATION AND OPERATION OF EQUIPMENT.
2. ALL TESTS AND INSPECTIONS RECOMMENDED BY THE EQUIPMENT MANUFACTURER SHALL BE INCLUDED, WHETHER REQUIRED BY THESE SPECIFICATIONS OR NOT, UNLESS SPECIFICALLY WAIVED IN WRITING BY THE ENGINEER.
3. TESTS SHALL INCLUDE BUT ARE NOT LIMITED TO THE FOLLOWING:
a. ALL WIRING: ALL LOW VOLTAGE INSULATED SINGLE AND MULTI-CONDUCTOR POWER, CONTROL AND INSTRUMENT CABLES SHALL BE TESTED TO ENSURE CABLE INTEGRITY.
1) CABLE SHALL BE VISUALLY INSPECTED ON THE REELS WHEN RECEIVED AT THE JOBSITE. WHERE DAMAGE IS SUSPECTED, PRELIMINARY INSULATION TESTS SHALL BE PERFORMED TO DETERMINE IF CABLE IS SATISFACTORY BEFORE CABLE IS INSTALLED.
2) ALL WIRES SHALL BE CHECKED FOR CONTINUITY AND IDENTIFICATION.
3) EACH CONDUCTOR SHALL BE INDIVIDUALLY AND SUCCESSIVELY MEGGERED TO GROUND AND BETWEEN PHASES, USING A MEGGER IN ACCORDANCE NETA ATS.
4) PERFORM INSULATION-RESISTANCE TEST ON EACH CONDUCTOR WITH RESPECT TO GROUND AND ADJACENT CONDUCTORS. APPLIED POTENTIAL SHALL BE 500 VOLTS DC FOR 300 VOLT RATED CABLE AND 1000 VOLTS DC FOR 600 VOLT RATED CABLE. TEST DURATION SHALL BE ONE MINUTE. FOR UNITS WITH SOLID STATE COMPONENTS OR CONTROL DEVICES THAT CANNOT TOLERATE THE APPLIED VOLTAGE, FOLLOW THE MANUFACTURER'S RECOMMENDATION.
5) FREE OF SHORT CIRCUITS, UNINTENTIONAL AND GROUNDS.
6) INSULATION RESISTANCE (IR) FOR SATISFACTORY LOW VOLTAGE CABLE INSTALLATIONS SHALL NOT BE LOWER THAN 50 MEGOHMS.
b. MOLDED CASE BREAKERS 150 A AND LARGER: TIME AND INSTANTANEOUS TRIPPING, PHYSICAL CONDITION, CONTACT RESISTANCE, INSULATION RESISTANCE.
c. POWER CIRCUIT BREAKERS: CALIBRATION TO TIME/CURRENT CURVES, PHYSICAL CONDITION, CONTACT RESISTANCE, INSULATION RESISTANCE.
d. GROUNDING SYSTEM: GROUND RESISTANCE, GROUND LOOP IMPEDANCE, GROUND CONTINUITY AND INTEGRITY.
e. MOTOR CONTROLS: PROPER OVERLOAD SENSING, INSULATION RESISTANCE.
f. FOR ACTUAL REQUIREMENTS OF EACH AREA, VERIFY TESTING REQUIREMENTS WITH THE ENGINEER.
g. ALL WIRE AND CABLE UTILIZED ON THE 120/208 AND 480/277 VOLT SYSTEMS SHALL BE MEGGAR TESTED UTILIZING A 1000 VOLT RATED TESTER.
h. ALL PANELBOARDS AND SWITCHBOARDS SHALL BE MEGGAR TESTED PRIOR TO ENERGIZING.
i. ALL CONNECTIONS INSIDE OF SWITCHBOARDS, PANELBOARDS, COMBINATION STARTERS, MOTOR CONTROL CENTERS, AND SIMILAR EQUIPMENT SHALL BE TORQUED AND TESTED PRIOR TO ENERGIZING THE EQUIPMENT.
j. PRE-CONNECTION:
1) VISUAL AND MECHANICAL INSPECTION.
2) PERFORM RESISTANCE MEASUREMENTS THROUGH BOLTED CONNECTIONS WITH A LOW RESISTANCE DC OHMMETER OR AN INSULATION RESISTANCE TEST METER.
3) CONTINUITY OF ALL PROTECTIVE CONDUCTORS TO BE RECORDED USING A LOW RESISTANCE DC OHMMETER OR AN INSULATION RESISTANCE TEST METER.
4) CHECK CONTINUITY OF ALL CONDUCTORS AND VERIFY CORRECT CABLE CONNECTIONS.
5) CHECK POLARITY OF ALL CONDUCTORS.
6) PERFORM INSULATION-RESISTANCE TEST ON EACH CONDUCTOR WITH RESPECT TO GROUND AND ALL ADJACENT CONDUCTORS USING AN INSULATION RESISTANCE TEST METER. EACH CONDUCTOR MUST BE TESTED FOR 1 MINUTE.
7) VERIFY UNIFORM RESISTANCE OF ALL PARALLEL CONDUCTORS.
k. POST-CONNECTION
1) TEST AND RECORD THE IMPEDANCE AT THE SUPPLY ORIGIN.
2) TEST AND RECORD THE GROUND FAULT LOOP IMPEDANCE BETWEEN ALL LIVE CONDUCTORS AND GROUND AT THE FURTHEST EXTENTS OF EACH FINAL CIRCUIT. THIS TEST IS TO BE COMPLETED USING A FAULT LOOP IMPEDANCE TESTER AND ALL RESULTS MUST BE IN COMPLIANCE WITH THE CIRCUIT PROTECTIVE DEVICE (CPD) LIMITS FROM THE MANUFACTURER.
3) TEST AND RECORD THE OPERATING TRIP TIME OF ALL GFI AND GFCI'S DEVICES TO ENSURE COMPLIANCE WITH NEC AND MANUFACTURER'S PUBLISHED DATA. THIS TEST IS TO BE COMPLETED USING A GFCI TEST METER.
l. UPON COMPLETION OF THE TESTS AND INSPECTIONS SPECIFIED, A LABEL SHALL BE PROVIDED IN ACCORDANCE WITH NETA LABELING.

c:\pwworking\hmm\external\ty61470.dm3727●3\071_0134CE5407.dgn 10/24/2014 10:34:02 AM TY:N61470

DESIGN AGENCY
HATCH MOTT MacDONALD
18013 CLEVELAND PKWY.
SUITE 200
CLEVELAND, OH 44135

DESIGNED	DRAWN	REVIEWED	DATE
DGC	CM	RF	08/11/14
CHECKED	REVISED	STRUCTURE FILE NUMBER	
LL	DGC	31065778	

ELECTRICAL NOTES - ELECTRICAL TESTING - SHEET 2 OF 4

BRIDGE NO. HAM-71-0134
I-71 LYTLE TUNNEL UNDER LYTLE PARK

HAM-71-01.34
PID No. 87268

m. FIRE ALARM TEST:
1) PROVIDE THE SERVICE OF A FACTORY-TRAINED ENGINEER OR TECHNICIAN AUTHORIZED BY THE MANUFACTURER OF THE FIRE ALARM EQUIPMENT TO SUPERVISE SYSTEM TESTS. FORMAT OF DOCUMENTATION FOR TESTING SHALL BE IN ACCORDANCE WITH NFPA 72, CHAPTER 10. BEFORE ENERGIZING THE CABLES AND WIRES, CHECK FOR CORRECT CONNECTIONS AND TEST FOR SHORT CIRCUITS, GROUND FAULTS, CONTINUITY, AND INSULATION.
2) NFPA 3, RECOMMENDED PRACTICE ON COMMISSIONING AND INTEGRATED TESTING OF FIRE PROTECTION AND LIFE SAFETY SYSTEMS.

3.02 START-UP PLAN

A. EQUIPMENT START-UP MUST BE PERFORMED TO TEST INDIVIDUAL EQUIPMENT AND SYSTEM PERFORMANCE IN ACCORDANCE WITH MANUFACTURER'S PERFORMANCE PARAMETERS. ALL START-UP TESTING SHALL BE PERFORMED BY THE MANUFACTURER'S AUTHORIZED REPRESENTATIVES IN CONJUNCTION WITH NETA CERTIFIED ELECTRICAL TESTING COMPANY AND DESIGN ENGINEER.

B. THE CONTRACTOR SHALL PERFORM START-UP TESTING FOR EACH PIECE OF EQUIPMENT TO ENSURE THAT THE EQUIPMENT AND SYSTEMS ARE PROPERLY INSTALLED AND READY FOR OPERATION, SO THAT FUNCTIONAL PERFORMANCE TESTING MAY PROCEED WITHOUT DELAYS.

C. THE CONTRACTOR SHALL PREPARE A START-UP PLAN FOR EACH PIECE OF EQUIPMENT. THIS PLAN SHALL BE SUBMITTED TO ODOT FOR REVIEW AND COMMENT. THE START-UP PLAN SHALL CONSIST, AT A MINIMUM OF THE MANUFACTURER'S STANDARD START-UP AND CHECK OUT PROCEDURES COPIED FROM THE INSTALLATION MANUALS.

D. FOUR (4) WEEKS PRIOR TO EXPECTED START-UP FOR A PIECE OF EQUIPMENT, THE CONTRACTOR SHALL NOTIFY ODOT IN WRITING. THE EXECUTION OF THE START-UP PLAN SHALL BE DIRECTED AND PERFORMED BY THE CONTRACTOR. ODOT SHALL BE INVITED TO BE PRESENT FOR THE STARTUP OF THE EQUIPMENT.

E. THE CONTRACTOR SHALL SUBMIT THE COMPLETED CHECKLISTS AND STARTUP REPORTS TO ODOT FOR REVIEW. THE CONTRACTOR SHALL NOTE ALL NON-COMPLIANCE ITEMS ON THESE CHECKLISTS. THE CONTRACTOR SHALL NOTIFY ODOT WHEN OUTSTANDING ITEMS HAVE BEEN CORRECTED.

F. THE CONTRACTOR SHALL COMPLETE THE START-UP PLAN AND RESOLVE OR CORRECT ALL ISSUES RESOLVED BEFORE FUNCTIONAL TESTING MAY BEGIN.

G. FUNCTIONAL PERFORMANCE TESTS

H. THE CONTRACTOR SHALL PROVIDE ALL DOCUMENTATION AS REQUESTED TO ODOT FOR THE DEVELOPMENT OF TESTS.

3.03 FUNCTIONAL PERFORMANCE TESTING

A. PROCEDURES. THIS DOCUMENTATION SHALL INCLUDE, AT A MINIMUM, MANUFACTURER INSTALLATION, START-UP, OPERATION AND MAINTENANCE PROCEDURES. ODOT MAY REQUEST FURTHER DOCUMENTATION AS NECESSARY FOR THE DEVELOPMENT OF FUNCTIONAL PERFORMANCE TESTS.

B. THE CONTRACTOR SHALL REVIEW THE FUNCTIONAL PERFORMANCE TEST PROCEDURES DEVELOPED BY ODOT.
1. THE CONTRACTOR SHALL RESPOND IN WRITING TO ODOT REGARDING THE ACCEPTABILITY OF THE PROPOSED TEST PROCEDURES.
2. THE CONTRACTOR SHALL NOTE ANY NECESSARY MODIFICATIONS TO THE PROCEDURES DUE TO THE ACTUAL EQUIPMENT/SYSTEMS OR SAFETY CONCERNS AND SHALL SUBMIT THESE TO ODOT FOR CONSIDERATION.

C. THE CONTRACTOR SHALL PLACE EQUIPMENT AND SYSTEMS INTO OPERATION AND CONTINUE THE OPERATION AS REQUIRED DURING EACH WORKING DAY OF THE TESTING ACTIVITIES.

D. THE CONTRACTOR SHALL ACCOMPLISH THE FUNCTIONAL PERFORMANCE TESTING OF EQUIPMENT BASED ON PROCEDURES DEVELOPED BY ODOT AND AS REVIEWED BY THE CONTRACTOR.
1. THE CONTRACTOR SHALL PROVIDE SKILLED TECHNICIANS TO ASSIST IN OPERATION OF THE SYSTEMS DURING FUNCTIONAL PERFORMANCE TESTING.
2. THE CONTRACTOR SHALL CORRECT ANY DEFICIENCIES IDENTIFIED DURING TESTING AND RETEST EQUIPMENT AS REQUIRED.

E. FUNCTIONAL TESTING SHALL VERIFY ALL SEQUENCES OF OPERATION FOR THE COMMISSIONED EQUIPMENT AND SYSTEMS.
1. TESTING SHALL OCCUR BY OVERRIDING LOCAL CONTROLS OR SETPOINTS, OVERRIDING CONTROLS, MANUAL ENABLING/DISABLING OF THE UTILITY POWER, OR OTHER MEANS MUTUALLY AGREED TO BY THE CONTRACTOR AND ODOT TO INITIATE SEQUENCES OF OPERATION AND VERIFY THE RESPONSE OF THE SYSTEM. SEQUENCES OF OPERATION SHALL BE VERIFIED UNDER NORMAL POWER, EMERGENCY POWER, AND FIRE SCENARIOS.

F. UPON SUCCESSFUL COMPLETION OF ALL FUNCTIONAL PERFORMANCE TESTS, THE CONTRACTOR SHALL PERFORM INTEGRATED SYSTEMS TESTING. THE TESTING SHALL DOCUMENT AND VERIFY THE PROPER RESPONSE OF ALL ELECTRICAL SYSTEMS.

G. BEGIN FUNCTIONAL TESTING AFTER ACCEPTANCE OF THE SHORT CIRCUIT STUDY AND PROTECTIVE DEVICE COORDINATION STUDY, AND AFTER IMPLEMENTATION OF THE COORDINATION STUDY. IT IS THE RESPONSIBILITY OF THE CONTRACTOR TO COORDINATE THIS REQUIREMENT IN A TIMELY MANNER.

H. PERFORM ELECTRICAL ACCEPTANCE TESTING IN ACCORDANCE WITH NETA STANDARDS.

I. PERFORM TESTS TO ASSURE THAT ELECTRICAL EQUIPMENT SPECIFIED TO BE TESTED WILL OPERATE WITHIN INDUSTRY AND MANUFACTURER'S PUBLISHED TOLERANCES, AND WILL PERFORM SAFELY. RECORD TEST RESULT DATA, TO BE USED AS A BASELINE FOR FUTURE TESTS.

J. TEST ALL MOTORS TO VERIFY CONFORMANCE WITH THE CONTRACT DOCUMENTS AND FOR ACCEPTANCE.

K. TEST PROJECT ELECTRICAL EQUIPMENT, INCLUDING ELECTRICAL DISTRIBUTION EQUIPMENT AND GROUNDING. COMPLETE TEST REPORTS FOR EACH INDIVIDUAL PIECE OF EQUIPMENT.

L. VERIFY OTHER OPERATIONS AS DIRECTED BY THE ENGINEER.

3.04 DEFERRED FUNCTIONAL PERFORMANCE TESTING

A. THE CONTRACTOR SHALL PROPERLY DEMONSTRATE SUCCESSFUL OPERATION TO ODOT.
1. SOME TEST CONDITIONS MAY NOT BE ABLE TO BE SIMULATED AND THUS REQUIRE THESE ACTUAL CONDITIONS TO BE PRESENT TO IMPLEMENT THE TEST.
2. A MUTUALLY CONVENIENT TIME TO ODOT AND THE CONTRACTOR WILL BE SCHEDULED WHEN THESE TEST CONDITIONS WILL BE PRESENT TO CONDUCT THIS DEFERRED TESTING.

B. THE CONTRACTOR SHALL PERFORM THESE TESTS AS INDICATED IN THE FUNCTIONAL PERFORMANCE TEST PROCEDURES.

C. THE CONTRACTOR SHALL CORRECT ANY DEFICIENCIES OR FAILURES IDENTIFIED IN THE PROCESS OF PERFORMING THESE TESTS.

D. ALL TESTS PERFORMED SHALL NOT IMPACT TUNNEL OPERATIONS.

3.05 EXAMINATION

A. VERIFY THAT ELECTRICAL WORK IS FREE FROM IMPROPER GROUNDS, SHORT CIRCUITS, AND OVERLOADS.

B. VERIFY CORRECTNESS OF WIRING FIRST BY VISUAL COMPARISON OF THE CONDUCTOR CONNECTIONS WITH CONNECTION DIAGRAMS.

C. MAKE INDIVIDUAL CIRCUIT CONTINUITY CHECKS BY USING ELECTRICAL CIRCUIT TESTERS.

D. VERIFY CORRECTNESS OF WIRING BY ACTUAL ELECTRICAL OPERATION OF ELECTRICAL AND MECHANICAL DEVICES IN BOTH MANUAL AND AUTOMATIC MODES OF OPERATION.

E. CHECK PHASE ROTATION.

3.06 SUMMARY TEST REPORT

A. UPON COMPLETION OF TESTING IN EVERY AREA, SUBMIT 3 COPIES OF SUMMARY TEST REPORT TO THE ENGINEER.

3.07 COMMISSIONING AND SYSTEM INTEGRATION

A. COMMISSIONING SHALL BE PERFORMED WITH ALL INTER-RELATED SYSTEMS OPERATING. IN GENERAL, INTEGRATED SYSTEM COMMISSIONING SHALL BE OPERATED THROUGH ALL MODES OF OPERATION (NORMAL, EMERGENCY, INTERRUPTION TO THE INCOMING SERVICES, MANUAL OPERATIONS). VERIFICATION OF EACH MODE IN THE SEQUENCES OF OPERATION IS REQUIRED.
1. INTEGRATED SYSTEM COMMISSIONING SHALL NOT BE INITIATED BY THE CONTRACTOR UNTIL FINAL ACCEPTANCE OF ALL EQUIPMENT, SYSTEMS AND INDIVIDUAL SUBSYSTEMS IS COMPLETED INCLUDING TRAINING AND APPROVAL OF AS-BUILT DRAWINGS, MAINTENANCE AND TECHNICAL MANUALS.
2. CONTRACTOR SHALL PROVIDE A DETAILED, STEP BY STEP, COMMISSIONING PROCEDURES FOR ODOT REVIEW AND APPROVAL AT LEAST THIRTY (30) WORKING DAYS PRIOR TO THE SCHEDULED COMMISSIONING DATE.
3. IF A PROBLEM IS DETECTED WHILE CONDUCTING COMMISSIONING, THE PROBLEM WILL BE IDENTIFIED AND REPORTED TO THE CONTRACTOR FOR DIAGNOSIS AND CORRECTION. THE FAILED PORTION SHALL BE REPEATED AFTER THE REPAIRS ARE COMPLETED.
4. A PRE-APPROVED CHECKLIST SHALL BE PROVIDED INCLUDING A SPREADSHEET LISTING OF ALL EQUIPMENT

c:\pwworking\hmm\external\tyn61470\dms7278●\071_0134CES408.dgn 10/25/2014 12:24:09 PM TYN61470

DESIGN AGENCY
HATCH MOTT MacDONALD
18013 CLEVELAND PKWY.
SUITE 200
CLEVELAND, OH 44135

DESIGNED	DRAWN	REVIEWED	DATE
DGC	CM	RF	08/11/14
CHECKED	REVISED	STRUCTURE FILE NUMBER	
LL	DGC	31065781	

ELECTRICAL NOTES - ELECTRICAL TESTING - SHEET 3 OF 4

BRIDGE NO. HAM-71-0134
I-71 LYTLE TUNNEL UNDER LYTLE PARK

HAM-71-01.34
PID No. 87268

AND ITS ASSOCIATED OPERATING MODES, ALARMS OR FUNCTION INVOLVED. THE SPACES PROVIDED IN THE SPREADSHEET SHOULD BE INITIALED AS EACH PIECE OF EQUIPMENT, SYSTEM AND SUBSYSTEM IS COMMISSIONED. THE SPREADSHEET SHALL BE AN INTEGRAL PART OF THE DOCUMENTATION AND MUST BE INCLUDED WITH FINAL REPORT.

5. CONTRACTOR SHALL DEVELOP AND MAINTAIN A METHOD FOR IDENTIFYING COMMISSIONING RELATED ISSUES AND TRACKING THOSE ITEMS. THE PRIMARY MEANS OF COMMUNICATING THESE ITEMS ARE THROUGH A CORRECTIVE ACTION REPORT. CONTRACTOR SHALL BE RESPONSIBLE FOR REPAIRS TO THE IDENTIFIED DEFECTIVE ITEMS WITHIN TEN (10) WORKING DAYS.

6. CONTRACTOR SHALL RECORD THE RESULTS OF THE EACH INTEGRATED SYSTEM COMMISSIONING TEST ON THE PROCEDURE AND CHECKLIST FORMS. ALL DEFICIENCIES OR NON-CONFORMANCE ISSUES SHALL BE NOTED AND REPORTED TO ODOT ON A STANDARD NON-COMPLIANCE FORM. CORRECTIONS OF MINOR DEFICIENCIES IDENTIFIED MAY BE MADE DURING THE COMMISSIONING PROCESS AT THE DISCRETION OF ODOT. IN SUCH CASES THE DEFICIENCY AND RESOLUTION SHALL BE DOCUMENTED ON THE PROCEDURE FORM. THE BURDEN OF RESPONSIBILITY TO SOLVE, CORRECT AND RETEST PROBLEMS IS WITH THE CONTRACTOR.

3.08 CERTIFICATION

A. NOTIFICATION OF COMPLETION OF WORK
   1. PRIOR TO ACCEPTANCE OF WORK, ODOT SHALL REQUEST FROM THE CONTRACTOR A WRITTEN NOTIFICATION CERTIFYING THAT:
      a. WORK HAS BEEN COMPLETED IN ACCORDANCE WITH CONTRACT DOCUMENTS.
      b. WORK HAS BEEN INSPECTED FOR COMPLIANCE WITH CONTRACT DOCUMENTS.
      c. WORK IS READY FOR FINAL INSPECTION.

B. FINAL WALK-THRU
   1. AFTER RECEIPT OF THE NOTIFICATION OF COMPLETION OF WORK, THE ENGINEER WILL CONDUCT A FINAL WALK-THRU WITH THE PARTICIPATION OF ODOT (ENGINEER DESIGNEE), CONTRACTOR, ENGINEER AND OTHER APPROPRIATE PROJECT TEAM MEMBERS TO VERIFY THE STATUS OF THE COMPLETION.

C. FINAL PUNCH LIST
   1. SHOULD THE ENGINEER CONSIDER THAT THE WORK IS INCOMPLETE OR DEFECTIVE:
      a. ODOT WILL NOTIFY THE CONTRACTOR IN WRITING, BY FORM OF A FINAL PUNCH LIST, LISTING THE INCOMPLETE OR DEFECTIVE WORK.
      b. THE CONTRACTOR WILL TAKE IMMEDIATE STEPS TO REMEDY THE STATED DEFICIENCIES AND SEND A SECOND OR SUBSEQUENT WRITTEN CERTIFICATION TO THE ENGINEER STATING THAT THE WORK IS COMPLETE.
      c. THE ENGINEER WILL RE-INSPECT THE WORK.
      d. UPON SATISFACTION THAT ALL THE WORK IS COMPLETE AND ALL ITEMS IN THE FINAL PUNCH LIST ADDRESSED TO THE SATISFACTION OF THE ENGINEER, ODOT AND CONTRACTOR WILL SIGN-OFF ON THE FINAL PUNCH LIST INDICATING CONCURRENCE THAT THE WORK IS COMPLETE.

D. MANUALS AND RECORDS
   1. AFTER FINAL WALK-THRU AND SIGN-OFF ON THE FINAL PUNCH LIST HAVE BEEN ACHIEVED THE CONTRACTOR RELEASES TO ODOT THE FOLLOWING MANUALS AND RECORDS KEPT, UPDATED AND/OR DEVELOPED DURING THE PROJECT:
   2. THE APPROVED OPERATING AND MAINTENANCE (O&M) MANUALS INCLUDING:
      a. WARRANTIES – THE TERMS AND CONDITIONS FOR REPLACEMENT OF DEFECTIVE EQUIPMENT INCLUDING BEGINNING AND ENDING DATE COVERAGE MUST BE CLEARLY STATED.
      b. GUARANTEES – GUARANTEEING EQUIPMENT'S CAPABILITIES, COMPARABILITY, MATERIALS, FUNCTIONALITY, ETC.
      c. SPARE PARTS LISTS – SUPPLIERS NAME AND CONTACT INFORMATION MUST BE INCLUDED.
      d. PREVENTIVE MAINTENANCE PLAN
   3. NEW EQUIPMENT LISTING.
   4. EQUIPMENT/SYSTEM TESTING LOG AND RECORDS.
   5. MAINTENANCE TRAINING SESSION FORM.
   6. COPIES OF ALL PUNCH LISTS
   7. UPON RECEIPT AND VERIFICATION OF THE O & M MANUALS AND RECORDS FROM THE CONTRACTOR ODOT SHALL COMPLETE THE COMPLETION CERTIFICATE.

3.09 TRAINING

A. AFTER SYSTEM TESTING HAS BEEN COMPLETED, AND EQUIPMENT HAS BEEN FULLY CHECKED FOR PROPER OPERATION, DESIGNATED ODOT PERSONNEL SHALL BE INSTRUCTED IN THE OPERATION, ADJUSTMENT AND MAINTENANCE OF ALL EQUIPMENT AND SYSTEMS.

B. TRAINING SHALL CONSIST OF FORMAL EDUCATIONAL SESSIONS WHEREIN ALL PROCEDURES NECESSARY TO OPERATE AND MAINTAIN EQUIPMENT AND SYSTEMS ON A CONTINUING BASIS ARE EXPLAINED IN FULL DETAIL. HANDS-ON OPERATIONS AND MAINTENANCE TASKS SHALL BE EXECUTED TO INSURE THAT ALL ASPECTS OF THE TRAINING ARE FULLY UNDERSTOOD.

C. THE CONTENTS OF THE OPERATIONS AND MAINTENANCE MANUAL (O&M MANUAL) SHALL BE REVIEWED IN FULL DETAIL TO CLARIFY ALL ASPECTS OF THE MANUAL AND THE OPERATION AND MAINTENANCE OF ALL EQUIPMENT AND SYSTEMS.

D. ON SITE TRAININGS SHALL BE CONDUCTED BY THE MANUFACTURER'S REPRESENTATIVE. EACH TRAINING SESSION SHALL BE OFFERED TO ACCOMMODATE UP TO TWELVE (12) PERSONS. TRAINING TIMES SHALL BE DETERMINED BY ODOT. A DETAILED TRAINING MANUAL SHALL BE PROVIDED FOR EACH TRAINEE.

E. THE TEXT OF THE APPROVED OPERATING INSTRUCTIONS FOR THE SYSTEM OR PIECE OF EQUIPMENT IN QUESTION SHALL BE REVIEWED DURING THE TRAINING SESSION.

F. TRAININGS SHALL BE PROVIDED FOR ODOT PERSONNEL AS FOLLOWS:
   1. FIRE ALARM SYSTEM
   2. OPERATIONAL CONTROL SYSTEMS
   3. COMMUNICATIONS SYSTEMS
   4. OVERALL SYSTEM OPERATION PROCEDURES (INCLUDING OPERATIONS IN AUTOMATIC AND MANUAL MODES)
   5. TUNNEL LIGHTING CONTROL SYSTEM
   6. VENTILATION FAN MOTOR STARTING
   7. SWITCHBOARD
   8. UPS

G. TRAINING SHALL BE PERFORMED ON OR NEAR THE WORK SITE AND SHALL BE CONDUCTED BY THE MANUFACTURER'S AUTHORIZED REPRESENTATIVE.

H. TRAINING SHALL BE PERFORMED WITHIN TWO (2) MONTHS OF SUBSTANTIAL COMPLETION. INSTRUCTORS SHALL BE AVAILABLE FOR CONSULTATION, AT NO ADDITIONAL COST TO ODOT, FOR A PERIOD OF THREE MONTHS AFTER ODOT HAS ASSUMED FULL OPERATION OF THE EQUIPMENT OR SYSTEMS.

I. O & M MANUALS FOR ALL EQUIPMENT AND SYSTEMS SHALL BE PROVIDED AT THE TIME OF INITIAL TRAINING. MANUALS TO INCLUDE DIAGRAMS, PICTURES AND PROCEDURES.

J. TRAINING PROGRAM: A DETAILED DESCRIPTION OF THE TRAINING PROGRAM AND MATERIALS PROPOSED FOR EACH TYPE OF SYSTEM SHALL BE SUBMITTED FOR ODOT REVIEW AND APPROVAL.

3.10 TURNOVER PROCESS

A. DOCUMENTS AND RECORDS
   1. AFTER CERTIFICATION IS COMPLETED, ODOT SHALL TURNOVER ALL THE SYSTEMS, SUBSYSTEMS, EQUIPMENT AND COMPONENTS REQUIRING FORMAL PROCESSES OVER TO THE FACILITY SUPERINTENDENT AND THE MANAGER OF CMMS / PLANNER PROVIDING THE FOLLOWING DOCUMENTATION:
      a. COMPLETION CERTIFICATE
      b. OPERATING AND MAINTENANCE (O&M) MANUAL INCLUDING:
         1) SPARE PART LISTS – SUPPLIERS NAME AND CONTACT INFORMATION MUST BE INCLUDED.
         2) PREVENTIVE MAINTENANCE PLAN.
      c. NEW EQUIPMENT LISTING.
      d. EQUIPMENT/SYSTEM TESTING LOG AND RECORDS.
      e. MAINTENANCE TRAINING SESSION FORM.
      f. COPIES OF ALL PUNCH LISTS.

PART 4 - METHOD OF PAYMENT AND ITEMS

4.01 PAYMENT

A. PAYMENT FOR ITEMS SHALL BE MADE AT THE CONTRACT UNIT PRICE, INCLUDING BUT NOT LIMITED TO ALL WORK, LABOR, EQUIPMENT, AND MATERIALS NECESSARY THEREFORE OR INCIDENTAL THERETO, AS FOLLOWS:

ITEM NO.	DESCRIPTION	UNIT
SPECIAL	SPECIAL – MISC.: ELECTRICAL TESTING AND COMMISSIONING	LUMP

c:\pwworking\jmm\external\tyn61470\dms727●3\071_0134CES409.dgn 10/25/2014 12:24:18 PM TYN61470

ITEM 690 – SPECIAL – MISC.: PENETRATION FIRESTOPPING

PART 1 - GENERAL

1.01 SECTION INCLUDES

A. REQUIREMENTS FOR FURNISHING AND INSTALLING SPRAY APPLIED FIREPROOFING, FIRESTOPPING FOR CONDUITS AND FIRE-RESISTANT PENETRATION SEALS.

1.02 CITED STANDARDS

A. AMERICAN SOCIETY FOR TESTING AND MATERIALS (ASTM):
   1. C39, TEST METHOD FOR COMPRESSIVE STRENGTH OF CYLINDRICAL CONCRETE SPECIMENS.
   2. C193, MAGNESIA THERMAL INSULATING CEMENT
   3. C719, ADHESION AND COHESION OF ELASTOMERIC JOINT SEALANTS UNDER CYCLIC MOVEMENT (HOCKMAN CYCLE)
   4. C920, ELASTOMERIC JOINT SEALANTS
   5. D2240, RUBBER PROPERTY - DUROMETER HARDNESS.
   6. E84, TEST METHOD FOR SURFACE BURNING CHARACTERISTICS OF BUILDING MATERIALS.
   7. E119, METHOD FOR FIRE TESTS OF BUILDING CONSTRUCTION AND MATERIALS.
   8. E136, BEHAVIOR OF MATERIALS IN A VERTICAL TUBE FURNACE AT 750 DEGREES CENTIGRADE
   9. E736, TEST METHOD FOR COHESION/ADHESION OF SPRAYED FIRE-RESISTIVE MATERIALS APPLIED TO STRUCTURAL MEMBERS.
   10. E814, FIRE TEST OF BUILDING CONSTRUCTION AND MATERIALS.

B. UNDERWRITERS' LABORATORIES, INC. (UL):
   1. BUILDING MATERIALS DIRECTORY.
   2. 1479, FIRE TESTS OF THROUGH-PENETRATION FIRESTOPS FIRE STOPS.

1.03 QUALITY CONTROL

A. ALL PREPARATION AND APPLICATION WORK SHALL BE PERFORMED UNDER THE DIRECT SUPERVISION OF A QUALIFIED TECHNICAL REPRESENTATIVE OF THE PRODUCT MANUFACTURER.

B. REGULATORY REQUIREMENTS:
   1. UNIFORM FIRE PREVENTION AND BUILDING CODES OF MARYLAND CODES, RULES, AND REGULATIONS (BCNYS)

C. MATERIAL SHALL HAVE BSA AND/OR MEA APPROVAL FOR USE IN MARYLAND.

D. PROVIDE FIRESTOPPING SYSTEMS THAT ARE PRODUCED AND INSTALLED TO RESIST THE SPREAD OF FIRE, AND THE PASSAGE OF SMOKE AND OTHER GASES.

E. FIRESTOPPING MATERIALS SHALL CONFORM TO FLAME (F) AND TEMPERATURE (T) RATINGS AS REQUIRED BY LOCAL BUILDING CODE AND AS TESTED BY NATIONALLY ACCEPTED TEST AGENCIES PER ASTM E814 OR UL 1479. THE F-RATING MUST BE A MINIMUM OF 2 HOURS BUT NOT LESS THAN THE FIRE RESISTANCE RATING OF THE ASSEMBLY BEING PENETRATED. T-RATING, WHEN REQUIRED BY CODE AUTHORITY, SHALL BE BASED ON MEASUREMENT OF THE TEMPERATURE RISE ON THE PENETRATING ITEM(S). THE FIRE TEST SHALL BE CONDUCTED WITH A MINIMUM POSITIVE PRESSURE DIFFERENTIAL OF 0.01-INCH OF WATER COLUMN.

F. SUBSTITUTIONS: INFORMATION ON CONTRACT DRAWINGS REFERRING TO SPECIFIC DESIGN DESIGNATIONS OF THROUGH-PENETRATION FIRESTOP SYSTEMS IS INTENDED TO ESTABLISH REQUIREMENTS FOR PERFORMANCE BASED ON CONDITIONS THAT ARE EXPECTED TO EXIST DURING INSTALLATION. ANY CHANGES IN CONDITIONS, OR DESIGNATED SYSTEMS, REQUIRE REVIEW BY THE CONSTRUCTION MANAGER. SUBMIT DOCUMENTATION SHOWING THAT THE PERFORMANCE OF PROPOSED SUBSTITUTIONS EQUALS OR EXCEEDS THAT OF THE SYSTEMS THEY WOULD REPLACE AND ARE ACCEPTABLE TO THE CONSTRUCTION MANAGER.

G. SINGLE-SOURCE RESPONSIBILITY: OBTAIN THROUGH-PENETRATION FIRESTOP SYSTEMS FOR EACH KIND OF PENETRATION AND CONSTRUCTION CONDITION SHOWN ON THE CONTRACT DRAWINGS FROM A SINGLE MANUFACTURER.

H. COORDINATING WORK: COORDINATE CONSTRUCTION OF OPENINGS AND PENETRATING ITEMS TO ENSURE THAT DESIGNATED THROUGH-PENETRATION FIRESTOP SYSTEMS ARE INSTALLED PER SPECIFIED REQUIREMENTS.

I. SEQUENCING: DO NOT COVER UP THOSE FIRESTOPPING INSTALLATIONS THAT WILL BECOME CONCEALED BEHIND OTHER CONSTRUCTION UNTIL CONSTRUCTION MANAGER HAS EXAMINED EACH INSTALLATION.

J. PROVIDE ALL REQUIREMENTS FOR INSPECTIONS AS REQUIRED BY BCNYS.

K. FIRESTOPPING PRODUCTS SHALL BE ASBESTOS FREE AND FREE OF ANY PCBS.

L. DO NOT USE ANY PRODUCT CONTAINING SOLVENTS OR THAT REQUIRES HAZARDOUS WASTE DISPOSAL.

M. DO NOT USE FIRESTOP PRODUCTS WHICH AFTER CURING, DISSOLVE IN WATER.

N. DO NOT USE FIRESTOP PRODUCTS THAT CONTAIN CERAMIC FIBERS.

O. FIRESTOPPING INSTALLER QUALIFICATIONS: FIRESTOP APPLICATION SHALL BE PERFORMED BY A SINGLE FIRESTOPPING CONTRACTOR WHO SPECIALIZES IN THE INSTALLATION OF FIRESTOP SYSTEMS, WHOSE PERSONNEL HAS RECEIVED SPECIFIC TRAINING AND CERTIFICATION OR APPROVAL FROM THE PROPOSED RESPECTIVE FIRESTOP MANUFACTURER, AND FIRESTOP INSTALLER SHALL HAVE A MINIMUM OF FIVE YEARS' EXPERIENCE (UNDER PRESENT COMPANY NAME) INSTALLING FIRESTOP SYSTEMS OF THE TYPE HEREIN SPECIFIED.

P. FOR FIRESTOPPING EXPOSED TO VIEW, TRAFFIC, MOISTURE, AND PHYSICAL DAMAGE, PROVIDE PRODUCTS THAT DO NOT DETERIORATE WHEN EXPOSED TO THESE CONDITIONS.
   1. FOR PIPING PENETRATIONS FOR PLUMBING AND WET-PIPE SPRINKLER SYSTEMS, PROVIDE MOISTURE-RESISTANT THROUGH-PENETRATION FIRESTOP SYSTEMS.
   2. FOR FLOOR PENETRATIONS WITH ANNULAR SPACES EXCEEDING 4-INCHES OR MORE IN WIDTH AND EXPOSED TO POSSIBLE LOADING AND TRAFFIC, PROVIDE FIRESTOP SYSTEMS CAPABLE OF SUPPORTING THE FLOOR LOADS INVOLVED EITHER BY INSTALLING FLOOR PLATES OR BY OTHER MEANS.
   3. FOR PENETRATIONS INVOLVING INSULATED PIPING, PROVIDE THROUGH-PENETRATION FIRESTOP SYSTEMS NOT REQUIRING REMOVAL OF INSULATION

1.04 SUBMITTALS

A. THE FOLLOWING SHALL BE SUBMITTED A MINIMUM OF THIRTY (30) CALENDAR DAYS PRIOR TO PROCURING MATERIALS REQUIRED FOR THIS SECTION:
   1. CONTRACTOR'S METHODS, EQUIPMENT, MATERIALS AND PRODUCT DATA.
   2. SUBMIT MANUFACTURER'S PRODUCT LITERATURE FOR EACH TYPE OF FIRESTOP MATERIAL TO BE INSTALLED. LITERATURE SHALL INDICATE PRODUCT CHARACTERISTICS, TYPICAL USED, PERFORMANCE, LIMITATION CRITERIA, INSTALLATION INSTRUCTIONS, TEST DATA AND INDICATE THAT PRODUCTS COMPLY WITH SPECIFIED REQUIREMENTS.
      a. CERTIFICATIONS BY THE FIRESTOPPING MANUFACTURER, SHOWING THAT THE PRODUCTS SUPPLIED COMPLY WITH LOCAL REGULATIONS CONTROLLING THE USE OF VOLATILE ORGANIC COMPOUNDS (VOCS) AND ARE NONTOXIC TO BUILDING OCCUPANTS.
   3. SUBMIT SHOP DRAWINGS DETAILING LOCATIONS, MATERIALS, INSTALLATION METHODS, AND RELATIONSHIPS TO ADJOINING CONSTRUCTION FOR EACH FIRESTOP SYSTEM, AND EACH KIND OF CONSTRUCTION CONDITION PENETRATED AND KIND OF PENETRATING ITEM. INCLUDE FIRESTOP DESIGN DESIGNATION OF QUALIFIED TESTING AND INSPECTION AGENCY EVIDENCING COMPLIANCE WITH REQUIREMENTS FOR EACH CONDITION INDICATED.
      a. SUBMIT DOCUMENTATION, INCLUDING ILLUSTRATIONS, FROM A QUALIFIED TESTING AND INSPECTING AGENCY THAT IS APPLICABLE TO EACH THROUGH-PENETRATION FIRESTOP CONFIGURATION FOR CONSTRUCTION AND PENETRATING ITEMS.
      b. SUBMIT DOCUMENTATION, WHERE CONTRACT CONDITIONS REQUIRE THE MODIFICATION OF A QUALIFIED TESTING AND INSPECTING AGENCY'S ILLUSTRATION TO SUIT A PARTICULAR THROUGH-PENETRATION FIRESTOP CONDITION, SUPPORTING THE PROPOSED MODIFICATION.
   4. MATERIAL SAFETY DATA SHEETS (MSDS): SUBMIT MSDS FOR EACH FIRESTOP PRODUCT.
   5. SUBMIT QUALIFICATIONS OF FIRESTOP INSTALLER, INCLUDING LETTER FROM FIRESTOP MANUFACTURER OF PRODUCTS PROPOSED TO BE INSTALLED, WHEREIN MANUFACTURER APPROVES OR RECOGNIZES AS TRAINED/OR CERTIFIES INSTALLER FOR INSTALLATION OF THAT MANUFACTURER'S PRODUCTS

1.05 DELIVERABLES

A. RECORDS OF INSTALLATION AND QUALITY CONTROL RECORDS, AS REQUIRED BY THIS SECTION, WITHIN 7 CALENDAR DAYS FROM PERFORMING THE WORK.

PART 2 - PRODUCTS

2.01 GENERAL

A. FURNISH PRODUCTS AS INDICATED. MATERIALS SHALL BE DELIVERED IN THE MANUFACTURER'S UNDAMAGED, UNOPENED CONTAINERS. EACH CONTAINER SHALL BE CLEARLY MARKED WITH THE FOLLOWING:
   1. PRODUCT NAME/NUMBER.
   2. MANUFACTURER'S NAME.
   3. BATCH NUMBER.
   4. EXPIRATION DATE. MIXING AND INSTALLATION INSTRUCTIONS.

B. QUANTITIES SHALL BE ADEQUATE SUPPLIES THAT ARE READILY AVAILABLE FOR THE WORK.

C. SHIPMENTS SHALL BE INSPECTED TO ASSURE THAT MATERIALS COMPLY WITH CONTRACT REQUIREMENTS, QUANTITIES ARE CORRECT, MATERIALS HAVE NOT EXPIRED AND ARE UNDAMAGED.

D. PRIOR TO ACTUAL USE, MATERIALS SHALL BE STORED IN ACCORDANCE WITH MANUFACTURER'S INSTRUCTIONS, WITH SEALS AND LABELS INTACT AND LEGIBLE.

E. MIXING AND HANDLING SHALL BE IN ACCORDANCE WITH OSHA, THE MANUFACTURER'S SAFETY RECOMMENDATIONS AND ALL APPLICABLE SAFETY CODES. THE MOST STRINGENT REQUIREMENT SHALL GOVERN.

F. ALL FIRESTOP MATERIALS SHALL BE INSTALLED PRIOR TO EXPIRATION OF SHELF LIFE.

2.02 DESIGN AND PERFORMANCE REQUIREMENTS

A. GENERAL: PROVIDE FIRESTOPPING SYSTEMS THAT ARE PRODUCED AND INSTALLED TO RESIST THE SPREAD OF FIRE AND THE PASSAGE OF SMOKE AND OTHER GASES.

c:\pwworking\hmm\externa\tyn61470\dms727●3\071_0134CE5410.dgn 10/24/2014 10:34:35 AM TYN61470

B. FOR FIRESTOPPING EXPOSED TO TRAFFIC, MOISTURE, AND PHYSICAL DAMAGE, PROVIDE PRODUCTS THAT DO NOT DETERIORATE WHEN EXPOSED TO THESE CONDITIONS.
   1. FOR PIPING PENETRATIONS, FOR PLUMBING, AND WET-PIPE SPRINKLER AND FIRE STANDPIPE SYSTEMS, PROVIDE MOISTURE-RESISTANT THROUGH-PENETRATION FIRESTOP SYSTEMS.
   2. FOR FLOOR PENETRATIONS WITH ANNULAR SPACES EXCEEDING 4-INCHES OR MORE IN WIDTH AND EXPOSED TO POSSIBLE LOADING AND TRAFFIC, PROVIDE FIRESTOP SYSTEMS CAPABLE OF SUPPORTING THE FLOOR LOADS INVOLVED, EITHER BY INSTALLING FLOOR PLATES OR BY OTHER MEANS.
   3. FOR PENETRATIONS INVOLVING INSULATED PIPING, PROVIDE THROUGH-PENETRATION FIRESTOP SYSTEMS NOT REQUIRING REMOVAL OF INSULATION.

C. FOR FIRESTOPPING EXPOSED TO VIEW, PROVIDE PRODUCTS WITH FLAME-SPREAD VALUES OF LESS THAN 25 AND SMOKE-DEVELOPED VALUES OF LESS THAN 450, AS DETERMINED PER ASTM E84.

D. CONDITIONS REQUIRING FIRESTOPPING
   1. PROVIDE FIRESTOPPING FOR CONDITIONS SPECIFIED, WHETHER OR NOT FIRESTOPPING IS SHOWN ON THE CONTRACT DRAWINGS, AND, IF SHOWN, WHETHER SUCH MATERIAL IS DESIGNATED AS INSULATION, SAFING (AREA REQUIRING A FIRE SEPARATION) OR OTHERWISE.
   2. INSULATION TYPES SPECIFIED IN OTHER SECTIONS OF THE SPECIFICATIONS SHALL NOT BE INSTALLED IN LIEU OF FIRESTOPPING MATERIAL SPECIFIED HEREIN

2.03 MATERIALS

A. SYSTEM REQUIREMENTS: PROVIDE MANUFACTURER'S PRODUCTS AND ACCESSORIES TO ACHIEVE SYSTEMS HAVING FIRE-RESISTANCE ("F") RATINGS AS INDICATED ON THE CONTRACT DRAWINGS, BUT IN NO CASE LESS THAN THE RATING OF THE BARRIER PENETRATED, AND TEMPERATURE ("T") RATINGS NO LESS THAN THAT REQUIRED BY THE APPLICABLE CODE, AS ESTABLISHED BY TESTING IDENTICAL ASSEMBLIES PER ASTM E 814 OR UL 1479.

B. COMPATIBILITY: PROVIDE FIRESTOPPING COMPOSED OF COMPONENTS THAT ARE COMPATIBLE WITH EACH OTHER, THE SUBSTRATES FORMING OPENINGS, AND THE ITEMS, IF ANY, PENETRATING THE FIRESTOPPING UNDER CONDITIONS OF SERVICE AND APPLICATION, AS DEMONSTRATED BY FIRESTOPPING MANUFACTURER BASED ON TESTING AND FIELD EXPERIENCE.

C. ACCESSORIES: PROVIDE COMPONENTS FOR EACH FIRESTOPPING SYSTEM THAT ARE NEEDED TO INSTALL FILL MATERIALS. USE ONLY COMPONENTS SPECIFIED BY THE FIRESTOPPING MANUFACTURER AND APPROVED BY THE QUALIFIED TESTING AND INSPECTING AGENCY FOR THE DESIGNATED FIRE-RESISTANCE-RATED SYSTEMS. ACCESSORIES INCLUDE BUT ARE NOT LIMITED TO THE FOLLOWING ITEMS:
   1. PERMANENT FORMING/DAMMING/BACKING MATERIALS INCLUDING THE FOLLOWING:
      a. SEMI REFRACTORY FIBER (MINERAL WOOL) INSULATION.
      b. SEALANTS USED IN COMBINATION WITH OTHER FORMING/DAMMING MATERIALS TO PREVENT LEAKAGE OF FILL MATERIALS IN LIQUID STATE.
      c. FIRE-RATED FORM BOARD.
      d. JOINT FILLERS FOR JOINT SEALANTS.
   2. TEMPORARY FORMING MATERIALS
   3. SUBSTRATE PRIMERS
   4. COLLARS
   5. STEEL SLEEVES

D. APPLICATIONS: PROVIDE FIRESTOPPING SYSTEMS COMPOSED OF MATERIALS SPECIFIED IN THIS SECTION THAT COMPLY WITH SYSTEM PERFORMANCE AND OTHER REQUIREMENTS

E. SEALANT FOR THE SEALING OF JOINTS PACKED WITH MINERAL FIBER OR SAFING INSULATION SHALL BE FIRESTOP SEALANT MANUFACTURED FOR THE PURPOSE, MEETING FIRE RATING AND INSTALLATION REQUIREMENTS INDICATED. DO NOT USE MATERIALS CONTAINING ASBESTOS OR VOLATILE SOLVENTS OR FOAMS WHICH EMIT HYDROGEN GAS WHILE CURING.

F. FIRE-RESISTANT PENETRATION SEALS SHALL BE THE FOLLOWING MINERAL FIBER OR FOAM TYPE, AS APPLICABLE.
   1. MINERAL FIBER: LOOSE OR BATT MINERAL FIBER SAFING INSULATION, MEETING FIRE RATING AND INSTALLATION REQUIREMENTS INDICATED.

G. SEALANT/PUTTY: PROVIDE READY TO USE SILICONE PENETRATION CAULK OR SEALANT FOR USE INDIVIDUALLY OR WITH OTHER PRODUCTS AND ACCESSORIES IN PENETRATIONS THAT WILL STOP PASSAGE OF FIRE, SMOKE AND WATER THROUGH FIRE RATED WALL AND FLOOR PENETRATIONS AND WILL CURE IN THE PRESENCE OF ATMOSPHERIC MOISTURE TO PRODUCE DURABLE AND FLEXIBLE SEAL, AND WILL FORM AIR-TIGHT AND WATER-TIGHT BONDS WITH MOST COMMON BUILDING MATERIALS IN ANY COMBINATION INCLUDING CEMENT, MASONRY, STEEL, AND ALUMINUM.
   1. COMPOSITION: PROVIDE ONE PART, READY TO USE MATERIAL WITH CONSISTENCY OF SOFT CAULK AT TEMPERATURES RANGING FROM MINUS 35 TO 160 DEGREES FAHRENHEIT, AND EXTENSION AND COMPRESSION PROPERTIES OF PLUS OR MINUS 40 PERCENT OF ORIGINAL GAP.
   2. PRIMER: PROVIDE MANUFACTURER'S RECOMMENDED PRIME COAT, IF REQUIRED.
   3. MASKING TAPE: PROVIDE PRESSURE SENSITIVE ADHESIVE TAPE AS SELECTED BY INSTALLER. USE MASKING TAPE TO COVER FINISHED SUBSTRATE ADJACENT TO SEALANT.

H. FOAM: PROVIDE 14 TO 18 POUNDS PER CUBIC FOOT FREE FOAM DENSITY, TWO PART SILICONE ELASTOMER, SUPPLIED IN LIQUID "A" AND "B" COMPONENTS COLORED BLACK AND OFF-WHITE, RESPECTIVELY, FOR EASY IDENTIFICATION.
   1. MIXING: PROVIDE "A" AND "B" COMPONENTS THAT, WHEN THOROUGHLY MIXED AT ROOM TEMPERATURE IN 1:1 RATIO BY EITHER WEIGHT OR VOLUME, WILL EXPAND AND CURE TO A FOAMED ELASTOMER IN ONE TO FIVE MINUTES.
   2. DAMS: PROVIDE ALUMINA SILICATE FIRE-BOARD, MINERAL FIBER BOARD, MINERAL FIBER MATTING, MINERAL FIBER PUTTY, DUCT TAPE, GYPSUM WALLBOARD, TYPE OF PLYWOOD OR PARTICLE BOARD, AS SELECTED BY INSTALLER.
   3. SUPPORT: WHERE REQUIRED, SUPPORT SEALANT WITH ANY COMMON DAMMING MATERIAL SUCH AS CARDBOARD, DUCT TAPE, PLASTIC FOAM, OR BACKER ROD. WHERE REQUIRED, SUPPORT SEALANT WITH THREE INCH THICKNESS OF MINERAL WOOL, INSERTED AND COMPRESSED INTO OPENING.
      a. COLOR FOR EXPOSED LOCATIONS SHALL BE AS SELECTED BY THE ENGINEER FROM MANUFACTURER'S STANDARD COLORS.
      b. WHEREVER SEALS ARE NOT EXPOSED TO VIEW, PROVIDE MANUFACTURER'S STANDARD COLOR WHICH HAS THE BEST OVERALL PERFORMANCE CHARACTERISTICS FOR THE APPLICATION INDICATED.
      c. ASSOCIATED ADHESIVE SEALANT, DAMMING MATERIALS AND SOLVENT SHALL BE AS RECOMMENDED BY THE FOAM MANUFACTURER.

I. FIRESTOP MORTARS: PROVIDE ONE-PART CEMENT-BASED FIRESTOP COMPOUND TO WHICH WATER IS ADDED AND MIXED TO FORM A SLURRY. PROVIDE FORMS TO SUPPORT MATERIAL WHILE CURING.

J. FIBER BOARD: FIBER BOARDS SHALL BE MANUFACTURED FROM NON-ASBESTOS, CALCIUM SILICATE FIBER CEMENT BOARDS HAVING A MINIMUM DENSITY OF 54 POUNDS PER CUBIC FOOT. BOARDS SHALL BE FOUR FEET BY EIGHT FEET AND A MINIMUM OF ONE INCH IN THICKNESS. BOARDS SHALL PROVIDE FIRE PROTECTION FOR THREE HOURS.
   1. FASTENERS: STAPLES, SCREWS AND STEEL BANDING SHALL BE CADMIUM PLATED OR STAINLESS STEEL SIZED IN ACCORDANCE WITH MANUFACTURER'S INSTRUCTIONS.
   2. JOINTS: JOINTS SHALL BE SEALED USING THE SEALANT/PUTTY PREVIOUSLY DESCRIBED HEREIN ABOVE.
   3. FIRE-BREAKS, WHEN REQUIRED, SHALL CONSIST OF A NON-COMBUSTIBLE FLEXIBLE MATERIAL SUCH AS EIGHT POUNDS PER CUBIC FOOT ROCK WOOL INSULATION IN ACCORDANCE WITH FIBER BOARD MANUFACTURER'S RECOMMENDATIONS.

K. WHEN A PENETRATION, JOINT OR OTHER OPENING EXISTS FOR WHICH THERE IS NO AVAILABLE SYSTEM WHICH IS TESTED PER ASTM E 814 OR UL 1479, SUBMIT MANUFACTURER'S RECOMMENDATION TO THE ENGINEER FOR APPROVAL.

L. SPRAY APPLIED FIREPROOFING (CONDUIT SYSTEM PROVISION):
   1. THE FIRE-RESISTIVE COATING SHALL BE A PORTLAND CEMENT EXFOLIATED VERMICULITE BASED MATERIAL, HOMOGENEOUS THROUGHOUT ITS ENTIRE THICKNESS; CONTAINING ALKALINE-RESISTANT GLASS AND SHALL BE FORMULATED WITHOUT ASBESTOS; TNEME-SHIELD NO. 40 G AS MANUFACTURED BY TNEMEC COMPANY, INC., W. R. GRACE NO. 146, OR APPROVED EQUAL.
   2. THE FIRE-RESISTIVE COATING SHALL CONFORM TO THE FOLLOWING:

PROPERTY	TEST METHOD	VALUE
AIR EROSION	INTERNATIONAL TESTING LABORATORIES	0.0100 GRAMS PER SQUARE FOOT (MAXIMUM)
BOND STRENGTH	ASTM E 7362,	300 POUNDS PER SQUARE FOOT (MINIMUM)
CHLORIDE ANALYSIS	408-B	150 PPM (MAXIMUM)
COMPRESSIVE	ASTM C 39	300 POUNDS PER SQUARE INCH (MINIMUM; ULTIMATE)
DENSITY (DRY)	PER UL LISTINGS AND ASTM	39 POUNDS PER CUBIC FOOT (MINIMUM AVERAGE)
HARDNESS	ASTM D 2240	32 SHORE D (MINIMUM)

   3. FIRE-RESISTIVE COATING SHALL HAVE BEEN TESTED BY UL, OR OTHER INDEPENDENT TESTING AGENCY ACCEPTABLE TO THE ENGINEER, IN ACCORDANCE WITH ASTM E 119. FULL SCALE TEST AS DEFINED BY ASTM E 119 SHALL BE REQUIRED.
   4. FIRE-RESISTIVE COATING SHALL HAVE UL FIRE-RESISTANCE RATINGS AND SHALL BE APPLIED OVER A METAL LATHE FRAME

c:\pwworking\hnm\external\tyn61470\dms72703\071_0134CEC411.dgn 10/24/2014 10:34:46 AM TYN61470

DESIGN AGENCY
HATCH MOTT MacDONALD
18013 CLEVELAND PKWY.
SUITE 200
CLEVELAND, OH 44135

DESIGNED DGC | DRAWN CM | CHECKED LL | REVISED DGC | REVIEWED RF | DATE 08/11/14 | STRUCTURE FILE NUMBER 3106578

BRIDGE NO. HAM-71-0134
I-71 LYTLE TUNNEL UNDER LYTLE PARK

AT A MINIMUM THICKNESS FOR TWO HOUR FIRE RATING WITHIN THE ROADWAY AIR DUCTSPLENUM.

5. FIRE-RESISTIVE COATING SHALL BE LISTED BY UL AS "INVESTIGATED FOR EXTERIOR USE"; UPON BEING TESTED AS FOLLOWS:

TEST	TEST DESCRIPTION	TEST DURATION
AGING	CIRCULATIONS AIR OVEN	NINE MONTHS EXPOSURE AT 70°C (158°F); MIXTURE AT 95°F
HIGH HUMIDITY	EXPOSURE TO CONTROLLED HUMIDITY OF 97-100%	SIX MONTHS
INDUSTRIAL ATMOSPHERE	EXPOSURE TO CO2 AIR MIXTURE AT 95°F	ONE MONTH
WET, FREEZE AND DRY CYCLE	ALTERNATE EXPOSURE TO WATER 0.7" PER HOUR FOR 72 HOURS, FREEZE -40°F FOR 24 HOURS, AND DRY ATMOSPHERE (120°F) FOR 72 HOURS	12 WEEKS
WEATHEROMETER	ALTERNATE EXPOSURE TO ULTRAVIOLET LIGHT AND WATER SPRAY (3 MINUTES) AND ULTRAVIOLET LIGHT ONLY (17 MINUTES)	720 HOURS
SALT SPRAY	EXPOSURE TO SALT SPRAY USING ASTM B 117	90 DAYS
FIRE TESTS	UPON COMPLETION OF THE ABOVE SIMULATED OUTDOORS ENVIRONMENT EXPOSURES, ALL TEST SAMPLES ARE SUBJECT TO THE FIRE EXPOSURE DEFINED IN UL 263 AND ASTM	TWO HOURS

6. WATER SHALL BE CLEAN, FRESH, POTABLE, AND FREE FROM AMOUNTS OF OILS, ACIDS, ALKALIS, AND ORGANIC MATTER THAT WOULD BE INJURIOUS TO THE FIREPROOFING.

PART 3 - EXECUTION

3.01 PREPARATION

A. EXAMINE PENETRATIONS AND OPENINGS TO BE SEALED WITH INSTALLER PRESENT TO DETERMINE IF CONDITIONS ARE SATISFACTORY FOR THE PROPER INSTALLATION OF FIRE-RESISTANT MATERIALS AND SEALS. IF UNSATISFACTORY CONDITIONS EXIST, DO NOT COMMENCE WORK UNTIL SUCH CONDITIONS HAVE BEEN CORRECTED.

B. SURFACE CLEANING: CLEAN OUT OPENINGS AND JOINTS IMMEDIATELY PRIOR TO INSTALLING FIRESTOPPING TO COMPLY WITH RECOMMENDATIONS OF FIRESTOPPING MANUFACTURER AND THE FOLLOWING REQUIREMENTS:

1. REMOVE ALL FOREIGN MATERIALS FROM SURFACES OF OPENING AND JOINT SUBSTRATES AND FROM PENETRATING ITEMS THAT COULD INTERFERE WITH ADHESION OF FIRESTOPPING.
2. CLEAN OPENING AND JOINT SUBSTRATES AND PENETRATING ITEMS TO PRODUCE CLEAN, SOUND SURFACES CAPABLE OF DEVELOPING OPTIMUM BOND WITH FIRESTOPPING. REMOVE LOOSE PARTICLES REMAINING FROM CLEANING OPERATION.
3. REMOVE LAITANCE AND FORM RELEASE AGENTS FROM CONCRETE.

C. PRIMING: PRIME SUBSTRATES WHERE RECOMMENDED BY FIRESTOPPING MANUFACTURER USING THAT MANUFACTURER'S RECOMMENDED PRODUCTS AND METHODS. CONFINE PRIMERS TO AREAS OF BOND; DO NOT ALLOW SPILLAGE AND MIGRATION ONTO EXPOSED SURFACES.

D. MASKING TAPE: USE MASKING TAPE TO PREVENT FIRESTOPPING FROM CONTACTING ADJOINING SURFACES THAT WILL REMAIN EXPOSED UPON COMPLETION OF WORK AND THAT WOULD OTHERWISE BE PERMANENTLY STAINED OR DAMAGED BY SUCH CONTACT OR BY CLEANING METHODS USED TO REMOVE SMEARS FROM FIRESTOPPING MATERIALS. REMOVE TAPE AS SOON AS IT IS POSSIBLE TO DO SO WITHOUT DISTURBING FIRESTOPPING'S SEAL WITH SUBSTRATES

E. VERIFY THAT ITEMS AND APPARATUS PENETRATING OPENINGS ARE INSTALLED AND COMPLETED BEFORE BEGINNING THE FIRESTOPFIRE STOP INSTALLATION.

F. FOLLOW MANUFACTURER'S INSTRUCTIONS FOR TEMPERATURE, VENTILATION AND OTHER CONDITIONS REQUIRED FOR PROPER MIXING AND INSTALLING OF FOAM SEALS AND SEALANTS.

3.02 LOCATIONS

A. PROVIDE FIRESTOPPING AND FIRE-RESISTANT PENETRATION SEALS WHEREVER REQUIRED TO PRESERVE FIRE RATINGS OF BUILDING ELEMENTS AT PLUMBING, MECHANICAL, ELECTRICAL, AND OTHER PENETRATIONS.

B. INTERIOR WALLS AND PARTITIONS

1. CONSTRUCTION JOINTS BETWEEN TOP OF FIRE RATED WALLS AND UNDERSIDE OF FLOORS ABOVE, SHALL BE FIRESTOPPED.
2. FIRESTOP SYSTEM INSTALLED SHALL HAVE BEEN TESTED BY UL, INCLUDING EXPOSURE TO HOSE STREAM TEST AND INCLUDING FOR USE WITH STEEL FLUTED DECK FLOOR ASSEMBLIES.
3. FIRESTOP SYSTEM USED SHALL ALLOW FOR DEFLECTION OF FLOOR ABOVE.

C. PENETRATIONS

1. PENETRATIONS INCLUDE CONDUIT, CABLE, WIRE, PIPE, DUCT, OR OTHER ELEMENTS WHICH PASS THROUGH ONE OR BOTH OUTER SURFACES OF A FIRE RATED FLOOR, WALL, OR PARTITION.
2. EXCEPT FOR FLOORS ON GRADE, WHERE A PENETRATION OCCURS THROUGH A STRUCTURAL FLOOR AND A SPACE WOULD OTHERWISE REMAIN OPEN BETWEEN THE SURFACES OF THE PENETRATION AND THE EDGE OF THE ADJOINING STRUCTURAL FLOOR OR ROOF, PROVIDE FIRESTOPPING TO FILL SUCH SPACES IN ACCORDANCE WITH ASTM E814.
3. THESE REQUIREMENTS FOR PENETRATIONS SHALL APPLY WHETHER OR NOT SLEEVES HAVE BEEN PROVIDED, AND WHETHER OR NOT PENETRATIONS ARE TO BE EQUIPPED WITH ESCUTCHEONS OR OTHER TRIM. IF PENETRATIONS ARE SLEEVED, FIRESTOP ANNULAR SPACE, IF ANY, BETWEEN SLEEVE AND WALL OF OPENING.

D. PROVIDE FIRESTOPPING TO FILL MISCELLANEOUS VOIDS AND OPENINGS IN FIRE RATED CONSTRUCTION IN A MANNER ESSENTIALLY THE SAME AS SPECIFIED HEREIN BEFORE

3.03 INSTALLATION

A. VERIFY EXISTING CONDITIONS AND SUBSTRATES BEFORE STARTING WORK.

B. DO NOT USE MATERIALS THAT CONTAIN SOLVENTS, SHOW SIGN OF DAMAGE OR ARE BEYOND THEIR SHELF LIFE.

C. DURING INSTALLATION, PROVIDE MASKING AND DROP CLOTHS AS NEEDED TO PREVENT FIRESTOPPING PRODUCTS FROM CONTAMINATING ANY ADJACENT SURFACES.

D. CONFORM TO VENTILATION REQUIREMENTS IF REQUIRED BY MANUFACTURER'S INSTALLATION INSTRUCTIONS OR MATERIAL SAFETY DATA SHEET.

E. WEATHER CONDITIONS: DO NOT PROCEED WITH INSTALLATION OF FIRESTOP PRODUCTS WHEN TEMPERATURES ARE IN EXCESS OR BELOW THE MANUFACTURER'S RECOMMENDATIONS.

F. SCHEDULE INSTALLATION OF FIRESTOP PRODUCTS AFTER COMPLETION OF PENETRATING ITEM INSTALLATION BUT PRIOR TO COVERING OR CONCEALING OF OPENINGS.

G. COORDINATE THIS WORK AS REQUIRED WITH WORK OF OTHER TRADES

H. INSTALL MATERIALS IN CLEAN, DRY OPENINGS FREE OF LOOSE MATERIAL AND PROJECTIONS.

I. INSTALL MATERIALS IN ACCORDANCE WITH THE RESPECTIVE MANUFACTURER'S INSTALLATION INSTRUCTIONS, AND AS REQUIRED TO PROVIDE A TIGHT SEAL AND PRESERVE FIRE RATINGS AT PENETRATIONS AND OPENINGS.

J. INSTALLATION OF SEALANT/PUTTY: USE SEALANT FOR SIMPLE FIRE RATED WALL AND FLOOR PENETRATIONS, INCLUDING CABLE SYSTEMS, CONDUIT OR PIPE THROUGH SLEEVES, AND FIRE RATED EXPANSION JOINTS.

1. TWO HOUR RATED SEAL: APPLY SEALANT BEAD TO DEPTH OF 1-1/2 INCHES BY PUSHING BEAD IN FRONT OF NOZZLE TO FILL VOID ABOVE SUPPORT, OR IF MINERAL WOOL SUPPORT IS USED, TO A DEPTH OF 1/2 INCH THICK.
2. TOOL SEALANT: IMMEDIATELY AFTER APPLICATION AND BEFORE SKIN FORMS, REMOVE ANY MASKING TAPE USED. PROTECT SEAL FROM ANY DISTURBANCE FOR 48 HOURS MINIMUM.

K. INSTALLATION OF FOAM OR FIRESTOPFIRE STOP MORTARS: USE FOAM OR MORTARS FOR COMPLEX FIRE RATED WALL AND FLOOR PENETRATIONS, INCLUDING MULTIPLE CABLES, MULTIPLE CABLES IN TRAYS, MULTIPLE CONDUIT AND PIPES, AND MIXTURES OF CABLES, CONDUITS AND PIPES.

1. REMOVE OIL AND OTHER FREE LIQUIDS FROM PENETRATION OPENINGS.
2. INSTALLATION: PROVIDE DAMMING OF PENETRATION OPENING IN ACCORDANCE WITH MANUFACTURER'S INSTRUCTION.
3. SEALING: SEALING GAPS AND CRACKS LEFT AFTER DAMMING MATERIALS ARE PLACED.
4. MIXING: STIR MORTAR INTO A SLURRY OR PARTS "A" AND "B" OF THE FOAM IN THEIR ORIGINAL CONTAINERS. COMBINE WITH 1:1 RATIO OF PARTS "A" AND "B". STIR RESULTING MIXTURES THOROUGHLY, EITHER BY HAND OR WITH POWER MIXERS.
5. PLACEMENT: IMMEDIATELY AFTER MIXING, POUR OR INJECT MORTAR OR LIQUID FOAM INTO PENETRATION OPENING, NOT MORE THAN ONE-THIRD FULL TO COMPENSATE FOR EXPANSION DURING CURE. FOLLOW MANUFACTURER'S INSTRUCTIONS EXPLICITLY.

c:\pwworking\hnm\external\ty6\1470\dms727●3\071_0134CE5412.dgn 10/24/2014 10:34:53 AM TY6\1470

DESIGN AGENCY
HATCH MOTT MacDONALD
18013 CLEVELAND PKWY.
SUITE 200
CLEVELAND, OH 44135

DESIGNED	DRAWN	REVIEWED	DATE
DGC	CM	RF	08/11/14
CHECKED	REVISED	STRUCTURE FILE NUMBER	
LL	DGC	3106578	

ELECTRICAL NOTES - PENETRATION FIRESTOPPING - SHEET 3 OF 4

BRIDGE NO. HAM-71-0134
I-71 LYTLE TUNNEL UNDER LYTLE PARK

HAM-71-01.34
PID No. 87268

a. WHEN DISPENSING CONTINUOUSLY, DO NOT EXCEED MEASURED SNAP TIME* OR THREE MINUTES, WHICHEVER IS LESS.

b. IF OPENING IS NOT FILLED WHEN SHOT REACHES MEASURED SNAP TIME* THREE MINUTE MAXIMUM, STOP APPLICATION FOR AT LEAST 15 MINUTES TO ALLOW FOAM TO SET. (* = TIME TO NON-POUR CONDITIONS, BEGINNING OF FOAM RISE.)

6. DAM: LEAVE DAM IN PLACE FOR 24 HOURS MINIMUM TO ALLOW FOAM TO FULLY CURE.

L. INSTALLATION OF FIBER BOARDS

1. PREPARATION

a. INSPECT ALL MATERIALS PRIOR TO CONSTRUCTION TO ENSURE THAT THEY ARE FREE OF DEFECTS AND ARE LABELED WITH AN APPROVED UL LISTING AND LABELING.

b. STORE ALL MATERIALS IN A SAFE, DRY AREA IN THE ORIGINAL FACTORY SUPPLIED PACKAGING. ASSUME RESPONSIBILITY TO PROPERLY STORE ALL MATERIALS AT THE JOB SITE AND TO PREVENT DAMAGE TO STORED MATERIALS.

c. MAINTAIN MATERIALS AT ROOM TEMPERATURE FOR PERIOD OF 48 HOURS PRIOR TO INSTALLATION.

d. INSPECT ALL FRAMING SUPPORTS, CONDUIT, DUCTWORK, ETC., TO MAKE SURE THAT MEMBERS ARE FREE OF DEFECT, SECURELY ATTACHED AND PROPERLY ALIGNED PRIOR TO THE INSTALLATION OF THE BOARDS.

2. CUT BOARDS UTILIZING STANDARD CARPENTER TOOLS SUCH AS A CIRCULAR SAW WITH A CARBIDE TIP BLADE. CUT PANELS WITH A STRAIGHTEDGE TO MAINTAIN FLUSH JOINTS.

3. INSTALLATION: CUT BOARDS FOR THE VERTICAL SIDES OF CONDUITS EQUAL TO THE HEIGHT PLUS 1/8 INCH. CUT THE HORIZONTAL BOARDS EQUAL TO THE WIDTH OF THE CONDUITS PLUS TWICE THE THICKNESS OF THE BOARD PLUS 1/8 INCH. ASSEMBLE THE CLADDING AROUND THE CONDUIT RACK FASTENING THE BOARDS TOGETHER UTILIZING THE REQUIRED SCREW FASTENER. TRANSITIONS FROM VERTICAL/HORIZONTAL TO HORIZONTAL/VERTICAL (BENDS) REQUIRE THAT A CLEARANCE BE MAINTAINED IN THE LENGTH OF THE CONDUIT EQUAL TO 1-1/2 INCHES FOR EVERY TEN FEET.

M. INSTALLATION OF SPRAY APPLIED FIREPROOFING (CONDUIT SYSTEM PROVISION):

1. GENERAL: WRAP CONDUITS FOR A MINIMUM DISTANCE OF ONE FOOT ON EITHER SIDE OF AN EXPANSION OR CONTRACTION JOINT, INCLUDING FITTING.

2. INSTALL METAL LATHE SUPPORTS AND FRAMING AFTER ALL CONDUITS HAVE BEEN INSTALLED AND CLEANED. METAL LATHE SHALL WRAP THE ENTIRE DUCT BANK. METAL LATHE SHALL BE RIGIDLY SUPPORTED TO PREVENT SAGGING OR DEFORMATION AND TO ENSURE ADEQUATE BOND WITH THE SPRAY APPLIED FIREPROOFING MATERIAL.

3. SURFACE PREPARATION:

a. ALL SURFACES, INCLUDING EXISTING CONCRETE, BOXES, CONDUIT, AND SUPPORTS SHALL BE THOROUGHLY CLEANED PRIOR TO APPLICATION OF METAL LATHE, SUPPORTS AND FIREPROOFING TO ENSURE ADHESION.

b. ELECTRICAL CONDUIT WHICH IS GALVANIZED DOES NOT REQUIRE SURFACE PREPARATION.

c. GALVANIZED CONDUIT SURFACES WHICH HAVE BEEN CUT, DAMAGED OR ABRADED SHALL BE TOUCHED-UP AS SPECIFIED IN SECTION 16110. WITH TNEMEC C 90-93 TNEME-ZINC.

4. MIXING: FIREPROOFING MATERIALS SHALL BE MIXED IN STRICT ACCORDANCE WITH THE MANUFACTURER'S RECOMMENDATIONS.

5. APPLICATION:

a. APPLY FIRE-RESISTIVE COATING AFTER ALL CONDUITS AND HANGERS ARE IN PLACE.

b. OTHER WORK SHALL NOT BE PERFORMED ON, OR ADJACENT TO, FRESHLY APPLIED FIRE-RESISTIVE COATING FOR AT LEAST 24 HOURS AFTER APPLICATION HAS BEEN COMPLETED.

c. FIREPROOFING MATERIAL SHALL BE APPLIED OVER METAL LATHE TO A THICKNESS AS REQUIRED TO OBTAIN THE SPECIFIED FIRE RATING SUBJECT TO A MINIMUM THICKNESS OF TWO INCHES.

d. FIREPROOFING SHALL BE APPLIED IN ACCORDANCE WITH THE PROCEDURE RECOMMENDED BY THE MANUFACTURER AND SHALL BE TROWELED SMOOTH.

e. FIRE-RESISTIVE COATING SHALL NOT BE APPLIED WHEN THE SUBSTRATE SURFACE TEMPERATURE IS GREATER THAN 100 DEGREES FAHRENHEIT.

6. CLEAN-UP: SURFACES NOT INDICATED TO RECEIVE FIREPROOFING SHALL BE THOROUGHLY CLEANED OF ALL SPRAYED MATERIAL.

7. FIELD TESTS AND INSPECTION: SPRAYED MATERIAL SHALL BE TESTED FOR THICKNESS AND DENSITY IN ACCORDANCE WITH ASTM E 605, BY AN ACCEPTED INDEPENDENT TESTING LABORATORY, AND TEST RESULTS SHALL BE SUBMITTED FOR APPROVAL. TESTING AND ANY REQUIRED REPAIR WORK SHALL BE THE RESPONSIBILITY OF THE CONTRACTOR.

8. REPAIR

a. TEST AREAS AND REJECTED AREAS SHALL BE RE-SPRAYED WITH FIREPROOFING MATERIAL.

b. FINAL INSPECTION OF SPRAYED AREAS WILL BE CONDUCTED BY THE ENGINEER.

c. AREAS REQUIRING ADDITIONAL FIREPROOFING MATERIAL TO PROVIDE PROPER THICKNESS FOR THE SPECIFIED FIRE-RESISTANCE RATING SHALL BE RE-SPRAYED AT NO ADDITIONAL COST TO THE AUTHORITY.

3.04 SEQUENCING AND SCHEDULING

A. PRE-INSTALLATION CONFERENCE: CONVENE A PRE-INSTALLATION CONFERENCE TO ESTABLISH PROCEDURES TO MAINTAIN OPTIMUM WORKING CONDITIONS AND TO COORDINATE THIS WORK WITH RELATED AND ADJACENT WORK.

B. SEQUENCE: PERFORM WORK OF THIS AND OTHER SECTIONS IN PROPER SEQUENCE TO PREVENT DAMAGE TO THE FIRESTOP SYSTEMS AND TO ENSURE THAT THEIR INSTALLATION WILL OCCUR PRIOR TO ENCLOSING OR CONCEALING WORK.

C. INSTALL ALL FIRESTOP SYSTEMS AFTER VOIDS AND JOINTS ARE PREPARED SUFFICIENTLY TO ACCEPT THE APPLICABLE FIRESTOP SYSTEM.

D. DO NOT COVER FIRESTOP SYSTEMS UNTIL THEY HAVE BEEN PROPERLY INSPECTED AND ACCEPTED BY THE AUTHORITY HAVING JURISDICTION.

3.05 FIELD QUALITY CONTROL

A. SEALANT: INSPECT SEALANT AFTER 24 HOURS FOR COMPLETE ADHESION, AND SEAL AND CORRECT ALL DEFICIENCIES. REMOVE DAMMING MATERIALS TO INSPECT UNDER SITE.

B. FOAM: FOLLOW MANUFACTURER'S INSTALLATION INSTRUCTIONS PRECISELY INCLUDING FOUR-POINT FIELD QUALITY CONTROL CHECKS WHICH CONSIST OF FOAM COLOR, FOAM CELL STRUCTURES, SNAP TIME, AND FREE FOAM DENSITY.

C. CORRECT ANY DEFICIENCIES BY ADDING FOAM OR SEALANT. PERFORMED A RE-INSPECTION AFTER 24 HOURS.

D. REINSTALL DAMMING MATERIALS WHICH ARE REQUIRED TO ACHIEVE FIRE RATING.

3.06 CLEANING

A. REMOVE SPILLED AND EXCESS MATERIALS ADJACENT TO PENETRATIONS WITHOUT DAMAGING ADJACENT SURFACES AS WORK PROGRESSES BY METHODS AND WITH CLEANING MATERIALS APPROVED BY MANUFACTURERS OF FIRESTOPPING PRODUCTS AND OF ADJACENT PRODUCTS.

B. LEAVE FINISHED WORK IN NEAT, CLEAN CONDITION WITH NO EVIDENCE OF SPILL-OVERS OR DAMAGE TO ADJACENT SURFACES.

C. PROTECT FIRESTOPPING DURING AND AFTER CURING PERIOD FROM CONTACT WITH CONTAMINATING SUBSTANCES OR FROM DAMAGE RESULTING FROM CONSTRUCTION OPERATIONS OR OTHER CAUSES SO THAT THEY ARE WITHOUT DETERIORATION OR DAMAGE AT TIME OF SUBSTANTIAL COMPLETION. IF, DESPITE SUCH PROTECTION, DAMAGE OR DETERIORATION OCCURS, CUT OUT AND REMOVE DAMAGED OR DETERIORATED FIRESTOPPING IMMEDIATELY AND INSTALL NEW MATERIALS TO PRODUCT FIRESTOPPING COMPLYING WITH SPECIFIED REQUIREMENTS.

PART 4 - METHOD OF PAYMENT AND ITEMS

4.01 METHOD OF PAYMENT AND ITEMS

A. PAYMENT FOR ITEMS SHALL BE MADE AT THE CONTRACT UNIT PRICE, INCLUDING BUT NOT LIMITED TO ALL WORK, LABOR, EQUIPMENT, AND MATERIALS NECESSARY THEREFORE OR INCIDENTAL THERETO, AS FOLLOWS:

ITEM NO.	DESCRIPTION	UNIT
SPECIAL	SPECIAL - MISC.: PENETRATION FIRESTOPPING	LUMP

c:\pwworking\hnm\external\tyn61470\dms727303\071_0134CE5413.dgn 10/24/2014 10:35:02 AM TYN61470

DESIGN AGENCY
HATCH MOTT MacDONALD
18013 CLEVELAND PKWY.
SUITE 200
CLEVELAND, OH 44135

DESIGNED DGC | DRAWN CM | REVIEWED RF | DATE 08/11/14
CHECKED LL | REVISED DGC | STRUCTURE FILE NUMBER 3106578

ELECTRICAL NOTES - PENETRATION FIRESTOPPING - SHEET 4 OF 4

HAM-71-01.34
PID No. 87268

BRIDGE NO. HAM-71-0134
I-71 LYTLE TUNNEL UNDER LYTLE PARK

ITEM 625 - CONDUCTORS AND CABLES

PART 1 EXECUTION

1.01 SECTION INCLUDES

A. BUILDING WIRES, CORDS AND CABLES RATED 600 V AND LESS.
B. CONNECTORS, SPLICES, AND TERMINATIONS RATED 600 V AND LESS.

1.02 STANDARDS

A. NATIONAL ELECTRICAL MANUFACTURERS ASSOCIATION (NEMA).
   1. WC 70/ICEA S-95-658 ANNEALED (SOFT) COPPER.
B. NATIONAL FIRE PROTECTION ASSOCIATION (NFPA):
   1. 70, NATIONAL ELECTRICAL CODE (NEC)
   2. 70E STANDARD FOR ELECTRICAL SAFETY IN THE WORKPLACE
   3. 502 STANDARDS FOR ROAD TUNNELS, BRIDGES AND OTHER LIMITED ACCESS HIGHWAYS

1.03 QUALITY CONTROL

A. TESTING AGENCY QUALIFICATIONS: MEMBER COMPANY OF NETA OR A NRTL. TESTING AGENCY AS DEFINED BY OSHA IN 29 CFR 1910.7 OR A MEMBER COMPANY OF THE INTERNATIONAL ELECTRICAL TESTING ASSOCIATION AND THAT IS ACCEPTABLE TO AUTHORITIES HAVING JURISDICTION.
B. TESTING AGENCY'S FIELD SUPERVISOR: CERTIFIED BY NETA TO SUPERVISE ON-SITE TESTING.
C. ELECTRICAL COMPONENTS, DEVICES, AND ACCESSORIES: LISTED AND LABELED AS DEFINED IN NFPA 70, ARTICLE 100, BY A TESTING AGENCY ACCEPTABLE TO AUTHORITIES HAVING JURISDICTION, AND MARKED FOR INTENDED USE.
D. COMPLY WITH NFPA 70.

1.04 SUBMITTALS

A. SUBMIT MANUFACTURERS PRODUCT DATA FOR EACH CABLE AND ACCESSORY TYPE. FOR CABLE INCLUDE INSULATION RESISTANCE DATA.
B. SUBMIT MANUFACTURERS INSTALLATION INSTRUCTIONS FOR EACH CABLE AND ACCESSORY TYPE.
C. QUALIFICATION DATA: FOR TESTING AGENCY AND TESTING PERSONNEL.
D. FIELD QUALITY-CONTROL REPORTS. FROM A QUALIFIED TESTING AND INSPECTING AGENCY ENGAGED BY CONTRACTOR FOR CABLE SIZES NO. 3 AWG AND LARGER INTERPRETING TEST RESULT RELATIVE TO COMPLIANCE WITH PERFORMANCE REQUIREMENTS OF TESTING STANDARD. SUBMIT ALL TEST RECORD SHEETS.

PART 2 PRODUCTS

2.01 GENERAL

A. FURNISH PRODUCTS AS INDICATED.

2.02 CONDUCTORS AND CABLES

A. SUPPLIERS:
   1. ALCAN PRODUCTS CORPORATION; ALCAN CABLE DIVISION.
   2. ALPHA WIRE.
   3. BELDEN INC.
   4. ENCORE WIRE CORPORATION.
   5. GENERAL CABLE TECHNOLOGIES CORPORATION.
   6. SOUTHWIRE INCORPORATED.
      OR APPROVED EQUAL.
B. ALL WIRE SHALL BE NEW AND LESS THAN ONE YEAR OLD OUT OF MANUFACTURER'S STOCK.
C. POWER CONDUCTORS SHALL NOT BE LESS THAN 12 AWG, SIGNALING AND CONTROL WIRES SHALL NOT BE LESS THAN #14 AWG. ALL CONDUCTORS MUST BE SUITABLE FOR THE APPLICATION INTENDED. POWER WIRES #10 AWG AND #12 AWG SHALL BE SOLID, #8 AWG OR LARGER SHALL BE STRANDED, CONTROL WIRES #12 AWG OR SMALLER MAY BE STRANDED WITH THE FOLLOWING REQUIREMENTS OR EXCEPTIONS:
   1. ALL CONDUCTORS TERMINATED WITH CRIMP TYPE DEVICES MUST BE STRANDED.
   2. STRANDED CONDUCTORS MAY ONLY BE TERMINATED WITH UL OR ETL LISTED TYPE TERMINATIONS OR METHODS: E.G. STRANDED CONDUCTORS MAY NOT BE WRAPPED AROUND A TERMINAL SCREW BUT MUST BE TERMINATED WITH A CRIMP
D. CONDUCTORS SHALL BE COPPER, RATED FOR 600V INSULATION.
E. COPPER CONDUCTORS: COMPLY WITH NEMA WC 70/ICEA S-95-658 ANNEALED (SOFT) COPPER.
F. CONDUCTOR INSULATION: COMPLY WITH NEMA WC 70/ICEA S-95-658 FOR TYPE RHW-2 LOW SMOKE ZERO HALOGEN (LSZH)
G. CONTROL CABLE FOR CLASS 1 REMOTE CONTROL AND SIGNAL CIRCUITS: 600 VOLT INSULATION, INDIVIDUAL CONDUCTORS TWISTED TOGETHER, SHIELDED, AND COVERED WITH AN OVERALL LOW SMOKE ZERO HALOGEN EMISSIONS JACKET. CABLE SHALL BE LISTED, TEMPERATURE RATED, AND PLENUM OR NON-PLENUM RATED FOR THE APPLICATION AS REQUIRED IN THE NATIONAL ELECTRICAL CODE.
H. CONTROL CABLE FOR CLASS 2 OR CLASS 3 REMOTE CONTROL AND SIGNAL CIRCUITS SHALL BE CONSTRUCTED, LISTED, TEMPERATURE RATED, AND PLENUM OR NON-PLENUM RATED FOR THE APPLICATION AS REQUIRED IN THE NEC.
I. 600V, RHW-2 LSZH INSULATED CONDUCTORS, COLOR-CODED AS FOLLOWS:

PHASE	208Y/120V	480Y/277V
A	BLACK	BROWN
B	RED	ORANGE
C	BLUE	YELLOW
NEUTRAL	WHITE	GREY
EQUIPMENT GROUND	GREEN	GREEN

2.03 CONNECTORS AND SPLICES

A. SUBJECT TO COMPLIANCE WITH REQUIREMENTS, PROVIDE EQUAL-TO OR COMPARABLE PRODUCT BY ONE OF THE FOLLOWING:
   1. AFC CABLE SYSTEMS, INC.
   2. GARDNER BENDER.
   3. HUBBELL POWER SYSTEMS, INC.
   4. IDEAL INDUSTRIES, INC.
   5. ILSCO; A BRANCH OF BARDES CORPORATION.
   6. NSI INDUSTRIES LLC.
   7. O-Z/GEDNEY; A BRAND OF THE EGS ELECTRICAL GROUP.
   8. THOMAS & BETTS
   9. BURNDY LLC.
   10. 3M; ELECTRICAL MARKETS DIVISION.
   11. TYCO ELECTRONICS.
B. DESCRIPTION: FACTORY-FABRICATED CONNECTORS AND SPLICES OF SIZE, AMPACITY RATING, MATERIAL, TYPE, AND CLASS FOR APPLICATION AND SERVICE INDICATED.
C. WHERE TAP CONNECTORS ARE SHOWN ON DRAWINGS THEY SHALL BE THE INSULATED TAP BOLT TYPE WITH INSULATION TO BE LSZH. THE MAIN CONDUCTOR PASSED THROUGH THE TAP CONNECTOR SHALL REMAIN UNBROKEN WITH THE INSULATION REMOVED FOR THE CONNECTION. NO SPLIT BOLT CONNECTORS WILL BE ACCEPTABLE.
D. COMPRESSION CONNECTORS FOR CONDUCTORS NO. 8 AWG AND LARGER: LONG-BARRELED, UL 486-LISTED, BARE COPPER, COMPRESSION TYPE (BURNDY "HYLUG", OR EQUAL), INSULATED WITH CLAMP-ON, COLD-SHRINK, OR MOLDED COVERS, OR WRAPPED WITH MULTIPLE OVER-LAPPING LAYERS OF 3-M SCOTCH ELECTRICAL TAPE.
   1. TERMINATION FITTINGS: 1- OR 2-HOLE PAD AND INSPECTION PORT.
E. CONNECTORS FOR SOLID CONDUCTORS NO. 10 AWG AND SMALLER: INSULATED WINGED WIRE NUTS. COLOR-CODED FOR SIZE, EXCEPT USE GREEN ONLY FOR GROUNDING CONNECTIONS.
F. CONNECTORS FOR STRANDED CONDUCTORS NO. 10 AWG AND SMALLER: TINNED COPPER, INSULATED SLEEVE, COMPRESSION TYPE, UL-LISTED, WITH WIRE INSULATION GRIP.
G. ALL WIRE CONNECTORS USED IN UNDERGROUND OR EXTERIOR PULL BOXES SHALL BE GEL FILLED TWIST CONNECTORS OR A CONNECTOR DESIGNED FOR DAMP AND WET LOCATIONS.
H. MAKE EACH WIRE AND CABLE CONNECTION ABOVE GRADE WITH AN APPROVED CABLE CONNECTOR KIT.
I. SPLICES FOR LOW VOLTAGE CONDUCTORS SHALL BE SOLDERLESS MECHANICAL PRESSURE TYPE CONNECTIONS. FULLY INSULATED TAP BLOCKS AS MANUFACTURED BY ILSCO (OR APPROVED EQUAL) OR FIELD INSULATION USING PROPER TAPING PROCEDURES USING RUBBER AND PLASTIC ELECTRICAL TAPES AS MANUFACTURED BY 3M COMPANY OR OKONITE C. (OR APPROVED EQUAL) SHALL BE UTILIZED.

2.04 SYSTEM DESCRIPTION

A. ELECTRICAL COMPONENTS, DEVICES, AND ACCESSORIES: LISTED AND LABELED AS DEFINED IN NFPA 70, BY A QUALIFIED TESTING AGENCY, AND MARKED FOR INTENDED LOCATION AND APPLICATION.
B. COMPLY WITH NFPA 70.

PART 3 EXECUTION

3.01 CONDUCTOR MATERIAL APPLICATIONS

A. FEEDERS: COPPER, SOLID FOR NO. 10 AWG AND SMALLER; STRANDED FOR NO. 8 AWG AND LARGER.
B. BRANCH CIRCUITS: COPPER. SOLID FOR NO. 10 AWG AND SMALLER; STRANDED FOR NO. 8 AWG AND LARGER.

3.02 CONDUCTOR INSULATION AND MULTICONDUCTOR CABLE APPLICATIONS AND WIRING METHODS

A. ALL CONDUCTORS INSTALLED IN THE ROAD TUNNEL SHALL BE TYPE LOW SMOKE ZERO HALOGEN.
B. FEEDERS: TYPE RHW-2 LSZH.
C. BRANCH CIRCUITS: TYPE RHW-2 LSZH.
D. TUNNEL LIGHTING FINAL TAP CIRCUITS: TYPE RHW-2 LSZH.
E. FEEDERS CONCEALED IN CONCRETE, BELOW SLABS-ON-GRADE, AND UNDERGROUND: TYPE DUAL RATED RHW-2/USE-2 LSZH.
F. CIRCUITS IN AIR PLENUM: TYPE CIC (CIRCUIT INTEGRITY CONDUIT
G. CONTROL CIRCUITS IN EQUIPMENT ROOM: TYPE TC LZSH, 300V

DESIGN AGENCY
HATCH MOTT MacDONALD
18013 CLEVELAND PKWY.
SUITE 200
CLEVELAND, OH 44135

DESIGNED DGC | DRAWN CM | CHECKED LL | REVIEWED RF | DATE 08/11/14 | REVISED DGC | STRUCTURE FILE NUMBER 3106578

ELECTRICAL NOTES - CONDUCTORS AND CABLES - SHEET 1 OF 3

BRIDGE NO. HAM-71-0134
I-71 LYTLE TUNNEL UNDER LYTLE PARK

HAM-71-01.34
PID No. 87268

183/296

441/555

c:\pwworking\hmm\external\tyn61470\dms727●3\071_0134CE5416.dgn 10/24/2014 10:35:11 AM TYN61470

H. EQUIPMENT ROOM COMMS: TYPE SM FO LSZH (SINGLE MODE FIBER OPTIC), TYPE S/SM (SINGLE MODE), CAT6 LSZH
I. COAX TYPE INSULATION: TYPE RG-6

3.03 INSTALLATION OF CONDUCTORS AND CABLES

A. LOW VOLTAGE POWER, CONTROL AND SIGNAL CABLES SHALL BE INSTALLED IN CONDUIT.
B. CONCEAL CABLES IN FINISHED WALLS, CEILINGS, AND FLOORS UNLESS OTHERWISE INDICATED.
C. COMPLETE RACEWAY INSTALLATION BETWEEN CONDUCTOR AND CABLE TERMINATION POINTS ACCORDING TO GENERAL NOTES FOR "RACEWAYS AND BOXES FOR ELECTRICAL SYSTEMS" PRIOR TO PULLING CONDUCTORS AND CABLES.
D. CONTRACTOR SHALL PROVIDE ALL NECESSARY EQUIPMENT FOR PULLING CABLE, INCLUDING BUT NOT LIMITED TO; REELS, WINDERS, BLOCKS, PULLEYS, RIGGING AND PULLING EYES FOR INSTALLATION OF CONDUCTORS. CABLES SHALL BE PROPERLY LUBRICATED USING A LUBRICANT AND METHOD AS RECOMMENDED BY THE MANUFACTURER.
E. USE MANUFACTURER-APPROVED PULLING COMPOUND OR LUBRICANT WHERE NECESSARY; COMPOUND USED MUST NOT DETERIORATE CONDUCTOR OR INSULATION. DO NOT EXCEED MANUFACTURER'S RECOMMENDED MAXIMUM PULLING TENSIONS AND SIDEWALL PRESSURE VALUES.
F. USE PULLING MEANS, INCLUDING FISH TAPE, CABLE, ROPE, AND BASKET-WEAVE WIRE/CABLE GRIPS, THAT WILL NOT DAMAGE CABLES OR RACEWAY.
G. INSTALL EXPOSED CABLES PARALLEL AND PERPENDICULAR TO SURFACES OF EXPOSED STRUCTURAL MEMBERS, AND FOLLOW SURFACE CONTOURS WHERE POSSIBLE.
H. SUPPORT CABLES ACCORDING TO GENERAL NOTES ON "HANGERS AND SUPPORTS FOR ELECTRICAL SYSTEMS."
I. UNLESS OTHERWISE INDICATED ON THE DRAWINGS, INSTALL ALL CONDUCTORS IN RACEWAY. INSTALL CONTINUOUS CONDUCTORS BETWEEN OUTLETS, DEVICES AND BOXES WITHOUT SPLICES OR TAPS. DO NOT PULL CONNECTIONS INTO RACEWAYS. LEAVE AT LEAST 8 INCHES OF CONDUCTOR AT OUTLETS FOR FIXTURE OR DEVICE CONNECTIONS.
J. ELECTRICAL CONDUCTOR AND CABLE WORK IS REPRESENTED ON THE DRAWINGS. UNLESS OTHERWISE INDICATED, CONDUCTOR SIZES SHOWN ON THE DRAWINGS ARE BASED ON NEC CURRENT RATINGS COPPER AT 75 DEGREES C TEMPERATURE RATING FOR ALL POWER CIRCUITS. MODIFY RACEWAY AND CONDUCTOR SIZING AS MAY BE NECESSITATED BY ANY DEVIATION FROM THE DRAWINGS. DO NOT DECREASE THE INDICATED CONDUCTOR SIZE DUE TO THE USE OF CONDUCTORS HAVING A TEMPERATURE RATING OF 90 DEGREES C.
K. PULL ALL CONDUCTORS INTO A RACEWAY AT THE SAME TIME. USE LISTED WIRE PULLING LUBRICANT FOR PULLING CONDITIONS WHEN NECESSARY. COMPLETELY AND THOROUGHLY SWAB RACEWAY SYSTEM BEFORE INSTALLING CONDUCTORS.

3.04 CONNECTIONS

A. TIGHTEN ELECTRICAL CONNECTORS AND TERMINALS ACCORDING TO MANUFACTURER'S PUBLISHED TORQUE-TIGHTENING VALUES. IF MANUFACTURER'S TORQUE VALUES ARE NOT INDICATED, USE THOSE SPECIFIED IN UL 486A-486B. ALL TORQUE TIGHTENING EQUIPMENT SHALL BE CALIBRATED BEFORE USE WITH CALIBRATION RECORDS AVAILABLE FOR INSPECTION.
B. MAKE SPLICES, TERMINATIONS, AND TAPS THAT ARE COMPATIBLE WITH CONDUCTOR MATERIAL AND THAT POSSESS EQUIVALENT OR BETTER MECHANICAL STRENGTH AND INSULATION RATINGS THAN UNSPLICED CONDUCTORS.
C. USE OXIDE INHIBITOR IN EACH SPLICE, TERMINATION, AND TAP FOR ALUMINUM CONDUCTORS.
D. WIRING AT OUTLETS: INSTALL CONDUCTOR AT EACH OUTLET, WITH AT LEAST 8 INCHES (200 MM) OF SLACK.
E. CONNECT CONDUCTORS NO. 6 AWG AND LARGER TO PANELBOARDS AND APPARATUS BY MEANS OF APPROVED MECHANICAL LUGS OR COMPRESSION CONNECTORS.

3.05 IDENTIFICATION

A. IDENTIFY AND COLOR-CODE CONDUCTORS AND CABLES ACCORDING TO GENERAL NOTES ON "IDENTIFICATION FOR ELECTRICAL SYSTEMS."
B. IDENTIFY EACH SPARE CONDUCTOR AT EACH END WITH IDENTITY NUMBER AND LOCATION OF OTHER END OF CONDUCTOR, AND IDENTIFY AS SPARE CONDUCTOR.

3.06 FIRESTOPPING

A. APPLY FIRESTOPPING TO ELECTRICAL PENETRATIONS OF FIRE-RATED FLOOR AND WALL ASSEMBLIES TO RESTORE ORIGINAL FIRE-RESISTANCE RATING OF ASSEMBLY ACCORDING TO SECTION 07250 "PENETRATION FIRESTOPPING."
B. SEAL AROUND CABLES PENETRATING FIRE-RATED ELEMENTS.
C. FIELD QUALITY CONTROL
D. TESTING AGENCY: ENGAGE A QUALIFIED TESTING AGENCY TO PERFORM TESTS AND INSPECTIONS.
E. MANUFACTURER'S FIELD SERVICE: ENGAGE A FACTORY-AUTHORIZED SERVICE REPRESENTATIVE TO TEST AND INSPECT COMPONENTS, ASSEMBLIES, AND EQUIPMENT INSTALLATIONS, INCLUDING CONNECTIONS.
F. PERFORM THE FOLLOWING TESTS AND INSPECTIONS:
NETA TESTS ON ALL CONDUCTORS AND CABLES INCLUDING BUT NOT LIMITED TO FEEDER CONDUCTORS, CONTROL CABLES, BRANCH CIRCUIT CONDUCTORS, CONDUCTORS FEEDING CRITICAL EQUIPMENT AND SERVICES, CIRCUIT CONDUCTORS.
G. ALL TESTING MUST BE CARRIED OUT BY COMPETENT PERSONS, QUALIFIED AS NETA CERTIFIED TECHNICIANS, NETA ETT LEVEL 3 OR ABOVE.
H. AFTER INSTALLING CONDUCTORS AND CABLES AND BEFORE ELECTRICAL CIRCUITRY HAS BEEN ENERGIZED, TEST FEEDER CONDUCTORS AND BRANCH CONDUCTORS FOR COMPLIANCE WITH REQUIREMENTS. TEST ALL WIRING PRIOR TO ENERGIZING TO ENSURE THAT IT IS FREE FROM UNINTENTIONAL GROUNDS AND SHORTS, IS PROPERLY PHASED, AND THAT ALL CONNECTORS ARE TIGHT.
I. PERFORM EACH VISUAL AND MECHANICAL INSPECTION AND ELECTRICAL TEST STATED IN NETA ACCEPTANCE TESTING SPECIFICATION. RECORD ALL RESULTS AND SUBMIT TO ENGINEER FOR APPROVAL. CERTIFY COMPLIANCE WITH MANUFACTURER'S TEST PARAMETERS, IN THE ABSENCE OF MANUFACTURER'S PUBLISHED DATA, CERTIFY COMPLIANCE WITH THE TABLE LISTED IN NETA ACCEPTANCE TESTING SPECIFICATION.
J. NETA ACCEPTANCE TESTING SPECIFICATION COMBINED WITH ADDITIONAL TESTS SHALL BE REQUIRED UNLESS STATED OTHERWISE. THE LIST BELOW INCLUDES ADDITIONAL TESTS AS LISTED.
K. PRE-CONNECTION: VISUAL AND MECHANICAL INSPECTION.
L. PERFORM RESISTANCE MEASUREMENTS THROUGH BOLTED CONNECTIONS WITH A LOW RESISTANCE DC OHMMETER OR AN INSULATION RESISTANCE TEST METER.
M. CONTINUITY OF ALL PROTECTIVE CONDUCTORS TO BE RECORDED USING A LOW RESISTANCE DC OHMMETER OR AN INSULATION RESISTANCE TEST METER.
N. CHECK CONTINUITY OF ALL CONDUCTORS AND VERIFY CORRECT CABLE CONNECTIONS.
O. CHECK POLARITY OF ALL CONDUCTORS.
P. PERFORM INSULATION-RESISTANCE TEST ON EACH CONDUCTOR WITH RESPECT TO GROUND AND ALL ADJACENT CONDUCTORS USING AN INSULATION RESISTANCE TEST METER. EACH CONDUCTOR MUST BE TESTED FOR 1 MINUTE.
Q. VERIFY UNIFORM RESISTANCE OF ALL PARALLEL CONDUCTORS.
R. POST-CONNECTION
S. TEST AND RECORD THE IMPEDANCE AT THE SUPPLY ORIGIN.
T. TEST AND RECORD THE GROUND FAULT LOOP IMPEDANCE BETWEEN ALL LIVE CONDUCTORS AND GROUND AT THE FURTHEST EXTENTS OF EACH FINAL CIRCUIT. THIS TEST IS TO BE COMPLETED USING A FAULT LOOP IMPEDANCE TESTER AND ALL RESULTS MUST BE IN COMPLIANCE WITH THE CIRCUIT PROTECTIVE DEVICE (CPD) LIMITS FROM THE MANUFACTURER.
U. TEST AND RECORD THE OPERATING TRIP TIME OF ALL GFI AND GFCI DEVICES TO ENSURE COMPLIANCE WITH NEC AND MANUFACTURER'S PUBLISHED DATA. THIS TEST IS TO BE COMPLETED USING A GFCI TEST METER.
V. INFRARED SCANNING: AFTER SUBSTANTIAL COMPLETION AND AT THE COMMISSIONING STAGE, BUT NOT MORE THAN 60 DAYS AFTER FINAL ACCEPTANCE, PERFORM AN INFRARED SCAN OF EACH SPLICE IN CONDUCTORS NO. 3 AWG AND LARGER. REMOVE BOX AND EQUIPMENT COVERS SO SPLICES ARE ACCESSIBLE TO PORTABLE SCANNER. CORRECT DEFICIENCIES DETERMINED DURING THE SCAN.
W. INSTRUMENT: USE AN INFRARED SCANNING DEVICE DESIGNED TO MEASURE TEMPERATURE OR TO DETECT SIGNIFICANT DEVIATIONS FROM NORMAL VALUES. PROVIDE CALIBRATION RECORD FOR DEVICE.
X. RECORD OF INFRARED SCANNING: PREPARE A CERTIFIED REPORT THAT IDENTIFIES SPLICES CHECKED AND THAT DESCRIBES SCANNING RESULTS. INCLUDE NOTATION OF DEFICIENCIES DETECTED, REMEDIAL ACTION TAKEN, AND OBSERVATIONS AFTER REMEDIAL ACTION.
Y. TEST AND INSPECTION REPORTS: PREPARE A WRITTEN REPORT TO RECORD THE FOLLOWING:
Z. PROCEDURES USED.
AA. LIST OF TEST PERSONAL WITH RESUMES.
BB. TEST RECORD SHEETS WITH RESULTS THAT COMPLY WITH REQUIREMENTS.
CC. RESULTS THAT DO NOT COMPLY WITH REQUIREMENTS AND CORRECTIVE ACTION TAKEN TO ACHIEVE COMPLIANCE WITH REQUIREMENTS.
DD. CABLES WILL BE CONSIDERED DEFECTIVE IF THEY DO NOT PASS TESTS AND INSPECTIONS.
EE. SUBMIT THREE (3) COPIES OF TEST REPORTS TO THE ENGINEER.

PART 4 METHOD OF PAYMENT AND ITEMS

A. PAYMENT FOR ITEMS SHALL BE MADE AT THE CONTRACT UNIT PRICE, INCLUDING BUT NOT LIMITED TO ALL WORK, LABOR, EQUIPMENT, AND MATERIALS NECESSARY THEREFORE OR INCIDENTAL THERETO, AS FOLLOWS:

DESIGN AGENCY
HATCH MOTT MacDONALD
18013 CLEVELAND PKWY.
SUITE 200
CLEVELAND, OH 44135

DESIGNED DGC | DRAWN CM | REVIEWED RF | DATE 08/11/14
CHECKED LL | REVISED DGC | STRUCTURE FILE NUMBER 3106578

ELECTRICAL NOTES - CONDUCTORS AND CABLES - SHEET 2 OF 3

BRIDGE NO. HAM-71-0134
I-71 LYTLE TUNNEL UNDER LYTLE PARK

HAM-71-01.34
PID No. 87268

c:\pw working\hmm\external\tyn61470\dms727●3\071_0134CES417.dgn 10/24/2014 10:35:23 AM TYN61470

ITEM	DESCRIPTION	UNIT
625	LIGHTING, MISC.: 3 CONDUCTOR, NO. 12 AWG 'TRAY CABLE', LSZH	FT
625	LIGHTING, MISC.: 3 CONDUCTOR, NO. 10 AWG 'TRAY CABLE , LSZH	FT
625	LIGHTING, MISC.: 4 CONDUCTOR, NO. 10 AWG 'TRAY CABLE, LSZH	FT
625	LIGHTING, MISC.: 1 PAIR, NO. 16 AWG SHIELDED 'TRAY CABLE', LSZH	FT
625	LIGHTING, MISC.: 1 CONDUCTOR, 4 PAIR, NO. 16 AWG SHIELDED 'TRAY CABLE', LSZH	FT
625	LIGHTING, MISC.: 1 CONDUCTOR, 8 PAIR, NO. 16 AWG SHIELDED 'TRAY CABLE', LSZH	FT
625	LIGHTING, MISC.: 1 CONDUCTOR, 12 PAIR, NO. 16 AWG SHIELDED 'TRAY CABLE', LSZH	FT
625	LIGHTING, MISC.: 1 CONDUCTOR, 24 PAIR, NO. 16 AWG SHIELDED 'TRAY CABLE', LSZH	FT
625	LIGHTING, MISC.: 1 CONDUCTOR, 36 PAIR, NO. 16 AWG SHIELDED 'TRAY CABLE', LSZH	FT
625	LIGHTING, MISC.: 1 CONDUCTOR 1-TRIAD NO. 16 AWG SHIELDED 'TRAY CABLE', LSZH	FT
625	LIGHTING, MISC.: 3 CONDUCTOR, NO. 8 AWG 'TRAY CABLE', LSZH	FT
625	LIGHTING, MISC.: 3 CONDUCTOR, NO. 8 AWG W/GROUND 'TRAY CABLE', LSZH	FT
625	LIGHTING, MISC.: 4 CONDUCTOR, NO. 8 AWG W/GROUND 'TRAY CABLE', LSZH	FT
625	LIGHTING, MISC.: 3 CONDUCTOR, NO. 6 AWG 'TRAY CABLE', LSZH	FT
625	LIGHTING, MISC.: 3 CONDUCTOR, NO. 6 AWG W/GROUND 'TRAY CABLE', LSZH	FT
625	LIGHTING, MISC.: 4 CONDUCTOR, NO. 6 AWG W/GROUND 'TRAY CABLE', LSZH	FT
625	LIGHTING, MISC.: 3 CONDUCTOR, NO. 2 AWG W/GROUND 'TRAY CABLE', LSZH	FT
625	LIGHTING, MISC.: 4 CONDUCTOR, NO. 2 AWG W/GROUND 'TRAY CABLE', LSZH	FT
625	LIGHTING, MISC.: 1 CONDUCTOR, NO. 4/0 AWG, LSZH	FT
625	LIGHTING, MISC.: 1 CONDUCTOR, 400KCMIL, RHW-2, LSZH	FT
625	LIGHTING, MISC.: 1 CONDUCTOR, 500 KCMIL, RHW-2, LSZH	FT
625	LIGHTING, MISC.: 1 CONDUCTOR, 750 KCMIL, RHW-2, LSZH	FT
625	LIGHTING, MISC.: 1 CONDUCTOR, NO. 14 AWG, CIC	FT
625	LIGHTING, MISC.: 1 CONDUCTOR, NO. 8 AWG, CIC	FT
625	LIGHTING, MISC.: 1 CONDUCTOR, NO. 6 AWG, CIC	FT
625	LIGHTING, MISC.: 2 CONDUCTOR, NO. 12 AWG, CIC	FT
625	LIGHTING, MISC.: 1 CONDUCTOR, NO. 12 AWG, RHW-2, LSZH	FT
625	LIGHTING, MISC.: 10 CONDUCTOR, NO. 14 AWG, RHW-2, LSZH	FT
625	LIGHTING, MISC.: 2 CONDUCTOR, NO. 10 AWG, 1/C #12G, RHW-2, LSZH	FT
625	LIGHTING, MISC.: 2 CONDUCTOR, NO. 12 AWG, RHW-2, LSZH	FT
625	LIGHTING, MISC.: 2 CONDUCTOR, NO. 12 AWG, 1/C #12G, RHW-2, LSZH	FT
625	LIGHTING, MISC.: 24 CONDUCTOR, SINGLE MODE FIBER OPTIC, LSZH	FT

ITEM	DESCRIPTION	UNIT
625	LIGHTING, MISC.: 1 CONDUCTOR, NO. 3/0 AWG, LSZH	FT
625	LIGHTING, MISC.: 4 CONDUCTOR, NO. 14 AWG, RHW-2, LSZH	FT
625	LIGHTING, MISC.: 6 CONDUCTOR, NO. 12 AWG, RHW-2, LSZH	FT
625	LIGHTING, MISC.: 6 CONDUCTOR, NO. 14 AWG, RHW-2, LSZH	FT

c:\pwworking\hnm\external\tyn61470\dms72703\071_0134CES418.dgn 10/24/2014 10:35:32 AM TYN61470

DESIGN AGENCY
HATCH MOTT MacDONALD
18013 CLEVELAND PKWY.
SUITE 200
CLEVELAND, OH 44135

DESIGNED	DRAWN	REVIEWED	DATE
DGC	CM	RF	08/11/14
CHECKED	REVISED	STRUCTURE FILE NUMBER	
LL	DGC	31065578	

ELECTRICAL NOTES - CONDUCTORS AND CABLES - SHEET 3 OF 3

BRIDGE NO. HAM-71-0134
I-71 LYTLE TUNNEL UNDER LYTLE PARK

HAM-71-01.34
PID No. 87268

RACEWAYS AND BOXES FOR ELECTRICAL SYSTEMS

PART 1 - GENERAL

1.01 SECTION INCLUDES:

A. REQUIREMENTS FOR THE CONTRACTOR TO PROVIDE:
   1. METAL CONDUITS, TUBING, AND FITTINGS.
   2. NONMETAL CONDUITS, TUBING, AND FITTINGS.
   3. METAL WIREWAYS AND AUXILIARY GUTTERS.
   4. SURFACE RACEWAYS.
   5. BOXES, ENCLOSURES, AND CABINETS.

1.02 STANDARDS

A. ANSI C80.1 - RIGID STEEL CONDUIT, ZINC COATED.
B. NECA APPROPRIATE NATIONAL ELECTRICAL INSTALLATION STANDARDS (NEIS).
C. NEMA 250 - ENCLOSURES FOR ELECTRICAL EQUIPMENT (1000 VOLTS MAXIMUM).
D. NEMA FB 1 - FITTINGS, CAST METAL BOXES, AND CONDUIT BODIES FOR CONDUIT AND CABLE ASSEMBLIES.
E. NFPA 502 – STANDARD FOR ROAD TUNNELS, BRIDGES, AND OTHER LIMITED ACCESS HIGHWAYS.
F. NFPA70 – NATIONAL ELECTRICAL CODE.

1.03 QUALITY CONTROL

A. ELECTRICAL COMPONENTS, DEVICES, AND ACCESSORIES: LISTED AND LABELED AS DEFINED IN NFPA 70, ARTICLE 100, BY A TESTING AGENCY ACCEPTABLE TO AUTHORITIES HAVING JURISDICTION, AND MARKED FOR INTENDED USE.
B. COMPLY WITH NFPA 70.
C. COMPLY WITH GENERAL NOTES ON "GROUNDING AND BONDING FOR ELECTRICAL SYSTEMS".

1.04 SUBMITTALS

A. PRODUCT DATA: FOR SURFACE RACEWAYS, WIREWAYS AND FITTINGS, HINGED-COVER ENCLOSURES, AND CABINETS.
B. SHOP DRAWINGS: SHOW FABRICATION, ROUTING, PENETRATION, CONDUIT LABELING AND INSTALLATION DETAILS OF COMPONENTS FOR RACEWAYS, FITTINGS, BOXES, ENCLOSURES, SUPPORTS AND CABINETS. FOR CUSTOM ENCLOSURES AND CABINETS, INCLUDE PLANS, ELEVATIONS, SECTIONS, AND ATTACHMENT DETAILS.
C. SAMPLES: FOR WIREWAYS AND SURFACE RACEWAYS AND FOR EACH COLOR AND TEXTURE SPECIFIED, 12 INCHES (300 MM) LONG.
D. COORDINATION DRAWINGS: CONDUIT ROUTING PLANS, DRAWN TO SCALE, ON WHICH THE FOLLOWING ITEMS ARE SHOWN AND COORDINATED WITH EACH OTHER, USING INPUT FROM INSTALLERS OF ITEMS INVOLVED:
   1. STRUCTURAL MEMBERS IN PATHS OF CONDUIT GROUPS WITH COMMON SUPPORTS.
   2. HVAC AND PLUMBING ITEMS AND ARCHITECTURAL FEATURES IN PATHS OF CONDUIT GROUPS WITH COMMON SUPPORTS.
E. QUALIFICATION DATA: FOR PROFESSIONAL ENGINEER.
F. SOURCE QUALITY-CONTROL REPORTS.
G. "COMBUSTION/TOXICITY CERTIFICATION NUMBER" FOR COVERED PRODUCTS.

PART 2 - PRODUCTS

2.01 GENERAL

A. FURNISH PRODUCTS AS INDICATED.

2.02 METAL CONDUITS, TUBING, AND FITTINGS

A. MANUFACTURERS: SUBJECT TO COMPLIANCE WITH REQUIREMENTS,
   1. ALLIED TUBE & CONDUIT.
   2. O-Z/GEDNEY.
   3. THOMAS & BETTS CORPORATION.
   4. WHEATLAND TUBE COMPANY.
   5. OR EQUAL AND APPROVED.
B. LISTING AND LABELING: METAL CONDUITS, TUBING, AND FITTINGS SHALL BE LISTED AND LABELED AS DEFINED IN NFPA 70, BY A QUALIFIED TESTING AGENCY, AND MARKED FOR INTENDED LOCATION AND APPLICATION.
C. CONDUIT APPLICATION IS LOCATION SPECIFIC AND SHALL BE APPLIED IN ACCORDANCE WITH THE DRAWINGS.
D. RGS: COMPLY WITH ANSI C80.1 AND UL 6.
   1. PROVIDE CONDUIT, COUPLINGS, ELBOWS, BENDS, SEALING FITTINGS, AND NIPPLES CONFORMING TO ANSI C80.1 AND UL 6, WITH EACH LENGTH BEARING MANUFACTURER'S STAMP AND UL LABEL. ALL CONDUITS SHALL BE THREADED.
   2. THE MALE THREADS OF CONDUIT AND FITTINGS SHALL BE HOT-DIP GALVANIZED IN SUCH A MANNER AS TO KEEP THE THREADS CLEAR OF EXCESS ZINC. FEMALE THREADS MAY BE ELECTRO-GALVANIZED INSTEAD OF HOT-DIPPED. CONDUIT ACCESSORIES SUCH AS LOCK NUTS, BUSHINGS AND CONNECTORS SHALL BE ZINC COATED. ALL CONDUIT FITTINGS SHALL BE THREADED AND SHALL CONFORM TO NEMA FB-1. NO SET SCREW FITTINGS SHALL BE USED. NO RUNNING THREADS SHALL BE PERMITTED.
   3. BUSHINGS FOR CONDUITS 1-1/4 INCHES AND LARGER SHALL HAVE A NYLON INSULATED INSERT, AND SHALL BE CONCRETE TIGHT.
   4. FABRICATE CONDUIT BENDS IN A CONDUIT BENDING MACHINE. DO NOT BEND CONDUIT WITH A BENDING TOOL. THE RADIUS OF THE CURVE OF THE INNER EDGE OF ANY BEND SHALL BE NOT LESS THAN SIX TIMES THE INTERNAL DIAMETER OF THE CONDUIT. USE FACTORY BENDS WHEREVER POSSIBLE. ALL FACTORY BENDS SHALL BE SIMILAR IN CONSTRUCTION TO AND OF A TYPE DESIGNED FOR USE WITH THE CONDUIT.
   5. TOUCH-UP GALVANIZED COATING WHERE THE ORIGINAL GALVANIZED COATING ON CONDUIT OR ON GALVANIZED STEEL HAS BEEN REMOVED DUE TO HANDLING OR FOR OTHER REASONS. REPLACE GALVANIZING COATING FOR MALE THREADS WHEN CONDUIT IS FIELD CUT. NO COLD GALVANIZING SPRAY SHALL BE USED. APPLY TOUCH UP GALVANIZING WITH A BRUSH. GALVANIZED COATING SHALL BE ZRC COLD GALVANIZING COMPOUND, OR APPROVED EQUAL.
   6. CONDUIT SLEEVES SHALL BE GALVANIZED RIGID STEEL.
   7. THREE PIECE COUPLINGS, ERIKSON FITTINGS AND SPLIT COUPLINGS SHALL BE CONCRETE-TIGHT.
   8. ALL CONDUIT FITTINGS SUCH AS "T", "C", "L" "E", AND X FITTINGS, SHALL BE GALVANIZED CAST IRON AS MANUFACTURED BY APPLETON ELECTRICAL PRODUCTS, KILLARK, CROUSE HINDS, OR APPROVED EQUAL. EXPANSION/DEFLECTION FITTINGS SHALL BE HOT-DIPPED GALVANIZED, WATERTIGHT (NEMA 4) AND CONCRETE-TIGHT. FITTINGS SHALL PERMIT MOVEMENT OF CONDUIT IN ANY DIRECTION OF ONE INCH, FROM NORMAL AND ANGULAR MISALIGNMENT OF THE AXES OF COUPLED CONDUIT RUNS IN ANY DIRECTION UP TO 30 DEGREES. PROVIDE JUMPER CABLES ACROSS EXPANSION/DEFLECTION FITTINGS AND ASSOCIATED CABLE CLAMPS TO ENSURE CONTINUITY OF CONDUIT GROUNDING.
E. EMT: COMPLY WITH ANSI C80.3 AND UL 797. ELECTRICAL METALLIC TUBING SHALL BE IN ACCORDANCE WITH NEC ARTICLE 358 AND SHALL BE ZINC COATED STEEL. ONLY UL APPROVED STEEL FITTINGS, COUPLINGS AND CONNECTORS SHALL BE USED AND SHALL BE ZINC-COATED, RAINTIGHT, GLAND COMPRESSION TYPE WITH INSULATION THROAT. CRIMP, SPRING, OR SETSCREW TYPE FITTINGS SHALL NOT BE ACCEPTABLE. ONLY APPROVED FULL RADIUS BENDERS SHALL BE USED. MINIMUM SIZE EMT SHALL BE 1". EMT SHALL ONLY BE USED FOR TEMPORARY CONSTRUCTION IN THIS PROJECT.
F. LFMC: FLEXIBLE STEEL CONDUIT WITH PVC JACKET AND COMPLYING WITH UL 360.
G. ALL PVC JACKETS SHALL BE RATED FOR LOW SMOKE AND ZERO HALOGEN (LSZH) BY A QUALIFIED TESTING AGENCY, AND MARKED FOR INTENDED LOCATION AND APPLICATION.
H. FITTINGS FOR METAL CONDUIT: COMPLY WITH NEMA FB 1 AND UL 514B.
   1. CONDUIT FITTINGS FOR HAZARDOUS (CLASSIFIED) LOCATIONS: COMPLY WITH UL 886 AND NFPA 70.
   2. FITTINGS FOR EMT:
      a. MATERIAL: STEEL.
      b. TYPE: COMPRESSION TYPE ONLY, NO SETSCREW CONNECTIONS WILL BE ALLOWED.
   3. EXPANSION FITTINGS: STEEL TO MATCH CONDUIT TYPE, COMPLYING WITH UL 651, RATED FOR ENVIRONMENTAL CONDITIONS WHERE INSTALLED, AND INCLUDING FLEXIBLE EXTERNAL BONDING JUMPER.
I. JOINT COMPOUND: APPROVED, AS DEFINED IN NFPA 70, BY AUTHORITIES HAVING JURISDICTION FOR USE IN CONDUIT ASSEMBLIES, AND COMPOUNDED FOR USE TO LUBRICATE AND PROTECT THREADED CONDUIT JOINTS FROM CORROSION AND TO ENHANCE THEIR CONDUCTIVITY.
J. CONDUITS SHALL BE SUPPORTED ON APPROVED TYPE HANGERS AS INDICATED ON THE DRAWINGS AND SHALL PRECLUDE THE COLLECTION OF CONDENSATE BY DRILLING HOLES AT ALL LOW POINTS IN CONDUIT SYSTEMS OR BY OTHER APPROVED MEANS OF DRAINAGE BEFORE INSTALLATION OF WIRING. HORIZONTAL RUNS OF CONDUIT SHALL BE SUPPORTED AT INTERVALS NOT EXCEEDING THE FOLLOWING LIMITS OF CLOSER AS INDICATED ON THE DRAWINGS.

CONDUIT SIZE:	MAXIMUM SUPPORT SPACING:
¾"	5' – 0"
1"	7' – 0"
1-1/2" OR LARGER	10' – 0"

K. CONDUITS ENTERING BOXES, FITTINGS AND EQUIPMENT STRUCTURES SHALL TERMINATE IN THREADED WATERTIGHT HUBS. BEDS AND OFFSETS SHALL BE AVOIDED WHERE POSSIBLE. UNAVOIDABLE BENDS AND OFFSETS SHALL BE FORMED WITH APPROVED CONDUIT BENDING MACHINE, CONDUIT WHICH HAS BEEN DEFORMED OR CRUSHED IN ANY WAY SHALL NOT BE USED. ALL SCRATCHES, NICKS, COUPLINGS, FITTINGS, EXPOSED THREADS AND OTHER EXPOSED METAL PARTS OF THE RACEWAY CONDUIT SHALL BE PROTECTED AS RECOMMENDED BY THE MANUFACTURER OF THE CONDUIT.
L. CONDUIT EXPANSION FITTINGS, RIGID TYPE, SHALL BE PROVIDED WHERE CONDUITS CROSS STRUCTURAL EXPANSION JOINTS. WHERE THE DISTANCE OF A STRAIGHT LINE OF CONDUIT EXCEEDS 100 LINEAR FEET WITHOUT CROSSING A STRUCTURAL JOINT, A CONDUIT EXPANSION JOINT SHALL BE INSTALLED AT THE MIDPOINT. CONDUIT EXPANSION JOINTS SHALL BE AT CLOSER INTERVALS WHERE INDICATED ON THE DRAWINGS.
M. THE INTERIOR OF ALL CONDUITS SHALL BE THOROUGHLY CLEANED BEFORE INSTALLING CONDUCTORS.

2.03 WIREWAYS

A. SHALL BE SUPPORTED ON APPROVED TYPE HANGERS ON 5'-0" CENTERS AS DETAILED ON DRAWINGS AND SHALL BE PARALLEL TO FLOOR AND SYMMETRICAL WITH RESPECT TO EQUIPMENT LAYOUT AND STRUCTURES.

c:\pwworking\hmm\external\tyn61470\dms72703\071_0134CES419.dgn 10/24/2014 10:35:40 AM TYN61470

DESIGN AGENCY
HATCH MOTT MacDONALD
18013 CLEVELAND PKWY.
SUITE 200
CLEVELAND, OH 44135

DESIGNED DGC | DRAWN CM | REVIEWED RF | DATE 08/11/14
CHECKED LL | REVISED DGC | STRUCTURE FILE NUMBER 3106578

ELECTRICAL NOTES - RACEWAYS AND BOXES - SHEET 1 OF 3

BRIDGE NO. HAM-71-0134
I-71 LYTLE TUNNEL UNDER LYTLE PARK

HAM-71-01.34
PID No. 87268

2.04 SURFACE RACEWAYS

A. LISTING AND LABELING: SURFACE RACEWAYS SHALL BE LISTED AND LABELED AS DEFINED IN NFPA 70, BY A QUALIFIED TESTING AGENCY, AND MARKED FOR INTENDED LOCATION AND APPLICATION.

B. SURFACE METAL RACEWAYS: GALVANIZED STEEL WITH SNAP-ON COVERS COMPLYING WITH UL 5.

1. MANUFACTURERS: SUBJECT TO COMPLIANCE WITH REQUIREMENTS
   a. MONO-SYSTEMS, INC.
   b. PANDUIT CORP.
   c. WIREMOLD / LEGRAND.
   d. OR APPROVED EQUAL.

2.05 BOXES, ENCLOSURES AND CABINETS

A. MANUFACTURERS: SUBJECT TO COMPLIANCE WITH REQUIREMENTS:
1. COOPER TECHNOLOGIES COMPANY; COOPER CROUSE-HINDS.
2. EGS/APPLETON ELECTRIC.
3. HOFFMAN.
4. HUBBELL INCORPORATED.
5. O-Z/GEDNEY.
6. THOMAS & BETTS CORPORATION.
7. NEMANCO.
8. OR APPROVED EQUAL.

B. GENERAL REQUIREMENTS FOR BOXES, ENCLOSURES, AND CABINETS: BOXES, ENCLOSURES, AND CABINETS INSTALLED IN WET LOCATIONS SHALL BE LISTED FOR USE IN WET LOCATIONS.

C. ALL JUNCTION/JOINT/PULL BOXES, COMPONENT BOXES SHALL BE IP66, NEMA 4X RATED, TYPE 316L STAINLESS STEEL ENCLOSURE UNLESS NOTED ON DRAWINGS AS SUBMERSIBLE.

D. FOR NEMA 4X BOXES, CONDUIT SHALL ENTER BOX FROM SIDES OR BOTTOM ONLY.

E. SHEET METAL OUTLET AND DEVICE BOXES: COMPLY WITH NEMA OS 1 AND UL 514A.

F. CAST-METAL OUTLET AND DEVICE BOXES: COMPLY WITH NEMA FB 1, FERROUS ALLOY, TYPE FD, WITH GASKETED COVER.

G. LUMINAIRE OUTLET BOXES: NONADJUSTABLE, DESIGNED FOR ATTACHMENT OF LUMINAIRE WEIGHING 50 LB (23 KG). OUTLET BOXES DESIGNED FOR ATTACHMENT OF LUMINAIRES WEIGHING MORE THAN 50 LB (23 KG) SHALL BE LISTED AND MARKED FOR THE MAXIMUM ALLOWABLE WEIGHT.

H. NEMA 4X STAINLESS STEEL BOXES: CORROSION-RESISTANT SURFACE BOXES SHALL BE MANUFACTURED FROM TYPE 316L STAINLESS STEEL AND HAVE A SMOOTH #4 BRUSHED FINISH. CONTRACTOR SHALL UTILIZE THREADED HUBS OR THREADED CONDUIT HUBS, SEALS, DRAINS AS APPROPRIATE TO MAINTAIN NEMA 4X RATING.

I. HINGED-COVER ENCLOSURES: COMPLY WITH UL 50 AND NEMA 4X, TYPE 12 WITH CONTINUOUS-HINGE COVER WITH FLUSH LATCH UNLESS OTHERWISE INDICATED. METAL ENCLOSURES: 316L STAINLESS STEEL, FINISHED WITH A SMOOTH #4 BRUSHED FINISH.

J. FURNISH AND INSTALL JUNCTION BOXES OF THE SIZE AND TYPE SPECIFIED, LUBRICATE EACH COVER SCREW WITH A COMPOUND TO PREVENT THE SCREW FROM SEIZING AND INSTALL ALL COVER SCREWS.

K. METAL PULL BOX LIDS SHALL BE BONDED BY ATTACHMENT OF THE EQUIPMENT GROUNDING CONDUCTOR TO THE FRAME.

L. CABINETS:
1. FOR ALL VENTILATION BUILDING AREAS: NEMA 3R, TYPE 12 GALVANIZED-STEEL BOX WITH REMOVABLE INTERIOR PANEL AND REMOVABLE FRONT, FINISHED INSIDE AND OUT WITH MANUFACTURER'S STANDARD ENAMEL.
2. HINGED DOOR IN FRONT COVER WITH FLUSH LATCH AND CONCEALED HINGE.
3. KEY LATCH TO MATCH PANELBOARDS.
4. METAL BARRIERS TO SEPARATE WIRING OF DIFFERENT SYSTEMS AND VOLTAGE.
5. ACCESSORY FEET WHERE REQUIRED FOR FREESTANDING EQUIPMENT.

2.06 SPRAY-APPLIED FIREPROOFING

A. IN ACCORDANCE WITH THE REQUIREMENTS OF NFPA-502, EMERGENCY CIRCUITS INSTALLED WITHIN THE TUNNEL SHALL REMAIN FUNCTIONAL FOR A PERIOD OF NOTE LESS THAN 1 HOUR.

B. SPRAY-APPLIED FIREPROOFING MATERIAL SHALL BE APPLIED TO ALL CONDUITS CONTAINING EMERGENCY CIRCUITS. THE MATERIAL SHALL BE APPLIED PER MANUFACTURERS INSTRUCTIONS TO A DEPTH EQUIVALENT TO A 2-HOUR FIRE BARRIER.

C. THE FIREPROOFING MATERIAL SHALL COMPLY WITH THE REQUIREMENTS OF UL-1724.

PART 3 - EXECUTION

3.01 GENERAL

A. INDOORS: APPLY RACEWAY PRODUCTS AS SPECIFIED BELOW UNLESS OTHERWISE INDICATED:
1. EXPOSED AND SUBJECT TO SEVERE PHYSICAL DAMAGE OR CONCEALED: RGS. RACEWAY LOCATIONS INCLUDE THE FOLLOWING:
   a. ALL TUNNEL LOCATIONS.
   b. SERVICE AREA EQUIPMENT ROOMS IN TUNNEL VENTILATION BUILDING.
2. DAMP OR WET LOCATIONS: RGS.
3. CONNECTION TO VIBRATING EQUIPMENT: LFMC
4. BOXES AND ENCLOSURES: NEMA 250, 316L STAINLESS STEEL TYPE 4.

B. MINIMUM RACEWAY SIZE: 3/4-INCH TRADE SIZE.

C. RACEWAY FITTINGS: COMPATIBLE WITH RACEWAYS AND SUITABLE FOR USE AND LOCATION.
1. RIGID AND INTERMEDIATE STEEL CONDUIT: USE THREADED RIGID STEEL CONDUIT FITTINGS UNLESS OTHERWISE INDICATED. COMPLY WITH NEMA FB 2.10.
2. EMT: USE COMPRESSION, STEEL FITTINGS. COMPLY WITH NEMA FB 2.10.
3. FLEXIBLE CONDUIT: USE ONLY FITTINGS LISTED FOR USE WITH FLEXIBLE CONDUIT. COMPLY WITH NEMA FB 2.20.

D. DO NOT INSTALL ALUMINUM CONDUITS, BOXES, OR FITTINGS IN CONTACT WITH CONCRETE OR EARTH.

E. DO NOT INSTALL ANY NONMETALLIC CONDUIT.

3.02 INSTALLATION

A. COMPLY WITH NECA 1 AND NECA 101 FOR INSTALLATION REQUIREMENTS EXCEPT WHERE REQUIREMENTS ON DRAWINGS OR IN THIS ARTICLE ARE STRICTER. COMPLY WITH NFPA 70 LIMITATIONS FOR TYPES OF RACEWAYS ALLOWED IN SPECIFIC OCCUPANCIES AND NUMBER OF FLOORS.

B. KEEP RACEWAYS AT LEAST 6 INCHES (150 MM) AWAY FROM PARALLEL RUNS OF FLUES AND STEAM OR HOT-WATER PIPES. INSTALL HORIZONTAL RACEWAY RUNS ABOVE WATER AND STEAM PIPING.

C. COMPLETE RACEWAY INSTALLATION BEFORE STARTING CONDUCTOR INSTALLATION.

D. COMPLY WITH REQUIREMENTS IN GENERAL NOTES ON "HANGERS AND SUPPORTS FOR ELECTRICAL SYSTEMS" FOR HANGERS AND SUPPORTS.

E. ARRANGE STUB-UPS SO CURVED PORTIONS OF BENDS ARE NOT VISIBLE ABOVE FINISHED SLAB.

F. INSTALL NO MORE THAN THE EQUIVALENT OF THREE 90-DEGREE BENDS IN ANY CONDUIT RUN EXCEPT FOR CONTROL WIRING CONDUITS, FOR WHICH FEWER BENDS ARE ALLOWED. SUPPORT WITHIN 12 INCHES (300 MM) OF CHANGES IN DIRECTION.

G. CONCEAL CONDUIT WITHIN FINISHED WALLS, CEILINGS, AND FLOORS UNLESS OTHERWISE INDICATED. INSTALL CONDUITS PARALLEL OR PERPENDICULAR TO BUILDING LINES.

H. SUPPORT CONDUIT WITHIN 12 INCHES (300 MM) OF ENCLOSURES TO WHICH ATTACHED.

I. RACEWAYS EMBEDDED IN SLABS:
1. RUN CONDUIT LARGER THAN 1-INCH (27-MM) TRADE SIZE, PARALLEL OR AT RIGHT ANGLES TO MAIN REINFORCEMENT. WHERE AT RIGHT ANGLES TO REINFORCEMENT, PLACE CONDUIT CLOSE TO SLAB SUPPORT. SECURE RACEWAYS TO REINFORCEMENT AT MAXIMUM 10-FOOT (3-M) INTERVALS.
2. ARRANGE RACEWAYS TO CROSS BUILDING EXPANSION JOINTS AT RIGHT ANGLES WITH EXPANSION FITTINGS.
3. ARRANGE RACEWAYS TO KEEP A MINIMUM OF 1 INCH (25 MM) OF CONCRETE COVER IN ALL DIRECTIONS.
4. DO NOT EMBED THREADLESS FITTINGS IN CONCRETE UNLESS SPECIFICALLY ACCEPTED BY ENGINEER FOR EACH SPECIFIC LOCATION.

J. THREADED CONDUIT JOINTS, EXPOSED TO WET, DAMP, CORROSIVE, OR OUTDOOR CONDITIONS: APPLY LISTED COMPOUND TO THREADS OF RACEWAY AND FITTINGS BEFORE MAKING UP JOINTS. FOLLOW COMPOUND MANUFACTURER'S WRITTEN INSTRUCTIONS.

K. RACEWAY TERMINATIONS AT LOCATIONS SUBJECT TO MOISTURE OR VIBRATION: USE INSULATING BUSHINGS TO PROTECT CONDUCTORS INCLUDING CONDUCTORS SMALLER THAN NO. 4 AWG.

L. TERMINATE THREADED CONDUITS INTO THREADED HUBS OR WITH LOCKNUTS ON INSIDE AND OUTSIDE OF BOXES OR CABINETS. INSTALL BUSHINGS ON CONDUITS UP TO 1-1/4-INCH (35MM) TRADE SIZE AND INSULATED THROAT METAL BUSHINGS ON 1-1/2-INCH (41-MM) TRADE SIZE AND LARGER CONDUITS TERMINATED WITH LOCKNUTS. INSTALL INSULATED THROAT METAL GROUNDING BUSHINGS ON SERVICE CONDUITS.

M. INSTALL RACEWAYS SQUARE TO THE ENCLOSURE AND TERMINATE AT ENCLOSURES WITH LOCKNUTS. INSTALL LOCKNUTS HAND TIGHT PLUS 1/4 TURN MORE.

N. DO NOT RELY ON LOCKNUTS TO PENETRATE NONCONDUCTIVE COATINGS ON ENCLOSURES. REMOVE COATINGS IN THE LOCKNUT AREA PRIOR TO ASSEMBLING CONDUIT TO ENCLOSURE TO ASSURE A CONTINUOUS GROUND PATH.

O. CUT CONDUIT PERPENDICULAR TO THE LENGTH. FOR CONDUITS 2-INCH (53-MM) TRADE SIZE AND LARGER, USE ROLL CUTTER OR A GUIDE TO MAKE CUT STRAIGHT AND PERPENDICULAR TO THE LENGTH.

P. INSTALL PULL WIRES IN EMPTY RACEWAYS. USE POLYPROPYLENE OR MONOFILAMENT PLASTIC LINE WITH NOT LESS THAN 200-LB (90-KG) TENSILE STRENGTH. LEAVE AT LEAST 12 INCHES (300 MM) OF SLACK AT EACH END OF PULL WIRE. CAP UNDERGROUND RACEWAYS DESIGNATED AS SPARE ABOVE GRADE ALONGSIDE RACEWAYS IN USE.

Q. SURFACE RACEWAYS:
1. INSTALL SURFACE RACEWAY WITH A MINIMUM 2-INCH (50-MM) RADIUS CONTROL AT BEND POINTS.
2. SECURE SURFACE RACEWAY WITH SCREWS OR OTHER ANCHOR-TYPE DEVICES AT INTERVALS NOT EXCEEDING 48 INCHES (1200 MM) AND WITH NO LESS THAN TWO SUPPORTS PER STRAIGHT RACEWAY SECTION. SUPPORT SURFACE RACEWAY ACCORDING TO MANUFACTURER'S WRITTEN

c:\pwworking\hmm\external\tyn61470.dm3727●3\071_0134CE5420.dgn 10/24/2014 10:35:53 AM TYN61470

DESIGN AGENCY
HATCH MOTT MacDONALD
18013 CLEVELAND PKWY.
SUITE 200
CLEVELAND, OH 44135

DESIGNED	DRAWN	REVIEWED	DATE
DGC	CM	RF	08/11/14
CHECKED	REVISED	STRUCTURE FILE NUMBER	
LL	DGC	3106578	

ELECTRICAL NOTES - RACEWAYS AND BOXES - SHEET 2 OF 3

BRIDGE NO. HAM-71-0134
I-71 LYTLE TUNNEL UNDER LYTLE PARK

HAM-71-01.34
PID No. 87268

INSTRUCTIONS. TAPE AND GLUE ARE NOT ACCEPTABLE SUPPORT METHODS.

R. INSTALL RACEWAY SEALING FITTINGS AT ACCESSIBLE LOCATIONS ACCORDING TO NFPA 70 AND FILL THEM WITH LISTED SEALING COMPOUND. FOR CONCEALED RACEWAYS, INSTALL EACH FITTING IN A FLUSH STEEL BOX WITH A BLANK COVER PLATE HAVING A FINISH SIMILAR TO THAT OF ADJACENT PLATES OR SURFACES. INSTALL RACEWAY SEALING FITTINGS ACCORDING TO NFPA 70.

S. EXPANSION-JOINT FITTINGS:

1. INSTALL IN EACH RUN OF ABOVEGROUND RGS THAT IS LOCATED WHERE ENVIRONMENTAL TEMPERATURE CHANGE MAY EXCEED 30 DEG F (17 DEG C) AND THAT HAS STRAIGHT-RUN LENGTH THAT EXCEEDS 25 FEET (7.6 M). INSTALL IN EACH RUN OF ABOVEGROUND RGS CONDUIT THAT IS LOCATED WHERE ENVIRONMENTAL TEMPERATURE CHANGE MAY EXCEED 100 DEG F (55 DEG C) AND THAT HAS STRAIGHT-RUN LENGTH THAT EXCEEDS 100 FEET (30 M).
2. INSTALL TYPE AND QUANTITY OF FITTINGS THAT ACCOMMODATE TEMPERATURE CHANGE LISTED FOR EACH OF THE FOLLOWING LOCATIONS:
   a. SUPPLY AIR DUCT LOCATIONS AND FRESH AIR DUCT LOCATIONS
   b. MAIN TUNNEL BORES AND ASSOCIATED CROSS PASSAGES
   c. OUTDOOR LOCATIONS NOT EXPOSED TO DIRECT SUNLIGHT: 125 DEG F (70 DEG C) TEMPERATURE CHANGE.
   d. OUTDOOR LOCATIONS EXPOSED TO DIRECT SUNLIGHT: 155 DEG F (86 DEG C) TEMPERATURE CHANGE.
   e. INDOOR SPACES CONNECTED WITH OUTDOORS WITHOUT PHYSICAL SEPARATION: 125 DEG F (70 DEG C) TEMPERATURE CHANGE.
3. INSTALL FITTING(S) THAT PROVIDE EXPANSION AND CONTRACTION FOR AT LEAST 0.000078 INCH PER FOOT OF LENGTH OF STRAIGHT RUN PER DEG F (0.0115 MM PER METER OF LENGTH OF STRAIGHT RUN PER DEG C) OF TEMPERATURE CHANGE FOR METAL CONDUITS.
4. INSTALL EXPANSION FITTINGS AT ALL LOCATIONS WHERE CONDUITS CROSS BUILDING OR TUNNEL STRUCTURE EXPANSION JOINTS.
5. INSTALL EACH EXPANSION-JOINT FITTING WITH POSITION, MOUNTING, AND PISTON SETTING SELECTED ACCORDING TO MANUFACTURER'S WRITTEN INSTRUCTIONS FOR CONDITIONS AT SPECIFIC LOCATION AT TIME OF INSTALLATION. INSTALL CONDUIT SUPPORTS TO ALLOW FOR EXPANSION MOVEMENT.
6. EXPANSION FITTINGS SHALL BE HOT-DIPPED GALVANIZED, WATER-TIGHT (NEMA 4) AND CONCRETE-TIGHT. FITTINGS SHALL PERMIT EXPANSION AND CONTRACTION OF CONDUIT UP TO FOUR INCHES IN THE AXIAL DIRECTION. PROVIDE JUMPER CABLES ACROSS EXPANSION FITTINGS AND ASSOCIATED CABLE CLAMPS TO ENSURE CONTINUITY OF CONDUIT GROUND.

T. FLEXIBLE CONDUIT CONNECTIONS: COMPLY WITH NEMA RV 3. USE A MAXIMUM OF 72 INCHES (1830 MM) OF FLEXIBLE CONDUIT FOR RECESSED LUMINAIRES, EQUIPMENT SUBJECT TO VIBRATION, NOISE TRANSMISSION, OR MOVEMENT; AND FOR TRANSFORMERS AND MOTORS.

1. USE LFMC IN DAMP OR WET LOCATIONS SUBJECT TO SEVERE PHYSICAL DAMAGE.
2. USE LFMC IN DAMP OR WET LOCATIONS NOT SUBJECT TO SEVERE PHYSICAL DAMAGE.

U. MOUNT BOXES AT HEIGHTS INDICATED ON DRAWINGS. IF MOUNTING HEIGHTS OF BOXES ARE NOT INDIVIDUALLY INDICATED, GIVE PRIORITY TO ADA REQUIREMENTS. INSTALL BOXES WITH HEIGHT MEASURED TO CENTER OF BOX UNLESS OTHERWISE INDICATED.

V. RECESSED BOXES IN MASONRY WALLS: SAW-CUT OPENING FOR BOX IN CENTER OF CELL OF MASONRY BLOCK, AND INSTALL BOX FLUSH WITH SURFACE OF WALL. PREPARE BLOCK SURFACES TO PROVIDE A FLAT SURFACE FOR A RAINTIGHT CONNECTION BETWEEN BOX AND COVER PLATE OR SUPPORTED EQUIPMENT AND BOX.

W. HORIZONTALLY SEPARATE BOXES MOUNTED ON OPPOSITE SIDES OF WALLS SO THEY ARE NOT IN THE SAME VERTICAL CHANNEL.

X. FASTEN JUNCTION AND PULL BOXES TO OR SUPPORT FROM BUILDING STRUCTURE. DO NOT SUPPORT BOXES BY CONDUITS.

Y. RUN PARALLEL OR BANKED RACEWAYS TOGETHER ON COMMON SUPPORTS.

Z. THE CONTRACTOR SHALL BE PERMITTED TO INSTALL ADDITIONAL JUNCTION OR PULL BOXES AT THEIR DISCRETION ABOVE AND BEYOND THOSE SPECIFIED AT NO ADDITIONAL COST TO THE OWNER

AA. JUNCTION AND/OR PULL BOXES SHALL BE INSTALLED FOR EXTENDED CONDUIT RUNS TO ALLOW FOR THE INSTALLATION OF WIRING/CABLING AS NECESSARY.

3.03 FIRESTOPPING

A. INSTALL FIRESTOPPING AT PENETRATIONS OF FIRE-RATED FLOOR AND WALL ASSEMBLIES. COMPLY WITH REQUIREMENTS IN GENERAL NOTES FOR PENETRATION FIRESTOPPING.

3.04 PROTECTION

A. PROTECT COATINGS, FINISHES, AND CABINETS FROM DAMAGE AND DETERIORATION.
   1. REPAIR DAMAGE TO GALVANIZED FINISHES WITH ZINC-RICH PAINT RECOMMENDED BY MANUFACTURER.

PART 4 - METHOD OF PAYMENT AND ITEMS

4.01 METHOD OF PAYMENT AND ITEMS

A. PAYMENT FOR ITEMS SHALL BE MADE AT THE CONTRACT UNIT PRICE, INCLUDING BUT NOT LIMITED TO ALL WORK, LABOR, EQUIPMENT, AND MATERIALS NECESSARY THEREFORE OR INCIDENTAL THERETO, AS FOLLOWS:

B. REFER TO THE GENERAL NOTES ON LIGHTING, CONTROLS, RACEWAYS AND BOXES, CONDUCTORS AND CABLES, HANGERS AND SUPPORTS FOR PAY ITEMS ASSOCIATED WITH THE INSTALLATION OF MATERIALS IN THIS SECTION.

ITEM NO.	DESCRIPTION	UNIT
625	CONDUIT, 3/4", 725.04	FT
625	CONDUIT, 1", 725.04	FT
625	CONDUIT, 1-1/2", 725.04	FT
625	CONDUIT, 2", 725.04	FT
625	CONDUIT, 2-1/2", 725.04	FT
625	CONDUIT, 3", 725.04	FT
625	CONDUIT, 3-1/2", 725.04	FT
625	CONDUIT, 4", 725.04	FT
625	CONDUIT, MISC.: 4" PVC MULTICELL	FT
625	LIGHTING, MISC.: FIREPROOFING	SF
625	JUNCTION BOX, AS PER PLAN (NEMA 4X. 30" x 24" x 12"	EACH
625	JUNCTION BOX, AS PER PLAN (NEMA 4X. 16" x 16" x 6"	EACH

c:\pwworking\hnm\external\tyn61470\dms727●3\071_0134CE5421.dgn 10/24/2014 10:36:05 AM TYN61470

DESIGN AGENCY
HATCH MOTT MacDONALD
18013 CLEVELAND PKWY.
SUITE 200
CLEVELAND, OH 44135

DESIGNED	DRAWN	REVIEWED	DATE
DGC	CM	RF	08/11/14
CHECKED	REVISED	STRUCTURE FILE NUMBER	
LL	DGC	3106578	

ELECTRICAL NOTES - RACEWAYS AND BOXES - SHEET 3 OF 3

BRIDGE NO. HAM-71-0134
I-71 LYTLE TUNNEL UNDER LYTLE PARK

HAM-71-01.34
PID No. 87268

OVERCURRENT PROTECTIVE DEVICE - ARC FLASH STUDY

PART 1 - GENERAL

1.01 RELATED DOCUMENTS

A. DRAWINGS AND GENERAL PROVISIONS OF THE CONTRACT, INCLUDING GENERAL AND SUPPLEMENTARY CONDITIONS APPLY TO THIS SECTION.

B. THE CONTRACTOR WILL PROVIDE A SIMILAR STUDY USING SKM SOFTWARE.

1.02 SUMMARY

A. SECTION INCLUDES A COMPUTER-BASED, ARC-FLASH STUDY TO DETERMINE THE ARC-FLASH HAZARD DISTANCE AND THE INCIDENT ENERGY TO WHICH PERSONNEL COULD BE EXPOSED DURING WORK ON OR NEAR ELECTRICAL EQUIPMENT. THE STUDY SHALL INCLUDE THE ENTIRE ELECTRICAL SYSTEM (BOTH EXISTING AND PROPOSED) FOR THE FACILITY.

1.03 ACTION SUBMITTALS

A. PRODUCT DATA: FOR COMPUTER SOFTWARE PROGRAM TO BE USED FOR STUDIES.

B. OTHER ACTION SUBMITTALS: AFTER THE APPROVAL OF SYSTEM PROTECTIVE DEVICES SUBMIT THREE SIGNED AND SEALED REPORTS AND ONE COMPLETE ELECTRONIC COPY INCLUDING ALL COMPUTER FILES.

1. ARC-FLASH STUDY INPUT DATA, INCLUDING COMPLETED COMPUTER PROGRAM INPUT DATA SHEETS.
2. ARC-FLASH STUDY REPORT; SIGNED, DATED, AND SEALED BY A QUALIFIED PROFESSIONAL ENGINEER.
   a. SUBMIT STUDY REPORT FOR ACTION PRIOR TO RECEIVING FINAL APPROVAL OF THE DISTRIBUTION EQUIPMENT SUBMITTALS. IF FORMAL COMPLETION OF STUDIES WILL CAUSE DELAY IN EQUIPMENT MANUFACTURING, OBTAIN APPROVAL FROM ARCHITECT FOR PRELIMINARY SUBMITTAL OF SUFFICIENT STUDY DATA TO ENSURE THAT THE SELECTION OF DEVICES AND ASSOCIATED CHARACTERISTICS IS SATISFACTORY.

1.04 INFORMATIONAL SUBMITTALS

A. QUALIFICATION DATA: PROFESSIONAL ENGINEER

B. PRODUCT CERTIFICATES: FOR ARC-FLASH HAZARD ANALYSIS SOFTWARE, CERTIFYING COMPLIANCE WITH IEEE 1584 AND NFPA 70E OR CSA Z462-12(2012).

1.05 CLOSEOUT SUBMITTALS

A. MAINTENANCE PROCEDURES ACCORDING TO REQUIREMENTS IN NFPA 70E SHALL BE PROVIDED IN THE EQUIPMENT MANUALS.

B. OPERATION AND MAINTENANCE PROCEDURES PROVIDE MAINTENANCE PROCEDURES FOR USE BY OWNER'S PERSONNEL THAT COMPLY WITH REQUIREMENTS IN NFPA 70E.

1.06 QUALITY ASSURANCE

A. STUDIES SHALL USE COMPUTER PROGRAMS THAT ARE DISTRIBUTED NATIONALLY AND ARE IN WIDE USE. SOFTWARE ALGORITHMS SHALL COMPLY WITH REQUIREMENTS OF STANDARDS AND GUIDES SPECIFIED IN THIS SECTION. MANUAL CALCULATIONS ARE UNACCEPTABLE.

B. ARC-FLASH STUDY SOFTWARE DEVELOPER QUALIFICATIONS: AN ENTITY THAT OWNS AND MARKETS COMPUTER SOFTWARE USED FOR STUDIES, HAVING PERFORMED SUCCESSFUL STUDIES OF SIMILAR MAGNITUDE ON ELECTRICAL DISTRIBUTION SYSTEMS USING SIMILAR DEVICES.

1. THE COMPUTER PROGRAM SHALL BE DEVELOPED UNDER THE CHARGE OF A LICENSED PROFESSIONAL ENGINEER WHO HOLDS IEEE COMPUTER SOCIETY'S CERTIFIED SOFTWARE DEVELOPMENT PROFESSIONAL CERTIFICATION.

C. ARC-FLASH STUDY SPECIALIST QUALIFICATIONS: PROFESSIONAL ENGINEER IN CHARGE OF PERFORMING THE STUDY, ANALYZING THE ARC FLASH, AND DOCUMENTING RECOMMENDATIONS, LICENSED IN THE STATE WHERE PROJECT IS LOCATED. ALL ELEMENTS OF THE STUDY SHALL BE PERFORMED UNDER THE DIRECT SUPERVISION AND CONTROL OF THIS PROFESSIONAL ENGINEER.

PART 2 - PRODUCTS

2.01 COMPUTER SOFTWARE DEVELOPERS

A. SOFTWARE DEVELOPERS: SUBJECT TO COMPLIANCE WITH REQUIREMENTS, PROVIDE SOFTWARE BY ONE OF THE FOLLOWING:

1. OPERATION TECHNOLOGY, INC. (ETAP)
2. SKM SYSTEMS ANALYSIS, INC. (POWER TOOLS FOR WINDOWS)

B. COMPLY WITH IEEE 1584 AND NFPA 70E.

C. ANALYTICAL FEATURES OF DEVICE COORDINATION STUDY COMPUTER SOFTWARE PROGRAM SHALL HAVE THE CAPABILITY TO CALCULATE "MANDATORY," "VERY DESIRABLE," AND "DESIRABLE" FEATURES AS LISTED IN IEEE 399.

2.02 SHORT-CIRCUIT STUDY REPORT CONTENT

A. EXECUTIVE SUMMARY.

B. STUDY DESCRIPTIONS, PURPOSE, BASIS AND SCOPE.

C. ONE-LINE DIAGRAM, SHOWING THE FOLLOWING:

1. PROTECTIVE DEVICE DESIGNATIONS AND AMPERE RATINGS (FRAM, TRIP SIZES & AIC).
2. CABLE SIZE AND LENGTHS.
3. TRANSFORMER KILOVOLT AMPERE (KVA) AND VOLTAGE RATINGS.
4. MOTOR AND GENERATOR DESIGNATIONS AND KVA RATINGS.
5. SWITCHGEAR, SWITCHBOARD, MOTOR-CONTROL CENTER AND PANELBOARD DESIGNATIONS.
6. VOLTAGE DROP AT SWITCHGEAR, PANELBOARDS AND FINAL LOADS.

D. STUDY INPUT DATA: AS DESCRIBED IN "POWER SYSTEM DATA" ARTICLE.

E. SHORT-CIRCUIT STUDY OUTPUT:

1. INTERRUPTING DUTY REPORT: THREE-PHASE AND UNBALANCED FAULT CALCULATIONS, SHOWING THE FOLLOWING FOR EACH OVERCURRENT DEVICE LOCATION:
   a. VOLTAGE.
   b. CALCULATED SYMMETRICAL FAULT-CURRENT MAGNITUDE AND ANGLE.
   c. FAULT-POINT X/R RATIO.
   d. NO AC DECREMENT (NACD) RATIO.
   e. EQUIVALENT IMPEDANCE.
   f. MULTIPLYING FACTORS FOR 2-, 3-, 5-, AND 8-CYCLE CIRCUIT BREAKERS RATED ON A SYMMETRICAL BASIS.
   g. MULTIPLYING FACTORS FOR 2-, 3-, 5-, AND 8-CYCLE CIRCUIT BREAKERS RATED ON A TOTAL BASIS.

F. INCIDENT ENERGY AND FLASH PROTECTION BOUNDARY CALCULATIONS:

1. ARCING FAULT MAGNITUDE.
2. PROTECTIVE DEVICE CLEARING TIME.
3. DURATION OF ARC.
4. ARC-FLASH BOUNDARY.
5. WORKING DISTANCE.
6. INCIDENT ENERGY.
7. HAZARD RISK CATEGORY.
8. RECOMMENDATIONS FOR ARC-FLASH ENERGY REDUCTION.

G. FAULT STUDY INPUT DATA, CASE DESCRIPTIONS, AND FAULT-CURRENT CALCULATIONS INCLUDING A DEFINITION OF TERMS AND GUIDE FOR INTERPRETATION OF THE COMPUTER PRINTOUT.

2.03 ARC-FLASH WARNING LABELS

A. COMPLY WITH REQUIREMENTS IN SHEET # "IDENTIFICATION FOR ELECTRICAL SYSTEMS." PRODUCE A 3.5-BY-5-INCH (76-BY-127-MM) THERMAL TRANSFER LABEL OF HIGH-ADHESION POLYESTER FOR EACH WORK LOCATION INCLUDED IN THE ANALYSIS.

B. THE LABEL SHALL HAVE AN ORANGE HEADER WITH THE WORDING, "WARNING, ARC-FLASH HAZARD," AND SHALL INCLUDE THE FOLLOWING INFORMATION TAKEN DIRECTLY FROM THE ARC-FLASH HAZARD ANALYSIS:

1. LOCATION DESIGNATION.
2. NOMINAL VOLTAGE.
3. FLASH PROTECTION BOUNDARY.
4. HAZARD RISK CATEGORY.
5. INCIDENT ENERGY.
6. WORKING DISTANCE.
7. ENGINEERING REPORT NUMBER, REVISION NUMBER, AND ISSUE DATE.

C. LABELS SHALL BE MACHINE PRINTED, WITH NO FIELD-APPLIED MARKINGS.

PART 3 - EXECUTION

3.01 EXAMINATION

A. EXAMINE PROJECT OVERCURRENT PROTECTIVE DEVICE SUBMITTALS. PROCEED WITH ARC-FLASH STUDY ONLY AFTER RELEVANT EQUIPMENT SUBMITTALS HAVE BEEN ASSEMBLED. OVERCURRENT PROTECTIVE DEVICES THAT HAVE NOT BEEN SUBMITTED AND APPROVED PRIOR TO ARC-FLASH STUDY MAY NOT BE USED IN STUDY.

3.02 SHORT-CIRCUIT STUDY

A. PERFORM STUDY FOLLOWING THE GENERAL STUDY PROCEDURES CONTAINED IN IEEE 399.

B. CALCULATE SHORT-CIRCUIT CURRENTS ACCORDING TO IEEE 551.

C. BASE STUDY ON THE DEVICE CHARACTERISTICS SUPPLIED BY DEVICE MANUFACTURER.

1. THE ENTIRE ELECTRICAL SYSTEM BOTH NEW AND OLD SHALL BE INCLUDED IN THE STUDY.

D. STUDY ELECTRICAL DISTRIBUTION SYSTEM FROM NORMAL AND ALTERNATE POWER SOURCES THROUGHOUT ELECTRICAL DISTRIBUTION SYSTEM FOR PROJECT. INCLUDE STUDIES OF SYSTEM-SWITCHING CONFIGURATIONS AND ALTERNATE OPERATIONS THAT COULD RESULT IN MAXIMUM FAULT CONDITIONS.

E. THE CALCULATIONS SHALL INCLUDE THE AC FAULT-CURRENT DECAY FROM INDUCTION MOTORS AND SYNCHRONOUS MOTORS AND SHALL APPLY TO LOW- AND MEDIUM-VOLTAGE, AC SYSTEMS.

F. CALCULATE SHORT-CIRCUIT MOMENTARY AND INTERRUPTING DUTIES FOR A THREE-PHASE BOLTED FAULT AND SINGLE LINE-TO-GROUND FAULT AT EACH OF THE FOLLOWING:

1. ELECTRIC UTILITY'S SUPPLY TERMINATION POINT.
2. SWITCHGEAR.
3. UNIT SUBSTATION PRIMARY AND SECONDARY TERMINALS.
4. LOW-VOLTAGE SWITCHGEAR.
5. MOTOR-CONTROL CENTERS.
6. AUTOMATIC TRANSFER SWITCHES.
7. BRANCH CIRCUIT PANELBOARDS.

3.03 PROTECTIVE DEVICE COORDINATION STUDY

A. PERFORM COORDINATION STUDY USING APPROVED COMPUTER SOFTWARE PROGRAM. PREPARE A WRITTEN REPORT USING RESULTS OF FAULT-CURRENT STUDY. COMPLY WITH IEEE 399.

1. CALCULATE THE MAXIMUM AND MINIMUM 1/2-CYCLE SHORT-CIRCUIT CURRENTS.
2. CALCULATE THE MAXIMUM AND MINIMUM INTERRUPTING DUTY (5 CYCLES TO 2 SECONDS) SHORT-CIRCUIT CURRENTS.
3. CALCULATE THE MAXIMUM AND MINIMUM GROUND-FAULT CURRENTS.

B. COMPLY WITH IEEE 141 AND IEEE 242 RECOMMENDATIONS FOR FAULT CURRENTS AND TIME INTERVALS. (COMPLY WITH NEC FOR SELECTIVE COORDINATION NFPA 70; 240.12, 700.27, 701.18)

C. TRANSFORMER PRIMARY OVERCURRENT PROTECTIVE DEVICES:

DESIGN AGENCY
HATCH MOTT MacDONALD
18013 CLEVELAND PKWY.
SUITE 200
CLEVELAND, OH 44135

DESIGNED DGC | DRAWN CM | CHECKED LL | REVIEWED RF | DATE 08/11/14 | REVISED DGC | STRUCTURE FILE NUMBER 3106578

ELEC. NOTES-OVER CURRENT PROTECTION DEVICES-SHEET 1 OF 2

BRIDGE NO. HAM-71-0134
I-71 LYTLE TUNNEL UNDER LYTLE PARK

HAM-71-01.34
PID No. 87268

189/296

447/555

c:\pwworking\hmm\external\tyn61470\dms727●3\071_0134CE5422.dgn 10/24/2014 10:36:17 AM TYN61470

1. DEVICE SHALL NOT OPERATE IN RESPONSE TO THE FOLLOWING:
   a. INRUSH CURRENT WHEN FIRST ENERGIZED.
   b. SELF-COOLED, FULL-LOAD CURRENT OR FORCED-AIR-COOLED, FULL-LOAD CURRENT, WHICHEVER IS SPECIFIED FOR THAT TRANSFORMER.
   c. PERMISSIBLE TRANSFORMER OVERLOADS ACCORDING TO IEEE C57.96 IF REQUIRED BY UNUSUAL LOADING OR EMERGENCY CONDITIONS.
2. DEVICE SETTINGS SHALL PROTECT TRANSFORMERS ACCORDING TO IEEE C57.12.00, FOR FAULT CURRENTS.

D. MOTORS SERVED BY VOLTAGES MORE THAN 600 V SHALL BE PROTECTED ACCORDING TO IEEE 620.

E. CONDUCTOR PROTECTION: PROTECT CABLES AGAINST DAMAGE FROM FAULT CURRENTS ACCORDING TO ICEA P-32-382, ICEA P-45-482, AND CONDUCTOR MELTING CURVES IN IEEE 242. DEMONSTRATE THAT EQUIPMENT WITHSTANDS THE MAXIMUM SHORT-CIRCUIT CURRENT FOR A TIME EQUIVALENT TO THE TRIPPING TIME OF THE PRIMARY RELAY PROTECTION OR TOTAL CLEARING TIME OF THE FUSE. TO DETERMINE TEMPERATURES THAT DAMAGE INSULATION, USE CURVES FROM CABLE MANUFACTURERS OR FROM LISTED STANDARDS INDICATING CONDUCTOR SIZE AND SHORT-CIRCUIT CURRENT.

F. COORDINATION-STUDY REPORT: PREPARE A WRITTEN REPORT INDICATING THE FOLLOWING RESULTS OF COORDINATION STUDY:
1. TABULAR FORMAT OF SETTINGS SELECTED FOR OVERCURRENT PROTECTIVE DEVICES:
   a. DEVICE TAG.
   b. RELAY-CURRENT TRANSFORMER RATIOS; AND TAP, TIME-DIAL, AND INSTANTANEOUS-PICKUP VALUES.
   c. CIRCUIT-BREAKER SENSOR RATING; AND LONG-TIME, SHORT-TIME, AND INSTANTANEOUS SETTINGS.
   d. FUSE-CURRENT RATING AND TYPE.
   e. GROUND-FAULT RELAY-PICKUP AND TIME-DELAY SETTINGS.
2. COORDINATION CURVES: PREPARED TO DETERMINE SETTINGS OF OVERCURRENT PROTECTIVE DEVICES TO ACHIEVE SELECTIVE COORDINATION. GRAPHICALLY ILLUSTRATE THAT ADEQUATE TIME SEPARATION EXISTS BETWEEN DEVICES INSTALLED IN SERIES, INCLUDING POWER UTILITY COMPANY'S UPSTREAM DEVICES. PREPARE SEPARATE SETS OF CURVES FOR THE SWITCHING SCHEMES AND FOR EMERGENCY PERIODS WHERE THE POWER SOURCE IS LOCAL GENERATION. SHOW THE FOLLOWING INFORMATION:
   a. DEVICE TAG.
   b. VOLTAGE AND CURRENT RATIO FOR CURVES.
   c. THREE-PHASE AND SINGLE-PHASE DAMAGE POINTS FOR EACH TRANSFORMER.
   d. NO DAMAGE, MELTING, AND CLEARING CURVES FOR FUSES.
   e. CABLE DAMAGE CURVES.
   f. TRANSFORMER INRUSH POINTS.
   g. MAXIMUM FAULT-CURRENT CUTOFF POINT.

G. PROVIDE COMPLETED DATA SHEETS FOR SETTING OF OVERCURRENT PROTECTIVE DEVICES BOUND IN A 3 RING BINDER AND ELECTRONIC COPY ON CD

3.04 ARC-FLASH HAZARD ANALYSIS

A. COMPLY WITH NFPA 70E AND ITS ANNEX D FOR HAZARD ANALYSIS STUDY.

B. USE THE SHORT-CIRCUIT STUDY OUTPUT AND THE FIELD-VERIFIED SETTINGS OF THE OVERCURRENT DEVICES.

C. CALCULATE MAXIMUM AND MINIMUM CONTRIBUTIONS OF FAULT-CURRENT SIZE.
1. THE MINIMUM CALCULATION SHALL ASSUME THAT THE CONTRIBUTION FROM ALL SOURCES IS AT A MINIMUM AND SHALL ASSUME NO MOTOR LOAD.
2. THE MAXIMUM CALCULATION SHALL ASSUME A MAXIMUM CONTRIBUTION FROM ALL SOURCES AND SHALL ASSUME MOTORS TO BE OPERATING UNDER FULL-LOAD CONDITIONS.

D. CALCULATE THE ARC-FLASH PROTECTION BOUNDARY AND INCIDENT ENERGY AT LOCATIONS IN THE ELECTRICAL DISTRIBUTION SYSTEM WHERE PERSONNEL COULD PERFORM WORK ON ENERGIZED PARTS.

E. INCLUDE MEDIUM- AND LOW-VOLTAGE EQUIPMENT LOCATIONS. SAFE WORKING DISTANCES SHALL BE SPECIFIED FOR CALCULATED FAULT LOCATIONS BASED ON THE CALCULATED ARC-FLASH BOUNDARY, CONSIDERING INCIDENT ENERGY OF 1.2 CAL/SQ.CM.

F. INCIDENT ENERGY CALCULATIONS SHALL CONSIDER THE ACCUMULATION OF ENERGY OVER TIME WHEN PERFORMING ARC-FLASH CALCULATIONS ON BUSES WITH MULTIPLE SOURCES. ITERATIVE CALCULATIONS SHALL TAKE INTO ACCOUNT THE CHANGING CURRENT CONTRIBUTIONS, AS THE SOURCES ARE INTERRUPTED OR DECREMENTED WITH TIME. FAULT CONTRIBUTION FROM MOTORS AND GENERATORS SHALL BE DECREMENTED AS FOLLOWS:
1. FAULT CONTRIBUTION FROM INDUCTION MOTORS SHOULD NOT BE CONSIDERED BEYOND THREE TO FIVE CYCLES.
2. FAULT CONTRIBUTION FROM SYNCHRONOUS MOTORS AND GENERATORS SHOULD BE DECAYED TO MATCH THE ACTUAL DECREMENT OF EACH AS CLOSELY AS POSSIBLE (E.G., CONTRIBUTIONS FROM PERMANENT MAGNET GENERATORS WILL TYPICALLY DECAY FROM 10 PER UNIT TO THREE PER UNIT AFTER 10 CYCLES).

G. ARC-FLASH COMPUTATION SHALL INCLUDE BOTH LINE AND LOAD SIDE OF A CIRCUIT BREAKER AS FOLLOWS:
1. WHEN THE CIRCUIT BREAKER IS IN A SEPARATE ENCLOSURE.
2. WHEN THE LINE TERMINALS OF THE CIRCUIT BREAKER ARE SEPARATE FROM THE WORK LOCATION.

H. BASE ARC-FLASH CALCULATIONS ON ACTUAL OVERCURRENT PROTECTIVE DEVICE CLEARING TIME. CAP MAXIMUM CLEARING TIME AT TWO SECONDS BASED ON IEEE 1584, SECTION B.1.2.

3.05 POWER SYSTEM DATA

A. OBTAIN ALL DATA NECESSARY FOR THE CONDUCT OF THE ARC-FLASH HAZARD ANALYSIS.
1. VERIFY COMPLETENESS OF DATA SUPPLIED ON THE ONE-LINE DIAGRAM ON DRAWINGS. CALL DISCREPANCIES TO THE ATTENTION OF ARCHITECT.
2. FOR NEW EQUIPMENT, USE CHARACTERISTICS SUBMITTED UNDER THE PROVISIONS OF ACTION SUBMITTALS AND INFORMATION SUBMITTALS FOR THIS PROJECT.
3. FOR EXISTING EQUIPMENT, WHETHER OR NOT RELOCATED, OBTAIN REQUIRED ELECTRICAL DISTRIBUTION SYSTEM DATA BY FIELD INVESTIGATION AND SURVEYS, CONDUCTED BY QUALIFIED TECHNICIANS AND ENGINEERS.

B. GATHER AND TABULATE THE FOLLOWING INPUT DATA TO SUPPORT COORDINATION STUDY. COMPLY WITH RECOMMENDATIONS IN IEEE 1584 AND NFPA 70E AS TO THE AMOUNT OF DETAIL THAT IS REQUIRED TO BE ACQUIRED IN THE FIELD. FIELD DATA GATHERING SHALL BE UNDER THE DIRECT SUPERVISION AND CONTROL OF THE ENGINEER IN CHARGE OF PERFORMING THE STUDY.
1. PRODUCT DATA FOR OVERCURRENT PROTECTIVE DEVICES SPECIFIED IN OTHER SECTIONS AND INVOLVED IN OVERCURRENT PROTECTIVE DEVICE COORDINATION STUDIES. USE EQUIPMENT DESIGNATION TAGS THAT ARE CONSISTENT WITH ELECTRICAL DISTRIBUTION SYSTEM DIAGRAMS, OVERCURRENT PROTECTIVE DEVICE SUBMITTALS, INPUT AND OUTPUT DATA, AND RECOMMENDED DEVICE SETTINGS.
2. OBTAIN ELECTRICAL POWER UTILITY IMPEDANCE AT THE SERVICE.
3. POWER SOURCES AND TIES.
4. FOR TRANSFORMERS, INCLUDE KVA, PRIMARY AND SECONDARY VOLTAGES, CONNECTION TYPE, IMPEDANCE, X/R RATIO, TAPS MEASURED IN PER CENT, AND PHASE SHIFT.
5. FOR REACTORS, PROVIDE MANUFACTURER AND MODEL DESIGNATION, VOLTAGE RATING AND IMPEDANCE.
6. FOR CIRCUIT BREAKERS AND FUSES, PROVIDE MANUFACTURER AND MODEL DESIGNATION. LIST TYPE OF BREAKER, TYPE OF TRIP AND AVAILABLE RANGE OF SETTINGS, SCCR, CURRENT RATING, AND BREAKER SETTINGS.
7. MOTOR SHORT CIRCUIT CURRENT CONTRIBUTION DATA, INCLUDING FLA AND HP.
8. FOR RELAYS, PROVIDE MANUFACTURER AND MODEL DESIGNATION, CURRENT TRANSFORMER RATIOS, POTENTIAL TRANSFORMER RATIOS, AND RELAY SETTINGS.
9. BUSWAY MANUFACTURER AND MODEL DESIGNATION, CURRENT RATING, IMPEDANCE, LENGTHS, AND CONDUCTOR MATERIAL.
10. MOTOR HORSEPOWER AND NEMA MG 1 CODE LETTER DESIGNATION.
11. LOW-VOLTAGE CABLE SIZES, LENGTHS, NUMBER, CONDUCTOR MATERIAL AND CONDUIT MATERIAL (MAGNETIC OR NONMAGNETIC).
12. MEDIUM-VOLTAGE CABLE SIZES, LENGTHS, CONDUCTOR MATERIAL, AND CABLE CONSTRUCTION AND METALLIC SHIELD PERFORMANCE PARAMETERS.

3.06 LABELING

A. APPLY ONE ARC-FLASH LABEL FOR 600-V AC, 480-VAC, AND APPLICABLE 208-VAC PANELBOARDS AND DISCONNECTS AND FOR EACH OF THE FOLLOWING LOCATIONS:
1. MOTOR-CONTROL CENTER.
2. LOW-VOLTAGE SWITCHBOARD.
3. SWITCHGEAR.
4. MEDIUM-VOLTAGE SWITCH.
5. CONTROL PANEL.

3.07 APPLICATION OF WARNING LABELS

A. INSTALL THE ARC-FAULT WARNING LABELS UNDER THE DIRECT SUPERVISION AND CONTROL OF THE ARC-FLASH STUDY SPECIALIST.

3.08 DEMONSTRATION

A. ENGAGE THE ARC-FLASH STUDY SPECIALIST TO TRAIN OHIO DEPARTMENT OF TRANSPORTATION'S (ODOT) MAINTENANCE PERSONNEL IN THE POTENTIAL ARC-FLASH HAZARDS ASSOCIATED WITH WORKING ON ENERGIZED EQUIPMENT AND THE SIGNIFICANCE OF THE ARC-FLASH WARNING LABELS.

PART 1 - METHOD OF PAYMENT AND ITEMS

A. PAYMENT FOR ITEMS SHALL BE MADE AT THE CONTRACT UNIT PRICE, INCLUDING BUT NOT LIMITED TO ALL WORK, LABOR, EQUIPMENT, AND MATERIALS NECESSARY THEREFORE OR INCIDENTAL THERETO, AS FOLLOWS:

ITEM NO.	DESCRIPTION	UNIT
SPECIAL	SPECIAL – MISC.: PROTECTIVE COORDINATION AND ARC FLASH STUDY	LUMP

c:\pwworking\hmm\external\tyn61470\dms7278●\071_0134CES423.dgn 10/24/2014 10:36:31 AM TYN61470

DESIGN AGENCY
HATCH MOTT MacDONALD
18013 CLEVELAND PKWY.
SUITE 200
CLEVELAND, OH 44135

DESIGNED	DRAWN	REVIEWED	DATE
DGC	CM	RF	08/11/14
CHECKED	REVISED	STRUCTURE FILE NUMBER	
LL	DGC	3106578	

ELEC. NOTES-OVER CURRENT PROTECTION DEVICES-SHEET 2 OF 2
BRIDGE NO. HAM-71-0134
I-71 LYTLE TUNNEL UNDER LYTLE PARK

HAM-71-01.34
PID No. 87268

ITEM 690 – SPECIAL – MISC.: LOW-VOLTAGE TRANSFORMERS

PART 1 - GENERAL

1.1 SUMMARY

THIS SECTION INCLUDES DRY-TYPE DISTRIBUTION TRANSFORMERS RATED 600 V AND LESS, WITH CAPACITIES UP TO 1000 KVA. THE TWO SUPPLY TRANSFORMERS ARE NOT INCLUDED IN THIS SPECIFICATION AS THEY ARE PROVIDED BY THE UTILITY COMPANY.

1. 15 KVA AND 75 KVA DISTRIBUTION TRANSFORMERS

1.2 ACTION SUBMITTALS

A. PRODUCT DATA: INCLUDE RATED NAMEPLATE DATA, CAPACITIES, WEIGHTS, DIMENSIONS, MINIMUM CLEARANCES, INSTALLED DEVICES AND FEATURES, AND PERFORMANCE FOR EACH TYPE AND SIZE OF TRANSFORMER INDICATED.

B. SHOP DRAWINGS: DETAIL EQUIPMENT ASSEMBLIES AND INDICATE DIMENSIONS, WEIGHTS, LOADS, REQUIRED CLEARANCES, METHOD OF FIELD ASSEMBLY, COMPONENTS, AND LOCATION AND SIZE OF EACH FIELD CONNECTION.

1. WIRING DIAGRAMS: POWER, SIGNAL, AND CONTROL WIRING.

1.3 INFORMATIONAL SUBMITTALS

A. QUALIFICATION DATA: FOR TESTING AGENCY.

B. SOURCE QUALITY-CONTROL TEST REPORTS.

C. FIELD QUALITY-CONTROL TEST REPORTS.

1.4 CLOSEOUT SUBMITTALS

A. OPERATION AND MAINTENANCE DATA: FOR TRANSFORMERS TO INCLUDE IN EMERGENCY, OPERATION, AND MAINTENANCE MANUALS. MANUFACTURER SHALL PROVIDE COPIES OF FOLLOWING DOCUMENTS TO OWNER FOR REVIEW AND EVALUATION:

1. PRODUCT DATA AND SPARE PARTS LIST;

1.5 QUALITY ASSURANCE

A. TESTING QUALIFICATIONS: ENGAGE MANUFACTURER WITH THE EXPERIENCE AND CAPABILITY TO CONDUCT THE TESTING TO NETA STANDARDS.

B. SOURCE LIMITATIONS: OBTAIN EACH TRANSFORMER TYPE THROUGH ONE SOURCE FROM A SINGLE MANUFACTURER.

C. ELECTRICAL COMPONENTS, DEVICES, AND ACCESSORIES: LISTED AND LABELED AS DEFINED IN NFPA 70, ARTICLE 100, BY A TESTING AGENCY ACCEPTABLE TO AUTHORITIES HAVING JURISDICTION, AND MARKED FOR INTENDED USE.

D. COMPLY WITH IEEE C57.12.91, "TEST CODE FOR DRY-TYPE DISTRIBUTION AND POWER TRANSFORMERS."

1.6 DELIVERY, STORAGE, AND HANDLING

A. TEMPORARY HEATING: APPLY TEMPORARY HEAT ACCORDING TO MANUFACTURER'S WRITTEN INSTRUCTIONS WITHIN THE ENCLOSURE OF EACH VENTILATED-TYPE UNIT, THROUGHOUT PERIODS DURING WHICH EQUIPMENT IS NOT ENERGIZED AND WHEN TRANSFORMER IS NOT IN A SPACE THAT IS CONTINUOUSLY UNDER NORMAL CONTROL OF TEMPERATURE AND HUMIDITY.

1.7 COORDINATION

A. COORDINATE SIZE AND LOCATION OF CONCRETE BASES WITH ACTUAL TRANSFORMER PROVIDED. CAST ANCHOR-BOLT INSERTS INTO BASES. CONCRETE, REINFORCEMENT, AND FORMWORK REQUIREMENTS ARE SPECIFIED WITH CONCRETE.

B. COORDINATE INSTALLATION OF WALL-MOUNTING AND STRUCTURE-HANGING SUPPORTS WITH ACTUAL TRANSFORMER PROVIDED.

PART 2 - PRODUCTS

2.1 MANUFACTURERS

A. MANUFACTURERS: SUBJECT TO COMPLIANCE WITH REQUIREMENTS, PROVIDE PRODUCTS BY ONE OF THE FOLLOWING:

1. ACME ELECTRIC CORPORATION.
2. CHALLENGER ELECTRICAL EQUIPMENT CORP.
3. CONTROLLED POWER COMPANY.
4. EATON ELECTRICAL SECTOR; EATON CORPORATION; CUTLER-HAMMER PRODUCTS.
5. FEDERAL PACIFIC TRANSFORMER COMPANY.
6. GENERAL ELECTRIC COMPANY.
7. HAMMOND CO.
8. MAGNETEK POWER ELECTRONICS GROUP.
9. MICRON INDUSTRIES CORP.
10. MYERS POWER PRODUCTS, INC.
11. SIEMENS ENERGY & AUTOMATION, INC.
12. SOLA/HEVI-DUTY.
13. SQUARE D CO/SCHNEIDER ELECTRIC.
14. ENGINEER APPROVED EQUAL

2.2 GENERAL TRANSFORMER REQUIREMENTS

A. DESCRIPTION: FACTORY-ASSEMBLED AND TESTED, AIR-COOLED UNITS FOR 60-HZ SERVICE.

B. CORES: GRAIN-ORIENTED, NON-AGING SILICON STEEL.

C. COILS: CONTINUOUS WINDINGS WITHOUT SPLICES EXCEPT FOR TAPS.

1. INTERNAL COIL CONNECTIONS: BRAZED OR PRESSURE TYPE.
2. COIL MATERIAL: COPPER UNLESS OTHERWISE SPECIFIED.

2.3 DISTRIBUTION TRANSFORMERS

A. COMPLY WITH NEMA ST 20, AND LIST AND LABEL AS COMPLYING WITH UL 1561.

B. CORES: ONE LEG PER PHASE.

C. INDOOR TRANSFORMER ENCLOSURE: VENTILATED, NEMA 250, TYPE 2.

1. CORE AND COIL SHALL BE ENCAPSULATED WITHIN RESIN COMPOUND, SEALING OUT MOISTURE AND AIR.
2. CORE AND COIL SHALL BE ENCAPSULATED WITHIN RESIN COMPOUND, SEALING OUT MOISTURE AND AIR.

D. TRANSFORMER ENCLOSURE FINISH: COMPLY WITH NEMA 250.

1. FINISH COLOR: ANSI 61 GRAY.

E. TAPS FOR TRANSFORMERS 7.5 TO 24 KVA: ONE 5 PERCENT TAP ABOVE AND ONE 5 PERCENT TAP BELOW NORMAL FULL CAPACITY.

F. TAPS FOR TRANSFORMERS 25 KVA AND LARGER: TWO 2.5 PERCENT TAPS ABOVE AND TWO 2.5 PERCENT TAPS BELOW NORMAL FULL CAPACITY.

G. INSULATION CLASS: 220 DEG C, UL-COMPONENT-RECOGNIZED INSULATION SYSTEM WITH A MAXIMUM OF 115 DEG C RISE ABOVE 40 DEG C AMBIENT TEMPERATURE.

H. ENERGY EFFICIENCY FOR TRANSFORMERS RATED 15 KVA AND LARGER:

1. COMPLYING WITH NEMA TP 1, CLASS 1 EFFICIENCY LEVELS.
2. TESTED ACCORDING TO NEMA TP 2.

I. K-FACTOR RATING: TRANSFORMERS INDICATED TO BE K-FACTOR RATED SHALL COMPLY WITH UL 1561 REQUIREMENTS FOR NONSINUSOIDAL LOAD CURRENT-HANDLING CAPABILITY TO THE DEGREE DEFINED BY DESIGNATED K-FACTOR.

1. UNIT SHALL NOT OVERHEAT WHEN CARRYING FULL-LOAD CURRENT WITH HARMONIC DISTORTION CORRESPONDING TO DESIGNATED K-FACTOR.
2. INDICATE VALUE OF K-FACTOR ON TRANSFORMER NAMEPLATE.

J. ELECTROSTATIC SHIELDING: EACH WINDING SHALL HAVE AN INDEPENDENT, SINGLE, FULL-WIDTH COPPER ELECTROSTATIC SHIELD ARRANGED TO MINIMIZE INTERWINDING CAPACITANCE.

1. ARRANGE COIL LEADS AND TERMINAL STRIPS TO MINIMIZE CAPACITIVE COUPLING BETWEEN INPUT AND OUTPUT TERMINALS.
2. INCLUDE SPECIAL TERMINAL FOR GROUNDING THE SHIELD.
3. SHIELD EFFECTIVENESS:
   a. CAPACITANCE BETWEEN PRIMARY AND SECONDARY WINDINGS: NOT TO EXCEED 33 PICOFARADS OVER A FREQUENCY RANGE OF 20 HZ TO 1 MHZ.
   b. COMMON-MODE NOISE ATTENUATION: MINIMUM OF MINUS 120 DBA AT 0.5 TO 1.5 KHZ; MINIMUM OF MINUS 65 DBA AT 1.5 TO 100 KHZ.
   c. NORMAL-MODE NOISE ATTENUATION: MINIMUM OF MINUS 52 DBA AT 1.5 TO 10 KHZ.

K. FOR WALL MOUNTED TRANSFORMERS, WALL BRACKETS: MANUFACTURER'S STANDARD BRACKETS.

L. FOR TROPICAL OR SUB TROPIC ENVIRONMENTS, PROVIDE FUNGUS PROOFING, PERMANENT FUNGICIDAL TREATMENT FOR COIL AND CORE.

M. LOW-SOUND-LEVEL REQUIREMENTS: MINIMUM OF 3 DBA LESS THAN NEMA ST 20 STANDARD SOUND LEVELS WHEN FACTORY TESTED ACCORDING TO IEEE C57.12.91.

N. LOW-SOUND-LEVEL REQUIREMENTS: MAXIMUM SOUND LEVELS, WHEN FACTORY TESTED ACCORDING TO IEEE C57.12.91, AS FOLLOWS:

1. 9 KVA AND LESS: <40 DBA
2. 30 TO 50 KVA: <45 DBA
3. 51 TO 150 KVA: <50 DBA

2.4 IDENTIFICATION DEVICES

A. NAMEPLATES: ENGRAVED, LAMINATED-PLASTIC OR METAL NAMEPLATE FOR EACH DISTRIBUTION TRANSFORMER, MOUNTED WITH CORROSION-RESISTANT SCREWS. NAMEPLATES AND LABEL PRODUCTS ARE SPECIFIED IN GENERAL NOTES SECTION "IDENTIFICATION FOR ELECTRICAL SYSTEMS."

2.5 SOURCE QUALITY CONTROL

A. TEST AND INSPECT TRANSFORMERS ACCORDING TO IEEE C57.12.91.

B. FACTORY SOUND-LEVEL TESTS: CONDUCT SOUND-LEVEL TESTS ON EQUIPMENT FOR THIS PROJECT.

PART 3 - EXECUTION

3.1 EXAMINATION

A. EXAMINE CONDITIONS FOR COMPLIANCE WITH ENCLOSURE- AND AMBIENT-TEMPERATURE REQUIREMENTS FOR EACH TRANSFORMER.

B. VERIFY THAT FIELD MEASUREMENTS ARE AS NEEDED TO MAINTAIN WORKING CLEARANCES REQUIRED BY NFPA 70 AND MANUFACTURER'S WRITTEN INSTRUCTIONS.

C. EXAMINE WALLS, FLOORS, ROOFS, AND CONCRETE BASES FOR SUITABLE MOUNTING CONDITIONS WHERE TRANSFORMERS WILL BE INSTALLED.

D. VERIFY THAT GROUND CONNECTIONS ARE IN PLACE AND REQUIREMENTS IN GENERAL NOTES SECTION "GROUNDING AND BONDING FOR ELECTRICAL SYSTEMS" HAVE BEEN MET.

E. PROCEED WITH INSTALLATION ONLY AFTER UNSATISFACTORY CONDITIONS HAVE BEEN CORRECTED.

c:\pwworking\hmm\externol\tyn61470\dms7270●3\071_0134CE5424.dgn 10/24/2014 10:36:40 AM TYN61470

DESIGN AGENCY
HATCH MOTT MacDONALD
18013 CLEVELAND PKWY.
SUITE 200
CLEVELAND, OH 44135

DESIGNED DGC | DRAWN CM | CHECKED LL | REVIEWED RF | DATE 08/11/14 | REVISED DGC | STRUCTURE FILE NUMBER 3106578

BRIDGE NO. HAM-71-0134
I-71 LYTLE TUNNEL UNDER LYTLE PARK

HAM-71-01.34
PID No. 87268

3.2 INSTALLATION

A. CONSTRUCT CONCRETE BASES AND ANCHOR FLOOR-MOUNTING TRANSFORMERS ACCORDING TO MANUFACTURER'S WRITTEN INSTRUCTIONS AND REQUIREMENTS IN GENERAL NOTES SECTION "HANGERS AND SUPPORTS FOR ELECTRICAL SYSTEMS."

3.3 CONNECTIONS

A. GROUND EQUIPMENT ACCORDING TO GENERAL NOTES SECTION "GROUNDING AND BONDING FOR ELECTRICAL SYSTEMS."

B. CONNECT WIRING ACCORDING TO GENERAL NOTES SECTION "CONDUCTORS AND CABLES."

3.4 FIELD QUALITY CONTROL

A. PERFORM TESTS AND INSPECTIONS AND PREPARE TEST REPORTS.

1. MANUFACTURER'S FIELD SERVICE: ENGAGE A FACTORY-AUTHORIZED SERVICE REPRESENTATIVE TO INSPECT COMPONENTS, ASSEMBLIES, AND EQUIPMENT INSTALLATIONS, INCLUDING CONNECTIONS, AND TO ASSIST IN TESTING.

B. TESTS AND INSPECTIONS:

1. PERFORM EACH VISUAL AND MECHANICAL INSPECTION AND ELECTRICAL TEST STATED IN NETA ACCEPTANCE TESTING SPECIFICATION. CERTIFY COMPLIANCE WITH TEST PARAMETERS.

C. REMOVE AND REPLACE UNITS THAT DO NOT PASS TESTS OR INSPECTIONS AND RETEST AS SPECIFIED ABOVE.

D. INFRARED SCANNING: TWO MONTHS AFTER SUBSTANTIAL COMPLETION, PERFORM AN INFRARED SCAN OF TRANSFORMER CONNECTIONS.

1. USE AN INFRARED-SCANNING DEVICE DESIGNED TO MEASURE TEMPERATURE OR DETECT SIGNIFICANT DEVIATIONS FROM NORMAL VALUES. PROVIDE DOCUMENTATION OF DEVICE CALIBRATION.
2. PERFORM 2 FOLLOW-UP INFRARED SCANS OF TRANSFORMERS, ONE AT 4 MONTHS AND THE OTHER AT 11 MONTHS AFTER SUBSTANTIAL COMPLETION.
3. PREPARE A CERTIFIED REPORT IDENTIFYING TRANSFORMER CHECKED AND DESCRIBING RESULTS OF SCANNING. INCLUDE NOTATION OF DEFICIENCIES DETECTED, REMEDIAL ACTION TAKEN, AND SCANNING OBSERVATIONS AFTER REMEDIAL ACTION.

E. TEST LABELING: ON COMPLETION OF SATISFACTORY TESTING OF EACH UNIT, ATTACH A DATED AND SIGNED "SATISFACTORY TEST" LABEL TO TESTED COMPONENT.

3.5 ADJUSTING

A. RECORD TRANSFORMER SECONDARY VOLTAGE AT EACH UNIT FOR AT LEAST 48 HOURS OF TYPICAL OCCUPANCY PERIOD. ADJUST TRANSFORMER TAPS TO PROVIDE OPTIMUM VOLTAGE CONDITIONS AT SECONDARY TERMINALS. OPTIMUM IS DEFINED AS NOT EXCEEDING NAMEPLATE VOLTAGE PLUS 10 PERCENT AND NOT BEING LOWER THAN NAMEPLATE VOLTAGE MINUS 3 PERCENT AT MAXIMUM LOAD CONDITIONS. SUBMIT RECORDING AND TAP SETTINGS AS TEST RESULTS.

B. OUTPUT SETTINGS REPORT: PREPARE A WRITTEN REPORT RECORDING OUTPUT VOLTAGES AND TAP SETTINGS.

C. ADJUST ALL ACCESS DOORS AND OPERATING HANDLES FOR FREE MECHANICAL OPERATION AS DESCRIBED IN MANUFACTURER'S INSTRUCTIONS.

3.6 CLEANING

A. VACUUM DIRT AND DEBRIS; DO NOT USE COMPRESSED AIR TO ASSIST IN CLEANING.

B. REPAINT SCRATCHED OR MARRED EXTERIOR SURFACES TO MATCH ORIGINAL FINISH.

PART 4 - METHOD OF PAYMENT AND ITEMS

4.1 METHOD OF PAYMENT AND ITEMS

A. PAYMENT FOR ITEMS SHALL BE MADE AT THE CONTRACT UNIT PRICE, INCLUDING BUT NOT LIMITED TO ALL WORK, LABOR, EQUIPMENT, AND MATERIALS NECESSARY THEREFORE OR INCIDENTAL THERETO, AS FOLLOWS:

ITEM NO.	DESCRIPTION	UNIT
SPECIAL	SPECIAL – MISC.: TRANSFORMERS	EACH

c:\pwworking\hmm\externa\tyn61470\dms7278\ACAD\71_0134CES425.dgn 10/24/2014 10:36:57 AM TYN61470

DESIGN AGENCY
HATCH MOTT MacDONALD
18013 CLEVELAND PKWY.
SUITE 200
CLEVELAND, OH 44135

DESIGNED	DRAWN	REVIEWED	DATE
DGC	CM	RF	08/11/14
CHECKED	REVISED	STRUCTURE FILE NUMBER	
LL	DGC	3106578	

ELECTRICAL NOTES – LOW VOLTAGE TRANSFORMERS – SHEET 2 OF 2

BRIDGE NO. HAM-71-0134
I-71 LYTLE TUNNEL UNDER LYTLE PARK

HAM-71-01.34
PID No. 87268

ITEM 690 – SPECIAL – MISC.: LOW VOLTAGE SWITCHGEAR

PART 1 - GENERAL

1.1 RELATED DOCUMENTS

A. DRAWINGS AND GENERAL PROVISIONS OF THE CONTRACT, INCLUDING GENERAL AND SUPPLEMENTARY CONDITIONS.

1.2 SUMMARY

A. THIS SECTION INCLUDES METAL-ENCLOSED, LOW-VOLTAGE POWER CIRCUIT-BREAKER SWITCHGEAR RATED 1000 V AND LESS.

1.3 ACTION SUBMITTALS

A. PRODUCT DATA: FOR EACH TYPE OF SWITCHGEAR, CIRCUIT BREAKER, ACCESSORY, AND COMPONENT INDICATED. INCLUDE DIMENSIONS AND MANUFACTURERS' TECHNICAL DATA ON FEATURES, PERFORMANCE, ELECTRICAL CHARACTERISTICS, RATINGS, AND FINISHES.

B. SHOP DRAWINGS: FOR EACH TYPE OF SWITCHGEAR AND RELATED EQUIPMENT.

1. DIMENSIONED PLANS, ELEVATIONS, SECTIONS, AND DETAILS, INCLUDING REQUIRED CLEARANCES AND SERVICE SPACE AROUND EQUIPMENT. INCLUDE THE FOLLOWING:
   a. TABULATION OF INSTALLED DEVICES WITH FEATURES AND RATINGS.
   b. ENCLOSURE TYPES AND DETAILS.
   c. OUTLINE AND GENERAL ARRANGEMENT DRAWING SHOWING DIMENSIONS, SHIPPING SECTIONS, AND WEIGHTS OF EACH ASSEMBLED SECTION.
   d. BUS CONFIGURATION WITH SIZE AND NUMBER OF CONDUCTORS IN EACH BUS RUN, INCLUDING PHASE, NEUTRAL, AND GROUND CONDUCTORS OF MAIN AND BRANCH BUSES.
   e. CURRENT RATING OF BUSES.
   f. SHORT-TIME AND SHORT-CIRCUIT CURRENT RATING OF SWITCHGEAR ASSEMBLY.
   g. NAMEPLATE LEGENDS.
   h. MIMIC-BUS DIAGRAM.
   i. UTILITY COMPANY'S METERING PROVISIONS WITH INDICATION OF APPROVAL BY UTILITY COMPANY.
   j. UL LISTING FOR SERIES RATING OF INSTALLED DEVICES.
   k. FEATURES, CHARACTERISTICS, RATINGS, AND FACTORY SETTINGS OF INDIVIDUAL OVERCURRENT PROTECTIVE DEVICES AND AUXILIARY COMPONENTS.
2. WIRING DIAGRAMS: POWER, SIGNAL, AND CONTROL WIRING.

C. SAMPLES: REPRESENTATIVE PORTION OF MIMIC BUS WITH SPECIFIED FINISH. MANUFACTURER'S COLOR CHARTS SHOWING COLORS AVAILABLE FOR MIMIC BUS.

1.4 INFORMATIONAL SUBMITTALS

A. COORDINATION DRAWINGS: FLOOR PLANS SHOWING DIMENSIONED LAYOUT, REQUIRED WORKING CLEARANCES, AND REQUIRED AREA ABOVE AND AROUND SWITCHGEAR WHERE PIPE AND DUCTS ARE PROHIBITED. SHOW SWITCHGEAR LAYOUT AND RELATIONSHIPS BETWEEN COMPONENTS AND ADJACENT STRUCTURAL AND MECHANICAL ELEMENTS. SHOW SUPPORT LOCATIONS, TYPE OF SUPPORT, AND WEIGHT ON EACH SUPPORT. INDICATE FIELD MEASUREMENTS.

B. MANUFACTURER SEISMIC QUALIFICATION CERTIFICATION: SUBMIT CERTIFICATION THAT SWITCHGEAR, OVERCURRENT PROTECTIVE DEVICES, ACCESSORIES, AND COMPONENTS WILL WITHSTAND SEISMIC FORCES. INCLUDE THE FOLLOWING:

1. BASIS OF CERTIFICATION: INDICATE WHETHER WITHSTAND CERTIFICATION IS BASED ON ACTUAL TEST OF ASSEMBLED COMPONENTS OR ON CALCULATION.
   a. THE TERM "WITHSTAND" MEANS "THE UNIT WILL REMAIN IN PLACE WITHOUT SEPARATION OF ANY PARTS FROM THE DEVICE WHEN SUBJECTED TO THE SEISMIC FORCES SPECIFIED AND THE UNIT WILL BE FULLY OPERATIONAL AFTER THE SEISMIC EVENT."
2. DIMENSIONED OUTLINE DRAWINGS OF EQUIPMENT UNIT: IDENTIFY CENTER OF GRAVITY AND LOCATE AND DESCRIBE MOUNTING AND ANCHORAGE PROVISIONS.
3. DETAILED DESCRIPTION OF EQUIPMENT ANCHORAGE DEVICES ON WHICH THE CERTIFICATION IS BASED AND THEIR INSTALLATION REQUIREMENTS.

C. FIELD QUALITY-CONTROL TEST REPORTS.

D. UPDATED MIMIC-BUS DIAGRAM REFLECTING FIELD CHANGES AFTER FINAL SWITCHGEAR LOAD CONNECTIONS HAVE BEEN MADE, FOR RECORD.

1.5 CLOSEOUT SUBMITTALS

A. OPERATION AND MAINTENANCE DATA: FOR SWITCHGEAR AND COMPONENTS TO INCLUDE IN EMERGENCY, OPERATION, AND MAINTENANCE MANUALS. INCLUDE THE FOLLOWING:

1. MANUFACTURER'S WRITTEN INSTRUCTIONS FOR TESTING AND ADJUSTING OVERCURRENT PROTECTIVE DEVICES.
2. TIME-CURRENT CURVES, INCLUDING SELECTABLE RANGES FOR EACH TYPE OF OVERCURRENT PROTECTIVE DEVICE.

1.6 MAINTENANCE MATERIAL SUBMITTALS

A. FURNISH EXTRA MATERIALS DESCRIBED BELOW THAT MATCH PRODUCTS INSTALLED AND THAT ARE PACKAGED WITH PROTECTIVE COVERING FOR STORAGE AND IDENTIFIED WITH LABELS DESCRIBING CONTENTS.

1. FUSES: SIX OF EACH TYPE AND RATING USED. INCLUDE SPARES FOR POTENTIAL TRANSFORMER FUSES, CONTROL POWER FUSES, AND FUSES AND FUSIBLE DEVICES FOR FUSED CIRCUIT BREAKERS.
2. INDICATING LIGHTS: SIX OF EACH TYPE INSTALLED.
3. TOUCHUP PAINT: THREE CONTAINERS OF PAINT MATCHING ENCLOSURE FINISH, EACH 0.5 PINT (250 ML).

1.7 QUALITY ASSURANCE

A. TESTING AGENCY QUALIFICATIONS: AN INDEPENDENT AGENCY, WITH THE EXPERIENCE AND CAPABILITY TO CONDUCT THE TESTING INDICATED, THAT IS A MEMBER COMPANY OF THE INTERNATIONAL ELECTRICAL TESTING ASSOCIATION OR IS A NATIONALLY RECOGNIZED TESTING LABORATORY (NRTL) AS DEFINED BY OSHA IN 29 CFR 1910.7, AND THAT IS ACCEPTABLE TO AUTHORITIES HAVING JURISDICTION.

1. TESTING AGENCY'S FIELD SUPERVISOR: PERSON CURRENTLY CERTIFIED BY THE INTERNATIONAL ELECTRICAL TESTING ASSOCIATION OR THE NATIONAL INSTITUTE FOR CERTIFICATION IN ENGINEERING TECHNOLOGIES TO SUPERVISE ON-SITE TESTING SPECIFIED IN PART 3.

B. SOURCE LIMITATIONS: OBTAIN SWITCHGEAR THROUGH ONE SOURCE FROM A SINGLE MANUFACTURER.

C. ELECTRICAL COMPONENTS, DEVICES, AND ACCESSORIES: LISTED AND LABELED AS DEFINED IN NFPA 70, ARTICLE 100, BY A TESTING AGENCY ACCEPTABLE TO AUTHORITIES HAVING JURISDICTION, AND MARKED FOR INTENDED USE.

D. COMPLY WITH NFPA 70.

1.8 DELIVERY, STORAGE, AND HANDLING

A. DELIVER SWITCHGEAR IN SECTIONS OF LENGTHS THAT CAN BE MOVED PAST OBSTRUCTIONS IN DELIVERY PATH.

B. STORE SWITCHGEAR INDOORS IN CLEAN DRY SPACE WITH UNIFORM TEMPERATURE TO PREVENT CONDENSATION. PROTECT SWITCHGEAR FROM EXPOSURE TO DIRT, FUMES, WATER, CORROSIVE SUBSTANCES, AND PHYSICAL DAMAGE.

C. IF STORED IN AREAS SUBJECTED TO WEATHER, COVER SWITCHGEAR TO PROVIDE PROTECTION FROM WEATHER, DIRT, DUST, CORROSIVE SUBSTANCES, AND PHYSICAL DAMAGE. REMOVE LOOSE PACKING AND FLAMMABLE MATERIALS FROM INSIDE SWITCHGEAR; INSTALL ELECTRIC HEATING (250 W PER SECTION) TO PREVENT CONDENSATION.

1.9 PROJECT CONDITIONS

A. INTERRUPTION OF EXISTING ELECTRIC SERVICE: DO NOT INTERRUPT ELECTRIC SERVICE TO FACILITIES OCCUPIED BY OWNER OR OTHERS UNLESS PERMITTED UNDER THE FOLLOWING CONDITIONS AND THEN ONLY AFTER ARRANGING TO PROVIDE TEMPORARY ELECTRIC SERVICE ACCORDING TO REQUIREMENTS INDICATED:

1. NOTIFY OWNER NO FEWER THAN TEN WORKING DAYS IN ADVANCE OF PROPOSED INTERRUPTION OF ELECTRIC SERVICE.
2. DO NOT PROCEED WITH INTERRUPTION OF ELECTRIC SERVICE WITHOUT OWNER'S WRITTEN PERMISSION.

B. ENVIRONMENTAL LIMITATIONS: RATE EQUIPMENT FOR CONTINUOUS OPERATION UNDER THE FOLLOWING CONDITIONS, UNLESS OTHERWISE INDICATED:

1. AMBIENT TEMPERATURE: NOT EXCEEDING 40 DEG C.
2. ALTITUDE: NOT EXCEEDING 6600 FEET (2010 M).

1.10 COORDINATION

A. COORDINATE LAYOUT AND INSTALLATION OF SWITCHGEAR AND COMPONENTS WITH OTHER CONSTRUCTION THAT PENETRATES CEILINGS OR IS SUPPORTED BY THEM, INCLUDING CONDUIT, PIPING, EQUIPMENT, AND ADJACENT SURFACES. MAINTAIN REQUIRED CLEARANCES FOR WORKSPACE AND EQUIPMENT ACCESS DOORS AND PANELS.

B. COORDINATE SIZE AND LOCATION OF CONCRETE BASES. CONCRETE, REINFORCEMENT, AND FORMWORK REQUIREMENTS ARE SPECIFIED WITH CONCRETE.

PART 2 - PRODUCTS

2.1 MANUFACTURERS

A. MANUFACTURERS: SUBJECT TO COMPLIANCE WITH REQUIREMENTS, PROVIDE PRODUCTS BY ONE OF THE FOLLOWING:

1. CUTLER-HAMMER, INC.; EATON CORPORATION.
2. GENERAL ELECTRIC COMPANY.
3. SIEMENS ENERGY & AUTOMATION, INC.
4. SQUARE D; SCHNEIDER ELECTRIC.

OR APPROVED EQUAL

2.2 RATINGS

A. NOMINAL SYSTEM VOLTAGE: 480/277 V, 4WIRE, 60 HZ.

B. MAIN-BUS CONTINUOUS: 3000A.

C. SHORT-TIME AND SHORT-CIRCUIT CURRENT: MATCH RATING OF HIGHEST-RATED CIRCUIT BREAKER IN SWITCHGEAR ASSEMBLY.

2.3 FABRICATION

A. FACTORY ASSEMBLED AND TESTED AND COMPLYING WITH IEEE C37.20.1.

B. INDOOR ENCLOSURE MATERIAL: STEEL.

C. FINISH: IEEE C37.20.1, MANUFACTURER'S STANDARD GRAY FINISH OVER A RUST-INHIBITING PRIMER ON PHOSPHATIZING-TREATED METAL SURFACES.

D. SECTION BARRIERS BETWEEN MAIN AND TIE CIRCUIT-BREAKER COMPARTMENTS SHALL BE EXTENDED TO REAR OF SECTION.

E. BUS ISOLATION BARRIERS SHALL BE ARRANGED TO ISOLATE LINE BUS FROM LOAD BUS AT EACH MAIN AND TIE CIRCUIT BREAKER.

F. CIRCUIT-BREAKER COMPARTMENTS SHALL BE EQUIPPED TO HOUSE DRAW-OUT-TYPE CIRCUIT BREAKERS AND SHALL BE FITTED WITH HINGED OUTER DOORS.

G. FABRICATE ENCLOSURE WITH REMOVABLE, HINGED, REAR COVER PANELS TO ALLOW ACCESS TO REAR INTERIOR OF SWITCHGEAR.

c:\pwworking\hmm\external\tyn61470\dms7278\071_0134CES+26.dgn 10/24/2014 10:37:06 AM TYN61470

DESIGN AGENCY
HATCH MOTT MacDONALD
18013 CLEVELAND PKWY.
SUITE 200
CLEVELAND, OH 44135

DESIGNED	DRAWN	REVIEWED	DATE
DGC	CM	RF	08/11/14
CHECKED	REVISED	STRUCTURE FILE NUMBER	
PAP	DGC	3106578	

H. AUXILIARY COMPARTMENTS: MATCH AND ALIGN WITH BASIC SWITCHGEAR ASSEMBLY. INCLUDE THE FOLLOWING:
1. UTILITY METERING COMPARTMENT THAT COMPLIES WITH UTILITY COMPANY REQUIREMENTS.
2. BUS TRANSITION SECTIONS.
3. INCOMING-LINE PULL SECTIONS.
4. HINGED FRONT PANELS FOR ACCESS TO METERING, ACCESSORY, AND BLANK COMPARTMENTS.
5. PULL BOX ON TOP OF SWITCHGEAR FOR EXTRA ROOM FOR PULLING CABLE, WITH REMOVABLE TOP, FRONT, AND SIDE COVERS AND VENTILATION PROVISIONS ADEQUATE TO MAINTAIN AIR TEMPERATURE IN PULL BOX WITHIN SAME LIMITS AS SWITCHGEAR.
   a. SET PULL BOX BACK FROM FRONT TO CLEAR CIRCUIT-BREAKER LIFTING MECHANISM.
   b. BOTTOM: INSULATING, FIRE-RESISTANT MATERIAL WITH SEPARATE HOLES FOR CABLE DROPS INTO SWITCHGEAR.
   c. CABLE SUPPORTS: ARRANGED TO EASE CABLING AND ADEQUATE TO SUPPORT CABLES INDICATED, INCLUDING THOSE FOR FUTURE INSTALLATION.

I. BUS BARS CONNECT BETWEEN VERTICAL SECTIONS AND BETWEEN COMPARTMENTS. CABLE CONNECTIONS ARE NOT PERMITTED.
1. MAIN PHASE BUS: UNIFORM CAPACITY THE ENTIRE LENGTH OF ASSEMBLY.
2. USE COPPER FOR CONNECTING CIRCUIT-BREAKER LINE TO COPPER BUS.
3. CONTACT SURFACES OF BUSES: SILVER PLATED.
4. FEEDER CIRCUIT-BREAKER LOAD TERMINALS: SILVER-PLATED COPPER BUS EXTENSIONS EQUIPPED WITH PRESSURE CONNECTORS FOR OUTGOING CIRCUIT CONDUCTORS.
5. GROUND BUS: HARD-DRAWN COPPER OF 98 PERCENT MINIMUM CONDUCTIVITY, WITH PRESSURE CONNECTOR FOR FEEDER AND BRANCH-CIRCUIT GROUND CONDUCTORS, MINIMUM SIZE 1/4 BY 2 INCHES (6 BY 50 MM).
6. SUPPORTS AND BRACING FOR BUSES: ADEQUATE STRENGTH FOR INDICATED SHORT-CIRCUIT CURRENTS.
7. NEUTRAL BUS EQUIPPED WITH PRESSURE-CONNECTOR TERMINATIONS FOR OUTGOING CIRCUIT NEUTRAL CONDUCTORS. NEUTRAL-BUS EXTENSIONS FOR BUSWAY FEEDERS ARE BRACED.
8. NEUTRAL DISCONNECT LINK: BOLTED, UNINSULATED, 1/4-BY-2-INCH (6-BY-50-MM) COPPER BUS, ARRANGED TO CONNECT NEUTRAL BUS TO GROUND BUS.
9. PROVIDE FOR FUTURE EXTENSIONS FROM EITHER END OF MAIN PHASE, NEUTRAL, AND GROUND BUS BY MEANS OF PREDRILLED BOLT-HOLES AND CONNECTING LINKS.
10. BUS-BAR INSULATION: INDIVIDUAL BUS BARS WRAPPED WITH FACTORY-APPLIED, FLAME-RETARDANT TAPE OR SPRAY-APPLIED, FLAME-RETARDANT INSULATION.
    a. SPRAYED INSULATION THICKNESS: 3 MILS (0.08 MM), MINIMUM.
    b. BOLTED BUS JOINTS: INSULATE WITH SECURE JOINT COVERS THAT CAN EASILY BE REMOVED AND REINSTALLED.

2.4 COMPONENTS

A. INSTRUMENT TRANSFORMERS: COMPLY WITH IEEE C57.13.
1. POTENTIAL TRANSFORMERS: SECONDARY-VOLTAGE RATING OF 120 V AND NEMA ACCURACY CLASS OF 0.3 WITH BURDENS OF W, X, AND Y.
2. CURRENT TRANSFORMERS: RATIOS AS INDICATED; BURDEN AND ACCURACY CLASS SUITABLE FOR CONNECTED RELAYS, METERS, AND INSTRUMENTS.

B. MULTIFUNCTION DIGITAL-METERING MONITOR: UL-LISTED OR -RECOGNIZED, MICROPROCESSOR-BASED UNIT SUITABLE FOR THREE- OR FOUR-WIRE SYSTEMS AND WITH THE FOLLOWING FEATURES:
1. INPUTS FROM SENSORS OR 5-A CURRENT-TRANSFORMER SECONDARIES, AND POTENTIAL TERMINALS RATED TO 600 V.
2. SWITCH-SELECTABLE DIGITAL DISPLAY OF THE FOLLOWING:
   a. PHASE CURRENTS, EACH PHASE: PLUS OR MINUS 1 PERCENT.
   b. PHASE-TO-PHASE VOLTAGES, THREE PHASE: PLUS OR MINUS 1 PERCENT.
   c. PHASE-TO-NEUTRAL VOLTAGES, THREE PHASE: PLUS OR MINUS 1 PERCENT.
   d. THREE-PHASE REAL POWER: PLUS OR MINUS 2 PERCENT.
   e. THREE-PHASE REACTIVE POWER: PLUS OR MINUS 2 PERCENT.
   f. POWER FACTOR: PLUS OR MINUS 2 PERCENT.
   g. FREQUENCY: PLUS OR MINUS 0.5 PERCENT.
   h. INTEGRATED DEMAND, WITH DEMAND INTERVAL SELECTABLE FROM 5 TO 60 MINUTES: PLUS OR MINUS 2 PERCENT.
   i. ACCUMULATED ENERGY, IN MEGAWATT HOURS (JOULES), PLUS OR MINUS 2 PERCENT; STORED VALUES UNAFFECTED BY POWER OUTAGES FOR UP TO 72 HOURS.
3. MOUNTING: DISPLAY AND CONTROL UNIT FLUSH OR SEMIFLUSH MOUNTED IN INSTRUMENT COMPARTMENT DOOR.

C. RELAYS: COMPLY WITH IEEE C37.90, TYPES AND SETTINGS AS INDICATED; WITH TEST BLOCKS AND PLUGS.

D. SURGE ARRESTERS: DISTRIBUTION CLASS, METAL-OXIDE-VARISTOR TYPE. COMPLY WITH IEEE C62.11 AND NEMA LA 1.
1. INSTALL IN CABLE TERMINATION COMPARTMENTS AND CONNECT IN EACH PHASE OF CIRCUIT.
2. COORDINATE RATING WITH CIRCUIT VOLTAGE.

E. PROVISION FOR FUTURE DEVICES: EQUIP COMPARTMENTS WITH RAILS, MOUNTING BRACKETS, SUPPORTS, NECESSARY APPURTENANCES, AND BUS CONNECTIONS.

F. FUNGUS PROOFING: PERMANENT FUNGICIDAL TREATMENT FOR SWITCHGEAR INTERIOR, INCLUDING INSTRUMENTS AND INSTRUMENT TRANSFORMERS.

G. CONTROL POWER SUPPLY: EXTERNAL CONTROL POWER WILL BE SUPPLIED FROM AN EXTERNAL UPS SOURCE AT 120VAC.MANUFACTURER WILL PROVIDE CONTROL POWER DISTRIBUTION FUSES FOR EACH COMPARTMENT AND PREWIRED.

H. CONTROL WIRING: FACTORY INSTALLED, COMPLETE WITH BUNDLING, LACING, AND PROTECTION; AND COMPLYING WITH THE FOLLOWING:
1. FLEXIBLE CONDUCTORS FOR NO. 8 AWG AND SMALLER, FOR CONDUCTORS ACROSS HINGES AND FOR CONDUCTORS FOR INTERCONNECTIONS BETWEEN SHIPPING UNITS.
2. CONDUCTORS SIZED ACCORDING TO NFPA 70 FOR DUTY REQUIRED.

2.5 CIRCUIT BREAKERS

A. DESCRIPTION: COMPLY WITH IEEE C37.13.

B. RATINGS: AS INDICATED FOR CONTINUOUS, INTERRUPTING, AND SHORT-TIME CURRENT RATINGS FOR EACH CIRCUIT BREAKER; VOLTAGE AND FREQUENCY RATINGS SAME AS SWITCHGEAR.

C. OPERATING MECHANISM: MECHANICALLY AND ELECTRICALLY TRIP-FREE, STORED-ENERGY OPERATING MECHANISM WITH THE FOLLOWING FEATURES:
1. NORMAL CLOSING SPEED: INDEPENDENT OF BOTH CONTROL AND OPERATOR.
2. SLOW CLOSING SPEED: OPTIONAL WITH OPERATOR FOR INSPECTION AND ADJUSTMENT.
3. STORED-ENERGY MECHANISM: ELECTRICALLY CHARGED, WITH OPTIONAL MANUAL CHARGING.
4. OPERATION COUNTER.

D. TRIP DEVICES: SOLID-STATE, OVERCURRENT TRIP-DEVICE SYSTEM CONSISTING OF ONE OR TWO CURRENT TRANSFORMERS OR SENSORS PER PHASE, A RELEASE MECHANISM, AND THE FOLLOWING FEATURES:
1. FUNCTIONS: LONG-TIME-DELAY, SHORT-TIME-DELAY, AND INSTANTANEOUS-TRIP FUNCTIONS, INDEPENDENT OF EACH OTHER IN BOTH ACTION AND ADJUSTMENT.
2. TEMPERATURE COMPENSATION: ENSURES ACCURACY AND CALIBRATION STABILITY FROM MINUS 5 TO PLUS 40 DEG C.
3. FIELD-ADJUSTABLE, TIME-CURRENT CHARACTERISTICS.
4. CURRENT ADJUSTABILITY: DIAL SETTINGS AND RATING PLUGS ON TRIP UNITS OR SENSORS ON CIRCUIT BREAKERS, OR A COMBINATION OF THESE METHODS.
5. THREE BANDS, MINIMUM, FOR LONG-TIME- AND SHORT-TIME-DELAY FUNCTIONS; MARKED "MINIMUM," "INTERMEDIATE," AND "MAXIMUM."
6. PICKUP POINTS: FIVE MINIMUM, FOR LONG-TIME- AND SHORT-TIME-TRIP FUNCTIONS. EQUIP SHORT-TIME-TRIP FUNCTION FOR SWITCHABLE I2T OPERATION.
7. PICKUP POINTS: FIVE MINIMUM, FOR INSTANTANEOUS-TRIP FUNCTIONS.
8. GROUND-FAULT PROTECTION WITH AT LEAST THREE SHORT-TIME-DELAY SETTINGS AND THREE TRIP-TIME-DELAY BANDS; ADJUSTABLE CURRENT PICKUP. ARRANGE TO PROVIDE PROTECTION FOR THE FOLLOWING:
   a. THREE-WIRE CIRCUIT OR SYSTEM.
   b. FOUR-WIRE CIRCUIT OR SYSTEM.
   c. FOUR-WIRE, DOUBLE-ENDED SUBSTATION.
9. TRIP INDICATION: LABELED, BATTERY-POWERED LIGHTS OR MECHANICAL TARGETS ON TRIP DEVICE TO INDICATE TYPE OF FAULT.

E. AUXILIARY CONTACTS: FOR INTERLOCKING OR REMOTE INDICATION OF CIRCUIT-BREAKER POSITION, WITH SPARE AUXILIARY SWITCHES AND OTHER AUXILIARY SWITCHES REQUIRED FOR NORMAL CIRCUIT-BREAKER OPERATION, QUANTITY AS INDICATED. EACH CONSISTS OF TWO TYPE "A" AND TWO TYPE "B" STAGES (CONTACTS) WIRED THROUGH SECONDARY DISCONNECT DEVICES TO A TERMINAL BLOCK IN STATIONARY HOUSING.

F. DRAWOUT FEATURES: CIRCUIT-BREAKER MOUNTING ASSEMBLY EQUIPPED WITH A RACKING MECHANISM TO POSITION CIRCUIT BREAKER AND HOLD IT RIGIDLY IN CONNECTED, TEST, AND DISCONNECTED POSITIONS. INCLUDE THE FOLLOWING FEATURES:
1. INTERLOCKS: PREVENT MOVEMENT OF CIRCUIT BREAKER TO OR FROM CONNECTED POSITION WHEN IT IS CLOSED, AND PREVENT CLOSURE OF CIRCUIT BREAKER UNLESS IT IS IN CONNECTED, TEST, OR DISCONNECTED POSITION.
2. CIRCUIT-BREAKER POSITIONING: AN OPEN CIRCUIT BREAKER MAY BE RACKED TO OR FROM CONNECTED, TEST, AND DISCONNECTED POSITIONS ONLY WITH THE ASSOCIATED COMPARTMENT DOOR CLOSED UNLESS LIVE PARTS ARE COVERED BY A FULL DEAD-FRONT SHIELD. AN OPEN CIRCUIT BREAKER MAY BE MANUALLY WITHDRAWN TO A POSITION FOR REMOVAL FROM THE STRUCTURE WITH THE DOOR OPEN. STATUS FOR CONNECTION DEVICES FOR DIFFERENT POSITIONS INCLUDES THE FOLLOWING:
   a. TEST POSITION: PRIMARY DISCONNECT DEVICES DISENGAGED, AND SECONDARY DISCONNECT DEVICES AND GROUND CONTACT ENGAGED.
   b. DISCONNECTED POSITION: PRIMARY AND SECONDARY DEVICES AND GROUND CONTACT DISENGAGED.

G. ARC CHUTES: READILY REMOVABLE FROM ASSOCIATED CIRCUIT BREAKER WHEN IT IS IN DISCONNECTED POSITION, AND ARRANGED TO PERMIT INSPECTION OF CONTACTS WITHOUT REMOVING CIRCUIT BREAKER FROM SWITCHGEAR.

H. PADLOCKING PROVISIONS: FOR INSTALLING AT LEAST THREE PADLOCKS ON EACH CIRCUIT BREAKER TO SECURE ITS ENCLOSURE AND PREVENT MOVEMENT OF DRAWOUT MECHANISM.

I. OPERATING HANDLE: ONE FOR EACH CIRCUIT BREAKER CAPABLE OF MANUAL OPERATION.

J. ELECTRIC CLOSE BUTTON: ONE FOR EACH ELECTRICALLY OPERATED CIRCUIT BREAKER.

DESIGN AGENCY
HATCH MOTT MacDONALD
18013 CLEVELAND PKWY.
SUITE 200
CLEVELAND, OH 44135

DESIGNED DGC | DRAWN CM | CHECKED PAP | REVIEWED RF | DATE 08/11/14 | REVISED DGC | STRUCTURE FILE NUMBER 3106578

BRIDGE NO. HAM-71-0134
I-71 LYTLE TUNNEL UNDER LYTLE PARK

HAM-71-01.34
PID No. 87268

c:\pwworking\hmm\external\ty61470.dms/72703\071_0134CEC427.dgn 10/24/2014 10:37:22 AM TYN61470

K. MECHANICAL INTERLOCKING OF CIRCUIT BREAKERS: USES A MECHANICAL TRIPPING LEVER OR EQUIVALENT DESIGN AND ELECTRICAL INTERLOCKS.
L. KEY INTERLOCKS: ARRANGED SO KEYS ARE ATTACHED AT DEVICES INDICATED. MOUNTINGS AND HARDWARE ARE INCLUDED WHERE FUTURE INSTALLATION OF KEY-INTERLOCK DEVICES IS INDICATED.
M. UNDERVOLTAGE TRIP DEVICES: INSTANTANEOUS, WITH ADJUSTABLE PICKUP VOLTAGE.
N. UNDERVOLTAGE TRIP DEVICES: ADJUSTABLE TIME-DELAY AND PICKUP VOLTAGE.RETAIN FIRST PARAGRAPH AND SUBPARAGRAPHS BELOW FOR FUSED CIRCUIT BREAKERS.
O. INDICATING LIGHTS: TO INDICATE CIRCUIT BREAKER IS OPEN OR CLOSED, FOR MAIN AND BUS TIE CIRCUIT BREAKERS INTERLOCKED EITHER WITH EACH OTHER OR WITH EXTERNAL DEVICES.

2.6 ACCESSORIES

A. ACCESSORY SET: FURNISH TOOLS AND MISCELLANEOUS ITEMS REQUIRED FOR CIRCUIT-BREAKER AND SWITCHGEAR TEST, INSPECTION, MAINTENANCE, AND OPERATION.
1. RACKING HANDLE TO MANUALLY MOVE CIRCUIT BREAKER BETWEEN CONNECTED AND DISCONNECTED POSITIONS.
2. PORTABLE TEST SET FOR TESTING ALL FUNCTIONS OF CIRCUIT-BREAKER, SOLID-STATE TRIP DEVICES WITHOUT REMOVAL FROM SWITCHGEAR.
3. RELAY AND METER TEST PLUGS SUITABLE FOR TESTING SWITCHGEAR METERS AND SWITCHGEAR CLASS RELAYS.

B. CIRCUIT-BREAKER REMOVAL APPARATUS: PORTABLE, FLOOR-SUPPORTED, ROLLER-BASE, ELEVATING CARRIAGE ARRANGED FOR MOVING CIRCUIT BREAKERS IN AND OUT OF COMPARTMENTS.
C. CIRCUIT-BREAKER REMOVAL APPARATUS: OVERHEAD-CIRCUIT-BREAKER LIFTING DEVICE, TRACK MOUNTED AT TOP FRONT OF SWITCHGEAR AND COMPLETE WITH HOIST AND LIFTING YOKES MATCHING EACH SIZE OF DRAWOUT CIRCUIT BREAKER INSTALLED.
D. SPARE-FUSE CABINET: IDENTIFIED AND COMPARTMENTED STEEL BOX OR CABINET WITH LOCKABLE DOOR.
E. STORAGE FOR MANUAL: INCLUDE A RACK OR HOLDER, NEAR THE OPERATING INSTRUCTIONS, FOR A COPY OF MAINTENANCE MANUAL.

2.7 IDENTIFICATION

A. MIMIC BUS: CONTINUOUS MIMIC BUS, ARRANGED IN SINGLE-LINE DIAGRAM FORMAT, USING SYMBOLS AND LETTERED DESIGNATIONS CONSISTENT WITH APPROVED MIMIC-BUS DIAGRAM.
1. MIMIC-BUS SEGMENTS COORDINATED WITH DEVICES IN SWITCHGEAR SECTIONS TO WHICH APPLIED, TO PRODUCE A CONCISE VISUAL PRESENTATION OF PRINCIPAL SWITCHGEAR COMPONENTS AND CONNECTIONS.
2. MEDIUM: PAINTED GRAPHICS, AS SELECTED BY ARCHITECT.
3. COLOR: CONTRASTING WITH FACTORY-FINISH BACKGROUND; AS SELECTED BY ARCHITECT FROM MANUFACTURER'S FULL RANGE.

B. SYSTEM POWER RISER DIAGRAMS: DEPICT POWER SOURCES, FEEDERS, DISTRIBUTION COMPONENTS, AND MAJOR LOADS. INCLUDE AS-BUILT DATA FOR LOW-VOLTAGE POWER SWITCHGEAR AND CONNECTIONS AS FOLLOWS:
1. FRAME SIZE OF EACH CIRCUIT BREAKER.
2. TRIP RATING FOR EACH CIRCUIT BREAKER.
3. CONDUIT AND WIRE SIZE FOR EACH FEEDER.

PART 3 - EXECUTION

3.1 EXAMINATION

A. EXAMINE ELEMENTS AND SURFACES WHERE SWITCHGEAR WILL BE INSTALLED FOR COMPLIANCE WITH INSTALLATION TOLERANCES, REQUIRED CLEARANCES, AND OTHER CONDITIONS AFFECTING PERFORMANCE.
1. PROCEED WITH INSTALLATION ONLY AFTER UNSATISFACTORY CONDITIONS HAVE BEEN CORRECTED.

3.2 INSTALLATION

A. COMPLY WITH APPLICABLE PORTIONS OF NECA 400.
B. ANCHOR SWITCHGEAR ASSEMBLY TO 4-INCH (100-MM), CHANNEL-IRON FLOOR SILL EMBEDDED IN FLOOR AND ATTACH BY BOLTING.
1. SILLS: SELECT TO SUIT SWITCHGEAR; LEVEL AND GROUT FLUSH INTO FLOOR.
2. DESIGN EACH FASTENER AND SUPPORT TO CARRY LOAD INDICATED BY SEISMIC REQUIREMENTS AND ACCORDING TO SEISMIC-RESTRAINT DETAILS.
3. CONCRETE BASES: 4 INCHES (100 MM) HIGH, REINFORCED, WITH CHAMFERED EDGES. EXTEND BASE NO MORE THAN 3 INCHES (75 MM) IN ALL DIRECTIONS BEYOND THE MAXIMUM DIMENSIONS OF SWITCHGEAR UNLESS OTHERWISE INDICATED OR UNLESS REQUIRED FOR SEISMIC ANCHOR SUPPORT. CONSTRUCT CONCRETE BASES ACCORDING TO SECTION 260529 "HANGERS AND SUPPORTS FOR ELECTRICAL SYSTEMS."

C. TEMPORARY LIFTING PROVISIONS: REMOVE TEMPORARY LIFTING EYES, CHANNELS, BRACKETS, AND TEMPORARY BLOCKING OF MOVING PARTS FROM SWITCHGEAR UNITS AND COMPONENTS.

3.3 IDENTIFICATION

A. IDENTIFY FIELD-INSTALLED CONDUCTORS, INTERCONNECTING WIRING, AND COMPONENTS; PROVIDE WARNING SIGNS AS .
B. DIAGRAM AND INSTRUCTIONS:
1. FRAME AND MOUNT UNDER CLEAR ACRYLIC PLASTIC ON THE FRONT OF SWITCHGEAR.
a. OPERATING INSTRUCTIONS: PRINTED BASIC INSTRUCTIONS FOR SWITCHGEAR, INCLUDING CONTROL AND KEY-INTERLOCK SEQUENCES AND EMERGENCY PROCEDURES.
b. SYSTEM POWER RISER DIAGRAMS: DEPICT POWER SOURCES, FEEDERS, DISTRIBUTION COMPONENTS, AND MAJOR LOADS.
2. STORAGE FOR MAINTENANCE: INCLUDE A RACK OR HOLDER, NEAR THE OPERATING INSTRUCTIONS, FOR A COPY OF MAINTENANCE MANUAL.

3.4 FIELD QUALITY CONTROL

A. PREPARE FOR ACCEPTANCE TESTS AS FOLLOWS:
1. TEST INSULATION RESISTANCE FOR EACH SWITCHGEAR BUS, COMPONENT, CONNECTING SUPPLY, FEEDER, AND CONTROL CIRCUIT.
2. TEST CONTINUITY OF EACH CIRCUIT.

B. MANUFACTURER'S FIELD SERVICE: ENGAGE A FACTORY-AUTHORIZED SERVICE REPRESENTATIVE TO PERFORM THE FOLLOWING:
1. INSPECT SWITCHGEAR INSTALLATION, INCLUDING WIRING, COMPONENTS, CONNECTIONS, AND EQUIPMENT. TEST AND ADJUST COMPONENTS AND EQUIPMENT.
2. VERIFY THAT ELECTRICAL CONTROL WIRING INSTALLATION COMPLIES WITH MANUFACTURER'S SUBMITTAL BY MEANS OF POINT-TO-POINT CONTINUITY TESTING. VERIFY THAT WIRING INSTALLATION COMPLIES WITH REQUIREMENTS IN ELECTRICAL SECTIONS.
3. COMPLETE INSTALLATION AND STARTUP CHECKS ACCORDING TO MANUFACTURER'S WRITTEN INSTRUCTIONS.
4. ASSIST IN FIELD TESTING OF EQUIPMENT INCLUDING PRETESTING AND ADJUSTING OF EQUIPMENT AND COMPONENTS.
5. REPORT RESULTS IN WRITING.

C. TESTING AGENCY: ENGAGE A QUALIFIED INDEPENDENT TESTING AND INSPECTING AGENCY TO PERFORM FIELD TESTS AND INSPECTIONS AND PREPARE TEST REPORTS.
D. PERFORM THE FOLLOWING FIELD TESTS AND INSPECTIONS AND PREPARE TEST REPORTS:
1. PERFORM EACH VISUAL AND MECHANICAL INSPECTION AND ELECTRICAL TEST STATED IN NETA ACCEPTANCE TESTING SERVICE. CERTIFY COMPLIANCE WITH TEST PARAMETERS. PERFORM NETA TESTS AND INSPECTIONS FOR EACH OF THE FOLLOWING NETA CATEGORIES:
a. SWITCHGEAR.
b. CIRCUIT BREAKERS.
c. PROTECTIVE RELAYS.
d. INSTRUMENT TRANSFORMERS.
e. METERING AND INSTRUMENTATION.
f. GROUND-FAULT SYSTEMS.
g. BATTERY SYSTEMS.
h. SURGE ARRESTERS.
i. CAPACITORS.
2. REMOVE AND REPLACE MALFUNCTIONING UNITS AND RETEST AS SPECIFIED ABOVE.

E. INFRARED SCANNING: AFTER SUBSTANTIAL COMPLETION, BUT NOT MORE THAN 60 DAYS AFTER FINAL ACCEPTANCE, PERFORM AN INFRARED SCAN OF EACH SWITCHGEAR. REMOVE FRONT AND REAR PANELS SO JOINTS AND CONNECTIONS ARE ACCESSIBLE TO PORTABLE SCANNER.
1. FOLLOW-UP INFRARED SCANNING: PERFORM AN ADDITIONAL FOLLOW-UP INFRARED SCAN OF EACH SWITCHGEAR 11 MONTHS AFTER DATE OF SUBSTANTIAL COMPLETION.
2. INSTRUMENT: USE AN INFRARED SCANNING DEVICE DESIGNED TO MEASURE TEMPERATURE OR TO DETECT SIGNIFICANT DEVIATIONS FROM NORMAL VALUES. PROVIDE CALIBRATION RECORD FOR DEVICE.
3. RECORD OF INFRARED SCANNING: PREPARE A CERTIFIED REPORT THAT IDENTIFIES SWITCHGEAR CHECKED AND THAT DESCRIBES SCANNING RESULTS. INCLUDE NOTATION OF DEFICIENCIES DETECTED, REMEDIAL ACTION TAKEN, AND OBSERVATIONS AFTER REMEDIAL ACTION.

3.5 ADJUSTING

A. SET FIELD-ADJUSTABLE, PROTECTIVE-RELAY TRIP CHARACTERISTICS ACCORDING TO RESULTS IN SECTION 260574 "OVERCURRENT PROTECTIVE DEVICE COORDINATION STUDY."
B. SET FIELD-ADJUSTABLE, PROTECTIVE-RELAY TRIP CHARACTERISTICS.

3.6 CLEANING

A. ON COMPLETION OF INSTALLATION, INSPECT INTERIOR AND EXTERIOR OF SWITCHGEAR. REMOVE PAINT SPLATTERS AND OTHER SPOTS. VACUUM DIRT AND DEBRIS; DO NOT USE COMPRESSED AIR TO ASSIST IN CLEANING. REPAIR EXPOSED SURFACES TO MATCH ORIGINAL FINISH.

3.7 PROTECTION

A. TEMPORARY HEATING: APPLY TEMPORARY HEAT TO SWITCHGEAR, ACCORDING TO MANUFACTURER'S WRITTEN INSTRUCTIONS, THROUGHOUT PERIODS WHEN SWITCHGEAR ENVIRONMENT IS NOT CONTROLLED FOR TEMPERATURE AND HUMIDITY WITHIN MANUFACTURER'S STIPULATED SERVICE CONDITIONS.

3.8 DEMONSTRATION

A. ENGAGE A FACTORY-AUTHORIZED SERVICE REPRESENTATIVE TO TRAIN OWNER'S MAINTENANCE PERSONNEL TO ADJUST, OPERATE, AND MAINTAIN SWITCHGEAR.

PART 4 - METHOD OF PAYMENT AND ITEMS

4.1 METHOD OF PAYMENT AND ITEMS

A. PAYMENT FOR ITEMS SHALL BE MADE AT THE CONTRACT UNIT PRICE, INCLUDING BUT NOT LIMITED TO ALL WORK, LABOR, EQUIPMENT, AND MATERIALS NECESSARY THEREFORE OR INCIDENTAL THERETO, AS FOLLOWS:

ITEM NO.	DESCRIPTION	UNIT
SPECIAL	SPECIAL – MISC.: SWITCHGEAR	EACH

c:\pwworking\nmn\externa\tyn61470\dms727●3\071_0134CE5428.dgn 10/24/2014 10:37:34 AM TYN●1470

DESIGN AGENCY
HATCH MOTT MacDONALD
18013 CLEVELAND PKWY.
SUITE 200
CLEVELAND, OH 44135

DESIGNED	DRAWN	REVIEWED	DATE
DGC	CM	RF	08/11/14
CHECKED	REVISED	STRUCTURE FILE NUMBER	
PAP	DGC	3106578	

ITEM 690 – SPECIAL – MISC.: PANELBOARDS

PART 1 - GENERAL

1.01 RELATED DOCUMENTS

A. DRAWINGS AND GENERAL PROVISIONS OF THE CONTRACT, INCLUDING GENERAL AND SUPPLEMENTARY CONDITIONS.

1.02 SUMMARY

A. SECTION INCLUDES:
   1. DISTRIBUTION PANELBOARDS.
   2. LIGHTING AND APPLIANCE BRANCH-CIRCUIT PANELBOARDS.

1.03 DEFINITIONS

A. SVR: SUPPRESSED VOLTAGE RATING.
B. SPD: SURGE PROTECTION DEVICE

1.04 ACTION SUBMITTALS

A. PRODUCT DATA: FOR EACH TYPE OF PANELBOARD, SWITCHING AND OVERCURRENT PROTECTIVE DEVICE, TRANSIENT VOLTAGE SUPPRESSION DEVICE, ACCESSORY, AND COMPONENT INDICATED. INCLUDE DIMENSIONS AND MANUFACTURERS' TECHNICAL DATA ON FEATURES, PERFORMANCE, ELECTRICAL CHARACTERISTICS, RATINGS, AND FINISHES.
B. SHOP DRAWINGS: FOR EACH PANELBOARD AND RELATED EQUIPMENT.
   1. INCLUDE DIMENSIONED PLANS, ELEVATIONS, SECTIONS, AND DETAILS. SHOW TABULATIONS OF INSTALLED DEVICES, EQUIPMENT FEATURES, AND RATINGS.
   2. DETAIL ENCLOSURE TYPES AND DETAILS FOR TYPES OTHER THAN NEMA 250, TYPE 1.
   3. DETAIL BUS CONFIGURATION, CURRENT, AND VOLTAGE RATINGS.
   4. SHORT-CIRCUIT CURRENT RATING OF PANELBOARDS AND OVERCURRENT PROTECTIVE DEVICES.
   5. RETAIN FIRST SUBPARAGRAPH BELOW IF SERIES RATING OF OVERCURRENT PROTECTIVE DEVICES IS USED.
   6. DETAIL FEATURES, CHARACTERISTICS, RATINGS, AND FACTORY SETTINGS OF INDIVIDUAL OVERCURRENT PROTECTIVE DEVICES AND AUXILIARY COMPONENTS.
   7. INCLUDE WIRING DIAGRAMS FOR POWER, SIGNAL, AND CONTROL WIRING.

1.05 INFORMATIONAL SUBMITTALS

A. QUALIFICATION DATA: FOR QUALIFIED TESTING AGENCY.
B. FIELD QUALITY-CONTROL REPORTS:
   1. TEST PROCEDURES USED.
   2. TEST RESULTS THAT COMPLY WITH REQUIREMENTS.
   3. RESULTS OF FAILED TESTS AND CORRECTIVE ACTION TAKEN TO ACHIEVE TEST RESULTS THAT COMPLY WITH REQUIREMENTS.
C. PANELBOARD SCHEDULES: FOR INSTALLATION IN PANELBOARDS. SUBMIT FINAL VERSIONS AFTER LOAD BALANCING INDICATING THE CONNECTED LOAD FOR EACH BREAKER IN ACCORDANCE WITH THE NEC. SCHEDULE TO BE TYPED AND DATED.

1.06 CLOSEOUT SUBMITTALS

A. OPERATION AND MAINTENANCE DATA: FOR PANELBOARDS AND COMPONENTS TO INCLUDE IN EMERGENCY, OPERATION, AND MAINTENANCE MANUALS INCLUDE THE FOLLOWING:
   1. MANUFACTURER'S WRITTEN INSTRUCTIONS FOR TESTING AND ADJUSTING OVERCURRENT PROTECTIVE DEVICES.
   2. TIME-CURRENT CURVES, INCLUDING SELECTABLE RANGES FOR EACH TYPE OF OVERCURRENT PROTECTIVE DEVICE THAT ALLOWS ADJUSTMENTS.

1.07 MAINTENANCE MATERIAL SUBMITTALS

A. FURNISH EXTRA MATERIALS THAT MATCH PRODUCTS INSTALLED AND THAT ARE PACKAGED WITH PROTECTIVE COVERING FOR STORAGE AND IDENTIFIED WITH LABELS DESCRIBING CONTENTS.
   1. KEYS: TWO SPARES FOR EACH TYPE OF PANELBOARD CABINET LOCK.
   2. CIRCUIT BREAKERS INCLUDING GFCI AND GROUND FAULT EQUIPMENT PROTECTION (GFEP) TYPES: PROVIDE SPARE BREAKERS AS SHOWN IN THE SCHEDULES ON THE DRAWINGS
   3. FUSES FOR FUSED SWITCHES: EQUAL TO 10 PERCENT OF QUANTITY INSTALLED FOR EACH SIZE AND TYPE, BUT NO FEWER THAN THREE OF EACH SIZE AND TYPE.
   4. FUSES FOR FUSED POWER-CIRCUIT DEVICES: EQUAL TO 10 PERCENT OF QUANTITY INSTALLED FOR EACH SIZE AND TYPE, BUT NO FEWER THAN THREE OF EACH SIZE AND TYPE.

1.08 QUALITY ASSURANCE

A. SOURCE LIMITATIONS: OBTAIN PANELBOARDS, OVERCURRENT PROTECTIVE DEVICES, COMPONENTS, AND ACCESSORIES FROM SINGLE SOURCE FROM SINGLE MANUFACTURER.
B. PRODUCT SELECTION FOR RESTRICTED SPACE: DRAWINGS INDICATE MAXIMUM DIMENSIONS FOR PANELBOARDS INCLUDING CLEARANCES BETWEEN PANELBOARDS AND ADJACENT SURFACES AND OTHER ITEMS. COMPLY WITH INDICATED MAXIMUM DIMENSIONS.
C. ELECTRICAL COMPONENTS, DEVICES, AND ACCESSORIES: LISTED AND LABELED AS DEFINED IN NFPA 70, BY A QUALIFIED TESTING AGENCY, AND MARKED FOR INTENDED LOCATION AND APPLICATION.
D. COMPLY WITH NEMA PB 1.
E. COMPLY WITH NFPA 70.

1.09 DELIVERY, STORAGE, AND HANDLING

A. STORE IN ACCORDANCE WITH THE MANUFACTURER'S RECOMMENDATIONS.
B. HANDLE AND PREPARE PANELBOARDS FOR INSTALLATION ACCORDING TO NEMA PB 1.

1.10 PROJECT CONDITIONS

A. ENVIRONMENTAL LIMITATIONS:
   1. DO NOT DELIVER OR INSTALL PANELBOARDS UNTIL SPACES ARE ENCLOSED AND WEATHERTIGHT, WET WORK IN SPACES IS COMPLETE AND DRY, WORK ABOVE PANELBOARDS IS COMPLETE, AND TEMPORARY HVAC SYSTEM IS OPERATING AND MAINTAINING AMBIENT TEMPERATURE AND HUMIDITY CONDITIONS AT OCCUPANCY LEVELS DURING THE REMAINDER OF THE CONSTRUCTION PERIOD.
   2. RATE EQUIPMENT FOR CONTINUOUS OPERATION UNDER THE FOLLOWING CONDITIONS UNLESS OTHERWISE INDICATED:
      a. AMBIENT TEMPERATURE: NOT EXCEEDING MINUS 22 DEG F (MINUS 30 DEG C) TO PLUS 104 DEG F (PLUS 40 DEG C).
      b. ALTITUDE: NOT EXCEEDING 6600 FEET (2000 M).
B. SERVICE CONDITIONS: NEMA PB 1, USUAL SERVICE CONDITIONS, AS FOLLOWS:
   1. AMBIENT TEMPERATURES WITHIN LIMITS SPECIFIED.
   2. ALTITUDE NOT EXCEEDING 6600 FEET (2000 M).
C. INTERRUPTION OF EXISTING ELECTRIC SERVICE: DO NOT INTERRUPT ELECTRIC SERVICE TO FACILITIES OCCUPIED BY OWNER OR OTHERS UNLESS PERMITTED UNDER THE FOLLOWING CONDITIONS AND THEN ONLY AFTER ARRANGING TO PROVIDE TEMPORARY ELECTRIC SERVICE ACCORDING TO REQUIREMENTS INDICATED:
   1. NOTIFY ENGINEER AND OHIO DEPARTMENT OF TRANSPORTATION (ODOT) NO FEWER THAN 10 WORKING DAYS IN ADVANCE OF PROPOSED INTERRUPTION OF ELECTRIC SERVICE.
   2. DO NOT PROCEED WITH INTERRUPTION OF ELECTRIC SERVICE WITHOUT ENGINEER'S WRITTEN PERMISSION.
   3. COMPLY WITH NFPA 70E.

1.11 COORDINATION

A. COORDINATE LAYOUT AND INSTALLATION OF PANELBOARDS AND COMPONENTS WITH OTHER CONSTRUCTION THAT PENETRATES WALLS OR IS SUPPORTED BY THEM, INCLUDING ELECTRICAL AND OTHER TYPES OF EQUIPMENT, RACEWAYS, PIPING, ENCUMBRANCES TO WORKSPACE CLEARANCE REQUIREMENTS, AND ADJACENT SURFACES. MAINTAIN REQUIRED WORKSPACE CLEARANCES AND REQUIRED CLEARANCES FOR EQUIPMENT ACCESS DOORS AND PANELS.
B. COORDINATE SIZES AND LOCATIONS OF CONCRETE BASES WITH ACTUAL EQUIPMENT PROVIDED. CAST ANCHOR-BOLT INSERTS INTO BASES. CONCRETE, REINFORCEMENT, AND FORMWORK REQUIREMENTS ARE SPECIFIED WITH CONCRETE.

PART 2 - PRODUCTS

2.01 GENERAL REQUIREMENTS FOR PANELBOARDS

A. FABRICATE AND TEST PANELBOARDS ACCORDING TO IEEE 344.
B. ENCLOSURES: SEE PLAN SHEET PANEL SCHEDULE FOR ENCLOSURE TYPES AND MOUNTING.
   1. PROVIDE RATED ENCLOSURES AS SHOWN BELOW UNLESS OTHERWISE INDICATED ON PLANS:
      a. INDOOR LOCATION: NEMA 250, TYPE 3R.
   2. FRONT: SECURED TO BOX WITH CONCEALED TRIM CLAMPS. FOR SURFACE-MOUNTED FRONTS, MATCH BOX DIMENSIONS; FOR FLUSH-MOUNTED FRONTS, OVERLAP BOX.
   3. HINGED FRONT COVER: ENTIRE FRONT TRIM HINGED TO BOX AND WITH STANDARD DOOR WITHIN HINGED TRIM COVER.
   4. SKIRT FOR SURFACE-MOUNTED PANELBOARDS: SAME GAGE AND FINISH AS PANELBOARD FRONT WITH FLANGES FOR ATTACHMENT TO PANELBOARD, WALL, AND CEILING OR FLOOR.
   5. GUTTER EXTENSION AND BARRIER: SAME GAGE AND FINISH AS PANELBOARD ENCLOSURE; INTEGRAL WITH ENCLOSURE BODY. ARRANGE TO ISOLATE INDIVIDUAL PANEL SECTIONS.
   6. FINISHES:
      a. PANELS AND TRIM: STEEL, FACTORY FINISHED IMMEDIATELY AFTER CLEANING AND PRETREATING WITH MANUFACTURER'S STANDARD TWO-COAT, BAKED-ON FINISH CONSISTING OF PRIME COAT AND THERMOSETTING TOPCOAT.
      b. BACK BOXES: GALVANIZED STEEL UNLESS INDICATED OTHERWISE ON PANEL SCHEDULE.
      c. FUNGUS PROOFING: PERMANENT FUNGICIDAL TREATMENT FOR OVERCURRENT PROTECTIVE DEVICES AND OTHER COMPONENTS. (ONLY REQUIRED WITH THE RELATIVE HUMIDITY IS ABOVE 90% AND THE ELECTRICAL ROOM OR SPACE IS NOT CONDITIONED.)
   7. DIRECTORY CARD: INSIDE PANELBOARD DOOR, MOUNTED IN TRANSPARENT CARD HOLDER. ALL BREAKER TEXT TO BE TYPED AND DATED. DIRECTORY CARD SHALL INCLUDE THE SOURCE OF SUPPLY TO THE PANELBOARD DIRECTORY CARD SHALL INCLUDE TYPED CONTACT INFORMATION FOR THE ELECTRICAL CONTRACTOR
C. INCOMING MAINS LOCATION: TOP OR BOTTOM PER CONTRACTORS INSTALLATION METHOD UNLESS SPECIFICALLY INDICATED ON THE DRAWINGS.

DESIGN AGENCY
HATCH MOTT MacDONALD
18013 CLEVELAND PKWY.
SUITE 200
CLEVELAND, OH 44135

DESIGNED	DRAWN	REVIEWED	DATE
DGC	CM	RF	08/11/14
CHECKED	REVISED	STRUCTURE FILE NUMBER	
LL	DGC	3106578	

ELECTRICAL NOTES - PANELBOARDS - SHEET 1 OF 3

HAM-71-01.34
PID No. 87268

BRIDGE NO. HAM-71-0134
I-71 LYTLE TUNNEL UNDER LYTLE PARK

c:\pwworking\hmm\external\ty6147\0\dms727●3\071_0134CE5429.dgn 10/24/2014 10:37:49 AM TYN6147

D. PHASE, NEUTRAL, AND GROUND BUSES:
1. MATERIAL: HARD-DRAWN COPPER, 98 PERCENT CONDUCTIVITY.
2. EQUIPMENT GROUND BUS: ADEQUATE FOR FEEDER AND BRANCH-CIRCUIT EQUIPMENT GROUNDING CONDUCTORS; BONDED TO BOX.
3. ISOLATED GROUND BUS: ADEQUATE FOR BRANCH-CIRCUIT ISOLATED GROUND CONDUCTORS; INSULATED FROM BOX.
4. NEUTRAL BUS: 100% OF THE PHASE BUS CAPACITY UNLESS OTHERWISE INDICATED ON THE PANEL SCHEDULES AS 200%.
5. EXTRA-CAPACITY NEUTRAL BUS (WHEN SHOWN ON THE DRAWINGS): NEUTRAL BUS RATED 200 PERCENT OF PHASE BUS AND UL LISTED AS SUITABLE FOR NONLINEAR LOADS.
6. SPLIT BUS: VERTICAL BUSES DIVIDED INTO INDIVIDUAL VERTICAL SECTIONS.

E. CONDUCTOR CONNECTORS: SUITABLE FOR USE WITH CONDUCTOR MATERIAL AND SIZES.
1. MATERIAL: HARD-DRAWN COPPER, 98 PERCENT CONDUCTIVITY.
2. MAIN AND NEUTRAL LUGS MECHANICAL TYPE.
3. FEED-THROUGH LUGS: MECHANICAL TYPE, SUITABLE FOR USE WITH CONDUCTOR MATERIAL. LOCATE AT OPPOSITE END OF BUS FROM INCOMING LUGS OR MAIN DEVICE.
4. GUTTER-TAP LUGS: MECHANICAL TYPE SUITABLE FOR USE WITH CONDUCTOR MATERIAL. LOCATE AT SAME END OF BUS AS INCOMING LUGS OR MAIN DEVICE.
EXTRA-CAPACITY NEUTRAL LUGS: RATED 200 PERCENT OF PHASE LUGS MOUNTED ON EXTRA-CAPACITY NEUTRAL BUS.

F. SERVICE EQUIPMENT LABEL: NRTL LABELED FOR USE AS SERVICE EQUIPMENT FOR PANELBOARDS WITH ONE OR MORE MAIN SERVICE DISCONNECTING AND OVERCURRENT PROTECTIVE DEVICES.

G. FUTURE DEVICES: MOUNTING BRACKETS, BUS CONNECTIONS, FILLER PLATES, AND NECESSARY APPURTENANCES REQUIRED FOR FUTURE INSTALLATION OF DEVICES.

H. PANELBOARD SHORT-CIRCUIT CURRENT RATING: FULLY RATED TO INTERRUPT SYMMETRICAL SHORT-CIRCUIT CURRENT AVAILABLE AT TERMINALS, AS SHOWN ON SINGLE LINE DRAWING PLANS.

2.02 PERFORMANCE REQUIREMENTS

A. SEISMIC PERFORMANCE: PANELBOARDS SHALL WITHSTAND THE EFFECTS OF EARTHQUAKE MOTIONS DETERMINED ACCORDING TO SEI/ASCE 7.
1. THE TERM "WITHSTAND" MEANS "THE UNIT WILL REMAIN IN PLACE WITHOUT SEPARATION OF ANY PARTS FROM THE DEVICE WHEN SUBJECTED TO THE SEISMIC FORCES SPECIFIED."

2.03 DISTRIBUTION PANELBOARDS

A. BASIS-OF-DESIGN PRODUCT: SUBJECT TO COMPLIANCE WITH REQUIREMENTS, PROVIDE PRODUCT INDICATED ON DRAWINGS OR COMPARABLE PRODUCT BY ONE OF THE FOLLOWING:
1. EATON ELECTRICAL INC.; CUTLER-HAMMER BUSINESS UNIT.
2. GENERAL ELECTRIC COMPANY
3. SQUARE D
OR APROVED EQUAL.

B. PANELBOARDS: NEMA PB 1, POWER AND FEEDER DISTRIBUTION TYPE.

C. DOORS: SECURED WITH VAULT-TYPE LATCH WITH TUMBLER LOCK; KEYED ALIKE.
1. FOR DOORS MORE THAN 36 INCHES (914 MM) HIGH, PROVIDE TWO LATCHES, KEYED ALIKE.

D. MAINS: AS SHOWN ON THE DRAWINGS

E. BRANCH OVERCURRENT PROTECTIVE DEVICES FOR CIRCUIT-BREAKER FRAME SIZES 125 A AND SMALLER: BOLT-ON CIRCUIT BREAKERS.

F. BRANCH OVERCURRENT PROTECTIVE DEVICES FOR CIRCUIT-BREAKER FRAME SIZES LARGER THAN 125 A: BOLT-ON CIRCUIT BREAKERS; PLUG-IN CIRCUIT BREAKERS WHERE INDIVIDUAL POSITIVE-LOCKING DEVICE REQUIRES MECHANICAL RELEASE FOR REMOVAL.

G. BRANCH OVERCURRENT PROTECTIVE DEVICES: FUSED SWITCHES.

2.04 LIGHTING AND APPLIANCE BRANCH-CIRCUIT PANELBOARDS

A. BASIS-OF-DESIGN PRODUCT: SUBJECT TO COMPLIANCE WITH REQUIREMENTS, PROVIDE PRODUCT INDICATED ON DRAWINGS OR COMPARABLE PRODUCT BY ONE OF THE FOLLOWING:
1. EATON ELECTRICAL INC.;
2. CUTLER-HAMMER BUSINESS UNIT.
3. GENERAL ELECTRIC COMPANY; GE CONSUMER & INDUSTRIAL - ELECTRICAL DISTRIBUTION.
4. SIEMENS ENERGY & AUTOMATION, INC.
5. SQUARE D; A BRAND OF SCHNEIDER ELECTRIC.
6. OR ENGINEER APPROVED EQUAL.

B. PANELBOARDS: NEMA PB 1, LIGHTING AND APPLIANCE BRANCH-CIRCUIT TYPE.

C. MAINS AS SHOWN ON THE DRAWINGS

D. BRANCH OVERCURRENT PROTECTIVE DEVICES: BOLT-ON CIRCUIT BREAKERS, REPLACEABLE WITHOUT DISTURBING ADJACENT UNITS.

E. DOORS: PROVIDE DOOR-IN-DOOR CONSTRUCTION WITH CONCEALED HINGES; SECURED WITH FLUSH LATCH WITH TUMBLER LOCK; KEYED ALIKE.

F. COLUMN-TYPE PANELBOARDS: NARROW GUTTER EXTENSION, WITH COVER, TO OVERHEAD JUNCTION BOX EQUIPPED WITH GROUND AND NEUTRAL TERMINAL BUSES.

2.05 ELECTRONIC-GRADE PANELBOARDS

A. BASIS-OF-DESIGN PRODUCT: SUBJECT TO COMPLIANCE WITH REQUIREMENTS, PROVIDE PRODUCT INDICATED ON DRAWINGS OR COMPARABLE PRODUCT BY ONE OF THE FOLLOWING:
1. CURRENT TECHNOLOGY; A SUBSIDIARY OF DANAHAR CORPORATION.
2. EATON ELECTRICAL INC.; CUTLER-HAMMER BUSINESS UNIT.
3. GENERAL ELECTRIC COMPANY; GE CONSUMER & INDUSTRIAL - ELECTRICAL DISTRIBUTION.
4. LIEBERT CORPORATION.
5. SIEMENS ENERGY & AUTOMATION, INC.
6. SQUARE D; A BRAND OF SCHNEIDER ELECTRIC.
7. OR ENGINEER APPROVED EQUAL.

B. PANELBOARDS: NEMA PB 1; WITH FACTORY-INSTALLED; LABELED BY AN NRTL FOR COMPLIANCE WITH UL 67.

C. DOORS: PROVIDE DOOR-IN-DOOR CONSTRUCTION WITH SECURED WITH VAULT-TYPE LATCH WITH TUMBLER LOCK; KEYED ALIKE.

D. MAIN OVERCURRENT PROTECTIVE DEVICES: BOLT-ON THERMAL-MAGNETIC CIRCUIT BREAKERS.

E. BRANCH OVERCURRENT PROTECTIVE DEVICES: BOLT-ON THERMAL-MAGNETIC CIRCUIT BREAKERS.

F. BUSES:
1. COPPER PHASE AND NEUTRAL BUSES; 200 PERCENT CAPACITY NEUTRAL BUS AND LUGS.
2. COPPER EQUIPMENT AND ISOLATED GROUND BUSES.

2.06 DISCONNECTING AND OVERCURRENT PROTECTIVE DEVICES

A. BASIS-OF-DESIGN PRODUCT: SUBJECT TO COMPLIANCE WITH REQUIREMENTS, PROVIDE PRODUCT INDICATED ON DRAWINGS OR COMPARABLE PRODUCT BY ONE OF THE FOLLOWING:
1. EATON ELECTRICAL INC.; CUTLER-HAMMER BUSINESS UNIT.
2. GENERAL ELECTRIC COMPANY; GE CONSUMER & INDUSTRIAL - ELECTRICAL DISTRIBUTION.
3. SIEMENS ENERGY & AUTOMATION, INC.
4. SQUARE D; A BRAND OF SCHNEIDER ELECTRIC.
5. OR ENGINEER APPROVED EQUAL.

B. MOLDED-CASE CIRCUIT BREAKER (MCCB): COMPLY WITH UL 489, WITH INTERRUPTING CAPACITY TO MEET AVAILABLE FAULT CURRENTS.
1. THERMAL-MAGNETIC CIRCUIT BREAKERS: INVERSE TIME-CURRENT ELEMENT FOR LOW-LEVEL OVERLOADS, AND INSTANTANEOUS MAGNETIC TRIP ELEMENT FOR SHORT CIRCUITS. ADJUSTABLE MAGNETIC TRIP SETTING FOR CIRCUIT-BREAKER FRAME SIZES 250 A AND LARGER.
2. ELECTRONIC TRIP CIRCUIT BREAKERS WITH RMS SENSING; FIELD-REPLACEABLE RATING PLUG OR FIELD-REPLICABLE ELECTRONIC TRIP; AND THE FOLLOWING FIELD-ADJUSTABLE SETTINGS:
a. INSTANTANEOUS TRIP.
b. LONG- AND SHORT-TIME PICKUP LEVELS.
c. LONG- AND SHORT-TIME TIME ADJUSTMENTS.
d. GROUND-FAULT PICKUP LEVEL, TIME DELAY, AND I SQUARED X T RESPONSE.
3. CURRENT-LIMITING CIRCUIT BREAKERS: FRAME SIZES 400 A AND SMALLER; LET-THROUGH RATINGS LESS THAN NEMA FU 1, RK-5.
4. GFCI CIRCUIT BREAKERS: SINGLE- AND TWO-POLE CONFIGURATIONS WITH CLASS A GROUND-FAULT PROTECTION (6-MA TRIP).
5. GROUND-FAULT EQUIPMENT PROTECTION (GFEP) CIRCUIT BREAKERS: CLASS B GROUND-FAULT PROTECTION (30-MA TRIP).
6. ARC-FAULT CIRCUIT INTERRUPTER (AFCI) CIRCUIT BREAKERS: COMPLY WITH UL 1699; 120/240-V, SINGLE-POLE CONFIGURATION.
7. MOLDED-CASE CIRCUIT-BREAKER (MCCB) FEATURES AND ACCESSORIES:
a. STANDARD FRAME SIZES, TRIP RATINGS, AND NUMBER OF POLES.
b. LUGS: MECHANICAL STYLE, SUITABLE FOR NUMBER, SIZE, TRIP RATINGS, AND CONDUCTOR MATERIALS.
c. APPLICATION LISTING: APPROPRIATE FOR APPLICATION; TYPE SWD FOR SWITCHING FLUORESCENT LIGHTING LOADS; TYPE HID FOR FEEDING FLUORESCENT AND HIGH-INTENSITY DISCHARGE (HID) LIGHTING CIRCUITS.
d. GROUND-FAULT PROTECTION: INTEGRALLY MOUNTED OR REMOTE-MOUNTED RELAY AND TRIP UNIT WITH ADJUSTABLE PICKUP AND TIME-DELAY SETTINGS, PUSH-TO-TEST FEATURE, AND GROUND-FAULT INDICATOR.
e. COMMUNICATION CAPABILITY: AS SHOWN ON THE CONTROLS DRAWINGS WHEN SPECIFICALLY INDICATED.
f. SHUNT TRIP: AS SHOWN ON THE DRAWINGS.
g. UNDERVOLTAGE TRIP: AS SHOWN ON THE DRAWINGS.
h. AUXILIARY CONTACTS: WHERE SHOWN ON THE DRAWINGS, TWO SPDT SWITCHES WITH "A" AND "B" CONTACTS; "A" CONTACTS MIMIC CIRCUIT-BREAKER CONTACTS AND "B" CONTACTS OPERATE IN REVERSE OF CIRCUIT-BREAKER CONTACTS.
i. ALARM SWITCH: WHERE SHOWN ON THE DRAWINGS, SINGLE-POLE, NORMALLY OPEN CONTACT THAT ACTUATES ONLY WHEN CIRCUIT BREAKER TRIPS.
j. KEY INTERLOCK KIT: WHERE SHOWN ON THE DRAWINGS, EXTERNALLY MOUNTED TO PROHIBIT CIRCUIT-BREAKER OPERATION; KEY SHALL BE REMOVABLE ONLY WHEN CIRCUIT BREAKER IS IN OFF POSITION.
k. ZONE-SELECTIVE INTERLOCKING: WHERE SHOWN ON THE DRAWINGS, INTEGRAL WITH ELECTRONIC TRIP UNIT; FOR INTERLOCKING GROUND-FAULT PROTECTION

c:\pwworking\hmm\external\tyn61470\dms727●3\071_0134CES+30.dgn 10/24/2014 10:38:04 AM TYN61470

DESIGN AGENCY
HATCH MOTT MacDONALD
18013 CLEVELAND PKWY.
SUITE 200
CLEVELAND, OH 44135

DESIGNED	DRAWN	REVIEWED	DATE
DGC	CM	RF	08/11/14
CHECKED	REVISED	STRUCTURE FILE NUMBER	
LL	DGC	31065778	

ELECTRICAL NOTES - PANELBOARDS - SHEET 2 OF 3
BRIDGE NO. HAM-71-0134
I-71 LYTLE TUNNEL UNDER LYTLE PARK

HAM-71-01.34
PID No. 87268

FUNCTION WITH OTHER UPSTREAM OR DOWNSTREAM DEVICES.

l. MULTIPOLE UNITS ENCLOSED IN A SINGLE HOUSING OR FACTORY ASSEMBLED TO OPERATE AS A SINGLE UNIT.

m. HANDLE PADLOCKING DEVICE: FIXED ATTACHMENT, FOR LOCKING CIRCUIT-BREAKER HANDLE IN OFF] POSITION.

n. HANDLE CLAMP: LOOSE ATTACHMENT, FOR HOLDING CIRCUIT-BREAKER HANDLE IN ON POSITION.

C. FUSED SWITCH: NEMA KS 1, TYPE HD; CLIPS TO ACCOMMODATE SPECIFIED FUSES; LOCKABLE HANDLE.

1. FUSED SWITCH FEATURES AND ACCESSORIES: STANDARD AMPERE RATINGS AND NUMBER OF POLES.

2. AUXILIARY CONTACTS: WHEN SHOWN ON THE DRAWINGS PROVIDE TWO NORMALLY OPEN AND NORMALLY CLOSED CONTACT(S) THAT OPERATE WITH SWITCH HANDLE OPERATION.

2.07 ACCESSORY COMPONENTS AND FEATURES

A. ACCESSORY SET: INCLUDE TOOLS AND MISCELLANEOUS ITEMS REQUIRED FOR OVERCURRENT PROTECTIVE DEVICE TEST, INSPECTION, MAINTENANCE, AND OPERATION.

B. PORTABLE TEST SET: FOR TESTING FUNCTIONS OF SOLID-STATE TRIP DEVICES WITHOUT REMOVING FROM PANELBOARD. INCLUDE RELAY AND METER TEST PLUGS SUITABLE FOR TESTING PANELBOARD METERS AND SWITCHBOARD CLASS RELAYS.

PART 3 - EXECUTION

3.01 EXAMINATION

A. RECEIVE, INSPECT, HANDLE, AND STORE PANELBOARDS ACCORDING TO NEMA PB 1.1.

B. EXAMINE PANELBOARDS BEFORE INSTALLATION. REJECT PANELBOARDS THAT ARE DAMAGED OR RUSTED OR HAVE BEEN SUBJECTED TO WATER SATURATION.

C. EXAMINE ELEMENTS AND SURFACES TO RECEIVE PANELBOARDS FOR COMPLIANCE WITH INSTALLATION TOLERANCES AND OTHER CONDITIONS AFFECTING PERFORMANCE OF THE WORK.

D. PROCEED WITH INSTALLATION ONLY AFTER UNSATISFACTORY CONDITIONS HAVE BEEN CORRECTED.

3.02 INSTALLATION

A. INSTALL PANELBOARDS AND ACCESSORIES ACCORDING TO NEMA PB 1.1.

B. EQUIPMENT MOUNTING:

FLOOR MOUNTED PANELBOARDS ON CONCRETE BASES, 4-INCH (100-MM) NOMINAL THICKNESS. COMPLY WITH REQUIREMENTS FOR CONCRETE IN THE PROJECT SPECIFICATIONS. IF NO CONCRETE IS SPECIFIED USE 3000 PSI.

1. INSTALL DOWEL RODS TO CONNECT CONCRETE BASE TO CONCRETE FLOOR. UNLESS OTHERWISE INDICATED, INSTALL DOWEL RODS ON 18-INCH (450-MM) CENTERS AROUND FULL PERIMETER OF BASE.

2. FOR PANELBOARDS, INSTALL EPOXY-COATED ANCHOR BOLTS THAT EXTEND THROUGH CONCRETE BASE AND ANCHOR INTO STRUCTURAL CONCRETE FLOOR.

3. PLACE AND SECURE ANCHORAGE DEVICES. USE SETTING DRAWINGS, TEMPLATES, DIAGRAMS, INSTRUCTIONS, AND DIRECTIONS FURNISHED WITH ITEMS TO BE EMBEDDED.

4. INSTALL ANCHOR BOLTS TO ELEVATIONS REQUIRED FOR PROPER ATTACHMENT TO PANELBOARDS.

5. ATTACH PANELBOARD TO THE VERTICAL FINISHED OR STRUCTURAL SURFACE BEHIND THE PANELBOARD.

C. WALL/RACK MOUNTED:

1. MOUNT TO WALL/RACK USING UNISTRUT WITH BOLTS/MOUNTING HARDWARE APPROVED BY THE ENGINEER.

D. TEMPORARY LIFTING PROVISIONS: REMOVE TEMPORARY LIFTING EYES, CHANNELS, AND BRACKETS AND TEMPORARY BLOCKING OF MOVING PARTS FROM PANELBOARDS.

E. MOUNT PANELBOARDS SUCH THAT THE HIGHEST OPERATOR IS LESS THAN 78" ABOVE FINISHED FLOOR.

F. MOUNT PANELBOARD CABINET PLUMB AND RIGID WITHOUT DISTORTION OF BOX. INSTALL OVERCURRENT PROTECTIVE DEVICES AND CONTROLLERS NOT ALREADY FACTORY INSTALLED.

1. SET FIELD-ADJUSTABLE, CIRCUIT-BREAKER TRIP RANGES.

G. INSTALL FILLER PLATES IN UNUSED SPACES.

H. STUB A MINIMUM OF FOUR 1-INCH (27-GRC) EMPTY CONDUITS BUT NOT LESS THAN 25% OF THE COMBINED CROSS SECTIONAL AREA OF THE ALL OTHER LIVE CONDUIT FROM PANELBOARD INTO ACCESSIBLE CEILING SPACE OR SPACE DESIGNATED TO BE CEILING SPACE IN THE FUTURE. STUB A MINIMUM OF FOUR 1-INCH (27-GRC) EMPTY CONDUITS BUT NOT LESS THAN 25% OF THE COMBINED CROSS SECTIONAL AREA OF THE ALL OTHER LIVE CONDUIT INTO RAISED FLOOR SPACE OR BELOW SLAB NOT ON GRADE. THIS IS FOR RECESSED PANELBOARDS ONLY.

I. ARRANGE CONDUCTORS IN GUTTERS INTO GROUPS AND BUNDLE AND WRAP WITH WIRE TIES AFTER COMPLETING LOAD BALANCING.

J. COMPLY WITH NECA 1.

3.03 IDENTIFICATION

A. IDENTIFY FIELD-INSTALLED CONDUCTORS, INTERCONNECTING WIRING, AND COMPONENTS; PROVIDE WARNING SIGNS COMPLYING WITH GENERAL NOTES SECTION "IDENTIFICATION FOR ELECTRICAL SYSTEMS."

B. CREATE A DIRECTORY TO INDICATE INSTALLED CIRCUIT LOADS AFTER BALANCING PANELBOARD LOADS; INCORPORATE OWNER'S FINAL ROOM DESIGNATIONS. OBTAIN APPROVAL BEFORE INSTALLING. USE A COMPUTER OR TYPEWRITER TO CREATE DIRECTORY; HANDWRITTEN DIRECTORIES ARE NOT ACCEPTABLE.

C. PANELBOARD NAMEPLATES: LABEL EACH PANELBOARD WITH A NAMEPLATE COMPLYING WITH REQUIREMENTS FOR IDENTIFICATION SPECIFIED IN GENERAL NOTES SECTION "IDENTIFICATION FOR ELECTRICAL SYSTEMS."

D. DEVICE NAMEPLATES: LABEL EACH BRANCH CIRCUIT DEVICE IN DISTRIBUTION PANELBOARDS WITH A NAMEPLATE COMPLYING WITH REQUIREMENTS FOR IDENTIFICATION SPECIFIED IN GENERAL NOTES SECTION "IDENTIFICATION FOR ELECTRICAL SYSTEMS."

3.04 FIELD QUALITY CONTROL

A. MANUFACTURER'S FIELD SERVICE: ENGAGE A FACTORY-AUTHORIZED SERVICE REPRESENTATIVE TO INSPECT, TEST, AND ADJUST COMPONENTS, ASSEMBLIES, AND EQUIPMENT INSTALLATIONS, INCLUDING CONNECTIONS.

B. PERFORM TESTS AND INSPECTIONS.

1. MANUFACTURER'S FIELD SERVICE: ENGAGE A FACTORY-AUTHORIZED SERVICE REPRESENTATIVE TO INSPECT COMPONENTS, ASSEMBLIES, AND EQUIPMENT INSTALLATIONS, INCLUDING CONNECTIONS, AND TO ASSIST IN TESTING.

C. ACCEPTANCE TESTING PREPARATION:

1. TEST INSULATION RESISTANCE FOR EACH PANELBOARD BUS, COMPONENT, CONNECTING SUPPLY, FEEDER, AND CONTROL CIRCUIT.

2. TEST CONTINUITY OF EACH CIRCUIT.

D. TESTS AND INSPECTIONS:

1. PERFORM EACH VISUAL AND MECHANICAL INSPECTION AND ELECTRICAL TEST STATED IN NETA ACCEPTANCE TESTING SPECIFICATION. CERTIFY COMPLIANCE WITH TEST PARAMETERS.

2. CORRECT MALFUNCTIONING UNITS ON-SITE, WHERE POSSIBLE, AND RETEST TO DEMONSTRATE COMPLIANCE; OTHERWISE, REPLACE WITH NEW UNITS AND RETEST.

3. PERFORM THE FOLLOWING INFRARED SCAN TESTS AND INSPECTIONS AND PREPARE REPORTS:

a. INITIAL INFRARED SCANNING: AFTER SUBSTANTIAL COMPLETION, BUT NOT MORE THAN 60 DAYS AFTER FINAL ACCEPTANCE, PERFORM AN INFRARED SCAN OF EACH PANELBOARD. REMOVE FRONT PANELS SO JOINTS AND CONNECTIONS ARE ACCESSIBLE TO PORTABLE SCANNER.

b. FOLLOW-UP INFRARED SCANNING: PERFORM AN ADDITIONAL FOLLOW-UP INFRARED SCAN OF EACH PANELBOARD 11 MONTHS AFTER DATE OF SUBSTANTIAL COMPLETION.

c. INSTRUMENTS AND EQUIPMENT:

1) USE AN INFRARED SCANNING DEVICE DESIGNED TO MEASURE TEMPERATURE OR TO DETECT SIGNIFICANT DEVIATIONS FROM NORMAL VALUES. PROVIDE CALIBRATION RECORD FOR DEVICE.

E. PANELBOARDS WILL BE CONSIDERED DEFECTIVE IF THEY DO NOT PASS TESTS AND INSPECTIONS.

F. PREPARE TEST AND INSPECTION REPORTS, INCLUDING A CERTIFIED REPORT THAT IDENTIFIES PANELBOARDS INCLUDED AND THAT DESCRIBES SCANNING RESULTS. INCLUDE NOTATION OF DEFICIENCIES DETECTED, REMEDIAL ACTION TAKEN, AND OBSERVATIONS AFTER REMEDIAL ACTION.

3.05 ADJUSTING

A. ADJUST MOVING PARTS AND OPERABLE COMPONENT TO FUNCTION SMOOTHLY, AND LUBRICATE AS RECOMMENDED BY MANUFACTURER.

B. SET FIELD-ADJUSTABLE CIRCUIT-BREAKER TRIP RANGES AS SPECIFIED IN THE "OVERCURRENT PROTECTIVE DEVICE COORDINATION STUDY."

C. LOAD BALANCING: AFTER SUBSTANTIAL COMPLETION, BUT NOT MORE THAN 60 DAYS AFTER FINAL ACCEPTANCE, MEASURE LOAD BALANCING AND MAKE CIRCUIT CHANGES.

1. MEASURE AS DIRECTED DURING PERIOD OF NORMAL SYSTEM LOADING.

2. PERFORM LOAD-BALANCING CIRCUIT CHANGES OUTSIDE NORMAL OCCUPANCY/WORKING SCHEDULE OF THE FACILITY AND AT TIME DIRECTED. AVOID DISRUPTING CRITICAL 24-HOUR SERVICES SUCH AS FAX MACHINES AND ON-LINE DATA PROCESSING, COMPUTING, TRANSMITTING, AND RECEIVING EQUIPMENT.

3. AFTER CIRCUIT CHANGES, RECHECK LOADS DURING NORMAL LOAD PERIOD. RECORD ALL LOAD READINGS BEFORE AND AFTER CHANGES AND SUBMIT TEST RECORDS.

4. TOLERANCE: DIFFERENCE EXCEEDING 20 PERCENT BETWEEN PHASE LOADS, WITHIN A PANELBOARD, IS NOT ACCEPTABLE. REBALANCE AND RECHECK AS NECESSARY TO MEET THIS MINIMUM REQUIREMENT.

3.06 PROTECTION

TEMPORARY HEATING: APPLY TEMPORARY HEAT TO MAINTAIN TEMPERATURE ACCORDING TO MANUFACTURER'S WRITTEN INSTRUCTIONS.

PART 4 - METHOD OF PAYMENT AND ITEMS

4.01 METHOD OF PAYMENT AND ITEMS

A. PAYMENT FOR ITEMS SHALL BE MADE AT THE CONTRACT UNIT PRICE, INCLUDING BUT NOT LIMITED TO ALL WORK, LABOR, EQUIPMENT, AND MATERIALS NECESSARY THEREFORE OR INCIDENTAL THERETO, AS FOLLOWS:

ITEM NO.	DESCRIPTION	UNIT
625	SPECIAL – MISC.: PANELBOARDS	EACH

c:\pwworking\hmm\externa\tyn61470\dms727●3\071_013+CE3431.dgn 10/24/2014 10:38:19 AM TYN:61470

DESIGN AGENCY
HATCH MOTT MacDONALD
18013 CLEVELAND PKWY.
SUITE 200
CLEVELAND, OH 44135

DESIGNED DGC | DRAWN CM | REVIEWED RF | DATE 08/11/14
CHECKED LL | REVISED DGC | STRUCTURE FILE NUMBER 31065778

ELECTRICAL NOTES – PANELBOARDS – SHEET 3 OF 3

BRIDGE NO. HAM-71-0134
I-71 LYTLE TUNNEL UNDER LYTLE PARK

HAM-71-01.34
PID No. 87268

ITEM 690 – SPECIAL – MISC.: ENCLOSED MOTOR CONTROLLERS

PART 1 - GENERAL

1.1 RELATED DOCUMENTS

A. DRAWINGS AND GENERAL PROVISIONS OF THE CONTRACT, INCLUDING GENERAL AND SUPPLEMENTARY CONDITIONS AND DIVISION 01 SPECIFICATION SECTIONS, APPLY TO THIS SECTION.

1.2 SUMMARY

A. SECTION INCLUDES THE FOLLOWING ENCLOSED CONTROLLERS RATED 600 V AND LESS:
   1. FULL-VOLTAGE MAGNETIC.
   2. REDUCED-VOLTAGE SOLID STATE.
   3. MULTISPEED.

1.3 DEFINITIONS

A. CPT: CONTROL POWER TRANSFORMER.
B. MCCB: MOLDED-CASE CIRCUIT BREAKER.
C. MCP: MOTOR CIRCUIT PROTECTOR.
D. N.C.: NORMALLY CLOSED.
E. N.O.: NORMALLY OPEN.
F. OCPD: OVERCURRENT PROTECTIVE DEVICE.
G. SCR: SILICON-CONTROLLED RECTIFIER.
H. ST: SPEED TRANSMITTER
I. SS: SPEED SWITCH

1.4 PERFORMANCE REQUIREMENTS

A. SEISMIC PERFORMANCE: ENCLOSED CONTROLLERS SHALL WITHSTAND THE EFFECTS OF EARTHQUAKE MOTIONS DETERMINED ACCORDING TO THE INTERNATIONAL BUILDING CODE AND SHALL BE EVALUATED BY THE INTERNATIONAL CODE COUNCIL-EVALUATION SERVICE (ICC-ES) OR ANOTHER AGENCY ACCEPTABLE TO AUTHORITIES HAVING JURISDICTION.
   1. THE TERM "WITHSTAND" MEANS "THE UNIT WILL REMAIN IN PLACE WITHOUT SEPARATION OF ANY PARTS FROM THE DEVICE WHEN SUBJECTED TO THE SEISMIC FORCES SPECIFIED AND THE UNIT WILL BE FULLY OPERATIONAL AFTER THE SEISMIC EVENT."

1.5 ACTION SUBMITTALS

A. PRODUCT DATA: FOR EACH TYPE OF ENCLOSED CONTROLLER. INCLUDE MANUFACTURER'S TECHNICAL DATA ON FEATURES, PERFORMANCE, ELECTRICAL CHARACTERISTICS, RATINGS, WEIGHT, AND ENCLOSURE TYPES AND FINISHES.
B. SHOP DRAWINGS: FOR EACH ENCLOSED CONTROLLER. INCLUDE DIMENSIONED PLANS, ELEVATIONS, SECTIONS, DETAILS, AND REQUIRED CLEARANCES AND SERVICE SPACES AROUND CONTROLLER ENCLOSURES.
   1. SHOW TABULATIONS OF THE FOLLOWING:
      a. EACH INSTALLED UNIT'S TYPE AND DETAILS.
      b. FACTORY-INSTALLED DEVICES.
      c. NAMEPLATE LEGENDS.
      d. SHORT-CIRCUIT CURRENT RATING OF INTEGRATED UNIT.
      e. FEATURES, CHARACTERISTICS, RATINGS, AND FACTORY SETTINGS OF INDIVIDUAL OCPDS IN COMBINATION CONTROLLERS.
   2. WIRING DIAGRAMS: FOR POWER, SIGNAL, AND CONTROL WIRING.

1.6 INFORMATIONAL SUBMITTALS

A. QUALIFICATION DATA: TESTING AGENCY SHALL BE A MEMBER COMPANY OF NETA OR AN NRTL AS APPROPRIATE. TESTING AGENCY'S FIELD SUPERVISOR SHALL BE CURRENTLY CERTIFIED BY NETA TO SUPERVISE ON-SITE TESTING.
B. SEISMIC QUALIFICATION CERTIFICATES: FOR ENCLOSED CONTROLLERS, ACCESSORIES, AND COMPONENTS, FROM MANUFACTURER.
   1. BASIS FOR CERTIFICATION: INDICATE WHETHER WITHSTAND CERTIFICATION IS BASED ON ACTUAL TEST OF ASSEMBLED COMPONENTS OR ON CALCULATION.
   2. DIMENSIONED OUTLINE DRAWINGS OF EQUIPMENT UNIT: IDENTIFY CENTER OF GRAVITY AND LOCATE AND DESCRIBE MOUNTING AND ANCHORAGE PROVISIONS.
   3. DETAILED DESCRIPTION OF EQUIPMENT ANCHORAGE DEVICES ON WHICH THE CERTIFICATION IS BASED AND THEIR INSTALLATION REQUIREMENTS.
C. FIELD QUALITY-CONTROL REPORTS.
   1. TEST PROCEDURES USED, SEE TESTING SECTION.
   2. TEST RESULTS THAT COMPLY WITH REQUIREMENTS.
   3. RESULTS OF FAILED TESTS AND CORRECTIVE ACTION TAKEN TO ACHIEVE TEST RESULTS THAT COMPLY WITH REQUIREMENTS.
D. LOAD-CURRENT AND LIST OF SETTINGS OF ADJUSTABLE OVERLOAD RELAYS: COMPILE AFTER MOTORS HAVE BEEN INSTALLED, AND ARRANGE TO DEMONSTRATE THAT SWITCH SETTINGS FOR MOTOR RUNNING OVERLOAD PROTECTION SUIT ACTUAL MOTORS TO BE PROTECTED.
E. MANUFACTURER'S FIELD SERVICE REPORT.

1.7 CLOSEOUT SUBMITTALS

A. OPERATION AND MAINTENANCE DATA: FOR ENCLOSED CONTROLLERS TO INCLUDE IN EMERGENCY, OPERATION, AND MAINTENANCE MANUALS. MANUALS SHALL INCLUDE THE FOLLOWING AS A MINIMUM:
   1. ROUTINE MAINTENANCE REQUIREMENTS FOR ENCLOSED CONTROLLERS AND INSTALLED COMPONENTS.
   2. MANUFACTURER'S WRITTEN INSTRUCTIONS FOR TESTING AND ADJUSTING CIRCUIT BREAKER AND MCP TRIP SETTINGS.
   3. MANUFACTURER'S WRITTEN INSTRUCTIONS FOR SETTING FIELD-ADJUSTABLE OVERLOAD RELAYS.
   4. MANUFACTURER'S WRITTEN INSTRUCTIONS FOR TESTING, ADJUSTING, AND REPROGRAMMING REDUCED-VOLTAGE SOLID-STATE CONTROLLERS.

1.8 MATERIALS MAINTENANCE SUBMITTALS

A. FURNISH EXTRA MATERIALS THAT MATCH PRODUCTS INSTALLED AND THAT ARE PACKAGED WITH PROTECTIVE COVERING FOR STORAGE AND IDENTIFIED WITH LABELS DESCRIBING CONTENTS.
   1. CONTROL POWER FUSES: EQUAL TO 10 PERCENT OF QUANTITY INSTALLED FOR EACH SIZE AND TYPE, BUT NO FEWER THAN SIX OF EACH SIZE AND TYPE.
   2. INDICATING LIGHTS: THREE OF EACH TYPE AND COLOR INSTALLED.
   3. AUXILIARY CONTACTS: FURNISH TWO SPARE(S) FOR EACH SIZE AND TYPE OF MAGNETIC CONTROLLER INSTALLED.
   4. POWER CONTACTS: FURNISH THREE SPARES FOR EACH SIZE AND TYPE OF MAGNETIC CONTACTOR INSTALLED.

1.9 QUALITY ASSURANCE

A. TESTING AGENCY QUALIFICATIONS: MEMBER COMPANY OF NETA OR AN NRTL.
   1. TESTING AGENCY'S FIELD SUPERVISOR: CURRENTLY CERTIFIED BY NETA TO SUPERVISE ON-SITE TESTING.
B. ELECTRICAL COMPONENTS, DEVICES, AND ACCESSORIES: LISTED AND LABELED AS DEFINED IN NFPA 70, BY A QUALIFIED TESTING AGENCY, AND MARKED FOR INTENDED LOCATION AND APPLICATION.
C. COMPLY WITH NFPA 70.

1.10 DELIVERY, STORAGE, AND HANDLING

A. STORE ENCLOSED CONTROLLERS INDOORS IN CLEAN, DRY SPACE WITH UNIFORM TEMPERATURE TO PREVENT CONDENSATION. PROTECT ENCLOSED CONTROLLERS FROM EXPOSURE TO DIRT, FUMES, WATER, CORROSIVE SUBSTANCES, AND PHYSICAL DAMAGE.
B. IF STORED IN AREAS SUBJECT TO WEATHER DAMAGE, COVER ENCLOSED CONTROLLERS TO PROTECT THEM FROM WEATHER, DIRT, DUST, CORROSIVE SUBSTANCES, AND PHYSICAL DAMAGE. REMOVE LOOSE PACKING AND FLAMMABLE MATERIALS FROM INSIDE CONTROLLERS; INSTALL TEMPORARY ELECTRIC HEATING, WITH AT LEAST 250 W PER CONTROLLER.

1.11 PROJECT CONDITIONS

A. ENVIRONMENTAL LIMITATIONS: RATE EQUIPMENT FOR CONTINUOUS OPERATION UNDER THE FOLLOWING CONDITIONS UNLESS OTHERWISE INDICATED:
   1. AMBIENT TEMPERATURE: NOT LESS THAN MINUS 22 DEG F (MINUS 30 DEG C) AND NOT EXCEEDING 104 DEG F (40 DEG C).
   2. ALTITUDE: NOT EXCEEDING 6600 FEET (2010 M).

1.12 COORDINATION

A. COORDINATE LAYOUT AND INSTALLATION OF ENCLOSED CONTROLLERS WITH OTHER CONSTRUCTION INCLUDING CONDUIT, PIPING, EQUIPMENT, AND ADJACENT SURFACES. MAINTAIN REQUIRED WORKSPACE CLEARANCES AND REQUIRED CLEARANCES FOR EQUIPMENT ACCESS DOORS AND PANELS.
B. COORDINATE SIZES AND LOCATIONS OF CONCRETE BASES WITH ACTUAL EQUIPMENT PROVIDED. CAST ANCHOR-BOLT INSERTS INTO BASES. CONCRETE, REINFORCEMENT, AND FORMWORK REQUIREMENTS ARE SPECIFIED WITH CONCRETE.

PART 2 - PRODUCTS

2.1 FULL-VOLTAGE CONTROLLERS

A. GENERAL REQUIREMENTS FOR FULL-VOLTAGE CONTROLLERS: COMPLY WITH NEMA ICS 2, GENERAL PURPOSE, CLASS A.
B. MAGNETIC CONTROLLERS: FULL VOLTAGE, ACROSS THE LINE, ELECTRICALLY HELD.
   1. BASIS-OF-DESIGN PRODUCT: SUBJECT TO COMPLIANCE WITH REQUIREMENTS, PROVIDE PRODUCT INDICATED ON DRAWINGS OR COMPARABLE PRODUCT BY ONE OF THE FOLLOWING:
      a. EATON ELECTRICAL INC.; CUTLER-HAMMER BUSINESS UNIT.
      b. GENERAL ELECTRIC COMPANY; GE CONSUMER & INDUSTRIAL - ELECTRICAL DISTRIBUTION.
      c. ROCKWELL AUTOMATION, INC.; ALLEN-BRADLEY BRAND.
      d. SIEMENS ENERGY & AUTOMATION, INC.
      e. SQUARE D; A BRAND OF SCHNEIDER ELECTRIC.
      f. OR APPROVED EQUAL.
   2. CONFIGURATION: REVERSING AND HIGH/LOW SPEED
   3. CONTACTOR COILS: PRESSURE-ENCAPSULATED TYPE WITH COIL TRANSIENT SUPPRESSORS.
      a. OPERATING VOLTAGE: DEPENDING ON CONTACTOR NEMA SIZE AND LINE-VOLTAGE RATING, MANUFACTURER'S STANDARD MATCHING CONTROL POWER OR LINE VOLTAGE.

c:\pwworking\hnm\external\ty61470.dms/72703\071_0134CEC432.dgn 10/24/2014 10:38:33 AM T-YN61470

DESIGN AGENCY
HATCH MOTT MacDONALD
18013 CLEVELAND PKWY.
SUITE 200
CLEVELAND, OH 44135

DESIGNED	DRAWN	REVIEWED	DATE
DGC	CM	RF	08/11/14
CHECKED	REVISED	STRUCTURE FILE NUMBER	
PAP	DGC	3106578	

4. POWER CONTACTS: TOTALLY ENCLOSED, DOUBLE-BREAK, SILVER-CADMIUM OXIDE; ASSEMBLED TO ALLOW INSPECTION AND REPLACEMENT WITHOUT DISTURBING LINE OR LOAD WIRING.
5. CONTROL CIRCUITS: 120-V AC; OBTAINED FROM INTEGRAL CPT, WITH PRIMARY AND SECONDARY FUSES, WITH CONTROL POWER SOURCE OF SUFFICIENT CAPACITY TO OPERATE INTEGRAL DEVICES AND REMOTELY LOCATED PILOT, INDICATING, AND CONTROL DEVICES.
   a. CPT SPARE CAPACITY: 500 VA.
6. SOLID-STATE OVERLOAD RELAY:
   a. SWITCH OR DIAL SELECTABLE FOR MOTOR RUNNING OVERLOAD PROTECTION.
   b. SENSORS IN EACH PHASE.
   c. CLASS 10/20 SELECTABLE TRIPPING CHARACTERISTIC SELECTED TO PROTECT MOTOR AGAINST VOLTAGE AND CURRENT UNBALANCE AND SINGLE PHASING.
7. 2 N.C. AND 2 N.O. ISOLATED OVERLOAD ALARM CONTACT.
8. EXTERNAL OVERLOAD RESET PUSH BUTTON.

C. COMBINATION MAGNETIC CONTROLLER: FACTORY-ASSEMBLED COMBINATION OF MAGNETIC CONTROLLER, OCPD, AND DISCONNECTING MEANS.
1. BASIS-OF-DESIGN PRODUCT: SUBJECT TO COMPLIANCE WITH REQUIREMENTS, PROVIDE PRODUCT INDICATED ON DRAWINGS OR COMPARABLE PRODUCT BY ONE OF THE FOLLOWING:
   a. EATON ELECTRICAL INC.; CUTLER-HAMMER BUSINESS UNIT.
   b. GENERAL ELECTRIC COMPANY; GE CONSUMER & INDUSTRIAL - ELECTRICAL DISTRIBUTION.
   c. ROCKWELL AUTOMATION, INC.; ALLEN-BRADLEY BRAND.
   d. SIEMENS ENERGY & AUTOMATION, INC.
   e. SQUARE D; A BRAND OF SCHNEIDER ELECTRIC.
   f. OR APPROVED EQUAL.
2. MCP DISCONNECTING MEANS:
   a. UL 489, NEMA AB 1, AND NEMA AB 3, WITH INTERRUPTING CAPACITY TO COMPLY WITH AVAILABLE FAULT CURRENTS, INSTANTANEOUS-ONLY CIRCUIT BREAKER WITH FRONT-MOUNTED, FIELD-ADJUSTABLE, SHORT-CIRCUIT TRIP COORDINATED WITH MOTOR LOCKED-ROTOR AMPERES.
   b. LOCKABLE HANDLE: ACCEPTS THREE PADLOCKS AND INTERLOCKS WITH COVER IN CLOSED POSITION.
   c. AUXILIARY CONTACTS "A" AND "B" ARRANGED TO ACTIVATE WITH MCP HANDLE.
   d. 1N.C.1N.O ALARM CONTACT THAT OPERATES ONLY WHEN MCP HAS TRIPPED.

2.2 REDUCED-VOLTAGE SOLID-STATE CONTROLLERS

A. GENERAL REQUIREMENTS FOR REDUCED-VOLTAGE SOLID-STATE CONTROLLERS: COMPLY WITH UL 508.
B. REDUCED-VOLTAGE SOLID-STATE CONTROLLERS: AN INTEGRATED UNIT WITH POWER SCRS, HEAT SINK, MICROPROCESSOR LOGIC BOARD, DOOR-MOUNTED DIGITAL DISPLAY AND KEYPAD, BYPASS CONTACTOR, AND OVERLOAD RELAY; SUITABLE FOR USE WITH NEMA MG 1, DESIGN B, POLYPHASE, MEDIUM INDUCTION MOTORS.
1. BASIS-OF-DESIGN PRODUCT: SUBJECT TO COMPLIANCE WITH REQUIREMENTS, PROVIDE PRODUCT INDICATED ON DRAWINGS OR COMPARABLE PRODUCT BY ONE OF THE FOLLOWING:
   a. EATON ELECTRICAL INC.; CUTLER-HAMMER BUSINESS UNIT.
   b. GENERAL ELECTRIC COMPANY; GE CONSUMER & INDUSTRIAL - ELECTRICAL DISTRIBUTION.
   c. ROCKWELL AUTOMATION, INC.; ALLEN-BRADLEY BRAND.
   d. SIEMENS ENERGY & AUTOMATION, INC.
   e. SQUARE D; A BRAND OF SCHNEIDER ELECTRIC.
   f. OR APPROVED EQUAL.
2. CONFIGURATION: STANDARD DUTY; NONREVERSIBLE.
3. STARTING MODE: FIELD SELECTABLE.
4. STOPPING MODE: FIELD SELECTABLE.
5. SHORTING (BYPASS) CONTACTOR: OPERATES AUTOMATICALLY WHEN FULL VOLTAGE IS APPLIED TO MOTOR, AND BYPASSES THE SCRS. SOLID-STATE CONTROLLER PROTECTIVE FEATURES SHALL REMAIN ACTIVE WHEN THE SHORTING CONTACTOR IS IN THE BYPASS MODE.
6. SHORTING CONTACTOR COILS: PRESSURE-ENCAPSULATED TYPE; MANUFACTURER'S STANDARD OPERATING VOLTAGE, MATCHING CONTROL POWER OR LINE VOLTAGE, DEPENDING ON CONTACTOR SIZE AND LINE-VOLTAGE RATING. PROVIDE COIL TRANSIENT SUPPRESSORS.
7. LOGIC BOARD: IDENTICAL FOR ALL AMPERE RATINGS AND VOLTAGE CLASSES, WITH ENVIRONMENTAL PROTECTIVE COATING.
8. CONTROL CIRCUITS: 120-V AC; OBTAINED FROM INTEGRAL CPT, WITH PRIMARY AND SECONDARY FUSES, WITH CONTROL POWER SOURCE OF SUFFICIENT CAPACITY TO OPERATE INTEGRAL DEVICES AND REMOTELY LOCATED PILOT, INDICATING, AND CONTROL DEVICES.
   a. CPT SPARE CAPACITY: 500 VA.
9. ADJUSTABLE ACCELERATION-RATE CONTROL USING VOLTAGE OR CURRENT RAMP, AND ADJUSTABLE STARTING TORQUE CONTROL WITH UP TO 400 PERCENT CURRENT LIMITATION FOR 20 SECONDS.
10. SCR BRIDGE SHALL CONSIST OF AT LEAST TWO SCRS PER PHASE, PROVIDING STABLE AND SMOOTH ACCELERATION WITHOUT EXTERNAL FEEDBACK FROM THE MOTOR OR DRIVEN EQUIPMENT.
11. KEYPAD, FRONT ACCESSIBLE; FOR PROGRAMMING THE CONTROLLER PARAMETERS, FUNCTIONS, AND FEATURES; SHALL BE MANUFACTURER'S STANDARD AND INCLUDE NOT LESS THAN THE FOLLOWING FUNCTIONS:
   a. ADJUSTING MOTOR FULL-LOAD AMPERES, AS A PERCENTAGE OF THE CONTROLLER'S RATING.
   b. ADJUSTING CURRENT LIMITATION ON STARTING, AS A PERCENTAGE OF THE MOTOR FULL-LOAD CURRENT RATING.
   c. ADJUSTING LINEAR ACCELERATION AND DECELERATION RAMPS, IN SECONDS.
   d. INITIAL TORQUE, AS A PERCENTAGE OF THE NOMINAL MOTOR TORQUE.
   e. ADJUSTING TORQUE LIMIT, AS A PERCENTAGE OF THE NOMINAL MOTOR TORQUE.
   f. ADJUSTING MAXIMUM START TIME, IN SECONDS.
   g. ADJUSTING VOLTAGE BOOST, AS A PERCENTAGE OF THE NOMINAL SUPPLY VOLTAGE.
   h. SELECTING STOPPING MODE, AND ADJUSTING PARAMETERS.
   i. SELECTING MOTOR THERMAL OVERLOAD PROTECTION CLASS BETWEEN 5 AND 30.
   j. ACTIVATING AND DE-ACTIVATING PROTECTION MODES.
   k. SELECTING OR ACTIVATING COMMUNICATION MODES.
12. DIGITAL DISPLAY, FRONT ACCESSIBLE; FOR SHOWING MOTOR, CONTROLLER, AND FAULT STATUS; SHALL BE MANUFACTURER'S STANDARD AND INCLUDE NOT LESS THAN THE FOLLOWING:
   a. CONTROLLER CONDITION: READY, STARTING, RUNNING, STOPPING.
   b. MOTOR CONDITION: AMPERES, VOLTAGE, POWER FACTOR, POWER, AND THERMAL STATE.
   c. FAULT CONDITIONS: CONTROLLER THERMAL FAULT, MOTOR OVERLOAD ALARM AND TRIP, MOTOR UNDERLOAD, OVERCURRENT, SHORTED SCRS, LINE OR PHASE LOSS, PHASE REVERSAL, AND LINE FREQUENCY OVER OR UNDER NORMAL.
13. CONTROLLER DIAGNOSTICS AND PROTECTION:
   a. MICROPROCESSOR-BASED THERMAL PROTECTION SYSTEM FOR MONITORING SCR AND MOTOR THERMAL CHARACTERISTICS, AND PROVIDING CONTROLLER OVER-TEMPERATURE AND MOTOR-OVERLOAD ALARM AND TRIP; SETTINGS SELECTABLE VIA THE KEYPAD.
   b. PROTECTION FROM LINE-SIDE REVERSE PHASING; LINE-SIDE AND MOTOR-SIDE PHASE LOSS; MOTOR JAM, STALL, AND UNDER LOAD CONDITIONS; AND LINE FREQUENCY OVER OR UNDER NORMAL.
   c. SHUNT TRIP THAT OPENS THE DISCONNECTING MEANS WHEN THE CONTROLLER DIAGNOSTICS DETECT A FAULTED SOLID-STATE COMPONENT.
14. REMOTE OUTPUT FEATURES:
   a. ALL OUTPUTS PREWIRED TO TERMINAL BLOCKS.
   b. FORM C STATUS CONTACTS THAT CHANGE STATE WHEN CONTROLLER IS RUNNING.
   c. FORM C ALARM CONTACTS THAT CHANGE STATE WHEN A FAULT CONDITION OCCURS.
15. OPTIONAL FEATURES:
   a. ADDITIONAL FIELD-ASSIGNABLE FORM C CONTACTS, AS INDICATED, FOR ALARM OUTPUTS.
   b. FULL-VOLTAGE BYPASS CONTACTOR OPERATING AUTOMATICALLY. POWER CONTACTS SHALL BE TOTALLY ENCLOSED, DOUBLE BREAK, AND SILVER-CADMIUM OXIDE; AND ASSEMBLED TO ALLOW INSPECTION AND REPLACEMENT WITHOUT DISTURBING LINE OR LOAD WIRING.
   c. SOLID-STATE OVERLOAD RELAY:
      1) SWITCH OR DIAL SELECTABLE FOR MOTOR RUNNING OVERLOAD PROTECTION.
      2) SENSORS IN EACH PHASE.
      3) CLASS 10/20 SELECTABLE TRIPPING CHARACTERISTIC SELECTED TO PROTECT MOTOR AGAINST VOLTAGE AND CURRENT UNBALANCE AND SINGLE PHASING.
      4) CLASS II GROUND-FAULT PROTECTION, WITH START AND RUN DELAYS TO PREVENT NUISANCE TRIP ON STARTING.
   d. 2 N.C. AND 2 N.O., ISOLATED OVERLOAD ALARM CONTACT.
   e. EXTERNAL OVERLOAD RESET PUSH BUTTON.

2.3 MULTISPEED MAGNETIC CONTROLLERS

A. GENERAL REQUIREMENTS FOR MULTISPEED MAGNETIC CONTROLLERS: COMPLY WITH NEMA ICS 2, GENERAL PURPOSE, CLASS A.
B. MULTISPEED AND FORWARD/REVERSE MAGNETIC CONTROLLERS: TWO SPEED, FOREWARD/REVERSE, FULL VOLTAGE, ACROSS THE LINE, ELECTRICALLY HELD.
1. BASIS-OF-DESIGN PRODUCT: SUBJECT TO COMPLIANCE WITH REQUIREMENTS, PROVIDE PRODUCT INDICATED ON DRAWINGS OR COMPARABLE PRODUCT BY ONE OF THE FOLLOWING:
   a. EATON ELECTRICAL INC.; CUTLER-HAMMER BUSINESS UNIT.

c:\pwworking\hmm\externo\tyn61470\dms7278\1071_0134CES433.dgn 10/24/2014 10:38:49 AM TYN61470

DESIGN AGENCY
HATCH MOTT MacDONALD
18013 CLEVELAND PKWY.
SUITE 200
CLEVELAND, OH 44135

DESIGNED	DRAWN	REVIEWED	DATE
DGC	CM	RF	08/11/14
CHECKED	REVISED	STRUCTURE FILE NUMBER	
PAP	DGC	31065781	

ELECTRICAL NOTES - ENCLOSED CONTROLLERS - SHEET 2 OF 4
BRIDGE NO. HAM-71-0134
I-71 LYTLE TUNNEL UNDER LYTLE PARK

HAM-71-01.34
PID No. 87268

b. GENERAL ELECTRIC COMPANY; GE CONSUMER & INDUSTRIAL - ELECTRICAL DISTRIBUTION.
c. ROCKWELL AUTOMATION, INC.; ALLEN-BRADLEY BRAND.
d. SIEMENS ENERGY & AUTOMATION, INC.
e. SQUARE D; A BRAND OF SCHNEIDER ELECTRIC.
f. OR APPROVED EQUAL.

2. CONFIGURATION: REVERSING, 2 SPEEDCONSEQUENT POLE SINGLE WINDING.
3. CONTACTOR COILS: PRESSURE-ENCAPSULATED TYPE WITH COIL TRANSIENT SUPPRESSORS.
   a. OPERATING VOLTAGE: DEPENDING ON CONTACTOR NEMA SIZE AND LINE-VOLTAGE RATING, MANUFACTURER'S STANDARD MATCHING CONTROL POWER OR LINE VOLTAGE.
4. POWER CONTACTS: TOTALLY ENCLOSED, DOUBLE BREAK, SILVER-CADMIUM OXIDE; ASSEMBLED TO ALLOW INSPECTION AND REPLACEMENT WITHOUT DISTURBING LINE OR LOAD WIRING.
5. CONTROL CIRCUITS: 120-V AC; OBTAINED FROM INTEGRAL CPT, WITH PRIMARY AND SECONDARY FUSES, WITH CONTROL POWER SOURCE OF SUFFICIENT CAPACITY TO OPERATE INTEGRAL DEVICES AND REMOTELY LOCATED PILOT, INDICATING, AND CONTROL DEVICES.
   a. CPT SPARE CAPACITY: 500 VA.
6. COMPELLING RELAYS SHALL ENSURE THAT MOTOR WILL START ONLY AT LOW SPEED.
7. SPEED TRANSMITTER AND SWITCHES SHALL ENSURE MOTOR SPEED AND DIRECTION CAN ONLY BE CHANGED AFTER MOTOR HAS COME TO A COMPLETE STOP.
8. ANTIPLUGGING TIMER RELAYS SHALL ENSURE A TIME DELAY WHEN TRANSFERRING FROM FORWARD TO REVERSE AND LOW AND HIGH SPEED AND BACK.
9. SOLID-STATE OVERLOAD RELAY:
   a. SWITCH OR DIAL SELECTABLE FOR MOTOR RUNNING OVERLOAD PROTECTION.
   b. SENSORS IN EACH PHASE.
   c. CLASS 10/20 SELECTABLE TRIPPING CHARACTERISTIC SELECTED TO PROTECT MOTOR AGAINST VOLTAGE AND CURRENT UNBALANCE AND SINGLE PHASING.
   d. CLASS II GROUND-FAULT PROTECTION, WITH START AND RUN DELAYS TO PREVENT NUISANCE TRIP ON STARTING.
10. 2 N.C. AND 2 N.O., ISOLATED OVERLOAD ALARM CONTACT.
11. EXTERNAL OVERLOAD RESET PUSH BUTTON.

C. COMBINATION MULTISPEED MAGNETIC CONTROLLER: FACTORY-ASSEMBLED COMBINATION OF REDUCED-VOLTAGE MAGNETIC CONTROLLER, OCPD, AND DISCONNECTING MEANS.
1. BASIS-OF-DESIGN PRODUCT: SUBJECT TO COMPLIANCE WITH REQUIREMENTS, PROVIDE PRODUCT INDICATED ON DRAWINGS OR COMPARABLE PRODUCT BY ONE OF THE FOLLOWING:
   a. EATON ELECTRICAL INC.; CUTLER-HAMMER BUSINESS UNIT.
   b. GENERAL ELECTRIC COMPANY; GE CONSUMER & INDUSTRIAL - ELECTRICAL DISTRIBUTION.
   c. ROCKWELL AUTOMATION, INC.; ALLEN-BRADLEY BRAND.
   d. SIEMENS ENERGY & AUTOMATION, INC.
   e. SQUARE D; A BRAND OF SCHNEIDER ELECTRIC.
   f. OR APPROVED EQUAL.
2. MCP DISCONNECTING MEANS:
   a. UL 489, NEMA AB 1, AND NEMA AB 3, WITH INTERRUPTING CAPACITY TO COMPLY WITH AVAILABLE FAULT CURRENTS, INSTANTANEOUS-ONLY CIRCUIT BREAKER WITH FRONT-MOUNTED, FIELD-ADJUSTABLE, SHORT-CIRCUIT TRIP COORDINATED WITH MOTOR LOCKED-ROTOR AMPERES.
   b. LOCKABLE HANDLE: ACCEPTS THREE PADLOCKS AND INTERLOCKS WITH COVER IN CLOSED POSITION.
   c. TWO MCPS ARE REQUIRED ONE FOR EACH HP RATING.
   d. AUXILIARY CONTACTS "A" AND "B" ARRANGED TO ACTIVATE WITH MCP HANDLE.
   e. N.C. ALARM CONTACT THAT OPERATES ONLY WHEN MCP HAS TRIPPED.

2.4 ENCLOSURES

A. ENCLOSED CONTROLLERS: NEMA ICS 6, TO COMPLY WITH ENVIRONMENTAL CONDITIONS AT INSTALLED LOCATION.
1. INDOOR LOCATIONS SUBJECT TO DUST, FALLING DIRT, AND DRIPPING NONCORROSIVE LIQUIDS: TYPE 12.

2.5 ACCESSORIES

A. GENERAL REQUIREMENTS FOR CONTROL CIRCUIT AND PILOT DEVICES: NEMA ICS 5; FACTORY INSTALLED IN CONTROLLER ENCLOSURE COVER UNLESS OTHERWISE INDICATED.
1. PUSH BUTTONS, PILOT LIGHTS, AND SELECTOR SWITCHES: STANDARD-DUTY, OILTIGHT TYPE.
   a. PUSH BUTTONS: SHROUDED TYPES; MAINTAINED AS INDICATED.
   b. PILOT LIGHTS: LED OR NEON TYPES; COLORS AS INDICATED; PUSH TO TEST.
   c. SELECTOR SWITCHES: ROTARY TYPE.
2. ELAPSED TIME METERS: HEAVY DUTY WITH DIGITAL READOUT IN HOURS; NONRESETTABLE.

B. 1 N.C. AND 1 N.O. AUXILIARY CONTACT(S).
C. CONTROL RELAYS: AUXILIARY AND ADJUSTABLE SOLID-STATE TIME-DELAY RELAYS.
D. SPARE CONTROL WIRING TERMINAL BLOCKS, QUANTITY AS INDICATED; WIRED.

PART 3 - EXECUTION

3.1 EXAMINATION

A. EXAMINE AREAS AND SURFACES TO RECEIVE ENCLOSED CONTROLLERS, WITH INSTALLER PRESENT, FOR COMPLIANCE WITH REQUIREMENTS AND OTHER CONDITIONS AFFECTING PERFORMANCE OF THE WORK.
B. EXAMINE ENCLOSED CONTROLLERS BEFORE INSTALLATION. REJECT ENCLOSED CONTROLLERS THAT ARE WET, MOISTURE DAMAGED, OR MOLD DAMAGED.
C. PROCEED WITH INSTALLATION ONLY AFTER UNSATISFACTORY CONDITIONS HAVE BEEN CORRECTED.

3.2 INSTALLATION

A. FLOOR-MOUNTED CONTROLLERS: INSTALL ENCLOSED CONTROLLERS ON 4-INCH (100-MM) NOMINAL-THICKNESS CONCRETE BASE. COMPLY WITH REQUIREMENTS FOR CONCRETE BASE SPECIFIED ON DRAWINGS.
1. INSTALL DOWEL RODS TO CONNECT CONCRETE BASE TO CONCRETE FLOOR. UNLESS OTHERWISE INDICATED, INSTALL DOWEL RODS ON 18-INCH (450-MM) CENTERS AROUND THE FULL PERIMETER OF CONCRETE BASE.
2. FOR SUPPORTED EQUIPMENT, INSTALL EPOXY-COATED ANCHOR BOLTS THAT EXTEND THROUGH CONCRETE BASE AND ANCHOR INTO STRUCTURAL CONCRETE FLOOR.
3. PLACE AND SECURE ANCHORAGE DEVICES. USE SETTING DRAWINGS, TEMPLATES, DIAGRAMS, INSTRUCTIONS, AND DIRECTIONS FURNISHED WITH ITEMS TO BE EMBEDDED.
4. INSTALL ANCHOR BOLTS TO ELEVATIONS REQUIRED FOR PROPER ATTACHMENT TO SUPPORTED EQUIPMENT.

B. TEMPORARY LIFTING PROVISIONS: REMOVE TEMPORARY LIFTING EYES, CHANNELS, AND BRACKETS AND TEMPORARY BLOCKING OF MOVING PARTS FROM ENCLOSURES AND COMPONENTS.
C. INSTALL FUSES IN CONTROL CIRCUITS IF NOT FACTORY INSTALLED COMPLY WITH NECA 1.

3.3 IDENTIFICATION

A. IDENTIFY ENCLOSED CONTROLLERS, COMPONENTS, AND CONTROL WIRING.
1. IDENTIFY FIELD-INSTALLED CONDUCTORS, INTERCONNECTING WIRING, AND COMPONENTS; PROVIDE WARNING SIGNS.
2. LABEL EACH ENCLOSURE WITH ENGRAVED NAMEPLATE.
3. LABEL EACH ENCLOSURE-MOUNTED CONTROL AND PILOT DEVICE.

3.4 CONTROL WIRING INSTALLATION

A. INSTALL WIRING BETWEEN ENCLOSED CONTROLLERS AND REMOTE DEVICES AND FACILITY'S CENTRAL CONTROL SYSTEM. BUNDLE, TRAIN, AND SUPPORT WIRING IN ENCLOSURES.
B. CONNECT SELECTOR SWITCHES AND OTHER AUTOMATIC-CONTROL SELECTION DEVICES WHERE APPLICABLE.
1. CONNECT SELECTOR SWITCHES TO BYPASS ONLY THOSE MANUAL- AND AUTOMATIC-CONTROL DEVICES THAT HAVE NO SAFETY FUNCTIONS WHEN SWITCH IS IN MANUAL-CONTROL POSITION.
2. CONNECT SELECTOR SWITCHES WITH ENCLOSED-CONTROLLER CIRCUIT IN BOTH MANUAL AND AUTOMATIC POSITIONS FOR SAFETY-TYPE CONTROL DEVICES SUCH AS LOW- AND HIGH-PRESSURE CUTOUTS, HIGH-TEMPERATURE CUTOUTS, AND MOTOR OVERLOAD PROTECTORS.

3.5 FIELD QUALITY CONTROL

A. TESTING AGENCY: ENGAGE A QUALIFIED TESTING AGENCY TO PERFORM TESTS AND INSPECTIONS.
1. OBTAIN THE SERVICES OF A NETA QUALIFIED AND AN INDEPENDENT TESTING SERVICE FIRM NOT AFFILIATED WITH THE EQUIPMENT MANUFACTURER THAT MEETS THE FEDERAL OSHA CRITERIA FOR ACCREDITATION OF TESTING LABORATORIES, TITLE 29, PART 1910.7.
2. TESTING SERVICE OR TESTING PERSONNEL MAY BE ACCEPTED OR REJECTED BASED UPON, BUT NOT LIMITED TO, THE TESTING EQUIPMENT INTENDED TO BE USED, THE QUALIFICATIONS OF THE FIRM, AND PERSONNEL.

B. TEST EQUIPMENT TRACEABILITY:
1. TESTING FIRM SHALL HAVE A CALIBRATION PROGRAM WHICH MAINTAINS APPLICABLE TEST INSTRUMENTATION AND EQUIPMENT WITHIN RATED ACCURACY AND WITHIN THEIR CALIBRATION TIME LIMITS.
2. EQUIPMENT AND INSTRUMENTS USED TO EVALUATE ELECTRICAL PERFORMANCE SHALL BE CALIBRATED TO A SECONDARY STANDARD TRACEABLE TO THE NATIONAL INSTITUTE OF STANDARDS AND TECHNOLOGY.
3. ALL MATERIALS, SUPPLIES, TOOLS, EQUIPMENT, LABOR, AND SERVICES SHALL BE PROVIDED TO PERFORM ALL TESTS AS REQUIRED. SUBMIT A LIST OF INSTRUMENTS AND CERTIFICATION INDICATING THAT INSTRUMENTS THAT TO BE USED FOR TESTING HAVE BEEN CALIBRATED AND THEIR ACCURACY CERTIFIED WITHIN A PREVIOUS PERIOD OF NOT MORE THAN SIX MONTH. LIST TYPES OF INSTRUMENTS TO BE USED, MANUFACTURER, MODEL NUMBER, SERIAL NUMBER,

c:\pwworking\hnm\external\tyn61470\dms727●3\071_0134CEC434.dgn 10/24/2014 10:39:01 AM TYN61470

DESIGN AGENCY
HATCH MOTT MacDONALD
18013 CLEVELAND PKWY.
SUITE 200
CLEVELAND, OH 44135

DESIGNED	DRAWN	REVIEWED	DATE
DGC	CM	RF	08/11/14
CHECKED	REVISED	STRUCTURE FILE NUMBER	
PAP	DGC	3106578	

ELECTRICAL NOTES - ENCLOSED CONTROLLERS - SHEET 3 OF 4

BRIDGE NO. HAM-71-0134
I-71 LYTLE TUNNEL UNDER LYTLE PARK

HAM-71-01.34
PID No. 87268

LATEST DATE OF CALIBRATION, AND CALIBRATION ORGANIZATION.

4. TEST EQUIPMENT OPERATING INSTRUCTIONS AND PROCEDURES SHALL BE WITH THE TEST EQUIPMENT.
5. A COPY OF TEST EQUIPMENT CALIBRATION CERTIFICATE MUST BE WITH EQUIPMENT AT ALL TIMES TO BE AVAILABLE FOR INSPECTION.

C. MANUFACTURER'S FIELD SERVICE: ENGAGE A FACTORY-AUTHORIZED SERVICE REPRESENTATIVE TO INSPECT, TEST, AND ADJUST COMPONENTS, ASSEMBLIES, AND EQUIPMENT INSTALLATIONS, INCLUDING CONNECTIONS.

D. PERFORM ALL TESTS AND INSPECTIONS IN FULL COMPLIANCE WITH THE ELECTRICAL TESTING SECTION.
1. MANUFACTURER'S FIELD SERVICE: ENGAGE A FACTORY-AUTHORIZED SERVICE REPRESENTATIVE TO INSPECT COMPONENTS, ASSEMBLIES, AND EQUIPMENT INSTALLATIONS, INCLUDING CONNECTIONS, AND TO ASSIST IN TESTING.

E. ACCEPTANCE TESTING PREPARATION:
1. TEST INSULATION RESISTANCE FOR EACH ENCLOSED CONTROLLER, COMPONENT, CONNECTING SUPPLY, FEEDER, AND CONTROL CIRCUIT.
2. TEST CONTINUITY OF EACH CIRCUIT.

F. TESTS AND INSPECTIONS:
1. INSPECT CONTROLLERS, WIRING, COMPONENTS, CONNECTIONS, AND EQUIPMENT INSTALLATION. TEST AND ADJUST CONTROLLERS, COMPONENTS, AND EQUIPMENT.
2. TEST INSULATION RESISTANCE FOR EACH ENCLOSED-CONTROLLER ELEMENT, COMPONENT, CONNECTING MOTOR SUPPLY, FEEDER, AND CONTROL CIRCUITS.
3. TEST CONTINUITY OF EACH CIRCUIT.
4. VERIFY THAT VOLTAGES AT CONTROLLER LOCATIONS ARE WITHIN PLUS OR MINUS 10 PERCENT OF MOTOR NAMEPLATE RATED VOLTAGES. IF OUTSIDE THIS RANGE FOR ANY MOTOR, NOTIFY OWNER BEFORE STARTING THE MOTOR(S).
5. TEST EACH MOTOR FOR PROPER PHASE ROTATION.
6. PERFORM EACH ELECTRICAL TEST AND VISUAL AND MECHANICAL INSPECTION STATED IN NETA ACCEPTANCE TESTING SPECIFICATION AND THE ELECTRICAL TESTING SECTION. CERTIFY COMPLIANCE WITH TEST PARAMETERS.
7. CORRECT MALFUNCTIONING UNITS ON-SITE, WHERE POSSIBLE, AND RETEST TO DEMONSTRATE COMPLIANCE; OTHERWISE, REPLACE WITH NEW UNITS AND RETEST.
8. PERFORM THE FOLLOWING INFRARED (THERMOGRAPHIC) SCAN TESTS AND INSPECTIONS AND PREPARE REPORTS:
   a. INITIAL INFRARED SCANNING: AFTER SUBSTANTIAL COMPLETION, BUT NOT MORE THAN 60 DAYS AFTER FINAL ACCEPTANCE, PERFORM AN INFRARED SCAN OF EACH MULTI-POLE ENCLOSED CONTROLLER. REMOVE FRONT PANELS SO JOINTS AND CONNECTIONS ARE ACCESSIBLE TO PORTABLE SCANNER.
   b. FOLLOW-UP INFRARED SCANNING: PERFORM AN ADDITIONAL FOLLOW-UP INFRARED SCAN OF EACH MULTI-POLE ENCLOSED CONTROLLER 11 MONTHS AFTER DATE OF SUBSTANTIAL COMPLETION.
   c. INSTRUMENTS AND EQUIPMENT: USE AN INFRARED SCANNING DEVICE DESIGNED TO MEASURE TEMPERATURE OR TO DETECT SIGNIFICANT DEVIATIONS FROM NORMAL VALUES. PROVIDE CALIBRATION RECORD FOR DEVICE.
9. TEST AND ADJUST CONTROLS, REMOTE MONITORING, AND SAFETIES. REPLACE DAMAGED AND MALFUNCTIONING CONTROLS AND EQUIPMENT.

G. ENCLOSED CONTROLLERS WILL BE CONSIDERED DEFECTIVE IF THEY DO NOT PASS TESTS AND INSPECTIONS.

H. PREPARE TEST AND INSPECTION REPORTS INCLUDING A CERTIFIED REPORT THAT IDENTIFIES ENCLOSED CONTROLLERS AND THAT DESCRIBES SCANNING RESULTS. INCLUDE NOTATION OF DEFICIENCIES DETECTED, REMEDIAL ACTION TAKEN, AND OBSERVATIONS AFTER REMEDIAL ACTION.

3.6 ADJUSTING

A. SET FIELD-ADJUSTABLE SWITCHES, AUXILIARY RELAYS, TIME-DELAY RELAYS, TIMERS, AND OVERLOAD-RELAY PICKUP AND TRIP RANGES.

B. ADJUST OVERLOAD-RELAY HEATERS OR SETTINGS IF POWER FACTOR CORRECTION CAPACITORS ARE CONNECTED TO THE LOAD SIDE OF THE OVERLOAD RELAYS.

C. ADJUST THE TRIP SETTINGS OF MCPS AND THERMAL-MAGNETIC CIRCUIT BREAKERS WITH ADJUSTABLE INSTANTANEOUS TRIP ELEMENTS. INITIALLY ADJUST TO FOUR TIMES THE MOTOR NAMEPLATE FULL-LOAD AMPERE RATINGS AND ATTEMPT TO START MOTORS SEVERAL TIMES, ALLOWING FOR MOTOR COOLDOWN BETWEEN STARTS. IF TRIPPING OCCURS ON MOTOR INRUSH, ADJUST SETTINGS IN INCREMENTS UNTIL MOTORS START WITHOUT TRIPPING. DO NOT EXCEED EIGHT TIMES THE MOTOR FULL-LOAD AMPERES (OR 11 TIMES FOR NEMA PREMIUM EFFICIENT MOTORS IF REQUIRED). WHERE THESE MAXIMUM SETTINGS DO NOT ALLOW STARTING OF A MOTOR, NOTIFY OWNER BEFORE INCREASING SETTINGS.

D. SET FIELD-ADJUSTABLE SWITCHES AND PROGRAM MICROPROCESSORS FOR REQUIRED START AND STOP SEQUENCES IN REDUCED-VOLTAGE SOLID-STATE CONTROLLERS.

E. SET FIELD-ADJUSTABLE CIRCUIT-BREAKER TRIP RANGES

3.7 PROTECTION

A. TEMPORARY HEATING: APPLY TEMPORARY HEAT TO MAINTAIN TEMPERATURE ACCORDING TO MANUFACTURER'S WRITTEN INSTRUCTIONS UNTIL ENCLOSED CONTROLLERS ARE READY TO BE ENERGIZED AND PLACED INTO SERVICE.

B. REPLACE CONTROLLERS WHOSE INTERIORS HAVE BEEN EXPOSED TO WATER OR OTHER LIQUIDS PRIOR TO SUBSTANTIAL COMPLETION.

3.8 DEMONSTRATION

A. ENGAGE A FACTORY-AUTHORIZED SERVICE REPRESENTATIVE TO TRAIN OWNER'S MAINTENANCE PERSONNEL TO ADJUST, OPERATE, AND MAINTAIN ENCLOSED CONTROLLERS, AND TO USE AND REPROGRAM MICROPROCESSOR-BASED, REDUCED-VOLTAGE SOLID-STATE CONTROLLERS.

PART 4 - METHOD OF PAYMENT AND ITEMS

4.01 METHOD OF PAYMENT AND ITEMS

A. PAYMENT FOR ITEMS SHALL BE MADE AT THE CONTRACT UNIT PRICE, INCLUDING BUT NOT LIMITED TO ALL WORK, LABOR, EQUIPMENT, AND MATERIALS NECESSARY THEREFORE OR INCIDENTAL THERETO, AS FOLLOWS:

ITEM NO.	DESCRIPTION	UNIT
SPECIAL	SPECIAL – MISC.: SOFT STARTERS	EACH

c:\pwworking\hnm\external\ty-n61470\dms727803\071_0134CEC435.dgn 10/24/2014 10:39:15 AM TYN61470

DESIGN AGENCY
HATCH MOTT MacDONALD
18013 CLEVELAND PKWY.
SUITE 200
CLEVELAND, OH 44135

DESIGNED	DRAWN	REVIEWED	DATE
DGC	CM	RF	08/11/14
CHECKED	REVISED	STRUCTURE FILE NUMBER	
PAP	DGC	31065578	

ELECTRICAL NOTES - ENCLOSED CONTROLLERS - SHEET 4 OF 4

BRIDGE NO. HAM-71-0134
I-71 LYTLE TUNNEL UNDER LYTLE PARK

HAM-71-01.34
PID No. 87268

ITEM 690 – SPECIAL – MISC.: UPS SYSTEMS

PART 1 - GENERAL

1.01 SUMMARY

THIS SPECIFICATION DESCRIBES A THREE PHASE, CONTINUOUS DUTY, SOLID STATE UNINTERRUPTIBLE POWER SYSTEM (UPS). THE UPS SHALL OPERATE IN CONJUNCTION WITH THE EXISTING BUILDING ELECTRICAL SYSTEM TO PROVIDE POWER FOR CRITICAL EQUIPMENT LOADS. THE SYSTEM SHALL CONSIST OF A SOLID STATE INVERTER, RECTIFIER/BATTERY CHARGER, A STORAGE BATTERY, A STATIC BYPASS TRANSFER SWITCH, SYNCHRONIZATION CONTROL CIRCUITRY, CONNECTION CONTROL CIRCUITRY, DISCONNECTION CONTROL CIRCUITRY, SYSTEM METERING, SYSTEM STATUS INDICATORS, SYSTEM ALARM ANNUNCIATION CIRCUITRY, ACCESSORIES AS SPECIFIED HEREIN AND A BYPASS SWITCH. THE SYSTEM SHALL AUTOMATICALLY ENSURE CONTINUITY OF ELECTRIC POWER WITHIN SPECIFIED TOLERANCES, WITHOUT INTERRUPTION, UPON FAILURE OR DETERIORATION OF THE NORMAL POWER SUPPLY. CONTINUITY OF ELECTRIC POWER TO THE LOAD SHALL BE SUPPLIED BY THE BATTERIES, UP TO THE SPECIFIED MAXIMUM PROTECTION TIME OR UNTIL RESTORATION OF THE NORMAL INPUT AC POWER SOURCE, WHICHEVER OCCURS FIRST. UPS AUTONOMY SHALL BE 90 MINUTES.

1.02 REFERENCE STANDARDS

A. UL LISTED UNDER 1778, STANDARDS FOR UNINTERRUPTIBLE POWER SUPPLY EQUIPMENT
B. UL CANADA (CUL)
C. IEEE 587-1980/ANSI C62.41 1980 STANDARDS FOR SURGE WITHSTAND ABILITY
D. ISO 9001 QUALITY STANDARD
E. THE UPS SHALL BE DESIGNED IN ACCORDANCE WITH THE APPLICABLE SECTIONS OF THE DOCUMENTS PUBLISHED BY:
F. NATIONAL FIRE PROTECTION ASSOCIATION (NFPA)/ NATIONAL ELECTRIC CODE (NEC) INCLUDING NFPA 111
G. NATIONAL ELECTRICAL MANUFACTURER'S ASSOCIATION (NEMA)
H. OCCUPATIONAL SAFETY & HEALTH ADMINISTRATION (OSHA)
I. ALL COMPONENTS SHALL BE LISTED BY UNDERWRITER'S LABORATORIES, INC. (UL) WHENEVER SUCH LISTINGS HAVE BEEN ESTABLISHED.

1.03 SUBMITTALS

A. INSTALLATION PACKAGE: COMPLETE ELECTRICAL CHARACTERISTICS AND CONNECTION REQUIREMENTS. PROVIDE DETAILED EQUIPMENT OUTLINES WITH CABINET DIMENSIONS AND SPACING REQUIREMENTS; LOCATION OF CONDUIT ENTRY/EXIT PATHS; LOCATION OF FLOOR/SEISMIC MOUNTING; AVAILABLE BATTERY TYPES/SIZES; ALL CABINET WEIGHTS; HEAT REJECTION AND AIR FLOW REQUIREMENTS; SINGLE-LINE DIAGRAM; CONTROL, AND EXTERNAL WIRING.
B. PRODUCT DATA: PROVIDE CATALOG SHEETS AND TECHNICAL DATA SHEETS TO INDICATE PHYSICAL DATA AND ELECTRICAL PERFORMANCE, ELECTRICAL CHARACTERISTICS, AND CONNECTION REQUIREMENTS.
C. MANUFACTURER'S INSTALLATION INSTRUCTIONS: INDICATE APPLICATION CONDITIONS AND LIMITATIONS OF USE STIPULATED BY PRODUCT TESTING AGENCY. INCLUDE INSTRUCTIONS FOR STORAGE, HANDLING, PROTECTION, EXAMINATION, PREPARATION, INSTALLATION, AND STARTING OF PRODUCT. INCLUDE EQUIPMENT INSTALLATION OUTLINE, CONNECTION DIAGRAM FOR EXTERNAL CABLING, INTERNAL WIRING DIAGRAM, AND WRITTEN INSTRUCTION FOR INSTALLATION.
D. MANUFACTURER'S FACTORY STANDARD TEST PROCEDURE. NOTE: FACTORY TESTING SHALL INCLUDE LOAD BANK TESTS WITH AN
E. 8 HOUR BURN IN.
F. FLOOR PLAN LAYOUT (BASED ON ACTUAL FIELD MEASUREMENTS)

1.04 FINAL SUBMITTALS

UPON DELIVERY OF THE UPS SYSTEM, THE FOLLOWING SUBMITTALS SHALL BE INCLUDED:

A. A COMPLETE SET OF INSTALLATION DRAWINGS SHOWING ALL THE INFORMATION STATED IN SECTION 1.03.
B. AN INSTALLATION AND USER MANUAL SHOWING SAFE AND CORRECT OPERATION OF ALL UPS FUNCTIONS.
C. UPS FIELD START-UP PROCEDURES

1.05 QUALIFICATIONS & QUALITY ASSURANCE

A. MANUFACTURER'S CERTIFICATION: THE MANUFACTURER SHALL SPECIALIZE IN MANUFACTURING OF ON-LINE, DOUBLE CONVERSION THREE PHASE UPS MODULES SPECIFIED IN THIS DOCUMENT WITH A MINIMUM OF TWENTY YEARS DOCUMENTED EXPERIENCE, AND WITH A NATIONWIDE FIRST PARTY SERVICE ORGANIZATION. THE MANUFACTURER SHALL BE ISO 9001 CERTIFIED AND SHALL DESIGN TO INTERNATIONALLY ACCEPTED STANDARDS.
B. FACTORY TESTING: PRIOR TO SHIPMENT THE MANUFACTURER SHALL COMPLETE A DOCUMENTED TEST PROCEDURE TO TEST ALL FUNCTIONS OF THE UPS MODULE AND BATTERIES (VIA A DISCHARGE TEST), WHEN SUPPLIED BY THE UPS MANUFACTURER, AND GUARANTEE COMPLIANCE WITH THE SPECIFICATION. THE FACTORY TEST SHALL BE PERFORMED IN THE PRESENCE OF THE CUSTOMER PROVIDING THE MANUFACTURER RECEIVES ADEQUATE PRIOR NOTICE. THE MANUFACTURER SHALL PROVIDE A COPY OF THE TEST REPORT UPON REQUEST. THE MANUFACTURER SHALL PROVIDE THREE COPIES OF CERTIFIED FACTORY TEST REPORTS TO THE ENGINEER.
C. MATERIALS AND ASSEMBLIES: ALL MATERIALS AND PARTS COMPRISING THE UPS SHALL BE NEW, OF CURRENT MANUFACTURE, AND SHALL NOT HAVE BEEN IN PRIOR SERVICE, EXCEPT AS REQUIRED DURING FACTORY TESTING. ALL ACTIVE ELECTRONIC DEVICES SHALL BE SOLID STATE AND NOT EXCEED THE MANUFACTURER'S RECOMMENDED TOLERANCES FOR TEMPERATURE OR CURRENT TO ENSURE MAXIMUM RELIABILITY. ALL SEMICONDUCTOR DEVICES SHALL BE SEALED. ALL RELAYS SHALL BE PROVIDED WITH DUST COVERS. THE MANUFACTURER SHALL CONDUCT INSPECTIONS ON INCOMING PARTS, MODULAR ASSEMBLIES AND FINAL PRODUCTS.

1.06 DELIVERY, STORAGE, AND HANDLING

A. ALL PRODUCTS SHALL BE PACKAGED IN A MANNER TO PREVENT PENETRATION BY DEBRIS AND TO ALLOW SAFE DELIVERY BY ALL MODES OF GROUND TRANSPORTATION AND AIR TRANSPORTATION WHERE SPECIFIED.
B. PRIOR TO SHIPPING ALL PRODUCTS SHALL BE INSPECTED AT THE FACTORY FOR DAMAGE.
C. EQUIPMENT SHALL BE PROTECTED AGAINST EXTREME TEMPERATURE AND HUMIDITY AND SHALL BE STORED IN A CONDITIONED AND PROTECTED ENVIRONMENT.
D. EQUIPMENT CONTAINING BATTERIES SHALL NOT BE STORED FOR A PERIOD EXCEEDING FOUR WEEKS WITHOUT POWERING UP THE EQUIPMENT FOR A PERIOD OF EIGHT HOURS TO RECHARGE THE BATTERIES.
E. OFFLOADING FROM THE TRUCK AND SETTING IN PLACE OF ALL EQUIPMENT INCLUDING BATTERIES SPECIFIED HEREIN SHALL BE RESPONSIBILITY OF THE INSTALLATION CONTRACTOR, INCLUDING AND ALL ASSOCIATED LABOR, PARTS, TOOLS AND EQUIPMENT.

1.07 ENVIRONMENTAL REQUIREMENTS

THE UPS SHALL BE CAPABLE OF WITHSTANDING ANY COMBINATION OF THE FOLLOWING ENVIRONMENTAL CONDITIONS IN WHICH IT MUST OPERATE WITHOUT MECHANICAL OR ELECTRICAL DAMAGE, OR DEGRADATION OF OPERATING CHARACTERISTICS.

A. TEMPERATURE:
UPS MODULE OPERATING: 0°C TO 40°C
NON-OPERATING: -25°C TO +45°C
(-4° TO 113°F)
B. RELATIVE HUMIDITY (OPERATING AND STORAGE): 0 TO 95% NON-CONDENSING
C. BAROMETRIC PRESSURE: UP TO 1,000 METERS ABOVE SEA LEVEL UP TO 10,000 METERS ABOVE SEA LEVEL NON-OPERATING
D. AUDIBLE NOISE: MAXIMUM 68 DB "A" WEIGHING @ FIVE FEET

1.08 MAINTENANCE, ACCESSIBILITY AND SELF DIAGNOSTICS

A. PROVIDE THE FOLLOWING:
1. AUTO-COMPENSATION OF COMPONENT DRIFT;
2. SELF-ADJUSTMENT OF REPLACED SUBASSEMBLIES;
3. EXTENSIVE ACQUISITION OF INFORMATION VITAL FOR COMPUTER-AIDED DIAGNOSTICS (LOCAL OR REMOTE);
4. SOCKET CONNECTION TO INTERFACE WITH COMPUTER-AIDED DIAGNOSTICS SYSTEM.
B. THE UPS SHALL BE REPAIRABLE BY REPLACING STANDARD SUBASSEMBLIES REQUIRING NO ADJUSTMENTS. COMMUNICATION VIA A MODEM WITH A REMOTE MAINTENANCE SYSTEM SHALL BE POSSIBLE.

PART 2 - PRODUCTS

2.01 APPROVED MANUFACTURERS

A. APPROVED MANUFACTURER(S):
1. LIEBERT
2. APC/MGE
3. EATON
4. GENERAL ELECTRIC
5. APPROVED EQUAL

2.02 SPARE PARTS

A. PROVIDE (1) FULL SPARE PARTS KIT.. PARTS SHALL INCLUDE BUT NOT BE LIMITED TO: CAPACITORS, MONITOR BOARD, RECTIFIER CONTROL BOARD, SCR DRIVER BOARD, SCR DRIVER BOARD, SCR'S, FUSES.

PART 3 - EXECUTION

3.01 CONNECTIONS

A. EQUIPMENT TERMINATIONS: FOR NO. 8 AWG AND LARGER, USE PRESSURE-TYPE LUGS. NO. 10 AWG AND SMALLER CONDUCTORS MAY BE TERMINATED WITH WINGED PRESSURE-TYPE CONNECTORS.
B. TIGHTEN SCREWS AND BOLTS FOR CONNECTORS AND TERMINALS ACCORDING TO MANUFACTURER'S PUBLISHED TORQUE-TIGHTENING VALUES. IF MANUFACTURER'S TORQUE VALUES ARE NOT INDICATED, USE THOSE SPECIFIED IN UL 486A, WIRE CONNECTORS AND SOLDERING LUGS FOR USE WITH COPPER CONDUCTORS.
C. COMPRESSION-TYPE CONNECTIONS: USE HYDRAULIC COMPRESSION TOOLS TO PROVIDE CORRECT CIRCUMFERENTIAL PRESSURE FOR COMPRESSION CONNECTORS. USE TOOLS AND DIES RECOMMENDED BY CONNECTOR MANUFACTURER. PROVIDE EMBOSSING DIE CODE OR OTHER STANDARD METHOD TO MAKE A

c:\pwworking\hmm\external\ty61470\dms72773\071_0134CE5436.dgn 10/24/2014 10:39:25 AM TYN61470

DESIGN AGENCY
HATCH MOTT MacDONALD
18013 CLEVELAND PKWY.
SUITE 200
CLEVELAND, OH 44135

DESIGNED	DRAWN	REVIEWED	DATE
DGC	CM	RF	08/11/14
CHECKED	REVISED	STRUCTURE FILE NUMBER	
LL	DGC	3106578	

ELEC. NOTES-STATIC UNINTERRUPTIBLE POWER SUPPLY-SHT. 1 OF 2

BRIDGE NO. HAM-71-0134
I-71 LYTLE TUNNEL UNDER LYTLE PARK

HAM-71-01.34
PID No. 87268

203/296

461/555

VISIBLE INDICATION THAT A CONNECTOR HAS BEEN ADEQUATELY COMPRESSED ON CONDUCTOR.

3.02 MAINTENANCE TRAINING

A. THE MANUFACTURER SHALL PROVIDE 8 HOURS OF TRAINING. THIS SHALL BE AVAILABLE TO THE CUSTOMER VARIOUS LEVELS OF TRAINING RANGING FROM BASIC UPS OPERATION TO UPS MAINTENANCE.

B. *PROVIDE EIGHT COPIES OF COMPLETE DOCUMENTS INCLUDING MANUFACTURER'S CATALOG CUTS-SHEETS, OPERATION AND MAINTENANCE MANUALS, SHOP DRAWINGS, DATA SHEETS, ETC.*

3.03 COMMISSIONING & FIELD TESTING

A. IN ADDITION TO STANDARD FACTORY START-UP PROCEDURES REQUIRED IN 1.03.E., THE FOLLOWING FIELD TESTING SHALL BE CONDUCTED BY MANUFACTURER'S FIELD SERVICE ENGINEER:

1. UPS SYSTEM SHALL BE LOAD TESTED FOR 4 HOUR MINIMUM ON CONTRACTOR SUPPLIED LOAD BANK AT FULL LOAD WITH TEMPORARY CABLING.
2. BATTERY FULL CAPACITY DISCHARGE TEST IN ACCORDANCE WITH IEEE 1188.
3. CONDUCT OPERATION TESTS INCLUDING SIMULATED POWER FAILURES.
4. TEST BYPASS OPERATIONS, HARMONICS, LOAD STEPS.
5. SUBMIT 3 COPIES OF FIELD TEST REPORTS TO THE ENGINEER.
6. TESTS SHALL BE WITNESSED BY THE ENGINEER.

PART 4 - METHOD OF PAYMENT AND ITEMS

4.01 METHOD OF PAYMENT AND ITEMS

A. PAYMENT FOR ITEMS SHALL BE MADE AT THE CONTRACT UNIT PRICE, INCLUDING BUT NOT LIMITED TO ALL WORK, LABOR, EQUIPMENT, AND MATERIALS NECESSARY THEREFORE OR INCIDENTAL THERETO, AS FOLLOWS:

ITEM NO.	***DESCRIPTION***	***UNIT***
SPECIAL	*SPECIAL – MISC.: 30KVA UNINTERRUPTIBLE POWER SUPPLY*	*EACH*

c:\pwworking\hmm\external\ty-n61470\dms7270\3\07L_0134CES437.dgn 10/24/2014 10:39:40 AM T:\N61470

DESIGN AGENCY
HATCH MOTT MacDONALD
18013 CLEVELAND PKWY.
SUITE 200
CLEVELAND, OH 44135

REVIEWED	DATE	DESIGNED	DRAWN	REVISED	STRUCTURE FILE NUMBER
RF	08/11/14	DGC	CM	DGC	31065578

CHECKED: LL

ELEC. NOTES-STATIC UNINTERRUPTIBLE POWER SUPPLY-SHT. 2 OF 2

BRIDGE NO. HAM-71-0134
I-71 LYTLE TUNNEL UNDER LYTLE PARK

HAM-71-01.34
PID No. 87268

204/296

462
555

ITEM SPECIAL – MISC.: ELECTRICAL DEMOLITION

PART 1 - GENERAL

1.01 SECTION INCLUDES

A. THIS SECTION INCLUDES ELECTRICAL DEMOLITION FOR REPLACEMENT OF ELECTRICAL EQUIPMENT, CABLES AND CONDUITS.

B. IN THE EVENT OF CONFLICT REGARDING ELECTRICAL DEMOLITION REQUIREMENTS BETWEEN THIS SECTION AND ANY OTHER SECTION, THE PROVISIONS OF THIS SECTION SHALL GOVERN.

1.02 CITED STANDARDS

A. NATIONAL FIRE PROTECTION ASSOCIATION (NFPA)
   1. 70,NATIONAL ELECTRICAL CODE (NEC)
   2. 70E STANDARD FOR ELECTRICAL SAFETY IN THE WORKPLACE 2012

B. OCCUPATIONAL SAFETY & HEALTH ADMINISTRATION (OSHA)
   1. 29 CFR 1910.7 DEFINITION AND REQUIREMENTS FOR A NATIONALLY RECOGNIZED TESTING LABORATORY.

1.03 NOTED RESTRICTIONS

A. INTERRUPTION OF EXISTING ELECTRIC SERVICE: DO NOT INTERRUPT ELECTRIC SERVICE TO FACILITIES OCCUPIED BY OHIO DEPARTMENT OF TRANSPORTATION (ODOT) UNLESS PERMITTED UNDER THE FOLLOWING CONDITIONS AND THEN ONLY AFTER ARRANGING A PLANNED SHUTDOWN OR PROVIDING TEMPORARY ELECTRIC SERVICE ACCORDING TO REQUIREMENTS INDICATED:
   1. OUTAGES ARE ALLOWED FOR ODOT FACILITIES ONLY. POWER TO OTHER OWNED FACILITIES MUST BE MAINTAINED.
   2. NOTIFY ODOT NO FEWER THAN 30 DAYS IN ADVANCE OF PROPOSED INTERRUPTION OF ELECTRIC SERVICE.
   3. INDICATE METHOD OF PROVIDING TEMPORARY ELECTRIC SERVICE.
   4. DO NOT PROCEED WITH INTERRUPTION OF ELECTRIC SERVICE WITHOUT ODOT WRITTEN PERMISSION.
   5. COMPLY WITH NFPA 70E.

1.04 QUALITY CONTROL

A. COMPLY WITH NFPA, NEC, OSHA, AND UTILITY COMPANY REQUIREMENTS.

1.05 SUBMITTALS

A. THE FOLLOWING SUBMITTALS SHALL BE MADE A MINIMUM OF THIRTY (30) CALENDAR DAYS PRIOR TO THE START OF RELEVANT WORK:
   1. PROVIDE METHOD AND SEQUENCE OF DEMOLITION FOR APPROVAL PRIOR TO BEGINNING ANY DEMOLITION WORK.
   2. QUALIFICATIONS OF THE LICENSED ELECTRICIANS CERTIFIED AND LICENSED FOR WORK WITH ENVIRONMENTAL HAZARDS.

PART 2 - PRODUCTS

2.01 GENERAL

A. FURNISH PRODUCTS AS INDICATED.

2.02 MATERIALS AND EQUIPMENT

A. MATERIALS AND EQUIPMENT FOR PATCHING AND EXTENDING WORK: AS SPECIFIED IN INDIVIDUAL SECTIONS.

B. PROVIDE ALL MATERIALS NECESSARY FOR WORK.

PART 3 - EXECUTION

3.01 PREPARATION

A. DISCONNECT ELECTRICAL SYSTEMS IN TUNNEL & VENT BUILDING WALLS, FLOORS, AND CEILINGS SCHEDULED FOR REMOVAL. PROVIDE TEMPORARY WIRING AND CONNECTIONS TO MAINTAIN REMAINING SYSTEMS IN SERVICE DURING DEMOLITION AND/OR MODIFICATION. ODOT RESERVES THE RIGHT UP TO 24 HOURS PRIOR TO ANY SCHEDULED EVENT TO DELAY OR SUSPEND SHUTDOWNS OR OUTAGES TO MORE CONVENIENT TIMES AT NO ADDITIONAL COST.

B. NO WORK SHALL BEGIN WITHOUT PROPER PERMITS AND AUTHORIZATIONS. DISABLE SYSTEM ONLY TO MAKE SWITCHOVERS AND CONNECTIONS. OBTAIN PERMISSION FROM ODOT AT LEAST THIRTY (30) CALENDAR DAYS BEFORE PARTIALLY OR COMPLETELY DISABLING SYSTEM. MINIMIZE OUTAGE DURATION. MAKE TEMPORARY CONNECTIONS TO MAINTAIN SERVICE IN AREAS ADJACENT TO WORK AREA.

C. PROVIDE SECONDARY POWER CENTERS FOR MISCELLANEOUS TOOLS AND EQUIPMENT USED IN WORK AREAS.
   1. PROVIDE WEATHERPROOF DISTRIBUTION BOXES.
   2. PROVIDE GROUND FAULT PROTECTION FOR EACH CIRCUIT IN ACCORDANCE WITH APPLICABLE FEDERAL AND STATE REQUIREMENTS.
   3. EACH CONTRACTOR USING THE SECONDARY POWER CENTERS SHALL PROVIDE THEIR OWN GROUNDED, UL LISTED EXTENSION CORDS AND OTHER ACCESSORIES FROM SECONDARY POWER CENTERS TO POINT OF OPERATION.

3.02 EXAMINATION

A. ALL DEMOLITIONS OR MODIFICATIONS TO EXISTING SYSTEMS SHALL BE COORDINATED THROUGH ODOT. DEMOLITION DRAWINGS ARE BASED ON FIELD OBSERVATION AND EXISTING RECORD DOCUMENTATIONS. THEREFORE THE ACCURACY OR EXACTNESS OF THE DRAWINGS IS NOT GUARANTEED. THE CONTRACTOR SHALL VERIFY THAT FIELD MEASUREMENTS AND CIRCUITING ARRANGEMENTS ARE AS SHOWN ON DRAWINGS AND ABANDONED WIRING AND EQUIPMENT SERVE ONLY ABANDONED FACILITIES. THE CONTRACTOR SHALL BE RESPONSIBLE FOR REPORTING DISCREPANCIES TO ENGINEER BEFORE DISTURBING EXISTING INSTALLATION.

B. BEGINNING OF DEMOLITION MEANS CONTRACTOR ACCEPTS EXISTING CONDITIONS.

3.03 DEMOLITION AND EXTENSION OF EXISTING ELECTRICAL WORK

A. REMOVE, RELOCATE, AND EXTEND EXISTING INSTALLATIONS TO ACCOMMODATE NEW PLAN DRAWINGS.

B. REMOVE EXPOSED ABANDONED CONDUIT, INCLUDING ABANDONED CONDUIT ABOVE ACCESSIBLE CEILING FINISHES FULL LENGTH FROM SOURCE TO DEVICE. CUT EMBEDDED OR CONCEALED CONDUIT FLUSH WITH WALLS AND FLOORS, AND PATCH SURFACES.

C. DISCONNECT ABANDONED OUTLETS AND REMOVE DEVICES. REMOVE ABANDONED OUTLETS IF CONDUIT SERVICING THEM IS ABANDONED AND REMOVED. PROVIDE BLANK COVER FOR ABANDONED OUTLETS THAT ARE NOT REMOVED.

D. DISCONNECT AND REMOVE ABANDONED SWITCHBOARDS, CONTROLLERS, LV TRANSFORMERS, UPS, ATS, PANEL BOARDS AND DISTRIBUTION EQUIPMENT.

E. DISCONNECT AND REMOVE ELECTRICAL DEVICES AND EQUIPMENT SERVING UTILIZATION EQUIPMENT THAT HAS BEEN REMOVED.

F. REPAIR ADJACENT CONSTRUCTION AND FINISHES DAMAGED DURING DEMOLITION AND EXTENSION WORK.

G. MAINTAIN ACCESS TO EXISTING ELECTRICAL INSTALLATIONS THAT REMAIN ACTIVE. MODIFY INSTALLATION OR PROVIDE ACCESS PANEL AS APPROPRIATE.

H. EXTEND EXISTING INSTALLATIONS USING MATERIALS AND METHODS COMPATIBLE WITH EXISTING ELECTRICAL INSTALLATION OR AS SPECIFIED.

I. THE LEVEL OF COMPLETION SHALL BE DEMONSTRATED TO ODOT.

J. WHERE EQUIPMENT IS INDICATED TO BE DEMOLISHED AND RETURNED TO ODOT, THE CONTRACTOR SHALL INCLUDE THE DELIVERY OF THIS EQUIPMENT TO ODOT SITE STORAGE AREA. REMOVE WITH CARE ALL EQUIPMENT TO BE RELOCATED. REPAIR OR REPLACE OF NEWLY DAMAGED EQUIPMENT IS THE RESPONSIBILITY OF THE CONTRACTOR.

K. FOR ELECTRICAL ITEMS REQUIRING SPECIAL CARE DUE TO SPECIFIC ENVIRONMENTAL HAZARDS (ASBESTOS CONTAMINATED MATERIAL, ETC.) THE CONTRACTOR SHALL ENGAGE THE SERVICES OF LICENSED ELECTRICIANS CERTIFIED AND LICENSED FOR WORK WITH SUCH SPECIAL CONDITIONS. QUALIFICATIONS ARE TO BE SUBMITTED TO ODOT FOR REVIEW AND APPROVAL PRIOR TO COMMENCEMENT OF WORK.

3.04 CLEANING AND REPAIR

A. THE CONTRACTOR SHALL FOLLOW ODOT'S CLEAN WORK POLICY AND SHALL INCLUDE THE REMOVAL OF TRASH AND DEMOLISHED MATERIAL FROM THE BUILDING OR WORK AREA AT THE END OF THE EACH DAY AND REMOVAL FROM THE SITE ONCE A WEEK.

B. CONTRACTOR SHALL BE RESPONSIBLE FOR REPAIRING ADJACENT CONSTRUCTION AND FINISHES DAMAGED DURING DEMOLITION AND/OR MODIFICATION.

C. THE CONTRACTOR SHALL CLEAN PANEL BOARDS. CLEAN EXPOSED SURFACES AND CHECK TIGHTNESS OF ELECTRICAL CONNECTIONS. REPLACE DAMAGED CIRCUIT BREAKERS AND PROVIDE CLOSURE PLATES FOR VACANT POSITIONS. PROVIDE TYPED CIRCUIT DIRECTORY SHOWING REVISED CIRCUITING ARRANGEMENT.

3.05 DISPOSITION OF MATERIAL AND EQUIPMENT

A. REVIEW WITH ODOT MATERIALS THAT HAVE BEEN REMOVED AND ARE NO LONGER REQUIRED, TO DETERMINE ANY WHICH ODOT MAY DESIRE TO KEEP. ODOT REQUIRES THAT ALL FUNCTIONAL MOTORS ARE RETAINED BY THE AUTHORITY AFTER REMOVAL FROM SERVICE. NO MATERIALS ARE TO BE DISPOSED OF WITHOUT FIRST CHECKING IF THEY ARE DESIRED TO BE RETAINED BY ODOT. DELIVER THOSE MATERIALS THAT ODOT DESIRES TO ODOT'S SPECIFIED LOCATION.

B. FOR THOSE MATERIALS NOT REQUIRED BY ODOT, DISPOSE OF THEM IN ACCORDANCE WITH APPLICABLE FEDERAL, STATE, AND LOCAL LAWS AND REGULATIONS.

PART 4 - METHOD OF PAYMENT AND ITEMS

4.01 METHOD OF PAYMENT AND ITEMS

A. PAYMENT FOR ITEMS SHALL BE MADE AT THE CONTRACT UNIT PRICE, INCLUDING BUT NOT LIMITED TO ALL WORK, LABOR, EQUIPMENT, AND MATERIALS NECESSARY THEREFORE OR INCIDENTAL THERETO, AS FOLLOWS:

ITEM NO.	DESCRIPTION	UNIT
690	SPECIAL - MISC.: ELECTRICAL DEMOLITION	LUMP

c:\pwworking\hmm\external\tyn61470\dms727●\X071_0134CES438.dgn 10/25/2014 12:24:26 PM TYN61470

DESIGN AGENCY
HATCH MOTT MacDONALD
18013 CLEVELAND PKWY.
SUITE 200
CLEVELAND, OH 44135

DESIGNED	DRAWN	REVIEWED	DATE
DGC	CM	RF	08/11/14
CHECKED	REVISED	STRUCTURE FILE NUMBER	
LL	DGC	31065578	

ELECTRICAL NOTES – ELECTRICAL DEMOLITION

BRIDGE NO. HAM-71-0134
I-71 LYTLE TUNNEL UNDER LYTLE PARK

HAM-71-01.34
PID No. 87268

SEE SHEET 466/555 FOR CONTINUATION

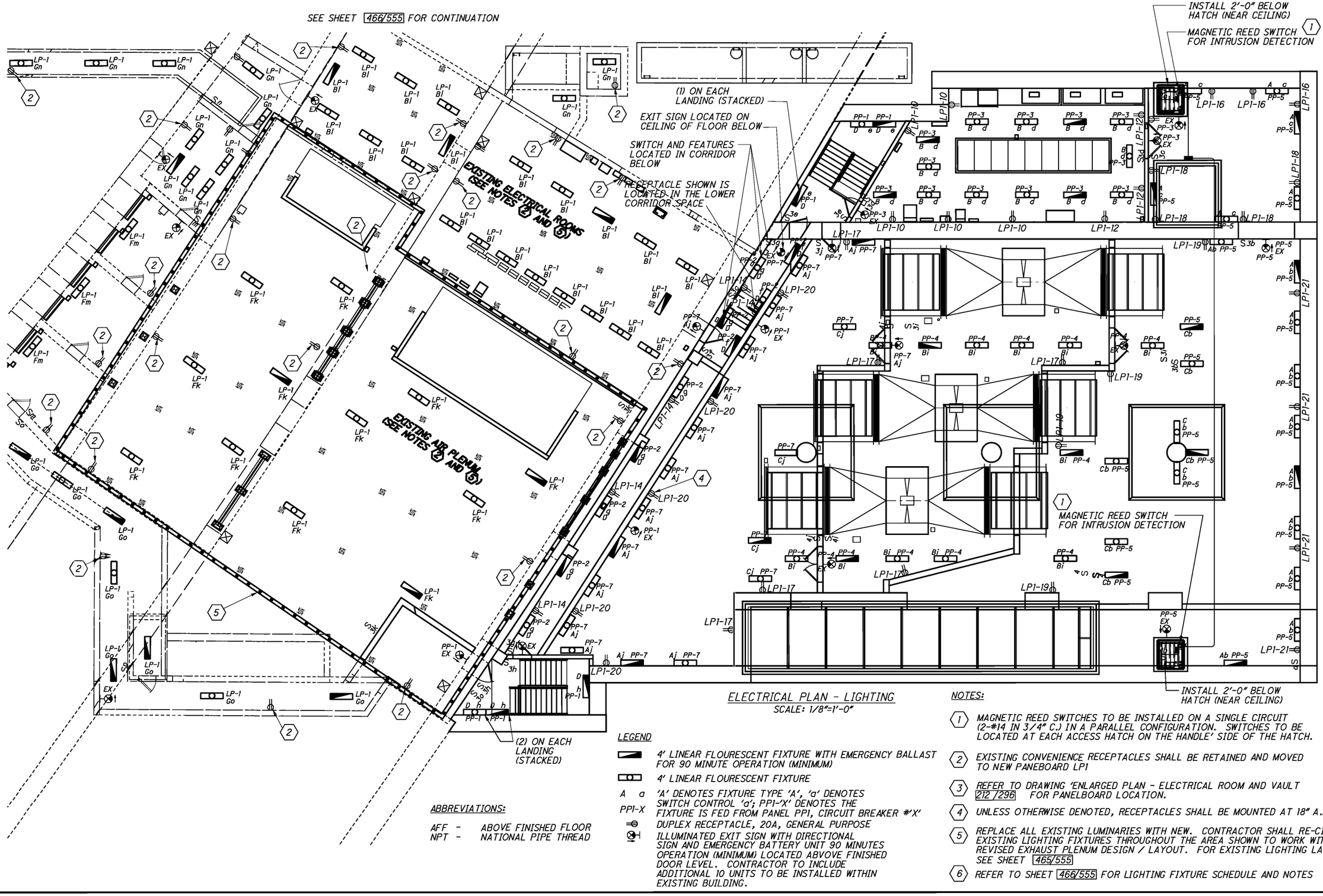

ELECTRICAL PLAN - LIGHTING
SCALE: 1/8"=1'-0"

LEGEND

- 4' LINEAR FLOURESCENT FIXTURE WITH EMERGENCY BALLAST FOR 90 MINUTE OPERATION (MINIMUM)
- 4' LINEAR FLOURESCENT FIXTURE
- A a — 'A' DENOTES FIXTURE TYPE 'A', 'a' DENOTES SWITCH CONTROL 'a'; PP1-'X' DENOTES THE FIXTURE IS FED FROM PANEL PP1, CIRCUIT BREAKER #'X'
- PP1-X
- DUPLEX RECEPTACLE, 20A, GENERAL PURPOSE
- ILLUMINATED EXIT SIGN WITH DIRECTIONAL SIGN AND EMERGENCY BATTERY UNIT 90 MINUTES OPERATION (MINIMUM) LOCATED ABVOVE FINISHED DOOR LEVEL. CONTRACTOR TO INCLUDE ADDITIONAL 10 UNITS TO BE INSTALLED WITHIN EXISTING BUILDING.

ABBREVIATIONS:

AFF - ABOVE FINISHED FLOOR
NPT - NATIONAL PIPE THREAD

NOTES:

1. MAGNETIC REED SWITCHES TO BE INSTALLED ON A SINGLE CIRCUIT (2-#14 IN 3/4" C.) IN A PARALLEL CONFIGURATION. SWITCHES TO BE LOCATED AT EACH ACCESS HATCH ON THE HANDLE' SIDE OF THE HATCH.
2. EXISTING CONVENIENCE RECEPTACLES SHALL BE RETAINED AND MOVED TO NEW PANEBOARD LP1
3. REFER TO DRAWING 'ENLARGED PLAN - ELECTRICAL ROOM AND VAULT 212/296 FOR PANELBOARD LOCATION.
4. UNLESS OTHERWISE DENOTED, RECEPTACLES SHALL BE MOUNTED AT 18" A.F.F.
5. REPLACE ALL EXISTING LUMINARIES WITH NEW. CONTRACTOR SHALL RE-CIRCUIT EXISTING LIGHTING FIXTURES THROUGHOUT THE AREA SHOWN TO WORK WITH REVISED EXHAUST PLENUM DESIGN / LAYOUT. FOR EXISTING LIGHTING LAYOUT, SEE SHEET 465/555
6. REFER TO SHEET 466/555 FOR LIGHTING FIXTURE SCHEDULE AND NOTES

DESIGN AGENCY
HATCH MOTT MacDONALD
18013 CLEVELAND PKWY.
SUITE 200
CLEVELAND, OH 44135

DESIGNED	DRAWN	REVIEWED	DATE
DMM	BJG	RAF	8/11/2014
CHECKED	REVISED	STRUCTURE FILE NUMBER	
PAP		31065178	

ELECTRICAL PLAN - LIGHTING AND RECEPTACLES
BRIDGE NO. HAM-71-0134
I-71 LYTLE TUNNEL UNDER LYTLE PARK

HAM-71-01.34
PID No. 87268

206/296

464/555

c:\pwworking\hmm\external\pre47802\dms72703\071_0134CES004.dgn 3/15/2015 4:46:57 PM PRE47802

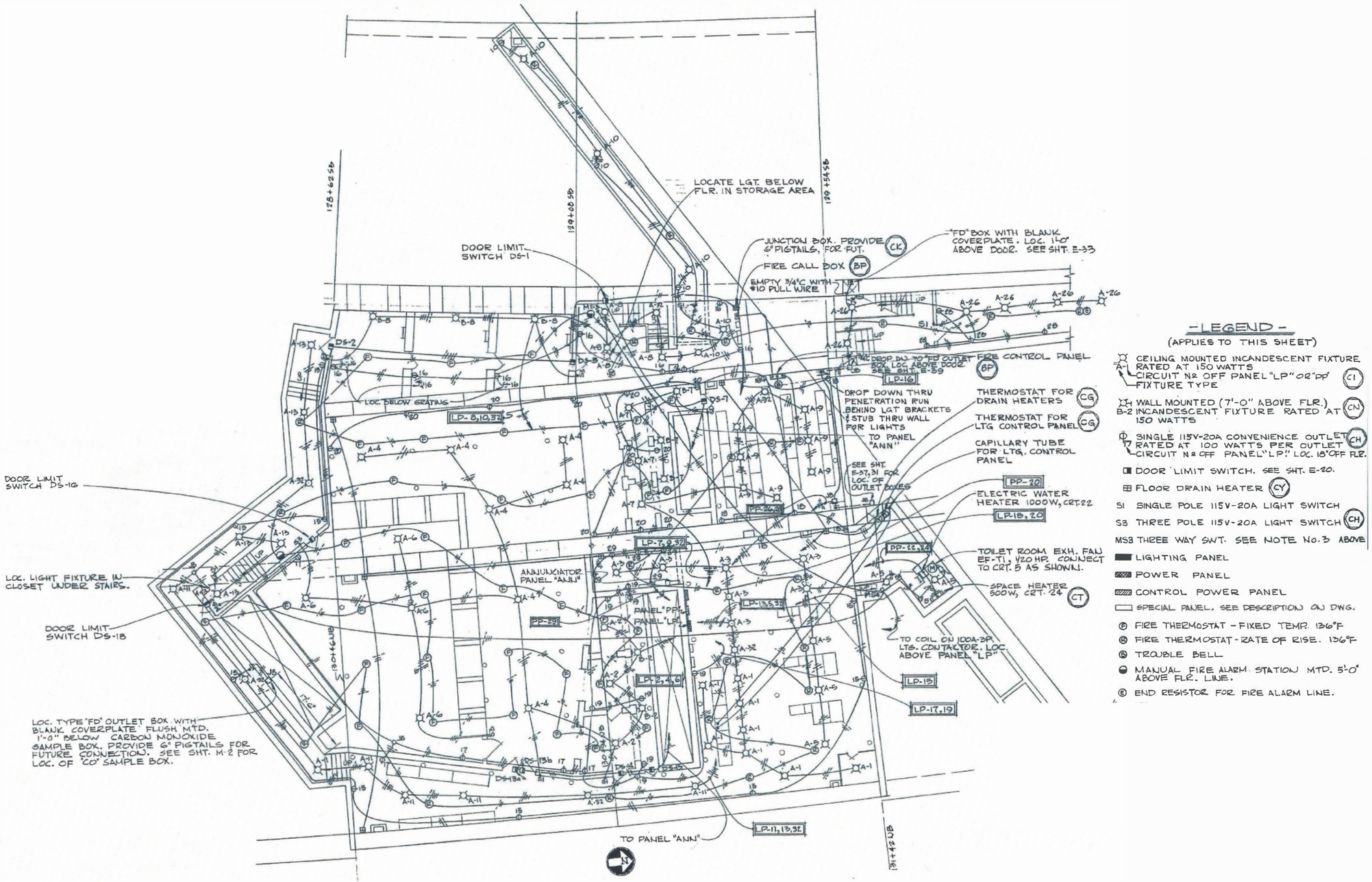

-LEGEND-

(APPLIES TO THIS SHEET)

- A-1 — CEILING MOUNTED INCANDESCENT FIXTURE RATED AT 150 WATTS. CIRCUIT No OFF PANEL "LP" OR "PP" FIXTURE TYPE (C1)
- B-2 — WALL MOUNTED (7'-0" ABOVE FLR.) INCANDESCENT FIXTURE RATED AT 150 WATTS (CN)
- 17 — SINGLE 115V-20A CONVENIENCE OUTLET RATED AT 100 WATTS PER OUTLET. CIRCUIT No OFF PANEL "LP". LOC. 18" OFF FLR. (CH)
- DOOR LIMIT SWITCH. SEE SHT. E-20.
- FLOOR DRAIN HEATER (CY)
- S1 SINGLE POLE 115V-20A LIGHT SWITCH
- S3 THREE POLE 115V-20A LIGHT SWITCH (CH)
- MS3 THREE WAY SWT. SEE NOTE No. 3 ABOVE
- LIGHTING PANEL
- POWER PANEL
- CONTROL POWER PANEL
- SPECIAL PANEL, SEE DESCRIPTION ON DWG.
- (F) FIRE THERMOSTAT - FIXED TEMP. 136°F
- (R) FIRE THERMOSTAT - RATE OF RISE. 136°F
- (B) TROUBLE BELL
- MANUAL FIRE ALARM STATION MTD. 5'-0" ABOVE FLR. LINE.
- (E) END RESISTOR FOR FIRE ALARM LINE.

DESIGN AGENCY
HATCH MOTT MacDONALD
18013 CLEVELAND PKWY.
SUITE 200
CLEVELAND, OH 44135

DESIGNED	DRAWN	REVIEWED	DATE
DMM	BJG	RF	08/11/14
CHECKED	REVISED	STRUCTURE FILE NUMBER	
DGC	CL	3106578	

ELECTRICAL PLAN - EXIST. EQUP. RM. LIGHTING AND RECEPTACLES

BRIDGE NO. HAM-71-0134
I-71 LYTLE TUNNEL UNDER LYTLE PARK

HAM-71-01.34
PID No. 87268

207/296

465/555

c:\pwworking\hmm\externa\tyn61470\dms7278\071_0134ES005.dgn 10/24/2014 10:40:08 AM TYN61470

LIGHTING FIXTURE SCHEDULE							
MARK	MANUFACTURER (BASIS OF DESIGN)	CATALOG NO.	LAMPS-NUMBER/TYPE	MOUNTING	NOTES	REMARKS	APPROVED EQUIVALENT MANUFACTURERS
A	COOPER	ED2N 4 3 1 7 2	3-32W T8 LINEAR FLOURESCENT	WALL MOUNT	1,2,3,4,5,7		HUBBELL, LITHONIA, DAY-BRITE OR APPROVED EQUAL
B	COOPER	ED2N 4 3 1 7 4	3-32W T8 LINEAR FLOURESCENT	CABLE SUSPENSION EYE-BOLT	1,2,3,4,5,7		HUBBELL, LITHONIA, DAY-BRITE OR APPROVED EQUAL
C	COOPER	ED2N 4 3 1 7 3	3-32W T8 LINEAR FLOURESCENT	PIPE CLAMP BRACKET	1,2,3,4,5,7	SEE DETAILS 161/296 FOR ADDITIONAL INFORMATION	HUBBELL, LITHONIA, DAY-BRITE OR APPROVED EQUAL
D	COOPER	ED2N 4 3 1 7 3	3-32W T8 LINEAR FLOURESCENT	WALL MOUNT	1,2,3,4,5,7		HUBBELL, LITHONIA, DAY-BRITE OR APPROVED EQUAL
EX	DUAL LITE FREEDOM	LED 1EMRWA	1-3.34W LED	WALL MOUNT			LITHONIA OR APPROVED EQUAL
F	COOPER	ED2N 4 3 1 7 1	3-32 T8 LINIEAR FLUORESCENT	CEILING	1,2,3,4,5,7		HUBBELL, LITHONIA, DAY-BRITE OR APPROVED EQUAL
G	COOPER	ED2N 4 3 2 7 1	2-32 T8 LINIEAR FLUORESCENT	CEILING	1,2,3,4,5,7		HUBBELL, LITHONIA, DAY-BRITE OR APPROVED EQUAL

LIGHTING FIXTURE NOTES:

1. PROVIDE FIXTURE WITH STAINLESS STEEL MEYERS CONDUIT HUBS WITH APPROPRIATE NUMBER OF 3/4" ENTRIES.
2. PROVIDE FIXTURE WITH STAINLESS STEEL LATCH.
3. PROVIDE FIXTURE WITH INTERNAL SAFETY DISCONNECT SWITCH.
4. PROVIDE FIXTURE WITH LAMPS.
5. FIXTURE TO BE MOUNTED AT 8'-6" AFF TO BOTTOM OF FIXTURE.
6. FIXTURE TO BE MOUNTED AT 12'-0" AFF TO BOTTOM OF FIXTURE.
7. FIXTURES SHOWN AS 'EMERGENCY' LIGHTING FIXTURES SHALL BE PROVIDED WITH A 1-LAMP EMERGENCY BALLAST.

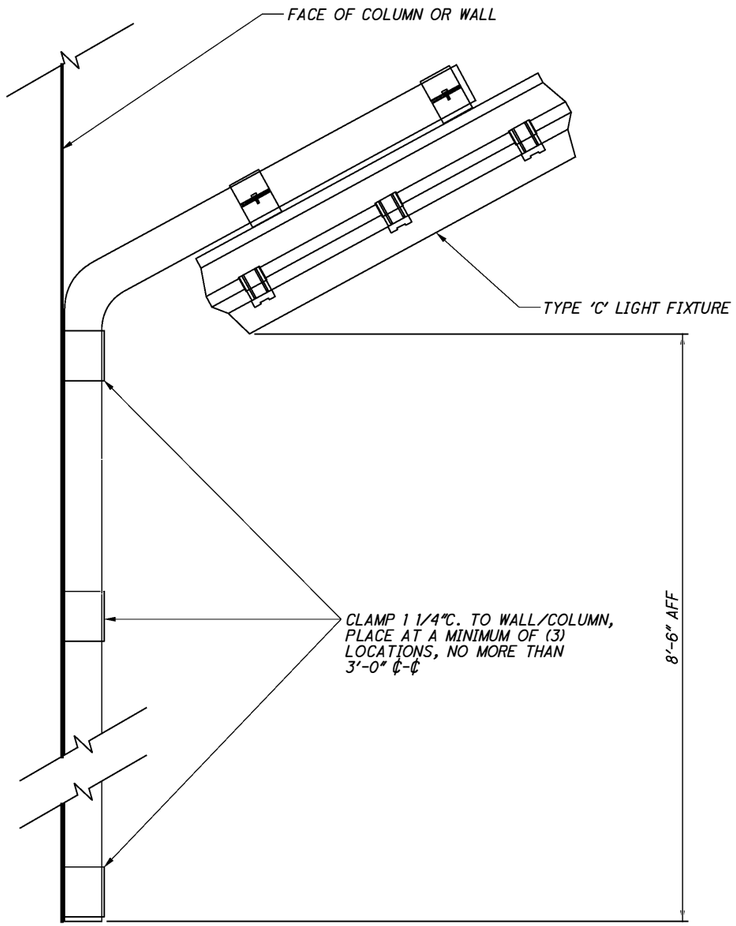

PIPE MOUNT

FIXTURE TYPE 'C' MOUNTING DETAIL
SCALE: NOT TO SCALE

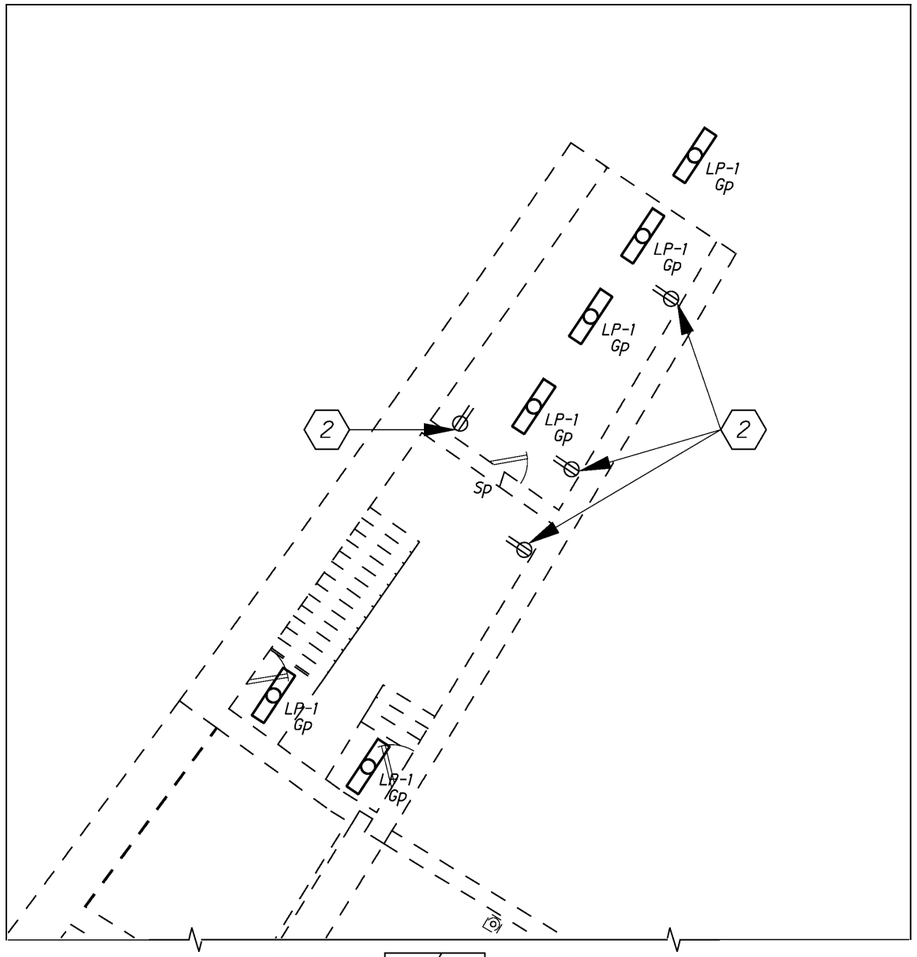

SEE SHEET 464/555 FOR CONTINUATION

ELECTRICAL PLAN - LIGHTING AND RECEPTACLES - SERVICE CORRIDOR (CONT'D)

DESIGN AGENCY
HATCH MOTT MacDONALD
18013 CLEVELAND PKWY.
SUITE 200
CLEVELAND, OH 44135

DESIGNED	DRAWN	REVIEWED	DATE
DMM	BJG	RF	08/11/14
CHECKED	REVISED	STRUCTURE FILE NUMBER	
PAP	LL	31066578	

ELECTRICAL - LIGHTING DETAIL
BRIDGE NO. HAM-71-0134
I-71 LYTLE TUNNEL UNDER LYTLE PARK

HAM-71-01.34
PID No. 87268

208/296

466/555

c:\pwworking\hmm\external\pre47802\dms72703\071_0134CES026_revA.dgn 3/15/2015 4:52:16 PM PRE47802

c:\pwworking\hmm\external\pre47802\dms72703\071_0134CES007.dgn 9/11/2015 9:36:10 AM PRE47802

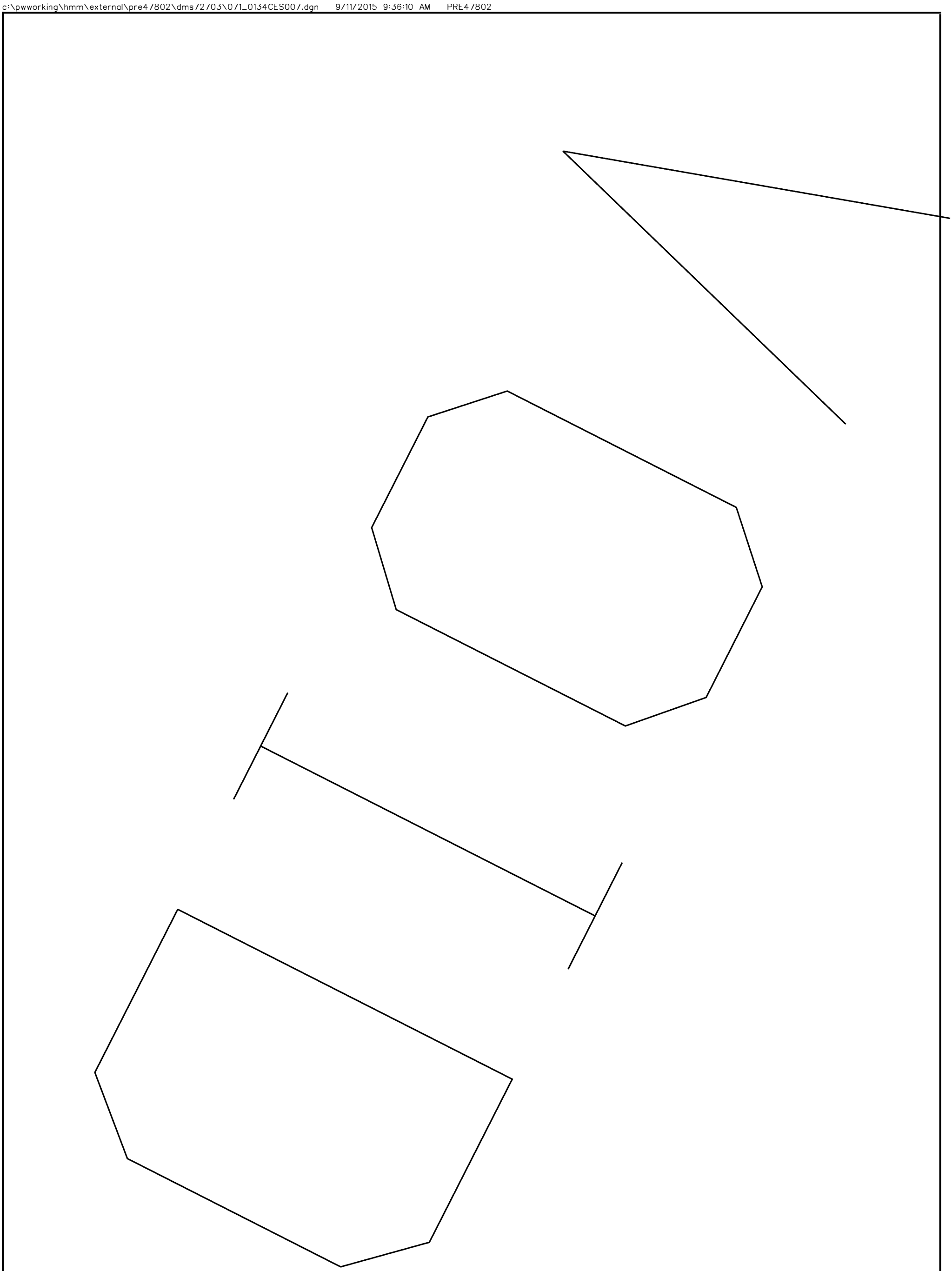

467 / 555	209/296	**HAM-71-01.34** **PID No. 87268**	**ELECTRICAL- TRANSFORMER VAULT DETAILS** BRIDGE NO. HAM-71-0134 I-71 LYTLE TUNNEL UNDER LYTLE PARK	DESIGNED DMM / CHECKED PAP	DRAWN BJG / REVISED PAP	REVIEWED RF DATE 08/11/14 / STRUCTURE FILE NUMBER 3106578	DESIGN AGENCY HATCH MOTT MacDONALD 18013 CLEVELAND PKWY. SUITE 200 CLEVELAND, OH 44135

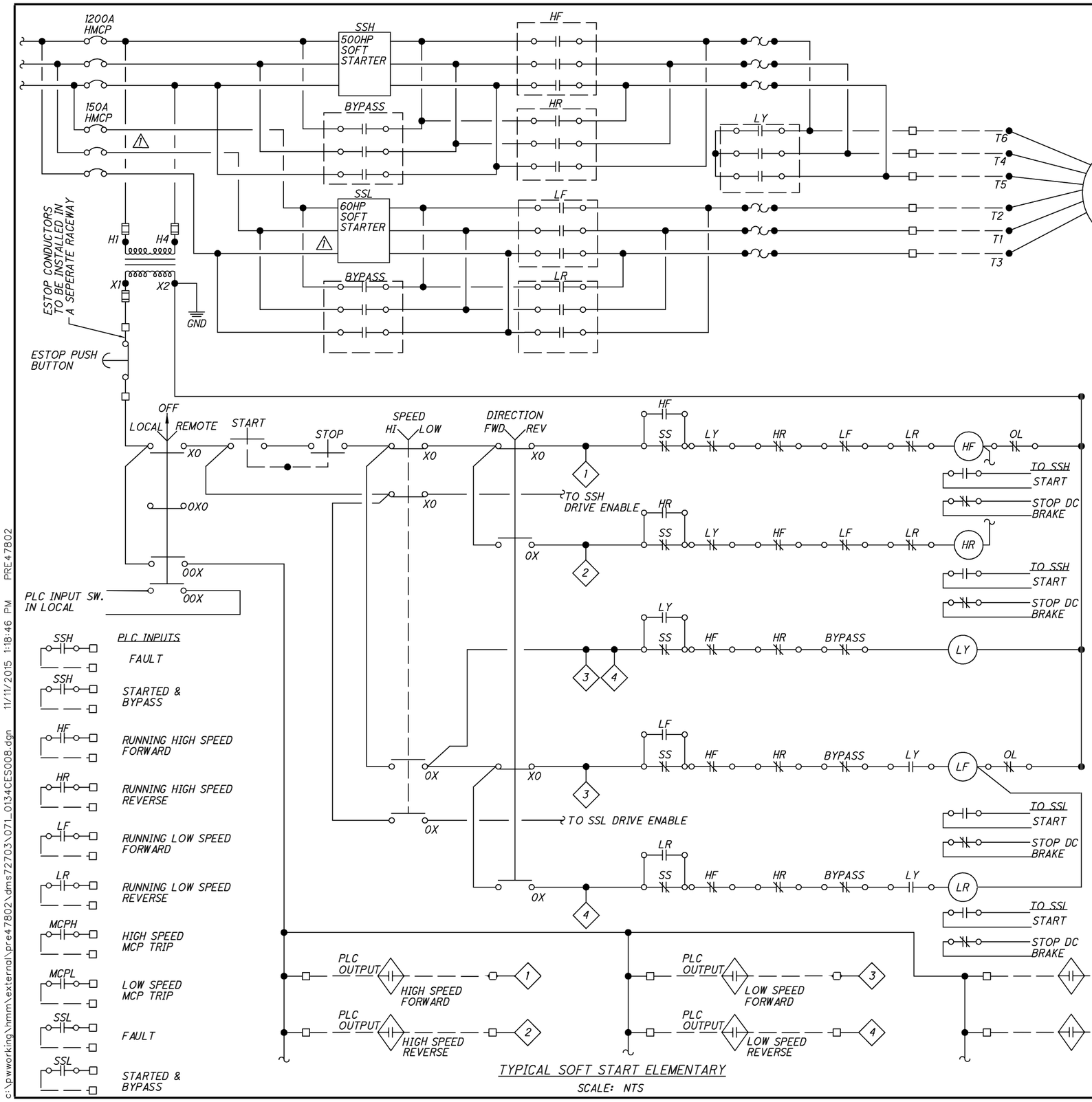

TYPICAL SOFT START ELEMENTARY

SCALE: NTS

CONTROL WIRING DIAGRAM NOTES:

1. THE CONTROL WIRING DIAGRAMS DEVELOPED FOR THESE CONTRACT DRAWINGS ARE INTENDED TO DESCRIBE THE FUNCTIONAL OPERATION ONLY. THE NUMBER AND LOCATION OF CONTROL DEVICES MAY VARY BASED ON THE ACTUAL COMPONENTS PROVIDED.
2. THE DIAGRAM SYMBOLS SHOWN CONFORM, WHERE APPLICABLE, TO STANDARDS ESTABLISHED BY NEMA. SPECIALTY SYMBOLS OR DEVICES SHALL BE AS INDICATED.
3. WIRING INDICATED BY DASHED LINES IS EXTERNAL TO THE PANELS AND IS CONNECTED TO A TERMINAL BLOCK. EXTERNAL DEVICES SHALL BE PROVIDED BY THE EQUIPMENT MANUFACTURER OR THE CONTRACTOR AS REQUIRED.
4. CONTROL POWER TRANSFORMERS SHALL BE PROVIDED WITH PRIMARY AND SECONDARY FUSING.
5. DOOR MOUNTED CONTROL AND INDICATING DEVICES SHALL BE HEAVY DUTY, INDUSTRIAL, OIL-TIGHT. INDICATOR LIGHTS SHALL BE LED.
6. NAMEPLATES SHALL BE TRIPLE LAMINATED WHITE WITH BLACK LETTERING. ENGRAVINGS SHALL DESCRIBE THE FUNCTION OR EQUIPMENT BEING CONTROLLED AS SHOWN ON THE DRAWINGS. FONTS SHALL BE AS DIRECTED BY THE ENGINEER.
7. HEATER CONTACTOR COIL TO BE RATED SAME VOLTAGE AS DRIVE CONTROL POWER OUTPUT.
8. PANEL SHALL MEET THE REQUIREMENTS OF NFPA 70, ARTICLE 409 AND UL 508A WITH A MINIMUM SCCR OF 65 kA AND MARKING PER NFPA 70-409.110.

ABBREVIATIONS:

AUTO	-	AUTOMATIS
CAT	-	CATEGORY
ESTOP	-	EMERGENCY STOP
GND	-	GROUND
HF	-	HIGH FORWARD
HR	-	HIGH REVERSE
HMCP	-	HIGH INTERRUPT MOTOR CIRCUIT PROTECTOR
HMI	-	HUMAN MACHINE INTERFACE
KA	-	KILO AMPERE
LF	-	LOW FORWARD
LR	-	LOW REVERSE
LY	-	SHORT WINDING
MCP	-	MAIN CIRCUIT PROTECTION
MFG	-	MANUFACTURER
NEMA	-	NATIONAL ELECTRICAL MANUFACTURERS ASSOCIATION
NFPA	-	NATIONAL FIRE PROTECTION ASSOCIATION
OL	-	OVERLOAD
OS	-	OVERALL SHIELDED
PLC	-	PROGRAMMABLE LOGIC CONTROLLER
SCCR	-	SHORT CIRCUIT CURRENT RATING
SPD	-	SURGE PROTECTIVE DEVICE
SS	-	SPEED SWITCH
SSH	-	SOFT START HIGH
SSL	-	SOFT START LOW
ST	-	SPEED TRANSMITTER
T	-	TERMINAL #
UL	-	UNDERWRITERS LABORATORY
V	-	VOLT

LEGEND:

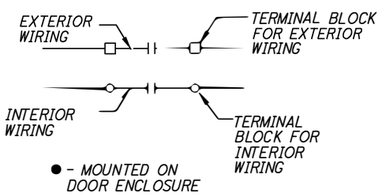

NO.	DATE	REVISION DESCRIPTION
1	11/09/15	VENTILATION FANS HP CHANGED

DESIGN AGENCY
HATCH MOTT MacDONALD
18013 CLEVELAND PKWY.
SUITE 200
CLEVELAND, OH 44135

DESIGNED PAP | DRAWN BJG | REVIEWED RF | DATE 08/11/14 | CHECKED PAP | REVISED PAP | STRUCTURE FILE NUMBER 3106578

ELECTRICAL DETAILS - TYP. SOFT STARTERS ELEMENTARY DIAGRAM

BRIDGE NO. HAM-71-0134
I-71 LYTLE TUNNEL UNDER LYTLE PARK

HAM-71-01.34
PID No. 87268

210/296
468/555

c:\pwworking\hmm\external\pre47802\dms72703\071_0134CES008.dgn 11/11/2015 1:18:46 PM PRE47802

NO.	DATE	REVISION DESCRIPTION
2	11/09/15	VENTILATION FANS HP CHANGED
1	02/20/15	NOTE 5 CHANGED

"MSG-1" 3000A SWITCH GEAR, 480/277Y 4W, 65KAIC
CALCULATED AVAILABLE FAULT CURRENT 46KAIC

XFMR 2 MVA 13.2kV - 480V 3ϕ

P-100 P-101 P-102 P-103 P-104 P-105

P-110 P-111 P-112 P-113 P-114 P-115

UTILITY METER

REMOTE TRIP CLOSE

V, A, W, VAR, PF 50G/51G,50/51, 27, 59, 47, 50BF, 86, 25

52 3000AT 3000AF

(3) 4000:5

(2)

CLOSE REMOTE TRIP AUTO XFER ON

50/51, 50BF, 27/59, 25

4 52 3000AT 3000AF

TIE BKR. 4 POLE (NOTE 5) 1

SPD

800AT 800AF 52 V, A, W, VAR, PF 50/51, 50G/51G, 38, 49, 47, 86 (3) 1000:5 CLOSE REMOTE TRIP

800AT 800AF 52 V, A, W, VAR, PF 50/51, 50G/51G, 38, 49, 47, 86 (3) 1000:5 CLOSE REMOTE TRIP

500AT 800AF 52 V, A, W, VAR, PF 50/51,50G/51G (3) 500:5

400AT 400AF 52 V, A, W, VAR, PF 50/51,50G/51G (3) 500:5

400AT 400AF 52 V, A, W, VAR, PF 50/51,50G/51G (3) 500:5

500AT 800AF 52 V, A, W, VAR, PF 50/51,50G/51G (3) 500:5

800AT 800AF 52 V, A, W, VAR, PF 50/51, 50G/51G, 38, 49, 47, 86 (3) 1000:5 REMOTE TRIP CLOSE

P-106 P-107 SS#1 1200A HMCP 150A HMCP

BYPASS 500HP SOFT START BYPASS 60HP SOFT START HF HR LF LR LY

P-108 P-109 P-121

VENT FAN #1 500/60 HP REF. 491/555

P-116 P-117 SS#2 1200A HMCP 150A HMCP

BYPASS 500HP SOFT START BYPASS 60HP SOFT START HF HR LF LR LY

P-118 P-119 P-122 2

VENT FAN #2 500/60 HP REF. 491/555

2 MECHANICAL INTERLOCK

P-120A P-120B

PANEL "LP-DP" 480V, 4W, 35KAIC 400A, MAIN LUG REF 491/555

P-165

50AT 3PH

ATS 4-POLE

P-166 P-175 P-157 P-170

UPS 30KVA

MAINT. BY-PASS 4-POLE

XFMR 15 KVA 480-120/208V 3ϕ P-180 L-111

LOAD CENTER 120/208V, 4W, 50A, MAIN BREAKER

LOC. IN NEW FACILITY PANEL "120VAC UPS" REF. 491/555

LOAD CENTER 480VAC, 4W, 35KAIC 60A, MAIN BREAKER

EMERGENCY LIGHT PANEL "480VAC UPS" REF. 491/555

P-152

50AT 3PH 50AT 3PH 100AT 3PH 100AT 3PH

PANEL "LP-PP" 480V, 4W, 35KAIC 400A, MAIN LUG REF. 491/555

P-155 P-156

XFMR 75 KVA 480-120/208V 3ϕ L-112

XFMR 75 KVA 480-120/208V 3ϕ L-113

LOAD CENTER 120/208V, 4W, 225A, MAIN BKR

LOC. IN NEW FACILITY PANEL "LP-1" REF. 492/555

LOAD CENTER 120/208V, 4W, 225A, MAIN BKR

PANEL "LP-2" (EXIST. BLDG.) REF. 492/555

P-125A P-125B

L-205

LOAD CENTER 120/208V, 4W, 50A, MAIN BKR

PANEL "LP" (EXIST. BLDG.) REF. 492/555

P-176 P-177 P-178

PANEL "N-EM" 480/277V, 4W, 35KAIC 50A, MAIN BKR

PANEL "R-EM" 480/277V, 4W, 35KAIC 50A, MAIN BKR

PANEL "S-EM" 480/277V, 4W, 35KAIC 50A, MAIN BKR

P-145 P-146 SS#3 1200A HMCP 150A HMCP

BYPASS 500HP SOFT START BYPASS 60HP SOFT START HF HR LF LR LY

P-147 P-148 P-123 2

VENT FAN #3 500/60 HP REF. 491/555 2

600AT 3PH

PANEL "DP-E" 480V, 3PH, 4W, 35KAIC

150AT 1PH 150AT 1PH 150AT 1PH 100AT 3PH 100AT 3PH 100AT 3PH 100AT 3PH 100AT 3PH 100AT 3PH 100AT 3PH 100AT 3PH 100AT 3PH 100AT 3PH

SPARE SPARE SPARE

REF. 232/555

NE-C1 NE-C2 RE-C1 RE-C2 SE-C1 SE-C2

NE-DN NE-LP1 NE-LP2 RE-DN RE-LP1 RE-LP2 SE-DN SE-LP1 SE-LP2

600AT 3PH

PANEL "DP-W" 480V, 3PH, 4W, 35KAIC

100AT 3PH 100AT 3PH 100AT 3PH 100AT 3PH 100AT 3PH 100AT 3PH 100AT 3PH 100AT 3PH 100AT 3PH 150AT 1PH 150AT 1PH 150AT 1PH

SPARE SPARE SPARE

REF. 232/555

NW-C1 NW-C2 RW-C1 RW-C2 SW-C1 SW-C2

NW-DN NW-LP1 NW-LP2 RW-DN RW-LP1 RW-LP2 SW-DN SW-LP1 SW-LP2

1 2

DESIGN AGENCY
HATCH MOTT MacDONALD
18013 CLEVELAND PKWY.
SUITE 200
CLEVELAND, OH 44135

DESIGNED PAP | DRAWN BJG | REVIEWED RF | DATE 08/11/14
CHECKED LL | REVISED CL | STRUCTURE FILE NUMBER 3106578

ELECTRICAL DETAILS - ONE LINE DIAGRAM

BRIDGE NO. HAM-71-0134
I-71 LYTLE TUNNEL UNDER LYTLE PARK

HAM-71-01.34
PID No. 87268

211/296
469/555

ELECTRICAL SINGLE LINE DIAGRAM - NEW WORK:

1. CONTRACTOR TO COORDINATE WITH DUKE ENERGY FOR THE INSTALLATION OF NEW SERVICES TO THE TUNNEL SUPPORT FACILITY.
2. STRUCTURES DESIGNATED SHALL BE CONSTRUCTED TO MEET DUKE ENERGY SPECIFICATIONS FOR USE AS UTILITY METERING AND ANCILLARY EQUIPMENT STRUCTURE.
3. UTILITY METERING EQUIPMENT, CT'S, ETC. SHALL BE PROVIDED AND INSTALLED BY DUKE ENERGY. CONTRACTOR SHALL COORDINATE THIS INSTALLATION WITH DUKE ENERGY.
4. MAIN-TIE-MAIN CONTROLS SCHEME SHALL BE CAPABLE OF BEING CONTROLLED AUTOMATICALLY (VIA ELECTRONICALLY INTERLOCKED MICROPROCESSOR CONTROLS) OR MANUALLY (VIA KIRK KEY INTERLOCKS). CONTROLS FOR THIS SCHEME SHALL BE FIELD SELECTABLE VIA A HAND/AUTO SELECTOR SWITCH TO BE LOCATED ON THE FRONT OF THE TIE BREAKER STRUCTURE. AT LEAST ONE MAIN WILL NEED TO BE OPEN BEFORE TIE IS CLOSED.
5. ALL BREAKERS TO BE 3 POLE EXCEPT TIE BREAKER AS NOTED 4 POLE.

c:\pwworking\hmm\external\pre47802\dms72703\071_0134CES009.dgn 11/11/2015 1:11:44 PM PRE47802

NOTES

1. FOR INDOOR CCTV CAMERA SPECIFICATIONS SEE SHEETS 175/555 - 177/555
2. CONDUIT SPACING ARE BASED UPON MINUMUM REQUIREMENTS.

SEE STRUCTURAL DRAWINGS FOR TRANSFORMER VAULT CONSTRUCTION DETAILS

SEE DETAIL 1 ON THIS SHEET

P100 P101 P102 P103 P104 P105

P110 P111 P112 P113 P114 P115

24"

ATS 30KVA UPS

SS #1 SS #2 SS #3

C101 C104 C107

P157 P170

PANEL "LP-PP"

PANEL "480VAC UPS"

ELECTRICAL ROOM CCTV CAMERA

C728 L725 FSD-3

P106 P107 P116 P117 P145 P146

P152 EF-1

SERVICE FEEDER CABLE TRAYS - SEE DETAIL 1 ON THIS SHEET (TYPICAL 2 PLACES)

FSD-1

L226

"MSG-1" DOUBLE ENDED SWITCHGEAR LINEUP WITH TIE BREAKER

P155 P175 C118

C735 C109

FRONT

XFMR (120VAC UPS) 15KVA TRANSFORMER

PANEL "120VAC UPS"

PANEL "MS-1"

XFMR (LP-1)

PANEL "LP-1"

L110 L223 P180

P165 P125A P125B P120B P120A

C117 L105

PLC CABINET

L213 L105 L112

L227

EUH-1

FSD-2

L222 L221 L224

SB# 8 SB# 7

L225

L111 L200

L220

SEE SHEET 213/296 (VENTILATION FAN AREA PLAN) FOR CONTINUATION

L228 C106 E103 L103 P147 P148 P123

C103 E102 L102 P118 P119 P122

C116 C115 C511

C102 C110 C105 C108

P156 P166 P176 P177 P178

L104 L107 L108 L109 L114

C100 E101 L101 P108 P109 P121

ABBREVIATIONS:

ATS	-	AUTOMATIC TRANSFER SWITCH
EC	-	ELECTRICAL CONTRACTOR
EUH	-	ELECTRIC UNIT HEATER
FSD	-	FIRE/SMOKE DAMPER
KVA	-	KILOVOLT AMPERE
SS	-	SOFT STARTER
TYP.	-	TYPICAL
UPS	-	UNINTERRUPTIBLE POWER SUPPY
VFD	-	VARIABLE FREQUENCY DRIVE

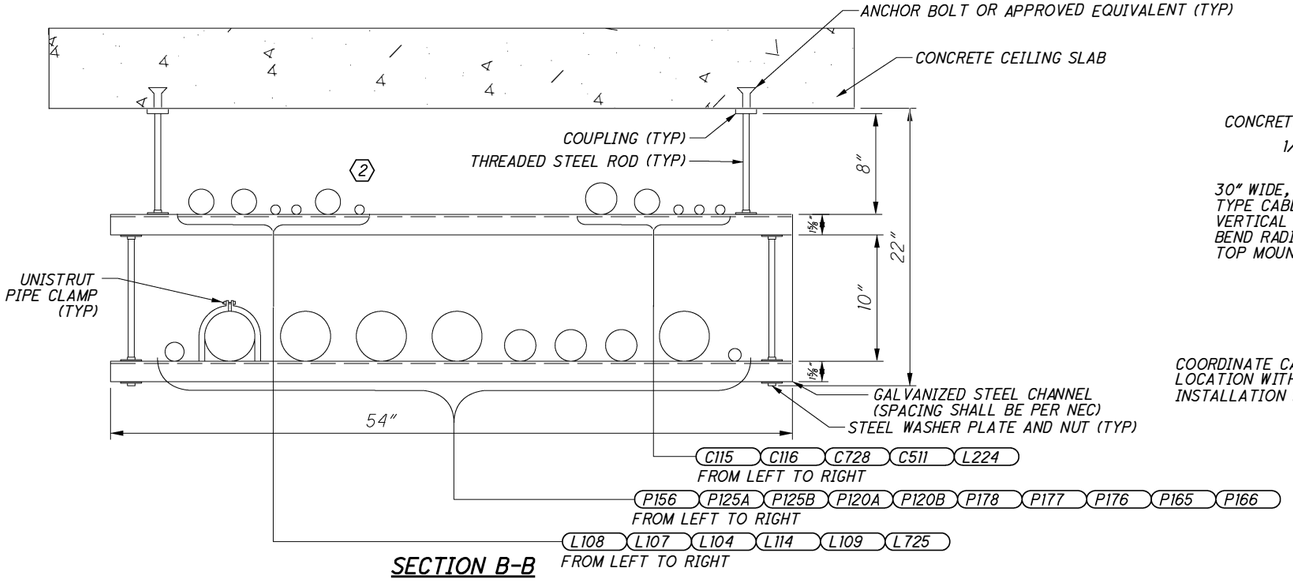

SECTION B-B

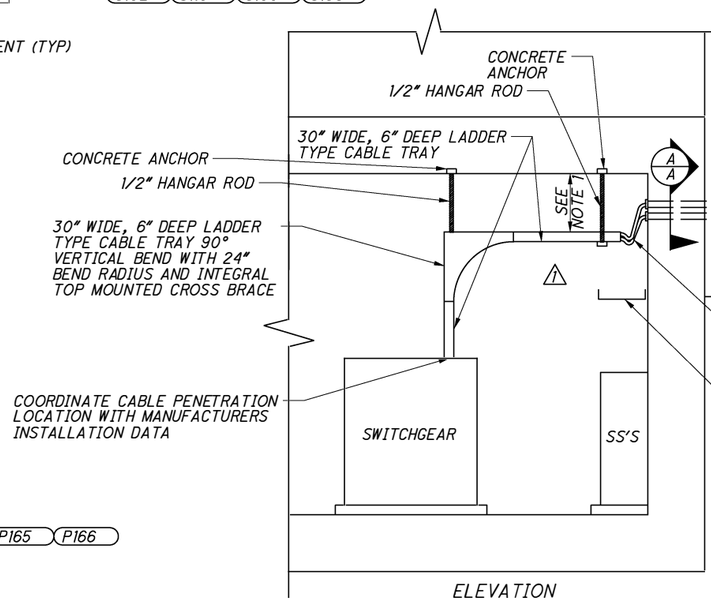

ELEVATION

DETAIL 1
SCALE: 1/4"=1'-0"

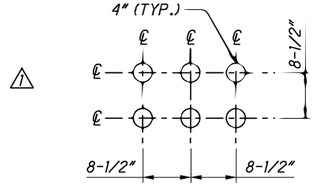

SECTION (A A)
SCALE: NOT TO SCALE

NOTES:

1. THE CABLE TRAY DISTANCE MAYBE INSTALLED BETWEEN A MINIMUM OF 6" TO 24" FROM THE TOP RAIL TO THE CEILING.
2. THE ELECTRICAL CONDUITS EXITING THE VAULTS SHOULD BE SLOPED TO ENTER THE ELECTRICAL ROOM BELOW THE ROOF SLAB.

NO.	DATE	REVISION DESCRIPTION
2	10/28/15	CONDUIT QUERY
1	11/6/15	REVISED TRANSFORMER VAULTS

DESIGN AGENCY
HATCH MOTT MacDONALD
18013 CLEVELAND PKWY.
SUITE 200
CLEVELAND, OH 44135

DESIGNED	DRAWN	REVIEWED	DATE
PAP	BJG	RF	08/11/14
CHECKED	REVISED	STRUCTURE FILE NUMBER	
MK	CL	3106578	

ELECTRICAL - ENLARGED PLAN - ELECTRICAL ROOM AND VAULT
BRIDGE NO. HAM-71-0134
I-71 LYTLE TUNNEL UNDER LYTLE PARK

HAM-71-01.34
PID No. 87268

212/296

470/555

c:\pwworking\hmm\external\pre47802\dms72703\071_0134CES010.dgn 11/6/2015 11:31:32 AM PRE47802

SEE SHEET 212/296 (NEW ELECTRICAL ROOM PLAN) FOR CONTINUATION

SEE SHEET 214/296 (LIGHTING CONTROL ROOM PLAN) FOR CONTINUATION

F1-D1, F1-D2

L200

C100 E101 L101 P108 P109 P121

L120 L121

SB #1

F1-D3, F1-D4

L122 L123

C111

VENT FAN #1 MOTOR

PB #1 (1)

C110

C102 C110 C105 C108

C103 E102 L102 P118 P119 P122

C106 E103 L103 P147 P148 P123

C105

L228

L124 L125

L201

SEE SHEET 216/296 FOR CONTROL CONDUITS TO DAMPER ACTUATOR LIMIT SWITCHES

F2-D1, F2-D2

C113

C112

SB #2

PB #2 (1)

EUH-2

BACK TO BACK UNISTRUT W/END CAP

ESD PUSHBUTTON

6"X 6" X 3/16" ALUM. PLATE W/ ROUNDED CORNERS

4'-8"

UNISTRUT BASE PLATE

(4) 1/2" CONCRETE ANCHORS

DETAIL 1

L126 L127

F2-D3, F2-D4

L128 L129

F3-D1, F3-D2

VENT FAN #2 MOTOR

L202

C114

C108

(2) VENTILATION AREA CCTV CAMERA

L729

L726

L130 L131

F3-D3, F3-D4

SB #3

PB #3 (1)

VENT FAN #3 MOTOR

SEE SHEET 212/296 FOR CONTROL CONDUITS TO DAMPER ACTUATORS (TYPICAL)

1

NOTES

(1) PROVIDE A LOCAL ESD PUSHBUTTON TYPE CONTROLLER AT EACH VENTILATION FAN MOTOR LOCATION. SEE DRAWING 210/296 FOR ADDITIONAL INFORMATION. SEE DETAIL 1.

(2) FOR INDOOR CCTV CAMERA SPECIFICATIONS SEE SHEETS 175/555 - 177/555

ABBREVIATIONS:

ATS	-	AUTOMATIC TRANSFER SWITCH
EC	-	ELECTRICAL CONTRACTOR
FSD	-	FIRE/SMOKE DAMPER
KVA	-	KILOVOLT AMPERE
PB	-	PUSHBUTTON
SB	-	SPLICE BOX
SS	-	SOFT STARTER
TYP.	-	TYPICAL
UPS	-	UNINTERRUPTIBLE POWER SUPPY
VFD	-	VARIABLE FREQUENCY DRIVE

NO.	DATE	REVISION DESCRIPTION
1	10/28/15	CONDUIT QUERY

c:\pwworking\hmm\external\pre47802\dms72703\071_0134CES027.dgn 12/2/2015 8:54:12 AM PRE47802

DESIGN AGENCY
HATCH MOTT MacDONALD
18013 CLEVELAND PKWY.
SUITE 200
CLEVELAND, OH 44135

DESIGNED	DRAWN	REVIEWED	DATE
PAP	BJG	RF	08/11/14
CHECKED	REVISED	STRUCTURE FILE NUMBER	
LL	CL	3106578	

ELECTRICAL - ENLARGED PLAN - VENTILATION FAN AREA

BRIDGE NO. HAM-71-0134
I-71 LYTLE TUNNEL UNDER LYTLE PARK

HAM-71-01.34
PID No. 87268

213/296

471/555

Camera moved to new location in RFI #298, 06-26-17

CONTROL ROOM CCTV CAMERA

LIGHTING CONTROL ROOM

PANEL 'FACP'
SB #6
24VDC REMOTE POWER SUPPLY
CONTROLLER 1
CONTROLLER 2
CONTROLLER 3
LINEAR HEAT DETECTORS
PANEL 'LP-DP'
MAIN COMM RACK
PULLBOX (PB-MCR) TO MAIN COMM RACK
P165
P166
C728
18"x18"x6"
18"x18"x6"
48"x36"x10"
SB #9
FSD-4
L224
L229
L230
L211
FSD-5
PENETRATION #3 NORTHBOUND EAST WALL
EUH-4
EUH-3
L212
VENTILATION AREA CCTV CAMERA
SEE SHEET 213/296 (VENTILATION ROOM) FOR CONTINUATION

S-EM
R-EM
N-EM
LIGHTS CNTR PNL
TO S. TUNNEL EMERG
TO RAMP TUNNEL EMERG
TO N. TUNNEL EMERG
L127
C730
L107
C152
L115
L116
L119
L118
L117
C516
L104
C513
L114
C511
C514
C512
L204
L134
SB #4
L203
C115
C116
P176
P177
P178
L109
L725
L726
C729
L108
L113
PANEL 'LP'
L205
PANEL 'LP-2'
XFMR (LP-2) 75KVA XFMR
PANEL 'DP-W'
PANEL 'DP-E'
P156
L210
P125B
P125A
P120B
P120A
L133
L132
T1-DN-1
T1-DN-2
SEE SHEET 215/296 (SOUTHBOUND & RAMP E TUNNEL AREA) FOR CONTINUATION
SEE SHEET 216/296 FOR CONTROL CONDUITS TO DAMPER ACTUATOR LIMIT SWITCHES

B 212
A A
B B
1

NOTES

1. FOR INDOOR CCTV CAMERA SPECIFICATIONS SEE SHEETS 175/555 - 177/555

ABBREVIATIONS:

LP	-	LIGHTING PANEL
DN	-	DAY NIGHT
E	-	EAST
EM	-	EMERGENCY
EUH	-	ELECTRIC UNIT HEATER
FACP	-	FIRE ALARM CONTROL PANEL
FSD	-	FIRE/SMOKE DAMPER
R	-	RAMP
S	-	SOUTH
SB	-	SPLICE BOX
W	-	WEST
XFMR	-	TRANSFORMER

TOP OF WALL OPENING
VARIES
LOCKNUT (1 HOUR FIRE RATED MATERIAL ADDED)
COUPLING
48" X 18" X 1/4" THICK PLATE
TYP.
BOTTOM OF WALL OPENING

SECTION B-B
SIDE VIEW OF WALL OPENING (TYP.)

4'-4"
4'-0"
1'-6"
1'-10"
6" 6" 6" 5" 4" 4" 5"

SECTION A-A
FRONT VIEW OF PLATE INSTALLED OVER WALL OPENING

NO.	DATE	REVISION DESCRIPTION
1	10/28/15	CONDUIT QUERY

DESIGN AGENCY
HATCH MOTT MacDONALD
18013 CLEVELAND PKWY.
SUITE 200
CLEVELAND, OH 44135

DESIGNED	DRAWN	REVIEWED	DATE
PAP	BJG	RF	08/11/14
CHECKED	REVISED	STRUCTURE FILE NUMBER	
LL	CL	3106578	

ELECTRICAL-ENLARGED PLAN-TNNL LIGHTING CONTROL RM-N. TNNL
BRIDGE NO. HAM-71-0134
I-71 LYTLE TUNNEL UNDER LYTLE PARK

HAM-71-01.34
PID No. 87268

214/296

472/555

c:\pwworking\hmm\external\pre47802\dms72703\071_0134CES028.dgn 12/2/2015 8:59:34 AM PRE47802

PENETRATION #5
SOUTHBOUND
EAST WALL

L107

SB #5

SEE SHEET 216/296 FOR CONTROL CONDUITS
TO DAMPER ACTUATOR LIMIT SWITCHES

L204

C116

L135

L140

L136

T1-DS-1

L137

L138

T1-DS-2

L139

T1-DS-3

L141

T1-DS-4

L142

L143

T1-DS-5

L144

T1-DS-6

L134

T1-DR

SEE SHEET 214/296 (LIGHTING CONTROL ROOM/ NORTH TUNNEL PLAN) FOR CONTINUATION

ABBREVIATIONS:

SB - SPLICE BOX

c:\pwworking\hmm\external\tyn61470\dms72703\071_0134CES029.dgn 10/24/2014 10:45:38 AM TYN61470

DESIGN AGENCY
HATCH MOTT MacDONALD
18013 CLEVELAND PKWY.
SUITE 200
CLEVELAND, OH 44135

DESIGNED	DRAWN	REVIEWED	DATE
PAP	BJG	RF	08/11/14
CHECKED	REVISED	STRUCTURE FILE NUMBER	
MK	CL	3106578	

ELECTRICAL - ENLARGED PLAN - RAMP E AND SOUTH TUNNEL

BRIDGE NO. HAM-71-0134
I-71 LYTLE TUNNEL UNDER LYTLE PARK

HAM-71-01.34
PID No. 87268

215/296

473
555

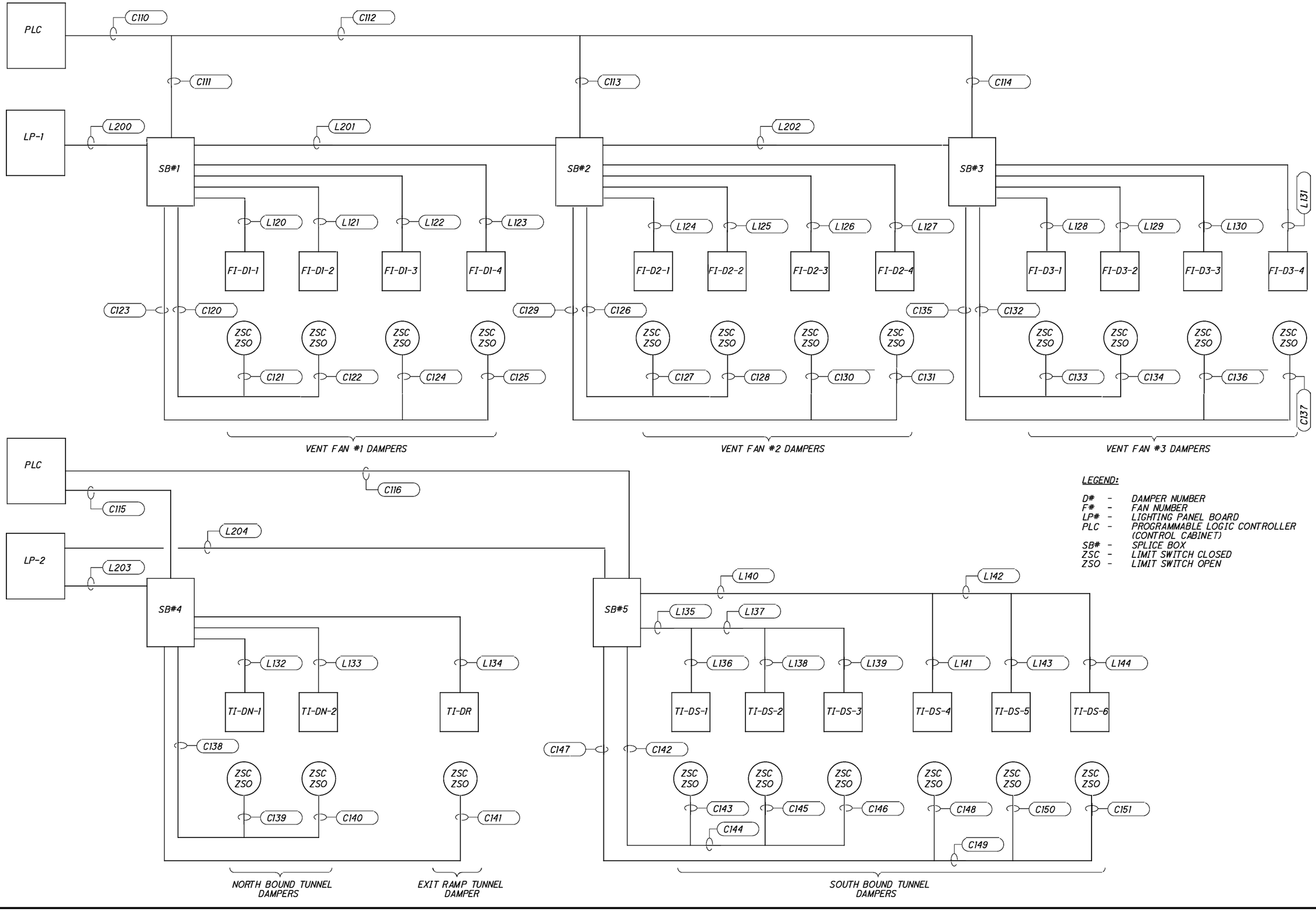

c:\pwworking\hmm\external\pre47802\dms72703\071_0134CES030.dgn 1/22/2015 1:04:47 PM PRE47802

DESIGN AGENCY
HATCH MOTT MacDONALD
18013 CLEVELAND PKWY.
SUITE 200
CLEVELAND, OH 44135

DESIGNED	DRAWN	REVIEWED	DATE
PAP	BJG	RF	08/11/14
CHECKED	REVISED	STRUCTURE FILE NUMBER	
LL	CL	3106578	

ELECTRICAL - CONDUIT DIAGRAM - DAMPER ACTUATOR FEEDERS

BRIDGE NO. HAM-71-0134
I-71 LYTLE TUNNEL UNDER LYTLE PARK

HAM-71-01.34
PID No. 87268

RACEWAY SCHEDULE

RACEWAY TAG	SIZE	TYPE	FROM DEVICE	TO DEVICE	NOTES
C100	1"	RGS	SWITCHGEAR MULTILIN	FAN MOTOR #1 RTDS	
C101	2"	RGS	PLC CABINET	SS#1	
C102	3/4"	RGS	PLC CABINET	FAN #1 VIBRATION XMTR	
C103	1"	RGS	SWITCHGEAR MULTILIN	FAN MOTOR #2 RTDS	
C104	2"	RGS	PLC CABINET	SS#2	
C105	3/4"	RGS	PLC CABINET	FAN #2 VIBRATION XMTR	
C106	1"	RGS	SWITCHGEAR MULTILIN	FAN MOTOR # 3 RTDS	
C107	2"	RGS	PLC CABINET	SS#3	
C108	3/4"	RGS	PLC CABINET	FAN #3 VIBRATION XMTR	
C109	4"	RGS	PLC CABINET	SWITCH GEAR	
C110	3 1/2"	RGS	PLC CABINET	CONDUIT C111, C112	
C111	2"	RGS	CONDUIT C110	SPICE BOX #1	
C112	3 1/2"	RGS	CONDUIT C110	CONDUIT C113, C114	
C113	2"	RGS	CONDUIT C112	SPLICE BOX #2	
C114	2"	RGS	CONDUIT C112	SPLICE BOX #3	
C115	2 1/2"	RGS	PLC CABINET	SPLICE BOX #4	
C116	2"	RGS	PLC CABINET	SPLICE BOX #5	
C120	3/4"	RGS	SPLICE BOX #1	CONDUIT C121, C122	
C121	3/4"	RGS	CONDUIT C120	LIMIT SWITCHES FAN 1 DAMPER 1	
C122	3/4"	RGS	CONDUIT C120	LIMIT SWITCHES FAN 1 DAMPER 2	
C123	3/4"	RGS	SPLICE BOX #1	CONDUIT C124, C125	
C124	3/4"	RGS	CONDUIT C123	LIMIT SWITCHES FAN 1 DAMPER 3	
C125	3/4"	RGS	CONDUIT C123	LIMIT SWITCHES FAN 1 DAMPER 4	
C126	3/4"	RGS	SPLICE BOX #2	CONDUIT C127, C128	
C127	3/4"	RGS	CONDUIT C126	LIMIT SWITCHES FAN 2 DAMPER 1	
C128	3/4"	RGS	CONDUIT C126	LIMIT SWITCHES FAN 2 DAMPER 2	
C129	3/4"	RGS	SPLICE BOX #2	CONDUIT C130, C131	
C130	3/4"	RGS	CONDUIT C129	LIMIT SWITCHES FAN 2 DAMPER 3	
C131	3/4"	RGS	CONDUIT C129	LIMIT SWITCHES FAN 2 DAMPER 4	
C132	3/4"	RGS	SPLICE BOX #3	CONDUIT C133 , C134	
C133	3/4"	RGS	CONDUIT C132	LIMIT SWITCHES FAN 3 DAMPER 1	
C134	3/4"	RGS	CONDUIT C132	LIMIT SWITCHES FAN 3 DAMPER 2	
C135	3/4"	RGS	SPLICE BOX #3	CONDUIT C136, C137	
C136	3/4"	RGS	CONDUIT C135	LIMIT SWITCHES FAN 3 DAMPER 3	
C137	3/4"	RGS	CONDUIT C135	LIMIT SWITCHES FAN 3 DAMPER 4	
C138	3/4"	RGS	SPLICE BOX #4	CONDUIT C139, C140	
C139	3/4"	RGS	CONDUIT C138	LIMIT SWITCHES NB DAMPER 1	
C140	3/4"	RGS	CONDUIT C138	LIMIT SWITCHES NB DAMPER 2	
C141	3/4"	RGS	SPLICE BOX #4	LIMIT SWITCHES RAMP DAMPER	
C142	3/4"	RGS	SPLICE BOX #5	CONDUIT C143, C144	
C143	3/4"	RGS	CONDUIT C142	LIMIT SWITCHES SB DAMPER 1	
C144	3/4"	RGS	CONDUIT C142	CONDUIT C145, C146	
C145	3/4"	RGS	CONDUIT C144	LIMIT SWITCHES SB DAMPER 2	
C146	3/4"	RGS	CONDUIT C144	LIMIT SWITCHES SB DAMPER 3	
C147	3/4"	RGS	SPLICE BOX #5	CONDUIT C148, C149	
C148	3/4"	RGS	CONDUIT C147	LIMIT SWITCHES SB DAMPER 4	
C149	3/4"	RGS	CONDUIT C147	CONDUIT C150, C151	
C150	3/4"	RGS	CONDUIT C149	LIMIT SWITCHES SB DAMPER 5	
C151	3/4"	RGS	CONDUIT C149	LIMIT SWITCHES SB DAMPER 6	
C152	3/4"	RGS	MAIN COMM RACK	FACP	
D100	3/4"	RGS	FACP	SIGNALING LINE CIRCUIT (TYP.)	
D101	3/4"	RGS	FACP	NOTIFICATION APPLIANCE CIRCUIT (TYP.)	
D102	1"	RGS	FACP	FAP	
D103	3/4"	RGS	FACP	FIRE DEPARTMENT	
D104	3/4"	RGS	FACP	SCADA RELAY INTERFACE ENCLOSURE	
D105	3/4"	RGS	SCADA RELAY INTERFACE ENCLOSURE	FAN-PLC	
D106	3/4"	RGS	FACP	LINEAR HEAT DETECTOR CONTROLLER 1	
D107	3/4"	RGS	FACP	LINEAR HEAT DETECTOR CONTROLLER 2	
D108	3/4"	RGS	FACP	LINEAR HEAT DETECTOR CONTROLLER 3	
D109	3/4"	RGS	FACP	REMOTE POWER SUPPLY	
E101	3/4"	RGS	SS#1	FAN #1 E-STOP PB #1	
E102	3/4"	RGS	SS#2	FAN #2 E-STOP PB #2	
E103	3/4"	RGS	SS#3	FAN #3 E-STOP PB #3	
L101	3/4"	RGS	SS#1	FAN MOTOR #1 HEATER	
L102	3/4"	RGS	SS#2	FAN MOTOR #2 HEATER	
L103	3/4"	RGS	SS#3	FAN MOTOR #3 HEATER	
L104	3/4"	RGS	PANEL "120VAC UPS"	FACP	
L105	1 1/2"	RGS	PANEL "120VAC UPS"	PLC CABINET	
L107	2"	RGS	PANEL "120VAC UPS"	SOUTH PORTAL PB5	
L108	2"	RGS	PANEL "120VAC UPS"	NORTH PORTAL PB8	
L109	2"	RGS	PANEL "120VAC UPS"	MAIN COMM RACK	
L110	3/4"	RGS	PANEL "120VAC UPS"	SWITCHGEAR CONTROL POWER	
L111	1"	RGS	XFMR (120VAC UPS)	PANEL "120VAC UPS"	
L112	2"	RGS	XFMR (LP-1)	Panel "LP-1"	
L113	2"	RGS	XFMR (LP-2)	Panel "LP-2"	
L114	3/4"	RGS	PANEL "120VAC UPS"	SPLICE BOX #6	
L115	3/4"	RGS	SPLICE BOX #6	FACP	
L116	3/4"	RGS	SPLICE BOX #6	REMOTE POWER SUPPLY (24VDC)	
L117	3/4"	RGS	LINEAR HEAT DETECTOR CONTROLLER 1	REMOTE POWER SUPPLY (24VDC)	
L118	3/4"	RGS	LINEAR HEAT DETECTOR CONTROLLER 2	REMOTE POWER SUPPLY (24VDC)	
L119	3/4"	RGS	LINEAR HEAT DETECTOR CONTROLLER 3	REMOTE POWER SUPPLY (24VDC)	

RACEWAY SCHEDULE

RACEWAY TAG	SIZE	TYPE	FROM DEVICE	TO DEVICE	NOTES
L120	3/4"	RGS	SPLICE BOX #1	F1-D1 (1HP)	FAN #1 ACTUATOR #1
L121	3/4"	RGS	SPLICE BOX #1	F1-D2 (1HP)	FAN #1 ACTUATOR #2
L122	3/4"	RGS	SPLICE BOX #1	F1-D3 (1HP)	FAN #1 ACTUATOR #3
L123	3/4"	RGS	SPLICE BOX #1	F1-D4 (1HP)	FAN #1 ACTUATOR #4
L124	3/4"	RGS	SPLICE BOX #2	F2-D1 (1HP)	FAN #2 ACTUATOR #1
L125	3/4"	RGS	SPLICE BOX #2	F2-D2 (1HP)	FAN #2 ACTUATOR #2
L126	3/4"	RGS	SPLICE BOX #2	F2-D3 (1HP)	FAN #2 ACTUATOR #3
L127	3/4"	RGS	SPLICE BOX #2	F2-D4 (1HP)	FAN #2 ACTUATOR #4
L128	3/4"	RGS	SPLICE BOX #3	F3-D1 (1HP)	FAN #3 ACTUATOR #1
L129	3/4"	RGS	SPLICE BOX #3	F3-D2 (1HP)	FAN #3 ACTUATOR #2
L130	3/4"	RGS	SPLICE BOX #3	F3-D3 (1HP)	FAN #3 ACTUATOR #3
L131	3/4"	RGS	SPLICE BOX #3	F3-D4 (1HP)	FAN #3 ACTUATOR #4
L132	3/4"	RGS	SPLICE BOX #4	T1-DN-1	NORTHBOUND TUNNEL DAMP #1
L133	3/4"	RGS	SPLICE BOX #4	T1-DN-2	NORTHBOUND TUNNEL DAMP #2
L134	3/4"	RGS	SPLICE BOX #4	T1-DR	RAMP TUNNEL DAMP
L135	1 1/2"	RGS	SPLICE BOX #5	CONDUIT L136, L137	
L136	3/4"	RGS	CONDUIT L135	T1-DS-1	SOUTHBOUND TUNNEL DAMP #1
L137	1"	RGS	CONDUIT L135	CONDUIT L138, L139	
L138	3/4"	RGS	CONDUIT L137	T1-DS-2	SOUTHBOUND TUNNEL DAMP #2
L139	3/4"	RGS	CONDUIT L137	T1-DS-3	SOUTHBOUND TUNNEL DAMP #3
L140	1 1/2"	RGS	SPLICE BOX #5	CONDUIT L141, L142	
L141	3/4"	RGS	CONDUIT L140	T1-DS-4	SOUTHBOUND TUNNEL DAMP #4
L142	1"	RGS	CONDUIT L140	CONDUIT L143, L144	
L143	3/4"	RGS	CONDUIT L142	T1-DS-5	SOUTHBOUND TUNNEL DAMP #5
L144	3/4"	RGS	CONDUIT L142	T1-DS-6	SOUTHBOUND TUNNEL DAMP #6
L200	4"	RGS	Panel "LP-1"	SPLICE BOX #1	
L201	4"	RGS	SPLICE BOX #1	SPLICE BOX #2	
L202	3"	RGS	SPLICE BOX #2	SPLICE BOX #3	
L203	1 1/2"	RGS	Panel "LP-2"	SPLICE BOX #4	
L204	3"	RGS	Panel "LP-2"	SPLICE BOX #5	
L205	2"	RGS	Panel "LP-2"	PANEL "LP"	
L210	2"	RGS	PANEL "LP-2"	CONDUIT L211, L212	
L211	1"	RGS	CONDUIT L210	EUH-4	
L212	1"	RGS	CONDUIT L210	EUH-3	
L213	3/4"	RGS	PANEL "120VAC UPS"	MOTOR STARTER PANEL "MS-1"	
L220	1 1/2"	RGS	PANEL "120VAC UPS"	SPLICE BOX #7	
L221	1 1/2"	RGS	SPLICE BOX #7	SPLICE BOX #8	
L222	3/4"	RGS	SPLICE BOX #8	FSD-2	
L223	3/4"	RGS	SPLICE BOX #8	FSD-3	
L224	3/4"	RGS	SPLICE BOX #7	SPLICE BOX #9	
L225	2"	RGS	PANEL "LP-1"	CONDUIT L227,L228	
L226	3/4"	RGS	PANEL "120VAC UPS"	FSD-1	
L227	1"	RGS	CONDUIT L225	EUH-1	
L228	1"	RGS	CONDUIT L225	EUH-2	
L229	3/4"	RGS	SPLICE BOX #9	FSD-4	
L230	3/4"	RGS	SPLICE BOX #9	FSD-5	
P100	4"	RGS	Power Co Transformer #1	Switch Gear Main #1	
P101	4"	RGS	Power Co Transformer #1	Switch Gear Main #1	
P102	4"	RGS	Power Co Transformer #1	Switch Gear Main #1	
P103	4"	RGS	Power Co Transformer #1	Switch Gear Main #1	
P104	4"	RGS	Power Co Transformer #1	Switch Gear Main #1	
P105	4"	RGS	Power Co Transformer #1	Switch Gear Main #1	
P106	4"	RGS	Switch Gear	SS#1	
P107	4"	RGS	Switch Gear	SS#1	
P108	4"	RGS	SS#1	FAN MOTOR #1	
P109	4"	RGS	SS#1	FAN MOTOR #1	
P110	4"	RGS	Power Co Transformer #2	Switch Gear Main #2	
P111	4"	RGS	Power Co Transformer #2	Switch Gear Main #2	
P112	4"	RGS	Power Co Transformer #2	Switch Gear Main #2	
P113	4"	RGS	Power Co Transformer #2	Switch Gear Main #2	
P114	4"	RGS	Power Co Transformer #2	Switch Gear Main #2	
P115	4"	RGS	Power Co Transformer #2	Switch Gear Main #2	
P116	4"	RGS	Switch Gear	SS#2	
P117	4"	RGS	Switch Gear	SS#2	
P118	4"	RGS	SS#2	FAN MOTOR #2	
P119	4"	RGS	SS#2	FAN MOTOR #2	
P120A	4"	RGS	Switch Gear	Panel "DP-E"	
P120B	4"	RGS	Switch Gear	Panel "DP-E"	
P121	1 1/2"	RGS	SS#1	FAN MOTOR #1	
P122	1 1/2"	RGS	SS#2	FAN MOTOR #2	
P123	1 1/2"	RGS	SS#3	FAN MOTOR #3	
P125A	4"	RGS	Switch Gear	Panel "DP-W"	
P125B	4"	RGS	Switch Gear	Panel "DP-W"	
P145 ⚠1	3"	RGS	Switch Gear	SS#3	
P146	3"	RGS	Switch Gear	SS#3	
P147	4"	RGS	SS#3	FAN MOTOR #3	
P148	4"	RGS	SS#3	FAN MOTOR #3	
P152	4"	RGS	Switch Gear	Panel "LP-PP"	
P155	1 1/2"	RGS	Panel "LP-PP"	XFMR (LP-1)	
P156 ⚠2	1 1/2"	RGS	Panel "LP-PP"	XFMR (LP-2)	
P157	1"	RGS	Panel "LP-PP"	ATS UPS	

NO.	DATE	REVISION DESCRIPTION
⚠2	12/28/15	RFI 110 (CONDUIT SIZE)
⚠1	11/09/15	VENTILATION FANS HP CHANGED

DESIGN AGENCY
HATCH MOTT MacDONALD
18013 CLEVELAND PKWY.
SUITE 200
CLEVELAND, OH 44135

DESIGNED MK | DRAWN BJG | REVIEWED RF | DATE 08/11/14
CHECKED LL | REVISED CL | STRUCTURE FILE NUMBER 3106578

ELECTRICAL - CONDUIT RACEWAY SCHEDULE - SHEET 1 OF 3
BRIDGE NO. HAM-71-0134
I-71 LYTLE TUNNEL UNDER LYTLE PARK

HAM-71-01.34
PID No. 87268

217/296

475/555

c:\pwworking\hmm\external\pre47802\dms72703\071_0134CES031.dgn 12/28/2015 2:35:21 PM PRE47802

RACEWAY SCHEDULE

RACEWAY TAG	SIZE	TYPE	FROM DEVICE	TO DEVICE	NOTES
P165	4"	RGS	Switch Gear	Panel "LP-DP"	
P166	1"	RGS	Panel "LP-DP"	ATS UPS	
P170	1 1/2"	RGS	Panel "LP-PP"	UPS VIA MAINTENANCE BYPASS	
P175	1 1/2"	RGS	UPS VIA MAINTENANCE BYPASS	PANEL "480VAC UPS"	
P176	2 1/2"	RGS	PANEL "480VAC UPS"	EMERGENCY LIGHTING PANEL 'N-EM'	
P177	2 1/2"	RGS	PANEL "480VAC UPS"	EMERGENCY LIGHTING PANEL 'R-EM'	
P178	2 1/2"	RGS	PANEL "480VAC UPS"	EMERGENCY LIGHTING PANEL 'S-EM'	
P180	1"	RGS	PANEL "480VAC UPS"	XFMR (120VAC UPS)	
C-300	3/4"	RGS	N-C	NB TUNNEL PHOTOMETER	
C-301	3/4"	RGS	N-C	NE-C1	
C-302	3/4"	RGS	N-C	NE-C2	
C-303	1 1/4"	RGS	N-C	RDE-NE1 / RDE-NE4	
P-304	3/4"	RGS	N-EM	RDE-NE1 / RDE-NE4	
C-305	3/4"	RGS	RDE-NE1 / RDE-NE4	NE-LED DIMMING DRIVERS	
C-306	3/4"	RGS	N-C	NW-C1	TUNNEL ROADWAY LIGHTING CONTROL- NORTHBOUND TUNNEL
C-307	3/4"	RGS	N-C	NW-C2	
C-308	1 1/4"	RGS	N-C	RDE-NW1 / RDE-NW4	
P-309	3/4"	RGS	N-EM	RDE-NW1 / RDE-NW4	
C-310	3/4"	RGS	RDE-NW1 / RDE-NW4	NW-LED DIMMING DRIVERS	
P-311	2"	RGS	N-EM	N-C	
C-312	3/4"	RGS	N-C	PB-MCR	
P-320	2"	RGS	DP-E	NE-DN	
P-321	2"	RGS	DP-E	NE-LP1	
P-322	2"	RGS	DP-E	NE-LP2	
P-323	2"	RGS	DP-E	RE-DN	
P-324	2"	RGS	DP-E	RE-LP1	EAST WALL LIGHTING DISTRIBUTION PANEL FEEDERS
P-325	2"	RGS	DP-E	RE-LP2	
P-326	2"	RGS	DP-E	SE-DN	
P-327	2"	RGS	DP-E	SE-LP1	
P-328	2"	RGS	DP-E	SE-LP2	
P-343	1"	RGS	N-EM	JB-NE-1	
P-345	2 1/2"	RGS	T-NE	JB-NE-5	
P-346	1"	RGS	N-EM	JB-NE-2	
P-347	1 1/2"	RGS	T-NE	JB-NE-11	
P-348	2 1/2"	RGS	T-NE	JB-NE-6	
P-349	1 1/2"	RGS	T-NE	JB-NE-17	
P-350	1 1/4"	RGS	T-NE	JB-NE-16	
P-351	1"	RGS	JB-NE-1	JB-NE-3	
P-352	1"	RGS	JB-NE-2	JB-NE-4	
P-353	2 1/2"	RGS	JB-NE-5	JB-NE-7	TUNNEL ROADWAY LIGHTING - NORTHBOUND TUNNEL, EAST WALL
P-354	2 1/2"	RGS	JB-NE-6	JB-NE-8	
P-355	2 1/2"	RGS	JB-NE-7	JB-NE-9	
P-356	2 1/2"	RGS	JB-NE-8	JB-NE-10	
P-357	1 1/2"	RGS	JB-NE-11	JB-NE-13	
P-358	2 1/2"	RGS	JB-NE-10	JB-NE-12	
P-359	1 1/2"	RGS	JB-NE-13	JB-NE-15	
P-360	2 1/2"	RGS	JB-NE-12	JB-NE-14	
P-361	1 1/2"	RGS	JB-NE-17	JB-NE-19	
P-362	1 1/4"	RGS	JB-NE-16	JB-NE-18	
P-363	1 1/2"	RGS	JB-NE-19	JB-NE-21	
P-373	1"	RGS	N-EM	JB-NW-1	
P-374	1"	RGS	N-EM	JB-NW-2	
P-375	2 1/2"	RGS	T-NW	JB-NW-5	
P-376	2 1/2"	RGS	T-NW	JB-NW-6	
P-377	1 1/2"	RGS	T-NW	JB-NW-11	
P-378	1 1/4"	RGS	T-NW	JB-NW-16	
P-379	1 1/2"	RGS	T-NW	JB-NW-17	
P-380	1"	RGS	JB-NW-2	JB-NW-4	
P-381	1"	RGS	JB-NW-1	JB-NW-3	
P-382	2 1/2"	RGS	JB-NW-6	JB-NW-8	
P-383	2 1/2"	RGS	JB-NW-5	JB-NW-7	TUNNEL ROADWAY LIGHTING - NORTHBOUND TUNNEL, WEST WALL
P-384	2 1/2"	RGS	JB-NW-8	JB-NW-10	
P-385	2 1/2"	RGS	JB-NW-7	JB-NW-9	
P-386	2 1/2"	RGS	JB-NW-10	JB-NW-12	
P-387	1 1/2"	RGS	JB-NW-11	JB-NW-13	
P-388	2 1/2"	RGS	JB-NW-12	JB-NW-14	
P-389	1 1/2"	RGS	JB-NW-13	JB-NW-15	
P-390	1 1/4"	RGS	JB-NW-16	JB-NW-18	
P-391	1 1/2"	RGS	JB-NW-17	JB-NW-19	
P-393	1 1/2"	RGS	JB-NW-19	JB-NW-21	
C-400	3/4"	RGS	S-C	SB TUNNEL PHOTOMETER	
C-401	3/4"	RGS	S-C	SE-C1	
C-402	3/4"	RGS	S-C	SE-C2	TUNNEL ROADWAY LIGHTING CONTROL - SOUTHBOUND TUNNEL
C-403	1 1/4"	RGS	S-C	RDE-SE1 / RDE-SE4	
P-404	3/4"	RGS	S-EM	RDE-SE1 / RDE-SE4	

RACEWAY SCHEDULE

RACEWAY TAG	SIZE	TYPE	FROM DEVICE	TO DEVICE	NOTES
C-405	3/4"	RGS	RDE-SE1 / RDE-SE4	SE-LED DIMMING DRIVERS	
C-406	3/4"	RGS	S-C	SW-C1	
C-407	3/4"	RGS	S-C	SW-C2	
C-408	1 1/4"	RGS	S-C	RDE-SW1 / RDE-SW4	TUNNEL ROADWAY LIGHTING CONTROL - SOUTHBOUND TUNNEL
P-409	3/4"	RGS	S-EM	RDE-SW1 / RDE-SW4	
C-410	3/4"	RGS	RDE-SW1 / RDE-SW4	SW-LED DIMMING DRIVERS	
P-411	2"	RGS	S-EM	S-C	
C-412	3/4"	RGS	S-C	PB-MCR	
P-420	2"	RGS	DP-W	NW-DN	
P-421	2"	RGS	DP-W	NW-LP1	
P-422	2"	RGS	DP-W	NW-LP2	
P-423	2"	RGS	DP-W	RW-DN	WEST WALL LIGHTING DISTRIBUTION PANEL FEEDERS
P-424	2"	RGS	DP-W	RW-LP1	
P-425	2"	RGS	DP-W	RW-LP2	
P-426	2"	RGS	DP-W	SE-DN	
P-427	2"	RGS	DP-W	SE-LP1	
P-428	2"	RGS	DP-W	SE-LP2	
P-444	1"	RGS	S-EM	JB-SE-2	
P-445	1"	RGS	S-EM	JB-SE-1	
P-446	2 1/2"	RGS	T-SE	JB-SE-6	
P-447	2 1/2"	RGS	T-SE	JB-SE-5	
P-448	2"	RGS	T-SE	JB-SE-12	
P-449	1 1/4"	RGS	T-SE	JB-SE-13	
P-450	2"	RGS	T-SE	JB-SE-20	
P-451	1"	RGS	JB-SE-1	JB-SE-3	
P-452	1"	RGS	JB-SE-2	JB-SE-4	
P-453	2 1/2"	RGS	JB-SE-5	JB-SE-7	
P-454	2 1/2"	RGS	JB-SE-6	JB-SE-8	
P-455	2 1/2"	RGS	JB-SE-7	JB-SE-9	
P-456	2 1/2"	RGS	JB-SE-8	JB-SE-10	
P-457	2 1/2"	RGS	JB-SE-9	JB-SE-11	
P-458	2"	RGS	JB-SE-12	JB-SE-14	
P-459	1 1/4"	RGS	JB-SE-13	JB-SE-15	
P-460	2"	RGS	JB-SE-14	JB-SE-16	
P-462	2"	RGS	JB-SE-16	JB-SE-18	
P-464	2"	RGS	JB-SE-20	JB-SE-22	
P-466	2"	RGS	JB-SE-22	JB-SE-24	TUNNEL ROADWAY LIGHTING - SOUTHBOUND TUNNEL, EAST WALL
P-468	2"	RGS	JB-SE-24	JB-SE-26	
P-472	3/4"	RGS	S-EM	JB-SW-2	
P-474	2 1/2"	RGS	T-SW	JB-SW-6	
P-475	3/4"	RGS	S-EM	JB-SW-1	
P-476	2"	RGS	T-SW	JB-SW-12	
P-477	2 1/2"	RGS	T-SW	JB-SW-5	
P-478	2"	RGS	T-SW	JB-SW-20	
P-479	1 1/4"	RGS	T-SW	JB-SW-11	
P-480	3/4"	RGS	JB-SW-2	JB-SW-4	
P-481	3/4"	RGS	JB-SW-1	JB-SW-3	
P-482	2 1/2"	RGS	JB-SW-6	JB-SW-8	
P-483	2 1/2"	RGS	JB-SW-5	JB-SW-7	
P-484	2 1/2"	RGS	JB-SW-8	JB-SW-10	
P-485	2 1/2"	RGS	JB-SW-7	JB-SW-9	
P-486	2"	RGS	JB-SW-12	JB-SW-14	
P-487	1 1/4"	RGS	JB-SW-11	JB-SW-13	
P-488	2"	RGS	JB-SW-14	JB-SW-16	
P-490	2"	RGS	JB-SW-16	JB-SW-18	
P-492	2"	RGS	JB-SW-20	JB-SW-22	
P-494	2"	RGS	JB-SW-22	JB-SW-24	
P-496	2"	RGS	JB-SW-24	JB-SW-26	
C-501	3/4"	RGS	S-C	RE-C1	
C-502	3/4"	RGS	S-C	RE-C2	
C-503	1 1/4"	RGS	S-C	RDE-RE1 / RDE-RE4	
P-504	1"	RGS	R-EM	RDE-RE1 / RDE-RE4	
C-505	3/4"	RGS	RDE-RE1 / RDE-RE4	RE-LED DIMMING DRIVERS	TUNNEL ROADWAY LIGHTING CONTROL - SOUTHBOUND EXIT RAMP TO THIRD STREET
C-506	3/4"	RGS	S-C	RW-C1	
C-507	3/4"	RGS	S-C	RW-C2	
C-508	1 1/4"	RGS	S-C	RDE-RW1 / RDE-RW4	
P-509	1"	RGS	R-EM	RDE-RW1 / RDE-RW4	
C-510	3/4"	RGS	RDE-RW1 / RDE-RW4	RW-LED DIMMING DRIVERS	
C-511	3/4"	RGS	PLC CABINET	CONDUIT C-512, C-513	
C-512	3/4"	RGS	CONDUIT C-511	LINEAR HEAT DETECTOR CONTROLLER 1	PLC CABINET TO LINEAR HEAT DETECTORS
C-513	3/4"	RGS	CONDUIT C-511	CONDUIT C-514, C-515	
C-514	3/4"	RGS	CONDUIT C-513	LINEAR HEAT DETECTOR CONTROLLER 2	
C-515	3/4"	RGS	CONDUIT C-513	LINEAR HEAT DETECTOR CONTROLLER 3	
P-545	1"	RGS	R-EM	JB-RE-1	
P-546	1"	RGS	R-EM	JB-RE-2	
P-547	2 1/2"	RGS	T-RE	JB-RE-5	
P-548	2 1/2"	RGS	T-RE	JB-RE-6	TUNNEL ROADWAY LIGHTING - SOUTHBOUND EXIT RAMP TO THIRD STREET, EAST WALL
P-549	1 1/4"	RGS	T-RE	JB-RE-11	
P-550	1 1/2"	RGS	T-RE	JB-RE-14	
P-551	1"	RGS	JB-RE-1	JB-RE-3	
P-552	1"	RGS	JB-RE-2	JB-RE-4	

DESIGN AGENCY
HATCH MOTT MacDONALD
18013 CLEVELAND PKWY.
SUITE 200
CLEVELAND, OH 44135

DESIGNED MK | DRAWN BJG | CHECKED LL | REVIEWED RF | DATE 08/11/14 | REVISED CL | STRUCTURE FILE NUMBER 3106578

ELECTRICAL - CONDUIT RACEWAY SCHEDULE - SHEET 2 OF 3

BRIDGE NO. HAM-71-0134
I-71 LYTLE TUNNEL UNDER LYTLE PARK

HAM-71-01.34
PID No. 87268

218/296

476/555

c:\pwworking\hmm\external\tyn61470\dms72703\071_0134CES032.dgn 10/24/2014 10:45:57 AM T:N61470

RACEWAY SCHEDULE

RACEWAY TAG	SIZE	TYPE	FROM DEVICE	TO DEVICE	NOTES
P-553	2 1/2"	RGS	JB-RE-5	JB-RE-7	
P-554	2 1/2"	RGS	JB-RE-6	JB-RE-8	
P-555	2 1/2"	RGS	JB-RE-7	JB-RE-9	
P-556	2 1/2"	RGS	JB-RE-8	JB-RE-10	
P-557	1 1/4"	RGS	JB-RE-11	JB-RE-13	
P-558	2 1/2"	RGS	JB-RE-10	JB-RE-12	
P-560	1 1/2"	RGS	JB-RE-14	JB-RE-16	
P-574	1"	RGS	R-EM	JB-RW-2	TUNNEL ROADWAY LIGHTING - SOUTHBOUND EXIT RAMP TO THIRD STREET, WEST WALL
P-575	1"	RGS	R-EM	JB-RW-1	
P-576	2 1/2"	RGS	T-RW	JB-RW-6	
P-577	2 1/2"	RGS	T-RW	JB-RW-5	
P-578	1 1/2"	RGS	T-RW	JB-RW-14	
P-579	1 1/4"	RGS	T-RW	JB-RW-11	
P-580	1"	RGS	JB-RW-2	JB-RW-4	
P-581	1"	RGS	JB-RW-1	JB-RW-3	
P-582	2 1/2"	RGS	JB-RW-6	JB-RW-8	
P-583	2 1/2"	RGS	JB-RW-5	JB-RW-7	
P-584	2 1/2"	RGS	JB-RW-8	JB-RW-10	
P-585	2 1/2"	RGS	JB-RW-7	JB-RW-9	
P-586	3 1/2"	RGS	JB-RW-10	JB-RW-12	
P-587	1 1/4"	RGS	JB-RW-11	JB-RW-13	
P-588	1 1/2"	RGS	JB-RW-16	JB-RW-14	
C-600	3/4"	RGS	COPLC	JB-CO-1	CARBON MONOXIDE DETECTION SYSTEM
C-601	3/4"	RGS	JB-CO-1	COER1	
C-602	3/4"	RGS	JB-CO-1	JB-CO-2	
C-603	3/4"	RGS	JB-CO-2	COFP1	
C-604	3/4"	RGS	JB-CO-2	JB-CO-3	
C-605	3/4"	RGS	JB-CO-3	JB-CO-4	
C-606	3/4"	RGS	JB-CO-4	CONB1	
C-607	3/4"	RGS	JB-CO-4	CONB2	
C-608	3/4"	RGS	JB-CO-3	JB-CO-5	
C-609	3/4"	RGS	JB-CO-5	JB-CO-6	
C-610	3/4"	RGS	JB-CO-6	COSR1	
C-611	3/4"	RGS	JB-CO-6	COSR2	
C-612	3/4"	RGS	JB-CO-5	JB-CO-7	
C-613	3/4"	RGS	JB-CO-7	COSB1	
C-614	3/4"	RGS	JB-CO-7	COSB2	
T-300	2"	EMT	DP-E	A1/NE	TEMPORARY FEEDERS TO EXISTING EAST WALL LIGHTING DISTRIBUTION PANELS
T-301	2"	EMT	DP-E	B2/NE	
T-302	2"	EMT	DP-E	C3/NE	
T-303	2"	EMT	DP-E	A2/SE	
T-304	2"	EMT	DP-E	B3/SE	
T-305	2"	EMT	DP-E	C1/SE	
T-306	2"	EMT	DP-E	A3/RE	
T-307	2"	EMT	DP-E	B1/RE	
T-308	2"	EMT	DP-E	C2/RE	
T-400	2"	EMT	DP-W	A2/NW	TEMPORARY FEEDERS TO EXISTING WEST WALL LIGHTING DISTRIBUTION PANELS
T-401	2"	EMT	DP-W	B3/NW	
T-402	2"	EMT	DP-W	C1/NW	
T-403	2"	EMT	DP-W	A3/SW	
T-404	2"	EMT	DP-W	B1/SW	
T-405	2"	EMT	DP-W	C2/SW	
T-406	2"	EMT	DP-W	A1/RW	
T-407	2"	EMT	DP-W	B2/RW	
T-408	2"	EMT	DP-W	C3/RW	

RACEWAY SCHEDULE

RACEWAY TAG	SIZE	TYPE	FROM DEVICE	TO DEVICE	NOTES
F-701	2 1/2"	RGS	PLC CABINET	MAIN COMM RACK	
F-702	2 1/2"	RGS	MAIN COMM RACK	F-JB1	
F-703	2 1/2"	RGS	F-JB1	F-JB2	
F-704	2 1/2"	RGS	F-JB2	F-JB3	
F-705	2 1/2"	RGS	F-JB1	NORTH PORTAL PB8	
F-706	2 1/2"	RGS	F-JB3	SOUTH PORTAL PB5	
C-707	1 1/2"	RGS	NORTH PORTAL PB8	NORTH PORTAL CAMERA 1	CCTV
C-708	1 1/2"	RGS	NORTH PORTAL PB8	NORTH PORTAL CAMERA 2	
C-709	1 1/2"	RGS	NORTH PORTAL PB8	NORTH PORTAL CAMERA 3	
C-710	1 1/2"	RGS	SOUTH PORTAL PB5	SOUTH PORTAL CAMERA 1	
C-711	1 1/2"	RGS	SOUTH PORTAL PB5	SOUTH PORTAL CAMERA 2	
C-712	1 1/2"	RGS	SOUTH PORTAL PB5	SOUTH PORTAL CAMERA 3	
C-713	1 1/2"	RGS	F-JB1	MID TUNNEL CAMERA 1	
C-714	1 1/2"	RGS	F-JB2	MID TUNNEL CAMERA 2	
C-715	1 1/2"	RGS	F-JB3	MID TUNNEL CAMERA 3	
L-716	1 1/2"	RGS	NORTH PORTAL PB8	NORTH PORTAL CAMERA 1	
L-717	1 1/2"	RGS	NORTH PORTAL PB8	NORTH PORTAL CAMERA 2	
L-718	1 1/2"	RGS	NORTH PORTAL PB8	NORTH PORTAL CAMERA 3	
L-719	1 1/2"	RGS	SOUTH PORTAL PB5	SOUTH PORTAL CAMERA 1	
L-720	1 1/2"	RGS	SOUTH PORTAL PB5	SOUTH PORTAL CAMERA 2	
L-721	1 1/2"	RGS	SOUTH PORTAL PB5	SOUTH PORTAL CAMERA 3	
L-722	1 1/2"	RGS	F-JB1	MID TUNNEL CAMERA 1	
L-723	1 1/2"	RGS	F-JB2	MID TUNNEL CAMERA 2	
L-724	1 1/2"	RGS	F-JB3	MID TUNNEL CAMERA 3	
L-725	1 1/2"	RGS	MAIN COMM RACK	ELECTRICAL ROOM CAMERA	
L-726	1 1/2"	RGS	MAIN COMM RACK	VENTILATION AREA CAMERA	
L-727	1 1/2"	RGS	MAIN COMM RACK	CONTROL ROOM CAMERA	
C-728	1 1/2"	RGS	MAIN COMM RACK	ELECTRICAL ROOM CAMERA	
C-729	1 1/2"	RGS	MAIN COMM RACK	VENTILATION AREA CAMERA	
C-730	1 1/2"	RGS	MAIN COMM RACK	CONTROL ROOM CAMERA	
C-736	4"	PVC MULTI-CELL	EXISTING ITS CABINET	SOUTH PORTAL PB5	EXISTING ITS TO NEW ITS
C-737	4"	PVC MULTI-CELL	EXISTING ITS CABINET	SOUTH PORTAL PB5	
C-738	4"	PVC MULTI-CELL	EXISTING ITS CABINET	NORTH PORTAL PB8	
C-739	4"	PVC MULTI-CELL	EXISTING ITS CABINET	NORTH PORTAL PB8	
C-735	1"	RGS	FAN-PLC-CABINET	SWITCH GEAR	
O-731	4"	PVC MULTI-CELL	SOUTH PORTAL PB5	SOUTH PORTAL CABINET	
O-732	4"	PVC MULTI-CELL	SOUTH PORTAL PB5	SOUTH PORTAL CABINET	
O-733	4"	PVC MULTI-CELL	NORTH PORTAL PB8	NORTH PORTAL CABINET	
O-734	4"	PVC MULTI-CELL	NORTH PORTAL PB8	NORTH PORTAL CABINET	

DESIGN AGENCY
HATCH MOTT MacDONALD
18013 CLEVELAND PKWY.
SUITE 200
CLEVELAND, OH 44135

DESIGNED MK | DRAWN BJG | CHECKED LL | REVISED CL | REVIEWED RF | DATE 08/11/14 | STRUCTURE FILE NUMBER 3106578

ELECTRICAL - CONDUIT RACEWAY SCHEDULE - SHEET 3 OF 3

BRIDGE NO. HAM-71-0134
I-71 LYTLE TUNNEL UNDER LYTLE PARK

HAM-71-01.34
PID No. 87268

c:\pwworking\hmm\external\tyn61470\dms72703\071_0134CFS033.dgn 10/24/2014 10:46:11 AM TYN61470

CABLE SCHEDULE

CABLE TAG	QTY	CABLE DESCRIPTION	GROUND	VOLTAGE	AREA	CABLE ROUTING SEGMENTS					FROM DEVICE	TO DEVICE	NOTES
						1	2	3	4	5			
C-PLC/ VIB FAN1	2	1PR #16 SH 'TC' LSZH	#14 AWG GND/COND.		0.144	C102					PLC CABINET	FAN #1 VIBRATION XMTR	
C-PLC/ VIB FAN3	2	1PR #16 SH 'TC' LSZH	#14 AWG GND/COND.		0.144	C108					PLC CABINET	FAN #3 VIBRATION XMTR	
-PLC/ VIBFAN2	2	1PR #16 SH 'TC' LSZH	#14 AWG GND/COND.		0.144	C105					PLC CABINET	FAN #2 VIBRATION XMTR	
C-PLC/DPE	1	4PR #16 SH 'TC' LSZH	#14 AWG GND/COND.		0.262	C109					PLC CABINET	SWITCH GEAR FEEDER BREAKER PANEL "DP-E"	
C-PLC/DPW	1	4PR #16 SH 'TC' LSZH	#14 AWG GND/COND.		0.262	C109					PLC CABINET	SWITCH GEAR FEEDER BREAKER PANEL "DP-W"	
-PLC/FAN#1 DAMP	1	24PR #16 SH 'TC' LSZH	#14 AWG GND/COND.		1.215	C110	C111				PLC CABINET	SPLICE BOX #1	
C-PLC/FAN#2 DAMP	1	24PR #16 SH 'TC' LSZH	#14 AWG GND/COND.		1.215	C110	C112	C113			PLC CABINET	SPLICE BOX #2	
C-PLC/FAN#3 DAMP	1	24PR #16 SH 'TC' LSZH	#14 AWG GND/COND.		1.215	C110	C112	C114			PLC CABINET	SPLICE BOX #3	
C-PLC/LPDP	1	4PR #16 SH 'TC' LSZH	#14 AWG GND/COND.		0.262	C109					PLC CABINET	SWITCH GEAR FEEDER BREAKER PANEL "LP-DP"	
C-PLC/LPPP	1	4PR #16 SH 'TC' LSZH	#14 AWG GND/COND.		0.262	C109					PLC CABINET	SWITCH GEAR FEEDER BREAKER PANEL "LP-PP"	
C-PLC/MAIN#1	1	8PR #16 SH 'TC' LSZH	#14 AWG GND/COND.		0.417	C109					PLC CABINET	SWITCH GEAR Main #1 (Bus A)	
C-PLC/MAIN#2	1	8PR #16 SH 'TC' LSZH	#14 AWG GND/COND.		0.417	C109					PLC CABINET	SWITCH GEAR Main #2 (Bus B)	
C-PLC/MULI#1	1	8PR #16 SH 'TC' LSZH	#14 AWG GND/COND.		0.417	C109					PLC CABINET	SWITCH GEAR MULTILIN FOR FAN #1	
C-PLC/MULTI#2	1	8PR #16 SH 'TC' LSZH	#14 AWG GND/COND.		0.417	C109					PLC CABINET	SWITCH GEAR MULTILIN FOR FAN #2	
C-PLC/MULTI#3	1	8PR #16 SH 'TC' LSZH	#14 AWG GND/COND.		0.417	C109					PLC CABINET	SWITCH GEAR MULTILIN FOR FAN #3	
C-PLC/SS#1	1	24PR #16 SH 'TC' LSZH	#14 AWG GND/COND.		1.215	C101					PLC CABINET	SS#1	
-PLC/SS#2	1	24PR #16 SH 'TC' LSZH	#14 AWG GND/COND.		1.215	C104					PLC CABINET	SS#2	
C-PLC/SS#3	1	24PR #16 SH 'TC' LSZH	#14 AWG GND/COND.		1.215	C107					PLC CABINET	SS#3	
C-PLC/TI-DN	1	12PR #16 SH 'TC' LSZH	#14 AWG GND/COND.		0.592	C115					PLC CABINET	SPLICE BOX #4	
C-PLC/TI-DR	1	12PR #16 SH 'TC' LSZH	#14 AWG GND/COND.		0.592	C115					PLC CABINET	SPLICE BOX #4	
C-PLC/TIDS	1	36PR #16 SH 'TC' LSZH	#14 AWG GND/COND.		1.590	C116					PLC CABINET	SPLICE BOX #5	
C-PLC/MS-1	1	8PR #16 SH 'TC' LSZH	#14 AWG GND/COND.		2.085	C117					PLC CABINET	MOTOR STARTER PANEL "MS-1"	
C-MS-1/EF-1	1	4PR #16 SH 'TC' LSZH	#14 AWG GND/COND.		0.262	C118					MOTOR STARTER PANEL "MS-1"	EF-1	
-PLC/TIE	1	8PR #16 SH 'TC' LSZH	#14 AWG GND/COND.		0.417	C109					PLC CABINET	SWITCH GEAR TIE BREAKER	
C-SB#1/ZS F1D1	5	#14 CIC	#14 AWG GND/COND.		0.05	C120	C121				SPLICE BOX #1	LIMIT SWITCHES FAN 1 DAMPER 1	
C-SB#1/ZS F1D2	5	#14 CIC	#14 AWG GND/COND.		0.05	C120	C122				SPLICE BOX #1	LIMIT SWITCHES FAN 1 DAMPER 2	
C-SB#1/ZS F1D3	5	#14 CIC	#14 AWG GND/COND.		0.05	C123	C1 4				SPLICE BOX #1	LIMIT SWITCHES FAN 1 DAMPER 3	
C-SB#1/ZS F1D4	5	#14 CIC	#14 AWG GND/COND.		0.05	C123	C125				SPLICE BOX #1	LIMIT SWITCHES FAN 1 DAMPER 4	
C-SB#2/ZS F2D1	5	#14 CIC	#14 AWG GND/COND.		0.05	C126	C127				SPLICE BOX #2	LIMIT SWITCHES FAN 2 DAMPER 1	
C-SB#2/ZS F2D2	5	#14 CIC	#14 AWG GND/COND.		0.05	C126	C128				SPLICE BOX #2	LIMIT SWITCHES FAN 2 DAMPER 2	
C-SB#2/ZS F2D3	5	#14 CIC	#14 AWG GND/COND.		0.05	C129	C130				SPLICE BOX #2	LIMIT SWITCHES FAN 2 DAMPER 3	
C-SB#2/ZS F2D4	5	#14 CIC	#14 AWG GND/COND.		0.05	C129	C131				SPLICE BOX #2	LIMIT SWITCHES FAN 2 DAMPER 4	
C-SB#3/ZS F3D1	5	#14 CIC	#14 AWG GND/COND.		0.05	C132	C133				SPLICE BOX #3	LIMIT SWITCHES FAN 3 DAMPER 1	
C-SB#3/ZS F3D2	5	#14 CIC	#14 AWG GND/COND.		0.05	C132	C134				SPLICE BOX #3	LIMIT SWITCHES FAN 3 DAMPER 2	
C-SB#3/ZS F3D3	5	#14 CIC	#14 AWG GND/COND.		0.05	C135	C136				SPLICE BOX #3	LIMIT SWITCHES FAN 3 DAMPER 3	
C-SB#3/ZS F3D4	5	#14 CIC	#14 AWG GND/COND.		0.05	C135	C137				SPLICE BOX #3	LIMIT SWITCHES FAN 3 DAMPER 4	
C-SB#4/ZS TI-DN1	5	#14 CIC	#14 AWG GND/COND.		0.05	C138	C139				SPLICE BOX #4	LIMIT SWITCHES NB DAMPER 1	
C-SB#4/ZS TI-DN2	5	#14 CIC	#14 AWG GND/COND.		0.05	C138	C140				SPLICE BOX #4	LIMIT SWITCHES NB DAMPER 2	
-SB#4/ZS TI-DR	5	#14 CIC	#14 AWG GND/COND.		0.05	C141					SPLICE BOX #4	LIMIT SWITCHES RAMP DAMPER	
C-SB#5/ZS TI-DS1	5	#14 CIC	#14 AWG GND/COND.		0.05	C142	C143				SPLICE BOX #5	LIMIT SWITCHES SB DAMPER 1	
C-SB#5/ZS TI-DS2	5	#14 CIC	#14 AWG GND/COND.		0.05	C142	C144	C145			SPLICE BOX #5	LIMIT SWITCHES SB DAMPER 2	
C-SB#5/ZS TI-DS3	5	#14 CIC	#14 AWG GND/COND.		0.05	C142	C144	C146			SPLICE BOX #5	LIMIT SWITCHES SB DAMPER 3	
-SB#5/ZS TI-DS4	5	#14 CIC	#14 AWG GND/COND.		0.05	C147	C148				SPLICE BOX #5	LIMIT SWITCHES SB DAMPER 4	
-SB#5/ZS TI-DS5	5	#14 CIC	#14 AWG GND/COND.		0.05	C147	C149	C150			SPLICE BOX #5	LIMIT SWITCHES SB DAMPER 5	
-SB#5/ZS TI-DS6	5	#14 CIC	#14 AWG GND/COND.		0.05	C147	C149	C151			SPLICE BOX #5	LIMIT SWITCHES SB DAMPER 6	
C-SWGR/FAN1 RTDS	5	1-TRIAD #16 SH 'TC' LSZH	#14 AWG GND/COND.		0.365	C100					SWITCHGEAR MULTILIN	FAN MOTOR #1 RTDS	
C-SWGR/FAN2 RTDS	5	1-TRIAD #16 SH 'TC' LSZH	#14 AWG GND/COND.		0.365	C103					SWITCHGEAR MULTILIN	FAN MOTOR #2 RTDS	
C-SWGR/FAN3 RTDS	5	1-TRIAD #16 SH 'TC' LSZH	#14 AWG GND/COND.		0.365	C106					SWITCHGEAR MULTILIN	FAN MOTOR #3 RTDS	
D-SLC-1	1	2/C#12 CIC-FPLR	N/A		0.027	D100					FACP	SIGNALING LINE CIRCUIT (TYP.)	
D-NAC-1	1	2/C#12 CIC-FPLR	N/A		0.027	D101					FACP	NOTIFICATION APPLIANCE CIRCUIT (TYP.)	
D-FAP/FACP-1	1	24S/SM	N/A		0.040	D102					FACP	FAP	
D-FDEP/FACP-1	1	2#12 CIC-FPLR	N/A		0.027	D103					FACP	FIRE DEPARTMENT	
D-SCADA/FACP-1	1	6#14 AWG CIC-FPLR	N/A		0.058	D104					FACP	SCADA RELAY INTERFACE ENCLOSURE	TERMINATE 2#14 AT EACH RELAY
D-SCADA/FACP-2	1	6#12 AWG CIC-FPLR	N/A		0.079	D105					SCADA RELAY INTERFACE ENCLOSURE	FAN-PLC	TERMINATE 2#12 AT EACH RELAY
D-HD.FACP-1	1	10/C#14 CIC-FPLR	N/A		0.097	D106					FACP	LINEAR HEAT DETECTOR CONTROLLER 1	
D-HD.FACP-2	1	10/C#14 CIC-FPLR	N/A		0.097	D107					FACP	LINEAR HEAT DETECTOR CONTROLLER 2	
D-HD.FACP-3	1	10/C#14 CIC-FPLR	N/A		0.097	D108					FACP	LINEAR HEAT DETECTOR CONTROLLER 3	
D-RPS/FACP	1	4#14 AWG CIC-FPLR	N/A		0.039	D109					FACP	REMOTE POWER SUPPLY (24VDC)	
E-SS1/FAN1 ESTOP	1	1PR #16 SH 'TC' LSZH	#14 AWG GND/COND.		0.072	E101					SS#1	FAN #1 E-STOP PB	
E-SS2/FAN2 ESTOP	1	1PR #16 SH 'TC' LSZH	#14 AWG GND/COND.		0.072	E102					SS#2	FAN #2 E-STOP PB	
E-SS3/FAN3 ESTOP	1	1PR #16 SH 'TC' LSZH	#14 AWG GND/COND.		0.072	E103					SS#3	FAN #3 E-STOP PB	
L- 4VDC RPS/HD1	1	2/C#12, 1/C#12G CIC-FPLR 1	N/A	120/208V	0.04	L119					LINEAR HEAT DETECTOR CONTROLLER 1	REMOTE POWER SUPPLY (24VDC)	
L-24VDC RPS/HD2	1	2/C#12, 1/C#12G CIC-FPLR	N/A	120/208V	0.04	L118					LINEAR HEAT DETECTOR CONTROLLER 2	REMOTE POWER SUPPLY (24VDC)	
L- 4VDC RPS/HD3	1	2/C#12, 1/C#12G CIC-FPLR	N/A	120/208V	0.04	L117					LINEAR HEAT DETECTOR CONTROLLER 3	REMOTE POWER SUPPLY (24VDC)	
L-120UPS/FACP	1	2/C#10, 1/C#12G 'TC' LSZH	N/A	120/208V	0.055	L114	L115				PANEL "120VAC UPS"	FACP	
L-120UPS/RPS	1	2/C#10, 1/C#12G 'TC' LSZH	N/A	120/208V	0.055	L114	L116				PANEL "120VAC UPS"	REMOTE POWER SUPPLY (24VDC)	
L-120UPS/ CR COMM RK1	1	3/C #8 'TC' LSZH	N/A	120/208V	0.332	L109	PB-MCR				PANEL "120VAC UPS"	CONTROL ROOM COMMS RACK	
L-120UPS/ CR COMM RK2	1	3/C #8 'TC' LSZH	N/A	120/208V	0.332	L109	PB-MCR				PANEL "120VAC UPS"	CONTROL ROOM COMMS RACK	
L-120UPS/ MS-1	1	4/C #12 'TC' LSZH	N/A	120/208V	0.181	L213					PANEL "120VAC UPS"	MOTOR STARTER PANEL "MS-1"	
L-120UPS/ NP COMM RK1	1	3/C #6 'TC' LSZH	N/A	120/208V	0.419	L108	0-734				PANEL "120VAC UPS"	NORTH PORTAL COMM EQUIP	
L-1 0UPS/ NP COMM RK2	1	3/C #6 'TC' LSZH	N/A	120/208V	0.419	L108	0-734				PANEL "120VAC UPS"	NORTH PORTAL COMM EQUIP	
L-120UPS/ SP COMM RK1	1	3/C #6 'TC' LSZH	N/A	120/208V	0.419	L107	0-732				PANEL "120VAC UPS"	SOUTH PORTAL COMM EQUIP	
L-120UPS/ SP COMM RK2	1	3/C #6 'TC' LSZH	N/A	120/208V	0.419	L107	0-732				PANEL "120VAC UPS"	SOUTH PORTAL COMM EQUIP	
L-120UPS/ SWGR PWR	1	3/C #10 'TC' LSZH	N/A	120/208V	0.189	L110					PANEL "120VAC UPS"	SWITCHGEAR CONTROL POWER	
L-120UPS/PLC	1	3/C #10 'TC' LSZH	N/A	120/208V	0.189	L105					PANEL "120VAC UPS"	PLC CABINET	

NO.	DATE	REVISION DESCRIPTION
1	4/06/16	RFI #148

DESIGN AGENCY
HATCH MOTT MacDONALD
18013 CLEVELAND PKWY.
SUITE 200
CLEVELAND, OH 44135

DESIGNED	DRAWN	REVIEWED	DATE
MK	BJG	RF	08/11/14
CHECKED	REVISED	STRUCTURE FILE NUMBER	
LL	CL	3106578	

ELECTRICAL - CABLE ROUTING SCHEDULE - SHEET 1 OF 7

BRIDGE NO. HAM-71-0134
I-71 LYTLE TUNNEL UNDER LYTLE PARK

HAM-71-01.34
PID No. 87268

220/296

478/555

c:\pwworking\hmm\external\pre47802\dms72703\071_0134CES046.dgn 4/7/2016 1:06:37 PM PRE47802

CABLE SCHEDULE

CABLE TAG	QTY	CABLE DESCRIPTION	GROUND	VOLTAGE	AREA	CABLE ROUTING SEGMENTS					FROM DEVICE	TO DEVICE	NOTES
						1	2	3	4	5			
L-120UPS/FACP	3	#12 AWG-RHW2-LSZH	N/A	120/208V	0.105	L104					PANEL "120VAC UPS"	FACP	
L-F1-D1	3	#8 CIC	N/A	120/208V	0.0999	L120					SPLICE BOX#1	FAN #1 ACTUATOR #1 (1HP)	SPLICE TO CA# L-LP1 / FAN1 DAMP 1
L-F1-D2	3	#8 CIC	N/A	120/208V	0.0999	L121					SPLICE BOX#1	FAN #1 ACTUATOR #2 (1HP)	SPLICE TO CA# L-LP1 / FAN1 DAMP 2
L-F1-D3	3	#8 CIC	N/A	120/208V	0.0999	L122					SPLICE BOX#1	FAN #1 ACTUATOR #3 (1HP)	SPLICE TO CA# L-LP1 / FAN1 DAMP 3
L-F1-D4	3	#8 CIC	N/A	120/208V	0.0999	L123					SPLICE BOX#1	FAN #1 ACTUATOR #4 (1HP)	SPLICE TO CA# L-LP1 / FAN1 DAMP 4
L-F2-D1	3	#8 CIC	N/A	120/208V	0.0999	L124					SPLICE BOX#2	FAN #2 ACTUATOR #1 (1HP)	SPLICE TO CA# L-LP1 / FAN2 DAMP 1
L-F2-D2	3	#8 CIC	N/A	120/208V	0.0999	L125					SPLICE BOX#2	FAN #2 ACTUATOR #2 (1HP)	SPLICE TO CA# L-LP1 / FAN2 DAMP 2
L-F2-D3	3	#8 CIC	N/A	120/208V	0.0999	L126					SPLICE BOX#2	FAN #2 ACTUATOR #3 (1HP)	SPLICE TO CA# L-LP1 / FAN2 DAMP 3
L-F2-D4	3	#8 CIC	N/A	120/208V	0.0999	L127					SPLICE BOX#2	FAN #2 ACTUATOR #4 (1HP)	SPLICE TO CA# L-LP1 / FAN2 DAMP 4
L-F3-D1	3	#8 CIC	N/A	120/208V	0.0999	L128					SPLICE BOX#3	FAN #3 ACTUATOR #1 (1HP)	SPLICE TO CA# L-LP1 / FAN3 DAMP 1
L-F3-D2	3	#8 CIC	N/A	120/208V	0.0999	L129					SPLICE BOX#3	FAN #3 ACTUATOR #2 (1HP)	SPLICE TO CA# L-LP1 / FAN3 DAMP 2
L-F3-D3	3	#8 CIC	N/A	120/208V	0.0999	L130					SPLICE BOX#3	FAN #3 ACTUATOR #3 (1HP)	SPLICE TO CA# L-LP1 / FAN3 DAMP 3
L-F3-D4	3	#8 CIC	N/A	120/208V	0.0999	L131					SPLICE BOX#3	FAN #3 ACTUATOR #4 (1HP)	SPLICE TO CA# L-LP1 / FAN3 DAMP 4
L-LP/LTS EQUIP RM-1	1	3/C #10 'TC' LSZH	N/A		0.189	exist					PANEL "LP"	EXIST. EQUIPMENT ROOM LIGHTS	SPLICE TO EXISTING
L-LP/LTS EQUIP RM-10	1	3/C #10 'TC' LSZH	N/A		0.189	exist					PANEL "LP"	EXIST. EQUIPMENT ROOM LIGHTS	SPLICE TO EXISTING
L-LP/LTS EQUIP RM-11	1	3/C #10 'TC' LSZH	N/A		0.189	exist					PANEL "LP"	EXIST. EQUIPMENT ROOM LIGHTS	SPLICE TO EXISTING
L-LP/LTS EQUIP RM-12	1	3/C #10 'TC' LSZH	N/A		0.189	exist					PANEL "LP"	EXIST. EQUIPMENT ROOM LIGHTS	SPLICE TO EXISTING
L-LP/LTS EQUIP RM-2	1	3/C #10 'TC' LSZH	N/A		0.189	exist					PANEL "LP"	EXIST. EQUIPMENT ROOM LIGHTS	SPLICE TO EXISTING
L-LP/LTS EQUIP RM-3	1	3/C #10 'TC' LSZH	N/A		0.189	exist					PANEL "LP"	EXIST. EQUIPMENT ROOM LIGHTS	SPLICE TO EXISTING
L-LP/LTS EQUIP RM-4	1	3/C #10 'TC' LSZH	N/A		0.189	exist					PANEL "LP"	EXIST. EQUIPMENT ROOM LIGHTS	SPLICE TO EXISTING
L-LP/LTS EQUIP RM-5	1	3/C #10 'TC' LSZH	N/A		0.189	exist					PANEL "LP"	EXIST. EQUIPMENT ROOM LIGHTS	SPLICE TO EXISTING
L-LP/LTS EQUIP RM-6	1	3/C #10 'TC' LSZH	N/A		0.189	exist					PANEL "LP"	EXIST. EQUIPMENT ROOM LIGHTS	SPLICE TO EXISTING
L-LP/LTS EQUIP RM-7	1	3/C #10 'TC' LSZH	N/A		0.189	exist					PANEL "LP"	EXIST. EQUIPMENT ROOM LIGHTS	SPLICE TO EXISTING
L-LP/LTS EQUIP RM-8	1	3/C #10 'TC' LSZH	N/A		0.189	exist					PANEL "LP"	EXIST. EQUIPMENT ROOM LIGHTS	SPLICE TO EXISTING
L-LP/LTS EQUIP RM-9	1	3/C #10 'TC' LSZH	N/A		0.189	exist					PANEL "LP"	EXIST. EQUIPMENT ROOM LIGHTS	SPLICE TO EXISTING
L-LP/REC EQUIP RM-1	1	3/C #10 'TC' LSZH	N/A		0.189	exist					PANEL "LP"	EXIST. EQUIPMENT ROOM RECEPTACLES	SPLICE TO EXISTING
L-LP/REC EQUIP RM-2	1	3/C #10 'TC' LSZH	N/A		0.189	exist					PANEL "LP"	EXIST. EQUIPMENT ROOM RECEPTACLES	SPLICE TO EXISTING
L-LP/REC EQUIP RM-3	1	3/C #10 'TC' LSZH	N/A		0.189	exist					PANEL "LP"	EXIST. EQUIPMENT ROOM RECEPTACLES	SPLICE TO EXISTING
L-LP/REC EQUIP RM-4	1	3/C #10 'TC' LSZH	N/A		0.189	exist					PANEL "LP"	EXIST. EQUIPMENT ROOM RECEPTACLES	SPLICE TO EXISTING
L-LP/REC EQUIP RM-5	1	3/C #10 'TC' LSZH	N/A		0.189	exist					PANEL "LP"	EXIST. EQUIPMENT ROOM RECEPTACLES	SPLICE TO EXISTING
L-LP/REC EQUIP RM-6	1	3/C #10 'TC' LSZH	N/A		0.189	exist					PANEL "LP"	EXIST. EQUIPMENT ROOM RECEPTACLES	SPLICE TO EXISTING
L-LP1 / ACC RM REC 1	1	3/C #10 'TC' LSZH	N/A		0.189						PANEL "LP-1"	ACCESS ROOM RECEPTACLE	FIELD TO ROUTE
L-LP1 / ACC RM REC 2	1	3/C #10 'TC' LSZH	N/A		0.189						PANEL "LP-1"	ACCESS ROOM RECEPTACLE	FIELD TO ROUTE
L-LP1 / CORR REC	1	3/C #10 'TC' LSZH	N/A		0.189						PANEL "LP-1"	CORRIDOR RECEPTACLE	FIELD TO ROUTE
L-LP1 / ER REC 1	1	3/C #10 'TC' LSZH	N/A		0.189						PANEL "LP-1"	ELECTRICAL ROOM RECEPTACLE	FIELD TO ROUTE
L-LP1 / ER REC 2	1	3/C #10 'TC' LSZH	N/A		0.189						PANEL "LP-1"	ELECTRICAL ROOM RECEPTACLE	FIELD TO ROUTE
L-LP1 / FAN1 DAMP 1	1	3/C #6 'TC' LSZH	N/A	120/208V	0.419	L200	L201				PANEL "LP-1"	SPLICE BOX#2	SPLICE TO CA# L-F2-D1
L-LP1 / FAN1 DAMP 1	1	3/C #6 'TC' LSZH	N/A	120/208V	0.419	L200					PANEL "LP-1"	SPLICE BOX#1	SPLICE TO CA# L-F1-D1
L-LP1 / FAN1 DAMP 2	1	3/C #6 'TC' LSZH	N/A	120/208V	0.419	L200					PANEL "LP-1"	SPLICE BOX#1	SPLICE TO CA# L-F1-D2
L-LP1 / FAN1 DAMP 3	1	3/C #6 'TC' LSZH	N/A	120/208V	0.419	L200					PANEL "LP-1"	SPLICE BOX#1	SPLICE TO CA# L-F1-D3
L-LP1 / FAN1 DAMP 4	1	3/C #6 'TC' LSZH	N/A	120/208V	0.419	L200					PANEL "LP-1"	SPLICE BOX#1	SPLICE TO CA# L-F1-D4
L-LP1 / FAN2 DAMP 2	1	3/C #6 'TC' LSZH	N/A	120/208V	0.419	L200	L201				PANEL "LP-1"	SPLICE BOX#2	SPLICE TO CA# L-F2-D2
L-LP1 / FAN2 DAMP 3	1	3/C #6 'TC' LSZH	N/A	120/208V	0.419	L200	L201				PANEL "LP-1"	SPLICE BOX#2	SPLICE TO CA# L-F2-D3
L-LP1 / FAN2 DAMP 4	1	3/C #6 'TC' LSZH	N/A	120/208V	0.419	L200	L201				PANEL "LP-1"	SPLICE BOX#2	SPLICE TO CA# L-F2-D4
L-LP1 / FAN3 DAMP 1	1	3/C #6 'TC' LSZH	N/A	120/208V	0.419	L200	L201	L202			PANEL "LP-1"	SPLICE BOX#3	SPLICE TO CA# L-F3-D1
L-LP1 / FAN3 DAMP 2	1	3/C #6 'TC' LSZH	N/A	120/208V	0.419	L200	L201	L202			PANEL "LP-1"	SPLICE BOX#3	SPLICE TO CA# L-F3-D2
L-LP1 / FAN3 DAMP 3	1	3/C #6 'TC' LSZH	N/A	120/208V	0.419	L200	L201	L202			PANEL "LP-1"	SPLICE BOX#3	SPLICE TO CA# L-F3-D3
L-LP1 / FAN3 DAMP 4	1	3/C #6 'TC' LSZH	N/A	120/208V	0.419	L200	L201	L202			PANEL "LP-1"	SPLICE BOX#3	SPLICE TO CA# L-F3-D4
L-LP1 / PLEN RM REC 1	1	3/C #10 'TC' LSZH	N/A		0.189						PANEL "LP-1"	PLENUM ROOM RECEPTACLE	FIELD TO ROUTE
L-LP1 / PLEN RM REC 2	1	3/C #10 'TC' LSZH	N/A		0.189						PANEL "LP-1"	PLENUM ROOM RECEPTACLE	FIELD TO ROUTE
L-LP1 / PLEN RM REC 3	1	3/C #10 'TC' LSZH	N/A		0.189						PANEL "LP-1"	PLENUM ROOM RECEPTACLE	FIELD TO ROUTE
L-LP1 / PLEN RM REC 4	1	3/C #10 'TC' LSZH	N/A		0.189						PANEL "LP-1"	PLENUM ROOM RECEPTACLE	FIELD TO ROUTE
L-LP1/EUH-1	1	3/C #8 'TC' LSZH	N/A	120/208V	0.332	L225	L227				PANEL "LP-1"	EUH-1	
L-LP1/EUH-2	1	3/C #8 'TC' LSZH	N/A	120/208V	0.332	L225	L228				PANEL "LP-1"	EUH-2	
L-120UPS/FSD-2	1	3/C #12 'TC' LSZH	N/A	120/208V	0.152	L220	L221	L222			PANEL "120VAC UPS"	FSD-2	
L-120UPS/FSD-3	1	3/C #12 'TC' LSZH	N/A	120/208V	0.152	L220	L221	L223			PANEL "120VAC UPS"	FSD-3	
L-120UPS/FSD-4	1	3/C #12 'TC' LSZH	N/A	120/208V	0.152	L220	L224	L229			PANEL "120VAC UPS"	FSD-4	
L-120UPS/FSD-5	1	3/C #12 'TC' LSZH	N/A	120/208V	0.152	L220	L224	L230			PANEL "120VAC UPS"	FSD-5	
L-120UPS/FSD-1	1	3/C #12 'TC' LSZH	N/A	120/208V	0.152	L226					PANEL "120VAC UPS"	FSD-1	
L-LP2/ NB TUN E WL	1	4/C #10 'TC' LSZH	N/A		0.255	exist					PANEL "LP-2"	NB TUNNEL EAST WALL (OLD "PP-1,3,5)	SPLICE TO EXISTING
L-LP2/ NB TUN W WL	1	4/C #10 'TC' LSZH	N/A		0.255	exist					PANEL "LP-2"	NB TUNNEL WEST WALL (OLD "PP-2,4,6)	SPLICE TO EXISTING
L-LP2/ RP TUN E WL	1	4/C #10 'TC' LSZH	N/A		0.255	exist					PANEL "LP-2"	RAMP TUNNEL EAST WALL (OLD "PP-7,9,11)	SPLICE TO EXISTING
L-LP2/ RP TUN W WL	1	4/C #10 'TC' LSZH	N/A		0.255	exist					PANEL "LP-2"	RAMP TUNNEL WEST WALL (OLD "PP-8,10,12)	SPLICE TO EXISTING
L-LP2/ SB TUN E WL	1	4/C #10 'TC' LSZH	N/A		0.255	exist					PANEL "LP-2"	SB TUNNEL EAST WALL (OLD "PP-13,15,17)	SPLICE TO EXISTING
L-LP2/ SB TUN E WL	1	4/C #10 'TC' LSZH	N/A		0.255	exist					PANEL "LP-2"	SB TUNNEL WEST WALL (OLD "PP-14,16,18)	SPLICE TO EXISTING
L-LP2/EUH-3	1	3/C #8 'TC' LSZH	N/A	120/208V	0.332	L210	L212				PANEL "LP-2"	EUH-3	
L-LP2/EUH-4	1	3/C #8 'TC' LSZH	N/A	120/208V	0.332	L210	L211				PANEL "LP-2"	EUH-4	
L-LP2/TOIL RM W HTR-1	1	3/C #10 'TC' LSZH	N/A		0.189	exist					PANEL "LP-2"	TOILET RM WATER HTR	SPLICE TO EXISTING
L-LP2/TOIL RM W HTR-2	1	3/C #10 'TC' LSZH	N/A		0.189	exist					PANEL "LP-2"	TOILET RM WATER HTR	SPLICE TO EXISTING
L-SS1/FAN1 HTR	1	3/C #12 'TC' LSZH	N/A	120/208V	0.152	L101					SS#1	FAN MOTOR #1 HEATER	
L-SS2/FAN2 HTR	1	3/C #12 'TC' LSZH	N/A	120/208V	0.152	L102					SS#2	FAN MOTOR #2 HEATER	
L-SS3/FAN3 HTR	1	3/C #12 'TC' LSZH	N/A	120/208V	0.152	L103					SS#3	FAN MOTOR #3 HEATER	
L-TI-DN-1	3	#8 CIC	N/A	120/208V	0.0999	L132					SPLICE BOX#4	NORTH BOUND TUNNEL DAMP #1	SPLICE TO CA# P-LP2/ NB DAMP 1
L-TI-DN-2	3	#8 CIC	N/A	120/208V	0.0999	L133					SPLICE BOX#4	NORTH BOUND TUNNEL DAMP #2	SPLICE TO CA# P-LP2/ NB DAMP 2
L-TI-DR	3	#8 CIC	N/A	120/208V	0.0999	L134					SPLICE BOX#4	RAMP TUNNEL DAMP	SPLICE TO CA# P-LP2/ RP DAMP
L-TI-DS-1	3	#6 CIC	N/A	120/208V	0.1404	L135	L136				SPLICE BOX#5	SOUTH BOUND TUNNEL DAMP #1	SPLICE TO CA# P-LP2/ SB DAMP 1
L-TI-DS-2	3	#6 CIC	N/A	120/208V	0.1404	L135	L137	L138			SPLICE BOX#5	SOUTH BOUND TUNNEL DAMP #2	SPLICE TO CA# P-LP2/ SB DAMP 2
L-TI-DS-3	3	#6 CIC	N/A	120/208V	0.1404	L135	L137	L139			SPLICE BOX#5	SOUTH BOUND TUNNEL DAMP #3	SPLICE TO CA# P-LP2/ SB DAMP 3
L-TI-DS-4	3	#6 CIC	N/A	120/208V	0.1404	L140	L141				SPLICE BOX#5	SOUTH BOUND TUNNEL DAMP #4	SPLICE TO CA# P-LP2/ SB DAMP 4
L-TI-DS-5	3	#6 CIC	N/A	120/208V	0.1404	L140	L142	L143			SPLICE BOX#5	SOUTH BOUND TUNNEL DAMP #5	SPLICE TO CA# P-LP2/ SB DAMP 5

c:\pwworking\hmm\external\tyn61470\dms72703\071_0134CE5047.dgn 10/24/2014 10:46:34 AM TYNG1470

DESIGN AGENCY
HATCH MOTT MacDONALD
18013 CLEVELAND PKWY.
SUITE 200
CLEVELAND, OH 44135

DESIGNED MK | DRAWN BJG | REVIEWED RF | DATE 08/11/14
CHECKED LL | REVISED CL | STRUCTURE FILE NUMBER 3106578

ELECTRICAL - CABLE ROUTING SCHEDULE - SHEET 2 OF 7

BRIDGE NO. HAM-71-0134
I-71 LYTLE TUNNEL UNDER LYTLE PARK

HAM-71-01.34
PID No. 87268

CABLE SCHEDULE

CABLE TAG	QTY	CABLE DESCRIPTION	GROUND	VOLTAGE	AREA	CABLE ROUTING SEGMENTS					FROM DEVICE	TO DEVICE	NOTES
						1	2	3	4	5			
L-TI-DS-6	3	#6 CIC	N/A	120/208V	0.1404	L140	L142	L144			SPLICE BOX#5	SOUTH BOUND TUNNEL DAMP #6	SPLICE TO CA# P-LP2/ SB DAMP 6
P-480UPS/ XFMR 120UPS	1	4/C #10 'TC' LSZH	N/A	480/277V	0.255	P180					PANEL "480VAC UPS"	XFMR (120VAC UPS)	
P-480UPS/N-EM	4	3/0 AWG RHW2-LSZH	#6 AWG GND	480/277V	1.248	P176					PANEL "480VAC UPS"	NORTH BOUND TUNNEL EMERGENCY LIGHTS	#6 AWG GND
P-480UPS/R-EM	4	3/0 AWG RHW2-LSZH	#6 AWG GND	480/277V	1.248	P177					PANEL "480VAC UPS"	SOUTH BOUND RAMP EMERGENCY LIGHTS	#6 AWG GND
P-480UPS/S-EM	4	3/0 AWG RHW2-LSZH	#6 AWG GND	480/277V	1.248	P178					PANEL "480VAC UPS"	SOUTHBOUND TUNNEL EMERGENCY LIGHTS	#6 AWG GND
P-LP DP/ ATS UPS	1	3/C #6 W/GND 'TC' LSZH	N/A	480/277V	0.442	P166					PANEL "LP-DP"	ATS-UPS	
P-LP DP/ EXIST WELD-1	1	3/C #8 W/GND 'TC' LSZH	N/A		0.332	exist					PANEL "LP-DP"	EXISTING WELDING OUTLET	SPLICE TO EXISTING
-LP DP/ EXIST WELD-2	1	3/C #8 W/GND 'TC' LSZH	N/A		0.332	exist					PANEL "L -DP"	EXISTING WELDING OUTLET	SPLICE TO EXISTING
P-LP DP/ UNIT HTR UH1	1	4/C #10 'TC' LSZH	N/A		0.255	exist					PANEL "LP-DP"	EXIST. UNIT HEATER UH-1	
P-LP DP/ UNIT HTR UH2	1	4/C #10 'TC' LSZH	N/A		0.255	exist					PANEL "LP-DP"	EXIST. UNIT HEATER UH-2	
P-LP DP/ UNIT HTR UH3	1	4/C #10 'TC' LSZH	N/A		0.255	exist					PANEL "LP-DP"	EXIST. UNIT HEATER UH-3	
P-LP DP/ UNIT HTR UH4	1	4/C #10 'TC' LSZH	N/A		0.255	exist					PANEL "LP-DP"	EXIST. UNIT HEATER UH-4	
-LP DP/ UNIT HTR UH5	1	4/C #10 'TC' LSZH	N/A		0.255	exist					PANEL "L -DP"	EXIST. UNIT HEATER UH-5	
P-LP DP/ UNIT HTR UH6	1	4/C #10 'TC' LSZH	N/A		0.255	exist					PANEL "LP-DP"	EXIST. UNIT HEATER UH-6	
P-LP PP/ ATS UPS	1	3/C #6 W/GND 'TC' LSZH	N/A		0.442	P157					PANEL "LP-PP"	ATS-UPS	
P-LP PP/ CORR LTG	1	4/C #10 'TC' LSZH	N/A		0.255						PANEL "LP-PP"	CORRIDOR LIGHTING	FIELD TO ROUTE
P-LP PP/ EL RM LTG	1	4/C #10 'TC' LSZH	N/A		0.255						PANEL "LP-PP"	ELECTRICAL ROOM LIGHTING	FIELD TO ROUTE
P-LP PP/ FAN CORR LTG	1	4/C #10 'TC' LSZH	N/A		0.255						PANEL "LP-PP"	FAN CORRIDOR LIGHTING	FIELD TO ROUTE
P-LP PP/ PLEN EXH LTG	1	4/C #10 'TC' LSZH	N/A		0.255						PANEL "LP-PP"	PLENUM EXHAUST LIGTING	FIELD TO ROUTE
-LP PP/ PLEN IN LTG	1	4/C #10 'TC' LSZH	N/A		0.255						PANEL "LP-PP"	PLENUM INLET LIGHTING	FIELD TO ROUTE
P-LP PP/ PLEN OUT LTG	1	4/C #10 'TC' LSZH	N/A		0.255						PANEL "LP-PP"	PLENUM OUTLET LIGHTING	FIELD TO ROUTE
P-LP PP/ ST WELL LTG	1	4/C #10 'TC' LSZH	N/A		0.255						PANEL "LP-PP"	STAIRWELL LIGHTING	FIELD TO ROUTE
P-LP PP/ UPS BYPASS	1	4/C #6 W/GND 'TC' LSZH	N/A	480/277V	0.608	P170					PANEL "LP-PP"	UPS MAINTENANCE BY-PASS	
P-LP PP/ XFMR LP1	1	3/C #2 W/GND 'TC' LSZH	N/A	480/277V	0.785	P155					PANEL "LP-PP"	XFMR (LP-1)	
P-LP PP/ XFMR LP2	1	3/C #2 W/GND 'TC' LSZH	N/A	480/277V	0.785	P156					PANEL "LP-PP"	XFMR (LP-2)	
P-LP2/LP	1	4/C #2 W/GND 'TC' LSZH	N/A	120/208V	0.817	L205					PANEL "LP-2"	PANEL "LP"	
P-LP2/ NB DAMP 1	1	3/C #10 'TC' LSZH	N/A	120/208V	0.189	L203					PANEL "L -2"	SPLICE BOX#4	SPLICE TO CA# L-TI-DN-1
P-LP2/ NB DAMP 2	1	3/C #10 'TC' LSZH	N/A	120/208V	0.189	L203					PANEL "LP-2"	SPLICE BOX#4	SPLICE TO CA# L-TI-DN-2
P-LP2/ RP DAMP	1	3/C #10 'TC' LSZH	N/A	120/208V	0.189	L203					PANEL "LP-2"	SPLICE BOX#4	SPLICE TO CA# L-TI-DR
P-LP2/ SB DAMP 1	1	3/C #8 'TC' LSZH	N/A	120/208V	0.332	L204					PANEL "LP-2"	SPLICE BOX#5	SPLICE TO CA# L-TI-DS-1
P-LP2/ SB DAMP 2	1	3/C #8 'TC' LSZH	N/A	120/208V	0.332	L204					PANEL "LP-2"	SPLICE BOX#5	SPLICE TO CA# L-TI-DS-2
P-LP2/ SB DAMP 3	1	3/C #8 'TC' LSZH	N/A	120/208V	0.332	L204					PANEL "L -2"	SPLICE BOX#5	SPLICE TO CA# L-TI-DS-3
P-LP2/ SB DAMP 4	1	3/C #8 'TC' LSZH	N/A	120/208V	0.332	L204					PANEL "LP-2"	SPLICE BOX#5	SPLICE TO CA# L-TI-DS-4
P-LP2/ SB DAMP 5	1	3/C #8 'TC' LSZH	N/A	120/208V	0.332	L204					PANEL "LP-2"	SPLICE BOX#5	SPLICE TO CA# L-TI-DS-5
P-LP2/ SB DAMP 6	1	3/C #8 'TC' LSZH	N/A	120/208V	0.332	L204					PANEL "LP-2"	SPLICE BOX#5	SPLICE TO CA# L-TI-DS-6
P-MAIN BYPASS/ UPS	1	4/C #6 W/GND 'TC' LSZH	N/A	480/277V	0.608	P175					UPS MAINTENANCE BY-PASS	PANEL "480VAC UPS"	
P-MAIN FEED A-1	4	750 KCM-RHW2-LSZH	N/A	480/277V	4.524	P100	CTRAY				Power Co. Transformer #1	SWITCH GEAR Main #1 (Bus A)	
P-MAIN FEED A-2	4	750 KCM-RHW2-LSZH	N/A	480/277V	4.524	P101	CTRAY				Power Co. Transformer #1	SWITCH GEAR Main #1 (Bus A)	
P-MAIN FEED A-3	4	750 KCM-RHW2-LSZH	N/A	480/277V	4.524	P102	CTRAY				Power Co. Transformer #1	SWITCH GEAR Main #1 (Bus A)	
P-MAIN FEED A-4	4	750 KCM-RHW2-LSZH	N/A	480/277V	4.524	P103	CTRAY				Power Co. Transformer #1	SWITCH GEAR Main #1 (Bus A)	
P-MAIN FEED A-5	4	750 KCM-RHW2-LSZH	N/A	480/277V	4.524	P104	CTRAY				Power Co. Transformer #1	SWITCH GEAR Main #1 (Bus A)	
P-MAIN FEED A-6	4	750 KCM-RHW2-LSZH	N/A	480/277V	4.524	P105	CTRAY				Power Co. Transformer #1	SWITCH GEAR Main #1 (Bus A)	
P-MAIN FEED B-1	4	750 KCM-RHW2-LSZH	N/A	480/277V	4.524	P110	CTRAY				Power Co. Transformer #2	SWITCH GEAR Main #2 (Bus B)	
P-MAIN FEED B-2	4	750 KCM-RHW2-LSZH	N/A	480/277V	4.524	P111	CTRAY				Power Co. Transformer #2	SWITCH GEAR Main #2 (Bus B)	
P-MAIN FEED B-3	4	750 KCM-RHW2-LSZH	N/A	480/277V	4.524	P112	CTRAY				Power Co. Transformer #2	SWITCH GEAR Main #2 (Bus B)	
P-MAIN FEED B-4	4	750 KCM-RHW2-LSZH	N/A	480/277V	4.524	P113	CTRAY				Power Co. Transformer #2	SWITCH GEAR Main #2 (Bus B)	
P-MAIN FEED B-5	4	750 KCM-RHW2-LSZH	N/A	480/277V	4.524	P114	CTRAY				Power Co. Transformer #2	SWITCH GEAR Main #2 (Bus B)	
P-MAIN FEED B-6	4	750 KCM-RHW2-LSZH	N/A	480/277V	4.524	P115	CTRAY				Power Co. Transformer #2	SWITCH GEAR Main #2 (Bus B)	
P-SS1/ FAN1-1	3	500 KCM-RHW2-LSZH	#1/0 GND	480/277V	2.31	P108					SS#1	FAN MOTOR #1	
P-SS1/ FAN1-2	3	500 KCM-RHW2-LSZH	#1/0 GND	480/277V	2.31	P109					SS#1	FAN MOTOR #1	
P-SS1/ FAN1-3	3	#3 AWG-RHW2-LSZH	#6 GND	480/277V	0.456	P121					SS#1	FAN MOTOR #1	
-SS1/ FAN3-1	3	500 KCM-RHW2-LSZH	#1/0 GND	480/277V	2.31	P147					SS#3	FAN MOTOR #3	
P-SS1/ FAN3-2	3	500 KCM-RHW2-LSZH	#1/0 GND	480/277V	2.31	P148					SS#3	FAN MOTOR #3	
-SS2/ FAN2-1	3	500 KCM-RHW2-LSZH	#1/0 GND	480/277V	2.31	P118					SS#2	FAN MOTOR #2	
P-SS2/ FAN2-2	3	500 KCM-RHW2-LSZH	#1/0 GND	480/277V	2.31	P119					SS#2	FAN MOTOR #2	
P-SS2/ FAN2-3	3	#3 AWG-RHW2-LSZH	#6 GND	480/277V	0.456	P122					SS#2	FAN MOTOR #2	
P-SS3/ FAN3-3	3	#3 AWG-RHW2-LSZH	#6 GND	480/277V	0.456	P123					SS#3	FAN MOTOR #3	
P-SWGR/ DPE-A	4	400 KCM-RHW2-LSZH	#1/0 GND	480/277V	2.488	P120A					SWITCH GEAR	PANEL "DP-E"	
P-SWGR/ DPE-B	4	400 KCM-RHW2-LSZH	#1/0 GND	480/277V	2.488	P120B					SWITCH GEAR	PANEL "DP-E"	
P-SWGR/ DPW-A	4	400 KCM-RHW2-LSZH	#1/0 GND	480/277V	2.488	P125A					SWITCH GEAR	PANEL "DP-W"	
-SWGR/ DPW-B	4	400 KCM-RHW2-LSZH	#1/0 GND	480/277V	2.488	P125B					SWITCH GEAR	PANEL "DP-W"	
-SWGR/ LP PP	4	500 KCM-RHW2-LSZH	#1/0 GND	480/277V	3.08	P152					SWITCH GEAR	PANEL "LP-PP"	
P-SWGR/ PNL DP	4	500 KCM-RHW2-LSZH	#1/0 GND	480/277V	3.08	P165					SWITCH GEAR	PANEL DP	
P-SWGR/ SS1-1	3	500 KCM-RHW2-LSZH	#1/0 GND	480/277V	2.31	P106					SWITCH GEAR	SS#1	
P-SWGR/ SS1-2	3	500 KCM-RHW2-LSZH	#1/0 GND	480/277V	2.31	P107					SWITCH GEAR	SS#1	
P-SWGR/ SS2-1	3	500 KCM-RHW2-LSZH	#1/0 GND	480/277V	2.31	P116					SWITCH GEAR	SS#2	
P-SWGR/ SS2-2	3	500 KCM-RHW2-LSZH	#1/0 GND	480/277V	2.31	P117					SWITCH GEAR	SS#2	
P-SWGR/ SS3-1	3	500 KCM-RHW2-LSZH	#1/0 GND	480/277V	2.31	P145					SWITCH GEAR	SS#3	
P-SWGR/ SS3-2	3	500 KCM-RHW2-LSZH	#1/0 GND	480/277V	2.31	P146					SWITCH GEAR	SS#3	
P-XFMR 120UPS/ 120UPS	1	4/C #8 W/GND 'TC' LSZH	N/A	120/208V	0.43	L111					XFMR (120VAC UPS)	PANEL "120VAC UPS"	
P-XFMR LP1/ LP1	4	4/0 AWG RHW2-LSZH	#2 GND	120/208V	1.452	L112					XFMR (L -1)	PANEL "LP-1"	
P-XFMR LP2/ LP2	4	4/0 AWG RHW2-LSZH	#2 GND	120/208V	1.452	L113					XFMR (LP-2)	PANEL "LP-2"	

NO.	DATE	REVISION DESCRIPTION
1	11/09/15	VENTILATION FANS HP CHANGED

DESIGN AGENCY
HATCH MOTT MacDONALD
18013 CLEVELAND PKWY.
SUITE 200
CLEVELAND, OH 44135

DESIGNED MK | DRAWN BJG | CHECKED LL | REVIEWED RF | DATE 08/11/14 | REVISED CL | STRUCTURE FILE NUMBER 3106578

ELECTRICAL - CABLE ROUTING SCHEDULE - SHEET 3 OF 7
BRIDGE NO. HAM-71-0134
I-71 LYTLE TUNNEL UNDER LYTLE PARK

HAM-71-01.34
PID No. 87268

222/296

480/555

c:\pwworking\hmm\external\pre47802\dms72703\071_0134CES034.dgn 11/11/2015 12:55:15 PM PRE47802

CABLE SCHEDULE

CABLE TAG	QTY.	CABLE DESCRIPTION	GROUND	VOLTS	CABLE ROUTING SEGMENTS					FROM DEVICE	TO DEVICE	NOTES
					1	2	3	4	5			
P-NEM-01	4	#10 AWG-RHW2-LSZH	#10 AWG	480/277V	P-343	P-351				N-EM	NEM-5/3	NORTHBOUND TUNNEL EAST WALL EMERGENGY FIXTURES
P-NEM-02	4	#10 AWG-RHW2-LSZH	#10 AWG	480/277V	P-346	P-352				N-EM	NEM-4/5	
P-NEM-03	4	#10 AWG-RHW2-LSZH	#10 AWG	480/277V	P-373	P-381				N-EM	NEM-3/3	NORTHBOUND TUNNEL WEST WALL EMERGENGY FIXTURES
P-NEM-04	4	#10 AWG-RHW2-LSZH	#10 AWG	480/277V	P-374	P-380				N-EM	NEM-2/5	
P-NEM-05	4	#10 AWG-RHW2-LSZH	#10 AWG	480/277V	P-304					N-EM	RDE-NE1 / RDE-NE4	NORTHBOUND EAST WALL RDE
P-NEM-06	4	#10 AWG-RHW2-LSZH	#10 AWG	480/277V	P-309					N-EM	RDE-NW1 / RDE-NW4	NORTHBOUND WEST WALL RDE
P-NEM-07	4	#10 AWG-RHW2-LSZH	#10 AWG	480/277V	P-311					N-EM	N-C	FEED TO 'N-C' PANEL
P-NEDN-01	4	#8 AWG-RHW2-LSZH	#10 AWG	480/277V	P-345	P-353	P-355			NE-DN	NEDN-3/9	TUNNEL ROADWAY LIGHTING NORTHBOUND TUNNEL, EAST WALL
P-NEDN-02	4	#10 AWG-RHW2-LSZH	#10 AWG	480/277V	P-348	P-354	P-356	P-358	P-360	NE-DN	NEDN-6/14	
P-NELP1-01	4	#8 AWG-RHW2-LSZH	#10 AWG	480/277V	P-345	P-353	P-355			NE-LP1	NELP1-3/12	
P-NELP1-02	4	#8 AWG-RHW2-LSZH	#10 AWG	480/277V	P-347	P-357				NE-LP1	NELP1-11/11	
P-NELP1-03	4	#8 AWG-RHW2-LSZH	#10 AWG	480/277V	P-347	P-357	P-359			NE-LP1	NELP1-15/10	
P-NELP1-04	4	#8 AWG-RHW2-LSZH	#10 AWG	480/277V	P-348	P-354	P-356	P-358		NE-LP1	NELP1-6/10	
P-NELP1-05	4	#8 AWG-RHW2-LSZH	#10 AWG	480/277V	P-348	P-354	P-356	P-358	P-360	NE-LP1	NELP1-8/9	
P-NELP1-06	4	#10 AWG-RHW2-LSZH	#10 AWG	480/277V	P-350	P-362				NE-LP1	NELP1-14/7	
P-NELP2-01	4	#8 AWG-RHW2-LSZH	#10 AWG	480/277V	P-345	P-353				NE-LP2	NELP2-5/12	
P-NELP2-02	4	#8 AWG-RHW2-LSZH	#10 AWG	480/277V	P-345	P-353	P-355			NE-LP2	NELP2-11/11	
P-NELP2-03	4	#8 AWG-RHW2-LSZH	#10 AWG	480/277V	P-349	P-361				NE-LP2	NELP2-17/11	
P-NELP2-04	4	#8 AWG-RHW2-LSZH	#10 AWG	480/277V	P-349	P-361	P-363			NE-LP2	NELP2-21/10	
P-NELP2-05	4	#8 AWG-RHW2-LSZH	#10 AWG	480/277V	P-348	P-354				NE-LP2	NELP2-6/10	
P-NELP2-06	4	#8 AWG-RHW2-LSZH	#10 AWG	480/277V	P-348	P-354	P-356			NE-LP2	NELP2-12/9	
P-NELP2-07	4	#10 AWG-RHW2-LSZH	#10 AWG	480/277V	P-350	P-362				NE-LP2	NELP2-14/7	
P-NWDN-01	4	#8 AWG-RHW2-LSZH	#10 AWG	480/277V	P-375	P-383	P-385			NW-DN	NWDN-3/9	TUNNEL ROADWAY LIGHTING NORTHBOUND TUNNEL, WEST WALL
P-NWDN-02	4	#8 AWG-RHW2-LSZH	#10 AWG	480/277V	P-376	P-382	P-384	P-386	P-388	NW-DN	NWDN-6/13	
P-NWLP1-01	4	#8 AWG-RHW2-LSZH	#10 AWG	480/277V	P-375	P-383	P-385			NW-LP1	NWLP1-1/12	
P-NWLP1-02	4	#8 AWG-RHW2-LSZH	#10 AWG	480/277V	P-377	P-387				NW-LP1	NWLP1-11/10	
P-NWLP1-03	4	#8 AWG-RHW2-LSZH	#10 AWG	480/277V	P-377	P-387	P-389			NW-LP1	NWLP1-13/11	
P-NWLP1-04	4	#8 AWG-RHW2-LSZH	#10 AWG	480/277V	P-376	P-382	P-384			NW-LP1	NWLP1-6/9	
P-NWLP1-05	4	#8 AWG-RHW2-LSZH	#10 AWG	480/277V	P-376	P-382	P-384	P-386	P-388	NW-LP1	NWLP1-8/9	
P-NWLP1-06	4	#10 AWG-RHW2-LSZH	#10 AWG	480/277V	P-378	P-390				NW-LP1	NWLP1-14/7	
P-NWLP2-01	4	#8 AWG-RHW2-LSZH	#10 AWG	480/277V	P-375	P-383				NW-LP2	NWLP2-5/11	
P-NWLP2-02	4	#8 AWG-RHW2-LSZH	#10 AWG	480/277V	P-375	P-383	P-385			NW-LP2	NWLP2-7/12	
P-NWLP2-03	4	#8 AWG-RHW2-LSZH	#10 AWG	480/277V	P-379	P-391				NW-LP2	NWLP2-17/10	
P-NWLP2-04	4	#8 AWG-RHW2-LSZH	#10 AWG	480/277V	P-379	P-391	P-393			NW-LP2	NWLP2-19/11	
P-NWLP2-05	4	#8 AWG-RHW2-LSZH	#10 AWG	480/277V	P-376	P-382				NW-LP2	NWLP2-6/10	
P-NWLP2-06	4	#8 AWG-RHW2-LSZH	#10 AWG	480/277V	P-376	P-382	P-384	P-386		NW-LP2	NWLP2-10/10	
P-NWLP2-07	4	#10 AWG-RHW2-LSZH	#10 AWG	480/277V	P-378	P-390				NW-LP2	NWLP2-18/6	
P-SEM-01	4	#10 AWG-RHW2-LSZH	#10 AWG	480/277V	P-445	P-451				S-EM	SEM-3/2	SOUTHBOUND EAST WALL EMERGENGY FIXTURES
P-SEM-02	4	#10 AWG-RHW2-LSZH	#10 AWG	480/277V	P-444	P-452				S-EM	SEM-6/2	
P-SEM-03	4	#10 AWG-RHW2-LSZH	#10 AWG	480/277V	P-475	P-481				S-EM	SEM-9/2	SOUTHBOUND WEST WALL EMERGENGY FIXTURES
P-SEM-04	4	#10 AWG-RHW2-LSZH	#10 AWG	480/277V	P-472	P-480				S-EM	SEM-10/2	
P-SEM-05	4	#10 AWG-RHW2-LSZH	#10 AWG	480/277V	P-404					S-EM	RDE-SE1 / RDE-SE4	SOUTHBOUND EAST WALL RDE
P-SEM-06	4	#10 AWG-RHW2-LSZH	#10 AWG	480/277V	P-409					S-EM	RDE-SW1 / RDE-SW4	SOUTHBOUND WEST WALL RDE
P-SEM-07	4	#10 AWG-RHW2-LSZH	#10 AWG	480/277V	P-411					S-EM	S-C	SOUTHBOUND LIGHTING CONTROL PANEL
P-SEDN-01	4	#8 AWG-RHW2-LSZH	#10 AWG	480/277V	P-447	P-453	P-455	P-457		SE-DN	SEDN-1/6	TUNNEL ROADWAY LIGHTING SOUTHBOUND TUNNEL, EAST WALL
P-SEDN-02	4	#8 AWG-RHW2-LSZH	#10 AWG	480/277V	P-446	P-454	P-456			SE-DN	SEDN-4/6	
P-SELP1-01	4	#8 AWG-RHW2-LSZH	#10 AWG	480/277V	P-447	P-453	P-455			SE-LP1	SELP1-5/8	
P-SELP1-02	4	#8 AWG-RHW2-LSZH	#10 AWG	480/277V	P-447	P-453	P-455	P-457		SE-LP1	SELP1-7/6	
P-SELP1-03	4	#10 AWG-RHW2-LSZH	#10 AWG	480/277V	P-449	P-459				SE-LP1	SELP1-17/5	
P-SELP1-04	4	#8 AWG-RHW2-LSZH	#10 AWG	480/277V	P-446	P-454				SE-LP1	SELP1-6/9	
P-SELP1-05	4	#8 AWG-RHW2-LSZH	#10 AWG	480/277V	P-446	P-454	P-456			SE-LP1	SELP1-8/7	
P-SELP1-06	4	#8 AWG-RHW2-LSZH	#10 AWG	480/277V	P-448	P-458				SE-LP1	SELP1-18/9	
P-SELP1-07	4	#8 AWG-RHW2-LSZH	#10 AWG	480/277V	P-448	P-458	P-460			SE-LP1	SELP1-24/9	
P-SELP1-08	4	#8 AWG-RHW2-LSZH	#10 AWG	480/277V	P-448	P-458	P-460	P-462		SE-LP1	SELP1-28/7	
P-SELP2-01	4	#8 AWG-RHW2-LSZH	#10 AWG	480/277V	P-447	P-453				SE-LP2	SELP2-5/10	
P-SELP2-02	4	#8 AWG-RHW2-LSZH	#10 AWG	480/277V	P-447	P-453	P-455	P-457		SE-LP2	SELP2-11/10	
P-SELP2-03	4	#10 AWG-RHW2-LSZH	#10 AWG	480/277V	P-449	P-459				SE-LP2	SELP2-15/5	
P-SELP2-04	4	#8 AWG-RHW2-LSZH	#10 AWG	480/277V	P-446	P-454				SE-LP2	SELP2-6/13	
P-SELP2-05	4	#8 AWG-RHW2-LSZH	#10 AWG	480/277V	P-446	P-454	P-456			SE-LP2	SELP2-12/10	
P-SELP2-06	4	#8 AWG-RHW2-LSZH	#10 AWG	480/277V	P-450	P-464				SE-LP2	SELP2-18/9	
P-SELP2-07	4	#8 AWG-RHW2-LSZH	#10 AWG	480/277V	P-450	P-464	P-466			SE-LP2	SELP2-24/9	
P-SELP2-08	4	#8 AWG-RHW2-LSZH	#10 AWG	480/277V	P-450	P-464	P-466	P-468		SE-LP2	SELP2-26/7	
P-SWDN-01	4	#8 AWG-RHW2-LSZH	#10 AWG	480/277V	P-477	P-483	P-485			SW-DN	SWDN-1/5	TUNNEL ROADWAY LIGHTING SOUTHBOUND TUNNEL, WEST WALL
P-SWDN-02	4	#8 AWG-RHW2-LSZH	#10 AWG	480/277V	P-474	P-482	P-484			SW-DN	SWDN-6/6	
P-SWLP1-01	4	#8 AWG-RHW2-LSZH	#10 AWG	480/277V	P-477	P-483	P-485			SW-LP1	SWLP1-3/12	
P-SWLP1-02	4	#10 AWG-RHW2-LSZH	#10 AWG	480/277V	P-479	P-487				SW-LP1	SWLP1-9/5	
P-SWLP1-03	4	#8 AWG-RHW2-LSZH	#10 AWG	480/277V	P-474	P-482				SW-LP1	SWLP1-6/9	
P-SWLP1-04	4	#8 AWG-RHW2-LSZH	#10 AWG	480/277V	P-474	P-482	P-484			SW-LP1	SWLP1-10/7	
P-SWLP1-05	4	#8 AWG-RHW2-LSZH	#10 AWG	480/277V	P-476	P-486				SW-LP1	SWLP1-18/9	
P-SWLP1-06	4	#8 AWG-RHW2-LSZH	#10 AWG	480/277V	P-476	P-486	P-488			SW-LP1	SWLP1-24/9	
P-SWLP1-07	4	#8 AWG-RHW2-LSZH	#10 AWG	480/277V	P-476	P-486	P-490			SW-LP1	SWLP1-26/7	
P-SWLP2-01	4	#8 AWG-RHW2-LSZH	#10 AWG	480/277V	P-477	P-483				SW-LP2	SWLP2-5/10	
P-SWLP2-02	4	#8 AWG-RHW2-LSZH	#10 AWG	480/277V	P-477	P-483	P-485			SW-LP2	SWLP2-7/8	
P-SWLP2-03	4	#10 AWG-RHW2-LSZH	#10 AWG	480/277V	P-479	P-487				SW-LP2	SWLP2-17/5	
P-SWLP2-04	4	#8 AWG-RHW2-LSZH	#10 AWG	480/277V	P-474	P-482				SW-LP2	SWLP2-6/13	
P-SWLP2-05	4	#8 AWG-RHW2-LSZH	#10 AWG	480/277V	P-474	P-482	P-484			SW-LP2	SWLP2-10/11	
P-SWLP2-06	4	#8 AWG-RHW2-LSZH	#10 AWG	480/277V	P-478	P-492				SW-LP2	SWLP2-18/9	
P-SWLP2-07	4	#8 AWG-RHW2-LSZH	#10 AWG	480/277V	P-478	P-492	P-494			SW-LP2	SWLP2-24/9	

c:\pwworking\hmm\external\tyn61470\dms72703\071_0134CES035.dgn 10/24/2014 10:47:00 AM TYN61470

DESIGN AGENCY
HATCH MOTT MacDONALD
18013 CLEVELAND PKWY.
SUITE 200
CLEVELAND, OH 44135

DESIGNED MK | DRAWN BJG | REVIEWED RF | DATE 08/11/14
CHECKED LL | REVISED CL | STRUCTURE FILE NUMBER 3106578

ELECTRICAL - CABLE ROUTING SCHEDULE - SHEET 4 OF 7

BRIDGE NO. HAM-71-0134
I-71 LYTLE TUNNEL UNDER LYTLE PARK

HAM-71-01.34
PID No. 87268

CABLE SCHEDULE

CABLE TAG	QTY.	CABLE DESCRIPTION	GROUND	VOLTS	CABLE ROUTING SEGMENTS					FROM DEVICE	TO DEVICE	NOTES
					1	2	3	4	5			
P-SWLP2-08	4	#8 AWG-RHW2-LSZH	#10 AWG	480/277V	P-478	P-492	P-494	P-496		SW-LP2	SWLP2-30/6	
P-REM-01	4	#10 AWG-RHW2-LSZH	#10 AWG	480/277V	P-545	P-551				R-EM	REM-3/2	SOUTHBOUND EXIT RAMP TO 3RD STREET EAST WALL EMERGENGY FIXTURES
P-REM-02	4	#10 AWG-RHW2-LSZH	#10 AWG	480/277V	P-546	P-552				R-EM	REM-6/2	
P-REM-03	4	#10 AWG-RHW2-LSZH	#10 AWG	480/277V	P-575	P-581				R-EM	REM-9/2	SOUTHBOUND EXIT RAMP TO 3RD STREET WEST WALL EMERGENGY FIXTURES
P-REM-04	4	#10 AWG-RHW2-LSZH	#10 AWG	480/277V	P-574	P-580				R-EM	REM-10/2	
P-REM-05	4	#10 AWG-RHW2-LSZH	#10 AWG	480/277V	P-504					R-EM	RDE-SRE1 / RDE-SRE4	SOUTHBOUND EXIT RAMP EAST WALL RDE
P-REM-06	4	#10 AWG-RHW2-LSZH	#10 AWG	480/277V	P-509					R-EM	RDE-SRW1 / RDE-SRW4	SOUTHBOUND EXIT RAMP WEST WALL RDE
P-REDN-01	4	#8 AWG-RHW2-LSZH	#10 AWG	480/277V	P-547	P-553	P-555			RE-DN	REDN-3/5	TUNNEL ROADWAY LIGHTING SOUTHBOUND EXIT RAMP TO 3RD STREET EAST WALL
P-REDN-02	4	#8 AWG-RHW2-LSZH	#10 AWG	480/277V	P-548	P-554	P-556	P-558		RE-DN	REDN-4/6	
P-RELP1-01	4	#8 AWG-RHW2-LSZH	#10 AWG	480/277V	P-547	P-553	P-555			RE-LP1	RELP1-5/13	
P-RELP1-02	4	#10 AWG-RHW2-LSZH	#10 AWG	480/277V	P-549	P-557				RE-LP1	RELP1-11/2	
P-RELP1-03	4	#8 AWG-RHW2-LSZH	#10 AWG	480/277V	P-548	P-554	P-556			RE-LP1	RELP1-6/8	
P-RELP1-04	4	#8 AWG-RHW2-LSZH	#10 AWG	480/277V	P-548	P-554	P-556	P-558		RE-LP1	RELP1-12/7	
P-RELP1-05	4	#8 AWG-RHW2-LSZH	#10 AWG	480/277V	P-550	P-560				RE-LP1	RELP1-16/12	
P-RELP2-01	4	#8 AWG-RHW2-LSZH	#10 AWG	480/277V	P-547	P-553				RE-LP2	RELP2-5/10	
P-RELP2-02	4	#8 AWG-RHW2-LSZH	#10 AWG	480/277V	P-547	P-553	P-555			RE-LP2	RELP2-11/9	
P-RELP2-03	4	#10 AWG-RHW2-LSZH	#10 AWG	480/277V	P-549	P-557				RE-LP2	RELP2-17/2	
P-RELP2-04	4	#8 AWG-RHW2-LSZH	#10 AWG	480/277V	P-548	P-554				RE-LP2	RELP2-6/11	
P-RELP2-05	4	#8 AWG-RHW2-LSZH	#10 AWG	480/277V	P-548	P-554	P-556	P-558		RE-LP2	RELP2-10/12	
P-RELP2-06	4	#8 AWG-RHW2-LSZH	#10 AWG	480/277V	P-550	P-560				RE-LP2	RELP2-16/12	
P-RWDN-01	4	#8 AWG-RHW2-LSZH	#10 AWG	480/277V	P-577	P-583	P-585			RW-DN	RWDN-3/5	TUNNEL ROADWAY LIGHTING SOUTHBOUND EXIT RAMP TO 3RD STREET WEST WALL
P-RWDN-02	4	#8 AWG-RHW2-LSZH	#10 AWG	480/277V	P-576	P-582	P-584	P-586		RW-DN	RWDN-4/6	
P-RWLP1-01	4	#8 AWG-RHW2-LSZH	#10 AWG	480/277V	P-577	P-583	P-585			RW-LP1	RWLP1-1/13	
P-RWLP1-02	4	#10 AWG-RHW2-LSZH	#10 AWG	480/277V	P-579	P-587				RW-LP1	RWLP1-11/2	
P-RWLP1-03	4	#8 AWG-RHW2-LSZH	#10 AWG	480/277V	P-576	P-582	P-584			RW-LP1	RWLP1-6/8	
P-RWLP1-04	4	#8 AWG-RHW2-LSZH	#10 AWG	480/277V	P-576	P-582	P-584	P-586		RW-LP1	RWLP1-12/7	
P-RWLP1-05	4	#8 AWG-RHW2-LSZH	#10 AWG	480/277V	P-578	P-588				RW-LP1	RWLP1-16/12	
P-RWLP2-01	4	#8 AWG-RHW2-LSZH	#10 AWG	480/277V	P-577	P-583				RW-LP2	RWLP2-5/10	
P-RWLP2-02	4	#8 AWG-RHW2-LSZH	#10 AWG	480/277V	P-577	P-583	P-585			RW-LP2	RWLP2-11/9	
P-RWLP2-03	4	#10 AWG-RHW2-LSZH	#10 AWG	480/277V	P-579	P-587				RW-LP2	RWLP2-17/2	
P-RWLP2-04	4	#8 AWG-RHW2-LSZH	#10 AWG	480/277V	P-576	P-582				RW-LP2	RWLP2-6/11	
P-RWLP2-05	4	#8 AWG-RHW2-LSZH	#10 AWG	480/277V	P-576	P-582	P-584	P-586		RW-LP2	RWLP2-12/11	
P-RWLP2-06	4	#8 AWG-RHW2-LSZH	#10 AWG	480/277V	P-578	P-588				RW-LP2	RWLP2-14/12	
P-DPE/NEDN	4	#1 AWG-RHW2-LSZH	#8 AWG	480/277V	P-320					DP-E	NE-DN	FEEDS TO EAST WALL DISTRIBUTION PANELS
P-DPE/NELP1	4	#1 AWG-RHW2-LSZH	#8 AWG	480/277V	P-321					DP-E	NE-LP1	
P-DPE/NELP2	4	#1 AWG-RHW2-LSZH	#8 AWG	480/277V	P-322					DP-E	NE-LP2	
P-DPE/REDN	4	#1 AWG-RHW2-LSZH	#8 AWG	480/277V	P-323					DP-E	RE-DN	
P-DPE/RELP1	4	#1 AWG-RHW2-LSZH	#8 AWG	480/277V	P-324					DP-E	RE-LP1	
P-DPE/RELP2	4	#1 AWG-RHW2-LSZH	#8 AWG	480/277V	P-325					DP-E	RE-LP2	
P-DPE/SEDN	4	#1 AWG-RHW2-LSZH	#8 AWG	480/277V	P-326					DP-E	SE-DN	
P-DPE/SELP1	4	#1 AWG-RHW2-LSZH	#8 AWG	480/277V	P-327					DP-E	SE-LP1	
P-DPE/SELP2	4	#1 AWG-RHW2-LSZH	#8 AWG	480/277V	P-328					DP-E	SE-LP2	
P-DPW/NWDN	4	#1 AWG-RHW2-LSZH	#8 AWG	480/277V	P-420					DP-W	NW-DN	FEEDS TO WEST WALL DISTRIBUTION PANELS
P-DPW/NW-LP1	4	#1 AWG-RHW2-LSZH	#8 AWG	480/277V	P-421					DP-W	NW-LP1	
P-DPW/NWLP2	4	#1 AWG-RHW2-LSZH	#8 AWG	480/277V	P-422					DP-W	NW-LP2	
P-DPW/RWLDN	4	#1 AWG-RHW2-LSZH	#8 AWG	480/277V	P-423					DP-W	RW-DN	
P-DPW/RWLP1	4	#1 AWG-RHW2-LSZH	#8 AWG	480/277V	P-424					DP-W	RW-LP1	
P-DPW/RWLP2	4	#1 AWG-RHW2-LSZH	#8 AWG	480/277V	P-425					DP-W	RW-LP2	
P-DPW/SWDN	4	#1 AWG-RHW2-LSZH	#8 AWG	480/277V	P-426					DP-W	SW-DN	
P-DPW/SWLP1	4	#1 AWG-RHW2-LSZH	#8 AWG	480/277V	P-427					DP-W	SW-LP1	
P-DPW/SWLP2	4	#1 AWG-RHW2-LSZH	#8 AWG	480/277V	P-428					DP-W	SW-LP2	
P-DPE/A1NE	2	#2/0 AWG-RHW2-LSZH	#6 AWG	277V	T-300					DP-E	A1/NE	TEMPORARY FEEDERS FOR EXISITNG TUNNEL LIGHTING DISTRIBUTION BOARDS
P-DPE/B2NE	2	#2/0 AWG-RHW2-LSZH	#6 AWG	277V	T-301					DP-E	B2/NE	
P-DPE/C3NE	2	#2/0 AWG-RHW2-LSZH	#6 AWG	277V	T-302					DP-E	C3/NE	
P-DPE/A2SE	2	#2/0 AWG-RHW2-LSZH	#6 AWG	277V	T-303					DP-E	A2/SE	
P-DPE/B3SE	2	#2/0 AWG-RHW2-LSZH	#6 AWG	277V	T-304					DP-E	B3/SE	
P-DPE/C1SE	2	#2/0 AWG-RHW2-LSZH	#6 AWG	277V	T-305					DP-E	C1/SE	
P-DPE/A3RE	2	#2/0 AWG-RHW2-LSZH	#6 AWG	277V	T-306					DP-E	A3/RE	
P-DPE/B1RE	2	#2/0 AWG-RHW2-LSZH	#6 AWG	277V	T-307					DP-E	B1/RE	
P-DPE/C2RE	2	#2/0 AWG-RHW2-LSZH	#6 AWG	277V	T-308					DP-E	C2/RE	
P-DPW/A2NW	2	#2/0 AWG-RHW2-LSZH	#6 AWG	277V	T-400					DP-W	A2/NW	
P-DPW/B3NW	2	#2/0 AWG-RHW2-LSZH	#6 AWG	277V	T-401					DP-W	B3/NW	
P-DPW/C1NW	2	#2/0 AWG-RHW2-LSZH	#6 AWG	277V	T-402					DP-W	C1/NW	
P-DPW/A3SW	2	#2/0 AWG-RHW2-LSZH	#6 AWG	277V	T-403					DP-W	A3/SW	
P-DPW/B1SW	2	#2/0 AWG-RHW2-LSZH	#6 AWG	277V	T-404					DP-W	B1/SW	
P-DPW/C2SW	2	#2/0 AWG-RHW2-LSZH	#6 AWG	277V	T-405					DP-W	C2/SW	
P-DPW/A1RW	2	#2/0 AWG-RHW2-LSZH	#6 AWG	277V	T-406					DP-W	A1/RW	
P-DPW/B2RW	2	#2/0 AWG-RHW2-LSZH	#6 AWG	277V	T-407					DP-W	B2/RW	
P-DPW/C3RW	2	#2/0 AWG-RHW2-LSZH	#6 AWG	277V	T-408					DP-W	C3/RW	
C-PLC/COER1	1	3/C #14 'TC' LSZH			C-600	C-604				CO PLC	COER1	CARBON MONOXIDE DETECTION
C-PLC/COFP1	1	3/C #14 'TC' LSZH			C-600	C-602	C-603			CO PLC	COFP1	
C-PLC/CONB1	1	3/C #14 'TC' LSZH			C-600	C-602	C-604	C-606		CO PLC	CONB1	
C-PLC/CONB2	1	3/C #14 'TC' LSZH			C-600	C-602	C-604	C-607		CO PLC	CONB2	
C-PLC/COSR1	1	3/C #14 'TC' LSZH			C-600	C-602	C-604	C-608	C-610	CO PLC	COSR1	
C-PLC/COSR2	1	3/C #14 'TC' LSZH			C-600	C-602	C-604	C-608	C-611	CO PLC	COSR2	
C-PLC/COSB1	1	3/C #14 'TC' LSZH			C-600	C-602	C-604	C-608	C-612	CO PLC	COSB1	
C-PLC/COSB2	1	3/C #14 'TC' LSZH			C-600	C-602	C-604	C-608	C-612	CO PLC	COSB2	
C-NC-NP-01	1	2-PAIRS #16AWG BELDEN 1069S			C-300					N-C	NORTHBOUND PHOTOMETER	

c:\pwworking\hmm\external\tyn61470\dms72703\071-0134CES036.dgn 10/24/2014 10:47:14 AM TYN61470

DESIGN AGENCY
HATCH MOTT MacDONALD
18013 CLEVELAND PKWY.
SUITE 200
CLEVELAND, OH 44135

DESIGNED MK | DRAWN BJG | REVIEWED RF | DATE 08/11/14
CHECKED LL | REVISED CL | STRUCTURE FILE NUMBER 3106578

ELECTRICAL - CABLE ROUTING SCHEDULE - SHEET 5 OF 7

BRIDGE NO. HAM-71-0134
I-71 LYTLE TUNNEL UNDER LYTLE PARK

HAM-71-01.34
PID No. 87268

CABLE SCHEDULE

CABLE TAG	QTY.	CABLE DESCRIPTION	GROUND	VOLTS	CABLE ROUTING SEGMENTS					FROM DEVICE	TO DEVICE	NOTES
					1	2	3	4	5			
C-NC-NEC1-01	2	#12 AWG-RHW2-LSZH		120V	C-301					N-C	NE-C1	TUNNEL ROADWAY LIGHTING CONTROL NORTHBOUND TUNNEL
C-NC-NEC1-02	2	#12 AWG-RHW2-LSZH		120V	C-302					N-C	NE-C2	
C-NC-RDE-NE-01	1	2/C #12AWG BELDEN 3103S			C-303					N-C	RDE-NE1 / RDE-NE4	
C-RDE-NE-LED		2/C #12AWG BELDEN 3103S			C-305					RDE-NE1 / RDE-NE4	NE-LED DIMMING DRIVERS	
C-NC-NWC1-01	2	#12 AWG-RHW2-LSZH		120V	C-306					N-C	NW-C1	
C-NC-NWC2-01	2	#12 AWG-RHW2-LSZH		120V	C-307					N-C	NW-C2	
C-NC-RDE-NW-01	1	2/C #12AWG BELDEN 3103S			C-308					N-C	RDE-NW1 / RDE-NW4	
C-RDE-NW-LED		2/C #12AWG BELDEN 3103S			C-310					RDE-NW1 / RDE-NW4	NW-LED DIMMING DRIVERS	
C-SC-SP-01	1	2-PAIRS #16AWG BELDEN 1069S			C-400						SOUTHBOUND PHOTOMETER	
C-SC-SEC1-01	2	#12 AWG-RHW2-LSZH		120V	C-401					S-C	SE-C1	TUNNEL ROADWAY LIGHTING CONTROL SOUTHBOUND TUNNELAND SOUTHBOUND EXIT RAMP TO 3RD STREET
C-SC-SEC2-01	2	#12 AWG-RHW2-LSZH		120V	C-402					S-C	SE-C2	
C-SC-RDE-SE-01	1	2/C #12AWG BELDEN 3103S			C-403					S-C	RDE-SE1 / RDE-SE4	
C-RDE-SE-LED		2/C #12AWG BELDEN 3103S			C-405					RDE-SE1 / RDE-SE4	SE-LED DIMMING DRIVERS	
C-SC-SWC1-01	2	#12 AWG-RHW2-LSZH		120V	C-406					S-C	SW-C1	
C-SC-SWC2-01	2	#12 AWG-RHW2-LSZH		120V	C-407					S-C	SW-C2	
C-SC-RDE-SW-01	1	2/C #12AWG BELDEN 3103S			C-408					S-C	RDE-SW1 / RDE-SW4	
C-RDE-SW-LED		2/C #12AWG BELDEN 3103S			C-410					RDE-SW1 / RDE-SW4	SW-LED DIMMING DRIVERS	
C-SC-REC1-01	2	#12 AWG-RHW2-LSZH		120V	C-501					S-C	RE-C1	
C-SC-REC2-01	2	#12 AWG-RHW2-LSZH		120V	C-502					S-C	RE-C2	
C-SC-RDE-RE-01	1	2/C #12AWG BELDEN 3103S			C-503					S-C	RDE-RE1 / RDE-RE4	
C-RDE-RE-LED		2/C #12AWG BELDEN 3103S			C-505					RDE-RE1 / RDE-RE4	RE-LED DIMMING DRIVERS	
C-SC-RWC1-01	2	#12 AWG-RHW2-LSZH		120V	C-506					S-C	RW-C1	
C-SC-RWC2-01	2	#12 AWG-RHW2-LSZH		120V	C-507					S-C	RW-C2	
C-SC-RDE-RW-01	1	2/C #12AWG BELDEN 3103S			C-508					S-C	RDE-RW1 / RDE-RW4	
C-RDE-RW-LED		2/C #12AWG BELDEN 3103S			C-510					RDE-RW1 / RDE-RW4	RW-LED DIMMING DRIVERS	

c:\pwworking\hnm\external\tyn61470\dms72703\071_0134CES037.dgn 10/24/2014 10:47:27 AM TYN61470

DESIGN AGENCY
HATCH MOTT MacDONALD
18013 CLEVELAND PKWY.
SUITE 200
CLEVELAND, OH 44135

DESIGNED MK | DRAWN BJG | CHECKED LL | REVIEWED RF | REVISED CL | DATE 08/11/14 | STRUCTURE FILE NUMBER 3106578

ELECTRICAL - CABLE ROUTING SCHEDULE - SHEET 6 OF 7

BRIDGE NO. HAM-71-0134
I-71 LYTLE TUNNEL UNDER LYTLE PARK

HAM-71-01.34
PID No. 87268

CABLE SCHEDULE

CABLE TAG	QTY	CABLE DESCRIPTION	GROUND	VOLTAGE	CABLE ROUTING SEGMENTS							FROM DEVICE	TO DEVICE	NOTES
					1	2	3	4	5	6	7			
F-MCRC-01	1	24S/SM	N/A	N/A	F-702	F-JB1	F-705	NBPC				PP-G1-CR-R1 (CENTRAL CABINET)	PP-G1-NBP-R1 (NORTH PORTAL CABINET)	
F-MCRC-02	1	24S/SM	N/A	N/A	F-702	F-JB1	F-703	F-JB3	F-706	0-732	SBPC	PP-S1-CR-R1 (CENTRAL CABINET)	PP-S1-SBP-R1 (SOUTH PORTAL CABINET)	
F-MCRC-03	1	24S/SM	N/A	N/A	F-702	F-JB1	F-703	F-JB3	F-706	0-732	SBPC	PP-G1-CR-R1 (CENTRAL CABINET)	PP-G1-SBP-R1 (SOUTH PORTAL CABINET)	
O-NBPC-01	1	CAT6	N/A	N/A	F-702	F-JB1	C-713					CRSW-G1-CR-R1 (CENTRAL CABINET)	MID TUNNEL CAMERA 1	
O-NBPC-02	1	CAT6	N/A	N/A	F-702	F-JB1	F-703	F-JB2	C-714			CRSW-G1-CR-R1 (CENTRAL CABINET)	MID TUNNEL CAMERA 2	
O-NBPC-03	1	CAT6	N/A	N/A	F-702	F-JB1	F-703	F-JB2	F-704	F-JB3	C-715	CRSW-G1-CR-R1 (CENTRAL CABINET)	MID TUNNEL CAMERA 3	
O-NBPC-04	1	CAT6	N/A	N/A	C-730							CRSW-G1-CR-R1 (CENTRAL CABINET)	TUNNEL CONTROL ROOM CAMERA	
O-NBPC-05	1	CAT6	N/A	N/A	C-728							CRSW-G1-CR-R1 (CENTRAL CABINET)	ELECTRICAL ROOM CAMERA	
O-NBPC-06	1	CAT6	N/A	N/A	C-729							CRSW-G1-CR-R1 (CENTRAL CABINET)	FAN ROOM CAMERA	
O-CRSW-01	1	CAT6	N/A	N/A	C-701							FAN-PLC PRIMARY (FAN-PLC CABINET)	CRSW-S1-CR-R1 (CENTRAL CABINET)	
O-CRSW-02	1	CAT6	N/A	N/A	C-701							FAN-PLC BACK-UP(FAN-PLC CABINET)	CRSW-S2-CR-R1 (CENTRAL CABINET)	
O-CRSW-03	1	CAT6	N/A	N/A	C-701							FSW-S1-CR-R2 (FAN-PLC CABINET)	CRSW-S1-CR-R1 (CENTRAL CABINET)	
O-CRSW-04	1	CAT6	N/A	N/A	C-701							FSW-S1-CR-R2 (FAN-PLC CABINET)	CRSW-S2-CR-R1 (CENTRAL CABINET)	
O-MBRE-01	1	CAT6 STP	N/A	N/A	C-735							FSW-S1-CR-R2 (FAN-PLC CABINET)	MAIN UTILITY BREAKER NO 1	
O-MBRE-02	1	CAT6 STP	N/A	N/A	C-735							FSW-S1-CR-R2 (FAN-PLC CABINET)	MAIN UTILITY BREAKER NO 2	
O-MULT-01	1	CAT6 STP	N/A	N/A	C-735							FSW-S1-CR-R2 (FAN-PLC CABINET)	MULTILIN NO 1	
O-MULT-02	1	CAT6 STP	N/A	N/A	C-735							FSW-S1-CR-R2 (FAN-PLC CABINET)	MULTILIN NO 2	
O-MULT-03	1	CAT6 STP	N/A	N/A	C-735							FSW-S1-CR-R2 (FAN-PLC CABINET)	MULTILIN NO 3	
O-LHDT-01	1	CAT6	N/A	N/A	C-511	C-512						FSW-S1-CR-R2 (FAN-PLC CABINET)	LINEAR HEAT DETECTION #1	
O-LHDT-02	1	CAT6	N/A	N/A	C-511	C-513	C-514					FSW-S1-CR-R2 (FAN-PLC CABINET)	LINEAR HEAT DETECTION #2	
O-LHDT-03	1	CAT6	N/A	N/A	C-511	C-513	C-515					FSW-S1-CR-R2 (FAN-PLC CABINET)	LINEAR HEAT DETECTION #3	
O-TLCP-01	1	CAT6	N/A	N/A	C-701	PB-MCR	C-312					FSW-S1-CR-R2 (FAN-PLC CABINET)	TUNNEL LIGHTING CONTROL PANEL (N-C)	
O-TLCP-02	1	CAT6	N/A	N/A	C-701	PB-MCR	C-412					FSW-S1-CR-R2 (FAN-PLC CABINET)	TUNNEL LIGHTING CONTROL PANEL (S-C)	
O-NBPC-01	1	CAT6	N/A	N/A	C-707	0-733	C-707					FSW-G1-NBP-R1 (NORTH PORTAL CABINET)	NORTH PORTAL CAMERA 1	
O-NBPC-02	1	CAT6	N/A	N/A	C-708	0-733	C-708					FSW-G1-NBP-R1 (NORTH PORTAL CABINET)	NORTH PORTAL CAMERA 2	
O-NBPC-03	1	CAT6	N/A	N/A	C-709	0-733	C-709					FSW-G1-NBP-R1 (NORTH PORTAL CABINET)	NORTH PORTAL CAMERA 3	
O-SBPC-01	1	CAT6	N/A	N/A	C-710	0-731	C-710					FSW-G1-SBP-R1 (SOUTH PORTAL CABINET)	SOUTH PORTAL CAMERA 1	
O-SBPC-02	1	CAT6	N/A	N/A	C-711	0-731	C-711					FSW-G1-SBP-R1 (SOUTH PORTAL CABINET)	SOUTH PORTAL CAMERA 2	
O-SBPC-03	1	CAT6	N/A	N/A	C-712	0-731	C-712					FSW-G1-SBP-R1 (SOUTH PORTAL CABINET)	SOUTH PORTAL CAMERA 3	

c:\pwworking\hmm\external\tyn61470\dms72703\071_0134CES038.dgn 10/24/2014 10:47:34 AM TYN61470

DESIGN AGENCY
HATCH MOTT MacDONALD
18013 CLEVELAND PKWY.
SUITE 200
CLEVELAND, OH 44135

DESIGNED MK | DRAWN BJG | CHECKED LL | REVISED CL | REVIEWED RF | DATE 08/11/14 | STRUCTURE FILE NUMBER 3106578

ELECTRICAL - CABLE ROUTING SCHEDULE - SHEET 7 OF 7

BRIDGE NO. HAM-71-0134
I-71 LYTLE TUNNEL UNDER LYTLE PARK

HAM-71-01.34
PID No. 87268

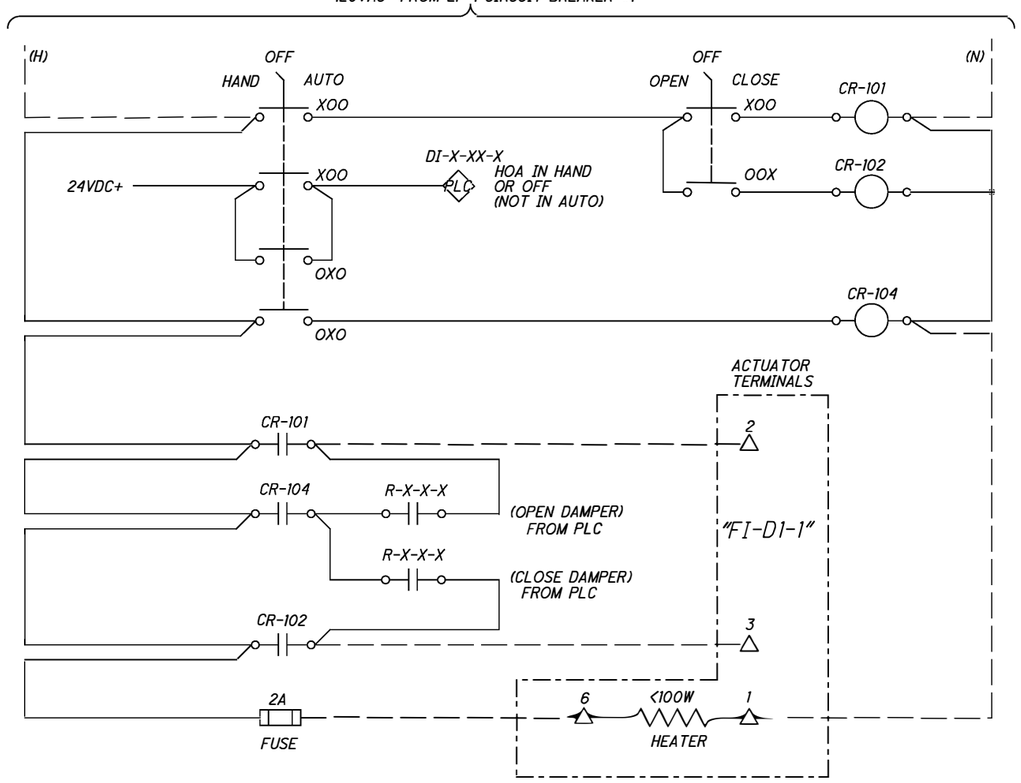

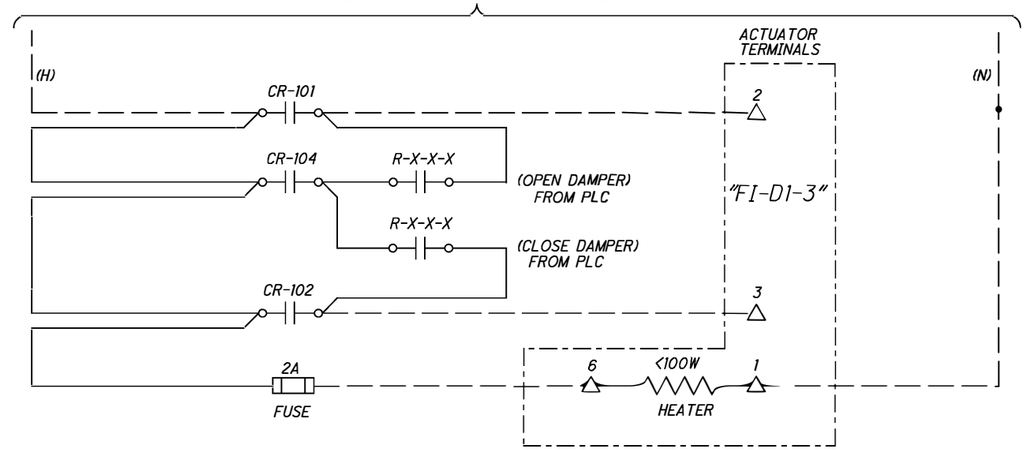

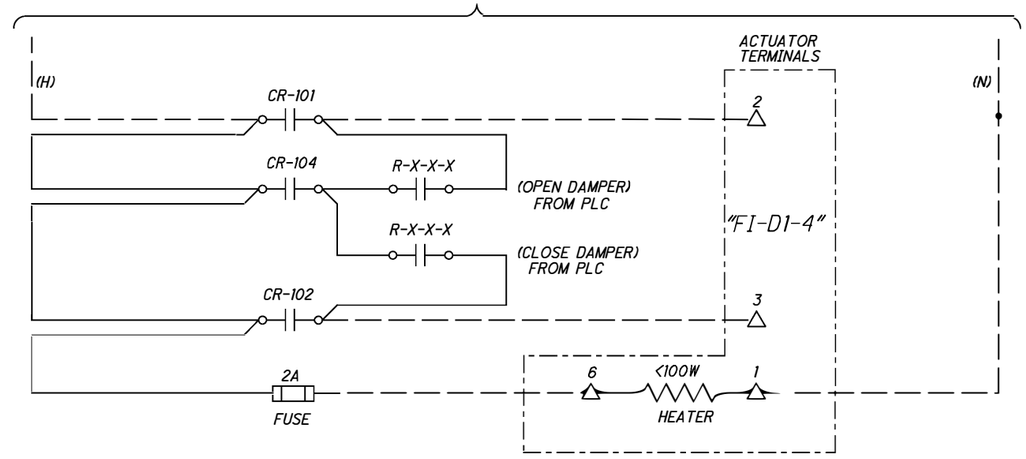

c:\pwworking\hmm\external\pre47802\dms72703\071_0134CES039.dgn 1/22/2015 1:08:58 PM PRE47802

DESIGN AGENCY
HATCH MOTT MacDONALD
18013 CLEVELAND PKWY.
SUITE 200
CLEVELAND, OH 44135

DESIGNED	DRAWN	REVIEWED	DATE
DMM	BJG	RF	08/11/14
CHECKED	REVISED	STRUCTURE FILE NUMBER	
PAP	PAP	3106578	

ELECTRICAL - CONTROLS/SCHEMATICS - SB #1 (FAN #1 DAMPERS)
BRIDGE NO. HAM-71-0134
I-71 LYTLE TUNNEL UNDER LYTLE PARK

HAM-71-01.34
PID No. 87268

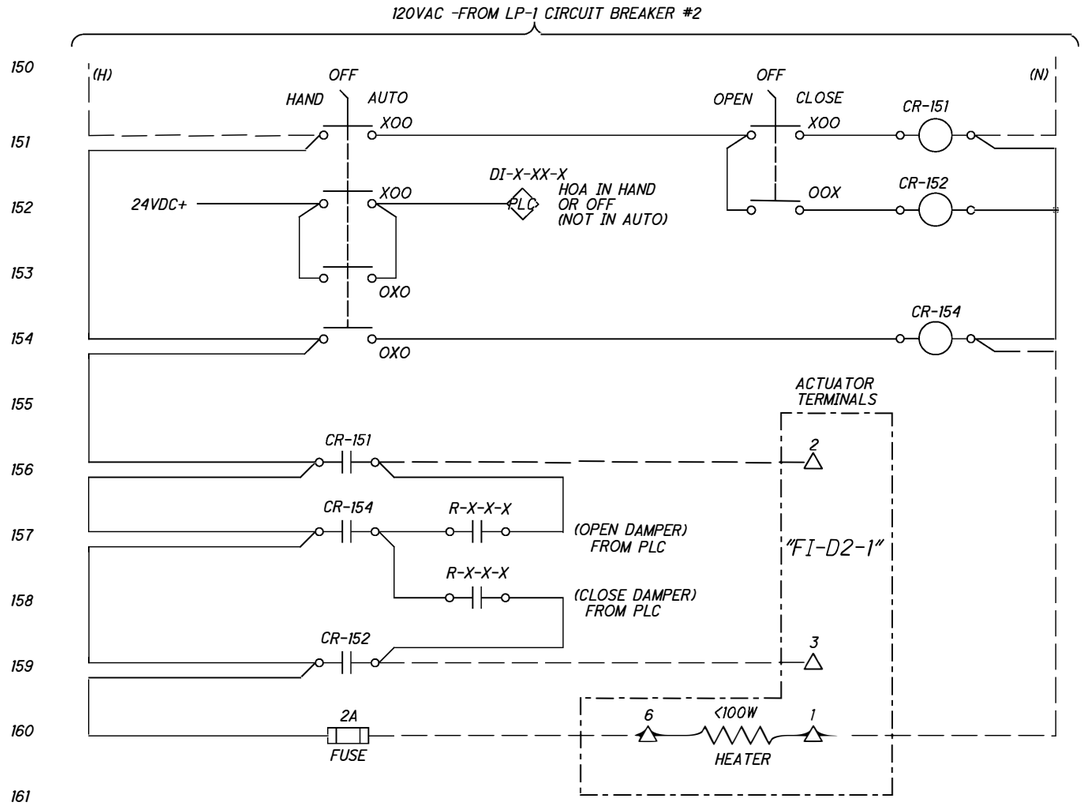

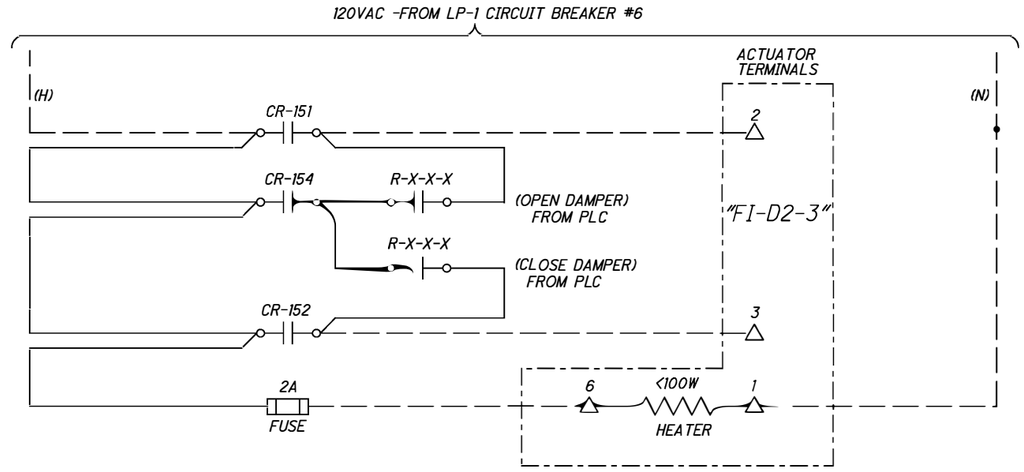

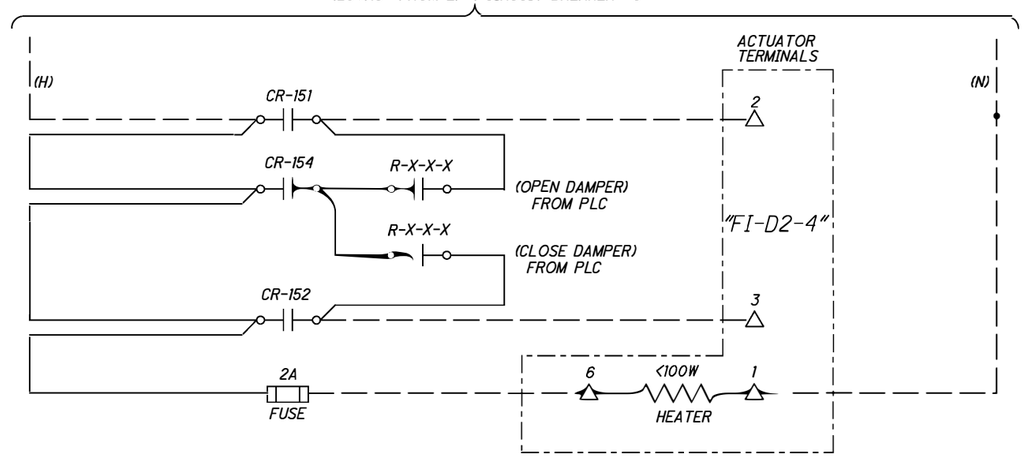

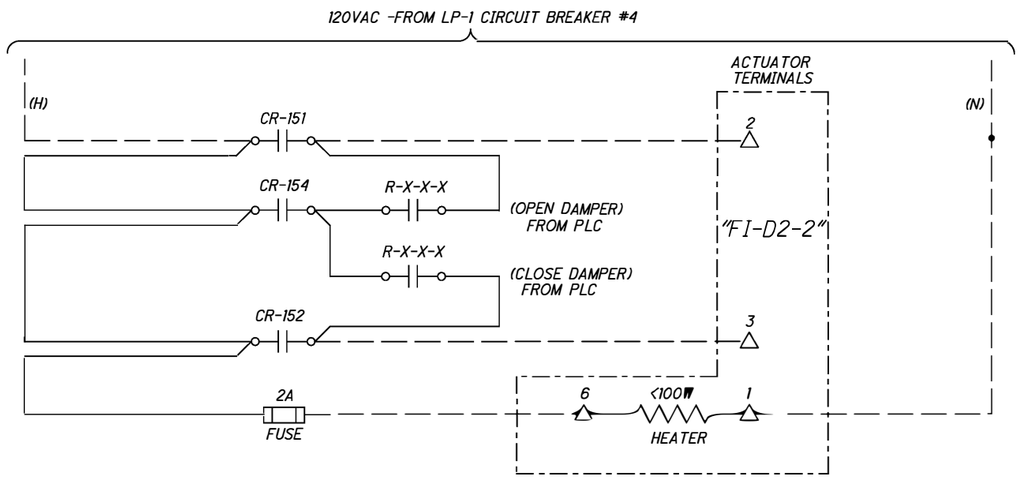

LEGEND

——— — —— WIRING EXTERNAL TO SPLICE BOX SB #2

——————— WIRING INTERNAL TO SPLICE BOX SB #2

c:\pwworking\hmm\external\pre47802\dms72703\071_0134CES040.dgn 1/22/2015 1:12:04 PM PRE47802

DESIGN AGENCY
HATCH MOTT MacDONALD
18013 CLEVELAND PKWY.
SUITE 200
CLEVELAND, OH 44135

DESIGNED	DRAWN	REVIEWED	DATE
DMM	BJG	RF	08/11/14
CHECKED	REVISED	STRUCTURE FILE NUMBER	
PAP	PAP	3106578	

ELECTRICAL - CONTROLS/SCHEMATICS - SB #2 (FAN #2 DAMPERS)

BRIDGE NO. HAM-71-0134
I-71 LYTLE TUNNEL UNDER LYTLE PARK

HAM-71-01.34

PID No. 87268

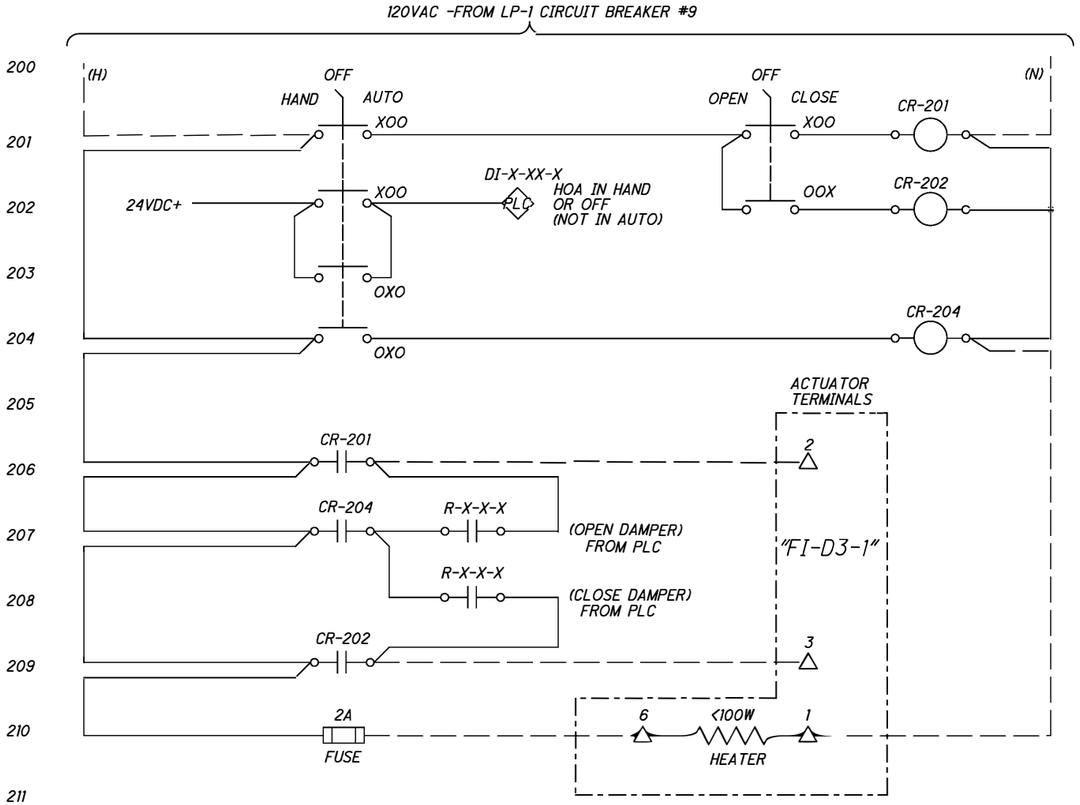

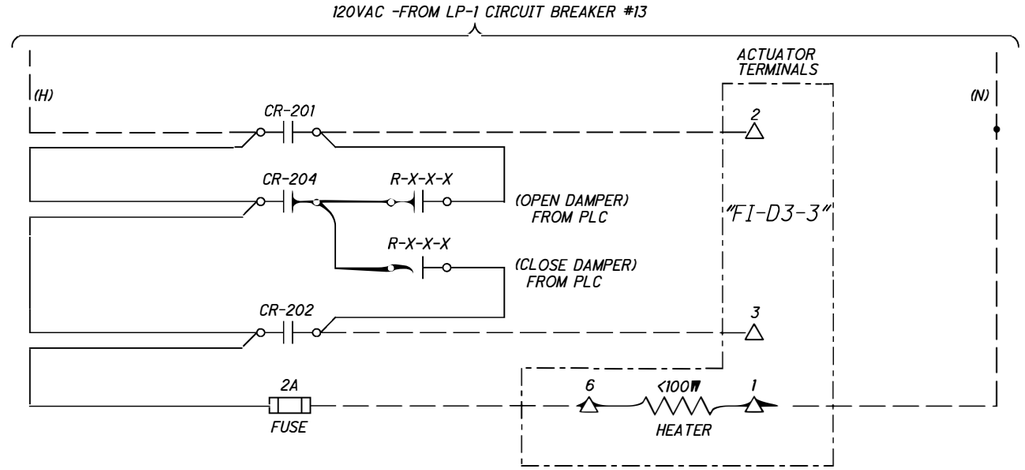

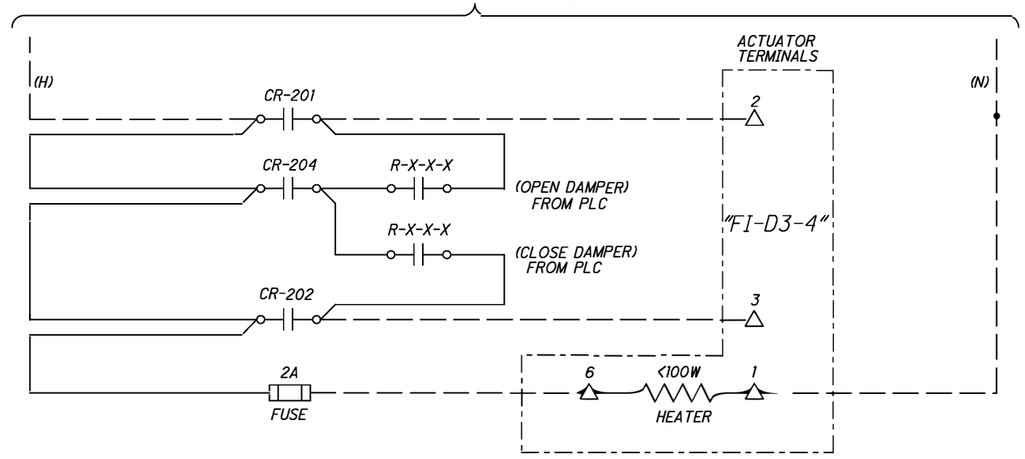

DESIGN AGENCY
HATCH MOTT MacDONALD
18013 CLEVELAND PKWY.
SUITE 200
CLEVELAND, OH 44135

DESIGNED	DRAWN	REVIEWED	DATE
DMM	BJG	RF	08/11/14
CHECKED	REVISED	STRUCTURE FILE NUMBER	
PAP	PAP	3106578	

ELECTRICAL - CONTROLS/SCHEMATICS - SB #3 (FAN #3 DAMPERS)

BRIDGE NO. HAM-71-0134
I-71 LYTLE TUNNEL UNDER LYTLE PARK

HAM-71-01.34
PID No. 87268

c:\pwworking\hmm\external\pre47802\dms72703\071_0134CES041.dgn 1/22/2015 1:14:53 PM PRE47802

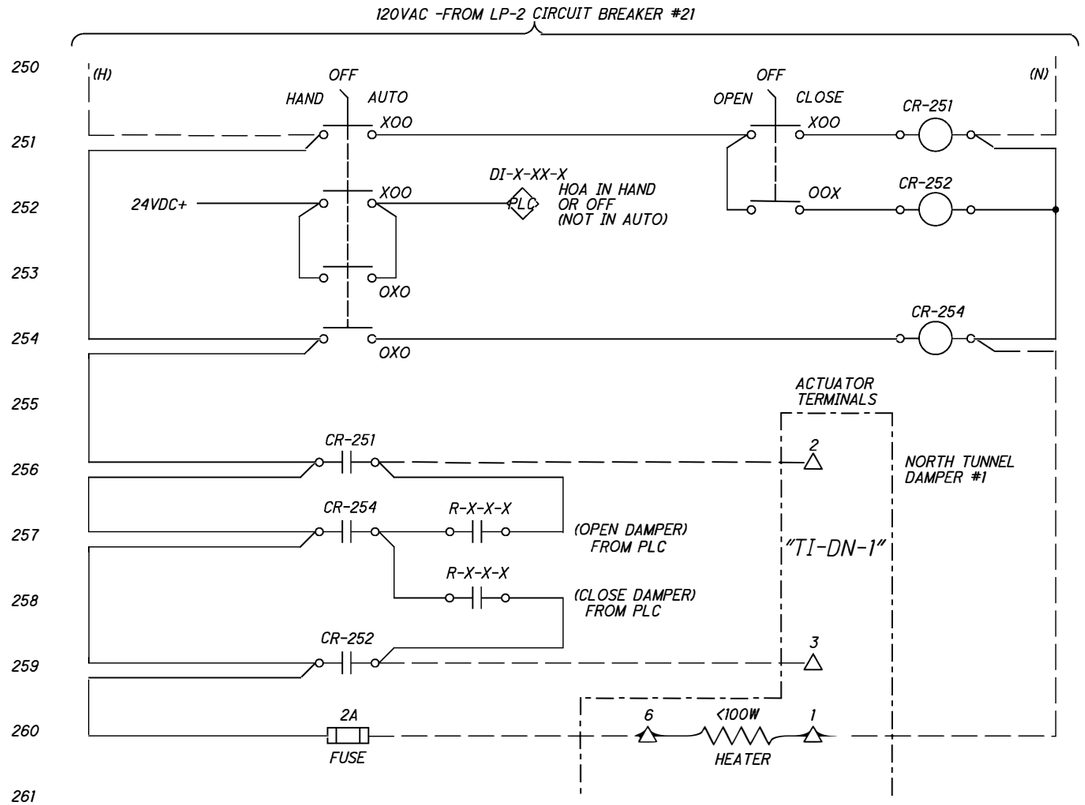

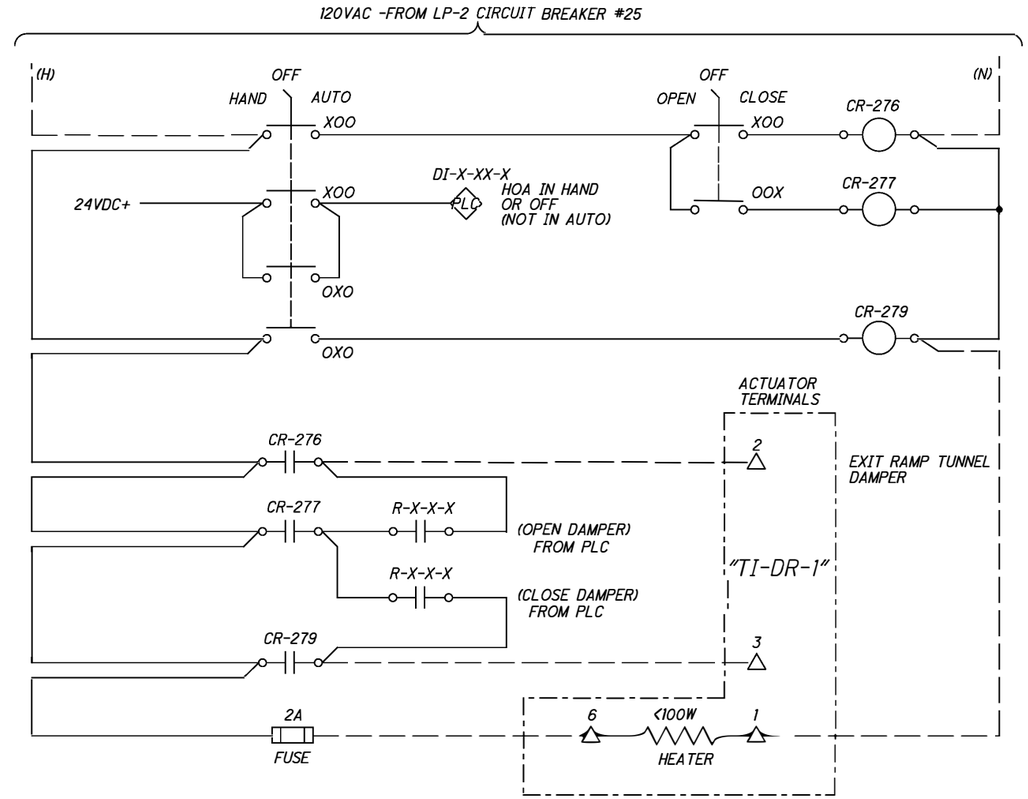

LEGEND

—— —— - WIRING EXTERNAL TO SPLICE BOX SB #4

———— WIRING INTERNAL TO SPLICE BOX SB #4

c:\pwworking\hmm\external\pre47802\dms72703\071_0134CES042.dgn 1/22/2015 1:16:40 PM PRE47802

DESIGN AGENCY
HATCH MOTT MacDONALD
18013 CLEVELAND PKWY.
SUITE 200
CLEVELAND, OH 44135

DESIGNED	DRAWN	REVIEWED	DATE
DMM	BJG	RF	08/11/14
CHECKED	REVISED	STRUCTURE FILE NUMBER	
PAP	PAP	3106578	

ELEC. - CONTROLS/SCHEMTICS - SB #4 (N. TNNL. & RAMP DAMPERS)

BRIDGE NO. HAM-71-0134
I-71 LYTLE TUNNEL UNDER LYTLE PARK

HAM-71-01.34
PID No. 87268

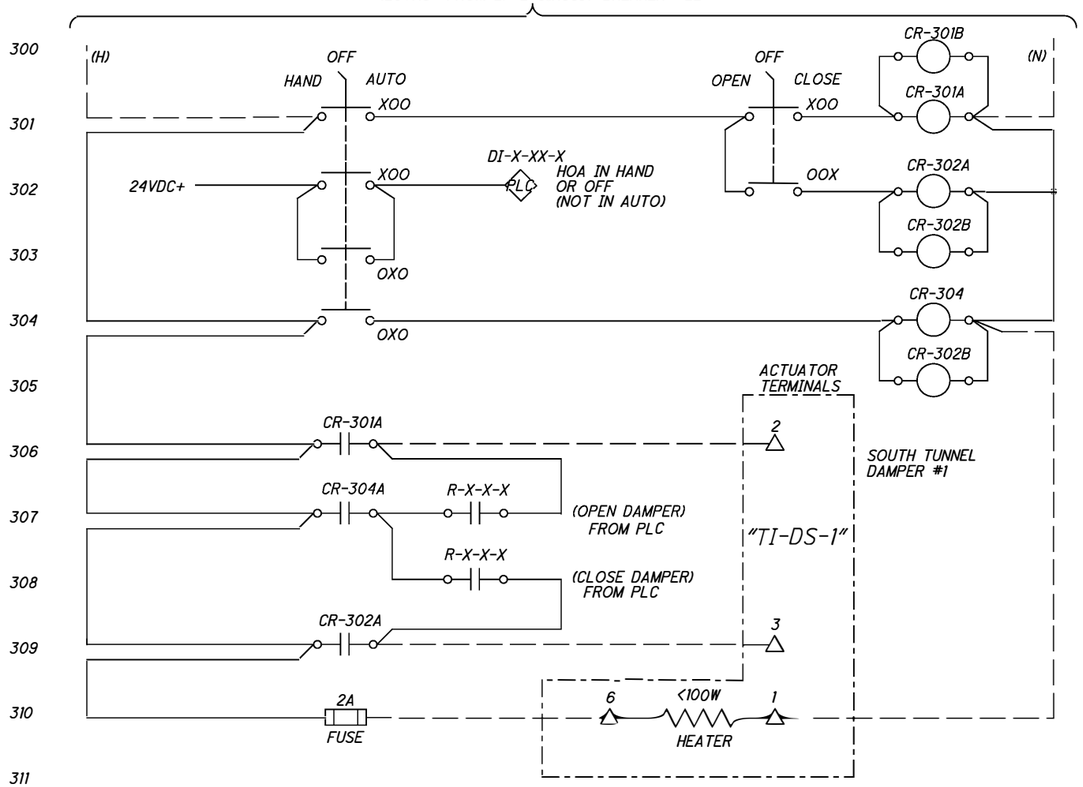

c:\pwworking\hmm\external\pre47802\dms72703\071_0134CES043.dgn 1/22/2015 1:20:38 PM PRE47802

DESIGN AGENCY
HATCH MOTT MacDONALD
18013 CLEVELAND PKWY.
SUITE 200
CLEVELAND, OH 44135

REVIEWED	DATE	STRUCTURE FILE NUMBER
RF	08/11/14	3106578

DRAWN	REVISED
BJG	PAP

DESIGNED	CHECKED
DMM	PAP

ELECTRICAL - CONTROLS/SCHEMTICS - SB #2 (S. TNNL. DAMPERS)
BRIDGE NO. HAM-71-0134
I-71 LYTLE TUNNEL UNDER LYTLE PARK

HAM-71-01.34
PID No. 87268

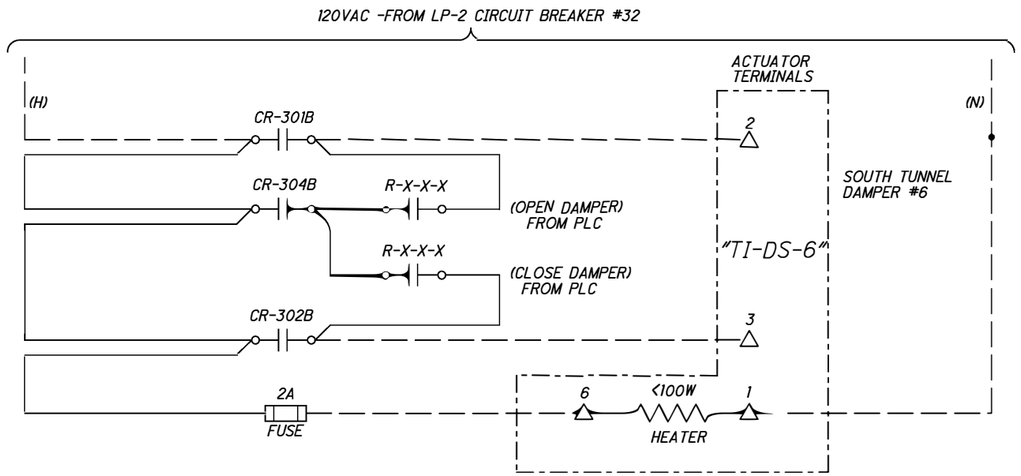

LEGEND

—— —— - WIRING EXTERNAL TO SPLICE BOX SB #5

———— WIRING INTERNAL TO SPLICE BOX SB #5

c:\pwworking\hmm\external\pre47802\dms72703\071_0134CES044.dgn 1/22/2015 1:22:31 PM PRE47802

DESIGN AGENCY
HATCH MOTT MacDONALD
18013 CLEVELAND PKWY.
SUITE 200
CLEVELAND, OH 44135

REVIEWED	DATE	STRUCTURE FILE NUMBER
RF	08/11/14	3106578

DRAWN	REVISED
BJG	PAP

DESIGNED	CHECKED
DMM	PAP

ELEC. - CONTROLS/SCHEMTICS - SB #2 (S. TNNL. DAMPERS CONT.)

BRIDGE NO. HAM-71-0134
I-71 LYTLE TUNNEL UNDER LYTLE PARK

HAM-71-01.34
PID No. 87268

PANEL: PANEL 120VAC UPS — LOCATION: ELECTRICAL ROOM

CKT#	BKR.	POLE	TYPE	DESCRIPTION	VA	PHASE A	PHASE B	PHASE C	VA	DESCRIPTION	TYPE	POLE	BKR.	CKT#
1					0	600			600	SWITCHGEAR CONTROL POWER		1	20	2
3	60	3		MAIN	0		3584		3584	CONTROL ROOM COMMS RACK SOURCE A		1	40	4
5					0			3584	3584	CONTROL ROOM COMMS RACK SOURCE B		1	40	6
7	20	1		NORTH PORTAL COMMS RACK SOURCE A	1106	3509			2403	PLC CP		1	30	8
9	20	1		NORTH PORTAL COMMS RACK SOURCE B	1106		2492		1386	SOUTH PORTAL COMMS RACK SOURCE A		1	20	10
11	20	3		EXHAUST FAN EF-1	950			2336	1386	SOUTH PORTAL COMMS RACK SOURCE B		1	20	12
13					950	1700			750	FIRE ALARM PANEL		1	20	14
15					950		1400		450	REMOTE POWER SUPPLY		1	20	16
17	20	1			0			480	480	FIRE/SMOKE DAMPER		1	40	18
19	20	1			0	480			480	FIRE/SMOKE DAMPER		1	30	20
21	20	1			0		240		240	FIRE/SMOKE DAMPER		1	20	22
23	20	1			0			0	0			1	20	24
25	20	1			0	0			0			1	20	26
27	20	1			0		0		0			1	20	28
29	20	1			0			0	0			1	20	30
31	20	1			0	0			0			1	20	32
33	20	1			0		0		0			1	20	34
35	20	1			0			0	0			1	20	36
37	20	1			0	0			0			1	20	38
39	20	1			0		0		0			1	20	40
41	20	1			0			0	0			1	20	42
				TOTAL CONNECTED LOAD (VA) PER PHASE:		6289	7716	6400						
				CONNECTED LOAD (AMPS) PER PHASE		52	64	53						

TOTAL CONNECTED LOAD (VA):	20405	TOTAL DEMAND LOAD (VA):	12859
TOTAL CONNECTED LOAD (AMPS):	57	TOTAL DEMAND LOAD (AMPS):	36

OPTIONS

VOLTS L-L:	208	MAIN OVERCURRENT:	60A MCB	BUS MATERIAL:	Cu	MOUNTING:	SURFACE
VOLTS L-N:	120	MAIN BUS RATING:	100A	NEUTRAL SIZE:	200%	ENCLOSURE TYPE:	NEMA 1
PHASE:	3	MINIMUM A.I.C.:	14kA	GROUND:	EQUIPMENT		
WIRE:	4						

NOTES:
1. DEMAND LOAD CALCULATIONS BASED ON REMOVING REDUNDANT LOADING AND RECEPTACLES VA
2.

PANEL: PANEL 480VAC UPS — LOCATION: ELECTRICAL ROOM

CKT#	BKR.	POLE	TYPE	DESCRIPTION	VA	PHASE A	PHASE B	PHASE C	VA	DESCRIPTION	TYPE	POLE	BKR.	CKT#
1					1666	2999			1333					2
3	50	3		NORTH BOUND TUNNEL EMERGENCY LIGHTS	1666		2999		1333	SOUTHBOUND TUNNEL EMERGENCY LIGHTS		3	50	4
5					1666			2999	1333					6
7					2000	7000			5000					8
9	50	3		SOUTH BOUND RAMP EMERGENCY LIGHTS	2000		7000		5000	120VAC UPS PANEL BOARD (VIA 15KVA XFMR)		3	30	10
11					2000			7000	5000					12
13					0	0			0					14
15		3			0		0		0			3		16
17					0			0	0					18
19					0	0			0					20
21		3			0		0		0			3		22
23					0			0	0					24
25					0	0			0					26
27		3			0		0		0			3		28
29					0			0	0					30
31					0	0			0					32
33		3			0		0		0			3		34
35					0			0	0					36
37					0	0			0					38
39		3			0		0		0			3		40
41					0			0	0					42
				TOTAL CONNECTED LOAD (VA) PER PHASE:		9999	9999	9999						
				CONNECTED LOAD (AMPS) PER PHASE		36	36	36						

TOTAL CONNECTED LOAD (VA):	29997	TOTAL DEMAND LOAD (VA):	29997
TOTAL CONNECTED LOAD (AMPS):	36	TOTAL DEMAND LOAD (AMPS):	36

OPTIONS

VOLTS L-L:	480	MAIN OVERCURRENT:	60A MCB	BUS MATERIAL:	Cu	MOUNTING:	SURFACE
VOLTS L-N:	277	MAIN BUS RATING:	100A	NEUTRAL SIZE:	100%	ENCLOSURE TYPE:	NEMA 1
PHASE:	3	MINIMUM A.I.C.:	14kA	GROUND:	EQUIPMENT		
WIRE:	4						

NOTES:
1. DEMAND LOAD CALCULATIONS BASED ON REMOVING REDUNDANT LOADING AND RECEPTACLES VA
2.

PANEL: PANEL LP-PP (480VAC) — LOCATION: ELECTRICAL ROOM

CKT#	BKR.	POLE	TYPE	DESCRIPTION	VA	PHASE A	PHASE B	PHASE C	VA	DESCRIPTION	TYPE	POLE	BKR.	CKT#
1	20	3		STAIRWELL LIGHTING AND EXIT SIGNS	1920	3840			1920	CORRIDOR LIGHTING AND EXIT SIGNS		3	20	2
					1920		3840		1920					
					1920			3840	1920					
3	20	3		ELECTRICAL ROOM LIGHTING AND EXIT SIGNS	1920	3840			1920	FAN CORRIDOR LIGHTING AND EXIT SIGNS		3	20	4
					1920		3840		1920					
					1920			3840	1920					
5	20	3		PLENUM OUTLET LIGHTING AND EXIT SIGNS	1920	3840			1920	PLENUM EXHAUST LIGHTING		3	20	6
					1920		3840		1920					
					1920			3840	1920					
7	20	3		PLENUM INLET LIGHTING AND EXIT SIGNS	1920	1920			0			3	20	8
					1920		1920		0					
					1920			1920	0					
9	100	3		LIGHTING PANEL "LP-1" FEEDER VIA 75KVA XFMR	13277	30917			17640	LIGHTING PANEL "LP-2" FEEDER VIA 75KVA XFMR		3	100	10
					13277		30917		17640					
					13277			30917	17640					
11	50	3		UPS VIA TRANSFER SWITCH FEEDER	11000	21000			10000	UPS VIA MAINTENANCE BYPASS SWITCH FEEDER		3	50	12
					11000		21000		10000					
					11000			21000	10000					
13	30	3			0	0			0			3	20	14
					0		0		0					
					0			0	0					
15	15	3			0	0			0			3		16
					0		0		0					
					0			0	0					
17	15	3			0	0			0			3		18
					0		0		0					
					0			0	0					
19	15	3			0	0			0			3		20
					0		0		0					
					0			0	0					
21	15	3			0	0			0			3		22
					0		0		0					
					0			0	0					
				TOTAL CONNECTED LOAD (VA) PER PHASE:		65357	65357	65357						
				CONNECTED LOAD (AMPS) PER PHASE		236	236	236						

TOTAL CONNECTED LOAD (VA):	196070	TOTAL DEMAND LOAD (VA):	133070
TOTAL CONNECTED LOAD (AMPS):	236	TOTAL DEMAND LOAD (AMPS):	160

OPTIONS

VOLTS L-L:	480	MAIN OVERCURRENT:	NONE	BUS MATERIAL:	Cu	MOUNTING:	SURFACE
VOLTS L-N:	277	MAIN BUS RATING:	400A	NEUTRAL SIZE:	200%	ENCLOSURE TYPE:	NEMA 1
PHASE:	3	MINIMUM A.I.C.:	42kA	GROUND:	EQUIPMENT		
WIRE:	4						

NOTES:
1. DEMAND LOAD CALCULATIONS BASED ON REMOVING REDUNDANT LOADING AND RECEPTACLES VA
2.
3

PANEL: PANEL LP-DP (480VAC) — LOCATION: ELECTRICAL ROOM

CKT#	BKR.	POLE	TYPE	DESCRIPTION	VA	PHASE A	PHASE B	PHASE C	VA	DESCRIPTION	TYPE	POLE	BKR.	CKT#
1	30	3		EXISTING WELDING OUTLET (OLD DP CKT#3)	8444	16888			8444	EXISTING WELDING OUTLET (OLD DP CKT#4)		3	30	2
					8444		16888		8444					
					8444			16888	8444					
3	20	1		EXIST. UNIT HEATER UH-1 (OLD DP CKT#5)	4400	8800			4400	EXIST. UNIT HEATER UH-2 (OLD DP CKT#6)		1	20	6
5	20	1		EXIST. UNIT HEATER UH-3 (OLD DP CKT#7)	4400		8800		4400	EXIST. UNIT HEATER UH-4 (OLD DP CKT#8)		1	20	8
7	20	1		EXIST. UNIT HEATER UH-5 (OLD DP CKT#9)	4400			8800	4400	EXIST. UNIT HEATER UH-6 (OLD DP CKT#10)		1	20	10
9	50	3		UPS VIA TRANSFER SWITCH FEEDER	11000	11000								
					11000		11000					3	20	12
					11000			11000						
11	15	3				0								
							0					3	30	12
								0						
13		3				0								
							0					3		14
								0						
15		3				0								
							0					3		16
								0						
17		3				0								
							0					3		18
								0						
19		3				0			0					
							0		0			3		20
								0	0					
21		3				0			0					
							0		0			3		22
								0	0					
23		3				0			0					
							0		0			3		24
								0	0					
25		3				0			0					
							0		0			3		26
								0	0					
				TOTAL CONNECTED LOAD (VA) PER PHASE:		36688	36688	36688						
				CONNECTED LOAD (AMPS) PER PHASE		132	132	132						

TOTAL CONNECTED LOAD (VA):	110064	TOTAL DEMAND LOAD (VA):	59400
TOTAL CONNECTED LOAD (AMPS):	132	TOTAL DEMAND LOAD (AMPS):	71

OPTIONS

VOLTS L-L:	480	MAIN OVERCURRENT:	NONE	BUS MATERIAL:	Cu	MOUNTING:	SURFACE
VOLTS L-N:	277	MAIN BUS RATING:	400A	NEUTRAL SIZE:	100%	ENCLOSURE TYPE:	NEMA 1
PHASE:	3	MINIMUM A.I.C.:	42kA	GROUND:	EQUIPMENT		
WIRE:	4						

NOTES:
1. DEMAND LOAD CALCULATIONS BASED ON REMOVING REDUNDANT LOADING AND RECEPTACLES VA
2. CIRCUIT SIZE FOR UNIT HEATERS WILL NEED TO BE VERIFIED.
3

DESIGN AGENCY
HATCH MOTT MacDONALD
18013 CLEVELAND PKWY.
SUITE 200
CLEVELAND, OH 44135

DESIGNED PAP | DRAWN BJG | CHECKED MK | REVIEWED RF | DATE 08/11/14 | REVISED CL | STRUCTURE FILE NUMBER 3106578

ELECTRICAL - PANEL SCHEDULES - SHEET 1 OF 2

BRIDGE NO. HAM-71-0134
I-71 LYTLE TUNNEL UNDER LYTLE PARK

HAM-71-01.34
PID No. 87268

233/296
491/555

c:\pwworking\hmm\external\tyn61470\dms72703\071_0134CES050.dgn 10/24/2014 10:48:31 AM TYN61470

PANEL: PANEL LP-2 (208VAC) — LOCATION: ELECTRICAL ROOM

CKT#	BKR.	POLE	TYPE	DESCRIPTION	VA	PHASE A	PHASE B	PHASE C	VA	DESCRIPTION	TYPE	POLE	BKR.	CKT#
1					1500	3000			1500					2
3	20	3		NB TUNNEL EAST WALL (OLD "PP-1,3,5)	1500		3000		1500	NB TUNNEL WEST WALL (OLD "PP-2,4,6)		3	20	4
5					1500			3000	1500					6
7					1500	3000			1500					8
9	20	3		RAMP TUNNEL EAST WALL (OLD "PP-7,9,11)	1500		3000		1500	RAMP TUNNEL WEST WALL (OLD "PP-8,10,12)		3	20	10
11					1500			3000	1500					12
13					1500	3000			1500					14
15	20	3		SB TUNNEL EAST WALL (OLD "PP-13,15,17)	1500		3000		1500	SB TUNNEL WEST WALL (OLD "PP-14,16,18)		3	20	16
17					1500			3000	1500					18
19	20	1		TOILET RM WATER HTR	1680	3360			1680	TOILET RM SPACE HTER		1	20	20
21	30	1		NB TUNNEL ACTUATOR #1 (1HP)	1840		3680		1840	SB TUNNEL ACTUATOR #1 (1HP)		1	30	22
23	30	1		NB TUNNEL ACTUATOR #2 (1HP)	1840			3680	1840	SB TUNNEL ACTUATOR #2 (1HP)		1	30	24
25	30	1		RAMP TUNNEL ACTUATOR #1 (1HP)	1840	3680			1840	SB TUNNEL ACTUATOR #3 (1HP)		1	30	26
27	30	1			0		1840		1840	SB TUNNEL ACTUATOR #4 (1HP)		1	30	28
29					11200			13040	1840	SB TUNNEL ACTUATOR #5 (1HP)		1	30	30
31	100	3		SUB FEED TO PANEL "LP"	9600	11440			1840	SB TUNNEL ACTUATOR #6 (1HP)		1	30	32
33					8000		8000		0			1	20	34
35	30	2		UNIT HEATER EUH-3	1500			1500	0			1	30	36
37					1500	1500			0			1	30	38
39	40	2		HEAT PUMP	1500		1500		0			1	20	40
41					1500			1500	0			1	20	42
				TOTAL CONNECTED LOAD (VA) PER PHASE:		28980	24020	28720						
				CONNECTED LOAD (AMPS) PER PHASE		242	200	239						

TOTAL CONNECTED LOAD (VA): 81720 — TOTAL DEMAND LOAD (VA): 52920

TOTAL CONNECTED LOAD (AMPS): 227 — TOTAL DEMAND LOAD (AMPS): 147

OPTIONS							
VOLTS L-L:	208	MAIN OVERCURRENT:	225A MCB	BUS MATERIAL:	Cu	MOUNTING:	SURFACE
VOLTS L-N:	120	MAIN BUS RATING:	225A	NEUTRAL SIZE:	100%	ENCLOSURE TYPE:	NEMA 1
PHASE:	3	MINIMUM A.I.C.:	22kA	GROUND:	EQUIPMENT		
WIRE:	4						

NOTES:
1. DEMAND LOAD CALCULATIONS BASED ON REMOVING REDUNDANT LOADING AND RECEPTACLES VA
2.

PANEL: PANEL LP (208VAC) — LOCATION: ELECTRICAL ROOM

CKT#	BKR.	POLE	TYPE	DESCRIPTION	VA	PHASE A	PHASE B	PHASE C	VA	DESCRIPTION	TYPE	POLE	BKR.	CKT#
1	20	1		LIGHTS EQUIP ROOM (OLD LP CKT#1)	1600	3200			1600	LIGHTS EQUIP ROOM (OLD LP CKT#2)		1	20	2
3	20	1		LIGHTS EQUIP ROOM (OLD LP CKT#3)	1600		3200		1600	LIGHTS EQUIP ROOM (OLD LP CKT#4)		1	20	4
5	20	1		LIGHTS EQUIP ROOM (OLD LP CKT#5)	1600			3200	1600	LIGHTS EQUIP ROOM (OLD LP CKT#6)		1	20	6
7	20	1		LIGHTS EQUIP ROOM (OLD LP CKT#7)	1600	3200			1600	LIGHTS EQUIP ROOM (OLD LP CKT#8)		1	20	8
9	20	1		LIGHTS EQUIP ROOM (OLD LP CKT#9)	1600		3200		1600	LIGHTS EQUIP ROOM (OLD LP CKT#10)		1	20	10
11	20	1		LIGHTS EQUIP ROOM (OLD LP CKT#11)	1600			1600	0			1	20	12
13	20	1		LIGHTS EQUIP ROOM (OLD LP CKT#13)	1600	1600			0			1	20	14
15	20	1		OUTLETS EQUIP ROOM (OLD LP CKT#15)	1600		3200		1600	OUTLETS EQUIP ROOM (OLD LP CKT#16)		1	20	16
17	20	1		OUTLETS EQUIP ROOM (OLD LP CKT#17)	1600			3200	1600	OUTLETS EQUIP ROOM (OLD LP CKT#18)		1	20	18
19	20	1		OUTLETS EQUIP ROOM (OLD LP CKT#19)	1600	3200			1600	OUTLETS EQUIP ROOM (OLD LP CKT#20)		1	20	20
21	20	1			0		0		0			1	20	22
23	20	1			0			0	0			1	20	24
25	20	1			0	0			0			1	20	26
27	20	1			0		0		0			1	20	28
29	20	1			0			0	0			1	20	30
31	20	1			0	0			0			1	20	32
33	20	1			0		0		0			1	20	34
35	20	1			0			0	0			1	20	36
37	20	1			0	0			0			1	20	38
39	20	1			0		0		0			1	20	40
41	20	1			0			0	0			1	20	42
				TOTAL CONNECTED LOAD (VA) PER PHASE:		11200	9600	8000						
				CONNECTED LOAD (AMPS) PER PHASE		93	80	67						

TOTAL CONNECTED LOAD (VA): 28800 — TOTAL DEMAND LOAD (VA): 28800

TOTAL CONNECTED LOAD (AMPS): 80 — TOTAL DEMAND LOAD (AMPS): 80

OPTIONS							
VOLTS L-L:	208	MAIN OVERCURRENT:	NONE	BUS MATERIAL:	Cu	MOUNTING:	SURFACE
VOLTS L-N:	120	MAIN BUS RATING:	100A	NEUTRAL SIZE:	100%	ENCLOSURE TYPE:	NEMA 1
PHASE:	3	MINIMUM A.I.C.:	14kA	GROUND:	EQUIPMENT		
WIRE:	4						

NOTES:
1. DEMAND LOAD CALCULATIONS BASED ON REMOVING REDUNDANT LOADING AND RECEPTACLES VA
2.

PANEL: PANEL LP-1 (208VAC) — LOCATION: ELECTRICAL ROOM

CKT#	BKR.	POLE	TYPE	DESCRIPTION	VA	PHASE A	PHASE B	PHASE C	VA	DESCRIPTION	TYPE	POLE	BKR.	CKT#
1	30	1		FAN #1 ACTUATOR #1 (1HP)	1840	3680			1840	FAN #2 ACTUATOR #1 (1HP)		1	30	2
3	30	1		FAN #1 ACTUATOR #2 (1HP)	1840		3680		1840	FAN #2 ACTUATOR #2 (1HP)		1	30	4
5	30	1		FAN #1 ACTUATOR #3 (1HP)	1840			3680	1840	FAN #2 ACTUATOR #3 (1HP)		1	30	6
7	30	1		FAN #1 ACTUATOR #4 (1HP)	1840	3680			1840	FAN #2 ACTUATOR #4 (1HP)		1	30	8
9	30	1		FAN #3 ACTUATOR #1 (1HP)	1840		3340		1500	ELECTRICAL ROOM RECEPTACLES		1	20	10
11	30	1		FAN #3 ACTUATOR #2 (1HP)	1840			3340	1500	ELECTRICAL ROOM RECEPTACLES		1	20	12
13	30	1		FAN #3 ACTUATOR #3 (1HP)	1840	3340			1500	CORRIDOR RECEPTACLES		1	20	14
15	30	1		FAN #3 ACTUATOR #4 (1HP)	1840		3340		1500	ACCESS ROOM RECEPTACLES		1	20	16
17	20	1		PLENUM ROOM RECEPTACLES	1500			3000	1500	ACCESS ROOM RECEPTACLES		1	20	18
19	20	1		PLENUM ROOM RECEPTACLES	1500	3000			1500	PLENUM ROOM RECEPTACLES		1	20	20
21	20	1		PLENUM ROOM RECEPTACLES	1500		1500		0			1	20	22
23	30	2		UNIT HEATER EUH-1	1500			1500	0			1	20	24
25					1500	1500			0			1	20	26
27	30	2		UNIT HEATER EUH-2	1500		1500		0			1	20	28
29					1500			1500	0			1	20	30
31	20	1			0	0			0			1	20	32
33	20	1			0		0		0			1	20	34
35	20	1			0			0	0			1	20	36
37	20	1			0	0			0			1	20	38
39	20	1			0		0		0			1	20	40
41	20	1			0			0	0			1	20	42
				TOTAL CONNECTED LOAD (VA) PER PHASE:		15200	13360	13020						
				CONNECTED LOAD (AMPS) PER PHASE		127	111	109						

TOTAL CONNECTED LOAD (VA): 41580 — TOTAL DEMAND LOAD (VA): 39830

TOTAL CONNECTED LOAD (AMPS): 115 — TOTAL DEMAND LOAD (AMPS): 111

OPTIONS							
VOLTS L-L:	208	MAIN OVERCURRENT:	225A MCB	BUS MATERIAL:	Cu	MOUNTING:	SURFACE
VOLTS L-N:	120	MAIN BUS RATING:	225A	NEUTRAL SIZE:	100%	ENCLOSURE TYPE:	NEMA 1
PHASE:	3	MINIMUM A.I.C.:	22kA	GROUND:	EQUIPMENT		
WIRE:	4						

NOTES:
1. DEMAND LOAD CALCULATIONS BASED ON REMOVING REDUNDANT LOADING AND RECEPTACLES VA
2.

DESIGN AGENCY
HATCH MOTT MacDONALD
18013 CLEVELAND PKWY.
SUITE 200
CLEVELAND, OH 44135

DESIGNED PAP | DRAWN BJG | CHECKED MK | REVIEWED RF | REVISED CL | DATE 08/11/14

STRUCTURE FILE NUMBER 3106578

ELECTRICAL - PANEL SCHEDULES - SHEET 2 OF 2

BRIDGE NO. HAM-71-0134
I-71 LYTLE TUNNEL UNDER LYTLE PARK

HAM-71-01.34
PID No. 87268

234 296

492 555

c:\pwworking\hmm\external\tyn61470\dms72703\071_0134CE5051.dgn 10/24/2014 10:48:37 AM TYN61470

c:\pwworking\hmm\external\tyn61470\dms72703\071_0134CES052.dgn 10/24/2014 10:48:42 AM TYN61470

TOTALS CARRIED TO GENERAL SUMMARY	SHEET NO.	REFERENCE NO.	LOCATION			ITEM NO.
	417		ELECTRICAL ONE LINE DIAGRAM			
	419		ELECTRICAL ROOM AND VAULT			
	420		VENTILATION FAN AREA			
	421		TUNNEL LIGHTING CONTROL ROOM			
	422		SOUTH AND RAMP TUNNEL AREA			
2				2	EACH	SPECIAL - MISC.: UTILITY VAULT 690
2				2	EACH	SPECIAL - MISC.: UTILITY TRANSFORMER 690
2				2	EACH	SPECIAL - MISC.: UTILITY METER AND EQUIPMENT 690
3				3	EACH	SPECIAL - MISC.: SOFT STARTER WITH TWO SPEED AND REVERSING CONTACTORS 690
1				1	EACH	SPECIAL - MISC.: 480VAC SWITCHGEAR 690
7				7	EACH	SPECIAL - MISC.: PANELBOARDS 690
3				3	EACH	SPECIAL - MISC.: LV TRANSFORMERS 690
1				1	EACH	SPECIAL - MISC.: 30KVA UPS 690
6422				6422	FT	CONDUIT, 3/4", 725.04 625
620				620	FT	CONDUIT, 1", 725.04 625
395				395	FT	CONDUIT, 1-1/2", 725.04 625
1255				1255	FT	CONDUIT, 2", 725.04 625
400				400	FT	CONDUIT, 2-1/2", 725.04 625
470				470	FT	CONDUIT, 3", 725.04 625
40				40	FT	CONDUIT, 3-1/2", 725.04 625
3515				3515	FT	CONDUIT, 4", 725.04 625
20				20	FT	CONDUIT, 4" MULTICELL, 725.04 625
180				180	FT	DISTRIBUTION CABLE, MISC.: 2/C #10, 1/C NO. 12G, RHW-2, LSZH 625

493 / 555 | 235 / 296

HAM-71-1.34

PID No. 87268

ELECTRICAL SUBSUMMARY

BRIDGE NO. HAM-71-0134

I.R.-71 LYTLE TUNNEL UNDER LYTLE PARK

DESIGNED	DRAWN	REVIEWED	DATE
DGC	CM	RF	8/11/14
CHECKED	REVISED	STRUCTURE FILE NUMBER	
LL		3106578	

DESIGN AGENCY
HATCH MOTT MacDONALD
18013 CLEVELAND PKWY.
SUITE 200
CLEVELAND, OH 44135

c:\pwworking\hmm\external\tyn61470\dms72703\071_0134CES053.dgn 10/24/2014 10:48:44 AM TYN61470

ITEM NO.	LOCATION	REFERENCE NO.	SHEET NO.		TOTALS CARRIED TO GENERAL SUMMARY
625	2/C NO. 12, RHW-2, LSZH		417	FT	2200
625	DISTRIBUTION CABLE, MISC.: 2/C NO. 12, 1/C NO. 12G, RHW-2, LSZH		419	FT	20
625	DISTRIBUTION CABLE, MISC.: 3/C NO. 12 'TC' LSZH		420	FT	675
625	DISTRIBUTION CABLE, MISC.: 3/C NO. 10 'TC' LSZH		421	FT	2150
625	DISTRIBUTION CABLE, MISC.: 4/C NO. 10 'TC' LSZH		422	FT	1040
625	DISTRIBUTION CABLE, MISC.: 1PR NO. 16 SH 'TC' LSZH		ELECTRICAL ONE LINE DIAGRAM	FT	1350
625	DISTRIBUTION CABLE, MISC.: 4PR NO. 16 SH 'TC' LSZH		ELECTRICAL ROOM AND VAULT	EACH	220
625	DISTRIBUTION CABLE, MISC.: 8PR NO. 16 SH 'TC' LSZH		VENTILATION FAN AREA	EACH	320
625	DISTRIBUTION CABLE, MISC.: 12PR NO. 16 SH 'TC' LSZH		TUNNEL LIGHTING CONTROL ROOM	EACH	400
625	DISTRIBUTION CABLE, MISC.: 24PR NO . 16 SH 'TC' LSZH		SOUTH AND RAMP TUNNEL AREA	FT	675
625	DISTRIBUTION CABLE, MISC.: 36PR NO. 16 SH 'TC' LSZH			FT	250
625	DISTRIBUTION CABLE, MISC.: 1-TRIAD NO. 16 SH 'TC' LSZH			FT	2250
625	DISTRIBUTION CABLE, MISC.: 3/C NO. 8 'TC' LSZH			FT	900
625	DISTRIBUTION CABLE, MISC.: 3/C NO. 8 W/GND 'TC' LSZH			FT	40
625	DISTRIBUTION CABLE, MISC.: 4/C NO. 8 W/GND 'TC' LSZH			FT	20
625	DISTRIBUTION CABLE, MISC.: 3/C NO. 6 'TC' LSZH			FT	4200
625	DISTRIBUTION CABLE, MISC.: 3/C NO. 6 W/GND 'TC' LSZH			FT	250
625	DISTRIBUTION CABLE, MISC.: 4/C NO. 6 W/GND 'TC' LSZH			FT	100

494 / 555 | 236/296

HAM-71-1.34

PID No. 87268

ELECTRICAL SUBSUMMARY

BRIDGE NO. HAM-71-0134

I.R.-71 LYTLE TUNNEL UNDER LYTLE PARK

DESIGNED	DRAWN	REVIEWED	DATE
DGC	CM	RF	8/11/14
CHECKED	REVISED	STRUCTURE FILE NUMBER	
LL		3106578	

DESIGN AGENCY
HATCH MOTT MacDONALD
18013 CLEVELAND PKWY.
SUITE 200
CLEVELAND, OH 44135

c:\pwworking\hmm\external\tyn61470\dms72703\071_0134CES054.dgn 10/24/2014 10:48:46 AM TYN61470

TOTALS CARRIED TO GENERAL SUMMARY	SHEET NO.	REFERENCE NO.	LOCATION	ITEM NO.		
	417		ELECTRICAL ONE LINE DIAGRAM			
	419		ELECTRICAL ROOM AND VAULT			
	420		VENTILATION FAN AREA			
	421		TUNNEL LIGHTING CONTROL ROOM			
	422		SOUTH AND RAMP TUNNEL AREA			
100			100	FT	DISTRIBUTION CABLE, MISC.: 3/C NO. 2 W/GND 'TC' LSZH	625
20			20	FT	DISTRIBUTION CABLE, MISC.: 4/C NO. 2 W/GND 'TC' LSZH	625
30			30	FT	DISTRIBUTION CABLE, MISC.: 10/C NO. 14, RHW-2, LSZH	625
50			50	FT	DISTRIBUTION CABLE, MISC.: 24/C NO. 14 SM FO, LSZH	625
3000			3000	FT	DISTRIBUTION CABLE, MISC.: NO. 3/0 AWG, RHW-2, LSZH	625
160			160	FT	DISTRIBUTION CABLE, MISC.: NO. 4/0 AWG, RHW-2, LSZH	625
5			5	FT	DISTRIBUTION CABLE, MISC.: 4 NO. 14 AWG, RHW-2, LSZH	625
100			100	FT	DISTRIBUTION CABLE, MISC.: 6 NO. 12 AWG, RHW-2, LSZH	625
5			5	FT	DISTRIBUTION CABLE, MISC.: 6 NO. 14 AWG, RHW-2, LSZH	625
3200			3200	FT	DISTRIBUTION CABLE, MISC.: 400KCMIL, RHW-2, LSZH	625
4600			4600	FT	DISTRIBUTION CABLE, MISC.: 500KCMIL, RHW-2, LSZH	625
2400			2400	FT	DISTRIBUTION CABLE, MISC.: 750KCMIL, RHW-2, LSZH	625
300			300	FT	DISTRIBUTION CABLE, MISC.: NO. 12 AWG, RHW-2, LSZH	625
5250			5250	FT	DISTRIBUTION CABLE, MISC.: NO. 14 CIC	625
2700			2700	FT	DISTRIBUTION CABLE, MISC.: NO. 8 CIC	625
2700			2700	FT	DISTRIBUTION CABLE, MISC.: NO. 6 CIC	625
100			100	FT	DISTRIBUTION CABLE, MISC.: 2 NO. 12 CIC	625

HAM-71-1.34

PID No. 87268

ELECTRICAL SUBSUMMARY

BRIDGE NO. HAM-71-0134

I.R.-71 LYTLE TUNNEL UNDER LYTLE PARK

DESIGNED	DRAWN	REVIEWED	DATE
DGC	CM	RF	8/11/14
CHECKED	REVISED	STRUCTURE FILE NUMBER	
LL		3106578	

DESIGN AGENCY
HATCH MOTT MacDONALD
18013 CLEVELAND PKWY.
SUITE 200
CLEVELAND, OH 44135

ITEM SPECIAL – MISC.: FIRE ALARM SYSTEM

PART 1 - GENERAL

1.01 SECTION INCLUDES

A. REQUIREMENTS FOR THE CONTRACTOR TO PROVIDE AND INSTALL THE FOLLOWING FIRE ALARM SYSTEM COMPONENTS:
1. *FIRE-ALARM CONTROL UNIT*
2. *MANUAL FIRE-ALARM BOXES*
3. *SYSTEM SMOKE DETECTORS*
4. *HEAT DETECTORS*
5. *NOTIFICATION APPLIANCES*
6. *ADDRESSABLE INTERFACE DEVICE*
7. *DIGITAL ALARM COMMUNICATOR TRANSMITTER*
8. *NETWORK COMMUNICATIONS*
9. *SYSTEM PRINTER*

1.02 CITED STANDARDS

A. REGULATORY REQUIREMENTS AND STANDARDS
1. *NFPA-NATIONAL FIRE PROTECTION ASSOCIATION*
2. *ANSI-AMERICAN NATIONAL STANDARDS INSTITUTE*
3. *IEEE-INSTITUTE OF ELECTRICAL AND ELECTRONIC ENGINEERS*
4. *NICET-NATIONAL INSTITUTE FOR CERTIFICATION IN ENGINEERING TECHNOLOGIES*
5. *NEC-NATIONAL ELECTRICAL CODE*
6. *NEMA-NATIONAL ELECTRICAL MANUFACTURERS ASSOCIATION*
7. *UL-UNDERWRITERS LABORATORY*

1.03 NOTED RESTRICTIONS

A. FIRE ALARM SYSTEMS SHALL BE OF A SINGLE MANUFACTURER AND DESIGNED TO FUNCTION TOGETHER AS A UNIT. SYSTEMS COMPRISED OF COMPONENTS FROM MORE THAN A SINGLE MANUFACTURER SHALL NOT BE ALLOWED EXCEPT WITH THE WRITTEN APPROVAL FROM THE ENGINEER AND A CONCURRING LETTER OF ACCEPTABILITY FROM THE AUTHORITY HAVING JURISDICTION.

1.04 QUALITY CONTROL

A. INSTALLER PERSONNEL SHALL BE TRAINED AND CERTIFIED BY MANUFACTURER FOR INSTALLATION OF UNITS REQUIRED FOR THIS PROJECT

B. INSTALLATION SHALL BE BY PERSONNEL CERTIFIED BY NICET AS FIRE-ALARM LEVEL II TECHNICIAN. THE INSTALLATION CREW SHALL BE SUPERVISED BY A NICET CERTIFIED FIRE-ALARM LEVEL III TECHNICIAN.

1.05 SUBMITTALS

A. THE FOLLOWING SUBMITTALS SHALL BE MADE A MINIMUM OF THIRTY (30) CALENDAR DAYS PRIOR TO THE START OF RELEVANT WORK:

1. *FOR EACH TYPE OF PRODUCT, INCLUDING FURNISHED OPTIONS AND ACCESSORIES:*

   A. INCLUDE CONSTRUCTION DETAILS, MATERIAL DESCRIPTIONS, DIMENSIONS, PROFILES, AND FINISHES.
   B. INCLUDE RATED CAPACITIES, OPERATING CHARACTERISTICS, AND ELECTRICAL CHARACTERISTICS.

2. *INSTALLER QUALIFICATION DATA*
3. *SAMPLE WARRANTEE*
4. *SHOP DRAWINGS*

   A. SHOP DRAWINGS SHALL BE PREPARED BY PERSONS WITH THE FOLLOWING QUALIFICATIONS:
      1) *TRAINED AND CERTIFIED BY MANUFACTURER IN FIRE-ALARM SYSTEM DESIGN*
      2) *NICET-CERTIFIED, FIRE-ALARM TECHNICIAN; LEVEL III MINIMUM*
      3) *LICENSED OR CERTIFIED BY AUTHORITIES HAVING JURISDICTION*

   B. COMPLY WITH RECOMMENDATIONS AND REQUIREMENTS IN THE "DOCUMENTATION" SECTION OF THE "FUNDAMENTALS" CHAPTER IN NFPA 72.
   C. INCLUDE PLANS, ELEVATIONS, SECTIONS, DETAILS, AND ATTACHMENTS TO OTHER WORK.
   D. INCLUDE DETAILS OF EQUIPMENT ASSEMBLIES. INDICATE DIMENSIONS, WEIGHTS, LOADS, REQUIRED CLEARANCES, METHOD OF FIELD ASSEMBLY, COMPONENTS, AND LOCATIONS. INDICATE CONDUCTOR SIZES, INDICATE TERMINATION LOCATIONS AND REQUIREMENTS, AND DISTINGUISH BETWEEN FACTORY AND FIELD WIRING.
   E. DETAIL ASSEMBLY AND SUPPORT REQUIREMENTS.
   F. INCLUDE VOLTAGE DROP CALCULATIONS FOR NOTIFICATION-APPLIANCE CIRCUITS.
   G. INCLUDE BATTERY-SIZE CALCULATIONS.
   H. INCLUDE INPUT/OUTPUT MATRIX
   I. INCLUDE STATEMENT FROM MANUFACTURER THAT ALL EQUIPMENT AND COMPONENTS SHAVE BEEN TESTED AS A SYSTEM AND MEET ALL REQUIREMENTS IN THIS SPECIFICATION AND IN NFPA 72. INCLUDE VOICE/ALARM SIGNALING-SERVICE EQUIPMENT RACK OR CONSOLE LAYOUT, GROUNDING SCHEMATIC, AMPLIFIER POWER CALCULATION, AND SINGLE-LINE CONNECTION DIAGRAM.
   J. INCLUDE FLOOR PLANS TO INDICATE FINAL OUTLET LOCATIONS SHOWING ADDRESS OF EACH ADDRESSABLE DEVICE. SHOW SIZE AND ROUTE OF CABLE AND CONDUITS AND POINT-TO-POINT WIRING DIAGRAMS.

1.06 DELIVERABLES

A. THE FOLLOWING SHALL BE MADE A MAXIMUM OF THIRTY (30) CALENDAR DAYS AFTER PERFORMING THE RELEVANT WORK:
1. *OPERATION AND MAINTENANCE MANUALS*
2. *INSPECTION AND TESTING FORM PREPARED IN ACCORDANCE WITH THE "INSPECTION, TESTING AND MAINTENANCE" CHAPTER OF NFPA 72.*
3. *COMPLETE AS-BUILT WIRING DIAGRAMS AND RISER DIAGRAM*
4. *TABLE OF DEVICE ADDRESSES*
5. *SOFTWARE OPERATING AND UPGRADE MANUALS.*
6. *PROGRAM SOFTWARE BACKUP: ON MAGNETIC MEDIA OR COMPACT DISK, COMPLETE WITH DATA FILES.*
7. *PRINTOUT OF SOFTWARE APPLICATION AND GRAPHIC SCREENS.*

B. FURNISH EXTRA MATERIALS THAT MATCH PRODUCTS INSTALLED AND THAT ARE PACKAGED WITH PROTECTIVE COVERING FOR STORAGE AND IDENTIFIED WITH LABELS DESCRIBING CONTENTS.

1. *LAMPS FOR REMOTE INDICATING LAMP UNITS: QUANTITY EQUAL TO 10% OF AMOUNT INSTALLED, BUT NO LESS THAN ONE (1) UNIT.*
2. *LAMPS FOR STROBE UNITS: QUANTITY EQUAL TO 10% OF AMOUNT INSTALLED, BUT NO LESS THAN ONE (1) UNIT.*

PART 2 - PRODUCTS

2.01 GENERAL

A. FURNISH AND INSTALL A NON-CODED, UL-CERTIFIED, FM GLOBAL-PLACARDED ADDRESSABLE SYSTEM, WITH MULTIPLEXED SIGNAL TRANSMISSION AND HORN/STROBE EVACUATION.
B. ALL COMPONENTS PROVIDED SHALL BE LISTED FOR USE WITH THE SELECTED SYSTEM.
C. ELECTRICAL COMPONENTS, DEVICES, AND ACCESSORIES SHALL BE LISTED AND LABELED AS DEFINED BY NFPA 70, BY A QUALIFIED TESTING AGENCY, AND MARKED FOR INTENDED LOCATION AND APPLICATION.
D. FIRE ALARM SYSTEMS SHALL BE OF A SINGLE MANUFACTURER AND DESIGNED TO FUNCTION TOGETHER AS A UNIT. SYSTEMS COMPRISED OF COMPONENTS FROM MORE THAN A SINGLE MANUFACTURER SHALL NOT BE ALLOWED EXCEPT WITH THE WRITTEN APPROVAL FROM THE ENGINEER AND A CONCURRING LETTER OF ACCEPTABILITY FROM THE AUTHORITY HAVING JURISDICTION.

2.02 SYSTEM OPERATIONAL DESCRIPTION

A. FIRE-ALARM SIGNAL INITIATION SHALL BE BY ONE OR MORE OF THE FOLLOWING DEVICES
1. *MANUAL STATIONS*
2. *SMOKE DETECTORS*
3. *HEAT DETECTORS*

B. FIRE-ALARM SIGNAL SHALL INITIATE THE FOLLOWING ACTIONS:

1. *CONTINUOUSLY OPERATE ALARM NOTIFICATION APPLIANCES*
2. *IDENTIFY ALARM AND SPECIFIC INITIATING DEVICE AT FIRE-ALARM CONTROL UNIT, CONNECTED NETWORK CONTROL PANELS, AND OFF-PREMISES NETWORK CONTROL PANELS.*
3. *TRANSMIT AN ALARM SIGNAL TO THE REMOTE ALARM RECEIVING STATION*
4. *ACTIVATE ALARM COMMUNICATION SYSTEM*
5. *ACTIVATE EMERGENCY LIGHTING CONTROL*
6. *RECORD EVENTS IN THE SYSTEM MEMORY*
7. *RECORD EVENTS BY THE SYSTEM PRINTER*
8. *INDICATE DEVICE IN ALARM ON THE FIRE ALARM CONTROL PANEL*

C. SUPERVISORY SIGNAL INITIATION SHALL BE BY ONE OR MORE OF THE FOLLOWING DEVICES AND ACTIONS

1. *USER DISABLING OF ZONES OR INDIVIDUAL DEVICES*
2. *LOSS OF COMMUNICATION WITH ANY PANEL ON THE NETWORK*

D. SYSTEM TROUBLE SIGNAL INITIATION SHALL BE BY ONE OR MORE OF THE FOLLOWING DEVICES AND ACTIONS

1. *OPEN CIRCUITS, SHORTS, AND GROUNDS IN DESIGNATED CIRCUITS*
2. *OPENING, TAMPERING WITH OR REMOVING ALARM-INITIATING AND SUPERVISORY SIGNAL-INITIATING DEVICES.*
3. *LOSS OF COMMUNICATION WITH ANY ADDRESSABLE SENSOR, INPUT MODULE, RELAY, CONTROL MODULE, REMOTE ANNUNCIATOR, PRINTER INTERFACE, OR ETHERNET MODULE.*
4. *LOSS OF PRIMARY POWER AT FIRE-ALARM CONTROL UNIT*
5. *GROUND OR A SINGLE BREAK IN INTERNAL CIRCUITS OF FIRE-ALARM CONTROL UNIT*
6. *ABNORMAL AC VOLTAGE AT FIRE-ALARM CONTROL UNIT*
7. *BREAK IN STANDBY BATTERY CIRCUITRY*
8. *FAILURE OF BATTERY CHARGING*
9. *ABNORMAL POSITION OF A SWITCH AT FIRE-ALARM CONTROL UNIT OR ANNUNCIATOR.*

E. SYSTEM SUPERVISORY SIGNAL ACTIONS

1. *INITIATE NOTIFICATION APPLIANCES*
2. *IDENTIFY SPECIFIC DEVICE INITIATING THE EVENT AT FIRE-ALARM CONTROL UNIT, CONNECTED NETWORK CONTROL PANELS, OFF-PREMISES NETWORK CONTROL PANELS, AND REMOTE ANNUNCIATORS.*
3. *RECORD THE EVENT ON SYSTEM PRINTER.*
4. *TRANSMIT A TROUBLE OR SUPERVISORY SIGNAL TO THE REMOTE ALARM RECEIVING STATION, AS PER NFPA 72.*
5. *TRANSMIT SYSTEM STATUS TO THE FACILITY MONITORING CONTROL PANEL.*

2.03 FIRE-ALARM CONTROL UNIT

A. SUBJECT TO COMPLIANCE WITH REQUIREMENTS, PROVIDE PRODUCTS INDICATED ON THE DRAWINGS BY ONE OF THE FOLLOWING OR APPROVED EQUAL:
1. *NOTIFIER (HONEYWELL)*
2. *GE UTC FIRE & SECURITY; A UNITED TECHNOLOGIES COMPANY*

c:\pwworking\hmm\external\pre47802\dms72703\071_0134CES250.dgn 3/16/2015 12:22:42 PM PRE47802

DESIGN AGENCY
HATCH MOTT MacDONALD
18013 CLEVELAND PKWY.
SUITE 200
CLEVELAND, OH 44135

DESIGNED	DRAWN	REVIEWED	DATE
BDP	CM	RF	08/11/14
CHECKED	REVISED	STRUCTURE FILE NUMBER	
DGC	BDP	31066578	

ELECTRICAL – FIRE ALARM SPECIFICATIONS – SHEET 1 OF 4
BRIDGE NO. HAM-71-0134
I-71 LYTLE TUNNEL UNDER LYTLE PARK

HAM-71-01.34
PID No. 87268

3. SIEMENS INDUSTRY, INC.; FIRE SAFETY DIVISION
4. FEDERAL SIGNAL CORPORATION

B. GENERAL REQUIREMENTS FOR FIRE-ALARM CONTROL UNIT

1. FIELD-PROGRAMMABLE, MICROPROCESSOR-BASED, MODULAR, POWER-LIMITED DESIGN WITH ELECTRONIC MODULES, COMPLYING WITH UL 864.

A. SYSTEM SOFTWARE AND PROGRAMS SHALL BE HELD IN NON-VOLATILE FLASH, ELECTRICALLY ERASABLE, PROGRAMMABLE, READ-ONLY MEMORY, RETAINING THE INFORMATION THROUGH FAILURE OF PRIMARY AND SECONDARY POWER SUPPLIES.
B. INCLUDE A REAL-TIME CLOCK FOR TIME ANNOTATION OF EVENTS ON THE EVENT RECORDER AND PRINTER.
C. PROVIDE COMMUNICATION BETWEEN THE FIRE ALARM CONTROL PANEL (FACP) AND REMOTE CIRCUIT INTERFACE PANELS, ANNUNCIATORS, AND DISPLAYS.
D. THE FACP SHALL BE LISTED FOR CONNECTION TO A CENTRAL-STATION SIGNALING SYSTEM SERVICE.
E. PROVIDE NONVOLATILE MEMORY FOR SYSTEM DATABASE, LOGIC, AND OPERATING SYSTEM AND EVENT HISTORY. THE SYSTEM SHALL REQUIRE NO MANUAL INPUT TO INITIALIZE IN THE EVENT OF A COMPLETE POWER DOWN CONDITION. THE FACP SHALL PROVIDE A MINIMUM 500 EVENT HISTORY LOG.

2. ADDRESSABLE INITIATION DEVICE CIRCUITS.

A. THE FACP SHALL INDICATE WHICH COMMUNICATION ZONES HAVE BEEN SILENCED AND SHALL PROVIDE SELECTIVE SILENCING OF ALARM NOTIFICATION APPLIANCE BY BUILDING COMMUNICATION ZONE.

3. ADDRESSABLE CONTROL CIRCUITS FOR OPERATION OF NOTIFICATION APPLIANCES AND MECHANICAL EQUIPMENT.

A. THE FACP SHALL BE LISTED FOR RELEASING SERVICE

C. ALPHANUMERIC DISPLAY AND SYSTEM CONTROLS:

1. THE SYSTEM SHALL BE ARRANGED FOR INTERFACE BETWEEN A HUMAN OPERATOR AT THE FIRE-ALARM CONTROL UNIT AND ADDRESSABLE SYSTEM COMPONENTS INCLUDING ANNUNCIATION AND SUPERVISION.
2. THE SYSTEM SHALL DISPLAY ALARM, SUPERVISORY, AND COMPONENT STATUS MESSAGES AND THE PROGRAMMING AND CONTROL MENU,

A. THE ANNUNCIATOR AND DISPLAY SHALL BE LIQUID-CRYSTAL TYPE, 80 CHARACTERS MINIMUM.
B. THE KEYPAD SHALL BE ARRANGED TO PERMIT ENTRY AND EXECUTION OF PROGRAMMING, DISPLAY, AND CONTROL COMMANDS.

D. INITIATING DEVICE, NOTIFICATION APPLIANCE, AND SIGNALING LINE CIRCUITS

1. PATHWAY CLASS DESIGNATIONS: NFPA 72, CLASS B
2. PATHWAY SURVIVABILITY: LEVEL 0
3. INSTALL NO MORE THAN 100 ADDRESSABLE DEVICES ON EACH SIGNALING-LINE CIRCUIT.
4. SERIAL INTERFACES:

A. ONE DEDICATED RS 485 PORT FOR CENTRAL-STATION OPERATION USING POINT ID DACT.
B. ONE RS 485 PORT FOR REMOTE ANNUNCIATORS, ETHERNET MODULE, OR MULTI-INTERFACE MODULE (PRINTER PORT)
C. ONE USB PORT FOR PC CONFIGURATION
D. ONE RS232 PORT FOR VESDA HLI CONNECTION

5. NOTIFICATION-APPLIANCE CIRCUIT:
A. AUDIBLE APPLIANCES SHALL SOUND IN A THREE-PULSE TEMPORAL PATTERN, AS DEFINED IN NFPA 72.
B. VISUAL ALARM APPLIANCES SHALL FLASH IN SYNCHRONIZATION WHERE MULTIPLE APPLIANCES ARE IN THE SAME FIELD OF VIEW, AS DEFINED IN NFPA 72.

6. TRANSMISSION TO REMOTE ALARM RECEIVING STATION

A. AUTOMATICALLY TRANSMIT ALARM, SUPERVISORY, AND TROUBLE SIGNALS TO A REMOTE ALARM STATION.

7. PRINTOUT OF EVENTS

A. ON RECEIPT OF SIGNAL, PRINT ALARM, SUPERVISORY, AND TROUBLE EVENTS:

1) IDENTIFY ZONE, DEVICE AND FUNCTION
2) INCLUDE TYPE OF SIGNAL AND DATE/TIME OF OCCURRENCE
3) DIFFERENTIATE ALARM SIGNALS FROM ALL OTHER PRINTED INDICATIONS.
4) PRINT SYSTEM RESET EVENT, INCLUDING SAME INFORMATION FOR DEVICE, LOCATION, DATE AND TIME.
5) A LIST OF THE ALARMS, SUPERVISORY, AND TROUBLE CONDITIONS SHALL BE MAINTAINED IN THE SYSTEM AND A SEPARATE HISTORICAL LOG OF EVENTS.

8. POWER SUPPLY SOURCES

A. POWER SUPPLIES SHALL BE INSTALLED IN CONFORMITY WITH NFPA 70, NATIONAL ELECTRIC CODE.
B. POWER SHALL BE SUPPLIED IN COMPLIANCE WITH EITHER NFPA 72: 10.6.3.2 OR 10.6.3.4
C. UNLESS CONFIGURED WITH AN UNINTERRUPTABLE POWER SUPPLY, AT LEAST TWO INDEPENDENT AND RELIABLE POWER SUPPLIES SHALL BE PROVIDED, ONE PRIMARY AND ONE SECONDARY.

1) PRIMARY POWER SHALL BE 24 VDC OBTAINED FROM A 120 VAC SERVICE AND POWER-SUPPLY MODULE.
2) INITIATING DEVICES, NOTIFICATION APPLIANCES, SIGNALING LINES, TROUBLE SIGNALS, SUPERVISORY AND DIGITAL ALARM COMMUNICATION TRANSMITTERS SHALL BE POWERED BY A 24 VDC SOURCE.
3) SECONDARY POWER SHALL BE A 24 VDC SUPPLY SYSTEM WITH BATTERIES, AUTOMATIC BATTERY CHARGER, AND AUTOMATIC TRANSFER SWITCH. BATTERIES SHALL BE SEALED LEAD CALCIUM; SEALED, VALVE-REGULATED, RECOMBINANT LEAD ACID, OR VENTED, WET-CELL POCKET, PLATE NICKEL CADMIUM.

9. INSTRUCTIONS

A. COMPUTER PRINTOUT OR TYPEWRITTEN INSTRUCTION CARD MOUNTED BEHIND A PLASTIC OR GLASS COVER IN A STAINLESS-STEEL OR ALUMINUM FRAMES
B. INSTRUCTIONS SHALL INCLUDE INTERPRETATION AND DESCRIBE APPROPRIATE RESPONSE FOR DISPLAYS AND SIGNALS.
C. INSTRUCTIONS SHALL BRIEFLY DESCRIBE THE FUNCTIONAL OPERATION OF THE SYSTEM UNDER NORMAL, ALARM, AND TROUBLE CONDITIONS.

2.04 MANUAL FIRE-ALARM BOXES

A. SUBJECT TO COMPLIANCE WITH REQUIREMENTS, PROVIDE PRODUCTS INDICATED ON THE DRAWINGS BY ONE OF THE FOLLOWING OR APPROVED EQUAL:
1. NOTIFIER (HONEYWELL)
2. GE UTC FIRE & SECURITY; A UNITED TECHNOLOGIES COMPANY
3. SIEMENS INDUSTRY, INC.; FIRE SAFETY DIVISION
4. FEDERAL SIGNAL CORPORATION

B. GENERAL REQUIREMENTS FOR MANUAL FIRE-ALARM BOXES: COMPLY WITH UL 38. BOXES SHALL BE FINISHED IN RED WITH MOLDED, RAISED-LETTER OPERATING INSTRUCTIONS IN CONTRASTING COLOR; SHALL SHOW VISIBLE INDICATION OF OPERATION; AND SHALL BE MOUNTED ON RECESSED OUTLET BOX. IF INDICATED AS SURFACE MOUNTED, PROVIDE MANUFACTURER'S SURFACE BACK BOX.

1. SINGLE-ACTION MECHANISM, PLASTIC-ROD, PULL-LEVER TYPE; WITH INTEGRAL ADDRESSABLE MODULE ARRANGED TO COMMUNICATE MANUAL-STATION STATUS (NORMAL, ALARM, OR TROUBLE) TO FIRE-ALARM CONTROL UNIT.
2. STATION RESET: WRENCH-OPERATED SWITCH.

2.05 SYSTEM SMOKE DETECTORS

A. SUBJECT TO COMPLIANCE WITH REQUIREMENTS, PROVIDE PRODUCTS BY ONE OF THE FOLLOWING OR APPROVED EQUAL:
1. NOTIFIER (HONEYWELL)
2. GE UTC FIRE & SECURITY; A UNITED TECHNOLOGIES COMPANY
3. SIEMENS INDUSTRY, INC.; FIRE SAFETY DIVISION
4. FEDERAL SIGNAL CORPORATION

B. GENERAL REQUIREMENTS FOR SYSTEM SMOKE DETECTORS:

1. UL 268 COVERS DETECTORS THAT ARE PART OF A FIRE-ALARM SYSTEM AND DETECTORS INTENDED SOLELY FOR CONTROL OF RELEASING DEVICES SUCH AS DOOR HOLDERS AND DAMPERS. SINGLE- OR MULTIPLE-STATION, NONSYSTEM SMOKE-DETECTOR/ALARM UNITS FOR RESIDENTIAL UNITS ARE SPECIFIED IN "NONSYSTEM SMOKE DETECTORS" ARTICLE. SEE EDITING INSTRUCTION NO. 9 IN THE EVALUATIONS FOR DISCUSSION ABOUT DETECTOR LOCATIONS.
2. COMPLY WITH UL 268; OPERATING AT 24-V DC, NOMINAL.
3. DETECTORS SHALL BE TWO-WIRE TYPE.
4. INTEGRAL ADDRESSABLE MODULE: ARRANGED TO COMMUNICATE DETECTOR STATUS (NORMAL, ALARM, OR TROUBLE) TO FIRE-ALARM CONTROL UNIT.
5. BASE MOUNTING: DETECTOR AND ASSOCIATED ELECTRONIC COMPONENTS SHALL BE MOUNTED IN A TWIST-LOCK MODULE THAT CONNECTS TO A FIXED BASE. PROVIDE TERMINALS IN THE FIXED BASE FOR CONNECTION TO BUILDING WIRING.
6. SELF-RESTORING: DETECTORS DO NOT REQUIRE RESETTING OR READJUSTMENT AFTER ACTUATION TO RESTORE THEM TO NORMAL OPERATION.
7. INTEGRAL VISUAL-INDICATING LIGHT: LED TYPE, INDICATING DETECTOR HAS OPERATED AND POWER-ON STATUS.
8. REMOTE CONTROL: UNLESS OTHERWISE INDICATED, DETECTORS SHALL BE DIGITAL-ADDRESSABLE TYPE, INDIVIDUALLY MONITORED AT FIRE-ALARM CONTROL UNIT FOR CALIBRATION, SENSITIVITY, AND ALARM CONDITION AND INDIVIDUALLY ADJUSTABLE FOR SENSITIVITY BY FIRE-ALARM CONTROL UNIT.

A. RATE-OF-RISE TEMPERATURE CHARACTERISTIC OF COMBINATION SMOKE- AND HEAT-DETECTION UNITS SHALL BE SELECTABLE AT FIRE-ALARM CONTROL UNIT FOR 15 OR 20 DEG F PER MINUTE.
B. FIXED-TEMPERATURE SENSING CHARACTERISTIC OF COMBINATION SMOKE- AND HEAT-DETECTION UNITS SHALL BE INDEPENDENT OF RATE-OF-RISE SENSING AND SHALL BE

c:\pwworking\hmm\external\pre47802\dms72703\071_0134CES251.dgn 3/16/2015 11:54:44 AM PRE47802

DESIGN AGENCY
HATCH MOTT MacDONALD
18013 CLEVELAND PKWY.
SUITE 200
CLEVELAND, OH 44135

DESIGNED	DRAWN	REVIEWED	DATE	STRUCTURE FILE NUMBER
BDP	CM	RF	08/11/14	3106578
CHECKED	REVISED			
DGC	BDP			

SETTABLE AT FIRE-ALARM CONTROL UNIT TO OPERATE AT 135 OR 155 DEG F.
C. NUMBER OF SETTABLE LEVELS IN FIRE-ALARM CONTROL UNIT VARIES AMONG MANUFACTURERS AND BETWEEN DETECTOR TYPES. INDICATE SPECIFIC NUMBER OF LEVELS ON DRAWINGS OR IN "REMARKS" COLUMN OF A DETECTOR SCHEDULE.
D. MULTIPLE LEVELS OF DETECTION SENSITIVITY FOR EACH SENSOR.
E. SENSITIVITY LEVELS BASED ON TIME OF DAY.

C. PHOTOELECTRIC SMOKE DETECTORS:

1. DETECTOR ADDRESS SHALL BE ACCESSIBLE FROM FIRE-ALARM CONTROL UNIT AND SHALL BE ABLE TO IDENTIFY THE DETECTOR'S LOCATION WITHIN THE SYSTEM AND ITS SENSITIVITY SETTING.
2. AN OPERATOR AT FIRE-ALARM CONTROL UNIT, HAVING THE DESIGNATED ACCESS LEVEL, SHALL BE ABLE TO MANUALLY ACCESS THE FOLLOWING FOR EACH DETECTOR:

A. PRIMARY STATUS.
B. DEVICE TYPE.
C. PRESENT AVERAGE VALUE.
D. PRESENT SENSITIVITY SELECTED.
E. SENSOR RANGE (NORMAL, DIRTY, ETC.).

D. IONIZATION SMOKE DETECTOR:

1. DETECTOR ADDRESS SHALL BE ACCESSIBLE FROM FIRE-ALARM CONTROL UNIT AND SHALL BE ABLE TO IDENTIFY THE DETECTOR'S LOCATION WITHIN THE SYSTEM AND ITS SENSITIVITY SETTING.
2. AN OPERATOR AT FIRE-ALARM CONTROL UNIT, HAVING THE DESIGNATED ACCESS LEVEL, SHALL BE ABLE TO MANUALLY ACCESS THE FOLLOWING FOR EACH DETECTOR:

A. PRIMARY STATUS.
B. DEVICE TYPE.
C. PRESENT AVERAGE VALUE.
D. PRESENT SENSITIVITY SELECTED.
E. SENSOR RANGE (NORMAL, DIRTY, ETC.).

2.06 NOTIFICATION APPLIANCES

A. SUBJECT TO COMPLIANCE WITH REQUIREMENTS, PROVIDE PRODUCTS INDICATED ON THE DRAWINGS BY ONE OF THE FOLLOWING OR APPROVED EQUAL:
1. NOTIFIER (HONEYWELL)
2. GE UTC FIRE & SECURITY; A UNITED TECHNOLOGIES COMPANY
3. SIEMENS INDUSTRY, INC.; FIRE SAFETY DIVISION
4. FEDERAL SIGNAL CORPORATION

B. GENERAL REQUIREMENTS FOR NOTIFICATION APPLIANCES: INDIVIDUALLY ADDRESSED, CONNECTED TO A SIGNALING-LINE CIRCUIT, EQUIPPED FOR MOUNTING AS INDICATED, AND WITH SCREW TERMINALS FOR SYSTEM CONNECTIONS.
C. GENERAL REQUIREMENTS FOR NOTIFICATION APPLIANCES: CONNECTED TO NOTIFICATION-APPLIANCE SIGNAL CIRCUITS, ZONED AS INDICATED, EQUIPPED FOR MOUNTING AS INDICATED, AND WITH SCREW TERMINALS FOR SYSTEM CONNECTIONS.

1. COMBINATION DEVICES: FACTORY-INTEGRATED AUDIBLE AND VISIBLE DEVICES IN A SINGLE-MOUNTING ASSEMBLY, EQUIPPED FOR MOUNTING AS INDICATED, AND WITH SCREW TERMINALS FOR SYSTEM CONNECTIONS.

A. CHIMES, HIGH-LEVEL OUTPUT: VIBRATING TYPE, 81 DBA MINIMUM RATED OUTPUT.
B. VISIBLE NOTIFICATION APPLIANCES: XENON STROBE LIGHTS COMPLYING WITH UL 1971, WITH CLEAR OR NOMINAL WHITE POLYCARBONATE LENS MOUNTED ON AN ALUMINUM FACEPLATE.

1) RATED LIGHT OUTPUT:
2) 15/30/75/110 CD, SELECTABLE IN THE FIELD.
3) MOUNTING: WALL MOUNTED UNLESS OTHERWISE INDICATED.
4) FOR UNITS WITH GUARDS TO PREVENT PHYSICAL DAMAGE, LIGHT OUTPUT RATINGS SHALL BE DETERMINED WITH GUARDS IN PLACE.
5) FLASHING SHALL BE IN A TEMPORAL PATTERN.
6) STROBE LEADS: FACTORY CONNECTED TO SCREW TERMINALS.
7) MOUNTING FACEPLATE: FACTORY FINISHED RED.

2.07 ADDRESSABLE INTERFACE DEVICE

A. INCLUDE ADDRESS-SETTING MEANS ON THE MODULE.
B. STORE AN INTERNAL IDENTIFYING CODE FOR CONTROL PANEL USE TO IDENTIFY THE MODULE TYPE.
C. MONITOR MODULE: MICROELECTRONIC MODULE PROVIDING A SYSTEM ADDRESS FOR ALARM-INITIATING DEVICES FOR WIRED APPLICATIONS WITH NORMALLY OPEN CONTACTS.

2.08 DIGITAL ALARM COMMUNICATOR TRANSMITTER

A. DIGITAL ALARM COMMUNICATOR TRANSMITTER SHALL BE ACCEPTABLE TO THE REMOTE CENTRAL STATION AND SHALL COMPLY WITH UL 632.
B. FUNCTIONAL PERFORMANCE: UNIT SHALL RECEIVE AN ALARM, SUPERVISORY, OR TROUBLE SIGNAL FROM FIRE-ALARM CONTROL UNIT AND AUTOMATICALLY CAPTURE TWO TELEPHONE LINES AND DIAL A PRESET NUMBER FOR A REMOTE CENTRAL STATION. WHEN CONTACT IS MADE WITH CENTRAL STATION(S), SIGNALS SHALL BE TRANSMITTED. IF SERVICE ON EITHER LINE IS INTERRUPTED FOR LONGER THAN 45 SECONDS, TRANSMITTER SHALL INITIATE A LOCAL TROUBLE SIGNAL AND TRANSMIT THE SIGNAL INDICATING LOSS OF TELEPHONE LINE TO THE REMOTE ALARM RECEIVING STATION OVER THE REMAINING LINE. TRANSMITTER SHALL AUTOMATICALLY REPORT TELEPHONE SERVICE RESTORATION TO THE CENTRAL STATION. IF SERVICE IS LOST ON BOTH TELEPHONE LINES, TRANSMITTER SHALL INITIATE THE LOCAL TROUBLE SIGNAL.
C. LOCAL FUNCTIONS AND DISPLAY AT THE DIGITAL ALARM COMMUNICATOR TRANSMITTER SHALL INCLUDE THE FOLLOWING:

1. VERIFICATION THAT BOTH TELEPHONE LINES ARE AVAILABLE.
2. PROGRAMMING DEVICE.
3. LED DISPLAY.
4. MANUAL TEST REPORT FUNCTION AND MANUAL TRANSMISSION CLEAR INDICATION.
5. COMMUNICATIONS FAILURE WITH THE CENTRAL STATION OR FIRE-ALARM CONTROL UNIT.

D. DIGITAL DATA TRANSMISSION SHALL INCLUDE THE FOLLOWING:

1. ADDRESS OF THE ALARM-INITIATING DEVICE.
2. ADDRESS OF THE SUPERVISORY SIGNAL.
3. ADDRESS OF THE TROUBLE-INITIATING DEVICE.
4. LOSS OF AC SUPPLY.
5. LOSS OF POWER.
6. LOW BATTERY.
7. ABNORMAL TEST SIGNAL.
8. COMMUNICATION BUS FAILURE.

E. SECONDARY POWER: INTEGRAL RECHARGEABLE BATTERY AND AUTOMATIC CHARGER.
F. SELF-TEST: CONDUCTED AUTOMATICALLY EVERY 24 HOURS WITH REPORT TRANSMITTED TO CENTRAL STATION.

2.09 NETWORK COMMUNICATIONS

A. PROVIDE NETWORK COMMUNICATIONS FOR FIRE-ALARM SYSTEM ACCORDING TO FIRE-ALARM MANUFACTURER'S WRITTEN REQUIREMENTS.
B. PROVIDE NETWORK COMMUNICATIONS PATHWAY PER MANUFACTURER'S WRITTEN REQUIREMENTS AND REQUIREMENTS IN NFPA 72 AND NFPA 70.
C. PROVIDE INTEGRATION GATEWAY USING ETHERNET MODULE FOR CONNECTION TO BUILDING SCADA SYSTEM.

2.10 SYSTEM PRINTER

A. PRINTER SHALL BE UL LISTED AND LABELED AS AN INTEGRAL PART OF FIRE-ALARM SYSTEM AND AS SUCH, BE ABLE TO OPERATE UNDER MAINS FAIL CONDITIONS FOR THE SAME LENGTH OF TIME AS THE FIRE ALARM CONTROL PANEL.
B. THE PRINTER SHALL PRODUCE A PRINTED RECORD OF TIME, DATE, EVENT TYPE, AND LOACTION OF EACH EVENT OCCURING ON THE SYSTEM.
C. SYSTEM PRINTOUTS SHALL BE IN CLEAR READABLE TEXT TO ENABLE MAINTENANCE AND SERVICE PERSONNEL TO UNDERSTAND HOW THE SYSTEM OPERATES.

PART 3 - EXECUTION

3.01 PREPARATION

A. EQUIPMENT INSTALLATION
1. COMPLY WITH NFPA 72, NFPA 101, AND REQUIREMENTS OF AUTHORITIES HAVING JURISDICTION FOR INSTALLATION AND TESTING OF FIRE-ALARM EQUIPMENT. INSTALL ALL ELECTRICAL WIRING TO COMPLY WITH REQUIREMENTS IN NFPA 70 INCLUDING, BUT NOT LIMITED TO, ARTICLE 760, "FIRE ALARM SYSTEMS."
2. DEVICES INSTALLED BUT NOT YET PLACED IN SERVICE SHALL BE PROTECTED FROM CONSTRUCTION DUST, DEBRIS, DIRT, MOISTURE, AND DAMAGE ACCORDING TO MANUFACTURER'S WRITTEN STORAGE INSTRUCTIONS.
3. CONNECTING EXISTING EQUIPMENT: VERIFY THAT EXISTING FIRE-ALARM SYSTEM IS OPERATIONAL BEFORE MAKING CHANGES OR CONNECTIONS.

A. INTERCONNECT EXISTING CONTROL PANEL IN EXISTING PART OF THE BUILDING TO A NEW FA CONTROLLER PANEL.

4. INSTALL WALL-MOUNTED EQUIPMENT, WITH TOPS OF CABINETS NOT MORE THAN 78 INCHES ABOVE THE FINISHED FLOOR.

B. MANUAL FIRE-ALARM BOXES:

1. THE OPERABLE PART OF MANUAL FIRE-ALARM BOX SHALL BE BETWEEN 42 INCHES (1060 MM) AND 48 INCHES (1220 MM) ABOVE FLOOR LEVEL. ALL DEVICES SHALL BE MOUNTED AT THE SAME HEIGHT UNLESS OTHERWISE INDICATED.
2. AUDIBLE ALARM-INDICATING DEVICES: INSTALL BELLS AND HORNS ON FLUSH-MOUNTED BACK BOXES WITH THE DEVICE-OPERATING MECHANISM CONCEALED BEHIND A GRILLE. INSTALL ALL DEVICES AT THE SAME HEIGHT UNLESS OTHERWISE INDICATED.
3. VISIBLE ALARM-INDICATING DEVICES: INSTALL ADJACENT TO EACH ALARM BELL OR ALARM HORN AND AT LEAST 6 INCHES (150 MM) BELOW THE CEILING. INSTALL ALL DEVICES AT THE SAME HEIGHT UNLESS OTHERWISE INDICATED.

C. SMOKE- OR HEAT-DETECTOR SPACING:

1. COMPLY WITH THE "SMOKE-SENSING FIRE DETECTORS" SECTION IN THE "INITIATING DEVICES" CHAPTER IN NFPA 72, FOR SMOKE-DETECTOR SPACING.

c:\pwworking\hmm\external\tyn61470\dms72703\071_0134CES252.dgn 10/24/2014 10:49:06 AM TYN61470

DESIGN AGENCY
HATCH MOTT MacDONALD
18013 CLEVELAND PKWY.
SUITE 200
CLEVELAND, OH 44135

DESIGNED	DRAWN	REVIEWED	DATE
BDP	CM	RF	08/11/14
CHECKED	REVISED	STRUCTURE FILE NUMBER	
DGC	BDP	3106578	

ELECTRICAL - FIRE ALARM SPECIFICATIONS - SHEET 3 OF 4

BRIDGE NO. HAM-71-0134
I-71 LYTLE TUNNEL UNDER LYTLE PARK

HAM-71-01.34
PID No. 87268

2. COMPLY WITH THE "HEAT-SENSING FIRE DETECTORS" SECTION IN THE "INITIATING DEVICES" CHAPTER IN NFPA 72, FOR HEAT-DETECTOR SPACING.
3. SMOOTH CEILING SPACING SHALL NOT EXCEED 30 FEET.
4. SPACING OF DETECTORS FOR IRREGULAR AREAS, FOR IRREGULAR CEILING CONSTRUCTION, AND FOR HIGH CEILING AREAS SHALL BE DETERMINED ACCORDING TO ANNEX A OR ANNEX B IN NFPA 72.
5. HVAC: LOCATE DETECTORS NOT CLOSER THAN 60 INCHES FROM AIR-SUPPLY DIFFUSER OR RETURN-AIR OPENING.
6. LIGHTING FIXTURES: LOCATE DETECTORS NOT CLOSER THAN 12 INCHES FROM ANY PART OF A LIGHTING FIXTURE AND NOT DIRECTLY ABOVE PENDANT MOUNTED OR INDIRECT LIGHTING.

D. INSTALL A COVER ON EACH SMOKE DETECTOR THAT IS NOT PLACED IN SERVICE DURING CONSTRUCTION. COVER SHALL REMAIN IN PLACE EXCEPT DURING SYSTEM TESTING. REMOVE COVER PRIOR TO SYSTEM TURNOVER.

3.02 FIELD QUALITY CONTROL

A. FIELD TESTS SHALL BE WITNESSED BY AUTHORITIES HAVING JURISDICTION.
B. MANUFACTURER'S FIELD SERVICE: ENGAGE A FACTORY-AUTHORIZED SERVICE REPRESENTATIVE TO TEST AND INSPECT COMPONENTS, ASSEMBLIES, AND EQUIPMENT INSTALLATIONS, INCLUDING CONNECTIONS.
C. PERFORM TESTS AND INSPECTIONS.
D. PERFORM THE FOLLOWING TESTS AND INSPECTIONS WITH THE ASSISTANCE OF A FACTORY-AUTHORIZED SERVICE REPRESENTATIVE:

1. VISUAL INSPECTION: CONDUCT VISUAL INSPECTION PRIOR TO TESTING.

   A. INSPECTION SHALL BE BASED ON COMPLETED RECORD DRAWINGS AND SYSTEM DOCUMENTATION THAT IS REQUIRED BY THE "COMPLETION DOCUMENTS, PREPARATION" TABLE IN THE "DOCUMENTATION" SECTION OF THE "FUNDAMENTALS" CHAPTER IN NFPA 72.
   B. COMPLY WITH THE "VISUAL INSPECTION FREQUENCIES" TABLE IN THE "INSPECTION" SECTION OF THE "INSPECTION, TESTING AND MAINTENANCE" CHAPTER IN NFPA 72; RETAIN THE "INITIAL/REACCEPTANCE" COLUMN AND LIST ONLY THE INSTALLED COMPONENTS.

2. SYSTEM TESTING: COMPLY WITH THE "TEST METHODS" TABLE IN THE "TESTING" SECTION OF THE "INSPECTION, TESTING AND MAINTENANCE" CHAPTER IN NFPA 72.
3. TEST AUDIBLE APPLIANCES FOR THE PUBLIC OPERATING MODE ACCORDING TO MANUFACTURER'S WRITTEN INSTRUCTIONS. PERFORM THE TEST USING A PORTABLE SOUND-LEVEL METER COMPLYING WITH TYPE 2 REQUIREMENTS IN ANSI S1.4.
4. TEST AUDIBLE APPLIANCES FOR THE PRIVATE OPERATING MODE ACCORDING TO MANUFACTURER'S WRITTEN INSTRUCTIONS.
5. TEST VISIBLE APPLIANCES FOR THE PUBLIC OPERATING MODE ACCORDING TO MANUFACTURER'S WRITTEN INSTRUCTIONS.
6. FACTORY-AUTHORIZED SERVICE REPRESENTATIVE SHALL PREPARE THE "FIRE ALARM SYSTEM RECORD OF COMPLETION" IN THE "DOCUMENTATION" SECTION OF THE "FUNDAMENTALS" CHAPTER IN NFPA 72 AND THE "INSPECTION AND TESTING FORM" IN THE "RECORDS" SECTION OF THE "INSPECTION, TESTING AND MAINTENANCE" CHAPTER IN NFPA 72.

E. REACCEPTANCE TESTING: PERFORM REACCEPTANCE TESTING TO VERIFY THE PROPER OPERATION OF ADDED OR REPLACED DEVICES AND APPLIANCES.
F. FIRE-ALARM SYSTEM WILL BE CONSIDERED DEFECTIVE IF IT DOES NOT PASS TESTS AND INSPECTIONS.

G. PREPARE TEST AND INSPECTION REPORTS.
H. MAINTENANCE TEST AND INSPECTION: PERFORM TESTS AND INSPECTIONS LISTED FOR WEEKLY, MONTHLY, QUARTERLY, AND SEMIANNUAL PERIODS. USE FORMS DEVELOPED FOR INITIAL TESTS AND INSPECTIONS.

3.03 SOFTWARE SERVICE AGREEMENT

A. COMPLY WITH UL 864.
B. TECHNICAL SUPPORT: BEGINNING AT SUBSTANTIAL COMPLETION, SERVICE AGREEMENT SHALL INCLUDE SOFTWARE SUPPORT FOR TWO (2) YEARS.
C. UPGRADE SERVICE: AT SUBSTANTIAL COMPLETION, UPDATE SOFTWARE TO LATEST VERSION. UPGRADING SOFTWARE SHALL INCLUDE OPERATING SYSTEM AND NEW OR REVISED LICENSES FOR USING SOFTWARE.

3.04 DEMONSTRATION

A. ENGAGE A FACTORY-AUTHORIZED SERVICE REPRESENTATIVE TO TRAIN OWNER'S MAINTENANCE PERSONNEL TO ADJUST, OPERATE, AND MAINTAIN FIRE-ALARM SYSTEM.

PART 4 - METHOD OF PAYMENT AND ITEMS

4.01 METHOD OF PAYMENT AND ITEMS

A. PAYMENT FOR ITEMS SHALL BE MADE AT THE CONTRACT UNIT PRICE, INCLUDING BUT NOT LIMITED TO ALL WORK, LABOR, EQUIPMENT, AND MATERIALS NECESSARY THEREFORE OR INCIDENTAL THERETO, AS FOLLOWS:

ITEM NO.	DESCRIPTION	QUANTITY	UNIT
690	SPECIAL - MISC.: FIRE ALARM CONTROL PANEL (HONEYWELL, NOTIFIER NFS2-3030 OR APPROVED EQUAL)	1	EACH
690	SPECIAL - MISC.: HEAT DETECTOR PANEL (HONEYWELL, NOTIFIER FST-851(A) OR APPROVED EQUAL)	40	EACH
690	SPECIAL - MISC.: SMOKE DETECTOR (HONEYWELL, NOTIFIER FSP-851(A) SERIES OR APPROVED EQUAL)	34	EACH
690	SPECIAL - MISC.: STROBE LIGHT (HONEYWELL, NOTIFIER SPECTRALERT ADVANCED P2RHKA OR APPROVED EQUAL)	30	EACH
690	SPECIAL - MISC.: MANUAL PULL STATION (HONEYWELL, NOTIFIER NBG-12 SERIES OR APPROVED EQUAL)	8	EACH
690	SPECIAL - MISC.: DUCT SMOKE DETECTOR (HONEYWELL, NOTIFIER	5	EACH
690	SPECIAL - MISC.: RELAY MODULE (HONEYWELL, NOTIFIER FRM-1 OR APPROVED EQUAL)	8	EACH
625	LIGHTING, MISC.: CABLE 2/C #10 CIC-FPLR (BELDEN, SAFE-T-LINE OR APPROVED EQUAL)	400	FT
625	LIGHTING, MISC.: CABLE 2/C NO. 12 CIC-FPLR (BELDEN, SAFE-T-LINE OR APPROVED EQUAL)	350	FT
625	LIGHTING, MISC.: CABLE 2/C NO. 14 CIC-FPLR (BELDEN, SAFE-T-LINE OR APPROVED EQUAL)	560	FT
625	CONDUIT, ¾", 725.04	2650	FT
625	CONDUIT, 1", 725.04	100	FT
690	SPECIAL - MISC.: FIRE ALARM – TRAINING AND COMMISSIONING		LUMP

c:\pwworking\hnm\external\tyn61470\dms727●3\071_0134CE2253.dgn 10/24/2014 10:49:15 AM TYN61470

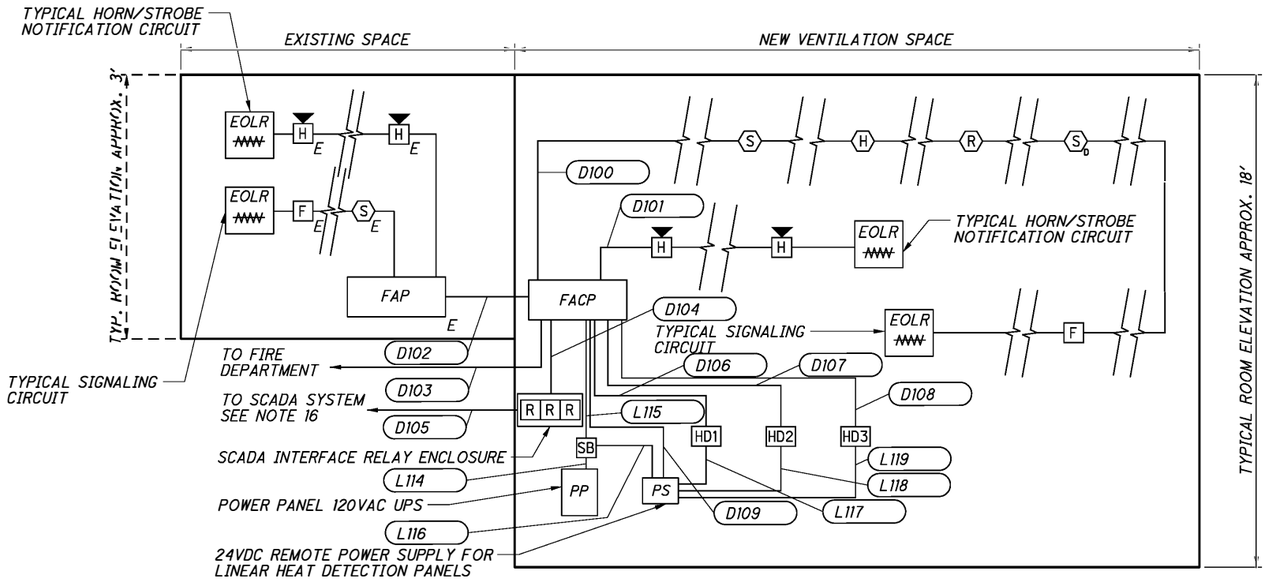

ELECTRICAL-FIRE ALARM DIAGRAM

SCALE: NOT TO SCALE

NOTES:

1. EXISTING FA CIRCUITS NOT SHOWN FOR CLARITY
2. FOR QUANTITY OF FIRE ALARM DEVICES REFER TO FIRE ALARM PLAN.

LEGEND:

(H)	HEAT DETECTOR
(S)	SMOKE DETECTOR
(S_D)	AIR DUCT SMOKE DETECTOR
(R)	RELAY
H	FIRE ALARM HORN/STROBE LIGHT; CD INDICATES MIN. ELECTRIC LIGHT OUTPUT (INCANDESCENT)
F	FIRE ALARM MANUAL PULL STATION
FACP	FIRE ALARM CONTROL PANEL
FAP	FIRE ALARM SUB-PANEL
HD	LINEAR HEAT DETECTION PANEL
CP	CONTROL PANEL
PP	POWER PANEL
PS	24VDC REMOTE POWER SUPPLY
SB	SPLICE BOX

ABBREVIATIONS:

A	-	AMPERE
ADA	-	AMERICANS WITH DISABILITIES ACT
AFF	-	ABOVE FINISHED FLOOR
APPROX	-	APPROXIMATE
BKR	-	BREAKER
CD	-	CANDELA
E	-	EXISTING
ETC	-	ET CETERA
EOLR	-	END OF LINE RESISTOR
FA	-	FIRE ALARM
FAP	-	FIRE ALARM SUB- PANEL
FACP	-	FIRE ALARM CONTROL PANEL
GND	-	GROUND
HOA	-	HAND/OFF/AUTO
MIN	-	MINIMUM
NEMA	-	NATIONAL ELECTRICAL MANUFACTURERS ASSOCIATION
NFPA	-	NATIONAL FIRE PROTECTION ASSOCIATION
P	-	POLE
PB	-	PUSH BUTTON
PLC	-	PROGRAMMABLE LOGIC CONTROLLER
TYP	-	TYPICAL
V	-	VOLT

FIRE ALARM SYSTEM GENERAL NOTES:

1.
2. PROVIDE FACP (FIRE ALARM CONTROL PANEL) AS REQUIRED. PROVIDE ASSOCIATED 120 VOLT POWER FEEDS FROM LOCAL ELECTRICAL BRANCH CIRCUIT PANELBOARD (STANDBY POWER IF AVAILABLE) TO EACH FACP PANEL PROVIDED. THE EXISTING FAP PANEL SHALL BE TIED BACK TO THE FIRE ALARM CONTROL PANEL. PROVIDE AND INSTALL ADDITIONAL EXPANSION MODULES, ACCESSORIES, ETC. AS REQUIRED TO PROVIDE A COMPLETE AND WORKING FIRE ALARM SYSTEM.
3. SUBMIT VENDOR DESIGNED AND APPROVED LAYOUT DRAWINGS OF FIRE ALARM COMPONENTS AS PART OF SHOP DRAWING SUBMITTAL PACKAGE. QUANTITIES, LOCATIONS AND SETTINGS OF FIRE ALARM COMPONENTS SHOWN ON THESE DRAWINGS ARE GENERIC AND MAY REQUIRE MODIFICATION TO MEET VENDOR-SPECIFIC REQUIREMENTS OR LIMITATIONS.
4. FIRE ALARM DEVICES SHALL BE INSTALLED IN ACCORDANCE WITH ADA REQUIREMENTS.
5. FIRE ALARM SYSTEM DEVICES AND INSTALLATION SHALL COMPLY WITH GOVERNING EDITIONS OF THE NFPA 72 AND INTERNATIONAL BUILDING CODE.
6. PROVIDE LOCKABLE CIRCUIT BREAKER FOR 120 VOLT POWER CIRCUITS SERVING FIRE ALARM SYSTEM COMPONENTS. CLEARLY IDENTIFY EACH CIRCUIT BREAKER SERVING THE FIRE ALARM SYSTEM COMPONENTS AS SUCH.
7. PROVIDE LABELS AT EACH FIRE ALARM DEVICE INDICATING THE DEVICE NUMBER AND ADDRESS.
8. FIRE ALARM WIRING IN EXPOSED LOCATIONS (MECHANICAL ROOMS, ELECTICAL ROOMS, ETC) SHALL BE ROUTED IN CONDUIT.
9. PROVIDE ISOLATION MODULES TO PROTECT FIRE ALARM CIRCUITS AT A MINIMUM, PROVIDE ONE ISOLATION MODULE PER 25 ADDRESSABLE DEVICES, AND AT EACH TAP LOCATION ON CLASS B CIRCUITS.
10. SUBMIT A LETTER ATTESTING TO 100% ACCEPTANCE TEST OF THE FIRE ALARM SYSTEM PRIOR TO REQUESTING LOCAL FIRE DEPARTMENT INSPECTION AND ACCEPTANCE TESTING.
11. PROVIDE A COMPLETE AND WORKING FIRE ALARM SYSTEM.
12. UNLESS OTHERWISE NOTED, SMOKE DETECTORS AND HEAT DETECTORS SHALL BE CEILING MOUNTED.
13. HORN/STROBE UNITS SHALL BE MOUNTED A MINIMUM OF 80" AFF AND A MINIMUM OF 6" BELOW THE FINISHED CEILING.
14. IN AREAS WHERE MORE THAN TWO VISIBLE NOTIFICATION APPLIANCES ARE IN ANY FIELD OF VIEW, THEY SHALL FLASH IN SYNCHRONIZATION.
15. UTILIZE EXISTING CONNECTION TO FIRE DEPARTMENT, EXTEND TELEPHONE LINE TO NEW LOCATION.
16. PROVIDE CONNECTION TO SCADA SYSTEM.

DESIGN AGENCY
HATCH MOTT MacDONALD
18013 CLEVELAND PKWY.
SUITE 200
CLEVELAND, OH 44135

DESIGNED	DRAWN	REVIEWED	DATE
DMM	BJG	RF	08/11/14
CHECKED	REVISED	STRUCTURE FILE NUMBER	
PAP	BDP	3106578	

ELECTRICAL - FIRE ALARM DIAGRAM
BRIDGE NO. HAM-71-0134
I-71 LYTLE TUNNEL UNDER LYTLE PARK

HAM-71-01.34
PID No. 87268

c:\pwworking\hmm\external\pre47802\dms72703\071_0134CES254.dgn 3/16/2015 11:18:52 AM PRE47802

EXISTING TELEPHONE BOARD TO REMAIN

EXISTING FIRE CALL BOX TO REMAIN

I.R.-71 SB RAMP E TUNNEL TO THIRD STREET

I.R.-71 NORTHBOUND

I.R.-71 SOUTHBOUND

D102

30CD

EXISTING FIRE CONTROL PANEL TO REMAIN

LOCATE SMOKE DETECTOR AT TOP OF STAIRWELL

NEW FIRE ALARM CONTROL PANEL "FACP"

FACP

CONTROLLER 1
CONTROLLER 2
CONTROLLER 3
} LINEAR HEAT DETECTORS

D104

D106

60CD

SCADA INTERFACE RELAY ENCLOSURE

24VDC REMOTE POWER SUPPLY FOR LINEAR HEAT DETECTOR PANELS

D108

D107

D105

15CD

60CD

AREA DENOTED HAS 8' HIGH CEILINGS.

95CD

30CD

DEVICE LOCATED ADJACENT TO BASE OF LADDER 5'-0" AFF

WALL MOUNTED 4"-12" BELOW FINISHED CEILING

FAN-PLC

TUNNEL SIDE ATTENUATOR "TS-A1"

AIR SIDE ATTENUATOR "AS-A1"

TUNNEL VENTILATION FAN "TV-F2"

TUNNEL VENTILATION FAN "TV-F1"

TUNNEL SIDE ATTENUATOR "TS-A2"

AIR SIDE ATTENUATOR "AS-A2"

TUNNEL VENTILATION FAN "TV-F3"

TUNNEL SIDE ATTENUATOR "TS-A3"

AIR SIDE ATTENUATOR "AS-A3"

LOCATE SMOKE DETECTOR AT TOP OF STAIRWELL

AREA DENOTED HAS 18-20' HIGH CEILINGS. HEAT DETECTOR SPACING HAS BEEN REDUCED PER NFPA72 TABLE 17.6.3.5.1

DEVICE LOCATED ADJACENT TO BASE OF LADDER 5'-0" AFF

ABBREVIATIONS:

AFF - ABOVE FINISHED FLOOR
CD - CANDELA
MIN - MINIMUM
NFPA - NATIONAL FIRE PROTECTION ASSOCIATION

FIRE ALARM PLAN LAYOUT

SCALE: 1/8"=1'-0"

LEGEND:

- HEAT DETECTOR
- SMOKE DETECTOR
- AIR DUCT SMOKE DETECTOR
- FIRE/SMOKE DAMPER RELAY
- FIRE ALARM HORN/STROBE LIGHT; CD INDICATES MIN. ELECTRIC LIGHT OUTPUT (INCANDESCENT)
- F FIRE ALARM MANUAL PULL STATION
- FACP FIRE ALARM CONTROL PANEL
- FAP FIRE ALARM SUB-PANEL
- HD LINEAR HEAT DETECTION PANEL
- CP CONTROL PANEL

NO.	DATE	REVISION DESCRIPTION
2	1/16/2017	RFI #240
1	9/8/2015	TRANSFORMER VAULT CHANGE

c:\pwworking\hmm\vexternal\pre47802\dms72703\071_0134CES255.dgn 1/17/2017 9:21:35 AM PRE47802

DESIGN AGENCY
HATCH MOTT MacDONALD
18013 CLEVELAND PKWY.
SUITE 200
CLEVELAND, OH 44135

DESIGNED	DRAWN	REVIEWED	DATE
DMM	BJG	RF	08/11/14
CHECKED	REVISED	STRUCTURE FILE NUMBER	
PAP	BDP	3106578	

ELECTRICAL PLAN - FIRE ALARM
BRIDGE NO. HAM-71-0134
I-71 LYTLE TUNNEL UNDER LYTLE PARK

HAM-71-01.34
PID No. 87268

243/296

501
555

EXISTING TELEPHONE BOARD TO REMAIN

EXISTING FIRE CALL BOX TO REMAIN

I.R.-71 SB RAMP E TUNNEL TO THIRD STREET

I.R.-71 NORTHBOUND

I.R.-71 SOUTHBOUND

D102

30CD

EXISTING FIRE CONTROL PANEL TO REMAIN

LOCATE SMOKE DETECTOR AT TOP OF STAIRWELL

NEW FIRE ALARM CONTROL PANEL "FACP"

FACP

CONTROLLER 1
CONTROLLER 2
CONTROLLER 3
} LINEAR HEAT DETECTORS

D104
D109
D106

60CD

SCADA INTERFACE RELAY ENCLOSURE

24VDC REMOTE POWER SUPPLY FOR LINEAR HEAT DETECTOR PANELS

D108
D107
D105

15CD

60CD

95CD

AREA DENOTED HAS 8' HIGH CEILINGS.

DEVICE LOCATED ADJACENT TO BASE OF LADDER 5'-0" AFF

WALL MOUNTED 4"-12" BELOW FINISHED CEILING

FAN-PLC

TUNNEL SIDE ATTENUATOR "TS-A1"

AIR SIDE ATTENUATOR "AS-A1"

TUNNEL VENTILATION FAN "TV-F2"

TUNNEL VENTILATION FAN "TV-F1"

TUNNEL SIDE ATTENUATOR "TS-A2"

AIR SIDE ATTENUATOR "AS-A2"

TUNNEL VENTILATION FAN "TV-F3"

TUNNEL SIDE ATTENUATOR "TS-A3"

AIR SIDE ATTENUATOR "AS-A3"

LOCATE SMOKE DETECTOR AT TOP OF STAIRWELL

AREA DENOTED HAS 18-20' HIGH CEILINGS. HEAT DETECTOR SPACING HAS BEEN REDUCED PER NFPA72 TABLE 17.6.3.5.1

DEVICE LOCATED ADJACENT TO BASE OF LADDER 5'-0" AFF

Original drawing
Has been modified by RFI #240 01-18-17
Tranformer Vault Change 09-8-15

ABBREVIATIONS:

AFF - ABOVE FINISHED FLOOR
CD - CANDELA
MIN - MINIMUM
NFPA - NATIONAL FIRE PROTECTION ASSOCIATION

FIRE ALARM PLAN LAYOUT

SCALE: 1/8"=1'-0"

LEGEND:

- H — HEAT DETECTOR
- S — SMOKE DETECTOR
- S, — AIR DUCT SMOKE DETECTOR
- R — FIRE/SMOKE DAMPER RELAY
- H — FIRE ALARM HORN/STROBE LIGHT; CD INDICATES MIN. ELECTRIC LIGHT OUTPUT (INCANDESCENT)
- F — FIRE ALARM MANUAL PULL STATION
- FACP — FIRE ALARM CONTROL PANEL
- FAP — FIRE ALARM SUB-PANEL
- HD — LINEAR HEAT DETECTION PANEL
- CP — CONTROL PANEL

DESIGN AGENCY
HATCH MOTT MacDONALD
18013 CLEVELAND PKWY.
SUITE 200
CLEVELAND, OH 44135

DESIGNED	DRAWN	REVIEWED	DATE
DMM	BJG	RF	08/11/14
CHECKED	REVISED	STRUCTURE FILE NUMBER	
PAP	BDP	3106578	

ELECTRICAL PLAN - FIRE ALARM

BRIDGE NO. HAM-71-0134
I-71 LYTLE TUNNEL UNDER LYTLE PARK

HAM-71-01.34
PID No. 87268

243/296

501
555

c:\pwworking\hmm\external\pre47802\dms72703\071_0134CES255.dgn 9/11/2015 9:31:03 AM PRE47802

ABBREVIATIONS

AWG	AMERICAN WIRE GAUGE
CB	CIRCUIT BREAKER
EG	EQUIPMENT GROUND
EGC	EQUIPMENT GROUND CONDUCTOR
ETC	ET CETERA
GEC	GROUNDING ELECTRODE CONDUCTOR
MBJ	MAIN BONDING JUMPER
N	NEUTRAL
No.	NUMBER
NEC	NATIONAL ELECTRICAL CODE
NEMA	NATIONAL ELECTRICAL MANUFACTURERS ASSOCIATION
TYP	TYPICAL
UPS	UNINTERRUPTABLE POWER SUPPLY
KVA	KILOVOLT AMPS
VFD	VARIABLE FREQUENCY DRIVE
LV	LOW VOLTAGE
LP	LIGHTING PANEL
XFMR	TRANSFORMER
WSP	WATER SERVICES PIPEWORK
GFI	GROUND FAULT INTERRUPT
SSBJ	SUPPLY SIDE BONDING JUMPER

CABLE TAG DESIGNATIONS

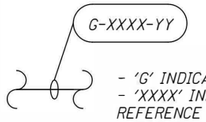

- 'G' INDICATES GROUND
- 'XXXX' INDICATES EQUIPMENT REFERENCE
- 'YY' NUMBER SUFFIX

ONE-LINE DIAGRAM

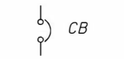

LOW VOLTAGE MOLDED CASE CIRCUIT BREAKER.

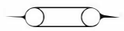

BUS BAR LINK

EARTH GROUND

ELECTRICAL EQUIPMENT BOUNDARY. INDICATES MULTIPLE DEVICES ENCLOSED WITHIN BORDER ARE LOCATED WITHIN THE SAME ENCLOSURE, OR MOUNTED TO SAME PANEL RACK.

c:\pwworking\hmm\external\tyn61470\dms72703\071_0134CES100.dgn 10/24/2014 10:49:31 AM TYN61470

DESIGN AGENCY
HATCH MOTT MacDONALD
18013 CLEVELAND PKWY.
SUITE 200
CLEVELAND, OH 44135

DESIGNED	DRAWN	REVIEWED	DATE
LL	GN	RF	08/11/14
CHECKED	REVISED	STRUCTURE FILE NUMBER	
RL	CL	3106578	

ELECTRICAL - GROUNDING LEGEND

BRIDGE NO. HAM-71-0134

I-71 LYTLE TUNNEL UNDER LYTLE PARK

HAM-71-01.34

PID No. 87268

ITEM NO.	ROOM	UNIT	EXISTING EQUIPMENT ROOM (SHEET 504)	EXISTING EQUIPMENT ROOM SUBSUMMARY	NEW EQUIPMENT ROOM (SHEET 505)	NEW EQUIPMENT ROOM SUBSUMMARY	NEW EQUIPMENT ROOM (SHEET 506)	NEW EQUIPMENT ROOM SUBSUMMARY	TOTALS CARRIED TO GENERAL SUMMARY
625	LIGHTING, MISC.: SUPPLEMENTAL GROUNDED LOOP 4-WAY TAP	EACH	8	8	19	19		0	27
625	LIGHTING, MISC.: 750 KCMIL MBJ	FT		0		0	10	10	10
625	LIGHTING, MISC.: 750 KCMIL SSBJ	FT		0		0	138	138	138
625	LIGHTING, MISC.: 750 KCMIL GEC CABLE	FT		0		0	45	45	45
625	LIGHTING, MISC.: NO. 8 AWG GEC CABLE	FT		0	6	6		0	6
625	LIGHTING, MISC.: NO. 3/0 AWG SEGC CABLE	FT	114	114	157	157		0	271
625	LIGHTING, MISC.: NO. 1/0 AWG SEGC TAP CABLE	FT	16	16	93	93		0	109
625	LIGHTING, MISC.: NO. 4 AWG GEC CABLE	FT		0	20	20		0	20
625	LIGHTING, MISC.: COPPER BUS BAR	EACH		0	1	1		0	1

REFERENCE NO.

HAM-71-01.34

PID No. 87268

ELECTRICAL - TUNNEL GROUNDING SUBSUMMARY

BRIDGE NO. HAM-71-0134

I-71 LYTLE TUNNEL UNDER LYTLE PARK

DESIGNED	DRAWN	REVIEWED	DATE
LL	GN	RF	08/11/14
CHECKED	REVISED	STRUCTURE FILE NUMBER	
RL	CL	3106578	

DESIGN AGENCY
HATCH MOTT MacDONALD
18013 CLEVELAND PKWY.
SUITE 200
CLEVELAND, OH 44135

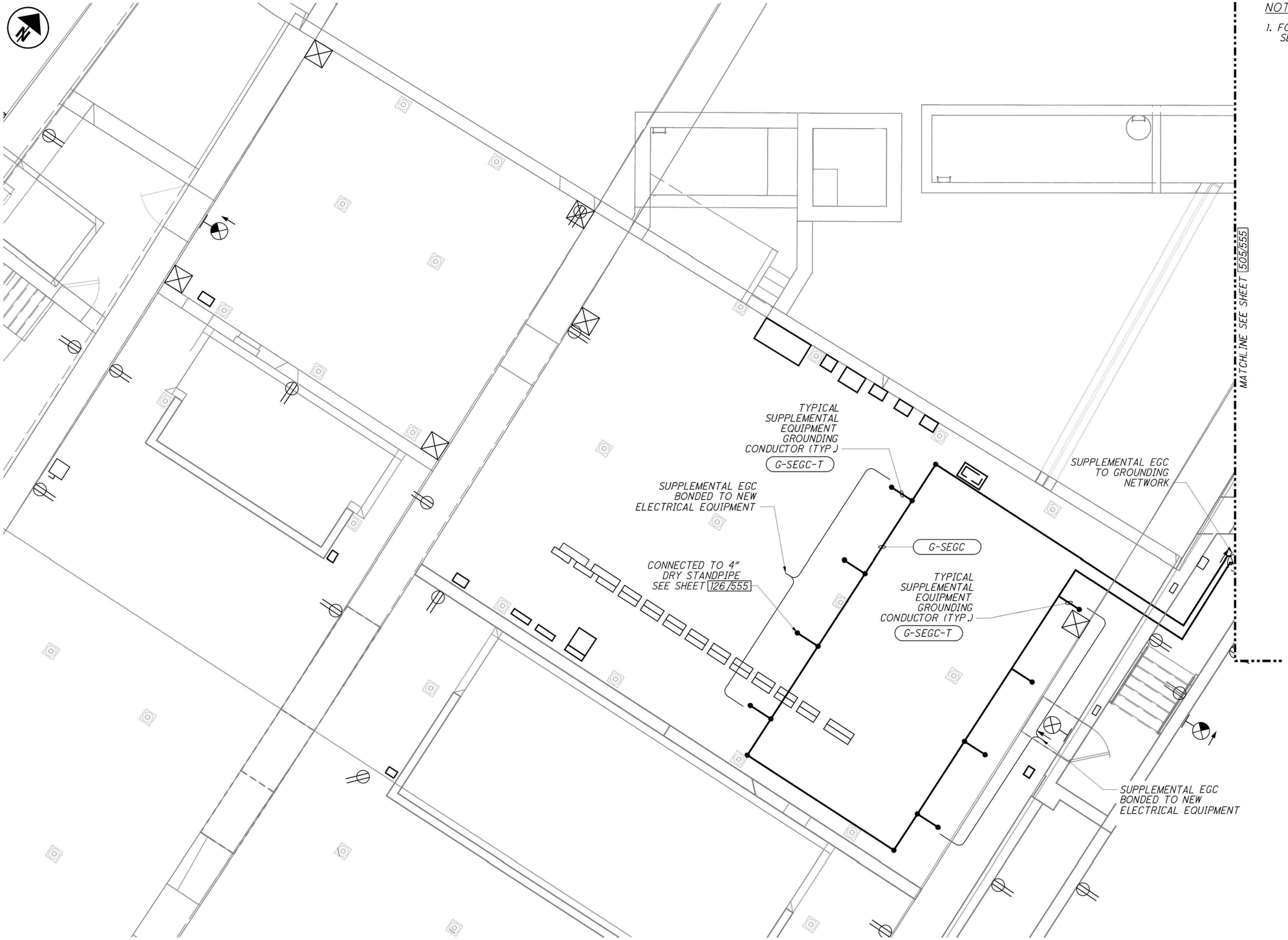

NOTES:

1. FOR LEGEND AND ABBREVIATION, SEE SHEET 502/555

TUNNEL GROUNDING PLAN

SCALE: 1/4" =1'-0"

DESIGN AGENCY
HATCH MOTT MacDONALD
18013 CLEVELAND PKWY.
SUITE 200
CLEVELAND, OH 44135

DESIGNED	DRAWN	REVIEWED	DATE
LL	GN	RF	08/11/14
CHECKED	REVISED	STRUCTURE FILE NUMBER	
RL	CL	3106578	

ELECTRICAL - TUNNEL GROUNDING PLAN - SHEET 1 OF 2

BRIDGE NO. HAM-71-0134
I-71 LYTLE TUNNEL UNDER LYTLE PARK

HAM-71-01.34
PID No. 87268

246/296

504/555

c:\pwworking\hmm\external\tyn61476\dms727●S\071_0134CES101.dgn 10/24/2014 10:49:37 AM TYNG1470

NOTE:

1. FOR LEGEND AND ABBREVIATION, SEE SHEET 502/555

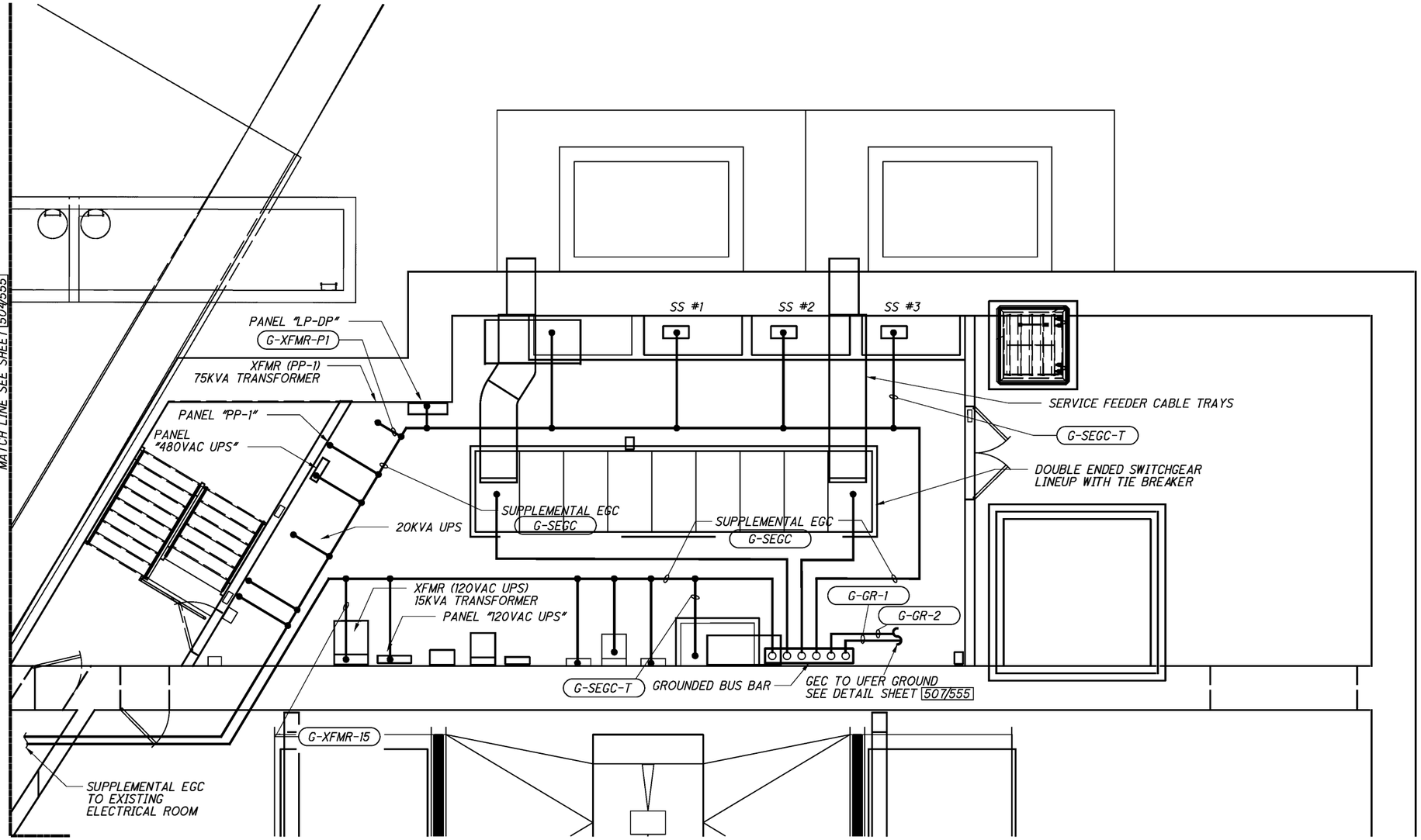

TUNNEL GROUNDING PLAN

SCALE: 1/4" = 1'-0"

DESIGN AGENCY
HATCH MOTT MacDONALD
18013 CLEVELAND PKWY.
SUITE 200
CLEVELAND, OH 44135

DESIGNED	DRAWN	REVIEWED	DATE
LL	GN	RF	08/11/14
CHECKED	REVISED	STRUCTURE FILE NUMBER	
RL	CL	3106578	

ELECTRICAL - TUNNEL GROUNDING PLAN - SHEET 2 OF 2

BRIDGE NO. HAM-71-0134

I-71 LYTLE TUNNEL UNDER LYTLE PARK

HAM-71-01.34

PID No. 87268

247/296

505/555

c:\pwworking\hmm\external\pre47802\dms72703\071_0134CES102.dgn 9/11/2015 9:27:29 AM PRE47802

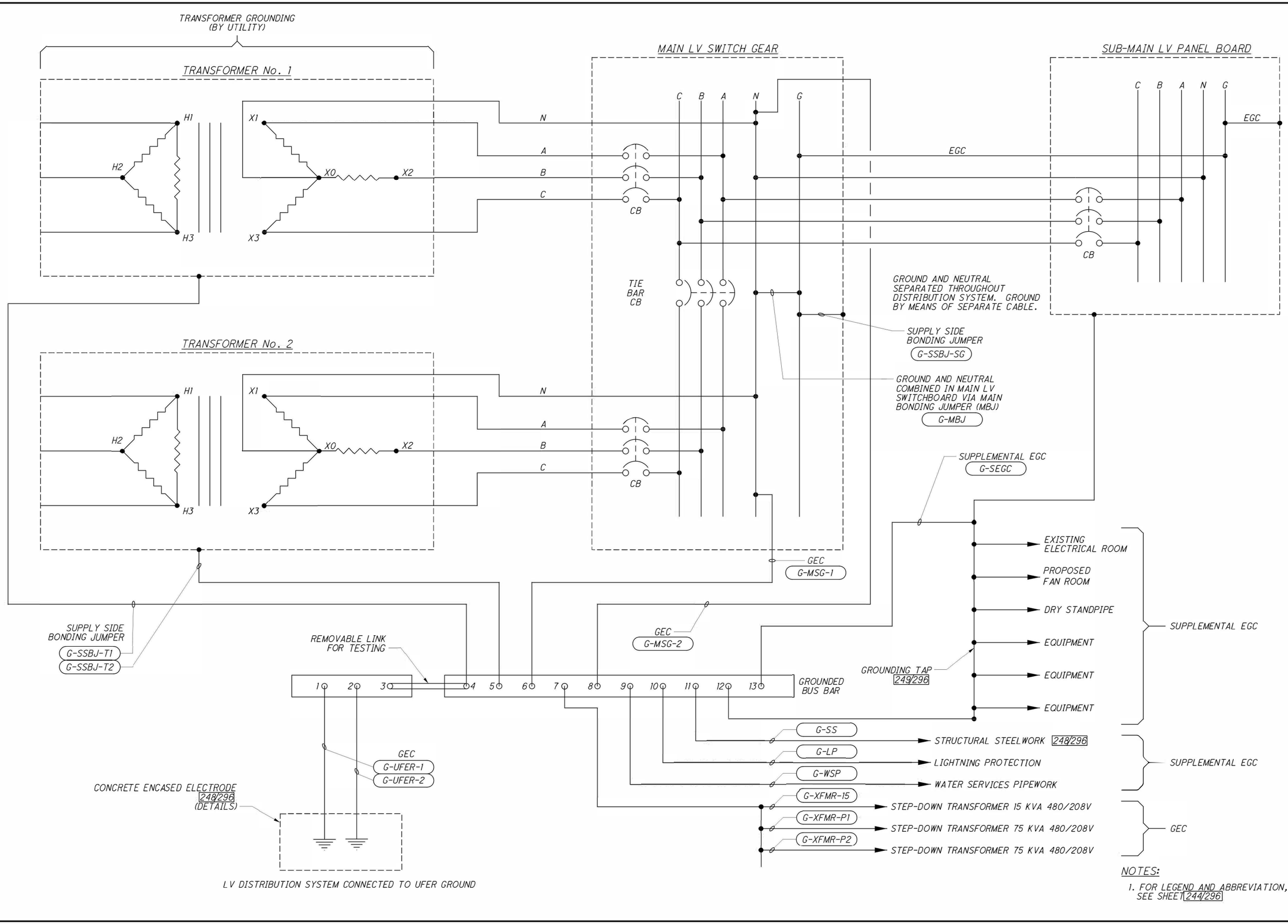

NOTES:

1. FOR LEGEND AND ABBREVIATION, SEE SHEET 244/296

DESIGN AGENCY
HATCH MOTT MacDONALD
18013 CLEVELAND PKWY.
SUITE 200
CLEVELAND, OH 44135

DESIGNED	DRAWN	REVIEWED	DATE
LL	GN	RF	08/11/14
CHECKED	REVISED	STRUCTURE FILE NUMBER	
RL	CL	3106578	

ELECTRICAL - TUNNEL GROUNDING SCHEMATIC

BRIDGE NO. HAM-71-0134
I-71 LYTLE TUNNEL UNDER LYTLE PARK

HAM-71-01.34
PID No. 87268

248/296

506
555

c:\pwworking\hmm\external\tyn61470\dms727●3\071_0134CES103.dgn 10/24/2014 10:49:44 AM TYN61470

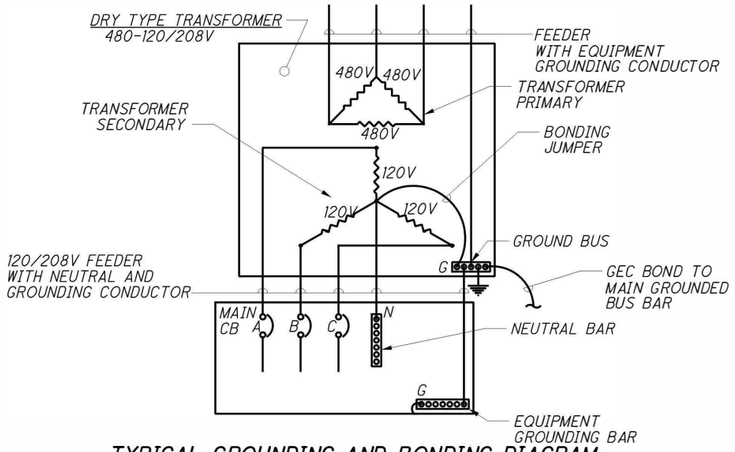

TYPICAL GROUNDING AND BONDING DIAGRAM FOR STEP-DOWN TRANSFORMERS

NOT TO SCALE

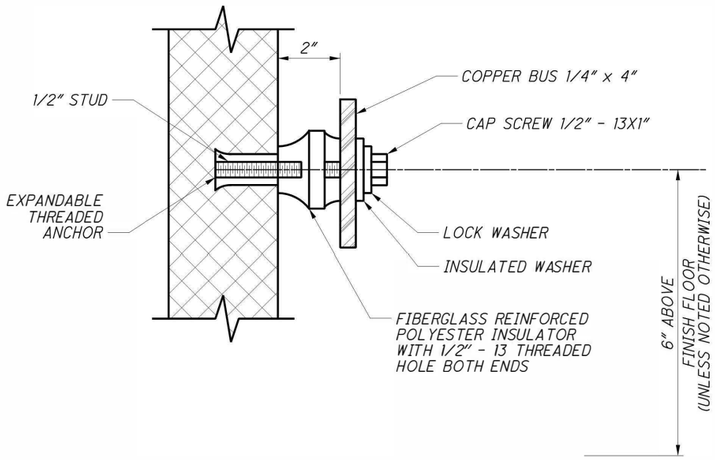

GROUND BUS BAR INSTALLATION

NOT TO SCALE

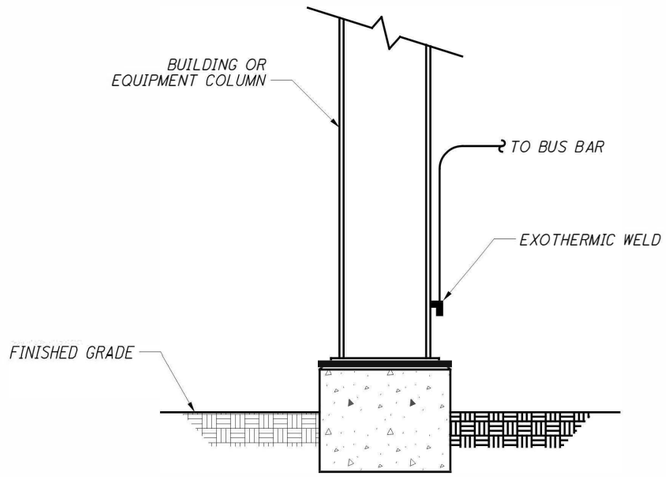

TYPICAL GROUND FOR STRUCTURE

NOT TO SCALE

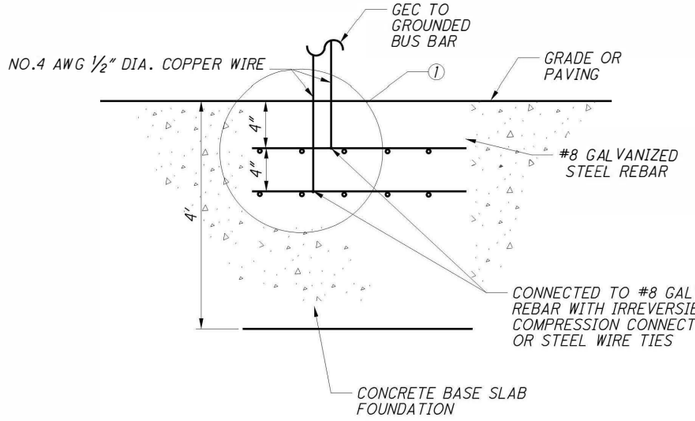

GROUNDING TO CONCRETE ENCASED ELECTRODE (UFER GROUND)

NOT TO SCALE

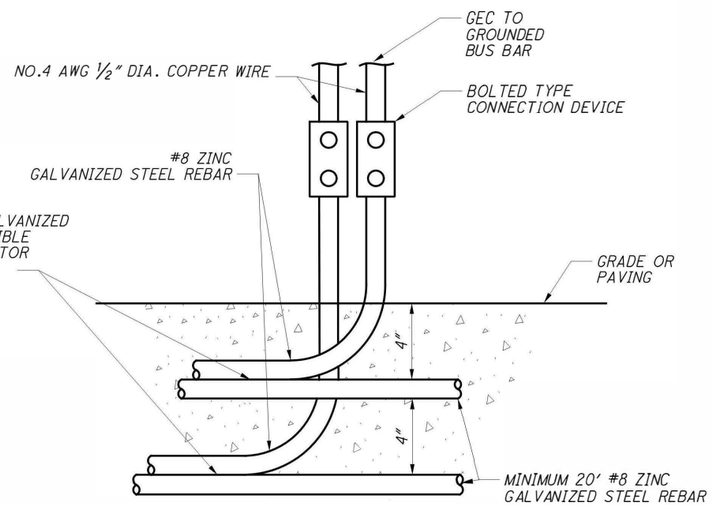

DETAIL 1-1

NOT TO SCALE

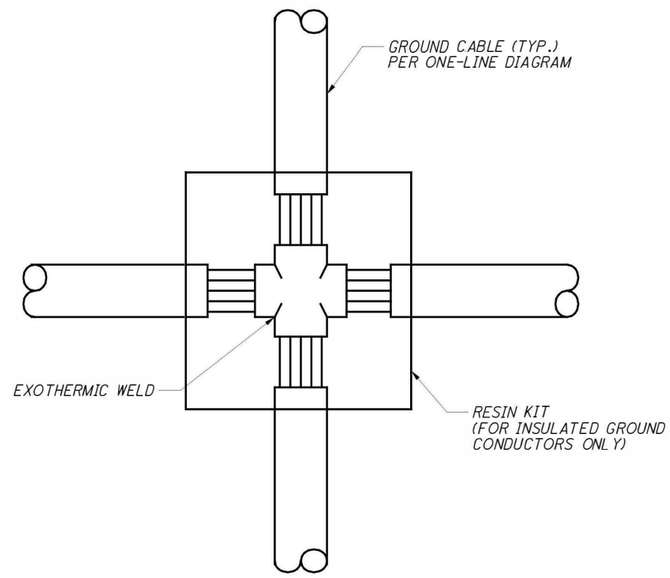

MAIN GROUNDING LOOP 4-WAY TAP (3-WAY TAP SIMILAR)

NOT TO SCALE

NOTES:

1. FOR LEGEND AND ABBREVIATION, SEE SHEET 244/296
2. FOR REBAR INSTALLATION LOCATION, SEE SHEET 29/296 AND 30/296

DESIGN AGENCY
HATCH MOTT MacDONALD
18013 CLEVELAND PKWY.
SUITE 200
CLEVELAND, OH 44135

DESIGNED	DRAWN	REVIEWED	DATE
LL	GN	RF	08/11/14
CHECKED	REVISED	STRUCTURE FILE NUMBER	
RL	CL	3106578	

ELECTRICAL - TUNNEL GROUNDING DETAILS
BRIDGE NO. HAM-71-0134
I-71 LYTLE TUNNEL UNDER LYTLE PARK

HAM-71-01.34
PID No. 87268

249/296

507
555

c:\pwworking\hmm\external\tyn61470\dms727●3\071_0134CES104.dgn 10/24/2014 10:49:46 AM TYN61470

ITEM 625 - LIGHTING, MISC.: GROUNDING AND BONDING FOR ELECTRICAL SYSTEMS

PART 1 - GENERAL

1.1 RELATED DOCUMENTS

A. DRAWINGS AND GENERAL PROVISIONS OF THE CONTRACT, INCLUDING GENERAL AND SUPPLEMENTARY CONDITIONS AND DIVISION 01 SPECIFICATION SECTIONS, APPLY TO THIS SECTION.
B. FOR DEFINITIONS OF GROUNDING AND BONDING TERMS, SEE NFPA70.

1.2 SUMMARY

A. SECTION INCLUDES GROUNDING AND BONDING SYSTEMS AND EQUIPMENT.
   1. UNDERGROUND DISTRIBUTION GROUNDING.
   2. GROUND BONDING COMMON WITH LIGHTNING PROTECTION SYSTEM.
   3. FOUNDATION STEEL ELECTRODES.

1.3 ACTION SUBMITTALS

A. PRODUCT DATA: FOR EACH TYPE OF PRODUCT INDICATED.

1.4 INFORMATIONAL SUBMITTALS

A. AS-BUILT DATA: PLANS SHOWING DIMENSIONED AS-BUILT LOCATIONS OF GROUNDING FEATURES SPECIFIED IN "FIELD QUALITY CONTROL" ARTICLE, INCLUDING THE FOLLOWING:
   1. TEST WELLS.
   2. GROUND RODS/UFER.
   3. GROUND RINGS.
   4. GROUNDING ARRANGEMENTS AND CONNECTIONS FOR SEPARATELY DERIVED SYSTEMS.
B. FIELD QUALITY-CONTROL REPORTS.

1.5 CLOSEOUT SUBMITTALS

A. OPERATION AND MAINTENANCE DATA: FOR GROUNDING TO INCLUDE IN EMERGENCY, OPERATION, AND MAINTENANCE MANUALS.
   1. IN ADDITION TO ITEMS SPECIFIED IN SECTION 017823 "OPERATION AND MAINTENANCE DATA," INCLUDE THE FOLLOWING:
      a. INSTRUCTIONS FOR PERIODIC TESTING AND INSPECTION OF GROUNDING FEATURES AT TEST WELLS GROUND RINGS GROUNDING CONNECTIONS FOR SEPARATELY DERIVED SYSTEMS BASED ON NETA MTS
         1) TESTS SHALL DETERMINE IF GROUND-RESISTANCE OR IMPEDANCE VALUES REMAIN WITHIN SPECIFIED MAXIMUMS, AND INSTRUCTIONS SHALL RECOMMEND CORRECTIVE ACTION IF VALUES DO NOT.
         2) INCLUDE RECOMMENDED TESTING INTERVALS.

1.6 QUALITY ASSURANCE

A. ELECTRICAL COMPONENTS, DEVICES, AND ACCESSORIES: LISTED AND LABELED AS DEFINED IN NFPA 70, BY A QUALIFIED TESTING AGENCY, AND MARKED FOR INTENDED LOCATION AND APPLICATION.
B. COMPLY WITH UL 467 FOR GROUNDING AND BONDING MATERIALS AND EQUIPMENT.

PART 2 - PRODUCTS

2.1 MANUFACTURERS

A. MANUFACTURERS: SUBJECT TO COMPLIANCE WITH REQUIREMENTS, PROVIDE PRODUCTS BY ONE OF THE FOLLOWING:
   1. BURNDY; PART OF HUBBELL ELECTRICAL SYSTEMS.
   2. ERICO INTERNATIONAL CORPORATION.
   3. HARGER LIGHTNING AND GROUNDING.
   4. ILSCO.
   5. O-Z/GEDNEY; A BRAND OF THE EGS ELECTRICAL GROUP.
   6. ROBBINS LIGHTNING, INC.
   7. SIEMENS POWER TRANSMISSION & DISTRIBUTION, INC
   8. OR ENGINEER APPROVED EQUAL

2.2 SYSTEM DESCRIPTION

A. ELECTRICAL COMPONENTS, DEVICES, AND ACCESSORIES: LISTED AND LABELED AS DEFINED IN NFPA 70, BY A QUALIFIED TESTING AGENCY, AND MARKED FOR INTENDED LOCATION AND APPLICATION.
B. COMPLY WITH UL 467 FOR GROUNDING AND BONDING MATERIALS AND EQUIPMENT.

2.3 CONDUCTORS

A. INSULATED CONDUCTORS: COPPER WIRE OR CABLE INSULATED FOR 600 V UNLESS OTHERWISE REQUIRED BY APPLICABLE CODE OR AUTHORITIES HAVING JURISDICTION.
B. BARE COPPER CONDUCTORS:
   1. SOLID CONDUCTORS: ASTM B 3.
   2. STRANDED CONDUCTORS: ASTM B 8.
C. GROUNDING BUS: PREDRILLED RECTANGULAR BARS OF ANNEALED COPPER, 1/4 BY 4 INCHES (6.3 BY 100 MM) IN CROSS SECTION, WITH 9/32-INCH (7.14-MM) HOLES SPACED 1-1/8 INCHES (28 MM) APART. STAND-OFF INSULATORS FOR MOUNTING SHALL COMPLY WITH UL 891 FOR USE IN SWITCHBOARDS, 600 V AND SHALL BE LEXAN OR PVC, IMPULSE TESTED AT 5000 V.
D. GROUNDING & BONDING CONDUCTORS
   1. ALL RACEWAYS AND EQUIPMENT SHALL BE PROVIDED WITH AN EQUIPMENT GROUNDING CONDUCTOR AS SHOWN ON THE DRAWINGS. WHEN THE EQUIPMENT GROUNDING CONDUCTOR IS NOT SHOWN ON THE DRAWINGS, PROVIDE AN EQUIPMENT GROUNDING CONDUCTOR PER TABLE 250.122 OF THE NEC.
   2. ALL SERVICE ENTRANCE EQUIPMENT SHALL BE PROVIDED WITH A GROUNDING ELECTRODE CONDUCTOR BETWEEN THE SERVICE ENTRANCE GROUND AND THE GROUNDING ELECTRODE SYSTEM AS SHOWN ON THE DRAWINGS. WHEN THE GROUNDING ELECTRODE CONDUCTOR IS NOT SHOWN ON THE DRAWING, PROVIDE A GROUNDING ELECTRODE CONDUCTOR PER TABLE 250.66 OF THE NEC.
   3. MAIN BONDING JUMPER INSTALLED BETWEEN THE SERVICE ENTRANCE GROUND AND NEUTRAL AND SHALL BE SIZED PER TABLE 250.66 OF THE NEC.
   4. SYSTEM BONDING JUMPER INSTALLED BETWEEN THE SEPARATELY DERIVED SYSTEM GROUND AND NEUTRAL AND SHALL BE SIZED PER TABLE 250.66 OF THE NEC.

2.4 CONNECTORS

A. LISTED AND LABELED BY AN NRTL ACCEPTABLE TO AUTHORITIES HAVING JURISDICTION FOR APPLICATIONS IN WHICH USED AND FOR SPECIFIC TYPES, SIZES, AND COMBINATIONS OF CONDUCTORS AND OTHER ITEMS CONNECTED.
B. BOLTED CONNECTORS FOR CONDUCTORS AND PIPES: COPPER OR COPPER ALLOY.
C. WELDED CONNECTORS: EXOTHERMIC-WELDING KITS OF TYPES RECOMMENDED BY KIT MANUFACTURER FOR MATERIALS BEING JOINED AND INSTALLATION CONDITIONS.
D. BUS-BAR CONNECTORS: MECHANICAL TYPE, CAST SILICON BRONZE, SOLDERLESS [COMPRESSION] [EXOTHERMIC]-TYPE WIRE TERMINALS, AND LONG-BARREL, TWO-BOLT CONNECTION TO GROUND BUS BAR.

2.5 CONCRETE ENCASED ELECTRODE (UFER) GROUND

A. CONCRETE ENCASED ELECTRODES (UFER) CONSISTING OF 2 NO LENGTHS OF REBAR. EACH REBAR LENGTH SHALL BE 20 FT OR MORE.
B. REBAR DIAMETER SHALL BE MINIMUM #8 OR LARGER GALVANIZED SOLID STEEL INSTALLED IN THE FOUNDATION WITH A MINIMUM OF 2" OF CONCRETE COVER.
C. MINIMUM #4 GEC BETWEEN GROUND BAR AND UFER.
D. PROTECT UFER REBAR PASSING THROUGH CONCRETE FLOOR WITH A NONMETALLIC PROTECTIVE SLEEVE OR DOUBLE WRAPPING OF PRESSURE-SENSITIVE INSULATING TAPE OR HEAT-SHRUNK INSULATING SLEEVE FROM 2 INCHES (50 MM) ABOVE TO 6 INCHES (150 MM) BELOW CONCRETE. SEAL FLOOR OPENING WITH WATERPROOF, NONSHRINK GROUT.

PART 3 - EXECUTION

3.1 APPLICATIONS

A. CONDUCTORS: INSTALL SOLID CONDUCTOR FOR NO. 8 AWG AND SMALLER, AND STRANDED CONDUCTORS FOR NO. 6AWG AND LARGER UNLESS OTHERWISE INDICATED.
B. UNDERGROUND GROUNDING CONDUCTORS: INSTALL BARE COPPER CONDUCTOR, NO. 3/0 AWG MINIMUM.
   1. BURY AT LEAST 24 INCHES (600 MM) BELOW GRADE.
   2. DUCT-BANK GROUNDING CONDUCTOR: BURY 12 INCHES (300 MM) ABOVE DUCT BANK WHEN INDICATED AS PART OF DUCT-BANK INSTALLATION.
C. ISOLATED GROUNDING CONDUCTORS: GREEN-COLORED INSULATION WITH CONTINUOUS YELLOW STRIPE. ON FEEDERS WITH ISOLATED GROUND, IDENTIFY GROUNDING CONDUCTOR WHERE VISIBLE TO NORMAL INSPECTION, WITH ALTERNATING BANDS OF GREEN AND YELLOW TAPE, WITH AT LEAST THREE BANDS OF GREEN AND TWO BANDS OF YELLOW.
D. GROUNDING BUS: INSTALL IN ELECTRICAL EQUIPMENT ROOMS, IN ROOMS HOUSING SERVICE EQUIPMENT, AND ELSEWHERE AS INDICATED.
   1. INSTALL BUS HORIZONTALLY, ON INSULATED SPACERS 2 INCHES (50 MM) MINIMUM FROM WALL, 6 INCHES (150 MM) ABOVE FINISHED FLOOR UNLESS OTHERWISE INDICATED.
   2. WHERE INDICATED ON BOTH SIDES OF DOORWAYS, ROUTE BUS UP TO TOP OF DOOR FRAME, ACROSS TOP OF DOORWAY, AND DOWN; CONNECT TO HORIZONTAL BUS.
E. CONDUCTOR TERMINATIONS AND CONNECTIONS:
   1. PIPE AND EQUIPMENT GROUNDING CONDUCTOR TERMINATIONS: BOLTED CONNECTORS.
   2. UNDERGROUND CONNECTIONS: WELDED CONNECTORS EXCEPT AT TEST WELLS AND AS OTHERWISE INDICATED.
   3. CONNECTIONS TO GROUND RODS/UFER AT TEST WELLS: BOLTED CONNECTORS.
   4. CONNECTIONS TO STRUCTURAL STEEL: WELDED CONNECTORS.

3.2 GROUNDING AT THE SERVICE

A. GROUNDING ELECTRODE CONDUCTORS SHALL BE CONNECTED TO THE GROUNDED BAR. INSTALL A MAIN BONDING JUMPER BETWEEN THE NEUTRAL AND GROUND BUSES.

3.3 GROUNDING UNDERGROUND DISTRIBUTION SYSTEM COMPONENTS

A. COMPLY WITH IEEE C2 GROUNDING REQUIREMENTS.
B. GROUNDING MANHOLES AND HANDHOLES: INSTALL A DRIVEN GROUND ROD THROUGH MANHOLE OR HANDHOLE FLOOR, CLOSE TO WALL, AND SET ROD DEPTH SO 4 INCHES (100 MM) WILL EXTEND ABOVE FINISHED FLOOR. IF NECESSARY, INSTALL GROUND ROD BEFORE MANHOLE IS PLACED AND PROVIDE NO. 1/0 AWG BARE, COPPER CONDUCTOR FROM GROUND ROD INTO MANHOLE THROUGH A WATERPROOF SLEEVE IN MANHOLE WALL. PROTECT GROUND RODS PASSING THROUGH CONCRETE FLOOR WITH A DOUBLE WRAPPING OF PRESSURE-SENSITIVE INSULATING TAPE OR HEAT-SHRUNK INSULATING SLEEVE FROM 2 INCHES (50 MM) ABOVE TO 6 INCHES (150 MM) BELOW CONCRETE. SEAL FLOOR OPENING WITH WATERPROOF, NONSHRINK GROUT.
C. GROUNDING CONNECTIONS TO MANHOLE COMPONENTS: BOND EXPOSED-METAL PARTS SUCH AS INSERTS, CABLE RACKS, PULLING IRONS, LADDERS, AND CABLE SHIELDS WITHIN EACH MANHOLE OR HANDHOLE, TO GROUND ROD OR GROUNDING CONDUCTOR. MAKE CONNECTIONS WITH NO. 4 AWG MINIMUM, STRANDED, HARD-DRAWN COPPER BONDING CONDUCTOR. TRAIN CONDUCTORS LEVEL OR PLUMB AROUND CORNERS AND FASTEN TO MANHOLE WALLS. CONNECT TO CABLE ARMOR AND CABLE SHIELDS ACCORDING TO WRITTEN

DESIGN AGENCY
HATCH MOTT MacDONALD
18013 CLEVELAND PKWY.
SUITE 200
CLEVELAND, OH 44135

DESIGNED LL | DRAWN CM | REVIEWED RF | DATE 08/11/14
CHECKED RL | REVISED CL | STRUCTURE FILE NUMBER 31065781

ELECTRICAL - TUNNEL GROUNDING NOTES - SHEET 1 OF 2

BRIDGE NO. HAM-71-0134
I-71 LYTLE TUNNEL UNDER LYTLE PARK

HAM-71-01.34
PID No. 87268

250/296

508
555

c:\pwworking\hmm\external\tyn61470\dms727●3\071_0134CE5414.dgn 10/24/2014 10:49:49 AM TYN61470

INSTRUCTIONS BY MANUFACTURER OF SPLICING AND TERMINATION KITS.

D. DISTRIBUTION TRANSFORMER – GROUND TO GROUNDED BUS BAR. INSTALL 3/0 AWG CONDUCTOR FOR CONNECTION TO BUS BAR.

E. UTILITY TRANSFORMER – GROUNDED BY UTILITY COMPANY. PROVIDE CHASSIS GROUND TO GROUNDED BUS BAR.

3.4 EQUIPMENT GROUNDING

A. INSTALL INSULATED EQUIPMENT GROUNDING CONDUCTORS WITH ALL FEEDERS AND BRANCH CIRCUITS.

B. AIR-DUCT EQUIPMENT CIRCUITS: INSTALL INSULATED EQUIPMENT GROUNDING CONDUCTOR TO DUCT-MOUNTED ELECTRICAL DEVICES OPERATING AT 120 V AND MORE, INCLUDING AIR CLEANERS, HEATERS, DAMPERS, HUMIDIFIERS, AND OTHER DUCT ELECTRICAL EQUIPMENT. BOND CONDUCTOR TO EACH UNIT AND TO AIR DUCT AND CONNECTED METALLIC PIPING.

C. WATER HEATER, HEAT-TRACING, AND ANTI-FROST HEATING CABLES: INSTALL A SEPARATE INSULATED EQUIPMENT GROUNDING CONDUCTOR TO EACH ELECTRIC WATER HEATER AND HEAT-TRACING CABLE. BOND CONDUCTOR TO HEATER UNITS, PIPING, CONNECTED EQUIPMENT, AND COMPONENTS.

D. ISOLATED GROUNDING RECEPTACLE CIRCUITS: INSTALL AN INSULATED EQUIPMENT GROUNDING CONDUCTOR CONNECTED TO THE RECEPTACLE GROUNDING TERMINAL. ISOLATE CONDUCTOR FROM RACEWAY AND FROM PANELBOARD GROUNDING TERMINALS. TERMINATE AT EQUIPMENT GROUNDING CONDUCTOR TERMINAL OF THE APPLICABLE DERIVED SYSTEM OR SERVICE UNLESS OTHERWISE INDICATED.

E. ISOLATED EQUIPMENT ENCLOSURE CIRCUITS: FOR DESIGNATED EQUIPMENT SUPPLIED BY A BRANCH CIRCUIT OR FEEDER, ISOLATE EQUIPMENT ENCLOSURE FROM SUPPLY CIRCUIT RACEWAY WITH A NONMETALLIC RACEWAY FITTING LISTED FOR THE PURPOSE. INSTALL FITTING WHERE RACEWAY ENTERS ENCLOSURE, AND INSTALL A SEPARATE INSULATED EQUIPMENT GROUNDING CONDUCTOR. ISOLATE CONDUCTOR FROM RACEWAY AND FROM PANELBOARD GROUNDING TERMINALS. TERMINATE AT EQUIPMENT GROUNDING CONDUCTOR TERMINAL OF THE APPLICABLE DERIVED SYSTEM OR SERVICE UNLESS OTHERWISE INDICATED.

F. POLES SUPPORTING OUTDOOR LIGHTING FIXTURES: INSTALL GROUNDING ELECTRODE AND A SEPARATE INSULATED EQUIPMENT GROUNDING CONDUCTOR IN ADDITION TO GROUNDING CONDUCTOR INSTALLED WITH BRANCH-CIRCUIT CONDUCTORS.

G. METALLIC FENCES: COMPLY WITH REQUIREMENTS OF IEEE C2.

1. GROUNDING CONDUCTOR: BARE COPPER, NOT LESS THAN NO. 8 AWG.
2. GATES: SHALL BE BONDED TO THE GROUNDING CONDUCTOR WITH A FLEXIBLE BONDING JUMPER.
3. BARBED WIRE: STRANDS SHALL BE BONDED TO THE GROUNDING CONDUCTOR.

3.5 INSTALLATION

A. GROUNDING CONDUCTORS: ROUTE ALONG SHORTEST AND STRAIGHTEST PATHS POSSIBLE UNLESS OTHERWISE INDICATED OR REQUIRED BY CODE. AVOID OBSTRUCTING ACCESS OR PLACING CONDUCTORS WHERE THEY MAY BE SUBJECTED TO STRAIN, IMPACT, OR DAMAGE.

B. GROUND BONDING COMMON WITH LIGHTNING PROTECTION SYSTEM: COMPLY WITH NFPA 780 AND UL 96 WHEN INTERCONNECTING WITH LIGHTNING PROTECTION SYSTEM. BOND ELECTRICAL POWER SYSTEM GROUND DIRECTLY TO LIGHTNING PROTECTION SYSTEM GROUNDING CONDUCTOR AT CLOSEST POINT TO ELECTRICAL SERVICE GROUNDING ELECTRODE. USE BONDING CONDUCTOR SIZED SAME AS SYSTEM GROUNDING ELECTRODE CONDUCTOR, AND INSTALL IN CONDUIT.

C. BONDING STRAPS AND JUMPERS: INSTALL IN LOCATIONS ACCESSIBLE FOR INSPECTION AND MAINTENANCE EXCEPT WHERE ROUTED THROUGH SHORT LENGTHS OF CONDUIT.

1. BONDING TO STRUCTURE: BOND STRAPS DIRECTLY TO BASIC STRUCTURE, TAKING CARE NOT TO PENETRATE ANY ADJACENT PARTS.
2. BONDING TO EQUIPMENT MOUNTED ON VIBRATION ISOLATION HANGERS AND SUPPORTS: INSTALL BONDING SO VIBRATION IS NOT TRANSMITTED TO RIGIDLY MOUNTED EQUIPMENT.
3. USE EXOTHERMIC-WELDED CONNECTORS FOR OUTDOOR LOCATIONS; IF A DISCONNECT-TYPE CONNECTION IS REQUIRED, USE A BOLTED CLAMP.

D. GROUNDING AND BONDING FOR PIPING:

1. METAL WATER SERVICE PIPE: INSTALL INSULATED COPPER GROUNDING CONDUCTORS, IN CONDUIT, FROM BUILDING'S MAIN SERVICE EQUIPMENT, OR GROUNDING BUS, TO MAIN METAL WATER SERVICE ENTRANCES TO BUILDING. CONNECT GROUNDING CONDUCTORS TO MAIN METAL WATER SERVICE PIPES; USE A BOLTED CLAMP CONNECTOR OR BOLT A LUG-TYPE CONNECTOR TO A PIPE FLANGE BY USING ONE OF THE LUG BOLTS OF THE FLANGE. WHERE A DIELECTRIC MAIN WATER FITTING IS INSTALLED, CONNECT GROUNDING CONDUCTOR ON STREET SIDE OF FITTING. BOND METAL GROUNDING CONDUCTOR CONDUIT OR SLEEVE TO CONDUCTOR AT EACH END.
2. WATER METER PIPING: USE BRAIDED-TYPE BONDING JUMPERS TO ELECTRICALLY BYPASS WATER METERS. CONNECT TO PIPE WITH A BOLTED CONNECTOR.
3. BOND EACH ABOVEGROUND PORTION OF GAS PIPING SYSTEM DOWNSTREAM FROM EQUIPMENT SHUTOFF VALVE.
4. BOND EACH ABOVEGROUND PORTION OF DRY STAND PIPE FROM EQUIPMENT SHUTOFF VALVE.

E. BONDING INTERIOR METAL DUCTS: BOND METAL AIR DUCTS TO EQUIPMENT GROUNDING CONDUCTORS OF ASSOCIATED FANS, BLOWERS, ELECTRIC HEATERS, AND AIR CLEANERS. INSTALL BONDING JUMPER TO BOND ACROSS FLEXIBLE DUCT CONNECTIONS TO ACHIEVE CONTINUITY.

F. GROUNDING FOR STEEL BUILDING STRUCTURE: INSTALL A CONDUCTOR TO GROUND BAR AT BASE OF EACH CORNER COLUMN AND AT INTERMEDIATE EXTERIOR COLUMNS AT DISTANCES NOT MORE THAN 60 FEET (18 M) APART.

G. CONCRETE-ENCASED GROUNDING ELECTRODE (UFER GROUND): FABRICATE ACCORDING TO NFPA 70; USING ELECTRICALLY CONDUCTIVE COATED STEEL REINFORCING BARS OR RODS, AT LEAST 20 FEET (6.0 M) LONG. IF REINFORCING IS IN MULTIPLE PIECES, CONNECT TOGETHER BY THE USUAL STEEL TIE WIRES OR EXOTHERMIC WELDING TO CREATE THE REQUIRED LENGTH. GROUND ELECTRODE CONDUCTOR CONNECTED TO UFER GROUND SYSTEM.

3.6 FIELD QUALITY CONTROL

A. PERFORM TESTS AND INSPECTIONS.

1. CONTRACTOR TO PERFORM GROUNDING TESTS PRIOR TO CONSTRUCTION OF CONCRETE POUR IN ACCORDANCE WITH IEEE STANDARD 81.
2. AFTER INSTALLING GROUNDING SYSTEM BUT BEFORE PERMANENT ELECTRICAL CIRCUITS HAVE BEEN ENERGIZED, TEST FOR COMPLIANCE WITH REQUIREMENTS.
3. INSPECT PHYSICAL AND MECHANICAL CONDITION. VERIFY TIGHTNESS OF ACCESSIBLE, BOLTED, ELECTRICAL CONNECTIONS WITH A CALIBRATED TORQUE WRENCH ACCORDING TO MANUFACTURER'S WRITTEN INSTRUCTIONS.
4. TEST COMPLETED GROUNDING SYSTEM AT EACH LOCATION WHERE A MAXIMUM GROUND-RESISTANCE LEVEL IS SPECIFIED, AT SERVICE DISCONNECT ENCLOSURE GROUNDING TERMINAL, AT GROUND TEST WELLS, AND AT INDIVIDUAL GROUND ROD/UFER. MAKE TESTS AT GROUND RODS/UFER BEFORE ANY CONDUCTORS ARE CONNECTED.
   a. MEASURE GROUND RESISTANCE NO FEWER THAN TWO FULL DAYS AFTER LAST TRACE OF PRECIPITATION AND WITHOUT SOIL BEING MOISTENED BY ANY MEANS OTHER THAN NATURAL DRAINAGE OR SEEPAGE AND WITHOUT CHEMICAL TREATMENT OR OTHER ARTIFICIAL MEANS OF REDUCING NATURAL GROUND RESISTANCE.
   b. PERFORM TESTS BY FALL-OF-POTENTIAL METHOD ACCORDING TO IEEE 81 AND NETA STANDARDS.
5. PREPARE DIMENSIONED DRAWINGS LOCATING EACH TEST WELL, GROUND ROD/UFER AND GROUND-ROD ASSEMBLY, AND OTHER GROUNDING ELECTRODES. IDENTIFY EACH BY LETTER IN ALPHABETICAL ORDER, AND KEY TO THE RECORD OF TESTS AND OBSERVATIONS. INCLUDE THE NUMBER OF RODS DRIVEN AND THEIR DEPTH AT EACH LOCATION, AND INCLUDE OBSERVATIONS OF WEATHER AND OTHER PHENOMENA THAT MAY AFFECT TEST RESULTS. DESCRIBE MEASURES TAKEN TO IMPROVE TEST RESULTS.

B. GROUNDING SYSTEM WILL BE CONSIDERED DEFECTIVE IF IT DOES NOT PASS TESTS AND INSPECTIONS.

C. PREPARE TEST AND INSPECTION REPORTS.

D. REPORT MEASURED GROUND RESISTANCES THAT EXCEED THE FOLLOWING VALUES:

1. POWER AND LIGHTING EQUIPMENT OR SYSTEM WITH CAPACITY MORE THAN 1000 KVA: 3 OHMS.

E. EXCESSIVE GROUND RESISTANCE: IF RESISTANCE TO GROUND EXCEEDS SPECIFIED VALUES, NOTIFY ENGINEER PROMPTLY AND INCLUDE RECOMMENDATIONS TO REDUCE GROUND RESISTANCE.

PART 4 - METHOD OF PAYMENT AND ITEMS

4.01 METHOD OF PAYMENT AND ITEMS

A. PAYMENT FOR ITEMS SHALL BE MADE AT THE CONTRACT UNIT PRICE, INCLUDING BUT NOT LIMITED TO ALL WORK, LABOR, EQUIPMENT, AND MATERIALS NECESSARY THEREFORE OR INCIDENTAL THERETO, AS FOLLOWS:

ITEM NO.	DESCRIPTION	UNIT
625	LIGHTING, MISC.: SUPPLEMENTAL GROUND LOOP 4-WAY TAP	EACH
625	LIGHTING, MISC.: 750 KCMIL MBJ	FT
625	LIGHTING, MISC.: 750 KCMIL SSBJ	FT
625	LIGHTING, MISC.: 750 KCMIL GEC CABLE	FT
625	LIGHTING, MISC.: NO. 8 AWG GEC CABLE	FT
625	LIGHTING, MISC.: NO. 3/0 AWG SEGC CABLE	FT
625	LIGHTING, MISC.: NO. 1/0 AWG SEGC TAP CABLE	FT
625	LIGHTING, MISC.: NO. 4 AWG GEC CABLE	FT
625	LIGHTING, MISC.: COPPER BUS BAR	FT

DESIGN AGENCY
HATCH MOTT MacDONALD
18013 CLEVELAND PKWY.
SUITE 200
CLEVELAND, OH 44135

DESIGNED	DRAWN	REVIEWED	DATE
LL	CM	RF	08/11/14
CHECKED	REVISED	STRUCTURE FILE NUMBER	
RL	CL	31065778	

ELECTRICAL – TUNNEL GROUNDING NOTES – SHEET 1 OF 2

BRIDGE NO. HAM-71-0134
I-71 LYTLE TUNNEL UNDER LYTLE PARK

HAM-71-01.34
PID No. 87268

c:\pwworking\hmm\external\tyn61470\dms727●3\071_0134CE5415.dgn 10/24/2014 10:50:07 AM TYN61470

AUTOMATIC FIRE DETECTION NOTES – LINEAR HEAT DETECTION

PART 1 - GENERAL

1.1 GENERAL REQUIREMENTS

A. THE CONTRACTOR SHALL FURNISH ALL LABOR, EQUIPMENT AND MATERIALS AND PERFORM ALL OPERATIONS IN CONJUNCTION WITH THE INSTALLATION OF THE AUTOMATIC LINEAR HEAT DETECTION SYSTEM AS INDICATED AND DESCRIBED IN THIS SPECIFICATION AND CONTRACT DRAWINGS.

B. ALL EXCEPTIONS TAKEN TO THESE SPECIFICATIONS, ALL VARIANCES FROM THESE SPECIFICATIONS AND ALL SUBSTITUTIONS OF OPERATING CAPABILITIES OR EQUIPMENT CALLED FOR IN THESE SPECIFICATIONS SHALL BE LISTED IN WRITING AND FORWARDED TO THE ENGINEER FOR APPROVAL.

C. ANY EQUIPMENT PROPOSED AS EQUAL TO THAT SPECIFIED HEREIN SHALL CONFORM TO THE STANDARDS AND THE MANUFACTURER MUST SUPPLY PROOF OF HAVING PRODUCED SIMILAR EQUIPMENT, NOW GIVING SATISFACTORY SERVICE. THE MANUFACTURER'S NAME, MODEL NUMBERS, WORKING DRAWINGS AND ENGINEERING DATA SHEETS SHALL BE SUBMITTED FOR APPROVAL. INCLUDED IN THE SUBMITTAL SHALL BE A WRITTEN STATEMENT, INDICATING COMPLIANCE WITH THE FEATURES, FUNCTIONS, AND PERFORMANCE OF THE SPECIFIED EQUIPMENT.

1.2 SCOPE

A. GENERAL - THIS SPECIFICATION INCLUDES THE FOLLOWING WORK TO BE PERFORMED BY THE CONTRACTOR:

1. COMPLETE INSTALLATION IN ACCORDANCE WITH THE MANUFACTURER'S INSTRUCTIONS OF THE LINEAR HEAT DETECTION CABLES AND CONTROLLERS AS SPECIFIED HEREIN AND INDICATED ON THE DRAWINGS
2. ENSURE ALL COMMUNICATIONS WITH THE FIRE ALARM AND SUPERVISORY CONTROL AND DATA ACQUISITION (SCADA) SYSTEMS ARE COMPLETED AND FUNCTION

1.3 QUALIFICATIONS

A. ACCEPTABLE MANUFACTURERS OF THE FIRE DETECTION AND CONTROL EQUIPMENT IS PROTECTOWIRE COMPANY OR APPROVED EQUAL.

1.4 STANDARDS

1. UNDERWRITERS LABORATORIES, INC (UL)
2. NATIONAL FIRE PROTECTION ASSOCIATION (NFPA)
   a. 70, NATIONAL ELECTRICAL CODE, 2014.
   b. 70E, STANDARD FOR ELECTRICAL SAFETY IN THE WORKPLACE, 2012
   c. 502, STANDARDS FOR ROAD TUNNELS, BRIDGES, AND OTHER LIMITED ACCESS HIGHWAYS, 2014
3. OHIO FIRE CODE
4. OHIO BUILDING CODE
5. FACTORY MUTUAL (FM)
6. CINCINNATI FIRE PREVENTION CODE

1.5 SUBMITTALS

A. AS A MINIMUM, THE CONTRACTOR SHALL SUBMIT TWO (2) COPIES OF THE FOLLOWING PRIOR TO PERFORMING ANY WORK:
1. A SCHEDULE INDICATING THE INSTALLATION SEQUENCE, THE TIME FRAME, PROJECTED DATES OF DELIVERY OF THE EQUIPMENT, INSTALLATION COMPLETION DATE, DEMONSTRATION TEST AND FINAL TEST/ACCEPTANCE DATES.
2. SHOP DRAWINGS INCLUDING ORIGINAL MANUFACTURER SPECIFICATION AND INSTALLATION INSTRUCTION SHEETS. ALL EQUIPMENT AND DEVICES ON THE SHOP DRAWINGS TO BE FURNISHED UNDER THIS CONTRACT SHALL BE CLEARLY MARKED IN THE SPECIFICATION SHEETS.
3. INSTALLATION DIAGRAM; TYPICAL WIRING DIAGRAMS ARE NOT ACCEPTABLE.
4. SUFFICIENT INFORMATION SO THAT THE EXACT FUNCTION IS KNOWN OF EACH INSTALLED DEVICE.

B. THE CONTRACTOR SHALL NOT ORDER ANY EQUIPMENT, NOR PERFORM ANY INSTALLATIONS, PRIOR TO COMPLETION OF REVIEW OF THE SUBMITTALS BY THE ENGINEER AND RECEIPT OF A WRITTEN AUTHORITY TO PROCEED.

PART 2 - PRODUCTS

A. GENERAL:
1. LINEAR HEAT DETECTION SYSTEM SHALL USE A FIBER OPTIC SENSING TECHNOLOGY IN EACH TUNNEL AND ABOVE EACH LANE OF TRAFFIC.
2. AUTOMATIC FIRE DETECTION SYSTEM SHALL BE ZONED TO CORRESPOND WITH THE TUNNEL VENTILATION ZONES: THE SYSTEM SHALL COMPRISE THREE (3) MAIN ZONES: ZONE 1 SHALL COVER THE SOUTHBOUND TUNNEL FROM PORTAL TO PORTAL, ZONE 2 SHALL COVER THE SOUTHBOUND RAMP E TUNNEL TO THIRD STREET FROM PORTAL TO PORTAL, AND ZONE 3 SHALL COVER THE NORTHBOUND TUNNEL FROM PORTAL TO PORTAL.
EACH MAIN ZONE WILL BE DIVIDED INTO 2 SUB-ZONES, NORTH AND SOUTH OF THE VENTILATION OPENINGS, CORRESPONDING TO THE VENTILATION ZONES.
3. UPON DETECTION OF A FIRE WITHIN ONE OF THESE ZONES, THE TUNNEL HEAT DETECTION SYSTEM SHALL TRANSMIT A DISCRETE SIGNAL CORRESPONDING TO THE ZONE IN ALARM TO THE CONTROLLER, FIRE ALARM PANEL AND SCADA FOR SUBSEQUENT ACTIONS.
4. THE SYSTEM SHALL BE INTEGRATED INTO THE SCADA SYSTEM BY DIRECTLY COMMUNICATING OVER ETHERNET (TCP/IP) USING SCPI (STANDARD COMMANDS FOR PROGRAMMABLE INTERFACE).

SYSTEM RESET
1. MEANS TO RESET THE SYSTEM TO RETURN THE CONTROL UNIT TO ITS NORMAL STATE AFTER ALL ALARM CONDITIONS HAVE BEEN REMEDIED SHALL BE PROVIDED.
2. SHOULD AN ALARM CONDITION CONTINUE TO EXIST, THE SYSTEM SHALL RETURN TO THE ALARM STATE. THE ZONE ALARM LED SHALL REMAIN ON.

B. CONTROL PANEL:
1. THE FIRE ALARM CONTROL PANEL SHALL BE PRODUCED BY THE SAME MANUFACTURER THAT MANUFACTURES THE LINEAR HEAT DETECTION CABLE, AND THEY SHALL BE UL LISTED AND/OR FM APPROVED AS COMPATIBLE.
2. THE SYSTEM CONTROLLER SHALL BE ABLE TO PROVIDE A LOCATION OF A FIRE OR HOT SPOT ANYWHERE ALONG THE SENSOR'S LENGTH. TEMPERATURES SHALL BE RECORDED AS A CONTINUOUS PROFILE SUCH THAT THE SYSTEM IS CAPABLE OF PROVIDING GRAPHICAL REPRESENTATION OF THE FIRE SIZE AND DIRECTION OF FIRE SPREAD BASED UPON THE LENGTH OF THE SENSOR IN ALARM.
3. CONTROLLER SHALL BE CONNECTED TO AN UL LISTED OR APPROVED FIRE ALARM PANEL AND WILL BE FED FROM EITHER THIS PANEL OR A REMOTE POWER SUPPLY, BOTH CONNECTED TO AN UPS.
4. THE CONTROLLER SHALL BE CONNECTED TO A PC BY USB TO ALLOW SYSTEM MEASUREMENTS TO BE READ AND DISPLAYED.
5. FOR MORE RELIABILITY, THE CONTROLLER IS CONFIGURED IN A DUAL CHANNEL CLOSED LOOP CONFIGURATION. NO FIELD SPLICES OR END TERMINATIONS ARE REQUIRED.
6. EACH FIBERSYSTEM 8000 CONTROLLER (OR APPROVED EQUAL) WILL BE FURNISHED STANDARD WITH 43 AUXILIARY ALARM RELAYS. UNUSED RELAYS CAN BE CONFIGURED IN FIELD IF DESIRED.
7. ONE CONTROLLER PER TUNNEL IS INSTALLED TO FACILITATE TROUBLESHOOTING AND TO COORDINATE LOCK-OUT-TAG-OUT WITHOUT TAKING MORE THAN ONE TUNNEL OUT OF SERVICE.
8. THE SPECIFIED DATA RECORDING REQUIRES THE PWIS-1 (PROTECTOWIRE COMPANY) OR APPROVED EQUAL ENHANCED VISUALIZATION SOFTWARE TO BE SUPPLIED WITH THE SYSTEM).
9. FIBER OPTIC CABLE TERMINATION: 65FT EXCESS CABLE AND A CLEAN ANGLED E2000 CONNECTOR OR APPROVED EQUAL ARE RECOMMENDED.
10. SYSTEM CHECK-OUT, INSPECTION AND COMMISSIONING SHALL BE PERFORMED BY AN INDIVIDUAL FACTORY-TRAINED ON THE PROTECTOWIRE FIBERSYSTEM 8000 OR THE APPROVED EQUAL SYSTEM.
11. ENCLOSURE: SHALL BE A NEMA 1 RATED

C. LINEAR HEAT DETECTION CABLE:
1. THE FIBER OPTIC SENSING CABLE USED SHALL BE OF RUGGED CONSTRUCTION THAT RESISTS ROUGH ENVIRONMENTAL AREAS, TYPE PFS 654-MF OR APPROVED EQUAL, METAL FREE (POLYAMIDE CORE TUBE REINFORCED WITH ARAMID YARD). THE OUTER JACKET IS HALOGEN FREE, FLAME RETARDANT NON-CORROSIVE (FRNC) THERMOPLASTIC.
2. THE CABLE SHALL DETECT THE SPECIFIED TEMPERATURE ANYWHERE ALONG ITS LENGTH, REGARDLESS OF THE SOURCE OF THE HEAT.
3. THE DETECTION CABLE TEMPERATURE RANGES SHALL BE SELECTED FOR THE EXPECTED MAXIMUM AMBIENT TEMPERATURE AND THE ALARM ACTIVATION TEMPERATURE SUITABLE FOR THE APPLICATION IN ACCORDANCE WITH THE MANUFACTURER'S GUIDELINES.
4. DETECTION CABLES OF DIFFERENT TEMPERATURE RATINGS SHALL HAVE THE ABILITY TO BE EASILY SPLICED TOGETHER IN SERIES WITHOUT AFFECTING THE ADJACENT DETECTOR ALARM POINT.

D. SUPPORTS
1. INSULATED STANDOFFS
   a. 4'-0" TO 5'-0" SPACING FOR STANDOFFS IS REQUIRED (WITHOUT MESSENGER WIRE).
   b. 50'-0" SPACING FOR STANDOFFS IS REQUIRED WITH MESSENGER WIRE.
   c. USE 3/8" DIAMETER BIT FOR ANCHORS – 1" EMBEDMENT DEPTH.
2. SUPPORTS FOR MESSENGER WIRE
   a. 50'-0" SPACING FOR TR-5G STANDOFFS IS REQUIRED FOR MESSENGER WIRE SEGMENTS.
   b. MESSENGER WIRE SHALL BE 1/8" DIAMETER STAINLESS STEEL PULL STOP CABLE OR APPROVED EQUAL. WRAP FIBER OPTIC AROUND MESSENGER CABLE IN SPIRAL PATTERN (AT A RATE OF APPROXIMATELY ONE TURN PER FOOT) AND USE MANUFACTURER SUPPLIED OR APPROVED CABLE TIES TO SECURE FIBER OPTIC CABLE TO MESSENGER CABLE.
3. OTHER MOUNTING AND INSTALLATION ACCESSORIES (CLIPS, STRAPS, DRIVE RINGS, BEAM CLAMPS, CABLE STANDOFFS, CONNECTORS, TIES, ETC.) SHALL ONLY BE INSTALLED IF SUPPLIED OR APPROVED BY THE AUTOMATED FIRE DETECTION SYSTEM MANUFACTURER.

c:\pwworking\hmm\external\tyn61470\dms727●3\071_0134CES198● dgn 10/24/2014 10:50:19 AM TYN61470

DESIGN AGENCY
HATCH MOTT MacDONALD
18013 CLEVELAND PKWY.
SUITE 200
CLEVELAND, OH 44135

DESIGNED	DRAWN	REVIEWED	DATE
DGC	CM	RF	08/11/14
CHECKED	REVISED	STRUCTURE FILE NUMBER	
LL	CL	3106578	

ELECTRICAL-LINEAR HEAT DETECTION GENERAL NOTES-SHEET 1 OF 2

BRIDGE NO. HAM-71-0134
I-71 LYTLE TUNNEL UNDER LYTLE PARK

HAM-70-01.34
PID No. 87268

PART 3 - EXECUTION

3.1 INSTALLATION

A. THE CONTRACTOR SHALL FOLLOW AND COMPLY WITH THE MANUFACTURER'S INSTALLATION INSTRUCTIONS FOR THE INSTALLATION OF ALL EQUIPMENT.

B. THE LINEAR HEAT DETECTION CABLE SHALL BE LOCATED IN ACCORDANCE WITH THE APPROPRIATE STANDARDS AND MANUFACTURER'S GUIDELINES. THE LINEAR HEAT DETECTION CABLE SHALL NOT BE RECESSED IN ANY WAY INTO ANY MOUNTING SURFACE.

C. AS A MINIMUM, THE LINEAR HEAT DETECTION CABLE OF THE TYPE AND TEMPERATURE RATING SPECIFIED SHALL BE RUN AS SHOWN ON THE PLANS.
   1. THE LINEAR HEAT DETECTION CABLE SHALL BE INSTALLED UNDER THE VENTILATION OPENINGS USING MESSENGER WIRE SUPPORTING THE DETECTOR WITH STAINLESS STEEL TURNBUCKLES LOCATED BETWEEN EVERY 250 FEET OF MESSENGER CABLE.
   2. STANDOFFS WITH RUBBER GROMMET SHALL SUPPORT THE FIBER OPTIC CABLE EACH 4-5'.

D. AS A MINIMUM, THE LINEAR HEAT DETECTION CABLE SHALL BE FORMED IN ACCORDANCE WITH THE FOLLOWING:
   1. THE CABLE SHALL BE INSTALLED BY HAND; MECHANICAL DEVICES SHALL NOT BE APPLIED TO THE CABLE.
   2. ALL BENDING AND FITTING SHALL BE PERFORMED WITH INSTALLER'S FINGERS. PLIERS OR OTHER HAND TOOLS SHALL NOT BE USED TO FORM THE CABLE.
   3. ONLY FASTENING AND SUPPORT DEVICES APPROVED BY THE MANUFACTURER SHALL BE USED TO SUPPORT OR CONNECT THE CABLE.
   4. ONLY STAPLING MACHINES OR TACKERS APPROVED BY THE MANUFACTURER SHALL BE USED TO FASTEN THE CABLE.
   5. ONLY MOUNTING CLIPS APPROVED BY THE MANUFACTURER SHALL BE USED TO ATTACH THE CABLE.
   6. FASTENING AND SUPPORTING DEVICES, INCLUDING STAPLES, STRAPS, AND MOUNTING CLIPS, SHALL NOT BE PLACED AT INTERVALS GREATER THAN TEN (10) FEET.

E. THE LINEAR HEAT DETECTION CABLE SHALL BE INSTALLED IN A MANNER TO PROTECT IT FROM PHYSICAL DAMAGE. IN AREAS WHERE IT MAY BE SUBJECT TO PHYSICAL DAMAGE, THE CONTRACTOR SHALL INSTALL MECHANICAL PROTECTION FOR THE CABLE. AS A MINIMUM, THE CABLE SHALL BE PROTECTED IN ACCORDANCE WITH THE FOLLOWING:
   1. IN AREAS SUBJECT TO ABRASION AND/OR PINCHING, THE CABLE SHALL BE MECHANICALLY AND ELECTRICALLY INSULATED, AS RECOMMENDED BY THE MANUFACTURER.
   2. WHEN THE CABLE PASSES THOUGH A WALL, BEAM, OR JOIST, THE HOLE SHALL BE LARGE ENOUGH TO ALLOW THE CABLE TO BE FREELY DRAWN THROUGH THE OPENING. THE CABLE SHALL BE PROTECTED WHEN PASSING THOUGH MASONRY WALLS WITH CONDUIT, TAPE OR PVC SLEEVING.
   3. A BUSHING SHALL BE INSTALLED AT THE OPEN END OF METAL CONDUIT THROUGH WHICH THE CABLE ENTERS OR EXITS.
   4. IN AREAS WHERE THE LINEAR HEAT DETECTION CABLE IS SUBJECT TO ABUSE, IT SHALL BE INSTALLED IN PERFORATED STAINLESS STEEL CONDUIT IN ACCORDANCE WITH THE MANUFACTURER'S GUIDELINES.
   5. WHEN THE CABLE IS INSTALLED LOWER THAN SEVEN (7) FEET FROM THE FLOOR, OR WHEN THE AREA TO BE PROTECTED IS LESS THAN SEVEN (7) FEET IN THE AIR AND UNPROTECTED BY A STRUCTURE, THE CONTRACTOR SHALL INSTALL PHYSICAL PROTECTION IN ACCORDANCE WITH THE MANUFACTURER'S GUIDELINES.

F. AS A MINIMUM, THE LINEAR HEAT DETECTION CABLE SHALL BE CONNECTED IN ACCORDANCE WITH THE FOLLOWING:
   1. THE LENGTH OF THE LINEAR HEAT DETECTION CIRCUITS SHALL NOT EXCEED THE LIMITS PRESCRIBED BY THE MANUFACTURER, UNLESS OTHERWISE EXPRESSLY STIPULATED IN WRITING AND APPROVED BY THE MANUFACTURER.
   2. ALL LINEAR HEAT AND FIRE DETECTION ZONES SHALL BE TERMINATED IN THE CONTROL PANEL.
   3. ALL LINEAR HEAT DETECTION CABLE AND FIRE PROTECTION CIRCUITS SHALL BE WIRED IN A LOOP CONFIGURATION. CIRCUITS WITH T TAPS OR Y BRANCHES SHALL NOT BE ACCEPTABLE.
   4. ALL SPLICES MADE IN THE LINEAR HEAT DETECTION CABLE SHALL BE MADE ONLY BY UTILIZING SPLICING CONNECTORS FURNISHED BY THE MANUFACTURER.

3.2 AS-BUILT DRAWINGS

A. THE CONTRACTOR SHALL DELIVER A COMPLETE SET OF REPRODUCIBLE, AS-BUILT DRAWINGS AND FOUR (4) COPIES OF THE DRAWINGS UPON COMPLETION OF THE INSTALLATION AND A MINIMUM OF ONE WEEK PRIOR TO THE DEMONSTRATION TEST.

B. A COPY OF THE AS-BUILT DRAWINGS SHALL BE SUBMITTED TO THE FIRE DEPARTMENT PRIOR TO THE FIRE DEPARTMENT'S ACCEPTANCE TEST.

C. TRAINING REQUIREMENTS: PRIOR TO FINAL ACCEPTANCE OF THE SYSTEM, THE CONTRACTOR AND SUPPLIER SHALL PROVIDE OPERATION TRAINING FOR THE OWNER'S PERSONNEL.

3.3 OPERATING INSTRUCTIONS

A. THE CONTRACTOR SHALL PROVIDE OPERATING AND USER INSTRUCTION MANUALS A MINIMUM OF ONE WEEK PRIOR TO THE DEMONSTRATION TEST OF THE SYSTEM. FOUR (4) COMPLETE SETS OF OPERATING AND INSTRUCTION MANUALS SHALL BE DELIVERED TO THE OWNER UPON COMPLETION, AND ONE (1) TO THE FIRE DEPARTMENT PRIOR TO FINAL ACCEPTANCE.

B. USER OPERATING INSTRUCTIONS SHALL BE PROMINENTLY DISPLAYED ON THE CABINET FRONT OR ON A SEPARATE PLASTIC LAMINATED SHEET LOCATED NEXT TO THE CONTROL UNIT.

3.4 TESTING INSTRUCTIONS

A. PRIOR TO FINAL ACCEPTANCE, THE CONTRACTOR SHALL DELIVER TO THE OWNER COMPLETE, SIMPLE, COMPREHENSIVE, STEP-BY-STEP TESTING INSTRUCTIONS PROVIDING RECOMMENDED AND REQUIRED TESTING FREQUENCY OF ALL EQUIPMENT, METHODS FOR TESTING EACH INDIVIDUAL PIECE OF EQUIPMENT, AND A COMPLETE TROUBLESHOOTING MANUAL EXPLAINING WHAT MIGHT BE WRONG IF A CERTAIN MALFUNCTION OCCURS AND EXPLAINING HOW TO TEST THE PRIMARY INTERNAL PARTS OF EACH PIECE OF EQUIPMENT.

B. THE LINEAR HEAT DETECTION CABLE SHALL NOT BE TESTED WITH AN ACTUAL TEST. THE SYSTEM SHALL BE TESTED BY INSPECTION.

3.5 MAINTENANCE INSTRUCTIONS

A. PRIOR TO FINAL ACCEPTANCE, THE CONTRACTOR SHALL PROVIDE FOUR (4) COMPLETE SETS OF MAINTENANCE INSTRUCTION MANUALS TO THE OWNER.

B. MAINTENANCE INSTRUCTIONS SHALL BE COMPLETE, EASY TO READ, UNDERSTANDABLE, AND SHALL PROVIDE THE FOLLOWING INFORMATION:
   1. ALL ASPECTS OF THE SYSTEM OPERATION AND MAINTENANCE SHALL BE DETAILED, INCLUDING A WRITTEN DESCRIPTION OF THE SPECIFIC SYSTEM DESIGN (A TYPICAL DESCRIPTION WILL NOT BE ACCEPTED), SYSTEM LOGIC DIAGRAMS, ELECTRICAL WIRING DIAGRAMS OF ALL CIRCUITS, DRAWINGS ILLUSTRATING EQUIPMENT LOCATION AND TECHNICAL DATA SHEETS DESCRIBING EACH PIECE OF EQUIPMENT USED IN THE SYSTEM.
   2. INSTRUCTIONS ON REPLACING ANY COMPONENTS OF THE SYSTEM, INCLUDING INTERNAL PARTS.
   3. INSTRUCTIONS ON PERIODIC CLEANING AND ADJUSTMENT OF EQUIPMENT WITH A SCHEDULE OF THESE FUNCTIONS.
   4. A COMPLETE LIST OF ALL EQUIPMENT AND COMPONENTS WITH INFORMATION AS TO THE ADDRESS AND PHONE NUMBER OF BOTH THE MANUFACTURER AND LOCAL SUPPLIER OF EACH ITEM.

3.6 PAYMENT METHOD AND ITEMS:

PAYMENT FOR LINEAR HEAT DETECTION ITEMS SHALL BE MADE AT THE CONTRACT UNIT PRICE, INCLUDING BUT NOT LIMITED TO ALL WORK, LABOR, EQUIPMENT AND MATERIALS NECESSARY THEREFORE OR INCIDENTAL THERETO AS FOLLOWS:

ITEM	DESCRIPTION	UNIT
804	FIBER OPTIC CABLE, MISC.: FIBER OPTIC SENSOR CABLE, TYPE PFS 654-MF	FT
804	FIBER OPTIC CABLE, MISC.: INSULATED STANDOFF EVERY 5FT	EACH
633	CONTROLLER ITEM, MISC.: CONTROLLER NEMA 1, 4-CHANNEL, 3,280FT RANGE	EACH
633	CONTROLLER ITEM, MISC.: CONTROLLER NEMA 1, 4-CHANNEL, 6,560FT RANGE	EACH
633	CONTROLLER ITEM, MISC.: CONTROLLER INTEGRATED BUS MOD-BUS TCP/IP	EACH
633	CONTROLLER ITEM, MISC.: CONTROLLER INTERFACE BOX FOR MOD-BUS RS235 MIB-8000	EACH
633	CONTROLLER ITEM, MISC.: FIBER OPTIC FIRE DETECTION CONTROLLER SOFTWARE	LUMP
632	MESSENGER WIRE, MISC.: MESSENGER WIRE, 7 STRANDS, 1/8" DIAMETER, WITH ACCESSORIES (ONLY FOR NB AND SBR UNDER THE VENT OPENINGS)	FT
632	SIGNALIZATION, MISC.: FASTENERS FOR MESSENGER WIRE (ONLY FOR NB AND SBR UNDER THE VENT OPENINGS)	EACH
633	CONTROLLER ITEM, MISC.: TRAINING AND COMMISSIONING	LUMP

c:\pwworking\hnm\external\ty-f61470\dms-72703\071_0134CE5199.dgn 10/24/2014 10:50:31 AM TYN61470

DESIGN AGENCY
HATCH MOTT MacDONALD
18013 CLEVELAND PKWY.
SUITE 200
CLEVELAND, OH 44135

DESIGNED	DRAWN	REVIEWED	DATE
DGC	CM	RF	08/11/14
CHECKED	REVISED	STRUCTURE FILE NUMBER	
LL	CL	3106578	

ELECTRICAL-LINEAR HEAT DETECTION GENERAL NOTES-SHEET 2 OF 2

BRIDGE NO. HAM-71-0134
I-71 LYTLE TUNNEL UNDER LYTLE PARK

HAM-70-01.34
PID No. 87268

REFERENCE NO.	SHEET NO.	SIDE	ROADWAY	STATION FROM	STATION TO	LENGTH (FT)	804 FIBER OPTIC CABLE, MISC: FIBER OPTIC SENSOR CABLE, TYPE PFS 654 MF (FT)	804 FIBER OPTIC CABLE, MISC: FIBER OPTIC CABLE INSULATED STANDOFF EVERY 5FT (EACH)	633 CONTROLLER ITEM, MISC: CONTROLLER NEMA 1, 4-CHANNEL, 3,280FT RANGE (EACH)	633 CONTROLLER ITEM, MISC: CONTROLLER NEMA 1, 4-CHANNEL, 6,560FT RANGE (EACH)	633 CONTROLLER ITEM, MISC: CONTROLLER INTEGRATED BUS MOD-BUS TCP/IP (EACH)	633 CONTROLLER ITEM, MISC: CONTROLLER INTERFACE BOX FOR MOD-BUS RS235 MIB-8000 (EACH)	633 CONTROLLER ITEM, MISC: FIBER OPTIC FIRE DETECTION CONTROLLER SOFTWARE (LUMP)	632 MESSENGER WIRE, MISC: MESSENGER WIRE 7 STRANDS, 1/8" DIAMETER, WITH ACCESSORIES (ONLY FOR NB AND SBR UNDER THE VENT OPENINGS) (FT)	632 SIGNALIZATION, MISC: FASTENERS FOR MESSENGER WIRE (ONLY FOR NB AND SBR UNDER THE VENT OPENINGS) (EACH)	633 CONTROLLER ITEM, MISC: TRAINING AND COMMISSIONING (LUMP)
	513	Lane 1	NB	131+34.00	127+10.00	424.00	699	95						50	10	
	513 - 514	Lane 2	NB	127+10.00	135+74.51	864.51	900	183								
	513 - 514	Lane 2	NB	135+74.51	127+10.00	864.51	900	183								
	513 - 514	Lane 3	NB	127+10.00	135+74.51	864.51	900	183								
	513 - 514	Lane 1	NB	135+74.51	131+34.00	440.51	716	99								
	513	Lane 1	SB	129+33.00	125+40.00	393.00	668	89								
	513 - 514	Lane 2	SB	125+40.00	133+57.00	817.00	850	174								
	513 - 514	Lane 1	SB	133+57.00	129+33.00	424.00	699	95								
	513	Lane 1	SBR	131+40.50	126+86.50	454.00	729	101						50	10	
	513 - 514	Lane 1	SBR	126+86.50	135+26.50	840.00	850	178								
	513 - 514	Lane 1	SBR	135+26.50	131+40.50	386.00	661	88								
	515	-	NB							1	1	1	LUMP			
	515	-	SB						1		1	1				
	515	-	SBR						1		1	1				
TOTALS CARRIED TO GENERAL SUMMARY							8572	1468	2	1	3	3	LUMP	100	20	LUMP

HAM-70-01.34
PID No. 87268

ELECTRICAL - LINEAR HEAT DETECTION SUBSUMMARY
BRIDGE NO. HAM-71-0134
I-71 LYTLE TUNNEL UNDER LYTLE PARK

DESIGNED	DRAWN	REVIEWED	DATE
DGC	CM	RF	08/11/14
CHECKED	REVISED	STRUCTURE FILE NUMBER	
LL	CL	3106578	

DESIGN AGENCY
HATCH MOTT MacDONALD
18013 CLEVELAND PKWY.
SUITE 200
CLEVELAND, OH 44135

NOTES:

1. EXISTING PENETRATIONS THROUGH TUNNEL CEILING ARE USED FOR CABLE ROUTING.
2. FIBER OPTIC CABLE RUNS ALONG CEILING, ABOVE MIDDLE OF EACH LANE.

LEGEND:

LINEAR HEAT DETECTION CABLE (FIBER OPTIC) TYPE PFS-654MF OR APPROVED EQUAL

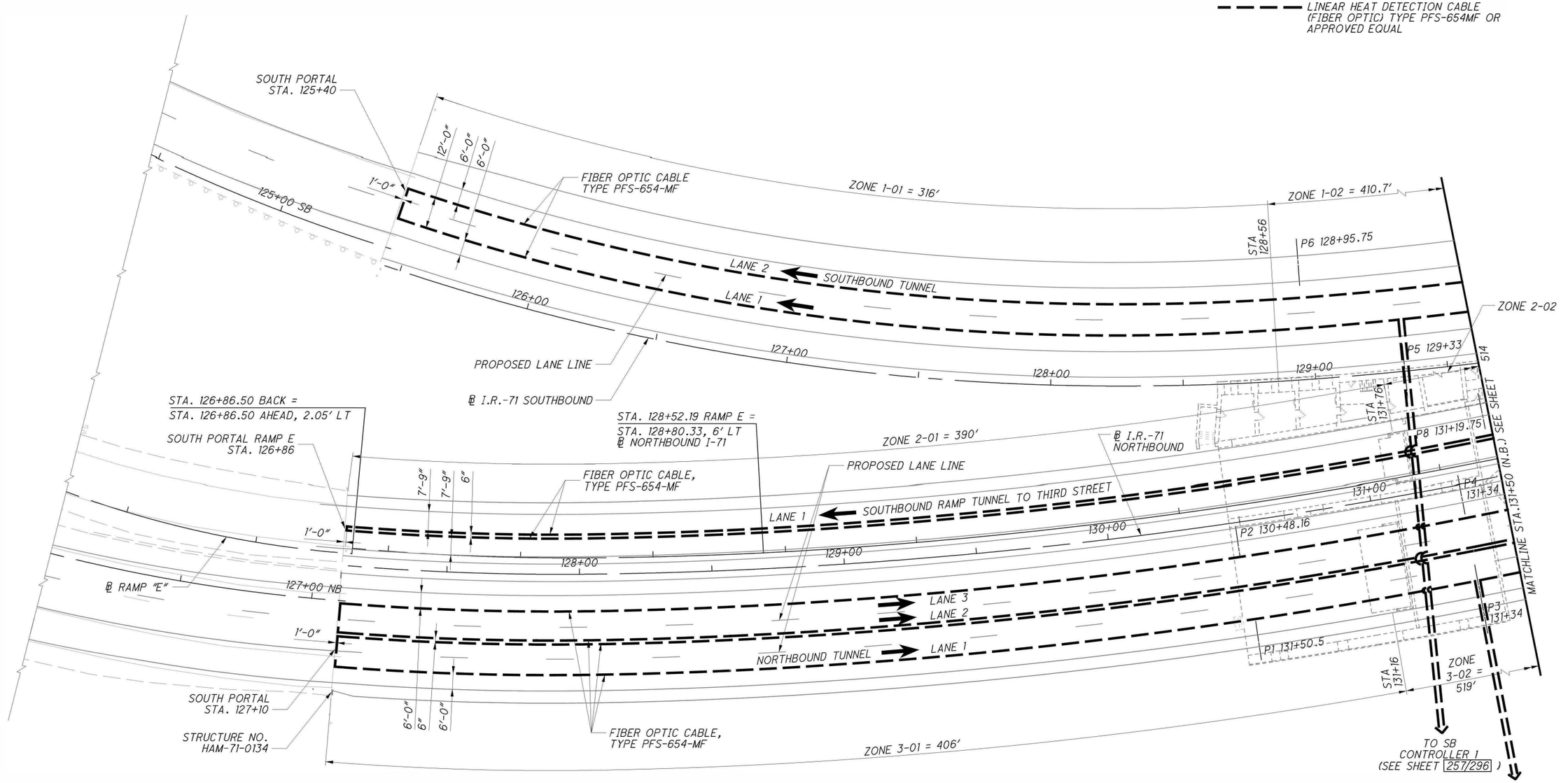

LINEAR HEAT DETECTION PLAN STA. 127+10 (NB) TO STA. 131+50 (NB)

SCALE: 1"=20'

DESIGN AGENCY
HATCH MOTT MacDONALD
18013 CLEVELAND PKWY.
SUITE 200
CLEVELAND, OH 44135

DESIGNED	DRAWN	REVIEWED	DATE
DGC	CM	RF	08/01/14
CHECKED	REVISED	STRUCTURE FILE NUMBER	
LL	CL	3106578	

ELECTRICAL-LINEAR HEAT DETECTION CABLE LAYOUT-SHEET 1 OF 2

BRIDGE NO. HAM-71-0134
I-71 LYTLE TUNNEL UNDER LYTLE PARK

HAM-71-01.34
PID No. 87268

255/296

513/555

c:\pwworking\hmm\external\tyn61470\dms72703\071_0134CES201.dgn 10/24/2014 10:50:50 AM T:\N61470

NOTES:

1. EXISTING PENETRATIONS THROUGH TUNNEL CEILING ARE USED FOR CABLE ROUTING.
2. FIBER OPTIC CABLE RUNS ALONG CEILING, ABOVE MIDDLE OF EACH LANE.

LEGEND:

— — — — LINEAR HEAT DETECTION CABLE (FIBER OPTIC) TYPE PFS-654MF OR APPROVED EQUAL

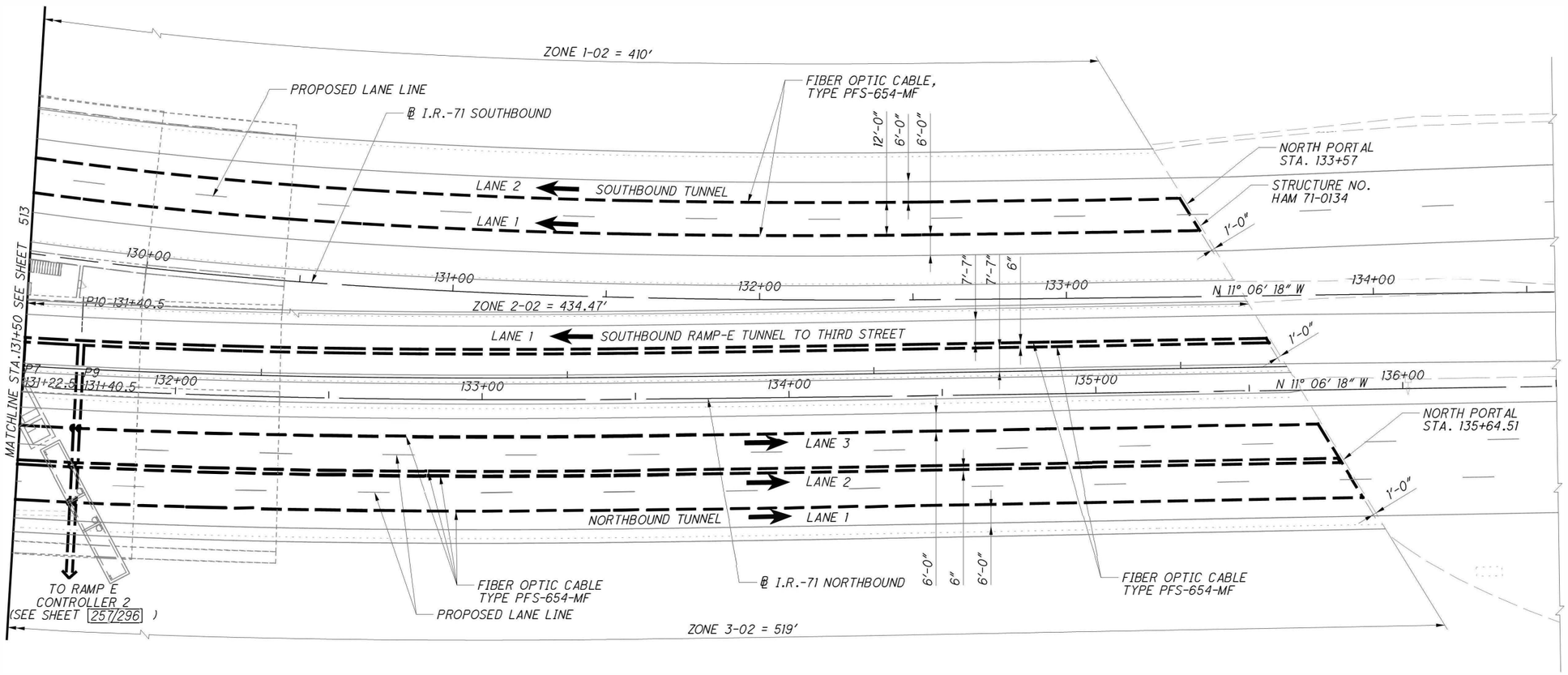

LINEAR HEAT DETECTION PLAN STA. 131+50 (NB) TO STA. 135+64.51 (NB)

SCALE: 1"=20'

c:\pwworking\hnm\external\ty-n61470\dms727●3\071_013+CES202.dgn 10/24/2014 10:50:54 AM TYN61470

DESIGN AGENCY
HATCH MOTT MacDONALD
18013 CLEVELAND PKWY.
SUITE 200
CLEVELAND, OH 44135

DESIGNED	DRAWN	REVIEWED	DATE
DGC	CM	RF	08/01/14
CHECKED	REVISED	STRUCTURE FILE NUMBER	
LL	CL	3106578	

ELECTRICAL-LINEAR HEAT DETECTION CABLE LAYOUT-SHEET 2 OF 2
BRIDGE NO. HAM-71-0134
I-71 LYTLE TUNNEL UNDER LYTLE PARK

HAM-71-01.34
PID No. 87268

256/296

514/555

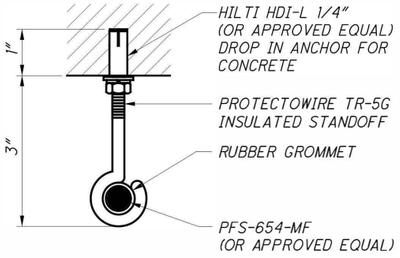

INSULATED STANDOFF - DETAIL A
CONCEPT FOR SUPPORT

SCALE: NTS

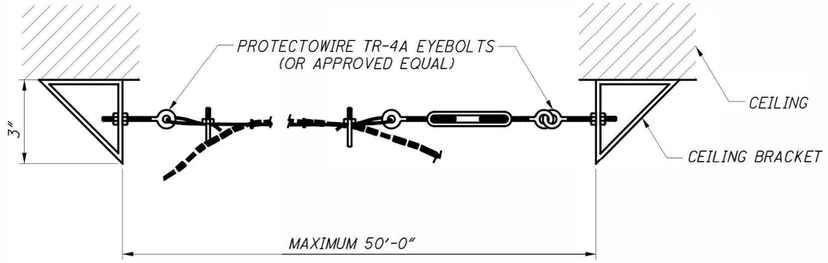

MESSENGER WIRE - DETAIL B
CONCEPT FOR SUPPORT UNDER VENTILATION OPENINGS

SCALE: NTS

NOTES:

1. SEE SHEET 252/296 FOR NOTES AND MOUNTING DETAILS FOR SUPPORTS.
2. SEE SHEET 241/296 FOR CONTROL PANEL LOCATIONS.
3. DESIGN BASED ON PROTECTOWIRE COMPANY PRODUCTS, APPROVED EQUAL PRODUCTS ARE ACCEPTABLE.

LEGEND:

- LINEAR HEAT DETECTION CABLE (FIBER OPTIC)
- NC- NORMAL CLOSED
- NO- NORMAL OPEN
- PC- PERSONAL COMPUTER
- SCADA- SUPERVISORY CONTROL AND DATA ACQUISITION
- TCP/IP- TRANSMISSION CONTROL PROTOCOL/ INTERNET PROTOCOL
- USB- UNIVERSAL SERIAL BUS
- VDC- VOLT DIRECT CURRENT

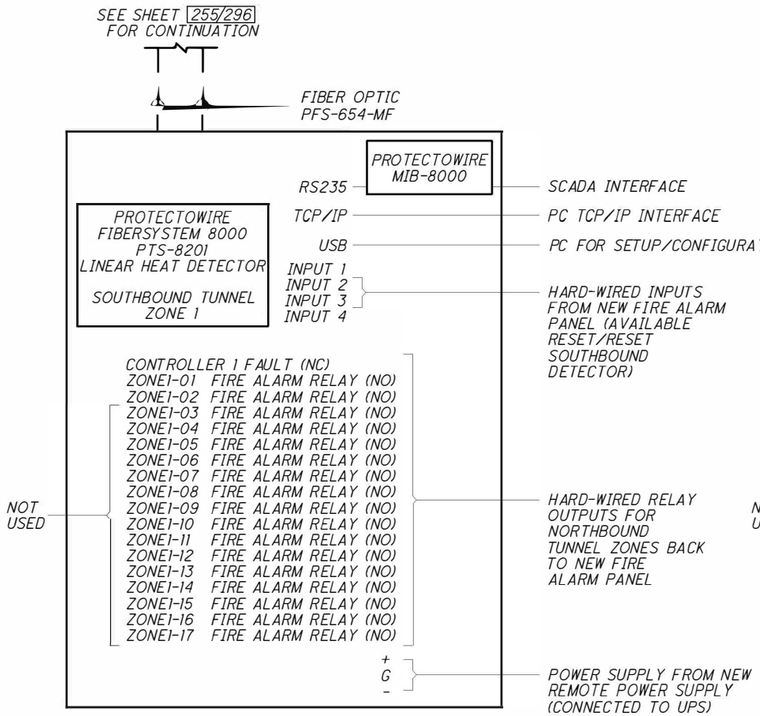

PROTECTOWIRE FIBER SYSTEM 8000
CONTROLLER 1 - SOUTHBOUND LANES

SCALE: NTS

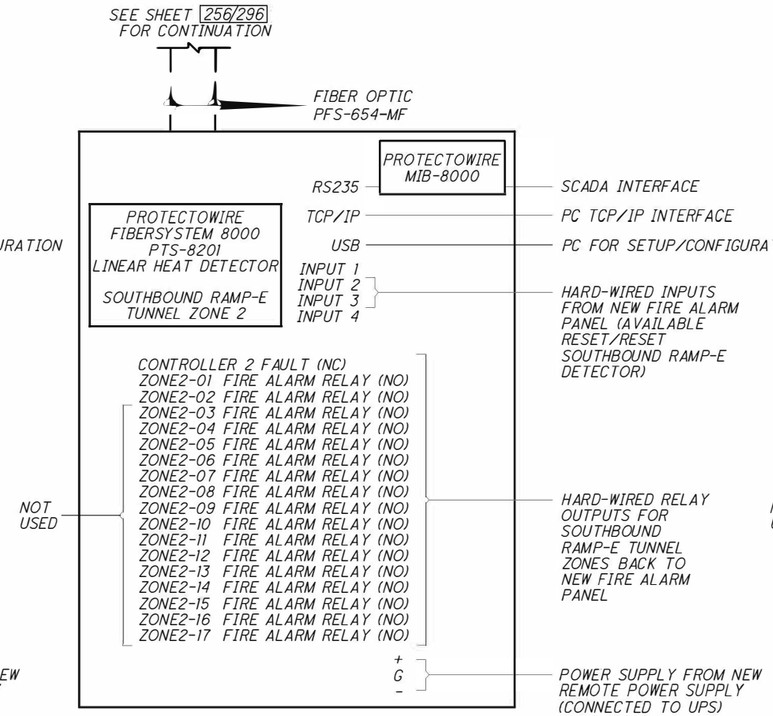

PROTECTOWIRE FIBER SYSTEM 8000
CONTROLLER 2 - SOUTHBOUND RAMP-E LANES

SCALE: NTS

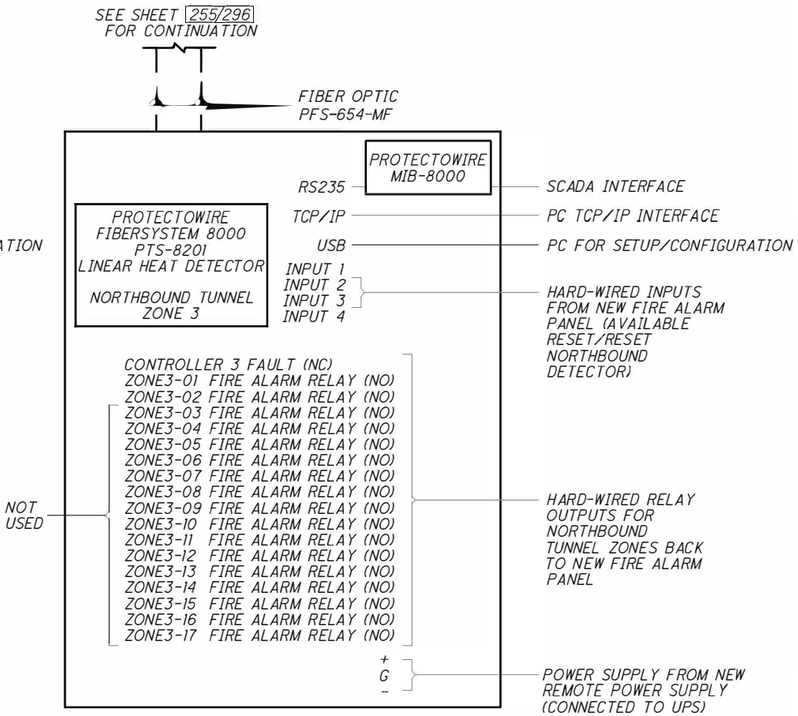

PROTECTOWIRE FIBER SYSTEM 8000
CONTROLLER 3 - NORTHBOUND LANES

SCALE: NTS

DESIGN AGENCY
HATCH MOTT MacDONALD
18013 CLEVELAND PKWY.
SUITE 200
CLEVELAND, OH 44135

DESIGNED	DRAWN	REVIEWED	DATE
DGC	CM	MK	08/11/14
CHECKED	REVISED	STRUCTURE FILE NUMBER	
LL	CL	3106578	

ELECTRICAL - LINEAR HEAT DETECTION CABLE DETAILS

BRIDGE NO. HAM-71-0134
I-71 LYTLE TUNNEL UNDER LYTLE PARK

HAM-70-01.34
PID No. 87268

c:\pwworking\hmm\external\ty-61470\dms727●3\071_0134CE5205.dgn 10/27/2014 12:54:00 PM TYN61470

ABBREVIATIONS:

##/S	FIBER OPTIC STRAND COUNT
ACTR	ACTUATOR
ASI	ACTUATOR SENSOR INTERFACE
CAT6	CATEGORY-6 ETHERNET CABLE
CB	CIRCUIT BREAKER
C-BOX	COMMUNICATION BOX
CCTV	CLOSED CIRCUIT TELEVISION
CDC	CINCINNATI DISPATCH CENTER (LOCATED IN THE CITY OF CINCINNATI)
CKT	CIRCUIT
CMD	COMMAND
COAX	COAXIAL CABLE
CO	CARBON MONOXIDE
COMM	COMMON
CON	CONTACTOR (RELAY)
CPU	CENTRAL PROCESSING UNIT
CR	CONTROL ROOM
CRW	CONTROL ROOM SWITCH
CSW	CORE SWITCH
DMZ	DEMILITARIZED ZONE
DPCS	DRAINAGE PUMP CONTROL SYSTEM
DSW	DISTRIBUTION SWITCH
DVI	DIGITAL VISUAL INTERFACE
DVR	DIGITAL VIDEO RECORDER
DWG	DRAWING
EBU	EXTENDED BATTERY UNIT OF A RACK MOUNTED UPS
EDR	ELECTRICAL DISTRIBUTION ROOM
EN	ENCODER, NETWORK VIDEO ENCODER
E-NET	ETHERNET
E,TBM	EXISTING TO BE MODIFIED
E,TRIS	EXISTING TO REMAIN IN SERVICE
E-BOX	EMERGENCY BOX (ELECTRICAL PANEL)
FA	FIRE ALARM
FACP	FIRE ALARM CONTROL PANEL
FAP	FIRE ALARM PANEL
FAD	FRESH AIR DUCT
FEP	FLUORINATED EHYLEN PROPLYLEN
F.L.	FOCAL LENGTH - LENSE ADJUSTMENT VALUE
FO	FIBER OPTIC CABLE
F.O.V.	FIELD OF VIEW - VIEWING AREA
FSW	FIELD SWITCH
GBE	GIGABIT
GFCI	GROUND FAULT INTERRUPT RECEPTACLE
GND	GROUND
GPLC	GENERAL PLC
HMI	HUMAN MACHINE INTERFACE
I/O	INPUT/OUTPUT
IP	INTERNET PROTOCOL
IS	INDIVIDUAL SHIELD (PER PAIR/TRIAD)
ISD	INTERNAL SECURITY DEPARTMENT
ISW	INTERNAL SECURITY SWITCH
LAN	LOCAL AREA NETWORK
LCP	LOCAL CONTROL PANEL
LP	LIGHT CONTROL PANEL
LFSO	LIMIT SWITCH FULL OPEN
LSHH	LEVEL SWITCH HIGH HIGH
LT	LEVEL TRANSMITTER
MC	MEDIA CONVERTER, MULTIMODE 100 MB FIBER OPTIC CONVERTER TO 10/100Mbps
MM	MULTIMODE (FIBER OPTIC)
MNS	MASS NOTIFICATION SYSTEM
MTRC	MASTER TERMINAL AND RELAY CLOSURE
NAS	NETWORK ACCESSIBLE STORAGE
NBP	NORTHBOUND PORTAL
NFC	NOT FULL CLOSED
NFO	NOT FULL OPEN
NVR	NETWORK VIDEO RECORDER
OIT	OPERATOR INTERFACE TERMINAL

ABBREVIATIONS (CONT.):

OS	OVERALL SHIELD (ENTIRE CABLE)
OLM	OPTICAL LINK MODULE
PLC	PROGRAMMABLE LOGIC CONTROLLER
PM	POWER MONITORING
POE	POWER OVER ETHERNET
PP	PATCH PANEL
PR	PAIR
QoS	QUALITY OF SERVICE
RIO	REMOTE INPUT OUTPUT
RTU	REMOTE TERMINAL UNIT
SBP	SOUTHBOUND PORTAL
SCADA	SUPERVISORY CONTROL AND DATA ACQUISITION
SM	SINGLE MODE FIBER
SW	NETWORK SWITCH
TBD	TO BE DETERMINED
TBOX	TAP BOX
TD	TECHNOLOGY DEPARTMENT
TLCS	TUNNEL LIGHTING CONTROL SYSTEM
TLCP	TUNNEL LIGHTING CONTROL PANEL
TMC	TRAFFIC MANAGEMENT CENTER (LOCATED IN COLUMBUS)
TR	TRIAD
TVCS	TUNNEL VENTILATION CONTROL SYSTEM
U	RACK UNIT (1¾" HEIGHT)
UPS	UNINTERRUPTIBLE POWER SUPPLY
VLAN	VIRTUAL LOCAL AREA NETWORK
VoIP	VOICE OVER INTERNET PROTOCOL
WAN	WIDE AREA NETWORK
WS	WORK STATION
ZS	POSITION SWITCH

ELECTRICAL SYMBOLS:	DEFINITION:
LC	LIGHTING CONTACTOR
	GENERAL ENCLOSURE OR DEVICE
	MOMENTARY CONTACT PUSH BUTTON NORMALLY OPEN
	MOMENTARY CONTACT PUSH BUTTON NORMALLY CLOSED
	NORMALLY OPEN CONTACT
	NORMALLY CLOSED CONTACT
	TEMPERATURE SWITCH
	LIMIT SWITCH OR TORQUE SWITCH
	INDICATING PILOT LIGHTS W - WHITE B - BLUE R - RED A - AMBER G - GREEN C - CLEAR
	DOOR POSITION LIMIT SWITCH
CR	CONTROL RELAY COIL
	FUSE TERMINAL BLOCK
	PLUG-IN STYLE TERMINAL BLOCK
	FEED THROUGH TERMINAL BLOCK
	CONNECTION TO EQUIPMENT GROUND BUS
	CONNECTION TO ISOLATED GROUND BUS
	CIRCUIT BREAKER
	SIGNAL CABLE TWISTED PAIR WITH SHIELD
	FUSION SPLICE
JB	JUNCTION BOX
	RESIN SPLICE
	CISCO STACKING CABLES
	TERMINAL BLOCK (AS SPECIFIED PER DRAWING)
	TERMINAL BLOCK / JUMPER (AS SPECIFIED PER DRAWING)

NETWORKING SYMBOLS:	DEFINITION:
	NETWORK SWITCH
	FIREWALL
	FILE SERVER
	NETWORK ACCESSIBLE STORAGE (NAS)
	ETHERNET AND HARDWIRED DEVICE
	SCADA WORK STATION
	OPERATOR INTERFACE TERMINAL
PDU	POWER DISTRIBUTION UNIT (PDU)
	IP PHONE
PTZ	PAN TILT ZOOM CAMERA (PTZ)
	CAMERA
PLC	MICRO PLC
PLC	PROGRAMMABLE LOGIC CONTROLLER (PLC)
REMOTE I/O	REMOTE INPUT AND OUTPUT (I/O)
PATCH	FIBER PATCH PANEL

RACEWAYS NETWORKING:	DEFINITION:
	CATEGORY 6 COPPER CABLE (CAT6)
	FIBER OPTIC PATCH CABLE
	DESIGNATE REDUNDANT LINK

RACEWAYS ELECTRICAL:	DEFINITION:
	PANEL WIRE (INTERIOR)
	PANEL WIRING (EXTERIOR)
	FLEXIBLE TUBING
	CROSS-HATCHED LINEWORK INDICATES EXISTING INSTALLATION TO BE REMOVED.

CABLE TAGGING

W-XXXX-YY

CABLE TAG, DESIGNATIONS:
FOR 'W':
H - POWER (>5kVAC)
M - POWER (601-4999VAC)
P - POWER (241-600VAC)
L - POWER (51-240VAC)
D - DC POWER
C - CONTROL (TO A STARTER)
I - INSTRUMENTATION (TO A PLC)
E - EMERGENCY SHUT DOWN
F - FIBER OPTIC COMMUNICATIONS
O - OTHER COMMUNICATIONS
G - GROUNDING
FOR 'XXXX':
EQUIPMENT REFERENCE
FOR 'YY':
ALPHANUMERIC SUFFIX AS NEEDED

DESIGN AGENCY
HATCH MOTT MacDONALD
18013 CLEVELAND PKWY.
SUITE 200
CLEVELAND, OH 44135

DESIGNED	DRAWN	REVIEWED	DATE
MS	MS	RF	08/19/14
CHECKED	REVISED	STRUCTURE FILE NUMBER	
KS	CZ	3106578	

SCADA - SYMBOLS DESCRIPTIONS AND LEGENDS
BRIDGE NO. HAM-71-0134
I-71 LYTLE TUNNEL UNDER LYTLE PARK

HAM-71-01.34
PID No. 87268

c:\pwworking\hnm\external\ty16147O.dms72703\071_0134CES301.dgn 10/27/2014 12:54:02 PM TYN16147O

ITEM 633 - CONTROLLER ITEM, MISC.: NETWORKING HARDWARE AND MEDIA

PART 1 - GENERAL PROVISIONS

A. **GENERAL**
B. **STANDARDS AND QC**
C. **SUBMITTALS**
D. **CONSTRUCTION**
E. **DISCONNECTING EXISTING SERVICES**

1.1 GENERAL:

A. THE CONTRACTOR SHALL FURNISH ALL LABOR, EQUIPMENT AND MATERIALS, AND PERFORM ALL OPERATIONS REQUIRED TO INSTALL THE NETWORK AND SCADA SYSTEMS INFRASTRUCTURE. THE CONTRACTOR SHALL FURNISH ALL ENCLOSURES, SWITCHES, TERMINATIONS, AND SIMILAR DEVICES NECESSARY FOR THE COMPLETE INSTALLATION. THE SYSTEM SHALL INCLUDE, BUT NOT BE LIMITED TO ALL NETWORKING, MONITORING, CONTROL, DATA ACQUISITION, COMMUNICATION, TESTING AND VALIDATIONS, QUALITY ASSURANCE/QUALITY CONTROL, EQUIPMENT, POWER SUPPLIES, FITTINGS, AND ALL OTHER ACCESSORIES REQUIRED TO PROVIDE A FULLY OPERATIONAL AND FUNCTIONAL SYSTEM.

B. BEFORE BEGINNING ANY WORK UNDER THE CONTRACT, THE CONTRACTOR SHALL BECOME FAMILIAR WITH THE SITE AND CURRENT CONDITIONS AND SHALL BECOME RESPONSIBLE FOR THE PROPER CARE AND MAINTENANCE OF ALL THE SYSTEMS UNTIL COMPLETE SWITCH OVER AND DEMOLITION OF THE EXISTING FACILITIES. THE INTENTION OF THE PROJECT IS TO MINIMIZE IMPACTS TO THE EXISTING FACILITIES UNTIL THE NEW ARE BUILT AND FULLY OPERATIONAL.

C. FOR ALL EQUIPMENT, WORK, LABOR, AND MATERIAL CONFORM TO THE STANDARD DRAWINGS, SPECIFICATIONS, AND SUPPLEMENTAL SPECIFICATIONS.

1.2 STANDARDS AND QC:

A. REFERENCE STANDARDS SHALL INCLUDE, BUT NOT LIMITED TO, THE FOLLOWING:
1. NATIONAL FIRE PROTECTION ASSOCIATION (NFPA) 502, ROAD TUNNELS, BRIDGES, AND OTHER LIMITED HIGHWAYS.
2. NATIONAL FIRE PROTECTION ASSOCIATION (NFPA) 72,
3. NATIONAL ELECTRICAL CODE (NEC) 70 AND 70E
4. THE INSTITUTE OF ELECTRICAL AND ELECTRONICS ENGINEERS (IEEE)
5. OCCUPATIONAL SAFETY & HEALTH ADMINISTRATION (OSHA)
6. OHIO DEPARTMENT OF TRANSPORTATION (ODOT) STANDARDS
7. INTERNATIONAL SOCIETY OF AUTOMATION (ISA)
8. TELECOMMUNICATIONS INDUSTRY ASSOCIATION (TIA)
9. BUILDING INDUSTRY CONSULTING SERVICE INTERNATIONAL (BICSI)
10. AMERICAN SOCIETY FOR TESTING AND MATERIALS (ASTM):

B. THE SYSTEM SHALL COMPLY WITH ALL STATE AND LOCAL CODES WITHOUT EXCEPTION. THE INSTALLATION SHALL BE MADE IN ACCORDANCE WITH APPLICABLE PROVISIONS OF THE REFERENCED STANDARDS, LATEST EDITIONS, AS WELL AS THE EQUIPMENT MANUFACTURERS' INSTALLATION INSTRUCTIONS.

C. THE CONTRACTOR SHALL VERIFY THAT ALL NETWORK HARDWARE IS CONFIGURED AS PER THE MANUFACTURER'S RECOMMENDED PRACTICES PRIOR TO PROCEEDING WITH THE FACTORY ACCEPTANCE TESTS AND FINAL COMMISSIONING OF THE PROJECT.

D. THE CONTRACTOR SHALL VERIFY THAT ALL NETWORK MEDIA (CABLES) SHALL BE FROM THE SAME MANUFACTURER AND SHALL CONTAIN NO FACTORY SPLICES. CABLES SHALL BE TESTED AT RECEIVING, AFTER INSTALLATION AND UPON COMPLETING ALL CONNECTIONS. PARTICULAR ATTENTION IS FOR FIBER OPTICAL CABLE TESTING, EACH EXPECTED TO BE 100% ATTENUATION TESTED IN THE FACTORY (PRIOR SHIPPING) AND PRIOR INSTALLATION AT THE SITE.

E. ALL ELECTRICAL COMPONENTS SHALL BE CSA APPROVED AND/OR LISTED UNDER THE APPROPRIATE CATEGORY BY UNDERWRITERS' LABORATORIES, INC. (UL), AND SHALL BEAR THE "FM" AND/OR "UL" LABELS.

1.3 SUBMITTALS:

A. THE FOLLOWING SUBMITTALS SHALL BE MADE A MINIMUM OF THIRTY (30) CALENDAR DAYS PRIOR TO THE START OF CONSTRUCTION WORK:
B. SHOP DRAWINGS FOR THE NETWORKING, MONITORING, CONTROL AND DATA ACQUISITION INFRASTRUCTURE.
C. CATALOG INFORMATION AND DESCRIPTIVE LITERATURE OF ALL COMPONENTS, WIRING DIAGRAMS, AND PANEL LAYOUT DRAWINGS SHOWING DIMENSIONS FOR ALL DEVICES.
D. CALCULATIONS SHOWING THE NETWORK BANDWIDTH AVAILABILITY FOR THE WORST CASE OPERATION SCENARIO, E.G. REDUNDANCY LINK FAILURES.
E. RELIABILITY INDEX OF THE NETWORK FOR THE PROPOSED EQUIPMENT AND NETWORK CONFIGURATION, INCLUDING HEAT LOAD CALCULATIONS FOR EQUIPMENT CONTAINING ACTIVE ELECTRONIC COMPONENTS.
1. DETAILED LAYOUT OF EACH RACK.
2. PLC RACK LAYOUT
3. PLC PANEL LAYOUT
4. I/O LOOP DRAWINGS
5. WIRING DIAGRAMS
6. DETAILED CONTROL SCHEMATICS
7. DETAILED BILL OF MATERIALS

F. EQUIPMENT TECHNICAL AND PERFORMANCE INFORMATION SHALL INCLUDE, AS MINIMUM:
1. POWER AND GROUNDING REQUIREMENTS
2. INSTALLATION INSTRUCTIONS AND PRECAUTIONS
3. ENVIRONMENTAL REQUIREMENTS, HUMIDITY AND TEMPERATURE RANGE
4. WIRING REQUIREMENTS AND DETAILS
5. ENCLOSURE DIMENSIONS AND RATINGS
6. OPERATION AND MAINTENANCE MANUALS

G. THE FOLLOWING SUBMITTALS SHALL BE MADE A MINIMUM OF TRIRTY (30) CALENDAR DAYS PRIOR TO THE COMMISSIONING PROCESS:
H. FAT (FACTORY ACCEPTANCE TEST) PROCEDURE
I. SAT (SITE ACCEPTANCE TEST PROCEDURE)
J. REVISED FUNCTIONAL DESCRIPTION
K. THE FOLLOWING DOCUMENTATION SHALL BE SUBMITTED A MINIMUM OF TRIRTY (30) DAYS AFTER THE SUCCESSFUL COMMISSIONING OF THE WORK
1. AS BUILT/RECORD DRAWINGS
2. USER MANUALS
3. OPERATIONS MANUAL
4. TRAINING MANUALS

1.4 CONSTRUCTION:

A. MANUFACTURER SHALL SUBMIT MANUFACTURER'S CERTIFICATION OF MATERIALS AND CERTIFICATE OF COMPLIANCE STATING THAT THE EQUIPMENT FURNISHED UNDER THIS CONTRACT MEETS THE CONTRACT REQUIREMENTS.

B. THE CONTRACTOR SHALL SUBMIT FOR APPROVAL A SCHEDULE INDICATING THE INSTALLATION SEQUENCE, COORDINATION WITH THE EXISTING OPERATIONS AND DETAILED SWITCH OVER PROCEDURE. PROJECTED DATES OF DELIVERY OF THE EQUIPMENT TO BE SUPPLIED, INSTALLATION COMPLETION, DEMONSTRATION TEST AND FINAL TEST/ACCEPTANCE DATES SHALL BE INCLUDED.

C. THE CONTRACTOR SHALL BE RESPONSIBLE FOR INSTALLATION, START-UP AND COMMISSIONING OF A FULLY OPERATIONAL AND FUNCTIONAL SYSTEM AS SHOWN IN THE CONTRACT DRAWINGS AND SPECIFIED HEREIN. FURTHERMORE, THE FINAL CONFIGURATION OF THE NETWORKS AND ITS COMPLIANCE WITH THE CONTRACT REQUIREMENTS AND THE OWNER'S MINIMUM STANDARD EXPECTATIONS SHALL BE THE SOLE RESPONSIBILITY OF THE CONTRACTOR. THE CONTRACTOR SHALL ENSURE THAT THE CABLE IS NOT DAMAGED DURING STORAGE AND INSTALLATION.

D. THE CONTRACTOR SHALL SUBMIT FOR APPROVAL CABLE INSTALLATION PLAN. THE PLAN SHALL INCLUDE INSTALLATION SET UP INCLUDING SIZE AND TYPE OF ROLLERS, FEEDER GUIDES, TENSION GAUGE MAKE AND MODEL NUMBER, ATTACHMENT OF PULLING JUG TO JACKET AND DIRECTION OF PULL. MAXIMUM PULLING TENSIONS AND CORRESPONDING METHOD OF ATTACHMENT OF PULLING GRIP TO THE CABLE SHALL BE DEFINED. ONLY MANUFACTURER'S APPROVED PULLING LUBRICANTS AND METHOD OF INSTALLATION WILL BE PERMITTED. SLACK (MINIMUM 30 FT FOR FIBER OPTIC CABLES) SHALL BE LEFT IN PULL BOXES AND ENCLOSURES REQUIRED FOR TERMINATION AND SPLICE ENCLOSURE PREPARATION. PRIOR TO THE INSTALLATION OF CABLE, THE CONTRACTOR SHALL CLEAN EXISTING CONDUITS, IF REUSED, AND CHECK IF NEW CONDUITS HAVE BEEN PROPERLY INSTALLED, FREE OF DEBRIS AND INCLUDE PULL WIRES.

E. WHEN USING LUBRICANTS, THE CONTRACTOR SHALL USE AMERICAN POLYWATER TYPE F, GARDNER BENDER POLY GEL™, PT TECHNOLOGIES TECHLUBE-FO, OR APPROVED EQUAL OPTICAL FIBER CABLE PULLING LUBRICANT AND SHALL ADHERE TO THE MANUFACTURER'S REQUIREMENTS FOR THE PROPER AMOUNT, APPLICATION METHOD AND TOOLS, AND REMOVAL OF LUBRICANT FROM EXPOSED CABLE.

F. A BREAKAWAY SWIVEL SHALL BE USED TO ENSURE THAT THE MAXIMUM TENSION OF THE CABLE IS NOT EXCEEDED. THE BREAKAWAY SWIVEL SHALL BE IN ADDITION TO A CALIBRATE DEVICE TO MEASURE TENSION SUCH AS A DYNAMOMETER OR IN-LINE TENSION METER.

G. SLACK CABLE SHALL BE NEATLY RACKED AND SECURED EITHER IN THE PULL BOX OR CABINET SUCH THAT ITS MINIMUM BEND RADIUS IS MAINTAINED AND MAXIMUM PROTECTION IS PROVIDED.

H. FIBER OPTIC CABLE SHALL NOT BE INSTALLED UNTIL ALL OF THE REQUIREMENTS LISTED HEREIN HAVE BEEN SUBMITTED AND ACCEPTED BY THE ENGINEER. SPECIFICALLY, THE FIGURE-EIGHT

c:\pwworking\hnm\external\tyn61470\dms72703\071_0134CES303.dgn 10/27/2014 12:54:05 PM TYN61470

DESIGN AGENCY
HATCH MOTT MacDONALD
18013 CLEVELAND PKWY.
SUITE 200
CLEVELAND, OH 44135

DESIGNED	DRAWN	REVIEWED	DATE
OA	MS	RF	08/19/14
CHECKED	REVISED	STRUCTURE FILE NUMBER	
CS	DC	3106578	

SCADA – NETWORK SPECIFICATIONS – SHEET 1 OF 5
BRIDGE NO. HAM-71-0134
I-71 LYTLE TUNNEL UNDER LYTLE PARK

HAM-71-01.34
PID No. 87268

CONFIGURATION SHALL BE USED WHERE CABLE LENGTHS OF GREATER THAN 100 FEET MUST BE UNREELED OR BACK FED. THE FIGURE-EIGHT LOOPS SHOULD BE APPROXIMATELY FIFTEEN (15) FEET IN LENGTH WITH THE DIAMETER OF EACH LOOP FIVE (5) TO EIGHT (8) FEET.

I. ONLY TRAINED AND CERTIFIED PERSONNEL SHALL BE INVOLVED IN THE SPECIFIC TASKS TO MEET THE FOLLOWING REQUIREMENTS:
   1. SPLICERS SHALL HAVE BEEN TRAINED AND CERTIFIED IN OPTICAL FIBER SPLICING PROCEDURES BY THE MANUFACTURER OF THE FIBER OPTIC SPLICE MATERIAL/EQUIPMENT.
   2. INSTALLERS SHALL HAVE BEEN TRAINED AND CERTIFIED IN OPTICAL FIBER CABLE INSTALLATION AND HANDLING PROCEDURES BY THE MANUFACTURER OF THE OPTICAL FIBER CABLE USED.
   3. TESTERS SHALL HAVE BEEN TRAINED AND CERTIFIED BY THE MANUFACTURER OF THE OPTIC FIBER TEST EQUIPMENT USED IN PERFORMING THE TESTS.
   4. CERTIFICATION FROM AN APPROPRIATE TRAINING ORGANIZATION (E.G., BICSI) MAY BE SUBSTITUTED FOR MANUFACTURER-SPECIFIC TRAINING, SUBJECT TO APPROVAL OF THE ENGINEER.

J. THE CONTRACTOR SHALL SUBMIT PROOF OF THE EXPERIENCE REQUIREMENTS DEFINED BELOW, INCLUDING RESUMES LISTING THE PERSON'S NAME, ADDRESS, TELEPHONE NUMBER, PROOF OF APPROPRIATE TRAINING AND PROJECTS WORKED ON AND THE NAMES OF REFERENCES WHO CAN BE CONTACTED REGARDING THE INSTALLED OPTICAL FIBER SYSTEMS. PERSONNEL INVOLVED IN THE INSTALLATION, SPLICING AND TESTING OF THE OPTICAL FIBER CABLE SHALL HAVE, AS THE MINIMUM, THE FOLLOWING REQUIREMENTS:
   1. FIVE (5) YEARS' EXPERIENCE IN THE INSTALLATION OF OPTICAL FIBER CABLE INCLUDING FUSION SPLICING, TERMINATING AND TESTING OF SINGLE MODE FIBER;
   2. INSTALLED A MINIMUM OF FIVE (5) SYSTEMS WHERE THE OPTICAL FIBER CABLE HAS BEEN INSTALLED BOTH OUTDOORS AND INDOORS IN CONDUIT AND WHERE THE SYSTEMS HAVE BEEN IN CONTINUOUS OPERATION FOR AT LEAST TWO YEARS.

K. ALL RACKS SHALL BE MOUNTED FIRMLY TO THE GROUND SURFACE OR SIDE WALL AT ANY LOCATION. AN ACCESS TO EQUIPMENT AND CABLING SHALL BE PROVIDED FROM THE TOP, FRONT AND REAR OF THE RACKS.

L. THE CONTRACTOR SHALL PROVIDE NECESSARY CABLE MANAGEMENT. RACK INSTALLATION SHOULD NOT INTERFERE WITH ANY EXISTING EQUIPMENT. CONTRACTOR SHALL SUPPLY EQUIPMENT AND INSTALL ACCORDING TO THE CONTRACT DOCUMENTS AND IN ACCORDANCE WITH THE MANUFACTURER'S RECOMMENDATIONS.

M. CONTRACTOR SHALL PROVIDE IDENTIFICATION NAMEPLATES FOR ALL HARDWARE AS PER THE CONTRACT DRAWINGS AND IN ACCORDANCE TO RELATED ODOT STANDARD.

N. UPON COMPLETION OF THE DEMONSTRATION TEST AND THE CORRECTION OF ANY DEFICIENCIES, THE CONTRACTOR SHALL SUBMIT A COMPLETE SET OF REPRODUCIBLE "AS-BUILT" DRAWINGS WHICH SHALL INCLUDE ORIGINAL MANUFACTURER'S SPECIFICATIONS, CONSTRUCTION DETAILS AND INSTALLATION INSTRUCTION SHEETS.

1.5 DISCONNECTING EXISTING SERVICES:

A. IN ORDER TO ENSURE CONTINUOUS TUNNELS OPERATIONS, THE EXISTING COMMUNICATION INFRASTRUCTURE SHALL REMAIN OPERATIONAL UNTIL THE NEW INFRASTRUCTURE IS BUILT, TESTED AND READY FOR USE. THE CONTRACTOR SHALL SUBMIT DETAILS ABOUT THE SWITCHOVER PROCEDURE FOR APPROVAL. UPON SUCCESSFUL SWITCHOVER AND TRIAL PERIOD, THE CONTRACTOR SHALL REMOVE ALL THE NETWORKING EQUIPMENT NOT IN USE AND RELATED CABLING WITHOUT AFFECTING THE CURRENT OPERATIONS. THE CONTRACTOR SHALL COORDINATE WITH ODOT/ITS PERSONNEL FOR ALL RELATED EQUIPMENT REMOVALS.

PART 2 - TECHNICAL PROVISIONS

A. **DESCRIPTION**
B. **RESPONSIBILITY FOR MATERIAL**
C. **RACKS**
D. **FIBER OPTIC PATCH PANELS**
E. **ETHERNET SWITCHES**
F. **CABLING**

2.2 DESCRIPTION:

A. THIS WORK COVERS THE FURNISHING OF ALL NECESSARY LABOR, MATERIAL, AND EQUIPMENT REQUIRED TO ESTABLISH OPERATIONAL NETWORKING AND ALL INTERFACES. THIS WORK CONSISTS OF UNLOADING OF EQUIPMENT AND MATERIAL, PROPER STORAGE OF ALL ELECTRONIC EQUIPMENT, LOCATING ALL UTILITIES AND CONNECTING POINTS, LAYING AND TERMINATING ALL CABLES, INSTALLING REQUIRED SOFTWARE AND TOOLS AND UPON SUCCESSFUL COMMISSIONING AND START DECOMMISSION AND REMOVE ALL THE EXISTING PARTS REPLACED BY THIS CONTRACT.

2.3 RESPONSIBILITY FOR MATERIALS:

A. SCHEDULE THE DELIVERY OF ALL MATERIAL, INCLUDING EQUIPMENT, CABLING AND FITTINGS. BE RESPONSIBLE FOR ALL MATERIAL FURNISHED. FURNISH CERTIFICATION, ANALYSIS, AND CHARACTERISTICS OF ALL MATERIAL. ALL MATERIALS THAT WILL BE EXPOSED TO WEATHER AND EXTERNAL CONDITIONS MUST BE ACCOMPANIED BY CERTIFICATION PRIOR TO APPROVAL AND INSTALLATION.

2.4 RACKS:

A. ALL RACKS SHALL BE MANUFACTURED BY HOFFMAN OR APPROVED EQUAL. RACKS SHALL HAVE ADJUSTABLE MOUNTING DEPTH, LOCKABLE DOORS, SIDE PANELS, REAR CABLE MANAGEMENT CHANNELS AND ROOF (FOR INDOOR) AND BASE (FOR OUTDOOR) CABLE ACCESS. RACKS NOT CONTAINING HEAT PRODUCING EQUIPMENT SHALL BE SEALED TO PREVENT THE ENTRY OF DUST. ALL RACKS CONTAINING HEAT PRODUCING EQUIPMENT SHALL BE SUPPLIED WITH FORCED AIR COOLING SYSTEMS. ALL FORCED AIR COOLING SYSTEMS SHALL BE FILTERED.

B. ALL RACKS SHALL INCLUDE PDU (POWER DISTRIBUTION UNITS), WIRE MANAGEMENT SYSTEMS, SHELVES, AND FILLER PLATES SHALL BE AS PER MANUFACTURER'S RECOMMENDATIONS, SHALL HAVE ADJUSTABLE MOUNTING DEPTH AND SHALL BE LOCKABLE. DOORS AND SIDE PANELS SHALL HAVE NUMBERED POSITIONS. POWDER COAT PAINT FINISH SHALL BE USED.

2.5 FIBER OPTIC PATCH PANELS:

A. ALL PATCH PANELS SHALL BE IN ACCORDANCE WITH THE FIBER OPTIC CABLE MANUFACTURER SELECTED FOR THIS PROJECT AND FOR THE SPECIFIC TYPE OF CABLE BEING SUPPLIED FOR EACH SPECIFIC APPLICATION.

2.6 ETHERNET SWITCHES:

A. THE BASIS OF DESIGN FOR THE NETWORK HARDWARE IS SHOWN ON THE PROJECT PLANS. ALL NEW NETWORK HARDWARE SHALL BE BY THE SAME MANUFACTURER, CISCO OR APPROVED EQUAL.

B. THE NETWORK HARDWARE MANUFACTURER SHALL HAVE A NATIONALLY RECOGNIZED PROGRAM FOR IDENTIFYING QUALIFIED INDIVIDUALS TO CONFIGURE AND SUPPORT THE SUPPLIED NETWORK HARDWARE.

C. ALL SWITCHES SHALL BE L2 AND L3 CAPABLE AND SERVE ONLY DEDICATED NETWORKS, DESIGNATED AS FOLLOWS:
   1. SCADA (SUPERVISORY CONTROL AND DATA ACQUISITION) SWITCHES FOR INTERCONNECTIONS OF SCADA PROJECT COMPONENTS AND SERVING THE LOCAL CONTROL ROOM.
   2. GENERAL SWITCHES FOR INTERCONNECTIONS TO TRAFFIC MANAGEMENT CENTER (TMC) SURVEILLANCE CENTER IN COLUMBUS, OH FOR ALL PROJECT SURVEILLANCE AND VOIP PHONES.

D. EACH SWITCH IN THE FIELD SHALL HAVE TWO SEPARATE UPLINKS TO ITS CORRESPONDING UPPER LEVELS FOR REDUNDANCY CONNECTIONS. CONTRACTOR SHALL BE RESPONSIBLE TO ENSURE LINK LOSS BUDGET REMAINS WITHIN LIMIT VALUES FOR ALL PATHS IN THE PROJECT.

E. IP ADDRESSING SCHEME SHALL BE BASED ON SERVICE TYPE. E.G., CCTV WILL HAVE ITS OWN IP ADDRESS RANGE (FOR EXAMPLE /24) REGARDLESS OF THE CAMERA LOCATION. SAME APPROACH SHOULD BE FOLLOWED FOR VOIP AND ANY OTHER SERVICES SERVED FROM THE SWITCH. THE CONTRACTOR SHALL SUBMIT AS PART OF THEIR SHOP DRAWINGS SUBMISSION A COMPREHENSIVE DESCRIPTION OF THE ENTIRE IP ADDRESSING SCHEME, INCLUDING ALL NETWORKS. VLAN IMPLEMENTATION SHALL BE CLEARLY IDENTIFIED.

F. MAIN SCADA SWITCHES SHALL BE REDUNDANT AND STACKED WITH ITS REDUNDANT PAIR. REDUNDANCY PROTOCOLS FOR INTERCONNECTIONS SHALL MAKE THE TWO SWITCHES PERFORM AS A LOGICAL SINGLE UNIT. ALL SCADA FIELD DEVICES (PLC AND IP I/O) SHALL BE LINKED TO BOTH SCADA SWITCHES. THE REMOTE ACCESS LIST SHOULD BE SET AS TO WHO HAS REMOTE ACCESS. ONLY THE SSH (SECURE SOCKET SHELL) REMOTE CONNECTION WILL BE ALLOWED WITH A MAXIMUM OF THREE (3) LOGGING ATTEMPTS. AFTER THREE (3) ATTEMPTS THE LOGIN SESSION SHALL REMAIN CLOSED FOR ONE (1) HOUR.TWO UPLINKS FROM FIELD SWITCHES WILL GO AS AN ETHERCHANNELED LACP LINKS WITH TRUNK CONFIGURATION. PORT SECURITY SHALL BE IMPLEMENTED WITH "STICKY" OPTION, SHUTDOWN AS VIOLATION POLICY WITH LIMIT TO 1 (ONE) DEVICE, AND VIOLATION LOG SENT TO NETWORK MANAGEMENT SOFTWARE. TRUNK ENCAPSULATION WILL BE SET TO .1Q. VTP (VLAN TRUNKING PROTOCOL) MODE SHALL BE SET TO TRANSPARENT. DTP (DYNAMIC TRUNKING PROTOCOL) IS SET TO "NO NEGOTIATE" AND ONLY VLANS THAT EXIST ON THE FIELD SWITCH IS ALLOWED. ALL UNUSED PORTS

c:\pwworking\hnm\external\tyn61470\dms72703\071_0134CES304.dgn 10/27/2014 12:54:17 PM TYN61470

DESIGN AGENCY
HATCH MOTT MacDONALD
18013 CLEVELAND PKWY.
SUITE 200
CLEVELAND, OH 44135

DESIGNED	DRAWN	REVIEWED	DATE
OA	MS	RF	08/19/14
CHECKED	REVISED	STRUCTURE FILE NUMBER	
CS	DC	3106578	

SCADA - NETWORK SPECIFICATIONS - SHEET 2 OF 5
BRIDGE NO. HAM-71-0134
I-71 LYTLE TUNNEL UNDER LYTLE PARK

HAM-71-01.34
PID No. 87268

SHALL BE SET TO "SHUTDOWN" STATE. BOTH SYSLOG AND QOS SHALL BE ENABLED.

G. GENERAL SWITCHES SHALL FOLLOW ODOT'S ITS STANDARDS. ALL SWITCHES SHALL BE MULTICAST ENABLED.

H. TUNNEL NETWORKING INFRASTRUCTURE SHALL BE LINKED VIA A DEDICATED NODE LOCATED AT SOUTBOUND PORTAL SIDE, PROVIDED AND SUPPORTED BY ODOT/ITS. PROJECT LIMITS SHALL BE ESTABLISHED AT THE PATCH PANEL WITHIN THE SOUTHBOUND CABINET INCLUDING SUFFICIENT PATCH CABLE LENGTHS TO CONNECT TO ODOT/ITS NODE NEARBY.

2.7 CABLING:

A. ALL CABLES SHALL BE IDENTIFIED AND MARKED AS PER THE PROJECT DRAWINGS AND PROCEDURES. A DURABLE WEATHERPROOF TAG OR LABEL ON EACH REEL SHALL CONTAIN THE CABLE TYPE, REEL NUMBER MANUFACTURER, LENGTH OF CABLE CONTAINED ON THE REEL IN FEET AND THE CONTRACT IDENTIFICATIONS WITH SHIPPING RECORDS.

B. THE CABLE SHALL BE DELIVERED ON REELS WITHOUT SPLICES. TEN FEET OF EACH END OF THE CABLE SHALL BE ACCESSIBLE FOR TESTING AT THE CONTRACTOR'S FACILITY PRIOR TO INSTALLATION. BOTH ENDS OF THE CABLE SHALL BE SEALED TO PREVENT MOISTURE INGRESS.

C. WHEN ORDERING PRE-TERMINATED CABLES, INCLUDING THE OPTICAL FIBER PATCH PANEL WITH PRE-TERMINATED STUB CABLE, THE CONTRACTOR SHALL BE ENTIRELY RESPONSIBLE FOR DETERMINING THE PROPER LENGTH OF CABLE TO ENSURE THAT THE CABLE MAY BE INSTALLED WITHIN THE EXISTING AND AS-BUILT CABLE PATHWAYS AND MEET ALL SLACK AND BEND RADIUS REQUIREMENTS.

2.8 FIBER OPTIC CABLES:

A. ONLY OS2 SINGLE MODE (SM), DIELECTRIC LOOSE TUBE DESIGN, TOTALLY DRY (GEL FREE) CABLE SHALL BE USED, SUITABLE FOR AERIAL, DUCT, GENERAL PURPOSE HORIZONTAL APPLICATIONS. ALL CABLES SHALL BE BY THE SAME MANUFACTURER, CORNING CABLE SYSTEMS OR APPROVED EQUAL.

B. LASER-BASED GIGABIT ETHERNET OPERATION SHALL BE SUPPORTED. MAXIMUM ATTENUATION SHALL BE 0.4 DB/KM AT 1310/1383 NM AND 0.3 DB/KM AT 1550 NM. ATTENUATION SHALL BE UNIFORM WITH NO DISCONTINUITIES GREATER THAN 0.1 DB

C. ALL FIBERS SHALL BE ENCLOSED IN NON-CONDUCTIVE LOOSE BUFFER TUBES, WITH MAXIMUM OF SIX (6) FIBERS SHALL BE PLACED IN EACH BUFFER TUBE. EACH BUFFER TUBE CONTAINING FIBERS SHALL BE COLOR CODED IN ACCORDANCE WITH EIA/TIA 598-A. COLORS SHALL NOT CAUSE FIBERS TO STICK TOGETHER. EACH BUFFER TUBE SHALL CONTAIN A WATER-SWELL ABLE YARN OR WATER-BLOCKING ELEMENT TO PREVENT WATER AND MOISTURE PENETRATION, NONNUTRITIVE TO FUNGUS, ELECTRICALLY NON-CONDUCTIVE, AND HOMOGENOUS, FREE FROM DIRT OR FOREIGN MATTER. FILLER RODS SHALL BE USED TO FILL ALL UNUSED BUFFER TUBES, OR SHALL BE USED INSTEAD OF UNUSED BUFFER TUBES. THE FILLER RODS SHALL MAINTAIN THE CONCENTRICITY OF THE CABLE CROSS SECTION WHERE REQUIRED. BUFFER TUBES SHALL BE STRANDED AROUND THE CENTRAL STRENGTH MEMBER USING THE REVERSE OSCILLATION, OR "S-Z", STRANDING PROCESS. WATER SWELL ABLE YARNS SHALL BE APPLIED LONGITUDINALLY ALONG THE CENTRAL STRENGTH MEMBER DURING STRANDING. WATER BLOCKING ELEMENTS SHALL BE APPLIED UNIFORMLY THROUGHOUT EACH BUFFER TUBE. A RIPCORD SHALL BE PLACED UNDER THE SHEATH FOR EASY SHEATH REMOVAL.

D. ALL CABLE SHALL BE RATED AS LOW SMOKE/ZERO HALOGEN LSZH (OFN-LS). THE TEMPERATURE RATING OF THE CABLE SHALL BE (-40°F TO +158°F) FOR SHIPPING, STORAGE AND OPERATING; (-22°F TO +158°F) FOR INSTALLATION.

E. THE CABLE SHALL BE CAPABLE OF WITHSTANDING A MINIMUM BENDING RADIUS OF 10 TIMES ITS OUTER DIAMETER DURING OPERATION AND 15 TIMES ITS OUTER DIAMETER DURING INSTALLATION WITHOUT CHANGING THE CHARACTERISTICS OF THE OPTICAL FIBER.

F. THE CABLE MANUFACTURER SHALL CERTIFY THAT EACH REEL OF CABLE THAT IS FURNISHED MEETS OR EXCEEDS THE TEST REQUIREMENTS AS DEFINED BY EIA/TIA-455A FIBER OPTIC TEST PROCEDURES (FOTP).

G. CONNECTORS SHALL BE COMPLIANT WITH ANSI/TIA/EIA-568-B.3 OR LATER. ALL CONNECTORS SHALL HAVE A CERAMIC FERRULE. WHEN TESTED IN ACCORDANCE WITH FOTP-171, CONNECTORS SHALL BE CONSISTENTLY CAPABLE OF INSERTION LOSSES ≤ 0.3 DB (AVERAGE) AND ≤ 0.75 DB (MAXIMUM) WHEN INSTALLED IN ACCORDANCE WITH THE MANUFACTURER' RECOMMENDED PROCEDURE. THE CONNECTOR SHALL NOT REQUIRE POLISHING OF THE END-FACE IN THE FIELD. CONNECTORS SHALL HAVE A FACTORY-POLISHED FIBER STUB IN THE CONNECTOR FERRULE. THE CONNECTOR INSTALLATION SHALL NOT REQUIRE THE USE OF EPOXIES. THE CONNECTOR CRIMP-ON MECHANISM SHALL PROTECT THE BARE FIBER FROM THE INGRESS OF AIR OR WATERBORNE CONTAMINANTS AND SHALL SECURE THE FIBER IN THE FERRULE MICRO-HOLE.

H. PATCH CORDS WITHIN PANELS SHALL BE TWO (2) FIBER ASSEMBLIES MANUFACTURED BY THE SAME COMPANY AS THOSE MANUFACTURING THE PATCH PANELS AND FIBER OPTICAL CABLE. CONNECTORS SHALL BE FACTORY ASSEMBLED BY THE CABLE MANUFACTURER. PATCH CORDS SHALL NOT HAVE CONNECTORS APPLIED IN THE FIELD UNLESS AUTHORIZED BY THE ENGINEER AND THE CONNECTORS INSTALLED BY A TECHNICIAN TRAINED AND CERTIFIED BY THE CABLE MANUFACTURER.

I. FIBER CLOSET CONNECTOR HOUSING (CCH) SHALL BE USED (CCH PANEL DIN-MOUNTABLE FOR LIMITED HOUSING CASES OR CCH CASSETTE FOR CABINETS) AS INDICATED IN THE PLANS. CCH SHALL BE MANUFACTURED BY THE SAME COMPANY AS THOSE MANUFACTURING THE PATCH PANELS AND FIBER OPTICAL CABLE. SPLICE CASSETTES ARE REQUIRED FOR THE PROJECT (MAXIMUM 12 SPLICE CASSETTES PER HOUSING), LC CONNECTOR TYPE, INCLUDING PIGTAIL MODULE. CCH SHALL MEET ANSI/TIA/EIA-568A AND 606.

J. TABLE LISTING SHALL INCLUDE THE EXPECTED ATTENUATION BETWEEN TERMINATION POINTS OF ALL FIBERS INCLUDING LOSSES RESULTING FROM SPLICES AND CONNECTORS.

K. OPTICAL FIBER CABLE SHALL BE INSTALLED IN CONTINUOUS LENGTHS WITHOUT INTERMEDIATE SPLICES THROUGHOUT THE PROJECT EXCEPT WHERE SPLICES ARE INDICATED ON THE PLANS OR ACCEPTED BY THE ENGINEER. ALL SPLICING SHALL USE FUSION TECHNIQUES. SPLICES SHALL ONLY BE IN RE-ENTERABLE SPLICE ENCLOSURES MOUNTED IN PULL BOXES, JUNCTION BOXES, UNDERGROUND VAULTS OR CABINETS.

L. ONLY THE FIBERS DESIGNATED FOR SPLICING SHALL BE SPLICED. ALL OTHER FIBERS SHALL BE ROUTED THROUGH THE ENCLOSURE WITH AT LEAST TWELVE (12) INCHES OF SLACK LEFT WITHIN THE ENCLOSURE. ONLY BUFFER TUBES CONTAINING FIBERS TO BE SPLICED SHALL BE OPENED. THE OTHER TUBES SHALL BE NEATLY COILED AND STORED IN THE ENCLOSURE. EACH SPLICED FIBER SHALL BE PACKAGED IN A PROTECTIVE SLEEVE OR HOUSING. BARE FIBERS SHALL BE COMPLETELY RE-COATED WITH A PROTECTIVE RTV GEL OR SIMILAR SUBSTANCE, PRIOR TO APPLICATION OF THE SLEEVE OR HOUSING, SO AS TO PROTECT THE FIBER FROM SCORING, DIRT OR MICROBENDING. AVERAGE LOSS PER SPLICE SHALL NOT EXCEED 0.1 DB PER LINK. NO SPLICE LOSS ABOVE 0.15 DB SHALL BE PERMITTED. IF A SPLICE LOSS IS MEASURED TO EXCEED 0.15 DB DURING THE SPLICING PROCESS, IT SHALL BE REMADE UNTIL ITS LOSS FALLS BELOW 0.15 DB OR THE ENGINEER WAIVES THE 0.15 DB REQUIREMENT. EACH ATTEMPT SHALL BE RECORDED FOR PURPOSES OF ACCEPTANCE. IF THE AVERAGE LOSS PER SPLICE EXCEEDS 0 1 DB IN A LINK, SPLICES IN THE LINK SHALL BE REMADE UNTIL THE LOSS DOES NOT EXCEED 0.1 DB. ALL SPLICE LOSSES SHALL BE MEASURED WITH AN OTDR. TABULAR RECORDINGS OF THE LOSS AND CHART RECORDINGS OF THE SIGNATURE SHALL BE SUBMITTED TO THE ENGINEER FOR APPROVAL WITH A RECORD OF THE OTDR SETTINGS AND THE LOCATION OF THE OTDR WRITTEN ON THE TRACE.

M. THE END OF FIBERS TERMINATED IN A SPLICE ENCLOSURE (I.E. NOT ROUTED THROUGH OR SPLICED TO ANOTHER FIBER IN THE ENCLOSURE) SHALL BE SEALED IN ACCORDANCE WITH THE MANUFACTURER'S RECOMMENDATION.

N. ALL CONNECTORS SHALL BE FACTORY INSTALLED. CABLES SHALL EITHER BE ORDERED AS PART OF THE PATCH PANEL WITH PRE-TERMINATED STUB CABLE ASSEMBLIES, OR THE CONTRACTOR MAY FUSION SPLICE BULK CABLE TO FACTORY CONNECTORIZED PIGTAILS IN THE FIELD. DUST CAPS SHALL REMAIN ON THE CONNECTOR UNTIL READY FOR INSTALLATION.

O. WHERE FIBERS ARE TO BE TERMINATED IN A PATCH PANEL, A MINIMUM OF TEN (10) FEET OF FIBER SHALL BE LEFT IN THE PATCH PANEL. THIS FIBER SHALL BE RACKED SO AS NOT TO VIOLATE THE MINIMUM BEND RADIUS SPECIFICATION FOR THE FIBER. ALL CABLES ENTERING A PATCH PANEL OR SPLICE ENCLOSURE SHALL BE PERMANENTLY LABELED WITH THE CABINET OR SPLICE ENCLOSURE TO WHICH THE CABLE IS ROUTED TO/FROM. A COLOR CODE CHART WITH FIBER ASSIGNMENTS ON THE PATCH PANEL SHALL BE PROVIDED AT EACH CABINET. FIBER ASSIGNMENTS SHALL BE AS SHOWN ON THE PLANS.

P. THE INSERTION LOSS FOR COMPLETE CONNECTION TO THE TERMINAL EQUIPMENT SHALL NOT EXCEED A MEAN OF 0.75DB (MEAN FOR POPULATION OF ALL CONNECTORS MOUNTED IN A PANEL). NO CONNECTOR LOSS ABOVE 1.0 DB SHALL BE PERMITTED.

c:\pwworking\hmm\external\tyn61470\dms72703\071_0134CES305.dgn 10/27/2014 12:54:29 PM TYN61470

Q. PATCH CORDS SHALL BE INSTALLED BETWEEN TERMINATED FIBERS AS DESIGNATED IN THE PLANS. THE LENGTHS OF THE PATCH CORDS SHALL BE SUCH AS TO PROVIDE NEAT ROUTING AND SECURING, WITHOUT DOUBLING BACK, SO AS TO PREVENT MOVING OR SHIFTING OF THE CABLE. PATCH CABLES WITHIN THE CABINET HOUSING THE PATCH PANEL SHALL BE NEATLY ROUTED THROUGH THE PATCH PANEL GROMMET OPENING AND TIED-BACK IN THE CABINET TO PREVENT MOVEMENT OR INTERFERENCE WITH THE OPERATION OR MAINTENANCE OF OTHER EQUIPMENT. WHERE FIBER IS TERMINATED IN A SPLICE ENCLOSURE WITHOUT BEING SPLICED THROUGH, THE END OF THE FIBER SHALL BE COATED WITH A WATERPROOF SEALANT AND COILED WITHIN THE ENCLOSURE OBSERVING THE MINIMUM BEND RADIUS REQUIREMENT FOR THE FIBER.

2.9 COPPER CABLES:

A. SUBJECT TO COMPLIANCE WITH REQUIREMENTS, AVAILABLE MANUFACTURERS OFFERING PRODUCTS THAT MAY BE INCORPORATED IN THE WORK INCLUDE, BUT ARE NOT LIMITED TO BELDEN OR APPROVED EQUAL.

B. CATEGORY-6 CABLES SHALL HAVE FOUR, NO. 23 AWG, SOLID BARE COPPER, TWISTED PAIRS WITH OVERALL SHIELD AND DRAIN WIRE. CONDUCTORS SHALL HAVE FEP INSULATION. THE CABLE SHALL BE PLENUM RATED. CABLES SHALL BE RJ-45 COMPATIBLE.

C. CONTROL ANALOG SIGNAL CABLE (4-20 MA) SHALL BE NO.18 AWG TWISTED SHIELDED SINGLE PAIR TINNED COPPER STRANDED CONDUCTORS WITH TEFLON INSULATION. THE PAIR SHALL HAVE A MINIMUM LAY OF 2 INCHES PER TWIST. THE SHIELD SHALL BE ALUMINUM-POLYESTER WITH A NO. 20 AWG STRANDED TINNED COPPER DRAIN WIRE AND AN OVERALL TEFLON JACKET RATED AT 300 VOLTS. COLOR CODE SHALL BE RED AND BLACK.

D. CONTROL DISCRETE SIGNAL WIRE SHALL BE SOFT DRAWN COPPER CONFORMING TO ASTM STANDARD B-3. ALL WIRE SHALL BE SINGLE CONDUCTOR TYPE UNLESS OTHERWISE INDICATED. ALL WIRE SHALL BE STRANDED IN ACCORDANCE WITH ASTM STANDARD B-8. INSTRUMENTATION DISCRETE SIGNAL WIRE SHALL BE A MINIMUM OF NO. 14 AWG. WIRING WITHIN THE PANELS SHALL BE A MINIMUM OF NO. 16 AWG.

2.10 HMI/PLC (HUMAN MACHINE INTERFACE/PROGRAMMABLE LOGIC CONTROLLER) SOFTWARE

A. THE HUMAN MACHINE INTERFACE SOFTWARE IN THIS PROJECT SHALL BE GE INTELLIGENT PLATFORMS PROFICY HMI/SCADA – IFIX VERSION 5.8 OR APPROVED EQUAL. THE LISTING OF REQUIRED LICENSING IS AS FOLLOWS;
   1. SERVERS: I/O SERVERS WITH UNLIMITED TAGS QUANTITY – 2
   2. WORKSTATIONS: CLIENT LICENSING THAT SUPPORT UNLIMITED TAGSQUANTITY – 3
   3. PLC RSLOGIX 5000 VERSION

2.11 GENERAL

A. ALL COMPUTING EQUIPMENT LISTED IN THE SECTION BELOW ARE TO BE MANUFACTURED BY A 'TIER 1' MANUFACTURER THAT MAY INCLUDE HP, LENOVO OR DELL.

B. ALL COMPUTERS WITHIN THIS PROJECT ARE TO BE CONFIGURED USING WINDOWS BACKUP TO IMAGE THEIR SYSTEMS TO THE NETWORK ATTACHED STORAGE DEVICE INCLUDED WITHIN THE PROJECT.

2.12 SERVER SPECIFICATION (FOR MASTER AND BACKUP SCADA SERVERS)

A. CHASSIS WITH A MINIMUM CAPACITY FOR 8 – 3.5" HOT-PLUG HARD DRIVES
B. INTEL® XEON® E5-2643 3.30GHZ, 10M CACHE, 8.0GT/S QPI, TURBO, 4C, 130W, 1600MHZ BUS 16 GB RAM
C. RAID CONTROLLER WITH A MINIMUM OF 512MB CACHE
D. 4 – 1TB 7.2K RPM SATA 3GBPS 3.5IN HOT-PLUG HARD DRIVES CONFIGURED RAID 10
E. INTEL ETHERNET I350 DUAL-PORT 1GBPS SERVER ADAPTER
F. DUAL, HOT-PLUG, REDUNDANT POWER SUPPLIES, 495W EACH MINIMUM
G. RACK MOUNT KIT FOR 4-POST RACKS
H. DVD-ROM DRIVE, SATA
I. WINDOWS SERVER 2008 R2 SP1, STANDARD EDITION, X64 WITH 10 CALS

2.13 NETWORK ATTACHED STORAGE FOR BACKUP PURPOSES

A. NAS APPLIANCE POWERED BY AN INTEL® XEON E5-2403 1.8 GHZ QUAD CORE PROCESSOR, 8 GB MEMORY OR GREATER.
B. 2 - 1 GBPS ETHERNET INTERFACE (MINIMUM)
C. RAID CONTROLLER WITH A MINIMUM OF 512MB CACHE
D. CHASSIS WITH A MINIMUM CAPACITY FOR 12 – 3.5" HOT-PLUG HARD DRIVES
E. 8 – 2TB 7.2K RPM SATA 3GBPS 3.5IN HOT-PLUG HARD DRIVES CONFIGURED RAID 10
F. 750 WATTS, HOT PLUG REDUNDANT POWER SUPPLY

2.14 WORKSTATION/VIEW NODE SPECIFICATION (2 REMOTES)

A. INTEL® CORE™ I5-4670 PROCESSOR (QUAD CORE, 3.40GHZ TURBO, 6MB, W/ HD GRAPHICS 4600)
B. WINDOWS 7 PROFESSIONAL, MEDIA, 64-BIT, ENGLISH
C. 500GB 3.5INCH SATA (7.200 RPM) HARD DRIVE
D. 8GB (2X4GB) 1600MHZ DDR3 MEMORY
E. AMD RADEON™ HD 8490, 1GB DDR3, FH, 1 DP 1 DVI 16X DVD+/-RW
F. 24" LED MONITOR SUPPORTING 1080P RESOLUTION

2.15 LOCAL SCADA VIEW NODE SPECIFICATION

A. GE WOLVERINE III OR ENGINEER APPROVED EQUAL
B. PROCESSOR INTEL CORE I3 (4TH GEN) 4130 / 2.26 GHZ
C. OS WINDOWS 7 PRO 64-BIT OR ANY ELSE THAT'S COMPLIANT WITH CCTV SOFTWARE
D. MEMORY 2 X 2 GB
E. HARD DRIVE 64 GB SATAA SOLID STATE
F. VIDEO CARD HD GRAPHICS 4400
G. OPTICAL DRIVE N/A
H. MONITOR 15" XGVA 1024X768, 16.2 AMTFT LCD SPECIFICATION FOR CCTV OIT

2.16 GE WOLVERINE III OR ENGINEER APPROVED EQUAL

A. PROCESSOR: INTEL CORE I3 (4TH GEN) 4130 / 2.26 GHZ
B. OS WINDOWS 7 PRO 64-BIT OR ANY ELSE THAT'S COMPLIANT WITH CCTV SOFTWARE
C. MEMORY: 2 X 2 GB
D. HARD DRIVE: 64 GB SATAA SOLID STATE
E. VIDEO CARD: MOBILE GRAPHICS MEDIA ACCELERATOR (GMA) 4500 MHD
F. OPTICAL DRIVE: N/A
G. MONITOR: 15" XGVA 1024X768, 16.2 AMTFT LCD

2.17 PAGING SOFTWARE

A. THE CONTRACTOR SHALL PROVIDE, INSTALL AND CONFIGURE A PAGING SOFTWARE TO PAGE CRITICAL ALARMS TO SPECIFIC DEVICES AS SELECTED BY ODOT.
B. THE PAGING SOFTWARE SHALL BE INSTALLED ON THE SCADA SERVERS
C. THE PAGING SOFTWARE SHALL BE WIN911 BASIC 2014 OR ENGINEER APPROVED EQUAL

PART 3 - COMMISSIONING

3.1 FAT (FACTORY ACCEPTANCE TEST)

A. THE CONTRACTOR SHALL PROVIDE ALL LABOR, MATERIALS, EQUIPMENT AS REQUIRED TO PERFORM FACTORY ACCEPTANCE TESTING.

B. PROVIDE A DETAILED FACTORY ACCEPTANCE TEST PROCEDURES DOCUMENT THAT WILL INCLUDE BUT NO BE LIMITED TO:
   1. CONTROL AND MONITORING SYSTEM HARDWARE AND SOFTWARE
   2. COMPUTER HARDWARE AND SOFTWARE
   3. NETWORK HARDWARE AND MEDIA
   4. VIDEO SYSTEM AND RELATED CONTROL ROOM DISPLAYS
   5. TRAFFIC CONTROL DEVICES

C. THE CONTRACTOR SHALL SUBMIT INFORMATION ON THE FACTORY TESTING FACILITY AND PROCEDURES TO VERIFY THAT TESTING SHALL FULFILL THE REQUIREMENTS AS SPECIFIED HEREIN. SUBMITTAL SHALL BE MADE AT LEAST 30 CALENDAR DAYS IN ADVANCE OF ANY SCHEDULED TESTING AND SHALL INCLUDE DATES OF SCHEDULED TESTS.

D. FACTORY ACCEPTANCE TEST PROCEDURES DOCUMENT SHALL INCLUDE BUT NOT NECESSARILY BE LIMITED TO THE FOLLOWING:
   1. DETAILED DESCRIPTION OF THE EQUIPMENT TO BE INSTALLED AND TESTED AT THE CONTRACTOR FACILITIES.
   2. DETAILED DESCRIPTION OF EACH OF THE TESTS TO BE PERFORMED, STEP BY STEP AND ITS EXPECTED SYSTEM RESPONSE. THIS SHALL INCLUDE BUT NOT BE LIMITED TO THE FOLLOWING:
      A. FIELD I/O VERIFICATION
      B. SIMULATED SIGNALS
      C. REAL SIGNALS, I/O, COMMUNICATION, ETC.
      D. EXPECTED RESPONSES
      E. FIELD EQUIPMENT FAILURE SCENARIOS
      F. SYSTEM ALARMS

DESIGN AGENCY
HATCH MOTT MacDONALD
18013 CLEVELAND PKWY.
SUITE 200
CLEVELAND, OH 44135

DESIGNED	DRAWN	REVIEWED	DATE
MS	MS	RF	08/19/14
CHECKED	REVISED	STRUCTURE FILE NUMBER	
KS	CZ	3106578	

SCADA – NETWORK SPECIFICATIONS – SHEET 4 OF 5

BRIDGE NO. HAM-71-0134
I-71 LYTLE TUNNEL UNDER LYTLE PARK

HAM-71-01.34
PID No. 87268

c:\pwworking\hmm\external\tyn61470.dms727●3\071_0134CES306.dgn 10/27/2●14 12:54:37 PM TYN61470

G. PASS/FAIL CRITERIA

3. THE FAT PROCEDURE SHALL MAKE REFERENCE TO ALL APPLICABLE MATERIALS
   A. DETAILED DESIGN DRAWINGS
   B. SHOP DRAWINGS (APPROVED)
   C. PROCESS NARRATIVES
   D. SOFTWARE PROGRAMMING REQUIREMENTS
   E. NETWORK CONFIGURATION DOCUMENTS
   F. P&IDS
4. NETWORK PERFORMANCE CRITERIA
5. VIDEO SYSTEM PERFORMANCE CRITERIA
6. TRAFFIC CONTROL DEVICES PERFORMANCE CRITERIA

E. FACTORY TESTING FORMS FOR EACH OF THE SYSTEMS TO BE TESTED, FOR APPROVAL BY THE ENGINEER AND THE AUTHORITY.

F. THE APPROVED FORMS SHALL BE USED FOR RECORDING THE TEST RESULTS DURING THE PROCEDURE AND INCLUDE SPACES FOR ENGINEER, CONTRACTOR/INTEGRATOR AND ODOT/ITS SIGN-OFF.

1. AN ORIGINAL FORM PLUS FOUR COPIES SHALL BE REQUIRED. THE FOUR COPIES MAY BE IN DIGITAL FORMAT WITH DIGITAL SIGNATURES.
2. THE FORM SHALL BE SIGNED BY THE PROJECT MANAGER, WORKING FOR THE CONTRACTOR/CONTROL SYSTEM INTEGRATOR.

3.2 SAT (SAT ACCEPTANCE TEST),

A. THE CONTRACTOR SHALL SUBMIT INFORMATION ON THE SITE ACCEPTANCE TESTING INCLUDING BUT NOT LIMITED TO SCHEDULE, TESTING PROCESS SEQUENCING, AND PROCEDURES TO VERIFY THAT TESTING SHALL FULFILL THE REQUIREMENTS AS SPECIFIED HEREIN. SUBMITTAL SHALL BE MADE AT LEAST 30 CALENDAR DAYS IN ADVANCE OF ANY SCHEDULED TESTING AND SHALL INCLUDE DATES OF SCHEDULED TESTS.

B. THE SAT PROCEDURES DOCUMENT SHALL CONTAINED A COMPREHENSIVE SCHEDULE. THE SAT SCHEDULE MUST BE CONGRUENT WITH THE PROJECT IMPLEMENTATION SEQUENCING.

C. THE SAT PROCEDURES DOCUMENT SHALL INCLUDE A CONTINGENCY PLAN BY WHICH THE CONTROL SYSTEM INTEGRATOR SHALL DESCRIBE HOW THEY WILL MAINTAIN THE OPERATIONAL STATUS OF THE TUNNEL IN CASE OF FAILURE OF THE ONGOING TEST. THE CONTINGENCY PLAN SHALL CONSIDER GOING BACK TO THE PREVIOUS STATE IN ORDER TO MAINTAIN THE CONTINUOUS OPERATION OF THE TUNNEL.

D. SITE ACCEPTANCE TEST PROCEDURES DOCUMENT SHALL INCLUDE BUT NOT BE LIMITED TO THE FOLLOWING:

1. DETAILED DESCRIPTION OF THE EQUIPMENT TO BE INSTALLED AND TESTED
2. DETAILED DESCRIPTION OF EACH OF THE TESTS TO BE PERFORMED, STEP BY STEP AND ITS EXPECTED SYSTEM RESPONSE. THIS SHALL INCLUDE BUT NOT LIMITED TO THE FOLLOWING:
   A. FIELD I/O VERIFICATION
   B. COMMUNICATION, EXPECTED RESPONSES
   C. FIELD EQUIPMENT FAILURE SCENARIOS
   D. SYSTEM ALARMS
   E. PASS/FAIL CRITERIA
3. THE SAT PROCEDURE SHALL MAKE REFERENCE TO ALL APPLICABLE MATERIALS
   A. DETAILED DESIGN DRAWINGS
   B. SHOP DRAWINGS (APPROVED)
   C. PROCESS NARRATIVES
   D. SOFTWARE PROGRAMMING REQUIREMENTS
   E. NETWORK CONFIGURATION DOCUMENTS
4. NETWORK PERFORMANCE CRITERIA
5. VIDEO SYSTEM PERFORMANCE CRITERIA
6. VOIP PHONES PERFORMANCE CRITERIA
7. TRAFFIC CONTROL DEVICES PERFORMANCE CRITERIA

E. SITE TESTING FORMS FOR EACH OF THE SYSTEMS TO BE TESTED, FOR APPROVAL BY THE ENGINEER AND THE AUTHORITY.

F. THE APPROVED FORMS SHALL BE USED FOR RECORDING THE TEST RESULTS DURING THE PROCEDURE AND INCLUDE SPACES FOR ENGINEER, CONTRACTOR/INTEGRATOR AND ODOT/ITS SIGN-OFF.

G. AN ORIGINAL FORM PLUS FOUR COPIES SHALL BE REQUIRED. THE FOUR COPIES MAY BE IN DIGITAL FORMAT WITH DIGITAL SIGNATURES.

H. THE FORM SHALL BE SIGNED BY THE PROJECT MANAGER, WORKING FOR THE CONTRACTOR/CONTROL SYSTEM INTEGRATOR.

PART 4 - MEASUREMENT AND PAYMENT

4.1 MEASUREMENT:

A. NO MEASUREMENT SHALL BE MADE OF THE WORK OF THIS SECTION.

4.2 PAYMENT

A. PAYMENT FOR ITEM 633 – CONTROLLER, MISC.: COMMUNICATION MEDIUM (FIBER OPTIC CABLE, FIBER PATCH CABLES, CAT6 AND ACCESSORIES, FIBER TESTING) SHALL BE MADE AT THE LUMP SUM CONTRACT PRICE, INCLUDING BUT NOT LIMITED TO ALL WORK, LABOR, EQUIPMENT, AND MATERIALS NECESSARY TO COMPLETE THE WORK.

B. PAYMENT FOR ITEM 633 – CONTROLLER, MISC.: MAIN NETWORK CABINET INCLUDING NETWORK HARDWARE AND SOFTWARE, LOCAL HMI, SERVERS HARDWARE AND SOFTWARE, SUPPLY INTALLATION SHALL BE MADE AT THE LUMP SUM CONTRACT PRICE, INCLUDING BUT NOT LIMITED TO ALL WORK, LABOR, EQUIPMENT, AND MATERIALS TO COMPLETE THE WORK

C. PAYMENT FOR ITEM 633 – CONTROLLER, MISC.: MAIN PLC CABINET INCLUDING HARDWARE AND SOFTWARE, SUPPLY AND INTALLATION SHALL BE MADE AT THE LUMP SUM CONTRACT PRICE, INCLUDING BUT NOT LIMITED TO ALL WORK, LABOR, EQUIPMENT, AND MATERIALS TO COMPLETE THE WORK

D. PAYMENT FOR ITEM 633 – CONTROLLER, MISC.: SOUTH PORTAL COMM. RACK INCLUDING HARDWARE AND SOFTWARE, SUPPLY AND INTALLATION SHALL BE MADE AT THE LUMP SUM CONTRACT PRICE, INCLUDING BUT NOT LIMITED TO ALL WORK, LABOR, EQUIPMENT, AND MATERIALS TO COMPLETE THE WORK

E. PAYMENT FOR ITEM 633 – CONTROLLER, MISC.: NORTH PORTAL COMM. RACK HARDWARE AND SOFTWARE, SUPPLY AND INTALLATION SHALL BE MADE AT THE LUMP SUM CONTRACT PRICE, INCLUDING BUT NOT LIMITED TO ALL WORK, LABOR, EQUIPMENT, AND MATERIALS TO COMPLETE THE WORK

F. PAYMENT FOR ITEM 633 – CONTROLLER, MISC.: SCADA PROGRAMMING AND CONFIGURATION PLC/HMI (PROGRAMMABLE LOGIC CONTROLLER AND HUMAN MACHINE INTERFACE) PROGRAMMING AND CONFIGURATION, INCLUDING SCADA SERVERS, HISTORIAN, PAGING SOFTWARE AND NAS SHALL BE MADE AT THE LUMP SUM CONTRACT PRICE, INCLUDING BUT NOT LIMITED TO ALL WORK, LABOR, EQUIPMENT, AND MATERIALS TO COMPLETE THE WORK

G. PAYMENT FOR ITEM 633 – CONTROLLER, MISC.: DOCUMENTATION SUBMITTALS (SHOP DRAWINGS, CUT SHEETS, AS BUILT RECORD DRAWINGS, USER MANUALS, OPERATIONS MANUAL) AND TRAINING SHALL BE MADE AT THE LUMP SUM CONTRACT PRICE, INCLUDING BUT NOT LIMITED TO ALL WORK, LABOR, EQUIPMENT, AND MATERIALS TO COMPLETE THE WORK

H. PAYMENT FOR ITEM 633 – CONTROLLER, MISC.: HMI/PLC (HUMAN MACHINE INTERFACE/PROGRAMMABLE LOGIC CONTROLLER) TESTING AND COMMISSIONING, INCLUDING FACTORY ACCEPTANCE TEST (FAT), SITE ACCEPTANCE TEST (SAT) AND FINAL COMMISSIONING. SHALL BE MADE AT THE LUMP SUM CONTRACT PRICE, INCLUDING BUT NOT LIMITED TO ALL WORK, LABOR, EQUIPMENT, AND MATERIALS NECESSARY TO COMPLETE THE WORK.

c:\pwworking\hnm\external\tyn61470\dms72703\071_0134CES307.dgn 10/27/2014 12:54:54 PM TYN61470

DESIGN AGENCY
HATCH MOTT MacDONALD
18013 CLEVELAND PKWY.
SUITE 200
CLEVELAND, OH 44135

DESIGNED	DRAWN	REVIEWED	DATE
MS	MS	RF	08/19/14
CHECKED	REVISED	STRUCTURE FILE NUMBER	
KS	CZ	3106578	

SCADA - NETWORK SPECIFICATIONS - SHEET 5 OF 5

BRIDGE NO. HAM-71-0134
I-71 LYTLE TUNNEL UNDER LYTLE PARK

HAM-71-01.34
PID No. 87268

PROCESS NARRATIVE
(FUNCTIONAL DESCRIPTION)

PART 1 - BACKGROUND

AS PART OF THE LYTLE TUNNEL REHABILITATION PROJECT, A NEW SCADA (SUPERVISORY, CONTROL AND DATA ACQUISITION) SYSTEM WILL BE DEPLOYED TO MONITOR CONTROL AND COLLECT DATA RELATED TO THE TUNNEL VENTILATION SYSTEM (TVS), CARBON MONOXIDE (CO) MONITORING, LINEAR HEAT DETECTION, FACILITY FIRE ALARM, ANCILLARY SYSTEM, AND PERFORM THE TUNNEL SURVEILLANCE THROUGH THE NEW CLOSED CIRCUIT TELEVISION (CCTV) SYSTEM.

THIS PROCESS NARRATIVE PRESENTS THE GUIDELINES FOR PROGRAMMING THE SCADA SYSTEM. AS THUS, IT TAKES AS A BASE THE FUNTIONALITY SCENARIOS CONTAINED IN THE MECHANICAL PLANS AS PART OF THE SCOPE OF WORK THE CONTRACTOR SHALL REVIEW AND MARKE UP ACCORDINLGY. AN UPDATED PROCESS NARRATIVE SHALL BE SUBMITTED AS PART OF THE FAT AND SAT DOCUMENTATION.

PART 2 - PROCESS NARRATIVE

2.01 GENERAL

THE CO LEVEL IN THE TUNNELS ARE MONITORED BY CO DETECTORS LOCATED AT SEVERAL POINTS WITHIN THE TUNNEL AS WELL AS INSIDE THE FACILITY. THE CO LEVEL IS USED BY THE PROGRAMMABLE LOGIC CONTROLLER (PLC) TO AUTOMATICALLY START AND STOP THE FANS ACCORDING TO PRE-ESTABLISHED SETPOINTS. FURTHERMORE, FIRE IS DETECTED AND LOCATED BY THE LINEAR HEAT DETECTORS, WITHIN THE TUNNELS, WHICH COMMUNICATE WITH THE PLC TO TRIGGER AN ALARM IN THE HMI, ACTIVATE THE TUNNEL VENTILATION FANS AND ALSO TRIGGER THE TUNNEL CLOSURE PROCEDURE. OTHER STATUSES AND ALARMS RELATED TO THE SWITCHGEAR, AND OTHER ANCILLARY EQUIPMENT ARE ALSO MONITORED BY THE SCADA SYSTEM.

2.02 EQUIPMENT SUMMARY

THE TUNNEL INCLUDES THE FOLLOWING EQUIPMENT:

A. THREE FANS. TWO SPEED FANS (500/250 HP, WITH FORWARD/REVERSE OPTION) WITH THEIR CORRESPONDING SWITCHGEAR AND SOFT STARTERS
B. THREE TUNNEL ISOLATION DAMPERS
C. THREE FAN ISOLATION DAMPERS
D. EIGHT CARBON MONOXIDE DETECTORS
E. THREE LINEAR HEAT DETECTORS
F. PLC HARDWARE/SOFTWARE
G. HMI/SERVERS
H. HMI/CCTV
I. COMMUNICATION AND NETWORK HARDWARE

2.03 GENERAL PROCESS CONTROL STRATEGY

A. TUNNEL VENTILATION SYSTEM

1. THE TUNNEL VENTILATION FANS ARE AUTOMATICALLY STARTED AND STOPPED BASED ON CO LEVEL START AND STOP SETPOINTS AND BASED ON FIRE DETECTION.

2.04 CARBON MONOXIDE SYSTEM

A. GENERAL

1. NEW, SELF-CONTAINED ELECTRONIC CARBON MONOXIDE DETECTORS WILL CONTINUOUSLY SAMPLE THE AIR PRESENT IN THE SPACE SURROUNDING THE DETECTOR AND WILL PRODUCE A CONTINUOUS ANALOG 4-20 MA ELECTRICAL SIGNAL PROPORTIONAL TO THE CO CONCENTRATION IN THE AIR. THIS ANALOG SIGNAL WILL BE RECEIVED, INTERPRETED AND PROCESSED BY A REDUNDANT VENTILATION PLC.

2. TWO DETECTORS WILL BE MOUNTED IN EACH TUNNEL AND WILL BE LOCATED NEAR THE SAMPLE POINTS FOR THE EXISTING CO MONITORING SYSTEM, AT POINTS APPROXIMATELY ONE- THIRD AND TWO -THIRDS OF THE DISTANCES THROUGH THE TUNNELS. THE DETECTORS WILL BE EQUIPPED WITH RAIN GUARDS AROUND THE CELLS AND WILL BE INSTALLED SO THAT THEY WILL BE PROTECTED FROM DIRECT IMPINGEMENT OF WATER FROM A WATER HOSE. IN ADDITION TO THE SIX DETECTORS IN THE TUNNEL, ONE WILL BE INSTALLED IN THE TUNNEL VENTILATION PLENUM IN THE EXISTING TUNNEL VENTILATION FACILITY AND ONE IN NEW ELECTRICAL ROOM. THE DETECTORS SHALL BE SELF-CALIBRATING TYPE.

B. CARBON MONOXIDE MONITORING AND CONTROL FUNCTIONS ARE THREEFOLD:
1. TO PROVIDE CONTINUOUS VISUAL INDICATIONS OF THE CO LEVEL (IN PARTS PER MILLION (PPM) AT EACH OF THE MONITORING LOCATIONS.
2. TO AUTOMATICALLY START AND RUN THE TUNNEL VENTILATION FANS (AS APPROPRIATE) WHEN THE SETPOINT CONCENTRATION IS EXCEEDED.
3. TO INITIATE AN ALARM WHENEVER ANY DETECTOR READS A HIGH CO LEVEL FOR LONGER THAN AN ALLOWABLE TIME PERIOD.

2.05 TUNNEL VENTILATION SYSTEM

A. GENERAL

1. UNDER NORMAL CONDITIONS, THE THREE SETS OF TUNNEL ISOLATION DAMPERS WILL BE IN A CLOSED POSITION, THE THREE SETS OF FAN ISOLATION DAMPERS WILL BE IN A CLOSED POSITION, AND THE THREE FANS WILL BE STOPPED.

2. THE NEW TUNNEL VENTILATION SYSTEM WILL OPERATE USING THE THREE NEW TUNNEL VENTILATION FANS. EACH FAN WILL BE STARTED AND RUN BY A COMBINATION OF SOLID STATE SOFT STARTERS AND ELECTROMECHANICAL CONTACTORS. THE OVERALL SYSTEM OPERATION WILL BE CONTROLLED BY A NEW, REDUNDANT PLC SYSTEM TO BE INSTALLED IN THE NEW SWITCHGEAR LINEUP. THIS PLC WILL CONTINUOUSLY MONITOR THE FOLLOWING CRITICAL INPUTS TO DETERMINE SYSTEM OPERATIONS:

a. CO LEVEL IN I.R. - 71 SOUTHBOUND TUNNEL
b. CO LEVEL IN I.R. - 71 SB RAMP E TUNNEL TO THIRD STREET
c. CO LEVEL IN I.R. - 71 NORTHBOUND TUNNEL
d. FIRE ALARM STATUS IN I.R. -71 SOUTHBOUND TUNNEL
e. FIRE ALARM STATUS IN I.R. -71 SB RAMP E TUNNEL TO THIRD STREET
f. FIRE ALARM STATUS IN I.R. -71 NORTHBOUND TUNNEL

B. SYSTEM OPERATION BASED ON CARBON MONOXIDE LEVEL

1. THE PLC WILL RECEIVE A CONTINUOUS 4-20MA INPUT SIGNAL FROM EACH CARBON MONOXIDE DETECTOR, REPRESENTING THE HIGHEST MEASURED VALUE FOR A GIVEN TUNNEL. ONCE THE PLC HAS RECEIVED A VALUE IN EXCESS OF THE SYSTEM ON' THRESHOLD VALUE, THE PLC SHALL SEND OUTPUT SIGNALS TO THE FOLLOWING DEVICES:

a. AN ACTUATOR 'OPEN' SIGNAL TO THE APPROPRIATE TUNNEL ISOLATION DAMPER ACTUATOR FOR THE TUNNEL IN ALARM
b. AN ACTUATOR 'OPEN' SIGNAL TO THE APPROPRIATE FAN ISOLATION DAMPER ACTUATOR FOR THE FAN MOTOR ('X') TO BE USED
c. THE CONTROL LOGIC WILL VERIFY THAT BOTH DAMPERS ARE OPENED BEFORE SENDING THE RUN COMMAND TO THE FAN
d. FAN MOTOR RUN SIGNAL (TO STARTER CONTROL 'X') TO RUN THE MOTOR EITHER ON LOW OR HIGH SPEED, SUBJECT TO THE FIELD CONDITION.

2. THE FAN MOTOR WILL START BASED ON THE SCENARIOS CONTAINED IN SHEET 391. THE PLC WILL CONTINUE TO OPERATE THE FAN WHILE CONTINUOUSLY MONITORING THE 4-20 MA SIGNAL FROM THE CARBON MONOXIDE DETECTORS. IF THE CARBON MONOXIDE CONCENTRATION BEGINS TO DECAY/REDUCE, THE MOTOR SPEED WILL REMAIN CONSTANT UNTIL THE LEVEL HAS DROPPED BELOW THE MINIMUM THRESHOLD LEVEL FOR A MINIMUM TIME (15 MINUTES). IF THE CARBON MONOXIDE CONCENTRATION REMAINS CONSTANT OR CONTINUES TO RISE, ADDITIONAL FANS WILL START AS INDICATED IN SHEET 391. FANS WILL CONTINUE TO RUN UNTIL A REDUCTION IN CARBON MONOXIDE CONCENTRATION IS DETECTED. IF THE FAN IS OPERATING AT LOW SPEED AND CARBON MONOXIDE CONCENTRATIONS CONTINUE TO RISE OR REMAIN CONSTANT, A SECOND FAN MOTOR WILL START AT LOW SPEED. BOTH FANS WILL CONTINUE TO RUN AT LOW SPEED UNTIL CARBON MONOXIDE CONCENTRATIONS BEGIN TO REDUCE. THIS CONTINUOUS MONITOR / ADJUST PROCEDURE WILL CONTINUE WITH ADDITIONAL FANS COMING ON AS NECESSARY UNTIL THE CARBON MONOXIDE LEVELS HAVE BEEN SUFFICIENTLY REDUCED. THE FANS WILL RUN AT EITHER LOW SPEED OR HIGH SPEED.

3. OPERATING FANS AT DIFFERENT SPEEDS IS AVOIDED BY INTERLOCKS INSTALLED IN THE PLC.

4. FOLLOWING A RETURN TO NORMAL, SUSTAINED CARBON MONOXIDE CONCENTRATIONS, THE OVERALL OPERATION SYSTEM WILL RETURN TO ITS DORMANT STATE.

5. IN THE EXTREME CASE OF A HIGH CONCENTRATION OF THE CO, THE VENTILATION PLC SHALL RUN ALL 3 FANS AT HIGH SPEED AND THE PORTAL PLC SHALL TRIGGER A TUNNEL CLOSURE PROCEDURE.

C. SYSTEM OPERATION BASED ON FIRE ALARM STATUS

1. THE PLC WILL RECEIVE A SIGNAL FROM THE LINEAR HEAT DETECTOR CONTROL PANEL, WHICH WILL CONTINUOUSLY MONITOR EACH TUNNEL. ONCE THE PLC HAS RECEIVED A SIGNAL IDENTIFYING A FIRE ALARM CONDITION IN ONE OF THE THREE TUNNELS, THE PLC SHALL SEND OUTPUT SIGNALS TO THE FOLLOWING DEVICES:
a. FAN MOTOR RUN SIGNAL
b. AN ACTUATOR 'OPEN' SIGNAL TO THE APPROPRIATE TUNNEL ISOLATION DAMPER ACTUATOR FOR THE TUNNEL IN ALARM
c. AN ACTUATOR 'OPEN' SIGNAL TO THE ALL THREE FAN ISOLATION DAMPER ACTUATORS FOR THE FAN MOTORS TO BE USED

c:\pwworking\hmm\external\pre47802\dms72703\071_0134CES341.dgn 8/4/2015 12:03:10 PM PRE47802

DESIGN AGENCY
HATCH MOTT MacDONALD
18013 CLEVELAND PKWY.
SUITE 200
CLEVELAND, OH 44135

DESIGNED	DRAWN	REVIEWED	DATE
CZ	RL	RF	08/19/14
CHECKED	REVISED	STRUCTURE FILE NUMBER	
KS	TM	3106578	

SCADA - PROCESS CONTROL NARRATIVE - SHEET 1 OF 4
BRIDGE NO. HAM-71-0134
I-71 LYTLE TUNNEL UNDER LYTLE PARK

HAM-71-01.34
PID No. 87268

d. THE PORTAL PLC WILL TRIGGER A TUNNEL CLOSURE PROCEDURE

2. THE FAN MOTOR WILL START ON HIGH SPEED BASED ON THE SCENARIOS CONTAINED IN SHEET 391. THE PLC WILL CONTINUE TO RUN THE FANS AT HIGH SPEED UNTIL THE LINEAR HEAT DETECTOR PANEL IS MANUALLY RESET OR THE OPERATION OF THE FANS ARE MANUALLY OVERRIDDEN USING THE ON-SITE HUMAN MACHINE INTERFACE (HMI) OR THE REMOTE HMI AT THE CITY OF CINCINNATI DISPATCH CENTER HMI AND THE DISTRICT 8 OFFICE HMI IN LEBANON, OHIO.

3. IF THERE IS A FIRE IN ONE OF THE TUNNELS, ALL 3 FANS WILL SUPPLY/EXHAUST AIR TO THAT PARTICULAR TUNNEL. IF A SIMULTANEOUS FIRE OCCURS IN ANOTHER TUNNEL THE TVS WILL NOT SUPPLY/EXHAUST AIR TO THE LATTER TUNNEL IN EMERGENCY. FURTHERMORE, IF THE TVS IS OPERATING DUE TO AN EMERGENCY CONDITION IT WILL NOT RESPOND TO ANY OTHER INCIDENT, LIKE CO ALARMS FOR INSTANCE.

D. MANUAL SYSTEM OPERATION VIA THE HMI SYSTEM

1. THE FANS ARE CAPABLE OF BEING CONTROLLED ONSITE AUTOMATICALLY OR MANUALLY, OR REMOTELY VIA THE NEW HMI TO BE INSTALLED AS PART OF THIS PROJECT.

2. LOCAL ONSITE OPERATION WILL REQUIRE THE USER TO CHANGE THE AUTO-LOCAL SELECTOR SWITCH ON THE MOTOR CONTROLLER TO LOCAL CONTROLS. THIS WILL BYPASS THE PLC CONTROL AND WILL ALLOW THE USER TO START AND STOP THE FANS IN ANY DIRECTION AT ANY OF THE TWO SPEEDS AVAILABLE. A STATUS INDICATION WILL BE SHOWN ON THE HMI AT THE SITE AS WELL AS ON VARIOUS MONITORING POINTS ON THE SCADA SYSTEM.

3. AUTOMATIC ONSITE OR REMOTE OFFSITE OPERATION WILL REQUIRE THE USER TO CHANGE THE AUTO-LOCAL SELECTOR SWITCH ON THE MOTOR CONTROLLER TO "REMOTE" CONTROL. THIS ALLOWS THE MOTOR TO OPERATE USING INPUT DATA FROM THE PLC AND USER DIRECTED ACTION FROM THE HMI. THIS WILL BE THE PREFERRED METHOD FOR OPERATING THE VENTILATION SYSTEM. IN AUTOMATIC, THE SYSTEM WILL BE FULLY AVAILABLE FOR MONITORING AND CONTROL PURPOSES AT THE TUNNEL VENTILATION FACILITY (LOCAL HMI), THE CITY OF CINCINNATI DISPATCH CENTER HMI AND THE DISTRICT 8 OFFICE HMI IN LEBANON, OHIO.

4. WHEN ANY ALARM CONDITION IS DETECTED BY THE PLC, THE INFORMATION WILL BE TRANSMITTED TO THE HMI. THE COMPUTER WILL THEN COMMUNICATE VIA THE ITS FIBER OPTIC NETWORK RUN BETWEEN THE ITS CABINET AT THE SOUTHERN PORTAL OF THE TUNNELS. INFORMATION WILL BE SENT SIMULTANEOUSLY TO THE TUNNEL VENTILATION FACILITY (LOCAL HMI), THE CITY OF CINCINNATI DISPATCH CENTER HMI AND THE DISTRICT 8 OFFICE HMI IN LEBANON, OHIO. . A VIRTUAL PRIVATE NETWORK WILL BE USED AT BOTH THE TUNNEL VENTILATION FACILITY AND THE TWO REMOTE HMI STATIONS.

5. WHEN THE ALARM CONDITION HAS CLEARED, ANOTHER MESSAGE WILL BE LOGGED TO SHOW WHEN THE ALARM CONDITION RETURNED TO NORMAL.

PART 3 - SCADA PROGRAMMING REQUIREMENTS

3.01 VENTILATION CONTROL STRATEGY

REFER TO THE TYPICAL P&ID (071_0134CES334, 071_0134CES335 AND 071_0134CES336), PLUS THE ASSOCIATED ELECTRICAL AND MECHANICAL DRAWINGS.

A. NORMAL AUTOMATIC CO LEVEL CONTROL

1. THE VENTILATION CONTROL LOGIC FOR THIS TUNNEL IS BASED ON LEVEL CONTROL OF CO AND FIRE DETECTION AND CONTROL. BASED ON THE CO LEVEL READING AND OPERATOR LEVEL SET POINTS, THE PLC PROGRAMMED LOGIC CONTROLS THE OPERATION OF FAN(S).

2. THE FOLLOWING SCADA SETPOINTS ARE AVAILABLE FROM THE HMI TO CONTROL THE FAN DUTIES

TABLE 1: VENTILATION FAN DUTY SETPOINTS

DESCRIPTION	SETPOINT RANGE	DEFAULT VALUE
DUTY FAN 1	TV-F1, TV-F2, TV-F3	TV-F1
DUTY FAN 2	TV-F1, TV-F2, TV-F3	TV-F2
DUTY FAN 3	TV-F1, TV-F2, TV-F3	TV-F3
AUTO ALTERNATION	ENABLE/DISABLE	ENABLE

3. WHEN IN AUTO ALTERNATION MODE, THE FANS ARE AUTOMATICALLY ALTERNATED ON A CYCLE-BY-CYCLE BASIS SO AS TO EQUALIZE FAN USAGE BASED ON A DUTY TABLE PROGRAM IN THE PLC. THE PLC MONITORS THE FOLLOWING TO DETERMINE THE AVAILABILITY AND SELECTION OF THE DUTY FAN:
   a. FAN AUTO SELECTOR SWITCH POSITION
   b. FAN STATUS CONTACT (RUNNING OR OFF)
   c. FAN FAULT CONTACT

4. TABLE 2 INDICATES THE LEVEL SETPOINTS THAT WILL BE TRANSFERRED FROM THE SCADA COMPUTER TO THE PLC.

TABLE 2: VENTILATION FAN LEVEL AND SPEED SETPOINTS

DESCRIPTION	SETPOINT RANGE	DEFAULT VALUE
DUTY 1 START LOW SPEED	25-100 (CO PPM)	25
DUTY 2 START LOW SPEED	25-100 (CO PPM)	50
DUTY 3 START LOW SPEED	25-100 (CO PPM)	75
DUTY 1 STOP LOW SPEED	25-100 (CO PPM)	<25 FOR 15 MINUTES
DUTY 2 STOP LOW SPEED	25-100 (CO PPM)	25
DUTY 3 STOP LOW SPEED	25-100 (CO PPM)	50
HIGH CO CONCENTRATION SETPOINTS		
DUTY 1 START HIGH SPEED	100-120 (CO PPM)	100
DUTY 2 START HIGH SPEED	100-120 (CO PPM)	100 (WITH MIN. 15 S TIME DELAY AFTER DUTY 1)
DUTY 3 START HIGH SPEED	100-120 (CO PPM)	100 (WITH MIN. 15 S TIME DELAY AFTER DUTY 2)
DUTY 1 STOP HIGH SPEED	25-100 (CO PPM)	TBD
DUTY 2 STOP HIGH SPEED	25-100 (CO PPM)	TBD
DUTY 3 STOP HIGH	25-100 (CO PPM)	TBD
SPEED		

5. THE DUTY START AND STOP LEVEL SETPOINTS ARE CHECKED TO ENSURE THE FOLLOWING CONDITIONS ARE MET:

TABLE 3: AUTO CONTROL SETPOINT ERROR CHECK

TEST CONDITION	ERROR MESSAGE	COMMENTS
DUTY 1 START < DUTY 1 STOP (PPM) LOW SPEED	SETPOINT ENTRY ERROR	
DUTY 2 START < DUTY 2 STOP (PPM) LOW SPEED	SETPOINT ENTRY ERROR	
DUTY 3 START < DUTY 3 STOP (PPM) LOW SPEED	SETPOINT ENTRY ERROR	
DUTY 2 STOP ≤ TO DUTY 1 STOP (PPM) LOW SPEED	SETPOINT ENTRY ERROR	
DUTY 3 STOP ≤ DUTY 2 STOP (PPM) LOW SPEED	SETPOINT ENTRY ERROR	
DUTY 1 START ≥ DUTY 1 STOP (PPM) HIGH SPEED	SETPOINT ENTRY ERROR	
DUTY 2 START ≥ DUTY 2 STOP (PPM) HIGH SPEED	SETPOINT ENTRY ERROR	
DUTY 3 START ≥ DUTY 3 STOP (PPM) HIGH SPEED	SETPOINT ENTRY ERROR	
DUTY 2 STOP < DUTY 1 STOP (PPM) HIGH SPEED	SETPOINT ENTRY ERROR	
DUTY 3 STOP < DUTY 2 STOP (PPM) HIGH SPEED	SETPOINT ENTRY ERROR	

6. SETPOINTS ARE ACCEPTED FROM THE HMI VIA AN UPDATE BUTTON ON THE SCADA SCREEN. THE UPDATE BUTTON IS INDEPENDENT FOR EACH THE TUNNEL VENTILATION FAN. THE PLC WILL CHECK THE OPERATOR ENTERED SETPOINTS TO ENSURE THAT TWO OR MORE FANS ARE NOT SET TO THE SAME DUTY POSITION. IF AN ERROR OCCURS WITH THE OPERATOR ENTERED START AND STOP LEVELS, THE EXISTING START AND STOP SETPOINTS ARE RETAINED AND AN ERROR MESSAGE IS DISPLAYED ON THE SETPOINT ENTRY SCREEN.

B. ON RISING CO LEVEL

1. IF THE CO LEVEL RISES IN ANY OF THE TUNNELS TO THE DUTY 1 START SETPOINT, DUTY FAN 1 IS REQUESTED TO START AT ITS CORRESPONDING SPEED SETPOINT.

2. SHOULD CO LEVEL CONTINUES TO RISE TO THE DUTY 2 START LEVEL SETPOINT, DUTY 2 FAN IS REQUESTED TO START AT ITS CORRESPONDING SPEED SETPOINT.

3. SHOULD CO LEVEL CONTINUE TO RISE TO THE DUTY 3 START LEVEL SETPOINT, DUTY 3 FAN IS REQUESTED TO START AT ITS CORRESPONDING SPEED SETPOINT.

4. IF THE CARBON MONOXIDE LEVEL (CO) RISES TO THE HIGH LEVEL "CRITICAL LEVEL" (100 PPM DEFAULT), EVEN THOUGH THE FANS ARE RUNNING AT LOW SPEED, THE PLC SHALL ISSUE A STOP COMMAND TO STOP ALL RUNNING FANS. ONCE THE FANS COME TO A COMPLETE STOP THE PLC WILL RE-START THE FANS SEQUENTIALLY (DUTY 1, DUTY 2, DUTY 3) AT HIGH SPEED. THE FANS DO NOT START AT THE SAME TIME. THERE WILL BE A PROGRAMMABLE TIME DELAY (MINIMUM 15 SECONDS) BETWEEN EACH OF THE DUTY MOTOR STARTS.

5. IF THE CO LEVEL CONTINUES TO RISE AND REACHES 120 PM (SETPOINT) THE TVS WILL CONTINUE RUNNING AND THE

c:\pwworking\hmm\external\pre47802\dms72703\071_0134CES342.dgn 8/4/2015 12:09:44 PM PRE47802

DESIGN AGENCY
HATCH MOTT MacDONALD
18013 CLEVELAND PKWY.
SUITE 200
CLEVELAND, OH 44135
DESIGNED CZ | DRAWN RL | REVIEWED RF | DATE 08/19/14
CHECKED KS | REVISED TM | STRUCTURE FILE NUMBER 3106578
SCADA - PROCESS CONTROL NARRATIVE - SHEET 2 OF 4
BRIDGE NO. HAM-71-0134
I-71 LYTLE TUNNEL UNDER LYTLE PARK
HAM-71-01.34
PID No. 87268
265/296
523/555

TUNNEL CLOSURE PROCEDURE WILL BE TRIGGERED BY THE CORRESPONDING PORTAL PLC.

C. ON FALLING CO LEVEL

1. ONCE THE SYSTEM HAS DETECTED THAT THE LEVEL OF CARBON MONOXIDE HAS BEEN REDUCED BELOW THE DUTY 3 STOP LEVEL SETPOINT, THE DUTY 3 FAN IS REQUESTED TO STOP (PROVIDED IT WAS OPERATING). IF THE LEVEL CONTINUES TO FALL BELOW THE DUTY 2 STOP LEVEL SETPOINT, THE DUTY 2 FAN IS REQUESTED TO STOP (PROVIDED IT WAS OPERATING). IF THE LEVEL CONTINUES TO FALL BELOW THE DUTY 1 STOP LEVEL SETPOINT, THE DUTY 1 FAN IS REQUESTED TO STOP. DUTY STOP SETPOINTS CAN EITHER BE SET TO STOP AT SEPARATE LEVELS OR AT THE SAME LEVEL. THE SETTINGS ARE TO BE DETERMINED DURING COMMISSIONING.

D. ON EMERGENCY OPERATIONS

1. ON EMERGENCY OPERATIONS THE PLC WILL START THE FANS AS PER THE TUNNEL EMERGENCY OPERATIONS MODES TABLE IN SHEET 391.

2. THE PORTAL PLC WILL TRIGGER THE TUNNEL CLOSURE PROCEDURE, BY TURNING ON THE CLOSURE SIGN, FLASHERS AND EVACUATION ROUTE INDICATION.

3. THE PLC DOES NOT TURN OFF THE FANS NOR ENABLE THE TUNNEL TRAFFIC. THIS ACTION IS TO BE PERFORMED BY OPERATIONS BY EITHER USING REMOTE-MODE SCADA/MANUAL FROM THE HMI OR LOCALLY AT THE MCC IN THE NEW ELECTRICAL ROOM.

3.02 FAILURE RESPONSES

1. IF THE CO DETECTOR LOSS OF SIGNAL ALARM BECOMES ACTIVATED, THE PLC WILL NOT ATTEMPT TO START OR STOP ANY FANS, AS THE ACTUAL CO LEVEL IS UNKNOWN.

2. IF THERE IS A COMMUNICATION FAILURE FROM PLC TO THE HMI, THE TUNNEL FACILITY WILL CONTINUE TO OPERATE AUTOMATICALLY BASED ON THE CURRENT SETPOINTS.

3.03 PROCESS INTERLOCKS

A. SAFETY INTERLOCKS ARE HARDWIRED. TO ENSURE SAFE OPERATION OF THE FACILITY BOTH ELECTRICAL AND PLC PROGRAMMED INTERLOCKS ARE INCORPORATED INTO THE DESIGN. TABLE 4 PROVIDES DETAILS ON THE STANDARD PROCESS INTERLOCKS AND PLC PROGRAMMED RESPONSES.

TABLE 4: PROCESS INTERLOCKS AND RESPONSES

FAULT (IF AVAILABLE)	PLC PROGRAMMED RESPONSE
SOFT STARTER FAULT	AUTO TRANSFER TO NEXT DUTY FAN, OR STAND BY FAN
DUTY 1 FAN NOT IN AUTO (FAN FIELD SELECTOR SWITCH IS IN THE LOCAL POSITION)	AUTO TRANSFER TO NEXT DUTY FAN, OR STAND BY FAN
CO SENSOR FAULT	DOES NOT ATTEMPT TO START OR STOP FANS. CONTINUE TO DISPLAY THE ANALOG VALUE ON THE HMI GRAPHICS.
FAN MOTOR FAULT	AUTO TRANSFER TO NEXT DUTY FAN, OR STAND BY FAN
TUNNEL ISOLATION DAMPER FAILS	FAN DOES NOT START
FAN ISOLATION DAMPER FAILS	AUTO TRANSFER TO NEXT DUTY FAN, OR STAND BY FAN

3.04 FAILURE OF FANS AND ISOLATION DAMPERS

A. FANS FAILURES

1. IF THE CONTROL SYSTEM DETECTS THAT MULTIPLE FANS HAVE FAILED, AN ALARM WILL BE GENERATED ON THE HMI THAT REQUIRES IMMEDIATE ATTENTION BY THE OPERATOR. STAFF SHOULD ATTEMPT TO GET TO THE FACILITY IMMEDIATELY AND ATTEMPT TO START THE FANS USING THE MANUAL CONTROLS.

B. ISOLATION DAMPERS

1. IF THE CONTROL SYSTEM DETECTS THAT MULTIPLE FANS HAVE FAILED, AND ALARM WILL BE GENERATED ON THE HMI THAT REQUIRES IMMEDIATE ATTENTION BY THE OPERATOR. STAFF SHOULD ATTEMPT TO GET TO THE FACILITY IMMEDIATELY AND ATTEMPT TO START THE FANS USING THE MANUAL CONTROLS.

3.05 INDIVIDUAL FAN CONTROL

A. CONTROL MODES

1. EACH FAN HAS A TWO (2) POSITION SELECTOR SWITCH ALLOWING THE FAN TO BE CONTROLLED LOCALLY OR REMOTELY.

B. (LOCAL MODE)

1. WHEN THE DEVICE IS IN LOCAL MODE THE INDICATION ON THE SCADA SYSTEM IS "LOCAL". WHEN A FAN IS IN LOCAL THE PLC SOFTWARE WILL NOT START THE FAN, AND THE FAN IS STARTED AND STOPPED THROUGH THE USE OF THE START AND STOP PUSH BUTTONS LOCATED AT THE MOTOR CONTROL CENTER (MCC). THE SPEED AND DIRECTION AT WHICH THE FAN OPERATES CAN BE ALSO SELECTED LOCALLY AT THE MCC.

2. IT SHOULD BE NOTED THAT THE FAN WILL NOT STOP AUTOMATICALLY WHEN THE CO LEVEL IN THE TUNNEL FALLS BELOW THE SETPOINTS. OPERATION OF THE FANS AT THIS POINT IS THE SOLE RESPONSIBILITY OF THE USER.

C. REMOTE (SCADA MODE)

1. WHEN THE FAN IS IN REMOTE THE INDICATION ON THE SCADA DISPLAY IS "REMOTE." WHEN THE SELECTOR SWITCH IS IN THE REMOTE POSITION, THE FAN AUTOMATICALLY STARTS AND STOPS BASED ON PROCESS CONDITIONS. IF THE OPERATOR HAS SELECTED SCADA-AUTO CONTROL FROM THE SCADA GRAPHICS (VERSUS SCADA-MANUAL) THE PLC PROGRAM WILL OPERATE THE FANS BASED ON THE SETPOINTS USED BY THE FANS PROCESS LOGIC. WHEN SCADA MANUAL IS SELECTED, THE OPERATOR HAS THE ABILITY TO START AND STOP THE FAN AND SELECT THE SPEED AND DIRECTION.

3.06 HARDWIRED INTERLOCKS

A. THE FOLLOWING INTERLOCKS ARE HARDWIRED IN THE FAN CONTROL CIRCUIT.

1. SOFT STARTER FAULT
2. MOTOR OVERLOAD

B. THE DRIVE FAULT BECOMES LATCHED, AND IS UNLATCHED USING THE SOFT STARTER LOCAL INTERFACE LOCATED ON THE LOCAL MCC. THIS INTERLOCK CANNOT BE DEACTIVATED REMOTELY, USING THE SCADA GRAPHICS.

C. THE MOTOR OVERLOAD BECOMES LATCHED, AND IS UNLATCHED USING THE RESET PUSHBUTTON LOCATED ON THE LOCAL MCC. THIS INTERLOCK CANNOT BE DEACTIVATED REMOTELY, USING THE SCADA GRAPHICS.

3.07 PROGRAMMED INTERLOCKS

A. THE FOLLOWING INTERLOCKS ARE PROGRAMMED IN THE FAN CONTROL SUBROUTINE, AND APPLY IN THE SCADA-MANUAL AND SCADA-AUTO MODES.

B. WHEN THE FAN IS RUNNING-

1. IF ANY OF THE HARDWIRED INTERLOCK FAULT INPUTS BECOMES ACTIVE, THE SCADA SYSTEM WILL NOT ATTEMPT TO CONTROL THE FAN
2. IF THE CO DETECTORS FAULT SIGNAL IS ACTIVE, THE SCADA SYSTEM WILL NOT ATTEMPT TO CONTROL THE FAN
3. IF THE FAN STOPS WITHOUT A REQUEST FROM THE PLC, AN "UNCOMMANDED STOP" ALARM IS GENERATED AFTER A 2 SECOND DELAY. NO FURTHER ATTEMPTS ARE MADE TO CONTROL THE FAN UNTIL THIS VIRTUAL ALARM IS RESET AT SCADA
4. IF ANY OF THE DAMPERS CLOSES WITHOUT A REQUEST FROM THE PLC, AN "UNCOMMANDED CLOSED" ALARM IS GENERATED AFTER A 2 SECOND DELAY. THE PLC LOGIC WILL STOP THE FAN. NO FURTHER ATTEMPTS ARE MADE TO CONTROL THE DAMPER OR THE FAN UNTIL THIS VIRTUAL ALARM IS RESET AT SCADA
5. IF THE FAN IS REQUESTED TO STOP, AND FAILS TO STOP AFTER A PROGRAMMABLE TIME PERIOD (MINIMUM 5 SECONDS), A "FAILED TO STOP" ALARM IS GENERATED AND THE PLC WILL NOT ATTEMPT TO CONTROL THE FAN UNTIL THIS VIRTUAL ALARM IS RESET AT SCADA.
6. IF THE ANY OF THE DAMPERS IS REQUESTED TO CLOSE, AND FAILS TO CLOSE AFTER A PROGRAMMABLE TIME PERIOD (MINIMUM 5 SECONDS), A "FAILED TO CLOSE" ALARM IS GENERATED AND THE PLC WILL NOT ATTEMPT TO CONTROL THE DAMPER UNTIL THIS VIRTUAL ALARM IS RESET AT SCADA.

C. WHEN THE FAN IS OFF AND IN SCADA-AUTO OR SCADA-MANUAL

1. IF THE FAN STARTS WITHOUT A REQUEST FROM THE SCADA SYSTEM, AN "UNCOMMANDED START" ALARM IS GENERATED AFTER A 2 SECOND DELAY. NO FURTHER ATTEMPTS ARE MADE TO CONTROL THE DEVICE.
2. IF ANY OF THE DAMPERS OPENS WITHOUT A REQUEST FROM THE SCADA SYSTEM, AN "UNCOMMANDED OPEN" ALARM IS GENERATED AFTER A 2 SECOND DELAY. NO FURTHER ATTEMPTS ARE MADE TO CONTROL THE DEVICE.
3. IF THE FAN IS REQUESTED TO START, AND FAILS TO START AFTER A PROGRAMMABLE TIME PERIOD (MINIMUM 5 SECONDS), A "FAILED TO START" ALARM IS GENERATED AND THE PLC WILL NOT ATTEMPT TO CONTROL THE FAN UNTIL THIS VIRTUAL ALARM IS RESET AT SCADA
4. IF ANY OF THE DAMPERS IS REQUESTED TO OPEN, AND FAILS TO OPEN AFTER A PROGRAMMABLE TIME PERIOD (MINIMUM 5 SECONDS), A "FAILED TO OPEN" ALARM IS GENERATED AND THE PLC WILL NOT ATTEMPT TO CONTROL THE DAMPER OR THE FAN UNTIL THIS VIRTUAL ALARM IS RESET AT SCADA

D. AUTO STARTING LOGIC -

1. IF THE FAN IS REQUESTED TO START IN EITHER SCADA-MANUAL OR SCADA-AUTO THE FAN CAN BE STARTED PROVIDED THE FOLLOWING CONDITIONS ARE MET.
   a. FAN FAULT INPUTS ARE OFF
   b. OTHER FANS ARE NOT ATTEMPTING TO START

2. THE FOLLOWING STEPS OUTLINE THE STARTING SEQUENCE.
   a. THE FAN START/STOP OUTPUT IS ACTIVATED.

c:\pwworking\hmm\external\pre47802\dms72703\071_0134CES343.dgn 8/4/2015 12:14:47 PM PRE47802

DESIGN AGENCY
HATCH MOTT MacDONALD
18013 CLEVELAND PKWY.
SUITE 200
CLEVELAND, OH 44135

DESIGNED CZ | DRAWN RL | CHECKED KS | REVIEWED RF | REVISED TM | DATE 08/19/14 | STRUCTURE FILE NUMBER 3106578

SCADA - PROCESS CONTROL NARRATIVE - SHEET 3 OF 4
BRIDGE NO. HAM-71-0134
I-71 LYTLE TUNNEL UNDER LYTLE PARK

HAM-71-01.34
PID No. 87268

266/296

524
555

b. IF THE RUNNING SIGNAL IS NOT SENSED WITHIN A SET TIME, THEN A FAILED TO START ALARM IS ISSUED AND THE PLC STOPS ATTEMPTING TO START THE FAN.

E. AUTO RUNNING LOGIC
1. WHEN RUNNING IN SCADA-AUTO, THE FAN SIMPLY RUNS.
2. AUTO STOPPING LOGIC
3. THE FAN ENTERS THE STOPPING SEQUENCE WHEN ANY OF THE FOLLOWING CONDITIONS OCCUR.
a. ANY OF THE SPECIFIED SOFTWARE PROGRAMMED INTERLOCKS OCCUR
b. THE FAN IS SWITCHED TO SCADA-MANUAL, THEN THE OPERATOR PRESSES THE STOP PUSHBUTTON ON THE HMI GRAPHICS
c. THE FAN IS REQUESTED TO STOP BY THE PROCESS AUTO LOGIC

F. THE FOLLOWING STEPS OUTLINE THE STOPPING SEQUENCE.
1. THE FAN START/STOP OUTPUT IS DEACTIVATED
2. ONCE THE RUNNING SIGNAL IS OFF THE FAN IS CONSIDERED STOPPED
3. IF THE RUNNING SIGNAL IS SENSED WITHIN A SET TIME, THEN A FAILED TO STOP ALARM IS ISSUED AND THE PLC STOPS ATTEMPTING TO CONTROL THE FAN.

3.08 COMMUNICATION FAILURES
A. IN THE EVENT OF COMMUNICATION FAILURE BETWEEN THE VENTILATION PLC AND SCADA SERVERS THE VENTILATION PLC WILL CONTINUE TO RUN THE STATION IN SCADA-AUTO BASED ON THE LAST ENTERED SETPOINTS FROM THE SCADA COMPUTER. LOCAL CONTROL IS STILL AVAILABLE VIA THE THREE (3) POSITION SELECTOR SWITCH.

3.09 POWER FAILURE
A. KEY INSTRUMENTS ARE BACKED UP BY A LOCAL UNINTERRUPTED POWER SUPPLY (UPS) TO ENSURE THEY REMAIN OPERATIONAL AND PROVIDE REAL TIME STATUS READINGS UNTIL NORMAL POWER IS RESTORED TO THE STATION.

B. THE FOLLOWING EQUIPMENT IS TO BE CONNECTED TO THE UPS;

1. PLC
2. THE POWER SUPPLY FEEDING MOST OF THE PLC SIGNALS (CO AND FIRE)
3. COMMUNICATION AND NETWORKING EQUIPMENT

3.10 ADDITIONAL PROCESS MONITORING
A. SOME ADDITIONAL PROCESS MONITORING IS ALSO PROVIDED, AS PER THE I/O TABLE.

3.11 TUNNEL LIGHTING CONTROL
A. THE TUNNEL LIGHTING CONTROL CONSISTS OF TWO STANDALONE LIGHTING CONTROL PANELS. DURING NORMAL CONDITIONS THE LIGHTING CONTROL PANEL OPERATES IN AUTO MODE. THE SCADA SYSTEM OR HMI WILL NOT HAVE CONTROL CAPABILITIES. THE SCADA SYSTEM WILL MONITOR AND DISPLAY ON THE HMI THE FOLLOWING PARAMETERS:
1. HAND/OFF/AUTO SELECTOR SWITCH STATUS
2. CONTACTOR OUTPUT
3. CONTACTOR STATUS
4. LOCAL TUNNEL LIGHTING SWITCHING OUTPUT
5. LOCAL TUNNEL LIGHTING DIMMING OUTPUT
6. LUMINANCE SENSOR STATUS
7. LUMINANCE SENSOR READING

3.12 BUILDING FIRE ALARM
A. THE SCADA SYSTEM WILL MONITOR AND DISPLAY ON THE HMI THE FOLLOWING PARAMETERS RELATED TO THE FACILITY FIRE ALARM:
1. FIRE ALARM GENERAL ALARM
2. FIRE ALARM TROUBLE SIGNAL
3. FIRE ALARM SUPERVISORY SIGNAL

B. THE BUILDING FIRE ALARM DOES NOT TRIGGER A TUNNEL CLOSURE

3.13 HVAC
A. THE SCADA SYSTEM MONITORS THE FOLLOWING PARAMETERS RELATED TO THE HVAC:
1. RUNNING STATUS
2. FAULT

3.14 ANCILLARY SYSTEMS
A. THE SCADA SYSTEM ALSO MONITORS THE FOLLOWING ANCILLARY DEVICES:
1. PANELS/RACK AND DOORS (OPEN/CLOSE AND ILLEGAL ENTRY)
2. TEMPERATURE
3. MOISTURE
4. BUILDING CARBON MONOXIDE (ELECTRICAL ROOM AND FAN PLENUM)

3.15 ENVIRONMENTAL ALARMS
A. THE PLC DOES NOT MONITOR FACILITY ENVIRONMENTAL ALARMS.

3.16 BUILDING SECURITY
A. THE PLC DOES NOT MONITOR THE BUILDING SECURITY.

3.17 ANALOG SIGNAL CALIBRATION
A. TABLE 5 PROVIDES DETAILS ON THE POINTS CALCULATED BY THE PLC FROM THE RAW DATA PROVIDED FROM THE FIELD DEVICES. THE FINAL SETTINGS WILL BE CONFIRMED DURING COMMISSIONING.

TABLE 5: ANALOG SIGNAL CALIBRATION

DESCRIPTION	TAGNAME	SCALED MIN	SCALED MAX
ANALOG INPUTS			
SOUTHBOUND CO SENSOR 1		0 (PPM)	XXX (PPM)
SOUTHBOUND CO SENSOR 2		0 (PPM)	XXX (PPM)
SOUTHBOUND RAMP CO SENSOR 1		0 (PPM)	XXX (PPM)
SOUTHBOUND RAMP CO SENSOR 2		0 (PPM)	XXX (PPM)
NORTHBOUND CO SENSOR 1		0 (PPM)	XXX (PPM)
NORTHBOUND CO SENSOR 2		0 (PPM)	XXX (PPM)
ELECTRICAL ROOM CO SENSOR 1		0 (PPM)	XXX (PPM)
FAN PLENUM SENSOR 1			
FAN 1 MOTOR VIBRATION 1			
FAN 1 MOTOR VIBRATION 2			
FAN 2 MOTOR VIBRATION 1			
FAN 2 MOTOR VIBRATION 2			
FAN 3 MOTOR VIBRATION 1			
FAN 3 MOTOR VIBRATION 2			
FAN 1 SPEED INDICATION (%)		0 (%)	100 (%)
FAN 2 SPEED INDICATION (%)		0 (%)	100 (%)
FAN 3 SPEED INDICATION (%)		0 (%)	100 (%)

3.18 SCADA SYSTEM CALCULATED VARIABLES

A. TABLE 6 PROVIDES DETAILS ON THE POINTS CALCULATED BY THE PLC FROM THE RAW DATA PROVIDED FROM FIELD DEVICES. THE FINAL SETTINGS WILL BE CONFIRMED DURING COMMISSIONING.

TABLE 6: PROCESS OVERVIEW - VIRTUAL POINTS

DESCRIPTION	TAGNAME	SCALED MIN	SCALED MAX
VIRTUAL ANALOG INPUTS			
FAN 1 RUNTIME (HRS)		0 HRS	999999 HRS
FAN 2 RUNTIME (HRS)		0 HRS	999999 HRS
FAN 3 RUNTIME (HRS)		0 HRS	999999 HRS

3.19 ALARMING AND NOTIFICATION
A. THE CRITICAL ALARM CONDITIONS ARE MONITORED BY THE PLC AND TRANSMITTED TO THE CENTRAL SCADA NODE VIA A SCADA COMMUNICATION LINK. ALL ALARMING IS PROGRAMMED AND CONFIGURED IN THE PLC INCLUDING ALARM QUEUING, ENABLING, DISABLING AND ACKNOWLEDGEMENT. THESE ALARM CONDITIONS ARE ISSUED TO THE SCADA NODE AND PAGING SYSTEM FOR REMOTE ANNUNCIATION.

3.20 TUNNEL SCADA
A. THE TUNNEL SCADA PROVIDES THE FIELD DATA COLLECTION, REAL TIME COLOUR GRAPHICS FOR MONITORING AND CONTROL, SHORT TERM TRENDING, AND THE COLLECTION OF INFORMATION REQUIRED FOR THE LONG TERM DATA STORAGE.

B. I/O SCHEDULE CONTAINED IN SHEETS 543, 544, AND 545 IDENTIFIES THE INFORMATION TRANSMITTED BETWEEN THE PLC AND SCADA SOFTWARE. IT ALSO IDENTIFIES THE SIGNALS WHICH MUST BE DISPLAYED ON THE SCADA GRAPHICS AS MONITORED INFORMATION, ACCESSIBLE FROM A SETPOINT ENTRY DISPLAY, TRENDED, PAGED, AND/OR STORED IN THE IFIX HISTORIAN SERVER.

3.21 DATA COLLECTION
A. THE DATA COLLECTION FROM THE HMI WILL BE PERFORMED BY A SERVER THE GE PROFICY HISTORIAN. PROFICY HISTORIAN IS INCLUDED WITH THE LICENSE OF A STANDARD GE PROFICY IFIX SERVER KEY. IT HAS THE ABILITY TO TREND UP TO 2500 REALTIME I/O TAGS FOR A 200 DAY COLLECTION PERIOD. THIS SOFTWARE IS INCLUDED AS AN ADD-ON TO THE EXISTING IFIX PRODUCT. THE PROFICY HISTORIAN WILL BE INSTALLED ON EACH OF THE PROFICY IFIX SERVERS AND SHALL BE CONFIGURED TO PROVIDE REDUNDANCY FOR THE DATA COLLECTION. THE FOLLOWING INFORMATION WILL BE LOGGED INTO THE HISTORIAN:
1. ALL ANALOG TAGS INCLUDED WITHIN THE HMI.
2. CALCULATED VARIABLES: FAN RUNNING HOURS
3. POWER RELATED VARIABLES
4. DEVICE FAULTS
5. ALARMS

B. DATA COLLECTED BY THE HISTORIAN SERVERS CAN BE VIEWED USING THE TREND SCREENS THAT ARE ACCESSIBLE FROM THE OPERATOR WORKSTATIONS. THESE TRENDS CAN VIEW BOTH REAL-TIME AND HISTORICALLY INFORMATION DEPENDING ON THE OPERATOR REQUEST. ONE CAN SELECT MANY TREND-LINES TO DISPLAY AND THE DATE SPAN CAN ALSO BE CHANGED AS REQUIRED. SPECIFIC DATA QUERIES CAN BE PERFORMED TO SEARCH WITHIN THE RANGE OF THE HISTORIAN USING THE PROFICY HISTORIAN ADD-IN FOR MICROSOFT EXCEL.

C. THE DATA COLLECTED BY THE HISTORIAN SOFTWARE WILL BE BACKED UP TO THE LOCAL NETWORK ATTACHED STORAGE DEVICE LOCATED WITHIN THE TUNNEL'S SERVER RACK.

c:\pwworking\hnm\external\tyn61470\dms727●3\071_0134CE5344.dgn 10/27/2014 12:55:39 PM TYN61470

NOTES

THERE ARE TWO SEPARATE NETWORKS:
1. ITS (GENERAL) SWITCHES (G1.1, G1.2, G2, AND G3) W FIREWALLS PROVIDED BY ITS AT TMC SIDE
2. TUNNEL SCADA MAIN SWITCHES S1 (A & B), S2 AND S3, W FIREWALLS AT TUNNEL SIDE-PASS THROUGH
-ADDITIONAL SCADA SWITCH FOR A WS AT SOUTH PORTAL
-CONECTIVITY FOR EXTERNAL SCADA WS'S BY ODOT

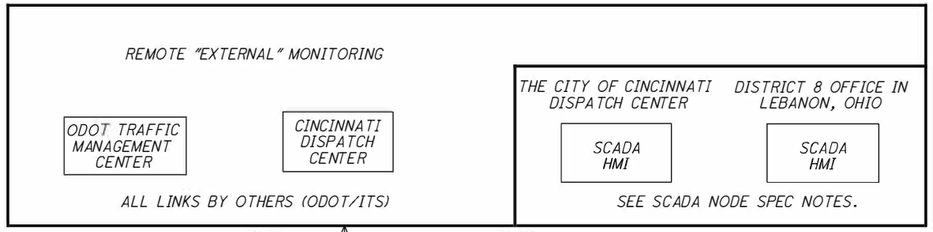

SCADA NODE SPEC NOTES:

1. CONTRACTOR SHALL SUPPLY, INSTALL AND CONFIGURE BOTH SCADA NODES AND SUPPLY ALL REQUIRED LICENSES.

2. SCADA NODE(S) SHALL MEET OR EXCEED THE FOLLOWING SPECIFICATIONS:
INTEL(R) CORE I5-4670 PROCESSOR
(QUAD CORE, 3.4GHz TURBO, 6MB, W/ HD GRAPHICS 4600)
WINDOWS 7 PROFESSIONAL, MEDIA, 64-BIT, ENGLISH
500GB 3.5" SATA (7,200 RPM) HARD DRIVE
8GB (2X4GB) 1600MHz DDR3 MEMORY
AMD RADEON HD 8490, 1GB DDR3, FH, 1-DP 1-DVI
16X DVD+/-RW
24" LED MONITOR SUPPORTING 1080P RESOLUTION

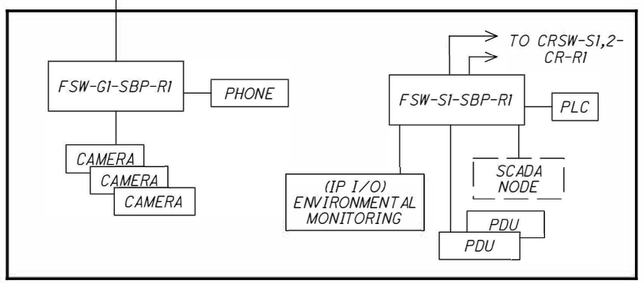

SOUTH PORTAL

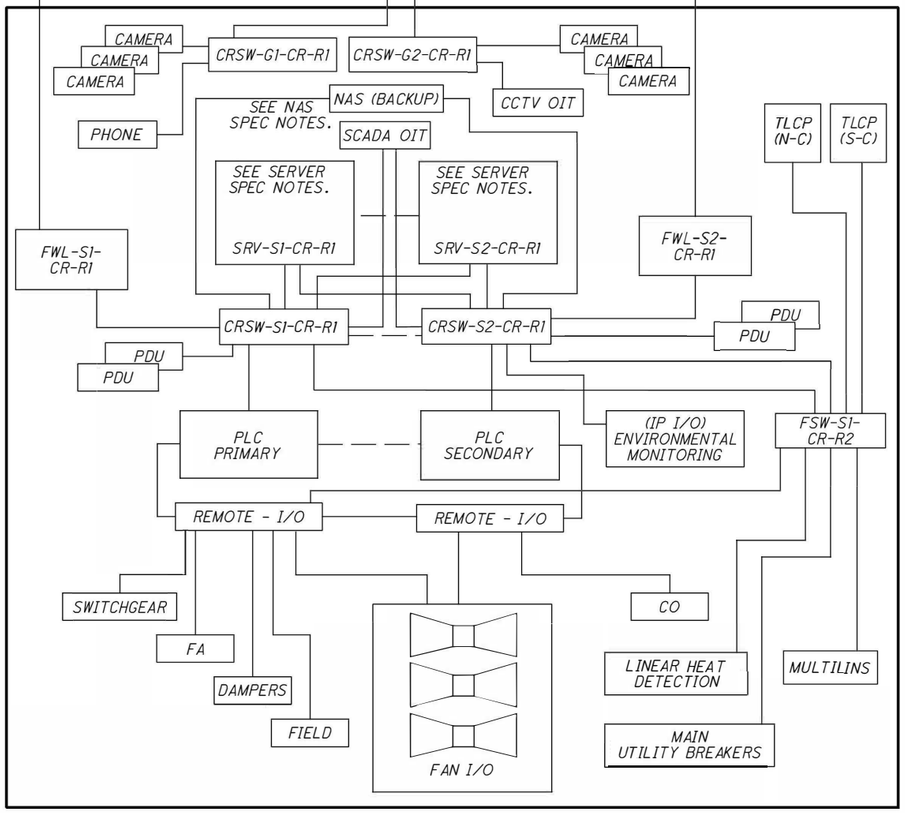

TUNNEL

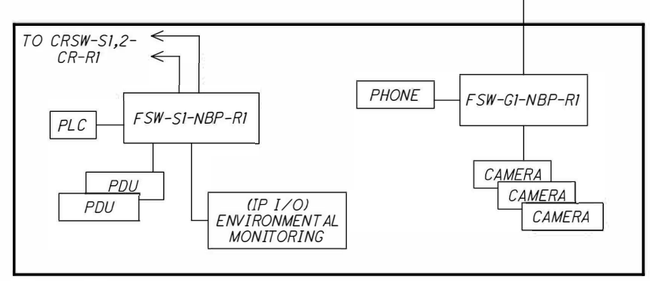

NORTH PORTAL

NAS SPEC NOTES:

1. CONTRACTOR SHALL SUPPLY, INSTALL AND CONFIGURE NETWORK ATTACHED STORAGE (NAS) FOR BACK UP PURPOSES.

2. NAS SHALL MEET OR EXCEED THE FOLLOWING SPECIFICATIONS:
POWER BY AN INTEL(R) XEON E5-2403 1.8GHz
QUAD CORE PROCESSOR, 8GB MEMORY
TWO 1-GBps ETHERNET INTERFACE
RAID CONTROLLER WITH 512MB CACHE
CHASSIS CAPACITY FOR 12 - 3.5" HOT-PLUG HARD DRIVES
EIGHT - 2 TB 7,200 RPM SATA 3GBps
3.5" HOT-PLUG HARD DRIVES CONFIGURED RAID 10
750 WATTS, HOT PLUG REDUNDANT POWER SUPPLIES

SERVER SPEC NOTES:

1. CONTRACTOR SHALL SUPPLY, INSTALL AND CONFIGURE BOTH SERVER NODES AND SUPPLY ALL REQUIRED LICENSES.

2. SERVER SHALL MEET OR EXCEED THE FOLLOWING SPECIFICATIONS:
CHASSIS WITH EIGHT 3.5" HOT-PLUG HARD DRIVES
INTEL(R) XEON E5-2643 3.3GHz, 10M CACHE,
8.0 GT/S QPI, TURBO, 4C, 130W, 1600 MHz BUS
16GB RAM
RAID CONTROLLER 512MB CACHE
FOUR 1-TB 7,200 RPM SATA 3GBps 3.5"
HOT-PLUG HARD DRIVES CONFIGURED RAID 10
INTEL ETHERNET i350 DUAL-PORT 1 GBps SERVER ADAPTER
DUAL, HOT-PLUG, REDUNDENT POWER SUPPLIES, 495W EACH
RACK MOUNT KIT (4-POST)
DVD-ROM DRIVE, SATA
WINDOWS SERVER 2008 R2 SP1, STANDARD EDITION,
x64 WITH 10 CALs

NOTE:

1. FOR LEGEND AND ABBREVIATIONS SEE SHEET 516/555

DESIGN AGENCY
HATCH MOTT MacDONALD
18013 CLEVELAND PKWY.
SUITE 200
CLEVELAND, OH 44135

DESIGNED	DRAWN	REVIEWED	DATE
OA	MS	RF	08/19/14
CHECKED	REVISED	STRUCTURE FILE NUMBER	
CS	DC	3106578	

SCADA - NETWORKING OVERALL SYSTEMS BLOCK DIAGRAM

BRIDGE NO. HAM-71-0134
I-71 LYTLE TUNNEL UNDER LYTLE PARK

HAM-71-01.34
PID No. 87268

c:\pwworking\hmm\external\tyn61470\dms727●3\071_0134CE5311.dgn 10/27/2014 12:56:24 PM TYN61470

LEGENDS

FIBER OPTICAL CABLE (SM, MIN 12s)

CAT6 CABLE

DESIGNATE OPTIONAL

CRSW	CONTROL ROOM SWITCH
FW	FIREWALL
PPG	PATCH PANEL GENERAL FOR CCTV AND PHONE
PPS	PATCH PANEL SCADA
R-I/O	REMOTE INPUT/OUTPUT DEVICE
SC	SPLICE CASSETTE
SRV	SERVER FOR SCADA
SW	SWITCH

FOR LEGEND AND ABBREVIATIONS SEE SHEET 516/555

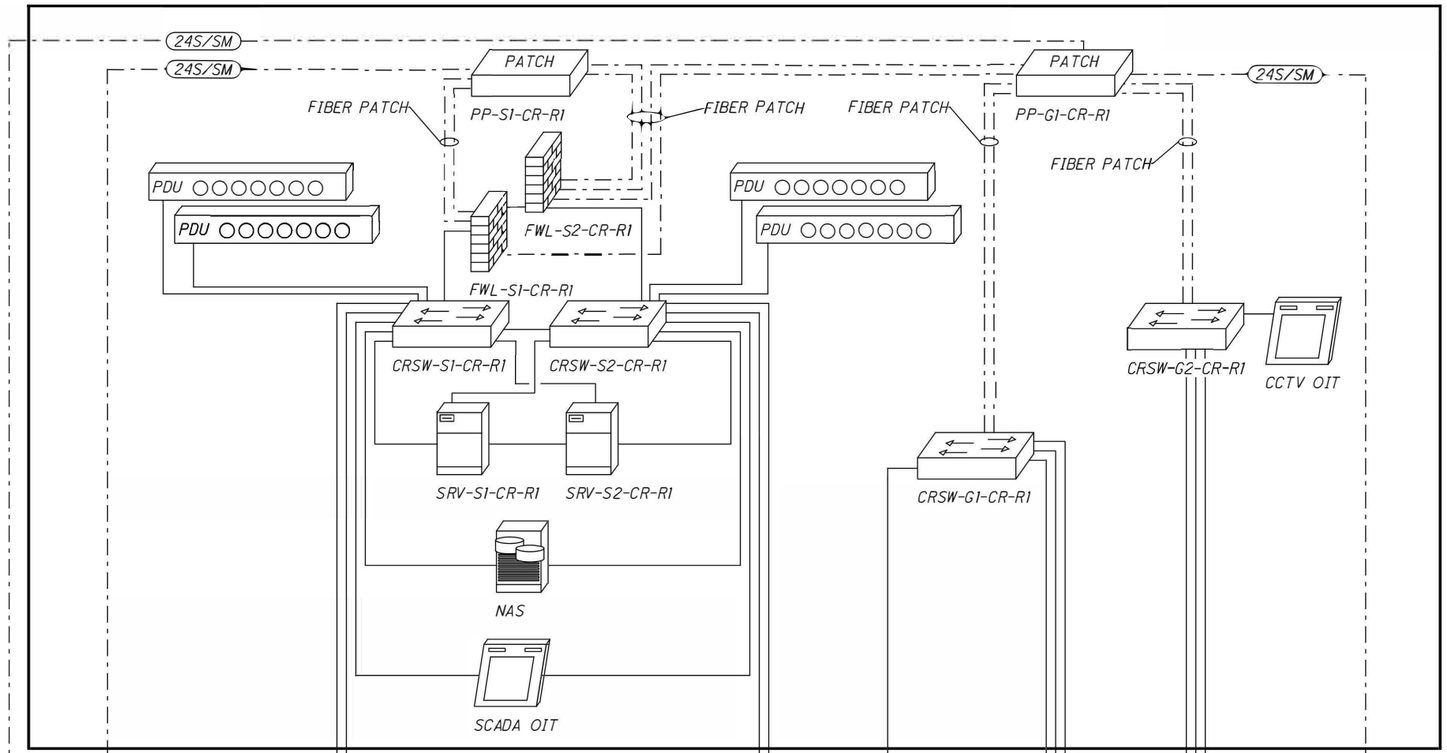

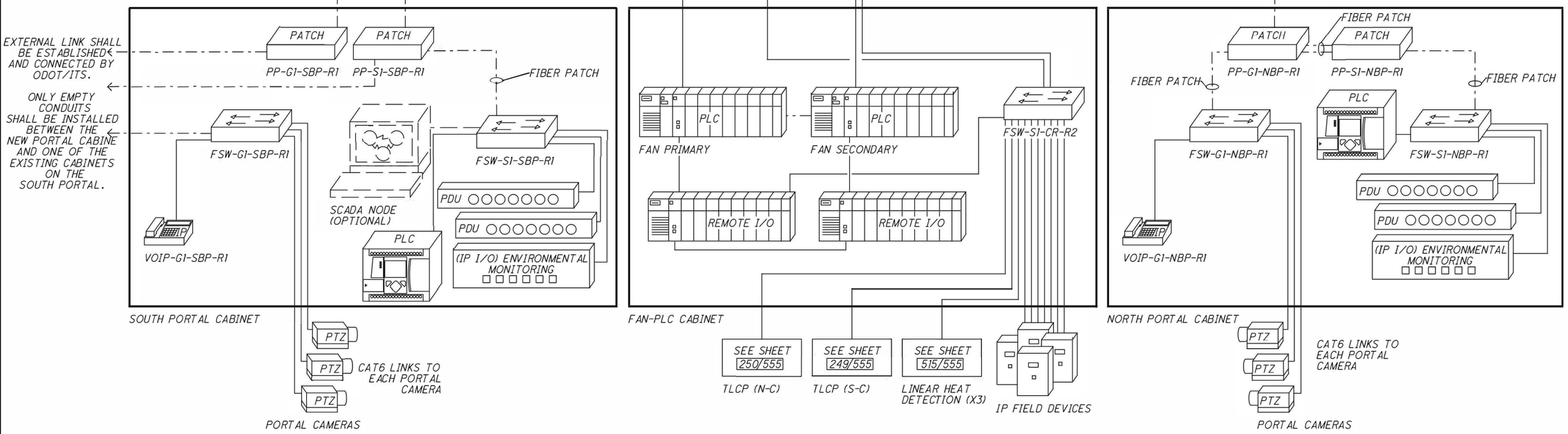

DESIGN AGENCY
HATCH MOTT MacDONALD
18013 CLEVELAND PKWY.
SUITE 200
CLEVELAND, OH 44135

DESIGNED	DRAWN	REVIEWED	DATE
OA	SW	RF	08/19/14
CHECKED	REVISED	STRUCTURE FILE NUMBER	
CS	DC	3106578	

SCADA - NETWORKING WIRING DIAGRAM - PATCH PANEL LAYOUT

BRIDGE NO. HAM-71-0134
I-71 LYTLE TUNNEL UNDER LYTLE PARK

HAM-71-01.34
PID No. 87268

c:\pwworking\hmm\external\tyn61470\dms72703\071_0134CES312.dgn 10/27/2014 12:56:26 PM TYN61470

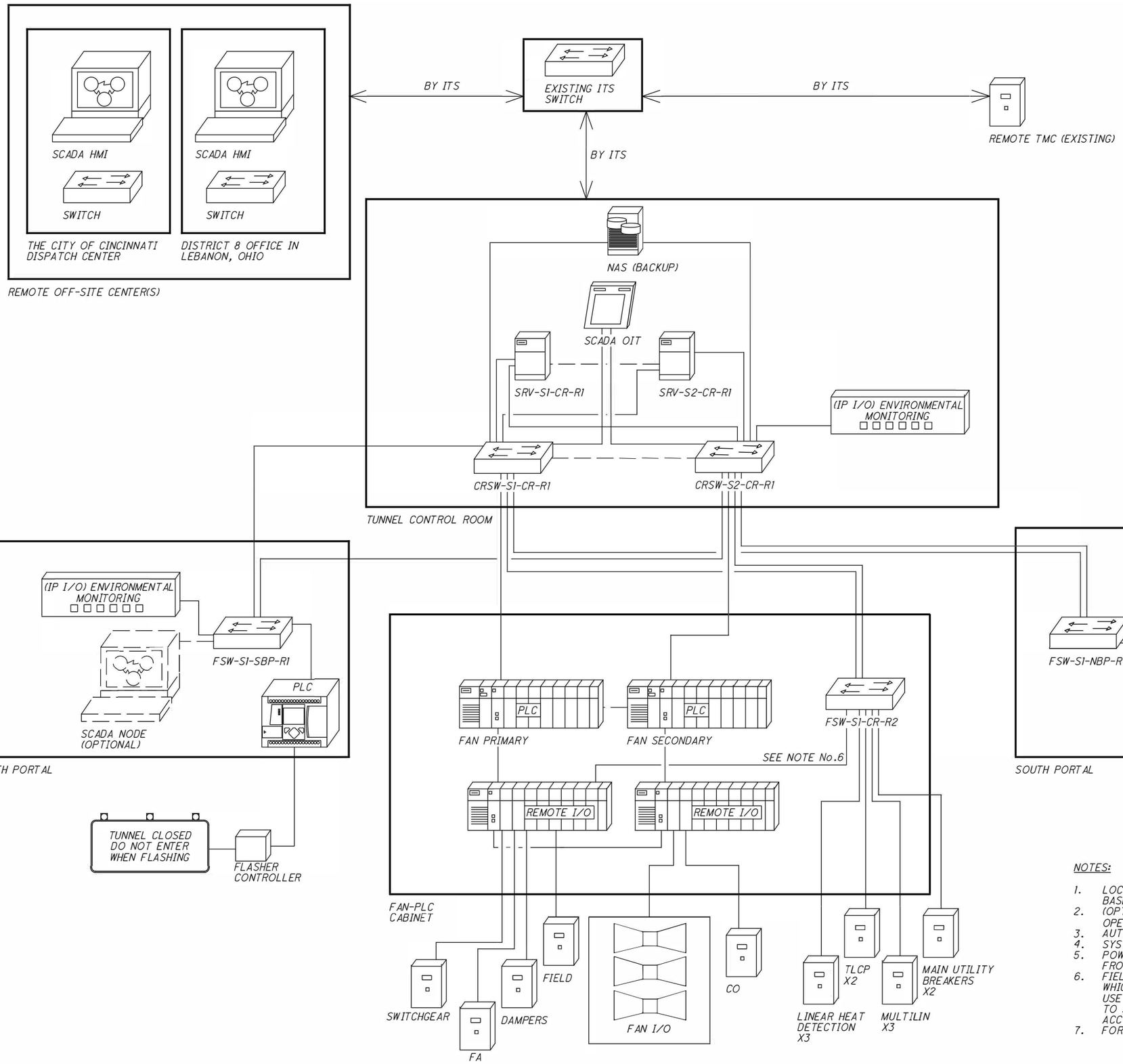

NOTES:

1. LOCAL CABINET I/O COLLECTION BY REMOTE I/O AT PORTAL, IP BASED, DIRECTLY CONNECTED TO SCADA SERVERS.
2. (OPTIONAL) OIT AT PORTAL ACTS AS A REMOTE OPERATOR'S INTERFACE.
3. AUTODIALER IS A SERVER BASED APPLICATION.
4. SYSTEM WIDE TIME SYNCHRONISATION AS PER ODOT STANDARD.
5. POWER TO COMMUNICATION AND SCADA IS CRITICAL AND PROVIDED FROM THE CENTRAL UPS.
6. FIELD DEVICES CONNECTED TO SWITCH FSW-S1-CR-R2 WHICH COMMUNICATE VIA MODBUS PROTOCOL SHALL USE THE FAN-PLC AS A GATEWAY FOR COMMUNICATION TO SCADA. THE CONTRACTOR SHALL PROGRAM THE PLC ACCORDINGLY. SEE FAN-PLC-VIRTUAL I/O 544/555
7. FOR LEGEND AND ABBREVIATIONS SEE SHEET 516/555

DESIGN AGENCY
HATCH MOTT MacDONALD
18013 CLEVELAND PKWY.
SUITE 200
CLEVELAND, OH 44135

DESIGNED	DRAWN	REVIEWED	DATE
OA	SW	RF	08/19/14
CHECKED	REVISED	STRUCTURE FILE NUMBER	
CS	DC	3106578	

SCADA - NETWORKING SCADA ARCHITECTURE BLOCK DIAGRAM

BRIDGE NO. HAM-71-0134
I-71 LYTLE TUNNEL UNDER LYTLE PARK

HAM-71-01.34
PID No. 87268

c:\pwworking\hmm\external\tyn61470\dms727●3\071_0134CE5313.dgn 10/27/2014 12:56:28 PM TYN61470

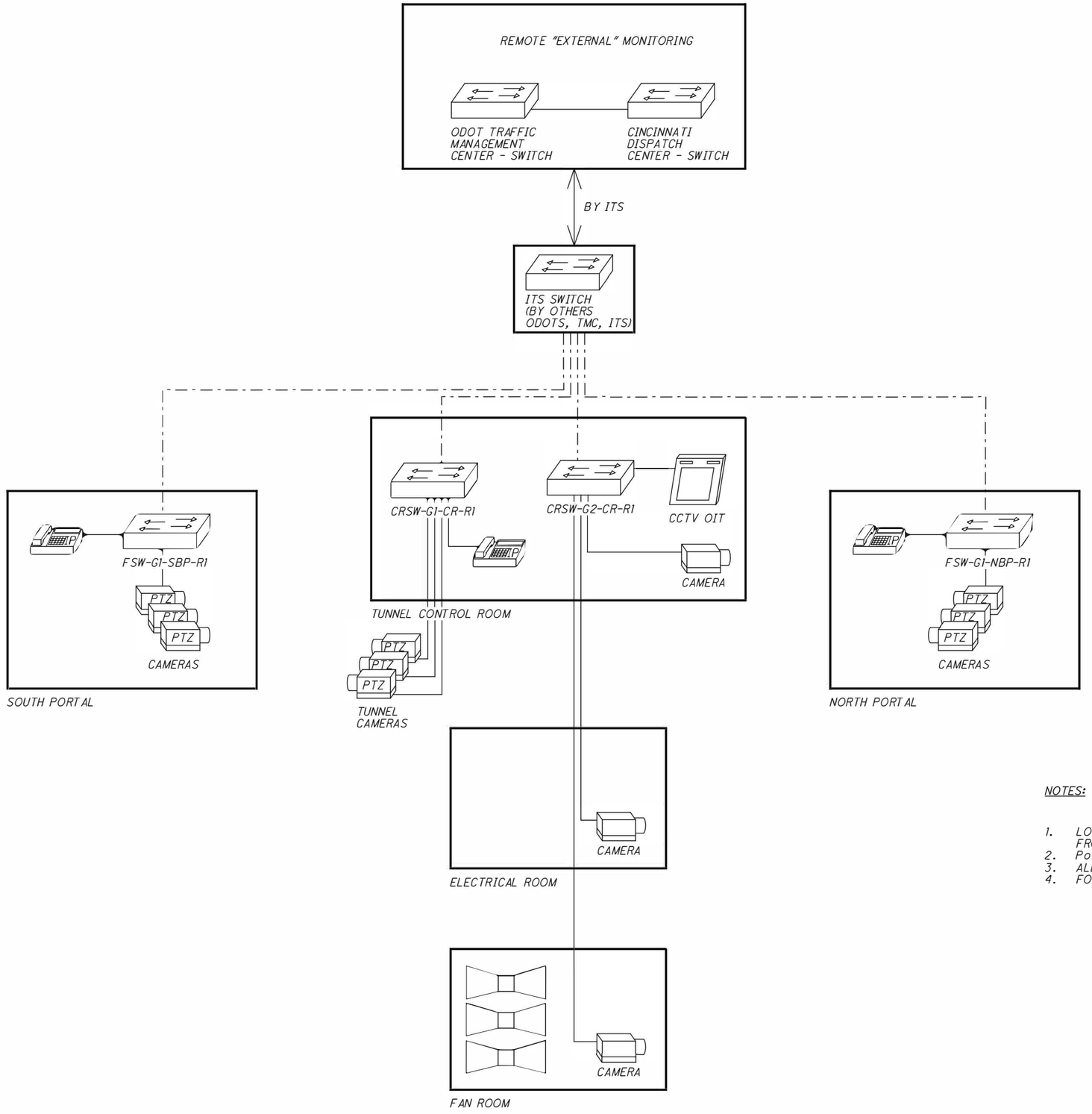

LEGENDS

FIBER OPTICAL CABLE (SM, MIN 24s)

CAT6 CABLE

NOTES:

1. *LOCAL SWITCH FSW-G1-CR-R1 STRATEGICALLY LOCATED MAX 300FT FROM ANY CORRESPONDING DEVICE.*
2. *PoE NOT USED FOR THE PROJECT AS PER OWNER REQUEST.*
3. *ALL PHONES ARE VoIP TYPE.*
4. *FOR LEGEND AND ABBREVIATIONS SEE SHEET* 516/555

DESIGN AGENCY
HATCH MOTT MacDONALD
18013 CLEVELAND PKWY.
SUITE 200
CLEVELAND, OH 44135

DESIGNED	DRAWN	REVIEWED	DATE
OA	SW	RF	08/19/14
CHECKED	REVISED	STRUCTURE FILE NUMBER	
CS	DC	3106578	

SCADA - NETWORKING CCTV & VOIP - BLOCK DIAGRAM

BRIDGE NO. HAM-71-0134
I-71 LYTLE TUNNEL UNDER LYTLE PARK

HAM-71-01.34
PID No. 87268

271/296

529/555

c:\pwworking\hmm\externo\tyn61470\dms727●\071_0134CES314.dgn 10/27/2014 12:56:30 PM TYN61470

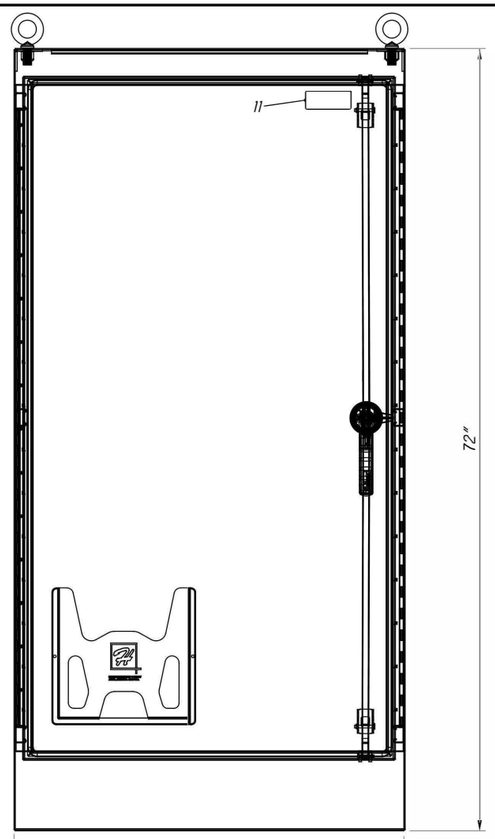

FRONT VIEW

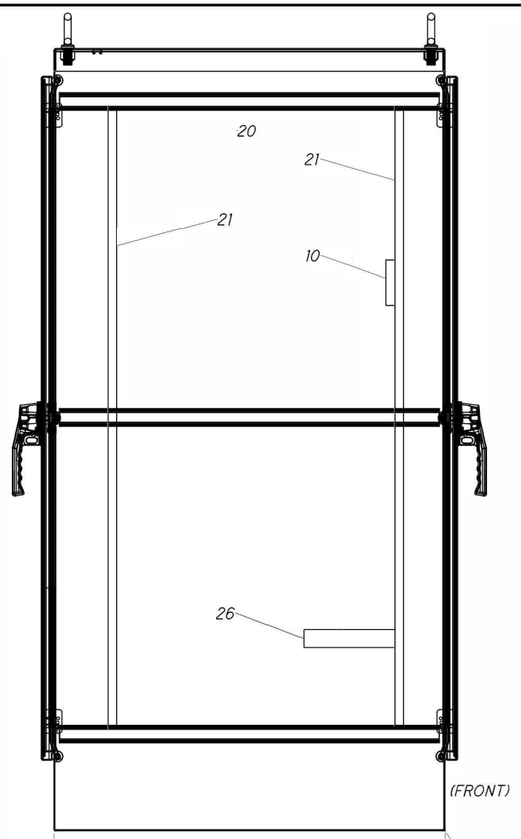

SIDE VIEW (LEFT)

NOTES:

1. FANS (HEATER/CIRCULATION) SHALL BE MOUNTED IN A WAY TO ALLOW FOR ADEQUATE AIR FLOW.

2. CIRCULATION FAN ITEM #27 SHALL BE ON AT ALL TIMES.

3. HEATER SHALL TURN ON DURING LOW TEMPERATURE CONDITIONS VIA AUX CONTACTS ON ENVIRONMENTAL MONITORNG DEVICE ITEM #6. CONTRACTOR SHALL PROGRAM DEVICE AS REQUIRED.

4. A VoIP PHONE SHALL BE PROVIDED WITHIN CABINET, FOR INTERNAL USE. THE PHONE MUST BE COMPATIBLE WITH ODOT/ITS EXISTING INFRASTRUCTRE. PHONE SHALL HAVE ITS OWN POWER SUPPLY, PoE NOT TO BE USED. CONTRACTOR TO DETERMINE MOUNTING METHOD WITHIN CABINET.

5. CABINET FOUNDATION SHALL BE PROVIDED BY THE CONTRACTOR, AS PER ODOT LATEST STANDARDS. MINIMUM FOUR 4" CONDUITS ENTERING FROM THE BOTTOM.

6. CONTRACTOR SHALL MODIFY RACK PLATE ITEM #24 MOUNTING FOR APPROPRIATE DEPTH CLEARANCE IF REQUIRED.

7.SERVING ALL PORTALS AT THE SAME TUNNEL SIDE.

8.ENVIRONMENTALLY PROTECTED CABINET (NEMA-4X)

9. FOR LEGEND AND ABBREVIATIONS SEE SHEET 516/555

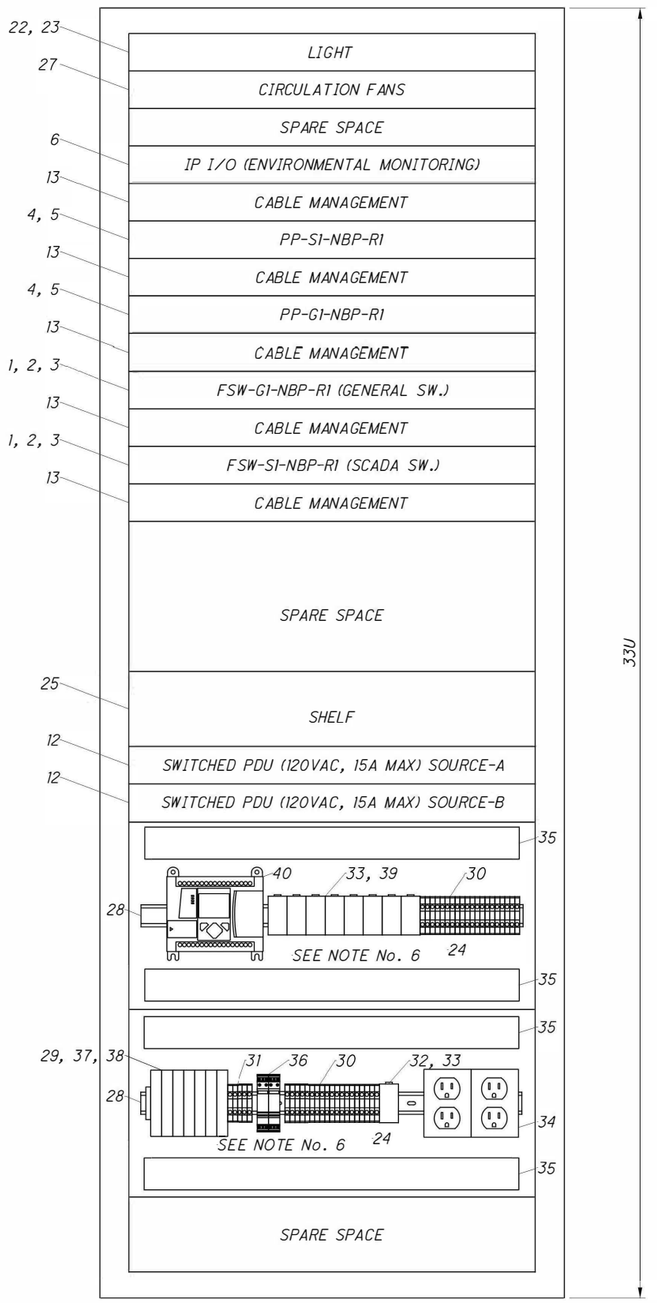

OUTDOOR COMMS CABINET (NORTH PORTAL)

GENERAL NOTE:

THE CURRENT DESIGN IS BASED ON THE PARTS AND COMPONENTS SPECIFIED IN THE BILL OF MATERIALS. ENGINEER (ODOT) APPROVED OR EQUAL COMPONENTS MAY BE ACCEPTED. WHEN APPROVED EQUALS ARE TO BE USED THE CONTRACTOR SHALL BE RESPONSIBLE FOR ANY MODIFICATIONS TO THE DESIGN PLANS ASSOCIATED WITH THE CHANGE. MODIFICATIONS WILL INCLUDE BUT NOT LIMITED TO BILL OF MATERIALS, DIMENSIONS, SPECIFICATIONS, POWER DISTRIBUTION, CABLE AND CONDUIT SCHEDULE. FINAL DESIGN UTILIZING ENGINEER APPROVED MATERIALS SHALL ALSO BE SUBJECT TO APPROVAL.

PLAN LAYOUT

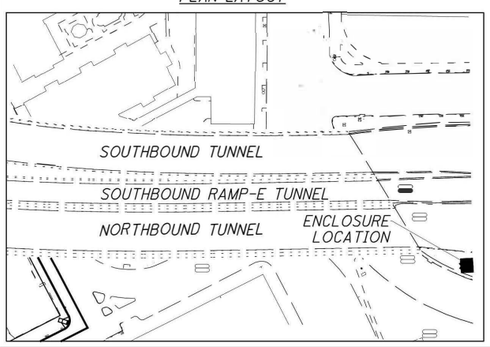

EQUIPMENT LIST

ITEM NO.	PART NUMBER	MANUFACTURER	DESCRIPTION	QTY
1	IE-3010-24TC	CISCO	INDUSTRIAL ETHERNET 3010 SERIES 24 RJ45 + 2 SFP PORTS	2
2	GLC-LX-SM-RGD	CISCO	RUGGED GIGABIT ETHERNET TRANCEIVER SFP, LC	4
3	PWR-RGD-AC-DC/IA	CISCO	ADDITIONAL POWER SUPPLY UNIT FOR REDUNDANCY	2
4	CCH-01U	CORNING	FIBER HOUSING FOR SPLICE CASSETTES (HOLDS 2 CCH)	2
5	CCH-CS24-A9-P00RE	CORNING	SPLICE CASSETTE IN THE HOUSING - 24 STRANDS CAPACITY	4
6	NBRK0201	APC	NETBOTZ ENVIRONMENTAL MONITORING	1
10	AP9335TH	APC	NETBOTZ TEMPERATURE & HUMIDITY SENSOR	1
11	NBES0302	APC	NETBOTZ DOOR SWITCH SENSOR	1
12	AP7900	APC	SWITCHED RACK PDU (8)5-15 (120VAC, 15A)	2
13	AR8602A	APC	1U HORIZONTAL CABLE MANAGEMENT	5
20	A723636SSFSDAN4	HOFFMAN	FLOOR-MOUNT FREE-STAND ENCLOSURE 72" X 36" X 36"	1
21	A7236SOF19	HOFFMAN	SWING-OUT RACK MTG. FRAME	2
22	LF120V18	HOFFMAN	FLUORESCENT LIGHT 18"	1
23	F8T5	HOFFMAN	FLUORESCENT LIGHT BULB T5	1
24	P19RPP5UB	HOFFMAN	5U RACK PANEL FOR 19" RACKS	2
25	ESH1915V	HOFFMAN	2U SINGLE-SIDED SHELF 19" X 17"	1
26	SHV031159	HAMMOND	400WATT CONTROL PANEL HEATER	1
27	FT600TA1BK	HAMMOND	RACK MOUNT FAN TRAY (6 FANS)	1
28	199-DR1	ALLEN BRADLEY	35MM DIN RAIL	AS REQ.
29	1492-GH150	ALLEN BRADLEY	15A CIRCUIT BREAKER	3
30	1492-J6	ALLEN BRADLEY	FEED THROUGH TERMINAL BLOCK	AS REQ.
31	1492-JG4	ALLEN BRADLEY	GROUND TERMINAL BLOCKS	AS REQ.
32	700-HC22Z12	ALLEN BRADLEY	MINATURE RELAY DPDT 12 VDC	1
33	700-HN103	ALLEN BRADLEY	SCREW TERMINAL SOCKET	9
34	N/A	N/A	DUAL PLUG RECEPTACLE	2
35	N/A	N/A	WIREWAY	AS REQ.
36	2856812	PHOENIX CONTACT	TYPE 3 SUURGE PROTECTOR	2
37	1492-GH050	ALLEN BRADLEY	5A CIRCUIT BREAKER	1
38	1492-GH020	ALLEN BRADLEY	2A CIRCUIT BREAKER	4
39	700-HC22A1	ALLEN BRADLEY	MINATURE RELAY DPDT 120VAC	8
40	1763-L16AWA	ALLEN BRADLEY	MICROLOGIX 1100 PROGRAMMABLE CONTROLLER	1
50	DTT-60-VoIP	GUARDIAN TELECOM	VoIP DESKTOP/WALL MOUNT PHONE TYPE 4X (NOTE No.4)	1

DESIGN AGENCY
HATCH MOTT MacDONALD
18013 CLEVELAND PKWY.
SUITE 200
CLEVELAND, OH 44135

DESIGNED	DRAWN	REVIEWED	DATE
MS	MS	RF	08/19/14
CHECKED	REVISED	STRUCTURE FILE NUMBER	
KS	CZ	3106578	

SCADA - NETWORKING NORTH PORTAL CABINET LAYOUT

BRIDGE NO. HAM-71-0134
I-71 LYTLE TUNNEL UNDER LYTLE PARK

HAM-71-01.34
PID No. 87268

c:\pwworking\hmm\external\tyn61470\dms727703\071-0134CES315.dgn 10/27/2014 12:56:56 PM TYN61470

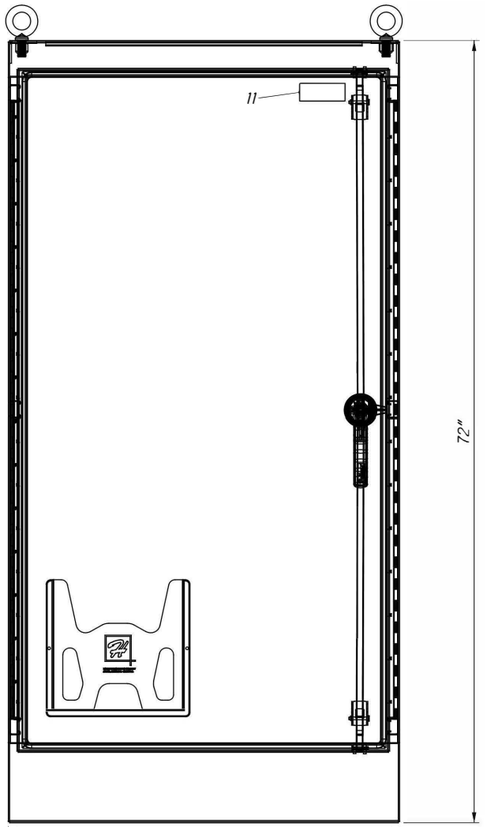

FRONT VIEW

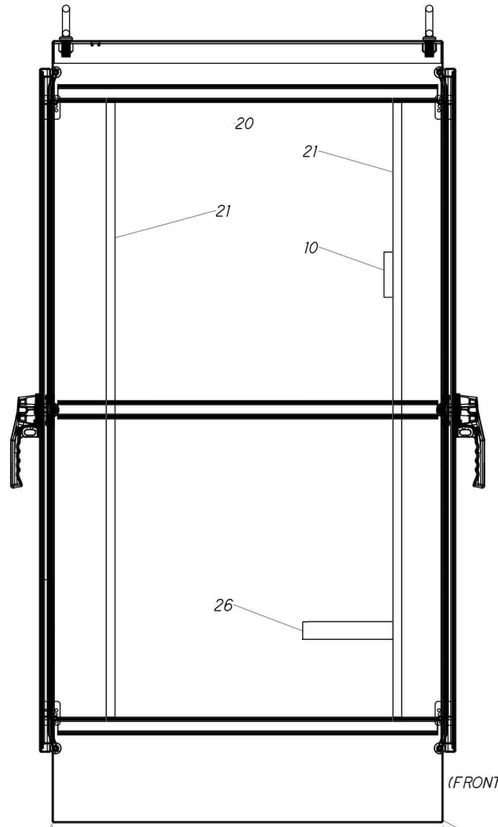

SIDE VIEW (LEFT)

NOTES:

1. FANS (HEATER/CIRCULATION) SHALL BE MOUNTED IN A WAY TO ALLOW FOR ADEQUATE AIR FLOW.

2. CIRCULATION FAN ITEM #27 SHALL BE ON AT ALL TIMES.

3. HEATER SHALL TURN ON DURING LOW TEMPERATURE CONDITIONS VIA AUX CONTACTS ON ENVIRONMENTAL MONITORNG DEVICE ITEM #6. CONTRACTOR SHALL PROGRAM DEVICE AS REQUIRED.

4. A VoIP PHONE SHALL BE PROVIDED WITHIN CABINET, FOR INTERNAL USE. THE PHONE MUST BE COMPATIBLE WITH ODOT/ITS EXISTING INFRASTRUCTRE. PHONE SHALL HAVE ITS OWN POWER SUPPLY, PoE NOT TO BE USED. CONTRACTOR TO DETERMINE MOUNTING METHOD WITHIN CABINET.

5. CONTRACTOR SHALL ALLOW FOR A SCADA NODE INCLUDING KEYBOARD, MONITOR AND CLIENT LICENSE WITHIN CABINET AT ODOT/ITS REQUEST.

6. CABINET FOUNDATION SHALL BE PROVIDED BY THE CONTRACTOR, AS PER ODOT LATEST STANDARDS. MINIMUM FOUR 4" CONDUITS ENTERING FROM THE BOTTOM.

7. CONTRACTOR SHALL MODIFY RACK PLATE ITEM #24 MOUNTING FOR APPROPRIATE DEPTH CLEARANCE IF REQUIRED.

8.CABINET SHALL SERVE ALL PORTALS AT THE SAME TUNNEL SIDE.

9.ENVIRONMENTALLY PROTECTED CABINET (NEMA-4X)

10.FOR LEGEND AND ABBREVIATIONS SEE SHEET 516/555

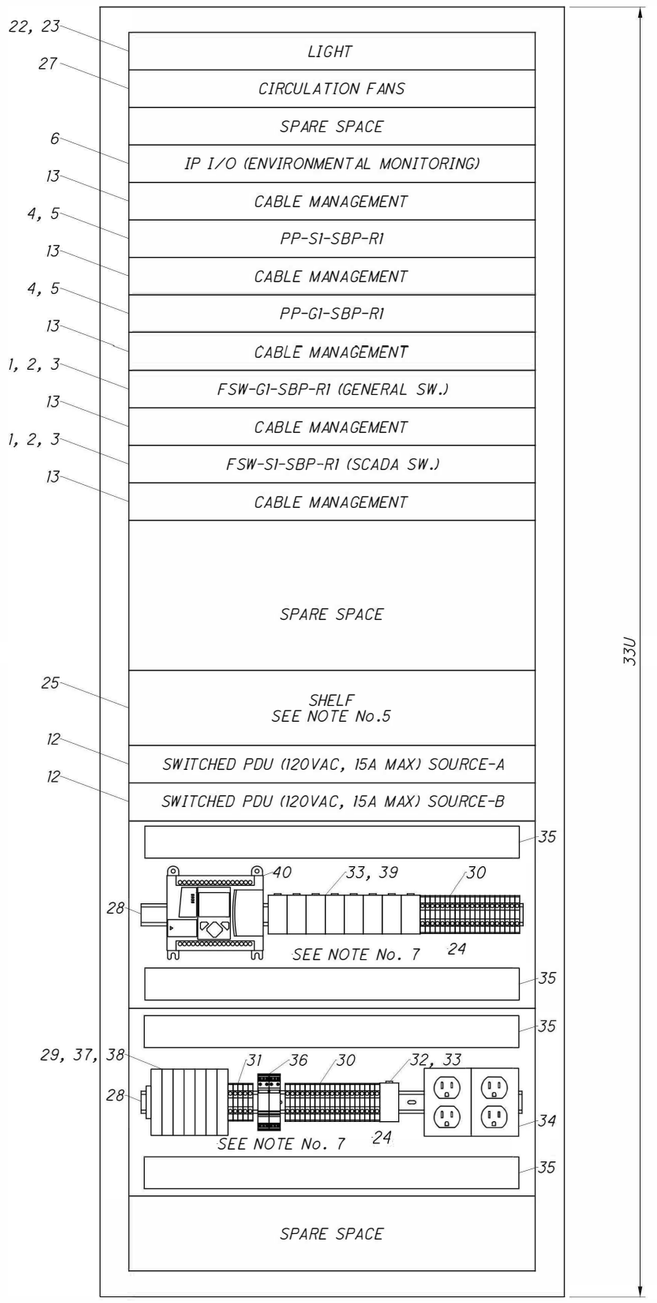

OUTDOOR COMMS CABINET (SOUTH PORTAL)

GENERAL NOTE:

THE CURRENT DESIGN IS BASED ON THE PARTS AND COMPONENTS SPECIFIED IN THE BILL OF MATERIALS. ENGINEER (ODOT) APPROVED OR EQUAL COMPONENTS MAY BE ACCEPTED. WHEN APPROVED EQUALS ARE TO BE USED THE CONTRACTOR SHALL BE RESPONSIBLE FOR ANY MODIFICATIONS TO THE DESIGN PLANS ASSOCIATED WITH THE CHANGE. MODIFICATIONS WILL INCLUDE BUT NOT LIMITED TO BILL OF MATERIALS, DIMENSIONS, SPECIFICATIONS, POWER DISTRIBUTION, CABLE AND CONDUIT SCHEDULE. FINAL DESIGN UTILIZING ENGINEER APPROVED MATERIALS SHALL ALSO BE SUBJECT TO APPROVAL.

PLAN LAYOUT

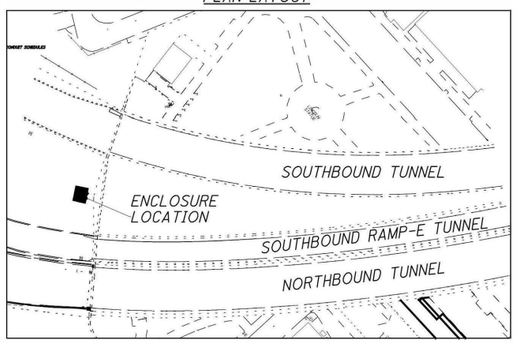

EQUIPMENT LIST

ITEM NO.	PART NUMBER	MANUFACTURER	DESCRIPTION	QTY
1	IE-3010-24TC	CISCO	INDUSTRIAL ETHERNET 3010 SERIES 24 RJ45 + 2 SFP PORTS	2
2	GLC-LX-SM-RGD	CISCO	RUGGED GIGABIT ETHERNET TRANCEIVER SFP, LC	4
3	PWR-RGD-AC-DC/IA	CISCO	ADDITIONAL POWER SUPPLY UNIT FOR REDUNDANCY	2
4	CCH-01U	CORNING	FIBER HOUSING FOR SPLICE CASSETTES (HOLDS 2 CCH)	2
5	CCH-CS24-A9-P00RE	CORNING	SPLICE CASSETTE IN THE HOUSING - 24 STRANDS CAPACITY	4
6	NBRK0201	APC	NETBOTZ ENVIRONMENTAL MONITORING	1
10	AP9335TH	APC	NETBOTZ TEMPERATURE & HUMIDITY SENSOR	1
11	NBES0302	APC	NETBOTZ DOOR SWITCH SENSOR	1
12	AP7900	APC	SWITCHED RACK PDU (8)5-15 (120VAC, 15A)	2
13	AR8602A	APC	1U HORIZONTAL CABLE MANAGEMENT	5
20	A723636SSFSDAN4	HOFFMAN	FLOOR-MOUNT FREE-STAND ENCLOSURE 72" X 36" X 36"	1
21	A7236SOF19	HOFFMAN	SWING-OUT RACK MTG. FRAME	2
22	LF120VI8	HOFFMAN	FLUORESCENT LIGHT 18"	1
23	F8T5	HOFFMAN	FLUORESCENT LIGHT BULB T5	1
24	P19RPP5UB	HOFFMAN	5U RACK PANEL FOR 19" RACKS	1
25	ESH1915V	HOFFMAN	2U SINGLE-SIDED SHELF 19" X 17"	1
26	SHV031159	HAMMOND	400WATT CONTROL PANEL HEATER	1
27	FT600TA1BK	HAMMOND	RACK MOUNT FAN TRAY (6 FANS)	1
28	199-DR1	ALLEN BRADLEY	35MM DIN RAIL	AS REQ.
29	1492-GH150	ALLEN BRADLEY	15A CIRCUIT BREAKER	2
30	1492-J6	ALLEN BRADLEY	FEED THROUGH TERMINAL BLOCK	AS REQ.
31	1492-JG4	ALLEN BRADLEY	GROUND TERMINAL BLOCKS	AS REQ.
32	700-HC22Z12	ALLEN BRADLEY	MINATURE RELAY DPDT 12 VDC	1
33	700-HN103	ALLEN BRADLEY	SCREW TERMINAL SOCKET	1
34	N/A	N/A	DUAL PLUG RECEPTICAL	2
35	N/A	N/A	WIREWAY	AS REQ.
36	2856812	PHOENIX CONTACT	TYPE 3 SURGE PROTECTOR	2
37	1492-GH050	ALLEN BRADLEY	5A CIRCUIT BREAKER	1
38	1492-GH020	ALLEN BRADLEY	2A CIRCUIT BREAKER	4
39	700-HC22A1	ALLEN BRADLEY	MINATURE RELAY DPDT 120VAC	8
40	1763-L16AWA	ALLEN BRADLEY	MICROLOGIX 1100 PROGRAMMABLE CONTROLLER	1
50	DTT-60-VoIP	GUARDIAN TELECOM	VoIP DESKTOP/WALL MOUNT PHONE TYPE 4X (NOTE No.4)	1

DESIGN AGENCY
HATCH MOTT MacDONALD
18013 CLEVELAND PKWY.
SUITE 200
CLEVELAND, OH 44135

DESIGNED	DRAWN	REVIEWED	DATE
MS	MS	RF	08/19/14
CHECKED	REVISED	STRUCTURE FILE NUMBER	
KS	CZ	3106578	

SCADA - NETWORKING SOUTH PORTAL CABINET LAYOUT

BRIDGE NO. HAM-71-0134
I-71 LYTLE TUNNEL UNDER LYTLE PARK

HAM-71-01.34
PID No. 87268

273/296

531/555

c:\pwworking\hmm\external\tyn61470\dms72703\071_0134CES316.dgn 10/27/2014 12:56:40 PM TYN61470

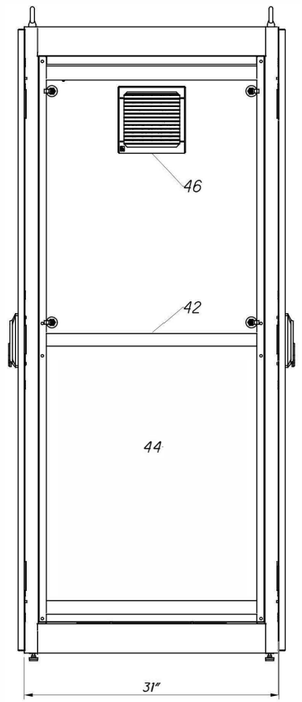

SIDE VIEW (LEFT)

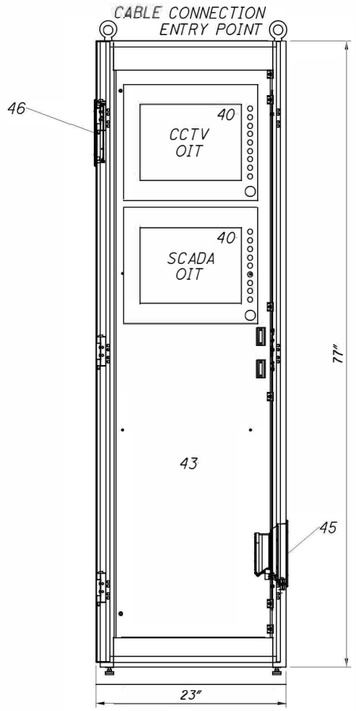

FRONT VIEW

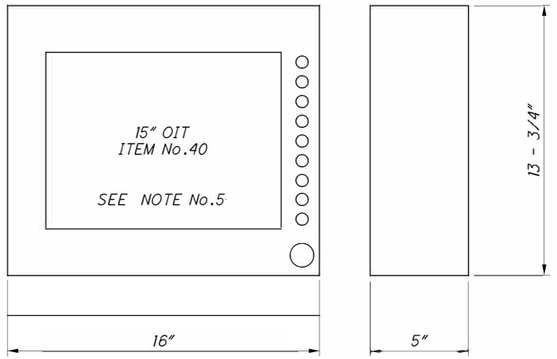

FRONT VIEW SIDE

NOTES:

1. VENTALATION FAN SHALL TURN ON DURING HIGH TEMERATURE CONDITIONS VIA AUX CONTACTS ON ENVIRONMENTAL MONITORNG DEVICE ITEM #20. CONTRACTOR SHALL PROGRAM DEVICE AS REQUIRED.

2. VoIP PHONE UNIT SHALL BE FOR INTERNAL USE, COMPATIBLE WITH THE ODOT/ITS EXISTING INFRASTRUCTURE.

3. CUT-OUT MAY BE FACTORY PROVIDED FOR THE CABINET AND MUST BE CLOSED OFF USING APPROPRIATE NEMA RATED SEALS TO MAINTAIN RESPECTIVE NEMA RATING.

4. CONTRACTOR SHALL MODIFY RACK PLATE ITEM #25 MOUNTING FOR APPROPRIATE DEPTH CLEARANCE IF REQUIRED.

5. CONTRACTOR SHALL MOUNT THE DEVICE IN A WAY WHICH ALLOWS REQUIRED CLEARANCE FOR COMPONENT(S). CUSTOM MOUNTING PLATES MAY BE REQUIRED, WHICH SHALL BE THE RESPONSIBILITY OF THE CONTRACTOR.

6. CABINET SHALL BE NEMA-12 RATED OR GREATER.

7. FOR LEGEND AND ABBREVIATIONS SEE SHEET 516/555

EQUIPMENT LIST

ITEM NO.	PART NUMBER	MANUFACTURER	DESCRIPTION	QTY
1	IE-3010-16S-8PC	CISCO	INDUSTRIAL SW. 3010 SERIES 16 SFP + 8 PoE + 2GE UPLINKS	1
2	GLC-LH-SMD	CISCO	GE SFP, LC CONNECTOR LX/LH TRANSCEIVER	24
3	PWR-RGD-AC-DC/IA	CISCO	ADDITIONAL POWER SUPPLY UNIT FOR REDUNDANCY	2
4	IE-3010-24TC	CISCO	INDUSTRIAL ETHERNET 3010 SERIES 24 RJ45 + 2 SFP PORTS	1
5	WS-C3850-24P	CISCO	CATALYST SW. 3850 SERIES 24 10/100/1000 PORTS	2
6	C3850-NM-4-1G	CISCO	4 X 1 G NETWORK MODULE	2
7	PWR-C1-715WAC	CISCO	ADDITIONAL POWER SUPPLY UNIT FOR REDUNDANCY	2
8	STACK-T1-50CM	CISCO	STACKWISE - 480 50CM STACKING CABLE	2
9	CAB-SPWR-30CM	CISCO	STACKPOWER CABLE 30CM	2
10	ASA5515-SSD120-K9	CISCO	CISCO FIREWALL WITH 6 GE RJ45	2
11	ASA-IC-6GE-SFP-A	CISCO	CISCO ASA INTERFACE CARD, 6 SFP GE PORTS (SX, LH & LX)	2
12	CCH-01U	CORNING	FIBER HOUSING FOR SPLICE CASSETTES (HOLDS 2 CCH)	2
13	CCH-CS24-A9-P00RE	CORNING	SPLICE CASSETTE IN THE HOUSING - 24 STRANDS CAPACITY	4
20	NBRK0201	APC	NETBOTZ ENVIRONMENTAL MONITORING	1
21	AP9335TH	APC	NETBOTZ TEMPERATURE & HUMIDITY SENSOR	1
22	NBES0302	APC	NETBOTZ DOOR SWITCH SENSOR	1
23	AP7900	APC	SWITCHED RACK PDU (8)5-15 (120VAC, 15A)	4
24	AR8602A	APC	1U HORIZONTAL CABLE MANAGEMENT	6
25	P19RPP5UB	HOFFMAN	5U RACK PANEL FOR 19" RACKS	1
26	ESH1915V	HOFFMAN	2U SINGLE-SIDED SHELF 19" X 17"	1
27	199-DR1	ALLEN BRADLEY	35MM DIN RAIL	AS REQ.
28	1492-GH250	ALLEN BRADLEY	25A CIRCUIT BREAKER	2
29	1492-J6	ALLEN BRADLEY	FEED THROUGH TERMINAL BLOCK	AS REQ.
30	1492-JG4	ALLEN BRADLEY	GROUND TERMINAL BLOCKS	AS REQ.
31	N/A	N/A	DUAL PLUG RECEPTICAL	2
32	N/A	N/A	WIREWAY	AS REQ.
33	2856812	PHOENIX CONTACT	TYPE 3 SURGE PROTECTOR	2
34	700-HC22Z12	ALLEN BRADLEY	MINATURE RELAY DPDT 12 VDC	1
35	700-HN103	ALLEN BRADLEY	SCREW TERMINAL SOCKET	1
36	1492-GH050	ALLEN BRADLEY	5A CIRCUIT BREAKER	1
37	LF120V18	HOFFMAN	FLUORESCENT LIGHT 18"	1
38	F8T5	HOFFMAN	FLUORESCENT LIGHT BULB T5	1
40	WOLVERINE III	GENERAL ELECTRIC	RUGGED FLAT PANEL COMPUTER 15"	2
41	C3F197031CG1	HAMMOND	C3 SERIES NETWORK CABINET FRAME 77" X 23" X 32"	1
42	CPR70SZPL	HAMMOND	C3 SERIES NETWORK CABINET MOUNTING RAILS 19"	2
43	C3DSI970HCG1	HAMMOND	C3 NETWORK CABINET SOLID DOOR (HEIGHT 70")	2
44	C3SP7031CG1	HAMMOND	C3 NETWORK CABINET SIDE PANEL 70" X 31.5"	2
45	PF43000T12LG	HAMMOND	FILTER FAN T12 (163 CFM)	1
46	PFA40000LG	HAMMOND	EXHAUST FILTER T12	1
47	1492-GH020	ALLEN BRADLEY	2A CIRCUIT BREAKER	5
50	DTT-60-VoIP	GUARDIAN TELECOM	VoIP DESKTOP/WALL MOUNT PHONE TYPE 4X (NOTE No.2)	1
60	697494-S01	HP	DL380E SERVER	2
61	657750-B21	HP	1TB 6G SATA 7.2K RPM LFF (3.5-INCH) HARD DRIVE	8
62	BD506AAE	HP	ILO ADVANCED ELECTRONIC LICENSE	2
63	BB878A	HP	STOREONCE 4500 24TB BACKUP NAS	1

GENERAL NOTES:

1. THE CURRENT DESIGN IS BASED ON THE PARTS AND COMPONENTS SPECIFIED IN THE BILL OF MATERIALS. ENGINEER (ODOT) APPROVED OR EQUAL COMPONENTS MAY BE ACCEPTED. WHEN APPROVED EQUALS ARE TO BE USED THE CONTRACTOR SHALL BE RESPONSIBLE FOR ANY MODIFICATIONS TO THE DESIGN PLANS ASSOCIATED WITH THE CHANGE. MODIFICATIONS WILL INCLUDE BUT NOT LIMITED TO BILL OF MATERIALS, DIMENSIONS, SPECIFICATIONS, POWER DISTRIBUTION, CABLE AND CONDUIT SCHEDULE. FINAL DESIGN UTILIZING ENGINEER APPROVED MATERIALS SHALL ALSO BE SUBJECT TO APPROVAL.

2. CONTRACTOR SHALL ENSURE INTERNAL CABINET ENVIROMENTAL CONDITIONS ARE WITHIN REQUIRMENTS OF THE CABINET MOUNTED EQUIPMENT. THE CONTRACTOR SHALL SUPPLY AND INSTALL ANY ADITIONAL EQUIPMENT TO MEET THESE REQUIRMENTS AND MAINTAIN THE CABINET NEMA RATING.

PLAN LAYOUT

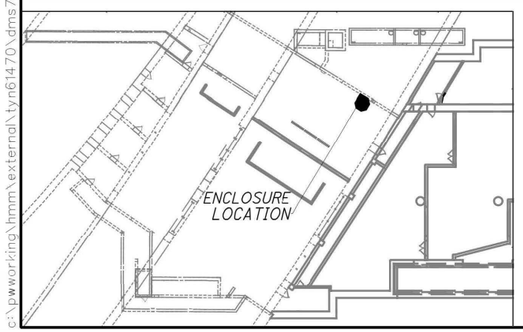

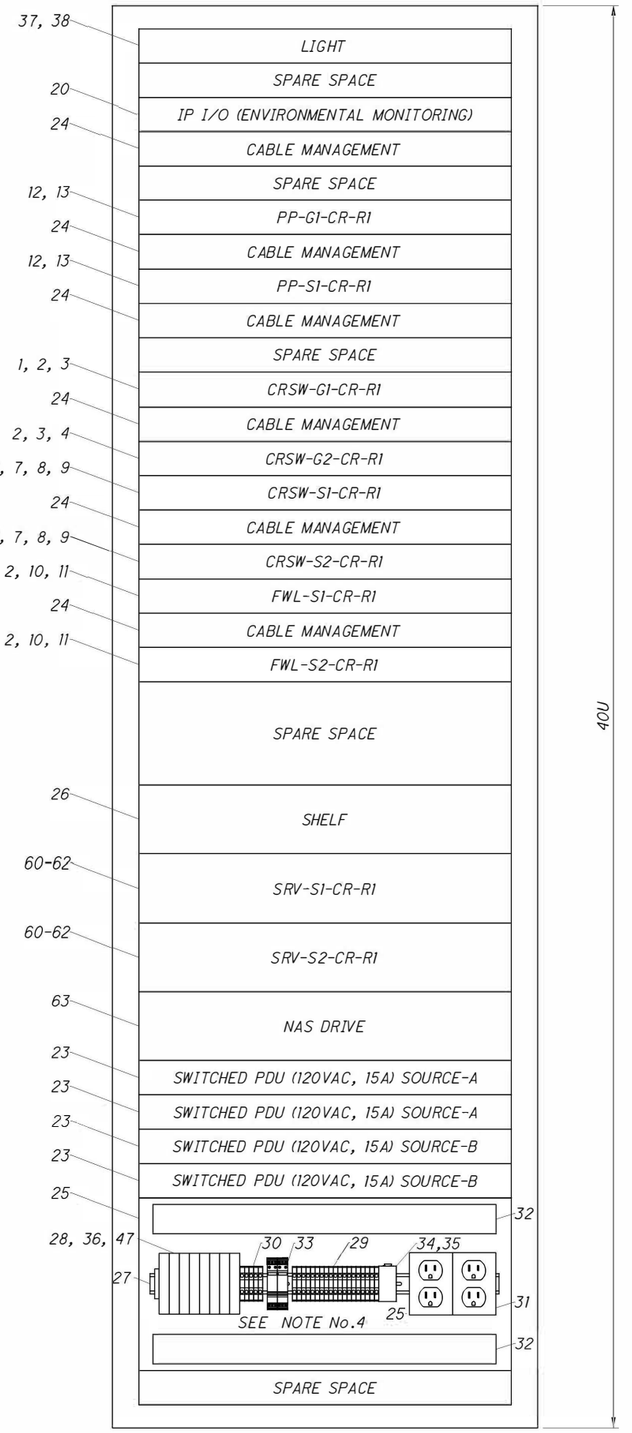

CENTRAL COMMS CABINET (CONTROL ROOM)

DESIGN AGENCY
HATCH MOTT MacDONALD
18013 CLEVELAND PKWY.
SUITE 200
CLEVELAND, OH 44135

DESIGNED	DRAWN	REVIEWED	DATE
MS	MS	RF	08/19/14
CHECKED	REVISED	STRUCTURE FILE NUMBER	
KS	CZ	3106578	

SCADA - NETWORKING CENTRAL CABINET LAYOUT
BRIDGE NO. HAM-71-0134
I-71 LYTLE TUNNEL UNDER LYTLE PARK

HAM-71-01.34
PID No. 87268

274/296

532/555

TYN61470

c:\pwworking\hmm\external\tyn61470\dms72703\071_0134CES317.dgn 10/27/2014 12:56:45 PM

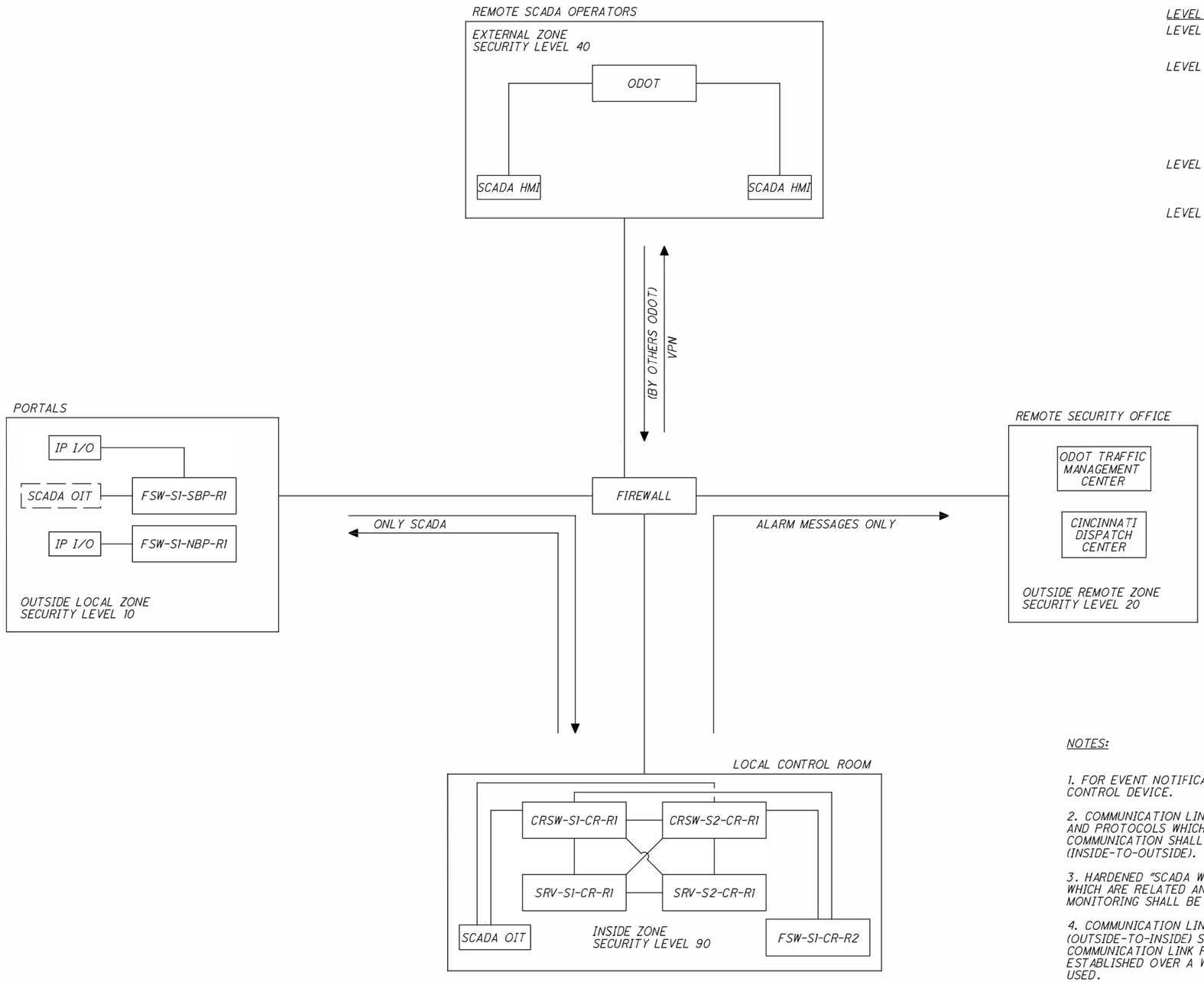

SECURITY LEVEL TABLE

LEVEL	ZONE NAME	LOCATION
90	INSIDE	MAIN CONTROL CABINET(S)
10	OUTSIDE LOCAL	PORTALS
40	EXTERNAL	REMOTE SCADA OPERATORS - ODOT
20	OUTSIDE REMOTE	REMOTE SECURITY OFFICE - TMC

LEVEL DESCRIPTIONS:

LEVEL 90: CONTROL CABINETS LOCATED INSIDE THE TUNNEL'S SECURED AREA(S), CONSIDERED PHYSICALLY SAFE.

LEVEL 10: PORTAL CABINETS ARE ACCESSIBLE FROM THE OUTSIDE AREA AND ARE SUBJECT TO SECURITY VIOLATIONS. ALTHOUGH CABINETS ARE MONITORED WITH CONTROL ACCESS, EASE OF ACCESS MAKES IT THE LEAST SECURED ZONE. THE GOAL IS TO LIMIT THE EXPOSURE AND VISIBILITY OF THE TUNNEL'S SYSTEMS AS WELL AS THE REMOTE OFFICES FROM THE PORTAL NETWORK DEVICES.

LEVEL 40: THIS ZONE IS CONSIDERED AS PART OF THE TUNNEL NETWORK, DUE TO THE SCADA DATA TRANSMITTING AND ODOT MANAGEMENT OPERATIONS.

LEVEL 20: THIS ZONE IS FOR CCTV DATA AND REQUESTED TO HAVE NOTIFICATION OF SCADA ALARM MESSAGES ONLY.

SECURITY GENERAL NOTES:

1. ZONES ARE ASSIGNED BASED ON PHYSICAL LOCATIONS OF CABINET(S).

2. SECURITY LEVELS REPRESENT THE LEVEL OF TRUST FOR EACH ZONE. THE HIGHER THE SECURITY LEVEL, THE MORE TRUSTED THE ZONE IS.

3. USUAL SETUP IS THAT OF TRAFFIC FLOW IS ONLY POSSIBLE FROM ZONE OF HIGHER LEVELS TO LOWER LEVEL ZONES. ACCESS IN THE OPPOSITE DIRECTION (LOWER TO HIGHER ZONES) IS FORBIDDEN BY DEFAULT, UNLESS MANUALLY OVERRIDDEN WITH RULE(S).

NOTES:

1. FOR EVENT NOTIFICATION ON SCADA, "FW" SHALL BE AN ACCESS CONTROL DEVICE.

2. COMMUNICATION LINK BETWEEN CONTROL ROOM AND TMC, PORTS AND PROTOCOLS WHICH ARE RELATED AND NECESSARY FOR ALARM EMAIL COMMUNICATION SHALL BE ACCESSABLE, IN ONE DIRECTION (INSIDE-TO-OUTSIDE).

3. HARDENED "SCADA WS" AND "IP I/O" ALARM, PORTS AND PROTOCOLS WHICH ARE RELATED AND NECESSARY FOR SCADA COMMUNCATION AND MONITORING SHALL BE ACCESSABLE, IN BOTH DIRECTIONS.

4. COMMUNICATION LINK BETWEEN ODOT AND CONTROL ROOM (OUTSIDE-TO-INSIDE) SHALL BE IN BOTH DIRECTIONS. THIS IS A PRIMARY COMMUNICATION LINK FOR SCADA TUNNEL CONTROLS WHICH SHALL BE ESTABLISHED OVER A WAN, AN ENCRYPTED VPN CONNECTION SHALL BE USED.

5. FOR LEGEND AND ABBREVIATIONS SEE SHEET 516/555

DESIGN AGENCY
HATCH MOTT MacDONALD
18013 CLEVELAND PKWY.
SUITE 200
CLEVELAND, OH 44135

DESIGNED	DRAWN	REVIEWED	DATE
OA	MS	RF	08/19/14
CHECKED	REVISED	STRUCTURE FILE NUMBER	
CS	DC	3106578	

SCADA - NETWORKING LAYER 3/4 DIAGRAM

BRIDGE NO. HAM-71-0134
I-71 LYTLE TUNNEL UNDER LYTLE PARK

HAM-71-01.34
PID No. 87268

TYNG1470
c:\pwworking\hmm\externo\tyn61470\dms72703\071_0134CES318.dgn 10/27/2014 12:56:47 PM TYNG1470

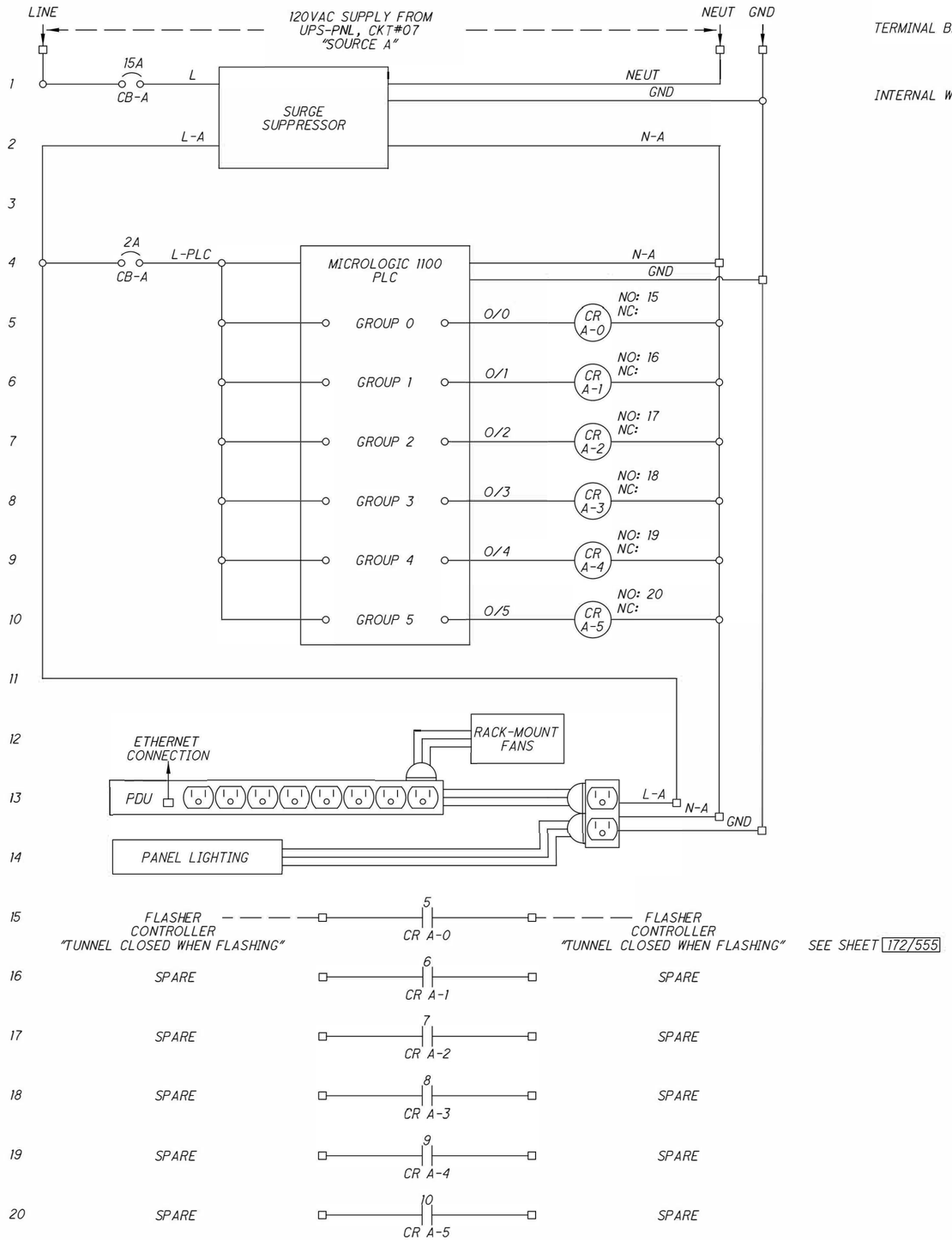

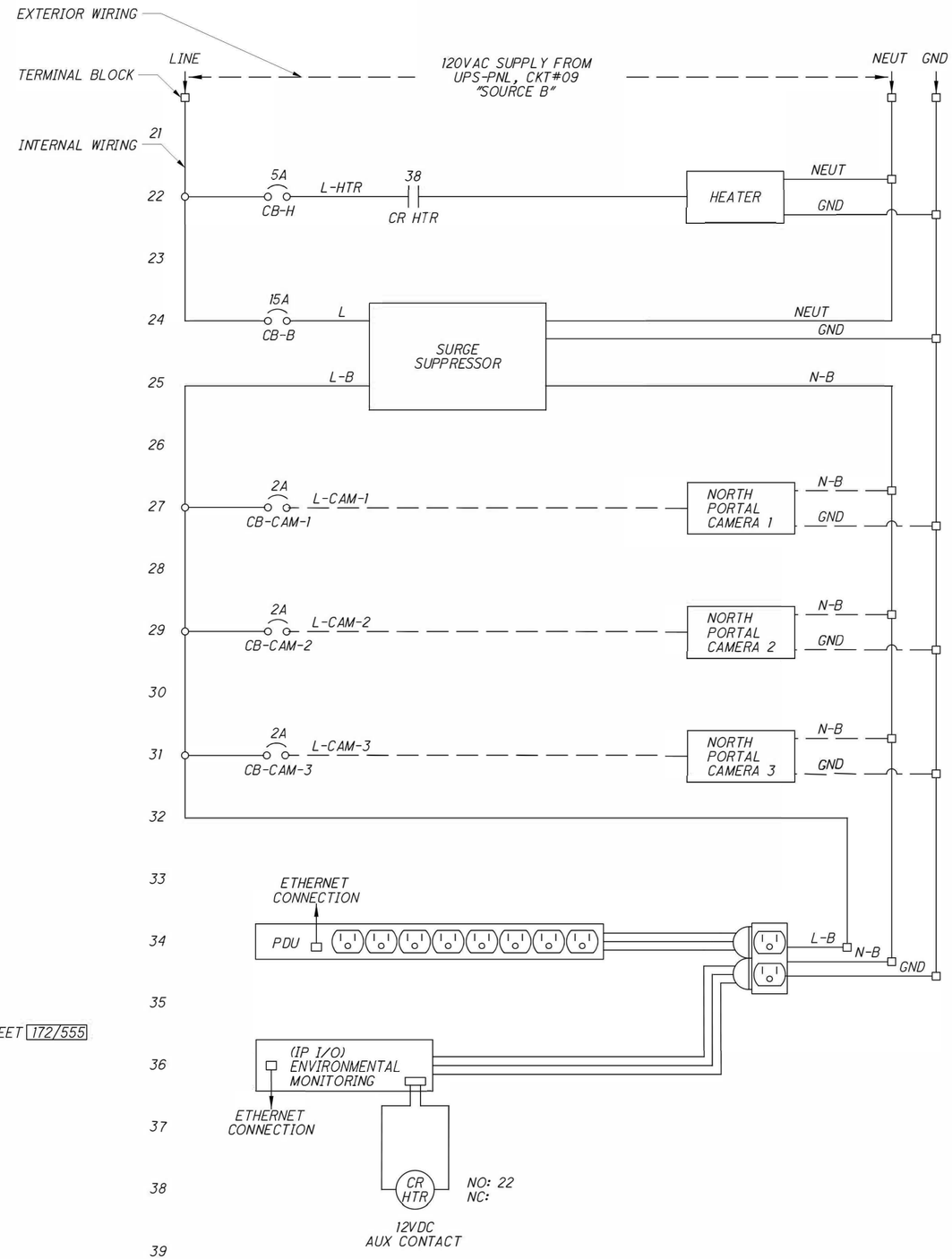

NOTE:

1. FOR LEGEND AND ABBREVIATIONS SEE SHEET 516/555

DESIGN AGENCY
HATCH MOTT MacDONALD
18013 CLEVELAND PKWY.
SUITE 200
CLEVELAND, OH 44135

DESIGNED	DRAWN	REVIEWED	DATE
MS	MS	RF	08/19/14
CHECKED	REVISED	STRUCTURE FILE NUMBER	
KS	CZ	3106578	

SCADA - NORTH PORTAL CABINET WIRING SCHEMATIC

BRIDGE NO. HAM-71-0134
I-71 LYTLE TUNNEL UNDER LYTLE PARK

HAM-71-01.34
PID No. 87268

276/296

534/555

TYN01470

c:\pwworking\hmm\external\tyn61470\dms727803\071_0134CE5319.dgn 10/27/2014 12:56:50 PM TYN01470

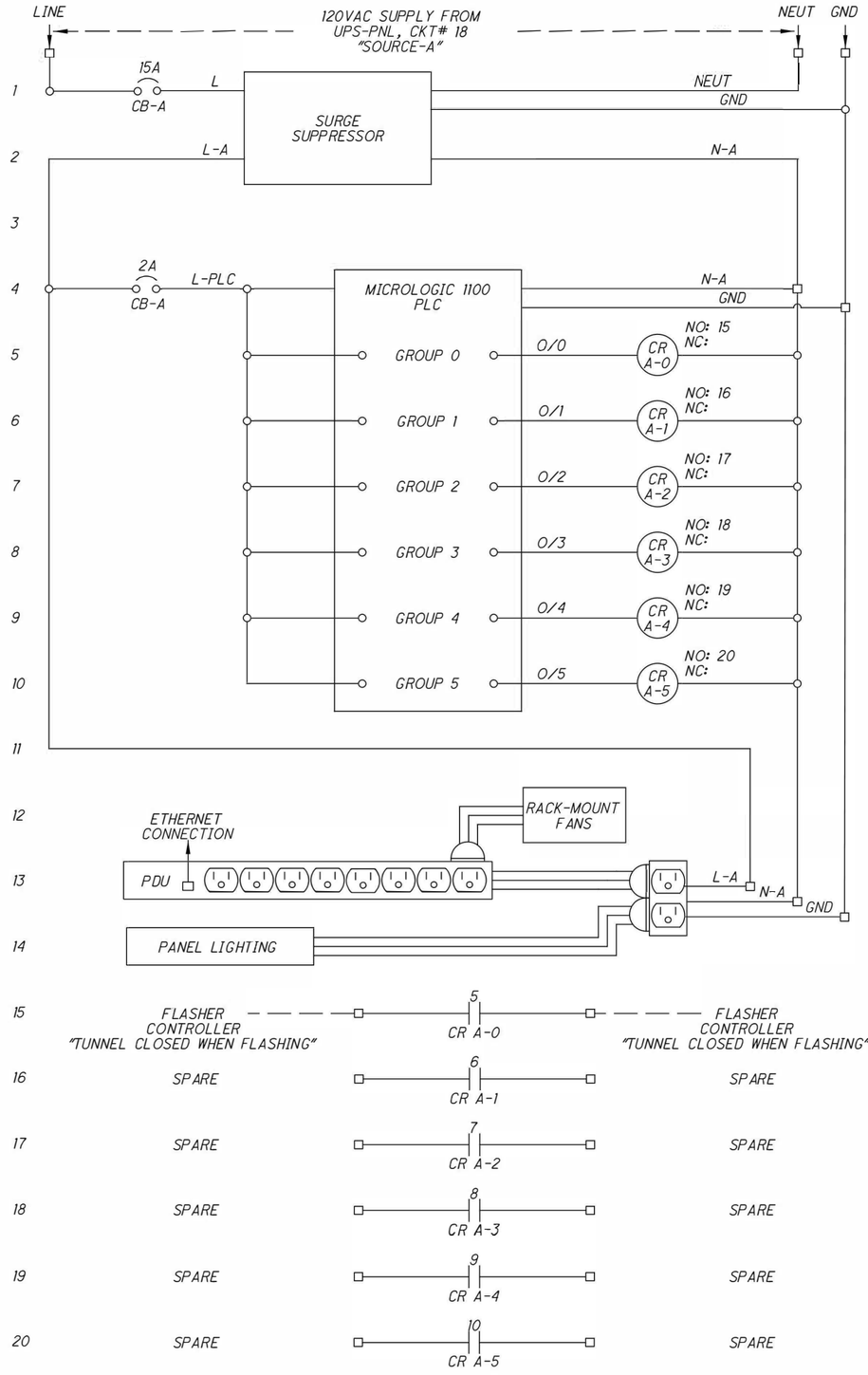

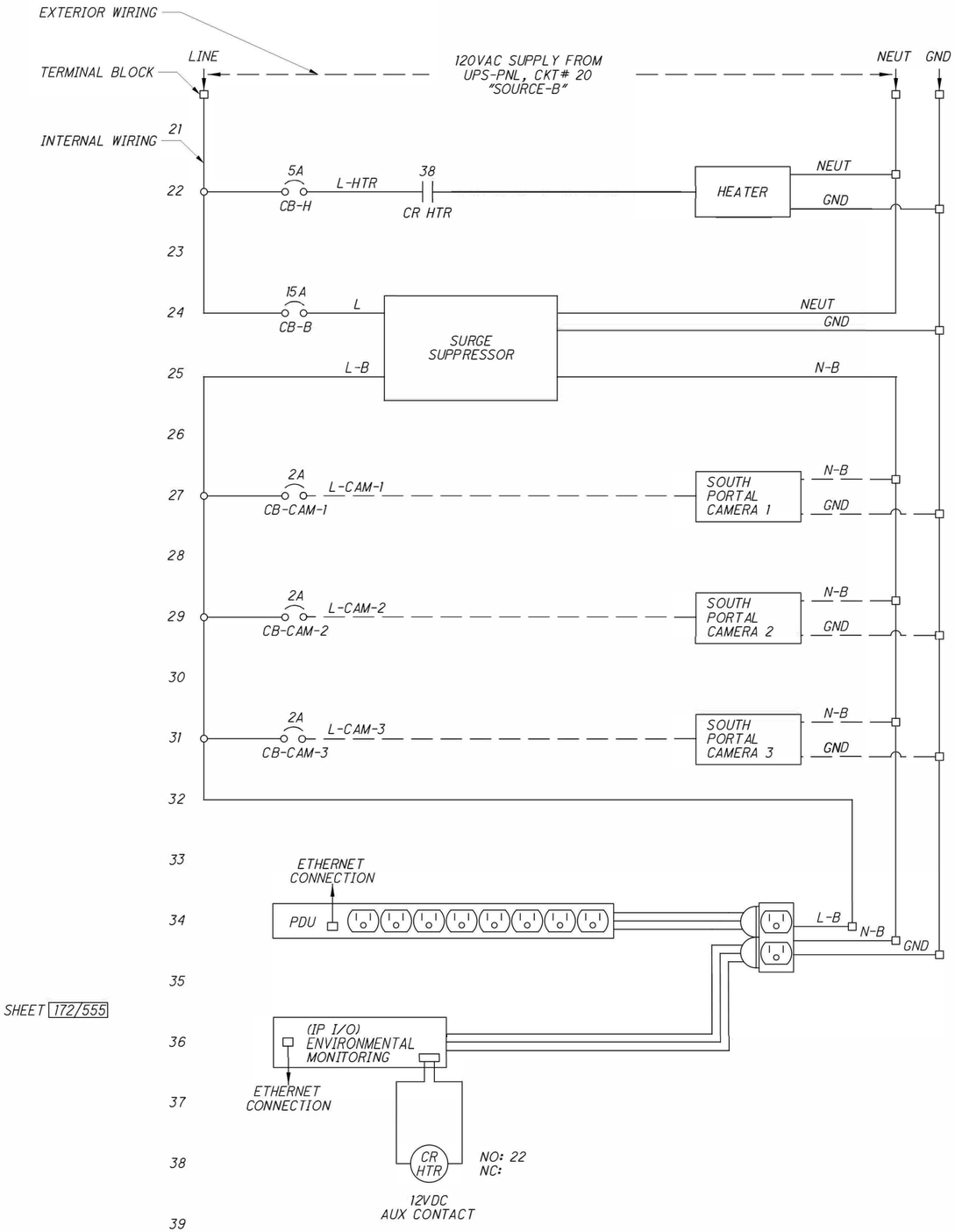

NOTE:

1. FOR LEGEND AND ABBREVIATIONS SEE SHEET 516/555

DESIGN AGENCY	HATCH MOTT MacDONALD 18013 CLEVELAND PKWY. SUITE 200 CLEVELAND, OH 44135
REVIEWED	RF
DATE	08/19/14
STRUCTURE FILE NUMBER	3106578
DRAWN	MS
REVISED	CZ
DESIGNED	MS
CHECKED	KS

SCADA - SOUTH PORTAL CABINET WIRING SCHEMATIC

BRIDGE NO. HAM-71-0134
I-71 LYTLE TUNNEL UNDER LYTLE PARK

HAM-71-01.34
PID No. 87268

277/296

535/555

c:\pwworking\hmm\external\tyn61470\dms72703\071_0134CE320.dgn 10/27/2014 12:56:51 PM TYNG1470

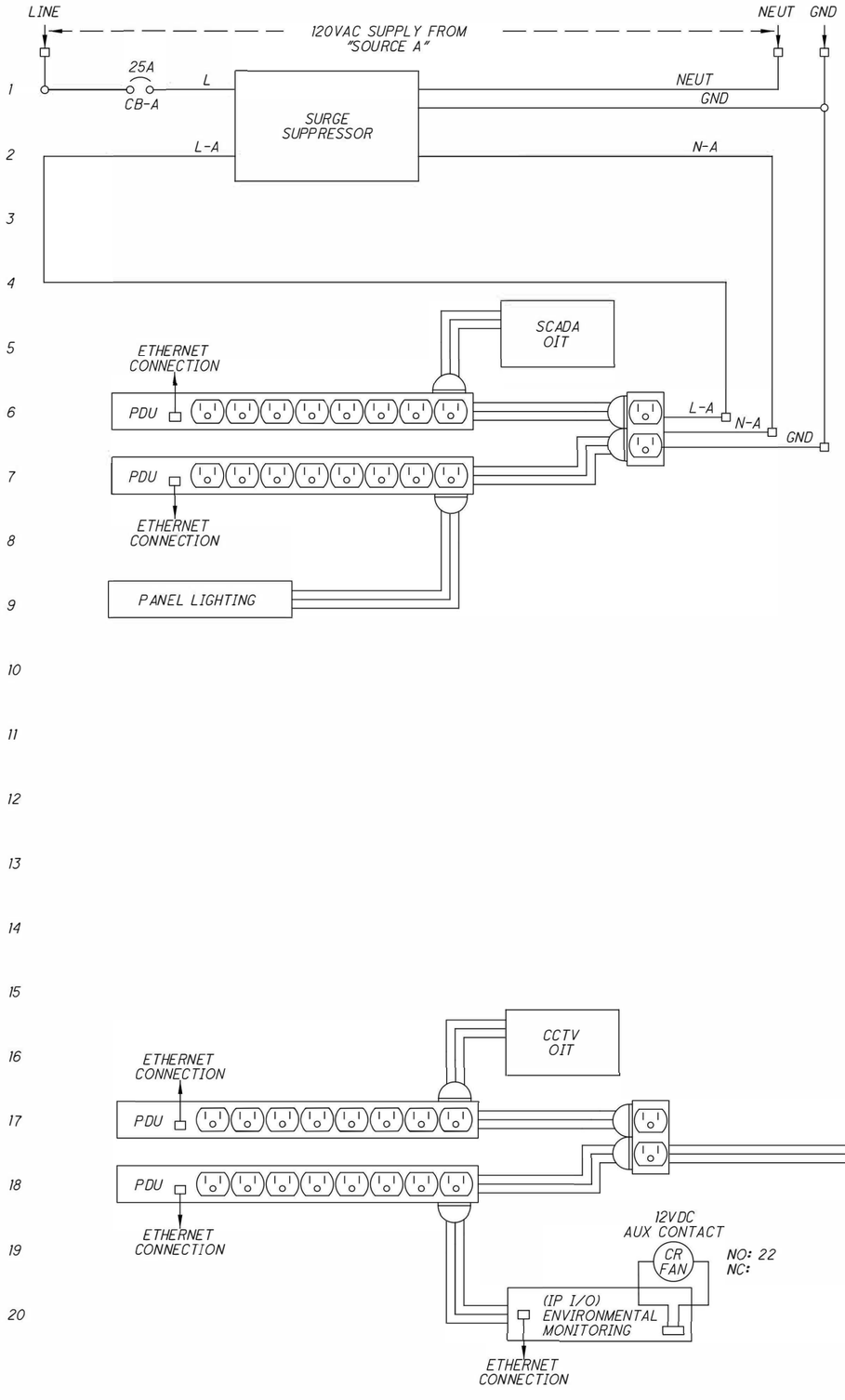

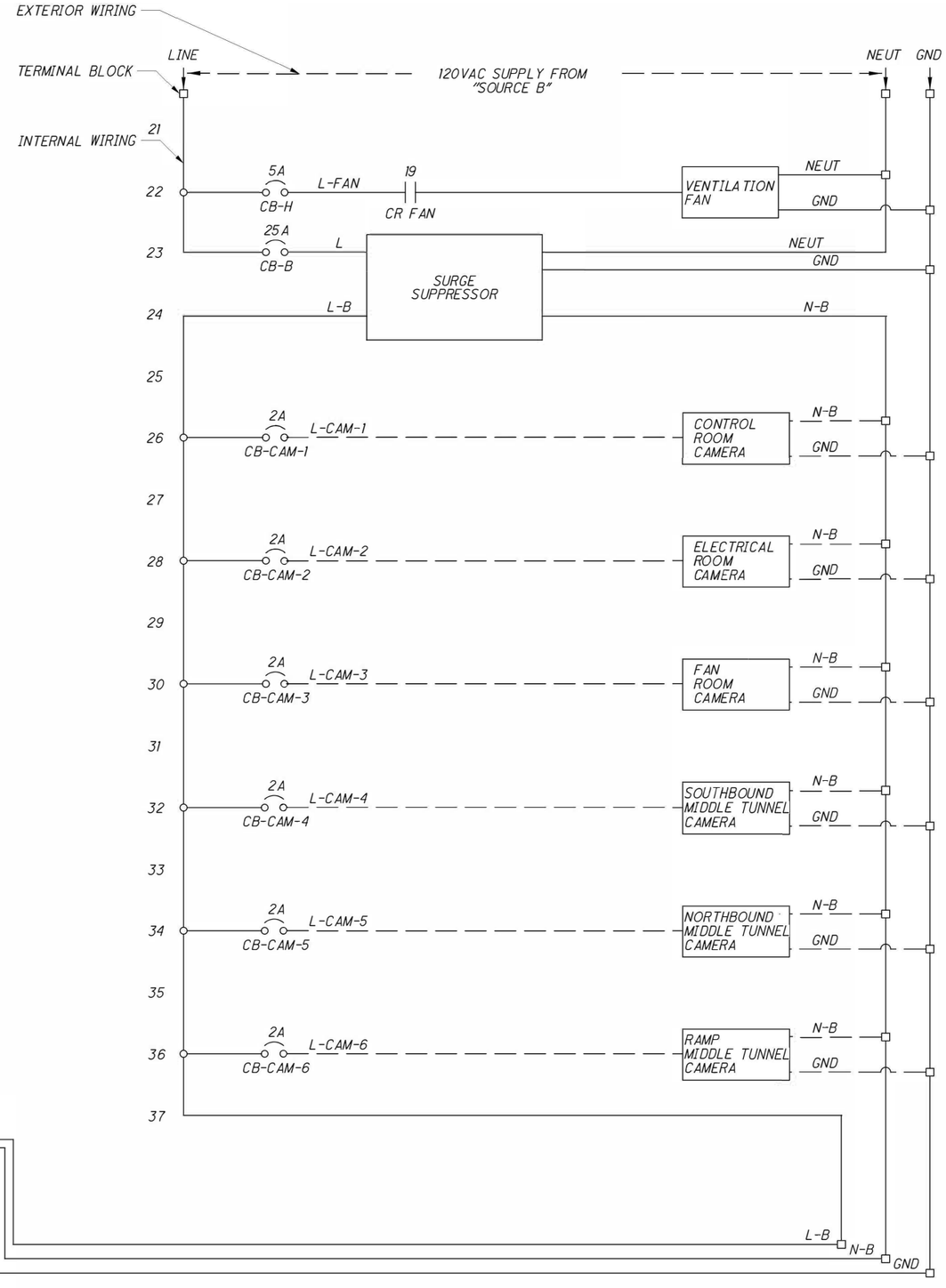

NOTE:

1. FOR LEGEND AND ABBREVIATIONS SEE SHEET 516/555

DESIGN AGENCY
HATCH MOTT MacDONALD
18013 CLEVELAND PKWY.
SUITE 200
CLEVELAND, OH 44135

DESIGNED	DRAWN	REVIEWED	DATE
MS	MS	RF	08/19/14
CHECKED	REVISED	STRUCTURE FILE NUMBER	
KS	CZ	3106578	

SCADA - CENTRAL CABINET WIRING SCHEMATIC

BRIDGE NO. HAM-71-0134
I-71 LYTLE TUNNEL UNDER LYTLE PARK

HAM-71-01.34
PID No. 87268

c:\pwworking\hmm\external\tyn61470\dms727●3\071_0134CE3321.dgn 10/27/2014 12:56:53 PM TYN61470

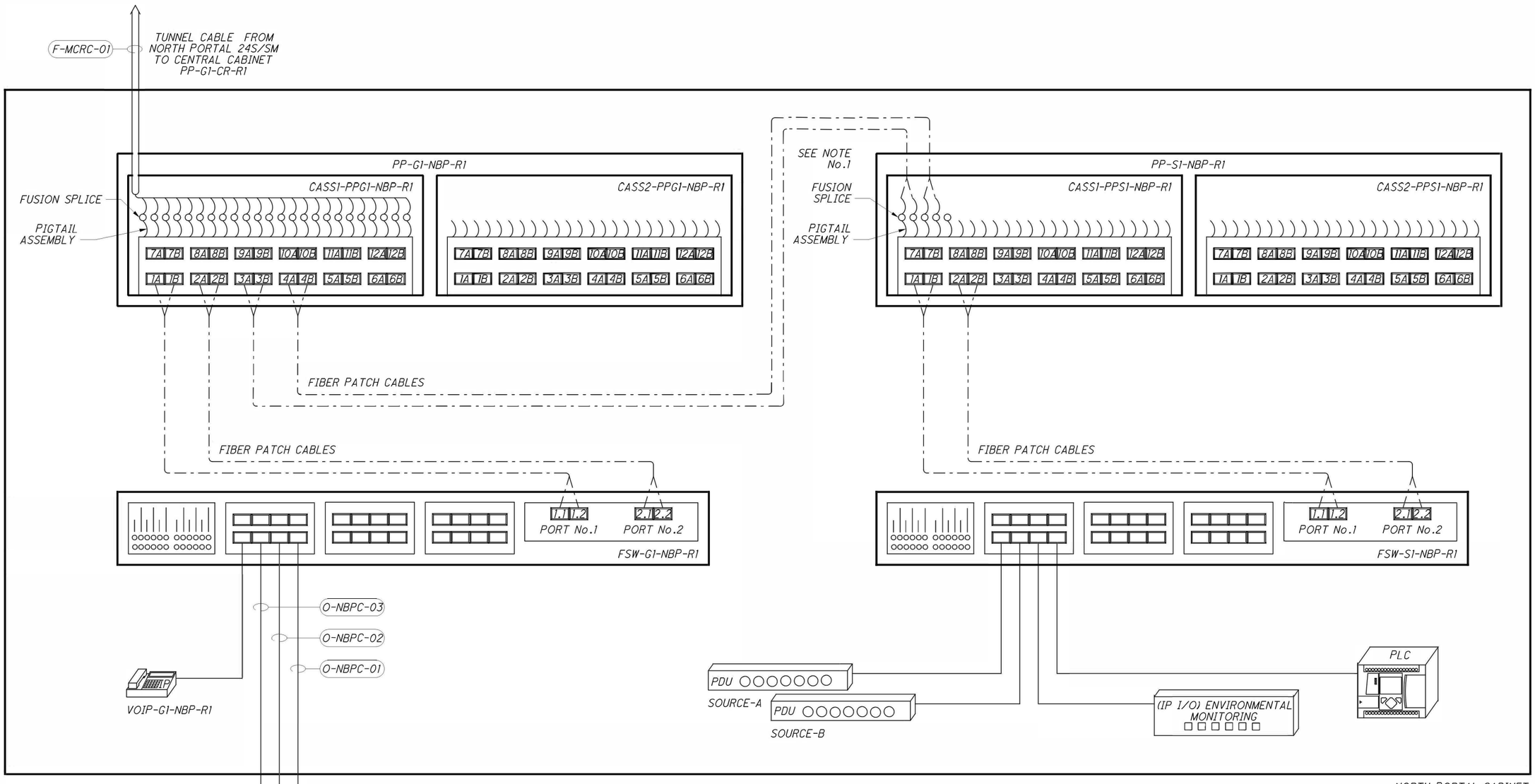

NOTES:

1. FIBER PATCH CABLES WHICH CONNECT PP-S1 AND PP-G1 SHALL BE INSTALLED IN THE FOLLOWING WAY
   - END AT PP-G1-NBP-R1 SHALL HAVE LC CONNECTORS
   - END AT PP-S1-NBP-R1 SHALL BE CUT (LC CONNECTORS)
   LOOSE FIBERS SHALL BE SPLICED TO PIGTAILS FROM SPLICE CASSETTE.
2. FOR LEGEND AND ABBREVIATIONS SEE SHEET 516/555

DESIGN AGENCY
HATCH MOTT MacDONALD
18013 CLEVELAND PKWY.
SUITE 200
CLEVELAND, OH 44135

DESIGNED	DRAWN	REVIEWED	DATE
OA	MS	RF	08/19/14
CHECKED	REVISED	STRUCTURE FILE NUMBER	
CS	DC	3106578	

SCADA - NETWORKING NORTH PORTAL CABINET DIAGRAM

BRIDGE NO. HAM-71-0134
I-71 LYTLE TUNNEL UNDER LYTLE PARK

HAM-71-01.34
PID No. 87268

279/296

537/555

c:\pwworking\hmm\external\tyn61470\dms7273\071_0134CE323.dgn 10/27/2014 12:56:55 PM TYN61470

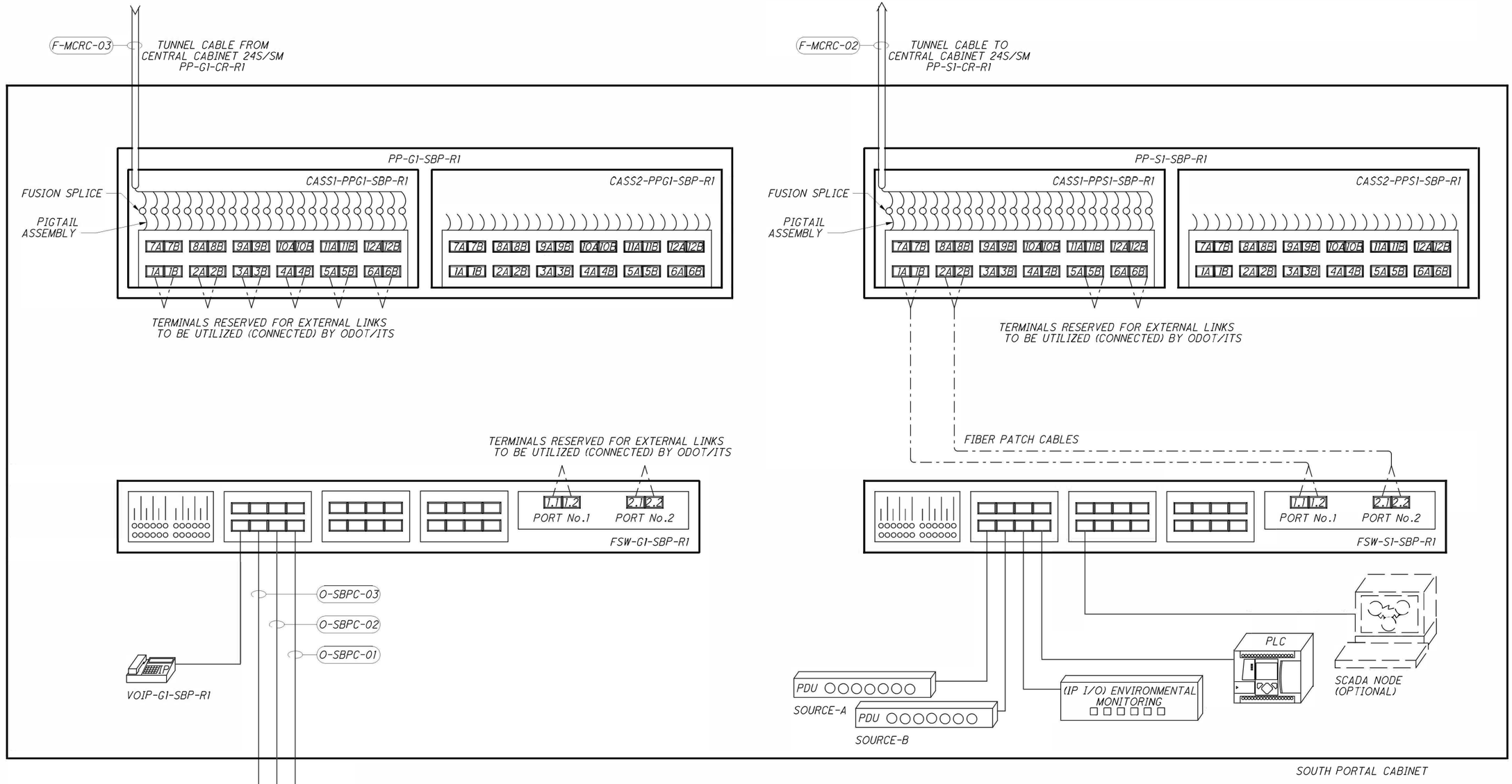

NOTE:

1. FOR LEGEND AND ABBREVIATIONS SEE SHEET 516/555

DESIGN AGENCY
HATCH MOTT MacDONALD
18013 CLEVELAND PKWY.
SUITE 200
CLEVELAND, OH 44135

DESIGNED	DRAWN	REVIEWED	DATE	STRUCTURE FILE NUMBER
OA	MS	RF	08/19/14	3106578
CHECKED	REVISED			
CS	DC			

SCADA - NETWORKING SOUTH PORTAL CABINET DIAGRAM

BRIDGE NO. HAM-71-0134
I-71 LYTLE TUNNEL UNDER LYTLE PARK

HAM-71-01.34
PID No. 87268

280/296

538/555

c:\pwworking\hmm\external\tyn61470\dms7277●3\071_0134CE5324.dgn 10/27/2014 12:56:57 PM TYN61470

F-MCRC-03 — TUNNEL CABLE 24S/SM TO SOUTH PORTAL PP-G1-SBP-R1

F-MCRC-01 — TUNNEL CABLE 24S/SM FROM NORTH PORTAL PP-G1-NBP-R1

F-MCRC-02 — TUNNEL CABLE 24S/SM TO SOUTH PORTAL PP-S1-SBP-R1

NOTE:

1. FOR LEGEND AND ABBREVIATIONS SEE SHEET 516/555

PP-G1-CR-R1

CASS2-PPG1-CR-R1

CASS1-PPG1-CR-R1

FUSION SPLICE

PIGTAIL ASSEMBLY

7A|7B 8A|8B 9A|9B 10A|10B 11A|11B 12A|12B

1A|1B 2A|2B 3A|3B 4A|4B 5A|5B 6A|6B

FIBER PATCH CABLES

FIBER PATCH CABLES FROM FSW-S1-NBP-R1

FIBER PATCH CABLES

1.1|1.2 PORT No.1 2.1|2.2 PORT No.2

CRSW-G2-CR-R1

O-NBPC-04

O-NBPC-05

O-NBPC-06

CCTV OIT

FIBER PATCH CABLES

1.1|1.2 PORT No.1 2.1|2.2 PORT No.2

CRSW-G1-CR-R1

O-NBPC-01

O-NBPC-02

O-NBPC-03

VOIP-G1-CR-R1

PTZ

PTZ

PTZ

TUNNEL CAMERAS

FACILITY CAMERAS

MULTILIN (X3)

LINEAR HEAT DETECTION (X3)

TLCP (2)

MAIN UTILITY BREAKER (X2)

FSW-S1-CR-R2

PLC

FAN PRIMARY

REMOTE I/O

PLC

FAN SECONDARY

FAN PLC CABINET

PP-S1-CR-R1

CASS1-PPS1-CR-R1

CASS2-PPS1-CR-R1

FUSION SPLICE

PIGTAIL ASSEMBLY

7A|7B 8A|8B 9A|9B 10A|10B 11A|11B 12A|12B

1A|1B 2A|2B 3A|3B 4A|4B 5A|5B 6A|6B

FIBER PATCH CABLES TO MAIN-PP

FIBER PATCH CABLES FROM FSW-S1-SBP-R1

FIBER PATCH CABLES FROM FSW-S1-SBP-R1

1.1|1.2 PORT No.1 2.1|2.2 No.2 3.1|3.2 No.3

FWL-S2-CR-R1

1.1|1.2 PORT No.1 2.1|2.2 No.2 3.1|3.2 No.3

FWL-S1-CR-R1

(No.2 SOURCE-A)

PDU

PDU

(No.2 SOURCE-B)

CRSW-S1-CR-R1

(IP I/O) ENVIRONMENTAL MONITORING

NAS

SCADA OIT

SRV-S1-CR-R1

SRV-S2-CR-R1

CRSW-S2-CR-R1

(No.1 SOURCE-A)

PDU

PDU

(No.1 SOURCE-B)

CENTRAL CABINET

DESIGN AGENCY
HATCH MOTT MacDONALD
18013 CLEVELAND PKWY.
SUITE 200
CLEVELAND, OH 44135

DESIGNED OA | DRAWN MS | CHECKED CS | REVIEWED RF | REVISED DC | DATE 08/19/14 | STRUCTURE FILE NUMBER 3106578

SCADA - NETWORKING CENTRAL CABINET DIAGRAM

BRIDGE NO. HAM-71-0134

I-71 LYTLE TUNNEL UNDER LYTLE PARK

HAM-71-01.34

PID No. 87268

281/296

539/555

c:\pwworking\hmm\external\tyn61470\dms72703\071_0134CES325.dgn 10/27/2014 12:56:59 PM TYN61470

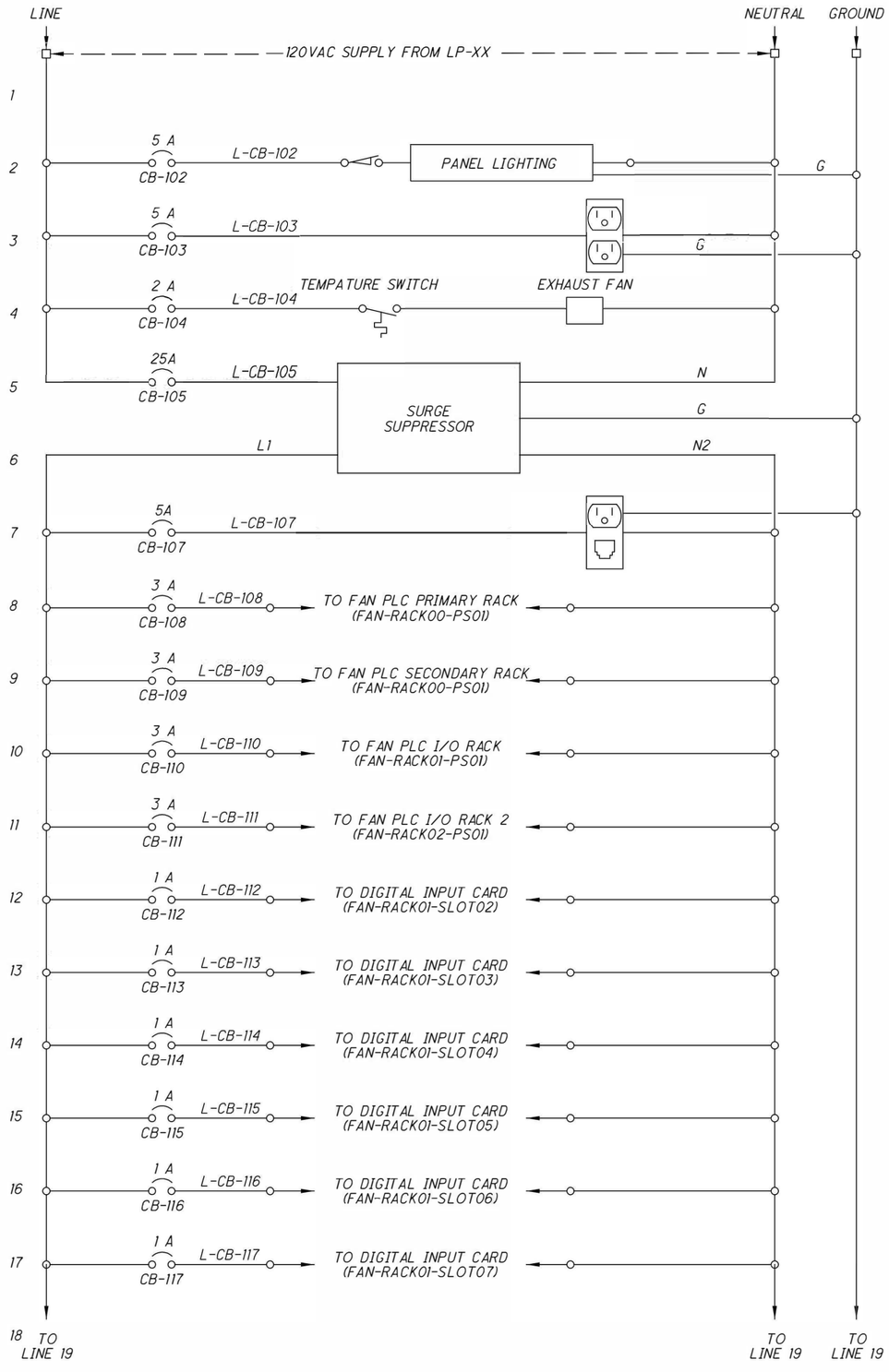

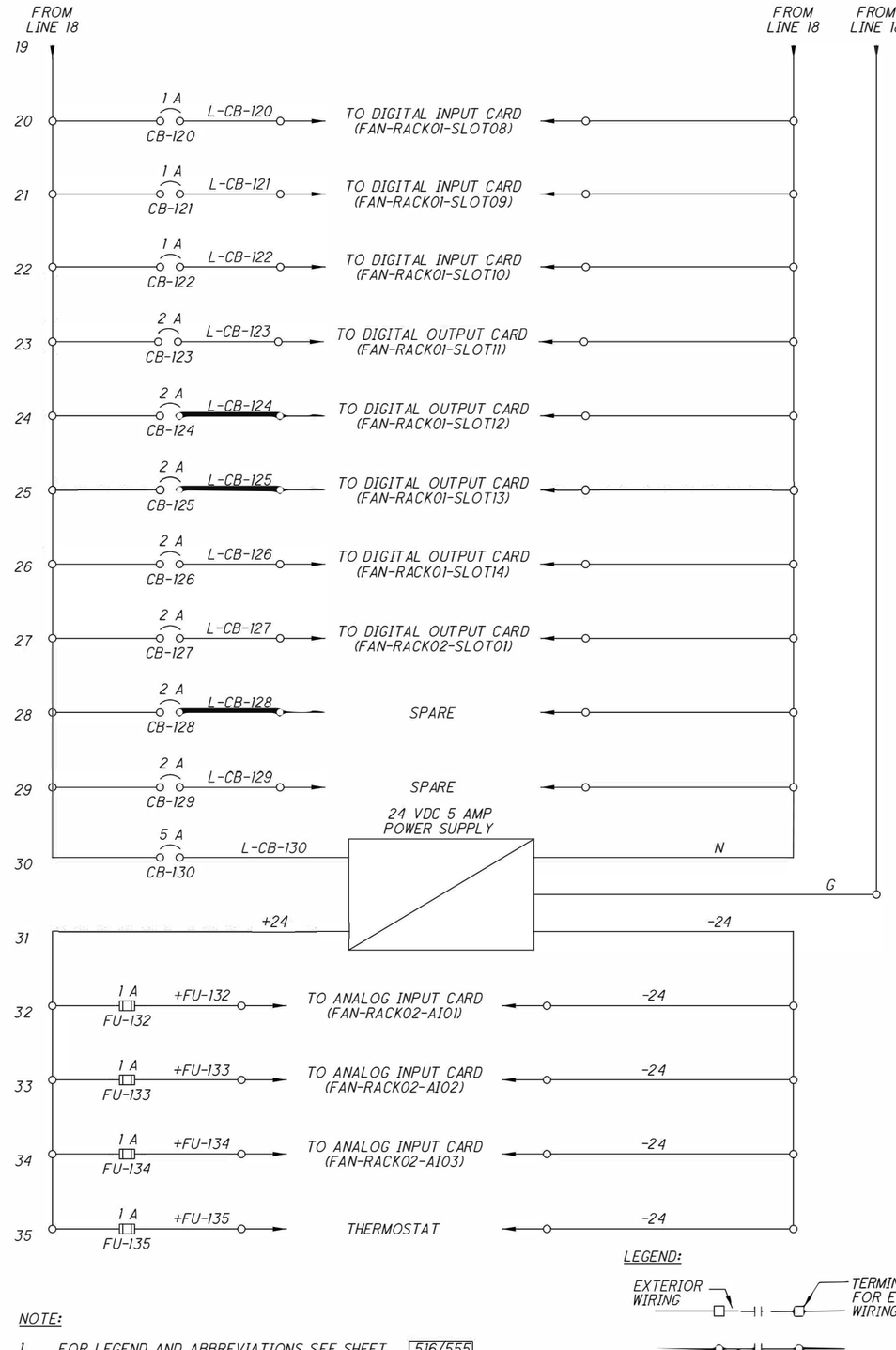

NOTE:

1. FOR LEGEND AND ABBREVIATIONS SEE SHEET 516/555

DESIGN AGENCY
HATCH MOTT MacDONALD
18013 CLEVELAND PKWY.
SUITE 200
CLEVELAND, OH 44135

DESIGNED	DRAWN	REVIEWED	DATE
SW	SW	RF	08/19/14
CHECKED	REVISED	STRUCTURE FILE NUMBER	
KS	CZ	3106578	

SCADA - PLC ELECTRICAL POWER DISTRIBUTION
BRIDGE NO. HAM-71-0134
I-71 LYTLE TUNNEL UNDER LYTLE PARK

HAM-71-01.34
PID No. 87268

c:\pwworking\hmm\external\tyn61470.dms72703\071_0134CE3326.dgn 10/27/2014 12:57:01 PM TYN61470

c:\pwworking\hmm\external\pre47802\dms72703\071_0134CES327.dgn 8/4/2015 11:34:37 AM PRE47802

LEGENDS

FIBER OPTICAL PATCH CABLE

CAT6 CABLE

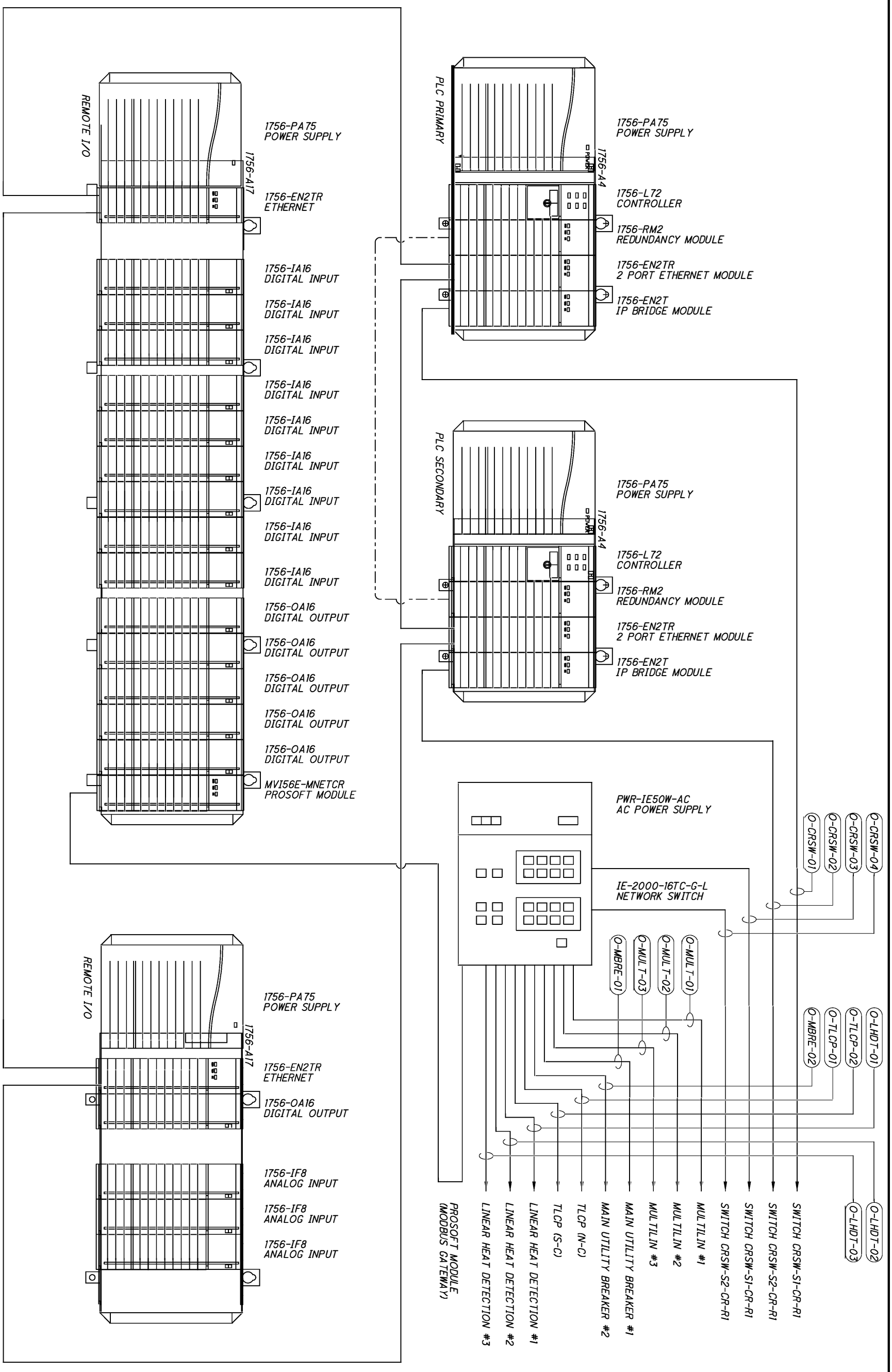

FAN-PLC RACK LAYOUT AND NETWORK DIAGRAM

NOTE:

1. FOR LEGEND AND ABBREVIATIONS SEE SHEET 516/555

541/555	283/296	HAM-71-01.34 PID No. 87268	SCADA - FAN-PLC RACK LAYOUT AND NETWORK DIAGRAM BRIDGE NO. HAM-71-0134 I-71 LYTLE TUNNEL UNDER LYTLE PARK	DESIGNED SW CHECKED KS	DRAWN SW REVISED CZ	REVIEWED RF DATE 08/19/14 STRUCTURE FILE NUMBER 3106578	DESIGN AGENCY HATCH MOTT MacDONALD 18013 CLEVELAND PKWY. SUITE 200 CLEVELAND, OH 44135

FAN-PLC-HARDWIRED I/O
(SHEET 1 OF 2)

PLC CARD	RACK	SLOT	POINT	DESCRIPTION	TAG	LOG
1756-PA75				PLC POWER SUPPLY		
1756-ENET	0	0		ETHERNET MODULE		
SPARE	0	1		SPARE-SLOT		
1756-IA16	0	2		DIGITAL INPUT MODULE		
			0	UTILITY MAIN #1 BREAKER RACKED IN (TOC)	MBRER1-000-RACKD	
			1	UTILITY MAIN #1 BREAKER POSITION OPEN/CLOSE (MOC)	MBRER1-000-OPNED	
			2	UTILITY MAIN #2 BREAKER RACKED IN (TOC)	MBRER2-000-OPNED	
			3	UTILITY MAIN #2 BREAKER POSITION OPEN/CLOSE (MOC)	MBRER2-000-OPNED	
			4	UTILITY TIE BREAKER RACKED IN (TOC)	UBRER1-000-RACKD	
			5	UTILITY TIE BREAKER POSITION OPEN/CLOSE (MOC)	UBRER1-000-OPNED	
			6	PANEL BOARD DP-E SUPPLY BREAKER RACKED IN (TOC)	PBHER1-000-RACKD	
			7	PANEL BOARD DP-E SUPPLY BREAKER POSITION OPEN/CLOSE (MOC)	PBHER1-000-OPNED	
			8	PANEL BOARD DP-W SUPPLY BREAKER RACKED IN (TOC)	PBHER2-000-RACKD	
			9	PANEL BOARD DP-W SUPPLY BREAKER POSITION OPEN/CLOSE (MOC)	PBHER2-000-OPNED	
			10	PANEL BOARD LP-PP SUPPLY BREAKER RACKED IN (TOC)	PBERLP-000-RACKD	
			11	PANEL BOARD LP-PP SUPPLY BREAKER POSITION OPEN/CLOSE (MOC)	PBERLP-000-OPNED	
			12	PANEL BOARD LP-DP SUPPLY BREAKER RACKED IN (TOC)	PBHRLP-000-RACKD	
			13	PANEL BOARD LP-DP SUPPLY BREAKER POSITION OPEN/CLOSE (MOC)	PBHRLP-000-OPNED	
			14	- SPARE		
			15	- SPARE		
1756-IA16	0	3		DIGITAL INPUT MODULE		
			0	FAN MOTOR #1 MOTOR WINDING/BEARING OVER TEMPERATURE BLOCK START	TV-F1-WBR-OVRTM	LOG
			1	FAN MOTOR #1 HS SOFT STARTER FAULT	TV-F1-SSH-FAULT	LOG
			2	FAN MOTOR #1 HS SOFT STARTER STARTED/BYPASSED	TV-F1-SSH-BYPAS	
			3	FAN MOTOR #1 HIGH-SPEED FORWARD RUNNING	TV-F1-HSP-FDRNG	
			4	FAN MOTOR #1 HIGH-SPEED REVERSE RUNNING	TV-F1-HSP-RVRNG	
			5	FAN MOTOR #1 LOW-SPEED FORWARD RUNNING	TV-F1-LSP-FDRNG	
			6	FAN MOTOR #1 LOW-SPEED REVERSE RUNNING	TV-F1-LSP-RVRNG	
			7	FAN MOTOR #1 HIGH-SPEED TRIP	TV-F1-HSP-TRIP	LOG
			8	FAN MOTOR #1 LOW-SPEED TRIP	TV-F1-LSP-TRIP	LOG
			9	FAN MOTOR #1 LOCAL/REMOTE	TV-F1-CTR-REMOT	
			10	FAN MOTOR #1 LS SOFT STARTER FAULT	TV-F1-SSL-FAULT	
			11	FAN MOTOR #1 LS SOFT STARTER STARTED/BYPASSED	TV-F1-SSL-BYPAS	
			12	- SPARE		
			13	- SPARE		
			14	- SPARE		
			15	- SPARE		
1756-IA16	0	4		DIGITAL INPUT MODULE		
			0	FAN #1 ISO. DAMPER ACTR.S LOCAL/REMOTE	FI-D1-D00-REMOT	
			1	FAN #1 ISO. DAMPER ACTR. "FI-D1-1" POSITION (EXT. LIMIT SWITCH) OPENED	FI-D1-D01-OPNED	
			2	FAN #1 ISO. DAMPER ACTR. "FI-D1-1" POSITION (EXT. LIMIT SWITCH) CLOSED	FI-D1-D01-CLOSD	
			3	FAN #1 ISO. DAMPER ACTR. "FI-D1-2" POSITION (EXT. LIMIT SWITCH) OPENED	FI-D1-D02-OPNED	
			4	FAN #1 ISO. DAMPER ACTR. "FI-D1-2" POSITION (EXT. LIMIT SWITCH) CLOSED	FI-D1-D02-CLOSD	
			5	FAN #1 ISO. DAMPER ACTR. "FI-D1-3" POSITION (EXT. LIMIT SWITCH) OPENED	FI-D1-D03-OPNED	
			6	FAN #1 ISO. DAMPER ACTR. "FI-D1-3" POSITION (EXT. LIMIT SWITCH) CLOSED	FI-D1-D03-CLOSD	
			7	FAN #1 ISO. DAMPER ACTR. "FI-D1-4" POSITION (EXT. LIMIT SWITCH) OPENED	FI-D1-D04-OPNED	
			8	FAN #1 ISO. DAMPER ACTR. "FI-D1-4" POSITION (EXT. LIMIT SWITCH) CLOSED	FI-D1-D04-CLOSD	
			9	SOFT STARTER #1 UTILITY SUPPLY BREAKER RACKED IN	SS1FR1-SBR-RACKD	
			10	SOFT STARTER #1 UTILITY SUPPLY BREAKER OPEN/CLOSE	SS1FR1-SBR-OPNED	
			11	- SPARE		
			12	- SPARE		
			13	- SPARE		
			14	- SPARE		
			15	- SPARE		
1756-IA16	0	5		DIGITAL INPUT MODULE		
			0	FAN MOTOR #2 MOTOR WINDING/BEARING OVER TEMPERATURE BLOCK START	TV-F2-WBR-OVRTM	LOG
			1	FAN MOTOR #2 HS SOFT STARTER FAULT	TV-F2-SSH-FAULT	LOG
			2	FAN MOTOR #2 HS SOFT STARTER STARTED/BYPASSED	TV-F2-SSH-BYPAS	
			3	FAN MOTOR #2 HIGH-SPEED FORWARD RUNNING	TV-F2-HSP-FDRNG	
			4	FAN MOTOR #2 HIGH-SPEED REVERSE RUNNING	TV-F2-HSP-RVRNG	
			5	FAN MOTOR #2 LOW-SPEED FORWARD RUNNING	TV-F2-LSP-FDRNG	
			6	FAN MOTOR #2 LOW-SPEED REVERSE RUNNING	TV-F2-LSP-RVRNG	
			7	FAN MOTOR #2 HIGH-SPEED TRIP	TV-F2-HSP-TRIP	LOG
			8	FAN MOTOR #2 LOW-SPEED TRIP	TV-F2-LSP-TRIP	LOG
			9	FAN MOTOR #2 LOCAL/REMOTE	TV-F2-CTR-REMOT	
			10	FAN MOTOR #2 LS SOFT STARTER FAULT	TV-F2-SSL-FAULT	
			11	FAN MOTOR #2 LS SOFT STARTER STARTED/BYPASSED	TV-F2-SSL-BYPAS	
			12	- SPARE		
			13	- SPARE		
			14	- SPARE		
			15	- SPARE		
1756-IA16	0	6		DIGITAL INPUT MODULE		
			0	FAN #2 ISO. DAMPER ACTR.S LOCAL/REMOTE	FI-D2-D00-REMOT	
			1	FAN #2 ISO. DAMPER ACTR. "FI-D2-1" POSITION (EXT. LIMIT SWITCH) OPENED	FI-D2-D01-OPNED	
			2	FAN #2 ISO. DAMPER ACTR. "FI-D2-1" POSITION (EXT. LIMIT SWITCH) CLOSED	FI-D2-D01-CLOSD	
			3	FAN #2 ISO. DAMPER ACTR. "FI-D2-2" POSITION (EXT. LIMIT SWITCH) OPENED	FI-D2-D02-OPNED	
			4	FAN #2 ISO. DAMPER ACTR. "FI-D2-2" POSITION (EXT. LIMIT SWITCH) CLOSED	FI-D2-D02-CLOSD	
			5	FAN #2 ISO. DAMPER ACTR. "FI-D2-3" POSITION (EXT. LIMIT SWITCH) OPENED	FI-D2-D03-OPNED	
			6	FAN #2 ISO. DAMPER ACTR. "FI-D2-3" POSITION (EXT. LIMIT SWITCH) CLOSED	FI-D2-D03-CLOSD	
			7	FAN #2 ISO. DAMPER ACTR. "FI-D2-4" POSITION (EXT. LIMIT SWITCH) OPENED	FI-D2-D04-OPNED	
			8	FAN #2 ISO. DAMPER ACTR. "FI-D2-4" POSITION (EXT. LIMIT SWITCH) CLOSED	FI-D2-D04-CLOSD	
			9	SOFT STARTER #2 UTILITY SUPPLY BREAKER RACKED IN	SS2FR2-SBR-RACKD	
			10	SOFT STARTER #2 UTILITY SUPPLY BREAKER OPEN/CLOSE	SS2FR2-SBR-OPNED	
			11	- SPARE		
			12	- SPARE		
			13	- SPARE		
			14	- SPARE		
			15	- SPARE		

PLC CARD	RACK	SLOT	POINT	DESCRIPTION	TAG	LOG
1756-IA16	0	7		DIGITAL INPUT MODULE		
			0	FAN MOTOR #3 MOTOR WINDING/BEARING OVER TEMPERATURE BLOCK START	TV-F3-WBR-OVRTM	LOG
			1	FAN MOTOR #3 HS SOFT STARTER FAULT	TV-F3-SSH-FAULT	LOG
			2	FAN MOTOR #3 HS SOFT STARTER STARTED/BYPASSED	TV-F3-SSH-BYPAS	
			3	FAN MOTOR #3 HIGH-SPEED FORWARD RUNNING	TV-F3-HSP-FDRNG	
			4	FAN MOTOR #3 HIGH-SPEED REVERSE RUNNING	TV-F3-HSP-RVRNG	
			5	FAN MOTOR #3 LOW-SPEED FORWARD RUNNING	TV-F3-LSP-FDRNG	
			6	FAN MOTOR #3 LOW-SPEED REVERSE RUNNING	TV-F3-LSP-RVRNG	
			7	FAN MOTOR #3 HIGH-SPEED TRIP	TV-F3-HSP-TRIP	LOG
			8	FAN MOTOR #3 LOW-SPEED TRIP	TV-F3-LSP-TRIP	LOG
			9	FAN MOTOR #3 LOCAL/REMOTE	TV-F3-CTR-REMOT	
			10	FAN MOTOR #3 LS SOFT STARTER FAULT	TV-F3-SSL-FAULT	
			11	FAN MOTOR #3 LS SOFT STARTER STARTED/BYPASSED	TV-F3-SSL-BYPAS	
			12	- SPARE		
			13	- SPARE		
			14	- SPARE		
			15	- SPARE		
1756-IA16	0	8		DIGITAL INPUT MODULE		
			0	FAN #3 ISO. DAMPER ACTR.S LOCAL/REMOTE	FI-D3-D00-REMOT	
			1	FAN #3 ISO. DAMPER ACTR. "FI-D3-1" POSITION (EXT. LIMIT SWITCH) OPENED	FI-D3-D01-OPNED	
			2	FAN #3 ISO. DAMPER ACTR. "FI-D3-1" POSITION (EXT. LIMIT SWITCH) CLOSED	FI-D3-D01-CLOSD	
			3	FAN #3 ISO. DAMPER ACTR. "FI-D3-2" POSITION (EXT. LIMIT SWITCH) OPENED	FI-D3-D02-OPNED	
			4	FAN #3 ISO. DAMPER ACTR. "FI-D3-2" POSITION (EXT. LIMIT SWITCH) CLOSED	FI-D3-D02-CLOSD	
			5	FAN #3 ISO. DAMPER ACTR. "FI-D3-3" POSITION (EXT. LIMIT SWITCH) OPENED	FI-D3-D03-OPNED	
			6	FAN #3 ISO. DAMPER ACTR. "FI-D3-3" POSITION (EXT. LIMIT SWITCH) CLOSED	FI-D3-D03-CLOSD	
			7	FAN #3 ISO. DAMPER ACTR. "FI-D3-4" POSITION (EXT. LIMIT SWITCH) OPENED	FI-D3-D04-OPNED	
			8	FAN #3 ISO. DAMPER ACTR. "FI-D3-4" POSITION (EXT. LIMIT SWITCH) CLOSED	FI-D3-D04-CLOSD	
			9	SOFT STARTER #3 UTILITY SUPPLY BREAKER RACKED IN	SS3FR2-SBR-RACKD	
			10	SOFT STARTER #3 UTILITY SUPPLY BREAKER OPEN/CLOSE	SS3FR2-SBR-OPNED	
			11	- SPARE		
			12	- SPARE		
			13	- SPARE		
			14	- SPARE		
			15	- SPARE		
1756-IA16	0	9		DIGITAL INPUT MODULE		
			0	SOUTHBOUND TUNNEL DAMPER ACTR.S LOCAL/REMOTE	TI-DS00-000-REMOTE	
			1	SOUTHBOUND TUNNEL DAMPER ACTR. "TI-DS-1" POSITION OPENED	TI-DS01-000-OPNED	
			2	SOUTHBOUND TUNNEL DAMPER ACTR. "TI-DS-1" POSITION CLOSED	TI-DS01-000-CLOSD	
			3	SOUTHBOUND TUNNEL DAMPER ACTR. "TI-DS-2" POSITION OPENED	TI-DS02-000-OPNED	
			4	SOUTHBOUND TUNNEL DAMPER ACTR. "TI-DS-2" POSITION CLOSED	TI-DS02-000-CLOSD	
			5	SOUTHBOUND TUNNEL DAMPER ACTR. "TI-DS-3" POSITION OPENED	TI-DS03-000-OPNED	
			6	SOUTHBOUND TUNNEL DAMPER ACTR. "TI-DS-3" POSITION CLOSED	TI-DS03-000-CLOSD	
			7	SOUTHBOUND TUNNEL DAMPER ACTR. "TI-DS-4" POSITION OPENED	TI-DS04-000-OPNED	
			8	SOUTHBOUND TUNNEL DAMPER ACTR. "TI-DS-4" POSITION CLOSED	TI-DS04-000-OPNED	
			9	SOUTHBOUND TUNNEL DAMPER ACTR. "TI-DS-5" POSITION OPENED	TI-DS05-000-OPNED	
			10	SOUTHBOUND TUNNEL DAMPER ACTR. "TI-DS-5" POSITION CLOSED	TI-DS05-000-CLOSD	
			11	SOUTHBOUND TUNNEL DAMPER ACTR. "TI-DS-6" POSITION OPENED	TI-DS06-000-OPNED	
			12	SOUTHBOUND TUNNEL DAMPER ACTR. "TI-DS-6" POSITION CLOSED	TI-DS06-000-CLOSD	
			13	- SPARE		
			14	- SPARE		
			15	- SPARE		
1756-IA16	0	10		DIGITAL INPUT MODULE		
			0	EXIT RAMP TUNNEL DAMPER ACTR.S LOCAL/REMOTE	TI-DR00-000-REMOTE	
			1	EXIT RAMP TUNNEL DAMPER ACTR. "TI-DR" POSITION OPENED	TI-DR01-000-OPNED	
			2	EXIT RAMP TUNNEL DAMPER ACTR. "TI-DR" POSITION CLOSED	TI-DR01-000-CLOSED	
			3	NORTHBOUND TUNNEL ACTR.S LOCAL/REMOTE	TI-DN00-000-REMOT	
			4	NORTHBOUND TUNNEL ACTR. "TI-DN-1" POSITION OPENED	TI-DN01-000-OPNED	
			5	NORTHBOUND TUNNEL ACTR. "TI-DN-1" POSITION CLOSED	TI-DN01-000-OPNED	
			6	NORTHBOUND TUNNEL ACTR. "TI-DN-2" POSITION OPENED	TI-DN02-000-OPNED	
			7	NORTHBOUND TUNNEL ACTR. "TI-DN-2" POSITION CLOSED	TI-DN02-000-CLOSD	
			8	FIRE ALARM GENERAL ALARM SIGNAL	FIRALM-GNL-SIGNL	LOG
			9	FIRE ALARM TROUBLE SIGNAL	FIRALM-TRB-SIGNL	LOG
			10	FIRE ALARM SUPERVISORY SIGNAL	FIRALM-SUP-SIGNL	LOG
			11	HVAC #1 STATUS	HVAC01-000-STATS	
			12	HVAC #1 FAULT	HVAC01-000-FAULT	LOG
			13	- SPARE		
			14	- SPARE		
			15	- SPARE		
1756-OA16	0	11		DIGITAL OUTPUT MODULE		
			0	FAN #1 ISO. DAMPER ACTR. "FI-D1-1" OPEN COMMAND	FI-D1-D01-OPCMD	
			1	FAN #1 ISO. DAMPER ACTR. "FI-D1-1" CLOSE COMMAND	FI-D1-D01-CLCMD	
			2	FAN #1 ISO. DAMPER ACTR. "FI-D1-2" OPEN COMMAND	FI-D2-D02-OPCMD	
			3	FAN #1 ISO. DAMPER ACTR. "FI-D1-2" CLOSE COMMAND	FI-D2-D02-CLCMD	
			4	FAN #1 ISO. DAMPER ACTR. "FI-D1-3" OPEN COMMAND	FI-D3-D03-OPCMD	
			5	FAN #1 ISO. DAMPER ACTR. "FI-D1-3" CLOSE COMMAND	FI-D3-D03-CLCMD	
			6	- SPARE		
			7	- SPARE		
			8	FAN MOTOR #1 HS SOFT STARTER ENABLE	TV-F1-SSH-ENBLE	
			9	FAN MOTOR #1 HIGH-SPEED FORWARD RUN	TV-F1-HSP-FDRUN	
			10	FAN MOTOR #1 HIGH-SPEED REVERSE RUN	TV-F1-HSP-RVRUN	
			11	FAN MOTOR #1 LOW-SPEED FORWARD RUN	TV-F1-LSP-FDRUN	
			12	FAN MOTOR #1 LOW-SPEED REVERSE RUN	TV-F1-LSP-RVRUN	
			13	SOFT STARTER #1 UTILITY BREAKER REMOTE TRIP	SS1-TV-F1-SBR-RTRIP	LOG
			14	SOFT STARTER #1 UTILITY BREAKER CLOSE	SS1-TV-F1-SBR-CLOSE	
			15	- SPARE		

NOTES:
1. "LOG" IDENTIFIES TAGS WHICH NEED TO BE COLLECTED FOR HISTORICAL TRENDING.
2. FOR LEGEND AND ABBREVIATIONS SEE SHEET 516/555

DESIGN AGENCY
HATCH MOTT MacDONALD
18013 CLEVELAND PKWY.
SUITE 200
CLEVELAND, OH 44135

DESIGNED MS | DRAWN MS | REVIEWED RF | DATE 08/19/14
CHECKED KS | REVISED CZ | STRUCTURE FILE NUMBER 3106578

SCADA - PLC HARDWIRED I/O SCHEDULE SHEET 1 OF 2

BRIDGE NO. HAM-71-0134
I-71 LYTLE TUNNEL UNDER LYTLE PARK

HAM-71-01.34
PID No. 87268

c:\pwworking\hmm\external\pre47802\dms72703\071_0134CES328.dgn 1/22/2015 1:27:50 PM PRE47802

FAN-PLC-HARDWIRED I/O
(SHEET 2 OF 2)

PLC CARD	RACK	SLOT	POINT	DESCRIPTION	TAG	LOG
1756-OA16	0	12		DIGITAL OUTPUT MODULE		
			0	- SPARE		
			1	- SPARE		
			2	- SPARE		
			3	- SPARE		
			4	- SPARE		
			5	- SPARE		
			6	- SPARE		
			7	- SPARE		
			8	FAN MOTOR #2 HS SOFT STARTER ENABLE	TV-F2-SSH-ENBLE	
			9	FAN MOTOR #2 HIGH-SPEED FORWARD RUN	TV-F2-HSP-FDRUN	
			10	FAN MOTOR #2 HIGH-SPEED REVERSE RUN	TV-F2-HSP-RVRUN	
			11	FAN MOTOR #2 LOW-SPEED FORWARD RUN	TV-F2-LSP-FDRUN	
			12	FAN MOTOR #2 LOW-SPEED REVERSE RUN	TV-F2-LSP-RVRUN	
			13	SOFT STARTER #2 UTILITY BREAKER REMOTE TRIP	SS2FR2-SBR-RTRIP	LOG
			14	SOFT STARTER #2 UTILITY BREAKER CLOSE	SS2FR2-SBR-CLOSE	
			15	- SPARE		
1756-OA16	0	13		DIGITAL OUTPUT MODULE		
			0	- SPARE		
			1	- SPARE		
			2	- SPARE		
			3	- SPARE		
			4	- SPARE		
			5	- SPARE		
			6	- SPARE		
			7	- SPARE		
			8	FAN MOTOR #3 HS SOFT STARTER ENABLE	TV-F3-SSH-ENBLE	
			9	FAN MOTOR #3 HIGH-SPEED FORWARD RUN	TV-F3-HSP-FDRUN	
			10	FAN MOTOR #3 HIGH-SPEED REVERSE RUN	TV-F3-HSP-RVRUN	
			11	FAN MOTOR #3 LOW-SPEED FORWARD RUN	TV-F3-LSP-FDRUN	
			12	FAN MOTOR #3 LOW-SPEED REVERSE RUN	TV-F3-LSP-RVRUN	
			13	SOFT STARTER #3 UTILITY BREAKER REMOTE TRIP	SS2FR3-SBR-RTRIP	LOG
			14	SOFT STARTER #3 UTILITY BREAKER CLOSE	SS2FR3-SBR-CLOSE	
			15	- SPARE		
1756-OA16	0	14		DIGITAL OUTPUT MODULE		
			0	UTILITY MAIN #1 REMOTE TRIP	MBRER2-000-RTRIP	LOG
			1	UTILITY MAIN #1 REMOTE CLOSE (INTERLOCKED WITH TIE BREAKER)	MBRER2-000-CLOSE	
			2	UTILITY MAIN #2 REMOTE TRIP	MBRER2-000-RTRIP	LOG
			3	UTILITY MAIN #2 REMOTE CLOSE (INTERLOCKED WITH TIE BREAKER)	MBRER2-000-CLOSE	
			4	UTILITY TIE BREAKER REMOTE TRIP	UBRERI-000-RTRIP	LOG
			5	UTILITY TIE BREAKER REMOTE CLOSE (INTERLOCKED WITH MAIN #1 & #2)	UBRERI-000-CLOSE	
			6	UTILITY TIE BREAKER AUTO TRANSFER ENABLED	UBRERI-000-AUTOT	
			7	FAN MOTOR #1 LS SOFT STARTER ENABLE	TV-F1-SSL-ENBLE	
			8	FAN MOTOR #2 LS SOFT STARTER ENABLE	TV-F2-SSL-ENBLE	
			9	- SPARE		
			10	- SPARE		
			11	- SPARE		
			12	- SPARE		
			13	- SPARE		
			14	- SPARE		
			15	- SPARE		
SPARE	0	15		DIGITAL OUTPUT MODULE		
			0	SOUTHBOUND TUNNEL DAMPER ACTR. "TI-DS-1" OPEN COMMAND	TI-DS01-000-OPCMD	
			1	SOUTHBOUND TUNNEL DAMPER ACTR. "TI-DS-1" CLOSE COMMAND	TI-DS01-000-CLCMD	
			2	SOUTHBOUND TUNNEL DAMPER ACTR. "TI-DS-2" OPEN COMMAND	TI-DS02-000-OPCMD	
			3	SOUTHBOUND TUNNEL DAMPER ACTR. "TI-DS-2" CLOSE COMMAND	TI-DS02-000-CLCMD	
			4	SOUTHBOUND TUNNEL DAMPER ACTR. "TI-DS-3" OPEN COMMAND	TI-DS03-000-OPCMD	
			5	SOUTHBOUND TUNNEL DAMPER ACTR. "TI-DS-3" CLOSE COMMAND	TI-DS03-000-CLCMD	
			6	SOUTHBOUND TUNNEL DAMPER ACTR. "TI-DS-4" OPEN COMMAND	TI-DS04-000-OPCMD	
			7	SOUTHBOUND TUNNEL DAMPER ACTR. "TI-DS-4" CLOSE COMMAND	TI-DS04-000-CLCMD	
			8	SOUTHBOUND TUNNEL DAMPER ACTR. "TI-DS-5" OPEN COMMAND	TI-DS05-000-OPCMD	
			9	SOUTHBOUND TUNNEL DAMPER ACTR. "TI-DS-5" CLOSE COMMAND	TI-DS05-000-CLCMD	
			10	SOUTHBOUND TUNNEL DAMPER ACTR. "TI-DS-6" OPEN COMMAND	TI-DS06-000-OPCMD	
			11	SOUTHBOUND TUNNEL DAMPER ACTR. "TI-DS-6" CLOSE COMMAND	TI-DS06-000-CLCMD	
			12	FAN MOTOR #3 LS SOFT STARTER ENABLE	TV-F3-SSL-ENBLE	
			13	- SPARE		
			14	- SPARE		
			15	- SPARE		
MVI56E-MNETCR	0	16		PROSOFT MODBUS MODULE		

PLC CARD	RACK	SLOT	POINT	DESCRIPTION	TAG	LOG
1756-ENET	1	0		ETHERNET MODULE		
1756-OA16	1	1		DIGITAL OUTPUT MODULE		
			0	EXIT RAMP TUNNEL DAMPER ACTR. "TI-DR" OPEN COMMAND	TIDR01-000-OPCMD	
			1	EXIT RAMP TUNNEL DAMPER ACTR. "TI-DR" CLOSE COMMAND	TIDR01-000-CLCMD	
			2	NORTHBOUND TUNNEL ACTR. "TI-DN-1" OPEN COMMAND	TIDN01-000-OPCMD	
			3	NORTHBOUND TUNNEL ACTR. "TI-DN-1" CLOSE COMMAND	TIDN01-000-CLCMD	
			4	- SPARE	TIDN02-000-OPCMD	
			5	- SPARE	TIDN02-000-CLCMD	
			6	- SPARE		
			7	- SPARE		
			8	- SPARE		
			9	- SPARE		
			10	- SPARE		
			11	- SPARE		
			12	- SPARE		
			13	- SPARE		
			14	- SPARE		
			15	- SPARE		
SPARE	1	2		SPARE-SLOT		
1756-IF8	1	3		ANALOG INPUT MODULE		
			0	FAN #1 MOTOR VIBRATION #1	TV-F1-VR1-STAAI	LOG
			1	FAN #1 MOTOR VIBRATION #2	TV-F1-VR2-STAAI	LOG
			2	FAN #1 MOTOR SPEED	TV-F1-000-SPEED	LOG
			3	CARBON MONOXIDE LEVEL - SOUTHBOUND TUNNEL	COSB01-000-STAAI	LOG
			4	CARBON MONOXIDE LEVEL - SOUTHBOUND RAMP TUNNEL	COSR01-000-STAAI	LOG
			5	CARBON MONOXIDE LEVEL - NORTHBOUND TUNNEL	CONB01-000-STAAI	LOG
			6	CARBON MONOXIDE LEVEL - ELECTRICAL ROOM	COER01-000-STAAI	LOG
			7	- SPARE		
1756-IF8	1	4		ANALOG INPUT MODULE		
			0	FAN #2 MOTOR VIBRATION #1	TV-F2-VR1-STAAI	LOG
			1	FAN #2 MOTOR VIBRATION #2	TV-F2-VR2-STAAI	LOG
			2	FAN #2 MOTOR SPEED	TV-F2-000-SPEED	LOG
			3	CARBON MONOXIDE LEVEL - SOUTHBOUND TUNNEL	COSB02-000-STAAI	LOG
			4	CARBON MONOXIDE LEVEL - SOUTHBOUND RAMP TUNNEL	COSR02-000-STAAI	LOG
			5	CARBON MONOXIDE LEVEL - NORTHBOUND TUNNEL	CONB02-000-STAAI	LOG
			6	CARBON MONOXIDE LEVEL - FAN PLENUM ROOM	COFP01-000-STAAI	LOG
			7	- SPARE		
1756-IF8	1	5		ANALOG INPUT MODULE		
			0	FAN #3 MOTOR VIBRATION #1	TV-F3-VR1-STAAI	LOG
			1	FAN #3 MOTOR VIBRATION #2	TV-F3-VR2-STAAI	LOG
			2	FAN #3 MOTOR SPEED	TV-F3-000-SPEED	LOG
			3	- SPARE		
			4	- SPARE		
			5	- SPARE		
			6	- SPARE		
			7	- SPARE		
SPARE	1	2		SPARE-SLOT		

NOTES:
1. "LOG" IDENTIFIES TAGS WHICH NEED TO BE COLLECTED FOR HISTORICAL TRENDING.
2. FOR LEGEND AND ABBREVIATIONS SEE SHEET 516/555

DESIGN AGENCY
HATCH MOTT MacDONALD
18013 CLEVELAND PKWY.
SUITE 200
CLEVELAND, OH 44135

DESIGNED MS | DRAWN MS | CHECKED KS | REVIEWED RF | DATE 08/19/14 | REVISED CZ | STRUCTURE FILE NUMBER 3106578

SCADA - PLC HARDWIRED I/O SCHEDULE SHEET 2 OF 2

BRIDGE NO. HAM-71-0134
I-71 LYTLE TUNNEL UNDER LYTLE PARK

HAM-71-01.34
PID No. 87268

c:\pwworking\hmm\external\pre47802\dms72703\071_0134CES329.dgn 1/22/2015 1:31:56 PM PRE47802

VIRTUAL I/O SCHEDULE

DEVICE	VIRTUAL I/O	I/O TYPE	PROTOCOL	LOG
LIGHTING CONTROL PANEL (N-C)	HAND/OFF/AUTO SELECTOR SWITCH STATUS	DI	NATIVE-PLC	
	CONTACTOR OUTPUT	AI	NATIVE-PLC	LOG
	CONTACTOR STATUS	DI	NATIVE-PLC	
	LOCAL TUNNEL LIGHTING SWITCHING OUTPUT	AI	NATIVE-PLC	LOG
	LOCAL TUNNEL LIGHTING DIMMING OUTPUT	AI	NATIVE-PLC	LOG
	LUMINANCE SENSOR STATUS	DI	NATIVE-PLC	
	LUMINANCE SENSOR READING	AI	NATIVE-PLC	LOG
LIGHTING CONTROL PANEL (S-C)	HAND/OFF/AUTO SELECTOR SWITCH STATUS	DI	NATIVE-PLC	
	CONTACTOR OUTPUT	AI	NATIVE-PLC	
	CONTACTOR STATUS	DI	NATIVE-PLC	
	LOCAL TUNNEL LIGHTING SWITCHING OUTPUT	AI	NATIVE-PLC	
	LOCAL TUNNEL LIGHTING DIMMING OUTPUT	AI	NATIVE-PLC	
	LUMINANCE SENSOR STATUS	DI	NATIVE-PLC	
	LUMINANCE SENSOR READING	AI	NATIVE-PLC	
SOUTHBOUND TUNNEL HEAT DETECTION CONTROL PANEL	ZONE 1 FIRE ALARM	DI	MODBUS	LOG
	ZONE 2 FIRE ALARM	DI	MODBUS	LOG
NORTHBOUND TUNNEL HEAT DETECTION CONTROL PANEL	ZONE 1 FIRE ALARM	DI	MODBUS	LOG
	ZONE 2 FIRE ALARM	DI	MODBUS	LOG
SOUTHBOUND RAMP-E TUNNEL HEAT DETECTION CONTROL PANEL	ZONE 1 FIRE ALARM	DI	MODBUS	LOG
	ZONE 2 FIRE ALARM	DI	MODBUS	LOG
SOUTHBOUND PORTAL NETWORK CABINET	CABINET DOOR OPEN	DI	SNMP	LOG
	CABINET TEMPERATURE	AI	SNMP	LOG
	CABINET HUMIDITY	AI	SNMP	LOG
NORTHBOUND PORTAL NETWORK CABINET	CABINET DOOR OPEN	DI	SNMP	LOG
	CABINET TEMPERATURE	AI	SNMP	LOG
	CABINET HUMIDITY	AI	SNMP	LOG
CONTROL ROOM NETWORK CABINET	CABINET DOOR OPEN	DI	SNMP	LOG
	CABINET TEMPERATURE	AI	SNMP	LOG
	CABINET HUMIDITY	AI	SNMP	LOG
MULTILIN 1	MOTOR 1 WINDING 1 TEMPERATURE	AI	MODBUS	LOG
	MOTOR 1 WINDING 2 TEMPERATURE	AI	MODBUS	LOG
	MOTOR 1 WINDING 3 TEMPERATURE	AI	MODBUS	LOG
	MOTOR 1 BEARING 1 TEMPERATURE	AI	MODBUS	LOG
	MOTOR 1 BEARING 2 TEMPERATURE	AI	MODBUS	LOG
MULTILIN 2	MOTOR 2 WINDING 1 TEMPERATURE	AI	MODBUS	LOG
	MOTOR 2 WINDING 2 TEMPERATURE	AI	MODBUS	LOG
	MOTOR 2 WINDING 3 TEMPERATURE	AI	MODBUS	LOG
	MOTOR 2 BEARING 1 TEMPERATURE	AI	MODBUS	LOG
	MOTOR 2 BEARING 2 TEMPERATURE	AI	MODBUS	LOG
	MOTOR 2 BEARING 2 TEMPERATURE	AI	MODBUS	LOG
MULTILIN 3	MOTOR 3 WINDING 1 TEMPERATURE	AI	MODBUS	LOG
	MOTOR 3 WINDING 2 TEMPERATURE	AI	MODBUS	LOG
	MOTOR 3 WINDING 3 TEMPERATURE	AI	MODBUS	LOG
	MOTOR 3 BEARING 1 TEMPERATURE	AI	MODBUS	LOG
	MOTOR 3 BEARING 2 TEMPERATURE	AI	MODBUS	LOG
	MOTOR 3 BEARING 2 TEMPERATURE	AI	MODBUS	LOG
UTILITY MAIN BREAKER 1	VOLTAGE (V)	AI	MODBUS	LOG
	CURRENT (A)	AI	MODBUS	LOG
	POWER (W)	AI	MODBUS	LOG
	POWER (VAR)	AI	MODBUS	LOG
	POWER FACTOR	AI	MODBUS	LOG
UTILITY MAIN BREAKER 2	VOLTAGE (V)	AI	MODBUS	LOG
	CURRENT (A)	AI	MODBUS	LOG
	ACTIVE POWER (W)	AI	MODBUS	LOG
	REACTIVE POWER (VAR)	AI	MODBUS	LOG
	POWER FACTOR	AI	MODBUS	LOG

NOTES:

1. FIELD DEVICES CONNECTED TO SWITCH FSW-S1-CR-R2 WHICH COMMUNICATE VIA MODBUS PROTOCOL SHALL USE THE FAN-PLC AS A GATEWAY FOR COMMUNICATION TO SCADA. THE CONTRACTOR SHALL PROGRAM THE PLC ACCORDINGLY.

2. SNMP & NATIVE PLC PROTOCOL DEVICES SHALL BE READ BY SCADA SERVER DIRECTLY.

3. "LOG" IDENTIFIES TAGS WHICH NEED TO BE COLLECTED FOR HISTORICAL TRENDING.

4. FOR LEGEND AND ABBREVIATIONS SEE SHEET 516/555

DESIGN AGENCY
HATCH MOTT MacDONALD
18013 CLEVELAND PKWY.
SUITE 200
CLEVELAND, OH 44135

DESIGNED	DRAWN	REVIEWED	DATE
MS	MS	RF	08/19/14
CHECKED	REVISED	STRUCTURE FILE NUMBER	
KS	CZ	3106578	

SCADA - VIRTUAL I/O SCHEDULE
BRIDGE NO. HAM-71-0134
I-71 LYTLE TUNNEL UNDER LYTLE PARK

HAM-71-01.34
PID No. 87268

c:\pwworking\hmm\external\tyn61470\dms72703\071_0134CES330.dgn 10/27/2014 12:57:10 PM TYN61470

ITEM NO.	PART NUMBER	MANUFACTURER	DESCRIPTION	QTY
1	1756-A4	ALLEN BRADLEY	CONTROL LOGIX 4 SLOT CHASSIS	2
2	1756-A7	ALLEN BRADLEY	CONTROL LOGIX 7 SLOT CHASSIS	1
3	1756-N2	ALLEN BRADLEY	CONTROL LOGIX SLOT FILLER	3
4	1756-PA72	ALLEN BRADLEY	CONTROL LOGIX AC POWER SUPPLY	2
5	1756-PA75	ALLEN BRADLEY	CONTROL LOGIX AC POWER SUPPLY	2
6	1756-RM2	ALLEN BRADLEY	CONTROL LOGIX REDUNDANCY MODULE	2
7	1756-RMC1	ALLEN BRADLEY	CONTROL LOGIX RM MODULE FIBER PATCH CABLE	1
8	1756-A17	ALLEN BRADLEY	CONTROL LOGIX 17 SLOT CHASSIS	1
9	1756-IA16	ALLEN BRADLEY	CONTROL LOGIX 16 POINT DIGITAL INPUT MODULE	9
10	1756-IF8	ALLEN BRADLEY	CONTROL LOGIX 8 POINT ANALOG INPUT MODULE	4
11	1756-OA16	ALLEN BRADLEY	CONTROL LOGIX 16 POINT DIGITAL OUTPUT MODULE	6
12	1756-OF4	ALLEN BRADLEY	CONTROL LOGIX 4 POINT ANALOG OUTPUT MODULE	0
13	1756-PAR2	ALLEN BRADLEY	CONTROL LOGIX POWER SUPPLY BUND	1
14	1783-ETAP	ALLEN BRADLEY	3 PORT ETHERNET/IP TAP	1
15	1756-L72	ALLEN BRADLEY	CONTROL LOGIX 4 MB CONTROLLER	2
16	1756-EN2TR	ALLEN BRADLEY	CONTROL LOGIX ETHERNET MODULE	4
17	MVI56E-MNET	PROSOFT	MODBUS MASTER/SLAVE MODULE	1
18	1756-EN2T	ALLEN BRADLEY	CONTROL LOGIX IP BRIDGE MODULE	2
19	1498-A1C250	ALLEN BRADLEY	25 A CIRCUIT BREAKER	1
20	1492-GH150	ALLEN BRADLEY	15 A CIRCUIT BREAKER	2
21	1492-GH050	ALLEN BRADLEY	5 A CIRCUIT BREAKER	3
22	1492-GH030	ALLEN BRADLEY	3 A CIRCUIT BREAKER	3
23	1492-GH010	ALLEN BRADLEY	1 A CIRCUIT BREAKER	AS REQ.
24	1492-WFB242	ALLEN BRADLEY	24 V DC FUSE TERMINAL BLOCK	AS REQ.
25	1492-J6	ALLEN BRADLEY	FEED THROUGH TERMINAL BLOCKS	AS REQ.
26	1492-JDG3	ALLEN BRADLEY	TWO LEVEL FEED THROUGH TERMINAL BLOCKS	AS REQ.
27	1492-JKD4	ALLEN BRADLEY	KNIFE DISCONNECT TERMINAL BLOCK	AS REQ.
28	1492-JG4	ALLEN BRADLEY	GROUND TERMINAL BLOCK	AS REQ.
29	700-HN104	ALLEN BRADLEY	SCREW TERMINAL SOCKET	AS REQ.
30	700-HC22A1	ALLEN BRADLEY	MINATURE RELAY DPDT 120 VAC	48
31	2856812	PHOENIX CONTACT	TYPE 3 SURGE PROTECTOR	1
32	2866310	PHOENIX CONTACT	5 AMP 24V DC POWER SUPPLY	1
33	N/A	N/A	WIREWAY	AS REQ.
34	N/A	N/A	DUAL PLUG RECEPTACLE	1
35	N/A	N/A	PANEL LIGHT	1
36	199-DR1	ALLEN BRADLEY	DIN RAIL	AS REQ.
37	A726024FSDG	HOFFMAN	FREE STANDING ENCLOSURE	1
38	A72P60F1	HOFFMAN	BACKPLATE	1
39	N/A	N/A	THERMOSTAT	1
40	N/A	N/A	FAN	1
41	IE-2000-16TC-G-L	CISCO	INDUSTRIAL ETHERNET 2000 SERIES 16 RJ45 + 2 SFP	1
42	PWR-IE50W-AC	CISCO	POWER SUPPLY FOR SWITCH	2
43	ACSHELF1212SS	HOFFMAN	STAINLESS STEEL FOLDING SHELF 12" X 12"	1
44	HGF5ETHETHSS	HOFFMAN	STAINLESS STEEL INTERSAFE DATA PORTS	1
45	SF1016414	HOFFMAN	10" SIDE-MOUNT FILTER FAN 162CFM	1
46	SG1000404	HOFFMAN	10" EXHAUST GRILLE KIT 7035	1

GENERAL NOTE:

THE CURRENT DESIGN IS BASED ON THE PARTS AND COMPONENTS SPECIFIED IN THE BILL OF MATERIALS. ENGINEER (ODOT) APPROVED OR EQUAL COMPONENTS MAY BE ACCEPTED. WHEN APPROVED EQUALS ARE TO BE USED THE CONTRACTOR SHALL BE RESPONSIBLE FOR ANY MODIFICATIONS TO THE DESIGN PLANS ASSOCIATED WITH THE CHANGE. MODIFICATIONS WILL INCLUDE BUT NOT LIMITED TO BILL OF MATERIALS, DIMENSIONS, SPECIFICATIONS, POWER DISTRIBUTION, CABLE AND CONDUIT SCHEDULE. FINAL DESIGN UTILIZING ENGINEER APPROVED MATERIALS SHALL ALSO BE SUBJECT TO APPROVAL.

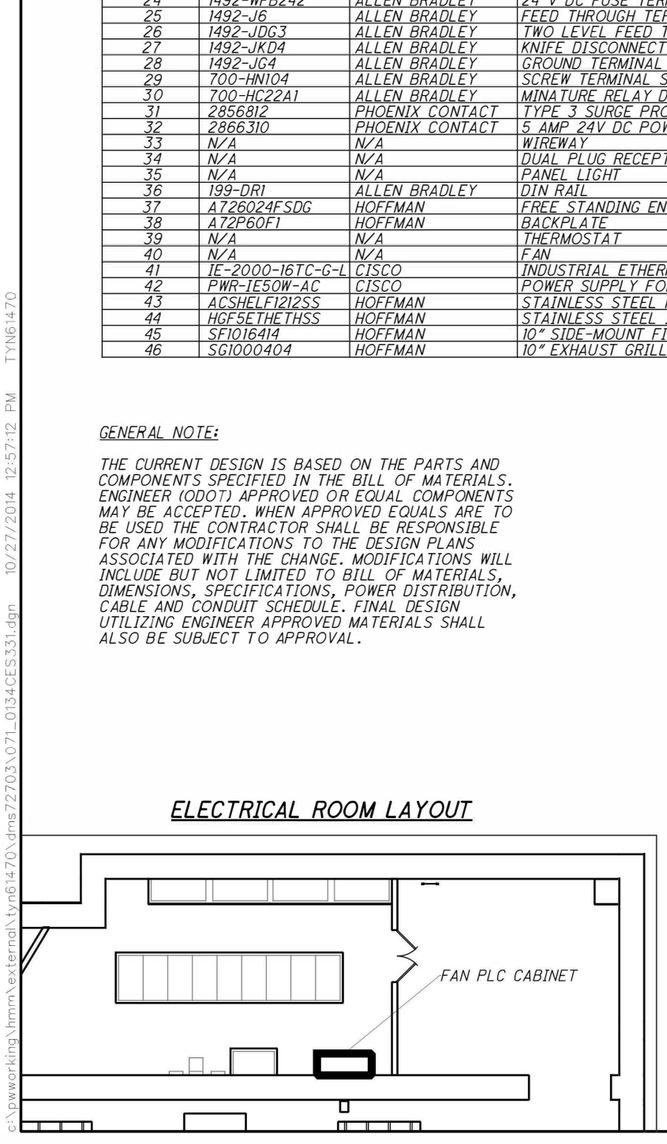

ELECTRICAL ROOM LAYOUT

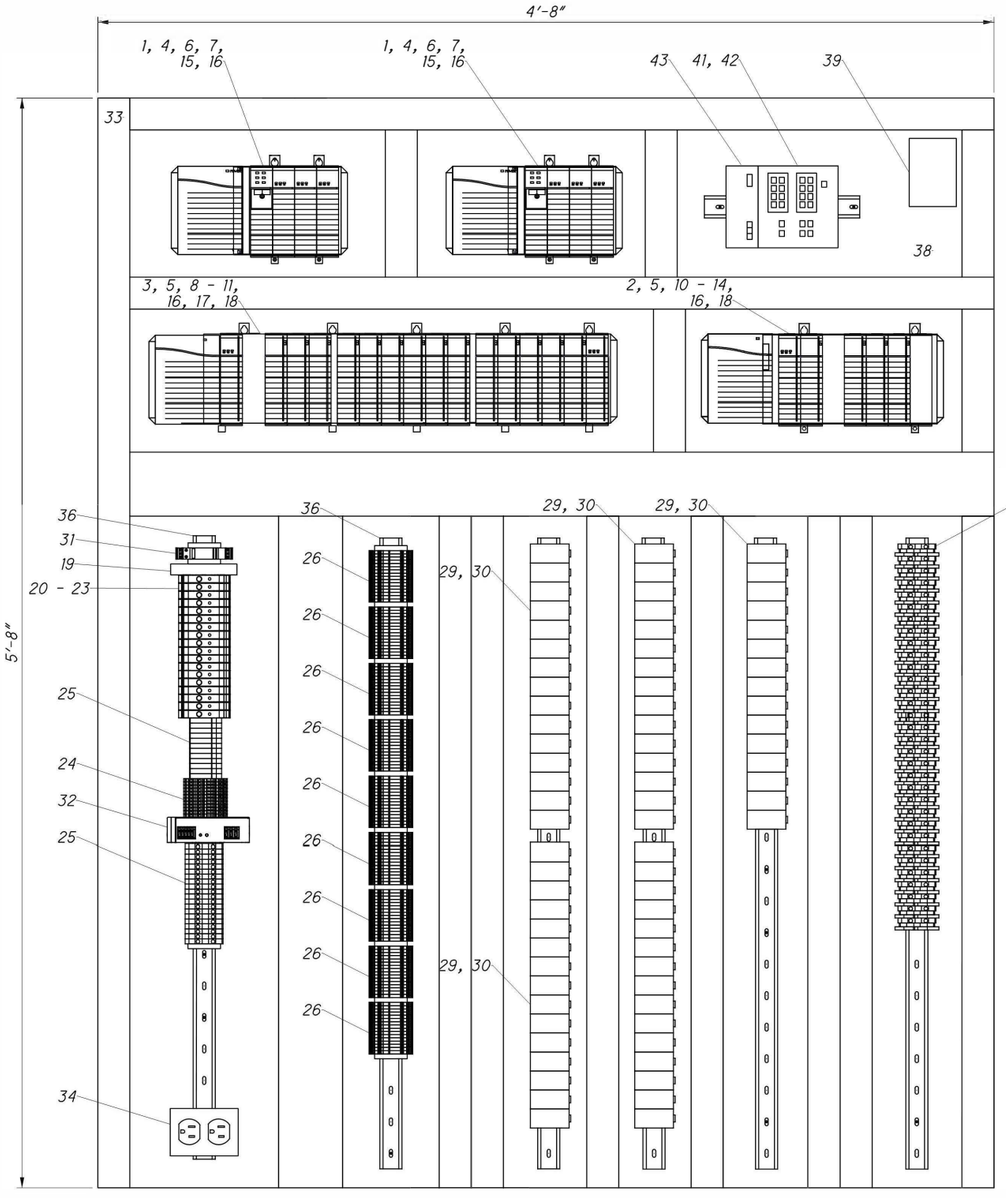

FAN-PLC PANEL LAYOUT

NOTE:

1. FOR LEGEND AND ABBREVIATIONS SEE SHEET 516/555

TYN61470

c:\pwworking\hmm\external\tyn61470\dms72703\071_0134CES331.dgn 10/27/2014 12:57:12 PM

DESIGN AGENCY
HATCH MOTT MacDONALD
18013 CLEVELAND PKWY.
SUITE 200
CLEVELAND, OH 44135

DESIGNED SW | DRAWN SW | REVIEWED RF | DATE 08/19/14
CHECKED KS | REVISED CZ | STRUCTURE FILE NUMBER 3106578

PLC PANEL LAYOUT - INTERIOR
BRIDGE NO. HAM-71-0134
I-71 LYTLE TUNNEL UNDER LYTLE PARK

HAM-71-01.34
PID No. 87268

287/296

545/555

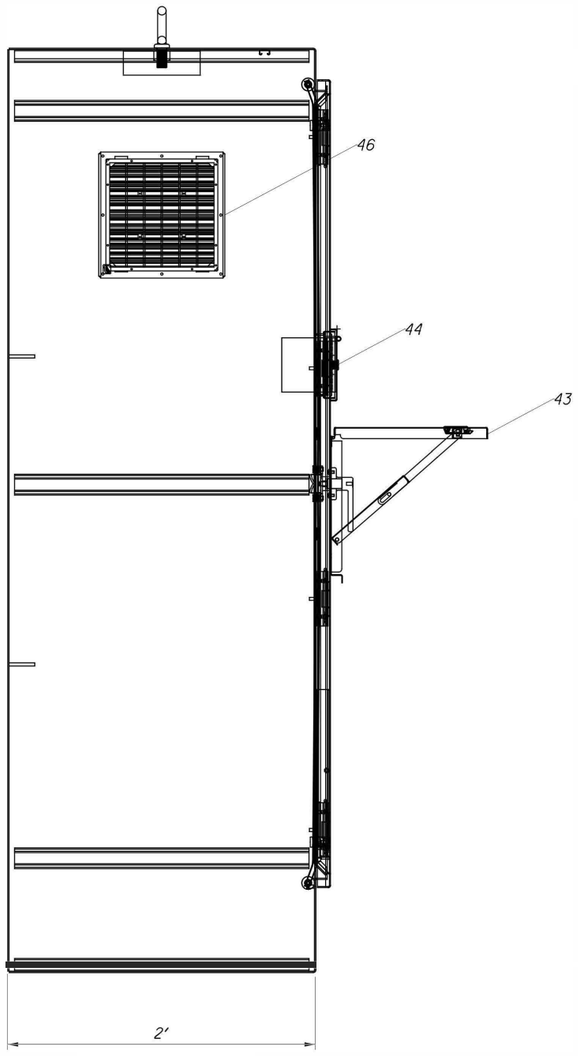

LEFT SIDE VIEW

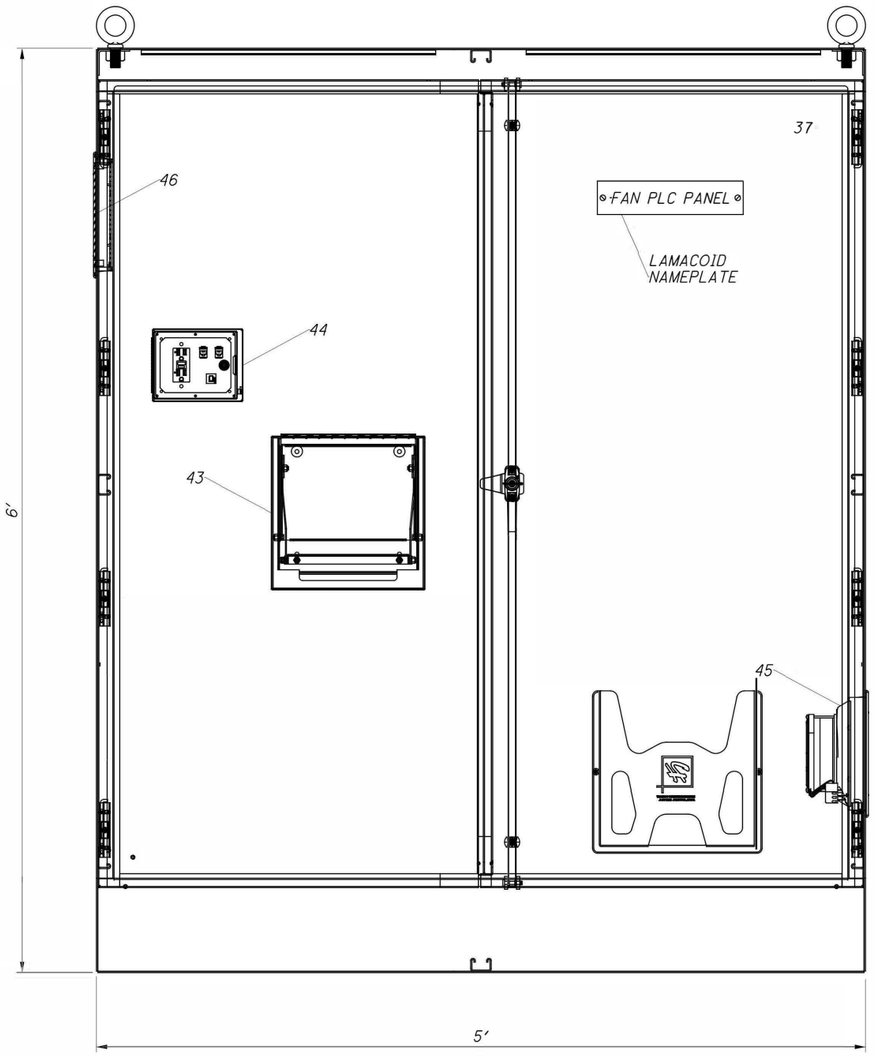

FAN PLC PANEL FRONT VIEW

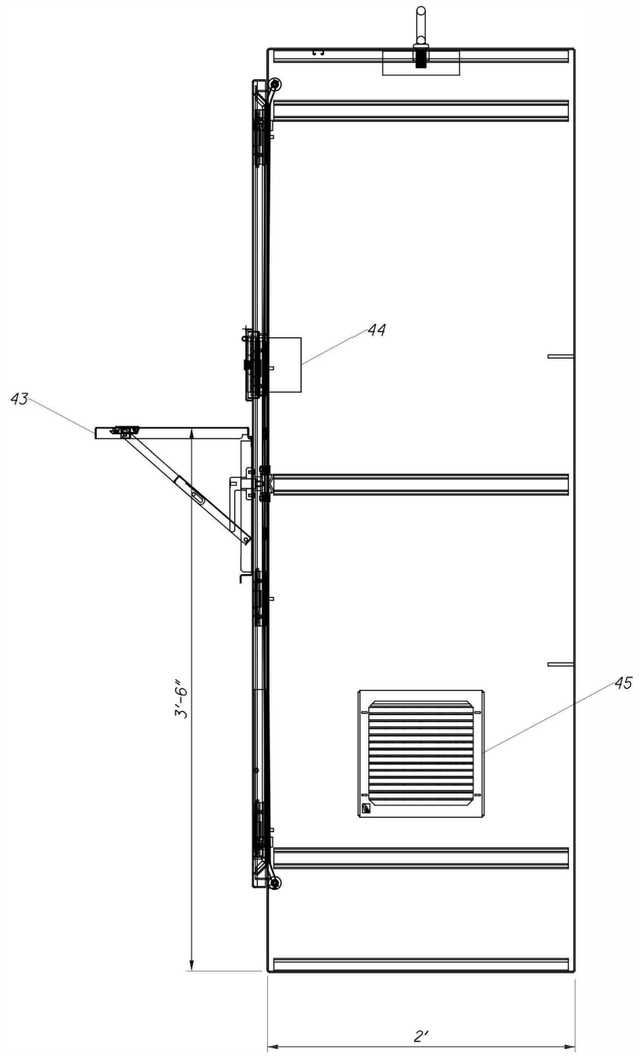

RIGHT SIDE VIEW

ELECTRICAL ROOM LAYOUT

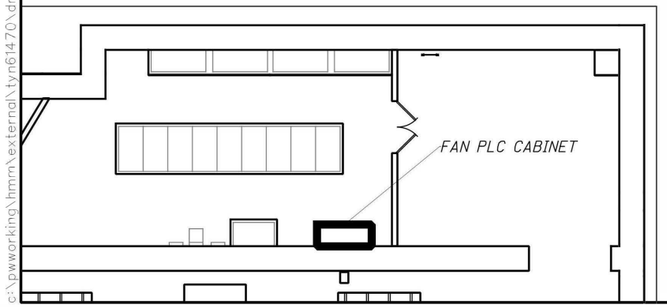

NOTES:

1. FOR EQUIPMENT LIST SEE SHEET 545/555
2. LAMACOID NAME PLATE SHALL BE TO LATEST ODOT STANDARDS.
3. FOR LEGEND AND ABBREVIATIONS SEE SHEET 516/555

DESIGN AGENCY
HATCH MOTT MacDONALD
18013 CLEVELAND PKWY.
SUITE 200
CLEVELAND, OH 44135

DESIGNED	DRAWN	REVIEWED	DATE
MS	MS	RF	08/19/14
CHECKED	REVISED	STRUCTURE FILE NUMBER	
KS	CZ	3106578	

SCADA - PLC PANEL LAYOUT - EXTERIOR

BRIDGE NO. HAM-71-0134
I-71 LYTLE TUNNEL UNDER LYTLE PARK

HAM-71-01.34
PID No. 87268

288/296

546/555

c:\pwworking\hmm\external\tyn61470\dms727●3\071_0134CES332.dgn 10/27/2●14 12:57:16 PM TYN61470

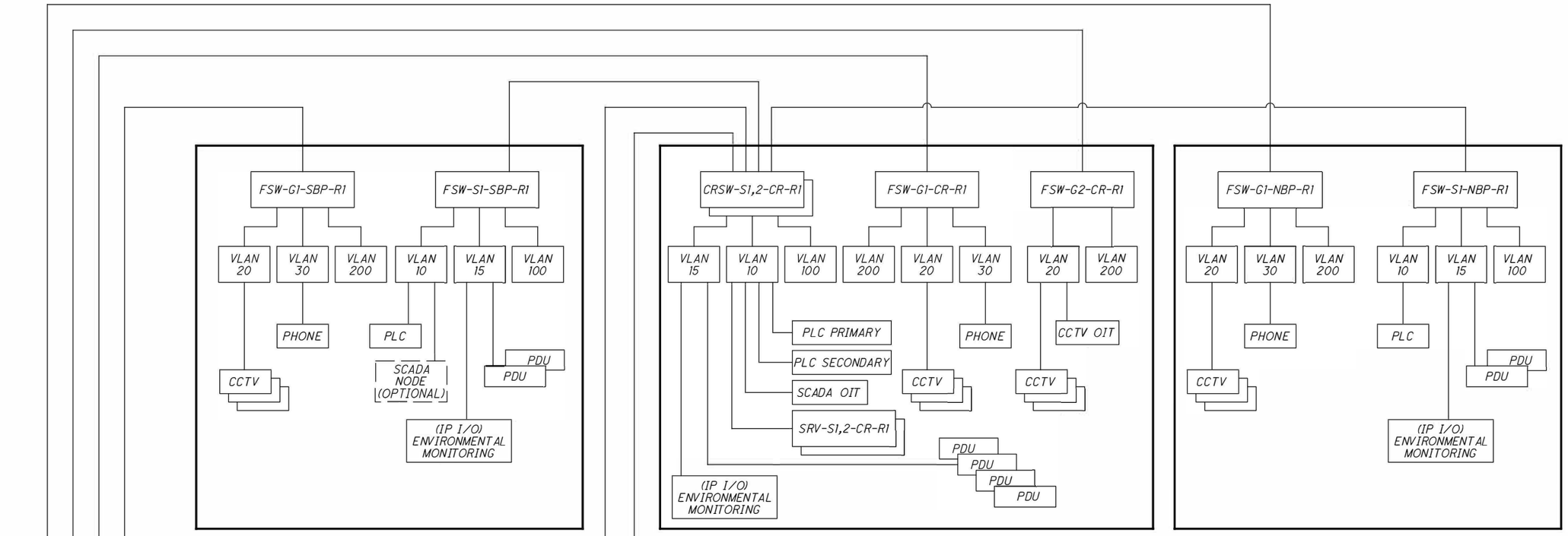

NOTES:

1. CCTV MONITOR IN THE LOCAL FACILITY WILL BE ABLE TO GATHER VIDEO SIGNALS AND CONTROL OF ALL TUNNEL CAMERAS. LOCAL CCTV ACCESS SHALL REMAIN IN THE EVENT OF THE MAIN COMMUNICATION LINK FAILURE.

2. SIMULTANEOUS VIDEO SIGNAL FEED SHALL BE BY MULTICASTING.

MULTICAST SHALL BE CONFIGURED AS FOLLOWS:
-MULTICAST GROUP MEMBERS ARE SWG-G1,2 AND SW-MAIN
-MULTICAST SOURCES ARE SW-G3, SW-G1.1 AND SW-G2
SOURCE SWITCHES SHALL SEND DATA TO MULTICAST GROUP MEMBERS ONLY.

3. VLAN TAGGING (EXAMPLE)
VLAN 10 - SCADA
VLAN 15 - DMZ SCADA AND IP I/O ALARM
VLAN 16 - MODBUS TCP/IP
VLAN 20 - CCTV
VLAN 30 - VoIP
VLAN 100 - SCADA MANAGEMENT
VLAN 200 - GENERAL MANAGEMENT

4. FOR LEGEND AND ABBREVIATIONS SEE SHEET 516/555

DESIGN AGENCY
HATCH MOTT MacDONALD
18013 CLEVELAND PKWY.
SUITE 200
CLEVELAND, OH 44135

DESIGNED	DRAWN	REVIEWED	DATE
OA	MS	RF	08/19/14
CHECKED	REVISED	STRUCTURE FILE NUMBER	
CS	DC	3106578	

SCADA - LAYER 2 DIAGRAM (ALL SYSTEMS)
BRIDGE NO. HAM-71-0134
I-71 LYTLE TUNNEL UNDER LYTLE PARK

HAM-71-01.34
PID No. 87268

289/296

547/555

c:\pwworking\hmm\external\tyn61470\dms727●3\071_0134CE5333.dgn 10/27/2014 12:57:18 PM TYN61470

c:\pwworking\hmm\external\pre47802\dms72703\071_0134CES334.dgn 1/28/2015 9:55:02 AM PRE47802

HAM-71-01.34
PID No. 87268

SCADA – P&ID SOUTHBOUND, NORTHBOUND AND RAMP DAMPERS

BRIDGE NO. HAM-71-0134
I-71 LYTLE TUNNEL UNDER LYTLE PARK

DESIGNED	DRAWN	REVIEWED	DATE
CZ	AB	RF	08/19/14
CHECKED	REVISED	STRUCTURE FILE NUMBER	
KS	TM	3106578	

DESIGN AGENCY
HATCH MOTT MacDONALD
18013 CLEVELAND PKWY.
SUITE 200
CLEVELAND, OH 44135

NOTE:
1. FOR LEGEND AND ABBREVIATIONS SEE SHEET 516/555

SOUTHBOUND TUNNEL — TI-DS
SOUTHBOUND RAMP-E TUNNEL — TI-DR
NORTHBOUND TUNNEL — TI-DN

AIR PLENUM SEE SHEET 212/296

FIELD MOUNTED DAMPER PANEL TI-DS — LOR, OPEN/CLOSE, HS, HS
FIELD MOUNTED DAMPER PANEL TI-DR — LOR, OPEN/CLOSE, HS, HS
FIELD MOUNTED DAMPER PANEL TI-DN — LOR, OPEN/CLOSE, HS, HS

FIELD/LOCAL AREA CONTROL PANEL

DO	DI	
0100	0100	DAMPER LOCAL/REMOTE
0101	0101	ACTUATOR TI-DS-1 OPENED
		ACTUATOR TI-DS-1 CLOSED
0102	0102	ACTUATOR TI-DS-2 OPENED
		ACTUATOR TI-DS-2 CLOSED
0103	0103	ACTUATOR TI-DS-3 CLOSED
		ACTUATOR TI-DS-3 OPENED
0104	0104	ACTUATOR TI-DS-4 OPENED
		ACTUATOR TI-DS-4 CLOSED
0105	0105	ACTUATOR TI-DS-5 CLOSED
		ACTUATOR TI-DS-5 OPENED
0106	0106	ACTUATOR TI-DS-6 OPENED
		ACTUATOR TI-DS-6 CLOSED
0101	0101	ACTUATOR TI-DS-1 OPEN CMD.
0102	0102	ACTUATOR TI-DS-2 CLOSE CMD.
0103	0103	ACTUATOR TI-DS-3 OPEN CMD.
0104	0104	ACTUATOR TI-DS-4 CLOSE CMD.
0105	0105	ACTUATOR TI-DS-5 CLOSE CMD.
0106	0106	ACTUATOR TI-DS-6 OPEN CMD.
0101	0101	ACTUATOR TI-DS-6 CLOSE CMD.

DO	DI	
0100	0100	DAMPER LOCAL/REMOTE
0101	0101	ACTUATOR TI-DR OPENED
		ACTUATOR TI-DR CLOSED
0101	0101	ACTUATOR TI-DR CLOSE CMD.
0101	0101	ACTUATOR TI-DR OPEN CMD.

DO	DI	
0100	0100	DAMPER LOCAL/REMOTE
0101	0101	ACTUATOR TI-DN-1 OPENED
		ACTUATOR TI-DN-1 CLOSED
0102	0102	ACTUATOR TI-DN-2 CLOSED
		ACTUATOR TI-DN-2 OPENED
0101	0101	ACTUATOR TI-DN-1 CLOSE CMD.
0101	0101	ACTUATOR TI-DN-1 OPEN CMD.

LOCAL PLC CONTROL PANEL

SCADA

(TYPICAL 1)

(TYPICAL 1)
FOR FAN #3

NOTES:

"FI-D2-X" SHALL BE REPLACED WITH "FI-D3-X". "X" INDICATES ACTUATOR.

DAMPER LOCAL/REMOTE	ACTUATOR FI-D2-1 OPENED	ACTUATOR FI-D2-1 CLOSED	ACTUATOR FI-D2-2 OPENED	ACTUATOR FI-D2-2 CLOSED	ACTUATOR FI-D2-3 OPENED	ACTUATOR FI-D2-3 CLOSED	ACTUATOR FI-D2-4 OPENED	ACTUATOR FI-D2-4 CLOSED	ACTUATOR FI-D2-1 OPEN CMD.	ACTUATOR FI-D2-1 CLOSE CMD.
DI 0200	DI 0201	DI 0201	DI 0202	DI 0202	DI 0203	DI 0203	DI 0204	DI 0204	DO 0201	DO 0201

DAMPER LOCAL/REMOTE	ACTUATOR FI-D1-1 OPENED	ACTUATOR FI-D1-1 CLOSED	ACTUATOR FI-D1-2 OPENED	ACTUATOR FI-D1-2 CLOSED	ACTUATOR FI-D1-3 OPENED	ACTUATOR FI-D1-3 CLOSED	ACTUATOR FI-D1-4 OPENED	ACTUATOR FI-D1-4 CLOSED	ACTUATOR FI-D1-1 OPEN CMD.	ACTUATOR FI-D1-1 CLOSE CMD.
DI 0100	DI 0101	DI 0101	DI 0102	DI 0102	DI 0103	DI 0103	DI 0104	DI 0104	DO 0101	DO 0101

SCADA

LOCAL PLC CONTROL PANEL

FIELD/LOCAL AREA CONTROL PANEL

FIELD MOUNTED DAMPER PANEL FI-D3
LOR OPEN/CLOSE
HS HS

FIELD MOUNTED DAMPER PANEL FI-D2
LOR OPEN/CLOSE
HS HS

FIELD MOUNTED DAMPER PANEL FI-D1
LOR OPEN/CLOSE
HS HS

AIR PLENUM SEE SHEET 211/296

FI-D1 TV-F1
FI-D2 TV-F2
FI-D3 TV-F3

DAMPERS FANS

NEW VENTILATION FAN ROOM

NOTE:

1. FOR LEGEND AND ABBREVIATIONS SEE SHEET 516/555

c:\pwworking\hmm\external\pre47802\dms72703\071_0134CES335.dgn 1/28/2015 9:53:06 AM PRE47802

DESIGN AGENCY
HATCH MOTT MacDONALD
8013 CLEVELAND PKWY.
SUITE 200
CLEVELAND, OH 44135

DESIGNED	DRAWN	REVIEWED	DATE
CZ	AB	RF	08/19/14
CHECKED	REVISED	STRUCTURE FILE NUMBER	
KS	TM	3106578	

SCADA - P&ID NEW VENTILATION FAN ROOM 1
BRIDGE NO. HAM-71-0134
I-71 LYTLE TUNNEL UNDER LYTLE PARK

HAM-71-01.34
PID No. 87268

291/296

549/555

(TYPICAL 1)

(TYPICAL 1)
FOR FAN #3

SCADA

LOCAL PLC CONTROL PANEL

FIELD/LOCAL AREA CONTROL PANEL

SS #2 FAULT	SS #2 BYPASSED	FAN #2 LOCAL/REMOTE	FAN #2 OVER TEMPERATURE	FAN #2 H. SPEED FORWARD	FAN #2 H. SPEED REVERSE	FAN #2 L. SPEED FORWARD	FAN #2 L. SPEED REVERSE	FAN #2 H. SPEED TRIP	FAN #2 L. SPEED TRIP	SS #2 ENABLE	FAN #2 H. SPEED FWD. RUN	FAN #2 H. SPEED REV. RUN	FAN #2 L. SPEED FWD. RUN	FAN #2 L. SPEED REV. RUN	FAN #2 SPEED FEEDBACK	FAN #2 MOTOR VIBRATION #1	FAN #2 MOTOR VIBRATION #2
DI 0201	DI 0201	DI 0201	DI 0201	DI 0201	DI 0201	DI 0201	DI 0201	DI 0201	DI 0201	DO 0201	DO 0201	DO 0201	DO 0201	DO 0201	AI 0201	AI 0201	AI 0202

SS #1 FAULT	SS #1 BYPASSED	FAN #1 LOCAL/REMOTE	FAN #1 OVER TEMPERATURE	FAN #1 H. SPEED FORWARD	FAN #1 H. SPEED REVERSE	FAN #1 L. SPEED FORWARD	FAN #1 L. SPEED REVERSE	FAN #1 H. SPEED TRIP	FAN #1 L. SPEED TRIP	SS #1 ENABLE	FAN #1 H. SPEED FWD. RUN	FAN #1 H. SPEED REV. RUN	FAN #1 L. SPEED FWD. RUN	FAN #1 L. SPEED REV. RUN	FAN #1 SPEED FEEDBACK	FAN #1 MOTOR VIBRATION #1	FAN #1 MOTOR VIBRATION #2
DI 0101	DI 0101	DI 0101	DI 0101	DI 0101	DI 0101	DI 0101	DI 0101	DI 0101	DI 0101	DO 0101	DO 0101	DO 0101	DO 0101	DO 0101	AI 0101	AI 0101	AI 0102

FAN #3 SOFT STARTER ENCLOSURE
HIM
G ON
G RUN
R FAULT
SI
HS
L/R
SS #3

FAN #2 SOFT STARTER ENCLOSURE
HIM
G ON
G RUN
R FAULT
SI
HS
L/R
SS #2

FAN #1 SOFT STARTER ENCLOSURE
HIM
G ON
G RUN
R FAULT
SI
HS
L/R
SS #1

AIR PLENUM SEE SHEET 211/296

FI-D1
FI-D2
FI-D3

TV-F1
TV-F2
TV-F3

DAMPERS
FANS

NEW VENTILATION FAN ROOM

NOTE:

1. FOR LEGEND AND ABBREVIATIONS SEE SHEET 516/555

DESIGN AGENCY
HATCH MOTT MacDONALD
8013 CLEVELAND PKWY.
SUITE 200
CLEVELAND, OH 44135

DESIGNED	DRAWN	REVIEWED	DATE
CZ	AB	RF	08/19/14
CHECKED	REVISED	STRUCTURE FILE NUMBER	
KS	TM	3106578	

SCADA - P&ID NEW VENTILATION FAN ROOM 2
BRIDGE NO. HAM-71-0134
I-71 LYTLE TUNNEL UNDER LYTLE PARK

HAM-71-01.34
PID No. 87268

c:\pwworking\hmm\external\pre47802\dms72703\071_0134CES336.dgn 1/22/2015 1:37:17 PM PRE47802

SCADA HMI ONLY

SBOUND TUNNEL CO LEVEL — AI Q101
SBOUND RAMP CO LEVEL — AI Q101
NBOUND TUNNEL CO LEVEL — AI Q101
SB ZONE 1 FIRE ALARM — DI Q101
SB ZONE 2 FIRE ALARM — DI Q102
RAMP ZONE 1 FIRE ALARM — DI Q201
RAMP ZONE 2 FIRE ALARM — DI Q202
NB ZONE 1 FIRE ALARM — DI Q301
NB ZONE 2 FIRE ALARM — DI Q302
SBOUND TUNNEL CO LEVEL — AI Q102
SBOUND RAMP CO LEVEL — AI Q102
NBOUND TUNNEL CO LEVEL — AI Q102
FAN PLENUM CO LEVEL — AI Q101
FA GEN. ALARM SIGNAL — DI Q101
FA TROUBLE SIGNAL — DI Q101
FA SUPERVISORY SIGNAL — DI Q101
ELECT ROOM CO LEVEL — AI Q101

SCADA
LOCAL PLC CONTROL PANEL
FIELD/LOCAL AREA CONTROL PANEL

ETHERNET
HEAT DETECTOR PANEL SOUTHBOUND TUNNEL
ETHERNET
HEAT DETECTOR PANEL SOUTHBOUND RAMP-E TUNNEL
ETHERNET
HEAT DETECTOR PANEL NORTHBOUND TUNNEL

FIRE ALARM PANEL

FIBER
FIBER
FIBER

(COFP1) FAN PLENUM

(COER1) ELECTRICAL ROOM

COSB1 CO MONITORING STATION

I.R.-71 SOUTHBOUND TUNNEL

COSB2 CO MONITORING STATION

COSR1 CO MONITORING STATION

CONB1 CO MONITORING STATION

I.R.-71 SOUTHBOUND RAMP-E TUNNEL TO THIRD STREET

COSR2 CO MONITORING STATION

CONB2 CO MONITORING STATION

I.R.-71 NORTHBOUND TUNNEL

NOTES:

1. SENSOR LOCATIONS ARE DIAGRAMATIC ONLY.
2. FOR LEGEND AND ABBREVIATIONS SEE SHEET 516/555

LEGEND:

- CARBON MONOXIDE DETECTION SENSOR
- FIRE ALARM DETECTION SENSOR
- TRAFFIC DIRECTION

COSB1
- UNIQUE IDENTIFIER
- SOUTHBOUND TUNNEL
- CARBON MONOXIDE DETECTOR

SB - SOUTHBOUND TUNNEL
NB - NORTHBOUND TUNNEL
SR - SOUTHBOUND RAMP-E TUNNEL
ER - ELECTRICAL ROOM
FP - FAN PLENUM

SCADA - P&ID CARBON MONOXIDE DETECTION & FIRE ALARM

BRIDGE NO. HAM-71-0134
I-71 LYTLE TUNNEL UNDER LYTLE PARK

HAM-71-01.34
PID No. 87268

293/296

551/555

DESIGN AGENCY
HATCH MOTT MacDONALD
18013 CLEVELAND PKWY.
SUITE 200
CLEVELAND, OH 44135

DESIGNED	DRAWN	REVIEWED	DATE	STRUCTURE FILE NUMBER
CZ	AB	RF	08/19/14	3106578
CHECKED	REVISED			
KS	TM			

c:\pwworking\hmm\external\tyn61470\dms72703\071_0134CES337.dgn 10/27/2014 12:57:26 PM TYN61470

SCADA HMI ONLY

SCADA HMI ONLY

SCADA

LOCAL PLC CONTROL PANEL

FIELD/LOCAL AREA CONTROL PANEL

MAIN #1 BREAKER RACKED IN — DI 0101
MAIN #1 BREAKER OPEN/CLOSE — DI 0101
MAIN #1 BREAKER REMOTE TRIP — DO 0101
MAIN #1 BREAKER REMOTE CLOSE — DO 0101
MAIN #1 BREAKER VOLTAGE (V) — AI 0101
MAIN #1 BREAKER CURRENT (A) — AI 0101
MAIN #1 BREAKER POWER (W) — AI 0101
MAIN #1 BREAKER POWER (VAR) — AI 0101
MAIN #1 BREAKER POWER FACTOR — AI 0101
SS #1 BREAKER RACKED IN — DI 0101
SS #1 BREAKER OPEN/CLOSE — DI 0101
SS #1 BREAKER REMOTE TRIP — DO 0101
SS #1 BREAKER REMOTE CLOSE — DO 0101
SS #2 BREAKER RACKED IN — DI 0201
SS #2 BREAKER OPEN/CLOSE — DI 0201
SS #2 BREAKER REMOTE TRIP — DO 0201
SS #2 BREAKER REMOTE CLOSE — DO 0201
DP-E BREAKER RACKED IN — DI 0101
DP-E BREAKER OPEN/CLOSE — DI 0101
LP-DP BREAKER RACKED IN — DI 0101
LP-DP BREAKER OPEN/CLOSE — DI 0101
TIE BREAKER RACKED IN — DI 0101
TIE BREAKER OPEN/CLOSE — DI 0101
TIE BREAKER REMOTE TRIP — DO 0101
TIE BREAKER REMOTE CLOSE — DO 0101
TIE BREAKER AUTO XFER ON — DO 0101
LP-PP BREAKER RACKED IN — DI 0101
LP-PP BREAKER OPEN/CLOSE — DI 0101
DP-W BREAKER RACKED IN — DI 0101
DP-W BREAKER OPEN/CLOSE — DI 0101
MAIN #2 BREAKER VOLTAGE (V) — AI 0201
MAIN #2 BREAKER CURRENT (A) — AI 0201
MAIN #2 BREAKER POWER (W) — AI 0201
MAIN #2 BREAKER POWER (VAR) — AI 0201
MAIN #2 BREAKER POWER FACTOR — AI 0201
MAIN #2 BREAKER RACKED IN — DI 0201
MAIN #2 BREAKER OPEN/CLOSE — DI 0201
MAIN #2 BREAKER REMOTE TRIP — DO 0201
MAIN #2 BREAKER REMOTE CLOSE — DO 0201
SS #3 BREAKER RACKED IN — DI 0301
SS #3 BREAKER OPEN/CLOSE — DI 0301
SS #3 BREAKER REMOTE TRIP — DO 0301
SS #3 BREAKER REMOTE CLOSE — DO 0301

ETHERNET

ETHERNET

XFMR
2 MVA
13.2kV - 480V
3ϕ

UTILITY METER

"MSG-1" 3000A SWITCH GEAR, 480/277Y 4W, 65KAIC
CALCULATED AVAILABLE FAULT CURRENT 46KAIC

V, A, W, VAR, PF
50G/51G,50/51, 27,
59, 47, 50BF, 86, 25

52 — 3000AT 3000AF

MBRER1

(3) 4000:5

(2)

50/51, 50BF,
27/59, 25

UBRER1

52 — 3000AT 3000AF

TIE BKR.

PBHER1

PBLPDP

PBERLP

PBHER2

MBRER2

800AT 800AF — 52 — V, A, W, VAR, PF 50/51, 50G/51G, 38, 49, 47, 86 — SS #1 — (3) 1000:5

800AT 800AF — 52 — V, A, W, VAR, PF 50/51, 50G/51G, 38, 49, 47, 86 — SS #2 — (3) 1000:5

500AT 800AF — 52 — V, A, W, VAR, PF 50/51,50G/51G — (3) 500:5 — (3) 500:5

400AT 400AF — 52 — V, A, W, VAR, PF 50/51,50G/51G — (3) 500:5 — (3) 500:5

400AT 400AF — 52 — V, A, W, VAR, PF 50/51,50G/51G — (3) 500:5 — (3) 500:5

500AT 800AF — 52 — V, A, W, VAR, PF 50/51,50G/51G — (3) 500:5 — (3) 500:5

800AT 800AF — 52 — V, A, W, VAR, PF 50/51, 50G/51G, 38, 49, 47, 86 — SS #3 — (3) 1000:5

NOTE:

1. FOR LEGEND AND ABBREVIATIONS SEE SHEET 516/555

TO SS #1

TO SS #2

TO PANEL "DP-E" SEE SHEET 232/555

TO PANEL "LP-DP" SEE SHEET 491/555

TO PANEL "LP-PP" SEE SHEET 491/555

TO PANEL "DP-W" SEE SHEET 232/555

TO SS #3 SEE SHEET 491/555

DESIGN AGENCY
HATCH MOTT MacDONALD
18013 CLEVELAND PKWY.
SUITE 200
CLEVELAND, OH 44135

DESIGNED	DRAWN	REVIEWED	DATE	STRUCTURE FILE NUMBER
CZ	MS	RF	08/19/14	3106578
CHECKED	REVISED			
KS	TM			

SCADA - P&ID ELECTRICAL
BRIDGE NO. HAM-71-0134
I-71 LYTLE TUNNEL UNDER LYTLE PARK

HAM-71-01.34
PID No. 87268

294/296

552/555

c:\pwworking\hmm\external\tyn61470\dms72703\071_0134CES338.dgn 10/27/2014 12:57:28 PM TYN61470

c:\pwworking\hmm\external\pre47802\dms72703\071_0134CES339.dgn 1/22/2015 1:38:42 PM PRE47802

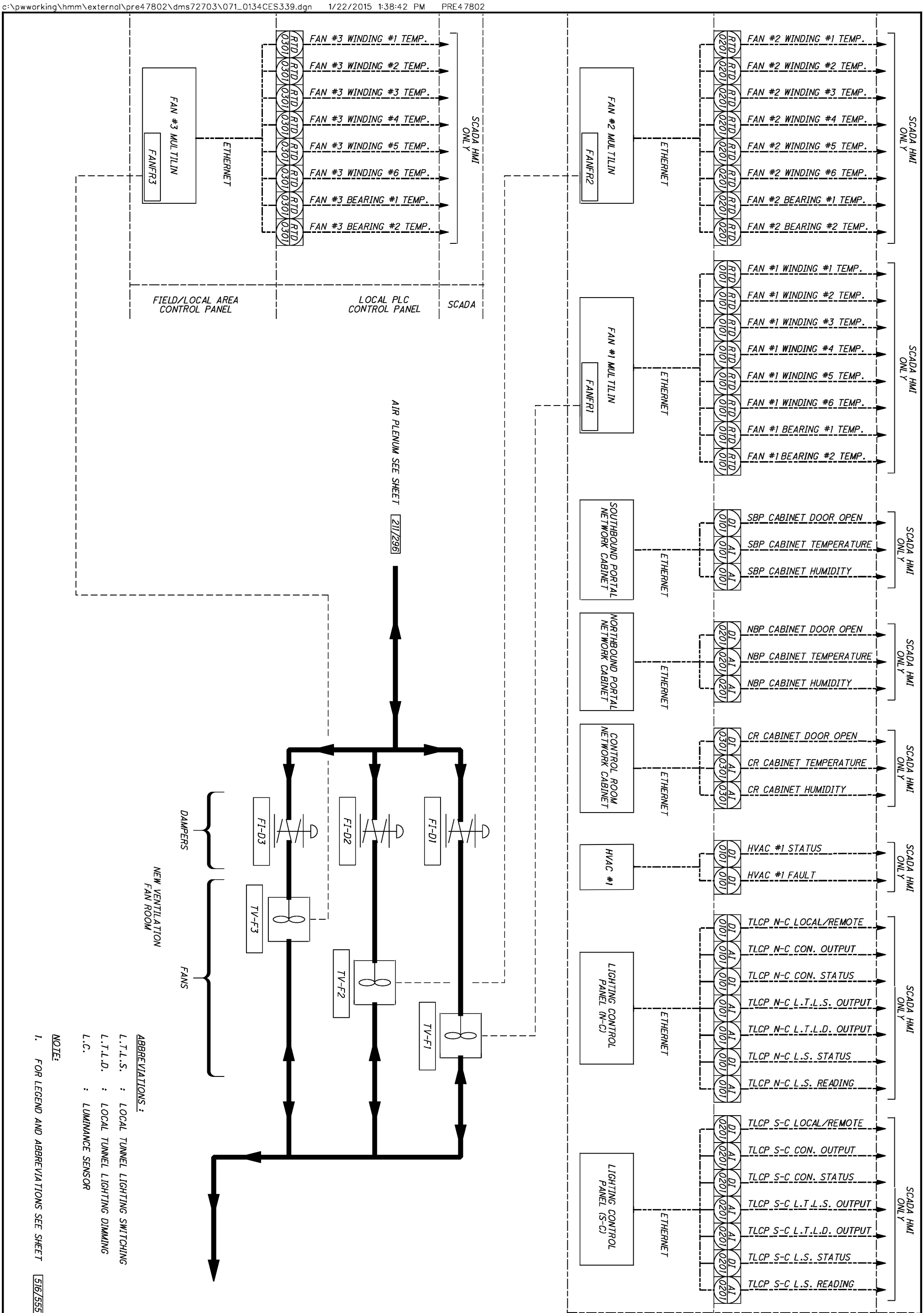

ABBREVIATIONS :

L.T.L.S. : LOCAL TUNNEL LIGHTING SWITCHING

L.T.L.D. : LOCAL TUNNEL LIGHTING DIMMING

L.C. : LUMINANCE SENSOR

NOTE:

1. FOR LEGEND AND ABBREVIATIONS SEE SHEET 516/555

553/555	295/296	**HAM-71-01.34** PID No. 87268	SCADA - P&ID NEW VENTILATION FAN ROOM 3 & OTHERS BRIDGE NO. HAM-71-0134 I-71 LYTLE TUNNEL UNDER LYTLE PARK	DESIGNED CZ / DRAWN AB / REVIEWED RF / DATE 08/19/14 CHECKED KS / REVISED TM / STRUCTURE FILE NUMBER 3106578	DESIGN AGENCY HATCH MOTT MacDONALD 18013 CLEVELAND PKWY. SUITE 200 CLEVELAND, OH 44135	

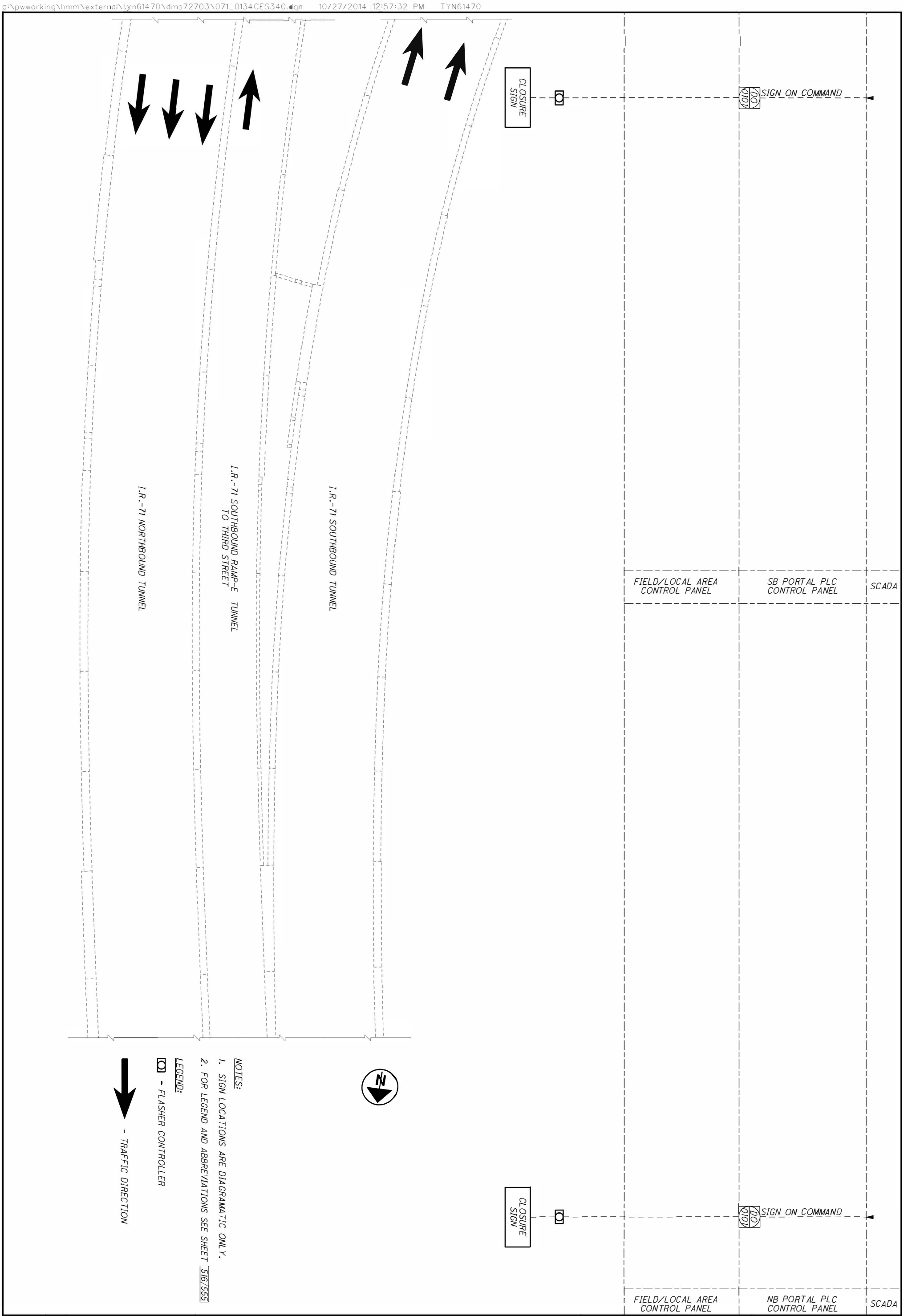

NOTES:

1. SIGN LOCATIONS ARE DIAGRAMATIC ONLY.
2. FOR LEGEND AND ABBREVIATIONS SEE SHEET 516/555

LEGEND:

- FLASHER CONTROLLER
- TRAFFIC DIRECTION

554/555	296/296	HAM-71-01.34 PID No. 87268	SCADA - P&ID NB AND SB PORTAL PLC BRIDGE NO. HAM-71-0134 I-71 LYTLE TUNNEL UNDER LYTLE PARK	DESIGNED CZ CHECKED KS	DRAWN AB REVISED TM	REVIEWED RF DATE 08/19/14 STRUCTURE FILE NUMBER 3106578	DESIGN AGENCY HATCH MOTT MacDONALD 18013 CLEVELAND PKWY. SUITE 200 CLEVELAND, OH 44135

EAST FOURTH STREET
60' R/W (BY ORD. #1838)

POINT OF COMMENCEMENT

S 51° 57' 40" W
30.36'

TRUE POINT OF BEGINNING

ORIGINAL LOT LINE (+/-)

S 38° 2' 20" E
30.00'

℄ OF INT. BASED ON CURB SPLITS OF PIKE & EAST FOURTH STREETS

7.62'

131+08.27
58.18 LT

131+18.91
41.82 LT

131+23.03
35.38 LT

SH

132.75'

N 51° 57' 40" E 203.32'

131+77.65
55.06 RT

CITY SURFACE STREET R/W

132+11.72
116.17 RT

PAVEMENT REPLACEMENT EXTENTS

THE STATE OF OHIO
(ORIGINAL PARCEL 5222-3DE-1)

SUBSURFACE LA

Ex LA

THE CITY OF CINCINNATI, LYTLE PARK
JOHN C. SYMMES SUBDIVISION
D.B. "I", Pg. 0458
0.6657 ACRES (C)
AUD. PAR. #
084-0003-0131 TH 0135 (CONS.)
0.6657 AC. (CALC.)

130+86.49
44.48 LT

130+72.11
35.19 LT

LOT 55

THE STATE OF OHIO
(ORIGINAL PARCEL 5222-3DE-2)

LOT 54

ORIGINAL LOT LINE (+/-)

1-SH

N 38° 5' 40" W
143.21'

S 37° 20' 50" E
143.38'

HS

LYTLE STREET
40' R/W

NORTHBOUND EXPRESSWAY ℄ R/W

PIKE STREET
60' R/W

1.N.S.

BASIS FOR BEARINGS:

ALL BEARINGS SHOWN ARE FOR PROJECT USE ONLY. THE BASIS OF BEARINGS SHOWN ON THE DESCRIBED PARCEL ARE BASED ON GRID NORTH AS RESOLVED BY RTK GPS OBSERVATIONS TAKEN FROM THE ODOT VRS SYSTEM DATUM BASED ON, OHIO STATE PLANE SOUTH, NAD83(CORS96) AND ARE FOR THE DETERMINATION OF ANGLES ONLY. ALL DISTANCES RECITED ARE GRID DISTANCES.

CITY SURFACE STREET R/W

CITY SURFACE STREET R/W

38.84'

NOT DEDICATED PUBLIC R/W

M.N.S.

129+88.89
22.64 RT

130+12.16
55.71 RT

S 52° 0' 22" W 201.45'

160.74'

130+96.77
188.91 RT

THE STATE OF OHIO
(PARCEL 5221-WL)
D.B. ____, Pg. ___
AUD. PAR. #
084-0003-0188

THE WESTERN AND SOUTHERN LIFE INSURANCE COMPANY
O.R. 06892, Pg. 1553
AUD. PAR. #
084-0003-0129, 0130

DO NOT DISTURB STONE WALL

SIDEWALK REPLACEMENT EXTENTS

SURVEYORS SEAL

HORIZONTAL SCALE IN FEET
0 5 10 20

PID NO. 87268

R/W DESIGNER CAL
R/W REVIEWER WCL

RIGHT OF WAY PLAN

HAM-71-01.34

1 / 1

555
555

c:\pwworking\hmm\external\tyn61470\dms72886\87268RD001.dgn 10/27/2014 1:08:51 PM TYN61470

PROJECT DESCRIPTION

IMPROVEMENTS ARE TO BE MADE FOR THE EXISTING PUMP STATION FACILITIES AND VENTILATION SYSTEM FOR LYTLE TUNNEL. THE EXISTING PUMP STATION FACILITIES AT THE SOUTH END OF THE TUNNEL WILL BE REMOVED AND A SLAB ON GRADE WILL BE RECONSTRUCTED TO ALLOW PORTABLE PUMPS TO BE USED IN LIEU OF PERMANENT PUMPS. THE EXISTING BELOW GRADE VENTILATION STRUCTURE WILL BE EXPANDED TO THE EAST TO ACCOMMODATE NEW FANS AND ELECTRICAL EQUIPMENT.

HISTORIC RECORDS

SIX HISTORIC BORINGS ARE PRESENTED FROM PROJECT HAM-71-0.93, DATED 1963.

GEOLOGY

IN GENERAL, THE GEOLOGY OF THE OVERALL PROJECT AREA IS CHARACTERIZED BY SOILS FORMED FROM THE UNDERLYING SEDIMENTARY ROCK (POINT PLEASANT FORMATION) AND THE ALLUVIAL AND RESIDUAL DEPOSITS COMMON IN THE OHIO RIVER VALLEY. THE RESIDUAL CLAY SOILS FORMED FROM THE WEATHERED INTERBEDDED SHALE AND LIMESTONE ROCK ARE TYPICALLY THIN AND HAVE LOW SHEAR STRENGTH. THE ALLUVIAL DEPOSITS CONSIST OF GRAVEL AND SAND AND ARE LOCATED ALONG THE OHIO RIVER VALLEY TERRACES AND FLOOD PLAINS. IN THE PROJECT AREA, THE MAPPING SHOWS THE DEPTH TO BEDROCK ON THE ORDER OF 100 TO 200 FEET BELOW GROUND SURFACE.

RECONNAISSANCE

THE UNDERGROUND BUILDING IS LOCATED BELOW LYTLE PARK NEAR THE INTERSECTION OF 4TH STREET AND PIKE STREET. THE PARK CONSISTS OF GENERALLY FLAT SODDED AREAS AS WELL AS PAVED WALKWAYS.

THE PUMP STATION PAD IS LOCATED ON THE SOUTH SIDE OF THE TUNNEL ALONG THE NORTH EDGE OF I-71 RAMP E TO E 3RD STREET. THIS AREA IS GENTLY TO MODERATELY SLOPING TOWARD THE RAMP. THE SLOPE IS COVERED BY SOD AND MULCH. THE PUMP STATION PAD WILL BE LOCATED JUST EAST OF THE EXISTING PUMP STATION.

SUBSURFACE EXPLORATION

A TOTAL OF TWO (2) TEST BORINGS, IDENTIFIED AS B-001 AND B-002, WERE COMPLETED AS PART OF THIS SUBSURFACE EXPLORATION FOR THE UNDERGROUND VENTILATION BUILDING ON JANUARY 28 THROUGH 30, 2013.

A TOTAL OF ONE (1) TEST BORING, IDENTIFIED AS B-003, WAS COMPLETED AS PART OF THIS SUBSURFACE EXPLORATION FOR THE NEW PORTABLE PUMP STATION FOUNDATION ON JANUARY 31, 2013.

TEST BORINGS B-001 AND B-002 WERE DRILLED WITH A TRUCK-MOUNTED ROTARY DRILL RIGS USING 3-1/4 INCH I.D. HOLLOW-STEM AUGERS. DISTURBED SOIL SAMPLES WERE OBTAINED IN ACCORDANCE WITH THE STANDARD PENETRATION TEST (AASHTO T206) AT INTERVALS OF 2.5 FEET THROUGH THE SOIL USING AN AUTOMATIC HAMMER SYSTEM. THE HAMMER WAS CALIBRATED ON SEPTEMBER 27, 2011 AND HAD A DRILL ROD ENERGY RATIO OF 80.9%.

TEST BORING B-003 WAS DRILLED USING A PORTABLE ROTARY DRILL RIG USING 2 INCH SOLID FLIGHT AUGERS. DISTURBED SOIL SAMPLES WERE OBTAINED IN ACCORDANCE WITH THE STANDARD PENETRATION TEST (AASHTO T206) AT INTERVALS NO LARGER THAN 1 FOOT THROUGH THE SOIL USING A MANUAL HAMMER SYSTEM. THE HAMMER HAD A DRILL ROD ENERGY RATIO OF 60%.

EXPLORATION FINDINGS

GENERALLY, BELOW THE SURFICIAL MATERIALS, STIFF TO VERY STIFF FINE GRAINED SOILS (A-4a, A-4b, AND A-6b) WERE ENCOUNTERED TO DEPTHS RANGING FROM 5 TO 8 FEET BELOW GROUND SURFACE. BELOW THESE MATERIALS, MEDIUM DENSE TO VERY DENSE COARSE-GRAINED GRANULAR SOILS (A-1-a, A-2-4, AND A-3) WERE ENCOUNTERED TO DEPTHS RANGING FROM 12.5 TO 30.5 FEET BELOW GROUND SURFACE. BELOW THE COARSE-GRAINED MATERIALS, MEDIUM STIFF TO VERY STIFF FINE-GRAINED SOILS (A-4a, A-4b, A-7-6, AND A-6a) WERE ENCOUNTERED.

IN TEST BORINGS B-001 AND B-002, GROUNDWATER WAS ENCOUNTERED DURING DRILLING AT DEPTHS OF 45.5 FEET AND 35.5 FEET (ELEVATIONS 495.7 FEET TO 505.8.1 FEET), RESPECTIVELY. A MONITORING WELL WAS INSTALLED IN TEST BORING B-001 AT THE COMPLETION OF DRILLING. WATER LEVEL READINGS WERE TAKEN AT 1 DAY AND 7 DAYS AND RECORDED DEPTHS OF 44.7 FEET AND 42.6 FEET (ELEVATIONS 496.5 FEET AND 498.6 FEET), RESPECTIVELY.

SPECIFICATIONS

THIS GEOTECHNICAL EXPLORATION WAS PERFORMED IN ACCORDANCE WITH THE STATE OF OHIO, DEPARTMENT OF TRANSPORTATION, OFFICE OF GEOTECHNICAL ENGINEERING, SPECIFICATIONS FOR GEOTECHNICAL EXPLORATIONS, DATED APRIL 2010.

LEGEND

DESCRIPTION	ODOT CLASS	CLASSIFIED MECH./VISUAL	
GRAVEL AND/OR STONE FRAGMENTS	A-1-a	5	11
GRAVEL AND/OR STONE FRAGMENTS W/SAND AND SILT	A-2-4	2	2
FS FINE SAND	A-3	-	2
SANDY SILT	A-4a	2	7
SILT	A-4b	2	1
SILT AND CLAY	A-6a	2	-
CLAY	A-7-6	4	4
UNCONTROLLED FILL	-	-	4
	TOTAL	17	31
SOD AND TOPSOIL = X = APPROXIMATE THICKNESS	VISUAL		

BORING LOCATION - PLAN VIEW.

HISTORIC BORING LOCATION - PLAN VIEW - HAM-71-0.93 (1963)

DRIVE SAMPLE AND/OR ROCK CORE BORING PLOTTED TO VERTICAL SCALE ONLY. HORIZONTAL BAR INDICATES A CHANGE IN STRATIGRAPHY.

WC INDICATES WATER CONTENT IN PERCENT.

N_{60} INDICATES STANDARD PENETRATION RESISTANCE NORMALIZED TO 60% DRILL ROD ENERGY RATIO.

W— INDICATES FREE WATER ELEVATION.

SS INDICATES A SPLIT SPOON SAMPLE.

ST INDICATES A SHELBY TUBE SAMPLE.

NP INDICATES A NON-PLASTIC SAMPLE.

AVAILABLE INFORMATION

ALL AVAILABLE SOIL AND BEDROCK INFORMATION THAT CAN BE CONVENIENTLY SHOWN ON THE SOIL PROFILE SHEETS HAS BEEN SO REPORTED. ADDITIONAL SUBSURFACE EXPLORATIONS MAY HAVE BEEN MADE TO STUDY SOME SPECIAL ASPECT OF THE PROJECT. COPIES OF THIS DATA, IF ANY, MAY BE INSPECTED IN THE DISTRICT DEPUTY DIRECTOR'S OFFICE, THE OFFICE OF GEOTECHNICAL ENGINEERING AT 1600 WEST BROAD STREET OR THE OFFICE OF STRUCTURAL ENGINEERING AT 1980 WEST BROAD STREET.

LOCATION MAP

SCALE IN MILES

0 0.5 1

N

PARTICLE SIZE DEFINITIONS

12"	3"	2.0 mm	0.42 mm	0.074 mm	0.005 mm
BOULDERS	COBBLES	GRAVEL	COARSE SAND	FINE SAND	SILT	CLAY
		No. 10 SIEVE	No. 40 SIEVE	No. 200 SIEVE		

RECON. - NW 01/21/13
DRILLING - BK 01/28-31/13
DRAWN - BRU 04/02/13
REVIEWED - NW 05/31/13
DB 06/21/13

CTL ENGINEERING, INC.
2105 SCHAPPELLE LANE
CINCINNATI, OHIO 45240
PHONE: 513/722-8665

PID NO. 87268

STRUCTURE FOUNDATION EXPLORATION

HAM-71-1.34

D:\DropBox\CTL-2014\October\Dept 12\CIN\Joshua\130500010IN\87268-geo01.dgn 10/15/2014 12:54:49 PM Sachina

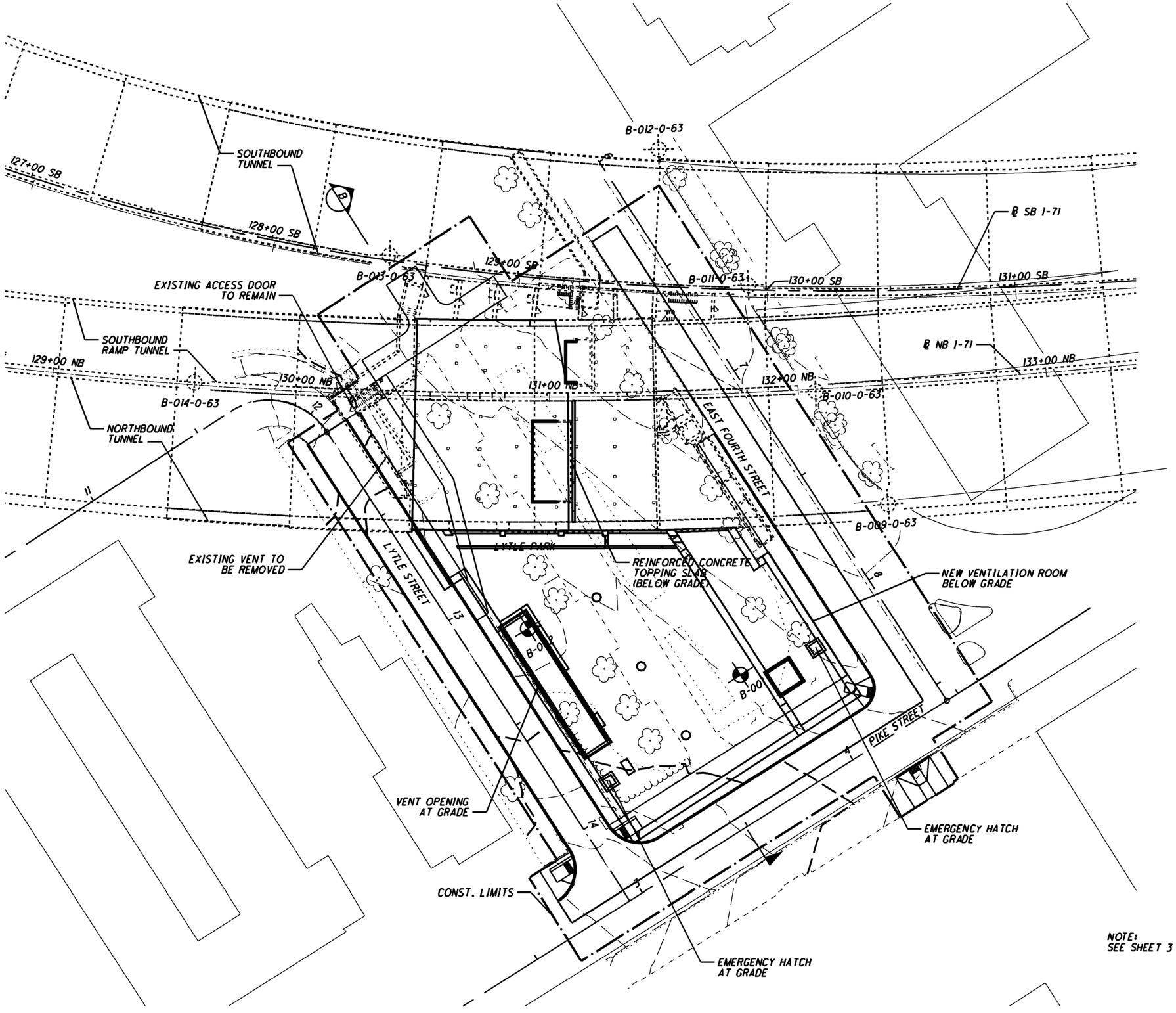

NOTE:
SEE SHEET 3 FOR CROSS SECTION B-B

HORIZONTAL SCALE IN FEET
0 10 20 40

DRAWN BRU
CHECKED NW

STRUCTURE FOUNDATION EXPLORATION
LYTLE TUNNEL VENTILATION ROOM

HAM-71-1.34

2 / 18

D:\DropBox\CTL-2014\October\Dept 12\CIN\Joshua\13050001CIN\87268-geo02.dgn 10/15/2014 12:55:30 PM Sachino

NOTE:

SEE SHEET 2 FOR PLAN VIEW

THE LOCATIONS OF TEST BORINGS B-001 AND B-002 ON CROSS SECTION B-B ARE A PERPENDICULAR PROJECTION FROM THEIR ACTUAL LOCATIONS.

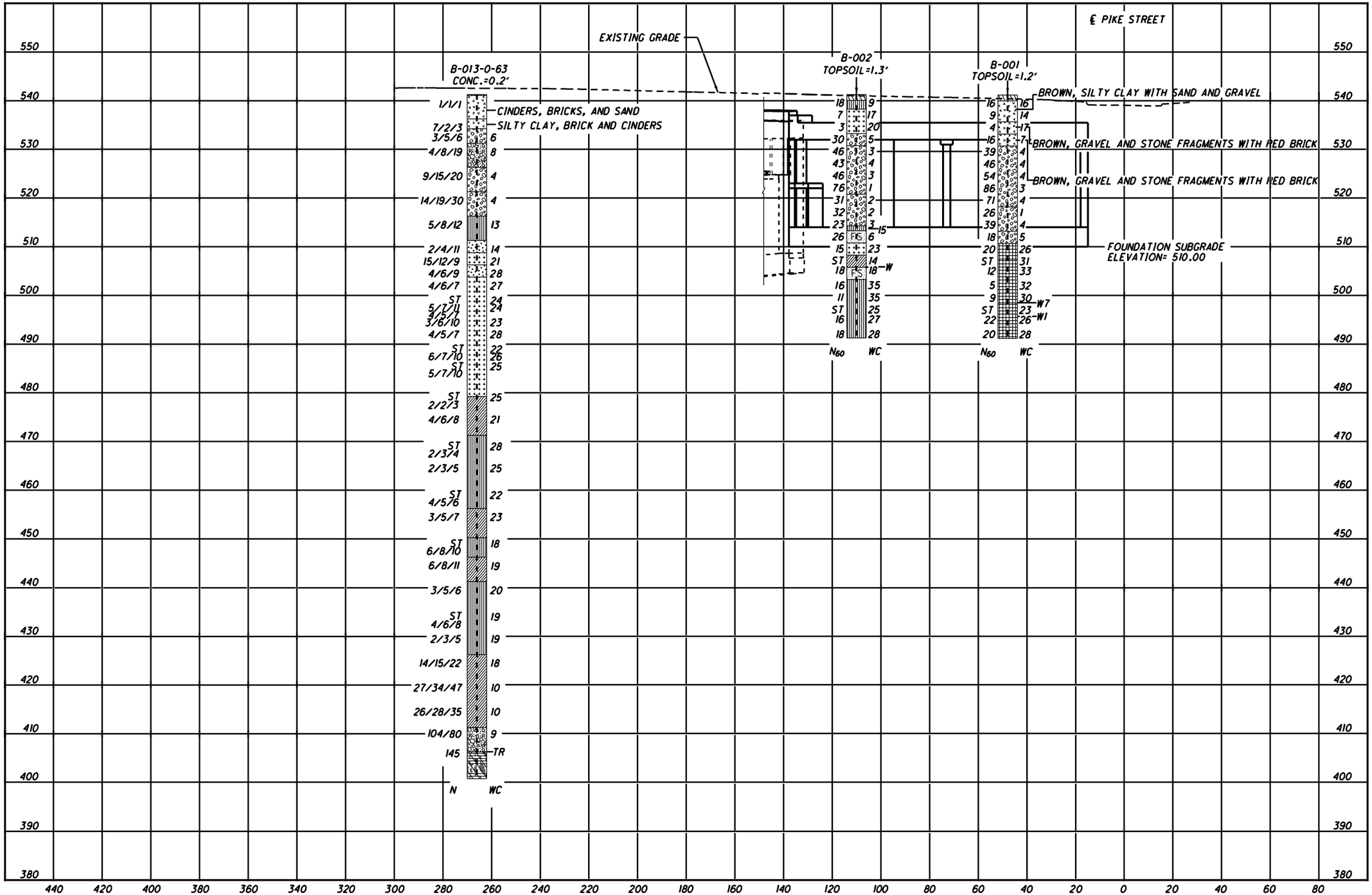

SECTION B-B

DRAWN BRU
CHECKED NW

STRUCTURE FOUNDATION EXPLORATION
CROSS SECTION

HAM-71-1.34

3 / 18

D:\DropBox\CTL-2014\October\Dept 12\CIN\Joshua\130500001CIN\87268-geo03.dgn 10/15/2014 12:56:47 PM Sachino

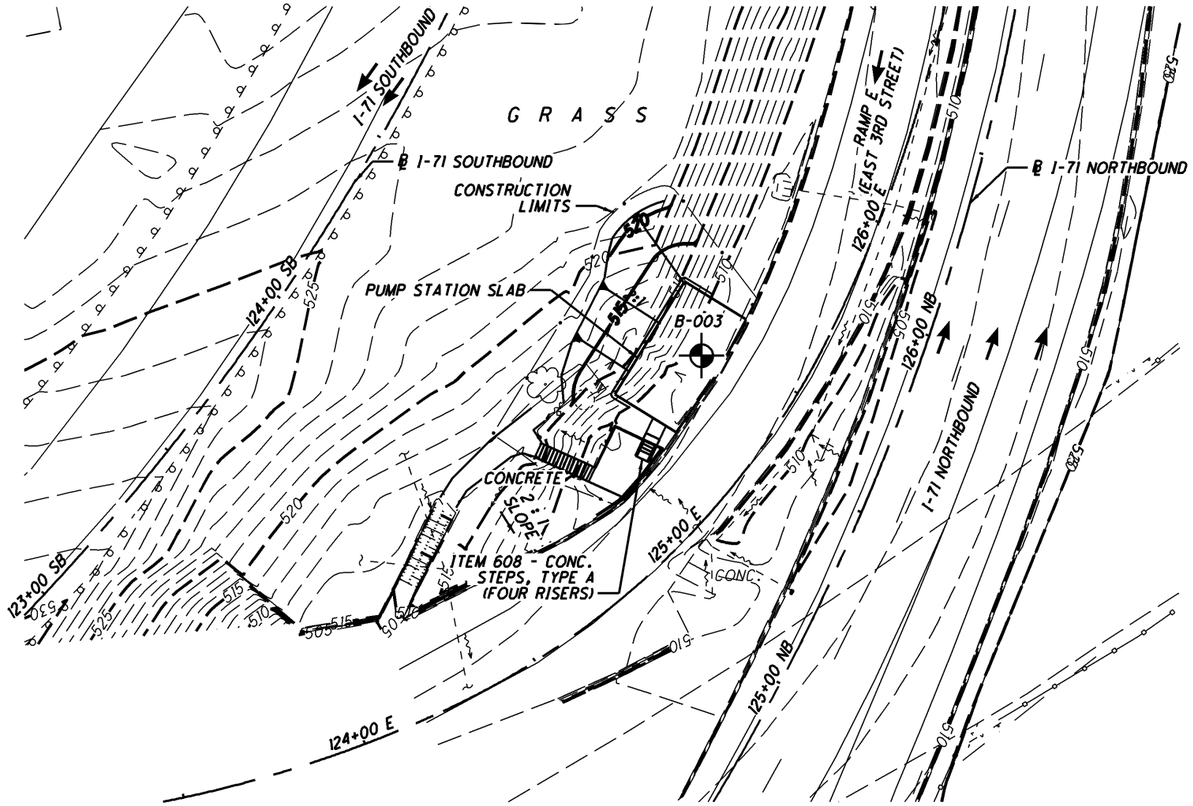

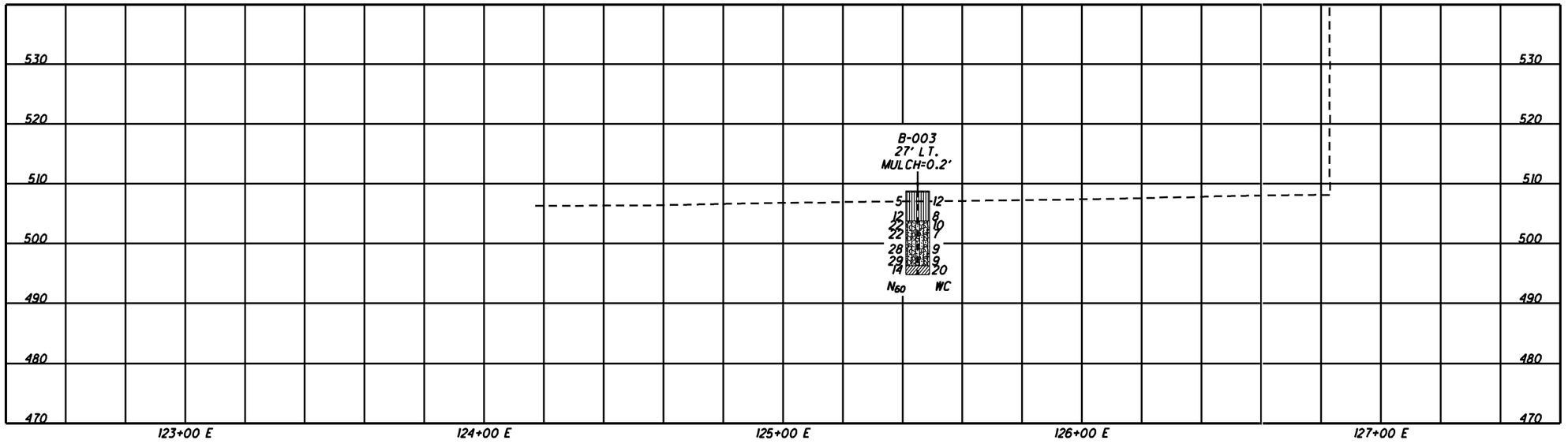

HORIZONTAL SCALE IN FEET
0 10 20 40

DRAWN BRU
CHECKED NW

STRUCTURE FOUNDATION EXPLORATION
PUMP STATION IMPROVEMENTS

HAM-71-1.34

4 / 18

D:\DropBox\CTL-2014\October\Dept 12\CIN\Joshuo\130500010IN\87268-geo04.dgn 10/15/2014 12:57:11 PM Sochino

D:\DropBox\CTL-2014\October\Dept 12\CIN\Joshua\13050001CIN\87268-geo05.dgn 10/15/2014 12:57:34 PM Sachina

PROJECT: HAM-71-1.34 LYTLE TUNNEL
TYPE: STRUCTURE
PID: 87268 BR ID: N/A
START: 1/28/13 END: 1/29/13

DRILLING FIRM / OPERATOR: CTL / BK
SAMPLING FIRM / LOGGER: CTL / BK
DRILLING METHOD: 3.25" HSA
SAMPLING METHOD: SPT / ST

DRILL RIG: CTL CME 75 #25
HAMMER: AUTOMATIC HAMMER
CALIBRATION DATE: 9/27/11
ENERGY RATIO (%): 80.9

STATION / OFFSET: 131+72, 113 RT
ALIGNMENT: IR-71 NB
ELEVATION: 541.2 (MSL) EOB: 50.0 ft.
COORD: 1400002.990 N, 407593.459 E

EXPLORATION ID B-001

MATERIAL DESCRIPTION AND NOTES	ELEV. 541.2	DEPTHS	SPT/ RQD	N_{60}	REC (%)	SAMPLE ID	HP (tsf)	GR	CS	FS	SI	CL	LL	PL	PI	WC	ODOT CLASS (GI)	MON. WELL
TOPSOIL (14")	540.0																	
STIFF TO VERY STIFF, BROWN, SILTY CLAY, LITTLE SAND, LITTLE GRAVEL, MOIST (FILL)	535.7	1	3 5 7	16	39	SS-1	1.50	-	-	-	-	-	-	-	-	16	A-6b (V)	
		2																
		3																
		4	3 4 3	9	78	SS-2	2.50	-	-	-	-	-	-	-	-	14	A-6b (V)	
		5																
VERY LOOSE, BROWN, GRAVEL AND/OR STONE FRAGMENTS, RED BRICK FRAGMENTS, DAMP (FILL)	533.2	6																
		7	4 2 1	4	39	SS-3	-	-	-	-	-	-	-	-	-	17	A-1-a (V)	
MEDIUM DENSE, BROWN, GRAVEL AND/OR STONE FRAGMENTS, RED BRICK FRAGMENTS, DAMP (FILL)	530.7	8																
		9	4 6 6	16	56	SS-4	-	59	18	11	9	3	NP	NP	NP	7	A-1-a (0)	
		10																
DENSE TO VERY DENSE, BROWN, GRAVEL AND/OR STONE FRAGMENTS, SOME SAND, TRACE SILT, DAMP		11																
		12	6 13 16	39	100	SS-5	-	-	-	-	-	-	-	-	-	4	A-1-a (V)	
		13																
		14	16 17 17	46	100	SS-6	-	61	22	5	10	2	NP	NP	NP	4	A-1-a (0)	
		15																
		16																
		17	14 19 21	54	100	SS-7	-	-	-	-	-	-	-	-	-	4	A-1-a (V)	
		18																
		19	19 27 37	86	100	SS-8	-	-	-	-	-	-	-	-	-	3	A-1-a (V)	
		20																
		21																
		22	24 22 31	71	100	SS-9	-	-	-	-	-	-	-	-	-	4	A-1-a (V)	
		23																
		24	10 9 10	26	100	SS-10	-	67	19	2	11	1	NP	NP	NP	1	A-1-a (0)	
		25																
		26																
		27	14 15 14	39	100	SS-11	-	-	-	-	-	-	-	-	-	4	A-1-a (V)	
		28																
		29																
		30	6 4 9	18	100	SS-12	-	-	-	-	-	-	-	-	-	5	A-1-a (V)	
		31																
		32	4 6 9	20	100	SS-13	4.00	0	1	1	41	57	47	27	20	26	A-7-6 (13)	
		33																
		34			100	ST-14	-	1	1	10	32	56	41	21	20	31	A-7-6 (12)	
		35																
		36	3 4 5	12	100	SS-15	1.00	-	-	-	-	-	-	-	-	33	A-7-6 (V)	
		37																
		38																
		39	1 2 2	5	100	SS-16	1.00	-	-	-	-	-	-	-	-	32	A-7-6 (V)	
		40																
		41																
		42	2 3 4	9	100	SS-17	1.50	2	3	0	23	72	47	25	22	30	A-7-6 (14)	
	498.2	43																
▼ 7 day		44																
VERY STIFF, GRAY, CLAY, SOME SILT, DAMP		45			96	ST-18	-	0	0	0	23	77	46	24	22	23	A-7-6 (14)	
@ 43.5' - 45.5'; Qu = 17.3 psi		46	4 6 10	22	100	SS-19	3.50	-	-	-	-	-	-	-	-	26	A-7-6 (V)	
▼ 1 day		47																
W		48																
		49	4 6 9	20	100	SS-20	3.50	-	-	-	-	-	-	-	-	28	A-7-6 (V)	
	491.2	50																
BOTTOM OF BORING @ 50.0 FEET		EOB																

NOTES: SOIL CUTTING PLACED AT WELL FROM 3 TO30 FEET. UPON REMOVAL, RISER PIPE BROKE 5 FEET BELOW GROUND SURFACE, PIPE AND HOLE WERE BACKFILLED WITH GRAVEL.
ABANDONMENT METHODS, MATERIALS, QUANTITIES: NOT RECORDED

PROJECT: HAM-71-1.34 LYTLE TUNNEL
TYPE: STRUCTURE
PID: 87268 BR ID: N/A
START: 1/29/13 END: 1/30/13

DRILLING FIRM / OPERATOR: CTL / BK
SAMPLING FIRM / LOGGER: CTL / BK
DRILLING METHOD: 3.25" HSA
SAMPLING METHOD: SPT / ST

DRILL RIG: CTL CME 75 #25
HAMMER: AUTOMATIC HAMMER
CALIBRATION DATE: 9/27/11
ENERGY RATIO (%): 80.9

STATION / OFFSET: 130+91, 93 RT
ALIGNMENT: IR-71 NB
ELEVATION: 541.3 (MSL) EOB: 50.0 ft.
COORD: 1399992.390 N, 407506.613 E

EXPLORATION ID B-002

MATERIAL DESCRIPTION AND NOTES	ELEV. 541.3	DEPTHS	SPT/ ROD	N_{60}	REC (%)	SAMPLE ID	HP (tsf)	GR	CS	FS	SI	CL	LL	PL	PI	WC	ODOT CLASS (GI)	BACK FILL
TOPSOIL (15")	540.1																	
VERY STIFF, BROWN, SANDY SILT, TRACE GRAVEL, DAMP (FILL)	538.3	1	4 6 7	18	89	SS-1	3.50	-	-	-	-	-	-	-	-	9	A-4a (V)	
VERY LOOSE TO LOOSE, BROWN, SILT, LITTLE CLAY, TRACE GRAVEL, TRACE SAND, MOIST (FILL)	533.3	2	2 2 3	7	100	SS-2	2.00	5	2	6	75	12	NP	NP	NP	17	A-4b (8)	
		3																
		4																
		5	1 1 1	3	33	SS-3	1.50	-	-	-	-	-	-	-	-	20	A-4b (V)	
MEDIUM DENSE, BROWN, GRAVEL AND/OR STONE FRAGMENTS, LITTLE SILT, LITTLE SAND, TRACE CLAY, DAMP	530.8	6																
		7																
		8																
		9	4 9 13	30	100	SS-4	-	70	11	4	14	1	NP	NP	NP	5	A-1-a (0)	
		10																
		11																
DENSE TO VERY DENSE, BROWN, GRAVEL AND/OR STONE FRAGMENTS, SOME SAND, TRACE SILT, TRACE CLAY, DAMP	520.8	12	15 15 19	46	100	SS-5	-	-	-	-	-	-	-	-	-	3	A-1-a (V)	
		13																
		14	15 15 17	43	100	SS-6	-	-	-	-	-	-	-	-	-	4	A-1-a (V)	
		15																
		16																
		17	7 15 19	46	100	SS-7	-	60	19	10	10	1	NP	NP	NP	3	A-1-a (0)	
		18																
		19	10 27 29	76	100	SS-8	-	-	-	-	-	-	-	-	-	1	A-1-a (V)	
		20																
		21																
MEDIUM DENSE TO DENSE, BROWN, GRAVEL AND/OR STONE FRAGMENTS, SOME SAND, TRACE SILT, TRACE CLAY, DAMP	514.3	22	9 10 13	31	100	SS-9	-	-	-	-	-	-	-	-	-	2	A-1-a (V)	
		23																
		24	10 10 14	32	100	SS-10	-	55	27	8	8	2	NP	NP	NP	2	A-1-a (0)	
		25																
		26																
		27	10 9 8	23	100	SS-11	-	-	-	-	-	-	-	-	-	3	A-1-a (V)	
VERY STIFF, BROWN, SANDY SILT, DAMP	513.3						3.50	-	-	-	-	-	-	-	-	15	A-4a (V)	
MEDIUM DENSE, BROWN, FINE SAND, DAMP	510.8	28	7 9 10	26	100	SS-12	-	-	-	-	-	-	-	-	-	6	A-3 (V)	
		29																
		30																
		31	4 6 5	15	100	SS-13	2.00	0	3	9	70	18	NP	NP	NP	23	A-4b (8)	
MEDIUM DENSE, BROWN, SILT, LITTLE SAND, LITTLE CLAY, DAMP	508.3	32																
		33																
		34			100	ST-14	-	1	4	37	36	22	21	16	5	14	A-4a (5)	
STIFF, GRAY, SANDY SILT, TRACE GRAVEL, SOME CLAY, DAMP @ 33.5' - 35.5'; Qu = 6.4 psi	505.8	35																
		36	3 4 9	18	89	SS-15	-	-	-	-	-	-	-	-	-	18	A-3 (V)	
MEDIUM DENSE, BROWN, FINE SAND, MOIST	503.3	37																
		38																
		39	3 4 8	16	100	SS-16	1.00	-	-	-	-	-	-	-	-	35	A-6a (V)	
STIFF TO VERY STIFF, GRAY, SILT AND CLAY, LITTLE SAND, MOIST		40																
		41																
		42	3 4 4	11	100	SS-17	1.00	-	-	-	-	-	-	-	-	35	A-6a (V)	
		43																
		44			100	ST-18	-	0	0	11	39	50	32	21	11	25	A-6a (8)	
@ 43.5' - 45.5'; Qu = 11.1 psi		45																
		46	3 5 7	16	100	SS-19	2.00	-	-	-	-	-	-	-	-	27	A-6a (V)	
		47																
		48																
		49	3 6 7	18	100	SS-20	1.50	-	-	-	-	-	-	-	-	28	A-6a (V)	
	491.3	50																

W

EOB

BOTTOM OF BORING @ 50.0 FEET

NOTES: TOP OF HOLE SEALED WITH SOD PER CINCINNATI PARKS DISTRICT.

ABANDONMENT METHODS, MATERIALS, QUANTITIES: SHOVELED SOIL CUTTINGS

D:\DropBox\CTL-2014\October\Dept 12\CIN\Joshua\13050001CIN\87268-geo07.dgn 10/15/2014 12:58:19 PM Sachina

PROJECT: HAM-71-1.34 LYTLE TUNNEL
TYPE: STRUCTURE
PID: 87268 BR ID: N/A
START: 1/31/13 END: 1/31/13

DRILLING FIRM / OPERATOR: CTL / BK
SAMPLING FIRM / LOGGER: CTL / BK
DRILLING METHOD: 3.25" HSA
SAMPLING METHOD: SPT

DRILL RIG: MOBILE B-53 R TRAILER
HAMMER: SAFETY HAMMER
CALIBRATION DATE: N/A
ENERGY RATIO (%): 60

STATION / OFFSET: 125+45, 27 LT
ALIGNMENT: I-71 RAMP E
ELEVATION: 508.8 (MSL) EOB: 14.0 ft.
COORD: 1399819.021 N, 407003.495 E

EXPLORATION ID B-003
PAGE 1 OF 1

MATERIAL DESCRIPTION AND NOTES	ELEV. 508.8	DEPTHS	SPT/ ROD	N_{60}	REC (%)	SAMPLE ID	HP (tsf)	GRADATION (%) GR	CS	FS	SI	CL	ATTERBERG LL	PL	PI	WC	ODOT CLASS (GI)	BACK FILL
MULCH (2")	508.6																	
VERY STIFF, BROWN, SANDY SILT, "AND" GRAVEL, LITTLE CLAY, TRACE ORGANICS, MOIST (FILL)			2 2 3	5	33	SS-1	2.00	38	15	11	26	10	29	19	10	12	A-4a (0)	
	503.8		3 6 6	12	39	SS-2	2.50	-	-	-	-	-	-	-	-	8	A-4a (V)	
MEDIUM DENSE, BROWN, STONE FRAGMENTS WITH SAND AND SILT, TRACE TO LITTLE CLAY, TRACE ORGANICS, DAMP (FILL)			7 10 12	22	100	SS-3	1.50	-	-	-	-	-	-	-	-	10	A-2-4 (V)	
			8 10 12	22	100	SS-4	2.50	52	17	7	18	6	24	16	8	7	A-2-4 (0)	
	496.3		8 14 14	28	100	SS-5	2.00	37	20	12	21	10	27	20	7	9	A-2-4 (0)	
VERY STIFF, GRAY, SILT AND CLAY, TRACE SAND, DAMP			12 13 16	29	100	SS-6	2.50	-	-	-	-	-	-	-	-	9	A-2-4 (V)	
	494.8	EOB	7 8 6	14	89	SS-7	4.00	0	0	2	62	36	31	20	11	20	A-6a (8)	

BOTTOM OF BORING @ 14.0 FEET

NOTES: NONE

ABANDONMENT METHODS, MATERIALS, QUANTITIES: SOIL MIXED WITH BENTONITE CHIPS

One Dimensional Consolidation and Swell Properties of Soil - ASTM D 2435

CTL ENGINEERING, INC.

2860 Fisher Road

Columbus, OH 43204

Project No.:	13050001CIN	Depth:	43.5' - 45.5'
Project:	Lytle Tunnel Ventilation and Pump Station Improvements	Sample Type:	Shelby Tube
Client:	Hatch Mott MacDonald I E LLC	Test Date:	2/11/2013
Boring No.:	B-001	Checked By:	SM
Sample No.:	ST-18	Tested By:	JD

Soil Description: Gray Clay, moist

Physical Characteristics:

% Agg.	% C.S.	% F.S.	% Silt	% Clay	L.L.	P.I.	W.C.
0	0	0	23	77	46	22	23

Step No.	Applied Stress, tsf	Final Displacement, in	Void Ratio	Strain at End %	Sq.Rt. T90 min	Cv ft^2/sec	Mv 1/tsf	k ft/day
1	0.125	0.01386	0.481	1.39	3.0	7.95E-06	1.11E-01	2.38E-03
2	0.25	0.02150	0.470	2.15	14.9	1.59E-06	6.11E-02	2.63E-04
3	0.5	0.02811	0.460	2.81	13.6	1.72E-06	2.64E-02	1.23E-04
4	1	0.03585	0.448	3.58	8.7	2.64E-06	1.55E-02	1.10E-04
5	2	0.04418	0.436	4.42	4.7	4.85E-06	8.34E-03	1.09E-04
6	4	0.05448	0.420	5.45	4.2	5.25E-06	5.15E-03	7.29E-05
7	8	0.06677	0.402	6.68	2.1	1.04E-05	3.07E-03	8.60E-05
8	16	0.08029	0.382	8.03	0.9	2.22E-05	1.69E-03	1.01E-04
9	4	0.07273	0.393	7.27	0.1	1.78E-04	6.30E-04	3.02E-04
10	1	0.06527	0.404	6.53	4.8	4.41E-06	2.49E-03	2.96E-05
11	0.25	0.05597	0.418	5.60	19.0	1.14E-06	1.24E-02	3.80E-05

Step No.	Applied Stress, tsf	Final Displacement, in	Void Ratio	Strain at End %	Log. T50, min	Cv ft^2/sec	Mv 1/tsf	k ft/day	Ca %
1	0.125	0.01386	0.481	1.39	1.2	4.88E-06	1.11E-01	1.46E-03	0.00E+00
2	0.25	0.02150	0.470	2.15	0.0	0.00E+00	6.11E-02	0.00E+00	0.00E+00
3	0.5	0.02811	0.460	2.81	0.0	0.00E+00	2.64E-02	0.00E+00	0.00E+00
4	1	0.03585	0.448	3.58	1.4	3.80E-06	1.55E-02	1.58E-04	0.00E+00
5	2	0.04418	0.436	4.42	0.0	0.00E+00	8.34E-03	0.00E+00	0.00E+00
6	4	0.05448	0.420	5.45	0.8	6.77E-06	5.15E-03	9.40E-05	0.00E+00
7	8	0.06677	0.402	6.68	0.0	0.00E+00	3.07E-03	0.00E+00	0.00E+00
8	16	0.08029	0.382	8.03	0.0	0.00E+00	1.69E-03	0.00E+00	0.00E+00
9	4	0.07273	0.393	7.27	0.0	1.29E-04	6.30E-04	2.19E-04	0.00E+00
10	1	0.06527	0.404	6.53	0.4	1.26E-05	2.49E-03	8.42E-05	0.00E+00
11	0.25	0.05597	0.418	5.60	0.0	0.00E+00	1.24E-02	0.00E+00	0.00E+00

CONSOLIDATION PARAMETERS	
Preconsolidation Pressure (tsf): 2.70	Initial Void Ratio: 0.48
Compression Index (C_c): 0.07	Compression Ratio : 0.04
Recompression Index (C_r): 0.03	Recompression Ratio: 0.02

ENGINEERING INC.

CONSOLIDATION TEST DATA

SUMMARY REPORT

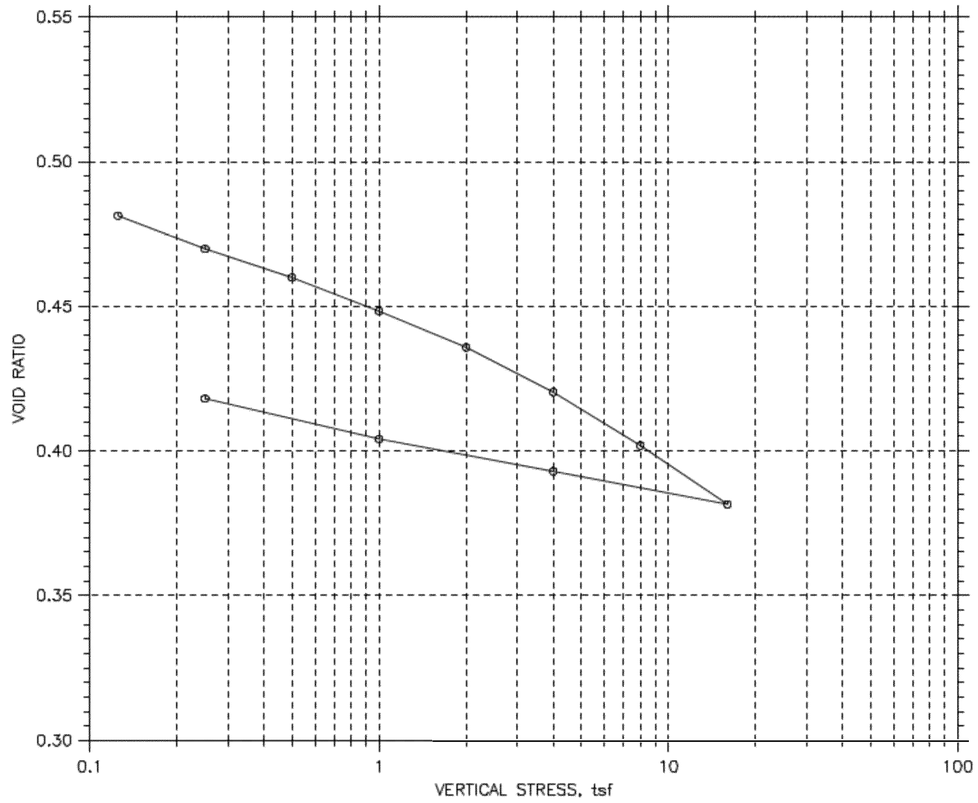

				Before Test	After Test
Overburden Pressure, tsf: 2.7				Water Content, %	16.89	16.96
Preconsolidation Pressure, tsf: 2.7				Dry Unit Weight, pcf		
Compression Index: 0.07				Saturation, %	90.45	102.82
Diameter: 2.5 in		Height: 1 in		Void Ratio	0.50	0.44
LL: 46	PL: 24	PI: 22	GS: 2.69	Back Pressure, tsf	0	0

Project: HAM-71-01.34	Location: COL	Project No.: 13050001CIN
Boring No.: B-001	Tested By: JD	Checked By: SM
Sample No.: ST-18	Test Date: 2/11/13	Depth: 43.5-45.5
Test No.: 1	Sample Type: Shelby Tube	Elevation: 495.7-497.7
Description: Gray Clay		
Remarks:		

DRAWN BRU CHECKED NW

LABORATORY TEST DATA

HAM-71-1.34

8 / 18

D:\DropBox\CTL-2014\October\Dept 12\CIN\Joshuo\13050001CIN.87268-geo08.dgn 10/15/2014 12:58:45 PM Sachino

CONSOLIDATION TEST DATA

SUMMARY REPORT

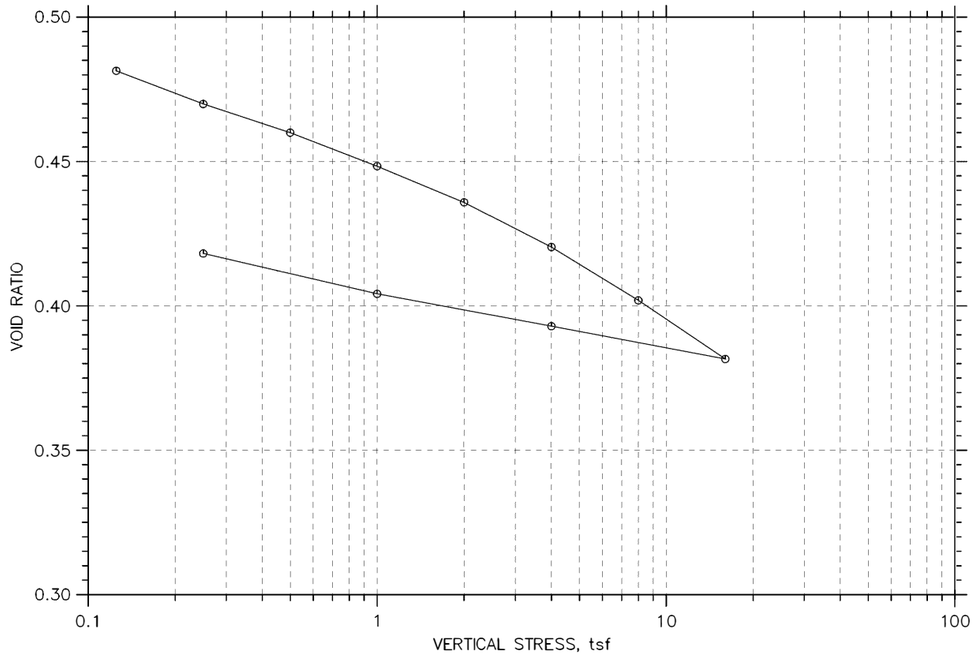

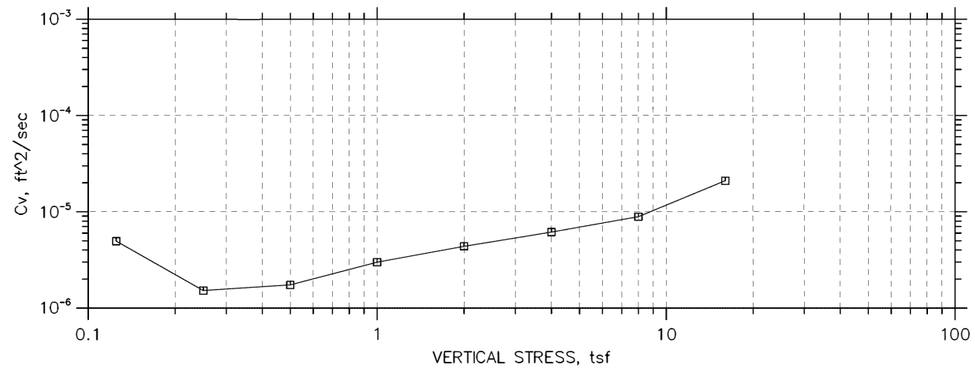

Project: HAM-71-01.34	Location: COL	Project No.: 13050001CIN
Boring No.: B-001	Tested By: JD	Checked By: SM
Sample No.: ST-18	Test Date: 2/11/13	Depth: 43.5-45.5
Test No.: 1	Sample Type: Shelby Tube	Elevation: 495.7-497.7
Description: Gray Clay		
Remarks:		

CONSOLIDATION TEST DATA

TIME CURVES

Step: 5 of 11

Stress: 2. tsf

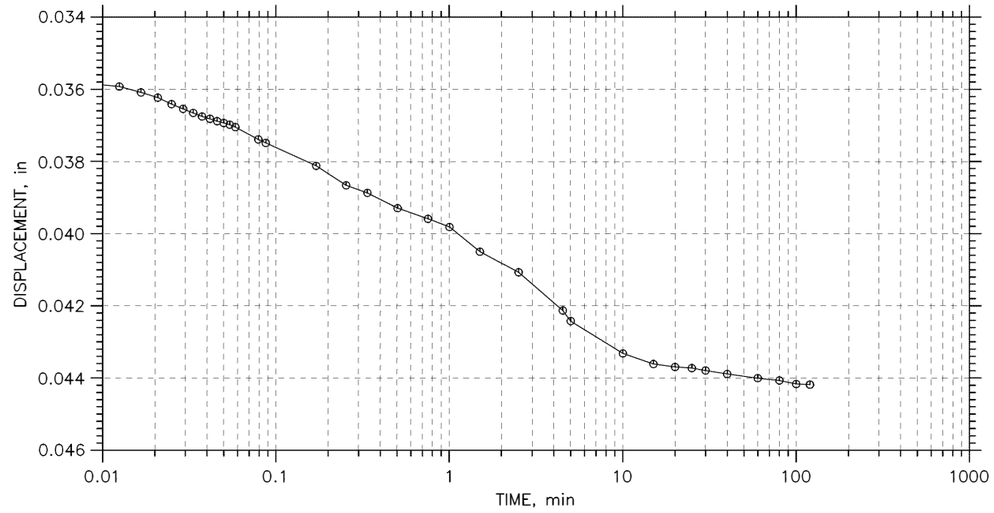

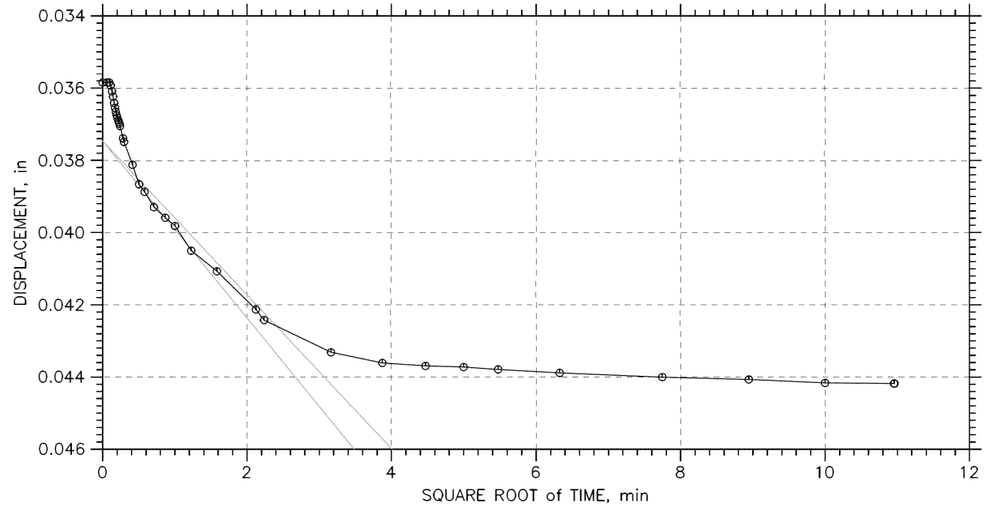

Project: HAM-71-01.34	Location: COL	Project No.: 13050001CIN
Boring No.: B-001	Tested By: JD	Checked By: SM
Sample No.: ST-18	Test Date: 2/11/13	Depth: 43.5-45.5
Test No.: 1	Sample Type: Shelby Tube	Elevation: 495.7-497.7
Description: Gray Clay		
Remarks:		

DRAWN BRU CHECKED NW

LABORATORY TEST DATA

HAM-71-1.34

9 / 18

D:\DropBox\CTL-2014\October\Dept 12\CIN\Jashua\13050001CIN\87268-geo09.dgn 10/15/2014 12:59:38 PM Sachino

CONSOLIDATION TEST DATA

TIME CURVES

Step: 6 of 11

Stress: 4. tsf

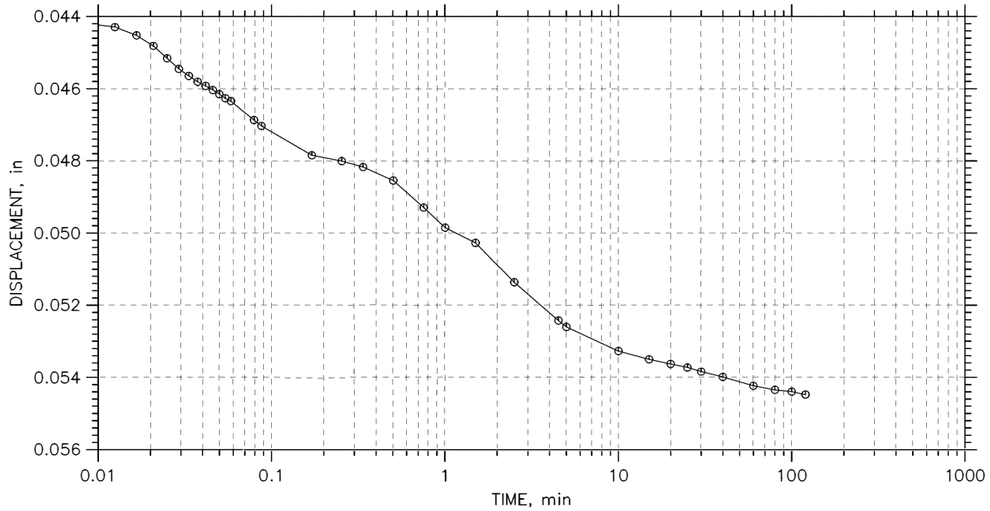

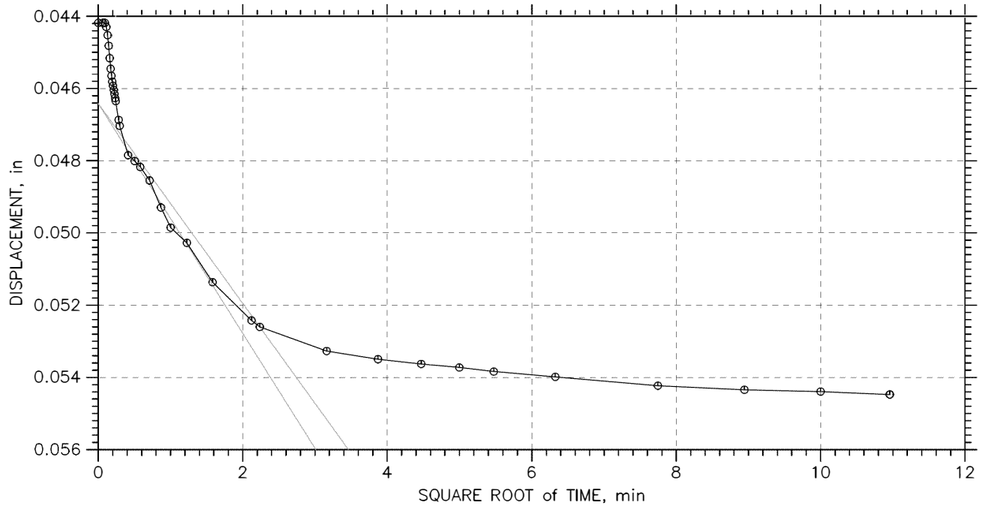

Project: HAM-71-01.34	Location: COL	Project No.: 13050001CIN
Boring No.: B-001	Tested By: JD	Checked By: SM
Sample No.: ST-18	Test Date: 2/11/13	Depth: 43.5-45.5
Test No.: 1	Sample Type: Shelby Tube	Elevation: 495.7-497.7
Description: Gray Clay		
Remarks:		

CONSOLIDATION TEST DATA

TIME CURVES

Step: 7 of 11

Stress: 8. tsf

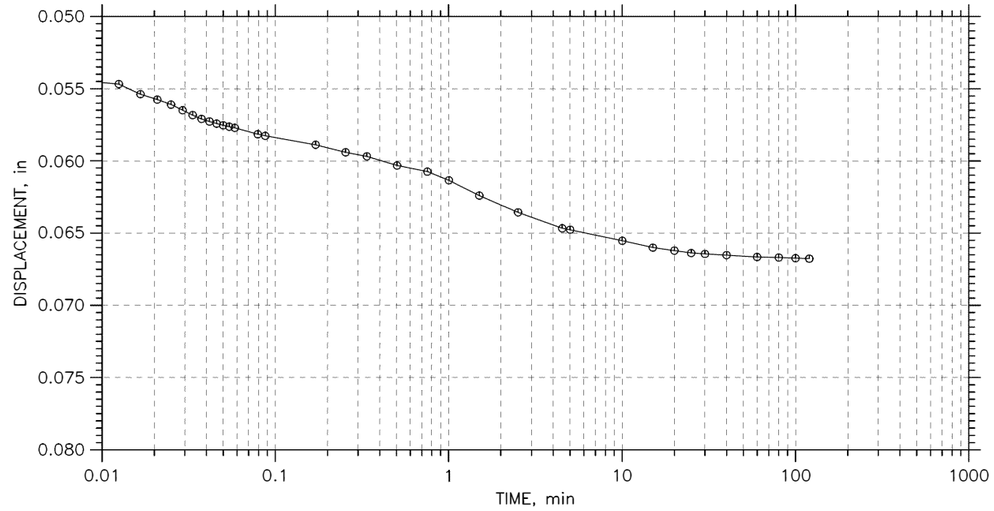

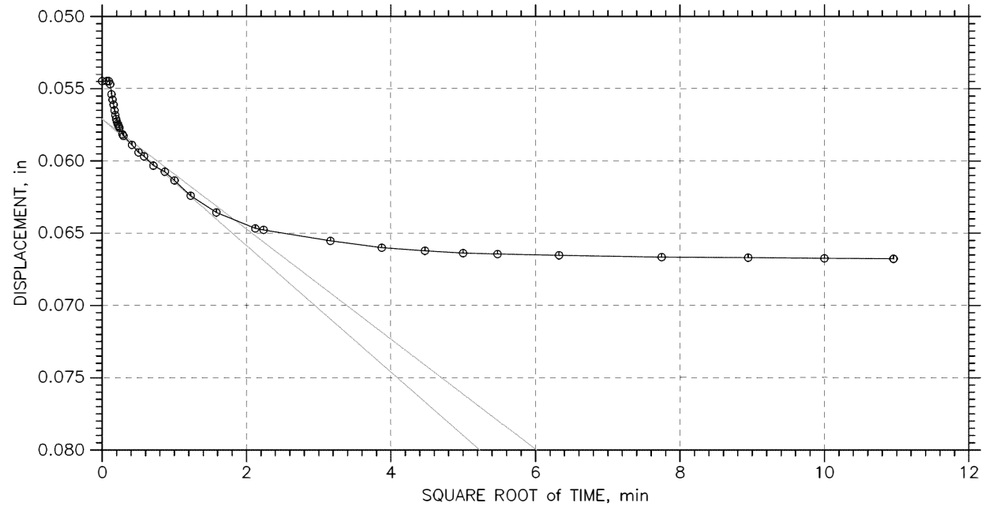

Project: HAM-71-01.34	Location: COL	Project No.: 13050001CIN
Boring No.: B-001	Tested By: JD	Checked By: SM
Sample No.: ST-18	Test Date: 2/11/13	Depth: 43.5-45.5
Test No.: 1	Sample Type: Shelby Tube	Elevation: 495.7-497.7
Description: Gray Clay		
Remarks:		

DRAWN BRU CHECKED NW

LABORATORY TEST DATA

HAM-71-1.34

10 / 18

D:\DropBox\CTL-2014\October\Dept 12\CIN\Joshua\13050001CIN\87268-geo10.dgn 10/15/2014 1:01:44 PM Sachina

CONSOLIDATION TEST DATA

TIME CURVES

Step: 8 of 11

Stress: 16. tsf

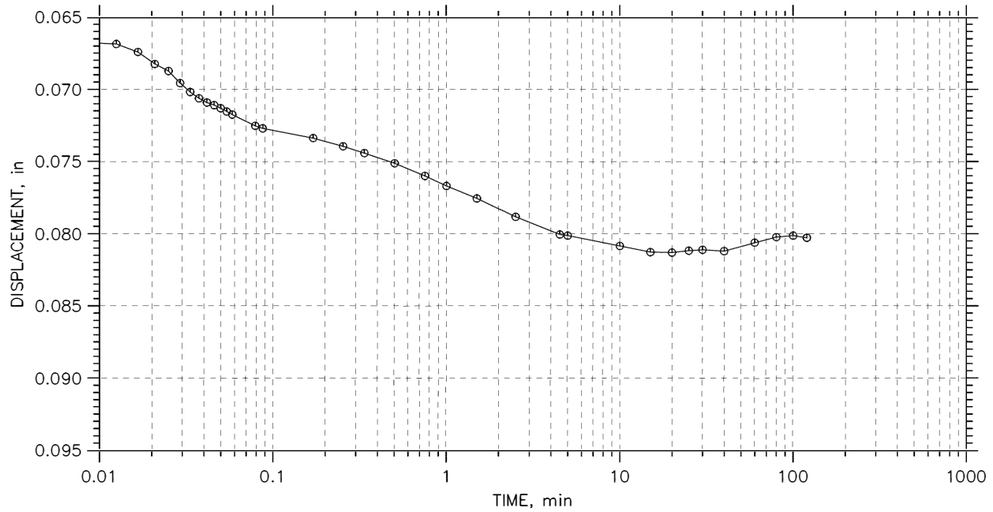

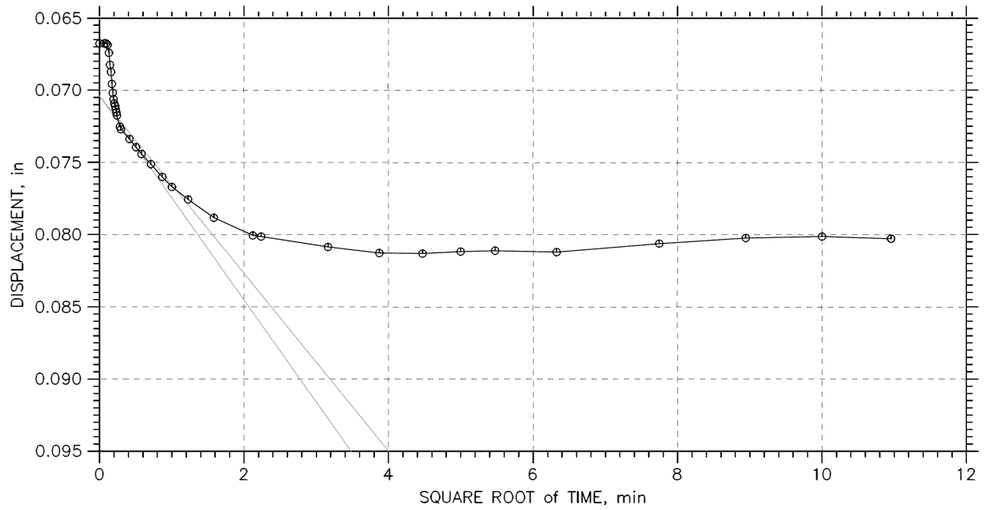

Project: HAM-71-01.34	Location: COL	Project No.: 13050001CIN
Boring No.: B-001	Tested By: JD	Checked By: SM
Sample No.: ST-18	Test Date: 2/11/13	Depth: 43.5-45.5
Test No.: 1	Sample Type: Shelby Tube	Elevation: 495.7-497.7
Description: Gray Clay		
Remarks:		

DRAWN BRU CHECKED NW

LABORATORY TEST DATA

HAM-71-1.34

11 / 18

D:\DropBox\CTL-2014\October\Dept 12\CIN\Joshua\13050001CIN\87268-geo11.dgn 10/15/2014 1:04:07 PM Sachina

One Dimensional Consolidation and Swell Properties of Soil - ASTM D 2435

CTL ENGINEERING, INC.

2860 Fisher Road

Columbus, OH 43204

Project No.:	13050001CIN	Depth:	33.5' - 35.5'
Project:	Lytle Tunnel Ventilation and Pump Station Improvements	Sample Type:	Shelby Tube
Client:	Hatch Mott MacDonald I E LLC	Test Date:	3/1/2013
Boring No.:	B-002	Checked By:	SM
Sample No.:	ST-14	Tested By:	JD

Soil Description: Brown Sandy Silt

Physical Characteristics:

% Agg.	% C.S.	% F.S.	% Silt	% Clay	L.L.	P.I.	W.C.
1	4	37	36	22	21	5	14

Step No.	Applied Stress, tsf	Final Displacement, in	Void Ratio	Strain at End %	Sq.Rt. T90 min	Cv ft^2/sec	Mv l/tsf	k ft/day
1	0.125	0.00839	0.334	0.84	56.3	4.32E-07	6.71E-02	7.82E-05
2	0.25	0.01480	0.325	1.48	9.4	2.55E-06	5.13E-02	3.53E-04
3	0.5	0.02065	0.317	2.07	4.5	5.27E-06	2.34E-02	3.32E-04
4	1	0.02664	0.309	2.66	4.4	5.36E-06	1.20E-02	1.73E-04
5	2	0.03264	0.301	3.26	2.4	9.62E-06	5.99E-03	1.55E-04
6	4	0.03951	0.292	3.95	1.5	1.52E-05	3.44E-03	1.41E-04
7	8	0.04713	0.282	4.71	0.7	3.23E-05	1.91E-03	1.66E-04
8	16	0.05713	0.268	5.71	0.3	6.98E-05	1.25E-03	2.35E-04
9	4	0.05124	0.276	5.12	0.1	3.59E-04	4.91E-04	4.76E-04
10	1	0.04827	0.280	4.83	1.4	1.61E-05	9.88E-04	4.29E-05
11	0.25	0.04490	0.285	4.49	1.4	1.62E-05	4.49E-03	1.96E-04

Step No.	Applied Stress, tsf	Final Displacement, in	Void Ratio	Strain at End %	Log. T50, min	Cv ft^2/sec	Mv l/tsf	k ft/day	Ca %
1	0.125	0.00839	0.334	0.84	15.4	3.67E-07	6.71E-02	6.65E-05	0.00E+00
2	0.25	0.01480	0.325	1.48	0.0	0.00E+00	5.13E-02	0.00E+00	0.00E+00
3	0.5	0.02065	0.317	2.07	1.1	5.10E-06	2.34E-02	3.22E-04	0.00E+00
4	1	0.02664	0.309	2.66	0.7	7.63E-06	1.20E-02	2.47E-04	0.00E+00
5	2	0.03264	0.301	3.26	0.4	1.22E-05	5.99E-03	1.97E-04	0.00E+00
6	4	0.03951	0.292	3.95	0.1	4.05E-05	3.44E-03	3.75E-04	0.00E+00
7	8	0.04713	0.282	4.71	0.1	5.92E-05	1.91E-03	3.04E-04	0.00E+00
8	16	0.05713	0.268	5.71	0.0	0.00E+00	1.25E-03	0.00E+00	0.00E+00
9	4	0.05124	0.276	5.12	0.0	1.33E-04	4.91E-04	1.76E-04	0.00E+00
10	1	0.04827	0.28	4.83	0.0	0.00E+00	9.88E-04	0.00E+00	0.00E+00
11	0.25	0.04490	0.285	4.49	0.1	4.49E-05	4.49E-03	5.44E-04	0.00E+00

CONSOLIDATION PARAMETERS	
Preconsolidation Pressure (tsf): 3.10	Initial Void Ratio: 0.33
Compression Index (C_c): 0.05	Compression Ratio : 0.03
Recompression Index (C_r): 0.03	Recompression Ratio: 0.02

ENGINEERING INC

CONSOLIDATION TEST DATA

SUMMARY REPORT

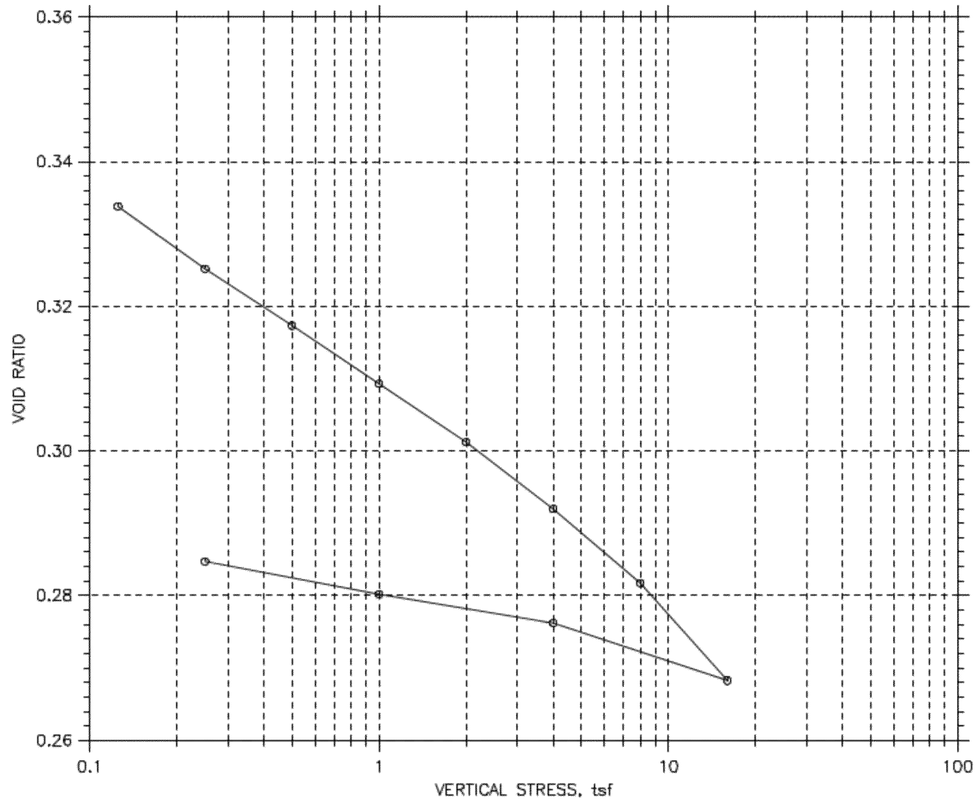

				Before Test	After Test
Overburden Pressure, tsf: 2.1				Water Content, %	11.19	11.19
Preconsolidation Pressure, tsf: 3.1				Dry Unit Weight, pcf		
Compression Index: 0.05				Saturation, %	87.19	97.84
Diameter: 2.5 in		Height: 1 in		Void Ratio	0.35	0.31
LL: 21	PL: 16	PI: 5	GS: 2.69	Back Pressure, tsf	0	0

Project: HAM-71-01.34	Location: COL	Project No.: 13050001CIN
Boring No.: B-002	Tested By: JD	Checked By: SM
Sample No.: ST-14	Test Date: 2/25/13	Depth: 33.5 - 35.5
Test No.: 2	Sample Type: Shelby Tube	Elevation: 505.8-507.8
Description: Sandy Silt		
Remarks:		

DRAWN BRU CHECKED NW

LABORATORY TEST DATA

HAM-71-1.34

12 / 18

D:\DropBox\CTL-2014\October\Dept 12\CIN\Joshuo\13050001CIN\87268-geo12.dgn 10/15/2014 1:09:30 PM Sachino

CONSOLIDATION TEST DATA

TIME CURVES

Step: 5 of 11

Stress: 2. tsf

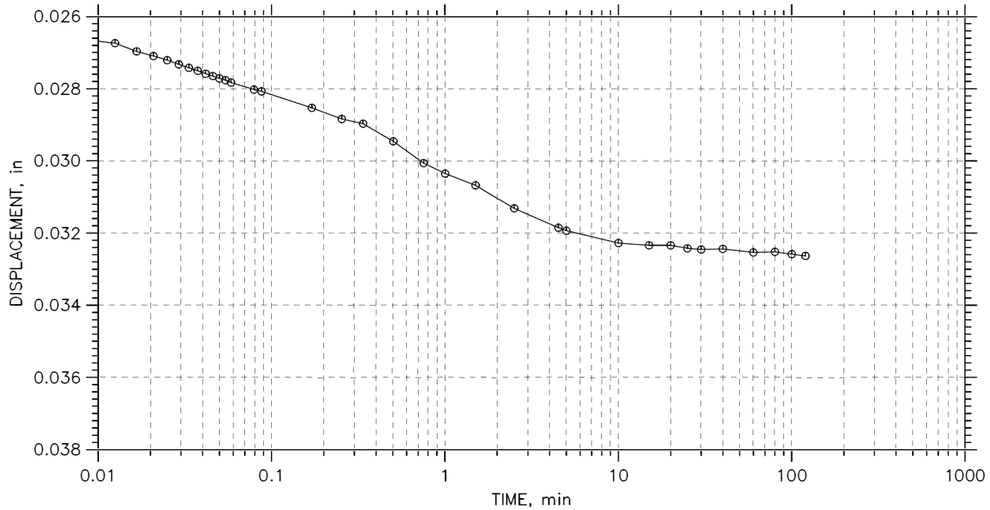

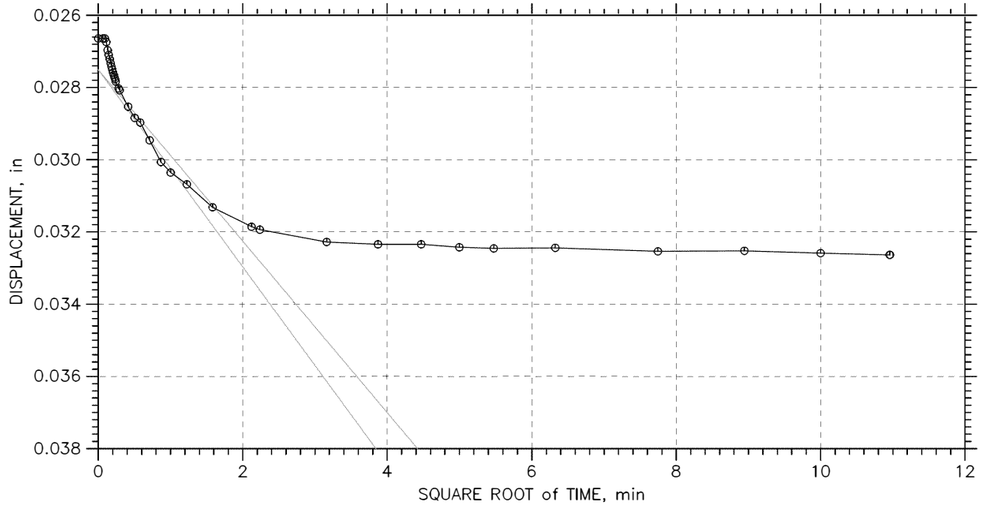

Project: HAM-71-01.34	Location: COL	Project No.: 13050001CIN
Boring No.: B-002	Tested By: JD	Checked By: SM
Sample No.: ST-14	Test Date: 2/25/13	Depth: 33.5 - 35.5
Test No.: 2	Sample Type: Shelby Tube	Elevation: 505.8-507.8
Description: Sandy Silt		
Remarks:		

CONSOLIDATION TEST DATA

TIME CURVES

Step: 6 of 11

Stress: 4. tsf

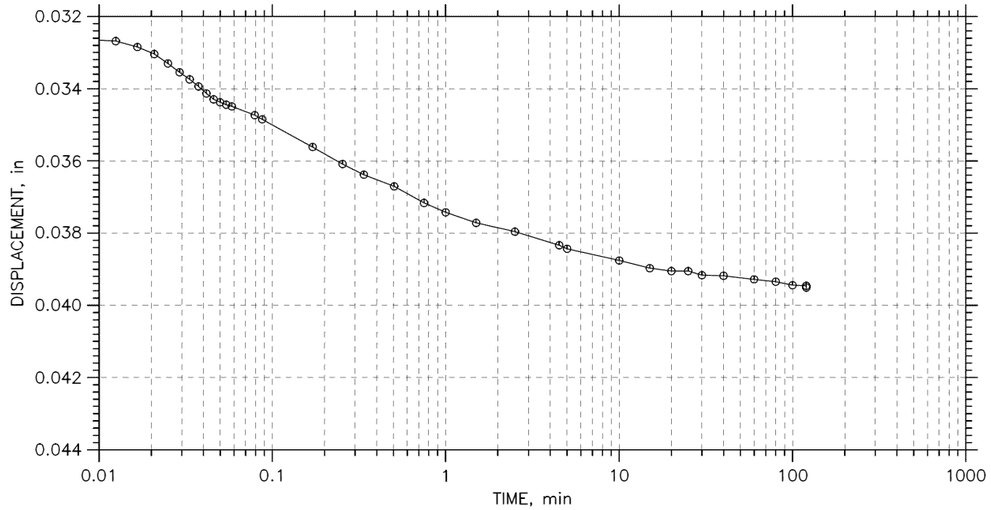

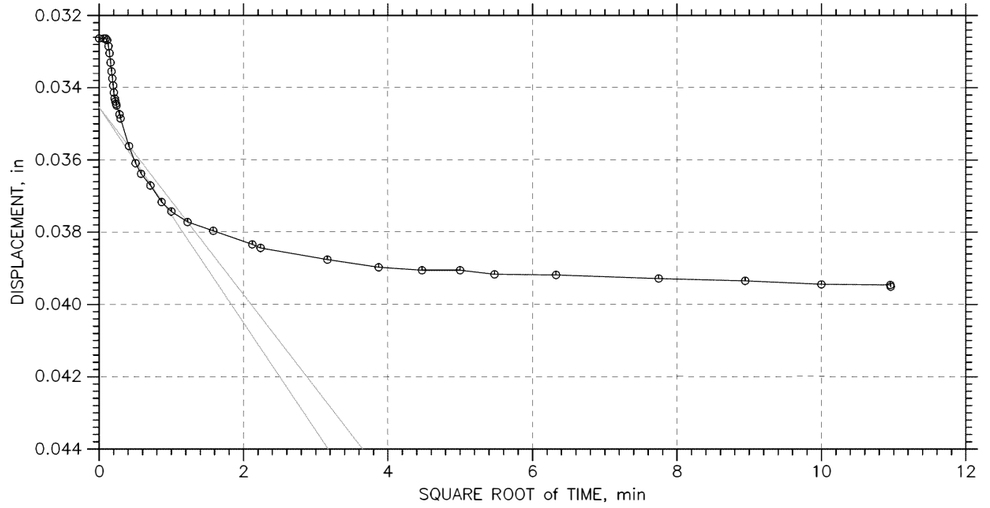

Project: HAM-71-01.34	Location: COL	Project No.: 13050001CIN
Boring No.: B-002	Tested By: JD	Checked By: SM
Sample No.: ST-14	Test Date: 2/25/13	Depth: 33.5 - 35.5
Test No.: 2	Sample Type: Shelby Tube	Elevation: 505.8-507.8
Description: Sandy Silt		
Remarks:		

DRAWN BRU CHECKED NW

LABORATORY TEST DATA

HAM-71-1.34

13 / 18

D:\DropBox\CTL-2014\October\Dept 12\CIN\Joshua\13050001CIN\87268-geo13.dgn 10/15/2014 1:10:45 PM Sachina

CONSOLIDATION TEST DATA

TIME CURVES

Step: 7 of 11

Stress: 8. tsf

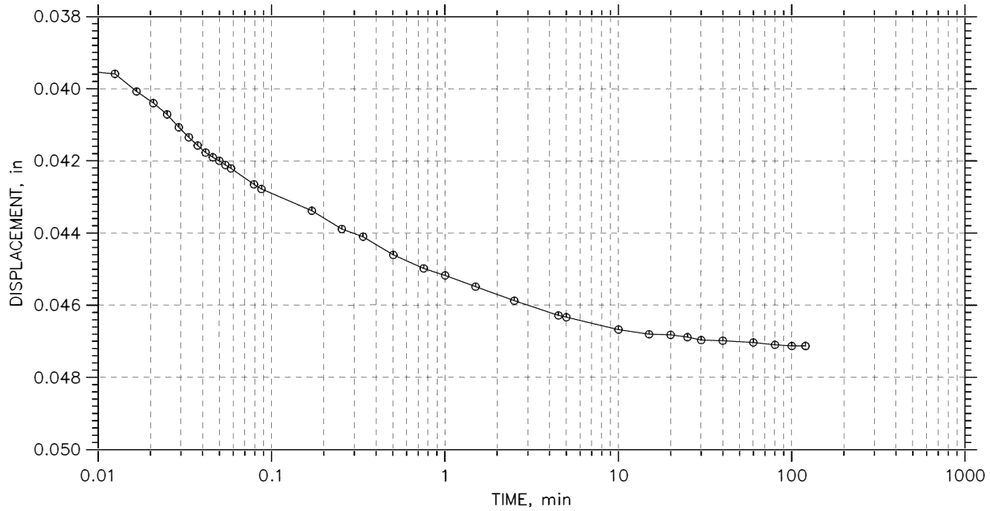

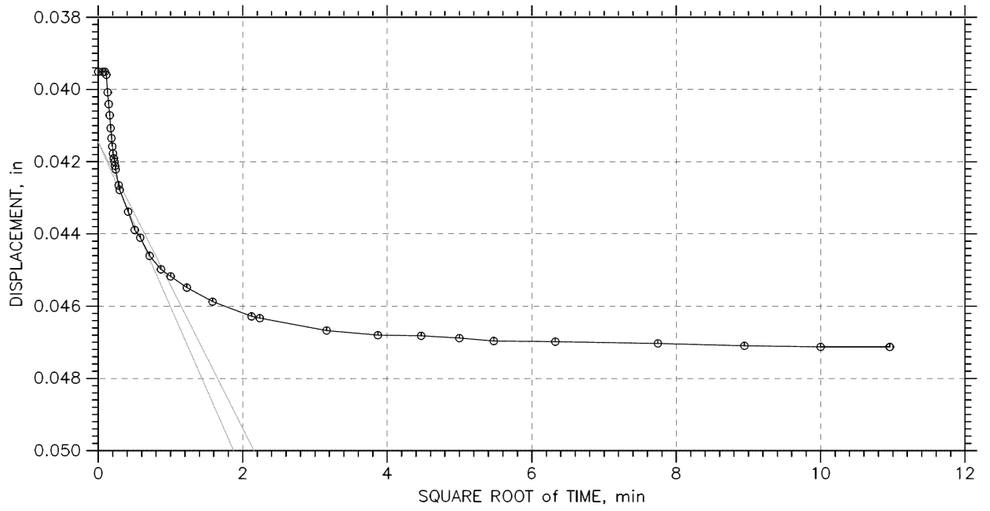

Project: HAM-71-01.34	Location: COL	Project No.: 13050001CIN
Boring No.: B-002	Tested By: JD	Checked By: SM
Sample No.: ST-14	Test Date: 2/25/13	Depth: 33.5 - 35.5
Test No.: 2	Sample Type: Shelby Tube	Elevation: 505.8-507.8
Description: Sandy Silt		
Remarks:		

CONSOLIDATION TEST DATA

TIME CURVES

Step: 8 of 11

Stress: 16. tsf

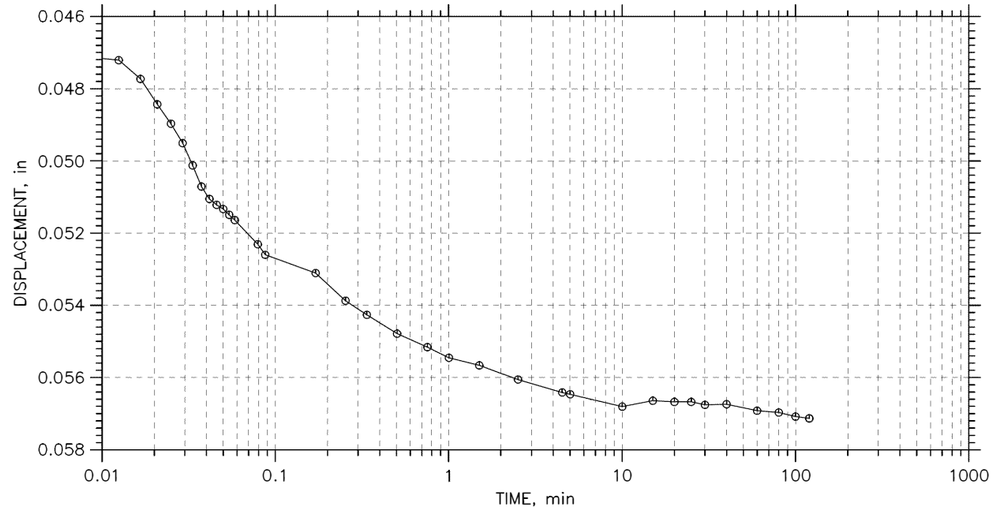

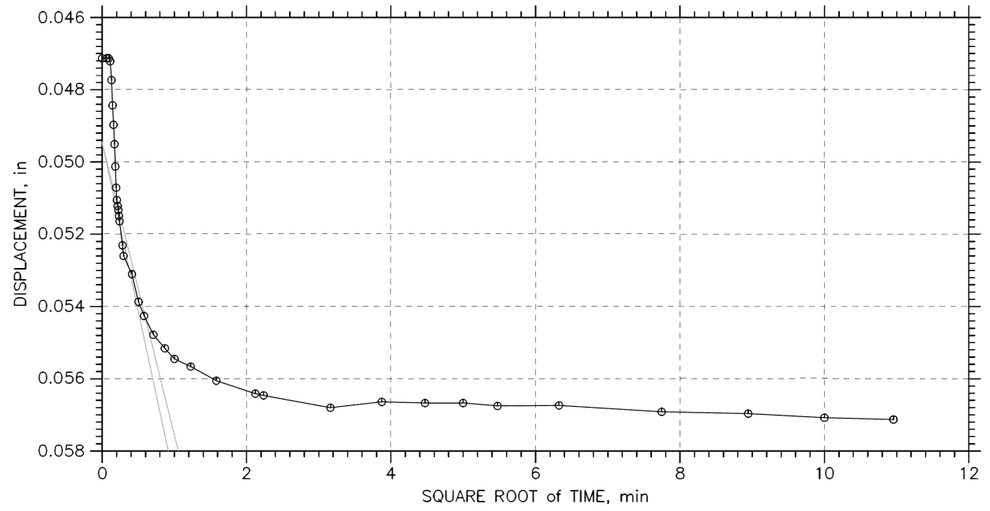

Project: HAM-71-01.34	Location: COL	Project No.: 13050001CIN
Boring No.: B-002	Tested By: JD	Checked By: SM
Sample No.: ST-14	Test Date: 2/25/13	Depth: 33.5 - 35.5
Test No.: 2	Sample Type: Shelby Tube	Elevation: 505.8-507.8
Description: Sandy Silt		
Remarks:		

DRAWN BRU CHECKED NW

LABORATORY TEST DATA

HAM-71-1.34

14 / 18

D:\DropBox\CTL-2014\October\Dept 12\CIN\Joshua\13050001CIN\87268-geo14.dgn 10/15/2014 1:15:42 PM Sachina

CTL ENGINEERING, INC
2860 FISHER ROAD, COLUMBUS, OH 43204

Unconfined Compression Test
ASTM D 2166, D 5102

Client: Hatch Mott & McDonald
Project: HAM-71-01.34 Lytle Tunnel
Location: Cincinnati, OH
Project No. 13050001CIN
Sample ID: B-001, ST-14: 33.5'-35.5'
Station & Offset: 131+72.2, 113.3' RT (IR-71 NB)
Date Tested: 2/7/13

Specimen Data

Avg. Sample Height (in.): 5.75 Wet Density (pcf): 116.2
Avg. Sample Diameter (in.): 2.86 Dry Density (pcf): 88.6
Visual Description: Gray Clay

Physical Characteristics

% Agg.	% C.S.	% F.S.	% Silt	% Clay	L.L.	P.I.	W.C.
1	1	10	32	56	41	20	31

Failure Diagrams

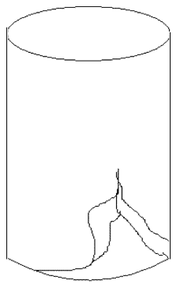

Penetrometer: N/A
Torvane: N/A
Remarks: Q_u @ 19.7 psi @ 11.5 % STRAIN

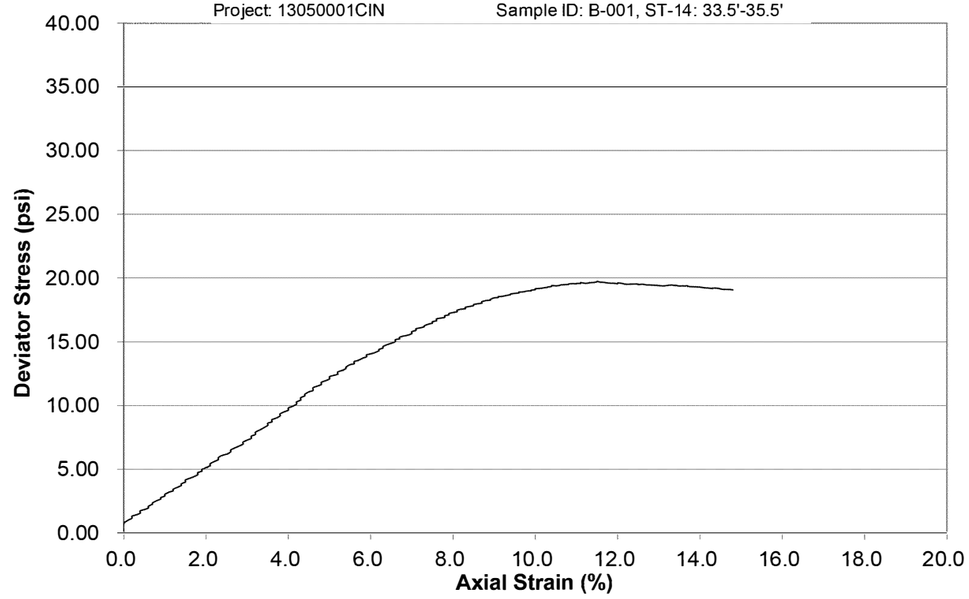

DRAWN BRU CHECKED NW

LABORATORY TEST DATA

HAM-71-1.34

15 / 18

D:\DropBox\CTL-2014\October\Dept 12\CIN\Joshua\13050001CIN\87268-geo15.dgn 10/15/2014 1:18:56 PM Sochino

CTL ENGINEERING, INC
2860 FISHER ROAD, COLUMBUS, OH 43204

Unconfined Compression Test
ASTM D 2166, D 5102
Client: Hatch Mott & McDonald
Project: HAM-71-01.34 Lytle Tunnel
Location: Cincinnati, OH
Project No. 13050001CIN
Sample ID: B-001, ST-18: 43.5'-45.5'
Station & Offset: 131+72.2, 113.3' RT (IR-71 NB)
Date Tested: 2/7/13

Specimen Data

Avg. Sample Height (in.): 5.88 Wet Density (pcf): 117.7
Avg. Sample Diameter (in.): 2.85 Dry Density (pcf): 95.9
Visual Description: Gray Clay

Physical Characteristics

% Agg.	% C.S.	% F.S.	% Silt	% Clay	L.L.	P.I.	W.C.
0	0	0	23	77	46	22	23

Failure Diagrams

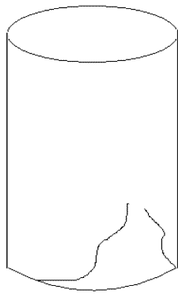

Penetrometer: N/A
Torvane: N/A
Remarks: Q_u @ 17.3 psi @ 9 % STRAIN

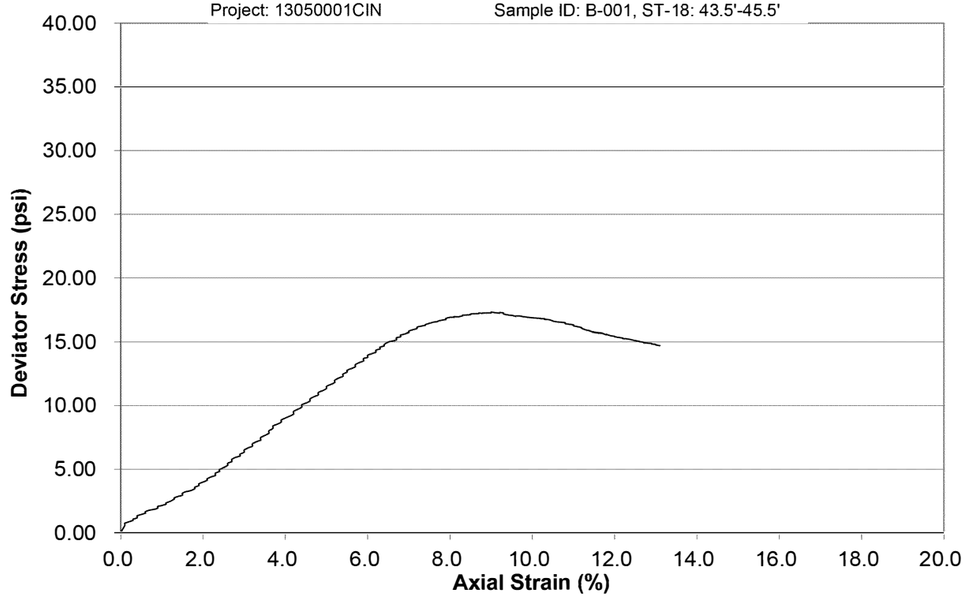

DRAWN BRU CHECKED NW

LABORATORY TEST DATA

HAM-71-1.34

16 / 18

D:\DropBox\CTL-2014\October\Dept 12\CIN\Joshua\13050001CIN\87268-geo16.dgn 10/15/2014 1:19:41 PM Sachino

CTL ENGINEERING, INC
2860 FISHER ROAD, COLUMBUS, OH 43204

Unconfined Compression Test
ASTM D 2166, D 5102
Client: Hatch Mott & McDonald
Project: HAM-71-01.34 Lytle Tunnel
Location: Cincinnati, OH
Project No. 13050001CIN
Sample ID: B-002, ST-14: 33.5'-35.5'
Station & Offset: 130+91.4, 93.0' RT (IR-71 NB)
Date Tested: 2/7/13

Specimen Data

Avg. Sample Height (in.): 5.80 Wet Density (pcf): 117.8
Avg. Sample Diameter (in.): 2.85 Dry Density (pcf): 103.0
Visual Description: Gray Sandy Silt

Physical Characteristics

% Agg.	% C.S.	% F.S.	% Silt	% Clay	L.L.	P.I.	W.C.
1	4	37	36	22	21	5	14

Failure Diagrams

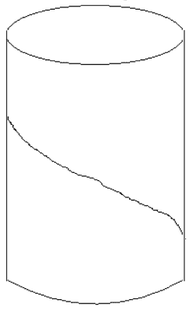

Penetrometer: N/A
Torvane: N/A
Remarks: Q_u @ 6.4 psi @ 8.2 % STRAIN

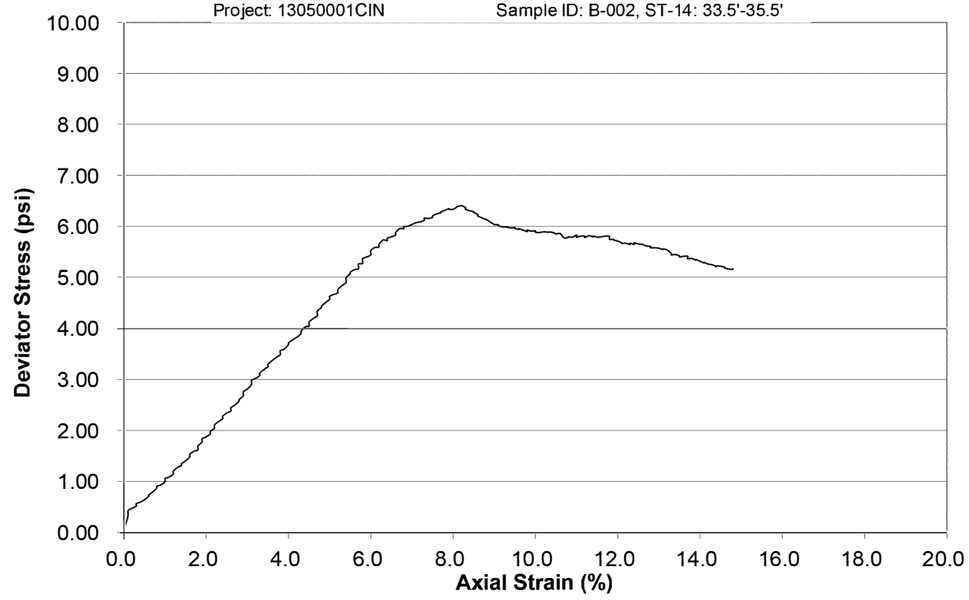

DRAWN BRU CHECKED NW

LABORATORY TEST DATA

HAM-71-1.34

17 / 18

D:\DropBox\CTL-2014\October\Dept 12\CIN\Joshua\13050001CIN\87268-geo17.dgn 10/15/2014 1:20:25 PM Sachino

CTL ENGINEERING, INC
2860 FISHER ROAD, COLUMBUS, OH 43204

Unconfined Compression Test
ASTM D 2166, D 5102
Client: Hatch Mott & McDonald
Project: HAM-71-01.34 Lytle Tunnel
Location: Cincinnati, OH
Project No. 13050001CIN
Sample ID: B-002, ST-18: 43.5'-45.5'
Station & Offset: 13+20, 25' LT. (Lytle St.)
Date Tested: 2/7/13

Specimen Data

Avg. Sample Height (in.): 5.84 Wet Density (pcf): 116.7
Avg. Sample Diameter (in.): 2.85 Dry Density (pcf): 93.3
Visual Description: Gray Silt and Clay

Physical Characteristics

% Agg.	% C.S.	% F.S.	% Silt	% Clay	L.L.	P.I.	W.C.
0	0	11	39	50	32	11	25

Failure Diagrams

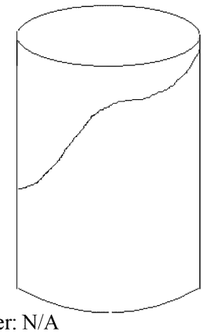

Penetrometer: N/A
Torvane: N/A
Remarks: Q_u @ 11.1 psi @ 11.4 % STRAIN

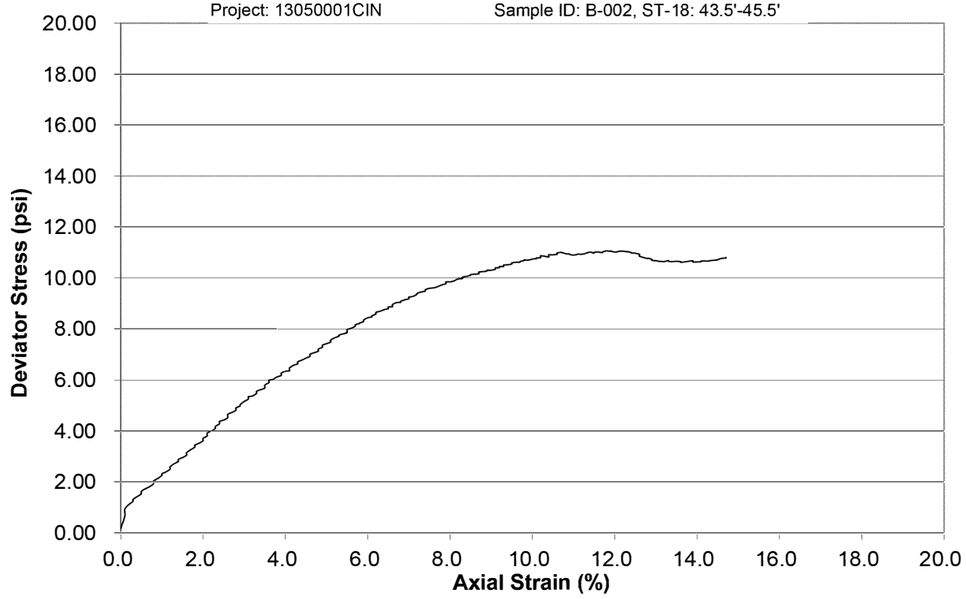

DRAWN BRU CHECKED NW

LABORATORY TEST DATA

HAM-71-1.34

18 / 18

D:\DropBox\CTL-2014\October\Dept 12\CIN\Joshua\13050001CIN\87268-geo18.dgn 10/15/2014 1:21:12 PM Sachino