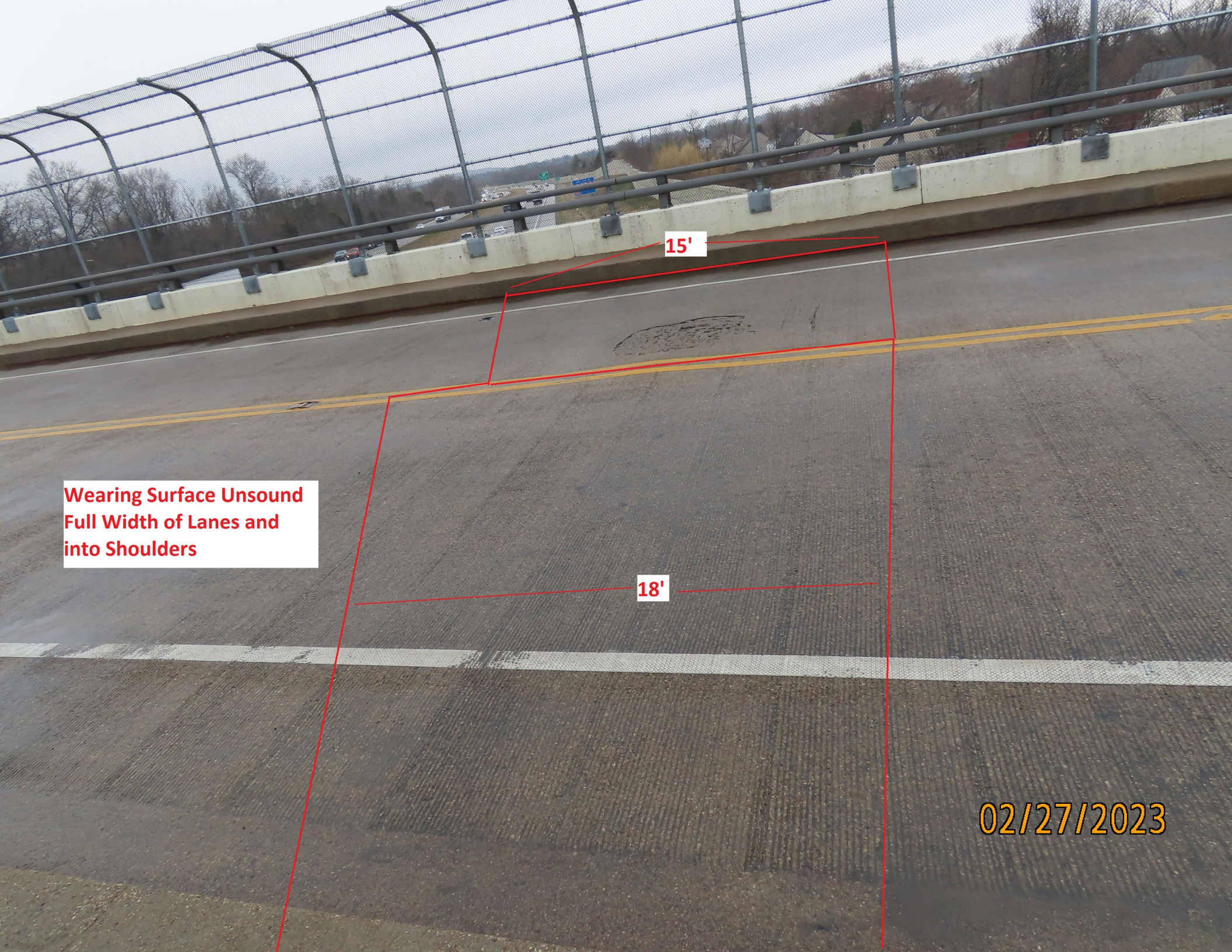
15'
Wearing Surface Unsound
Full Width of Lanes and
into Shoulders
18'
02/27/2023

02/27/2023

03/01/2021 11:14

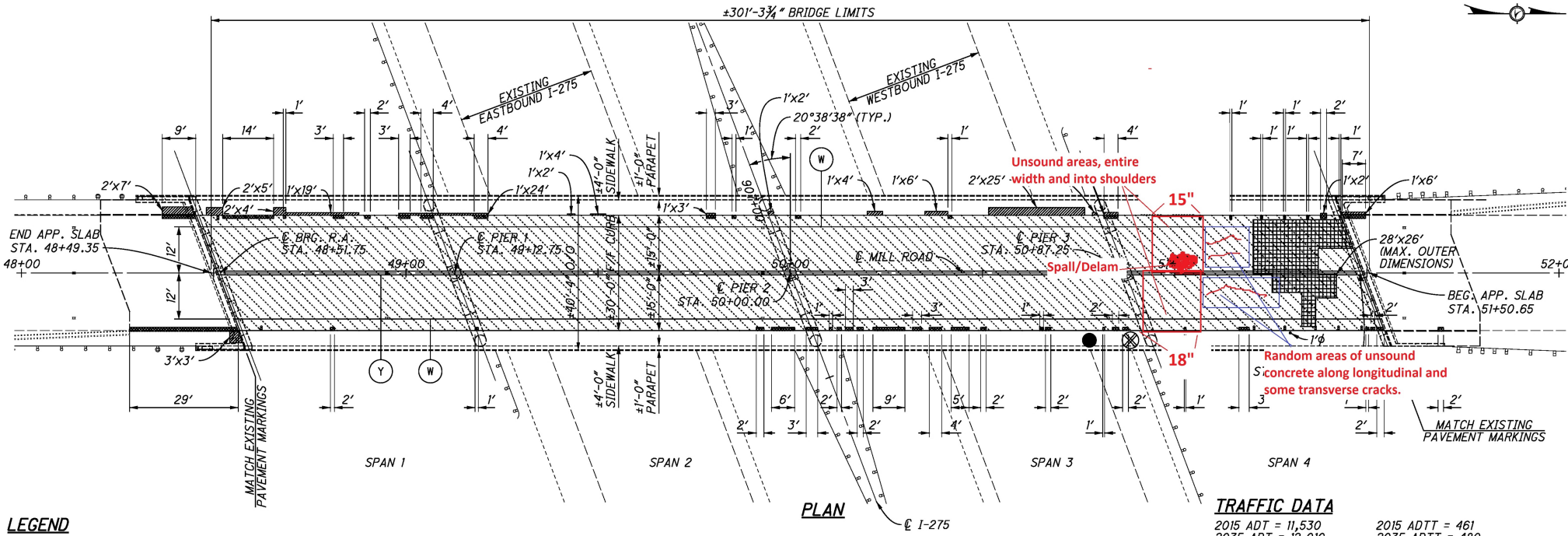

PLAN

LEGEND

- AREA TO BE REPAIRED WITH ITEM 519 - PATCHING CONCRETE STRUCTURE, AS PER PLAN
- AREA TO BE REPAIRED WITH ITEM 519 - SPECIAL - PATCHING CONCRETE STRUCTURE, MISC.: SIDEWALK CURB
- AREA TO BE REPAIRED WITH ITEM 519 - SPECIAL - PATCHING CONCRETE BRIDGE DECK OVERLAY WITH MICRO-SILICA MODIFIED CONCRETE
- AREA TO BE SEALED WITH ITEM 512 - TREATING CONCRETE BRIDGE DECKS WITH GRAVITY FED RESIN
- 16.09' MAINLINE MINIMUM VERTICAL CLEARANCE
- 16.43' SHOULDER MINIMUM VERTICAL CLEARANCE
- (W) EDGE LINE (4" WHITE)
- (Y) CENTER LINE (4" DOUBLE YELLOW)

APP. - APPROACH
BEG. - BEGIN
BRG. - BEARING
F.A. - FORWARD ABUTMENT
F/F - FACE-TO-FACE
MAX. - MAXIMUM
O/O - OUT-TO-OUT
R.A. - REAR ABUTMENT
STA. - STATION

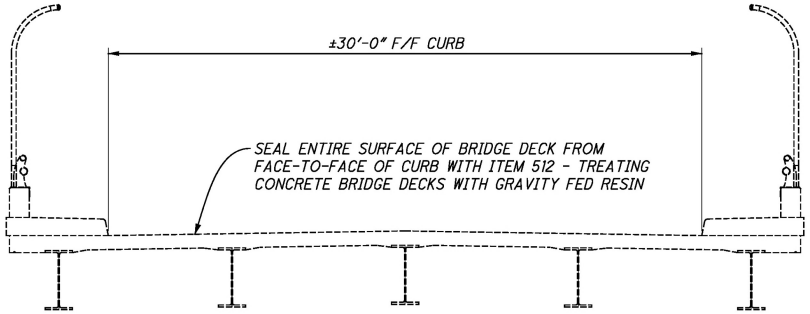

TRANSVERSE SECTION

(FOR INFORMATION ONLY)

NOTES

1. ALL DIMENSIONS ARE ±.
2. ALL ESTIMATED AREAS ARE GIVEN AS WIDTH x LENGTH.
3. MAINTAIN ONE LANE OF TWO-WAY TRAFFIC USING A FLAGGING OPERATION. SEE MAINTENANCE OF TRAFFIC SHEETS FOR ADDITIONAL INFORMATION.
4. SEE ROADWAY SHEETS 55 - 56 / 107 FOR PERMANENT TRAFFIC CONTROL ITEMS AND QUANTITIES.

LIMITS OF PAINTING

PAINT ALL STRUCTURAL STEEL WITHIN 5 FEET OF THE EXPANSION JOINTS. THIS INCLUDES MAIN MEMBERS, END CROSS-FRAMES, STIFFENERS, AND BEARINGS. WHEN INTERMEDIATE CROSS-FRAMES OCCUR WITHIN 5 FEET OF THE EXPANSION JOINTS, PAINT THE ENTIRE CROSS-FRAME, NOT JUST THOSE COMPONENTS LOCATED WITHIN THE 5 FOOT SPECIFIED RANGE.

SUMMARY OF REPAIR AREAS

PHYSICAL INVENTORY OF MEASURED QUANTITIES OF DETERIORATION WAS PERFORMED IN FEBRUARY OF 2013.

EXACT DIMENSIONS AND LOCATIONS OF REPAIRS SHALL BE DETERMINED BY THE ENGINEER IN THE FIELD FOR FINAL PAY QUANTITIES.

TYPE	MEASURED QUANTITIES	ESTIMATING FACTOR*	ESTIMATED QUANTITIES
SIDEWALK PATCHING	199 SQ. FT.	3.0	597 SQ. FT.
CURB PATCHING	159 FT.	1.95	310 FT.
OVERLAY PATCHING	47 SQ. YD.	3.0	141 SQ. YD.
RESIN TREATMENT	993 SQ. YD.	1.0	993 SQ. YD.

* - ESTIMATING FACTOR BASED ON ODOT BDM SECTION 412.2.

TRAFFIC DATA

2015 ADT = 11,530 2015 ADTT = 461
2035 ADT = 12,010 2035 ADTT = 480
DIRECTIONAL DISTRIBUTION = 0.55

EXISTING STRUCTURE

TYPE: 4-SPAN CONTINUOUS ROLLED STEEL BEAM BRIDGE W
REINFORCED CONCRETE DECK AND SUBSTRUCTURE

SPANS: 61'-0", 87'-3", 87'-3", 61'-0" C/C BEARINGS

ROADWAY: 38'-0" F/F PARAPETS & 30'-0" F/F SIDEWALKS

LOADING: CF-400 (1957)

SKEW: 20°38'38" RT. FWD.

APPROACH SLABS: 25' LONG (AS-1-54)

WEARING SURFACE: LATEX MODIFIED CONCRETE

ALIGNMENT: TANGENT

CROWN: 3/16" PER FOOT

STRUCTURAL FILE NUMBER: 3111768

DATE BUILT: 1968, CONDITION: FAIR

DISPOSITION: TO BE REHABILITATED

PROPOSED WORK

1. PATCH EXISTING DECK OVERLAY AT NORTH END OF BRIDG AS SHOWN.
2. REMOVE EXISTING PAVEMENT MARKINGS FROM BRIDGE DE
3. SEAL BRIDGE DECK WEARING SURFACES WITH GRAVITY FE RESIN (GFR).
4. SEAL THE EXPANSION JOINTS WITH DOW CORNING 902 RU WABO SILICONE SEAL, DELASTIC LS POURABLE BRIDGE S OR APPROVED EQUAL.
5. PAINT PORTIONS OF STRUCTURAL STEEL WITHIN 5 FEET THE EXPANSION JOINTS.
6. REPAIR PORTIONS OF THE SUBSTRUCTURE, APPROACH SL SIDEWALK, AND SUPERSTRUCTURE SIDEWALK AS SHOWN.