STATE OF OHIO
DEPARTMENT OF TRANSPORTATION

JEF-7-13.68

VILLAGE OF MINGO JUNCTION

JEFFERSON COUNTY

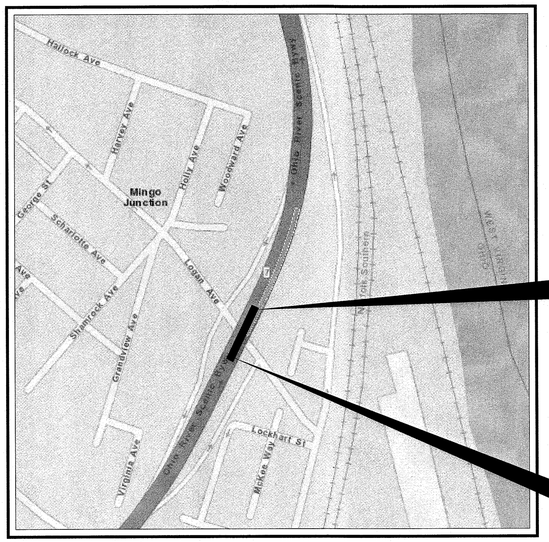

LOCATION MAP

LATITUDE: 40°19'30" LONGITUDE: 80°36'25"

PORTION TO BE IMPROVED
INTERSTATE HIGHWAY
FEDERAL ROUTES
STATE ROUTES
COUNTY & TOWNSHIP ROADS
OTHER ROADS

DESIGN DESIGNATION

CURRENT ADT (2024)	*17,500*
DESIGN YEAR ADT (2044)	*21,500*
DESIGN HOURLY VOLUME (2044)	*2,600*
DIRECTIONAL DISTRIBUTION	*52%*
TRUCKS (24 HOUR B&C)	*13%*
Td	*7%*
DESIGN SPEED	*55 MPH*
LEGAL SPEED	*55 MPH*

DESIGN FUNCTIONAL CLASSIFICATION:
02 OTHER FREEWAYS OR EXPRESSWAYS
NHS PROJECT — *YES*

DESIGN EXCEPTIONS

DESIGN FEATURE	*APPROVAL DATE*	*SHEET NO.*
SHOULDER WIDTH	*09/02/2021*	*4*

ADA DESIGN WAIVERS

NONE REQUIRED

UNDERGROUND UTILITIES
Contact Two Working Days Before You Dig
OHIO811.org Before You Dig
OHIO811, 8-1-1, or 1-800-362-2764
(Non members must be called directly)

PLAN PREPARED BY:

KORDA / NEMETH ENGINEERING, INC
1650 Watermark Drive, Suite 200 - Columbus, OH 43215
TEL. 614-487-1650 WEB www.korda.com

ENGINEER'S SEAL:
FOR ENTIRE PLAN EXCEPT MAINTENANCE OF TRAFFIC AND STRUCTURES (OVER 20 FOOT SPAN)
STATE OF OHIO — CHRISTINE L. PLACEK E-74317 — REGISTERED PROFESSIONAL ENGINEER
SIGNED: *DATE: 01/21/2022*

ENGINEER'S SEAL:
MAINTENANCE OF TRAFFIC
STATE OF OHIO — ADAM L. LANIER E-58884 — REGISTERED PROFESSIONAL ENGINEER
SIGNED: *DATE: 01/21/2022*

ENGINEER'S SEAL:
STRUCTURES (OVER 20 FOOT SPAN)
STATE OF OHIO — CAROL ANN BOEHM E-52242 — REGISTERED PROFESSIONAL ENGINEER
SIGNED: *DATE: 01/21/2022*

INDEX OF SHEETS:

TITLE SHEET	*1*
SCHEMATIC PLAN	*2*
TYPICAL SECTIONS	*3 - 4*
GENERAL NOTES	*5 - 6*
MAINTENANCE OF TRAFFIC	*7 - 48*
GENERAL SUMMARY	*49 - 50*
PLAN	*51*
PROFILE	*52*
ESTIMATED QUANTITES	*53*
CROSS-SECTIONS	*54 - 59*
TRAFFIC CONTROL	*60 - 61*
STRUCTURES (OVER 20 FOOT SPAN)	*62 - 95*

STANDARD CONSTRUCTION DRAWINGS

BP-3.1	*1/21/22*	*RM-4.2*	*4/17/20*	*MT-95.40*	*1/17/20*	*TC-22.20*	*1/17/14*		
BP-5.1	*7/15/22*	*RM-4.3*	*1/21/22*	*MT-95.70*	*1/17/20*	*TC-41.20*	*10/18/13*		
BP-9.1	*1/18/19*			*MT-96.11*	*4/16/21*	*TC-42.20*	*10/18/13*		
		AS-1-15	*7/17/15*	*MT-96.20*	*7/15/16*	*TC-52.10*	*10/18/13*		
CB-6	*1/21/22*	*AS-2-15*	*1/18/19*	*MT-96.26*	*1/18/19*	*TC-52.20*	*1/15/21*		
		GSD-1-19	*1/15/21*	*MT-97.10*	*4/19/19*				
DM-4.3	*1/15/16*	*PCB-91*	*7/17/20*	*MT-98.20*	*4/19/19*				
DM-4.4	*1/15/16*	*SBR-1-20*	*7/17/20*	*MT-99.30*	*1/17/20*				
		SBR-2-20	*1/15/21*	*MT-100.00*	*7/16/21*				
I-4B, 4B1	*7/15/22*	*SICD-1-96*	*7/18/14*	*MT-101.60*	*1/17/20*				
		SICD-2-14	*1/15/21*	*MT-101.70*	*1/17/20*				
MGS-1.1	*7/16/21*	*VPF-1-90*	*7/20/18*	*MT-101.75*	*1/17/20*				
MGS-2.1	*1/19/18*			*MT-101.80*	*1/17/20*				
MGS-3.1	*1/19/18*	*MT-95.30*	*7/19/19*	*MT-101.90*	*7/17/20*				
MGS-3.2	*1/18/13*	*MT-95.31*	*7/19/19*	*MT-105.10*	*1/17/20*				
MGS-4.2	*7/19/13*	*MT-95.32*	*4/19/19*						

SUPPLEMENTAL SPECIFICATIONS

800-2019		*SEE PROPOSAL*
832	*7/15/22*	
843	*10/18/19*	
846	*4/17/15*	

SPECIAL PROVISIONS

FEDERAL PROJECT NUMBER

E190 (465)

RAILROAD INVOLVEMENT

NONE

PROJECT DESCRIPTION

REHABILITATION OF STRUCTURE JEF-7-1369 (SFN 4100751) BY REPLACING THE SUPERSTRUCTURE AND APPROACH SLABS AND REPAIRING THE PIERS AND ABUTMENTS. THE ABUTMENTS WILL BE CONVERTED TO SEMI-INTEGRAL TYPE AND THE BEARINGS WILL BE REPLACED. MINOR ROADWAY APPROACH WORK ALONG SR 7 INCLUDING REPLACING THE MEDIAN BARRIER AND MINOR CONCRETE SLOPE REPAIR AT LOGAN AVENUE UNDERPASS.

EARTH DISTURBED AREAS

PROJECT EARTH DISTURBED AREA: *0.25 ACRES*
ESTIMATED CONTRACTOR EARTH DISTURBED AREA: *0.25 ACRES*
NOTICE OF INTENT EARTH DISTURBED AREA: N/A (NOI NOT REQUIRED)

LIMITED ACCESS

THIS IMPROVEMENT IS ESPECIALLY DESIGNED FOR THROUGH TRAFFIC AND HAS BEEN DECLARED A LIMITED ACCESS HIGHWAY OR FREEWAY BY ACTION OF THE DIRECTOR IN ACCORDANCE WITH THE PROVISIONS OF SECTION 5511.02 OF THE OHIO REVISED CODE.

2019 SPECIFICATIONS

THE STANDARD SPECIFICATIONS OF THE STATE OF OHIO, DEPARTMENT OF TRANSPORTATION, INCLUDING SUPPLEMENTAL SPECIFICATIONS LISTED IN THE PLANS AND CHANGES LISTED IN THE PROPOSAL SHALL GOVERN THIS IMPROVEMENT.

I HEREBY APPROVE THESE PLANS AND DECLARE THAT THE MAKING OF THIS IMPROVEMENT WILL NOT REQUIRE THE CLOSING TO TRAFFIC OF THE HIGHWAY AND THAT PROVISIONS FOR THE MAINTENANCE AND SAFETY OF TRAFFIC WILL BE AS SET FORTH ON THE PLANS AND ESTIMATES.

APPROVED _____
DATE 12-19-2022 *DISTRICT DEPUTY DIRECTOR*

APPROVED _____
DATE _____ *DIRECTOR, DEPARTMENT OF TRANSPORTATION*

TITLE SHEET

DESIGN AGENCY
KORDA
KORDA / NEMETH ENGINEERING, INC
1650 Watermark Drive, Suite 200, Columbus, OH 43215

DESIGNER	CLP
REVIEWER	CAB 09/28/21
PROJECT ID	109309
SHEET	1
TOTAL	95

JEF-7-13.68

MODEL: Sheet PAPERSIZE: 34x22 (in.) DATE: 8/24/2022 TIME: 12:15:35 PM USER: cplacek
H:\Projects\2019-0430.00 JEF-7-13.69\109309\400-Engineering\Roadway\Sheets\109309_GT00I.dgn

NOTE: ALL ELEVATIONS ARE IN NAVD88 (USGS).

PROJECT CONTROL DATA (GROUND COORDINATES)

POINT NO.	DESCRIPTION	STATION	℄	OFFSET	SIDE	NORTHING	EASTING	ELEVATION
CP1	3/4" REBAR SET, ODOT TYPE A	716+56.71	SR 7	48.85'	LT	245670.391	2496539.785	779.26
CP2	3/4" REBAR SET, ODOT TYPE A	711+11.68	SR 7	39.12'	LT	245176.013	2496318.529	779.45

SR 7 CENTERLINE OF CONSTRUCTION HORIZONTAL CONTROL DATA (GROUND COORDINATES)

DESCRIPTION	STATION	℄	OFFSET	SIDE	NORTHING	EASTING
TS	701+81.54	SR 7	0.00'	℄	244619.290	2496031.813
SC	707+31.54	SR 7	0.00'	℄	244822.614	2496177.165
PI	707+70.53	SR 7	9.78'	RT	244850.031	2496205.806
CS	708+08.16	SR 7	0.00'	℄	244888.076	2496216.971
ST	710+58.16	SR 7	0.00'	℄	245110.680	2496330.614
TS	714+28.01	SR 7	0.00'	℄	245444.263	2496490.345
SC	717+28.01	SR 7	0.00'	℄	245719.065	2496610.329
PI	707+70.53	SR 7	109.94'	RT	246089.339	2496799.230
CS	725+03.02	SR 7	0.00'	℄	246482.707	2496664.888
ST	710+58.16	SR 7	0.00'	℄	245110.680	2496330.614

LOGAN AVENUE CENTERLINE OF CONSTRUCTION HORIZONTAL CONTROL DATA (GROUND COORDINATES)

DESCRIPTION	STATION	℄	OFFSET	SIDE	NORTHING	EASTING
POT	34+90.66	LOGAN AVE	0.00'	℄	245023.897	2496752.427
POT	25+44.31	LOGAN AVE	0.00'	℄	245775.559	2496177.463

NOTE: THERE ARE NO EXISTING LANDSCAPED AREAS WITHIN THE WORK LIMIT.

PROPOSED PAVEMENT ELEVATION TABLE

LEFT SIDE			℄	RIGHT SIDE		
EDGE OF SHOULDER	EDGE OF PAVEMENT	MEDIAN EDGE OF PAVEMENT	STATION	MEDIAN EDGE OF PAVEMENT	EDGE OF PAVEMENT	EDGE OF SHOULDER
781.27	781.59	782.16	712+30	782.16	782.56	782.06
781.35	781.69	782.25	712+40	782.25	782.65	782.15
781.43	781.78	782.34	712+50	782.34	782.74	782.24
781.50	781.87	782.42	712+60	782.42	782.82	*
781.58	781.96	782.50	712+70	782.50	*	*
781.88	782.04	*	712+80	*	*	*
782.21	*	*	712+90	*	*	*
*	*	*	714+60	*	*	783.41
*	*	*	714+70	*	783.84	783.43
*	*	783.45	714+80	783.45	783.85	783.45
*	783.06	783.46	714+90	783.49	783.89	783.50
782.81	783.07	783.47	715+00	783.54	783.94	783.57
782.69	783.07	783.47	715+10	783.58	783.98	783.69
782.57	783.07	783.47	715+20	783.62	784.02	783.80

* SEE APPROACH SLAB DETAILS

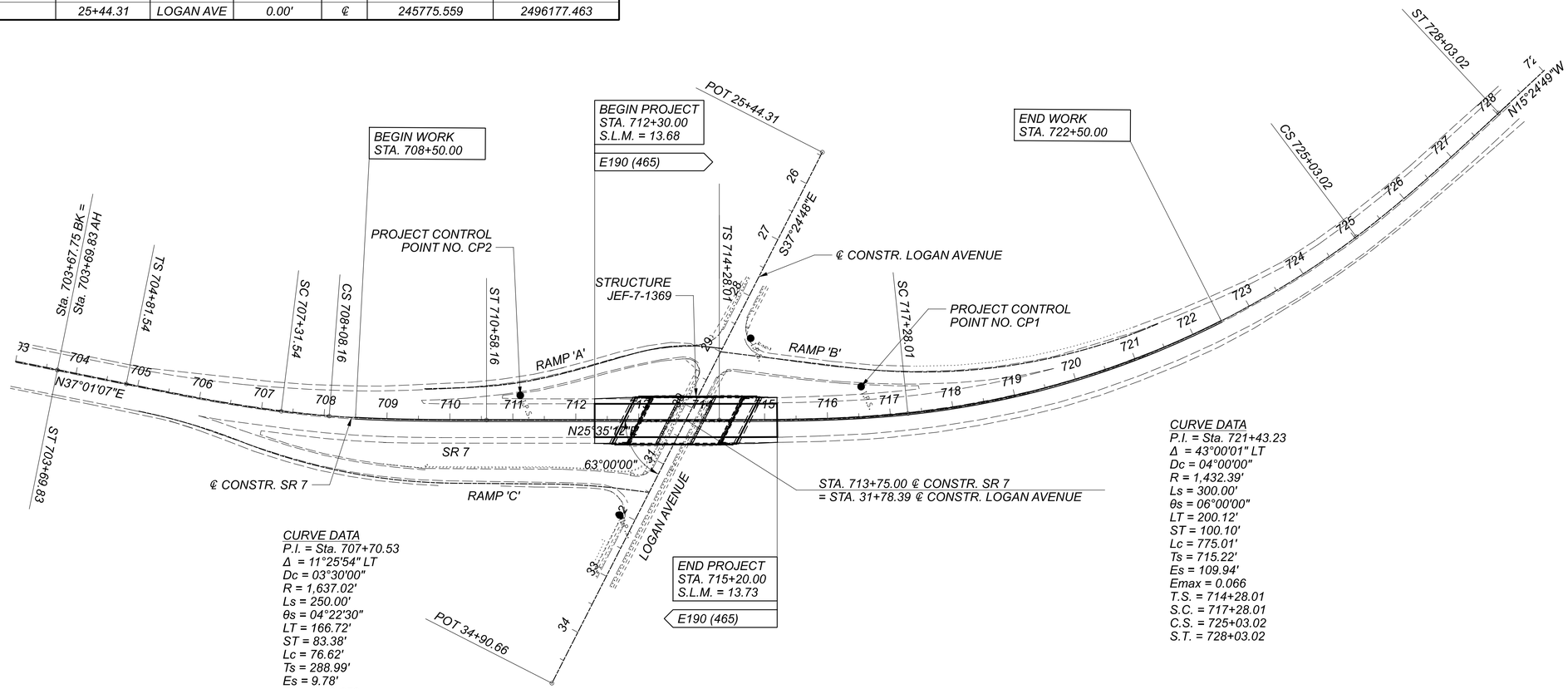

CURVE DATA
P.I. = Sta. 707+70.53
Δ = 11°25'54" LT
Dc = 03°30'00"
R = 1,637.02'
Ls = 250.00'
θs = 04°22'30"
LT = 166.72'
ST = 83.38'
Lc = 76.62'
Ts = 288.99'
Es = 9.78'
Emax = 0.058
T.S. = 704+81.54
S.C. = 707+31.54
C.S. = 708+08.16
S.T. = 710+58.16

CURVE DATA
P.I. = Sta. 721+43.23
Δ = 43°00'01" LT
Dc = 04°00'00"
R = 1,432.39'
Ls = 300.00'
θs = 06°00'00"
LT = 200.12'
ST = 100.10'
Lc = 775.01'
Ts = 715.22'
Es = 109.94'
Emax = 0.066
T.S. = 714+28.01
S.C. = 717+28.01
C.S. = 725+03.02
S.T. = 728+03.02

HORIZONTAL SCALE IN FEET
0 50 100 200

SCHEMATIC PLAN

JEF-7-13.68

MODEL: Plan [(Sheet)] PAPERSIZE: 34x22 (in.) DATE: 8/24/2022 TIME: 12:16:14 PM USER: cplacek
H:\Projects\2019\2019-0430_00 JEF-7-13.69\109309\400-Engineering\Roadway\Sheets\109309_GB001.dgn

DESIGN AGENCY
KORDA
KORDA / NEMETH ENGINEERING, INC
1650 Watermark Drive, Suite 200, Columbus, OH 43215

DESIGNER CLP
REVIEWER BMV 09/28/21
PROJECT ID 109309
SHEET 2 TOTAL 95

EXISTING LEGEND

- (A) ±3" ASPHALT CONRETE
- (B) ±5" BITUMINOUS AGGREGATE BASE
- (C) ±7 ¾" AGGREGATE BASE (WATERBOUND MACADAM)
- (D) ±2" STABILIZED CRUSHED AGGREGATE
- (E) ±6" SUBBASE
- (F) ±2" ASPHALT CONCRETE
- (G) 42" CONCRETE BARRIER, TYPE B
- (H) GUARDRAIL, TYPE 5
- (I) ±13" APPROACH SLAB
- (J) ±2 ¾"ASPHALT CONRETE
- (K) ±2 ¾"ASPHALT CONRETE BASE
- (L) ±9" AGGREGATE BASE (WATERBOUND MACADAM)
- (M) BACKFILL MATERIAL
- (N) 4" CONCRETE WALK
- (O) COMBINATION CURB AND GUTTER
- (P) 6" PIPE UNDERDRAIN

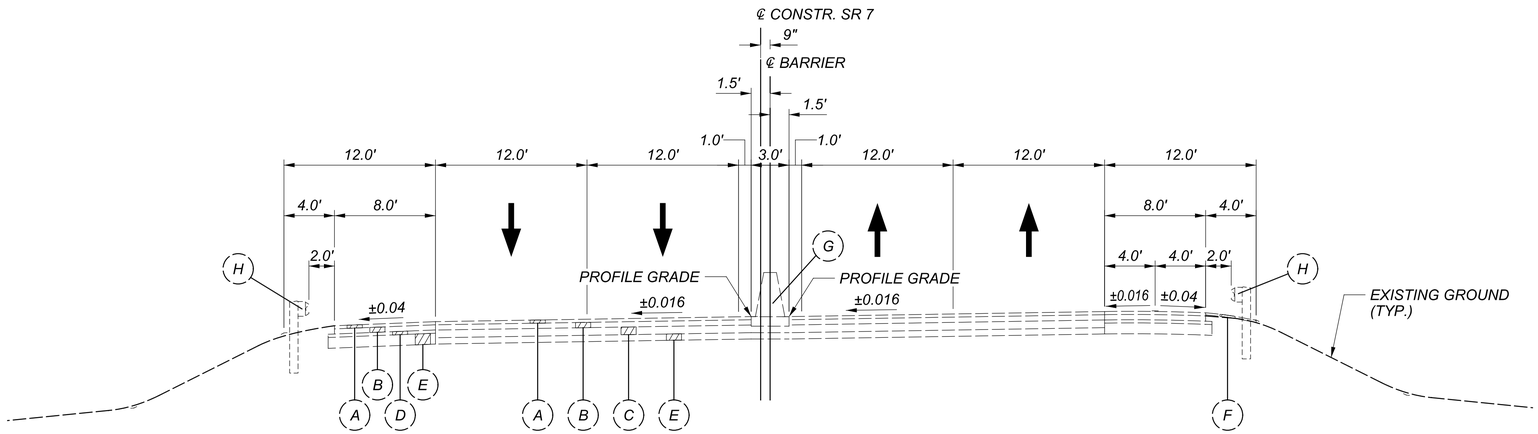

EXISTING NORMAL SECTION (SR 7)

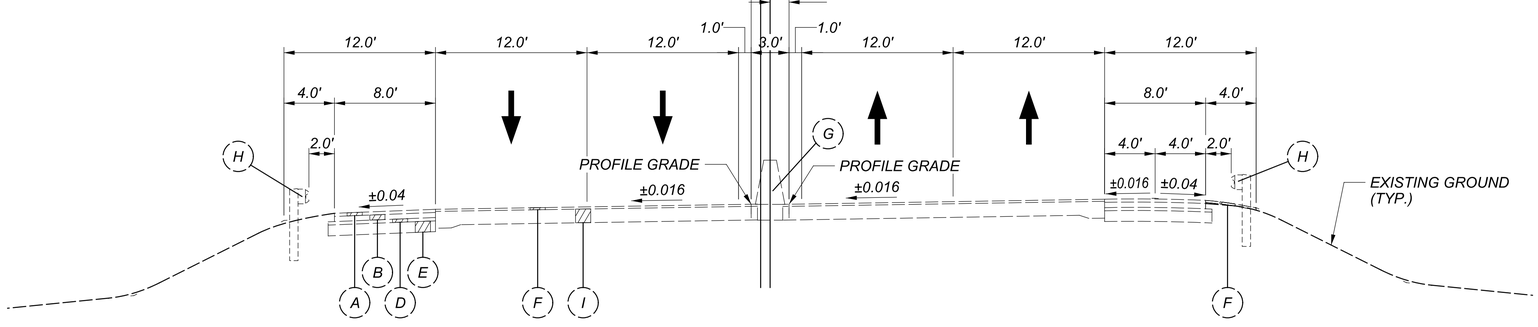

EXISTING APPROACH SLAB SECTION (SR 7)

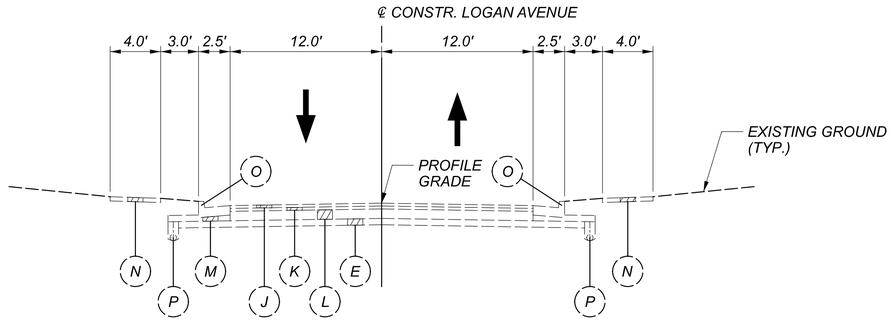

EXISTING NORMAL SECTION (LOGAN AVENUE)

TYPICAL SECTIONS

JEF-7-13.68

MODEL: Sheet PAPERSIZE: 34x22 (in.) DATE: 8/24/2022 TIME: 12:16:17 PM USER: cplacek
H:\Projects\2019\2019-0430_00 JEF-7-13.69\109309\400-Engineering\Roadway\Sheets\109309_GY001.dgn

DESIGN AGENCY
KORDA
KORDA / NEMETH ENGINEERING, INC
1650 Watermark Drive, Suite 200, Columbus, OH 43215

DESIGNER CLP

REVIEWER BMV 09/28/21

PROJECT ID 109309

SHEET 3 TOTAL 95

LEGEND

(1) ITEM 441 - 3" ASPHALT CONRETE SURFACE COURSE, TYPE 1, (449), AS PER PLAN (PG70-22M) (PLACE IN TWO EQUAL LIFTS)

(2) ITEM 301 - 9" ASPHALT CONCRETE BASE, PG64-22, (449)

(3) ITEM 304 - 10" AGGREGATE BASE

(4) ITEM 304 - 4" AGGREGATE BASE

(5) ITEM 407 - TACK COAT

(6) ITEM 204 - SUBGRADE COMPACTION

(7) ITEM 526 - REINFORCED CONCRETE APPROACH SLABS (T=15")

(8) ITEM 605 - AGGREGATE DRAINS

(9) ITEM 606 - GUARDRAIL, TYPE MGS WITH LONG POSTS

(10) ITEM 609 - CURB, TYPE 4-C

(11) ITEM 622 - CONCRETE BARRIER, SINGLE SLOPE, TYPE B, AS PER PLAN

(12) ITEM 659 - SEEDING AND MULCHING

NOTES:

(A) OR AS SHOWN ON CROSS SECTIONS.

(B) 0.04 MINIMUM, 0.08 DESIRABLE (TYP.).

(C) CURB SHALL BE TYPE 4 AND INCLUDED IN THE COST OF THE APPROACH SLAB.

(D) FOR ADDITIONAL APPROACH SLAB DETAILS, INCLUDING DIMENSIONS AND ELEVATIONS, SEE BRIDGE PLAN SHEETS 91 AND 92.

(E) TRANSITION CROSS SLOPE FROM APPROACH SLAB SHOULDER TO PAVED SHOULDER CROSS SLOPE AWAY FROM BRIDGE.

(F) FOR INTEGRAL MEDIAN RAILING AND INTEGRAL PARAPET RAILING DETAILS SEE BRIDGE PLAN SHEETS 88-90.

(G) GUARDRAIL IS SHOWN FOR CLARITY ONLY. REFER TO PLAN AND PROFILE SHEETS FOR LIMITS AND LOCATION OF GUARDRAIL.

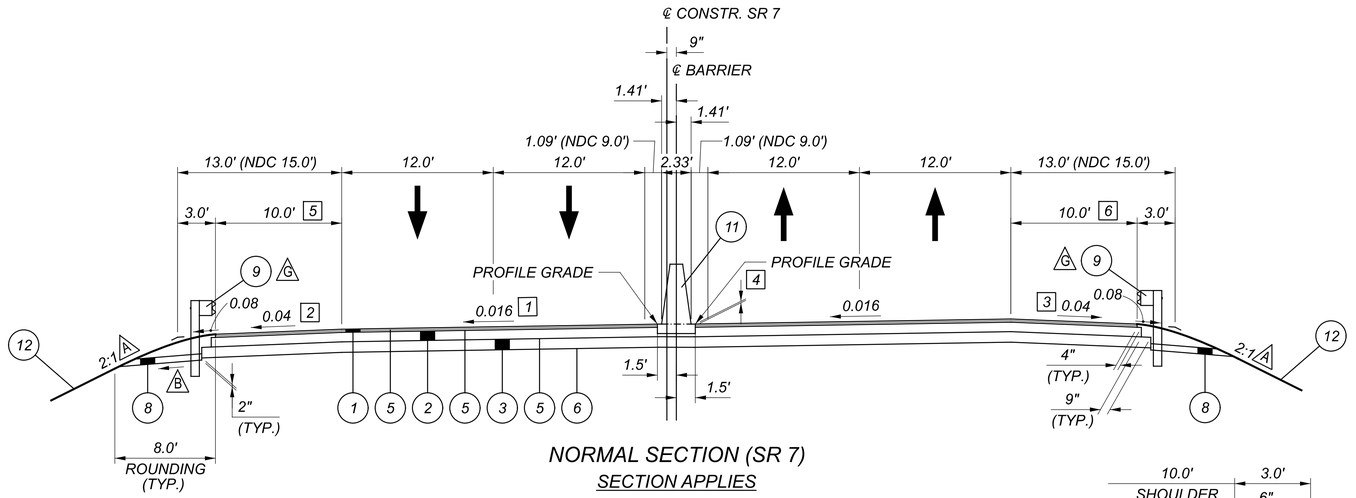

NORMAL SECTION (SR 7)

SECTION APPLIES

STA. 712+30.00 TO STA. 712+76.61
STA. 714+73.82 TO STA. 715+20.00

1 STA. 712+30.00 TO STA. 712+76.61
-0.023 TO -0.0108

STA. 714+73.82 TO STA. 715+20.00
-0.0137 TO 0.016

E 2 STA. 712+70.00 TO STA. 712+90.00
-0.04 TO -0.016

STA. 712+90.00 TO STA. 712+95.00
STA. 714+87.00 TO STA. 714+92.00
-0.016

STA. 714+92.00 TO STA. 715+20.00
-0.016 TO -0.05

3 STA. 712+30.00 TO STA. 712+50.00
-0.05 TO -0.04

STA. 715+00.00 TO STA. 715+20.00
-0.04 TO -0.025

4 STA. 714+82.50 TO STA. 715+20.00
0.00" TO +1.75" (HIGHER THAN LEFT SIDE)

5 STA. 712+30.00 TO STA. 712+80.00
8.0' TO 10.0'

6 STA. 714+82.50 TO STA. 715+20.00
10.0' TO 8.5'

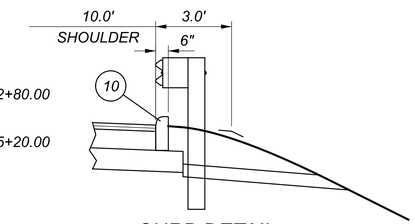

CURB DETAIL

(SIMILAR FOR BOTH SIDES)

SECTION APPLIES

STA. 712+44.63 TO STA. 712+57.63 (RIGHT SIDE)
STA. 714+92.25 TO STA. 715+05.27 (LEFT SIDE)

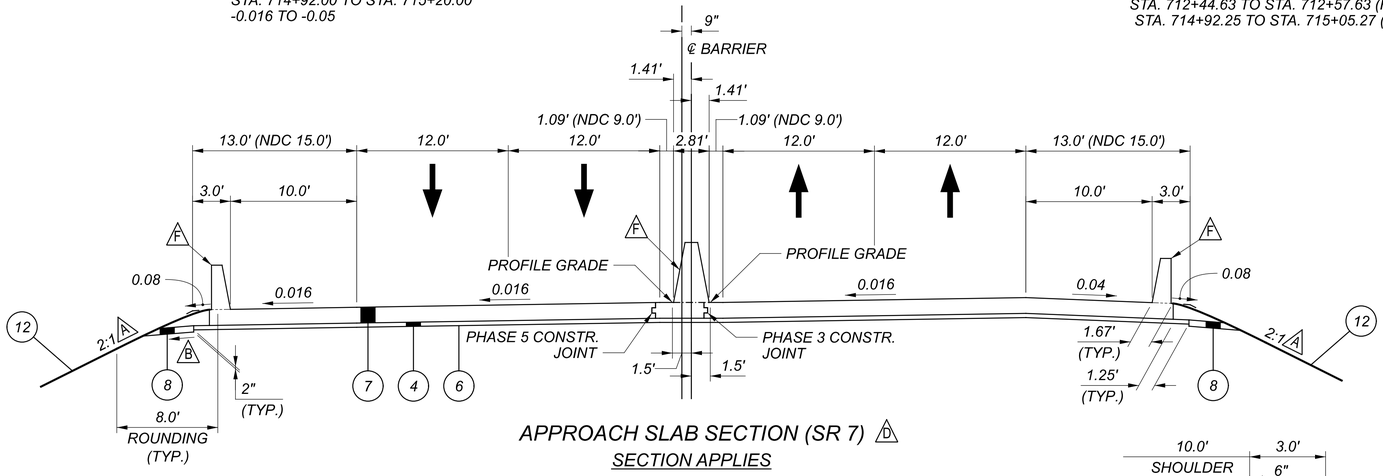

APPROACH SLAB SECTION (SR 7) (D)

SECTION APPLIES

STA. 712+76.61 TO STA. 713+01.61
STA. 714+48.82 TO STA. 714+73.82

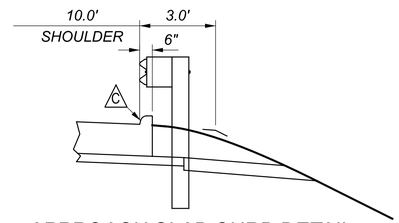

APPROACH SLAB CURB DETAIL

(SIMILAR FOR BOTH SIDES)

SECTION APPLIES

STA. 712+57.63 TO STA. 712+62.78 (RIGHT SIDE)
STA. 712+94.82 TO STA. 713+00.82 (LEFT SIDE)
STA. 714+49.81 TO STA. 714+54.80 (RIGHT SIDE)
STA. 714+86.99 TO STA. 714+92.25 (LEFT SIDE)

TYPICAL SECTIONS

JEF-7-13.68

MODEL: Sheet PAPERSIZE: 34x22 (in.) DATE: 8/24/2022 TIME: 12:16:20 PM USER: cplacek
H:\Projects\2019\2019-0430_00 JEF-7-13.69\09309\400-Engineering\Roadway\Sheets\09309_GY002.dgn

DESIGN AGENCY
KORDA
KORDA / NEMETH ENGINEERING, INC
1650 Watermark Drive, Suite 200, Columbus, OH 43215

DESIGNER CLP

REVIEWER BMV 09/28/21

PROJECT ID 109309

SHEET 4 TOTAL 95

ROUNDING

THE ROUNDING AT SLOPE BREAKPOINTS SHOWN ON THE TYPICAL SECTIONS APPLIES TO ALL CROSS-SECTIONS EVEN THOUGH OTHERWISE SHOWN.

UTILITIES

LISTED BELOW ARE ALL UTILITIES LOCATED WITHIN THE PROJECT CONSTRUCTION LIMITS TOGETHER WITH THEIR RESPECTIVE OWNERS:

ELECTRIC

AEP OHIO POWER COMPANY
ATTN: CLARKE SAUNDERS
777 HOPEWELL DRIVE
HEATH, OHIO 43056
PHONE: 614-460-4794
EMAIL: CMSAUNDERS@AEP.COM

TELECOMMUNCATIONS & CABLE

AT&T OHIO, INC.
ATTN: BARRETT J. TAMASOVICH
160 NORTH 6TH STREET
ZANESVILLE, OHIO 43701
PHONE: 740-454-3552
EMAIL: BT2178@ATT.COM

AT&T TRANSMISSION
ATTN: MIKE DIEDERICH
7555 E. PLEASE VALLEY RD.
SUITE 140
INDEPENDENCE, OHIO 44131
PHONE: 216-750-0135
EMAIL: MD4145@ATT.COM

COMCAST
ATTN: GENE HELMES
908 NATIONAL RD.
BRIDGEPORT, OH 43912
PHONE: 740-314-5397
EMAIL: GENE_HELMS@COMCAST.COM

GAS

COLUMBIA GAS OF OHIO, INC.
ATTN: TIMOTHY SEECH
300 LURAY DRIVE
WINTERSVILLE, OHIO 43953
PHONE: 740-266-4282
EMAIL: TGSEECH@NISOURCE.COM

COLUMBIA GAS TRANSMISSION
ATTN: ANTHONY WINTERS
4115 CORK BOCKTOWN ROAD
CLINTON, PA 15026
PHONE: 724-223-3944
EMAIL: ANTHONY_WINTERS@TCENERGY.COM
COPY: US_CROSSINGS@TCENERGY.COM

WATER

VILLAGE OF MINGO JUNCTION
ATTN: GEORGE SPODDART, WATER PLANT OPERATOR
501 COMMERCIAL STREET
MINGO JUNCTION, OHIO 43938
PHONE: 740-535-9162
EMAIL: WATERTPLANT@COMCAST.NET

THE LOCATION OF THE UNDERGROUND UTILITIES SHOWN ON THE PLANS ARE AS OBTAINED FROM THE OWNERS AS REQUIRED BY SECTION 153.64 O.R.C.

SURVEYING PARAMETERS

PRIMARY PROJECT CONTROL MONUMENTS GOVERN ALL POSITIONING ON ODOT PROJECTS. SEE SHEET ___ OF THE PLANS FOR A TABLE CONTAINING PROJECT CONTROL INFORMATION.

USE THE FOLLOWING PROJECT CONTROL, VERTICAL POSITIONING, AND HORIZONTAL POSITIONING PARAMETERS FOR ALL SURVEYING:

PROJECT CONTROL

POSITIONING METHOD: ODOT VRS
MONUMENT TYPE: TYPE B

VERTICAL POSITIONING

ORTHOMETRIC HEIGHT DATUM: NAVD 88
GEOID: 12A

HORIZONTAL POSITIONING

REFERENCE FRAME: NAD83 (2011)
ELLIPSOID: GRS-80
MAP PROJECTION: LAMBERT CONFORMAL CONIC
COORDINATE SYSTEM: OHIO STATE PLANE NORTH ZONE
COMBINED SCALE FACTOR: 0.9999905500
(TO GO FROM GRID TO GROUND DIVIDE BY 0.9999905500)
ORIGIN OF COORDINATE SYSTEM: 0,0,0

USE THE POSITIONING METHODS AND MONUMENT TYPE USED IN THE ORIGINAL SURVEY TO RESTORE ALL MONUMENTS RELATED TO PRIMARY PROJECT CONTROL THAT ARE DAMAGED OR DESTROYED BY CONSTRUCTION ACTIVITIES. RESTORE THE DAMAGED OR DESTROYED MONUMENTS IN ACCORDANCE WITH CMS 623.

UNITS ARE IN U.S. SURVEY FEET.

WORK LIMITS

THE WORK LIMITS SHOWN ON THESE PLANS ARE FOR PHYSICAL CONSTRUCTION ONLY. PROVIDE THE INSTALLATION AND OPERATION OF ALL WORK ZONE TRAFFIC CONTROL AND WORK ZONE TRAFFIC CONTROL DEVICES REQUIRED BY THESE PLANS WHETHER INSIDE OR OUTSIDE THESE WORK LIMITS.

ITEM 204 - PROOF ROLLING

THE FOLLOWING QUANTITY IS PROVIDED IN THE GENERAL SUMMARY TO ADDRESS LOCATIONS REQUIRING PROOF ROLLING.

ITEM 204 - PROOF ROLLING 1 HOUR.

CLEARING AND GRUBBING

ALTHOUGH THERE ARE NO TREES OR STUMPS SPECIFICALLY MARKED FOR REMOVAL WITHIN THE LIMITS OF THE PROJECT, A LUMP SUM QUANTITY IS INCLUDED IN THE GENERAL SUMMARY FOR ITEM 201, CLEARING AND GRUBBING. ALL PROVISIONS AS SET FORTH IN THE SPECIFICATIONS UNDER THIS ITEM ARE INCLUDED IN THE LUMP SUM PRICE BID FOR ITEM 201, CLEARING AND GRUBBING.

THIS WORK INCLUDES THE REMOVAL OF VINES, BRUSH, AND OTHER VEGETATIVE GROWTH WITHIN THE PROJECT LIMITS AND MOST NOTABLY UNDERNEATH THE BRIDGE, EXTENDING 20 FEET ON THE EAST AND WEST SIDES OF THE BRIDGE.

ITEM 441 - 3" ASPHALT CONCRETE SURFACE COURSE, TYPE 1 (449), AS PER PLAN (PG70-22M)

FOLLOW SPECIFICATION 703.05 EXCEPT DO NOT USE COARSE AGGREGATE FROM A SOURCE DESIGNATED 'SR' OR 'SRH' ACCORDING TO THE OFFICE OF MATERIALS MANAGEMENT (OMM) IN ANY JOB MIX FORMULA (JMF) FOR THIS ITEM.

ITEM 605 - AGGREGATE DRAINS

AGGREGATE DRAINS SHALL BE PLACED AT 50 FOOT INTERVALS ON EACH SIDE OF NORMAL CROWNED SECTIONS, STAGGERED SO THAT EACH DRAIN IS 25 FEET FROM THE ADJACENT DRAIN ON THE OPPOSITE SIDE, AND AT 25 FOOT INTERVALS ON THE LOW SIDE ONLY OF SUPERELEVATED SECTIONS. AN AGGREGATE DRAIN SHALL BE PLACED AT THE LOW POINT OF EACH SAG VERTICAL CURVE.

SEEDING AND MULCHING

THE FOLLOWING QUANTITIES ARE PROVIDED TO PROMOTE GROWTH AND CARE OF PERMANENT SEEDED AREAS:

659, TOPSOIL 38 CU. YD.
659, SEEDING AND MULCHING 345 SQ. YD.
659, REPAIR SEEDING AND MULCHING 17 SQ. YD.
659, COMMERCIAL FERTILIZER 0.05 TON
659, LIME 0.07 ACRES
659, WATER 2 M. GAL.

SEEDING AND MULCHING SHALL BE APPLIED TO ALL AREAS OF EXPOSED SOIL BETWEEN THE RIGHT-OF-WAY LINES, AND WITHIN THE CONSTRUCTION LIMITS FOR AREAS OUTSIDE THE RIGHT-OF-WAY LINES COVERED BY WORK AGREEMENT OR SLOPE EASEMENT. QUANTITY CALCULATIONS FOR SEEDING AND MULCHING ARE BASED ON THESE LIMITS.

ASBESTOS NOTIFICATION

AN ASBESTOS SURVEY OF THE BRIDGE STRUCTURE SCHEDULED FOR REHABILITATION WAS CONDUCTED BY A CERTIFIED ASBESTOS HAZARD EVALUATION SPECIALIST. THE SURVEY DETERMINED THAT NO ASBESTOS IS PRESENT ON THE BRIDGE STRUCTURE.

A COPY OF THE OHIO ENVIRONMENTAL PROTECTION AGENCY (OEPA) NOTIFICATION OF DEMOLITION AND RENOVATION FORMS, PARTIALLY COMPLETED BY THE BRIDGE OWNER, WILL BE PROVIDED TO THE SUCCESSFUL BIDDER. THE CONTRACTOR SHALL COMPLETE AND SUBMIT THE FORMS VIA OHIO EPA'S WEBSITE OR MAIL HARD COPIES TO THE ADDRESS BELOW AT LEAST TEN (10) WORKING DAYS PRIOR TO THE START OF ANY DEMOLITION AND/OR RENOVATION.

ASBESTOS PROGRAM
OHIO EPA, DAPC
P.O. BOX 1049
COLUMBUS, OH 43216-1049

THE CONTRACTOR SHALL PROVIDE A COPY OF THE COMPLETED FORM TO THE ENGINEER. INFORMATION REQUIRED ON THE FORM WILL INCLUDE: 1) THE CONTRACTORS NAME AND ADDRESS, 2) THE SCHEDULED DATES FOR THE START AND COMPLETION OF THE BRIDGE REMOVAL AND 3) A DESCRIPTION OF THE PLANNED DEMOLITION WORK AND THE METHOD(S) TO BE USED. COPIES OF THE OEPA FORM AND BRIDGE INSPECTION REPORT ARE AVAILABLE FOR REVIEW AT THE ODOT DISTRICT 11 OFFICE, 2201 REISER AVENUE, NEW PHILADELPHIA, OHIO 44663.

BASIS FOR PAYMENT - THE CONTRACTOR SHALL FURNISH ALL FEES, LABOR, AND MATERIAL NECESSARY TO COMPLETE AND SUBMIT THE OEPA NOTIFICATION FORM. PAYMENT FOR THIS WORK SHALL BE INCLUDED IN ITEM 202 - PORTIONS OF STRUCTURE REMOVED, AS PER PLAN.

COOPERATION BETWEEN CONTRACTORS

THE CONTRACTOR IS HEREBY ADVISED THAT PROJECTS JEF-7-14.32, PID 113626 AND JEF-7-13.95, PID 113999 MAY BE UNDER CONSTRUCTION DURING THE SAME PERIOD THAT THIS PROJECT IS TO BE CONSTRUCTED. UPON AWARD OF THIS CONTRACT, THE CONTRACTOR SHALL NOTIFY THE ENGINEER AND THE OTHER CONTRACTORS OF THE EFFECTS OF THIS CONTRACT UPON THE JEF-7-14.32, PID 113626 AND JEF-7-13.95, PID 113999 PROJECTS. THE CONTRACTOR SHALL COOPERATE WITH THE OTHER CONTRACTORS IN ACCORDANCE WITH SEC. 105.08 AND ARRANGE A MUTUALLY ACCEPTABLE WORK SCHEDULE, SUBJECT TO THE APPROVAL OF THE ENGINEER. ANY CONFLICTS BETWEEN CONTRACTORS INVOLVING WORK SCHEDULES, WORK AREAS OR COOPERATION WILL BE RESOLVED BY THE ENGINEER.

GENERAL NOTES

DESIGN AGENCY
KORDA
KORDA / NEMETH ENGINEERING, INC
1650 Watermark Drive, Suite 200, Columbus, OH 43215

DESIGNER CLP
REVIEWER BMV 09/28/21
PROJECT ID 109309
SHEET 5 TOTAL 95

JEF-7-13.68

MODEL: Sheet PAPERSIZE: 34x22 (in.) DATE: 8/24/2022 TIME: 12:16:21 PM USER: cplacek
H:\Projects\2019\2019-0430_00 JEF-7-13.69\109309\400-Engineering\Roadway\Sheets\109309_GN00.dgn

ITEM 622 - CONCRETE BARRIER, SINGLE SLOPE, TYPE B, AS PER PLAN

THIS ITEM CONSISTS OF PLACING CONCRETE BARRIER, SINGLE SLOPE, AS PER THE PROVISIONS OF THE CMS AND THE STANDARD CONSTRUCTION DRAWINGS, EXCEPT THAT THE BARRIER WILL BE PLACED ON A 36" WIDE BY 9" THICK CONCRETE BASE. IF THE BASE IS BUILT SEPARATELY FROM THE SINGLE SLOPE BARRIER, THE CONSTRUCTION JOINTS MUST BE DOWELED AS PER THE STANDARD CONSTRUCTION DRAWING DETAILS AND NOTES. THE TOP OF THE BASE MUST BE LEVEL WITH THE TOP OF THE ITEM 441 SURFACE COURSE (SEE DETAIL BELOW).

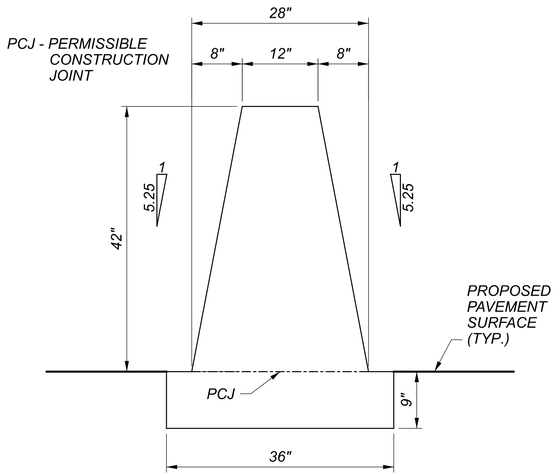

TYPE B BARRIER

ITEM 255 - FULL DEPTH PAVMENT SAWING

FULL DEPTH PAVEMENT SAWING HAS BEEN PROVIDED TO SAW CUT BOTH SIDES OF THE EXISTING MEDIAN BARRIER TO FACILITATE ITS REMOVAL. ALL PROVISIONS OF ITEM 255 APPLY.

ITEM 255- FULL DEPTH PAVEMENT SAWING.....2,408 FT

ITEM 512 - SEALING OF CONCRETE SURFACES (EPOXY-URETHANE), AS PER PLAN

NEWLY CONSTRUCTED MEDIAN BARRIER AND MEDIAN BARRIER INLETS ARE TO BE SEALED USING ITEM 512 - SEALING OF CONCRETE SURFACES (EPOXY-URETHANE). THIS INCLUDES THE TOP EXPOSED SURFACE OF THE BASE. THE EPOXY SEALER SHALL BE TINTED FEDERAL COLOR STANDARD NO. 17778 (LIGHT NEUTRAL).

ITEM 512 - SEALING OF CONCRETE SURFACES (EPOXY-URETHANE) 1,495 SY

GENERAL NOTES

DESIGN AGENCY
KORDA
KORDA / NEMETH ENGINEERING, INC
1650 Watermark Drive, Suite 200, Columbus, OH 43215
DESIGNER
CLP
REVIEWER
BMV 09-28-21
PROJECT ID
109309
SHEET 6 TOTAL 95

JEF-7-13.68
MODEL: Sheet PAPERSIZE: 34x22 (In.) DATE: 8/24/2022 TIME: 12:16:23 PM USER: cplacek
H:\Projects\2019\2019-0430.00 JEF-7-13.69\109309\400-Engineering\Roadway\Sheets\109309_GN002.dgn

MAINTENANCE OF TRAFFIC GENERAL NOTES

SEQUENCE OF CONSTRUCTION:

PHASE 1:

INSTALL ALL TRAFFIC CONTROL DEVICES NEEDED TO MAINTAIN TRAFFIC ON S.R. 7 NORTHBOUND LANES AS PER STANDARD DRAWING MT-95.30. MOVE NORTHBOUND TRAFFIC INTO THE LEFT LANE.

RAMPS SHALL REMAIN OPEN.

MILL AND FILL OUTSIDE SHOULDER IN THE AREA OF THE EXISTING RUMBLE STRIPS TO REMOVE RUMBLE STRIPS, STA. 707+04 TO STA. 712+54 AND STA. 714+60 TO STA. 722+50 NORTHBOUND LANES.

TRAFFIC SHALL BE RETURNED TO ORIGINAL TRAFFIC FLOW PATTERN UPON COMPLETION OF THIS WORK.

PHASE 2:

INSTALL ALL TRAFFIC CONTROL DEVICES NEEDED TO MAINTAIN TRAFFIC ON S.R. 7 SOUTHBOUND AND NORTHBOUND AS DETAILED IN THE PLANS AS SHOWN ON SHEETS 19 TO 24.

RAMPS SHALL REMAIN OPEN,

CLOSE THE LEFT LANES AND MAINTAIN ONE LANE IN THE SOUTHBOUND AND NORTHBOUND LANES (RIGHT LANE).

REMOVE THE EXISTING MEDIAN CONCRETE BARRIER IN THE AREAS OF THE PROPOSED MEDIAN CROSSOVERS, AS DETAILED IN THE PLANS.

CONSTRUCT PAVEMENT FOR MEDIAN CROSSOVERS AND DRAINAGE RELATED ITEMS AS DETAILED IN THE PLANS.

PHASE 3:

INSTALL ALL TRAFFIC CONTROL DEVICES NEEDED TO MAINTAIN TRAFFIC ON S.R. 7 SOUTHBOUND AND NORTHBOUND AS DETAILED IN THE PLANS AS SHOWN ON SHEETS 26 TO 31.

MOVE THE SOUTHBOUND LANES OF TRAFFIC INTO THE RIGHT LANES AND CROSS NORTHBOUND LANES OF TRAFFIC INTO THE SOUTHBOUND LEFT LANE AS DETAILED IN THE PLANS AS SHOWN ON SHEETS 26 TO 31.

TEMPORARY LANE WIDTHS SHALL BE 12' MINIMUM.

ON LOGAN AVENUE, USE SHORT TERM CLOSURES TO REMOVE AND REPLACE THE STEEL BEAMS OF THE CENTER SPAN. IN ADDITION TO SHORT TERM CLOSURES, NIGHT TIME CLOSURES OF LOGAN AVENUE AND RAMP CLOSURES WITH A DETOUR AS SHOWN ON SHEET 48 ARE ALLOWED FOR DECK DEMOLITION AND DECK CONCRETE POUR ACTIVITIES.

PERFORM ALL BRIDGE REMOVALS NECESSARY FOR PHASE 3 CONSTRUCTION OF THE NORTHBOUND BRIDGE.

CONSTRUCT PHASE 3 OF THE BRIDGE AS DETAILED IN THE PLANS. CONSTRUCTION OF THE PIER WORK IS CONCURRENT TO THIS PHASE AND SHALL MAINTAIN TRAFFIC ON LOGAN AVENUE AS DETAILED IN PHASE 8.

CONSTRUCT PAVEMENT AND DRAINAGE RELATED ITEMS, AS DETAILED IN THE PLANS.

PHASE 4:

INSTALL ALL TRAFFIC CONTROL DEVICES NEEDED TO MAINTAIN TRAFFIC ON S.R. 7 SOUTHBOUND LANES AS PER STANDARD DRAWING MT-95.30. MOVE SOUTHBOUND TRAFFIC INTO THE LEFT LANE.

RAMPS SHALL REMAIN OPEN.

MILL AND FILL OUTSIDE SHOULDER IN THE AREA OF THE EXISTING RUMBLE STRIPS TO REMOVE RUMBLE STRIPS, STA. 710+83 TO STA. 713+04 AND STA. 714+83 TO STA. 717+50 SOUTHBOUND LANES.

TRAFFIC SHALL BE RETURNED TO ORIGINAL TRAFFIC FLOW PATTERN UPON COMPLETION OF THIS WORK.

PHASE 4 MAY BE DONE CONCURRENTLY WITH PHASE 1.

PHASE 5:

INSTALL ALL TRAFFIC CONTROL DEVICES NEEDED TO MAINTAIN TRAFFIC ON S.R. 7 SOUTHBOUND AND NORTHBOUND AS DETAILED IN THE PLANS AS SHOWN ON SHEETS 33 TO 38.

MOVE THE NORTHBOUND LANES OF TRAFFIC INTO THE RIGHT LANE AND CROSS SOUTHBOUND LANES OF TRAFFIC INTO THE NORTHBOUND LEFT LANE AS DETAILED IN THE PLANS AS SHOWN ON SHEETS 33 TO 38.

TEMPORARY LANE WIDTHS SHALL BE 12' MINIMUM.

ON LOGAN AVENUE, USE SHORT TERM CLOSURES TO REMOVE AND REPLACE THE STEEL BEAMS OF THE CENTER SPAN. IN ADDITION TO SHORT TERM CLOSURES, NIGHT TIME CLOSURES OF LOGAN AVENUE AND RAMP CLOSURES OF LOGAN AVENUE AND RAMP CLOSURES WITH A DETOUR AS SHOWN ON SHEET 48 ARE ALLOWED FOR DECK DEMOLITION AND DECK CONCRETE POUR ACTIVITES.

PERFORM ALL BRIDGE REMOVALS NECESSARY FOR PHASE 5 CONSTRUCTION OF THE SOUTHBOUND BRIDGE.

CONSTRUCT PHASE 5 OF THE BRIDGE AS DETAILED IN THE PLANS.

CONSTRUCT PAVEMENT AND DRAINAGE RELATED ITEMS, AS DETAILED IN THE PLANS. CONSTRUCTION OF THE PIER WORK IS CONCURRENT TO THIS PHASE AND SHALL MAINTAIN TRAFFIC ON LOGAN AVENUE AS DETAILED IN PHASE 8.

PHASE 6:

INSTALL ALL TRAFFIC CONTROL DEVICES NEEDED TO MAINTAIN TRAFFIC ON S.R. 7 SOUTHBOUND AND NORTHBOUND LANES AS PER STANDARD DRAWING MT-95.30.
MOVE THE TRAFFIC INTO THE RIGHT LANE IN THE SOUTHBOUND AND NORTHBOUND LANES AS SHOWN ON SHEETS 40 TO 45.

RAMPS SHALL REMAIN OPEN.

REMOVE THE CROSSOVERS, RECONSTRUCT THE MEDIAN BARRIER AND PLACE PERMANENT PAVEMENT MARKINGS.

TRAFFIC SHALL BE RETURNED TO ORIGINAL TRAFFIC FLOW PATTERN UPON COMPLETION OF THIS WORK.

PHASE 7:

CONSTRUCT PROPOSED RUMBLE STRIPS UNDER TRAFFIC AS PER MT-95.31 AND MT-95.32.

PHASE 8A:
LOGAN AVENUE

DURING PHASE 3 AND PHASE 5, INSTALL ALL TEMPORARY TRAFFIC CONTROL DEVICES REQUIRED TO MAINTAIN ONE-LANE, TWO-WAY DIRECTIONAL TRAFFIC ON THE LEFT SIDE OF LOGAN AVENUE.

LOGAN AVENUE TRAFFIC, RAMP TRAFFIC AND PEDESTRIANS SHALL BE CONTROLLED BY WORK ZONE TRAFFIC SIGNALS, AS DETAILED IN THE PLANS AND PER STANDARD CONSTRUCTION DRAWINGS MT-96.11, MT-96.20 AND MT-96.26.

RAMPS SHALL REMAIN OPEN.

CONSTRUCT PHASE 8A BRIDGE ITEMS, AS SHOWN ON THE PLANS. THIS INCLUDES PIER 1 REPAIRS, PORTIONS REMOVED AND CONSTRUCTION.

THIS PHASE IS EXPECTED TO BE INSTALLED THREE TIMES TO CONSTRUCT THE OVERHEAD BRIDGE WORK, QUANTITY ESTIMATES ARE TRIPLED TO REFLECT THAT.

PHASE 8B:
LOGAN AVENUE

DURING PHASE 3 AND PHASE 5, INSTALL ALL TEMPORARY TRAFFIC CONTROL DEVICES REQUIRED TO MAINTAIN ONE-LANE, TWO-WAY DIRECTIONAL TRAFFIC ON THE RIGHT SIDE OF LOGAN AVENUE.

LOGAN AVENUE TRAFFIC, RAMP TRAFFIC AND PEDESTRIANS SHALL BE CONTROLLED BY WORK ZONE TRAFFIC SIGNALS, AS DETAILED IN THE PLANS AND PER STANDARD CONSTRUCTION DRAWINGS MT-96.11, MT-96.20 AND MT-96.26.

RAMPS SHALL REMAIN OPEN.

CONSTRUCT PHASE 8B BRIDGE ITEMS, AS SHOWN ON THE PLANS. THIS INCLUDES PIER 2 REPAIRS, PORTIONS REMOVED AND CONSTRUCTION.

THIS PHASE S EXPECTED TO BE INSTALLED THREE TIMES TO CONSTRUCT THE OVERHEAD BRIDGE WORK, QUANTITIY ESTIMATES ARE TRIPLED TO REFLECT THAT.

DESIGN AGENCY	2LMN
DESIGNER	JJR
REVIEWER	ALL 11/24/21
PROJECT ID	109309
SHEET	7
TOTAL	95

JEF-7-13.68

MODEL: Sheet 1 PAPERSIZE: 34x22 (in.) DATE: 8/24/2022 TIME: 11:55:42 AM USER: Josh_Rognon
V:\Projects\KNEL_109309_JEF_7_13.69\400-Engineering\MOT\Sheets\109309_MN001.dgn

MAINTENANCE OF TRAFFIC GENERAL NOTES

ITEM 614 - MAINTAINING TRAFFIC

ON SR 7, A MINIMUM OF ONE LANE OF TRAFFIC IN EACH DIRECTION SHALL BE MAINTAINED AT ALL TIMES BY USE OF THE EXISTING PAVEMENT, THE COMPLETED PAVEMENT, AND TEMPORARY SURFACES USING ITEMS 441.

ON LOGAN AVENUE, A MINIMUM OF ONE LANE OF TRAFFIC IN EACH DIRECTION SHALL BE MAINTAINED AT ALL TIMES BY USE OF THE EXISTING PAVEMENT, EXCEPT FOR SHORT TERM CLOSURES TO REMOVE AND REPLACE THE STEEL BEAMS AND NIGHT TIME CLOSURES OF LOGAN AVENUE AND THE RAMPS WITH A DETOUR SHOWN ON SHEET 48 FOR DECK DEMOLITION AND DECK CONCRETE POUR ACTIVITIES.

ITEM 614, MAINTAINING TRAFFIC (LANES OPEN DURING HOLIDAYS OR SPECIAL EVENTS)

NO WORK SHALL BE PERFORMED AND ALL EXISTING LANES SHALL BE OPEN TO TRAFFIC DURING THE FOLLOWING DESIGNATED HOLIDAYS OR EVENTS:

CHRISTMAS	*FOURTH OF JULY*
NEW YEAR'S	*LABOR DAY*
MEMORIAL DAY	*THANKSGIVING*

THE PERIOD OF TIME THAT THE LANES ARE TO BE OPEN DEPENDS ON THE DAY OF THE WEEK ON WHICH THE HOLIDAY OR EVENT FALLS. THE FOLLOWING SCHEDULE SHALL BE USED TO DETERMINE THIS PERIOD:

DAY OF HOLIDAY OR EVENT	*TIME ALL LANES MUST BE OPEN TO TRAFFIC*
SUNDAY	*12:00N FRIDAY THROUGH 6:00 AM MONDAY*
MONDAY	*12:00N FRIDAY THROUGH 6:00 AM TUESDAY*
TUESDAY	*12:00N FRIDAY THROUGH 6:00 AM WEDNESDAY*
WEDNESDAY	*12:00N FRIDAY THROUGH 6:00 AM THURSDAY*
THURSDAY	*12:00N FRIDAY THROUGH 6:00 AM FRIDAY*
THURSDAY (THANKSGIVING ONLY)	*6:00 AM WEDNESDAY THROUGH 6:00 AM MONDAY*
FRIDAY	*12:00N THURSDAY THROUGH 6:00 AM MONDAY*
SATURDAY	*12:00N FRIDAY THROUGH 6:00 AM MONDAY*

SHOULD THE CONTRACTOR FAIL TO MEET ANY OF THESE REQUIREMENTS, THE CONTRACTOR SHALL BE ASSESSED A DISINCENTIVE IN THE AMOUNT OF $5,400 PER HOUR.

LENGTH AND DURATION OF LANE CLOSURE AND RESTRICTIONS SHALL BE AT THE APPROVAL OF THE ENGINEER. IT IS THE INTENT TO MINIMIZE THE IMPACT TO THE TRAVELING PUBLIC. LANE CLOSURES OR RESTRICTIONS OVER SEGMENTS OF THE PROJECT IN WHICH NO WORK IS ANTICIPATED WITHIN A REASONABLE TIME FRAME, AS DETERMINED BY THE ENGINEER, SHALL NOT BE PERMITTED. THE LEVEL OF UTILIZATION OF MAINTENANCE OF TRAFFIC DEVICES SHALL BE COMMENSURATE WITH THE WORK IN PROGRESS.

ALL WORK AND TRAFFIC CONTROL DEVICES SHALL BE IN ACCORDANCE WITH C&MS 614 AND OTHER APPLICABLE PORTIONS OF THE SPECIFICATIONS, AS WELL AS THE OHIO MANUAL OF UNIFORM TRAFFIC CONTROL DEVICES. PAYMENT FOR ALL LABOR, EQUIPMENT AND MATERIALS SHALL BE INCLUDED IN THE LUMP SUM CONTRACT PRICE FOR ITEM 614, MAINTAINING TRAFFIC, UNLESS SEPARATELY ITEMIZED IN THE PLAN.

ITEM 614, WORK ZONE IMPACT ATTENUATOR FOR 24" WIDE HAZARDS (UNIDIRECTIONAL)

THIS ITEM SHALL CONSIST OF FURNISHING AND INSTALLING A NON-GATING IMPACT ATTENUATOR. FURNISH AN IMPACT ATTENUATOR FROM THE OFFICE OF ROADWAY ENGINEERING'S APPROVED LIST FOR WORK ZONE IMPACT ATTENUATORS, FROM THE ROADWAY STANDARDS WEB PAGE FOR ROADWAY STANDARDS WEB PAGE.

INSTALLATION SHALL BE AT THE LOCATIONS SPECIFIED IN THE PLANS IN ACCORDANCE WITH THE MANUFACTURER'S SPECIFICATIONS.

THE CONTRACTOR SHALL REPAIR OR REPLACE A DAMAGED UNIT WITHIN 24 HOURS OF A DAMAGING IMPACT.

WHEN BIDIRECTIONAL DESIGNS ARE SPECIFIED, THE CONTRACTOR SHALL SUPPLY APPROPRIATE TRANSITIONS.

WHEN GATING IMPACT ATTENUATORS ARE DESIRED, THE CONTRACTOR SHALL SUBMIT DOCUMENTATION TO THE ENGINEER FOR ACCEPTANCE.

THE COST FOR THE ADDITIONAL BARRIER REQUIRED FOR A GATING IMPACT ATTENUATOR SHALL BE INCLUDED IN THE COST OF THE GATING IMPACT ATTENUATOR.

PAYMENT FOR THE ABOVE WORK SHALL BE MADE AT THE UNIT PRICE BID AND SHALL INCLUDE ALL LABOR, TOOLS, EQUIPMENT AND MATERIALS NECESSARY TO CONSTRUCT AND MAINTAIN A COMPLETE AND FUNCTIONAL IMPACT ATTENUATOR SYSTEM, INCLUDING ALL RELATED BACKUPS, TRANSITIONS, LEVELING PADS, HARDWARE AND GRADING, NOT SEPARATELY SPECIFIED, AS REQUIRED BY THE MANUFACTURER.

FLOODLIGHTING

FLOODLIGHTING OF THE WORK SITE FOR OPERATIONS CONDUCTED DURING NIGHTTIME PERIODS SHALL BE ACCOMPLISHED SO THAT THE LIGHTS DO NOT CAUSE GLARE TO THE DRIVERS ON THE ROADWAY. TO ENSURE THE ADEQUACY OF THE FLOODLIGHT PLACEMENT, THE CONTRACTOR AND THE ENGINEER SHALL DRIVE THROUGH THE WORK SITE EACH NIGHT WHEN THE LIGHTING IS IN PLACE AND OPERATIVE PRIOR TO COMMENCING ANY WORK. IF GLARE IS DETECTED, THE LIGHT PLACEMENT AND SHIELDING SHALL BE ADJUSTED TO THE SATISFACTION OF THE ENGINEER BEFORE WORK PROCEEDS.

PAYMENT FOR ALL LABOR, EQUIPMENT AND MATERIALS SHALL BE INCLUDED IN THE LUMP SUM CONTRACT PRICE FOR ITEM 614 MAINTAINING TRAFFIC.

CONFLICTING PAVEMENT MARKINGS

THE EXISTING CONFLICTING PAVEMENT MARKINGS AND REFLECTORS FROM THE RAISED PAVEMENT MARKERS SHALL BE REMOVED. AFTER COMPLETION OF THE WORK, PAVEMENT MARKING OTHER THAN CMS 740.06 , TYPE I SHALL BE REMOVED IN ACCORDANCE WITH CMS 614.11 I. THE ORIGINAL MARKINGS AND RAISED PAVEMENT MARKER REFLECTORS SHALL BE RESTORED. THE COST FOR THE WORK AS DESCRIBED ABOVE SHALL BE WITH THE LUMP SUM CONTRACT PRICE FOR ITEM 614 MAINTAINING TRAFFIC .

COVERING OF SIGNS

WHERE THE PLANS CALL FOR OR AS DIRECTED BY THE PROJECT ENGINEER FOR A PERMANENT SIGN TO BE COVERED, THE CONTRACTOR SHALL DO SO IN SUCH A MANNER AS TO AVOID DAMAGING THE PERMANENT SIGN WHEN THE COVER IS REMOVED. THE COVER SHALL BE TOTALLY OPAQUE. THE USE OF ADHESIVE TAPE APPLIED DIRECTLY TO A SIGN FACE IS STRICTLY PROHIBITED. COST FOR THE WORK AS DESCRIBED ABOVE SHALL BE PAID WITH THE LUMP SUM CONTRACT PRICE FOR ITEM 614 - MAINTAINING TRAFFIC.

ITEM 614, WORK ZONE CROSSOVER LIGHTING SYSTEM

THIS WORK SHALL CONSIST OF FURNISHING, ERECTING, OPERATING, MAINTAINING AND REMOVING A WORK ZONE LIGHTING SYSTEM FOR A SINGLE CROSSOVER, OR OVERLAPPING A PAIR OF CROSSOVERS. THE SYSTEM SHALL BE AS SHOWN ON TRAFFIC SCD MT-100.00. THE CONTRACTOR SHALL ARRANGE FOR AND PAY FOR POWER. ALL MATERIALS AND CONSTRUCTION SHALL COMPLY WITH APPLICABLE PORTIONS OF 625 AND 725 EXCEPT: THE PERFORMANCE TEST OF 625.19F, AND CERTIFIED DRAWING REQUIREMENT OF 625.04, ARE WAIVED AND USED MATERIALS IN GOOD CONDITION ARE ACCEPTABLE.

POLES WHICH ARE NOT PROTECTED BY GUARDRAIL OR PORTABLE BARRIER SHALL BE LOCATED OUTSIDE THE CLEAR ZONE, AND SHOULD BE LOCATED AT LEAST 30 FEET (PREFERABLY 40 FEET) FROM THE EDGE OF PAVEMENT WHEN POSSIBLE. ADDITIONAL POLE LINES, CABLES AND APPURTENANCES NECESSARY TO FURNISH POWER TO THE LIGHTING SYSTEM SHALL BE INCLUDED IN THIS ITEM. SERVICE POLES SHALL BE POSITIONED WITH THE SAME CONSTRAINTS AS THE LIGHTING POLES AS A MINIMUM.

PAYMENT WILL BE MADE AT THE UNIT PRICE PER EACH FOR ITEM 614, WORK ZONE CROSSOVER LIGHTING SYSTEM THROUGHOUT ALL PHASES OF WORK WHEN THE CROSSOVER ROADWAYS ARE USED.

THE FOLLOWING ESTIMATED QUANTITY HAS BEEN INCLUDED IN THE GENERAL SUMMARY FOR USE AS DIRECTED BY THE ENGINEER

ITEM 614 WORK ZONE CROSSOVER LIGHTING SYSTEM 2 EACH

DUST CONTROL

THE CONTRACTOR SHALL FURNISH AND APPLY WATER FOR DUST CONTROL AS DIRECTED BY THE ENGINEER. THE FOLLOWING ESTIMATED QUANTITIES HAVE BEEN INCLUDED FOR DUST CONTROL PURPOSES:

ITEM 616, WATER 20 M. GAL.

DESIGN AGENCY
2LMN

DESIGNER
JJR

REVIEWER
ALL 11/24/21

PROJECT ID
109309

SHEET 8 TOTAL 95

JEF-7-13.68

MODEL: Sheet PAPERSIZE: 34x22 (in.) DATE: 8/24/2022 TIME: 10:06:39 AM USER: cplacek
H:\Projects\2019\2019-0430_00_JEF-7-13.69\109309\400-Engineering\MOT\Sheets\109309_MN002.dgn

ITEM 614, PORTABLE CHANGEABLE MESSAGE SIGNS, AS PER PLAN

THE CONTRACTOR SHALL FURNISH, INSTALL, MAINTAIN AND REMOVE, WHEN NO LONGER NEEDED, A CHANGEABLE MESSAGE SIGN. THE SIGN SHALL BE OF A TYPE SHOWN ON A LIST OF APPROVED PCMS UNITS AVAILABLE ON THE (OFFICE OF MATERIALS MANAGEMENT WEB PAGE). THE LIST CONTAINS CLASS A AND B UNITS WITH MINIMUM LEGIBILITY DISTANCES OF 800 FEET AND 650 FEET, RESPECTIVELY.

EACH SIGN SHALL BE TRAILER-MOUNTED AND EQUIPPED WITH A FUNCTIONAL DIMMING MECHANISM, TO DIM THE SIGN DURING DARKNESS, AND A TAMPER AND VANDAL PROOF ENCLOSURE. EACH SIGN SHALL BE PROVIDED WITH APPROPRIATE TRAINING AND OPERATION INSTRUCTIONS TO ENABLE ON-SITE PERSONNEL TO OPERATE AND TROUBLESHOOT THE UNIT. THE SIGN SHALL ALSO BE CAPABLE OF BEING POWERED BY AN ELECTRICAL SERVICE DROP FROM A LOCAL UTILITY COMPANY. THE PCMS SHALL BE DELINEATED IN ACCORDANCE WITH C&MS 614.03

PLACEMENT, OPERATION, MAINTENANCE AND ALL ACTIVATION OF THE SIGNS BY THE CONTRACTOR SHALL BE AS DIRECTED BY THE ENGINEER. THE PCMS SHALL BE LOCATED IN A HIGHLY VISIBLE POSITION YET PROTECTED FROM TRAFFIC. THE CONTRACTOR SHALL, AT THE DIRECTION OF THE ENGINEER, RELOCATE THE PCMS TO IMPROVE VISIBILITY OR ACCOMMODATE CHANGED CONDITIONS. WHEN NOT IN USE, THE PCMS SHALL BE TURNED OFF. ADDITIONALLY, WHEN NOT IN USE FOR EXTENDED PERIODS OF TIME, THE PCMS SHALL BE TURNED AWAY FROM ALL TRAFFIC.

THE ENGINEER SHALL BE PROVIDED ACCESS TO EACH SIGN UNIT AND SHALL BE PROVIDED WITH APPROPRIATE TRAINING AND OPERATION INSTRUCTIONS TO ENABLE ODOT PERSONNEL TO OPERATE AND TROUBLESHOOT THE UNIT, AND TO REVISE SIGN MESSAGES, IF NECESSARY.

ALL MESSAGES TO BE DISPLAYED ON THE SIGN WILL BE PROVIDED BY THE ENGINEER. A LIST OF ALL REQUIRED PRE-PROGRAMMED MESSAGES WILL BE GIVEN TO THE CONTRACTOR AT THE PROJECT PRE-CONSTRUCTION CONFERENCE. THE SIGN SHALL HAVE THE CAPABILITY TO STORE UP TO 99 MESSAGES. MESSAGE MEMORY OR PRE-PROGRAMMED DISPLAYS SHALL NOT BE LOST AS A RESULT OF POWER FAILURES TO THE ON-BOARD COMPUTER. THE SIGN LEGEND SHALL BE CAPABLE OF BEING CHANGED IN THE FIELD. THREE-LINE PRESENTATION FORMATS WITH UP TO SIX MESSAGE PHASES SHALL BE SUPPORTED. PCMS FORMAT SHALL PERMIT THE COMPLETE MESSAGE FOR EACH PHASE TO BE READ AT LEAST TWICE.

THE PCMS SHALL CONTAIN AN ACCURATE CLOCK AND PROGRAMMING LOGIC WHICH WILL ALLOW THE SIGN TO BE ACTIVATED, DEACTIVATED OR MESSAGES CHANGED AUTOMATICALLY AT DIFFERENT TIMES OF THE DAY FOR DIFFERENT DAYS OF THE WEEK.

ITEM 614, PORTABLE CHANGEABLE MESSAGE SIGNS, AS PER PLAN (CONT...)

THE PCMS UNIT SHALL BE MAINTAINED IN GOOD WORKING ORDER BY THE CONTRACTOR IN ACCORDANCE WITH THE PROVISIONS OF C&MS 614.07. THE CONTRACTOR SHALL, PRIOR TO ACTIVATING THE UNIT, MAKE ARRANGEMENTS, WITH AN AUTHORIZED SERVICE AGENT FOR THE PCMS, TO ASSURE PROMPT SERVICE IN THE EVENT OF FAILURE. ANY FAILURE SHALL NOT RESULT IN THE SIGN BEING OUT OF SERVICE FOR MORE THAN 12 HOURS, INCLUDING WEEKENDS. FAILURE TO COMPLY MAY RESULT IN AN ORDER TO STOP WORK AND OPEN ALL TRAFFIC LANES AND/OR IN THE DEPARTMENT TAKING APPROPRIATE ACTION TO SAFELY CONTROL TRAFFIC. THE ENTIRE COST TO CONTROL TRAFFIC, ACCRUED BY THE DEPARTMENT DUE TO THE CONTRACTOR'S NONCOMPLIANCE, WILL BE DEDUCTED FROM MONEYS DUE, OR TO BECOME DUE THE CONTRACTOR ON HIS CONTRACT.

THE CONTRACTOR SHALL BE RESPONSIBLE FOR 24-HOUR-PER-DAY OPERATION AND MAINTENANCE OF THESE SIGNS ON THE PROJECT FOR THE DURATION OF THE PHASES WHEN THE PLAN REQUIRES THEIR USE.

PAYMENT FOR THE ABOVE DESCRIBED ITEM SHALL BE AT THE CONTRACT UNIT PRICE. PAYMENT SHALL INCLUDE ALL LABOR, MATERIALS, EQUIPMENT, FUELS, LUBRICATING OILS, SOFTWARE, HARDWARE AND INCIDENTALS TO PERFORM THE ABOVE DESCRIBED WORK.

ITEM 614, PORTABLE CHANGEABLE MESSAGE SIGN, AS PER PLAN 12 SIGN MONTH

ASSUMING 2 PCMS SIGN(S) FOR 6 MONTH(S) 12 = MONTHS

ITEM 614, LAW ENFORCEMENT OFFICER (WITH PATROL CAR) FOR ASSISTANCE DURING CONSTRUCTION OPERATIONS

USE OF LAW ENFORCEMENT OFFICERS (LEOS) BY CONTRACTORS OTHER THAN THE USES SPECIFIED BELOW WILL NOT BE PERMITTED AT PROJECT COST. LEOS SHOULD NOT BE USED WHERE THE OMUTCD INTENDS THAT FLAGGERS BE USED.

IN ADDITION TO THE REQUIREMENTS OF C&MS 614 AND THE OMUTCD, A UNIFORMED LEO WITH AN OFFICIAL PATROL CAR (CAR WITH TOP-MOUNTED EMERGENCY FLASHING LIGHTS AND COMPLETE MARKINGS OF THE APPROPRIATE LAW ENFORCEMENT AGENCY) SHALL BE PROVIDED FOR THE FOLLOWING TRAFFIC CONTROL TASKS:

-DURING THE ENTIRE ADVANCE PREPARATION AND CLOSURE SEQUENCE WHERE COMPLETE BLOCKAGE OF TRAFFIC IS REQUIRED.

-DURING A TRAFFIC SIGNAL INSTALLATION WHEN IMPACTING THE NORMAL FUNCTION OF THE SIGNAL OR THE FLOW OF TRAFFIC, OR WHEN TRAFFIC NEEDS TO BE DIRECTED THROUGH AN ENERGIZED TRAFFIC SIGNAL CONTRARY TO THE SIGNAL DISPLAY (E.G., DIRECTING MOTORISTS THROUGH A RED LIGHT).

IN ADDITION TO THE REQUIREMENT OF C&MS 614 AND THE OMUTCD, A UNIFORMED LEO WITH AN OFFICIAL PATROL CAR (CAR WITH TOP-MOUNTED EMERGENCY FLASHING LIGHTS AND COMPLETE MARKINGS OF THE APPROPRIATE LAW ENFORCEMENT AGENCY) SHOULD BE PROVIDED FOR THE FOLLOWING TRAFFIC CONTROL TASKS AS APPROVED BY THE ENGINEER:

-FOR LANE CLOSURES: DURING INITIAL SET-UP PERIODS, TEAR DOWN PERIODS, SUBSTANTIAL SHIFTS OF A CLOSURE POINT OR WHEN NEW LANE CLOSURE ARRANGEMENTS ARE INITIATED FOR LONG-TERM LANE CLOSURES/SHIFTS (FOR THE FIRST AND LAST DAY OF MAJOR CHANGES IN TRAFFIC CONTROL SETUP).

ITEM 614, LAW ENFORCEMENT OFFICER (WITH PATROL CAR) FOR ASSISTANCE DURING CONSTRUCTION OPERATIONS (CONT...)

-FOR OPERATIONS WITHOUT POSITIVE PROTECTION OCCURRING WITHIN 10 FEET OF AN OPEN TRAVELED LANE THAT MEET ALL OF THE FOLLOWING CRITERIA:
-ON A MULTI-LANE DIVIDED INTERSTATE, OTHER FREEWAY OR EXPRESSWAY; AND
-AN AUTHORIZED SPEED LIMIT OF 45 MPH OR GREATER THAT IS IN EFFECT AT THE TIME OF THE OPERATION; AND,
-AADT OF 50,000 (OR AADT OF 30,000 WITH 25% OR HIGHER PERCENT TRUCKS)

"WITHOUT POSITIVE PROTECTION" MEANS USE OF DRUMS, CONES, SHADOW VEHICLE, ETC, WITHOUT PROTECTION FROM PORTABLE BARRIER OR OTHER RIGID BARRIER ALONG THE WORK AREA. THIS PHRASE DOES NOT APPLY TO CASES WHERE POSITIVE PROTECTION IS REQUIRED. MOBILE OPERATIONS ARE REGARDED AS "WITHOUT POSITIVE PROTECTION". FOR WORK ZONES USING A COMBINATION OF BARRIER AND TEMPORARY TRAFFIC CONTROL DEVICES (CONES, DRUMS, ETC), THE DESIGNATION SHALL BE BASED UPON THE TYPE OF DEVICES USED IN THE AREA THAT WORKERS ARE LOCATED.

IF MULTIPLE ACTIVE LOCALIZED QUALIFYING WORK AREAS OCCUR WITHOUT POSITIVE PROTECTION, PER MAINLINE TRAFFIC DIRECTION, PROVIDE A UNIFORMED LEO AND OFFICIAL PATROL CAR IN ADVANCE OF:
-THE FIRST ACTIVE WORK AREA THAT DRIVERS WILL ENCOUNTER; OR
-THE ACTIVE WORK AREA LATERALLY CLOSEST TO THE OPEN TRAVELED LANE; OR
-OTHER LOCATION AS APPROVED BY THE ENGINEER.
THE UNIFORMED LEO AND OFFICIAL PATROL CAR MAY RELOCATE AMONG THE LISTED LOCATIONS AS APPROPRIATE AS THE OPERATIONS PROCEED IN THE LOCALIZED QUALIFYING WORK AREAS.

IN GENERAL, LEOS SHOULD BE POSITIONED IN ADVANCE OF AND ON THE SAME SIDE AS THE LANE RESTRICTION (OR AT THE POINT OF ROAD CLOSURE), AND TO MANUALLY CONTROL TRAFFIC MOVEMENTS THROUGH SIGNALIZED INTERSECTIONS IN WORK ZONES.

LEOS SHOULD NOT FORGO THEIR TRAFFIC CONTROL RESPONSIBILITIES TO APPREHEND MOTORISTS FOR ROUTINE TRAFFIC VIOLATIONS. HOWEVER, IF A MOTORIST'S ACTIONS ARE CONSIDERED TO BE RECKLESS, THEN PURSUIT OF THE MOTORIST IS APPROPRIATE.

THE LEOS WORK AT THE DIRECTION OF THE CONTRACTOR. THE CONTRACTOR IS RESPONSIBLE FOR SECURING THE SERVICES OF THE LEOS WITH THE APPROPRIATE AGENCIES AND COMMUNICATING THE INTENTIONS OF THE PLANS WITH RESPECT TO DUTIES OF THE LEOS. THE ENGINEER SHALL HAVE FINAL CONTROL OVER THE LEOS' DUTIES AND PLACEMENT, AND WILL RESOLVE ANY ISSUES THAT MAY ARISE BETWEEN THE TWO PARTIES.

ENSURE PROVIDED LEOS HAVE BEEN TRAINED APPROPRIATE TO THE JOB DECISIONS THEY ARE REQUIRED TO MAKE WHILE ON THE PROJECT, IN ACCORDANCE WITH C&MS 614.03.

THE LEO SHALL REPORT IN TO THE CONTRACTOR PRIOR TO THE START OF THE SHIFT, IN ORDER TO RECEIVE INSTRUCTIONS REGARDING SPECIFIC WORK ASSIGNMENTS DURING HIS/HER SHIFT. THE LEO IS EXPECTED TO STAY AT THE PROJECT SITE FOR THE ENTIRE DURATION OF HIS/HER SHIFT. THE LEO SHALL REPORT TO THE CONTRACTOR AT THE END OF HIS/HER SHIFT. SHOULD IT BE NECESSARY TO LEAVE THE PROJECT SITE, THE LEO SHALL NOTIFY THE ENGINEER. THE CONTRACTOR SHALL PROVIDE THE LEO WITH A TWO-WAY COMMUNICATION DEVICE THAT SHALL BE RETURNED TO THE CONTRACTOR AT THE END OF HIS/HER SHIFT.

ITEM 614, LAW ENFORCEMENT OFFICER (WITH PATROL CAR) FOR ASSISTANCE DURING CONSTRUCTION OPERATIONS (CONT...)

LEOS (WITH PATROL CAR) REQUIRED BY THE TRAFFIC MAINTENANCE TASKS ABOVE SHALL BE PAID FOR ON A UNIT PRICE (HOURLY) BASIS UNDER ITEM 614, LAW ENFORCEMENT OFFICER (WITH PATROL CAR) FOR ASSISTANCE. THE FOLLOWING ESTIMATED QUANTITIES HAVE BEEN CARRIED TO THE GENERAL SUMMARY.

ITEM 614, LAW ENFORCEMENT OFFICER WITH PATROL CAR FOR ASSISTANCE 150 HOURS

THE HOURS PAID SHALL INCLUDE ANY MINIMUM SHOW-UP TIME REQUIRED BY THE LAW ENFORCEMENT AGENCY INVOLVED.

ANY ADDITIONAL COSTS (ADMINISTRATIVE OR OTHERWISE) INCURRED BY THE CONTRACTOR TO OBTAIN THE SERVICES OF A LEO ARE INCLUDED WITH THE BID UNIT PRICE FOR ITEM 614, LAW ENFORCEMENT OFFICER WITH PATROL CAR FOR ASSISTANCE.

DELINEATION OF PORTABLE AND PERMANENT BARRIER

BARRIER REFLECTORS AND OBJECT MARKERS SHALL BE INSTALLED ON ALL PORTABLE BARRIER (PB) USED FOR TRAFFIC CONTROL; AND, ON PERMANENT CONCRETE BARRIER (INCLUDING BRIDGE PARAPETS) LOCATED WITHIN 5 FEET OF THE EDGE OF THE ADJACENT TRAVEL LANE.

BARRIER REFLECTORS SHALL CONFORM TO C&MS 626, EXCEPT THAT THE SPACING SHALL BE AS PER TRAFFIC SCD MT-101.70. OBJECT MARKERS AND THEIR INSTALLATION SHALL CONFORM TO C&MS 614.03 AND SCD MT-101.70. WHEN THE PB CONTAINS GLARE SCREEN, ONE SET OF THREE VERTICAL STRIPES OF SHEETING SHALL BE CONSIDERED EQUIVALENT TO AN OBJECT MARKER, ONE-WAY.

THE FOLLOWING ESTIMATED QUANTITIES HAVE BEEN INCLUDED IN THE PLANS AND CARRIED TO THE GENERAL SUMMARY:

ITEM 614, BARRIER REFLECTOR, TYPE 1 (ONE-WAY) 834 EACH

ITEM 614, BARRIER REFLECTOR, TYPE 1 (BI-DIRECTIONAL) 18 EACH

ITEM 614, OBJECT MARKER, ONE WAY 278 EACH

PAYMENT SHALL BE FULL COMPENSATION FOR ALL MATERIAL, LABOR, INCIDENTALS AND EQUIPMENT NECESSARY FOR FURNISHING, INSTALLING, MAINTAINING AND REMOVING EACH OF THE ABOVE ITEMS.

DELINEATION OF TEMPORARY AND PERMANENT GUARDRAIL

BARRIER REFLECTORS SHALL BE INSTALLED ON ALL TEMPORARY GUARDRAIL USED FOR TRAFFIC CONTROL; AND, ON ALL PERMANENT GUARDRAIL LOCATED WITHIN 5 FEET OF THE EDGE OF THE ADJACENT TRAVEL LANE. BARRIER REFLECTORS SHALL CONFORM TO C&MS 626 AND THE SPACING SHALL BE APPROXIMATELY 50 FEET.

[OBJECT MARKERS SHALL BE INSTALLED ON ALL TEMPORARY AND PERMANENT GUARDRAIL LOCATED WITHIN 5 FEET OF THE EDGE OF THE ADJACENT TRAVEL LANE. GUARDRAIL-MOUNTING OF OBJECT MARKERS SHALL BE MADE BY INSTALLING THE OBJECT MARKERS ON THE EXTENSION BLOCKS RATHER THAN DIRECTLY ONTO THE GUARDRAIL ITSELF. OBJECT MARKERS SHALL CONFORM TO C&MS 614.03 AND THE SPACING SHALL BE APPROXIMATELY 50 FEET WITH A 25 FOOT OFFSET FROM THE BARRIER REFLECTORS.]

THE FOLLOWING ESTIMATED QUANTITIES HAVE BEEN INCLUDED IN THE PLANS AND CARRIED TO THE GENERAL SUMMARY:

ITEM 614, BARRIER REFLECTOR, TYPE 2, (1 WAY) 15 EACH

ITEM 614, OBJECT MARKER, ONE WAY 15 EACH

PAYMENT SHALL BE FULL COMPENSATION FOR ALL MATERIAL, LABOR, INCIDENTALS AND EQUIPMENT NECESSARY FOR FURNISHING, INSTALLING, MAINTAINING AND REMOVING THE ABOVE ITEM(S).

MAINTENANCE OF TRAFFIC GENERAL NOTES

DESIGN AGENCY
2LMN

DESIGNER JJR

REVIEWER ALL 11/24/21

PROJECT ID 109309

SHEET 9 TOTAL 95

JEF-7-13.68

MODEL: Sheet PAPERSIZE: 34x22 (in.) DATE: 8/24/2022 TIME: 11:55:52 AM USER: Josh_Rognon
V:\Projects\KNEI_109309_JEF_7_13.68\400-Engineering\MOT\Sheets\109309_MN003.dgn

MAINTENANCE OF TRAFFIC GENERAL NOTES

WORKSITE TRAFFIC SUPERVISOR

SUBJECT TO APPROVAL OF THE ENGINEER, THE CONTRACTOR SHALL EMPLOY AND IDENTIFY (SOMEONE OTHER THAN THE SUPERINTENDENT) A PREQUALIFIED WORKSITE TRAFFIC SUPERVISOR (WTS) BEFORE STARTING WORK IN THE FIELD. THE WTS SHALL BE TRAINED IN ACCORDANCE WITH CMS 614.03, SHALL HAVE SUCCESSFULLY COMPLETED ODOT ADMINISTERED WTS TESTING (AND RE-TESTING WHEN APPLICABLE) AND BE LISTED ON THE ODOT PREQUALIFIED WTS ROSTER. PREQUALIFICATION EXPIRES EVERY 5 YEARS. RE-TESTING SHALL BE SUCCESSFULLY REPEATED EVERY 5 YEARS TO REMAIN PREQUALIFIED.

THE NAME OF THE PREQUALIFIED WTS AND RELATED 24-HOUR CONTACT INFORMATION SHALL BE PROVIDED TO THE ENGINEER AT THE PRECONSTRUCTION CONFERENCE. IF THE DESIGNATED WTS WILL NOT BE AVAILABLE FULL TIME (24/7), THE CONTRACTOR MAY DESIGNATE AN ALTERNATE (SECONDARY) WTS TO BE AVAILABLE WHEN THE PRIMARY IS OFF DUTY; HOWEVER THE PRIMARY WTS SHALL REMAIN THE POINT OF CONTACT AT ALL TIMES. ANY ALTERNATE (SECONDARY) WTS IS SUBJECT TO THE SAME TRAINING, PREQUALIFICATION AND OTHER REQUIREMENTS OUTLINED WITHIN THIS PLAN NOTE. AT ALL TIMES THE ENGINEER, OR ENGINEER'S REPRESENTATIVES, MUST BE INFORMED OF WHO THE PRIMARY WTS (AND SECONDARY WTS, IF APPLICABLE) IS AT THE CURRENT TIME.

THE WTS POSITION HAS THE PRIMARY RESPONSIBILITY OF IMPLEMENTING THE TRAFFIC MANAGEMENT PLAN (TMP), MONITORING THE SAFETY AND MOBILITY OF THE ENTIRE WORK ZONE, AND CORRECTING TEMPORARY TRAFFIC CONTROL (TTC) DEFICIENCIES FOR THE ENTIRE WORK ZONE. THE WTS, AND ALTERNATE WTS WHEN ON DUTY, SHALL HAVE SUFFICIENT AUTHORITY TO EFFECTIVELY CARRY OUT THE IDENTIFIED WTS RESPONSIBILITIES AND DUTIES. THE DUTIES OF THE WTS ARE AS FOLLOWS:

1. BE AVAILABLE ON A 24-HOUR PER DAY BASIS.

2. BE ON SITE FOR ALL EMERGENCY TCC NEEDS WITHIN ONE HOUR OF NOTIFICATION BY POLICE OR PROJECT STAFF AND EFFECT CORRECTIVE MEASURES IMMEDIATELY ON EXISTING WORK ZONE TTC DEVICES.

3. ATTEND PRECONSTRUCTION MEETING AND ALL PROJECT MEETINGS WHERE TCC MANAGEMENT IS DISCUSSED.

4. BE AVAILABLE ON SITE FOR OTHER MEETINGS OR DISCUSSIONS WITH THE ENGINEER UPON REQUEST.

5. BE AWARE OF ALL EXISTING AND PROPOSED TCC OPERATIONS OF THE CONTRACTOR, SUBCONTRACTORS AND SUPPLIERS, AND ENSURE COORDINATION OCCURS BETWEEN THEM TO ELIMINATE CONFLICTING TEMPORARY AND/OR PERMANENT TRAFFIC CONTROL.

6. COORDINATE PROJECT ACTIVITIES WITH ALL LAW ENFORCEMENT OFFICERS (LEOS). THE WTS SHALL ALSO BE THE MAIN CONTACT PERSON WITH THE LEOS WHILE LEOS ARE ON THE PROJECT.

CONTINUED

7. COORDINATE AND FACILITATE MEETINGS WITH ODOT PERSONNEL, LEOS AND OTHER APPLICABLE ENTITIES BEFORE EACH PLAN PHASE SWITCH TO DISCUSS THE WORK ZONE TCC FOR IMPLEMENTING THE PHASE SWITCH. SUBMIT A WRITTEN DETAIL OF MOT OPERATIONS AND SCHEDULE OF EVENTS TO IMPLEMENT THE SWITCH BETWEEN PHASE PLANS TO THE ENGINEER 5 CALENDAR DAYS PRIOR TO THIS MEETING.

8. BE PRESENT, ON SITE FOR, AND INVOLVED WITH, EACH TTC SET UP/TAKE DOWN AND EACH PHASE CHANGE IN ACCORDANCE WITH CMS 614.03.

9. ON CONTINUAL BASIS ENSURE THAT THE TTC ZONE AND ALL RELATED DEVICES ARE INSTALLED, MAINTAINED, AND REMOVED IN COMPLIANCE WITH THE CONTRACT DOCUMENTS.

10. ON A CONTINUAL BASIS FACILITATE CORRECTIVE ACTION(S) NECESSARY TO BRING DEFICIENT TCC ZONES AND ALL RELATED DEVICES INTO COMPLIANCE WITH CONTRACT DOCUMENTS IN THE TIME FRAME DETERMINED BY THE ENGINEER.

11. INSPECT, EVALUATE, PROPOSE NECESSARY MODIFICATIONS TO, AND DOCUMENT THE EFFECTIVENESS OF, THE TTC DEVICES AND TRAFFIC OPERATIONS ON A DAILY BASIS (7 DAYS A WEEK). IN ADDITION, PERFORM ONE WEEKLY NIGHT INSPECTION OF THE WORK ZONE SETUP FOR DAYTIME WORK OPERATIONS; AND ONE DAYTIME INSPECTION PER WEEK FOR NIGHTTIME PROJECTS. THIS SHALL INCLUDE (BUT NOT BE LIMITED TO) DOCUMENTATION ON THE FOLLOWING PROJECT EVENTS:

   A. INITIAL TTC SETUP (DAY AND NIGHT REVIEW).

   B. DAILY TTC SETUP AND REMOVAL.

   C. WHEN CONSTRUCTION STAGING CAUSES A CHANGE IN THE TTC SETUP.

   D. CRASH OCCURRENCES WITHIN THE CONSTRUCTION AREA AND WITHIN THE INFLUENCE AREA(S) APPROACHING THE WORK ZONE.

   E. REMOVAL OF TTC DEVICES AT THE END OF A PHASE OR PROJECT.

   F. ALL OTHER EMERGENCY TTC NEEDS.

12. COMPLETE THE DEPARTMENT APPROVED LONG TERM INSPECTION FORM (CA-D-8) AFTER EACH INSPECTION AS REQUIRED IN # 11 AND SUBMIT IT TO THE ENGINEER THE FOLLOWING WORK DAY. THESE REPORTS SHALL INCLUDE A CHECKLIST OF ALL TTC MAINTENANCE ITEMS TO BE REVIEWED. A COPY OF THE FORM WILL BE PROVIDED AT THE PRECONSTRUCTION MEETING. ANY DEFICIENCIES OBSERVED SHALL BE NOTED, ALONG WITH RECOMMENDED OR COMPLETED CORRECTIVE ACTIONS AND THE DATES BY WHICH SUCH CORRECTIONS WERE, OR WILL BE, COMPLETED. A COPY OF THE CURRENT CA-D-8 DOCUMENT CAN BE FOUND ON THE OFFICE OF CONSTRUCTION ADMINISTRATION'S INSPECTION FORMS WEB SITE.

CONTINUED

13. HAVE COPIES OF THE ODOT TEMPORARY TRAFFIC CONTROL MANUAL AND CONTRACT DOCUMENTS AVAILABLE AT ALL TIMES ON THE PROJECT.

THE DEPARTMENT WILL DEDUCT:

A. THE PRORATED DAILY AMOUNT OF ITEM 614 MAINTAINING TRAFFIC FOR ANY DAY IN WHICH THE WTS FAILS TO PERFORM THE DUTIES SET FORTH ABOVE. THE PRORATED DAILY AMOUNT WILL BE EQUAL TO THE ORIGINAL BID AMOUNT FOR ITEM 614 MAINTAINING TRAFFIC DIVIDED BY THE DIFFERENCE BETWEEN THE ORIGINAL COMPLETION DATE AND THE FIRST DAY OF WORK, IN CALENDAR DAYS.

B. 1% OF THE ORIGINAL BID AMOUNT FOR ITEM 614 MAINTAINING TRAFFIC FOR ANY DAY THAT A TTC ISSUE IS IDENTIFIED IN THE FIELD AND IS NOT CORRECTED IN THE GIVEN TIME FRAME PER THE ENGINEER. DEDUCTION B SHALL NOT APPLY TO SITUATIONS COVERED BY DEDUCTION C.

C. 1% OF THE ORIGINAL BID AMOUNT FOR ITEM 614 MAINTAINING TRAFFIC FOR ANY DAY THAT A LANE OR RAMP IS BLOCKED (FULLY OR PARTIALLY) WITHOUT TTC, AS DETERMINED BY THE ENGINEER. THIS DEDUCTION SHALL BE IN ADDITION TO ANY OTHER DISINCENTIVES ESTABLISHED FOR UNAUTHORIZED LANE USE.

FOR DAYS IN WHICH MORE THAN ONE DEDUCTION LISTED ABOVE OCCUR, THE HIGHEST DEDUCTION AMOUNT WILL APPLY.

IF THREE OR MORE TOTAL DAYS RESULT IN TTC ISSUES DESCRIBED IN DEDUCTION B OR C ABOVE, THE PRIMARY WTS SHALL BE IMMEDIATELY REMOVED FROM THE WORK IN ACCORDANCE WITH C&MS 108.05. UPON REMOVAL THE ENGINEER SHALL NOTIFY ODOT CENTRAL OFFICE (WTS PREQUALIFICATION@DOT.OHIO.GOV) TO REGISTER A REMOVAL AGAINST THE STATEWIDE PREQUALIFICATION FOR THE PRIMARY WTS. THREE REMOVALS SHALL CAUSE STATEWIDE DISQUALIFICATION FOR ANY PREVIOUSLY PREQUALIFIED WTS.

PAYMENT FOR THE ABOVE REQUIREMENTS, RESPONSIBILITIES AND DUTIES SHALL BE INCLUDED IN THE LUMP SUM PRICE BID FOR ITEM 614, MAINTAINING TRAFFIC.

NOTIFICATION OF TRAFFIC RESTRICTIONS

THROUGHOUT THE DURATION OF THE PROJECT, THE CONTRACTOR SHALL NOTIFY THE PROJECT ENGINEER IN WRITING OF ALL TRAFFIC RESTRICTIONS AND UPCOMING MAINTENANCE OF TRAFFIC CHANGES. THE CONTRACTOR SHALL ENSURE THE WRITTEN NOTIFICATION IS SUBMITTED IN A TIMELY MANNER TO ALLOW THE PROJECT ENGINEER TO MEET THE REQUIRED TIME FRAMES SET FORTH IN THE TABLE BELOW TO INFORM THE SPECIAL HAULING PERMITS SECTION (HAULING.PERMITS@DOT.OHIO.GOV) AND THE DISTRICT PUBLIC INFORMATION OFFICE (PIO). THIS NOTIFICATION SHALL BE RECEIVED BY THE PROJECT ENGINEER PRIOR TO THE PHYSICAL SETUP OF ANY APPLICABLE SIGNS OR MESSAGE BOARDS.

INFORMATION SHOULD INCLUDE, BUT IS NOT LIMITED TO, ALL CONSTRUCTION ACTIVITIES THAT IMPACT OR INTERFERE WITH TRAFFIC AND SHALL LIST THE SPECIFIC LOCATION, TYPE OF WORK, ROAD STATUS, DATE AND TIME OF RESTRICTION, DURATION OF RESTRICTION, NUMBER OF LANES MAINTAINED, NUMBER OF LANES CLOSED, MINIMUM VERTICAL CLEARANCE, MINIMUM WIDTH OF DRIVABLE PAVEMENT, DETOUR ROUTES, IF APPLICABLE, AND ANY OTHER INFORMATION REQUESTED BY THE PROJECT ENGINEER.

NOTIFICATION OF TRAFFIC RESTRICTIONS TIME TABLE

ITEM	DURATION OF CLOSURE	NOTICE DUE TO PERMITS & PIO
RAMP & ROAD CLOSURES	>= 2 WEEKS	21 CALENDAR DAYS PRIOR TO CLOSURE
	> 12 HOURS & < 2 WEEKS	14 CALENDAR DAYS PRIOR TO CLOSURE
	<= 12 HOURS	4 BUSINESS DAYS PRIOR TO CLOSURE
LANE CLOSURES & RESTRICTIONS	>=2 WEEKS	14 CALENDAR DAYS PRIOR TO CLOSURE
	< 2 WEEKS	5 BUSINESS DAYS PRIOR TO CLOSURE
START OF CONSTRUCTION & TRAFFIC PATTERN CHANGES	N/A	14 CALENDAR DAYS PRIOR TO IMPLEMENTATION

ANY UNFORESEEN CONDITIONS NOT SPECIFIED IN THE PLANS REQUIRING TRAFFIC RESTRICTIONS SHALL ALSO BE REPORTED TO THE PROJECT ENGINEER USING THE NOTIFICATION TIME

DESIGN AGENCY
2LMN

DESIGNER JJR

REVIEWER ALL 11/24/21

PROJECT ID 109309

SHEET 10 TOTAL 95

JEF-7-13.68

MODEL: Sheet PAPERSIZE: 34x22 (in.) DATE: 8/24/2022 TIME: 11:55:58 AM USER: Josh_Rognon
V:\Projects\KNEI_109309_JEF_7_13.69\400-Engineering\MOT\Sheets\109309_MN004.dgn

ITEM 254 PAVEMENT PLANING, ASPHALT CONCRETE (1.5") &
ITEM 441 ASPHALT CONCRETE SURFACE COURSE, TYPE 1, (449), AS PER PLAN PG70-22M

THIS ITEM OF WORK IS TO MILL AND FILL IN THE EXISTING RUMBLE STRIPS FOR THE TRAFFIC PATTERN OF THE PHASES OF CONSTRUCTION.

FOR CALCULATION PURPOSES THE THICKNESS IS 1 1/2" AND THE WIDTH IS 2' WIDE.

CALCULATIONS:

ITEM 441 ASPHALT CONCRETE SURFACE COURSE, TYPE 1, (449), AS PER PLAN PG70-22M

NORTHBOUND LANES: OUTSIDE SHOULDER
STA. 707+04 TO STA. 712+30 + STA. 715+20 TO STA. 722+50 = 1,256 FT.
(1,256 FT. x 2' x 0.125) / 27 = 11.63 C.Y.

SOUTHBOUND LANES: OUTSIDE SHOULDER
STA. 710+83 TO STA. 713+04 + STA. 714+83 TO STA. 717+50 = 488 FT.
(488 FT. x 2' x 0.125) / 27 = 4.52 C.Y.

ITEM 254 PAVEMENT PLANING, ASPHALT CONCRETE

NORTHBOUND LANES:
STA. 707+04 TO STA. 712+30 + STA. 715+20 TO STA. 722+50 = 1,256 FT.
(1,256 FT. x 2') / 9 = 279.1 SQ.YD.

SOUTHBOUND LANES:
STA. 710+83 TO STA. 713+04 + STA. 714+83 TO STA. 717+50 = 488 FT.
(488 FT. x 2') / 9 = 108.4 SQ.YD.

THE FOLLOWING ESTIMATED QUANTITIES HAVE BEEN CARRIED TO THE GENERAL SUMMARY.

ITEM 254 PAVEMENT PLANING, ASPHALT CONCRETE 388 SQ.YD.
ITEM 441 ASPHALT CONCRETE SURFACE COURSE, TYPE 1,
(449), AS PER PLAN PG70-22M 17 C.Y.

ITEM 615 PAVEMENT FOR MAINTAINING TRAFFIC, CLASS A, AS PER PLAN

THIS ITEM OF WORK IS TO FILL IN THE VOID CREATED BY THE REMOVAL OF THE EXISTING MEDIAN CONCRETE BARRIER TO ALLOW FOR THE TRAFFIC PATTERN OF THE PHASES OF CONSTRUCTION.
WHEN THE PAVEMENT IS NO LONGER NEEDED, REMOVE IT AS PER CMS 615.08, INCLUDED UNDER THIS ITEM.

FOR CALCULATION PURPOSES THE AREA IS 3' WIDE AND 9" DEEP.
THE PAVEMENT BUILDUP SHALL BE 3" OF 441 ASPHALT CONCRETE SURFACE COURSE, TYPE 1, (449), PG70-22M ON 6" ITEM 301 ASPHALT CONCRETE BASE, PG64-22, (449).

(STA. 708+50 TO STA. 713+03 + STA. 714+45 TO STA. 722+50 = 1,258 FT.)
1,258' x 3' / 9 = 420 SQ.YD.

THE FOLLOWING ESTIMATED QUANTITY HAS BEEN INCLUDED IN THE GENERAL SUMMARY.

ITEM 615 PAVEMENT FOR MAINTAINING TRAFFIC, CLASS A, AS PER PLAN 420 SQ.YD.

ITEM 611 INLET, NO. 4 FOR SINGLE SLOPE BARRIER, TYPE B, AS PER PLAN

DURING PHASE 2 CONSTRUCTION WHEN REMOVING THE EXISTING MEDIAN BARRIER CONSTRUCT THE PROPOSED PERMANENT STRUCTURE UP TO THE PERMISSIBLE CONSTRUCTION JOINT AS SHOWN IN SCD I-4B,4B1. CONNECT ALL PROPOSED PERMANENT STORM SEWER INLETS AND OUTLETS. PROVIDE A STEEL PLATE OVER PERMANENT STRUCTURE AT THE PERMISSIBLE CONSTRUCTION JOINT. FIELD CUT A DRAINAGE OPENING (6" X 18") IN THE STEEL PLATE TO ALLOW PAVEMENT DRAINAGE FROM THE TEMPORARY CB 6 TOP SECTION INTO THE LOWER PERMANENT DRAINAGE STRUCTURE TO OUTLET INTO THE EXISTING STORM SEWER. THE CB 6 TOP SECTION WILL BE USED DURING SUBSEQUENT MAINTENANCE OF TRAFFIC PHASES UNTIL PHASE 6. IN PHASE 6 THE CB 6 TEMPORARY TOP PORTION AS WELL AS THE STEEL PLATE SHALL BE REMOVED AND THE PERMANENT STRUCTURE CONSTRUCTION CAN BE COMPLETED TO ITS FINAL PLAN CONDITION.

PAYMENT WILL BE MADE AT THE UNIT PRICE BID PER EACH AND SHALL INCLUDE ALL MATERIALS, REINFORCING STEEL, CASTINGS, RACEWAY, FURNISHING AND PLACING A STEEL PLATE, PROVIDING A TEMPORARY CB-6 TOP SECTION, CUTTING OF DRAINAGE OPENING IN THE STEEL PLATE, AND REMOVING THE CB-6 TEMPORARY TOP PORTION AND STEEL PLATE THEN CONSTRUCTING THE FINAL ITEM 611 INLET, NO. 4 FOR SINGLE SLOPE BARRIER, TYPE B, AS PER SCD I-4B.

THE FOLLOWING QUANTITY HAS BEEN CARRIED TO THE GENERAL SUMMARY.

ITEM 611 INLET, NO. 4 FOR SINGLE SLOPE BARRIER, TYPE B, AS PER PLAN 1 EACH

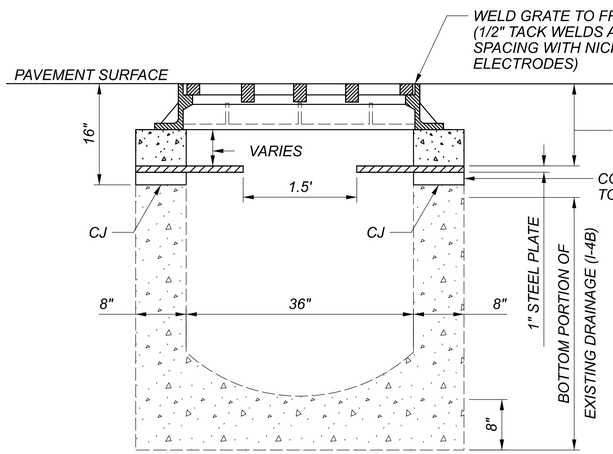

FRONT/BACK VIEW

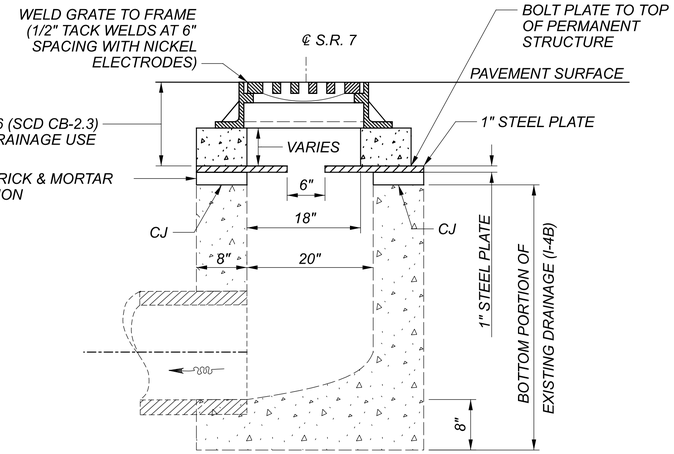

SIDE VIEW

NOTE - FOR DETAILS NOT SHOWN REFER TO SCDS:
CB 6: (CB-6)
I-4B: (I-4B, 4B1)

BOLT PLATE TO DRAINAGE STRUCTURE (TYP.) USE ½" φ HIGH STRENGTH BOLT A TYPE 1 WITH HILTI HY 200 ADHESIVE ANCHORS OR APPROVED EQUAL. A 9/16" HOLE DIAMETER SHALL BE USED IN ACCORDANCE WITH THE RECOMMENDATIONS.

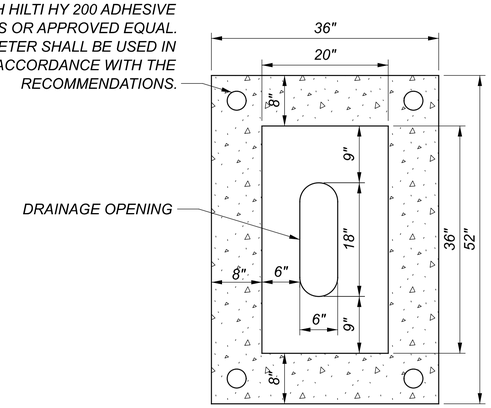

TOP VIEW

MAINTENANCE OF TRAFFIC GENERAL NOTES

JEF-7-13.68

DESIGN AGENCY
2LMN
DESIGNER
JJR
REVIEWER
ALL 11/24/21
PROJECT ID
109309
SHEET 11 TOTAL 95

FULLY-ACTUATED OPERATION OF WORK ZONE TRAFFIC SIGNAL

THE WORK ZONE SIGNAL CONTROL REQUIRED FOR THIS PROJECT AND SHOWN ON SHEETS 41 AND 42 AND TRAFFIC SCDS MT-96.11, 96.20 AND 96.26 SHALL BE FULLY TRAFFIC-ACTUATED AND OPERATE IN A MANNER SIMILAR TO THAT DESCRIBED IN SECTION 733.02 OF THE CONSTRUCTION AND MATERIAL SPECIFICATIONS.

THE INITIAL CONTROLLER TIMING SHALL BE AS FOLLOWS:

	LOGAN AVENUE EASTBOUND		LOGAN AVENUE WESTBOUND		RAMP "C"		RAMP "B"		PED
PHASE	1	2	3	4	5	6	7	8	9
DESCRIPTION	ALL RED	MAINLINE	ALL RED	MAINLINE	ALL RED	RAMP	ALL RED	RAMP	PEDESTRIAN
MIN. GREEN	-	20	-	20	-	20	-	15	-
EXTENSION	-	5	-	5	-	5	-	5	-
MAX. GREEN	-	40	-	40	-	30	-	25	-
YELLOW	-	5	-	5	-	5	-	5	-
RED	18	-	18	-	13	-	13	-	17
RECALL	MAX.	NONE	MAX.	NONE	MAX.	NONE	MAX.	NONE	PED.
WALK	N/A	N/A	N/A	N/A	N/A	N/A	N/A	N/A	10
DON'T WALK (FLASHING)	N/A	N/A	N/A	N/A	N/A	N/A	N/A	N/A	5
DON'T WALK (STEADY)	ENTIRE PHASE	ENTIRE PHASE	ENTIRE PHASE	ENTIRE PHASE	ENTIRE PHASE	ENTIRE PHASE	ENTIRE PHASE	ENTIRE PHASE	2

THE CONTRACTOR SHALL ALSO DESIGN, FURNISH, INSTALL AND MAINTAIN A TRAFFIC DETECTOR ON EACH TRAFFIC APPROACH WHICH WILL RELIABLY DETECT ALL LEGAL TRAFFIC APPROACHING (BUT NOT LEAVING) THE SIGNAL AS IT PASSES OR WAITS IN THE DESIGNATED DETECTOR ZONE SHOWN IN THE PLANS. DETECTOR DESIGNS WHICH DO NOT PROVIDE RELIABLE DETECTION, FREE FROM FALSE CALLS, SHALL BE IMMEDIATELY REPLACED BY THE CONTRACTOR.

AN ADDITIONAL SIGNAL PHASE FOR PEDESTRIAN TRAFFIC SHALL BE INCLUDED. THE CONTRACTOR SHALL DESIGN, FURNISH, INSTALL AND MAINTAIN TEMPORARY PEDESTRIAN SIGNAL HEADS AND PUSH BUTTONS AT LOCATIONS INDICATED ON SHEETS 41 AND 42 AND AS DETAILED IN THIS NOTE.

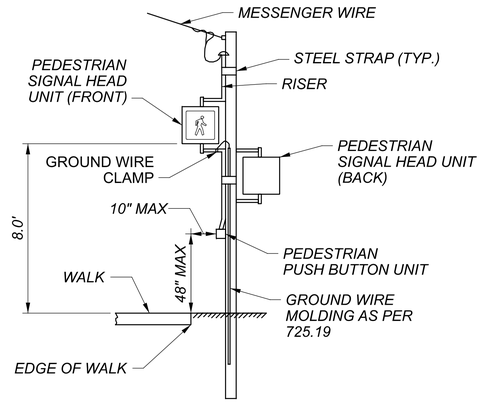

PAYMENT FOR ALL LABOR, EQUIPMENT AND MATERIALS FOR THE WORK ZONE TRAFFIC SIGNALS AND ASSOCIATED ITEMS SHALL BE INCLUDED IN THE LUMP SUM CONTRACT PRICE FOR ITEM 614, MAINTAINING TRAFFIC.

MAINTENANCE OF TRAFFIC GENERAL NOTES

DESIGN AGENCY
2LMN

DESIGNER
JJR

REVIEWER
ALL 11/24/21

PROJECT ID
109309

SHEET 12 TOTAL 95

JEF-7-13.68

MODEL: Sheet PAPERSIZE: 34x22 (in.) DATE: 8/24/2022 TIME: 11:56:12 AM USER: Josh_Rognon
V:\Projects\KNEI_109309_JEF_7_13.69\400-Engineering\MOT\Sheets\109309_MN006.dgn

SHEET NO.	REF NO.	STATION TO STATION																						
									614	614		614	614			614	614	622	622	622				
									WORK ZONE EDGE LINE, CLASS I, 6", 873 (WHITE)	WORK ZONE EDGE LINE, CLASS I, 6", 873 (YELLOW)		WORK ZONE CHANNELIZING LINE, CLASS I, 12", 873	WORK ZONE DOTTED LINE, CLASS I, 6", 873			WORK ZONE RAISED PAVEMENT MARKER	WORK ZONE IMPACT ATTENUATOR, 24" WIDE HAZARDS, (UNIDIRECTIONAL)	PORTABLE BARRIER, UNANCHORED	PORTABLE BARRIER, ANCHORED	GLARE SCREEN				
									MILE	MILE		FT	FT			EACH	EACH	FT	FT	FT				
		PHASE 2 - NORTHBOUND LANES																						
19		STA. 695+21	TO	STA. 701+81						0.125														
19-23		STA. 701+81	TO	STA. 723+00						0.402														
20-23		STA. 707+10	TO	STA. 722+50													1	1540						
		PHASE 2 - SOUTHBOUND LANES																						
20-24		STA. 708+00	TO	STA. 729+18						0.402														
24		STA. 729+18	TO	STA. 735+78						0.125														
20-23		STA. 708+50	TO	STA. 723+90													1	1540						
		SUBTOTALS								1.06														
		TOTALS CARRIED TO SHEET 17							1.06								2	3080						

JEF-7-13.68

MODEL: Sheet 1 PAPERSIZE: 34x22 (in.) DATE: 8/24/2022 TIME: 11:56:19 AM USER: Josh_Rognon
V:\Projects\KNEI_109309_JEF_7_13.69\400-Engineering\MOT\Sheets\109309_MS001.dgn

MAINTENANCE OF TRAFFIC SUBSUMMARY - PHASE 2

DESIGN AGENCY
2LMN

DESIGNER
JJR

REVIEWER
ALL 11/24/21

PROJECT ID
109309

SHEET 13 TOTAL 95

SHEET NO.	REF NO.	STATION TO STATION																					
								614	614		614	614			614	614	622	622	622				
								WORK ZONE EDGE LINE, CLASS I, 6", 873 (WHITE)	WORK ZONE EDGE LINE, CLASS I, 6", 873 (YELLOW)		WORK ZONE CHANNELIZING LINE, CLASS I, 12", 873	WORK ZONE DOTTED LINE, CLASS I, 6", 873			WORK ZONE RAISED PAVEMENT MARKER	WORK ZONE IMPACT ATTENUATOR, 24" WIDE HAZARDS, (UNIDIRECTIONAL)	PORTABLE BARRIER, UNANCHORED	PORTABLE BARRIER, ANCHORED	GLARE SCREEN				
								MILE	MILE		FT	FT			EACH	EACH	FT	FT	FT				
		PHASE 3 - NORTHBOUND LANES																					
26		STA. 694+60	TO	STA. 701+20				0.125															
26-27		STA. 701+20	TO	STA. 705+60				0.084															
26		STA. 702+70	TO	STA. 704+58								188											
26-27		STA. 704+58	TO	STA. 706+05							294												
27		STA. 706+05	TO	STA. 707+62				0.03															
27-28		STA. 707+62	TO	STA. 712+29							936												
28-29		STA. 712+29	TO	STA. 715+28				0.057															
28-29		STA. 712+29	TO	STA. 715+28					0.057														
29		STA. 715+28	TO	STA. 718+71							686												
28		STA. 711+00	TO	STA. 712+80												1	180						
28		STA. 712+80	TO	STA. 713+10														30					
28		STA. 714+50	TO	STA. 714+80														30					
28-29		STA. 714+80	TO	STA. 715+30													50						
27-28		STA. 707+62	TO	STA. 712+30											48								
29		STA. 715+28	TO	STA. 718+71											36								
		PHASE 3 - SOUTHBOUND LANES																					
27-29		STA. 709+55	TO	STA. 719+83				0.195															
27-31		STA. 708+00	TO	STA. 738+00					0.569														
27-30		STA. 708+50	TO	STA. 722+50													1400		700				
		SUBTOTALS						0.50	0.63														
		TOTALS CARRIED TO SHEET 17						1.13			1916	188			84	1	1630	60	700				

MAINTENANCE OF TRAFFIC SUBSUMMARY - PHASE 3

DESIGN AGENCY
2LMN

DESIGNER
JJR

REVIEWER
ALL 11/24/21

PROJECT ID
109309

SHEET 14 TOTAL 95

JEF-7-13.68

MODEL: Sheet 1 PAPERSIZE: 34x22 (in.) DATE: 8/24/2022 TIME: 11:56:26 AM USER: Josh_Rognon
V:\Projects\KNEI_109309_JEF_7_13.69\400-Engineering\MOT\Sheets\109309_MS002.dgn

SHEET NO.	REF NO.	STATION TO STATION					614 WORK ZONE EDGE LINE, CLASS I, 6", 873 (WHITE) MILE	614 WORK ZONE EDGE LINE, CLASS I, 6", 873 (YELLOW) MILE		614 WORK ZONE CHANNELIZING LINE, CLASS I, 12", 873 FT	614 WORK ZONE DOTTED LINE, CLASS I, 6", 873 FT			614 WORK ZONE RAISED PAVEMENT MARKER EACH	614 WORK ZONE IMPACT ATTENUATOR, 24" WIDE HAZARDS, (UNIDIRECTIONAL) EACH	622 PORTABLE BARRIER, UNANCHORED FT	622 PORTABLE BARRIER, ANCHORED FT	622 GLARE SCREEN FT				
		PHASE 5 - NORTHBOUND LANES																			
33		STA. 694+92	TO	STA. 701+52				0.125													
33-37		STA. 701+52	TO	STA. 723+70				0.420													
33-34		STA. 701+52	TO	STA. 706+05							453										
34-37		STA. 706+80	TO	STA. 722+50			0.298														
34-37		STA. 706+80	TO	STA. 722+70											1	1570		850			
		MEDIAN																			
34		STA. 708+50 (EX. BARRIER)													1						
		PHASE 5 - SOUTHBOUND LANES																			
34-35		STA. 708+82	TO	STA. 712+30						696											
35-36		STA. 712+30	TO	STA. 715+28			0.057														
35-36		STA. 712+30	TO	STA. 715+28				0.057													
36-37		STA. 715+28	TO	STA. 722+46						1436											
36-37		STA. 19+80 (RAMP B)	TO	STA. 722+46						266											
37		STA. 722+46	TO	STA. 724+90							244										
37-38		STA. 723+85	TO	STA. 729+06			0.099														
38		STA. 729+06	TO	STA. 735+66			0.125														
35		STA. 712+30	TO	STA. 712+70												30					
35		STA. 712+70	TO	STA. 714+80													210				
35-36		STA. 714+80	TO	STA. 715+30											1	80					
36-37		STA. 715+28	TO	STA. 722+46										74							
34-35		STA. 708+82	TO	STA. 712+30										36							
		SUBTOTALS					0.58	0.61													
		TOTALS CARRIED TO SHEET 17					1.19			2398	697			110	3	1680	210	850			

MAINTENANCE OF TRAFFIC SUBSUMMARY - PHASE 5

DESIGN AGENCY
2LMN

DESIGNER
JJR

REVIEWER
ALL 11/24/21

PROJECT ID
109309

SHEET 15 TOTAL 95

JEF-7-13.68

MODEL: Sheet 1 PAPERSIZE: 34x22 (in.) DATE: 8/24/2022 TIME: 11:56:32 AM USER: Josh_Rognon
V:\Projects\KNE_109309_JEF_7_13.69\400-Engineering\MOT\Sheets\109309_MS003.dgn

SHEET NO.	REF NO.	STATION TO STATION																							
							614	614	614		614	614	614	614	614	614	622	622	622	614			
							WORK ZONE EDGE LINE, CLASS I, 6", 740.06, TYPE I	WORK ZONE EDGE LINE, CLASS I, 6", 873 (WHITE)	WORK ZONE EDGE LINE, CLASS I, 6", 873 (YELLOW)		WORK ZONE CHANNELIZING LINE, CLASS I, 12", 873	WORK ZONE DOTTED LINE, CLASS I, 6", 873	WORK ZONE DOTTED LINE, CLASS I, 6", 740.06, TYPE I	WORK ZONE STOP LINE, CLASS I, 740.06, TYPE I	WORK ZONE RAISED PAVEMENT MARKER	WORK ZONE IMPACT ATTENUATOR, 24" WIDE HAZARDS, (UNIDIRECTIONAL)	PORTABLE BARRIER, UNANCHORED	PORTABLE BARRIER, ANCHORED	GLARE SCREEN	WORK ZONE IMPACT ATTENUATOR, 24" WIDE HAZARDS, (BIDIRECTIONAL)			
							MILE	MILE	MILE		FT	FT	FT	FT	EACH	EACH	FT	FT	FT	EACH			
		PHASE 6 - NORTHBOUND LANES																					
40		STA. 695+21	TO	STA. 701+81					0.125														
40-44		STA. 701+81	TO	STA. 723+00					0.402														
41-44		STA. 707+10	TO	STA. 722+50												1	1540						
41-44		STA. 706+00	TO	STA. 722+50				0.313															
		PHASE 6 - SOUTHBOUND LANES																					
41-45		STA. 708+00	TO	STA. 729+18					0.402														
45		STA. 729+18	TO	STA. 735+78					0.125														
41-44		STA. 708+50	TO	STA. 723+90												1	1540						
41-44		STA. 709+60	TO	STA. 719+80				0.193															
		*PHASE 8A - LOGAN AVENUE																					
46	SL-1	STA. 28+26.00												12									
46	SL-2	STA. 32+75.00												12									
46	DL-1	STA. 28+44.00		STA. 29+60.00									354										
46	DL-2	STA. 31+05.00		STA. 32+25.00									351										
46	IM-1	STA. 29+60.00		STA. 29+70.00																3			
46	IM-2	STA. 30+90.00		STA. 31+00.00																3			
46	PB-1	STA. 29+70.00		STA. 30+90.00													360						
46	EL-1	STA. 29+60.00		STA. 31+05.00			0.09																
		*PHASE 8B - LOGAN AVENUE																					
47	DL-3	STA. 28+10.00		STA. 29+60.00									453										
47	IM-3	STA. 29+63.00		STA. 29+73.00																3			
47	IM-4	STA. 32+23.00		STA. 32+33.00																3			
47	PB-2	STA. 29+73.00		STA. 32+23.00													750						
47	EL-2	STA. 29+60.00		STA. 32+72.00			0.18																
		*QUANTITIES ARE INCREASED TO BE INSTALLED THREE TIMES.																					
		SUBTOTALS						0.51	1.06														
		TOTALS CARRIED TO SHEET 17					0.27	1.57					1158	24		2	4190			12			

MAINTENANCE OF TRAFFIC SUBSUMMARY - PHASE 6, 8A & 8B

DESIGN AGENCY
2LMN

DESIGNER
JJR

REVIEWER
ALL 11/24/21

PROJECT ID
109309

SHEET 16 TOTAL 95

JEF-7-13.68

MODEL: Sheet 1 PAPERSIZE: 34x22 (in.) DATE: 8/24/2022 TIME: 11:56:37 AM USER: Josh_Rognon
V:\Projects\KNEI_109309_JEF_7_13.69\400-Engineering\MOT\Sheets\109309_MS004.dgn

MAINTENANCE OF TRAFFIC SUBSUMMARY

SHEET NO.	REF NO.	STATION TO STATION				614 WORK ZONE EDGE LINE, CLASS I, 6", 740.06, TYPE I (MILE)	614 WORK ZONE EDGE LINE, CLASS I, 6", 873 (WHITE) (MILE)	614 WORK ZONE EDGE LINE, CLASS I, 6", 873 (YELLOW) (MILE)		614 WORK ZONE CHANNELIZING LINE, CLASS I, 12", 873 (FT)	614 WORK ZONE DOTTED LINE, CLASS I, 6", 873 (FT)	614 WORK ZONE DOTTED LINE, CLASS I, 6", 740.06, TYPE I (FT)	614 WORK ZONE STOP LINE, CLASS I, 740.06, TYPE I (FT)	614 WORK ZONE RAISED PAVEMENT MARKER (EACH)	614 WORK ZONE IMPACT ATTENUATOR, 24" WIDE HAZARDS, (UNIDIRECTIONAL) (EACH)	622 PORTABLE BARRIER, UNANCHORED (FT)	622 PORTABLE BARRIER, ANCHORED (FT)	622 GLARE SCREEN (FT)	614 WORK ZONE IMPACT ATTENUATOR, 24" WIDE HAZARDS, (BIDIRECTIONAL) (EACH)			
		TOTALS FROM PHASE 2 (SHEET 13)						1.06							2	3080						
		TOTALS FROM PHASE 3 (SHEET 14)					0.50	0.63		1916	188			84	1	1630	60	700				
		TOTALS FROM PHASE 5 (SHEET 15)					0.58	0.61		2398	697			110	3	1680	210	850				
		TOTALS FROM PHASE 6 (SHEET 16)				0.27	0.51	1.06				1158	24		2	4190			12			
		SUBTOTALS					1.59	3.36														
		TOTALS CARRIED TO GENERAL SUMMARY				0.27	4.95			4314	885	1158	24	194	8	10580	270	1550	12			

DESIGN AGENCY
2LMN

DESIGNER
JJR

REVIEWER
ALL 11/24/21

PROJECT ID
109309

SHEET 17 TOTAL 95

JEF-7-13.68

MODEL: Sheet 1 PAPERSIZE: 34x22 (in.) DATE: 8/24/2022 TIME: 11:56:42 AM USER: Josh_Rognon
V:\Projects\KNEI_109309_JEF_7_13.69\400-Engineering\MOT\Sheets\109309_MS005.dgn

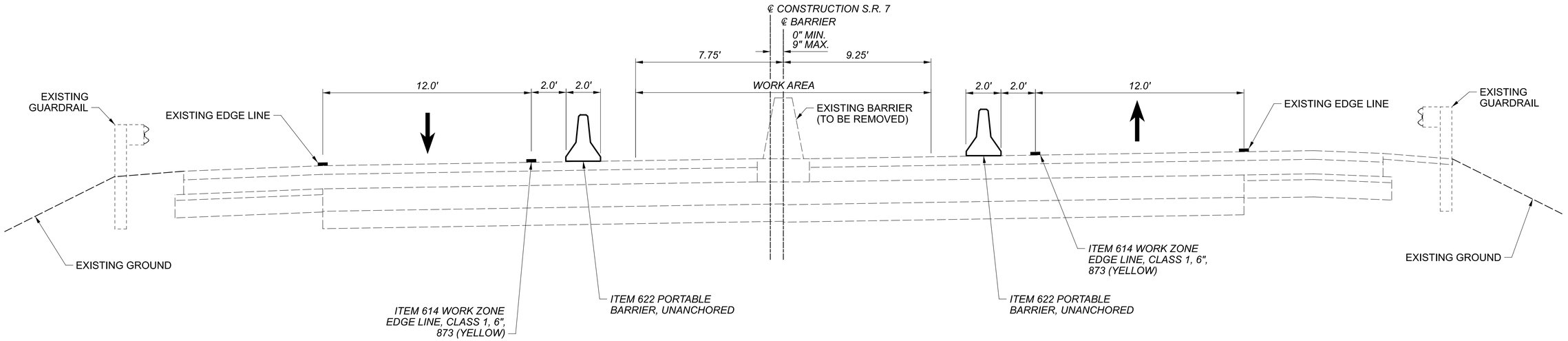

PHASE 2 CONSTRUCTION

STA. 708+50 - STA. 709+74.84 (BK) = 124.84 FT.
STA. 709+74.82 (AH) - STA. 717+28.05 (BK) = 753.23 FT.
STA. 717+28.02 (AH) - STA. 722+50 = 521.98 FT.
TOTAL = 1400.05 FT.

NOTE:
FOR ENTRANCE AND EXIT TRANSITIONS
SEE SHEETS 19-23.

HORIZONTAL SCALE IN FEET
0 1.5 3 6

MOT TYPICAL SECTION PHASE 2

DESIGN AGENCY
2LMN

DESIGNER
JJR

REVIEWER
ALL 11/24/21

PROJECT ID
109309

SHEET 18 TOTAL 95

JEF-7-13.68

MODEL: Sheet PAPERSIZE: 34x22 (in.) DATE: 8/24/2022 TIME: 11:56:47 AM USER: Josh_Rognon
V:\Projects\KNEI_109309_JEF_7_13.69\400-Engineering\MOT\Sheets\109309_MY002.dgn

LEGEND

DIRECTION OF TRAVEL
DRUMS
PORTABLE BARRIER, UNANCHORED
ATTENUATOR
WORK AREA

YEL - ITEM 614 - WORK ZONE EDGE LINE, CLASS I, 6", 873 (YELLOW)
WEL - ITEM 614 - WORK ZONE EDGE LINE, CLASS I, 6", 873 (WHITE)
CH - ITEM 614 - WORK ZONE CHANNELIZING LINE, CLASS I, 12", 873

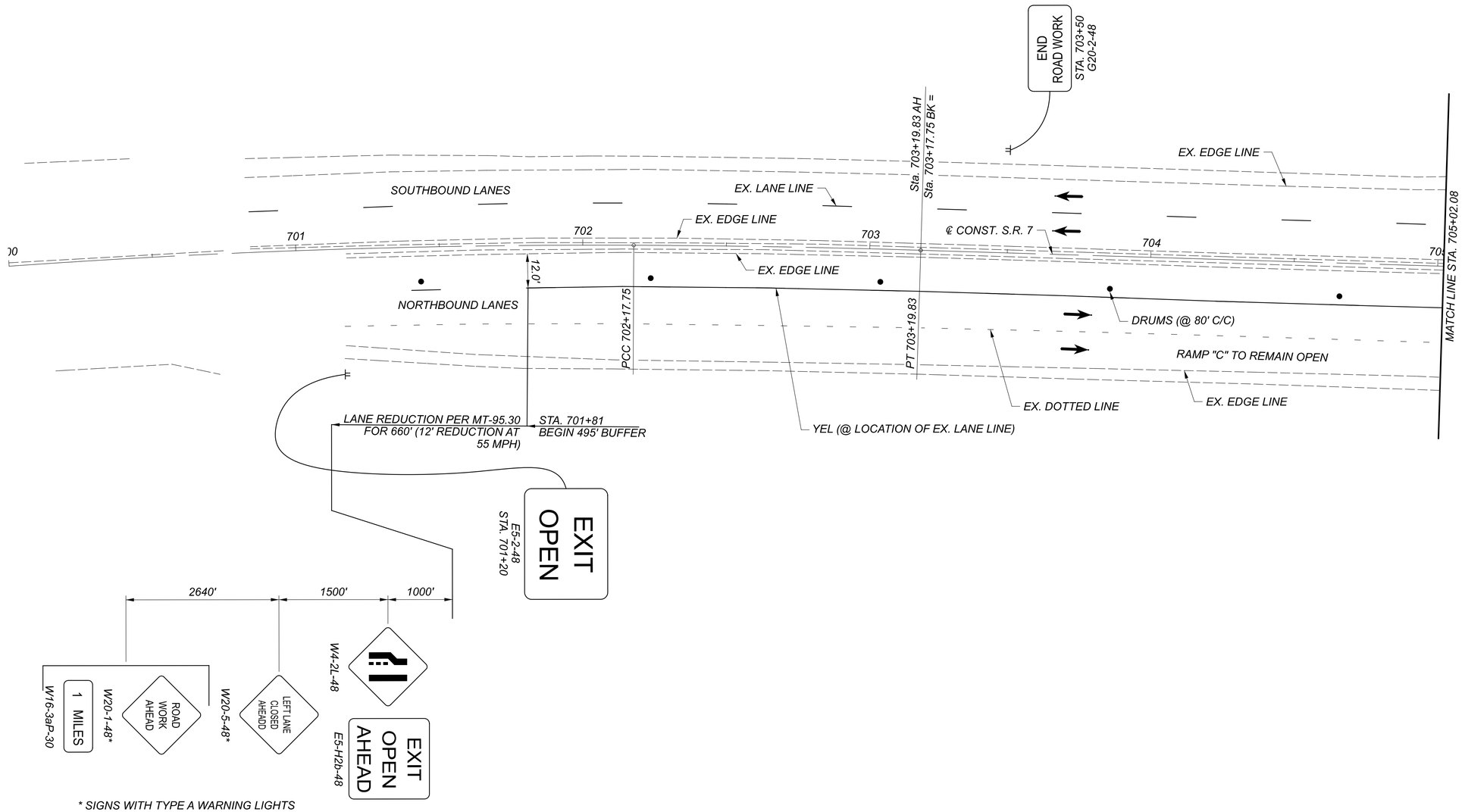

* SIGNS WITH TYPE A WARNING LIGHTS

HORIZONTAL SCALE IN FEET
0 10 20 40

MAINTENANCE OF TRAFFIC PHASE 2

DESIGN AGENCY
2LMN
DESIGNER
JJR
REVIEWER
ALL 11/24/21
PROJECT ID
109309
SHEET 19
TOTAL 95

JEF-7-13.68

MODEL: 109309_MP2 PAPERSIZE: 34x22 (In.) DATE: 8/24/2022 TIME: 11:56:55 AM USER: Josh_Rognon
V:\Projects\KNE\109309_JEF_7_13.69\400-Engineering\MOT\Sheets\109309_MP20i.dgn

LEGEND

- DIRECTION OF TRAVEL
- DRUMS
- PORTABLE BARRIER, UNANCHORED
- ATTENUATOR
- WORK AREA

YEL - ITEM 614 - WORK ZONE EDGE LINE, CLASS I, 6", 873 (YELLOW)

WEL - ITEM 614 - WORK ZONE EDGE LINE, CLASS I, 6", 873 (WHITE)

CH - ITEM 614 - WORK ZONE CHANNELIZING LINE, CLASS I, 12", 873

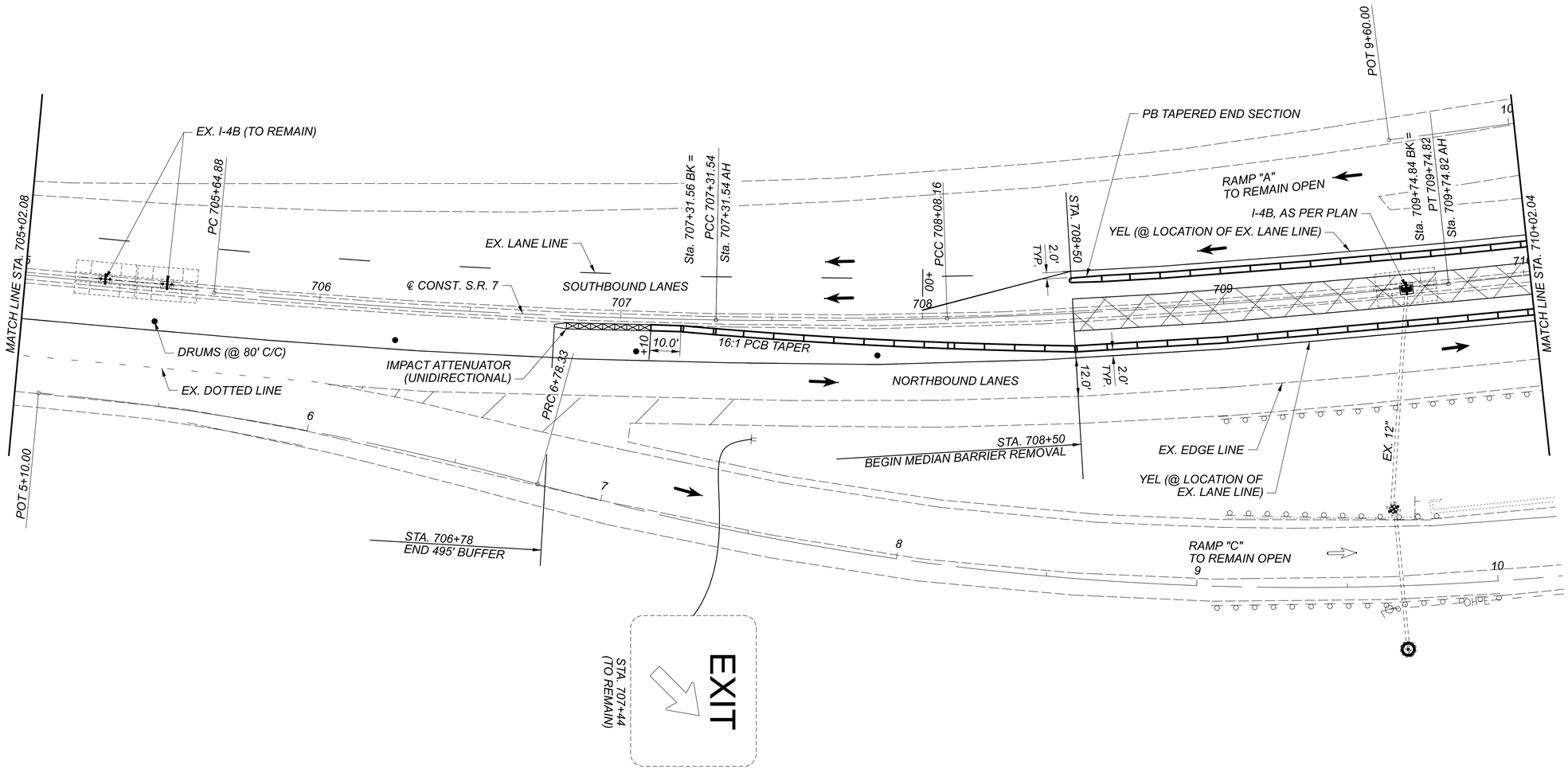

HORIZONTAL SCALE IN FEET
0 10 20 40

MAINTENANCE OF TRAFFIC PHASE 2

DESIGN AGENCY
2LMN

DESIGNER	JJR
REVIEWER	ALL 11/24/21
PROJECT ID	109309
SHEET	20
TOTAL	95

JEF-7-13.68

MODEL: I09309_MP3 PAPERSIZE: 34x22 (in) DATE: 8/24/2022 TIME: 11:57:03 AM USER: Josh_Rognon
V:\Projects\KNE_I09309_JEF_7_13.69\400-Engineering\MOT\Sheets\I09309_MP202.dgn

LEGEND

DIRECTION OF TRAVEL
DRUMS
PORTABLE BARRIER, UNANCHORED
ATTENUATOR
WORK AREA

YEL - ITEM 614 - WORK ZONE EDGE LINE, CLASS I, 6", 873 (YELLOW)
WEL - ITEM 614 - WORK ZONE EDGE LINE, CLASS I, 6", 873 (WHITE)
CH - ITEM 614 - WORK ZONE CHANNELIZING LINE, CLASS I, 12", 873

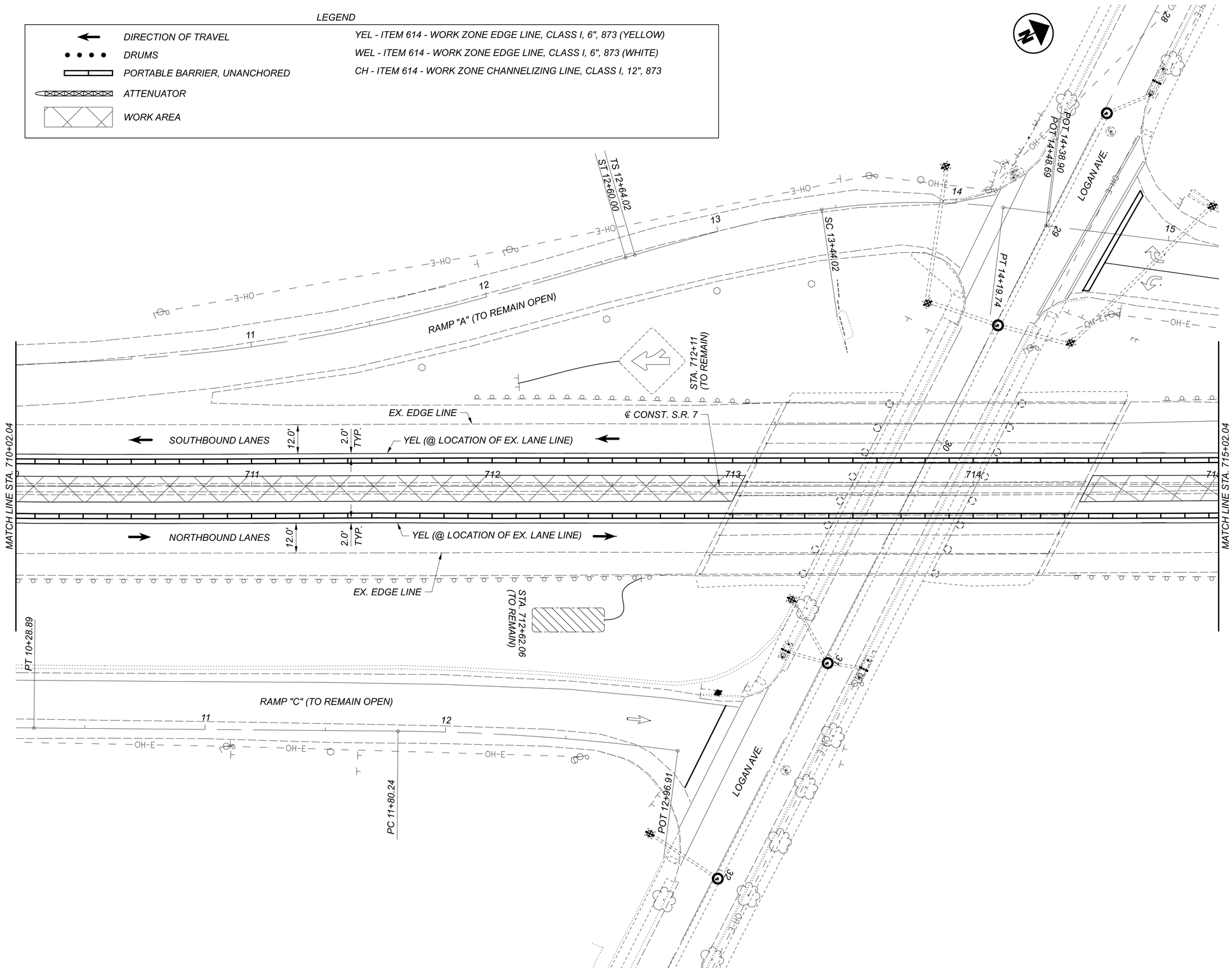

HORIZONTAL SCALE IN FEET
0 10 20 40

MAINTENANCE OF TRAFFIC PHASE 2

DESIGN AGENCY
2LMN

DESIGNER
JJR

REVIEWER
ALL 11/24/21

PROJECT ID
109309

SHEET 21 TOTAL 95

JEF-7-13.68

MODEL: 109309_MP4 PAPERSIZE: 34x22 (In.) DATE: 8/24/2022 TIME: 11:57:09 AM USER: Josh_Rognon
V:\Projects\KNEI_109309_JEF_7_13.69\400-Engineering\MOT\Sheets\109309_MP203.dgn

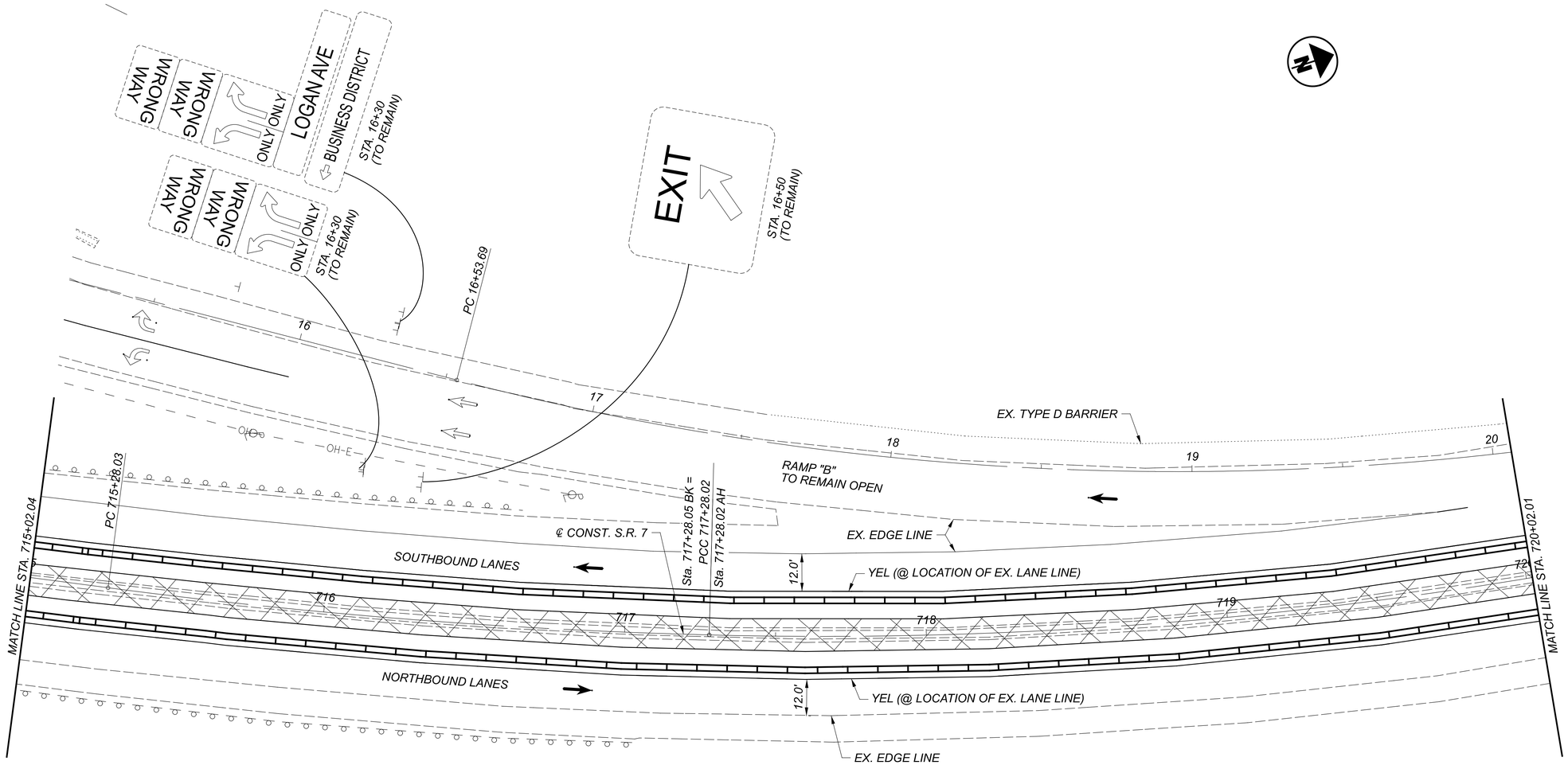

LEGEND

DIRECTION OF TRAVEL	YEL - ITEM 614 - WORK ZONE EDGE LINE, CLASS I, 6", 873 (YELLOW)
DRUMS	WEL - ITEM 614 - WORK ZONE EDGE LINE, CLASS I, 6", 873 (WHITE)
PORTABLE BARRIER, UNANCHORED	CH - ITEM 614 - WORK ZONE CHANNELIZING LINE, CLASS I, 12", 873
ATTENUATOR	
WORK AREA	

HORIZONTAL SCALE IN FEET
0 10 20 40

MAINTENANCE OF TRAFFIC PHASE 2

DESIGN AGENCY
2LMN

DESIGNER JJR
REVIEWER ALL 11/24/21
PROJECT ID 109309
SHEET 22 TOTAL 95

JEF-7-13.68

MODEL: 109309_MP5 PAPERSIZE: 34x22 (in) DATE: 8/24/2022 TIME: 11:57:16 AM USER: Josh_Rognon
V:\Projects\KNE_109309_JEF_7_13.69\400-Engineering\MOT\Sheets\109309_MP204.dgn

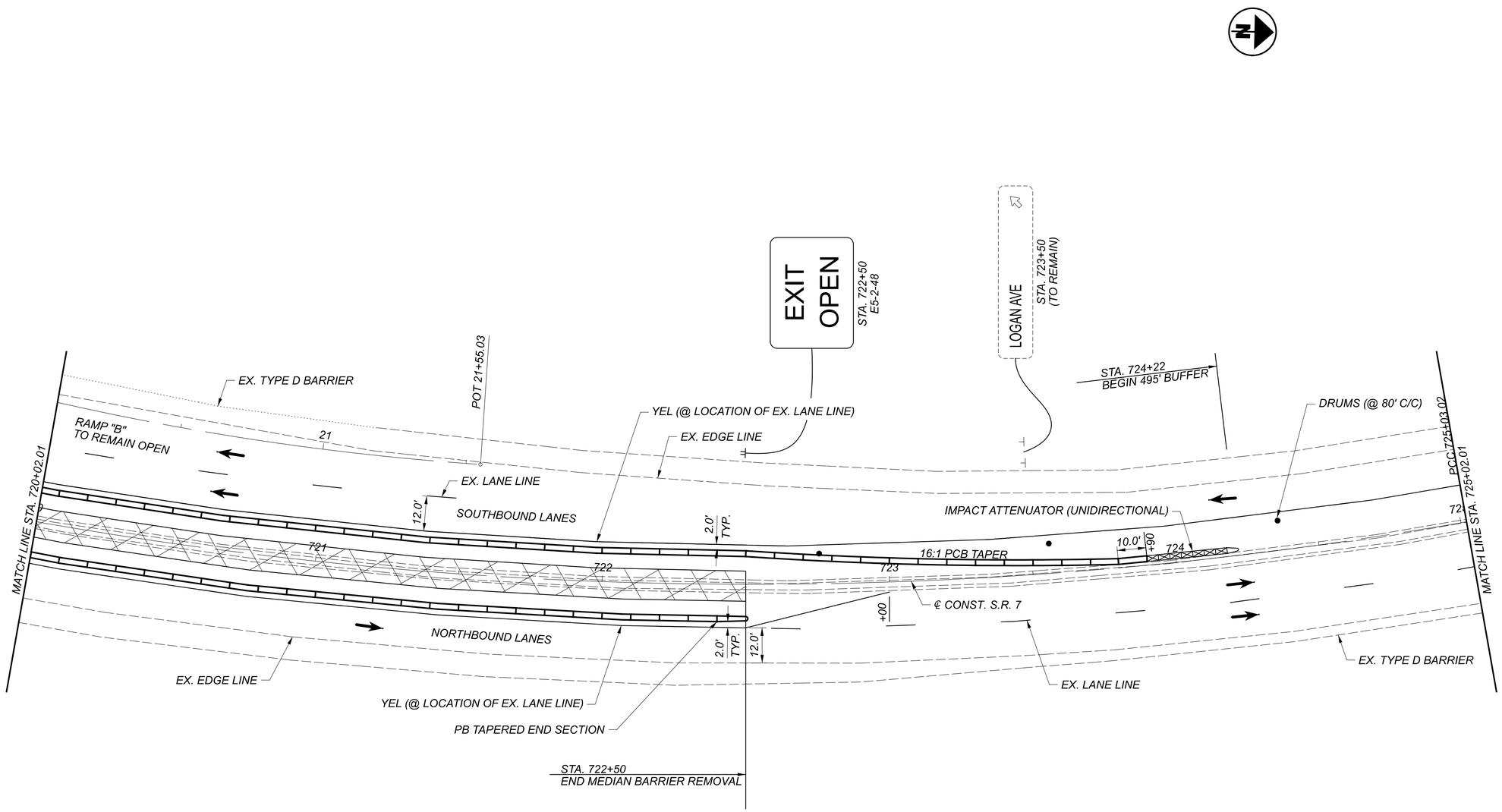

LEGEND

DIRECTION OF TRAVEL	YEL - ITEM 614 - WORK ZONE EDGE LINE, CLASS I, 6", 873 (YELLOW)
DRUMS	WEL - ITEM 614 - WORK ZONE EDGE LINE, CLASS I, 6", 873 (WHITE)
PORTABLE BARRIER, UNANCHORED	CH - ITEM 614 - WORK ZONE CHANNELIZING LINE, CLASS I, 12", 873
ATTENUATOR	
WORK AREA	

HORIZONTAL SCALE IN FEET
0 10 20 40

MAINTENANCE OF TRAFFIC PHASE 2

JEF-7-13.68

MODEL: 109309.MP6 PAPERSIZE: 34x22 (in.) DATE: 8/24/2022 TIME: 11:57:22 AM USER: Josh.Rognon
V:\Projects\KNE\109309_JEF_7_13.69\400-Engineering\MOT\Sheets\109309_MP205.dgn

DESIGN AGENCY
2LMN

DESIGNER JJR
REVIEWER ALL 11/24/21
PROJECT ID 109309
SHEET 23 TOTAL 95

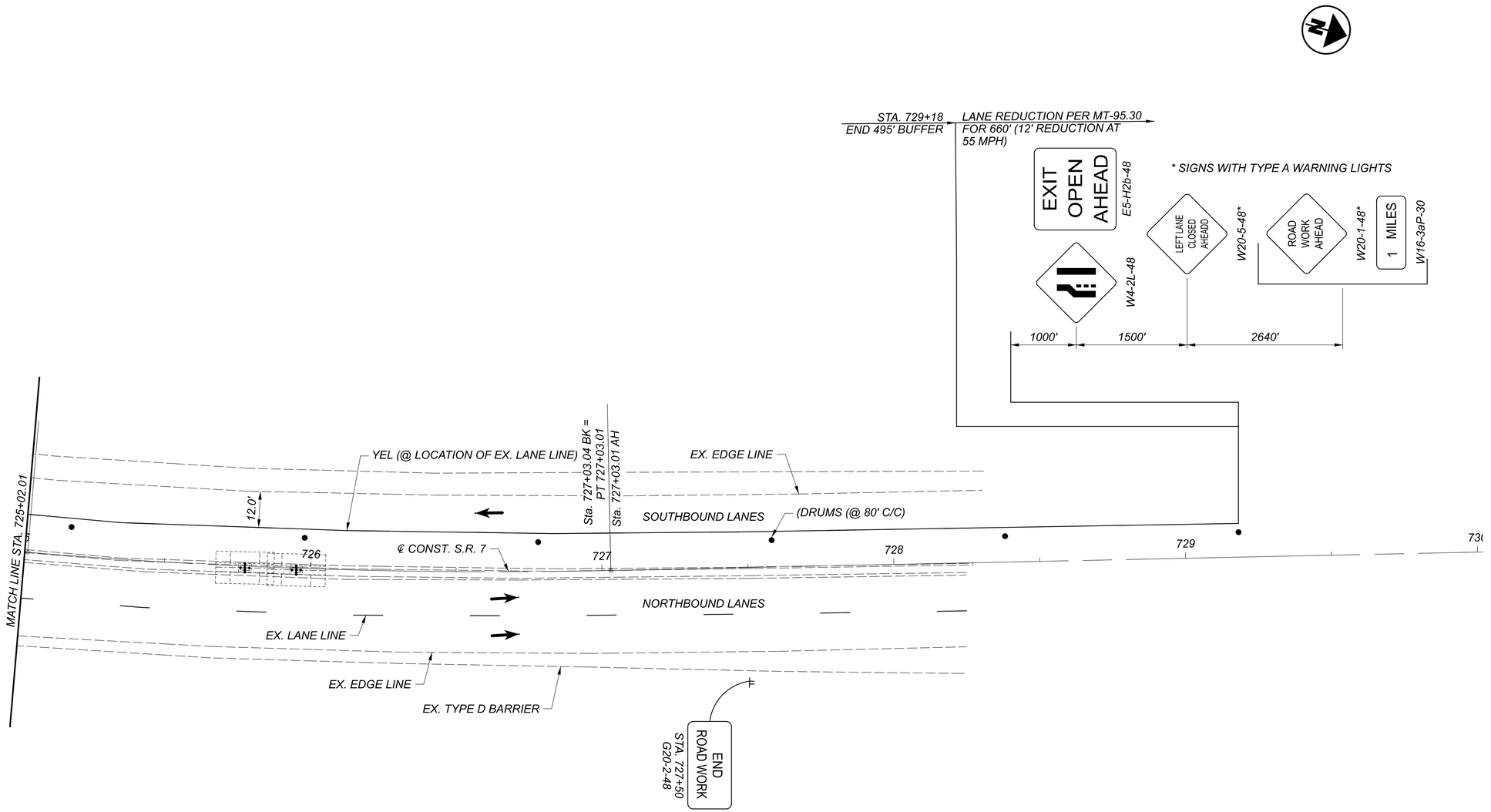

LEGEND

DIRECTION OF TRAVEL	YEL - ITEM 614 - WORK ZONE EDGE LINE, CLASS I, 6", 873 (YELLOW)
DRUMS	WEL - ITEM 614 - WORK ZONE EDGE LINE, CLASS I, 6", 873 (WHITE)
PORTABLE BARRIER, UNANCHORED	CH - ITEM 614 - WORK ZONE CHANNELIZING LINE, CLASS I, 12", 873
ATTENUATOR	
WORK AREA	

HORIZONTAL SCALE IN FEET
0 10 20 40

MAINTENANCE OF TRAFFIC PHASE 2

DESIGN AGENCY
2LMN

DESIGNER
JJR

REVIEWER
ALL 11/24/21

PROJECT ID
109309

SHEET 24 | TOTAL 95

JEF-7-13.68

MODEL: 109309_MP7 PAPERSIZE: 34x22 (in) DATE: 8/24/2022 TIME: 11:57:28 AM USER: Josh_Rognon
V:\Projects\KNE\109309_JEF_7_13.69\400-Engineering\MOT\Sheets\109309_MP206.dgn

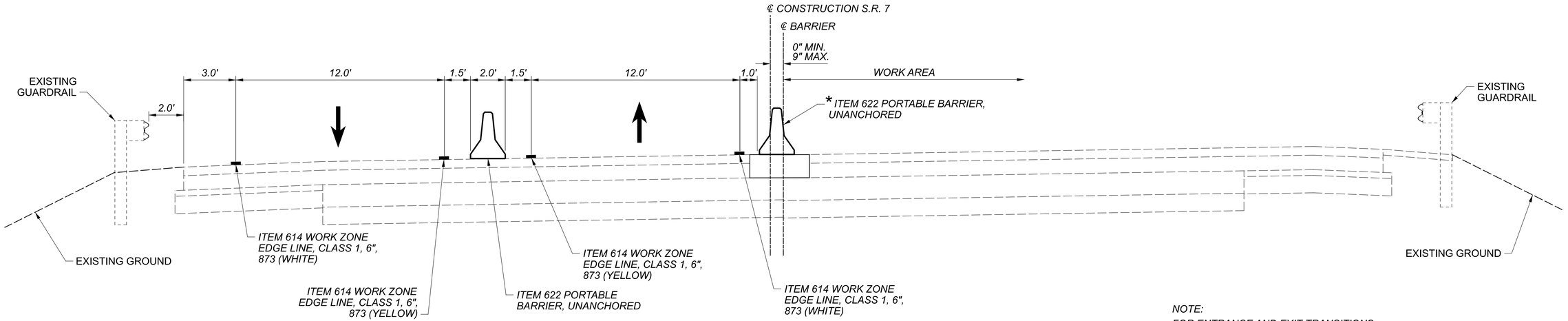

NOTE:
FOR ENTRANCE AND EXIT TRANSITIONS SEE SHEETS 26-31.

FOR STRUCTURE REMOVAL SECTIONS SEE STAGE CONSTRUCTION PLAN SHEET 67.

PHASE 3 CONSTRUCTION

* STA. 712+30 - STA. 715+20 = 290 FT.
* STA. 712+30 TO STA. 712+80 = 50 FT. ITEM 622 PORTABLE UNANCHORED (ROADWAY)
* STA. 712+80 TO STA. 713+10 = 30 FT. ITEM 622 PORTABLE BARRIER 4 ANCHORS PER SEGMENT (REAR APPROACH SLAB)
* STA. 713+10 TO STA. 714+50 = 140 FT. EXISTING BRIDGE PARAPET
* STA. 714+50 TO STA. 714+80 = 30 FT. ITEM 622 PORTABLE BARRIER 4 ANCHORS PER SEGMENT (FWD APPROACH SLAB)
* STA. 714+80 TO STA. 715+20 = 40 FT. ITEM 622 PORTABLE BARRIER UNANCHORED (ROADWAY)

HORIZONTAL SCALE IN FEET
0 1.5 3 6

MOT TYPICAL SECTION PHASE 3

JEF-7-13.68

MODEL: Sheet PAPERSIZE: 34x22 (in.) DATE: 8/24/2022 TIME: 11:57:33 AM USER: Josh_Rognon
V:\Projects\KNE_109309_JEF_7_13.69\400-Engineering\MOT\Sheets\109309_MY003.dgn

DESIGN AGENCY
2LMN

DESIGNER
JJR

REVIEWER
ALL 11/24/21

PROJECT ID
109309

SHEET 25 TOTAL 95

LEGEND

DIRECTION OF TRAVEL	YEL - ITEM 614 - WORK ZONE EDGE LINE, CLASS I, 6", 873 (YELLOW)
DRUMS	WEL - ITEM 614 - WORK ZONE EDGE LINE, CLASS I, 6", 873 (WHITE)
PORTABLE BARRIER, UNANCHORED	CH - ITEM 614 - WORK ZONE CHANNELIZING LINE, CLASS I, 12", 873
ATTENUATOR	DL - ITEM 614 - WORK ZONE DOTTED LINE, CLASS I, 6", 873
WORK AREA	
XXXXXX REMOVE EXISTING MARKINGS	

HORIZONTAL SCALE IN FEET
0 10 20 40

MAINTENANCE OF TRAFFIC PHASE 3

DESIGN AGENCY
2LMN

DESIGNER JJR

REVIEWER ALL 11/24/21

PROJECT ID 109309

SHEET 26 TOTAL 95

JEF-7-13.68

MODEL: 109309_MPOO PAPERSIZE: 34x22 (In.) DATE: 8/24/2022 TIME: 11:57:40 AM USER: Josh_Rognon
V:\Projects\KNE\109309_JEF_7_13.69\400-Engineering\MOT\Sheets\109309_MP30L.dgn

LEGEND

DIRECTION OF TRAVEL
DRUMS
PORTABLE BARRIER, UNANCHORED
ATTENUATOR
WORK AREA
XXXXXX REMOVE EXISTING MARKINGS

YEL - ITEM 614 - WORK ZONE EDGE LINE, CLASS I, 6", 873 (YELLOW)
WEL - ITEM 614 - WORK ZONE EDGE LINE, CLASS I, 6", 873 (WHITE)
CH - ITEM 614 - WORK ZONE CHANNELIZING LINE, CLASS I, 12", 873
DL - ITEM 614 - WORK ZONE DOTTED LINE, CLASS I, 6", 873

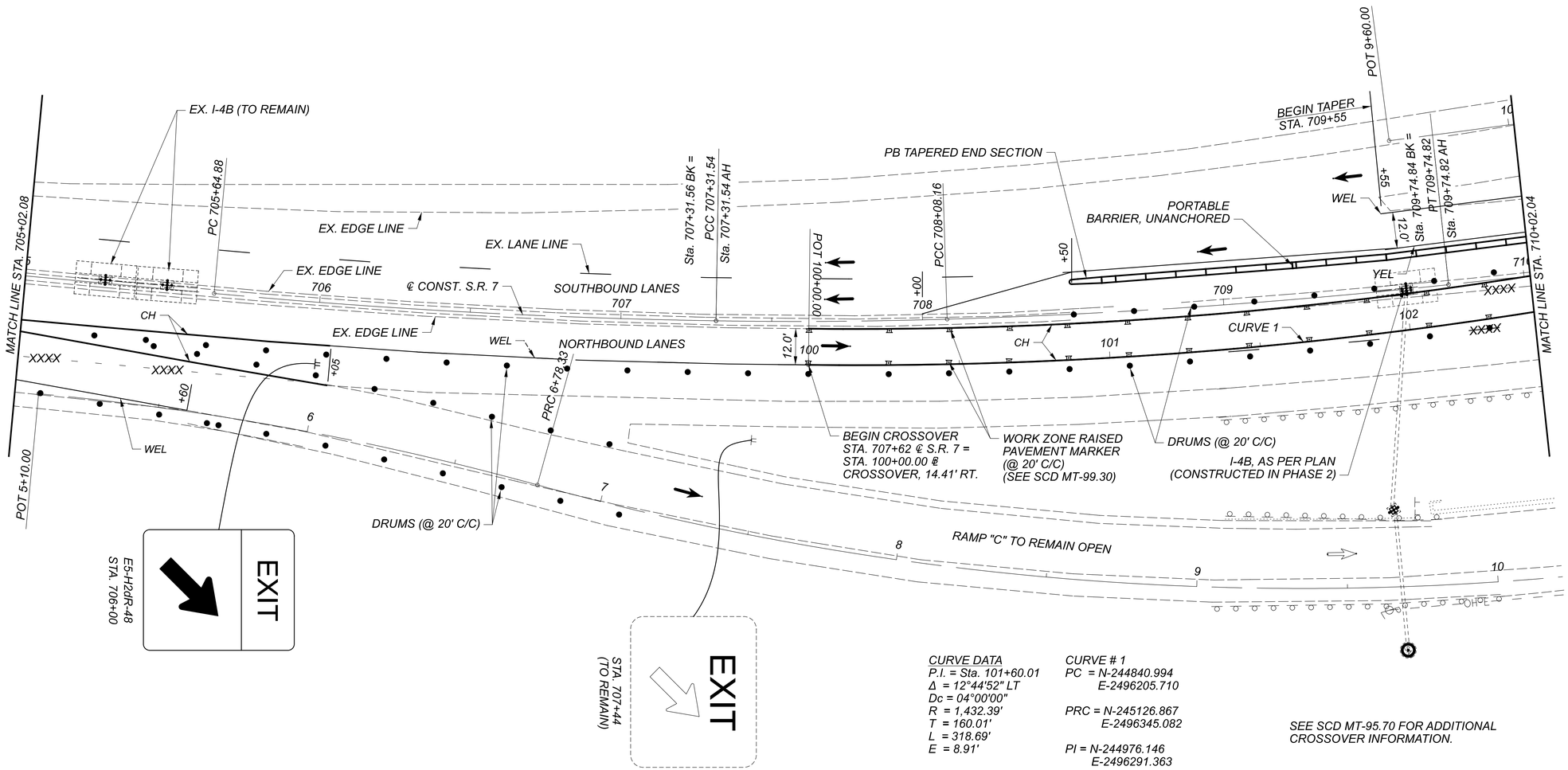

CURVE DATA
P.I. = Sta. 101+60.01
Δ = 12°44'52" LT
Dc = 04°00'00"
R = 1,432.39'
T = 160.01'
L = 318.69'
E = 8.91'

CURVE # 1
PC = N-244840.994
E-2496205.710
PRC = N-245126.867
E-2496345.082
PI = N-244976.146
E-2496291.363

SEE SCD MT-95.70 FOR ADDITIONAL CROSSOVER INFORMATION.

HORIZONTAL SCALE IN FEET
0 10 20 40

MAINTENANCE OF TRAFFIC
PHASE 3

DESIGN AGENCY
2LMN

DESIGNER JJR
REVIEWER ALL 11/24/21
PROJECT ID 109309
SHEET 27 TOTAL 95

JEF-7-13.68

MODEL: I09309_MPI PAPERSIZE: 34x22 (in.) DATE: 8/24/2022 TIME: 11:57:46 AM USER: Josh_Rognon
V:\Projects\KNEL_I09309_JEF_7_13.69\400-Engineering\MOT\Sheets\I09309_MP302.dgn

LEGEND

DIRECTION OF TRAVEL
DRUMS
PORTABLE BARRIER, UNANCHORED
ATTENUATOR
WORK AREA
XXXXXX REMOVE EXISTING MARKINGS

YEL - ITEM 614 - WORK ZONE EDGE LINE, CLASS I, 6", 873 (YELLOW)
WEL - ITEM 614 - WORK ZONE EDGE LINE, CLASS I, 6", 873 (WHITE)
CH - ITEM 614 - WORK ZONE CHANNELIZING LINE, CLASS I, 12", 873
DL - ITEM 614 - WORK ZONE DOTTED LINE, CLASS I, 6", 873

SEE SCD MT-95.70 FOR ADDITIONAL CROSSOVER INFORMATION.

WORK ZONE RAISED PAVEMENT MARKER (@ 20' C/C) (SEE SCD MT-99.30)

DRUMS (@ 20' C/C)

RAMP "A" (TO REMAIN OPEN)

TS 12+64.02
ST 12+60.00

SC 13+44.02

PT 14+19.74

POT 14+38.90
POT 14+48.69

LOGAN AVE.

END TAPER
STA. 712+30

STA. 712+11
(TO REMAIN)

W11-4L-48
STA. 713+00

PORTABLE BARRIER
4 ANCHORS PER
SEGMENT

PORTABLE BARRIER, UNANCHORED
WITH GLARE SCREEN

SOUTHBOUND LANES

NORTHBOUND LANES

MATCH LINE STA. 710+02.04

MATCH LINE STA. 715+02.04

CURVE # 2

CH

PORTABLE BARRIER, UNANCHORED

PT 104+68.67

IMPACT ATTENUATOR
(UNIDIRECTIONAL)

PRC 103+18.69

W1-6L-72

TYPE B
WARNING
LIGHTS

R11-2-48
MOUNTED ON TYPE 3
BARRICADES
AS PER STD. DRAWING
MT-101.60

ROAD
CLOSED

STA. 712+62.06
(TO BE
REMOVED)

ATTACH PCB TO EX.
BRIDGE PARAPET
AS PER MT-101.80

ATTACH PCB TO EX.
BRIDGE PARAPET
AS PER MT-101.80

FOR LOGAN AVENUE MOT
DETAILS, SEE SHEETS 46-47.

PT 10+28.89

RAMP "C" (TO REMAIN OPEN)

POT 12+96.91

PC 11+80.24

299.32'
N25°35'12"E

SEE SCD MT-95.70 FOR ADDITIONAL
CROSSOVER INFORMATION.

\# PRC CROSSOVER
STA. 710+79.00 ℄ S.R. 7 =
STA. 103+18.69 ℄
CROSSOVER, 6.06' RT.

CURVE # 2
PRC = N-245126.867
E-2496345.082

PT = N-245265.266
E-2496402.695

PI = N-245197.569
E-2496370.279

CURVE DATA
P.I. = Sta. 103+93.75
Δ = 05°58'12" RT
Dc = 03°58'50"
R = 1,439.39'
T = 75.06'
L = 149.98'
E = 1.96'

\## PT CROSSOVER
STA. 712+28.71 ℄ S.R. 7 =
STA. 104+68.67 ℄
CROSSOVER, 1.75' LT.

HORIZONTAL
SCALE IN FEET
0 10 20 40

MAINTENANCE OF TRAFFIC
PHASE 3

DESIGN AGENCY
2LMN

DESIGNER
JJR

REVIEWER
ALL 11/24/21

PROJECT ID
109309

SHEET 28 TOTAL 95

JEF-7-13.68

MODEL: I09309_MP2 PAPERSIZE: 34x22 (In.) DATE: 8/24/2022 TIME: 11:57:52 AM USER: Josh_Rognon
V:\Projects\KNEL\09309_JEF_7_13.68\400-Engineering\MOT\Sheets\I09309_MP303.dgn

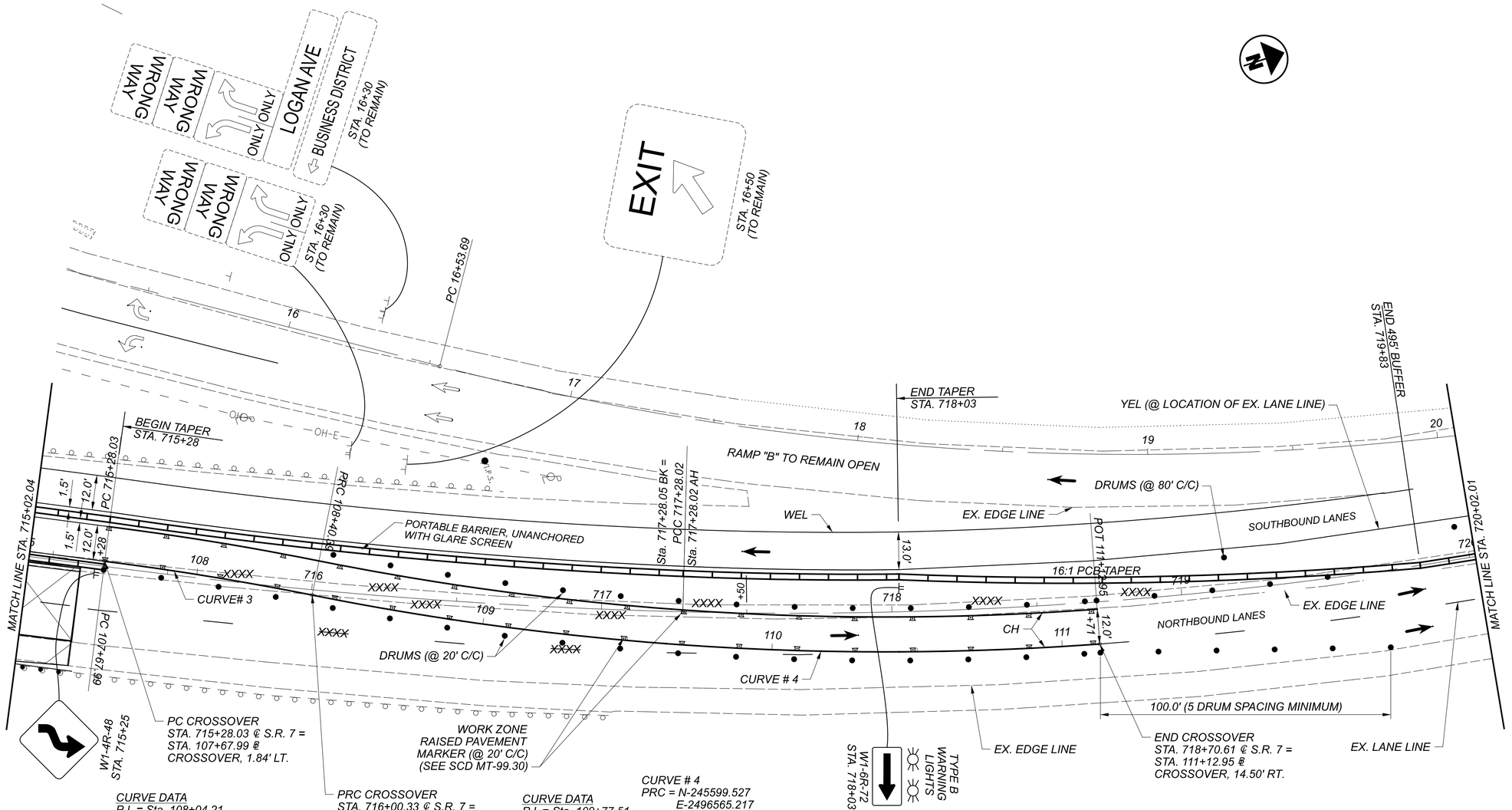

CURVE DATA
P.I. = Sta. 108+04.21
Δ = 04°07'29" RT
Dc = 05°41'48"
R = 1,005.76'
T = 36.22'
L = 72.4'
E = .65'

CURVE # 3
PC = N-245535.230
E-2496531.963

PRC = N-245599.527
E-2496565.217

PI = N-245567.977
E-2496547.432

CURVE DATA
P.I. = Sta. 109+77.51
Δ = 15°31'36" LT
Dc = 05°41'48"
R = 1,005.76'
T = 137.12'
L = 272.55'
E = 9.30'

CURVE # 4
PRC = N-245599.527
E-2496565.217

PT = N-245852.085
E-2496665.448

PI = N-245718.973
E-2496632.548

SEE SCD MT-95.70 FOR ADDITIONAL CROSSOVER INFORMATION.

LEGEND

DIRECTION OF TRAVEL	*YEL - ITEM 614 - WORK ZONE EDGE LINE, CLASS I, 6", 873 (YELLOW)*
DRUMS	*WEL - ITEM 614 - WORK ZONE EDGE LINE, CLASS I, 6", 873 (WHITE)*
PORTABLE BARRIER, UNANCHORED	*CH - ITEM 614 - WORK ZONE CHANNELIZING LINE, CLASS I, 12", 873*
ATTENUATOR	*DL - ITEM 614 - WORK ZONE DOTTED LINE, CLASS I, 6", 873*
WORK AREA	
XXXXXX *REMOVE EXISTING MARKINGS*	

HORIZONTAL SCALE IN FEET
0 10 20 40

MAINTENANCE OF TRAFFIC PHASE 3

DESIGN AGENCY
2LMN

DESIGNER JJR
REVIEWER ALL 11/24/21
PROJECT ID 109309
SHEET 29 TOTAL 95

JEF-7-13.68

MODEL: 109309_MP3 PAPERSIZE: 34x22 (in) DATE: 8/24/2022 TIME: 11:57:59 AM USER: Josh_Rognon
V:\Projects\KNE_109309_JEF_7_13.69\400-Engineering\MOT\Sheets\109309_MP304.dgn

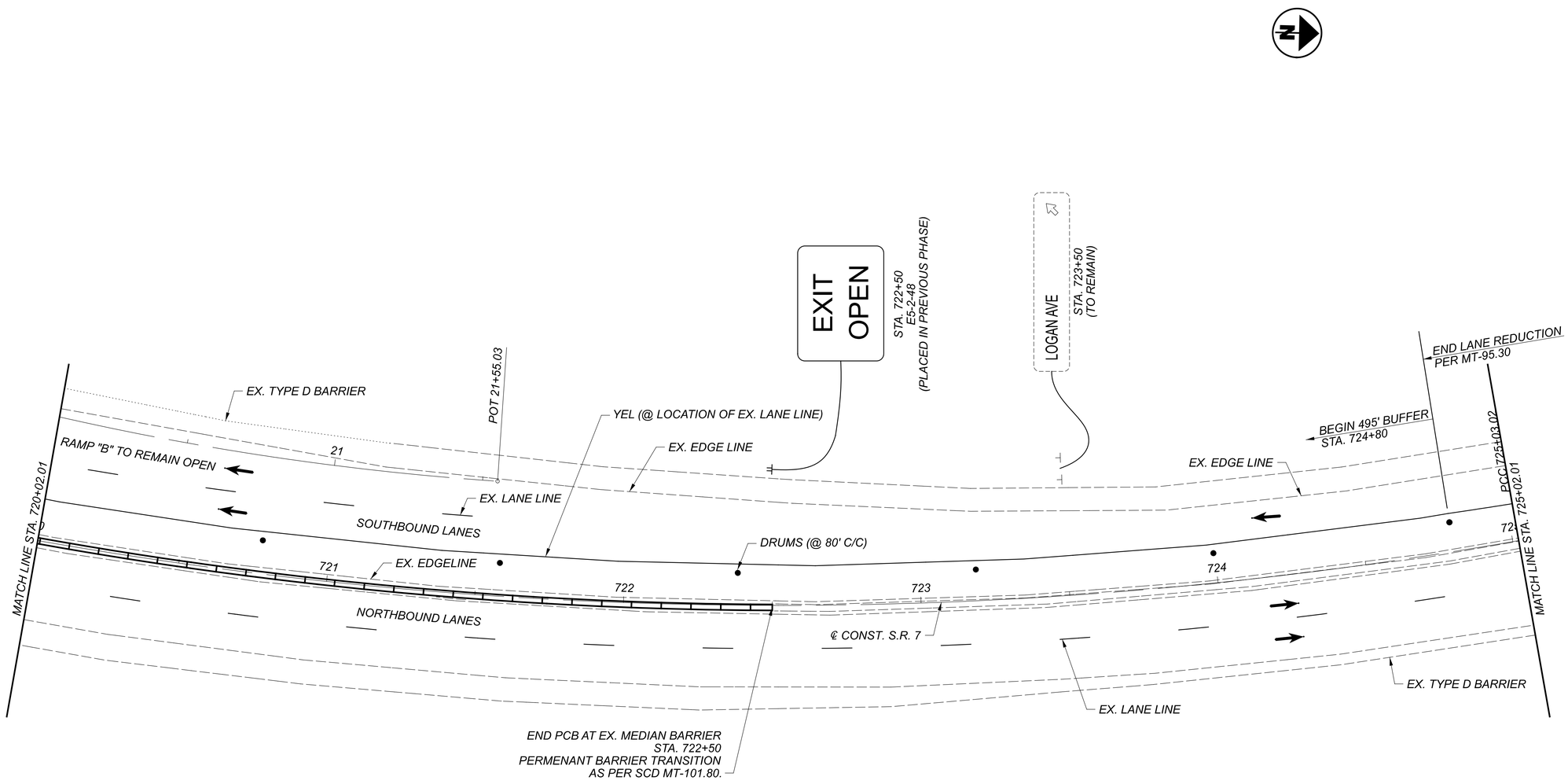

SEE SCD MT-95.70 FOR ADDITIONAL
CROSSOVER INFORMATION.

LEGEND

DIRECTION OF TRAVEL	YEL - ITEM 614 - WORK ZONE EDGE LINE, CLASS I, 6", 873 (YELLOW)
DRUMS	WEL - ITEM 614 - WORK ZONE EDGE LINE, CLASS I, 6", 873 (WHITE)
PORTABLE BARRIER, UNANCHORED	CH - ITEM 614 - WORK ZONE CHANNELIZING LINE, CLASS I, 12", 873
ATTENUATOR	DL - ITEM 614 - WORK ZONE DOTTED LINE, CLASS I, 6", 873
WORK AREA	
XXXXXX REMOVE EXISTING MARKINGS	

HORIZONTAL SCALE IN FEET
0 10 20 40

MAINTENANCE OF TRAFFIC PHASE 3

JEF-7-13.68

MODEL: 109309_MP4 PAPERSIZE: 34x22 (in) DATE: 8/24/2022 TIME: 11:58:04 AM USER: Josh_Rognon
V:\Projects\KNE_109309_JEF_7_13.69\400-Engineering\MOT\Sheets\109309_MP305.dgn

DESIGN AGENCY
2LMN
DESIGNER
JJR
REVIEWER
ALL 11/24/21
PROJECT ID
109309
SHEET 30
TOTAL 95

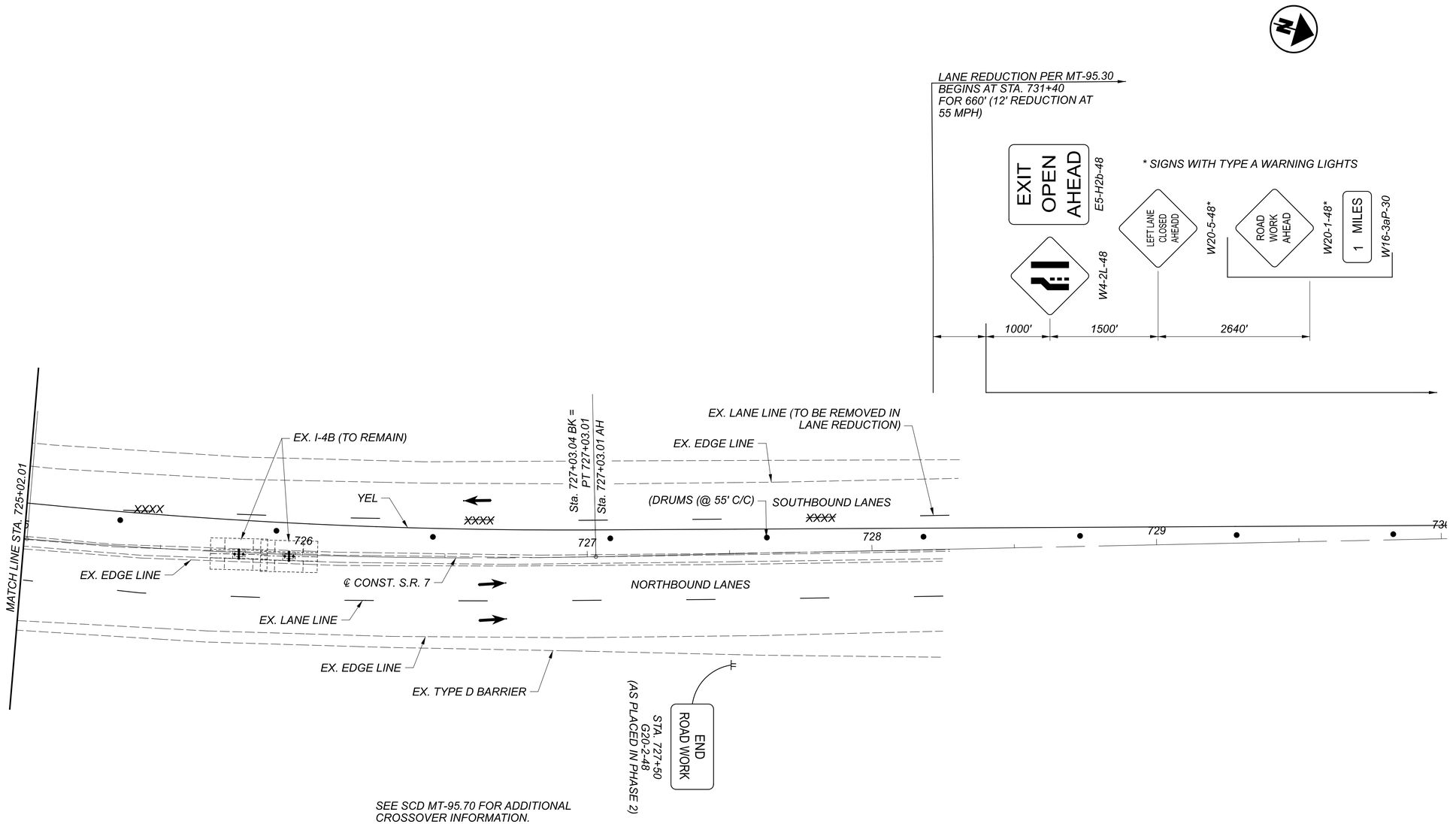

LEGEND

DIRECTION OF TRAVEL	YEL - ITEM 614 - WORK ZONE EDGE LINE, CLASS I, 6", 873 (YELLOW)
DRUMS	WEL - ITEM 614 - WORK ZONE EDGE LINE, CLASS I, 6", 873 (WHITE)
PORTABLE BARRIER, UNANCHORED	CH - ITEM 614 - WORK ZONE CHANNELIZING LINE, CLASS I, 12", 873
ATTENUATOR	DL - ITEM 614 - WORK ZONE DOTTED LINE, CLASS I, 6", 873
WORK AREA	
XXXXXX REMOVE EXISTING MARKINGS	

HORIZONTAL SCALE IN FEET
0 10 20 40

MAINTENANCE OF TRAFFIC PHASE 3

DESIGN AGENCY
2LMN

DESIGNER JJR
REVIEWER ALL 11/24/21
PROJECT ID 109309
SHEET 31 TOTAL 95

JEF-7-13.68

MODEL: I09309_MP5 PAPERSIZE: 34x22 (In.) DATE: 8/24/2022 TIME: 11:58:10 AM USER: Josh_Rognon
V:\Projects\KNEL\I09309_JEF_7_13.69\400-Engineering\MOT\Sheets\I09309_MP306.dgn

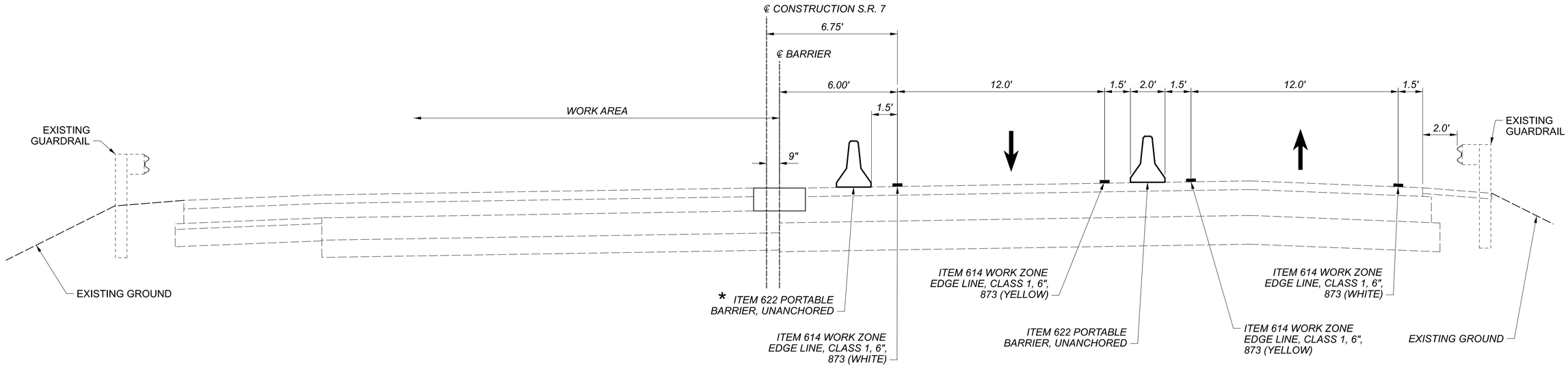

NOTE:
FOR ENTRANCE AND EXIT TRANSITIONS
SEE SHEETS 33-37 .

FOR STRUCTURAL REMOVAL SECTIONS
SEE CONSTRUCTION PLAN SHEET 68.

PHASE 5 CONSTRUCTION

STA. 712+30 - STA. 715+20 = 290 FT.
* *STA. 712+30 TO STA. 712+70 = 40 FT. ITEM 622 PORTABLE BARRIER, UNANCHORED (ROADWAY)*
* *STA. 712+70 TO STA. 714+80 = 210 FT. ITEM 622 PORTABLE BARRIER, 4 ANCHORS PER SEGMENT (BRIDGE AND APPROACH SLAB)*
* *STA. 714+80 TO STA. 715+30 = 50 FT. ITEM 622 PORTABLE BARRIER, UNANCHORED (ROADWAY)*

HORIZONTAL SCALE IN FEET
0 1.5 3 6

MOT TYPICAL SECTION PHASE 5

DESIGN AGENCY
2LMN

DESIGNER JJR
REVIEWER ALL 11/24/21
PROJECT ID 109309
SHEET 32 TOTAL 95

JEF-7-13.68

MODEL: Sheet PAPERSIZE: 34x22 (in.) DATE: 8/24/2022 TIME: 11:58:15 AM USER: Josh_Rognon
V:\Projects\KNEI_109309_JEF_7_13.69\400-Engineering\MOT\Sheets\109309_MY005.dgn

LEGEND

DIRECTION OF TRAVEL	YEL - ITEM 614 - WORK ZONE EDGE LINE, CLASS I, 6", 873 (YELLOW)
DRUMS	WEL - ITEM 614 - WORK ZONE EDGE LINE, CLASS I, 6", 873 (WHITE)
ITEM 622 PORTABLE BARRIER, UNANCHORED (PCB)	CH - ITEM 614 - WORK ZONE CHANNELIZING LINE, CLASS I, 12", 873
ATTENUATOR	DL - ITEM 614 - WORK ZONE DOTTED LINE, CLASS I, 6", 873
WORK AREA	
XXXXXX REMOVE EXISTING MARKINGS	

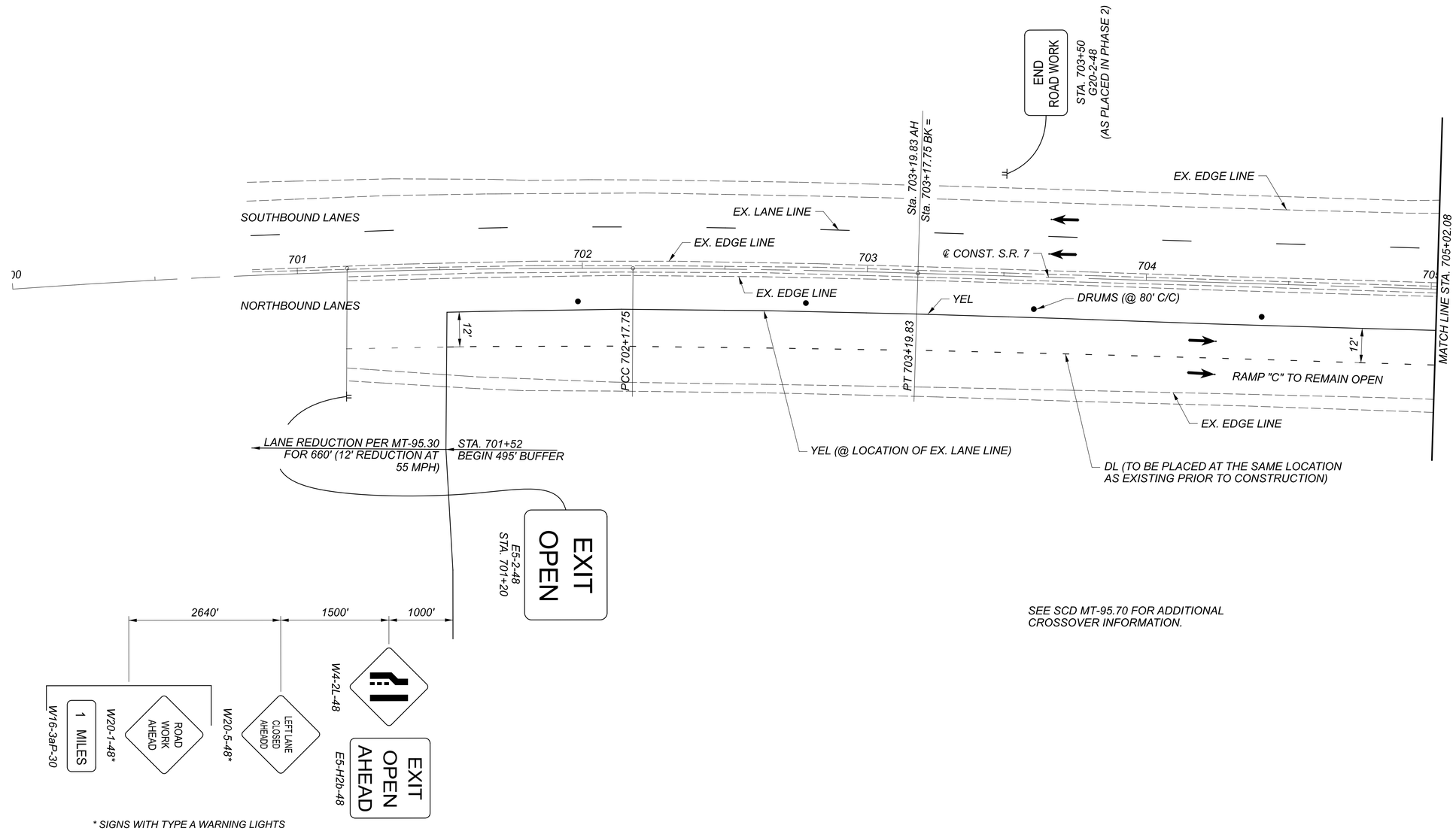

SEE SCD MT-95.70 FOR ADDITIONAL CROSSOVER INFORMATION.

* SIGNS WITH TYPE A WARNING LIGHTS

HORIZONTAL SCALE IN FEET
0 10 20 40

MAINTENANCE OF TRAFFIC PHASE 5

JEF-7-13.68

MODEL: 109309_MPS01 PAPERSIZE: 34x22 (In.) DATE: 8/24/2022 TIME: 11:58:22 AM USER: Josh_Rognon
V:\Projects\KNE\109309_JEF_7_13.69\400-Engineering\MOT\Sheets\109309_MPS01.dgn

DESIGN AGENCY
2LMN

DESIGNER
JJR

REVIEWER
ALL 11/24/21

PROJECT ID
109309

SHEET 33 TOTAL 95

LEGEND

DIRECTION OF TRAVEL	YEL - ITEM 614 - WORK ZONE EDGE LINE, CLASS I, 6", 873 (YELLOW)
DRUMS	WEL - ITEM 614 - WORK ZONE EDGE LINE, CLASS I, 6", 873 (WHITE)
ITEM 622 PORTABLE BARRIER, UNANCHORED (PCB)	CH - ITEM 614 - WORK ZONE CHANNELIZING LINE, CLASS I, 12", 873
ATTENUATOR	DL - ITEM 614 - WORK ZONE DOTTED LINE, CLASS I, 6", 873
WORK AREA	
XXXXXX REMOVE EXISTING MARKINGS	

CURVE DATA
P.I. = Sta. 200+66.67
Δ = 03°59'56" RT
Dc = 03°00'00"
R = 1,909.90'
T = 66.67'
L = 133.29'
E = 1.16'

CURVE # 1
PC = N-244959.025
E-2496240.592

PRC = N-245074.392
E-2496307.307

PI = N-245017.873
E-249271.936

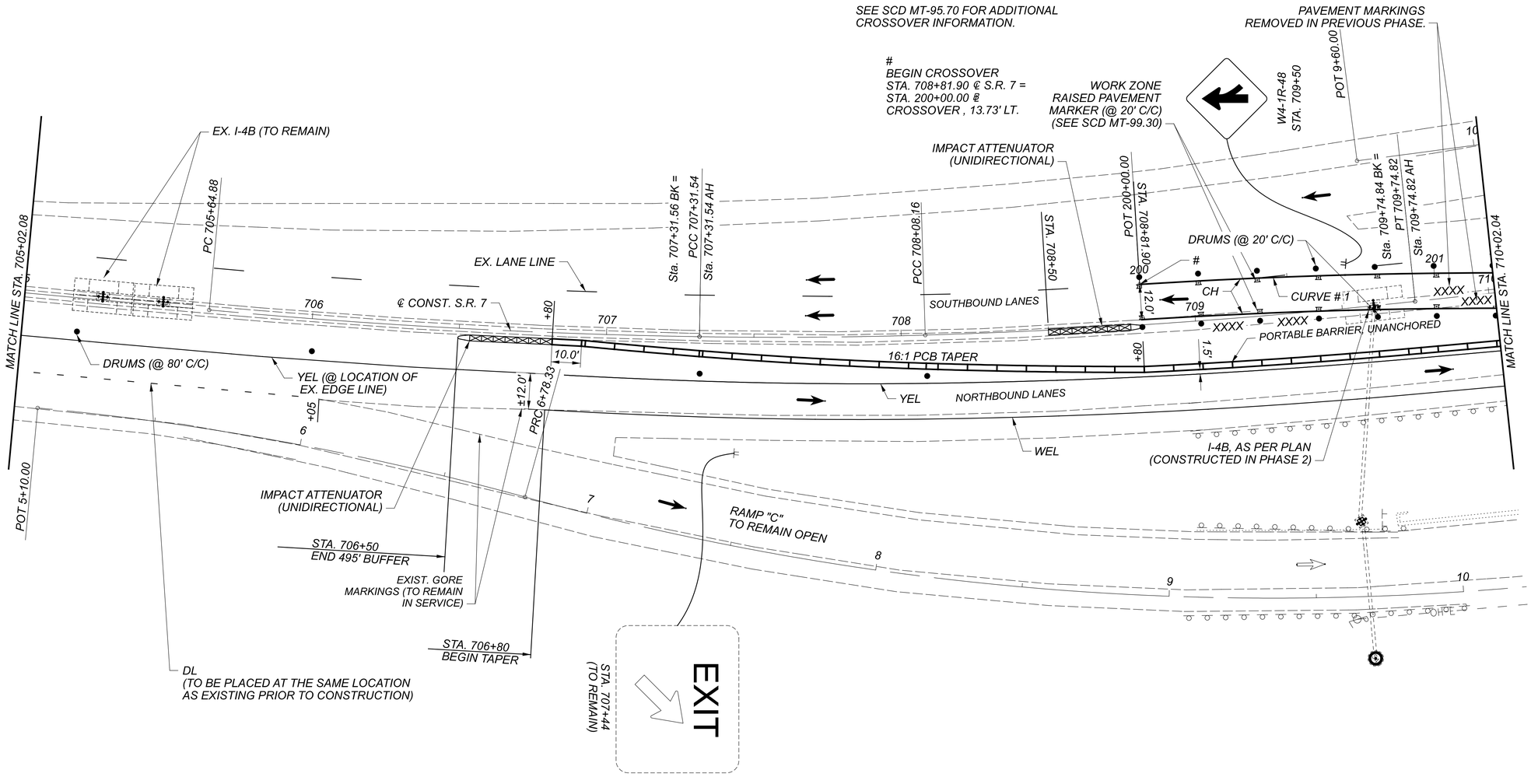

HORIZONTAL SCALE IN FEET
0 10 20 40

MAINTENANCE OF TRAFFIC PHASE 5

DESIGN AGENCY
2LMN

DESIGNER JJR
REVIEWER ALL 11/24/21
PROJECT ID 109309
SHEET 34 TOTAL 95

JEF-7-13.68

MODEL: I09309_MP502 PAPERSIZE: 34x22 (In.) DATE: 8/24/2022 TIME: 11:58:29 AM USER: Josh_Rognon
V:\Projects\KNE_I09309_JEF-7_13.69\400-Engineering\MOT\Sheets\I09309_MP502.dgn

LEGEND

DIRECTION OF TRAVEL
DRUMS
ITEM 622 PORTABLE BARRIER, UNANCHORED (PCB)
ATTENUATOR
WORK AREA
XXXXXX REMOVE EXISTING MARKINGS

YEL - ITEM 614 - WORK ZONE EDGE LINE, CLASS I, 6", 873 (YELLOW)
WEL - ITEM 614 - WORK ZONE EDGE LINE, CLASS I, 6", 873 (WHITE)
CH - ITEM 614 - WORK ZONE CHANNELIZING LINE, CLASS I, 12", 873
DL - ITEM 614 - WORK ZONE DOTTED LINE, CLASS I, 6", 873

CURVE # 2
PRC = N-245074.392
E-2496307.307

PT = N-245262.756
E-2496410.917

PI = N-245165.654
E-2496364.421

CURVE DATA
P.I. = Sta. 202+40.96
Δ = 06°27'10" LT
Dc = 03°00'00"
R = 1,909.90'
T = 107.66'
L = 215.09'
E = 3.03'

TS 12+64.02
ST 12+60.00

W1-4R-48
STA. 712+20

SC 13+44.02

POT 14+38.90
POT 14+48.69

LOGAN AVE.

PT 14+19.74

TYPE B WARNING LIGHTS

W1-6R-72
STA. 710+05

RAMP "A" (TO REMAIN OPEN)

STA. 712+11
(TO REMAIN)

FOR LOGAN AVENUE MOT DETAILS SEE SHEETS 40-41.

PRC 201+33.29

PT 203+48.39

WORK ZONE RAISED PAVEMENT MARKER (@ 20' C/C) (SEE SCD MT-99.30)

DRUMS (@ 20' C/C)

PAVEMENT MARKINGS REMOVED IN PREVIOUS PHASE.

SOUTHBOUND LANES

CURVE # 2

CH

MATCH LINE STA. 710+02.04

MATCH LINE STA. 715+02.04

NORTHBOUND LANES

YEL

WEL

END TAPER
STA. 712+30

PORTABLE BARRIER, UNANCHORED WITH GLARE SCREEN

PORTABLE BARRIER, UNANCHORED

TO NEWLY CONSTRUCTION BRIDGE PARAPET IN THE PREVIOUS PAGE

PORTABLE BARRIER, UNANCHORED WITH GLARE SCREEN

PORTABLE BARRIER, ANCHORED

PT 10+28.89

RAMP "C" (TO REMAIN OPEN)

PC 11+80.24

POT 12+96.91

LOGAN AVE.

\# PRC CROSSOVER
STA. 710+15.36 ℄ S.R. 7 =
STA. 201+33.29 ℄
CROSSOVER, 5.35' LT.

SEE SCD MT-95.70 FOR ADDITIONAL CROSSOVER DETAILS.

PT CROSSOVER
STA. 712+30.00 ℄ S.R. 7 =
STA. 203+48.39 ℄
CROSSOVER, 6.75' RT.

HORIZONTAL SCALE IN FEET
0 10 20 40

MAINTENANCE OF TRAFFIC
PHASE 5

DESIGN AGENCY
2LMN

DESIGNER
JJR

REVIEWER
ALL 11/24/21

PROJECT ID
109309

SHEET 35 TOTAL 95

JEF-7-13.68

MODEL: 109309_MP503 PAPERSIZE: 34x22 (in.) DATE: 8/24/2022 TIME: 11:58:35 AM USER: Josh_Rognon
V:\Projects\KNEL_109309_JEF_7_13.69\400-Engineering\MOT\Sheets\109309_MP503.dgn

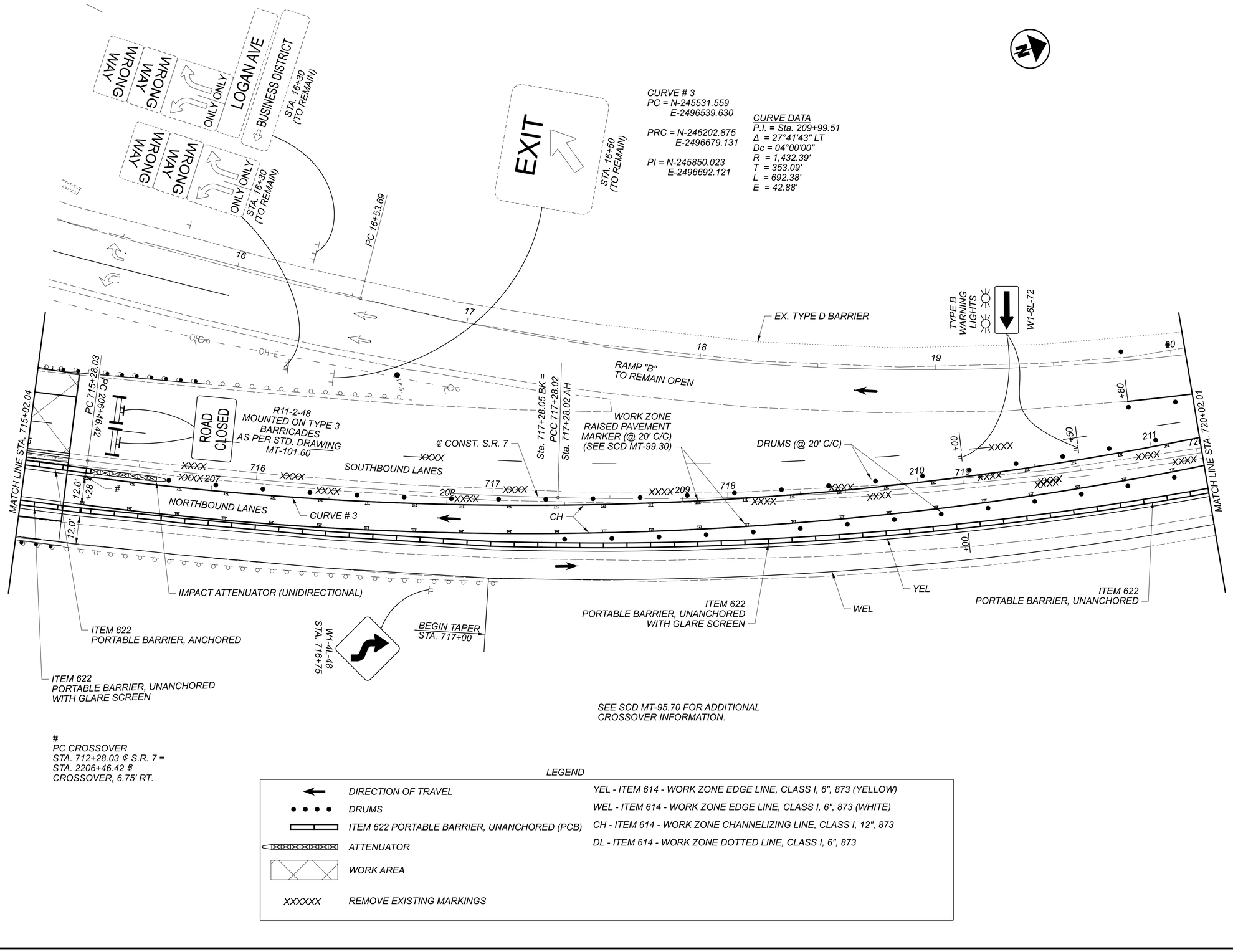

SEE SCD MT-95.70 FOR ADDITIONAL CROSSOVER INFORMATION.

#
PC CROSSOVER
STA. 712+28.03 ℄ S.R. 7 =
STA. 2206+46.42 ℄
CROSSOVER, 6.75' RT.

LEGEND

DIRECTION OF TRAVEL	YEL - ITEM 614 - WORK ZONE EDGE LINE, CLASS I, 6", 873 (YELLOW)
DRUMS	WEL - ITEM 614 - WORK ZONE EDGE LINE, CLASS I, 6", 873 (WHITE)
ITEM 622 PORTABLE BARRIER, UNANCHORED (PCB)	CH - ITEM 614 - WORK ZONE CHANNELIZING LINE, CLASS I, 12", 873
ATTENUATOR	DL - ITEM 614 - WORK ZONE DOTTED LINE, CLASS I, 6", 873
WORK AREA	
XXXXXX REMOVE EXISTING MARKINGS	

HORIZONTAL SCALE IN FEET
0 10 20 40

MAINTENANCE OF TRAFFIC PHASE 5

DESIGN AGENCY
2LMN

DESIGNER JJR
REVIEWER ALL 11/24/21
PROJECT ID 109309
SHEET 36 TOTAL 95

JEF-7-13.68

MODEL: 109309_MP504 PAPERSIZE: 34x22 (in.) DATE: 8/24/2022 TIME: 11:58:42 AM USER: Josh_Rognon
V:\Projects\KNEL_109309_JEF_7_13.69\400-Engineering\MOT\Sheets\109309_MP504.dgn

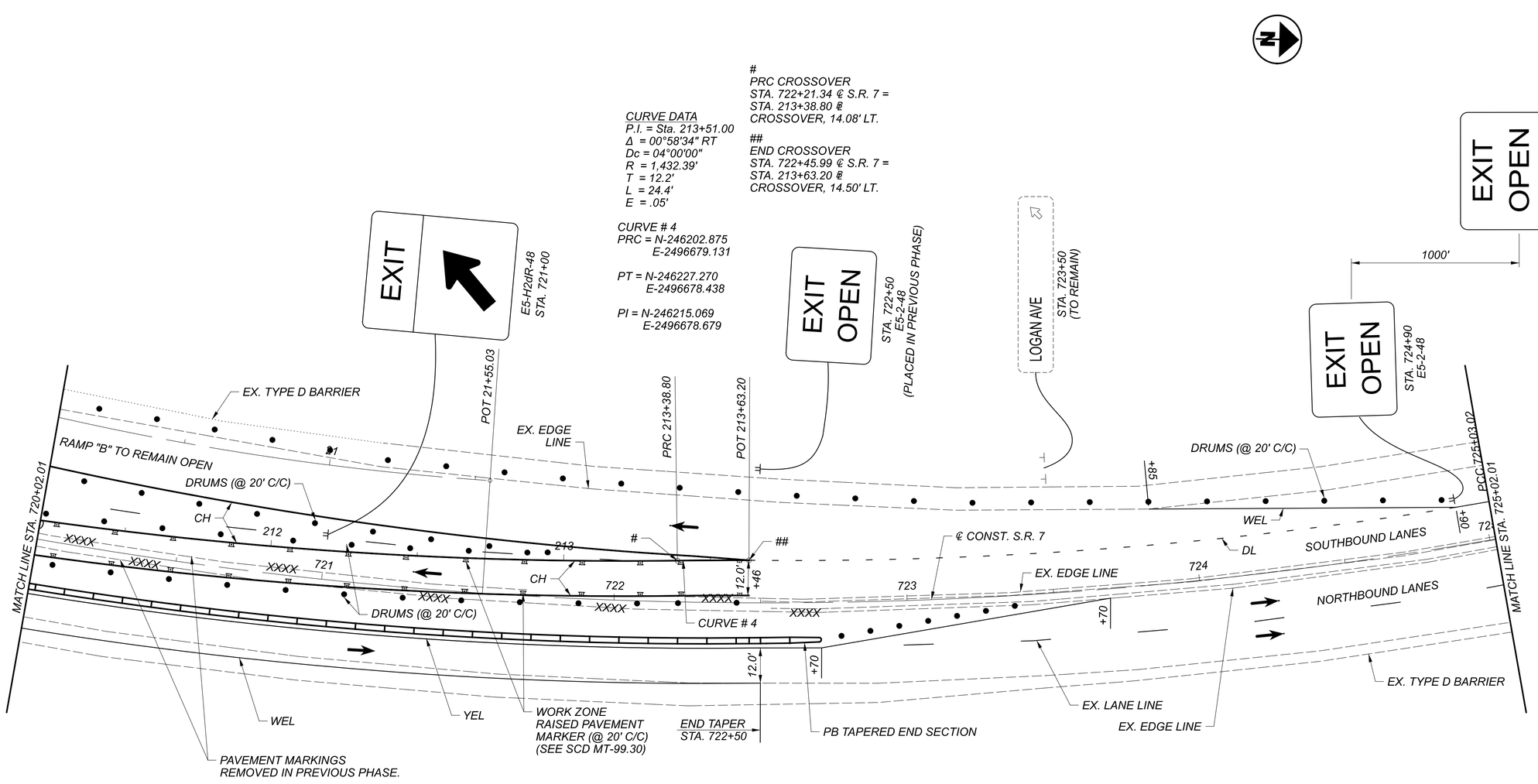

SEE SCD MT-95.70 FOR ADDITIONAL
CROSSOVER INFORMATION.

LEGEND

DIRECTION OF TRAVEL	YEL - ITEM 614 - WORK ZONE EDGE LINE, CLASS I, 6", 873 (YELLOW)
DRUMS	WEL - ITEM 614 - WORK ZONE EDGE LINE, CLASS I, 6", 873 (WHITE)
ITEM 622 PORTABLE BARRIER, UNANCHORED (PCB)	CH - ITEM 614 - WORK ZONE CHANNELIZING LINE, CLASS I, 12", 873
ATTENUATOR	DL - ITEM 614 - WORK ZONE DOTTED LINE, CLASS I, 6", 873
WORK AREA	
XXXXXX REMOVE EXISTING MARKINGS	

HORIZONTAL SCALE IN FEET
0 10 20 40

MAINTENANCE OF TRAFFIC PHASE 5

DESIGN AGENCY
2LMN

DESIGNER JJR
REVIEWER ALL 11/24/21
PROJECT ID 109309
SHEET 37 TOTAL 95

JEF-7-13.68

MODEL: I09309_MP505 PAPERSIZE: 34x22 (in.) DATE: 8/24/2022 TIME: 11:58:49 AM USER: Josh_Rognon
V:\Projects\KNE_I09309_JEF-7_13.69\400-Engineering\MOT\Sheets\I09309_MP505.dgn

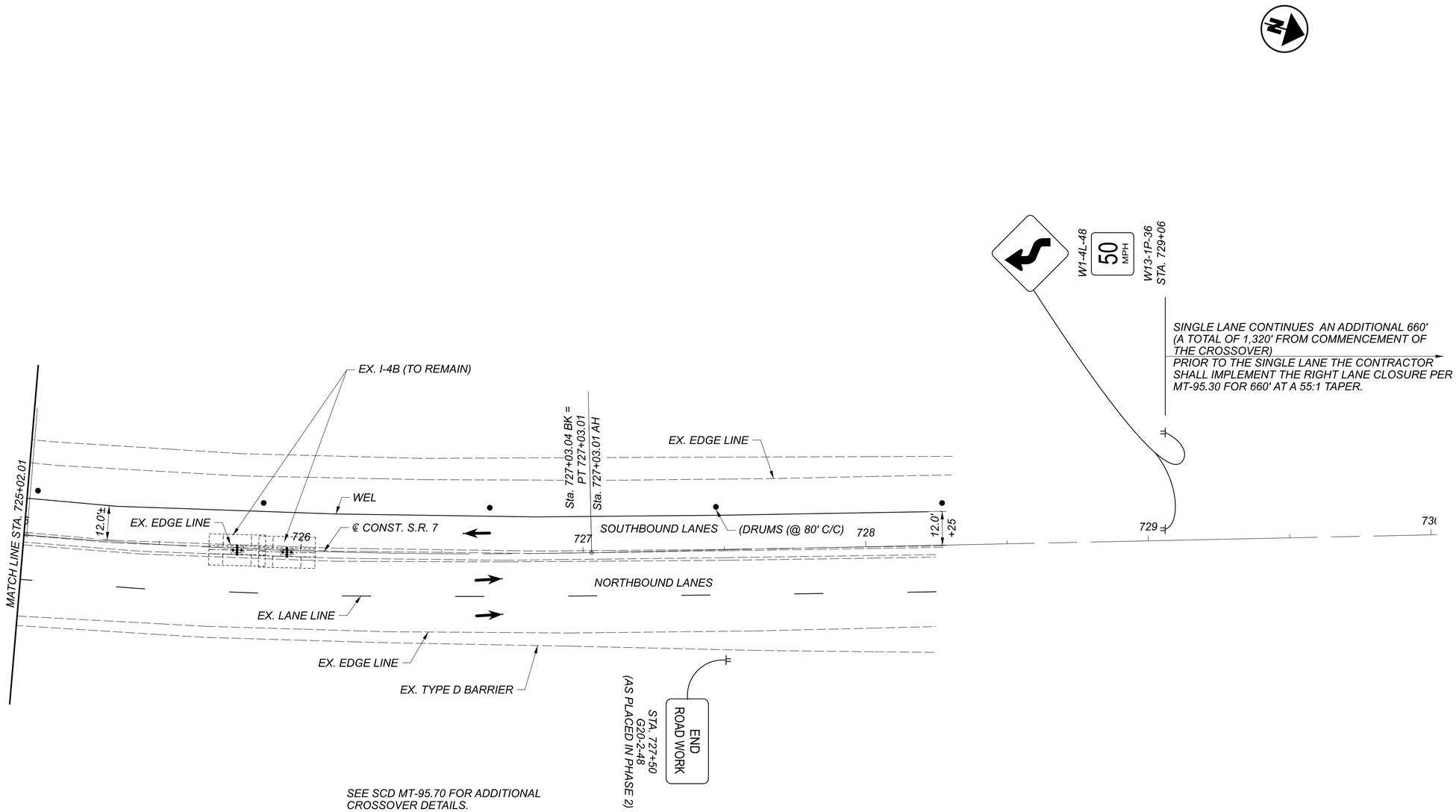

SEE SCD MT-95.70 FOR ADDITIONAL CROSSOVER DETAILS.

LEGEND

DIRECTION OF TRAVEL	YEL - ITEM 614 - WORK ZONE EDGE LINE, CLASS I, 6", 873 (YELLOW)
DRUMS	WEL - ITEM 614 - WORK ZONE EDGE LINE, CLASS I, 6", 873 (WHITE)
ITEM 622 PORTABLE BARRIER, UNANCHORED (PCB)	CH - ITEM 614 - WORK ZONE CHANNELIZING LINE, CLASS I, 12", 873
ATTENUATOR	DL - ITEM 614 - WORK ZONE DOTTED LINE, CLASS I, 6", 873
WORK AREA	
XXXXXX REMOVE EXISTING MARKINGS	

HORIZONTAL SCALE IN FEET
0 10 20 30

MAINTENANCE OF TRAFFIC PHASE 5

DESIGN AGENCY
2LMN

DESIGNER JJR
REVIEWER ALL 11/24/21
PROJECT ID 109309
SHEET 38 TOTAL 95

JEF-7-13.68

MODEL: 109309_MP506 PAPERSIZE: 34x22 (in.) DATE: 8/24/2022 TIME: 11:58:56 AM USER: Josh_Rognon
V:\Projects\KNE\109309_JEF_7_13.69\400-Engineering\MOT\Sheets\109309_MP506.dgn

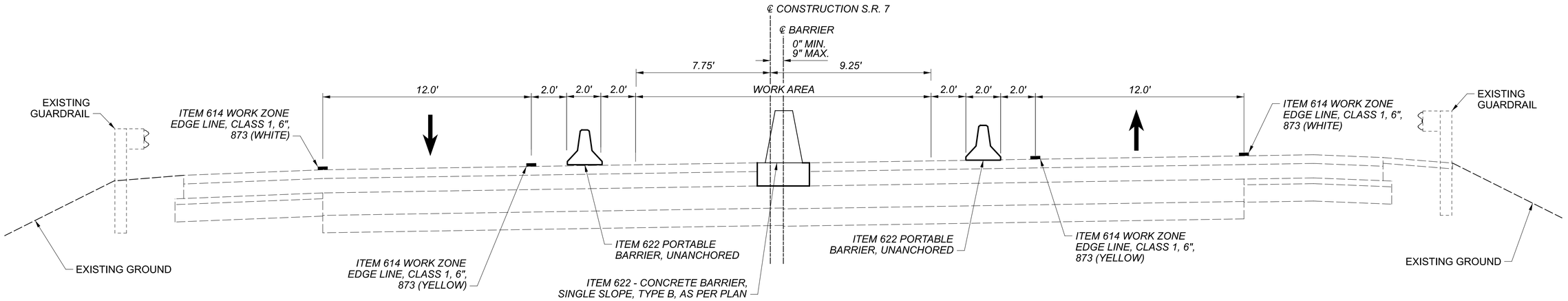

PHASE 6 CONSTRUCTION

STA. 708+50 - STA. 709+74.84 (BK) = 124.84 FT.
STA. 709+74.82 (AH) - STA. 717+28.05 (BK) = 753.23 FT.
STA. 717+28.02 (AH) - STA. 722+50 = 521.98 FT.
TOTAL = 1400.05 FT.

NOTE:
FOR ENTRANCE AND EXIT TRANSITIONS
SEE SHEETS 40-44.

HORIZONTAL SCALE IN FEET
0 1.5 3 6

MOT TYPICAL SECTION PHASE 6

DESIGN AGENCY
2LMN

DESIGNER
JJR

REVIEWER
ALL 11/24/21

PROJECT ID
109309

SHEET 39 TOTAL 95

JEF-7-13.68

MODEL: Sheet PAPERSIZE: 34x22 (in.) DATE: 8/24/2022 TIME: 11:59:02 AM USER: Josh_Rognon
V:\Projects\KNE_109309_JEF_7_13.69\400-Engineering\MOT\Sheets\109309_MY006.dgn

LEGEND

DIRECTION OF TRAVEL

DRUMS

PORTABLE CONCRETE BARRIER, 32" (PCB)

ATTENUATOR

WORK AREA

YEL - ITEM 614 - WORK ZONE EDGE LINE, CLASS I, 6", 873 (YELLOW)

WEL - ITEM 614 - WORK ZONE EDGE LINE, CLASS I, 6", 873 (WHITE)

CH - ITEM 614 - WORK ZONE CHANNELIZING LINE, CLASS I, 12", 873

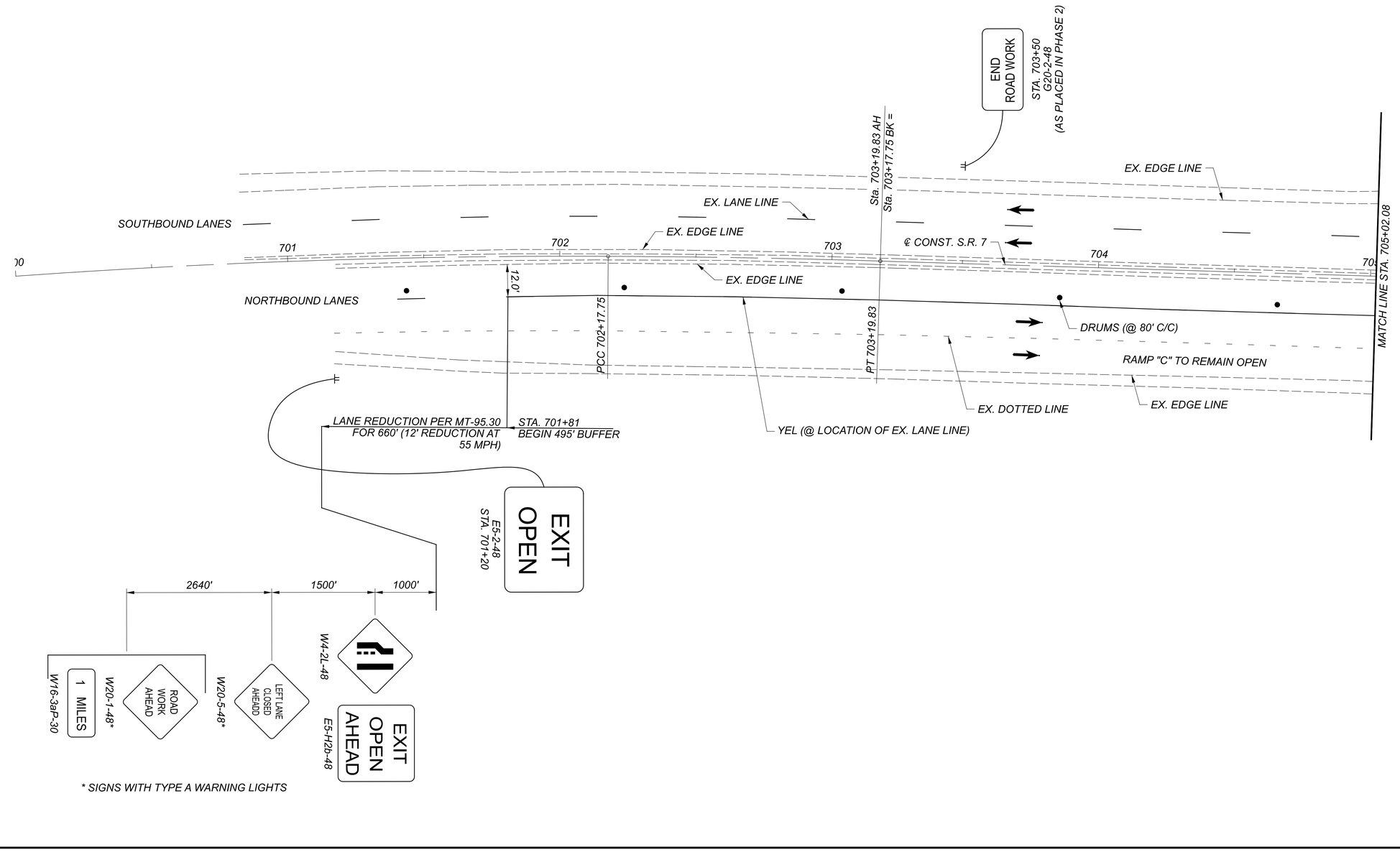

* SIGNS WITH TYPE A WARNING LIGHTS

HORIZONTAL SCALE IN FEET
0 10 20 40

MAINTENANCE OF TRAFFIC PHASE 6

JEF-7-13.68

MODEL: I09309_MP60I PAPERSIZE: 34x22 (in.) DATE: 8/24/2022 TIME: 11:59:10 AM USER: Josh_Rognon
V:\Projects\KNEL\I09309_JEF_7_13.69\400-Engineering\MOT\Sheets\I09309_MP60I.dgn

DESIGN AGENCY
2LMN
DESIGNER
JJR
REVIEWER
ALL 11/24/21
PROJECT ID
109309
SHEET 40
TOTAL 95

LEGEND

- DIRECTION OF TRAVEL
- DRUMS
- PORTABLE CONCRETE BARRIER, 32" (PCB)
- ATTENUATOR
- WORK AREA

YEL - ITEM 614 - WORK ZONE EDGE LINE, CLASS I, 6", 873 (YELLOW)

WEL - ITEM 614 - WORK ZONE EDGE LINE, CLASS I, 6", 873 (WHITE)

CH - ITEM 614 - WORK ZONE CHANNELIZING LINE, CLASS I, 12", 873

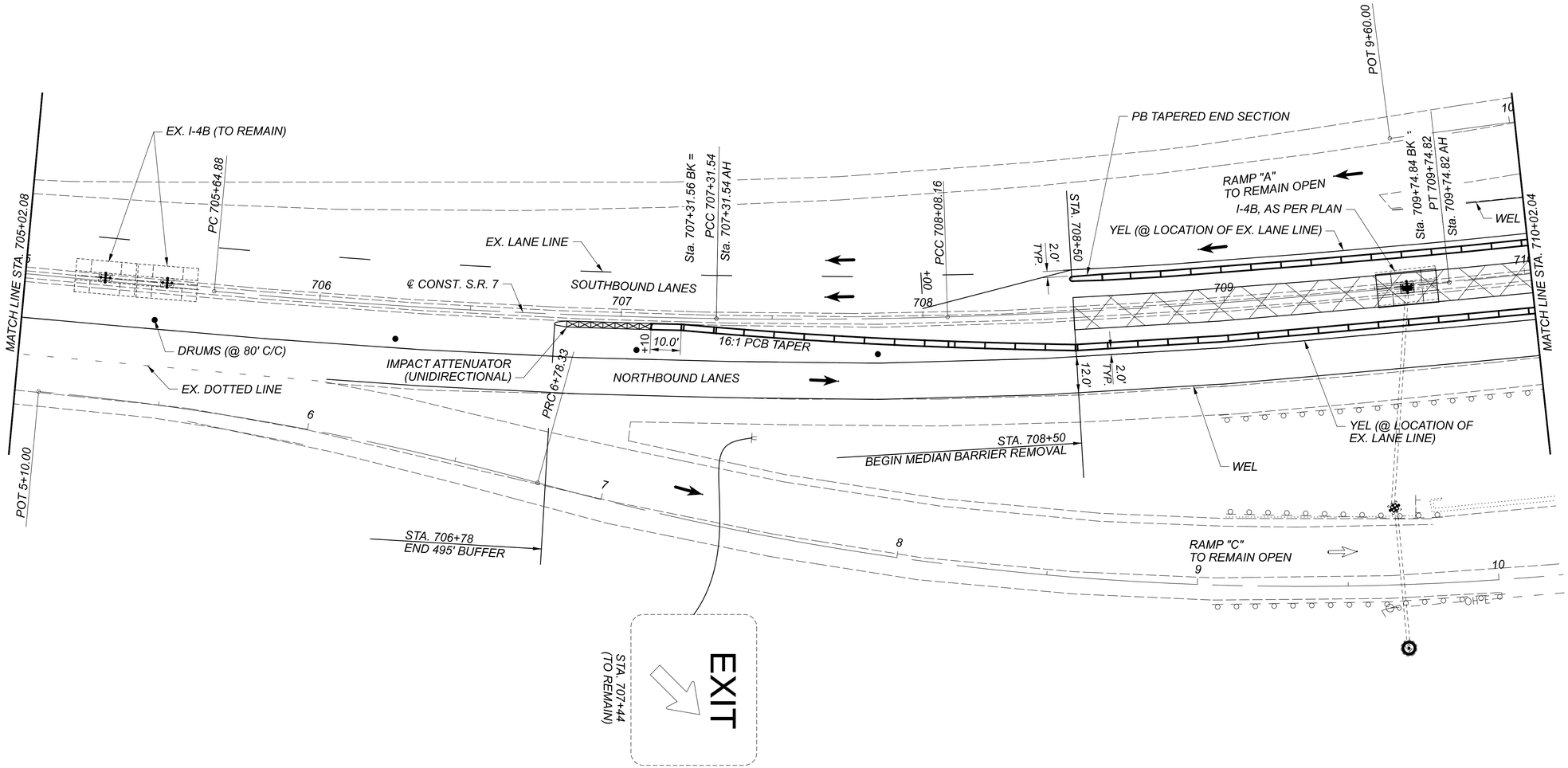

HORIZONTAL SCALE IN FEET
0 10 20 40

MAINTENANCE OF TRAFFIC PHASE 6

DESIGN AGENCY
2LMN

DESIGNER JJR

REVIEWER ALL 11/24/21

PROJECT ID 109309

SHEET 41 TOTAL 95

JEF-7-13.68

MODEL: 109309_MP602 PAPERSIZE: 34x22 (in.) DATE: 8/24/2022 TIME: 11:59:17 AM USER: Josh_Rognon
V:\Projects\KNE_109309_JEF_7_13.69\400-Engineering\MOT\Sheets\109309_MP602.dgn

LEGEND

DIRECTION OF TRAVEL
DRUMS
PORTABLE CONCRETE BARRIER, 32" (PCB)
ATTENUATOR
WORK AREA

YEL - ITEM 614 - WORK ZONE EDGE LINE, CLASS I, 6", 873 (YELLOW)
WEL - ITEM 614 - WORK ZONE EDGE LINE, CLASS I, 6", 873 (WHITE)
CH - ITEM 614 - WORK ZONE CHANNELIZING LINE, CLASS I, 12", 873

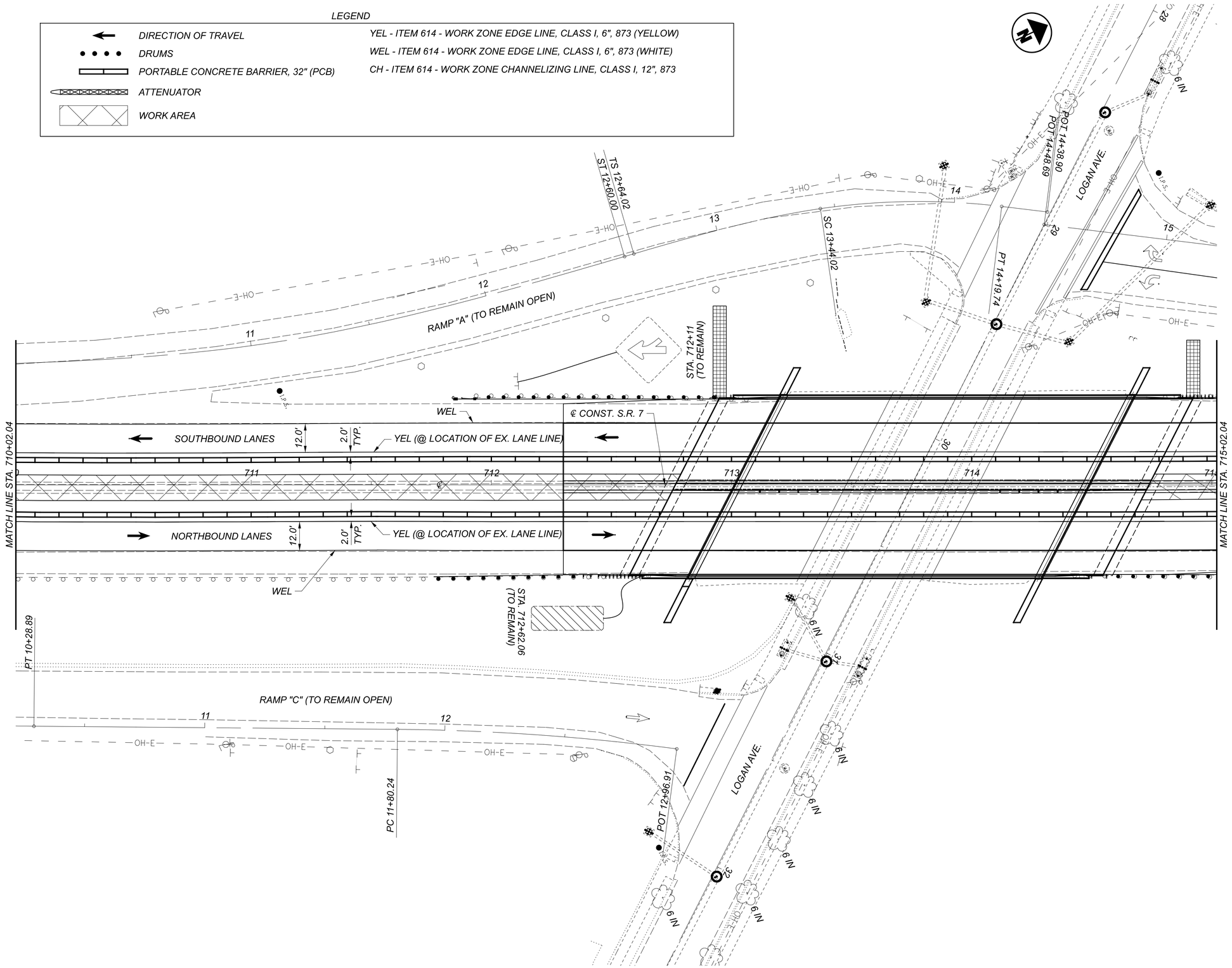

HORIZONTAL SCALE IN FEET
0 10 20 40

MAINTENANCE OF TRAFFIC
PHASE 6

DESIGN AGENCY
2LMN

DESIGNER JJR
REVIEWER ALL 11/24/21
PROJECT ID 109309
SHEET 42 TOTAL 95

JEF-7-13.68

MODEL: I09309_MP603 PAPERSIZE: 34x22 (in.) DATE: 8/24/2022 TIME: 11:59:24 AM USER: Josh.Rognon
V:\Projects\KNEL\109309_JEF_7_13.69\400-Engineering\MOT\Sheets\109309_MP603.dgn

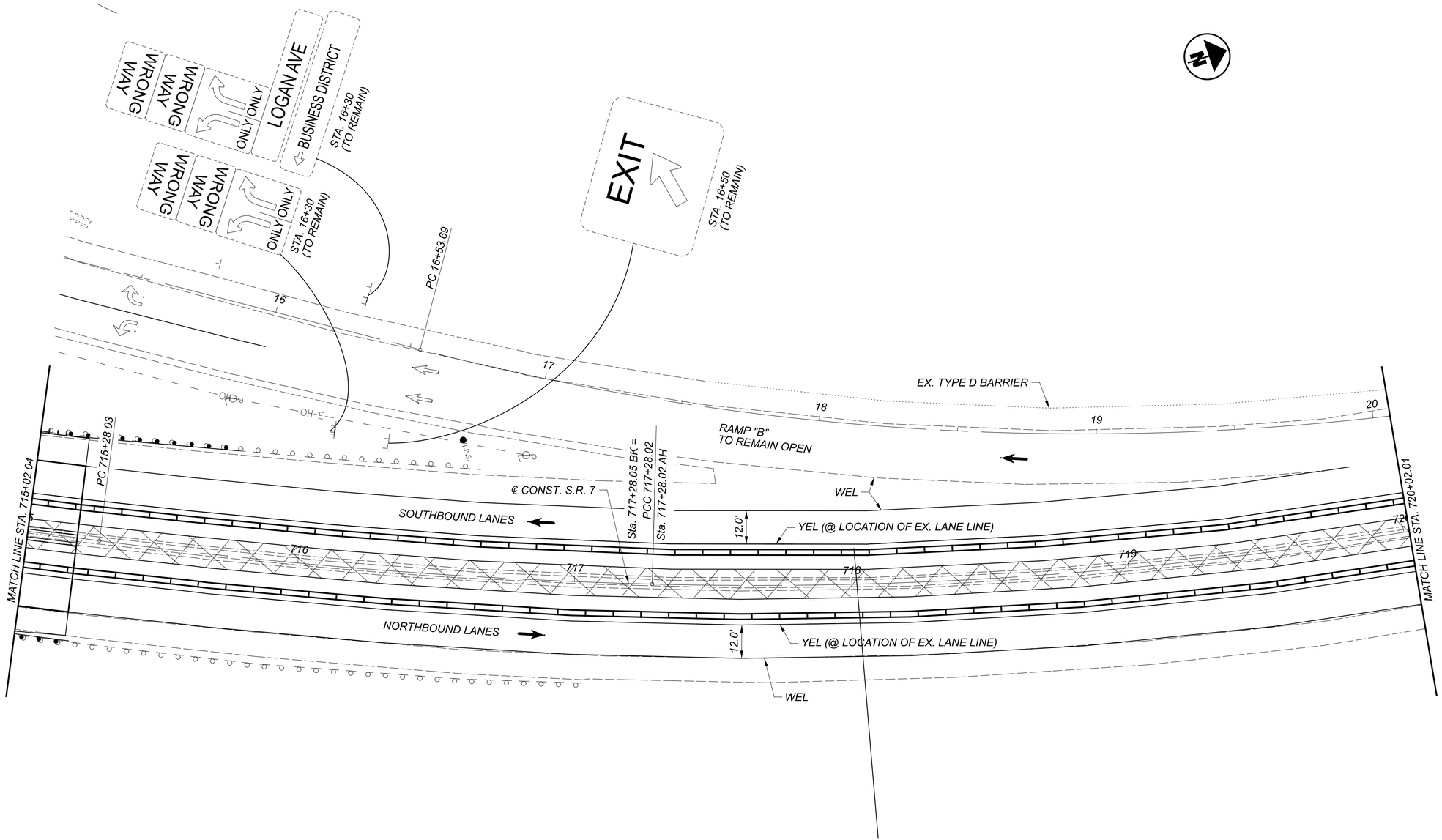

LEGEND

DIRECTION OF TRAVEL	YEL - ITEM 614 - WORK ZONE EDGE LINE, CLASS I, 6", 873 (YELLOW)
DRUMS	WEL - ITEM 614 - WORK ZONE EDGE LINE, CLASS I, 6", 873 (WHITE)
PORTABLE CONCRETE BARRIER, 32" (PCB)	CH - ITEM 614 - WORK ZONE CHANNELIZING LINE, CLASS I, 12", 873
ATTENUATOR	
WORK AREA	

HORIZONTAL SCALE IN FEET
0 10 20 40

MAINTENANCE OF TRAFFIC PHASE 6

JEF-7-13.68

MODEL: 109309_MP604 PAPERSIZE: 34x22 (in.) DATE: 8/24/2022 TIME: 11:59:30 AM USER: Josh_Rognon
V:\Projects\KNE\109309_JEF_7_13.69\400-Engineering\MOT\Sheets\109309_MP604.dgn

DESIGN AGENCY
2LMN

DESIGNER
JJR

REVIEWER
ALL 11/24/21

PROJECT ID
109309

SHEET 43 | TOTAL 95

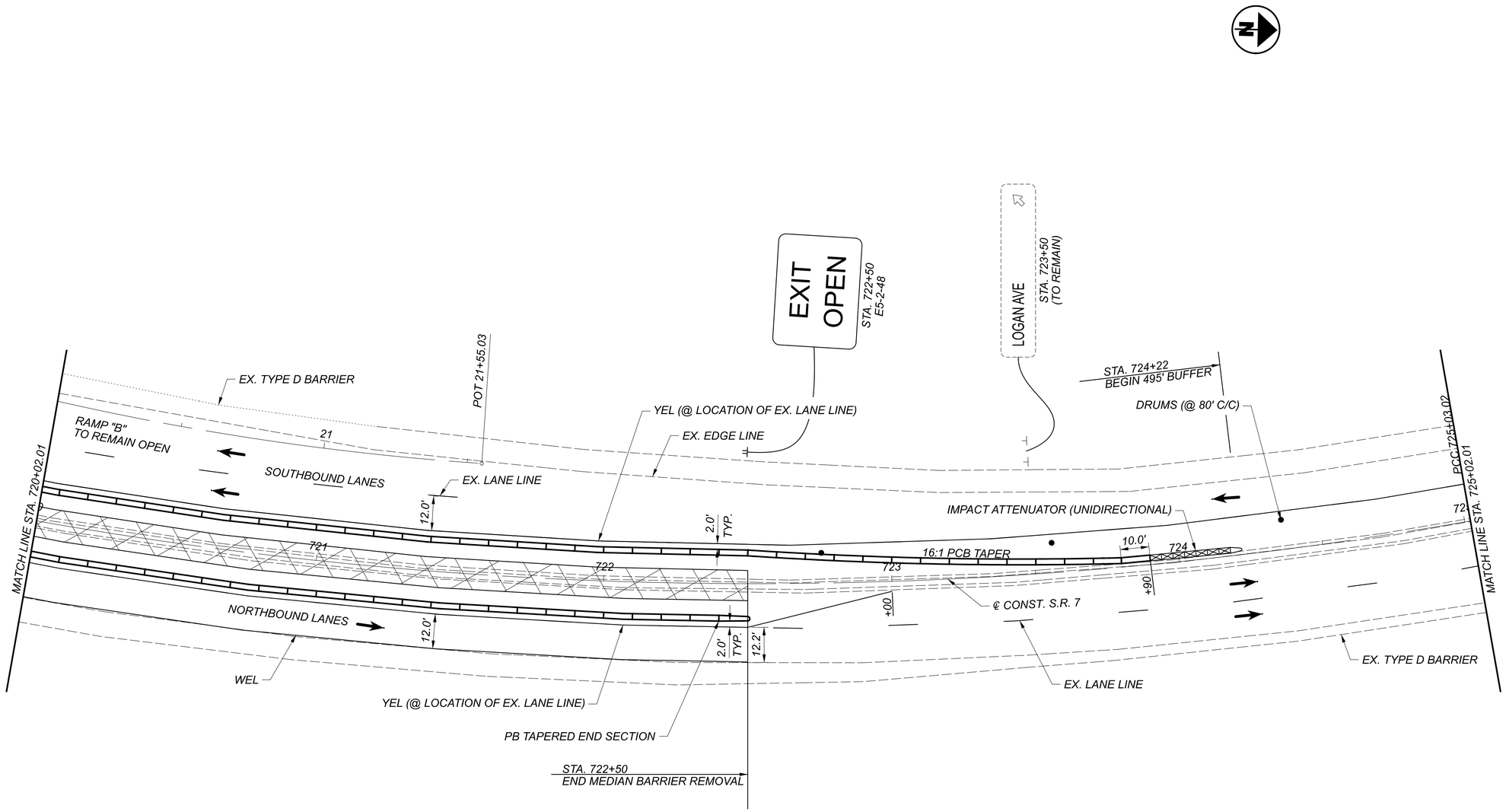

LEGEND

DIRECTION OF TRAVEL	YEL - ITEM 614 - WORK ZONE EDGE LINE, CLASS I, 6", 873 (YELLOW)
DRUMS	WEL - ITEM 614 - WORK ZONE EDGE LINE, CLASS I, 6", 873 (WHITE)
PORTABLE CONCRETE BARRIER, 32" (PCB)	CH - ITEM 614 - WORK ZONE CHANNELIZING LINE, CLASS I, 12", 873
ATTENUATOR	
WORK AREA	

HORIZONTAL SCALE IN FEET
0 10 20 40

MAINTENANCE OF TRAFFIC PHASE 6

DESIGN AGENCY
2LMN

DESIGNER
JJR

REVIEWER
ALL 11/24/21

PROJECT ID
109309

SHEET 44 TOTAL 95

JEF-7-13.68

MODEL: I09309_MP605 PAPERSIZE: 34x22 (In.) DATE: 8/24/2022 TIME: 11:59:36 AM USER: Josh_Rognon
V:\Projects\KNEL\09309_JEF-7_13.69\400-Engineering\MOT\Sheets\09309_MP605.dgn

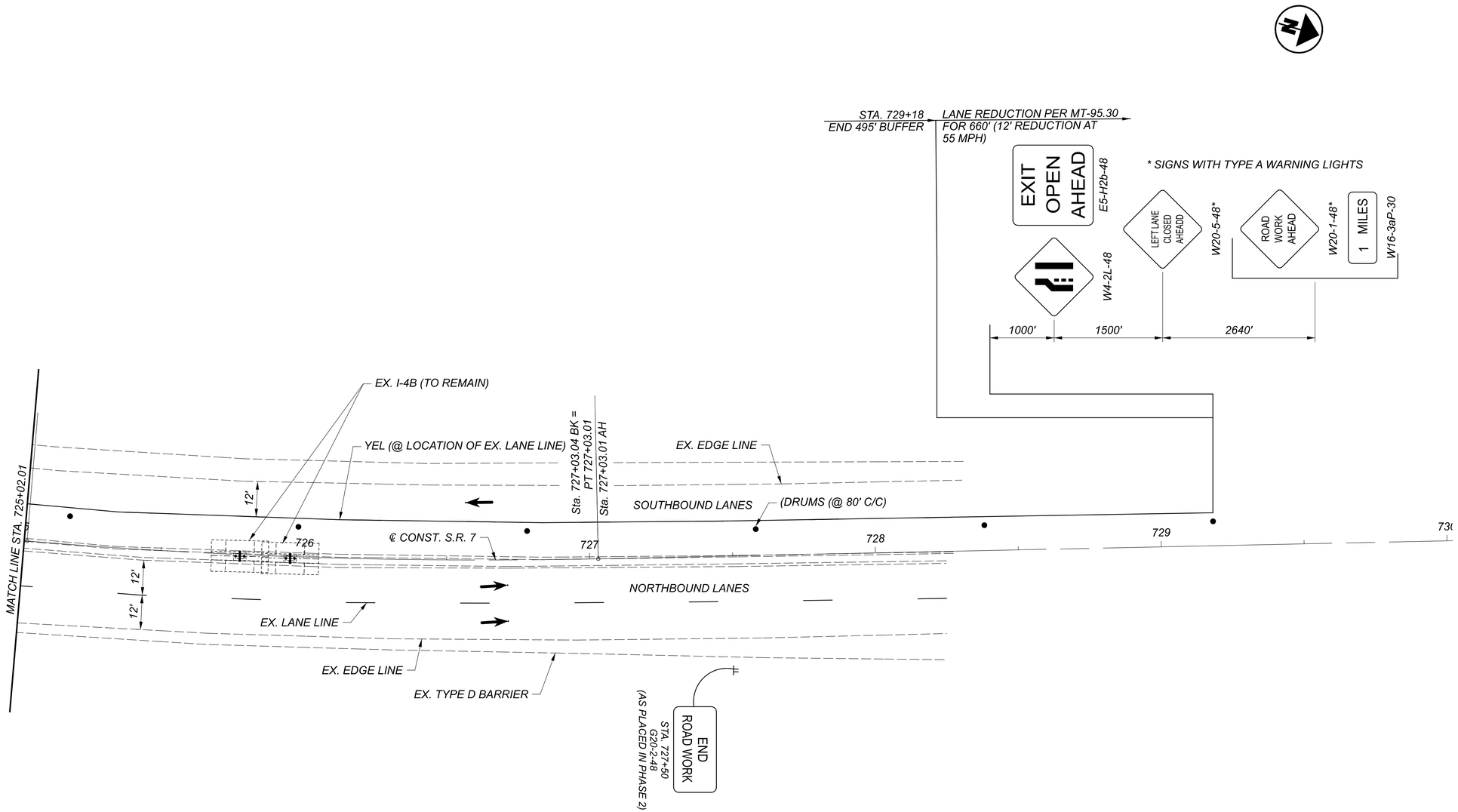

LEGEND

DIRECTION OF TRAVEL	YEL - ITEM 614 - WORK ZONE EDGE LINE, CLASS I, 6", 873 (YELLOW)
DRUMS	WEL - ITEM 614 - WORK ZONE EDGE LINE, CLASS I, 6", 873 (WHITE)
PORTABLE CONCRETE BARRIER, 32" (PCB)	CH - ITEM 614 - WORK ZONE CHANNELIZING LINE, CLASS I, 12", 873
ATTENUATOR	
WORK AREA	

HORIZONTAL SCALE IN FEET
0 10 20 40

MAINTENANCE OF TRAFFIC PHASE 6

DESIGN AGENCY
2LMN

DESIGNER
JJR

REVIEWER
ALL 11/24/21

PROJECT ID
109309

SHEET 45 TOTAL 95

JEF-7-13.68

MODEL: 109309_MP606 PAPERSIZE: 34x22 (in.) DATE: 8/24/2022 TIME: 11:59:43 AM USER: Josh_Rognon
V:\Projects\KNE_109309_JEF_7_13.69\400-Engineering\MOT\Sheets\109309_MP606.dgn

LEGEND

- TEMPORARY SIGN SUPPORT
- WORK ZONE TRAFFIC ANTENUATOR
- PORTABLE BARRIER
- DRUMS
- TYPE III BARRICADE
- TRAFFIC DIRECTION ARROW
- WORK ZONE TRAFFIC SIGNAL
- WORK ZONE SIGNAL POLE
- WORK ZONE PEDESTRIAN PUSHBUTTON AND SIGNAL HEADS
- PHASE 3 WORK AREA
- PHASE 5 WORK AREA
- TYPE A WARNING LIGHT

GENERAL NOTES

1. COVER ALL CONFLICTING EXISTING PAVEMENT MARKINGS AND SIGNS.

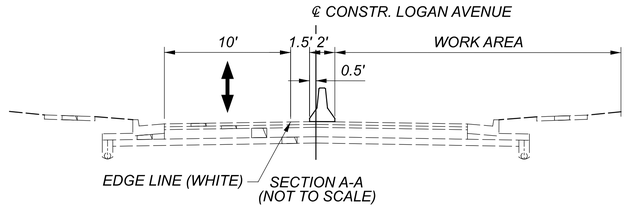

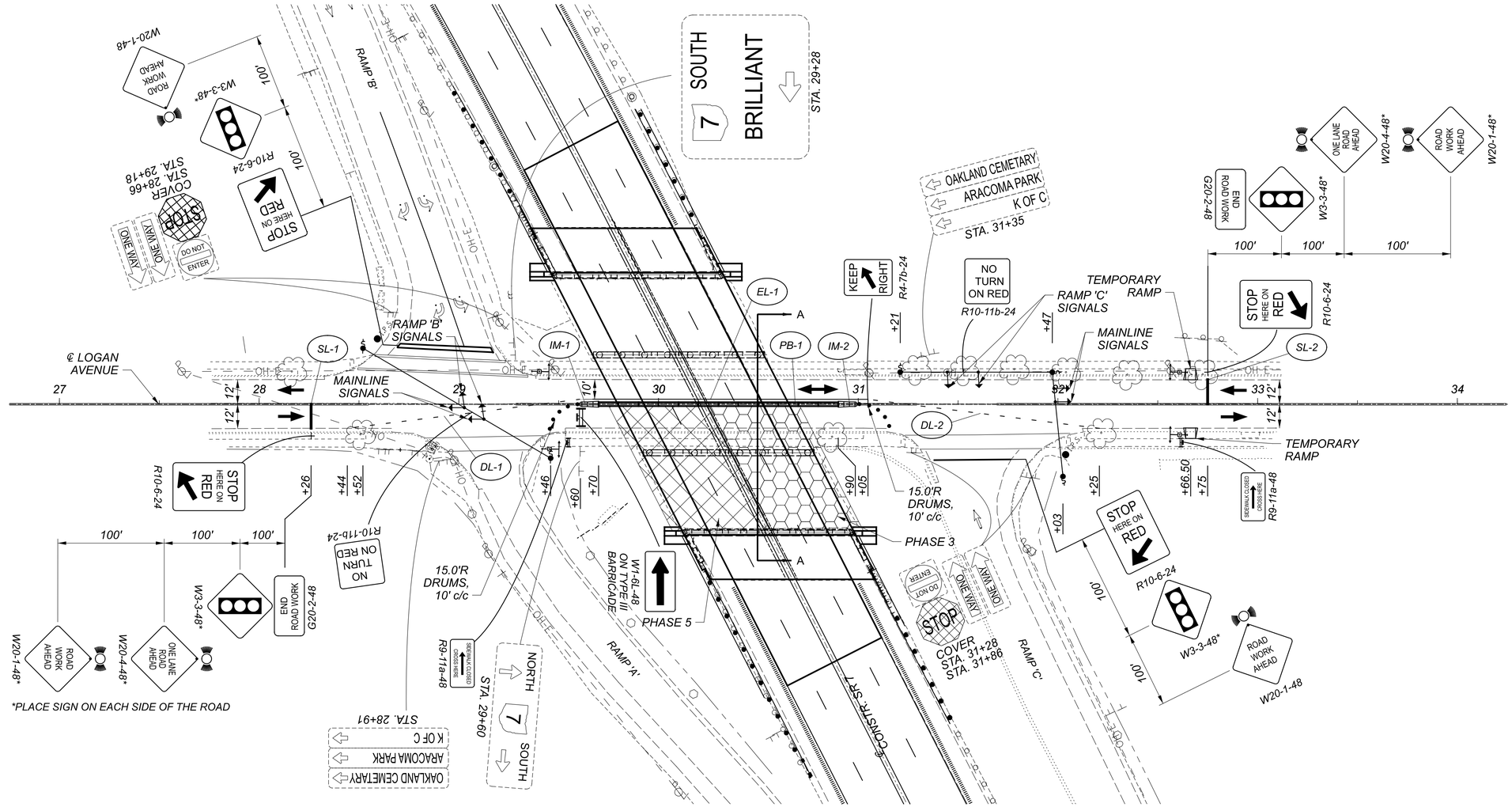

MAINTENANCE OF TRAFFIC PHASE 8A
LOGAN AVENUE

JEF-7-13.68

MODEL: Phase 8A PAPERSIZE: 34x22 (in.) DATE: 8/24/2022 TIME: 12:17:05 PM USER: cplacek
H:\Projects\2019\2019-0430_00 JEF-7-13,69\109309\400-Engineering\MOT\Sheets\109309_MP80i.dgn

DESIGN AGENCY
KORDA

KORDA / NEMETH ENGINEERING, INC
1650 Watermark Drive, Suite 200, Columbus, OH 43215

DESIGNER	ATD
REVIEWER	CLP 09/28/21
PROJECT ID	109309
SHEET	46
TOTAL	95

LEGEND

- TEMPORARY SIGN SUPPORT
- WORK ZONE TRAFFIC ANTENUATOR
- PORTABLE BARRIER
- DRUMS
- TYPE III BARRICADE
- TRAFFIC DIRECTION ARROW
- WORK ZONE TRAFFIC SIGNAL
- WORK ZONE SIGNAL POLE
- WORK ZONE PEDESTRIAN PUSHBUTTON AND SIGNAL HEADS
- PHASE 3 WORK AREA
- PHASE 5 WORK AREA
- TYPE A WARNING LIGHT

GENERAL NOTES

1. COVER ALL CONFLICTING EXISTING PAVEMENT MARKINGS AND SIGNS.

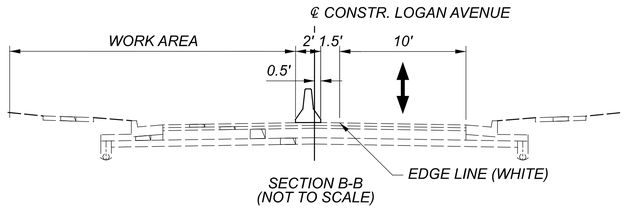

SECTION B-B
(NOT TO SCALE)

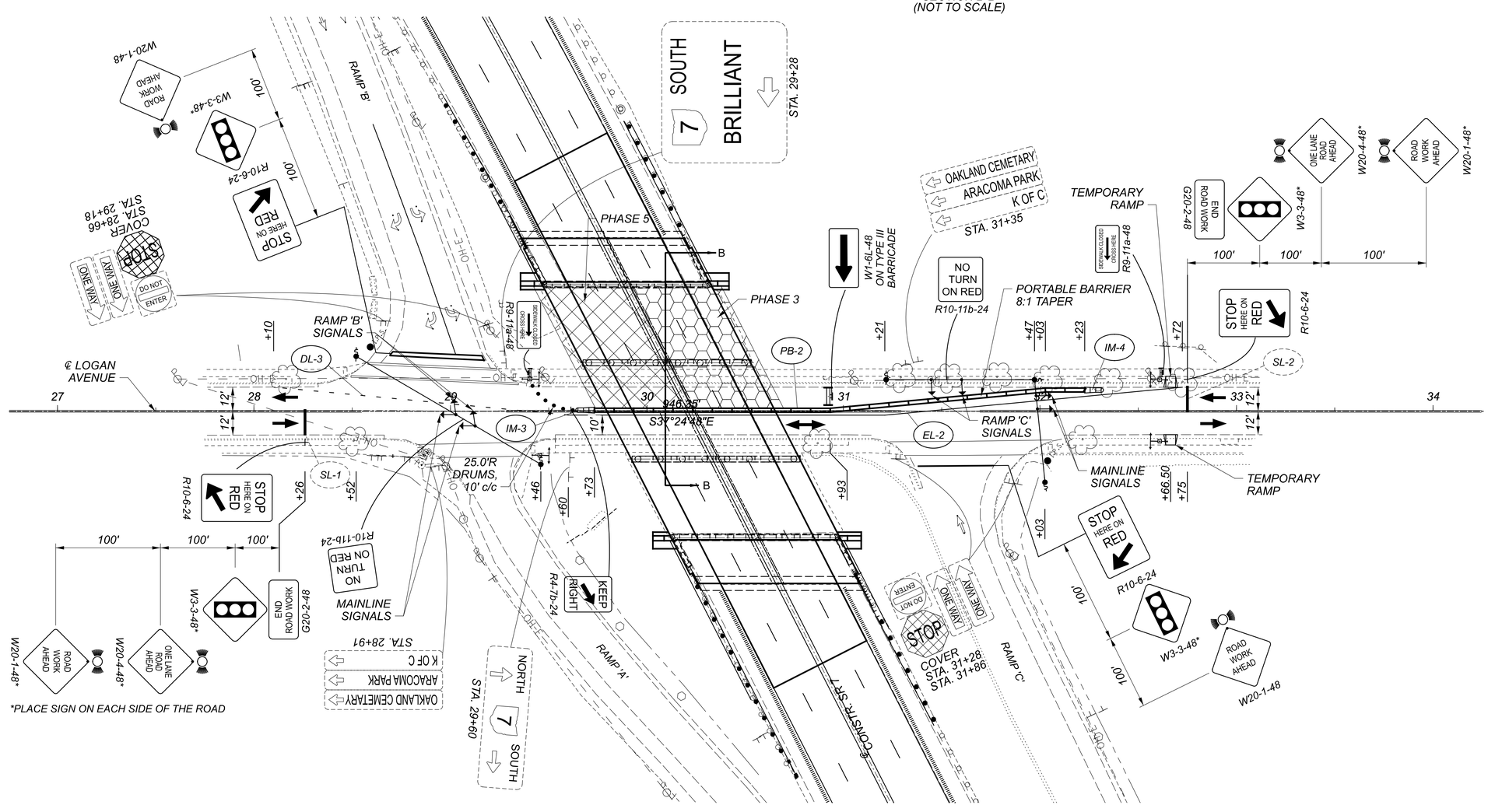

MAINTENANCE OF TRAFFIC PHASE 8B LOGAN AVENUE

DESIGN AGENCY	KORDA
	KORDA / NEMETH ENGINEERING, INC
	1650 Watermark Drive, Suite 200, Columbus, OH 43215
DESIGNER	ATD
REVIEWER	CLP 09/28/21
PROJECT ID	109309
SHEET	47
TOTAL	95

JEF-7-13.68

MODEL: Phase 8B PAPERSIZE: 34x22 (In.) DATE: 8/24/2022 TIME: 12:17:07 PM USER: cplacek
H:\Projects\2019\2019-0430_00 JEF-7-13.69\109309\400-Engineering\MOT\Sheets\109309_MP802.dgn

LOGAN AVENUE DETOUR PLAN

(NOT TO SCALE)

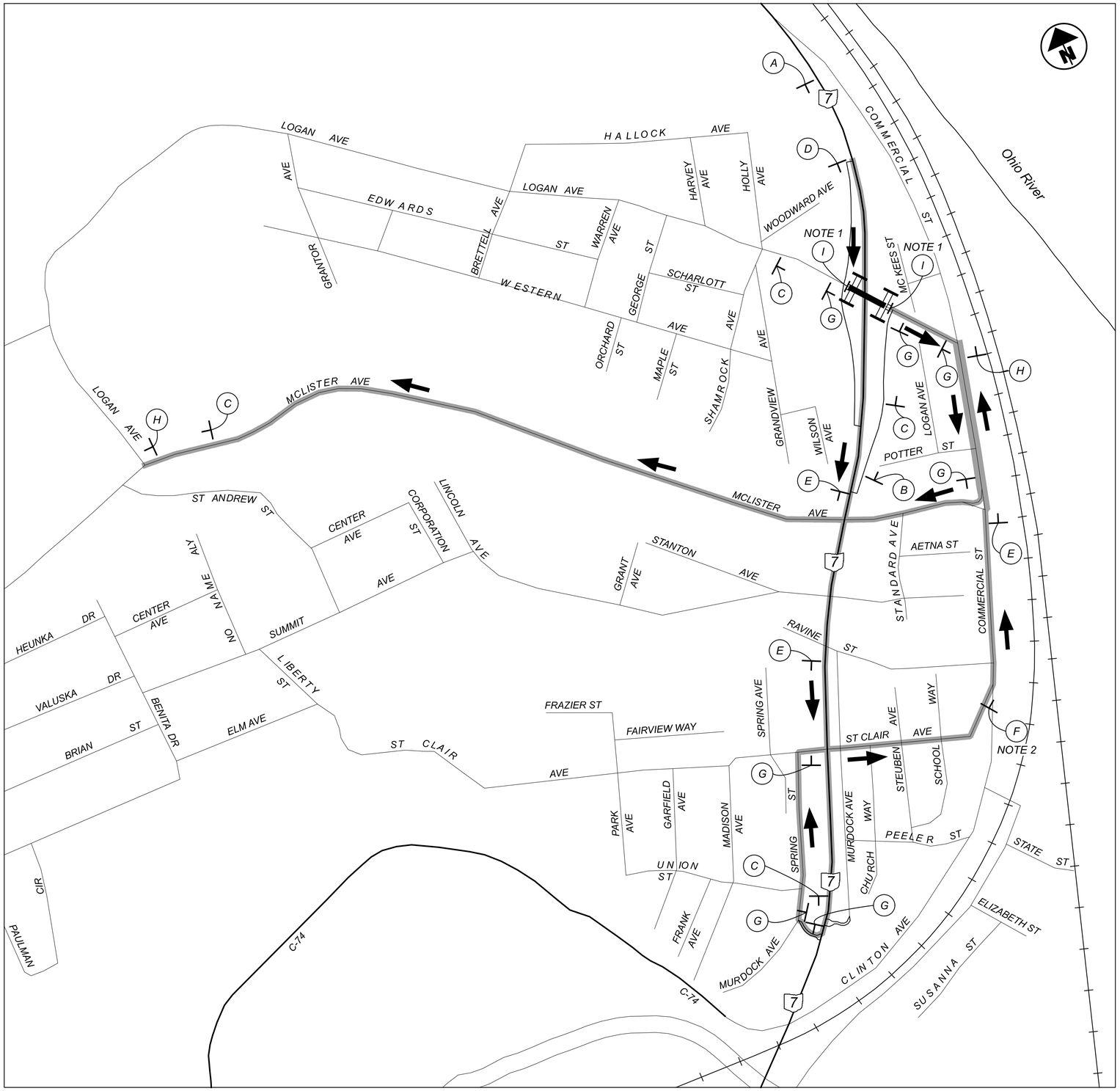

LEGEND

- EXISTING SIGN
- TEMPORARY SIGN SUPPORT
- TYPE III BARRICADE, WITH SIGNS AS NOTED
- DIRECTION ARROW
- WORK AREA
- DETOUR ROUTE (SB S.R. 7)
- DETOUR ROUTE (NB S.R. 7)

GENERAL NOTES

1. BARRICADES AND ADVANCE WARNING SIGNS AS PER SCD MT-101.60.
2. SIGNS SHALL BE OVERHEAD MOUNTED ON SPAN WIRE AND GROUND MOUNTED.

SIGN KEY

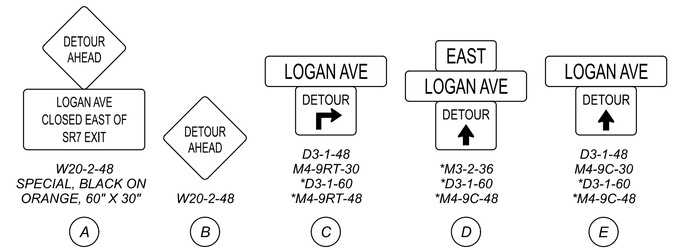

* SIGN SIZES ALONG S.R. 7

CODE	SIZE (INCHES)	TOTAL NUMBER OF SIGNS
SPECIAL	60 X 30	1
W20-2	48 X 48	2
D3-1	48 X 12	13
*D3-1	60 X 18	5
*M3-2	36 X 18	1
M4-9RT	30 X 24	3
*M4-9RT	48 X 36	1
M4-9C	30 X 24	1
*M4-9C	48 X 36	3
M4-9L	30 X 24	1
M4-9R	30 X 24	6
*M4-9R	48 X 36	1
M4-8a	24 X 18	2
R11-2	48 X 30	2

DETOUR PLAN
LOGAN AVENUE

DESIGN AGENCY
KORDA

KORDA / NEMETH ENGINEERING, INC
1650 Watermark Drive, Suite 200, Columbus, OH 43215

DESIGNER: ATD
REVIEWER: CLP 09/28/21
PROJECT ID: 109309
SHEET 48 TOTAL 95

JEF-7-13.68

MODEL: Sheet PAPERSIZE: 34x22 (in.) DATE: 8/24/2022 TIME: 12:17:08 PM USER: cplacek
H:\Projects\2019\2019-0430_00 JEF-7-13.69\109309\400-Engineering\MOT\Sheets\109309_MD801.dgn

SHEET NUM.												PART.	ITEM	ITEM EXT	GRAND TOTAL	UNIT	DESCRIPTION	SEE SHEET NO.
OFFICE CALCS						5	6	53	59	60	66	01/NHS/14						
																	ROADWAY	
						LS						LS	201	11000	LS		CLEARING AND GRUBBING	
781												781	202	23000	781	SY	PAVEMENT REMOVED	
								388				388	202	38000	388	FT	GUARDRAIL REMOVED	
								1				1	202	42040	1	EACH	ANCHOR ASSEMBLY REMOVED, TYPE T	
								4				4	202	47000	4	EACH	BRIDGE TERMINAL ASSEMBLY REMOVED	
									163			163	203	10000	163	CY	EXCAVATION	
									88			88	203	20000	88	CY	EMBANKMENT	
1,137												1,137	204	10000	1,137	SY	SUBGRADE COMPACTION	
						1						1	204	45000	1	HOUR	PROOF ROLLING	
							1,495					1,495	512	10101	1,495	SY	SEALING OF CONCRETE SURFACES (EPOXY-URETHANE), AS PER PLAN	6
								287.5				287.5	606	15100	287.5	FT	GUARDRAIL, TYPE MGS WITH LONG POSTS	
								1				1	606	26550	1	EACH	ANCHOR ASSEMBLY, MGS TYPE T	
								2				2	606	35002	2	EACH	MGS BRIDGE TERMINAL ASSEMBLY, TYPE 1	
								2				2	606	35102	2	EACH	MGS BRIDGE TERMINAL ASSEMBLY, TYPE 2	
								1,204				1,204	622	10061	1,204	FT	CONCRETE BARRIER, SINGLE SLOPE, TYPE B, AS PER PLAN	6
																	EROSION CONTROL	
								39				39	601	21060	39	SY	TIED CONCRETE BLOCK MAT WITH TYPE 2 UNDERLAYMENT	
						38						38	659	00300	38	CY	TOPSOIL	
						345						345	659	10000	345	SY	SEEDING AND MULCHING	
						17						17	659	14000	17	SY	REPAIR SEEDING AND MULCHING	
						0.05						0.05	659	20000	0.05	TON	COMMERCIAL FERTILIZER	
						0.07						0.07	659	31000	0.07	ACRE	LIME	
						2						2	659	35000	2	MGAL	WATER	
												1,000	832	30000	1,000	EACH	EROSION CONTROL	
																	DRAINAGE	
61												61	605	31100	61	FT	AGGREGATE DRAINS	
																	PAVEMENT	
							2,408					2,408	255	20000	2,408	FT	FULL DEPTH PAVEMENT SAWING	
179												179	301	56000	179	CY	ASPHALT CONCRETE BASE, PG64-22, (449)	
247												247	304	20000	247	CY	AGGREGATE BASE	
119												119	407	10000	119	GAL	TACK COAT	
59												59	441	70101	59	CY	ASPHALT CONCRETE SURFACE COURSE, TYPE 1, (449), AS PER PLAN (PG70-22M)	5
								26				26	609	24510	26	FT	CURB, TYPE 4-C	
								0.35				0.35	618	40600	0.35	MILE	RUMBLE STRIPS, SHOULDER (ASPHALT CONCRETE)	
																	TRAFFIC CONTROL	
										32		32	626	00102	32	EACH	BARRIER REFLECTOR, TYPE 1, ONE WAY	
										5		5	626	00110	5	EACH	BARRIER REFLECTOR, TYPE 2, ONE WAY	
										22.0		22	630	03100	22	FT	GROUND MOUNTED SUPPORT, NO. 3 POST	
										6.0		6	630	80100	6	SF	SIGN, FLAT SHEET	
										2		2	630	84900	2	EACH	REMOVAL OF GROUND MOUNTED SIGN AND DISPOSAL	
										2		2	630	86002	2	EACH	REMOVAL OF GROUND MOUNTED POST SUPPORT AND DISPOSAL	
										0.95		0.95	646	10010	0.95	MILE	EDGE LINE, 6"	
										0.54		0.54	646	10110	0.54	MILE	LANE LINE, 6"	
																	STRUCTURE OVER 20 FOOT SPAN (SFN 4100751)	
											LS	LS	202	11203	LS		PORTIONS OF STRUCTURE REMOVED, OVER 20 FOOT SPAN, AS PER PLAN	64
											294	294	202	22900	294	SY	APPROACH SLAB REMOVED	
											294	294	202	23500	294	SY	WEARING COURSE REMOVED	
											LS	LS	503	11101	LS		COFFERDAMS AND EXCAVATION BRACING, AS PER PLAN	64
											95	95	503	22200	95	CY	UNCLASSIFIED EXCAVATION, INCLUDING ROCK AND/OR SHALE	
											123,821	123,821	509	10000	123,821	LB	EPOXY COATED STEEL REINFORCEMENT	
											4,562	4,562	509	30020	4,562	FT	NO. 4 DEFORMED GFRP REINFORCEMENT	
											542	542	510	10000	542	EACH	DOWEL HOLES WITH NONSHRINK, NONMETALLIC GROUT	
											478	478	511	34413	478	CY	CLASS QC2 CONCRETE WITH QC/QA, SUPERSTRUCTURE, AS PER PLAN	64
											4	4	511	33500	4	EACH	SEMI-INTEGRAL DIAPHRAGM GUIDE	

GENERAL SUMMARY

JEF-7-13.68

MODEL: Sheet PAPERSIZE: 34x22 (in.) DATE: 8/24/2022 TIME: 12:04:50 PM USER: cplacek
H:\Projects\2019\2019-0430_00 JEF-7-13.69\109309\400-Engineering\Roadway\Sheets\109309_GG001.dgn

DESIGN AGENCY
KORDA
KORDA / NEMETH ENGINEERING, INC
1650 Watermark Drive, Suite 200, Columbus, OH 43215

DESIGNER ATD

REVIEWER CLP 09/28/21

PROJECT ID 109309

SHEET 49 TOTAL 95

SHEET NUM.												PART.	ITEM	ITEM EXT	GRAND TOTAL	UNIT	DESCRIPTION	SEE SHEET NO.
							8	9	11	17	66	01/NHS/14						
																	STRUCTURE OVER 20 FOOT SPAN (SFN 4100751) (CONTINUED)	
											90	90	511	42512	90	CY	CLASS QC1 CONCRETE WITH QC/QA, PIER CAP	
											131	131	511	45712	131	CY	CLASS QC1 CONCRETE WITH QC/QA, ABUTMENT	
											1,374	1,374	512	10100	1,374	SY	SEALING OF CONCRETE SURFACES (EPOXY-URETHANE)	
											84	84	512	10600	84	FT	CONCRETE REPAIR BY EPOXY INJECTION	
											6	6	512	33000	6	SY	TYPE 2 WATERPROOFING	
											330	330	512	74000	330	SY	REMOVAL OF EXISTING COATINGS FROM CONCRETE SURFACES	
											306,724	306,724	513	10260	306,724	LB	STRUCTURAL STEEL MEMBERS, LEVEL 3	
											5,010	5,010	513	20000	5,010	EACH	WELDED STUD SHEAR CONNECTORS	
											11,716	11,716	514	00060	11,716	SF	FIELD PAINTING STRUCTURAL STEEL, INTERMEDIATE COAT	
											11,716	11,716	514	00066	11,716	SF	FIELD PAINTING STRUCTURAL STEEL, FINISH COAT	
											7	7	514	10000	7	EACH	FINAL INSPECTION REPAIR	
											36	36	516	13600	36	SF	1" PREFORMED EXPANSION JOINT FILLER	
											39	39	516	13900	39	SF	2" PREFORMED EXPANSION JOINT FILLER	
											192	192	516	14020	192	FT	SEMI-INTEGRAL ABUTMENT EXPANSION JOINT SEAL	
											516	516	516	31001	516	FT	JOINT SEALER, AS PER PLAN	64
											20	20	516	44100	20	EACH	ELASTOMERIC BEARING WITH INTERNAL LAMINATES AND LOAD PLATE (NEOPRENE) (1'-0" x 10" x 2.5")	
											20	20	516	44200	20	EACH	ELASTOMERIC BEARING WITH INTERNAL LAMINATES AND LOAD PLATE (NEOPRENE) (1'-4" x 1'-0" x 3.375")	
											8	8	518	12200	8	EACH	SCUPPERS, INCLUDING SUPPORTS	
											96	96	518	21200	96	CY	POROUS BACKFILL WITH GEOTEXTILE FABRIC	
											212	212	518	40000	212	FT	6" PERFORATED CORRUGATED PLASTIC PIPE	
											36	36	518	40010	36	FT	6" NON-PERFORATED CORRUGATED PLASTIC PIPE, INCLUDING SPECIALS	
											421	421	526	25011	421	SY	REINFORCED CONCRETE APPROACH SLABS WITH QC/QA (T=15"), AS PER PLAN	64
											166	166	526	90010	166	FT	TYPE A INSTALLATION	
											144	144	601	21000	144	SY	CONCRETE SLOPE PROTECTION	
											260	260	607	39900	260	FT	VANDAL PROTECTION FENCE, 6' STRAIGHT, COATED FABRIC	
											31	31	843	50000	31	SF	PATCHING CONCRETE STRUCTURES WITH TROWELABLE MORTAR	
											63	63	846	00110	63	CF	POLYMER MODIFIED ASPHALT EXPANSION JOINT SYSTEM	
																	MAINTENANCE OF TRAFFIC	
									388			388	254	01000	388	SY	PAVEMENT PLANING, ASPHALT CONCRETE (1.5" DEPTH)	
									17			17	441	70101	17	CY	ASPHALT CONCRETE SURFACE COURSE, TYPE 1, (449), AS PER PLAN (PG70-22M)	5
									1			1	611	99131	1	EACH	INLET, NO. 4 FOR SINGLE SLOPE BARRIER, TYPE B, AS PER PLAN	11
								150				150	614	11110	150	HOUR	LAW ENFORCEMENT OFFICER WITH PATROL CAR FOR ASSISTANCE	
										8		8	614	12380	8	EACH	WORK ZONE IMPACT ATTENUATOR, 24" WIDE HAZARDS, (UNIDIRECTIONAL)	
										12		12	614	12384	12	EACH	WORK ZONE IMPACT ATTENUATOR, 24" WIDE HAZARDS, (BIDIRECTIONAL)	
							2					2	614	12756	2	EACH	WORK ZONE CROSSOVER LIGHTING SYSTEM	
										194		194	614	12800	194	EACH	WORK ZONE RAISED PAVEMENT MARKER	
								834				834	614	13310	834	EACH	BARRIER REFLECTOR, TYPE 1 (1 WAY)	
								18				18	614	13310	18	EACH	BARRIER REFLECTOR, TYPE 1 (BI-DIRECTIONAL)	
								15				15	614	13312	15	EACH	BARRIER REFLECTOR, TYPE 2 (1 WAY)	
								293				293	614	13350	293	EACH	OBJECT MARKER, ONE WAY	
								12				12	614	18601	12	SNMT	PORTABLE CHANGEABLE MESSAGE SIGN, AS PER PLAN	9
										4.95		4.95	614	22326	4.95	MILE	WORK ZONE EDGE LINE, CLASS I, 6", 873	
										0.27		0.27	614	22210	0.27	MILE	WORK ZONE EDGE LINE, CLASS I, 6", 740.06, TYPE I	
										4,314		4,314	614	23130	4,314	FT	WORK ZONE CHANNELIZING LINE, CLASS I, 12", 873	
										885		885	614	24122	885	FT	WORK ZONE DOTTED LINE, CLASS I, 6", 873	
										1,158		1,158	614	24402	1,158	FT	WORK ZONE DOTTED LINE, CLASS I, 6", 740.06, TYPE I	
										24		24	614	26400	24	FT	WORK ZONE STOP LINE, CLASS I, 740.06, TYPE I	
									420			420	615	20001	420	SY	PAVEMENT FOR MAINTAINING TRAFFIC, CLASS A, AS PER PLAN	11
							20					20	616	10000	20	MGAL	WATER	
										10,580		10,580	622	41100	10,580	FT	PORTABLE BARRIER, UNANCHORED	
										270		270	622	41110	270	FT	PORTABLE BARRIER, ANCHORED	
										1,550		1,550	622	80000	1,550	FT	GLARE SCREEN	
																	INCIDENTALS	
							LS					LS	614	11000	LS		MAINTAINING TRAFFIC	
												7	619	16010	7	MNTH	FIELD OFFICE, TYPE B	
												LS	623	10000	LS		CONSTRUCTION LAYOUT STAKES AND SURVEYING	
												LS	624	10000	LS		MOBILIZATION	

GENERAL SUMMARY

JEF-7-13.68

MODEL: Sheet PAPERSIZE: 34x22 (in.) DATE: 8/24/2022 TIME: 12:04:19 PM USER: cplacek
H:\Projects\2019\2019-0430_00_JEF-7-13.69\109309\400-Engineering\Roadway\Sheets\109309_GG002.dgn

DESIGN AGENCY
KORDA
KORDA / NEMETH ENGINEERING, INC
1650 Watermark Drive, Suite 200, Columbus, OH 43215

DESIGNER ATD

REVIEWER CLP 09/28/21

PROJECT ID 109309

SHEET 50 TOTAL 95

CROSS REFERENCES	
SHEET	DESCRIPTION
49 , 50	GENERAL SUMMARY
53	ESTIMATED QUANTITIES
60 - 61	TRAFFIC CONTROL

CODED NOTES

1. TRANSITION MEDIAN BARRIER HEIGHT TYPE B OVER 20 FEET OF LENGTH ADJACENT TO THE APPROACH SLAB MEDIAN BARRIER.

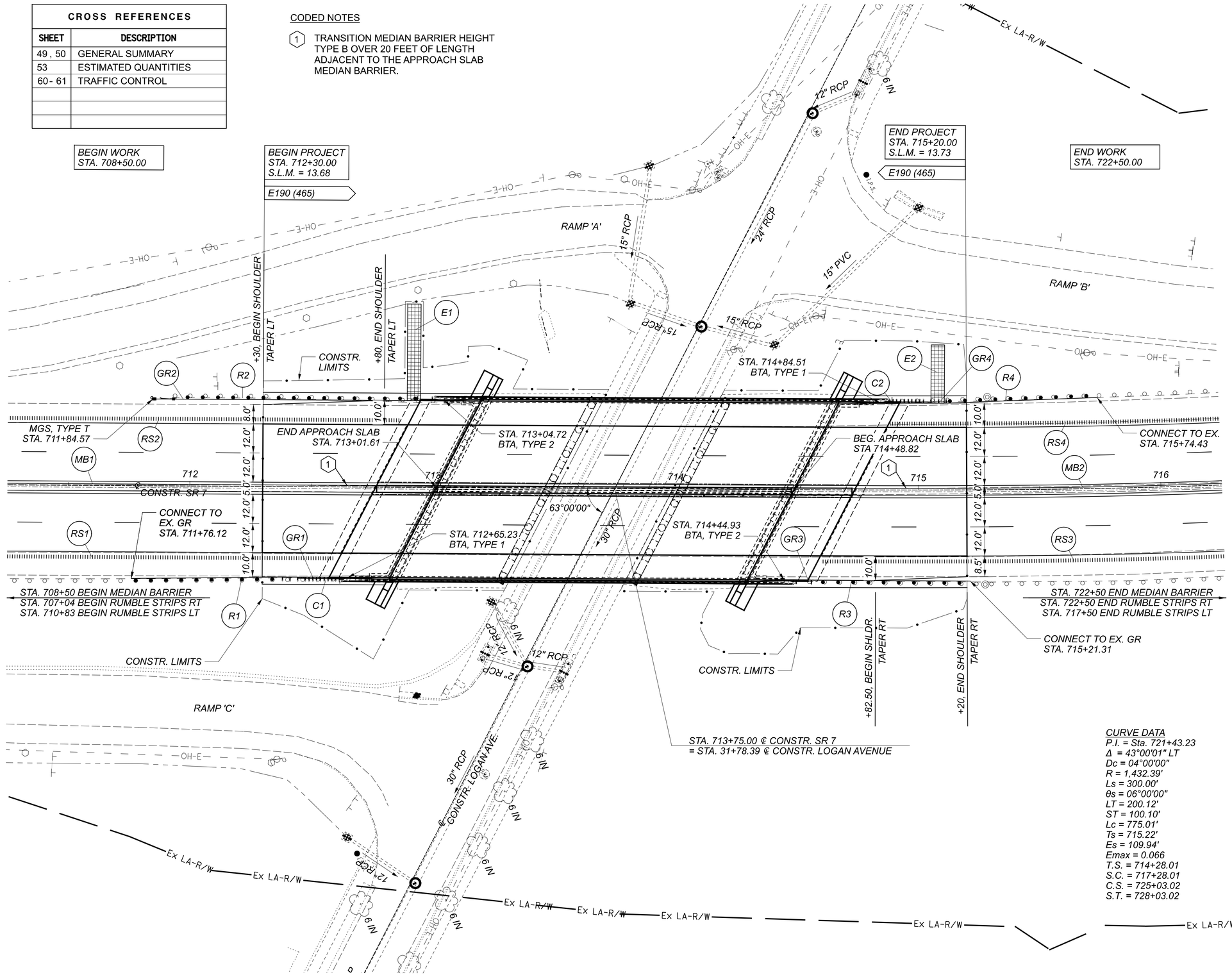

CURVE DATA
P.I. = Sta. 721+43.23
Δ = 43°00'01" LT
Dc = 04°00'00"
R = 1,432.39'
Ls = 300.00'
θs = 06°00'00"
LT = 200.12'
ST = 100.10'
Lc = 775.01'
Ts = 715.22'
Es = 109.94'
Emax = 0.066
T.S. = 714+28.01
S.C. = 717+28.01
C.S. = 725+03.02
S.T. = 728+03.02

HORIZONTAL SCALE IN FEET
0 10 20 40

PLAN (SR 7)
STA. 711+25.00 TO STA. 716+00.00

DESIGN AGENCY
KORDA

KORDA / NEMETH ENGINEERING, INC
1650 Watermark Drive, Suite 200, Columbus, OH 43215

DESIGNER CLP
REVIEWER BMV 09/28/21
PROJECT ID 109309
SHEET 51 TOTAL 95

JEF-7-13.68

MODEL: Plan [Sheet] PAPERSIZE: 34x22 (in.) DATE: 8/24/2022 TIME: 12:19:25 PM USER: cplacek
H:\Projects\2019\2019-0430_00 JEF-7-13,69\109309\400-Engineering\Roadway\Sheets\109309_GP001.dgn

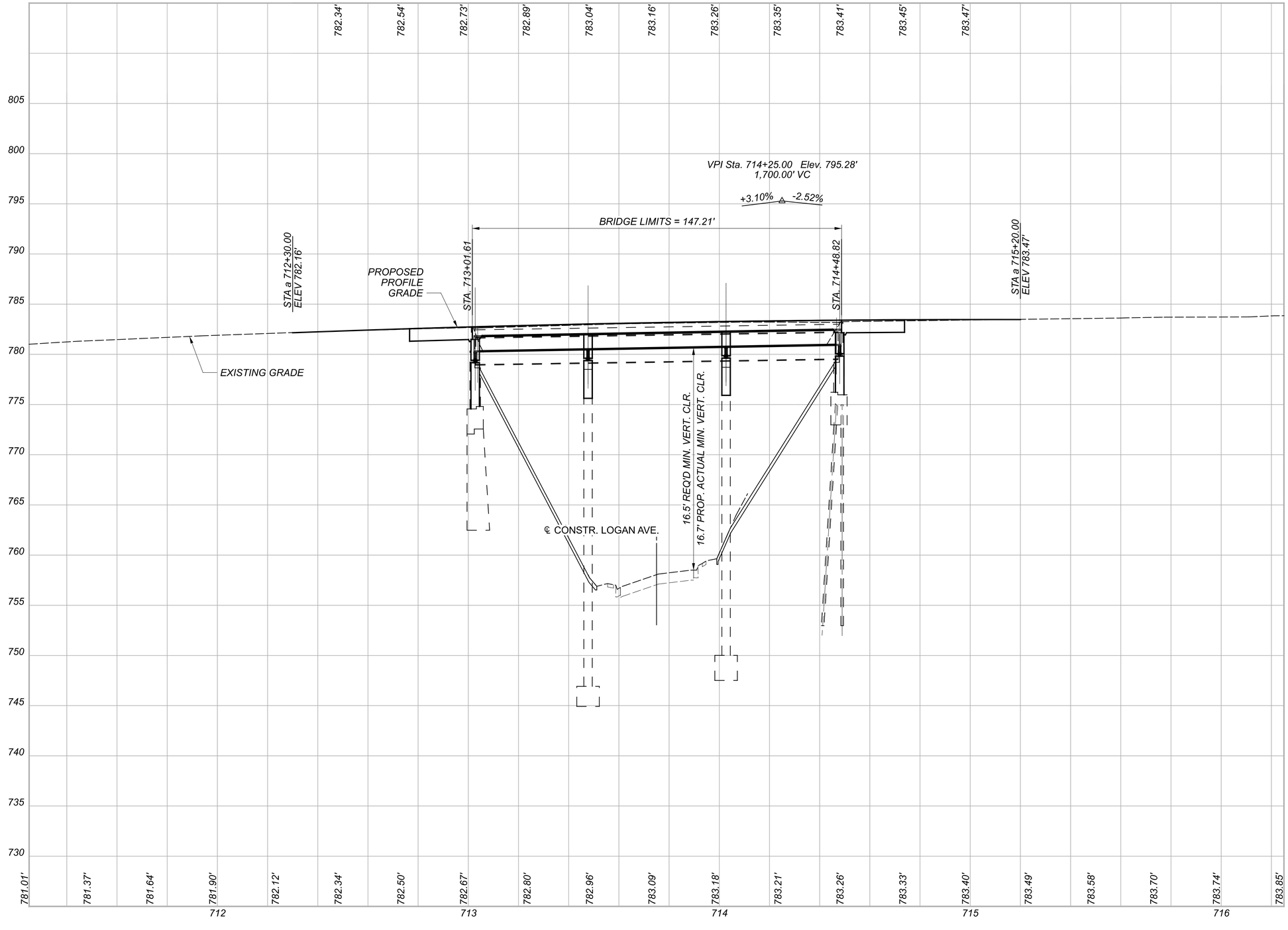

PROFILE (SR 7)
STA. 711+25.00 TO STA. 716+00.00

JEF-7-13.68

MODEL: Profile [Sheet] PAPERSIZE: 34x22 (in.) DATE: 8/24/2022 TIME: 12:19:27 PM USER: cplacek
H:\Projects\2019\2019-0430.00 JEF-7-13.69\109309\400-Engineering\Roadway\Sheets\109309_GP001.dgn

DESIGN AGENCY
KORDA
KORDA / NEMETH ENGINEERING, INC
1650 Watermark Drive, Suite 200,
Columbus, OH 43215

DESIGNER
CLP

REVIEWER
BMV 09/28/21

PROJECT ID
109309

SHEET 52 | TOTAL 95

ESTIMATED QUANTITIES

SHEET NO.	REF NO.	LOCATION	STATION FROM	STATION TO	SIDE	202 GUARDRAIL REMOVED	202 ANCHOR ASSEMBLY REMOVED, TYPE T	202 BRIDGE TERMINAL ASSEMBLY REMOVED	601 TIED CONCRETE BLOCK MAT WITH TYPE 2 UNDERLAYMENT	606 GUARDRAIL, TYPE MGS WITH LONG POSTS	606 ANCHOR ASSEMBLY, MGS TYPE T	606 MGS BRIDGE TERMINAL ASSEMBLY, TYPE 1	606 MGS BRIDGE TERMINAL ASSEMBLY, TYPE 2	609 CURB, TYPE 4-C	618 RUMBLE STRIPS, SHOULDER (ASPHALT CONCRETE)	622 CONCRETE BARRIER, SINGLE SLOPE, TYPE B, AS PER PLAN
						FT	EACH	EACH	SY	FT	EACH	EACH	EACH	FT	MILE	FT
51	R1	SR 7	711+77	712+71	RT	96		1								
51	R2	SR 7	711+93	713+08	LT	116	1	1								
51	R3	SR 7	714+41	715+21	RT	81		1								
51	R4	SR 7	714+79	715+74	LT	95		1								
51	GR1	SR 7	711+76.12	712+65.28	RT					62.5		1				
51	GR2	SR 7	711+84.57	713+04.72	LT					100.0	1		1			
51	GR3	SR 7	714+44.93	715+21.31	RT					62.5			1			
51	GR4	SR 7	714+84.51	715+74.43	LT					62.5		1				
51	C1	SR 7	712+44.63	712+57.63	RT									13		
51	C2	SR 7	714+92.25	715+05.27	LT									13		
51	E1	SR 7	712+89.32	712+94.82	LT				24							
51	E2	SR 7	715+05.27	715+10.77	LT				15							
51	RS1	SR 7	707+04	712+59	RT										0.11	
51	RS2	SR 7	710+83	712+86	LT										0.04	
51	RS3	SR 7	714+60	722+50	RT										0.15	
51	RS4	SR 7	714+88	717+50	LT										0.05	
51	MB1	SR 7	708+50	712+77	RT/LT											
51	MB2	SR 7	714+73	722+50	RT/LT											427
																777
TOTALS CARRIED TO GENERAL SUMMARY						388	1	4	39	287.5	1	2	2	26	0.35	1204

DESIGN AGENCY
KORDA
KORDA / NEMETH ENGINEERING, INC
1650 Watermark Drive, Suite 200, Columbus, OH 43215

DESIGNER ATD
REVIEWER CLP 09/28/21
PROJECT ID 109309
SHEET 53 TOTAL 95

JEF-7-13.68

MODEL: Sheet PAPERSIZE: 34x22 (in.) DATE: 8/24/2022 TIME: 12:08:18 PM USER: cplacek
H:\Projects\2019\2019-0430_00 JEF-7-13.69\109309\400-Engineering\Roadway\Sheets\109309_GS001.dgn

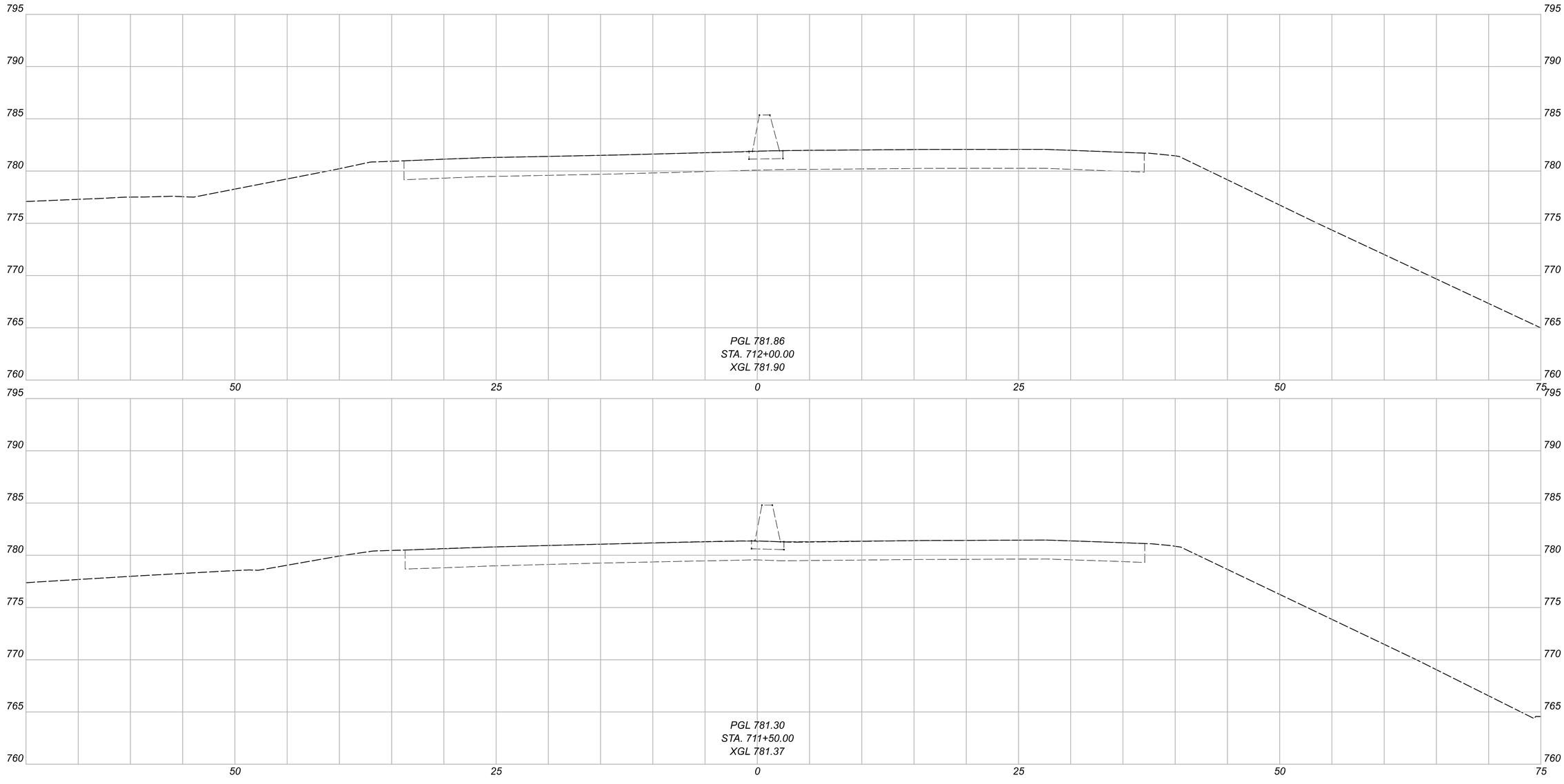

CROSS SECTIONS
STA. 711+50.00 TO STA. 712+00.00

JEF-7-13.69

MODEL: a 711+50.00 [Sheet] PAPERSIZE: 34x22 (in) DATE: 8/24/2022 TIME: 12:20:33 PM USER: cplacek
H:\Projects\2019-0430_00 JEF-7-13.69\109309\400-Engineering\Roadway\Sheets\109309_XS001.dgn

DESIGN AGENCY
KORDA
KORDA / NEMETH ENGINEERING, INC
1650 Watermark Drive, Suite 200,
Columbus, OH 43215

DESIGNER
CLP

REVIEWER
BMV 09/28/21

PROJECT ID
109309

SHEET 54 | TOTAL 95

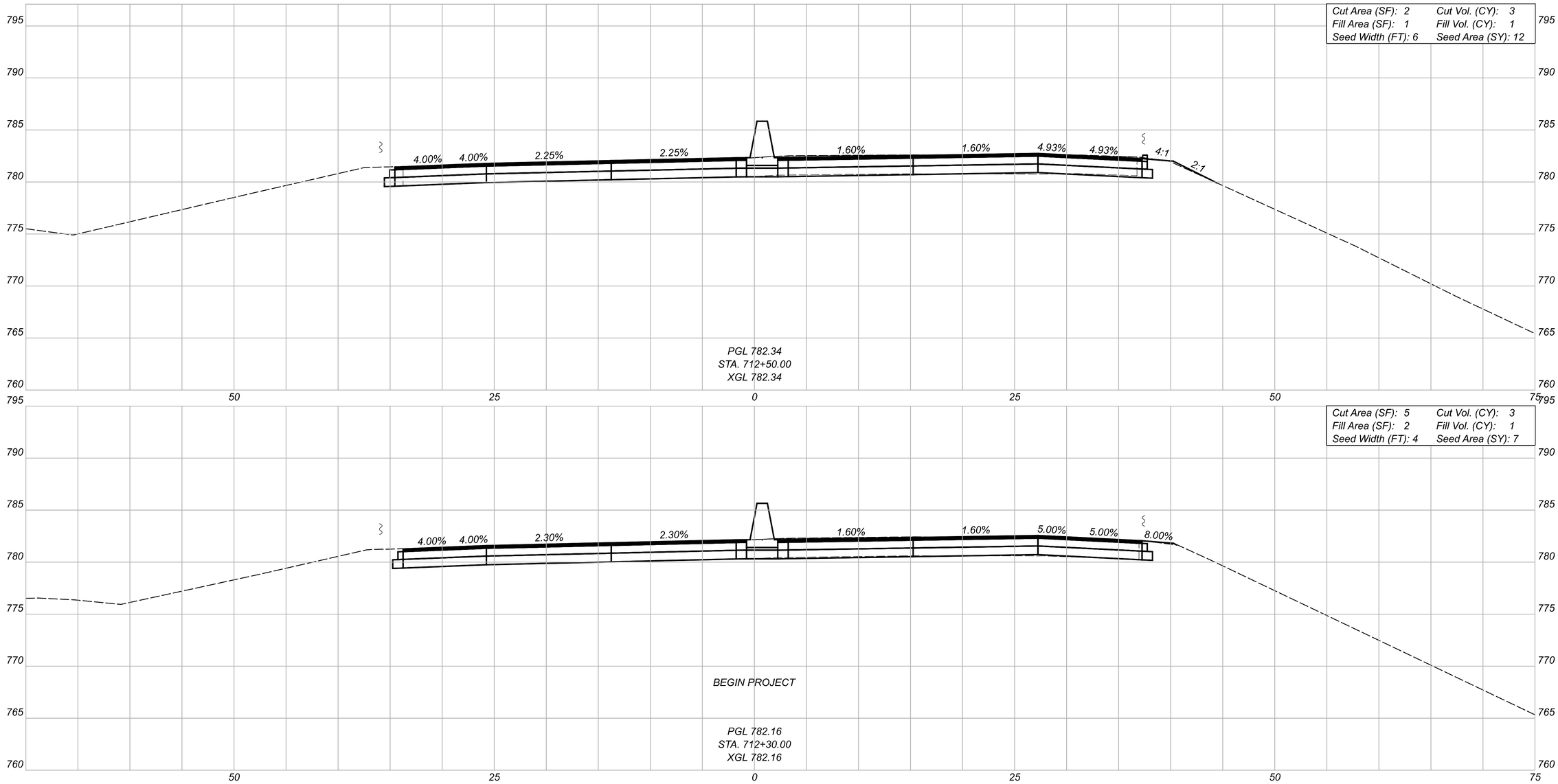

CROSS SECTIONS
STA. 712+30.00 TO STA. 712+50.00

JEF-7-13.69

MODEL: a 712+30.00 [Sheet] PAPERSIZE: 34x22 (in.) DATE: 8/24/2022 TIME: 12:20:35 PM USER: cplacek
H:\Projects\2019\2019-0430_00 JEF-7-13.69\109309\400-Engineering\Roadway\Sheets\109309_XS001.dgn

DESIGN AGENCY
KORDA
KORDA / NEMETH ENGINEERING, INC
1650 Watermark Drive, Suite 200, Columbus, OH 43215

DESIGNER
CLP

REVIEWER
BMV 09/28/21

PROJECT ID
109309

Sheet Totals		
Seeding	Cut	Fill
19	6	2

SHEET	TOTAL
55	95

CROSS SECTIONS
STA. 712+76.61 TO STA. 713+01.61

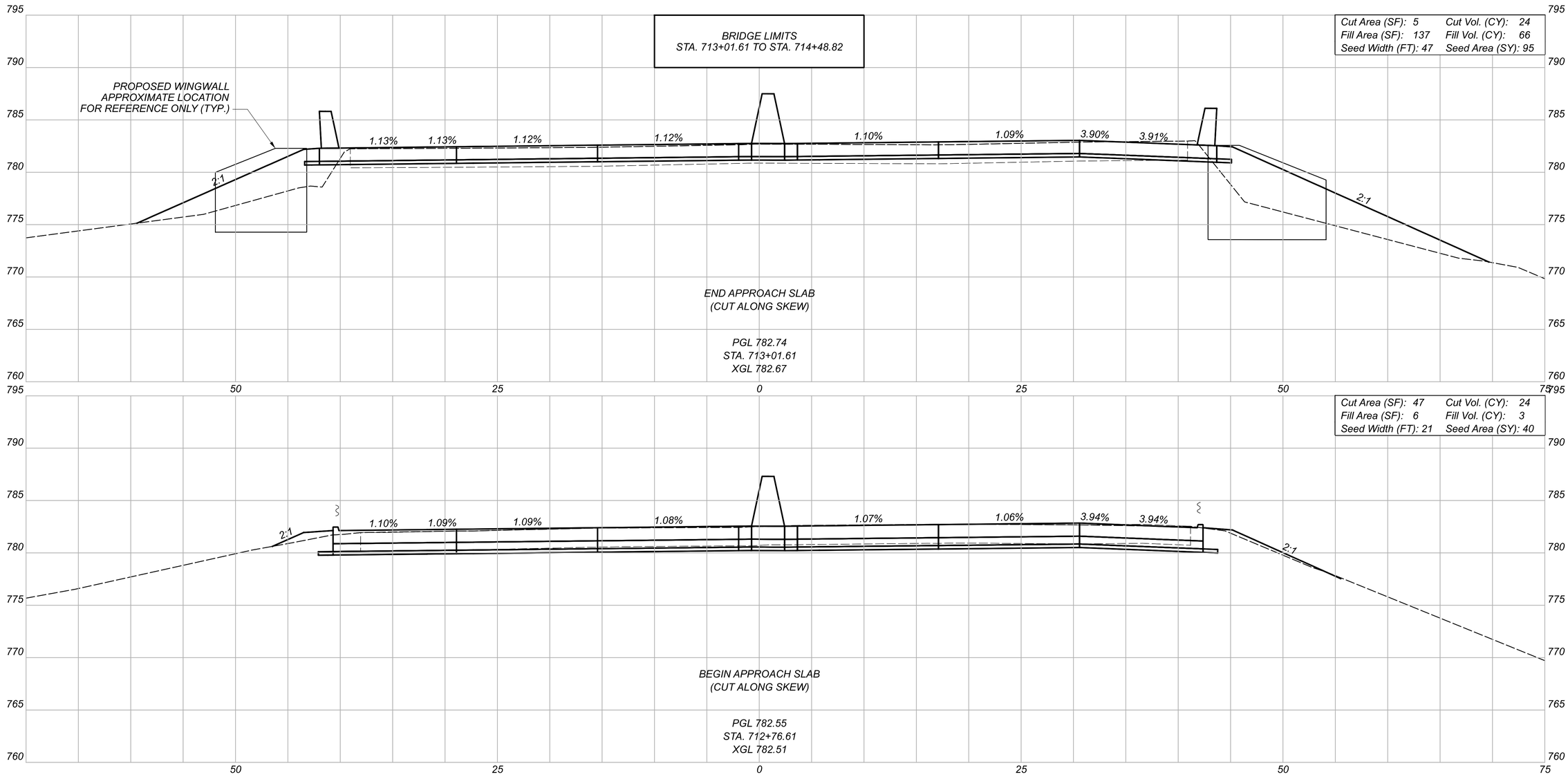

Sheet Totals		
Seeding	Cut	Fill
135	48	69

DESIGN AGENCY
KORDA
KORDA / NEMETH ENGINEERING, INC
1650 Watermark Drive, Suite 200, Columbus, OH 43215

DESIGNER: CLP

REVIEWER: BMV 09/28/21

PROJECT ID: 109309

SHEET: 56 TOTAL: 95

JEF-7-13.69

MODEL: a 712+76.61[Sheet] PAPERSIZE: 34x22 (in.) DATE: 8/24/2022 TIME: 12:20:36 PM USER: cplacek
H:\Projects\2019\2019-0430_00 JEF-7-13.69\109309\400-Engineering\Roadway\Sheets\109309_XS001.dgn

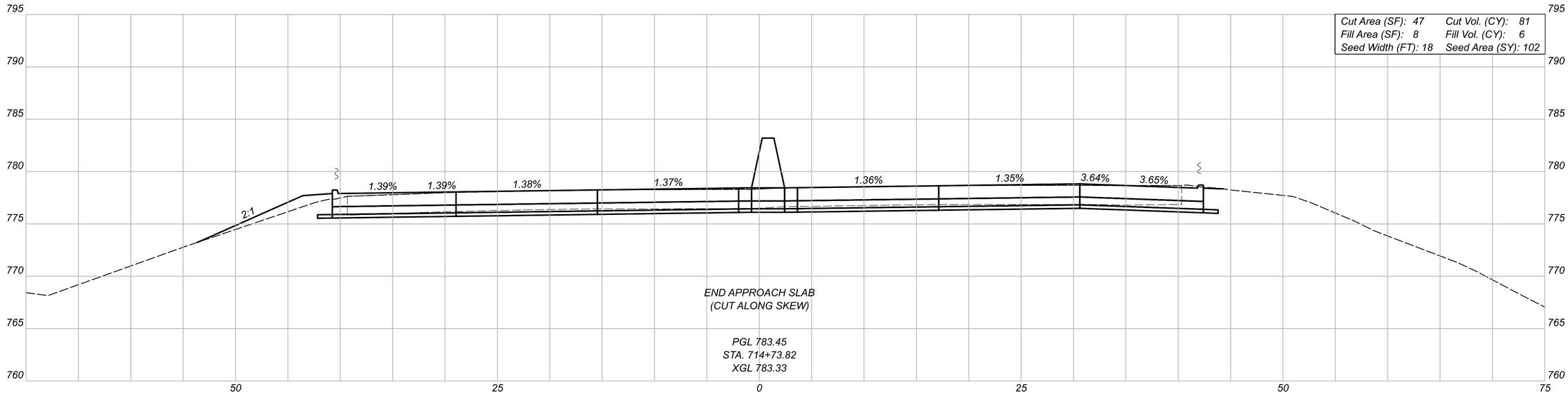

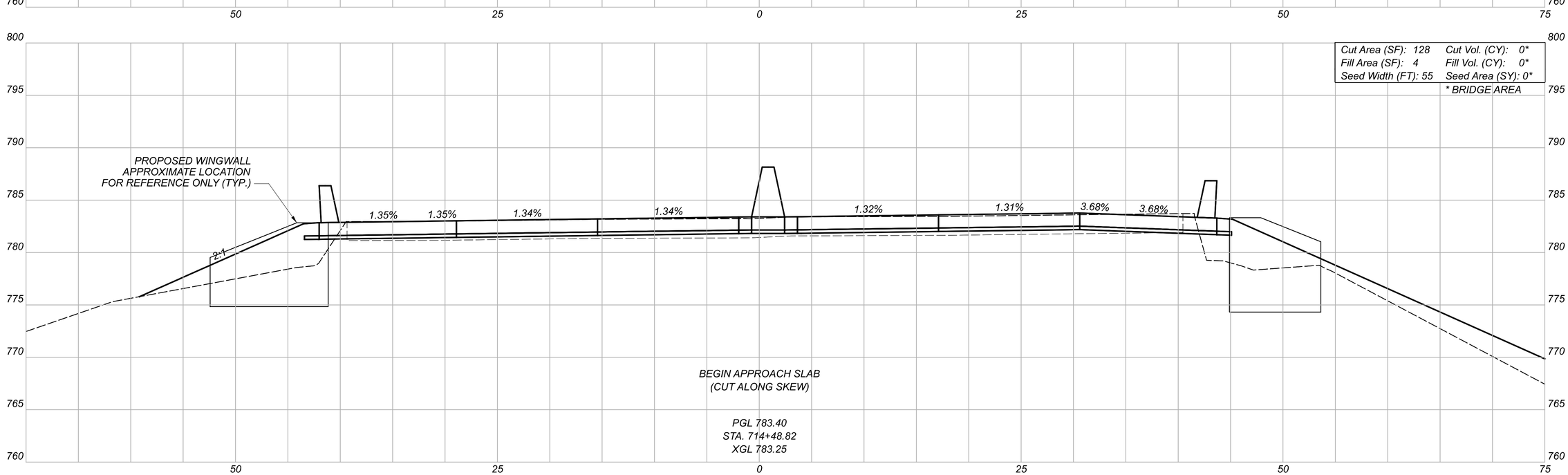

CROSS SECTIONS
STA. 714+48.82 TO STA. 714+73.82

JEF-7-13.69

MODEL: a 714+48.82 [Sheet] PAPERSIZE: 34x22 (in.) DATE: 8/24/2022 TIME: 12:20:38 PM USER: cplacek
H:\Projects\2019\2019-0430_00 JEF-7-13,69\109309\400-Engineering\Roadway\Sheets\109309_XS00l.dgn

Sheet Totals		
Seeding	Cut	Fill
102	81	6

DESIGN AGENCY
KORDA

KORDA / NEMETH ENGINEERING, INC
1650 Watermark Drive, Suite 200, Columbus, OH 43215

DESIGNER
CLP

REVIEWER
BMV 09/28/21

PROJECT ID
109309

SHEET 57 TOTAL 95

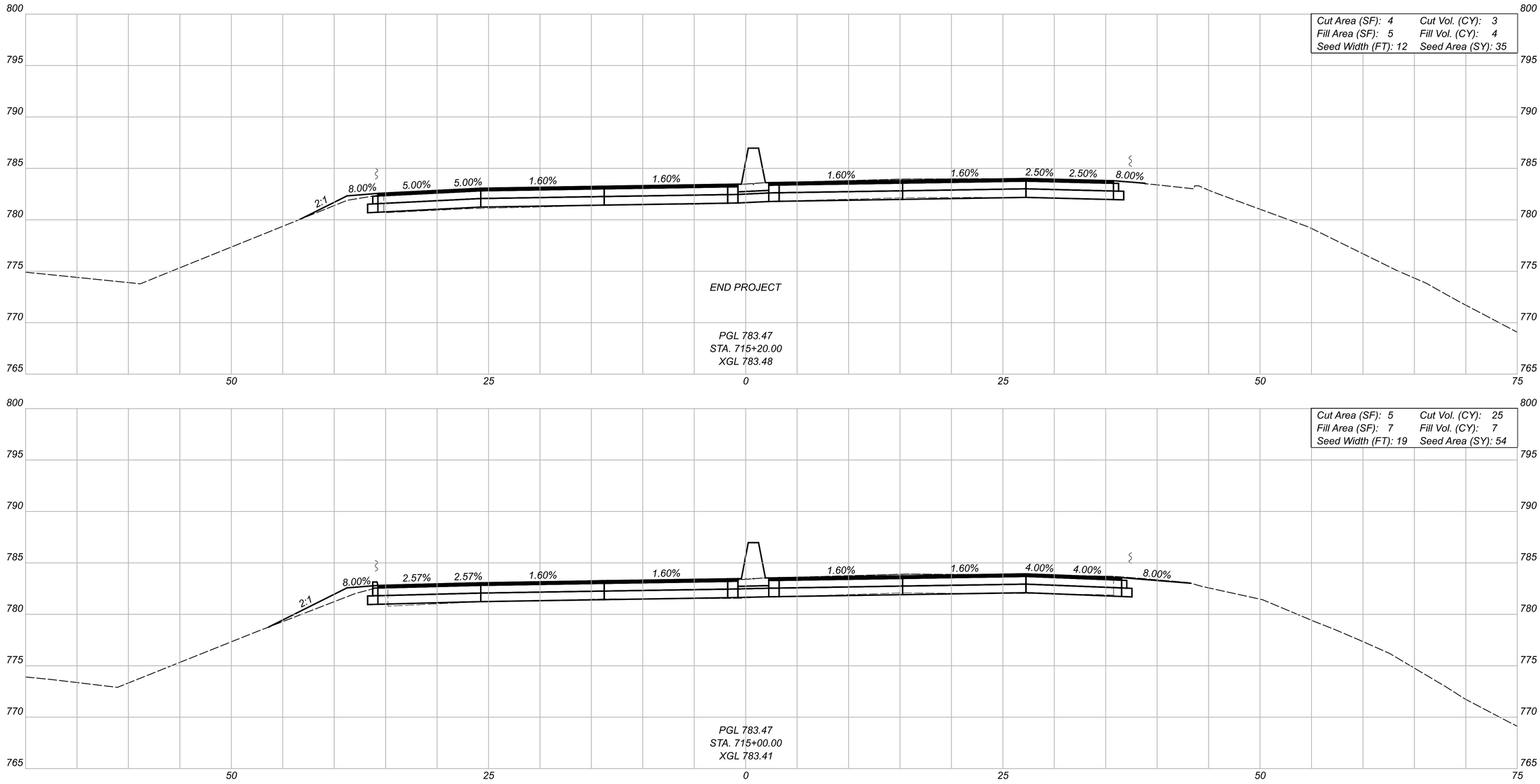

CROSS SECTIONS
STA. 715+00.00 TO STA. 715+20.00

JEF-7-13.69

MODEL: a 715+00.00 [Sheet] PAPERSIZE: 34x22 (in.) DATE: 8/24/2022 TIME: 12:20:39 PM USER: cplacek
H:\Projects\2019\2019-0430_00 JEF-7-13,69\109309\400-Engineering\Roadway\Sheets\109309_XS00l.dgn

Sheet Totals		
Seeding	Cut	Fill
89	28	11

DESIGN AGENCY
KORDA

KORDA / NEMETH ENGINEERING, INC
1650 Watermark Drive, Suite 200, Columbus, OH 43215

DESIGNER
CLP

REVIEWER
BMV 09/28/21

PROJECT ID
109309

SHEET 58 TOTAL 95

Project Totals		
Seeding*	Cut	Fill
345	163	88

* CARRIED TO GENERAL NOTES

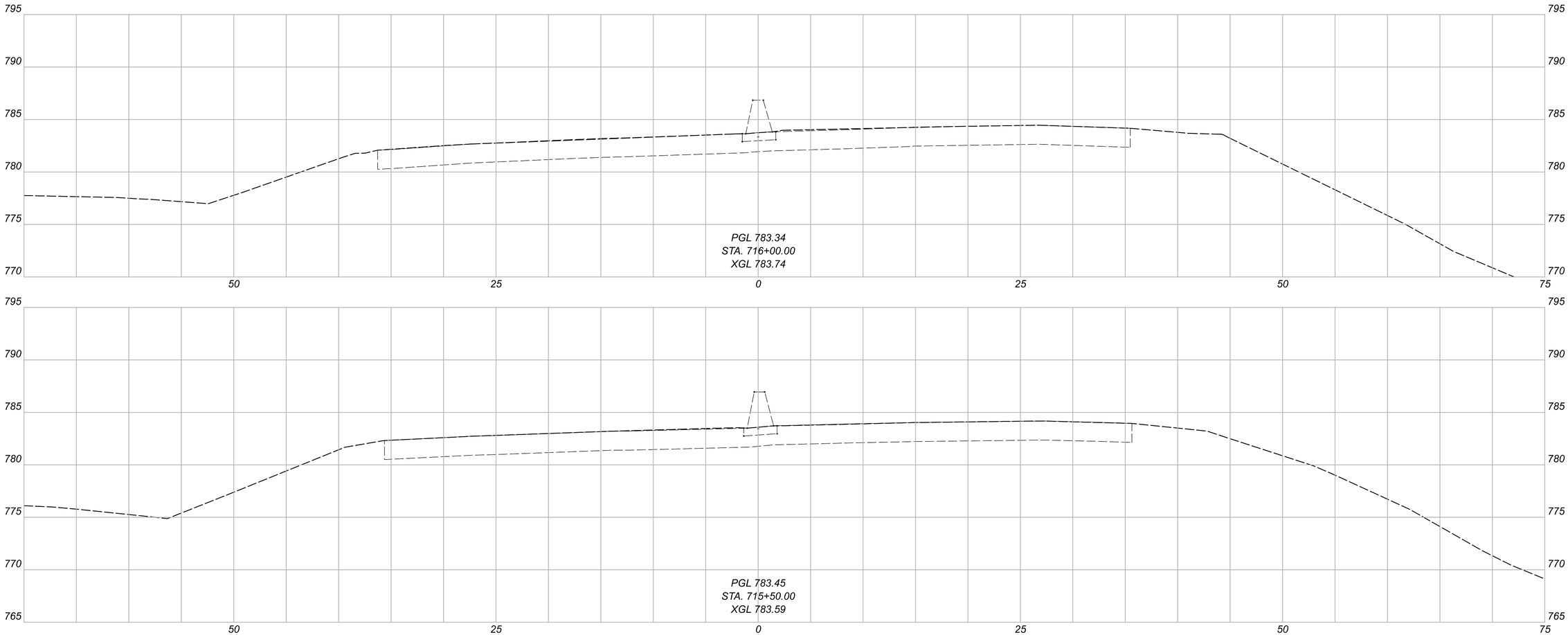

CROSS SECTIONS
STA. 715+50.00 TO STA. 716+00.00

JEF-7-13.69

MODEL: a 715+50.00 [Sheet] PAPERSIZE: 34x22 (in) DATE: 8/24/2022 TIME: 12:20:40 PM USER: cplacek
H:\Projects\2019\2019-0430_00 JEF-7-13.69\109309\400-Engineering\Roadway\Sheets\109309_XS001.dgn

DESIGN AGENCY
KORDA
KORDA / NEMETH ENGINEERING, INC
1650 Watermark Drive, Suite 200, Columbus, OH 43215

DESIGNER
CLP

REVIEWER
BMV 09/28/21

PROJECT ID
109309

SHEET 59 | TOTAL 95

SHEET NO.	REF NO.	LOCATION	STATION FROM	STATION TO	SIDE	CODE	SIZE (INCHES)	626 BARRIER REFLECTOR, TYPE 1, ONE WAY	626 BARRIER REFLECTOR, TYPE 2, ONE WAY	630 GROUND MOUNTED SUPPORT, NO. 3 POST	630 SIGN, FLAT SHEET	630 REMOVAL OF GROUND MOUNTED SIGN AND DISPOSAL	630 REMOVAL OF GROUND MOUNTED POST SUPPORT AND DISPOSAL	646 EDGE LINE, 6" (WHITE)	646 EDGE LINE, 6" (YELLOW)	646 LANE LINE, 6" (WHITE)						
								EACH	EACH	FT	SF	EACH	EACH	MILE	MILE	MILE						
61	R-1	SR 7	712+62		RT							1	1									
61	R-2	SR 7	714+89		LT							1	1									
61	S-1	SR 7	712+62		RT	OM3-R	12 X 36			11.0	3.0											
61	S-2	SR 7	714+89		LT	OM3-R	12 X 36			11.0	3.0											
61	EL-1	SR 7	708+50	722+50	RT									0.27								
61	EL-2	SR 7	708+50	722+50	RT										0.27							
61	EL-3	SR 7	708+50	722+50	LT										0.27							
61	EL-4	SR 7	709+58	717+09	LT									0.14								
61	LL-1	SR 7	708+50	722+50	RT											0.27						
61	LL-2	SR 7	708+50	722+50	LT											0.27						
61	BR-1	SR 7	711+76.12	715+21.31	RT			2	3													
61	BR-2	SR 7	711+84.57	715+74.43	LT			2	2													
61	BR-3	SR 7	708+50	722+50	LT			14														
61	BR-4	SR 7	708+50	722+50	RT			14														
TOTALS CARRIED TO GENERAL SUMMARY								32	5	22.0	6.0	2	2	0.41	0.54	0.54						
														0.95								

PAVEMENT MARKING AND SIGNING SUBSUMMARY

DESIGN AGENCY
KORDA

KORDA / NEMETH ENGINEERING, INC
1650 Watermark Drive, Suite 200, Columbus, OH 43215

DESIGNER ATD

REVIEWER CLP 09/28/21

PROJECT ID 109309

SHEET 60 | TOTAL 95

JEF-7-13.68

MODEL: Sheet PAPERSIZE: 34x22 (in.) DATE: 8/24/2022 TIME: 12:11:48 PM USER: cplacek
H:\Projects\2019\2019-0430_00 JEF-7-13.69\109309\400-Engineering\Traffic\Sheets\109309_TS001.dgn

LEGEND

- EL-# EDGE LINE
- LL-# LANE LINE
- CL-# CENTER LINE
- BR-# BARRIER REFLECTOR
- R-# SIGN REMOVED
- S-# SIGN
- EXISTING SIGN TO REMAIN
- EXISTING SIGN TO BE REMOVED
- PROPOSED SIGN

Ex LA-R/W
28
12" RCP
6 IN
29
24" RCP
15" RCP
15" PVC
OM-3R-12
STA. 714+89
S-2
R-2
STA. 714+89
CONSTR. LIMITS
EL-4
BR-2
EL-3
712
N25°35'12"E
CONSTR. SR 7
EL-2
EL-1
LL-1
BR-1
LL-2
713
BR-3
714
715
716
BR-4
63°00'00"
30" RCP
S37°24'
30
TSL 714+80.01
12.0'
10.0'
8.0'
5.0'
8.5'
STA. 708+50
BEGIN EDGE LINE (WHITE) RT
BEGIN EDGE LINE (YELLOW) LT & RT
BEGIN LANE LINE LT & RT
STA. 709+58
BEGIN EDGE LINE (WHITE) LT
STA. 722+50
END EDGE LINE (WHITE) RT
END EDGE LINE (YELLOW) LT & RT
END LANE LINE LT & RT
STA. 717+09
END EDGE LINE (WHITE) LT
CONSTR. LIMITS
CONSTR. LIMITS
STA. 712+62
R-1
OM-3R-12
STA. 712+62
S-1
12" RCP
12" RCP
12" RCP
NI 9
STA. 713+75.00 ℄ CONSTR. SR 7
= STA. 31+78.39 ℄ CONSTR. LOGAN AVENUE
Ex LA-R/W

HORIZONTAL SCALE IN FEET
0 10 20 40

PAVEMENT MARKING AND SIGNING PLAN
STA. 711+25.00 TO STA. 716+00.00

JEF-7-13.68

MODEL: Plan [Sheet] PAPERSIZE: 34x22 (in.) DATE: 8/24/2022 TIME: 12:21:46 PM USER: cplacek
H:\Projects\2019\2019-0430_00 JEF-7-13.69\09309\400-Engineering\Traffic\Sheets\109309_TP001.dgn

DESIGN AGENCY
KORDA
KORDA / NEMETH ENGINEERING, INC
1650 Watermark Drive, Suite 200, Columbus, OH 43215

DESIGNER ATD
REVIEWER CLP 09/28/21
PROJECT ID 109309
SHEET 61 TOTAL 95

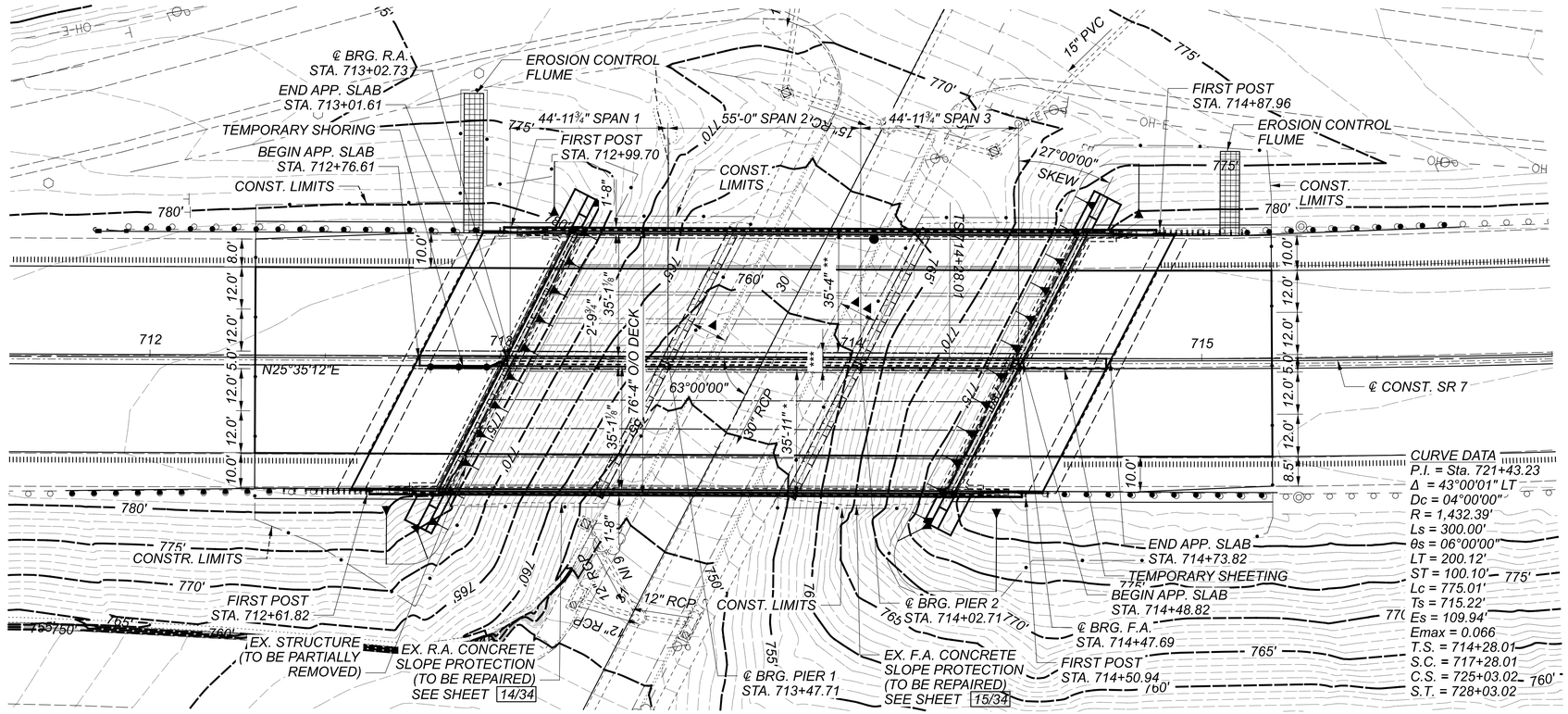

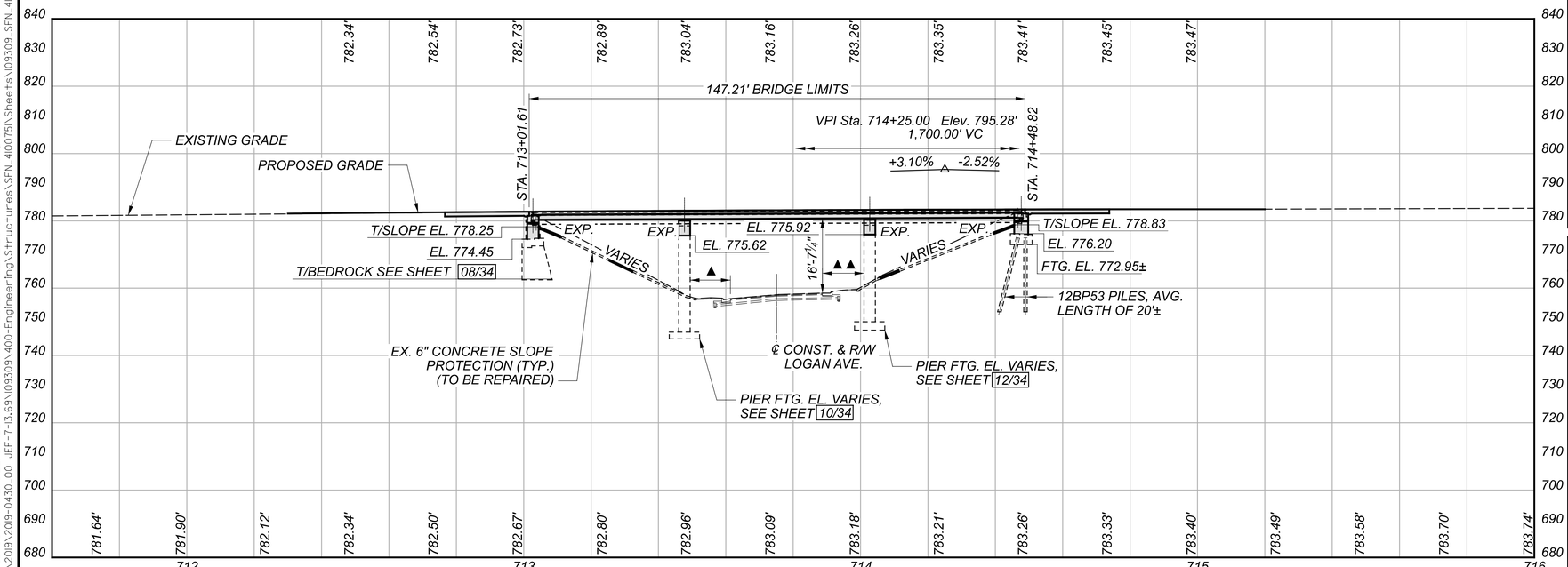

BENCHMARK DATA

BM #1 STA.	716+56.71,	ELEV.	779.26 ,	OFFSET	48.85 , LT
BM #2 STA.	711+11.68,	ELEV.	779.45 ,	OFFSET	39.12 , LT

FOR ADDITIONAL BENCHMARK INFORMATION. SEE ROADWAY PLAN SHEET 2/95

NOTES

EARTHWORK LIMITS SHOWN ARE APPROXIMATE. ACTUAL SLOPES SHALL CONFORM TO PLAN CROSS SECTIONS.

DESIGN TRAFFIC:

2024 ADT =	17500	2024 ADTT =	2275
2044 ADT =	21500	2044 ADTT =	2795

DIRECTIONAL DISTRIBUTION = 52%

LEGEND

* - PHASE 3 CONSTRUCTION
** - PHASE 5 CONSTRUCTION
*** - PHASE 5 CONSTRUCTION CLOSURE POUR
15'-4" EXISTING MINIMUM VERTICAL CLEARANCE
● 16'-6" REQUIRED MINIMUM VERTICAL CLEARANCE
16'-7¼" ACTUAL MINIMUM VERTICAL CLEARANCE
▲2'-0" REQUIRED LEFT MINIMUM LATERAL CLEARANCE
10'-9¼" ACTUAL LEFT MINIMUM LATERAL CLEARANCE
▲▲2'-0" REQUIRED RIGHT MINIMUM LATERAL CLEARANCE
10'-10¼" ACTUAL RIGHT MINIMUM LATERAL CLEARANCE

EXISTING STRUCTURE

TYPE: 3-SPAN CONTINUOUS STEEL BEAM WITH REINFORCED CONCRETE DECK AND SUBSTRUCTURES

SPANS: 44'-0"±, 55'-0"±, 44'-0"± (C/C BEARINGS)
ROADWAY: 72'-0"± T/T PARAPET WITH 3'-0" MEDIAN
LOADING: CF = 2000
SKEW: 27°00' 00"± LEFT FORWARD
WEARING SURFACE: 2.2"± MICRO-SILICA MODIFIED CONCRETE OVERLAY
APPROACH SLABS: 25'-0"± LONG, SPECIAL DESIGN
ALIGNMENT: TANGENT AND SPIRAL
CROWN: SUPERELEVATION, 0.016± FT/FT
STRUCTURAL FILE NUMBER: 4100751
DATE BUILT: 1961
DISPOSITION: TO BE REHABILITATED

PROPOSED STRUCTURE

PROPOSED WORK: NEW COMPOSITE REINFORCED CONCRETE DECK, NEW ELASTOMERIC BEARINGS, NEW SEMI-INTEGRAL ABUTMENTS, NEW PIER CAPS, WITH NEW PAINTED BEAMS, AND NEW APPROACH SLABS ON EXISTING SUBSTRUCTURES

SPANS: 44'-11¾", 55'-0", 44'-11¾" C/C BEARINGS ALONG CENTERLINE
ROADWAY: 32'- 7 ⅛" T/PARAPET TO T/MEDIAN (LEFT AND RIGHT)
LOADING: HL93 AND 60 PSF FUTURE WEARING SURFACE
SKEW: 27° 00' 00" LEFT FORWARD
WEARING SURFACE: 1" MONOLITHIC CONCRETE
APPROACH SLABS: 25'-0" LONG, T = 15" (AS-1-15, AS-2-15, TYPE A)
ALIGNMENT: TANGENT AND SPIRAL
CROWN: SUPERELEVATION, 0.016 FT/FT
DECK AREA: 11066 SF

COORDINATES: LATITUDE 40° 19' 27.50"
LONGITUDE 80° 36' 23.77"

HORIZONTAL SCALE IN FEET
0 10 20 40

SITE PLAN
BRIDGE NO. JEF-00007-13.690
SR 7 OVER LOGAN AVENUE

SFN	4100751
DESIGN AGENCY	KORDA
	KORDA / NEMETH ENGINEERING, INC
	1650 Watermark Drive, Suite 200, Columbus, OH 43215
DESIGNER	EAT
CHECKER	CAB
REVIEWER	CLP 09/28/21
PROJECT ID	109309
SUBSET	1
TOTAL	34
SHEET	62
TOTAL	95

JEF-7-13.680

MODEL: Plan (ISheet) PAPERSIZE: 34x22 (in.) DATE: 8/24/2022 TIME: 12:21:48 PM USER: cplacek
H:\Projects\2019\0430.00 JEF-7-13.69\09309\400-Engineering\Structures\SFN_4100751\Sheets\09309_SFN_4100751_SP001.dgn

R.A. TEMPORARY SHORING - NOTES:

1. WHEN NO LONGER NEEDED FOR EXCAVATION SUPPORT, REMOVE LAGGING TO THE SUBGRADE SURFACE AND CUT OFF AND REMOVE SOLDIER PILES TO THE SUBGRADE SURFACE.
2. SOLDIER PILES SHALL BE 50 KSI STEEL.
3. LAGGING SHALL BE STRUCTURAL GRADE LUMBER WITH A MINIMUM BENDING STRESS OF 1500 PSI.

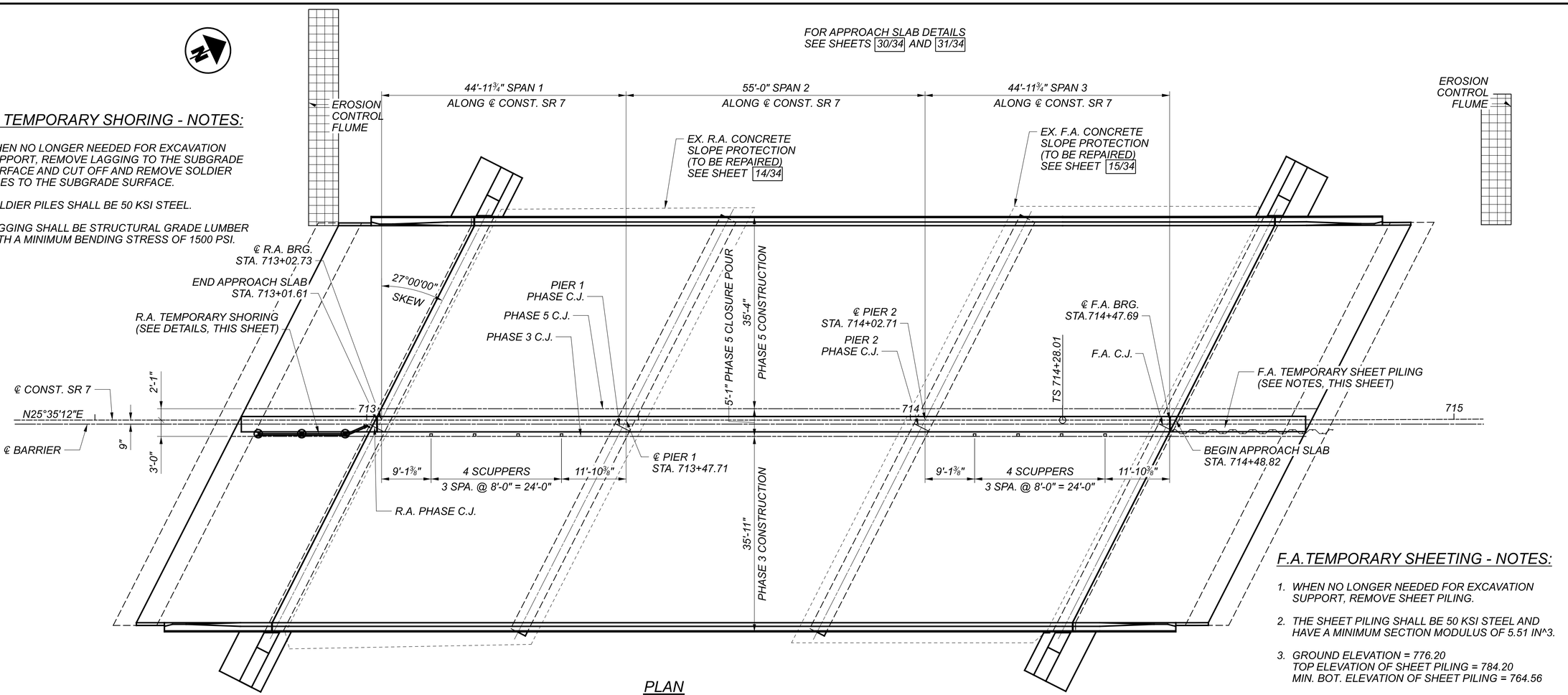

F.A. TEMPORARY SHEETING - NOTES:

1. WHEN NO LONGER NEEDED FOR EXCAVATION SUPPORT, REMOVE SHEET PILING.
2. THE SHEET PILING SHALL BE 50 KSI STEEL AND HAVE A MINIMUM SECTION MODULUS OF 5.51 IN^3.
3. GROUND ELEVATION = 776.20
   TOP ELEVATION OF SHEET PILING = 784.20
   MIN. BOT. ELEVATION OF SHEET PILING = 764.56

PLAN

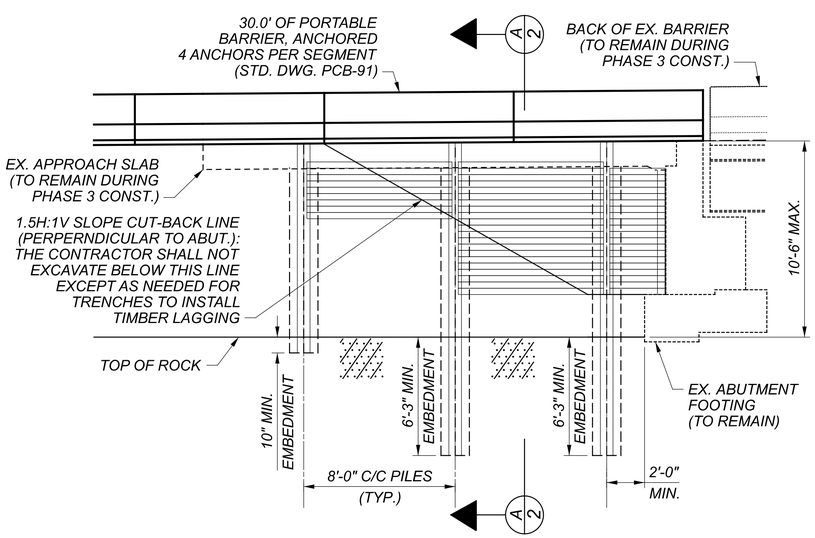

ELEVATION

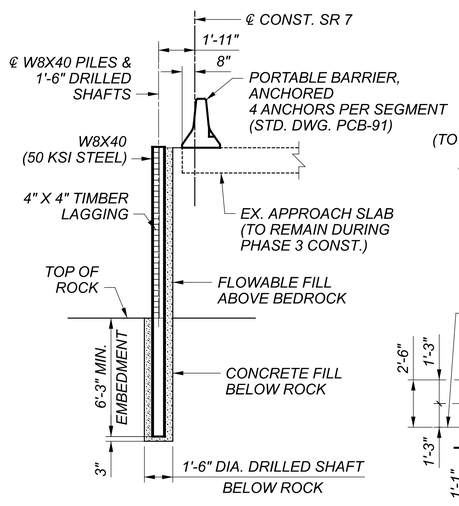

SECTION A-A

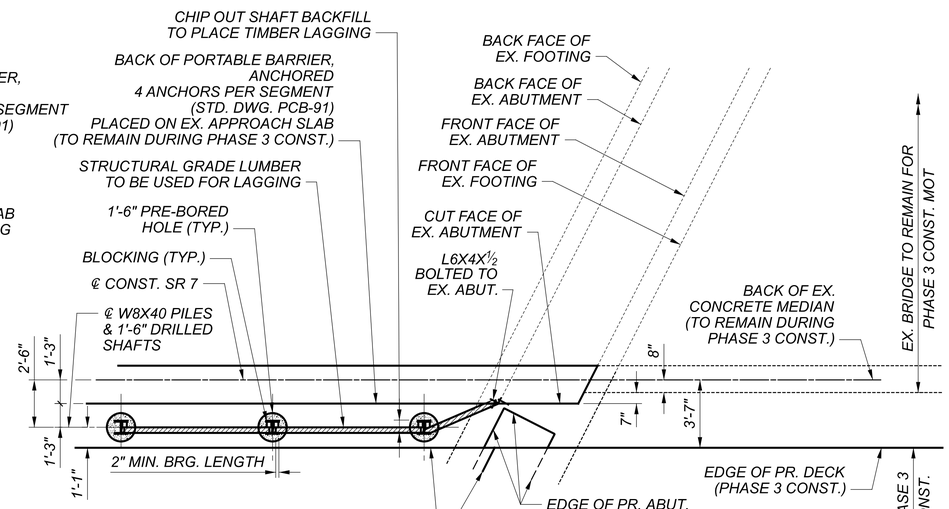

PARTIAL PLAN
(PHASE 3 CONSTRUCTION)

TEMPORARY SHORING DETAILS - REAR ABUTMENT

GENERAL PLAN
BRIDGE NO. JEF-00007-13.690
SR 7 OVER LOGAN AVENUE

JEF-7-13.680

SFN 4100751
DESIGN AGENCY KORDA
KORDA / NEMETH ENGINEERING, INC
1650 Watermark Drive, Suite 200, Columbus, OH 43215
DESIGNER EAT | CHECKER CAB
REVIEWER CLP 09/28/21
PROJECT ID 109309
SUBSET 2 | TOTAL 34
SHEET 63 | TOTAL 95

MODEL: Sheet PAPERSIZE: 34x22 (in.) DATE: 8/24/2022 TIME: 12:21:50 PM USER: cplacek
H:\Projects\2019\2019-0430_00 JEF-7-13.69\109309\400-Engineering\Structures\SFN_4100751\Sheets\109309_SFN_4100751_SG001.dgn

STANDARD DRAWINGS AND SUPPLEMENTAL SPECIFICATIONS

REFER TO THE FOLLOWING STANDARD BRIDGE DRAWINGS:

AS-1-15	REVISED	07-17-2015
AS-2-15	REVISED	01-18-2019
GSD-1-19	REVISED	01-15-2021
PCB-91	REVISED	07-17-2020
SBR-1-20	REVISED	07-17-2020
SBR-2-20	REVISED	01-15-2021
SICD-1-96	REVISED	07-18-2014
SICD-2-14	REVISED	01-15-2021
VPF-1-90	REVISED	07-20-2018

AND TO THE FOLLOWING SUPPLEMENTAL SPECIFICATIONS:

800	DATED	SEE PROPOSAL
843	DATED	10-18-2019
846	DATED	04-17-2015
832	DATED	07-15-2022

DESIGN SPECIFICATIONS

THIS STRUCTURE CONFORMS TO THE 8TH EDITION OF THE "LRFD BRIDGE DESIGN SPECIFICATIONS" ADOPTED BY THE AMERICAN ASSOCIATION OF STATE HIGHWAY AND TRANSPORTATION OFFICIALS, 2017 AND THE ODOT BRIDGE DESIGN MANUAL, 2020.

OPERATIONAL IMPORTANCE

A LOAD MODIFIER OF 1.00 HAS BEEN ASSUMED FOR THE DESIGN OF THIS STRUCTURE IN ACCORDANCE WITH THE AASHTO LRFD BRIDGE DESIGN SPECIFICATIONS, ARTICLE 1.3.5 AND THE ODOT BRIDGE DESIGN MANUAL, 2020.

DESIGN LOADING

VEHICULAR LIVE LOAD: HL-93

FUTURE WEARING SURFACE (FWS) OF 0.060 KIPS/SQ.FT.

DESIGN DATA

CONCRETE CLASS QC2 - COMPRESSIVE STRENGTH 4.5 KSI (SUPERSTRUCTURE)

CONCRETE CLASS QC1 - COMPRESSIVE STRENGTH 4.0 KSI (SUBSTRUCTURE)

REINFORCING STEEL - ASTM A615 OR A996, GRADE 60 MINIMUM YIELD STRENGTH 60 KSI

STRUCTURAL STEEL - ASTM A709 GRADE 50 YIELD STRENGTH 50 KSI

DECK PROTECTION METHOD

EPOXY COATED REINFORCING STEEL
2.5" CONCRETE COVER

MONOLITHIC WEARING SURFACE

MONOLITHIC WEARING SURFACE IS ASSUMED, FOR DESIGN PURPOSES, TO BE 1 INCH THICK.

ITEM 202 PORTIONS OF STRUCTURE REMOVED OVER 20' SPAN, AS PER PLAN

REMOVE REAR ABUTMENT TO EL. 774.45±
REMOVE FORWARD ABUTMENT TO EL. 776.20±
REMOVE PIER 1 TO EL. 775.62±
REMOVE PIER 2 TO EL. 775.92±

ITEM 202 PORTIONS OF STRUCTURE REMOVED OVER 20' SPAN, AS PER PLAN (CONTINUED)

THIS ITEM SHALL INCLUDE THE ELEMENTS INDICATED IN THE PLANS AND GENERAL NOTES AND THAT ARE NOT SEPARATELY LISTED FOR PAYMENT. ITEMS TO BE REMOVED INCLUDE ALL EXISTING MATERIALS BEING REPLACED BY NEW CONSTRUCTION AND MISCELLANEOUS ITEMS THAT ARE NOT SHOWN TO BE INCORPORATED INTO THE FINAL CONSTRUCTION AND ARE DIRECTED TO BE REMOVED BY THE ENGINEER. THE USE OF EXPLOSIVES, HEADACHE BALLS AND/OR HOE-RAMS WILL NOT BE PERMITTED. THE METHOD OF REMOVAL AND THE WEIGHT OF HAMMER SHALL BE APPROVED BY THE ENGINEER. PERFORM ALL WORK IN A MANNER THAT WILL NOT CUT, ELONGATE OR DAMAGE THE EXISTING REINFORCING STEEL TO BE PRESERVED. CHIPPING HAMMERS SHALL NOT BE HEAVIER THAN THE NOMINAL 90-POUND CLASS. PNEUMATIC HAMMERS SHALL NOT BE PLACED IN DIRECT CONTACT WITH REINFORCING STEEL THAT IS TO BE RETAINED IN THE REBUILT STRUCTURE. SUBMIT CONSTRUCTION PLANS ACCORDING TO C&MS 501.05.

ITEM 503 - COFFERDAMS AND EXCAVATION BRACING, AS PER PLAN

THE DESIGN SHOWN ON THE PLANS FOR TEMPORARY SUPPORT OF EXCAVATION IS ONE REPRESENTATIVE DESIGN THAT MAY BE USED TO CONSTRUCT THE PROJECT. THE CONTRACTOR MAY CONSTRUCT THE DESIGN SHOWN ON THE PLANS OR PREPARE AN ALTERNATE DESIGN TO SUPPORT THE SIDES OF EXCAVATIONS. IF CONSTRUCTING AN ALTERNATE DESIGN FOR TEMPORARY SUPPORT OF EXCAVATION, PREPARE AND PROVIDE PLANS IN ACCORDANCE WITH C&MS 501.05. THE DEPARTMENT WILL PAY FOR THE TEMPORARY SUPPORT OF EXCAVATION AT THE CONTRACT LUMP SUM PRICE FOR COFFERDAMS AND EXCAVATION BRACING. THE DEPARTMENT WILL NOT MAKE ADDITIONAL PAYMENT FOR PROVIDING AN ALTERNATE DESIGN.

ITEM 511 - CLASS QC2 CONCRETE WITH QC/QA, SUPERSTRUCTURE, AS PER PLAN

FURNISH MATERIAL MEETING THE REQUIREMENTS OF ASTM C578 TYPE IV. NEATLY CUT MATERIAL AS NECESSARY TO ALLOW FOR PROPER INSTALLATION JOINTS AT ABUTTING PIECES SHALL BE SEALED WITH DUCT TAPE. ALLOWABLE TOLERANCE FOR THE TOTAL THICKNESS OF MATERIAL SHALL BE -0 IN, +1/2 IN. DO NOT PLACE MORE THAN TWO LAYERS OF POLYSTYRENE TO ACHIEVE TOTAL THICKNESS.

THE ACCEPTED QUANTITIES SHALL INCLUDE ALL CONCRETE IN DECK, SEMI-INTEGRAL DIAPHRAGMS, PARAPETS AND MEDIAN, POLYSTYRENE AND OTHER MATERIALS.

ITEM 512 - SEALING OF CONCRETE SURFACES (EPOXY-URETHANE)

THE SINGLE SLOPE CONCRETE BRIDGE RAILING PER STD. DWG. SBR-1-20 AND THE 57" SINGLE SLOPE CONCRETE MEDIAN RAILING PER STD. DWG. SBR-2-20 ARE TO BE SEALED USING ITEM 512 - SEALING OF CONCRETE SURFACES (EPOXY URETHANE). THE EPOXY COAT SHALL BE TINTED FEDERAL COLOR STANDARD NO. 17778 (LIGHT NEUTRAL).

ITEM 514 - PAINTING OF STRUCTURAL STEEL

BEAMS SHALL RECEIVE A THREE - COAT PAINT SYSTEM CONSISTING OF AN INORGANIC ZINC PRIMER SHOP APPLIED, AN EPOXY INTERMEDIATE COAT FIELD APPLIED, AND A URETHANE FINISH COAT FIELD APPLIED.

THE TOP COAT SHALL BE FEDERAL STANDARD NO. 5526, BLUE.

ITEM 516 JOINT SEALER, AS PER PLAN

FURNISH JOINT SEALER AND APPLY JOINT SEALER CONFORMING TO C&MS 516, JOINT SEALER, HOT APPLIED 705.04.

ITEM 526 - REINFORCED CONCRETE APPROACH SLABS WITH QC/QA (T=15"), AS PER PLAN

FURNISH APPROACH SLABS CONFORMING TO C&MS 526. THE ACCEPTED QUANTITIES SHALL INCLUDE ALL CONCRETE, CURBS, PARAPETS, MEDIAN PARAPET, REINFORCING STEEL, DOWELS, JOINTS AND OTHER MATERIALS.

CUT LINE CONSTRUCTION JOINT PREPARATION

SAW CUT BOUNDARIES OF PROPOSED CONCRETE REMOVALS 1 INCH DEEP. REMOVE CONCRETE TO A ROUGH SURFACE. LEAVE THE EXISTING REINFORCING STEEL, IF REQUIRED IN THE PLANS, IN PLACE. INSTALL DOWEL BARS IF SPECIFIED. PRIOR TO CONCRETE PLACEMENT ABRASIVELY CLEAN JOINT SURFACES AND EXISTING EXPOSED REINFORCEMENT TO REMOVE LOOSE AND DISINTEGRATED CONCRETE AND LOOSE RUST. THOROUGHLY CLEAN THE JOINT SURFACE AND EXPOSED REINFORCEMENT OF ALL DIRT, DUST, RUST OR OTHER FOREIGN MATERIAL BY THE USE OF WATER, AIR UNDER PRESSURE, OR OTHER METHODS THAT PRODUCE SATISFACTORY RESULTS. EXISTING REINFORCING STEEL DOES NOT HAVE TO HAVE A BRIGHT STEEL FINISH BUT REMOVE ALL PACK AND LOOSE RUST. THOROUGHLY DRENCH EXISTING CONCRETE SURFACES WITH CLEAN WATER AND ALLOW TO DRY TO A DAMP CONDITION BEFORE PLACING CONCRETE.

DECK PLACEMENT DESIGN ASSUMPTIONS

THE FOLLOWING ASSUMPTIONS OF CONSTRUCTION MEANS AND METHODS WERE MADE FOR THE ANALYSIS AND DESIGN OF THE SUPERSTRUCTURE. THE CONTRACTOR IS RESPONSIBLE FOR THE DESIGN OF THE FALSEWORK SUPPORT SYSTEM WITHIN THESE PARAMETERS AND WILL ASSUME RESPONSIBILITY FOR SUPERSTRUCTURE ANALYSIS FOR DEVIATION FROM THESE DESIGN ASSUMPTIONS.

AN EIGHT WHEEL FINISHING MACHINE WITH A MAXIMUM WHEEL LOAD OF 2.3 KIPS.

A MINIMUM OUT-TO-OUT WHEEL SPACING AT EACH END OF THE MACHINE OF 103".

A MAXIMUM SPACING OF OVERHANG FALSEWORK BRACKETS OF 48 IN.

A MAXIMUM DISTANCE FROM THE CENTERLINE OF THE FASCIA GIRDER TO THE FACE OF THE SAFETY HANDRAIL OF 65".

EXISTING STRUCTURE VERIFICATION

DETAILS AND DIMENSIONS SHOWN ON THESE PLANS PERTAINING TO THE EXISTING STRUCTURE HAVE BEEN OBTAINED FROM PLANS OF THE EXISTING STRUCTURE AND FROM FIELD OBSERVATIONS AND MEASUREMENTS. CONSEQUENTLY, THEY ARE INDICATIVE OF THE EXISTING STRUCTURE AND THE PROPOSED WORK BUT THEY SHALL BE CONSIDERED TENTATIVE AND APPROXIMATE. THE CONTRACTOR IS REFERRED TO C&MS SECTIONS 102.05, 105.02 AND 513.04. BASE CONTRACT BID PRICES UPON A RECOGNITION OF THE UNCERTAINTIES DESCRIBED ABOVE AND UPON A PREBID EXAMINATION OF THE EXISTING STRUCTURE. HOWEVER, THE DEPARTMENT WILL PAY FOR ALL PROJECT WORK BASED UPON ACTUAL DETAILS AND DIMENSIONS THAT HAVE BEEN VERIFIED IN THE FIELD.

FOOTINGS

PLACE FOOTINGS AT ELEVATION OF EXISTING FOOTINGS.

WHERE APPLICABLE FOOTINGS SHALL EXTEND A MINIMUM OF 3 INCHES INTO BEDROCK OR TO THE ELEVATION SHOWN, WHICHEVER IS LOWER.

SPREAD FOOTING FOUNDATIONS

WINGWALL FOOTINGS, AS DESIGNED, PRODUCE A MAXIMUM SERVICE LIMIT STATE BEARING PRESSURE OF 1.5 KIPS PER SQUARE FOOT AND A MAXIMUM STRENGTH LIMIT STATE BEARING PRESSURE OF 2.1 KIPS PER SQUARE FOOT. THE FACTORED BEARING RESISTANCE IS 3.0 KIPS PER SQUARE FOOT.

MECHANICAL CONNECTORS FOR REINFORCING BARS

AN APPROVED TYPE OF NON-PROTRUDING MECHANICAL CONNECTOR FOR REINFORCING BARS SHALL BE PROVIDED. INSTALLATION OF MECHANICAL CONNECTORS SHALL CONFORM WITH MANUFACTURER'S RECOMMENDED PROCEDURES. IF A DOWEL BAR SPLICE TYPE OF MECHANICAL CONNECTOR IS FURNISHED THE MINIMUM DOWEL BAR LENGTH TO BE INCLUDED WITH THE CONNECTOR SHALL BE 3'-0".

CONNECTORS AND DOWEL BARS SHALL BE EPOXY COATED. COATING FOR BOTH CONNECTORS AND BARS SHALL CONFORM TO THE SAME SPECIFICATIONS. COATINGS WHICH HAVE BEEN DAMAGED OR DO NOT OTHERWISE MEET SPECIFICATIONS WITH RESPECT TO COLOR, CONTINUITY AND UNIFORMITY MAY BE REPAIRED AS DIRECTED BY THE ENGINEER, OR REPLACED BY MATERIAL WHICH MEETS THE SPECIFICATIONS.

CONNECTORS AND DOWEL BAR EXTRUSIONS SHALL BE SUPPLIED BY THE CONTRACTOR OF FABRICATOR AND INCLUDED AS INCIDENTALS IN THE BID PRICE FOR ITEM 509 EPOXY COATED REINFORCING STEEL.

SUBSTRUCTURE CONCRETE REMOVAL

REMOVE CONCRETE BY MEANS OF APPROVED PNEUMATIC HAMMERS EMPLOYING POINTED AND BLUNT CHISEL TOOLS. HYDRAULIC HOE-RAM TYPE HAMMERS WILL NOT BE PERMITTED. THE WEIGHT OF THE HAMMER SHALL NOT BE MORE THAN 35 POUNDS FOR REMOVAL WITHIN 18 INCHES OF PORTIONS TO BE PRESERVED. OUTSIDE THE 18 INCH LIMIT, THE CONTRACTOR MAY USE HAMMERS NOT EXCEEDING 90 POUNDS UPON THE APPROVAL OF THE ENGINEER. DO NOT PLACE PNEUMATIC HAMMERS IN DIRECT CONTACT WITH REINFORCING STEEL THAT IS TO BE RETAINED IN THE REBUILT STRUCTURE.

VANDAL PROTECTION FENCING

INSTALL FENCING FOR EACH CONSTRUCTION PHASE PRIOR TO OPENING THAT PHASE TO VEHICULAR TRAFFIC.

GENERAL NOTES
BRIDGE NO. JEF-00007-13.690
SR 7 OVER LOGAN AVENUE

SFN 4100751

DESIGN AGENCY
KORDA
KORDA / NEMETH ENGINEERING, INC
1650 Watermark Drive, Suite 200, Columbus, OH 43215

DESIGNER	CHECKER
EAT	CAB

REVIEWER
CLP 09/28/21

PROJECT ID 109309

SUBSET	TOTAL
3	34

SHEET	TOTAL
64	95

JEF-7-13.680

MODEL: Sheet PAPERSIZE: 34x22 (in.) DATE: 8/24/2022 TIME: 12:16:51 PM USER: cplacek
H:\Projects\2019\2019-0430_00 JEF-7-13,69\109309\400-Engineering\Structures\SFN_4100751\Sheets\109309_SFN_4100751_SN001.dgn

SEQUENCE OF CONSTRUCTION

1. SET PORTABLE CONCRETE BARRIERS AS SHOWN ON THE PHASE 3 REMOVALS TRANSVERSE SECTION DETAILS AND INSTALL ALL OTHER NECESSARY TRAFFIC DEVICES TO MAINTAIN A TWO WAY TWO LANE TRAFFIC ON THE BRIDGE.

2. REMOVE CONCRETE SUPERSTRUCTURE, STEEL CROSSFRAMES AND STEEL BEAMS INDICATED IN THE PHASE 3 REMOVALS TRANSVERSE SECTION.

3. SAWCUT EXISTING ABUTMENTS, APPROACH SLABS AND PIER AT LOCATION OF PHASE 3 REMOVAL LINE AS SHOWN ON THE GENERAL PLAN AND THE REMOVAL DETAIL SHEETS.

4. INSTALL TEMPORARY SHORING EXCAVATION BRACING AT THE ABUTMENTS.

5. PERFORM PHASE 3 REMOVALS AS INDICATED IN THE PLANS.

6. EXCAVATE AS REQUIRED FOR CONSTRUCTION OF PROPOSED PHASE 3 ABUTMENTS.

7. CONSTRUCT PHASE 3 OF PROPOSED BRIDGE.

8. SET PORTABLE CONCRETE BARRIER AS SHOWN ON THE PHASE 3 CONSTRUCTION AND PHASE 5 REMOVALS OF THE TRANSVERSE SECTION.

9. PERFORM REMAINING REMOVALS AS INDICATED IN THE PLANS.

10. CONSTRUCT PHASE 5 PORTION OF THE PROPOSED BRIDGE.

ABBREVIATIONS

ABUT.	-	ABUTMENT
APP.	-	APPROACH
A.S.	-	APPROACH SLAB
ABBR.	-	ABBREVIATION
BM	-	BENCH MARK
BOT.	-	BOTTOM
BRG.	-	BEARING
BTW.	-	BETWEEN
C/C	-	CENTER TO CENTER
C.J.	-	CONSTRUCTION JOINT
CLR.	-	CLEARANCE
℄	-	CENTERLINE
CONST.	-	CONSTRUCTION
DIA. & ϕ	-	DIAPHRAGM
DWG.	-	DRAWING
EB	-	EAST BOUND
EL.	-	ELEVATION
E.S.	-	EACH SIDE
EX.	-	EXISTING
EXP.	-	EXPANSION
F/F	-	FACE TO FACE
F/	-	FACE OF
F.A.	-	FORWARD ABUTMENT
F.S.	-	FAR SIDE
FTG.	-	FOOTING
FWD.	-	FORWARD
FWS	-	FUTURE WEARING SURFACE
GR	-	GROUND
G.R.	-	GUARDRAIL
HORIZ.	-	HORIZONTAL
H.W.	-	HIGH WATER
INC.	-	INCREMENT
IR	-	INTERSTATE ROUTE
JT.	-	JOINT
L.F.	-	LEFT FORWARD
L.R.	-	LEFT REAR
LT.	-	LEFT
MAX.	-	MAXIMUM
MIN.	-	MINIMUM
MISC.	-	MISCELLANEOUS
MOD.	-	MODIFIED
MOT	-	MAINTENANCE OF TRAFFIC
NB	-	NORTH BOUND
NDC	-	NORMAL DESIGN CRITERIA
NE	-	NORTHEAST
NCPP	-	NON-PERFORATED CORRUGATED PLASTIC PIPE
NW	-	NORTHWEST
N.S.	-	NEAR SIDE
NTS	-	NOT TO SCALE
O.C.	-	ON CENTER
O/O	-	OUT TO OUT
℗	-	PLATE
PCB	-	PORTABLE CONCRETE BARRIER
PCPP	-	PERFORATED CORRUGATED PLASTIC PIPE
PEJF	-	PREFORMED EXPANSION JOINT FILLER
P.G.	-	PROFILE GRADE
PR.	-	PROPOSED
PSF	-	POUNDS PER SQUARE FOOT
PSI	-	POUNDS PER SQUARE INCH
PT.	-	POINT
R	-	RADIUS
R.A.	-	REAR ABUTMENT
REQ	-	REQUIRED
R.F.	-	RIGHT FORWARD
R.R.	-	RIGHT REAR
RT	-	RIGHT
SB	-	SOUTHBOUND
SR	-	STATE ROUTE
SE	-	SOUTHEAST
SW	-	SOUTHWEST
SER.	-	SERIES
SHLDR.	-	SHOULDER
SLM	-	STRAIGHT LINE MILEAGE
SPA.	-	SPACES
SPL	-	SPLICE
STA.	-	STATION
STD.	-	STANDARD
T/BENCH	-	TOP OF BENCH
T/BEDROCK	-	TOP OF BEDROCK
T/MEDIAN	-	TOE OF MEDIAN
T/PARAPET	-	TOE OF PARAPET
T/SLOPE	-	TOP OF SLOPE
T/T	-	TOE TO TOE
T&B	-	TOP AND BOTTOM
TYP.	-	TYPICAL
U.N.O.	-	UNLESS NOTED OTHERWISE
V.C.	-	VERTICAL CURVE
WB	-	WESTBOUND
WW	-	WINGWALL

GENERAL NOTES
BRIDGE NO. JEF-00007-13.690
SR 7 OVER LOGAN AVENUE

SFN 4100751

DESIGN AGENCY
KORDA

KORDA / NEMETH ENGINEERING, INC
1650 Watermark Drive, Suite 200,
Columbus, OH 43215

DESIGNER	CHECKER
EAT	CAB

REVIEWER
CLP 09/28/21

PROJECT ID
109309

SUBSET	TOTAL
4	34

SHEET	TOTAL
65	95

JEF-7-13.680

MODEL: Sheet PAPERSIZE: 34x22 (in) DATE: 8/24/2022 TIME: 12:16:53 PM USER: cplacek
H:\Projects\2019\2019-0430_00 JEF-7-13,69\09309\400-Engineering\Structures\SFN_4100751\Sheets\09309_SFN_4100751_SN002.dgn

CALC:	EAT	DATE:	8/31/2021
CHECKED:	CAB	DATE:	12/28/2021

ESTIMATED QUANTITIES (STRUCTURE OVER 20' SPAN, SFN 4100751)

ITEM	TOTAL	UNIT	DESCRIPTION	ABUT.	PIERS	SUPER.	GEN.	SEE SHEET
202	LS	LS	PORTIONS OF STRUCTURE REMOVED, OVER 20 FOOT SPAN, AS PER PLAN					3/34
202	294	SY	APPROACH SLAB REMOVED				294	
202	294	SY	WEARING COURSE REMOVED				294	
503	LS	LS	COFFERDAMS AND EXCAVATION BRACING, AS PER PLAN					3/34
503	95	CY	UNCLASSIFIED EXCAVATION, INCLUDING ROCK AND/OR SHALE	95				
509	123821	LB	EPOXY COATED REINFORCING STEEL	10999	11113	101709		
509	4562	FEET	NO. 4 GFRP DEFORMED BARS			4562		
510	542	EACH	DOWEL HOLES WITH NONSHRINK, NONMETALLIC GROUT	364	144	34		
511	478	CY	CLASS QC2 CONCRETE WITH QC/QA, SUPERSTRUCTURE, AS PER PLAN			478		3/34
511	4	EACH	SEMI-INTEGRAL DIAPHRAGM GUIDE	4				
511	90	CY	CLASS QC1 CONCRETE WITH QC/QA, PIER CAP		90			
511	131	CY	CLASS QC1 CONCRETE WITH QC/QA, ABUTMENT	131				
512	1374	SY	SEALING OF CONCRETE SURFACES (EPOXY-URETHANE)	118	563	693		
512	84	FT	CONCRETE REPAIR BY EPOXY INJECTION				84	
512	6	SY	TYPE 2 WATERPROOFING	6				
512	330	SY	REMOVAL OF EXISTING COATINGS FROM CONCRETE SURFACES		330			
513	306724	LB	STRUCTURAL STEEL MEMBERS, LEVEL 3			306724		
513	5010	EACH	WELDED STUD SHEAR CONNECTORS			5010		
514	11716	SF	FIELD PAINTING STRUCTURAL STEEL, INTERMEDIATE COAT			11716		
514	11716	SF	FIELD PAINTING STRUCTURAL STEEL, FINISH COAT			11716		
514	7	EACH	FINAL INSPECTION REPAIR			7		
516	36	SF	1" PREFORMED EXPANSION JOINT FILLER				36	
516	39	SF	2" PREFORMED EXPANSION JOINT FILLER	39				
516	192	FT	SEMI-INTEGRAL ABUTMENT EXPANSION JOINT SEAL	192				
516	516	FT	JOINT SEALER, AS PER PLAN				516	3/34
516	20	EACH	ELASTOMERIC BEARING WITH INTERNAL LAMINATES AND LOAD PLATE (NEOPRENE) (1'-0" x 10" x 2.5")	20				
516	20	EACH	ELASTOMERIC BEARING WITH INTERNAL LAMINATES AND LOAD PLATE (NEOPRENE) (1'-4" x 1'-0" x 3.375")		20			
518	8	EACH	SCUPPERS, INCLUDING SUPPORTS			8		
518	96	CY	POROUS BACKFILL WITH GEOTEXTILE FABRIC	96				
518	212	FT	6" PERFORATED CORRUGATED PLASTIC PIPE	212				
518	36	FT	6" NON-PERFORATED CORRUGATED PLASTIC PIPE, INCLUDING SPECIALS	36				
526	421	SY	REINFORCED CONCRETE APPROACH SLABS WITH QC/QA (T=15"), AS PER PLAN				421	3/34
526	166	FT	TYPE A INSTALLATION				166	
601	144	SY	CONCRETE SLOPE PROTECTION				144	
607	260	FT	VANDAL PROTECTION FENCE, 6' STRAIGHT, COATED FABRIC			260		
843	31	SF	PATCHING CONCRETE STRUCTURES WITH TROWELABLE MORTAR		31			
846	63	CF	POLYMER MODIFIED ASPHALT EXPANSION JOINT SYSTEM				63	

NOTE:

ITEM 201 CLEARING AND GRUBBING, ITEM 622 PORTABLE BARRIER, UNANCHORED AND ITEM 622 PORTABLE BARRIER ANCHORED ARE INCLUDED WITH ROADWAY QUANTITIES.
SEE GENERAL SUMMARY SHEETS 49/95 AND 50/95.

BRIDGE ESTIMATED QUANTITIES
BRIDGE NO. JEF-00007-13.690
SR 7 OVER LOGAN AVENUE

SFN 4100751

DESIGN AGENCY
KORDA
KORDA / NEMETH ENGINEERING, INC
1650 Watermark Drive, Suite 200, Columbus, OH 43215

DESIGNER	CHECKER
EAT	CAB

REVIEWER CLP 09/28/21

PROJECT ID 109309

SUBSET	TOTAL
5	34

SHEET	TOTAL
66	95

JEF-7-13.680

MODEL: Sheet PAPERSIZE: 34x22 (in.) DATE: 8/24/2022 TIME: 12:12:10 PM USER: cplacek
H:\Projects\2019\2019-0430_00 JEF-7-13.69\109309\400-Engineering\Structures\SFN_4100751\Sheets\109309_SFN_4100751_S0001.dgn

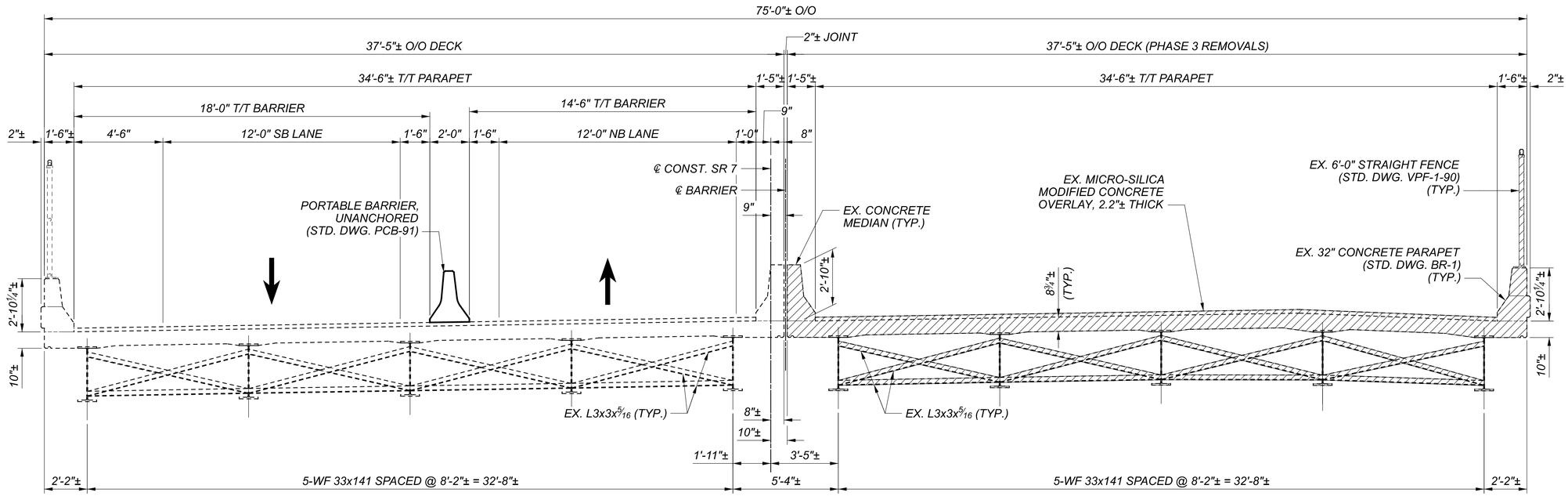

PHASE 3 REMOVALS

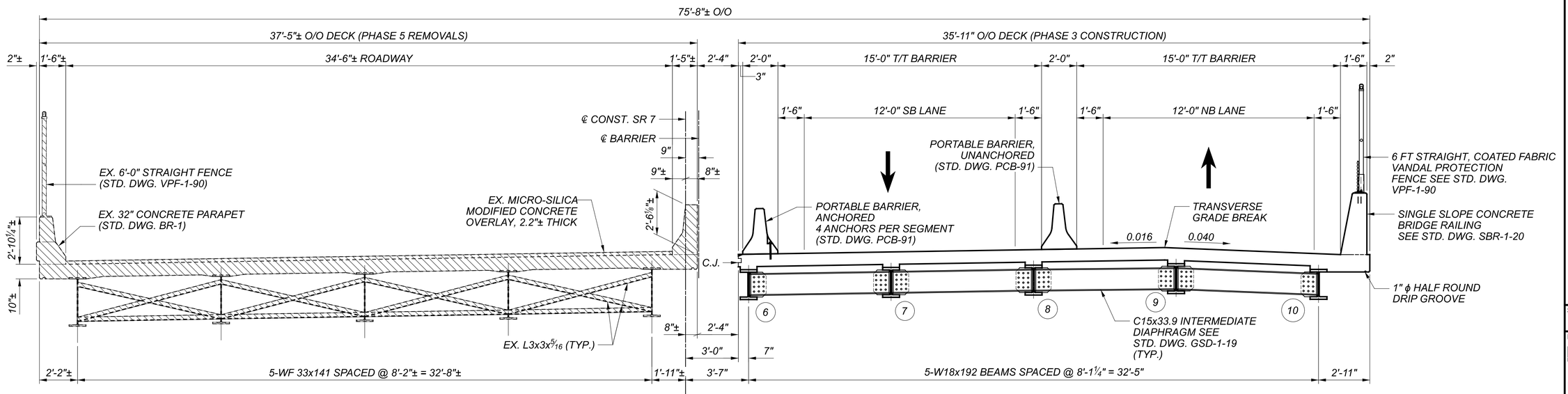

PHASE 3 CONSTRUCTION AND PHASE 5 REMOVALS

NOTE:

1. AFTER REMOVAL OF PORTABLE BARRIER GROUT VOIDS FROM ANCHORAGE WITH A NON-SHRINK NON-METALLIC GROUT, PER STD. DWG. PCB-91.

LEGEND

- PHASE 3 REMOVALS PER ITEM 202 PORTIONS OF STRUCTURE REMOVED, OVER 20' SPAN, AS PER PLAN
- PHASE 5 REMOVALS PER ITEM 202 PORTIONS OF STRUCTURE REMOVED, OVER 20' SPAN, AS PER PLAN
- (X) = BEAM NUMBER

PHASE CONSTRUCTION DETAILS
BRIDGE NO. JEF-00007-13.690
SR 7 OVER LOGAN AVENUE

SFN	4100751
DESIGN AGENCY	KORDA
	KORDA / NEMETH ENGINEERING, INC
	1650 Watermark Drive, Suite 200, Columbus, OH 43215
DESIGNER	EAT
CHECKER	CAB
REVIEWER	CLP 09/28/21
PROJECT ID	109309
SUBSET	6
TOTAL	34
SHEET	67
TOTAL	95

JEF-7-13.680

MODEL: Sheet PAPERSIZE: 34x22 (in.) DATE: 8/24/2022 TIME: 12:22:50 PM USER: cplacek
H:\Projects\2019\2019-0430_00 JEF-7-13.69\109309\400-Engineering\Structures\SFN_4100751\Sheets\109309_SFN_4100751_SC001.dgn

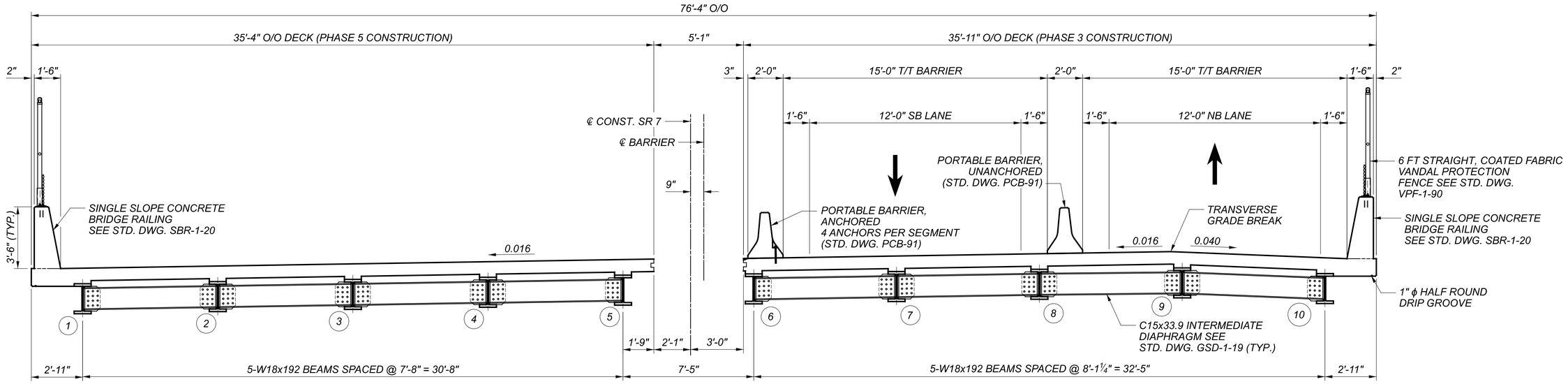

PHASE 5 CONSTRUCTION

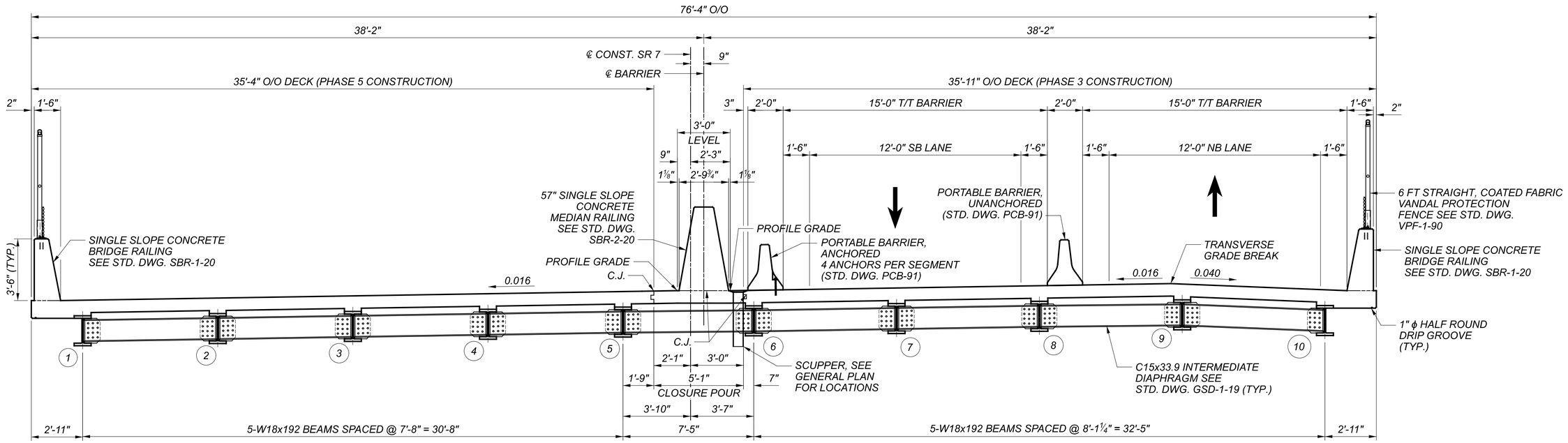

PHASE 5 CLOSURE POUR CONSTRUCTION AND BARRIER CONSTRUCTION

NOTE:

1. AFTER REMOVAL OF PORTABLE BARRIER GROUT VOIDS FROM ANCHORAGE WITH A NON-SHRINK NON-METALLIC GROUT, PER STD. DWG. PCB-91.

LEGEND

(X) = BEAM NUMBER

PHASE CONSTRUCTION DETAILS
BRIDGE NO. JEF-00007-13.690
SR 7 OVER LOGAN AVENUE

SFN	4100751
DESIGN AGENCY	KORDA
KORDA / NEMETH ENGINEERING, INC	1650 Watermark Drive, Suite 200, Columbus, OH 43215
DESIGNER	EAT
CHECKER	CAB
REVIEWER	CLP 09/28/21
PROJECT ID	109309
SUBSET	7
TOTAL	34
SHEET	68
TOTAL	95

JEF-7-13.680

MODEL: Sheet PAPERSIZE: 34x22 (in.) DATE: 8/24/2022 TIME: 12:22:51 PM USER: cplacek
H:\Projects\2019\2019-0430_00 JEF-7-13.69\109309\400-Engineering\Structures\SFN_4100751\Sheets\109309_SFN_4100751_SC002.dgn

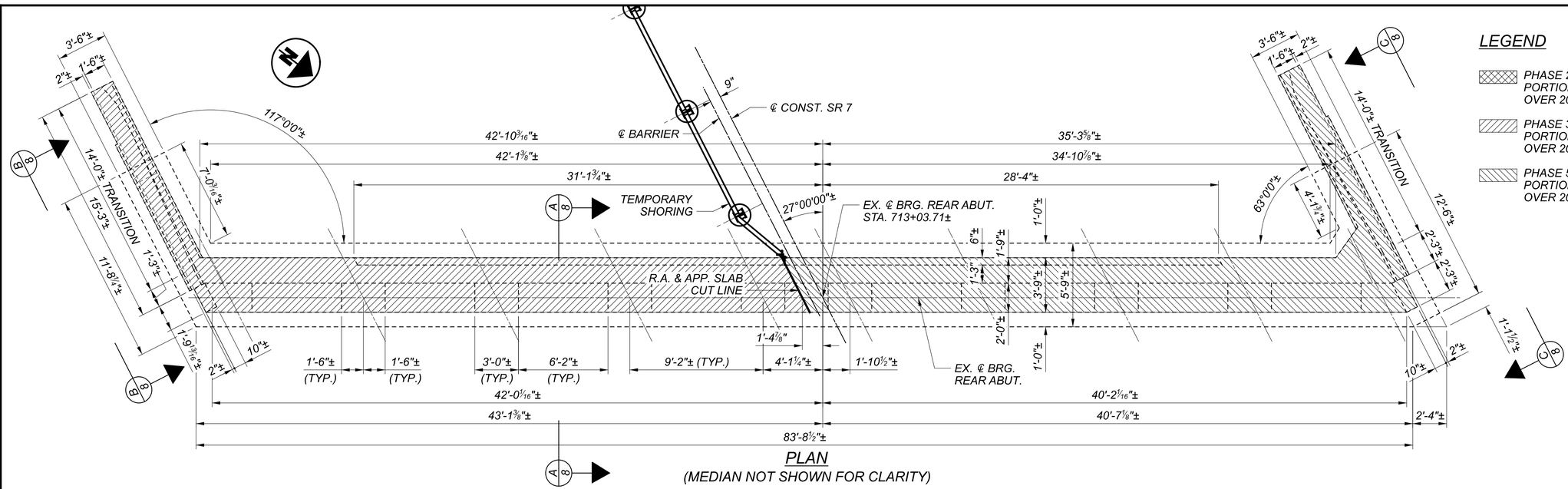

NOTES:

1. PHASE 2 REMOVALS PER ITEM 202 PORTIONS OF STRUCTURE REMOVED, OVER 20' SPAN, AS PER PLAN EXTENDS THE ENTIRE LENGTH OF THE EXISTING 25'-0" APPROACH SLAB.

REAR ABUTMENT REMOVAL DETAILS
BRIDGE NO. JEF-00007-13.690
SR 7 OVER LOGAN AVENUE

SFN	4100751
DESIGN AGENCY	KORDA
	KORDA / NEMETH ENGINEERING, INC
	1650 Watermark Drive, Suite 200, Columbus, OH 43215
DESIGNER	EAT
CHECKER	CAB
REVIEWER	CLP 09/28/21
PROJECT ID	109309
SUBSET	8
TOTAL	34
SHEET	69
TOTAL	95

JEF-7-13.680

MODEL: Sheet PAPERSIZE: 34x22 (in.) DATE: 8/24/2022 TIME: 12:22:53 PM USER: cplacek
H:\Projects\2019\2019-0430_00 JEF-7-13.69\109309\400-Engineering\Structures\SFN_4100751\Sheets\109309_SFN_4100751_SV001.dgn

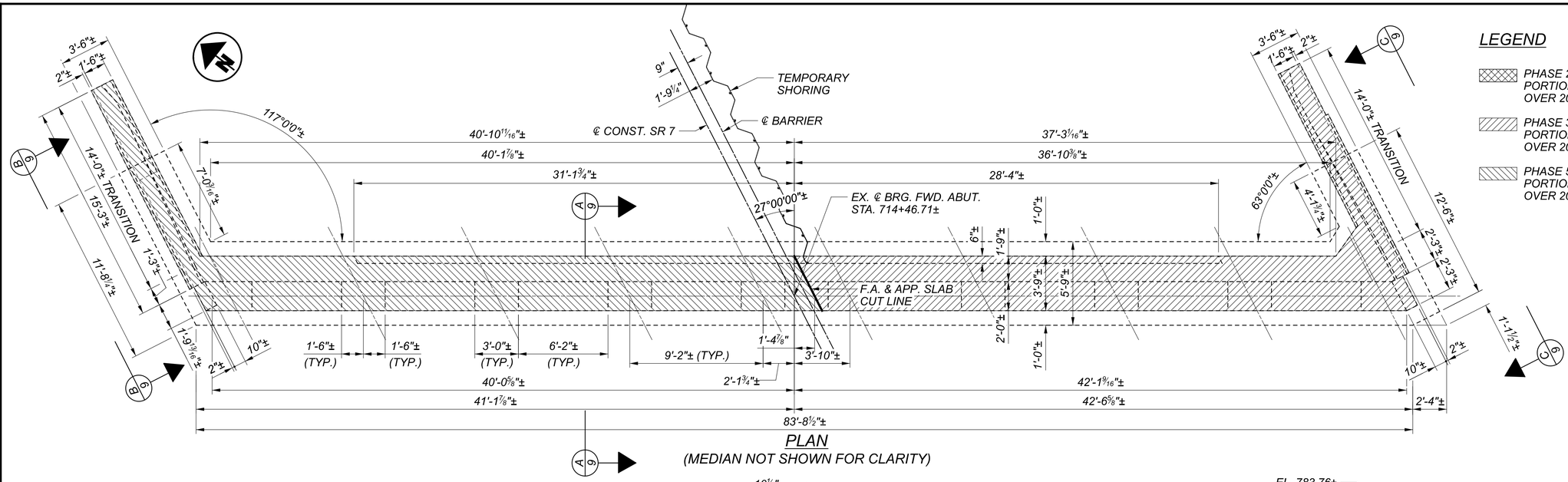

PLAN
(MEDIAN NOT SHOWN FOR CLARITY)

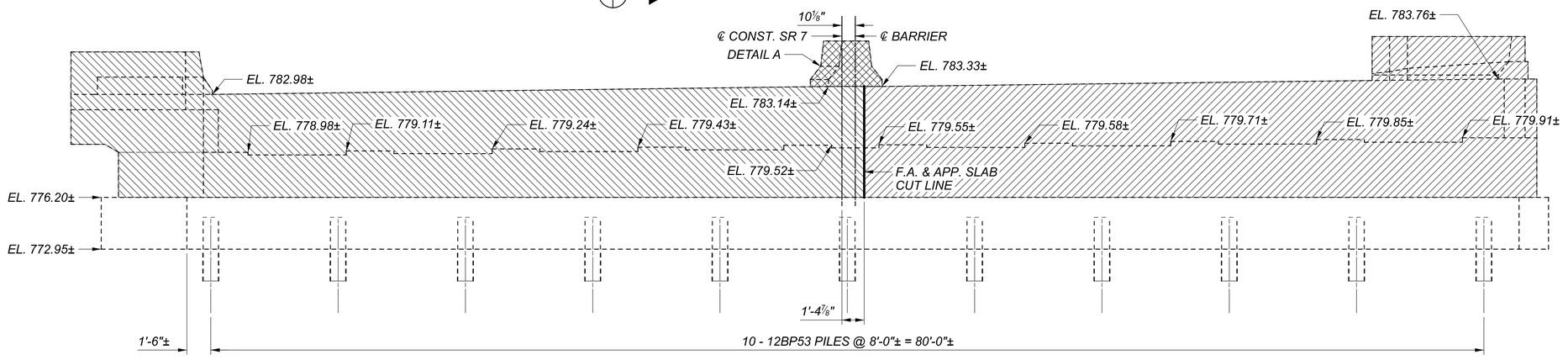

ELEVATION

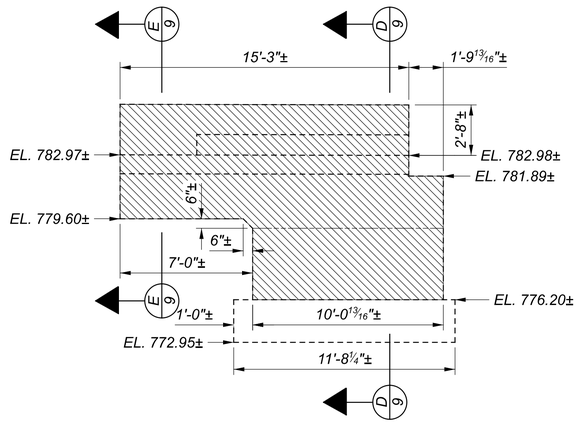

VIEW B-B

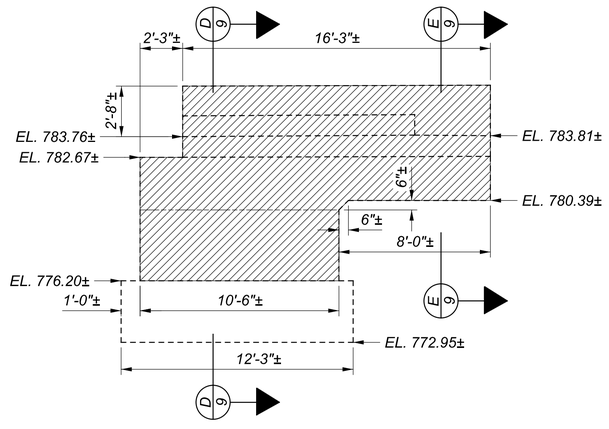

VIEW C-C

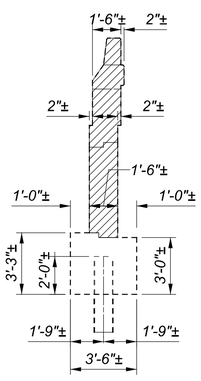

SECTION D-D

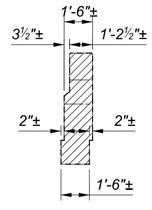

SECTION E-E

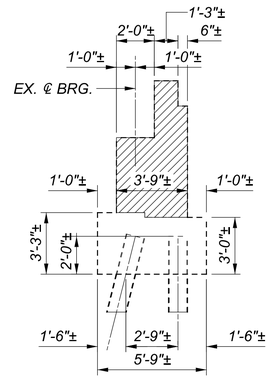

SECTION A-A

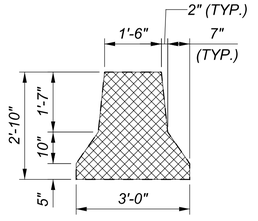

DETAIL A

NOTES:

1. PHASE 2 REMOVALS PER ITEM 202 PORTIONS OF STRUCTURE REMOVED, OVER 20' SPAN, AS PER PLAN EXTENDS THE ENTIRE LENGTH OF THE EXISTING 25'-0" APPROACH SLAB.

LEGEND

- PHASE 2 REMOVALS PER ITEM 202 PORTIONS OF STRUCTURE REMOVED, OVER 20' SPAN, AS PER PLAN
- PHASE 3 REMOVALS PER ITEM 202 PORTIONS OF STRUCTURE REMOVED, OVER 20' SPAN, AS PER PLAN
- PHASE 5 REMOVALS PER ITEM 202 PORTIONS OF STRUCTURE REMOVED, OVER 20' SPAN, AS PER PLAN

FORWARD ABUTMENT REMOVAL DETAILS
BRIDGE NO. JEF-00007-13.690
SR 7 OVER LOGAN AVENUE

JEF-7-13.680

MODEL: Sheet PAPERSIZE: 34x22 (in.) DATE: 8/24/2022 TIME: 12:22:54 PM USER: cplacek
H:\Projects\2019\2019-0430_00 JEF-7-13,69\09309\400-Engineering\Structures\SFN_4100751\Sheets\09309_SFN_4100751_SV002.dgn

SFN	4100751
DESIGN AGENCY	KORDA
	KORDA / NEMETH ENGINEERING, INC
	1650 Watermark Drive, Suite 200, Columbus, OH 43215
DESIGNER	EAT
CHECKER	CAB
REVIEWER	CLP 09/28/21
PROJECT ID	109309
SUBSET	9
TOTAL	34
SHEET	70
TOTAL	95

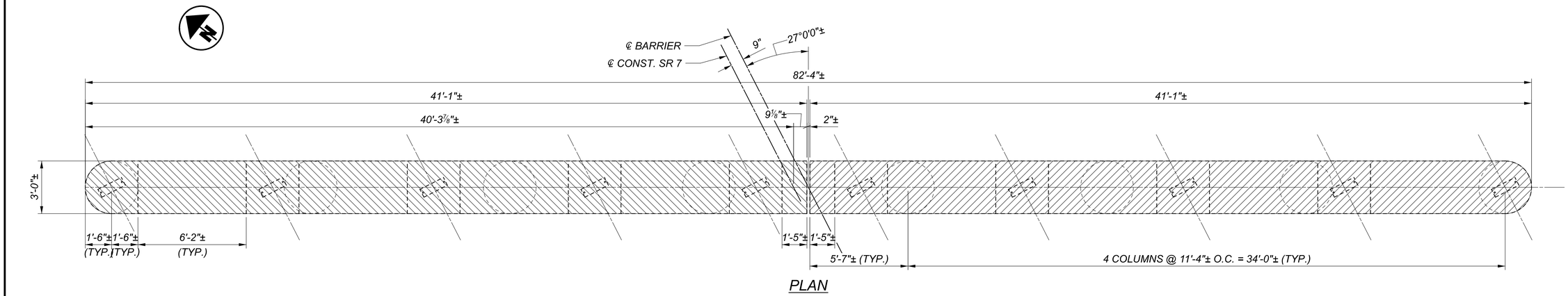

PLAN

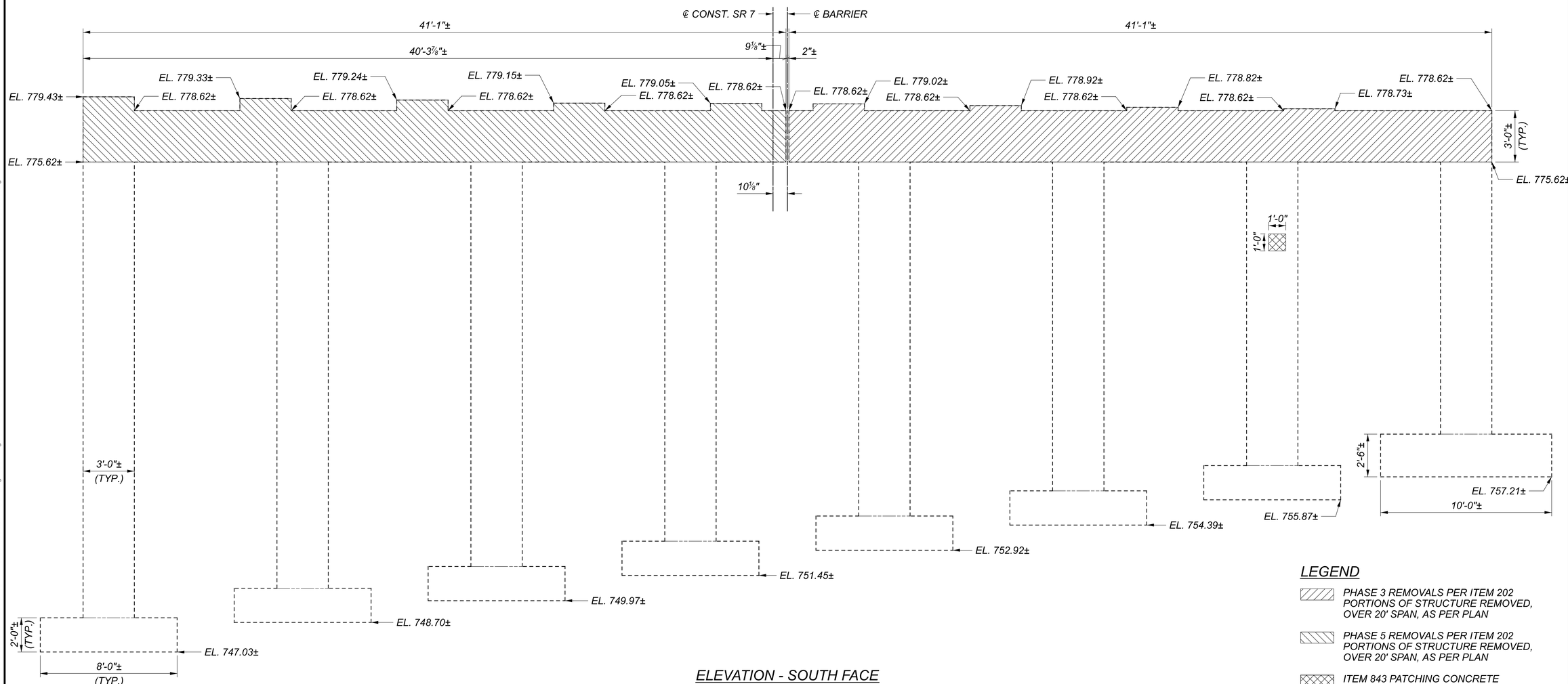

ELEVATION - SOUTH FACE

LEGEND

- PHASE 3 REMOVALS PER ITEM 202 PORTIONS OF STRUCTURE REMOVED, OVER 20' SPAN, AS PER PLAN
- PHASE 5 REMOVALS PER ITEM 202 PORTIONS OF STRUCTURE REMOVED, OVER 20' SPAN, AS PER PLAN
- ITEM 843 PATCHING CONCRETE STRUCTURES WITH TROWELABLE MORTAR

PIER 1 REMOVAL AND SOUTH FACE REPAIR DETAILS
BRIDGE NO. JEF-00007-13.690
SR 7 OVER LOGAN AVENUE

SFN	4100751
DESIGN AGENCY	KORDA
KORDA / NEMETH ENGINEERING, INC	1650 Watermark Drive, Suite 200, Columbus, OH 43215
DESIGNER	EAT
CHECKER	CAB
REVIEWER	CLP 09/28/21
PROJECT ID	109309
SUBSET	10
TOTAL	34
SHEET	71
TOTAL	95

JEF-7-13.680

MODEL: Sheet PAPERSIZE: 34x22 (In.) DATE: 8/24/2022 TIME: 12:22:56 PM USER: cplacek
H:\Projects\2019\2019-0430.00 JEF-7-13.69\109309\400-Engineering\Structures\SFN_4100751\Sheets\109309_SFN_4100751_SV003.dgn

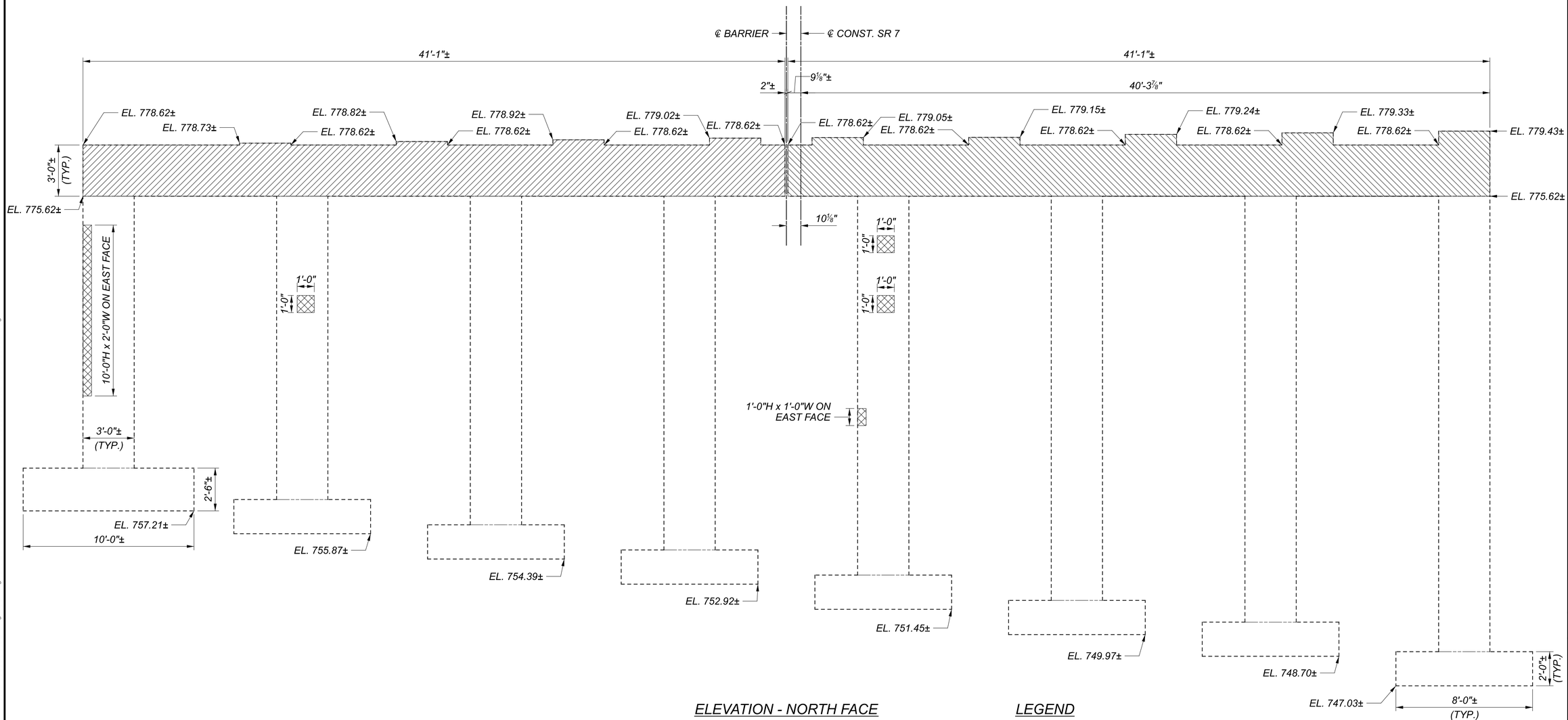

ELEVATION - NORTH FACE

LEGEND

- PHASE 3 REMOVALS PER ITEM 202 PORTIONS OF STRUCTURE REMOVED, OVER 20' SPAN, AS PER PLAN
- PHASE 5 REMOVALS PER ITEM 202 PORTIONS OF STRUCTURE REMOVED, OVER 20' SPAN, AS PER PLAN
- ITEM 843 PATCHING CONCRETE STRUCTURES WITH TROWELABLE MORTAR

PIER 1 REMOVAL AND NORTH FACE REPAIR DETAILS
BRIDGE NO. JEF-00007-13.690
SR 7 OVER LOGAN AVENUE

JEF-7-13.680

MODEL: Sheet PAPERSIZE: 34x22 (in.) DATE: 8/24/2022 TIME: 12:22:57 PM USER: cplacek
H:\Projects\2019\2019-0430_00 JEF-7-13,69\09309\400-Engineering\Structures\SFN_4100751\Sheets\09309_SFN_4100751_SV004.dgn

SFN 4100751

DESIGN AGENCY
KORDA
KORDA / NEMETH ENGINEERING, INC
1650 Watermark Drive, Suite 200, Columbus, OH 43215

DESIGNER	CHECKER
EAT	CAB

REVIEWER
CLP 09/28/21

PROJECT ID 109309

SUBSET	TOTAL
11	34

SHEET	TOTAL
72	95

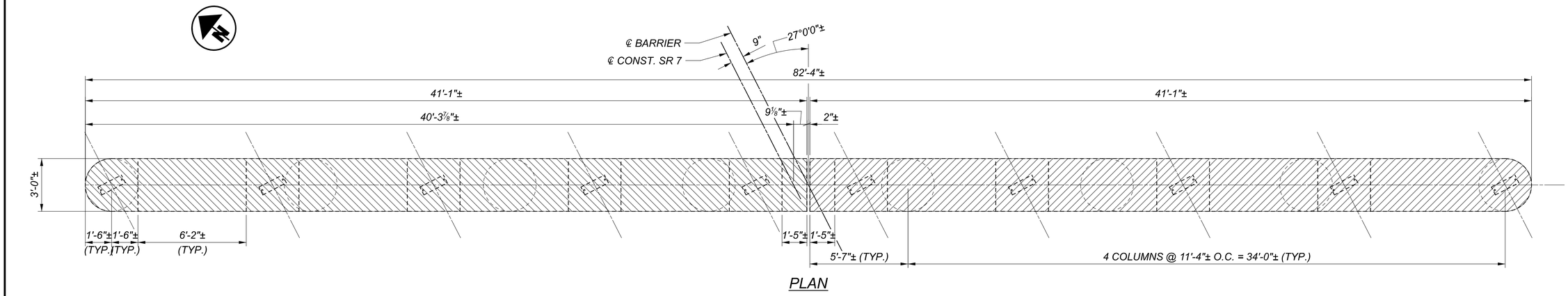

PLAN

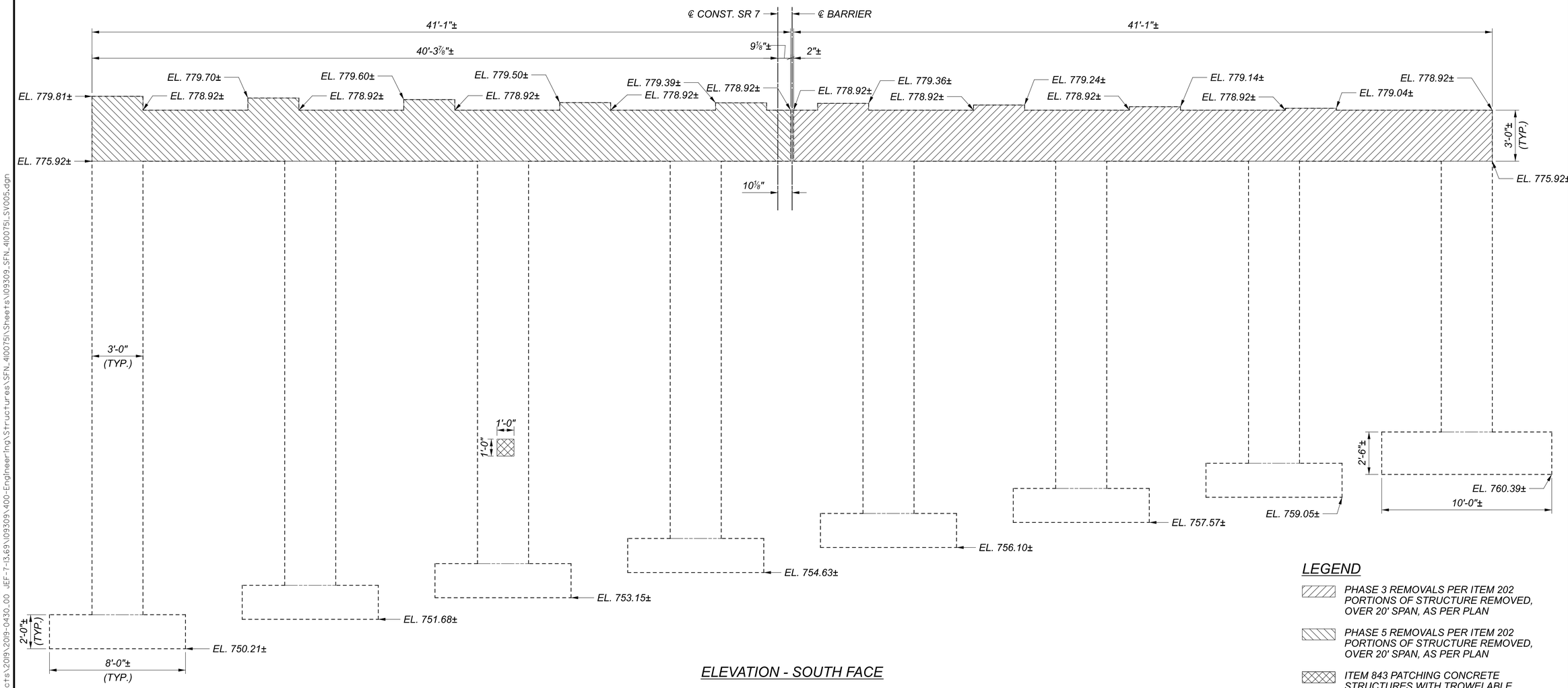

ELEVATION - SOUTH FACE

LEGEND

- PHASE 3 REMOVALS PER ITEM 202 PORTIONS OF STRUCTURE REMOVED, OVER 20' SPAN, AS PER PLAN
- PHASE 5 REMOVALS PER ITEM 202 PORTIONS OF STRUCTURE REMOVED, OVER 20' SPAN, AS PER PLAN
- ITEM 843 PATCHING CONCRETE STRUCTURES WITH TROWELABLE MORTAR

PIER 2 REMOVAL AND SOUTH FACE REPAIR DETAILS
BRIDGE NO. JEF-00007-13.690
SR 7 OVER LOGAN AVENUE

SFN	4100751
DESIGN AGENCY	KORDA
	KORDA / NEMETH ENGINEERING, INC
	1650 Watermark Drive, Suite 200, Columbus, OH 43215
DESIGNER	EAT
CHECKER	CAB
REVIEWER	CLP 09/28/21
PROJECT ID	109309
SUBSET	12
TOTAL	34
SHEET	73
TOTAL	95

JEF-7-13.680

MODEL: Sheet PAPERSIZE: 34x22 (In.) DATE: 8/24/2022 TIME: 12:22:58 PM USER: cplacek
H:\Projects\2019\2019-0430_00 JEF-7-13,69\09309\400-Engineering\Structures\SFN_4100751\Sheets\09309_SFN_4100751_SV005.dgn

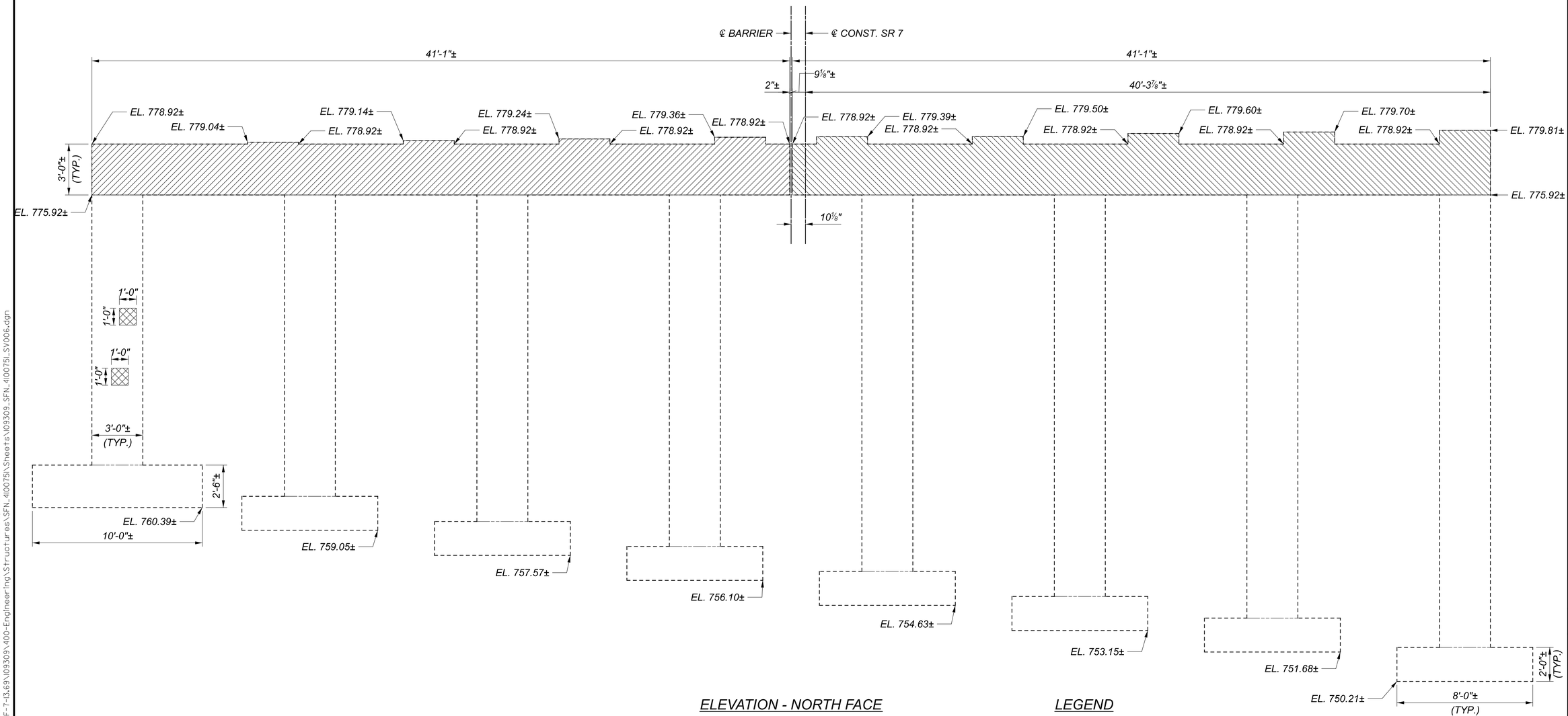

ELEVATION - NORTH FACE

LEGEND

- PHASE 3 REMOVALS PER ITEM 202 PORTIONS OF STRUCTURE REMOVED, OVER 20' SPAN, AS PER PLAN
- PHASE 5 REMOVALS PER ITEM 202 PORTIONS OF STRUCTURE REMOVED, OVER 20' SPAN, AS PER PLAN
- ITEM 843 PATCHING CONCRETE STRUCTURES WITH TROWELABLE MORTAR

PIER 2 REMOVAL AND NORTH FACE REPAIR DETAILS
BRIDGE NO. JEF-00007-13.690
SR 7 OVER LOGAN AVENUE

JEF-7-13.680

MODEL: Sheet PAPERSIZE: 34x22 (in.) DATE: 8/24/2022 TIME: 12:22:59 PM USER: cplacek
H:\Projects\2019\2019-0430.00 JEF-7-13.69\109309\400-Engineering\Structures\SFN_4100751\Sheets\109309_SFN_4100751_SV006.dgn

SFN	4100751
DESIGN AGENCY	KORDA
	KORDA / NEMETH ENGINEERING, INC
	1650 Watermark Drive, Suite 200, Columbus, OH 43215
DESIGNER	EAT
CHECKER	CAB
REVIEWER	CLP 09/28/21
PROJECT ID	109309
SUBSET	13
TOTAL	34
SHEET	74
TOTAL	95

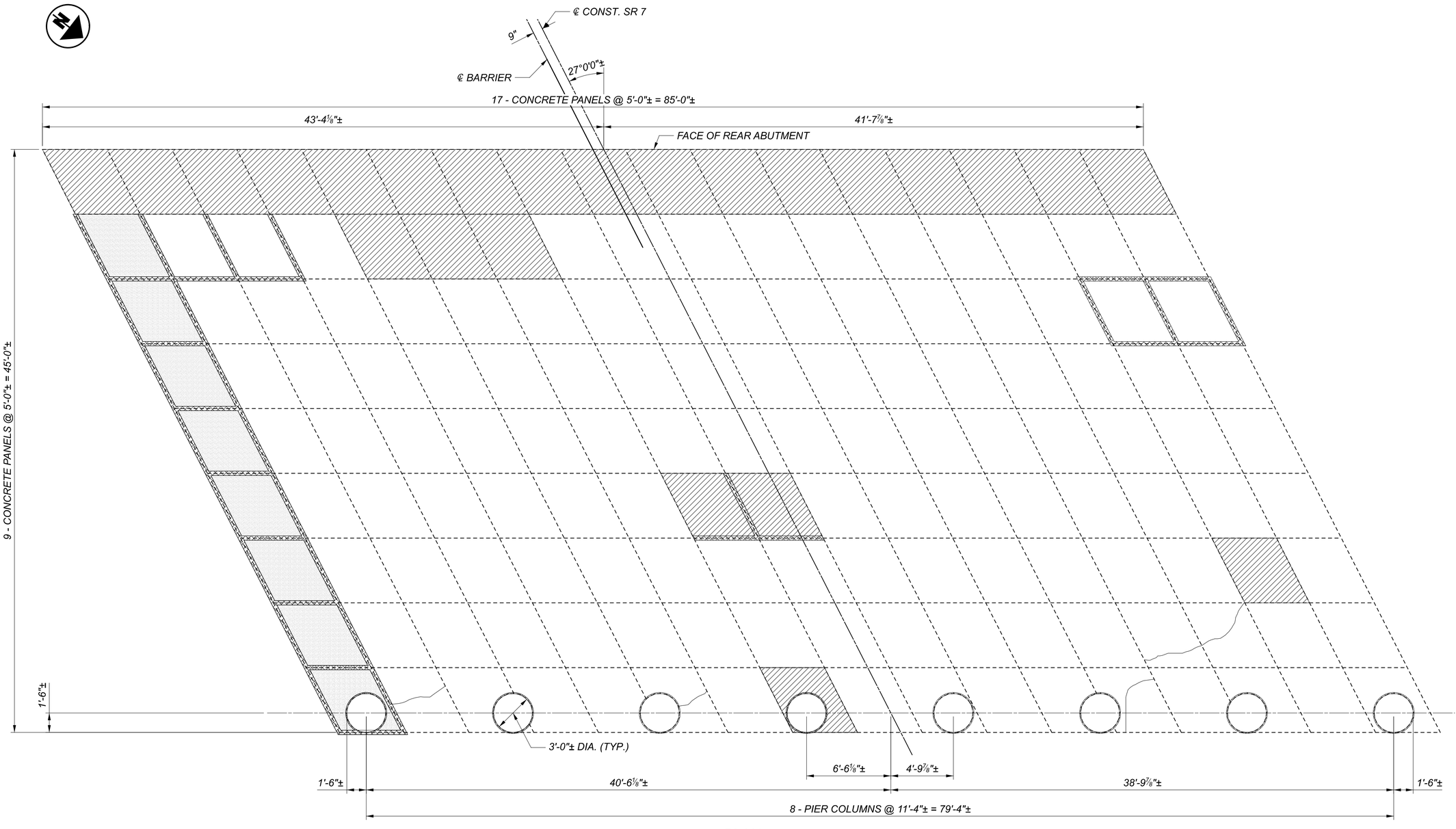

PLAN

NOTE:

ALL REMOVED PANELS ARE TO BE REPLACED IN KIND, EXCEPT THE SOUTHERN MOST ROW.

THE SOUTHERN MOST ROW OF REPLACEMENT PANELS SHALL BEGIN AT THE FACE OF THE REAR ABUTMENT AND END AT THE SOUTH EDGE OF THE EXISTING PANELS.

LEGEND

- ITEM 202 PORTIONS OF STRUCTURE REMOVED OVER 20 FOOT SPAN, AS PER PLAN (TO BE REPLACED)
- ITEM 516 JOINT SEALER, AS PER PLAN
- ITEM 201 CLEARING AND GRUBBING
- ITEM 512 CONCRETE REPAIR BY EPOXY INJECTION

REAR ABUTMENT SLOPE PROTECTION REMOVAL AND REPAIR DETAILS
BRIDGE NO. JEF-00007-13.690
SR 7 OVER LOGAN AVENUE

SFN	4100751
DESIGN AGENCY	KORDA
	KORDA / NEMETH ENGINEERING, INC
	1650 Watermark Drive, Suite 200, Columbus, OH 43215
DESIGNER	EAT
CHECKER	CAB
REVIEWER	CLP 09/28/21
PROJECT ID	109309
SUBSET	14
TOTAL	34
SHEET	75
TOTAL	95

JEF-7-13.680

MODEL: Sheet PAPERSIZE: 34x22 (in.) DATE: 8/24/2022 TIME: 12:23:00 PM USER: cplacek
H:\Projects\2019\2019-0430.00 JEF-7-13.69\109309\400-Engineering\Structures\SFN_4100751\Sheets\109309_SFN_4100751_SV007.dgn

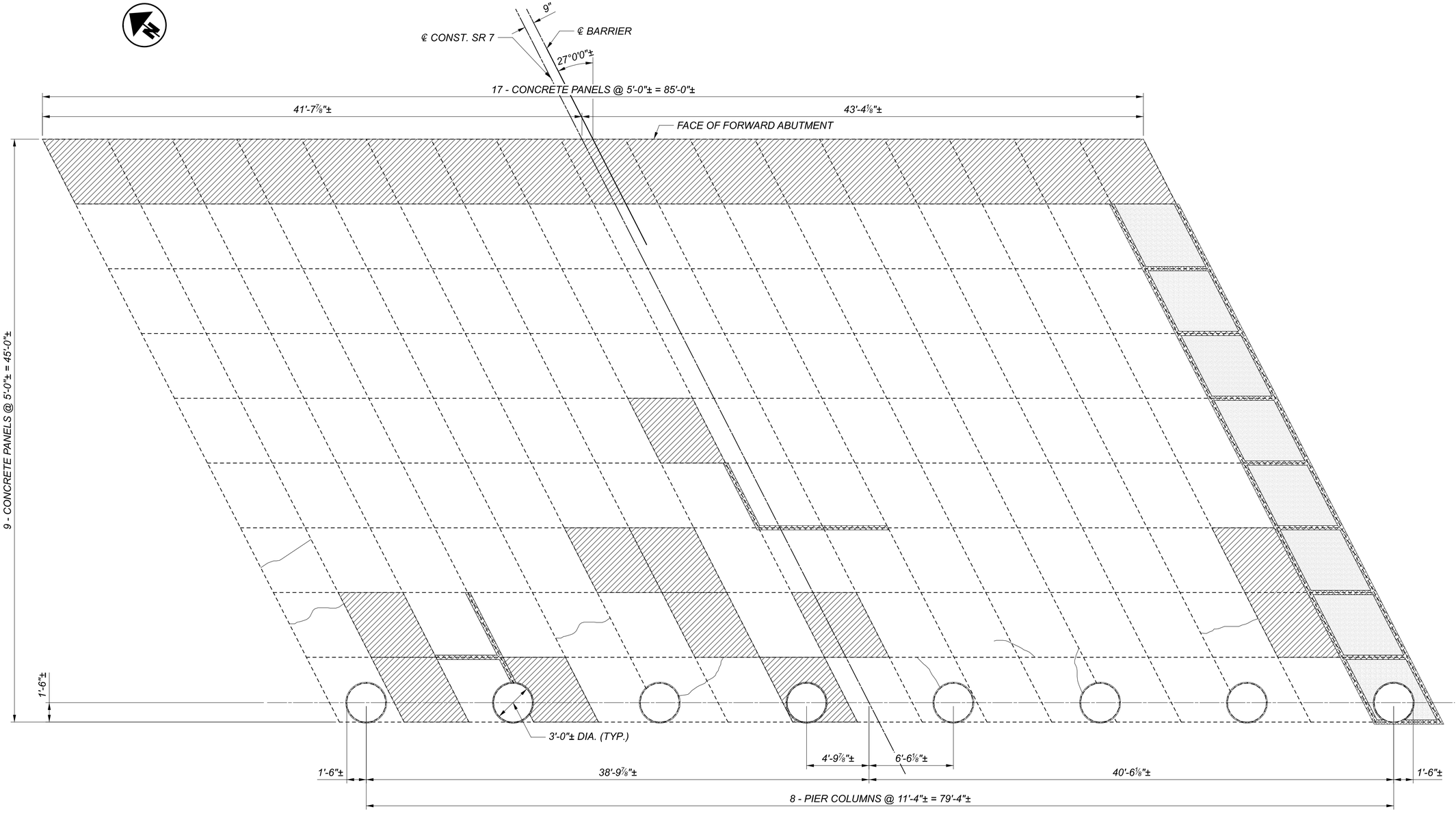

PLAN

NOTE:

ALL REMOVED PANELS ARE TO BE REPLACED IN KIND, EXCEPT THE NORTHERN MOST ROW.

THE NORTHERN MOST ROW OF REPLACEMENT PANELS SHALL BEGIN AT THE FACE OF THE FORWARD ABUTMENT AND END AT THE NORTH EDGE OF THE EXISTING PANELS.

LEGEND

- *ITEM 202 PORTIONS OF STRUCTURE REMOVED, OVER 20 FOOT SPAN, AS PER PLAN (TO BE REPLACED)*
- *ITEM 516 JOINT SEALER, AS PER PLAN*
- *ITEM 201 CLEARING AND GRUBBING*
- *ITEM 512 CONCRETE REPAIR BY EPOXY INJECTION*

FORWARD ABUTMENT SLOPE PROTECTION REMOVAL AND REPAIR DETAILS

BRIDGE NO. JEF-00007-13.690

SR 7 OVER LOGAN AVENUE

JEF-7-13.680

SFN	4100751
DESIGN AGENCY	KORDA
	KORDA / NEMETH ENGINEERING, INC
	1650 Watermark Drive, Suite 200, Columbus, OH 43215
DESIGNER / CHECKER	EAT / CAB
REVIEWER	CLP 09/28/21
PROJECT ID	109309
SUBSET / TOTAL	15 / 34
SHEET / TOTAL	76 / 95

MODEL: Sheet PAPERSIZE: 34x22 (in.) DATE: 8/24/2022 TIME: 12:23:02 PM USER: cplacek
H:\Projects\2019\2019-0430_00 JEF-7-13.69\109309\400-Engineering\Structures\SFN_4100751\Sheets\109309_SFN_4100751_SV008.dgn

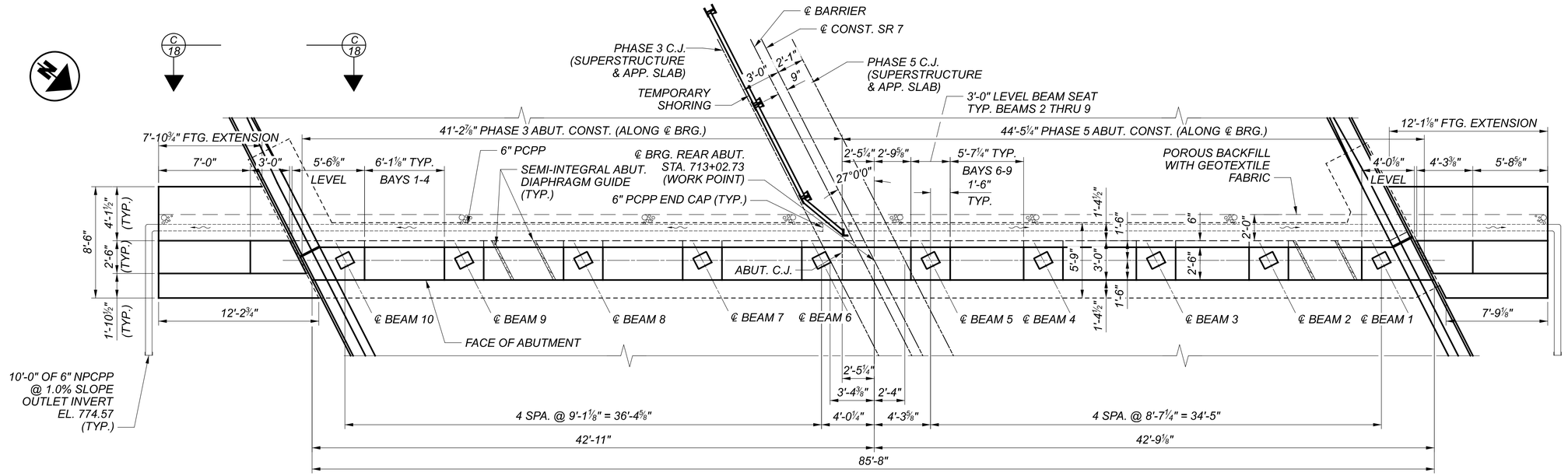

PLAN

MEDIAN BARRIER NOT SHOWN FOR CLARITY

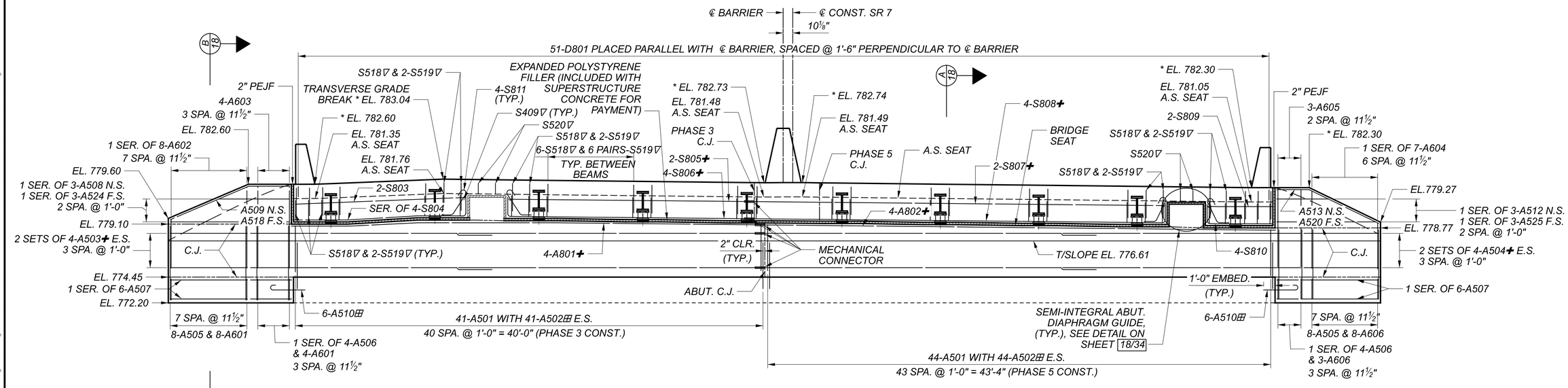

ELEVATION

PEDESTALS NOT SHOWN FOR CLARITY.
FOR EXISTING FOUNDATION DETAILS SEE SHEET 08/34 .

MINIMUM BAR LAP:

#5 - 3'-1" (HORIZONTAL)
- 2"-5" (VERTICAL)

#6 - 3'-7" (VERTICAL)

LEGEND

▽ = BARS ALIGNED PARALLEL WITH BEAMS

⊞ = HOLES FOR DOWELS TO BE PER ITEM 510. REINFORCING STEEL FOR DOWELS IS INCLUDED WITH ITEM 509. DOWEL 1'-0" INTO EXISTING CONCRETE.

* = THIS ELEVATION TO BE SET AT ℄ BEARING.

✚ = BARS SHALL USE MECHANICAL CONNECTORS

TABLE OF BEAM SEAT ELEVATIONS @ ℄ BEARING									
℄ BEAM 1	℄ BEAM 2	℄ BEAM 3	℄ BEAM 4	℄ BEAM 5	℄ BEAM 6	℄ BEAM 7	℄ BEAM 8	℄ BEAM 9	℄ BEAM 10
778.77	778.87	778.97	779.06	779.16	779.20	779.30	779.40	779.46	779.10

NOTES:

1. ABUTMENT DIAPHRAGM CONCRETE, PHASED CONSTRUCTION: PLACE THE DIAPHRAGM CONCRETE ENCASING THE STRUCTURAL MEMBER ENDS OF AN INDIVIDUAL PHASE WITH THE DECK CONCRETE OR AT LEAST 48 HOURS BEFORE PLACEMENT OF THE DECK CONCRETE. IF PLACED SEPARATELY, LOCATE A HORIZONTAL CONSTRUCTION JOINT IN THE DIAPHRAGM AS SHOWN ON SICD-1-96 FOR STEEL SUPERSTRUCTURES AND PLACE REMAINING DIAPHRAGM CONCRETE WITH THE DECK. PLACE CLOSURE POUR CONCRETE IN DIAPHRAGM AND DECK CONCURRENTLY.
2. FOR REINFORCING IN DECK SLAB, PARAPETS AND MEDIAN SEE SHEET 21/34 .
3. LOCATE EXISTING REINFORCING STEEL WITH PACHOMETER PRIOR TO DRILLING DOWEL HOLES.
4. SEAL THE VERTICAL JOINT BETWEEN PHASES ON BACKSIDE OF ABUTMENT WITH ITEM 512 TYPE 2 WATERPROOFING, 3'-0" WIDE, CENTERED ON JOINT. TURN TOP TO APPROACH SLAB SEAT.

REAR ABUTMENT DETAILS
BRIDGE NO. JEF-00007-13.690
SR 7 OVER LOGAN AVENUE

SFN 4100751

DESIGN AGENCY
KORDA

KORDA / NEMETH ENGINEERING, INC
1650 Watermark Drive, Suite 200, Columbus, OH 43215

DESIGNER	CHECKER
EAT	CAB

REVIEWER
CLP 09/28/21

PROJECT ID 109309

SUBSET	TOTAL
16	34

SHEET	TOTAL
77	95

JEF-7-13.680

MODEL: Sheet PAPERSIZE: 34x22 (in.) DATE: 8/24/2022 TIME: 12:23:04 PM USER: cplacek
H:\Projects\2019-0430_00 JEF-7-13.69\109309\400-Engineering\Structures\SFN_4100751\Sheets\109309_SFN_4100751_SR001.dgn

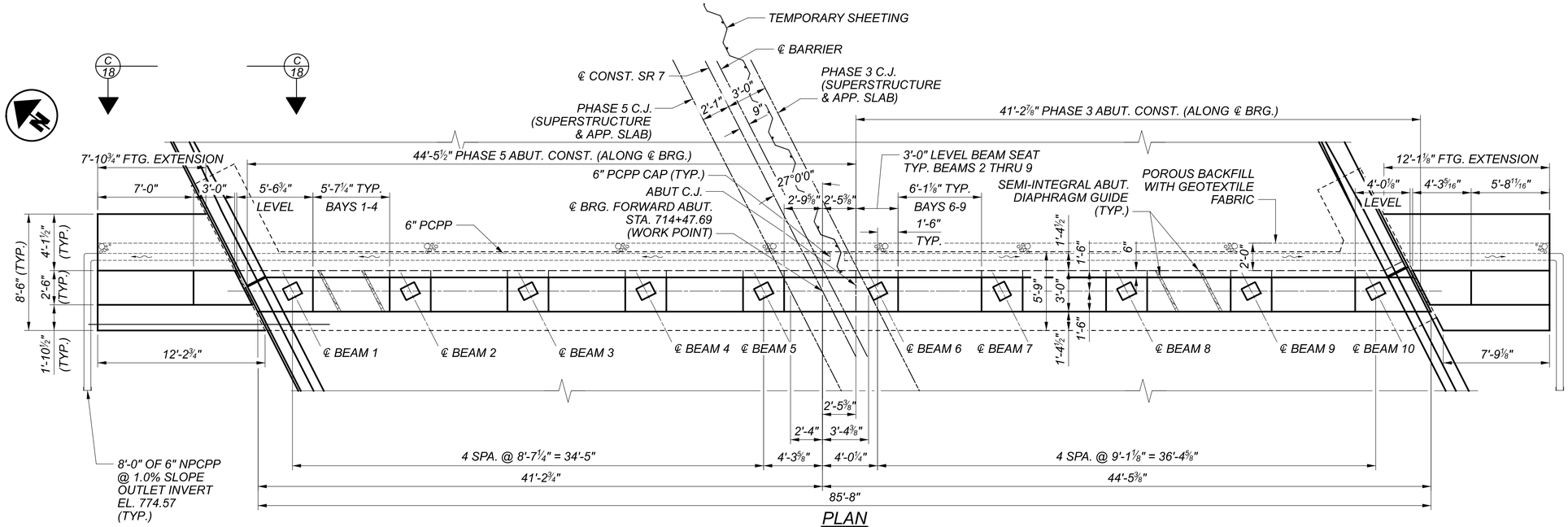

PLAN

MEDIAN BARRIER NOT SHOWN FOR CLARITY

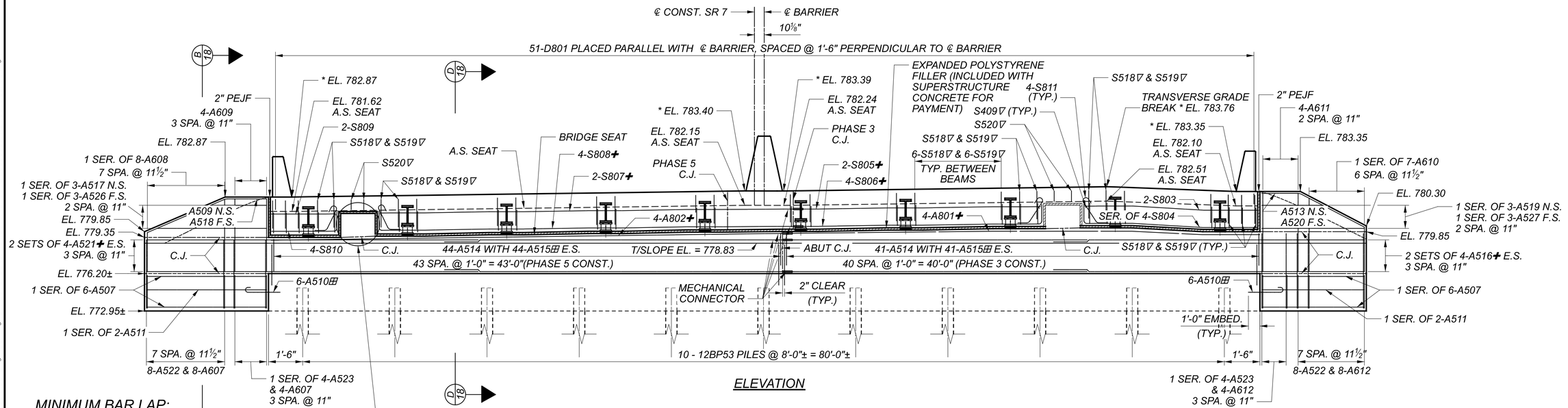

ELEVATION

MINIMUM BAR LAP:

#5 - 3'-1" (HORIZONTAL)
- 2"-5" (VERTICAL)

#6 - 3'-7" (VERTICAL)

LEGEND

▽ = BARS ALIGNED PARALLEL WITH BEAMS

⊞ = HOLES FOR DOWELS TO BE PER ITEM 510. REINFORCING STEEL FOR DOWELS IS INCLUDED WITH ITEM 509. DOWEL 1'-0" INTO EXISTING CONCRETE.

* = THIS ELEVATION TO BE SET AT ℄ BEARING.

✚ = BARS SHALL USE MECHANICAL CONNECTORS

TABLE OF BEAM SEAT ELEVATIONS @ ℄ BEARING

℄ BEAM 1	℄ BEAM 2	℄ BEAM 3	℄ BEAM 4	℄ BEAM 5	℄ BEAM 6	℄ BEAM 7	℄ BEAM 8	℄ BEAM 9	℄ BEAM 10
779.35	779.46	779.58	779.69	779.81	779.87	779.99	780.11	780.18	779.85

NOTES:

1. ABUTMENT DIAPHRAGM CONCRETE, PHASED CONSTRUCTION: PLACE THE DIAPHRAGM CONCRETE ENCASING THE STRUCTURAL MEMBER ENDS OF AN INDIVIDUAL PHASE WITH THE DECK CONCRETE OR AT LEAST 48 HOURS BEFORE PLACEMENT OF THE DECK CONCRETE. IF PLACED SEPARATELY, LOCATE A HORIZONTAL CONSTRUCTION JOINT IN THE DIAPHRAGM AS SHOWN ON SICD-1-96 FOR STEEL SUPERSTRUCTURES AND PLACE REMAINING DIAPHRAGM CONCRETE WITH THE DECK. PLACE CLOSURE POUR CONCRETE IN DIAPHRAGM AND DECK CONCURRENTLY.
2. FOR REINFORCING IN DECK SLAB, PARAPETS AND MEDIAN SEE SHEET 21/34 .
3. LOCATE EXISTING REINFORCING STEEL WITH PACHOMETER PRIOR TO DRILLING DOWEL HOLES.
4. SEAL THE VERTICAL JOINT BETWEEN PHASES ON BACKSIDE OF ABUTMENT WITH ITEM 512 TYPE 2 WATERPROOFING, 3'-0" WIDE, CENTERED ON JOINT. TURN TOP TO APPROACH SLAB SEAT.

FORWARD ABUTMENT DETAILS
BRIDGE NO. JEF-00007-13.690
SR 7 OVER LOGAN AVENUE

SFN 4100751

DESIGN AGENCY
KORDA

KORDA / NEMETH ENGINEERING, INC
1650 Watermark Drive, Suite 200, Columbus, OH 43215

DESIGNER	CHECKER
EAT	CAB

REVIEWER: CLP 09/28/21

PROJECT ID: 109309

SUBSET	TOTAL
17	34

SHEET	TOTAL
78	95

JEF-7-13.680

MODEL: Sheet PAPERSIZE: 34x22 (in.) DATE: 8/24/2022 TIME: 12:23:06 PM USER: cplacek
H:\Projects\2018\2019-0430.00 JEF-7-13.69\109309\400-Engineering\Structures\SFN_4100751\Sheets\109309_SFN_4100751_SF001.dgn

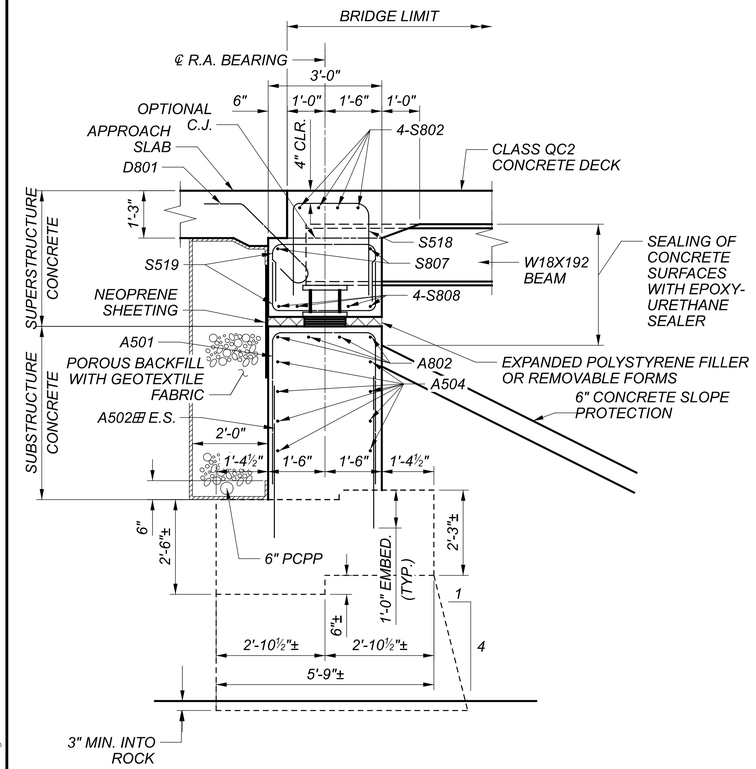

SECTION A-A
(AT PEDESTAL)

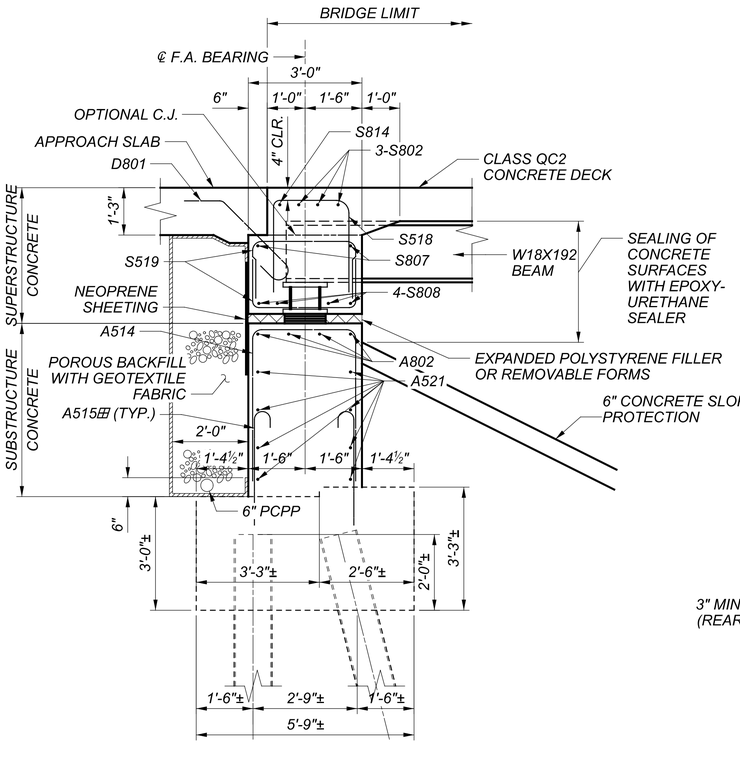

SECTION D-D

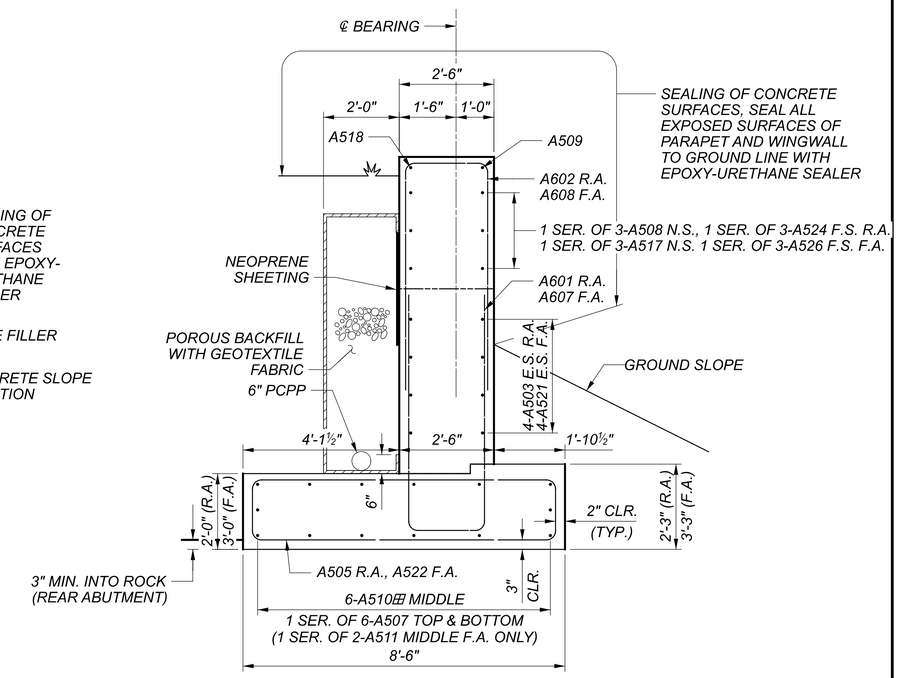

SECTION B-B

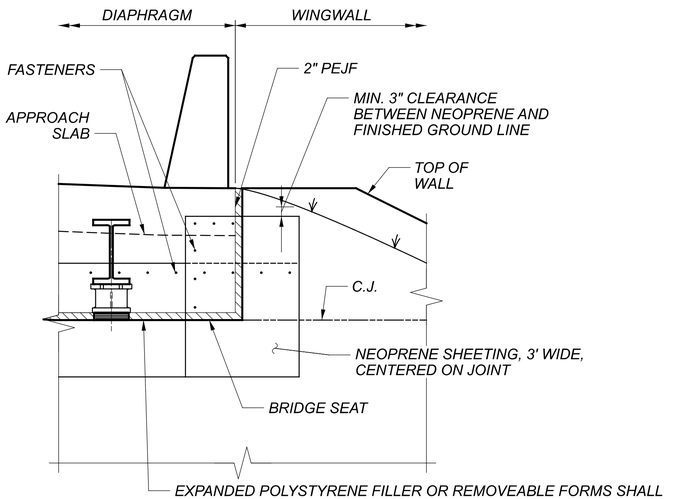

SECTION C-C

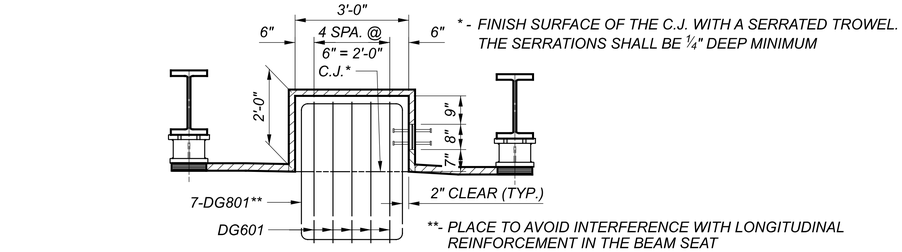

* - FINISH SURFACE OF THE C.J. WITH A SERRATED TROWEL. THE SERRATIONS SHALL BE ¼" DEEP MINIMUM

**- PLACE TO AVOID INTERFERENCE WITH LONGITUDINAL REINFORCEMENT IN THE BEAM SEAT

DIAPHRAGM GUIDE ELEVATION

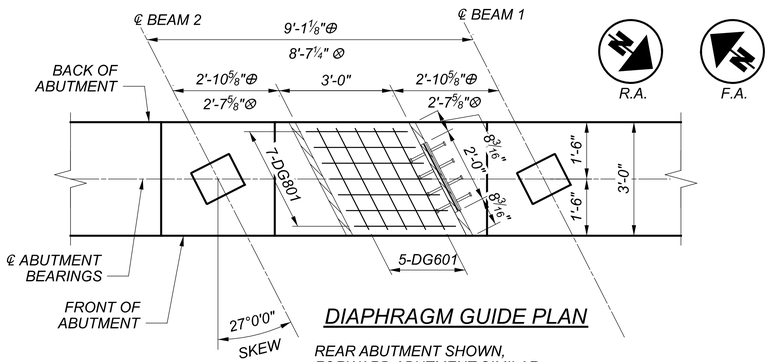

DIAPHRAGM GUIDE PLAN

REAR ABUTMENT SHOWN,
FORWARD ABUTMENT SIMILAR
⊕ = PHASE 3 CONST.
⊗ = PHASE 5 CONST.

NOTES:

1. EXPANDED POLYSTYRENE FILLER OR REMOVABLE FORMS SHALL BE USED IN FORMING TO PROVIDE THE CLEARANCE REQUIRED BETWEEN THE ABUTMENT AND THE SUPERSTRUCTURE CONCRETE AND SHALL BE INCLUDED WITH ITEM 511 CLASS QC2, QC/QA CONCRETE, SUPERSTRUCTURE, AS PER PLAN FOR PAYMENT.
2. ABUTMENT DIAPHRAGM CONCRETE, PHASED CONSTRUCTION: PLACE THE DIAPHRAGM CONCRETE ENCASING THE STRUCTURAL MEMBER ENDS OF AN INDIVIDUAL PHASE WITH THE DECK CONCRETE OR AT LEAST 48 HOURS BEFORE PLACEMENT OF THE DECK CONCRETE. IF PLACED SEPARATELY, LOCATE A HORIZONTAL CONSTRUCTION JOINT IN THE DIAPHRAGM AS SHOWN ON SICD-1-96 FOR STEEL SUPERSTRUCTURES AND PLACE REMAINING DIAPHRAGM CONCRETE WITH THE DECK. PLACE CLOSURE POUR CONCRETE IN THE DIAPHRAGM AND DECK CONCURRENTLY.
3. SCARIFY THE SURFACE AND APPLY A BONDING AGENT TO THE FACE OF THE FOOTING AND ABUTMENT STEM PRIOR TO PLACEMENT OF NEW CONCRETE.
4. LOCATE EXISTING REINFORCING STEEL WITH PACHOMETER PRIOR TO DRILLING DOWEL HOLES.
5. ⊞ HOLES FOR DOWELS TO BE PER ITEM 510. REINFORCING STEEL FOR DOWELS IS INCLUDED WITH ITEM 509. DOWEL 1'-0" INTO EXISTING CONCRETE.
6. FOR REINFORCING IN DECK SLAB, SEE SHEET 21/34 .
7. FOR DIAPHRAGM GUIDE DETAILS NOT SHOWN SEE STD. DWG. SICD-2-14.

ABUTMENT DETAILS
BRIDGE NO. JEF-00007-13.690
SR 7 OVER LOGAN AVENUE

SFN	4100751
DESIGN AGENCY	KORDA
	KORDA / NEMETH ENGINEERING, INC
	1650 Watermark Drive, Suite 200, Columbus, OH 43215
DESIGNER	EAT
CHECKER	CAB
REVIEWER	CLP 09/28/21
PROJECT ID	109309
SUBSET	18
TOTAL	34
SHEET	79
TOTAL	95

JEF-7-13.680

MODEL: Sheet PAPERSIZE: 34x22 (in.) DATE: 8/24/2022 TIME: 12:23:07 PM USER: cplacek
H:\Projects\2019\2019-0430_00 JEF-7-13,69\109309\400-Engineering\Structures\SFN_4100751\Sheets\109309_SFN_4100751_LSR002.dgn

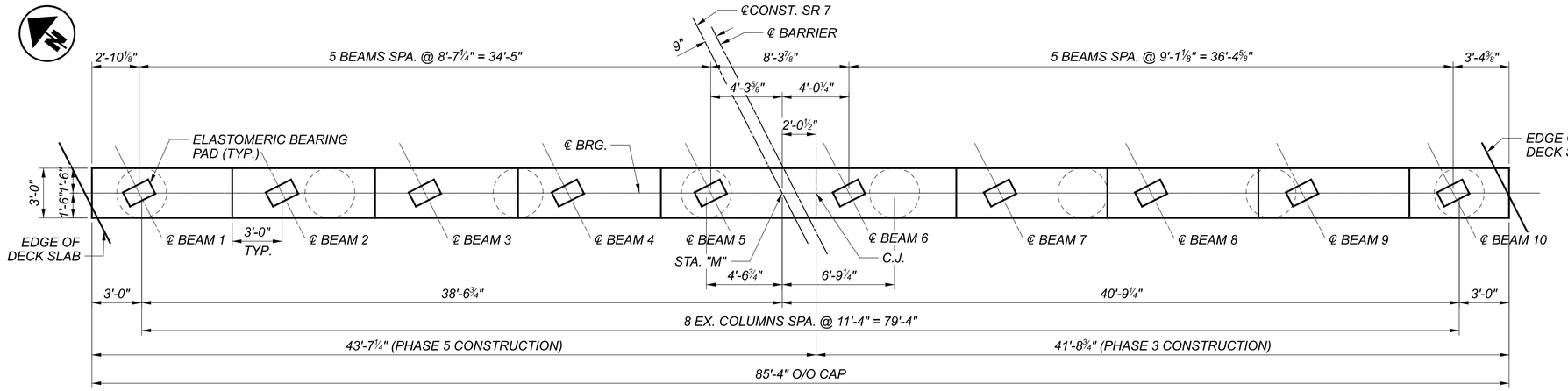

PLAN

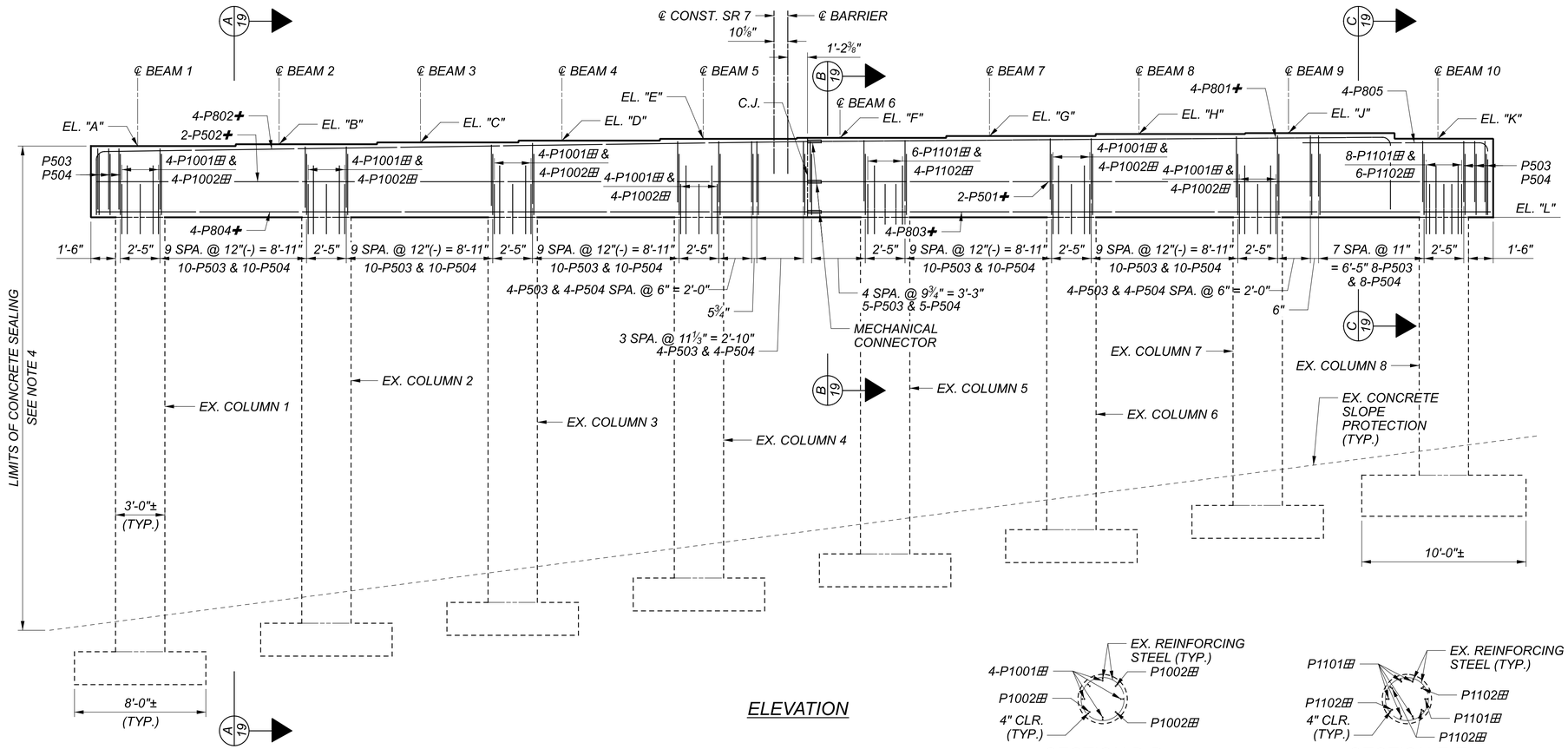

ELEVATION

TABLE OF ELEVATIONS												
LOCATION	EL. "A"	EL. "B"	EL. "C"	EL. "D"	EL. "E"	EL. "F"	EL. "G"	EL. "H"	EL. "J"	EL. "K"	EL. "L"	STA. "M"
PIER 1	779.57	779.68	779.78	779.88	779.98	780.04	780.14	780.25	780.31	779.96	775.18	713+47.71
PIER 2	779.79	779.90	780.01	780.12	780.23	780.29	780.41	780.52	780.58	780.24	775.40	714+02.71

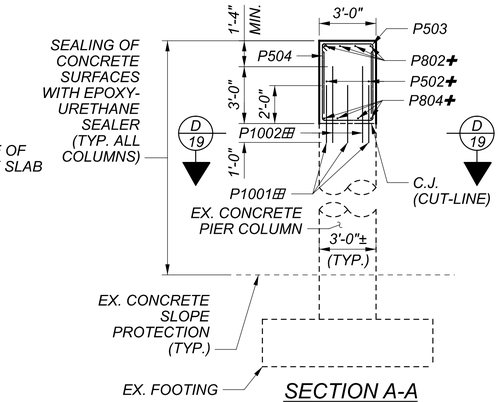

SECTION A-A

TYP. COLUMNS 1-4 & 6-7

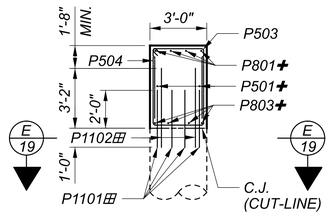

SECTION B-B

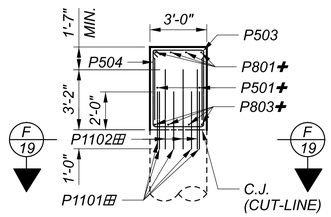

SECTION C-C

SECTION D-D

SECTION E-E

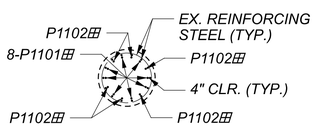

SECTION F-F

NOTES:

1. SCARIFY THE SURFACE AND APPLY A BONDING AGENT TO THE C.J. CUT-LINE PRIOR TO THE PLACEMENT OF NEW CONCRETE.
2. LOCATE EXISTING REINFORCING STEEL WITH PACHOMETER PRIOR TO DRILLING DOWEL HOLES.
3. HOLES FOR DOWELS TO BE PER ITEM 510. REINFORCING STEEL FOR DOWELS IS INCLUDED WITH ITEM 509.
4. SEAL ALL EXPOSED SURFACES, PROPOSED AND EXISTING, WITH EPOXY-URETHANE SEALER. DO NOT SEAL TOP OF PIER CAP.
5. "✚" DENOTES A BAR WITH MECHANICAL CONNECTION SYSTEM.
6. "⊞" DENOTES A DOWEL BAR.

MINIMUM BAR LAP:

#5 - 3'-1"

PIER DETAILS
BRIDGE NO. JEF-00007-13.690
SR 7 OVER LOGAN AVENUE

SFN 4100751

DESIGN AGENCY
KORDA
KORDA / NEMETH ENGINEERING, INC
1650 Watermark Drive, Suite 200, Columbus, OH 43215

DESIGNER	CHECKER
EAT	CAB

REVIEWER
CLP 09/28/21

PROJECT ID 109309

SUBSET	TOTAL
19	34

SHEET	TOTAL
80	95

JEF-7-13.680

MODEL: Sheet PAPERSIZE: 34x22 (In.) DATE: 8/24/2022 TIME: 12:23:09 PM USER: cplacek
H:\Projects\2019\2019-0430.00 JEF-7-13.69\109309\400-Engineering\Structures\SFN_4100751\Sheets\109309_SFN_4100751_SI001.dgn

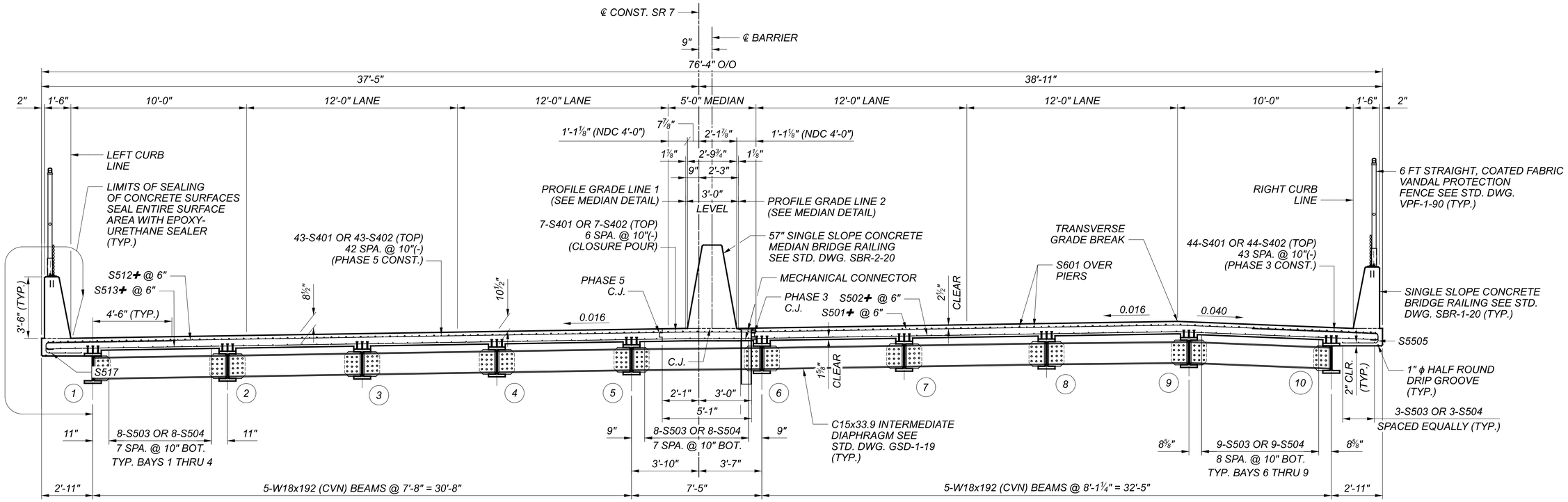

TRANSVERSE SECTION

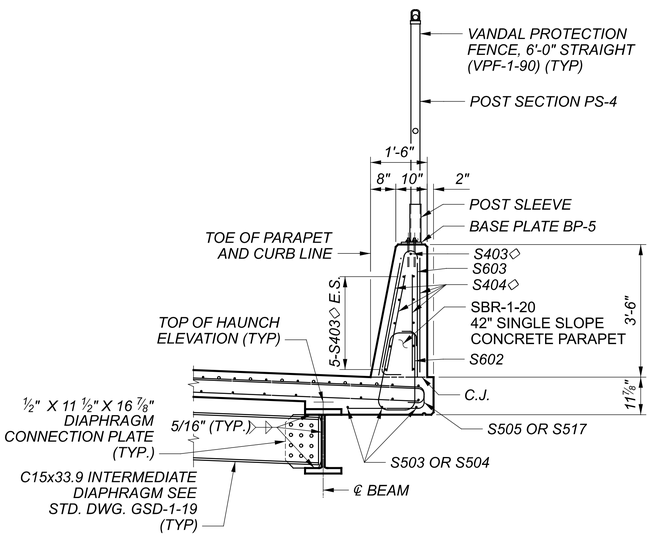

PARAPET DETAIL

SHEAR STUDS NOT SHOWN FOR CLARITY
SEE TRANSVERSE SECTION FOR DECK REINFORCING

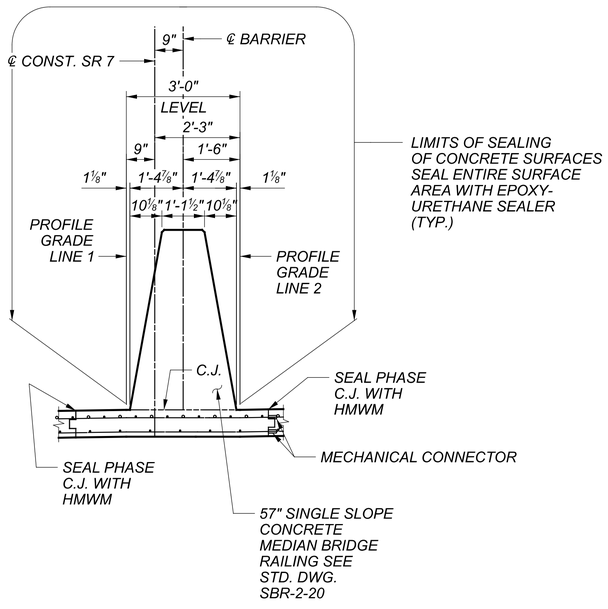

MEDIAN DETAIL

SEE TRANSVERSE SECTION FOR DECK REINFORCING

LEGEND

(X) = BEAM NUMBER
✚ = BAR WITH MECHANICAL CONNECTOR SYSTEM
◇ = NO. 4 GFRP DEFORMED BARS

NOTES:

1. FOR C15x33.9 INTERMEDIATE DIAPHRAGM DETAILS, SEE STD DWG GSD-1-19 (SHEET 2).
2. DECK SLAB CONCRETE QUANTITY: THE ESTIMATED QUANTITY OF DECK SLAB CONCRETE IS BASED ON THE CONSTANT DECK SLAB THICKNESS, AS SHOWN, PLUS THE QUANTITY OF CONCRETE THAT FORMS EACH BEAM HAUNCH. THE ESTIMATE ASSUMES A CONSTANT HAUNCH THICKNESS OF 3¾ INCHES AND A HAUNCH WIDTH EQUAL TO THE TOP FLANGE WIDTH. DEVIATE FROM THIS HAUNCH THICKNESS AS NECESSARY TO PLACE THE DECK SURFACE AT THE FINISHED GRADE.

   THE HAUNCH THICKNESS WAS MEASURED AT THE CENTERLINE OF THE BEAM, FROM THE SURFACE OF THE DECK TO THE BOTTOM OF THE TOP FLANGE MINUS THE DECK SLAB THICKNESS. THE AREA OF ALL EMBEDDED STEEL PLATES HAS BEEN DEDUCTED FROM THE HAUNCH QUANTITY IN ACCORDANCE WITH 511.23.
3. FOR DECK SCREED, TOP OF HAUNCH AND FINAL DECK ELEVATION TABLES SEE SHEET 23/34.
4. FOR REINFORCING IN DECK SLAB, PARAPET AND MEDIAN SEE SHEET 21/34.
5. FOR PARAPET AND MEDIAN DETAILS SEE SHEETS 27/34, 28/34 AND 29/34.
6. FOR SCUPPER DETAILS SEE SHEET 21/34 .

TRANSVERSE SECTION AND SCUPPER DETAILS
BRIDGE NO. JEF-00007-13.690
SR 7 OVER LOGAN AVENUE

SFN	4100751
DESIGN AGENCY	KORDA / NEMETH ENGINEERING, INC
	1650 Watermark Drive, Suite 200, Columbus, OH 43215
DESIGNER	EAT
CHECKER	CAB
REVIEWER	CLP 09/28/21
PROJECT ID	109309
SUBSET	20
TOTAL	34
SHEET	81
TOTAL	95

JEF-7-13.680

MODEL: Sheet PAPERSIZE: 34x22 (In.) DATE: 8/24/2022 TIME: 12:23:11 PM USER: cplacek
H:\Projects\2019\2019-0430_00 JEF-7-13.69\09309\400-Engineering\Structures\SFN_4100751\Sheets\09309_SFN_4100751_ST001.dgn

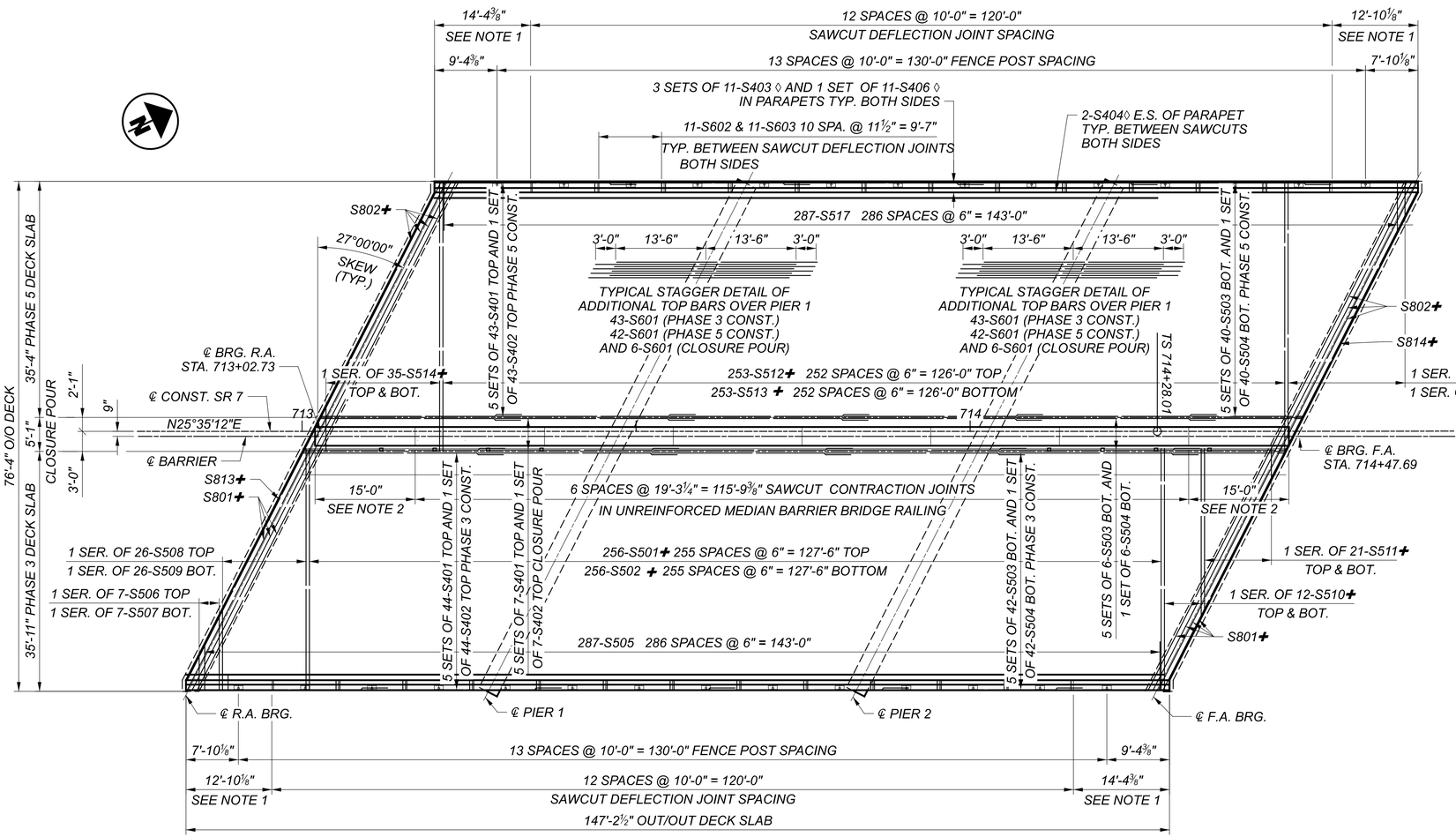

DECK REINFORCING

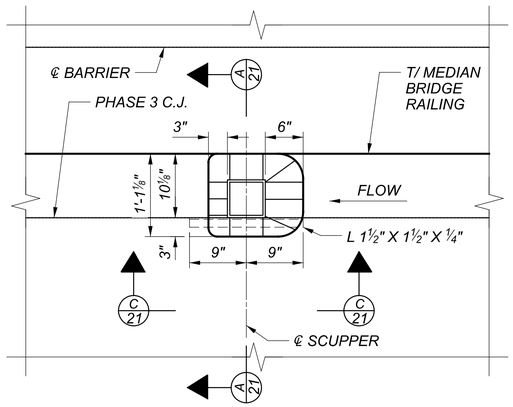

SCUPPER DETAIL PLAN

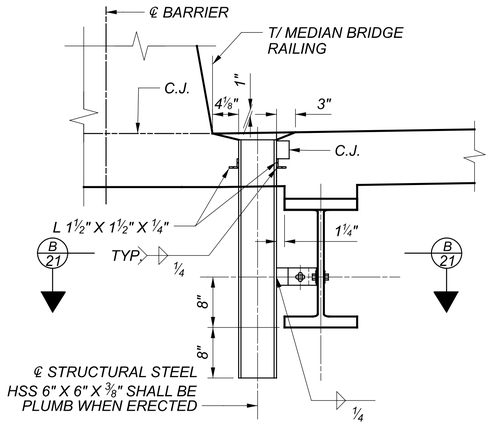

SECTION A-A

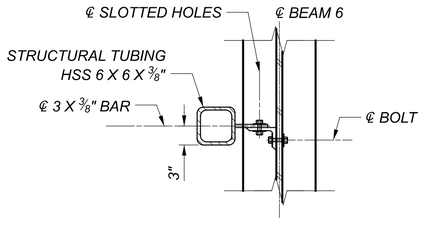

SECTION B-B

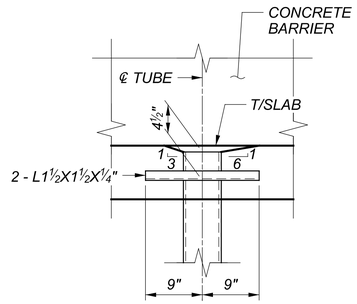

SECTION C-C

NOTES:

1. FOR ADDITIONAL PARAPET DETAILS SEE STD. DWG. SBR-1-20 (SHEET 3) AND SHEETS 27/34 AND 28/34 .
2. FOR ADDITIONAL MEDIAN DETAILS SEE STD. DWG. SBR-2-20 SHEET 1 OF 5 AND SHEET 29/34 .
3. FOR TRANSVERSE SECTION SHOWING REINFORCING STEEL LAYOUT SEE SHEET 20/34 .
4. FOR ADDITIONAL VANDAL PROTECTION FENCE DETAILS SEE STD. DWG. VPF-1-90 AND SHEET 20/34 .
5. FOR ADDITIONAL SCUPPER DETAILS SEE STD. DWG. GSD-1-19 (SHEET 4).
6. FOR LOCATION OF SCUPPERS SEE SHEET 02/34 .

MINIMUM EPOXY COATED STEEL BAR LAP LENGTH

#4 - 1'-11"

#5 - 2'-5"

#6 - 3'-7"

MINIMUM GFRP DEFORMED BAR LAP LENGTH

#4 - 1'-1"

LEGEND

✚ = REQUIRES MECHANICAL CONNECTOR
◊ = INDICATES GFRP BARS

DECK PLAN
BRIDGE NO. JEF-00007-13.690
SR 7 OVER LOGAN AVENUE

SFN	4100751
DESIGN AGENCY	KORDA
	KORDA / NEMETH ENGINEERING, INC
	1650 Watermark Drive, Suite 200, Columbus, OH 43215
DESIGNER	EAT
CHECKER	CAB
REVIEWER	CLP 09/28/21
PROJECT ID	109309
SUBSET	21
TOTAL	34
SHEET	82
TOTAL	95

JEF-7-13.680

MODEL: Sheet PAPERSIZE: 34x22 (In.) DATE: 8/24/2022 TIME: 12:23:12 PM USER: cplacek
H:\Projects\2019-0430.00 JEF-7-13.69\09309\400-Engineering\Structures\SFN_4100751\Sheets\09309_SFN_4100751_SD001.dgn

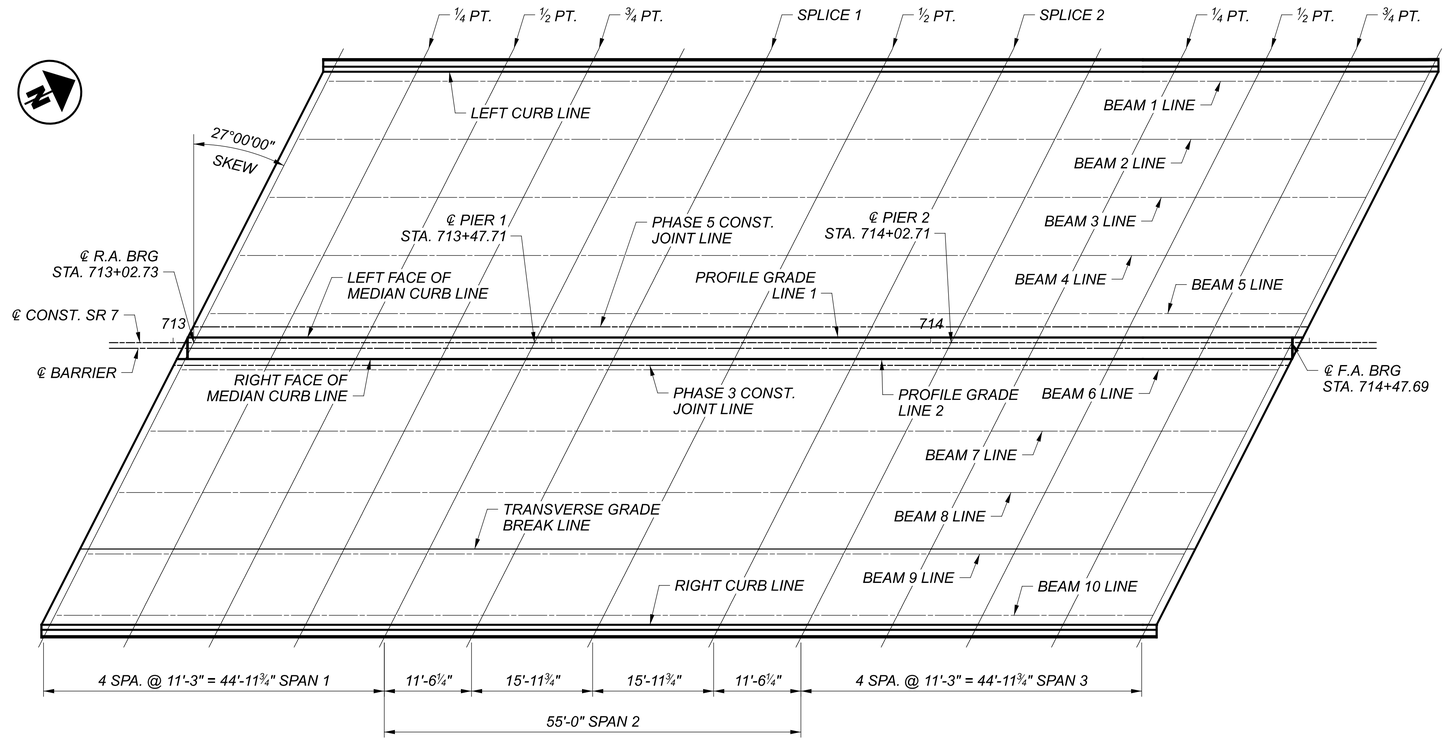

ELEVATION LOCATION PLAN

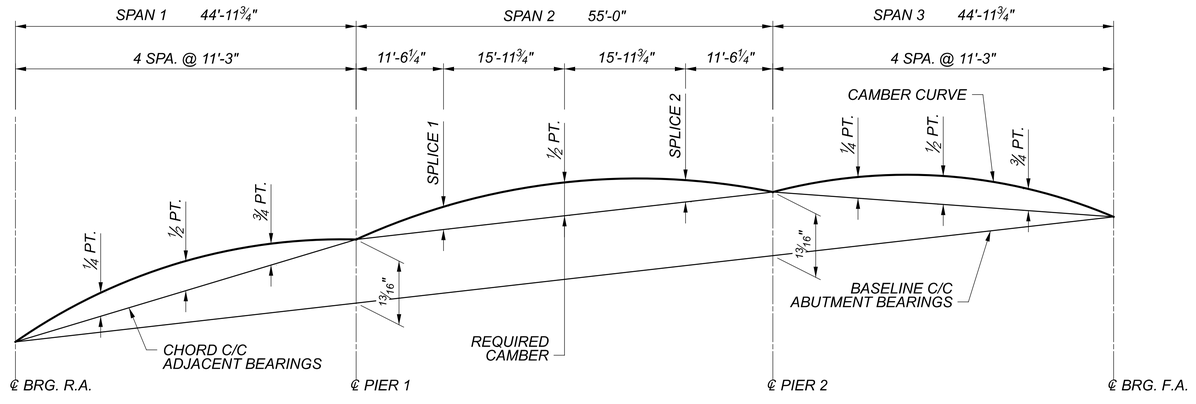

CAMBER AND BLOCKING DIAGRAM

BEAMS 1 THROUGH 10 DEFLECTION TABLE (INCHES)

	SPAN 1				SPAN 2				SPAN 3				
LOCATION	R.A. BRG.	¼PT.	½PT.	¾PT.	P1 BRG.	SPLICE 1	½PT.	SPLICE 2	P2 BRG.	¼PT.	½PT.	¾PT.	F.A. BRG.
DEFLECTION DUE TO WEIGHT OF STEEL	0	1/16	1/16	0	0	0	1/16	0	0	0	1/16	1/16	0
DEFLECTION DUE TO REMAINING DEAD LOAD	0	1/4	5/16	1/8	0	1/8	3/8	1/8	0	1/8	5/16	1/4	0
ADJUSTMENT REQUIRED FOR VERTICAL CURVE	0	1/8	1/8	1/8	0	1/8	1/8	1/8	0	1/8	1/8	1/8	0
REQUIRED SHOP CAMBER	0	7/16	1/2	1/4	0	1/4	9/16	1/4	0	1/4	1/2	7/16	0

NOTES:

1. FOR TRANSVERSE SECTION SHOWING LOCATION OF ELEVATION LINES SEE SHEET 20/34.
2. FOR DECK SCREED, TOP OF HAUNCH, AND FINAL DECK ELEVATION TABLES SEE SHEET 23/34.

DECK ELEVATION LOCATION PLAN AND CAMBER DIAGRAM
BRIDGE NO. JEF-00007-13.690
SR 7 OVER LOGAN AVENUE

SFN 4100751

DESIGN AGENCY
KORDA
KORDA / NEMETH ENGINEERING, INC
1650 Watermark Drive, Suite 200, Columbus, OH 43215

DESIGNER EAT | CHECKER CAB
REVIEWER CLP 09/28/21
PROJECT ID 109309
SUBSET 22 | TOTAL 34
SHEET 83 | TOTAL 95

JEF-7-13.680

MODEL: Sheet PAPERSIZE: 34x22 (in.) DATE: 8/24/2022 TIME: 12:23:14 PM USER: cplacek
H:\Projects\2019\2019-0430_00_JEF-7-13.69\109309\400-Engineering\Structures\SFN_4100751\Sheets\109309_SFN_4100751_SS001.dgn

DECK SCREED ELEVATIONS

	SPAN 1				SPAN 2				SPAN 3				
LOCATION	R.A. BRG.	¼PT.	½PT.	¾PT.	P1 BRG.	SPLICE 1	½PT.	SPLICE 2	P2 BRG.	¼PT.	½PT.	¾PT.	F.A. BRG.
STA. @ ℄ CONST. SR 7	713+02.73	713+13.97	713+25.22	713+36.47	713+47.71	713+59.23	713+75.21	713+91.19	714+02.71	714+13.96	714+25.20	714+36.45	714+47.69
LEFT CURB LINE	782.30	782.39	782.46	782.50	782.55	782.62	782.70	782.74	782.77	782.81	782.85	782.87	782.87
PHASE 5 CONST. JOINT	782.72	782.82	782.90	782.95	783.00	783.07	783.16	783.22	783.25	783.30	783.35	783.37	783.38
PROFILE GRADE LINE 1	782.74	783.04	782.91	782.97	783.02	783.09	783.18	783.24	783.27	783.32	783.37	783.39	783.40
LEFT FACE OF MEDIAN	782.74	783.04	782.91	782.97	783.02	783.09	783.18	783.23	783.27	783.32	783.37	783.39	783.40
℄ CONST. SR 7	782.74	783.04	782.91	782.96	783.01	783.09	783.18	783.23	783.26	783.32	783.37	783.39	783.39
RIGHT FACE OF MEDIAN	782.73	783.03	782.90	782.96	783.01	783.08	783.18	783.23	783.26	783.31	783.36	783.39	783.39
PROFILE GRADE LINE 2	782.73	783.03	782.90	782.96	783.01	783.08	783.18	783.23	783.26	783.31	783.36	783.39	783.39
PHASE 3 CONST. JOINT	782.74	783.04	782.91	782.97	783.02	783.09	783.19	783.24	783.27	783.32	783.37	783.40	783.40
TRANSVERSE GRADE BREAK	783.04	783.35	783.22	783.28	783.34	783.41	783.52	783.57	783.61	783.67	783.72	783.75	783.76
RIGHT CURB LINE	782.60	782.91	782.79	782.85	782.91	782.99	783.09	783.15	783.19	783.25	783.31	783.34	783.35

TOP OF HAUNCH ELEVATIONS

	SPAN 1				SPAN 2				SPAN 3				
LOCATION	R.A. BRG.	¼PT.	½PT.	¾PT.	P1 BRG.	SPLICE 1	½PT.	SPLICE 2	P2 BRG.	¼PT.	½PT.	¾PT.	F.A. BRG.
STA. @ ℄ CONST. SR 7	713+02.73	713+13.97	713+25.22	713+36.47	713+47.71	713+59.23	713+75.21	713+91.19	714+02.71	714+13.96	714+25.20	714+36.45	714+47.69
BEAM LINE 1	781.60	781.69	781.76	781.81	781.86	781.92	782.00	782.05	782.08	782.12	782.16	782.18	782.18
BEAM LINE 2	781.70	781.79	781.87	781.91	781.96	782.03	782.11	782.16	782.19	782.23	782.27	782.30	782.30
BEAM LINE 3	781.80	781.89	781.97	782.02	782.06	782.13	782.22	782.27	782.30	782.34	782.39	782.41	782.41
BEAM LINE 4	781.90	781.99	782.06	782.12	782.17	782.24	782.33	782.38	782.41	782.45	782.50	782.52	782.53
BEAM LINE 5	781.99	782.09	782.16	782.22	782.27	782.34	782.43	782.48	782.51	782.56	782.61	782.64	782.64
BEAM LINE 6	782.04	782.13	782.21	782.27	782.32	782.39	782.49	782.54	782.57	782.62	782.67	782.70	782.70
BEAM LINE 7	782.14	782.24	782.32	782.37	782.42	782.50	782.60	782.65	782.69	782.74	782.79	782.82	782.82
BEAM LINE 8	782.24	782.34	782.42	782.48	782.53	782.61	782.71	782.76	782.80	782.85	782.91	782.94	782.94
BEAM LINE 9	782.30	782.40	782.48	782.54	782.60	782.68	782.78	782.84	782.88	782.93	782.99	783.02	783.03
BEAM LINE 10	781.94	782.05	782.13	782.19	782.25	782.33	782.43	782.49	782.53	782.59	782.65	782.68	782.69

FINAL DECK ELEVATIONS

	SPAN 1				SPAN 2				SPAN 3				
LOCATION	R.A. BRG.	¼PT.	½PT.	¾PT.	P1 BRG.	SPLICE 1	½PT.	SPLICE 2	P2 BRG.	¼PT.	½PT.	¾PT.	F.A. BRG.
STA. @ ℄ CONST. SR 7	713+02.73	713+13.97	713+25.22	713+36.47	713+47.71	713+59.23	713+75.21	713+91.19	714+02.71	714+13.96	714+25.20	714+36.45	714+47.69
LEFT CURB LINE	782.30	782.37	782.43	782.49	782.55	782.60	782.67	782.73	782.77	782.80	782.83	782.85	782.87
BEAM LINE 1	782.31	782.38	782.45	782.51	782.57	782.62	782.69	782.75	782.78	782.82	782.84	782.87	782.89
BEAM LINE 2	782.41	782.48	782.55	782.61	782.67	782.72	782.79	782.86	782.89	782.93	782.96	782.98	783.00
BEAM LINE 3	782.51	782.58	782.65	782.71	782.77	782.83	782.90	782.96	783.00	783.04	783.07	783.10	783.12
BEAM LINE 4	782.60	782.68	782.75	782.81	782.87	782.93	783.01	783.07	783.11	783.15	783.18	783.21	783.23
BEAM LINE 5	782.70	782.78	782.85	782.91	782.98	783.04	783.11	783.18	783.22	783.26	783.29	783.32	783.35
PHASE 5 CONST. JOINT	782.72	782.80	782.87	782.94	783.00	783.06	783.14	783.20	783.25	783.29	783.32	783.35	783.38
PROFILE GRADE LINE 1	782.74	782.81	782.89	782.95	783.02	783.08	783.15	783.22	783.27	783.30	783.34	783.37	783.40
LEFT FACE OF MEDIAN	782.74	782.81	782.89	782.95	783.02	783.08	783.15	783.22	783.27	783.30	783.34	783.37	783.40
℄ CONST. SR 7	782.74	782.81	782.88	782.95	783.01	783.08	783.15	783.22	783.26	783.30	783.34	783.37	783.39
RIGHT FACE OF MEDIAN	782.73	782.80	782.88	782.94	783.01	783.07	783.15	783.22	783.26	783.30	783.33	783.37	783.39
PROFILE GRADE LINE 2	782.73	782.80	782.88	782.94	783.01	783.07	783.15	783.22	783.26	783.30	783.33	783.37	783.39
PHASE 3 CONST. JOINT	782.74	782.81	782.89	782.95	783.02	783.08	783.16	783.23	783.27	783.31	783.35	783.38	783.40
BEAM LINE 6	782.74	782.82	782.89	782.96	783.03	783.09	783.17	783.23	783.28	783.32	783.35	783.39	783.41
BEAM LINE 7	782.84	782.92	783.00	783.07	783.13	783.20	783.28	783.35	783.39	783.43	783.47	783.50	783.53
BEAM LINE 8	782.94	783.02	783.10	783.17	783.24	783.30	783.39	783.46	783.51	783.55	783.59	783.62	783.65
TRANSVERSE GRADE BREAK	783.04	783.12	783.19	783.27	783.34	783.40	783.49	783.56	783.61	783.65	783.69	783.73	783.76
BEAM LINE 9	783.01	783.09	783.17	783.24	783.31	783.37	783.46	783.53	783.58	783.63	783.67	783.70	783.74
BEAM LINE 10	782.65	782.74	782.81	782.89	782.96	783.03	783.11	783.19	783.24	783.29	783.33	783.37	783.40
RIGHT CURB LINE	782.60	782.68	782.76	782.83	782.91	782.97	783.06	783.14	783.19	783.24	783.28	783.31	783.35

NOTES:

1. SCREED ELEVATIONS SHOWN REPRESENT THE THEORETICAL DECK SURFACE LOCATIONS PRIOR TO DEFLECTIONS CAUSED BY DECK PLACEMENT AND OTHER ANTICIPATED DEAD LOADS.
2. TOP OF HAUNCH ELEVATIONS SHOWN REPRESENT THE THEORETICAL LOCATION OF THE BOTTOM OF THE DECK ABOVE THE BEAM HAUNCH PRIOR TO DEFLECTIONS CAUSED BY DECK PLACEMENT AND OTHER ANTICIPATED DEAD LOADS.
3. FINAL DECK SURFACE ELEVATIONS SHOWN REPRESENT THE DECK SURFACE LOCATION AFTER ALL ANTICIPATED DEAD LOAD DEFLECTIONS HAVE OCCURRED.
4. FOR TRANSVERSE SECTION SHOWING LOCATION OF ELEVATION LINES SEE SHEET 20/34.
5. FOR LOCATIONS OF POINT LINES SEE ELEVATION LOCATION PLAN ON SHEET 22/34.

DECK ELEVATION TABLES
BRIDGE NO. JEF-00007-13.690
SR 7 OVER LOGAN AVENUE

SFN 4100751

DESIGN AGENCY
KORDA
KORDA / NEMETH ENGINEERING, INC
1650 Watermark Drive, Suite 200, Columbus, OH 43215

DESIGNER	CHECKER
EAT	CAB

REVIEWER
CLP 09/28/21

PROJECT ID 109309

SUBSET	TOTAL
23	34

SHEET	TOTAL
84	95

JEF-7-13.680

MODEL: Sheet PAPERSIZE: 34x22 (in.) DATE: 8/24/2022 TIME: 12:23:15 PM USER: cplacek
H:\Projects\2019\2019-0430_00 JEF-7-13.69\109309\400-Engineering\Structures\SFN_4100751\Sheets\109309_SFN_4100751_SS004.dgn

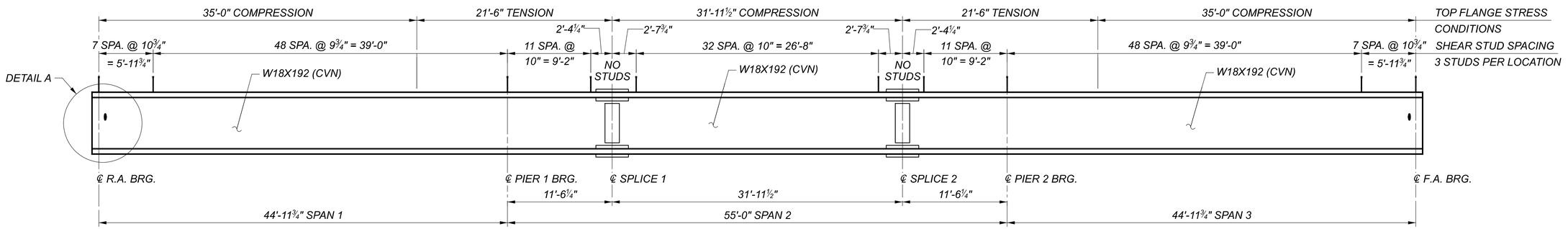

BEAM ELEVATION

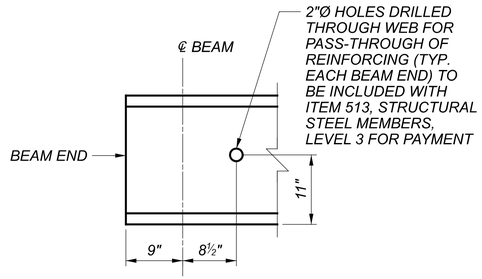

DETAIL A

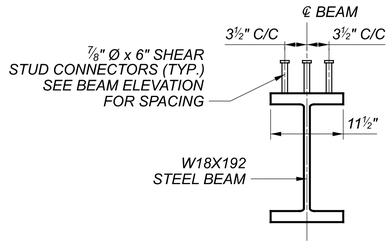

TRANSVERSE STUD SPACING

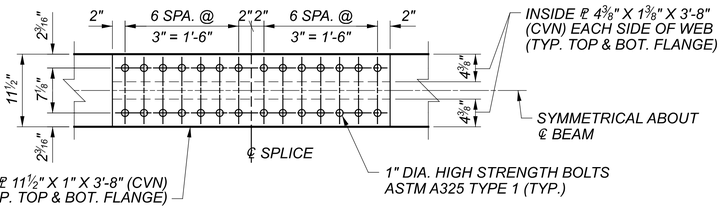

VIEW A-A

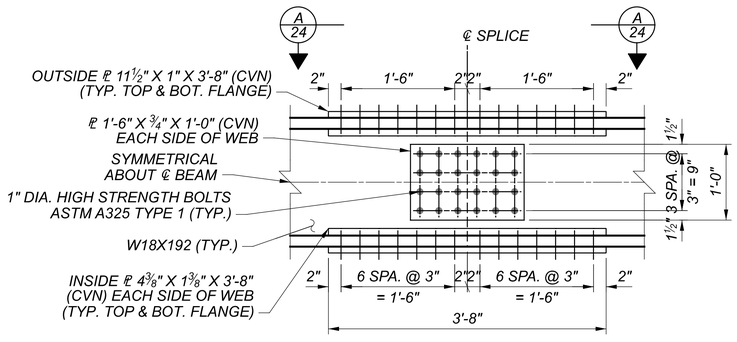

BEAM SPLICE DETAIL

NOTES:

1. CVN: WHERE A SHAPE OR PLATE IS DESIGNATED (CVN), FURNISH MATERIAL THAT MEETS THE MINIMUM NOTCH TOUGHNESS REQUIREMENTS AS SPECIFIED IN C&MS 711.01.
2. WELD ATTACHMENT OF SUPPORTS FOR THE CONCRETE DECK FINISHING MACHINE TO AREAS OF THE FASCIA STRINGER FLANGES DESIGNATED "COMPRESSION". DO NOT WELD ATTACHMENTS TO AREAS DESIGNATED "TENSION". FILLET WELDS TO COMPRESSION FLANGES SHALL BE AT LEAST 1" FROM EDGE OF FLANGE, BE NO MORE THAN 2" LONG AND BE AT LEAST ¼" FOR THICKNESSES UP TO ¾" OR 5/16" FOR GREATER THAN ¾" THICK.
3. HIGH STRENGTH BOLTS SHALL BE 1" DIAMETER ASTM F3125, GRADE A325, TYPE 1.
4. BOLT HOLES SHALL BE 1⅛" DIAMETER.
5. ALL SPLICE PLATES ARE TO BE (CVN).
6. ALL SPLICE PLATES ARE TO BE A709, GRADE 50.
7. ALL STRUCTURAL STEEL IS TO BE A709, GRADE 50.
8. PAYMENT FOR THE SPLICES SHALL BE INCLUDED WITH ITEM 513 STRUCTURAL STEEL MEMBERS, LEVEL 3.
9. FOR TRANSVERSE SECTION SEE SHEET 20/34.
10. FOR FRAMING PLAN SEE SHEET 25/34.

BEAM DETAILS
BRIDGE NO. JEF-00007-13.690
SR 7 OVER LOGAN AVENUE

SFN	4100751
DESIGN AGENCY	KORDA
	KORDA / NEMETH ENGINEERING, INC
	1650 Watermark Drive, Suite 200, Columbus, OH 43215
DESIGNER	EAT
CHECKER	CAB
REVIEWER	CLP 09/28/21
PROJECT ID	109309
SUBSET	24
TOTAL	34
SHEET	85
TOTAL	95

JEF-7-13.680

MODEL: Sheet PAPERSIZE: 34x22 (in.) DATE: 8/24/2022 TIME: 12:23:17 PM USER: cplacek
H:\Projects\2019\2019-0430_00_JEF-7-13.69\109309\400-Engineering\Structures\SFN_4100751\Sheets\109309_SFN_4100751_SS002.dgn

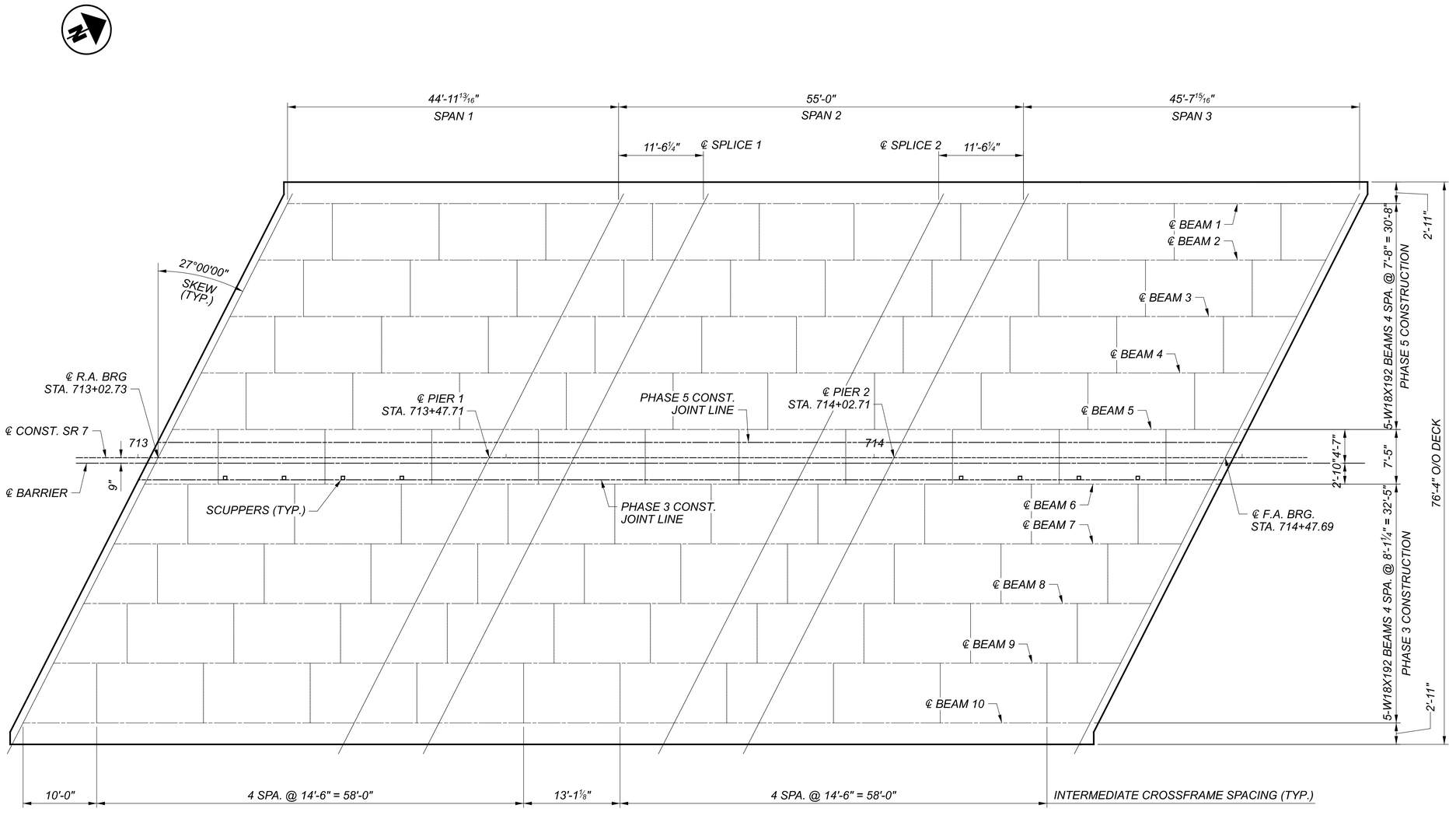

FRAMING PLAN

NOTES:

1. FOR TRANSVERSE SECTION SEE SHEET 20/34.
2. STEEL DEAD LOAD FIT (SDLF) CONDITION

FRAMING PLAN
BRIDGE NO. JEF-00007-13.690
SR 7 OVER LOGAN AVENUE

JEF-7-13.680

MODEL: Sheet PAPERSIZE: 34x22 (in.) DATE: 8/24/2022 TIME: 12:23:18 PM USER: cplacek
H:\Projects\2019\2019-0430_00_JEF-7-13.69\109309\400-Engineering\Structures\SFN_4100751\Sheets\109309_SFN_4100751_SS003.dgn

SFN	4100751
DESIGN AGENCY	KORDA

KORDA / NEMETH ENGINEERING, INC
1650 Watermark Drive, Suite 200, Columbus, OH 43215

DESIGNER	CHECKER
EAT	CAB

REVIEWER	
CLP	09/28/21

PROJECT ID	
109309	

SUBSET	TOTAL
25	34

SHEET	TOTAL
86	95

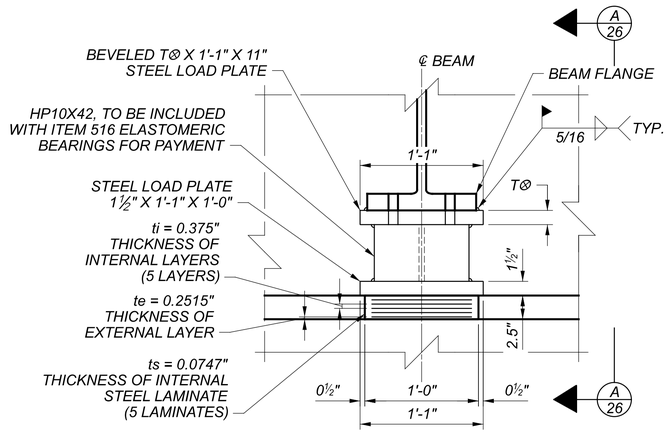

LAMINATED ELASTOMERIC ABUTMENT BEARINGS

BEARING - 1'-0" X 10" X 2.5"
BEVELED STEEL LOAD PLATE - 11" X 1'-1" X T⊗
STEEL LOAD PLATE - 1'-0" X 1'-1" X 1½"
(10 BEARINGS PER ABUTMENT = 20 BEARINGS TOTAL)

SERVICE LOADS
DEAD LOAD = 39.1 K
LIVE LOAD (NO IMPACT) = 64.3 K
TOTAL LOAD = 103.4 K

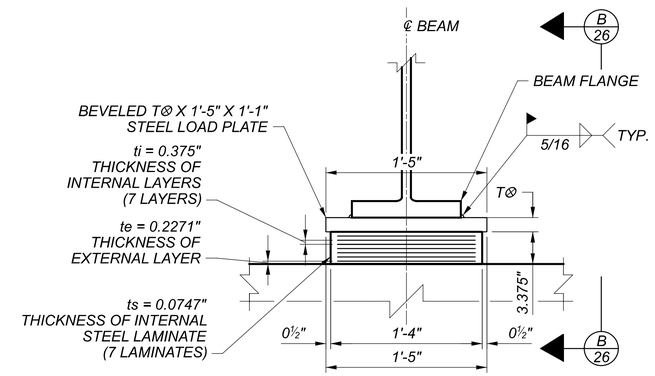

LAMINATED ELASTOMERIC PIER BEARINGS

BEARING - 1'-4" X 1'-0" X 3.375"
BEVELED STEEL LOAD PLATE - 1'-1" X 1'-5" X T
(10 BEARINGS PER PIER = 20 BEARINGS TOTAL)

SERVICE LOADS
DEAD LOAD = 99.7 K
LIVE LOAD (NO IMPACT) = 106.0 K
TOTAL LOAD = 205.7 K

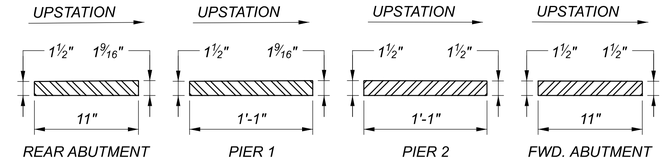

⊗ BEVELED LOAD PLATE PROFILES

FABRICATOR SHALL PROVIDE PIECE MARKS TO CLEARLY INDICATE INTENDED LOCATION AND ORIENTATION OF EACH PLATE

SECTION A-A

SECTION B-B

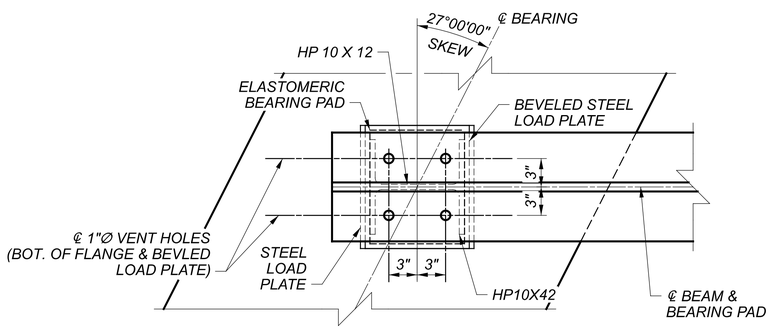

BEARING PLAN AT ABUTMENTS

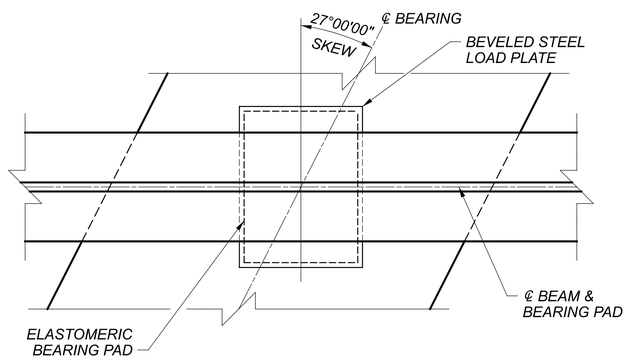

BEARING PLAN AT PIERS

NOTES:

1. ALL BEARINGS SHALL BE MARKED PRIOR TO SHIPPING. THE MARKS SHALL INCLUDE THE BEARING LOCATION ON THE BRIDGE, AND DIRECTION ARROW THAT POINTS UP-STATION. ALL MARKS SHALL BE PERMANENT AND BE VISIBLE AFTER BEARING IS INSTALLED.
2. ELASTOMERIC BEARINGS: THE ELASTOMER SHALL HAVE A HARDNESS OF 50 DUROMETER. THE BEARINGS WERE DESIGNED IN ACCORDANCE WITH SECTION 14.7.6 (METHOD A) OF THE AASHTO LRFD BRIDGE DESIGN SPECIFICATIONS. THE LONG-TERM COMPRESSION PROOF LOAD TEST (AASHTO STANDARD SPECIFICATIONS FOR HIGHWAY BRIDGES, DIVISION II, SECTION 18.7.2.6) IS NOT REQUIRED.

BEARING DETAILS
BRIDGE NO. JEF-00007-13.690
SR 7 OVER LOGAN AVENUE

SFN 4100751
DESIGN AGENCY
KORDA
KORDA / NEMETH ENGINEERING, INC
1650 Watermark Drive, Suite 200, Columbus, OH 43215
DESIGNER EAT | CHECKER CAB
REVIEWER CLP 09/28/21
PROJECT ID 109309
SUBSET 26 | TOTAL 34
SHEET 87 | TOTAL 95

JEF-7-13.680

MODEL: Sheet PAPERSIZE: 34x22 (in.) DATE: 8/24/2022 TIME: 12:23:20 PM USER: cplacek
H:\Projects\2019\2019-0430_00 JEF-7-13.69\109309\400-Engineering\Structures\SFN_4100751\Sheets\109309_SFN_4100751_SB001.dgn

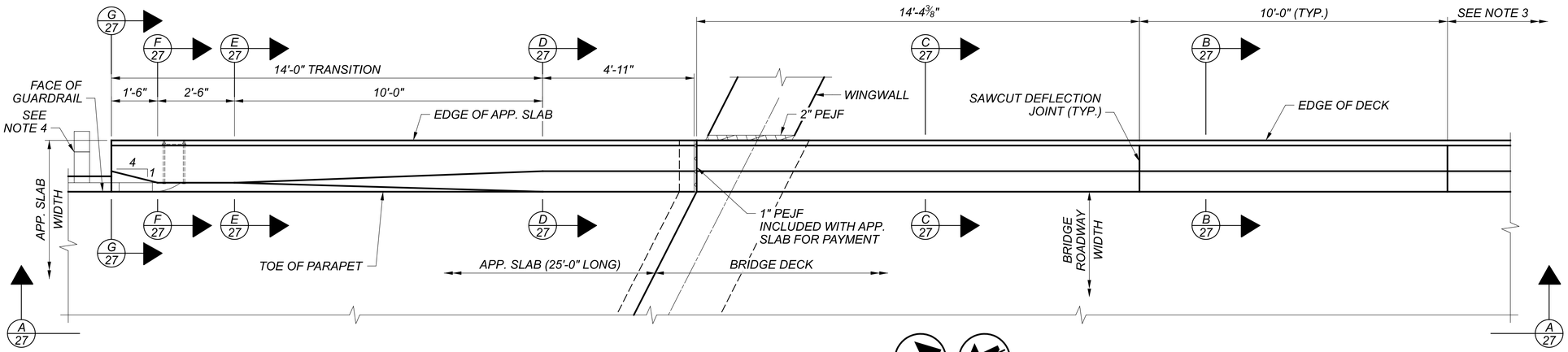

PART PLAN AT SW ABUTMENT (NE ABUTMENT SIMILAR)

R.A. F.A.

NOTES:

1. FOR APPROACH SLAB REINFORCING AND DETAILS SEE STD. DWG. AS-1-15 AND SHEET 30/34.
2. FOR SAWCUT DEFLECTION JOINT DETAILS SEE STD. DWG. SBR-1-20 (SHEET 3).
3. FOR SAWCUT DEFLECTION JOINT SPACING AND ADDITIONAL PARAPET REINFORCING DETAILS SEE SHEET 21/34.
4. FOR BRIDGE TERMINAL ASSEMBLY SEE ROADWAY SHEET 51/95

LEGEND

◊ = NO. 4 GFRP DEFORMED BARS

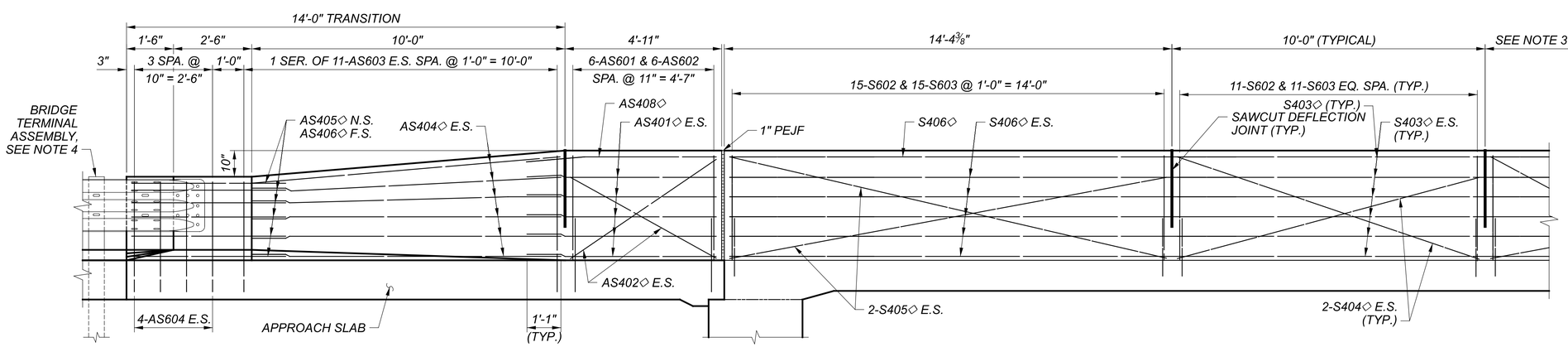

SECTION A-A

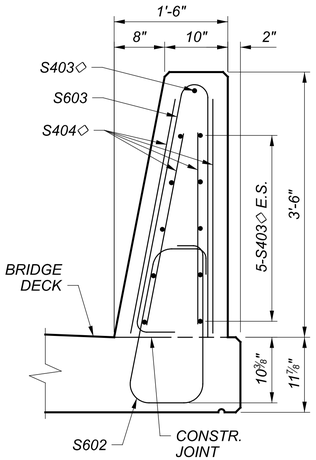

SECTION B-B

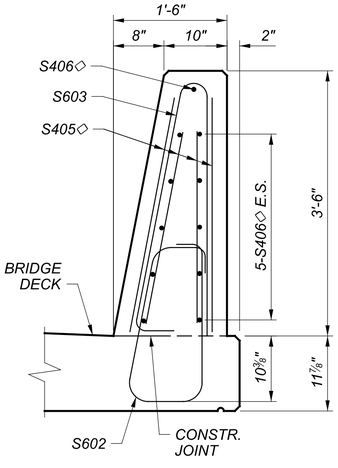

SECTION C-C

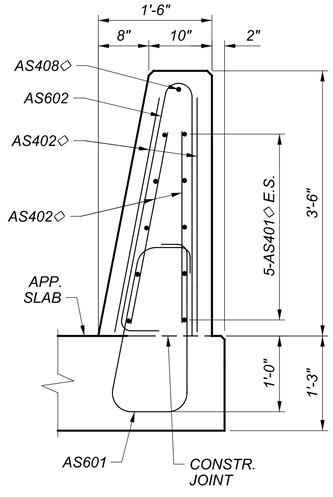

SECTION D-D

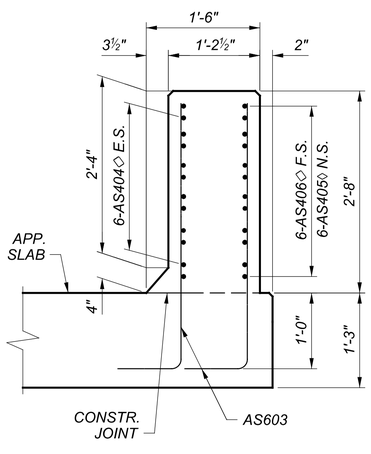

SECTION E-E

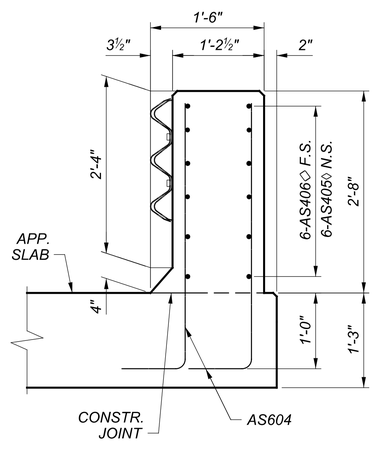

SECTION F-F

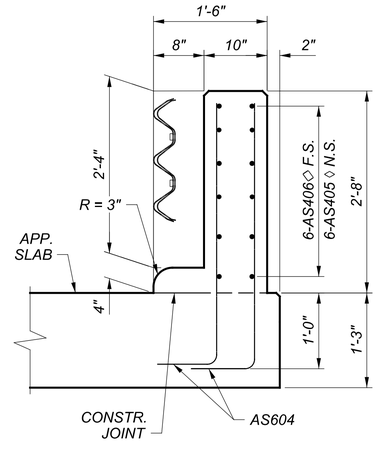

SECTION G-G

PARAPET DETAILS
BRIDGE NO. JEF-00007-13.690
SR 7 OVER LOGAN AVENUE

SFN	4100751
DESIGN AGENCY	KORDA
	KORDA / NEMETH ENGINEERING, INC
	1650 Watermark Drive, Suite 200, Columbus, OH 43215
DESIGNER	EAT
CHECKER	CAB
REVIEWER	CLP 09/28/21
PROJECT ID	109309
SUBSET	27
TOTAL	34
SHEET	88
TOTAL	95

JEF-7-13.680

MODEL: Sheet PAPERSIZE: 34x22 (in.) DATE: 8/24/2022 TIME: 12:23:21 PM USER: cplacek
H:\Projects\2019\2019-0430_00_JEF-7-13.69\109309\400-Engineering\Structures\SFN_4100751\Sheets\109309_SFN_4100751_SA001.dgn

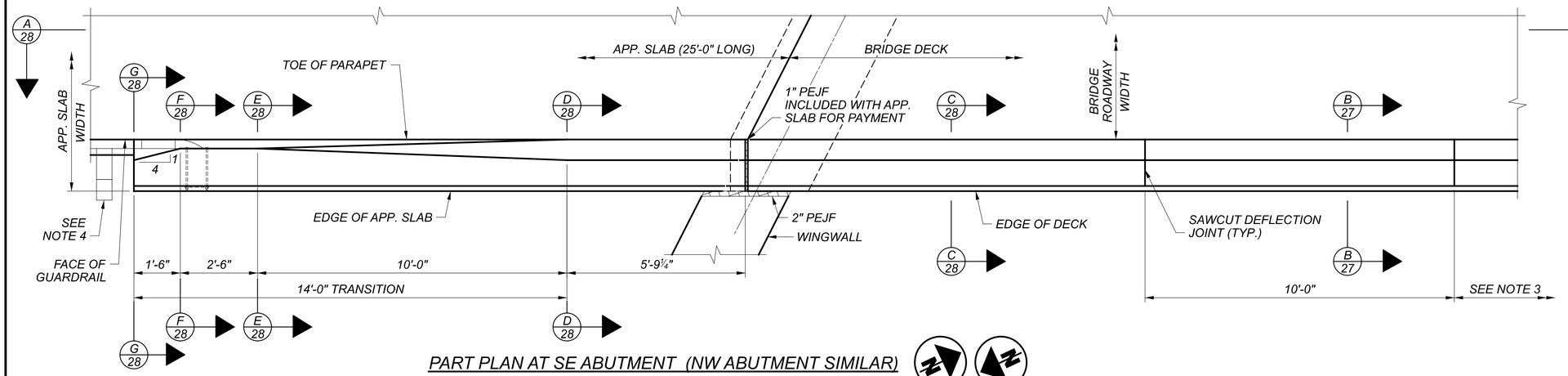

PART PLAN AT SE ABUTMENT (NW ABUTMENT SIMILAR)

R.A. F.A.

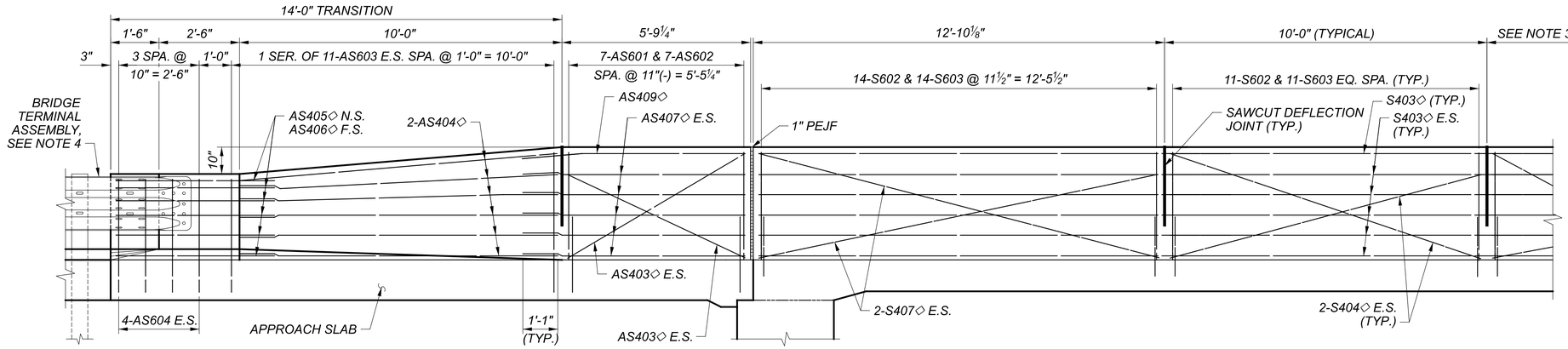

SECTION A-A

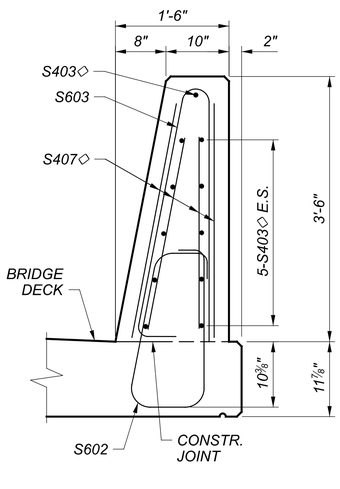

SECTION C-C

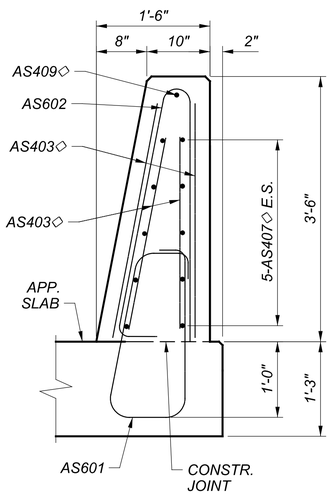

SECTION D-D

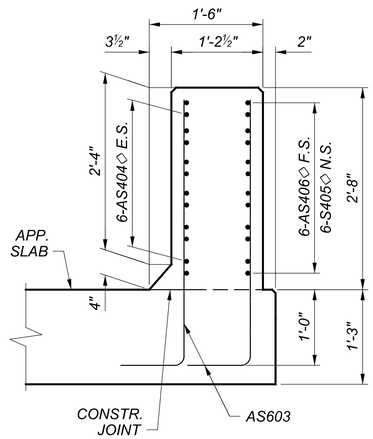

SECTION E-E

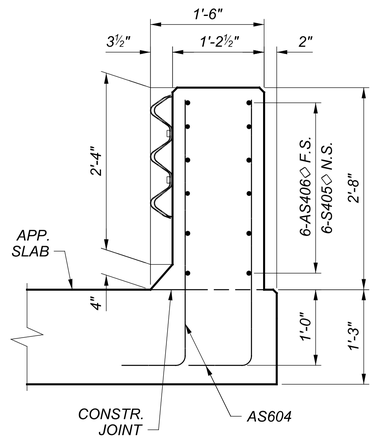

SECTION F-F

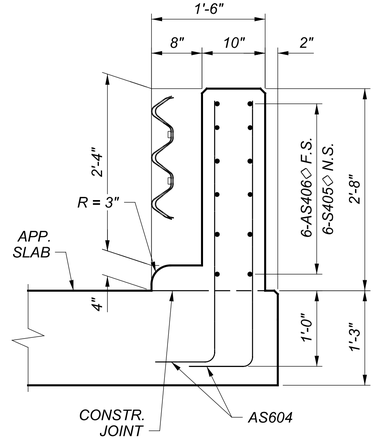

SECTION G-G

NOTES:

1. FOR APPROACH SLAB REINFORCING AND DETAILS SEE STD. DWG. AS-1-15 AND SHEET 30/34.
2. FOR SAWCUT DEFLECTION JOINT DETAILS SEE STD. DWG. SBR-1-20 (SHEET 3).
3. FOR SAWCUT DEFLECTION JOINT SPACING AND ADDITIONAL PARAPET REINFORCING DETAILS SEE SHEET 21/34.
4. FOR BRIDGE TERMINAL ASSEMBLY SEE ROADWAY SHEET 51/95 .
5. FOR SECTION B-B SEE SHEET 27/34 .

LEGEND

◊ = NO. 4 GFRP DEFORMED BARS

PARAPET DETAILS
BRIDGE NO. JEF-00007-13.690
SR 7 OVER LOGAN AVENUE

SFN 4100751

DESIGN AGENCY
KORDA

KORDA / NEMETH ENGINEERING, INC
1650 Watermark Drive, Suite 200, Columbus, OH 43215

DESIGNER	CHECKER
EAT	CAB

REVIEWER
CLP 09/28/21

PROJECT ID 109309

SUBSET	TOTAL
28	34

SHEET	TOTAL
89	95

JEF-7-13.680

MODEL: Sheet PAPERSIZE: 34x22 (in.) DATE: 8/24/2022 TIME: 12:23:23 PM USER: cplacek
H:\Projects\2019\2019-0430_00 JEF-7-13.69\109309\400-Engineering\Structures\SFN_4100751\Sheets\109309_SFN_4100751_SA002.dgn

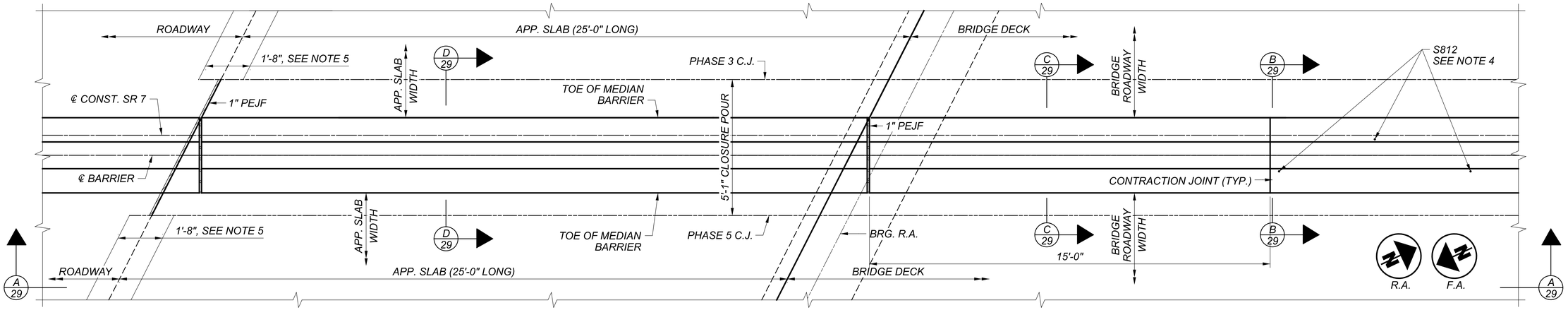

PART PLAN AT REAR ABUTMENT (FORWARD ABUTMENT SIMILAR)

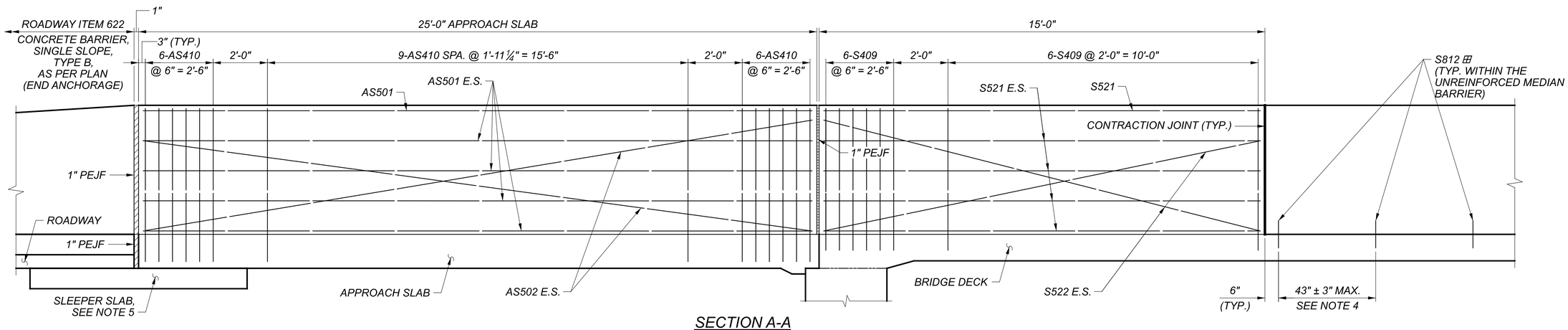

SECTION A-A

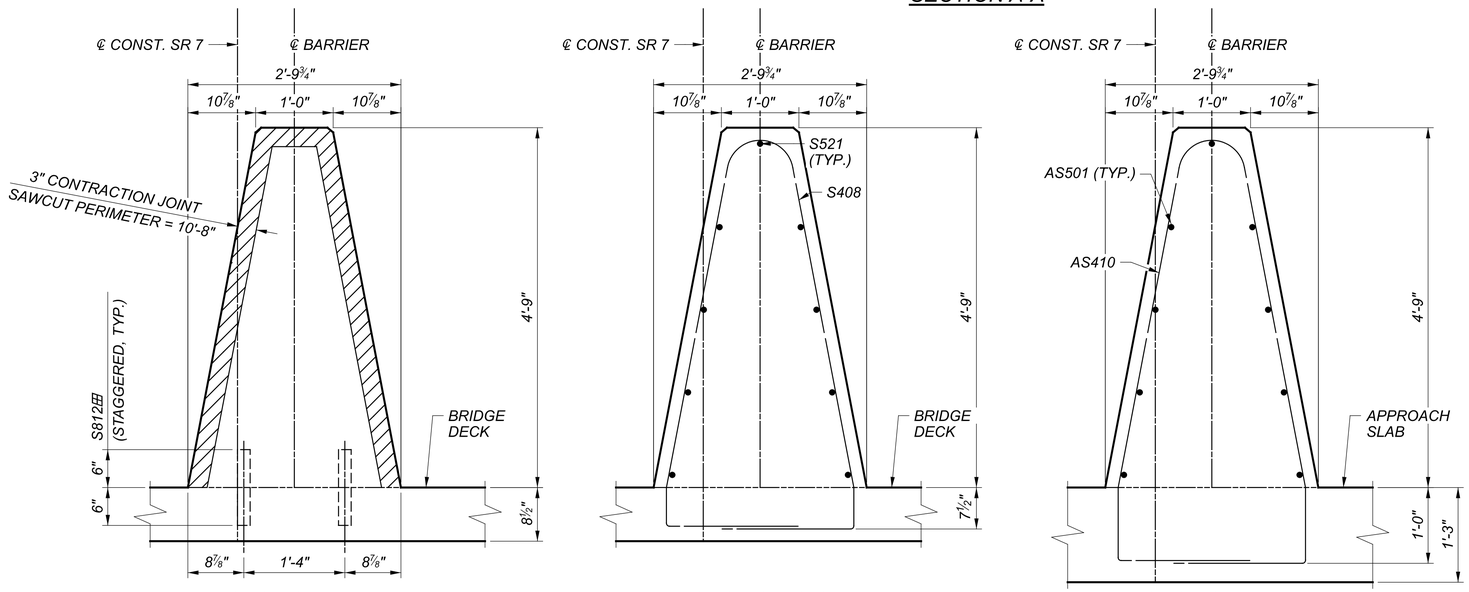

SECTION B-B

SECTION C-C

SECTION D-D

NOTES:

1. FOR APPROACH SLAB REINFORCING AND DETAILS SEE STD. DWG. AS-1-15 AND SHEET 30/34.
2. FOR SAWCUT CONTRACTION JOINT DETAILS SEE STD. DWG. SBR-2-20 (SHEET 2).
3. FOR SAWCUT CONTRACTION JOINT SPACING AND ADDITIONAL PARAPET REINFORCING DETAILS SEE SHEET 21/34.
4. PLACE S812 EPOXY COATED STEEL DOWEL BARS SPACED AT 45" +/- 3" MAXIMUM, AT STAGGERED LOCATIONS WITHIN THE UNREINFORCED MEDIAN BARRIER.
5. POLYMER MODIFIED ASPHALT JOINT SYSTEM, FOR DETAILS SEE STD. DWG. AS-2-15 AND SHEET 30/34.
6. ⊞ = HOLES FOR DOWELS TO BE PER ITEM 510. REINFORCING STEEL FOR DOWELS IS INCLUDED WITH ITEM 509. DOWEL 0'-6" INTO DECK CONCRETE.

MEDIAN DETAILS
BRIDGE NO. JEF-00007-13.690
SR 7 OVER LOGAN AVENUE

SFN 4100751

DESIGN AGENCY
KORDA / NEMETH ENGINEERING, INC
1650 Watermark Drive, Suite 200, Columbus, OH 43215

DESIGNER	CHECKER
EAT	CAB

REVIEWER
CLP 09/28/21

PROJECT ID 109309

SUBSET	TOTAL
29	34

SHEET	TOTAL
90	95

JEF-7-13.680

MODEL: Sheet PAPERSIZE: 34x22 (in.) DATE: 8/24/2022 TIME: 12:23:24 PM USER: cplacek
H:\Projects\2019\2019-0430_00 JEF-7-13.69\109309\400-Engineering\Structures\SFN_4100751\Sheets\109309_SFN_4100751_SA003.dgn

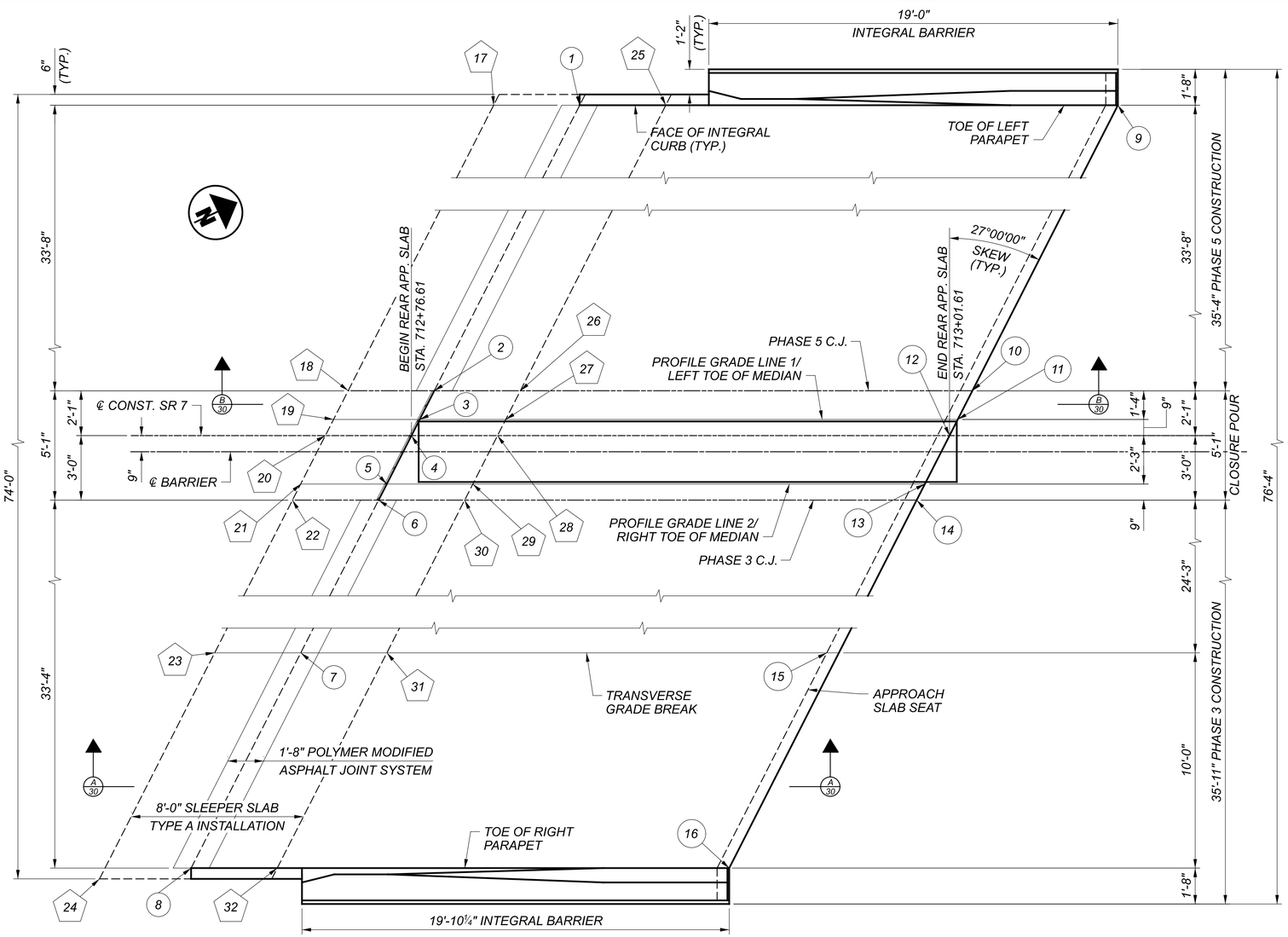

REAR APPROACH SLAB PLAN

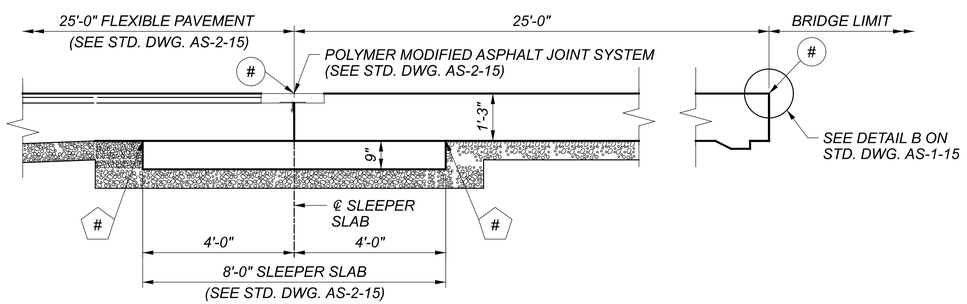

SECTION A-A

THROUGH POLYMER MODIFIED ASPHALT JOINT SYSTEM

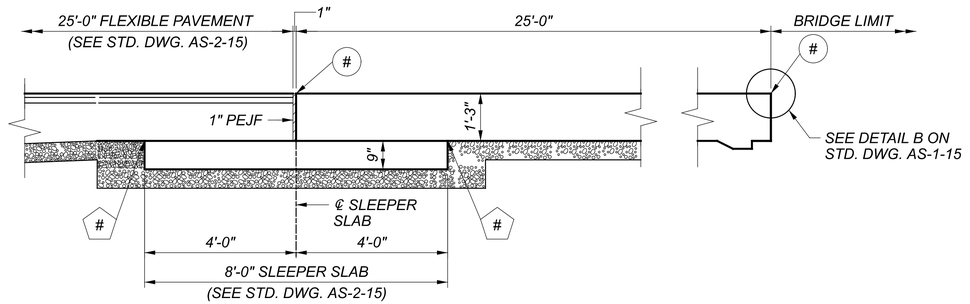

SECTION B-B

THROUGH CLOSURE POUR FOR DETAIL AT MEDIAN SEE SHEET 29/34

LEGEND

(#) = APPROACH SLAB SURFACE ELEVATION

⬠# = SLEEPER SLAB SURFACE ELEVATION

APPROACH SLAB SURFACE ELEVATIONS							
(1)	782.12	(5)	782.53	(9)	782.29	(13)	782.72
(2)	782.53	(6)	782.54	(10)	782.71	(14)	782.73
(3)	782.55	(7)	782.83	(11)	782.73	(15)	783.03
(4)	782.54	(8)	782.39	(12)	782.73	(16)	782.59

SLEEPER SLAB SURFACE ELEVATIONS							
⬠17	780.84	⬠21	781.25	⬠25	780.90	⬠29	781.32
⬠18	781.25	⬠22	781.26	⬠26	781.31	⬠30	781.32
⬠19	781.26	⬠23	781.55	⬠27	781.33	⬠31	781.61
⬠20	781.26	⬠24	781.11	⬠28	781.32	⬠32	781.17

NOTES:

1. FOR ADDITIONAL DETAILS NOT SHOWN SEE STD. DWG. AS-1-15 AND AS-2-15.
2. FOR PARAPET DETAILS SEE SHEETS 27/34 AND 28/34 .
3. FOR MEDIAN DETAILS SEE SHEET 29/34 .

REAR APPROACH SLAB DETAILS
BRIDGE NO. JEF-00007-13.690
SR 7 OVER LOGAN AVENUE

JEF-7-13.680

MODEL: Sheet PAPERSIZE: 34x22 (in.) DATE: 8/24/2022 TIME: 12:23:26 PM USER: cplacek
H:\Projects\2019\2019-0430_00 JEF-7-13.69\109309\400-Engineering\Structures\SFN_4100751\Sheets\109309_SFN_4100751_SM001.dgn

SFN	4100751
DESIGN AGENCY	KORDA
	KORDA / NEMETH ENGINEERING, INC
	1650 Watermark Drive, Suite 200, Columbus, OH 43215
DESIGNER	EAT
CHECKER	CAB
REVIEWER	CLP 09/28/21
PROJECT ID	109309
SUBSET	30
TOTAL	34
SHEET	91
TOTAL	95

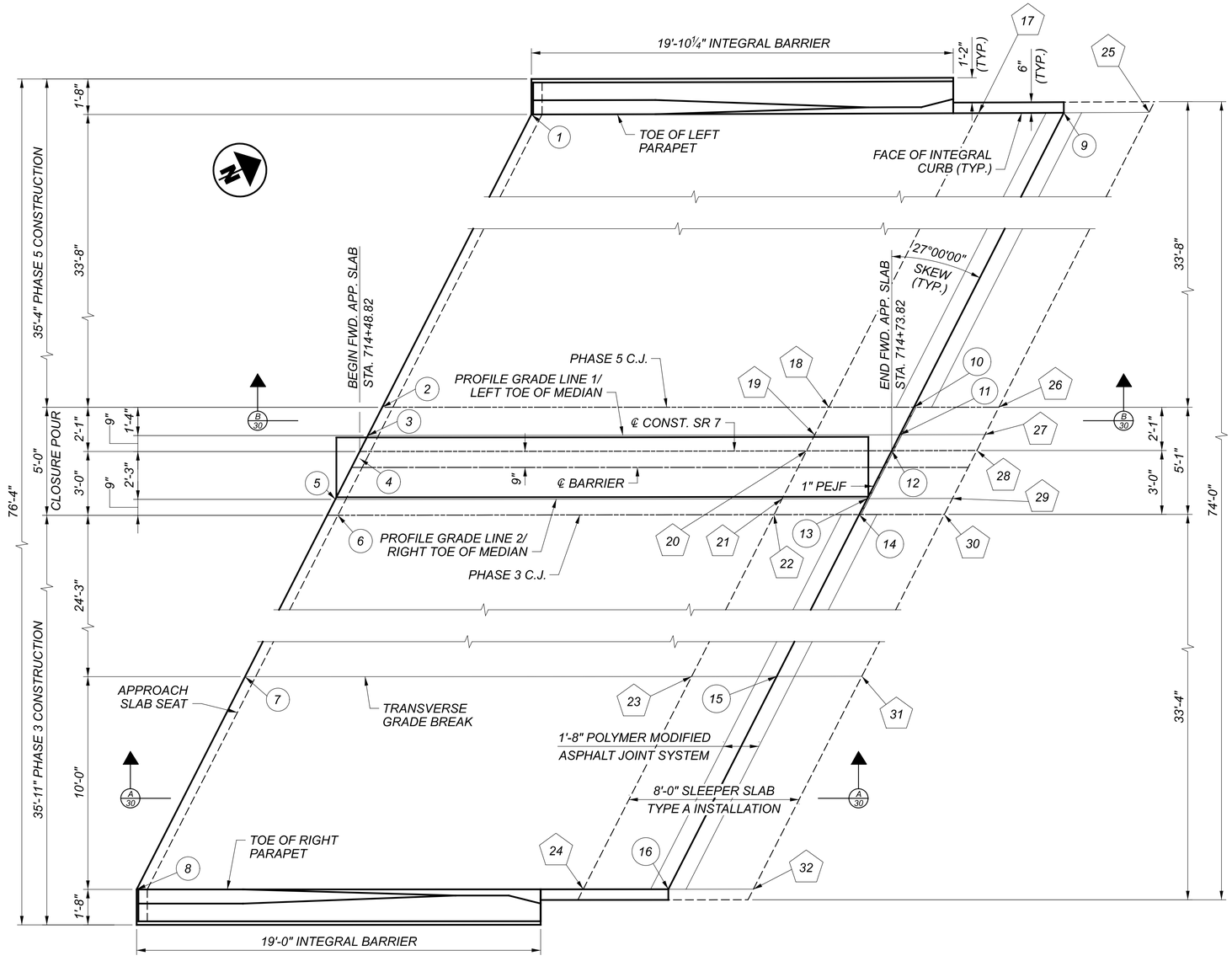

FORWARD APPROACH SLAB

LEGEND

(#) = APPROACH SLAB SURFACE ELEVATION

⬠# = SLEEPER SLAB SURFACE ELEVATION

APPROACH SLAB SURFACE ELEVATIONS							
(1)	782.87	(5)	783.39	(9)	782.90	(13)	783.44
(2)	783.38	(6)	783.41	(10)	783.42	(14)	783.45
(3)	783.40	(7)	783.76	(11)	783.44	(15)	783.82
(4)	783.40	(8)	783.35	(12)	783.44	(16)	783.41

SLEEPER SLAB SURFACE ELEVATIONS							
⬠17	781.64	⬠21	782.18	⬠25	781.65	⬠29	782.19
⬠18	782.16	⬠22	782.19	⬠26	782.17	⬠30	782.20
⬠19	782.18	⬠23	782.56	⬠27	782.19	⬠31	782.58
⬠20	782.18	⬠24	782.15	⬠28	782.19	⬠32	782.17

NOTES:

1. FOR ADDITIONAL DETAILS NOT SHOWN SEE STD. DWG. AS-1-15 AND AS-2-15.
2. FOR PARAPET DETAILS SEE SHEETS 27/34 AND 28/34.
3. FOR MEDIAN DETAILS SEE SHEET 29/34.

FORWARD APPROACH SLAB DETAILS
BRIDGE NO. JEF-00007-13.690
SR 7 OVER LOGAN AVENUE

SFN 4100751

DESIGN AGENCY
KORDA

KORDA / NEMETH ENGINEERING, INC
1650 Watermark Drive, Suite 200, Columbus, OH 43215

DESIGNER	CHECKER
EAT	CAB

REVIEWER
CLP 09/28/21

PROJECT ID 109309

SUBSET	TOTAL
31	34

SHEET	TOTAL
92	95

JEF-7-13.680

MODEL: Sheet PAPERSIZE: 34x22 (in.) DATE: 8/24/2022 TIME: 12:23:27 PM USER: cplacek
H:\Projects\2019\2019-0430_00_JEF-7-13.69\109309\400-Engineering\Structures\SFN_4100751\Sheets\109309_SFN_4100751_SM002.dgn

MARK	NUMBER			LENGTH	WEIGHT	TYPE	DIMENSIONS						
	REAR ABUT.	FWD. ABUT.	TOTAL				A	B	C	D	E	R	INC
ABUTMENTS													
A501	85		85	10'-5"	923	2	4'-0"	2'-8"	4'-0"				
A502⊞	170		170	4'-0"	709	STR							
A503✚	8		8	27'-7"	230	STR							
A504✚	8		8	28'-4"	236	STR							
A505	16		16	20'-1"	335	3	8'-2"	1'-7"					
A506	2 SR OF 4		2 SR OF 4	8'-1" TO 19'-7"	115	3	2'-2" TO 7'-11"	1'-7"					1'-11"
A507	4 SR OF 6	4 SR OF 6	8 SR OF 6	7'-6" TO 11'-8"	480	STR							0'-10"
A508	1 SR OF 3		1 SR OF 3	6'-7" TO 10'-10"	27	STR							2'-1½"
A509	1	1	2	11'-5"	24	19	4'-0"	6'-10"	3'-0"				
A510⊞	12	12	24	3'-7"	90	16	3'-0"						
A511		2 SR OF 2	2 SR OF 2	7'-6" TO 11'-8"	40	STR							4'-2"
A512	1 SR OF 3		1 SR OF 3	4'-0" TO 8'-5"	19	STR							2'-2½"
A513	1	1	2	9'-1"	19	19	2'-10"	5'-6"	3'-0"				
A514		85	85	7'-11"	702	2	2'-9"	2'-8"	2'-9"				
A515⊞		170	170	4'-1"	724	16	3'-6"						
A516✚		8	8	26'-10"	224	STR							
A517		1 SR OF 3	1 SR OF 3	5'-3" TO 9'-11"	24	STR							2'-4"
A518	1	1	2	10'-3"	21	19	2'-10"	6'-10"	3'-0"				
A519		1 SR OF 3	1 SR OF 3	4'-10" TO 8'-6"	21	STR							1'-10"
A520	1	1	2	10'-3"	21	19	4'-0"	5'-6"	3'-0"				
A521✚		8	8	29'-2"	243	STR							
A522		16	16	22'-1"	369	3	8'-2"	2'-7"					
A523		2 SR OF 4	2 SR OF 4	10'-1" TO 21'-7"	132	3	2'-2" TO 7'-11"	2'-7"					1'-11"
A524	1 SR OF 3		1 SR OF 3	5'-6" TO 9'-9"	24	STR							2'-1½"
A525	1 SR OF 3		1 SR OF 3	5'-2" TO 9'-6"	23	STR							2'-2"
A526		1 SR OF 3	1 SR OF 3	4'-2" TO 8'-9"	20	STR							2'-3½"
A527		1 SR OF 3	1 SR OF 3	5'-11" TO 9'-6"	24	STR							1'-9½"
A601	12		12	14'-10"	267	2	6'-6"	2'-2"	6'-6"				
A602	1 SR OF 8		1 SR OF 8	10'-0" TO 15'-10"	155	2	4'-1" TO 7'-0"	2'-2"	4'-1" TO 7'-0"				0'-5"
A603	4		4	16'-2"	97	2	7'-2"	2'-2"	7'-2"				
A604	1 SR OF 7		1 SR OF 7	10'-0" TO 15'-6"	134	2	4'-1" TO 6'-10"	2'-2"	4'-1" TO 6'-10"				0'-5½"
A605	3		3	15'-8"	71	2	6'-11"	2'-2"	6'-11"				
A606	11		11	13'-10"	229	2	6'-0"	2'-2"	6'-0"				
A607		12	12	13'-8"	246	2	5'-11"	2'-2"	5'-11"				
A608		1 SR OF 8	1 SR OF 8	8'-6" TO 14'-4"	137	2	3'-4" TO 6'-3"	2'-2"	3'-4" TO 6'-3"				0'-5"
A609		4	4	14'-4"	86	2	6'-3"	2'-2"	6'-3"				
A610		1 SR OF 7	1 SR OF 7	9'-4" TO 15'-4"	130	2	3'-9" TO 6'-9"	2'-2"	3'-9" TO 6'-9"				0'-6"
A611		4	4	15'-6"	93	2	6'-10"	2'-2"	6'-10"				
A612		12	12	14'-8"	264	2	6'-5"	2'-2"	6'-5"				
A801✚	1 SR. OF 4	1 SR. OF 4	2 SR. OF 4	40'-4" TO 41'-8"	876	37	3'-11" TO 5'-3"	6'-1"	12'-1"	18'-3"	0'-2"		
A802✚	1 SR. OF 4	1 SR. OF 4	2 SR. OF 4	43'-7" TO 44'-11"	945	STR							
DG601	10	10	20	14'-3"	428	3	3'-0"	3'-8½"					
DG801	14	14	28	13'-8"	1022	5	2'-8"	3'-7"	2'-4"				
				SUB-TOTAL	10999	POUNDS EPOXY COATED REINFORCING STEEL							

MARK	NUMBER			LENGTH	WEIGHT	TYPE	DIMENSIONS						
	PIER 1	PIER 2	TOTAL				A	B	C	D	E	R	INC
PIERS													
P501✚	2	2	4	41'-6"	173	STR							
P502✚	2	2	4	43'-4"	181	STR							
P503	81	81	162	10'-5"	1760	2	4'-0"	2'-8"	4'-0"				
P504	81	81	162	10'-0"	1690	2	3'-10"	2'-7"	3'-10"				
P801✚	4	4	8	39'-4"	840	11	0'-3"	35'-2"	4'-4"				
P802✚	4	4	8	47'-0"	1004	10	0'-5"	43'-2"	4'-0"				
P803✚	4	4	8	41'-6"	886	STR							
P804✚	4	4	8	43'-2"	922	STR							
P805	4	4	8	15'-7"	333	1	11'-5"	4'-4"					
P1001⊞	24	24	48	4'-5"	912	16	3'-0"						
P1002⊞	24	24	48	5'-5"	1119	16	4'-0"						
P1101⊞	14	14	28	4'-7"	682	16	3'-0"						
P1102⊞	10	10	20	5'-9"	611	16	4'-2"						
				SUB-TOTAL	11113	POUNDS EPOXY COATED REINFORCING STEEL							

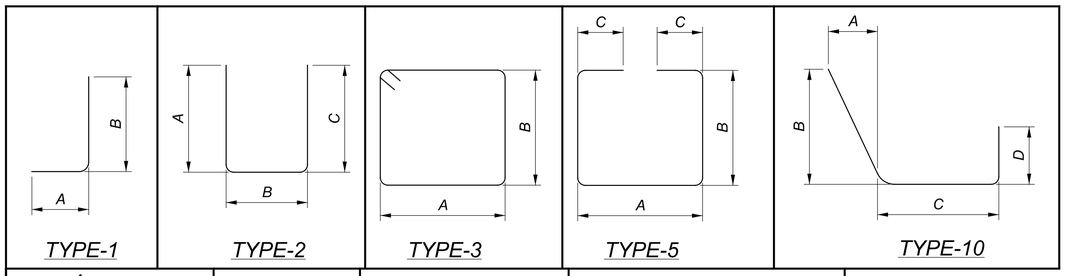

NOTES:

1. ALL REINFORCING STEEL TO BE EPOXY-COATED.
2. LENGTHS ARE RECORDED IN FEET - INCHES.
3. "STR" IN THE TYPE COLUMN INDICATES STRAIGHT BARS.
4. REFER TO C.M.S. SEC. 509.05 FOR STANDARD BEND DIMENSIONS.
5. ALL DIMENSIONS ARE OUT-TO-OUT
6. THE BAR SIZE NUMBER IS SPECIFIED ON THE PLANS IN THE BAR MARK COLUMN. THE FIRST DIGIT WHERE THREE DIGITS ARE USED, AND THE FIRST TWO DIGITS WHERE FOUR ARE USED, INDICATES THE BAR SIZE NUMBER. FOR EXAMPLE, A601 IS A NO. 6 BAR.
7. "⊞" INDICATES DOWEL BARS
8. "-" INDICATES A DIMENSION NOT USED.
9. "✚" INDICATES BARS WITH MECHANICAL CONNECTION SYSTEM. THE LENGTHS OF THE BARS DESIGNATED FOR MECHANICAL CONNECTORS ARE THE NOMINAL LENGTHS MEASURED TO THE CONSTRUCTION JOINT. ADJUSTMENT IN THE LENGTHS OF THE BARS DUE TO MECHANICAL SPLICING SHALL BE MADE PRIOR TO THE FABRICATIONS.

REINFORCING STEEL LIST
BRIDGE NO. JEF-00007-13.690
SR 7 OVER LOGAN AVENUE

SFN 4100751

DESIGN AGENCY
KORDA
KORDA / NEMETH ENGINEERING, INC
1650 Watermark Drive, Suite 200, Columbus, OH 43215

DESIGNER	CHECKER
EAT	CAB

REVIEWER CLP 09/28/21

PROJECT ID 109309

SUBSET	TOTAL
32	34

SHEET	TOTAL
93	95

JEF-7-13.680

MODEL: Sheet PAPERSIZE: 34x22 (in.) DATE: 8/24/2022 TIME: 12:23:28 PM USER: cplacek
H:\Projects\2019\2019-0430_00 JEF-7-13.69\109309\400-Engineering\Structures\SFN_4100751\Sheets\109309_SFN_4100751_SL001.dgn

MARK	NUMBER TOTAL	LENGTH (EACH)	LENGTH (TOTAL) (FEET)	WEIGHT	TYPE	DIMENSIONS A	B	C	D	E	R	INC
SUPERSTRUCTURE												
S401	470	30'-0"	-	9419	STR							
S402	94	6'-6"	-	408	STR							
S403◇	66	40'-0"	2640	-	STR							
S404◇	104	10'-0"	1040	-	STR							
S405◇	8	14'-4"	115	-	STR							
S406◇	22	30'-2"	664	-	STR							
S407◇	8	12'-11"	103	-	STR							
S408	24	14'-1"	-	226	34	0'-7½"	2'-5"	1'-0"	4'-7"		0'-4"	
S409	8	3'-0"	-	16	STR							
S501✚	256	36'-3"	-	9679	18	11'-5"	24'-3"	0'-8"				
S502✚	256	35'-8	-	9523	19	11'-5"	24'-3"	0'-8"				
S503	440	30'-0"	-	13768	STR							
S504	88	9'-0"	-	826	STR							
S505	287	9'-7"	-	2869	10	0'-3½"	7'-2"	0'-7"	2'-0"			
S506	1 SR OF 7	5'-5" TO 11'-5"	-	61	16	4'-10" TO 10'-10"						1'-0"
S507	1 SR OF 7	4'-10" TO 10'-10"	-	57	STR							1'-0"
S508	1 SR OF 26	12'-3" TO 36'-3"	-	658	18	11'-5"	0'-3½" TO 24'-3"	0'-0" TO 0'-8"				0'-11½"
S509	1 SR OF 26	11'-8" TO 35'-8"	-	642	19	11'-5"	0'-3½" TO 24'-3"	0'-0" TO 0'-8"				0'-11½"
S510✚	2 SR OF 12	24'-6" TO 35'-6"	-	751	19	24'-3"	0'-3" TO 11'-3"	0'-0" TO 0'-8"				1'-0"
S511✚	2 SR OF 21	4'-0" TO 24'-0"	-	613	STR							1'-0"
S512✚	253	40'-9"	-	10753	18	36'-5"	3'-9"	0'-1"				
S513✚	253	40'-2"	-	10599	19	36'-5"	3'-9"	0'-1"				
S514✚	2 SR OF 35	6'-2" TO 40'-2"	-	1691	19	2'-5" TO 36'-5"	3'-9"	0'-1"				1'-0"
S515	1 SR OF 35	5'-3½" TO 38'-7"	-	767	16	4'-8½" TO 38'-0"						0'-11¾"
S516	1 SR OF 35	4'-8½" TO 38'-0"	-	780	STR							0'-11¾"
S517	287	9'-7"	-	2869	10	0'-1⅜"	7'-2"	0'-7"	2'-0"			
S518	112	7'-6"	-	876	2	2'-8"	2'-5"	2'-8"				
S519	224	6'-1"	-	1421	2	1'-8"	3'-0"	1'-8"				
S520	8	3'-6"	-	29	2	0'-8"	2'-5"	0'-8"				
S521	18	14'-8"	-	275	STR							
S522	8	15'-0"	-	125	STR							
S601	182	30'-0"	-	8201	STR							
S602	344	7'-7"	-	3918	29	0'-9½"	0'-7"	1'-0"	2'-3⅜"	1'-2¾"		
S603	344	7'-0"	-	3617	23	0'-6"	3'-3"	3'-3"			0'-2"	
S801✚	7	39'-11"	-	746	19	27'-2"	12'-9"	0'-5"				
S802✚	7	45'-0"	-	841	STR							
S803	4	14'-11"	-	159	STR				2'-0"			
S804	2 SR OF 4	16'-2" TO 16'-2"	-	345	39	3'-9" TO 5'-3"	6'-1"	4'-10" TO 3'-4"	0'-4½"	1'-8"		0'-6"
S805✚	4	21'-6"	-	230	STR							
S806✚	8	23'-0"	-	461	11	0'-2½"	21'-6"	1'-8"				
S807✚	4	35'-11"	-	384	STR							
S808✚	8	37'-5"	-	799	11	0'-4⅛"	35'-11"	1'-8"				
S809	4	5'-6"	-	59	STR							

MARK	NUMBER TOTAL	LENGTH	FEET	WEIGHT	TYPE	DIMENSIONS A	B	C	D	E	R	INC
SUPERSTRUCTURE												
S810	8	7'-0"	-	150	1	5'-6"	1'-8"					
S811	32	4'-2"	-	358	18	2'-4½"	0'-6"	0'-9"				
S812⊞	34	1'-0"	-	91	STR							
S813✚	1	38'-5"	-	103	19	27'-2"	11'-3"	0'-3"				
S814✚	1	43'-6"	-	116	STR							
D801	102	5'-3"	-	1430	18	2'-11"	1'-0"	1'-0"				
	SUB-TOTAL		-	101,709	POUNDS EPOXY COATED REINFORCING STEEL							
	SUB-TOTAL		4562	-	FEET NO. 4 GFRP DEFORMED BARS							

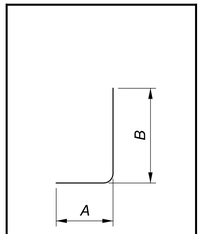

TYPE-1

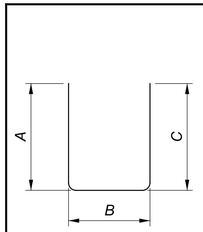

TYPE-2

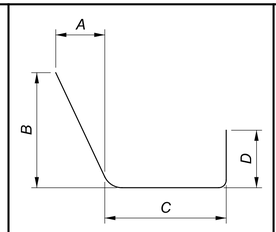

TYPE-10

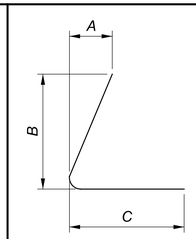

TYPE-11

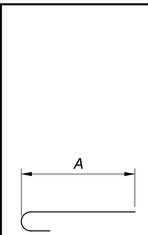

TYPE-16

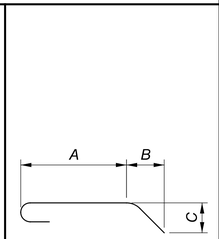

TYPE-18

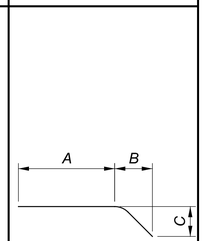

TYPE-19

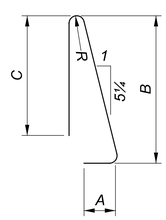

TYPE-23

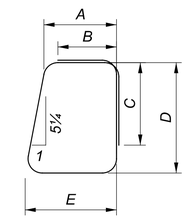

TYPE-29

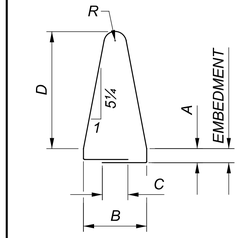

TYPE-34

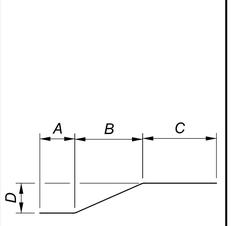

TYPE-38

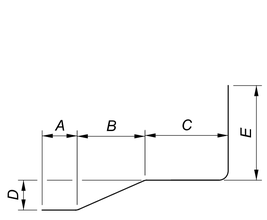

TYPE-39

NOTES:

1. ALL REINFORCING STEEL TO BE EPOXY-COATED.
2. LENGTHS ARE RECORDED IN FEET - INCHES.
3. "STR" IN THE TYPE COLUMN INDICATES STRAIGHT BARS.
4. REFER TO C.M.S. SEC. 509.05 FOR STANDARD BEND DIMENSIONS.
5. ALL DIMENSIONS ARE OUT-TO-OUT
6. "R" DIMENSION INDICATES INSIDE RADIUS, UNLESS OTHERWISE NOTED.
7. THE BAR SIZE NUMBER IS SPECIFIED ON THE PLANS IN THE BAR MARK COLUMN. THE FIRST DIGIT WHERE THREE DIGITS ARE USED, AND THE FIRST TWO DIGITS WHERE FOUR ARE USED, INDICATES THE BAR SIZE NUMBER. FOR EXAMPLE, A601 IS A NO. 6 BAR.
8. "⊞" INDICATES DOWEL BARS
9. "◇" INDICATES BARS INCLUDED WITH ITEM 509 NO. 4 GFRP DEFORMED BARS
10. "✚" INDICATES BARS WITH MECHANICAL CONNECTION SYSTEM. THE LENGTHS OF THE BARS DESIGNATED FOR MECHANICAL CONNECTORS ARE THE NOMINAL LENGTHS MEASURED TO THE CONSTRUCTION JOINT. ADJUSTMENT IN THE LENGTHS OF THE BARS DUE TO MECHANICAL SPLICING SHALL BE MADE PRIOR TO THE FABRICATIONS.

REINFORCING STEEL LIST
BRIDGE NO. JEF-00007-13.690
SR 7 OVER LOGAN AVENUE

SFN 4100751

DESIGN AGENCY
KORDA
KORDA / NEMETH ENGINEERING, INC
1650 Watermark Drive, Suite 200, Columbus, OH 43215

DESIGNER	CHECKER
EAT	CAB

REVIEWER: CLP 09/28/21

PROJECT ID: 109309

SUBSET	TOTAL
33	34

SHEET	TOTAL
94	95

JEF-7-13.680

MODEL: Sheet PAPERSIZE: 34x22 (in.) DATE: 8/24/2022 TIME: 12:23:30 PM USER: cplacek
H:\Projects\2019-0430.00 JEF-7-13.69\109309\400-Engineering\Structures\SFN_4100751\Sheets\109309_SFN_4100751_SL002.dgn

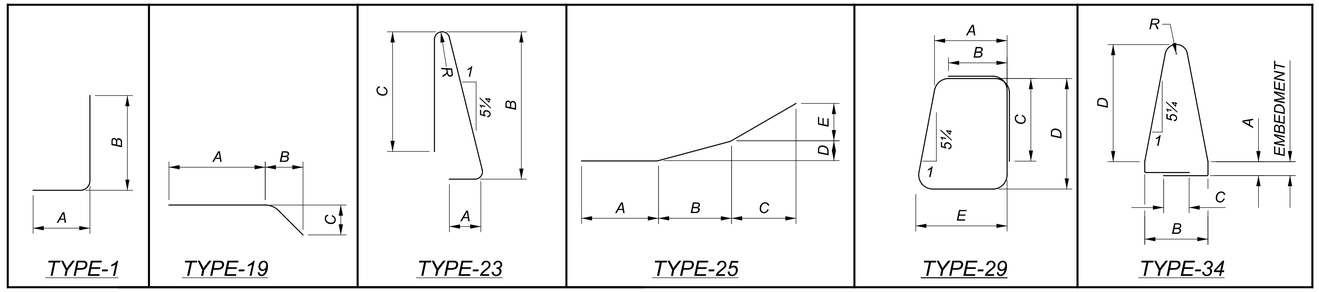

MARK	NUMBER			LENGTH (EACH)	LENGTH (TOTAL) (FEET)	WEIGHT	TYPE	DIMENSIONS						
	REAR	FWD.	TOTAL					A	B	C	D	E	R	INC
PARAPET														
AS401◇	10	10	20	6'-0"	120	-	STR							
AS402◇	4	4	8	5'-4"	43	-	STR							
AS403◇	4	4	8	6'-2"	49	-	STR							
AS404◇	24	24	48	10'-0"	480	-	STR							
AS405◇	12	12	24	6'-4"	152	-	25	2'-6"	2'-5"	1'-5"	0'-1½"	0'-5"		
AS406◇	12	12	24	5'-1"	122	-	STR							
AS407◇	10	10	20	6'-10"	137	-	STR							
AS408◇	1	1	2	6'-0"	12	-	19	4'-9"	1'-3"	0'-1½"				
AS409◇	1	1	2	6'-10"	14	-	19	5'-7"	1'-10"	0'-2"				
AS410	21	21	42	14'-10"	-	416	34	1'-0"	2'-5"	1'-0"	4'-7"		0'-4"	
AS501	9	9	18	24'-8"	-	463	STR							
AS502	4	4	8	24'-11"	-	208	STR							
AS601	13	13	26	7'-7"	-	296	29	0'-9½"	0'-7"	1'-0"	2'-3⅜"	1'-2¾"		
AS602	13	13	26	7'-0"	-	273	23	0'-6"	3'-3"	3'-3"			0'-2"	
	4 SR	4 SR	8 SR	4'-4"					3'-6"					
AS603	OF	OF	OF	TO	-	628	1	1'-0"	TO					0'-1"
	11	11	11	5'-2"					4'-4"					
AS604	16	16	32	4'-4"	-	208	1	1'-0"	3'-6"					
SUB-TOTAL					-	2492	POUNDS EPOXY COATED REINFORCING STEEL							
SUB-TOTAL					1129	-	FEET NO. 4 GFRP DEFORMED BARS							

NOTES:

1. ALL REINFORCING STEEL TO BE EPOXY-COATED.
2. LENGTHS ARE RECORDED IN FEET - INCHES.
3. "STR" IN THE TYPE COLUMN INDICATES STRAIGHT BARS.
4. REFER TO C.M.S. SEC. 509.05 FOR STANDARD BEND DIMENSIONS.
5. ALL DIMENSIONS ARE OUT-TO-OUT
6. "R" DIMENSION INDICATES INSIDE RADUS, UNLESS OTHERWISE NOTED.
7. THE BAR SIZE NUMBER IS SPECIFIED ON THE PLANS IN THE BAR MARK COLUMN. THE FIRST DIGIT WHERE THREE DIGITS ARE USED, AND THE FIRST TWO DIGITS WHERE FOUR ARE USED, INDICATES THE BAR SIZE NUMBER. FOR EXAMPLE, A601 IS A NO. 6 BAR.
8. "◇" INDICATED BARS INCLUDED WITH ITEM 509 NO. 4 GFRP DEFORMED BARS
9. REINFORCING STEEL IN SCHEDULE IS FOR PARAPET AND MEDIAN ON APPROACH SLAB ONLY. SEE STD. DWG. AS-1-15 FOR REINFORCING IN THE APPROACH SLAB. PAYMEMT FOR REINFORCING STEEL IN APPROACH SLAB, PARAPETS, AND MEDIAN IS INCLUDED IN ITEM 526 - REINFORCED CONCRETE APPROACH SLABS WITH QC/QA (T=15"), AS PER PLAN.

REINFORCING STEEL LIST
BRIDGE NO. JEF-00007-13.690
SR 7 OVER LOGAN AVENUE

SFN 4100751

DESIGN AGENCY
KORDA

KORDA / NEMETH ENGINEERING, INC
1650 Watermark Drive, Suite 200, Columbus, OH 43215

DESIGNER	CHECKER
EAT	CAB

REVIEWER
CLP 09/28/21

PROJECT ID
109309

SUBSET	TOTAL
34	34

SHEET	TOTAL
95	95

JEF-7-13.680

MODEL: Sheet PAPERSIZE: 34x22 (in.) DATE: 8/24/2022 TIME: 12:23:31PM USER: cplacek
H:\Projects\2019\2019-0430.00 JEF-7-13.69\109309\400-Engineering\Structures\SFN_4100751\Sheets\109309_SFN_4100751_SL003.dgn