

UNDERWATER BRIDGE INSPECTION REPORT

STRUCTURE NO. BEL-001-0051
SPRD 1 OVER
BARKCAMP CREEK / BELMONT LAKE
BELMONT COUNTY, OH
DISTRICT 11

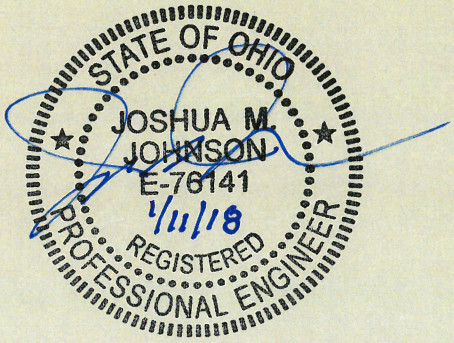

Prepared for:

STATE OF OHIO DEPARTMENT OF TRANSPORTATION

Prepared by:

COLLINS ENGINEERS INC.

124 Venture Court, Suite 10

Lexington, Kentucky 40511

859.367.0097 • www.collinsengr.com

TABLE OF CONTENTS

EXECUTIVE SUMMARY
1.0 INTRODUCTION 1
1.1 Purpose and Scope 1
1.2 General Description of the Structure 1
1.3 Method of Investigation 1
2.0 EXISTING CONDITIONS 2
2.1 General Conditions 2
2.2 Substructure Conditions 3
2.2.1 Abutment 1 3
2.2.2 Bent 2 3
2.2.3 Bent 3 3
2.2.4 Abutment 4 3
3.0 EVALUATION AND RECOMMENDATIONS 3
EXHIBIT 1 – FIGURES 5
LOCATION MAP
SOUNDING PLAN
UPSTREAM CHANNEL CROSS SECTIONS
CENTERLINE CHANNEL CROSS SECTIONS
DOWNSTREAM CHANNEL CROSS SECTIONS
ABUTMENT 1
BENT 2
BENT 3
ABUTMENT 4
EXHIBIT 2 – INSPECTION PHOTOGRAPHS 13
Photograph No. 1: Overall View of Structure No. BEL-001-0051, Looking North.
Photograph No. 2: Overall View of Structure No. BEL-001-0051, Looking Southwest.
Photograph No. 3: View of the West Embankment Upstream of the Structure, Looking Southwest.
Photograph No. 4: View of the West Embankment Downstream of the Structure, Looking Northwest.
Photograph No. 5: View of the East Embankment Upstream of the Structure, Looking Southeast.
Photograph No. 6: View of the East Embankment Downstream of the Structure, Looking East.
Photograph No. 7: View of Abutment 1, Looking Northwest (Note: Horizontal Cracking with Efflorescence).

Photograph No. 8: View of the West Face of Bent 2, Looking Northeast.

Photograph No. 9: View of the East Face of Bent 2, Looking Southwest.

Photograph No. 10: View of the West Face of Bent 3, Looking Northeast.

Photograph No. 11: View of the East Face of Bent 3, Looking Southwest.

Photograph No. 12: View of Section Loss at Pile "E" of Bent 3, Looking North.

Photograph No. 13: View of Abutment 4, Looking Southeast (Note: Horizontal Cracking with Efflorescence).

EXECUTIVE SUMMARY

Project: ODOT Underwater Bridge Inspections - 2017

Purpose of Project: To perform a detailed visual and tactile underwater investigation of bridges for District 11 of the Ohio Department of Transportation.

Inspection Team: Team Leader – Kurt Lingo, E.I.T. – Collins Engineers, Inc.
Team Member – Matthew Rogers, E.I.T. – Collins Engineers, Inc.
Team Member – John Strub – Collins Engineers, Inc.

Inspection Date(s): August 5, 2017

Water Visibility:	<1 ft	***Water Velocity:***	<1 ft/s
Water Temperature:	82 °F	***Weather:***	Sunny – 85 °F
Waterline Elevation:	91.4 ft	***Type of Boat:***	23 ft Carolina Skiff
Coordinates:	36.9426°N, 86.0287°W		
Access Location:	Public Boat Launch located just west of the structure.		
Dive Mode:	Surface Supplied Air		
Waterline Reference:	8.6 ft below the top of parapet at the downstream end of Bent 2.		
Maximum Depth at SSU:	6.5 ft – East face of Bent 3.		
Shoreline Conditions:	The west and east shorelines consisted of riprap approximately 2 to 3 feet diameter with no erosion observed.		

Summary of Findings:

- **Abutment 1:**
  - Horizontal hairline cracking with efflorescence was observed throughout the entire abutment.
- **Bent 2:**
  - The piles typically exhibited heavy corrosion with knife-edging on the flanges from 6 inches below to 6 inches above the waterline with up to 75 percent of cross section loss.
- **Bent 3:**
  - The piles typically exhibited heavy corrosion with knife-edging on the flanges from 6 inches below to 6 inches above the waterline with up to 75 percent of cross section loss.
  - Pile “E” exhibited areas of 100 percent section loss at the waterline in the web and flanges, approximately 1 inch high by 3 inches long.
- **Abutment 4:**
  - Horizontal hairline cracking with efflorescence was observed throughout the entire abutment.

Summary of Recommendations:

- Monitor area of poor concrete consolidation and spall on Pier 3.
- Monitor cracking with efflorescence at Abutments 1 and 4.
- Monitor corrosion / section loss on piles at Bents 2 and 3.
- Reinspect underwater in 24 months.

Underwater Inspection Coding:

NBI Ratings:

Item	Description	Coding	Condition
60	Substructure	4– Poor Condition	Cracking, Corrosion / Section Loss
61	Channel	7 – Good Condition	Riprap
62	Culvert	N/A	
92B	UW Insp. Frequency	24 Months	
93B	Previous Insp. Date	08 05 17	
113	Scour Critical Bridges	5 – Within Limits of Piles	Stable (Inspector Recommended)

AASHTO National Bridge Element (NBE) Ratings:

Element #	Description	Units	Total	Condition State			
				1	2	3	4
225	Steel Pile	EA	12	0	0	11	1
215	Reinforced Concrete Abutment	LF	80	0	80	0	0
220	Reinforced Concrete Pile Cap / Footing	LF	60	60	0	0	0

Note: Ratings were developed using the FHWA Recording and Coding Guide for the Structure Inventory and Appraisal of the Nation's Bridges. The recommended ratings consider inspected elements located within the waterway and conditions existing below the water surface only. Additional consideration is necessary for the assignment of overall condition ratings for this bridge.

1.0 INTRODUCTION

1.1 Purpose and Scope

This report consists of the results of a detailed underwater investigation performed at the SR 1 Bridge over Belmont Lake in Belmont County, OH. Collins Engineers, Inc. (Collins) conducted the underwater investigation for the Ohio Department of Transportation (ODOT) on July 20, 2017. The primary purpose of the investigation was as follows:

- Determine the condition of the substructure components located in the water at the time of the inspection from the waterline to the channel bottom.
- Obtain channel bottom depth measurements along the bridge fascias, upstream and downstream of the bridge, and around the submerged substructure units.
- Determine the condition of the shorelines in the vicinity of the structure.
- Obtain photographs of the bridge and any significant defects.

In addition, a brief inspection was made of areas that could be submerged during periods of high water. The following report includes a description of the structure, the method of investigation, a description of existing conditions, an evaluation and recommendations based on the conditions, inspection figures, and photographs.

1.2 General Description of the Structure

Structure No. BEL-001-0051 spans 73.0 ft, carrying SPRD 1 over Barkcamp Creek / Belmont Lake and is approximately 30.0 ft wide. The bridge superstructure is constructed of three continuous concrete slab spans. The roadway orientation of the longitudinal axis of the bridge is west to east. The substructure units are labeled as Abutment 1, Bents 2 and 3, and Abutment 4 from west to east. Existing design drawings were not available at the time of the inspection. Refer to Figure 1 in Exhibit 1 for a Location Map of the bridge. Refer to Photographs 1 and 2 in Exhibit 2 for overall views of the bridge.

1.3 Method of Investigation

A detailed field inspection was conducted to determine the physical condition of the submerged bridge substructure units from the waterline to the channel bottom. A brief visual examination of the substructure units above the waterline was also made.

A three-person team consisting of an engineer-diver and team leader (Kurt Lingo, E.I.T.) and two engineer divers (Matthew Rogers, E.I.T. and John Strub, E.I.T.) conducted the underwater inspection. The inspection was conducted using surface supplied air diving equipment. During the inspection, the inspectors worked from a boat and a note taker in the boat recorded the inspection notes.

The underwater inspection consisted of a visual and tactile examination of the accessible surfaces of the substructure units from the waterline to the channel bottom with particular attention given to any observed areas of deterioration or apparent distress. Approximately 10 percent of the total area on the underwater surfaces of the substructure units was cleaned so that the condition could be more closely examined. Photographs were taken to document the general conditions and observed deficiencies. Underwater Photographs could not be obtained due to poor water conditions. The type of channel bottom material, the presence or extent of scour, the presence or extent of riprap, the presence or extent of drift and debris, and the location of any foundation exposure or undermining were noted.

Channel bottom soundings were performed utilizing a telescoping survey rod and a digital fathometer. Soundings were collected at quarter points along the bridge centerline as well as 10 feet and 50 feet upstream and downstream of the bridge, parallel with its fascias. Additional soundings were collected adjacent to Bents 2 and 3 and at 10 feet intervals in-line with the piers, upstream and downstream, and the waterline was referenced to a known elevation on the bridge. A sounding plan was developed using the soundings and approximate location of the shorelines. Refer to Figures 2 through 5 in Exhibit 1 for the sounding plan and channel cross sections that show the channel limits and water depths around the structure.

2.0 EXISTING CONDITIONS

2.1 General Conditions

At the time of the inspection, the waterline of BEL-001-0051 was located approximately 8.6 ft below the top of parapet at the downstream end of Bent 2, which corresponds to a waterline elevation of 91.4 ft based off an assumed reference elevation of 100.0 ft. During the inspection, the waterway was flowing at less than 1 ft per second. The bridge pier skew was consistent with the channel alignment and does not require attention at this time. The west and east shorelines consisted of riprap approximately 2 to 3 feet diameter with no erosion observed. Refer to Photographs 3 through 6 in Exhibit 2 for views of the shorelines near the structure.

2.2 Substructure Conditions

2.2.1 Abutment 1

The channel bottom material around Abutment 1 consisted of riprap approximately 2 to 3 feet diameter with no probe rod penetration possible. Horizontal hairline cracking with efflorescence was observed throughout the entire abutment. Refer to Figure 6 in Exhibit 1 for detailed inspection notes of Abutment 1. Refer to Photograph 7 in Exhibit 2 for a view of Abutment 1.

2.2.2 Bent 2

The channel bottom material around Bent 2 consisted of riprap approximately 2 to 3 feet diameter with no probe rod penetration possible. The piles typically exhibited heavy corrosion with knife-edging on the flanges from 6 inches below to 6 inches above the waterline with up to 75 percent of cross section loss. Refer to Figure 7 in Exhibit 1 for detailed inspection notes of Bent 2. Refer to Photographs 8 and 9 in Exhibit 2 for views of Bent 2.

2.2.3 Bent 3

The channel bottom material around Bent 3 consisted of riprap approximately 2 to 3 feet diameter with no probe rod penetration possible. The piles typically exhibited heavy corrosion with knife-edging on the flanges from 6 inches below to 6 inches above the waterline with up to 75 percent of cross section loss. Pile "E" exhibited areas of 100 percent section loss at the waterline in the web and flanges, approximately 1 inch high by 3 inches long. Refer to Figure 8 in Exhibit 1 for detailed inspection notes of Bent 3. Refer to Photographs 10 through 12 in Exhibit 2 for views of Bent 3.

2.2.4 Abutment 4

The channel bottom material around Abutment 4 consisted of riprap approximately 2 to 3 feet diameter with no probe rod penetration possible. Horizontal hairline cracking with efflorescence was observed throughout the entire abutment. Refer to Figure 9 in Exhibit 1 for detailed inspection notes of Abutment 4. Refer to Photograph 13 in Exhibit 2 for a view of Abutment 4.

3.0 EVALUATION AND RECOMMENDATIONS

Overall, the inspected substructure units of Structure No. BEL-001-0051 were in fair condition. This was the first underwater inspection of this structure; therefore, the soundings taken during this inspection could not be compared to previous conditions. Since no design or as-built plans were available for the bridge, the

amount of embedment of the submerged substructure units in the channel bottom is unknown. As a result, the channel bottom configuration should continue to be monitored during future underwater inspections to ensure that localized scour or overall channel degradation is not occurring and that all submerged substructure units remain adequately embedded in the channel bottom. Design or as-built drawings for the bridge should be obtained and reviewed, if possible, prior to the next underwater inspection to determine the exact construction of the substructure units and their foundations.

The corrosion on the piles of Bents 2 and 3 is not a structural concern at this time, and as a result, no repairs are recommended. However, since design drawings were not available at the time of the inspection, the percentage of section loss due to corrosion is unknown. It is therefore recommended that the extent and severity of the corrosion be closely monitored during future inspections. Should the extent or severity of the corrosion progress, it may be necessary to repair the piles by cleaning the piles and installing wraps or encasements. It is also recommended that during future inspections the remaining thickness of the steel piles be measured with the use of an ultrasonic thickness measuring device.

The horizontal cracks at Abutments 1 and 4 are not structural concerns at this time. However, the cracks do provide a means for water infiltration and freeze-thaw damage. It is therefore recommended that these cracks be monitored during future underwater inspections. If further crack propagation or increased crack widths are observed, it may be necessary to repair the cracks by injection or patching with a repair material suitable for underwater applications.

It is recommended that the submerged substructure units of Structure No. BEL-001-0051 be next inspected underwater at an interval not to exceed 24 months, no later than August 5, 2019.

Respectfully Submitted,
COLLINS ENGINEERS, INC.



Joshua Johnson, P.E.
Project Manager/Team Leader

Originated by:
Jacob P. Green

EXHIBIT 1 – FIGURES



COLLINS ENGINEERS
124 Venture Court, Ste 10
Lexington, KY 40511
Phone: 859-367-0097
Fax: 859-367-0140

Ohio Department of
Transportation, District 11
2201 Reiser Avenue
New Philadelphia, OH 44663
Phone: 330-339-6633

NORTH FORK BARKCAMP CR/ BELMONT LAKE

STRUCTURE NO. BEL-001-0051

LOCATION MAP

BELMONT COUNTY, OHIO

INSPECTED BY: MOR	CEI PROJECT: 55–10356.00
DRAWN BY: DAJ	DATE: AUG 2017
CHECKED BY: JMJ	SHEET NO: 1

C:\USERS\DJORDAN\DESKTOP\TEMP\CURRENT\55-10356.00 ODOT\BEL-001-0051\BEL-001-0051 - DAJ.DWG8/29/2017 5:34:32 PM

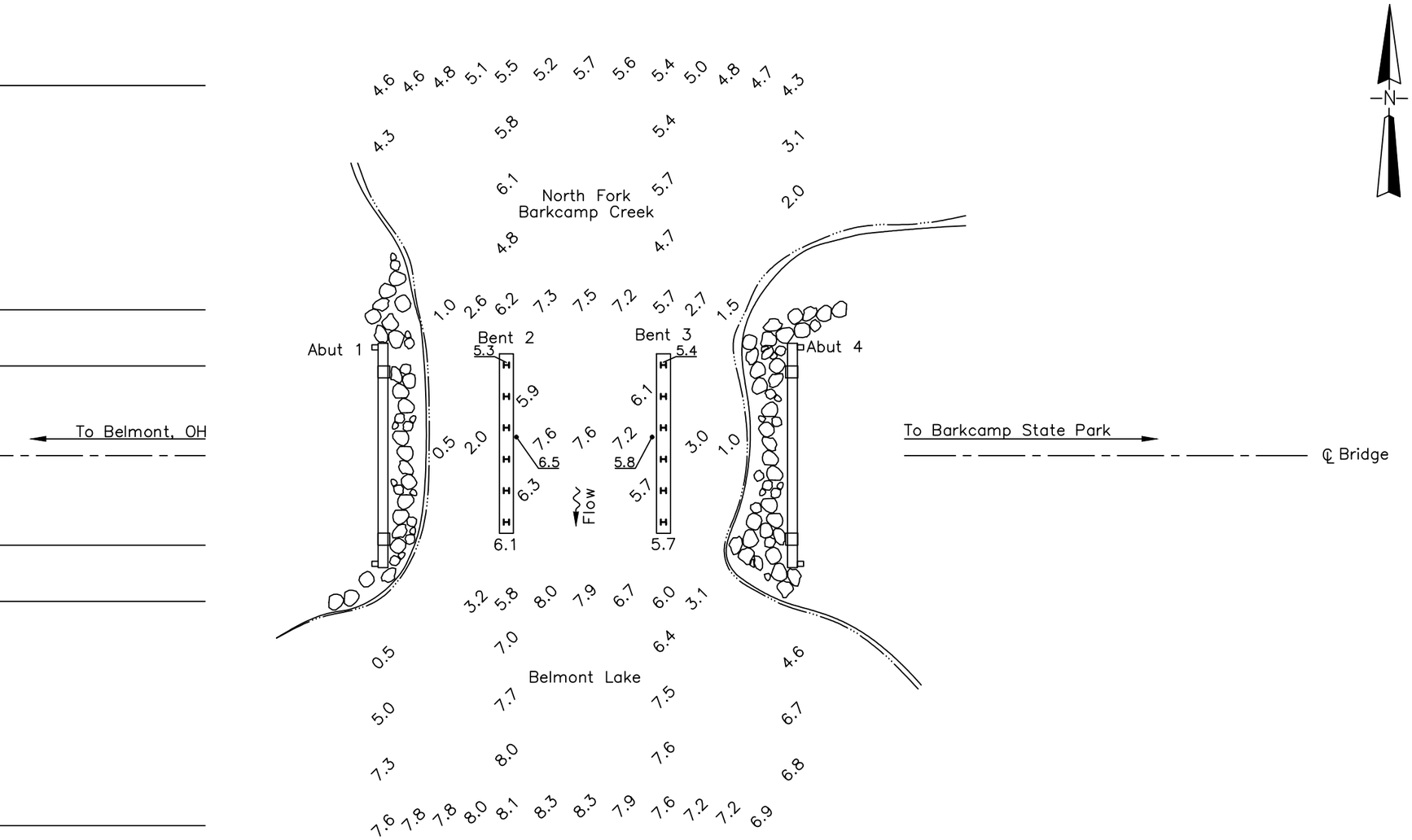

SOUNDING PLAN

GENERAL NOTES:

1. Bents 2 & 3 were inspected underwater. Substructure units are labeled according to available record drawings.
2. At the time of inspection on August 5, 2017, the waterline was located approximately 8.6 ft below the top of the parapet at downstream end of Bent 2 (Assumed EL. +100.0 ft). This corresponds with a waterline elevation of +91.4 ft.
3. Soundings indicate the water depth at the time of inspection and are measured in feet.
4. Soundings were collected at quarter points along the bridge as well as 10 feet and 50 feet upstream and downstream of the bridge, parallel with its fascias. Additional soundings were collected adjacent to Abutment 1 and Piers 2 and 3 and at 10 feet intervals in–line with the piers, upstream and downstream.

LEGEND

–2.7	Sounding Depth from Waterline (ft)
	Timber Debris

COLLINS ENGINEERS
124 Venture Court, Ste 10
Lexington, KY 40511
Phone: 859-367-0097
Fax: 859-367-0140

Ohio Department of Transportation, District 11
2201 Reiser Avenue
New Philadelphia, OH 44663
Phone: (330)-339-6633

NORTH FORK BARKCAMP CR/ BELMONT LAKE
STRUCTURE NO. BEL-001-0051
SOUNDING PLAN
BELMONT COUNTY, OHIO

CEI PROJECT 55–10356.00
INSPECTED BY: MOR
DRAWN BY: DAJ
CHECKED BY: JMJ
DATE: AUG 2017
SHEET NO: 2

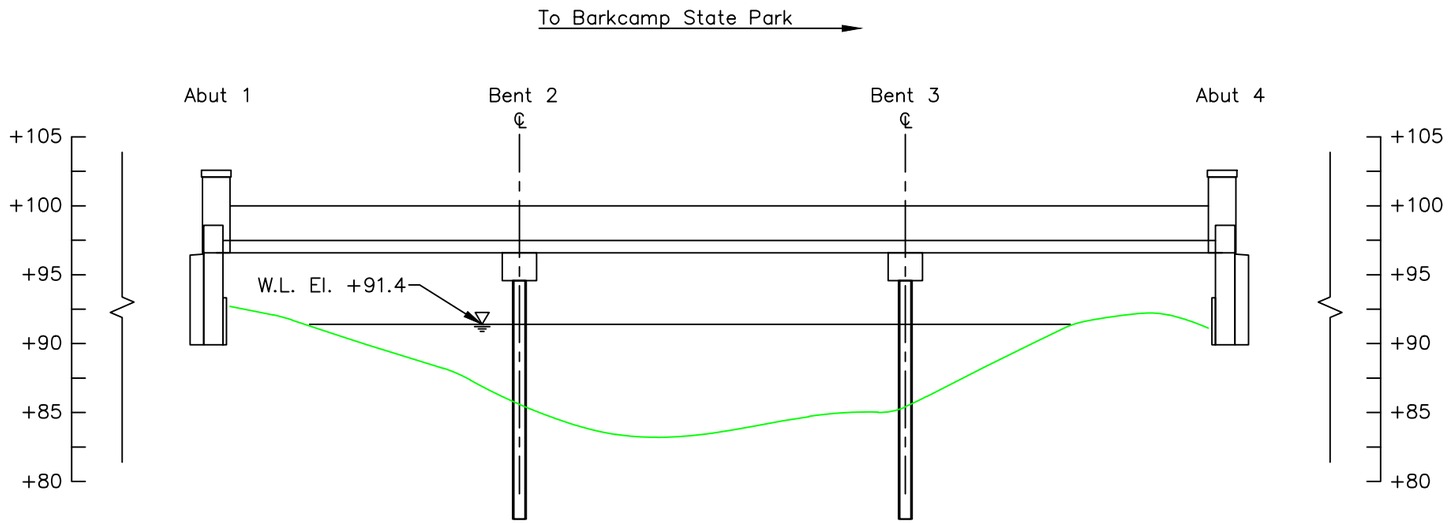

UPSTREAM FASCIA CROSS SECTION (LOOKING UPSTREAM)

Upstream Looking Upstream		
Location	X	Y
A1	0.0	5.4
1/4	5.5	6.4
1/2	11.0	6.7
3/4	16.5	6.7
B2	22.0	6.7
1/4	29.0	6.7
1/2	36.0	6.7
3/4	43.0	6.7
B3	50.0	6.7
1/4	55.8	6.7
1/2	61.5	6.5
3/4	67.3	5.9
A4	73.0	6.1

Note:

Footing elevations unknown due to unavailable record drawings.

LEGEND

- Approximate Channel Bottom – August 2017
- Approximate Channel Bottom – September 2012
- Approximate Channel Bottom – [No Data]
- Timber Debris
- Water Surface
- +450 Elevation (ft)

COLLINS ENGINEERS
124 Venture Court, Ste 10
Lexington, KY 40511
Phone: 859-367-0097
Fax: 859-367-0140

Ohio Department of Transportation, District 11
2201 Reiser Avenue
New Philadelphia, OH 44663
Phone: (330)-339-6633

NORTH FORK BARKCAMP CR/ BELMONT LAKE

STRUCTURE NO. BEL-001-0051

CROSS SECTIONS

BELMONT COUNTY, OHIO

CEI PROJECT 55–10356.00
INSPECTED BY: MOR
DRAWN BY: DAJ
CHECKED BY: JMJ
DATE: AUG 2017
SHEET NO: 3

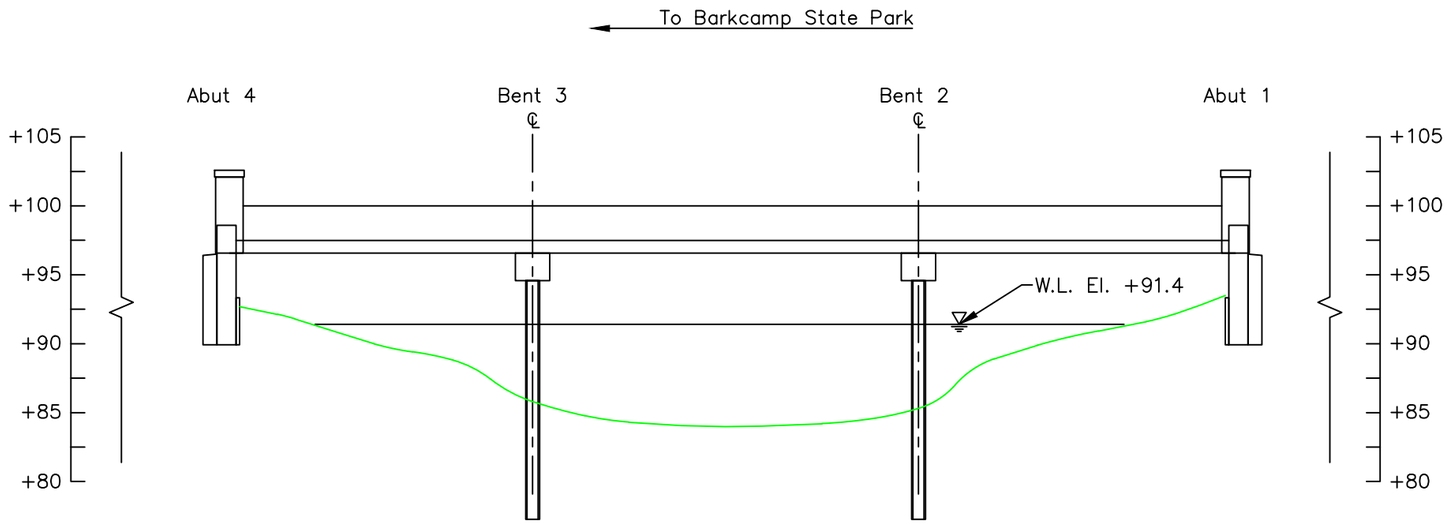

STRUCTURE CENTERLINE
CHANNEL CROSS SECTION
(LOOKING DOWNSTREAM)

Note:

Footing elevations unknown due to unavailable record drawings.

LEGEND

———	Approximate Channel Bottom – August 2017
----------	Approximate Channel Bottom – [No Data]
– – – – –	Approximate Channel Bottom – [No Data]
	Timber Debris
	Water Surface
+450	Elevation (ft)

COLLINS ENGINEERS
124 Venture Court, Ste 10
Lexington, KY 40511
Phone: 859-367-0097
Fax: 859-367-0140

Ohio Department of Transportation, District 11
2201 Reiser Avenue
New Philadelphia, OH 44663
Phone: (330)-339-6633

NORTH FORK BARKCAMP CR/ BELMONT LAKE

STRUCTURE NO. BEL-001-0051

CROSS SECTIONS

BELMONT COUNTY, OHIO

CEI PROJECT 55–10356.00
INSPECTED BY: MOR
DRAWN BY: DAJ
CHECKED BY: JMJ
DATE: AUG 2017
SHEET NO: 4

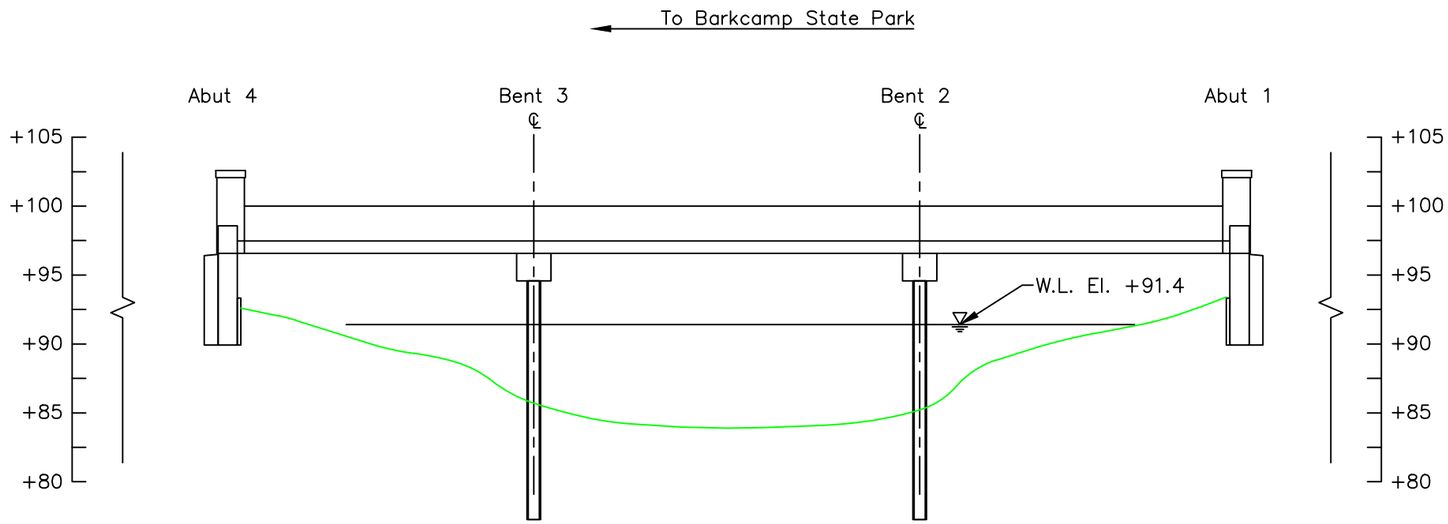

DOWNSTREAM FASCIA CROSS SECTION (LOOKING DOWNSTREAM)

Downstream Looking Downstream		
Location	X	Y
A4	0.0	5.0
3/4	5.5	5.9
1/2	11.0	6.3
1/4	16.5	6.3
B3	22.0	6.3
3/4	29.0	6.2
1/2	36.0	6.1
1/4	43.0	6.1
B2	50.0	6.1
3/4	55.8	6.1
1/2	61.5	6.1
1/4	67.3	6.1
A1	73.0	4.2

Note:

Footing elevations unknown due to unavailable record drawings.

LEGEND

- Approximate Channel Bottom – August 2017
- Approximate Channel Bottom – September 2012
- Approximate Channel Bottom – [No Data]
- Timber Debris
- Water Surface
- +450 Elevation (ft)

COLLINS ENGINEERS
124 Venture Court, Ste 10
Lexington, KY 40511
Phone: 859-367-0097
Fax: 859-367-0140

Ohio Department of Transportation, District 11
2201 Reiser Avenue
New Philadelphia, OH 44663
Phone: (330)-339-6633

NORTH FORK BARKCAMP CR/ BELMONT LAKE

STRUCTURE NO. BEL-001-0051

CROSS SECTIONS

BELMONT COUNTY, OHIO

CEI PROJECT 55-10356.00
INSPECTED BY: MOR
DRAWN BY: DAJ
CHECKED BY: JMJ
DATE: AUG 2017
SHEET NO: 5

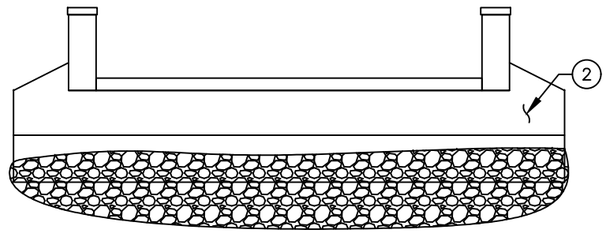

EAST ELEVATION– ABUTMENT 1

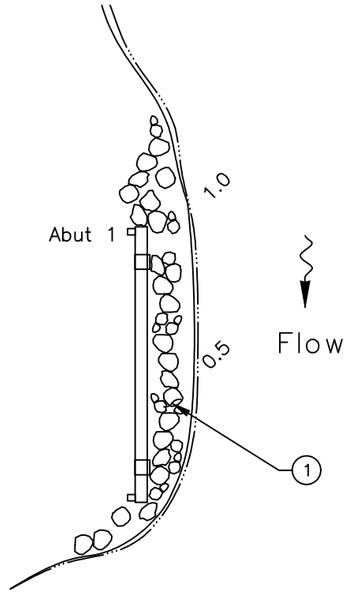

PLAN – ABUTMENT 1

INSPECTION NOTES:

(1) The channel bottom material around Abutment 1 consisted of riprap approximately 2–3 Ft. diameter with no prob rod penetration possible.

(2) Horizontal hairline cracking with efflorescence was observed throughout the entire abutment.

LEGEND

–2.7	Sounding Depth from Waterline (ft)
———	Approximate Channel Bottom – August 2017
	Timber Debris
	Water Surface

COLLINS ENGINEERS
124 Venture Court, Ste 10
Lexington, KY 40511
Phone: 859-367-0097
Fax: 859-367-0140

Ohio Department of Transportation, District 11
2201 Reiser Avenue
New Philadelphia, OH 44663
Phone: (330)-339-6633

NORTH FORK BARKCAMP CR/ BELMONT LAKE
STRUCTURE NO. BEL-001-0051
ABUTMENT 1
BELMONT COUNTY, OHIO

CEI PROJECT 55–10356.00
INSPECTED BY: MOR
DRAWN BY: DAJ
CHECKED BY: JMJ
DATE: AUG 2017
SHEET NO: 6

C:\USERS\DJORDAN\DESKTOP\TEMP\CURRENT\55-10356.00 ODOT\BEL-001-0051\BEL-001-0051 - DAJ.DWG8/30/2017 6:29:18 PM

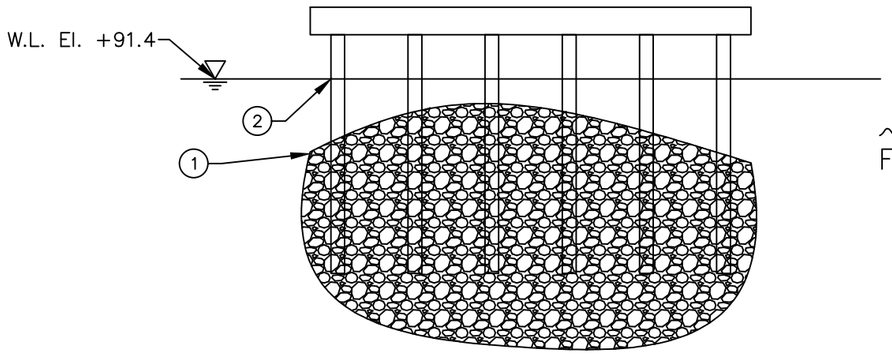

WEST ELEVATION – BENT 2

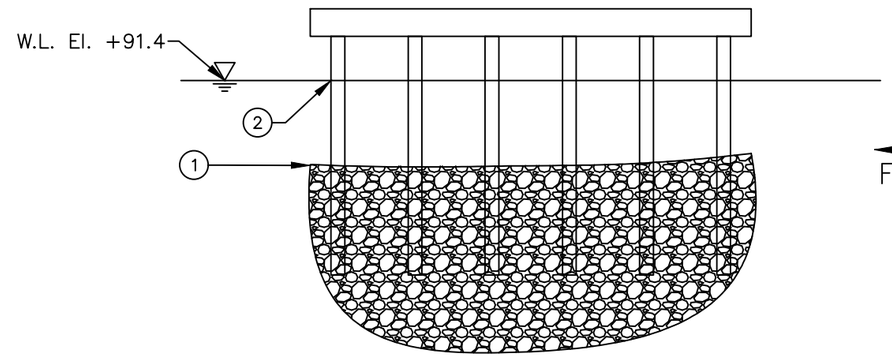

EAST ELEVATION – BENT 2

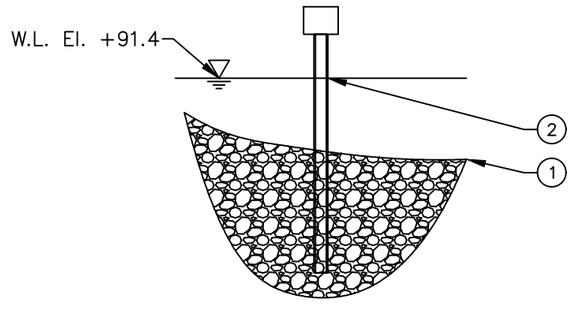

UPSTREAM ELEVATION – BENT 2

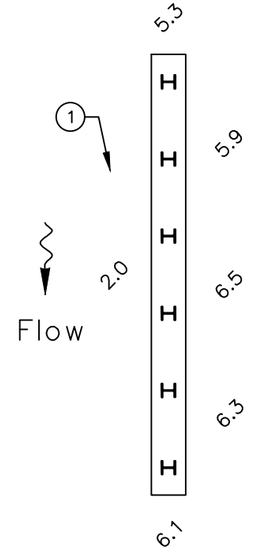

PLAN – BENT 2

INSPECTION NOTES:

(1) The channel bottom material around Bent 2 consisted of riprap approximately 2 to 3 feet diameter with no rod penetration possible.

(2) The H–piles typically exhibited heavy corrosion with knife–edging on the flanges from 6 inches below to 6 inches above the waterline with up to 75% of cross section loss.

LEGEND

–2.7	Sounding Depth from Waterline (ft)
———	Approximate Channel Bottom – August 2017
	Timber Debris
	Water Surface

COLLINS ENGINEERS
124 Venture Court, Ste 10
Lexington, KY 40511
Phone: 859-367-0097
Fax: 859-367-0140

Ohio Department of Transportation, District 11
2201 Reiser Avenue
New Philadelphia, OH 44663
Phone: (330)-339-6633

NORTH FORK BARKCAMP CR/ BELMONT LAKE

STRUCTURE NO. BEL-001-0051

BENT 2

BELMONT COUNTY, OHIO

CEI PROJECT 55–10356.00
INSPECTED BY: MOR
DRAWN BY: DAJ
CHECKED BY: JMJ
DATE: AUG 2017
SHEET NO: 7

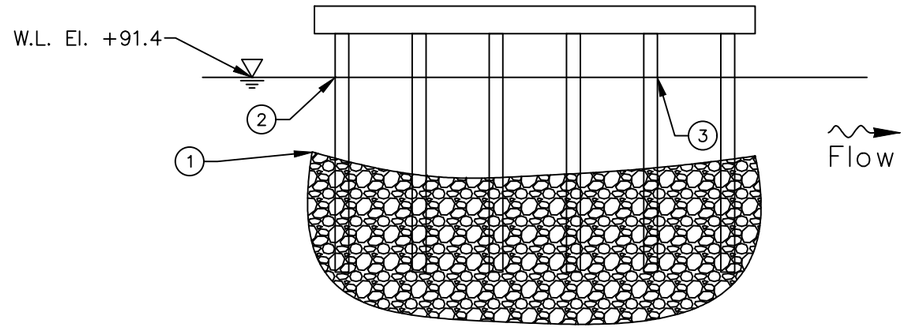

WEST ELEVATION – BENT 3

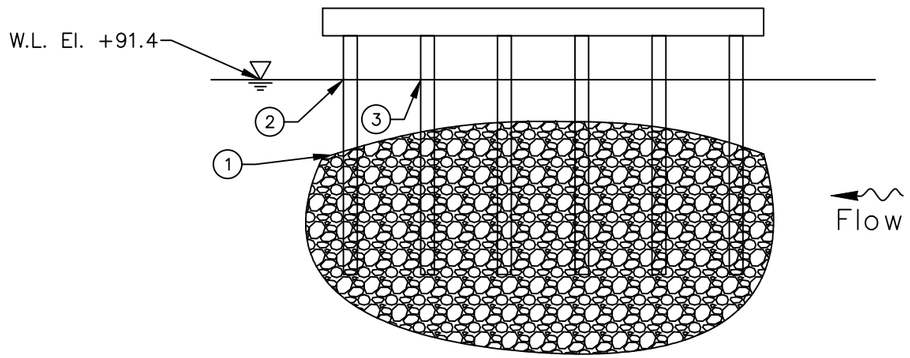

EAST ELEVATION – BENT 3

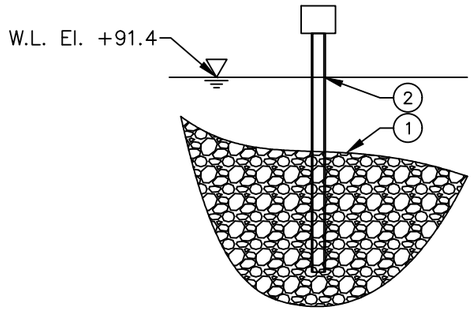

UPSTREAM ELEVATION – BENT 3

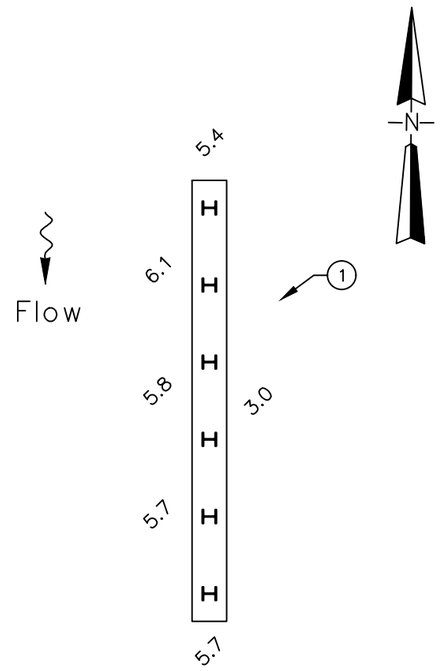

PLAN – BENT 3

INSPECTION NOTES:

1. The channel bottom material around Bent 2 consisted of riprap approximately 2 to 3 feet diameter with no rod penetration possible.
2. The H–piles typically exhibited heavy corrosion with knife–edging on the flanges from 6 inches below to 6 inches above the waterline with up to 75% of cross section loss.
3. Pile "E" exhibited areas of 100 percent section loss at the waterline in the web and flanges, approximately 1 inch by 3 inches long.

LEGEND

–2.7	Sounding Depth from Waterline (ft)
———	Approximate Channel Bottom – August 2017
	Timber Debris
	Water Surface

COLLINS ENGINEERS
124 Venture Court, Ste 10
Lexington, KY 40511
Phone: 859-367-0097
Fax: 859-367-0140

Ohio Department of Transportation, District 11
2201 Reiser Avenue
New Philadelphia, OH 44663
Phone: (330)-339-6633

NORTH FORK BARKCAMP CR/ BELMONT LAKE
STRUCTURE NO. BEL-001-0051
BENT 3
BELMONT COUNTY, OHIO

CEI PROJECT 55–10356.00
INSPECTED BY: MOR
DRAWN BY: DAJ
CHECKED BY: JMJ
DATE: AUG 2017
SHEET NO: 8

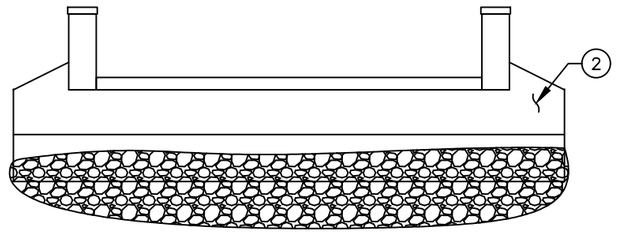

WEST ELEVATION– ABUTMENT 4

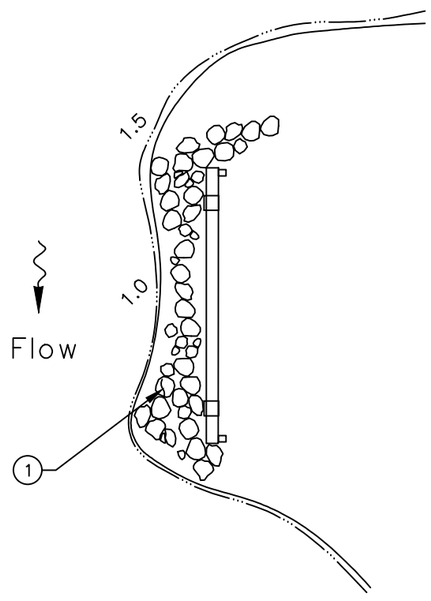

PLAN – ABUTMENT 4

INSPECTION NOTES:

1. The channel bottom material around Abutment 1 consisted of riprap approximately 2–3 Ft. diameter with no prob rod penetration possible.
2. Horizontal hairline cracking with efflorescence was observed throughout the entire abutment.

LEGEND

–2.7	Sounding Depth from Waterline (ft)
———	Approximate Channel Bottom – August 2017
	Timber Debris
	Water Surface

COLLINS ENGINEERS
124 Venture Court, Ste 10
Lexington, KY 40511
Phone: 859-367-0097
Fax: 859-367-0140

Ohio Department of Transportation, District 11
2201 Reiser Avenue
New Philadelphia, OH 44663
Phone: (330)-339-6633

NORTH FORK BARKCAMP CR/ BELMONT LAKE
STRUCTURE NO. BEL-001-0051
ABUTMENT 4
BELMONT COUNTY, OHIO

CEI PROJECT 55–10356.00
INSPECTED BY: MOR
DRAWN BY: DAJ
CHECKED BY: JMJ
DATE: AUG 2017
SHEET NO: 9

EXHIBIT 2 – INSPECTION PHOTOGRAPHS



Photograph No. 1: Overall View of Structure No. BEL-001-0051, Looking North.



Photograph No. 2: Overall View of Structure No. BEL-001-0051, Looking Southwest.



Photograph No. 3: View of the West Embankment Upstream of the Structure, Looking Southwest.



Photograph No. 4: View of the West Embankment Downstream of the Structure, Looking Northwest.



Photograph No. 5: View of the East Embankment Upstream of the Structure, Looking Southeast.



Photograph No. 6: View of the East Embankment Downstream of the Structure, Looking East.



Photograph No. 7: View of Abutment 1, Looking Northwest (Note: Horizontal Cracking with Efflorescence).



Photograph No. 8: View of the West Face of Bent 2, Looking Northeast.



Photograph No. 9: View of the East Face of Bent 2, Looking Southwest.



Photograph No. 10: View of the West Face of Bent 3, Looking Northeast.



Photograph No. 11: View of the East Face of Bent 3, Looking Southwest.

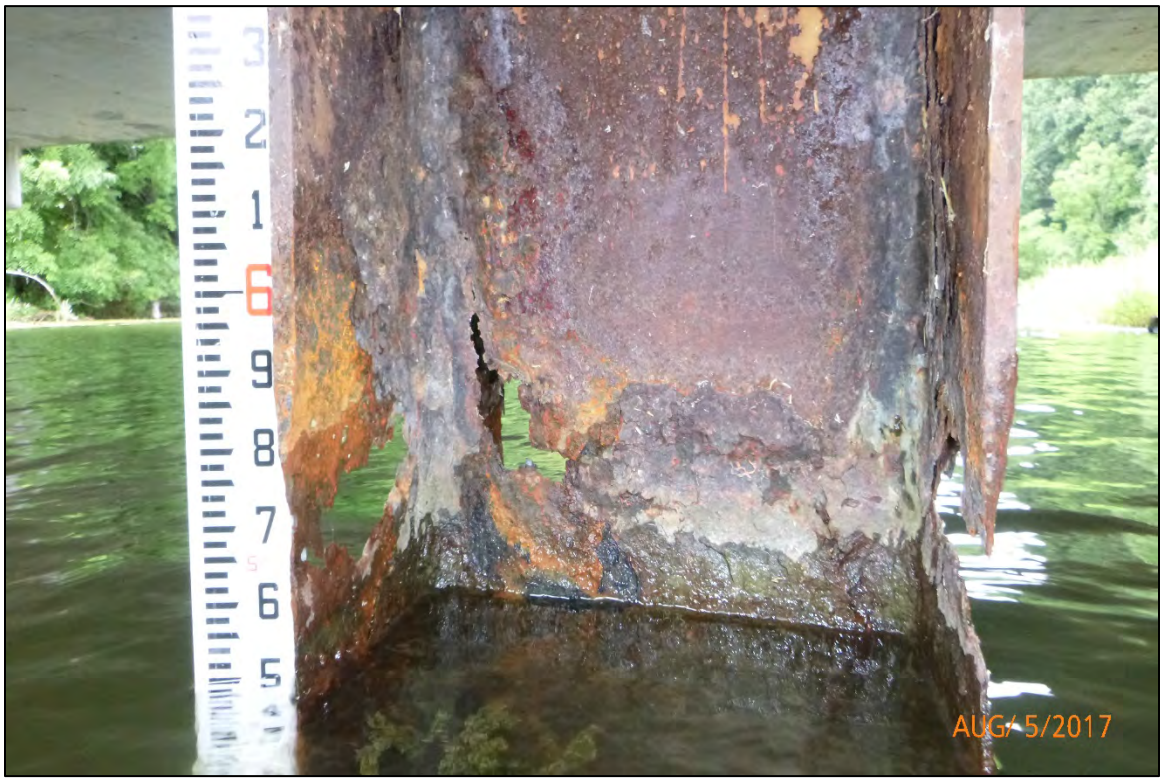

Photograph No. 12: View of Section Loss at Pile “E” of Bent 3, Looking North.



Photograph No. 13: View of Abutment 4, Looking Southeast (Note: Horizontal Cracking with Efflorescence).