







UNDERWATER BRIDGE INSPECTION REPORT

STRUCTURE NO. CAR-183-0790
SR 183 OVER BIG SANDY CREEK
CARROLL COUNTY, OH
DISTRICT 11

July 2017

Prepared for:

STATE OF OHIO DEPARTMENT OF TRANSPORTATION

STATE OF OHIO
JOSHUA M. JOHNSON
E-76141
1/11/18
REGISTERED PROFESSIONAL ENGINEER

Prepared by:

COLLINS ENGINEERS INC.

124 Venture Court, Suite 10

Lexington, Kentucky 40511

859.367.0097 • www.collinsengr.com

TABLE OF CONTENTS

EXECUTIVE SUMMARY
1.0 INTRODUCTION 1
1.1 Purpose and Scope 1
1.2 General Description of the Structure 1
1.3 Method of Investigation 1
2.0 EXISTING CONDITIONS 2
2.1 General Conditions 2
2.2 Substructure Conditions 3
2.2.1 Pier 2 3
2.2.2 Pier 3 3
3.0 EVALUATION AND RECOMMENDATIONS 4
EXHIBIT 1 – FIGURES 5
LOCATION MAP
SOUNDING PLAN
UPSTREAM CHANNEL CROSS SECTIONS
CENTERLINE CHANNEL CROSS SECTIONS
DOWNSTREAM CHANNEL CROSS SECTIONS
PIER 2
PIER 3
EXHIBIT 2 – INSPECTION PHOTOGRAPHS 13
Photograph No. 1: Overall View of CAR-183-0790, Looking Southwest.
Photograph No. 2: Overall View of CAR-183-0790, Looking Northeast.
Photograph No. 3: View of North Shoreline, Downstream of Bridge, Looking Northwest.
Photograph No. 4: View of North Shoreline, Downstream of Bridge, Looking North.
Photograph No. 5: View of North Shoreline, Upstream of Structure, Looking Northeast.
Photograph No. 6: View of South Shoreline, Upstream of Structure, Looking Southeast.
Photograph No. 7: View of South Shoreline, Downstream of Structure, Looking Southwest.
Photograph No. 8: View of South Shoreline at Bridge Centerline, Looking Southeast.
Photograph No. 9: View of Pier 2, Looking Northeast.
Photograph No. 10: View of Pier 2, Looking Southwest.
Photograph No. 11: Spall with Exposed Reinforced Steel at Downstream End of Pier 2, Looking East.

Photograph No. 12: View of Spall with Exposed Reinforced Steel at Upstream End of Pier 2, Looking North.
Photograph No. 13: Typical Concrete at Waterline at South Face Pier 2, Looking North.
Photograph No. 14: View of Pier 3, Looking Northeast.
Photograph No. 15: View of Spall with Exposed Reinforced Steel in Cap at Upstream End of Pier 3, Looking Northwest.
Photograph No. 16: View of Pier 3, Looking Southwest.
Photograph No. 17: View of Timber Debris at Upstream End of Pier 3, Looking Southwest.

EXECUTIVE SUMMARY

Project: ODOT District 11 Underwater Bridge Inspections - 2017

Purpose of Project: To perform a detailed visual and tactile underwater investigation of scour critical bridges for District 11 of the Ohio Department of Transportation.

Inspection Team: Team Leader – Matthew Rogers, E.I.T. – Collins Engineers, Inc.
Team Member – Gregory Desing, P.E. – Collins Engineers, Inc.
Team Member – Jacob Green – Collins Engineers, Inc.

Inspection Date(s): July 11, 2017

Water Visibility:	0 ft	***Water Velocity:***	1 ft/s
Water Temperature:	70 °F	***Weather:***	Partly Cloudy – 82 °F
Waterline Elevation:	89.9 ft	***Type of Boat:***	N/A
Coordinates:	36.9426°N, 86.0287°W		
Access Location:	South Embankment.		
Dive Mode:	Wading		
Waterline Reference:	Downstream Nose at Pier 1, Top of Pier.		
Maximum Depth at SSU:	8.1 ft – 50 ft Downstream First Quarter between Piers 2 and 3		
Shoreline Conditions:	The north and south shorelines consisted of heavily vegetated mild to moderate slopes with minor erosion. Shorelines densely forested with numerous trees leaning toward the channel.		

Summary of Findings:

- **Pier 2:**
  - The channel bottom material consisted of rip-rap up to 2 in. in diameter with sand and silt in-fill.
  - The submerged portions of the pier had light scaling up to ¼ in. diameter. The scaling extends 2 ft from 2 ft below the waterline to the channel bottom.
  - A spall was observed measuring approximately 3 ft vertical by 1 ft horizontal by 2 in. deep with 3 exposed bars and light surface corrosion.
  - A spall was observed measuring approximately 1 ft vertical by 1 ft horizontal by 2 in. deep with 1 exposed bar and light surface corrosion.
- **Pier 3:**
  - The channel bottom material consisted of rip-rap up to 2 in. in diameter with sand and silt in-fill.
  - The submerged portions of the pier had light scaling up to ¼ in. diameter. The scaling extends 2 ft from 2 ft below the waterline to the channel bottom.
  - A spall was observed measuring approximately 3.5 ft vertically by 18 in. horizontally by 2 in. deep with 1 exposed bar and delamination.

- Light timber debris accumulation consisting of logs and branches up to 2 ft diameter extends from the upstream quarter point along the north face, around the upstream nose and along the entire south face extends from the channel bottom to 2 ft above the waterline.

Summary of Recommendations:

- Monitor timber debris accumulation at Pier 3.
- Monitor scaling on Piers 2 and 3.

Underwater Inspection Coding:

NBI Ratings:

Item	Description	Coding	Condition
60	Substructure	6 – Satisfactory Condition	Spalls, Light Concrete Scaling
61	Channel	6 – Satisfactory Condition	Minor Erosion, Timber Debris Accumulation
92B	UW Insp. Frequency	60 Months	
93B	Insp. Date	07/11/17	
113	Scour Critical Bridges	8 – Above Foundation Limits	Stable (Inspector Recommended)

AASHTO National Bridge Element (NBE) Ratings:

Element #	Description	Units	Total	Condition State			
				1	2	3	4
210	Reinforced Concrete Pier Wall	LF	70.0	70.0	0	0	0

Note: Ratings were developed using the FHWA Recording and Coding Guide for the Structure Inventory and Appraisal of the Nation's Bridges. The recommended ratings consider inspected elements located within the waterway and conditions existing below the water surface only. Additional consideration is necessary for the assignment of overall condition ratings for this bridge.

1.0 INTRODUCTION

1.1 Purpose and Scope

This report consists of the results of a detailed underwater investigation performed at the SR 183 Bridge over Big Sandy Creek in Carroll County, OH. Collins Engineers, Inc. (Collins) conducted the underwater investigation for the Ohio Department of Transportation (ODOT) on July 11, 2017. The primary purpose of the investigation was as follows:

- Determine the condition of the substructure components located in the water at the time of the inspection from the waterline to the channel bottom.
- Obtain channel bottom depth measurements along the bridge fascias, upstream and downstream of the bridge, and around the submerged substructure units.
- Determine the condition of the shorelines in the vicinity of the structure.
- Obtain photographs of the bridge and any significant defects.

In addition, a brief inspection was made of areas that could be submerged during periods of high water. The following report includes a description of the structure, the method of investigation, a description of existing conditions, an evaluation and recommendations based on the conditions, inspection figures, and photographs.

1.2 General Description of the Structure

Structure No. CAR-183-0790 spans 201.36 ft, carrying SR 183 over Big Sandy Creek and is approximately 35.0 ft wide. The bridge superstructure is constructed of three steel multi-beam spans. The roadway orientation of the longitudinal axis of the bridge is south to north. The substructure units are labeled as Abutments 1 and 4 and Piers 2 through 3. Existing design drawings were not available at the time of the inspection. Refer to Figure 1 in Exhibit 1 for a Location Map of the bridge. Refer to Photographs 1 and 2 in Exhibit 2 for overall views of the bridge.

1.3 Method of Investigation

A detailed field inspection was conducted to determine the physical condition of the submerged bridge substructure units from the waterline to the channel bottom. A brief visual examination of the substructure units above the waterline was also made.

A three-person team consisting of an engineer-diver and team leader (Matthew Rogers, E.I.T.), a professional engineer-diver (Gregory Desing, P.E.) and a commercial diver (Jacob Green) conducted the underwater inspection. The inspection was conducted through wading. During the inspection, the inspectors worked from the shore and a note taker on the shore recorded the inspection notes.

The underwater inspection consisted of a visual and tactile examination of the accessible surfaces of the substructure units from the waterline to the channel bottom with particular attention given to any observed areas of deterioration or apparent distress. Approximately 10 percent of the total area on the underwater surfaces of the substructure units was cleaned so that the condition could be more closely examined. Photographs were taken to document the general conditions and observed deficiencies. Underwater photographs could not be obtained due to poor water conditions. The type of channel bottom material, the presence or extent of scour, the presence or extent of riprap, the presence or extent of drift and debris, and the location of any foundation exposure or undermining were noted.

Channel bottom soundings were performed utilizing a telescoping survey rod. Soundings were collected at quarter points along the bridge centerline as well as along the upstream and downstream fascias and 50 feet upstream and downstream of the bridge, parallel with its fascias. Additional soundings were collected adjacent to Piers 2 and 3 and at 10 feet intervals in-line with the piers, upstream and downstream. The waterline was referenced to a known elevation on the bridge. A sounding plan was developed using the soundings and approximate location of the shorelines. Refer to Figures 1 through 4 in Exhibit 1 for the sounding plan and channel cross sections that show the channel limits and water depths around the structure.

2.0 EXISTING CONDITIONS

2.1 General Conditions

At the time of the inspection, the waterline of CAR-183-0790 was located approximately 10.1 ft below the top of the downstream nose at pier 1, which corresponds to an assumed waterline elevation of 89.9 ft. During the inspection, the waterway was flowing at approximately 1 ft per second. The bridge pier skew was consistent with the channel alignment and does not require attention at this time. Shorelines moderately to heavily vegetated with several trees leaning toward the channel. Refer to Photographs 3 through 8 in Exhibit 2 for views of the shorelines near the structure.

2.2 Substructure Conditions

2.2.1 Pier 2

The channel bottom material consisted of rip-rap up to 2 in. in diameter with sand and silt in-fill. The submerged portions of the pier had light scaling up to ¼ in. diameter. The scaling extends 2 ft from 2 ft below the waterline to the channel bottom. A spall was observed measuring approximately 3 ft vertical by 1 ft horizontal by 3 in. deep with 3 exposed bars and light surface corrosion. Refer to Figure 6 in Exhibit 1 for detailed inspection notes of Pier 2. Refer to Photographs 9 through 13 in Exhibit 2 for views of Pier 2 and typical concrete condition at the waterline.

2.2.2 Pier 3

The channel bottom material consisted of rip-rap up to 2 in. in diameter with sand and silt in-fill. The submerged portions of the pier had light scaling up to ¼ in. diameter. The scaling extends 2 ft from 2 ft below the waterline to the channel bottom. A spall was observed measuring approximately 3.5 ft vertically by 18 in. horizontally by 2 in. deep with 1 exposed bar and delamination. Light timber debris accumulation consisting of logs and branches up to 2 ft diameter extends from the upstream quarter point along the north face, around the upstream nose and along the entire south face extends from channel bottom to 2 ft above the waterline. Refer to Figure 7 in Exhibit 1 for detailed inspection notes of Pier 2. Refer to Photographs 14 through 17 in Exhibit 2 for views of Pier 2 and typical concrete condition at the waterline.

3.0 EVALUATION AND RECOMMENDATIONS

Overall, the inspected substructure piers of Structure No. CAR-183-0790 were in good condition. A comparison of the soundings recorded during the previous inspection on September 24, 2012 and the soundings taken during this inspection revealed no significant change in the channel bottom profile in the vicinity of the structure. Although no channel deficiencies were observed, the channel bottom should continue to be monitored during future underwater inspections to verify that localized scour or overall channel degradation is not occurring and that the pier footings remain adequately embedded in the channel bottom.

It is recommended that the submerged substructure units of Structure No. CAR-183-0790 be next inspected underwater at an interval not to exceed 60 months, no later than July 11, 2022.

Respectfully Submitted,
COLLINS ENGINEERS, INC.

Joshua Johnson, P.E.
Project Manager/Team Leader

Originated by:
Matthew Rogers, E.I.T.

EXHIBIT 1 – FIGURES

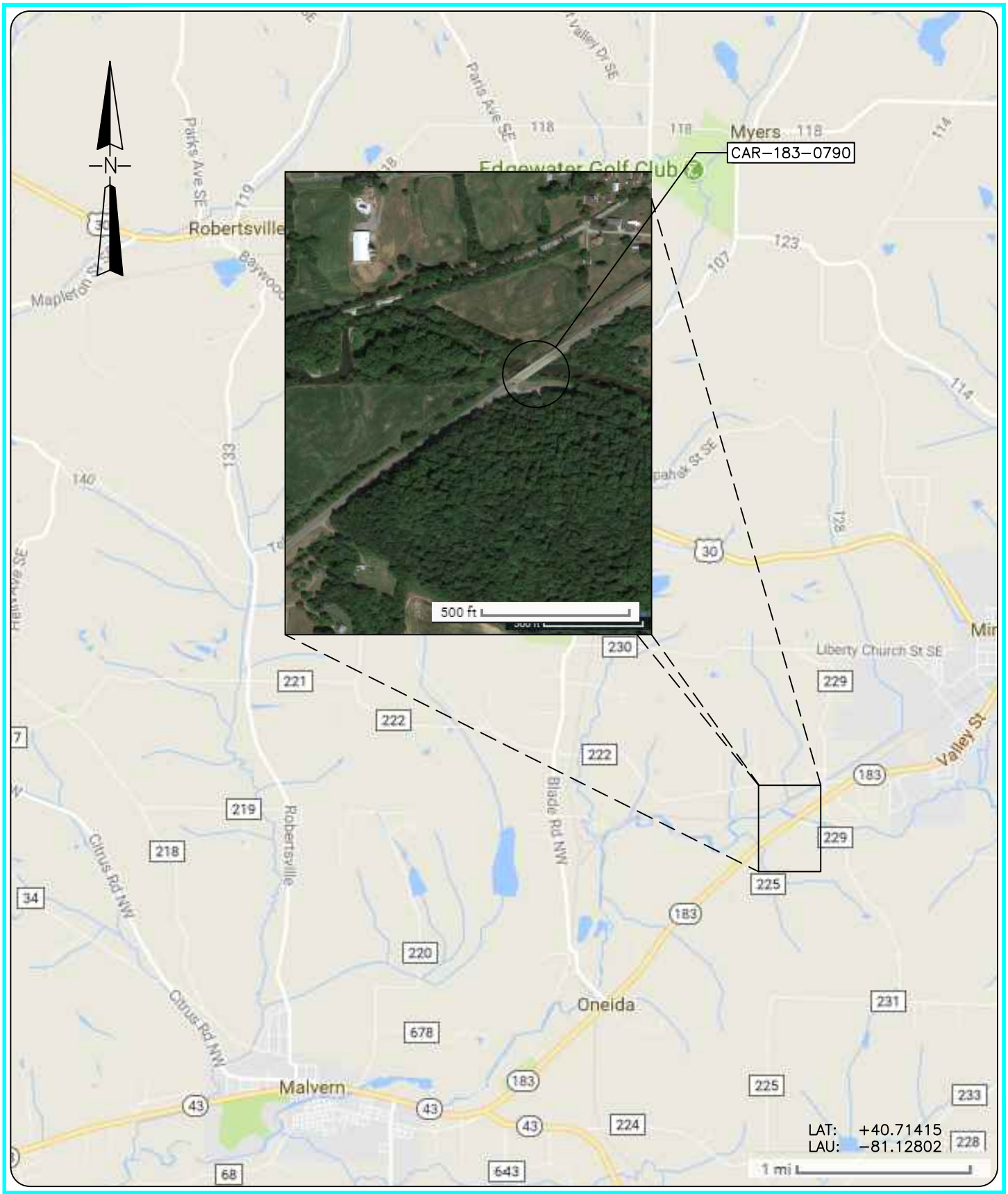

COLLINS ENGINEERS
124 Venture Court, Ste 10
Lexington, KY 40511
Phone: 859-367-0097
Fax: 859-367-0140

Ohio Department of Transportation, District 11
2201 Reiser Avenue
New Philadelphia, OH
44663
Phone: 330-339-6633

SR 183 OVER BIG SANDY CREEK
STRUCTURE NO. CAR-183-0790
LOCATION MAP

CARROLL COUNTY, OHIO

INSPECTED BY: JPG	CEI PROJECT: 55–10356.00
DRAWN BY: KMM	DATE: 11 JUL 2017
CHECKED BY: JMJ	SHEET NO: 1

\\10.1.8.42\NNVA\KY OFFICE TEMP\PROJECTS\WORKGROUP\55 - LEXINGTON\55-10356.00 - ODOT D11 UNDERWATER\ENGINEERING\DRAWINGS\CAR-183-0790.DWG9/11/2017 2:12:34 PM

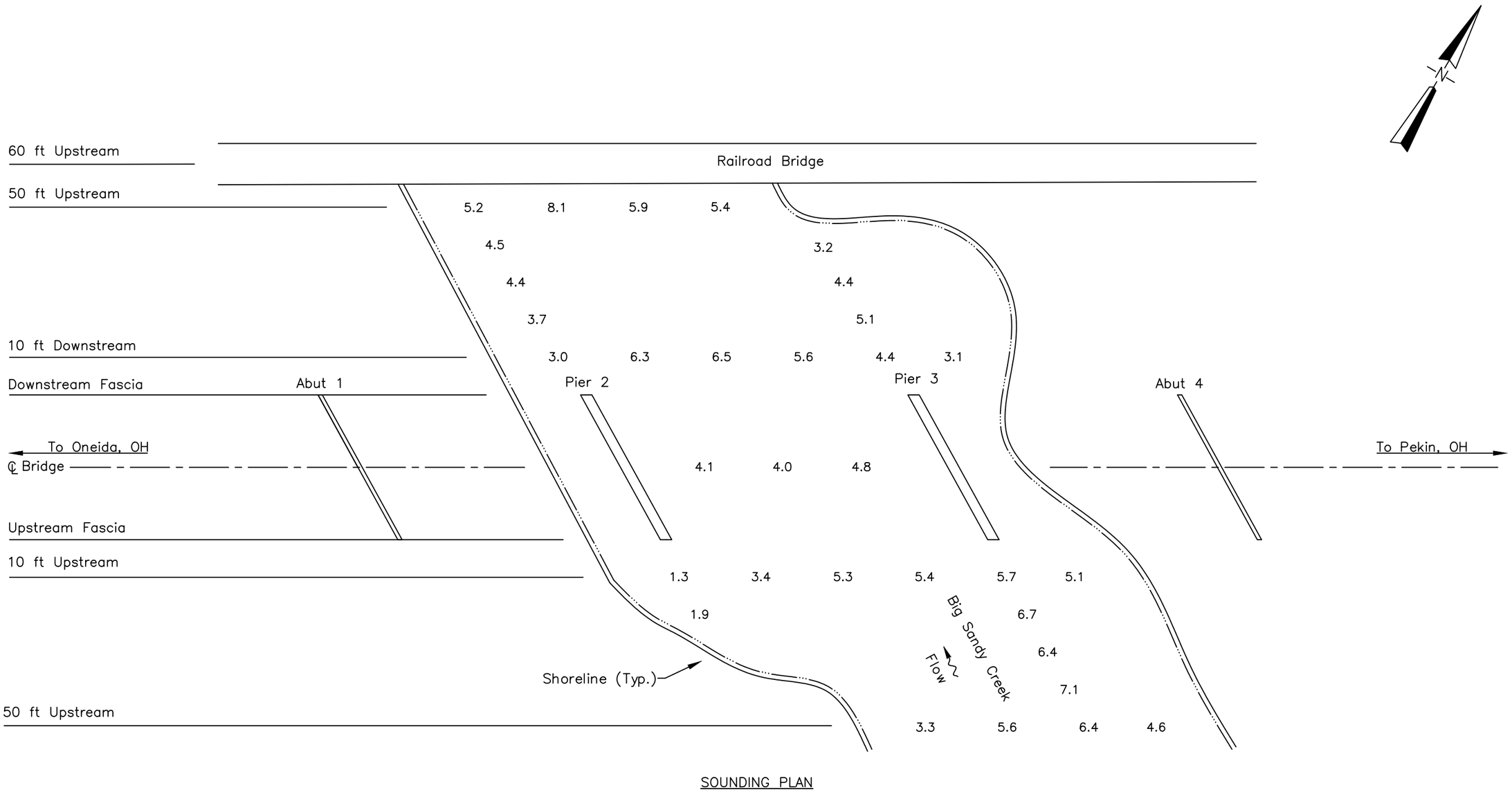

SOUNDING PLAN

GENERAL NOTES:

1. Piers 2 and 3 were inspected underwater. Substructure units are labeled according to available record drawings.
2. At the time of inspection on July 11, 2017, the waterline was located approximately 10.1 ft below Top of Cap at downstream nose of Pier 2 (Assumed EL. +100.0 ft). This corresponds with a waterline elevation of +89.9 ft.
3. Soundings indicate the water depth at the time of inspection and are measured in feet.
4. Soundings were taken parallel to the bridge at the upstream and downstream fascias, at 50 ft upstream and donwstream of the fascias, at 1/4 point intervals between the substructure units, and at 10 ft intervals in–line with the piers upstream and downstream up to 50 ft.

LEGEND

2.7 Sounding Depth from Waterline (ft)

Timber Debris

COLLINS ENGINEERS
124 Venture Court, Ste 10
Lexington, KY 40511
Phone: 859-367-0097
Fax: 859-367-0140

Ohio Department of Transportation, District 11
2201 Reiser Avenue
New Philadelphia, OH 44663
Phone: 330-339-6633

SR 183 OVER BIG SANDY CREEK
STRUCTURE NO. CAR-183-0790
SOUNDING PLAN
CARROLL COUNTY, OHIO

CEI PROJECT 55–10356.00
INSPECTED BY: JPG
DRAWN BY: KMM
CHECKED BY: JMJ
DATE: JUL 2017
SHEET NO: 2

Upstream Looking Downstream		
LOCATION	X	Y
A1	0.0	4.0
1/4	16.0	7.5
1/2	32.0	14.7
3/4	48.0	14.4
P2	64.0	14.2
1/4	82.8	14.2
1/2	101.5	14.0
3/4	120.3	14.0
P3	139.0	14.1
1/4	154.3	14.0
1/2	169.5	11.1
3/4	184.8	8.0
A4	200.0	5.2

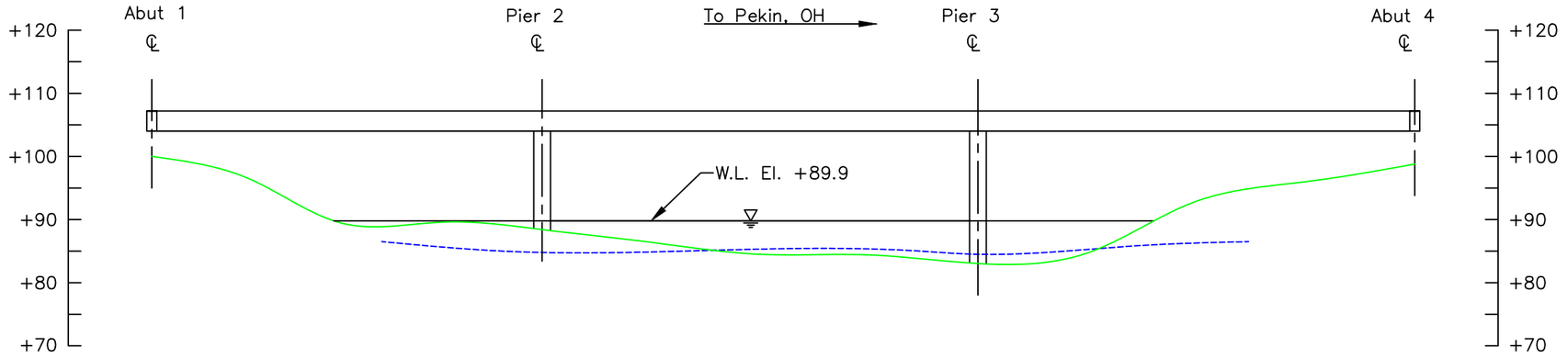

STRUCTURE UPSTREAM
FASCIA CROSS SECTION
(LOOKING DOWNSTREAM)

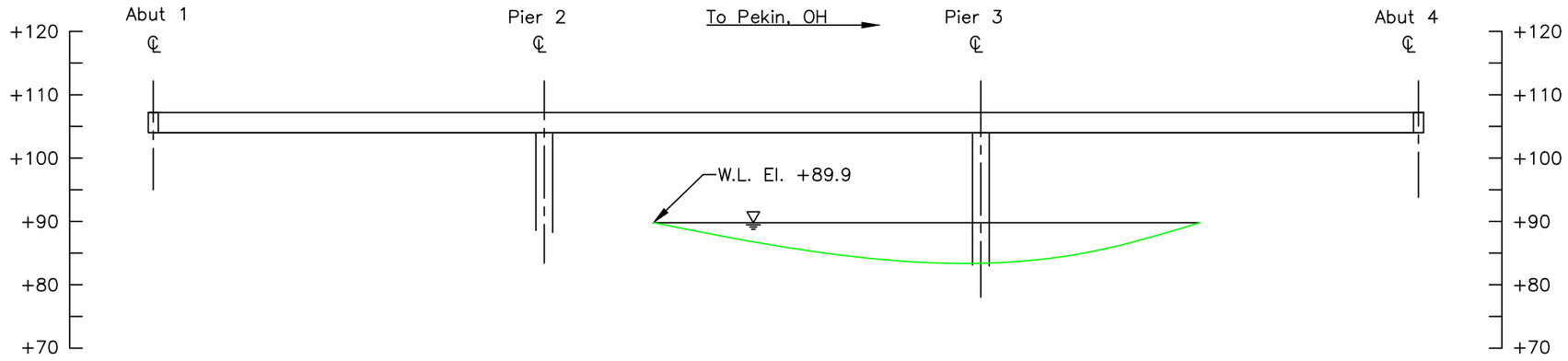

50 FT UPSTREAM
FASCIA CROSS SECTION
(LOOKING DOWNSTREAM)

Note:

Footing elevations unknown due to unavailable record drawings.

LEGEND

- Approximate Channel Bottom – July 2017
- Approximate Channel Bottom – September 2012
- Approximate Channel Bottom – [No Data]
- Timber Debris
- Water Surface
- +450 Elevation (ft)

COLLINS ENGINEERS
124 Venture Court, Ste 10
Lexington, KY 40511
Phone: 859-367-0097
Fax: 859-367-0140

Ohio Department of Transportation, District 11
2201 Reiser Avenue
New Philadelphia, OH 44663
Phone: 330-339-6633

SR 183 OVER BIG SANDY CREEK
STRUCTURE NO. CAR-183-0790
CROSS SECTIONS
CARROLL COUNTY, OHIO

CEI PROJECT	55–10356.00
INSPECTED BY:	JPG
DRAWN BY:	KMM
CHECKED BY:	JMJ
DATE:	JUL 2017
SHEET NO:	3

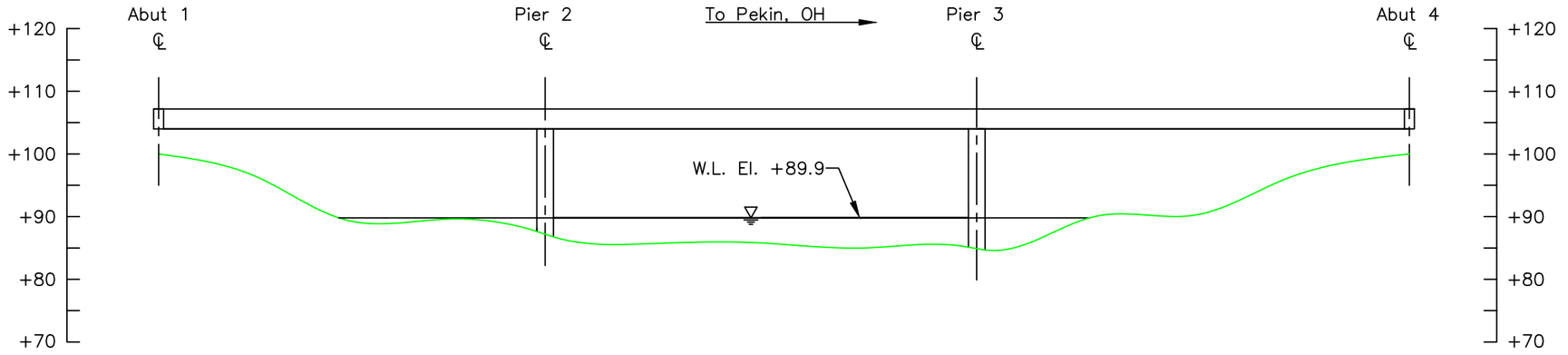

STRUCTURE CENTERLINE
CHANNEL CROSS SECTION
(LOOKING DOWNSTREAM)

Note:

Footing elevations unknown due to unavailable record drawings.

LEGEND

- Approximate Channel Bottom – July 2017
- Approximate Channel Bottom – [No Data]
- Approximate Channel Bottom – [No Data]
- Timber Debris
- Water Surface
- +450 Elevation (ft)

COLLINS ENGINEERS
124 Venture Court, Ste 10
Lexington, KY 40511
Phone: 859-367-0097
Fax: 859-367-0140

Ohio Department of Transportation, District 11
2201 Reiser Avenue
New Philadelphia, OH 44663
Phone: 330-339-6633

SR 183 OVER BIG SANDY CREEK
STRUCTURE NO. CAR-183-0790
CROSS SECTIONS
CARROLL COUNTY, OHIO

CEI PROJECT	55–10356.00
INSPECTED BY:	JPG
DRAWN BY:	KMM
CHECKED BY:	JMJ
DATE:	JUL 2017
SHEET NO:	4

Downstream Looking Downstream		
LOCATION	X	Y
A1	0.0	4.4
1/4	16.0	5.7
1/2	32.0	8.3
3/4	48.0	13.9
P2	64.0	14.2
1/4	82.8	14.1
1/2	101.5	14.0
3/4	120.3	14.1
P3	139.0	14.0
1/4	154.3	13.9
1/2	169.5	13.8
3/4	184.8	8.1
A4	200.0	4.0

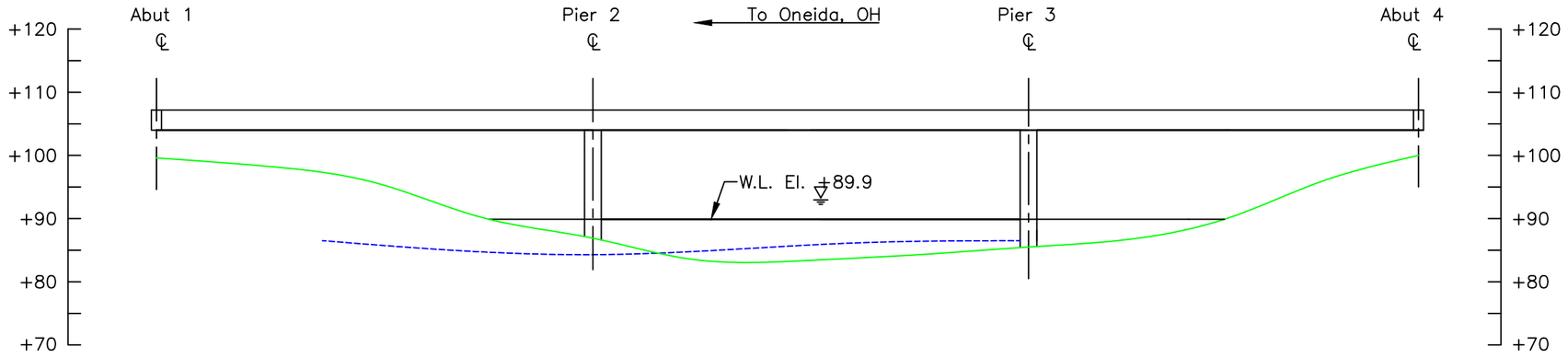

STRUCTURE DOWNSTREAM
CHANNEL CROSS SECTION
(LOOKING DOWNSTREAM)

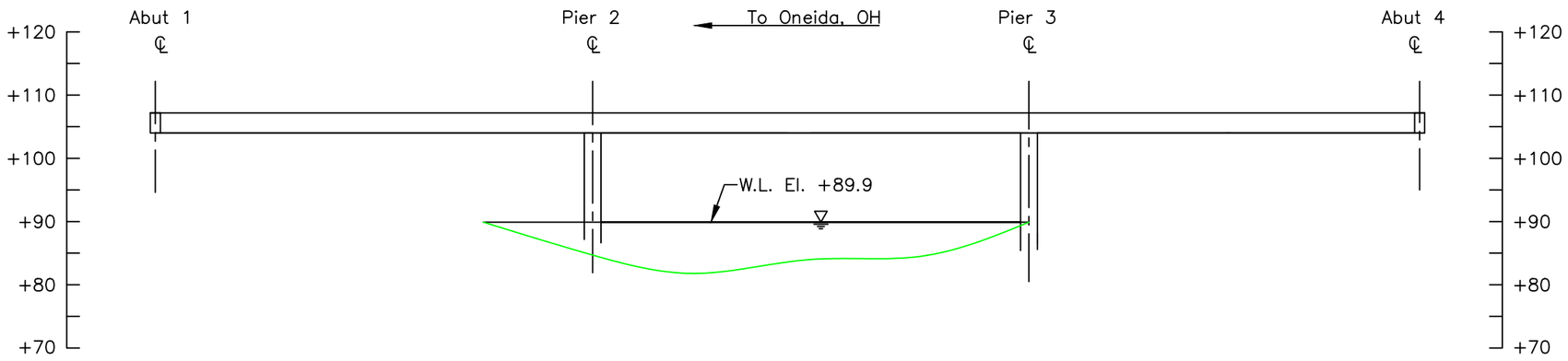

50 FT DOWNSTREAM
CHANNEL CROSS SECTION
(LOOKING DOWNSTREAM)

Note:

Footing elevations unknown due to unavailable record drawings.

LEGEND

- Approximate Channel Bottom – July 2017
- Approximate Channel Bottom – September 2012
- Approximate Channel Bottom – [No Data]
- Timber Debris
- Water Surface
- +450 Elevation (ft)

COLLINS ENGINEERS
124 Venture Court, Ste 10
Lexington, KY 40511
Phone: 859-367-0097
Fax: 859-367-0140

Ohio Department of Transportation, District 11
2201 Reiser Avenue
New Philadelphia, OH 44663
Phone: 330-339-6633

SR 183 OVER BIG SANDY CREEK
STRUCTURE NO. CAR-183-0790
CROSS SECTIONS
CARROLL COUNTY, OHIO

CEI PROJECT	55–10356.00
INSPECTED BY:	JPG
DRAWN BY:	KMM
CHECKED BY:	JMJ
DATE:	JUL 2017
SHEET NO:	5

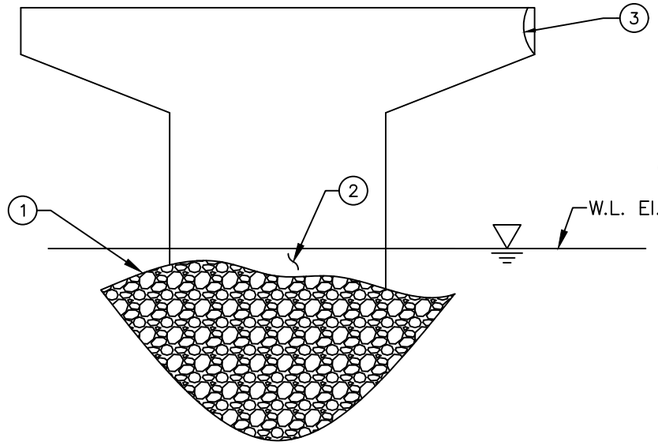

SOUTH ELEVATION
(LOOKING NORTH)

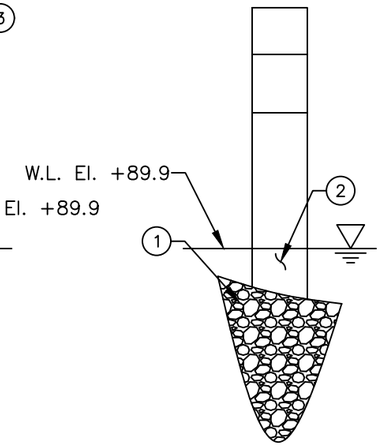

UPSTREAM ELEVATION
(LOOKING DOWNSTREAM)

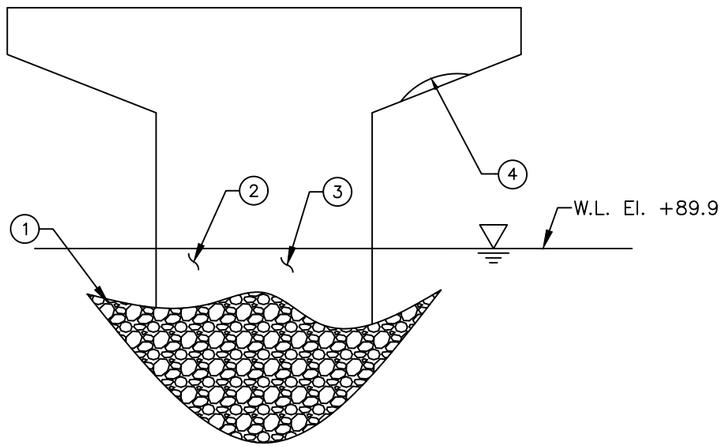

NORTH ELEVATION
(LOOKING SOUTH)

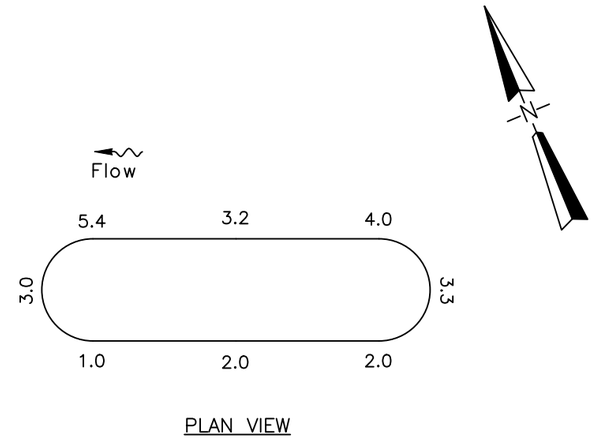

PLAN VIEW

INSPECTION NOTES:

1. The channel bottom material consisted of rip rap up to 2 in. in diameter with sand and silt in–fill.
2. The submerged portions of the pier had light scaling up to 1/4 in. diameter. The scaling extends 2 ft from 2 ft below the waterline to the channel bottom.
3. A spall was observed measuring approximately 3 ft vertical by 1 ft horizontal by 3 in. deep with 3 exposed bars and light surface corrosion.
4. A spall was observed measuring approximately 1 ft vertical by 1 ft horizontal by 2 in. deep with 1 exposed bar and light surface corrosion.

LEGEND

2.7	Sounding Depth from Waterline (ft)
———	Approximate Channel Bottom – July 2017
	Timber Debris
	Water Surface

COLLINS ENGINEERS
124 Venture Court, Ste 10
Lexington, KY 40511
Phone: 859-367-0097
Fax: 859-367-0140

Ohio Department of Transportation, District 11
2201 Reiser Avenue
New Philadelphia, OH 44663
Phone: 330-339-6633

SR 183 OVER BIG SANDY CREEK
STRUCTURE NO. CAR-183-0790
PIER 2
CARROLL COUNTY, OHIO

CEI PROJECT	55–10356.00
INSPECTED BY:	JPG
DRAWN BY:	KMM
CHECKED BY:	JMJ
DATE:	JUL 2017
SHEET NO:	6

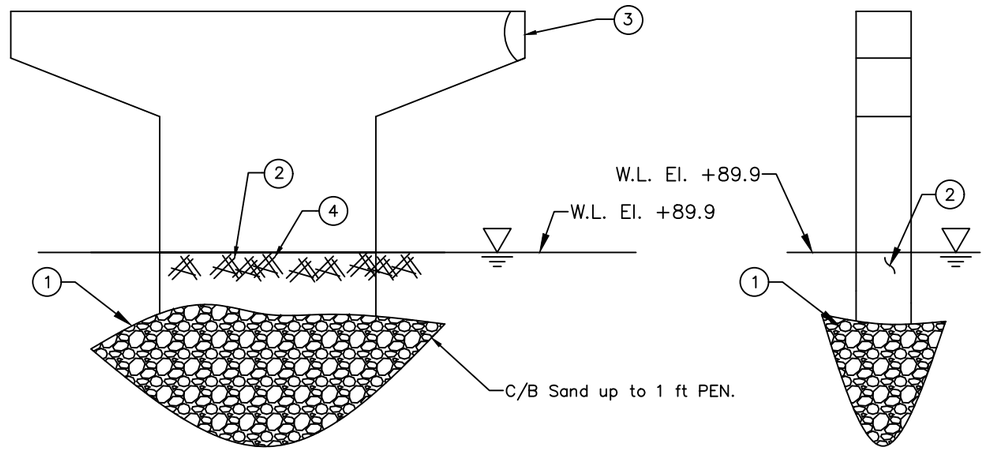

SOUTH ELEVATION
(LOOKING NORTH)

UPSTREAM ELEVATION
(LOOKING DOWNSTREAM)

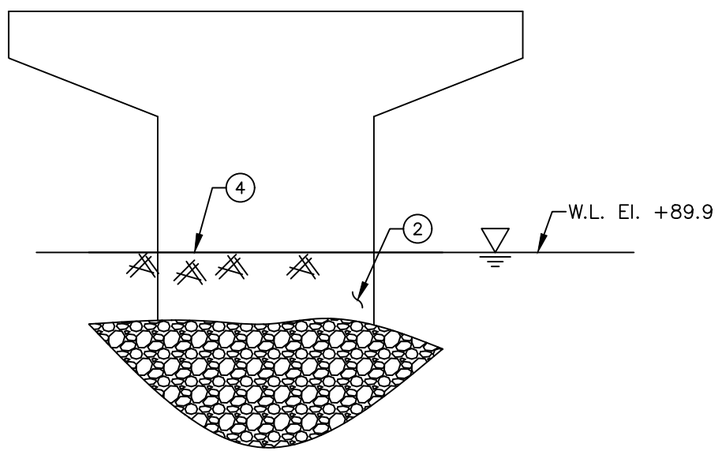

NORTH ELEVATION
(LOOKING SOUTH)

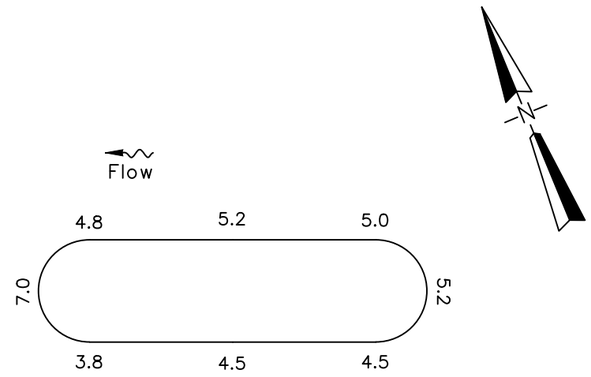

PLAN VIEW

INSPECTION NOTES:

(1) The channel bottom material consisted of rip rap up to 2 in. in diameter with sand and silt in–fill.

(2) The submerged portions of the pier had light scaling up to 1/4 in. diameter. The scaling extends 2 ft from 2 ft below the waterline to the channel bottom.

(3) A spall was observed measuring approximately 3.5 ft vertically by 18 in. horizontally by 2 in. deep with 1 exposed bar and delamination.

(4) Light timber debris accumulation consisting of logs and branches up to 2 ft diameter extends from the upstream quarter point along the north face, around the upstream nose and along the entire south face extends from C/B to 2 ft above the waterline.

LEGEND

2.7	Sounding Depth from Waterline (ft)
———	Approximate Channel Bottom – July 2017
	Timber Debris
	Water Surface

COLLINS ENGINEERS
124 Venture Court, Ste 10
Lexington, KY 40511
Phone: 859-367-0097
Fax: 859-367-0140

Ohio Department of Transportation, District 11
2201 Reiser Avenue
New Philadelphia, OH 44663
Phone: 330-339-6633

SR 183 OVER BIG SANDY CREEK
STRUCTURE NO. CAR-183-0790
PIER 3
CARROLL COUNTY, OHIO

CEI PROJECT	55–10356.00
INSPECTED BY:	JPG
DRAWN BY:	KMM
CHECKED BY:	JMJ
DATE:	JUL 2017
SHEET NO:	7

EXHIBIT 2 – INSPECTION PHOTOGRAPHS



Photograph No. 1: Overall View of CAR-183-0790, Looking Southwest.



Photograph No. 2: Overall View of CAR-183-0790, Looking Northeast.



Photograph No. 3: View of North Shoreline, Downstream of Bridge, Looking Northwest.



Photograph No. 4: View of North Shoreline, Downstream of Bridge, Looking North.



Photograph No. 5: View of North Shoreline, Upstream of Structure, Looking Northeast.



Photograph No. 6: View of South Shoreline, Upstream of Structure, Looking Southeast.



Photograph No. 7: View of South Shoreline, Downstream of Structure, Looking Southwest.



Photograph No. 8: View of South Shoreline at Bridge Centerline, Looking Southeast.



Photograph No. 9: View of Pier 2, Looking Northeast.



Photograph No. 10: View of Pier 2, Looking Southwest.



Photograph No. 11: Spall with Exposed Reinforced Steel at Downstream End of Pier 2, Looking East.



Photograph No. 12: View of Spall with Exposed Reinforced Steel at Upstream End of Pier 2, Looking North.



Photograph No. 13: Typical Concrete at Waterline at South Face Pier 2, Looking North.



Photograph No. 14: View of Pier 3, Looking Northeast.



Photograph No. 15: View of Spall with Exposed Reinforced Steel in Cap at Upstream End of Pier 3, Looking Northwest.



Photograph No. 16: View of Pier 3, Looking Southwest.



Photograph No. 17: View of Timber Debris at Upstream End of Pier 3, Looking Southwest.