





UNDERWATER BRIDGE INSPECTION REPORT

STRUCTURE NO. CAR-542-0573
SR 542 OVER ATWOOD RESERVOIR
CARROLL COUNTY, OH
DISTRICT 11

July 2017

Prepared for:

STATE OF OHIO DEPARTMENT OF TRANSPORTATION

STATE OF OHIO
JOSHUA M. JOHNSON
E-76141
7/11/18
REGISTERED PROFESSIONAL ENGINEER

Prepared by:

COLLINS ENGINEERS INC.

124 Venture Court, Suite 10

Lexington, Kentucky 40511

859.367.0097 • www.collinsengr.com

TABLE OF CONTENTS

EXECUTIVE SUMMARY
1.0 INTRODUCTION 1
1.1 Purpose and Scope 1
1.2 General Description of the Structure 1
1.3 Method of Investigation 1
2.0 EXISTING CONDITIONS 2
2.1 General Conditions 2
2.2 Substructure Conditions 3
2.2.1 Abutment 1 3
2.2.2 Bent 2 3
2.2.3 Bent 3 3
2.2.4 Abutment 4 3
3.0 EVALUATION AND RECOMMENDATIONS 4
EXHIBIT 1 – FIGURES 6
LOCATION MAP
SOUNDING PLAN
UPSTREAM CHANNEL CROSS SECTIONS
CENTERLINE CHANNEL CROSS SECTIONS
DOWNSTREAM CHANNEL CROSS SECTIONS
ABUTMENT 1
BENT 2
BENT 3
ABUTMENT 4
EXHIBIT 2 – INSPECTION PHOTOGRAPHS 16
Photograph No. 1: Overall View of Structure No. CAR-542-0573, Looking West.
Photograph No. 2: Overall View of Structure No. CAR-542-0573, Looking East.
Photograph No. 3: View of the Northwest Embankment Upstream of the Structure, Looking Northeast.
Photograph No. 4: View of the Northeast Embankment Downstream of the Structure, Looking Northwest.
Photograph No. 5: View of the Southwest Embankment Upstream of the Structure, Looking Southeast.

Photograph No. 6: View of the Southeast Embankment Downstream of the Structure, Looking Southwest.
Photograph No. 7: View of the Abutment 1, Looking Northwest.
Photograph No. 8: View of the Undermining at Abutment 1, Looking Northeast.
Photograph No. 9: View of the Failed Repair at Abutment 1, Looking Northeast.
Photograph No. 10: View of the Spall at Abutment 1, Looking North.
Photograph No. 11: View of the Spalls and Areas of Delamination on Abutment 1, Looking North.
Photograph No. 12: View of the South Face and Upstream Nose of Bent 2, Looking Northwest.
Photograph No. 13: View of the North Face and Downstream Nose of Bent 2, Looking Southeast.
Photograph No. 14: View of the Exposed Seel Reinforcing Bar on the North Face of Bent 2, Looking South.
Photograph No. 15: View of the Typical Concrete Conditon at the Waterline on the Downstream Nose of Bent 2, Looking East.
Photograph No. 16: View of the South Face and Upstream Nose of Bent 3, Looking Northwest.
Photograph No. 17: View of the North Face and Downstream Nose of Bent 3, Looking Southeast.
Photograph No. 18: View of Abutment 4, Looking South.
Photograph No. 19: View of Abutment 4, Looking Southeast.
Photograph No. 20: View of the Crack at Abutment 4, Looking South.
Photograph No. 21: View of the Spall at Abutment 4, Looking South.
Photograph No. 22: View of the Spall at Abutment 4, Looking South.

EXECUTIVE SUMMARY

Project: ODOT District 11 Underwater Bridge Inspections - 2017

Purpose of Project: To perform a detailed visual and tactile underwater investigation of bridges for District 11 of the Ohio Department of Transportation.

Inspection Team: Team Leader – Kurt Lingo, E.I.T. – Collins Engineers, Inc.
Team Member – Matthew Rogers, E.I.T. – Collins Engineers, Inc.
Team Member – Russell Richards, E.I.T. – Collins Engineers, Inc.

Inspection Date(s): July 15, 2017

Water Visibility:	<1 ft	***Water Velocity:***	<1 ft/s
Water Temperature:	83 °F	***Weather:***	Cloudy – 80 °F
Waterline Elevation:	91.8 ft	***Type of Boat:***	14 ft Jon Boat
Coordinates:	40.56013°N, 81.20396°W		
Access Location:	Shoreline just West of CAR-542-0573		
Dive Mode:	Surface Supplied Air		
Waterline Reference:	8.2 ft below the bottom of cap at the downstream nose of Bent 1.		
Maximum Depth at SSU:	8.0 ft – Upstream Nose of Bent 3		
Shoreline Conditions:	The north and south shorelines consisted of large rock and mild vegetation with mild slopes.		

Summary of Findings:

- **Abutment 1:**
  - Moderate scaling up to 1/4 in. deep was observed extending from channel bottom to the waterline.
  - A crack measuring up to 3/16 in. wide was observed extending from the channel bottom to the top of the step on the abutment.
  - Spall measuring 5 ft horizontal by 2.5 ft vertical by 6 in. deep with 4 exposed steel reinforcing bar with up to 20% section loss was observed on the face of the abutment.
  - Spall measuring 1 ft diameter by 1 in. deep with 1 exposed steel reinforcing bar with up to 20% section loss was observed on the face of the abutment.
  - Area of delamination measuring up to 3 ft diameter was observed on the face of the abutment.
  - Area of delamination measuring up to 1.5 ft diameter was observed on the face of the abutment.
  - Area of delamination measuring 14 in. horizontal by 20 in. vertical was observed on the face of the abutment.
- **Bent 2:**
  - Light scaling up to 1/8 in. deep was observed extending from the channel bottom to approximately 4 ft above the waterline.
- **Bent 3:**
  - Light scaling up to 1/8 in. deep was observed extending from the channel bottom to approximately 4 ft above the waterline
  - Spall measuring approximately 18 in. vertical by 3 in horizontal by 1 in. deep with 1 exposed steel reinforcing bar with no measuring section loss.

- **Abutment 4:**
  - Moderate scaling up to 1/4 in. deep was observed extending from channel bottom to the waterline.
  - Spall measuring 7 ft horizontal by 2.2 ft vertical by 1 ft deep was observed at the southwest corner of the abutment.
  - Spall measuring 3 ft horizontal by 1.5 ft vertical by 3 in. deep with 3 exposed steel reinforcing bar with up to 20% section loss was observed on the face of the abutment.
  - Area of delamination/failed repair measuring up to 3 ft diameter was observed on the face of the abutment.

Summary of Recommendations:

- Repair undermining at Abutment 1.
- Repair spalls/delaminations at Abutments 1 and 4.
- Monitor cracks at Abutment 4.
- Monitor scaling on all substructure units.

Underwater Inspection Coding:

NBI Ratings:

Item	Description	Coding	Condition
60	Substructure	4 – Poor Condition	Abutment Undermining, Spall, Moderate Concrete Scaling
61	Channel	6 – Satisfactory Condition	Minor Erosion
62	Culvert	N/A	
92B	UW Insp. Frequency	60 Months	
93B	Insp. Date	07 15 17	
113	Scour Critical Bridges	3 – Below Foundation Limits	Unstable (Inspector Recommended)

AASHTO National Bridge Element (NBE) Ratings:

Element #	Description	Units	Total	Condition State			
				1	2	3	4
205	Reinforced Concrete Column	EA	6	0	6	0	0
215	Reinforced Concrete Abutment	LF	60	0	0	50	10

Note: Ratings were developed using the FHWA Recording and Coding Guide for the Structure Inventory and Appraisal of the Nation's Bridges. The recommended ratings consider inspected elements located within the waterway and conditions existing below the water surface only. Additional consideration is necessary for the assignment of overall condition ratings for this bridge.

1.0 INTRODUCTION

1.1 Purpose and Scope

This report consists of the results of a detailed underwater investigation performed at the SR 542 Bridge over Atwood Reservoir in Carroll County, OH. Collins Engineers, Inc. (Collins) conducted the underwater investigation for the Ohio Department of Transportation (ODOT) on July 15, 2017. The primary purpose of the investigation was as follows:

- Determine the condition of the substructure components located in the water at the time of the inspection from the waterline to the channel bottom.
- Obtain channel bottom depth measurements along the bridge fascias, upstream and downstream of the bridge, and around the submerged substructure units.
- Determine the condition of the shorelines in the vicinity of the structure.
- Obtain photographs of the bridge and any significant defects.

In addition, a brief inspection was made of areas that could be submerged during periods of high water. The following report includes a description of the structure, the method of investigation, a description of existing conditions, an evaluation and recommendations based on the conditions, inspection figures, and photographs.

1.2 General Description of the Structure

Structure No. CAR-542-0573 spans 87 ft, carrying SR 542 over Atwood Lake and is approximately 25 ft wide. The bridge superstructure is constructed of three steel multi-beam spans. The roadway orientation of the longitudinal axis of the bridge is west to east. The substructure units are labeled as Abutments 1 & 4 and Bents 2 & 3. Existing design drawings were not available at the time of the inspection. Refer to Figure 1 in Exhibit 1 for a Location Map of the bridge. Refer to Photographs 1 and 2 in Exhibit 2 for overall views of the bridge.

1.3 Method of Investigation

A detailed field inspection was conducted to determine the physical condition of the submerged bridge substructure units from the waterline to the channel bottom. A brief visual examination of the substructure units above the waterline was also made.

A three-person team consisting of an engineer-diver and team leader (Kurt Lingo, E.I.T.) and two engineer divers (Matthew Rogers, E.I.T. and Russell Richards, E.I.T.) conducted the underwater inspection. The inspection was conducted using surface supplied air diving equipment. During the inspection, the inspectors worked from a boat and a note taker in the boat recorded the inspection notes.

The underwater inspection consisted of a visual and tactile examination of the accessible surfaces of the substructure units from the waterline to the channel bottom with particular attention given to any observed areas of deterioration or apparent distress. Approximately 10 percent of the total area on the underwater surfaces of the substructure units was cleaned so that the condition could be more closely examined. Photographs were taken to document the general conditions and observed deficiencies. Underwater Photographs could not be obtained due to poor water conditions. The type of channel bottom material, the presence or extent of scour, the presence or extent of riprap, the presence or extent of drift and debris, and the location of any foundation exposure or undermining were noted.

Channel bottom soundings were performed utilizing a telescoping survey rod. Soundings were collected at quarter points along the bridge centerline as well as along the upstream and downstream fascias and 50 feet upstream and downstream of the bridge, parallel with its fascias. Additional soundings were collected adjacent to Bents 2 and 3 and at 10 feet intervals in-line with the piers, upstream and downstream. The waterline was referenced to a known elevation on the bridge. A sounding plan was developed using the soundings and approximate location of the shorelines. Refer to Figures 2 thru 5 in Exhibit 1 for the sounding plan and channel cross sections that show the channel limits and water depths around the structure.

2.0 EXISTING CONDITIONS

2.1 General Conditions

At the time of the inspection, the waterline of CAR-542-0573 was located approximately 8.2 feet below the top of Bent 2 at the downstream nose, which corresponds to a waterline elevation of 91.8 ft. During the inspection, the waterway was flowing at approximately 0 ft per second. The bridge pier skew was consistent with the channel alignment and does not require attention at this time. The north and south shorelines consisted of large rock and mild vegetation with mild slopes. Refer to Photographs 3 through 6 in Exhibit 2 for views of the shorelines near the structure.

2.2 Substructure Conditions

2.2.1 Abutment 1

The channel bottom material consisted of rip-rap up to 1 ft diameter with silt overlay and no probe rod penetration. Moderate scaling up to 1/4 in. deep was observed extending from channel bottom to the waterline. A spall measuring 7 ft horizontal by 2.2 ft vertical by 1 ft deep was observed at the southwest corner of the abutment. A spall measuring 3 ft horizontal by 1.5 ft vertical by 3 in. deep with 3 exposed steel reinforcing bar with up to 20% section loss was observed on the face of the abutment. An area of delamination/failed repair measuring up to 3 ft diameter was observed on the face of the abutment. Refer to Figure 6 in Exhibit 1 for detailed inspection notes of Abutment 1. Refer to Photographs 7 through 11 in Exhibit 2 for views of Abutment 1.

2.2.2 Bent 2

The channel bottom material consisted of sand, gravel and cobbles with approximately 2 in. probe rod penetration. Light scaling up to 1/8 in. deep was observed extending from the channel bottom to approximately 4 ft above the waterline Refer to Figure 7 in Exhibit 1 for detailed inspection notes of Bent 2. Refer to Figure 7 in Exhibit 1 for detailed inspection notes of Bent 2. Refer to Photographs 12 through 15 in Exhibit 2 for views of Bent 2 and typical concrete condition at the waterline.

2.2.3 Bent 3

The channel bottom material consisted of sand, gravel and cobbles with approximately 2 in. probe rod penetration. Light scaling up to 1/8 in. deep was observed extending from the channel bottom to approximately 4 ft above the waterline. A spall measuring approximately 18 in. vertical by 3 in horizontal by 1 in. deep with 1 exposed steel reinforcing bar with no measuring section loss. Refer to Figure 8 in Exhibit 1 for detailed inspection notes of Bent 3. Refer to Photographs 16 and 17 in Exhibit 2 for views of Bent 3.

2.2.4 Abutment 4

The channel bottom material consisted of rip-rap up to 1 ft diameter with silt overlay and no probe rod penetration. Moderate scaling up to 1/4 in. deep was observed extending from channel bottom to the waterline. A crack measuring up to 3/16 in. wide was observed extending from the channel bottom to the top of the step on the abutment. A spall measuring 5 ft horizontal by 2.5 ft vertical by 6 in. deep with 4 exposed steel reinforcing bar with up to 20% section loss was observed on the face of the abutment. A spall measuring 1 ft diameter by 1 in. deep with 1 exposed steel reinforcing bar with up to 20% section loss was observed on the face of the abutment. An area of delamination measuring up to 3 ft diameter was observed on the face of the abutment. An

area of delamination measuring up to 1.5 ft diameter was observed on the face of the abutment. An area of delamination measuring 14 in. horizontal by 20 in. vertical was observed on the face of the abutment. Refer to Figure 9 in Exhibit 1 for detailed inspection notes of Abutment 4. Refer to Photographs 18 through 22 in Exhibit 2 for views of Abutment 4.

3.0 EVALUATION AND RECOMMENDATIONS

Overall, the inspected substructure units of Structure No. CAR-542-0573 were in poor condition. A comparison of the soundings recorded during the previous inspection on September 24, 2012 and the soundings taken during this inspection revealed footing exposure and undermining of the substructure units. To prevent further deterioration of the bearing material, corrective actions should be taken at this time. Corrective actions may include placement of properly design riprap, installation of spur dikes, or other means of erosion control depending on site conditions. The channel bottom configuration should continue to be closely monitored during future underwater inspections to verify that the footing exposure and undermining is not increasing and that all footings remain adequately embedded in the channel bottom.

The spalls and associated concrete delaminations at Abutments 1 and 4 are not structural concerns at this time; however, they should be repaired to prevent further deterioration. The repairs should include removal of unsound concrete to a minimum of 1 inch behind the reinforcing steel, cleaning and replacing reinforcing steel as required, and placing concrete designed to provide high durability with low permeability.

The vertical cracks at Abutment 4 are not structural concerns at this time. However, the cracks do provide a means for water infiltration and freeze-thaw damage. It is therefore recommended that these cracks be monitored during future underwater inspections. If further crack propagation or increased crack widths are observed, it may be necessary to repair the cracks by injection or patching with a repair material suitable for underwater applications.

It is recommended that the submerged substructure units of Structure No. CAR-542-0573 be next inspected underwater at an interval not to exceed 60 months, no later than July 15, 2022.

Respectfully Submitted,
COLLINS ENGINEERS, INC.

Joshua Johnson, P.E.
Project Manager

Originated by:
Matthew Rogers, E.I.T.

EXHIBIT 1 – FIGURES



COLLINS ENGINEERS
124 Venture Court, Ste 10
Lexington, KY 40511
Phone: 859-367-0097
Fax: 859-367-0140

Ohio Department of Transportation, District 11
2201 Reiser Ave.
New Philadelphia, OH 44663
Phone: (330) 339-6633

SR 542 OVER ATWOOD RESERVOIR
BRIDGE NO. CAR-542-0573
LOCATION MAP
CARROLL COUNTY, OHIO

INSPECTED BY: KDL	CEI PROJECT: 55–10356.00
DRAWN BY: BBM	DATE: 15 JUL 2017
CHECKED BY: JMJ	SHEET NO: 1

\\10.1.8.42\NNVA\KY OFFICE TEMP\PROJECTS\WORKGROUP\55 - LEXINGTON\55-10356.00 - ODOT D11 UNDERWATER\ENGINEERING\DRAWINGS\CAR-542-0573.DWG10/23/2017 12:55:41 PM

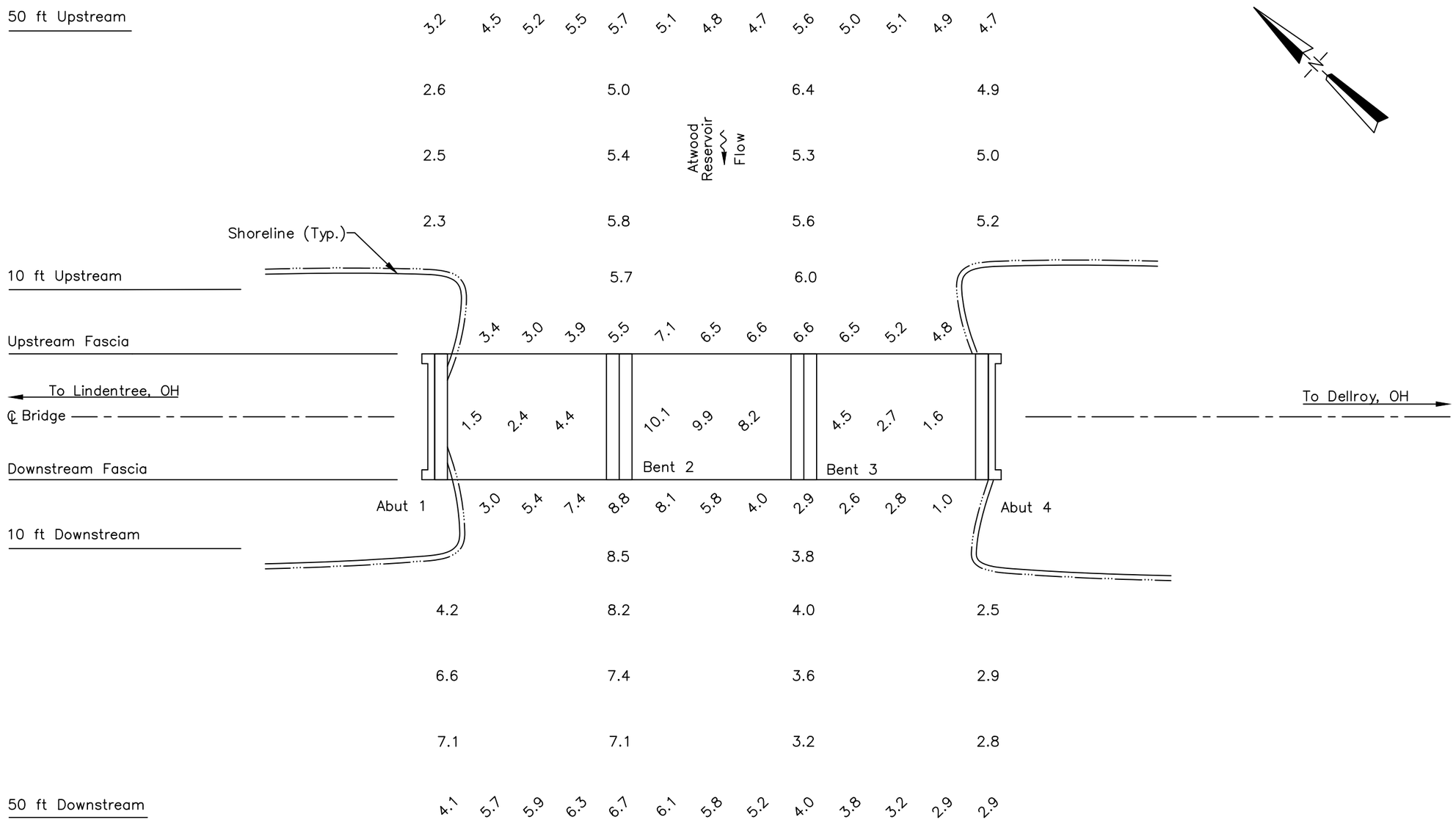

SOUNDING PLAN

GENERAL NOTES:

1. Abutments 1 & 4 and Bents 2 & 3 were inspected underwater. Substructure units are labeled according to available record drawings.
2. At the time of inspection on July 15, 2017, the waterline was located approximately 8.2 ft below the top of the deck at downstream nose of Bent 1. (Assumed EL. +100.0 ft). This corresponds with a waterline elevation of +91.8 ft.
3. Soundings indicate the water depth at the time of inspection and are measured in feet.
4. Soundings were taken parallel to the bridge at the upstream and downstream fascias, 50 ft upstream and downstream of the fascias, at 1/4 point intervals between the substructure units, and at 10 ft intervals in–line with the piers upstream and downstream up to 50 ft.

LEGEND

2.7 Sounding Depth from Waterline (ft)

Timber Debris

COLLINS ENGINEERS
124 Venture Court, Ste 10
Lexington, KY 40511
Phone: 859-367-0097
Fax: 859-367-0140

Ohio Department of Transportation, District 11
2201 Reiser Ave.
New Philadelphia, OH 44663
Phone: (330) 339-6633

SR 542 OVER ATWOOD RESERVOIR
BRIDGE NO. CAR-542-0573
SOUNDING PLAN
CARROLL COUNTY, OHIO

CEI PROJECT	55–10356.00
INSPECTED BY:	KDL
DRAWN BY:	BBM
CHECKED BY:	JMJ
DATE:	JUL 2017
SHEET NO:	2

PROFILE MEASUREMENTS (FT)		
LOCATION	X	Y
A4	0.0	6.8
1/4	10.0	13.2
1/2	20.0	14.1
3/4	30.0	15.3
P3	40.0	15.0
1/4	52.5	14.9
1/2	65.0	14.6
3/4	77.5	15.1
P2	90.0	13.6
1/4	100.0	11.9
1/2	110.0	11.0
3/4	120.0	11.4
A1	130.0	6.7

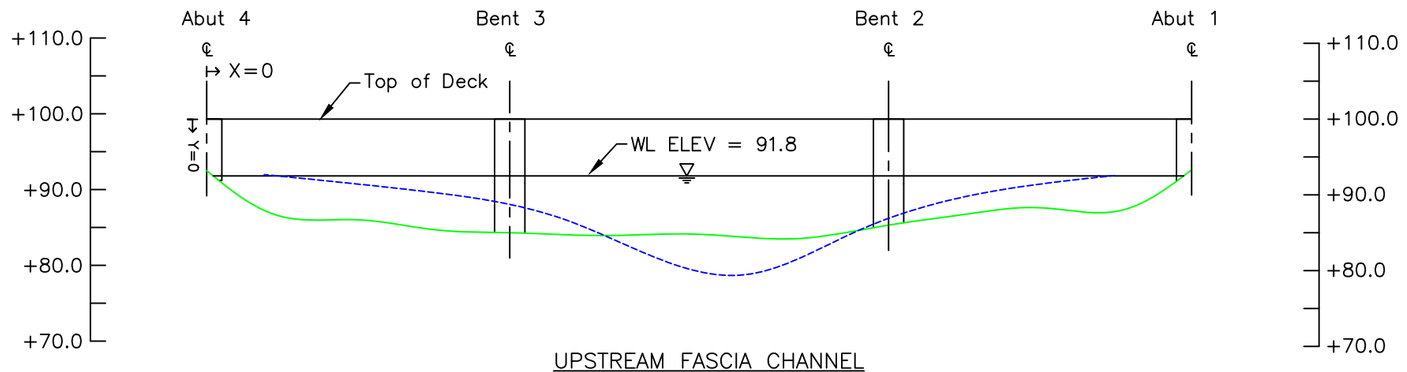

UPSTREAM FASCIA CHANNEL
CROSS SECTION
(LOOKING DOWNSTREAM)

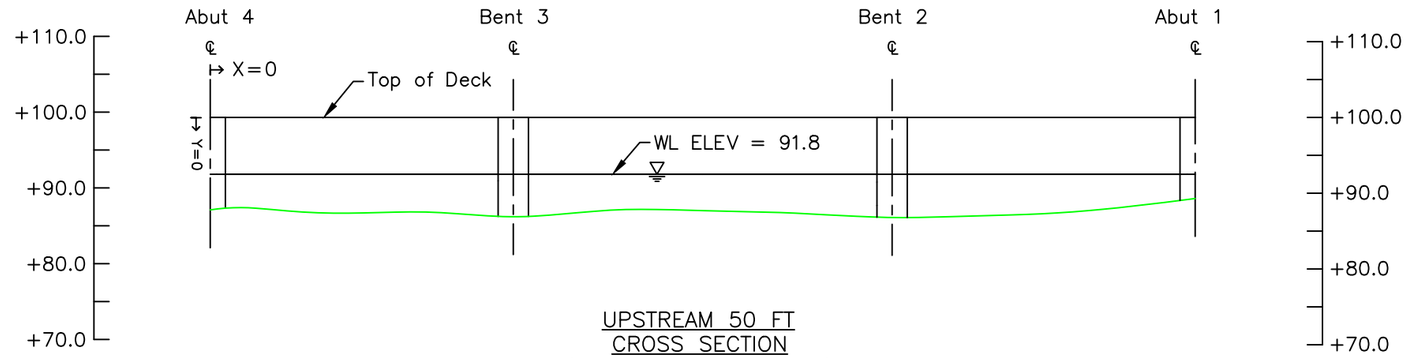

UPSTREAM 50 FT
CROSS SECTION
(LOOKING DOWNSTREAM)

Note:

Footing elevations unknown due to unavailable record drawings.

LEGEND

- Approximate Channel Bottom – July 2017
- Approximate Channel Bottom – September 2012
- Approximate Channel Bottom – 2007 (No Data)
- Timber Debris
- Water Surface
- +450 Elevation (ft)

COLLINS ENGINEERS
124 Venture Court, Ste 10
Lexington, KY 40511
Phone: 859-367-0097
Fax: 859-367-0140

Ohio Department of Transportation, District 11
2201 Reiser Ave.
New Philadelphia, OH 44663
Phone: (330) 339-6633

SR 542 OVER ATWOOD RESERVOIR
BRIDGE NO. CAR-542-0573
CROSS SECTIONS
CARROLL COUNTY, OHIO

CEI PROJECT 55–10356.00
INSPECTED BY: KDL
DRAWN BY: BBM
CHECKED BY: JMJ
DATE: JUL 2017
SHEET NO: 3

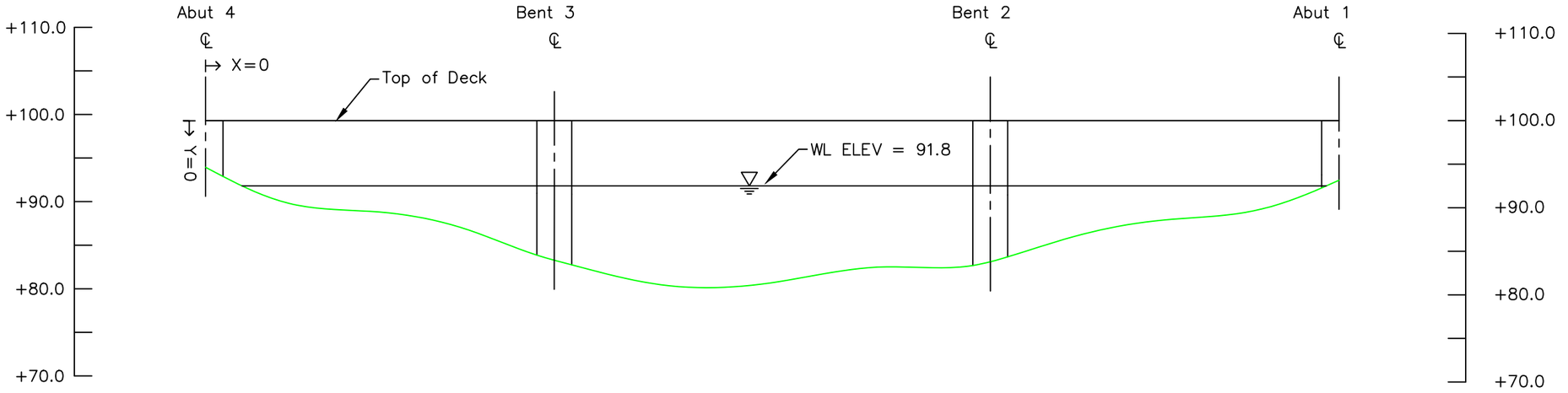

STRUCTURE CENTERLINE
CHANNEL CROSS SECTION
(LOOKING DOWNSTREAM)

Note:

Footing elevations unknown due to unavailable record drawings.

LEGEND

- Approximate Channel Bottom – July 2017
- Approximate Channel Bottom – September 2012 (No Data)
- Approximate Channel Bottom – 2007 (No Data)
- Timber Debris
- Water Surface
- +450 Elevation (ft)

COLLINS ENGINEERS
124 Venture Court, Ste 10
Lexington, KY 40511
Phone: 859-367-0097
Fax: 859-367-0140

Ohio Department of Transportation, District 11
2201 Reiser Ave.
New Philadelphia, OH 44663
Phone: (330) 339-6633

SR 542 OVER ATWOOD RESERVOIR
BRIDGE NO. CAR-542-0573
CROSS SECTIONS
CARROLL COUNTY, OHIO

CEI PROJECT	55–10356.00
INSPECTED BY:	KDL
DRAWN BY:	BBM
CHECKED BY:	JMJ
DATE:	JUL 2017
SHEET NO:	4

PROFILE MEASUREMENTS (FT)		
LOCATION	X	Y
A4	0.0	5.6
1/4	10.0	9.8
1/2	20.0	11.6
3/4	30.0	11.3
P3	40.0	11.4
1/4	52.5	12.6
1/2	65.0	14.5
3/4	77.5	16.5
P2	90.0	17.2
1/4	100.0	15.5
1/2	110.0	13.5
3/4	120.0	11.1
A1	130.0	7.0

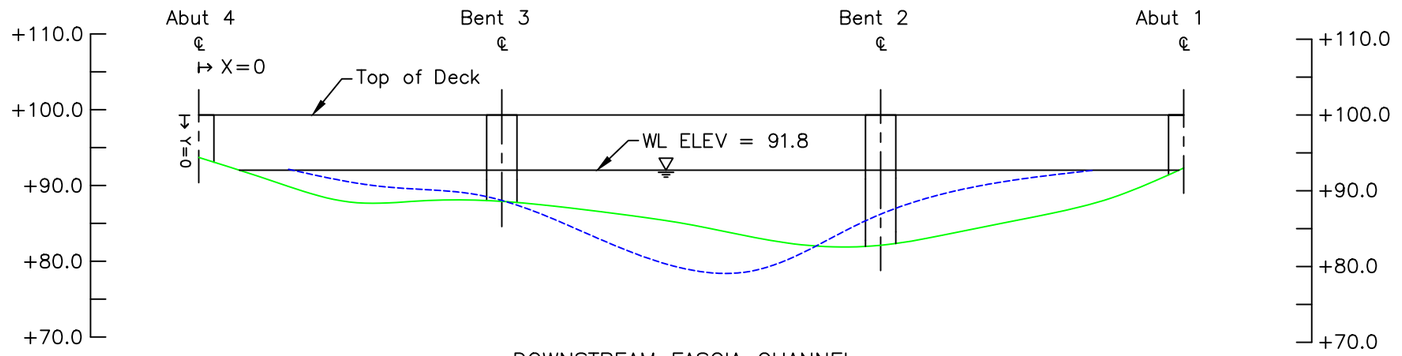

DOWNSTREAM FASCIA CHANNEL
CROSS SECTION
(LOOKING DOWNSTREAM)

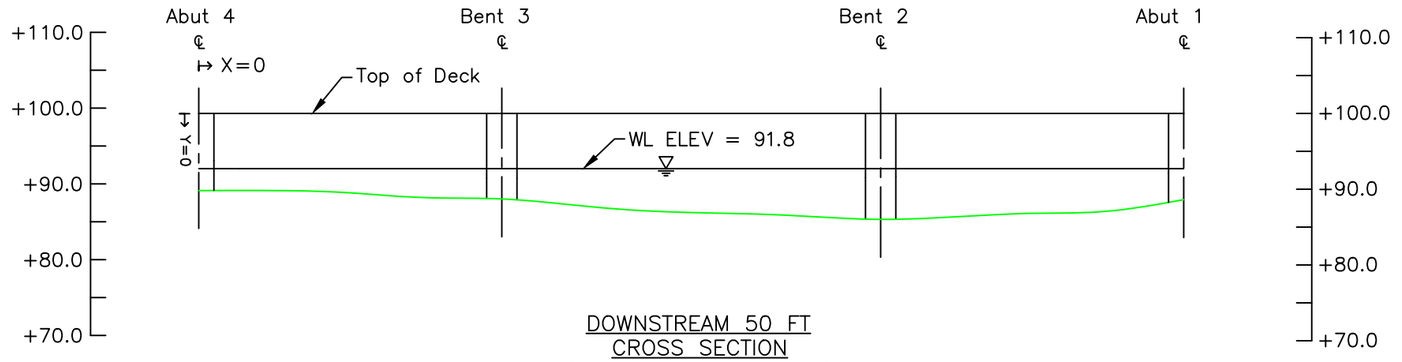

DOWNSTREAM 50 FT
CROSS SECTION
(LOOKING DOWNSTREAM)

Note:

Footing elevations unknown due to unavailable record drawings.

LEGEND

- Approximate Channel Bottom – July 2017
- Approximate Channel Bottom – September 2012
- Approximate Channel Bottom – 2007 (No Data)
- Timber Debris
- Water Surface
- +450 Elevation (ft)

COLLINS ENGINEERS
124 Venture Court, Ste 10
Lexington, KY 40511
Phone: 859-367-0097
Fax: 859-367-0140

Ohio Department of Transportation, District 11
2201 Reiser Ave.
New Philadelphia, OH 44663
Phone: (330) 339-6633

SR 542 OVER ATWOOD RESERVOIR
BRIDGE NO. CAR-542-0573
CROSS SECTIONS
CARROLL COUNTY, OHIO

CEI PROJECT 55–10356.00
INSPECTED BY: KDL
DRAWN BY: BBM
CHECKED BY: JMJ
DATE: JUL 2017
SHEET NO: 5

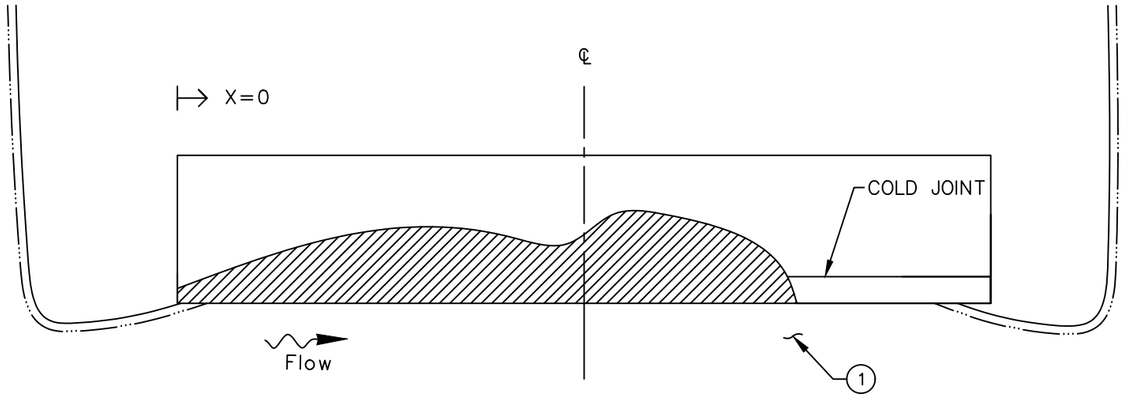

PLAN VIEW

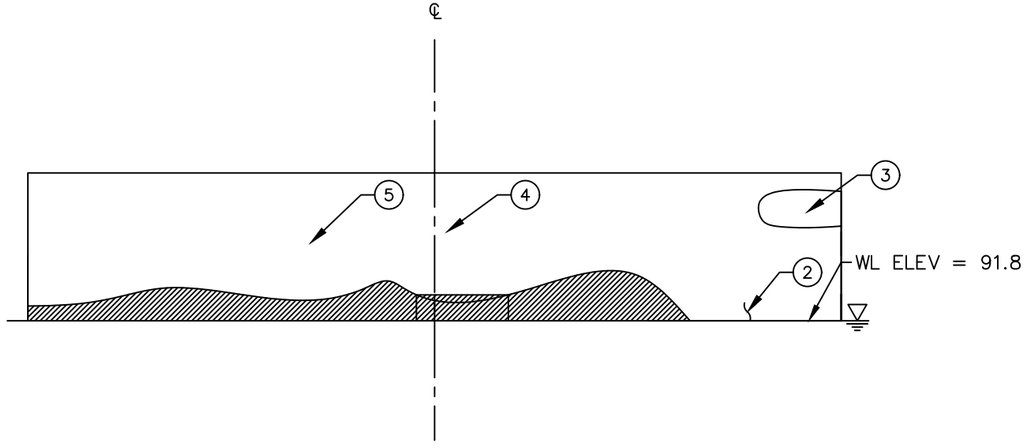

ELEVATION VIEW

UNDERMINING EXTENTS		
X (ft)	HEIGHT (in.)	DEPTH (in.)
0.0	2.0	2.0
5.0	3.0	10.5
10.0	4.0	19.0
15.0	0.5	17.0
20.0	5.0	36.0
24.0	0.0	0.0
27.5	0.0	0.0

INSPECTION NOTES:

(1) The channel bottom material consisted of rip–rap up to 1 ft diameter with silt overlay and no probe rod penetration.

(2) Moderate scaling up to 1/4 in. deep was observed extending from channel bottom to the waterline.

(3) Spall measuring 7 ft horizontal by 2.2 ft vertical by 1 ft deep was observed at the southwest corner of the abutment.

(4) Spall measuring 3 ft horizontal by 1.5 ft vertical by 3 in. deep with 3 exposed steel reinforcing bar with up to 20% section loss was observed on the face of the abutment.

(5) Area of delamination/failed repair measuring up to 3 ft diameter was observed on the face of the abutment.

LEGEND

2.7	Sounding Depth from Waterline (ft)
———	Approximate Channel Bottom – July 2017
	Timber Debris
	Water Surface
	Undermining

COLLINS ENGINEERS
124 Venture Court, Ste 10
Lexington, KY 40511
Phone: 859-367-0097
Fax: 859-367-0140

Ohio Department of Transportation, District 11
2201 Reiser Ave.
New Philadelphia, OH 44663
Phone: (330) 339-6633

SR 542 OVER ATWOOD RESERVOIR
BRIDGE NO. CAR-542-0573
ABUTMENT 1
CARROLL COUNTY, OHIO

CEI PROJECT 55–10356.00
INSPECTED BY: KDL
DRAWN BY: BBM
CHECKED BY: JMJ
DATE: JUL 2017
SHEET NO: 6

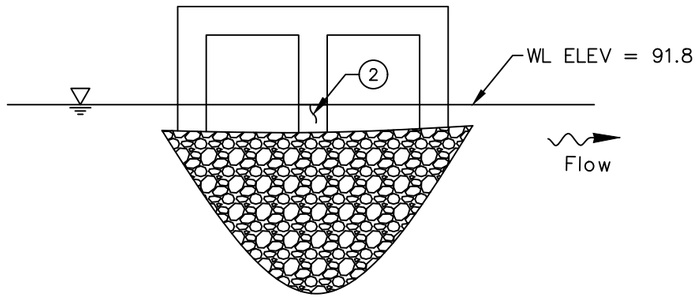

NORTH ELEVATION
(LOOKING SOUTH)

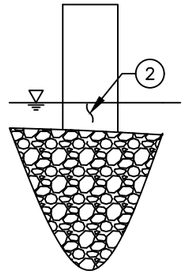

UPSTREAM ELEVATION
(LOOKING DOWNSTREAM)

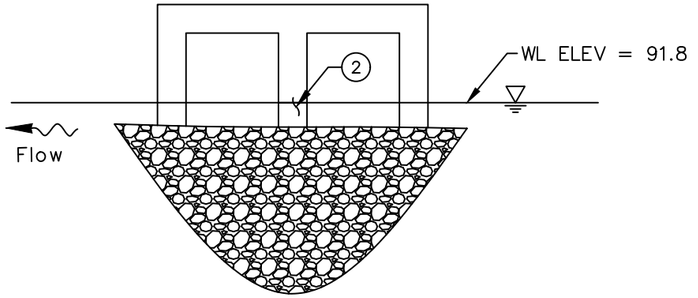

SOUTH ELEVATION
(LOOKING NORTH)

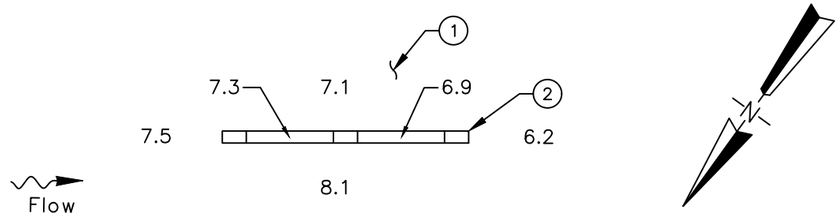

PLAN VIEW

INSPECTION NOTES:

1. The channel bottom material consisted of sand, gravel and cobbles with approximately 2 in. probe rod penetration.
2. Light scaling up to 1/8 in. deep was observed extending from the channel bottom to approximately 4 ft above the waterline.

LEGEND

2.7	Sounding Depth from Waterline (ft)
———	Approximate Channel Bottom – July 2017
	Timber Debris
	Water Surface

COLLINS ENGINEERS
124 Venture Court, Ste 10
Lexington, KY 40511
Phone: 859-367-0097
Fax: 859-367-0140

Ohio Department of Transportation, District 11
2201 Reiser Ave.
New Philadelphia, OH 44663
Phone: (330) 339-6633

SR 542 OVER ATWOOD RESERVOIR
BRIDGE NO. CAR-542-0573
BENT 2
CARROLL COUNTY, OHIO

CEI PROJECT	55–10356.00
INSPECTED BY:	KDL
DRAWN BY:	BBM
CHECKED BY:	JMJ
DATE:	JUL 2017
SHEET NO:	7

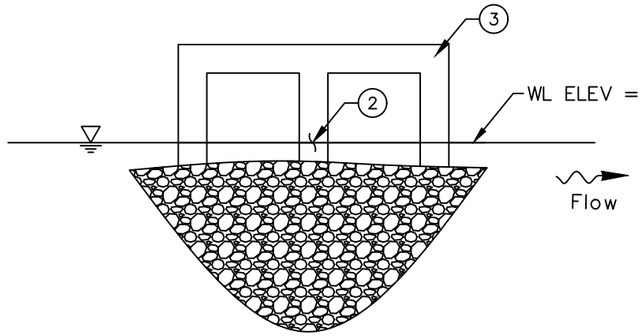

NORTH ELEVATION
(LOOKING SOUTH)

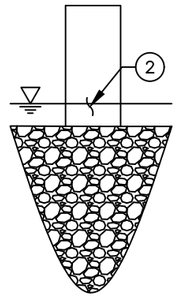

UPSTREAM ELEVATION
(LOOKING DOWNSTREAM)

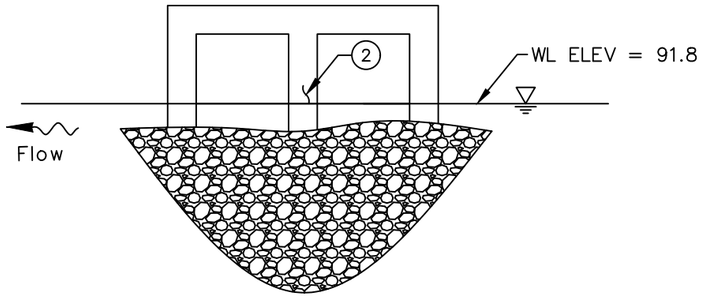

SOUTH ELEVATION
(LOOKING NORTH)

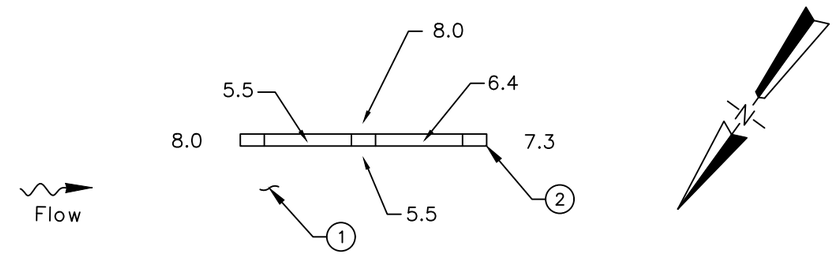

PLAN VIEW

INSPECTION NOTES:

1. The channel bottom material consisted of sand, gravel and cobbles with approximately 2 in. probe rod penetration.
2. Light scaling up to 1/8 in. deep was observed extending from the channel bottom to approximately 4 ft above the waterline
3. Spall measuring approximately 18 in. vertical by 3 in horizontal by 1 in. deep with 1 exposed steel reinforcing bar with no measuring section loss.

LEGEND

2.7	Sounding Depth from Waterline (ft)
———	Approximate Channel Bottom – July 2017
	Timber Debris
	Water Surface

COLLINS ENGINEERS
124 Venture Court, Ste 10
Lexington, KY 40511
Phone: 859-367-0097
Fax: 859-367-0140

Ohio Department of Transportation, District 11
2201 Reiser Ave.
New Philadelphia, OH 44663
Phone: (330) 339-6633

SR 542 OVER ATWOOD RESERVOIR
BRIDGE NO. CAR-542-0573
BENT 3
CARROLL COUNTY, OHIO

CEI PROJECT	55–10356.00
INSPECTED BY:	KDL
DRAWN BY:	BBM
CHECKED BY:	JMJ
DATE:	JUL 2017
SHEET NO:	8

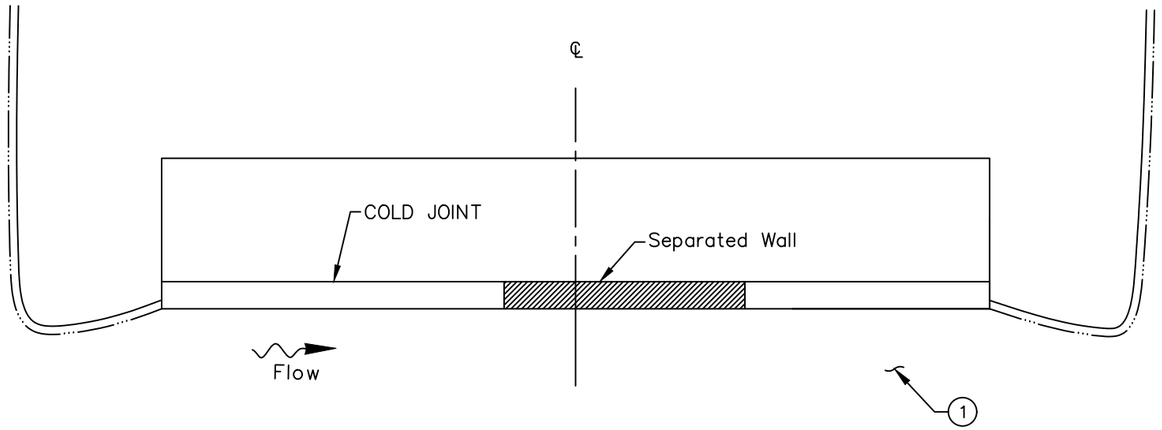

PLAN VIEW

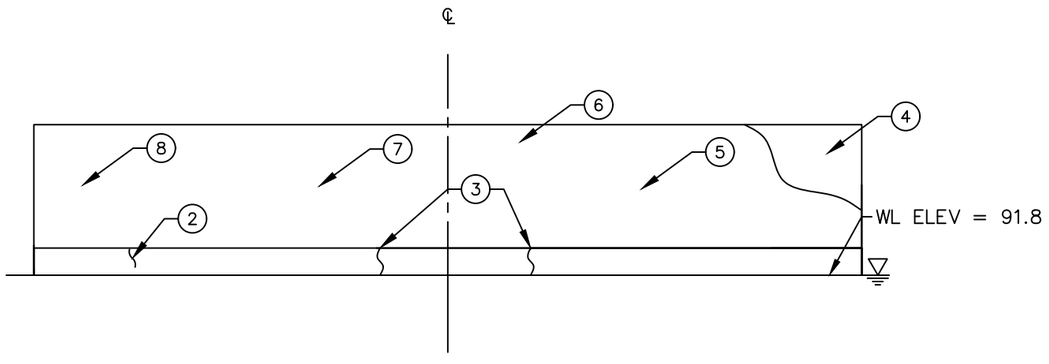

ELEVATION VIEW

INSPECTION NOTES:

1. The channel bottom material consisted of rip–rap up to 1 ft diameter with silt overlay and no probe rod penetration.
2. Moderate scaling up to 1/4 in. deep was observed extending from channel bottom to the waterline.
3. A crack measuring up to 3/16 in. wide was observed extending from the channel bottom to the top of the step on the abutment.
4. Spall measuring 5 ft horizontal by 2.5 ft vertical by 6 in. deep with 4 exposed steel reinforcing bar with up to 20% section loss was observed on the face of the abutment.
5. Spall measuring 1 ft diameter by 1 in. deep with 1 exposed steel reinforcing bar with up to 20% section loss was observed on the face of the abutment.
6. Area of delamination measuring up to 3 ft diameter was observed on the face of the abutment.
7. Area of delamination measuring up to 1.5 ft diameter was observed on the face of the abutment.
8. Area of delamination measuring 14 in. horizontal by 20 in. vertical was observed on the face of the abutment.

LEGEND

2.7	Sounding Depth from Waterline (ft)
———	Approximate Channel Bottom – July 2017
	Timber Debris
	Water Surface

COLLINS ENGINEERS
124 Venture Court, Ste 10
Lexington, KY 40511
Phone: 859-367-0097
Fax: 859-367-0140

Ohio Department of Transportation, District 11
2201 Reiser Ave.
New Philadelphia, OH 44663
Phone: (330) 339-6633

SR 542 OVER ATWOOD RESERVOIR
BRIDGE NO. CAR-542-0573
ABUTMENT 4
CARROLL COUNTY, OHIO

CEI PROJECT	55–10356.00
INSPECTED BY:	KDL
DRAWN BY:	BBM
CHECKED BY:	JMJ
DATE:	JUL 2017
SHEET NO:	9

EXHIBIT 2 – INSPECTION PHOTOGRAPHS



Photograph No. 1: Overall View of Structure No. CAR-542-0573, Looking West.



Photograph No. 2: Overall View of Structure No. CAR-542-0573, Looking East.



Photograph No. 3: View of the Northwest Embankment Upstream of the Structure, Looking Northeast.



Photograph No. 4: View of the Northeast Embankment Downstream of the Structure, Looking Northwest.



Photograph No. 5: View of the Southwest Embankment Upstream of the Structure, Looking Southeast.



Photograph No. 6: View of the Southeast Embankment Downstream of the Structure, Looking Southwest.



Photograph No. 7: View of the Abutment 1, Looking Northwest.



Photograph No. 8: View of the Undermining at Abutment 1, Looking Northeast.



Photograph No. 9: View of the Failed Repair at Abutment 1, Looking Northeast.



Photograph No. 10: View of the Spall at Abutment 1, Looking North.



Photograph No. 11: View of the Spalls and Areas of Delamination on Abutment 1, Looking North.



Photograph No. 12: View of the South Face and Upstream Nose of Bent 2, Looking Northwest.



Photograph No. 13: View of the North Face and Downstream Nose of Bent 2, Looking Southeast.



Photograph No. 14: View of the Exposed Seel Reinforcing Bar on the North Face of Bent 2, Looking South.



Photograph No. 15: View of the Typical Concrete Conditon at the Waterline on the Downstream Nose of Bent 2, Looking East.



Photograph No. 16: View of the South Face and Upstream Nose of Bent 3, Looking Northwest.



Photograph No. 17: View of the North Face and Downstream Nose of Bent 3, Looking Southeast.



Photograph No. 18: View of Abutment 4, Looking South.



Photograph No. 19: View of Abutment 4, Looking Southeast.



Photograph No. 20: View of the Crack at Abutment 4, Looking South.



Photograph No. 21: View of the Spall at Abutment 4, Looking South.



Photograph No. 22: View of the Spall at Abutment 4, Looking South.