







UNDERWATER BRIDGE INSPECTION REPORT

STRUCTURE NO. CAR-542-0606
SR 542 OVER ATWOOD RESERVOIR
CARROLL COUNTY, OH
DISTRICT 11

July 2017

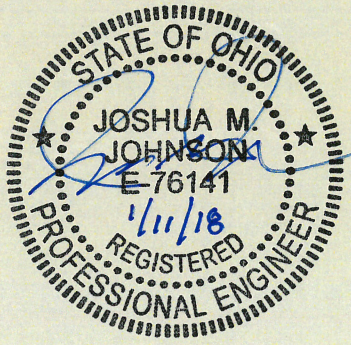

Prepared for:

STATE OF OHIO DEPARTMENT OF TRANSPORTATION

Prepared by:

COLLINS ENGINEERS INC.

124 Venture Court, Suite 10

Lexington, Kentucky 40511

859.367.0097 • www.collinsengr.com

TABLE OF CONTENTS

EXECUTIVE SUMMARY
1.0 INTRODUCTION 1
1.1 Purpose and Scope 1
1.2 General Description of the Structure 1
1.3 Method of Investigation 1
2.0 EXISTING CONDITIONS 2
2.1 General Conditions 2
2.2 Substructure Conditions 3
2.2.1 Abutment 1 3
2.2.1 Pier 2 3
2.2.2 Pier 3 3
2.2.1 Abutment 4 3
3.0 EVALUATION AND RECOMMENDATIONS 4
EXHIBIT 1 – FIGURES 5
LOCATION MAP 6
SOUNDING PLAN 7
UPSTREAM CHANNEL CROSS SECTIONS 8
CENTERLINE CHANNEL CROSS SECTIONS 9
DOWNSTREAM CHANNEL CROSS SECTIONS 10
PIER 1 11
PIER 2 12
EXHIBIT 2 – INSPECTION PHOTOGRAPHS 13
Photograph No. 1: Overall View of Structure No. CAR-542-0606, Looking Southeast. 14
Photograph No. 2: Overall View of Structure No. CAR-542-0606, Looking Northwest. 14
Photograph No. 3: View of the Northwest Embankment, Upstream of the Structure, Looking South. 15
Photograph No. 4: View of Abutment 1 at the Structure, Looking West. 15
Photograph No. 5: View of the Northeast Embankment, Upstream of the Structure, Looking East. 16
Photograph No. 6: View of the Southwest Embankment, Downstream of the Structure, Looking West. 16
Photograph No. 7: View of Abutment 4 at the Structure, Looking East. 17

Photograph No. 8: View of the Southeast Embankment, Downstream of the Structure, Looking North. 17
Photograph No. 9: View of Abutment 1, Looking South. 18
Photograph No. 10: View of Spalling with Exposed Bars and Section Loss on Abutment 1, Looking Northeast. 18
Photograph No. 11: View of Pier 2, Looking South. 19
Photograph No. 12: View of Pier 2, Looking North. 19
Photograph No. 14: View of Typical Concrete at Waterline, Pier 2, Looking Northwest. 20
Photograph No. 15: View of Pier 3, Looking North. 21
Photograph No. 16: View of Pier 3, Looking South. 21
Photograph No. 17: View of Cracking on Pier 3, Looking West. 22
Photograph No. 18: View of Abutment 4, Looking North. 22
Photograph No. 19: View of Corrosion of Girders, Abutment 1, Looking Northeast. 23
Photograph No. 20: View of Corrosion with Reference. 23

EXECUTIVE SUMMARY

Project: ODOT District 11 Underwater Bridge Inspections - 2017

Purpose of Project: To perform a detailed visual and tactile underwater investigation of scour critical bridges for District 11 of the Ohio Department of Transportation.

Inspection Team: Team Leader – Matthew Rogers, E.I.T. – Collins Engineers, Inc.
Team Member – Kurt Lingo, E.I.T. – Collins Engineers, Inc.
Team Member – Russell Richards, E.I.T. – Collins Engineers, Inc.

Inspection Date(s): July 15, 2017

Water Visibility:	<1 ft	***Water Velocity:***	<1 ft/s
Water Temperature:	83 °F	***Weather:***	Sunny – 85 °F
Waterline Elevation:	926.0 ft	***Type of Boat:***	23 ft Carolina Skiff
Coordinates:	40.56098°N, 81.20925°W		
Access Location:	Shoreline 0.2 miles East of CAR-542-0606		
Dive Mode:	Surface Supplied Air		
Waterline Reference:	6.2 ft below the top of deck at the downstream nose of Pier 2.		
Maximum Depth at SSU:	5.3 ft – Upstream Nose of Piers 2 and 3.		
Shoreline Conditions:	The west and east shorelines consisted of riprap up to 12 inches diameter with trees and shrubs throughout.		

Summary of Findings:

- **Abutment 1:**
  - A spall with exposed and corroded reinforcing steel was observed at the downstream end of the abutment, measuring 2.5 ft wide by 4.0 ft high with up to 6 inches of penetration. The spall consisted of 3 exposed bars exhibiting up to 50 percent section loss.
  - Scaling with exposed aggregate was observed along the entire east face of the abutment, extending from the channel bottom to 1.5 ft above the waterline with up to 1/2 in penetration.
- **Pier 2:**
  - A spall with exposed and corroded reinforcing steel was observed at the downstream column, 1 ft below the top of cap, measuring 2.0 ft wide by 18 inches high with up to 2 inches of penetration. The spall consisted of 2 exposed bars exhibiting up to 10 percent section loss.
  - Scaling with exposed aggregate was observed around the entire pier, extending from the channel bottom to 1.5 ft above the waterline with up to 1/2 in penetration.
- **Pier 3:**
  - An impending spall with delaminated concrete was observed at the downstream column, measuring 1.0 ft wide by 1.5 ft high.
  - Scaling with exposed aggregate was observed around the entire pier, extending from the channel bottom to 1.5 ft above the waterline with up to 1/2 in penetration.

- **Abutment 4:**
  - Scaling with exposed aggregate was observed along the entire west face of the abutment, extending from the channel bottom to 1.5 ft above the waterline with up to 1/2 in penetration.

Summary of Recommendations:

- Monitor spalls with exposed and corroded reinforcing steel at Abutment 1 and Pier 2.
- Monitor impending spall with delaminated concrete at Pier 3.
- Monitor scaling at all substructure units.

Underwater Inspection Coding:

NBI Ratings:

Item	Description	Coding	Condition
60	Substructure	7– Good Condition	Spalling with Exposed and Corroded Reinforcing Steel, Concrete Scaling
61	Channel	7 – Good Condition	Riprap
62	Culvert	N/A	
92B	UW Insp. Frequency	60 Months	
93B	Insp. Date	07 15 17	
113	Scour Critical Bridges	8 – Above Foundation Limits	Stable (Inspector Recommended)

AASHTO National Bridge Element (NBE) Ratings:

Element #	Description	Units	Total	Condition State			
				1	2	3	4
205	Reinforced Concrete Column	EA	6	6	0	0	0
215	Reinforced Concrete Abutment	LF	60	50	0	10	0
220	Reinforced Concrete Pile Cap / Footing	LF	60	55.5	1.5	3	0

Note: Ratings were developed using the FHWA Recording and Coding Guide for the Structure Inventory and Appraisal of the Nation's Bridges. The recommended ratings consider inspected elements located within the waterway and conditions existing below the water surface only. Additional consideration is necessary for the assignment of overall condition ratings for this bridge.

1.0 INTRODUCTION

1.1 Purpose and Scope

This report consists of the results of a detailed underwater investigation performed at the SR 542 Bridge over Atwood Reservoir in Carroll County, OH. Collins Engineers, Inc. (Collins) conducted the underwater investigation for the Ohio Department of Transportation (ODOT) on July 15, 2017. The primary purpose of the investigation was as follows:

- Determine the condition of the substructure components located in the water at the time of the inspection from the waterline to the channel bottom.
- Obtain channel bottom depth measurements along the bridge fascias, upstream and downstream of the bridge, and around the submerged substructure units.
- Determine the condition of the shorelines in the vicinity of the structure.
- Obtain photographs of the bridge and any significant defects.

In addition, a brief inspection was made of areas that could be submerged during periods of high water. The following report includes a description of the structure, the method of investigation, a description of existing conditions, an evaluation and recommendations based on the conditions, inspection figures, and photographs.

1.2 General Description of the Structure

Structure No. CAR-542-0606 spans 92.92 ft, carrying SR 542 over Atwood Reservoir and is approximately 30.0 ft wide. The bridge superstructure is constructed of five steel girder spans. The roadway orientation of the longitudinal axis of the bridge is west to east. The substructure units are labeled as Piers 1 and 2. Existing design drawings were not available at the time of the inspection. Refer to Figure 1 in Exhibit 1 for a Location Map of the bridge. Refer to Photographs 1 and 2 in Exhibit 2 for overall views of the bridge.

1.3 Method of Investigation

A detailed field inspection was conducted to determine the physical condition of the submerged bridge substructure units from the waterline to the channel bottom. A brief visual examination of the substructure units above the waterline was also made.

A three-person team consisting of engineer-diver and team leader (Matthew Rogers, E.I.T.) and two engineer-divers (Kurt Lingo, E.I.T. and Russell Richards, E.I.T.) conducted the underwater inspection. The inspection was conducted using surface supplied air diving equipment. During the inspection, the inspectors worked from a boat and a note taker in the boat recorded the inspection notes.

The underwater inspection consisted of a visual and tactile examination of the accessible surfaces of the substructure units from the waterline to the channel bottom with particular attention given to any observed areas of deterioration or apparent distress. Approximately 10 percent of the total area on the underwater surfaces of the substructure units was cleaned so that the condition could be more closely examined. Photographs were taken to document the general conditions and observed deficiencies. Underwater Photographs could not be obtained due to poor water conditions. The type of channel bottom material, the presence or extent of scour, the presence or extent of riprap, the presence or extent of drift and debris, and the location of any foundation exposure or undermining were noted.

Channel bottom soundings were performed utilizing a telescoping survey rod and digital fathometer. Soundings were collected at quarter points along the bridge centerline as well as 10 feet and 50 feet upstream and downstream of the bridge, parallel with its fascias. Additional soundings were collected adjacent to Piers 2 and 3 and at 10 feet intervals in-line with the piers, upstream and downstream, and the waterline was referenced to a known elevation on the bridge. A sounding plan was developed using the soundings and approximate location of the shorelines. Refer to Figures 2 thru 5 in Exhibit 1 for the sounding plan and channel cross sections that show the channel limits and water depths around the structure.

2.0 EXISTING CONDITIONS

2.1 General Conditions

At the time of the inspection, the waterline of CAR-542-0606 was located approximately 6.2 feet below the downstream nose of pier 2, which corresponds to a waterline elevation of 926.0 ft. During the inspection, the waterway was flowing at approximately <1 ft per second. The bridge pier skew was consistent with the channel alignment and does not require attention at this time. The north and south shorelines consisted of large rock and mild vegetation with mild slopes and large trees. Refer to Photographs 3 through 8 in Exhibit 2 for views of the shorelines near the structure.

2.2 Substructure Conditions

2.2.1 Abutment 1

The channel bottom material around Abutment 1 consisted of sand and rip-rap with approximately 1 ft probe rod penetration. Scaling up to 1/6 in. in diameter with exposed aggregate from 1.5 ft. below the water line to 1.5 ft above the waterline was typical. A spall was noted with dimensions 4.1 ft vertical by 2.3 ft wide by 0.6' in diameter with 3 exposed bars exhibiting up to 50 percent surface loss. Refer to Figure 8 in Exhibit 1 for detailed inspection notes of Abutment 1. Refer to Photographs 4, 9, 10, 19, and 20 in Exhibit 2 for all views of Abutment 1.

2.2.1 Pier 2

The channel bottom material around Pier 2 consisted of sand and rip-rap with approximately 1 ft probe rod penetration. Scaling up to 1/6 in. in diameter with exposed aggregate from 1.5 ft. below the water line to 1.5 ft above the waterline was typical. A spall was discovered at Bar 'A' with dimensions 18 in. vertical by 2 ft wide by 2 in. deep with 2 exposed bars and up to 10 percent surface loss at 1 ft below the top of cap. Corrosion was noted as well as a 4-6 in. in diameter spall on the top flange. There was no surface loss at Beam 'C' from mid-span at Pier 2 up through Abutment 1. Refer to Figure 6 in Exhibit 1 for detailed inspection notes of Pier 2. Refer to Photographs 11 through 14 in Exhibit 2 for views of Pier 2.

2.2.2 Pier 3

The channel bottom material around Pier 3 consisted of sand and rip-rap with approximately 1 ft probe rod penetration. Scaling up to 1/6 in. in diameter with exposed aggregate from 1.5 ft. below the water line to 1.5 ft above the waterline was typical. A delaminated spall with dimensions 1.5 ft vertical by 1 ft wide was noted on the southeast corner of Bent 'A'. Refer to Figure 7 in Exhibit 1 for detailed inspection notes of Pier 3. Refer to Photographs 15 through 17 in Exhibit 2 for views of Pier 3 and typical concrete condition at the waterline.

2.2.1 Abutment 4

The channel bottom material around Abutment 4 consisted of sand and rip-rap with approximately 1 ft probe rod penetration. Scaling up to 1/6 in. in diameter with exposed aggregate from 1.5 ft. below the water line to 1.5 ft above the waterline was typical. Refer to Figure 9 in Exhibit 1 for detailed inspection notes of Abutment 4. Refer to Photographs 7 and 18 in Exhibit 2 for all views of Abutment 4.

3.0 EVALUATION AND RECOMMENDATIONS

Overall, the inspected substructure units of Structure No. CAR-542-0606 were in good condition. A comparison of the soundings recorded during the previous inspection on September 24, 2012 and the soundings taken during this inspection revealed no significant change in the channel bottom profile in the vicinity of the structure. Although no channel deficiencies were observed, the channel bottom should continue to be monitored during future underwater inspections to verify that localized scour or overall channel degradation is not occurring and that the pier footings remain adequately embedded in the channel bottom.

The spalls at Abutments 1 and Pier 2 are not structural concerns at this time; however, they should be repaired to prevent further deterioration. The repairs should include removal of unsound concrete to a minimum of 1 inch behind the reinforcing steel, cleaning and replacing reinforcing steel as required, and placing concrete designed to provide high durability with low permeability.

The cracks at Pier 3 are not structural concerns at this time. However, the cracks do provide a means for water infiltration and freeze-thaw damage. It is therefore recommended that these cracks be monitored during future underwater inspections. If further crack propagation or increased crack widths are observed, it may be necessary to repair the cracks by injection or patching with a repair material suitable for underwater applications.

It is recommended that the submerged substructure units of Structure No. CAR-542-0606 be next inspected underwater at an interval not to exceed 60 months, no later than July 15, 2022.

Respectfully Submitted,
COLLINS ENGINEERS, INC.

Joshua Johnson, P.E.
Project Manager/Team Leader

Originated by:
Matthew Rogers, E.I.T.

EXHIBIT 1 – FIGURES



COLLINS ENGINEERS
124 Venture Court, Ste 10
Lexington, KY 40511
Phone: 859-367-0097
Fax: 859-367-0140

Ohio Department of
Transportation, District 11
2201 Reiser Ave.
New Philadelphia, OH 44663
Phone: (330) 339-6633

SR 542 OVER ATWOOD RESERVOIR
BRIDGE NO. CAR-542-0606
LOCATION MAP

CARROLL COUNTY, OHIO

INSPECTED BY: JMJ	CEI PROJECT: 55-10356.00
DRAWN BY: BBM	DATE: JULY 2017
CHECKED BY: JMJ	SHEET NO: 1

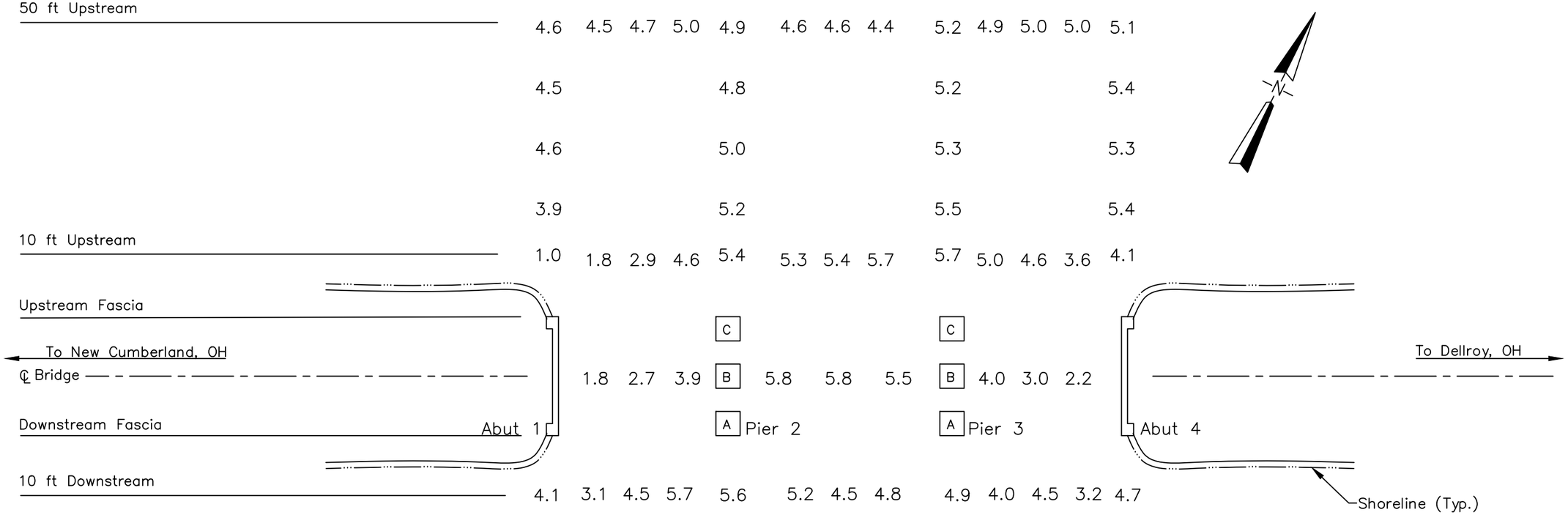

SOUNDING PLAN

GENERAL NOTES:

1. Piers 2 and 3 were inspected underwater. Substructure units are labeled according to available record drawings.
2. At the time of inspection on July 15, 2017, the waterline was located approximately 6.2 ft below the Top of Deck at the Pier 2 downstream nose. (EL. +932.2 ft). This corresponds with a waterline elevation of +926.0 ft.
3. Soundings indicate the water depth at the time of inspection and are measured in feet.
4. Soundings were taken parallel to the bridge at the upstream and downstream fascias, at 10 ft intervals between the substructure units, and at 10 ft intervals in–line with the piers upstream and downstream up to 50 ft.

LEGEND

–2.7	Sounding Depth from Waterline (ft)
	Timber Debris

COLLINS ENGINEERS
124 Venture Court, Ste 10
Lexington, KY 40511
Phone: 859-367-0097
Fax: 859-367-0140

Ohio Department of Transportation, District 11
2201 Reiser Ave.
New Philadelphia, OH 44663
Phone: (330) 339-6633

SR 542 OVER ATWOOD RESERVOIR
BRIDGE NO. CAR-542-0606
SOUNDING PLAN
CARROLL COUNTY, OHIO

CEI PROJECT	55–10356.00
INSPECTED BY:	JMJ
DRAWN BY:	BBM
CHECKED BY:	JMJ
DATE:	JULY 2017
SHEET NO:	2

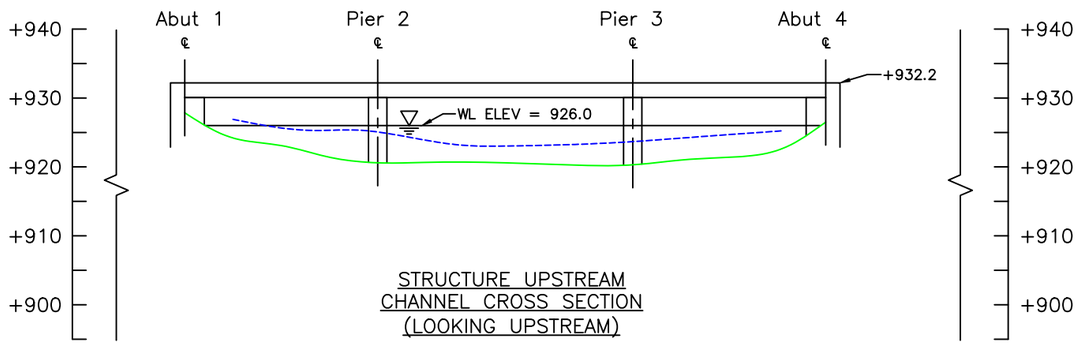

STRUCTURE UPSTREAM
CHANNEL CROSS SECTION
(LOOKING UPSTREAM)

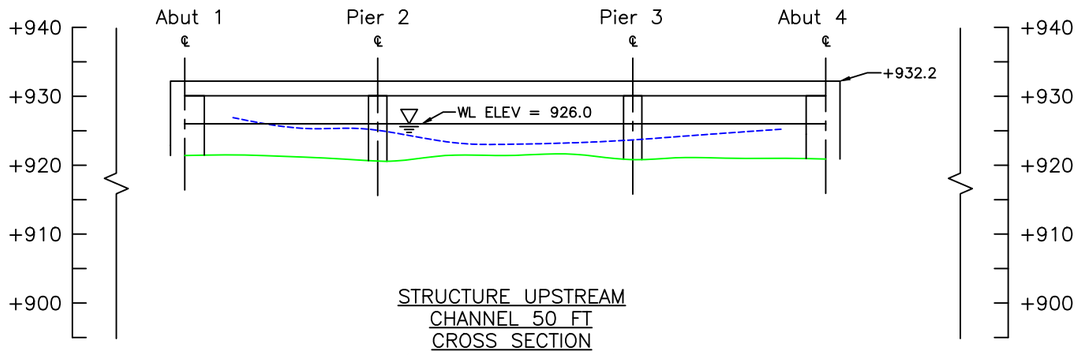

STRUCTURE UPSTREAM
CHANNEL 50 FT
CROSS SECTION
(LOOKING UPSTREAM)

Downstream Elevations (Looking Upstream)		
Location	Dist. (x)	Height (y)
A4	0.0	5.7
1/4		6.1
1/2		6.0
3/4		6.1
P3	28.0	6.0
1/4		6.2
1/2		6.1
3/4		6.3
P2	65.0	6.4
1/4		6.5
1/2		6.5
3/4		6.5
A1	93.0	6.5

LEGEND

- Approximate Channel Bottom – July 2017
- Approximate Channel Bottom – September 2012
- Approximate Channel Bottom – July 2004 (No Data)
- Timber Debris
- Water Surface
- +450 Elevation (ft)

COLLINS ENGINEERS
124 Venture Court, Ste 10
Lexington, KY 40511
Phone: 859-367-0097
Fax: 859-367-0140

Ohio Department of Transportation, District 11
2201 Reiser Ave.
New Philadelphia, OH 44663
Phone: (330) 339-6633

SR 542 OVER ATWOOD RESERVOIR
BRIDGE NO. CAR-542-0606
CROSS SECTIONS
CARROLL COUNTY, OHIO

CEI PROJECT 55–10356.00
INSPECTED BY: JMJ
DRAWN BY: BBM
CHECKED BY: JMJ
DATE: JULY 2017
SHEET NO: 3

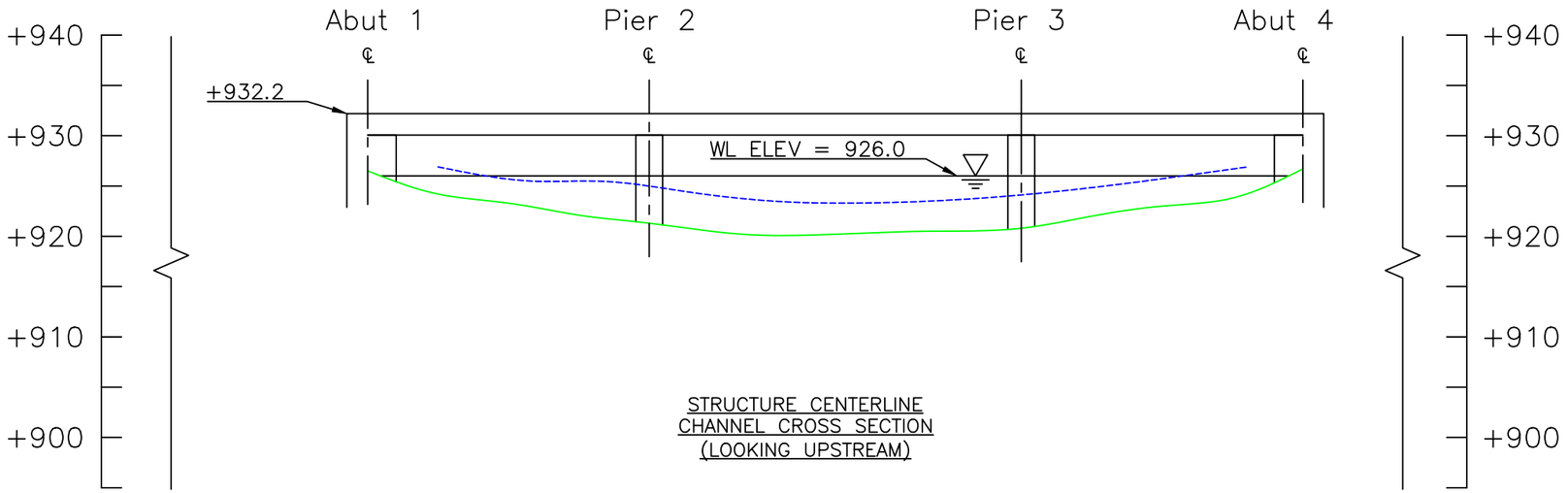

STRUCTURE CENTERLINE
CHANNEL CROSS SECTION
(LOOKING UPSTREAM)

Downstream Elevations (Looking Upstream)		
Location	Dist. (x)	Height (y)
A1	0.0	5.7
1/4		6.4
1/2		6.3
3/4		6.3
P2	28.0	6.2
1/4		6.2
1/2		6.1
3/4		6.1
P3	65.0	6.0
1/4		6.0
1/2		6.0
3/4		6.0
A4	93.0	5.5

LEGEND

- Approximate Channel Bottom – July 2017
- Approximate Channel Bottom – September 2012
- Approximate Channel Bottom – July 2004 (No Data)
- Timber Debris
- Water Surface
- +450 Elevation (ft)

COLLINS ENGINEERS
124 Venture Court, Ste 10
Lexington, KY 40511
Phone: 859-367-0097
Fax: 859-367-0140

Ohio Department of Transportation, District 11
2201 Reiser Ave.
New Philadelphia, OH 44663
Phone: (330) 339-6633

SR 542 OVER ATWOOD RESERVOIR
BRIDGE NO. CAR-542-0606
CROSS SECTIONS
CARROLL COUNTY, OHIO

CEI PROJECT 55–10356.00
INSPECTED BY: JMJ
DRAWN BY: BBM
CHECKED BY: JMJ
DATE: JULY 2017
SHEET NO: 4

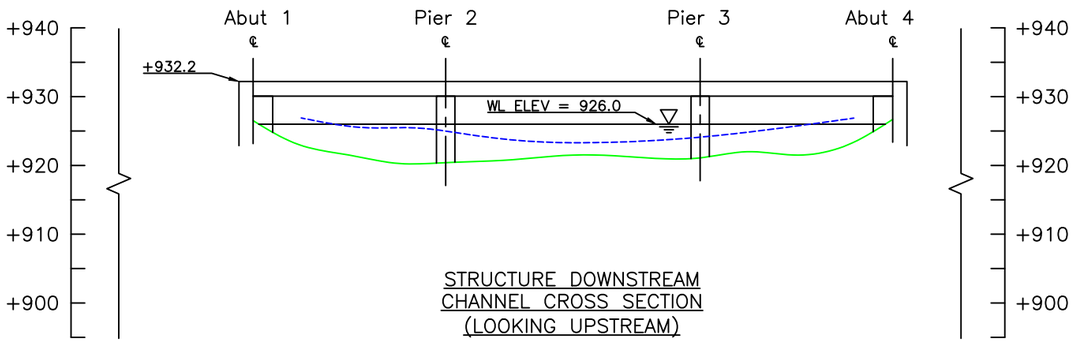

STRUCTURE DOWNSTREAM
CHANNEL CROSS SECTION
(LOOKING UPSTREAM)

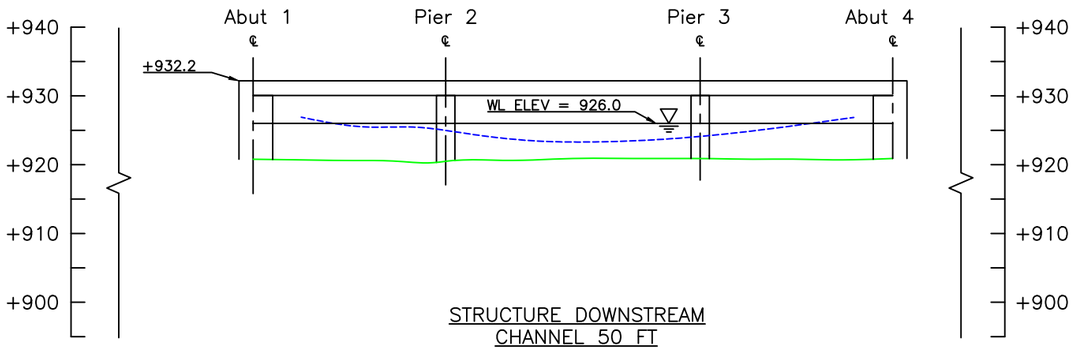

STRUCTURE DOWNSTREAM
CHANNEL 50 FT
CROSS SECTION
(LOOKING UPSTREAM)

Downstream Elevations
(Looking Upstream)

Location	Dist. (x)	Height (y)
A1	0.0	5.7
1/4		6.4
1/2		6.3
3/4		6.3
P2	28.0	6.2
1/4		6.2
1/2		6.1
3/4		6.1
P3	65.0	6.0
1/4		6.0
1/2		6.0
3/4		6.0
A4	93.0	5.5

LEGEND

- Approximate Channel Bottom – July 2017
- Approximate Channel Bottom – September 2012
- Approximate Channel Bottom – July 2004 (No Data)
- Timber Debris
- Water Surface
- +450 Elevation (ft)

COLLINS ENGINEERS
124 Venture Court, Ste 10
Lexington, KY 40511
Phone: 859-367-0097
Fax: 859-367-0140

Ohio Department of Transportation, District 11
2201 Reiser Ave.
New Philadelphia, OH 44663
Phone: (330) 339-6633

SR 542 OVER ATWOOD RESERVOIR
BRIDGE NO. CAR-542-0606
CROSS SECTIONS
CARROLL COUNTY, OHIO

CEI PROJECT
55–10356.00
INSPECTED BY:
JMJ
DRAWN BY:
BBM
CHECKED BY:
JMJ
DATE:
JULY 2017
SHEET NO:
5

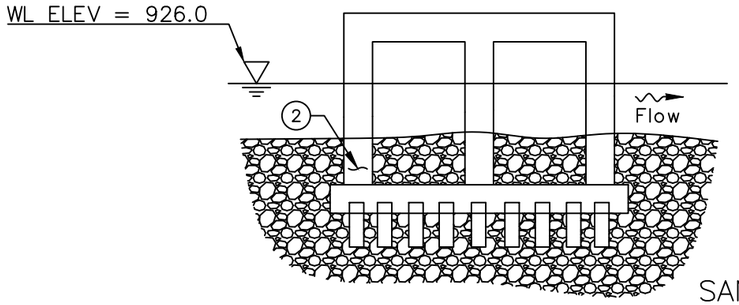

WEST ELEVATION
(LOOKING EAST)

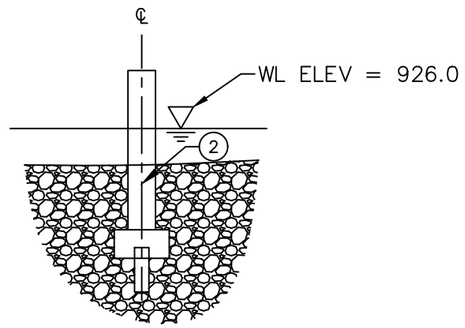

UPSTREAM
ELEVATION

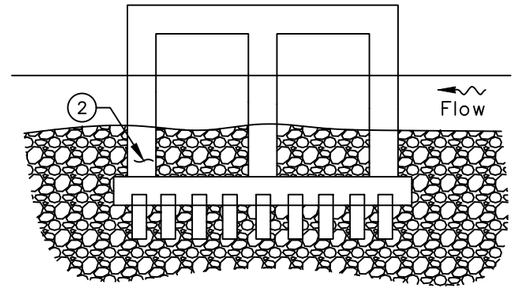

EAST ELEVATION

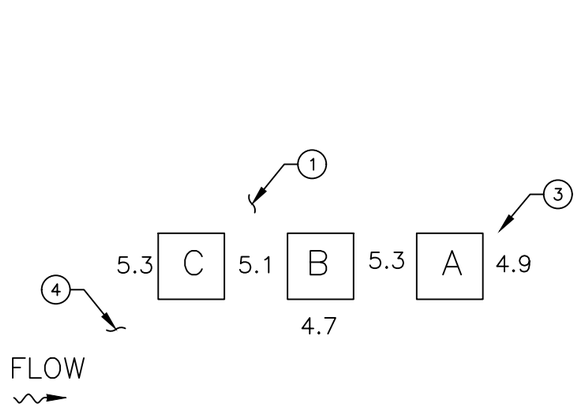

PIER 2
PLAN

INSPECTION NOTES:

1. The channel bottom material consisted of sand and rip–rap with approximately 1 ft probe rod penetration.
2. Typical scaling up to 1/6 in. diameter with exposed aggregate from –1.5 ft to +1.5 ft.
3. Bar 'A' has a spall with 18" V x 2' W x 2" D with 2 exposed bars up to 10% surface loss at 1' below Top of Cap.
4. Corrosion and a 4 in. to 6 in. diameter spall on the top flange. No surface loss at Beam 'C" from mid–span at Pier 2 up through Abutment 1.

LEGEND

–2.7	Sounding Depth from Waterline (ft)
———	Approximate Channel Bottom – July 2017
	Timber Debris
	Water Surface

COLLINS ENGINEERS
124 Venture Court, Ste 10
Lexington, KY 40511
Phone: 859-367-0097
Fax: 859-367-0140

Ohio Department of Transportation, District 11
2201 Reiser Ave.
New Philadelphia, OH 44663
Phone: (330) 339-6633

SR 542 OVER ATWOOD RESERVOIR
BRIDGE NO. CAR-542-0606
PIER 2
CARROLL COUNTY, OHIO

CEI PROJECT	55–10356.00
INSPECTED BY:	JMJ
DRAWN BY:	BBM
CHECKED BY:	JMJ
DATE:	JULY 2017
SHEET NO:	6

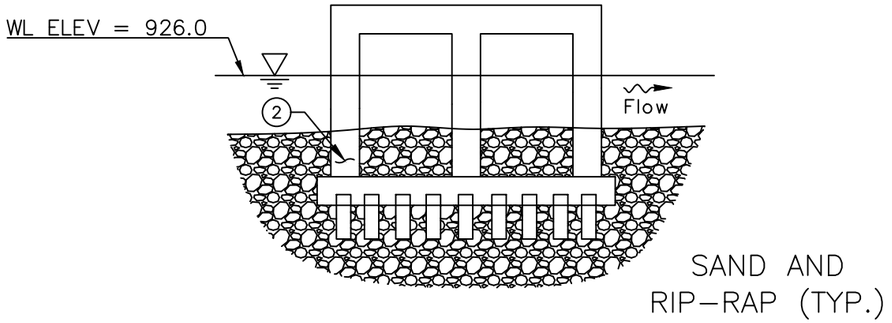

WEST ELEVATION
(LOOKING EAST)

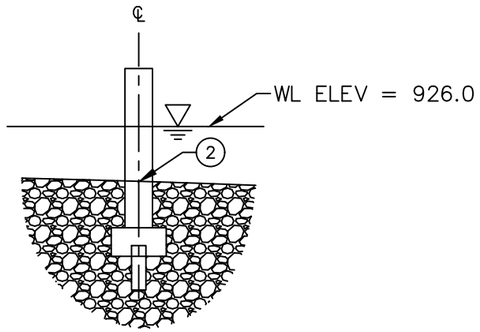

UPSTREAM
ELEVATION

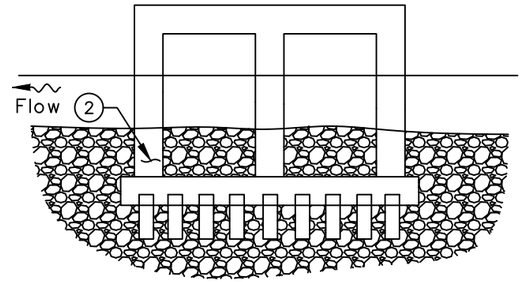

EAST ELEVATION

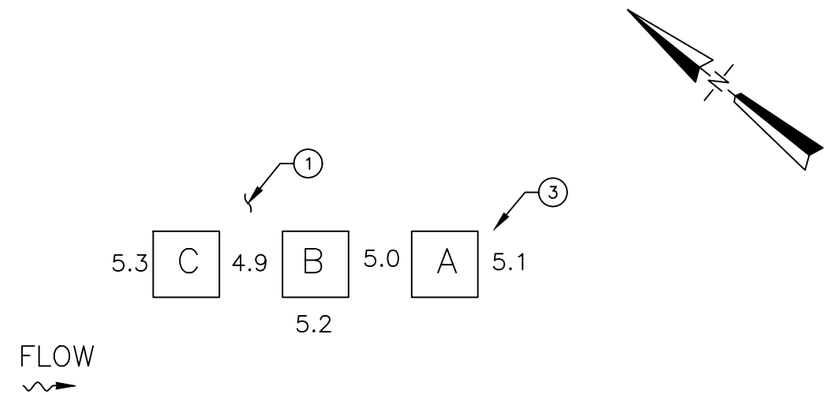

PIER 3
PLAN

INSPECTION NOTES:

1. The channel bottom material consisted of sand and rip–rap with approximately 1 ft probe rod penetration.
2. Typical scaling up to 1/6 in. diameter with exposed aggregate from –1.5 ft to +1.5 ft.
3. A delaminated spall with 1.5 ' V x 1' W is on the southeast corner of Bent A.

LEGEND

–2.7	Sounding Depth from Waterline (ft)
———	Approximate Channel Bottom – July 2017
	Timber Debris
	Water Surface

COLLINS ENGINEERS
124 Venture Court, Ste 10
Lexington, KY 40511
Phone: 859-367-0097
Fax: 859-367-0140

Ohio Department of Transportation, District 11
2201 Reiser Ave.
New Philadelphia, OH 44663
Phone: (330) 339-6633

SR 542 OVER ATWOOD RESERVOIR
BRIDGE NO. CAR-542-0606
PIER 3
CARROLL COUNTY, OHIO

CEI PROJECT
55–10356.00

INSPECTED BY:
JMJ

DRAWN BY:
BBM

CHECKED BY:
JMJ

DATE:
JULY 2017

SHEET NO:
7

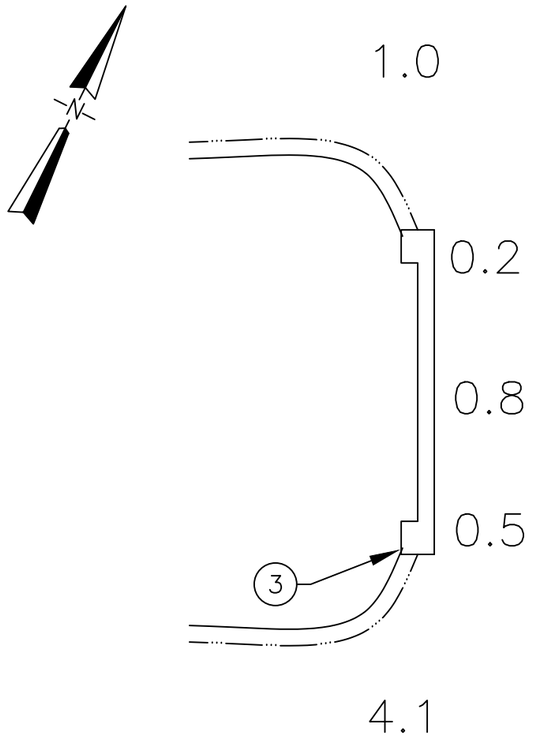

PLAN

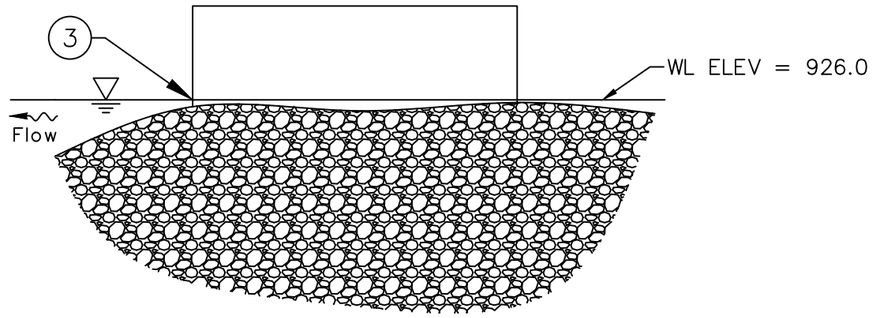

EAST ELEVATION
(LOOKING WEST)

ABUTMENT 1

INSPECTION NOTES:

1. The channel bottom material consisted of sand and rip–rap with approximately 1 ft probe rod penetration.
2. Typical scaling up to 1/6 in. diameter with exposed aggregate from –1.5 ft to +1.5 ft.
3. A spall with 4.1' vertical by 2.3' width by 0.6' diameter with 3 exposed bars exhibiting up to 50% surface loss.

LEGEND

–2.7	Sounding Depth from Waterline (ft)
———	Approximate Channel Bottom – July 2017
	Timber Debris
	Water Surface

COLLINS ENGINEERS
124 Venture Court, Ste 10
Lexington, KY 40511
Phone: 859-367-0097
Fax: 859-367-0140

Ohio Department of Transportation, District 11
2201 Reiser Ave.
New Philadelphia, OH 44663
Phone: (330) 339-6633

SR 542 OVER ATWOOD RESERVOIR
BRIDGE NO. CAR-542-0606
ABUTMENT 1
CARROLL COUNTY, OHIO

CEI PROJECT	55–10356.00
INSPECTED BY:	JMJ
DRAWN BY:	BBM
CHECKED BY:	JMJ
DATE:	JULY 2017
SHEET NO:	8

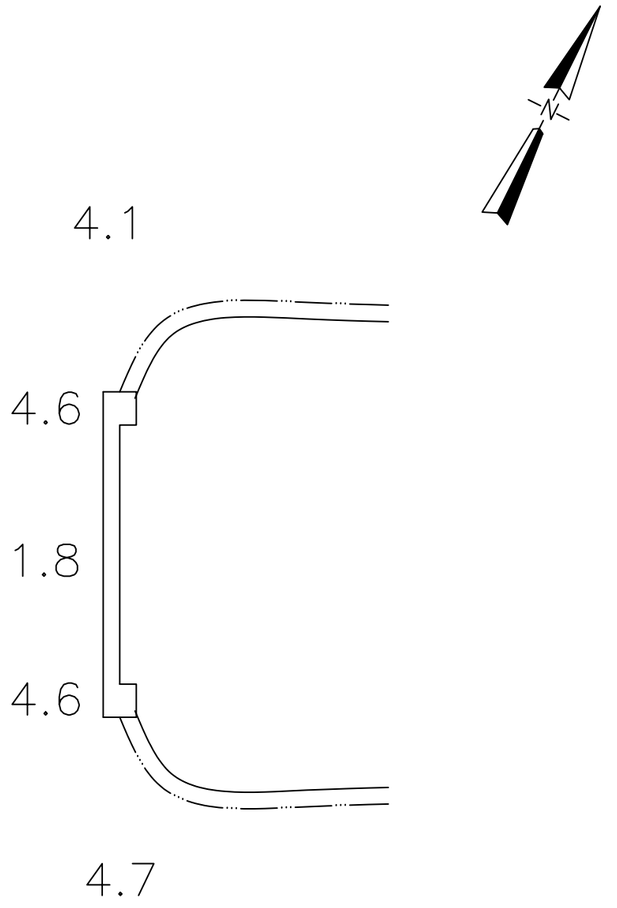

PLAN

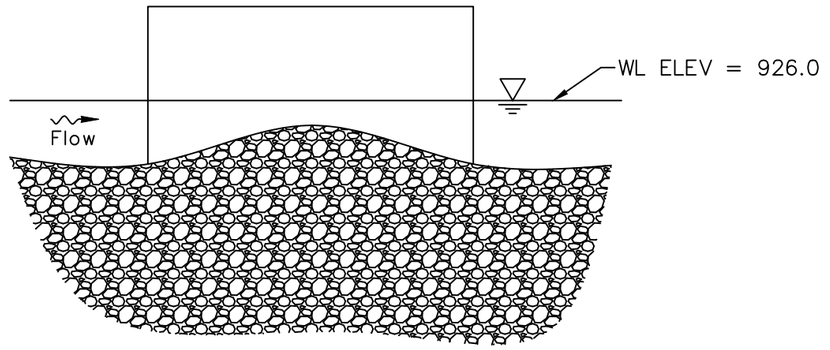

WEST ELEVATION
(LOOKING EAST)

ABUTMENT 4

INSPECTION NOTES:

1. The channel bottom material consisted of sand and rip–rap with approximately 1 ft probe rod penetration.
2. Typical scaling up to 1/6 in. diameter with exposed aggregate from –1.5 ft to +1.5 ft.

LEGEND

–2.7	Sounding Depth from Waterline (ft)
———	Approximate Channel Bottom – July 2017
	Timber Debris
	Water Surface

COLLINS ENGINEERS
124 Venture Court, Ste 10
Lexington, KY 40511
Phone: 859-367-0097
Fax: 859-367-0140

Ohio Department of Transportation, District 11
2201 Reiser Ave.
New Philadelphia, OH 44663
Phone: (330) 339-6633

SR 542 OVER ATWOOD RESERVOIR
BRIDGE NO. CAR-542-0606
ABUTMENT 4
CARROLL COUNTY, OHIO

CEI PROJECT 55–10356.00
INSPECTED BY: JMJ
DRAWN BY: BBM
CHECKED BY: JMJ
DATE: JULY 2017
SHEET NO: 9

EXHIBIT 2 – INSPECTION PHOTOGRAPHS



Photograph No. 1: Overall View of Structure No. CAR-542-0606, Looking Southeast.



Photograph No. 2: Overall View of Structure No. CAR-542-0606, Looking Northwest.



Photograph No. 3: View of the Northwest Embankment, Upstream of the Structure, Looking South.



Photograph No. 4: View of Abutment 1 at the Structure, Looking West.



Photograph No. 5: View of the Northeast Embankment, Upstream of the Structure, Looking East.



Photograph No. 6: View of the Southwest Embankment, Downstream of the Structure, Looking West.



Photograph No. 7: View of Abutment 4 at the Structure, Looking East.



Photograph No. 8: View of the Southeast Embankment, Downstream of the Structure, Looking North.



Photograph No. 9: View of Abutment 1, Looking South.



Photograph No. 10: View of Spalling with Exposed Bars and Section Loss on Abutment 1, Looking Northeast.



Photograph No. 11: View of Pier 2, Looking South.



Photograph No. 12: View of Pier 2, Looking North.



Photograph No. 13: View of Spalling at Pier 2, Looking West.



Photograph No. 14: View of Typical Concrete at Waterline, Pier 2, Looking Northwest.



Photograph No. 15: View of Pier 3, Looking North.



Photograph No. 16: View of Pier 3, Looking South.



Photograph No. 17: View of Cracking on Pier 3, Looking West.



Photograph No. 18: View of Abutment 4, Looking North.



Photograph No. 19: View of Corrosion of Girders, Abutment 1, Looking Northeast.



Photograph No. 20: View of Corrosion with Reference.