





UNDERWATER BRIDGE INSPECTION REPORT

STRUCTURE NO. CAR-542-0864
SR 542 OVER ATWOOD RESERVOIR
CARROLL COUNTY, OH
DISTRICT 11

July 2017

Prepared for:

STATE OF OHIO DEPARTMENT OF TRANSPORTATION

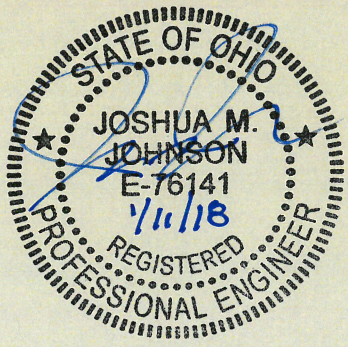

Prepared by:

COLLINS ENGINEERS INC.

124 Venture Court, Suite 10

Lexington, Kentucky 40511

859.367.0097 • www.collinsengr.com

TABLE OF CONTENTS

EXECUTIVE SUMMARY
1.0 INTRODUCTION 1
1.1 Purpose and Scope 1
1.2 General Description of the Structure 1
1.3 Method of Investigation 1
2.0 EXISTING CONDITIONS 2
2.1 General Conditions 2
2.2 Substructure Conditions 3
2.2.1 Abut 1 3
2.2.1 Abut 2 3
3.0 EVALUATION AND RECOMMENDATIONS 3
EXHIBIT 1 – FIGURES 5
LOCATION MAP
SOUNDING PLAN
UPSTREAM CHANNEL CROSS SECTIONS
CENTERLINE CHANNEL CROSS SECTIONS
DOWNSTREAM CHANNEL CROSS SECTIONS
ABUT 1
ABUT 2
EXHIBIT 2 – INSPECTION PHOTOGRAPHS 13
Photograph No. 1: Overall View of CAR-542-0864, Downstream Fascia, Looking Northeast.
Photograph No. 2: Overall View of CAR-542-0864, Upstream Fascia, Looking Southwest.
Photograph No. 3: View of Northern Embankment, Looking Southwest.
Photograph No. 4: View of Eastern Embankment, Looking Southwest.
Photograph No. 5: View of Western Embankment, Looking Northeast.
Photograph No. 6: View of Southern Embankment, Looking Northeast.
Photograph No. 7: View of Abutment 1, Looking West.
Photograph No. 8: View of Spall at Abutment 1, Looking Northwest.
Photograph No. 9: View of Spall at Abutment 1, Looking Northwest.
Photograph No. 10: View of Spall at Abutment 1, Looking Northwest.
Photograph No. 11: View of Spall at Abutment 1, Looking Northwest.
Photograph No. 12: View of Typical Concrete at waterline with Efflorescence, Abutment 1, Looking Northwest.

Photograph No. 13: View of Abutment 2, Looking South.
Photograph No. 14: View of Spall at Abutment 2, Looking East.
Photograph No. 15: View of Spall at Abutment 2, Looking Southeast.
Photograph No. 16: View of Spall at Abutment 2, Looking Southeast.
Photograph No. 17: View of Typical Concrete at waterline, Abutment 2, Looking Southeast.
Photograph No. 18: View of Typical Concrete at waterline, Abutment 2, Looking Southeast.

EXECUTIVE SUMMARY

Project: ODOT District 11 Underwater Bridge Inspections - 2017

Purpose of Project: To perform a detailed visual and tactile underwater investigation of scour critical bridges for the District 11 of the Ohio Department of Transportation.

Inspection Team: Team Leader – Kurt Lingo, E.I.T. – Collins Engineers, Inc.
Team Member – Matthew Rogers, E.I.T. – Collins Engineers, Inc.
Team Member – Greg Desing, P.E. – Collins Engineers, Inc.

Inspection Date(s): July 15, 2017

Water Visibility:	0 ft	***Water Velocity:***	1 ft/s
Water Temperature:	70 °F	***Weather:***	Cloudy – 81 °F
Waterline Elevation:	94.0 ft	***Type of Boat:***	14 ft Jon Boat
Coordinates:	40.55655°N, 81.25372°W		
Access Location:	Shore		
Dive Mode:	Surface Supplied Air		
Waterline Reference:	6.0 ft below the top of deck at Abutment 1 along the upstream fascia.		
Maximum Depth at SSU:	14.8 ft – Abutment 2 Centerline		
Shoreline Conditions:	The north and south shorelines consisted of lightly vegetated mild, rocky slopes.		

Summary of Findings:

- **Abut 1:**
  - Loss of joint filler between abutment and deck up to 2 ft vertically. Typical at all four corners.
  - One spall (3.2 ft x 1.2 ft x .6 ft) with no exposed bars at .5' below the waterline.
  - Hairline map cracking with efflorescence on 50% of total surface area.
  - Scaling up to 1/4 in. in diameter from channel bottom to 1 ft (typical).
- **Abut 2:**
  - Loss of joint filler between abutment and deck up to 2 ft vertically. Typical at all four corners.
  - Hairline map cracking with efflorescence on 50% of total surface area.
  - Scaling up to 1/4 in. in diameter from channel bottom to 1 ft (typical).
  - Spall (6 ft x 4 in. x 3 in.) No exposed bar at .5 feet below the waterline.
  - Spall (1.5 ft x 14 in. x 3 in.) with 1 exposed bar and up to 25% section-loss.

Summary of Recommendations:

- Monitor area of poor concrete consolidation and spalls on Abutments 1 and 2.
- Repair spalls with exposed reinforcement on Abutments 1 and 2.

Underwater Inspection Coding:

NBI Ratings:

Item	Description	Coding	Condition
61	Channel	7 – Good Condition	
62	Culvert	5 – Fair Condition	Spalls, Moderate Scaling Exposed Reinforcement
92B	UW Insp. Frequency	60 Months	
93B	Insp. Date	07 15 17	
113	Scour Critical Bridges	8 – Above Foundation Limits	Stable (Inspector Recommended)

AASHTO National Bridge Element (NBE) Ratings:

Element #	Description	Units	Total	Condition State			
				1	2	3	4
215	Reinforced Concrete Abutment	LF	120	0	110	10	0

Note: Ratings were developed using the FHWA Recording and Coding Guide for the Structure Inventory and Appraisal of the Nation's Bridges. The recommended ratings consider inspected elements located within the waterway and conditions existing below the water surface only. Additional consideration is necessary for the assignment of overall condition ratings for this bridge.

1.0 INTRODUCTION

1.1 Purpose and Scope

This report consists of the results of a detailed underwater investigation performed at the SR-542 Bridge over Atwood Reservoir in Carroll County, OH. Collins Engineers, Inc. (Collins) conducted the underwater investigation for the Ohio Department of Transportation (ODOT) on July 15, 2017. The primary purpose of the investigation was as follows:

- Determine the condition of the substructure components located in the water at the time of the inspection from the waterline to the channel bottom.
- Obtain channel bottom depth measurements along the bridge fascias, upstream and downstream of the bridge, and around the submerged substructure units.
- Determine the condition of the shorelines in the vicinity of the structure.
- Obtain photographs of the bridge and any significant defects.

In addition, a brief inspection was made of areas that could be submerged during periods of high water. The following report includes a description of the structure, the method of investigation, a description of existing conditions, an evaluation and recommendations based on the conditions, inspection figures, and photographs.

1.2 General Description of the Structure

Structure No. CAR-542-0864 spans 27.5 ft, carrying SR-542 over Atwood Reservoir and is approximately 60.0 ft wide. The bridge superstructure is constructed of one cast-in-place concrete deck. The roadway orientation of the longitudinal axis of the bridge is south to north. The substructure units are labeled as Abutments 1 and 2. Existing design drawings were not available at the time of the inspection. Refer to Figure 1 in Exhibit 1 for a Location Map of the bridge. Refer to Photographs 1 and 2 in Exhibit 2 for overall views of the bridge.

1.3 Method of Investigation

A detailed field inspection was conducted to determine the physical condition of the submerged bridge substructure units from the waterline to the channel bottom. A brief visual examination of the substructure units above the waterline was also made.

A three-person team consisting of an engineer-diver and team leader (Matthew Rogers, E.I.T.) and two engineer divers (Kurt Lingo, E.I.T. and Russell Richards, E.I.T.) conducted the underwater inspection. The inspection was conducted through wading. During the inspection, the inspectors worked from a boat and a note taker in the boat recorded the inspection notes.

The underwater inspection consisted of a visual and tactile examination of the accessible surfaces of the substructure units from the waterline to the channel bottom with particular attention given to any observed areas of deterioration or apparent distress. Approximately 10 percent of the total area on the underwater surfaces of the substructure units was cleaned so that the condition could be more closely examined. Photographs were taken to document the general conditions and observed deficiencies. Underwater Photographs could not be obtained due to poor water conditions. The type of channel bottom material, the presence or extent of scour, the presence or extent of riprap, the presence or extent of drift and debris, and the location of any foundation exposure or undermining were noted.

Channel bottom soundings were performed utilizing a telescoping survey rod. Soundings were collected at the halfway points along the bridge centerline as well as along the upstream and downstream fascias and 50 feet upstream and downstream of the bridge, parallel with its fascias. Additional soundings were collected adjacent to Abutment 1 and 2 and at 10 feet intervals upstream and downstream, and the waterline was referenced to a known elevation on the bridge. A sounding plan was developed using the soundings and approximate location of the shorelines. Refer to Figures 1 and 4 in Exhibit 1 for the sounding plan and channel cross sections that show the channel limits and water depths around the structure.

2.0 EXISTING CONDITIONS

2.1 General Conditions

At the time of the inspection, the waterline of CAR-542-0864 was located approximately 6.0 ft below the top of deck at Abutment 1 on the upstream fascia, which corresponds to an assumed waterline elevation of 94.0 ft. During the inspection, the waterway was flowing at approximately 1 ft per second. The bridge pier skew was consistent with the channel alignment and does not require attention at this time. The north and south shorelines consisted of lightly vegetated mild, rocky slopes. Refer to Photographs 3 through 6 in Exhibit 2 for views of the shorelines near the structure.

2.2 Substructure Conditions

2.2.1 Abut 1

The channel bottom material around Abutment 1 consisted of rip rap and gravel up to 1 ft in diameter and silt and sand up to 1' of penetration. Hairline map cracking with efflorescence covering 50% of the total surface area discovered. Loss of joint filler between abutment and deck up to 2 ft vertical (typical at all four corners). Scaling up to 1/4 in. in diameter from channel bottom to 1 ft (typical). One spall (3.2 ft x 1.2 ft x 0.6 ft) with 2 exposed bars and up to 25% section loss discovered on the eastern side of the abutment. Refer to Figure 5 in Exhibit 1 for detailed inspection notes of Abutment 1. Refer to Photographs 7 through 12 in Exhibit 2 for views, spalls, and typical concrete condition at the waterline of Abutment 1.

2.2.1 Abut 2

The channel bottom material around Abutment 2 consisted of rip rap and gravel up to 1 ft in diameter and silt and sand up to 1' of penetration. Hairline map cracking with efflorescence covering 50% of the total surface area discovered. Loss of joint filler between abutment and deck up to 2 ft vertical (typical at all four corners). Scaling up to 1/4 in. in diameter from channel bottom to 1 ft (typical). A spall (6 ft x 4 in. x 3 in.) with no exposed bars was discovered 0.5 ft below the waterline on the eastern side. A spall (1.5 ft x 14 in. x 3 in.) with 1 exposed bar and up to 25% section-loss was also found on the eastern side above the water line. Refer to Figure 6 in Exhibit 1 for detailed inspection notes of Abutment 2. Refer to Photographs 13 through 18 in Exhibit 2 for views of Abutment 2.

3.0 EVALUATION AND RECOMMENDATIONS

Overall, the inspected substructure wall of Structure No. CAR-542-0864 were in fair condition. A comparison of the soundings recorded during the previous inspection on September 24, 2012 and the soundings taken during this inspection revealed no significant change in the channel bottom profile in the vicinity of the structure. Although no channel deficiencies were observed, the channel bottom should continue to be monitored during future underwater inspections to verify that localized scour or overall channel degradation is not occurring and that the pier footings remain adequately embedded in the channel bottom.

The spalls and associated concrete delaminations at Abutments 1 and 2 are not structural concerns at this time; however, they should be repaired to prevent further deterioration. The repairs should include removal

of unsound concrete to a minimum of 1 inch behind the reinforcing steel, cleaning and replacing reinforcing steel as required, and placing concrete designed to provide high durability with low permeability.

It is recommended that the submerged substructure units of Structure No. CAR-542-0864 be next inspected underwater at an interval not to exceed 60 months, no later than July 15, 2022.

Respectfully Submitted,
COLLINS ENGINEERS, INC.

Joshua Johnson, P.E.
Project Manager/Team Leader

Originated by:
Matthew Rogers, E.I.T.

EXHIBIT 1 – FIGURES

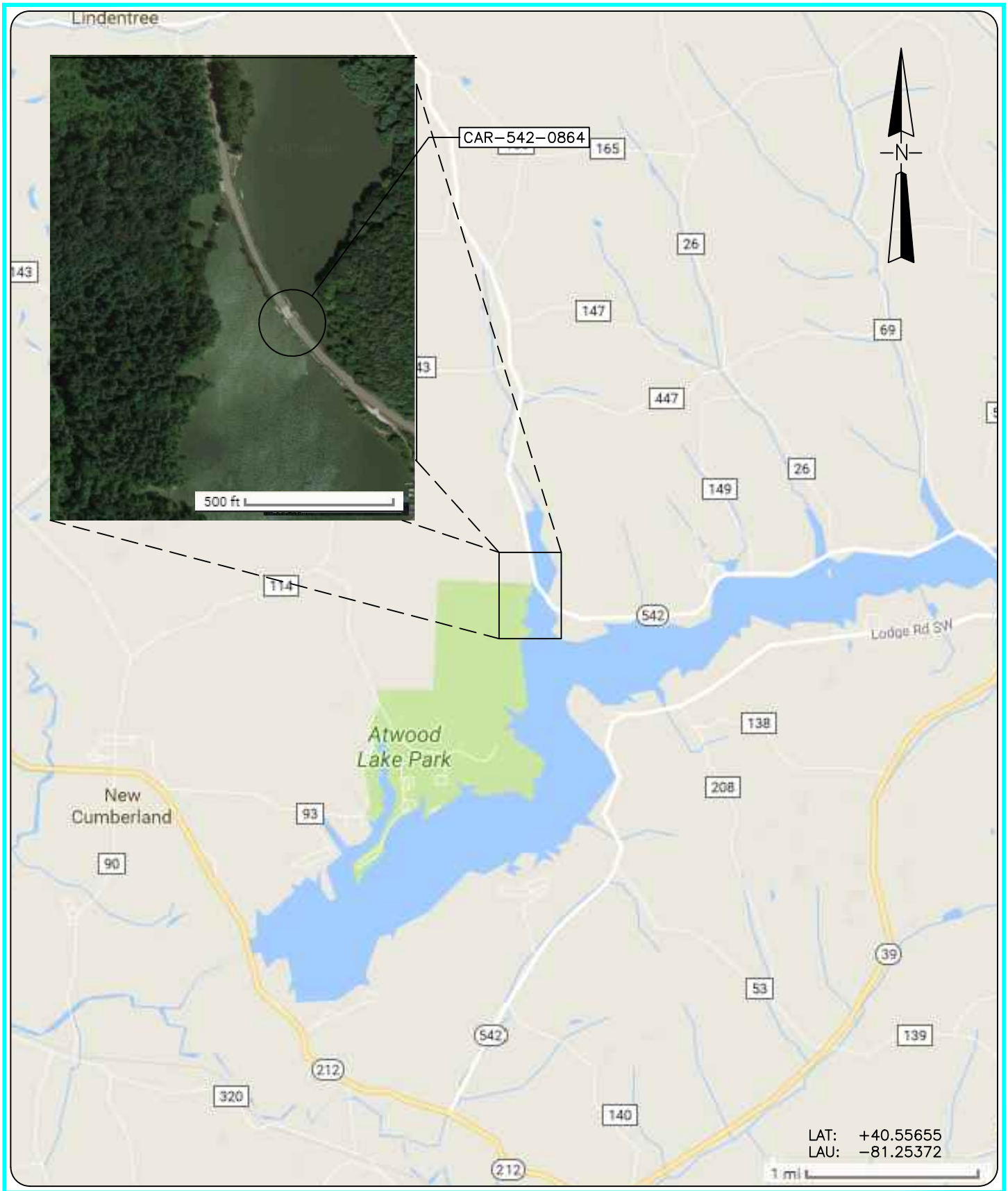

COLLINS ENGINEERS
124 Venture Court, Ste 10
Lexington, KY 40511
Phone: 859-367-0097
Fax: 859-367-0140

Ohio Department of
Transportation, District 11
2201 Reiser Avenue
New Philadelphia, OH 44663
Phone: 330-339-6633

SR 542 OVER ATWOOD RESERVOIR
STRUCTURE NO. CAR-542-0864
LOCATION MAP
CARROLL COUNTY, OHIO

INSPECTED BY: KDL	CEI PROJECT: 55–10356.00
DRAWN BY: KMM	DATE: 15 JUL 2017
CHECKED BY: JMJ	SHEET NO: 1

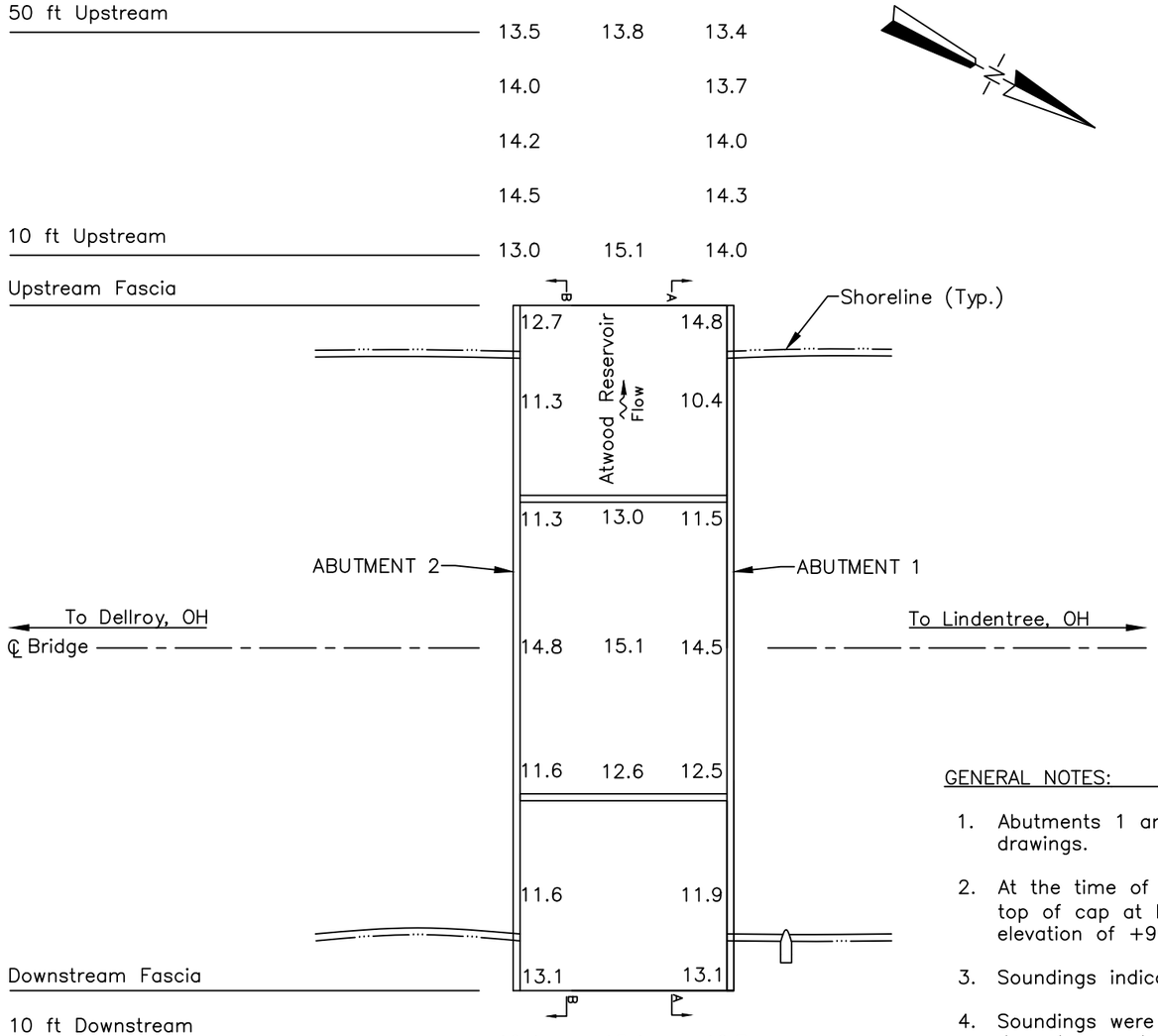

SOUNDING PLAN

GENERAL NOTES:

1. Abutments 1 and 2 were inspected underwater. Substructure units are labeled according to available record drawings.
2. At the time of inspection on July 15, 2017, the waterline was located approximately 6.0 ft below the top of cap at Pier 2, downstream nose. (Assumed EL. +100.0 ft). This corresponds with a waterline elevation of +94.0 ft.
3. Soundings indicate the water depth at the time of inspection and are measured in feet.
4. Soundings were taken parallel to the bridge at the upstream and downstream fascias, 50 ft upstream and downstream at the halfway points between the substructure units, and at 10 ft intervals in–line with the piers upstream and downstream up to 50 ft.

LEGEND

2.7 Approximate Channel Bottom Elevation (ft)

Timber Debris

COLLINS ENGINEERS
124 Venture Court, Ste 10
Lexington, KY 40511
Phone: 859-367-0097
Fax: 859-367-0140

Ohio Department of Transportation, District 11
2201 Reiser Avenue
New Philadelphia, OH 44663
Phone: 330-339-6633

SR 542 OVER ATWOOD RESERVOIR
STRUCTURE NO. CAR-542-0864
SOUNDING PLAN
CARROLL COUNTY, OHIO

CEI PROJECT 55–10356.00
INSPECTED BY: KDL
DRAWN BY: KMM
CHECKED BY: JMJ
DATE: JUL 2017
SHEET NO: 2

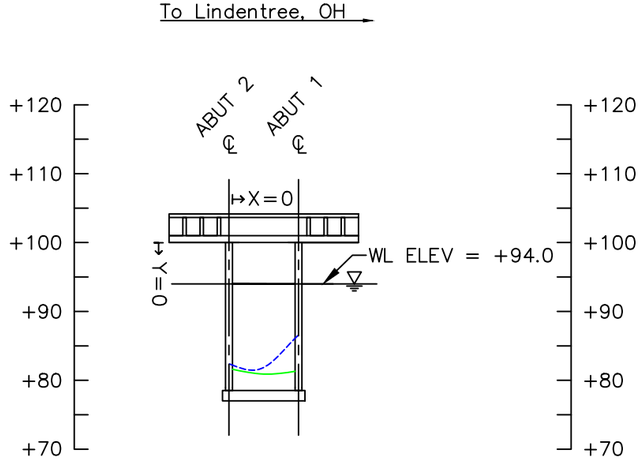

UPSTREAM FASCIA
CHANNEL CROSS SECTION
(LOOKING DOWNSTREAM)

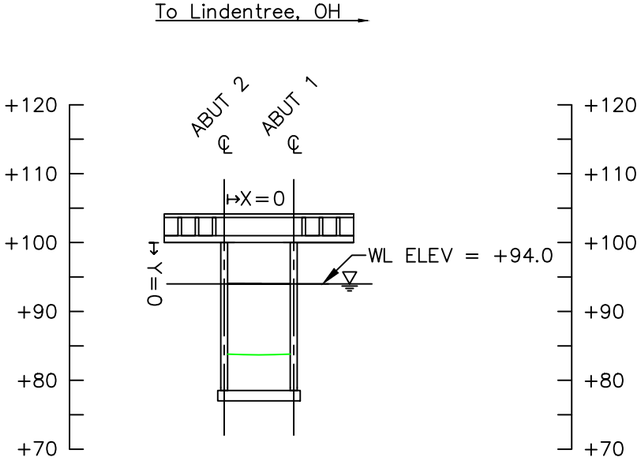

UPSTREAM 50 FT
CHANNEL CROSS SECTION
(LOOKING DOWNSTREAM)

PROFILE MEASUREMENTS (FT)		
LOCATION	X	Y
A2	0.0	18.2
1/2	12.5	19.0
A1	25.0	18.6

Note:

Footing elevations unknown due to unavailable record drawings.

LEGEND

- Approximate Channel Bottom – July 2017
- Approximate Channel Bottom – September 2012
- Approximate Channel Bottom – [No Data]
- Timber Debris
- Water Surface
- +450 Elevation (ft)

COLLINS ENGINEERS
124 Venture Court, Ste 10
Lexington, KY 40511
Phone: 859-367-0097
Fax: 859-367-0140

Ohio Department of Transportation, District 11
2201 Reiser Avenue
New Philadelphia, OH 44663
Phone: 330-339-6633

SR 542 OVER ATWOOD RESERVOIR
STRUCTURE NO. CAR-542-0864
CROSS SECTIONS
CARROLL COUNTY, OHIO

CEI PROJECT
55–10356.00
INSPECTED BY:
KDL
DRAWN BY:
KMM
CHECKED BY:
JMJ
DATE:
JUL 2017
SHEET NO:
3

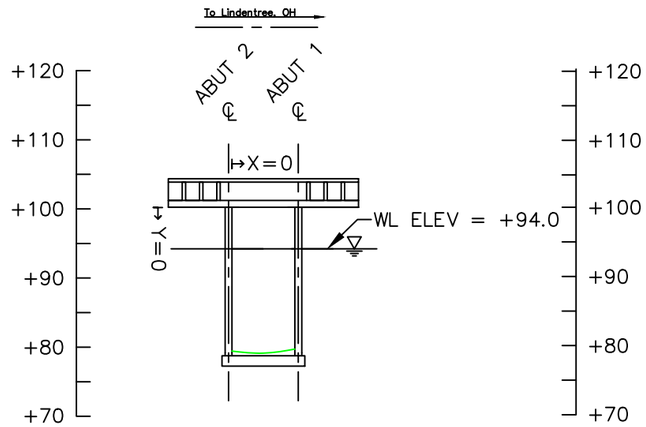

STRUCTURE CENTERLINE
CHANNEL CROSS SECTION
(LOOKING DOWNSTREAM)

Note:

Footing elevations unknown due to unavailable record drawings.

LEGEND

- Approximate Channel Bottom – July 2017
- Approximate Channel Bottom – [No Data]
- Approximate Channel Bottom – [No Data]
- Timber Debris
- Water Surface
- +450 Elevation (ft)

COLLINS ENGINEERS
124 Venture Court, Ste 10
Lexington, KY 40511
Phone: 859-367-0097
Fax: 859-367-0140

Ohio Department of Transportation, District 11
2201 Reiser Avenue
New Philadelphia, OH 44663
Phone: 330-339-6633

SR 542 OVER ATWOOD RESERVOIR
STRUCTURE NO. CAR-542-0864
CROSS SECTIONS
CARROLL COUNTY, OHIO

CEI PROJECT 55–10356.00
INSPECTED BY: KDL
DRAWN BY: KMM
CHECKED BY: JMJ
DATE: JUL 2017
SHEET NO: 4

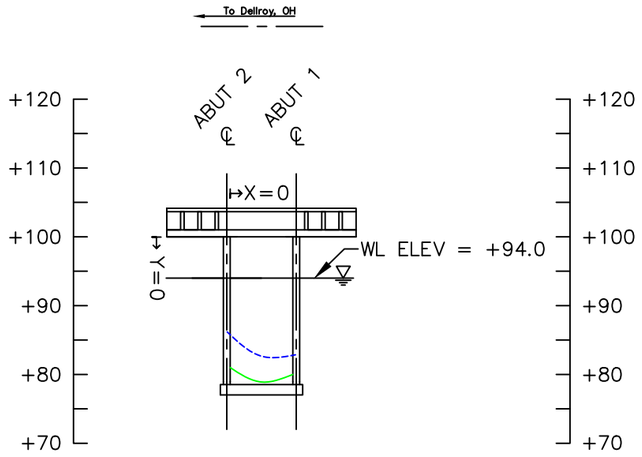

DOWNSTREAM FASCIA
CHANNEL CROSS SECTION
(LOOKING DOWNSTREAM)

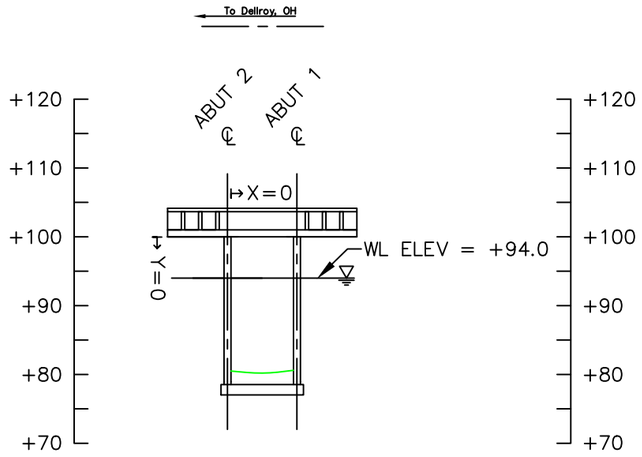

DOWNSTREAM 50 FT
CHANNEL CROSS SECTION
(LOOKING DOWNSTREAM)

PROFILE MEASUREMENTS (FT)		
LOCATION	X	Y
A2	0.0	7.1
1/2	12.5	7.2
A1	25.0	7.5

Note:

Footing elevations unknown due to unavailable record drawings.

LEGEND

- Approximate Channel Bottom – July 2017
- Approximate Channel Bottom – September 2012
- Approximate Channel Bottom – [No Data]
- Timber Debris
- Water Surface
- +450 Elevation (ft)

COLLINS ENGINEERS
124 Venture Court, Ste 10
Lexington, KY 40511
Phone: 859-367-0097
Fax: 859-367-0140

Ohio Department of Transportation, District 11
2201 Reiser Avenue
New Philadelphia, OH 44663
Phone: 330-339-6633

SR 542 OVER ATWOOD RESERVOIR
STRUCTURE NO. CAR-542-0864
CROSS SECTIONS
CARROLL COUNTY, OHIO

CEI PROJECT 55–10356.00
INSPECTED BY: KDL
DRAWN BY: KMM
CHECKED BY: JMJ
DATE: JUL 2017
SHEET NO: 5

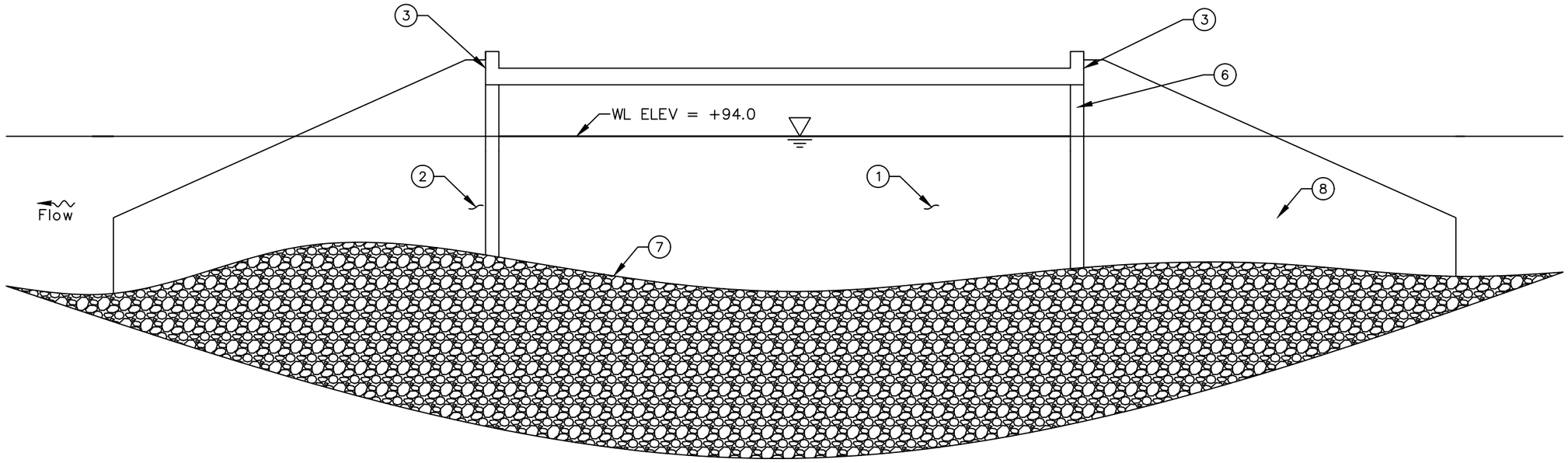

SOUTH ELEVATION
VIEW A–A

INSPECTION NOTES:

1. Hairline map cracking with efflorescence on 50% of the total surface area (typical).
2. Scaling up to 1/4 in. deep from channel bottom to 1 ft (typical).
3. Loss of joint filler between abutment and deck up to 2 ft vertical. Typical at all four corners.
4. A spall was observed measuring approximately 1.5 ft vertically by 14 in. horizontally by 3 in. deep with 1 exposed bar and up to 25% section–loss.
5. A spall was observed measuring approximately 6 ft vertically by 4 in. horizontally by 3 in. deep with no exposed bars at 0.5 ft below water level.
6. A spall was observed measuring approximately 3.2 ft vertically by 1.2 ft horizontally by 0.6 ft deep with 2 exposed bars and up to 25% site loss.
7. Channel bottom rip rap and gravel up to 1 ft in diameter and silty, sand up to 1 ft penetration.
8. The submerged portions of the abutment were sound and smooth with no defects observed.

LEGEND

2.7	Approximate Channel Bottom Elevation (ft)
———	Approximate Channel Bottom – July 2017
	Timber Debris
	Water Surface

COLLINS ENGINEERS
124 Venture Court, Ste 10
Lexington, KY 40511
Phone: 859-367-0097
Fax: 859-367-0140

Ohio Department of Transportation, District 11
2201 Reiser Avenue
New Philadelphia, OH 44663
Phone: 330-339-6633

SR 542 OVER ATWOOD RESERVOIR
STRUCTURE NO. CAR-542-0864
ABUT 1
CARROLL COUNTY, OHIO

CEI PROJECT 55–10356.00
INSPECTED BY: KDL
DRAWN BY: KMM
CHECKED BY: JMJ
DATE: JUL 2017
SHEET NO: 6

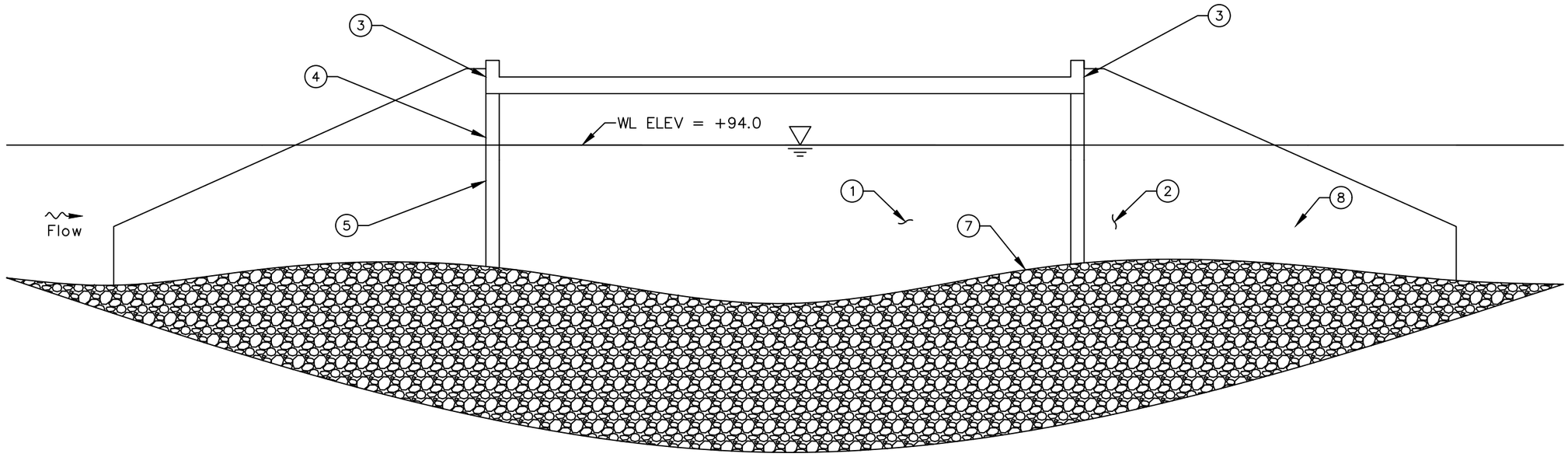

NORTH ELEVATION
VIEW B–B

INSPECTION NOTES:

1. Hairline map cracking with efflorescence on 50% of the total surface area (typical).
2. Scaling up to 1/4 in. deep from channel bottom to 1 ft (typical).
3. Loss of joint filler between abutment and deck up to 2 ft vertical. Typical at all four corners.
4. A spall was observed measuring approximately 1.5 ft vertically by 14 in. horizontally by 3 in. deep with 1 exposed bar and up to 25% section–loss.
5. A spall was observed measuring approximately 6 ft vertically by 4 in. horizontally by 3 in. deep with no exposed bars at 0.5 ft below water level.
6. A spall was observed measuring approximately 3.2 ft vertically by 1.2 ft horizontally by 0.6 ft deep with 2 exposed bars and up to 25% site loss.
7. Channel bottom rip rap and gravel up to 1 ft in diameter and silty, sand up to 1 ft penetration.
8. The submerged portions of the abutment were sound and smooth with no defects observed.

LEGEND

2.7	Approximate Channel Bottom Elevation (ft)
———	Approximate Channel Bottom – July 2017
	Timber Debris
	Water Surface

COLLINS ENGINEERS
124 Venture Court, Ste 10
Lexington, KY 40511
Phone: 859-367-0097
Fax: 859-367-0140

Ohio Department of Transportation, District 11
2201 Reiser Avenue
New Philadelphia, OH 44663
Phone: 330-339-6633

SR 542 OVER ATWOOD RESERVOIR
STRUCTURE NO. CAR-542-0864
ABUT 2
CARROLL COUNTY, OHIO

CEI PROJECT	55–10356.00
INSPECTED BY:	KDL
DRAWN BY:	KMM
CHECKED BY:	JMJ
DATE:	JUL 2017
SHEET NO:	7

EXHIBIT 2 – INSPECTION PHOTOGRAPHS



Photograph No. 1: Overall View of CAR-542-0864, Downstream Fascia, Looking Northeast.



Photograph No. 2: Overall View of CAR-542-0864, Upstream Fascia, Looking Southwest.



Photograph No. 3: View of Northern Embankment, Looking Southwest.



Photograph No. 4: View of Eastern Embankment, Looking Southwest.



Photograph No. 5: View of Western Embankment, Looking Northeast.



Photograph No. 6: View of Southern Embankment, Looking Northeast.



Photograph No. 7: View of Abutment 1, Looking West.



Photograph No. 8: View of Spall at Abutment 1, Looking Northwest.



Photograph No. 9: View of Spall at Abutment 1, Looking Northwest.



Photograph No. 10: View of Spall at Abutment 1, Looking Northwest.



Photograph No. 11: View of Spall at Abutment 1, Looking Northwest.



Photograph No. 12: View of Typical Concrete at waterline with Efflorescence, Abutment 1, Looking Northwest.



Photograph No. 13: View of Abutment 2, Looking South.



Photograph No. 14: View of Spall at Abutment 2, Looking East.



Photograph No. 15: View of Spall at Abutment 2, Looking Southeast.



Photograph No. 16: View of Spall at Abutment 2, Looking Southeast.



Photograph No. 17: View of Typical Concrete at waterline, Abutment 2, Looking Southeast.



Photograph No. 18: View of Typical Concrete at waterline, Abutment 2, Looking Southeast.