

UNDERWATER BRIDGE INSPECTION REPORT

STRUCTURE NO. HAS-250-0780
SR 250 OVER TAPPAN LAKE RESERVOIR
HARRISON COUNTY, OH
DISTRICT 11

September 2017

Prepared for:

STATE OF OHIO DEPARTMENT OF TRANSPORTATION

STATE OF OHIO
JOSHUA M. JOHNSON
E-76141
1/11/18
REGISTERED PROFESSIONAL ENGINEER

Prepared by:

COLLINS ENGINEERS INC.

124 Venture Court, Suite 10

Lexington, Kentucky 40511

859.367.0097 • www.collinsengr.com

TABLE OF CONTENTS

EXECUTIVE SUMMARY
1.0 INTRODUCTION 1
1.1 Purpose and Scope 1
1.2 General Description of the Structure 1
1.3 Method of Investigation 1
2.0 EXISTING CONDITIONS 2
2.1 General Conditions 2
2.2 Substructure Conditions 3
2.2.1 Abutment 1 3
2.2.2 Abutment 2 3
3.0 EVALUATION AND RECOMMENDATIONS 3
EXHIBIT 1 – FIGURES 5
LOCATION MAP 6
SOUNDING PLAN 7
UPSTREAM CHANNEL CROSS SECTIONS 8
CENTERLINE CHANNEL CROSS SECTIONS 9
DOWNSTREAM CHANNEL CROSS SECTIONS 10
ABUTMENT 1 11
ABUTMENT 2 12
EXHIBIT 2 – INSPECTION PHOTOGRAPHS 13
Photograph No. 1: Overall View of Structure No. HAS-250-0780, Looking North. 14
Photograph No. 2: Overall View of Structure No. HAS-250-0780, Looking South. 14
Photograph No. 3: View of the SW Embankment Upstream of the Structure, Looking NW. 15
Photograph No. 4: View of the SE Embankment at the Structure, Looking NE. 15
Photograph No. 5: View of the NE Embankment Downstream of the Structure, Looking SE. 16
Photograph No. 6: View of the NW Embankment Upstream of the Structure, Looking SW. 16
Photograph No. 7: View of the Abutment 1 at the Structure, Looking NW. 17
Photograph No. 8: View of the Abutment 2 of the Structure, Looking NE. 17
Photograph No. 9: View of the Typical Concrete Condition at the Waterline on the West Face of Abutment 2, Looking East. 18

EXECUTIVE SUMMARY

Project: ODOT District 11 Underwater Bridge Inspections - 2017

Purpose of Project: To perform a detailed visual and tactile underwater investigation of scour critical bridges for District 11 of the Ohio Department of Transportation.

Inspection Team: Team Leader – Kurt Lingo, E.I.T. – Collins Engineers, Inc.
Team Member – Matthew Rogers, E.I.T. – Collins Engineers, Inc.
Team Member – John Strub, E.I.T. – Collins Engineers, Inc.

Inspection Date(s):	August 2, 2017		
Water Visibility:	<1 ft	***Water Velocity:***	<1 ft/s
Water Temperature:	70 °F	***Weather:***	Cloudy – 80 °F
Waterline Elevation:	897.40 ft	***Type of Boat:***	23 ft Carolina Skiff
Coordinates:	40.33503°N, 81.16652°W		
Access Location:	Ripley Public Boat Ramp		
Dive Mode:	Surface Supplied Air		
Waterline Reference:	7.5 ft below the bottom of concrete deck at the midspan of the south fascia.		
Maximum Depth at SSU:	15.0 ft – Centerline of Bridge at Abutments 1 and 2.		
Shoreline Conditions:	The east and west shorelines consisted of large (approximately 4 ft diameter) riprap and mild vegetation with mild slopes.		

Summary of Findings:

- **Abutment 1:**
  - Two spalls on two steps of NW wingwall each measuring up to 1.5 ft long by 1.5 ft wide by 4 in penetration with no exposed rebar.
  - Two spalls on two steps of SW wingwall each measuring up to 1.5 ft long by 1.5 ft wide by 4 in penetration with no exposed rebar.
  - The submerged portions of the abutment exhibited light scaling up to ⅛ in deep and light marine growth up to ¼ in thick covering 100% of submerged elements.
- **Abutment 2:**
  - Spall on top of SE wingwall measuring 1.5 ft long by 1.5 ft wide by 4 in penetration with exposed rebar. Rebar exhibited light surface rust with no section loss.
  - Two spalls on two steps of NE wingwall each measuring up to 1.5 ft long by 1.5 ft wide by 4 in penetration with no exposed rebar.
  - The submerged portions of the abutment exhibited light scaling up to ⅛ in deep and light marine growth up to ¼ in thick covering 100% of submerged elements.

Summary of Recommendations:

- Monitor spalling on all wingwalls.
- Monitor scaling on Abutments 1 and 2.
- Repair spall on SE wingwall with exposed rebar.

Underwater Inspection Coding:

NBI Ratings:

Item	Description	Coding	Condition
60	Substructure	N/A	
61	Channel	7 – Good Condition	Banks and Channel are well protected.
62	Culvert	5 – Fair Condition	Spalling at wingwalls with exposed rebar, light scaling.
92B	UW Insp. Frequency	60 Months	
93B	Insp. Date	08 02 17	
113	Scour Critical Bridges	6 –Calculations not made	Stable (no indications of scour)

AASHTO National Bridge Element (NBE) Ratings:

Element #	Description	Units	Total	Condition State			
				1	2	3	4
241	Reinforced Concrete Culvert	FT	68	61	6	1	0

Note: Ratings were developed using the FHWA Recording and Coding Guide for the Structure Inventory and Appraisal of the Nation's Bridges. The recommended ratings consider inspected elements located within the waterway and conditions existing below the water surface only. Additional consideration is necessary for the assignment of overall condition ratings for this bridge.

1.0 INTRODUCTION

1.1 Purpose and Scope

This report consists of the results of a detailed underwater investigation performed at the SR 250 Bridge over Tappan Lake Reservoir in Harrison County, OH. Collins Engineers, Inc. (Collins) conducted the underwater investigation for the Ohio Department of Transportation (ODOT) on August 2, 2017. The primary purpose of the investigation was as follows:

- Determine the condition of the substructure components located in the water at the time of the inspection from the waterline to the channel bottom.
- Obtain channel bottom depth measurements along the bridge fascias, upstream and downstream of the bridge, and around the submerged substructure units.
- Determine the condition of the shorelines in the vicinity of the structure.
- Obtain photographs of the bridge and any significant defects.

In addition, a brief inspection was made of areas that could be submerged during periods of high water. The following report includes a description of the structure, the method of investigation, a description of existing conditions, an evaluation and recommendations based on the conditions, inspection figures, and photographs.

1.2 General Description of the Structure

Structure No. HAS-250-0780 spans 22.5 ft, carrying SR-250 over Tappan Lake Reservoir and is approximately 33.5 ft wide. The bridge superstructure is constructed of a cast-in-place concrete deck. The roadway orientation of the longitudinal axis of the bridge is east to west. The substructure units are labeled as Abutments 1 and 2. Previous inspection drawings were available at the time of the inspection and were used to determine water surface elevation and foundation elevations. Refer to Figure 1 in Exhibit 1 for a Location Map of the bridge. Refer to Photographs 1 and 2 in Exhibit 2 for overall views of the bridge.

1.3 Method of Investigation

A detailed field inspection was conducted to determine the physical condition of the submerged bridge substructure units from the waterline to the channel bottom. A brief visual examination of the substructure units above the waterline was also made.

A three-person team consisting of an engineer-diver and team leader (Kurt Lingo, E.I.T., P.E.) and two engineer divers (Matthew Rogers, E.I.T. and John Strub, E.I.T.) conducted the underwater inspection. The inspection was conducted using surface supplied air diving equipment. During the inspection, the inspectors worked from a boat and a note taker in the boat recorded the inspection notes.

The underwater inspection consisted of a visual and tactile examination of the accessible surfaces of the substructure units from the waterline to the channel bottom with particular attention given to any observed areas of deterioration or apparent distress. Approximately 10 percent of the total area on the underwater surfaces of the substructure units was cleaned so that the condition could be more closely examined. Photographs were taken to document the general conditions and observed deficiencies. Underwater photographs could not be obtained due to poor water conditions. The type of channel bottom material, the presence or extent of scour, the presence or extent of riprap, the presence or extent of drift and debris, and the location of any foundation exposure or undermining were noted.

Channel bottom soundings were performed utilizing a telescoping survey rod, digital fathometer, and/or pneumofathometer. Soundings were collected at quarter points along the bridge centerline as well as 10 feet and 50 feet upstream and downstream of the bridge, parallel to the bridge fascias. Additional soundings were collected adjacent to Abutments 1 and 2 and at 10 feet intervals in-line with the abutments, upstream and downstream, and the waterline was referenced to a known elevation on the bridge. A sounding plan was developed using the soundings and approximate location of the shorelines. Refer to Figures 2 through 7 in Exhibit 1 for the sounding plan and channel cross sections that show the channel limits and water depths around the structure.

2.0 EXISTING CONDITIONS

2.1 General Conditions

At the time of the inspection, the waterline of HAS-250-0780 was located approximately 7.5 ft below the bottom of concrete deck at the midspan of the downstream fascia, which corresponds to a waterline elevation of 897.40 ft. During the inspection, the waterway was flowing at approximately 1 ft per second. The culvert was well aligned with the reservoir. The east and west shorelines consisted of large riprap and mild vegetation with mild slopes.

2.2 Substructure Conditions

2.2.1 Abutment 1

The channel bottom material around Abutment 1 consisted of sand and riprap up to 6 in diameter. The submerged portions of the abutment exhibited light scaling up to ⅛ in deep and light marine growth up to ¼ in thick covering 100% of submerged elements. Refer to Figure 6 in Exhibit 1 for detailed inspection notes of Abutment 1. Refer to Photograph 7 in Exhibit 2 for views of Abutment 1 and typical concrete condition at the waterline. Specific defects are noted below:

- Two spalls on two steps of SW wingwall each measuring up to 1.5 ft long by 1.5 ft wide by 4 in penetration with no exposed rebar.
- Two spalls on two steps of NW wingwall each measuring up to 1.5 ft long by 1.5 ft wide by 4 in penetration with no exposed rebar.

2.2.2 Abutment 2

The channel bottom material around Abutment 2 consisted of sand and riprap up to 6 in diameter. The submerged portions of the abutment exhibited light scaling up to ⅛ in deep and light marine growth up to ¼ in thick covering 100% of submerged elements. Refer to Figure 7 in Exhibit 1 for detailed inspection notes of Abutment 2. Refer to Photographs 8 and 9 in Exhibit 2 for views of Abutment 2 and typical concrete condition at the waterline. Specific defects are noted below:

- Two spalls on two steps of NE wingwall each measuring up to 1.5 ft long by 1.5 ft wide by 4 in penetration with no exposed rebar.
- Spall on top of SE wingwall measuring 1.5 ft long by 1.5 ft wide by 4 in penetration with exposed rebar. Rebar exhibited light surface rust with no section loss.

3.0 EVALUATION AND RECOMMENDATIONS

Overall, the inspected substructure units of Structure No. HAS-250-0780 were in fair condition. A comparison of the soundings recorded during the previous inspection on September 21, 2012 and the soundings taken during this inspection revealed no significant change in the channel bottom profile in the vicinity of the structure. Although no channel deficiencies were observed, the channel bottom should continue to be monitored during future underwater inspections to verify that localized scour or overall channel degradation is not occurring.

The spalls and associated concrete delamination at Abutment 1 are not structural concerns at this time; however, they should be repaired to prevent further deterioration. The repairs should include removal of unsound concrete to a minimum of 1 inch behind the reinforcing steel, cleaning and replacing reinforcing steel as required, and placing concrete designed to provide high durability with low permeability.

It is recommended that the submerged substructure units of Structure No. HAS-250-0780 be next inspected underwater at an interval not to exceed 60 months, no later than August 2, 2023.

Respectfully Submitted,
COLLINS ENGINEERS, INC.

Joshua Johnson, P.E.
Project Manager/Team Leader

Originated by:
Matthew Rogers, E.I.T.

EXHIBIT 1 – FIGURES

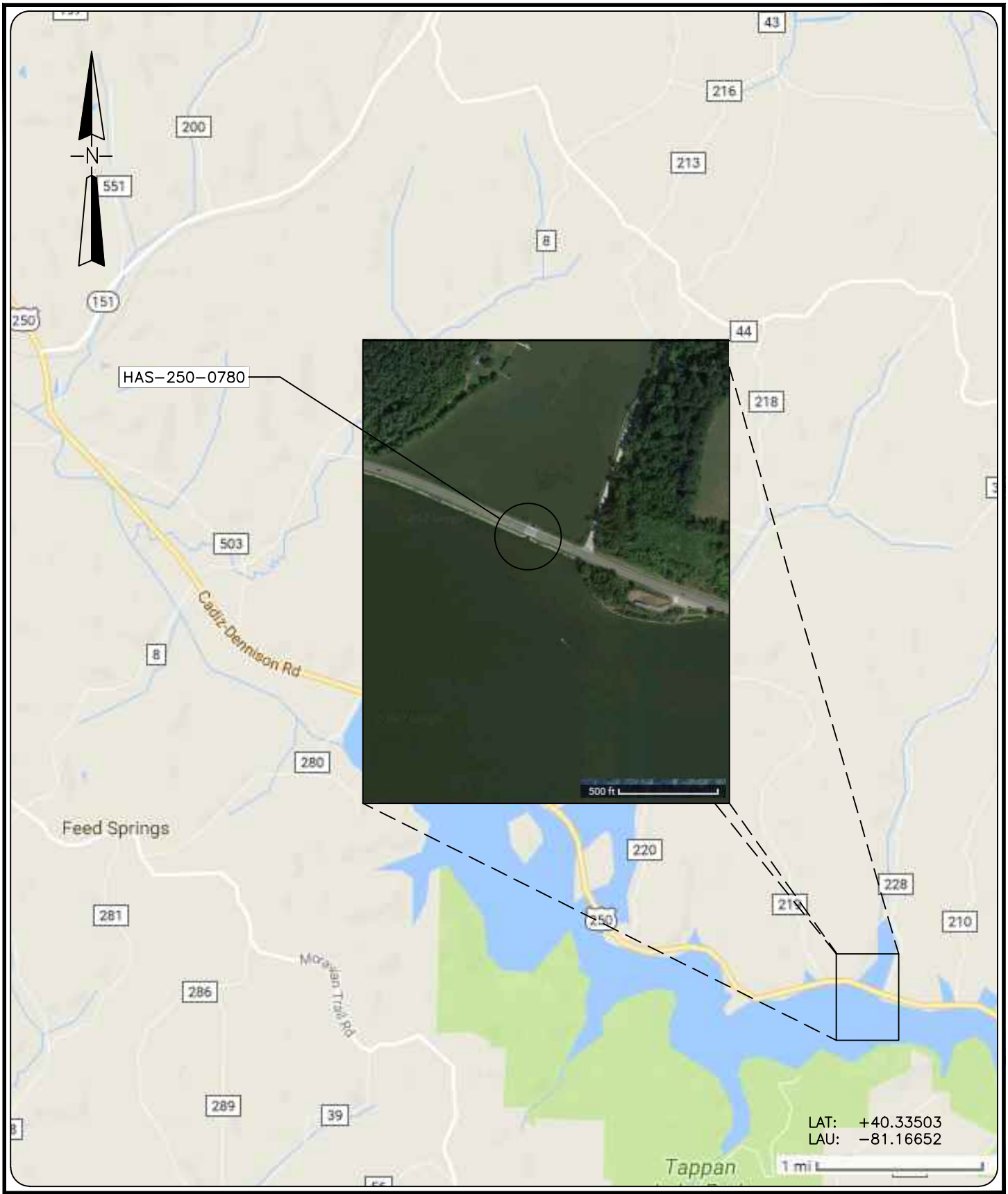

COLLINS ENGINEERS
124 Venture Court, Ste 10
Lexington, KY 40511
Phone: 859-367-0097
Fax: 859-367-0140

.\stock_photo.jpg

Ohio Department of Transportation, District 11
2201 Reiser Avenue
New Philadelphia, OH
44663

SR 250 OVER TAPPAN LAKE RESERVOIR
STRUCTURE NO. HAS-250-0780
LOCATION MAP
HARRISON COUNTY, OHIO

INSPECTED BY: MOR	CEI PROJECT: 55–10356.00
DRAWN BY: KMM	DATE: 13 JUN 2017
CHECKED BY: JMJ	SHEET NO: 1

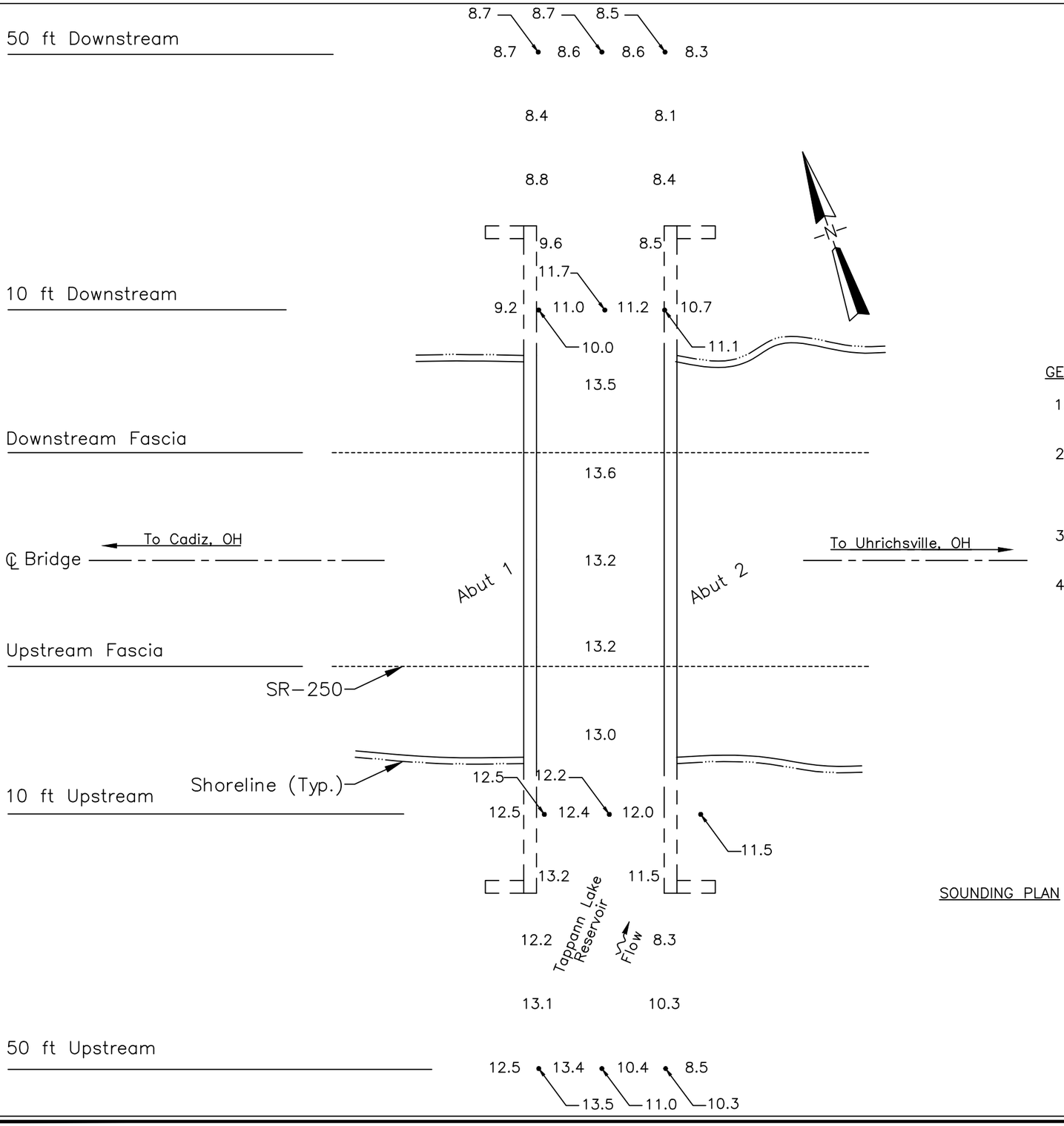

SOUNDING PLAN

GENERAL NOTES:

1. Abutments 1 and 2 were inspected underwater. Substructure units are labeled according to available record drawings.
2. At the time of inspection on August 2, 2017, the waterline was located approximately 7.5 ft below the bottom of the concrete deck at the midspan of the south fascia. This corresponds with a waterline elevation of +897.40 ft.
3. Soundings indicate the water depth at the time of inspection and are measured in feet.
4. Soundings were taken parallel to the bridge at the upstream and downstream fascias, 50 ft upstream and downstream of the fascias, at 1/4 point intervals between the substructure units, and at 10 ft intervals in-line with the piers upstream and downstream up to 50 ft.

LEGEND

2.7	Sounding Depth from Waterline (ft)
	Timber Debris

COLLINS ENGINEERS
124 Venture Court, Ste 10
Lexington, KY 40511
Phone: 859-367-0097
Fax: 859-367-0140

Ohio Department of Transportation, District 9
650 Eastern Avenue
Chillicothe, OH 45601
Phone: 740-773-2691

.\stock_photo.jpg

SR 250 OVER TAPPAN LAKE RESERVOIR
STRUCTURE NO. HAS-250-0780
SOUNDING PLAN
HARRISON COUNTY, OHIO

CEI PROJECT	55-10356.00
INSPECTED BY:	MOR
DRAWN BY:	KMM
CHECKED BY:	JMJ
DATE:	JUN 2017
SHEET NO:	2

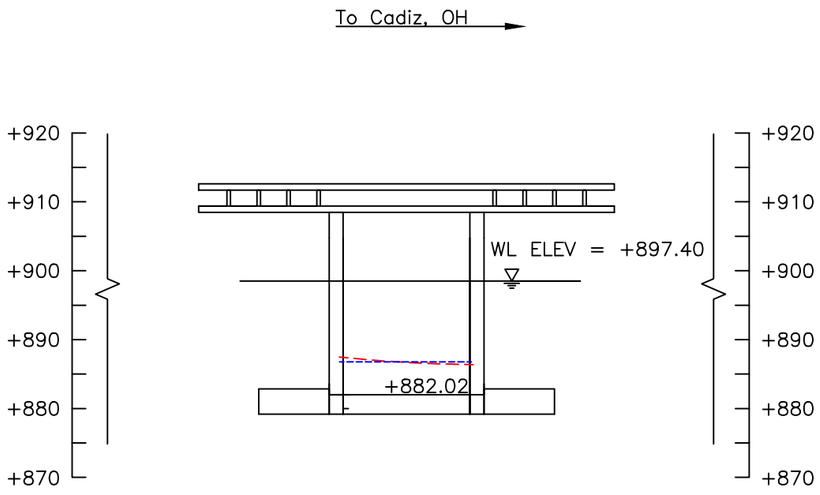

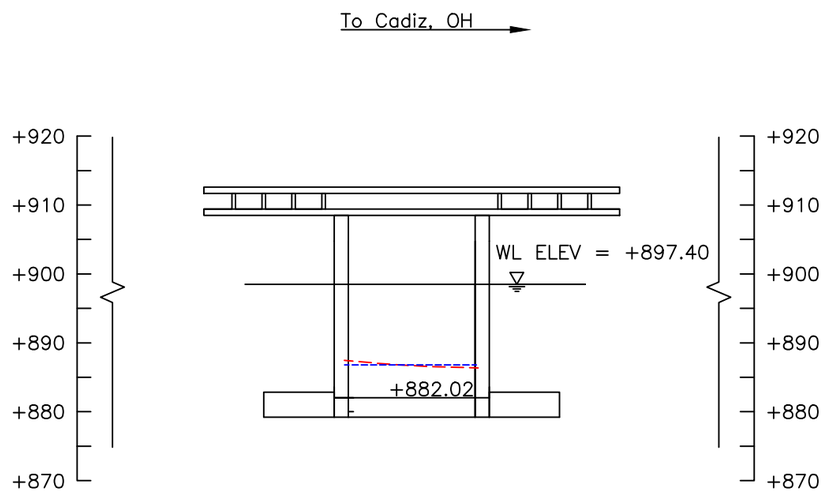

STRUCTURE CENTERLINE
CHANNEL CROSS SECTION
(LOOKING UPSTREAM)

Note:

Footing elevations unknown due to unavailable record drawings.

LEGEND

———	Original
- - - - -	2017 – Upstream Fascia
– – – – –	2017 – Downstream Fascia
	Timber Debris
	Water Surface
+450	Elevation (ft)

COLLINS ENGINEERS
124 Venture Court, Ste 10
Lexington, KY 40511
Phone: 859-367-0097
Fax: 859-367-0140

.\stock_photo.jpg

Ohio Department of Transportation, District 9
650 Eastern Avenue
Chillicothe, OH 45601
Phone: 740-773-2691

SR 250 OVER TAPPAN LAKE
RESERVOIR
STRUCTURES SECTION
HARRISON COUNTY, OHIO

CEI PROJECT
55–10356.00

INSPECTED BY:
MOR

DRAWN BY:
KMM

CHECKED BY:
JMJ

DATE:
JUN 2017

SHEET NO:
3

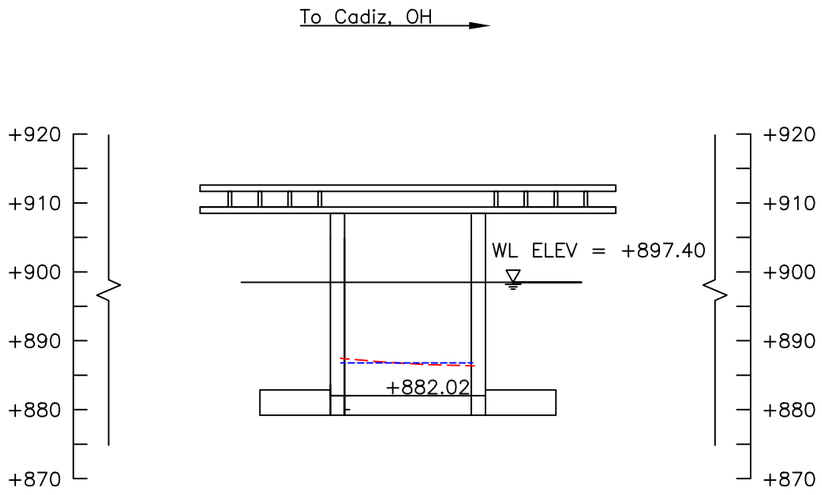

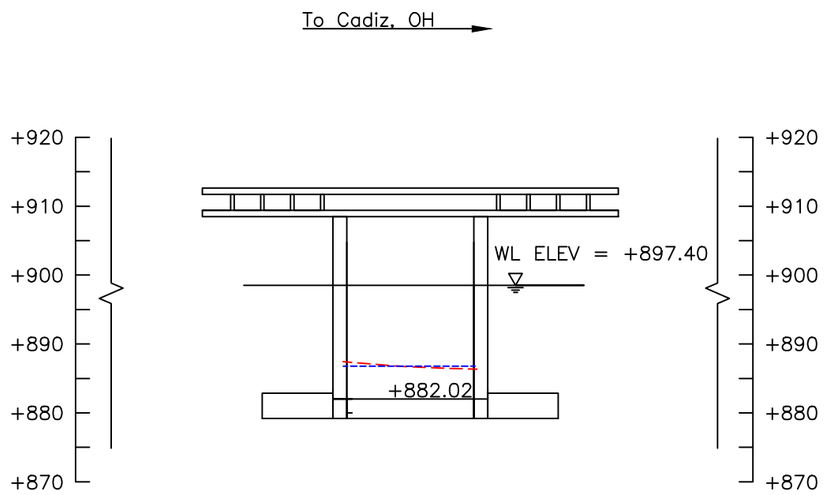

STRUCTURE CENTERLINE
CHANNEL CROSS SECTION
(LOOKING UPSTREAM)

Note:

Footing elevations unknown due to unavailable record drawings.

LEGEND

———	Original
- - - - -	2017 – Upstream Fascia
– – – – –	2017 – Downstream Fascia
	Timber Debris
	Water Surface
+450	Elevation (ft)

COLLINS ENGINEERS
124 Venture Court, Ste 10
Lexington, KY 40511
Phone: 859-367-0097
Fax: 859-367-0140

.\stock_photo.jpg

Ohio Department of Transportation, District 9
650 Eastern Avenue
Chillicothe, OH 45601
Phone: 740-773-2691

SR 250 OVER TAPPAN LAKE RESERVOIR
STRUCTURES SECTIONS
HARRISON COUNTY, OHIO

CEI PROJECT 55–10356.00
INSPECTED BY: MOR
DRAWN BY: KMM
CHECKED BY: JMJ
DATE: JUN 2017
SHEET NO: 3

To Uhrichsville, OH

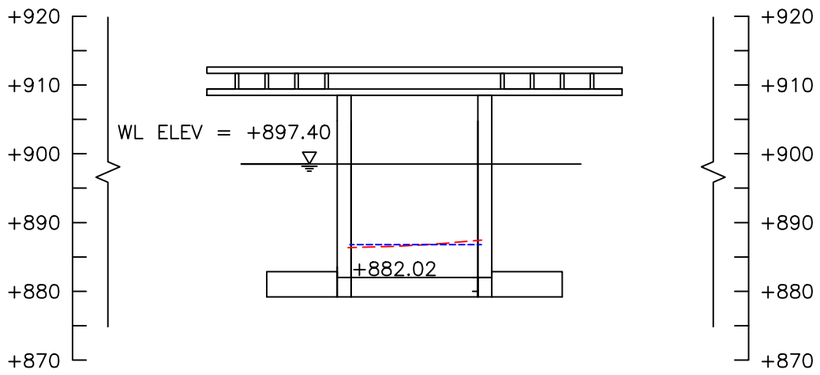

To Uhrichsville, OH

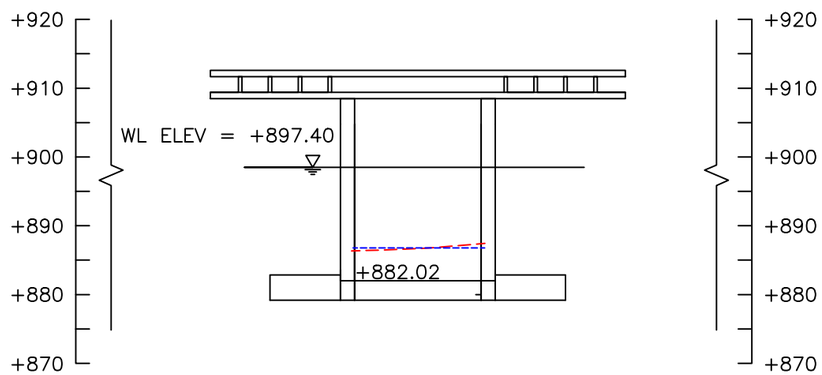

STRUCTURE CENTERLINE
CHANNEL CROSS SECTION
(LOOKING DOWNSTREAM)

Note:

Footing elevations unknown due to unavailable record drawings.

LEGEND

———	Original
- - - - -	2017 – Upstream Fascia
– – – – –	2017 – Downstream Fascia
	Timber Debris
	Water Surface
+450	Elevation (ft)

COLLINS ENGINEERS
124 Venture Court, Ste 10
Lexington, KY 40511
Phone: 859-367-0097
Fax: 859-367-0140

.\stock_photo.jpg

Ohio Department of Transportation, District 9
650 Eastern Avenue
Chillicothe, OH 45601
Phone: 740-773-2691

SR 250 OVER TAPPAN LAKE
RESERVOIR
STRUCTURE NO. HAS-250-0780
HARRISON COUNTY, OHIO

CEI PROJECT
55–10356.00

INSPECTED BY:
MOR

DRAWN BY:
KMM

CHECKED BY:
JMJ

DATE:
JUN 2017

SHEET NO:
3

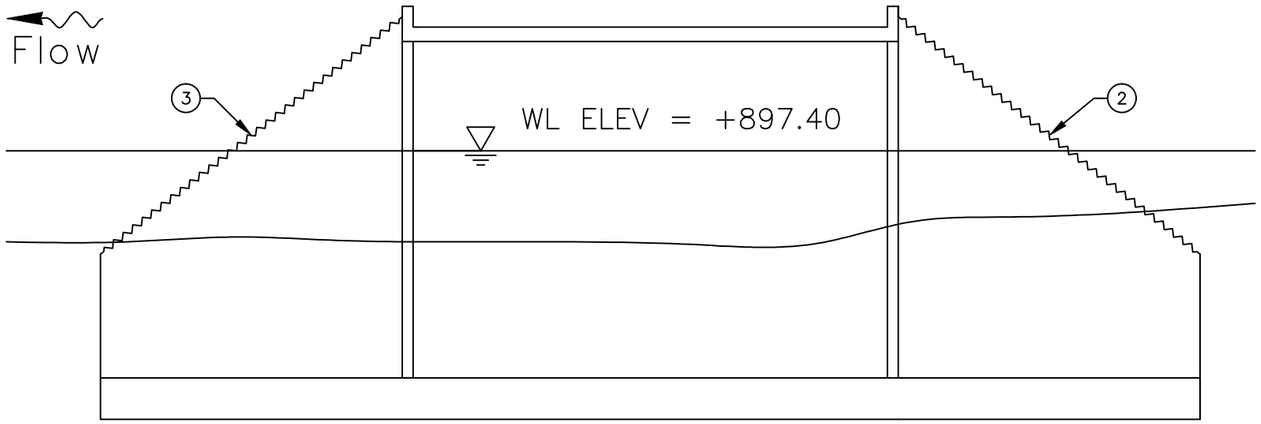

EAST ELEVATION
ABUTMENT 1
VIEW A–A

INSPECTION NOTES:

1. The channel bottom material around Abutment 1 consisted of sand and riprap up to 6 in diameter.
2. Two spalls on two steps of NW wingwall each measuring up to 1.5 ft long by 1.5 ft wide by 4in penetration with no exposed rebar.
3. Two spalls on two steps of SW wingwall each measuring up to 1.5 ft long by 1.5 ft wide by 4 in penetration with no exposed rebar.
4. The submerged portions of the abutment exhibited light scaling up to $\frac{1}{8}$ in deep and light marine growth up to ¼ in thick covering 100% of submerged elements.

LEGEND

–2.7	Sounding Depth from Waterline (ft)
———	Approximate Channel Bottom – 2017
	Timber Debris
	Water Surface

COLLINS ENGINEERS
124 Venture Court, Ste 10
Lexington, KY 40511
Phone: 859-367-0097
Fax: 859-367-0140

.\stock_photo.jpg

Ohio Department of Transportation, District 9
650 Eastern Avenue
Chillicothe, OH 45601
Phone: 740-773-2691

SR 250 OVER TAPPAN LAKE RESERVOIR
STRUCTURE NO. HAS-250-0780
HARRISON COUNTY, OHIO

CEI PROJECT 55–10356.00
INSPECTED BY: MOR
DRAWN BY: KMM
CHECKED BY: JMJ
DATE: JUN 2017
SHEET NO: 4

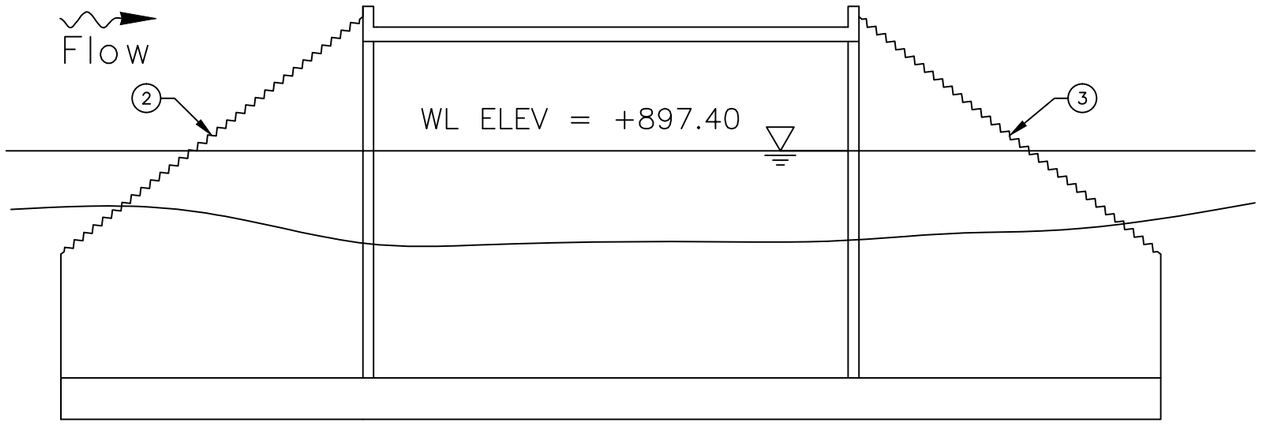

WEST ELEVATION
ABUTMENT 2
VIEW B–B

INSPECTION NOTES:

1. The channel bottom material around Abutment 1 consisted of sand and riprap up to 6 in diameter.
2. Two spalls on two steps of NE wingwall each measuring up to 1.5 ft long by 1.5 ft wide by 4 in penetration with no exposed rebar.
3. Spall on top of SE wingwall measuring 1.5 ft long by 1.5 ft wide by 4 in penetration with exposed rebar. Rebar exhibited light surface rust with no section loss.
4. The submerged portions of the abutment exhibited light scaling up to ⅛ in deep and light marine growth up to ¼ in thick covering 100% of submerged elements.

LEGEND

–2.7	Sounding Depth from Waterline (ft)
———	Approximate Channel Bottom – 2017
	Timber Debris
	Water Surface

COLLINS ENGINEERS
124 Venture Court, Ste 10
Lexington, KY 40511
Phone: 859-367-0097
Fax: 859-367-0140

.\stock_photo.jpg

Ohio Department of Transportation, District 9
650 Eastern Avenue
Chillicothe, OH 45601
Phone: 740-773-2691

SR 250 OVER TAPPAN LAKE RESERVOIR
STRUCTURE NO. HAS-250-0780
HARRISON COUNTY, OHIO

CEI PROJECT 55–10356.00
INSPECTED BY: MOR
DRAWN BY: KMM
CHECKED BY: JMJ
DATE: JUN 2017
SHEET NO: 4

EXHIBIT 2 – INSPECTION PHOTOGRAPHS



Photograph No. 1: Overall View of Structure No. HAS-250-0780, Looking North.



Photograph No. 2: Overall View of Structure No. HAS-250-0780, Looking South.



Photograph No. 3: View of the SW Embankment Upstream of the Structure, Looking NW.



Photograph No. 4: View of the SE Embankment at the Structure, Looking NE.



Photograph No. 5: View of the NE Embankment Downstream of the Structure, Looking SE.



Photograph No. 6: View of the NW Embankment Upstream of the Structure, Looking SW.



Photograph No. 7: View of Abutment 1, Looking NW.



Photograph No. 8: View of Abutment 2, Looking NE.



Photograph No. 9: View of the Typical Concrete Condition at the Waterline on the West Face of Abutment 2, Looking East.