



UNDERWATER BRIDGE INSPECTION REPORT

STRUCTURE NO. JEF-150A-0012
SR 150A OVER SHORT CREEK
JEFFERSON COUNTY, OH
DISTRICT 11

August 2017

Prepared for:

STATE OF OHIO DEPARTMENT OF TRANSPORTATION

STATE OF OHIO
JOSHUA M. JOHNSON
E-76141
7/11/18
REGISTERED PROFESSIONAL ENGINEER

Prepared by:

COLLINS ENGINEERS INC.

124 Venture Court, Suite 10

Lexington, Kentucky 40511

859.367.0097 • www.collinsengr.com

TABLE OF CONTENTS

EXECUTIVE SUMMARY
1.0 INTRODUCTION 1
1.1 Purpose and Scope 1
1.2 General Description of the Structure 1
1.3 Method of Investigation 1
2.0 EXISTING CONDITIONS 2
2.1 General Conditions 2
2.2 Substructure Conditions 3
2.2.1 Bents 3
3.0 EVALUATION AND RECOMMENDATIONS 3
EXHIBIT 1 – FIGURES 4
LOCATION MAP
SOUNDING PLAN
UPSTREAM CHANNEL CROSS SECTIONS
CENTERLINE CHANNEL CROSS SECTIONS
DOWNSTREAM CHANNEL CROSS SECTIONS
BENT 1
BENT 2
EXHIBIT 2 – INSPECTION PHOTOGRAPHS 12
Photograph No. 1: Overall View of Structure No. JEF-150A-0012, Looking West.
Photograph No. 2: Overall View of Structure No. JEF-150A-0012, Looking East.
Photograph No. 3: View of the North Embankment Upstream of the Structure, Looking Northeast.
Photograph No. 4: View of the North Embankment at the Structure, Looking Northwest.
Photograph No. 5: View of the North Embankment Downstream of the Structure, Looking Northeast.
Photograph No. 6: View of the South Embankment Upstream of the Structure, Looking Southeast. 15
Photograph No. 7: View of the South Embankment at the Structure, Looking South.
Photograph No. 8: View of the South Embankment Downstream of the Structure, Looking Southwest.
Photograph No. 9: View of the North Face of Bent 1, Looking Southwest.
Photograph No. 10: View of the South Face of Bent 2, Looking Northwest.
Photograph No. 11: View of the Typical Concrete Condition at the Waterline on the Southeast Face of Bent 1, Looking Northwest.

EXECUTIVE SUMMARY

Project: ODOT District 11 Underwater Bridge Inspections - 2017

Purpose of Project: To perform a detailed visual and tactile underwater investigation of bridges for District 11 of the Ohio Department of Transportation.

Inspection Team: Team Leader – Matthew Rogers, E.I.T. – Collins Engineers, Inc.
Team Member – Kurt Lingo, E.I.T. – Collins Engineers, Inc.
Team Member – John Strub, E.I.T. – Collins Engineers, Inc.

Inspection Date(s): August 5, 2017

Water Visibility:	<1 ft	***Water Velocity:***	<1 ft/s
Water Temperature:	71 °F	***Weather:***	Cloudy – 80 °F
Waterline Elevation:	644.95 ft	***Type of Boat:***	23 ft Carolina Skiff
Coordinates:	40.18706°N, 80.68594°W		
Access Location:	Rayland Marina		
Dive Mode:	Surface Supplied Air		

Waterline Reference: 10.5 ft below the top of cap at the downstream nose of Bent 2.

Maximum Depth at SSU: 8.3 ft – North side of Bent 2.

Shoreline Conditions: The north and south shorelines consisted of heavily vegetated mild slopes and multiple trees leaning toward the channel.

Summary of Findings:

- **Bent 1:**
  - Light surface corrosion with no significant loss of section to the steel pipe piles throughout, extending from the top of the piles to the channel bottom.
- **Bent 2:**
  - Light surface corrosion with no significant loss of section to the steel pipe piles throughout, extending from the top of the piles to the channel bottom.
  - Timber debris, up to 6 in diameter, at the upstream nose and quarter points of the North and South faces.

Summary of Recommendations:

- Monitor timber debris accumulation at Bent 2.

Underwater Inspection Coding:

NBI Ratings:

Item	Description	Coding	Condition
60	Substructure	6 – Satisfactory Condition	Light Surface Corrosion
61	Channel	6 – Satisfactory Condition	Minor Timber Debris Accumulation
62	Culvert	N/A	
92B	UW Insp. Frequency	60 Months	
93B	Insp. Date	08 05 17	
113	Scour Critical Bridges	5 – Within Foundation Limits	Stable (Inspector Recommended)

AASHTO National Bridge Element (NBE) Ratings:

Element #	Description	Units	Total	Condition State			
				1	2	3	4
225	Steel Pile	EA	18	0	18	0	0
220	Reinforced Concrete Pile Cap / Footing	LF	40	40	0	0	0

Note: Ratings were developed using the FHWA Recording and Coding Guide for the Structure Inventory and Appraisal of the Nation's Bridges. The recommended ratings consider inspected elements located within the waterway and conditions existing below the water surface only. Additional consideration is necessary for the assignment of overall condition ratings for this bridge.

1.0 INTRODUCTION

1.1 Purpose and Scope

This report consists of the results of a detailed underwater investigation performed at the SR 150A Bridge over Short Creek in Jefferson County, OH. Collins Engineers, Inc. (Collins) conducted the underwater investigation for the Ohio Department of Transportation (ODOT) on August 5, 2017. The primary purpose of the investigation was as follows:

- Determine the condition of the substructure components located in the water at the time of the inspection from the waterline to the channel bottom.
- Obtain channel bottom depth measurements along the bridge fascias, upstream and downstream of the bridge, and around the submerged substructure units.
- Determine the condition of the shorelines in the vicinity of the structure.
- Obtain photographs of the bridge and any significant defects.

In addition, a brief inspection was made of areas that could be submerged during periods of high water. The following report includes a description of the structure, the method of investigation, a description of existing conditions, an evaluation and recommendations based on the conditions, inspection figures, and photographs.

1.2 General Description of the Structure

Structure No. JEF-150A-0012 spans 150 ft, carrying SR 150A over Short Creek and is approximately 28 ft wide. The bridge superstructure is constructed of three steel multi-beam spans. The roadway orientation of the longitudinal axis of the bridge is south to north. The substructure units are labeled as Abutments 1 and 2, and Bents 1 through 4. Existing design drawings were not available at the time of the inspection. Refer to Figure 1 in Exhibit 1 for a Location Map of the bridge. Refer to Photographs 1 and 2 in Exhibit 2 for overall views of the bridge.

1.3 Method of Investigation

A detailed field inspection was conducted to determine the physical condition of the submerged bridge substructure units from the waterline to the channel bottom. A brief visual examination of the substructure units above the waterline was also made.

A three-person team consisting of a professional engineer-diver and team leader (Matthew Rogers, E.I.T.) and two engineer divers (John Strub, E.I.T. and William Gwaltney, E.I.T.) conducted the underwater inspection. The inspection was conducted using surface supplied air diving equipment. During the inspection, the inspectors worked from a boat and a note taker in the boat recorded the inspection notes.

The underwater inspection consisted of a visual and tactile examination of the accessible surfaces of the substructure units from the waterline to the channel bottom with particular attention given to any observed areas of deterioration or apparent distress. Approximately 10 percent of the total area on the underwater surfaces of the substructure units was cleaned so that the condition could be more closely examined. Photographs were taken to document the general conditions and observed deficiencies. Underwater Photographs could not be obtained due to poor water conditions. The type of channel bottom material, the presence or extent of scour, the presence or extent of riprap, the presence or extent of drift and debris, and the location of any foundation exposure or undermining were noted.

Channel bottom soundings were performed utilizing a telescoping survey rod and digital fathometer. Soundings were collected at quarter points along the bridge centerline as well as 10 feet and 50 feet upstream and downstream of the bridge, parallel with its fascias. Additional soundings were collected adjacent to Bents 1 and 2 and at 10 feet intervals in-line with the bents, upstream and downstream, and the waterline was referenced to a known elevation on the bridge. A sounding plan was developed using the soundings and approximate location of the shorelines. Refer to Figures 2 and 3 in Exhibit 1 for the sounding plan and channel cross sections that show the channel limits and water depths around the structure.

2.0 EXISTING CONDITIONS

2.1 General Conditions

At the time of the inspection, the waterline of JEF-150A-0012 was located approximately 10.5 ft below the top of cap at the downstream nose of Bent 2, which corresponds to an assumed waterline elevation of 644.95 ft. During the inspection, the waterway was flowing at approximately <1 ft per second. The bridge bent skew was consistent with the channel alignment and does not require attention at this time. The north and south shorelines consisted of heavily vegetated mild slopes and multiple trees leaning toward the channel. Refer to Photographs 3 through 8 in Exhibit 2 for views of the shorelines near the structure.

2.2 Substructure Conditions

2.2.1 Bents

The channel bottom material around Bents 1 and 2 consisted of soft silt with approximately 36 in probe rod penetration. The submerged portions of the piles exhibited light corrosion with no significant section loss. Refer to Figure 4 in Exhibit 1 for detailed inspection notes of Bents 1 and 2. Refer to Photographs 9 through 11 in Exhibit 2 for views of Bents 1 and 2 and typical concrete condition at the waterline.

3.0 EVALUATION AND RECOMMENDATIONS

Overall, the inspected substructure units of Structure No. JEF-150A-0012N were in good condition. A comparison of the soundings recorded during the previous inspection on September 18, 2012 and the soundings taken during this inspection revealed no significant change in the channel bottom profile in the vicinity of the structure. Although no channel deficiencies were observed, the channel bottom should continue to be monitored during future underwater inspections to verify that localized scour or overall channel degradation is not occurring and that the bent footings remain adequately embedded in the channel bottom.

It is recommended that the submerged substructure units of Structure No. JEF-150A-0012 be next inspected underwater at an interval not to exceed 60 months, no later than August 5, 2022.

Respectfully Submitted,
COLLINS ENGINEERS, INC.

Joshua Johnson, P.E.
Project Manager/Team Leader

Originated by:
Matthew Rogers, E.I.T.

EXHIBIT 1 – FIGURES

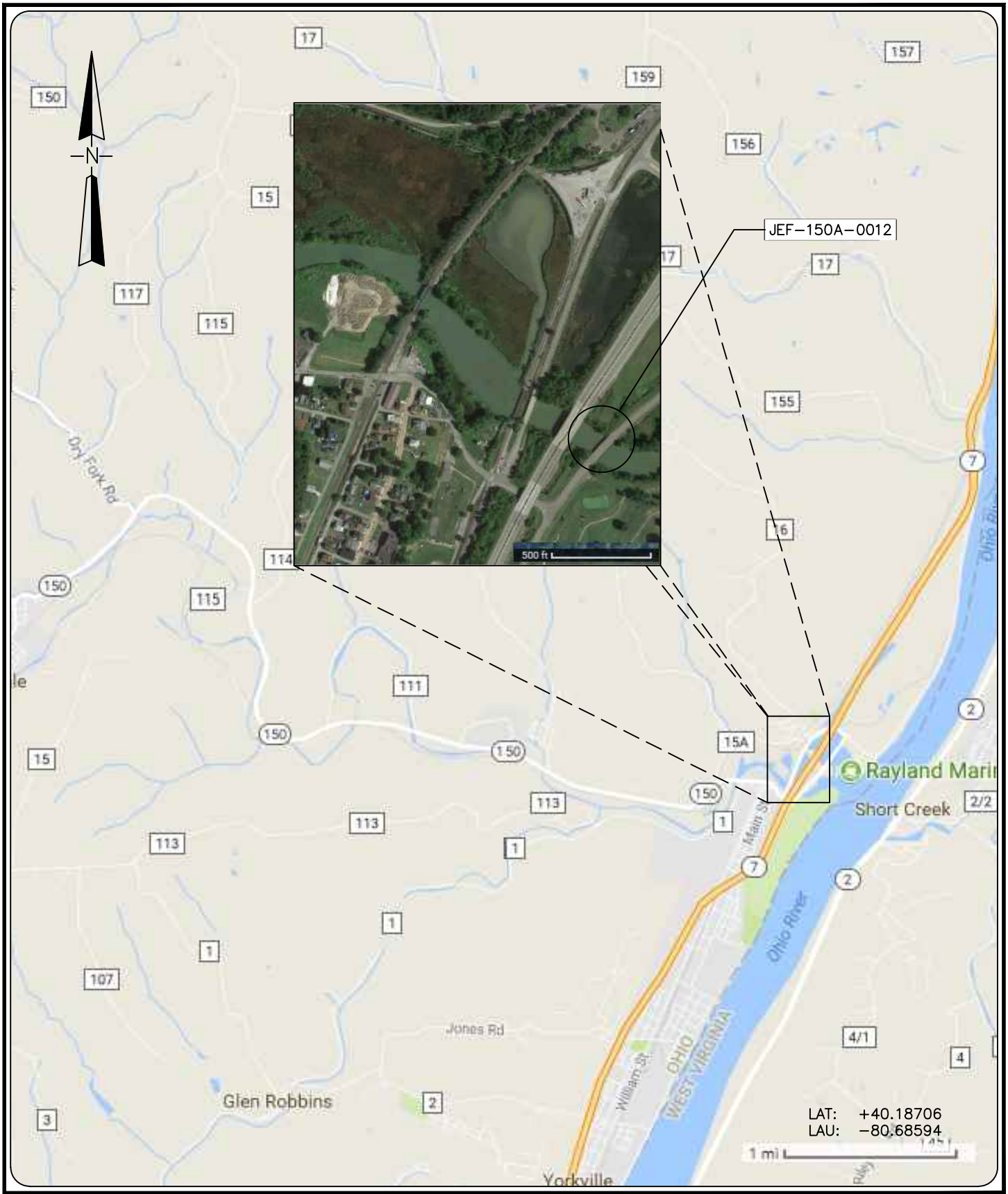

COLLINS ENGINEERS
124 Venture Court, Ste 10
Lexington, KY 40511
Phone: 859-367-0097
Fax: 859-367-0140

Ohio Department of Transportation, District 11
2201 Reiser Ave.
New Philadelphia, OH 44663
Phone: (330) 339-6633

SR 7 OVER SHORT CREEK
BRIDGE NO. JEF-150A-0012

LOCATION MAP

JEFFERSON COUNTY, OHIO

INSPECTED BY: JMJ	CEI PROJECT: 55–10356.00
DRAWN BY: BBM	DATE: JULY 2017
CHECKED BY: JMJ	SHEET NO: 1

\\10.1.8.42\NNVA\KY OFFICE TEMP\PROJECTS\WORKGROUP\55 - LEXINGTON\55-10356.00 - ODOT D11 UNDERWATER\ENGINEERING\DRAWINGS\JEF-150A-0012\JEF-150A-0012.DWG 11/1/2017 1:53:56 PM

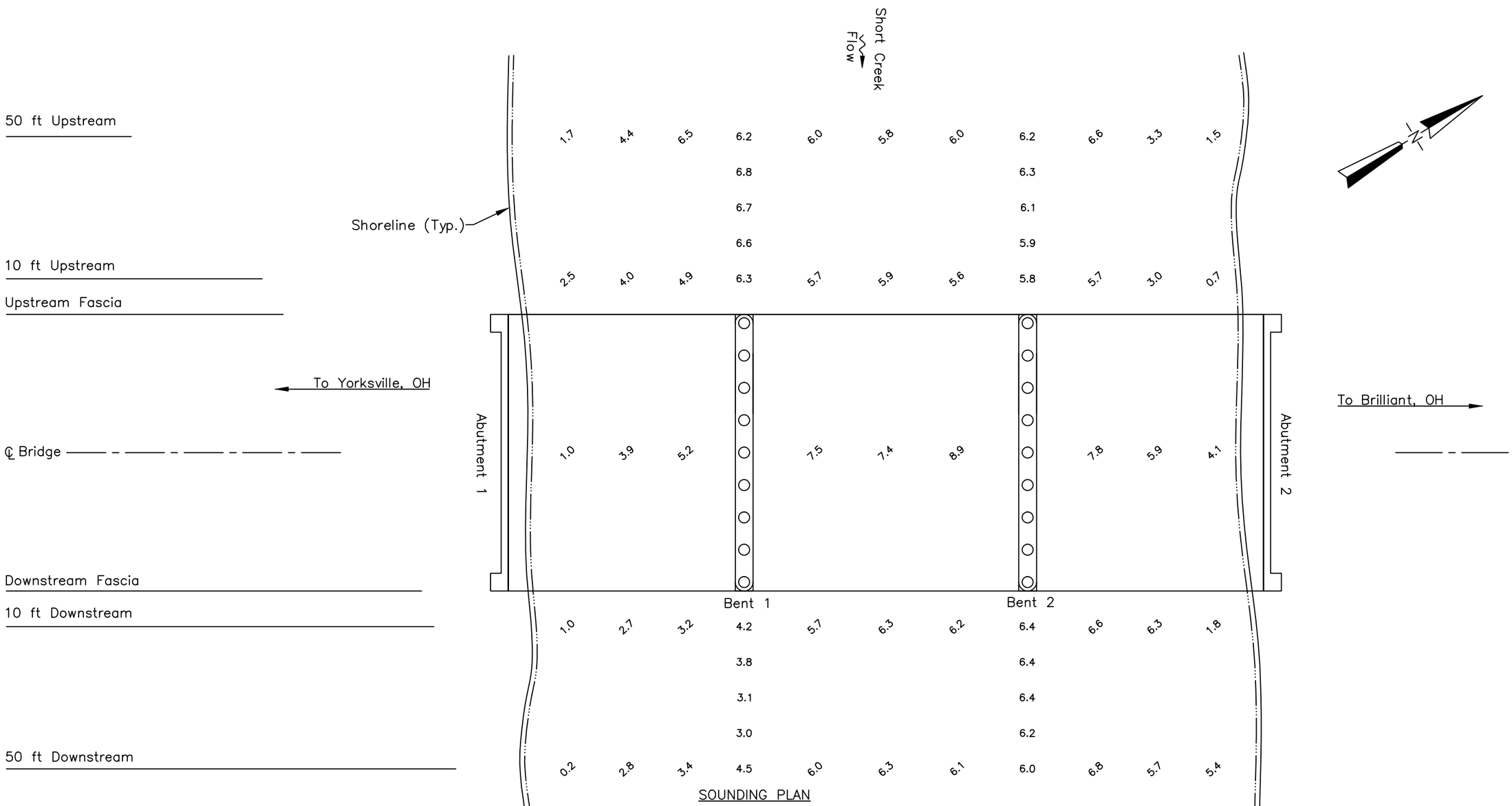

SOUNDING PLAN

GENERAL NOTES:

1. Bents 1 and 2 were inspected underwater. Substructure units are labeled according to available record drawings.
2. At the time of inspection on August 5, 2017, the waterline was located approximately 8.5 ft below the top of the deck at Bent 1, Downstream (East) Side. (Assumed EL. +100.0 ft). This corresponds with a waterline elevation of +644.95 ft.
3. Soundings indicate the water depth at the time of inspection and are measured in feet.
4. Soundings were taken parallel to the bridge at the upstream and downstream fascias, at 1/4 points between the substructure units, and at 10 ft intervals in–line with the bents upstream and downstream up to 50 ft.

LEGEND

X.X Sounding Depth from Waterline (ft)

Timber Debris

COLLINS ENGINEERS
124 Venture Court, Ste 10
Lexington, KY 40511
Phone: 859-367-0097
Fax: 859-367-0140

Ohio Department of Transportation, District 11
2201 Reiser Ave.
New Philadelphia, OH 44663
Phone: (330) 339-6633

SR 7 OVER SHORT CREEK
BRIDGE NO. JEF-07-0245
SOUNDING PLAN
JEFFERSON COUNTY, OHIO

CEI PROJECT	55–10356.00
INSPECTED BY:	MOR
DRAWN BY:	BBM
CHECKED BY:	JMJ
DATE:	AUG 2017
SHEET NO:	2

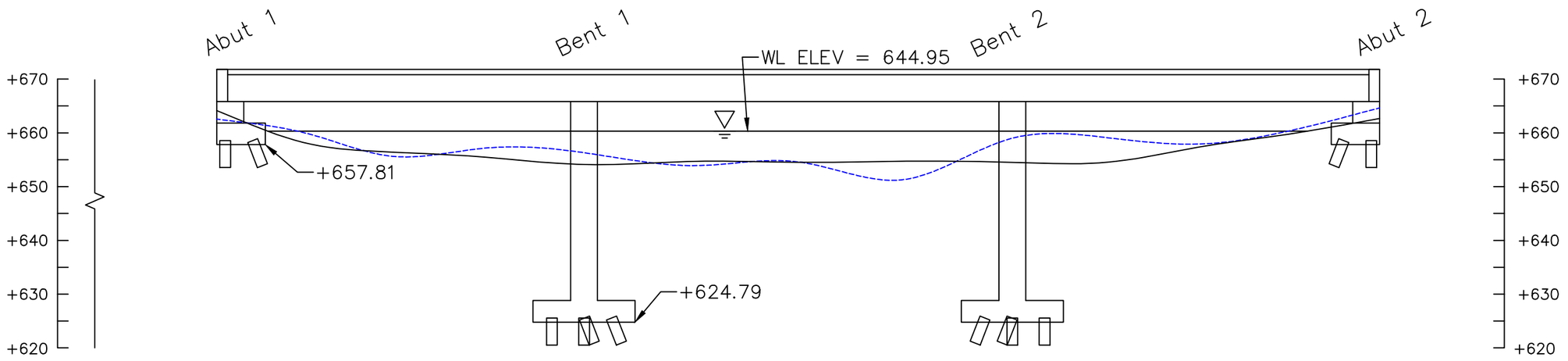

STRUCTURE CENTERLINE
CHANNEL CROSS SECTION
(EAST ELEVATION)

Note:

Footing elevations unknown due to unavailable record drawings.

LEGEND

———	Upstream Fascia – August 2017
– – – – –	Upstream Fascia – September 2012
	Timber Debris
	Water Surface
+450	Elevation (ft)

COLLINS ENGINEERS
124 Venture Court, Ste 10
Lexington, KY 40511
Phone: 859-367-0097
Fax: 859-367-0140

Ohio Department of Transportation, District 11
2201 Reiser Ave.
New Philadelphia, OH 44663
Phone: (330) 339-6633

SR 7 OVER SHORT CREEK
BRIDGE NO. JEF-07-0245
CROSS SECTIONS
JEFFERSON COUNTY, OHIO

CEI PROJECT	55–10356.00
INSPECTED BY:	MOR
DRAWN BY:	BBM
CHECKED BY:	JMJ
DATE:	AUG 2017
SHEET NO:	4

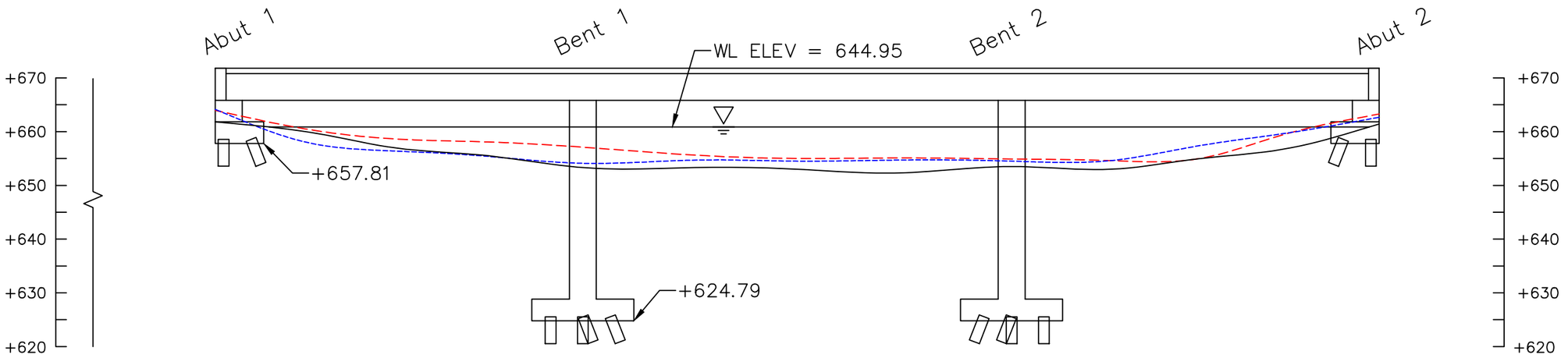

STRUCTURE CENTERLINE CHANNEL CROSS SECTION (CENTERLINE ELEVATION)

Note:

Footing elevations unknown due to unavailable record drawings.

LEGEND

———	Centerline – August 2017
- - - - -	Upstream Fascia – August 2017
– – – – –	Downstream Fascia – August 2017
	Timber Debris
	Water Surface
+450	Elevation (ft)

COLLINS ENGINEERS
124 Venture Court, Ste 10
Lexington, KY 40511
Phone: 859-367-0097
Fax: 859-367-0140

Ohio Department of Transportation, District 11
2201 Reiser Ave.
New Philadelphia, OH 44663
Phone: (330) 339-6633

SR 7 OVER SHORT CREEK
BRIDGE NO. JEF-07-0245
CROSS SECTIONS
JEFFERSON COUNTY, OHIO

CEI PROJECT	55–10356.00
INSPECTED BY:	MOR
DRAWN BY:	BBM
CHECKED BY:	JMJ
DATE:	AUG 2017
SHEET NO:	3

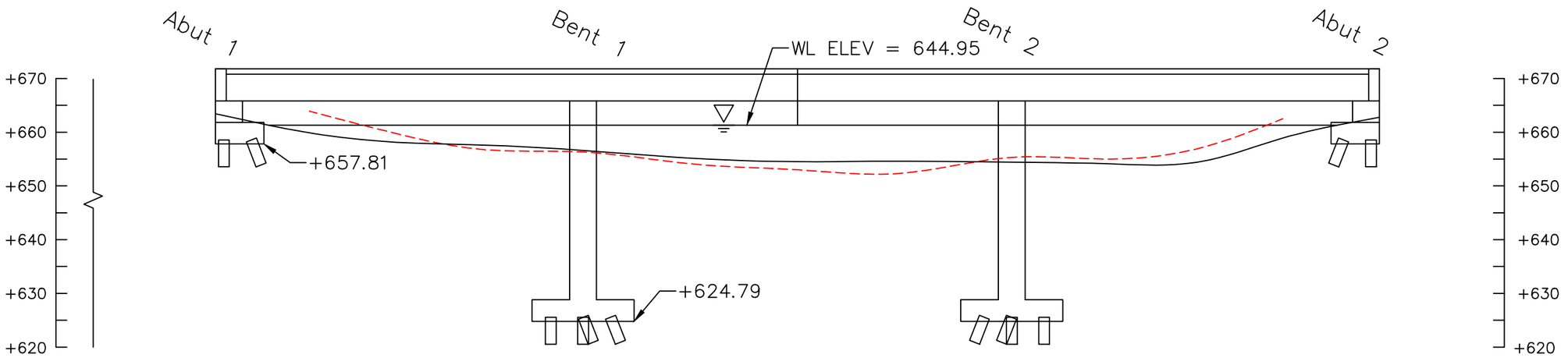

STRUCTURE CENTERLINE CHANNEL CROSS SECTION (WEST ELEVATION)

Note:

Footing elevations unknown due to unavailable record drawings.

LEGEND

———	Downstream Fascia – August 2017
– – – – –	Downstream Fascia – September 2012
	Timber Debris
	Water Surface
+450	Elevation (ft)

COLLINS ENGINEERS
124 Venture Court, Ste 10
Lexington, KY 40511
Phone: 859-367-0097
Fax: 859-367-0140

Ohio Department of Transportation, District 11
2201 Reiser Ave.
New Philadelphia, OH 44663
Phone: (330) 339-6633

SR 7 OVER SHORT CREEK
BRIDGE NO. JEF-07-0245
CROSS SECTIONS
JEFFERSON COUNTY, OHIO

CEI PROJECT	55–10356.00
INSPECTED BY:	MOR
DRAWN BY:	BBM
CHECKED BY:	JMJ
DATE:	AUG 2017
SHEET NO:	5

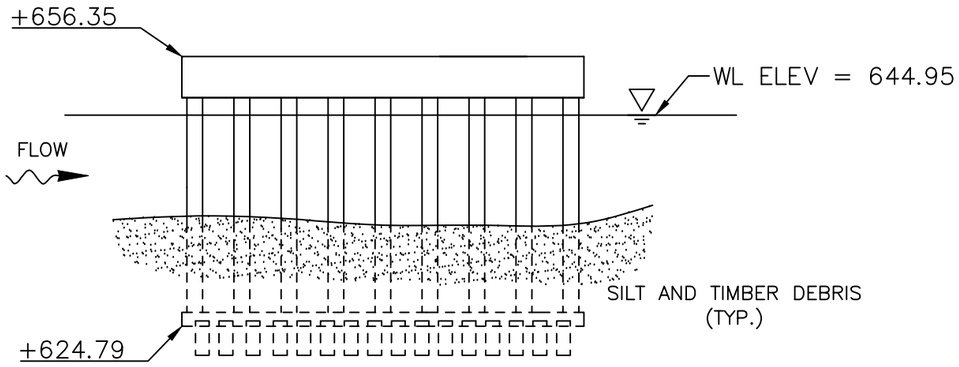

PIER 1
SOUTH ELEVATION
(LOOKING NORTH)

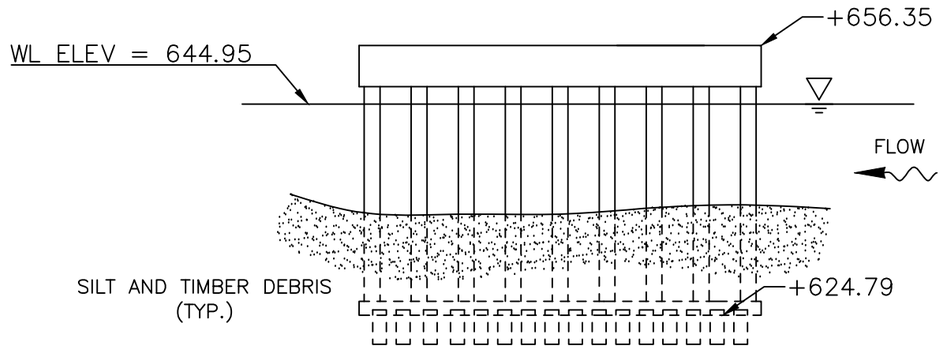

PIER 1
NORTH ELEVATION

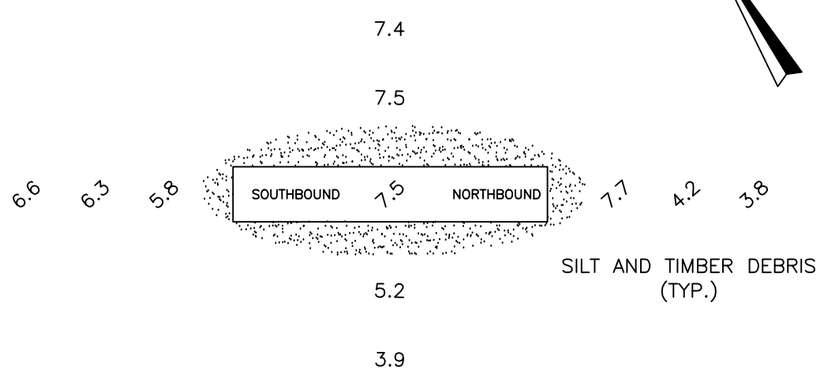

BENT 1
PLAN

INSPECTION NOTES:

1. The channel bottom material consisted of sand, gravel and cobbles with approximately 2 in probe rod penetration.
2. The submerged portions of the pier were sound and smooth with no defects observed.

LEGEND

X.X	Sounding Depth from Waterline (ft)
———	Approximate Channel Bottom – July 2015
	Timber Debris
	Water Surface

COLLINS ENGINEERS
124 Venture Court, Ste 10
Lexington, KY 40511
Phone: 859-367-0097
Fax: 859-367-0140

Ohio Department of Transportation, District 11
2201 Reiser Ave.
New Philadelphia, OH 44663
Phone: (330) 339-6633

SR 7 OVER SHORT CREEK
BRIDGE NO. JEF-07-0245
PIER 1
JEFFERSON COUNTY, OHIO

CEI PROJECT	55–10356.00
INSPECTED BY:	MOR
DRAWN BY:	BBM
CHECKED BY:	JMJ
DATE:	AUG 2017
SHEET NO:	6

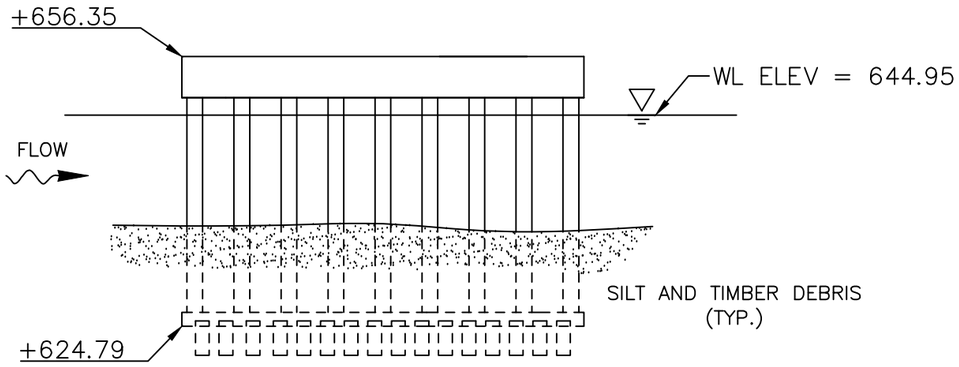

BENT 2
SOUTH ELEVATION
(LOOKING NORTH)

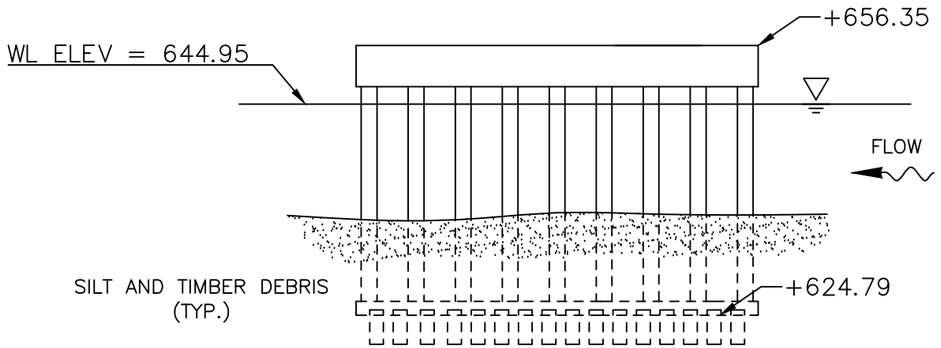

BENT 2
NORTH ELEVATION

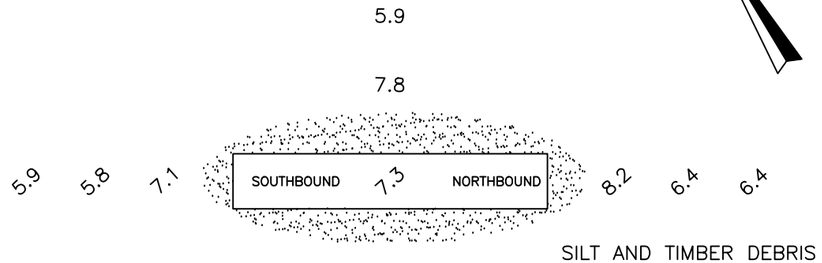

BENT 2
PLAN

INSPECTION NOTES:

1. The channel bottom material consisted of sand, gravel and cobbles with approximately 2 in probe rod penetration.
2. The submerged portions of the pier were sound and smooth with no defects observed.

LEGEND

X.X	Sounding Depth from Waterline (ft)
———	Approximate Channel Bottom – July 2015
	Timber Debris
	Water Surface

COLLINS ENGINEERS
124 Venture Court, Ste 10
Lexington, KY 40511
Phone: 859-367-0097
Fax: 859-367-0140

Ohio Department of Transportation, District 11
2201 Reiser Ave.
New Philadelphia, OH 44663
Phone: (330) 339-6633

SR 7 OVER SHORT CREEK
BRIDGE NO. JEF-07-0245
PIER 2
JEFFERSON COUNTY, OHIO

CEI PROJECT	55–10356.00
INSPECTED BY:	MOR
DRAWN BY:	BBM
CHECKED BY:	JMJ
DATE:	AUG 2017
SHEET NO:	7

EXHIBIT 2 – INSPECTION PHOTOGRAPHS



Photograph No. 1: Overall View of Structure No. JEF-150A-0012, Looking West.



Photograph No. 2: Overall View of Structure No. JEF-150A-0012, Looking East.



Photograph No. 3: View of the North Embankment Upstream of the Structure, Looking Northeast.



Photograph No. 4: View of the North Embankment at the Structure, Looking Northwest.



Photograph No. 5: View of the North Embankment Downstream of the Structure, Looking Northeast.



Photograph No. 6: View of the South Embankment Upstream of the Structure, Looking Southeast.



Photograph No. 7: View of the South Embankment at the Structure, Looking South.



Photograph No. 8: View of the South Embankment Downstream of the Structure, Looking Southwest.



Photograph No. 9: View of the North Face of Bent 1, Looking Southwest.



Photograph No. 10: View of the South Face of Bent 2, Looking Northwest.



Photograph No. 11: View of the Typical Concrete Condition at the Waterline on the Southeast Face of Bent 1, Looking Northwest.