



UNDERWATER BRIDGE INSPECTION REPORT

STRUCTURE NO. TUS-212-0343
SR-212 OVER TUSCARAWAS RIVER
TUSCARAWAS COUNTY, OH
DISTRICT 11

July 2017

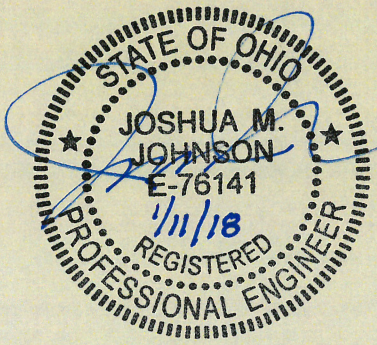

Prepared for:

STATE OF OHIO DEPARTMENT OF TRANSPORTATION

Prepared by:

COLLINS ENGINEERS INC.

124 Venture Court, Suite 10

Lexington, Kentucky 40511

859.367.0097 • www.collinsengr.com

TABLE OF CONTENTS

EXECUTIVE SUMMARY
1.0 INTRODUCTION 1
1.1 Purpose and Scope 1
1.2 General Description of the Structure 1
1.3 Method of Investigation 1
2.0 EXISTING CONDITIONS 2
2.1 General Conditions 2
2.2 Substructure Conditions 3
2.2.1 Pier 2 3
2.2.2 Pier 3 3
2.2.3 Pier 4 3
3.0 EVALUATION AND RECOMMENDATIONS 3
EXHIBIT 1 – FIGURES 5
LOCATION MAP
SOUNDING PLAN
UPSTREAM CHANNEL CROSS SECTIONS
CENTERLINE CHANNEL CROSS SECTIONS
DOWNSTREAM CHANNEL CROSS SECTIONS
PIER 2
PIER 3
PIER 4
EXHIBIT 2 – INSPECTION PHOTOGRAPHS 14
Photograph No. 1: Overall View of Structure No. TUS-212-0343, Looking South.
Photograph No. 2: Overall View of Structure No. TUS-212-0343, Looking North.
Photograph No. 3: View of the East Embankment Upstream of the Structure, Looking Northeast.
Photograph No. 4: View of the East Embankment at the Structure, Looking Northeast.
Photograph No. 5: View of the East Embankment Downstream of the Structure, Looking Southeast.
Photograph No. 6: View of the West Embankment Upstream of the Structure, Looking Northwest.
Photograph No. 7: View of the West Embankment at the Structure, Looking Northwest.
Photograph No. 8: View of the West Embankment Downstream of the Structure, Looking Northeast.
Photograph No. 9: View of the West Face of Pier 2, Looking Northeast.
Photograph No. 10: View of the East Face of Pier 2, Looking Southwest.

Photograph No. 11: View of the West Face of Pier 3, Looking Northeast.
Photograph No. 12: View of the East Face of Pier 3, Looking Southwest.
Photograph No. 13: View of the West Face of Pier 4, Looking Northeast.
Photograph No. 14: View of Typical Concrete at the Waterlevel.
Photograph No. 15: View of Typical Concrete at the Waterlevel.

EXECUTIVE SUMMARY

Project: ODOT District 11 Underwater Bridge Inspections - 2017

Purpose of Project: To perform a detailed visual and tactile underwater investigation of scour critical bridges for District 11 of the Ohio Department of Transportation.

Inspection Team: Team Leader – Matthew Rogers, E.I.T. – Collins Engineers, Inc.
Team Member – Kurt Lingo, E.I.T. – Collins Engineers, Inc.
Team Member – Russel Richard, E.I.T. – Collins Engineers, Inc.

Inspection Date(s): July 18, 2017

Water Visibility:	<1 ft	***Water Velocity:***	<1 ft/s
Water Temperature:	75 °F	***Weather:***	Sunny – 75 °F
Waterline Elevation:	885.05 ft	***Type of Boat:***	14 ft Jon Boat
Coordinates:	40.642602°N, 81.448697°W		
Access Location:	East Embankment of TUS-212-0343		
Dive Mode:	Wading		
Waterline Reference:	13.7 ft below the top of Pier 1, upstream (North) side.		
Maximum Depth at SSU:	8.4 ft – East face of Pier 3		
Shoreline Conditions:	The east and west shorelines consisted of a mild slope with heavy vegetation.		

Summary of Findings:

- **Pier 2:**
  - The channel bottom material consisted of rip-rap and cobbles with approximately 2 in. probe rod penetration.
  - The submerged portions of the pier were sound and smooth with no defects observed.
  - Timber debris consisting of up to 2 in. diameter was found from the upstream nose to 50 ft upstream and 10 ft off the East face.
- **Pier 3:**
  - The channel bottom material consisted of sand and cobbles with approximately 2 in. probe rod penetration.
  - The pier exhibited moderate scaling and abrasions measuring 3’ V and 8’ L on the East and West faces starting at the upstream nose.
  - A scour hole encircles the pier with an approximate 8 ft radius.
- **Pier 4:**
  - The channel bottom material consisted of sand, gravel, and cobbles with approximately 2 in. probe rod penetration.
  - The submerged portions of the pier were sound and smooth with no defects observed.

Summary of Recommendations:

- Monitor timber debris accumulation at Piers 2 and 3.
- Monitor scour hole under Pier 3.
- Monitor scaling on Piers 2 and 3.

Underwater Inspection Coding:

NBI Ratings:

Item	Description	Coding	Condition
60	Substructure	6 – Good Condition	Moderate Concrete Scaling
61	Channel	6 – Satisfactory Condition	Scour Hole, Timber Debris
62	Culvert	N/A	
92B	UW Insp. Frequency	60 Months	
93B	Insp. Date	07 18 17	
113	Scour Critical Bridges	8 – Above Foundation Limits	Stable (Inspector Recommended)

AASHTO National Bridge Element (NBE) Ratings:

Element #	Description	Units	Total	Condition State			
				1	2	3	4
210	Reinforced Concrete Pier Wall	LF	60	55	5	0	0

Note: Ratings were developed using the FHWA Recording and Coding Guide for the Structure Inventory and Appraisal of the Nation's Bridges. The recommended ratings consider inspected elements located within the waterway and conditions existing below the water surface only. Additional consideration is necessary for the assignment of overall condition ratings for this bridge.

1.0 INTRODUCTION

1.1 Purpose and Scope

This report consists of the results of a detailed underwater investigation performed at the SR-212 Bridge over Tuscarawas River in Tuscarawas County, OH. Collins Engineers, Inc. (Collins) conducted the underwater investigation for the Ohio Department of Transportation (ODOT) on July 18, 2017. The primary purpose of the investigation was as follows:

- Determine the condition of the substructure components located in the water at the time of the inspection from the waterline to the channel bottom.
- Obtain channel bottom depth measurements along the bridge fascias, upstream and downstream of the bridge, and around the submerged substructure units.
- Determine the condition of the shorelines in the vicinity of the structure.
- Obtain photographs of the bridge and any significant defects.

In addition, a brief inspection was made of areas that could be submerged during periods of high water. The following report includes a description of the structure, the method of investigation, a description of existing conditions, an evaluation and recommendations based on the conditions, inspection figures, and photographs.

1.2 General Description of the Structure

Structure No. TUS-212-0343 spans 268.0 ft carrying SR-212 over Tuscarawas and is approximately 30.95 ft wide. The bridge superstructure is constructed of 5 steel multi-beams. The roadway orientation of the longitudinal axis of the bridge is west to east. The substructure units are labeled as Piers 2, 3, and 4. Existing design drawings were available at the time of the inspection and were used to determine water surface elevation and foundation elevations. Refer to Figure 1 in Exhibit 1 for a Location Map of the bridge. Refer to Photographs 1 and 2 in Exhibit 2 for overall views of the bridge.

1.3 Method of Investigation

A detailed field inspection was conducted to determine the physical condition of the submerged bridge substructure units from the waterline to the channel bottom. A brief visual examination of the substructure units above the waterline was also made.

A three-person team consisting of a professional engineer-diver and team leader (Matthew Rogers, E.I.T.) and two engineer divers (Kurt Lingo, E.I.T. and Russell Richard, E.I.T.) conducted the underwater inspection. The inspection was conducted through wading. During the inspection, the inspectors worked from the shore and a note taker on the shore recorded the inspection notes.

The underwater inspection consisted of a visual and tactile examination of the accessible surfaces of the substructure units from the waterline to the channel bottom with particular attention given to any observed areas of deterioration or apparent distress. Approximately 10 percent of the total area on the underwater surfaces of the substructure units was cleaned so that the condition could be more closely examined. Photographs were taken to document the general conditions and observed deficiencies. Underwater photographs could not be obtained due to poor water conditions. The type of channel bottom material, the presence or extent of scour, the presence or extent of riprap, the presence or extent of drift and debris, and the location of any foundation exposure or undermining were noted.

Channel bottom soundings were performed utilizing a telescoping survey rod and digital fathometer. Soundings were collected at quarter points along the bridge centerline as well as 10 feet and 50 feet upstream and downstream of the bridge, parallel with its fascias. Additional soundings were collected adjacent to Piers 2 through 4 and at 10 feet intervals in-line with the piers, upstream and downstream, and the waterline was referenced to a known elevation on the bridge. A sounding plan was developed using the soundings and approximate location of the shorelines. Refer to Figures 2 thru 8 in Exhibit 1 for the sounding plan and channel cross sections that show the channel limits and water depths around the structure.

2.0 EXISTING CONDITIONS

2.1 General Conditions

At the time of the inspection, the waterline of TUS-212-0343 was located approximately 13.7 feet below the top of Pier 2, which corresponds to a waterline elevation of 885.05 ft. During the inspection, the waterway was flowing at approximately 0 ft per second. The bridge pier skew was consistent with the channel alignment and does not require attention at this time. The east and west shorelines consisted of a mild slope with heavy vegetation. Refer to Photographs 3 through 8 in Exhibit 2 for views of the shorelines near the structure.

2.2 Substructure Conditions

2.2.1 Pier 2

The channel bottom material consisted of rip-rap and cobbles with approximately 2 in. probe rod penetration. The submerged portions of the pier were sound and smooth with no defects observed. Timber debris consisting of up to 2 in. diameter was found from the upstream nose to 50 ft upstream and 10 ft off the East face. Refer to Figure 6 in Exhibit 1 for detailed inspection notes of Pier 2. Refer to Photographs 9 and 10 in Exhibit 2 for views of Pier 2 and typical concrete condition at the waterline.

2.2.2 Pier 3

The channel bottom material consisted of sand and cobbles with approximately 2 in. probe rod penetration. The pier exhibited moderate scaling and abrasions measuring 3’ V and 8’ L on the East and West faces starting at the upstream nose. A scour hole encircles the pier with an approximate 8 ft radius. Refer to Figure 7 in Exhibit 1 for detailed inspection notes of Pier 3. Refer to Photographs 11 and 12 in Exhibit 2 for views of Pier 3 and typical concrete condition at the waterline.

2.2.3 Pier 4

The channel bottom material consisted of sand, gravel, and cobbles with approximately 2 in. probe rod penetration. The submerged portions of the pier were sound and smooth with no defects observed. Refer to Figure 8 in Exhibit 1 for detailed inspection notes of Pier 4. Refer to Photograph 13 in Exhibit 2 for a view of Pier 4 and typical concrete condition at the waterline.

3.0 EVALUATION AND RECOMMENDATIONS

Overall, the submerged substructure units of Structure No. TUS-212-0343 were in satisfactory condition below water. A comparison of the soundings recorded during the previous inspection on September 24, 2012 and the soundings taken during this inspection revealed no significant change in the channel bottom profile in the vicinity of the structure. The timber debris accumulation at Pier 2 did not significantly affect the channel flow, and as a result, does not require removal at this time. If the debris accumulation increases in size or density, it may be necessary to remove the debris to reduce excessive lateral loads on the pier, limit further debris accumulation, and reduce the likelihood of channel bottom degradation resulting from obstructed flow. The scour depression observed at Pier 3 is not a concern at this time given that the bottom of the footing is embedded a minimum of 7.1 feet below the current channel bottom. The channel bottom configuration should continue to be closely monitored during future underwater inspections to verify that the footing exposure and

scour depression at Pier 3 are not increasing and that all footings remain adequately embedded in the channel bottom.

It is recommended that the submerged substructure units of Structure No. TUS-212-0343 be next inspected underwater at an interval not to exceed 60 months, no later than July 18, 2023.

Respectfully Submitted,
COLLINS ENGINEERS, INC.

Joshua Johnson, P.E.
Project Manager/Team Leader

Originated by:
Matthew Rogers, E.I.T.

EXHIBIT 1 – FIGURES

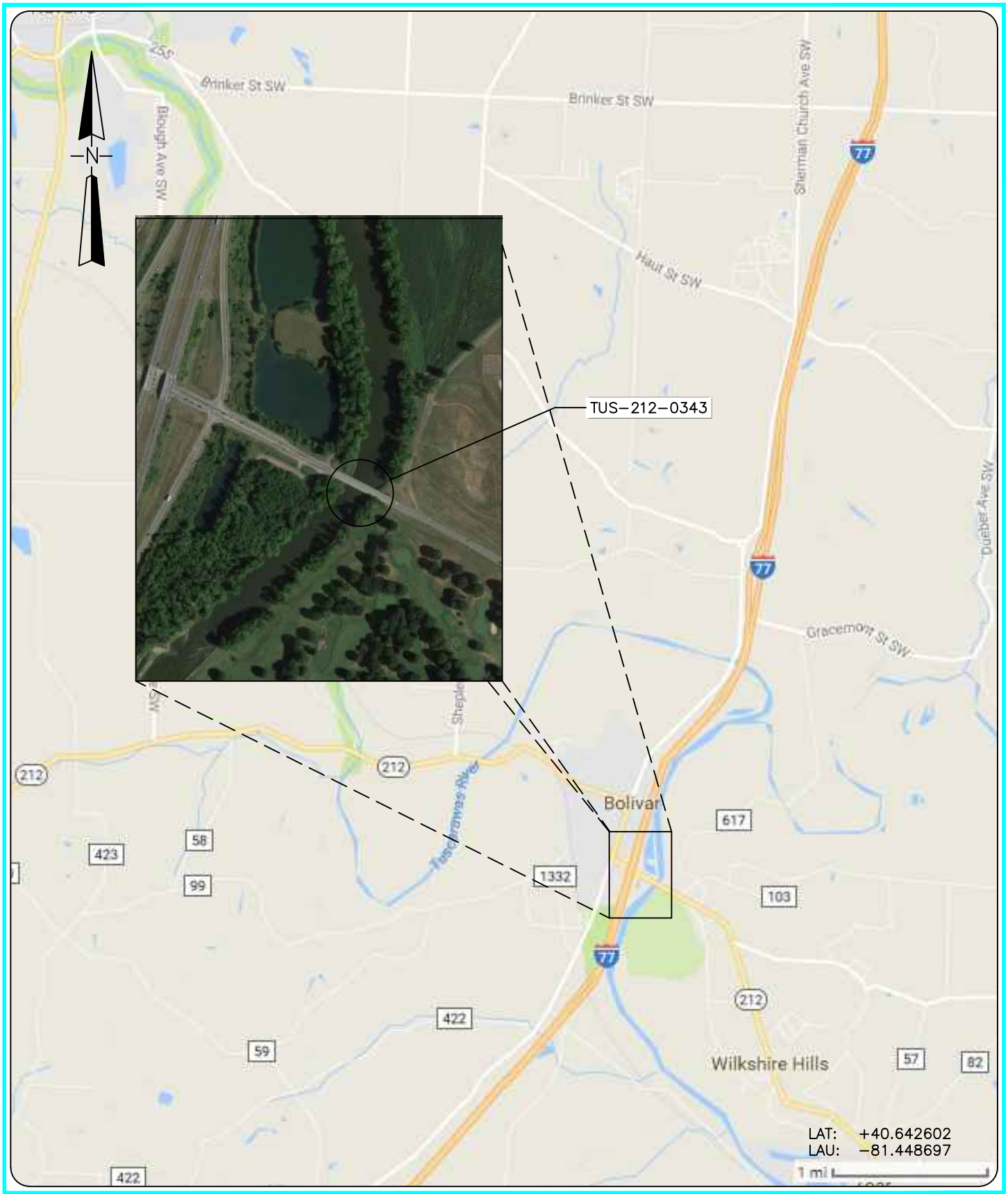

COLLINS ENGINEERS
124 Venture Court, Ste 10
Lexington, KY 40511
Phone: 859-367-0097
Fax: 859-367-0140

Ohio Department of
Transportation, District 11
2201 Reiser Ave.
New Philadelphia, OH 44663
Phone: (330) 339-6633

SR-212 OVER TUSCARAWAS RIVER
BRIDGE NO. TUS-212-0343

LOCATION MAP

TUSCARAWAS COUNTY, OHIO

INSPECTED BY: KDL	CEI PROJECT: 55–10356.00
DRAWN BY: BBM	DATE: JUL 2017
CHECKED BY: JMJ	SHEET NO: 1



SOUNDING PLAN

GENERAL NOTES:

1. Piers 1 through 3 were inspected underwater. Substructure units are labeled according to available record drawings.
2. At the time of inspection on July 18, 2017, the waterline was located approximately 13.7 ft below the top of Pier 1, upstream (North) side. (Assumed EL. +100.0 ft). This corresponds with a waterline elevation of +885.05 ft.
3. Soundings indicate the water depth at the time of inspection and are measured in feet.
4. Soundings were taken parallel to the bridge at the upstream and downstream fascias, at 10 ft intervals between the substructure units, and at 10 ft intervals in–line with the piers upstream and downstream up to 50 ft.

LEGEND

–2.7	Sounding Depth from Waterline (ft)
	Timber Debris

COLLINS ENGINEERS
124 Venture Court, Ste 10
Lexington, KY 40511
Phone: 859-367-0097
Fax: 859-367-0140

Ohio Department of Transportation, District 11
2201 Reiser Ave.
New Philadelphia, OH 44663
Phone: (330) 339-6633

SR-212 OVER TUSCARAWAS RIVER
BRIDGE NO. TUS-212-0343
SOUNDING PLAN
TUSCARAWAS COUNTY, OHIO

CEI PROJECT	55–10356.00
INSPECTED BY:	KDL
DRAWN BY:	BBM
CHECKED BY:	JMJ
DATE:	JUL 2017
SHEET NO:	2

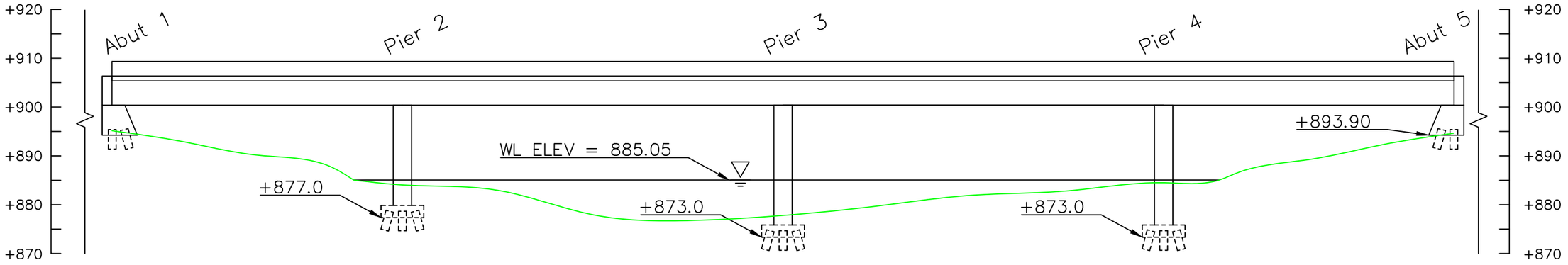

STRUCTURE CENTERLINE
CHANNEL CROSS SECTION
(LOOKING UPSTREAM)

Note:

Footing elevations unknown due to unavailable record drawings.

LEGEND

- Approximate Channel Bottom – July 2017
- Approximate Channel Bottom – September 2012
- Approximate Channel Bottom – July 2004 (No Data)
- Timber Debris
- Water Surface
- +450 Elevation (ft)

COLLINS ENGINEERS
124 Venture Court, Ste 10
Lexington, KY 40511
Phone: 859-367-0097
Fax: 859-367-0140

Ohio Department of Transportation, District 11
2201 Reiser Ave.
New Philadelphia, OH 44663
Phone: (330) 339-6633

SR-212 OVER TUSCARAWAS RIVER
BRIDGE NO. TUS-212-0343
CROSS SECTIONS
TUSCARAWAS COUNTY, OHIO

CEI PROJECT
55–10356.00

INSPECTED BY:
KDL

DRAWN BY:
BBM

CHECKED BY:
JMJ

DATE:
JUL 2017

SHEET NO:
3

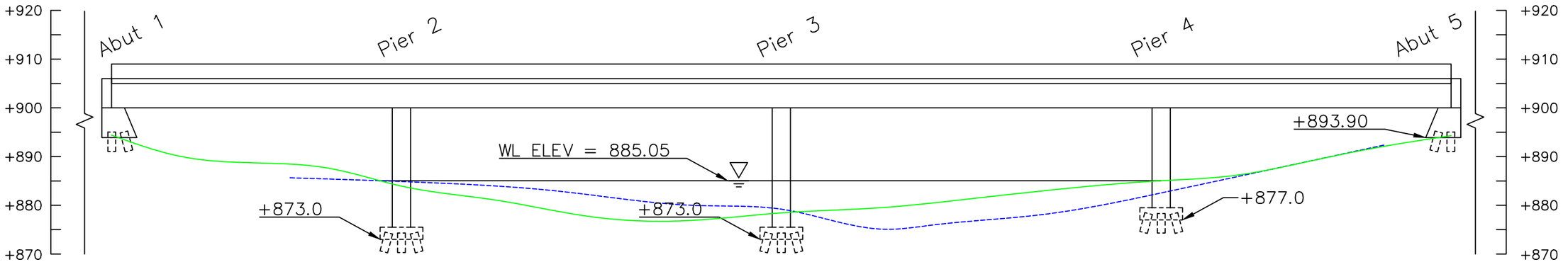

Downstream Elevations (Looking Upstream)		
Abut/Pier #	X	Y
A1	0	5.6
1/4		10.1
1/2		11.3
3/4		12.4
P2	68	15.2
1/4		15.2
1/2		15.0
3/4		15.1
P3	142	15.2
1/4		15.3
1/2		15.2
3/4		15.3
P4	208	15.3
1/4		13.9
1/2		11.1
3/4		8.1
A5	268	5.7

Note:

Footing elevations unknown due to unavailable record drawings.

STRUCTURE DOWNSTREAM CHANNEL CROSS SECTION (LOOKING UPSTREAM)

LEGEND

- Approximate Channel Bottom – July 2017
- Approximate Channel Bottom – September 2012
- Approximate Channel Bottom – July 2004 (No Data)
- Timber Debris
- Water Surface
- +450 Elevation (ft)

COLLINS ENGINEERS
124 Venture Court, Ste 10
Lexington, KY 40511
Phone: 859-367-0097
Fax: 859-367-0140

Ohio Department of Transportation, District 11
2201 Reiser Ave.
New Philadelphia, OH 44663
Phone: (330) 339-6633

SR-212 OVER TUSCARAWAS RIVER
BRIDGE NO. TUS-212-0343
CROSS SECTIONS
TUSCARAWAS COUNTY, OHIO

CEI PROJECT 55–10356.00
INSPECTED BY: KDL
DRAWN BY: BBM
CHECKED BY: JMJ
DATE: JUL 2017
SHEET NO: 4

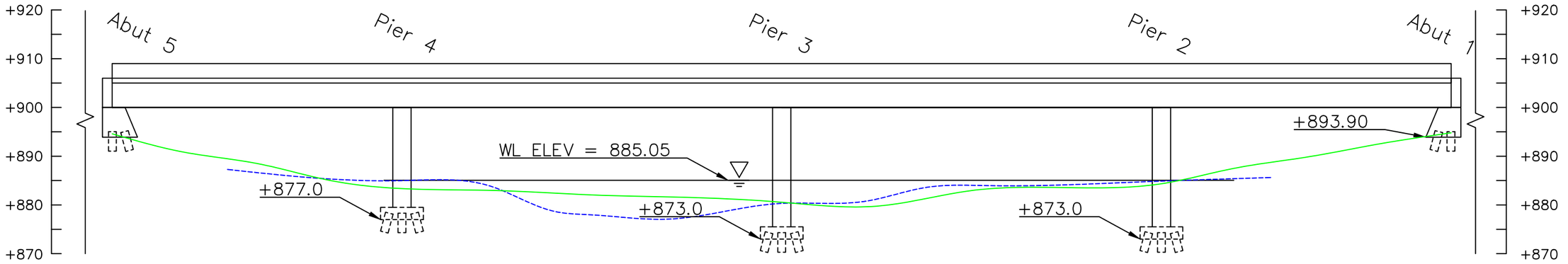

Upstream Elevations (Looking Downstream)		
Abut/Pier #	X	Y
A5	0	5.4
3/4		9.2
1/2		11.5
1/4		15.6
P4	68	15.6
3/4		15.4
1/2		15.4
1/4		15.4
P3	142	15.3
3/4		15.2
1/2		15.2
1/4		15.1
P2	208	15.1
3/4		12.5
1/2		10.2
1/4		7.5
A1	268	5.2

Note:

Footing elevations unknown due to unavailable record drawings.

STRUCTURE UPSTREAM CHANNEL CROSS SECTION (LOOKING DOWNSTREAM)

LEGEND

- Approximate Channel Bottom – July 2017
- Approximate Channel Bottom – September 2012
- Approximate Channel Bottom – July 2004 (No Data)
- Timber Debris
- Water Surface
- +450 Elevation (ft)

COLLINS ENGINEERS
124 Venture Court, Ste 10
Lexington, KY 40511
Phone: 859-367-0097
Fax: 859-367-0140

Ohio Department of Transportation, District 11
2201 Reiser Ave.
New Philadelphia, OH 44663
Phone: (330) 339-6633

SR-212 OVER TUSCARAWAS RIVER
BRIDGE NO. TUS-212-0343
CROSS SECTIONS
TUSCARAWAS COUNTY, OHIO

CEI PROJECT 55–10356.00
INSPECTED BY: KDL
DRAWN BY: BBM
CHECKED BY: JMJ
DATE: JUL 2017
SHEET NO: 5

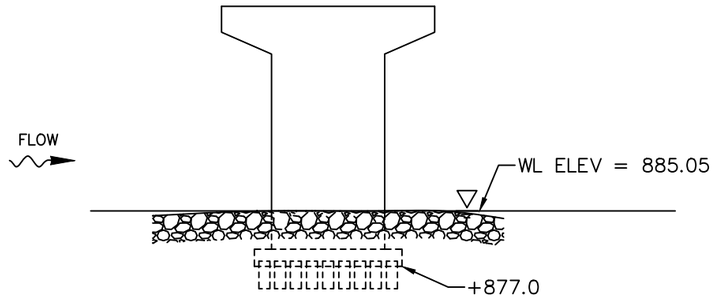

WEST ELEVATION
(LOOKING EAST)

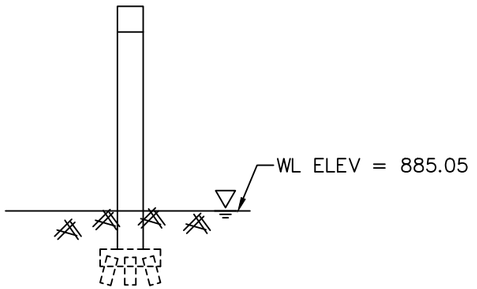

UPSTREAM NOSE

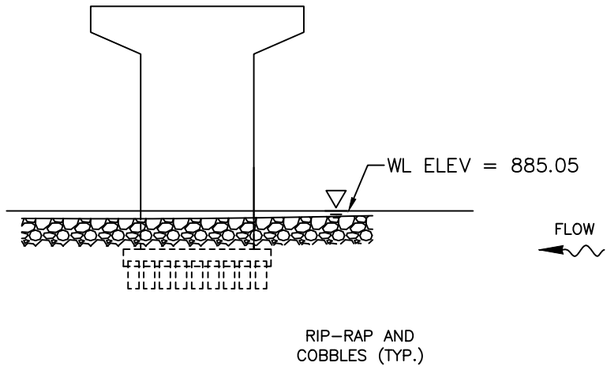

EAST ELEVATION

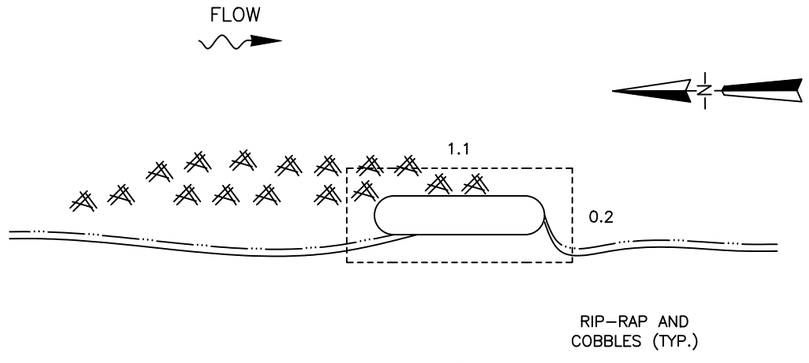

PIER 2
PLAN

INSPECTION NOTES:

1. The channel bottom material consisted of rip–rap and cobbles with approximately 2 in. probe rod penetration.
2. The submerged portions of the pier were sound and smooth with no defects observed.
3. Timber debris consisting of up to 2 in. diameter was found from the upstream nose to 50 ft upstream and 10 ft off the East face.

LEGEND

–2.7	Sounding Depth from Waterline (ft)
———	Approximate Channel Bottom – July 2015
	Timber Debris
	Water Surface

COLLINS ENGINEERS
124 Venture Court, Ste 10
Lexington, KY 40511
Phone: 859-367-0097
Fax: 859-367-0140

Ohio Department of Transportation, District 11
2201 Reiser Ave.
New Philadelphia, OH 44663
Phone: (330) 339-6633

SR-212 OVER TUSCARAWAS RIVER
BRIDGE NO. TUS-212-0343
PIER 2
TUSCARAWAS COUNTY, OHIO

CEI PROJECT
55–10356.00

INSPECTED BY:
KDL

DRAWN BY:
BBM

CHECKED BY:
JMJ

DATE:
JUL 2017

SHEET NO:
6

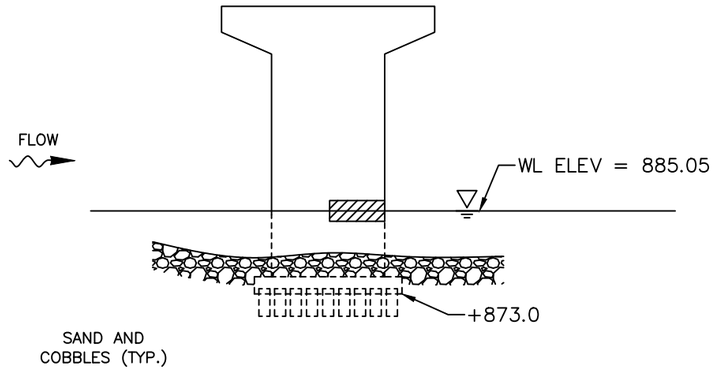

WEST ELEVATION
(LOOKING EAST)

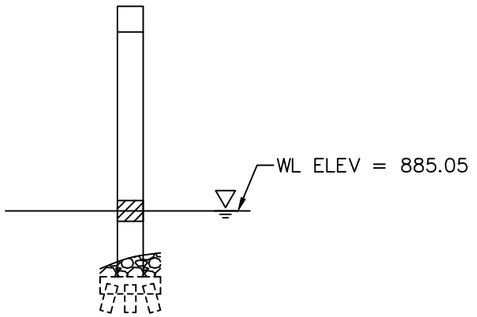

UPSTREAM NOSE

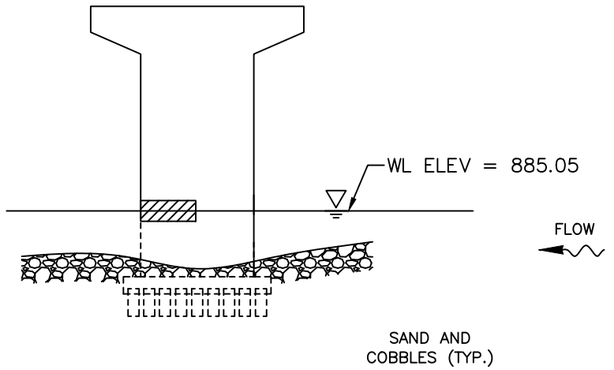

EAST ELEVATION

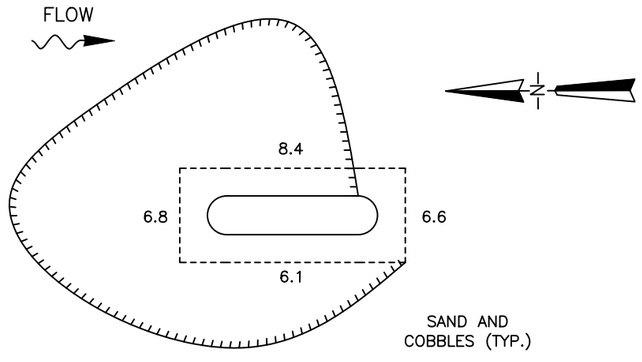

PIER 3
PLAN

INSPECTION NOTES:

1. The channel bottom material consisted of sand and cobbles with approximately 2 in. probe rod penetration.
2. The pier exhibited moderate scaling and abrasions measuring 3' V x 8' L on the East and West faces starting at the upstream nose.

LEGEND

−2.7	Sounding Depth from Waterline (ft)
———	Approximate Channel Bottom – July 2015
	Timber Debris
	Water Surface
	Scour Hole
	Scour Hole

COLLINS ENGINEERS
124 Venture Court, Ste 10
Lexington, KY 40511
Phone: 859-367-0097
Fax: 859-367-0140

Ohio Department of Transportation, District 11
2201 Reiser Ave.
New Philadelphia, OH 44663
Phone: (330) 339-6633

SR-212 OVER TUSCARAWAS RIVER
BRIDGE NO. TUS-212-0343
PIER 3
TUSCARAWAS COUNTY, OHIO

CEI PROJECT
55–10356.00

INSPECTED BY:
KDL

DRAWN BY:
BBM

CHECKED BY:
JMJ

DATE:
JUL 2017

SHEET NO:
7

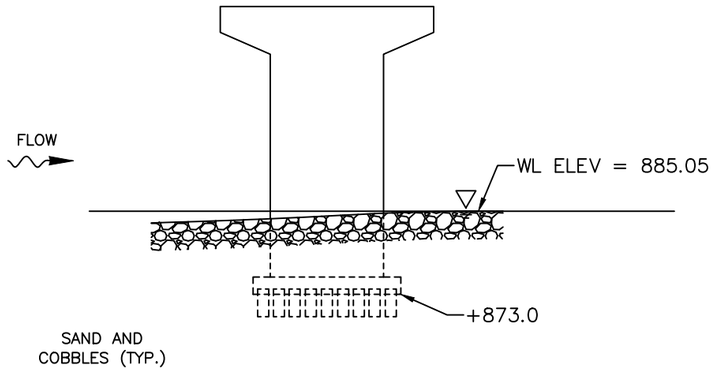

WEST ELEVATION
(LOOKING EAST)

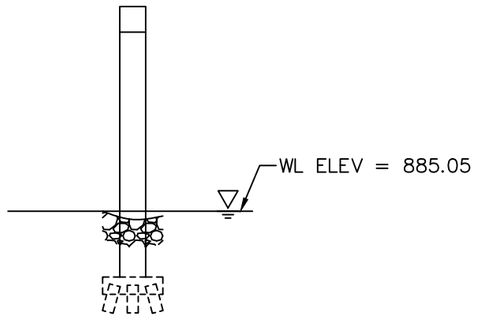

UPSTREAM NOSE

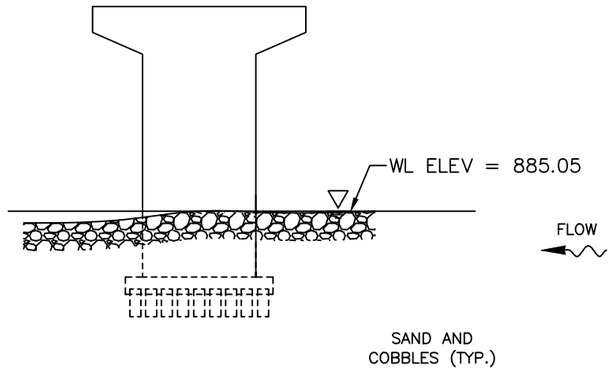

EAST ELEVATION

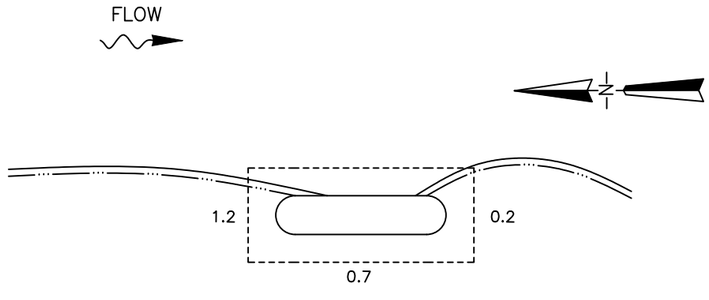

PIER 4
PLAN

INSPECTION NOTES:

1. The channel bottom material consisted of sand, gravel and cobbles with approximately 2 in. probe rod penetration.
2. The submerged portions of the pier were sound and smooth with no defects observed.

LEGEND

−2.7	Sounding Depth from Waterline (ft)
———	Approximate Channel Bottom – July 2015
	Timber Debris
	Water Surface

COLLINS ENGINEERS
124 Venture Court, Ste 10
Lexington, KY 40511
Phone: 859-367-0097
Fax: 859-367-0140

Ohio Department of Transportation, District 11
2201 Reiser Ave.
New Philadelphia, OH 44663
Phone: (330) 339-6633

SR-212 OVER TUSCARAWAS RIVER
BRIDGE NO. TUS-212-0343
PIER 4
TUSCARAWAS COUNTY, OHIO

CEI PROJECT	55–10356.00
INSPECTED BY:	KDL
DRAWN BY:	BBM
CHECKED BY:	JMJ
DATE:	JUL 2017
SHEET NO:	8

EXHIBIT 2 – INSPECTION PHOTOGRAPHS



Photograph No. 1: Overall View of Structure No. TUS-212-0343, Looking South.



Photograph No. 2: Overall View of Structure No. TUS-212-0343, Looking North.



Photograph No. 3: View of the East Embankment Upstream of the Structure, Looking Northeast.



Photograph No. 4: View of the East Embankment at the Structure, Looking Northeast.



Photograph No. 5: View of the East Embankment Downstream of the Structure, Looking Southeast.



Photograph No. 6: View of the West Embankment Upstream of the Structure, Looking Northwest.



Photograph No. 7: View of the West Embankment at the Structure, Looking Northwest.



Photograph No. 8: View of the West Embankment Downstream of the Structure, Looking Northeast.



Photograph No. 9: View of the West Face of Pier 2, Looking Northeast.



Photograph No. 10: View of the East Face of Pier 2, Looking Southwest.



Photograph No. 11: View of the West Face of Pier 3, Looking Northeast.



Photograph No. 12: View of the East Face of Pier 3, Looking Southwest.



Photograph No. 13: View of the West Face of Pier 4, Looking Northeast.



Photograph No. 14: View of Typical Concrete at the Waterlevel.



Photograph No. 15: View of Typical Concrete at the Waterlevel.