



UNDERWATER BRIDGE INSPECTION REPORT

STRUCTURE NO. TUS-250-0144
SR 250 OVER BEACH CITY RESERVOIR
TUSCARAWAS COUNTY, OH
DISTRICT 11

July 2017

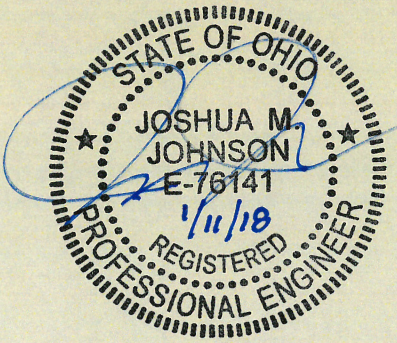

Prepared for:

STATE OF OHIO DEPARTMENT OF TRANSPORTATION

Prepared by:

COLLINS ENGINEERS INC.

124 Venture Court, Suite 10

Lexington, Kentucky 40511

859.367.0097 • www.collinsengr.com

TABLE OF CONTENTS

EXECUTIVE SUMMARY
1.0 INTRODUCTION 1
1.1 Purpose and Scope 1
1.2 General Description of the Structure 1
1.3 Method of Investigation 1
2.0 EXISTING CONDITIONS 2
2.1 General Conditions 2
2.2 Substructure Conditions 3
2.2.1 Pier 1 3
2.2.2 Pier 2 3
2.2.3 Pier 3 3
3.0 EVALUATION AND RECOMMENDATIONS 3
EXHIBIT 1 – FIGURES 5
LOCATION MAP
SOUNDING PLAN
UPSTREAM CHANNEL CROSS SECTIONS
CENTERLINE CHANNEL CROSS SECTIONS
DOWNSTREAM CHANNEL CROSS SECTIONS
ABUTMENT 1
PIER 1
PIER 2
PIER 3
EXHIBIT 2 – INSPECTION PHOTOGRAPHS 135
Photograph No. 1: Overall View of Structure No. TUS-250-0144, Looking North.
Photograph No. 2: Overall View of Structure No. TUS-250-0144, Looking Southwest.
Photograph No. 3: View of the West Embankment at the Bridge Centerline, Looking West.
Photograph No. 4: View of the West Embankment Downstream of the Bridge, Looking Northwest.
Photograph No. 5: View of the West Embankment Upstream of the Bridge, Looking Southwest.
Photograph No. 6: View of the East Embankment Upstream of the Bridge, Looking Southeast.
Photograph No. 7: View of the East Embankment at the Bridge Centerline, Looking Northeast.
Photograph No. 8: View of the East Embankment Downstream of the Bridge, Looking Northeast.
Photograph No. 9: View of the Erosion at the East Abutment (Northeast Corner), Looking East.
Photograph No. 10: View of the Erosion at the East Abutment (Northeast Corner), Looking East.

Photograph No. 11: View of the Erosion at the East Abutment (Northeast Corner), Looking West.
Photograph No. 12: View of the Undermining at the East Approach Roadway (Northeast End), Looking South
Photograph No. 13: View of the Erosion at the East Abutment (Southeast Corner), Looking Southeast.
Photograph No. 14: View of the Undermining at the East Approach, Looking South.
Photograph No. 15: View of the Undermining at the East Approach, Looking South.
Photograph No. 16: View of the Undermining Extents at the East Approach (Northeast End).
Photograph No. 17: View of the Undermining Extents at the East Approach (Northeast End).
Photograph No. 18: View of the Undermining Extents at the East Approach (Northeast End).
Photograph No. 19: View of the Undermining Extents at the East Approach (Northeast End).
Photograph No. 20: View of Pier 2, Looking Southwest.
Photograph No. 21: View of Pier 2, Looking Northeast.
Photograph No. 22: View of Pier 3, Looking Southwest.
Photograph No. 23: View of Pier 3, Looking Northeast.
Photograph No. 24: View of Pier 4, Looking Southwest.
Photograph No. 25: View of Pier 4, Looking Northeast.
Photograph No. 26: View of Typical Concrete at Waterlevel of the West Face of Pier 4, Looking East.
Photograph No. 27: View of Typical Map Cracking with Efflorescence at the Downstream Nose of Pier 4, Looking Southwest.

EXECUTIVE SUMMARY

Project: ODOT District 11 Underwater Bridge Inspections - 2017

Purpose of Project: To perform a detailed visual and tactile underwater investigation of scour critical bridges for District 11 of the Ohio Department of Transportation.

Inspection Team: Team Leader – Matthew Rogers, E.I.T. – Collins Engineers, Inc.
Team Member – Gregory Desing, P.E. – Collins Engineers, Inc.
Team Member – Jacob Green – Collins Engineers, Inc.

Inspection Date(s): July 11, 2017

Water Visibility:	<1 ft	***Water Velocity:***	<1 ft/s
Water Temperature:	70 °F	***Weather:***	Cloudy – 85 °F
Waterline Elevation:	66.2 ft	***Type of Boat:***	N/A
Coordinates:	40.633901°N, 81.562010°W		
Access Location:	1 mile East of TUS-250-0144		
Dive Mode:	Wading		
Waterline Reference:	33.8 ft below the top of Pier 2, upstream (North) side.		
Maximum Depth at SSU:	8.1 ft – North Face Centerline of Pier 2		
Shoreline Conditions:	The north shoreline consisted of little to no vegetation with shallow water. The south shoreline consisted of a mild slope with heavy vegetation and large trees.		

Summary of Findings:

- **Pier 2:**
  - The channel bottom material consisted of soft silt and stone, 6 in. in diameter, with approximately 12 in probe rod penetration.
  - The submerged portions of the pier were sound and smooth with no defects observed.
- **Pier 3:**
  - The channel bottom material consisted of soft silt and stone, 6 in. in diameter, with approximately 12 in probe rod penetration.
  - The submerged portions of the pier were sound and smooth with no defects observed.
- **Pier 4:**
  - The channel bottom material consisted of soft silt and stone, 6 in. in diameter, with approximately 12 in probe rod penetration.
  - The submerged portions of the pier were sound and smooth with no defects observed.
  - Hairline map cracking with efflorescence around pier from bridge centerline to +6 ft.

Summary of Recommendations:

- Monitor timber debris accumulation at Pier 2 through 4.
- Monitor general channel bottom and pier footings for any degradation.
- Monitor scaling on Piers 2 through 4.

Underwater Inspection Coding:

NBI Ratings:

Item	Description	Coding	Condition
60	Substructure	7 – Good Condition	Minor Concrete Efflorescence
61	Channel	7 – Good Condition	
62	Culvert	N/A	
92B	UW Insp. Frequency	60 Months	
93B	Insp. Date	07 11 17	
113	Scour Critical Bridges	8 – Above Foundation Limits	Stable (Inspector Recommended)

AASHTO National Bridge Element (NBE) Ratings:

Element #	Description	Units	Total	Condition State			
				1	2	3	4
210	Reinforced Concrete Pier Wall	LF	90	90	0	0	0

Note: Ratings were developed using the FHWA Recording and Coding Guide for the Structure Inventory and Appraisal of the Nation's Bridges. The recommended ratings consider inspected elements located within the waterway and conditions existing below the water surface only. Additional consideration is necessary for the assignment of overall condition ratings for this bridge.

1.0 INTRODUCTION

1.1 Purpose and Scope

This report consists of the results of a detailed underwater investigation performed at the SR 250 Bridge over Beach City Reservoir in Tuscarawas County, OH. Collins Engineers, Inc. (Collins) conducted the underwater investigation for the Ohio Department of Transportation (ODOT) on July 11, 2017. The primary purpose of the investigation was as follows:

- Determine the condition of the substructure components located in the water at the time of the inspection from the waterline to the channel bottom.
- Obtain channel bottom depth measurements along the bridge fascias, upstream and downstream of the bridge, and around the submerged substructure units.
- Determine the condition of the shorelines in the vicinity of the structure.
- Obtain photographs of the bridge and any significant defects.

In addition, a brief inspection was made of areas that could be submerged during periods of high water. The following report includes a description of the structure, the method of investigation, a description of existing conditions, an evaluation and recommendations based on the conditions, inspection figures, and photographs.

1.2 General Description of the Structure

Structure No. TUS-250-0144 spans 324.66 ft, carrying SR 250 over Beach City Reservoir and is approximately 35 ft wide. The bridge superstructure is constructed of 4 steel multi-beams. The roadway orientation of the longitudinal axis of the bridge is south to north. The substructure units are labeled as Abutment 1, Piers 2 through 4, and Abutment 5. Existing design drawings were available at the time of the inspection and were used to determine water surface elevation and foundation elevations. Refer to Figure 1 in Exhibit 1 for a Location Map of the bridge. Refer to Photographs 1 and 2 in Exhibit 2 for overall views of the bridge.

1.3 Method of Investigation

A detailed field inspection was conducted to determine the physical condition of the submerged bridge substructure units from the waterline to the channel bottom. A brief visual examination of the substructure units above the waterline was also made.

A three-person team consisting of a professional engineer-diver and team leader (Matthew Rogers, E.I.T.) and two engineer divers (Gregory Desing, P.E., and Jacob Green) conducted the underwater inspection. The inspection was conducted through wading. During the inspection, the inspectors worked from the shore and a note taker on the shore recorded the inspection notes.

The underwater inspection consisted of a visual and tactile examination of the accessible surfaces of the substructure units from the waterline to the channel bottom with particular attention given to any observed areas of deterioration or apparent distress. Approximately 10 percent of the total area on the underwater surfaces of the substructure units was cleaned so that the condition could be more closely examined. Photographs were taken to document the general conditions and observed deficiencies. Underwater photographs could not be obtained due to poor water conditions. The type of channel bottom material, the presence or extent of scour, the presence or extent of riprap, the presence or extent of drift and debris, and the location of any foundation exposure or undermining were noted.

Channel bottom soundings were performed utilizing a telescoping survey rod and digital fathometer. Soundings were collected at quarter points along the bridge centerline as well as 10 feet and 50 feet upstream and downstream of the bridge, parallel with its fascias. Additional soundings were collected adjacent to Piers 2 through 4 and at 10 feet intervals in-line with the piers, upstream and downstream, and the waterline was referenced to a known elevation on the bridge. A sounding plan was developed using the soundings and approximate location of the shorelines. Refer to Figures 2 thru 5 in Exhibit 1 for the sounding plan and channel cross sections that show the channel limits and water depths around the structure.

2.0 EXISTING CONDITIONS

2.1 General Conditions

At the time of the inspection, the waterline of TUS-250-0144 was located approximately 33.8 feet below the top of Pier 2, which corresponds to an assumed waterline elevation of 66.2 ft. During the inspection, the waterway was flowing at approximately 1 ft per second. The bridge pier skew was consistent with the channel alignment and does not require attention at this time. The north shoreline consisted of little to no vegetation with shallow water. The south shoreline consisted of a mild slope with heavy vegetation and large trees. Refer to Photographs 3 through 8 in Exhibit 2 for views of the shorelines near the structure.

2.2 Substructure Conditions

2.2.1 Pier 2

The channel bottom material consisted of soft silt and stone, 6 in. in diameter, with approximately 12 in probe rod penetration. The submerged portions of the pier were sound and smooth with no defects observed. Refer to Figure 7 in Exhibit 1 for detailed inspection notes of Pier 2. Refer to Photographs 20 and 21 in Exhibit 2 for views of Pier 2.

2.2.2 Pier 3

The channel bottom material consisted of soft silt and stone, 6 in. in diameter, with approximately 12 in probe rod penetration. The submerged portions of the pier were sound and smooth with no defects observed. Refer to Figure 8 in Exhibit 1 for detailed inspection notes of Pier 3. Refer to Photographs 22 and 23 in Exhibit 2 for views of Pier 3.

2.2.3 Pier 4

The channel bottom material consisted of soft silt and stone, 6 in. in diameter, with approximately 12 in probe rod penetration. The submerged portions of the pier were sound and smooth with no defects observed. Hairline map cracking with efflorescence around pier from bridge centerline to +6 ft. Refer to Figure 9 in Exhibit 1 for detailed inspection notes of Pier 4. Refer to Photographs 24 through 27 in Exhibit 2 for views of Pier 4 and typical concrete condition at the waterline.

3.0 EVALUATION AND RECOMMENDATIONS

Overall, the submerged substructure units of Structure No. TUS-250-0144 were in good condition below water. A comparison of the soundings recorded during the previous inspection on September 24, 2012 and the soundings taken during this inspection revealed no significant change in the channel bottom profile in the vicinity of the structure. Although no channel deficiencies were observed, the channel bottom should continue to be monitored during future underwater inspections to verify that localized scour or overall channel degradation is not occurring and that the pier footings remain adequately embedded in the channel bottom.

It is recommended that the submerged substructure units of Structure No. TUS-250-0144 be next inspected underwater at an interval not to exceed 5 years, no later than July 11, 2019.

Respectfully Submitted,
COLLINS ENGINEERS, INC.

Joshua Johnson, P.E.
Project Manager/Team Leader

Originated by:
Matthew Rogers, E.I.T.

EXHIBIT 1 – FIGURES

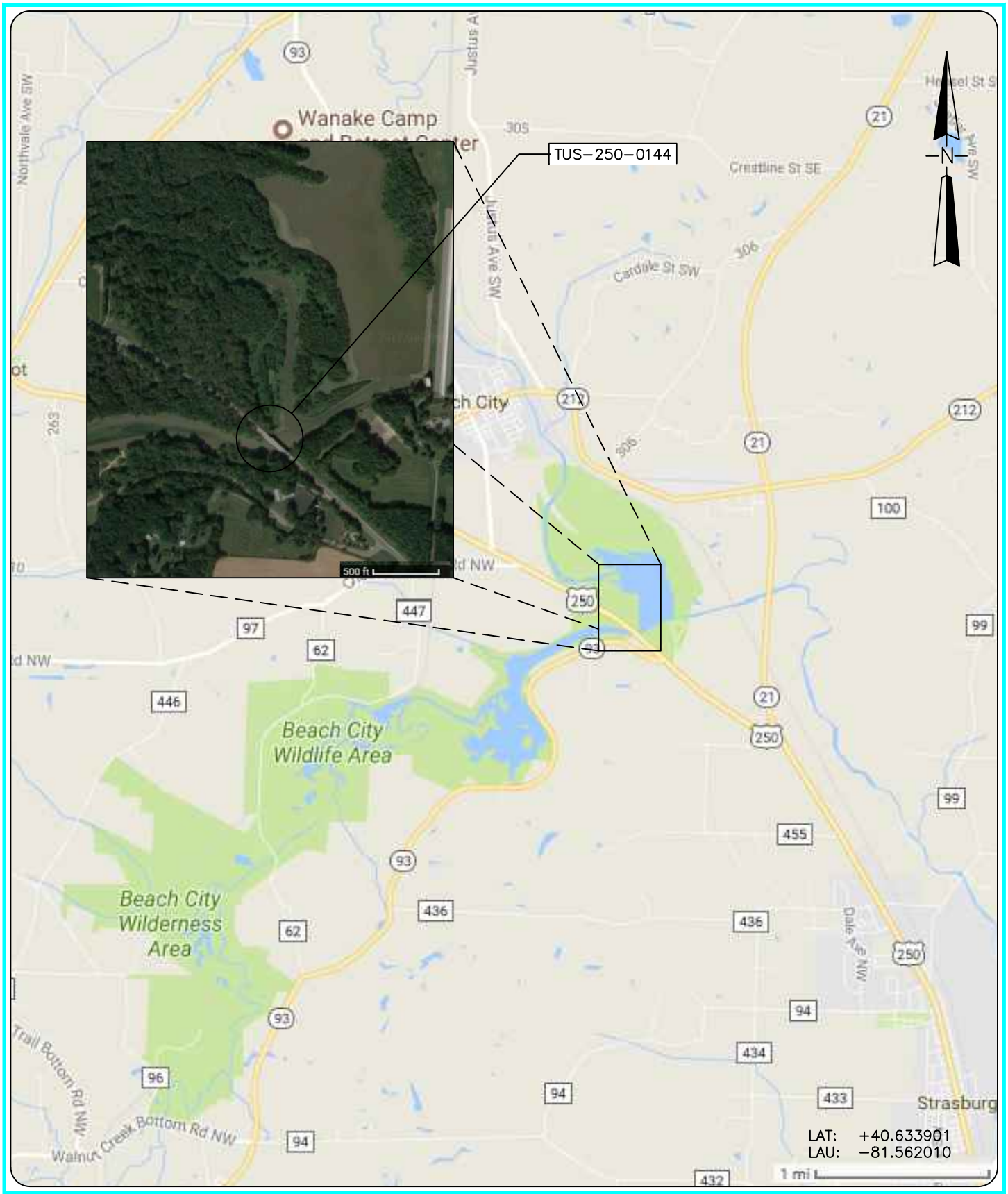

COLLINS ENGINEERS
124 Venture Court, Ste 10
Lexington, KY 40511
Phone: 859-367-0097
Fax: 859-367-0140

Ohio Department of Transportation, District 11
2201 Reiser Ave.
New Philadelphia, OH 44663
Phone: (330) 339-6633

SR 250 OVER BEACH CITY RESERVOIR
BRIDGE NO. TUS-250-0144

LOCATION MAP

TUSCARAWAS COUNTY, OHIO

INSPECTED BY: JPG	CEI PROJECT: 55–10356.00
DRAWN BY: BBM	DATE: JUL 2017
CHECKED BY: JMJ	SHEET NO: 1

\\10.1.8.42\NNVA\KY OFFICE TEMP\PROJECTS\WORKGROUP\55 - LEXINGTON\55-10356.00 - ODOT D11 UNDERWATER\ENGINEERING\DRAWINGS\TUS-250-0144.DWG7/20/2017 3:30:18 PM

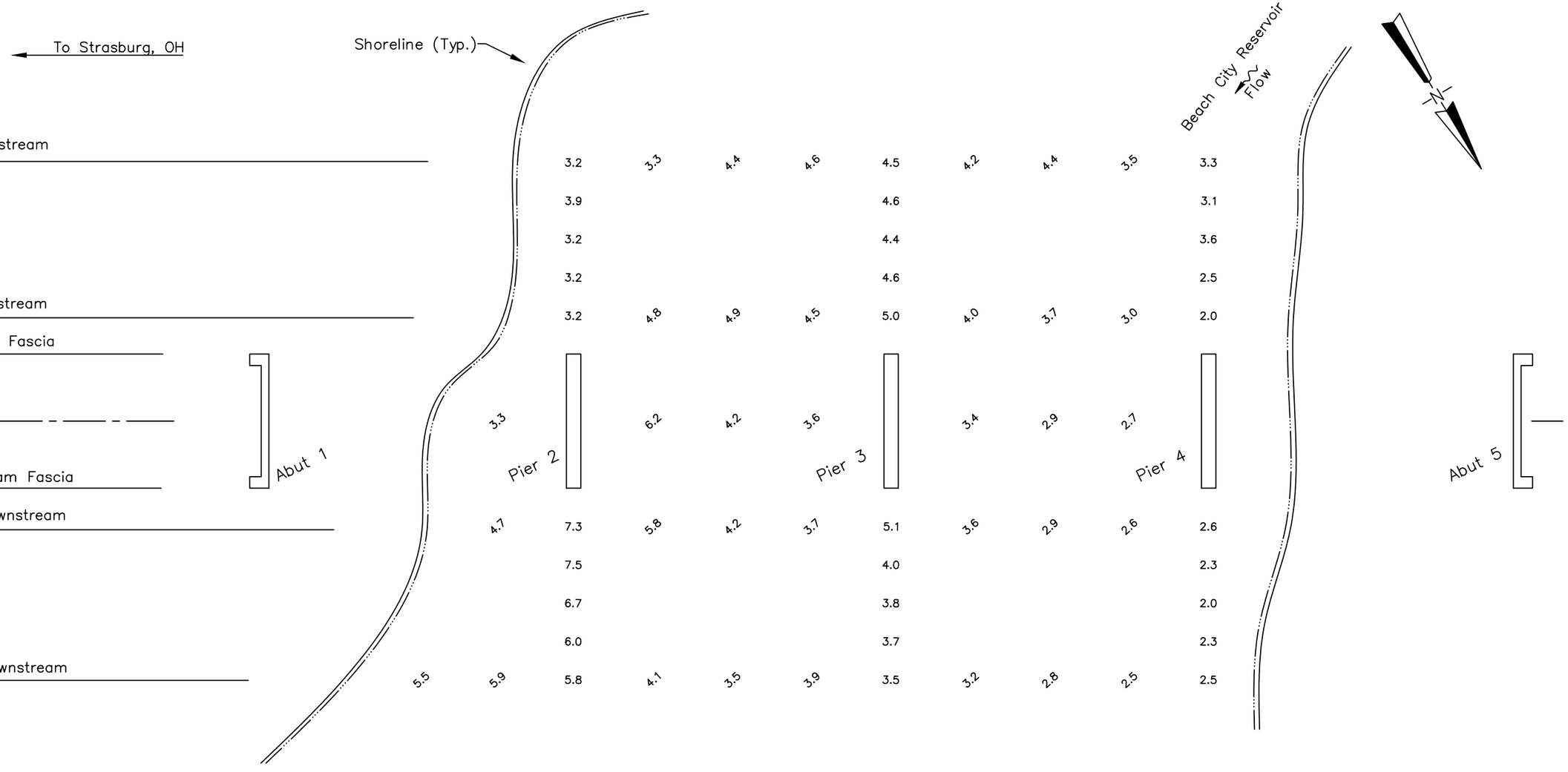

SOUNDING PLAN

GENERAL NOTES:

1. Piers 2 through 4 were inspected underwater. Substructure units are labeled according to available record drawings.
2. At the time of inspection on July 11, 2017, the waterline was located approximately 33.8 ft below the top of the barricade at Pier 2. (Assumed EL. +100.0 ft). This corresponds with a waterline elevation of +66.2 ft.
3. Soundings indicate the water depth at the time of inspection and are measured in feet.
4. Soundings were taken parallel to the bridge at the upstream and downstream fascias, at 10 ft intervals between the substructure units, and at 10 ft intervals in–line with the piers upstream and downstream up to 50 ft.

LEGEND

–2.7	Sounding Depth from Waterline (ft)
	Timber Debris

COLLINS ENGINEERS
124 Venture Court, Ste 10
Lexington, KY 40511
Phone: 859-367-0097
Fax: 859-367-0140

Ohio Department of Transportation, District 11
2201 Reiser Ave.
New Philadelphia, OH 44663
Phone: (330) 339-6633

SR 250 OVER BEACH CITY RESERVOIR
BRIDGE NO. TUS-250-0144
SOUNDING PLAN
TUSCARAWAS COUNTY, OHIO

CEI PROJECT	55–10356.00
INSPECTED BY:	JPG
DRAWN BY:	BBM
CHECKED BY:	JMJ
DATE:	JUL 2017
SHEET NO:	2

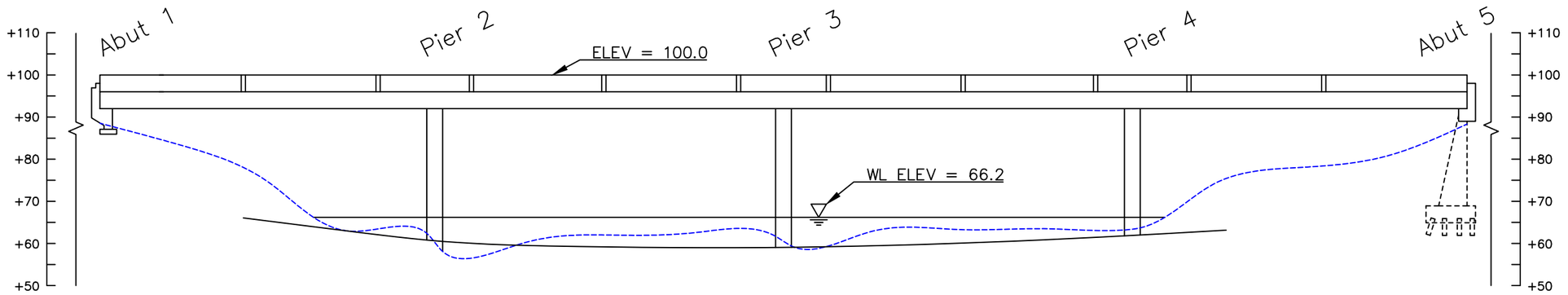

Upstream Elevations (Looking Downstream)		
Abut/Pier #	X	Y
A1	0	9.3
1/4		14.7
1/2		23.1
3/4		34.5
P2	79.5	34.1
1/4		33.9
1/2		33.8
3/4		33.8
P3	162.33	33.7
1/4		33.6
1/2		33.5
3/4		33.3
P4	245.16	33.3
1/4		33.5
1/2		28.0
3/4		17.3
A5	324.66	9.5

STRUCTURE CENTERLINE CHANNEL CROSS SECTION (EAST ELEVATION)

Note:

Footing elevations unknown due to unavailable record drawings.

LEGEND

- Approximate Channel Bottom – June 2012
- Approximate Channel Bottom – July 2017
- Approximate Channel Bottom – July 2004 (No Data)
- Timber Debris
- Water Surface
- +450 Elevation (ft)

COLLINS ENGINEERS
124 Venture Court, Ste 10
Lexington, KY 40511
Phone: 859-367-0097
Fax: 859-367-0140

Ohio Department of Transportation, District 11
2201 Reiser Ave.
New Philadelphia, OH 44663
Phone: (330) 339-6633

SR 250 OVER BEACH CITY RESERVOIR
BRIDGE NO. TUS-250-0144
CROSS SECTIONS
TUSCARAWAS COUNTY, OHIO

CEI PROJECT 55–10356.00
INSPECTED BY: JPG
DRAWN BY: BBM
CHECKED BY: JMJ
DATE: JUL 2017
SHEET NO: 3

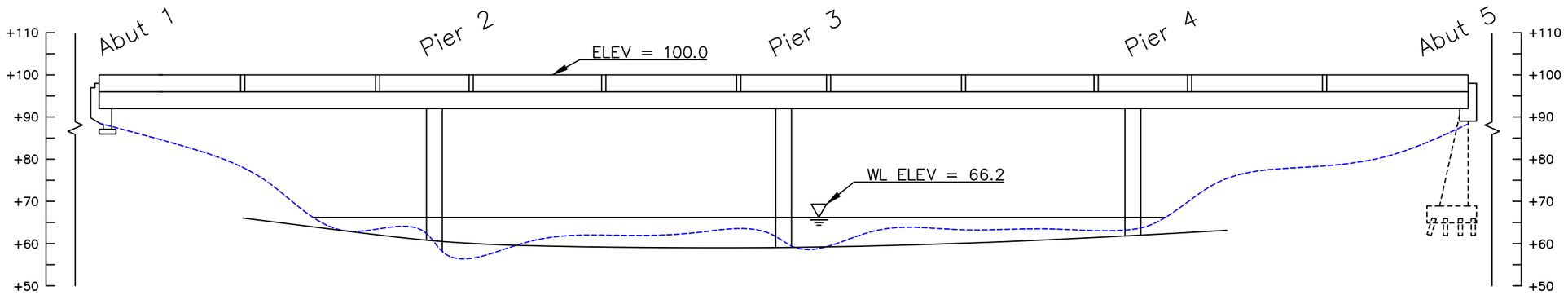

Upstream Elevations (Looking Downstream)		
Abut/Pier #	X	Y
A1	0	9.3
1/4		14.7
1/2		23.1
3/4		34.5
P2	79.5	34.1
1/4		33.9
1/2		33.8
3/4		33.8
P3	162.33	33.7
1/4		33.6
1/2		33.5
3/4		33.3
P4	245.16	33.3
1/4		33.5
1/2		28.0
3/4		17.3
A5	324.66	9.5

STRUCTURE CENTERLINE CHANNEL CROSS SECTION (EAST ELEVATION)

Note:

Footing elevations unknown due to unavailable record drawings.

LEGEND

- Approximate Channel Bottom – June 2012
- Approximate Channel Bottom – July 2017
- Approximate Channel Bottom – July 2004 (No Data)
- Timber Debris
- Water Surface
- +450 Elevation (ft)

COLLINS ENGINEERS
124 Venture Court, Ste 10
Lexington, KY 40511
Phone: 859-367-0097
Fax: 859-367-0140

Ohio Department of Transportation, District 11
2201 Reiser Ave.
New Philadelphia, OH 44663
Phone: (330) 339-6633

SR 250 OVER BEACH CITY RESERVOIR
BRIDGE NO. TUS-250-0144
CROSS SECTIONS
TUSCARAWAS COUNTY, OHIO

CEI PROJECT 55–10356.00
INSPECTED BY: JPG
DRAWN BY: BBM
CHECKED BY: JMJ
DATE: JUL 2017
SHEET NO: 4

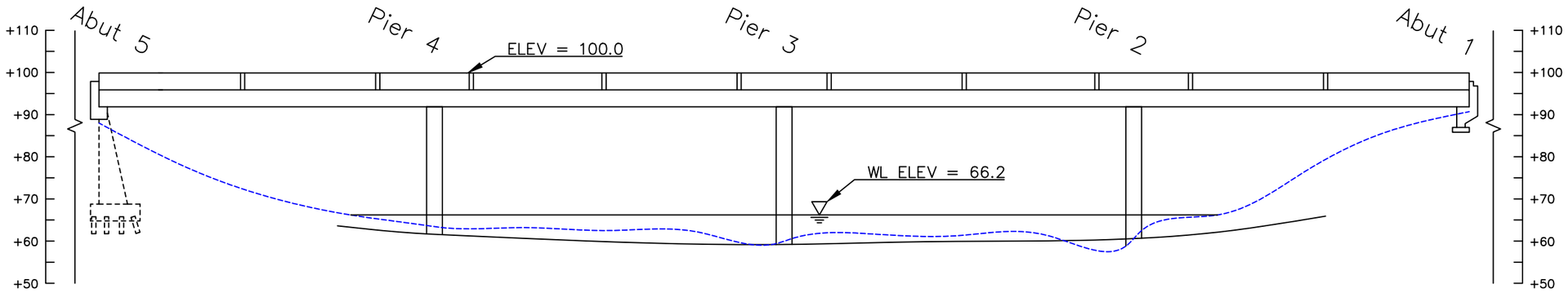

Downstream Elevations (Looking Upstream)		
Abut/Pier #	X	Y
A5	324.66	9.3
3/4		14.2
1/2		24.0
1/4		33.4
P4	245.16	33.5
3/4		33.5
1/2		33.6
1/4		33.7
P3	162.33	34.0
3/4		34.0
1/2		38.7
1/4		40.6
P2	79.5	41.4
3/4		39.2
1/2		37.4
1/4		29.0
A1	0	12.0

STRUCTURE UPSTREAM CHANNEL CROSS SECTION (WEST ELEVATION)

Note:

Footing elevations unknown due to unavailable record drawings.

LEGEND

- Approximate Channel Bottom – June 2012
- Approximate Channel Bottom – July 2017
- Approximate Channel Bottom – July 2004 (No Data)
- Timber Debris
- Water Surface
- +450 Elevation (ft)

COLLINS ENGINEERS
124 Venture Court, Ste 10
Lexington, KY 40511
Phone: 859-367-0097
Fax: 859-367-0140

Ohio Department of Transportation, District 11
2201 Reiser Ave.
New Philadelphia, OH 44663
Phone: (330) 339-6633

SR 250 OVER BEACH CITY RESERVOIR
BRIDGE NO. TUS-250-0144
CROSS SECTIONS
TUSCARAWAS COUNTY, OHIO

CEI PROJECT 55–10356.00
INSPECTED BY: JPG
DRAWN BY: BBM
CHECKED BY: JMJ
DATE: JUL 2017
SHEET NO: 5

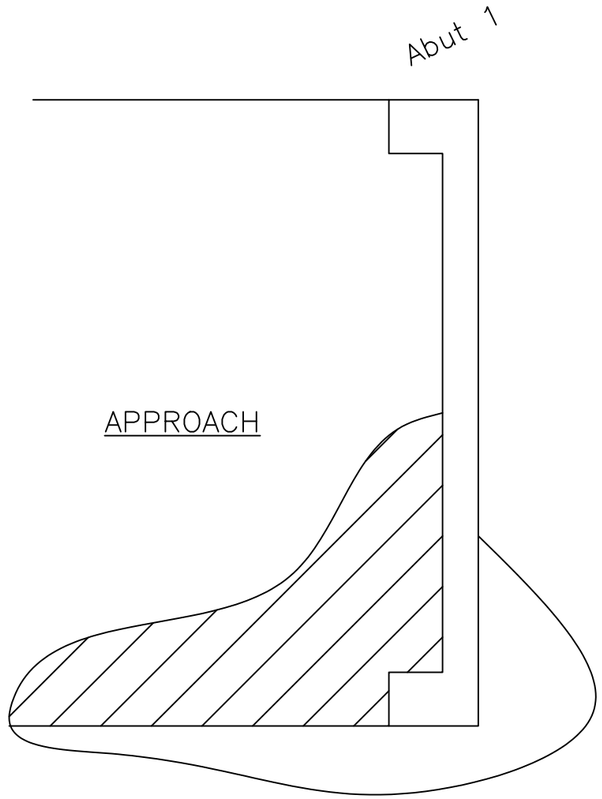

ABUTMENT 1
PLAN

INSPECTION NOTES:

1. The channel bottom material consisted of sand, gravel and cobbles with approximately 2 in probe rod penetration.
2. The submerged portions of the pier were sound and smooth with no defects observed.
3. The scour line is 10' L x 8' W x 7' D.

LEGEND

−2.7	Sounding Depth from Waterline (ft)
———	Approximate Channel Bottom – July 2015
	Timber Debris
	Water Surface
	Undermining

COLLINS ENGINEERS
124 Venture Court, Ste 10
Lexington, KY 40511
Phone: 859-367-0097
Fax: 859-367-0140

Ohio Department of Transportation, District 11
2201 Reiser Ave.
New Philadelphia, OH 44663
Phone: (330) 339-6633

SR 250 OVER BEACH CITY RESERVOIR
BRIDGE NO. TUS-250-0144
ABUTMENT 1
TUSCARAWAS COUNTY, OHIO

CEI PROJECT	55–10356.00
INSPECTED BY:	JPG
DRAWN BY:	BBM
CHECKED BY:	JMJ
DATE:	JUL 2017
SHEET NO:	6

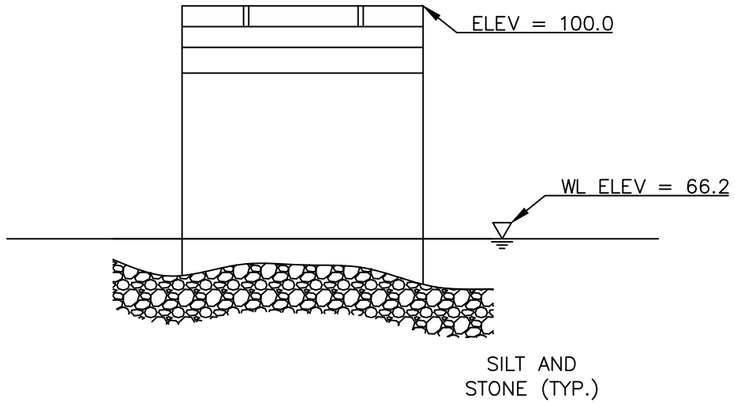

PIER 2
SOUTH ELEVATION
(LOOKING NORTH)

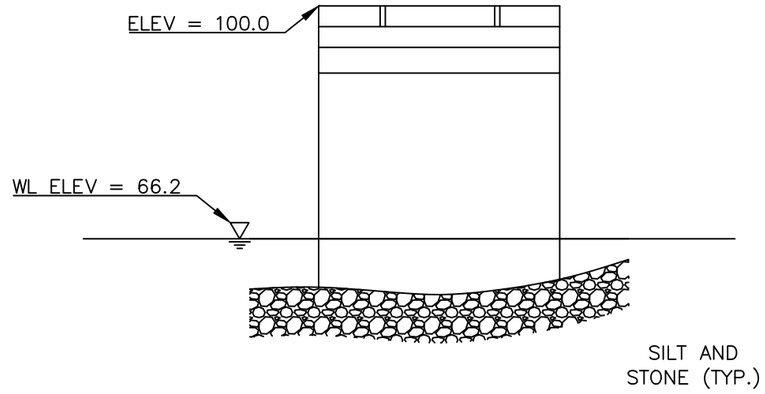

PIER 2
NORTH ELEVATION

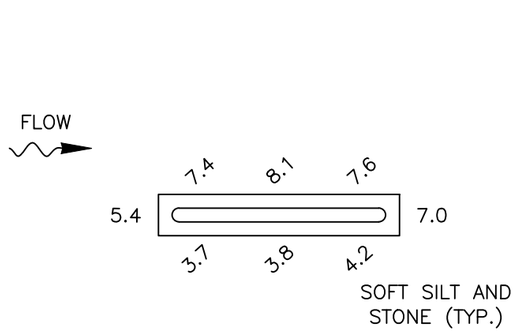

PIER 2
PLAN

INSPECTION NOTES:

1. The channel bottom material consisted of soft silt and stone, 6 in. in diameter, with approximately 12 in probe rod penetration.
2. The submerged portions of the pier were sound and smooth with no defects observed.

LEGEND

−2.7	Sounding Depth from Waterline (ft)
———	Approximate Channel Bottom – July 2015
	Timber Debris
	Water Surface

COLLINS ENGINEERS
124 Venture Court, Ste 10
Lexington, KY 40511
Phone: 859-367-0097
Fax: 859-367-0140

Ohio Department of Transportation, District 11
2201 Reiser Ave.
New Philadelphia, OH 44663
Phone: (330) 339-6633

SR 250 OVER BEACH CITY RESERVOIR
BRIDGE NO. TUS-250-0144
PIER 2
TUSCARAWAS COUNTY, OHIO

CEI PROJECT	55–10356.00
INSPECTED BY:	JPG
DRAWN BY:	BBM
CHECKED BY:	JMJ
DATE:	JUL 2017
SHEET NO:	7

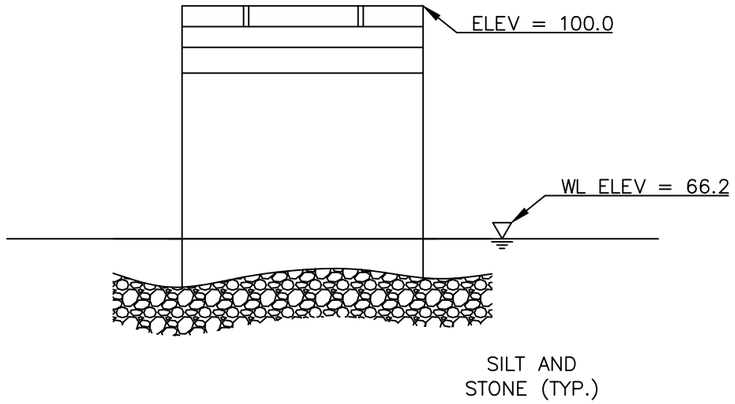

PIER 3
SOUTH ELEVATION
(LOOKING NORTH)

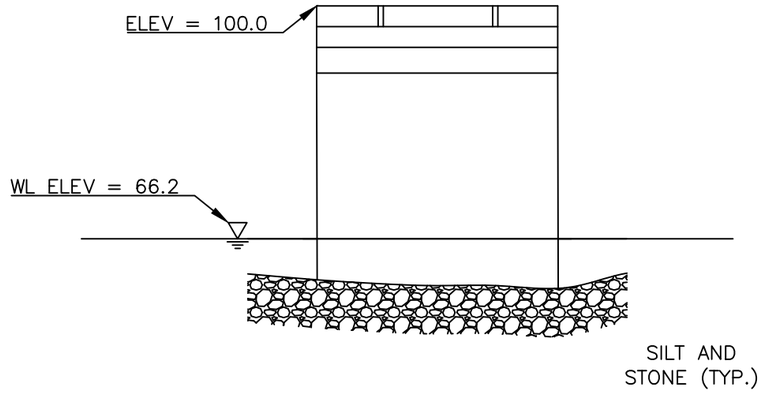

PIER 3
NORTH ELEVATION

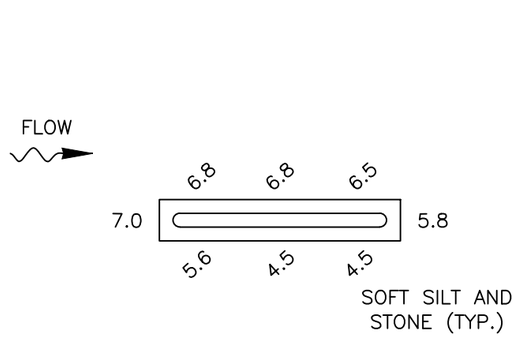

PIER 3
PLAN

INSPECTION NOTES:

1. The channel bottom material consisted of soft silt and stone, 6 in. in diameter, with approximately 12 in probe rod penetration.
2. The submerged portions of the pier were sound and smooth with no defects observed.

LEGEND

−2.7	Sounding Depth from Waterline (ft)
———	Approximate Channel Bottom – July 2015
	Timber Debris
	Water Surface

COLLINS ENGINEERS
124 Venture Court, Ste 10
Lexington, KY 40511
Phone: 859-367-0097
Fax: 859-367-0140

Ohio Department of Transportation, District 11
2201 Reiser Ave.
New Philadelphia, OH 44663
Phone: (330) 339-6633

SR 250 OVER BEACH CITY RESERVOIR
BRIDGE NO. TUS-250-0144
PIER 3
TUSCARAWAS COUNTY, OHIO

CEI PROJECT	55–10356.00
INSPECTED BY:	JPG
DRAWN BY:	BBM
CHECKED BY:	JMJ
DATE:	JUL 2017
SHEET NO:	8

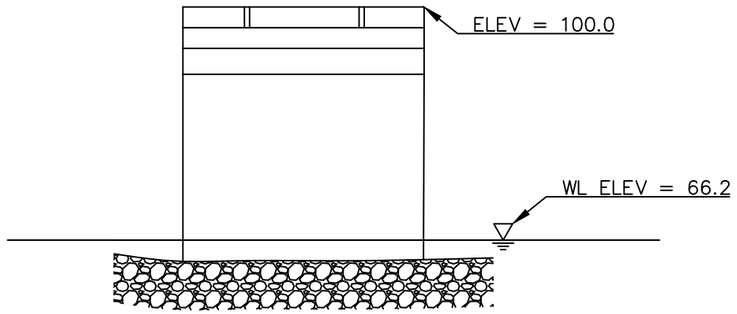

PIER 4
SOUTH ELEVATION
(LOOKING NORTH)

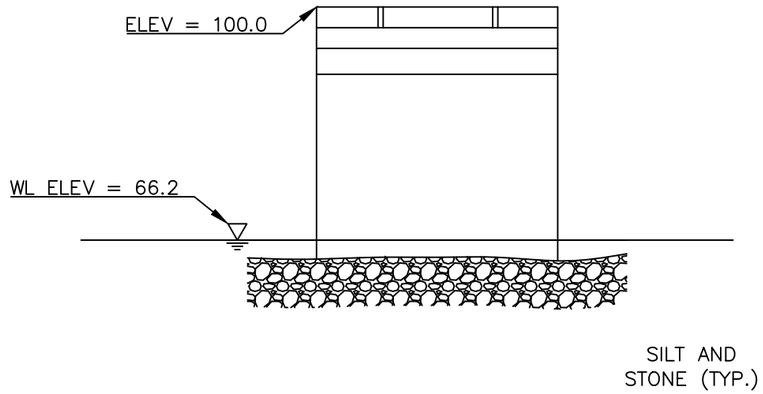

PIER 4
NORTH ELEVATION



PIER 4
PLAN

INSPECTION NOTES:

1. The channel bottom material consisted of sand, gravel and cobbles with approximately 2 in probe rod penetration.
2. The submerged portions of the pier were sound and smooth with no defects observed.
3. Hairline map cracking with efflorescence around pier from bridge centerline to +6 ft.

LEGEND

−2.7	Sounding Depth from Waterline (ft)
———	Approximate Channel Bottom – July 2015
	Timber Debris
	Water Surface

COLLINS ENGINEERS
124 Venture Court, Ste 10
Lexington, KY 40511
Phone: 859-367-0097
Fax: 859-367-0140

Ohio Department of Transportation, District 11
2201 Reiser Ave.
New Philadelphia, OH 44663
Phone: (330) 339-6633

SR 250 OVER BEACH CITY RESERVOIR
BRIDGE NO. TUS-250-0144
PIER 4
TUSCARAWAS COUNTY, OHIO

CEI PROJECT
55–10356.00

INSPECTED BY:
JPG

DRAWN BY:
BBM

CHECKED BY:
JMJ

DATE:
JUL 2017

SHEET NO:
9

EXHIBIT 2 – INSPECTION PHOTOGRAPHS



Photograph No. 1: Overall View of Structure No. TUS-250-0144, Looking North.



Photograph No. 2: Overall View of Structure No. TUS-250-0144, Looking Southwest.



Photograph No. 3: View of the West Embankment at the Bridge Centerline, looking West.



Photograph No. 4: View of the West Embankment Downstream of Bridge, looking Northwest



Photograph No. 5: View of the West Embankment Upstream of the Bridge, looking Southwest.



Photograph No. 6: View of the East Embankment Upstream of the Bridge, looking Southeast.



Photograph No. 7: View of the East Embankment at the Bridge Centerline, looking Northeast.



Photograph No. 8: View of the East Embankment Downstream of the Bridge, looking Northeast.



Photograph No. 9: View of the Erosion at the East Abutment (Northeast Corner), looking East.



Photograph No. 10: View of the Erosion at the East Abutment (Northeast Corner), looking East.



Photograph No. 11: View of the Erosion at the East Abutment (Northeast Corner), looking West.



Photograph No. 12: View of the Undermining at the East Approach Roadway (Northeast End), looking South.



Photograph No. 13: View of the Erosion at the East Abutment (Southeast Corner), looking Southeast.



Photograph No. 14: View of the Undermining at the East Approach, looking South.



Photograph No. 15: View of the Undermining at the East Approach, looking South.



Photograph No. 16: View of the Undermining Extents at the East Approach (Northeast End).



Photograph No. 17: View of the Undermining Extents at the East Approach (Northeast End).



Photograph No. 18: View of the Undermining Extents at the East Approach (Northeast End).



Photograph No. 19: View of the Undermining Extents at the East Approach (Northeast End).



Photograph No. 20: View of Pier 2, Looking Southwest.



Photograph No. 21: View of Pier 2, Looking Northeast.



Photograph No. 22: View of Pier 3, Looking Southwest.



Photograph No. 23: View of Pier 3, Looking Northeast.



Photograph No. 24: View of Pier 4, Looking Southwest.



Photograph No. 25: View of Pier 4, Looking Northeast.



Photograph No. 26: View of Typical Concrete at Waterlevel of the West Face of Pier 4, Looking East.



Photograph No. 27: View of Typical Map Cracking with Efflorescence at the Downstream Nose of Pier 4, Looking Southwest.