



UNDERWATER BRIDGE INSPECTION REPORT

STRUCTURE NO. TUS-250-1504 R
SR 250 OVER TUSCARAWAS
TUSCARAWAS COUNTY, OH
DISTRICT 11

July 2017

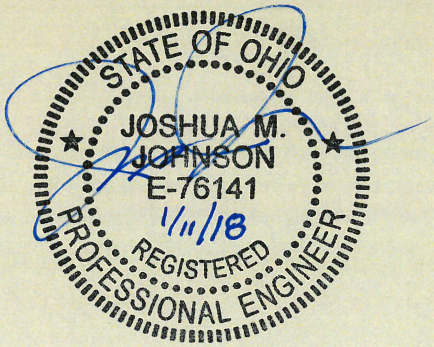

Prepared for:

STATE OF OHIO DEPARTMENT OF TRANSPORTATION

Prepared by:

COLLINS ENGINEERS INC.

124 Venture Court, Suite 10

Lexington, Kentucky 40511

859.367.0097 • www.collinsengr.com

TABLE OF CONTENTS

EXECUTIVE SUMMARY
1.0 INTRODUCTION 1
1.1 Purpose and Scope 1
1.2 General Description of the Structure 1
1.3 Method of Investigation 1
2.0 EXISTING CONDITIONS 2
2.1 General Conditions 2
2.2 Substructure Conditions 3
2.2.1 Pier 3 3
2.2.2 Pier 4 3
2.2.3 Pier 5 3
2.2.4 Pier 6 3
3.0 EVALUATION AND RECOMMENDATIONS 4
EXHIBIT 1 – FIGURES 5
LOCATION MAP
SOUNDING PLAN
UPSTREAM CHANNEL CROSS SECTIONS
CENTERLINE CHANNEL CROSS SECTIONS
DOWNSTREAM CHANNEL CROSS SECTIONS
PIER 3
PIER 4
PIER 5
PIER 6
EXHIBIT 2 – INSPECTION PHOTOGRAPHS 15
Photograph No. 1: Overall View of Structure No. TUS-250-1504R, Looking South.
Photograph No. 2: Overall View of Structure No. TUS-250-1504R, Looking North.
Photograph No. 3: View of the East Embankment Upstream of the Structure, Looking East.
Photograph No. 4: View of the East Embankment at the Structure, Looking East.
Photograph No. 5: View of the East Embankment Downstream of the Structure, Looking East.
Photograph No. 6: View of the West Embankment Upstream of the Structure, Looking West.
Photograph No. 7: View of the West Embankment at the Structure, Looking West.
Photograph No. 8: View of the West Embankment Downstream of the Structure, Looking West.
Photograph No. 9: View of the East Face of Pier 3, Looking West.

Photograph No. 10: View of the East Face of Pier 4, Looking West.

Photograph No. 11: View of the West Face of Pier 4, Looking East.

Photograph No. 12: View of the East Face of Pier 5, Looking West.

Photograph No. 13: View of the West Face of Pier 5, Looking East.

Photograph No. 14: View of the East Face of Pier 6, Looking West.

Photograph No. 15: View of the West Face of Pier 6, Looking East.

Photograph No. 16: View of the Typical Concrete Condition at the Waterline on the North Face of Pier 6, Looking South.

Photograph No. 17: View of the debris accumulation at the Waterline along Pier 5, Looking East.

EXECUTIVE SUMMARY

Project: ODOT Underwater Bridge Inspections - 2017

Purpose of Project: To perform a detailed visual and tactile underwater investigation of bridges for District 11 of the Ohio Department of Transportation.

Inspection Team: Team Leader – Kurt Lingo, E.I.T. – Collins Engineers, Inc.
Team Member – Matthew Rogers, E.I.T. – Collins Engineers, Inc.
Team Member – Russell Richards, E.I.T. – Collins Engineers, Inc.

Inspection Date(s): July 17, 2017

Water Visibility:	0 ft	***Water Velocity:***	2 ft/s
Water Temperature:	73 °F	***Weather:***	Cloudy – 75 °F
Waterline Elevation:	82.9 ft	***Type of Boat:***	14 ft Jon Boat
Coordinates:	36.9426°N, 86.0287°W		
Access Location:	Public Boat Ramp		
Dive Mode:	Wading		

Waterline Reference: 17.1 ft below the top of cap at the downstream nose of Pier 2 of the eastbound structure.

Maximum Depth at SSU: 5.9 ft – Midpoint of Pier 3 in Span 4

Shoreline Conditions: The west and east shorelines consisted of moderately vegetated natural embankments with no erosion observed.

Summary of Findings:

- **Pier 3:**
  - Light scaling was observed around the entire pier from 6 ft above the waterline to the channel bottom with 1/16 in typical penetration and up to 1/8 in of maximum penetration.
- **Pier 4:**
  - Light scaling was observed around the entire pier from 6 ft above the waterline to the channel bottom with 1/16 in typical penetration and up to 1/8 in of maximum penetration.
- **Pier 5:**
  - Light scaling was observed around the entire pier from 6 ft above the waterline to the channel bottom with 1/16 in typical penetration and up to 1/8 in of maximum penetration.
  - Moderate timber debris accumulation consisting of logs and branches, up to 18 in diameter by 40 ft long, was observed along the channel bottom at the West face of the pier.
- **Pier 6:**
  - Light scaling was observed around the entire pier from 6 ft above the waterline to the channel bottom with 1/16 in typical penetration and up to 1/8 in of maximum penetration.
  - Light timber debris accumulation consisting of logs and branches up to 8 in diameter was observed along the channel bottom at the upstream nose of the pier.

Summary of Recommendations:

- Monitor timber debris accumulation at Piers 5 and 6.
- Monitor scaling on Piers 3 through 6.

Underwater Inspection Coding:

NBI Ratings:

Item	Description	Coding	Condition
60	Substructure	7– Good Condition	Light Concrete Scaling
61	Channel	7 – Satisfactory Condition	Timber Debris Accumulation
62	Culvert	N/A	
92B	UW Insp. Frequency	60 Months	
93B	Insp. Date	07 17 17	
113	Scour Critical Bridges	8 – Above Foundation Limits	Stable (Inspector Recommended)

AASHTO National Bridge Element (NBE) Ratings:

Element #	Description	Units	Total	Condition State			
				1	2	3	4
210	Reinforced Concrete Pier Wall	LF	140	140	0	0	0

Note: Ratings were developed using the FHWA Recording and Coding Guide for the Structure Inventory and Appraisal of the Nation's Bridges. The recommended ratings consider inspected elements located within the waterway and conditions existing below the water surface only. Additional consideration is necessary for the assignment of overall condition ratings for this bridge.

1.0 INTRODUCTION

1.1 Purpose and Scope

This report consists of the results of a detailed underwater investigation performed at the SR-250 Bridge over Tuscarawas River in Tuscarawas County, OH. Collins Engineers, Inc. (Collins) conducted the underwater investigation for the Ohio Department of Transportation (ODOT) on June 17, 2017. The primary purpose of the investigation was as follows:

- Determine the condition of the substructure components located in the water at the time of the inspection from the waterline to the channel bottom.
- Obtain channel bottom depth measurements along the bridge fascias, upstream and downstream of the bridge, and around the submerged substructure units.
- Determine the condition of the shorelines in the vicinity of the structure.
- Obtain photographs of the bridge and any significant defects.

In addition, a brief inspection was made of areas that could be submerged during periods of high water. The following report includes a description of the structure, the method of investigation, a description of existing conditions, an evaluation and recommendations based on the conditions, inspection figures, and photographs.

1.2 General Description of the Structure

Structure No. TUS-250-1504R spans 360 ft, carrying SR-250 over Tuscarawas River and is approximately 26.5 ft wide. The bridge superstructure is constructed of six steel girder spans. The roadway orientation of the longitudinal axis of the bridge is West to East. The substructure units are labeled as Abutments and Piers 1 through 7. Existing design drawings were not available at the time of the inspection. Refer to Figure 1 in Exhibit 1 for a Location Map of the bridge. Refer to Photographs 1 and 2 in Exhibit 2 for overall views of the bridge.

1.3 Method of Investigation

A detailed field inspection was conducted to determine the physical condition of the submerged bridge substructure units from the waterline to the channel bottom. A brief visual examination of the substructure units above the waterline was also made.

A three-person team consisting of an engineer-diver and team leader (Matthew Rogers, E.I.T.) and two engineer-divers (Kurt Lingo, E.I.T. and Russell Richards, E.I.T.) conducted the underwater inspection. The inspection was conducted using surface supplied air diving equipment during the inspection, the inspectors worked from a boat and a note taker in the boat recorded the inspection notes.

The underwater inspection consisted of a visual and tactile examination of the accessible surfaces of the substructure units from the waterline to the channel bottom with particular attention given to any observed areas of deterioration or apparent distress. Approximately 10 percent of the total area on the underwater surfaces of the substructure units was cleaned so that the condition could be more closely examined. Photographs were taken to document the general conditions and observed deficiencies. Underwater Photographs could not be obtained due to poor water conditions. The type of channel bottom material, the presence or extent of scour, the presence or extent of riprap, the presence or extent of drift and debris, and the location of any foundation exposure or undermining were noted.

Channel bottom soundings were performed utilizing a telescoping survey rod and a digital fathometer. Soundings were collected at quarter points along the bridge centerline as well as 10 ft and 50 ft upstream and downstream of the bridge, parallel with its fascias. Additional soundings were collected adjacent to Piers 3 through 6 and at 10 ft intervals in-line with the piers, upstream and downstream, and the waterline was referenced to a known elevation on the bridge. A sounding plan was developed using the soundings and approximate location of the shorelines. Refer to Figure 2 in Exhibit 1 for the sounding plan and Figures 3 through 5 for the channel cross sections that show the channel limits and water depths around the structure.

2.0 EXISTING CONDITIONS

2.1 General Conditions

At the time of the inspection, the waterline of TUS-250-1504R was located approximately 17.1 ft below the top of cap at the downstream nose of Pier 6, which corresponds to an assumed waterline elevation of 100.00 ft. During the inspection, the waterway was flowing at approximately 2 ft per second. The bridge pier skew was consistent with the channel alignment and does not require attention at this time. The East and West shorelines consisted of moderately to heavily vegetated mild slopes with minor erosion and multiple trees leaning toward the channel. Refer to Photographs 3 through 8 in Exhibit 2 for views of the shorelines near the structure.

2.2 Substructure Conditions

2.2.1 Pier 3

The channel bottom material around Pier 3 consisted of hard-packed silt with approximately 1 in probe rod penetration. The submerged portions of the pier exhibited light scaling up to 1/8 in deep. Refer to Figure 6 in Exhibit 1 for detailed inspection notes of Pier 3. Refer to Photograph 9 in Exhibit 2 for a view of Pier 3 and Photograph 16 in Exhibit 2 for a view of the typical concrete condition at the waterline.

2.2.2 Pier 4

The channel bottom material around Pier 4 consisted of hard-packed silt with approximately 1 in probe rod penetration. The submerged portions of the pier exhibited light scaling up to 1/8 in deep. Refer to Figure 7 in Exhibit 1 for detailed inspection notes of Pier 4. Refer to Photographs 10 and 11 in Exhibit 2 for views of Pier 4 and Photograph 16 in Exhibit 2 for a view of the typical concrete condition at the waterline.

2.2.3 Pier 5

The channel bottom material around Pier 5 consisted of hard-packed silt with approximately 1 in probe rod penetration. Moderate timber debris accumulation consisting of logs up to 12 in diameter by 40 ft long was observed in Span 4, extending from the channel bottom to approximately 1 ft above the waterline. The submerged portions of the pier exhibited light scaling up to 1/8 in deep. Refer to Figure 8 in Exhibit 1 for detailed inspection notes of Pier 5. Refer to Photographs 12 and 13 in Exhibit 2 for views of Pier 5 Photograph 16 in Exhibit 2 for a view of the typical concrete condition at the waterline. Refer to Photograph 17 in Exhibit 2 for a view of the debris along the pier.

2.2.4 Pier 6

The channel bottom material around Pier 6 consisted of hard-packed silt with approximately 1 in probe rod penetration. Light timber debris accumulation consisting of logs up to 12 in diameter was observed at the upstream nose of the pier extending from the channel bottom to approximately 1 ft above the waterline. The submerged portions of the pier exhibited light scaling up to 1/8 in deep. Refer to Figure 9 in Exhibit 1 for detailed inspection notes of Pier 6. Refer to Photographs 14 and 15 in Exhibit 2 for views of Pier 6 and Photograph 16 in Exhibit 2 for a view of the typical concrete condition at the waterline.

3.0 EVALUATION AND RECOMMENDATIONS

Overall, the inspected substructure units of Structure No. TUS-250-1504R were in good condition. A comparison of the soundings recorded during the previous inspection on December 7, 2009 and the soundings taken during this inspection revealed no significant change in the channel bottom profile in the vicinity of the structure. Although no channel deficiencies were observed, the channel bottom should continue to be monitored during future underwater inspections to verify that localized scour or overall channel degradation is not occurring and that the pier footings remain adequately embedded in the channel bottom.

It is recommended that the submerged substructure units of Structure No. TUS-250-1504R be next inspected underwater at an interval not to exceed 60 months, no later than July 17, 2022.

Respectfully Submitted,
COLLINS ENGINEERS, INC.



Joshua Johnson, P.E.
Project Manager/Team Leader

Originated by:
Matthew Rogers, E.I.T.

EXHIBIT 1 – FIGURES

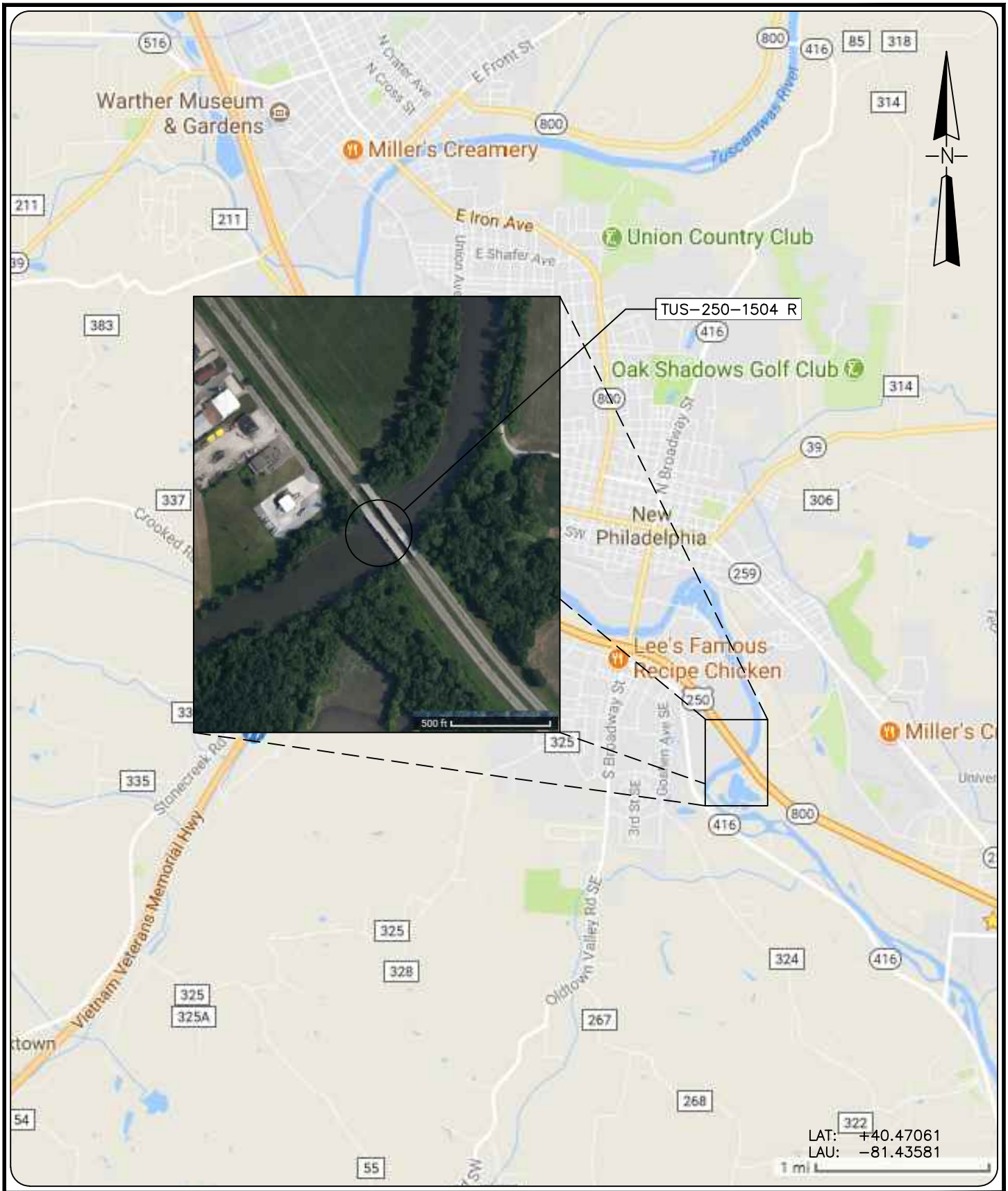

COLLINS ENGINEERS
124 Venture Court, Ste 10
Lexington, KY 40511
Phone: 859-367-0097
Fax: 859-367-0140

Ohio Department of Transportation, District 11
2201 Reiser Ave.
New Philadelphia, OH 44663
Phone: (330) 339-6633

SR 250 OVER BEACH CITY RESERVOIR
BRIDGE NO. TUS-250-1504 R

LOCATION MAP

TUSCARAWAS COUNTY, OHIO

INSPECTED BY: JMJ	CEI PROJECT: 55–10356.00
DRAWN BY: BBM	DATE: JUL 2017
CHECKED BY: JMJ	SHEET NO: 1

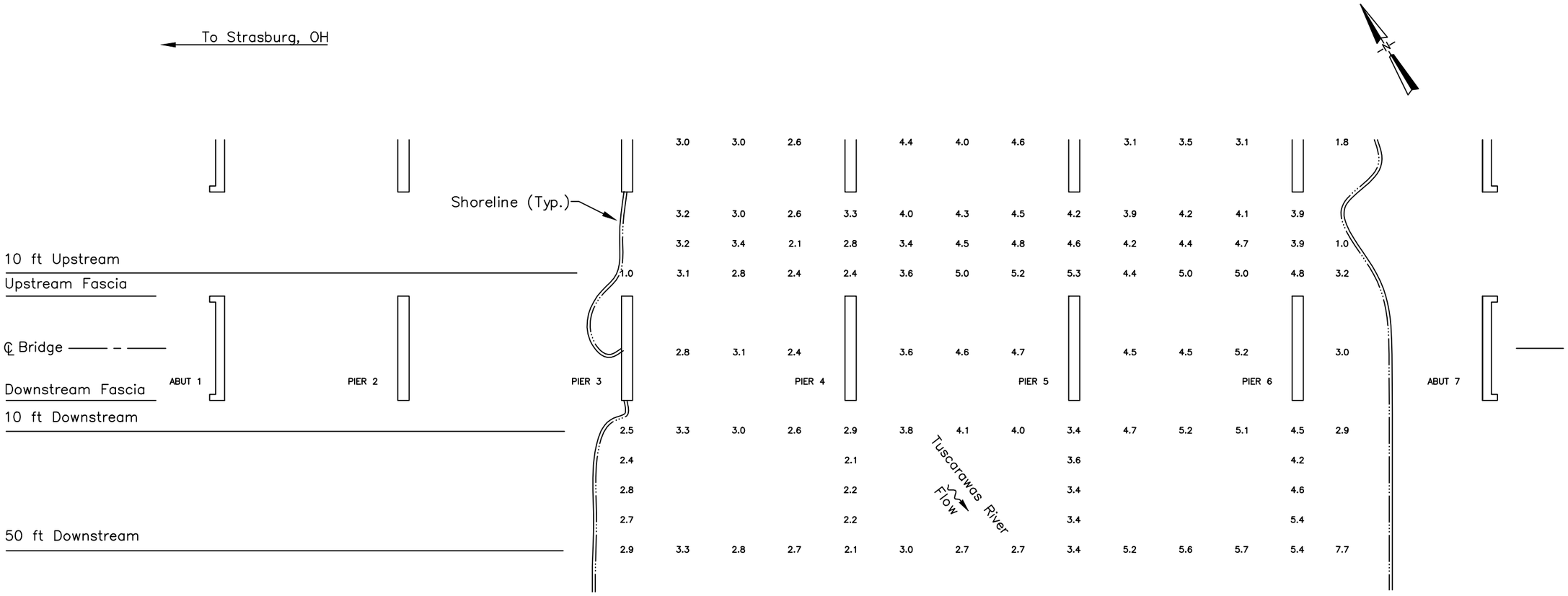

SOUNDING PLAN

GENERAL NOTES:

1. Piers 3 through 6 were inspected underwater. Substructure units are labeled according to available record drawings.
2. At the time of inspection on July 17, 2017, the waterline was located approximately 16.3 ft below the Top of Deck at Pier 6. (Assumed EL. +100.0 ft). This corresponds with a waterline elevation of +83.7 ft.
3. Soundings indicate the water depth at the time of inspection and are measured in feet.
4. Soundings were taken parallel to the bridge at the upstream and downstream fascias, at 10 ft intervals between the substructure units, and at 10 ft intervals in–line with the piers upstream and downstream up to 50 ft.

LEGEND

–2.7	Sounding Depth from Waterline (ft)
	Timber Debris

COLLINS ENGINEERS
124 Venture Court, Ste 10
Lexington, KY 40511
Phone: 859-367-0097
Fax: 859-367-0140

Ohio Department of Transportation, District 11
2201 Reiser Ave.
New Philadelphia, OH 44663
Phone: (330) 339-6633

SR 250 OVER TUSCARAWAS RIVER
BRIDGE NO. TUS-250-1504 R
SOUNDING PLAN
TUSCARAWAS COUNTY, OHIO

CEI PROJECT 55–10356.00
INSPECTED BY: JMJ
DRAWN BY: BBM
CHECKED BY: JMJ
DATE: JUL 2017
SHEET NO: 2

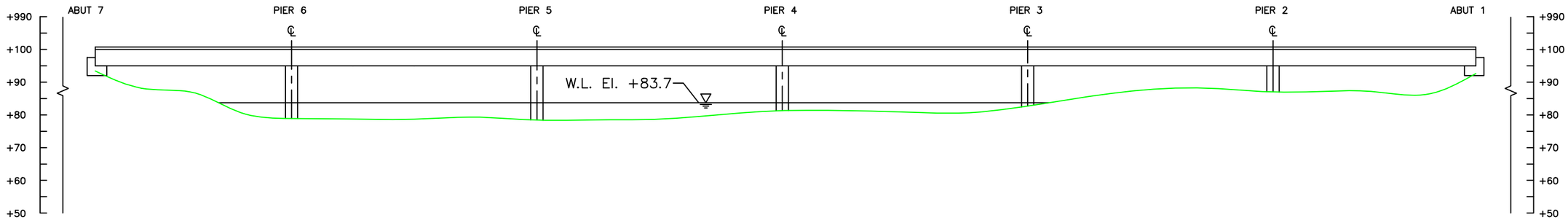

Downstream Elevations (Looking Upstream)		
Abut/Pier #	X	Y
A7	0	6.6
1/4		12.0
1/2		13.2
3/4		16.3
P6	60.0	16.4
1/4		16.4
1/2		16.4
3/4		16.3
P5	135.0	16.3
1/4		16.3
1/2		16.3
3/4		16.3
P4	210.0	16.3
1/4		16.3
1/2		16.3
3/4		16.3
P3	285.0	16.3
1/4		14.4
1/2		12.2
3/4		11.9
P2	360.0	13.0
1/4		12.8
1/2		12.9
3/4		13.8
A1	422.0	7.4

STRUCTURE UPSTREAM
CHANNEL CROSS SECTION
(LOOKING DOWNSTREAM)

Note:

Footing elevations unknown due to unavailable record drawings.

LEGEND

- Approximate Channel Bottom – July 2017
- Approximate Channel Bottom – July 2012 (No Data)
- Approximate Channel Bottom – July 2004 (No Data)
- Timber Debris
- Water Surface
- +450 Elevation (ft)

COLLINS ENGINEERS
124 Venture Court, Ste 10
Lexington, KY 40511
Phone: 859-367-0097
Fax: 859-367-0140

Ohio Department of Transportation, District 11
2201 Reiser Ave.
New Philadelphia, OH 44663
Phone: (330) 339-6633

SR 250 OVER TUSCARAWAS RIVER
BRIDGE NO. TUS-250-1504 R
CROSS SECTIONS
TUSCARAWAS COUNTY, OHIO

CEI PROJECT 55–10356.00
INSPECTED BY: JMJ
DRAWN BY: BBM
CHECKED BY: JMJ
DATE: JUL 2017
SHEET NO: 3

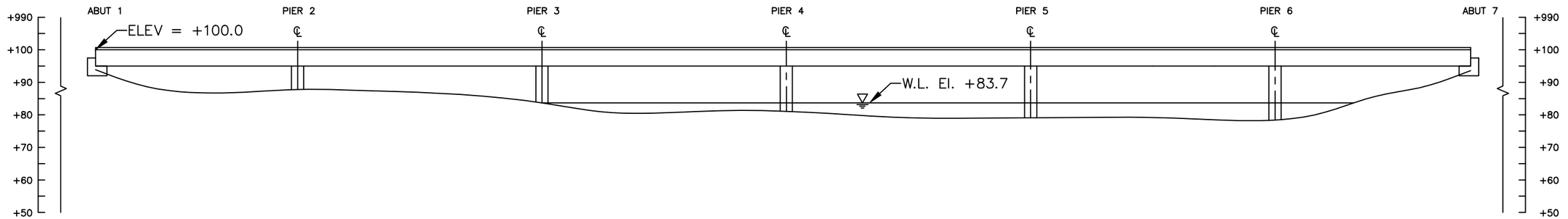

Upstream Elevations (Looking Downstream)		
Abut/Pier #	X	Y
A1	0	6.1
1/4		11.3
1/2		13.2
3/4		13.0
P2	62.0	12.2
1/4		12.5
1/2		13.1
3/4		14.2
P3	137.0	16.3
1/4		16.3
1/2		16.3
3/4		16.3
P4	212.0	16.4
1/4		16.4
1/2		16.4
3/4		16.4
P5	287.0	16.3
1/4		16.3
1/2		16.3
3/4		16.3
P6	362.0	16.3
1/4		16.3
1/2		14.1
3/4		11.5
A7	422.0	6.4

STRUCTURE CENTERLINE
CHANNEL CROSS SECTION
(LOOKING UPSTREAM)

Note:

Footing elevations unknown due to unavailable record drawings.

LEGEND

- Approximate Channel Bottom – July 2017
- Approximate Channel Bottom – July 2012 (No Data)
- Approximate Channel Bottom – July 2004 (No Data)
- Timber Debris
- Water Surface
- +450 Elevation (ft)

COLLINS ENGINEERS
124 Venture Court, Ste 10
Lexington, KY 40511
Phone: 859-367-0097
Fax: 859-367-0140

Ohio Department of Transportation, District 11
2201 Reiser Ave.
New Philadelphia, OH 44663
Phone: (330) 339-6633

SR 250 OVER TUSCARAWAS RIVER
BRIDGE NO. TUS-250-1504 R
CROSS SECTIONS
TUSCARAWAS COUNTY, OHIO

CEI PROJECT 55–10356.00
INSPECTED BY: JMJ
DRAWN BY: BBM
CHECKED BY: JMJ
DATE: JUL 2017
SHEET NO: 4

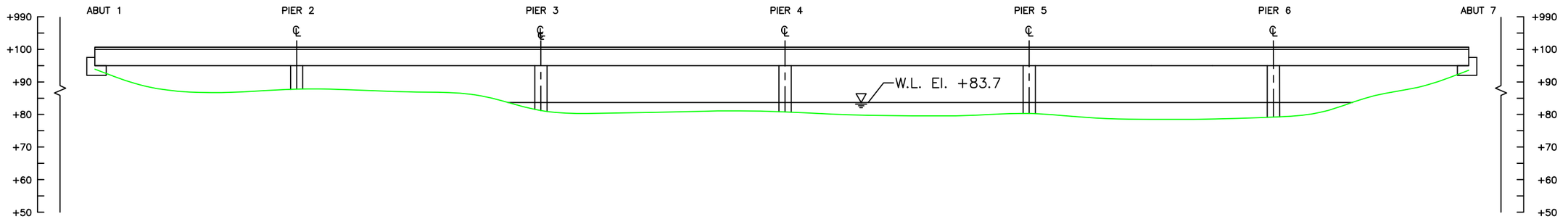

Upstream Elevations (Looking Downstream)		
Abut/Pier #	X	Y
A1	0	6.1
1/4		11.3
1/2		13.2
3/4		13.0
P2	62.0	12.2
1/4		12.5
1/2		13.1
3/4		14.2
P3	137.0	16.3
1/4		16.3
1/2		16.3
3/4		16.3
P4	212.0	16.4
1/4		16.4
1/2		16.4
3/4		16.4
P5	287.0	16.3
1/4		16.3
1/2		16.3
3/4		16.3
P6	362.0	16.3
1/4		16.3
1/2		14.1
3/4		11.5
A7	422.0	6.4

STRUCTURE DOWNSTREAM CHANNEL CROSS SECTION (LOOKING UPSTREAM)

Note:

Footing elevations unknown due to unavailable record drawings.

LEGEND

- Approximate Channel Bottom – July 2017
- Approximate Channel Bottom – July 2012 (No Data)
- Approximate Channel Bottom – July 2004 (No Data)
- Timber Debris
- Water Surface
- +450 Elevation (ft)

COLLINS ENGINEERS
124 Venture Court, Ste 10
Lexington, KY 40511
Phone: 859-367-0097
Fax: 859-367-0140

Ohio Department of Transportation, District 11
2201 Reiser Ave.
New Philadelphia, OH 44663
Phone: (330) 339-6633

SR 250 OVER TUSCARAWAS RIVER
BRIDGE NO. TUS-250-1504 R
CROSS SECTIONS
TUSCARAWAS COUNTY, OHIO

CEI PROJECT 55–10356.00
INSPECTED BY: JMJ
DRAWN BY: BBM
CHECKED BY: JMJ
DATE: JUL 2017
SHEET NO: 5

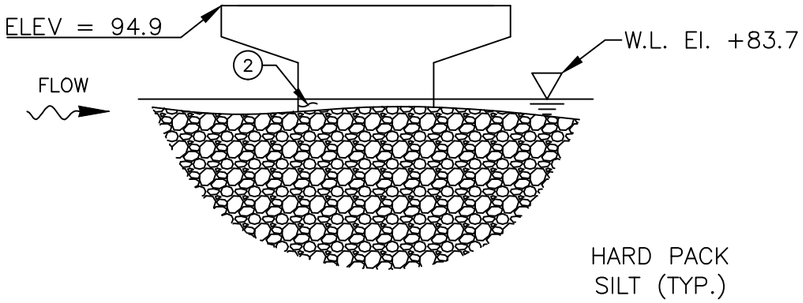

WEST ELEVATION
(LOOKING EAST)

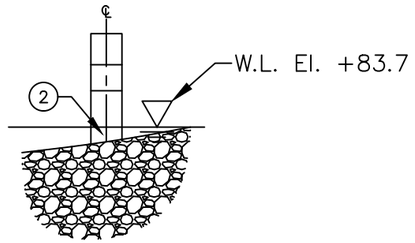

UPSTREAM NOSE
ELEVATION

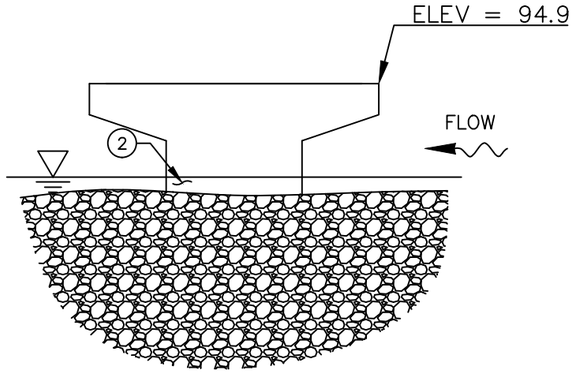

EAST ELEVATION

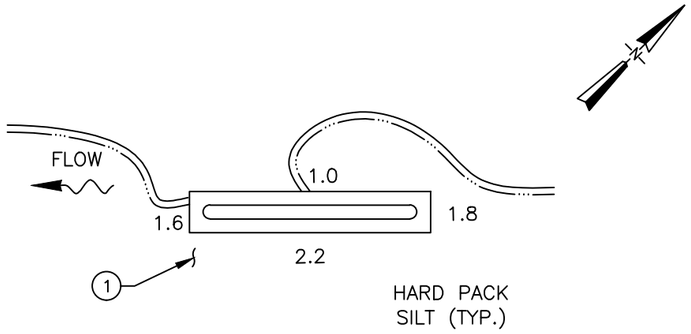

PIER 3
PLAN

INSPECTION NOTES:

1. The channel bottom material consisted of hard pack silt with approximately 1 in. probe rod penetration.
2. The piers consisted of light scaling with 1/16" to 1/8" penetration from +6 ft above the waterline.

LEGEND

−2.7	Sounding Depth from Waterline (ft)
———	Approximate Channel Bottom – July 2015
	Timber Debris
	Water Surface

COLLINS ENGINEERS
124 Venture Court, Ste 10
Lexington, KY 40511
Phone: 859-367-0097
Fax: 859-367-0140

Ohio Department of Transportation, District 11
2201 Reiser Ave.
New Philadelphia, OH 44663
Phone: (330) 339-6633

SR 250 OVER TUSCARAWAS RIVER
BRIDGE NO. TUS-250-1504 R
PIER 2
TUSCARAWAS COUNTY, OHIO

CEI PROJECT	55–10356.00
INSPECTED BY:	JMJ
DRAWN BY:	BBM
CHECKED BY:	JMJ
DATE:	JUL 2017
SHEET NO:	6

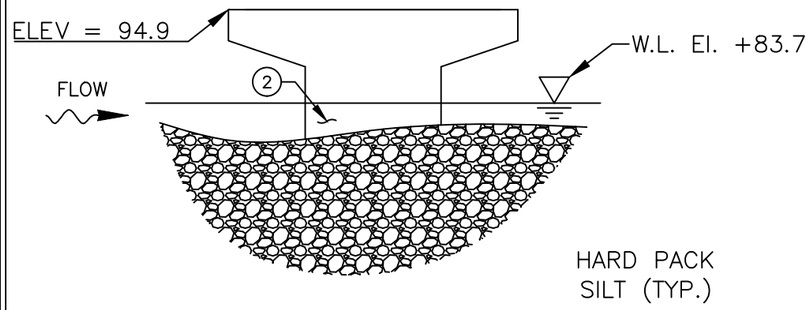

WEST ELEVATION
(LOOKING EAST)

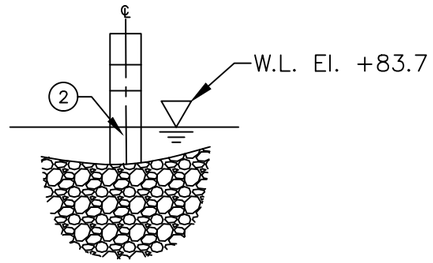

UPSTREAM NOSE
ELEVATION

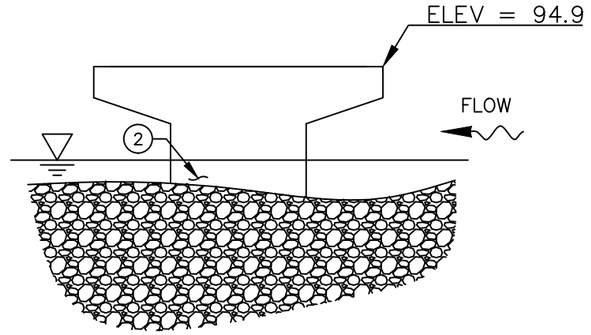

EAST ELEVATION

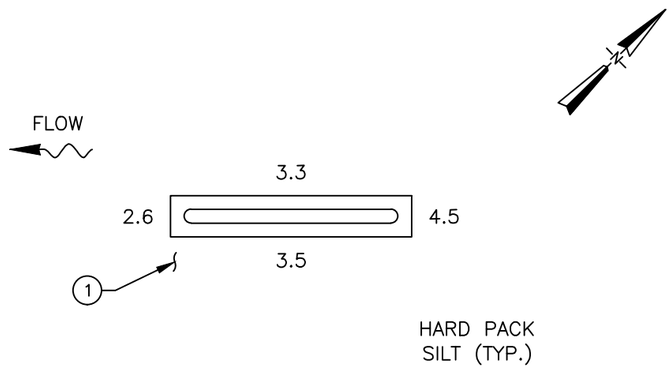

PIER 4
PLAN

INSPECTION NOTES:

1. The channel bottom material consisted of hard pack silt with approximately 1 in. probe rod penetration.
2. The piers consisted of light scaling with 1/16" to 1/8" penetration from +6 ft above the waterline.

LEGEND

−2.7	Sounding Depth from Waterline (ft)
———	Approximate Channel Bottom – July 2015
	Timber Debris
	Water Surface

COLLINS ENGINEERS
124 Venture Court, Ste 10
Lexington, KY 40511
Phone: 859-367-0097
Fax: 859-367-0140

Ohio Department of Transportation, District 11
2201 Reiser Ave.
New Philadelphia, OH 44663
Phone: (330) 339-6633

SR 250 OVER TUSCARAWAS RIVER
BRIDGE NO. TUS-250-1504 R
PIER 3
TUSCARAWAS COUNTY, OHIO

CEI PROJECT	55–10356.00
INSPECTED BY:	JMJ
DRAWN BY:	BBM
CHECKED BY:	JMJ
DATE:	JUL 2017
SHEET NO:	7

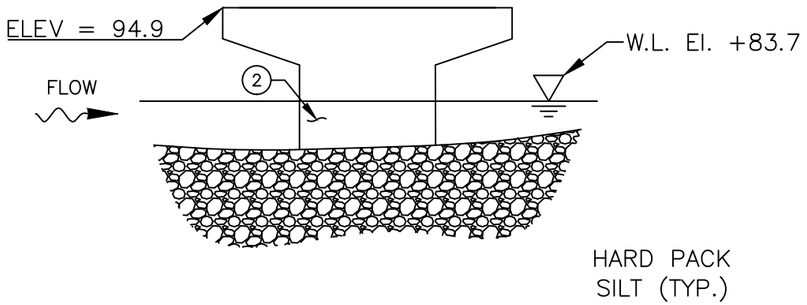

WEST ELEVATION
(LOOKING EAST)

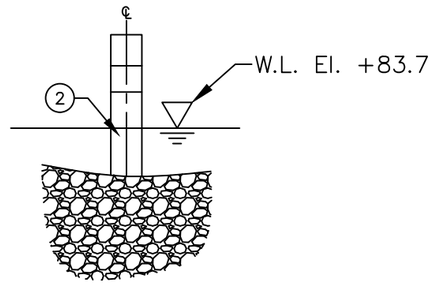

UPSTREAM NOSE
ELEVATION

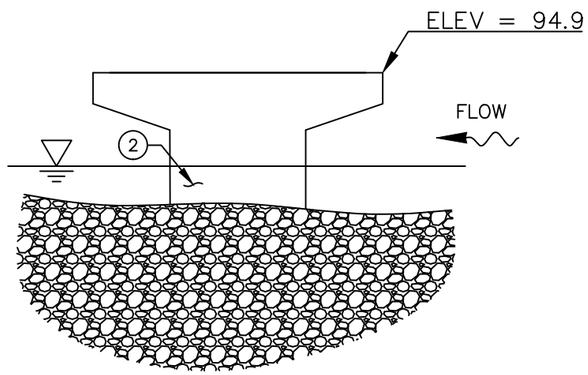

EAST ELEVATION

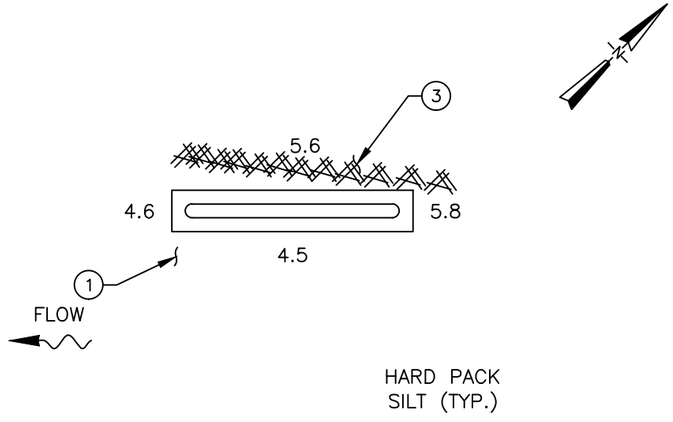

PIER 5
PLAN

INSPECTION NOTES:

1. The channel bottom material consisted of hard pack silt and gravel with approximately 1 in. probe rod penetration.
2. The piers consisted of light scaling with 1/16" to 1/8" penetration from +6 ft above the waterline.
3. The timber debris consisted of a 1.5 ft diameter tree at 40 ft long.

LEGEND

−2.7	Sounding Depth from Waterline (ft)
———	Approximate Channel Bottom – July 2015
	Timber Debris
	Water Surface

COLLINS ENGINEERS
124 Venture Court, Ste 10
Lexington, KY 40511
Phone: 859-367-0097
Fax: 859-367-0140

Ohio Department of Transportation, District 11
2201 Reiser Ave.
New Philadelphia, OH 44663
Phone: (330) 339-6633

SR 250 OVER TUSCARAWAS RIVER
BRIDGE NO. TUS-250-1504 R
PIER 4
TUSCARAWAS COUNTY, OHIO

CEI PROJECT	55–10356.00
INSPECTED BY:	JMJ
DRAWN BY:	BBM
CHECKED BY:	JMJ
DATE:	JUL 2017
SHEET NO:	8

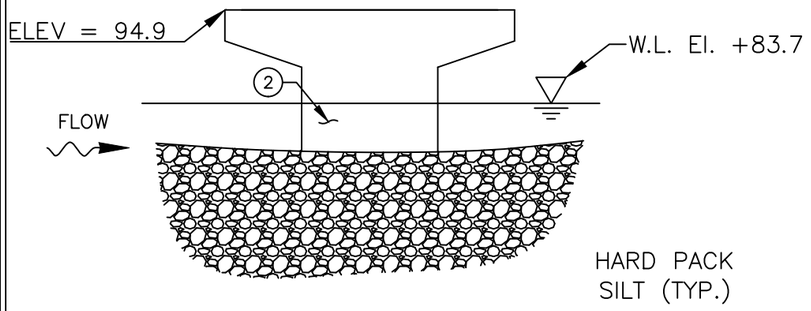

WEST ELEVATION
(LOOKING EAST)

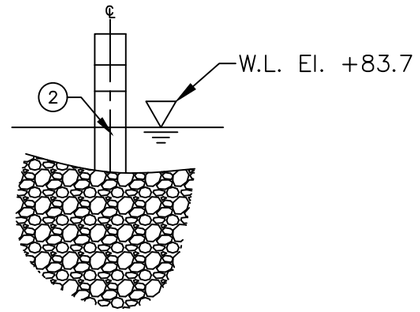

UPSTREAM NOSE
ELEVATION

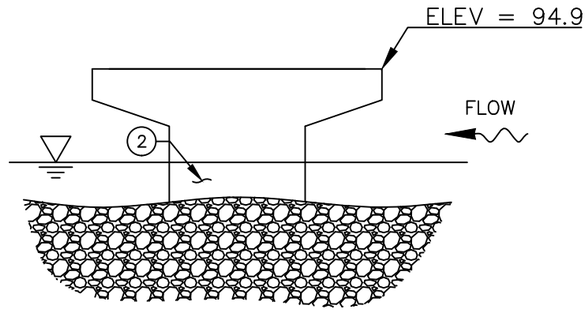

EAST ELEVATION

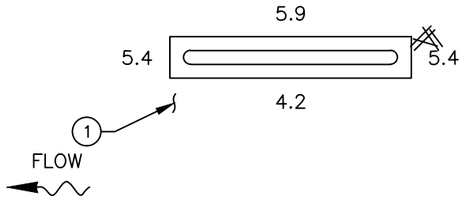

PIER 6
PLAN

INSPECTION NOTES:

1. The channel bottom material consisted of hard pack silt with approximately 1 in. probe rod penetration.
2. The piers consisted of light scaling with 1/16" to 1/8" penetration from +6 ft above the waterline.

LEGEND

−2.7	Sounding Depth from Waterline (ft)
———	Approximate Channel Bottom – July 2015
	Timber Debris
	Water Surface
	Undermining

COLLINS ENGINEERS
124 Venture Court, Ste 10
Lexington, KY 40511
Phone: 859-367-0097
Fax: 859-367-0140

Ohio Department of Transportation, District 11
2201 Reiser Ave.
New Philadelphia, OH 44663
Phone: (330) 339-6633

SR 250 OVER TUSCARAWAS RIVER
BRIDGE NO. TUS-250-1504 R
ABUTMENT 1
TUSCARAWAS COUNTY, OHIO

CEI PROJECT
55–10356.00

INSPECTED BY:
JMJ

DRAWN BY:
BBM

CHECKED BY:
JMJ

DATE:
JUL 2017

SHEET NO:
9

EXHIBIT 2 – INSPECTION PHOTOGRAPHS



Photograph No. 1: Overall View of Structure No. TUS-250-1504R, Looking South.



Photograph No. 2: Overall View of Structure No. TUS-250-1504R, Looking North.



Photograph No. 3: View of the East Embankment Upstream of the Structure, Looking East.



Photograph No. 4: View of the East Embankment at the Structure, Looking East.



Photograph No. 5: View of the East Embankment Downstream of the Structure, Looking East.



Photograph No. 6: View of the West Embankment Upstream of the Structure, Looking West.



Photograph No. 7: View of the West Embankment at the Structure, Looking West.



Photograph No. 8: View of the West Embankment Downstream of the Structure, Looking West.



Photograph No. 9: View of the East Face of Pier 3, Looking West.



Photograph No. 10: View of the East Face of Pier 4, Looking West.



Photograph No. 11: View of the West Face of Pier 4, Looking East.



Photograph No. 12: View of the East Face of Pier 5, Looking West.



Photograph No. 13: View of the West Face of Pier 5, Looking East.



Photograph No. 14: View of the East Face of Pier 6, Looking West.



Photograph No. 15: View of the West Face of Pier 6, Looking East.



Photograph No. 16: View of the Typical Concrete Condition at the Waterline on the North Face of Pier 6, Looking South.



Photograph No. 17: View of the debris accumulation at the Waterline along Pier 5, Looking East.