



UNDERWATER BRIDGE INSPECTION REPORT

STRUCTURE NO. TUS-250-1998 WB
SR 250 OVER BIG STILLWATER CREEK
TUSCARAWAS COUNTY, OH
DISTRICT 11

September 2017

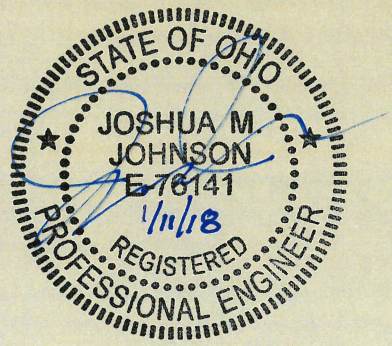

Prepared for:

STATE OF OHIO DEPARTMENT OF TRANSPORTATION

Prepared by:

COLLINS ENGINEERS INC.

124 Venture Court, Suite 10

Lexington, Kentucky 40511

859.367.0097 • www.collinsengr.com

TABLE OF CONTENTS

EXECUTIVE SUMMARY
1.0 INTRODUCTION 1
1.1 Purpose and Scope 1
1.2 General Description of the Structure 1
1.3 Method of Investigation 1
2.0 EXISTING CONDITIONS 2
2.1 General Conditions 2
2.2 Substructure Conditions 3
2.2.1 Pier 2 3
2.2.2 Pier 3 3
3.0 EVALUATION AND RECOMMENDATIONS 4
EXHIBIT 1 – FIGURES 5
LOCATION MAP
SOUNDING PLAN
UPSTREAM CHANNEL CROSS SECTIONS
CENTERLINE CHANNEL CROSS SECTIONS
DOWNSTREAM CHANNEL CROSS SECTIONS
PIER 2
PIER 3
EXHIBIT 2 – INSPECTION PHOTOGRAPHS 13
Photograph No. 1: Overall View of Westbound Fascia, Looking South.
Photograph No. 2: Overall View of Upstream Fascia, Looking Northeast.
Photograph No. 3: View of the Western Shoreline, Downstream of Bridge, Looking Southwest.
Photograph No. 4: View of the Western Shoreline at Bridge Centerline, Looking Southwest.
Photograph No. 5: View of the Western Shoreline, Upstream of Bridge, Looking West.
Photograph No. 6: View of the Eastern Shore, Downstream of Bridge, Looking East.
Photograph No. 7: View of Eastern Shore at Bridge Centerline, Looking East.
Photograph No. 8: View of the Eastern Shore, Upstream of Bridge, Looking Northeast.
Photograph No. 9: View of Pier 2, Looking Southwest.
Photograph No. 10: View of Pier 2, Looking Northeast.
Photograph No. 11: View of Typical Concrete, Pier 2 at Waterline, Looking East.
Photograph No. 12: View of Pier 3, Looking Southwest.
Photograph No. 13: View of Pier 3, Looking Northeast.

EXECUTIVE SUMMARY

Project: ODOT District 11 Underwater Bridge Inspections - 2017

Purpose of Project: To perform a detailed visual and tactile underwater investigation of scour critical bridges for District 11 of the Ohio Department of Transportation.

Inspection Team: Team Leader – Matthew Rogers, E.I.T. – Collins Engineers, Inc.
Team Member – Gregory Desing, P.E. – Collins Engineers, Inc.
Team Member – Jacob Green – Collins Engineers, Inc.

Inspection Date(s): July 14, 2017

Water Visibility:	0 ft	***Water Velocity:***	1 ft/s
Water Temperature:	72 °F	***Weather:***	Cloudy – 82 °F
Waterline Elevation:	86.6 ft	***Type of Boat:***	14’ John Boat

Coordinates: 40.42779°N, 81.36383°W
Access Location: No Nearby Boat Ramp / Parking on East Bank of Brightwood Road to the West.
Dive Mode: Wading
Waterline Reference: 13.4 ft below the top of cap at the downstream nose of Pier 2.
Maximum Depth at SSU: 11.0 ft – Center of Midline between Piers 2 and 3.
Shoreline Conditions: The east and west shorelines consisted of moderately to heavily vegetated mild slopes with minor erosion and multiple trees leaning toward the channel.

Summary of Findings:

- **Pier 2:**
  - Timber debris all along channel bottom.
  - The channel bottom material consisted of small twigs, mud, branches, and silt up to 18 in probe rod penetration.
  - The submerged portions of the pier were sound and smooth with no defects observed.
- **Pier 3:**
  - Timber debris all along channel bottom.
  - The channel bottom material consisted of small twigs, mud, branches, and silt up to 18 in probe rod penetration.
  - The submerged portions of the pier were sound and smooth with no defects observed.

Summary of Recommendations:

- Monitor timber debris accumulation at Pier 2 and 3.
- Monitor channel bottom in future underwater inspections to insure footing remains properly embedded.

Underwater Inspection Coding:

NBI Ratings:

Item	Description	Coding	Condition
60	Substructure	7– Good Condition	Poor Concrete Consolidation, Light Concrete Scaling
61	Channel	6 – Satisfactory Condition	Timber Debris Accumulation
92B	UW Insp. Frequency	60 Months	
93B	Insp. Date	07 14 17	
113	Scour Critical Bridges	8 – Above Foundation Limits	Stable (Inspector Recommended)

AASHTO National Bridge Element (NBE) Ratings:

Element #	Description	Units	Total	Condition State			
				1	2	3	4
210	Reinforced Concrete Pier Wall	LF	67.66	67.66	0	0	0

Note: Ratings were developed using the FHWA Recording and Coding Guide for the Structure Inventory and Appraisal of the Nation's Bridges. The recommended ratings consider inspected elements located within the waterway and conditions existing below the water surface only. Additional consideration is necessary for the assignment of overall condition ratings for this bridge.

1.0 INTRODUCTION

1.1 Purpose and Scope

This report consists of the results of a detailed underwater investigation performed at the SR 250 Bridge over Big Stillwater Creek in Tuscarawas County, OH. Collins Engineers, Inc. (Collins) conducted the underwater investigation for the Ohio Department of Transportation (ODOT) on July 14, 2017. The primary purpose of the investigation was as follows:

- Determine the condition of the substructure components located in the water at the time of the inspection from the waterline to the channel bottom.
- Obtain channel bottom depth measurements along the bridge fascias, upstream and downstream of the bridge, and around the submerged substructure units.
- Determine the condition of the shorelines in the vicinity of the structure.
- Obtain photographs of the bridge and any significant defects.

In addition, a brief inspection was made of areas that could be submerged during periods of high water. The following report includes a description of the structure, the method of investigation, a description of existing conditions, an evaluation and recommendations based on the conditions, inspection figures, and photographs.

1.2 General Description of the Structure

Structure No. TUS-250-1998 WB spans 212.64 ft, carrying SR 250 over Big Stillwater Creek and is approximately 33.83 ft wide. The bridge superstructure is constructed of three steel multi-beam spans. The roadway orientation of the longitudinal axis of the bridge is west to east. The substructure units are labeled as Abutments 1 and 4 and Piers 1 through 2. Existing design drawings were not available at the time of the inspection. Refer to Figure 1 in Exhibit 1 for a Location Map of the bridge. Refer to Photographs 1 and 2 in Exhibit 2 for overall views of the bridge.

1.3 Method of Investigation

A detailed field inspection was conducted to determine the physical condition of the submerged bridge substructure units from the waterline to the channel bottom. A brief visual examination of the substructure units above the waterline was also made.

A three-person team consisting of an engineer-diver and team leader (Matthew Rogers, E.I.T.), a professional engineer-diver (Gregory Desing, P.E.), and a Commercial Diver (Jacob Green) conducted the underwater inspection. The inspection was conducted through wading. During the inspection, the inspectors worked from a boat and a note taker in the boat recorded the inspection notes.

The underwater inspection consisted of a visual and tactile examination of the accessible surfaces of the substructure units from the waterline to the channel bottom with particular attention given to any observed areas of deterioration or apparent distress. Approximately 10 percent of the total area on the underwater surfaces of the substructure units was cleaned so that the condition could be more closely examined. Photographs were taken to document the general conditions and observed deficiencies. Underwater Photographs could not be obtained due to poor water conditions. The type of channel bottom material, the presence or extent of scour, the presence or extent of riprap, the presence or extent of drift and debris, and the location of any foundation exposure or undermining were noted.

Channel bottom soundings were performed utilizing a telescoping survey rod and a digital fathometer. Soundings were collected at quarter points along the bridge centerline as well as 10 feet and 50 feet upstream and downstream of the bridge, parallel with its fascias. Additional soundings were collected adjacent to Piers 2 and 3 and at 10 feet intervals in-line with the piers, upstream and downstream, and the waterline was referenced to an assumed elevation on the bridge. A sounding plan was developed using the soundings and approximate location of the shorelines. Refer to Figures 1 through 4 in Exhibit 1 for the sounding plan and channel cross sections that show the channel limits and water depths around the structure.

2.0 EXISTING CONDITIONS

2.1 General Conditions

At the time of the inspection, the waterline of TUS-250-1998 WB was located approximately 13.4 ft below the top of cap at the downstream nose of Pier 2, which corresponds to an assumed waterline elevation of 86.6 ft. During the inspection, the waterway was flowing at approximately 1 ft per second. The bridge pier skew was consistent with the channel alignment and does not require attention at this time. The east and west shorelines consisted of moderately to heavily vegetated mild slopes with minor erosion and multiple trees leaning toward the channel. Refer to Photographs 3 through 8 in Exhibit 2 for views of the shorelines near the structure.

2.2 Substructure Conditions

2.2.1 Pier 2

The channel bottom material around Pier 2 consisted of small twigs, mud, branches, and silt up to 18 in of probe rod penetration. Timber debris was noted along the entire channel bottom. The submerged portions of the pier were sound and smooth with no defects observed. Refer to Figure 5 in Exhibit 1 for detailed inspection notes of Pier 2. Refer to Photographs 9 through 11 in Exhibit 2 for views of Pier 2 and typical concrete condition at the waterline.

2.2.2 Pier 3

The channel bottom material around Pier 2 consisted of small twigs, mud, branches, and silt up to 18 in of probe rod penetration. Timber debris was noted along the entire channel bottom. The submerged portions of the pier were sound and smooth with no defects observed. Refer to Figure 6 in Exhibit 1 for detailed inspection notes of Pier 3. Refer to Photographs 12 and 13 in Exhibit 2 for views of Pier 3.

3.0 EVALUATION AND RECOMMENDATIONS

Overall, the inspected substructure units of Structure No. TUS-250-1998 WB were in good condition. A comparison of the soundings recorded during the previous inspection on September 22, 2012 and the soundings taken during this inspection revealed no significant change in the channel bottom profile in the vicinity of the structure. The timber debris accumulation on the channel bottom did not significantly affect the channel flow, and as a result, does not require removal at this time. If the debris accumulation increases in size or density, it may be necessary to remove the debris to reduce excessive lateral loads on the substructures, limit further debris accumulation, and reduce the likelihood of channel bottom degradation resulting from obstructed flow.

It is recommended that the submerged substructure units of Structure No. TUS-250-1998 WB be next inspected underwater at an interval not to exceed 60 months, no later than July 14, 2022.

Respectfully Submitted,
COLLINS ENGINEERS, INC.

Joshua Johnson, P.E.
Project Manager/Team Leader

Originated by:
Matthew Rogers, E.I.T.

EXHIBIT 1 – FIGURES

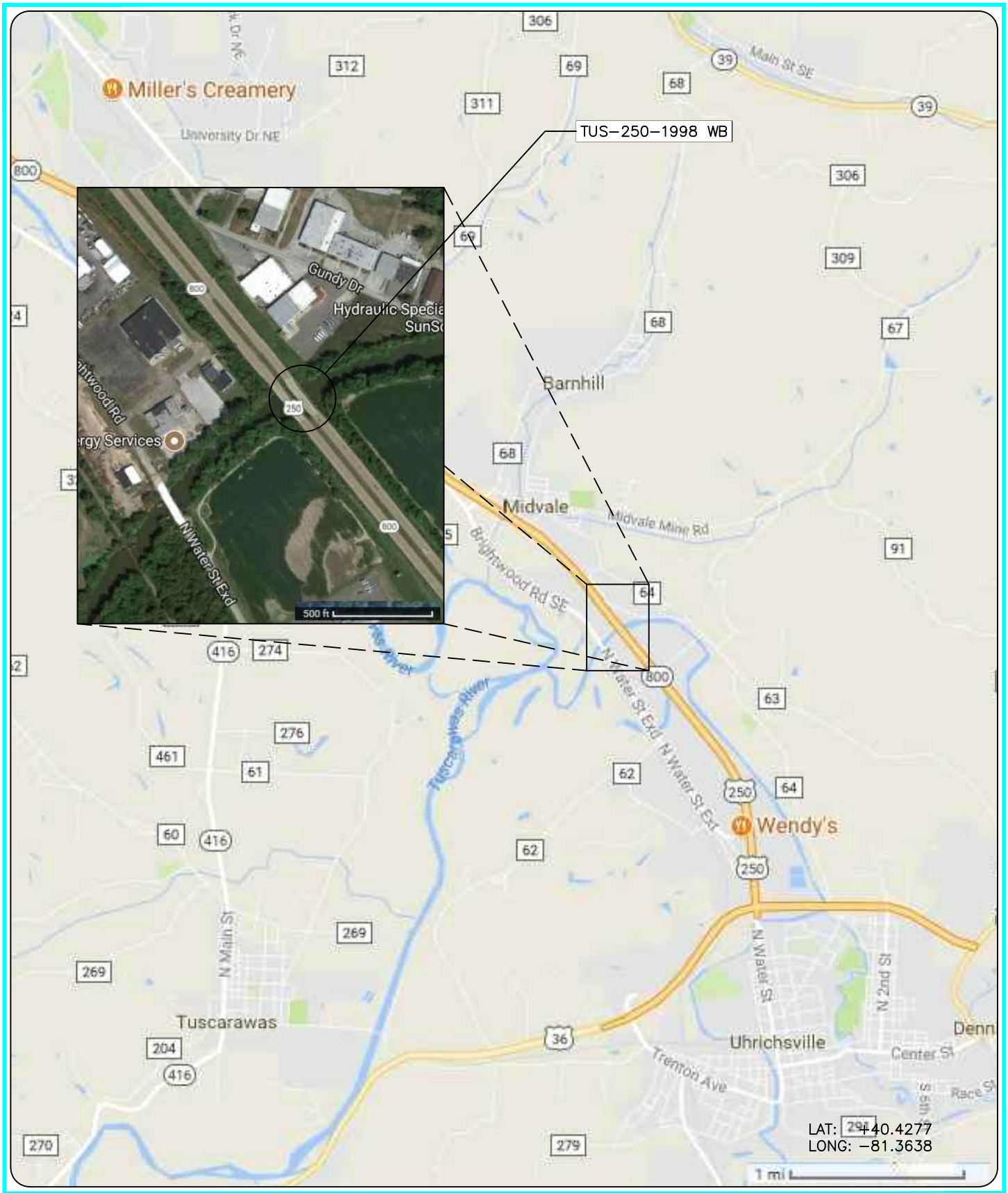

COLLINS ENGINEERS
124 Venture Court, Ste 10
Lexington, KY 40511
Phone: 859-367-0097
Fax: 859-367-0140

Ohio Department of Transportation, District 11
2201 Reiser Avenue
New Philadelphia, OH 44663
Phone: 330-339-6633

SR 250 OVER BIG STILLWATER CREEK
STRUCTURE NO. TUS-250-1998 WB
LOCATION MAP
TUSCARAWAS COUNTY, OHIO

INSPECTED BY: MOR	CEI PROJECT: 55–10356.00
DRAWN BY: KMM	DATE: 13 JUN 2017
CHECKED BY: JMJ	SHEET NO: 1

\\10.1.8.42\NNVA\KY OFFICE TEMP\PROJECTS\WORKGROUP\55 - LEXINGTON\55-10356.00 - ODOT D11 UNDERWATER\ENGINEERING\DRAWINGS\TUS-250-1998 WB.DWG10/16/2017 12:40:20 PM

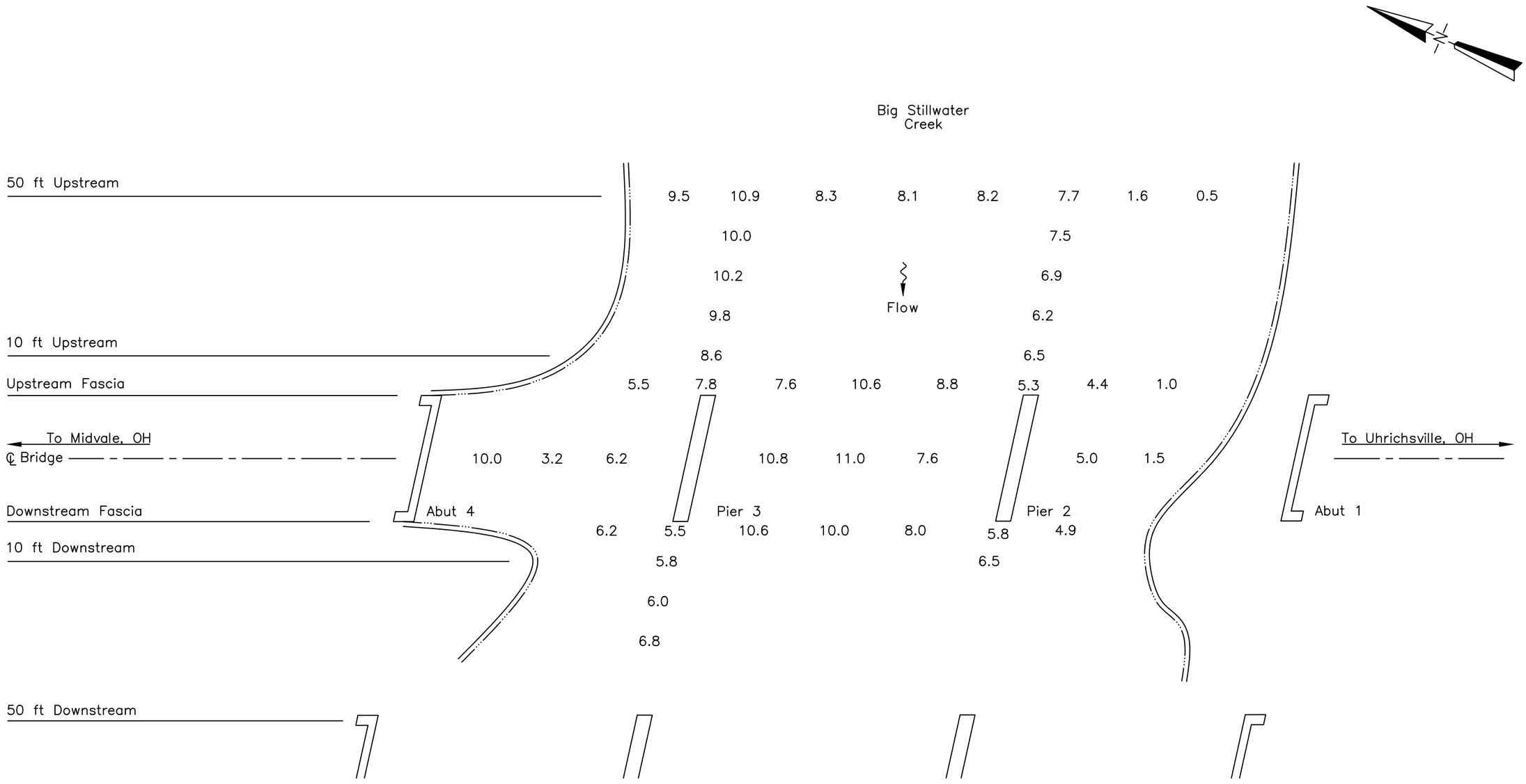

SOUNDING PLAN

GENERAL NOTES:

1. Piers 2 and 3 were inspected underwater. Substructure units are labeled according to available record drawings.
2. At the time of inspection on July 13, 2017, the waterline was located approximately 13.4 ft below Top of Cap at downstream nose of Pier 2 (Assumed EL. +100.0 ft). This corresponds with a waterline elevation of +86.6 ft.
3. Soundings indicate the water depth at the time of inspection and are measured in feet.
4. Soundings were taken parallel to the bridge at the upstream and downstream fascias, 50 ft upstream and downstream of the fascias, at 1/4 point intervals between the substructure units, and at 10 ft intervals in–line with the piers upstream and downstream up to 50 ft.

LEGEND

2.7 Sounding Depth from Waterline (ft)

Timber Debris

COLLINS ENGINEERS
124 Venture Court, Ste 10
Lexington, KY 40511
Phone: 859-367-0097
Fax: 859-367-0140

Ohio Department of Transportation, District 11
2201 Reiser Avenue
New Philadelphia, OH 44663
Phone: 330-339-6633

SR 250 OVER TUSCARAWAS RIVER
STRUCTURE NO. TUS-250-1998 WB
SOUNDING PLAN
TUSCARAWAS COUNTY, OHIO

CEI PROJECT 55–10356.00
INSPECTED BY: MOR
DRAWN BY: KMM
CHECKED BY: JMJ
DATE: JUN 2017
SHEET NO: 2

\\10.1.8.42\NNVA\KY OFFICE TEMP\PROJECTS\WORKGROUP\55 - LEXINGTON\55-10356.00 - ODOT D11 UNDERWATER\ENGINEERING\DRAWINGS\TUS-250-1998 WB.DWG10/16/2017 12:40:21 PM

PROFILE MEASUREMENTS (FT)		
LOCATION	X	Y
A1	0.0	8.9
1/4	16.0	14.4
1/2	32.0	17.1
3/4	48.0	21.0
P2	64.0	21.0
1/4	84.8	21.0
1/2	105.5	21.1
3/4	126.3	21.0
P3	147.0	21.0
1/4	163.3	21.1
1/2	179.5	19.1
3/4	195.8	14.0
A4	212.0	8.9

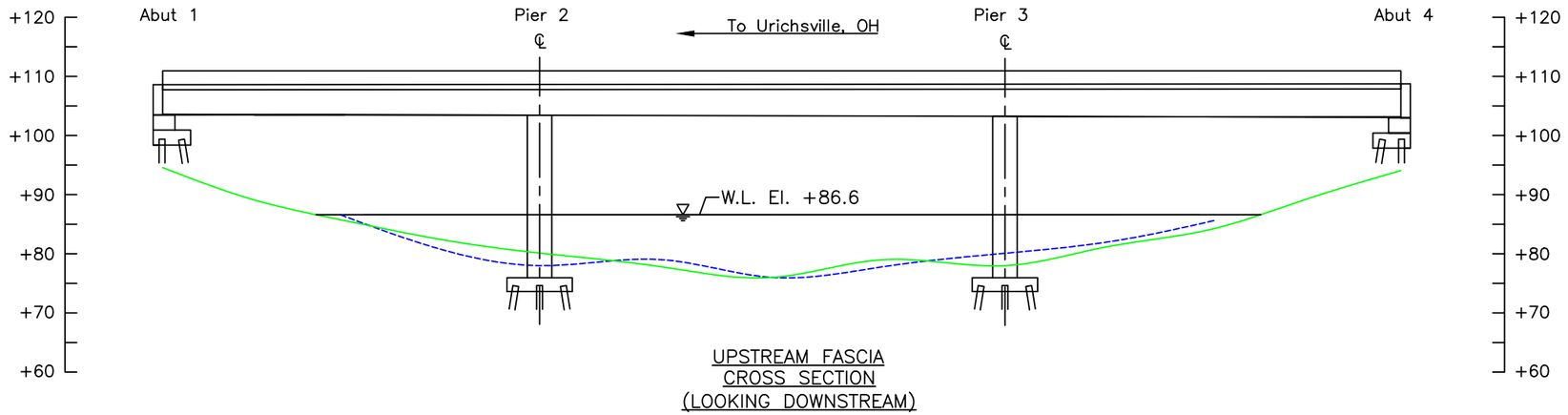

UPSTREAM FASCIA
CROSS SECTION
(LOOKING DOWNSTREAM)

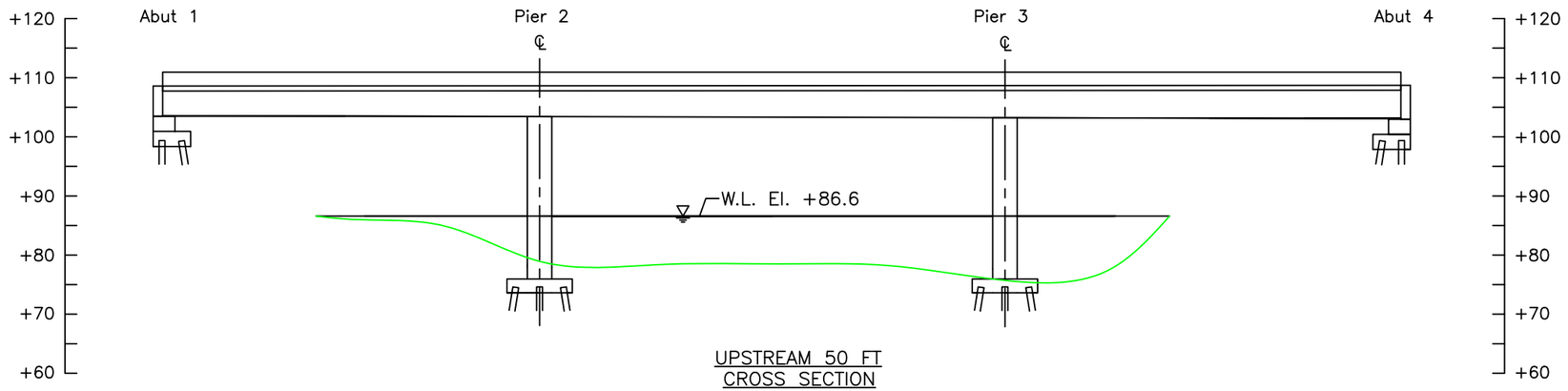

UPSTREAM 50 FT
CROSS SECTION
(LOOKING DOWNSTREAM)

LEGEND

———	Approximate Channel Bottom – July 2017
- - - - -	Approximate Channel Bottom – September 2012
– – – – –	Approximate Channel Bottom – [No Data]
	Timber Debris
	Water Surface
+450	Elevation (ft)

COLLINS ENGINEERS
124 Venture Court, Ste 10
Lexington, KY 40511
Phone: 859-367-0097
Fax: 859-367-0140

Ohio Department of Transportation, District 11
2201 Reiser Avenue
New Philadelphia, OH 44663
Phone: 330-339-6633

SR 250 OVER TUSCARAWAS RIVER
STRUCTURE NO. TUS-250-1998 WB
CROSS SECTIONS
TUSCARAWAS COUNTY, OHIO

CEI PROJECT	55–10356.00
INSPECTED BY:	MOR
DRAWN BY:	KMM
CHECKED BY:	JMJ
DATE:	JUN 2017
SHEET NO:	3

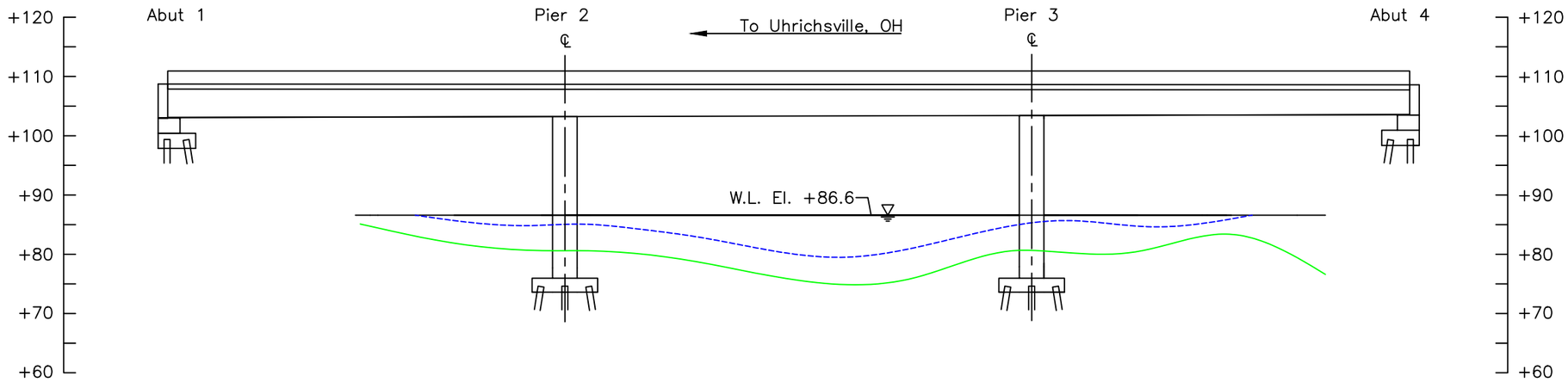

STRUCTURE CENTERLINE
CROSS SECTION
(LOOKING DOWNSTREAM)

LEGEND

———	Approximate Channel Bottom – July 2017
- - - - -	Approximate Channel Bottom – September 2012
– – – – –	Approximate Channel Bottom – [No Data]
	Timber Debris
	Water Surface
+450	Elevation (ft)

COLLINS ENGINEERS
124 Venture Court, Ste 10
Lexington, KY 40511
Phone: 859-367-0097
Fax: 859-367-0140

Ohio Department of Transportation, District 11
2201 Reiser Avenue
New Philadelphia, OH 44663
Phone: 330-339-6633

SR 250 OVER TUSCARAWAS RIVER
STRUCTURE NO. TUS-250-1998 WB
CROSS SECTIONS
TUSCARAWAS COUNTY, OHIO

CEI PROJECT	55–10356.00
INSPECTED BY:	MOR
DRAWN BY:	KMM
CHECKED BY:	JMJ
DATE:	JUN 2017
SHEET NO:	4

PROFILE MEASUREMENTS (FT)		
LOCATION	X	Y
A1	0.0	8.9
1/4	16.0	14.4
1/2	32.0	17.1
3/4	48.0	21.0
P2	64.0	21.0
1/4	84.8	21.0
1/2	105.5	21.1
3/4	126.3	21.0
P3	147.0	21.0
1/4	163.3	21.1
1/2	179.5	19.1
3/4	195.8	14.0
A4	212.0	8.9

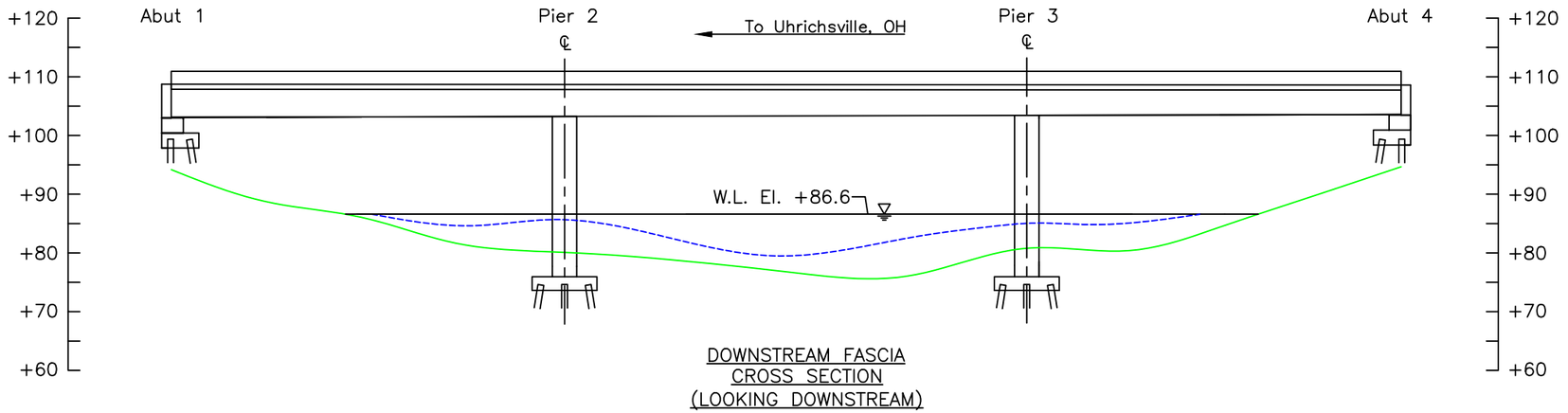

DOWNSTREAM FASCIA
CROSS SECTION
(LOOKING DOWNSTREAM)

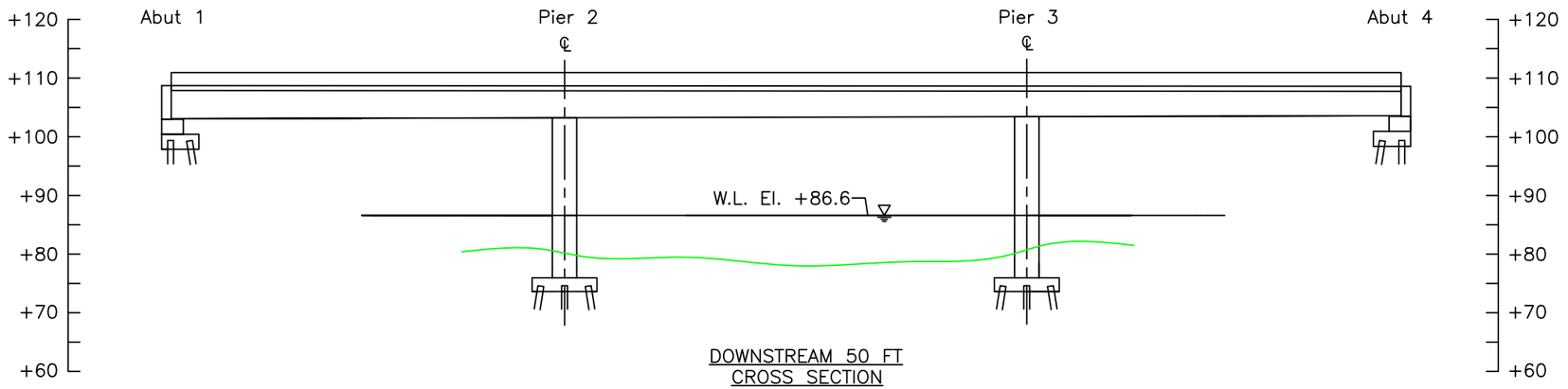

DOWNSTREAM 50 FT
CROSS SECTION
(LOOKING DOWNSTREAM)

LEGEND

- Approximate Channel Bottom – July 2017
- Approximate Channel Bottom – September 2012
- Approximate Channel Bottom – [No Data]
- Timber Debris
- Water Surface
- +450 Elevation (ft)

Note:

The downstream 50 ft cross section is treated as the centerline of TUS–250–1998 EB.

COLLINS ENGINEERS
124 Venture Court, Ste 10
Lexington, KY 40511
Phone: 859-367-0097
Fax: 859-367-0140

Ohio Department of Transportation, District 11
2201 Reiser Avenue
New Philadelphia, OH 44663
Phone: 330-339-6633

SR 250 OVER TUSCARAWAS RIVER
STRUCTURE NO. TUS-250-1998 WB
CROSS SECTIONS
TUSCARAWAS COUNTY, OHIO

CEI PROJECT	55–10356.00
INSPECTED BY:	MOR
DRAWN BY:	KMM
CHECKED BY:	JMJ
DATE:	JUN 2017
SHEET NO:	5

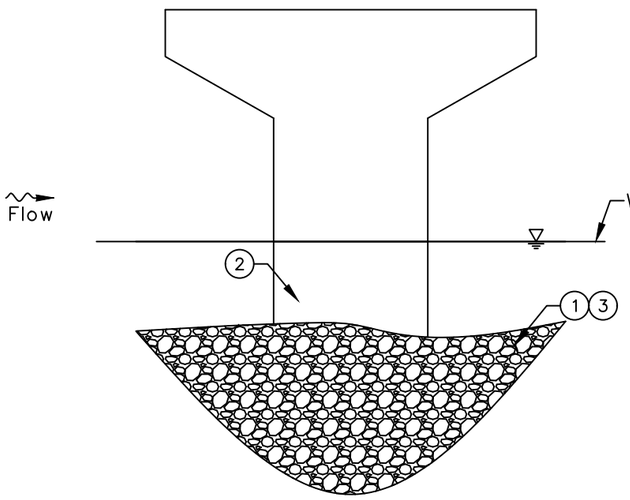

NORTH ELEVATION

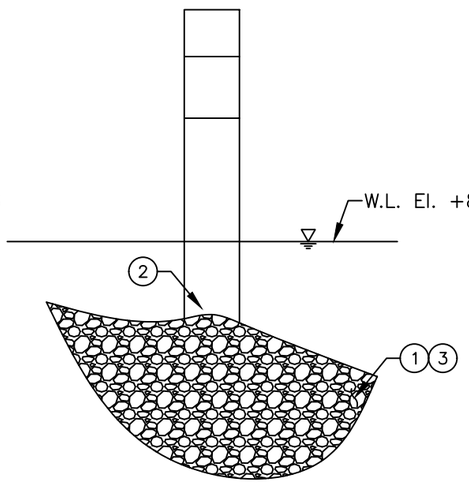

UPSTREAM ELEVATION

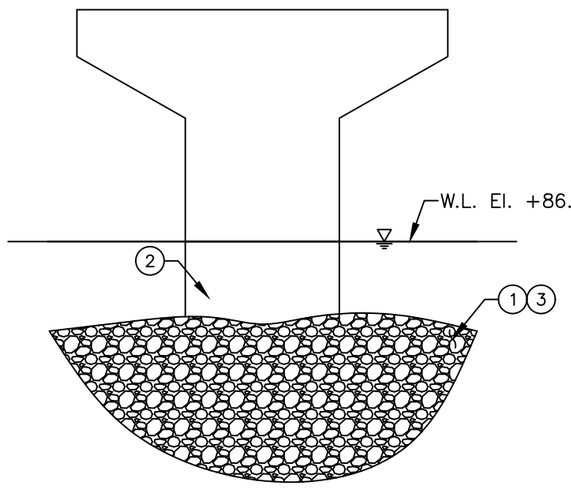

SOUTH ELEVATION

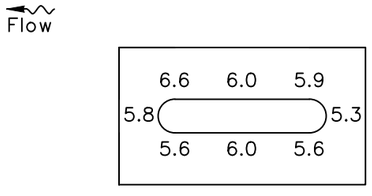

PLAN

INSPECTION NOTES:

1. The channel bottom material consisted of sand, gravel and cobbles with approximately 2 in probe rod penetration.
2. The submerged portions of the pier were sound and smooth with no defects observed.
3. Timber debris all along channel bottom.

LEGEND

−2.7	Sounding Depth from Waterline (ft)
———	Approximate Channel Bottom – July 2015
	Timber Debris
	Water Surface

COLLINS ENGINEERS
124 Venture Court, Ste 10
Lexington, KY 40511
Phone: 859-367-0097
Fax: 859-367-0140

Ohio Department of Transportation, District 11
2201 Reiser Avenue
New Philadelphia, OH 44663
Phone: 330-339-6633

SR 250 OVER TUSCARAWAS RIVER
STRUCTURE NO. TUS-250-1998 WB
PIER 2
TUSCARAWAS COUNTY, OHIO

CEI PROJECT 55–10356.00
INSPECTED BY: MOR
DRAWN BY: KMM
CHECKED BY: JMJ
DATE: JUN 2017
SHEET NO: 6

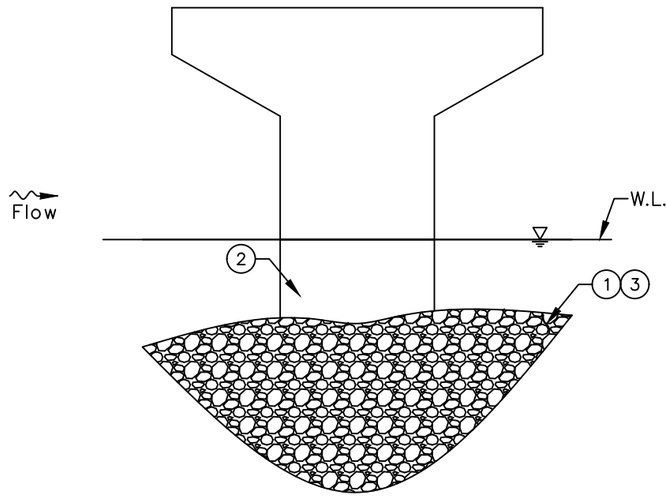

NORTH ELEVATION

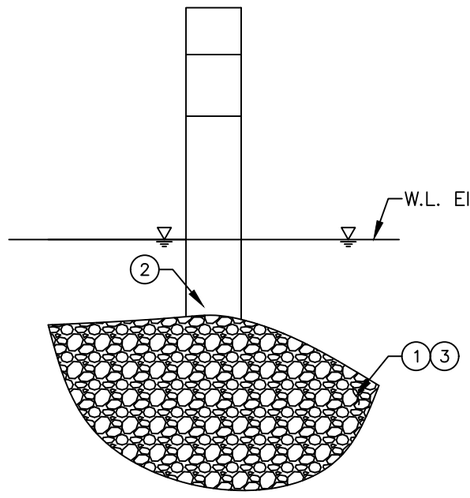

UPSTREAM ELEVATION

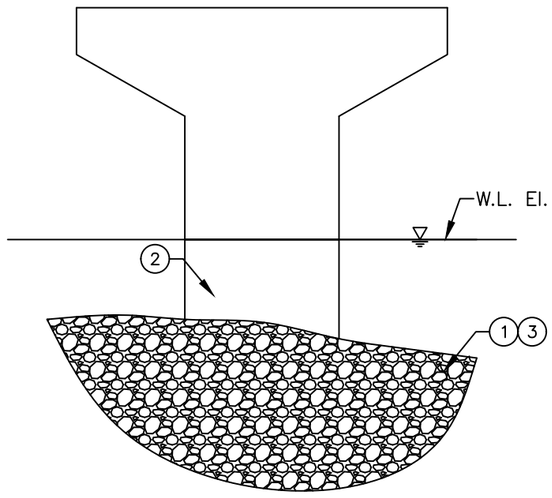

SOUTH ELEVATION

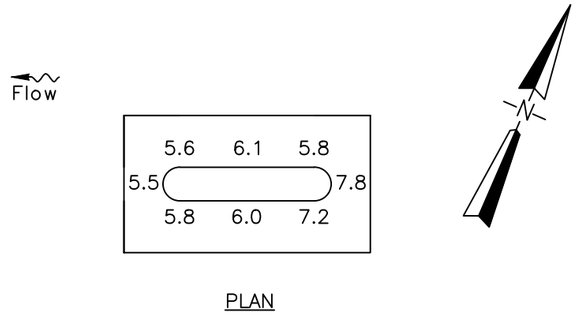

PLAN

INSPECTION NOTES:

1. The channel bottom material consisted of small twigs, mud, branches, silt up to 18 in., sand, gravel and cobbles with approximately 2 in. probe rod penetration.
2. The submerged portions of the pier were sound and smooth with no defects observed.
3. Timber debris all along channel bottom.

LEGEND

−2.7	Sounding Depth from Waterline (ft)
———	Approximate Channel Bottom – July 2015
	Timber Debris
———	Water Surface

COLLINS ENGINEERS
124 Venture Court, Ste 10
Lexington, KY 40511
Phone: 859-367-0097
Fax: 859-367-0140

Ohio Department of Transportation, District 11
2201 Reiser Avenue
New Philadelphia, OH 44663
Phone: 330-339-6633

SR 250 OVER TUSCARAWAS RIVER
STRUCTURE NO. TUS-250-1998 WB
PIER 3
TUSCARAWAS COUNTY, OHIO

CEI PROJECT	55–10356.00
INSPECTED BY:	MOR
DRAWN BY:	KMM
CHECKED BY:	JMJ
DATE:	JUN 2017
SHEET NO:	7

EXHIBIT 2 – INSPECTION PHOTOGRAPHS



Photograph No. 1: Overall View of Westbound Fascia, Looking South.



Photograph No. 2: Overall View of Upstream Fascia, Looking Northeast.



Photograph No. 3: View of the Western Shoreline, Downstream of Bridge, Looking Southwest.



Photograph No. 4: View of the Western Shoreline at Bridge Centerline, Looking Southwest.



Photograph No. 5: View of the Western Shoreline, Upstream of Bridge, Looking West.



Photograph No. 6: View of the Eastern Shore, Downstream of Bridge, Looking East.



Photograph No. 7: View of Eastern Shore at Bridge Centerline, Looking East.



Photograph No. 8: View of the Eastern Shore, Upstream of Bridge, Looking Northeast.



Photograph No. 9: View of Pier 2, Looking Southwest.



Photograph No. 10: View of Pier 2, Looking Northeast.



Photograph No. 11: View of Typical Concrete, Pier 2 at Waterline, Looking East.



Photograph No. 12: View of Pier 3, Looking Southwest.



Photograph No. 13: View of Pier 3, Looking Northeast.