

UNDERWATER BRIDGE INSPECTION REPORT

STRUCTURE NO. TUS-250-2251L
SR 250 OVER STILLWATER CREEK
TUSCARAWAS COUNTY, OH
DISTRICT 11

July 2017

Prepared for:

STATE OF OHIO DEPARTMENT OF TRANSPORTATION

STATE OF OHIO
JOSHUA M. JOHNSON
E-76141
1/11/18
REGISTERED PROFESSIONAL ENGINEER

Prepared by:

COLLINS ENGINEERS INC.
124 Venture Court, Suite 10
Lexington, Kentucky 40511
859.367.0097 • www.collinsengr.com

TABLE OF CONTENTS

EXECUTIVE SUMMARY
1.0 INTRODUCTION 1
1.1 Purpose and Scope 1
1.2 General Description of the Structure 1
1.3 Method of Investigation 1
2.0 EXISTING CONDITIONS 2
2.1 General Conditions 2
2.2 Substructure Conditions 3
2.2.1 Pier 2 3
2.2.2 Pier 3 3
3.0 EVALUATION AND RECOMMENDATIONS 3
EXHIBIT 1 – FIGURES 5
LOCATION MAP
SOUNDING PLAN
UPSTREAM CHANNEL CROSS SECTIONS
CENTERLINE CHANNEL CROSS SECTIONS
DOWNSTREAM CHANNEL CROSS SECTIONS
PIER 2
PIER 3
EXHIBIT 2 – INSPECTION PHOTOGRAPHS 13
Photograph No. 1: Overall View of Structure No. TUS-250-2251L, Looking South.
Photograph No. 2: Overall View of Structure No. TUS-250-2251L, looking North.
Photograph No. 3: View of the East Embankment Upstream of the Structure, Looking East.
Photograph No. 4: View of the East Embankment of the Structure, Looking East.
Photograph No. 5: View of the East Embankment Downstream of the Structure, Looking East.
Photograph No. 6: View of the West Embankment Downstream of the Structure, Looking West.
Photograph No. 7: View of the West Embankment of the Structure, Looking West.
Photograph No. 8: View of the West Embankment Upstream of the Structure, Looking West.
Photograph No. 9: View of Pier 1 Downstream Nose and East Face, looking Southwest.
Photograph No. 10: View of Pier 1 Upstream Nose and West Face, looking Northeast.
Photograph No. 11: View of Pier 2 Downstream Nose and East Face, looking Southwest.
Photograph No. 12: View of Pier 2 West Face, looking East.
Photograph No. 13: View of Typical Concrete at WaterlINE, looking East.

EXECUTIVE SUMMARY

Project: ODOT District 11 Underwater Bridge Inspections - 2017

Purpose of Project: To perform a detailed visual and tactile underwater investigation of scour critical bridges for D11 of the Ohio Department of Transportation.

Inspection Team: Team Leader – Gregory Desing, P.E. – Collins Engineers, Inc.
Team Member – Matthew Rogers, E.I.T. – Collins Engineers, Inc.
Team Member – Jacob Green – Collins Engineers, Inc.

Inspection Date(s): July 12, 2017

Water Visibility:	<1 ft	***Water Velocity:***	<1 ft/s
Water Temperature:	70 °F	***Weather:***	Cloudy – 85 °F
Waterline Elevation:	71.8 ft	***Type of Boat:***	14 ft Jon Boat
Coordinates:	40.40460°N, 81.34146°W		
Access Location:	Slope access 20 feet from East shoreline at TUS-250-2251L		
Dive Mode:	Surface Supplied Air		
Waterline Reference:	28.2 ft below the Top of Deck of Pier 2, downstream (North) side.		
Maximum Depth at SSU:	10.0 ft – Downstream Northwest Quarter of Pier 2		
Shoreline Conditions:	The west shoreline consisted of heavy vegetation and large trees with shallow water. The east shoreline consisted of a slope with mild vegetation and large trees.		

Summary of Findings:

- **Pier 2:**
  - The channel bottom material consisted of soft clay and silt with approximately 12 in. probe rod penetration.
  - The submerged portions of the pier exhibited light scaling up to 1/16 in. from the channel bottom to 4 ft above the water level.
- **Pier 3:**
  - The channel bottom material consisted of soft clay and silt with approximately 12 in. probe rod penetration.
  - The submerged portions of the pier exhibited light scaling up to 1/16 in. from the channel bottom to 4 ft above the water level.

Summary of Recommendations:

- Monitor timber debris accumulation at Pier 2 and 3.
- Monitor scaling on Piers 2 and 3.

Underwater Inspection Coding:

NBI Ratings:

Item	Description	Coding	Condition
60	Substructure	7 – Good Condition	Light Concrete Scaling
61	Channel	7 – Good Condition	Minor Erosion, Timber Debris Accumulation
62	Culvert	N/A	
92B	UW Insp. Frequency	60 Months	
93B	Insp. Date	07 12 17	
113	Scour Critical Bridges	8 – Above Foundation Limits	Stable (Inspector Recommended)

AASHTO National Bridge Element (NBE) Ratings:

Element #	Description	Units	Total	Condition State			
				1	2	3	4
210	Reinforced Concrete Pier Wall	LF	40	40	0	0	0

Note: Ratings were developed using the FHWA Recording and Coding Guide for the Structure Inventory and Appraisal of the Nation's Bridges. The recommended ratings consider inspected elements located within the waterway and conditions existing below the water surface only. Additional consideration is necessary for the assignment of overall condition ratings for this bridge.

1.0 INTRODUCTION

1.1 Purpose and Scope

This report consists of the results of a detailed underwater investigation performed at the SR 250 Bridge over Stillwater Creek in Tuscarawas County, OH. Collins Engineers, Inc. (Collins) conducted the underwater investigation for the Ohio Department of Transportation (ODOT) on July 12, 2017. The primary purpose of the investigation was as follows:

- Determine the condition of the substructure components located in the water at the time of the inspection from the waterline to the channel bottom.
- Obtain channel bottom depth measurements along the bridge fascias, upstream and downstream of the bridge, and around the submerged substructure units.
- Determine the condition of the shorelines in the vicinity of the structure.
- Obtain photographs of the bridge and any significant defects.

In addition, a brief inspection was made of areas that could be submerged during periods of high water. The following report includes a description of the structure, the method of investigation, a description of existing conditions, an evaluation and recommendations based on the conditions, inspection figures, and photographs.

1.2 General Description of the Structure

Structure No. TUS-250-2251L spans 303.85 ft, carrying SR 250 over Stillwater Creek and is approximately 35 ft wide. The bridge superstructure is constructed of 5 steel multi-beams. The roadway orientation of the longitudinal axis of the bridge is west to east. The substructure units are labeled as Abutments 1 and 4 and Piers 2 and 3. Existing design drawings were not available at the time of the inspection. Refer to Figure 1 in Exhibit 1 for a Location Map of the bridge. Refer to Photographs 1 and 2 in Exhibit 2 for overall views of the bridge.

1.3 Method of Investigation

A detailed field inspection was conducted to determine the physical condition of the submerged bridge substructure units from the waterline to the channel bottom. A brief visual examination of the substructure units above the waterline was also made.

A three-person team consisting of a professional engineer-diver and team leader (Gregory Desing, P.E.) and two engineer divers (Matthew Rogers, E.I.T. and Jacob Green) conducted the underwater inspection. The inspection was conducted using surface supplied air diving equipment. During the inspection, the inspectors worked from the shore and a note taker on the shore recorded the inspection notes.

The underwater inspection consisted of a visual and tactile examination of the accessible surfaces of the substructure units from the waterline to the channel bottom with particular attention given to any observed areas of deterioration or apparent distress. Approximately 10 percent of the total area on the underwater surfaces of the substructure units was cleaned so that the condition could be more closely examined. Photographs were taken to document the general conditions and observed deficiencies. Underwater photographs could not be obtained due to poor water conditions. The type of channel bottom material, the presence or extent of scour, the presence or extent of riprap, the presence or extent of drift and debris, and the location of any foundation exposure or undermining were noted.

Channel bottom soundings were performed utilizing a telescoping survey rod and digital fathometer. Soundings were collected at quarter points along the bridge centerline as well as along the upstream and downstream fascias and 50 feet upstream and downstream of the bridge, parallel with its fascias. Additional soundings were collected adjacent to Piers 2 and 3 and at 10 feet intervals in-line with the piers, upstream and downstream. The waterline was referenced to a known elevation on the bridge. A sounding plan was developed using the soundings and approximate location of the shorelines. Refer to Figures 2 through 5 in Exhibit 1 for the sounding plan and channel cross sections that show the channel limits and water depths around the structure. A channel profile was compiled along the upstream and downstream fascias of the bridge from Abutment 1 to Abutment 4 with vertical measurements taken from the Top of Deck to the channel bottom at each abutment, pier, and quarter point between each pier. Refer to Figures 3 and 5 in Exhibit 1 for the channel profile measurements.

2.0 EXISTING CONDITIONS

2.1 General Conditions

At the time of the inspection, the waterline of TUS-250-2251L was located approximately 28.2 feet below the Top of Deck of Pier 2, which corresponds to a waterline elevation of 71.8 ft. During the inspection, the waterway was flowing at approximately 0 ft per second. The bridge pier skew was consistent with the channel alignment and does not require attention at this time. The west shoreline consisted of heavy vegetation

and large trees with shallow water. The east shoreline consisted of a slope with mild vegetation and large trees. Refer to Photographs 3 through 8 in Exhibit 2 for views of the shorelines near the structure.

2.2 Substructure Conditions

2.2.1 Pier 2

The channel bottom material consisted of soft clay and silt with approximately 12 in. probe rod penetration. The submerged portions of the pier exhibited light scaling up to 1/16 in. from the channel bottom to 4 ft above the water level. Refer to Figure 6 in Exhibit 1 for detailed inspection notes of Pier 2. Refer to Photographs 9 and 10 in Exhibit 2 for views of Pier 2.

2.2.2 Pier 3

The channel bottom material consisted of soft clay and silt with approximately 12 in. probe rod penetration. The submerged portions of the pier exhibited light scaling up to 1/16 in. from the channel bottom to 4 ft above the water level. Refer to Figure 7 in Exhibit 1 for detailed inspection notes of Pier 3. Refer to Photographs 11 through 13 in Exhibit 2 for views of Pier 3 and typical concrete condition at the waterline.

3.0 EVALUATION AND RECOMMENDATIONS

Overall, the submerged substructure units of Structure No. TUS-250-2251L were in good condition below water. Since no design or as-built plans were available for the bridge, the amount of embedment of the footings in the channel bottom is unknown. As a result, the channel bottom configuration should continue to be monitored during future underwater inspections to verify that localized scour or overall channel degradation is not occurring and that both pier footings remain adequately embedded in the channel bottom. Design or as-built drawings for the bridge should be obtained and reviewed, if possible, prior to the next underwater inspection to determine the exact construction of the piers and their foundations.

It is recommended that the submerged substructure units of Structure No. TUS-250-2251L be next inspected underwater at an interval not to exceed 60 months, no later than July 12, 2022.

Respectfully Submitted,
COLLINS ENGINEERS, INC.

Joshua Johnson, P.E.
Project Manager

Originated by:
Matthew Rogers, E.I.T.

EXHIBIT 1 – FIGURES

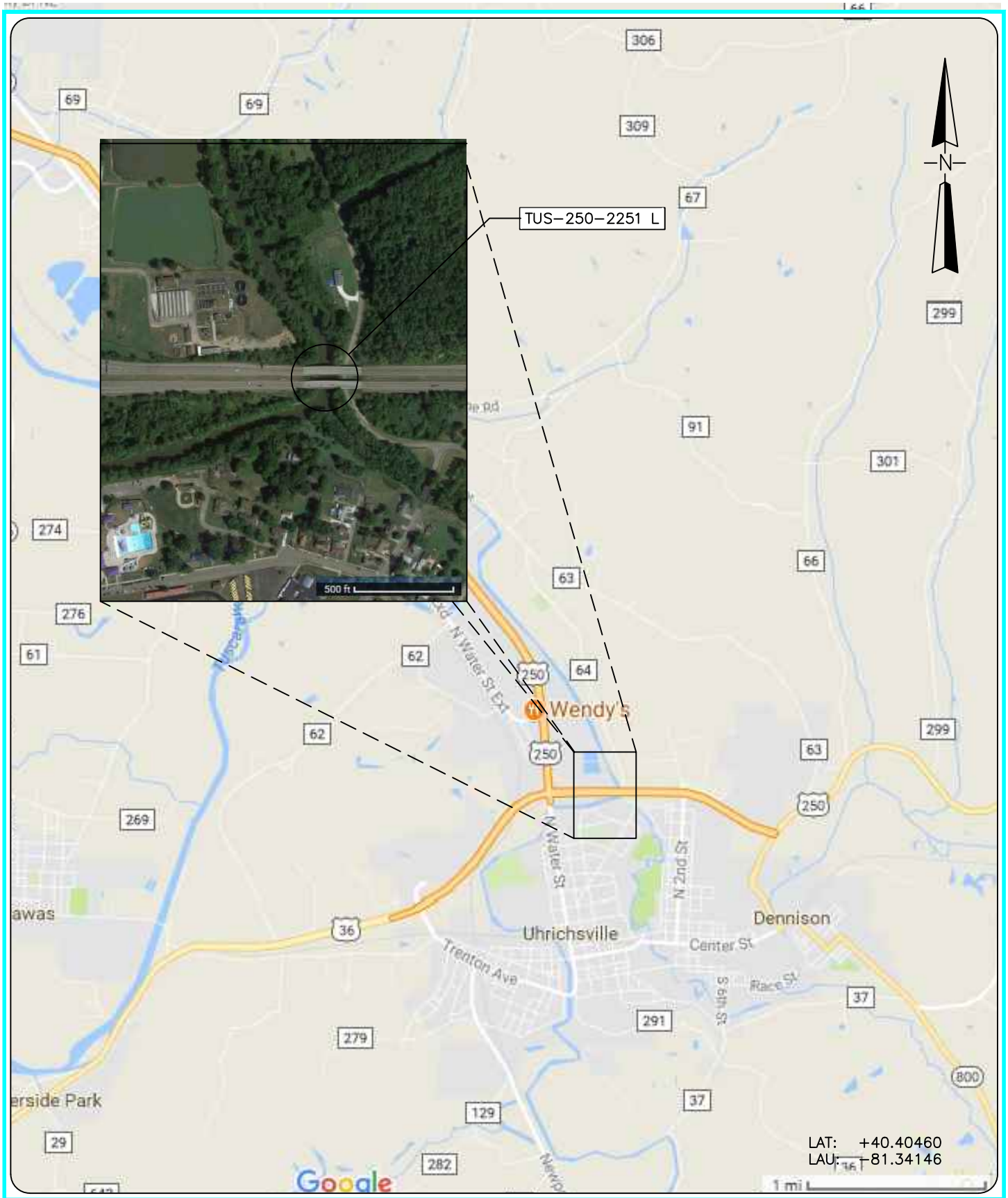

COLLINS ENGINEERS
124 Venture Court, Ste 10
Lexington, KY 40511
Phone: 859-367-0097
Fax: 859-367-0140

Ohio Department of Transportation, District 9
650 Eastern Avenue
Chillicothe, OH 45601
Phone: 740-773-2691

SR-250 OVER STILLWATER CREEK
STRUCTURE NO. TUS-250-2251L

LOCATION MAP

TUSCARAWAS COUNTY, OHIO

INSPECTED BY: MOR	CEI PROJECT: 55–10356.00
DRAWN BY: BBM	DATE: 12 JUL 2017
CHECKED BY: JMJ	SHEET NO: 1

\\10.1.8.42\NNVA\KY OFFICE TEMP\PROJECTS\WORKGROUP\55 - LEXINGTON\55-10356.00 - ODOT D11 UNDERWATER\ENGINEERING\DRAWINGS\TUS-250-2251 L.DWG9/18/2017 11:55:54 AM

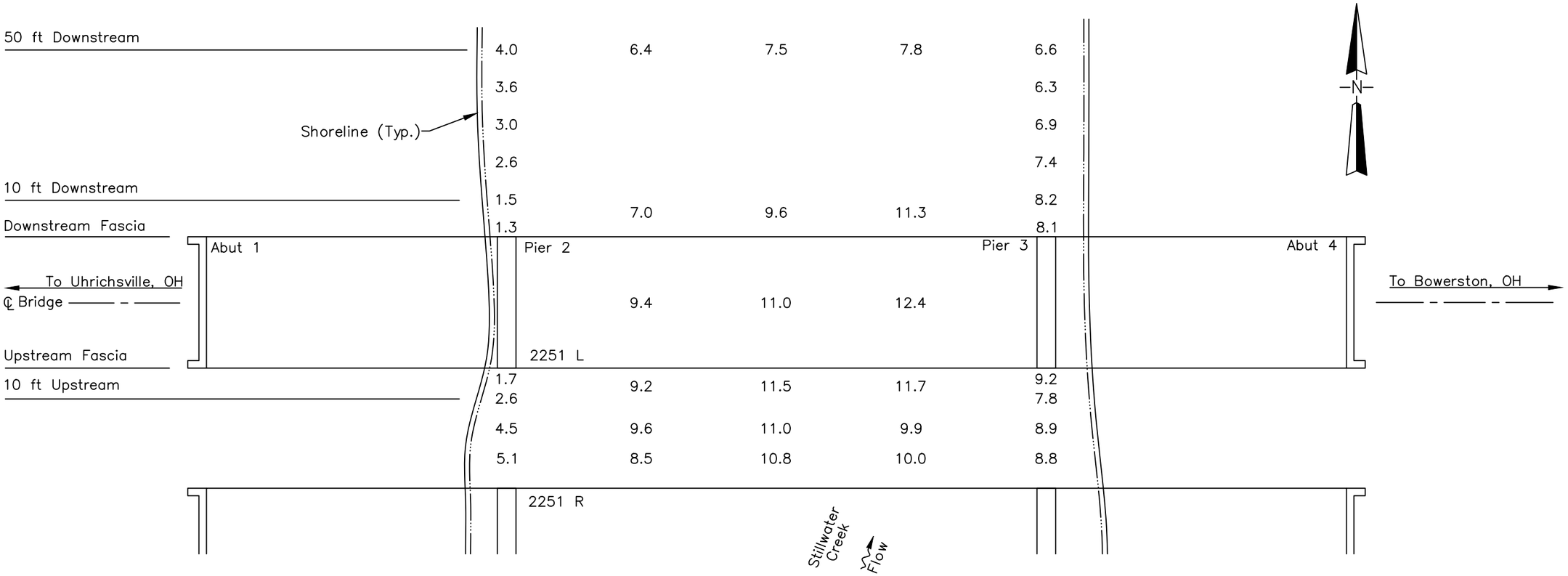

SOUNDING PLAN

GENERAL NOTES:

1. Piers 2 and 3 were inspected underwater. Substructure units are labeled according to available record drawings.
2. At the time of inspection on July 12, 2017, the waterline was located approximately 28.2 ft below Top of Deck at downstream nose of Pier 2 (Assumed EL. +100.0 ft). This corresponds with a waterline elevation of +71.8 ft.
3. Soundings indicate the water depth at the time of inspection and are measured in feet.
4. Soundings were taken parallel to the bridge at the upstream and downstream fascias, at 50 ft upstream and downstream of the fascias, at 10 ft intervals between the substructure units, and at 1/4 points in–line with the piers upstream and downstream up to 50 ft.

LEGEND

2.7 Sounding Depth from Waterline (ft)

Timber Debris

COLLINS ENGINEERS
124 Venture Court, Ste 10
Lexington, KY 40511
Phone: 859-367-0097
Fax: 859-367-0140

Ohio Department of Transportation, District 9
650 Eastern Avenue
Chillicothe, OH 45601
Phone: 740-773-2691

SR-250 OVER STILLWATER CREEK
STRUCTURE NO. TUS-250-2251L
SOUNDING PLAN
TUSCARAWAS COUNTY, OHIO

CEI PROJECT 55–10356.00
INSPECTED BY: MOR
DRAWN BY: BBM
CHECKED BY: JMJ
DATE: JUL 2017
SHEET NO: 2

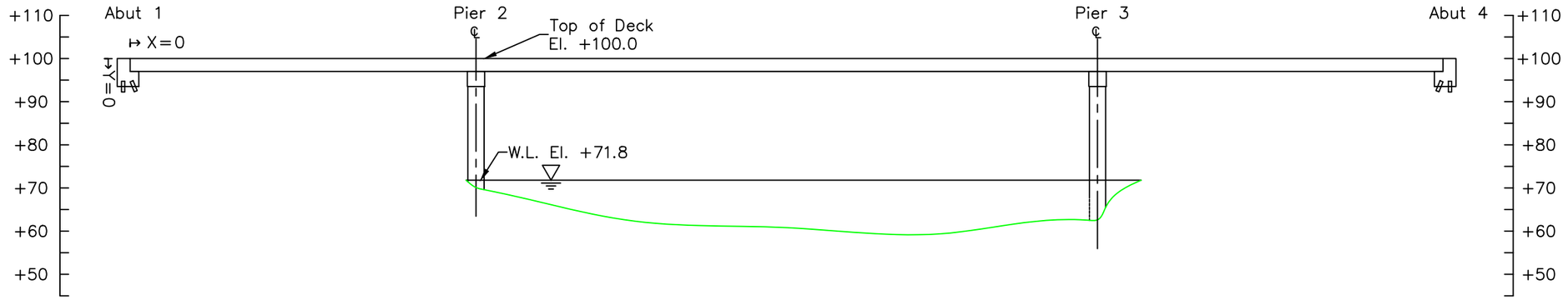

UPSTREAM FASCIA
CHANNEL CROSS SECTION
(LOOKING DOWNSTREAM)

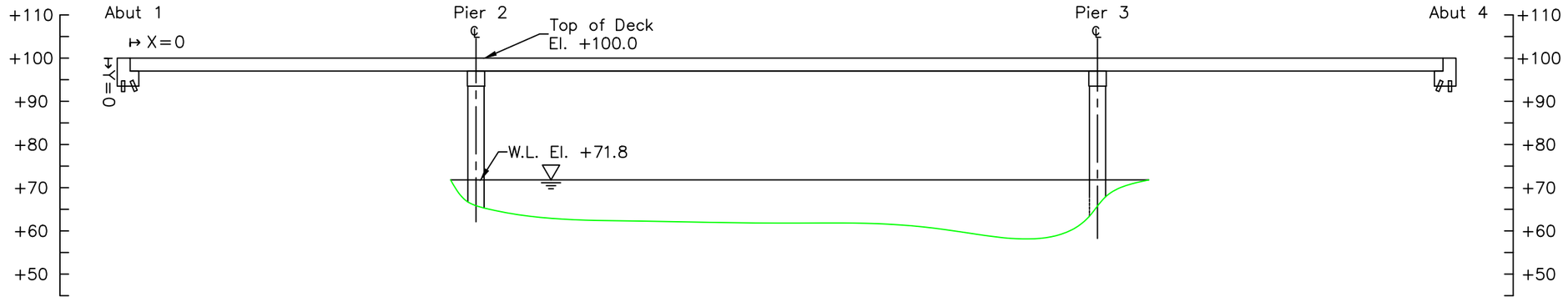

UPSTREAM 50 FT
CHANNEL CROSS SECTION
(LOOKING DOWNSTREAM)

PROFILE MEASUREMENTS (FT)		
LOCATION	X	Y
A1	0.0	
1/4	20.0	
1/2	40.0	
3/4	60.0	
P2	80.0	29.9
1/4	116.0	37.4
1/2	151.9	39.7
3/4	187.9	39.9
P3	223.9	37.4
1/4	243.9	
1/2	263.9	
3/4	283.9	
A4	303.9	

Notes:

1. Footing elevations unknown due to unavailable record drawings.
2. No channel report due to construction on the bridge.

LEGEND

- Approximate Channel Bottom – July 2017
- Approximate Channel Bottom – 2012 (No Data)
- Approximate Channel Bottom – 2007 (No Data)
- Timber Debris
- Water Surface
- +450 Elevation (ft)

COLLINS ENGINEERS
124 Venture Court, Ste 10
Lexington, KY 40511
Phone: 859-367-0097
Fax: 859-367-0140

Ohio Department of Transportation, District 9
650 Eastern Avenue
Chillicothe, OH 45601
Phone: 740-773-2691

SR-250 OVER STILLWATER CREEK
STRUCTURE NO. TUS-250-2251L
CROSS SECTIONS
TUSCARAWAS COUNTY, OHIO

CEI PROJECT 55–10356.00
INSPECTED BY: MOR
DRAWN BY: BBM
CHECKED BY: JMJ
DATE: JUL 2017
SHEET NO: 3

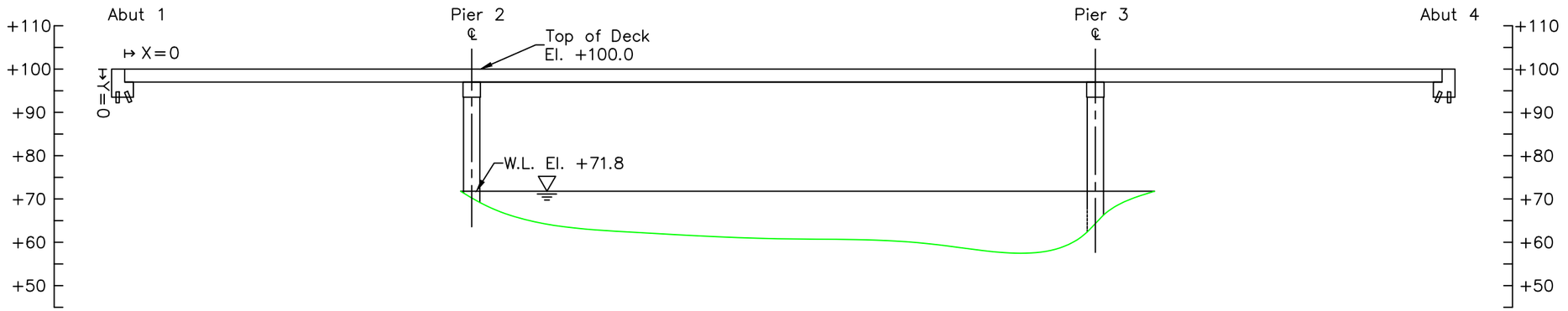

STRUCTURE CENTERLINE
CHANNEL CROSS SECTION
(LOOKING DOWNSTREAM)

Notes:

1. Footing elevations unknown due to unavailable record drawings.
2. No channel report due to construction on the bridge.

LEGEND

———	Approximate Channel Bottom – July 2017
- - - - -	Approximate Channel Bottom – 2012 (No Data)
– – – – –	Approximate Channel Bottom – 2007 (No Data)
	Timber Debris
	Water Surface
+450	Elevation (ft)

COLLINS ENGINEERS
124 Venture Court, Ste 10
Lexington, KY 40511
Phone: 859-367-0097
Fax: 859-367-0140

Ohio Department of Transportation, District 9
650 Eastern Avenue
Chillicothe, OH 45601
Phone: 740-773-2691

SR-250 OVER STILLWATER CREEK
STRUCTURE NO. TUS-250-2251L
CROSS SECTIONS
TUSCARAWAS COUNTY, OHIO

CEI PROJECT	55–10356.00
INSPECTED BY:	MOR
DRAWN BY:	BBM
CHECKED BY:	JMJ
DATE:	JUL 2017
SHEET NO:	4

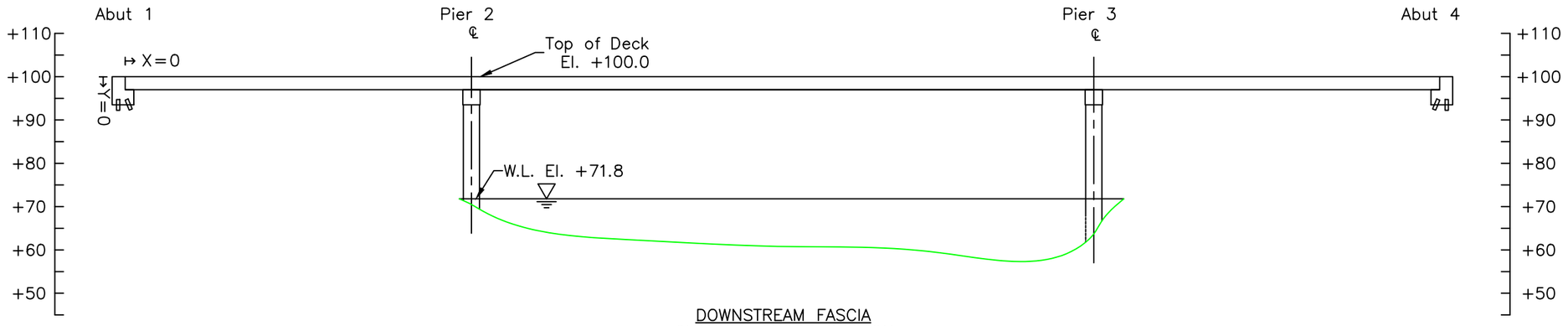

DOWNSTREAM FASCIA
CHANNEL CROSS SECTION
(LOOKING DOWNSTREAM)

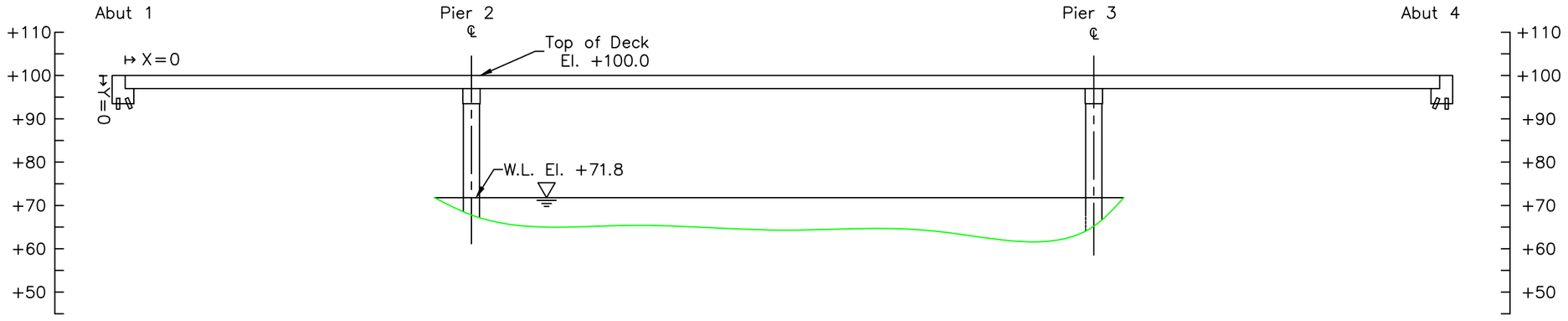

DOWNSTREAM 50 FT
CHANNEL CROSS SECTION
(LOOKING DOWNSTREAM)

PROFILE MEASUREMENTS (FT)		
LOCATION	X	Y
A1	0.0	
1/4	20.0	
1/2	40.0	
3/4	60.0	
P2	80.0	29.5
1/4	116.0	35.2
1/2	151.9	37.8
3/4	187.9	39.5
P3	223.9	36.3
1/4	243.9	
1/2	263.9	
3/4	283.9	
A4	303.9	

Notes:

1. Footing elevations unknown due to unavailable record drawings.
2. No channel report due to construction on the bridge.

LEGEND

- Approximate Channel Bottom – July 2017
- Approximate Channel Bottom – 2012 (No Data)
- Approximate Channel Bottom – 2007 (No Data)
- Timber Debris
- Water Surface
- +450 Elevation (ft)

COLLINS ENGINEERS
124 Venture Court, Ste 10
Lexington, KY 40511
Phone: 859-367-0097
Fax: 859-367-0140

Ohio Department of Transportation, District 9
650 Eastern Avenue
Chillicothe, OH 45601
Phone: 740-773-2691

SR-250 OVER STILLWATER CREEK
STRUCTURE NO. TUS-250-2251L
CROSS SECTIONS
TUSCARAWAS COUNTY, OHIO

CEI PROJECT 55–10356.00
INSPECTED BY: MOR
DRAWN BY: BBM
CHECKED BY: JMJ
DATE: JUL 2017
SHEET NO: 5

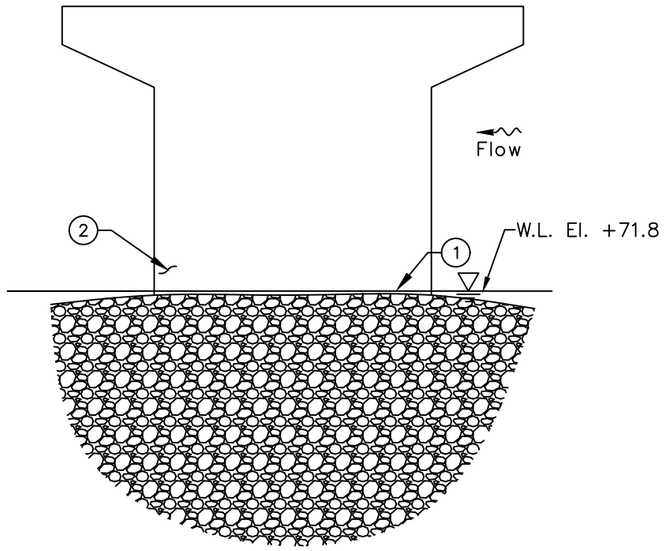

WEST ELEVATION

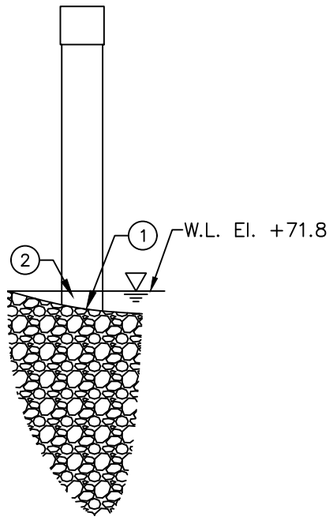

UPSTREAM NOSE

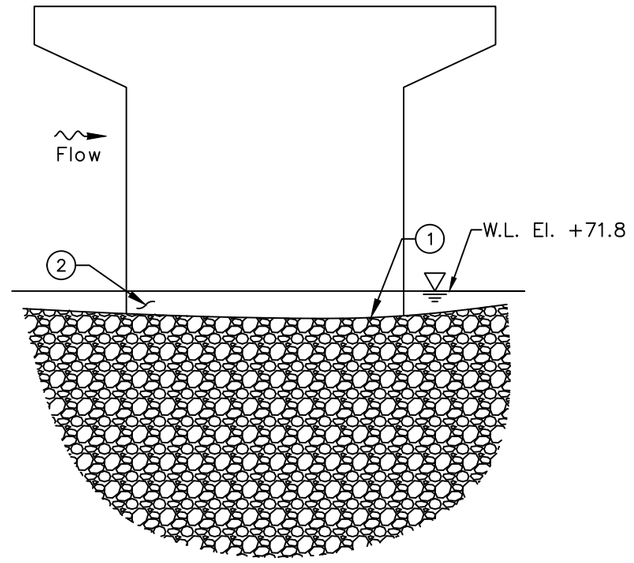

EAST ELEVATION

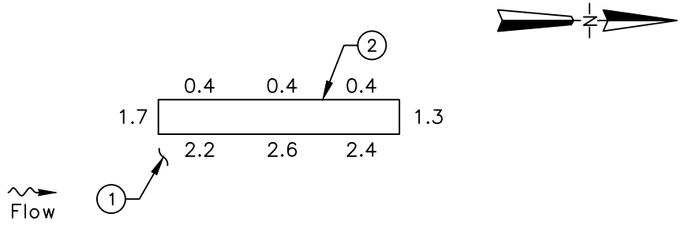

PLAN

INSPECTION NOTES:

1. The channel bottom material consisted of soft clay and silt with approximately 12 in. probe rod penetration.
2. The submerged portions of the pier exhibited light scaling up to 1/16 in. from the channel bottom to 4 ft above the water level.

LEGEND

2.7	Sounding Depth from Waterline (ft)
———	Approximate Channel Bottom – October 2016
	Timber Debris
	Water Surface

COLLINS ENGINEERS
124 Venture Court, Ste 10
Lexington, KY 40511
Phone: 859-367-0097
Fax: 859-367-0140

Ohio Department of Transportation, District 9
650 Eastern Avenue
Chillicothe, OH 45601
Phone: 740-773-2691

SR-250 OVER STILLWATER CREEK
STRUCTURE NO. TUS-250-2251L
PIER 2
TUSCARAWAS COUNTY, OHIO

CEI PROJECT 55–10356.00
INSPECTED BY: MOR
DRAWN BY: BBM
CHECKED BY: JMJ
DATE: JUL 2017
SHEET NO: 6

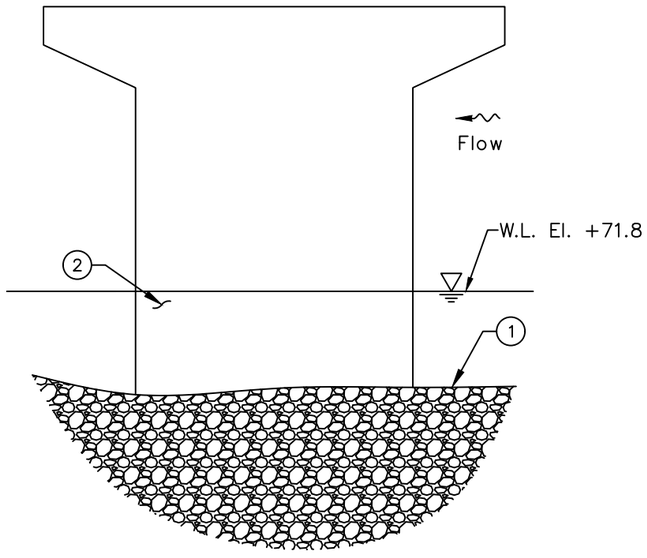

WEST ELEVATION

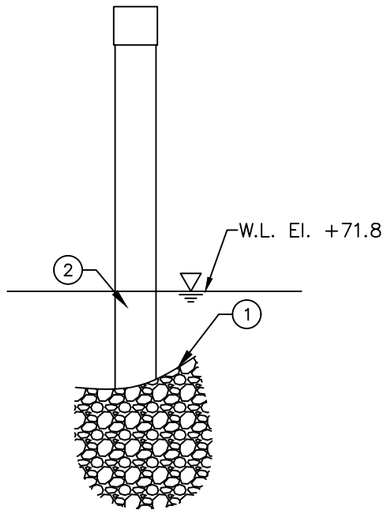

UPSTREAM NOSE

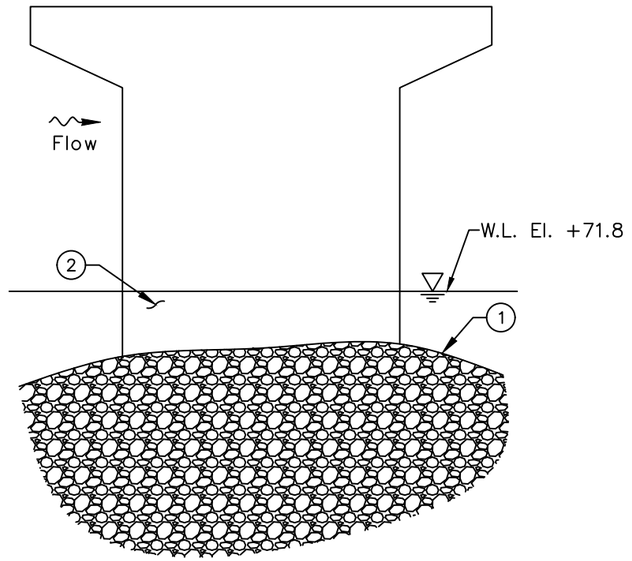

EAST ELEVATION

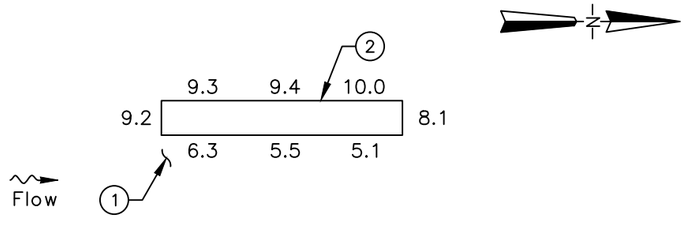

PLAN

INSPECTION NOTES:

1. The channel bottom material consisted of soft clay and silt with approximately 12 in. probe rod penetration.
2. The submerged portions of the pier exhibited light scaling up to 1/16 in. from the channel bottom to 4 ft above the water level.

LEGEND

2.7	Sounding Depth from Waterline (ft)
———	Approximate Channel Bottom – October 2016
	Timber Debris
	Water Surface

COLLINS ENGINEERS
124 Venture Court, Ste 10
Lexington, KY 40511
Phone: 859-367-0097
Fax: 859-367-0140

Ohio Department of Transportation, District 9
650 Eastern Avenue
Chillicothe, OH 45601
Phone: 740-773-2691

SR-250 OVER STILLWATER CREEK
STRUCTURE NO. TUS-250-2251L
PIER 3
TUSCARAWAS COUNTY, OHIO

CEI PROJECT 55–10356.00
INSPECTED BY: MOR
DRAWN BY: BBM
CHECKED BY: JMJ
DATE: JUL 2017
SHEET NO: 7

EXHIBIT 2 – INSPECTION PHOTOGRAPHS



Photograph No. 1: Overall View of Structure No. TUS-250-2251L, Looking South.



Photograph No. 2: Overall View of Structure No. TUS-250-2251L, looking North.



Photograph No. 3: View of the East Embankment Upstream of the Structure, Looking East.



Photograph No. 4: View of the East Embankment of the Structure, Looking East.



Photograph No. 5: View of the East Embankment Downstream of the Structure, Looking East.



Photograph No. 6: View of the West Embankment Downstream of the Structure, Looking West.



Photograph No. 7: View of the West Embankment of the Structure, Looking West.



Photograph No. 8: View of the West Embankment Upstream of the Structure, Looking West.



Photograph No. 9: View of Pier 1 Downstream Nose and East Face, looking Southwest.



Photograph No. 10: View of Pier 1 Upstream Nose and West Face, looking Northeast.



Photograph No. 11: View of Pier 2 Downstream Nose and East Face, looking Southwest.



Photograph No. 12: View of Pier 2 West Face, looking East.



Photograph No. 13: View of Typical Concrete at Waterline, looking East.