



UNDERWATER BRIDGE INSPECTION REPORT

STRUCTURE NO. TUS-416-1105
SR 416 OVER TUSCARAWAS RIVER
TUSCARAWAS COUNTY, OH
DISTRICT 11

September 2017

Prepared for:

STATE OF OHIO DEPARTMENT OF TRANSPORTATION

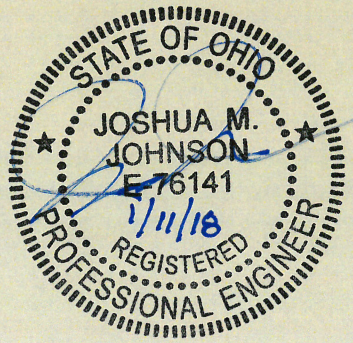

Prepared by:

COLLINS ENGINEERS INC.

124 Venture Court, Suite 10

Lexington, Kentucky 40511

859.367.0097 • www.collinsengr.com

TABLE OF CONTENTS

EXECUTIVE SUMMARY
1.0 INTRODUCTION 1
1.1 Purpose and Scope 1
1.2 General Description of the Structure 1
1.3 Method of Investigation 1
2.0 EXISTING CONDITIONS 2
2.1 General Conditions 2
2.2 Substructure Conditions 3
2.2.1 Abutment 1 3
2.2.2 Pier 2 3
2.2.3 Pier 3 3
2.2.4 Pier 4 3
2.2.3 Pier 5 3
3.0 EVALUATION AND RECOMMENDATIONS 4
EXHIBIT 1 – FIGURES 5
LOCATION MAP
SOUNDING PLAN
UPSTREAM CHANNEL CROSS SECTIONS
CENTERLINE CHANNEL CROSS SECTIONS
DOWNSTREAM CHANNEL CROSS SECTIONS
PIER 1
PIER 2
EXHIBIT 2 – INSPECTION PHOTOGRAPHS 16
Photograph No. 1: Overall View of Structure, Downstream Fascia, Looking West.
Photograph No. 2: Overall View of the Structure, Upstream Fascia, Looking East.
Photograph No. 3: View of South Embankment, Downstream of the Structure, Looking South.
Photograph No. 4: View of Abutment 1, Looking Southeast.
Photograph No. 5: View of Abutment 1, Looking Southeast.
Photograph No. 6: View of the South Embankment, Upstream of the Structure, Looking Southwest.
Photograph No. 7: View of the North Embankment, Upstream of the Structure, Looking North.
Photograph No. 8: View of the North Embankment, at Structure Centerline, Looking Northeast.
Photograph No. 9: View of Pier 5, Looking Northwest.
Photograph No. 10: View of Pier 4, Looking Northwest.

Photograph No. 11: View of Pier 4, Looking Southeast.
Photograph No. 12: View of Pier 3, Looking Northwest.
Photograph No. 13: View of Pier 3, Looking Southeast.
Photograph No. 14: View of Pier 2, Looking Northwest.
Photograph No. 15: View of Timber Debris at Pier 2, Looking Southeast.
Photograph No. 16: View of Typical Concrete at Waterline, Pier 5 Downstream Nose, Looking North.
Photograph No. 17: View of Timber Debris at Pier 2, Upstream Nose, Looking Southwest.
Photograph No. 18: View of Timber Debris at Pier 2, Upstream Nose, Looking Southeast.
Photograph No. 19: View of Construction Joint at Abutment 1, Looking South.
Photograph No. 20: View of Typical Crack at Abutment 1, Looking South.

EXECUTIVE SUMMARY

Project: ODOT District 11 Underwater Bridge Inspections - 2017

Purpose of Project: To perform a detailed visual and tactile underwater investigation of scour critical bridges for District 11 of the Ohio Department of Transportation.

Inspection Team: Team Leader – Matthew Rogers, E.I.T. – Collins Engineers, Inc.
Team Member – Kurt Lingo, E.I.T. – Collins Engineers, Inc.
Team Member – Russell Richards, E.I.T. – Collins Engineers, Inc.

Inspection Date(s): July 19, 2017

Water Visibility:	2 ft	***Water Velocity:***	1 ft/s
Water Temperature:	75 °F	***Weather:***	Sunny – 88 °F
Waterline Elevation:	85.00 ft	***Type of Boat:***	23 ft Carolina Skiff
Coordinates:	40.48097°N, 81.44801°W		
Access Location:	Buehler's Fresh Foods parking lot, 0.5 miles Northwest of TUS-416-1105		
Dive Mode:	Surface Supplied Air		
Waterline Reference:	15.0 feet below the top of Downstream Nose, Pier 1.		
Maximum Depth at SSU:	8.9 ft – Downstream South Quarter Point, Pier 2.		
Shoreline Conditions:	The north and south shorelines consisted of a mild slope with heavy vegetation and large trees.		

Summary of Findings:

- **Abutment 1:**
  - The channel bottom material consisted of sand, gravel, and cobbles with approximately 2 in. probe rod penetration.
  - The submerged portions of the pier were sound and smooth with no defects observed.
- **Pier 2:**
  - The channel bottom material consisted of sand, silt and mud with approximately 18 in. probe rod penetration.
  - The submerged portions of the pier were sound and smooth with no defects observed.
  - Heavy timber debris accumulation consisting of logs up to 12 in. diameter beginning at the upstream nose and extending 50 ft upstream. The timber debris extends from the channel bottom to approximately 1 ft above the waterline.
- **Pier 3:**
  - The channel bottom material consisted of sand, gravel and cobbles with no probe rod penetration.
  - The submerged portions of the pier were sound and smooth with no defects observed.
- **Pier 4:**
  - The channel bottom material consisted of sand and mud with approximately 3 in. probe rod penetration.
  - Light scaling up to 1/8 in. was observed on the submerged portion of the pier.

- Top of footing at 8.9 ft exposed on the south face from mid-point to downstream quarter point up to 2 ft wide.

- **Pier 5:**
  - The channel bottom material consisted of mud and silt with approximately 24 in. probe rod penetration.
  - The submerged portions of the pier were sound and smooth with no defects observed.
  - Refusal point, either top of footing or bedrock. Refusal at 6 ft.

Summary of Recommendations:

- Remove timber debris accumulation at Pier 2.
- Monitor scaling on Pier 4.
- Monitor refusal point on Piers 4 and 5.

Underwater Inspection Coding:

NBI Ratings:

Item	Description	Coding	Condition
60	Substructure	7 – Good Condition	Light Concrete Scaling
61	Channel	5 – Satisfactory Condition	Heavy Timber Debris Accumulation
62	Culvert	N/A	
92B	UW Insp. Frequency	60 Months	
93B	Insp. Date	07 19 17	
113	Scour Critical Bridges	5 – Within Foundation Limits	Stable (Inspector Recommended)

AASHTO National Bridge Element (NBE) Ratings:

Element #	Description	Units	Total	Condition State			
				1	2	3	4
210	Reinforced Concrete Pier Wall	LF	80	60	20	0	0
215	Reinforced Concrete Abutment	LF	40	38	2	0	0
220	Reinforced Concrete Pile Cap / Footing	LF	10	10	0	0	0

Note: Ratings were developed using the FHWA Recording and Coding Guide for the Structure Inventory and Appraisal of the Nation's Bridges. The recommended ratings consider inspected elements located within the waterway and conditions existing below the water surface only. Additional consideration is necessary for the assignment of overall condition ratings for this bridge.

1.0 INTRODUCTION

1.1 Purpose and Scope

This report consists of the results of a detailed underwater investigation performed at the SR 416 Bridge over Tuscarawas River in Tuscarawas County, OH. Collins Engineers, Inc. (Collins) conducted the underwater investigation for the Ohio Department of Transportation (ODOT) on July 19, 2017. The primary purpose of the investigation was as follows:

- Determine the condition of the substructure components located in the water at the time of the inspection from the waterline to the channel bottom.
- Obtain channel bottom depth measurements along the bridge fascias, upstream and downstream of the bridge, and around the submerged substructure units.
- Determine the condition of the shorelines in the vicinity of the structure.
- Obtain photographs of the bridge and any significant defects.

In addition, a brief inspection was made of areas that could be submerged during periods of high water. The following report includes a description of the structure, the method of investigation, a description of existing conditions, an evaluation and recommendations based on the conditions, inspection figures, and photographs.

1.2 General Description of the Structure

Structure No. TUS-416-1105 spans 400 ft, carrying SR 416 over Tuscarawas River and is approximately 62.5 ft wide. The bridge superstructure is constructed of 7 steel multi-beams. The roadway orientation of the longitudinal axis of the bridge is south to north. The substructure units are labeled as Piers 1, 2, 3 and 4. Existing design drawings were not available at the time of the inspection. Refer to Figure 1 in Exhibit 1 for a Location Map of the bridge. Refer to Photographs 1 and 2 in Exhibit 2 for overall views of the bridge.

1.3 Method of Investigation

A detailed field inspection was conducted to determine the physical condition of the submerged bridge substructure units from the waterline to the channel bottom. A brief visual examination of the substructure units above the waterline was also made.

A three-person team consisting of an engineer-diver and team leader (Matthew Rogers, E.I.T.) and two engineer divers (Kurt Lingo, E.I.T. and Russell Richards, E.I.T.) conducted the underwater inspection. The inspection was conducted through wading. During the inspection, the inspectors worked from a boat and a note taker in the boat recorded the inspection notes.

The underwater inspection consisted of a visual and tactile examination of the accessible surfaces of the substructure units from the waterline to the channel bottom with particular attention given to any observed areas of deterioration or apparent distress. Approximately 10 percent of the total area on the underwater surfaces of the substructure units was cleaned so that the condition could be more closely examined. Photographs were taken to document the general conditions and observed deficiencies. The type of channel bottom material, the presence or extent of scour, the presence or extent of riprap, the presence or extent of drift and debris, and the location of any foundation exposure or undermining were noted.

Channel bottom soundings were performed utilizing a telescoping survey rod and digital fathometer. Soundings were collected at quarter points along the bridge centerline as well as 10 feet and 50 feet upstream and downstream of the bridge, parallel with its fascias. Additional soundings were collected adjacent to Piers 2, 3 and 4 and at 10 feet intervals in-line with the piers, upstream and downstream, and the waterline was referenced to a known elevation on the bridge. A sounding plan was developed using the soundings and approximate location of the shorelines. Refer to Figures 2 thru 8 in Exhibit 1 for the sounding plan and channel cross sections that show the channel limits and water depths around the structure.

2.0 EXISTING CONDITIONS

2.1 General Conditions

At the time of the inspection, the waterline of TUS-416-1105 was located approximately 15.0 feet below the Downstream Nose of Pier 1, which corresponds to a waterline elevation of 85.0 ft. During the inspection, the waterway was flowing at approximately 1.0 ft per second. The bridge pier skew was consistent with the channel alignment and does not require attention at this time. The north and south shorelines consisted of a mild slope with heavy vegetation and large trees. Refer to Photographs 3 through 6 in Exhibit 2 for views of the shorelines near the structure.

2.2 Substructure Conditions

2.2.1 Abutment 1

The channel bottom material around Abutment 1 consisted of sand, gravel, and cobbles with approximately 2 in. in probe rod penetration. The submerged portions of the abutment were sound and smooth with no defects observed. Refer to Figure 6 in Exhibit 1 for detailed inspection notes of Abutment 1. Refer to Photographs 7 through 10 in Exhibit 2 for views of Abutment 1 and typical scaling conditions.

2.2.2 Pier 2

The channel bottom material around Pier 2 consisted of sand, silt, and mud with approximately 18 in. probe rod penetration. Heavy timber debris accumulation consisting of logs up to 12 in. in diameter beginning at the upstream nose and extending 50 ft upstream. The timber debris extends from the channel bottom to approximately 1 ft above the waterline. The submerged portions of the pier were sound and smooth with no defects observed. Refer to Figure 7 in Exhibit 1 for detailed inspection notes of Pier 2. Refer to Photographs 11 through 14 in Exhibit 2 for views of Pier 2 and timber debris.

2.2.3 Pier 3

The channel bottom material around Pier 3 consisted of sand, gravel, and cobbles with no probe rod penetration. The submerged portions of the pier were sound and smooth with no defects observed. Refer to Figure 8 in Exhibit 1 for detailed inspection notes of Pier 3. Refer to Photographs 15 and 16 in Exhibit 2 for views of Pier 3.

2.2.4 Pier 4

The channel bottom material around Pier 4 consisted of sand and mud with approximately 3 in. probe rod penetration. The submerged portions of the pier exhibited light scaling up to 1/8 in deep. Top of footing was exposed at 8.9 ft on the south face from mid-point to downstream quarter point up to 2 ft wide. Refer to Figure 9 in Exhibit 1 for detailed inspection notes of Pier 4. Refer to Photographs 17 and 18 in Exhibit 2 for views of Pier 4.

2.2.3 Pier 5

The channel bottom material around Pier 5 consisted of mud and silt with approximately 24 in. probe rod penetration. The submerged portions of the pier were sound and smooth with no defects observed. Refusal

at 6 ft. Refusal point, either at top of footing or bedrock. Refer to Figure 10 in Exhibit 1 for detailed inspection notes of Pier 5. Refer to Photographs 19 and 20 in Exhibit 2 for views of Pier 5 and typical concrete condition at the waterline.

3.0 EVALUATION AND RECOMMENDATIONS

Overall, the inspected substructure piers of Structure No. TUS-416-1105 were in good condition. A comparison of the soundings recorded during the previous inspection on September 22, 2012 and the soundings taken during this inspection revealed no significant change in the channel bottom profile in the vicinity of the structure. Although no channel deficiencies were observed, the channel bottom should continue to be monitored during future underwater inspections to verify that localized scour or overall channel degradation is not occurring and that the pier footings remain adequately embedded in the channel bottom.

The timber debris accumulation at Pier A did not significantly affect the channel flow, and as a result, does not require removal at this time. If the debris accumulation increases in size or density, it may be necessary to remove the debris to reduce excessive lateral loads on the pier, limit further debris accumulation, and reduce the likelihood of channel bottom degradation resulting from obstructed flow.

It is recommended that the submerged substructure units of Structure No. TUS-416-1105 be next inspected underwater at an interval not to exceed 60 months, no later than July 19, 2022.

Respectfully Submitted,
COLLINS ENGINEERS, INC.

Joshua Johnson, P.E.
Project Manager/Team Leader

Originated by:
Matthew Rogers, E.I.T.

EXHIBIT 1 – FIGURES

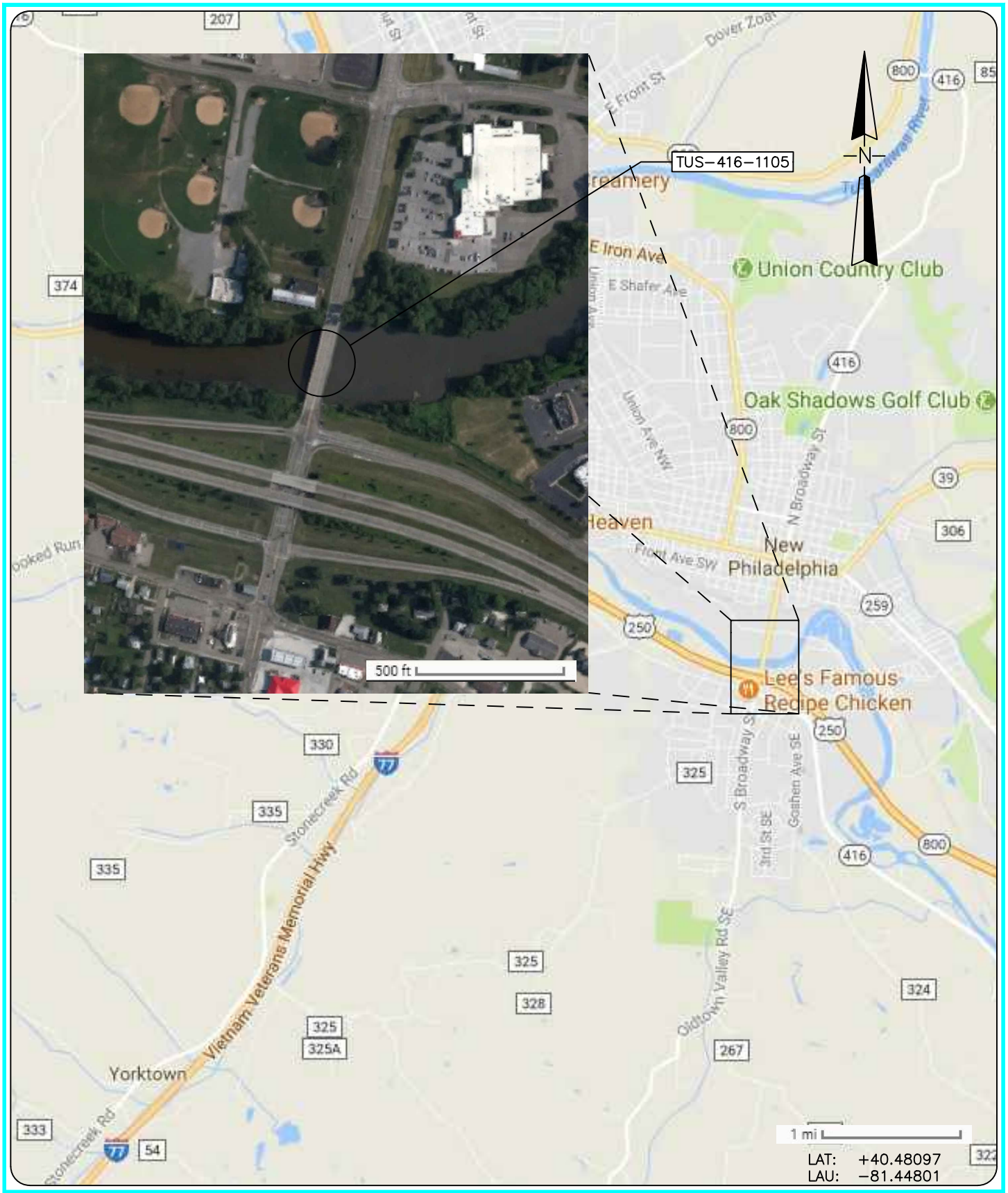

COLLINS ENGINEERS
124 Venture Court, Ste 10
Lexington, KY 40511
Phone: 859-367-0097
Fax: 859-367-0140

Ohio Department of Transportation, District 11
2201 Reiser Ave.
New Philadelphia, OH 44663
Phone: (330) 339-6633

SR 416 OVER TUSCARAWAS RIVER
BRIDGE NO. TUS-416-1105
LOCATION MAP
TUSCARAWAS COUNTY, OHIO

INSPECTED BY: RAR	CEI PROJECT: 55–10356.00
DRAWN BY: BBM	DATE: 19 JUL 2017
CHECKED BY: JMJ	SHEET NO: 1

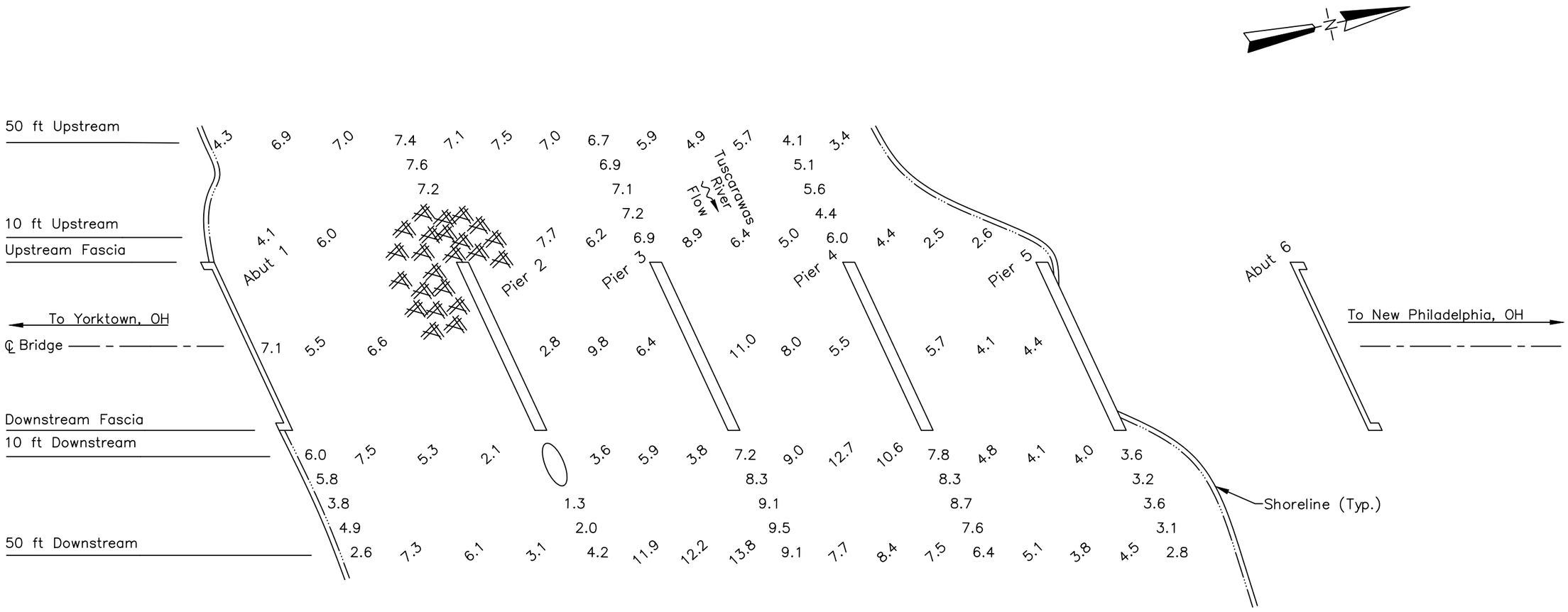

SOUNDING PLAN

GENERAL NOTES:

1. Abutment 1 and Piers 2 through 5 were inspected underwater. Substructure units are labeled according to available record drawings.
2. At the time of inspection on July 19, 2017, the waterline was located approximately 15.0 ft below the top of cap at Pier 2, downstream nose. (Assumed EL. +100.0 ft). This corresponds with a waterline elevation of +85.0 ft.
3. Soundings indicate the water depth at the time of inspection and are measured in feet.
4. Soundings were taken parallel to the bridge at the upstream and downstream fascias, 50 ft upstream and downstream of the fascias, at 1/4 point intervals between the substructure units, and at 10 ft intervals in–line with the piers upstream and downstream up to 50 ft.

LEGEND

2.7 Sounding Depth from Waterline (ft)

Timber Debris

COLLINS ENGINEERS
124 Venture Court, Ste 10
Lexington, KY 40511
Phone: 859-367-0097
Fax: 859-367-0140

Ohio Department of Transportation, District 11
2201 Reiser Ave.
New Philadelphia, OH 44663
Phone: (330) 339-6633

SR 416 OVER TUSCARAWAS RIVER
BRIDGE NO. TUS-416-1105
SOUNDING PLAN
TUSCARAWAS COUNTY, OHIO

CEI PROJECT 55–10356.00
INSPECTED BY: RAR
DRAWN BY: BBM
CHECKED BY: JMJ
DATE: JUL 2017
SHEET NO: 2

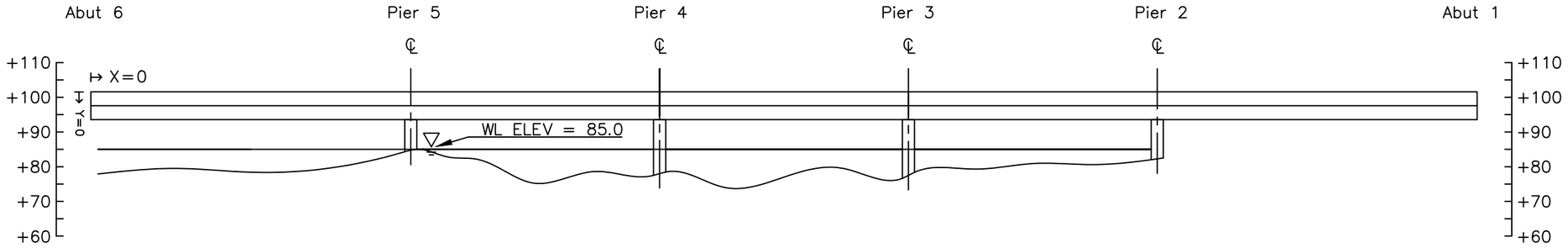

STRUCTURE CENTERLINE
CHANNEL CROSS SECTION
(LOOKING DOWNSTREAM)

Note:

Footing elevations unknown due to unavailable record drawings.

LEGEND

———	Approximate Channel Bottom – July 2017
- - - - - -	Approximate Channel Bottom – September 2012
– – – – –	Approximate Channel Bottom – (No Data)
	Timber Debris
	Water Surface
+450	Elevation (ft)

COLLINS ENGINEERS
124 Venture Court, Ste 10
Lexington, KY 40511
Phone: 859-367-0097
Fax: 859-367-0140

Ohio Department of Transportation, District 11
2201 Reiser Ave.
New Philadelphia, OH 44663
Phone: (330) 339-6633

SR 416 OVER TUSCARAWAS RIVER
BRIDGE NO. TUS-416-1105
CROSS SECTIONS
TUSCARAWAS COUNTY, OHIO

CEI PROJECT	55–10356.00
INSPECTED BY:	RAR
DRAWN BY:	BBM
CHECKED BY:	JMJ
DATE:	JUL 2017
SHEET NO:	3

PROFILE MEASUREMENTS (FT)		
LOCATION	X	Y
A1	0.0	8.8
1/4	14.8	13.3
1/2	29.5	17.4
3/4	44.3	18.3
P2	59.0	19.5
1/4	77.8	19.5
1/2	96.5	19.7
3/4	115.3	19.8
P3	134.0	19.7
1/4	153.0	19.9
1/2	172.0	19.7
3/4	191.0	19.5
P4	210.0	19.1
1/4	228.5	19.0
1/2	247.0	19.0
3/4	265.5	19.0
P5	284.0	18.7
1/4	299.3	18.7
1/2	314.5	18.6
3/4	329.8	18.5
A6	345.0	18.5

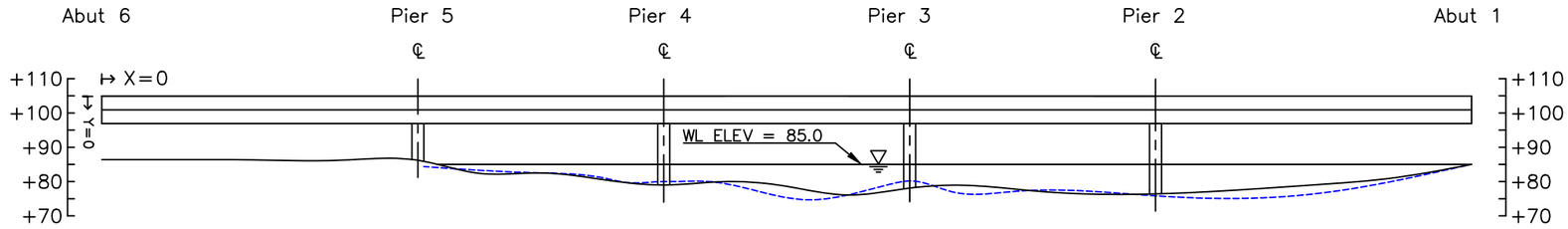

UPSTREAM FASCIA
CHANNEL CROSS SECTION
(LOOKING DOWNSTREAM)

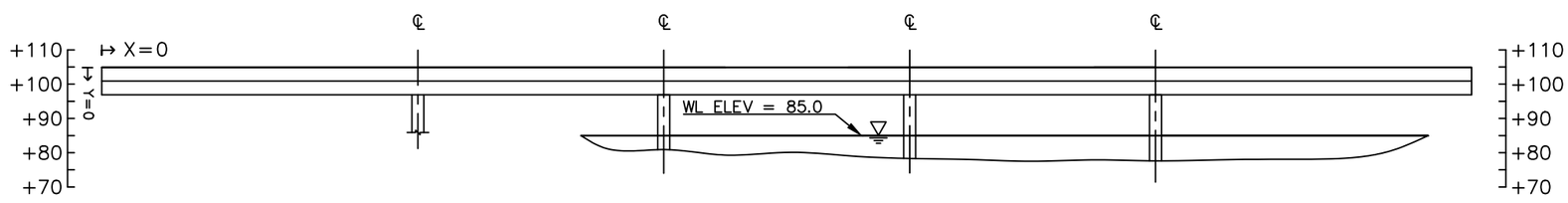

UPSTREAM 50 FT
CHANNEL CROSS SECTION
(LOOKING DOWNSTREAM)

Note:

Footing elevations unknown due to unavailable record drawings.

LEGEND

- Approximate Channel Bottom – July 2017
- Approximate Channel Bottom – September 2012
- Approximate Channel Bottom – (No Data)
- Timber Debris
- Water Surface
- +450 Elevation (ft)

COLLINS ENGINEERS
124 Venture Court, Ste 10
Lexington, KY 40511
Phone: 859-367-0097
Fax: 859-367-0140

Ohio Department of Transportation, District 11
2201 Reiser Ave.
New Philadelphia, OH 44663
Phone: (330) 339-6633

SR 416 OVER TUSCARAWAS RIVER
BRIDGE NO. TUS-416-1105
CROSS SECTIONS
TUSCARAWAS COUNTY, OHIO

CEI PROJECT 55–10356.00
INSPECTED BY: RAR
DRAWN BY: BBM
CHECKED BY: JMJ
DATE: JUL 2017
SHEET NO: 4

PROFILE MEASUREMENTS (FT)		
LOCATION	X	Y
A1	0.0	7.8
1/4	14.8	15.4
1/2	29.5	15.3
3/4	44.3	19.5
P2	59.0	19.5
1/4	77.8	19.4
1/2	96.5	19.5
3/4	115.3	19.5
P3	134.0	19.7
1/4	153.0	19.7
1/2	172.0	19.7
3/4	191.0	19.7
P4	210.0	19.6
1/4	228.5	19.3
1/2	247.0	19.2
3/4	265.5	19.0
P5	284.0	19.1
1/4	299.3	18.9
1/2	314.5	18.7
3/4	329.8	18.5
A6	345.0	18.6

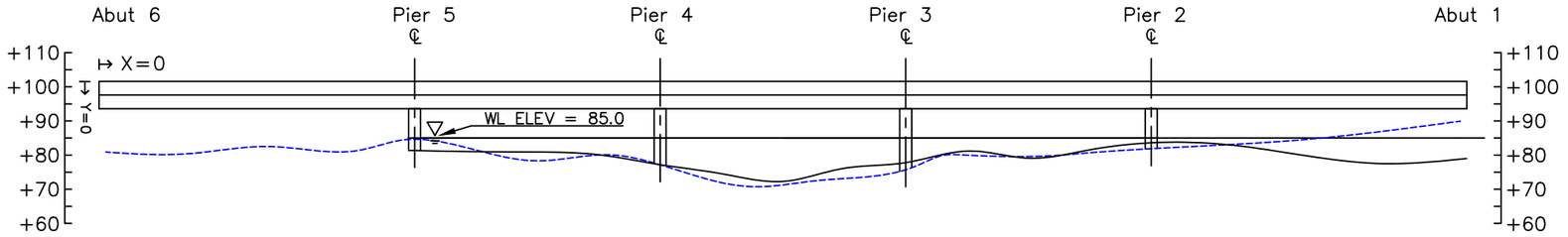

DOWNSTREAM FASCIA
CHANNEL CROSS SECTION
(LOOKING DOWNSTREAM)

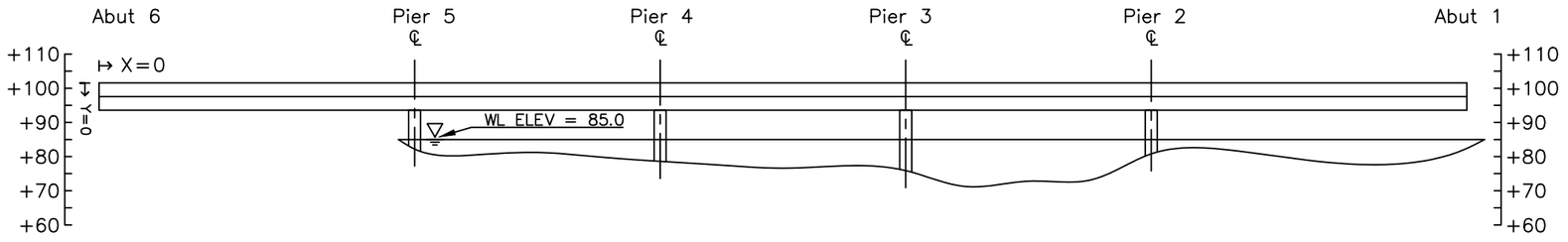

DOWNSTREAM 50 FT
CHANNEL CROSS SECTION
(LOOKING DOWNSTREAM)

LEGEND

- Approximate Channel Bottom – July 2017
- Approximate Channel Bottom – September 2012
- Approximate Channel Bottom – (No Data)
- Timber Debris
- Water Surface
- +450 Elevation (ft)

Note:

Footing elevations unknown due to unavailable record drawings.

COLLINS ENGINEERS
124 Venture Court, Ste 10
Lexington, KY 40511
Phone: 859-367-0097
Fax: 859-367-0140

Ohio Department of Transportation, District 11
2201 Reiser Ave.
New Philadelphia, OH 44663
Phone: (330) 339-6633

SR 416 OVER TUSCARAWAS RIVER
BRIDGE NO. TUS-416-1105
CROSS SECTIONS
TUSCARAWAS COUNTY, OHIO

CEI PROJECT 55–10356.00
INSPECTED BY: RAR
DRAWN BY: BBM
CHECKED BY: JMJ
DATE: JUL 2017
SHEET NO: 5

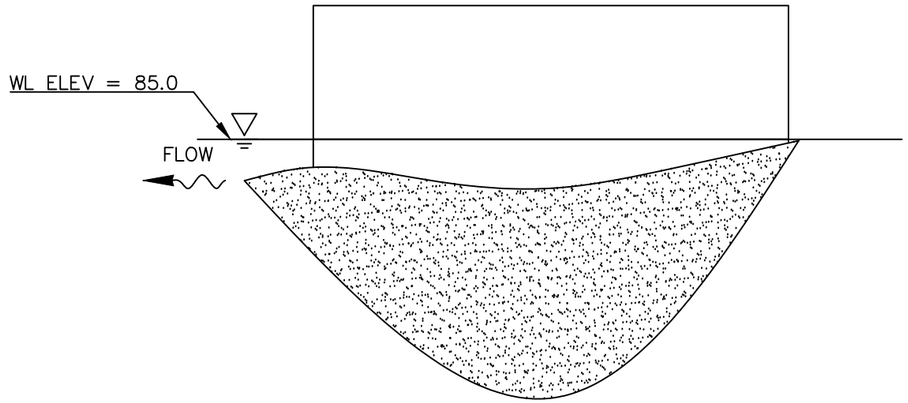

NORTH ELEVATION
(LOOKING SOUTH)

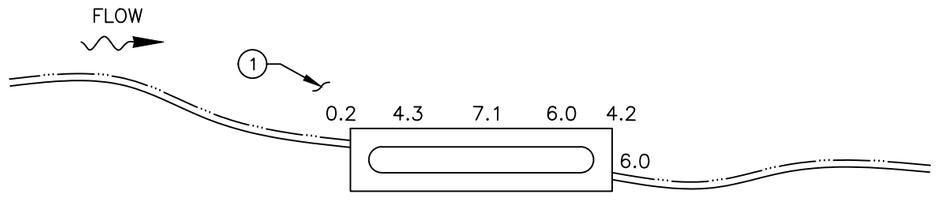

PLAN

INSPECTION NOTES:

1. The channel bottom material consisted of sand, gravel and cobbles with approximately 2 in. probe rod penetration.
2. The submerged portions of the pier were sound and smooth with no defects observed.

LEGEND

2.7	Sounding Depth from Waterline (ft)
———	Approximate Channel Bottom – July 2017
	Timber Debris
	Water Surface

COLLINS ENGINEERS
124 Venture Court, Ste 10
Lexington, KY 40511
Phone: 859-367-0097
Fax: 859-367-0140

Ohio Department of Transportation, District 11
2201 Reiser Ave.
New Philadelphia, OH 44663
Phone: (330) 339-6633

SR 416 OVER TUSCARAWAS RIVER
BRIDGE NO. TUS-416-1105
ABUTMENT 1
TUSCARAWAS COUNTY, OHIO

CEI PROJECT	55–10356.00
INSPECTED BY:	RAR
DRAWN BY:	BBM
CHECKED BY:	JMJ
DATE:	JUL 2017
SHEET NO:	6

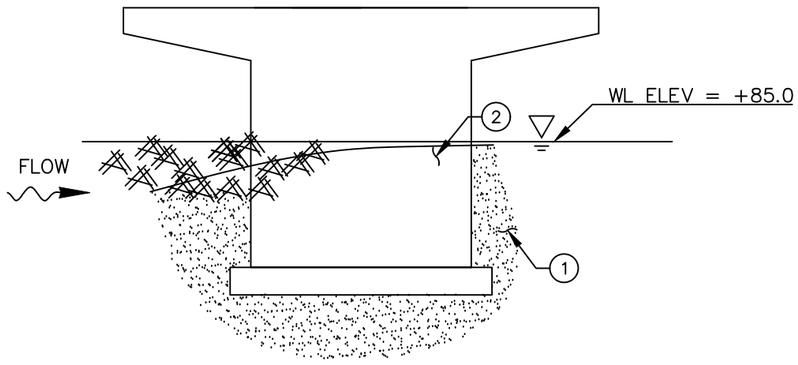

SOUTH ELEVATION
(LOOKING NORTH)

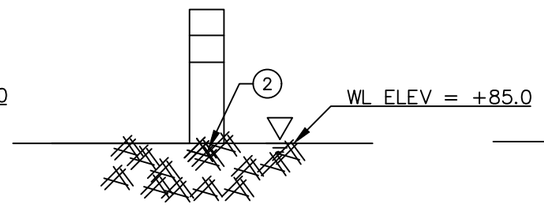

UPSTREAM ELEVATION
(LOOKING DOWNSTREAM)

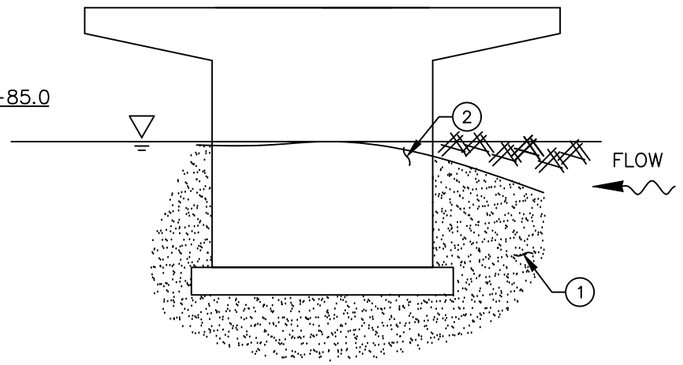

NORTH ELEVATION
(LOOKING SOUTH)

PLAN



INSPECTION NOTES:

1. The channel bottom material consisted of sand, silt and mud with approximately 18 in. probe rod penetration.
2. The submerged portions of the pier were sound and smooth with no defects observed.
3. Heavy timber debris accumulation consisting of logs up to 12 in. in diameter beginning at the upstream nose and extending 50 ft upstream. The timber debris extends from the channel bottom to approximately 1 ft above the waterline.

LEGEND

2.7	Sounding Depth from Waterline (ft)
———	Approximate Channel Bottom – July 2017
	Timber Debris
	Water Surface

COLLINS ENGINEERS
124 Venture Court, Ste 10
Lexington, KY 40511
Phone: 859-367-0097
Fax: 859-367-0140

Ohio Department of Transportation, District 11
2201 Reiser Ave.
New Philadelphia, OH 44663
Phone: (330) 339-6633

SR 416 OVER TUSCARAWAS RIVER
BRIDGE NO. TUS-416-1105
PIER 2
TUSCARAWAS COUNTY, OHIO

CEI PROJECT	55–10356.00
INSPECTED BY:	RAR
DRAWN BY:	BBM
CHECKED BY:	JMJ
DATE:	JUL 2017
SHEET NO:	7

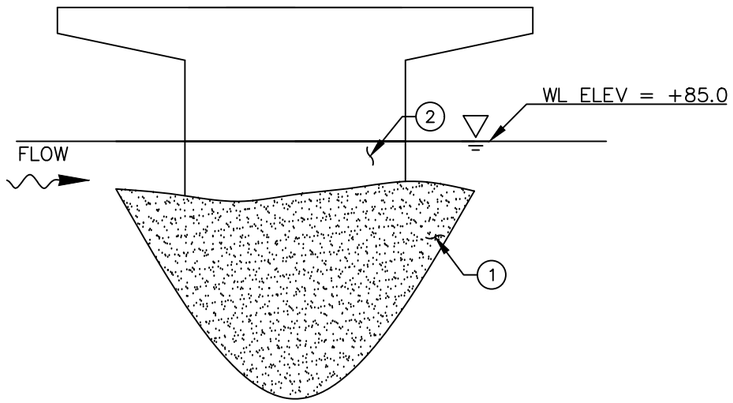

SOUTH ELEVATION
(LOOKING NORTH)

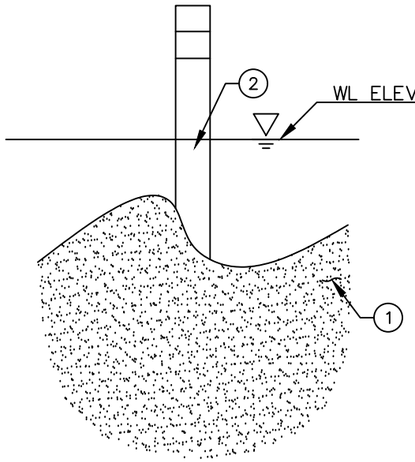

UPSTREAM ELEVATION
(LOOKING DOWNSTREAM)

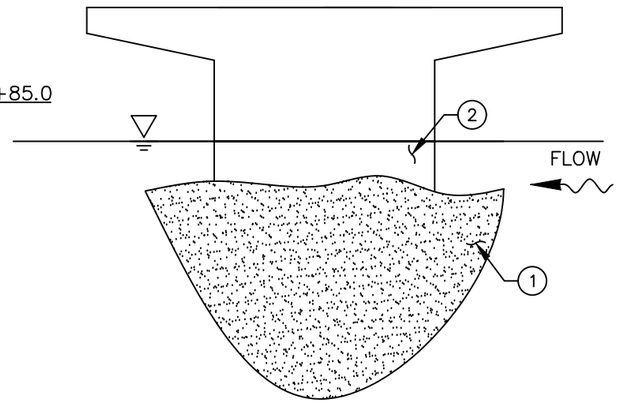

NORTH ELEVATION
(LOOKING SOUTH)

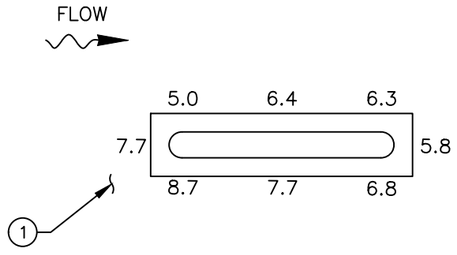

PLAN



INSPECTION NOTES:

1. The channel bottom material consisted of sand, gravel and cobbles with no probe rod penetration.
2. The submerged portions of the pier were sound and smooth with no defects observed.

LEGEND

2.7	Sounding Depth from Waterline (ft)
———	Approximate Channel Bottom – July 2017
	Timber Debris
	Water Surface

COLLINS ENGINEERS
124 Venture Court, Ste 10
Lexington, KY 40511
Phone: 859-367-0097
Fax: 859-367-0140

Ohio Department of Transportation, District 11
2201 Reiser Ave.
New Philadelphia, OH 44663
Phone: (330) 339-6633

SR 416 OVER TUSCARAWAS RIVER
BRIDGE NO. TUS-416-1105
PIER 3
TUSCARAWAS COUNTY, OHIO

CEI PROJECT	55–10356.00
INSPECTED BY:	RAR
DRAWN BY:	BBM
CHECKED BY:	JMJ
DATE:	JUL 2017
SHEET NO:	8

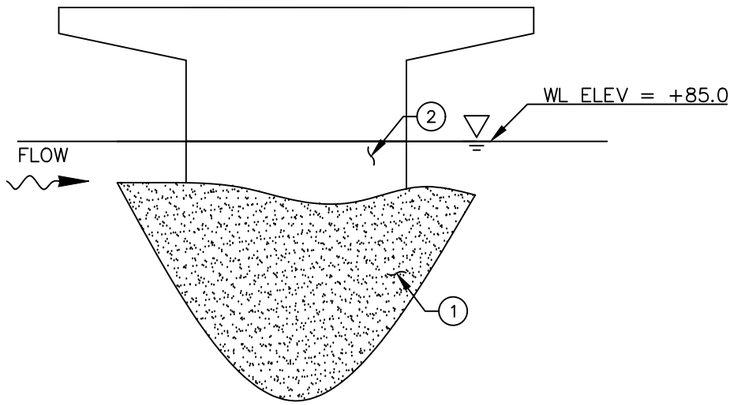

SOUTH ELEVATION
(LOOKING NORTH)

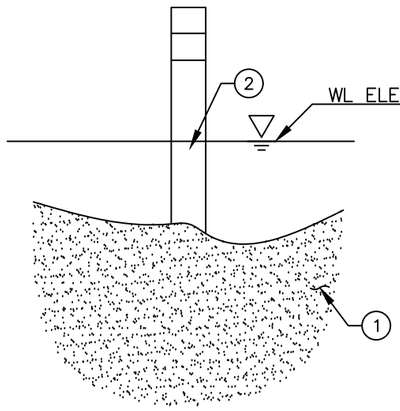

UPSTREAM ELEVATION
(LOOKING DOWNSTREAM)

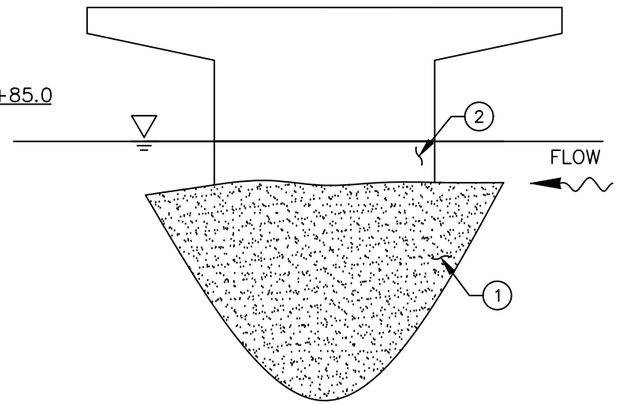

NORTH ELEVATION
(LOOKING SOUTH)

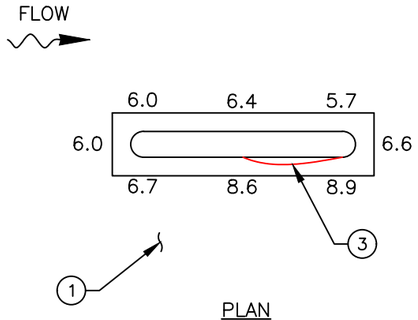

PLAN



INSPECTION NOTES:

1. The channel bottom material consisted of sand and mud with approximately 3 in. probe rod penetration.
2. Light scaling up to 1/8 in. was observed on the submerged portion of the pier.
3. Top of footing at 8.9 ft exposed on the south face from mid–point to downstream quarter point up to 2 ft wide.

LEGEND

2.7	Sounding Depth from Waterline (ft)
———	Approximate Channel Bottom – July 2017
	Timber Debris
	Water Surface

COLLINS ENGINEERS
124 Venture Court, Ste 10
Lexington, KY 40511
Phone: 859-367-0097
Fax: 859-367-0140

Ohio Department of Transportation, District 11
2201 Reiser Ave.
New Philadelphia, OH 44663
Phone: (330) 339-6633

SR 416 OVER TUSCARAWAS RIVER
BRIDGE NO. TUS-416-1105
PIER 4
TUSCARAWAS COUNTY, OHIO

CEI PROJECT	55–10356.00
INSPECTED BY:	RAR
DRAWN BY:	BBM
CHECKED BY:	JMJ
DATE:	JUL 2017
SHEET NO:	9

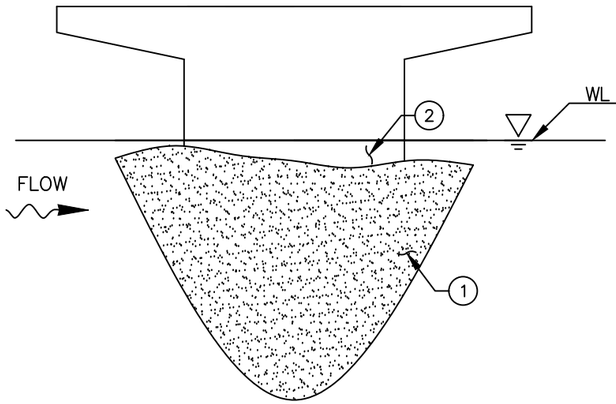

SOUTH ELEVATION
(LOOKING NORTH)

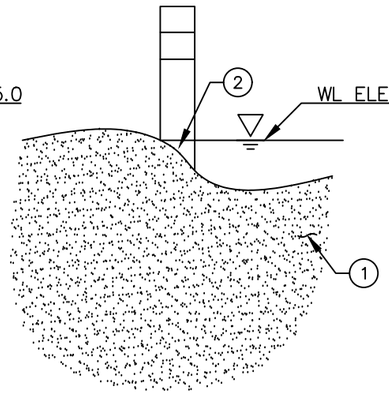

UPSTREAM ELEVATION
(LOOKING DOWNSTREAM)

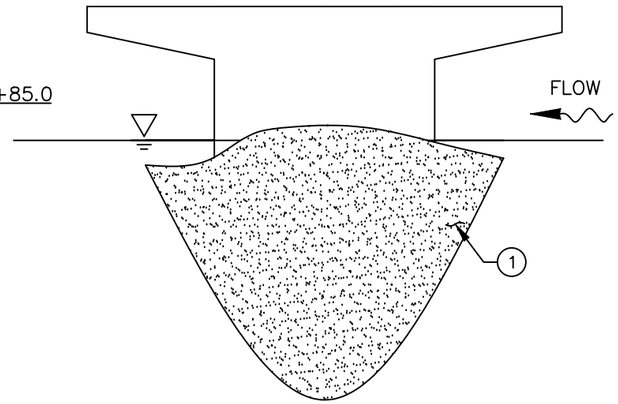

NORTH ELEVATION
(LOOKING SOUTH)

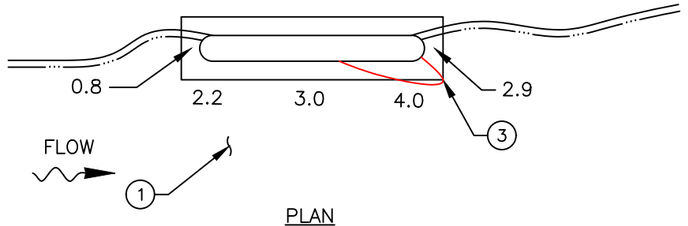

PLAN



INSPECTION NOTES:

1. The channel bottom material consisted of mud and silt with approximately 24 in. probe rod penetration.
2. The submerged portions of the pier were sound and smooth with no defects observed.
3. Refusal point, either top of footing or bedrock. Refusal at 6 ft.

LEGEND

2.7	Sounding Depth from Waterline (ft)
———	Approximate Channel Bottom – July 2017
	Timber Debris
	Water Surface

COLLINS ENGINEERS
124 Venture Court, Ste 10
Lexington, KY 40511
Phone: 859-367-0097
Fax: 859-367-0140

Ohio Department of Transportation, District 11
2201 Reiser Ave.
New Philadelphia, OH 44663
Phone: (330) 339-6633

SR 416 OVER TUSCARAWAS RIVER
BRIDGE NO. TUS-416-1105
PIER 5
TUSCARAWAS COUNTY, OHIO

CEI PROJECT	55–10356.00
INSPECTED BY:	RAR
DRAWN BY:	BBM
CHECKED BY:	JMJ
DATE:	JUL 2017
SHEET NO:	10

EXHIBIT 2 – INSPECTION PHOTOGRAPHS



Photograph No. 1: Overall View of Structure, Downstream Fascia, Looking West.



Photograph No. 2: Overall View of the Structure, Upstream Fascia, Looking East.



Photograph No. 3: View of South Embankment, Downstream of the Structure, Looking South.



Photograph No. 4: View of the South Embankment, Upstream of the Structure, Looking Southwest.



Photograph No. 5: View of the North Embankment, Upstream of the Structure, Looking North.



Photograph No. 6: View of the North Embankment, at Structure Centerline, Looking Northeast.



Photograph No. 7: View of Abutment 1, Looking South.



Photograph No. 8: View of Abutment 1, Looking Southeast.



Photograph No. 9: View of Construction Joint at Abutment 1, Looking South.

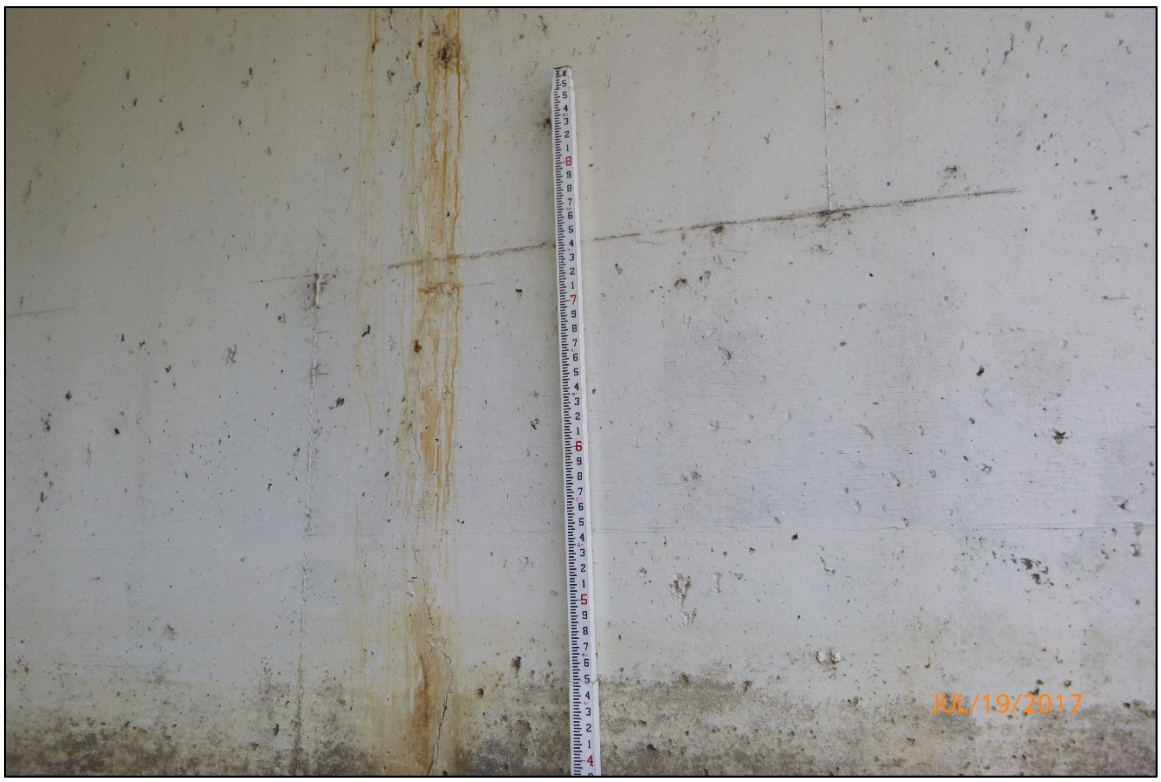

Photograph No. 10: View of Typical Crack at Abutment 1, Looking South.



Photograph No. 11: View of Pier 2, Looking Northwest.



Photograph No. 12: View of Timber Debris at Pier 2, Looking Southeast.



Photograph No. 13: View of Timber Debris at Pier 2, Upstream Nose, Looking Southwest.



Photograph No. 14: View of Timber Debris at Pier 2, Upstream Nose, Looking Southeast.



Photograph No. 15: View of Pier 3, Looking Northwest.



Photograph No. 16: View of Pier 3, Looking Southeast.



Photograph No. 17: View of Pier 4, Looking Northwest.



Photograph No. 18: View of Pier 4, Looking Southeast.



Photograph No. 19: View of Pier 5, Looking Northwest.



Photograph No. 20: View of Typical Concrete at Waterline, Pier 5 Downstream Nose, Looking North.