



UNDERWATER BRIDGE INSPECTION REPORT

STRUCTURE NO. TUS-77-3495 NB
I-77 OVER TUSCARAWAS RIVER
TUSCARAWAS COUNTY, OH
DISTRICT 11

July 2017

Prepared for:

STATE OF OHIO DEPARTMENT OF TRANSPORTATION

STATE OF OHIO
JOSHUA M. JOHNSON
E-76141
1/11/18
REGISTERED PROFESSIONAL ENGINEER

Prepared by:

COLLINS ENGINEERS INC.

124 Venture Court, Suite 10

Lexington, Kentucky 40511

859.367.0097 • www.collinsengr.com

TABLE OF CONTENTS

EXECUTIVE SUMMARY
1.0 INTRODUCTION 1
1.1 Purpose and Scope 1
1.2 General Description of the Structure 1
1.3 Method of Investigation 1
2.0 EXISTING CONDITIONS 2
2.1 General Conditions 2
2.2 Substructure Conditions 3
2.2.1 Pier 2 3
2.2.2 Pier 3 3
3.0 EVALUATION AND RECOMMENDATIONS 4
EXHIBIT 1 – FIGURES 5
LOCATION MAP
SOUNDING PLAN
UPSTREAM CHANNEL CROSS SECTIONS
CENTERLINE CHANNEL CROSS SECTIONS
DOWNSTREAM CHANNEL CROSS SECTIONS
PIER 2
PIER 3
EXHIBIT 2 – INSPECTION PHOTOGRAPHS 13
Photograph No. 1: Overall View of Structure No. TUS-77-3495 NB, Downstream Fascia, Looking West.
Photograph No. 2: View of South Embankment, Downstream of Structure, Looking South.
Photograph No. 3: View of South Embankment, North Bound, Looking Southeast.
Photograph No. 4: View of South Embankment, Upstream of Structure, Looking South.
Photograph No. 10: View of the North Embankment, Upstream of Structure, Looking Northeast.
Photograph No. 11: View of the North Embankment at the Structure, Looking Northeast.
Photograph No. 12: View of the North Embankment, Downstream of Structure, Looking North.
Photograph No. 13: View of Pier 1, Looking South.
Photograph No. 14: View of Pier 1, Looking South.
Photograph No. 15: View of Pier 1, Looking Northeast.
Photograph No. 16: View of Pier 2, Looking Southwest.
Photograph No. 17: View of Pier 2, Looking Northeast.

Photograph No. 18: View of Typical Concrete at Waterline, Upstream Nose of Pier 2, Looking East.

EXECUTIVE SUMMARY

Project: ODOT District 11 Underwater Bridge Inspections - 2017

Purpose of Project: To perform a detailed visual and tactile underwater investigation of scour critical bridges for District 11 of the Ohio Department of Transportation.

Inspection Team: Team Leader – Matthew Rogers, E.I.T. – Collins Engineers, Inc.
Team Member – Kurt Lingo, E.I.T. – Collins Engineers, Inc.
Team Member – Russell Richards, E.I.T. – Collins Engineers, Inc.

Inspection Date(s): July 18, 2017

Water Visibility:	1 ft	***Water Velocity:***	2 ft/s
Water Temperature:	70 °F	***Weather:***	Sunny – 75 °F
Waterline Elevation:	83.2 ft	***Type of Boat:***	14 ft Jon Boat
Coordinates:	40.66302°N, 81.43829°W		
Access Location:	Downstream at TUS-212-0343		
Dive Mode:	Wading		

Waterline Reference: 16.8 ft below the bottom edge of the hammer at the downstream nose of Pier 1.

Maximum Depth at SSU: 3.9 ft – Upstream Nose of Pier 3

Shoreline Conditions: The north and south shorelines consisted of moderately to heavily vegetated mild slopes with minor erosion and multiple trees leaning toward the channel.

Summary of Findings:

- **Pier 2:**
  - Typical concrete is sound and smooth with random areas of insignificant impact spalls (1/2 in. penetration).
  - Channel bottom at Pier 2 is typical mud with up to 18 in. penetration.
- **Pier 3:**
  - Typical concrete is sound and smooth with random areas of insignificant impact spalls. (1/2 in. penetration).
  - Pier 3 typical minor gravel and sand with 2 in. penetration with timber debris.

Summary of Recommendations:

- Monitor timber debris accumulation at Pier 2 and 3.
- Monitor scaling on Piers 2 and 3.

Underwater Inspection Coding:

NBI Ratings:

Item	Description	Coding	Condition
60	Substructure	7– Good Condition	Light Concrete Scaling
61	Channel	7– Good Condition	Minor Erosion
62	Culvert	N/A	
92B	UW Insp. Frequency	60 Months	
93B	Insp. Date	07/18/17	
113	Scour Critical Bridges	8 – Above Foundation Limits	Stable

AASHTO National Bridge Element (NBE) Ratings:

Element #	Description	Units	Total	Condition State			
				1	2	3	4
210	Reinforced Concrete Pier Wall	LF	40	40	0	0	0

Note: Ratings were developed using the FHWA Recording and Coding Guide for the Structure Inventory and Appraisal of the Nation's Bridges. The recommended ratings consider inspected elements located within the waterway and conditions existing below the water surface only. Additional consideration is necessary for the assignment of overall condition ratings for this bridge.

1.0 INTRODUCTION

1.1 Purpose and Scope

This report consists of the results of a detailed underwater investigation performed at the I-77 Bridge over Tuscarawas River in Tuscarawas County, OH. Collins Engineers, Inc. (Collins) conducted the underwater investigation for District 11 of the Ohio Department of Transportation (ODOT) on July 18, 2017. The primary purpose of the investigation was as follows:

- Determine the condition of the substructure components located in the water at the time of the inspection from the waterline to the channel bottom.
- Obtain channel bottom depth measurements along the bridge fascias, upstream and downstream of the bridge, and around the submerged substructure units.
- Determine the condition of the shorelines in the vicinity of the structure.
- Obtain photographs of the bridge and any significant defects.

In addition, a brief inspection was made of areas that could be submerged during periods of high water. The following report includes a description of the structure, the method of investigation, a description of existing conditions, an evaluation and recommendations based on the conditions, inspection figures, and photographs.

1.2 General Description of the Structure

Structure No. TUS-77-3495 NB spans 238.42 ft, carrying I-77 over Tuscarawas River and is approximately 41.7 ft wide. The bridge superstructure is constructed of three steel multi-beam spans. The roadway orientation of the longitudinal axis of the bridge is south to north. The substructure units are labeled as Abutments 1 and 4 and Piers 2 and 3 and Piers 1 through 2. Existing design drawings were not available at the time of the inspection. Refer to Figure 1 in Exhibit 1 for a Location Map of the bridge. Refer to Photograph 1 in Exhibit 2 for an overall view of the bridge.

1.3 Method of Investigation

A detailed field inspection was conducted to determine the physical condition of the submerged bridge substructure units from the waterline to the channel bottom. A brief visual examination of the substructure units above the waterline was also made.

A three-person team consisting of an engineer-diver and team leader (Matthew Rogers, E.I.T.) and two engineer divers (Kurt Lingo, E.I.T. and Russell Richards, E.I.T.) conducted the underwater inspection. The inspection was conducted through wading. During the inspection, the inspectors worked from a boat and a note taker in the boat recorded the inspection notes.

The underwater inspection consisted of a visual and tactile examination of the accessible surfaces of the substructure units from the waterline to the channel bottom with particular attention given to any observed areas of deterioration or apparent distress. Approximately 10 percent of the total area on the underwater surfaces of the substructure units was cleaned so that the condition could be more closely examined. Photographs were taken to document the general conditions and observed deficiencies. Underwater Photographs could not be obtained due to poor water conditions. The type of channel bottom material, the presence or extent of scour, the presence or extent of riprap, the presence or extent of drift and debris, and the location of any foundation exposure or undermining were noted.

Channel bottom soundings were performed utilizing a telescoping survey rod and digital fathometer. Soundings were collected at quarter points along the bridge centerline as well as 10 feet and 50 feet upstream and downstream of the bridge, parallel with its fascias. Additional soundings were collected adjacent to Piers 2 and 3 and at 10 feet intervals in-line with the piers, upstream and downstream, and the waterline was referenced to a known elevation on the bridge. A sounding plan was developed using the soundings and approximate location of the shorelines. Refer to Figures 1 through 4 in Exhibit 1 for the sounding plan and channel cross sections that show the channel limits and water depths around the structure.

2.0 EXISTING CONDITIONS

2.1 General Conditions

At the time of the inspection, the waterline of TUS-77-3495 NB was located approximately 16.8 ft below the bottom edge of the hammer at the downstream nose of Pier 1, which corresponds to an assumed waterline elevation of 83.2 ft. During the inspection, the waterway was flowing at approximately 2 ft per second. The bridge pier skew was consistent with the channel alignment and does not require attention at this time. The north and south shorelines consisted of moderately to heavily vegetated mild slopes with minor erosion and multiple trees leaning toward the channel. Refer to Photographs 2 through 7 in Exhibit 2 for views of the shorelines near the structure.

2.2 Substructure Conditions

2.2.1 Pier 2

The channel bottom material around Pier 2 is typical mud with up to 18 in. penetration. Typical concrete is sound and smooth with random areas of insignificant impact spalls (1/2 in. penetration). Refer to Figure 5 in Exhibit 1 for detailed inspection notes of Pier 2. Refer to Photographs 8 through 10 in Exhibit 2 for views of Pier 2.

2.2.2 Pier 3

The channel bottom material around Pier 3 is typical minor gravel and sand with 2 in. penetration with timber debris. Typical concrete is sound and smooth with random areas of insignificant impact spalls (1/2 in. penetration). Refer to Figure 6 in Exhibit 1 for detailed inspection notes of Pier 3. Refer to Photographs 11 through 13 in Exhibit 2 for views of Pier 3 and typical concrete condition at the waterline.

3.0 EVALUATION AND RECOMMENDATIONS

Overall, the inspected substructure piers of Structure No. TUS-77-3495 NB were in good condition. A comparison of the soundings recorded during the previous inspection on September 24, 2012 and the soundings taken during this inspection revealed no significant change in the channel bottom profile in the vicinity of the structure. Although no channel deficiencies were observed, the channel bottom should continue to be monitored during future underwater inspections to verify that localized scour or overall channel degradation is not occurring and that the pier footings remain adequately embedded in the channel bottom.

It is recommended that the submerged substructure units of Structure No. TUS-77-3495 NB be next inspected underwater at an interval not to exceed 60 months, no later than July 18, 2022.

Respectfully Submitted,
COLLINS ENGINEERS, INC.

Joshua Johnson, P.E.
Project Manager/Team Leader

Originated by:
Matthew Rogers, E.I.T.

EXHIBIT 1 – FIGURES

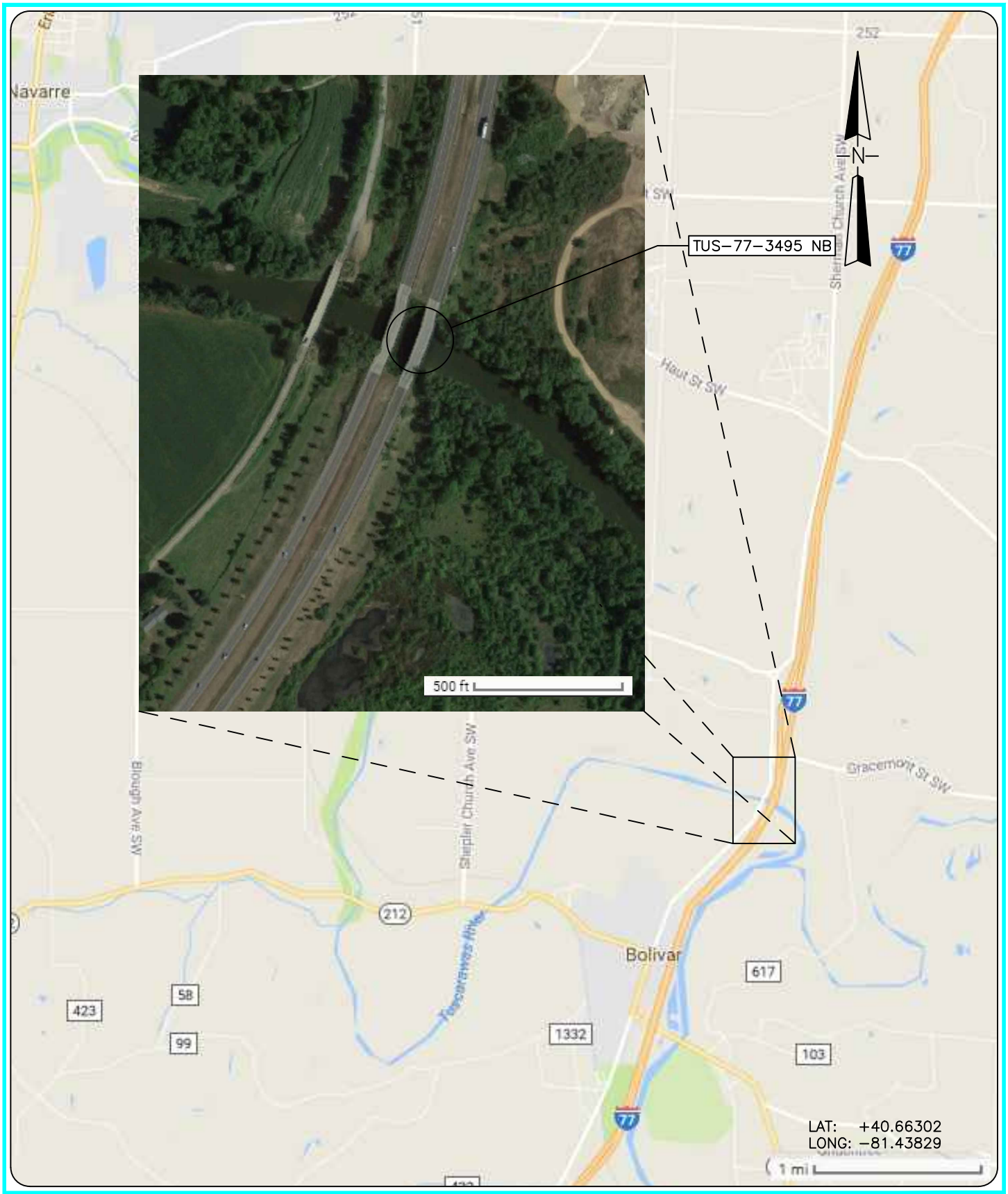

COLLINS ENGINEERS
124 Venture Court, Ste 10
Lexington, KY 40511
Phone: 859-367-0097
Fax: 859-367-0140

Ohio Department of Transportation, District 11
2201 Reiser Avenue
New Philadelphia, OH 44663
Phone: 330-339-6633

I-77 OVER TUSCARAWAS RIVER
STRUCTURE NO. TUS-77-3495 NB
LOCATION MAP

TUSCARAWAS COUNTY, OHIO

INSPECTED BY: MOR	CEI PROJECT: 55–10356.00
DRAWN BY: KMM	DATE: 18 JUL 2017
CHECKED BY: JMJ	SHEET NO: 1

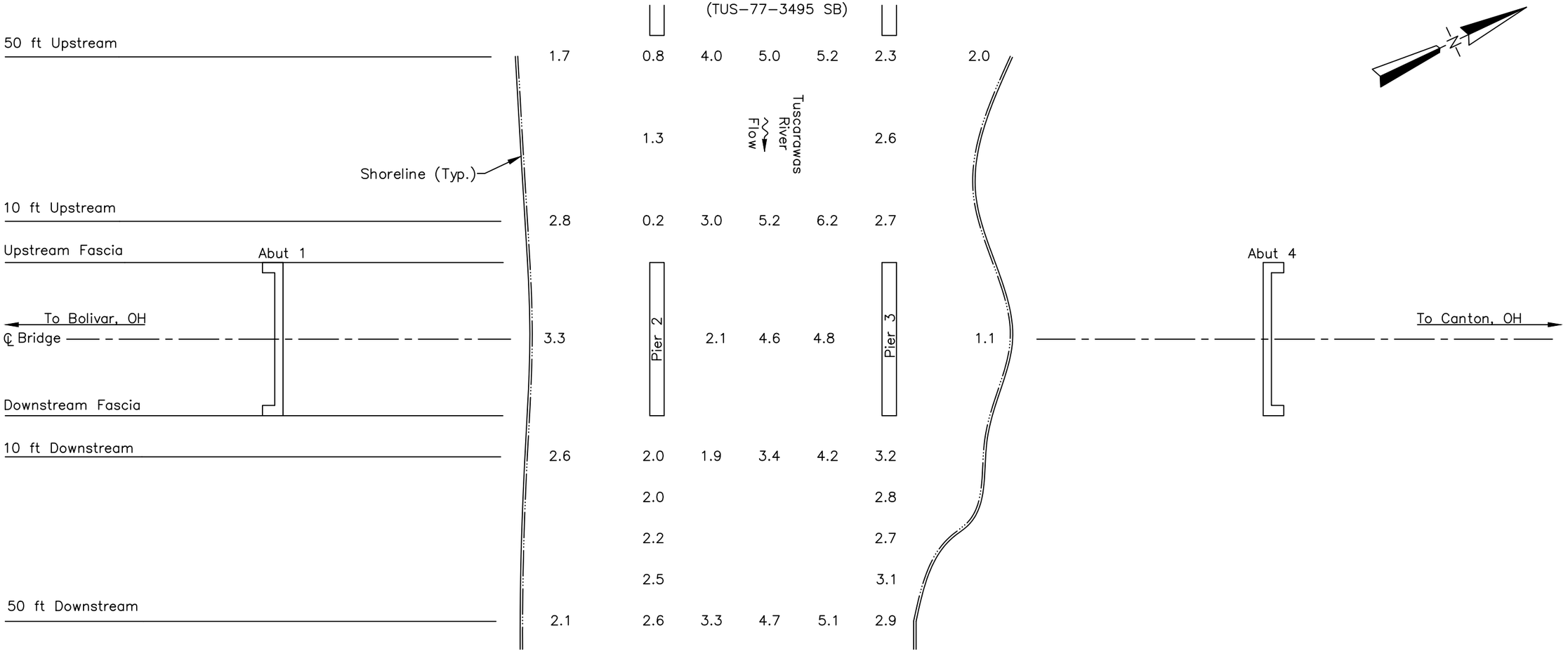

SOUNDING PLAN

GENERAL NOTES:

1. Piers 2 and 3 were inspected underwater. Substructure units are labeled according to available record drawings.
2. At the time of inspection on July 18, 2017, the waterline was located approximately 16.8 ft below the bottom edge of hammer at downstream nose of Pier 2 (Assumed EL. +100.0 ft). This corresponds with a waterline elevation of +83.2 ft.
3. Soundings indicate the water depth at the time of inspection and are measured in feet.
4. Soundings were taken parallel to the bridge at the upstream and downstream fascias, 50 ft upstream and downstream of the fascias, at 1/4 point intervals between the substructure units, and at 10 ft intervals in–line with the piers upstream and downstream up to 50 ft.

LEGEND

2.7 Sounding Depth from Waterline (ft)

Timber Debris

COLLINS ENGINEERS
124 Venture Court, Ste 10
Lexington, KY 40511
Phone: 859-367-0097
Fax: 859-367-0140

Ohio Department of Transportation, District 11
2201 Reiser Avenue
New Philadelphia, OH 44663
Phone: 330-339-6633

I-77 OVER TUSCARAWAS RIVER
STRUCTURE NO. TUS-77-3495 NB
SOUNDING PLAN
PIKE COUNTY, OHIO

CEI PROJECT 55–10356.00
INSPECTED BY: MOR
DRAWN BY: KMM
CHECKED BY: JMJ
DATE: JUN 2017
SHEET NO: 2

PROFILE MEASUREMENTS (FT)		
LOCATION	X	Y
A1	0.0	9.2
1/4	18.0	21.9
1/2	36.0	28.9
3/4	54.0	34.0
P2	72.0	33.8
1/4	94.5	33.0
1/2	117.0	32.1
3/4	139.5	31.5
P3	162.0	31.0
1/4	180.0	30.4
1/2	198.0	25.2
3/4	216.0	16.4
A4	234.0	9.7

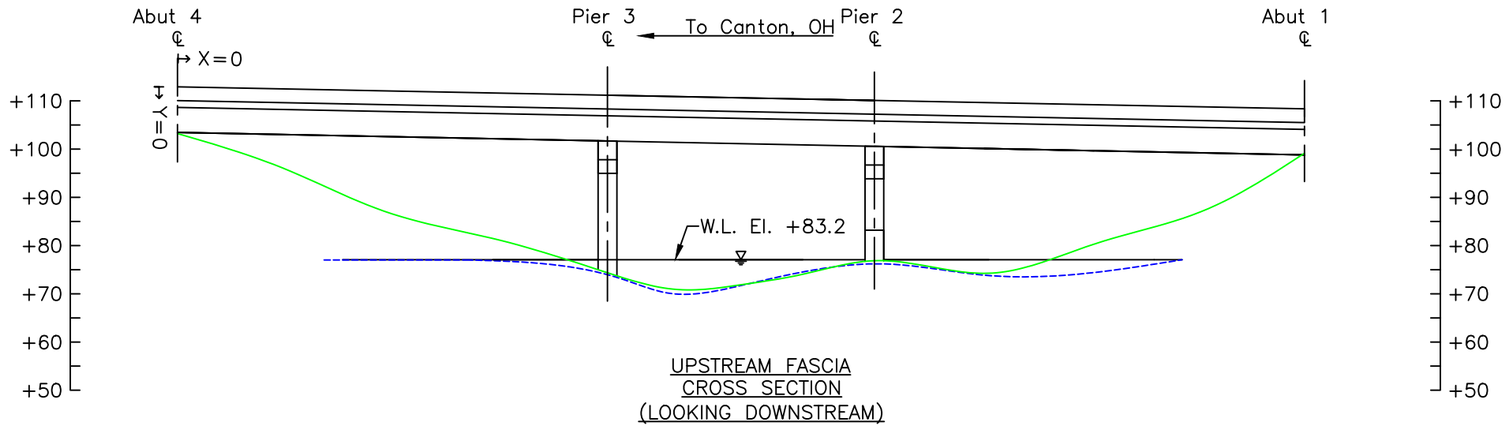

UPSTREAM FASCIA
CROSS SECTION
(LOOKING DOWNSTREAM)

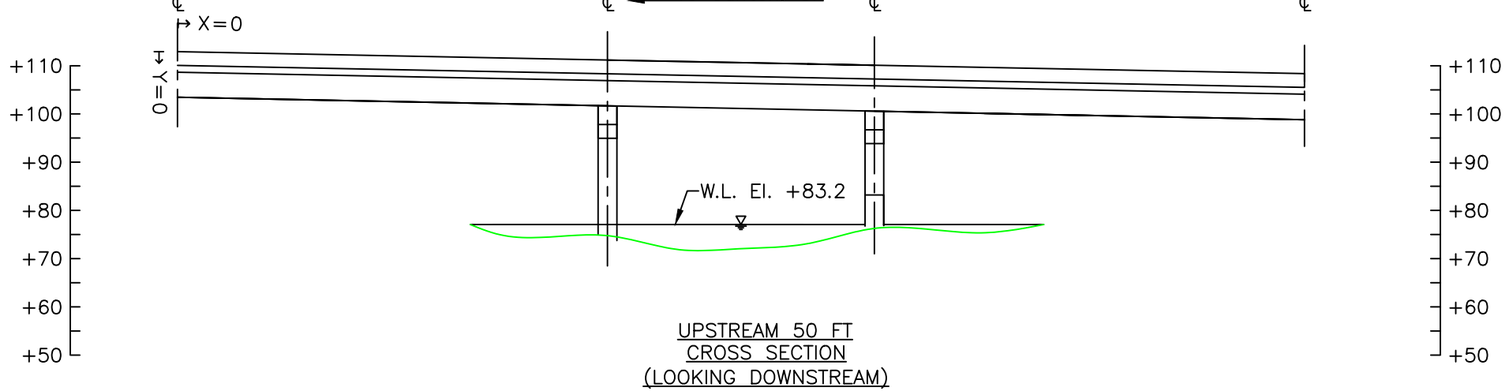

UPSTREAM 50 FT
CROSS SECTION
(LOOKING DOWNSTREAM)

LEGEND

- Approximate Channel Bottom – July 2017
- Approximate Channel Bottom – September 2012
- Approximate Channel Bottom – [No Data]
- Timber Debris
- Water Surface
- +450 Elevation (ft)

COLLINS ENGINEERS
124 Venture Court, Ste 10
Lexington, KY 40511
Phone: 859-367-0097
Fax: 859-367-0140

Ohio Department of Transportation, District 11
2201 Reiser Avenue
New Philadelphia, OH 44663
Phone: 330-339-6633

I-77 OVER TUSCARAWAS RIVER
STRUCTURE NO. TUS-77-3495 NB
CROSS SECTIONS
PIKE COUNTY, OHIO

CEI PROJECT 55–10356.00
INSPECTED BY: MOR
DRAWN BY: KMM
CHECKED BY: JMJ
DATE: JUN 2017
SHEET NO: 3

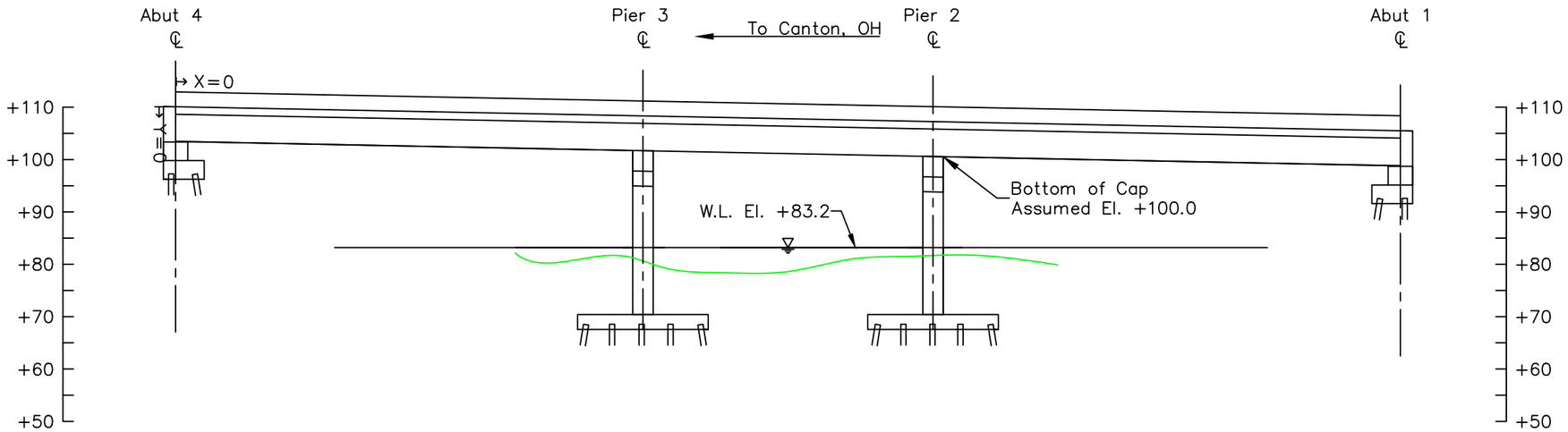

STRUCTURE CENTERLINE
CHANNEL CROSS SECTION
(LOOKING DOWNSTREAM)

LEGEND

- Approximate Channel Bottom – July 2017
- Approximate Channel Bottom – [No Data]
- Approximate Channel Bottom – [No Data]
- Timber Debris
- Water Surface
- +450 Elevation (ft)

COLLINS ENGINEERS
124 Venture Court, Ste 10
Lexington, KY 40511
Phone: 859-367-0097
Fax: 859-367-0140

Ohio Department of Transportation, District 11
2201 Reiser Avenue
New Philadelphia, OH 44663
Phone: 330-339-6633

I-77 OVER TUSCARAWAS RIVER
STRUCTURE NO. TUS-77-3495 NB
CROSS SECTIONS
PIKE COUNTY, OHIO

CEI PROJECT	55–10356.00
INSPECTED BY:	MOR
DRAWN BY:	KMM
CHECKED BY:	JMJ
DATE:	JUN 2017
SHEET NO:	4

PROFILE MEASUREMENTS (FT)		
LOCATION	X	Y
A1	0.0	9.6
1/4	18.0	16.5
1/2	36.0	23.9
3/4	54.0	30.2
P2	72.0	33.9
1/4	94.5	33.4
1/2	117.0	33.0
3/4	139.5	32.6
P3	162.0	32.2
1/4	180.0	32.0
1/2	198.0	29.9
3/4	216.0	19.1
A4	234.0	9.8

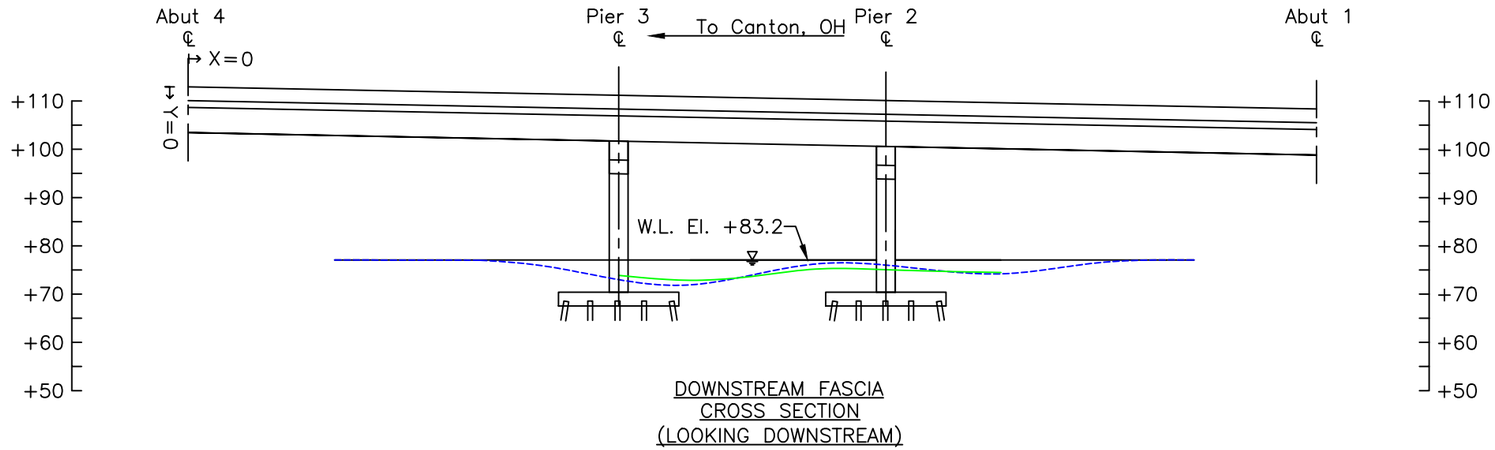

DOWNSTREAM FASCIA
CROSS SECTION
(LOOKING DOWNSTREAM)

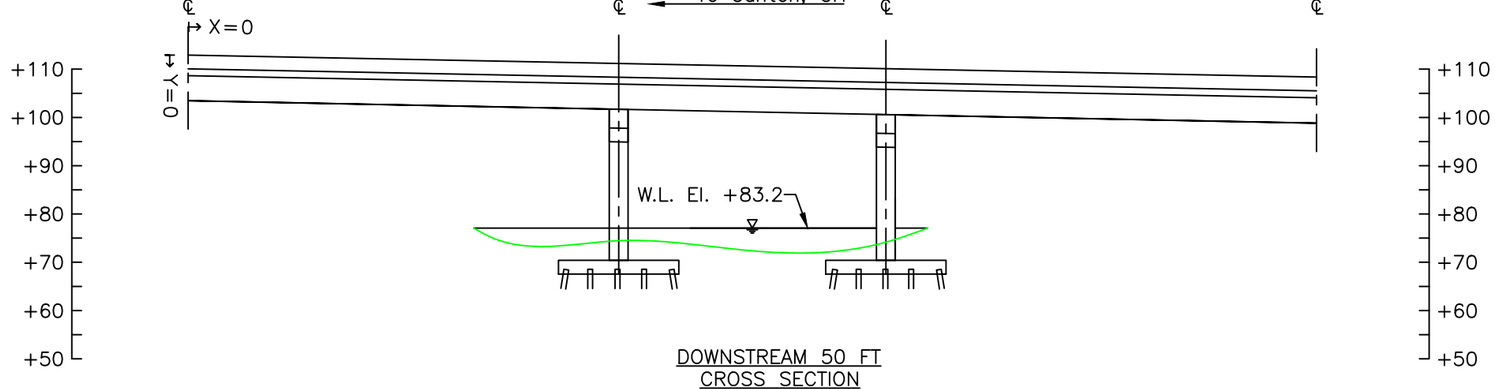

DOWNSTREAM 50 FT
CROSS SECTION
(LOOKING DOWNSTREAM)

LEGEND

- Approximate Channel Bottom – July 2017
- Approximate Channel Bottom – September 2012
- Approximate Channel Bottom – [No Data]
- Timber Debris
- Water Surface
- +450 Elevation (ft)

COLLINS ENGINEERS
124 Venture Court, Ste 10
Lexington, KY 40511
Phone: 859-367-0097
Fax: 859-367-0140

Ohio Department of Transportation, District 11
2201 Reiser Avenue
New Philadelphia, OH 44663
Phone: 330-339-6633

I-77 OVER TUSCARAWAS RIVER
STRUCTURE NO. TUS-77-3495 NB
CROSS SECTIONS
PIKE COUNTY, OHIO

CEI PROJECT 55–10356.00
INSPECTED BY: MOR
DRAWN BY: KMM
CHECKED BY: JMJ
DATE: JUN 2017
SHEET NO: 5

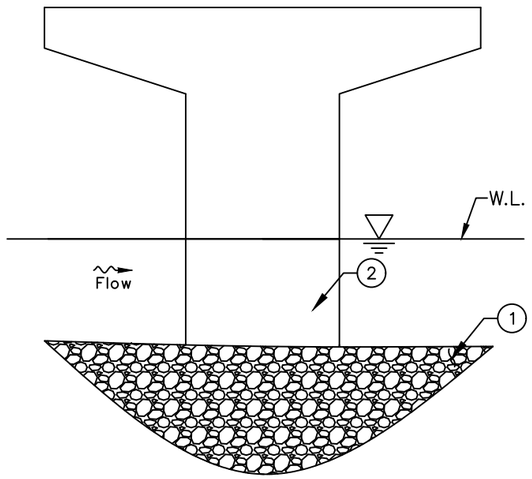

SOUTH ELEVATION
(LOOKING NORTH)

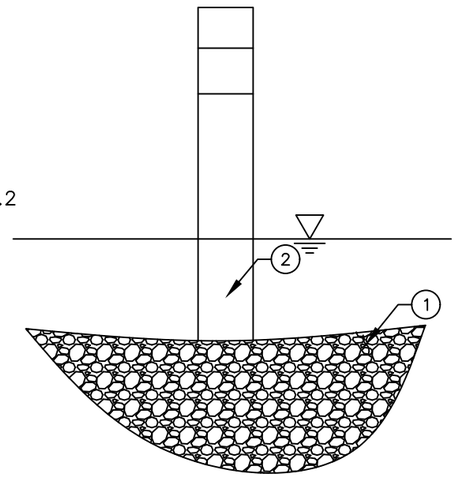

UPSTREAM ELEVATION
(LOOKING DOWNSTREAM)

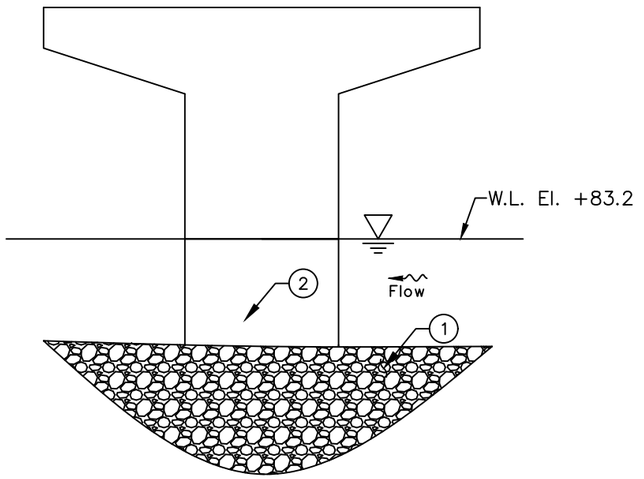

NORTH ELEVATION
(LOOKING SOUTH)

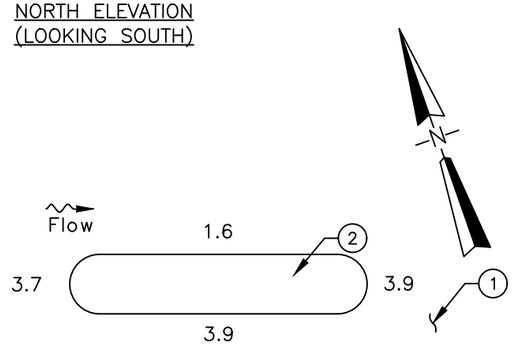

PLAN VIEW

INSPECTION NOTES:

1. The channel bottom material consisted of mud up to 18 in. probe rod penetration.
2. The submerged portions of the pier were sound and smooth with no defects observed.

LEGEND

2.7	Sounding Depth from Waterline (ft)
———	Approximate Channel Bottom – July 2015
	Timber Debris
	Water Surface

COLLINS ENGINEERS
124 Venture Court, Ste 10
Lexington, KY 40511
Phone: 859-367-0097
Fax: 859-367-0140

Ohio Department of Transportation, District 11
2201 Reiser Avenue
New Philadelphia, OH 44663
Phone: 330-339-6633

I-77 OVER TUSCARAWAS RIVER
STRUCTURE NO. TUS-77-3495 NB
PIER 2
PIKE COUNTY, OHIO

CEI PROJECT	55–10356.00
INSPECTED BY:	MOR
DRAWN BY:	KMM
CHECKED BY:	JMJ
DATE:	JUN 2017
SHEET NO:	6

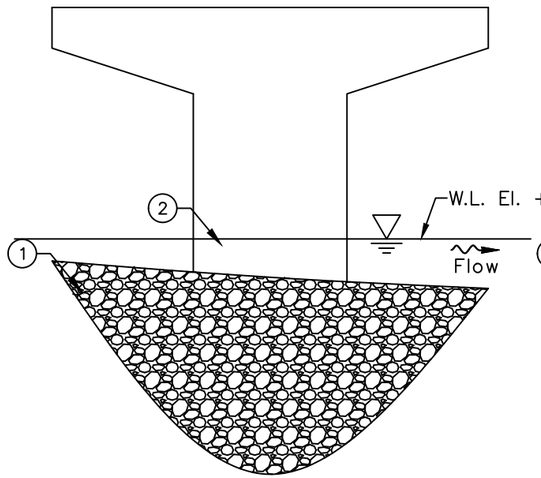

SOUTH ELEVATION
PIER 3
(LOOKING NORTH)

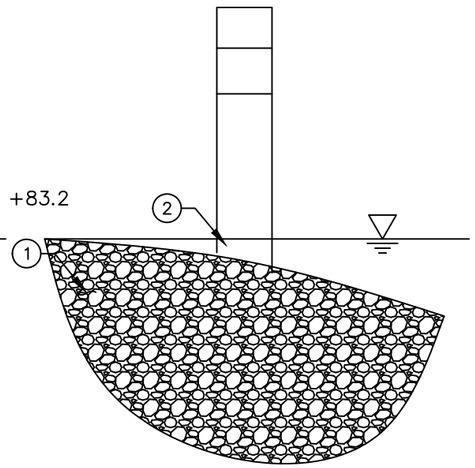

UPSTREAM ELEVATION
PIER 2
(LOOKING DOWNSTREAM)

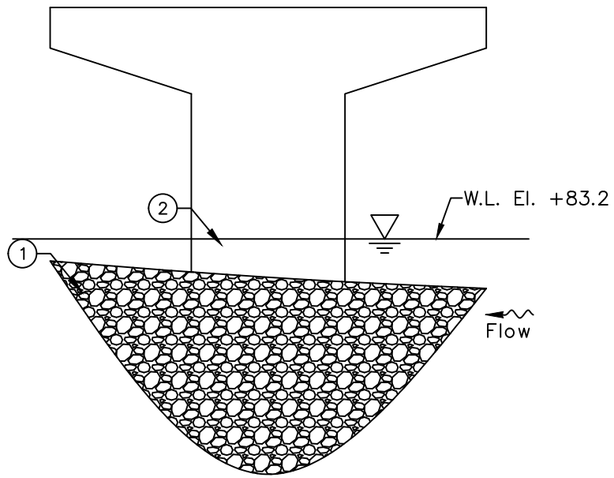

NORTH ELEVATION
PIER 3
(LOOKING SOUTH)

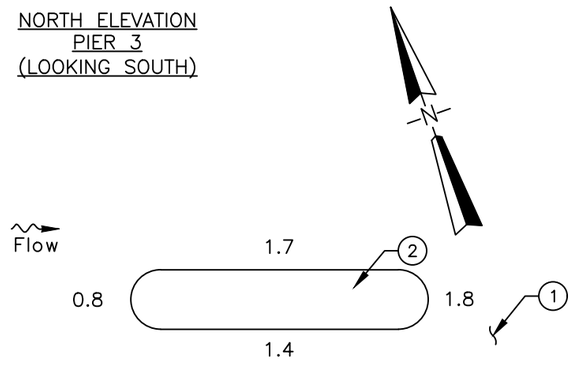

PLAN VIEW

INSPECTION NOTES:

(1) The channel bottom material consisted of sand, gravel, and timber debris with approximately 2 in. probe rod penetration.

(2) The submerged portions of the pier were sound and smooth with no defects observed.

LEGEND

2.7	Sounding Depth from Waterline (ft)
———	Approximate Channel Bottom – July 2015
	Timber Debris
	Water Surface

COLLINS ENGINEERS
124 Venture Court, Ste 10
Lexington, KY 40511
Phone: 859-367-0097
Fax: 859-367-0140

Ohio Department of Transportation, District 11
2201 Reiser Avenue
New Philadelphia, OH 44663
Phone: 330-339-6633

I-77 OVER TUSCARAWAS RIVER
STRUCTURE NO. TUS-77-3495 NB
PIER 3
PIKE COUNTY, OHIO

CEI PROJECT	55–10356.00
INSPECTED BY:	MOR
DRAWN BY:	KMM
CHECKED BY:	JMJ
DATE:	JUN 2017
SHEET NO:	7

EXHIBIT 2 – INSPECTION PHOTOGRAPHS



Photograph No. 1: Overall View of Structure No. TUS-77-3495 NB, Downstream Fascia, Looking West.



Photograph No. 2: View of South Embankment, Downstream of Structure, Looking South.



Photograph No. 3: View of South Embankment, North Bound, Looking Southeast.



Photograph No. 4: View of South Embankment, Upstream of Structure, Looking South.



Photograph No. 5: View of the North Embankment, Upstream of Structure, Looking Northeast.



Photograph No. 6: View of the North Embankment at the Structure, Looking Northeast.



Photograph No. 7: View of the North Embankment, Downstream of Structure, Looking North.



Photograph No. 8: View of Pier 2, Looking South.



Photograph No. 9: View of Pier 2, Looking South.



Photograph No. 10: View of Pier 2, Looking Northeast.



Photograph No. 11: View of Pier 3, Looking Southwest.



Photograph No. 12: View of Pier 3, Looking Northeast.



Photograph No. 13: View of Typical Concrete at Waterline, Upstream Nose of Pier 3, Looking East.