



UNDERWATER BRIDGE INSPECTION REPORT

STRUCTURE NO. TUS-800-2179
SR 800 OVER TUSCARAWAS RIVER
TUSCARAWAS COUNTY, OH
DISTRICT 11

September 2017

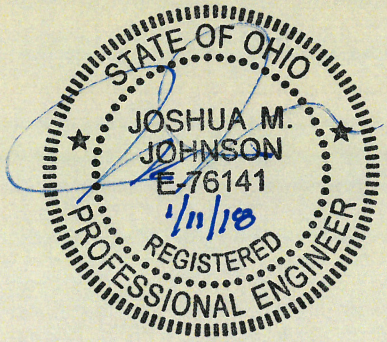

Prepared for:

STATE OF OHIO DEPARTMENT OF TRANSPORTATION

Prepared by:

COLLINS ENGINEERS INC.

124 Venture Court, Suite 10

Lexington, Kentucky 40511

859.367.0097 • www.collinsengr.com

TABLE OF CONTENTS

EXECUTIVE SUMMARY
1.0 INTRODUCTION 1
1.1 Purpose and Scope 1
1.2 General Description of the Structure 1
1.3 Method of Investigation 1
2.0 EXISTING CONDITIONS 2
2.1 General Conditions 2
2.2 Substructure Conditions 3
2.2.1 Bent 2 3
2.2.1 Bent 3 3
3.0 EVALUATION AND RECOMMENDATIONS 3
EXHIBIT 1 – FIGURES 5
LOCATION MAP
SOUNDING PLAN
UPSTREAM CHANNEL CROSS SECTIONS
CENTERLINE CHANNEL CROSS SECTIONS
DOWNSTREAM CHANNEL CROSS SECTIONS
BENT 2
BENT 3
EXHIBIT 2 – INSPECTION PHOTOGRAPHS 13
Photograph No. 1: Overall View of Upstream Fascia of Structure No. TUS-800-2179, Looking South.
Photograph No. 3: Overall View of the Downstream Fascia, Looking North.
Photograph No. 4: View of Upstream Embankment, Looking West.
Photograph No. 5: View of Embankment at Bridge Centerline, Looking West.
Photograph No. 6: View of North Embankment Downstream of the Structure, Looking Southwest.
Photograph No. 7: View of the South Embankment Downstream of the Structure, Looking East.
Photograph No. 8: View of the South Embankment at the Structure Centerline, Looking East.
Photograph No. 9: View of South Embankment, Upstream of Structure, Looking East.
Photograph No. 10: Overall View Bent 2, Eastern Elevation, Looking Southwest.
Photograph No. 11: Overall View of Bent 2, Western Elevation, Looking Northeast.
Photograph No. 12: View of Typical Steel Condition, Bent 2, Pile C, Looking Northeast.
Photograph No. 13: View of Typical Steel Condition, Bent 2, Pile C, Looking Northeast.

Photograph No. 14: View of Typical Timber Debris Between Pile C and Pile D and Bent 2.

Photograph No. 15: Overall View of Bent 3, Eastern Elevation, Looking Southwest.

Photograph No. 16: Overall View of Bent 3, Western Elevation, Looking Northeast.

EXECUTIVE SUMMARY

Project: ODOT District 11 Underwater Bridge Inspections - 2017

Purpose of Project: To perform a detailed visual and tactile underwater investigation of bridges for District 11 of the Ohio Department of Transportation.

Inspection Team: Team Leader – Kurt Lingo, E.I.T. – Collins Engineers, Inc.
Team Member – Matthew Rogers, E.I.T. – Collins Engineers, Inc.
Team Member – Russell Richards, E.I.T. – Collins Engineers, Inc.

Inspection Date(s): July 18, 2017

Water Visibility:	<1 ft	***Water Velocity:***	<1 ft/s
Water Temperature:	83 °F	***Weather:***	Sunny – 85 °F
Waterline Elevation:	82.4 ft	***Type of Boat:***	14 ft Jon Boat
Coordinates:	40.52007°N, 81.47348°W		
Access Location:	Northwest Embankment.		
Dive Mode:	Wading		

Waterline Reference: 17.6 ft below the top of cap at the downstream nose of Pier 2.

Maximum Depth at SSU: 6.7 ft – Upstream Column of Bent 2.

Shoreline Conditions: The north shoreline consisted of vertical cut banks up to 2 feet high with a gravel roadway and rock up to 3 ft diameter with no erosion observed. The south shoreline consisted of stones up to 2 ft diameter with no erosion observed.

Summary of Findings:

- **Bent 2:**
  - Light timber debris accumulation consisting of logs up to 6 inches diameter was scattered around the entire bent, extending from the channel bottom to the waterline.
  - The steel encasements typically exhibited light corrosion consisting of rust delaminations up to 1/16 inch thick from 6 inches above the waterline to the channel bottom.
- **Bent 3:**
  - Light timber debris accumulation consisting of logs up to 6 inches diameter was scattered around the entire bent, extending from the channel bottom to the waterline.
  - The steel encasements typically exhibited light corrosion consisting of rust delaminations up to 1/16 inch thick from 6 inches above the waterline to the channel bottom.

Summary of Recommendations:

- Monitor timber debris accumulation at Bents 2 and 3.
- Monitor corrosion on steel encasements at Bents 2 and 3.

Underwater Inspection Coding:

NBI Ratings:

Item	Description	Coding	Condition
60	Substructure	7– Good Condition	Rust Delaminations
61	Channel	7 – Good Condition	Timber Debris Accumulation
62	Culvert	N/A	
92B	UW Insp. Frequency	60 Months	
93B	Insp. Date	07/18/17	
113	Scour Critical Bridges	8 – Above Foundation Limits	Stable (Inspector Recommended)

AASHTO National Bridge Element (NBE) Ratings:

Element #	Description	Units	Total	Condition State			
				1	2	3	4
205	Reinforced Concrete Column	EA	8	8	0	0	0

Note: Ratings were developed using the FHWA Recording and Coding Guide for the Structure Inventory and Appraisal of the Nation's Bridges. The recommended ratings consider inspected elements located within the waterway and conditions existing below the water surface only. Additional consideration is necessary for the assignment of overall condition ratings for this bridge.

1.0 INTRODUCTION

1.1 Purpose and Scope

This report consists of the results of a detailed underwater investigation performed at the SR 800 Bridge over Tuscarawas River in Tuscarawas County, OH. Collins Engineers, Inc. (Collins) conducted the underwater investigation for the Ohio Department of Transportation (ODOT) on July 18, 2017. The primary purpose of the investigation was as follows:

- Determine the condition of the substructure components located in the water at the time of the inspection from the waterline to the channel bottom.
- Obtain channel bottom depth measurements along the bridge fascias, upstream and downstream of the bridge, and around the submerged substructure units.
- Determine the condition of the shorelines in the vicinity of the structure.
- Obtain photographs of the bridge and any significant defects.

In addition, a brief inspection was made of areas that could be submerged during periods of high water. The following report includes a description of the structure, the method of investigation, a description of existing conditions, an evaluation and recommendations based on the conditions, inspection figures, and photographs.

1.2 General Description of the Structure

Structure No. TUS-800-2179 spans 327.52 ft, carrying SR 800 over Tuscarawas River and is approximately 57.8 ft wide. The bridge superstructure is constructed of three steel multi-beam spans. The roadway orientation of the longitudinal axis of the bridge is south to north. The substructure units are labeled as Abutments 1 and 4 and Bents 2 and 3. Existing design drawings were not available at the time of the inspection. Refer to Figure 1 in Exhibit 1 for a Location Map of the bridge. Refer to Photographs 1 through 3 in Exhibit 2 for overall views of the bridge.

1.3 Method of Investigation

A detailed field inspection was conducted to determine the physical condition of the submerged bridge substructure units from the waterline to the channel bottom. A brief visual examination of the substructure units above the waterline was also made.

A three-person team consisting of an engineer-diver and team leader (Kurt Lingo, E.I.T.) and two engineer divers (Matthew Rogers, E.I.T. and Russell Richards, E.I.T.) conducted the underwater inspection. The inspection was conducted through wading. During the inspection, the inspectors worked from a boat and a note taker in the boat recorded the inspection notes.

The underwater inspection consisted of a visual and tactile examination of the accessible surfaces of the substructure units from the waterline to the channel bottom with particular attention given to any observed areas of deterioration or apparent distress. Approximately 10 percent of the total area on the underwater surfaces of the substructure units was cleaned so that the condition could be more closely examined. Photographs were taken to document the general conditions and observed deficiencies. Underwater Photographs could not be obtained due to poor water conditions. The type of channel bottom material, the presence or extent of scour, the presence or extent of riprap, the presence or extent of drift and debris, and the location of any foundation exposure or undermining were noted.

Channel bottom soundings were performed utilizing a telescoping survey rod and digital fathometer. Soundings were collected at quarter points along the bridge centerline as well as 10 feet and 50 feet upstream and downstream of the bridge, parallel with its fascias. Additional soundings were collected adjacent to Piers 2 and 3 and at 10 feet intervals in-line with the piers, upstream and downstream, and the waterline was referenced to a known elevation on the bridge. A sounding plan was developed using the soundings and approximate location of the shorelines. Refer to Figures 1 through 4 in Exhibit 1 for the sounding plan and channel cross sections that show the channel limits and water depths around the structure.

2.0 EXISTING CONDITIONS

2.1 General Conditions

At the time of the inspection, the waterline of TUS-800-2179 was located approximately 17.6 ft below the top of cap at the downstream nose of Bent 2, which corresponds to an assumed waterline elevation of 82.4 ft. During the inspection, the waterway was flowing at approximately 1 ft per second. The bridge pier skew was not consistent with the channel alignment and therefore requires attention at this time. The north shoreline was lightly vegetated with mild slopes and the south shoreline consisted of moderately to heavily vegetated mild slopes with multiple trees leaning toward the channel. Refer to Photographs 4 through 9 in Exhibit 2 for views of the shorelines near the structure.

2.2 Substructure Conditions

2.2.1 Bent 2

The channel bottom material around Bent 2 consists of typical gravel and sand with approximately 2 in. probe rod penetration. Typical steel is corroded at waterline with 1/16 in. delamination of steel. Minor timber debris is located at both bents. Refer to Figure 5 in Exhibit 1 for detailed inspection notes of Bent 2. Refer to Photographs 10 through 14 in Exhibit 2 for views of Bent 2 and typical concrete condition at the waterline.

2.2.1 Bent 3

The channel bottom material around Bent 3 consists of typical gravel and sand with approximately 2 in. probe rod penetration. Typical steel is corroded at waterline with 1/16 in. delamination of steel. Minor timber debris is located at both bents. Refer to Figure 6 in Exhibit 1 for detailed inspection notes of Bent 3. Refer to Photographs 15 and 16 in Exhibit 2 for views of Bent 3.

3.0 EVALUATION AND RECOMMENDATIONS

Overall, the inspected substructure units of Structure No. TUS-800-2179 were in good condition. A comparison of the soundings recorded during the previous inspection on September 23, 2012 and the soundings taken during this inspection revealed no significant change in the channel bottom profile in the vicinity of the structure. Although no channel deficiencies were observed, the channel bottom should continue to be monitored during future underwater inspections to verify that localized scour or overall channel degradation is not occurring and that the pier footings remain adequately embedded in the channel bottom.

It is recommended that the submerged substructure units of Structure No. TUS-800-2179 be next inspected underwater at an interval not to exceed 60 months, no later than July 18, 2022.

Respectfully Submitted,
COLLINS ENGINEERS, INC.

Joshua Johnson, P.E.
Project Manager/Team Leader

Originated by:
Matthew Rogers, E.I.T.

EXHIBIT 1 – FIGURES

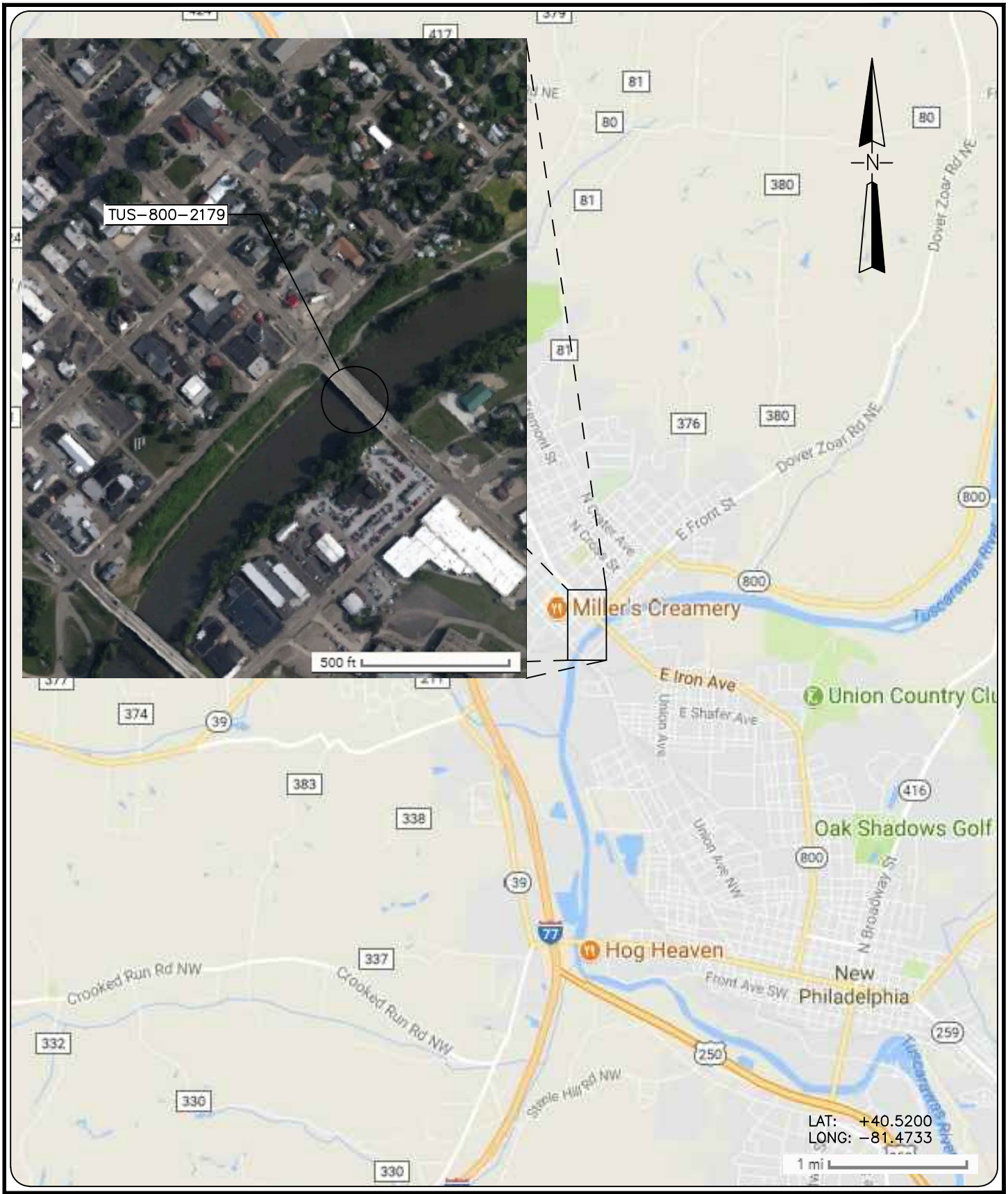

COLLINS ENGINEERS
124 Venture Court, Ste 10
Lexington, KY 40511
Phone: 859-367-0097
Fax: 859-367-0140

Ohio Department of Transportation, District 11
2201 Reiser Avenue
New Philadelphia, OH
44663
Phone: 330-339-2179

SR 800 OVER TUSCARAWAS RIVER
STRUCTURE NO. TUS-800-2179
LOCATION MAP

TUSCARAWAS COUNTY, OHIO

INSPECTED BY: MOR	CEI PROJECT: 55–10356.00
DRAWN BY: KMM	DATE: 18 JUL 2017
CHECKED BY: JMJ	SHEET NO: 1

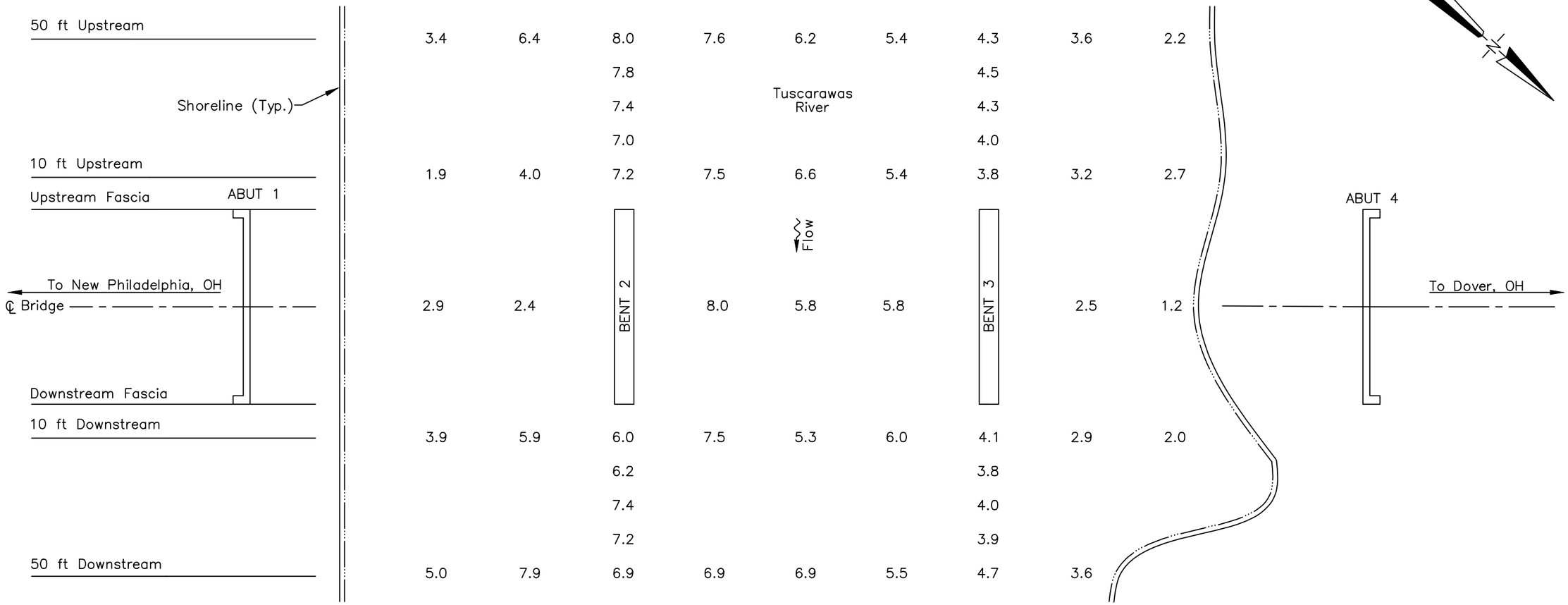

SOUNDING PLAN

GENERAL NOTES:

1. Bents 2 and 3 were inspected underwater. Substructure units are labeled according to available record drawings.
2. At the time of inspection on July 18, 2017, the waterline was located approximately 17.6 ft below the Top of Cap at the downstream nose of Bent 2. (Assumed EL. +100.0 ft). This corresponds with a waterline elevation of +82.4 ft.
3. Soundings indicate the water depth at the time of inspection and are measured in feet.
4. Soundings were taken parallel to the bridge at the upstream and downstream fascias, at 10 ft intervals between the substructure units, and at 10 ft intervals in–line with the piers upstream and downstream up to 50 ft.

LEGEND

–2.7	Sounding Depth from Waterline (ft)
	Timber Debris

COLLINS ENGINEERS
124 Venture Court, Ste 10
Lexington, KY 40511
Phone: 859-367-0097
Fax: 859-367-0140

Ohio Department of Transportation, District 11
2201 Reiser Avenue
New Philadelphia, OH 44663
Phone: 330-339-6633

SR 800 OVER TUSCARAWAS RIVER
STRUCTURE NO. TUS-800-2179
SOUNDING PLAN
TUSCARAWAS COUNTY, OHIO

CEI PROJECT 55–10356.00
INSPECTED BY: MOR
DRAWN BY: KMM
CHECKED BY: JMJ
DATE: JUL 2017
SHEET NO: 2

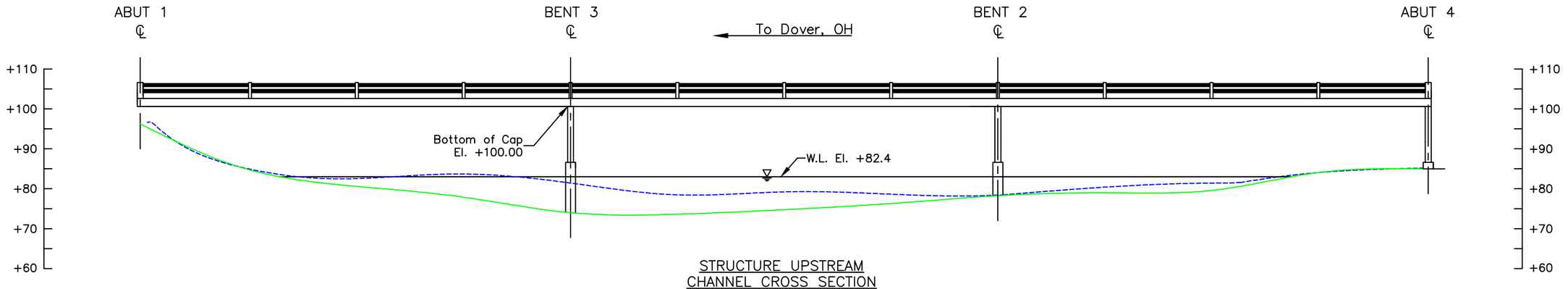

STRUCTURE UPSTREAM
CHANNEL CROSS SECTION
(LOOKING DOWNSTREAM)

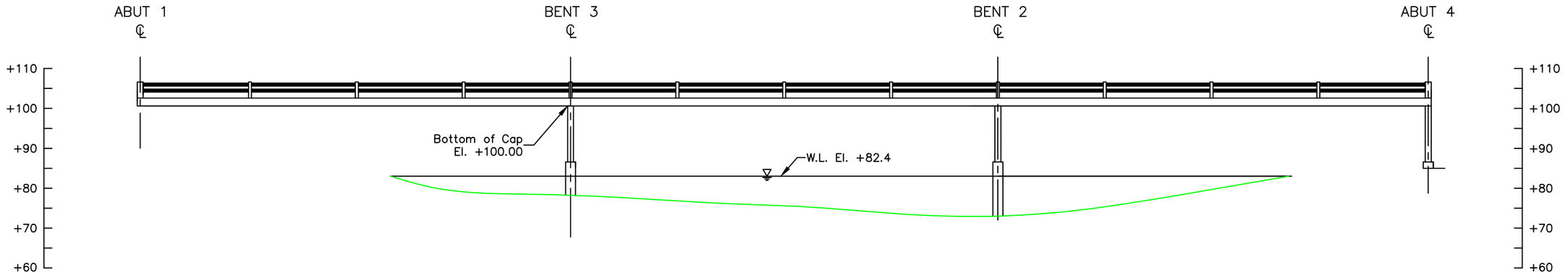

50 FT UPSTREAM
CHANNEL CROSS SECTION
(LOOKING DOWNSTREAM)

Downstream Looking Downstream		
LOCATION	X	Y
A1	0.0	14.0
1/4	28.3	20.3
1/2	56.5	24.9
3/4	84.8	25.7
B2	113.0	25.3
1/4	137.8	25.7
1/2	162.5	26.3
3/4	187.3	26.8
B3	212.0	27.3
1/4	239.8	28.1
1/2	267.5	29.8
3/4	295.3	28.0
A4	323.0	26.5

Note:

Footing elevations unknown due to unavailable record drawings.

LEGEND

- Approximate Channel Bottom – July 2017
- Approximate Channel Bottom – September 2012
- Approximate Channel Bottom – [No Data]
- Timber Debris
- Water Surface
- +450 Elevation (ft)

COLLINS ENGINEERS
124 Venture Court, Ste 10
Lexington, KY 40511
Phone: 859-367-0097
Fax: 859-367-0140

Ohio Department of Transportation, District 11
2201 Reiser Avenue
New Philadelphia, OH 44663
Phone: 330-339-6633

SR 800 OVER TUSCARAWAS RIVER
STRUCTURE NO. TUS-800-2179
CROSS SECTIONS
TUSCARAWAS COUNTY, OHIO

CEI PROJECT
55-10356.00
INSPECTED BY:
MOR
DRAWN BY:
KMM
CHECKED BY:
JMJ
DATE:
JUL 2017
SHEET NO:
3

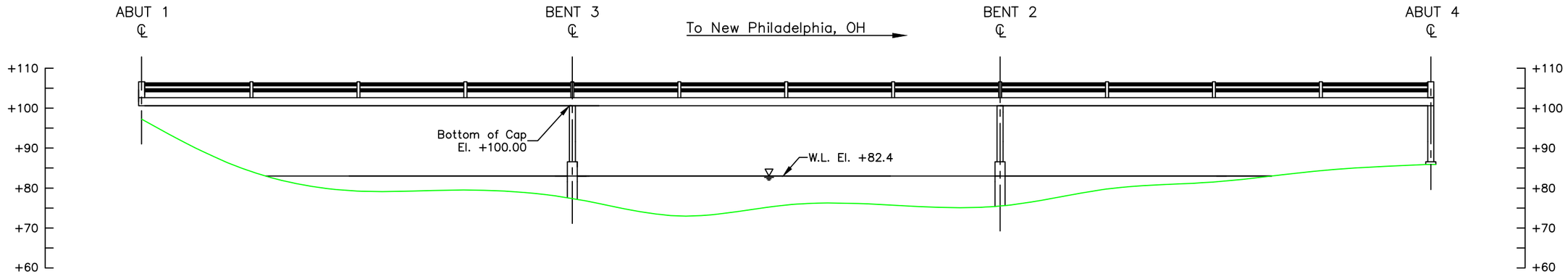

STRUCTURE CENTERLINE
CHANNEL CROSS SECTION
(LOOKING UPSTREAM)

Note:

Footing elevations unknown due to unavailable record drawings.

LEGEND

———	Approximate Channel Bottom – July 2017
- - - - -	Approximate Channel Bottom – [No Data]
– – – – –	Approximate Channel Bottom – [No Data]
	Timber Debris
	Water Surface
+450	Elevation (ft)

COLLINS ENGINEERS
124 Venture Court, Ste 10
Lexington, KY 40511
Phone: 859-367-0097
Fax: 859-367-0140

Ohio Department of Transportation, District 11
2201 Reiser Avenue
New Philadelphia, OH 44663
Phone: 330-339-6633

SR 800 OVER TUSCARAWAS RIVER
STRUCTURE NO. TUS-800-2179
CROSS SECTIONS
TUSCARAWAS COUNTY, OHIO

CEI PROJECT	55–10356.00
INSPECTED BY:	MOR
DRAWN BY:	KMM
CHECKED BY:	JMJ
DATE:	JUL 2017
SHEET NO:	4

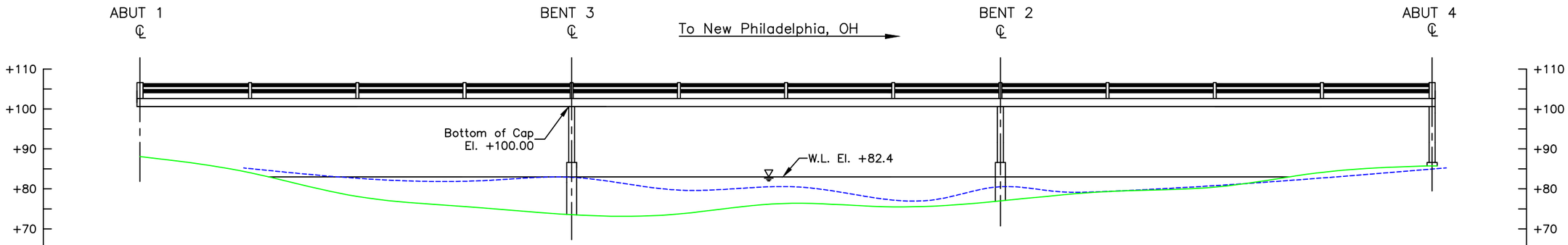

STRUCTURE DOWNSTREAM
CHANNEL CROSS SECTION
(LOOKING UPSTREAM)

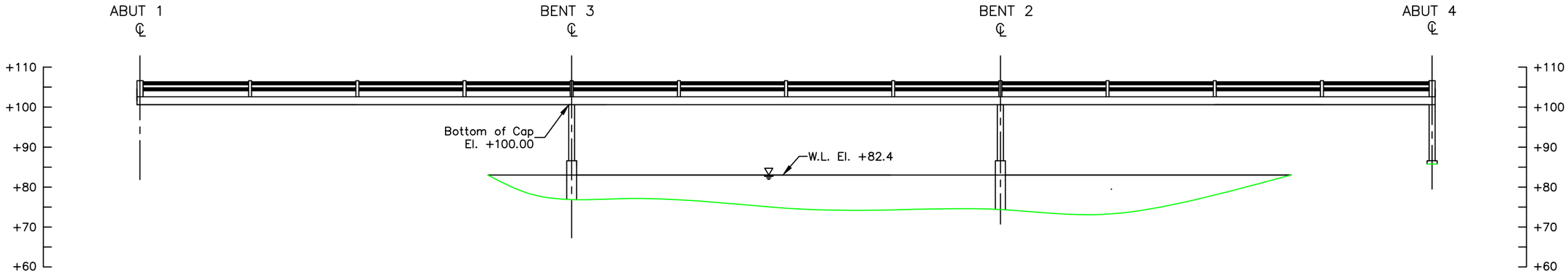

STRUCTURE DOWNSTREAM
CHANNEL CROSS SECTION
(LOOKING UPSTREAM)

Downstream Looking Upstream		
LOCATION	X	Y
A1	0.0	12.5
1/4	28.3	21.8
1/2	56.5	24.5
3/4	84.8	25.5
B2	113.0	25.8
1/4	137.8	26.3
1/2	162.5	27.0
3/4	187.3	27.7
B3	212.0	28.6
1/4	239.8	29.1
1/2	267.5	29.8
3/4	295.3	28.0
A4	323.0	27.2

Note:

Footing elevations unknown due to unavailable record drawings.

LEGEND

- Approximate Channel Bottom – July 2017
- Approximate Channel Bottom – September 2012
- Approximate Channel Bottom – [No Data]
- Timber Debris
- Water Surface
- +450 Elevation (ft)

COLLINS ENGINEERS
124 Venture Court, Ste 10
Lexington, KY 40511
Phone: 859-367-0097
Fax: 859-367-0140

Ohio Department of Transportation, District 11
2201 Reiser Avenue
New Philadelphia, OH 44663
Phone: 330-339-6633

SR 800 OVER TUSCARAWAS RIVER
STRUCTURE NO. TUS-800-2179
CROSS SECTIONS
TUSCARAWAS COUNTY, OHIO

CEI PROJECT
55-10356.00
INSPECTED BY:
MOR
DRAWN BY:
KMM
CHECKED BY:
JMJ
DATE:
JUL 2017
SHEET NO:
5

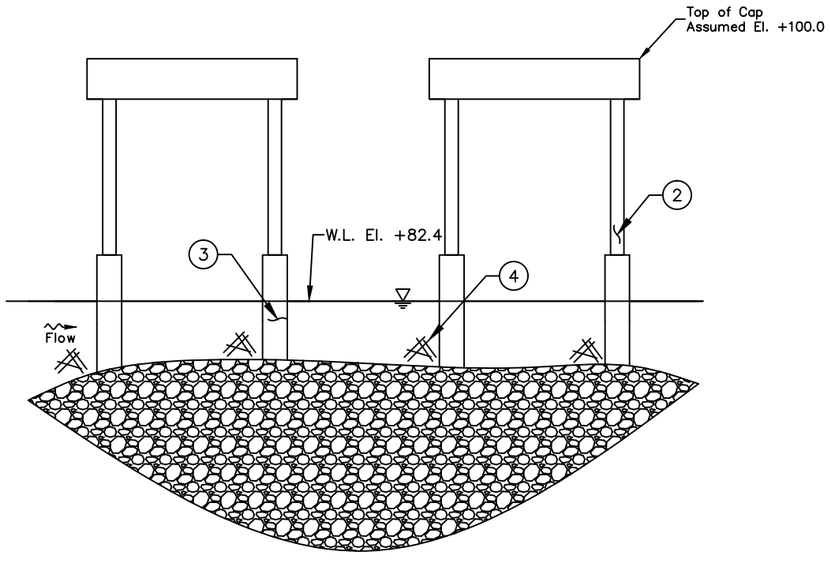

SOUTH ELEVATION
BENT 2
(LOOKING NORTH)

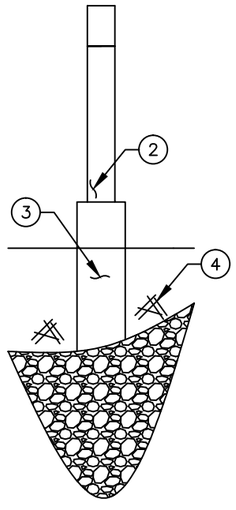

UPSTREAM ELEVATION
BENT 2
(LOOKING DOWNSTREAM)

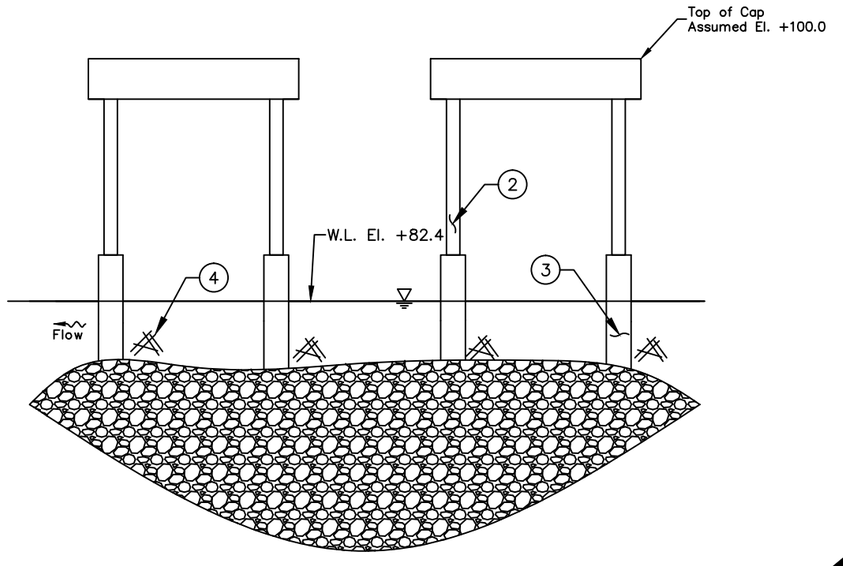

NORTH ELEVATION
BENT 2
(LOOKING SOUTH)

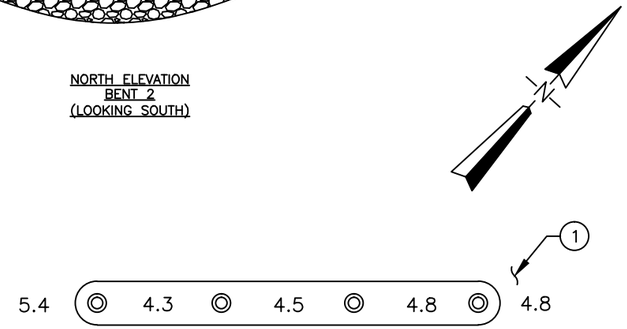

PLAN – BENT 2

INSPECTION NOTES:

1. The channel bottom material consisted of sand, gravel and cobbles with approximately 2 in. probe rod penetration.
2. The submerged portions of the pier were sound and smooth with no defects observed.
3. Steel is typical corroded at water level with 1/16 in. delamination of steel.
4. Minor timber debris is located at both bents.

LEGEND

–2.7	Sounding Depth from Waterline (ft)
———	Approximate Channel Bottom – July 2017
	Timber Debris
	Water Surface

COLLINS ENGINEERS
124 Venture Court, Ste 10
Lexington, KY 40511
Phone: 859-367-0097
Fax: 859-367-0140

Ohio Department of Transportation, District 11
2201 Reiser Avenue
New Philadelphia, OH 44663
Phone: 330-339-6633

SR 800 OVER TUSCARAWAS RIVER
STRUCTURE NO. TUS-800-2179
PIER 1
TUSCARAWAS COUNTY, OHIO

CEI PROJECT
55–10356.00

INSPECTED BY:
MOR

DRAWN BY:
KMM

CHECKED BY:
JMJ

DATE:
JUL 2017

SHEET NO:
6

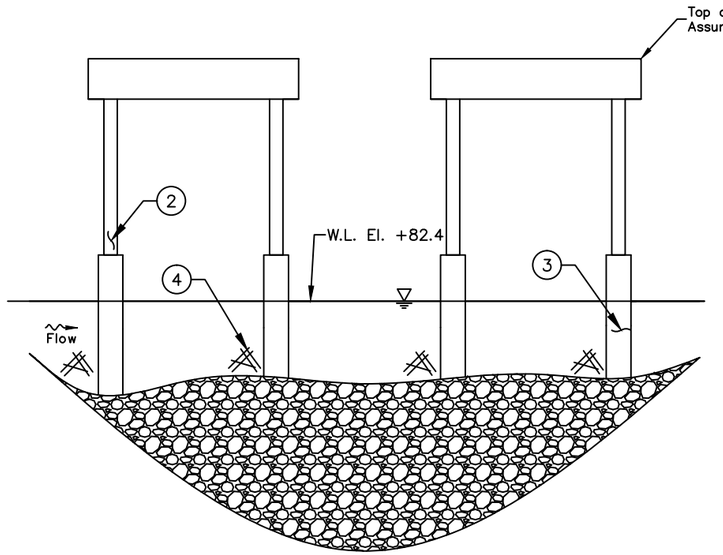

SOUTH ELEVATION
BENT 3
(LOOKING NORTH)

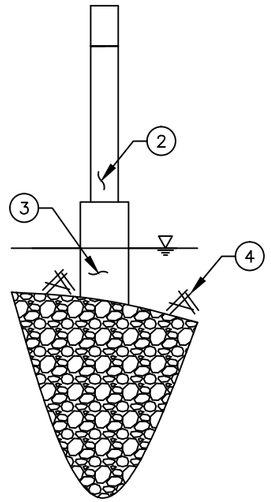

UPSTREAM ELEVATION
BENT 3
(LOOKING DOWNSTREAM)

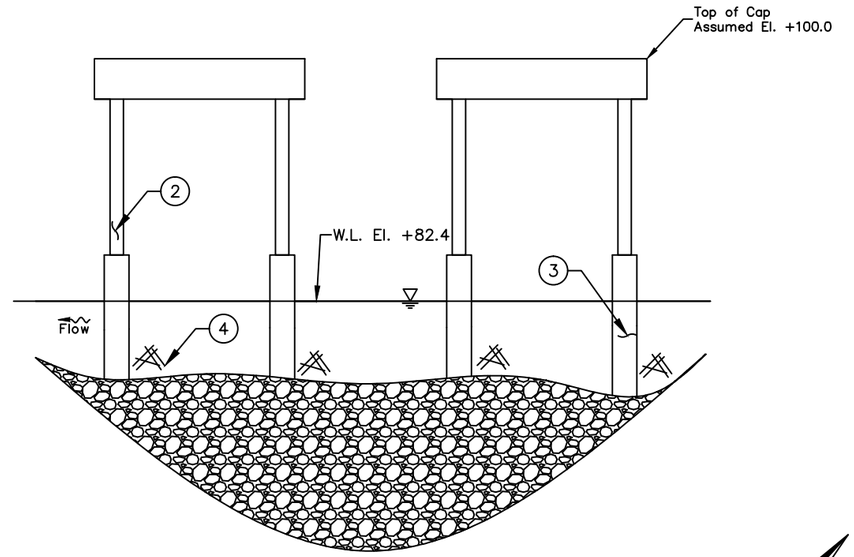

NORTH ELEVATION
BENT 3
(LOOKING SOUTH)

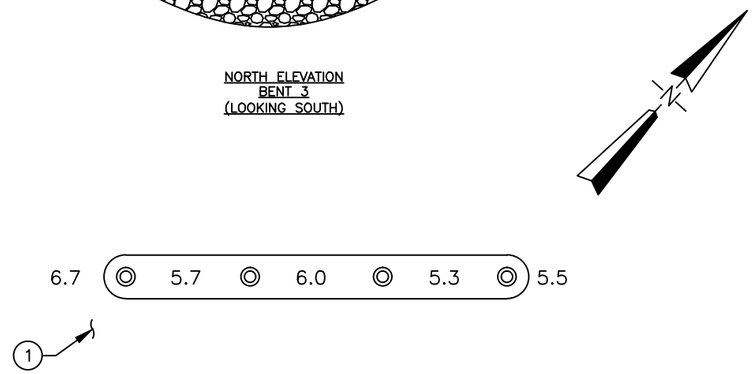

PLAN – BENT 3

INSPECTION NOTES:

1. The channel bottom material consisted of sand, gravel and cobbles with approximately 2 in probe rod penetration.
2. The submerged portions of the pier were sound and smooth with no defects observed.
3. Steel is typical corroded at water level with 1/16 in. delamination of steel.
4. Minor timber debris is located at both bents.

LEGEND

–2.7	Sounding Depth from Waterline (ft)
———	Approximate Channel Bottom – July 2017
	Timber Debris
	Water Surface

COLLINS ENGINEERS
124 Venture Court, Ste 10
Lexington, KY 40511
Phone: 859-367-0097
Fax: 859-367-0140

Ohio Department of Transportation, District 11
2201 Reiser Avenue
New Philadelphia, OH 44663
Phone: 330-339-6633

SR 800 OVER TUSCARAWAS RIVER
STRUCTURE NO. TUS-800-2179
PIER 2
TUSCARAWAS COUNTY, OHIO

CEI PROJECT	55–10356.00
INSPECTED BY:	MOR
DRAWN BY:	KMM
CHECKED BY:	JMJ
DATE:	JUL 2017
SHEET NO:	7

EXHIBIT 2 – INSPECTION PHOTOGRAPHS



Photograph No. 1: Overall View of Upstream Fascia of Structure No. TUS-800-2179, Looking South.



Photograph No. 3: Overall View of the Downstream Fascia, Looking North.



Photograph No. 4: View of Upstream Embankment, Looking West.



Photograph No. 5: View of Embankment at Bridge Centerline, Looking West.



Photograph No. 6: View of North Embankment Downstream of the Structure, Looking Southwest.



Photograph No. 7: View of the South Embankment Downstream of the Structure, Looking East.



Photograph No. 8: View of the South Embankment at the Structure Centerline, Looking East.



Photograph No. 9: View of South Embankment, Upstream of Structure, Looking East.



Photograph No. 10: Overall View Bent 2, Eastern Elevation, Looking Southwest.



Photograph No. 11: Overall View of Bent 2, Western Elevation, Looking Northeast.



Photograph No. 12: View of Typical Steel Condition, Bent 2, Pile C, Looking Northeast.



Photograph No. 13: View of Typical Steel Condition, Bent 2, Pile C, Looking Northeast.



Photograph No. 14: View of Typical Timber Debris Between Pile C and Pile D and Bent 2.



Photograph No. 15: Overall View of Bent 3, Eastern Elevation, Looking Southwest.



Photograph No. 16: Overall View of Bent 3, Western Elevation, Looking Northeast.