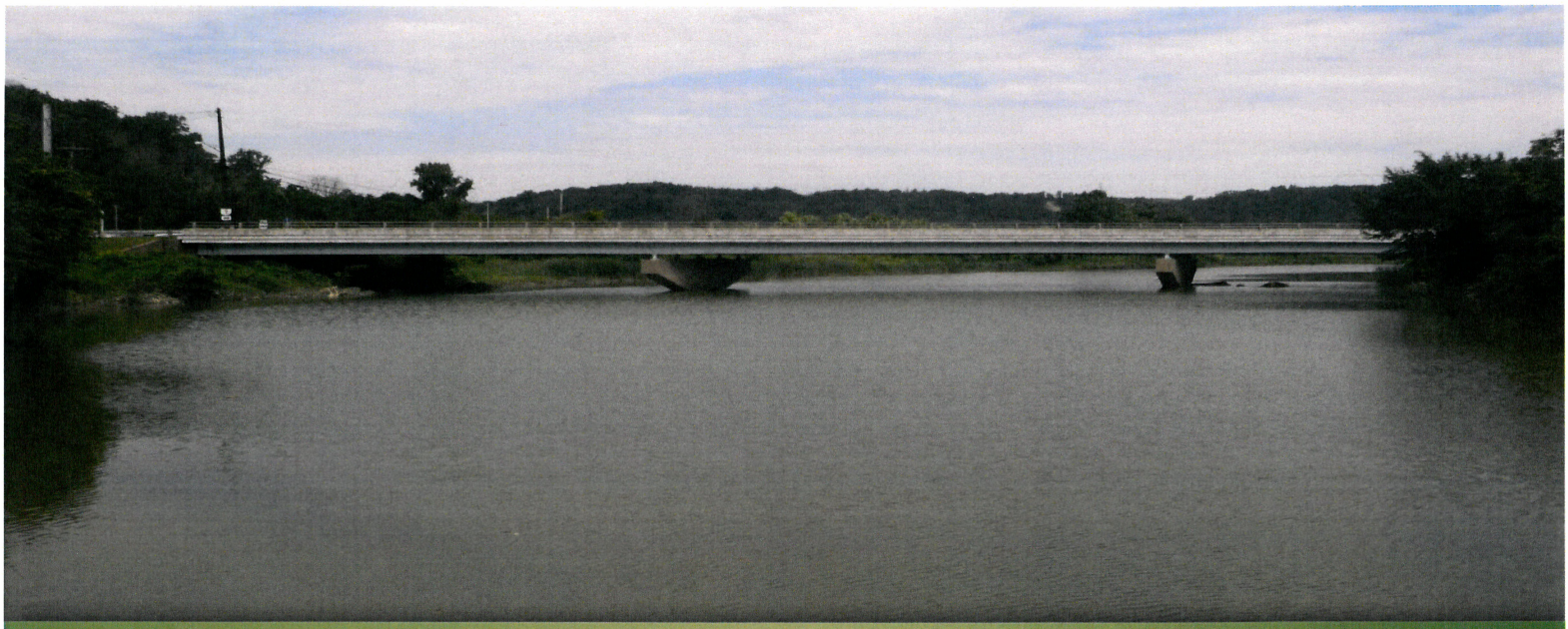

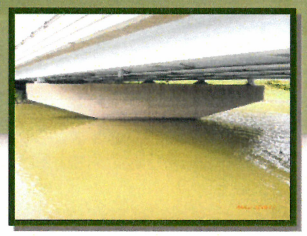

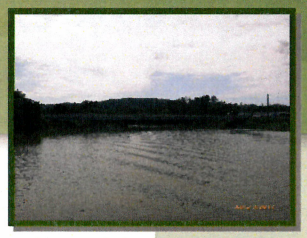



UNDERWATER BRIDGE INSPECTION REPORT

STRUCTURE NO. BEL-007-0099
SR 7 OVER CAPTINA CREEK
BELMONT COUNTY, OH
DISTRICT 11

August 2017

Prepared for:

STATE OF OHIO DEPARTMENT OF TRANSPORTATION

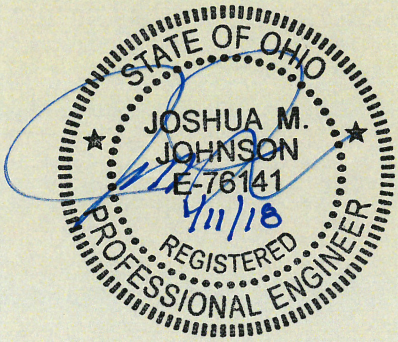

Prepared by:

COLLINS ENGINEERS INC.

124 Venture Court, Suite 10

Lexington, Kentucky 40511

859.367.0097 • www.collinsengr.com

TABLE OF CONTENTS

EXECUTIVE SUMMARY
1.0 INTRODUCTION 1
1.1 Purpose and Scope 1
1.2 General Description of the Structure 1
1.3 Method of Investigation 1
2.0 EXISTING CONDITIONS 2
2.1 General Conditions 2
2.2 Substructure Conditions 3
2.2.1 Pier 2 3
2.2.2 Pier 3 3
3.0 EVALUATION AND RECOMMENDATIONS 3
EXHIBIT 1 – FIGURES 5
LOCATION MAP 6
SOUNDING PLAN 7
UPSTREAM CHANNEL CROSS SECTIONS 8
CENTERLINE CHANNEL CROSS SECTIONS 9
DOWNSTREAM CHANNEL CROSS SECTIONS 10
PIER 1
PIER 2
EXHIBIT 2 – INSPECTION PHOTOGRAPHS 13
Photograph No. 1: Overall View of Structure No. BEL-007-0099, Looking West.
Photograph No. 2: Overall View of Structure No. BEL-007-0099, Looking East.
Photograph No. 3: View of the South Embankment Upstream of the Structure, Looking Southeast.
Photograph No. 4: View of the South Embankment Downstream of the Structure, Looking South.
Photograph No. 5: View of the North Embankment Upstream of the Structure, Looking Northeast.
Photograph No. 6: View of the North Embankment Downstream of the Structure, Looking Northwest.
Photograph No. 7: View of the South Face of Pier 2, Looking Northeast.
Photograph No. 8: View of the North Face of Pier 2, Looking Southeast.
Photograph No. 9: View of the Typical Concrete Condition on the North Face of Pier 2, Looking South.
Photograph No. 10: View of the North Face of Pier 3, Looking Southwest.
Photograph No. 11: View of the South Face of Pier 3, Looking Northeast.

EXECUTIVE SUMMARY

Project: ODOT District 11 Underwater Bridge Inspections - 2017

Purpose of Project: To perform a detailed visual and tactile underwater investigation of bridges for District 11 of the Ohio Department of Transportation.

Inspection Team: Team Leader – Kurt Lingo, E.I.T. – Collins Engineers, Inc.
Team Member – Matthew Rogers, E.I.T. – Collins Engineers, Inc.
Team Member – John Strub – Collins Engineers, Inc.

Inspection Date(s): August 3, 2017

Water Visibility:	<1 ft	***Water Velocity:***	<1 ft/s
Water Temperature:	82 °F	***Weather:***	Sunny – 85 °F
Waterline Elevation:	84.1 ft	***Type of Boat:***	23 ft Carolina Skiff
Coordinates:	39.862766°N, 80.812850°W		
Access Location:	Powhatan Point Public Boat Ramp		
Dive Mode:	Surface Supplied Air		
Waterline Reference:	15.9 ft below the top of parapet at the downstream nose of Pier 2.		
Maximum Depth at SSU:	17.0 ft – North face of Pier 2.		
Shoreline Conditions:	The north shoreline consisted of a moderately to heavily vegetated natural embankments with no erosion observed.		

Summary of Findings:

- **Pier 2:**
  - Light scaling up to 1/16-inch penetration extended from the waterline to the channel bottom.
  - A moderate accumulation of timber debris consisting of logs and branches up to 12 inches diameter was observed along the north and south face of the pier, extending from the channel bottom up 6 feet.
- **Pier 3:**
  - Light scaling up to 1/16-inch penetration extended from the waterline to the channel bottom.
  - A light accumulation of timber debris consisting of a tree and branches up to 4 inches diameter was observed at the waterline, extending across the upstream nose and along the entire north face to the downstream nose.

Summary of Recommendations:

- Monitor timber debris accumulation at Piers 2 and 3.
- Monitor scaling on Piers 2 and 3.

Underwater Inspection Coding:

NBI Ratings:

Item	Description	Coding	Condition
60	Substructure	7– Good Condition	Light Concrete Scaling
61	Channel	6 – Satisfactory Condition	Timber Debris Accumulation
62	Culvert	N/A	
92B	UW Insp. Frequency	60 Months	
93B	Insp. Date	08 03 17	
113	Scour Critical Bridges	8 – Above Foundation Limits	Stable (Inspector Recommended)

AASHTO National Bridge Element (NBE) Ratings:

Element #	Description	Units	Total	Condition State			
				1	2	3	4
210	Reinforced Concrete Pier Wall	LF	64	64	0	0	0

Note: Ratings were developed using the FHWA Recording and Coding Guide for the Structure Inventory and Appraisal of the Nation's Bridges. The recommended ratings consider inspected elements located within the waterway and conditions existing below the water surface only. Additional consideration is necessary for the assignment of overall condition ratings for this bridge.

1.0 INTRODUCTION

1.1 Purpose and Scope

This report consists of the results of a detailed underwater investigation performed at the SR 7 Bridge over Captina Creek in Belmont County, OH. Collins Engineers, Inc. (Collins) conducted the underwater investigation for the Ohio Department of Transportation (ODOT) on August 3, 2017. The primary purpose of the investigation was as follows:

- Determine the condition of the substructure components located in the water at the time of the inspection from the waterline to the channel bottom.
- Obtain channel bottom depth measurements along the bridge fascias, upstream and downstream of the bridge, and around the submerged substructure units.
- Determine the condition of the shorelines in the vicinity of the structure.
- Obtain photographs of the bridge and any significant defects.

In addition, a brief inspection was made of areas that could be submerged during periods of high water. The following report includes a description of the structure, the method of investigation, a description of existing conditions, an evaluation and recommendations based on the conditions, inspection figures, and photographs.

1.2 General Description of the Structure

Structure No. BEL-007-0099 spans 239.2 ft, carrying SR 7 over Belmont Creek and is approximately 32.0 ft wide. The bridge superstructure is constructed of three steel girder spans. The roadway orientation of the longitudinal axis of the bridge is south to north. The substructure units are labeled as Abutment 1, Piers 2 and 3, and Abutment 4. Existing design drawings were not available at the time of the inspection. Refer to Figure 1 in Exhibit 1 for a Location Map of the bridge. Refer to Photographs 1 and 2 in Exhibit 2 for overall views of the bridge.

1.3 Method of Investigation

A detailed field inspection was conducted to determine the physical condition of the submerged bridge substructure units from the waterline to the channel bottom. A brief visual examination of the substructure units above the waterline was also made.

A three-person team consisting of an engineer-diver and team leader (Kurt Lingo, E.I.T.) and two engineer divers (Matthew Rogers, E.I.T. and John Strub, E.I.T.) conducted the underwater inspection. The inspection was conducted using surface supplied air diving equipment. During the inspection, the inspectors worked from a boat and a note taker in the boat recorded the inspection notes.

The underwater inspection consisted of a visual and tactile examination of the accessible surfaces of the substructure units from the waterline to the channel bottom with particular attention given to any observed areas of deterioration or apparent distress. Approximately 10 percent of the total area on the underwater surfaces of the substructure units was cleaned so that the condition could be more closely examined. Photographs were taken to document the general conditions and observed deficiencies. Underwater Photographs could not be obtained due to poor water conditions. The type of channel bottom material, the presence or extent of scour, the presence or extent of riprap, the presence or extent of drift and debris, and the location of any foundation exposure or undermining were noted.

Channel bottom soundings were performed utilizing a telescoping survey rod and a digital fathometer. Soundings were collected at quarter points along the bridge centerline as well as 10 feet and 50 feet upstream and downstream of the bridge, parallel with its fascias. Additional soundings were collected adjacent to Piers 2 and 3 and at 10 feet intervals in-line with the piers, upstream and downstream, and the waterline was referenced to a known elevation on the bridge. A sounding plan was developed using the soundings and approximate location of the shorelines. Refer to Figures 2 thru 5 in Exhibit 1 for the sounding plan and channel cross sections that show1 the channel limits and water depths around the structure.

2.0 EXISTING CONDITIONS

2.1 General Conditions

At the time of the inspection, the waterline of BEL-007-0099 was located approximately 15.9 ft below the top of parapet at the downstream nose of Pier 2, which corresponds to a waterline elevation of 84.1 ft based off an assumed reference elevation of 100.0 ft. During the inspection, the waterway was flowing at less than 1 ft per second. The bridge pier skew was consistent with the channel alignment and does not require attention at this time. The north shoreline consisted of a moderately to heavily vegetated natural embankments with no erosion observed. Refer to Photographs 3 through 6 in Exhibit 2 for views of the shorelines near the structure.

2.2 Substructure Conditions

2.2.1 Pier 2

The channel bottom material around Pier 2 consisted of sand, gravel, and cobbles with approximately 2 inches of probe rod penetration. Light scaling up to 1/16-inch penetration extended from the waterline to the channel bottom. A moderate accumulation of timber debris consisting of logs and branches up to 12 inches diameter was observed along the north and south face of the pier, extending from the channel bottom up 6 feet. Refer to Figure 6 in Exhibit 1 for detailed inspection notes of Pier 2. Refer to Photographs 7 through 9 in Exhibit 2 for views of Pier 2.

2.2.2 Pier 3

The channel bottom material around Pier 3 consisted of sand, gravel, and cobbles with approximately 2 inches of probe rod penetration. Light scaling up to 1/16-inch penetration extended from the waterline to the channel bottom. A light accumulation of timber debris consisting of a tree and branches up to 4 inches diameter was observed at the waterline, extending across the upstream nose and along the entire north face to the downstream nose. Refer to Figure 7 in Exhibit 1 for detailed inspection notes of Pier 3. Refer to Photographs 10 and 11 in Exhibit 2 for views of Pier 3.

3.0 EVALUATION AND RECOMMENDATIONS

Overall, the inspected substructure units of Structure No. BEL-007-0099 were in good condition. A comparison of the soundings recorded during the previous inspection on September 19, 2012 and the soundings taken during this inspection revealed no significant change in the channel bottom profile in the vicinity of the structure. Since no design or as-built plans were available for the bridge, the amount of embedment of the submerged substructure units in the channel bottom is unknown. As a result, the channel bottom configuration should continue to be monitored during future underwater inspections to ensure that localized scour or overall channel degradation is not occurring and that all submerged substructure units remain adequately embedded in the channel bottom. Design or as-built drawings for the bridge should be obtained and reviewed, if possible, prior to the next underwater inspection to determine the exact construction of the substructure units and their foundations.

The scaling observed on Piers 2 and 3 is not a structural concern at this time given its size compared to the overall pier size, and as a result, no repairs are recommended. This area should be monitored during future inspections for increasing extent or severity of the scaling and exposure of reinforcing steel. If the extent or

severity of the scaling is observed to be increasing or reinforcing steel becomes exposed, it may be necessary to repair the area at that time.

The timber debris accumulation at Piers 2 and 3 did not significantly affect the channel flow, and as a result, does not require removal at this time. If the debris accumulation increases in size or density, it may be necessary to remove the debris to reduce excessive lateral loads on the pier, limit further debris accumulation, and reduce the likelihood of channel bottom degradation resulting from obstructed flow.

It is recommended that the submerged substructure units of Structure No. BEL-007-0099 be next inspected underwater at an interval not to exceed 60 months, no later than August 3, 2022.

Respectfully Submitted,
COLLINS ENGINEERS, INC.

Joshua Johnson, P.E.
Project Manager/Team Leader

Originated by:
Jacob P. Green

EXHIBIT 1 – FIGURES

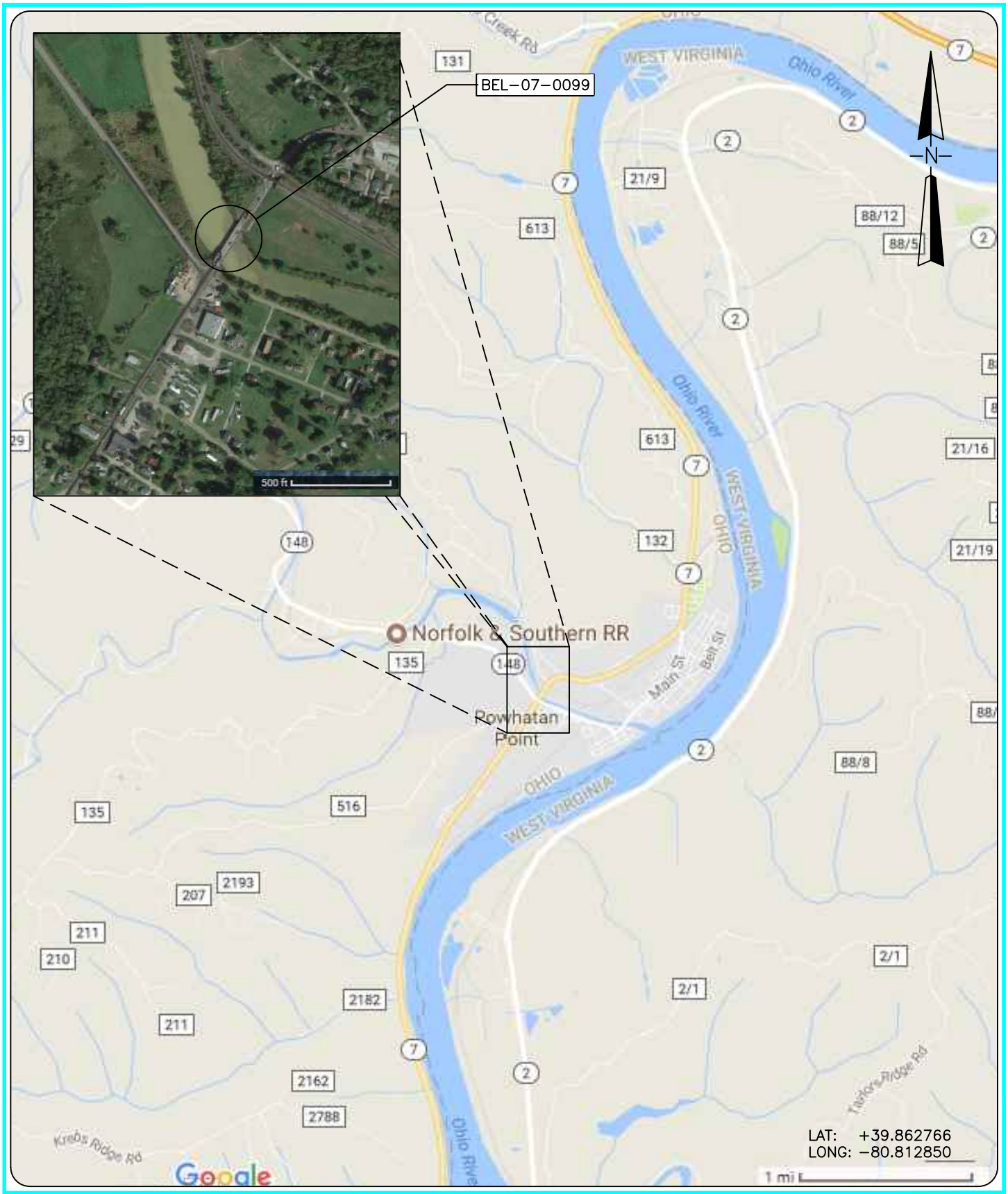

COLLINS ENGINEERS
124 Venture Court, Ste 10
Lexington, KY 40511
Phone: 859-367-0097
Fax: 859-367-0140

Ohio Department of Transportation, District 9
650 Eastern Avenue
Chillicothe, OH 45601
Phone: 740-773-2691

SR 7 OVER CAPTINA CREEK
STRUCTURE NO. BEL-07-0099

LOCATION MAP

BELMONT COUNTY, OHIO

INSPECTED BY: JMJ	CEI PROJECT: 55–10356.00
DRAWN BY: DAJ	DATE: AUG 2017
CHECKED BY: JMJ	SHEET NO: 1

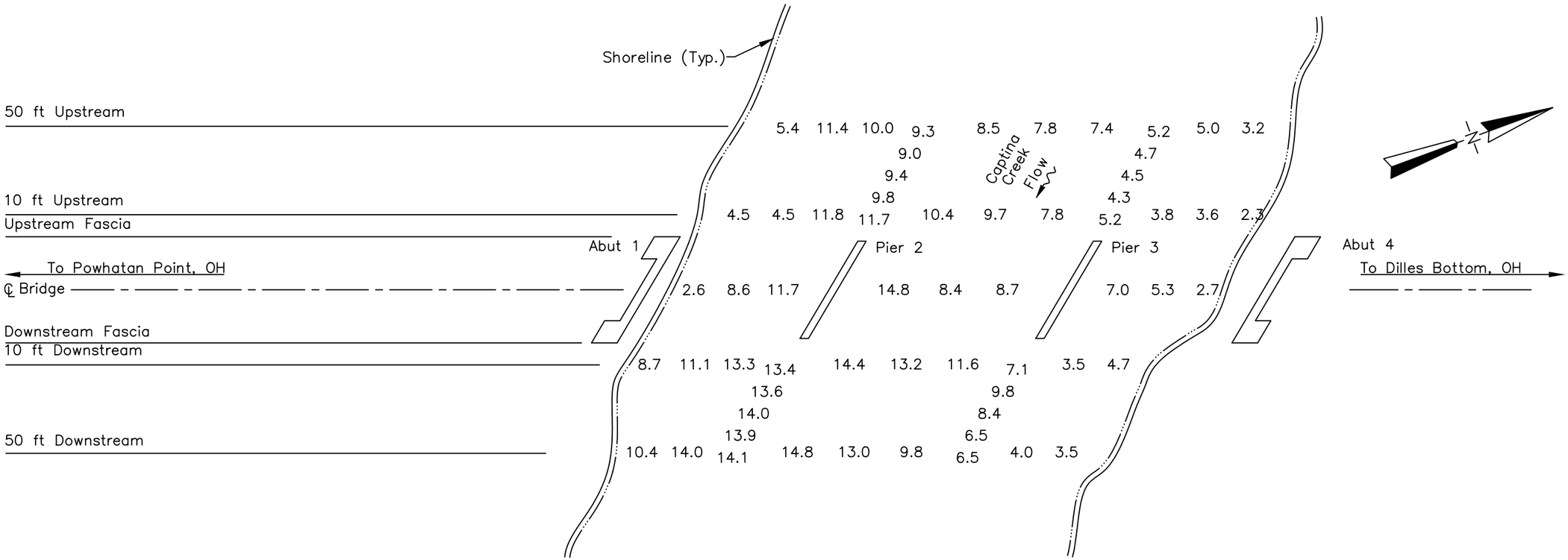

GENERAL NOTES:

SOUNDING PLAN

1. Piers 1 and 2 were inspected underwater. Substructure units are labeled according to available record drawings.
2. At the time of inspection on September 19, 2012, the waterline was located approximately 16.3 ft below Top of the Concrete Barrier at Pier 1, Upstream (West) Side (Assumed EL. +100.0 ft). This corresponds with a waterline elevation of +624.26 ft.
3. Soundings indicate the water depth at the time of inspection and are measured in feet.
4. Soundings were taken parallel to the bridge at the upstream and downstream fascias, at 50 ft upstream and downstream of the fascias, at 10 ft intervals between the substructure units, and at 1/4 points in–line with the piers upstream and downstream up to 50 ft.

LEGEND

2.7 Sounding Depth from Waterline (ft)

Timber Debris

COLLINS ENGINEERS
124 Venture Court, Ste 10
Lexington, KY 40511
Phone: 859-367-0097
Fax: 859-367-0140

Ohio Department of Transportation, District 9
650 Eastern Avenue
Chillicothe, OH 45601
Phone: 740-773-2691

SR 7 OVER CAPTINA CREEK
STRUCTURE NO. BEL-07-0099
SOUNDING PLAN
BELMONT COUNTY, OHIO

CEI PROJECT	55–10356.00
INSPECTED BY:	JMJ
DRAWN BY:	DAJ
CHECKED BY:	JMJ
DATE:	AUG 2017
SHEET NO:	2

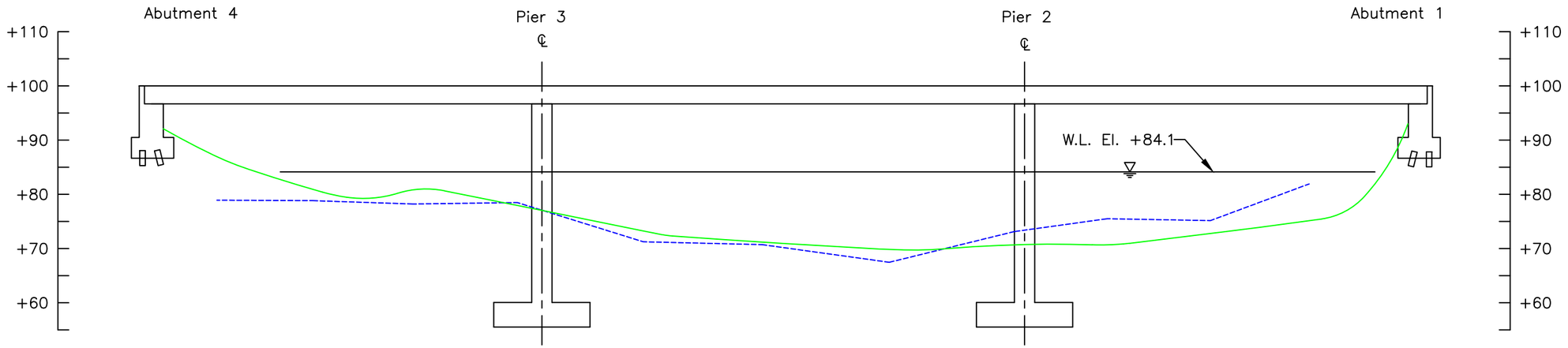

DOWNSTREAM FASCIA
CHANNEL CROSS SECTION
(LOOKING DOWNSTREAM)

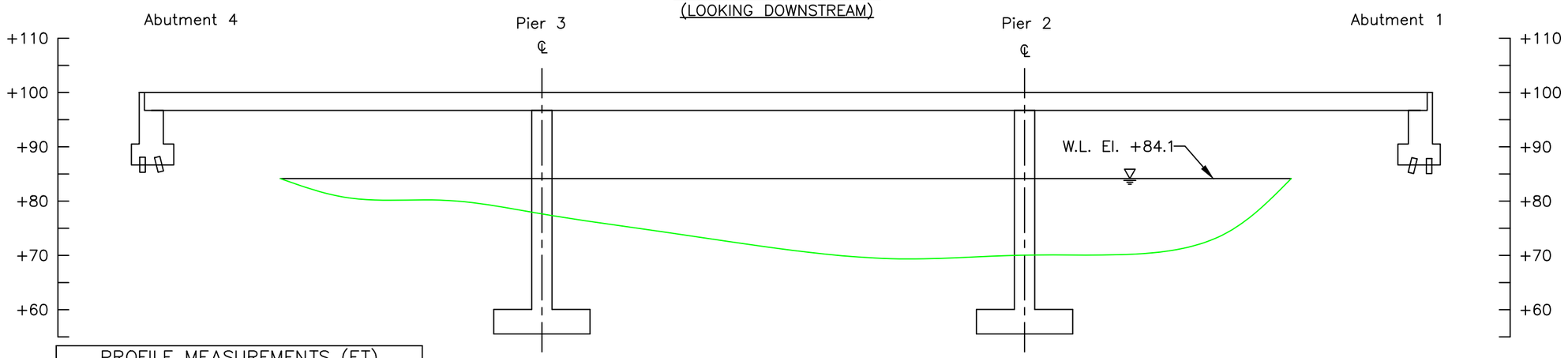

DOWNSTREAM 50 FT
CHANNEL CROSS SECTION
(LOOKING DOWNSTREAM)

PROFILE MEASUREMENTS (FT)		
Location	X	Y
A1	0.0	7.0
1/4	18.3	15.8
1/2	36.5	16.0
3/4	54.8	15.9
P2	73.0	15.9
1/4	95.3	15.9
1/2	117.5	15.9
3/4	139.8	15.6
P3	162.0	15.6
1/4	180.0	15.6
1/2	198.0	15.4
3/4	216.0	15.4
A4	234.0	7.9

Note:

Footing elevations unknown due to unavailable record drawings.

LEGEND

- Approximate Channel Bottom – August 2017
- Approximate Channel Bottom – July 2014
- Approximate Channel Bottom – 2009 (No Data)
- Timber Debris
- Water Surface
- +100 Elevation (ft)

COLLINS ENGINEERS
124 Venture Court, Ste 10
Lexington, KY 40511
Phone: 859-367-0097
Fax: 859-367-0140

Ohio Department of Transportation, District 9
650 Eastern Avenue
Chillicothe, OH 45601
Phone: 740-773-2691

SR 7 OVER CAPTINA CREEK
STRUCTURE NO. BEL-07-0099
CROSS SECTIONS
BELMONT COUNTY, OHIO

CEI PROJECT 55–10356.00
INSPECTED BY: JMJ
DRAWN BY: DAJ
CHECKED BY: JMJ
DATE: AUG 2017
SHEET NO: 3

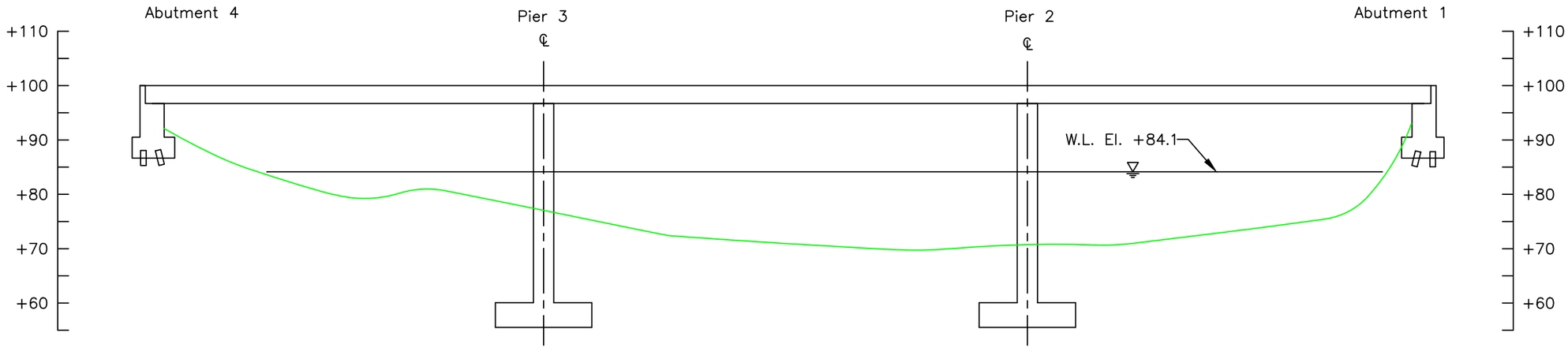

STRUCTURE CENTERLINE
CHANNEL CROSS SECTION
(LOOKING DOWNSTREAM)

Note:

Footing elevations unknown due to unavailable record drawings.

LEGEND

- Approximate Channel Bottom – August 2017
- Approximate Channel Bottom – 2014 (No Data)
- Approximate Channel Bottom – 2009 (No Data)
- Timber Debris
- Water Surface
- +100 Elevation (ft)

COLLINS ENGINEERS
124 Venture Court, Ste 10
Lexington, KY 40511
Phone: 859-367-0097
Fax: 859-367-0140

Ohio Department of Transportation, District 9
650 Eastern Avenue
Chillicothe, OH 45601
Phone: 740-773-2691

SR 7 OVER CAPTINA CREEK
STRUCTURE NO. BEL-07-0099
CROSS SECTIONS
BELMONT COUNTY, OHIO

CEI PROJECT	55–10356.00
INSPECTED BY:	JMJ
DRAWN BY:	DAJ
CHECKED BY:	JMJ
DATE:	AUG 2017
SHEET NO:	4

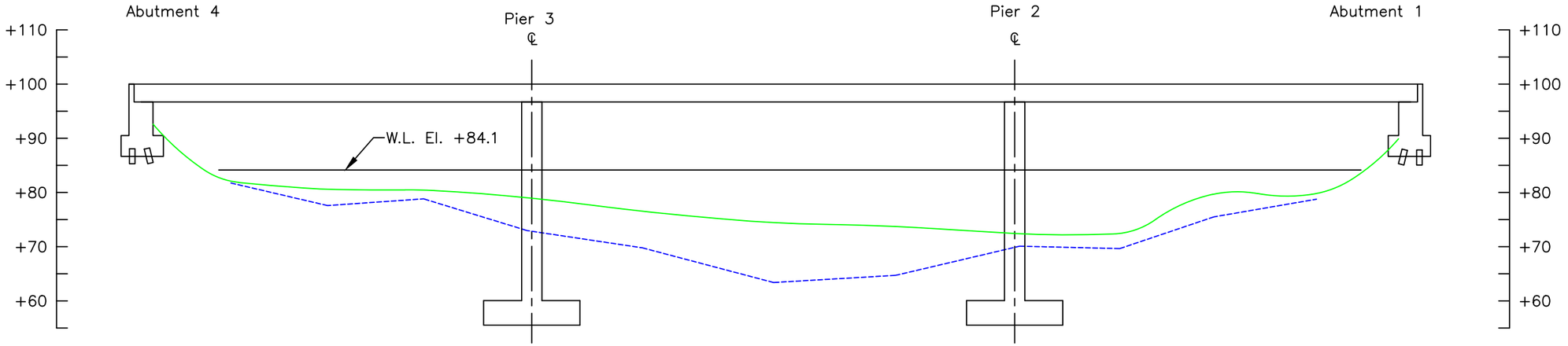

UPSTREAM FASCIA
CHANNEL CROSS SECTION
(LOOKING DOWNSTREAM)

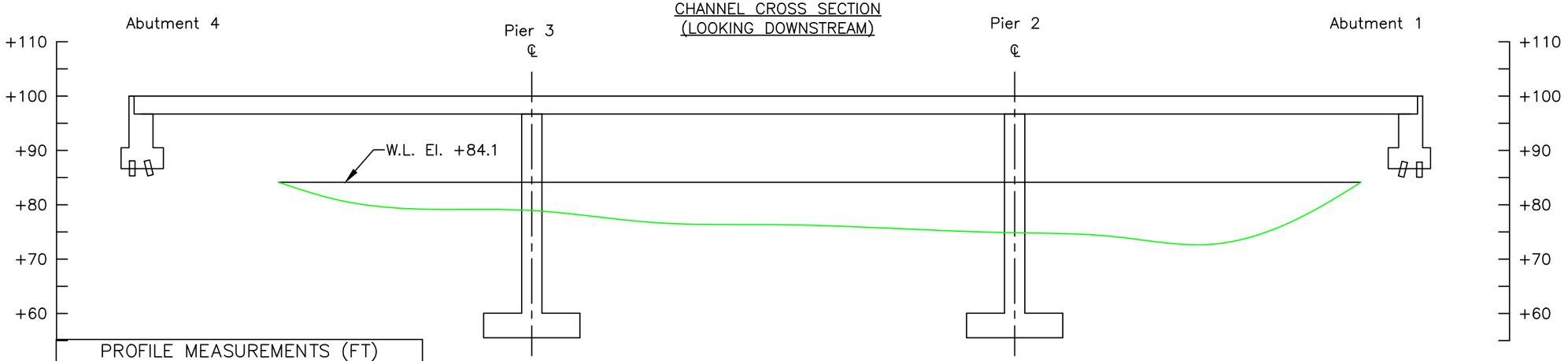

UPSTREAM 50 FT
CHANNEL CROSS SECTION
(LOOKING DOWNSTREAM)

PROFILE MEASUREMENTS (FT)		
Location	X	Y
A4	0.0	7.4
3/4	18.0	15.4
1/2	36.0	15.4
1/4	54.0	15.4
P3	72.0	15.5
3/4	94.3	15.5
1/2	116.5	15.5
1/4	138.8	15.6
P2	161.0	15.7
3/4	179.3	16.0
1/2	197.5	16.0
1/4	215.8	15.8
A1	234.0	10.1

Note:

Footing elevations unknown due to unavailable record drawings.

LEGEND

- Approximate Channel Bottom – August 2017
- Approximate Channel Bottom – July 2014
- Approximate Channel Bottom – 2009 (No Data)
- Timber Debris
- Water Surface
- +100 Elevation (ft)

COLLINS ENGINEERS
124 Venture Court, Ste 10
Lexington, KY 40511
Phone: 859-367-0097
Fax: 859-367-0140

Ohio Department of Transportation, District 9
650 Eastern Avenue
Chillicothe, OH 45601
Phone: 740-773-2691

SR 7 OVER CAPTINA CREEK
STRUCTURE NO. BEL-07-0099
CROSS SECTIONS
BELMONT COUNTY, OHIO

CEI PROJECT
55–10356.00

INSPECTED BY:
JMJ

DRAWN BY:
DAJ

CHECKED BY:
JMJ

DATE:
AUG 2017

SHEET NO:
5

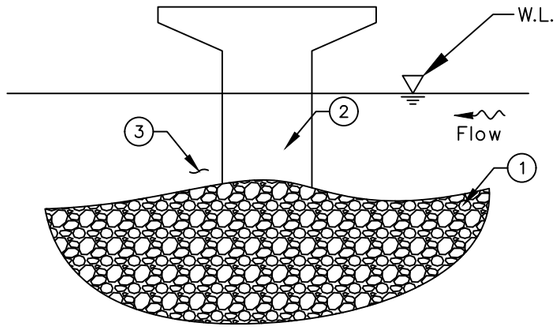

NORTH ELEVATION

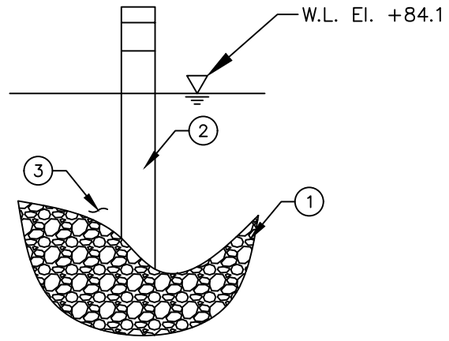

UPSTREAM NOSE

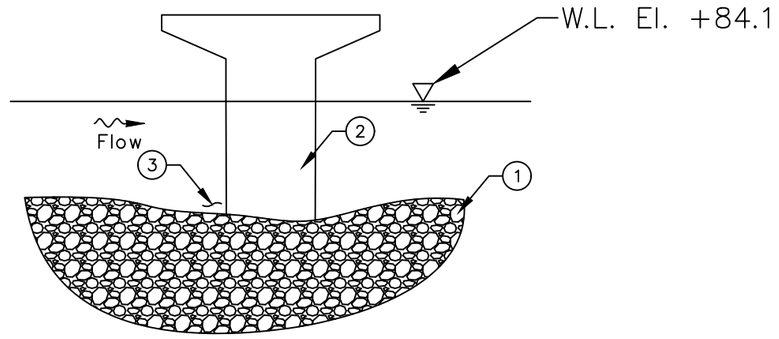

SOUTH ELEVATION

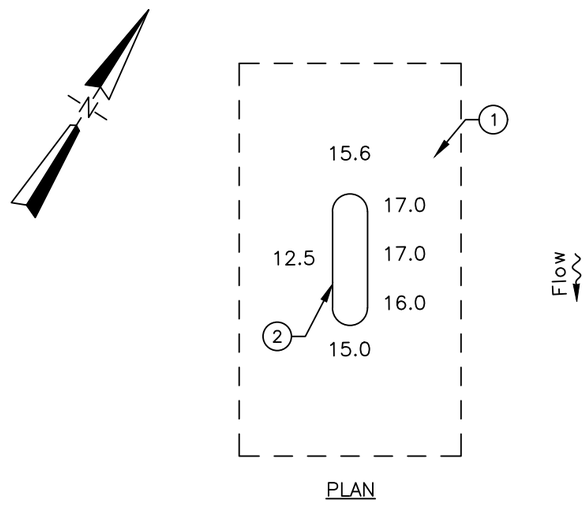

PLAN

INSPECTION NOTES:

1. The channel bottom material consisted of sand, gravel, and cobbles with approximately 2 in. probe rod penetration.
2. The submerged portions of the pier exhibited light scaling up to 1/16 in. from the channel bottom to the water level.
3. Moderate timber debris consisting of logs and branches up to 12 in. diameter along the face of the pier.

LEGEND

2.7	Sounding Depth from Waterline (ft)
———	Approximate Channel Bottom – July 2015
	Timber Debris
	Water Surface

COLLINS ENGINEERS
124 Venture Court, Ste 10
Lexington, KY 40511
Phone: 859-367-0097
Fax: 859-367-0140

Ohio Department of Transportation, District 9
650 Eastern Avenue
Chillicothe, OH 45601
Phone: 740-773-2691

SR 7 OVER CAPTINA CREEK
STRUCTURE NO. BEL-07-0099
PIER 2
BELMONT COUNTY, OHIO

CEI PROJECT 55–10356.00
INSPECTED BY: JMJ
DRAWN BY: DAJ
CHECKED BY: JMJ
DATE: AUG 2017
SHEET NO: 6

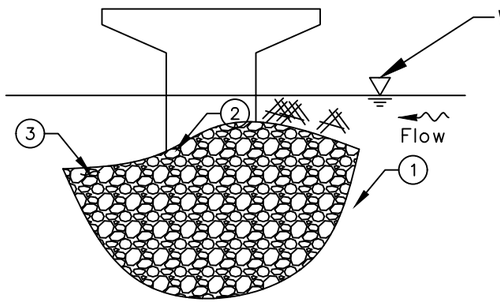

NORTH ELEVATION

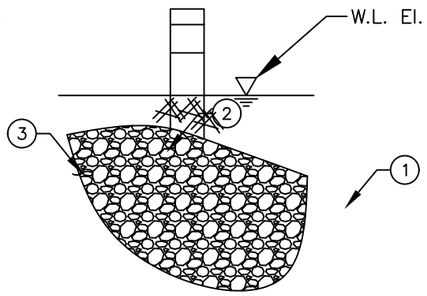

UPSTREAM NOSE

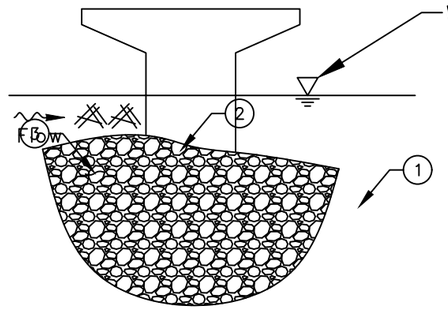

SOUTH ELEVATION

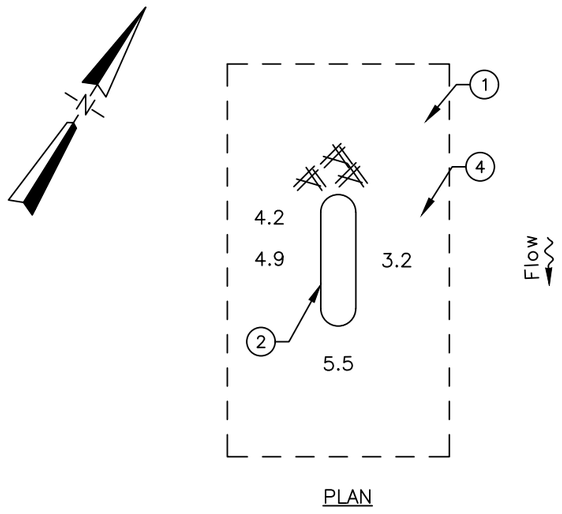

PLAN

INSPECTION NOTES:

1. The channel bottom material consisted of sand, gravel, and cobbles with approximately 2 in. probe rod penetration.
2. The submerged portions of the pier exhibited light scaling up to 1/16 in. from the channel bottom to the waterline.
3. Moderate timber debris consisting of logs and branches up to 4 in. diameter along the face of the pier.
4. A tree from the upstream nose to the downstream nose was found from the waterline to the channel bottom.

LEGEND

2.7	Sounding Depth from Waterline (ft)
———	Approximate Channel Bottom – July 2015
	Timber Debris
	Water Surface

COLLINS ENGINEERS
124 Venture Court, Ste 10
Lexington, KY 40511
Phone: 859-367-0097
Fax: 859-367-0140

Ohio Department of Transportation, District 9
650 Eastern Avenue
Chillicothe, OH 45601
Phone: 740-773-2691

SR 7 OVER CAPTINA CREEK
STRUCTURE NO. BEL-07-0099
PIER 3
BELMONT COUNTY, OHIO

CEI PROJECT 55–10356.00
INSPECTED BY: JMJ
DRAWN BY: DAJ
CHECKED BY: JMJ
DATE: AUG 2017
SHEET NO: 7

EXHIBIT 2 – INSPECTION PHOTOGRAPHS



Photograph No. 1: Overall View of Structure No. BEL-007-0099, Looking West.



Photograph No. 2: Overall View of Structure No. BEL-007-0099, Looking East.



Photograph No. 3: View of the South Embankment Upstream of the Structure, Looking Southeast.



Photograph No. 4: View of the South Embankment Downstream of the Structure, Looking South.



Photograph No. 5: View of the North Embankment Upstream of the Structure, Looking Northeast.



Photograph No. 6: View of the North Embankment Downstream of the Structure, Looking Northwest.



Photograph No. 7: View of the South Face of Pier 2, Looking Northeast.



Photograph No. 8: View of the North Face of Pier 2, Looking Southeast.



Photograph No. 9: View of the Typical Concrete Condition on the North Face of Pier 2, Looking South.



Photograph No. 10: View of the North Face of Pier 3, Looking Southwest.



Photograph No. 11: View of the South Face of Pier 3, Looking Northeast.