







UNDERWATER BRIDGE INSPECTION REPORT

STRUCTURE NO. SFN0726184
(BEL-001-0051)
SPRD 1 OVER BARKCAMP CREEK/BELMONT LAKE
BELMONT COUNTY, OH
DISTRICT 11

July 2022

Prepared for:

STATE OF OHIO DEPARTMENT OF TRANSPORTATION

STATE OF OHIO
MATTHEW ROGERS
PE.87504
PROFESSIONAL ENGINEER

Prepared by:

COLLINS ENGINEERS INC.

124 Venture Court, Suite 10

Lexington, Kentucky 40511

859.367.0097 • www.collinsengr.com

TABLE OF CONTENTS

EXECUTIVE SUMMARY
1.0 INTRODUCTION 1
1.1 Purpose and Scope 1
1.2 General Description of the Structure 1
1.3 Method of Investigation 1
2.0 EXISTING CONDITIONS 2
2.1 General Conditions 2
2.2 Substructure Conditions 3
2.2.1 Bent 2 3
2.2.2 Bent 3 3
2.2.3 Channel Bottom and Scour Assessment 3
3.0 EVALUATION AND RECOMMENDATIONS 4
EXHIBIT 1 – FIGURES 5
LOCATION MAP
SOUNDING PLAN
CHANNEL CROSS SECTIONS – 50 FT UPSTREAM & UPSTREAM FASCIA
CHANNEL CROSS SECTIONS – STRUCTURE CENTERLINE
CHANNEL CROSS SECTIONS – 50 FT DOWNSTREAM & DOWNSTREAM FASCIA
BENT 2
BENT 3
EXHIBIT 2 – INSPECTION PHOTOGRAPHS 13
Photograph No. 1: Overall View of Structure No. SFN0726184, Looking North.
Photograph No. 2: Overall View of Structure No. SFN0726184, Looking Southwest.
Photograph No. 3: View of the West Approach, Looking East.
Photograph No. 4: View of the East Approach, Looking West.
Photograph No. 5: View of the West Embankment Upstream of the Structure, Looking Southwest.
Photograph No. 6: View of the West Embankment at the Structure, Looking Northwest.
Photograph No. 7: View of the West Embankment Downstream of the Structure, Looking Northwest.
Photograph No. 8: View of the East Embankment Upstream of the Structure, Looking Southeast.
Photograph No. 9: View of the East Embankment at the Structure, Looking Southeast.
Photograph No. 10: View of the East Embankment Downstream of the Structure, Looking East.
Photograph No. 11: View of the Upstream Channel, Looking North.

Photograph No. 12: View of the Downstream Channel, Looking South.
Photograph No. 13: View of the Typical Underdeck Condition, Looking South.
Photograph No. 14: View of the West Face of Bent 2, Looking Southeast.
Photograph No. 15: View of the East Face of Bent 2, Looking Northwest.
Photograph No. 16: View of the West Face of Bent 3, Looking Northeast.
Photograph No. 17: View of the East Face of Bent 3, Looking Southwest.
Photograph No. 18: View of the Typical Pile Condition at the Waterline on Bent 3, Looking North.
EXHIBIT 3 – DIVE PROCEDURES CHECKLIST 23

EXECUTIVE SUMMARY

Project: ODOT D11 Underwater Bridge Inspections - 2022.

Purpose of Project: To perform a detailed visual and tactile underwater investigation of bridges for the Ohio Department of Transportation, District 11.

Inspection Team: Team Leader – Matthew Rogers, P.E. – Collins Engineers, Inc.
Team Member – Kevin Mitchell, E.I.T. – Collins Engineers, Inc.
Team Member – Josh Davis, E.I.T. – Collins Engineers, Inc.

Inspection Date(s): July 25, 2022

Water Visibility:	2 ft	***Water Velocity:***	<1 ft/s
Water Temperature:	86 °F	***Weather:***	Sunny – 85 °F
Waterline Elevation:	93.9 ft	***Type of Boat:***	10 ft Kayak
High-water Elevation:	94.5 ft		
Coordinates:	40.0490°N, 81.0236°W		
Access Location:	Public Boat Launch located west of the structure		
Dive Mode:	Surface Supplied Air		
Waterline Reference:	6.1 ft below the top of deck at the downstream nose of Bent 2.		
Maximum Depth at SSU:	6.1 ft – East Face of Bent 2		
Shoreline Conditions:	The west and east shorelines consisted of riprap approximately 2 to 3 ft diameter with no erosion observed.		

Summary of Findings:

- **Bent 2:**
  - Previous defects were observed to be repaired.
- **Bent 3:**
  - Previous defects were observed to be repaired.

Summary of Recommendations:

- Monitor the channel bottom.

Underwater Inspection Coding:

NBI Ratings:

Item	Description	Coding	Condition
B.C.03	Substructure (Overall)	8– Very Good Condition	Repaired
B.C.09	Channel Cond. Rating	8– Very Good Condition	
B.C.10	Channel Protection Cond.	8– Very Good Condition	Riprap
B.C.11	Scour Cond. Rating	5– Within Foundation Limits	Stable (Inspector Recommended)
B.C.15	Underwater Cond. Rating	7– Good Condition	
B.IE.03	Insp. Date	July 25, 2022	
B.IE.05	UW Insp. Interval	60 Months	

AASHTO National Bridge Element (NBE) Ratings:

Element #	Description	Units	Total	Condition State			
				1	2	3	4
225	Steel Pile	EA	12	12	0	0	0

Note: Ratings were developed using the FHWA Specifications for the National Bridge Inventory. The recommended ratings consider inspected elements located within the waterway and conditions existing below the water surface only. Additional consideration is necessary for the assignment of overall condition ratings for this bridge.

1.0 INTRODUCTION

1.1 Purpose and Scope

This report consists of the results of a detailed underwater investigation performed at the SPRD 1 Bridge over Barkcamp Creek/Belmont Lake in Belmont County, OH. Collins Engineers, Inc. (Collins) conducted the underwater investigation for the Ohio Department of Transportation (ODOT), District 11 on July 25, 2022. The primary purpose of the investigation was as follows:

- Determine the condition of the substructure components located in the water at the time of the inspection from the waterline to the channel bottom.
- Obtain channel bottom depth measurements along the bridge fascias, upstream and downstream of the bridge, and around the submerged substructure units.
- Determine the condition of the shorelines in the vicinity of the structure.
- Obtain photographs of the bridge and any significant defects.

In addition, a brief inspection was made of areas that could be submerged during periods of high water. The following report includes a description of the structure, the method of investigation, a description of existing conditions, an evaluation and recommendations based on the conditions, inspection figures, and photographs.

1.2 General Description of the Structure

Structure No. SFN0726184 spans 73 ft, carrying SPRD 1 over Barkcamp Creek/Belmont Lake and is approximately 36 ft wide. The bridge superstructure is constructed of three spans, each composed of continuous concrete. The roadway orientation of the longitudinal axis of the bridge is west to east. The substructure units are labeled as Abutments 1 and 4 and Bents 2 and 3. Existing design drawings were not available at the time of the inspection. Refer to Figure 1 in Exhibit 1 for a Location Map of the bridge. Refer to Photographs 1 through 4 in Exhibit 2 for overall views of the bridge.

1.3 Method of Investigation

A detailed field inspection was conducted to determine the physical condition of the submerged bridge substructure units from the waterline to the channel bottom. A brief visual examination of the substructure units above the waterline was also made.

A three-person team consisting of professional engineer-diver and team leader (Matthew O. Rogers, P.E.) and engineer-divers (Kevin Mitchell, E.I.T. and Josh Davis, E.I.T.) conducted the underwater inspection. The inspection was conducted using surface supplied air diving equipment. During the inspection, the inspectors worked from a boat and a note taker on the shore recorded the inspection notes.

The underwater inspection consisted of a visual and tactile examination of the accessible surfaces of the substructure units from the waterline to the channel bottom with particular attention given to any observed areas of deterioration or apparent distress. Approximately 10 percent of the total area on the underwater surfaces of the substructure units was cleaned so that the condition could be more closely examined. Photographs were taken to document the general conditions and observed deficiencies. The type of channel bottom material, the presence or extent of scour, the presence or extent of riprap, the presence or extent of drift and debris, and the location of any foundation exposure or undermining were noted.

Channel bottom soundings were performed utilizing a telescoping survey rod. Soundings were taken parallel to the bridge at the upstream and downstream fascias, at quarter intervals between the substructure units, and at 10 ft intervals in-line with the bents upstream and downstream up to 50 ft, and the waterline was referenced to a known elevation on the bridge. A sounding plan was developed using the soundings and approximate location of the shorelines. Refer to Figures 2 through 5 in Exhibit 1 for the sounding plan and channel cross sections that show the channel limits and water depths around the structure.

2.0 EXISTING CONDITIONS

2.1 General Conditions

At the time of the inspection, the waterline of Barkcamp Creek/Belmont Lake was located approximately 6.1 ft below the top of deck at the downstream nose of Bent 2, which corresponds to an assumed waterline elevation of 93.9 ft. During the inspection, the waterway was flowing north to south below the structure at a rate of 1 ft/s. The approximate high-water elevation was observed to be 94.5 ft.

The bridge bent skew was consistent with the channel alignment and does not require attention at this time. The west and east shorelines consisted of riprap approximately 2 to 3 ft diameter with no erosion observed. Refer to Photographs 5 through 12 in Exhibit 2 for views of the shorelines near the structure.

2.2 Substructure Conditions

2.2.1 Bent 2

The channel bottom material around Bent 2 consisted of riprap approximately 2 to 3 ft diameter with no probe rod penetration. Typical light marine growth algae and silt up to 1/8 in. deep was observed on the submerged portions of the bent. Refer to Figure 6 in Exhibit 1 for detailed inspection notes of Bent 2. Refer to Photographs 13 through 15 in Exhibit 2 for views of the typical underdeck condition and Bent 2.

2.2.2 Bent 3

The channel bottom material around Bent 3 consisted of riprap approximately 2 to 3 ft diameter with no probe rod penetration. Typical light marine growth algae and silt up to 1/8 in. deep was observed on the submerged portions of the bent. Refer to Figure 7 in Exhibit 1 for detailed inspection notes of Bent 3. Refer to Photographs 16 through 18 in Exhibit 2 for views of Bent 3 and typical pile condition at the waterline.

2.2.3 Channel Bottom and Scour Assessment

At the time of the inspection, Barkcamp Creek/Belmont Lake was experiencing normal flow and the channel bottom appeared stable for the type of material. The channel bottom was primarily riprap approximately 2 to 3 ft diameter surrounding the substructure units. No additional scour, undermining, or scour countermeasures were observed.

3.0 EVALUATION AND RECOMMENDATIONS

Overall, the submerged substructure units of Structure No. SFN0726184 were in good condition below water. A comparison of the soundings recorded during the previous inspection on August 5, 2017 and the soundings taken during this inspection revealed no significant change in the channel bottom profile in the vicinity of the structure. Since no design or as-built plans were available for the bridge, the amount of embedment of the footings in the channel bottom is unknown. As a result, the channel bottom configuration should continue to be monitored during future underwater inspections to verify that localized scour or overall channel degradation is not occurring and that both bent footings remain adequately embedded in the channel bottom. Design or as-built drawings for the bridge should be obtained and reviewed, if possible, prior to the next underwater inspection to determine the exact construction of the bent and their foundations.

It is recommended that the submerged substructure units of Structure No. SFN0726184 be next inspected underwater at an interval not to exceed 60 months, no later than July 25, 2027.

Respectfully Submitted,
COLLINS ENGINEERS, INC.



Matthew Rogers, P.E.
Project Manager

Originated by:
Olivia Farmer, E.I.T.

EXHIBIT 1 – FIGURES

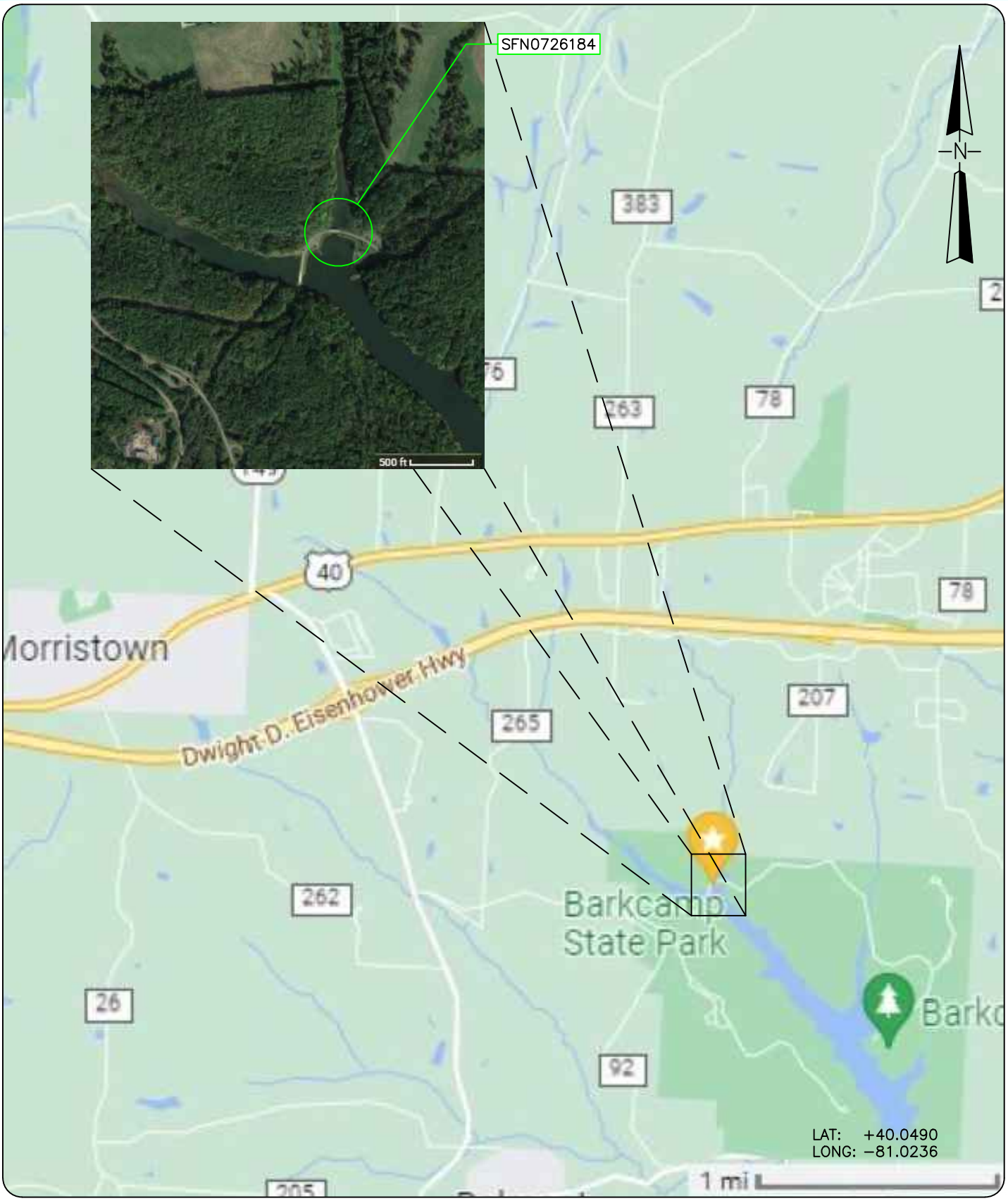

COLLINS ENGINEERS
124 Venture Court, Ste 10
Lexington, KY 40511
Phone: 859-367-0097
Fax: 859-367-0140

Ohio Department of Transportation, District 11
2201 Reiser Avenue
New Philadelphia, OH 44663
Phone: 330-339-6633

SPRD 1 OVER BARKCAMP CREEK/BELMONT LAKE
STRUCTURE NO. SFN0726184
LOCATION MAP
BELMONT COUNTY, OHIO

INSPECTED BY: JTD	CEI PROJECT: 55−13380.01
DRAWN BY: OPF	DATE: 25 JUL 2022
CHECKED BY: JMJ	SHEET NO: 1

Y:\PROJECTS\55 - KENTUCKY\55-13380.01 - ODOT D11 UW BRIDGE INSP (2022)\ENGINEERING\BRIDGES\SFN 0726184 (BEL-001SP-0.51)\DRAWINGS\SFN0726184 - OPF.DWG8/31/2022 8:34:27 AM

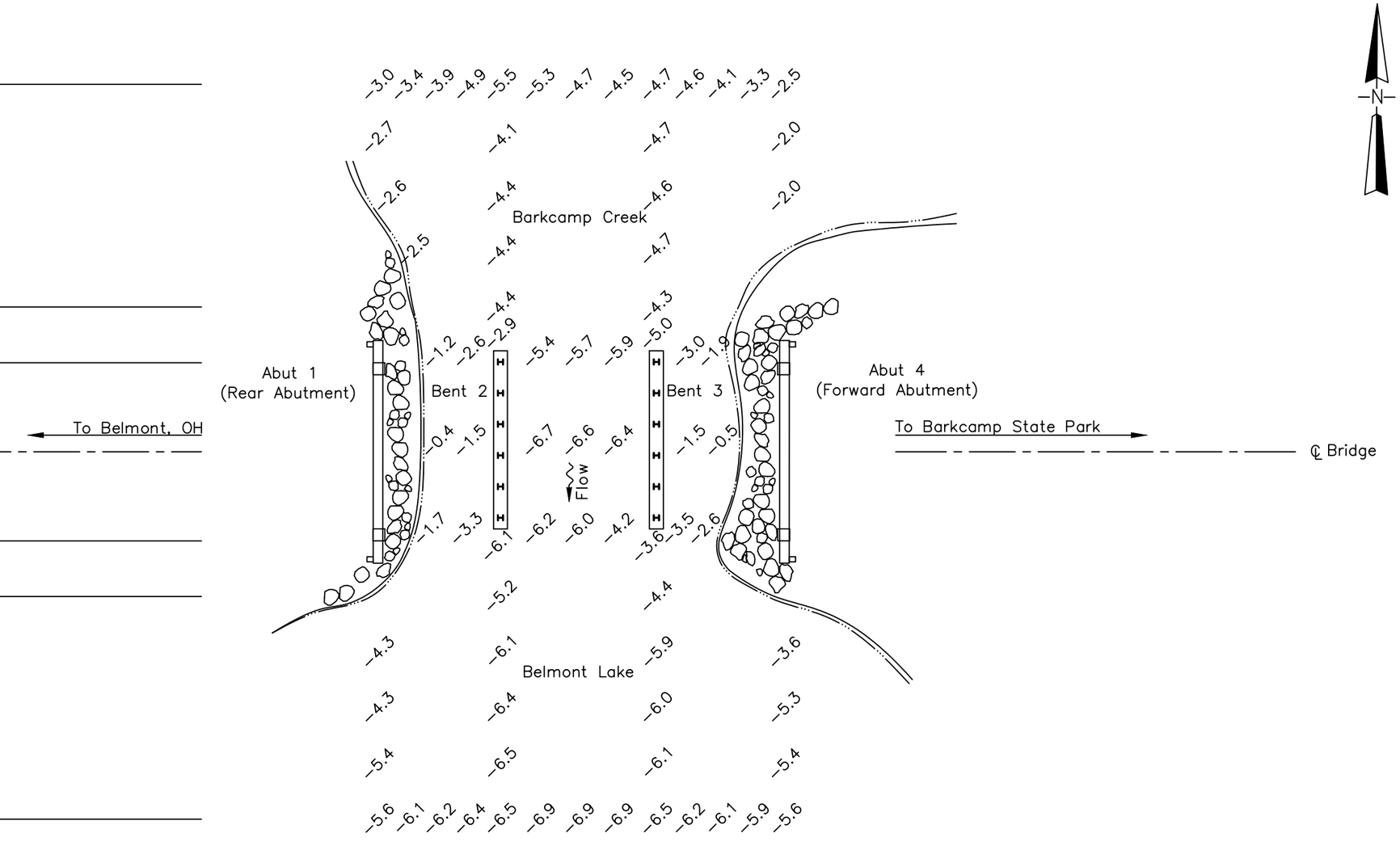

SOUNDING PLAN

GENERAL NOTES:

1. Bents 2 and 3 were inspected underwater. Substructure units are labeled according to available record drawings.
2. At the time of inspection on July 25, 2022, the waterline was located approximately 6.1 ft below the top of deck at the downstream nose of Bent 2 (EL. +100.0 ft). This corresponds with a waterline elevation of +93.9 ft.
3. Soundings indicate the water depth at the time of inspection and are measured in feet.
4. Soundings were taken parallel to the bridge at the upstream and downstream fascias, at quarter intervals between the substructure units, and at 10 ft intervals in–line with the bents upstream and downstream up to 50 ft.

LEGEND

–2.7	Sounding Depth from Waterline (ft)
	Timber Debris

COLLINS ENGINEERS
124 Venture Court, Ste 10
Lexington, KY 40511
Phone: 859-367-0097
Fax: 859-367-0140

Ohio Department of Transportation, District 11
2201 Reiser Avenue
New Philadelphia, OH 44663
Phone: 330-339-6633

SPRD 1 OVER BARKCAMP CREEK/BELMONT LAKE
STRUCTURE NO. SFN0726184

SOUNDING PLAN

BELMONT COUNTY, OHIO

CEI PROJECT 55–13380.01
INSPECTED BY: JTD
DRAWN BY: OPF
CHECKED BY: JMJ
DATE: JUL 2022
SHEET NO: 2

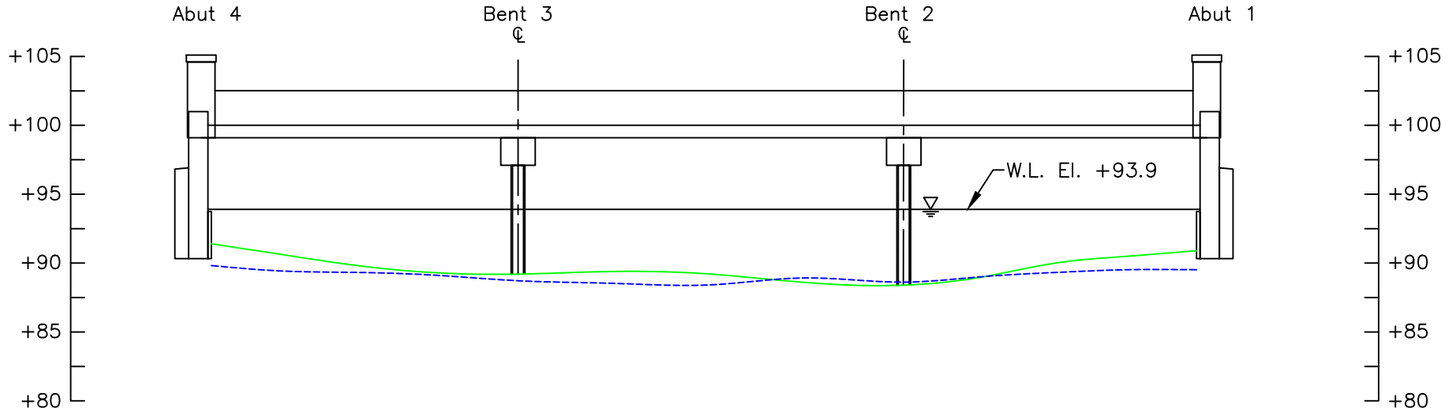

50 FT UPSTREAM
CHANNEL CROSS SECTION
(LOOKING DOWNSTREAM)

Upstream Elevation (Looking Downstream)

Location	Height (ft)
A4	3.5
3/4	5.7
1/2	8.0
1/4	9.1
B3	11.1
3/4	12.0
1/2	11.8
1/4	11.5
B2	9.0
3/4	8.7
1/2	7.3
1/4	5.8
A1	3.8

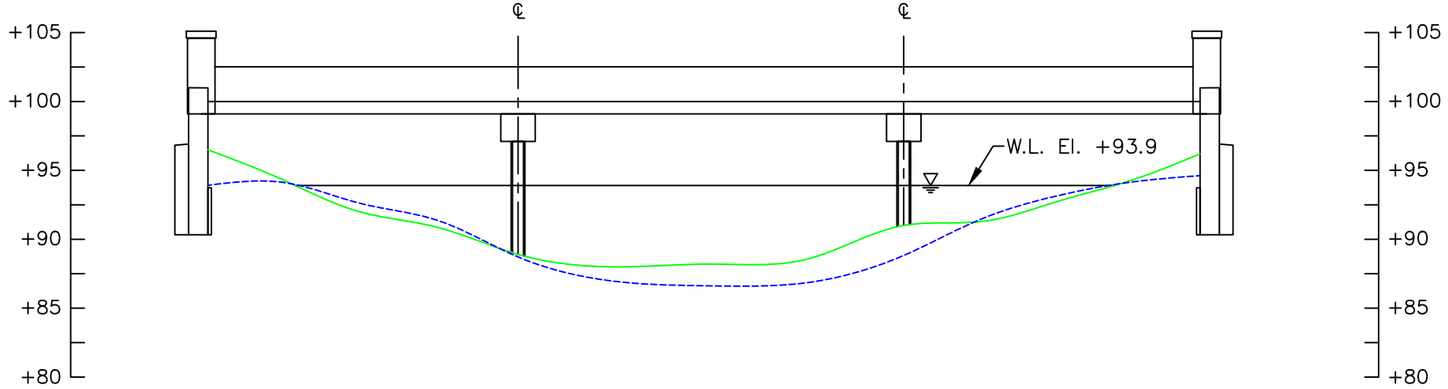

UPSTREAM FASCIA
CHANNEL CROSS SECTION
(LOOKING DOWNSTREAM)

LEGEND

- Approximate Channel Bottom – July 2022
- Approximate Channel Bottom – August 2017
- Approximate Channel Bottom – August 2012 (No Data)
- Timber Debris
- Water Surface
- +450 Elevation (ft)

Note:

Footing elevations unknown due to unavailable record drawings.

COLLINS ENGINEERS
124 Venture Court, Ste 10
Lexington, KY 40511
Phone: 859-367-0097
Fax: 859-367-0140

Ohio Department of Transportation, District 11
2201 Reiser Avenue
New Philadelphia, OH 44663
Phone: 330-339-6633

SPRD 1 OVER BARKCAMP CREEK/BELMONT LAKE
STRUCTURE NO. SFN0726184

CROSS SECTIONS

BELMONT COUNTY, OHIO

CEI PROJECT 55–13380.01
INSPECTED BY: JTD
DRAWN BY: OPF
CHECKED BY: JMJ
DATE: JUL 2022
SHEET NO: 3

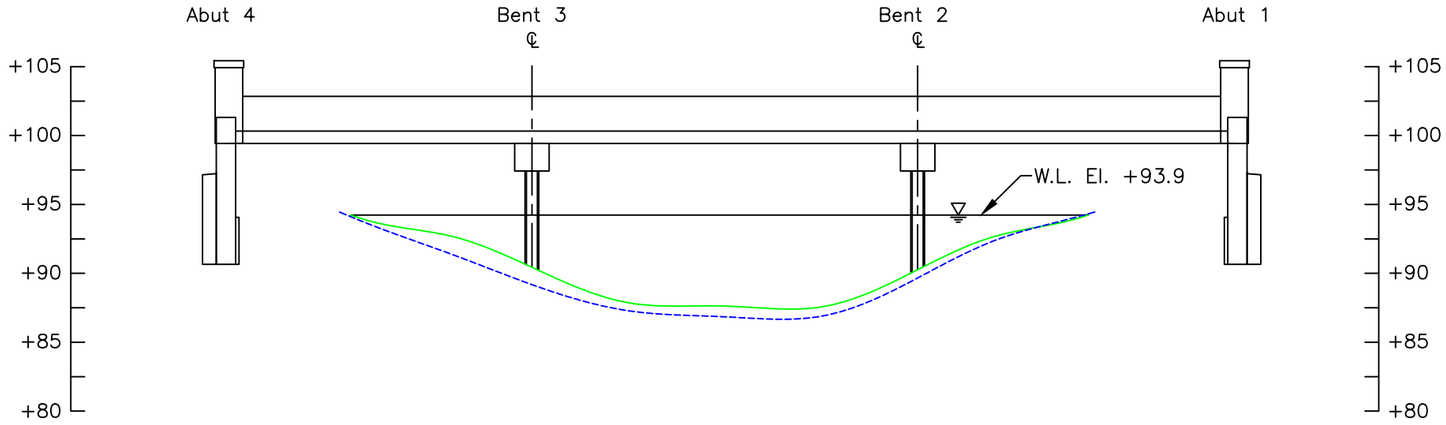

STRUCTURE CENTERLINE
CHANNEL CROSS SECTION
(LOOKING DOWNSTREAM)

Note:

Footing elevations unknown due to unavailable record drawings.

LEGEND

———	Approximate Channel Bottom – July 2022
- - - - - - - - -	Approximate Channel Bottom – August 2017
– – – – –	Approximate Channel Bottom – August 2012 (No Data)
	Timber Debris
	Water Surface
+450	Elevation (ft)

COLLINS ENGINEERS
124 Venture Court, Ste 10
Lexington, KY 40511
Phone: 859-367-0097
Fax: 859-367-0140

Ohio Department of Transportation, District 11
2201 Reiser Avenue
New Philadelphia, OH 44663
Phone: 330-339-6633

SPRD 1 OVER BARKCAMP CREEK/BELMONT LAKE
STRUCTURE NO. SFN0726184

CROSS SECTIONS

BELMONT COUNTY, OHIO

CEI PROJECT 55–13380.01
INSPECTED BY: JTD
DRAWN BY: OPF
CHECKED BY: JMJ
DATE: JUL 2022
SHEET NO: 4

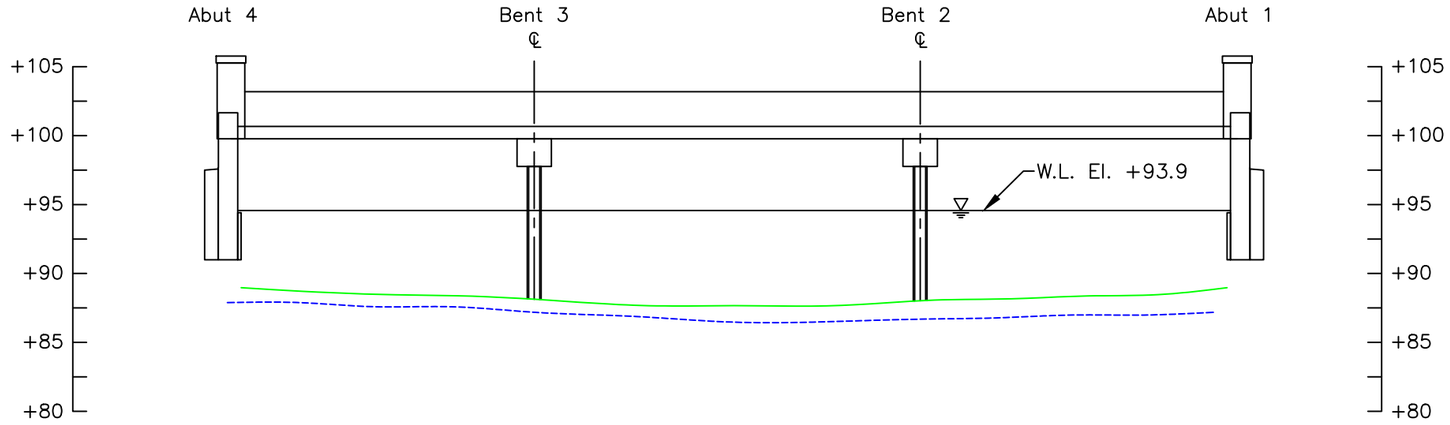

50 FT DOWNSTREAM
CHANNEL CROSS SECTION
(LOOKING DOWNSTREAM)

Downstream Elevation (Looking Downstream)

Location	Height (ft)
A4	3.5
3/4	5.4
1/2	8.7
1/4	9.6
B3	9.7
3/4	10.3
1/2	12.1
1/4	12.3
B2	12.2
3/4	9.4
1/2	8.3
1/4	5.0
A1	3.9

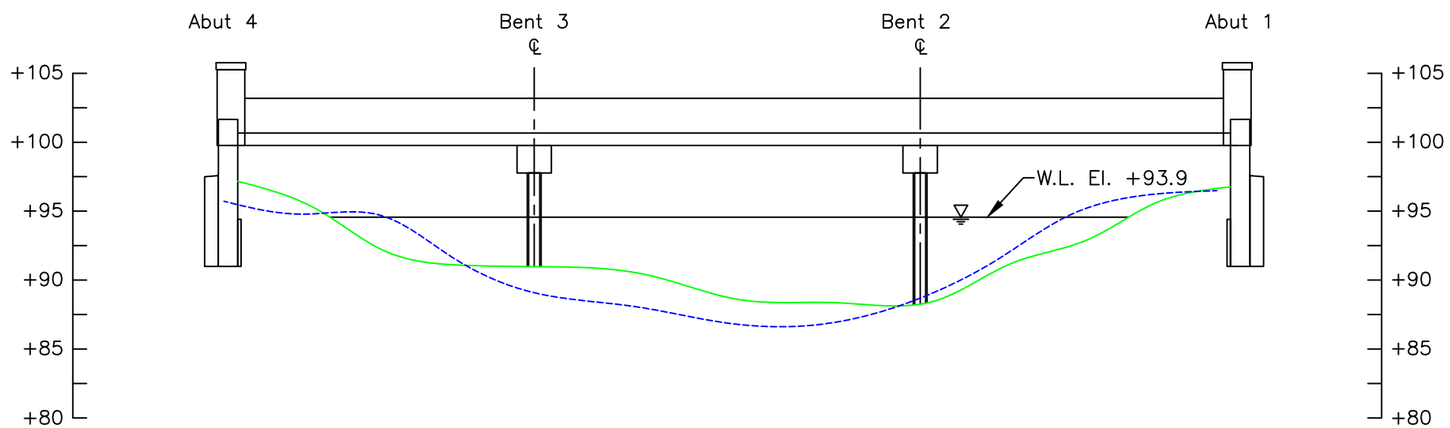

DOWNSTREAM FASCIA
CHANNEL CROSS SECTION
(LOOKING DOWNSTREAM)

LEGEND

- Approximate Channel Bottom – July 2022
- Approximate Channel Bottom – August 2017
- Approximate Channel Bottom – August 2012 (No Data)
- Timber Debris
- Water Surface
- +450 Elevation (ft)

Note:

Footing elevations unknown due to unavailable record drawings.

COLLINS ENGINEERS
124 Venture Court, Ste 10
Lexington, KY 40511
Phone: 859-367-0097
Fax: 859-367-0140

Ohio Department of Transportation, District 11
2201 Reiser Avenue
New Philadelphia, OH 44663
Phone: 330-339-6633

SPRD 1 OVER BARKCAMP CREEK/BELMONT LAKE
STRUCTURE NO. SFN0726184
CROSS SECTIONS
BELMONT COUNTY, OHIO

CEI PROJECT 55–13380.01
INSPECTED BY: JTD
DRAWN BY: OPF
CHECKED BY: JMJ
DATE: JUL 2022
SHEET NO: 5

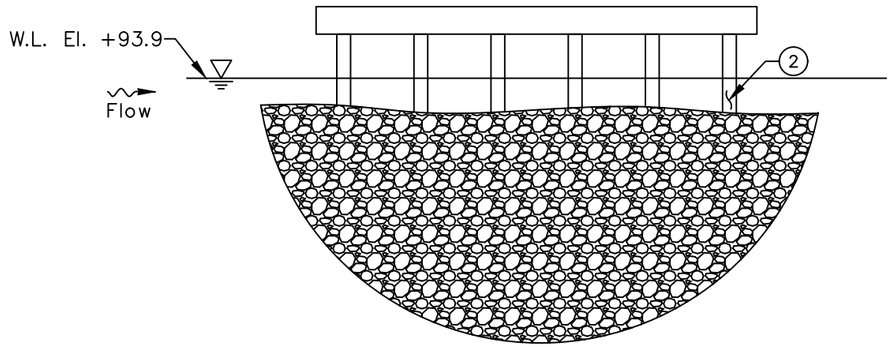

WEST ELEVATION
(LOOKING EAST)

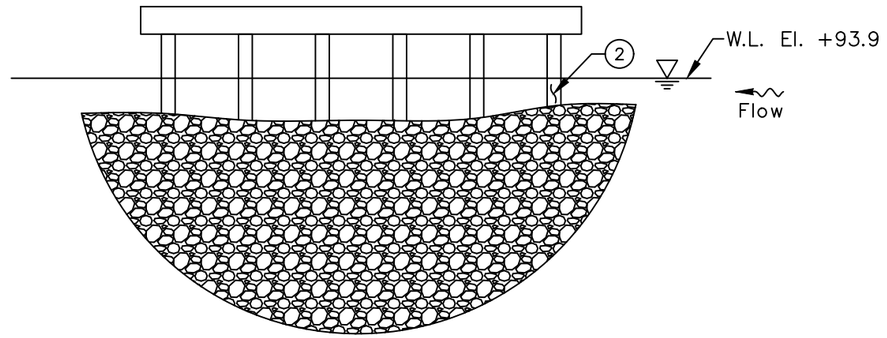

EAST ELEVATION
(LOOKING WEST)

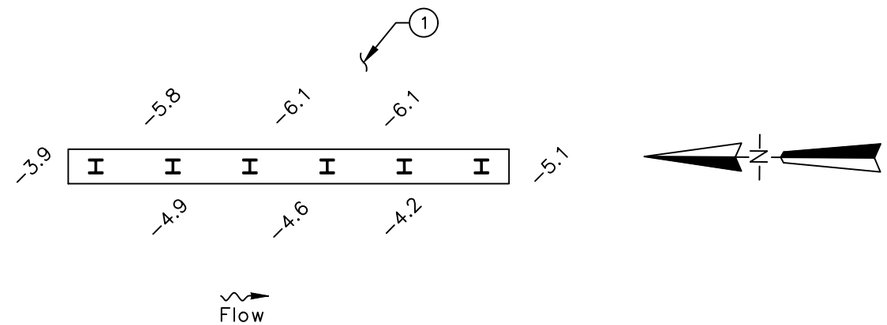

INSPECTION NOTES:

1. The channel bottom material consisted of riprap approximately 2 to 3 ft diameter with no probe rod penetration.
2. Typical light marine growth algae and silt up to 1/8 in. deep was observed on the submerged portions of the bent.

LEGEND

−2.7	Sounding Depth from Waterline (ft)
———	Approximate Channel Bottom – July 2022
	Timber Debris
	Water Surface

COLLINS ENGINEERS
124 Venture Court, Ste 10
Lexington, KY 40511
Phone: 859-367-0097
Fax: 859-367-0140

Ohio Department of Transportation, District 11
2201 Reiser Avenue
New Philadelphia, OH 44663
Phone: 330-339-6633

SPRD 1 OVER BARKCAMP CREEK/BELMONT LAKE
STRUCTURE NO. SFN0726184

BENT 2

BELMONT COUNTY, OHIO

CEI PROJECT
55-13380.01

INSPECTED BY:
JTD

DRAWN BY:
OPF

CHECKED BY:
JMJ

DATE:
JUL 2022

SHEET NO:
6

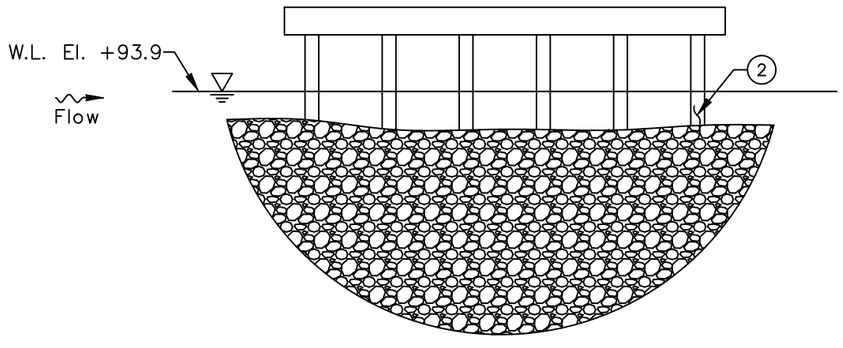

WEST ELEVATION
(LOOKING EAST)

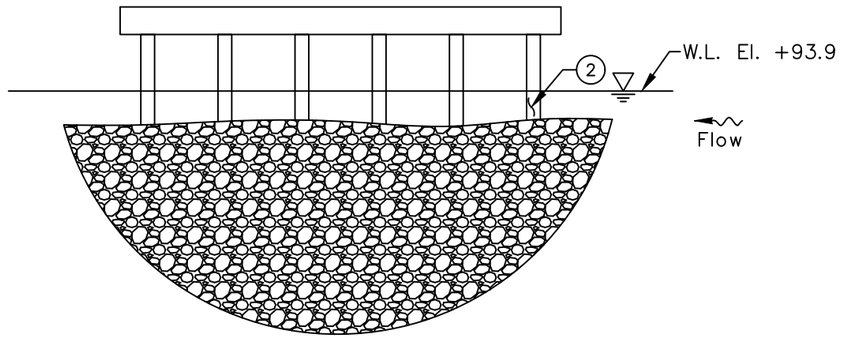

EAST ELEVATION
(LOOKING WEST)

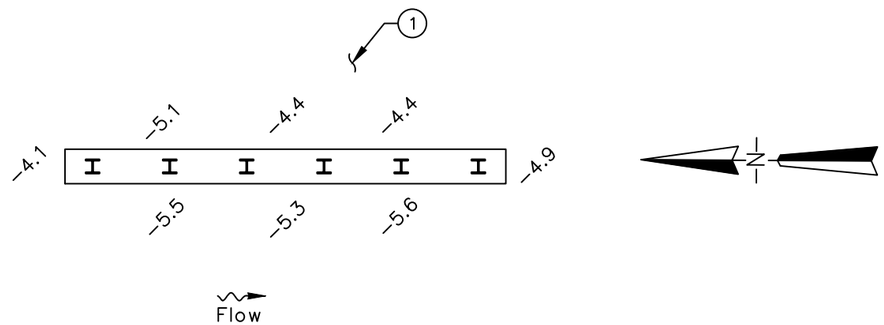

INSPECTION NOTES:

1. The channel bottom material consisted of riprap approximately 2 to 3 ft diameter with no probe rod penetration.
2. Typical light marine growth algae and silt up to 1/8 in. deep was observed on the submerged portions of the bent.

LEGEND

-2.7	Sounding Depth from Waterline (ft)
———	Approximate Channel Bottom – July 2022
	Timber Debris
	Water Surface

COLLINS ENGINEERS
124 Venture Court, Ste 10
Lexington, KY 40511
Phone: 859-367-0097
Fax: 859-367-0140

Ohio Department of Transportation, District 11
2201 Reiser Avenue
New Philadelphia, OH 44663
Phone: 330-339-6633

SPRD 1 OVER BARKCAMP CREEK/BELMONT LAKE
STRUCTURE NO. SFN0726184

BENT 3

BELMONT COUNTY, OHIO

CEI PROJECT 55-13380.01
INSPECTED BY: JTD
DRAWN BY: OPF
CHECKED BY: JMJ
DATE: JUL 2022
SHEET NO: 7

EXHIBIT 2 – INSPECTION PHOTOGRAPHS



Photograph No. 1: Overall View of Structure No. SFN0726184, Looking North.



Photograph No. 2: Overall View of Structure No. SFN0726184, Looking Southwest.



Photograph No. 3: View of the West Approach, Looking East.



Photograph No. 4: View of the East Approach, Looking West.



Photograph No. 5: View of the West Embankment Upstream of the Structure, Looking Southwest.



Photograph No. 6: View of the West Embankment at the Structure, Looking Northwest.



Photograph No. 7: View of the West Embankment Downstream of the Structure, Looking Northwest.



Photograph No. 8: View of the East Embankment Upstream of the Structure, Looking Southeast.



Photograph No. 9: View of the East Embankment at the Structure, Looking Southeast.



Photograph No. 10: View of the East Embankment Downstream of the Structure, Looking East.



Photograph No. 11: View of the Upstream Channel, Looking North.



Photograph No. 12: View of the Downstream Channel, Looking South.



Photograph No. 13: View of the Typical Underdeck Condition, Looking South.



Photograph No. 14: View of the West Face of Bent 2, Looking Southeast.



Photograph No. 15: View of the East Face of Bent 2, Looking Northwest.



Photograph No. 16: View of the West Face of Bent 3, Looking Northeast.



Photograph No. 17: View of the East Face of Bent 3, Looking Southwest.



Photograph No. 18: View of the Typical Pile Condition at the Waterline on Bent 3, Looking North.

EXHIBIT 3 – DIVE PROCEDURES CHECKLIST

Underwater Dive Inspection Procedure Checklist

Acceptable written procedures communicate to the next dive team what is necessary to ensure a safe and successful inspection. Each bridge requiring underwater dive techniques must have a unique written inspection procedure. The prior inspection report does not suffice for the required procedures. It is valuable to review the last inspection notes, but they do not serve the same purpose as a stand-alone inspection procedure.

This document shall be completed for all underwater dive inspections. This document shall be reviewed prior to performing the field work and it shall be updated when necessary.

I. Bridge Identification

a. Agency with Inspection Responsibility: ODOT DISTRICT 11

Dive Frequency: 60 months

SFN: 0726184 Bridge Number (County-Route-SLM-SD): BEL-001-0051

Superstructure Type Main Span Type: CONCRETE CONTINUOUS

Approach Span: CONCRETE CONTINUOUS

Substructure Type Abutment Type: REINFORCED CONCRETE

Pier Type: STEEL PILES

Total Pier Count: STEEL PILES

Total Pier Count in water: 2

Foundations: UNKNOWN

Feature Intersected BARKCAMP CREEK/BELMONT LAKE

b. Photographs



Endview



Elevation



Underside

II. Office and Field Assessment

Prior to the inspection, obtain and review copies of the previous underwater inspection reports, routine inspection reports, scour and hydraulic information, and design plans in preparation of the inspection. Divers should pay particular attention given to any observed areas of deterioration, the channel conditions and factors that may accelerate material deterioration. Changes shall be noted in the inspection procedure. Site conditions should be reviewed prior to diving.

a. Channel Conditions

____Waterway features

____Rapid stream flows,

____Significant debris accumulation

____Constricted waterway openings

____Soft or unstable streambeds

____Meandering channels

____Other which may promote scour and undermining of substructure elements

____Navigable Waterway

____Flow Controls

b. Anticipated Water conditions which may affect the inspection

____Cold Water (Apprx. Temp____)

____Black water

____Rapid stream flows

____Near military facility

____Tribal fishing

____Water quality

____History of Log jams

c. Identify factors that may accelerate the deterioration of the bridge elements:

____Highly corrosive water

____Unprotected steel members

____Other

Risk Factor Narrative:

III. **Contacts Prior to Work**

Dr. Waseem Khalifa, Ph. D., P.E.

District Bridge Engineer

2201 Reiser Avenue SE

New Philadelphia, OH 44663

(330) 308-7873

Point of contact for immediate action such as closing the bridge due to findings)

Contact Bridge Owner _____14_____ (number) days before the proposed underwater inspection.

Special contracting and scheduling procedures prior to inspection, include recommended lead time

Entity	Contact Name and Title	Contact Phone	Lead Time
Coast Guard	N/A	N/A	N/A
Property Owner	N/A	N/A	N/A
Access Equipment	N/A	N/A	N/A
Lake or River draw-down	N/A	N/A	N/A
Canal dry time	N/A	N/A	N/A
Tree removal	N/A	N/A	N/A
Other:	N/A	N/A	N/A
Other:	N/A	N/A	N/A

IV. **Dive Team Shall Include the Following:**

Dive Team Narrative:

The structure shall be investigated using a three-member dive team: one dive supervisor to monitor communications and air supply while taking notes, one diver, and one tender/standby diver. There shall be one NBIS Team Leader onsite at all times.

Example: The Bridge shall be investigated using a three-member dive team: one supervisor to monitor rack box and take notes, one diver, and one tender/standby diver. There shall be one NBIS Team Leader onsite at all times.

V. Site Information

Navigable waterway: Y /(N)

If Yes, waterway river point _____

Anticipated water visibility depth 2 ft

Anticipated Dive depth 6.9 ft

Anticipated current <1 ft

Scour Critical (item 113): 5

POA in place: Y/(N)

Scour Monitoring devices present: Y/(N)

Verify the Scope of Services when work is contracted for the procedure for underwater elements that are not in water during an inspection.

Site Information Narrative:

The underwater inspection consists of a visual and tactile examination of the accessible surfaces of the substructure items in water. Additional items should reference the scope of services in the contract. For reference the following items are in water:

Item	Number of Units	Level of Inspection (1, 2 or 3) with Commentary
Piers and Number of Columns	2	100% Level 1 10% Level 2
Abutment		
Culvert		
Scour Countermeasures		
Fenders or Dolphins		

Photographs should be taken, if water clarity permits, for typical conditions, conditions that have changed since last inspection and significant or noteworthy deficiencies. The type of channel bottom material, the presence or extent of scour, the presence or extent of riprap, the presence or extent of drift and debris, and the location of any foundation exposure or undermining shall be quantified. Include depth, length, height and location of deficiencies.

VI. **Equipment and Field Logistics**

a. The inspection should be conducted using:

____Chest waders

____Hip waders

__X__Diving equipment

____SCUBA (Note that ADCI Consensus Standards require communication systems be employed for both SCUBA and Surface-Supplied (whether air or mixed-gas) dive modes)

____SCUBA with communication

__X__Surface Supplied with communication

b. The channel bottom should be sounded utilizing

____Digital fathometer

__X__Telescoping survey rod

____ acoustic imaging

c. During the inspection, the divers should work from

____Shore

__X__Boat

____Either

The note taker should work alongside the dive team.

d. Access to the waterway should be obtained from the shore (north bank, southwest quadrant, driveway 30 yards north etc.)

PUBLIC BOAT LAUNCH LOCATED WEST OF THE STRUCTURE

e. The maximum depth of the channel is typically measured 6.1 feet from

THE EAST FACE OF BENT 2

Reference Datum 6.1 FT FROM THE TOP OF DECK AT THE DOWNSTREAM NOSE OF BENT 2

Soundings should be dictated by the scope of work. When not detailed in the scope they should be repeated from the previous soundings. If neither exist then they need to be taken in a grid pattern between substructure units 100’ upstream and 100’ downstream.

VII. Inspection Procedure History

Created: COLLINS ENGINEERS, INC. Date: 08/31/2022

Updated By: _____ Date: _____

Updated By: _____ Date: _____

Updated By: _____ Date: _____

Updated By: _____ Date: _____

Updated By: _____ Date: _____

VIII. Other Narrative Not Included In Previous Sections