







UNDERWATER BRIDGE INSPECTION REPORT

STRUCTURE NO. SFN1001957
(CAR-542-0864)
SR-542 OVER ATWOOD RESERVOIR
CARROLL COUNTY, OH
DISTRICT 11

July 2022

Prepared for:

STATE OF OHIO DEPARTMENT OF TRANSPORTATION

STATE OF OHIO
MATTHEW ROGERS
PE.87504
REGISTERED
PROFESSIONAL ENGINEER

Prepared by:

COLLINS ENGINEERS INC.

124 Venture Court, Suite 10

Lexington, Kentucky 40511

859.367.0097 • www.collinsengr.com

TABLE OF CONTENTS

EXECUTIVE SUMMARY
1.0 INTRODUCTION 1
1.1 Purpose and Scope 1
1.2 General Description of the Structure 1
1.3 Method of Investigation 1
2.0 EXISTING CONDITIONS 2
2.1 General Conditions 2
2.2 Substructure Conditions 3
2.2.1 Abutment 1 3
2.2.2 Abutment 2 3
2.2.3 Channel Bottom and Scour Assessment 3
3.0 EVALUATION AND RECOMMENDATIONS 4
EXHIBIT 1 – FIGURES 6
LOCATION MAP
SOUNDING PLAN
CHANNEL CROSS SECTIONS – 50 FT UPSTREAM & UPSTREAM FASCIA
CHANNEL CROSS SECTIONS – STRUCTURE CENTERLINE
CHANNEL CROSS SECTIONS – 50 FT DOWNSTREAM & DOWNSTREAM FASCIA
ABUTMENT 1
ABUTMENT 2
EXHIBIT 2 – INSPECTION PHOTOGRAPHS 14
Photograph No. 1: Overall View of Structure No. SFN1001957, Looking West.
Photograph No. 2: Overall View of Structure No. SFN1001957, Looking East.
Photograph No. 3: View of the North Approach, Looking South.
Photograph No. 4: View of the South Approach, Looking North.
Photograph No. 5: View of the North Embankment Upstream of the Structure, Looking Northwest.
Photograph No. 6: View of the North Embankment Downstream of the Structure, Looking Northeast.
Photograph No. 7: View of the South Embankment Upstream of the Structure, Looking Southwest.
Photograph No. 8: View of the South Embankment Downstream of the Structure, Looking Southeast.
Photograph No. 9: View of the Upstream Channel, Looking East.
Photograph No. 10: View of the Downstream Channel, Looking West.

Photograph No. 11: View of the Typical Underdeck Condition.
Photograph No. 12: View of the North Face of Abutment 1, Looking Southwest.
Photograph No. 13: View of the North Face of Abutment 1, Looking Southeast.
Photograph No. 14: View of the Spall at Abutment 1, Looking South.
Photograph No. 15: View of the Typical Concrete Condition at the Waterline on the North Face of Abutment 1, Looking South.
Photograph No. 16: View of the South Face of Abutment 2, Looking Northwest.
Photograph No. 17: View of the South Face of Abutment 2, Looking Northeast.
Photograph No. 18: View of the Spall at Abutment 2, Looking North.
Photograph No. 19: View of the Typical Concrete Condition with Efflorescence at the Waterline on the South Face of Abutment 2, Looking North.
EXHIBIT 3 – DIVE PROCEDURES CHECKLIST 25

EXECUTIVE SUMMARY

Project: ODOT D11 Underwater Bridge Inspections - 2022.

Purpose of Project: To perform a detailed visual and tactile underwater investigation of bridges for the Ohio Department of Transportation, District 11.

Inspection Team: Team Leader – Matthew Rogers, P.E. – Collins Engineers, Inc.
Team Member – Kevin Mitchell, E.I.T. – Collins Engineers, Inc.
Team Member – Joshua Davis, E.I.T. – Collins Engineers, Inc.

Inspection Date(s): July 28, 2022

Water Visibility:	1 ft	***Water Velocity:***	0 ft/s
Water Temperature:	77 °F	***Weather:***	Cloudy – 80 °F
Waterline Elevation:	93.4 ft	***Type of Boat:***	23 ft Carolina Skiff
High-water Elevation:	96.0 ft		
Coordinates:	40.5564°N, 81.2536°W		
Access Location:	Atwood Lake Marina		
Dive Mode:	Surface Supplied Air		
Waterline Reference:	6.6 ft below the top of deck at the upstream fascia of Abutment 2		
Maximum Depth at SSU:	12.4 ft – Downstream Fascia of Abutment 2		
Shoreline Conditions:	The south and north shorelines consisted of lightly vegetated mild, rocky slopes with no signs of erosion.		

Summary of Findings:

- **Abutment 1:**
  - Loss of joint filler up to 2 ft vertical was observed at all four corners between the abutment and the deck.
  - The submerged portions of the pier exhibited moderate scaling up to 1/4 in. deep from channel bottom to 1 ft above the waterline.
  - Hairline map cracking with efflorescence was observed on approximately 10% of total surface area.
  - A spall measuring up to 6 in. horizontal by 11 ft vertical by 3 in. deep with no exposed reinforcement bars was observed from the channel bottom to the waterline near the upstream wingwall.
  - A spall measuring up to 14 in. horizontal by 38 in. vertical by 7 in. deep with no exposed reinforcement bars was observed near the upstream wingwall.
- **Abutment 2:**
  - Loss of joint filler up to 2 ft vertical was observed at all four corners between the abutment and the deck.
  - The submerged portions of the pier exhibited moderate scaling up to 1/4 in. deep from channel bottom to 1 ft above the waterline.

- Hairline map cracking with efflorescence was observed on approximately 10% of total surface area.
- A spall measuring up to 6 in. horizontal by 11 ft vertical by 3 in. deep with no exposed reinforcement bars was observed from the channel bottom to the waterline near the upstream wingwall.
- A spall measuring up to 14 in. horizontal by 38 in. vertical by 7 in. deep with two exposed reinforcement bars and up to 25% loss of section was observed near the upstream wingwall.

Summary of Recommendations:

- Monitor areas of poor concrete consolidation and spalls on Abutments 1 and 2.
- Repair spalls on Abutments 1 and 2.

Underwater Inspection Coding:

NBI Ratings:

Item	Description	Coding	Condition
B.C.04	Culvert	5– Fair Condition	Spalls, Moderate Scaling, Exposed Reinforcement
B.C.09	Channel Cond. Rating	7– Good Condition	
B.C.10	Channel Protection Cond.	7– Good Condition	Riprap
B.C.11	Scour Cond. Rating	8– Above Foundation Limits	Stable (Inspector Recommended)
B.C.15	Underwater Cond. Rating	6– Satisfactory Condition	
B.IE.03	Insp. Date	July 28, 2022	
B.IE.05	UW Insp. Interval	60 Months	

AASHTO National Bridge Element (NBE) Ratings:

Element #	Description	Units	Total	Condition State			
				1	2	3	4
215	Reinforced Concrete Abutment	LF	120	0	110	0	10

Note: Ratings were developed using the FHWA Specifications for the National Bridge Inventory. The recommended ratings consider inspected elements located within the waterway and conditions existing below the water surface only. Additional consideration is necessary for the assignment of overall condition ratings for this bridge.

1.0 INTRODUCTION

1.1 Purpose and Scope

This report consists of the results of a detailed underwater investigation performed at the SR-542 Culvert over Atwood Reservoir in Carroll County, OH. Collins Engineers, Inc. (Collins) conducted the underwater investigation for the Ohio Department of Transportation (ODOT), District 11 on July 28, 2022. The primary purpose of the investigation was as follows:

- Determine the condition of the substructure components located in the water at the time of the inspection from the waterline to the channel bottom.
- Obtain channel bottom depth measurements along the bridge fascias, upstream and downstream of the bridge, and around the submerged substructure units.
- Determine the condition of the shorelines in the vicinity of the structure.
- Obtain photographs of the bridge and any significant defects.

In addition, a brief inspection was made of areas that could be submerged during periods of high water. The following report includes a description of the structure, the method of investigation, a description of existing conditions, an evaluation and recommendations based on the conditions, inspection figures, and photographs.

1.2 General Description of the Structure

Structure No. SFN1001957 spans 28 ft, carrying SR-542 over Atwood Reservoir and is approximately 32 ft wide. The culvert superstructure is constructed of one span composed of a concrete slab. The roadway orientation of the longitudinal axis of the culvert is south to north. The substructure units are labeled as Abutments 1 and 2. Existing design drawings were not available at the time of the inspection. Refer to Figure 1 in Exhibit 1 for a Location Map of the culvert. Refer to Photographs 1 through 4 in Exhibit 2 for overall views of the culvert.

1.3 Method of Investigation

A detailed field inspection was conducted to determine the physical condition of the submerged culvert substructure units from the waterline to the channel bottom. A brief visual examination of the substructure units above the waterline was also made.

A three-person team consisting of professional engineer-diver and team leader (Matthew O. Rogers, P.E.) and engineer-divers (Kevin Mitchell, E.I.T. and Joshua Davis, E.I.T.) conducted the underwater inspection. The inspection was conducted using surface supplied air diving equipment. During the inspection, the inspectors worked from a boat and a note taker in the boat recorded the inspection notes.

The underwater inspection consisted of a visual and tactile examination of the accessible surfaces of the substructure units from the waterline to the channel bottom with particular attention given to any observed areas of deterioration or apparent distress. Approximately 10 percent of the total area on the underwater surfaces of the substructure units was cleaned so that the condition could be more closely examined. Photographs were taken to document the general conditions and observed deficiencies. The type of channel bottom material, the presence or extent of scour, the presence or extent of riprap, the presence or extent of drift and debris, and the location of any foundation exposure or undermining were noted.

Channel bottom soundings were performed utilizing a telescoping survey rod. Soundings were taken parallel to the culvert at the upstream and downstream fascias, parallel to the abutments and at halfway intervals between the substructure units, and at 10 ft intervals in-line with the abutments upstream and downstream up to 50 ft, and the waterline was referenced to a known elevation on the culvert. A sounding plan was developed using the soundings and approximate location of the shorelines. Refer to Figures 2 through 5 in Exhibit 1 for the sounding plan and channel cross sections that show the channel limits and water depths around the structure.

2.0 EXISTING CONDITIONS

2.1 General Conditions

At the time of the inspection, the waterline of Atwood Reservoir was located approximately 6.6 ft below the top of deck at the upstream fascia of Abutment 2, which corresponds to an assumed waterline elevation of 93.4 ft. During the inspection, the waterway was flowing east to west below the structure at a rate of 0 ft/s. The approximate high-water elevation was observed to be 96.0 ft.

The culvert skew was consistent with the channel alignment and does not require attention at this time. The south and north shorelines consisted of lightly vegetated mild, rocky slopes with no signs of erosion. Refer to Photographs 5 through 10 in Exhibit 2 for views of the shorelines near the structure.

2.2 Substructure Conditions

2.2.1 Abutment 1

The channel bottom material around Abutment 1 consisted of silty sand with approximately 1 ft probe rod penetration with areas of riprap and gravel up to 1 ft diameter. Typical light marine growth algae and silt up to 1/16 in. deep was observed on the submerged portions of the abutment. Loss of joint filler up to 2 ft vertical was observed at all four corners between the abutment and the deck. The submerged portions of the pier exhibited moderate scaling up to 1/4 in. deep from channel bottom to 1 ft above the waterline. Hairline map cracking with efflorescence was observed on approximately 10% of total surface area. A spall measuring up to 6 in. horizontal by 11 ft vertical by 3 in. deep with no exposed reinforcement bars was observed from the channel bottom to the waterline near the upstream wingwall. A spall measuring up to 14 in. horizontal by 38 in. vertical by 7 in. deep with no exposed reinforcement bars was observed near the upstream wingwall. Refer to Figure 6 in Exhibit 1 for detailed inspection notes of Abutment 1. Refer to Photographs 11 through 15 in Exhibit 2 for views of the typical underdeck condition, Abutment 1, and typical concrete condition at the waterline.

2.2.2 Abutment 2

The channel bottom material around Abutment 2 consisted of silty sand with approximately 1 ft probe rod penetration with areas of riprap and gravel up to 1 ft diameter. Typical light marine growth algae and silt up to 1/16 in. deep was observed on the submerged portions of the abutment. Loss of joint filler up to 2 ft vertical was observed at all four corners between the abutment and the deck. The submerged portions of the pier exhibited moderate scaling up to 1/4 in. deep from channel bottom to 1 ft above the waterline. Hairline map cracking with efflorescence was observed on approximately 10% of total surface area. A spall measuring up to 6 in. horizontal by 11 ft vertical by 3 in. deep with no exposed reinforcement bars was observed from the channel bottom to the waterline near the upstream wingwall. A spall measuring up to 14 in. horizontal by 38 in. vertical by 7 in. deep with two exposed reinforcement bars and up to 25% loss of section was observed near the upstream wingwall. Refer to Figure 7 in Exhibit 1 for detailed inspection notes of Abutment 2. Refer to Photographs 16 through 19 in Exhibit 2 for views of Abutment 2 and typical concrete condition with efflorescence at the waterline.

2.2.3 Channel Bottom and Scour Assessment

At the time of the inspection, the Atwood Reservoir was experiencing normal flow and the channel bottom appeared stable for the type of material. The channel bottom was primarily silty sand with areas of

riprap and gravel surrounding the substructure units. No additional scour, undermining, or scour countermeasures were observed.

3.0 EVALUATION AND RECOMMENDATIONS

Overall, the submerged substructure units of Structure No. SFN1001957 were in satisfactory condition below water. A comparison of the soundings recorded during the previous inspection on July 15, 2017 and the soundings taken during this inspection revealed no significant change in the channel bottom profile in the vicinity of the structure. Since no design or as-built plans were available for the culvert, the amount of embedment of the footings in the channel bottom is unknown. As a result, the channel bottom configuration should continue to be monitored during future underwater inspections to verify that localized scour or overall channel degradation is not occurring and that both abutment footings remain adequately embedded in the channel bottom. Design or as-built drawings for the culvert should be obtained and reviewed, if possible, prior to the next underwater inspection to determine the exact construction of the abutments and their foundations.

The spalls and associated concrete delaminations at Abutments 1 and 2 are not structural concerns at this time; however, they should be repaired to prevent further deterioration. The repairs should include removal of unsound concrete to a minimum of 1 inch behind the reinforcing steel, cleaning and replacing reinforcing steel as required, and placing concrete designed to provide high durability with low permeability.

The scaling observed on Abutments 1 and 2 is not a structural concern at this time given its size compared to the overall abutment size, and as a result, no repairs are recommended. This area should be monitored during future inspections for increasing extent or severity of the scaling and exposure of reinforcing steel. If the extent or severity of the scaling is observed to be increasing or reinforcing steel becomes exposed, it may be necessary to repair the area at that time.

It is recommended that the submerged substructure units of Structure No. SFN1001957 be next inspected underwater at an interval not to exceed 60 months, no later than July 28, 2027.

Respectfully Submitted,
COLLINS ENGINEERS, INC.



Matthew Rogers, P.E.
Project Manager

Originated by:
Olivia Farmer, E.I.T.

EXHIBIT 1 – FIGURES

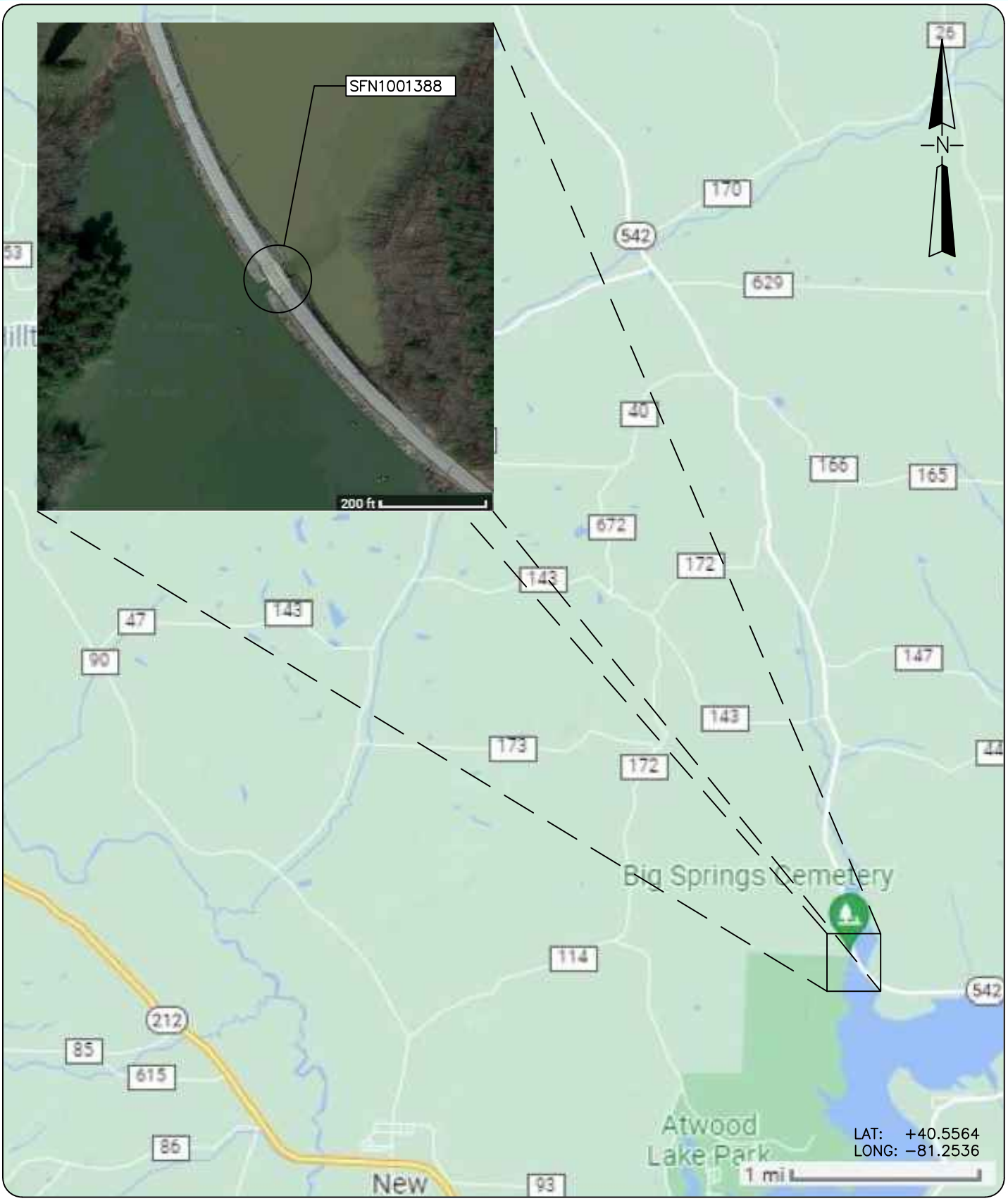

COLLINS ENGINEERS
124 Venture Court, Ste 10
Lexington, KY 40511
Phone: 859-367-0097
Fax: 859-367-0140

Ohio Department of Transportation, District 11
2201 Reiser Avenue
New Philadelphia, OH 44663
Phone: 330-339-6633

SR-542 OVER ATWOOD RESERVOIR
STRUCTURE NO. SFN1001957
LOCATION MAP
CARROLL COUNTY, OHIO

INSPECTED BY: KMM	CEI PROJECT: 55−13380.01
DRAWN BY: OPF	DATE: 28 JUL 2022
CHECKED BY: JMJ	SHEET NO: 1

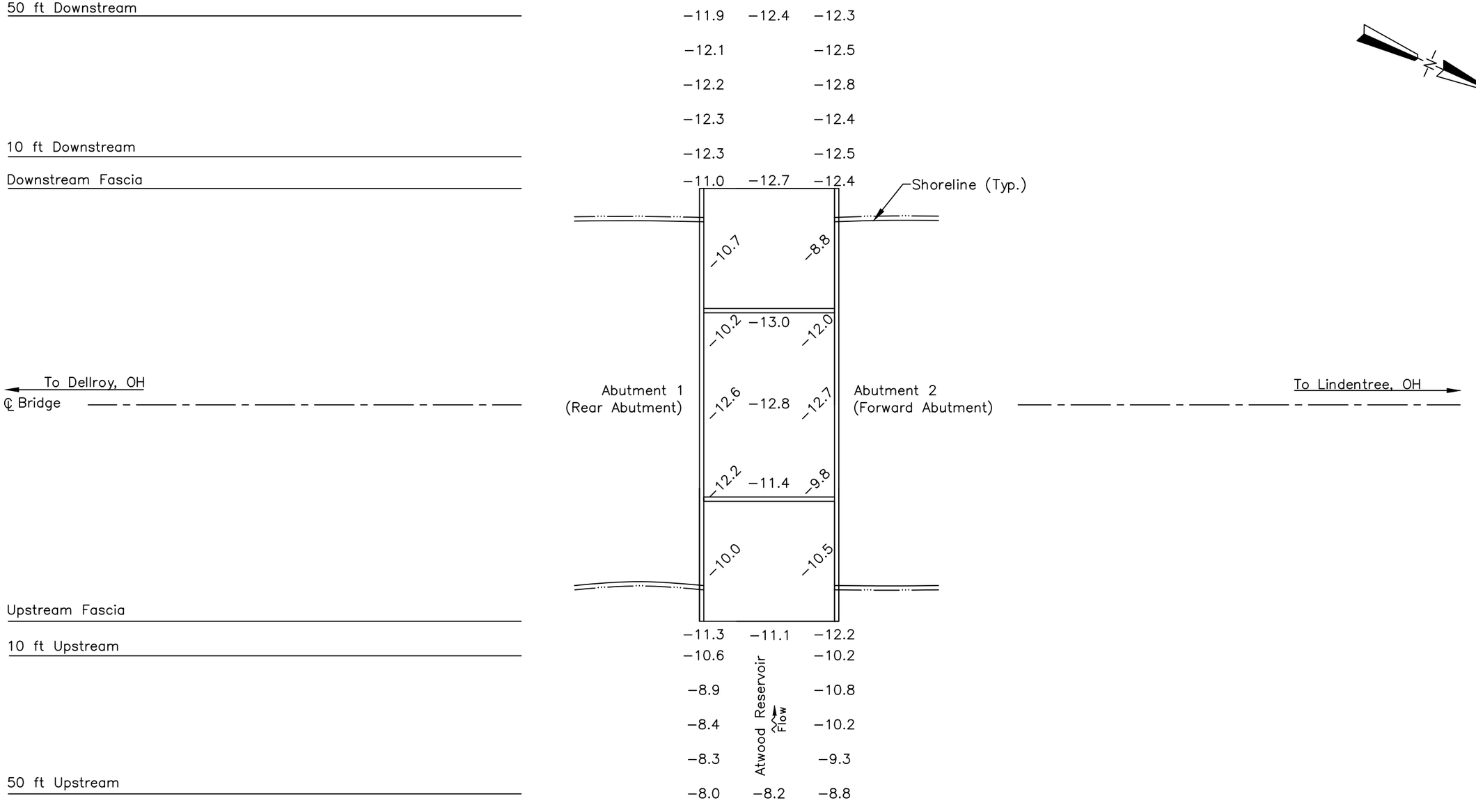

GENERAL NOTES:

1. Abutments 1 and 2 were inspected underwater. Substructure units are labeled according to available record drawings.
2. At the time of inspection on July 28, 2022, the waterline was located approximately 6.6 ft below the top of deck at the upstream fascia of Abutment 2 (EL. +100.0 ft). This corresponds with a waterline elevation of +93.4 ft.
3. Soundings indicate the water depth at the time of inspection and are measured in feet.
4. Soundings were taken parallel to the bridge at the upstream and downstream fascias, parallel to the abutments and at halfway intervals between the substructure units, and at 10 ft intervals in−line with the piers upstream and downstream up to 50 ft.

LEGEND

−2.7	Sounding Depth from Waterline (ft)
	Timber Debris

COLLINS ENGINEERS
124 Venture Court, Ste 10
Lexington, KY 40511
Phone: 859-367-0097
Fax: 859-367-0140

Ohio Department of Transportation, District 11
2201 Reiser Avenue
New Philadelphia, OH 44663
Phone: 330-339-6633

SR-542 OVER ATWOOD RESERVOIR
STRUCTURE NO. SFN1001957
SOUNDING PLAN
CARROLL COUNTY, OHIO

CEI PROJECT	55−13380.01
INSPECTED BY:	KMM
DRAWN BY:	OPF
CHECKED BY:	JMJ
DATE:	JUL 2022
SHEET NO:	2

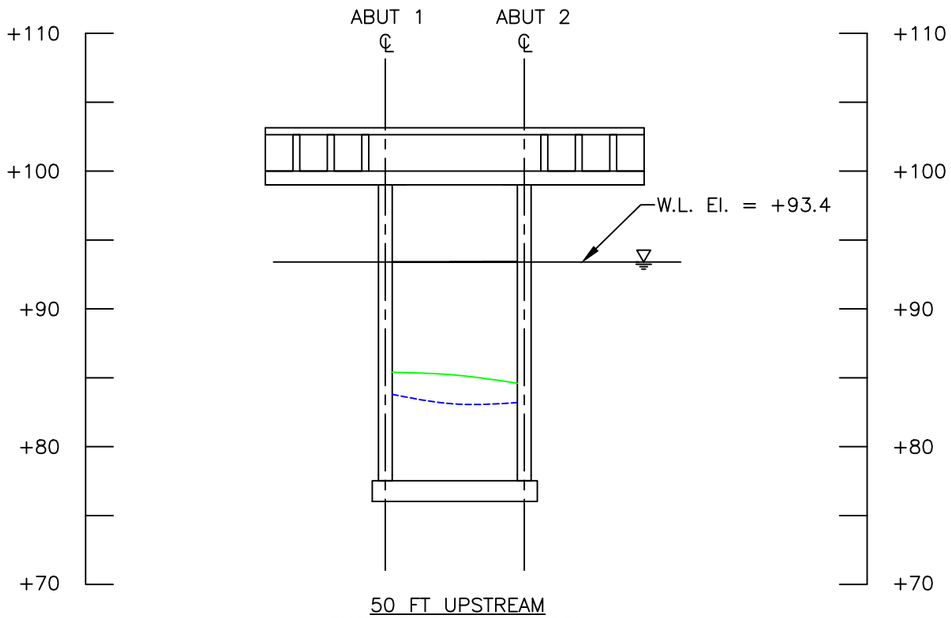

50 FT UPSTREAM
CHANNEL CROSS SECTION
(LOOKING DOWNSTREAM)

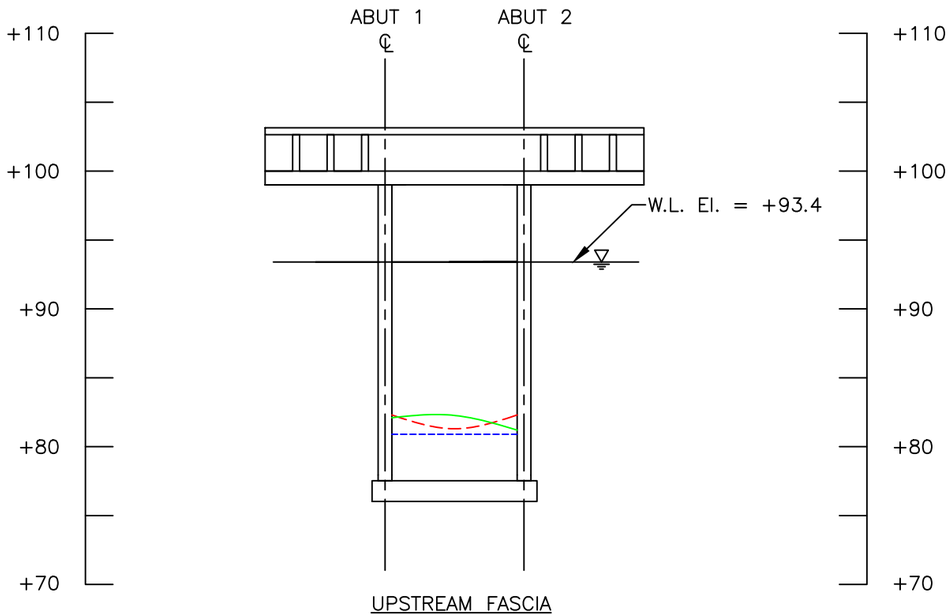

UPSTREAM FASCIA
CHANNEL CROSS SECTION
(LOOKING DOWNSTREAM)

Upstream Elevation (Looking Downstream)	
Location	Height (ft)
A1	17.9
1/2	17.7
A2	18.8

Note:

Footing elevations unknown due to unavailable record drawings.

LEGEND

- Approximate Channel Bottom – July 2022
- Approximate Channel Bottom – July 2017
- Approximate Channel Bottom – September 2012
- Timber Debris
- Water Surface
- +450 Elevation (ft)

COLLINS ENGINEERS
124 Venture Court, Ste 10
Lexington, KY 40511
Phone: 859-367-0097
Fax: 859-367-0140

Ohio Department of Transportation, District 11
2201 Reiser Avenue
New Philadelphia, OH 44663
Phone: 330-339-6633

SR-542 OVER ATWOOD RESERVOIR
STRUCTURE NO. SFN1001957
CROSS SECTIONS
CARROLL COUNTY, OHIO

CEI PROJECT 55-13380.01
INSPECTED BY: KMM
DRAWN BY: OPF
CHECKED BY: JMJ
DATE: JUL 2022
SHEET NO: 3

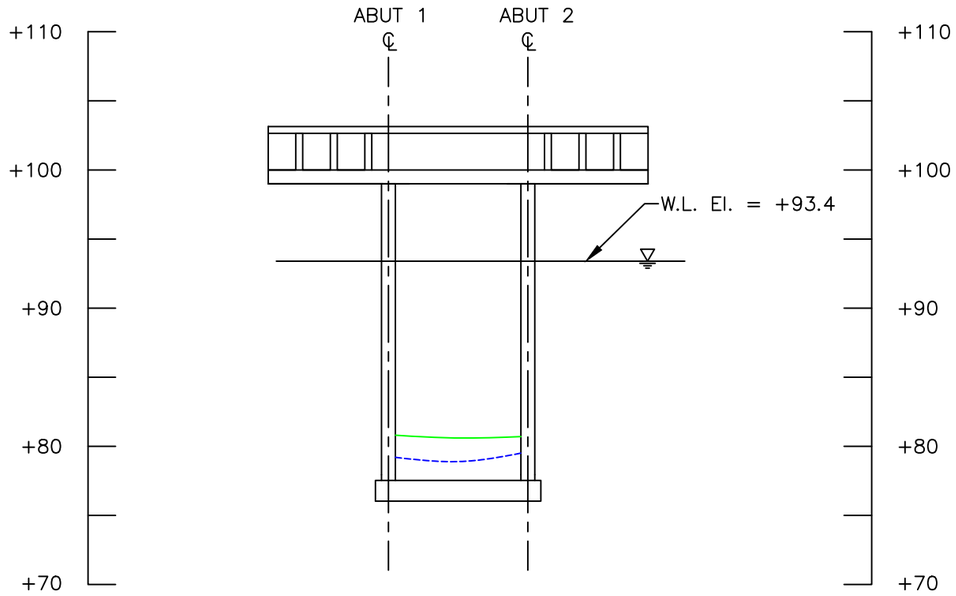

STRUCTURE CENTERLINE
CHANNEL CROSS SECTION
(LOOKING DOWNSTREAM)

Note:

Footing elevations unknown due to unavailable record drawings.

LEGEND

———	Approximate Channel Bottom – July 2022
- - - - -	Approximate Channel Bottom – July 2017
– – – – –	Approximate Channel Bottom – September 2012
	Timber Debris
	Water Surface
+450	Elevation (ft)

COLLINS ENGINEERS
124 Venture Court, Ste 10
Lexington, KY 40511
Phone: 859-367-0097
Fax: 859-367-0140

Ohio Department of Transportation, District 11
2201 Reiser Avenue
New Philadelphia, OH 44663
Phone: 330-339-6633

SR-542 OVER ATWOOD RESERVOIR
STRUCTURE NO. SFN1001957
CROSS SECTIONS
CARROLL COUNTY, OHIO

CEI PROJECT	55–13380.01
INSPECTED BY:	KMM
DRAWN BY:	OPF
CHECKED BY:	JMJ
DATE:	JUL 2022
SHEET NO:	4

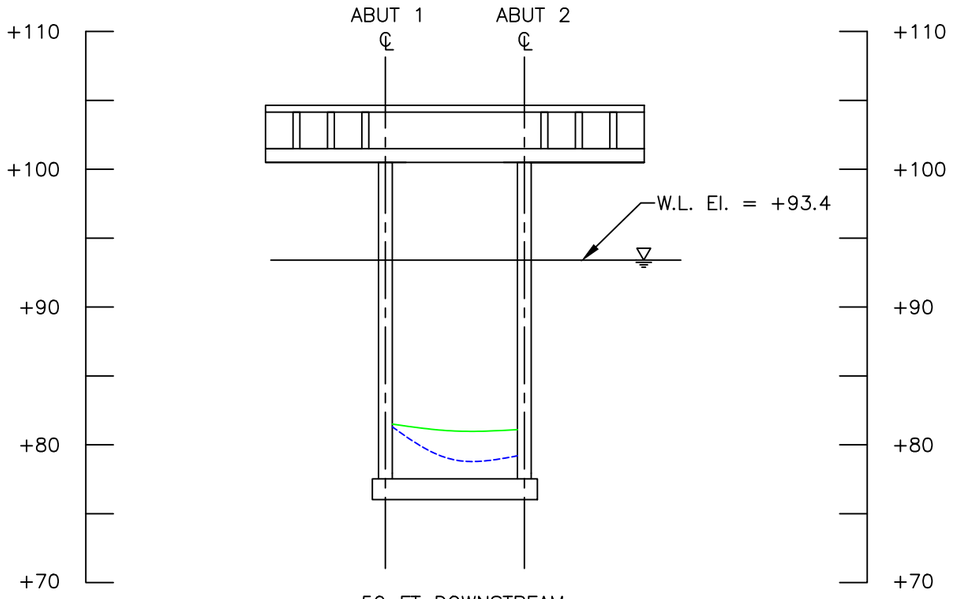

50 FT DOWNSTREAM
CHANNEL CROSS SECTION
(LOOKING DOWNSTREAM)

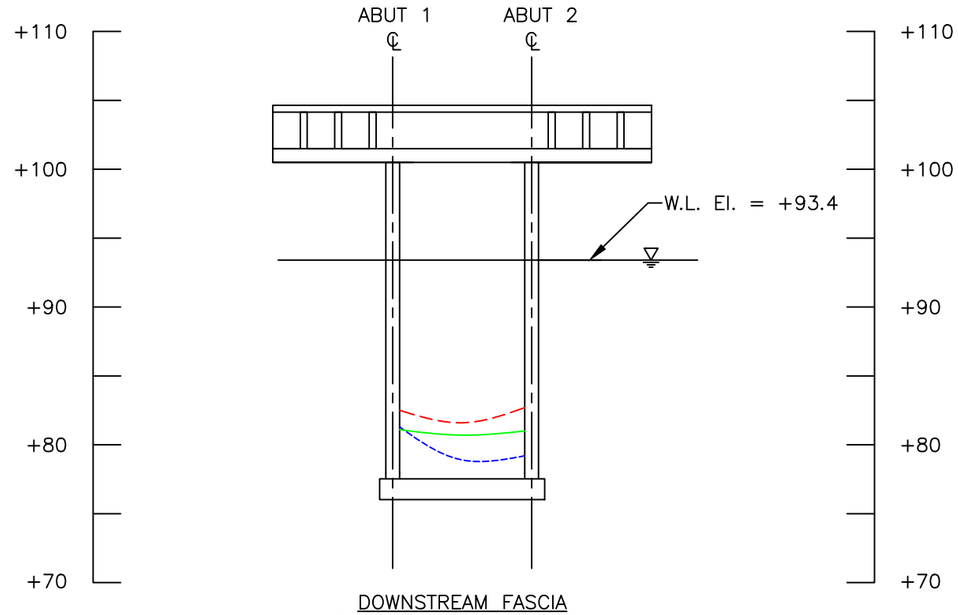

DOWNSTREAM FASCIA
CHANNEL CROSS SECTION
(LOOKING DOWNSTREAM)

Downstream Elevation (Looking Downstream)	
Location	Height (ft)
A1	20.4
1/2	20.8
A2	20.6

LEGEND

- Approximate Channel Bottom – July 2022
- Approximate Channel Bottom – July 2017
- Approximate Channel Bottom – September 2012
- Timber Debris
- Water Surface
- +450 Elevation (ft)

Note:

Footing elevations unknown due to unavailable record drawings.

COLLINS ENGINEERS
124 Venture Court, Ste 10
Lexington, KY 40511
Phone: 859-367-0097
Fax: 859-367-0140

Ohio Department of Transportation, District 11
2201 Reiser Avenue
New Philadelphia, OH 44663
Phone: 330-339-6633

SR-542 OVER ATWOOD RESERVOIR
STRUCTURE NO. SFN1001957
CROSS SECTIONS
CARROLL COUNTY, OHIO

CEI PROJECT 55–13380.01
INSPECTED BY: KMM
DRAWN BY: OPF
CHECKED BY: JMJ
DATE: JUL 2022
SHEET NO: 5

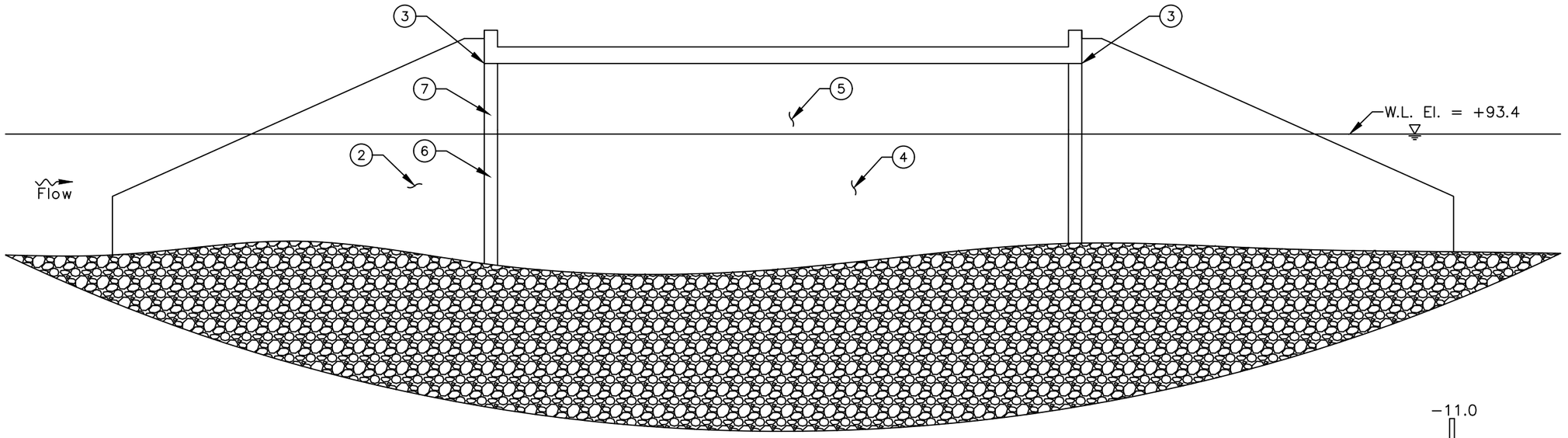

NORTH ELEVATION
(LOOKING SOUTH)

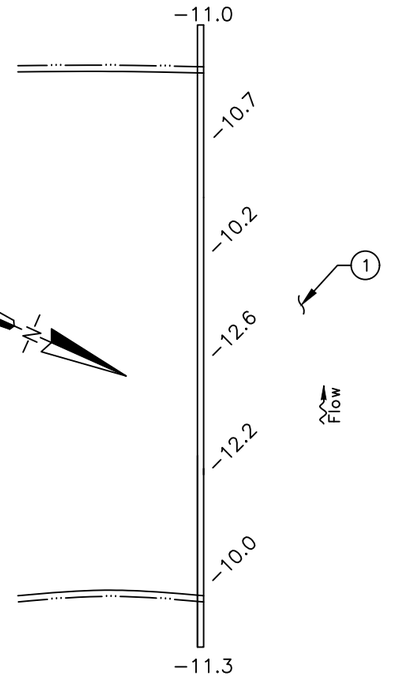

INSPECTION NOTES:

1. The channel bottom material consisted of silty sand with approximately 1 ft probe rod penetration with areas of riprap and gravel up to 1 ft diameter.
2. Typical light marine growth algae and silt up to 1/16 in. deep was observed on the submerged portions of the abutment.
3. Loss of joint filler up to 2 ft vertical was observed at all four corners between the abutment and the deck.
4. The submerged portions of the pier exhibited moderate scaling up to 1/4 in. deep from channel bottom to 1 ft above the waterline.
5. Hairline map cracking with efflorescence was observed on approximately 10% of total surface area.
6. A spall measuring up to 6 in. horizontal by 11 ft vertical by 3 in. deep with no exposed reinforcement bars was observed from the channel bottom to the waterline near the upstream wingwall.
7. A spall measuring up to 14 in. horizontal by 38 in. vertical by 7 in. deep with no exposed reinforcement bars was observed near the upstream wingwall.

LEGEND

-2.7	Sounding Depth from Waterline (ft)
———	Approximate Channel Bottom – July 2022
	Timber Debris
	Water Surface

COLLINS ENGINEERS
124 Venture Court, Ste 10
Lexington, KY 40511
Phone: 859-367-0097
Fax: 859-367-0140

Ohio Department of Transportation, District 11
2201 Reiser Avenue
New Philadelphia, OH 44663
Phone: 330-339-6633

SR-542 OVER ATWOOD RESERVOIR
STRUCTURE NO. SFN1001957
ABUTMENT 1
CARROLL COUNTY, OHIO

CEI PROJECT	55-13380.01
INSPECTED BY:	KMM
DRAWN BY:	OPF
CHECKED BY:	JMJ
DATE:	JUL 2022
SHEET NO:	6

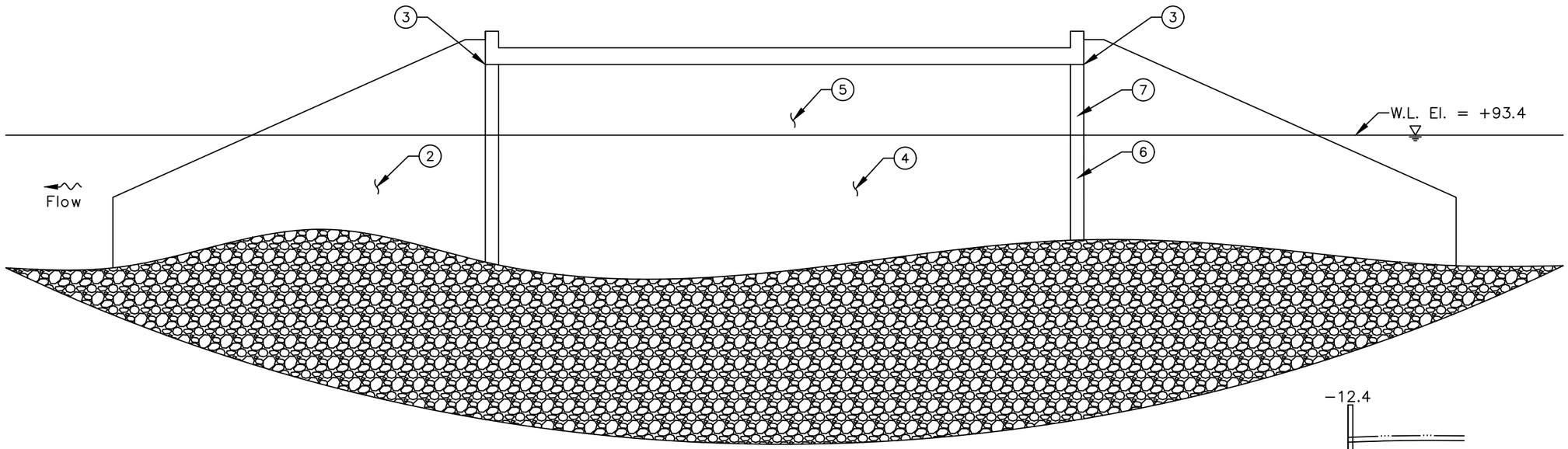

SOUTH ELEVATION
(LOOKING NORTH)

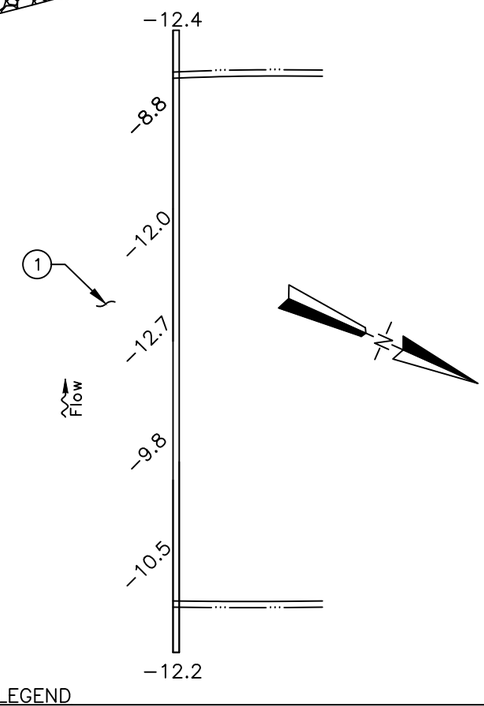

INSPECTION NOTES:

1. The channel bottom material consisted of silty sand with approximately 1 ft probe rod penetration with areas of riprap and gravel up to 1 ft diameter.
2. Typical light marine growth algae and silt up to 1/16 in. deep was observed on the submerged portions of the abutment.
3. Loss of joint filler up to 2 ft vertical was observed at all four corners between the abutment and the deck.
4. The submerged portions of the pier exhibited moderate scaling up to 1/4 in. deep from channel bottom to 1 ft above the waterline.
5. Hairline map cracking with efflorescence was observed on approximately 10% of total surface area.
6. A spall measuring up to 6 in. horizontal by 11 ft vertical by 3 in. deep with no exposed reinforcement bars was observed from the channel bottom to the waterline near the upstream wingwall.
7. A spall measuring up to 14 in. horizontal by 38 in. vertical by 7 in. deep with two exposed reinforcement bars and up to 25% loss of section was observed near the upstream wingwall.

LEGEND

−2.7	Sounding Depth from Waterline (ft)
———	Approximate Channel Bottom – July 2022
	Timber Debris
	Water Surface

COLLINS ENGINEERS
124 Venture Court, Ste 10
Lexington, KY 40511
Phone: 859-367-0097
Fax: 859-367-0140

Ohio Department of Transportation, District 11
2201 Reiser Avenue
New Philadelphia, OH 44663
Phone: 330-339-6633

SR-542 OVER ATWOOD RESERVOIR
STRUCTURE NO. SFN1001957
ABUTMENT 2
CARROLL COUNTY, OHIO

CEI PROJECT	55-13380.01
INSPECTED BY:	KMM
DRAWN BY:	OPF
CHECKED BY:	JMJ
DATE:	JUL 2022
SHEET NO:	7

EXHIBIT 2 – INSPECTION PHOTOGRAPHS



Photograph No. 1: Overall View of Structure No. SFN1001957, Looking West.



Photograph No. 2: Overall View of Structure No. SFN1001957, Looking East.



Photograph No. 3: View of the North Approach, Looking South.



Photograph No. 4: View of the South Approach, Looking North.



Photograph No. 5: View of the North Embankment Upstream of the Structure, Looking Northwest.



Photograph No. 6: View of the North Embankment Downstream of the Structure, Looking Northeast.



Photograph No. 7: View of the South Embankment Upstream of the Structure, Looking Southwest.



Photograph No. 8: View of the South Embankment Downstream of the Structure, Looking Southeast.



Photograph No. 9: View of the Upstream Channel, Looking East.



Photograph No. 10: View of the Downstream Channel, Looking West.



Photograph No. 11: View of the Typical Underdeck Condition.



Photograph No. 12: View of the North Face of Abutment 1, Looking Southwest.



Photograph No. 13: View of the North Face of Abutment 1, Looking Southeast.



Photograph No. 14: View of the Spall at Abutment 1, Looking South.



Photograph No. 15: View of the Typical Concrete Condition at the Waterline on the North Face of Abutment 1, Looking South.



Photograph No. 16: View of the South Face of Abutment 2, Looking Northwest.



Photograph No. 17: View of the South Face of Abutment 2, Looking Northeast.



Photograph No. 18: View of the Spall at Abutment 2, Looking North.

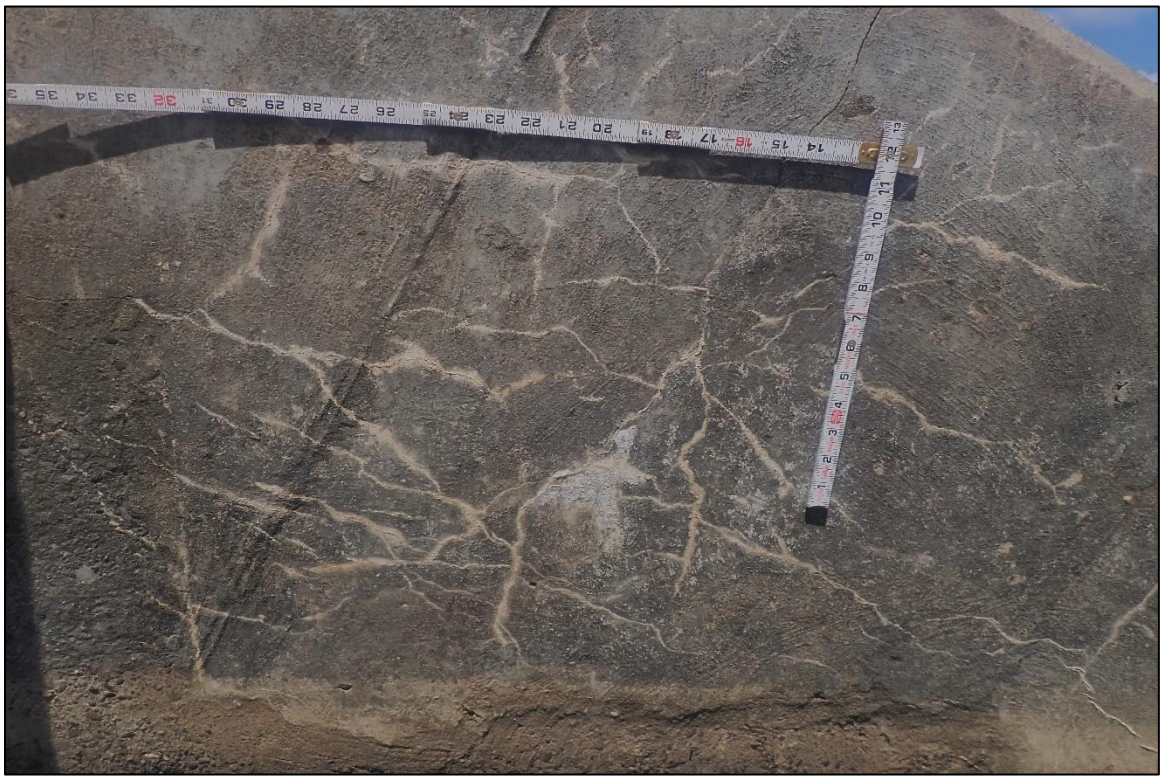

Photograph No. 19: View of the Typical Concrete Condition with Efflorescence at the Waterline on the South Face of Abutment 2, Looking North.

EXHIBIT 3 – DIVE PROCEDURES CHECKLIST

Underwater Dive Inspection Procedure Checklist

Acceptable written procedures communicate to the next dive team what is necessary to ensure a safe and successful inspection. Each bridge requiring underwater dive techniques must have a unique written inspection procedure. The prior inspection report does not suffice for the required procedures. It is valuable to review the last inspection notes, but they do not serve the same purpose as a stand-alone inspection procedure.

This document shall be completed for all underwater dive inspections. This document shall be reviewed prior to performing the field work and it shall be updated when necessary.

I. Bridge Identification

a. Agency with Inspection Responsibility: ODOT DISTRICT 11

Dive Frequency: 60 months

SFN: 1001957 Bridge Number (County-Route-SLM-SD): CAR-542-8.64

Superstructure Type Main Span Type: CONCRETE SLAB

Approach Span: CONCRETE SLAB

Substructure Type Abutment Type: REINFORCED CONCRETE

Pier Type: N/A

Total Pier Count: N/A

Total Pier Count in water: 2 ABUTMENTS

Foundations: SPREAD FOOTINGS

Feature Intersected ATWOOD RESERVOIR

b. Photographs



Endview



Elevation



Underside

II. Office and Field Assessment

Prior to the inspection, obtain and review copies of the previous underwater inspection reports, routine inspection reports, scour and hydraulic information, and design plans in preparation of the inspection. Divers should pay particular attention given to any observed areas of deterioration, the channel conditions and factors that may accelerate material deterioration. Changes shall be noted in the inspection procedure. Site conditions should be reviewed prior to diving.

a. Channel Conditions

____Waterway features

____Rapid stream flows,

____Significant debris accumulation

____Constricted waterway openings

____Soft or unstable streambeds

____Meandering channels

____Other which may promote scour and undermining of substructure elements

____Navigable Waterway

____Flow Controls

b. Anticipated Water conditions which may affect the inspection

____Cold Water (Apprx. Temp____)

____Black water

____Rapid stream flows

____Near military facility

____Tribal fishing

____Water quality

____History of Log jams

c. Identify factors that may accelerate the deterioration of the bridge elements:

____Highly corrosive water

____Unprotected steel members

____Other

Risk Factor Narrative:

III. **Contacts Prior to Work**

Dr. Waseem Khalifa, Ph. D., P.E.

District Bridge Engineer

2201 Reiser Avenue SE

New Philadelphia, OH 44663

(330) 308-7873

Point of contact for immediate action such as closing the bridge due to findings)

Contact Bridge Owner _____14_____ (number) days before the proposed underwater inspection.

Special contracting and scheduling procedures prior to inspection, include recommended lead time

Entity	Contact Name and Title	Contact Phone	Lead Time
Coast Guard	N/A	N/A	N/A
Property Owner	N/A	N/A	N/A
Access Equipment	N/A	N/A	N/A
Lake or River draw-down	N/A	N/A	N/A
Canal dry time	N/A	N/A	N/A
Tree removal	N/A	N/A	N/A
Other:	N/A	N/A	N/A
Other:	N/A	N/A	N/A

IV. **Dive Team Shall Include the Following:**

Dive Team Narrative:

The structure shall be investigated using a three-member dive team: one dive supervisor to monitor communications and air supply while taking notes, one diver, and one tender/standby diver. There shall be one NBIS Team Leader onsite at all times.

Example: The Bridge shall be investigated using a three-member dive team: one supervisor to monitor rack box and take notes, one diver, and one tender/standby diver. There shall be one NBIS Team Leader onsite at all times.

V. Site Information

Navigable waterway: Y /(N)

If Yes, waterway river point _____

Anticipated water visibility depth 1 ft

Anticipated Dive depth 12.8 ft

Anticipated current 0 ft

Scour Critical (item 113): 8

POA in place: Y/(N)

Scour Monitoring devices present: Y/(N)

Verify the Scope of Services when work is contracted for the procedure for underwater elements that are not in water during an inspection.

Site Information Narrative:

The underwater inspection consists of a visual and tactile examination of the accessible surfaces of the substructure items in water. Additional items should reference the scope of services in the contract. For reference the following items are in water:

Item	Number of Units	Level of Inspection (1, 2 or 3) with Commentary
Piers and Number of Columns		
Abutment	2	100% Level 1 10% Level 2
Culvert		
Scour Countermeasures		
Fenders or Dolphins		

Photographs should be taken, if water clarity permits, for typical conditions, conditions that have changed since last inspection and significant or noteworthy deficiencies. The type of channel bottom material, the presence or extent of scour, the presence or extent of riprap, the presence or extent of drift and debris, and the location of any foundation exposure or undermining shall be quantified. Include depth, length, height and location of deficiencies.

VI. **Equipment and Field Logistics**

a. The inspection should be conducted using:

____Chest waders

____Hip waders

_X_Diving equipment

____SCUBA (Note that ADCI Consensus Standards require communication systems be employed for both SCUBA and Surface-Supplied (whether air or mixed-gas) dive modes)

____SCUBA with communication

_X_Surface Supplied with communication

b. The channel bottom should be sounded utilizing

____Digital fathometer

_X_Telescoping survey rod

____ acoustic imaging

c. During the inspection, the divers should work from

____Shore

_X_Boat

____Either

The note taker should work alongside the dive team.

d. Access to the waterway should be obtained from the shore (north bank, southwest quadrant, driveway 30 yards north etc.)

ATWOOD LAKE MARINA

e. The maximum depth of the channel is typically measured 12.8 feet from

THE CENTERLINE BETWEEN ABUTMENTS 1 AND 2

Reference Datum 6.6 FT BELOW THE TOP OF DECK AT THE UPSTREAM FASCIA OF ABUTMENT 2

Soundings should be dictated by the scope of work. When not detailed in the scope they should be repeated from the previous soundings. If neither exist then they need to be taken in a grid pattern between substructure units 100' upstream and 100' downstream.

VII. Inspection Procedure History

Created: COLLINS ENGINEERS, INC. Date: 09/08/2022

Updated By: _____ Date: _____

Updated By: _____ Date: _____

Updated By: _____ Date: _____

Updated By: _____ Date: _____

Updated By: _____ Date: _____

VIII. Other Narrative Not Included In Previous Sections