





UNDERWATER BRIDGE INSPECTION REPORT

STRUCTURE NO. SFN7905319
(TUS-250-1998 WB)
US-250 OVER BIG STILLWATER CREEK
TUSCARAWAS COUNTY, OH
DISTRICT 11

June 2022

Prepared for:

STATE OF OHIO DEPARTMENT OF TRANSPORTATION

STATE OF OHIO
MATTHEW ROGERS
PE.87504
REGISTERED PROFESSIONAL ENGINEER

Prepared by:

COLLINS ENGINEERS INC.

124 Venture Court, Suite 10

Lexington, Kentucky 40511

859.367.0097 • www.collinsengr.com

TABLE OF CONTENTS

EXECUTIVE SUMMARY
1.0 INTRODUCTION 1
1.1 Purpose and Scope 1
1.2 General Description of the Structure 1
1.3 Method of Investigation 1
2.0 EXISTING CONDITIONS 2
2.1 General Conditions 2
2.2 Substructure Conditions 3
2.2.1 Pier 2 3
2.2.2 Pier 3 3
2.2.3 Channel Bottom and Scour Assessment 3
3.0 EVALUATION AND RECOMMENDATIONS 4
EXHIBIT 1 – FIGURES 5
LOCATION MAP
SOUNDING PLAN
CHANNEL CROSS SECTIONS – 50 FT UPSTREAM & UPSTREAM FASCIA
CHANNEL CROSS SECTION – STRUCTURE CENTERLINE
CHANNEL CROSS SECTIONS – 50 FT DOWNSTREAM & DOWNSTREAM FASCIA
PIER 2
PIER 3
EXHIBIT 2 – INSPECTION PHOTOGRAPHS 13
Photograph No. 1: Overall View of Structure No. SFN7905319, Looking West.
Photograph No. 2: Overall View of Structure No. SFN7905319, Looking Northeast.
Photograph No. 3: East Approach of Structure No. SFN7905319, Looking North.
Photograph No. 4: West Approach of Structure No. SFN7905319, Looking Southwest.
Photograph No. 5: View of the East Embankment Upstream of the Structure, Looking Southeast.
Photograph No. 6: View of East Embankment at the Structure, Looking Southeast.
Photograph No. 7: View of the East Embankment Downstream of the Structure, Looking East.
Photograph No. 8: View of the West Embankment Upstream of the Structure, Looking Northeast
Photograph No. 9: View of the West Embankment at the Structure, Looking Southwest.
Photograph No. 10: View to the Typical Underdeck of the Structure, Looking West.
Photograph No. 11: View of the East Face of Pier 2, Looking Northwest.
Photograph No. 12: View of the Timber Debris at the Upstream Nose of Pier 2, Looking Southwest.

Photograph No. 13: View of the West Face of Pier 3, Looking South.

Photograph No. 14: Overall View of Pier 3, Looking North.

Photograph No. 15: View of the Typical Concrete Condition at the Waterline of Pier 3, Looking Southeast.

EXHIBIT 3 – DIVE PROCEDURE CHECKLIST 22

EXECUTIVE SUMMARY

Project: ODOT D11 Underwater Bridge Inspections - 2022

Purpose of Project: To perform a detailed visual and tactile underwater investigation of bridges for the Ohio Department of Transportation, District 11.

Inspection Team: Team Leader – Matthew Rogers, P.E. – Collins Engineers, Inc.
Team Member – Donald Lort, E.I.T. – Collins Engineers, Inc.
Team Member – Isaiha Easley – Collins Engineers, Inc.

Inspection Date(s): June 30, 2022

Water Visibility:	2 ft	***Water Velocity:***	<1 ft/s
Water Temperature:	72 °F	***Weather:***	Clear – 65 °F
Waterline Elevation:	828.8 ft	***Type of Boat:***	10 ft kayak
High-water Elevation:	837.4 ft		
Coordinates:	40.42779°N, 81.36383°W		
Access Location:	Southwest embankment at the structure		
Dive Mode:	Surface Supplied Air		
Waterline Reference:	22.2 ft below the top of deck at the downstream nose of Pier 2.		
Maximum Depth at SSU:	4.5 ft – Upstream nose of Pier 2.		
Shoreline Conditions:	The east and west shorelines consisted of moderately to heavily vegetated mild slopes with minimal protection, no signs of erosion, and multiple trees leaning toward the channel.		

Summary of Findings:

- **Pier 2:**
  - The submerged portions of the pier exhibited light scaling up to 1/16 in. deep from the channel bottom to 1 ft above the waterline.
  - Moderate timber debris accumulation consisting of logs up to 12 in. diameter was observed along the upstream nose of the pier from the channel bottom to 4 ft above the waterline.
- **Pier 3:**
  - The submerged portions of the pier exhibited light scaling up to 1/16 in. deep from the channel bottom to 1 ft above the waterline.

Summary of Recommendations:

- Monitor timber debris accumulation at Pier 2.
- Monitor channel bottom.

Underwater Inspection Coding:

NBI Ratings:

Item	Description	Coding	Condition
B.C.03	Substructure (Overall)	7 – Good Condition	Poor Concrete Consolidation, Light Concrete Scaling
B.C.09	Channel Cond. Rating	6 – Satisfactory Condition	Timber Debris Accumulation
B.C.10	Channel Protection Cond.	N – Not Applicable	
B.C.11	Scour Cond. Rating	8 – Above Foundation Limits	Stable (Inspector Recommended)
B.C.15	Underwater Cond. Rating	7 – Good Condition	Light Concrete Scaling
B.IE.03	Insp. Date	June 30, 2022	
B.IE.05	UW Insp. Interval	60 Months	

AASHTO National Bridge Element (NBE) Ratings:

Element #	Description	Units	Total	Condition State			
				1	2	3	4
210	Reinforced Concrete Pier Wall	LF	28	28	0	0	0

Note: Ratings were developed using the FHWA Specifications for the National Bridge Inventory. The recommended ratings consider inspected elements located within the waterway and conditions existing below the water surface only. Additional consideration is necessary for the assignment of overall condition ratings for this bridge.

1.0 INTRODUCTION

1.1 Purpose and Scope

This report consists of the results of a detailed underwater investigation performed at the US-250 Bridge over Big Stillwater Creek in Tuscarawas County, OH. Collins Engineers, Inc. (Collins) conducted the underwater investigation for the Ohio Department of Transportation (ODOT), District 11 on June 30, 2022. The primary purpose of the investigation was as follows:

- Determine the condition of the substructure components located in the water at the time of the inspection from the waterline to the channel bottom.
- Obtain channel bottom depth measurements along the bridge fascias, upstream and downstream of the bridge, and around the submerged substructure units.
- Determine the condition of the shorelines in the vicinity of the structure.
- Obtain photographs of the bridge and any significant defects.

In addition, a brief inspection was made of areas that could be submerged during periods of high water. The following report includes a description of the structure, the method of investigation, a description of existing conditions, an evaluation and recommendations based on the conditions, inspection figures, and photographs.

1.2 General Description of the Structure

Structure No. SFN7905319 spans 212.64 ft, carrying US-250 over Big Stillwater Creek and is approximately 40 ft wide. The bridge superstructure is constructed of three spans, each composed of five continous steel girders. The roadway orientation of the longitudinal axis of the bridge is west to east. The substructure units are labeled as Abutments 1 and 4 and Piers 2 and 3. Previous inspection reports were available at the time of the inspection. Refer to Figure 1 in Exhibit 1 for a Location Map of the bridge. Refer to Photographs 1 through 4 in Exhibit 2 for overall views of the bridge.

1.3 Method of Investigation

A detailed field inspection was conducted to determine the physical condition of the submerged bridge substructure units from the waterline to the channel bottom. A brief visual examination of the substructure units above the waterline was also made.

A three-person team consisting of a professional engineer-diver and team leader (Matthew Rogers, P.E.), engineer-diver (Donald Lort, E.I.T.), and technican-diver (Isaiha Easley) conducted the underwater inspection. The inspection was conducted using surface-supplied air diving equipment. During the inspection, the inspectors worked from a boat and a note taker on the shore recorded the inspection notes.

The underwater inspection consisted of a visual and tactile examination of the accessible surfaces of the substructure units from the waterline to the channel bottom with particular attention given to any observed areas of deterioration or apparent distress. Approximately 10 percent of the total area on the underwater surfaces of the substructure units was cleaned so that the condition could be more closely examined. Photographs were taken to document the general conditions and observed deficiencies. Underwater Photographs could not be obtained due to poor water conditions. The type of channel bottom material, the presence or extent of scour, the presence or extent of riprap, the presence or extent of drift and debris, and the location of any foundation exposure or undermining were noted.

Channel bottom soundings were performed utilizing a telescoping survey rod and a digital fathometer. Soundings were taken parallel to the bridge at the upstream and downstream fascias, 50 ft upstream and downstream of the fascias, at quarter intervals between the substructure units, and at 10 ft intervals in-line with the piers upstream and downstream up to 50 ft. The waterline was referenced to a known elevation on the bridge. A sounding plan was developed using the soundings and approximate location of the shorelines. Refer to Figures 2 through 5 in Exhibit 1 for the sounding plan and channel cross sections that show the channel limits and water depths around the structure.

2.0 EXISTING CONDITIONS

2.1 General Conditions

At the time of the inspection, the waterline of Big Stillwater Creek was located approximately 22.2 ft below the top of deck at the downstream nose of Pier 2, which corresponds to a waterline elevation of 828.8 ft. During the inspection, the waterway was flowing north to south below the structure at a rate of less than 1 ft/s. The approximate high-water elevation was observed to be 837.4 ft.

The bridge pier skew was consistent with the channel alignment and does not require attention at this time. The east and west shorelines consisted of moderately to heavily vegetated mild slopes with no protection,

no signs of erosion, and multiple trees leaning toward the channel. Refer to Photographs 5 through 9 in Exhibit 2 for views of the shorelines near the structure.

2.2 Substructure Conditions

2.2.1 Pier 2

The channel bottom material around Pier 2 consisted of small twigs, mud, branches, and silt up to 18 in. of probe rod penetration. Typical light marine growth algae and silt up to 1/8 in. deep was observed on the submerged portions of the pier. The submerged portions of the pier exhibited light scaling up to 1/16 in. deep from the channel bottom to 1 ft above the waterline. Moderate timber debris accumulation consisting of logs up to 12 in. diameter was observed along the upstream nose of the pier from the channel bottom to 4 ft above the waterline. Refer to Figure 6 in Exhibit 1 for detailed inspection notes of Pier 2. Refer to Photographs 11 and 12 in Exhibit 2 for views of Pier 2.

2.2.2 Pier 3

The channel bottom material around Pier 3 consisted of small twigs, mud, branches, and silt up to 18 in. of probe rod penetration. Typical light marine growth algae and silt up to 1/8 in. deep was observed on the submerged portions of the pier. The submerged portions of the pier exhibited light scaling up to 1/16 in. deep from the channel bottom to 1 ft above the waterline. Refer to Figure 7 in Exhibit 1 for detailed inspection notes of Pier 3. Refer to Photographs 13 through 15 in Exhibit 2 for views of Pier 3 and typical concrete condition at the waterline.

2.2.3 Channel Bottom and Scour Assessment

At the time of the inspection, the Big Stillwater Creek was experiencing normal flow and the channel bottom appeared stable for the type of material. The channel bottom was primarily small twigs, mud, branches, and silt surrounding the substructure units. No additional scour, undermining, or scour countermeasures were observed.

3.0 EVALUATION AND RECOMMENDATIONS

Overall, the submerged substructure units of Structure No. SFN7905319 were in good condition below water. A comparison of the soundings recorded during the previous inspection on July 14, 2017 and the soundings taken during this inspection revealed no significant change in the channel bottom profile in the vicinity of the structure. Although no channel deficiencies were observed, the channel bottom should continue to be monitored during future underwater inspections to verify that localized scour or overall channel degradation is not occurring and that the pier footings remain adequately embedded in the channel bottom.

The timber debris accumulation on the channel bottom did not significantly affect the channel flow, and as a result, does not require removal at this time. If the debris accumulation increases in size or density, it may be necessary to remove the debris to reduce excessive lateral loads on the substructures, limit further debris accumulation, and reduce the likelihood of channel bottom degradation resulting from obstructed flow.

The scaling observed on Piers 2 and 3 is not a structural concern at this time given its size compared to the overall pier size, and as a result, no repairs are recommended. This area should be monitored during future inspections for increasing extent or severity of the scaling and exposure of reinforcing steel. If the extent or severity of the scaling is observed to be increasing or reinforcing steel becomes exposed, it may be necessary to repair the area at that time.

It is recommended that the submerged substructure units of Structure No. SFN7905319 be next inspected underwater at an interval not to exceed 60 months, no later than June 30, 2027.

Respectfully Submitted,
COLLINS ENGINEERS, INC.

Matthew Rogers

Matthew Rogers, P.E.
Project Manager

Originated by:
Victor Valdivia, E.I.T.

EXHIBIT 1 – FIGURES

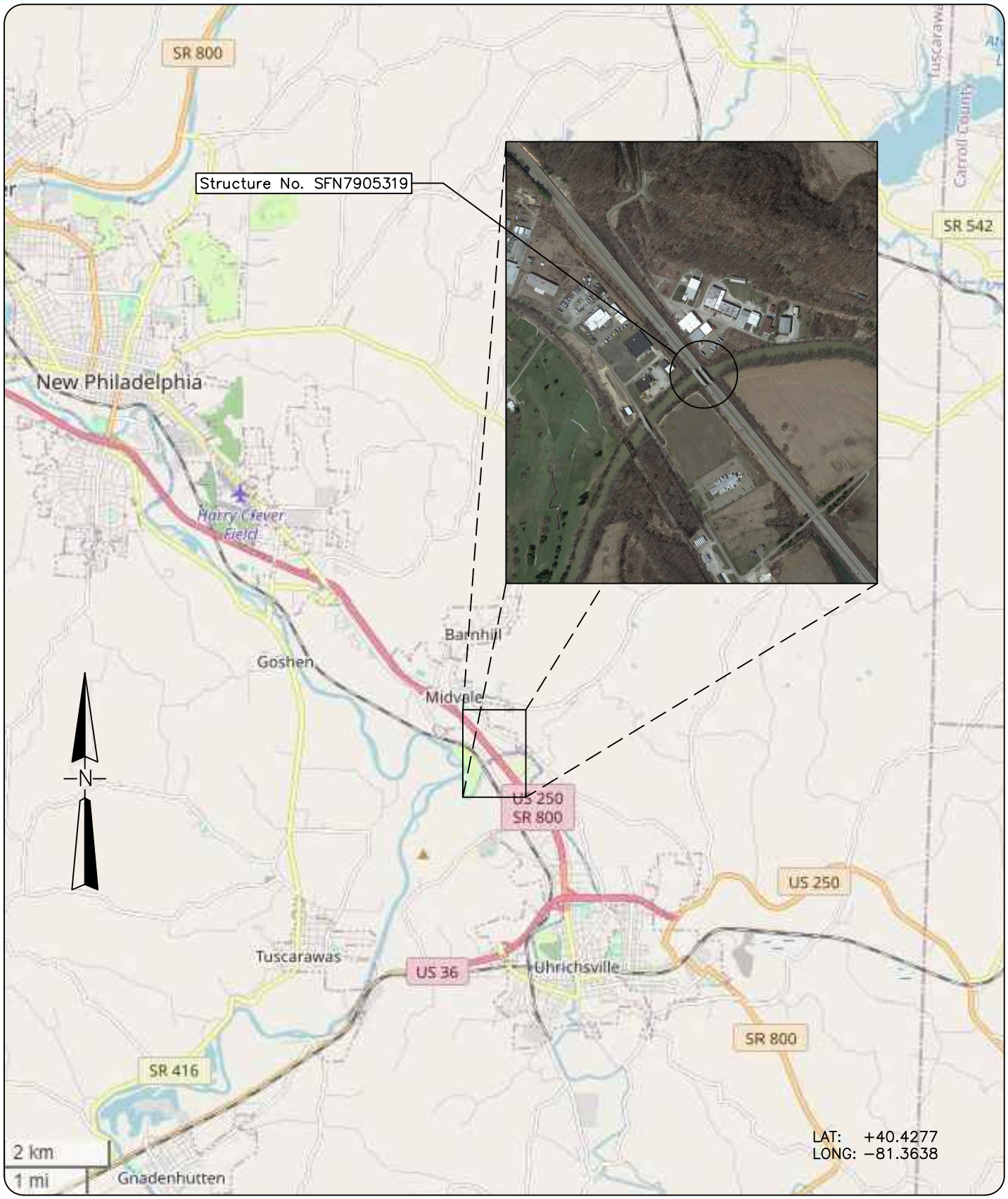

COLLINS ENGINEERS
124 Venture Court, Ste 10
Lexington, KY 40511
Phone: 859-367-0097
Fax: 859-367-0140

Ohio Department of Transportation, District 11
2201 Reiser Avenue
New Philadelphia, OH
44663
Phone: 330-339-6633

US 250 OVER BIG STILLWATER CREEK
STRUCTURE NO. SFN7905319
LOCATION MAP
TUSCARAWAS COUNTY, OHIO

INSPECTED BY: IME	CEI PROJECT: 55−13380.01
DRAWN BY: VTV	DATE: 30 JUN 2022
CHECKED BY: JMJ	SHEET NO: 1

Y:\PROJECTS\55 - KENTUCKY\55-13380.01 - ODOT D11 UW BRIDGE INSP (2022)\ENGINEERING\BRIDGES\SFN 7905319 (TUS-250-19.98 L)\DRAWINGS\SFN 7905319 - VTV.DWG10/11/2022 1:24:11 PM

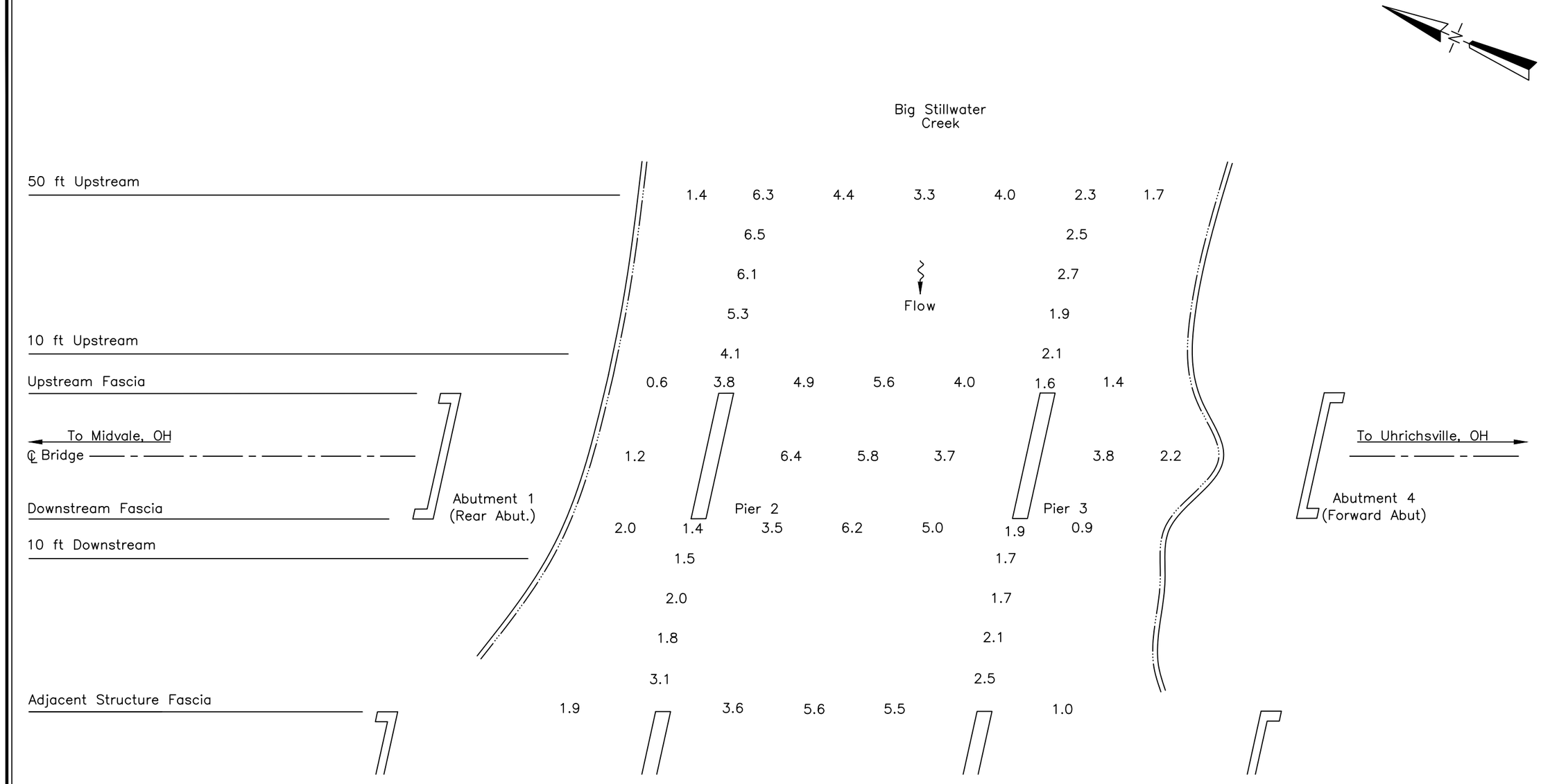

SOUNDING PLAN

GENERAL NOTES:

1. Piers 2 and 3 were inspected underwater. Substructure units are labeled according to available record drawings.
2. At the time of inspection on June 30, 2022, the waterline was located approximately 22.2 ft below Top of Deck at downstream nose of Pier 2 (EL. +851 ft based upon Sept. 2012 drawings). This corresponds with a waterline elevation of +828.8 ft.
3. Soundings indicate the water depth at the time of inspection and are measured in feet.
4. Soundings were taken parallel to the bridge at the upstream and downstream fascias and 50 ft upstream and downstream of the fascias, at quarter intervals between the substructure units, and at 10 ft intervals in–line with the piers upstream and downstream up to 50 ft.

LEGEND

2.7 Sounding Depth from Waterline (ft)

Timber Debris

COLLINS ENGINEERS
124 Venture Court, Ste 10
Lexington, KY 40511
Phone: 859-367-0097
Fax: 859-367-0140

Ohio Department of Transportation, District 11
2201 Reiser Avenue
New Philadelphia, OH 44663
Phone: 330-339-6633

US 250 OVER TUSCARAWAS RIVER
STRUCTURE NO. SFN7905319
SOUNDING PLAN
TUSCARAWAS COUNTY, OHIO

CEI PROJECT	55–13380.01
INSPECTED BY:	IME
DRAWN BY:	VTV
CHECKED BY:	JMJ
DATE:	JUN 2022
SHEET NO:	2

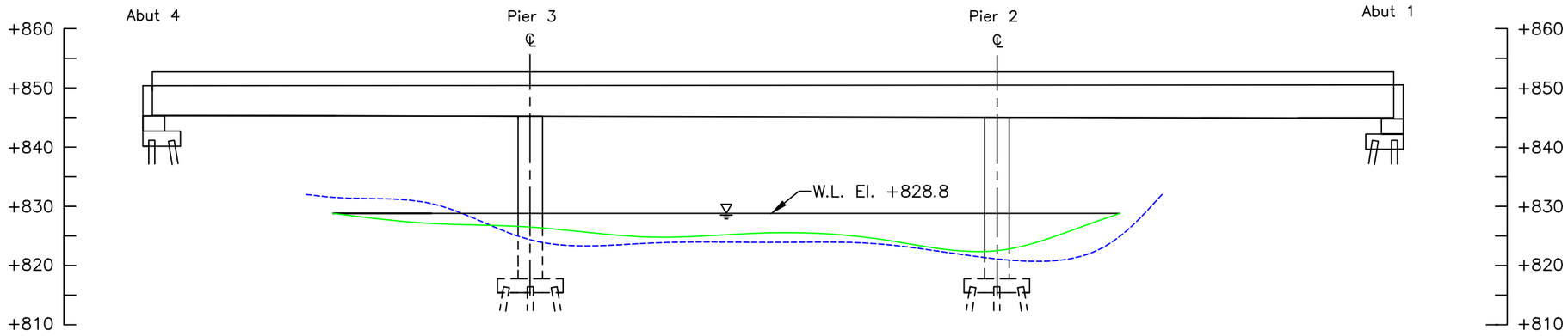

50 FT UPSTREAM
CHANNEL CROSS SECTION
(LOOKING DOWNSTREAM)

Upstream Elevations (Looking Downstream)	
LOCATION	Height (ft)
A4	5.5
3/4	12.3
1/2	17.9
1/4	23.6
P3	23.8
3/4	26.2
1/2	27.8
1/4	27.1
P2	26.0
3/4	22.8
1/2	16.8
1/4	11.6
A1	6.2

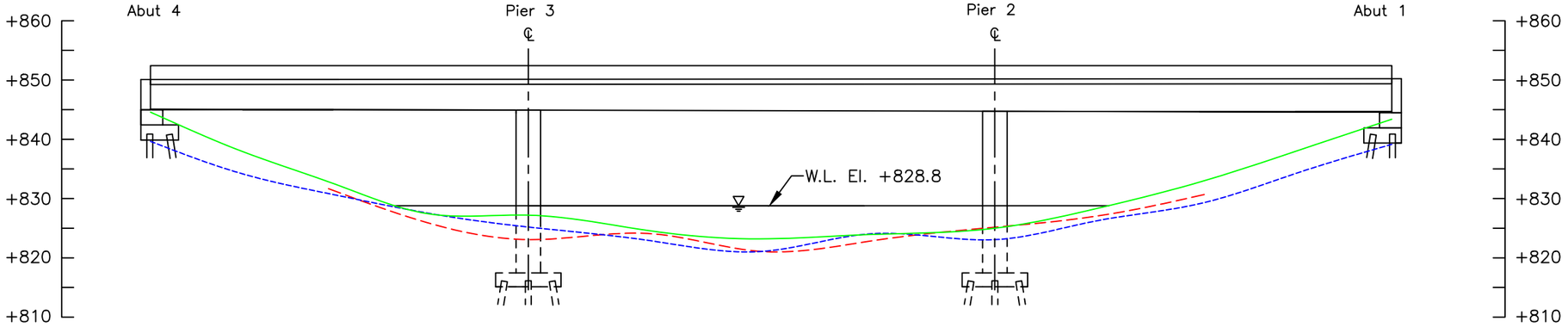

UPSTREAM FASCIA
CHANNEL CROSS SECTION
(LOOKING DOWNSTREAM)

LEGEND

- Approximate Channel Bottom – June 2022
- Approximate Channel Bottom – July 2017
- Approximate Channel Bottom – September 2012
- Timber Debris
- Water Surface
- +450 Elevation (ft)

COLLINS ENGINEERS
124 Venture Court, Ste 10
Lexington, KY 40511
Phone: 859-367-0097
Fax: 859-367-0140

Ohio Department of Transportation, District 11
2201 Reiser Avenue
New Philadelphia, OH 44663
Phone: 330-339-6633

US 250 OVER TUSCARAWAS RIVER
STRUCTURE NO. SFN7905319
CROSS SECTIONS
TUSCARAWAS COUNTY, OHIO

CEI PROJECT
55–13380.01

INSPECTED BY:
IME

DRAWN BY:
VTV

CHECKED BY:
JMJ

DATE:
JUN 2022

SHEET NO:
3

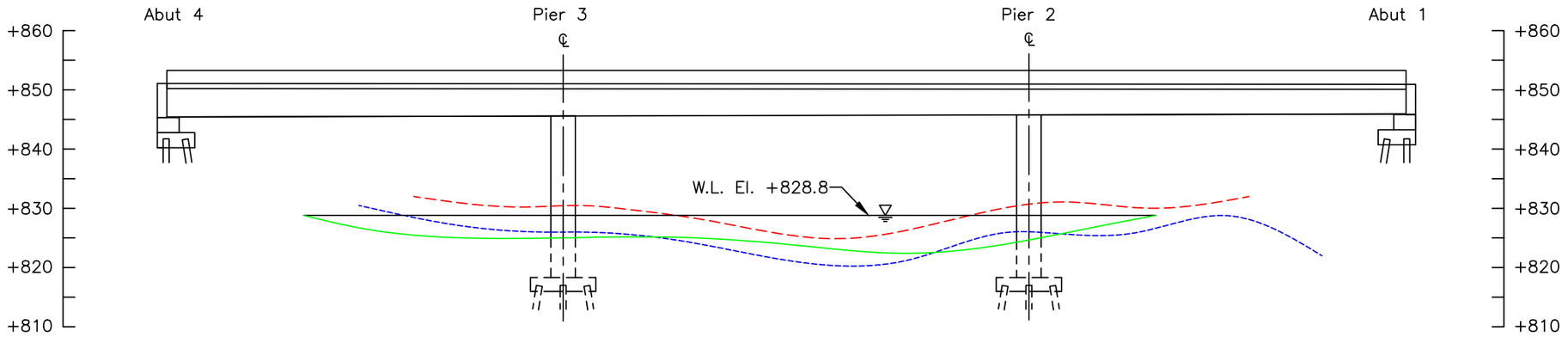

STRUCTURE CENTERLINE
CHANNEL CROSS SECTION
(LOOKING DOWNSTREAM)

LEGEND

- Approximate Channel Bottom – June 2022
- Approximate Channel Bottom – July 2017
- Approximate Channel Bottom – September 2012
- Timber Debris
- Water Surface
- +450 Elevation (ft)

COLLINS ENGINEERS
124 Venture Court, Ste 10
Lexington, KY 40511
Phone: 859-367-0097
Fax: 859-367-0140

Ohio Department of Transportation, District 11
2201 Reiser Avenue
New Philadelphia, OH 44663
Phone: 330-339-6633

US 250 OVER TUSCARAWAS RIVER
STRUCTURE NO. SFN7905319
CROSS SECTIONS
TUSCARAWAS COUNTY, OHIO

CEI PROJECT 55–13380.01
INSPECTED BY: IME
DRAWN BY: VTV
CHECKED BY: JMJ
DATE: JUN 2022
SHEET NO: 4

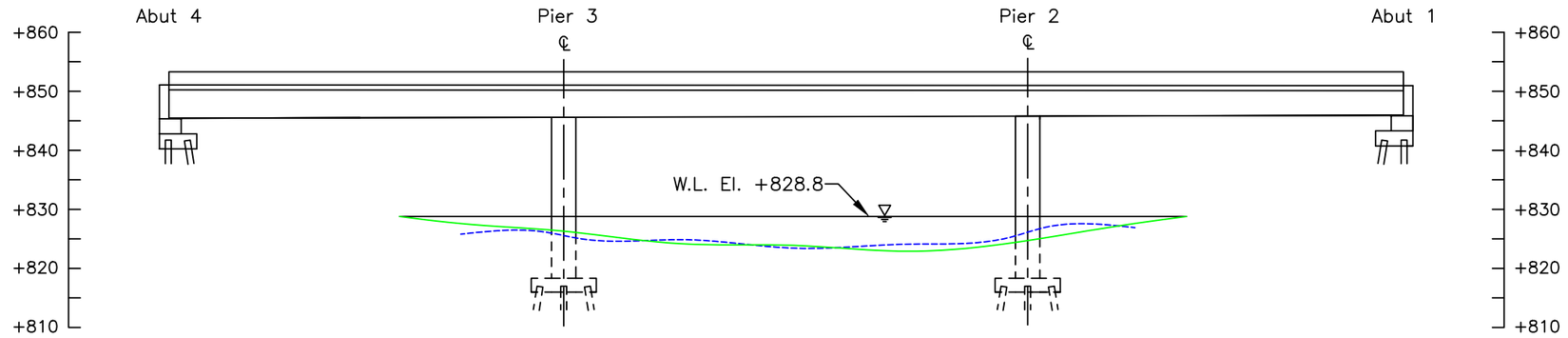

UPSTREAM FASCIA OF SFN7905343
CHANNEL CROSS SECTION
(LOOKING DOWNSTREAM)

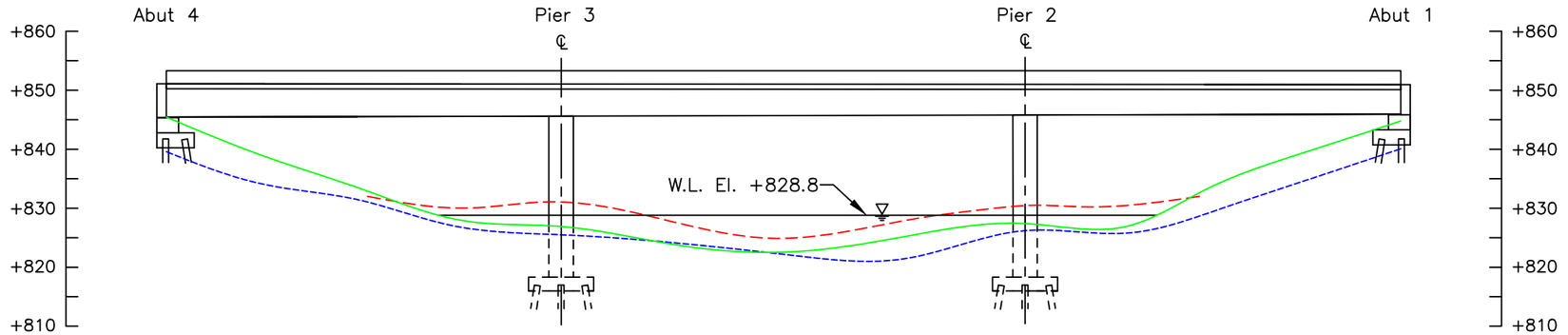

DOWNSTREAM FASCIA
CHANNEL CROSS SECTION
(LOOKING DOWNSTREAM)

Downstream Elevations (Looking Downstream)	
LOCATION	Height (ft)
A4	5.5
3/4	12.3
1/2	17.9
1/4	23.1
P3	24.1
3/4	27.2
1/2	28.4
1/4	25.7
P2	23.6
3/4	24.2
1/2	16.8
1/4	11.6
A1	6.2

LEGEND

- Approximate Channel Bottom – June 2022
- Approximate Channel Bottom – July 2017
- Approximate Channel Bottom – September 2012
- Timber Debris
- Water Surface
- +450 Elevation (ft)

COLLINS ENGINEERS
124 Venture Court, Ste 10
Lexington, KY 40511
Phone: 859-367-0097
Fax: 859-367-0140

Ohio Department of Transportation, District 11
2201 Reiser Avenue
New Philadelphia, OH 44663
Phone: 330-339-6633

US 250 OVER TUSCARAWAS RIVER
STRUCTURE NO. SFN7905319
CROSS SECTIONS
TUSCARAWAS COUNTY, OHIO

CEI PROJECT 55–13380.01
INSPECTED BY: IME
DRAWN BY: VTV
CHECKED BY: JMJ
DATE: JUN 2022
SHEET NO: 5

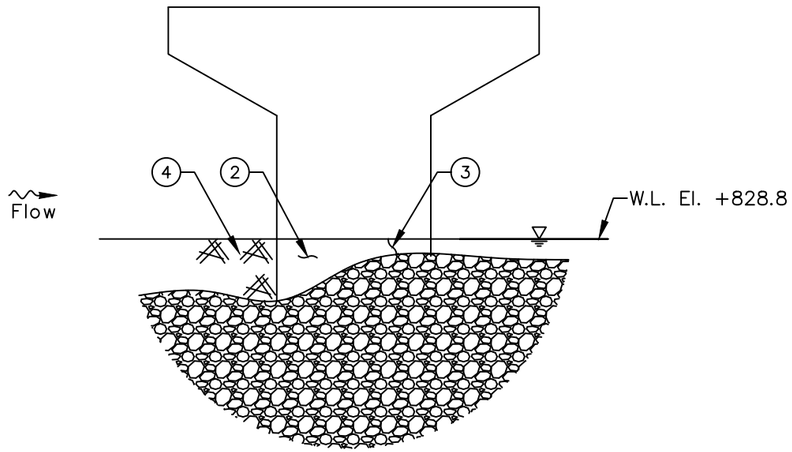

WEST ELEVATION
(LOOKING EAST)

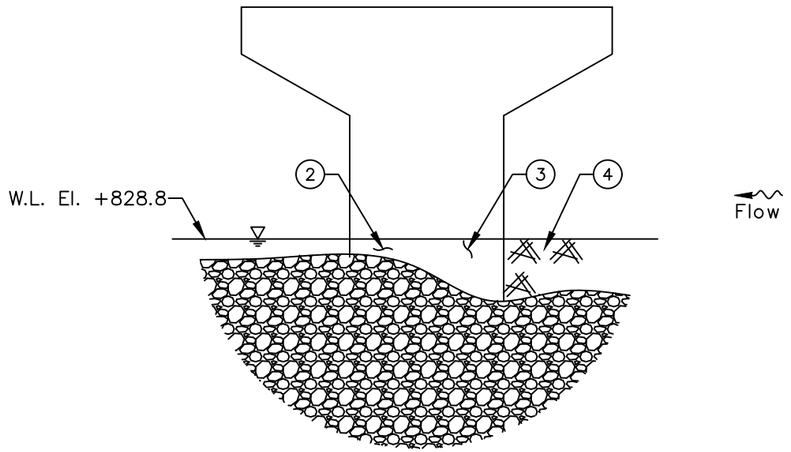

EAST ELEVATION
(LOOKING WEST)

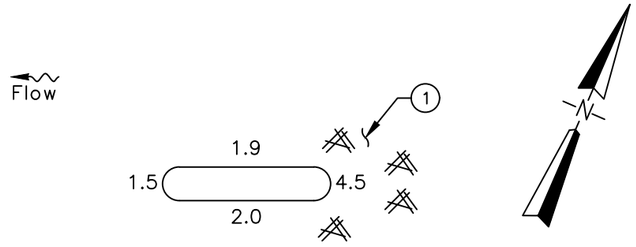

INSPECTION NOTES:

1. The channel bottom material consisted of small twigs, mud, branches, and silt up to 18 in. of probe rod penetration.
2. Typical light marine growth algae and silt up to 1/8 in. deep was observed on the submerged portions of the pier.
3. The submerged portions of the pier exhibited light scaling up to 1/16 in. deep from the channel bottom to 1 ft above the waterline.
4. Moderate timber debris accumulation consisting of logs up to 12 in. diameter was observed along the upstream nose of the pier from the channel bottom to 4 ft above the waterline.

LEGEND

2.7	Sounding Depth from Waterline (ft)
———	Approximate Channel Bottom – June 2022
	Timber Debris
	Water Surface

COLLINS ENGINEERS
124 Venture Court, Ste 10
Lexington, KY 40511
Phone: 859-367-0097
Fax: 859-367-0140

Ohio Department of Transportation, District 11
2201 Reiser Avenue
New Philadelphia, OH 44663
Phone: 330-339-6633

US 250 OVER TUSCARAWAS RIVER
STRUCTURE NO. SFN7905319
PIER 2
TUSCARAWAS COUNTY, OHIO

CEI PROJECT
55–13380.01

INSPECTED BY:
IME

DRAWN BY:
VTV

CHECKED BY:
JMJ

DATE:
JUN 2022

SHEET NO:
6

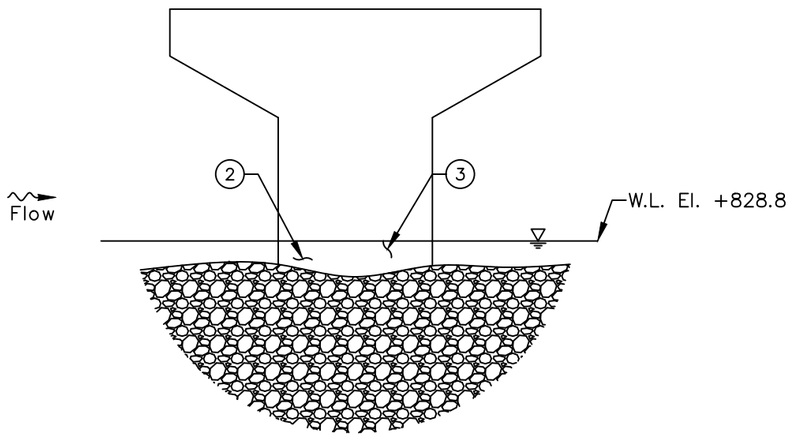

WEST ELEVATION
(LOOKING EAST)

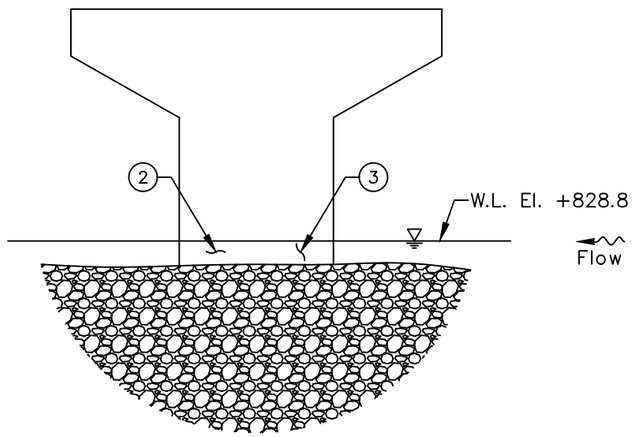

EAST ELEVATION
(LOOKING WEST)

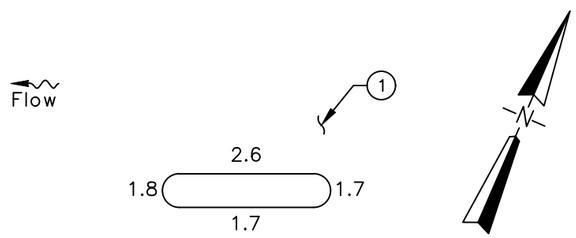

INSPECTION NOTES:

1. The channel bottom material consisted of small twigs, mud, branches, and silt up to 18 in. of probe rod penetration.
2. Typical light marine growth algae and silt up to 1/8 in. deep was observed on the submerged portions of the pier.
3. The submerged portions of the pier exhibited light scaling up to 1/16 in. deep from the channel bottom to 1 ft above the waterline.

LEGEND

2.7	Sounding Depth from Waterline (ft)
———	Approximate Channel Bottom – June 2022
	Timber Debris
	Water Surface

COLLINS ENGINEERS
124 Venture Court, Ste 10
Lexington, KY 40511
Phone: 859-367-0097
Fax: 859-367-0140

Ohio Department of Transportation, District 11
2201 Reiser Avenue
New Philadelphia, OH 44663
Phone: 330-339-6633

US 250 OVER TUSCARAWAS RIVER
STRUCTURE NO. SFN7905319
PIER 3
TUSCARAWAS COUNTY, OHIO

CEI PROJECT
55–13380.01

INSPECTED BY:
IME

DRAWN BY:
VTV

CHECKED BY:
JMJ

DATE:
JUN 2022

SHEET NO:
7

EXHIBIT 2 – INSPECTION PHOTOGRAPHS



Photograph No. 1: Overall View of Structure No. SFN7905319, Looking West.



Photograph No. 2: Overall View of Structure No. SFN7905319, Looking Northeast.



Photograph No. 3: East Approach of Structure No. SFN7905319, Looking North.



Photograph No. 4: West Approach of Structure No. SFN7905319, Looking Southwest.



Photograph No. 5: View of the East Embankment Upstream of the Structure, Looking Southeast.



Photograph No. 6: View of East Embankment at the Structure, Looking Southeast.



Photograph No. 7: View of the East Embankment Downstream of the Structure, Looking East.



Photograph No. 8: View of the West Embankment Upstream of the Structure, Looking Northeast



Photograph No. 9: View of the West Embankment at the Structure, Looking Southwest.



Photograph No. 10: View to the Typical Underdeck of the Structure, Looking West.



Photograph No. 11: View of the East Face of Pier 2, Looking Northwest.



Photograph No. 12: View of the Timber Debris at the Upstream Nose of Pier 2, Looking Southwest.



Photograph No. 13: View of the West Face of Pier 3, Looking South.



Photograph No. 14: Overall View of Pier 3, Looking North.



Photograph No. 15: View of the Typical Concrete Condition at the Waterline of Pier 3, Looking Southeast.

EXHIBIT 3 – DIVE PROCEDURE CHECKLIST

Underwater Dive Inspection Procedure Checklist

Acceptable written procedures communicate to the next dive team what is necessary to ensure a safe and successful inspection. Each bridge requiring underwater dive techniques must have a unique written inspection procedure. The prior inspection report does not suffice for the required procedures. It is valuable to review the last inspection notes, but they do not serve the same purpose as a stand-alone inspection procedure.

This document shall be completed for all underwater dive inspections. This document shall be reviewed prior to performing the field work and it shall be updated when necessary.

I. Bridge Identification

a. Agency with Inspection Responsibility: ODOT District 11

Dive Frequency: 60 months

SFN: 7905319 Bridge Number (County-Route-SLM-SD): TUS-250-1998L

Superstructure Type Main Span Type: Multi-beam Continous Steel Girder

Approach Span: Steel Girder

Substructure Type Abutment Type: Steel Girder

Pier Type: Reinforced Concrete

Total Pier Count: 2

Total Pier Count in water: 2

Foundations: Cast-in-place Reinforced Concrete Piles

Feature Intersected Big Stillwater Creek

b. Photographs



Endview



Elevation



Underside

II. Office and Field Assessment

Prior to the inspection, obtain and review copies of the previous underwater inspection reports, routine inspection reports, scour and hydraulic information, and design plans in preparation of the inspection. Divers should pay particular attention given to any observed areas of deterioration, the channel conditions and factors that may accelerate material deterioration. Changes shall be noted in the inspection procedure. Site conditions should be reviewed prior to diving.

a. Channel Conditions

____Waterway features

____Rapid stream flows,

X____Significant debris accumulation

____Constricted waterway openings

____Soft or unstable streambeds

____Meandering channels

____Other which may promote scour and undermining of substructure elements

____Navigable Waterway

____Flow Controls

b. Anticipated Water conditions which may affect the inspection

____Cold Water (Apprx. Temp____)

____Black water

____Rapid stream flows

____Near military facility

____Tribal fishing

____Water quality

____History of Log jams

c. Identify factors that may accelerate the deterioration of the bridge elements:

____Highly corrosive water

____Unprotected steel members

____Other

Risk Factor Narrative:

III. **Contacts Prior to Work**

Dr. Waseem Khalifa, Ph. D., P.E.

District Bridge Engineer

2201 Reiser Avenue SE

New Philadelphia, OH 44663

(330) 308-7873

Point of contact for immediate action such as closing the bridge due to findings)

Contact Bridge Owner _____14_____ (number) days before the proposed underwater inspection.

Special contracting and scheduling procedures prior to inspection, include recommended lead time

Entity	Contact Name and Title	Contact Phone	Lead Time
Coast Guard	N/A	N/A	N/A
Property Owner	N/A	N/A	N/A
Access Equipment	N/A	N/A	N/A
Lake or River draw-down	N/A	N/A	N/A
Canal dry time	N/A	N/A	N/A
Tree removal	N/A	N/A	N/A
Other:	N/A	N/A	N/A
Other:	N/A	N/A	N/A

IV. **Dive Team Shall Include the Following:**

Dive Team Narrative:

The structure shall be investigated using a three-member dive team: one dive supervisor to monitor communications and air supply while taking notes, one diver, and one tender/standby diver. There shall be one NBIS Team Leader onsite at all times.

Example: The Bridge shall be investigated using a three-member dive team: one supervisor to monitor rack box and take notes, one diver, and one tender/standby diver. There shall be one NBIS Team Leader onsite at all times.

V. Site Information

Navigable waterway: Y /(N)

If Yes, waterway river point _____

Anticipated water visibility depth 2 ft

Anticipated Dive depth 4.5 ft

Anticipated current <1 ft

Scour Critical (item 113): 8

POA in place: Y/(N)

Scour Monitoring devices present: Y/(N)

Verify the Scope of Services when work is contracted for the procedure for underwater elements that are not in water during an inspection.

Site Information Narrative:

The underwater inspection consists of a visual and tactile examination of the accessible surfaces of the substructure items in water. Additional items should reference the scope of services in the contract. For reference the following items are in water:

Item	Number of Units	Level of Inspection (1, 2 or 3) with Commentary
Piers and Number of Columns	2	100% Level 1 10% Level 2
Abutment		
Culvert		
Scour Countermeasures		
Fenders or Dolphins		

Photographs should be taken, if water clarity permits, for typical conditions, conditions that have changed since last inspection and significant or noteworthy deficiencies. The type of channel bottom material, the presence or extent of scour, the presence or extent of riprap, the presence or extent of drift and debris, and the location of any foundation exposure or undermining shall be quantified. Include depth, length, height and location of deficiencies.

VI. **Equipment and Field Logistics**

a. The inspection should be conducted using:

____Chest waders

____Hip waders

X___Diving equipment

____SCUBA (Note that ADCI Consensus Standards require communication systems be employed for both SCUBA and Surface-Supplied (whether air or mixed-gas) dive modes)

____SCUBA with communication

X___Surface Supplied with communication

b. The channel bottom should be sounded utilizing

X___Digital fathometer

X___Telescoping survey rod

____ acoustic imaging

c. During the inspection, the divers should work from

____Shore

____Boat

_X_Either

The note taker should work alongside the dive team.

d. Access to the waterway should be obtained from the shore (north bank, southwest quadrant, driveway 30 yards north etc.)

Southwest embankment at the structure

e. The maximum depth of the channel is typically measured 4.5 feet from Upstream nose of Pier 2

Reference Datum 22.2 ft below top of deck at the downstream nose of Pier 2

Soundings should be dictated by the scope of work. When not detailed in the scope they should be repeated from the previous soundings. If neither exist then they need to be taken in a grid pattern between substructure units 100' upstream and 100' downstream.

VII. Inspection Procedure History

Created: Collins Engineers, Inc. Date: 7/19/2022

Updated By: _____ Date: _____

Updated By: _____ Date: _____

Updated By: _____ Date: _____

Updated By: _____ Date: _____

Updated By: _____ Date: _____

VIII. Other Narrative Not Included In Previous Sections