







UNDERWATER BRIDGE INSPECTION REPORT

STRUCTURE NO. SFN3403246
(HAS-799-5.59)
OH-799 OVER CLENDENING LAKE
HARRISON COUNTY, OH
DISTRICT 11

August 2022

Prepared for:

STATE OF OHIO DEPARTMENT OF TRANSPORTATION

STATE OF OHIO
MATTHEW ROGERS
PE.87504
REGISTERED PROFESSIONAL ENGINEER

Prepared by:

COLLINS ENGINEERS INC.

124 Venture Court, Suite 10

Lexington, Kentucky 40511

859.367.0097 • www.collinsengr.com

TABLE OF CONTENTS

EXECUTIVE SUMMARY
1.0 INTRODUCTION 1
1.1 Purpose and Scope 1
1.2 General Description of the Structure 1
1.3 Method of Investigation 1
2.0 EXISTING CONDITIONS 2
2.1 General Conditions 2
2.2 Substructure Conditions 3
2.2.1 Abutment 1 3
2.2.2 Abutment 2 3
2.2.3 Channel Bottom and Scour Assessment 3
3.0 EVALUATION AND RECOMMENDATIONS 4
EXHIBIT 1 – FIGURES 5
LOCATION MAP
SOUNDING PLAN
HYDROGRAPHIC SURVEY
CHANNEL CROSS SECTIONS – 50 FT UPSTREAM & UPSTREAM FASCIA
CHANNEL CROSS SECTIONS – STRUCTURE CENTERLINE
CHANNEL CROSS SECTIONS – 50 FT DOWNSTREAM & DOWNSTREAM FASCIA
ABUTMENT 1
ABUTMENT 2
EXHIBIT 2 – INSPECTION PHOTOGRAPHS 14
Photograph No. 1: Overall View of Structure No. SFN3403246, Looking South.
Photograph No. 2: Overall View of Structure No. SFN3403246., Looking North.
Photograph No. 3: View of the South Approach of Structure No. SFN3403246, Looking North.
Photograph No. 4: View of the North Approach of Structure No. SFN3403246, Looking South.
Photograph No. 5: View of the East Embankment Upstream of the Structure, Looking Southeast.
Photograph No. 6: View of the East Embankment Downstream of the Structure, Looking Northeast.
Photograph No. 7: View of the West Embankment Upstream of the Structure, Looking South.
Photograph No. 8: View of the West Embankment Downstream of the Structure, Looking North.
Photograph No. 9: View of the Typical Underdeck, Looking West.
Photograph No. 10: View of the Underdeck Spall and Corrosion on Beam 3, Looking South.
Photograph No. 11: View of the Underdeck Spall and Corrosion of Beam 4, Looking West.

Photograph No. 12: View of the Underdeck Delamination of Beam 4, Looking West.
Photograph No. 13: View of the East Face of Abutment 1, Looking Southwest.
Photograph No. 14: View of the West Face of Abutment 2, Looking Southeast.
Photograph No. 15 : View of the Crack with Efflorescence on the West Face of Abutment 2, Looking East.
Photograph No. 16: View of the Typical Concrete Condition at the Waterline on the West Face of Abutment 2, Looking East.
EXHIBIT 3 – DIVE PROCEDURES CHECKLIST 23

EXECUTIVE SUMMARY

Project: ODOT D11 Underwater Bridge Inspections - 2022.

Purpose of Project: To perform a detailed visual and tactile underwater investigation of bridges for the Ohio Department of Transportation, District 11.

Inspection Team: Team Leader – Joshua Davis, E.I.T. – Collins Engineers, Inc.
Team Member – Callen Papineau, E.I.T. – Collins Engineers, Inc.
Team Member – Nicholas Lane – Collins Engineers, Inc.

Inspection Date(s): August 25, 2022

Water Visibility:	2 ft	***Water Velocity:***	<1 ft/s
Water Temperature:	78 °F	***Weather:***	Sunny – 72 °F
Waterline Elevation:	94.3 ft	***Type of Boat:***	23 ft Carolina Skiff
High-water Elevation:	95.6 ft		
Coordinates:	40.2655°N, 81.1872°W		
Access Location:	Southwest Embankment at Structure		
Dive Mode:	Surface Supplied Air		
Waterline Reference:	5.7 ft below the top of deck at the Upstream Fascia of Abutment 2.		
Maximum Depth at SSU:	9.7 ft – East Face of Abutment 1		
Shoreline Conditions:	The east and west shorelines consisted of well protected, moderately vegetated moderate slopes with no signs of erosion.		

Summary of Findings:

- **Abutment 1:**
  - The submerged portions of the abutment exhibited light scaling up to 1/16 in. deep from the channel bottom to the waterline.
  - Isolated areas of poor concrete consolidation up to 3/8 in. penetration with no exposed reinforcing steel was observed along the entire abutment.
  - A vertical crack up to 3/8 in. wide with spalling up to 6 in. diameter by 1 in. deep was observed extending from the channel bottom to the top of cap.
  - A vertical crack up to 1/16 in. wide from the channel bottom to the top of the web wall was observed 7 ft from the end of the northwest web wall.
- **Abutment 2:**
  - The submerged portions of the abutment exhibited light scaling up to 1/16 in. deep from the channel bottom to the waterline.
  - Isolated areas of poor concrete consolidation up to 3/8 in. penetration with no exposed reinforcing steel was observed along the entire abutment.
  - A vertical crack up to 1/16 in. wide from the channel bottom to the top of the web wall was observed 10 ft from the end of the northeast web wall.
  - A vertical crack with efflorescence up to 1/16 in. wide from the channel bottom to the top of the web wall was observed 13 ft from the end of the northeast web wall.

- A vertical crack up to 5 ft vertical by 1/16 in. wide extending from 3 ft below the waterline to 2 ft above the waterline was observed 6 ft from the end of the southeast web wall.

Summary of Recommendations:

- Monitor scaling on Abutments 1 and 2.
- Monitor cracking on Abutments 1 and 2.
- Monitor the channel bottom.

Underwater Inspection Coding:

NBI Ratings:

Item	Description	Coding	Condition
B.C.03	Substructure (Overall)	6– Satisfactory Condition	Scaling, Cracking
B.C.09	Channel Cond. Rating	8– Very Good Condition	
B.C.10	Channel Protection Cond.	N – Not Applicable	
B.C.11	Scour Cond. Rating	8– Above Foundation Limits	Stable (Inspector Recommended)
B.C.15	Underwater Cond. Rating	7– Good Condition	
B.IE.03	Insp. Date	August 25, 2022	
B.IE.05	UW Insp. Interval	60 Months	

AASHTO National Bridge Element (NBE) Ratings:

Element #	Description	Units	Total	Condition State			
				1	2	3	4
215	Reinforced Concrete Abutment	LF	125	61	64	0	0

Note: Ratings were developed using the FHWA Specifications for the National Bridge Inventory. The recommended ratings consider inspected elements located within the waterway and conditions existing below the water surface only. Additional consideration is necessary for the assignment of overall condition ratings for this bridge.

1.0 INTRODUCTION

1.1 Purpose and Scope

This report consists of the results of a detailed underwater investigation performed at the OH-799 Bridge over Clendening Lake in Harrison County, OH. Collins Engineers, Inc. (Collins) conducted the underwater investigation for the Ohio Department of Transportation (ODOT), District 11 on May 4, 2022 and August 25, 2022. The primary purpose of the investigation was as follows:

- Determine the condition of the substructure components located in the water at the time of the inspection from the waterline to the channel bottom.
- Obtain channel bottom depth measurements along the bridge fascias, upstream and downstream of the bridge, and around the submerged substructure units.
- Determine the condition of the shorelines in the vicinity of the structure.
- Obtain photographs of the bridge and any significant defects.

In addition, a brief inspection was made of areas that could be submerged during periods of high water. The following report includes a description of the structure, the method of investigation, a description of existing conditions, an evaluation and recommendations based on the conditions, inspection figures, and photographs.

1.2 General Description of the Structure

Structure No. SFN3403246 spans 24 ft, carrying OH-799 over Clendening Lake and is approximately 24 ft wide. The bridge superstructure is constructed of one span composed of multiple box beams. The roadway orientation of the longitudinal axis of the bridge is west to east. The substructure units are labeled as Abutments 1 and 2. Existing design drawings were not available at the time of the inspection. Refer to Figure 1 in Exhibit 1 for a Location Map of the bridge. Refer to Photographs 1 through 4 in Exhibit 2 for overall views of the bridge.

1.3 Method of Investigation

A detailed field inspection was conducted to determine the physical condition of the submerged bridge substructure units from the waterline to the channel bottom. A brief visual examination of the substructure units above the waterline was also made.

A three-person team consisting of engineer-diver and team leader (Joshua Davis, E.I.T.), engineer-diver (Callen Papineau, E.I.T.), and technician-diver (Nicholas Lane) conducted the underwater inspection. The inspection was conducted using surface supplied air diving equipment. During the inspection, the inspectors worked from a boat and a note taker on the shore recorded the inspection notes.

The underwater inspection consisted of a visual and tactile examination of the accessible surfaces of the substructure units from the waterline to the channel bottom with particular attention given to any observed areas of deterioration or apparent distress. Approximately 10 percent of the total area on the underwater surfaces of the substructure units was cleaned so that the condition could be more closely examined. Photographs were taken to document the general conditions and observed deficiencies. The type of channel bottom material, the presence or extent of scour, the presence or extent of riprap, the presence or extent of drift and debris, and the location of any foundation exposure or undermining were noted.

Channel bottom soundings were performed utilizing a digital fathometer. Soundings were taken parallel to the bridge at the upstream and downstream fascias, at 10 ft intervals between the substructure units, and at 10 ft intervals in-line with the piers upstream and downstream up to 50 ft, and the waterline was referenced to a known elevation on the bridge. A sounding plan was developed using the soundings and approximate location of the shorelines. Refer to Figures 2 through 6 in Exhibit 1 for the sounding plan, hydrographic survey, and channel cross sections that show the channel limits and water depths around the structure.

2.0 EXISTING CONDITIONS

2.1 General Conditions

At the time of the inspection, the waterline of Clendening Lake was located approximately 5.7 ft below the top of deck at the upstream fascia of Abutment 2, which corresponds to an assumed waterline elevation of 94.3 ft. During the inspection, the waterway was flowing north to south below the structure at a rate of 1 ft/s. The approximate high-water elevation was observed to be 95.6 ft.

The bridge pier skew was consistent with the channel alignment and does not require attention at this time. The east and west shorelines consisted of well protected, moderately vegetated moderate slopes with no signs of erosion. Refer to Photographs 5 through 8 in Exhibit 2 for views of the shorelines near the structure.

2.2 Substructure Conditions

2.2.1 Abutment 1

The channel bottom material around Abutment 1 consisted of gravel up to 2 in. diameter and silt. Typical light marine growth algae and silt up to 1/8 in. deep was observed on the submerged portions of the abutment. The submerged portions of the abutment exhibited light scaling up to 1/16 in. deep from the channel bottom to the waterline. Isolated areas of poor concrete consolidation up to 3/8 in. penetration with no exposed reinforcing steel was observed along the entire abutment. A vertical crack up to 3/8 in. wide with spalling up to 6 in. diameter by 1 in. deep was observed extending from the channel bottom to the top of cap. A vertical crack up to 1/16 in. wide from the channel bottom to the top of the web wall was observed 7 ft from the end of the northwest web wall. Refer to Figure 7 in Exhibit 1 for detailed inspection notes of Abutment 1. Refer to Photographs 9 through 13 in Exhibit 2 for views of the underdeck and Abutment 1.

2.2.2 Abutment 2

The channel bottom material around Abutment 2 consisted of gravel up to 2 in. diameter and silt. Typical light marine growth algae and silt up to 1/8 in. deep was observed on the submerged portions of the abutment. The submerged portions of the abutment exhibited light scaling up to 1/16 in. deep from the channel bottom to the waterline. Isolated areas of poor concrete consolidation up to 3/8 in. penetration with no exposed reinforcing steel was observed along the entire abutment. A vertical crack up to 1/16 in. wide from the channel bottom to the top of the web wall was observed 10 ft from the end of the northeast web wall. A vertical crack with efflorescence up to 1/16 in. wide from the channel bottom to the top of the web wall was observed 13 ft from the end of the northeast web wall. A vertical crack up to 5 ft vertical by 1/16 in. wide extending from 3 ft below the waterline to 2 ft above the waterline was observed 6 ft from the end of the southeast web wall. Refer to Figure 8 in Exhibit 1 for detailed inspection notes of Abutment 2. Refer to Photographs 14 through 16 in Exhibit 2 for views of Abutment 2 and typical concrete condition at the waterline.

2.2.3 Channel Bottom and Scour Assessment

At the time of the inspection, Clendening Lake was experiencing normal flow and the channel bottom appeared stable for the type of material. The channel bottom was primarily gravel and silt surrounding the substructure units. No additional scour, undermining, or scour countermeasures were observed.

3.0 EVALUATION AND RECOMMENDATIONS

Overall, the submerged substructure units of Structure No. SFN3403246 were in satisfactory condition below water. Since no design or as-built plans were available for the bridge, the amount of embedment of the footings in the channel bottom is unknown. As a result, the channel bottom configuration should continue to be monitored during future underwater inspections to verify that localized scour or overall channel degradation is not occurring and that both pier footings remain adequately embedded in the channel bottom. Design or as-built drawings for the bridge should be obtained and reviewed, if possible, prior to the next underwater inspection to determine the exact construction of the piers and their foundations.

The scaling observed on Abutments 1 and 2 is not a structural concern at this time given its size compared to the overall pier size, and as a result, no repairs are recommended. This area should be monitored during future inspections for increasing extent or severity of the scaling and exposure of reinforcing steel. If the extent or severity of the scaling is observed to be increasing or reinforcing steel becomes exposed, it may be necessary to repair the area at that time.

The vertical cracks at Abutments 1 and 2 are not structural concerns at this time. However, the cracks do provide a means for water infiltration and freeze-thaw damage. It is therefore recommended that these cracks be monitored during future underwater inspections. If further crack propagation or increased crack widths are observed, it may be necessary to repair the cracks by injection or patching with a repair material suitable for underwater applications.

It is recommended that the submerged substructure units of Structure No. SFN3403246 be next inspected underwater at an interval not to exceed 60 months, no later than August 25, 2027.

Respectfully Submitted,
COLLINS ENGINEERS, INC.

Matthew Rogers, P.E.
Project Manager

Originated by:
Olivia Farmer, E.I.T.

EXHIBIT 1 – FIGURES



COLLINS ENGINEERS
124 Venture Court, Ste 10
Lexington, KY 40511
Phone: 859-367-0097
Fax: 859-367-0140

Ohio Department of Transportation,
District 11
2201 Reiser Ave.
New Philadelphia, OH 44663
Phone: 330-339-6633

OH-799 OVER CLENDENING LAKE
STRUCTURE NO. SFN3403246

LOCATION MAP

HARRISON COUNTY, OHIO

INSPECTED BY: MOR	CEI PROJECT: 55−13380.01
DRAWN BY: OPF	DATE: 4 MAY 2022
CHECKED BY: JMJ	SHEET NO: 1

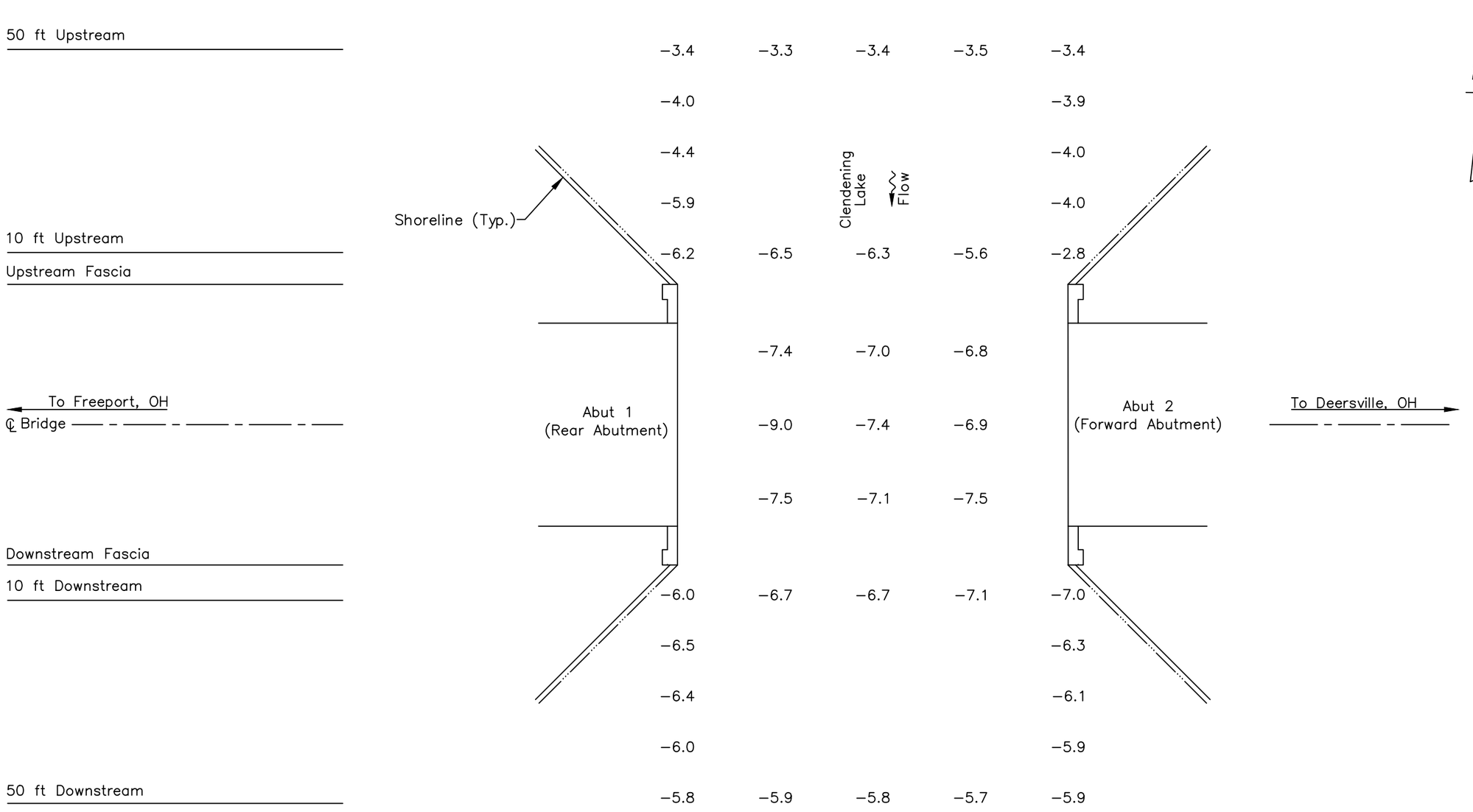

SOUNDING PLAN

GENERAL NOTES:

1. Abutments 1 and 2 were inspected underwater. Substructure units are labeled according to available record drawings.
2. At the time of inspection on May 4, 2022, the waterline was located approximately 5.7 ft below the top of deck at the upstream fascia of Abutment 2 (EL. +100.0 ft). This corresponds with a waterline elevation of +94.3 ft.
3. Soundings indicate the water depth at the time of inspection and are measured in feet.
4. Soundings were taken parallel to the bridge at the upstream and downstream fascias, at 10 ft intervals between the substructure units, and at 10 ft intervals in−line with the piers upstream and downstream up to 50 ft.

LEGEND

−2.7	Sounding Depth from Waterline (ft)
	Timber Debris

COLLINS ENGINEERS
124 Venture Court, Ste 10
Lexington, KY 40511
Phone: 859-367-0097
Fax: 859-367-0140

Ohio Department of Transportation, District 11
2201 Reiser Ave.
New Philadelphia, OH 44663
Phone: 330-339-6633

OH-799 OVER CLENDENING LAKE
STRUCTURE NO. SFN3403246
SOUNDING PLAN
HARRISON COUNTY, OHIO

CEI PROJECT 55−13380.01
INSPECTED BY: MOR
DRAWN BY: OPF
CHECKED BY: JMJ
DATE: MAY 2022
SHEET NO: 2

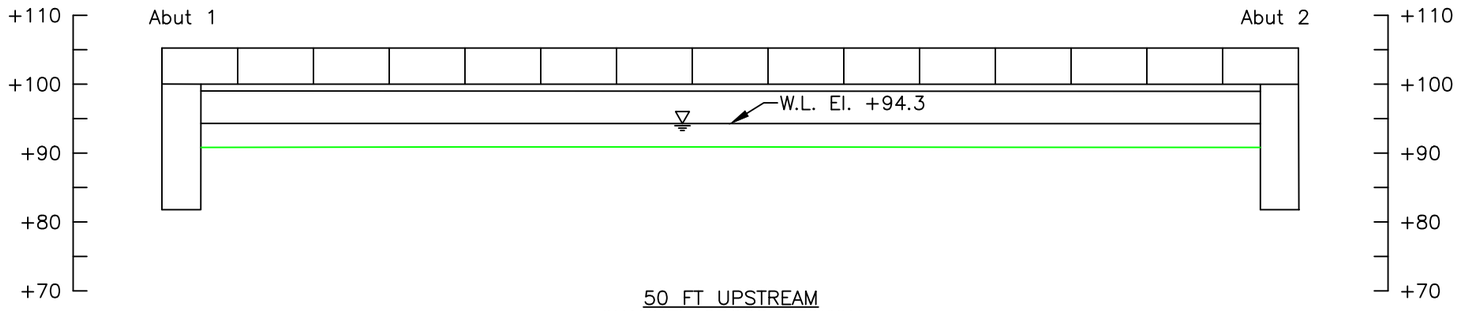

50 FT UPSTREAM
CHANNEL CROSS SECTION
(LOOKING UPSTREAM)

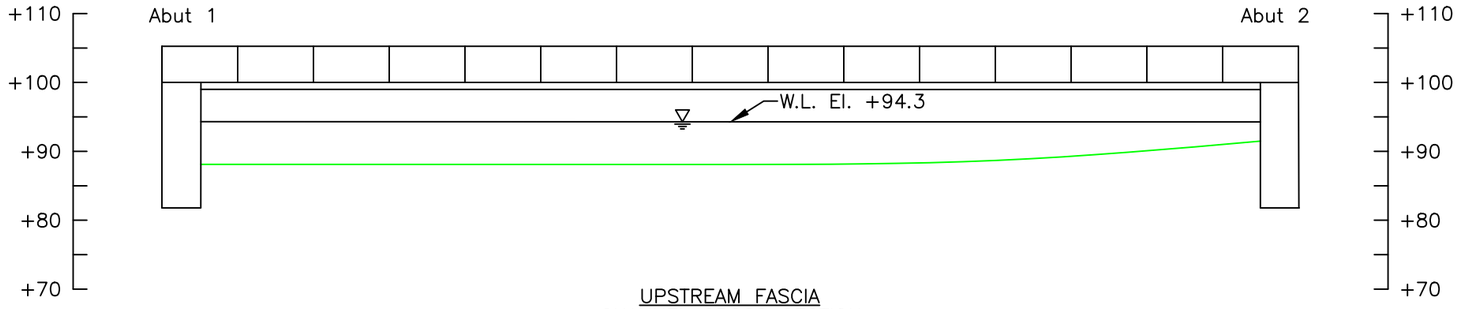

UPSTREAM FASCIA
CHANNEL CROSS SECTION
(LOOKING UPSTREAM)

Upstream Elevations (Looking Upstream)	
Location	Height (y)
A1	11.9
1/4	12.2
1/2	12.0
3/4	11.3
A2	8.5

Note:

Footing elevations unknown due to unavailable record drawings.
Vertical scale above waterline not drawn to scale for clarity.

LEGEND

- Approximate Channel Bottom – May 2022
- Approximate Channel Bottom – May 2017 (No Data)
- Approximate Channel Bottom – May 2012 (No Data)
- Timber Debris
- Water Surface
- +450 Elevation (ft)

COLLINS ENGINEERS
124 Venture Court, Ste 10
Lexington, KY 40511
Phone: 859-367-0097
Fax: 859-367-0140

Ohio Department of Transportation, District 11
2201 Reiser Ave.
New Philadelphia, OH 44663
Phone: 330-339-6633

OH-799 OVER CLENDENING LAKE
STRUCTURE NO. SFN3403246
CROSS SECTIONS
HARRISON COUNTY, OHIO

CEI PROJECT 55–13380.01
INSPECTED BY: MOR
DRAWN BY: OPF
CHECKED BY: JMJ
DATE: MAY 2022
SHEET NO: 4

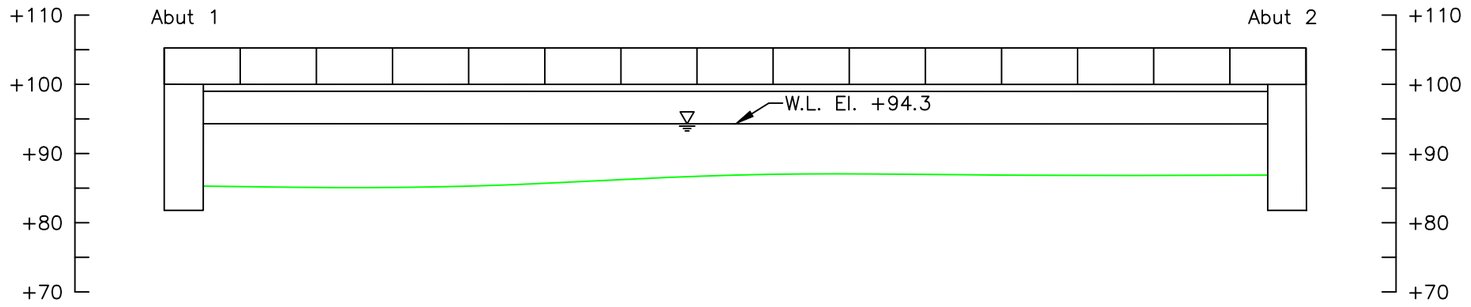

STRUCTURE CENTERLINE
CHANNEL CROSS SECTION
(LOOKING UPSTREAM)

Note:

Footing elevations unknown due to unavailable record drawings.
Vertical scale above waterline not drawn to scale for clarity.

LEGEND

- Approximate Channel Bottom – May 2022
- Approximate Channel Bottom – May 2017 (No Data)
- Approximate Channel Bottom – May 2012 (No Data)
- Timber Debris
- Water Surface
- +450 Elevation (ft)

COLLINS ENGINEERS
124 Venture Court, Ste 10
Lexington, KY 40511
Phone: 859-367-0097
Fax: 859-367-0140

Ohio Department of Transportation, District 11
2201 Reiser Ave.
New Philadelphia, OH 44663
Phone: 330-339-6633

OH-799 OVER CLENDENING LAKE
STRUCTURE NO. SFN3403246
CROSS SECTIONS
HARRISON COUNTY, OHIO

CEI PROJECT 55–13380.01
INSPECTED BY: MOR
DRAWN BY: OPF
CHECKED BY: JMJ
DATE: MAY 2022
SHEET NO: 5

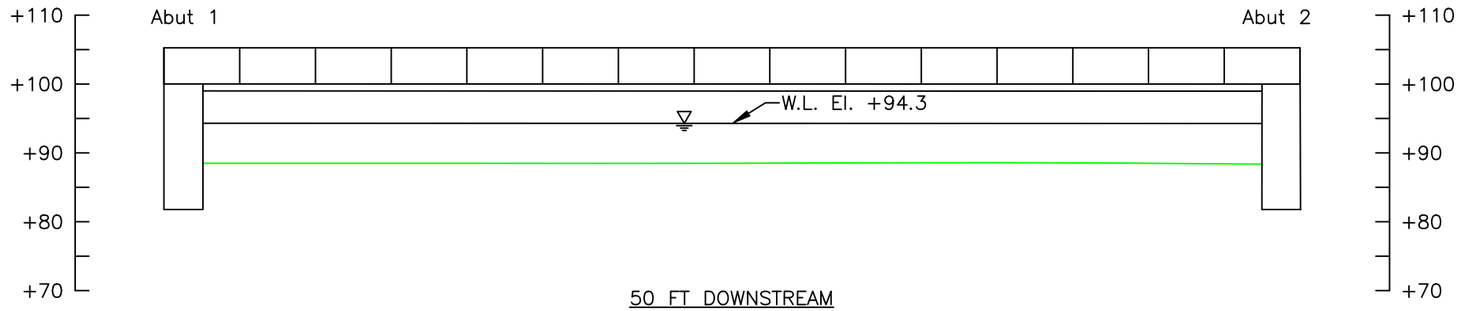

50 FT DOWNSTREAM
CHANNEL CROSS SECTION
(LOOKING UPSTREAM)

Downstream Elevations (Looking Upstream)	
Location	Height (y)
A1	11.7
1/4	12.4
1/2	12.4
3/4	12.8
A2	12.7

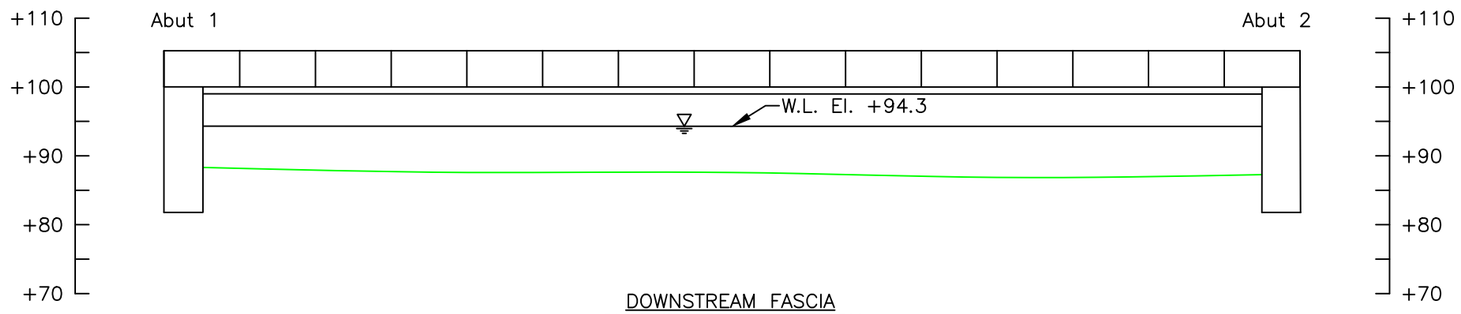

DOWNSTREAM FASCIA
CHANNEL CROSS SECTION
(LOOKING UPSTREAM)

Note:

Footing elevations unknown due to unavailable record drawings.
Vertical scale above waterline not drawn to scale for clarity.

LEGEND

- Approximate Channel Bottom – May 2022
- Approximate Channel Bottom – May 2017 (No Data)
- Approximate Channel Bottom – May 2012 (No Data)
- Timber Debris
- Water Surface
- +450 Elevation (ft)

COLLINS ENGINEERS
124 Venture Court, Ste 10
Lexington, KY 40511
Phone: 859-367-0097
Fax: 859-367-0140

Ohio Department of Transportation, District 11
2201 Reiser Ave.
New Philadelphia, OH 44663
Phone: 330-339-6633

OH-799 OVER CLENDENING LAKE
STRUCTURE NO. SFN3403246
CROSS SECTIONS
HARRISON COUNTY, OHIO

CEI PROJECT
55-13380.01

INSPECTED BY:
MOR

DRAWN BY:
OPF

CHECKED BY:
JMJ

DATE:
MAY 2022

SHEET NO:
6

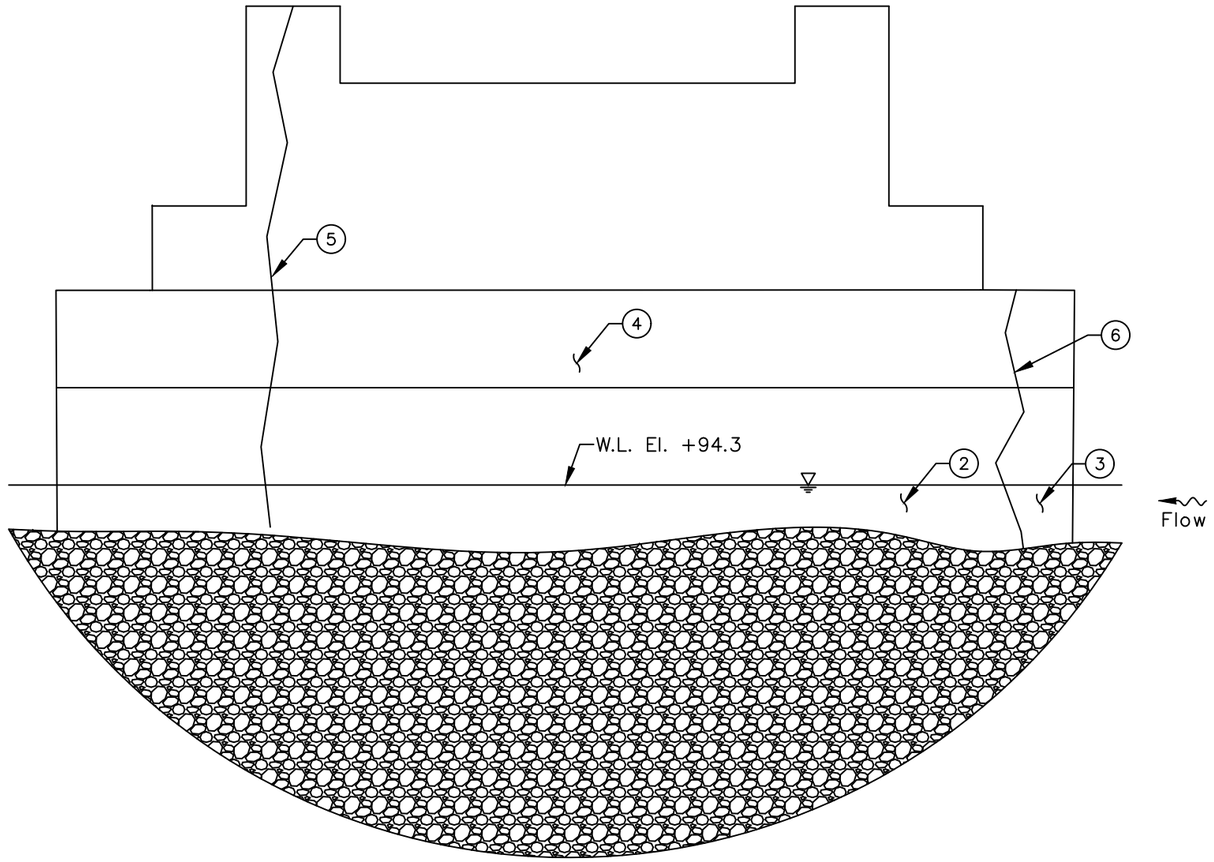

EAST ELEVATION
(LOOKING WEST)

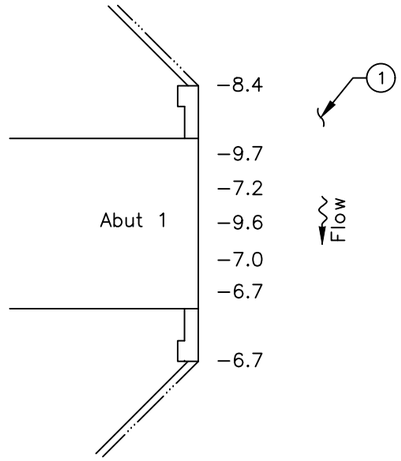

INSPECTION NOTES:

1. The channel bottom material consisted of gravel up to 2 in. diameter and silt.
2. Typical light marine growth algae and silt up to 1/8 in. deep was observed on the submerged portions of the abutment.
3. The submerged portions of the abutment exhibited light scaling up to 1/16 in. deep from the channel bottom to the waterline.
4. Isolated areas of poor concrete consolidation up to 3/8 in. penetration with no exposed reinforcing steel was observed along the entire abutment.
5. A vertical crack up to 3/8 in. wide with spalling up to 6 in. diameter by 1 in. deep was observed extending from the channel bottom to the top of cap.
6. A vertical crack up to 1/16 in. wide from the channel bottom to the top of the web wall was observed 7 ft from the end of the northwest web wall.

LEGEND

-2.7	Sounding Depth from Waterline (ft)
———	Approximate Channel Bottom – May 2022
	Timber Debris
	Water Surface

N

COLLINS ENGINEERS
124 Venture Court, Ste 10
Lexington, KY 40511
Phone: 859-367-0097
Fax: 859-367-0140

Ohio Department of Transportation, District 11
2201 Reiser Ave.
New Philadelphia, OH 44663
Phone: 330-339-6633

OH-799 OVER CLENDENING LAKE
STRUCTURE NO. SFN3403246
ABUTMENT 1
HARRISON COUNTY, OHIO

CEI PROJECT	55-13380.01
INSPECTED BY:	MOR
DRAWN BY:	OPF
CHECKED BY:	JMJ
DATE:	MAY 2022
SHEET NO:	7

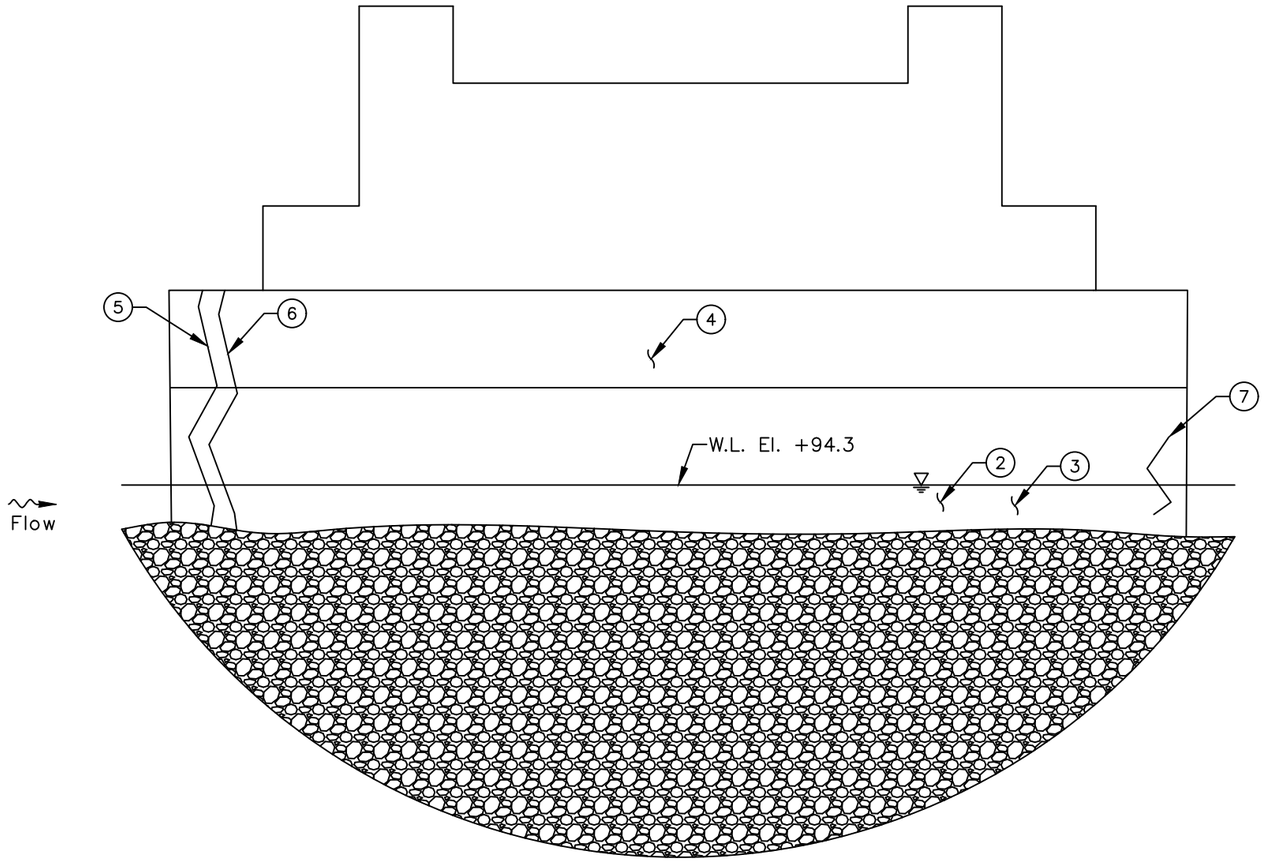

WEST ELEVATION
(LOOKING EAST)

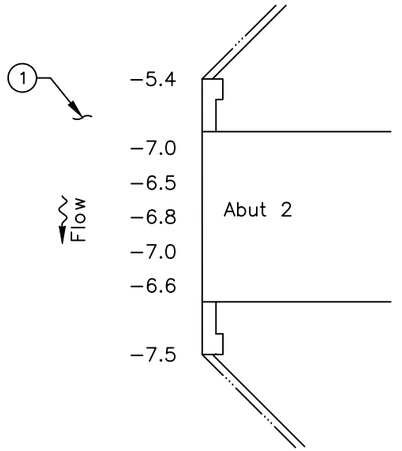

INSPECTION NOTES:

1. The channel bottom material around consisted of gravel up to 2 in. diameter and silt.
2. Typical light marine growth algae and silt up to 1/8 in. deep was observed on the submerged portions of the abutment.
3. The submerged portions of the abutment exhibited light scaling up to 1/16 in. deep from the channel bottom to the waterline.
4. Isolated areas of poor concrete consolidation up to 3/8 in. penetration with no exposed reinforcing steel was observed along the entire abutment.
5. A vertical crack up to 1/16 in. wide from the channel bottom to the top of the web wall was observed 10 ft from the end of the northeast web wall.
6. A vertical crack with efflorescence up to 1/16 in. wide from the channel bottom to the top of the web wall was observed 13 ft from the end of the northeast web wall.
7. A vertical crack up to 5 ft vertical by 1/16 in. wide extending from 3 ft below the waterline to 2 ft above the waterline was observed 6 ft from the end of the southeast web wall.

LEGEND

-2.7	Sounding Depth from Waterline (ft)
———	Approximate Channel Bottom – May 2022
	Timber Debris
	Water Surface

COLLINS ENGINEERS
124 Venture Court, Ste 10
Lexington, KY 40511
Phone: 859-367-0097
Fax: 859-367-0140

Ohio Department of Transportation, District 11
2201 Reiser Ave.
New Philadelphia, OH 44663
Phone: 330-339-6633

OH-799 OVER CLENDENING LAKE
STRUCTURE NO. SFN3403246
ABUTMENT 2
HARRISON COUNTY, OHIO

CEI PROJECT	55-13380.01
INSPECTED BY:	MOR
DRAWN BY:	OPF
CHECKED BY:	JMJ
DATE:	MAY 2022
SHEET NO:	8

EXHIBIT 2 – INSPECTION PHOTOGRAPHS



Photograph No. 1: Overall View of Structure No. SFN3403246, Looking South.



Photograph No. 2: Overall View of Structure No. SFN3403246., Looking North.



Photograph No. 3: View of the South Approach of Structure No. SFN3403246, Looking North.



Photograph No. 4: View of the North Approach of Structure No. SFN3403246, Looking South.



Photograph No. 5: View of the East Embankment Upstream of the Structure, Looking Southeast.



Photograph No. 6: View of the East Embankment Downstream of the Structure, Looking Northeast.



Photograph No. 7: View of the West Embankment Upstream of the Structure, Looking South.



Photograph No. 8: View of the West Embankment Downstream of the Structure, Looking North.



Photograph No. 9: View of the Typical Underdeck, Looking West.



Photograph No. 10: View of the Underdeck Spall and Corrosion on Beam 3, Looking South.



Photograph No. 11: View of the Underdeck Spall and Corrosion of Beam 4, Looking West.



Photograph No. 12: View of the Underdeck Delamination of Beam 4, Looking West.



Photograph No. 13: View of the East Face of Abutment 1, Looking Southwest.



Photograph No. 14: View of the West Face of Abutment 2, Looking Southeast.



Photograph No. 15 : View of the Crack with Efflorescence on the West Face of Abutment 2, Looking East.



Photograph No. 16: View of the Typical Concrete Condition at the Waterline on the West Face of Abutment 2, Looking East.

EXHIBIT 3 – DIVE PROCEDURES CHECKLIST

Underwater Dive Inspection Procedure Checklist

Acceptable written procedures communicate to the next dive team what is necessary to ensure a safe and successful inspection. Each bridge requiring underwater dive techniques must have a unique written inspection procedure. The prior inspection report does not suffice for the required procedures. It is valuable to review the last inspection notes, but they do not serve the same purpose as a stand-alone inspection procedure.

This document shall be completed for all underwater dive inspections. This document shall be reviewed prior to performing the field work and it shall be updated when necessary.

I. Bridge Identification

a. Agency with Inspection Responsibility: ODOT DISTRICT 11

Dive Frequency: 60 months

SFN: 3403246 Bridge Number (County-Route-SLM-SD): HAS-799-5.59

Superstructure Type Main Span Type: MULTIPLE BOX BEAMS

Approach Span: N/A

Substructure Type Abutment Type: REINFORCED CONCRETE

Pier Type: N/A

Total Pier Count: 2 ABUTMENTS

Total Pier Count in water: 2 ABUTMENTS

Foundations: CAST-IN-PLACE REINFORCED CONCRETE PILES

Feature Intersected CLENDENING LAKE

b. Photographs



Endview



Elevation



Underside

II. Office and Field Assessment

Prior to the inspection, obtain and review copies of the previous underwater inspection reports, routine inspection reports, scour and hydraulic information, and design plans in preparation of the inspection. Divers should pay particular attention given to any observed areas of deterioration, the channel conditions and factors that may accelerate material deterioration. Changes shall be noted in the inspection procedure. Site conditions should be reviewed prior to diving.

a. Channel Conditions

____Waterway features

____Rapid stream flows,

____Significant debris accumulation

____Constricted waterway openings

____Soft or unstable streambeds

____Meandering channels

____Other which may promote scour and undermining of substructure elements

____Navigable Waterway

____Flow Controls

b. Anticipated Water conditions which may affect the inspection

____Cold Water (Apprx. Temp____)

____Black water

____Rapid stream flows

____Near military facility

____Tribal fishing

____Water quality

____History of Log jams

c. Identify factors that may accelerate the deterioration of the bridge elements:

____Highly corrosive water

____Unprotected steel members

____Other

Risk Factor Narrative:

III. **Contacts Prior to Work**

Dr. Waseem Khalifa, Ph. D., P.E.

District Bridge Engineer

2201 Reiser Avenue SE

New Philadelphia, OH 44663

(330) 308-7873

Point of contact for immediate action such as closing the bridge due to findings)

Contact Bridge Owner _____14_____ (number) days before the proposed underwater inspection.

Special contracting and scheduling procedures prior to inspection, include recommended lead time

Entity	Contact Name and Title	Contact Phone	Lead Time
Coast Guard	N/A	N/A	N/A
Property Owner	N/A	N/A	N/A
Access Equipment	N/A	N/A	N/A
Lake or River draw-down	N/A	N/A	N/A
Canal dry time	N/A	N/A	N/A
Tree removal	N/A	N/A	N/A
Other:	N/A	N/A	N/A
Other:	N/A	N/A	N/A

IV. **Dive Team Shall Include the Following:**

Dive Team Narrative:

The structure shall be investigated using a three-member dive team: one dive supervisor to monitor communications and air supply while taking notes, one diver, and one tender/standby diver. There shall be one NBIS Team Leader onsite at all times.

Example: The Bridge shall be investigated using a three-member dive team: one supervisor to monitor rack box and take notes, one diver, and one tender/standby diver. There shall be one NBIS Team Leader onsite at all times.

V. Site Information

Navigable waterway: Y /(N)

If Yes, waterway river point _____

Anticipated water visibility depth 2 ft

Anticipated Dive depth 9.7 ft

Anticipated current <1 ft

Scour Critical (item 113): 8

POA in place: Y/(N)

Scour Monitoring devices present: Y/(N)

Verify the Scope of Services when work is contracted for the procedure for underwater elements that are not in water during an inspection.

Site Information Narrative:

The underwater inspection consists of a visual and tactile examination of the accessible surfaces of the substructure items in water. Additional items should reference the scope of services in the contract. For reference the following items are in water:

Item	Number of Units	Level of Inspection (1, 2 or 3) with Commentary
Piers and Number of Columns		
Abutment	2	100% Level 1 10% Level 2
Culvert		
Scour Countermeasures		
Fenders or Dolphins		

Photographs should be taken, if water clarity permits, for typical conditions, conditions that have changed since last inspection and significant or noteworthy deficiencies. The type of channel bottom material, the presence or extent of scour, the presence or extent of riprap, the presence or extent of drift and debris, and the location of any foundation exposure or undermining shall be quantified. Include depth, length, height and location of deficiencies.

VI. **Equipment and Field Logistics**

a. The inspection should be conducted using:

____Chest waders

____Hip waders

_X_Diving equipment

____SCUBA (Note that ADCI Consensus Standards require communication systems be employed for both SCUBA and Surface-Supplied (whether air or mixed-gas) dive modes)

____SCUBA with communication

_X_Surface Supplied with communication

b. The channel bottom should be sounded utilizing

_X_Digital fathometer

____Telescoping survey rod

____ acoustic imaging

c. During the inspection, the divers should work from

____Shore

_X_Boat

____Either

The note taker should work alongside the dive team.

d. Access to the waterway should be obtained from the shore (north bank, southwest quadrant, driveway 30 yards north etc.)

SOUTHWEST EMBANKMENT AT THE STRUCTURE

e. The maximum depth of the channel is typically measured 9.7 feet from THE EAST FACE OF ABUTMENT 1.

Reference Datum 5.7 FT BELOW THE TOP OF DECK AT THE UPSTREAM FASCIA OF ABUTMENT 2

Soundings should be dictated by the scope of work. When not detailed in the scope they should be repeated from the previous soundings. If neither exist then they need to be taken in a grid pattern between substructure units 100' upstream and 100' downstream.

VII. Inspection Procedure History

Created: COLLINS ENGINEERS, INC. Date: 9/20/2022

Updated By: _____ Date: _____

Updated By: _____ Date: _____

Updated By: _____ Date: _____

Updated By: _____ Date: _____

Updated By: _____ Date: _____

VIII. Other Narrative Not Included In Previous Sections