







UNDERWATER BRIDGE INSPECTION REPORT

STRUCTURE NO. SFN3800725
(HOL-60-4.23)
OH-60 OVER KILLBUCK CREEK
HOLMES COUNTY, OH
DISTRICT 11

May 2022

Prepared for:

STATE OF OHIO DEPARTMENT OF TRANSPORTATION

STATE OF OHIO
MATTHEW ROGERS
PE.87504
REGISTERED PROFESSIONAL ENGINEER

Prepared by:

COLLINS ENGINEERS INC.

124 Venture Court, Suite 10

Lexington, Kentucky 40511

859.367.0097 • www.collinsengr.com

TABLE OF CONTENTS

EXECUTIVE SUMMARY
1.0 INTRODUCTION 1
1.1 Purpose and Scope 1
1.2 General Description of the Structure 1
1.3 Method of Investigation 1
2.0 EXISTING CONDITIONS 2
2.1 General Conditions 2
2.2 Substructure Conditions 3
2.2.1 Abutment 2 3
2.2.2 Pier 1 3
3.0 EVALUATION AND RECOMMENDATIONS 3
EXHIBIT 1 – FIGURES 5
LOCATION MAP
SOUNDING PLAN
HYDROGRAPHIC SURVEY
CHANNEL CROSS SECTIONS– 50 FT UPSTREAM
CHANNEL CROSS SECTIONS–UPSTREAM FASCIA
CHANNEL CROSS SECTIONS– STRUCTURE CENTERLINE
CHANNEL CROSS SECTIONS–DOWNSTREAM FASCIA
CHANNEL CROSS SECTIONS– 50 FT DOWNSTREAM
ABUTMENT 2
PIER 1
EXHIBIT 2 – INSPECTION PHOTOGRAPHS 16
Photograph No. 1: Overall View of Structure No. SFN380725, Looking North.
Photograph No. 2: Overall View of Structure No. SFN3800725, Looking South.
Photograph No. 3: West Approach of Structure No. SFN380725, Looking East.
Photograph No. 4: East Approach of Structure No. SFN3800725, Looking West.
Photograph No. 5: View of the East Embankment Upstream of the Structure, Looking Southeast.
Photograph No. 6: View of the East Embankment Downstream of the Structure, Looking Northeast.
Photograph No. 7: View of the East Embankment Downstream of the Structure, Looking Southeast.
Photograph No. 8: View of the West Embankment Upstream of the Structure, Looking Southwest.
Photograph No. 9: View of the West Embankment Downstream of the Structure, Looking Northwest.

Photograph No. 10: View of the West Embankment Downstream of the Structure, Looking West.
Photograph No. 11: View of the West Face of Abutment 2, Looking Southeast.
Photograph No. 12: View of the West Face of Abutment 2, Looking Northeast.
Photograph No. 13: View of the East Face of Pier 1, Looking Northwest.
Photograph No. 14: View of the West Face of Pier 1, Looking Southeast.
Photograph No. 15: View of the Typical Concrete Condition at the Waterline on the West Face of Pier 1, Looking East.
Photograph No. 16: View of the Underdeck of the Structure, Looking West.
Photograph No. 17: View of the Debris on the Underdeck of the Structure, Looking West.
EXHIBIT 3 – DIVE PROCEDURES CHECKLIST 26

EXECUTIVE SUMMARY

Project: ODOT D11 Underwater Bridge Inspections - 2022.

Purpose of Project: To perform a detailed visual and tactile underwater investigation of bridges for the Ohio Department of Transportation, District 11.

Inspection Team: Team Leader – Joshua Johnson, P.E. – Collins Engineers, Inc.
Team Member – Matthew Rogers, P.E. – Collins Engineers, Inc.
Team Member – Kurt Lingo, E.I.T. – Collins Engineers, Inc.

Inspection Date(s): May 2, 2022

Water Visibility:	<1 ft	***Water Velocity:***	<1 ft/s
Water Temperature:	72 °F	***Weather:***	Clear – 65 °F
Waterline Elevation:	87.5 ft	***Type of Boat:***	10 ft Kayak
Coordinates:	40.5008°N, 81.9839°W		
Access Location:	Northeast Embankment at the Structure		
Dive Mode:	Surface Supplied Air		
Waterline Reference:	12.5 ft below the top of deck at the downstream nose of Pier 1.		
Maximum Depth at SSU:	4.0 ft – Upstream Nose of Pier 1		
Shoreline Conditions:	The east and west shorelines consisted of unprotected moderately vegetated steep slopes with vertical cut banks up to 4 ft at the east embankment. There is evidence of stream restriction with debris on the bottom flanges of girders.		

Summary of Findings:

- **Abutment 2:**
  - The submerged portions of the abutment exhibited light scaling up to 1/8 in. deep with light silt overlay from the channel bottom to the waterline.
- **Pier 1:**
  - The submerged portions of the pier exhibited light scaling up to 1/8 in. deep with light silt overlay from the channel bottom to the waterline.
  - Light timber debris accumulation consisting of twigs up to 1 in. diameter was observed at the upstream nose of the pier.

Summary of Recommendations:

- Monitor the channel bottom to ensure channel degradation does not occur.
- A scour assessment should be performed to ensure that the underwater portions of the substructure are not experiencing footing exposure and/or undermining.

Underwater Inspection Coding:

NBI Ratings:

Item	Description	Coding	Condition
60	Substructure	7 – Good Condition	Light Concrete Scaling
61	Channel	6 – Satisfactory Condition	Minor Erosion, Timber Debris Accumulation
92B	UW Insp. Frequency	60 Months	
93B	Insp. Date	05/02/22	
113	Scour Critical Bridges	8 – Above Foundation Limits	Stable (Inspector Recommended)

AASHTO National Bridge Element (NBE) Ratings:

Element #	Description	Units	Total	Condition State			
				1	2	3	4
210	Reinforced Concrete Pier Wall	LF	15	15	0	0	0
215	Reinforced Concrete Abutment	LF	30	30	0	0	0

Note: Ratings were developed using the FHWA Recording and Coding Guide for the Structure Inventory and Appraisal of the Nation's Bridges. The recommended ratings consider inspected elements located within the waterway and conditions existing below the water surface only. Additional consideration is necessary for the assignment of overall condition ratings for this bridge.

1.0 INTRODUCTION

1.1 Purpose and Scope

This report consists of the results of a detailed underwater investigation performed at the OH-60 Bridge over Killbuck Creek in Holmes County, OH. Collins Engineers, Inc. (Collins) conducted the underwater investigation for the Ohio Department of Transportation (ODOT), District 11 on May 2, 2022. The primary purpose of the investigation was as follows:

- Determine the condition of the substructure components located in the water at the time of the inspection from the waterline to the channel bottom.
- Obtain channel bottom depth measurements along the bridge fascias, upstream and downstream of the bridge, and around the submerged substructure units.
- Determine the condition of the shorelines in the vicinity of the structure.
- Obtain photographs of the bridge and any significant defects.

In addition, a brief inspection was made of areas that could be submerged during periods of high water. The following report includes a description of the structure, the method of investigation, a description of existing conditions, an evaluation and recommendations based on the conditions, inspection figures, and photographs.

1.2 General Description of the Structure

Structure No. SFN3800725 spans a total of 143 ft, carrying OH-60 over Killbuck Creek and is approximately 28 ft wide. The bridge superstructure is constructed of four steel girders. The roadway orientation of the longitudinal axis of the bridge is northwest to southeast. The channel flows from northeast to southwest at this location. The substructure units are labeled as Abutments 1 and 2 and Pier 1. Existing design drawings were not available at the time of the inspection. Refer to Figure 1 in Exhibit 1 for a Location Map of the bridge. Refer to Photographs 1 through 4 in Exhibit 2 for overall views of the bridge.

1.3 Method of Investigation

A detailed field inspection was conducted to determine the physical condition of the submerged bridge substructure units from the waterline to the channel bottom. A brief visual examination of the substructure units above the waterline was also made.

A three-person team consisting of professional engineer-divers and team leaders (Joshua Johnson, P.E., and Matthew Rogers, P.E.) and an engineer-diver (Kurt Lingo, E.I.T.) conducted the underwater inspection. The inspection was conducted using surface supplied air diving equipment. During the inspection, the inspectors worked from the shore and a note taker on the shore recorded the inspection notes.

The underwater inspection consisted of a visual and tactile examination of the accessible surfaces of the substructure units from the waterline to the channel bottom with particular attention given to any observed areas of deterioration or apparent distress. Approximately 10 percent of the total area on the underwater surfaces of the substructure units was cleaned so that the condition could be more closely examined. Photographs were taken to document the general conditions and observed deficiencies. The type of channel bottom material, the presence or extent of scour, the presence or extent of riprap, the presence or extent of drift and debris, and the location of any foundation exposure or undermining were noted.

Channel bottom soundings were performed utilizing a digital fathometer. Soundings were taken parallel to the bridge at the upstream and downstream fascias, at 10 ft intervals between the substructure units, and at 10 ft intervals in-line with the piers upstream and downstream up to 50 ft, and the waterline was referenced to a known elevation on the bridge. A sounding plan was developed using the soundings and approximate location of the shorelines. Refer to Figures 2 through 8 in Exhibit 1 for the sounding plan, hydrographic survey, and channel cross sections that show the channel limits and water depths around the structure.

2.0 EXISTING CONDITIONS

2.1 General Conditions

At the time of the inspection, the waterline of Killbuck Creek was located approximately 12.5 ft below the top of deck at the downstream nose of Pier 1, which corresponds to an assumed waterline elevation of 87.5 ft. During the inspection, the waterway was flowing at approximately 1 ft per second. The bridge pier skew was consistent with the channel alignment and does not require attention at this time. The east and west shorelines consisted of unprotected moderately vegetated steep slopes with vertical cut banks up to 4 ft at the east embankment. There is evidence of stream restriction with debris on the bottom flanges of girders. Refer to Photographs 5 through 10 and Photographs 16 and 17 for views of the girder debris in Exhibit 2 for views of the shorelines near the structure.

2.2 Substructure Conditions

2.2.1 Abutment 2

The channel bottom material around Abutment 2 consisted of silt with up to 4 ft probe rod penetration. The submerged portions of the abutment exhibited light scaling up to 1/8 in. deep with light silt overlay from the channel bottom to the waterline. Refer to Figure 9 in Exhibit 1 for detailed inspection notes of Abutment 2. Refer to Photographs 11 and 12 in Exhibit 2 for views of Abutment 2.

2.2.2 Pier 1

The channel bottom material around Pier 1 consisted of silt with up to 4 ft probe rod penetration. The submerged portions of the pier exhibited light scaling up to 1/8 in. deep with light silt overlay from the channel bottom to the waterline. Light timber debris accumulation consisting of twigs up to 1 in. diameter was observed at the upstream nose of the pier. Refer to Figure 10 in Exhibit 1 for detailed inspection notes of Pier 1. Refer to Photographs 13 through 15 in Exhibit 2 for views of Pier 1 and typical concrete conditions.

3.0 EVALUATION AND RECOMMENDATIONS

Overall, the submerged substructure units of Structure No. SFN3800725 were in good condition below water. Since no design or as-built plans were available for the bridge, the amount of embedment of the footings in the channel bottom is unknown. As a result, the channel bottom configuration should continue to be monitored during future underwater inspections to verify that localized scour or overall channel degradation is not occurring and that both pier footings remain adequately embedded in the channel bottom. Design or as-built drawings for the bridge should be obtained and reviewed, if possible, prior to the next underwater inspection to determine the exact construction of the piers and their foundations.

The timber debris accumulation at Pier 1 did not significantly affect the channel flow and as a result, does not require removal at this time. If the debris accumulation increases in size or density, it may be necessary to remove the debris to reduce excessive lateral loads on the pier, limit further debris accumulation, and reduce the likelihood of channel bottom degradation resulting from obstructed flow.

The scaling observed on Abutment 2 and Pier 1 is not a structural concern at this time given its depth and intensity compared to the overall pier size, and as a result, no repairs are recommended. This area should be monitored during future inspections for increasing extent or severity of the scaling and exposure of

reinforcing steel. If the extent or severity of the scaling is observed to be increasing or reinforcing steel becomes exposed, it may be necessary to repair the area at that time.

It is recommended that the submerged substructure units of Structure No. SFN3800725 be next inspected underwater at an interval not to exceed 60 months, no later than May 2, 2027.

Respectfully Submitted,
COLLINS ENGINEERS, INC.

Matthew Rogers

Matthew Rogers, P.E.
Project Manager

Originated by:
Olivia Farmer, E.I.T.

EXHIBIT 1 – FIGURES

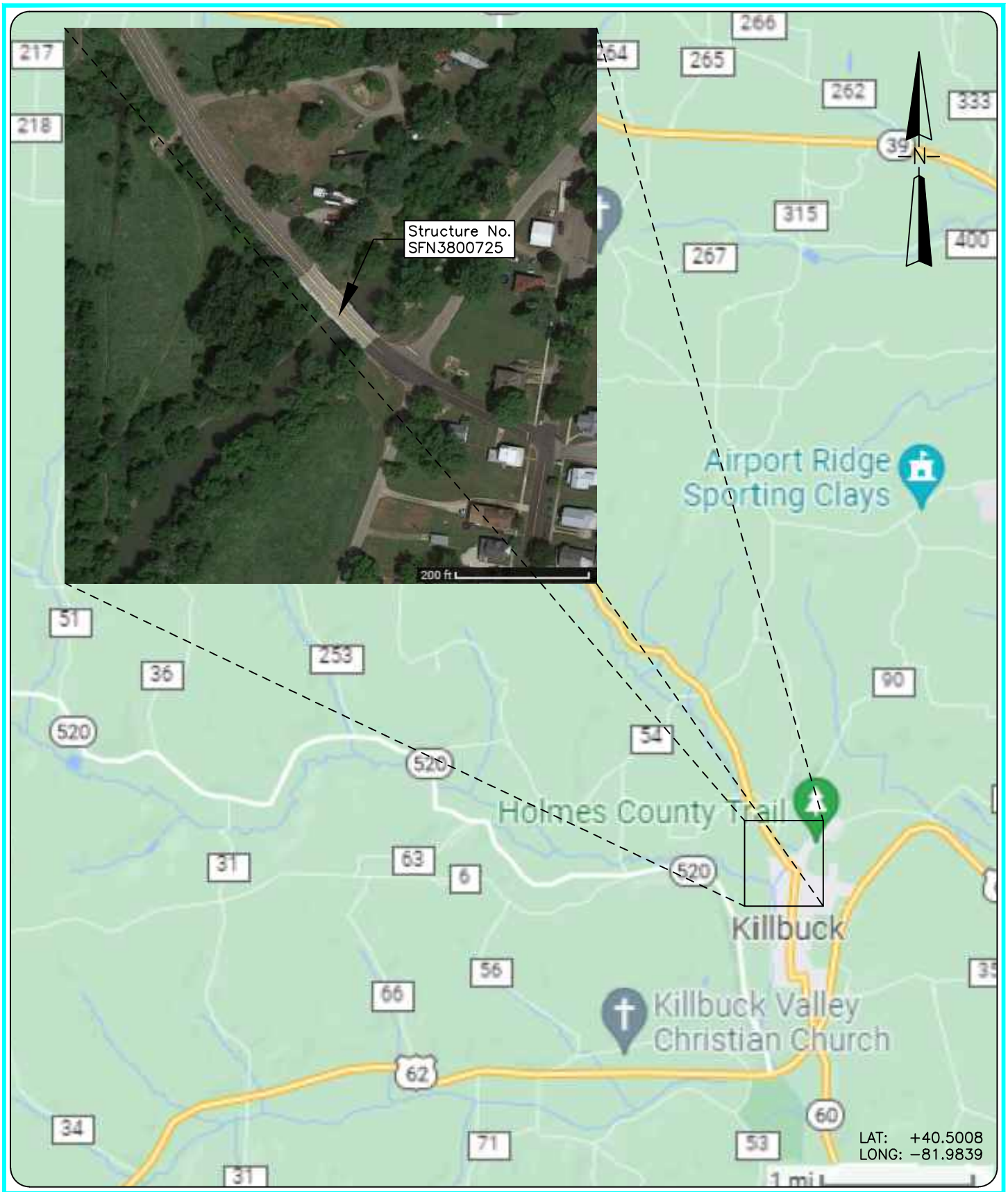

COLLINS ENGINEERS
124 Venture Court, Ste 10
Lexington, KY 40511
Phone: 859-367-0097
Fax: 859-367-0140

Ohio Department of Transportation,
District 11
2201 Reiser Ave.
New Philadelphia, OH
44663
Phone: 330-339-6633

OH-60 OVER KILLBUCK CREEK
STRUCTURE NO. SFN3800725

LOCATION MAP

HOLMES COUNTY, OHIO

INSPECTED BY: MOR	CEI PROJECT: 55−13380.01
DRAWN BY: OPF	DATE: 25 MAY 2022
CHECKED BY: JMJ	SHEET NO: 1

\\NASUNI-IL\KY\PROJECTS\55 - KENTUCKY\55-13380.01 - ODOT D11 UW BRIDGE INSP (2022)\ENGINEERING\BRIDGES\SFN 3800725 (HOL-60-4.23)\DRAWINGS\SFN 3800725 - OPF.DWG7/8/2022 10:37:24 AM

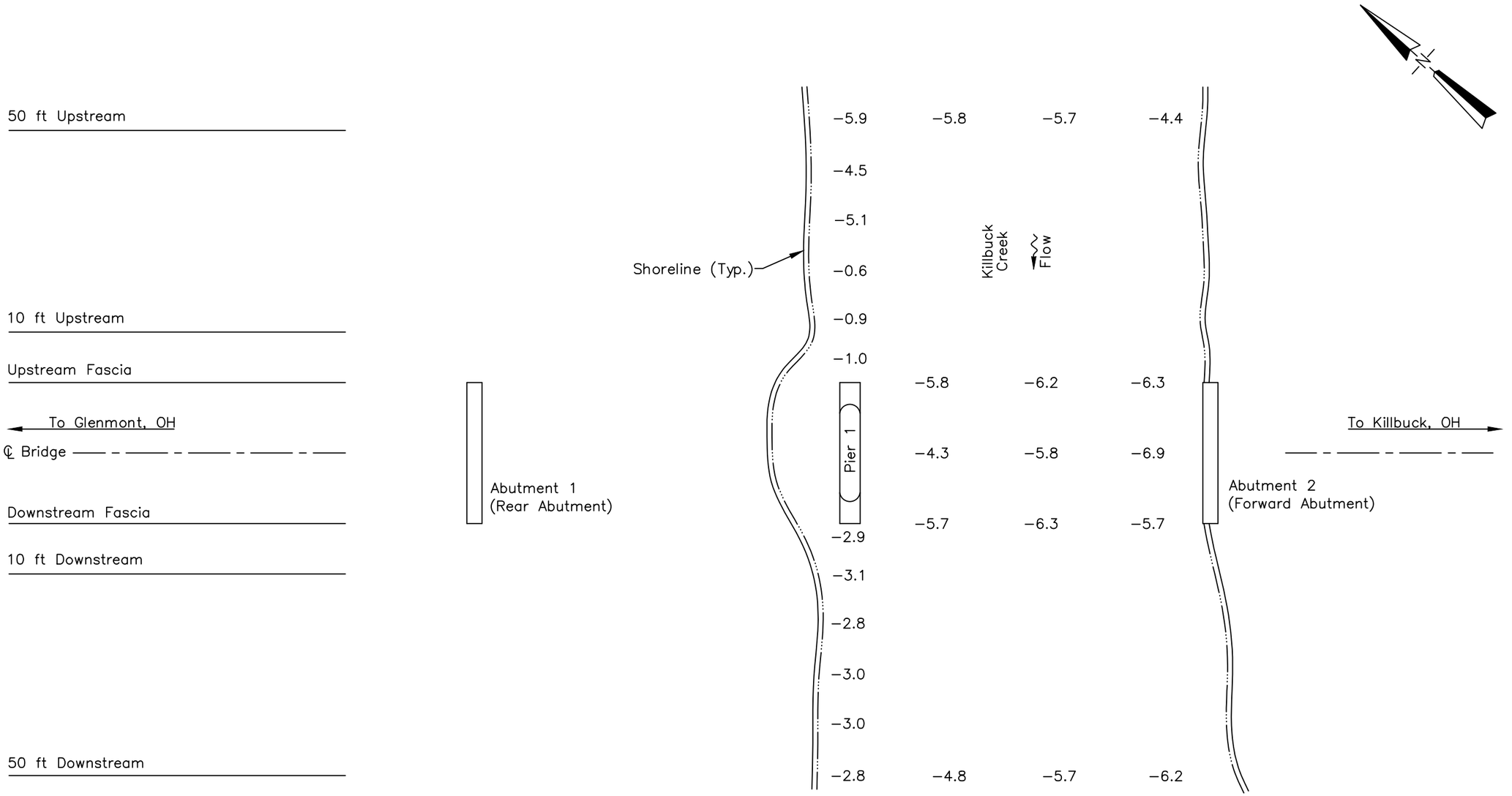

SOUNDING PLAN

GENERAL NOTES:

1. Abutment 2 and Pier 1 were inspected underwater. Substructure units are labeled from route west to east.
2. At the time of inspection on May 2, 2022, the waterline was located approximately 12.5 ft below the top of deck at the downstream nose of Pier 1 (EL. +100.0 ft). This corresponds with a waterline elevation of +87.5 ft.
3. Soundings indicate the water depth at the time of inspection and are measured in feet.
4. Soundings were taken parallel to the bridge at the upstream and downstream fascias, at 10 ft intervals between the substructure units, and at 10 ft intervals in−line with the piers upstream and downstream up to 50 ft.

LEGEND

−2.7 Sounding Depth from Waterline (ft)

Timber Debris

COLLINS ENGINEERS
124 Venture Court, Ste 10
Lexington, KY 40511
Phone: 859-367-0097
Fax: 859-367-0140

Ohio Department of Transportation, District 11
2201 Reiser Ave.
New Philadelphia, OH 44663
Phone: 330-339-6633

OH-60 OVER KILLBUCK CREEK
STRUCTURE NO. SFN3800725
SOUNDING PLAN
HOLMES COUNTY, OHIO

CEI PROJECT 55−13380.01
INSPECTED BY: MOR
DRAWN BY: OPF
CHECKED BY: JMJ
DATE: MAY 2022
SHEET NO: 2

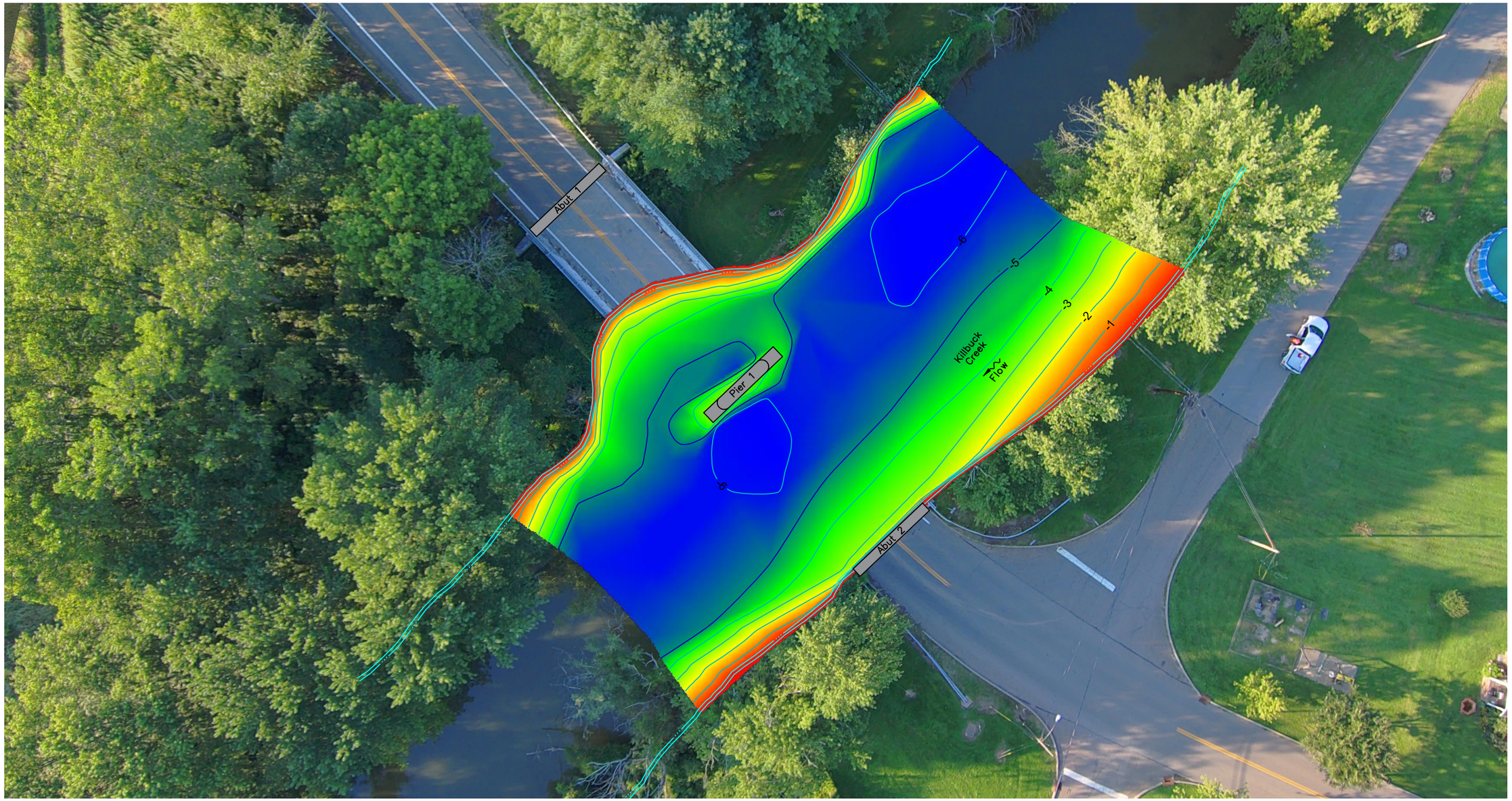

GENERAL NOTES:

1. The hydrographic survey was completed on May 2, 2022 by Collins Engineers, Inc.
2. Soundings were obtained using a continuously recording fathometer operating at 200kHz and linked to a WAAS capable GPS receiver.
3. All water depths are in feet and are referenced to the waterline elevation stated in the Structure Notes.
4. Base map information shown on this drawing shall be considered approximate.

2022 HYDROGRAPHIC SURVEY

SCALE: 1" = 30'

0 15' 30'

N

1

LEGEND:

- Major Contour
- Minor Contour

STRUCTURE NOTES:

1. The measured waterline elevation was 87.5 feet on the survey date of 05-02-2022.
2. The waterline was measured 12.5 feet below the top of deck at the downstream nose of Pier 1. The top of deck was located at 100 feet.
3. GPS Coordinates: N 40.5008°, W 81.9839°.

OH-60 OVER KILLBUCK CREEK
STRUCTURE NO. SFN3800725
HYDROGRAPHIC SURVEY
HOLMES COUNTY, OH

COLLINS ENGINEERS
124 Venture Court, Ste 10
Lexington, KY 40511
Phone: 859-367-0097
Fax: 859-367-0140

Ohio Department of Transportation, District 11
2201 Reiser Ave.
New Philadelphia, OH 44663
Phone: 330-339-6633

CEI PROJECT	55-13380.01
INSPECTED BY:	MOR
DRAWN BY:	OPF
CHECKED BY:	JMJ
DATE:	MAY 2022
SHEET NO:	3

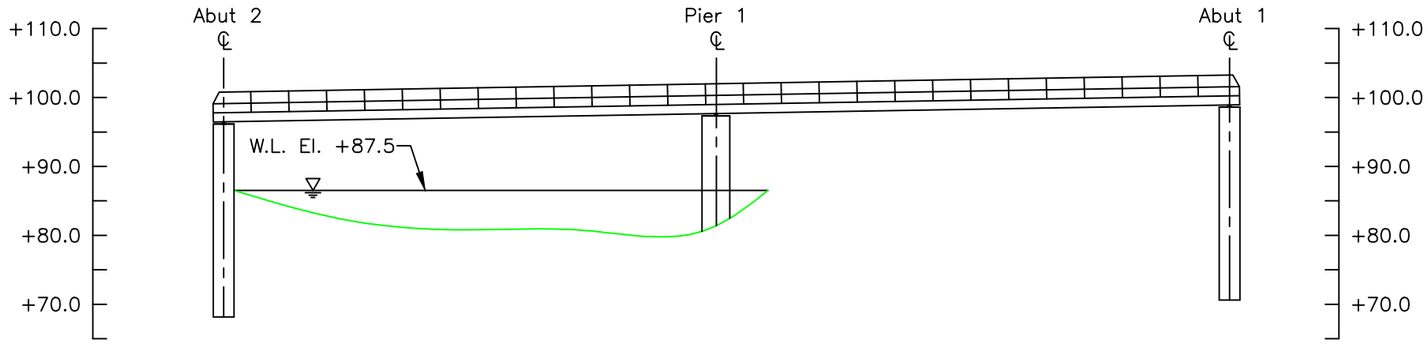

50 FT UPSTREAM
CHANNEL CROSS SECTION
(LOOKING DOWNSTREAM)

Note:

Footing elevations unknown due to unavailable record drawings.
Vertical scale above waterline not drawn to scale for clarity.

LEGEND

———	Approximate Channel Bottom – May 2022
- - - - - -	Approximate Channel Bottom – May 2017 (No Data)
— — — —	Approximate Channel Bottom – May 2012 (No Data)
	Timber Debris
	Water Surface
+450	Elevation (ft)

COLLINS ENGINEERS
124 Venture Court, Ste 10
Lexington, KY 40511
Phone: 859-367-0097
Fax: 859-367-0140

Ohio Department of Transportation, District 11
2201 Reiser Ave.
New Philadelphia, OH 44663
Phone: 330-339-6633

OH-60 OVER KILLBUCK CREEK
STRUCTURE NO. SFN3800725
CROSS SECTION - 50 FT US
HOLMES COUNTY, OHIO

CEI PROJECT 55–13380.01
INSPECTED BY: MOR
DRAWN BY: OPF
CHECKED BY: JMJ
DATE: MAY 2022
SHEET NO: 4

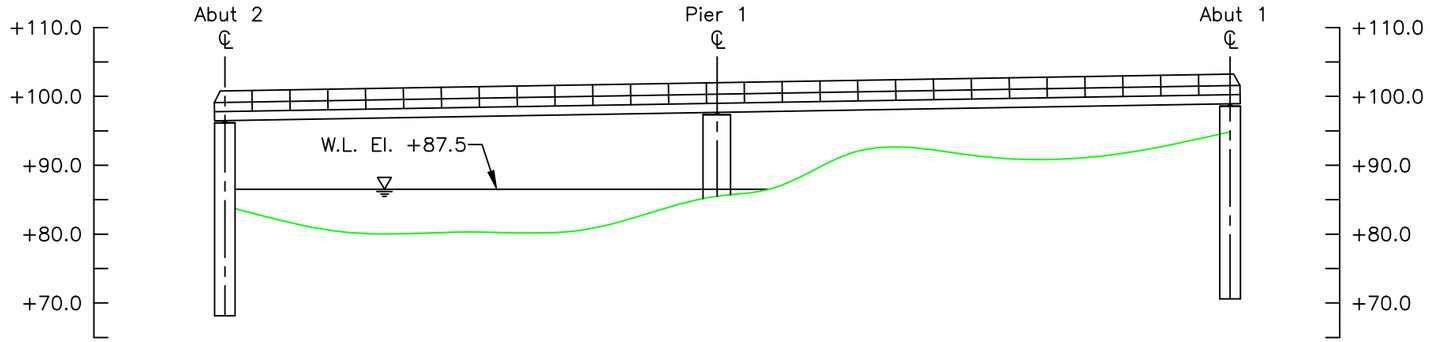

UPSTREAM FASCIA
CHANNEL CROSS SECTION
(LOOKING DOWNSTREAM)

Upstream Elevations (Looking Downstream)	
Location	Height (ft.)
A2	17.1
1/4	20.9
1/2	21.1
3/4	21.0
P1	16.5
1/4	10.6
1/2	11.2
3/4	11.6
A1	8.4

Note:

Footing elevations unknown due to unavailable record drawings.
Vertical scale above waterline not drawn to scale for clarity.

LEGEND

- Approximate Channel Bottom – May 2022
- Approximate Channel Bottom – May 2017 (No Data)
- Approximate Channel Bottom – May 2012 (No Data)
- Timber Debris
- Water Surface
- +450 Elevation (ft)

COLLINS ENGINEERS
124 Venture Court, Ste 10
Lexington, KY 40511
Phone: 859-367-0097
Fax: 859-367-0140

Ohio Department of Transportation, District 11
2201 Reiser Ave.
New Philadelphia, OH 44663
Phone: 330-339-6633

OH-60 OVER KILLBUCK CREEK
STRUCTURE NO. SFN3800725
CROSS SECTION - US FASCIA
HOLMES COUNTY, OHIO

CEI PROJECT 55–13380.01
INSPECTED BY: MOR
DRAWN BY: OPF
CHECKED BY: JMJ
DATE: MAY 2022
SHEET NO: 5

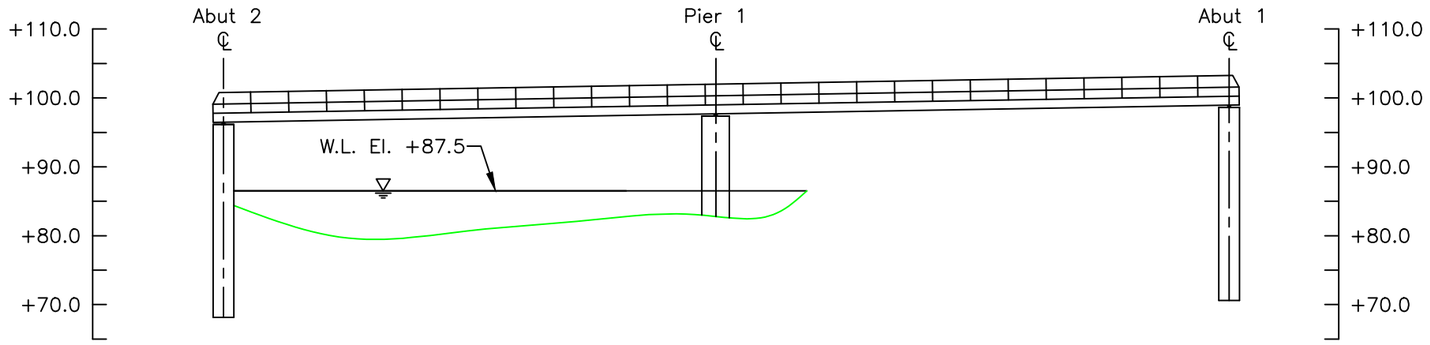

STRUCTURE CENTERLINE
CHANNEL CROSS SECTION
(LOOKING DOWNSTREAM)

Note:

Footing elevations unknown due to unavailable record drawings.
Vertical scale above waterline not drawn to scale for clarity.

LEGEND

- Approximate Channel Bottom – May 2022
- Approximate Channel Bottom – May 2017 (No Data)
- Approximate Channel Bottom – May 2012 (No Data)
- Timber Debris
- Water Surface
- +450 Elevation (ft)

COLLINS ENGINEERS
124 Venture Court, Ste 10
Lexington, KY 40511
Phone: 859-367-0097
Fax: 859-367-0140

Ohio Department of Transportation, District 11
2201 Reiser Ave.
New Philadelphia, OH 44663
Phone: 330-339-6633

OH-60 OVER KILLBUCK CREEK
STRUCTURE NO. SFN3800725
CROSS SECTION - STRUCTURE CL
HOLMES COUNTY, OHIO

CEI PROJECT 55–13380.01
INSPECTED BY: MOR
DRAWN BY: OPF
CHECKED BY: JMJ
DATE: MAY 2022
SHEET NO: 6

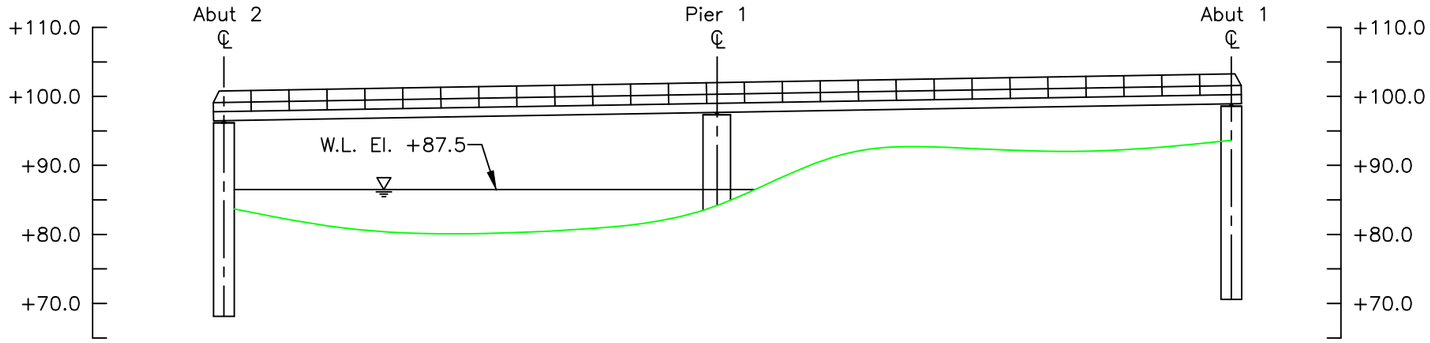

DOWNSTREAM FASCIA
CHANNEL CROSS SECTION
(LOOKING DOWNSTREAM)

Downstream Elevations (Looking Downstream)	
Location	Height (ft.)
A2	17.1
1/4	20.3
1/2	21.2
3/4	20.9
P1	18.5
1/4	10.3
1/2	10.1
3/4	10.7
A1	9.6

Note:

Footing elevations unknown due to unavailable record drawings.
Vertical scale above waterline not drawn to scale for clarity.

LEGEND

- Approximate Channel Bottom – May 2022
- Approximate Channel Bottom – May 2017 (No Data)
- Approximate Channel Bottom – May 2012 (No Data)
- Timber Debris
- Water Surface
- +450 Elevation (ft)

COLLINS ENGINEERS
124 Venture Court, Ste 10
Lexington, KY 40511
Phone: 859-367-0097
Fax: 859-367-0140

Ohio Department of Transportation, District 11
2201 Reiser Ave.
New Philadelphia, OH 44663
Phone: 330-339-6633

OH-60 OVER KILLBUCK CREEK
STRUCTURE NO. SFN3800725
CROSS SECTION - DS FASCIA
HOLMES COUNTY, OHIO

CEI PROJECT 55–13380.01
INSPECTED BY: MOR
DRAWN BY: OPF
CHECKED BY: JMJ
DATE: MAY 2022
SHEET NO: 7

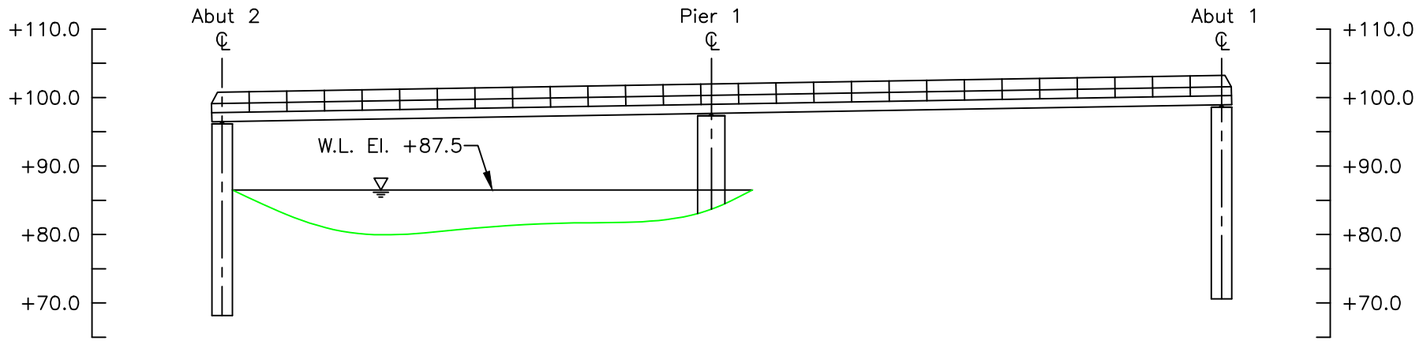

50 FT DOWNSTREAM
CHANNEL CROSS SECTION
(LOOKING DOWNSTREAM)

Note:

Footing elevations unknown due to unavailable record drawings.
Vertical scale above waterline not drawn to scale for clarity.

LEGEND

- Approximate Channel Bottom – May 2022
- Approximate Channel Bottom – May 2017 (No Data)
- Approximate Channel Bottom – May 2012 (No Data)
- Timber Debris
- Water Surface
- +450 Elevation (ft)

COLLINS ENGINEERS
124 Venture Court, Ste 10
Lexington, KY 40511
Phone: 859-367-0097
Fax: 859-367-0140

Ohio Department of Transportation, District 11
2201 Reiser Ave.
New Philadelphia, OH 44663
Phone: 330-339-6633

OH-60 OVER KILLBUCK CREEK
STRUCTURE NO. SFN3800725
CROSS SECTION - 50 FT DS
HOLMES COUNTY, OHIO

CEI PROJECT 55–13380.01
INSPECTED BY: MOR
DRAWN BY: OPF
CHECKED BY: JMJ
DATE: MAY 2022
SHEET NO: 8

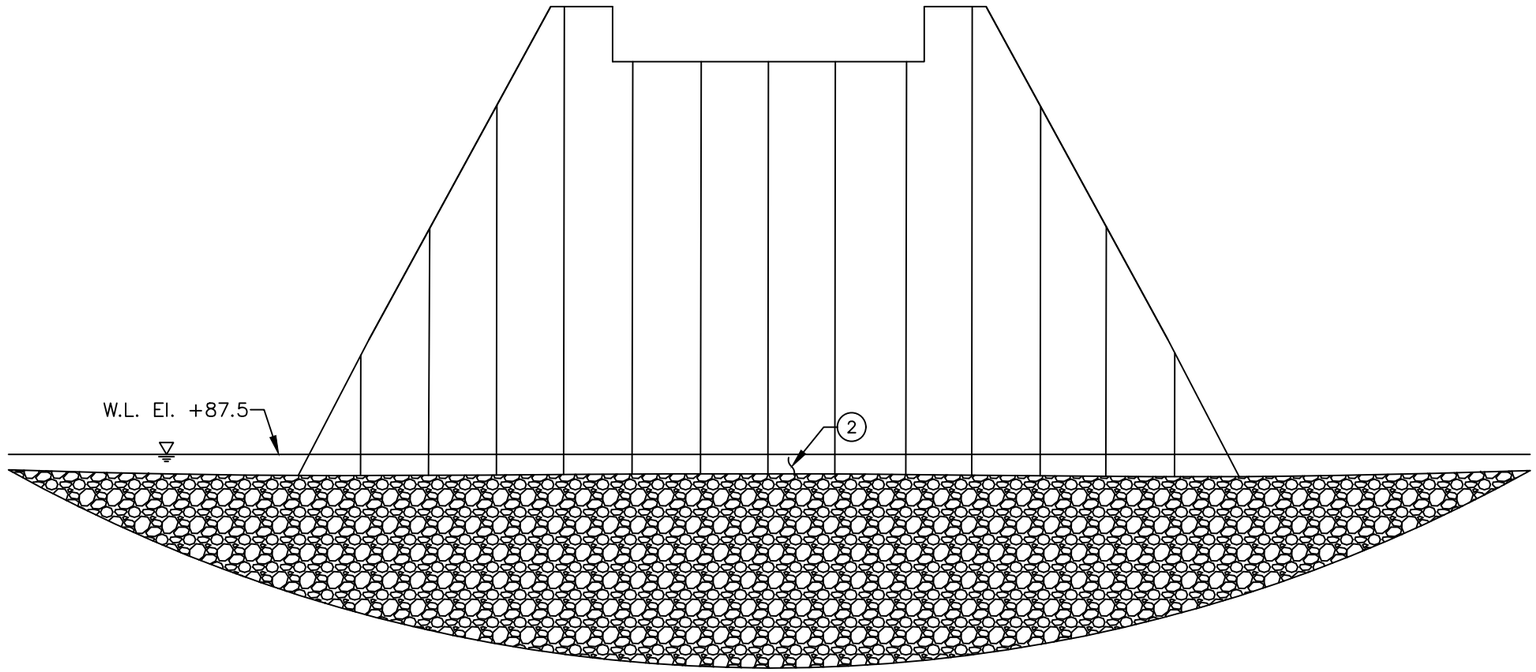

WEST ELEVATION
(LOOKING
SOUTHEAST)

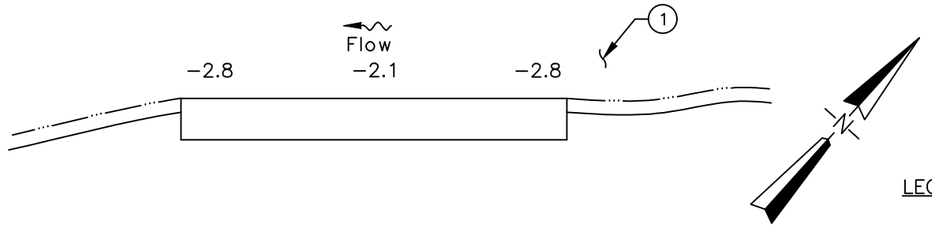

INSPECTION NOTES:

(1) The channel bottom material consisted of silt with up to 4 ft probe rod penetration.

(2) The submerged portions of the pier exhibited light scaling up to 1/8 in. deep with light silt overlay from the channel bottom to the waterline.

LEGEND

−2.7	Sounding Depth from Waterline (ft)
———	Approximate Channel Bottom – May 2022
	Timber Debris
	Water Surface

COLLINS ENGINEERS
124 Venture Court, Ste 10
Lexington, KY 40511
Phone: 859-367-0097
Fax: 859-367-0140

Ohio Department of Transportation, District 11
2201 Reiser Ave.
New Philadelphia, OH 44663
Phone: 330-339-6633

OH-60 OVER KILLBUCK CREEK
STRUCTURE NO. SFN3800725
ABUTMENT 2
HOLMES COUNTY, OHIO

CEI PROJECT 55–13380.01
INSPECTED BY: MOR
DRAWN BY: OPF
CHECKED BY: JMJ
DATE: MAY 2022
SHEET NO: 9

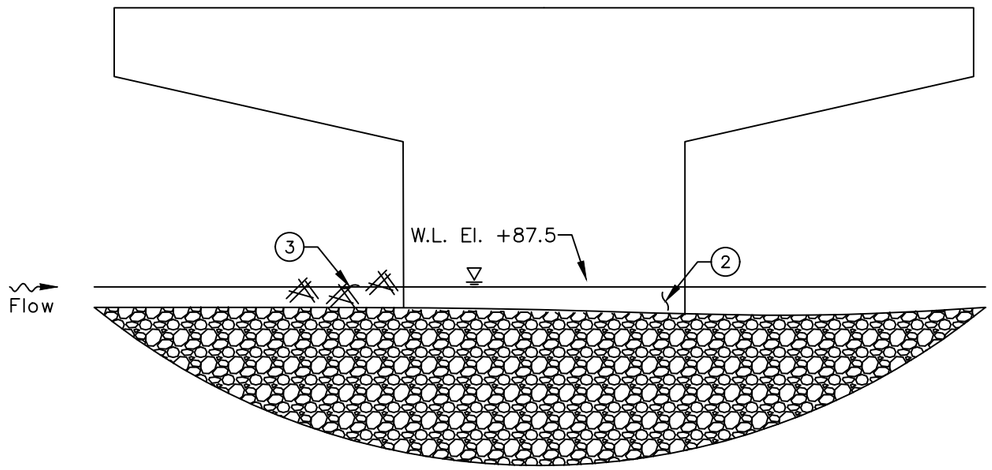

WEST ELEVATION
(LOOKING
SOUTHEAST)

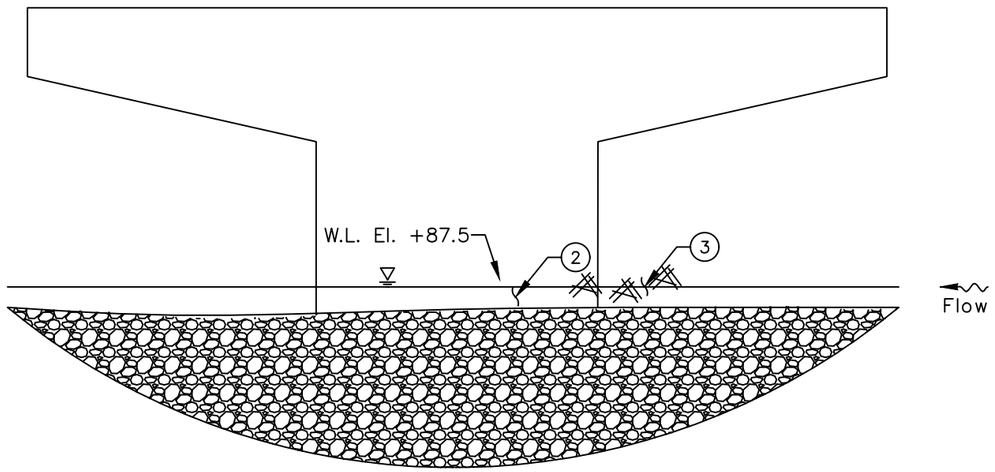

EAST ELEVATION
(LOOKING
NORTHWEST)

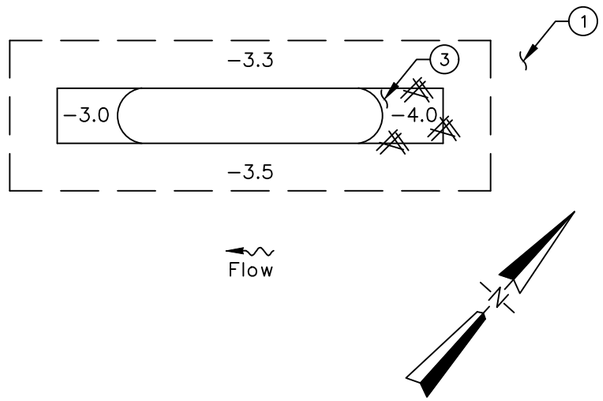

INSPECTION NOTES:

1. The channel bottom material consisted of silt with up to 4 ft probe rod penetration.
2. The submerged portions of the pier exhibited light scaling up to 1/8 in. deep with light silt overlay from the channel bottom to the waterline.
3. Light timber debris accumulation consisting of twigs up to 1 in. diameter was observed at the upstream nose of the pier.

LEGEND

−2.7	Sounding Depth from Waterline (ft)
———	Approximate Channel Bottom – May 2022
	Timber Debris
	Water Surface

COLLINS ENGINEERS
124 Venture Court, Ste 10
Lexington, KY 40511
Phone: 859-367-0097
Fax: 859-367-0140

Ohio Department of Transportation, District 11
2201 Reiser Ave.
New Philadelphia, OH 44663
Phone: 330-339-6633

OH-60 OVER KILLBUCK CREEK
STRUCTURE NO. SFN3800725
PIER 1
HOLMES COUNTY, OHIO

CEI PROJECT
55−13380.01

INSPECTED BY:
MOR

DRAWN BY:
OPF

CHECKED BY:
JMJ

DATE:
MAY 2022

SHEET NO:
10

EXHIBIT 2 – INSPECTION PHOTOGRAPHS



Photograph No. 1: Overall View of Structure No. SFN380725, Looking North.



Photograph No. 2: Overall View of Structure No. SFN3800725, Looking South.



Photograph No. 3: West Approach of Structure No. SFN380725, Looking East.



Photograph No. 4: East Approach of Structure No. SFN3800725, Looking West.



Photograph No. 5: View of the East Embankment Upstream of the Structure, Looking Southeast.



Photograph No. 6: View of the East Embankment Downstream of the Structure, Looking Northeast.



Photograph No. 7: View of the East Embankment Downstream of the Structure, Looking Southeast.



Photograph No. 8: View of the West Embankment Upstream of the Structure, Looking Southwest.



Photograph No. 9: View of the West Embankment Downstream of the Structure, Looking Northwest.



Photograph No. 10: View of the West Embankment Downstream of the Structure, Looking West.



Photograph No. 11: View of the West Face of Abutment 2, Looking Southeast.



Photograph No. 12: View of the West Face of Abutment 2, Looking Northeast.



Photograph No. 13: View of the East Face of Pier 1, Looking Northwest.



Photograph No. 14: View of the West Face of Pier 1, Looking Southeast.

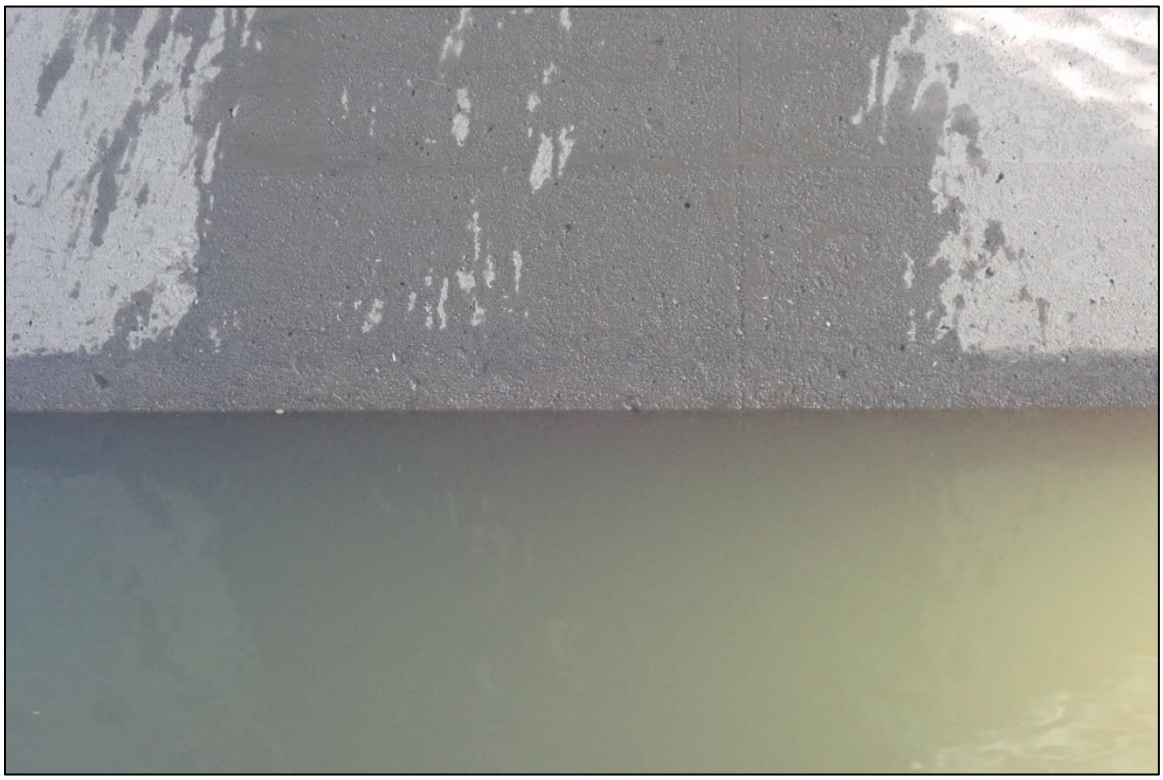

Photograph No. 15: View of the Typical Concrete Condition at the Waterline on the West Face of Pier 1, Looking East.



Photograph No. 16: View of the Underdeck of the Structure, Looking West.



Photograph No. 17: View of the Debris on the Underdeck of the Structure, Looking West.

EXHIBIT 3 – DIVE PROCEDURES CHECKLIST

Underwater Dive Inspection Procedure Checklist

Acceptable written procedures communicate to the next dive team what is necessary to ensure a safe and successful inspection. Each bridge requiring underwater dive techniques must have a unique written inspection procedure. The prior inspection report does not suffice for the required procedures. It is valuable to review the last inspection notes, but they do not serve the same purpose as a stand-alone inspection procedure.

This document shall be completed for all underwater dive inspections. This document shall be reviewed prior to performing the field work and it shall be updated when necessary.

I. Bridge Identification

a. Agency with Inspection Responsibility: ODOT DISTRICT 11

Dive Frequency: 60 months

SFN: 3800725 Bridge Number (County-Route-SLM-SD): HOL-60-4.23

Superstructure Type — Main Span Type: Steel Girder

Approach Span: Steel Girder

Substructure Type — Abutment Type: Reinforced Concrete

Pier Type: Reinforced Concrete

Total Pier Count: 1

Total Pier Count in water: 1

Foundations: Cast-In-Place Reinforced Concrete Piles

Feature Intersected: Killbuck Creek

b. Photographs



Endview



Elevation



Underside

II. Office and Field Assessment

Prior to the inspection, obtain and review copies of the previous underwater inspection reports, routine inspection reports, scour and hydraulic information, and design plans in preparation of the inspection. Divers should pay particular attention given to any observed areas of deterioration, the channel conditions and factors that may accelerate material deterioration. Changes shall be noted in the inspection procedure. Site conditions should be reviewed prior to diving.

a. Channel Conditions

____Waterway features

____Rapid stream flows

____Significant debris accumulation

____Constricted waterway openings

____Soft or unstable streambeds

____Meandering channels

____Other which may promote scour and undermining of substructure elements

____Navigable Waterway

____Flow Controls

b. Anticipated Water conditions which may affect the inspection

____Cold Water (Apprx. Temp____)

____Black water

____Rapid stream flows

____Near military facility

____Tribal fishing

____Water quality

____History of Log jams

c. Identify factors that may accelerate the deterioration of the bridge elements:

____Highly corrosive water

____Unprotected steel members

____Other

Risk Factor Narrative:

III. **Contacts Prior to Work**

Dr. Waseem Khalifa, Ph. D., P.E.

District Bridge Engineer

2201 Reiser Avenue SE

New Philadelphia, OH 44663

(330) 308-7873

Point of contact for immediate action such as closing the bridge due to findings)

Contact Bridge Owner _____14_____ (number) days before the proposed underwater inspection.

Special contracting and scheduling procedures prior to inspection, include recommended lead time

Entity	Contact Name and Title	Contact Phone	Lead Time
Coast Guard	N/A	N/A	N/A
Property Owner	N/A	N/A	N/A
Access Equipment	N/A	N/A	N/A
Lake or River draw-down	N/A	N/A	N/A
Canal dry time	N/A	N/A	N/A
Tree removal	N/A	N/A	N/A
Other:	N/A	N/A	N/A
Other:	N/A	N/A	N/A

IV. **Dive Team Shall Include the Following:**

Dive Team Narrative:

The structure shall be investigated using a three-member dive team: one dive supervisor to monitor communications and air supply while taking notes, one diver, and one tender/standby diver. There shall be one NBIS Team Leader onsite at all times.

Example: The Bridge shall be investigated using a three-member dive team: one supervisor to monitor rack box and take notes, one diver, and one tender/standby diver. There shall be one NBIS Team Leader onsite at all times.

V. Site Information

Navigable waterway: Y /(N)

If Yes, waterway river point _____

Anticipated water visibility depth <1 ft

Anticipated Dive depth 4 ft

Anticipated current <1 ft

Scour Critical (item 113): 8

POA in place: Y/(N)

Scour Monitoring devices present: Y/(N)

Verify the Scope of Services when work is contracted for the procedure for underwater elements that are not in water during an inspection.

Site Information Narrative:

The underwater inspection consists of a visual and tactile examination of the accessible surfaces of the substructure items in water. Additional items should reference the scope of services in the contract. For reference the following items are in water:

Item	Number of Units	Level of Inspection (1, 2 or 3) with Commentary
Piers and Number of Columns	1	100% Level 1 10% Level 2
Abutment	1	100% Level 1 10% Level 2
Culvert	N/A	N/A
Scour Countermeasures	N/A	N/A
Fenders or Dolphins	N/A	N/A

Photographs should be taken, if water clarity permits, for typical conditions, conditions that have changed since last inspection and significant or noteworthy deficiencies. The type of channel bottom material, the presence or extent of scour, the presence or extent of riprap, the presence or extent of drift and debris, and the location of any foundation exposure or undermining shall be quantified. Include depth, length, height and location of deficiencies.

VI. **Equipment and Field Logistics**

a. The inspection should be conducted using:

____Chest waders

____Hip waders

X___Diving equipment

____SCUBA (Note that ADCI Consensus Standards require communication systems be employed for both SCUBA and Surface-Supplied (whether air or mixed-gas) dive modes)

____SCUBA with communication

X___Surface Supplied with communication

b. The channel bottom should be sounded utilizing

X___Digital fathometer

____Telescoping survey rod

____ acoustic imaging

c. During the inspection, the divers should work from

X___Shore

____Boat

____Either

The note taker should work alongside the dive team.

d. Access to the waterway should be obtained from the shore (north bank, southwest quadrant, driveway 30 yards north etc.)

Northeast embankment at the structure

e. The maximum depth of the channel is typically measured 4 feet from the upstream nose of Pier 1.

Reference Datum: 13.5 ft below the top of deck at the downstream nose of Pier 1

Soundings should be dictated by the scope of work. When not detailed in the scope they should be repeated from the previous soundings. If neither exist then they need to be taken in a grid pattern between substructure units 100' upstream and 100' downstream.

VII. Inspection Procedure History

Created: Collins Engineers, Inc. Date: 7/6/2022

Updated By: _____ Date: _____

Updated By: _____ Date: _____

Updated By: _____ Date: _____

Updated By: _____ Date: _____

Updated By: _____ Date: _____

VIII. Other Narrative Not Included In Previous Sections