







UNDERWATER BRIDGE INSPECTION REPORT

STRUCTURE NO. SFN 7902077
(TUS-77-0388 SB)
I-77 OVER TUSCARAWAS COUNTY
TUSCARAWAS COUNTY, OH
DISTRICT 11

July 2022

Prepared for:

STATE OF OHIO DEPARTMENT OF TRANSPORTATION



Prepared by:

COLLINS ENGINEERS INC.

124 Venture Court, Suite 10

Lexington, Kentucky 40511

859.367.0097 • www.collinsengr.com

TABLE OF CONTENTS

EXECUTIVE SUMMARY
1.0 INTRODUCTION 1
1.1 Purpose and Scope 1
1.2 General Description of the Structure 1
1.3 Method of Investigation 1
2.0 EXISTING CONDITIONS 2
2.1 General Conditions 2
2.2 Substructure Conditions 3
2.2.1 Pier 2 3
2.2.2 Pier 3 3
2.2.3 Channel Bottom and Scour Assessment 3
3.0 EVALUATION AND RECOMMENDATIONS 4
EXHIBIT 1 – FIGURES 5
LOCATION MAP
SOUNDING PLAN
CHANNEL CROSS SECTIONS – DOWNSTREAM FASCIA OF SFN7902107 & UPSTREAM FASCIA
CHANNEL CROSS SECTIONS – STRUCTURE CENTERLINE
CHANNEL CROSS SECTIONS – 50 FT DOWNSTREAM & DOWNSTREAM FASCIA
PIER 2
PIER 3
EXHIBIT 2 – INSPECTION PHOTOGRAPHS 13
Photograph No. 1: Overall View of Downstream Fascia of Structure No. SFN 7902077, Looking East.
Photograph No. 2: Overall View of Upstream Fascia of Structure No. SFN 7902077, Looking West.
Photograph No. 3: View of the North Embankment Upstream of the Structure, Looking North.
Photograph No. 4: View of the North Embankment at the Structure, Looking North.
Photograph No. 5: View of the North Embankment Downstream of the Structure, Looking Northeast.
Photograph No. 6: View of the South Embankment Upstream of the Structure, Looking South.
Photograph No. 7: View of the South Embankment at the Structure, Looking South.
Photograph No. 8: View of the South Embankment Downstream of the Structure, Looking South.
Photograph No. 9: View of the South Face of Pier 2, Looking South.

Photograph No. 10: View of the North Face of Pier 2, Looking North.
Photograph No. 11: View of the South Face of Pier 3, Looking North.
Photograph No. 12: View of the North Face of Pier 3, Looking South.
Photograph No. 13: View of the Typical Concrete Condition at the Waterline on the South Face of Pier 3, Looking Northeast.
Photograph No. 14: View of the Channel Upstream of the Structure, Looking Northeast.
Photograph No. 15: View of the Channel Downstream of the Structure, Looking West.
EXHIBIT 3 – DIVE PROCEDURES CHECKLIST 22

EXECUTIVE SUMMARY

Project: ODOT District 11 Underwater Bridge Inspections - 2022

Purpose of Project: To perform a detailed visual and tactile underwater investigation of bridges for District 11 of the Ohio Department of Transportation.

Inspection Team: Team Leader – Matthew Rogers, P.E. – Collins Engineers, Inc.
Team Member – Kevin Mitchell, E.I.T. – Collins Engineers, Inc.
Team Member – Joshua Davis, E.I.T. – Collins Engineers, Inc.

Inspection Date(s): July 27, 2022

Water Visibility:	3 ft	***Water Velocity:***	<1 ft/s
Water Temperature:	77 °F	***Weather:***	Cloudy – 70 °F
Waterline Elevation:	789.0 ft	***Type of Boat:***	10 ft Kayak
Coordinates:	40.27339°N, 81.54519°W		
Access Location:	North embankment at structure.		
Dive Mode:	Surface-supplied air		
Waterline Reference:	23.2 ft below the Top of Deck at the downstream nose of Pier 2.		
Maximum Depth at SSU:	10.6 ft – Downstream Nose of Pier 2.		
Shoreline Conditions:	The north and south shorelines consisted of moderately to heavily vegetated mild slopes with minor erosion and multiple trees leaning toward the channel.		

Summary of Findings:

- **Pier 2:**
  - The channel bottom material consisted of sand, gravel and cobbles with approximately 2 in. probe rod penetration.
  - The submerged portions of the pier were sound and smooth with no defects observed.
  - Timber debris accumulation up to 10 in. diameter was observed on the upstream nose and north face.
- **Pier 3:**
  - The channel bottom material consisted of sand, gravel and cobbles with approximately 2 in. probe rod penetration.
  - The submerged portions of the pier were sound and smooth with no defects observed.

Summary of Recommendations:

- Monitor timber debris accumulation at Pier 2.
- Monitor channel bottom.

Underwater Inspection Coding:

NBI Ratings:

Item	Description	Coding	Condition
B.C.03	Substructure (Overall)	7– Good Condition	Timber Debris Accumulation
B.C.09	Channel Cond. Rating	6– Satisfactory Condition	Minor Erosion, Timber Debris Accumulation
B.C.10	Channel Protection Cond.	7– Good Condition	Riprap
B.C.11	Scour Cond. Rating	8– Above Foundation Limits	Stable (Inspector Recommended)
B.C.15	Underwater Cond. Rating	8– Very Good Condition	
B.IE.03	Insp. Date	July 27, 2022	
B.IE.05	UW Insp. Interval	60 Months	

AASHTO National Bridge Element (NBE) Ratings:

Element #	Description	Units	Total	Condition State			
				1	2	3	4
210	Reinforced Concrete Pier Wall	LF	105	105	0	0	0

Note: Ratings were developed using the FHWA Specifications for the National Bridge Inventory. The recommended ratings consider inspected elements located within the waterway and conditions existing below the water surface only. Additional consideration is necessary for the assignment of overall condition ratings for this bridge.

1.0 INTRODUCTION

1.1 Purpose and Scope

This report consists of the results of a detailed underwater investigation performed at the I-77 Bridge over Tuscarawas County in Tuscarawas County, OH. Collins Engineers, Inc. (Collins) conducted the underwater investigation for District 11 of the Ohio Department of Transportation on July 27, 2022. The primary purpose of the investigation was as follows:

- Determine the condition of the substructure components located in the water at the time of the inspection from the waterline to the channel bottom.
- Obtain channel bottom depth measurements along the bridge fascias, upstream and downstream of the bridge, and around the submerged substructure units.
- Determine the condition of the shorelines in the vicinity of the structure.
- Obtain photographs of the bridge and any significant defects.

In addition, a brief inspection was made of areas that could be submerged during periods of high water. The following report includes a description of the structure, the method of investigation, a description of existing conditions, an evaluation and recommendations based on the conditions, inspection figures, and photographs.

1.2 General Description of the Structure

Structure No. SFN 7902077 spans 319.50 ft, carrying I-77 over Tuscarawas County and is approximately 35 ft wide. The bridge superstructure is constructed of four steel multi-beam spans. The roadway orientation of the longitudinal axis of the bridge is south to north. The substructure units are labeled as Piers 2 and 3. Existing design drawings were available at the time of the inspection and were used to determine water surface elevation and foundation elevations. Refer to Figure 1 in Exhibit 1 for a Location Map of the bridge. Refer to Photograph 1 in Exhibit 2 for an overall view of the bridge.

1.3 Method of Investigation

A detailed field inspection was conducted to determine the physical condition of the submerged bridge substructure units from the waterline to the channel bottom. A brief visual examination of the substructure units above the waterline was also made.

A three-person team consisting of a professional engineer-diver and team leader (Matthew Rogers, P.E.) and two engineer divers (Kevin Mitchell, E.I.T. and Joshua Davis, E.I.T.) conducted the underwater inspection. The inspection was conducted through surface-supplied air diving. During the inspection, the inspectors worked from a kayak and the shore, and a note taker on the shore recorded the inspection notes.

The underwater inspection consisted of a visual and tactile examination of the accessible surfaces of the substructure units from the waterline to the channel bottom with particular attention given to any observed areas of deterioration or apparent distress. Approximately 10 percent of the total area on the underwater surfaces of the substructure units was cleaned so that the condition could be more closely examined. Photographs were taken to document the general conditions and observed deficiencies. Underwater photographs could not be obtained due to poor water conditions. The type of channel bottom material, the presence or extent of scour, the presence or extent of riprap, the presence or extent of drift and debris, and the location of any foundation exposure or undermining were noted.

Channel bottom soundings were performed utilizing a telescoping survey rod and digital fathometer. Soundings were collected at quarter points along the bridge centerline as well as the fascias and 50 feet upstream and downstream of the bridge, parallel with its fascias. Additional soundings were collected adjacent to Piers 2 and 3 and at 10 feet intervals in-line with the piers, up to 50 feet upstream and downstream, and the waterline was referenced to a known elevation on the bridge. A sounding plan was developed using the soundings and approximate location of the shorelines. Refer to Figures 2 through 5 in Exhibit 1 for the sounding plan and channel cross sections that show the channel limits and water depths around the structure.

2.0 EXISTING CONDITIONS

2.1 General Conditions

At the time of the inspection, the waterline of Tuscarawas River was located approximately 23.2 ft below the top of deck at the upstream nose of Pier 2, which corresponds to a waterline elevation of 789.0 ft. During the inspection, the waterway was flowing east to west below the structure at a rate of 1 ft/s. The approximate high-water elevation was observed to be 794.2 ft.

The bridge pier skew was consistent with the channel alignment and does not require attention at this time. The north and south shorelines consisted of moderately to heavily vegetated mild slopes with minor

erosion and multiple trees leaning toward the channel. Refer to Photographs 2 through 8 in Exhibit 2 for views of the shorelines near the structure.

2.2 Substructure Conditions

2.2.1 Pier 2

The channel bottom material around Pier 2 consisted of sand, gravel and cobbles with approximately 2 in. probe rod penetration. Typical light marine growth algae and silt up to 1/8 in. deep was observed on the submerged portions of the pier. The submerged portions of the pier were sound and smooth with no defects observed. Timber debris accumulation up to 10 in. diameter was observed on the upstream nose and north face. Refer to Figure 6 in Exhibit 1 for detailed inspection notes of Pier 2. Refer to Photographs 9 and 10 in Exhibit 2 for views of Pier 2.

2.2.2 Pier 3

The channel bottom material around Pier 3 consisted of sand, gravel and cobbles with approximately 2 in. probe rod penetration. Typical light marine growth algae and silt up to 1/8 in. deep was observed on the submerged portions of the pier. The submerged portions of the pier were sound and smooth with no defects observed. Refer to Figure 7 in Exhibit 1 for detailed inspection notes of Pier 3. Refer to Photographs 11 and 12 in Exhibit 2 for views of Pier 3.

2.2.3 Channel Bottom and Scour Assessment

At the time of the inspection, Tuscarawas River was experiencing normal flow and the channel bottom appeared stable for the type of material. The channel bottom was primarily sand, gravel, and cobbles surrounding the substructure units. No additional scour, undermining, or scour countermeasures were observed.

3.0 EVALUATION AND RECOMMENDATIONS

Overall, the inspected substructure piers of Structure No. SFN 7902077 were in good condition. A comparison of the soundings recorded during the previous inspection on July 16, 2017, and the soundings taken during this inspection revealed no significant change in the channel bottom profile in the vicinity of the structure.

The timber debris accumulation at Pier 3 did not significantly affect the channel flow, and as a result, does not require removal at this time. If the debris accumulation increases in size or density, it may be necessary to remove the debris to reduce excessive lateral loads on the pier, limit further debris accumulation, and reduce the likelihood of channel bottom degradation resulting from obstructed flow.

Although no channel deficiencies were observed, the channel bottom should continue to be monitored during future underwater inspections to verify that localized scour or overall channel degradation is not occurring and that the pier footings remain adequately embedded in the channel bottom.

It is recommended that the submerged substructure units of Structure No. SFN 7902077 be next inspected underwater at an interval not to exceed 60 months, no later than July 27, 2027.

Respectfully Submitted,
COLLINS ENGINEERS, INC.



Matthew Rogers, P.E.
Project Manager/Team Leader

Originated by:
Nicholas Lane

EXHIBIT 1 – FIGURES



COLLINS ENGINEERS
124 Venture Court, Ste 10
Lexington, KY 40511
Phone: 859-367-0097
Fax: 859-367-0140

Ohio Department of Transportation, District 11
2201 Reiser Avenue
New Philadelphia, OH 44663
Phone: 330-339-6633

I-77 OVER TUSCARAWAS RIVER
STRUCTURE NO. SFN 7902077

LOCATION MAP

TUSCARAWAS COUNTY, OHIO

INSPECTED BY: JTD	CEI PROJECT: 55−13380.01
DRAWN BY: NML	DATE: 27 JUL 2022
CHECKED BY: MOR	SHEET NO: 1

Y:\PROJECTS\55 - KENTUCKY\55-13380.01 - ODOT D11 UW BRIDGE INSP (2022)\ENGINEERING\BRIDGES\SFN 7902077 (TUS-77-3.88 L)\DRAWINGS\SFN 7902077 DRAWINGS.DWG10/13/2022 8:31:41 AM

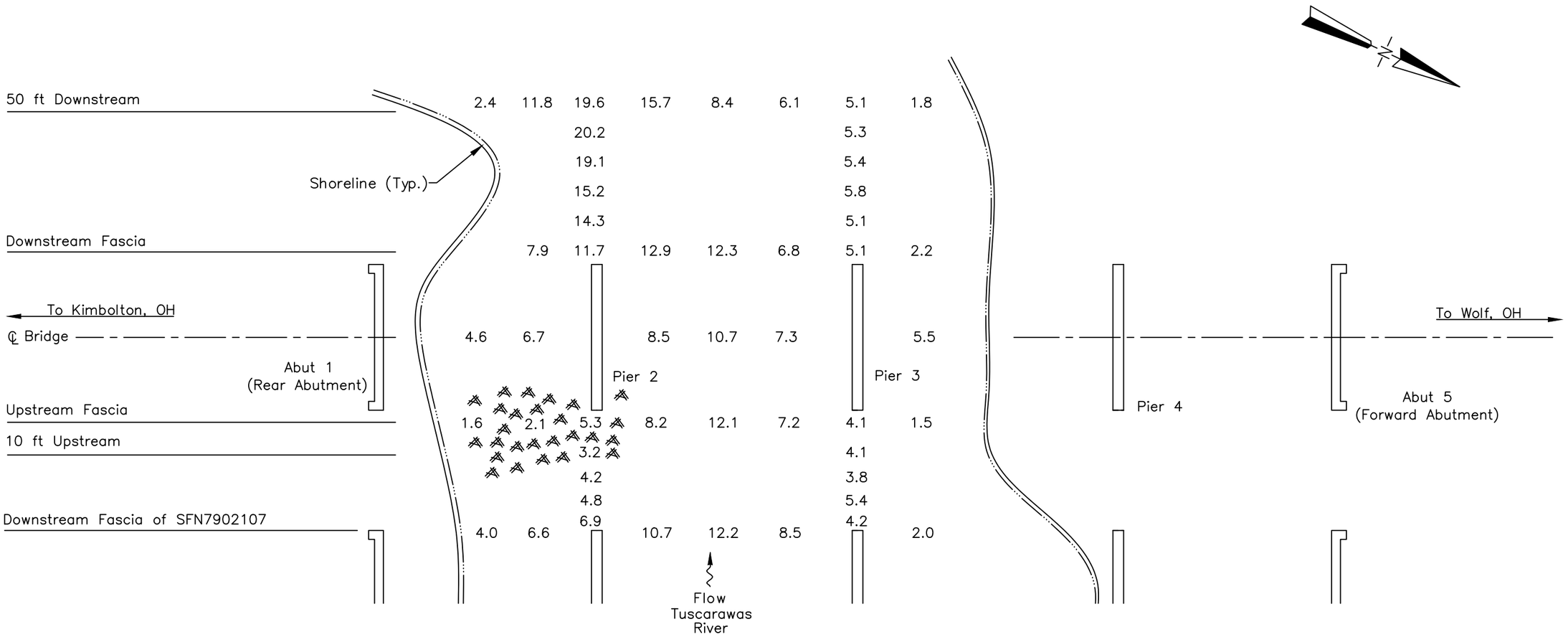

SOUNDING PLAN

GENERAL NOTES:

1. Piers 2 and 3 were inspected underwater. Substructure units are labeled according to available record drawings.
2. At the time of inspection on July 27, 2022, the waterline was located approximately 23.2 ft below Top of Deck at downstream nose of Pier 2 (assumed EL. +812.2 ft). This corresponds with an assumed waterline elevation of +789.0 ft.
3. Soundings indicate the water depth at the time of inspection and are measured in feet.
4. Soundings were taken parallel to the bridge at quarter–points along the centerline, the upstream and downstream fascias, and at 50 ft upstream and downstream of the fascias, and at 10 ft intervals in line with the piers to 50 ft.
5. Typical silt buildup up to 1/16 in. deep observed on all substructure units from high water mark to channel bottom.

LEGEND

2.7 Sounding Depth from Waterline (ft)

Timber Debris

COLLINS ENGINEERS
124 Venture Court, Ste 10
Lexington, KY 40511
Phone: 859-367-0097
Fax: 859-367-0140

Ohio Department of Transportation, District 11
2201 Reiser Avenue
New Philadelphia, OH 44663
Phone: 330-339-6633

I-77 OVER TUSCARAWAS RIVER
STRUCTURE NO. SFN 7902077
SOUNDING PLAN
TUSCARAWAS COUNTY, OHIO

CEI PROJECT 55–13380.01
INSPECTED BY: JTD
DRAWN BY: NML
CHECKED BY: MOR
DATE: JUL 2022
SHEET NO: 2

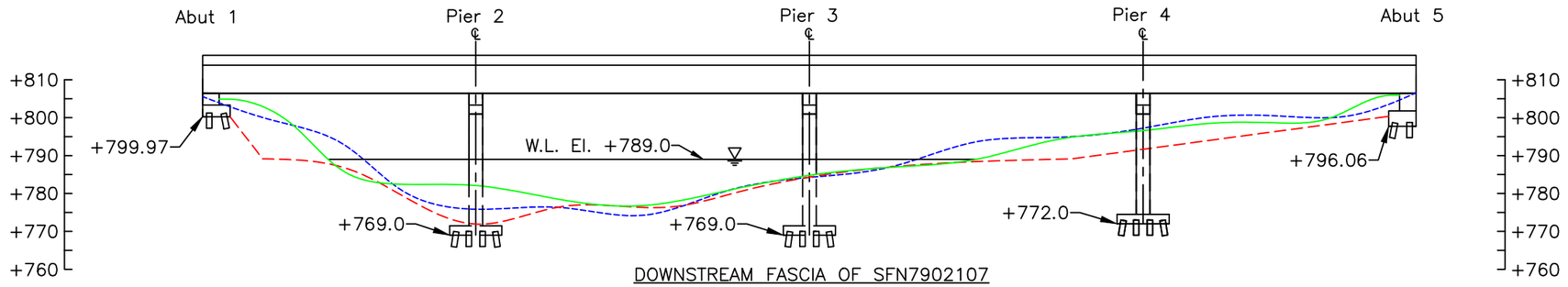

DOWNSTREAM FASCIA OF SFN7902107
CHANNEL CROSS SECTION
(LOOKING DOWNSTREAM)

Upstream Elevations (Looking Downstream)	
Location	Height (ft)
A1	10.5
1/4	19.2
1/2	24.8
3/4	25.3
P2	28.5
1/4	31.4
1/2	35.3
3/4	30.4
P3	27.3
1/4	24.7
1/2	20.0
3/4	16.1
P4	15.6
1/4	15.7
1/2	16.1
3/4	13.9
A5	10.5

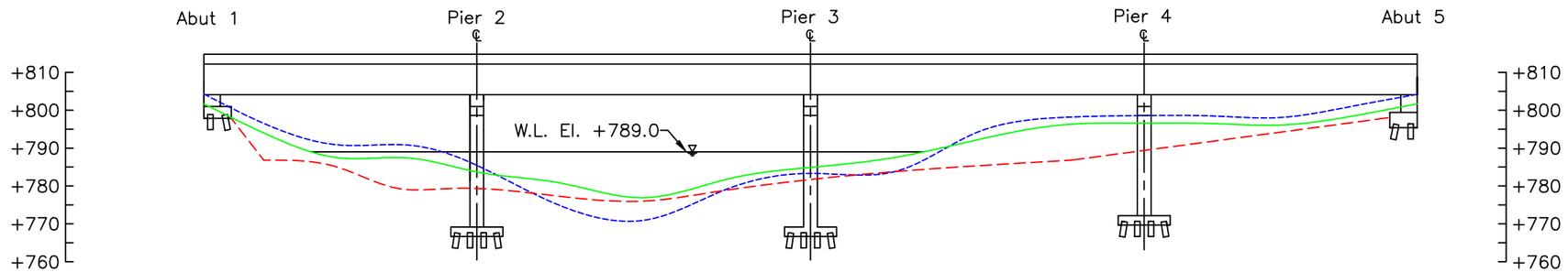

UPSTREAM FASCIA
CHANNEL CROSS SECTION
(LOOKING DOWNSTREAM)

NOTES:

1. Footing elevations unknown due to unavailable record drawings.

LEGEND

- Approximate Channel Bottom – July 2022
- Approximate Channel Bottom – July 2017
- Approximate Channel Bottom – September 2012
- Timber Debris
- Water Surface
- +450 Elevation (ft)

COLLINS ENGINEERS
124 Venture Court, Ste 10
Lexington, KY 40511
Phone: 859-367-0097
Fax: 859-367-0140

Ohio Department of Transportation, District 11
2201 Reiser Avenue
New Philadelphia, OH 44663
Phone: 330-339-6633

I-77 OVER TUSCARAWAS RIVER
STRUCTURE NO. SFN 7902077
CROSS SECTIONS
TUSCARAWAS COUNTY, OHIO

CEI PROJECT 55–13380.01
INSPECTED BY: JTD
DRAWN BY: NML
CHECKED BY: MOR
DATE: JUL 2022
SHEET NO: 3

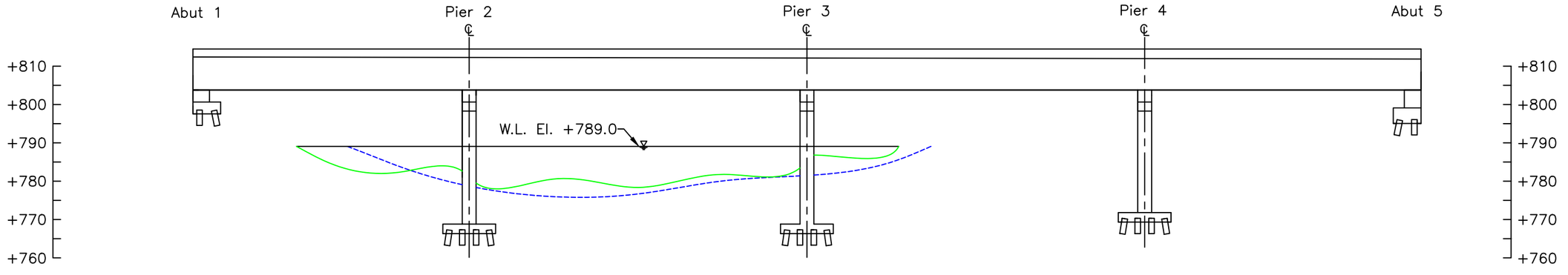

STRUCTURE CENTERLINE
CHANNEL CROSS SECTION
(LOOKING DOWNSTREAM)

NOTES:

1. Footing elevations unknown due to unavailable record drawings.

LEGEND

———	Approximate Channel Bottom – July 2022
- - - - -	Approximate Channel Bottom – July 2017
– – – – –	Approximate Channel Bottom – Sept. 2012 (No Data)
	Timber Debris
	Water Surface
+450	Elevation (ft)

COLLINS ENGINEERS
124 Venture Court, Ste 10
Lexington, KY 40511
Phone: 859-367-0097
Fax: 859-367-0140

Ohio Department of Transportation, District 11
2201 Reiser Avenue
New Philadelphia, OH 44663
Phone: 330-339-6633

I-77 OVER TUSCARAWAS RIVER
STRUCTURE NO. SFN 7902077
CROSS SECTIONS
TUSCARAWAS COUNTY, OHIO

CEI PROJECT	55–13380.01
INSPECTED BY:	JTD
DRAWN BY:	NML
CHECKED BY:	MOR
DATE:	JUL 2022
SHEET NO:	4

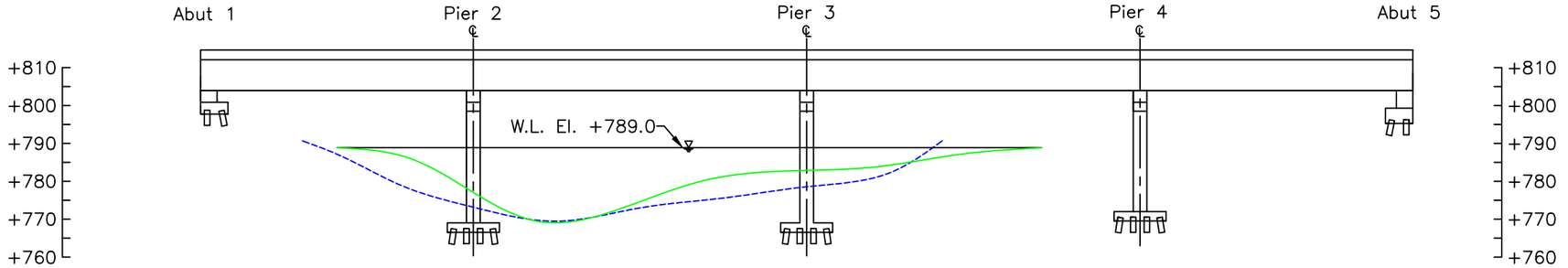

50 FT DOWNSTREAM
CHANNEL CROSS SECTION
(LOOKING DOWNSTREAM)

Downstream Elevations (Looking Downstream)	
Location	Height (ft)
A1	8.5
1/4	13.5
1/2	22.9
3/4	31.1
P2	34.9
1/4	36.1
1/2	35.5
3/4	30.0
P3	28.3
1/4	25.4
1/2	20.8
3/4	12.8
P4	12.4
1/4	10.9
1/2	11.5
3/4	9.4
A5	7.9

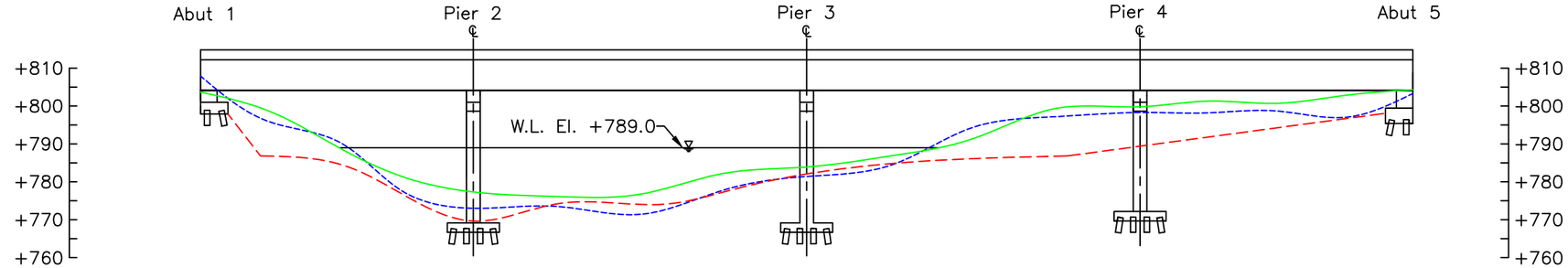

DOWNSTREAM FASCIA
CHANNEL CROSS SECTION
(LOOKING DOWNSTREAM)

LEGEND

- Approximate Channel Bottom – July 2022
- Approximate Channel Bottom – July 2017
- Approximate Channel Bottom – September 2012
- Timber Debris
- Water Surface
- +450 Elevation (ft)

NOTES:

1. Footing elevations unknown due to unavailable record drawings.

COLLINS ENGINEERS
124 Venture Court, Ste 10
Lexington, KY 40511
Phone: 859-367-0097
Fax: 859-367-0140

Ohio Department of Transportation, District 11
2201 Reiser Avenue
New Philadelphia, OH 44663
Phone: 330-339-6633

I-77 OVER TUSCARAWAS RIVER
STRUCTURE NO. SFN 7902077
CROSS SECTIONS
TUSCARAWAS COUNTY, OHIO

CEI PROJECT 55–13380.01
INSPECTED BY: JTD
DRAWN BY: NML
CHECKED BY: MOR
DATE: JUL 2022
SHEET NO: 5

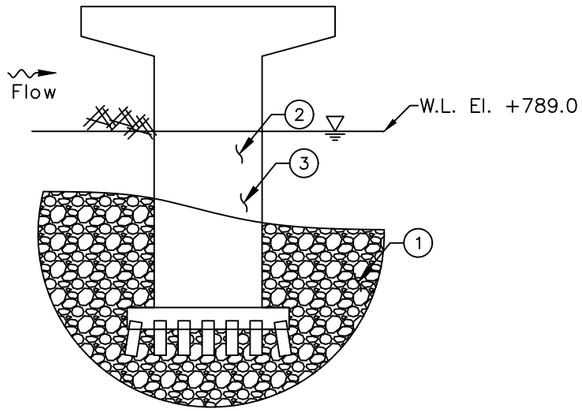

NORTH ELEVATION
(LOOKING SOUTH)

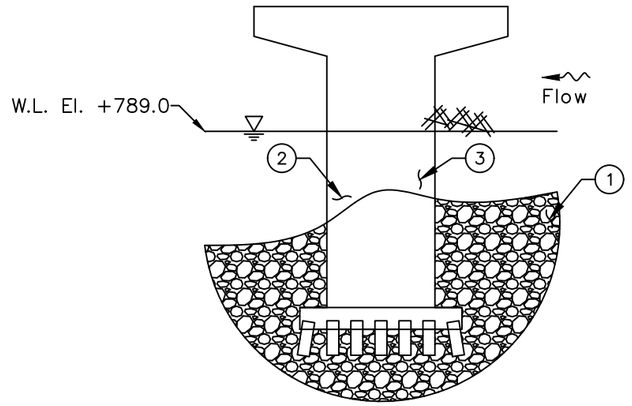

SOUTH ELEVATION
(LOOKING NORTH)

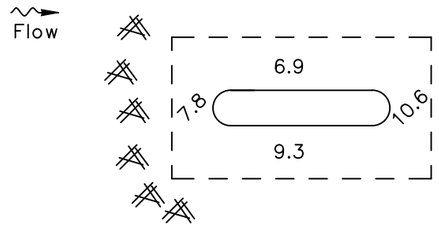

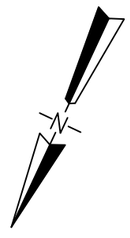

INSPECTION NOTES:

1. The channel bottom material consisted of sand, gravel and cobbles with approximately 2 in. probe rod penetration.
2. Typical light marine growth algae and silt up to 1/8 in. deep was observed on the submerged portions of the pier.
3. The submerged portions of the pier were sound and smooth with no defects observed.

LEGEND

2.7	Sounding Depth from Waterline (ft)
———	Approximate Channel Bottom – July 2022
	Timber Debris
	Water Surface

COLLINS ENGINEERS
124 Venture Court, Ste 10
Lexington, KY 40511
Phone: 859-367-0097
Fax: 859-367-0140

Ohio Department of Transportation, District 11
2201 Reiser Avenue
New Philadelphia, OH 44663
Phone: 330-339-6633

I-77 OVER TUSCARAWAS RIVER
STRUCTURE NO. SFN 7902077
PIER 2
TUSCARAWAS COUNTY, OHIO

CEI PROJECT 55-13380.01
INSPECTED BY: JTD
DRAWN BY: NML
CHECKED BY: MOR
DATE: JUL 2022
SHEET NO: 6

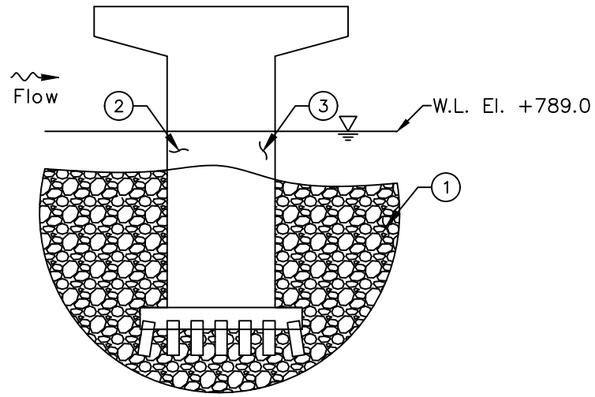

NORTH ELEVATION
(LOOKING SOUTH)

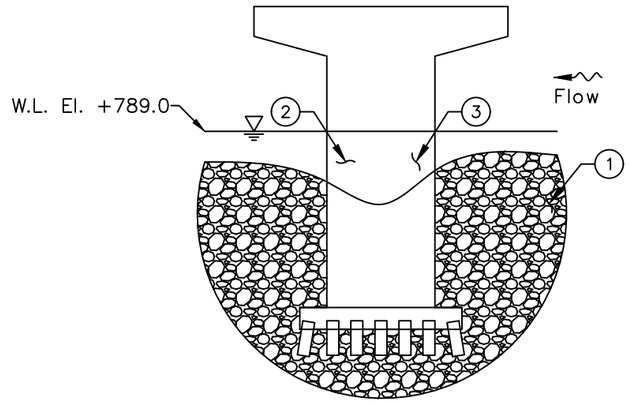

SOUTH ELEVATION
(LOOKING NORTH)

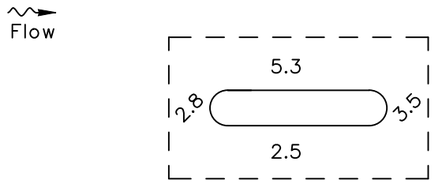

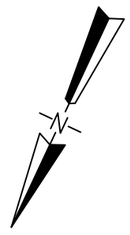

INSPECTION NOTES:

1. The channel bottom material consisted of sand, gravel and cobbles with approximately 2 in. probe rod penetration.
2. Typical light marine growth algae and silt up to 1/8 in. deep was observed on the submerged portions of the pier.
3. The submerged portions of the pier were sound and smooth with no defects observed.

LEGEND

2.7	Sounding Depth from Waterline (ft)
———	Approximate Channel Bottom – July 2022
	Timber Debris
	Water Surface

COLLINS ENGINEERS
124 Venture Court, Ste 10
Lexington, KY 40511
Phone: 859-367-0097
Fax: 859-367-0140

Ohio Department of Transportation, District 11
2201 Reiser Avenue
New Philadelphia, OH 44663
Phone: 330-339-6633

I-77 OVER TUSCARAWAS RIVER
STRUCTURE NO. SFN 7902077
PIER 3
TUSCARAWAS COUNTY, OHIO

CEI PROJECT
55–13380.01

INSPECTED BY:
JTD

DRAWN BY:
NML

CHECKED BY:
MOR

DATE:
JUL 2022

SHEET NO:
7

EXHIBIT 2 – INSPECTION PHOTOGRAPHS



Photograph No. 1: Overall View of Downstream Fascia of Structure No. SFN 7902077, Looking East.



Photograph No. 2: Overall View of Upstream Fascia of Structure No. SFN 7902077, Looking West.



Photograph No. 3: View of the North Embankment Upstream of the Structure, Looking North.



Photograph No. 4: View of the North Embankment at the Structure, Looking North.



Photograph No. 5: View of the North Embankment Downstream of the Structure, Looking Northeast.



Photograph No. 6: View of the South Embankment Upstream of the Structure, Looking South.



Photograph No. 7: View of the South Embankment at the Structure, Looking South.



Photograph No. 8: View of the South Embankment Downstream of the Structure, Looking South.



Photograph No. 9: View of the South Face of Pier 2, Looking South.



Photograph No. 10: View of the North Face of Pier 2, Looking North.



Photograph No. 11: View of the South Face of Pier 3, Looking North.



Photograph No. 12: View of the North Face of Pier 3, Looking South.

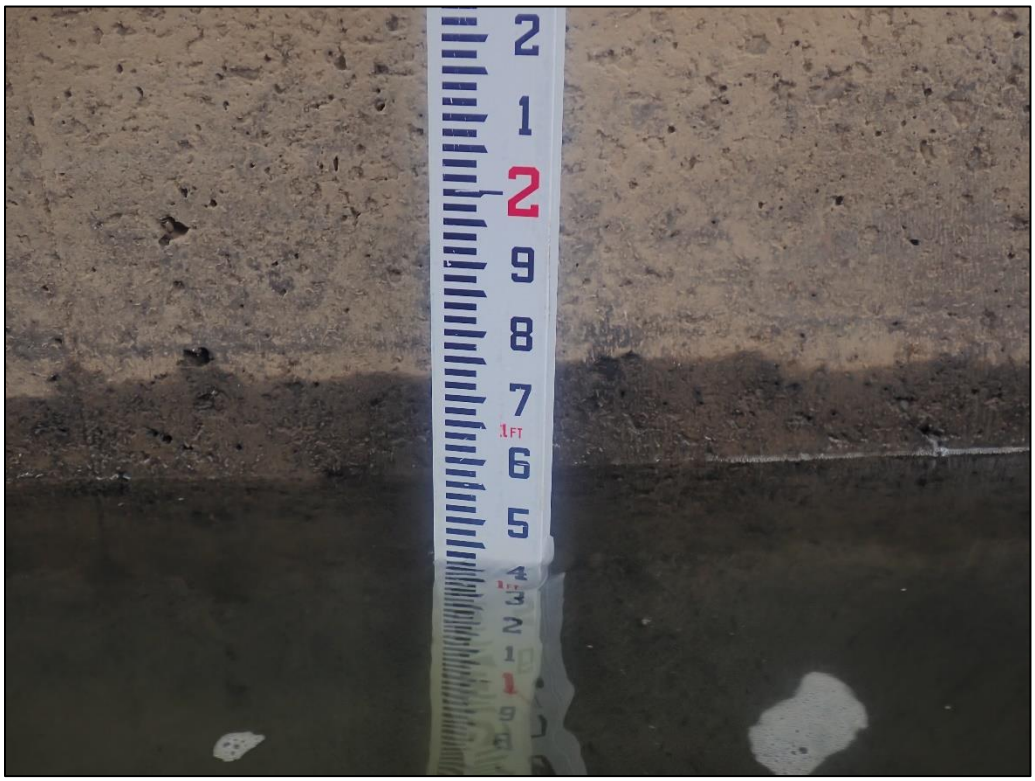

Photograph No. 13: View of the Typical Concrete Condition at the Waterline on the South Face of Pier 3, Looking Northeast.



Photograph No. 14: View of the Channel Upstream of the Structure, Looking Northeast.



Photograph No. 15: View of the Channel Downstream of the Structure, Looking West.

EXHIBIT 3 – DIVE PROCEDURES CHECKLIST

Underwater Dive Inspection Procedure Checklist

Acceptable written procedures communicate to the next dive team what is necessary to ensure a safe and successful inspection. Each bridge requiring underwater dive techniques must have a unique written inspection procedure. The prior inspection report does not suffice for the required procedures. It is valuable to review the last inspection notes, but they do not serve the same purpose as a stand-alone inspection procedure.

This document shall be completed for all underwater dive inspections. This document shall be reviewed prior to performing the field work and it shall be updated when necessary.

I. Bridge Identification

a. Agency with Inspection Responsibility: ODOT District 11

Dive Frequency: 60 months

SFN: 79002077 Bridge Number (County-Route-SLM-SD): TUS-77-0388 SB

Superstructure Type	Main Span Type:	Steel Multi-Beam
	Approach Span:	Steel Multi-Beam
Substructure Type	Abutment Type:	Reinforced Concrete
	Pier Type:	Reinforced Concrete Hammerhead
	Total Pier Count:	4
	Total Pier Count in water:	2
	Foundations:	Reinforced Concrete Pile Cap & Piles
Feature Intersected		Tuscarawas River

b. Photographs



Endview



Elevation



Underside

II. Office and Field Assessment

Prior to the inspection, obtain and review copies of the previous underwater inspection reports, routine inspection reports, scour and hydraulic information, and design plans in preparation of the inspection. Divers should pay particular attention given to any observed areas of deterioration, the channel conditions and factors that may accelerate material deterioration. Changes shall be noted in the inspection procedure. Site conditions should be reviewed prior to diving.

a. Channel Conditions

____Waterway features

____Rapid stream flows,

_X__Significant debris accumulation

____Constricted waterway openings

____Soft or unstable streambeds

____Meandering channels

____Other which may promote scour and undermining of substructure elements

____Navigable Waterway

____Flow Controls

b. Anticipated Water conditions which may affect the inspection

____Cold Water (Apprx. Temp____)

____Black water

____Rapid stream flows

____Near military facility

____Tribal fishing

____Water quality

____History of Log jams

c. Identify factors that may accelerate the deterioration of the bridge elements:

____Highly corrosive water

____Unprotected steel members

____Other

Risk Factor Narrative:

III. **Contacts Prior to Work**

Dr. Waseem Khalifa, Ph. D., P.E.

District Bridge Engineer

2201 Reiser Avenue SE

New Philadelphia, OH 44663

(330) 308-7873

Point of contact for immediate action such as closing the bridge due to findings.

Contact Bridge Owner _____14_____ (number) days before the proposed underwater inspection.

Special contracting and scheduling procedures prior to inspection, include recommended lead time

Entity	Contact Name and Title	Contact Phone	Lead Time
Coast Guard	N/A	N/A	N/A
Property Owner	N/A	N/A	N/A
Access Equipment	N/A	N/A	N/A
Lake or River draw-down	N/A	N/A	N/A
Canal dry time	N/A	N/A	N/A
Tree removal	N/A	N/A	N/A
Other:	N/A	N/A	N/A
Other:	N/A	N/A	N/A

IV. **Dive Team Shall Include the Following:**

Dive Team Narrative:

The structure shall be investigated using a three-member dive team: one dive supervisor to monitor communications and air supply while taking notes, one diver, and one tender/standby diver. There shall be one NBIS Team Leader onsite at all times.

Example: The Bridge shall be investigated using a three-member dive team: one supervisor to monitor rack box and take notes, one diver, and one tender/standby diver. There shall be one NBIS Team Leader onsite at all times.

V. Site Information

Navigable waterway:	Y / N	Anticipated current	<1 ft/s
If Yes, waterway river point	_____	Scour Critical (item 113):	8
Anticipated water visibility depth	3 ft	POA in place:	Y/N
Anticipated Dive depth	10.6 ft	Scour Monitoring devices present:	Y/N

Verify the Scope of Services when work is contracted for the procedure for underwater elements that are not in water during an inspection.

Site Information Narrative:

The underwater inspection consists of a visual and tactile examination of the accessible surfaces of the substructure items in water. Additional items should reference the scope of services in the contract. For reference the following items are in water:

Item	Number of Units	Level of Inspection (1, 2 or 3) with Commentary
Piers and Number of Columns	2	100% Level 1 10% Level 2
Abutment		
Culvert		
Scour Countermeasures		
Fenders or Dolphins		

Photographs should be taken, if water clarity permits, for typical conditions, conditions that have changed since last inspection and significant or noteworthy deficiencies. The type of channel bottom material, the presence or extent of scour, the presence or extent of riprap, the presence or extent of drift and debris, and the location of any foundation exposure or undermining shall be quantified. Include depth, length, height and location of deficiencies.

VI. **Equipment and Field Logistics**

a. The inspection should be conducted using:

____Chest waders

____Hip waders

__X_Diving equipment

____SCUBA (Note that ADCI Consensus Standards require communication systems be employed for both SCUBA and Surface-Supplied (whether air or mixed-gas) dive modes)

____SCUBA with communication

__X_Surface Supplied with communication

b. The channel bottom should be sounded utilizing

____Digital fathometer

__X_Telescoping survey rod

____ acoustic imaging

c. During the inspection, the divers should work from

__X_Shore

____Boat

____Either

The note taker should work alongside the dive team.

d. Access to the waterway should be obtained from the shore (north bank, southwest quadrant, driveway 30 yards north etc.)

Southwest shore at the structure

e. The maximum depth of the channel is typically measured:

At the downstream nose of Pier 2

Reference Datum 23.2 Feet below the top of the deck at the downstream nose of Pier 2

Soundings should be dictated by the scope of work. When not detailed in the scope they should be repeated from the previous soundings. If neither exist, then they need to be taken in a grid pattern between substructure units 100’ upstream and 100’ downstream.

VII. Inspection Procedure History

Created: Collins Engineers, Inc. Date: 07/27/2022

Updated By: _____ Date: _____

Updated By: _____ Date: _____

Updated By: _____ Date: _____

Updated By: _____ Date: _____

Updated By: _____ Date: _____

VIII. Other Narrative Not Included In Previous Sections