







UNDERWATER BRIDGE INSPECTION REPORT

STRUCTURE NO. SFN7904622
(TUS-250-5.11)
US-250 OVER SUGAR CREEK
TUSCARAWAS COUNTY, OH
DISTRICT 11



Prepared for:

Prepared by:

COLLINS ENGINEERS INC.

124 Venture Court, Suite 10

Lexington, Kentucky 40511

859.367.0097 • www.collinsengr.com

TABLE OF CONTENTS

EXECUTIVE SUMMARY
1.0 INTRODUCTION 1
1.1 Purpose and Scope 1
1.2 General Description of the Structure 1
1.3 Method of Investigation 1
2.0 EXISTING CONDITIONS 2
2.1 General Conditions 2
2.2 Substructure Conditions 3
2.2.1 Pier 1 3
2.2.2 Pier 2 3
2.2.3 Abutment 2 3
3.0 EVALUATION AND RECOMMENDATIONS 4
EXHIBIT 1 – FIGURES 5
LOCATION MAP
SOUNDING PLAN
HYDROGRAPHIC SURVEY
CHANNEL CROSS SECTIONS– 50 FT UPSTREAM
CHANNEL CROSS SECTIONS– UPSTREAM FASCIA
CHANNEL CROSS SECTIONS– STRUCTURE CENTERLINE
CHANNEL CROSS SECTIONS– DOWNSTREAM FASCIA
CHANNEL CROSS SECTIONS– 50 FT DOWNSTREAM
PIER 1
PIER 2
ABUTMENT 2
EXHIBIT 2 – INSPECTION PHOTOGRAPHS 17
Photograph No. 1: Overall View of Structure No. SFN7904622, Looking East.
Photograph No. 2: Overall View of Structure No. SFN7904622, Looking West.
Photograph No. 3: South Approach of Structure No. SFN7904622, Looking South.
Photograph No. 4: North Approach of Structure No. SFN7904622, Looking North.
Photograph No. 5: View of the North Embankment Upstream of the Structure, Looking Northeast.
Photograph No. 6: View of the North Embankment Downstream of the Structure, Looking Northwest.
Photograph No. 7: View of the South Embankment Upstream of the Structure, Looking South.

Photograph No. 8: View of the South Embankment Downstream of the Structure, Looking South.
Photograph No. 9: View of the Underdeck, Looking North.
Photograph No. 10: View of the North Face of Pier 1, Looking South.
Photograph No. 11: View of the South Face of Pier 1, Looking North.
Photograph No. 12: View of the Cracking on the South Face of Pier 1, Looking North.
Photograph No. 13: View of the North Face of Pier 2, Looking South.
Photograph No. 14: View of the South Face of Pier 2, Looking North.
Photograph No. 15: View of the Typical Concrete Condition at the Waterline without Scaling on the North Face of Pier 2, Looking South.
Photograph No. 16: View of the Typical Concrete Condition with Scaling at the Waterline on the North Face of Pier 2, Looking South.
Photograph No. 17: View of the Timber Debris at Span 3, Looking Southwest.
Photograph No. 18: View of the Timber Debris at Span 3, Looking East.
Photograph No. 19: View of the North Face of Abutment 2, Looking Southeast.
Photograph No. 20: Overall View of the Cracking on the North Face of Abutment 2, Looking South.
Photograph No. 21: Close Up View of the Cracking on the North Face of Abutment 2, Looking South.
EXHIBIT 3 – DIVE PROCEDURES CHECKLIST 29

EXECUTIVE SUMMARY

Project: ODOT D11 Underwater Bridge Inspections - 2022.

Purpose of Project: To perform a detailed visual and tactile underwater investigation of bridges for the Ohio Department of Transportation, District 11.

Inspection Team: Team Leader – Joshua Johnson, P.E. – Collins Engineers, Inc.
Team Member – Matthew Rogers, P.E. – Collins Engineers, Inc.
Team Member – Kurt Lingo, E.I.T. – Collins Engineers, Inc.

Inspection Date(s): May 3, 2022

Water Visibility:	<1 ft	***Water Velocity:***	<1 ft/s
Water Temperature:	55 °F	***Weather:***	Overcast – 60 °F
Waterline Elevation:	83.2 ft	***Type of Boat:***	10 ft Kayak
Coordinates:	40.5869°N, 81.5236°W		
Access Location:	Northeast Embankment at Structure		
Dive Mode:	Surface Supplied Air		
Waterline Reference:	16.8 ft below the top of deck at the downstream nose of Pier 1.		
Maximum Depth at SSU:	6.6 ft – Downstream Nose of Pier 1		
Shoreline Conditions:	The northeast and southwest shorelines consisted of well vegetated moderate slopes with no protection and no signs of erosion. The northwest and southeast shorelines consisted of moderately vegetated steep cut banks (up to 6 ft vertical) with no protection.		

Summary of Findings:

- **Pier 1:**
  - The submerged portions of the pier exhibited heavy scaling up to 1/2 in. deep with exposed aggregate from the channel bottom to 6 ft above the waterline for approximately a 25 ft length between Girders 2 and 4.
  - The top of the footing was exposed 5.2 ft below the waterline from the upstream nose to the upstream one-quarter point on the south face of the pier with a maximum vertical exposure of 1.4 ft located at the southwest corner of the pier.
  - A vertical crack measuring 1/8 in. horizontal by 7 ft vertical with efflorescence was observed on the south face of the pier.
  - A scour depression with approximately a 40 ft width by 20 ft length by 3.5 ft deep was observed at the downstream nose.
- **Pier 2:**
  - The submerged portions of the pier exhibited heavy scaling up to 1/2 in. deep with exposed aggregate from the channel bottom to 6 ft above the waterline for approximately a 25 ft length between Girders 2 and 4.
  - Severe timber debris accumulation consisting of logs up to 24 in. diameter was observed blocking the channel flow through Span 3 entirely.

- The top of the footing was exposed at 5.2 ft below the waterline with a maximum vertical exposure of 1.4 ft at the northeast corner of the pier.

- **Abutment 2:**
  - A vertical crack up to 1/16 in. width with efflorescence was present for a length of 12 ft on the north face of the abutment.
  - A horizontal crack measuring up to 1/2 in. width (1/8 in. typical) for a 15 ft length was observed on the north face of the abutment.

Summary of Recommendations:

- Stabilize the northwest and southeast embankments with rip-rap.
- Remove timber debris accumulation at Span 3.
- Place rip-rap at the scour depression on Pier 2.
- Monitor scaling on Piers 1 and 2 for changes in depth and exposed reinforcement.

Underwater Inspection Coding:

NBI Ratings:

Item	Description	Coding	Condition
60	Substructure	5 – Fair Condition	Heavy Scaling, Cracking
61	Channel	5 – Fair Condition	Steep Cut Banks, Timber Debris Accumulation
92B	UW Insp. Frequency	60 Months	
93B	Insp. Date	5/3/2022	
113	Scour Critical Bridges	5 – Within Foundation Limits	Stable (Inspector Recommended)

AASHTO National Bridge Element (NBE) Ratings:

Element #	Description	Units	Total	Condition State			
				1	2	3	4
210	Reinforced Concrete Pier Wall	LF	120	80	40	0	0

Note: Ratings were developed using the FHWA Recording and Coding Guide for the Structure Inventory and Appraisal of the Nation's Bridges. The recommended ratings consider inspected elements located within the waterway and conditions existing below the water surface only. The Ohio Department of Transportation manual states inspectors can change NBI Rating to a 4, 2, 1 or 0 based on observations performed in the field. Additional consideration is necessary for the assignment of overall condition ratings for this bridge.

1.0 INTRODUCTION

1.1 Purpose and Scope

This report consists of the results of a detailed underwater investigation performed at the US-250 Bridge over Sugar Creek in Tuscarawas County, OH. Collins Engineers, Inc. (Collins) conducted the underwater investigation for the Ohio Department of Transportation (ODOT), District 11 on May 3, 2022. The primary purpose of the investigation was as follows:

- Determine the condition of the substructure components located in the water at the time of the inspection from the waterline to the channel bottom.
- Obtain channel bottom depth measurements along the bridge fascias, upstream and downstream of the bridge, and around the submerged substructure units.
- Determine the condition of the shorelines in the vicinity of the structure.
- Obtain photographs of the bridge and any significant defects.

In addition, a brief inspection was made of areas that could be submerged during periods of high water. The following report includes a description of the structure, the method of investigation, a description of existing conditions, an evaluation and recommendations based on the conditions, inspection figures, and photographs.

1.2 General Description of the Structure

Structure No. SFN7904622 spans 199.3 ft, carrying US-250 over Sugar Creek and is approximately 58 ft wide. The bridge superstructure is constructed of three steel girder spans. The roadway orientation of the longitudinal axis of the bridge is north to south. The substructure units are labeled as Abutments 1 and 2 and Piers 1 and 2. Girders are labeled from east to west. Existing design drawings were not available at the time of the inspection. Refer to Figure 1 in Exhibit 1 for a Location Map of the bridge. Refer to Photographs 1 and 4 in Exhibit 2 for overall views of the bridge.

1.3 Method of Investigation

A detailed field inspection was conducted to determine the physical condition of the submerged bridge substructure units from the waterline to the channel bottom. A brief visual examination of the substructure units above the waterline was also made.

A three-person team consisting of professional engineer-divers and team leaders (Joshua M. Johnson, P.E., and Matthew Rogers, P.E.) and an engineer-diver (Kurt Lingo, E.I.T.) conducted the underwater inspection. The inspection was conducted using surface supplied air diving equipment. During the inspection, the inspectors worked from the shore and a note taker on the shore recorded the inspection notes.

The underwater inspection consisted of a visual and tactile examination of the accessible surfaces of the substructure units from the waterline to the channel bottom with particular attention given to any observed areas of deterioration or apparent distress. Approximately 10 percent of the total area on the underwater surfaces of the substructure units was cleaned so that the condition could be more closely examined. Photographs were taken to document the general conditions and observed deficiencies. The type of channel bottom material, the presence or extent of scour, the presence or extent of riprap, the presence or extent of drift and debris, and the location of any foundation exposure or undermining were noted.

Channel bottom soundings were performed utilizing a telescoping survey rod and digital fathometer. Soundings were taken parallel to the bridge at the upstream and downstream fascias, at 10 ft intervals between the substructure units, and at 10 ft intervals in-line with the piers upstream and downstream up to 50 ft, and the waterline was referenced to a known elevation on the bridge. A sounding plan was developed using the soundings and approximate location of the shorelines. Refer to Figures 2 through 8 in Exhibit 1 for the sounding plan, hydrographic survey, and channel cross sections that show the channel limits and water depths around the structure.

2.0 EXISTING CONDITIONS

2.1 General Conditions

At the time of the inspection, the waterline of Sugar Creek was located approximately 16.8 ft below the top of deck at the downstream nose of Pier 1, which corresponds to a waterline elevation of 83.2 ft. During the inspection, the waterway was flowing at approximately 1 ft per second. The bridge pier skew was consistent with the channel alignment and does not require attention at this time. The northeast and southwest shorelines consisted of well vegetated moderate slopes with no protection and no signs of erosion. The northwest and southeast shorelines consisted of moderately vegetated steep vertical cut banks up to 6 ft with no protection. Refer to Photographs 5 through 8 in Exhibit 2 for views of the shorelines near the structure.

2.2 Substructure Conditions

2.2.1 Pier 1

The channel bottom material around Pier 1 consisted of gravel with timber debris and a silt overlay with up to a 4 in. probe rod penetration. The typical concrete above the waterline exhibited smooth and sound condition. The submerged portions of the pier exhibited heavy scaling up to 1/2 in. deep with exposed aggregate from the channel bottom to 6 ft above the waterline for approximately a 25 ft length between Girders 2 and 4; girders are numbered from east to west. The top of the footing was exposed 5.2 ft below the waterline from the upstream nose to the upstream one-quarter point on the south face of the pier with a maximum vertical exposure of 1.4 ft located at the southwest corner of the pier. A vertical crack measuring 1/8 in. horizontal by 7 ft vertical with efflorescence was observed on the south face of the pier. A scour depression with approximately a 40 ft width by 20 ft length by 3.5 ft deep was observed at the downstream nose. Refer to Figure 9 in Exhibit 1 for detailed inspection notes of Pier 1. Refer to Photographs 10 through 12 in Exhibit 2 for views of Pier 1.

2.2.2 Pier 2

The channel bottom material around Pier 2 consisted of gravel with timber debris and a silt overlay with up to a 4 in. probe rod penetration. The typical concrete above the waterline exhibited smooth and sound conditions. The submerged portions of the pier exhibited heavy scaling up to 1/2 in. deep with exposed aggregate from the channel bottom to 6 ft above the waterline for approximately a 25 ft length between Girders 2 and 4. Severe timber debris accumulation consisting of logs up to 24 in. diameter was observed blocking the channel flow through Span 3 entirely. The top of the footing was exposed at 5.2 ft below the waterline with a maximum vertical exposure of 1.4 ft at the northeast corner of the pier. Refer to Figure 10 in Exhibit 1 for detailed inspection notes of Pier 2. Refer to Photographs 13 through 18 in Exhibit 2 for views of Pier 2 and the typical concrete conditions.

2.2.3 Abutment 2

The channel bottom material around Abutment 2 consisted of gravel with timber debris and a silt overlay with up to a 4 in. probe rod penetration. A vertical crack up to 1/16 in. width with efflorescence was present for a length of 12 ft on the north face of the abutment. A horizontal crack measuring up to 1/2 in. width (1/8 in. typical) for a 15 ft length was observed on the north face of the abutment. Refer to Figure 11 in Exhibit 1 for detailed inspection notes of Abutment 2. Refer to Photograph 19 through 21 in Exhibit 2 for views of Abutment 2.

3.0 EVALUATION AND RECOMMENDATIONS

Overall, the submerged substructure units of Structure No. SFN7904622 were in fair condition below water. The footing exposure at Pier 1 and Pier 2 is not a concern at this time given that the bottom of the footing was embedded a minimum of 1.4 feet below the current channel bottom. The scour depression observed at Pier 1 is also not a concern at this time given that the bottom of the footing is embedded a minimum of 3.5 feet below the current channel bottom. The channel bottom configuration should continue to be closely monitored during future underwater inspections to verify that the footing exposure at Piers 1 and 2 and the scour depression at Pier 1 are not increasing and that all footings remain adequately embedded in the channel bottom.

The timber debris accumulations at Pier 2 are obstructing channel flow and should be removed at this time. Removal of the timber debris will limit further debris accumulation and reduce the likelihood of channel bottom degradation resulting from obstructed flow.

The scaling observed on Pier 1 and Pier 2 is not a structural concern at this time given its size compared to the overall pier size, and as a result, no repairs are recommended. This area should be monitored during future inspections for increasing extent or severity of the scaling and exposure of reinforcing steel. If the extent or severity of the scaling is observed to be increasing or reinforcing steel becomes exposed, it may be necessary to repair the area at that time.

It is recommended that the submerged substructure units of Structure No. SFN7904622 be next inspected underwater at an interval not to exceed 60 months, no later than May 3, 2027.

Respectfully Submitted,
COLLINS ENGINEERS, INC.

Matthew Rogers

Matthew Rogers, P.E.
Project Manager

Originated by:
Olivia Farmer, E.I.T.

EXHIBIT 1 – FIGURES

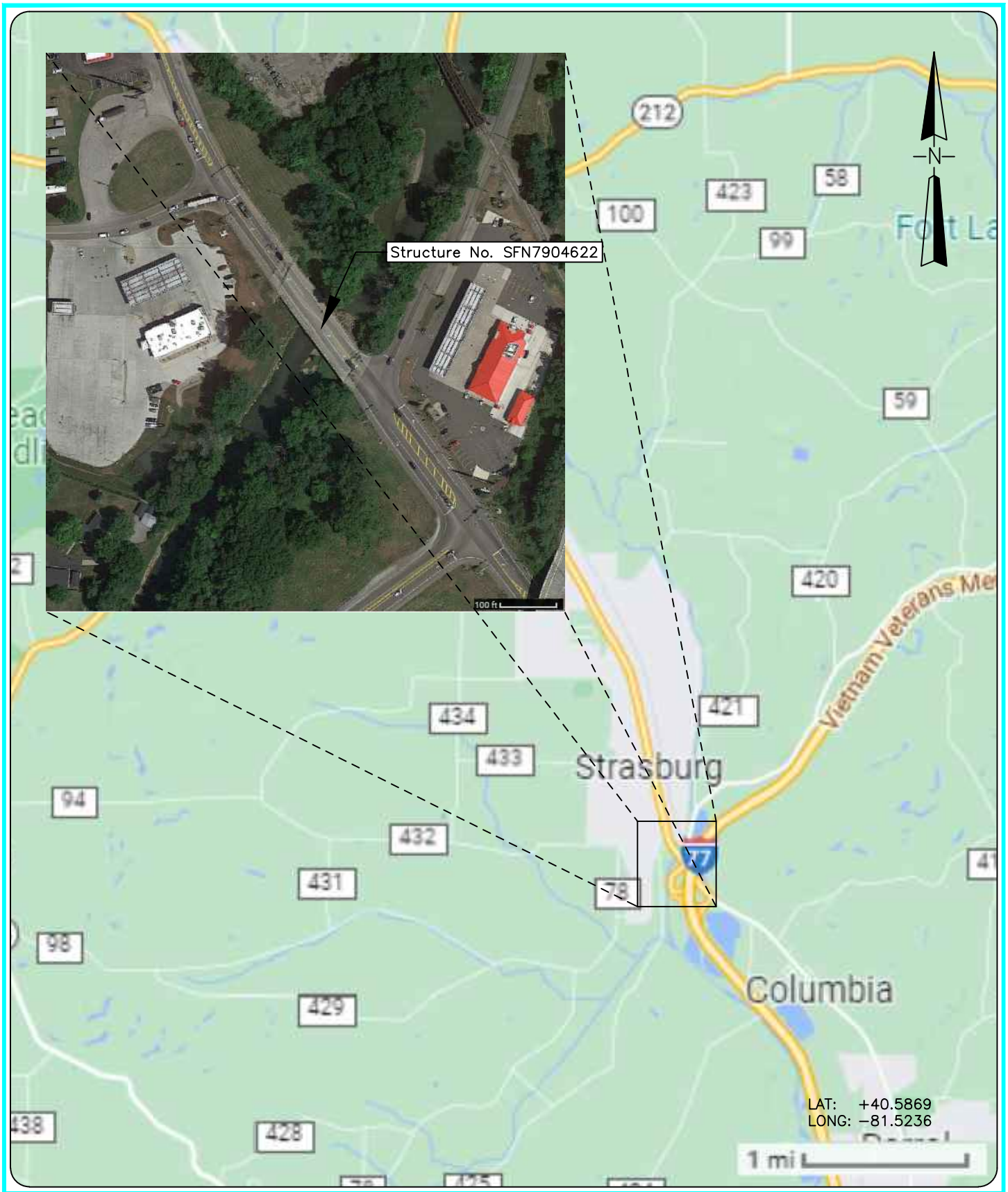

COLLINS ENGINEERS
124 Venture Court, Ste 10
Lexington, KY 40511
Phone: 859-367-0097
Fax: 859-367-0140

Ohio Department of Transportation,
District 11
2201 Reiser Ave.
New Philadelphia, OH 44663
Phone: 330-339-6633

US-250 OVER SUGAR CREEK
STRUCTURE NO. SFN7904622

LOCATION MAP

TUSCARAWAS COUNTY, OHIO

INSPECTED BY: MOR	CEI PROJECT: 55−13380.01
DRAWN BY: OPF	DATE: 23 MAY 2022
CHECKED BY: JMJ	SHEET NO: 1

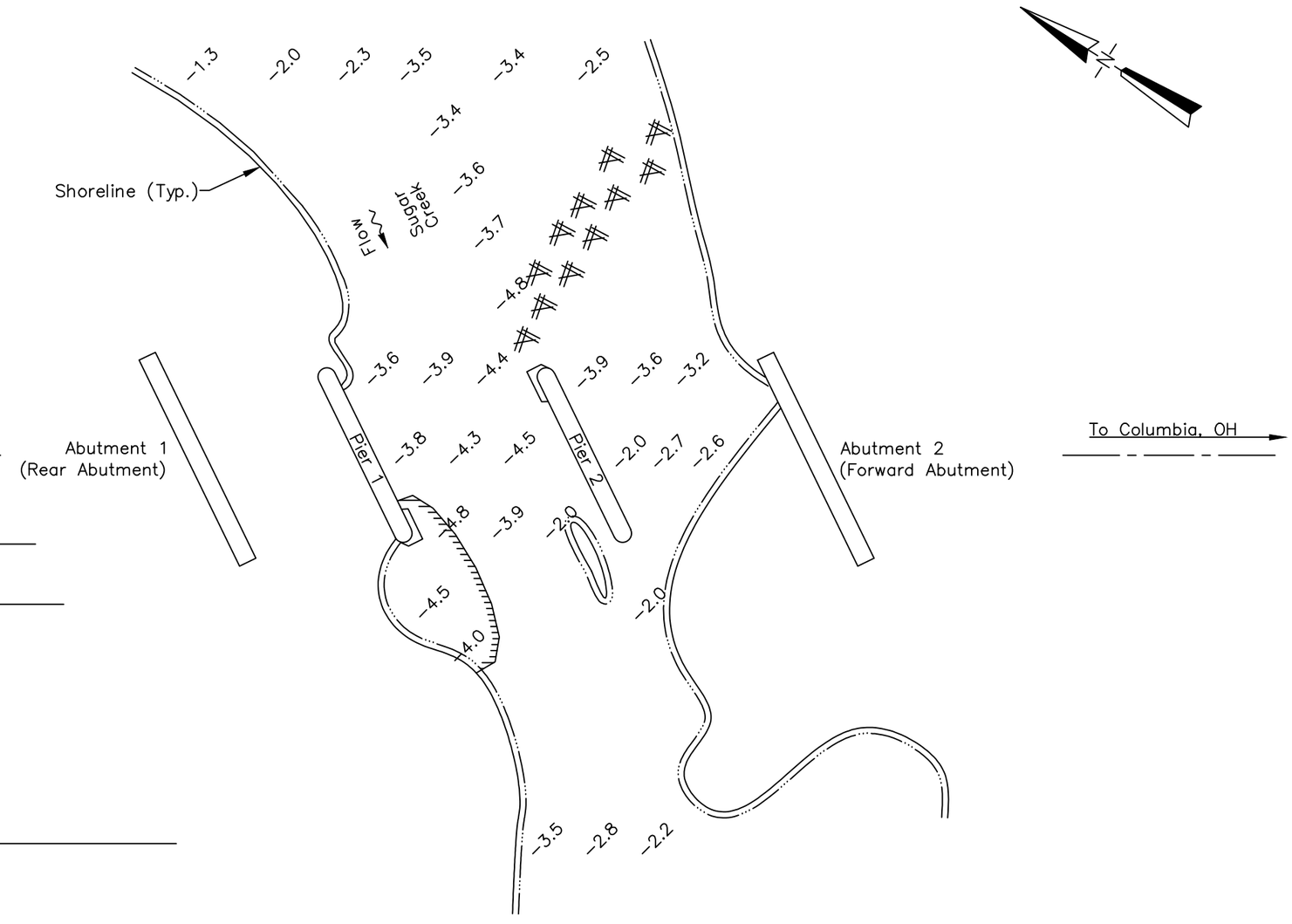

SOUNDING PLAN

GENERAL NOTES:

1. Piers 1, 2, and Abutment 2 were inspected underwater. Substructure units are labeled from route west to east.
2. At the time of inspection on May 3, 2022, the waterline was located approximately 16.8 ft below the top of deck at the downstream nose of Pier 1 (EL. +100.0 ft). This corresponds with a waterline elevation of +83.2 ft.
3. Soundings indicate the water depth at the time of inspection and are measured in feet.
4. Soundings were taken parallel to the bridge at the upstream and downstream fascias, at 10 ft intervals between the substructure units, and at 10 ft intervals in–line with the piers upstream and downstream up to 50 ft.

LEGEND

–2.7	Sounding Depth from Waterline (ft)
	Timber Debris
	Scour Depression

COLLINS ENGINEERS
124 Venture Court, Ste 10
Lexington, KY 40511
Phone: 859-367-0097
Fax: 859-367-0140

Ohio Department of Transportation, District 11
2201 Reiser Ave.
New Philadelphia, OH 44663
Phone: 330-339-6633

US-250 OVER SUGAR CREEK
STRUCTURE NO. SFN7904622
SOUNDING PLAN
TUSCARAWAS COUNTY, OHIO

CEI PROJECT	55–13380.01
INSPECTED BY:	MOR
DRAWN BY:	OPF
CHECKED BY:	JMJ
DATE:	MAY 2022
SHEET NO:	2

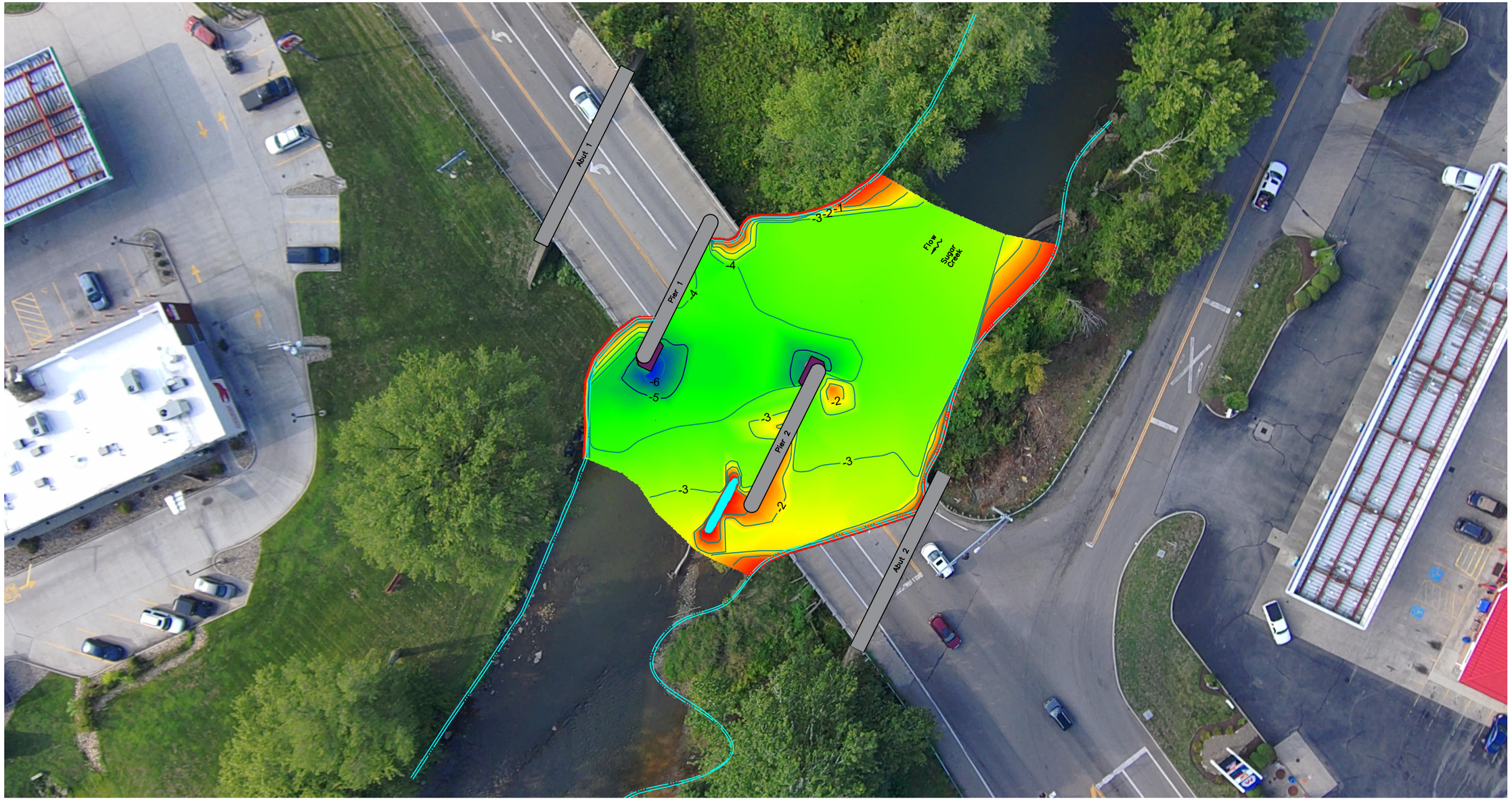

GENERAL NOTES:

1. The hydrographic survey was completed on May 3, 2022 by Collins Engineers, Inc.
2. Soundings were obtained using a continuously recording fathometer operating at 200kHz and linked to a WAAS capable GPS receiver.
3. All water depths are in feet and are referenced to the waterline elevation stated in the Structure Notes.
4. Base map information shown on this drawing shall be considered approximate.

2022 HYDROGRAPHIC SURVEY

SCALE: 1" = 40'

0 20' 40'

N

1

LEGEND:

- Major Contour
- Minor Contour

STRUCTURE NOTES:

1. The measured waterline elevation was 83.2 feet on the survey date of 05-03-2022.
2. The waterline was measured 16.8 feet below the top of deck at the downstream nose of Pier 1. The top of deck was located at 100 feet.
3. Access to the site was the northeast embankment at the structure. GPS Coordinates: N 40.5869°, W 81.5236°

US-250 OVER SUGAR CREEK
STRUCTURE NO. SFN7904622
HYDROGRAPHIC SURVEY
TUSCARAWAS COUNTY, OH

COLLINS ENGINEERS
124 Venture Court, Ste 10
Lexington, KY 40511
Phone: 859-367-0097
Fax: 859-367-0140

Ohio Department of Transportation, District 11
2201 Reiser Ave.
New Philadelphia, OH 44663
Phone: 330-339-6633

CEI PROJECT 55–13380.01
INSPECTED BY: MOR
DRAWN BY: OPF
CHECKED BY: JMJ
DATE: MAY 2022
SHEET NO: 3

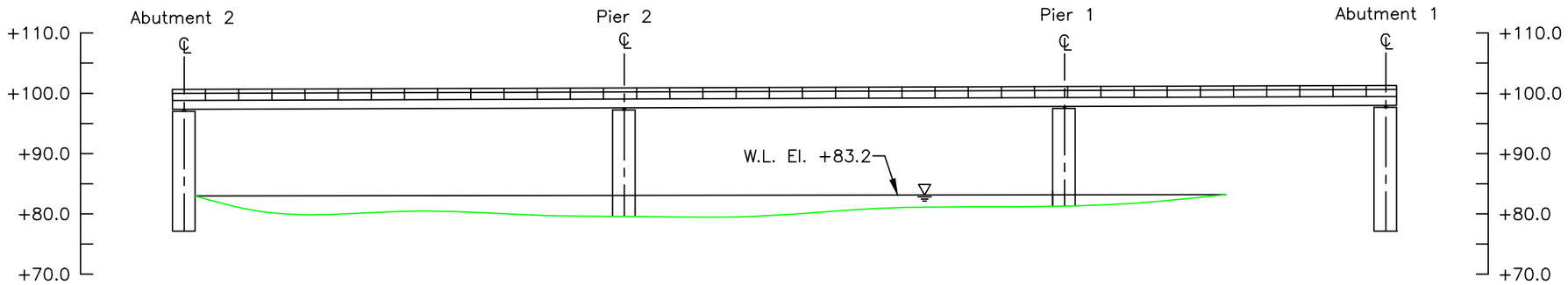

50 FT UPSTREAM
CHANNEL CROSS SECTION
(LOOKING DOWNSTREAM)

Note:

Footing elevations unknown due to unavailable record drawings.
Vertical scale above waterline not drawn to scale for clarity.

LEGEND

———	Approximate Channel Bottom – May 2022
- - - - -	Approximate Channel Bottom – May 2017 (No Data)
– – – – –	Approximate Channel Bottom – May 2012 (No Data)
	Timber Debris
	Water Surface
+450	Elevation (ft)

COLLINS ENGINEERS
124 Venture Court, Ste 10
Lexington, KY 40511
Phone: 859-367-0097
Fax: 859-367-0140

Ohio Department of Transportation, District 11
2201 Reiser Ave.
New Philadelphia, OH 44663
Phone: 330-339-6633

US-250 OVER SUGAR CREEK
STRUCTURE NO. SFN7904622
CROSS SECTIONS
TUSCARAWAS COUNTY, OHIO

CEI PROJECT 55-13380.01
INSPECTED BY: MOR
DRAWN BY: OPF
CHECKED BY: JMJ
DATE: MAY 2022
SHEET NO: 4

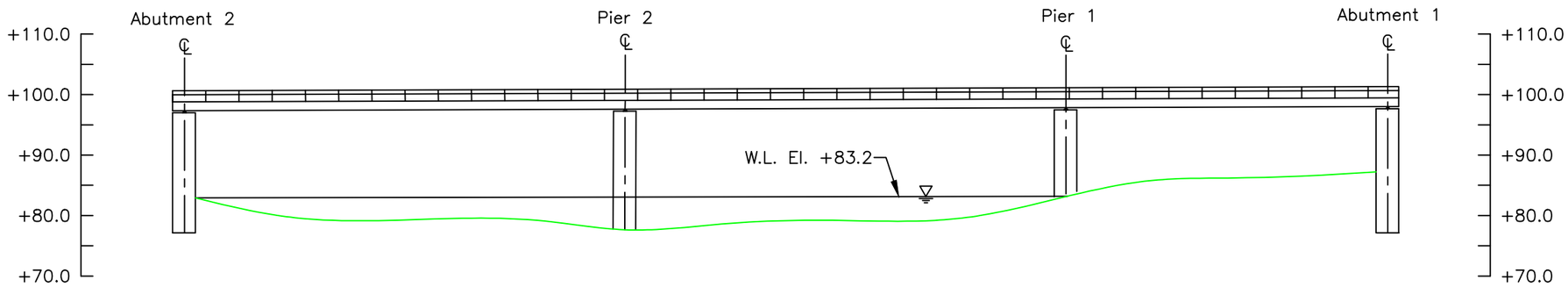

UPSTREAM FASCIA
CHANNEL CROSS SECTION
(LOOKING DOWNSTREAM)

Upstream Elevations (Looking Downstream)	
Location	Height (ft)
A2	16.8
1/4	20.0
1/2	20.4
3/4	20.7
P2	22.2
1/4	21.2
1/2	20.7
3/4	20.4
P1	15.8
1/4	14.0
1/2	13.6
3/4	13.3
A1	12.6

Note:

Footing elevations unknown due to unavailable record drawings.
Vertical scale above waterline not drawn to scale for clarity.

LEGEND

- Approximate Channel Bottom – May 2022
- Approximate Channel Bottom – May 2017 (No Data)
- Approximate Channel Bottom – May 2012 (No Data)
- Timber Debris
- Water Surface
- +450 Elevation (ft)

COLLINS ENGINEERS
124 Venture Court, Ste 10
Lexington, KY 40511
Phone: 859-367-0097
Fax: 859-367-0140

Ohio Department of Transportation, District 11
2201 Reiser Ave.
New Philadelphia, OH 44663
Phone: 330-339-6633

US-250 OVER SUGAR CREEK
STRUCTURE NO. SFN7904622
CROSS SECTIONS
TUSCARAWAS COUNTY, OHIO

CEI PROJECT
55-13380.01
INSPECTED BY:
MOR
DRAWN BY:
OPF
CHECKED BY:
JMJ
DATE:
MAY 2022
SHEET NO:
5

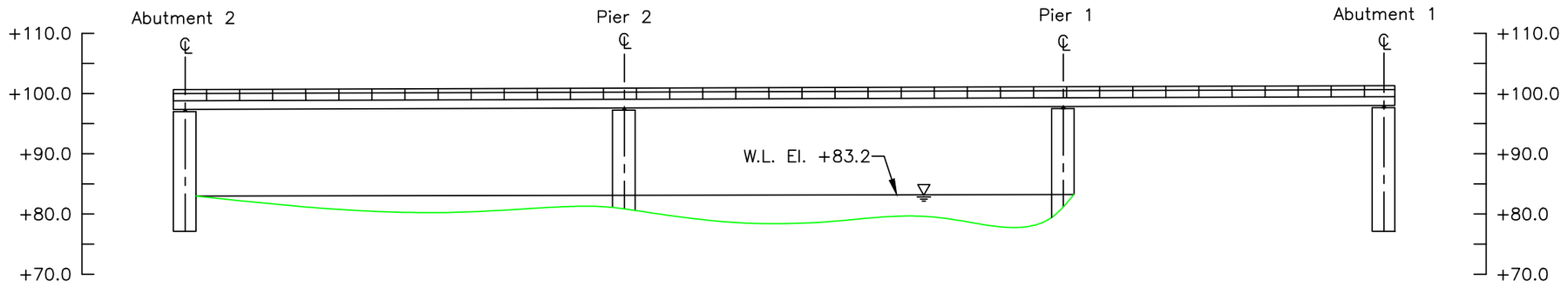

STRUCTURE CENTERLINE
CHANNEL CROSS SECTION
(LOOKING DOWNSTREAM)

Note:

Footing elevations unknown due to unavailable record drawings.
Vertical scale above waterline not drawn to scale for clarity.

LEGEND

———	Approximate Channel Bottom – May 2022
- - - - -	Approximate Channel Bottom – May 2017 (No Data)
– – – – –	Approximate Channel Bottom – May 2012 (No Data)
	Timber Debris
	Water Surface
+450	Elevation (ft)

COLLINS ENGINEERS
124 Venture Court, Ste 10
Lexington, KY 40511
Phone: 859-367-0097
Fax: 859-367-0140

Ohio Department of Transportation, District 11
2201 Reiser Ave.
New Philadelphia, OH 44663
Phone: 330-339-6633

US-250 OVER SUGAR CREEK
STRUCTURE NO. SFN7904622
CROSS SECTIONS
TUSCARAWAS COUNTY, OHIO

CEI PROJECT 55-13380.01
INSPECTED BY: MOR
DRAWN BY: OPF
CHECKED BY: JMJ
DATE: MAY 2022
SHEET NO: 6

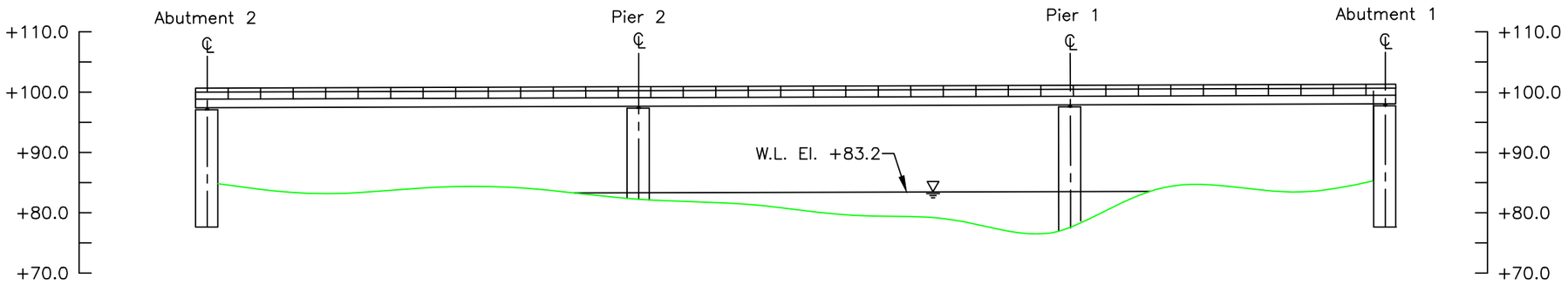

DOWNSTREAM FASCIA
CHANNEL CROSS SECTION
(LOOKING DOWNSTREAM)

Downstream Elevations (Looking Downstream)	
Location	Height (ft)
A2	14.9
1/4	16.8
1/2	15.8
3/4	15.9
P2	17.9
1/4	18.8
1/2	20.7
3/4	21.6
P1	22.3
1/4	15.9
1/2	15.8
3/4	16.8
A1	14.9

Note:

Footing elevations unknown due to unavailable record drawings.
Vertical scale above waterline not drawn to scale for clarity.

LEGEND

- Approximate Channel Bottom – May 2022
- Approximate Channel Bottom – May 2017 (No Data)
- Approximate Channel Bottom – May 2012 (No Data)
- Timber Debris
- Water Surface
- +450 Elevation (ft)

COLLINS ENGINEERS
124 Venture Court, Ste 10
Lexington, KY 40511
Phone: 859-367-0097
Fax: 859-367-0140

Ohio Department of Transportation, District 11
2201 Reiser Ave.
New Philadelphia, OH 44663
Phone: 330-339-6633

US-250 OVER SUGAR CREEK
STRUCTURE NO. SFN7904622
CROSS SECTIONS
TUSCARAWAS COUNTY, OHIO

CEI PROJECT 55-13380.01
INSPECTED BY: MOR
DRAWN BY: OPF
CHECKED BY: JMJ
DATE: MAY 2022
SHEET NO: 7

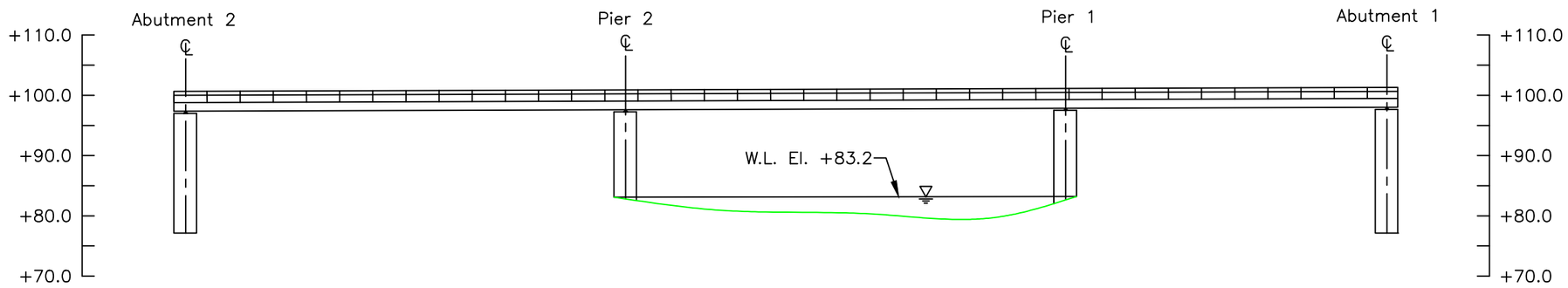

50 FT DOWNSTREAM
CHANNEL CROSS SECTION
(LOOKING DOWNSTREAM)

Note:

Footing elevations unknown due to unavailable record drawings.
Vertical scale above waterline not drawn to scale for clarity.

LEGEND

———	Approximate Channel Bottom – May 2022
- - - - - -	Approximate Channel Bottom – May 2017 (No Data)
– – – – –	Approximate Channel Bottom – May 2012 (No Data)
	Timber Debris
	Water Surface
+450	Elevation (ft)

COLLINS ENGINEERS
124 Venture Court, Ste 10
Lexington, KY 40511
Phone: 859-367-0097
Fax: 859-367-0140

Ohio Department of Transportation, District 11
2201 Reiser Ave.
New Philadelphia, OH 44663
Phone: 330-339-6633

US-250 OVER SUGAR CREEK
STRUCTURE NO. SFN7904622
CROSS SECTIONS
TUSCARAWAS COUNTY, OHIO

CEI PROJECT
55–13380.01
INSPECTED BY:
MOR
DRAWN BY:
OPF
CHECKED BY:
JMJ
DATE:
MAY 2022
SHEET NO:
8

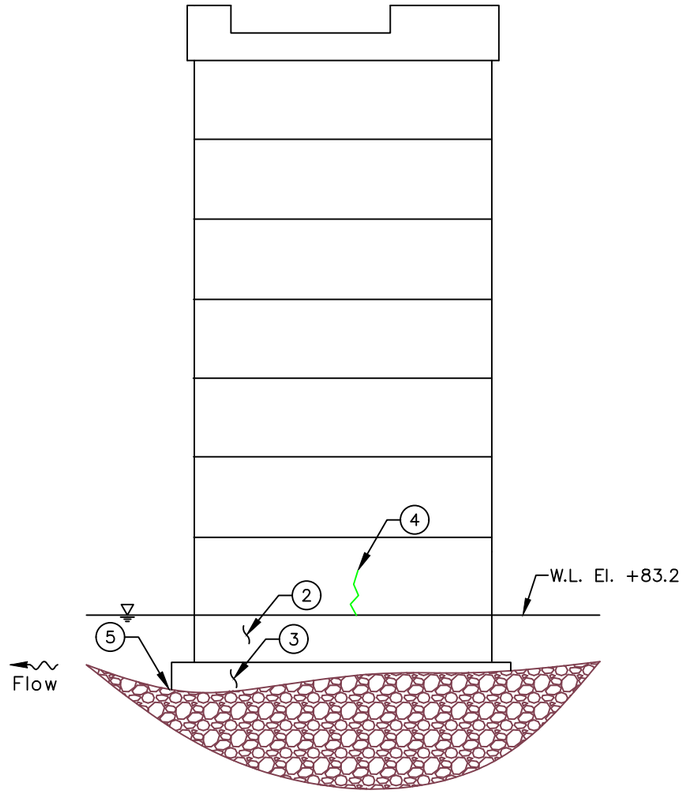

SOUTH ELEVATION
(LOOKING NORTH)

INSPECTION NOTES:

1. The channel bottom material consisted of gravel with timber debris and a silt overlay with up to a 4 in. probe rod penetration.

2. The submerged portions of the pier exhibited heavy scaling up to 1/2 in. deep with exposed aggregate from the channel bottom to 6 ft above the waterline for approximately a 25 ft length between Girders 2 and 4.

3. The top of the footing was exposed 5.2 ft below the waterline from the upstream nose to the upstream one–quarter point on the south face of the pier with a maximum vertical exposure of 1.4 ft located at the southwest corner of the pier.

4. A vertical crack measuring 1/8 in. horizontal by 7 ft vertical with efflorescence was observed on the south face of the pier.

5. A scour depression with approximately a 40 ft width by 20 ft length by 3.5 ft deep was observed at the downstream nose.

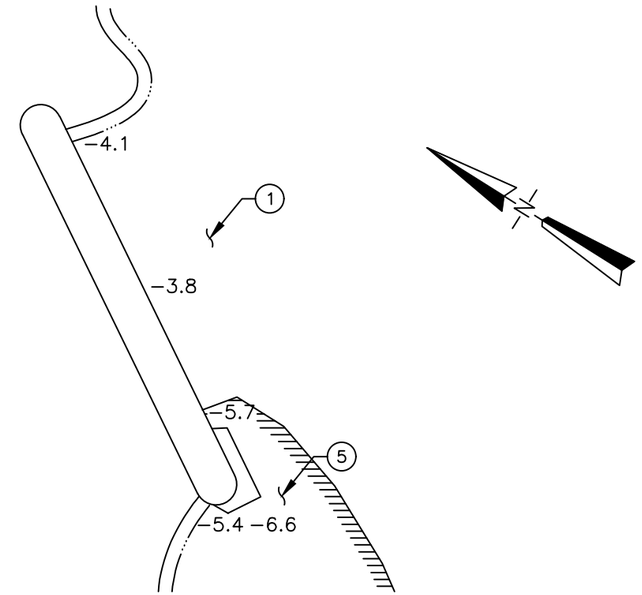

LEGEND

–2.7	Sounding Depth from Waterline (ft)
	Approximate Channel Bottom – May 2022
	Timber Debris
	Water Surface
	Scour Depression
	Crack

COLLINS ENGINEERS
124 Venture Court, Ste 10
Lexington, KY 40511
Phone: 859-367-0097
Fax: 859-367-0140

Ohio Department of Transportation, District 11
2201 Reiser Ave.
New Philadelphia, OH 44663
Phone: 330-339-6633

US-250 OVER SUGAR CREEK
STRUCTURE NO. SFN7904622
PIER 1
TUSCARAWAS COUNTY, OHIO

CEI PROJECT	55–13380.01
INSPECTED BY:	MOR
DRAWN BY:	OPF
CHECKED BY:	JMJ
DATE:	MAY 2022
SHEET NO:	9

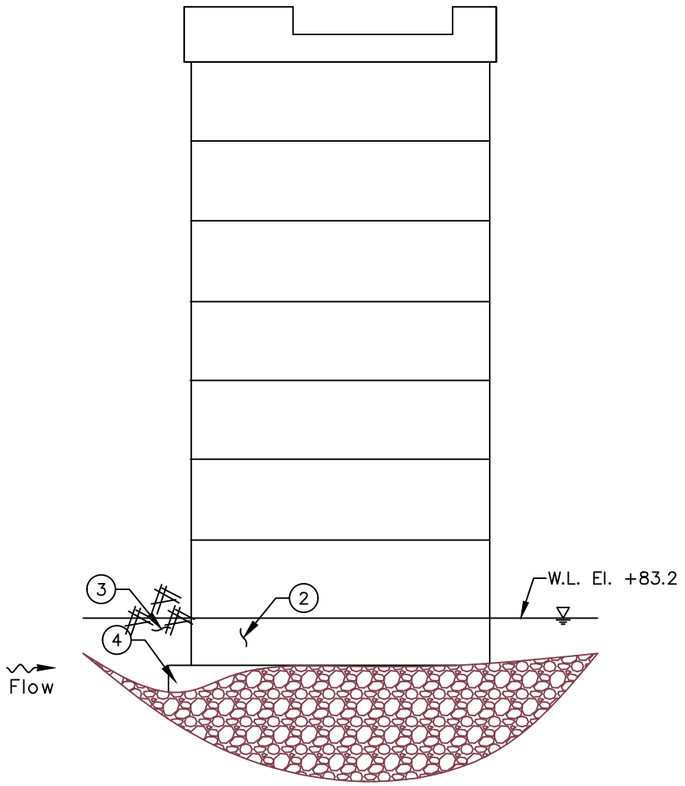

NORTH ELEVATION
(LOOKING SOUTH)

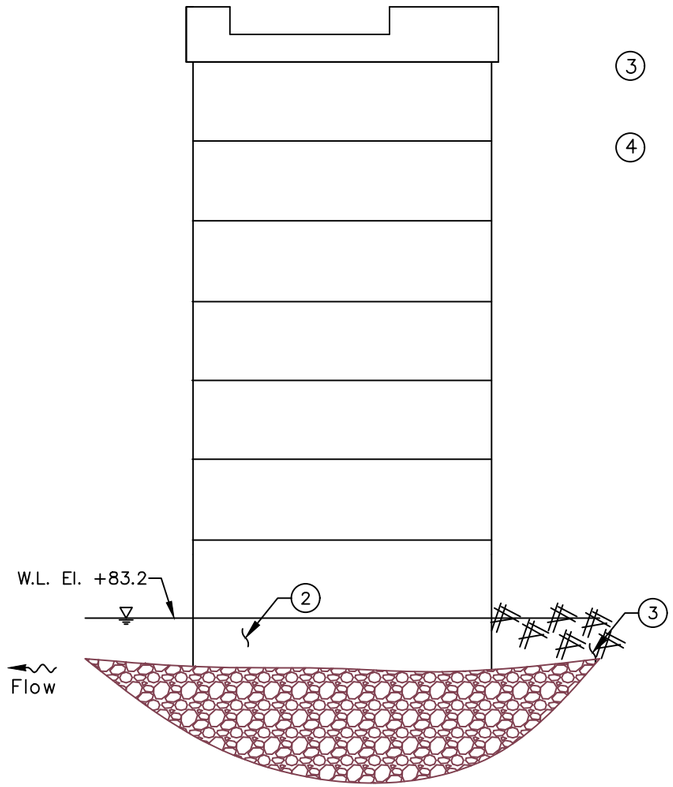

SOUTH ELEVATION
(LOOKING NORTH)

INSPECTION NOTES:

1. The channel bottom material consisted of gravel with timber debris and a silt overlay with up to a 4 in. probe rod penetration.

2. The submerged portions of the pier exhibited heavy scaling up to 1/2 in. deep with exposed aggregate from the channel bottom to 6 ft above the waterline for approximately a 25 ft length between Girders 2 and 4.

3. Severe timber debris accumulation consisting of logs up to 24 in. diameter was observed blocking the channel flow through Span 3 entirely.

4. The top of the footing was exposed at 5.2 ft below the waterline with a maximum vertical exposure of 1.4 ft at the northeast corner of the pier.

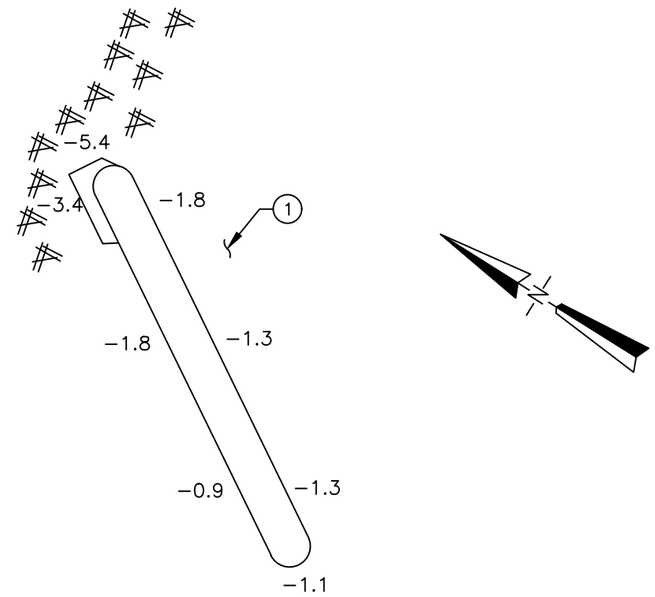

LEGEND

–2.7	Sounding Depth from Waterline (ft)
	Approximate Channel Bottom – May 2022
	Timber Debris
	Water Surface
	Scour Depression
	Crack

COLLINS ENGINEERS
124 Venture Court, Ste 10
Lexington, KY 40511
Phone: 859-367-0097
Fax: 859-367-0140

Ohio Department of Transportation, District 11
2201 Reiser Ave.
New Philadelphia, OH 44663
Phone: 330-339-6633

US-250 OVER SUGAR CREEK
STRUCTURE NO. SFN7904622
PIER 2
TUSCARAWAS COUNTY, OHIO

CEI PROJECT
55–13380.01

INSPECTED BY:
MOR

DRAWN BY:
OPF

CHECKED BY:
JMJ

DATE:
MAY 2022

SHEET NO:
10

INSPECTION NOTES:

1. The channel bottom material consisted of gravel with timber debris and a silt overlay with up to a 4 in. probe rod penetration.

2. A vertical crack up to 1/16 in. width with efflorescence was present for a length of 12 ft on the north face of the abutment.

3. A horizontal crack measuring up to 1/2 in. width (1/8 in. typical) for a 15 ft length was observed on the north face of the abutment.

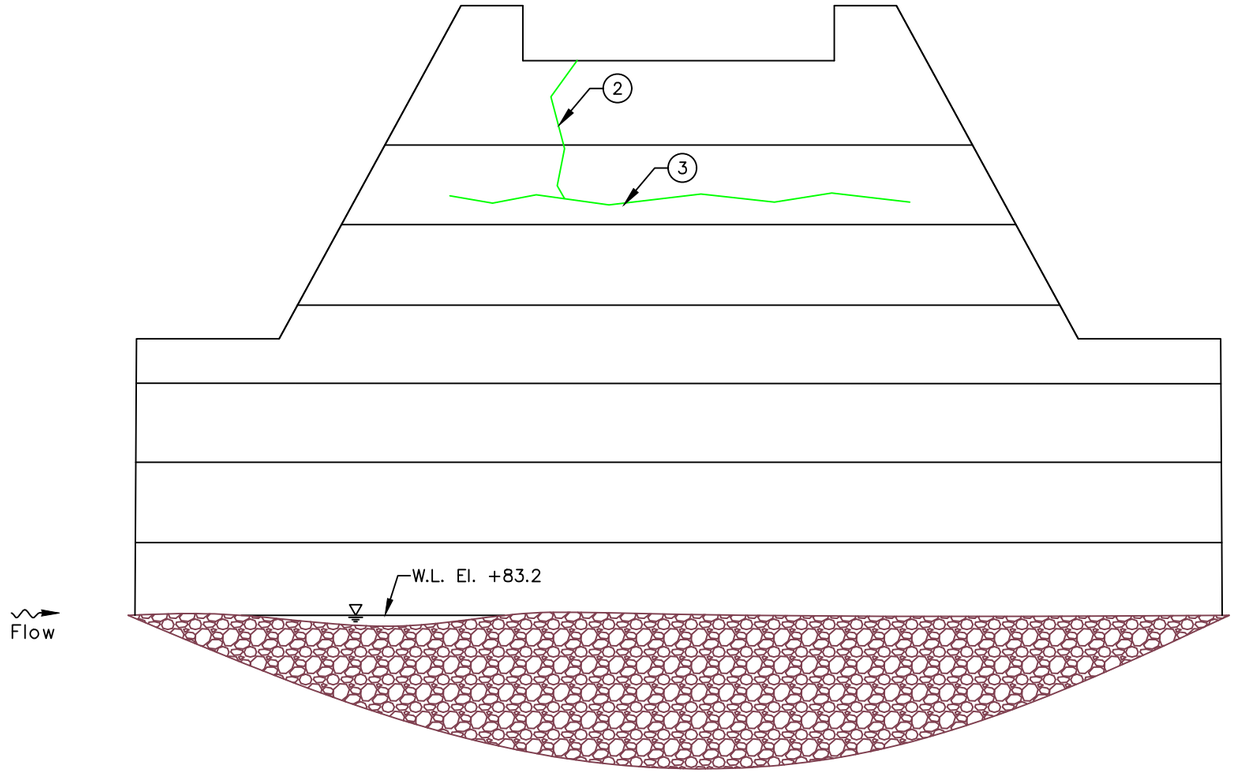

NORTH ELEVATION
(LOOKING SOUTH)

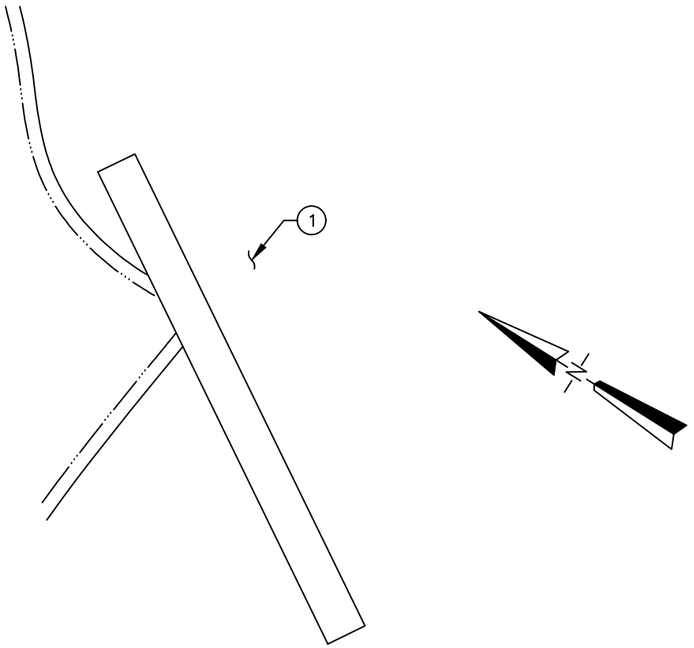

LEGEND

−2.7	Sounding Depth from Waterline (ft)
	Approximate Channel Bottom – May 2022
	Timber Debris
	Water Surface
	Scour Depression
	Crack

COLLINS ENGINEERS
124 Venture Court, Ste 10
Lexington, KY 40511
Phone: 859-367-0097
Fax: 859-367-0140

Ohio Department of Transportation, District 11
2201 Reiser Ave.
New Philadelphia, OH 44663
Phone: 330-339-6633

US-250 OVER SUGAR CREEK
STRUCTURE NO. SFN7904622
ABUTMENT 2
TUSCARAWAS COUNTY, OHIO

CEI PROJECT	55–13380.01
INSPECTED BY:	MOR
DRAWN BY:	OPF
CHECKED BY:	JMJ
DATE:	MAY 2022
SHEET NO:	11

EXHIBIT 2 – INSPECTION PHOTOGRAPHS



Photograph No. 1: Overall View of Structure No. SFN7904622, Looking East.



Photograph No. 2: Overall View of Structure No. SFN7904622, Looking West.



Photograph No. 3: South Approach of Structure No. SFN7904622, Looking South.



Photograph No. 4: North Approach of Structure No. SFN7904622, Looking North.



Photograph No. 5: View of the North Embankment Upstream of the Structure, Looking Northeast.



Photograph No. 6: View of the North Embankment Downstream of the Structure, Looking Northwest.



Photograph No. 7: View of the South Embankment Upstream of the Structure, Looking South.



Photograph No. 8: View of the South Embankment Downstream of the Structure, Looking South.



Photograph No. 9: View of the Underdeck, Looking North.



Photograph No. 10: View of the North Face of Pier 1, Looking South.



Photograph No. 11: View of the South Face of Pier 1, Looking North.



Photograph No. 12: View of the Cracking on the South Face of Pier 1, Looking North.



Photograph No. 13: View of the North Face of Pier 2, Looking South.



Photograph No. 14: View of the South Face of Pier 2, Looking North.



Photograph No. 15: View of the Typical Concrete Condition at the Waterline without Scaling on the North Face of Pier 2, Looking South.



Photograph No. 16: View of the Typical Concrete Condition with Scaling at the Waterline on the North Face of Pier 2, Looking South.



Photograph No. 17: View of the Timber Debris at Span 3, Looking Southwest.



Photograph No. 18: View of the Timber Debris at Span 3, Looking East.



Photograph No. 19: View of the North Face of Abutment 2, Looking Southeast.



Photograph No. 20: Overall View of the Cracking on the North Face of Abutment 2, Looking South.



Photograph No. 21: Close Up View of the Cracking on the North Face of Abutment 2, Looking South.

EXHIBIT 3 – DIVE PROCEDURES CHECKLIST

Underwater Dive Inspection Procedure Checklist

Acceptable written procedures communicate to the next dive team what is necessary to ensure a safe and successful inspection. Each bridge requiring underwater dive techniques must have a unique written inspection procedure. The prior inspection report does not suffice for the required procedures. It is valuable to review the last inspection notes, but they do not serve the same purpose as a stand-alone inspection procedure.

This document shall be completed for all underwater dive inspections. This document shall be reviewed prior to performing the field work and it shall be updated when necessary.

I. Bridge Identification

a. Agency with Inspection Responsibility: ODOT DISTRICT 11

Dive Frequency: 60 months

SFN: 7904622 Bridge Number (County-Route-SLM-SD): TUS-250-5.11

Superstructure Type Main Span Type: STEEL GIRDER

Approach Span: STEEL GIRDER

Substructure Type Abutment Type: STEEL GIRDER

Pier Type: REINFORCED CONCRETE

Total Pier Count: 2

Total Pier Count in water: 2

Foundations: CAST-IN-PLACE REINFORCED CONCRETE PILES

Feature Intersected SUGAR CREEK

b. Photographs



Endview



Elevation



Underside

II. Office and Field Assessment

Prior to the inspection, obtain and review copies of the previous underwater inspection reports, routine inspection reports, scour and hydraulic information, and design plans in preparation of the inspection. Divers should pay particular attention given to any observed areas of deterioration, the channel conditions and factors that may accelerate material deterioration. Changes shall be noted in the inspection procedure. Site conditions should be reviewed prior to diving.

a. Channel Conditions

____Waterway features

____Rapid stream flows,

__X__Significant debris accumulation

____Constricted waterway openings

____Soft or unstable streambeds

____Meandering channels

____Other which may promote scour and undermining of substructure elements

____Navigable Waterway

____Flow Controls

b. Anticipated Water conditions which may affect the inspection

____Cold Water (Apprx. Temp____)

____Black water

____Rapid stream flows

____Near military facility

____Tribal fishing

____Water quality

____History of Log jams

c. Identify factors that may accelerate the deterioration of the bridge elements:

____Highly corrosive water

____Unprotected steel members

____Other

Risk Factor Narrative:

III. **Contacts Prior to Work**

Dr. Waseem Khalifa, Ph. D., P.E.

District Bridge Engineer

2201 Reiser Avenue SE

New Philadelphia, OH 44663

(330) 308-7873

Point of contact for immediate action such as closing the bridge due to findings)

Contact Bridge Owner _____14_____ (number) days before the proposed underwater inspection.

Special contracting and scheduling procedures prior to inspection, include recommended lead time

Entity	Contact Name and Title	Contact Phone	Lead Time
Coast Guard	N/A	N/A	N/A
Property Owner	N/A	N/A	N/A
Access Equipment	N/A	N/A	N/A
Lake or River draw-down	N/A	N/A	N/A
Canal dry time	N/A	N/A	N/A
Tree removal	N/A	N/A	N/A
Other:	N/A	N/A	N/A
Other:	N/A	N/A	N/A

IV. **Dive Team Shall Include the Following:**

Dive Team Narrative:

The structure shall be investigated using a three-member dive team: one dive supervisor to monitor communications and air supply while taking notes, one diver, and one tender/standby diver. There shall be one NBIS Team Leader onsite at all times.

Example: The Bridge shall be investigated using a three-member dive team: one supervisor to monitor rack box and take notes, one diver, and one tender/standby diver. There shall be one NBIS Team Leader onsite at all times.

V. Site Information

Navigable waterway:	Y / **N**	Anticipated current	___<1___ ft
If Yes, waterway river point	_____	Scour Critical (item 113):	____5____
Anticipated water visibility depth	___<1___ ft	POA in place: Y/**N**	
Anticipated Dive depth	___6.6___ ft	Scour Monitoring devices present: Y/**N**	

Verify the Scope of Services when work is contracted for the procedure for underwater elements that are not in water during an inspection.

Site Information Narrative:

The underwater inspection consists of a visual and tactile examination of the accessible surfaces of the substructure items in water. Additional items should reference the scope of services in the contract. For reference the following items are in water:

Item	Number of Units	Level of Inspection (1, 2 or 3) with Commentary
Piers and Number of Columns	2	100% Level 1 10% Level 2
Abutment	1	100% Level 1 10% Level 2
Culvert		
Scour Countermeasures		
Fenders or Dolphins		

Photographs should be taken, if water clarity permits, for typical conditions, conditions that have changed since last inspection and significant or noteworthy deficiencies. The type of channel bottom material, the presence or extent of scour, the presence or extent of riprap, the presence or extent of drift and debris, and the location of any foundation exposure or undermining shall be quantified. Include depth, length, height and location of deficiencies.

VI. **Equipment and Field Logistics**

a. The inspection should be conducted using:

____Chest waders

____Hip waders

__X__Diving equipment

____SCUBA (Note that ADCI Consensus Standards require communication systems be employed for both SCUBA and Surface-Supplied (whether air or mixed-gas) dive modes)

____SCUBA with communication

__X__Surface Supplied with communication

b. The channel bottom should be sounded utilizing

__X__Digital fathometer

__X__Telescoping survey rod

____ acoustic imaging

c. During the inspection, the divers should work from

__X__Shore

____Boat

____Either

The note taker should work alongside the dive team.

d. Access to the waterway should be obtained from the shore (north bank, southwest quadrant, driveway 30 yards north etc.)

NORTHEAST EMBANKMENT AT THE STRUCTURE

e. The maximum depth of the channel is typically measured 6.6 feet from THE DOWNSTREAM NOSE OF PIER 1

Reference Datum: 16.8 FT BELOW THE TOP OF DECK AT THE DOWNSTREAM NOSE OF PIER 1

Soundings should be dictated by the scope of work. When not detailed in the scope they should be repeated from the previous soundings. If neither exist then they need to be taken in a grid pattern between substructure units 100’ upstream and 100’ downstream.

VII. Inspection Procedure History

Created: COLLINS ENGINEERS, INC. Date: 07/06/2022

Updated By: _____ Date: _____

Updated By: _____ Date: _____

Updated By: _____ Date: _____

Updated By: _____ Date: _____

Updated By: _____ Date: _____

VIII. Other Narrative Not Included In Previous Sections