







UNDERWATER BRIDGE INSPECTION REPORT

STRUCTURE NO. SFN0704660
(BEL-148-26.66)
SR-148 OVER CAPTINA CREEK
BELMONT COUNTY, OH
DISTRICT 11

August 2022

Prepared for:

STATE OF OHIO DEPARTMENT OF TRANSPORTATION

STATE OF OHIO
MATTHEW ROGERS
PE.87504
REGISTERED
PROFESSIONAL ENGINEER

Prepared by:

COLLINS ENGINEERS INC.

124 Venture Court, Suite 10

Lexington, Kentucky 40511

859.367.0097 • www.collinsengr.com

TABLE OF CONTENTS

EXECUTIVE SUMMARY
1.0 INTRODUCTION 1
1.1 Purpose and Scope 1
1.2 General Description of the Structure 1
1.3 Method of Investigation 1
2.0 EXISTING CONDITIONS 2
2.1 General Conditions 2
2.2 Substructure Conditions 3
2.2.1 Abutment 1 3
2.2.2 Pier 2 3
2.2.3 Pier 3 3
2.2.4 Channel Bottom and Scour Assessment 4
3.0 EVALUATION AND RECOMMENDATIONS 5
EXHIBIT 1 – FIGURES 6
LOCATION MAP
SOUNDING PLAN
CHANNEL CROSS SECTIONS – 50 FT UPSTREAM & UPSTREAM FASCIA
CHANNEL CROSS SECTIONS – STRUCTURE CENTERLINE
CHANNEL CROSS SECTIONS – 50 FT DOWNSTREAM & DOWNSTREAM FASCIA
ABUTMENT 1
PIER 2
PIER 3
EXHIBIT 2 – INSPECTION PHOTOGRAPHS 15
Photograph No. 1: Overall View of Structure No. SFN0704660, Looking West.
Photograph No. 2: Overall View of Structure No. SFN0704660, Looking East.
Photograph No. 3: View of the North Approach, Looking South.
Photograph No. 4: View of the South Approach, Looking North.
Photograph No. 5: View of the North Embankment Upstream of the Structure, Looking North.
Photograph No. 6: View of the North Embankment at the Structure, Looking North.
Photograph No. 7: View of the North Embankment Downstream of the Structure, Looking North.
Photograph No. 8: View of the South Embankment Upstream of the Structure, Looking South.
Photograph No. 9: View of the South Embankment at the Structure, Looking South.
Photograph No. 10: View of the South Embankment Downstream of the Structure, Looking South.

Photograph No. 11: View of the Upstream Channel, Looking East.
Photograph No. 12: View of the Downstream Channel, Looking West.
Photograph No. 13: View of the Typical Underdeck Condition, Looking North.
Photograph No. 14: View of the North Face of Pier 2, Looking Southeast.
Photograph No. 15: View of the South Face of Pier 2, Looking Northwest.
Photograph No. 16: View of the North Face of Pier 3, Looking Southeast.
Photograph No. 17: View of the South Face of Pier 3, Looking Northwest.
Photograph No. 18: View of the Typical Concrete Condition at the Waterline on the North Face of Pier 3, Looking South.
EXHIBIT 3 – DIVE PROCEDURES CHECKLIST 25

EXECUTIVE SUMMARY

Project: ODOT D11 Underwater Bridge Inspections - 2022.

Purpose of Project: To perform a detailed visual and tactile underwater investigation of bridges for the Ohio Department of Transportation, District 11.

Inspection Team: Team Leader – Nicholas Lane – Collins Engineers, Inc.
Team Member – Joshua Davis, E.I.T. – Collins Engineers, Inc.
Team Member – Callen Papineau, E.I.T.– Collins Engineers, Inc.

Inspection Date(s): August 24, 2022

Water Visibility:	<1 ft	***Water Velocity:***	<1 ft/s
Water Temperature:	78.3 °F	***Weather:***	Sunny – 75 °F
Waterline Elevation:	623.87 ft	***Type of Boat:***	23 ft Carolina Skiff
High-water Elevation:	625.61 ft		
Coordinates:	39.860452°N, 80.803509°W		
Access Location:	Powhatan Point Public Boat Ramp		
Dive Mode:	Surface Supplied Air		
Waterline Reference:	15.0 ft below the top of deck at the upstream nose of Pier 2.		
Maximum Depth at SSU:	12.4 ft – North Face of Pier 2		
Shoreline Conditions:	The north and south shorelines consisted of moderately vegetated mild slopes with minor erosion and a few trees leaning toward the channel.		

Summary of Findings:

- **Abutment 1:**
  - The submerged portions of the abutment exhibited light scaling up to 1/16 in. deep extending from the channel bottom to the waterline.
  - Grout bags were observed extending from the channel bottom to 2 ft above the waterline along the north face of the abutment.
- **Pier 2:**
  - Light timber debris accumulation consisting of logs up to 4 in. diameter was observed from the midpoint of the south face and around the upstream nose to the upstream quarter-point along the north face of the pier extending from the channel bottom to waterline.
  - A spall measuring 8 in. horizontal by 2 in. vertical by 2 in. deep was observed where the upstream nose meets the south face of the pier located at 6 ft below the waterline.
  - A spall measuring 10 in. horizontal by 3 in. vertical by 1 1/2 in. deep was observed on the upstream nose of the pier located at 1 ft below the waterline.
- **Pier 3:**
  - The submerged portions of the pier exhibited light scaling up to 1/16 in. deep extending from the channel bottom to the waterline.

- Moderate timber debris accumulation consisting of logs up to 18 in. diameter was observed at the upstream nose extending from the channel bottom to approximately 6 ft below the waterline.
- A steel H-pile was observed protruding 4 in. out from the pier wall at the midpoint of the pier located approximately 8 ft below the waterline.

Summary of Recommendations:

- Monitor scaling on Abutment 1 and Pier 3.
- Monitor timber debris accumulation at Piers 2 and 3.

Underwater Inspection Coding:

NBI Ratings:

Item	Description	Coding	Condition
B.C.03	Substructure (Overall)	6– Satisfactory Condition	Light Concrete Scaling
B.C.09	Channel Cond. Rating	7– Good Condition	Minor Erosion, Timber Debris
B.C.10	Channel Protection Cond.	7– Good Condition	Grout Bags
B.C.11	Scour Cond. Rating	8– Above Foundation Limits	Stable (Inspector Recommended)
B.C.15	Underwater Cond. Rating	7– Good Condition	
B.IE.03	Insp. Date	August 24, 2022	
B.IE.05	UW Insp. Interval	60 Months	

AASHTO National Bridge Element (NBE) Ratings:

Element #	Description	Units	Total	Condition State			
				1	2	3	4
210	Reinforced Concrete Pier Wall	LF	48	46	2	0	0
215	Reinforced Concrete Abutment	LF	24	24	0	0	0

Note: Ratings were developed using the FHWA Specifications for the National Bridge Inventory. The recommended ratings consider inspected elements located within the waterway and conditions existing below the water surface only. Additional consideration is necessary for the assignment of overall condition ratings for this bridge.

1.0 INTRODUCTION

1.1 Purpose and Scope

This report consists of the results of a detailed underwater investigation performed at the SR-148 Bridge over Captina Creek in Belmont County, OH. Collins Engineers, Inc. (Collins) conducted the underwater investigation for the Ohio Department of Transportation (ODOT), District 11 on August 24, 2022. The primary purpose of the investigation was as follows:

- Determine the condition of the substructure components located in the water at the time of the inspection from the waterline to the channel bottom.
- Obtain channel bottom depth measurements along the bridge fascias, upstream and downstream of the bridge, and around the submerged substructure units.
- Determine the condition of the shorelines in the vicinity of the structure.
- Obtain photographs of the bridge and any significant defects.

In addition, a brief inspection was made of areas that could be submerged during periods of high water. The following report includes a description of the structure, the method of investigation, a description of existing conditions, an evaluation and recommendations based on the conditions, inspection figures, and photographs.

1.2 General Description of the Structure

Structure No. SFN0704660 spans 239.2 ft, carrying SR-148 over Captina Creek and is approximately 30 ft wide. The bridge superstructure is constructed of three spans, each composed of four steel girders. The roadway orientation of the longitudinal axis of the bridge is south to north. The substructure units are labeled as Abutments 1 and 4 and Piers 1 and 2. Previous inspection reports were available at the time of the inspection and were used to determine water surface elevation and foundation elevations. Refer to Figure 1 in Exhibit 1 for a Location Map of the bridge. Refer to Photographs 1 through 4 in Exhibit 2 for overall views of the bridge.

1.3 Method of Investigation

A detailed field inspection was conducted to determine the physical condition of the submerged bridge substructure units from the waterline to the channel bottom. A brief visual examination of the substructure units above the waterline was also made.

A three-person team consisting of technician-diver and team leader (Nicholas Lane) and engineer-divers (Joshua Davis, E.I.T. and Callen Papineau, E.I.T.) conducted the underwater inspection. The inspection was conducted using surface supplied air diving equipment. During the inspection, the inspectors worked from a boat and a note taker in the boat recorded the inspection notes.

The underwater inspection consisted of a visual and tactile examination of the accessible surfaces of the substructure units from the waterline to the channel bottom with particular attention given to any observed areas of deterioration or apparent distress. Approximately 10 percent of the total area on the underwater surfaces of the substructure units was cleaned so that the condition could be more closely examined. Photographs were taken to document the general conditions and observed deficiencies. The type of channel bottom material, the presence or extent of scour, the presence or extent of riprap, the presence or extent of drift and debris, and the location of any foundation exposure or undermining were noted.

Channel bottom soundings were performed utilizing a digital fathometer and pneumofathometer. Soundings were taken parallel to the bridge at the upstream and downstream fascias, at quarter intervals between the substructure units, and at 10 ft intervals in-line with the piers upstream and downstream up to 50 ft, and the waterline was referenced to a known elevation on the bridge. A sounding plan was developed using the soundings and approximate location of the shorelines. Refer to Figures 2 through 5 in Exhibit 1 for the sounding plan and channel cross sections that show the channel limits and water depths around the structure.

2.0 EXISTING CONDITIONS

2.1 General Conditions

At the time of the inspection, the waterline of Captina Creek was located approximately 15.0 ft below the top of deck at the upstream nose of Pier 2, which corresponds to a waterline elevation of 623.87 ft. During the inspection, the waterway was flowing west to east below the structure at a rate of 1 ft/s. The approximate high-water elevation was observed to be 625.61 ft.

The bridge pier skew was consistent with the channel alignment and does not require attention at this time. The north and south shorelines consisted of moderately vegetated mild slopes with minor erosion and a few trees leaning toward the channel. Refer to Photographs 5 through 12 in Exhibit 2 for views of the shorelines near the structure.

2.2 Substructure Conditions

2.2.1 Abutment 1

The channel bottom material around Abutment 1 consisted of soft silt, mud, and clay with approximately 2 ft probe rod penetration. The submerged portions of the abutment exhibited light scaling up to 1/16 in. deep extending from the channel bottom to the waterline. Grout bags were observed extending from the channel bottom to 2 ft above the waterline along the north face of the abutment. Refer to Figure 6 in Exhibit 1 for detailed inspection notes of Abutment 1.

2.2.2 Pier 2

The channel bottom material around Pier 2 consisted of soft silt, mud, and clay with approximately 2 ft probe rod penetration. Typical light marine growth consisting of zebra mussels and algae up to 1 in. deep was observed on the submerged portions of the pier. Light timber debris accumulation consisting of logs up to 4 in. diameter was observed from the midpoint of the south face and around the upstream nose to the upstream quarter-point along the north face of the pier extending from the channel bottom to waterline. A spall measuring 8 in. horizontal by 2 in. vertical by 2 in. deep was observed where the upstream nose meets the south face of the pier located at 6 ft below the waterline. A spall measuring 10 in. horizontal by 3 in. vertical by 1 1/2 in. deep was observed on the upstream nose of the pier located at 1 ft below the waterline. Refer to Figure 7 in Exhibit 1 for detailed inspection notes of Pier 2. Refer to Photographs 13 through 15 in Exhibit 2 for views of the typical underdeck condition and Pier 2.

2.2.3 Pier 3

The channel bottom material around Pier 3 consisted of soft silt, mud, and clay with approximately 2 ft probe rod penetration. Typical light marine growth consisting of zebra mussels and algae up to 1 in. deep was observed on the submerged portions of the pier. The submerged portions of the pier exhibited light scaling up to 1/16 in. deep extending from the channel bottom to the waterline. Moderate timber debris accumulation consisting of logs up to 18 in. diameter was observed at the upstream nose extending from the channel bottom to approximately 6 ft below the waterline. A steel H-pile was observed protruding 4 in. out from the pier wall at the midpoint of the pier located approximately 8 ft below the waterline. Refer to Figure 8 in Exhibit 1 for detailed inspection notes of Pier 3. Refer to Photographs 16 through 18 in Exhibit 2 for views of Pier 3 and typical concrete condition at the waterline.

2.2.4 Channel Bottom and Scour Assessment

At the time of the inspection, Captina Creek was experiencing normal flow and the channel bottom appeared stable for the type of material. The channel bottom was primarily silt, mud, and clay surrounding the substructure units. No additional scour, undermining, or scour countermeasures were observed.

3.0 EVALUATION AND RECOMMENDATIONS

Overall, the inspected substructure units of Structure No. SFN0704660 were in satisfactory condition. A comparison of the soundings recorded during the previous inspection on August 3, 2017 and the soundings taken during this inspection revealed no significant change in the channel bottom profile in the vicinity of the structure. Although no channel deficiencies were observed, the channel bottom should continue to be monitored during future underwater inspections to verify that localized scour or overall channel degradation is not occurring and that the pier footings remain adequately embedded in the channel bottom.

The scaling observed on Abutment 1 and Pier 3 is not a structural concern at this time given its size compared to the overall pier size, and as a result, no repairs are recommended. This area should be monitored during future inspections for increasing extent or severity of the scaling and exposure of reinforcing steel. If the extent or severity of the scaling is observed to be increasing or reinforcing steel becomes exposed, it may be necessary to repair the area at that time.

The timber debris accumulation at Piers 2 and 3 did not significantly affect the channel flow, and as a result, does not require removal at this time. If the debris accumulation increases in size or density, it may be necessary to remove the debris to reduce excessive lateral loads on the pier, limit further debris accumulation, and reduce the likelihood of channel bottom degradation resulting from obstructed flow.

It is recommended that the submerged substructure units of Structure No. SFN0704660 be next inspected underwater at an interval not to exceed 60 months, no later than August 24, 2027.

Respectfully Submitted,
COLLINS ENGINEERS, INC.



Matthew Rogers, P.E.
Project Manager

Originated by:
Olivia Farmer, E.I.T.

EXHIBIT 1 – FIGURES

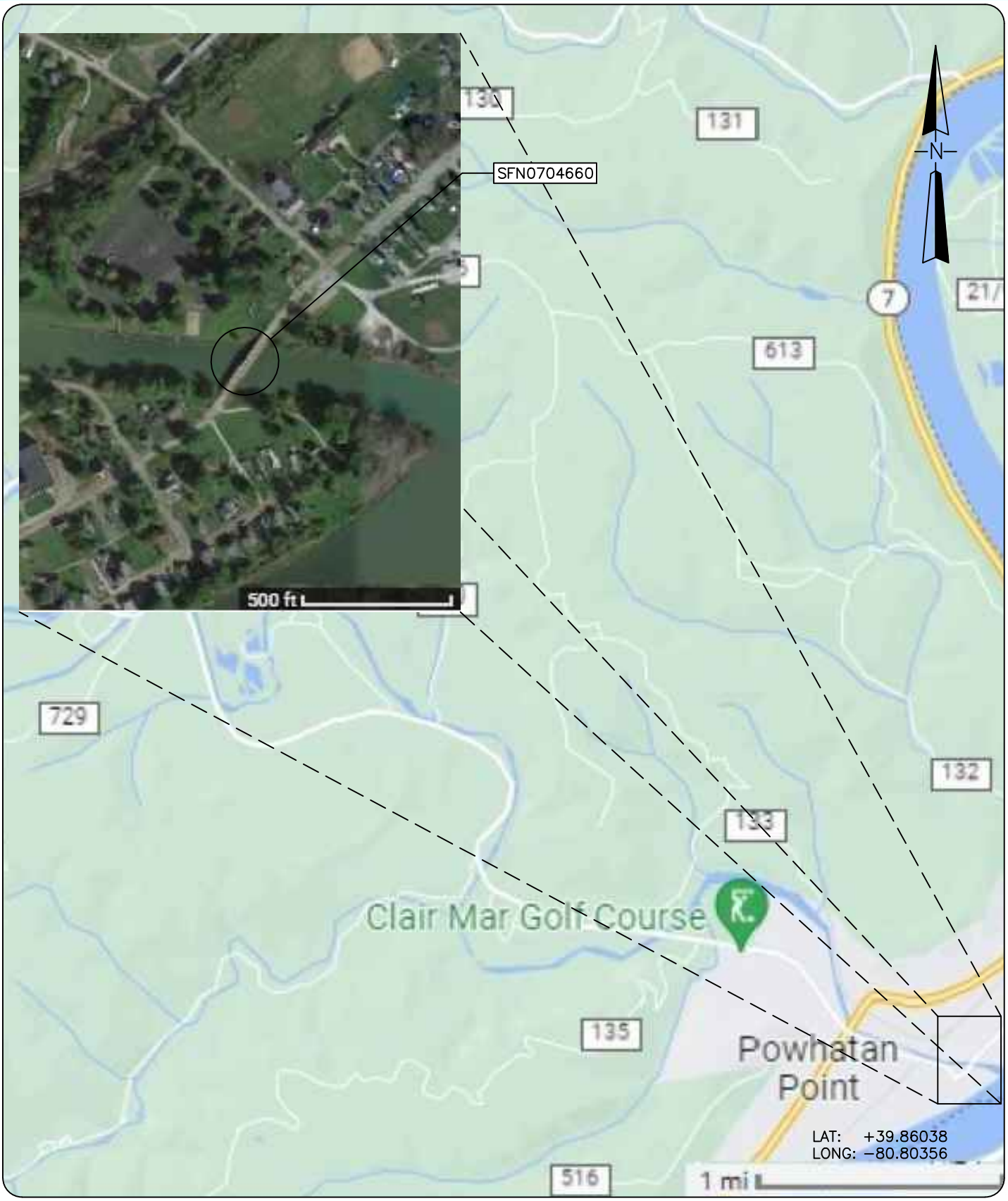

COLLINS ENGINEERS
124 Venture Court, Ste 10
Lexington, KY 40511
Phone: 859-367-0097
Fax: 859-367-0140

Ohio Department of
Transportation, District 11
2201 Reiser Avenue
New Philadelphia, OH 44663
Phone: 330-339-6633

SR-148 OVER CAPTINA CREEK
STRUCTURE NO. SFN0704660
LOCATION MAP
BELMONT COUNTY, OHIO

INSPECTED BY: NML	CEI PROJECT: 55−13380.01
DRAWN BY: OPF	DATE: 24 AUG 2022
CHECKED BY: JMJ	SHEET NO: 1

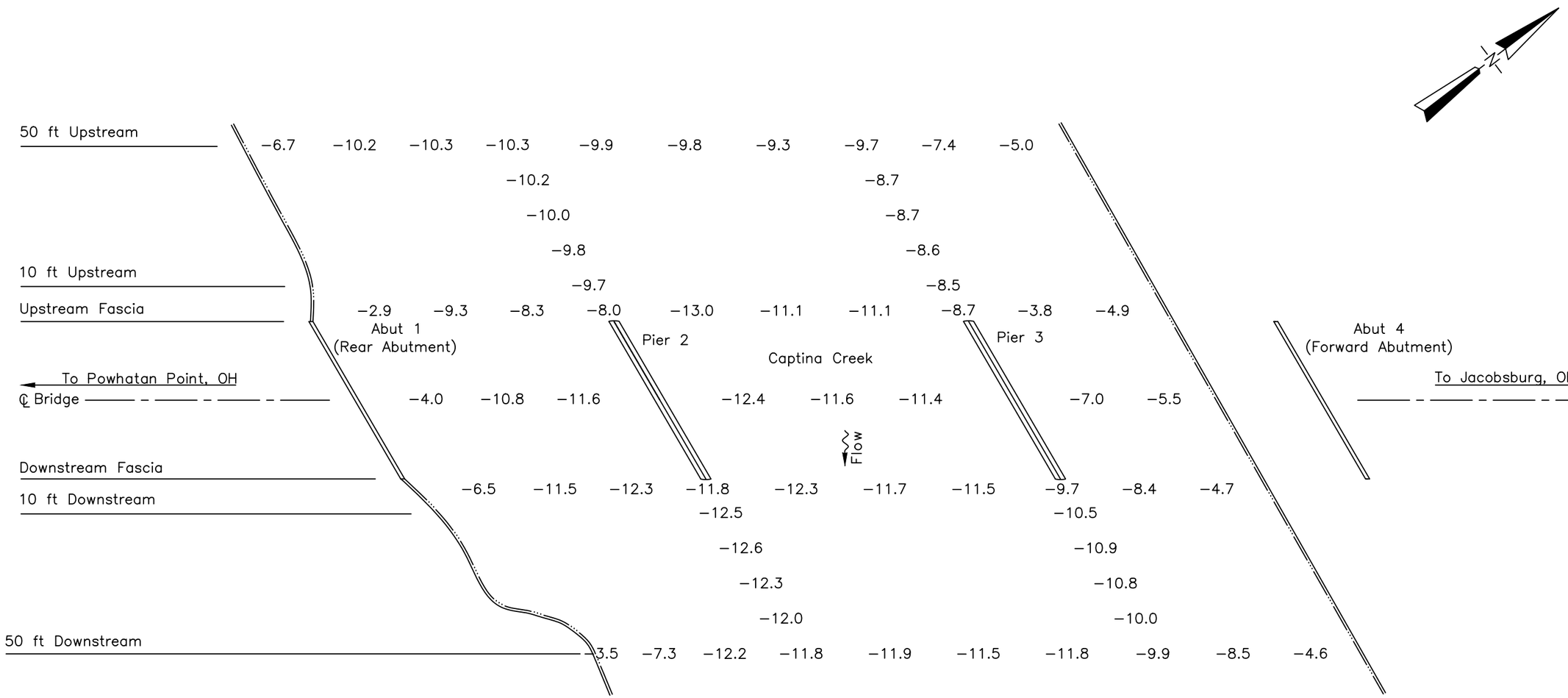

SOUNDING PLAN

GENERAL NOTES:

1. Abutment 1 and Piers 2 and 3 were inspected underwater. Substructure units are labeled according to available record drawings.
2. At the time of inspection on August 24, 2022, the waterline was located approximately 15.0 ft below the top of the deck at the upstream nose of Pier 2 (EL. 645.77). This corresponds with a waterline elevation of 623.87 ft.
3. Soundings indicate the water depth at the time of inspection and are measured in feet.
4. Soundings were taken parallel to the bridge at the upstream and downstream fascias, at quarter intervals between the substructure units, and at 10 ft intervals in−line with the piers upstream and downstream up to 50 ft.

LEGEND

−2.7 Sounding Depth from Waterline (ft)

Timber Debris

COLLINS ENGINEERS
124 Venture Court, Ste 10
Lexington, KY 40511
Phone: 859-367-0097
Fax: 859-367-0140

Ohio Department of Transportation, District 11
2201 Reiser Avenue
New Philadelphia, OH 44663
Phone: (330)-339-6633

SR-148 OVER CAPTINA CREEK
STRUCTURE NO. SFN0704660
SOUNDING PLAN
BELMONT COUNTY, OHIO

CEI PROJECT 55−13380.01
INSPECTED BY: NML
DRAWN BY: OPF
CHECKED BY: JMJ
DATE: AUG 2022
SHEET NO: 2

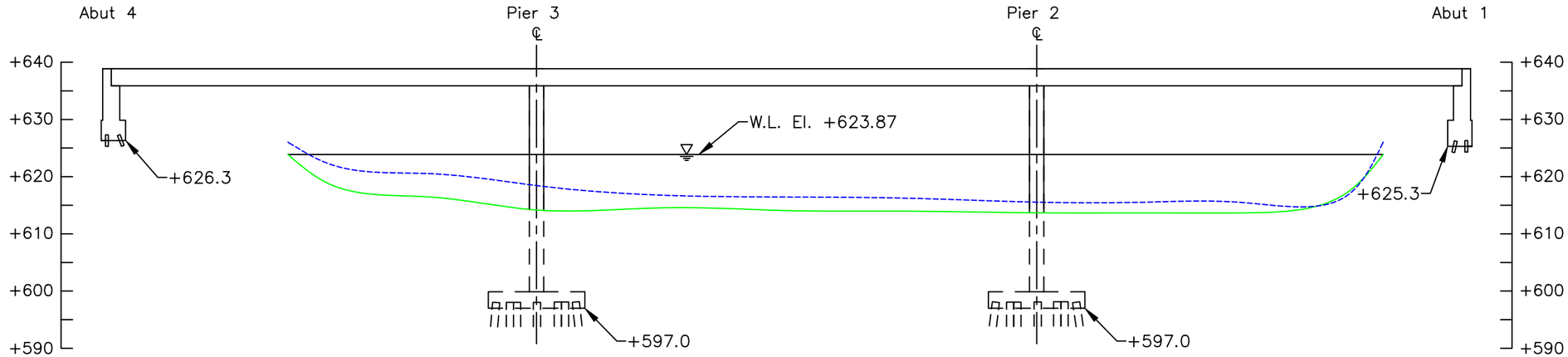

50 FT UPSTREAM
CHANNEL CROSS SECTION
(LOOKING DOWNSTREAM)

Upstream Elevations (Looking Downstream)	
Location	Height (ft)
A4	7.2
3/4	14.3
1/2	19.0
1/4	18.8
P3	23.7
3/4	26.1
1/2	26.1
1/4	28.0
P2	23.0
3/4	23.3
1/2	24.3
1/4	17.9
A1	8.9

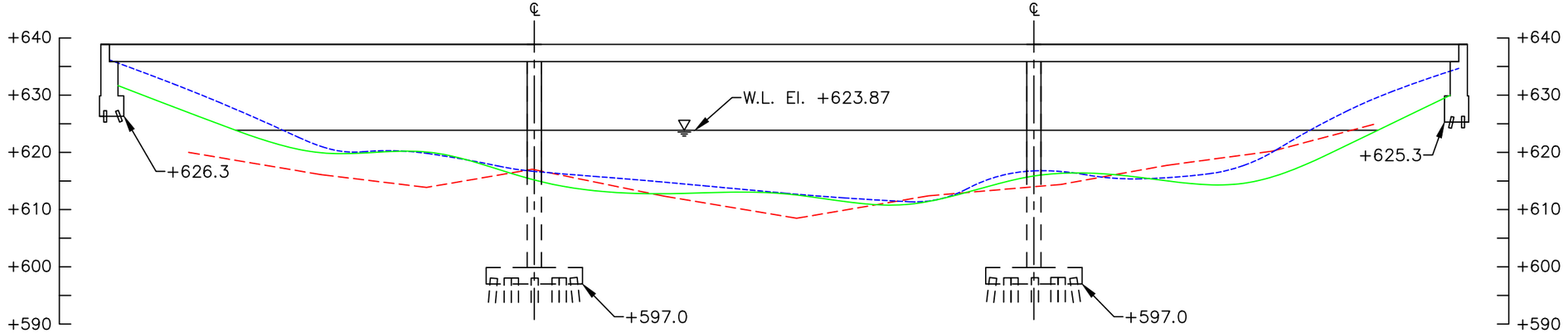

UPSTREAM FASCIA
CHANNEL CROSS SECTION
(LOOKING DOWNSTREAM)

LEGEND

- Approximate Channel Bottom – August 2022
- Approximate Channel Bottom – August 2017
- Approximate Channel Bottom – September 2012
- Timber Debris
- Water Surface
- +450 Elevation (ft)

NOTE:

Vertical scale above waterline not to scale.

COLLINS ENGINEERS
124 Venture Court, Ste 10
Lexington, KY 40511
Phone: 859-367-0097
Fax: 859-367-0140

Ohio Department of Transportation, District 11
2201 Reiser Avenue
New Philadelphia, OH 44663
Phone: (330)-339-6633

SR-148 OVER CAPTINA CREEK
STRUCTURE NO. SFN0704660
CROSS SECTIONS
BELMONT COUNTY, OHIO

CEI PROJECT 55-13380.01
INSPECTED BY: NML
DRAWN BY: OPF
CHECKED BY: JMJ
DATE: AUG 2022
SHEET NO: 3

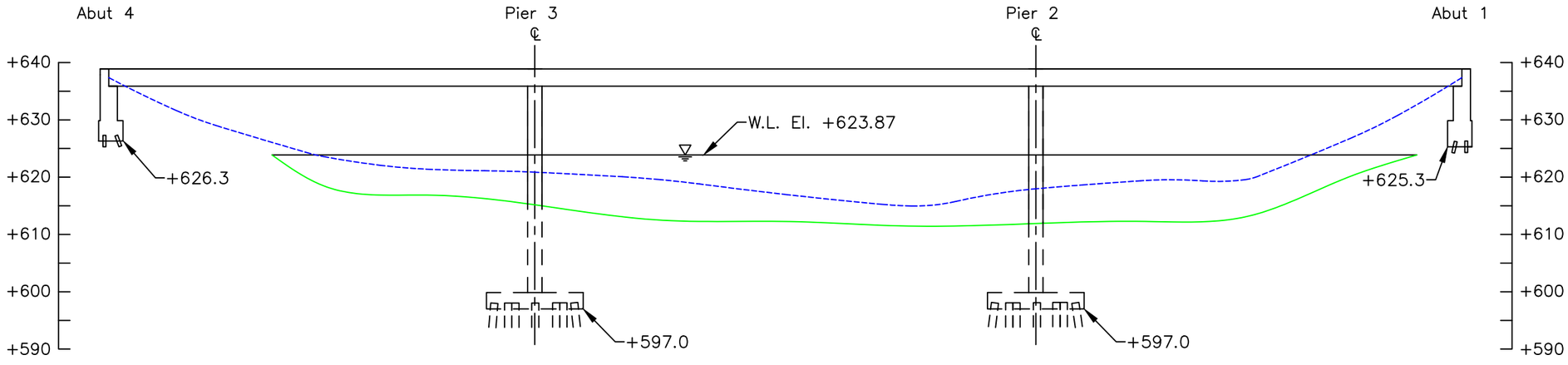

STRUCTURE CENTERLINE
CHANNEL CROSS SECTION
(LOOKING DOWNSTREAM)

NOTE:

Vertical scale above waterline not to scale.

LEGEND

———	Approximate Channel Bottom – August 2022
- - - - -	Approximate Channel Bottom – August 2017
– – – – –	Approximate Channel Bottom – September 2012
	Timber Debris
	Water Surface
+450	Elevation (ft)

COLLINS ENGINEERS
124 Venture Court, Ste 10
Lexington, KY 40511
Phone: 859-367-0097
Fax: 859-367-0140

Ohio Department of Transportation, District 11
2201 Reiser Avenue
New Philadelphia, OH 44663
Phone: (330)-339-6633

SR-148 OVER CAPTINA CREEK
STRUCTURE NO. SFN0704660
CROSS SECTIONS
BELMONT COUNTY, OHIO

CEI PROJECT	55–13380.01
INSPECTED BY:	NML
DRAWN BY:	OPF
CHECKED BY:	JMJ
DATE:	AUG 2022
SHEET NO:	4

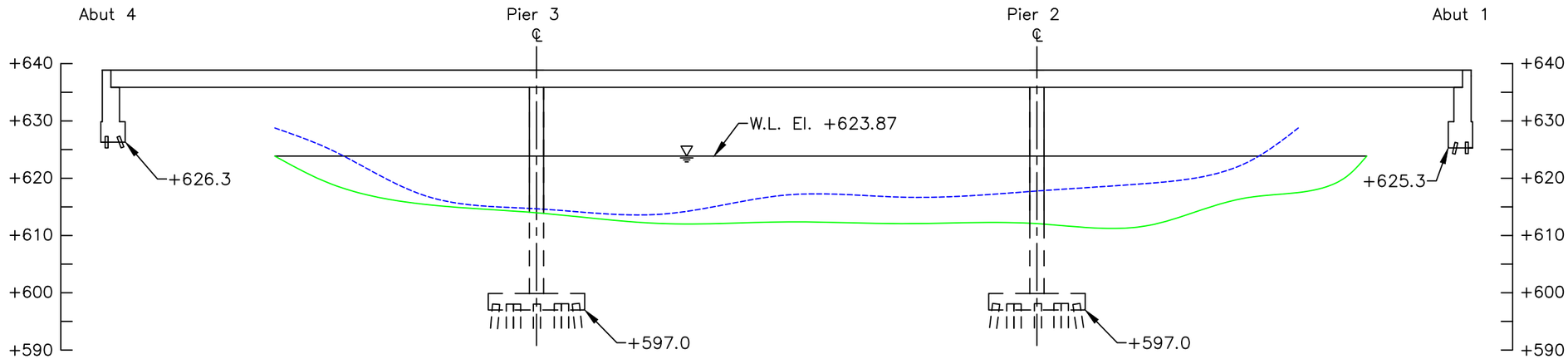

50 FT DOWNSTREAM
CHANNEL CROSS SECTION
(LOOKING DOWNSTREAM)

Downstream Elevations (Looking Downstream)	
Location	Height (ft)
A4	6.3
3/4	8.4
1/2	19.7
1/4	23.4
P3	24.7
3/4	26.5
1/2	26.7
1/4	27.3
P2	26.8
3/4	27.3
1/2	26.5
1/4	21.5
A1	8.0

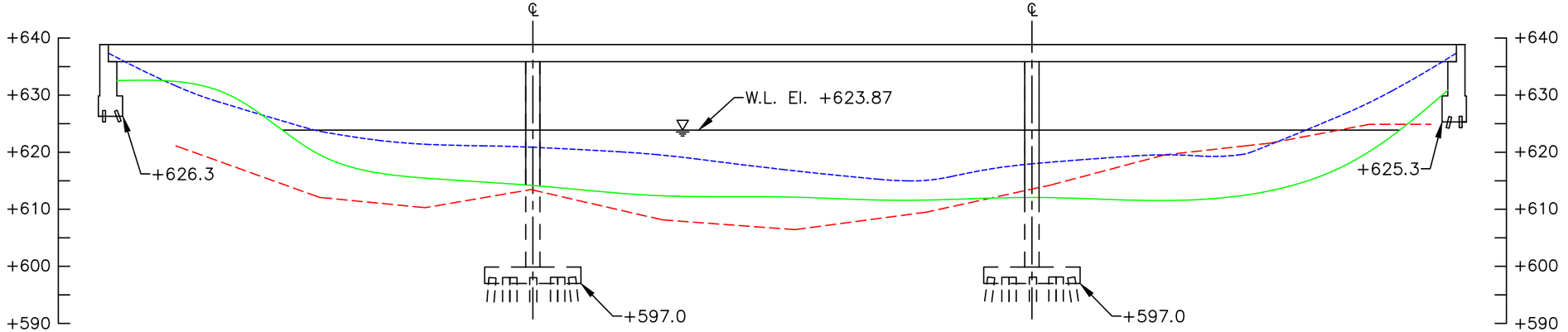

DOWNSTREAM FASCIA
CHANNEL CROSS SECTION
(LOOKING DOWNSTREAM)

LEGEND

- Approximate Channel Bottom – August 2022
- Approximate Channel Bottom – August 2017
- Approximate Channel Bottom – September 2012
- Timber Debris
- Water Surface
- +450 Elevation (ft)

NOTE:

Vertical scale above waterline not to scale.

COLLINS ENGINEERS
124 Venture Court, Ste 10
Lexington, KY 40511
Phone: 859-367-0097
Fax: 859-367-0140

Ohio Department of Transportation, District 11
2201 Reiser Avenue
New Philadelphia, OH 44663
Phone: (330)-339-6633

SR-148 OVER CAPTINA CREEK
STRUCTURE NO. SFN0704660
CROSS SECTIONS
BELMONT COUNTY, OHIO

CEI PROJECT 55-13380.01
INSPECTED BY: NML
DRAWN BY: OPF
CHECKED BY: JMJ
DATE: AUG 2022
SHEET NO: 5

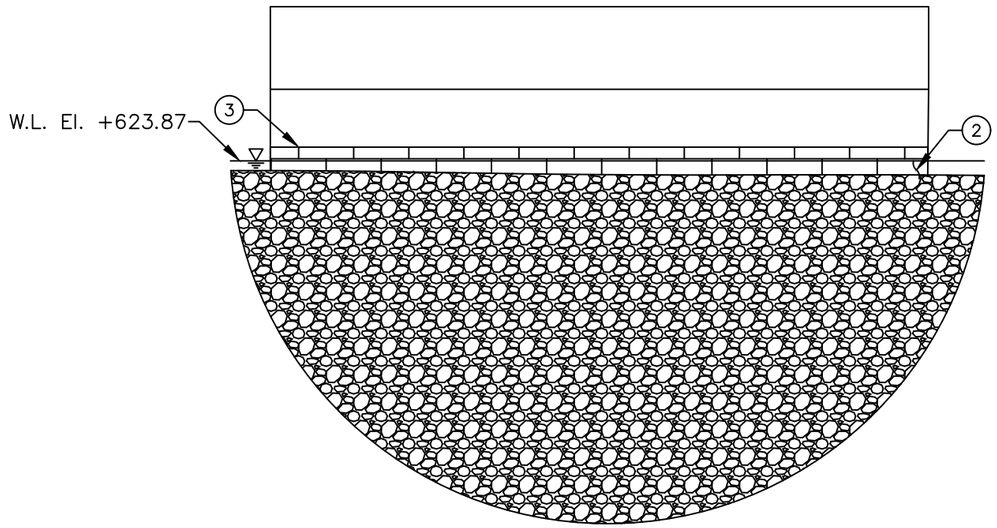

NORTH ELEVATION
(LOOKING SOUTH)

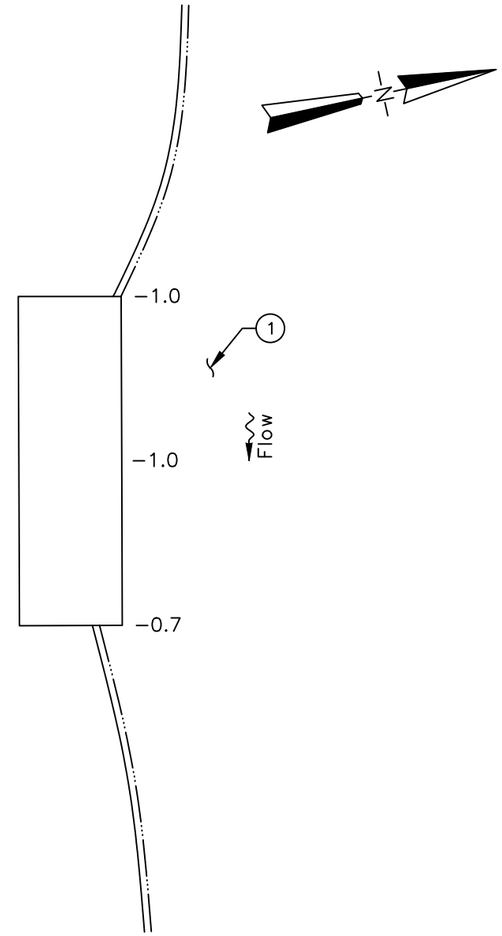

INSPECTION NOTES:

1. The channel bottom material around consisted of soft silt, mud, and clay with approximately 2 ft probe rod penetration.
2. The submerged portions of the abutment exhibited light scaling up to 1/16 in. deep extending from the channel bottom to the waterline.
3. Grout bags were observed extending from the channel bottom to 2 ft above the waterline along the north face of the abutment.

LEGEND

-2.7	Sounding Depth from Waterline (ft)
———	Approximate Channel Bottom – August 2022
	Timber Debris
———	Water Surface

COLLINS ENGINEERS
124 Venture Court, Ste 10
Lexington, KY 40511
Phone: 859-367-0097
Fax: 859-367-0140

Ohio Department of Transportation, District 11
2201 Reiser Avenue
New Philadelphia, OH 44663
Phone: (330)-339-6633

SR-148 OVER CAPTINA CREEK
STRUCTURE NO. SFN0704660
ABUTMENT 1
BELMONT COUNTY, OHIO

CEI PROJECT
55-13380.01

INSPECTED BY:
NML

DRAWN BY:
OPF

CHECKED BY:
JMJ

DATE:
AUG 2022

SHEET NO:
6

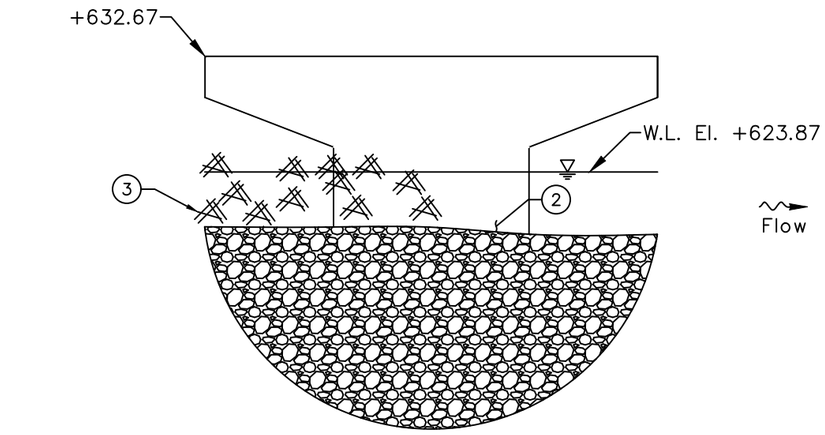

SOUTH ELEVATION
(LOOKING NORTH)

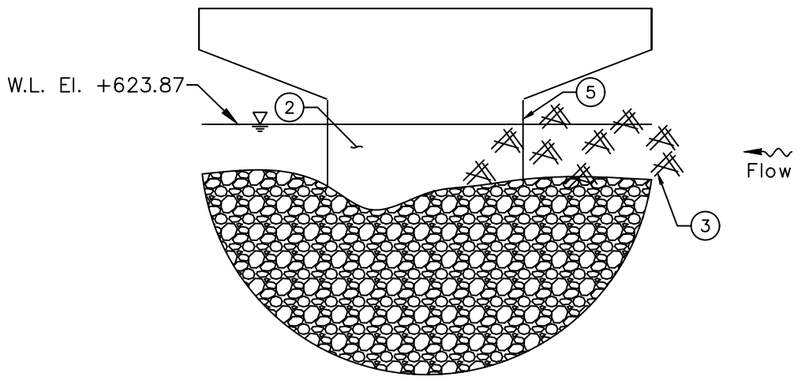

NORTH ELEVATION
(LOOKING SOUTH)

INSPECTION NOTES:

1. The channel bottom material consisted of soft silt, mud, and clay with approximately 2 ft probe rod penetration.
2. Typical light marine growth consisting of zebra mussels and algae up to 1 in. deep was observed on the submerged portions of the pier.
3. Light timber debris accumulation consisting of logs up to 4 in. diameter was observed from the midpoint of the south face and around the upstream nose to the upstream quarter–point along the north face of the pier extending from the channel bottom to waterline.
4. A spall measuring 8 in. horizontal by 2 in. vertical by 2 in. deep was observed where the upstream nose meets the south face of the pier located at 6 ft below the waterline.
5. A spall measuring 10 in. horizontal by 3 in. vertical by 1 1/2 in. deep was observed on the upstream nose of the pier located at 1 ft below the waterline.

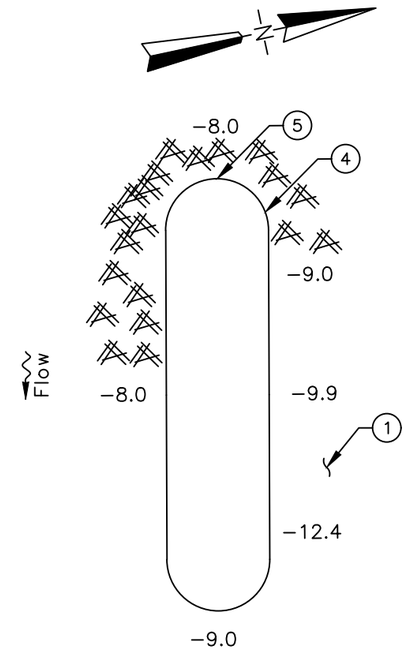

LEGEND

–2.7	Sounding Depth from Waterline (ft)
———	Approximate Channel Bottom – August 2022
	Timber Debris
	Water Surface

COLLINS ENGINEERS
124 Venture Court, Ste 10
Lexington, KY 40511
Phone: 859-367-0097
Fax: 859-367-0140

Ohio Department of Transportation, District 11
2201 Reiser Avenue
New Philadelphia, OH 44663
Phone: (330)-339-6633

SR-148 OVER CAPTINA CREEK
STRUCTURE NO. SFN0704660
PIER 2
BELMONT COUNTY, OHIO

CEI PROJECT 55–13380.01
INSPECTED BY: NML
DRAWN BY: OPF
CHECKED BY: JMJ
DATE: AUG 2022
SHEET NO: 7

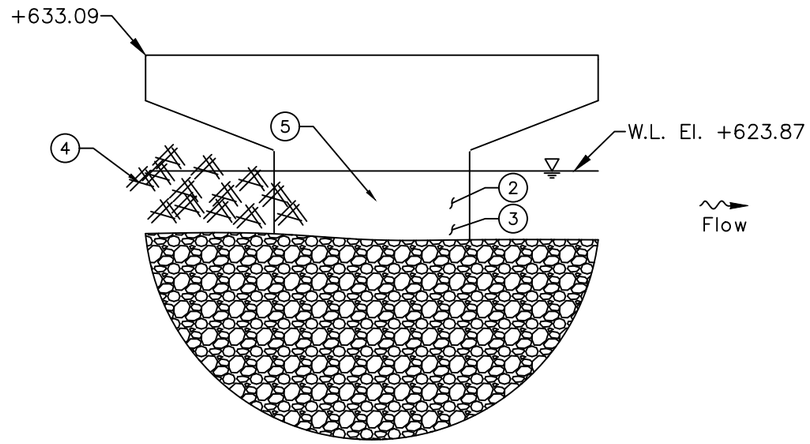

SOUTH ELEVATION
(LOOKING NORTH)

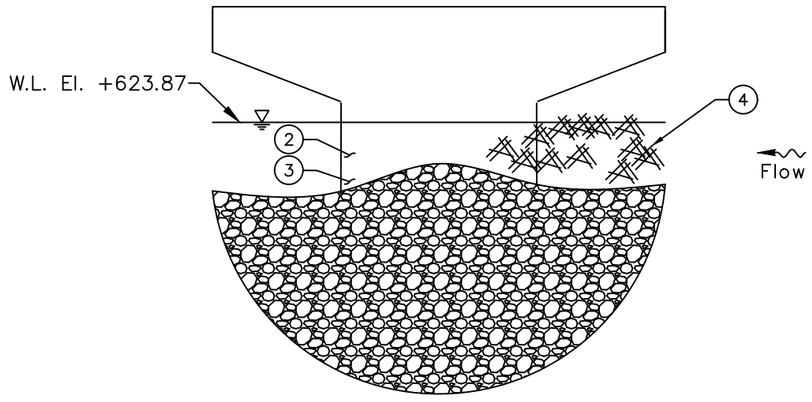

NORTH ELEVATION
(LOOKING SOUTH)

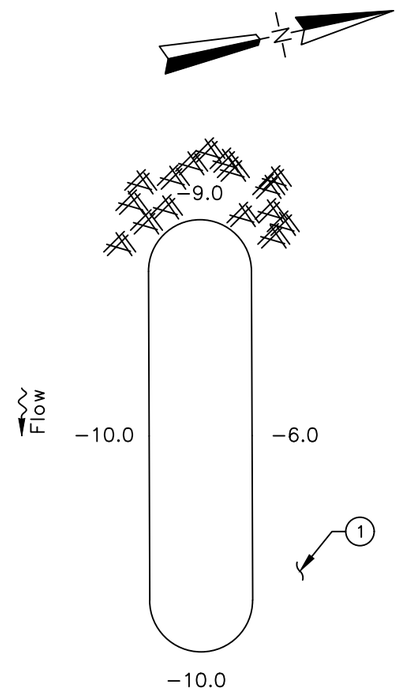

INSPECTION NOTES:

1. The channel bottom material consisted of soft silt, mud, and clay with approximately 2 ft probe rod penetration.
2. Typical light marine growth consisting of zebra mussels and algae up to 1 in. deep was observed on the submerged portions of the pier.
3. The submerged portions of the pier exhibited light scaling up to 1/16 in. deep extending from the channel bottom to the waterline.
4. Moderate timber debris accumulation consisting of logs up to 18 in. diameter was observed at the upstream nose extending from the channel bottom to approximately 6 ft below the waterline.
5. A steel H−pile was observed protruding 4 in. out from the south face pier wall at the midpoint of the pier located approximately 8 ft below the waterline.

LEGEND

−2.7	Sounding Depth from Waterline (ft)
———	Approximate Channel Bottom − August 2022
	Timber Debris
	Water Surface

COLLINS ENGINEERS
124 Venture Court, Ste 10
Lexington, KY 40511
Phone: 859-367-0097
Fax: 859-367-0140

Ohio Department of Transportation, District 11
2201 Reiser Avenue
New Philadelphia, OH 44663
Phone: (330)-339-6633

SR-148 OVER CAPTINA CREEK
STRUCTURE NO. SFN0704660
PIER 3
BELMONT COUNTY, OHIO

CEI PROJECT	55−13380.01
INSPECTED BY:	NML
DRAWN BY:	OPF
CHECKED BY:	JMJ
DATE:	AUG 2022
SHEET NO:	8

EXHIBIT 2 – INSPECTION PHOTOGRAPHS



Photograph No. 1: Overall View of Structure No. SFN0704660, Looking West.



Photograph No. 2: Overall View of Structure No. SFN0704660, Looking East.



Photograph No. 3: View of the North Approach, Looking South.



Photograph No. 4: View of the South Approach, Looking North.



Photograph No. 5: View of the North Embankment Upstream of the Structure, Looking North.



Photograph No. 6: View of the North Embankment at the Structure, Looking North.



Photograph No. 7: View of the North Embankment Downstream of the Structure, Looking North.



Photograph No. 8: View of the South Embankment Upstream of the Structure, Looking South.



Photograph No. 9: View of the South Embankment at the Structure, Looking South.



Photograph No. 10: View of the South Embankment Downstream of the Structure, Looking South.



Photograph No. 11: View of the Upstream Channel, Looking East.



Photograph No. 12: View of the Downstream Channel, Looking West.



Photograph No. 13: View of the Typical Underdeck Condition, Looking North.



Photograph No. 14: View of the North Face of Pier 2, Looking Southeast.



Photograph No. 15: View of the South Face of Pier 2, Looking Northwest.



Photograph No. 16: View of the North Face of Pier 3, Looking Southeast.



Photograph No. 17: View of the South Face of Pier 3, Looking Northwest.



Photograph No. 18: View of the Typical Concrete Condition at the Waterline on the North Face of Pier 3, Looking South.

EXHIBIT 3 – DIVE PROCEDURES CHECKLIST

Underwater Dive Inspection Procedure Checklist

Acceptable written procedures communicate to the next dive team what is necessary to ensure a safe and successful inspection. Each bridge requiring underwater dive techniques must have a unique written inspection procedure. The prior inspection report does not suffice for the required procedures. It is valuable to review the last inspection notes, but they do not serve the same purpose as a stand-alone inspection procedure.

This document shall be completed for all underwater dive inspections. This document shall be reviewed prior to performing the field work and it shall be updated when necessary.

I. Bridge Identification

a. Agency with Inspection Responsibility: ODOT DISTRICT 11

Dive Frequency: 60 months

SFN: 0704660 Bridge Number (County-Route-SLM-SD): BEL-148-2666

Superstructure Type Main Span Type: STEEL GIRDER

Approach Span: STEEL GIRDER

Substructure Type Abutment Type: REINFORCED CONCRETE

Pier Type: REINFORCED CONCRETE

Total Pier Count: 2

Total Pier Count in water: 2

Foundations: STEEL H PILES

Feature Intersected CAPTINA CREEK

b. Photographs



Endview



Elevation



Underside

II. Office and Field Assessment

Prior to the inspection, obtain and review copies of the previous underwater inspection reports, routine inspection reports, scour and hydraulic information, and design plans in preparation of the inspection. Divers should pay particular attention given to any observed areas of deterioration, the channel conditions and factors that may accelerate material deterioration. Changes shall be noted in the inspection procedure. Site conditions should be reviewed prior to diving.

a. Channel Conditions

____Waterway features

____Rapid stream flows,

_X_Significant debris accumulation

____Constricted waterway openings

____Soft or unstable streambeds

____Meandering channels

____Other which may promote scour and undermining of substructure elements

____Navigable Waterway

____Flow Controls

b. Anticipated Water conditions which may affect the inspection

____Cold Water (Apprx. Temp____)

____Black water

____Rapid stream flows

____Near military facility

____Tribal fishing

____Water quality

____History of Log jams

c. Identify factors that may accelerate the deterioration of the bridge elements:

____Highly corrosive water

____Unprotected steel members

____Other

Risk Factor Narrative:

III. **Contacts Prior to Work**

Dr. Waseem Khalifa, Ph. D., P.E.

District Bridge Engineer

2201 Reiser Avenue SE

New Philadelphia, OH 44663

(330) 308-7873

Point of contact for immediate action such as closing the bridge due to findings)

Contact Bridge Owner _____14_____ (number) days before the proposed underwater inspection.

Special contracting and scheduling procedures prior to inspection, include recommended lead time

Entity	Contact Name and Title	Contact Phone	Lead Time
Coast Guard	N/A	N/A	N/A
Property Owner	N/A	N/A	N/A
Access Equipment	N/A	N/A	N/A
Lake or River draw-down	N/A	N/A	N/A
Canal dry time	N/A	N/A	N/A
Tree removal	N/A	N/A	N/A
Other:	N/A	N/A	N/A
Other:	N/A	N/A	N/A

IV. **Dive Team Shall Include the Following:**

Dive Team Narrative:

The structure shall be investigated using a three-member dive team: one dive supervisor to monitor communications and air supply while taking notes, one diver, and one tender/standby diver. There shall be one NBIS Team Leader onsite at all times.

Example: The Bridge shall be investigated using a three-member dive team: one supervisor to monitor rack box and take notes, one diver, and one tender/standby diver. There shall be one NBIS Team Leader onsite at all times.

V. Site Information

Navigable waterway: Y /(N)

If Yes, waterway river point _____

Anticipated water visibility depth <1 ft

Anticipated Dive depth 12.4 ft

Anticipated current <1 ft

Scour Critical (item 113): 8

POA in place: Y/(N)

Scour Monitoring devices present: Y/(N)

Verify the Scope of Services when work is contracted for the procedure for underwater elements that are not in water during an inspection.

Site Information Narrative:

The underwater inspection consists of a visual and tactile examination of the accessible surfaces of the substructure items in water. Additional items should reference the scope of services in the contract. For reference the following items are in water:

Item	Number of Units	Level of Inspection (1, 2 or 3) with Commentary
Piers and Number of Columns	2	100% Level 1 10% Level 2
Abutment	1	100% Level 1 10% Level 2
Culvert		
Scour Countermeasures		
Fenders or Dolphins		

Photographs should be taken, if water clarity permits, for typical conditions, conditions that have changed since last inspection and significant or noteworthy deficiencies. The type of channel bottom material, the presence or extent of scour, the presence or extent of riprap, the presence or extent of drift and debris, and the location of any foundation exposure or undermining shall be quantified. Include depth, length, height and location of deficiencies.

VI. **Equipment and Field Logistics**

a. The inspection should be conducted using:

____Chest waders

____Hip waders

_X_Diving equipment

____SCUBA (Note that ADCI Consensus Standards require communication systems be employed for both SCUBA and Surface-Supplied (whether air or mixed-gas) dive modes)

____SCUBA with communication

_X_Surface Supplied with communication

b. The channel bottom should be sounded utilizing

_X_Digital fathometer

____Telescoping survey rod

____ acoustic imaging

c. During the inspection, the divers should work from

____Shore

_X_Boat

____Either

The note taker should work alongside the dive team.

d. Access to the waterway should be obtained from the shore (north bank, southwest quadrant, driveway 30 yards north etc.)

POWHATAN POINT PUBLIC BOAT LAUNCH

e. The maximum depth of the channel is typically measured 12.4 feet from

THE NORTH FACE OF PIER 2

Reference Datum 15.0 FT BELOW THE TOP OF DECK AT THE UPSTREAM NOSE OF PIER 2

Soundings should be dictated by the scope of work. When not detailed in the scope they should be repeated from the previous soundings. If neither exist then they need to be taken in a grid pattern between substructure units 100' upstream and 100' downstream.

VII. Inspection Procedure History

Created: COLLINS ENGINEERS, INC. Date: 9/22/2022

Updated By: _____ Date: _____

Updated By: _____ Date: _____

Updated By: _____ Date: _____

Updated By: _____ Date: _____

Updated By: _____ Date: _____

VIII. Other Narrative Not Included In Previous Sections