







# UNDERWATER CULVERT

# INSPECTION REPORT

## STRUCTURE NO. SFN1505858
## (COL-644-5.87)
## OH-644 OVER BRUSH CREEK
## COLUMBIANA COUNTY, OH
## DISTRICT 11




*Prepared for:*

*Prepared by:*

COLLINS ENGINEERS INC.

124 Venture Court, Suite 10

Lexington, Kentucky 40511

859.367.0097 • www.collinsengr.com

TABLE OF CONTENTS

EXECUTIVE SUMMARY
1.0 INTRODUCTION ..... 1
1.1 Purpose and Scope ..... 1
1.2 General Description of the Structure ..... 1
1.3 Method of Investigation ..... 1
2.0 EXISTING CONDITIONS ..... 2
2.1 General Conditions ..... 2
2.2 Substructure Conditions ..... 3
2.2.1 Wall 1 ..... 3
2.2.2 Wall 2 ..... 3
3.0 EVALUATION AND RECOMMENDATIONS ..... 3
EXHIBIT 1 – FIGURES ..... 5
LOCATION MAP
SOUNDING PLAN
HYDROGRAPHIC SURVEY
CHANNEL CROSS SECTIONS– 50 FT UPSTREAM
CHANNEL CROSS SECTIONS– UPSTREAM FASCIA
CHANNEL CROSS SECTIONS– STRUCTURE CENTERLINE
CHANNEL CROSS SECTIONS– DOWNSTREAM FASCIA
CHANNEL CROSS SECTIONS– 50 FT DOWNSTREAM
WALL 1
WALL 2
EXHIBIT 2 – INSPECTION PHOTOGRAPHS ..... 16
Photograph No. 1: Overall View of Structure No. SFN1505858, Looking East.
Photograph No. 2: Overall View of Structure No. SFN1505858, Looking West.
Photograph No. 3: View of the North Approach of the Structure, Looking North.
Photograph No. 4: View of the South Approach of the Structure, Looking South.
Photograph No. 5: View of the Southeast Embankment Downstream of the Structure, Looking Southeast.
Photograph No. 6: View of the Northeast Embankment Downstream of the Structure, Looking Northeast.
Photograph No. 7: View of the Downstream Channel of the Structure, Looking East.

Photograph No. 8: View of the Northwest Embankment Upstream of the Structure, Looking Northwest.
Photograph No. 9: View of the Southwest Embankment Upstream of the Structure, Looking Southwest.
Photograph No. 10: View of the Upstream Channel of the Structure, Looking Southwest.
Photograph No. 11: View of the Interior Barrel, Looking East.
Photograph No. 12: View of the Interior Barrel, Looking West.
Photograph No. 13: View of Wall 1, Looking Southwest.
Photograph No. 14: View of Wall 1, Looking Southeast.
Photograph No. 15: View of the Typical Masonry Condition at the Waterline of Wall 1, Looking South.
Photograph No. 16: View of Wall 2, Looking Northwest.
Photograph No. 17: View of Wall 2, Looking Northeast.
Photograph No. 18: View of the Upper Portion of the Crack 15 ft from the Downstream Fascia in Wall 2, Looking North.
Photograph No. 19: View of the Lower Portion of the Crack 15 ft from the Downstream Fascia in Wall 2, Looking North.
Photograph No. 20: View of the Upper Portion of the Crack in the Block at the Centerline of Wall 2, Looking North.
Photograph No. 21: View of the Lower Portion of the Crack in the Block at the Centerline of Wall 2, Looking North.
Photograph No. 22: View of the Seepage at Wall 2, Looking North.
EXHIBIT 3 – DIVE PROCEDURES CHECKLIST .....28

# EXECUTIVE SUMMARY

***Project:*** ODOT D11 Underwater Bridge Inspections - 2022.

***Purpose of Project:*** To perform a detailed visual and tactile underwater investigation of structures for the Ohio Department of Transportation, District 11.

***Inspection Team:*** Team Leader – Joshua Johnson, P.E. – Collins Engineers, Inc.
Team Member – Matthew Rogers, P.E. – Collins Engineers, Inc.
Team Member – Kurt Lingo, E.I.T. – Collins Engineers, Inc.

***Inspection Date(s):*** May 4, 2022

| | | | |
|---|---|---|---|
| ***Water Visibility:*** | <1 ft | ***Water Velocity:*** | 1.5 ft/s |
| ***Water Temperature:*** | 50 °F | ***Weather:*** | Overcast – 55 °F |
| ***Waterline Elevation:*** | 86 ft | ***Type of Boat:*** | N/A |
| ***Coordinates:*** | 40.6956°N, 80.8849°W | | |
| ***Access Location:*** | Northeast embankment at the structure | | |
| ***Dive Mode:*** | Surface Supplied Air | | |
| ***Waterline Reference:*** | 14.0 ft below the top of barrel at the downstream face. | | |
| ***Maximum Depth at SSU:*** | 4.6 ft – Downstream Nose of Wall 2 | | |
| ***Shoreline Conditions:*** | The north and south shorelines consisted of unprotected well vegetated gentle slopes with minor erosion and up to 2 ft vertical cut banks. | | |

***Summary of Findings:***

- **Wall 1:**
  - A crack up to 1/2 in. wide was observed 15 ft from the downstream fascia through 9 courses of stone.
  - A crack up to 1 in. wide was observed along the centerline through 8 courses of stone.
  - Seepage with efflorescence was observed along Wall 1.
  - The submerged portions of the wall exhibited moderate mortar loss up to 40% throughout with a typical depth of 3 in. deep.
- **Wall 2:**
  - A crack up to 1/2 in. wide was observed 15 ft from the downstream fascia through 9 courses of stone.
  - A crack up to 1 in. wide was observed along the centerline through 8 courses of stone.
  - Seepage with efflorescence was observed along Wall 2.
  - The submerged portions of the wall exhibited moderate mortar loss up to 40% throughout with a typical depth of 3 in. deep.

***Summary of Recommendations:***

- Monitor channel bottom.
- Monitor mortar loss.

***Underwater Inspection Coding:***

**NBI Ratings:**

| Item | Description | Coding | Condition |
|---|---|---|---|
| 60 | Substructure | N/A | |
| 61 | Channel | 7 – Good Condition | Minor Erosion |
| 62 | Culvert | 6 – Satisfactory Condition | Moderate Mortar Loss, Cracking |
| 92B | UW Insp. Frequency | 60 Months | |
| 93B | Insp. Date | 05/04/22 | |
| 113 | Scour Critical Bridges | 8 – Above Foundation Limits | Stable (Inspector Recommended) |

**AASHTO National Bridge Element (NBE) Ratings:**

| Element # | Description | Units | Total | Condition State | | | |
|---|---|---|---|---|---|---|---|
| | | | | 1 | 2 | 3 | 4 |
| 244 | Culvert, Masonry | LF | 45 | 0 | 43 | 2 | 0 |

Note: Ratings were developed using the FHWA Recording and Coding Guide for the Structure Inventory and Appraisal of the Nation's Bridges. The recommended ratings consider inspected elements located within the waterway and conditions existing below the water surface only. Additional consideration is necessary for the assignment of overall condition ratings for this bridge.

# 1.0 INTRODUCTION

## 1.1 Purpose and Scope

This report consists of the results of a detailed underwater investigation performed at the OH-644 Structure over Brush Creek in Columbiana County, OH. Collins Engineers, Inc. (Collins) conducted the underwater investigation for the Ohio Department of Transportation (ODOT), District 11 on May 4, 2022. The primary purpose of the investigation was as follows:

- Determine the condition of the substructure components located in the water at the time of the inspection from the waterline to the channel bottom.
- Obtain channel bottom depth measurements along the structure fascias, upstream and downstream of the structure, and around the submerged substructure units.
- Determine the condition of the shorelines in the vicinity of the structure.
- Obtain photographs of the structure and any significant defects.

In addition, a brief inspection was made of areas that could be submerged during periods of high water. The following report includes a description of the structure, the method of investigation, a description of existing conditions, an evaluation and recommendations based on the conditions, inspection figures, and photographs.

## 1.2 General Description of the Structure

Structure No. SFN1505858 spans 20 ft, carrying OH-644 over Brush Creek and is approximately 28 ft wide. The structure is constructed of masonry block. The roadway orientation of the longitudinal axis of the structure is south to north while Brush Creek flows from west to east. The substructure units are labeled as Walls 1 and 2. Existing design drawings were not available at the time of the inspection. Refer to Figure 1 in Exhibit 1 for a Location Map of the structure. Refer to Photographs 1 through 4 in Exhibit 2 for overall views of the structure.

## 1.3 Method of Investigation

A detailed field inspection was conducted to determine the physical condition of the submerged substructure units from the waterline to the channel bottom. A brief visual examination of the substructure units above the waterline was also made.

A three-person team consisting of professional engineer-divers and team leaders (Joshua Johnson, P.E., and Matthew Rogers, P.E.) and an engineer-diver (Kurt Lingo, E.I.T.) conducted the underwater inspection. The inspection was conducted using surface supplied air diving equipment. During the inspection, the inspectors worked from the shore and a note taker on the shore recorded the inspection notes.

The underwater inspection consisted of a visual and tactile examination of the accessible surfaces of the substructure units from the waterline to the channel bottom with particular attention given to any observed areas of deterioration or apparent distress. Approximately 10 percent of the total area on the underwater surfaces of the substructure units was cleaned so that the condition could be more closely examined. Photographs were taken to document the general conditions and observed deficiencies. The type of channel bottom material, the presence or extent of scour, the presence or extent of riprap, the presence or extent of drift and debris, and the location of any foundation exposure or undermining were noted.

Channel bottom soundings were performed utilizing a telescoping survey rod. Soundings were taken parallel to the structure at the upstream and downstream fascias, at 10 ft intervals between the substructure units, and at 10 ft intervals in-line with the walls upstream and downstream up to 50 ft, and the waterline was referenced to a known elevation on the structure. A sounding plan was developed using the soundings and approximate location of the shorelines. Refer to Figures 2 through 8 in Exhibit 1 for the sounding plan, hydrographic survey, and channel cross sections that show the channel limits and water depths around the structure.

## 2.0 EXISTING CONDITIONS

### 2.1 General Conditions

At the time of the inspection, the waterline of Brush Creek was located approximately 14.0 ft below the top of barrel at the downstream face, which corresponds to an assumed waterline elevation of 86 ft. During the inspection, the waterway was flowing at approximately 1.5 ft per second. The structure skew was consistent with the channel alignment and does not require attention at this time. The north and south shorelines consisted of unprotected, well vegetated gentle slopes with minor erosion and up to 2 ft vertical cut banks. Refer to Photographs 5 through 10 in Exhibit 2 for views of the shorelines near the structure.

## 2.2 Substructure Conditions

### *2.2.1 Wall 1*

The channel bottom material around Wall 1 consisted of masonry block with no probe rod penetration. A crack up to 1/2 in. wide was observed 15 ft from the downstream fascia through 9 courses of stone. A crack up to 1 in. wide was observed along the centerline through 8 courses of stone. Seepage with efflorescence was observed along the wall. The submerged portions of the wall exhibited moderate mortar loss up to 40% throughout with a typical depth of 3 in. deep. Refer to Figure 9 in Exhibit 1 for detailed inspection notes of Wall 1. Refer to Photographs 13 through 15 in Exhibit 2 for views of Wall 1 and the typical masonry condition at the waterline.

### *2.2.2 Wall 2*

The channel bottom material around Wall 2 consisted of masonry block with no probe rod penetration. A crack up to 1/2 in. wide was observed 15 ft from the downstream fascia through 9 courses of stone. A crack up to 1 in. wide was observed along the centerline through 8 courses of stone. Seepage with efflorescence was observed along the wall. The submerged portions of the wall exhibited moderate mortar loss up to 40% throughout with a typical depth of 3 in. deep. Refer to Figure 10 in Exhibit 1 for detailed inspection notes of Wall 2. Refer to Photographs 16 through 22 in Exhibit 2 for views of Wall 2.

## 3.0 EVALUATION AND RECOMMENDATIONS

Overall, the submerged substructure units of Structure No. SFN1505858 were in satisfactory condition below the water. Since no design or as-built plans were available for the structure, the amount of embedment of the masonry blocks is unknown. As a result, the channel bottom configuration should continue to be monitored during future underwater inspections to verify that additional mortar loss is not occurring and that the masonry blocks remain adequately embedded in the channel bottom. Design or as-built drawings for the structure should be obtained and reviewed, if possible, prior to the next underwater inspection to determine the exact construction of the masonry blocks.

The mortar loss observed in the masonry joints of the substructure units is not a serious structural concern at this time but should be re-pointed when convenient during a period of low water. Re-pointing the masonry joints will limit water infiltration and freeze-thaw damage. In addition, re-pointing the masonry joints will stabilize the individual masonry units and prevent stone displacement. The repairs should be carried out by a contractor with considerable experience in masonry construction and repairs. The joints should be repaired

by first removing all unsound mortar, vegetation, and debris. A repair mortar having the same properties as the original construction mortar should be used to carry out the repairs to verify that no adverse effects related to dissimilar mortars occur and that an "in-kind" repair is performed.

The embankment erosion along the north and south shoreline is not a concern at this time due to its location downstream of the structure and the adequately protected shorelines at the structure. However, the erosion should continue to be monitored during future underwater inspections for evidence of increasing extent and severity that may threaten the structural integrity of the structure.

It is recommended that the submerged substructure units of Structure No. SFN1505858 be next inspected underwater at an interval not to exceed 60 months, no later than May 4, 2027.

Respectfully Submitted,
COLLINS ENGINEERS, INC.

Matthew Rogers

Matthew Rogers, P.E.
Project Manager

Originated by:
Olivia Farmer, E.I.T.

# EXHIBIT 1 – FIGURES




COLLINS ENGINEERS
124 Venture Court, Ste 10
Lexington, KY 40511
Phone: 859-367-0097
Fax: 859-367-0140

Ohio Department of Transportation, District 11
2201 Reiser Ave.
New Philadelphia, OH 44663
Phone: 330-339-6633

# OH-644 OVER BRUSH CREEK
# STRUCTURE NO. SFN 1505858

## LOCATION MAP

COLUMBIANA COUNTY, OHIO

| | |
|---|---|
| INSPECTED BY: MOR | CEI PROJECT: 55−13280.01 |
| DRAWN BY: MLA | DATE: 25 MAY 2022 |
| CHECKED BY: JMJ | SHEET NO: 1 |

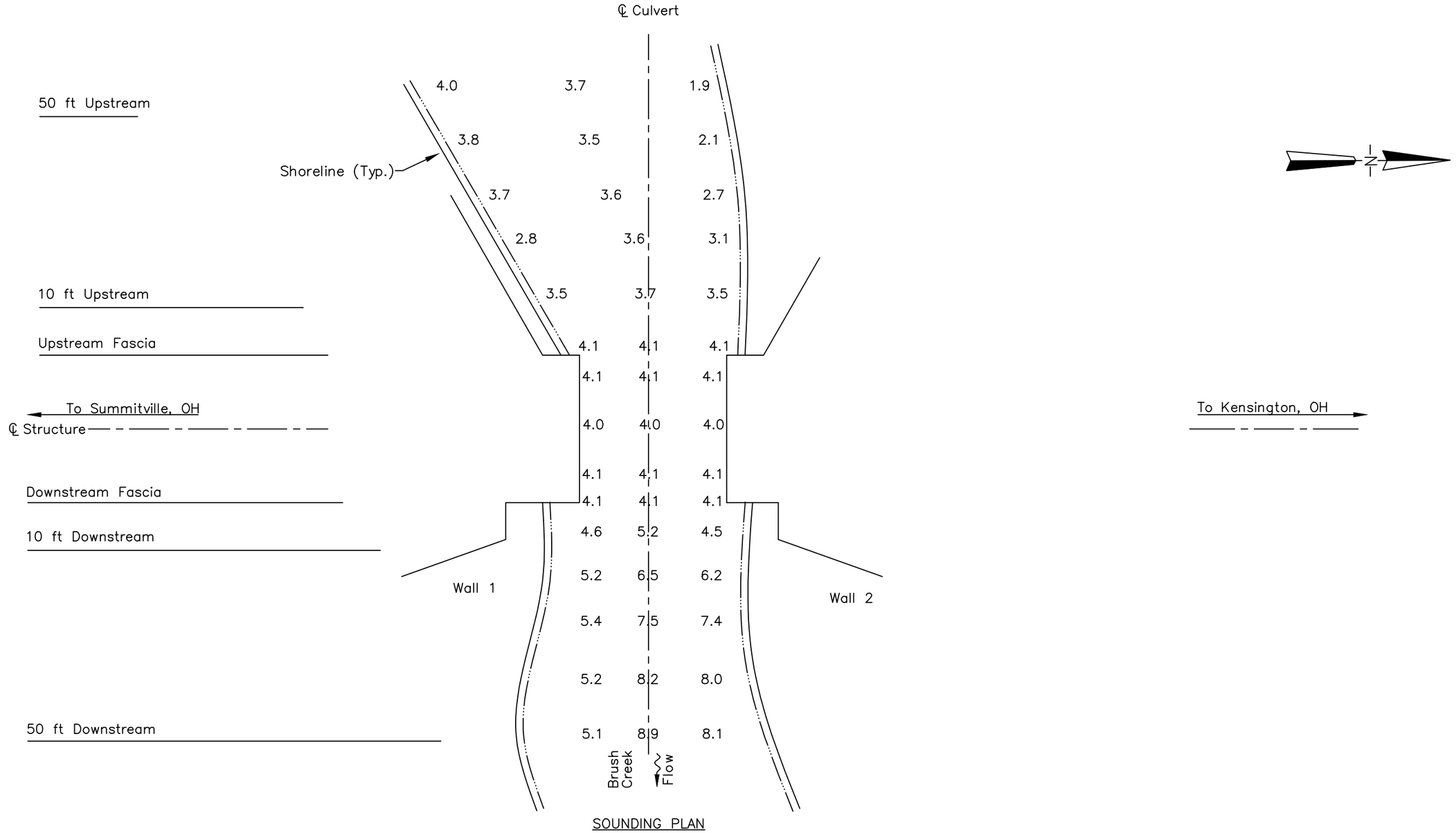


SOUNDING PLAN

GENERAL NOTES:

1. Wall 1 and 2 were inspected underwater.
2. At the time of inspection on May 4, 2022, the waterline was located approximately 14.0 ft below the top of barrel at the downstream face (EL. +100.0 ft). This corresponds with a waterline elevation of +86.0 ft.
3. Soundings indicate the water depth at the time of inspection and are measured in feet.
4. Soundings were taken parallel to the structure at the upstream and downstream fascias, at 10 ft intervals between the substructure units, and at 10 ft intervals in–line with the walls upstream and downstream up to 50 ft.

LEGEND

| | |
|---|---|
| –2.7 | Sounding Depth from Waterline (ft) |
| | Timber Debris |

COLLINS ENGINEERS
124 Venture Court, Ste 10
Lexington, KY 40511
Phone: 859-367-0097
Fax: 859-367-0140

Ohio Department of Transportation, District 11
2201 Reiser Avenue
New Philadelphia, OH 44663
Phone: 330-339-6633

# OH-644 OVER BRUSH CREEK
## STRUCTURE NO. SFN 1505858
## SOUNDING PLAN
COLUMBIANA COUNTY, OHIO

CEI PROJECT 55–13380.01
INSPECTED BY: MOR
DRAWN BY: MLA
CHECKED BY: JMJ
DATE: MAY 2022
SHEET NO: 2

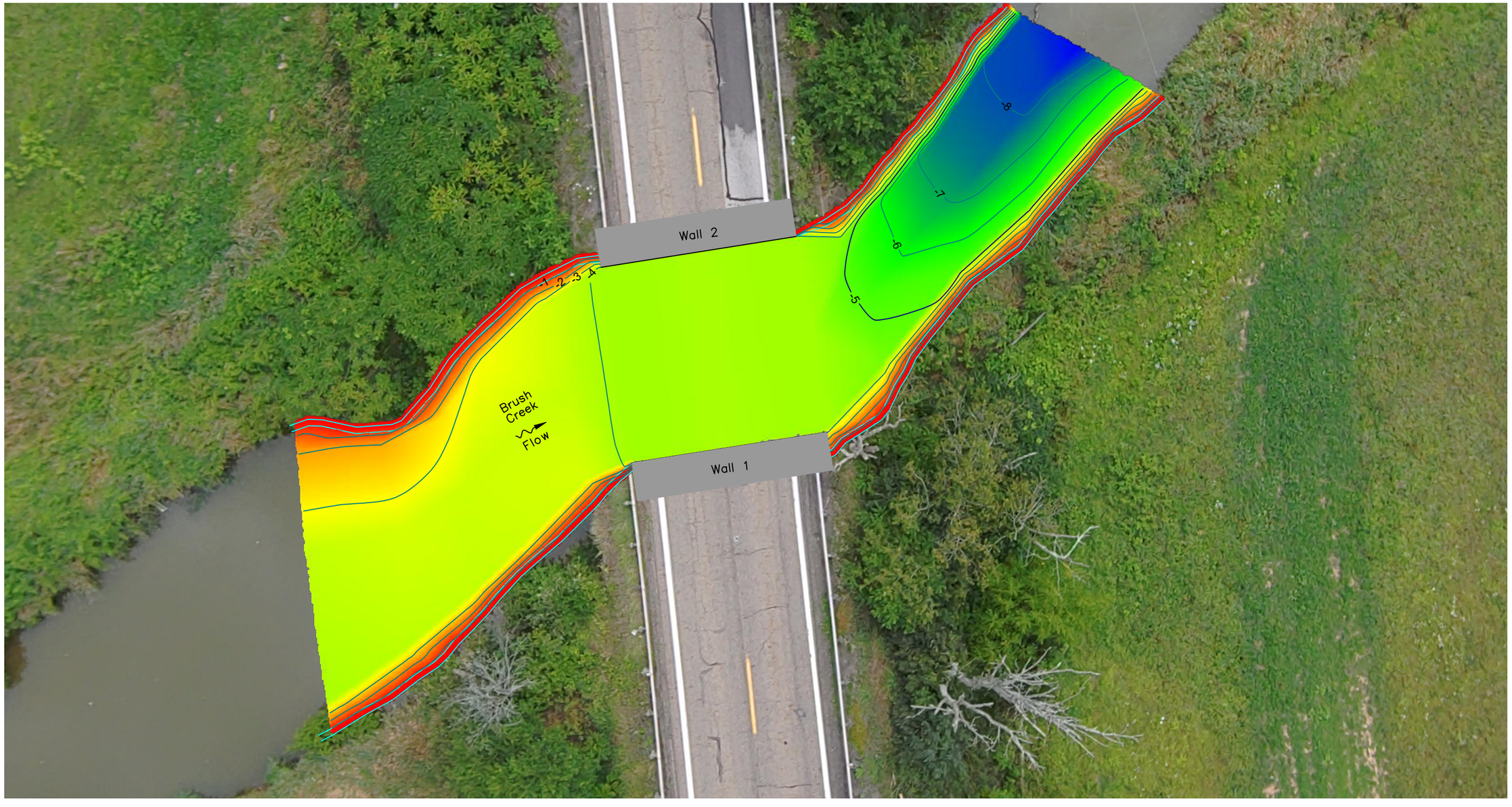


## GENERAL NOTES:

1. The hydrographic survey was completed on May 4, 2022 by Collins Engineers, Inc.
2. Soundings were obtained using a sounding pole.
3. All water depths are in feet and are referenced to the waterline elevation stated in the Structure Notes.
4. Base map information shown on this drawing shall be considered approximate.

## 2022 HYDROGRAPHIC SURVEY

SCALE: 1" = 16'

0 8' 16'

N

1

## LEGEND:

- Major Contour
- Minor Contour

## STRUCTURE NOTES:

1. The measured waterline elevation was 86.0 feet on the survey date of 05-04-2022.
2. The waterline was measured 14 feet below the top of barrel at the downstream face.
3. Access to the site was the northeast embankment at the structure. GPS Coordinates: N40.69565°, W80.88496°

COLLINS ENGINEERS
124 Venture Court, Ste 10
Lexington, KY 40511
Phone: 859-367-0097
Fax: 859-367-0140

Ohio Department of Transportation, District 11
2201 Reiser Ave.
New Philadelphia, OH 44663
Phone: 330-339-6633

# OH-644 OVER BRUSH CREEK
## STRUCTURE NO. SFN 1505858
## HYDROGRAPHIC SURVEY
COLUMBIANA COUNTY, OHIO

| | |
|---|---|
| CEI PROJECT | 55-13380.01 |
| INSPECTED BY: | MOR |
| DRAWN BY: | OPF |
| CHECKED BY: | JMJ |
| DATE: | MAY 2022 |
| SHEET NO: | 3 |

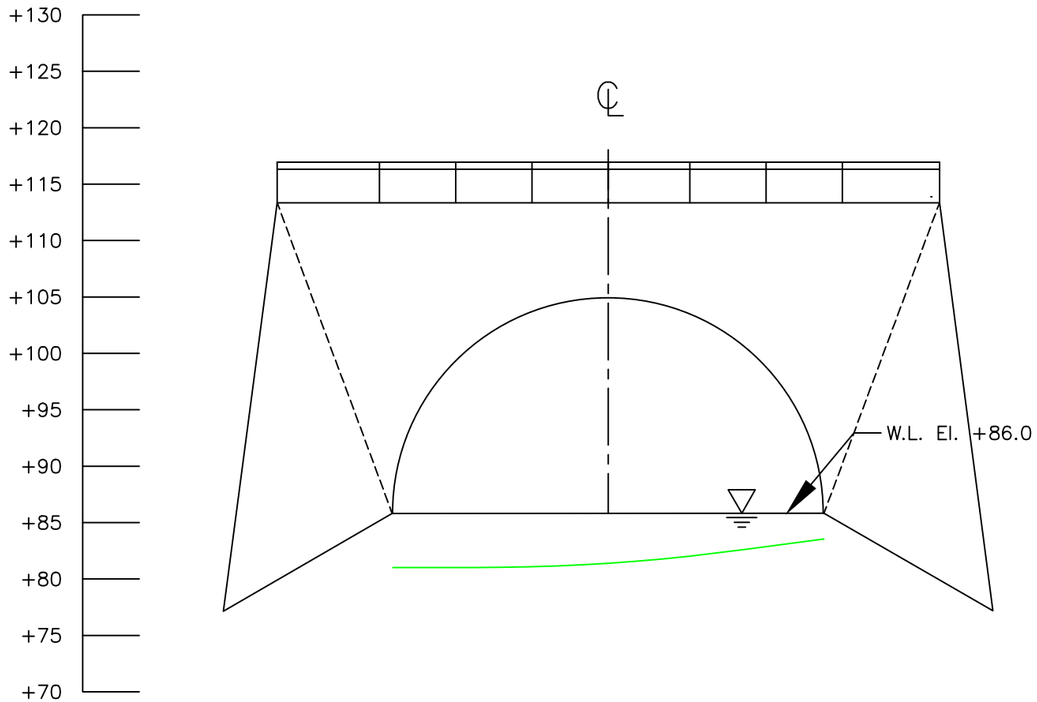


50 FT UPSTREAM CHANNEL
CROSS SECTION
(LOOKING DOWNSTREAM)

Note:

Footing elevations unknown due to unavailable record drawings.
Drawing not drawn to scale for clarity.

LEGEND

- Approximate Channel Bottom – May 2022
- Approximate Channel Bottom – May 2017 (No Data)
- Approximate Channel Bottom – May 2012 (No Data)
- Timber Debris
- Water Surface
- +450 Elevation (ft)

COLLINS ENGINEERS
124 Venture Court, Ste 10
Lexington, KY 40511
Phone: 859-367-0097
Fax: 859-367-0140

Ohio Department of Transportation, District 11
2201 Reiser Avenue
New Philadelphia, OH 44663
Phone: 330-339-6633

# OH-644 OVER BRUSH CREEK
## STRUCTURE NO. SFN 1505858
## CROSS SECTION - 50 FT US
COLUMBIANA COUNTY, OHIO

CEI PROJECT 55–13380.01
INSPECTED BY: MOR
DRAWN BY: MLA
CHECKED BY: JMJ
DATE: MAY 2022
SHEET NO: 4

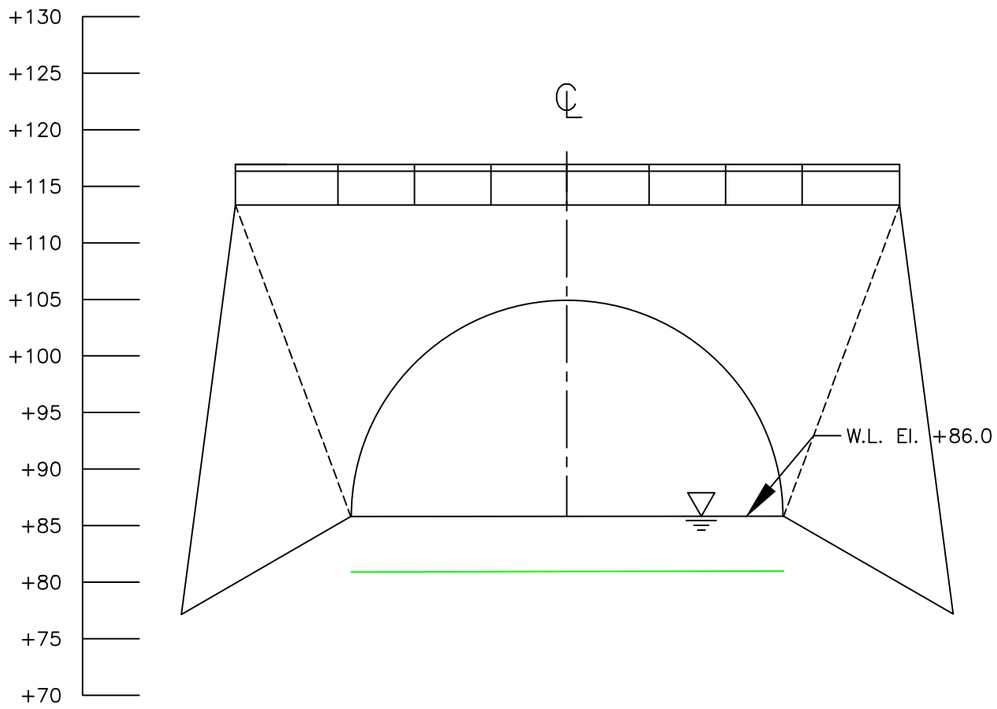


UPSTREAM FASCIA CHANNEL
CROSS SECTION
(LOOKING DOWNSTREAM)

Note:

Footing elevations unknown due to unavailable record drawings.
Drawing not drawn to scale for clarity.

LEGEND

- Approximate Channel Bottom – May 2022
- Approximate Channel Bottom – May 2017 (No Data)
- Approximate Channel Bottom – May 2012 (No Data)
- Timber Debris
- Water Surface
- +450 Elevation (ft)

COLLINS ENGINEERS
124 Venture Court, Ste 10
Lexington, KY 40511
Phone: 859-367-0097
Fax: 859-367-0140

Ohio Department of Transportation, District 11
2201 Reiser Avenue
New Philadelphia, OH 44663
Phone: 330-339-6633

# OH-644 OVER BRUSH CREEK
## STRUCTURE NO. SFN 1505858
## CROSS SECTION - US FASCIA
COLUMBIANA COUNTY, OHIO

CEI PROJECT 55–13380.01
INSPECTED BY: MOR
DRAWN BY: MLA
CHECKED BY: JMJ
DATE: MAY 2022
SHEET NO: 5

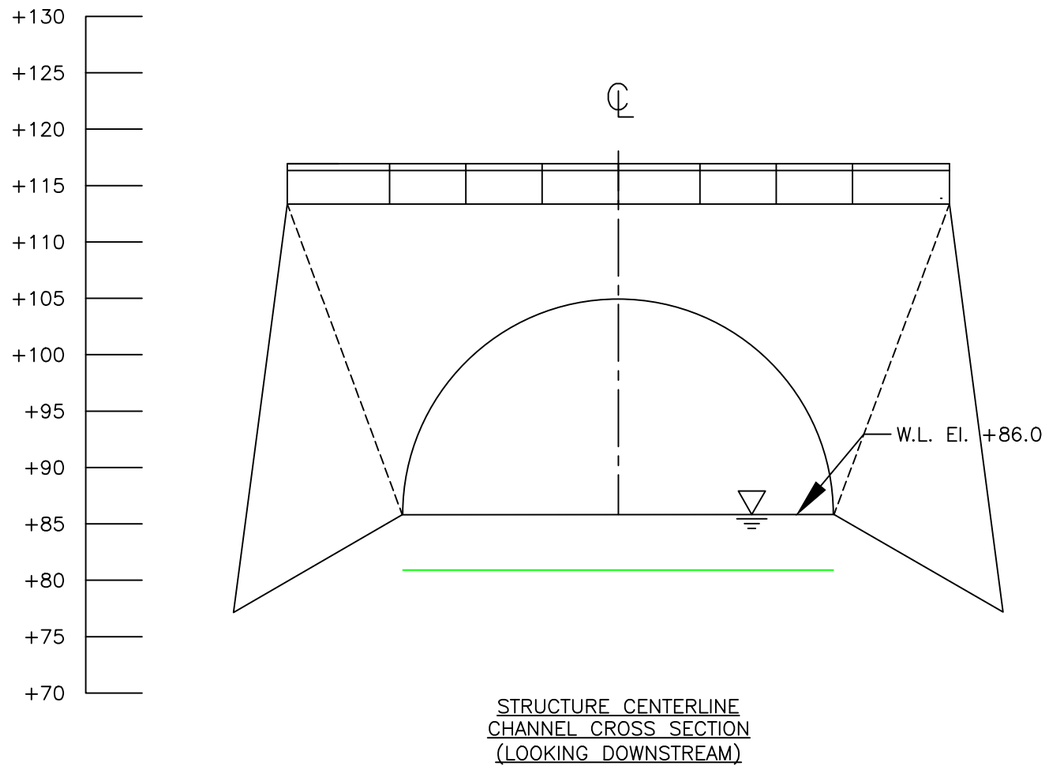


STRUCTURE CENTERLINE
CHANNEL CROSS SECTION
(LOOKING DOWNSTREAM)

Note:

Footing elevations unknown due to unavailable record drawings.
Drawing not drawn to scale for clarity.

LEGEND

- Approximate Channel Bottom – May 2022
- Approximate Channel Bottom – May 2017 (No Data)
- Approximate Channel Bottom – May 2012 (No Data)
- Timber Debris
- Water Surface
- +450 Elevation (ft)

COLLINS ENGINEERS
124 Venture Court, Ste 10
Lexington, KY 40511
Phone: 859-367-0097
Fax: 859-367-0140

Ohio Department of Transportation, District 11
2201 Reiser Avenue
New Philadelphia, OH 44663
Phone: 330-339-6633

# OH-644 OVER BRUSH CREEK
## STRUCTURE NO. SFN 1505858
## CROSS SECTION - STRUCTURE CL
COLUMBIANA COUNTY, OHIO

CEI PROJECT 55–13380.01
INSPECTED BY: MOR
DRAWN BY: MLA
CHECKED BY: JMJ
DATE: MAY 2022
SHEET NO: 6

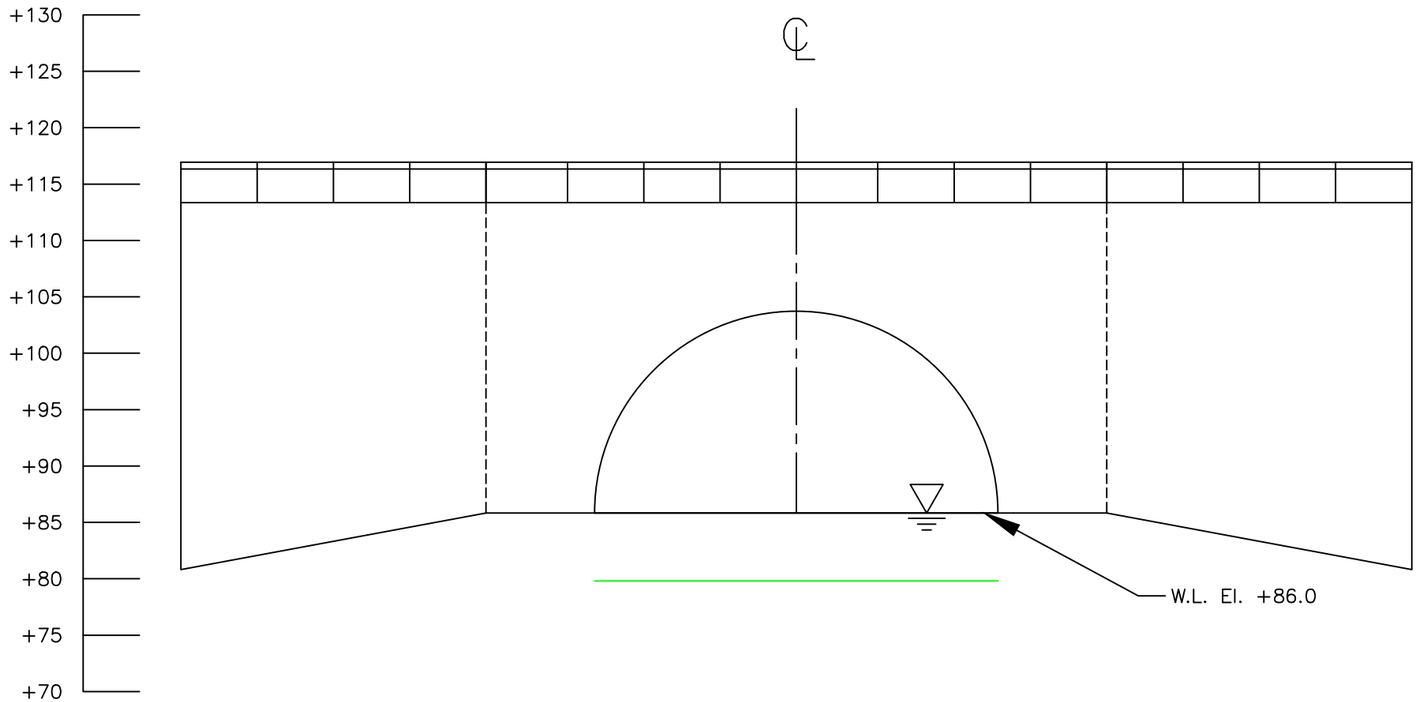


DOWNSTREAM FASCIA
CHANNEL CROSS SECTION
(LOOKING DOWNSTREAM)

LEGEND

| | |
|---|---|
| ——— | Approximate Channel Bottom – May 2022 |
| - - - - - | Approximate Channel Bottom – May 2017 (No Data) |
| – – – – | Approximate Channel Bottom – May 2012 (No Data) |
| | Timber Debris |
| | Water Surface |
| +450 | Elevation (ft) |

Note:

Footing elevations unknown due to unavailable record drawings.
Drawing not drawn to scale for clarity.

COLLINS ENGINEERS
124 Venture Court, Ste 10
Lexington, KY 40511
Phone: 859-367-0097
Fax: 859-367-0140

Ohio Department of Transportation, District 11
2201 Reiser Avenue
New Philadelphia, OH 44663
Phone: 330-339-6633

# OH-644 OVER BRUSH CREEK
## STRUCTURE NO. SFN 1505858
## CROSS SECTION - DS FASCIA
COLUMBIANA COUNTY, OHIO

| | |
|---|---|
| CEI PROJECT | 55–13380.01 |
| INSPECTED BY: | MOR |
| DRAWN BY: | MLA |
| CHECKED BY: | JMJ |
| DATE: | MAY 2022 |
| SHEET NO: | 7 |

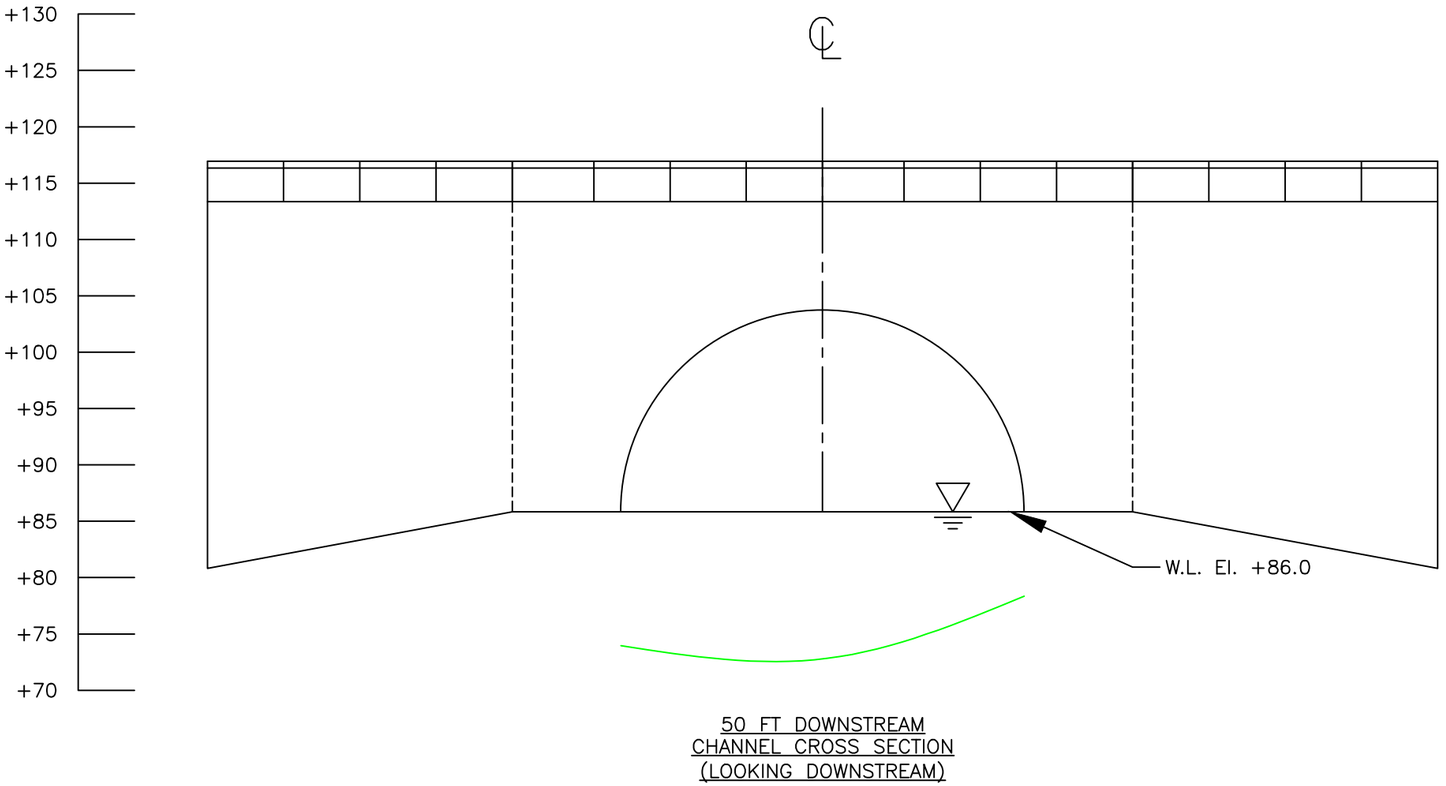


50 FT DOWNSTREAM
CHANNEL CROSS SECTION
(LOOKING DOWNSTREAM)

Note:

Footing elevations unknown due to unavailable record drawings.
Drawing not drawn to scale for clarity.

LEGEND

- Approximate Channel Bottom – May 2022
- Approximate Channel Bottom – May 2017 (No Data)
- Approximate Channel Bottom – May 2012 (No Data)
- Timber Debris
- Water Surface
- +450 Elevation (ft)

COLLINS ENGINEERS
124 Venture Court, Ste 10
Lexington, KY 40511
Phone: 859-367-0097
Fax: 859-367-0140

Ohio Department of Transportation, District 11
2201 Reiser Avenue
New Philadelphia, OH 44663
Phone: 330-339-6633

# OH-644 OVER BRUSH CREEK
## STRUCTURE NO. SFN 1505858
## CROSS SECTION - 50 FT DS
COLUMBIANA COUNTY, OHIO

CEI PROJECT 55–13380.01
INSPECTED BY: MOR
DRAWN BY: MLA
CHECKED BY: JMJ
DATE: MAY 2022
SHEET NO: 8

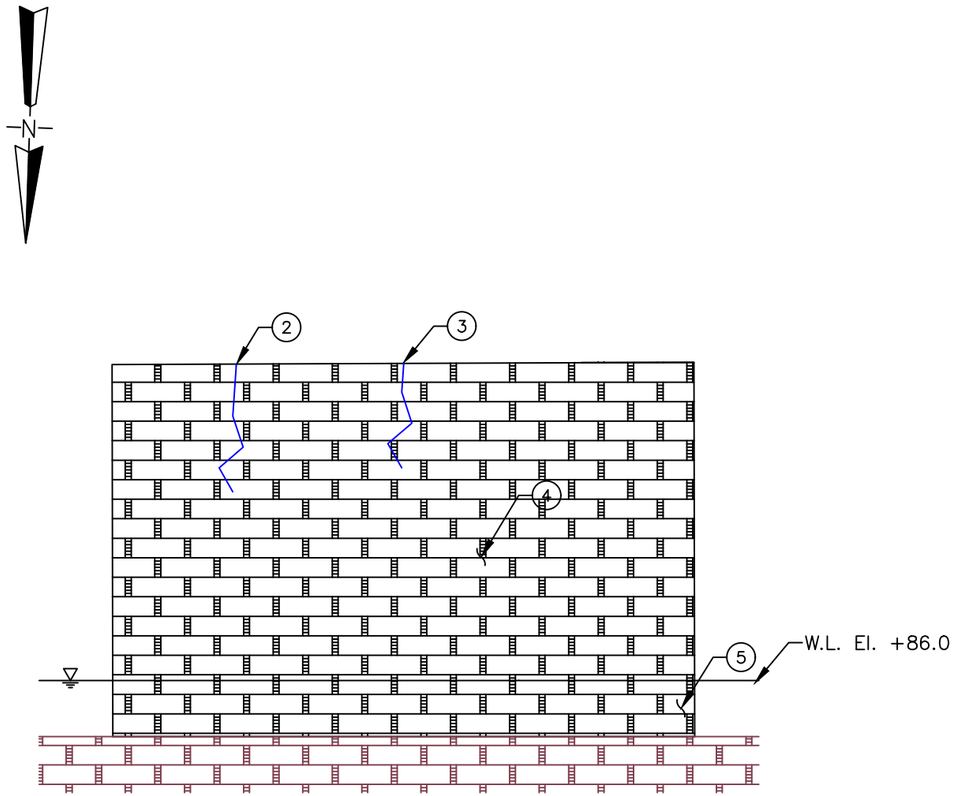


WALL 1
(LOOKING SOUTH)

Flow

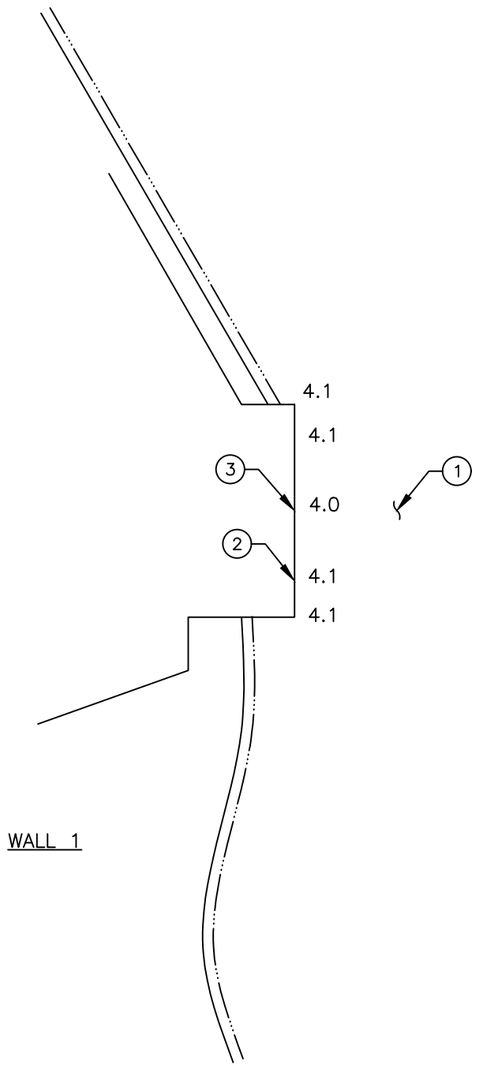


WALL 1

INSPECTION NOTES:

1. The channel bottom consisted of masonry block with no probe rod penetration.
2. A crack up to 1/2 in. wide was observed 15 ft from the downstream fascia through 9 courses of stone.
3. A crack up to 1 in. wide was observed along the centerline through 8 courses of stone.
4. Seepage with efflorescence was observed along the length of the wall.
5. The submerged portions of the wall exhibited moderate mortar loss up to 40% throughout with a typical depth of 3 in. deep.

LEGEND

| | |
|---|---|
| −2.7 | Sounding Depth from Waterline (ft) |
| | Approximate Channel Bottom−May 2022 |
| | Timber Debris |
| | Water Surface |
| | Crack |

COLLINS ENGINEERS
124 Venture Court, Ste 10
Lexington, KY 40511
Phone: 859-367-0097
Fax: 859-367-0140

Ohio Department of Transportation, District 11
2201 Reiser Avenue
New Philadelphia, OH 44663
Phone: 330-339-6633

OH-644 OVER BRUSH CREEK
STRUCTURE NO. SFN 1505858
WALL 1
COLUMBIANA COUNTY, OHIO

CEI PROJECT 55−13380.01
INSPECTED BY: MOR
DRAWN BY: MLA
CHECKED BY: JMJ
DATE: MAY 2022
SHEET NO: 9

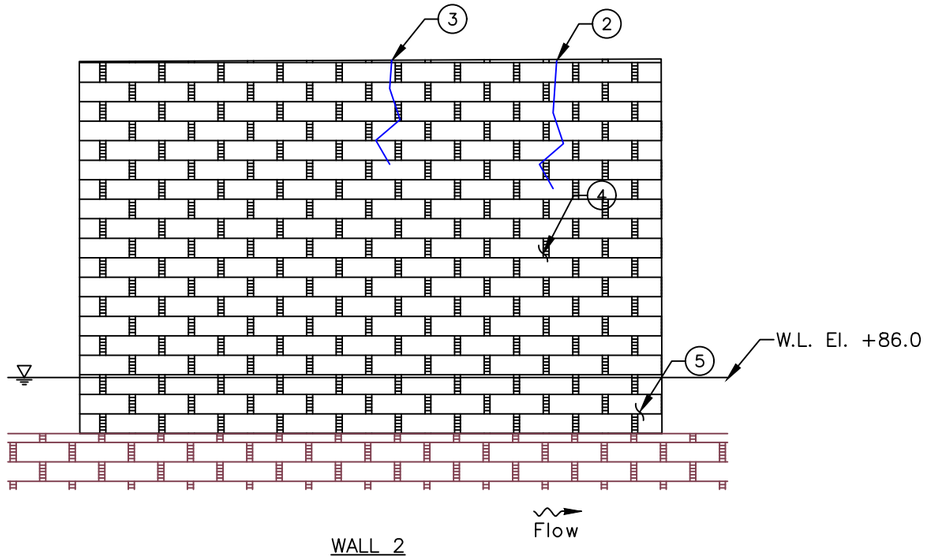


WALL 2

(LOOKING NORTH)

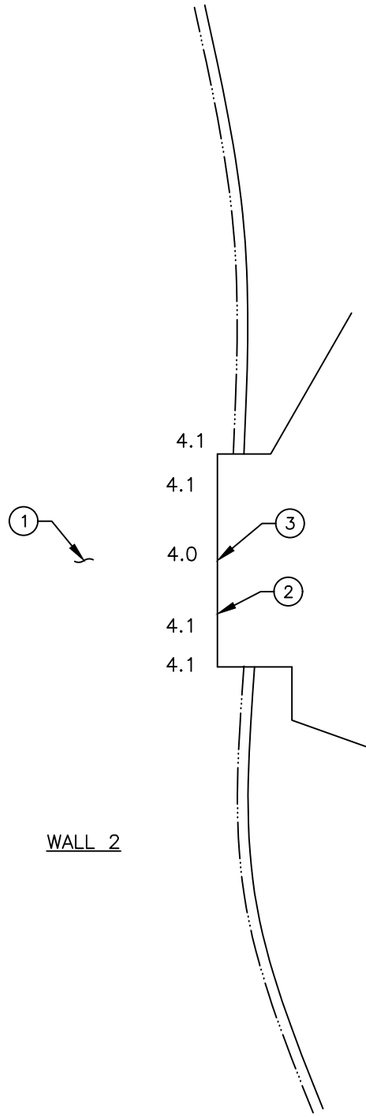


WALL 2

INSPECTION NOTES:

1. The channel bottom consisted of masonry block with no probe rod penetration.
2. A crack up to 1/2 in. wide was observed 15 ft from the downstream fascia through 9 courses of stone.
3. A crack up to 1 in. wide was observed along the centerline through 8 courses of stone.
4. Seepage with efflorescence was observed along the length of the wall.
5. The submerged portions of the wall exhibited moderate mortar loss up to 40% throughout with a typical depth of 3 in. deep.

LEGEND

| | |
|---|---|
| −2.7 | Sounding Depth from Waterline (ft) |
| | Approximate Channel Bottom−May 2022 |
| | Timber Debris |
| | Water Surface |
| | Crack |

COLLINS ENGINEERS
124 Venture Court, Ste 10
Lexington, KY 40511
Phone: 859-367-0097
Fax: 859-367-0140

Ohio Department of Transportation, District 11
2201 Reiser Avenue
New Philadelphia, OH 44663
Phone: 330-339-6633

OH-644 OVER BRUSH CREEK
STRUCTURE NO. SFN 1505858
WALL 2
COLUMBIANA COUNTY, OHIO

CEI PROJECT 55−13380.01
INSPECTED BY: MOR
DRAWN BY: MLA
CHECKED BY: JMJ
DATE: MAY 2022
SHEET NO: 10

# EXHIBIT 2 – INSPECTION PHOTOGRAPHS



Photograph No. 1: Overall View of Structure No. SFN1505858, Looking East.



Photograph No. 2: Overall View of Structure No. SFN1505858, Looking West.



Photograph No. 3: View of the North Approach of the Structure, Looking North.



Photograph No. 4: View of the South Approach of the Structure, Looking South.



Photograph No. 5: View of the Southeast Embankment Downstream of the Structure, Looking Southeast.



Photograph No. 6: View of the Northeast Embankment Downstream of the Structure, Looking Northeast.




Photograph No. 7: View of the Downstream Channel of the Structure, Looking East.



Photograph No. 8: View of the Northwest Embankment Upstream of the Structure, Looking Northwest.



Photograph No. 9: View of the Southwest Embankment Upstream of the Structure, Looking Southwest.



Photograph No. 10: View of the Upstream Channel of the Structure, Looking Southwest.



Photograph No. 11: View of the Interior Barrel, Looking East.



Photograph No. 12: View of the Interior Barrel, Looking West.



Photograph No. 13: View of Wall 1, Looking Southwest.



Photograph No. 14: View of Wall 1, Looking Southeast.



Photograph No. 15: View of the Typical Masonry Condition at the Waterline of Wall 1, Looking South.



Photograph No. 16: View of Wall 2, Looking Northwest.



Photograph No. 17: View of Wall 2, Looking Northeast.



Photograph No. 18: View of the Upper Portion of the Crack 15 ft from the Downstream Fascia in Wall 2, Looking North.



Photograph No. 19: View of the Lower Portion of the Crack 15 ft from the Downstream Fascia in Wall 2, Looking North.



Photograph No. 20: View of the Upper Portion of the Crack in the Block at the Centerline of Wall 2, Looking North.



Photograph No. 21: View of the Lower Portion of the Crack in the Block at the Centerline of Wall 2, Looking North.



Photograph No. 22: View of the Seepage at Wall 2, Looking North.

# EXHIBIT 3 – DIVE PROCEDURES CHECKLIST

**Underwater Dive Inspection Procedure Checklist**

Acceptable written procedures communicate to the next dive team what is necessary to ensure a safe and successful inspection. Each bridge requiring underwater dive techniques must have a unique written inspection procedure. The prior inspection report does not suffice for the required procedures. It is valuable to review the last inspection notes, but they do not serve the same purpose as a stand-alone inspection procedure.

This document shall be completed for all underwater dive inspections. This document shall be reviewed prior to performing the field work and it shall be updated when necessary.

## I. Bridge Identification

a. Agency with Inspection Responsibility: ODOT DISTRICT 11

Dive Frequency: 60 months

SFN: 1505858 Bridge Number (County-Route-SLM-SD): COL-644 -5.87

Superstructure Type Main Span Type: MASONRY CULVERT

Approach Span: 1

Substructure Type Abutment Type: N/A

Pier Type: N/A

Total Pier Count: N/A

Total Pier Count in water: N/A

Foundations: MASONRY

Feature Intersected BRUSH CREEK

**b. Photographs**



Endview



Elevation



Underside

## II. Office and Field Assessment

Prior to the inspection, obtain and review copies of the previous underwater inspection reports, routine inspection reports, scour and hydraulic information, and design plans in preparation of the inspection. Divers should pay particular attention given to any observed areas of deterioration, the channel conditions and factors that may accelerate material deterioration. Changes shall be noted in the inspection procedure. Site conditions should be reviewed prior to diving.

a. Channel Conditions

__X__Waterway features

____Rapid stream flows,

____Significant debris accumulation

____Constricted waterway openings

____Soft or unstable streambeds

____Meandering channels

____Other which may promote scour and undermining of substructure elements

____Navigable Waterway

____Flow Controls

b. Anticipated Water conditions which may affect the inspection

____Cold Water (Apprx. Temp____)

____Black water

____Rapid stream flows

____Near military facility

____Tribal fishing

____Water quality

____History of Log jams

c. Identify factors that may accelerate the deterioration of the bridge elements:

____Highly corrosive water

____Unprotected steel members

____Other

Risk Factor Narrative:

| |
|---|
| |

## III. **Contacts Prior to Work**

Dr. Waseem Khalifa, Ph. D., P.E.

District Bridge Engineer

2201 Reiser Avenue SE

New Philadelphia, OH 44663

(330) 308-7873

Point of contact for immediate action such as closing the bridge due to findings)

Contact Bridge Owner _____14_____ (number) days before the proposed underwater inspection.

Special contracting and scheduling procedures prior to inspection, include recommended lead time

| Entity | Contact Name and Title | Contact Phone | Lead Time |
|---|---|---|---|
| Coast Guard | N/A | N/A | N/A |
| Property Owner | N/A | N/A | N/A |
| Access Equipment | N/A | N/A | N/A |
| Lake or River draw-down | N/A | N/A | N/A |
| Canal dry time | N/A | N/A | N/A |
| Tree removal | N/A | N/A | N/A |
| Other: | N/A | N/A | N/A |
| Other: | N/A | N/A | N/A |

IV. **Dive Team Shall Include the Following:**

Dive Team Narrative:

| |
|---|
| The structure shall be investigated using a three-member dive team: one dive supervisor to monitor communications and air supply while taking notes, one diver, and one tender/standby diver. There shall be one NBIS Team Leader onsite at all times. |

*Example: The Bridge shall be investigated using a three-member dive team: one supervisor to monitor rack box and take notes, one diver, and one tender/standby diver. There shall be one NBIS Team Leader onsite at all times.*

**V. Site Information**

Navigable waterway: Y / N

If Yes, waterway river point _____

Anticipated water visibility depth 1 ft

Anticipated Dive depth 4.6 ft

Anticipated current 1.5 ft

Scour Critical (item 113): 8

POA in place: Y/N

Scour Monitoring devices present: Y/N

Verify the Scope of Services when work is contracted for the procedure for underwater elements that are not in water during an inspection.

Site Information Narrative:

| |
|---|
| |

The underwater inspection consists of a visual and tactile examination of the accessible surfaces of the substructure items in water. Additional items should reference the scope of services in the contract. For reference the following items are in water:

| Item | Number of Units | Level of Inspection (1, 2 or 3) with Commentary |
|---|---|---|
| Piers and Number of Columns | | |
| Abutment | | |
| Culvert | 1 | 100% Level 1<br>10% Level 2 |
| Scour Countermeasures | | |
| Fenders or Dolphins | | |

Photographs should be taken, if water clarity permits, for typical conditions, conditions that have changed since last inspection and significant or noteworthy deficiencies. The type of channel bottom material, the presence or extent of scour, the presence or extent of riprap, the presence or extent of drift and debris, and the location of any foundation exposure or undermining shall be quantified. Include depth, length, height and location of deficiencies.

VI. **Equipment and Field Logistics**

a. The inspection should be conducted using:

____Chest waders

____Hip waders

_X_Diving equipment

____SCUBA (Note that ADCI Consensus Standards require communication systems be employed for both SCUBA and Surface-Supplied (whether air or mixed-gas) dive modes)

____SCUBA with communication

_X_Surface Supplied with communication

b. The channel bottom should be sounded utilizing

_X_Digital fathometer

_X_Telescoping survey rod

____ acoustic imaging

c. During the inspection, the divers should work from

_X_Shore

____Boat

____Either

The note taker should work alongside the dive team.

d. Access to the waterway should be obtained from the shore (north bank, southwest quadrant, driveway 30 yards north etc.)

NORTHEAST EMBANKMENT AT THE STRUCTURE

e. The maximum depth of the channel is typically measured 4.6 feet from DOWNSTREAM NOSE OF WALL 2

Reference Datum CULVERT INVERT AT DOWNSTREAM FASCIA

Soundings should be dictated by the scope of work. When not detailed in the scope they should be repeated from the previous soundings. If neither exist then they need to be taken in a grid pattern between substructure units 100’ upstream and 100’ downstream.

## VII. Inspection Procedure History

Created: COLLINS ENGINEERS INC. Date: 7/8/2022

Updated By: _____ Date: _____

Updated By: _____ Date: _____

Updated By: _____ Date: _____

Updated By: _____ Date: _____

Updated By: _____ Date: _____

## VIII. Other Narrative Not Included In Previous Sections