







UNDERWATER BRIDGE INSPECTION REPORT

STRUCTURE NO. SFN 7904266
(TUS-212-3.49)
SR-212 OVER TUSCARAWAS RIVER
TUSCARAWAS COUNTY, OH
DISTRICT 11

June 2022

Prepared for:

STATE OF OHIO DEPARTMENT OF TRANSPORTATION

STATE OF OHIO
MATTHEW ROGERS
PE.87504
REGISTERED PROFESSIONAL ENGINEER

Prepared by:

COLLINS ENGINEERS INC.

124 Venture Court, Suite 10

Lexington, Kentucky 40511

859.367.0097 • www.collinsengr.com

TABLE OF CONTENTS

EXECUTIVE SUMMARY
1.0 INTRODUCTION 1
1.1 Purpose and Scope 1
1.2 General Description of the Structure 1
1.3 Method of Investigation 1
2.0 EXISTING CONDITIONS 2
2.1 General Conditions 2
2.2 Substructure Conditions 3
2.2.1 Pier 2 3
2.2.2 Pier 3 3
2.2.3 Pier 4 3
2.2.4 Channel Bottom and Scour Assessment 3
3.0 EVALUATION AND RECOMMENDATIONS 4
EXHIBIT 1 – FIGURES 5
LOCATION MAP
SOUNDING PLAN
CHANNEL CROSS SECTIONS – 50 FT UPSTREAM & UPSTREAM FASCIA
CHANNEL CROSS SECTIONS – STRUCTURE CENTERLINE
CHANNEL CROSS SECTIONS – 50 FT DOWNSTREAM & DOWNSTREAM FASCIA
PIER 2
PIER 3
PIER 4
EXHIBIT 2 – INSPECTION PHOTOGRAPHS 14
Photograph No. 1: Overall View of Structure No. SFN 7904266, Looking Southwest.
Photograph No. 2: Overall View of Structure No. SFN 7904266, Looking Northeast.
Photograph No. 3: West Approach of Structure No. SFN 7904266, Looking Northeast.
Photograph No. 4: East Approach of Structure No. SFN 7904266, Looking Northwest.
Photograph No. 5: View of the East Embankment Upstream of the Structure, Looking Northeast.
Photograph No. 6: View of the East Embankment at the Structure, Looking Northeast.
Photograph No. 7: View of the East Embankment Downstream of the Structure, Looking Southeast.
Photograph No. 8: View of the West Embankment Upstream of the Structure, Looking Northeast.
Photograph No. 9: View of the West Embankment at the Structure, Looking West.

Photograph No. 10: View of the West Embankment Downstream of the Structure, Looking Southwest.
Photograph No. 11: View of the West Face of Pier 2, Looking Southeast.
Photograph No. 12: View of the East Face of Pier 2, Looking Northwest.
Photograph No. 13: View of the East Face of Pier 2 Timber Debris, Looking Northwest.
Photograph No. 14: View of the West Face of Pier 3, Looking Southeast.
Photograph No. 15: View of the East Face of Pier 3, Looking West.
Photograph No. 16: View of the Typical Concrete Condition at the Waterline on the Upstream Nose of Pier 3, Looking Southwest.
Photograph No. 17: View of the East Face of Pier 4, Looking Northwest.
Photograph No. 18: View of the West Face of Pier 4, Looking Northwest.
EXHIBIT 3 – DIVE PROCEDURE CHECKLIST 24

EXECUTIVE SUMMARY

Project: ODOT D11 Underwater Bridge Inspections - 2022.

Purpose of Project: To perform a detailed visual and tactile underwater investigation of bridges for District 11 of the Ohio Department of Transportation.

Inspection Team: Team Leader – Matthew Rogers, P.E. – Collins Engineers, Inc.
Team Member – Kevin Mitchell, E.I.T. – Collins Engineers, Inc.
Team Member – Joshua Davis, E.I.T. – Collins Engineers, Inc.

Inspection Date(s): June 28, 2022

Water Visibility:	3 ft	***Water Velocity:***	<1 ft/s
Water Temperature:	75 °F	***Weather:***	Sunny – 78 °F
Waterline Elevation:	884.75 ft	***Type of Boat:***	10 ft Kayak
High-water Elevation:	893.4 ft		
Coordinates:	40.642602°N, 81.448697°W		
Access Location:	East Embankment of SFN 7904266		
Dive Mode:	Wading		
Waterline Reference:	19.0 ft below the top of deck at the upstream nose of Pier 3.		
Maximum Depth at SSU:	5.1 ft – Downstream Nose of Pier 3		
Shoreline Conditions:	The east and west shorelines consisted of a well-protected mild slope with minor erosion and heavy vegetation.		

Summary of Findings:

- **Pier 2:**
  - Moderate timber debris accumulation consisting of branches up to 2 in. diameter was observed on the channel bottom extending from the pier to 50 ft upstream and downstream and 10 ft off east face.
- **Pier 3:**
  - An area of moderate scaling and abrasion up to 3 ft vertical by 8 ft horizontal was observed extending from the upstream nose to the east and west faces.

Summary of Recommendations:

- Monitor timber debris accumulation at Pier 2.
- Monitor scaling and abrasion on Pier 3.

Underwater Inspection Coding:

NBI Ratings:

Item	Description	Coding	Condition
B.C.03	Substructure (Overall)	7 – Good Condition	Moderate Concrete Scaling and Abrasion
B.C.09	Channel Cond. Rating	7 – Good Condition	Minor Erosion, Timber Debris Accumulation
B.C.10	Channel Protection Cond.	5 – Fair Condition	
B.C.11	Scour Cond. Rating	8 – Above Foundation Limits	Stable (Inspector Recommended)
B.C.15	Underwater Cond. Rating	7 – Good Condition	
B.IE.03	Insp. Date	June 28, 2022	
B.IE.05	UW Insp. Interval	60 Months	

AASHTO National Bridge Element (NBE) Ratings:

Element #	Description	Units	Total	Condition State			
				1	2	3	4
210	Reinforced Concrete Pier Wall	LF	60	54	6	0	0

Note: Ratings were developed using the FHWA Specifications for the National Bridge Inventory. The recommended ratings consider inspected elements located within the waterway and conditions existing below the water surface only. Additional consideration is necessary for the assignment of overall condition ratings for this bridge.

1.0 INTRODUCTION

1.1 Purpose and Scope

This report consists of the results of a detailed underwater investigation performed at the SR-212 Bridge over Tuscarawas River in Tuscarawas County, OH. Collins Engineers, Inc. (Collins) conducted the underwater investigation for the Ohio Department of Transportation (ODOT), District 11 on June 28, 2022. The primary purpose of the investigation was as follows:

- Determine the condition of the substructure components located in the water at the time of the inspection from the waterline to the channel bottom.
- Obtain channel bottom depth measurements along the bridge fascias, upstream and downstream of the bridge, and around the submerged substructure units.
- Determine the condition of the shorelines in the vicinity of the structure.
- Obtain photographs of the bridge and any significant defects.

In addition, a brief inspection was made of areas that could be submerged during periods of high water. The following report includes a description of the structure, the method of investigation, a description of existing conditions, an evaluation and recommendations based on the conditions, inspection figures, and photographs.

1.2 General Description of the Structure

Structure No. SFN 7904266 spans 273 ft, carrying SR-212 over Tuscarawas and is approximately 44 ft wide. The bridge superstructure is constructed of four spans, each composed of five continuous steel girders. The roadway orientation of the longitudinal axis of the bridge is west to east. The substructure units are labeled as Abutments 1 and 5 and Piers 2 through 4. Previous inspection reports were available at the time of the inspection. Refer to Figure 1 in Exhibit 1 for a Location Map of the bridge. Refer to Photographs 1 through 4 in Exhibit 2 for overall views of the bridge.

1.3 Method of Investigation

A detailed field inspection was conducted to determine the physical condition of the submerged bridge substructure units from the waterline to the channel bottom. A brief visual examination of the substructure units above the waterline was also made.

A three-person team consisting of a professional engineer-diver and team leader (Matthew O. Rogers, P.E.) and engineer-divers (Kevin Mitchell, E.I.T. and Joshua Davis, E.I.T.) conducted the underwater inspection. The inspection was conducted through wading. During the inspection, the inspector worked from the shore while a notetaker took notes on the shore.

The underwater inspection consisted of a visual and tactile examination of the accessible surfaces of the substructure units from the waterline to the channel bottom with particular attention given to any observed areas of deterioration or apparent distress. Approximately 10 percent of the total area on the underwater surfaces of the substructure units was cleaned so that the condition could be more closely examined. Photographs were taken to document the general conditions and observed deficiencies. The type of channel bottom material, the presence or extent of scour, the presence or extent of riprap, the presence or extent of drift and debris, and the location of any foundation exposure or undermining were noted.

Channel bottom soundings were performed utilizing a telescoping survey rod. Soundings were taken parallel to the bridge at the upstream and downstream fascias and 50 ft upstream and downstream of the fascias, at quarter intervals between the substructure units, and at 10 ft intervals in-line with the piers upstream and downstream up to 50 ft. The waterline was referenced to a known elevation on the bridge. A sounding plan was developed using the soundings and approximate location of the shorelines. Refer to Figures 2 through 5 in Exhibit 1 for the sounding plan and channel cross sections that show the channel limits and water depths around the structure.

2.0 EXISTING CONDITIONS

2.1 General Conditions

At the time of the inspection, the waterline of Tuscarawas River was located approximately 19.0 ft below the top of deck at the upstream nose of Pier 3, which corresponds to a waterline elevation of 884.75 ft. During the inspection, the waterway was flowing north to south below the structure at a rate of less than 1 ft/s. The approximate high-water elevation was observed to be 893.4 ft.

The bridge pier skew was consistent with the channel alignment and does not require attention at this time. The east and west shorelines consisted of a well-protected mild slope with minor erosion and heavy vegetation. Refer to Photographs 5 through 10 in Exhibit 2 for views of the shorelines near the structure.

2.2 Substructure Conditions

2.2.1 Pier 2

The channel bottom material around Pier 2 consisted of riprap and cobbles with approximately 2 in. probe rod penetration. Typical light marine growth algae and silt up to 1/8 in. deep was observed on the submerged portions of the pier. Moderate timber debris accumulation consisting of branches up to 2 in. diameter was observed on the channel bottom extending from the pier to 50 ft upstream and downstream and 10 ft off east face. Refer to Figure 6 in Exhibit 1 for detailed inspection notes of Pier 2. Refer to Photographs 11 through 13 in Exhibit 2 for views of Pier 2.

2.2.2 Pier 3

The channel bottom material around Pier 3 consisted of sand and cobbles with approximately 2 in. probe rod penetration. Typical light marine growth algae and silt up to 1/8 in. deep was observed on the submerged portions of the pier. An area of moderate scaling and abrasion up to 3 ft vertical by 8 ft horizontal was observed extending from the upstream nose to the east and west faces. Refer to Figure 7 in Exhibit 1 for detailed inspection notes of Pier 3. Refer to Photographs 14 through 16 in Exhibit 2 for views of Pier 3 and typical concrete condition at the waterline.

2.2.3 Pier 4

The channel bottom material around Pier 4 consisted of sand, gravel and cobbles with approximately 2 in. probe rod penetration. Typical light marine growth algae and silt up to 1/8 in. deep was observed on the submerged portions of the pier. Refer to Figure 8 in Exhibit 1 for detailed inspection notes of Pier 4. Refer to Photographs 17 and 18 in Exhibit 2 for views of Pier 4.

2.2.4 Channel Bottom and Scour Assessment

At the time of the inspection, the Tuscarawas River was experiencing normal flow and the channel bottom appeared stable for the type of material. The channel bottom was primarily sand and cobbles surrounding the substructure units. No additional scour, undermining, or scour countermeasures were observed.

3.0 EVALUATION AND RECOMMENDATIONS

Overall, the inspected substructure units of Structure No. SFN7904266 were in good condition. A comparison of the soundings recorded during the previous inspection on July 18, 2017 and the soundings taken during this inspection revealed no significant change in the channel bottom profile in the vicinity of the structure. Although no channel deficiencies were observed, the channel bottom should continue to be monitored during future underwater inspections to verify that localized scour or overall channel degradation is not occurring and that the pier footings remain adequately embedded in the channel bottom.

The timber debris accumulation at Pier 2 did not significantly affect the channel flow, and as a result, does not require removal at this time. If the debris accumulation increases in size or density, it may be necessary to remove the debris to reduce excessive lateral loads on the substructures, limit further debris accumulation, and reduce the likelihood of channel bottom degradation resulting from obstructed flow.

The scaling observed on Pier 3 is not a structural concern at this time given its size compared to the overall pier size, and as a result, no repairs are recommended. This area should be monitored during future inspections for increasing extent or severity of the scaling and exposure of reinforcing steel. If the extent or severity of the scaling is observed to be increasing or reinforcing steel becomes exposed, it may be necessary to repair the area at that time.

It is recommended that the submerged substructure units of Structure No. SFN 7904266 be next inspected underwater at an interval not to exceed 60 months, no later than June 28, 2027.

Respectfully Submitted,
COLLINS ENGINEERS, INC.

Matthew Rogers

Matthew O. Rogers, P.E.
Project Manager

Originated by:
Victor Valdivia, E.I.T.

EXHIBIT 1 – FIGURES

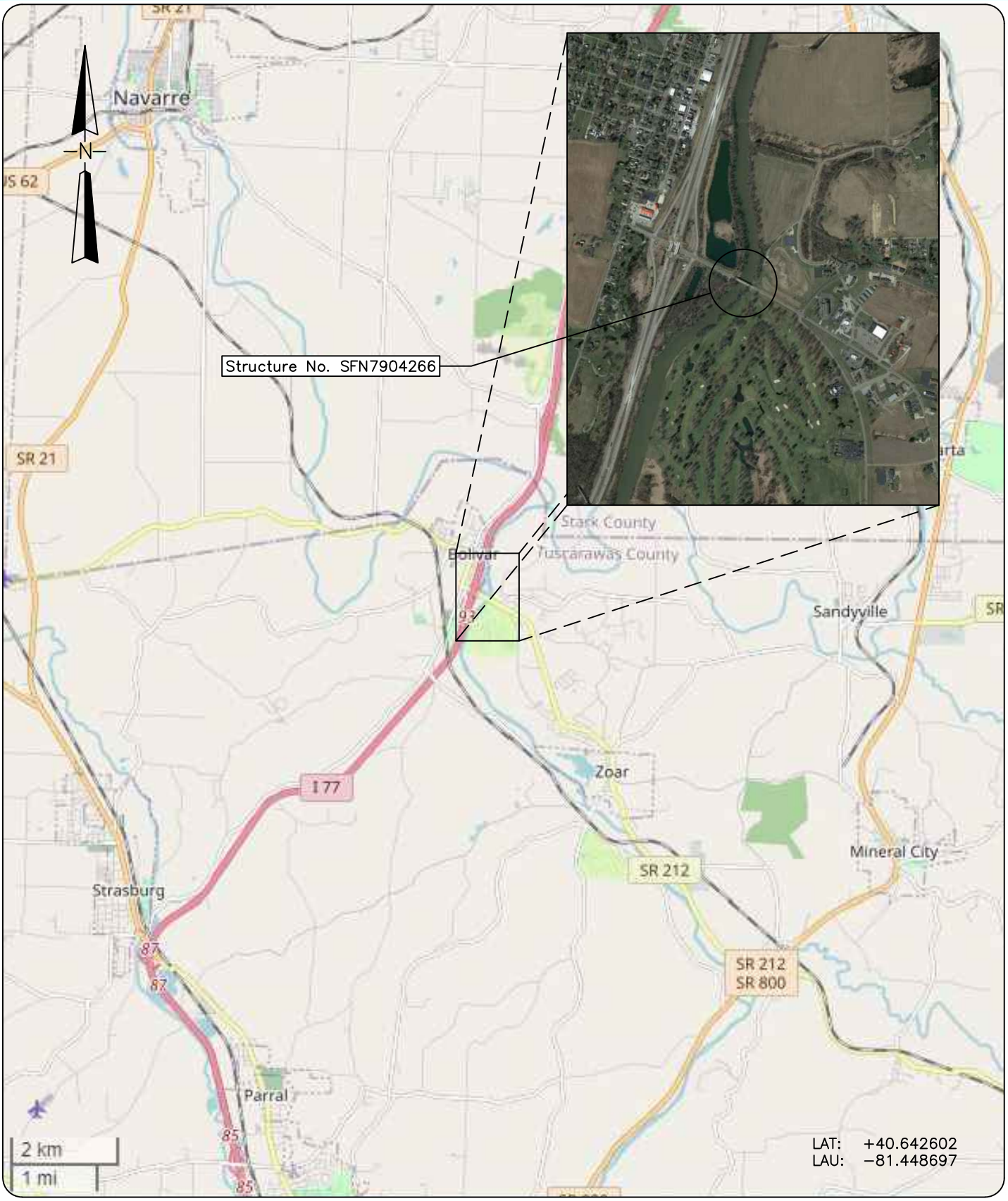

COLLINS ENGINEERS
124 Venture Court, Ste 10
Lexington, KY 40511
Phone: 859-367-0097
Fax: 859-367-0140

Ohio Department of Transportation, District 11
2201 Reiser Ave.
New Philadelphia, OH 44663
Phone: (330) 339-6633

SR-212 OVER TUSCARAWAS RIVER
STRUCTURE NO. SFN7904266

LOCATION MAP

TUSCARAWAS COUNTY, OHIO

INSPECTED BY: MOR	CEI PROJECT: 55−13380.01
DRAWN BY: VTV	DATE: 28 JUN 2022
CHECKED BY: JMJ	SHEET NO: 1

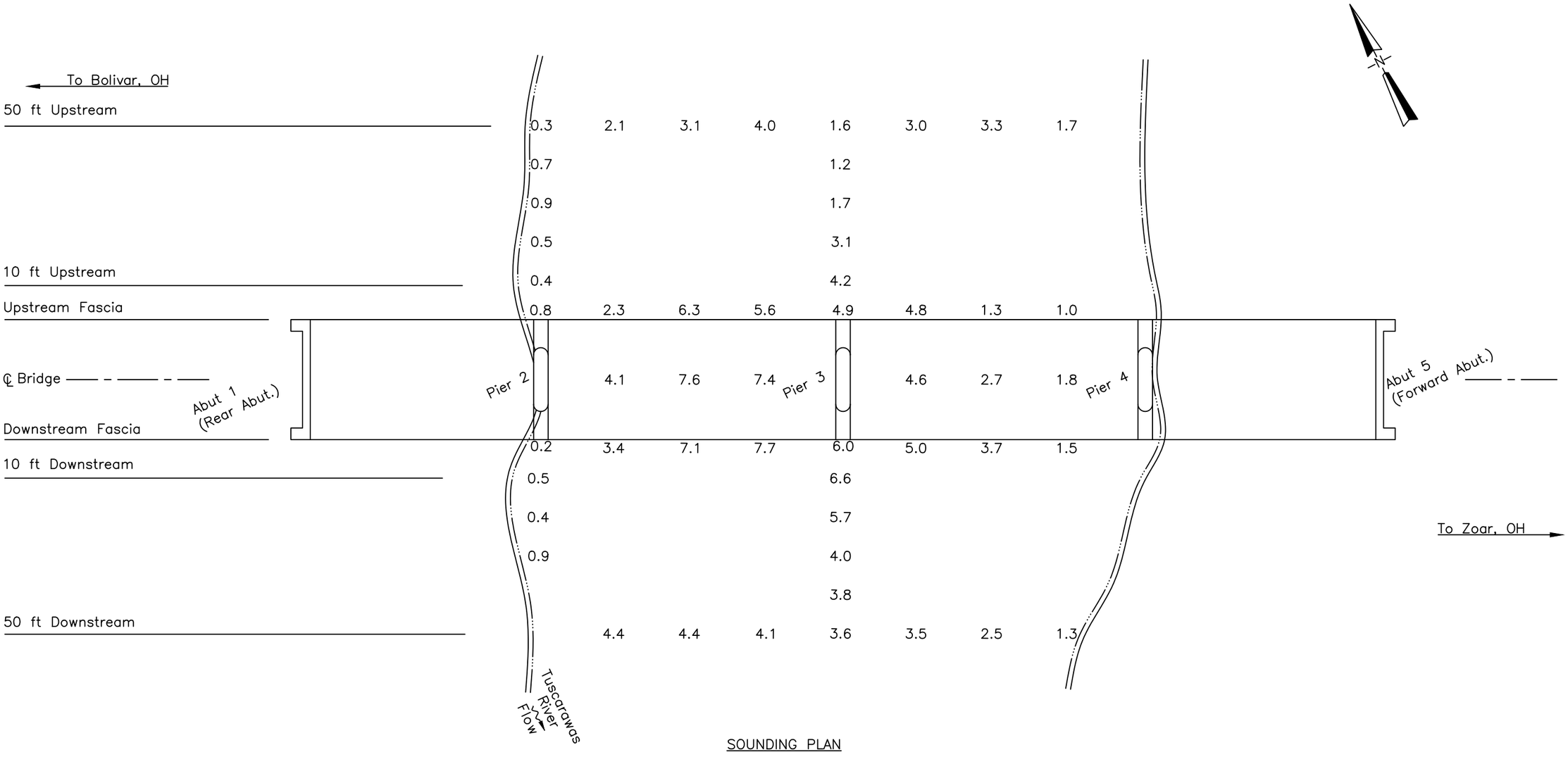

SOUNDING PLAN

GENERAL NOTES:

1. Piers 2 through 4 were inspected underwater. Substructure units are labeled according to available record drawings.
2. At the time of inspection on June 28, 2022, the waterline was located approximately 19.0 ft below the top of deck at Pier 3, upstream (North) side. (Assumed EL. +903.75 ft). This corresponds with a waterline elevation of +884.75 ft.
3. Soundings indicate the water depth at the time of inspection and are measured in feet.
4. Soundings were taken parallel to the bridge at the upstream and downstream fascias and 50 ft upstream and downstream of the fascias, at quarter intervals between the substructure units, and at 10 ft intervals in–line with the piers upstream and downstream up to 50 ft.

LEGEND

2.7 Sounding Depth from Waterline (ft)

Timber Debris

COLLINS ENGINEERS
124 Venture Court, Ste 10
Lexington, KY 40511
Phone: 859-367-0097
Fax: 859-367-0140

Ohio Department of Transportation, District 11
2201 Reiser Ave.
New Philadelphia, OH 44663
Phone: (330) 339-6633

SR-212 OVER TUSCARAWAS RIVER
BRIDGE NO. TUS-212-0343
SOUNDING PLAN
TUSCARAWAS COUNTY, OHIO

CEI PROJECT 55–13380.01
INSPECTED BY: MOR
DRAWN BY: VTV
CHECKED BY: JMJ
DATE: JUN 2022
SHEET NO: 2

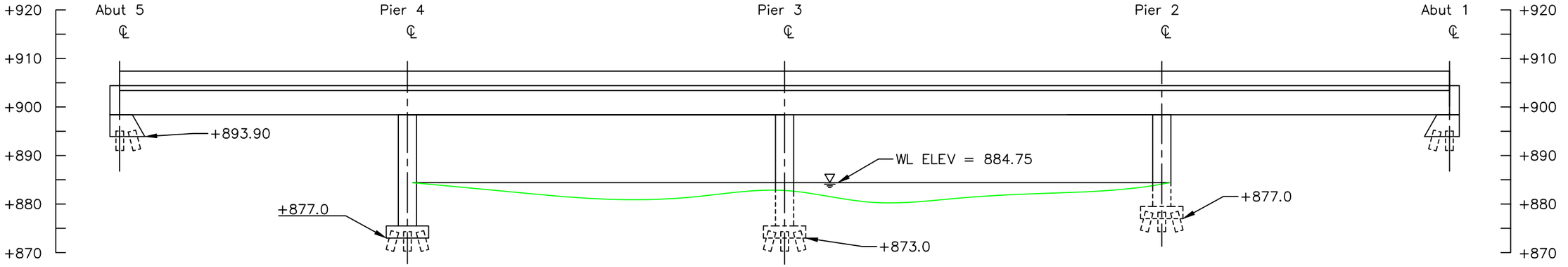

50 FT UPSTREAM
CHANNEL CROSS SECTION
(LOOKING DOWNSTREAM)

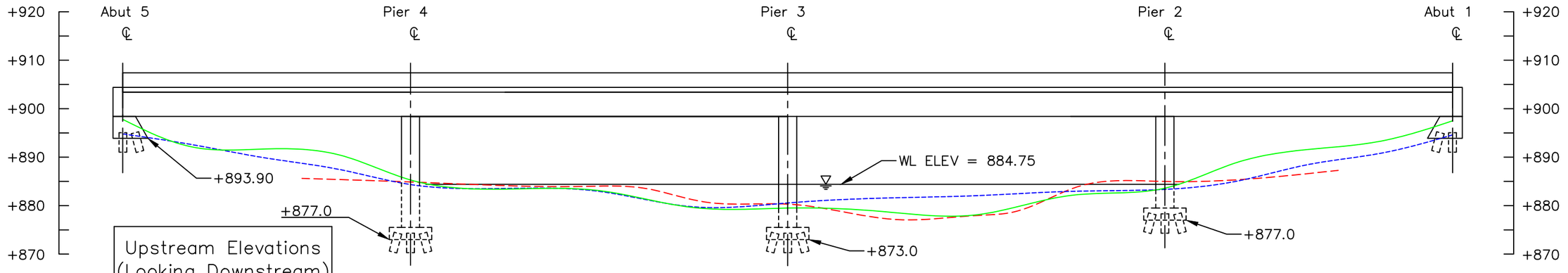

UPSTREAM FASCIA
CHANNEL CROSS SECTION
(LOOKING DOWNSTREAM)

Upstream Elevations (Looking Downstream)

Location	Height (ft)
A5	5.6
1/4	11.4
1/2	11.7
3/4	12.9
P4	18.1
1/4	20.0
1/2	20.3
3/4	23.8
P3	23.9
1/4	24.6
1/2	25.3
3/4	21.3
P2	19.8
1/4	14.5
1/2	11.8
3/4	10.1
A1	5.9

Note:

Vertical scale above waterline not drawn to scale for clarity.

LEGEND

- Approximate Channel Bottom – June 2022
- Approximate Channel Bottom – July 2017
- Approximate Channel Bottom – September 2012
- Timber Debris
- Water Surface
- +450 Elevation (ft)

COLLINS ENGINEERS
124 Venture Court, Ste 10
Lexington, KY 40511
Phone: 859-367-0097
Fax: 859-367-0140

Ohio Department of Transportation, District 11
2201 Reiser Ave.
New Philadelphia, OH 44663
Phone: (330) 339-6633

SR-212 OVER TUSCARAWAS RIVER
BRIDGE NO. TUS-212-0343
CROSS SECTIONS
TUSCARAWAS COUNTY, OHIO

CEI PROJECT 55–13380.01
INSPECTED BY: MOR
DRAWN BY: VTV
CHECKED BY: JMJ
DATE: JUN 2022
SHEET NO: 3

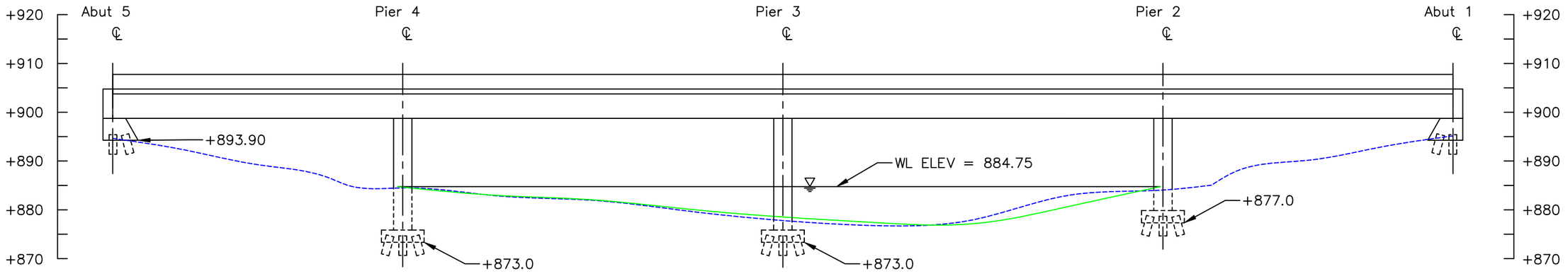

STRUCTURE CENTERLINE
CHANNEL CROSS SECTION
(LOOKING DOWNSTREAM)

LEGEND

———	Approximate Channel Bottom – June 2022
- - - - -	Approximate Channel Bottom – July 2017
– – – – –	Approximate Channel Bottom – September 2012
	Timber Debris
	Water Surface
+450	Elevation (ft)

Note:

Vertical scale above waterline not drawn to scale for clarity.

COLLINS ENGINEERS
124 Venture Court, Ste 10
Lexington, KY 40511
Phone: 859-367-0097
Fax: 859-367-0140

Ohio Department of Transportation, District 11
2201 Reiser Ave.
New Philadelphia, OH 44663
Phone: (330) 339-6633

SR-212 OVER TUSCARAWAS RIVER
BRIDGE NO. TUS-212-0343
CROSS SECTIONS
TUSCARAWAS COUNTY, OHIO

CEI PROJECT	55–13380.01
INSPECTED BY:	MOR
DRAWN BY:	VTV
CHECKED BY:	JMJ
DATE:	JUN 2022
SHEET NO:	4

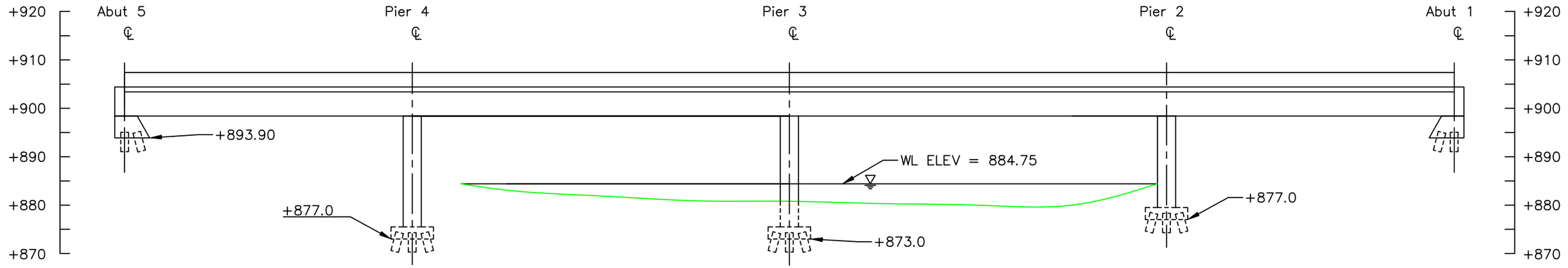

50 FT DOWNSTREAM
CHANNEL CROSS SECTION
(LOOKING DOWNSTREAM)

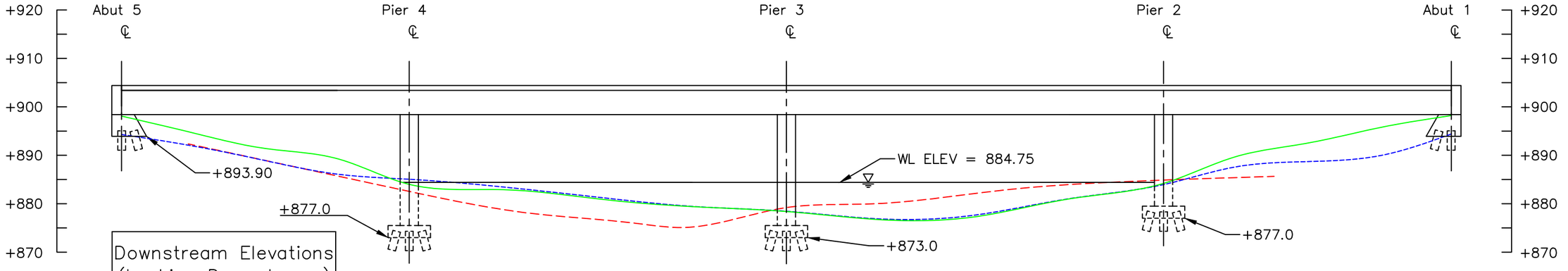

DOWNSTREAM FASCIA
CHANNEL CROSS SECTION
(LOOKING DOWNSTREAM)

Downstream Elevations
(Looking Downstream)

Location	Height (ft)
A5	5.3
1/4	8.8
1/2	12.0
3/4	14.1
P4	19.4
1/4	20.5
1/2	22.4
3/4	24.0
P3	25.0
1/4	26.7
1/2	26.1
3/4	22.4
P2	19.2
1/4	13.7
1/2	10.9
3/4	7.7
A1	5.2

Note:

Vertical scale above waterline not drawn to scale for clarity.

LEGEND

- Approximate Channel Bottom – June 2022
- Approximate Channel Bottom – July 2017
- Approximate Channel Bottom – September 2012
- Timber Debris
- Water Surface
- +450 Elevation (ft)

COLLINS ENGINEERS
124 Venture Court, Ste 10
Lexington, KY 40511
Phone: 859-367-0097
Fax: 859-367-0140

Ohio Department of Transportation, District 11
2201 Reiser Ave.
New Philadelphia, OH 44663
Phone: (330) 339-6633

SR-212 OVER TUSCARAWAS RIVER
BRIDGE NO. TUS-212-0343
CROSS SECTIONS
TUSCARAWAS COUNTY, OHIO

CEI PROJECT 55–13380.01
INSPECTED BY: MOR
DRAWN BY: VTV
CHECKED BY: JMJ
DATE: JUN 2022
SHEET NO: 5

Y:\PROJECTS\55 - KENTUCKY\55-13380.01 - ODOT D11 UW BRIDGE INSP (2022)\ENGINEERING\BRIDGES\SFN 7904266 (TUS-212-3.49)\DRAWINGS\TUS-212-0343.DWG10/14/2022 11:28:45 AM

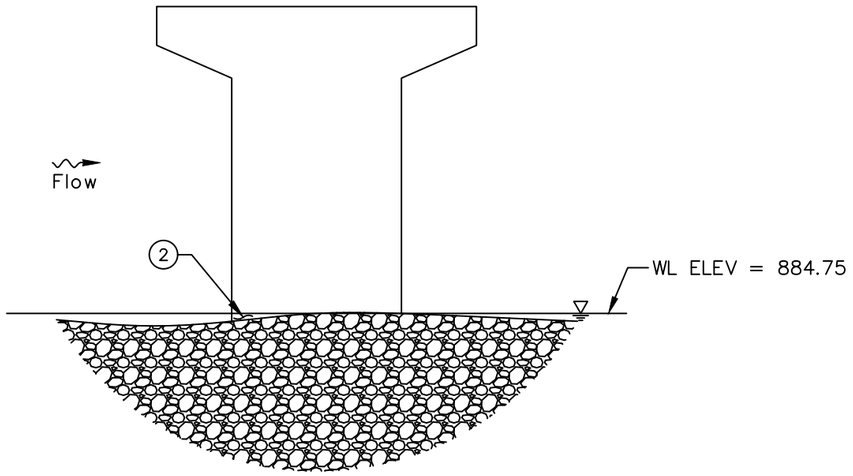

WEST ELEVATION
(LOOKING EAST)

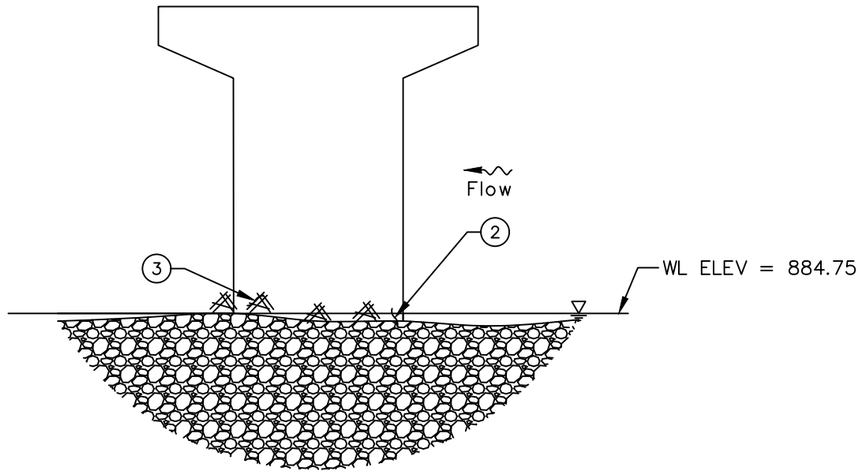

EAST ELEVATION
(LOOKING WEST)

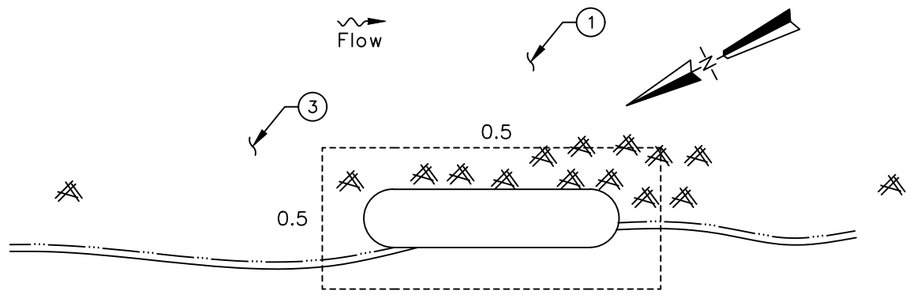

INSPECTION NOTES:

1. The channel bottom material consisted of rip–rap and cobbles with approximately 2 in. probe rod penetration.
2. Typical light marine growth algae and silt up to 1/8 in. deep was observed on the submerged portions of the pier.
3. Moderate timber debris accumulation consisting of branches up to 2 in. diameter was observed on the channel bottom extending from the pier to 50 ft upstream and downstream and 10 ft off east face.

LEGEND

2.7	Sounding Depth from Waterline (ft)
———	Approximate Channel Bottom – June 2022
	Timber Debris
	Water Surface

COLLINS ENGINEERS
124 Venture Court, Ste 10
Lexington, KY 40511
Phone: 859-367-0097
Fax: 859-367-0140

Ohio Department of Transportation, District 11
2201 Reiser Ave.
New Philadelphia, OH 44663
Phone: (330) 339-6633

SR-212 OVER TUSCARAWAS RIVER
BRIDGE NO. TUS-212-0343
PIER 2
TUSCARAWAS COUNTY, OHIO

CEI PROJECT 55–13380.01
INSPECTED BY: MOR
DRAWN BY: VTV
CHECKED BY: JMJ
DATE: JUN 2022
SHEET NO: 6

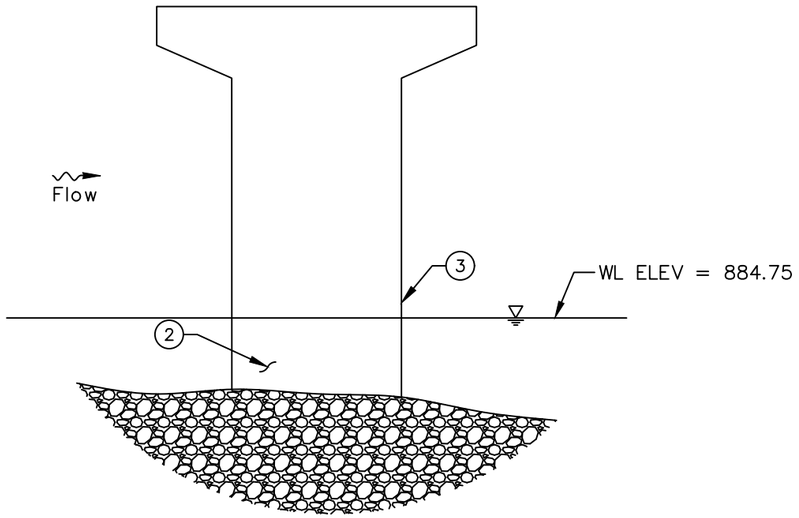

WEST ELEVATION
(LOOKING EAST)

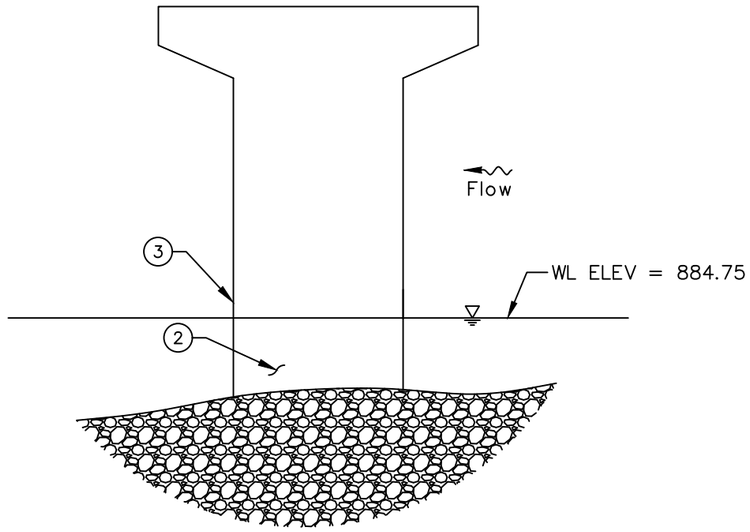

EAST ELEVATION
(LOOKING WEST)

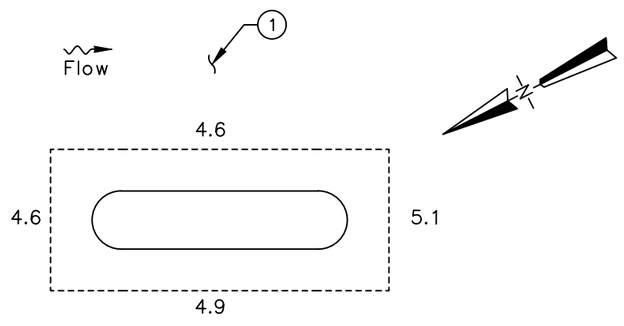

INSPECTION NOTES:

1. The channel bottom material consisted of sand and cobbles with approximately 2 in. probe rod penetration.
2. Typical light marine growth algae and silt up to 1/8 in. deep was observed on the submerged portions of the pier.
3. An area of moderate scaling and abrasion up to 3 ft vertical by 8 ft horizontal was observed extending from the upstream nose to the east and west faces.

LEGEND

2.7	Sounding Depth from Waterline (ft)
———	Approximate Channel Bottom – June 2022
	Timber Debris
	Water Surface

COLLINS ENGINEERS
124 Venture Court, Ste 10
Lexington, KY 40511
Phone: 859-367-0097
Fax: 859-367-0140

Ohio Department of Transportation, District 11
2201 Reiser Ave.
New Philadelphia, OH 44663
Phone: (330) 339-6633

SR-212 OVER TUSCARAWAS RIVER
BRIDGE NO. TUS-212-0343
PIER 3
TUSCARAWAS COUNTY, OHIO

CEI PROJECT
55–13380.01

INSPECTED BY:
MOR

DRAWN BY:
VTV

CHECKED BY:
JMJ

DATE:
JUN 2022

SHEET NO:
7

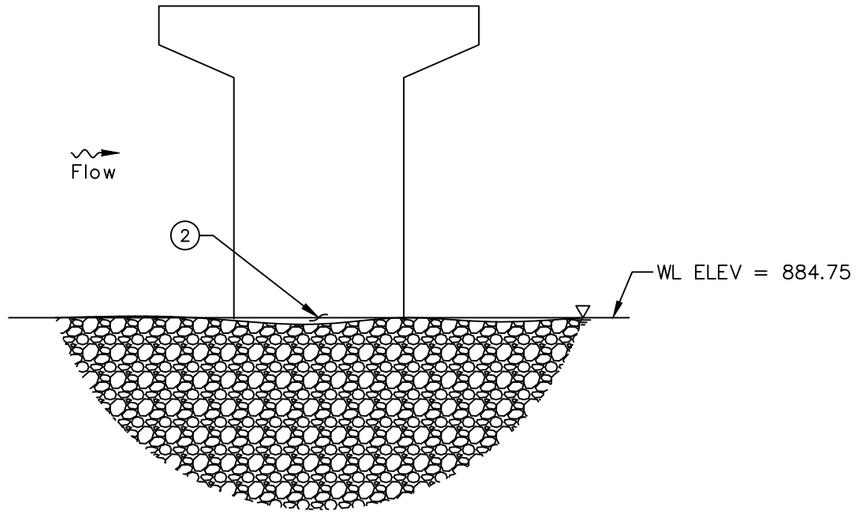

WEST ELEVATION
(LOOKING EAST)

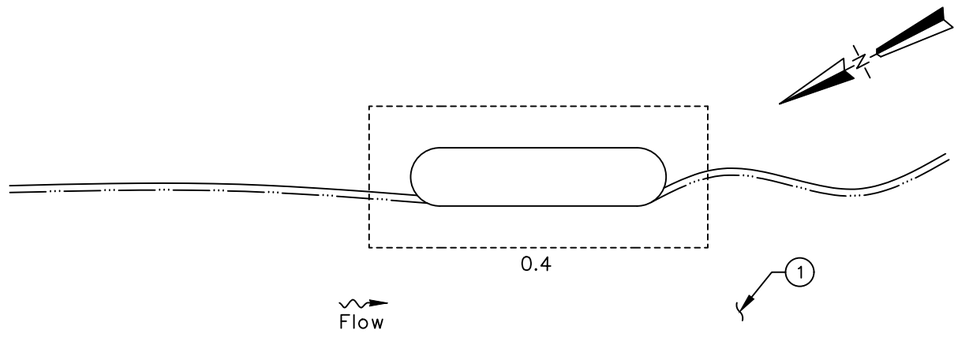

INSPECTION NOTES:

1. The channel bottom material consisted of sand, gravel and cobbles with approximately 2 in. probe rod penetration.
2. Typical light marine growth algae and silt up to 1/8 in. deep was observed on the submerged portions of the pier.

LEGEND

2.7	Sounding Depth from Waterline (ft)
———	Approximate Channel Bottom – June 2022
	Timber Debris
	Water Surface

COLLINS ENGINEERS
124 Venture Court, Ste 10
Lexington, KY 40511
Phone: 859-367-0097
Fax: 859-367-0140

Ohio Department of Transportation, District 11
2201 Reiser Ave.
New Philadelphia, OH 44663
Phone: (330) 339-6633

SR-212 OVER TUSCARAWAS RIVER
BRIDGE NO. TUS-212-0343
PIER 4
TUSCARAWAS COUNTY, OHIO

CEI PROJECT	55–13380.01
INSPECTED BY:	MOR
DRAWN BY:	VTV
CHECKED BY:	JMJ
DATE:	JUN 2022
SHEET NO:	8

EXHIBIT 2 – INSPECTION PHOTOGRAPHS



Photograph No. 1: Overall View of Structure No. SFN 7904266, Looking Southwest.



Photograph No. 2: Overall View of Structure No. SFN 7904266, Looking Northeast.



Photograph No. 3: West Approach of Structure No. SFN 7904266, Looking Northeast.



Photograph No. 4: East Approach of Structure No. SFN 7904266, Looking Northwest.



Photograph No. 5: View of the East Embankment Upstream of the Structure, Looking Northeast.



Photograph No. 6: View of the East Embankment at the Structure, Looking Northeast.



Photograph No. 7: View of the East Embankment Downstream of the Structure, Looking Southeast.



Photograph No. 8: View of the West Embankment Upstream of the Structure, Looking Northeast.



Photograph No. 9: View of the West Embankment at the Structure, Looking West.



Photograph No. 10: View of the West Embankment Downstream of the Structure, Looking Southwest.



Photograph No. 11: View of the West Face of Pier 2, Looking Southeast.



Photograph No. 12: View of the East Face of Pier 2, Looking Northwest.



Photograph No. 13: View of the East Face of Pier 2 Timber Debris, Looking Northwest.



Photograph No. 14: View of the West Face of Pier 3, Looking Southeast.



Photograph No. 15: View of the East Face of Pier 3, Looking West.



Photograph No. 16: View of the Typical Concrete Condition at the Waterline on the Upstream Nose of Pier 3, Looking Southwest.



Photograph No. 17: View of the East Face of Pier 4, Looking Northwest.



Photograph No. 18: View of the West Face of Pier 4, Looking Northwest.

EXHIBIT 3 – DIVE PROCEDURE CHECKLIST

Underwater Dive Inspection Procedure Checklist

Acceptable written procedures communicate to the next dive team what is necessary to ensure a safe and successful inspection. Each bridge requiring underwater dive techniques must have a unique written inspection procedure. The prior inspection report does not suffice for the required procedures. It is valuable to review the last inspection notes, but they do not serve the same purpose as a stand-alone inspection procedure.

This document shall be completed for all underwater dive inspections. This document shall be reviewed prior to performing the field work and it shall be updated when necessary.

I. Bridge Identification

a. Agency with Inspection Responsibility: ODOT District 11

Dive Frequency: 60 months

SFN: 7904266 Bridge Number (County-Route-SLM-SD): TUS-212-0343

Superstructure Type Main Span Type: Multi-beam Continous Steel Girder

Approach Span: Multi-beam Continuous Steel Girder

Substructure Type Abutment Type: Reinforced Concrete

Pier Type: Reinforced Concrete

Total Pier Count: 3

Total Pier Count in water: 3

Foundations: Cast-in-Place Concrete Piles

Feature Intersected Tuscarawas River

b. Photographs



Endview



Elevation



Underside

II. Office and Field Assessment

Prior to the inspection, obtain and review copies of the previous underwater inspection reports, routine inspection reports, scour and hydraulic information, and design plans in preparation of the inspection. Divers should pay particular attention given to any observed areas of deterioration, the channel conditions and factors that may accelerate material deterioration. Changes shall be noted in the inspection procedure. Site conditions should be reviewed prior to diving.

a. Channel Conditions

____Waterway features

____Rapid stream flows,

X____Significant debris accumulation

____Constricted waterway openings

____Soft or unstable streambeds

____Meandering channels

____Other which may promote scour and undermining of substructure elements

____Navigable Waterway

____Flow Controls

b. Anticipated Water conditions which may affect the inspection

____Cold Water (Apprx. Temp____)

____Black water

____Rapid stream flows

____Near military facility

____Tribal fishing

____Water quality

____History of Log jams

c. Identify factors that may accelerate the deterioration of the bridge elements:

____Highly corrosive water

____Unprotected steel members

____Other

Risk Factor Narrative:

III. **Contacts Prior to Work**

Dr. Waseem Khalifa, Ph. D., P.E.

District Bridge Engineer

2201 Reiser Avenue SE

New Philadelphia, OH 44663

(330) 308-7873

Point of contact for immediate action such as closing the bridge due to findings)

Contact Bridge Owner _____14_____ (number) days before the proposed underwater inspection.

Special contracting and scheduling procedures prior to inspection, include recommended lead time

Entity	Contact Name and Title	Contact Phone	Lead Time
Coast Guard	N/A	N/A	N/A
Property Owner	N/A	N/A	N/A
Access Equipment	N/A	N/A	N/A
Lake or River draw-down	N/A	N/A	N/A
Canal dry time	N/A	N/A	N/A
Tree removal	N/A	N/A	N/A
Other:	N/A	N/A	N/A
Other:	N/A	N/A	N/A

IV. **Dive Team Shall Include the Following:**

Dive Team Narrative:

The structure shall be investigated using a three-member dive team: one dive supervisor to monitor communications and air supply while taking notes, one diver, and one tender/standby diver. There shall be one NBIS Team Leader onsite at all times.

Example: The Bridge shall be investigated using a three-member dive team: one supervisor to monitor rack box and take notes, one diver, and one tender/standby diver. There shall be one NBIS Team Leader onsite at all times.

V. Site Information

Navigable waterway: Y /(N)

If Yes, waterway river point _____

Anticipated water visibility depth 3 ft

Anticipated Dive depth 5 ft

Anticipated current <1 ft

Scour Critical (item 113): 8

POA in place: Y/(N)

Scour Monitoring devices present: Y/(N)

Verify the Scope of Services when work is contracted for the procedure for underwater elements that are not in water during an inspection.

Site Information Narrative:

The underwater inspection consists of a visual and tactile examination of the accessible surfaces of the substructure items in water. Additional items should reference the scope of services in the contract. For reference the following items are in water:

Item	Number of Units	Level of Inspection (1, 2 or 3) with Commentary
Piers and Number of Columns	3	100% Level 1 10% Level 2
Abutment		
Culvert		
Scour Countermeasures		
Fenders or Dolphins		

Photographs should be taken, if water clarity permits, for typical conditions, conditions that have changed since last inspection and significant or noteworthy deficiencies. The type of channel bottom material, the presence or extent of scour, the presence or extent of riprap, the presence or extent of drift and debris, and the location of any foundation exposure or undermining shall be quantified. Include depth, length, height and location of deficiencies.

VI. **Equipment and Field Logistics**

a. The inspection should be conducted using:

X Chest waders

____Hip waders

____Diving equipment

____SCUBA (Note that ADCI Consensus Standards require communication systems be employed for both SCUBA and Surface-Supplied (whether air or mixed-gas) dive modes)

____SCUBA with communication

____Surface Supplied with communication

b. The channel bottom should be sounded utilizing

____Digital fathometer

X Telescoping survey rod

____ acoustic imaging

c. During the inspection, the divers should work from

X Shore

____Boat

____Either

The note taker should work alongside the dive team.

d. Access to the waterway should be obtained from the shore (north bank, southwest quadrant, driveway 30 yards north etc.)

East embankment at the structure

e. The maximum depth of the channel is typically measured 5.1 feet from Downstream Nose of Pier 3

Reference Datum 19.0 ft below the top of deck at the upstream nose of Pier 3

Soundings should be dictated by the scope of work. When not detailed in the scope they should be repeated from the previous soundings. If neither exist then they need to be taken in a grid pattern between substructure units 100' upstream and 100' downstream.

VII. Inspection Procedure History

Created: Collins Engineers, Inc. Date: 8/4/2022

Updated By: _____ Date: _____

Updated By: _____ Date: _____

Updated By: _____ Date: _____

Updated By: _____ Date: _____

Updated By: _____ Date: _____

VIII. Other Narrative Not Included In Previous Sections