







UNDERWATER BRIDGE INSPECTION REPORT

STRUCTURE NO. SFN7905785
(TUS-259-0.11)
OH-259 OVER TUSCARAWAS RIVER
TUSCARAWAS COUNTY, OH
DISTRICT 11

August 2022

Prepared for:

STATE OF OHIO DEPARTMENT OF TRANSPORTATION

STATE OF OHIO
MATTHEW ROGERS
PE.87504
REGISTERED PROFESSIONAL ENGINEER

Prepared by:

COLLINS ENGINEERS INC.

124 Venture Court, Suite 10

Lexington, Kentucky 40511

859.367.0097 • www.collinsengr.com

TABLE OF CONTENTS

EXECUTIVE SUMMARY
1.0 INTRODUCTION 1
1.1 Purpose and Scope 1
1.2 General Description of the Structure 1
1.3 Method of Investigation 1
2.0 EXISTING CONDITIONS 2
2.1 General Conditions 2
2.2 Substructure Conditions 3
2.2.1 Pier 1 3
2.2.2 Pier 2 3
2.2.3 Pier 3 3
2.2.4 Channel Bottom and Scour Assessment 3
3.0 EVALUATION AND RECOMMENDATIONS 4
EXHIBIT 1 – FIGURES 5
LOCATION MAP
SOUNDING PLAN
HYDROGRAPHIC SURVEY
CHANNEL CROSS SECTIONS – 50 FT UPSTREAM & UPSTREAM FASCIA
CHANNEL CROSS SECTIONS – STRUCTURE CENTERLINE
CHANNEL CROSS SECTIONS – 50 FT DOWNSTREAM & DOWNSTREAM FASCIA
PIER 1
PIER 2
PIER 3
EXHIBIT 2 – INSPECTION PHOTOGRAPHS 15
Photograph No. 1: Overall View of Structure No. SFN7905785, Looking West.
Photograph No. 2: Overall View of Structure No. SFN7905785, Looking Northeast.
Photograph No. 3: View of the North Approach, Looking South.
Photograph No. 4: View of the South Approach, Looking North.
Photograph No. 5: View of the North Embankment Upstream of the Structure, Looking North.
Photograph No. 6: View of the North Embankment at the Structure, Looking North.
Photograph No. 7: View of the North Embankment Downstream of the Structure, Looking Northeast.
Photograph No. 8: View of the South Embankment Upstream of the Structure, Looking South.

Photograph No. 9: View of the South Embankment at the Structure, Looking South.
Photograph No. 10: View of the South Embankment Downstream of the Structure, Looking South.
Photograph No. 11: View of the Upstream Channel, Looking West.
Photograph No. 12: View of the Downstream Channel, Looking East.
Photograph No. 13: View of the Typical Underdeck Condition, Looking North.
Photograph No. 14: View of the North Face of Pier 1, Looking South.
Photograph No. 15: View of the North Face of Pier 2, Looking Southeast.
Photograph No. 16: View of the South Face of Pier 2, Looking Northeast.
Photograph No. 17: View of the North Face of Pier 3, Looking Southwest.
Photograph No. 18: View of the South Face of Pier 3, Looking Northeast.
Photograph No. 19: View of the Typical Concrete Condition at the Waterline on the South Face of Pier 3, Looking North.
EXHIBIT 3 – DIVE PROCEDURES CHECKLIST 26

EXECUTIVE SUMMARY

Project: ODOT D11 Underwater Bridge Inspections - 2022.

Purpose of Project: To perform a detailed visual and tactile underwater investigation of bridges for the Ohio Department of Transportation, District 11.

Inspection Team: Team Leader – Nicholas Lane – Collins Engineers, Inc.
Team Member – Joshua Davis, E.I.T. – Collins Engineers, Inc.
Team Member – Callen Papineau, E.I.T. – Collins Engineers, Inc.

Inspection Date(s): August 26, 2022

Water Visibility:	3 ft	***Water Velocity:***	2 ft/s
Water Temperature:	70 °F	***Weather:***	Sunny– 75 °F
Waterline Elevation:	78.0 ft	***Type of Boat:***	N/A
High-water Elevation:	85.0 ft		
Coordinates:	40.45213°N, 81.41361°W		
Access Location:	South Embankment at the Structure		
Dive Mode:	Wading		
Waterline Reference:	22.0 ft below the top of deck at the upstream nose of Pier 2.		
Maximum Depth at SSU:	1.9 ft – North Face of Pier 1		
Shoreline Conditions:	The north and south shorelines consisted of heavily vegetated mild slopes with riprap in place at the structure and no signs of erosion.		

Summary of Findings:

- **Pier 1:**
  - No deficiencies were observed.
- **Pier 2:**
  - Moderate timber debris accumulation consisting of branches up to 6 in. diameter was observed along the upstream nose to the midpoint on the north and south face extending from the channel bottom to approximately 2 ft above the waterline.
- **Pier 3:**
  - Heavy timber debris accumulation consisting of logs and branches up to 30 in. diameter was observed from approximately a 20 ft radius from the upstream nose to the north face of the pier extending from the channel bottom to approximately 10 ft above the waterline.
  - A scour depression up to a 15 ft radius was observed on the upstream nose of the pier.

Summary of Recommendations:

- Remove timber debris accumulation at Pier 3.
- Monitor scour at Pier 3.
- Monitor channel bottom.

Underwater Inspection Coding:

NBI Ratings:

Item	Description	Coding	Condition
B.C.03	Substructure (Overall)	8– Very Good Condition	
B.C.09	Channel Cond. Rating	6– Satisfactory Condition	Local Scour, Timber Debris
B.C.10	Channel Protection Cond.	7– Good Condition	
B.C.11	Scour Cond. Rating	8– Above Foundation Limits	Stable (Inspector Recommended)
B.C.15	Underwater Cond. Rating	8– Very Good Condition	
B.IE.03	Insp. Date	August 26, 2022	
B.IE.05	UW Insp. Interval	60 Months	

AASHTO National Bridge Element (NBE) Ratings:

Element #	Description	Units	Total	Condition State			
				1	2	3	4
210	Reinforced Concrete Pier Wall	LF	120	120	0	0	0

Note: Ratings were developed using the FHWA Specifications for the National Bridge Inventory. The recommended ratings consider inspected elements located within the waterway and conditions existing below the water surface only. Additional consideration is necessary for the assignment of overall condition ratings for this bridge.

1.0 INTRODUCTION

1.1 Purpose and Scope

This report consists of the results of a detailed underwater investigation performed at the OH-259 Bridge over Tuscarawas River in Tuscarawas County, OH. Collins Engineers, Inc. (Collins) conducted the underwater investigation for the Ohio Department of Transportation (ODOT), District 11 on August 26, 2022. The primary purpose of the investigation was as follows:

- Determine the condition of the substructure components located in the water at the time of the inspection from the waterline to the channel bottom.
- Obtain channel bottom depth measurements along the bridge fascias, upstream and downstream of the bridge, and around the submerged substructure units.
- Determine the condition of the shorelines in the vicinity of the structure.
- Obtain photographs of the bridge and any significant defects.

In addition, a brief inspection was made of areas that could be submerged during periods of high water. The following report includes a description of the structure, the method of investigation, a description of existing conditions, an evaluation and recommendations based on the conditions, inspection figures, and photographs.

1.2 General Description of the Structure

Structure No. SFN7905785 spans 533 ft, carrying OH-259 over Tuscarawas River and is approximately 32 ft wide. The bridge superstructure is constructed of six spans, each composed of five steel girders. The roadway orientation of the longitudinal axis of the bridge is south to north. The substructure units are labeled as Abutments 1 and 2 and Piers 1 through 5. Existing design drawings were not available at the time of the inspection. Refer to Figure 1 in Exhibit 1 for a Location Map of the bridge. Refer to Photographs 1 through 4 in Exhibit 2 for overall views of the bridge.

1.3 Method of Investigation

A detailed field inspection was conducted to determine the physical condition of the submerged bridge substructure units from the waterline to the channel bottom. A brief visual examination of the substructure units above the waterline was also made.

A three-person team consisting of technician-diver and team leader (Nicholas Lane) and engineer-divers (Joshua Davis, E.I.T. and Callen Papineau, E.I.T.) conducted the underwater inspection. The inspection was conducted through wading. During the inspection, the inspectors worked from the shore and a note taker on the shore recorded the inspection notes.

The underwater inspection consisted of a visual and tactile examination of the accessible surfaces of the substructure units from the waterline to the channel bottom with particular attention given to any observed areas of deterioration or apparent distress. Approximately 10 percent of the total area on the underwater surfaces of the substructure units was cleaned so that the condition could be more closely examined. Photographs were taken to document the general conditions and observed deficiencies. The type of channel bottom material, the presence or extent of scour, the presence or extent of riprap, the presence or extent of drift and debris, and the location of any foundation exposure or undermining were noted.

Channel bottom soundings were performed utilizing a leadline. Soundings were taken parallel to the bridge at the upstream and downstream fascias, at quarter intervals between the substructure units, and at 10 ft intervals in-line with the piers upstream and downstream up to 50 ft, and the waterline was referenced to a known elevation on the bridge. A sounding plan was developed using the soundings and approximate location of the shorelines. Refer to Figures 2 through 6 in Exhibit 1 for the sounding plan, hydrographic survey, and channel cross sections that show the channel limits and water depths around the structure.

2.0 EXISTING CONDITIONS

2.1 General Conditions

At the time of the inspection, the waterline of Tuscarawas River was located approximately 22.0 ft below the top of deck at the upstream nose of Pier 2, which corresponds to an assumed waterline elevation of 78.0 ft. During the inspection, the waterway was flowing west to east below the structure at a rate of 2 ft/s. The approximate high-water elevation was observed to be 85.0 ft.

The bridge pier skew was consistent with the channel alignment and does not require attention at this time. The north and south shorelines consisted of heavily vegetated mild slopes with riprap in place at the structure and no signs of erosion. Refer to Photographs 5 through 12 in Exhibit 2 for views of the shorelines near the structure.

2.2 Substructure Conditions

2.2.1 Pier 1

The channel bottom material around Pier 1 consisted of gravel, cobbles, and boulders with no probe rod penetration. Typical light marine growth algae and silt up to 1/8 in. deep was observed on the submerged portions of the pier from the channel bottom to 1 ft above the waterline. The concrete exhibited smooth and sound conditions below the waterline. Refer to Figure 7 in Exhibit 1 for detailed inspection notes of Pier 1. Refer to Photographs 13 and 14 in Exhibit 2 for views of the typical underdeck condition and Pier 1.

2.2.2 Pier 2

The channel bottom material around Pier 2 consisted of gravel, cobbles, and boulders with no probe rod penetration. Typical light marine growth algae and silt up to 1/8 in. deep was observed on the submerged portions of the pier from the channel bottom to 1 ft above the waterline. Moderate timber debris accumulation consisting of branches up to 6 in. diameter was observed along the upstream nose to the midpoint on the north and south face extending from the channel bottom to approximately 2 ft above the waterline. Refer to Figure 8 in Exhibit 1 for detailed inspection notes of Pier 2. Refer to Photographs 15 and 16 in Exhibit 2 for views of Pier 2.

2.2.3 Pier 3

The channel bottom material around Pier 3 consisted of silt with approximately 6 in. probe rod penetration. Typical light marine growth algae and silt up to 1/8 in. deep was observed on the submerged portions of the pier from the channel bottom to 1 ft above the waterline. Heavy timber debris accumulation consisting of logs and branches up to 30 in. diameter was observed from approximately a 20 ft radius from the upstream nose to the north face of the pier extending from the channel bottom to approximately 10 ft above the waterline. A scour depression up to a 15 ft radius was observed on the upstream nose of the pier. Refer to Figure 9 in Exhibit 1 for detailed inspection notes of Pier 3. Refer to Photographs 17 through 19 in Exhibit 2 for views of Pier 3 and typical concrete condition at the waterline.

2.2.4 Channel Bottom and Scour Assessment

At the time of the inspection, the Tuscarawas River was experiencing normal flow and the channel bottom appeared stable for the type of material. The channel bottom was primarily gravel, cobbles, and boulders surrounding the substructure units. No additional scour, undermining, or scour countermeasures were observed.

3.0 EVALUATION AND RECOMMENDATIONS

Overall, the submerged substructure units of Structure No. SFN7905785 were in very good condition below water. The scour depression observed at Pier 3 is also not a concern at this time given that the bottom of the footing is adequately embedded in the current channel bottom. The channel bottom configuration should continue to be closely monitored during future underwater inspections to verify that the scour depression at Pier 3 is not increasing and that all footings remain adequately embedded in the channel bottom.

The timber debris accumulation at Pier 3 is the cause of scour and should be removed at this time. Removal of the timber debris will reduce excessive lateral loads on the pier, limit further debris accumulation, and reduce the likelihood of channel bottom degradation resulting from obstructed flow.

It is recommended that the submerged substructure units of Structure No. SFN7905785 be next inspected underwater at an interval not to exceed 60 months, no later than August 26, 2027.

Respectfully Submitted,
COLLINS ENGINEERS, INC.

Matthew Rogers

Matthew Rogers, P.E.
Project Manager

Originated by:
Olivia Farmer, E.I.T.

EXHIBIT 1 – FIGURES

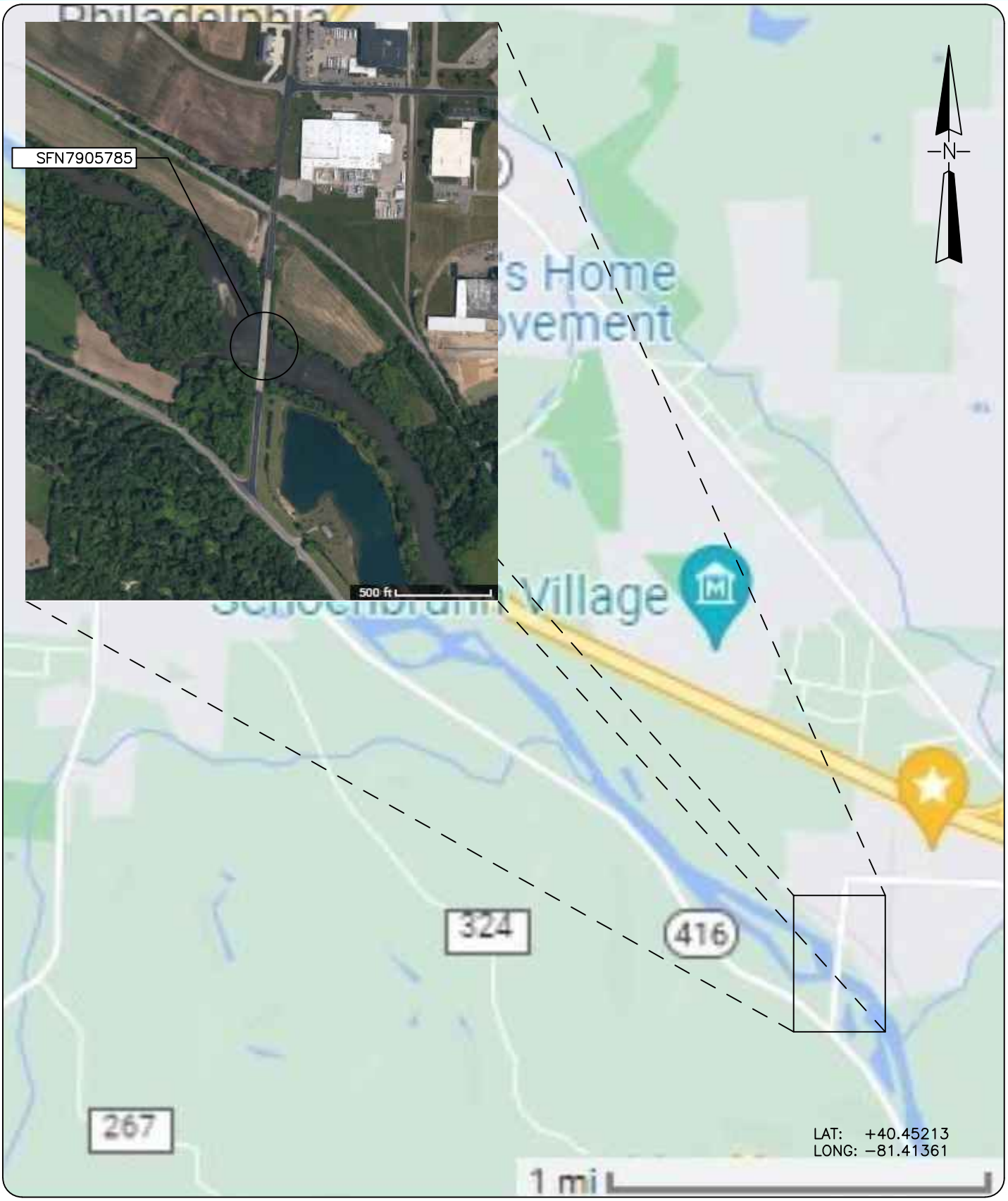

COLLINS ENGINEERS
124 Venture Court, Ste 10
Lexington, KY 40511
Phone: 859-367-0097
Fax: 859-367-0140

Ohio Department of Transportation, District 11
2201 Reiser Avenue
New Philadelphia, OH 44663
Phone: 330-339-6633

OH-259 OVER TUSCARAWAS RIVER
STRUCTURE NO. SFN7905785

LOCATION MAP

TUSCARAWAS COUNTY, OHIO

INSPECTED BY: NML	CEI PROJECT: 55−13380.01
DRAWN BY: OPF	DATE: 26 AUG 2022
CHECKED BY: JMJ	SHEET NO: 1



SOUNDING PLAN

GENERAL NOTES:

1. Piers 1 through 3 were inspected underwater. Substructure units are labeled from south to north.
2. At the time of inspection on August 26, 2022, the waterline was located approximately 22.0 ft below the top of deck at the upstream nose of Pier 2 (EL. +100.0 ft). This corresponds with a waterline elevation of +78.0 ft.
3. Soundings indicate the water depth at the time of inspection and are measured in feet.
4. Soundings were taken parallel to the bridge at the upstream and downstream fascias, at quarter intervals between the substructure units, and at 10 ft intervals in–line with the piers upstream and downstream up to 50 ft.

LEGEND

–2.7	Sounding Depth from Waterline (ft)
	Timber Debris

COLLINS ENGINEERS
124 Venture Court, Ste 10
Lexington, KY 40511
Phone: 859-367-0097
Fax: 859-367-0140

Ohio Department of Transportation, District 11
2201 Reiser Avenue
New Philadelphia, OH 44663
Phone: 330-339-6633

OH-259 OVER TUSCARAWAS RIVER
STRUCTURE NO. SFN7905785
SOUNDING PLAN
TUSCARAWAS COUNTY, OHIO

CEI PROJECT	55–13380.01
INSPECTED BY:	NML
DRAWN BY:	OPF
CHECKED BY:	JMJ
DATE:	AUG 2022
SHEET NO:	2

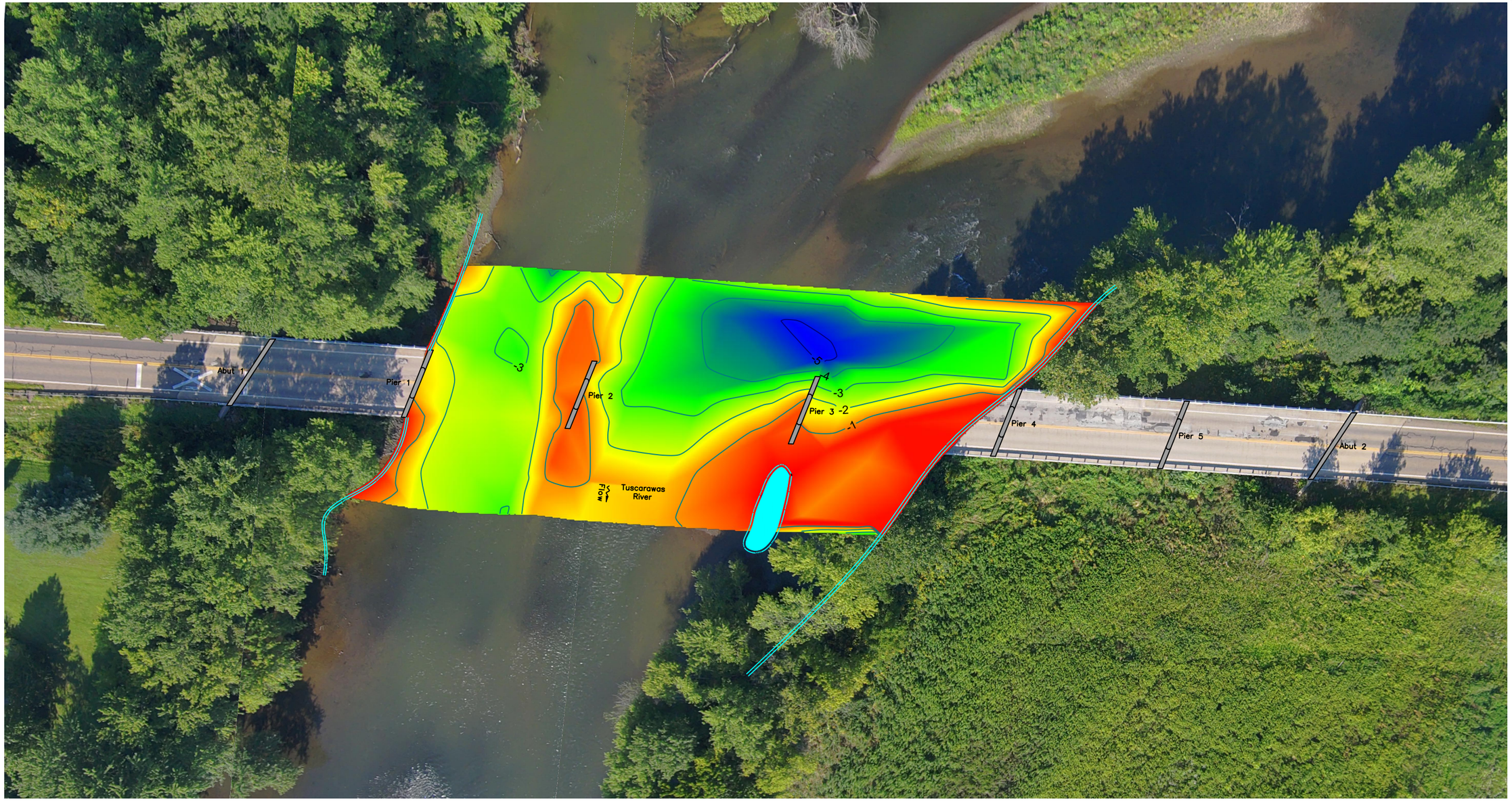

GENERAL NOTES:

1. The hydrographic survey was completed on August 26, 2022 by Collins Engineers, Inc.
2. Soundings were obtained using a telescoping survey rod.
3. All water depths are in feet and are referenced to the waterline elevation stated in the Structure Notes.
4. Base map information shown on this drawing shall be considered approximate.

2022 HYDROGRAPHIC SURVEY

SCALE: 1" = 50'

0 25' 50'

1

N

LEGEND:

- Major Contour
- Minor Contour

STRUCTURE NOTES:

1. The measured waterline elevation was 78.0 feet on the survey date of 08-26-2022.
2. The waterline was measured 22.0 feet below the top of deck at the upstream nose of Pier 2.
3. Access to the site was the south embankment at the structure. GPS Coordinates: N40.45213°, W81.41361°

COLLINS ENGINEERS
124 Venture Court, Ste 10
Lexington, KY 40511
Phone: 859-367-0097
Fax: 859-367-0140

Ohio Department of Transportation, District 11
2201 Reiser Ave.
New Philadelphia, OH 44663
Phone: 330-339-6633

OH-259 OVER TUSCARAWAS RIVER
STRUCTURE NO. 7905785
HYDROGRAPHIC SURVEY
TUSCARAWAS COUNTY, OH

CEI PROJECT	55-13380.01
INSPECTED BY:	NML
DRAWN BY:	OPF
CHECKED BY:	JMJ
DATE:	AUG 2022
SHEET NO:	3

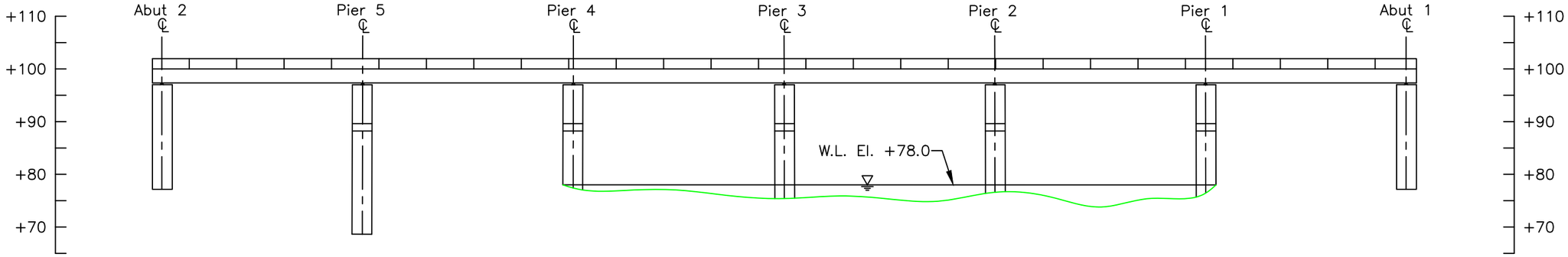

50 FT UPSTREAM
CHANNEL CROSS SECTION
(LOOKING DOWNSTREAM)

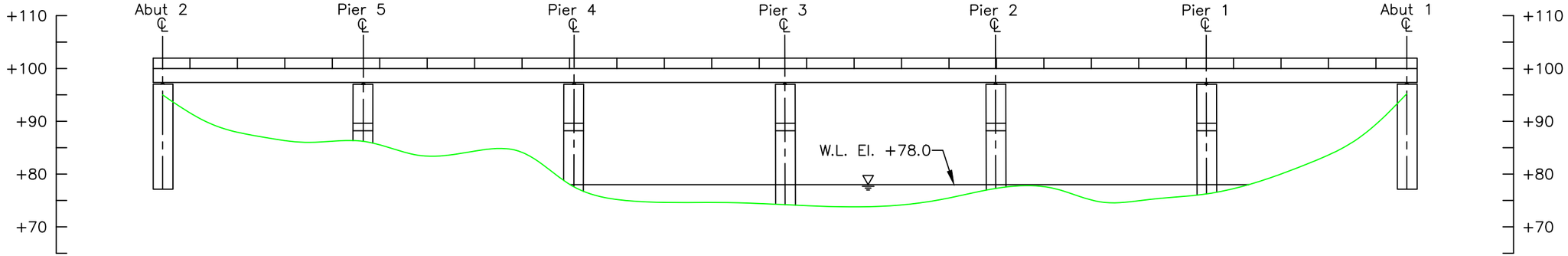

Upstream Elevations (Looking Downstream)	
Location	Height (ft)
A2	5.0
1/4	11.0
1/2	13.0
3/4	14.0
P5	13.8
1/4	16.5
1/2	15.9
3/4	15.5
P4	22.1
1/4	25.1
1/2	25.4
3/4	25.4
P3	22.4
1/4	26.2
1/2	26.0
3/4	24.9
P2	22.7
1/4	22.6
1/2	25.3
3/4	24.8
P1	23.7
1/4	18.1
1/2	18.1
3/4	14.0
A1	4.8

UPSTREAM FASCIA
CHANNEL CROSS SECTION
(LOOKING DOWNSTREAM)

LEGEND

- Approximate Channel Bottom – August 2022
- Approximate Channel Bottom – August 2017 (No Data)
- Approximate Channel Bottom – August 2012 (No Data)
- Timber Debris
- Water Surface
- +450 Elevation (ft)

Note:

Footing elevations unknown due to unavailable record drawings.

COLLINS ENGINEERS
124 Venture Court, Ste 10
Lexington, KY 40511
Phone: 859-367-0097
Fax: 859-367-0140

Ohio Department of Transportation, District 11
2201 Reiser Avenue
New Philadelphia, OH 44663
Phone: 330-339-6633

OH-259 OVER TUSCARAWAS RIVER
STRUCTURE NO. SFN7905785
CROSS SECTIONS
TUSCARAWAS COUNTY, OHIO

CEI PROJECT 55-13380.01
INSPECTED BY: NML
DRAWN BY: OPF
CHECKED BY: JMJ
DATE: AUG 2022
SHEET NO: 4

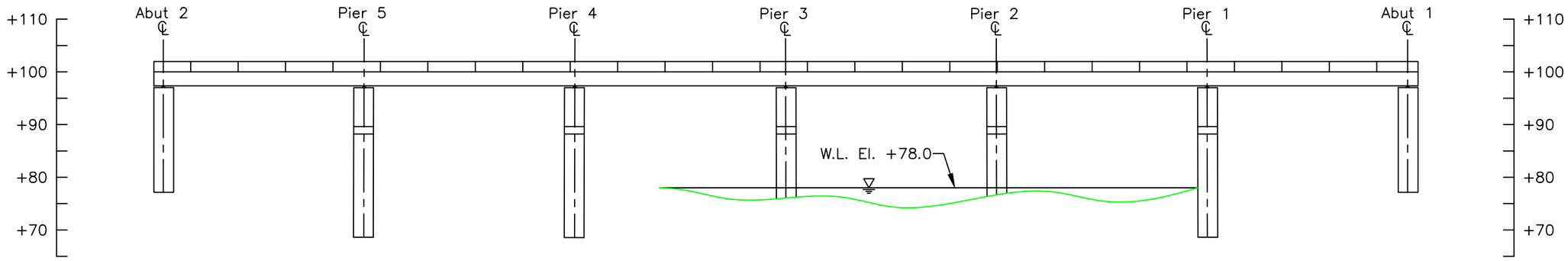

STRUCTURE CENTERLINE
CHANNEL CROSS SECTION
(LOOKING DOWNSTREAM)

LEGEND

———	Approximate Channel Bottom – August 2022
- - - - -	Approximate Channel Bottom – August 2017 (No Data)
– – – – –	Approximate Channel Bottom – August 2012 (No Data)
	Timber Debris
	Water Surface
+450	Elevation (ft)

Note:

Footing elevations unknown due to unavailable record drawings.

COLLINS ENGINEERS
124 Venture Court, Ste 10
Lexington, KY 40511
Phone: 859-367-0097
Fax: 859-367-0140

Ohio Department of Transportation, District 11
2201 Reiser Avenue
New Philadelphia, OH 44663
Phone: 330-339-6633

OH-259 OVER TUSCARAWAS RIVER
STRUCTURE NO. SFN7905785
CROSS SECTIONS
TUSCARAWAS COUNTY, OHIO

CEI PROJECT	55–13380.01
INSPECTED BY:	NML
DRAWN BY:	OPF
CHECKED BY:	JMJ
DATE:	AUG 2022
SHEET NO:	5

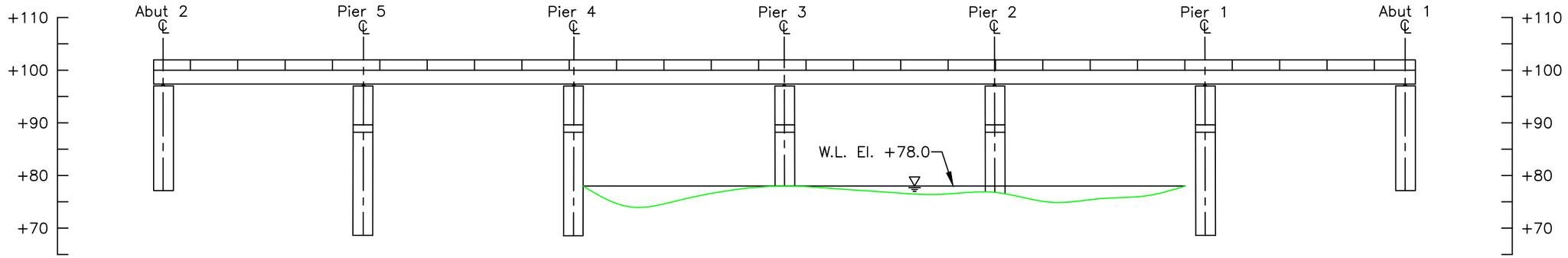

50 FT DOWNSTREAM
CHANNEL CROSS SECTION
(LOOKING DOWNSTREAM)

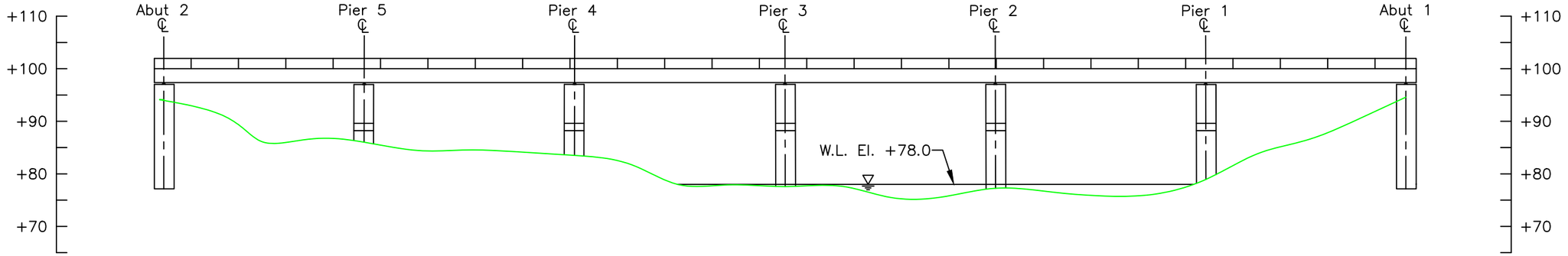

Downstream Elevations (Looking Downstream)	
Location	Height (ft)
A2	5.9
1/4	8.6
1/2	14.0
3/4	13.4
P5	14.0
1/4	15.6
1/2	15.5
3/4	15.8
P4	16.1
1/4	18.3
1/2	22.1
3/4	22.1
P3	22.4
1/4	22.4
1/2	24.5
3/4	24.5
P2	22.7
1/4	23.5
1/2	24.2
3/4	24.0
P1	21.0
1/4	15.9
1/2	13.6
3/4	10.2
A1	5.4

DOWNSTREAM FASCIA
CHANNEL CROSS SECTION
(LOOKING DOWNSTREAM)

LEGEND

- Approximate Channel Bottom – August 2022
- Approximate Channel Bottom – August 2017 (No Data)
- Approximate Channel Bottom – August 2012 (No Data)
- Timber Debris
- Water Surface
- +450 Elevation (ft)

Note:

Footing elevations unknown due to unavailable record drawings.

COLLINS ENGINEERS
124 Venture Court, Ste 10
Lexington, KY 40511
Phone: 859-367-0097
Fax: 859-367-0140

Ohio Department of Transportation, District 11
2201 Reiser Avenue
New Philadelphia, OH 44663
Phone: 330-339-6633

OH-259 OVER TUSCARAWAS RIVER
STRUCTURE NO. SFN7905785
CROSS SECTIONS
TUSCARAWAS COUNTY, OHIO

CEI PROJECT 55-13380.01
INSPECTED BY: NML
DRAWN BY: OPF
CHECKED BY: JMJ
DATE: AUG 2022
SHEET NO: 6

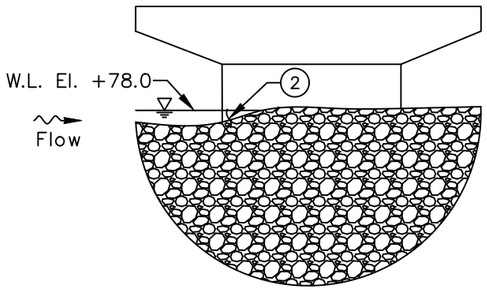

SOUTH ELEVATION
(LOOKING NORTH)

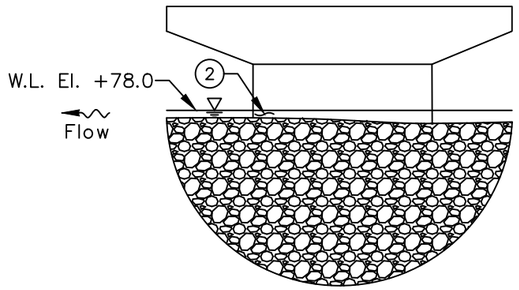

NORTH ELEVATION
(LOOKING SOUTH)

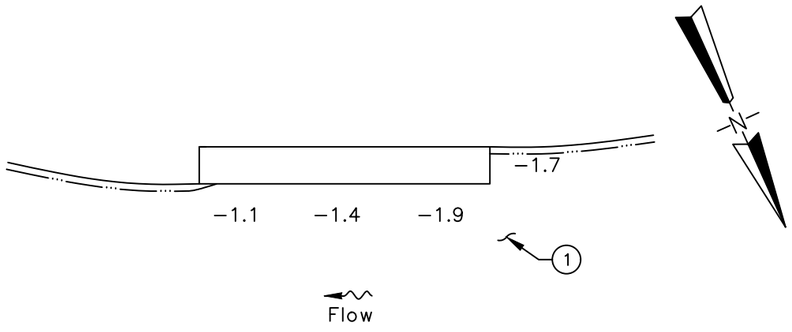

INSPECTION NOTES:

1. The channel bottom material consisted of gravel, cobbles, and boulders with no probe rod penetration.
2. Typical light marine growth algae and silt up to 1/8 in. deep was observed on the submerged portions of the pier from the channel bottom to 1 ft above the waterline.

LEGEND

−2.7	Sounding Depth from Waterline (ft)
———	Approximate Channel Bottom – August 2022
	Timber Debris
	Water Surface
	Scour

COLLINS ENGINEERS
124 Venture Court, Ste 10
Lexington, KY 40511
Phone: 859-367-0097
Fax: 859-367-0140

Ohio Department of Transportation, District 11
2201 Reiser Avenue
New Philadelphia, OH 44663
Phone: 330-339-6633

OH-259 OVER TUSCARAWAS RIVER
STRUCTURE NO. SFN7905785
PIER 1
TUSCARAWAS COUNTY, OHIO

CEI PROJECT	55−13380.01
INSPECTED BY:	NML
DRAWN BY:	OPF
CHECKED BY:	JMJ
DATE:	AUG 2022
SHEET NO:	7

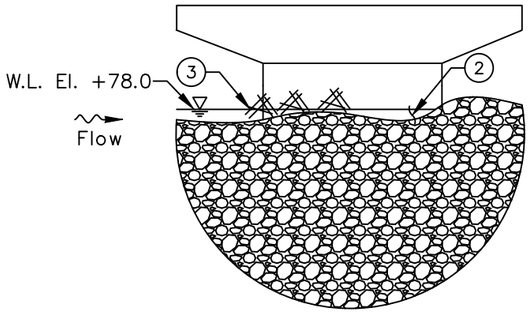

SOUTH ELEVATION
(LOOKING NORTH)

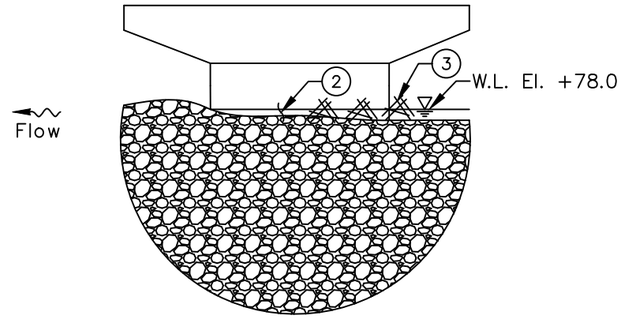

NORTH ELEVATION
(LOOKING SOUTH)

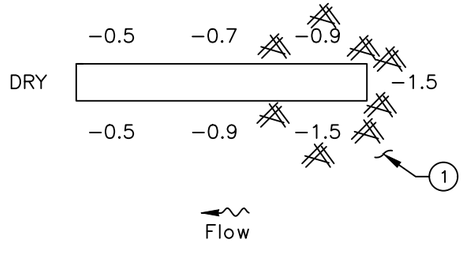

INSPECTION NOTES:

1. The channel bottom material consisted of gravel, cobbles, and boulders with no probe rod penetration.
2. Typical light marine growth algae and silt up to 1/8 in. deep was observed on the submerged portions of the pier from the channel bottom to 1 ft above the waterline.
3. Moderate timber debris accumulation consisting of branches up to 6 in. diameter was observed along the upstream nose to the midpoint on the north and south face extending from the channel bottom to approximately 2 ft above the waterline.

LEGEND

−2.7	Sounding Depth from Waterline (ft)
———	Approximate Channel Bottom – August 2022
	Timber Debris
	Water Surface
	Scour

COLLINS ENGINEERS
124 Venture Court, Ste 10
Lexington, KY 40511
Phone: 859-367-0097
Fax: 859-367-0140

Ohio Department of Transportation, District 11
2201 Reiser Avenue
New Philadelphia, OH 44663
Phone: 330-339-6633

OH-259 OVER TUSCARAWAS RIVER
STRUCTURE NO. SFN7905785
PIER 2
TUSCARAWAS COUNTY, OHIO

CEI PROJECT	55-13380.01
INSPECTED BY:	NML
DRAWN BY:	OPF
CHECKED BY:	JMJ
DATE:	AUG 2022
SHEET NO:	8

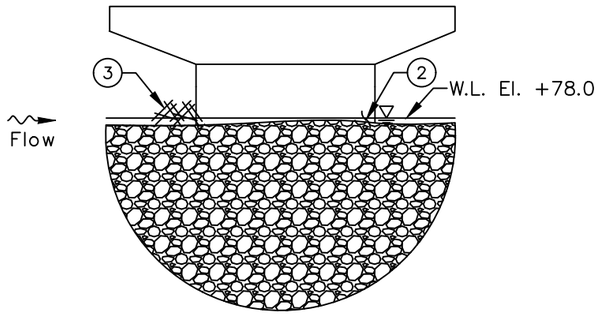

SOUTH ELEVATION
(LOOKING NORTH)

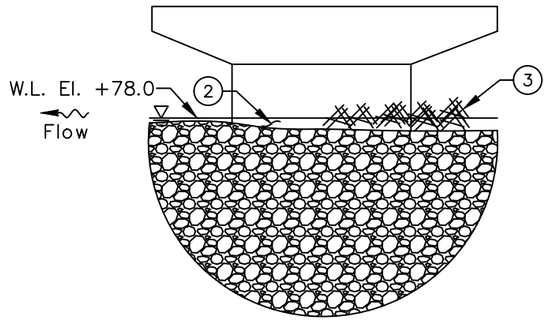

NORTH ELEVATION
(LOOKING SOUTH)

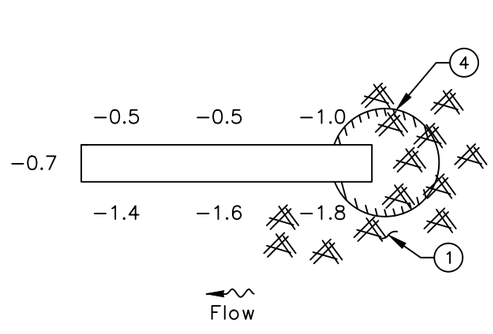

INSPECTION NOTES:

1. The channel bottom material consisted of silt with approximately 6 in. probe rod penetration.
2. Typical light marine growth algae and silt up to 1/8 in. deep was observed on the submerged portions of the pier from the channel bottom to 1 ft above the waterline.
3. Heavy timber debris accumulation consisting of logs and branches up to 30 in. diameter was observed from approximately a 20 ft radius from the upstream nose to the north face of the pier extending from the channel bottom to approximately 10 ft above the waterline.
4. A scour depression up to a 15 ft radius was observed on the upstream nose of the pier.

LEGEND

−2.7	Sounding Depth from Waterline (ft)
———	Approximate Channel Bottom – August 2022
	Timber Debris
	Water Surface
	Scour

COLLINS ENGINEERS
124 Venture Court, Ste 10
Lexington, KY 40511
Phone: 859-367-0097
Fax: 859-367-0140

Ohio Department of Transportation, District 11
2201 Reiser Avenue
New Philadelphia, OH 44663
Phone: 330-339-6633

OH-259 OVER TUSCARAWAS RIVER
STRUCTURE NO. SFN7905785
PIER 3
TUSCARAWAS COUNTY, OHIO

CEI PROJECT	55-13380.01
INSPECTED BY:	NML
DRAWN BY:	OPF
CHECKED BY:	JMJ
DATE:	AUG 2022
SHEET NO:	9

EXHIBIT 2 – INSPECTION PHOTOGRAPHS



Photograph No. 1: Overall View of Structure No. SFN7905785, Looking West.



Photograph No. 2: Overall View of Structure No. SFN7905785, Looking Northeast.



Photograph No. 3: View of the North Approach, Looking South.



Photograph No. 4: View of the South Approach, Looking North.



Photograph No. 5: View of the North Embankment Upstream of the Structure, Looking North.



Photograph No. 6: View of the North Embankment at the Structure, Looking North.



Photograph No. 7: View of the North Embankment Downstream of the Structure, Looking Northeast.



Photograph No. 8: View of the South Embankment Upstream of the Structure, Looking South.



Photograph No. 9: View of the South Embankment at the Structure, Looking South.



Photograph No. 10: View of the South Embankment Downstream of the Structure, Looking South.



Photograph No. 11: View of the Upstream Channel, Looking West.



Photograph No. 12: View of the Downstream Channel, Looking East.



Photograph No. 13: View of the Typical Underdeck Condition, Looking North.



Photograph No. 14: View of the North Face of Pier 1, Looking South.



Photograph No. 15: View of the North Face of Pier 2, Looking Southeast.



Photograph No. 16: View of the South Face of Pier 2, Looking Northeast.



Photograph No. 17: View of the North Face of Pier 3, Looking Southwest.



Photograph No. 18: View of the South Face of Pier 3, Looking Northeast.



Photograph No. 19: View of the Typical Concrete Condition at the Waterline on the South Face of Pier 3, Looking North.

EXHIBIT 3 – DIVE PROCEDURES CHECKLIST

Underwater Dive Inspection Procedure Checklist

Acceptable written procedures communicate to the next dive team what is necessary to ensure a safe and successful inspection. Each bridge requiring underwater dive techniques must have a unique written inspection procedure. The prior inspection report does not suffice for the required procedures. It is valuable to review the last inspection notes, but they do not serve the same purpose as a stand-alone inspection procedure.

This document shall be completed for all underwater dive inspections. This document shall be reviewed prior to performing the field work and it shall be updated when necessary.

I. Bridge Identification

a. Agency with Inspection Responsibility: ODOT DISTRICT 11

Dive Frequency: 60 months

SFN: 7905785 Bridge Number (County-Route-SLM-SD): TUS-259-0.11

Superstructure Type Main Span Type: STEEL GIRDER

Approach Span: STEEL GIRDER

Substructure Type Abutment Type: REINFORCED CONCRETE

Pier Type: REINFORCED CONCRETE

Total Pier Count: 5

Total Pier Count in water: 3

Foundations: CAST-IN-PLACE REINFORCED CONCRETE PILES

Feature Intersected TUSCARAWAS RIVER

b. Photographs



Endview



Elevation



Underside

II. Office and Field Assessment

Prior to the inspection, obtain and review copies of the previous underwater inspection reports, routine inspection reports, scour and hydraulic information, and design plans in preparation of the inspection. Divers should pay particular attention given to any observed areas of deterioration, the channel conditions and factors that may accelerate material deterioration. Changes shall be noted in the inspection procedure. Site conditions should be reviewed prior to diving.

a. Channel Conditions

____Waterway features

____Rapid stream flows,

_X_ Significant debris accumulation

____Constricted waterway openings

____Soft or unstable streambeds

____Meandering channels

____Other which may promote scour and undermining of substructure elements

____Navigable Waterway

____Flow Controls

b. Anticipated Water conditions which may affect the inspection

____Cold Water (Apprx. Temp____)

____Black water

____Rapid stream flows

____Near military facility

____Tribal fishing

____Water quality

____History of Log jams

c. Identify factors that may accelerate the deterioration of the bridge elements:

____Highly corrosive water

____Unprotected steel members

____Other

Risk Factor Narrative:

III. **Contacts Prior to Work**

Dr. Waseem Khalifa, Ph. D., P.E.

District Bridge Engineer

2201 Reiser Avenue SE

New Philadelphia, OH 44663

(330) 308-7873

Point of contact for immediate action such as closing the bridge due to findings)

Contact Bridge Owner _____14_____ (number) days before the proposed underwater inspection.

Special contracting and scheduling procedures prior to inspection, include recommended lead time

Entity	Contact Name and Title	Contact Phone	Lead Time
Coast Guard	N/A	N/A	N/A
Property Owner	N/A	N/A	N/A
Access Equipment	N/A	N/A	N/A
Lake or River draw-down	N/A	N/A	N/A
Canal dry time	N/A	N/A	N/A
Tree removal	N/A	N/A	N/A
Other:	N/A	N/A	N/A
Other:	N/A	N/A	N/A

IV. **Dive Team Shall Include the Following:**

Dive Team Narrative:

The structure shall be investigated using a three-member dive team: one dive supervisor to monitor communications and air supply while taking notes, one diver, and one tender/standby diver. There shall be one NBIS Team Leader onsite at all times.

Example: The Bridge shall be investigated using a three-member dive team: one supervisor to monitor rack box and take notes, one diver, and one tender/standby diver. There shall be one NBIS Team Leader onsite at all times.

V. Site Information

Navigable waterway: Y /(N)

If Yes, waterway river point _____

Anticipated water visibility depth 3 ft

Anticipated Dive depth 1.9 ft

Anticipated current 2 ft

Scour Critical (item 113): 8

POA in place: Y/(N)

Scour Monitoring devices present: Y/(N)

Verify the Scope of Services when work is contracted for the procedure for underwater elements that are not in water during an inspection.

Site Information Narrative:

The underwater inspection consists of a visual and tactile examination of the accessible surfaces of the substructure items in water. Additional items should reference the scope of services in the contract. For reference the following items are in water:

Item	Number of Units	Level of Inspection (1, 2 or 3) with Commentary
Piers and Number of Columns	3	100% Level 1 10% Level 2
Abutment		
Culvert		
Scour Countermeasures		
Fenders or Dolphins		

Photographs should be taken, if water clarity permits, for typical conditions, conditions that have changed since last inspection and significant or noteworthy deficiencies. The type of channel bottom material, the presence or extent of scour, the presence or extent of riprap, the presence or extent of drift and debris, and the location of any foundation exposure or undermining shall be quantified. Include depth, length, height and location of deficiencies.

VI. **Equipment and Field Logistics**

a. The inspection should be conducted using:

_X_ Chest waders

____ Hip waders

____ Diving equipment

____ SCUBA (Note that ADCI Consensus Standards require communication systems be employed for both SCUBA and Surface-Supplied (whether air or mixed-gas) dive modes)

____ SCUBA with communication

____ Surface Supplied with communication

b. The channel bottom should be sounded utilizing

____ Digital fathometer

_X_ Telescoping survey rod

____ acoustic imaging

c. During the inspection, the divers should work from

_X_ Shore

____ Boat

____ Either

The note taker should work alongside the dive team.

d. Access to the waterway should be obtained from the shore (north bank, southwest quadrant, driveway 30 yards north etc.)

SOUTH EMBANKMENT AT THE STRUCTURE

e. The maximum depth of the channel is typically measured 1.9 feet from

THE NORTH FACE OF PIER 1

Reference Datum 22.0 FT BELOW THE TOP OF DECK AT THE UPSTREAM NOSE OF PIER 2

Soundings should be dictated by the scope of work. When not detailed in the scope they should be repeated from the previous soundings. If neither exist then they need to be taken in a grid pattern between substructure units 100' upstream and 100' downstream.

VII. Inspection Procedure History

Created: COLLINS ENGINEERS, INC. Date: 9/22/2022

Updated By: _____ Date: _____

Updated By: _____ Date: _____

Updated By: _____ Date: _____

Updated By: _____ Date: _____

Updated By: _____ Date: _____

VIII. Other Narrative Not Included In Previous Sections