







UNDERWATER & NBI

CULVERT INSPECTION

STRUCTURE NO. SFN0704954

(BEL-331-0024)

SR-331 OVER BOGGS FORK

BELMONT COUNTY, OH

DISTRICT 11

November 2023

Prepared for:

STATE OF OHIO DEPARTMENT OF TRANSPORTATION

STATE OF OHIO
MATTHEW ROGERS
PE.87504
REGISTERED
PROFESSIONAL ENGINEER

Prepared by:

COLLINS ENGINEERS INC.

124 Venture Court, Suite 10

Lexington, Kentucky 40511

859.367.0097 • www.collinsengr.com

TABLE OF CONTENTS

EXECUTIVE SUMMARY
1.0 INTRODUCTION 1
1.1 Purpose and Scope 1
1.2 General Description of the Structure 1
1.3 Method of Investigation 1
2.0 EXISTING CONDITIONS 2
2.1 General Conditions 2
2.2 Substructure Conditions 3
2.2.1 Wall 1 3
2.2.2 Wall 2 3
2.2.3 Topside 3
2.2.4 Channel Bottom and Scour Assessment 3
3.0 EVALUATION AND RECOMMENDATIONS 4
EXHIBIT 1 – FIGURES 5
LOCATION MAP
SOUNDING PLAN
CHANNEL CROSS SECTIONS – UPSTREAM FASCIA
CHANNEL CROSS SECTIONS – STRUCTURE CENTERLINE
CHANNEL CROSS SECTIONS – DOWNSTREAM FASCIA
WALL 1
WALL 2
TOPSIDE
EXHIBIT 2 – INSPECTION PHOTOGRAPHS 14
Photograph No. 1: Overall View of Structure No. SFN0704954 (BEL-331-0024), Looking West.
Photograph No. 2: Overall View of Structure No. SFN0704954 (BEL-331-0024), Looking East.
Photograph No. 3: Overall View of the North Approach, Looking North.
Photograph No. 4: Overall View of the South Approach, Looking South.
Photograph No. 5: Overall View of the Upstream Channel, Looking East.
Photograph No. 6: Overall View of the Downstream Channel, Looking West.
Photograph No. 7: View of the North Embankment Upstream of the Structure, Looking North.
Photograph No. 8: View of the North Embankment Downstream of the Structure, Looking North.
Photograph No. 9: View of the South Embankment Upstream of the Structure, Looking South.
Photograph No. 10: View of the South Embankment Downstream of the Structure, Looking South.

Photograph No. 11: View of the Typical Ceiling Condition, Looking West.
Photograph No. 12: View of the Cold Joint with Efflorescence, Looking South.
Photograph No. 13: View of Wall 1, Looking Southwest.
Photograph No. 14: View of Wall 2, Looking Northwest.
Photograph No. 15: View of the Typical Concrete Condition at the Waterline on Wall 2, Looking North.
Photograph No. 16: View of the Typical Railing Condition, Looking South.
Photograph No. 17: View of the Typical Wearing Surface Condition, Looking West.
Photograph No. 18: View of the Typical Headwall Spall, Looking South.
Photograph No. 19: View of the Typical Wingwall Spall, Looking South.
EXHIBIT 3 – DIVE PROCEDURES CHECKLIST 25

EXECUTIVE SUMMARY

Project: ODOT D11 Underwater Bridge Inspections - 2023.

Purpose of Project: To perform a detailed visual and tactile underwater investigation of bridges for the Ohio Department of Transportation, District 11.

Inspection Team: Team Leader – Matthew Rogers, P.E. – Collins Engineers, Inc.
Team Member – Kevin Mitchell, E.I.T. – Collins Engineers, Inc.
Team Member – Olivia Farmer, E.I.T. – Collins Engineers, Inc.
Team Member – Nicholas Lane – Collins Engineers, Inc.

Inspection Date(s): November 7, 2023

Water Visibility:	<1 ft	***Water Velocity:***	<1 ft/s
Water Temperature:	50 °F	***Weather:***	Clear – 65 °F
Waterline Elevation:	95.0 ft	***Type of Boat:***	N/A
High-water Elevation:	96.0 ft		
Coordinates:	40.16953°N, 81.14985°W		
Access Location:	Northeast Embankment at Structure		
Dive Mode:	Wading		
Waterline Reference:	5.0 ft below the top of east headwall.		
Maximum Depth at SSU:	4.3 ft – East Headwall		
Shoreline Conditions:	The north and south shorelines consisted of well vegetated mild slopes with no signs of erosion.		

Summary of Findings:

- **Wall 1:**
  - The submerged portions of the wall exhibited light scaling up to 1/8 in. deep extending from the channel bottom to 2 ft above the waterline.
  - Efflorescence buildup was observed in the ceiling at the upstream cold joint.
- **Wall 2:**
  - The submerged portions of the wall exhibited light scaling up to 1/8 in. deep extending from the channel bottom to 2 ft above the waterline.
  - Efflorescence buildup was observed in the ceiling at the upstream cold joint.
- **Topside:**
  - The wearing surface typically exhibited scattered cracks up to 1/8 in. wide.
  - The headwalls typically exhibited scattered surface edge spalls up to 1 ft long by 2 in. wide.
  - The wingwalls typically exhibited scattered surface edge spalls up to 1.5 ft long by 6 in. wide.

Summary of Recommendations:

- Monitor scaling on Walls 1 and 2.

Underwater Inspection Coding:

NBI Ratings:

Item	Description	Coding	Condition
B.C.04	Culvert	6 – Satisfactory Condition	Scaling, Efflorescence Buildup
B.C.09	Channel Cond. Rating	8 – Very Good Condition	
B.C.10	Channel Protection Cond.	N – Not Applicable	
B.C.11	Scour Cond. Rating	9 – Excellent Condition	
B.C.15	Underwater Cond. Rating	6 – Satisfactory Condition	
B.IE.03	Insp. Date	November 7, 2023	
B.IE.05	UW Insp. Interval	60 Months	

AASHTO National Bridge Element (NBE) Ratings:

Element #	Description	Units	Total	Condition State			
				1	2	3	4
241	Reinforced Concrete Culvert	LF	48	0	48	0	0

Note: Ratings were developed using the FHWA Specifications for the National Bridge Inventory and AASHTO Manual for Bridge Element Inspection, 2nd Ed. The recommended ratings consider inspected elements located within the waterway and conditions existing below the water surface only. Additional consideration is necessary for the assignment of overall condition ratings for this bridge.

1.0 INTRODUCTION

1.1 Purpose and Scope

This report consists of the results of a detailed underwater investigation performed at the SR-331 Culvert over Boggs Fork in Belmont County, OH. Collins Engineers, Inc. (Collins) conducted the underwater investigation for the Ohio Department of Transportation (ODOT), District 11 on November 7, 2023. The primary purpose of the investigation was as follows:

- Determine the condition of the substructure components located in the water at the time of the inspection from the waterline to the channel bottom.
- Obtain channel bottom depth measurements along the culvert fascias, upstream and downstream of the culvert, and around the submerged substructure units.
- Determine the condition of the shorelines in the vicinity of the structure.
- Obtain photographs of the culvert and any significant defects.

In addition, a brief inspection was made of areas that could be submerged during periods of high water. The following report includes a description of the structure, the method of investigation, a description of existing conditions, an evaluation and recommendations based on the conditions, inspection figures, and photographs.

1.2 General Description of the Structure

Structure No. SFN0704954 (BEL-331-0024) spans 16 ft, carrying SR-331 over Boggs Fork and is approximately 14 ft wide. The culvert is constructed of one span composed of a concrete box culvert. The roadway orientation of the longitudinal axis of the culvert is south to north. The substructure units are labeled as Walls 1 and 2. Existing design drawings were not available at the time of the inspection. Refer to Figure 1 in Exhibit 1 for a Location Map of the culvert. Refer to Photographs 1 through 4 in Exhibit 2 for overall views of the culvert.

1.3 Method of Investigation

A detailed field inspection was conducted to determine the physical condition of the submerged culvert substructure units from the waterline to the channel bottom. A brief visual examination of the substructure units above the waterline was also made.

A four-person team consisting of a professional engineer-diver and team leader (Matthew O. Rogers, P.E.), two engineer-divers (Kevin Mitchell, E.I.T. and Olivia Farmer, E.I.T.), and a technician-diver (Nicholas Lane) conducted the underwater inspection. The inspection was conducted through wading. During the inspection, the inspectors worked from the shore and a note taker on the shore recorded the inspection notes.

The underwater inspection consisted of a visual and tactile examination of the accessible surfaces of the substructure units from the waterline to the channel bottom with particular attention given to any observed areas of deterioration or apparent distress. Approximately 10 percent of the total area on the underwater surfaces of the substructure units was cleaned so that the condition could be more closely examined. Photographs were taken to document the general conditions and observed deficiencies. The type of channel bottom material, the presence or extent of scour, the presence or extent of riprap, the presence or extent of drift and debris, and the location of any foundation exposure or undermining were noted.

Channel bottom soundings were performed utilizing a telescoping survey rod. Soundings were taken parallel to the culvert at the upstream and downstream fascias and 50 ft upstream and downstream, at the midpoint between the substructure units, and at 10 ft intervals in-line with the walls upstream and downstream up to 50 ft; the waterline was referenced to a known elevation on the culvert. A sounding plan was developed using the soundings and approximate location of the shorelines. Refer to Figures 2 through 5 in Exhibit 1 for the sounding plan and channel cross sections that show the channel limits and water depths around the structure.

2.0 EXISTING CONDITIONS

2.1 General Conditions

At the time of the inspection, the waterline of Boggs Fork was located approximately 5.0 ft below the top of east headwall, which corresponds to an assumed waterline elevation of 95.0 ft. During the inspection, the waterway was flowing east to west below the structure at a rate of less than 1 ft/s. The approximate high-water elevation was observed to be 96.0 ft.

The culvert wall skew was consistent with the channel alignment and does not require attention at this time. The north and south shorelines consisted of well vegetated mild slopes with no signs of erosion. Refer to Photographs 5 through 10 in Exhibit 2 for views of the shorelines near the structure.

2.2 Substructure Conditions

2.2.1 Wall 1

The channel bottom material around Wall 1 consisted of soft silt and vegetation with approximately 24 in. probe rod penetration. The submerged portions of the wall exhibited light scaling up to 1/8 in. deep extending from the channel bottom to 2 ft above the waterline. Efflorescence buildup was observed in the ceiling at the upstream cold joint. Refer to Figure 6 in Exhibit 1 for detailed inspection notes of Wall 1. Refer to Photographs 11 through 13 in Exhibit 2 for views of Wall 1 and the ceiling.

2.2.2 Wall 2

The channel bottom material around Wall 2 consisted of soft silt and vegetation with approximately 24 in. probe rod penetration. The submerged portions of the wall exhibited light scaling up to 1/8 in. deep extending from the channel bottom to 2 ft above the waterline. Efflorescence buildup was observed in the ceiling at the upstream cold joint. Refer to Figure 7 in Exhibit 1 for detailed inspection notes of Wall 2. Refer to Photographs 14 and 15 in Exhibit 2 for views of Wall 2 and typical concrete condition at the waterline.

2.2.3 Topside

The wearing surface typically exhibited scattered cracks up to 1/8 in. wide. The headwalls typically exhibited scattered surface edge spalls up to 1 ft long by 2 in. wide. The wingwalls typically exhibited scattered surface edge spalls up to 1.5 ft long by 6 in. wide. Refer to Figure 8 in Exhibit 1 for detailed inspection notes of the topside inspection. Refer to Photographs 16 through 19 in Exhibit 2 for views of the typical headwalls, wearing surface, and railing.

2.2.4 Channel Bottom and Scour Assessment

At the time of the inspection, the Ohio River was experiencing normal flow and the channel bottom appeared stable for the type of material. The channel bottom was primarily soft silt with vegetation surrounding the substructure units. No additional scour, undermining, or scour countermeasures were observed.

3.0 EVALUATION AND RECOMMENDATIONS

Overall, the submerged substructure units of Structure No. SFN0704954 (BEL-331-0024) were in satisfactory condition below water. The channel bottom configuration should continue to be monitored during future underwater inspections to verify that localized scour or overall channel degradation is not occurring. Design or as-built drawings for the culvert should be obtained and reviewed, if possible, prior to the next underwater inspection to determine the exact construction of the culvert.

The scaling observed on Walls 1 and 2 is not a structural concern at this time given its size compared to the overall wall size, and as a result, no repairs are recommended. This area should be monitored during future inspections for increasing extent or severity of the scaling and exposure of reinforcing steel. If the extent or severity of the scaling is observed to be increasing or reinforcing steel becomes exposed, it may be necessary to repair the area at that time.

It is recommended that the submerged substructure units of Structure No. SFN0704954 (BEL-331-0024) be next inspected underwater at an interval not to exceed 60 months, no later than November 7, 2028.

Respectfully Submitted,
COLLINS ENGINEERS, INC.

Matthew Rogers

Matthew Rogers, P.E.
Project Manager

Originated by:
Olivia Farmer, E.I.T.

EXHIBIT 1 – FIGURES



COLLINS ENGINEERS
124 Venture Court, Ste 10
Lexington, KY 40511
Phone: 859-367-0097
Fax: 859-367-0140

Ohio Department of Transportation, District 11
2201 Reiser Ave.
New Philadelphia, OH 44663
Phone: 330-339-6633

SR-331 OVER BR BOGGS FORK
STRUCTURE NO. SFN0704954

LOCATION MAP

BELLAIRE COUNTY, OHIO

INSPECTED BY: MOR	CEI PROJECT: 55−13380.02
DRAWN BY: OPF	DATE: 7 NOV 2023
CHECKED BY: JMJ	SHEET NO: 1

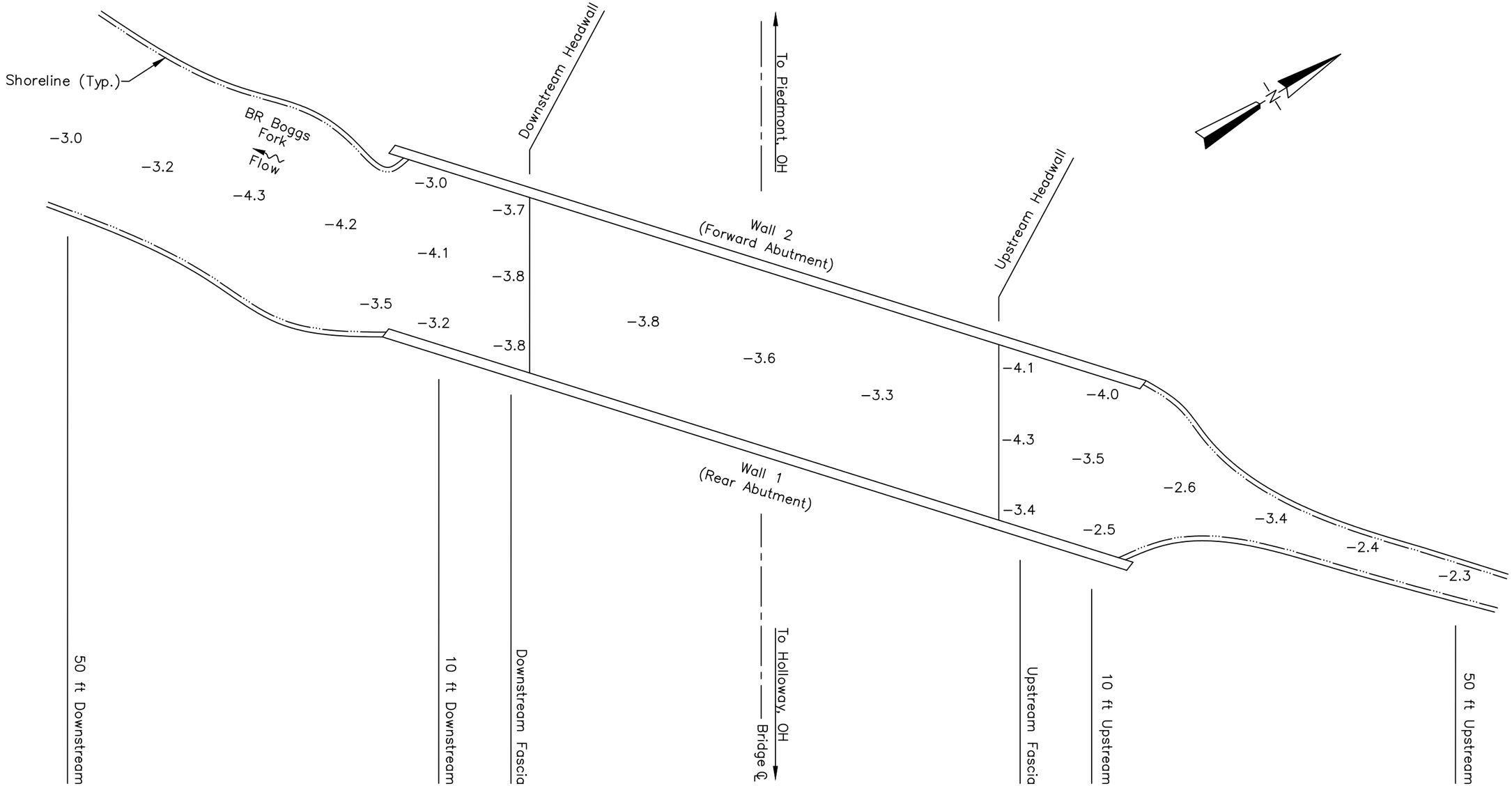

SOUNDING PLAN

GENERAL NOTES:

1. Walls 1 and 2 were inspected underwater. Substructure units are labeled according to available record drawings.
2. At the time of inspection on November 7, 2023, the waterline was located approximately 5.0 ft below the Top of Headwall (EL. +100.0 ft). This corresponds with a waterline elevation of +95.0 ft.
3. Soundings indicate the water depth at the time of inspection and are measured in feet.
4. Soundings were taken parallel to the culvert at the upstream and downstream fascias and 50 ft upstream and downstream, at the midpoint between the substructure units, and at 10 ft intervals in-line with the walls upstream and downstream up to 50 ft

LEGEND

-2.7	Sounding Depth from Waterline (ft)
	Timber Debris

COLLINS ENGINEERS
124 Venture Court, Ste 10
Lexington, KY 40511
Phone: 859-367-0097
Fax: 859-367-0140

Ohio Department of Transportation, District 11
2201 Reiser Ave.
New Philadelphia, OH 44663
Phone: 330-339-6633

SR-331 OVER BR BOGGS FORK
STRUCTURE NO. SFN0704954
SOUNDING PLAN
BELLAIRE COUNTY, OHIO

CEI PROJECT	55-13380.02
INSPECTED BY:	MOR
DRAWN BY:	KMM
CHECKED BY:	JMJ
DATE:	NOV 2023
SHEET NO:	2

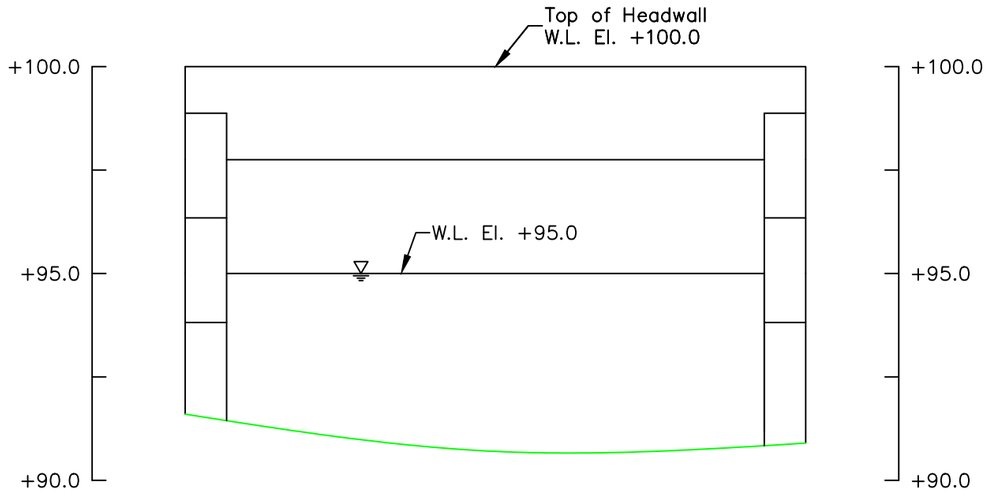

UPSTREAM FASCIA
CHANNEL CROSS SECTION
(LOOKING DOWNSTREAM)

Note:

Footing elevations unknown due to unavailable record drawings.

LEGEND

- Approximate Channel Bottom – Nov. 2023
- Approximate Channel Bottom – Nov. 2018 (No Data)
- Approximate Channel Bottom – Nov. 2013 (No Data)
- Timber Debris
- Water Surface
- +450 Elevation (ft)

COLLINS ENGINEERS
124 Venture Court, Ste 10
Lexington, KY 40511
Phone: 859-367-0097
Fax: 859-367-0140

Ohio Department of Transportation, District 11
2201 Reiser Ave.
New Philadelphia, OH 44663
Phone: 330-339-6633

SR-331 OVER BR BOGGS FORK
STRUCTURE NO. SFN0704954
CROSS SECTIONS
BELLAIRE COUNTY, OHIO

CEI PROJECT	55–13380.02
INSPECTED BY:	MOR
DRAWN BY:	KMM
CHECKED BY:	JMJ
DATE:	NOV 2023
SHEET NO:	3

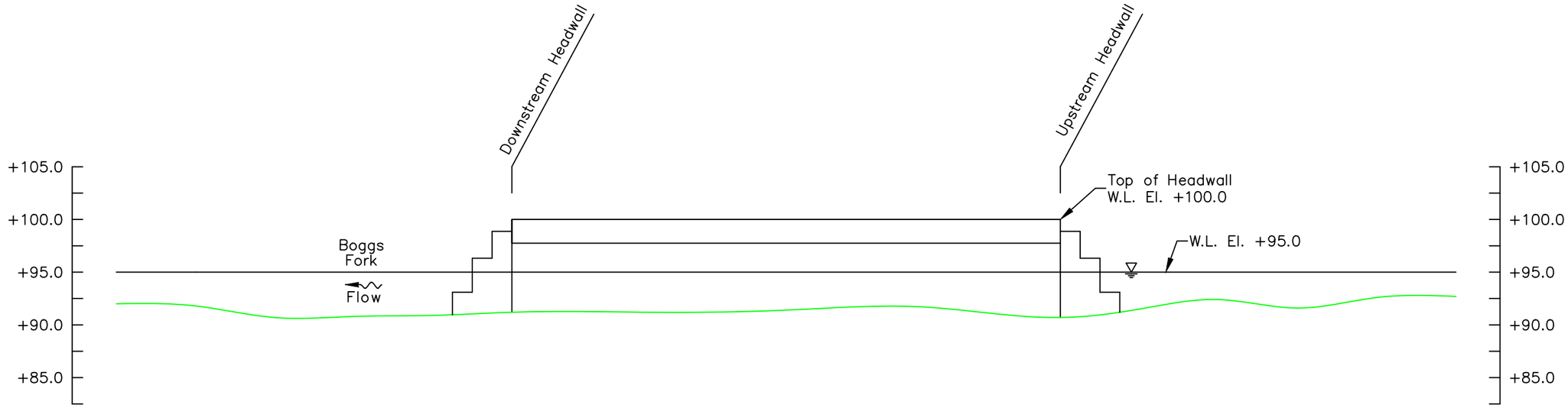

STRUCTURE CENTERLINE
CHANNEL CROSS SECTION
(LOOKING NORTH)

Note:

Footing elevations unknown due to unavailable record drawings.

LEGEND

- Approximate Channel Bottom – Nov. 2023
- Approximate Channel Bottom – Nov. 2018 (No Data)
- Approximate Channel Bottom – Nov. 2013 (No Data)
- Timber Debris
- Water Surface
- +450 Elevation (ft)

COLLINS ENGINEERS
124 Venture Court, Ste 10
Lexington, KY 40511
Phone: 859-367-0097
Fax: 859-367-0140

Ohio Department of Transportation, District 11
2201 Reiser Ave.
New Philadelphia, OH 44663
Phone: 330-339-6633

SR-331 OVER BR BOGGS FORK
STRUCTURE NO. SFN0704954
CROSS SECTIONS
BELLAIRE COUNTY, OHIO

CEI PROJECT	55–13380.02
INSPECTED BY:	MOR
DRAWN BY:	KMM
CHECKED BY:	JMJ
DATE:	NOV 2023
SHEET NO:	4

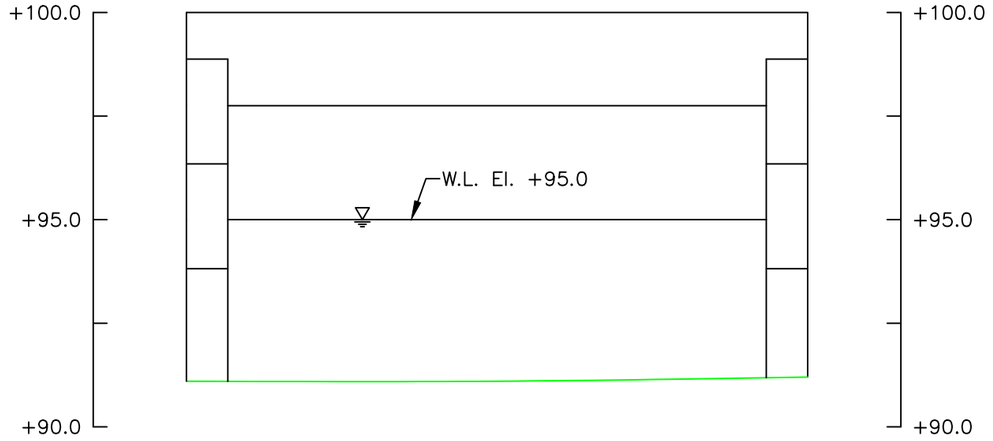

DOWNSTREAM FASCIA
CHANNEL CROSS SECTION
(LOOKING DOWNSTREAM)

Note:

Footing elevations unknown due to unavailable record drawings.

LEGEND

———	Approximate Channel Bottom – Nov. 2023
- - - - -	Approximate Channel Bottom – Nov. 2018 (No Data)
– – – – –	Approximate Channel Bottom – Nov. 2013 (No Data)
	Timber Debris
	Water Surface
+450	Elevation (ft)

COLLINS ENGINEERS
124 Venture Court, Ste 10
Lexington, KY 40511
Phone: 859-367-0097
Fax: 859-367-0140

Ohio Department of Transportation, District 11
2201 Reiser Ave.
New Philadelphia, OH 44663
Phone: 330-339-6633

SR-331 OVER BR BOGGS FORK
STRUCTURE NO. SFN0704954
CROSS SECTIONS
BELLAIRE COUNTY, OHIO

CEI PROJECT 55–13380.02
INSPECTED BY: MOR
DRAWN BY: KMM
CHECKED BY: JMJ
DATE: NOV 2023
SHEET NO: 5

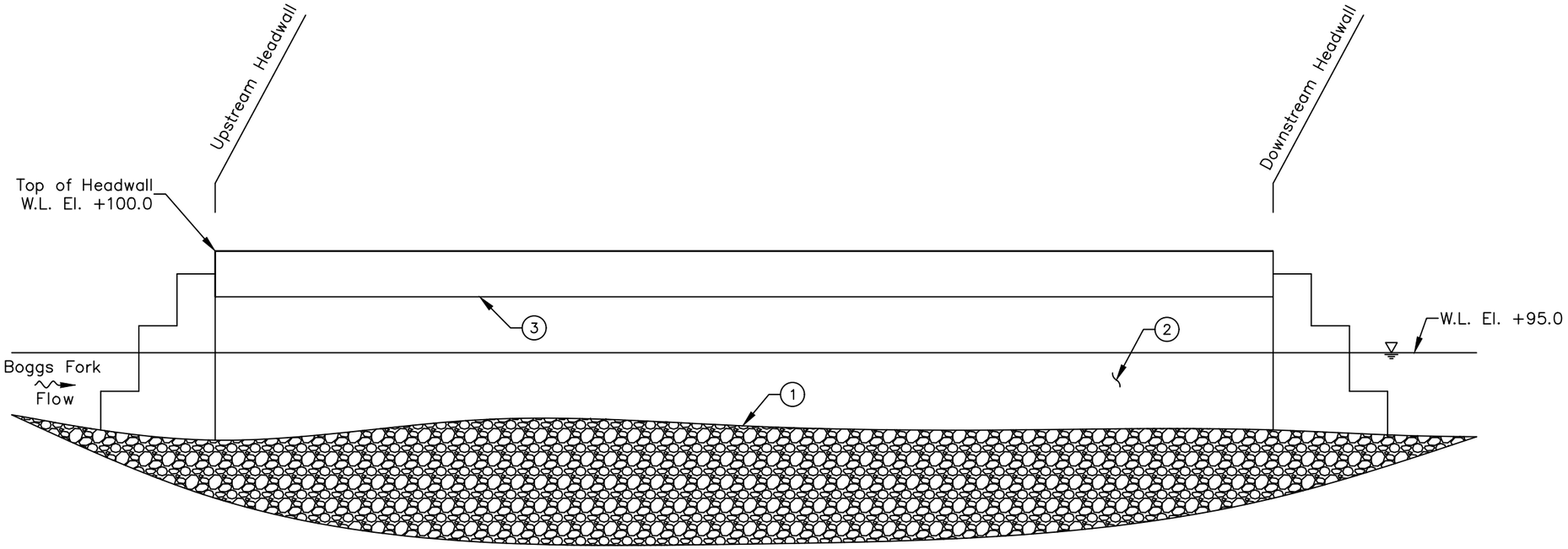

NORTH ELEVATION
(LOOKING SOUTH)

INSPECTION NOTES:

1. The channel bottom material around Wall 1 consisted of soft silt and vegetation with approximately 24 in. probe rod penetration.
2. The submerged portions of the wall exhibited light scaling up to 1/8 in. deep extending from the channel bottom to 2 ft above the waterline.
3. Efflorescence buildup was observed in the ceiling at the upstream cold joint.

LEGEND

−2.7	Sounding Depth from Waterline (ft)
———	Approximate Channel Bottom – Nov. 2023
	Timber Debris
	Water Surface

COLLINS ENGINEERS
124 Venture Court, Ste 10
Lexington, KY 40511
Phone: 859-367-0097
Fax: 859-367-0140

Ohio Department of Transportation, District 11
2201 Reiser Ave.
New Philadelphia, OH 44663
Phone: 330-339-6633

SR-331 OVER BR BOGGS FORK
STRUCTURE NO. SFN0704954
UPSTREAM HEADWALL
BELLAIRE COUNTY, OHIO

CEI PROJECT	55–13380.02
INSPECTED BY:	MOR
DRAWN BY:	KMM
CHECKED BY:	JMJ
DATE:	NOV 2023
SHEET NO:	6

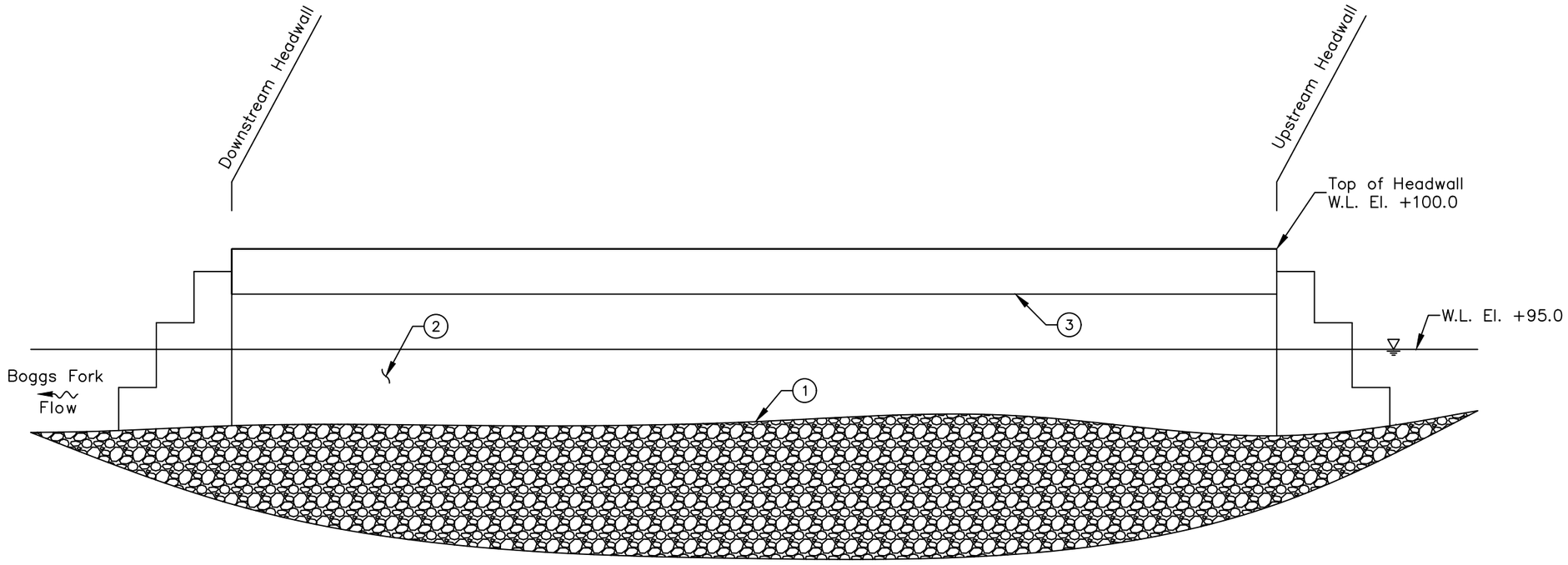

SOUTH ELEVATION
(LOOKING NORTH)

INSPECTION NOTES:

1. The channel bottom material around Wall 1 consisted of soft silt and vegetation with approximately 24 in. probe rod penetration.
2. The submerged portions of the wall exhibited light scaling up to 1/8 in. deep extending from the channel bottom to 2 ft above the waterline.
3. Efflorescence buildup was observed in the ceiling at the upstream cold joint.

LEGEND

−2.7	Sounding Depth from Waterline (ft)
———	Approximate Channel Bottom – Nov. 2023
	Timber Debris
	Water Surface

COLLINS ENGINEERS
124 Venture Court, Ste 10
Lexington, KY 40511
Phone: 859-367-0097
Fax: 859-367-0140

Ohio Department of Transportation, District 11
2201 Reiser Ave.
New Philadelphia, OH 44663
Phone: 330-339-6633

SR-331 OVER BR BOGGS FORK
STRUCTURE NO. SFN0704954
DOWNSTREAM HEADWALL
BELLAIRE COUNTY, OHIO

CEI PROJECT	55-13380.02
INSPECTED BY:	MOR
DRAWN BY:	KMM
CHECKED BY:	JMJ
DATE:	NOV 2023
SHEET NO:	7

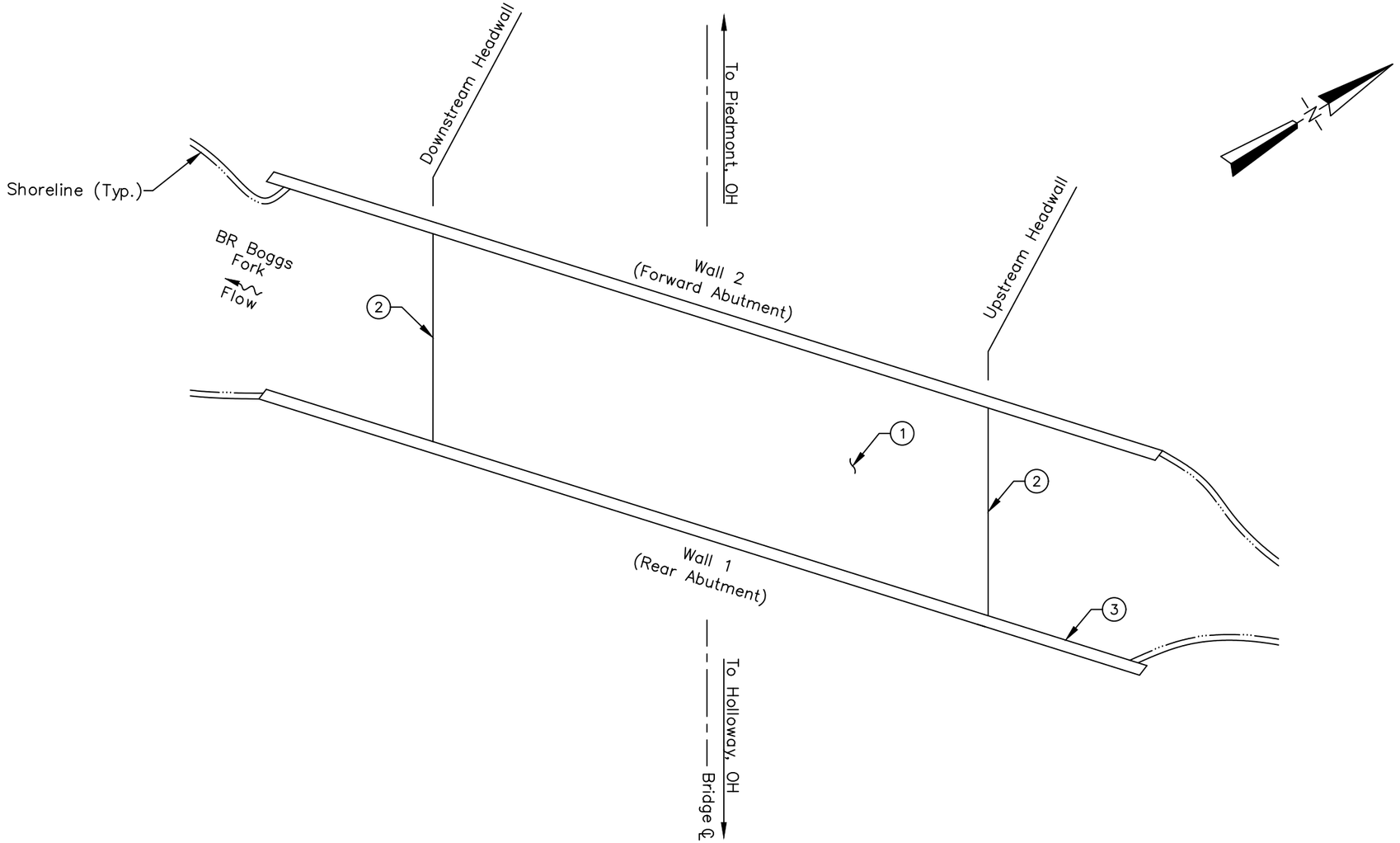

INSPECTION NOTES:

1. The wearing surface typically exhibited scattered cracks up to 1/8 in. wide.
2. The headwalls typically exhibited scattered surface edge spalls up to 1 ft long by 2 in. wide.
3. The wingwalls typically exhibited scattered surface edge spalls up to 1.5 ft long by 6 in. wide.

COLLINS ENGINEERS
124 Venture Court, Ste 10
Lexington, KY 40511
Phone: 859-367-0097
Fax: 859-367-0140

Ohio Department of Transportation, District 11
2201 Reiser Ave.
New Philadelphia, OH 44663
Phone: 330-339-6633

SR-331 OVER BR BOGGS FORK
STRUCTURE NO. SFN0704954
TOPSIDE
BELLAIRE COUNTY, OHIO

CEI PROJECT	55-13380.02
INSPECTED BY:	MOR
DRAWN BY:	KMM
CHECKED BY:	JMJ
DATE:	NOV 2023
SHEET NO:	8

EXHIBIT 2 – INSPECTION PHOTOGRAPHS



Photograph No. 1: Overall View of Structure No. SFN0704954 (BEL-331-0024), Looking West.



Photograph No. 2: Overall View of Structure No. SFN0704954 (BEL-331-0024), Looking East.



Photograph No. 3: Overall View of the North Approach, Looking North.



Photograph No. 4: Overall View of the South Approach, Looking South.



Photograph No. 5: Overall View of the Upstream Channel, Looking East.



Photograph No. 6: Overall View of the Downstream Channel, Looking West.



Photograph No. 7: View of the North Embankment Upstream of the Structure, Looking North.



Photograph No. 8: View of the North Embankment Downstream of the Structure, Looking North.



Photograph No. 9: View of the South Embankment Upstream of the Structure, Looking South.



Photograph No. 10: View of the South Embankment Downstream of the Structure, Looking South.



Photograph No. 11: View of the Typical Ceiling Condition, Looking West.



Photograph No. 12: View of the Cold Joint with Efflorescence, Looking South.



Photograph No. 13: View of Wall 1, Looking Southwest.



Photograph No. 14: View of Wall 2, Looking Northwest.



Photograph No. 15: View of the Typical Concrete Condition at the Waterline on Wall 2, Looking North.



Photograph No. 16: View of the Typical Railing Condition, Looking South.



Photograph No. 17: View of the Typical Wearing Surface Condition, Looking West.



Photograph No. 18: View of the Typical Headwall Spall, Looking South.



Photograph No. 19: View of the Typical Wingwall Spall, Looking South.

EXHIBIT 3 – DIVE PROCEDURES CHECKLIST

Underwater Dive Inspection Procedure Checklist

Acceptable written procedures communicate to the next dive team what is necessary to ensure a safe and successful inspection. Each bridge requiring underwater dive techniques must have a unique written inspection procedure. The prior inspection report does not suffice for the required procedures. It is valuable to review the last inspection notes, but they do not serve the same purpose as a stand-alone inspection procedure.

This document shall be completed for all underwater dive inspections. This document shall be reviewed prior to performing the field work and it shall be updated when necessary.

I. Bridge Identification

a. Agency with Inspection Responsibility: _ODOT DISTRICT 11_____

Dive Frequency: _____60_____ months

SFN: 0704954_____ Bridge Number (County-Route-SLM-SD): BEL-331-0024

Superstructure Type Main Span Type: N/A

Approach Span: N/A

Substructure Type Abutment Type: CONCRETE BOX CULVERT

Pier Type: N/A

Total Pier Count: N/A

Total Pier Count in water: N/A

Foundations: N/A

Feature Intersected BOGGS FORK

b. Photographs



Endview



Elevation



Underside

II. Office and Field Assessment

Prior to the inspection, obtain and review copies of the previous underwater inspection reports, routine inspection reports, scour and hydraulic information, and design plans in preparation of the inspection. Divers should pay particular attention given to any observed areas of deterioration, the channel conditions and factors that may accelerate material deterioration. Changes shall be noted in the inspection procedure. Site conditions should be reviewed prior to diving.

a. Channel Conditions

____Waterway features

____Rapid stream flows,

____Significant debris accumulation

_X__Constricted waterway openings

_X__Soft or unstable streambeds

____Meandering channels

____Other which may promote scour and undermining of substructure elements

____Navigable Waterway

____Flow Controls

b. Anticipated Water conditions which may affect the inspection

_X__Cold Water (Apprx. Temp 50 °F)

____Black water

____Rapid stream flows

____Near military facility

____Tribal fishing

____Water quality

____History of Log jams

c. Identify factors that may accelerate the deterioration of the bridge elements:

____Highly corrosive water

____Unprotected steel members

____Other

Risk Factor Narrative:

III. **Contacts Prior to Work**

Dr. Waseem Khalifa, Ph. D., P.E.

District Bridge Engineer

2201 Reiser Avenue SE

New Philadelphia, OH 44663

(330) 308-7873

Point of contact for immediate action such as closing the bridge due to findings)

Contact Bridge Owner _____14_____ (number) days before the proposed underwater inspection.

Special contracting and scheduling procedures prior to inspection, include recommended lead time

Entity	Contact Name and Title	Contact Phone	Lead Time
Coast Guard	N/A	N/A	N/A
Property Owner	N/A	N/A	N/A
Access Equipment	N/A	N/A	N/A
Lake or River draw-down	N/A	N/A	N/A
Canal dry time	N/A	N/A	N/A
Tree removal	N/A	N/A	N/A
Other:	N/A	N/A	N/A
Other:	N/A	N/A	N/A

IV. **Dive Team Shall Include the Following:**

Dive Team Narrative:

The structure shall be investigated using a three-member dive team: one dive supervisor to monitor communications and air supply while taking notes, one diver, and one tender/standby diver. There shall be one NBIS Team Leader onsite at all times.

Example: The Bridge shall be investigated using a three-member dive team: one supervisor to monitor rack box and take notes, one diver, and one tender/standby diver. There shall be one NBIS Team Leader onsite at all times.

V. Site Information

Navigable waterway:	Y / **N**	Anticipated current	___<1___ ft
If Yes, waterway river point	_____	Scour Critical (item 113):	___8_____
Anticipated water visibility depth	__<1__ ft	POA in place: Y/**N**	
Anticipated Dive depth	__4.3___ ft	Scour Monitoring devices present: Y/**N**	

Verify the Scope of Services when work is contracted for the procedure for underwater elements that are not in water during an inspection.

Site Information Narrative:

The underwater inspection consists of a visual and tactile examination of the accessible surfaces of the substructure items in water. Additional items should reference the scope of services in the contract. For reference the following items are in water:

Item	Number of Units	Level of Inspection (1, 2 or 3) with Commentary
Piers and Number of Columns		
Abutment		
Culvert	1	100% Level 1 10% Level 2
Scour Countermeasures		
Fenders or Dolphins		

Photographs should be taken, if water clarity permits, for typical conditions, conditions that have changed since last inspection and significant or noteworthy deficiencies. The type of channel bottom material, the presence or extent of scour, the presence or extent of riprap, the presence or extent of drift and debris, and the location of any foundation exposure or undermining shall be quantified. Include depth, length, height and location of deficiencies.

VI. **Equipment and Field Logistics**

a. The inspection should be conducted using:

____Chest waders

____Hip waders

__X__Diving equipment

____SCUBA (Note that ADCI Consensus Standards require communication systems be employed for both SCUBA and Surface-Supplied (whether air or mixed-gas) dive modes)

____SCUBA with communication

__X__Surface Supplied with communication

b. The channel bottom should be sounded utilizing

____Digital fathometer

__X__Telescoping survey rod

____ acoustic imaging

c. During the inspection, the divers should work from

__X__Shore

____Boat

____Either

The note taker should work alongside the dive team.

d. Access to the waterway should be obtained from the shore (north bank, southwest quadrant, driveway 30 yards north etc.)

_NORTHEAST EMBANKMENT AT THE STRUCTURE

e. The maximum depth of the channel is typically measured 4.3 feet from EAST HEADWALL.

Reference Datum TOP OF INLET HEADWALL

Soundings should be dictated by the scope of work. When not detailed in the scope they should be repeated from the previous soundings. If neither exist then they need to be taken in a grid pattern between substructure units 100' upstream and 100' downstream.

VII. Inspection Procedure History

Created: COLLINS ENGINEERS, INC. Date: 11/7/2023

Updated By: _____ Date: _____

Updated By: _____ Date: _____

Updated By: _____ Date: _____

Updated By: _____ Date: _____

Updated By: _____ Date: _____

VIII. Other Narrative Not Included In Previous Sections