







UNDERWATER BRIDGE INSPECTION REPORT

STRUCTURE NO. SFN4103211
(JEF-213-1641)
SR-213 OVER YELLOW CREEK
JEFFERSON COUNTY, OH
DISTRICT 11

November 2023

Prepared for:

STATE OF OHIO DEPARTMENT OF TRANSPORTATION

STATE OF OHIO
MATTHEW ROGERS
PE.87504
REGISTERED PROFESSIONAL ENGINEER

Prepared by:

COLLINS ENGINEERS INC.

124 Venture Court, Suite 10

Lexington, Kentucky 40511

859.367.0097 • www.collinsengr.com

TABLE OF CONTENTS

EXECUTIVE SUMMARY
1.0 INTRODUCTION 1
1.1 Purpose and Scope 1
1.2 General Description of the Structure 1
1.3 Method of Investigation 1
2.0 EXISTING CONDITIONS 2
2.1 General Conditions 2
2.2 Substructure Conditions 3
2.2.1 Pier 2 3
2.2.2 Pier 3 3
2.2.3 Channel Bottom and Scour Assessment 3
EXHIBIT 1 – FIGURES 6
LOCATION MAP
SOUNDING PLAN
CHANNEL CROSS SECTIONS – 50 FT UPSTREAM & UPSTREAM FASCIA
CHANNEL CROSS SECTIONS – STRUCTURE CENTERLINE
CHANNEL CROSS SECTIONS – 50 FT DOWNSTREAM & DOWNSTREAM FASCIA
PIER 2
PIER 3
EXHIBIT 2 – INSPECTION PHOTOGRAPHS 14
Photograph No. 1: Overall View of Structure No. SFN4103211, Looking West.
Photograph No. 2: Overall View of Structure No. SFN4103211, Looking East.
Photograph No. 3: Overall View of the North Approach, Looking South.
Photograph No. 4: Overall View of the South Approach, Looking North.
Photograph No. 5: Overall View of the Upstream Channel, Looking East.
Photograph No. 6: Overall View of the Downstream Channel, Looking West.
Photograph No. 7: View of the North Embankment Upstream of the Structure, Looking North.
Photograph No. 8: View of the North Embankment Downstream of the Structure, Looking North.
Photograph No. 9: View of the South Embankment Upstream of the Structure, Looking South.
Photograph No. 10: View of the South Embankment at the Structure, Looking South.
Photograph No. 11: View of the South Embankment Downstream of the Structure, Looking South.
Photograph No. 12: View of the Typical Underdeck Condition, Looking Southwest.
Photograph No. 13: View of the North Face of Pier 2, Looking South.

Photograph No. 14: View of the South Face of Pier 2, Looking North.
Photograph No. 15: View of the Timber Debris at the Upstream Nose of Pier 2, Looking West.
Photograph No. 16: View of the North Face of Pier 3, Looking South.
Photograph No. 17: View of the South Face of Pier 3, Looking North.
Photograph No. 18: View of the Spall at the Downstream End of Pier 3, Looking North.
Photograph No. 19: View of the Typical Rip-Rap Condition near Abutment 4, Looking Northeast.
Photograph No. 20: View of the Typical Concrete Condition at the Waterline on the South Face of Pier 3, Looking North.
EXHIBIT 3 – DIVE PROCEDURES CHECKLIST 25

EXECUTIVE SUMMARY

Project: ODOT D11 Underwater Bridge Inspections - 2023.

Purpose of Project: To perform a detailed visual and tactile underwater investigation of bridges for the Ohio Department of Transportation, District 11.

Inspection Team: Team Leader – Matthew Rogers, P.E. – Collins Engineers, Inc.
Team Member – Kevin Mitchell, E.I.T. – Collins Engineers, Inc.
Team Member – Olivia Farmer, E.I.T. – Collins Engineers, Inc.
Team Member – Nicholas Lane – Collins Engineers, Inc.

Inspection Date(s): November 7, 2023

Water Visibility:	3 ft	***Water Velocity:***	<1 ft/s
Water Temperature:	50 °F	***Weather:***	Cloudy – 60 °F
Waterline Elevation:	75.6 ft	***Type of Boat:***	N/A
High-water Elevation:	78.6 ft		
Coordinates:	40.5533°N, 80.6915°W		
Access Location:	Northeast Embankment at the Structure		
Dive Mode:	Surface Supplied Air		
Waterline Reference:	24.4 ft below the top of deck at the upstream nose of Pier 2.		
Maximum Depth at SSU:	6.5 ft – Midpoint of the South Face of Pier 3		
Shoreline Conditions:	The southeast embankment exhibited moderate vegetation with 5 ft vertical cut banks. The northeast, northwest, and southwest embankments consisted of moderately vegetated, mild slopes with failed channel protection consisting of washed out rip-rap.		

Summary of Findings:

- **Pier 2:**
  - The submerged portions of the pier exhibited moderate scaling up to 1/8 in. deep with coarse aggregate exposure extending from the channel bottom to 1 ft above the waterline.
  - Light timber debris accumulation consisting of two logs measuring 12 in. diameter was observed parallel to the south face of the pier.
  - Moderate timber debris accumulation consisting of small sticks up to 1 in. diameter were observed for a 10 ft radius at the upstream nose of the pier.
- **Pier 3:**
  - The submerged portions of the pier exhibited moderate scaling up to 1/8 in. deep with coarse aggregate exposure extending from the channel bottom to 1 ft above the waterline.
  - Localized scour measuring up to 15 ft diameter by approximately 3 ft deep was observed on the south face of Pier 3.
  - A spall measuring 1 ft diameter by 1 in. deep with associated delamination was observed 4 ft above the waterline on the west end of Pier 3.

Summary of Recommendations:

- Place Rip-Rap at Piers 2 and 3.

Underwater Inspection Coding:

NBI Ratings:

Item	Description	Coding	Condition
B.C.03	Substructure (Overall)	6 – Satisfactory Condition	Spall, Moderate Scaling
B.C.09	Channel Cond. Rating	5 – Fair Condition	Moderate Scour, Timber Debris Accumulation
B.C.10	Channel Protection Cond.	4 – Poor Condition	Washed Out Rip-Rap
B.C.11	Scour Cond. Rating	5 – Fair Condition	Localized Scour at Pier 3
B.C.15	Underwater Cond. Rating	6 – Satisfactory Condition	Spall, Moderate Scaling
B.IE.03	Insp. Date	November 7, 2023	
B.IE.05	UW Insp. Interval	60 Months	

AASHTO National Bridge Element (NBE) Ratings:

Element #	Description	Units	Total	Condition State			
				1	2	3	4
210	Reinforced Concrete Pier Wall	LF	68	0	68	0	0

Note: Ratings were developed using the FHWA Specifications for the National Bridge Inventory and AASHTO Manual for Bridge Element Inspection, 2nd Ed. The recommended ratings consider inspected elements located within the waterway and conditions existing below the water surface only. Additional consideration is necessary for the assignment of overall condition ratings for this bridge.

1.0 INTRODUCTION

1.1 Purpose and Scope

This report consists of the results of a detailed underwater investigation performed at the SR-213 Bridge over Yellow Creek in Jefferson County, OH. Collins Engineers, Inc. (Collins) conducted the underwater investigation for the Ohio Department of Transportation (ODOT), District 11 on November 7, 2023. The primary purpose of the investigation was as follows:

- Determine the condition of the substructure components located in the water at the time of the inspection from the waterline to the channel bottom.
- Obtain channel bottom depth measurements along the bridge fascias, upstream and downstream of the bridge, and around the submerged substructure units.
- Determine the condition of the shorelines in the vicinity of the structure.
- Obtain photographs of the bridge and any significant defects.

In addition, a brief inspection was made of areas that could be submerged during periods of high water. The following report includes a description of the structure, the method of investigation, a description of existing conditions, an evaluation and recommendations based on the conditions, inspection figures, and photographs.

1.2 General Description of the Structure

Structure No. SFN4103211 spans 199.9 ft, carrying SR-213 over Yellow Creek and is approximately 32 ft wide. The bridge superstructure is constructed of four spans, each composed of five continuous steel girders. The roadway orientation of the longitudinal axis of the bridge is south to north. The substructure units are labeled as Abutments 1 and 4 (Rear and Forward Abutments) and Piers 2 and 3. Existing design drawings were not available at the time of the inspection. Refer to Figure 1 in Exhibit 1 for a Location Map of the bridge. Refer to Photographs 1 through 4 in Exhibit 2 for overall views of the bridge.

1.3 Method of Investigation

A detailed field inspection was conducted to determine the physical condition of the submerged bridge substructure units from the waterline to the channel bottom. A brief visual examination of the substructure units above the waterline was also made.

A four-person team consisting of a professional engineer-diver and team leader (Matthew O. Rogers, P.E.), two engineer-divers (Kevin Mitchell, E.I.T. and Olivia Farmer, E.I.T.), and a technician-diver (Nicholas Lane) conducted the underwater inspection. The inspection was conducted using surface supplied air diving equipment. During the inspection, the inspectors worked from the shore and a note taker on the shore recorded the inspection notes.

The underwater inspection consisted of a visual and tactile examination of the accessible surfaces of the substructure units from the waterline to the channel bottom with particular attention given to any observed areas of deterioration or apparent distress. Approximately 10 percent of the total area on the underwater surfaces of the substructure units was cleaned so that the condition could be more closely examined. Photographs were taken to document the general conditions and observed deficiencies. The type of channel bottom material, the presence or extent of scour, the presence or extent of riprap, the presence or extent of drift and debris, and the location of any foundation exposure or undermining were noted.

Channel bottom soundings were performed utilizing a telescoping survey rod. Soundings were taken parallel to the bridge at the upstream and downstream fascias and 50 ft upstream and downstream, at quarter-point intervals between the substructure units, and at 10 ft intervals in-line with the piers upstream and downstream up to 50 ft; the waterline was referenced to an assumed elevation on the bridge. A sounding plan was developed using the soundings and approximate location of the shorelines. Refer to Figures 2 through 5 in Exhibit 1 for the sounding plan and channel cross sections that show the channel limits and water depths around the structure.

2.0 EXISTING CONDITIONS

2.1 General Conditions

At the time of the inspection, the waterline of Yellow Creek was located approximately 24.4 ft below the top of deck at the upstream nose of Pier 2, which corresponds to an assumed waterline elevation of 75.6 ft. During the inspection, the waterway was flowing west to east below the structure at a rate of less than 1 ft/s. The approximate high-water elevation was observed to be 78.6 ft.

The bridge pier skew was not consistent with the channel alignment and therefore requires attention at this time. The southeast embankment exhibited moderate vegetation with 5 ft vertical cut banks. The northeast, northwest, and southwest embankments consisted of moderately vegetated, mild slopes with failed channel

protection consisting of washed out rip-rap. Refer to Photographs 5 through 11 in Exhibit 2 for views of the upstream and downstream channel and shorelines near the structure.

2.2 Substructure Conditions

2.2.1 Pier 2

The channel bottom material around Pier 2 consisted of soft silt and tree debris with up to 1 ft of probe rod penetration and scattered boulders measuring up to 36 in. diameter. Typical marine growth consisting of algae measuring up to 1/4 in. deep was observed on the submerged portions of the pier. The submerged portions of the pier exhibited moderate scaling up to 1/8 in. deep with coarse aggregate exposure extending from the channel bottom to 1 ft above the waterline. Light timber debris consisting of two logs measuring 12 in. diameter were observed parallel to the south face of the pier. Moderate timber debris consisting of small sticks up to 1 in. diameter were observed for a 10 ft radius at the upstream nose of the pier. Refer to Figure 6 in Exhibit 1 for detailed inspection notes of Pier 2. Refer to Photographs 13 through 15 in Exhibit 2 for views of Pier 2.

2.2.2 Pier 3

The channel bottom material around Pier 3 consisted of soft silt and tree debris with up to 1 ft of probe rod penetration and scattered boulders measuring up to 36 in. diameter. Typical marine growth consisting of algae measuring up to 1/4 in. deep was observed on the submerged portions of the pier. The submerged portions of the pier exhibited moderate scaling up to 1/8 in. deep with coarse aggregate exposure extending from the channel bottom to 1 ft above the waterline. A spall measuring 1 ft diameter by 1 in. deep with associated delamination was observed 4 ft above the waterline on the west end of Pier 3. Localized scour measuring up to 15 ft diameter by approximately 3 ft deep was observed on the south face of Pier 3. Refer to Figure 7 in Exhibit 1 for detailed inspection notes of Pier 3. Refer to Photographs 16 through 20 in Exhibit 2 for views of Pier 3 and typical concrete condition at the waterline.

2.2.3 Channel Bottom and Scour Assessment

At the time of the inspection, Yellow Creek was experiencing normal flow and the channel bottom appeared unstable for the type of material. The channel bottom was primarily soft silt, timber debris, and scattered boulders surrounding the substructure units. Localized scour at Pier 3 with no undermining was observed. Failed channel protection countermeasures were observed at Pier 3, with the rip-rap previously placed at the pier observed to be washed away.

3.0 EVALUATION AND RECOMMENDATIONS

Overall, the inspected substructure units of Structure No. SFN4103211 were in Satisfactory Condition. The scour depression observed at the south face of Pier 3 is not a concern at this time given that the footing is fully embedded below the current channel bottom. However, to prevent further deterioration of the bearing material, corrective actions should be taken at this time consisting of the placement of properly design riprap. Additionally, the channel bottom configuration should continue to be closely monitored during future underwater inspections to verify that the scour depression at Pier 3 is not increasing and that all footings remain adequately embedded in the channel bottom.

The embankment erosion along the southeast shoreline is not a concern at this time due to its location downstream of the structure. However, the erosion should continue to be monitored during future underwater inspections for evidence of increasing extent and severity that may threaten the structural integrity of the bridge.

The timber debris accumulation at Pier 2 did not significantly affect the channel flow, and as a result, does not require removal at this time. If the debris accumulation increases in size or density, it may be necessary to remove the debris to reduce excessive lateral loads on the pier, limit further debris accumulation, and reduce the likelihood of channel bottom degradation resulting from obstructed flow.

The spalling observed at Pier 3 is not a structural concern at this time given its size compared to the overall pier size, and as a result, no repairs are recommended. This area should be monitored during future inspections for increasing extent or severity of the scaling and exposure of reinforcing steel. If the extent or severity of the scaling is observed to be increasing or reinforcing steel becomes exposed, it may be necessary to repair the area at that time.

The scaling observed at Piers 2 and 3 is not a structural concern at this time given its size compared to the overall pier size, and as a result, no repairs are recommended. This area should be monitored during future inspections for increasing extent or severity of the scaling and exposure of reinforcing steel. If the extent or severity of the scaling is observed to be increasing or reinforcing steel becomes exposed, it may be necessary to repair the area at that time.

It is recommended that the submerged substructure units of Structure No. SFN4103211 (JEF-213-1641) be next inspected underwater at an interval not to exceed 60 months, no later than November 7, 2028.

Respectfully Submitted,
COLLINS ENGINEERS, INC.



Matthew Rogers, P.E.
Project Manager/Team Leader

Originated by:
Kevin Mitchell, E.I.T.

EXHIBIT 1 – FIGURES

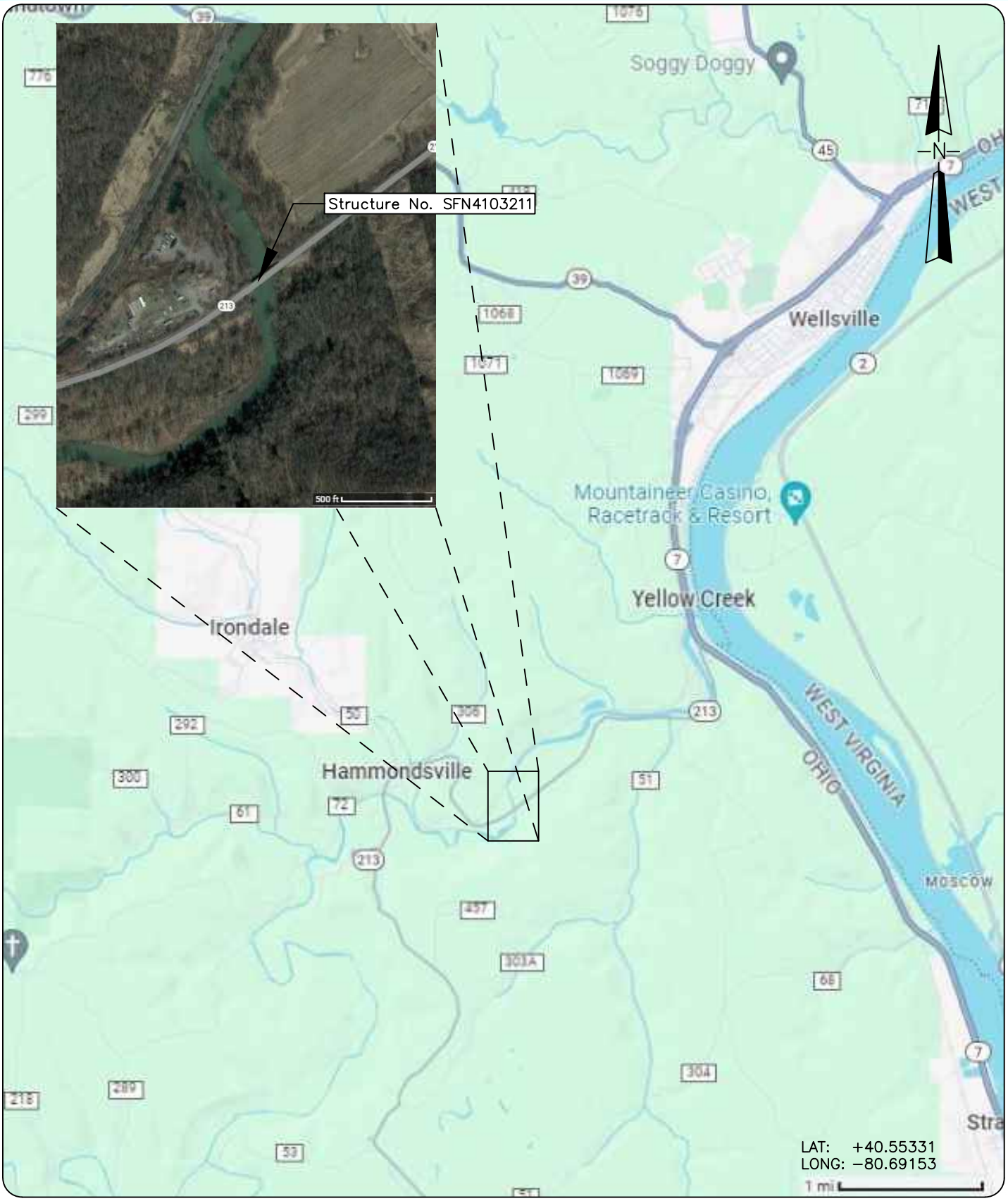

COLLINS ENGINEERS
124 Venture Court, Ste 10
Lexington, KY 40511
Phone: 859-367-0097
Fax: 859-367-0140

Ohio Department of Transportation, District 11
2201 Reiser Ave.
New Philadelphia, OH 44663
Phone: 330-339-6633

SR-213 OVER YELLOW CREEK
STRUCTURE NO. SFN4103211

LOCATION MAP

JEFFERSON COUNTY, OHIO

INSPECTED BY: MOR	CEI PROJECT: 55−13380.02
DRAWN BY: OPF	DATE: 07 NOV 2023
CHECKED BY: JMJ	SHEET NO: 1

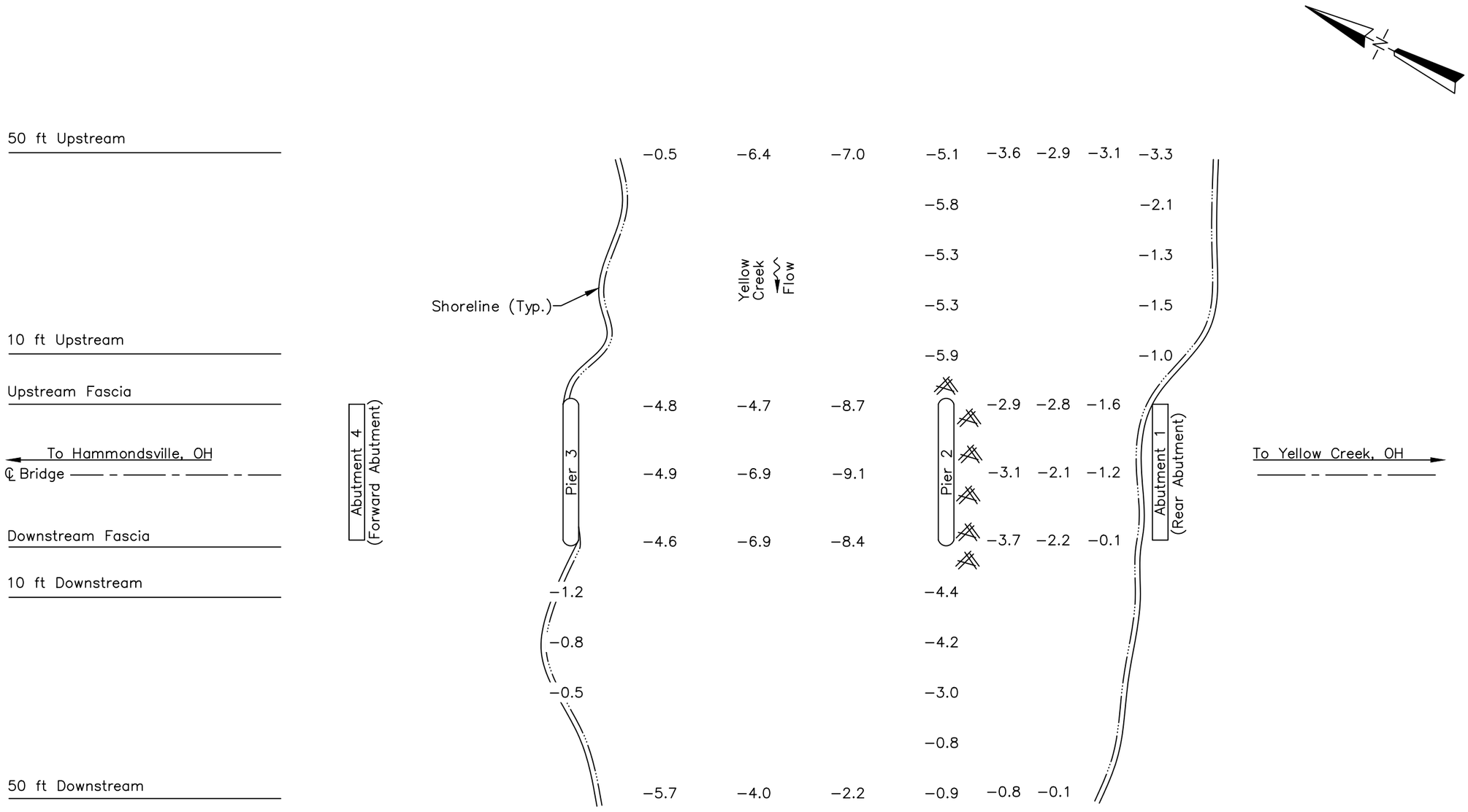

SOUNDING PLAN

GENERAL NOTES:

1. Piers 2 and 3 were inspected underwater. Substructure units are labeled south to north.
2. At the time of inspection on November 7, 2023, the waterline was located approximately 24.4 ft below the top of deck at the upstream nose of Pier 2 (EL. +100.0 ft). This corresponds with a waterline elevation of +75.6 ft.
3. Soundings indicate the water depth at the time of inspection and are measured in feet.
4. Soundings were taken parallel to the bridge at the upstream and downstream fascias and 50 ft upstream and downstream, at quarter intervals between the substructure units, and at 10 ft intervals in−line with the piers upstream and downstream up to 50 ft.

LEGEND

−2.7 Sounding Depth from Waterline (ft)

Timber Debris

COLLINS ENGINEERS
124 Venture Court, Ste 10
Lexington, KY 40511
Phone: 859-367-0097
Fax: 859-367-0140

Ohio Department of Transportation, District 11
2201 Reiser Ave.
New Philadelphia, OH 44663
Phone: 330-339-6633

SR-213 OVER YELLOW CREEK
STRUCTURE NO. SFN4103211
SOUNDING PLAN
JEFFERSON COUNTY, OHIO

CEI PROJECT	55−13380.02
INSPECTED BY:	MOR
DRAWN BY:	OPF
CHECKED BY:	JMJ
DATE:	NOV 2023
SHEET NO:	2

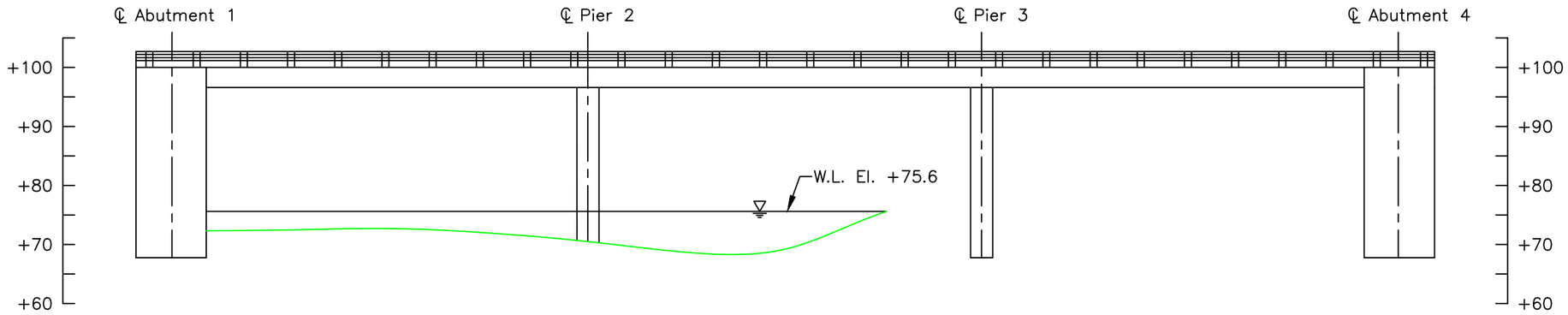

50 FT UPSTREAM
CHANNEL CROSS SECTION
(LOOKING DOWNSTREAM)

Upstream Elevations
(Looking Downstream)

Location	Height (ft)
A1	22.8
1/4	26.0
1/2	27.2
3/4	27.3
P2	29.0
1/4	33.1
1/2	29.1
3/4	29.2
P3	25.3
1/4	18.7
1/2	15.7
3/4	10.4
A4	6.7

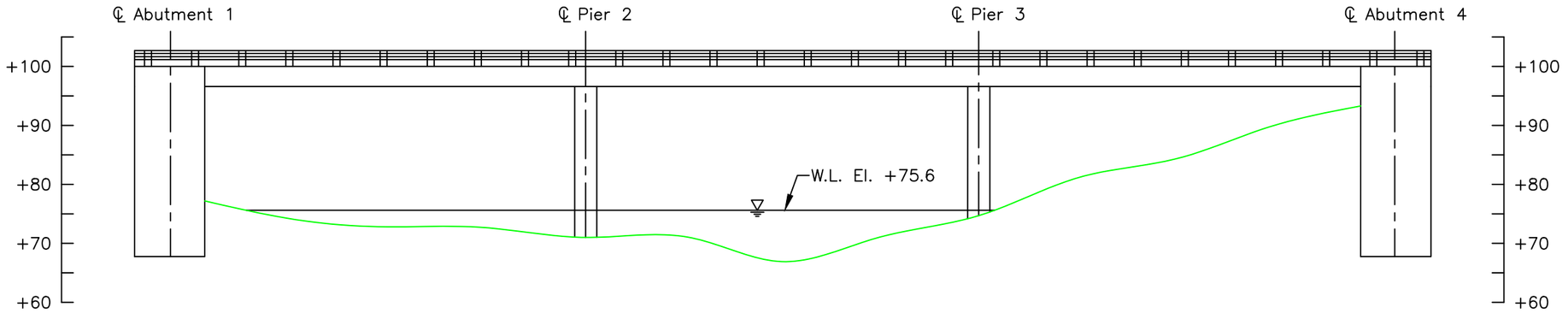

UPSTREAM FASCIA
CHANNEL CROSS SECTION
(LOOKING DOWNSTREAM)

Note:

Drawing not to scale. Footing elevations unknown due to unavailable record drawings.

LEGEND

- Approximate Channel Bottom – Nov. 2023
- Approximate Channel Bottom – Nov. 2018 (No Data)
- Approximate Channel Bottom – Nov. 2013 (No Data)
- Timber Debris
- Water Surface
- +450 Elevation (ft)

COLLINS ENGINEERS
124 Venture Court, Ste 10
Lexington, KY 40511
Phone: 859-367-0097
Fax: 859-367-0140

Ohio Department of Transportation, District 11
2201 Reiser Ave.
New Philadelphia, OH 44663
Phone: 330-339-6633

SR-213 OVER YELLOW CREEK
STRUCTURE NO. SFN4103211
CROSS SECTIONS
JEFFERSON COUNTY, OHIO

CEI PROJECT 55-13380.02
INSPECTED BY: MOR
DRAWN BY: OPF
CHECKED BY: JMJ
DATE: NOV 2023
SHEET NO: 3

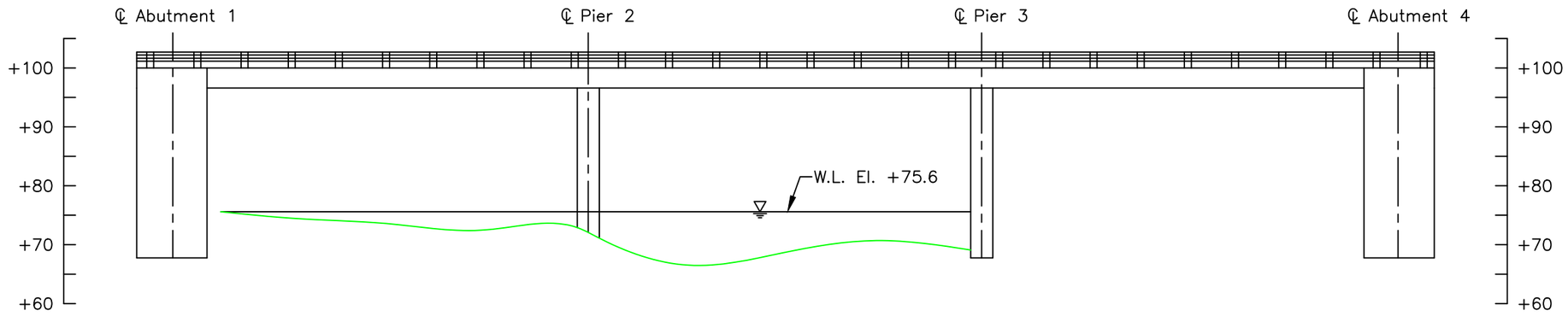

STRUCTURE CENTERLINE
CHANNEL CROSS SECTION
(LOOKING DOWNSTREAM)

Note:

Drawing not to scale. Footing elevations unknown due to unavailable record drawings.

LEGEND

- Approximate Channel Bottom – Nov. 2023
- Approximate Channel Bottom – Nov. 2018 (No Data)
- Approximate Channel Bottom – Nov. 2013 (No Data)
- Timber Debris
- Water Surface
- +450 Elevation (ft)

COLLINS ENGINEERS
124 Venture Court, Ste 10
Lexington, KY 40511
Phone: 859-367-0097
Fax: 859-367-0140

Ohio Department of Transportation, District 11
2201 Reiser Ave.
New Philadelphia, OH 44663
Phone: 330-339-6633

SR-213 OVER YELLOW CREEK
STRUCTURE NO. SFN4103211
CROSS SECTIONS
JEFFERSON COUNTY, OHIO

CEI PROJECT	55–13380.02
INSPECTED BY:	MOR
DRAWN BY:	OPF
CHECKED BY:	JMJ
DATE:	NOV 2023
SHEET NO:	4

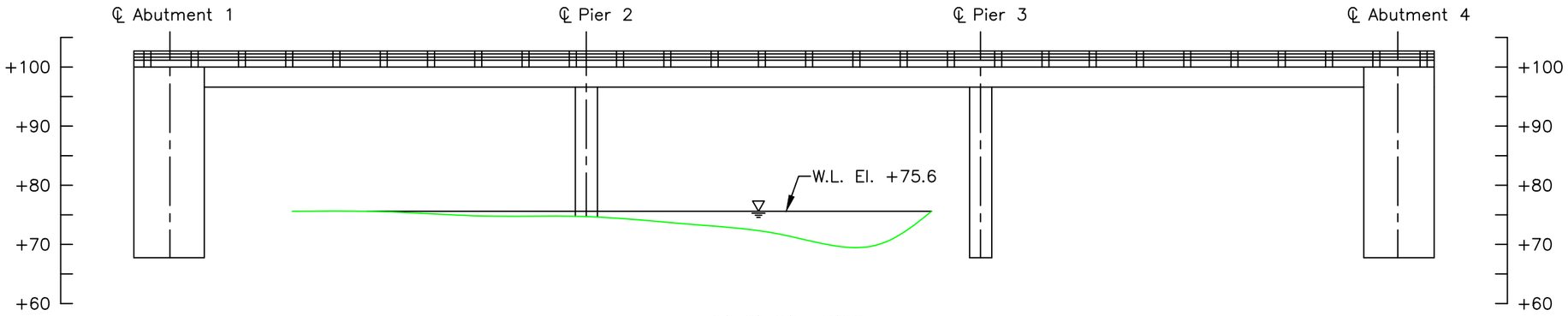

50 FT DOWNSTREAM
CHANNEL CROSS SECTION
(LOOKING DOWNSTREAM)

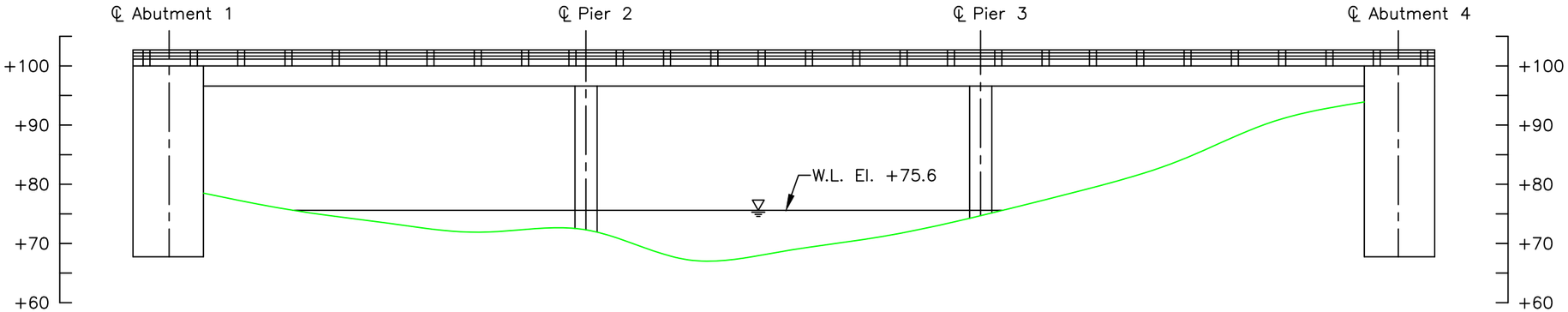

DOWNSTREAM FASCIA
CHANNEL CROSS SECTION
(LOOKING DOWNSTREAM)

Downstream Elevations
(Looking Downstream)

Location	Height (ft)
A1	21.5
1/4	24.5
1/2	26.6
3/4	28.1
P2	27.7
1/4	32.8
1/2	31.3
3/4	29.0
P3	25.3
1/4	20.9
1/2	16.1
3/4	9.5
A4	6.1

LEGEND

- Approximate Channel Bottom – Nov. 2023
- Approximate Channel Bottom – Nov. 2018 (No Data)
- Approximate Channel Bottom – Nov. 2013 (No Data)
- Timber Debris
- Water Surface
- +450 Elevation (ft)

Note:

Drawing not to scale. Footing elevations unknown due to unavailable record drawings.

COLLINS ENGINEERS
124 Venture Court, Ste 10
Lexington, KY 40511
Phone: 859-367-0097
Fax: 859-367-0140

Ohio Department of Transportation, District 11
2201 Reiser Ave.
New Philadelphia, OH 44663
Phone: 330-339-6633

SR-213 OVER YELLOW CREEK
STRUCTURE NO. SFN4103211
CROSS SECTIONS
JEFFERSON COUNTY, OHIO

CEI PROJECT 55–13380.02
INSPECTED BY: MOR
DRAWN BY: OPF
CHECKED BY: JMJ
DATE: NOV 2023
SHEET NO: 5

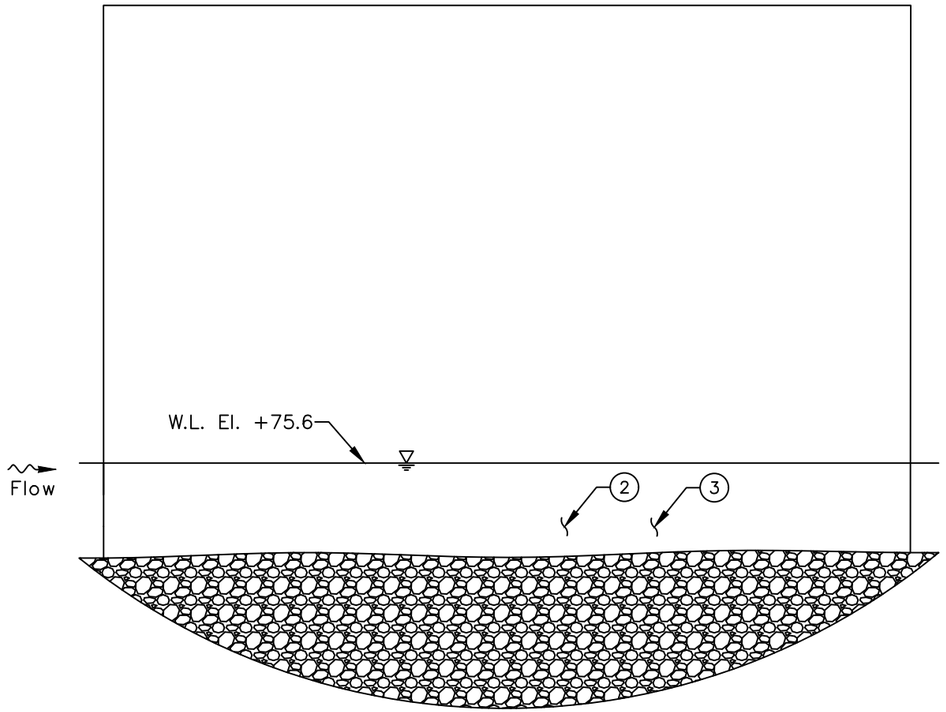

NORTH ELEVATION
(LOOKING SOUTH)

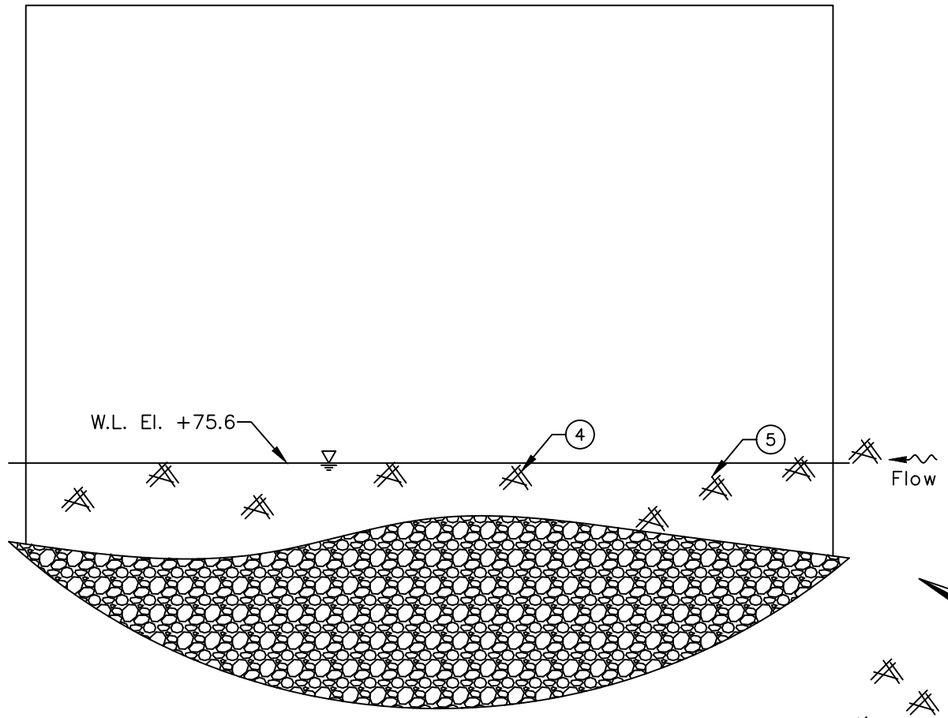

SOUTH ELEVATION
(LOOKING NORTH)

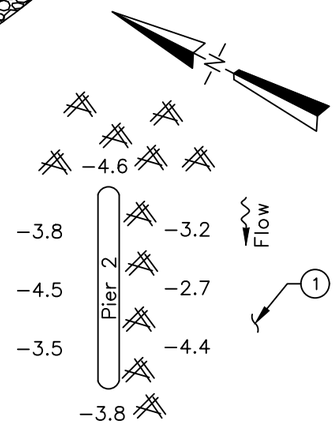

INSPECTION NOTES:

1. The channel bottom material around Pier 2 consisted of soft silt and tree debris with up to 1 ft of probe rod penetration and scattered boulders measuring up to 36 in. diameter.
2. Typical marine growth consisting of algae measuring up to 1/4 in. deep was observed on the submerged portions of the pier.
3. The submerged portions of the pier exhibited moderate scaling up to 1/8 in. deep with coarse aggregate exposure extending from the channel bottom to 1 ft above the waterline.
4. Light timber debris consisting of two logs measuring 12 in. diameter were observed parallel to the south face of the pier.
5. Moderate timber debris consisting of small sticks up to 1 in. diameter were observed for a 10 ft radius at the upstream nose of the pier.

LEGEND

−2.7	Sounding Depth from Waterline (ft)
———	Approximate Channel Bottom – Nov. 2023
	Timber Debris
———	Water Surface
	Scour

COLLINS ENGINEERS
124 Venture Court, Ste 10
Lexington, KY 40511
Phone: 859-367-0097
Fax: 859-367-0140

Ohio Department of Transportation, District 11
2201 Reiser Ave.
New Philadelphia, OH 44663
Phone: 330-339-6633

SR-213 OVER YELLOW CREEK
STRUCTURE NO. SFN4103211
PIER 2
JEFFERSON COUNTY, OHIO

CEI PROJECT 55-13380.02
INSPECTED BY: MOR
DRAWN BY: OPF
CHECKED BY: JMJ
DATE: NOV 2023
SHEET NO: 6

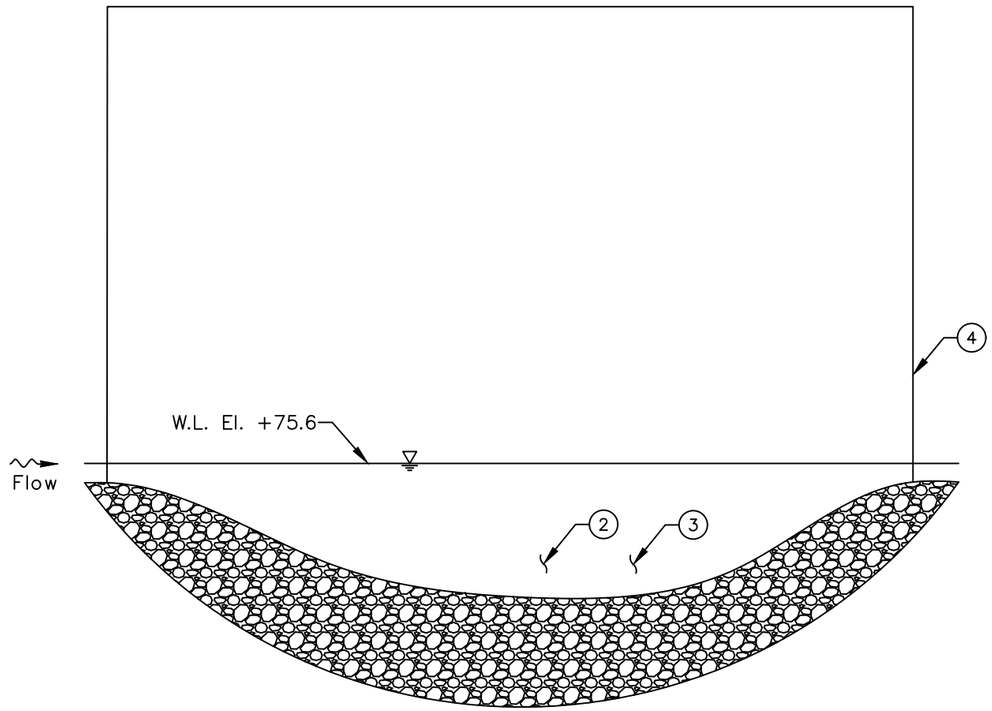

SOUTH ELEVATION
(LOOKING NORTH)

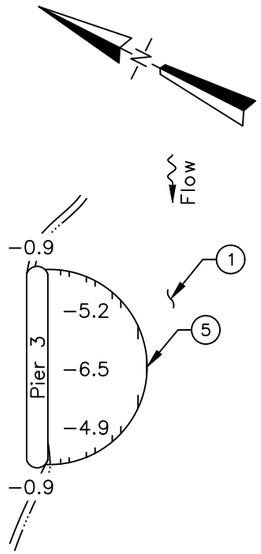

INSPECTION NOTES:

1. The channel bottom material around Pier 3 consisted of soft silt and tree debris with up to 1 ft of probe rod penetration and scattered boulders measuring up to 36 in. diameter.
2. Typical marine growth consisting of algae measuring up to 1/4 in. deep was observed on the submerged portions of the pier.
3. The submerged portions of the pier exhibited moderate scaling up to 1/8 in. deep with coarse aggregate exposure extending from the channel bottom to 1 ft above the waterline.
4. A spall measuring 1 ft diameter by 1 in. deep with associated delamination was observed 4 ft above the waterline on the west end of Pier 3.
5. Localized scour measuring up to 15 ft diameter by approximately 3 ft deep was observed on the south face of Pier 3.

LEGEND

−2.7	Sounding Depth from Waterline (ft)
———	Approximate Channel Bottom – Nov. 2023
	Timber Debris
	Water Surface
	Scour

COLLINS ENGINEERS
124 Venture Court, Ste 10
Lexington, KY 40511
Phone: 859-367-0097
Fax: 859-367-0140

Ohio Department of Transportation, District 11
2201 Reiser Ave.
New Philadelphia, OH 44663
Phone: 330-339-6633

SR-213 OVER YELLOW CREEK
STRUCTURE NO. SFN4103211
PIER 3
JEFFERSON COUNTY, OHIO

CEI PROJECT 55−13380.02
INSPECTED BY: MOR
DRAWN BY: OPF
CHECKED BY: JMJ
DATE: NOV 2023
SHEET NO: 7

EXHIBIT 2 – INSPECTION PHOTOGRAPHS



Photograph No. 1: Overall View of Structure No. SFN4103211, Looking West.



Photograph No. 2: Overall View of Structure No. SFN4103211, Looking East.



Photograph No. 3: Overall View of the North Approach, Looking South.



Photograph No. 4: Overall View of the South Approach, Looking North.



Photograph No. 5: Overall View of the Upstream Channel, Looking East.



Photograph No. 6: Overall View of the Downstream Channel, Looking West.



Photograph No. 7: View of the North Embankment Upstream of the Structure, Looking North.



Photograph No. 8: View of the North Embankment Downstream of the Structure, Looking North.



Photograph No. 9: View of the South Embankment Upstream of the Structure, Looking South.



Photograph No. 10: View of the South Embankment at the Structure, Looking South.



Photograph No. 11: View of the South Embankment Downstream of the Structure, Looking South.



Photograph No. 12: View of the Typical Underdeck Condition, Looking Southwest.



Photograph No. 13: View of the North Face of Pier 2, Looking South.



Photograph No. 14: View of the South Face of Pier 2, Looking North.



Photograph No. 15: View of the Timber Debris at the Upstream Nose of Pier 2, Looking West.



Photograph No. 16: View of the North Face of Pier 3, Looking South.



Photograph No. 17: View of the South Face of Pier 3, Looking North.



Photograph No. 18: View of the Spall at the Downstream End of Pier 3, Looking North.



Photograph No. 19: View of the Typical Rip-Rap Condition near Abutment 4, Looking Northeast.



Photograph No. 20: View of the Typical Concrete Condition at the Waterline on the South Face of Pier 3, Looking North.

EXHIBIT 3 – DIVE PROCEDURES CHECKLIST

Underwater Dive Inspection Procedure Checklist

Acceptable written procedures communicate to the next dive team what is necessary to ensure a safe and successful inspection. Each bridge requiring underwater dive techniques must have a unique written inspection procedure. The prior inspection report does not suffice for the required procedures. It is valuable to review the last inspection notes, but they do not serve the same purpose as a stand-alone inspection procedure.

This document shall be completed for all underwater dive inspections. This document shall be reviewed prior to performing the field work and it shall be updated when necessary.

I. Bridge Identification

a. Agency with Inspection Responsibility: _ODOT DISTRICT 11_____

Dive Frequency: _____60_____ months

SFN: 4103211_____ Bridge Number (County-Route-SLM-SD): JEF-213-1641

Superstructure Type — Main Span Type: STEEL GIRDER

Approach Span: N/A

Substructure Type — Abutment Type: CONCRETE

Pier Type: CONCRETE

Total Pier Count: 2

Total Pier Count in water: 2

Foundations: STEEL H-PILES

Feature Intersected: YELLOW CREEK

b. Photographs



Endview



Elevation



Underside

II. Office and Field Assessment

Prior to the inspection, obtain and review copies of the previous underwater inspection reports, routine inspection reports, scour and hydraulic information, and design plans in preparation of the inspection. Divers should pay particular attention given to any observed areas of deterioration, the channel conditions and factors that may accelerate material deterioration. Changes shall be noted in the inspection procedure. Site conditions should be reviewed prior to diving.

a. Channel Conditions

____Waterway features

____Rapid stream flows,

_X__Significant debris accumulation

____Constricted waterway openings

_X__Soft or unstable streambeds

____Meandering channels

____Other which may promote scour and undermining of substructure elements

____Navigable Waterway

____Flow Controls

b. Anticipated Water conditions which may affect the inspection

_X__Cold Water (Apprx. Temp 50 °F)

____Black water

____Rapid stream flows

____Near military facility

____Tribal fishing

____Water quality

____History of Log jams

c. Identify factors that may accelerate the deterioration of the bridge elements:

____Highly corrosive water

____Unprotected steel members

____Other

Risk Factor Narrative:

III. **Contacts Prior to Work**

Dr. Waseem Khalifa, Ph. D., P.E.

District Bridge Engineer

2201 Reiser Avenue SE

New Philadelphia, OH 44663

(330) 308-7873

Point of contact for immediate action such as closing the bridge due to findings)

Contact Bridge Owner _____14_____ (number) days before the proposed underwater inspection.

Special contracting and scheduling procedures prior to inspection, include recommended lead time

Entity	Contact Name and Title	Contact Phone	Lead Time
Coast Guard	N/A	N/A	N/A
Property Owner	N/A	N/A	N/A
Access Equipment	N/A	N/A	N/A
Lake or River draw-down	N/A	N/A	N/A
Canal dry time	N/A	N/A	N/A
Tree removal	N/A	N/A	N/A
Other:	N/A	N/A	N/A
Other:	N/A	N/A	N/A

IV. **Dive Team Shall Include the Following:**

Dive Team Narrative:

The structure shall be investigated using a three-member dive team: one dive supervisor to monitor communications and air supply while taking notes, one diver, and one tender/standby diver. There shall be one NBIS Team Leader onsite at all times.

Example: The Bridge shall be investigated using a three-member dive team: one supervisor to monitor rack box and take notes, one diver, and one tender/standby diver. There shall be one NBIS Team Leader onsite at all times.

V. Site Information

Navigable waterway:	Y / **N**	Anticipated current	___<1___ ft
If Yes, waterway river point	_____	Scour Critical (item 113):	___8_____
Anticipated water visibility depth	__3___ ft	POA in place: Y/**N**	
Anticipated Dive depth	__6.5___ ft	Scour Monitoring devices present: Y/**N**	

Verify the Scope of Services when work is contracted for the procedure for underwater elements that are not in water during an inspection.

Site Information Narrative:

The underwater inspection consists of a visual and tactile examination of the accessible surfaces of the substructure items in water. Additional items should reference the scope of services in the contract. For reference the following items are in water:

Item	Number of Units	Level of Inspection (1, 2 or 3) with Commentary
Piers and Number of Columns	2	100% Level 1 10% Level 2
Abutment		
Culvert		
Scour Countermeasures		
Fenders or Dolphins		

Photographs should be taken, if water clarity permits, for typical conditions, conditions that have changed since last inspection and significant or noteworthy deficiencies. The type of channel bottom material, the presence or extent of scour, the presence or extent of riprap, the presence or extent of drift and debris, and the location of any foundation exposure or undermining shall be quantified. Include depth, length, height and location of deficiencies.

VI. **Equipment and Field Logistics**

a. The inspection should be conducted using:

____Chest waders

____Hip waders

__X__Diving equipment

____SCUBA (Note that ADCI Consensus Standards require communication systems be employed for both SCUBA and Surface-Supplied (whether air or mixed-gas) dive modes)

____SCUBA with communication

__X__Surface Supplied with communication

b. The channel bottom should be sounded utilizing

____Digital fathometer

__X__Telescoping survey rod

____ acoustic imaging

c. During the inspection, the divers should work from

__X__Shore

____Boat

____Either

The note taker should work alongside the dive team.

d. Access to the waterway should be obtained from the shore (north bank, southwest quadrant, driveway 30 yards north etc.)

_NORTHEAST EMBANKMENT AT THE STRUCTURE

e. The maximum depth of the channel is typically measured 6.5 feet from THE MIDPOINT OF THE SOUTH FACE OF PIER 3.

Reference Datum TOP OF DECK AT UPSTREAM NOSE OF PIER 2.

Soundings should be dictated by the scope of work. When not detailed in the scope they should be repeated from the previous soundings. If neither exist then they need to be taken in a grid pattern between substructure units 100’ upstream and 100’ downstream.

VII. Inspection Procedure History

Created: COLLINS ENGINEERS, INC. Date: 11/7/2023

Updated By: _____ Date: _____

Updated By: _____ Date: _____

Updated By: _____ Date: _____

Updated By: _____ Date: _____

Updated By: _____ Date: _____

VIII. Other Narrative Not Included In Previous Sections