







DRAFT

UNDERWATER BRIDGE INSPECTION REPORT

STRUCTURE NO. SFN0700460
(BEL-149-0005R)
SR-149 OVER MCMAHON CREEK
BELMONT COUNTY, OH
DISTRICT 11

May 2025

Prepared for:

STATE OF OHIO DEPARTMENT OF TRANSPORTATION

Prepared by:

COLLINS ENGINEERS INC.

4449 Easton Way, Suite 200

Columbus, Ohio 43219

614.594.9142 • www.collinsengr.com

TABLE OF CONTENTS

EXECUTIVE SUMMARY
1.0 INTRODUCTION 1
1.1 Purpose and Scope 1
1.2 General Description of the Structure 1
1.3 Method of Investigation 2
2.0 EXISTING CONDITIONS 2
2.1 General Conditions 2
2.2 Substructure Conditions 3
2.2.1 Pier 2 3
2.2.2 Pier 3 3
2.2.3 Channel Bottom and Scour Assessment 3
3.0 EVALUATION AND RECOMMENDATIONS 4
EXHIBIT 1 – FIGURES 5
LOCATION MAP
SOUNDING PLAN
CHANNEL CROSS SECTIONS – 50 FT UPSTREAM & UPSTREAM FASCIA
CHANNEL CROSS SECTIONS – STRUCTURE CENTERLINE
CHANNEL CROSS SECTIONS – 50 FT DOWNSTREAM & DOWNSTREAM FASCIA
PIER 2
PIER 3
EXHIBIT 2 – INSPECTION PHOTOGRAPHS 13
Photograph No. 1: Overall View of Structure No. SFN0700460, Looking Southeast.
Photograph No. 2: Overall View of Structure No. SFN0700460, Looking West.
Photograph No. 3: Overall Plan View, Looking Top South.
Photograph No. 4: View of the North Approach, Looking South
Photograph No. 5: View of the South Approach, Looking North
Photograph No. 6: View of the Typical Underdeck, Looking North.
Photograph No. 7: View of the Upstream Overall Channel, Looking West.
Photograph No. 8: View of the Upstream Channel, Looking West.
Photograph No. 9: View of the Downstream Overall Channel, Looking East.
Photograph No. 10: View of the Downstream Channel, Looking East
Photograph No. 11: View of the North Embankment Upstream of the Structure, Looking Northwest.
Photograph No. 12: View of the North Embankment at the Structure, Looking Northwest. 19

DRAFT

Photograph No. 13: View of the North Embankment Downstream of the Structure, Looking North.
Photograph No. 14: View of the South Embankment Upstream of the Structure, Looking Southwest.
Photograph No. 15: View of the South Embankment at the Structure, Looking South.
Photograph No. 16: View of the South Embankment Downstream of the Structure, Looking Southeast.
Photograph No. 17: View of the South Face of Pier 2, Looking Northwest.
Photograph No. 18: View of the North Face of Pier 2, Looking Southwest.
Photograph No. 19: View of the South Face of Pier 3, Looking North.
Photograph No. 20: View of the South Face of Pier 3, Looking Northwest.
Photograph No. 21: View of the North Face of Pier 3, Looking South.
Photograph No. 22: View of the Typical Concrete Condition At The Waterline, Looking North.
EXHIBIT 3 – DIVE PROCEDURES CHECKLIST 25

DRAFT

EXECUTIVE SUMMARY

Project: ODOT D11 Routine & Underwater Bridge Inspections - 2025.

Purpose of Project: To perform an NBIS routine and detailed visual and tactile underwater investigation of bridges for the Ohio Department of Transportation, District 11.

Inspection Team: Team Leader – Kyle Nicks, P.E. – Collins Engineers, Inc.
Team Member – Jacob Quinteros – Collins Engineers, Inc.
Team Member – Joshua Sukow – Collins Engineers, Inc.

Inspection Date(s): May 15, 2025

Water Visibility:	<1 ft	***Water Velocity:***	<1 ft/s
Water Temperature:	66.8 °F	***Weather:***	Sunny – 74 °F
Waterline Elevation:	65.8 ft	***Type of Boat:***	N/A
High-water Elevation:	68.8 ft		
Coordinates:	40.00792°N, 80.74398°W		
Access Location:	Southeast Embankment at Structure		
Dive Mode:	Surface Supplied Air		
Waterline Reference:	34.2 ft below the top of the railing at the downstream nose of Pier 2.		
Maximum Depth at SSU:	13.3 ft – Upstream Quarter-Point of North Face of Pier 2		
Shoreline Conditions:	The north and south shorelines consisted of well-vegetated, steep, rocky slopes with no signs of erosion. No changes from the prior inspection.		

Summary of Findings:

- **Pier 2:**
  - Light marine growth and zebra mussels were observed extending from 5.4 ft below the waterline to the channel bottom. This overall has not changed since the prior inspection.
  - Minor scour was observed at the north face of Pier 2 causing footing exposure at 11.6 ft below the waterline with vertical exposure up to 1.7 ft. This overall has not changed since the prior inspection.
- **Pier 3:**
  - Light marine growth and zebra mussels were observed extending from 5.4 ft below the waterline to the channel bottom. This overall has not changed since the prior inspection.

Summary of Recommendations:

- Monitor scour and vertical footing exposure at Pier 2.

DRAFT

Underwater Inspection Coding:

SNBI Ratings:

Item	Description	Coding	Condition
B.C.03	Substructure (Overall)	8 – Very Good Condition	
B.C.09	Channel Cond. Rating	8 – Very Good Condition	
B.C.10	Channel Protection Cond.	8 – Very Good Condition	
B.C.11	Scour Cond. Rating	6 – Satisfactory Condition	Minor Scour, Vertical Footing Exposure
B.C.15	Underwater Cond. Rating	6 – Satisfactory Condition	
B.IE.03	Insp. Date	May 15, 2025	
B.IE.05	UW Insp. Interval	60 Months	

AASHTO National Bridge Element (NBE) Ratings:

Element #	Description	Units	Total	Condition State			
				1	2	3	4
210	Reinforced Concrete Pier Wall	LF	20	20	0	0	0
220	Reinforced Concrete Footing	LF	23	23	0	0	0

Note: Ratings were developed using the FHWA Recording and Coding Guide for the Specifications for the National Bridge Inventory (2022) and the AASHTO Manual for Bridge Element Inspection (2019). Numbers in parentheses beside the new codes indicate the nearest equivalent code from the previously used FHWA Recording and Coding Guide for the Structure Inventory and Appraisal of the Nation's Bridges, as an aid to transitioning to the updated coding. The recommended ratings consider inspected elements located within the waterway and conditions existing below the water surface only. Additional consideration is necessary for the assignment of overall condition ratings for this bridge.

DRAFT

1.0 INTRODUCTION

1.1 Purpose and Scope

This report consists of the results of a detailed underwater investigation performed at the SR-149 Bridge over McMahon Creek in Belmont County, OH. Collins Engineers, Inc. (Collins) conducted the underwater investigation for the Ohio Department of Transportation (ODOT), District 11 on May 15, 2025. **Information and photographs for the NBIS routine inspection are contained within the Assetwise record for this bridge.** The primary purpose of the investigation was as follows:

- Determine the condition of the substructure components located in the water at the time of the inspection from the waterline to the channel bottom.
- Obtain channel bottom depth measurements along the bridge fascias, upstream and downstream of the bridge, and around the submerged substructure units.
- Determine the condition of the shorelines in the vicinity of the structure.
- Obtain photographs of the bridge and any significant defects.

In addition, a brief inspection was made of areas that could be submerged during periods of high water. The following report includes a description of the structure, the method of investigation, a description of existing conditions, an evaluation and recommendations based on the conditions, inspection figures, and photographs.

1.2 General Description of the Structure

Structure No. SFN0700460 spans 239 ft, carrying SR-149 over McMahon Creek and is approximately 30 ft wide. The bridge superstructure is constructed of three spans, each composed of four steel girders. The roadway orientation of the longitudinal axis of the bridge is south to north. The substructure units are labeled as Abutments 1 and 4 and Piers 2 and 3. Existing design drawings were not available at the time of the inspection. Refer to Figure 1 in Exhibit 1 for a Location Map of the bridge. Refer to Photographs 1 through 10 in Exhibit 2 for overall views of the bridge, approaches, upstream channel and downstream channel, and typical underdeck.

DRAFT

1.3 Method of Investigation

A detailed field inspection was conducted to determine the physical condition of the submerged bridge substructure units from the waterline to the channel bottom. A brief visual examination of the substructure units above the waterline was also made.

A three-person team consisting of a professional engineer-diver and team leader (Kyle Nicks, P.E.) and two technician-divers (Joshua Sukow and Jacob Quinteros) conducted the underwater inspection. The inspection was conducted using surface supplied air diving equipment. During the inspection, the inspectors worked from the shore and a note taker on the shore recorded the inspection notes.

The underwater inspection consisted of a visual and tactile examination of the accessible surfaces of the substructure units from the waterline to the channel bottom with particular attention given to any observed areas of deterioration or apparent distress. Approximately 10 percent of the total area on the underwater surfaces of the substructure units was cleaned so that the condition could be more closely examined. Photographs were taken to document the general conditions and observed deficiencies. The type of channel bottom material, the presence or extent of scour, the presence or extent of riprap, the presence or extent of drift and debris, and the location of any foundation exposure or undermining were noted.

Channel bottom soundings were performed utilizing a telescoping survey rod. Soundings were taken parallel to the bridge at the upstream and downstream fascias and 50 ft upstream and downstream, at quarter intervals between the substructure units, and at 10 ft intervals in-line with the piers upstream and downstream up to 50 ft; the waterline was referenced to an assumed elevation on the bridge. A sounding plan was developed using the soundings and approximate location of the shorelines. Refer to Figures 2 through 5 in Exhibit 1 for the sounding plan and channel cross sections that show the channel limits and water depths around the structure.

2.0 EXISTING CONDITIONS

2.1 General Conditions

At the time of the inspection, the waterline of McMahon Creek was located approximately 34.2 ft below the top of the railing at the downstream nose of Pier 2, which corresponds to an assumed waterline elevation of 65.8 ft. During the inspection, the waterway was flowing west to east below the structure at a rate of less than 1 ft/s. The approximate high-water elevation was observed to be 68.8 ft.

DRAFT

The bridge pier skew was consistent with the channel alignment and does not require attention at this time. The north and south shorelines consisted of well-vegetated, steep, rocky slopes with no signs of erosion. Overall, there were no major changes from the prior inspection. Refer to Photographs 11 through 16 in Exhibit 2 for views of the shorelines near the structure.

2.2 Substructure Conditions

2.2.1 Pier 2

The channel bottom material around Pier 2 consisted of boulders up to 36 in. diameter with a silt overlay near the shoreline and silt with approximately 18 in. probe rod penetration on the channel side. Light marine growth and zebra mussels were observed from 5.4 ft below the waterline to the channel bottom. Minor scour was observed at the north face of Pier 2 causing footing exposure at 11.6 ft below the waterline with vertical exposure up to 1.7 ft; this has not noticeably changed since the prior inspection. Refer to Figure 6 in Exhibit 1 for detailed inspection notes of Pier 2. Refer to Photographs 17 and 18 in Exhibit 2 for views of Pier 2.

2.2.2 Pier 3

The channel bottom material around Pier 3 consisted of boulders up to 36 in. diameter with a silt overlay near the shoreline and silt with approximately 18 in. probe rod penetration on the channel side. Light marine growth and zebra mussels were observed from 5.4 ft below the waterline to the channel bottom. Refer to Figure 7 in Exhibit 1 for detailed inspection notes of Pier 3. Refer to Photographs 19 through 22 in Exhibit 2 for a view of Pier 3 and typical concrete condition at the waterline.

2.2.3 Channel Bottom and Scour Assessment

At the time of the inspection, the McMahon Creek was experiencing higher than normal flow and the channel bottom appeared stable for the type of material. The channel bottom was primarily boulders and silt surrounding the substructure units. Scour with vertical exposure up to 1.7 ft was observed at Pier 2. No undermining was observed during this inspection.

DRAFT

3.0 EVALUATION AND RECOMMENDATIONS

Overall, the inspected substructure units of Structure No. SFN0700460 (BEL-149-0005R) were in Good Condition. The footing exposure at Pier 2 is not a concern at this time given that the footing was adequately embedded in the channel bottom and no undermining was observed. The scour depression observed at Pier 2 is also not a concern at this time given that the footing is adequately embedded in the channel bottom. The channel bottom configuration should continue to be closely monitored during future underwater inspections to verify that the footing exposure and scour depression at Pier 2 are not increasing and that the footing remains adequately embedded in the channel bottom.

It is recommended that the submerged substructure units of Structure No. SFN0700460 be next inspected underwater at an interval not to exceed 60 months, no later than May 15, 2030.

Respectfully Submitted,
COLLINS ENGINEERS, INC.

Kevin Mitchell

Kevin Mitchell, P.E.
Project Manager

Originated by:
Richard Foose

DRAFT

EXHIBIT 1 – FIGURES

DRAFT

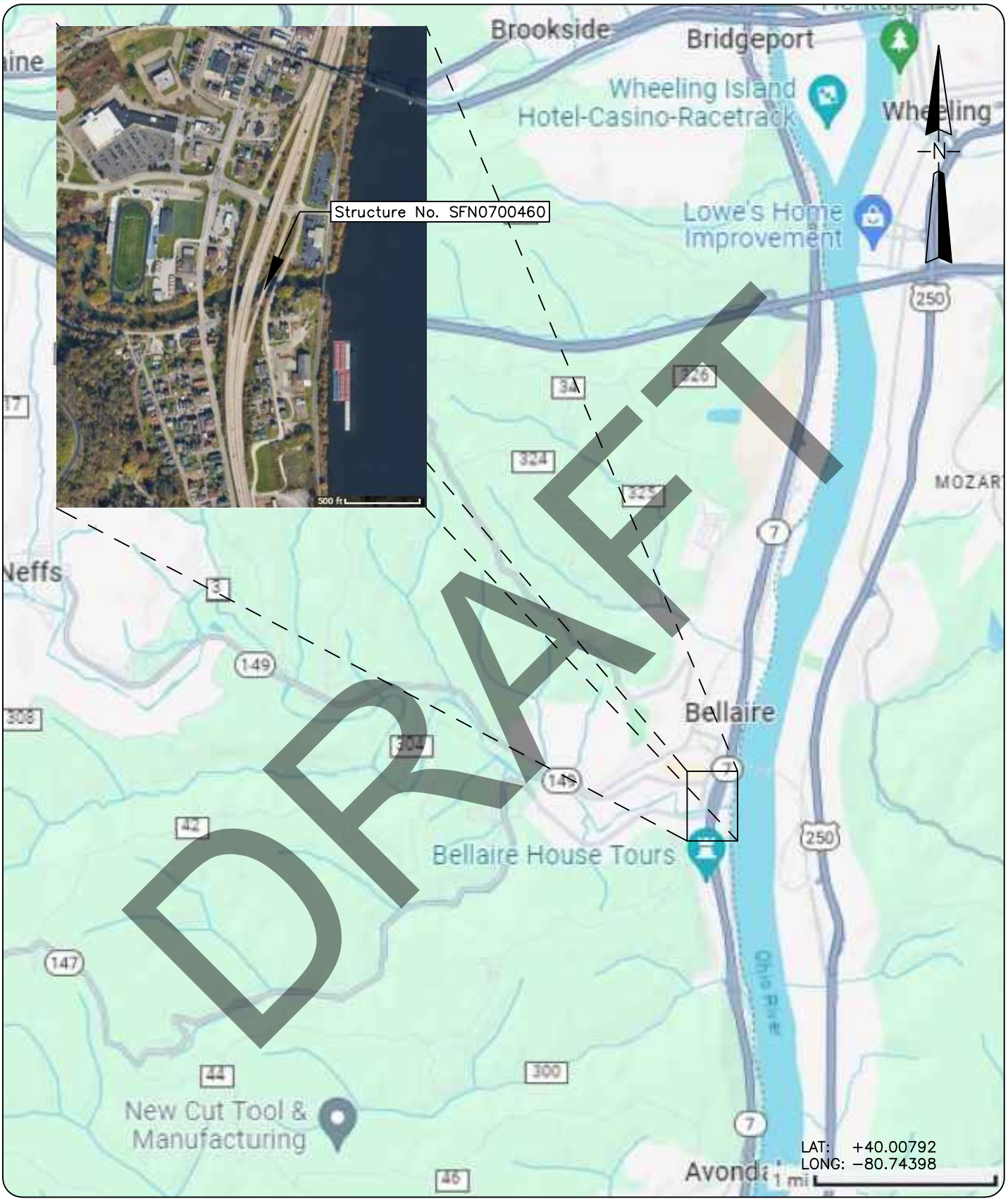

DRAFT

COLLINS ENGINEERS
124 Venture Court, Ste 10
Lexington, KY 40511
Phone: 859-367-0097
Fax: 859-367-0140

Ohio Department of
Transportation, District 11
2201 Reiser Ave.
New Philadelphia, OH 44663
Phone: 330-339-6633

SR-149 OVER MCMAHON CREEK
STRUCTURE NO. SFN0700460

LOCATION MAP

BELMONT COUNTY, OHIO

INSPECTED BY: KN	CEI PROJECT: 55−17019.00
DRAWN BY: RJF	DATE: MAY 2025
CHECKED BY: MAS	SHEET NO: 1

P:\55-KY\17019-ODOT D11 UW BRIDGE INSP (2025)\WORK\BRIDGES\0700460\DRAWINGS\SFN0700460_DRAWINGS.DWG7/13/2025 10:57:06 AM

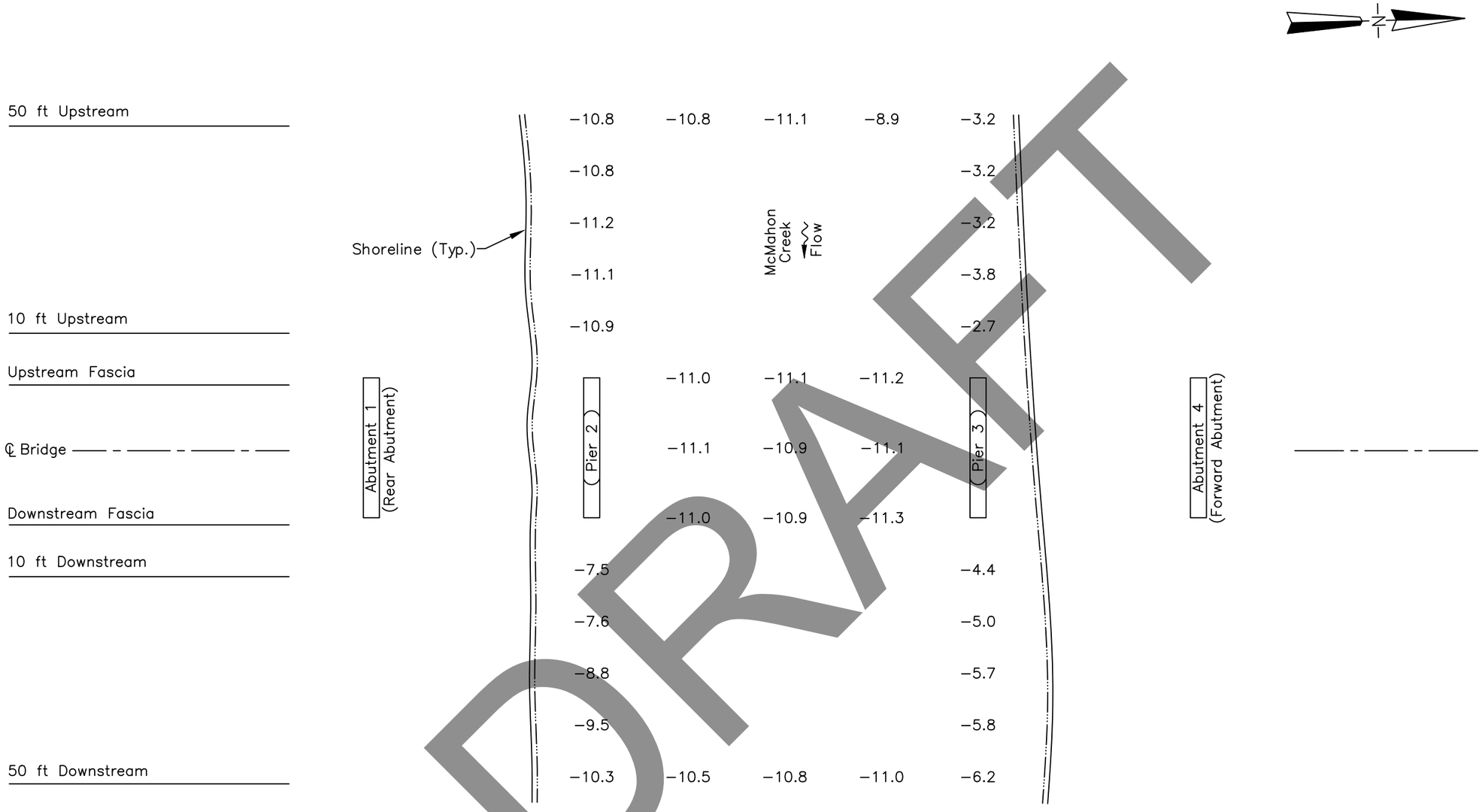

SOUNDING PLAN

DRAFT

GENERAL NOTES:

1. Piers 2 and 3 were inspected underwater. Substructure units are labeled south to north.
2. At the time of inspection on May 15, 2025, the waterline was located approximately 34.2 ft below the top of railing at the downstream nose of Pier 2 (EL. +100.0 ft). This corresponds with a waterline elevation of +65.8 ft.
3. Soundings indicate the water depth at the time of inspection and are measured in feet.
4. Soundings were taken parallel to the bridge at the upstream and downstream fascias and 50 ft upstream and downstream, at quarter intervals between the substructure units, and at 10 ft intervals in−line with the piers upstream and downstream up to 50 ft.

LEGEND

−0.0	Sounding Depth from Waterline (ft)
	Timber Debris

COLLINS ENGINEERS
124 Venture Court, Ste 10
Lexington, KY 40511
Phone: 859-367-0097
Fax: 859-367-0140

Ohio Department of Transportation, District 11
2201 Reiser Ave.
New Philadelphia, OH 44663
Phone: 330-339-6633

SR-149 OVER MCMAHON CREEK
STRUCTURE NO. SFN0700460
SOUNDING PLAN
BELMONT COUNTY, OHIO

CEI PROJECT	55−17019.00
INSPECTED BY:	KN
DRAWN BY:	RJF
CHECKED BY:	MAS
DATE:	MAY 2025
SHEET NO:	2

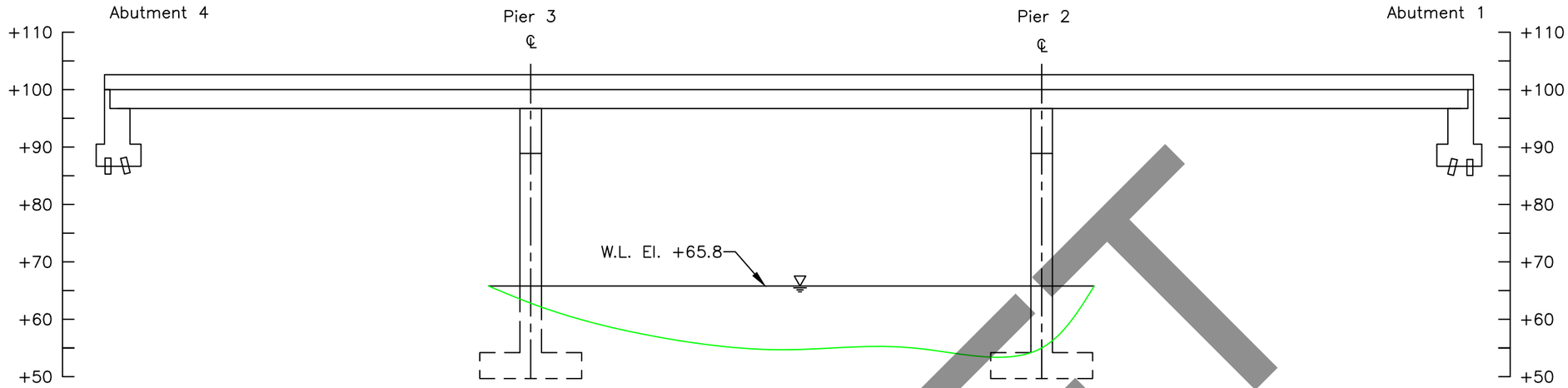

50 FT UPSTREAM
CHANNEL CROSS SECTION
(LOOKING DOWNSTREAM)

Upstream Elevations (Looking Downstream)	
Location	Height (ft)
A4	4.0
1/4	12.1
1/2	14.2
3/4	29.7
P3	36.7
1/4	45.5
1/2	45.3
3/4	45.2
P2	44.2
1/4	29.6
1/2	24.6
3/4	18.1
A1	6.6

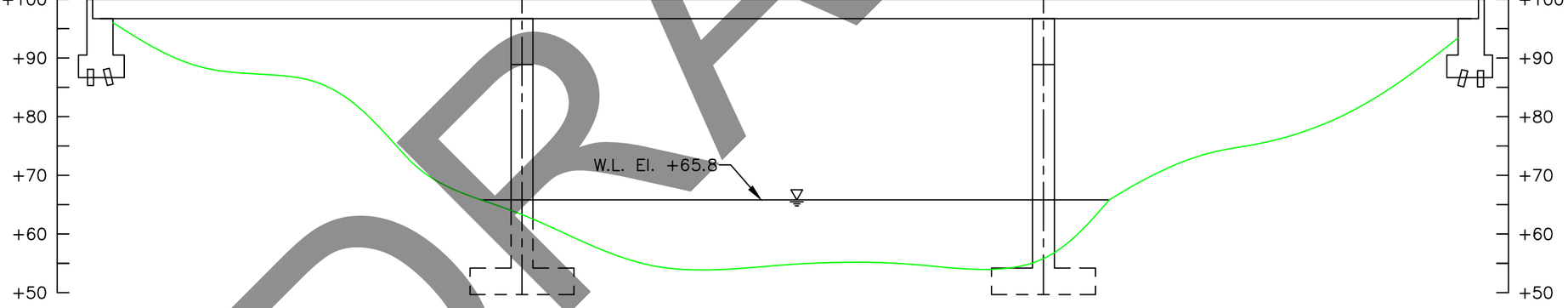

UPSTREAM FASCIA
CHANNEL CROSS SECTION
(LOOKING DOWNSTREAM)

Note:

Footing elevations unknown due to unavailable record drawings.

LEGEND

	Approximate Channel Bottom – May 2025
	Timber Debris
	Water Surface
+450	Elevation (ft)

DRAFT

COLLINS ENGINEERS
124 Venture Court, Ste 10
Lexington, KY 40511
Phone: 859-367-0097
Fax: 859-367-0140

Ohio Department of Transportation, District 11
2201 Reiser Ave.
New Philadelphia, OH 44663
Phone: 330-339-6633

SR-149 OVER MCMAHON CREEK
STRUCTURE NO. SFN0700460
CROSS SECTIONS
BELMONT COUNTY, OHIO

CEI PROJECT	55–17019.00
INSPECTED BY:	KN
DRAWN BY:	RJF
CHECKED BY:	MAS
DATE:	MAY 2025
SHEET NO:	3

P:\55-KY\17019-ODOT D11 UW BRIDGE INSP (2025)\WORK\BRIDGES\0700460\DRAWINGS\SFN0700460_DRAWINGS.DWG7/13/2025 10:57:08 AM

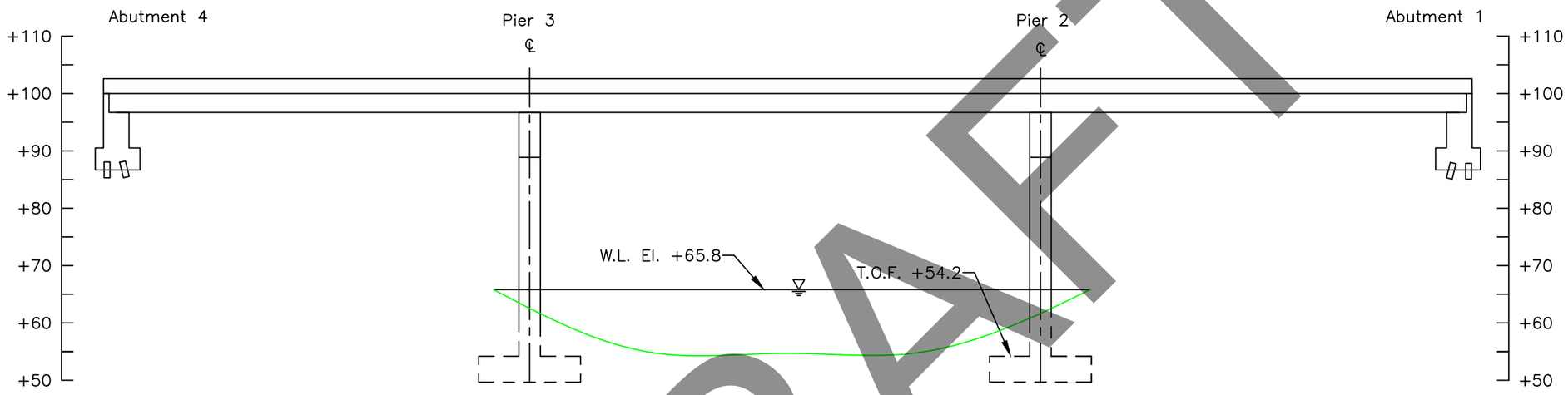

STRUCTURE CENTERLINE
CHANNEL CROSS SECTION
(LOOKING DOWNSTREAM)

DRAFT

Note:

Footing elevations unknown due to unavailable record drawings.

LEGEND

———	Approximate Channel Bottom – May 2025
	Timber Debris
	Water Surface
+450	Elevation (ft)

COLLINS ENGINEERS
124 Venture Court, Ste 10
Lexington, KY 40511
Phone: 859-367-0097
Fax: 859-367-0140

Ohio Department of Transportation, District 11
2201 Reiser Ave.
New Philadelphia, OH 44663
Phone: 330-339-6633

SR-149 OVER MCMAHON CREEK
STRUCTURE NO. SFN0700460
CROSS SECTIONS
BELMONT COUNTY, OHIO

CEI PROJECT	55–17019.00
INSPECTED BY:	KN
DRAWN BY:	RJF
CHECKED BY:	MAS
DATE:	MAY 2025
SHEET NO:	4

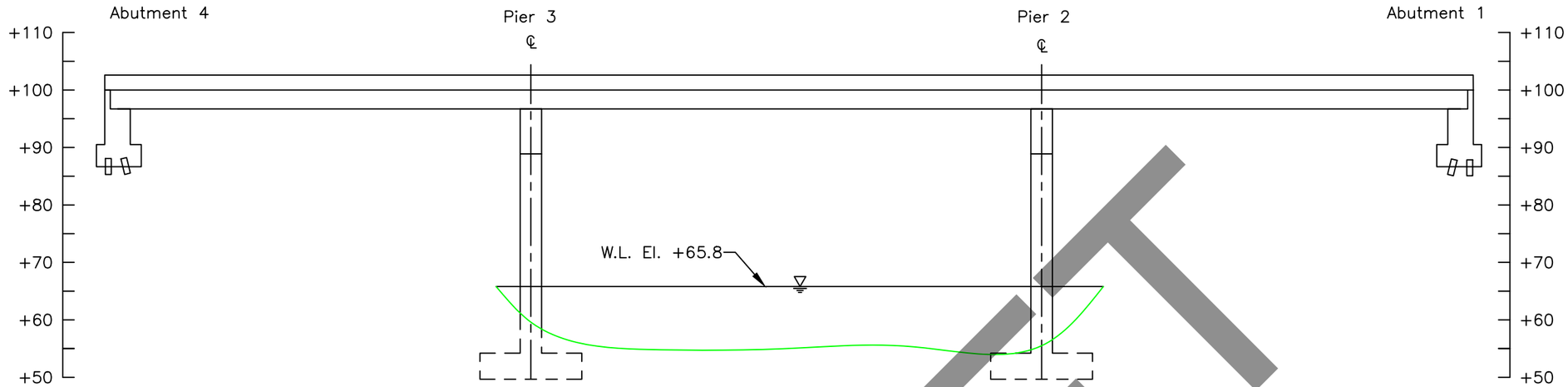

50 FT DOWNSTREAM
CHANNEL CROSS SECTION
(LOOKING DOWNSTREAM)

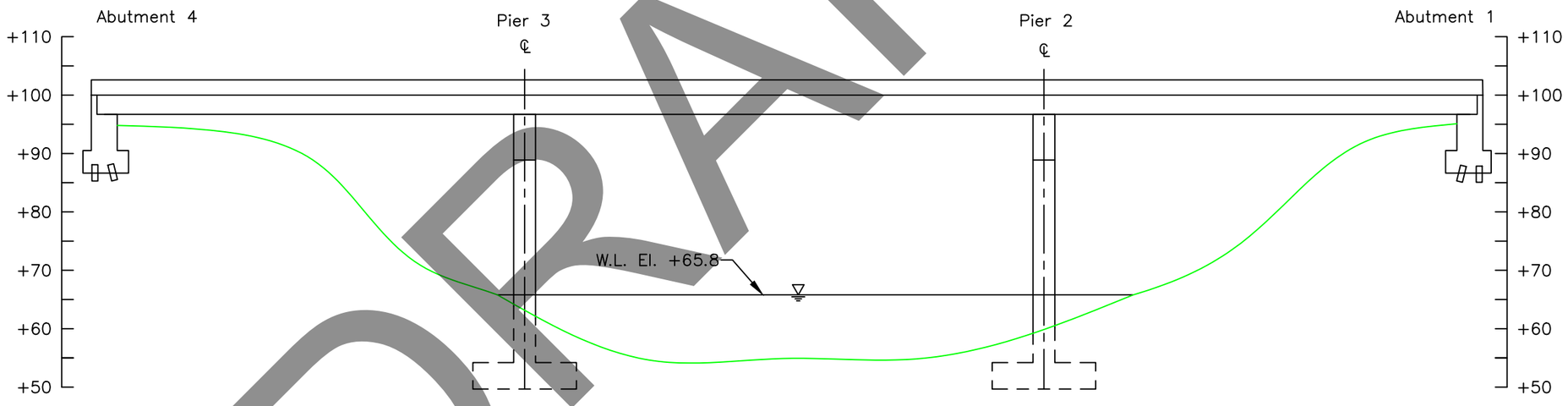

DOWNSTREAM FASCIA
CHANNEL CROSS SECTION
(LOOKING DOWNSTREAM)

Downstream Elevations
(Looking Downstream)

Location	Height (ft)
A4	5.2
1/4	6.2
1/2	12.2
3/4	29.5
P3	36.8
1/4	45.5
1/2	45.1
3/4	45.2
P2	40.1
1/4	32.3
1/2	23.7
3/4	8.8
A1	4.9

Note:

Footing elevations unknown due to unavailable record drawings.

LEGEND

———	Approximate Channel Bottom – May 2025
	Timber Debris
	Water Surface
+450	Elevation (ft)

DRAFT

COLLINS ENGINEERS
124 Venture Court, Ste 10
Lexington, KY 40511
Phone: 859-367-0097
Fax: 859-367-0140

Ohio Department of Transportation, District 11
2201 Reiser Ave.
New Philadelphia, OH 44663
Phone: 330-339-6633

SR-149 OVER MCMAHON CREEK
STRUCTURE NO. SFN0700460
CROSS SECTIONS
BELMONT COUNTY, OHIO

CEI PROJECT 55–17019.00
INSPECTED BY: KN
DRAWN BY: RJF
CHECKED BY: MAS
DATE: MAY 2025
SHEET NO: 5

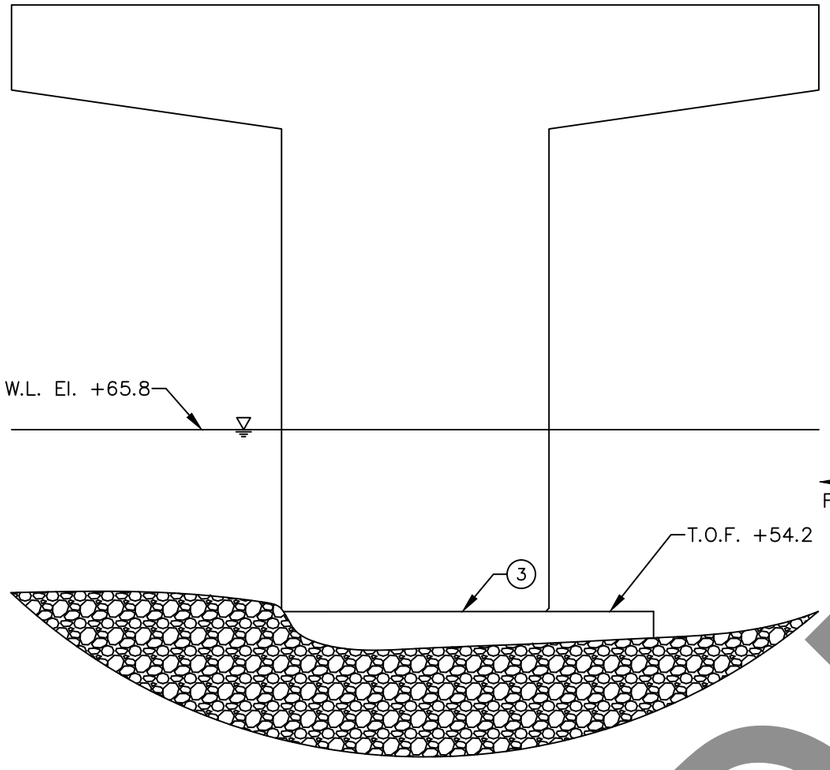

NORTH ELEVATION
(LOOKING SOUTH)

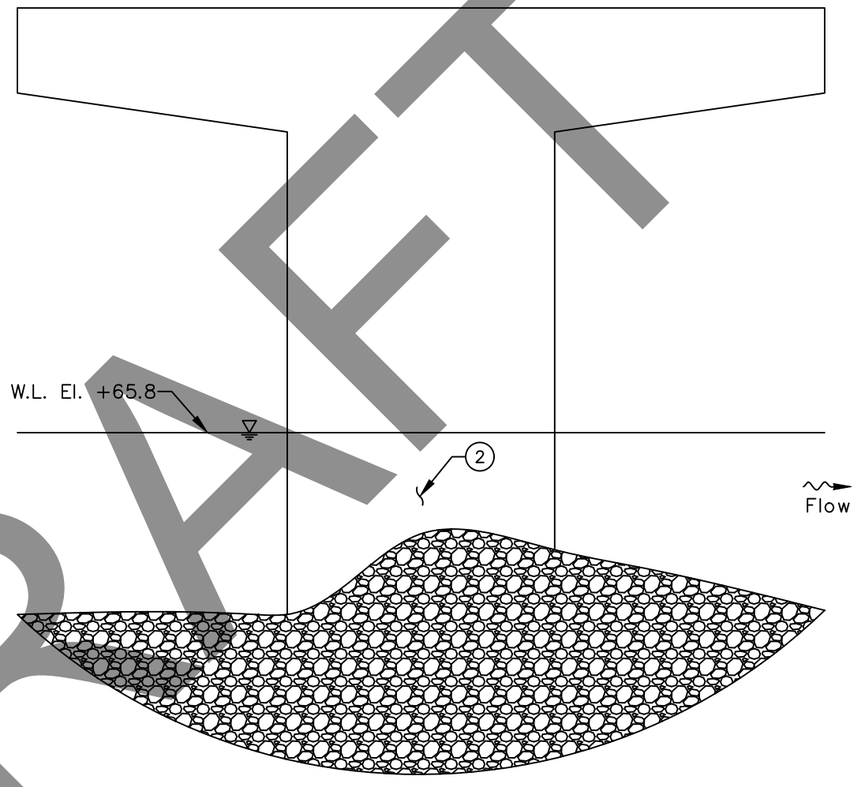

SOUTH ELEVATION
(LOOKING NORTH)

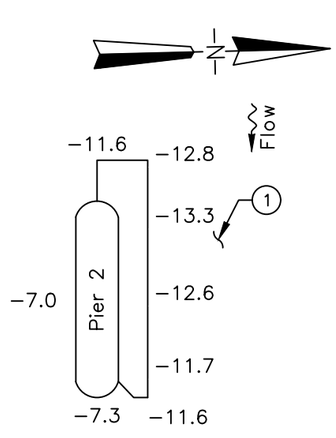

DRAFT

INSPECTION NOTES:

1. The channel bottom material around Pier 2 consisted of boulders up to 36 in. diameter with a silt overlay near the shoreline and silt with approximately 18 in. probe rod penetration on the channel side.
2. Light marine growth and zebra mussels were observed from 5.4 ft below the waterline to the channel bottom.
3. Minor scour was observed at the north face of Pier 2 causing footing exposure at 11.6 ft below the waterline with vertical exposure up to 1.7 ft.

LEGEND

−0.0	Sounding Depth from Waterline (ft)
———	Approximate Channel Bottom – May 2025
	Timber Debris
	Water Surface

COLLINS ENGINEERS
124 Venture Court, Ste 10
Lexington, KY 40511
Phone: 859-367-0097
Fax: 859-367-0140

Ohio Department of Transportation, District 11
2201 Reiser Ave.
New Philadelphia, OH 44663
Phone: 330-339-6633

SR-149 OVER MCMAHON CREEK
STRUCTURE NO. SFN0700460
PIER 2
BELMONT COUNTY, OHIO

CEI PROJECT
55–17019.00

INSPECTED BY:
KN

DRAWN BY:
RJF

CHECKED BY:
MAS

DATE:
MAY 2025

SHEET NO:
6

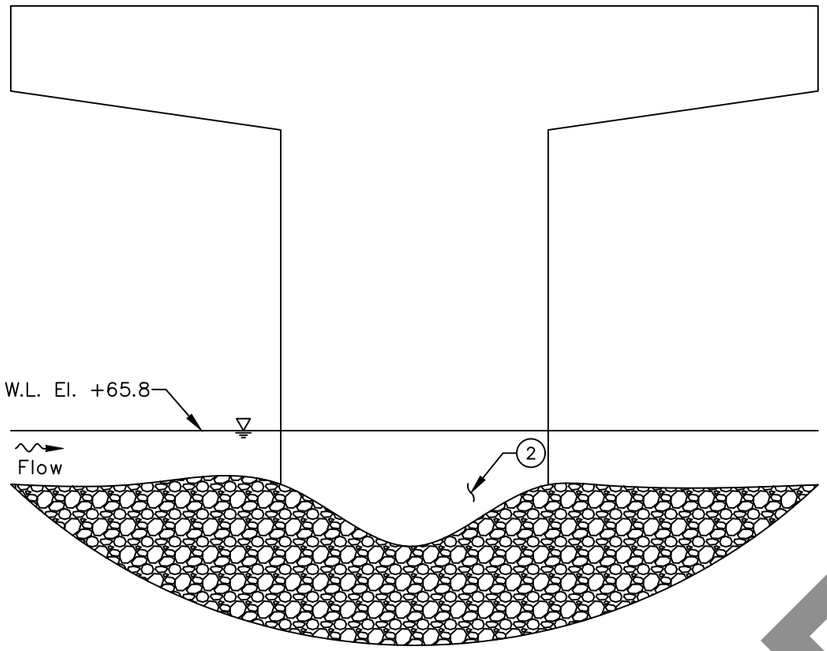

SOUTH ELEVATION
(LOOKING NORTH)

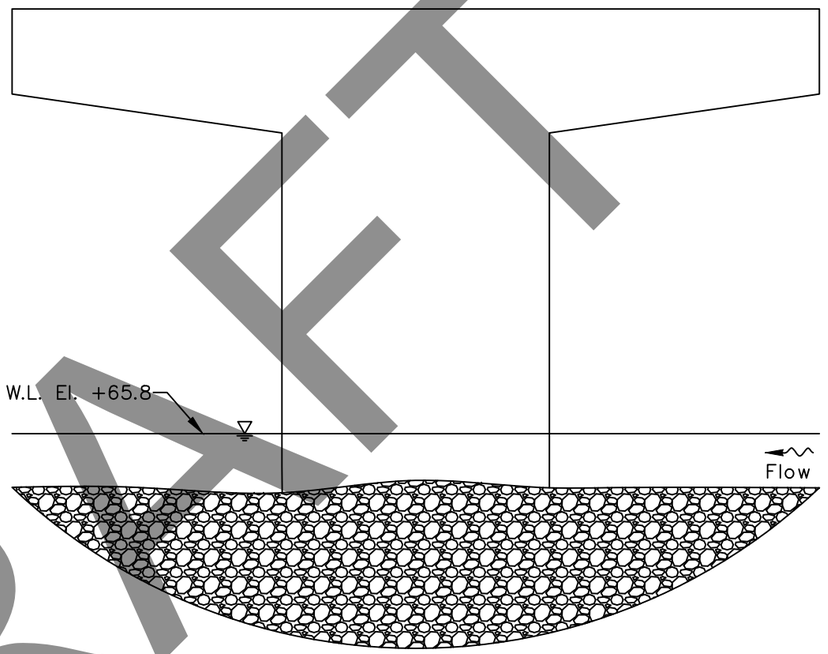

NORTH ELEVATION
(LOOKING SOUTH)

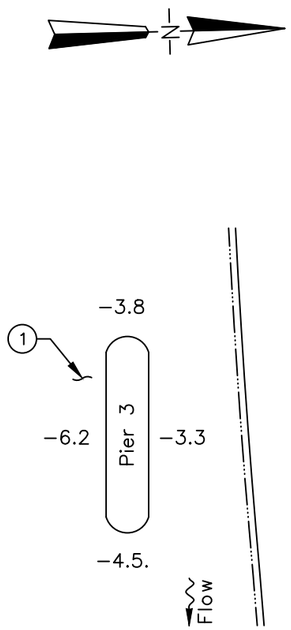

INSPECTION NOTES:

(1) The channel bottom material around Pier 3 consisted of boulders up to 36 in. diameter with a silt overlay near the shoreline and silt with approximately 18 in. probe rod penetration on the channel side.

(2) Light marine growth and zebra mussels were observed from 5.4 ft below the waterline to the channel bottom.

LEGEND

−0.0	Sounding Depth from Waterline (ft)
———	Approximate Channel Bottom – May 2025
	Timber Debris
———	Water Surface

DRAFT

COLLINS ENGINEERS
124 Venture Court, Ste 10
Lexington, KY 40511
Phone: 859-367-0097
Fax: 859-367-0140

Ohio Department of Transportation, District 11
2201 Reiser Ave.
New Philadelphia, OH 44663
Phone: 330-339-6633

SR-149 OVER MCMAHON CREEK
STRUCTURE NO. SFN0700460
PIER 3
BELMONT COUNTY, OHIO

CEI PROJECT	55−17019.00
INSPECTED BY:	KN
DRAWN BY:	RJF
CHECKED BY:	MAS
DATE:	MAY 2025
SHEET NO:	7

P:\55-KY\17019-ODOT D11 UW BRIDGE INSP (2025)\WORK\BRIDGES\0700460\DRAWINGS\SFN0700460_DRAWINGS.DWG7/13/2025 10:57:11 AM

EXHIBIT 2 – INSPECTION PHOTOGRAPHS

DRAFT



Photograph No. 1: Overall View of Structure No. SFN0700460, Looking Southeast.



Photograph No. 2: Overall View of Structure No. SFN0700460, Looking West.

DRAFT



Photograph No. 3: Overall Plan View, Looking Top South.



Photograph No. 4: View of the North Approach, Looking South

DRAFT



Photograph No. 5: View of the South Approach, Looking North



Photograph No. 6: View of the Typical Underdeck, Looking North.

DRAFT



Photograph No. 7: View of the Upstream Overall Channel, Looking West.



Photograph No. 8: View of the Upstream Channel, Looking West.

DRAFT



Photograph No. 9: View of the Downstream Overall Channel, Looking East.



Photograph No. 10: View of the Downstream Channel, Looking East

DRAFT



Photograph No. 11: View of the North Embankment Upstream of the Structure, Looking Northwest.



Photograph No. 12: View of the North Embankment at the Structure, Looking Northwest.

DRAFT



Photograph No. 13: View of the North Embankment Downstream of the Structure, Looking North.



Photograph No. 14: View of the South Embankment Upstream of the Structure, Looking Southwest.

DRAFT



Photograph No. 15: View of the South Embankment at the Structure, Looking South.



Photograph No. 16: View of the South Embankment Downstream of the Structure, Looking Southeast.

DRAFT



Photograph No. 17: View of the South Face of Pier 2, Looking Northwest.



Photograph No. 18: View of the North Face of Pier 2, Looking Southwest.



Photograph No. 19: View of the South Face of Pier 3, Looking North.



Photograph No. 20: View of the South Face of Pier 3, Looking Northwest.

DRAFT



Photograph No. 21: View of the North Face of Pier 3, Looking South.



Photograph No. 22: View of the Typical Concrete Condition At The Waterline, Looking North.

DRAFT

EXHIBIT 3 – DIVE PROCEDURES CHECKLIST

DRAFT

Underwater Dive Inspection Procedure Checklist

Acceptable written procedures communicate to the next dive team what is necessary to ensure a safe and successful inspection. Each bridge requiring underwater dive techniques must have a unique written inspection procedure. The prior inspection report does not suffice for the required procedures. It is valuable to review the last inspection notes, but they do not serve the same purpose as a stand-alone inspection procedure.

This document shall be completed for all underwater dive inspections. This document shall be reviewed prior to performing the field work and it shall be updated when necessary.

DRAFT

I. Bridge Identification

a. Agency with Inspection Responsibility: ODOT DISTRICT 11

Dive Frequency: 60 months

SFN: 0700460 Bridge Number (County-Route-SLM-SD): BEL-149-0005R

Superstructure Type Main Span Type: STEEL GIRDER

Approach Span: N/A

Substructure Type Abutment Type: CAPPED PILE

Pier Type: CONCRETE CANTILEVER

Total Pier Count: 2

Total Pier Count in water: 2

Foundations: STEEL H-PILES

Feature Intersected MCMAHON CREEK

b. Photographs



Endview



Elevation



Underside

DRAFT

II. Office and Field Assessment

Prior to the inspection, obtain and review copies of the previous underwater inspection reports, routine inspection reports, scour and hydraulic information, and design plans in preparation of the inspection. Divers should pay particular attention given to any observed areas of deterioration, the channel conditions and factors that may accelerate material deterioration. Changes shall be noted in the inspection procedure. Site conditions should be reviewed prior to diving.

a. Channel Conditions

____Waterway features

____Rapid stream flows,

____Significant debris accumulation

____Constricted waterway openings

_X__Soft or unstable streambeds

____Meandering channels

____Other which may promote scour and undermining of substructure elements

____Navigable Waterway

____Flow Controls

b. Anticipated Water conditions which may affect the inspection

_X__Cold Water (Apprx. Temp 55 °F)

____Black water

____Rapid stream flows

____Near military facility

____Tribal fishing

____Water quality

____History of Log jams

c. Identify factors that may accelerate the deterioration of the bridge elements:

____Highly corrosive water

____Unprotected steel members

____Other

Risk Factor Narrative:

DRAFT

III. **Contacts Prior to Work**

Dr. Waseem Khalifa, Ph. D., P.E.

District Bridge Engineer

2201 Reiser Avenue SE

New Philadelphia, OH 44663

(330) 308-7873

Point of contact for immediate action such as closing the bridge due to findings)

Contact Bridge Owner _____14_____ (number) days before the proposed underwater inspection.

Special contracting and scheduling procedures prior to inspection, include recommended lead time

Entity	Contact Name and Title	Contact Phone	Lead Time
Coast Guard	N/A	N/A	N/A
Property Owner	N/A	N/A	N/A
Access Equipment	N/A	N/A	N/A
Lake or River draw-down	N/A	N/A	N/A
Canal dry time	N/A	N/A	N/A
Tree removal	N/A	N/A	N/A
Other:	N/A	N/A	N/A
Other:	N/A	N/A	N/A

DRAFT

IV. **Dive Team Shall Include the Following:**

Dive Team Narrative:

The structure shall be investigated using a three-member dive team: one dive supervisor to monitor communications and air supply while taking notes, one diver, and one tender/standby diver. There shall be one NBIS Team Leader onsite at all times.

Example: The Bridge shall be investigated using a three-member dive team: one supervisor to monitor rack box and take notes, one diver, and one tender/standby diver. There shall be one NBIS Team Leader onsite at all times.

V. Site Information

Navigable waterway: Y / **N**

If Yes, waterway river point _____

Anticipated water visibility depth __3___ ft

Anticipated Dive depth __13.3___ ft

Anticipated current ___<1___ ft

Scour Critical (item 113): ___5_____

POA in place: Y/**N**

Scour Monitoring devices present: Y/**N**

Verify the Scope of Services when work is contracted for the procedure for underwater elements that are not in water during an inspection.

Site Information Narrative:

DRAFT

The underwater inspection consists of a visual and tactile examination of the accessible surfaces of the substructure items in water. Additional items should reference the scope of services in the contract. For reference the following items are in water:

Item	Number of Units	Level of Inspection (1, 2 or 3) with Commentary
Piers and Number of Columns	2	100% Level 1 10% Level 2
Abutment		
Culvert		
Scour Countermeasures		
Fenders or Dolphins		

Photographs should be taken, if water clarity permits, for typical conditions, conditions that have changed since last inspection and significant or noteworthy deficiencies. The type of channel bottom material, the presence or extent of scour, the presence or extent of riprap, the presence or extent of drift and debris, and the location of any foundation exposure or undermining shall be quantified. Include depth, length, height and location of deficiencies.

DRAFT

VI. **Equipment and Field Logistics**

a. The inspection should be conducted using:

____Chest waders

____Hip waders

__X__Diving equipment

____SCUBA (Note that ADCI Consensus Standards require communication systems be employed for both SCUBA and Surface-Supplied (whether air or mixed-gas) dive modes)

____SCUBA with communication

__X__Surface Supplied with communication

b. The channel bottom should be sounded utilizing

__X__Digital fathometer

__X__Telescoping survey rod

____ acoustic imaging

c. During the inspection, the divers should work from

__X__Shore

____Boat

____Either

The note taker should work alongside the dive team.

d. Access to the waterway should be obtained from the shore (north bank, southwest quadrant, driveway 30 yards north etc.)

_SOUTHEAST EMBANKMENT AT THE STRUCTURE NO. SFN0700460_____

_____

e. The maximum depth of the channel is typically measured 9.5 feet from THE UPSTREAM NOSE OF PIER 2.

Reference Datum TOP OF DECK AT DOWNSTREAM NOSE OF PIER 2.

Soundings should be dictated by the scope of work. When not detailed in the scope they should be repeated from the previous soundings. If neither exist then they need to be taken in a grid pattern between substructure units 100’ upstream and 100’ downstream.

DRAFT

VII. Inspection Procedure History

Created: COLLINS ENGINEERS, INC. Date: 11/7/2023

Updated By: COLLINS ENGINEERS, INC. Date: 5/15/2025

Updated By: _____ Date: _____

Updated By: _____ Date: _____

Updated By: _____ Date: _____

Updated By: _____ Date: _____

VIII. Other Narrative Not Included In Previous Sections

DRAFT