







DRAFT

UNDERWATER CULVERT INSPECTION REPORT

STRUCTURE NO. SFN1505858
(COL-00644-0587)
SR-644 OVER WILLARD RUN
COLUMBIANA COUNTY, OH
DISTRICT 11

May 2025

Prepared for:

STATE OF OHIO DEPARTMENT OF TRANSPORTATION

Prepared by:

COLLINS ENGINEERS INC.

4449 Easton Way, Suite 200

Columbus, Ohio 43219

614.594.9142 • www.collinsengr.com

TABLE OF CONTENTS

EXECUTIVE SUMMARY
1.0 INTRODUCTION 1
1.1 Purpose and Scope 1
1.2 General Description of the Structure 1
1.3 Method of Investigation 1
2.0 EXISTING CONDITIONS 2
2.1 General Conditions 2
2.2 Substructure Conditions 3
2.2.1 Wall 1 3
2.2.2 Wall 2 3
2.2.3 Channel Bottom and Scour Assessment 4
3.0 EVALUATION AND RECOMMENDATIONS 5
EXHIBIT 1 – FIGURES 7
LOCATION MAP
SOUNDING PLAN
CHANNEL CROSS SECTIONS – 50 FT UPSTREAM FASCIA
CHANNEL CROSS SECTIONS – UPSTREAM FASCIA
CHANNEL CROSS SECTIONS – STRUCTURE CENTERLINE
CHANNEL CROSS SECTIONS – DOWNSTREAM FASCIA
CHANNEL CROSS SECTIONS – 50 FT DOWNSTREAM FASCIA
WALL 1
WALL 2
EXHIBIT 2 – INSPECTION PHOTOGRAPHS 17
Photograph No. 1: Overall View of Structure No. SFN1505858, Looking East.
Photograph No. 2: Overall View of Structure No. SFN1505858, Looking Southwest.
Photograph No. 3: View of North Approach, Looking South.
Photograph No. 4: View of the South Approach, Looking North.
Photograph No. 5: View of the Downstream Channel, Looking East.
Photograph No. 6: View of the Upstream Channel, Looking Southwest.
Photograph No. 7: View of the Barrel Interior, Looking West.
Photograph No. 8: View of the Southeast Embankment, Looking Southeast.
Photograph No. 9: View of the Southwest Embankment, Looking Southwest.
Photograph No. 10: View of the Northeast Embankment, Looking Northeast.

DRAFT

Photograph No. 11: View of the Northwest Embankment, Looking Northwest.
Photograph No. 12: Overall View of the Structure Interior, Looking West.
Photograph No. 13: View of the Structure Interior, Looking East.
Photograph No. 14: View of the Typical Tuck Pointing Loss, Looking North.
Photograph No. 15: View of the Typical Tuck Pointing Loss Penetration, Looking South.
Photograph No. 16: View of the Typical Masonry Condition at the Waterline, Looking North.
Photograph No. 17: View of the Crack in Masonry Block at the Midpoint of Barrel, Looking West.
Photograph No. 18: View of the Crack in the Masonry Block Near the Downstream Fascia, Looking Southwest.
Photograph No. 19: View of the Typical Seepage and Efflorescence in the Barrel, Looking South.
EXHIBIT 3 – DIVE PROCEDURES CHECKLIST 28

DRAFT

EXECUTIVE SUMMARY

Project: ODOT D11 Routine & Underwater Bridge Inspections - 2025.

Purpose of Project: To perform an NBIS routine and detailed visual and tactile underwater investigation of bridges for the Ohio Department of Transportation, District 11.

Inspection Team: Team Leader – Kyle Nicks, P.E. – Collins Engineers, Inc.
Team Member – Jacob Quinteros – Collins Engineers, Inc.
Team Member – Joshua Sukow – Collins Engineers, Inc.

Inspection Date(s): May 15, 2025

Water Visibility:	<1 ft	***Water Velocity:***	1.5 ft/s
Water Temperature:	66 °F	***Weather:***	Sunny – 79 °F
Waterline Elevation:	87.6 ft	***Type of Boat:***	N/A
High-water Elevation:	90.6 ft		
Coordinates:	40.6956°N, 80.8849°W		
Access Location:	Northeast Embankment at Structure		
Dive Mode:	Surface Supplied Air		
Waterline Reference:	12.4 ft below the top of barrel obvert at the downstream fascia.		
Maximum Depth at SSU:	4.1 ft – Various locations along the culvert interior.		
Shoreline Conditions:	The north and south shorelines consisted of well vegetated unprotected banks with gentle slopes, minor erosion, and up to 2 ft vertically cut banks.		

Summary of Findings:

- **Wall 1:**
  - The channel bottom inside the barrel and 15 ft outside both ends of the barrel consisted of a masonry/concrete floor with no probe rod penetration.
  - The channel bottom from 15 ft outside the barrel upstream and downstream consisted of soft silt with up to 2 ft of probe rod penetration.
  - A crack up to 1/2 in. wide was observed near the downstream fascia; it extends 6 ft from the south face to 4 ft above the waterline on the north face. A crack up to 1 in. wide was observed along the centerline through 8 courses of stone. These cracks have not changed since the prior inspection.
  - Seepage with efflorescence was observed along the wall.
  - The wall mortar exhibits loss for approximately 60 percent of the joints, typically measuring up to 12 in. deep and up to a maximum of 16 in. deep. This condition generally extends from 5 ft above the waterline to the channel bottom. This condition has increased since the prior inspection.
  - There was 6 in. of soft silt in-fill observed in front of Wall 1 for this inspection that was not observed during the prior inspection.

DRAFT

- **Wall 2:**
  - The channel bottom inside the barrel and 15 ft outside both ends of the barrel consisted of a masonry/concrete floor with no probe rod penetration.
  - The channel bottom from 15 ft outside the barrels upstream and downstream consisted of soft silt with up to 2 ft of probe rod penetration.
  - A crack up to 1/2 in. wide was observed 5 ft from the downstream fascia through 9 courses of stone, extending from 6 ft from the south face to 4 ft above the waterline on the north face. A crack up to 1 in. wide was observed along the centerline through 8 courses of stone.
  - Seepage with efflorescence was observed along the wall.
  - The wall mortar exhibits loss for approximately 60 percent of the joints, typically measuring up to 12 in. deep and up to a maximum of 16 in. deep. This condition generally extends from 5 ft above the waterline to the channel bottom. This condition has increased since the prior inspection.

Summary of Recommendations:

- Monitor channel bottom for changes.
- Monitor mortar loss and cracks on stone.

DRAFT

Underwater Inspection Coding:

SNBI Ratings:

Item	Description	Coding	Condition
B.C.04	Culvert Cond. Rating	6 – Satisfactory Condition	Cracking, Efflorescence, Active Seepage, Mortar Loss
B.C.09	Channel Cond. Rating	7 – Good Condition	Minor Erosion, Vertical Cut Banks
B.C.10	Channel Protection Cond.	N/A – Not Applicable	
B.C.11	Scour Cond. Rating	6 – Satisfactory Condition	Minor Scour
B.C.15	Underwater Cond. Rating	6 – Satisfactory Condition	Cracking, Efflorescence, Active Seepage, Mortar Loss
B.IE.03	Insp. Date	May 15, 2025	
B.IE.05	UW Insp. Interval	60 Months	

AASHTO National Bridge Element (NBE) Ratings:

Element #	Description	Units	Total	Condition State			
				1	2	3	4
244	Masonry Culvert	LF	45	0	43	2	0

Note: Ratings were developed using the FHWA Recording and Coding Guide for the Specifications for the National Bridge Inventory (2022) and the AASHTO Manual for Bridge Element Inspection (2019). Numbers in parentheses beside the new codes indicate the nearest equivalent code from the previously used FHWA Recording and Coding Guide for the Structure Inventory and Appraisal of the Nation's Bridges, as an aid to transitioning to the updated coding. The recommended ratings consider inspected elements located within the waterway and conditions existing below the water surface only. Additional consideration is necessary for the assignment of overall condition ratings for this bridge.

DRAFT

1.0 INTRODUCTION

1.1 Purpose and Scope

This report consists of the results of a detailed underwater investigation performed at the SR-644 Bridge over Willard Run in Columbiana County, OH. Collins Engineers, Inc. (Collins) conducted the underwater investigation for the Ohio Department of Transportation (ODOT), District 11 on May 15, 2025. **Information and photographs for the NBIS routine inspection are contained within the Assetwise record for this bridge.** The primary purpose of the investigation was as follows:

- Determine the condition of the substructure components located in the water at the time of the inspection from the waterline to the channel bottom.
- Obtain channel bottom depth measurements along the bridge fascias, upstream and downstream of the bridge, and around the submerged substructure units.
- Determine the condition of the shorelines in the vicinity of the structure.
- Obtain photographs of the bridge and any significant defects.

In addition, a brief inspection was made of areas that could be submerged during periods of high water. The following report includes a description of the structure, the method of investigation, a description of existing conditions, an evaluation and recommendations based on the conditions, inspection figures, and photographs.

1.2 General Description of the Structure

Structure No. SFN1505858 spans 20 ft, carrying SR-644 over Willard Run and is approximately 28 ft wide. The bridge superstructure is constructed of masonry blocks. The roadway orientation of the longitudinal axis of the bridge is south to north. The substructure units are labeled as Walls 1 and 2. Existing design drawings were not available at the time of the inspection. Refer to Figure 1 in Exhibit 1 for a Location Map of the structure. Refer to Photographs 1 through 7 in Exhibit 2 for overall views of the bridge, approaches, upstream channel and downstream channel, and culvert interior.

1.3 Method of Investigation

A detailed field inspection was conducted to determine the physical condition of the submerged bridge substructure units from the waterline to the channel bottom. A brief visual examination of the substructure units above the waterline was also made.

DRAFT

A three-person team consisting of a professional engineer-diver and team leader (Kyle Nicks, P.E.) and two technician-divers (Joshua Sukow and Jacob Quinteros) conducted the underwater inspection. The inspection was conducted using surface-supplied air diving equipment. During the inspection, the inspectors worked from the shore and a note taker on the shore recorded the inspection notes.

The underwater inspection consisted of a visual and tactile examination of the accessible surfaces of the substructure units from the waterline to the channel bottom with particular attention given to any observed areas of deterioration or apparent distress. Approximately 10 percent of the total area on the underwater surfaces of the substructure units was cleaned so that the condition could be more closely examined. Photographs were taken to document the general conditions and observed deficiencies. The type of channel bottom material, the presence or extent of scour, the presence or extent of riprap, the presence or extent of drift and debris, and the location of any foundation exposure or undermining were noted.

Channel bottom soundings were performed utilizing a telescoping survey rod. Soundings were taken parallel to the bridge at the upstream and downstream fascias and 50 ft upstream and downstream, at quarter intervals between the substructure units, and at 10 ft intervals in-line with the piers upstream and downstream up to 50 ft; the waterline was referenced to an assumed elevation on the bridge. A sounding plan was developed using the soundings and approximate location of the shorelines. Refer to Figures 2 through 7 in Exhibit 1 for the sounding plan and channel cross sections that show the channel limits and water depths around the structure.

2.0 EXISTING CONDITIONS

2.1 General Conditions

At the time of the inspection, the waterline of Willard Run was located approximately 12.4 ft below the midspan of the downstream fascia of Wall 2, which corresponds to an assumed waterline elevation of 87.6 ft. During the inspection, the waterway was flowing west to east below the structure at a rate of 1.5 ft/s. The approximate high-water elevation was observed to be 90.7 ft.

The bridge pier skew was consistent with the channel alignment and does not require attention at this time. The north and south shorelines consisted of well vegetated unprotected banks with gentle slopes, minor erosion, and up to 2 ft vertically cut banks. Refer to Photographs 8 through 11 in Exhibit 2 for views of the shorelines near the structure.

DRAFT

2.2 Substructure Conditions

2.2.1 Wall 1

The channel bottom inside the barrel and 15 ft outside both ends of the barrel consisted of a masonry/concrete floor with no probe rod penetration. The channel bottom from 15 ft outside the barrel upstream and downstream consisted of soft silt with up to 2 ft of probe rod penetration. A crack up to 1/2 in. wide was observed near the downstream fascia; it extends 6 ft from the south face to 4 ft above the waterline on the north face. A crack up to 1 in. wide was observed along the centerline through 8 courses of stone. These cracks have not changed since the prior inspection. Seepage with efflorescence was observed along the wall. The wall mortar exhibits loss for approximately 60 percent of the joints, typically measuring up to 12 in. deep and up to a maximum of 16 in. deep. This condition generally extends from 5 ft above the waterline to the channel bottom. This condition has increased since the prior inspection. There was 6 in. of soft silt in-fill observed in front of Wall 1 for this inspection that was not observed during the prior inspection.

Refer to Figure 8 in Exhibit 1 for detailed inspection notes of Wall 1. Refer to Photographs 12 through 19 in Exhibit 2 for views of the structure.

2.2.2 Wall 2

The channel bottom inside the barrel and 15 ft outside both ends of the barrel consisted of a masonry/concrete floor with no probe rod penetration. The channel bottom from 15 ft outside the barrels upstream and downstream consisted of soft silt with up to 2 ft of probe rod penetration. A crack up to 1/2 in. wide was observed 5 ft from the downstream fascia through 9 courses of stone, extending from 6 ft from the south face to 4 ft above the waterline on the north face. A crack up to 1 in. wide was observed along the centerline through 8 courses of stone. Seepage with efflorescence was observed along the wall. The wall mortar exhibits loss for approximately 60 percent of the joints, typically measuring up to 12 in. deep and up to a maximum of 16 in. deep. This condition generally extends from 5 ft above the waterline to the channel bottom. This condition has increased since the prior inspection.

Refer to Figure 9 in Exhibit 1 for detailed inspection notes of Wall 2. Refer to Photographs 12 through 19 in Exhibit 2 for views of the structure.

DRAFT

2.2.3 Channel Bottom and Scour Assessment

At the time of the inspection, the Willard Run was experiencing normal flow and the channel bottom appeared stable for the type of material. The channel bottom was primarily soft silt with up to 2 ft probe rod penetration surrounding the substructure units. No undermining was observed during this inspection.

DRAFT

3.0 EVALUATION AND RECOMMENDATIONS

Overall, the inspected substructure units of Structure No. SFN1505858 (COL-00644-0587) were in Satisfactory Condition. Since no design or as-built plans were available for the structure, the amount of embedment of the masonry blocks is unknown. As a result, the channel bottom configuration should continue to be monitored during future underwater inspections to verify that additional mortar loss is not occurring and that the masonry blocks remain adequately embedded in the channel bottom. Design or as-built drawings for the structure should be obtained and reviewed, if possible, prior to the next underwater inspection to determine the exact construction of the masonry blocks.

The mortar loss observed in the masonry joints of the substructure units is not a serious structural concern at this time, but this condition has advanced since the prior inspection. This should be programmed for re-pointed during a period of low water. Re-pointing the masonry joints will limit water infiltration, freeze-thaw damage, and ensure the walls continue to act monolithically to retain fill. In addition, re-pointing the masonry joints will stabilize the individual masonry units and prevent stone displacement. The repairs should be carried out by a contractor with considerable experience in masonry construction and repairs. The joints should be repaired by first removing all unsound mortar, vegetation, and debris. A repair mortar having the same properties as the original construction mortar should be used to carry out the repairs to verify that no adverse effects related to dissimilar mortars occur and that an “in-kind” repair is performed.

The embankment erosion along the north and south shoreline is not a concern at this time due to the adequately vegetated shorelines at the structure. However, the existing erosion should continue to be monitored during future underwater inspections for evidence of increasing extent and severity that may threaten the structural integrity of the structure. For this inspection, no major changes were observed.

DRAFT

It is recommended that the submerged substructure units of Structure No. SFN1505858 be next inspected underwater at an interval not to exceed 60 months, no later than May 15, 2030.

Respectfully Submitted,
COLLINS ENGINEERS, INC.

Kevin Mitchell, P.E.
Project Manager

Originated by:
Richard Foose

DRAFT

EXHIBIT 1 – FIGURES

DRAFT

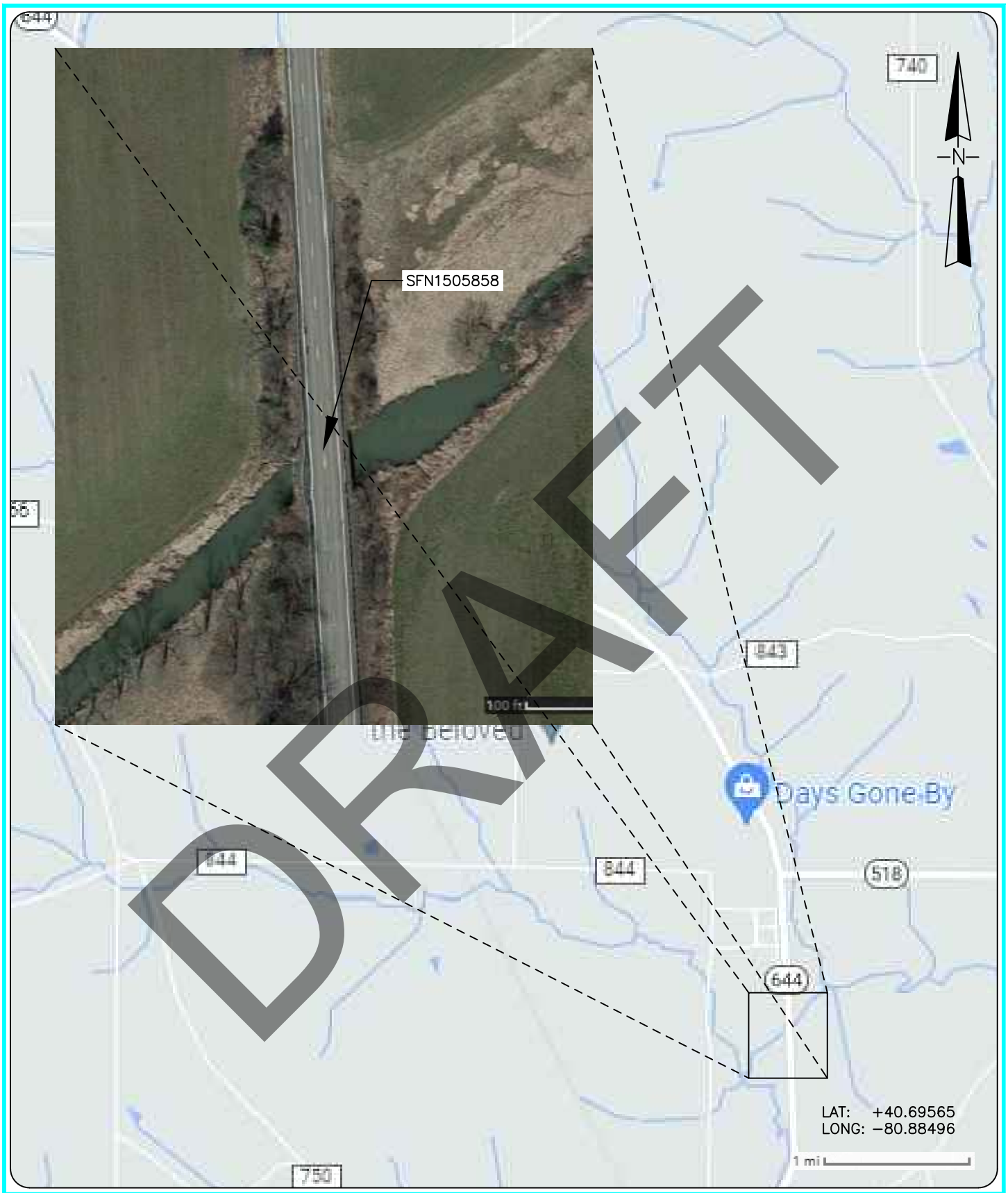

DRAFT

COLLINS ENGINEERS
124 Venture Court, Ste 10
Lexington, KY 40511
Phone: 859-367-0097
Fax: 859-367-0140

Ohio Department of Transportation, District 11
2201 Reiser Ave.
New Philadelphia, OH 44663
Phone: 330-339-6633

OH-644 OVER BRUSH CREEK
STRUCTURE NO. SFN 1505858

LOCATION MAP

COLUMBIANA COUNTY, OHIO

INSPECTED BY: KN	CEI PROJECT: 55−16199.01
DRAWN BY: RJF	DATE: MAY 2025
CHECKED BY: MAS	SHEET NO: 1

P:\55-KY\17019-ODOT D11 UW BRIDGE INSP (2025)\WORK\BRIDGES\1505858\DRAWINGS\SFN1505858_DRAWINGS.DWG7/14/2025 12:07:50 PM



SOUNDING PLAN

GENERAL NOTES:

1. Walls 1 and 2 were inspected underwater.
2. At the time of inspection on May 15, 2025, the waterline was located approximately 12.4 ft below the top of barrel at the downstream face (EL. +100.0 ft). This corresponds with a waterline elevation of +87.6 ft.
3. Soundings indicate the water depth at the time of inspection and are measured in feet.
4. Soundings were taken parallel to the structure at the upstream and downstream fascias, at quarter−intervals between the substructure units, and at 10 ft intervals in−line with the walls upstream and downstream up to 50 ft.

LEGEND

−0.0	Sounding Depth from Waterline (ft)
	Timber Debris

DRAFT

COLLINS ENGINEERS
124 Venture Court, Ste 10
Lexington, KY 40511
Phone: 859-367-0097
Fax: 859-367-0140

Ohio Department of Transportation, District 11
2201 Reiser Avenue
New Philadelphia, OH 44663
Phone: 330-339-6633

SR-644 OVER WILLARD RUN
STRUCTURE NO. SFN 1505858
SOUNDING PLAN
COLUMBIANA COUNTY, OHIO

CEI PROJECT	55−16199.01
INSPECTED BY:	KN
DRAWN BY:	RJF
CHECKED BY:	MAS
DATE:	MAY 2025
SHEET NO:	2

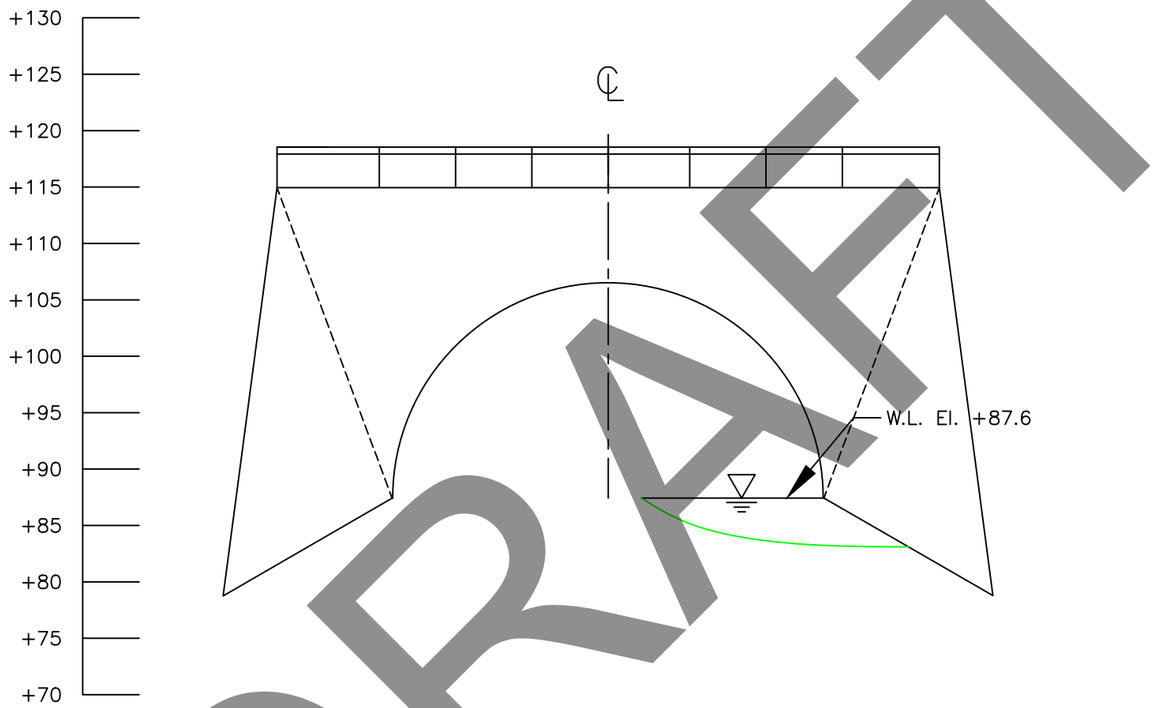

50 FT UPSTREAM CHANNEL
CROSS SECTION
(LOOKING DOWNSTREAM)

DRAFT

Note:

Footing elevations unknown due to unavailable record drawings.
Drawing not drawn to scale for clarity.

LEGEND

———	Approximate Channel Bottom – May 2025
	Timber Debris
	Water Surface
+450	Elevation (ft)

COLLINS ENGINEERS
124 Venture Court, Ste 10
Lexington, KY 40511
Phone: 859-367-0097
Fax: 859-367-0140

Ohio Department of Transportation, District 11
2201 Reiser Avenue
New Philadelphia, OH 44663
Phone: 330-339-6633

SR-644 OVER WILLARD RUN
STRUCTURE NO. SFN 1505858
CROSS SECTION - 50 FT US
COLUMBIANA COUNTY, OHIO

CEI PROJECT	55–16199.01
INSPECTED BY:	KN
DRAWN BY:	RJF
CHECKED BY:	MAS
DATE:	MAY 2025
SHEET NO:	3

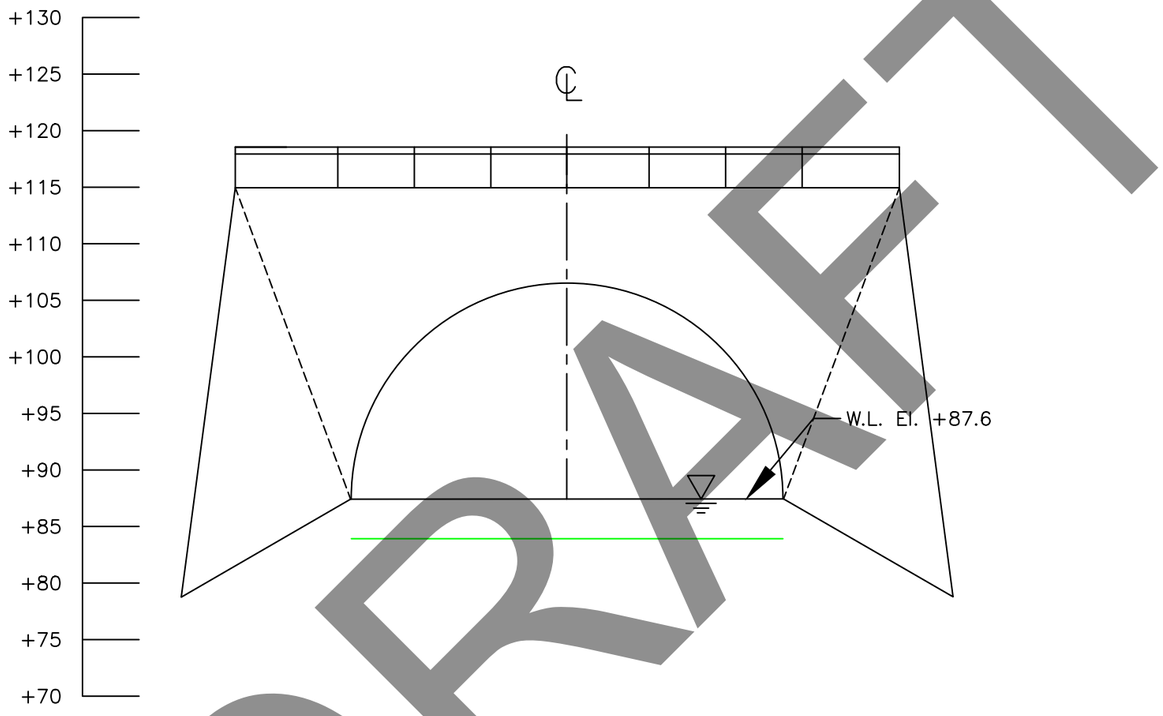

UPSTREAM FASCIA CHANNEL
CROSS SECTION
(LOOKING DOWNSTREAM)

DRAFT

Note:

Footing elevations unknown due to unavailable record drawings.
Drawing not drawn to scale for clarity.

LEGEND

———	Approximate Channel Bottom – May 2025
	Timber Debris
	Water Surface
+450	Elevation (ft)

COLLINS ENGINEERS
124 Venture Court, Ste 10
Lexington, KY 40511
Phone: 859-367-0097
Fax: 859-367-0140

Ohio Department of Transportation, District 11
2201 Reiser Avenue
New Philadelphia, OH 44663
Phone: 330-339-6633

SR-644 OVER WILLARD RUN
STRUCTURE NO. SFN 1505858
CROSS SECTION - US FASCIA
COLUMBIANA COUNTY, OHIO

CEI PROJECT	55–16199.01
INSPECTED BY:	KN
DRAWN BY:	RJF
CHECKED BY:	MAS
DATE:	MAY 2025
SHEET NO:	4

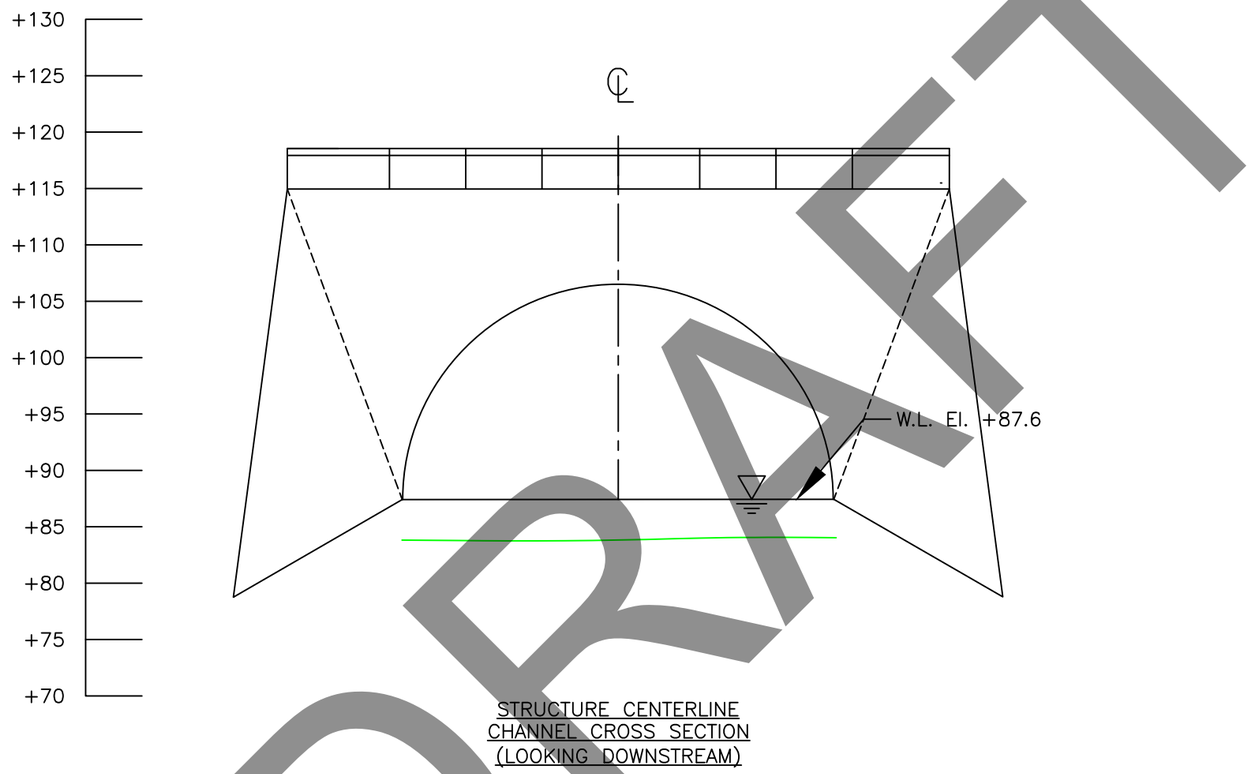

STRUCTURE CENTERLINE
CHANNEL CROSS SECTION
(LOOKING DOWNSTREAM)

DRAFT

Note:

Footing elevations unknown due to unavailable record drawings.
Drawing not drawn to scale for clarity.

LEGEND

	Approximate Channel Bottom – May 2025
	Timber Debris
	Water Surface
+450	Elevation (ft)

COLLINS ENGINEERS
124 Venture Court, Ste 10
Lexington, KY 40511
Phone: 859-367-0097
Fax: 859-367-0140

Ohio Department of Transportation, District 11
2201 Reiser Avenue
New Philadelphia, OH 44663
Phone: 330-339-6633

SR-644 OVER WILLARD RUN
STRUCTURE NO. SFN 1505858
CROSS SECTION - STRUCTURE CL
COLUMBIANA COUNTY, OHIO

CEI PROJECT	55–16199.01
INSPECTED BY:	KN
DRAWN BY:	RJF
CHECKED BY:	MAS
DATE:	MAY 2025
SHEET NO:	5

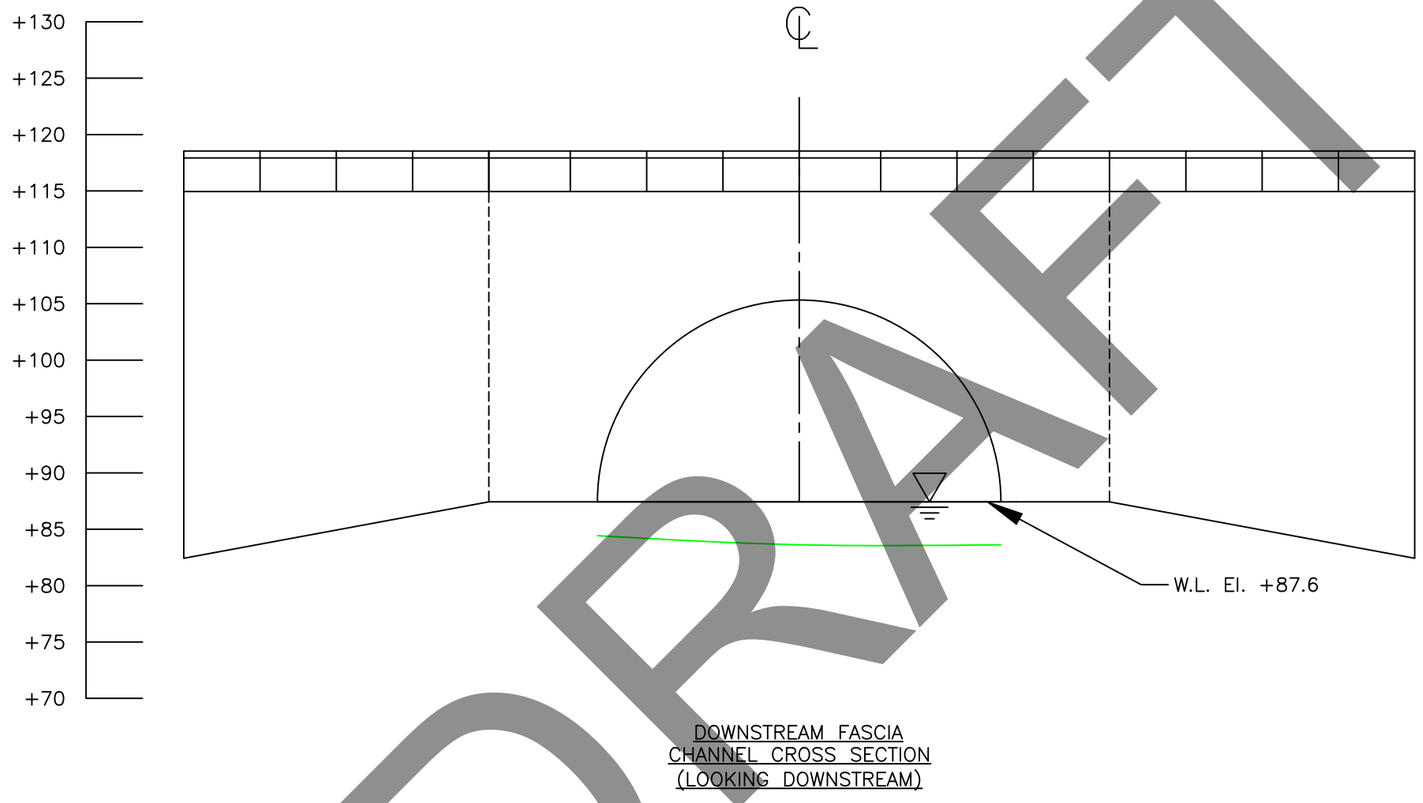

DOWNSTREAM FASCIA
CHANNEL CROSS SECTION
(LOOKING DOWNSTREAM)

DRAFT

LEGEND

———	Approximate Channel Bottom – May 2025
	Timber Debris
	Water Surface
+450	Elevation (ft)

Note:

Footing elevations unknown due to unavailable record drawings.
Drawing not drawn to scale for clarity.

COLLINS ENGINEERS
124 Venture Court, Ste 10
Lexington, KY 40511
Phone: 859-367-0097
Fax: 859-367-0140

Ohio Department of Transportation, District 11
2201 Reiser Avenue
New Philadelphia, OH 44663
Phone: 330-339-6633

SR-644 OVER WILLARD RUN
STRUCTURE NO. SFN 1505858
CROSS SECTION - DS FASCIA
COLUMBIANA COUNTY, OHIO

CEI PROJECT	55–16199.01
INSPECTED BY:	KN
DRAWN BY:	RJF
CHECKED BY:	MAS
DATE:	MAY 2025
SHEET NO:	6

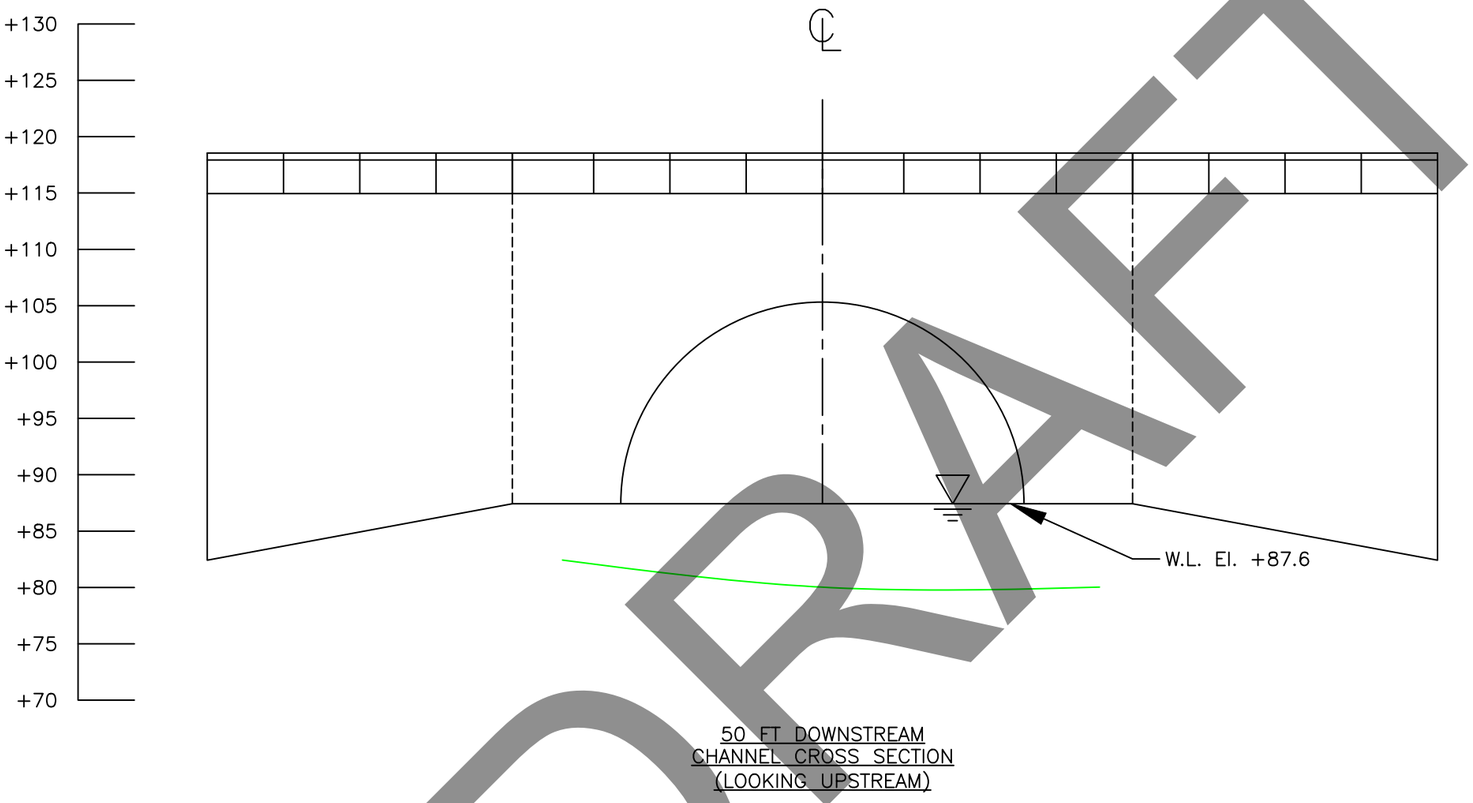

50 FT DOWNSTREAM
CHANNEL CROSS SECTION
(LOOKING UPSTREAM)

DRAFT

LEGEND

———	Approximate Channel Bottom – May 2025
	Timber Debris
	Water Surface
+450	Elevation (ft)

Note:

Footing elevations unknown due to unavailable record drawings.
Drawing not drawn to scale for clarity.

COLLINS ENGINEERS
124 Venture Court, Ste 10
Lexington, KY 40511
Phone: 859-367-0097
Fax: 859-367-0140

Ohio Department of Transportation, District 11
2201 Reiser Avenue
New Philadelphia, OH 44663
Phone: 330-339-6633

SR-644 OVER WILLARD RUN
STRUCTURE NO. SFN 1505858
CROSS SECTION - 50 FT DS
COLUMBIANA COUNTY, OHIO

CEI PROJECT 55–16199.01
INSPECTED BY: KN
DRAWN BY: RJF
CHECKED BY: MAS
DATE: MAY 2025
SHEET NO: 7

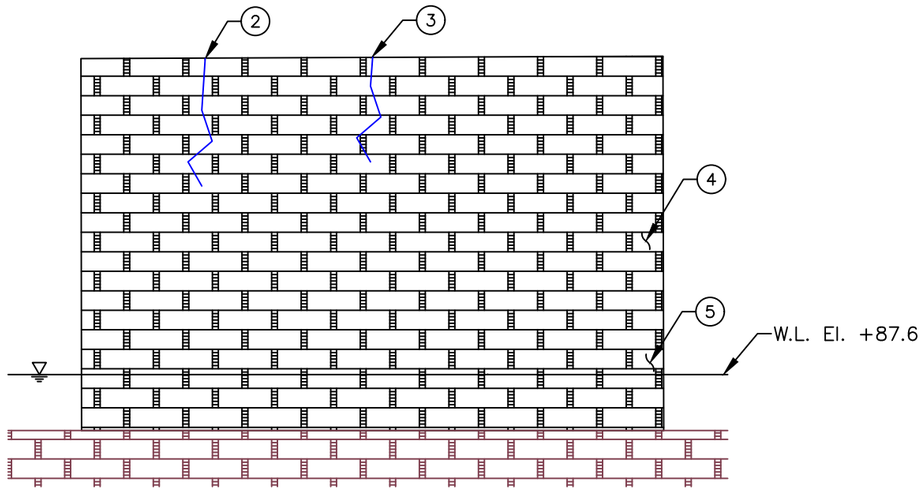

WALL 1
(LOOKING SOUTH)

Flow

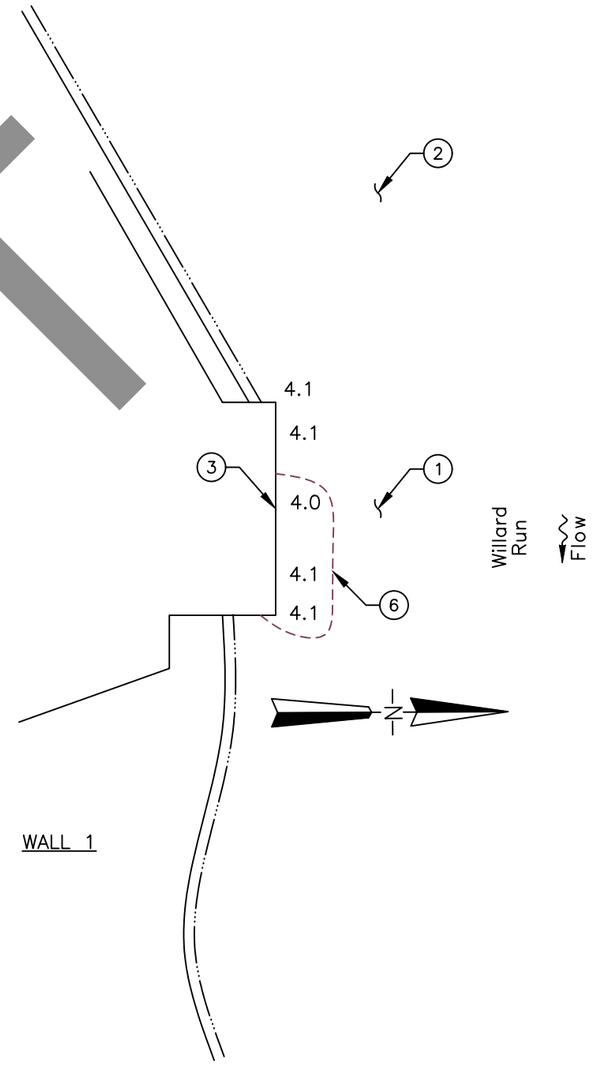

WALL 1

INSPECTION NOTES:

1. The channel bottom inside the barrel and 15 ft outside both ends of the barrel consisted of a masonry/concrete floor with no probe rod penetration.

2. The channel bottom from 15 ft outside the barrel upstream and downstream consisted of soft silt with up to 2 ft of probe rod penetration.

3. A crack up to 1/2 in. wide was observed near the downstream fascia; it extends 6 ft from the south face to 4 ft above the waterline on the north face. A crack up to 1 in. wide was observed along the centerline through 8 courses of stone. These cracks have not changed since the prior inspection.

4. Seepage with efflorescence was observed along the wall.

5. The wall mortar exhibits loss for approximately 60 percent of the joints, typically measuring up to 12 in. deep and up to a maximum of 16 in. deep. This condition generally extends from 5 ft above the waterline to the channel bottom. This condition has increased since the prior inspection.

6. There was 6 in. of soft silt in–fill observed in front of Wall 1 for this inspection that was not observed during the prior inspection.

LEGEND

–2.7	Sounding Depth from Waterline (ft)
	Approximate Channel Bottom–May 2025
	Timber Debris
	Water Surface
	Crack

DRAFT

COLLINS ENGINEERS
124 Venture Court, Ste 10
Lexington, KY 40511
Phone: 859-367-0097
Fax: 859-367-0140

Ohio Department of Transportation, District 11
2201 Reiser Avenue
New Philadelphia, OH 44663
Phone: 330-339-6633

SR-644 OVER WILLARD RUN
STRUCTURE NO. SFN 1505858
WALL 1
COLUMBIANA COUNTY, OHIO

CEI PROJECT	55–16199.01
INSPECTED BY:	KN
DRAWN BY:	RJF
CHECKED BY:	MAS
DATE:	MAY 2025
SHEET NO:	8

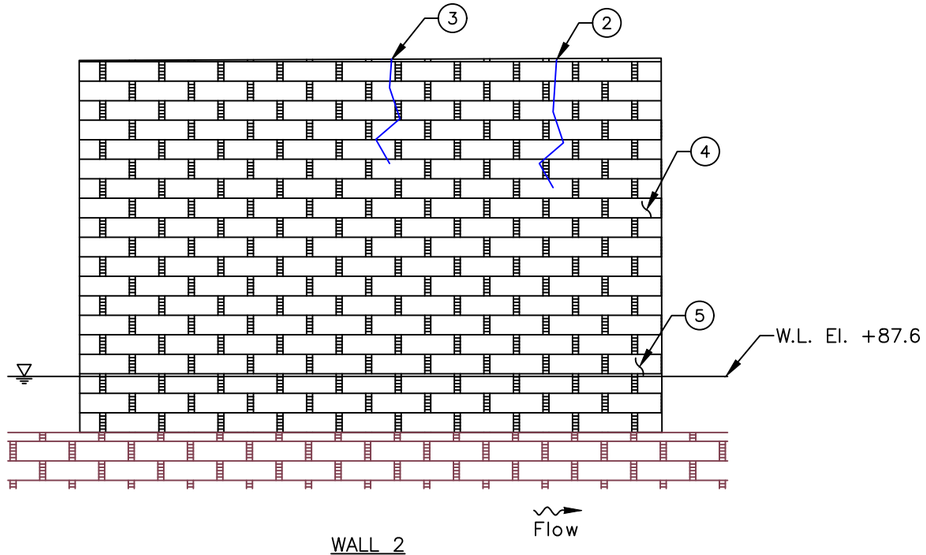

WALL 2

(LOOKING NORTH)

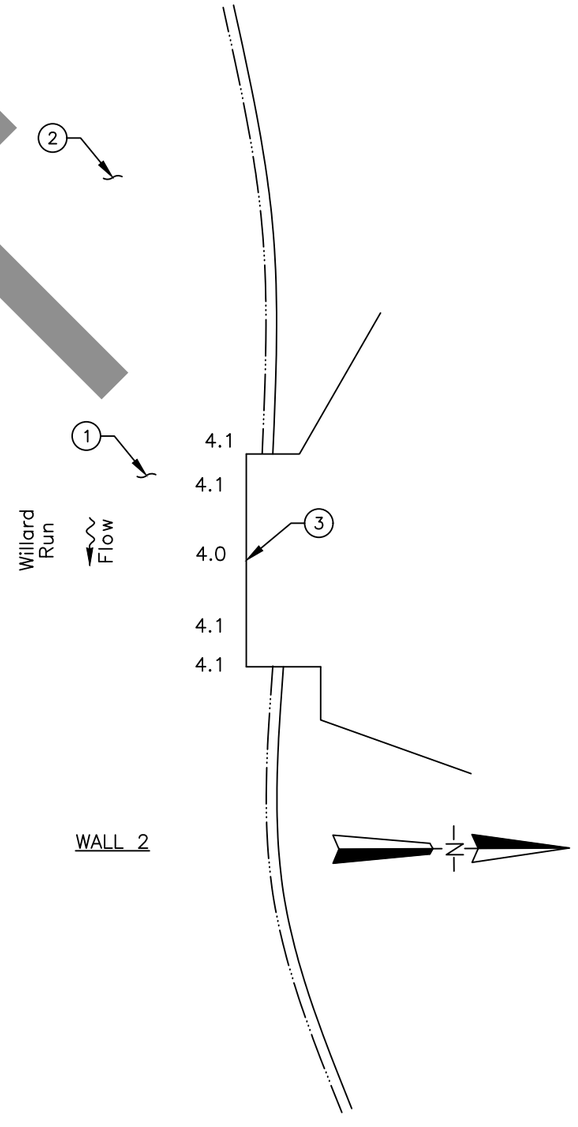

WALL 2

INSPECTION NOTES:

1. The channel bottom inside the barrel and 15 ft outside both ends of the barrel consisted of a masonry/concrete floor with no probe rod penetration.

2. The channel bottom from 15 ft outside the barrels upstream and downstream consisted of soft silt with up to 2 ft of probe rod penetration.

3. A crack up to 1/2 in. wide was observed 5 ft from the downstream fascia through 9 courses of stone, extending from 6 ft from the south face to 4 ft above the waterline on the north face. A crack up to 1 in. wide was observed along the centerline through 8 courses of stone.

4. Seepage with efflorescence was observed along the wall.

5. The wall mortar exhibits loss for approximately 60 percent of the joints, typically measuring up to 12 in. deep and up to a maximum of 16 in. deep. This condition generally extends from 5 ft above the waterline to the channel bottom. This condition has increased since the prior inspection.

LEGEND

−2.7	Sounding Depth from Waterline (ft)
	Approximate Channel Bottom–May 2025
	Timber Debris
	Water Surface
	Crack

DRAFT

COLLINS ENGINEERS
124 Venture Court, Ste 10
Lexington, KY 40511
Phone: 859-367-0097
Fax: 859-367-0140

Ohio Department of Transportation, District 11
2201 Reiser Avenue
New Philadelphia, OH 44663
Phone: 330-339-6633

SR-644 OVER WILLARD RUN
STRUCTURE NO. SFN 1505858
WALL 2
COLUMBIANA COUNTY, OHIO

CEI PROJECT	55–16199.01
INSPECTED BY:	KN
DRAWN BY:	RJF
CHECKED BY:	MAS
DATE:	MAY 2025
SHEET NO:	9

EXHIBIT 2 – INSPECTION PHOTOGRAPHS

DRAFT



Photograph No. 1: Overall View of Structure No. SFN1505858, Looking East.



Photograph No. 2: Overall View of Structure No. SFN1505858, Looking Southwest.

DRAFT



Photograph No. 3: View of North Approach, Looking South.



Photograph No. 4: View of the South Approach, Looking North.

DRAFT



Photograph No. 5: View of the Downstream Channel, Looking East.



Photograph No. 6: View of the Upstream Channel, Looking Southwest.

DRAFT



Photograph No. 7: View of the Barrel Interior, Looking West.



Photograph No. 8: View of the Southeast Embankment, Looking Southeast.

DRAFT



Photograph No. 9: View of the Southwest Embankment, Looking Southwest.



Photograph No. 10: View of the Northeast Embankment, Looking Northeast.

DRAFT



Photograph No. 11: View of the Northwest Embankment, Looking Northwest.



Photograph No. 12: Overall View of the Structure Interior, Looking West.

DRAFT



Photograph No. 13: View of the Structure Interior, Looking East.



Photograph No. 14: View of the Typical Tuck Pointing Loss, Looking North.

DRAFT

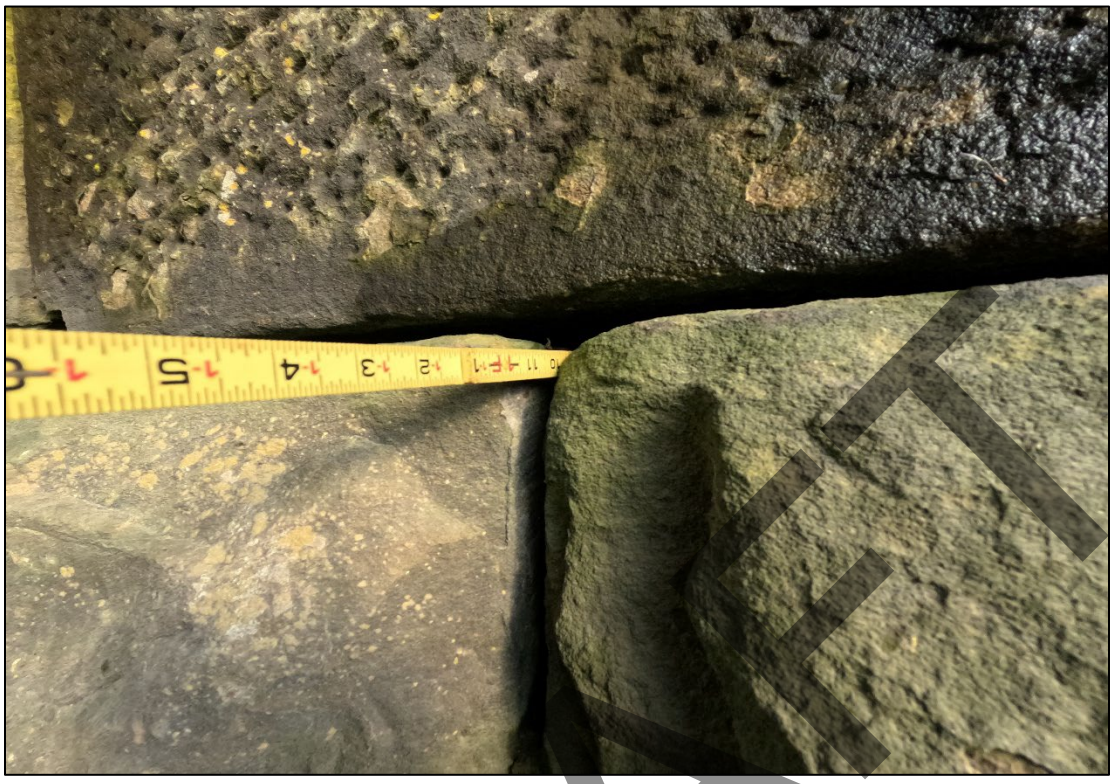

Photograph No. 15: View of the Typical Tuck Pointing Loss Penetration, Looking South.



Photograph No. 16: View of the Typical Masonry Condition at the Waterline, Looking North.

DRAFT



Photograph No. 17: View of the Crack in Masonry Block at the Midpoint of Barrel, Looking West.



Photograph No. 18: View of the Crack in the Masonry Block Near the Downstream Fascia, Looking Southwest.

DRAFT



Photograph No. 19: View of the Typical Seepage and Effloresecence in the Barrel, Looking South.

DRAFT

EXHIBIT 3 – DIVE PROCEDURES CHECKLIST

DRAFT

Underwater Dive Inspection Procedure Checklist

Acceptable written procedures communicate to the next dive team what is necessary to ensure a safe and successful inspection. Each bridge requiring underwater dive techniques must have a unique written inspection procedure. The prior inspection report does not suffice for the required procedures. It is valuable to review the last inspection notes, but they do not serve the same purpose as a stand-alone inspection procedure.

This document shall be completed for all underwater dive inspections. This document shall be reviewed prior to performing the field work and it shall be updated when necessary.

DRAFT

I. Bridge Identification

a. Agency with Inspection Responsibility: _____ODOT D11_____

Dive Frequency: _____60_____ months

SFN: __1505858_____ Bridge Number (County-Route-SLM-SD): ____COL-00644-0587_

Superstructure Type Main Span Type: _____Masonry Arch Culvert_____

Approach Span: _____

Substructure Type Abutment Type: _____

Pier Type: _____

Total Pier Count: _____

Total Pier Count in water: _____

Foundations: _____Masonry_____

Feature Intersected _____Willard Run_____

b. Photographs

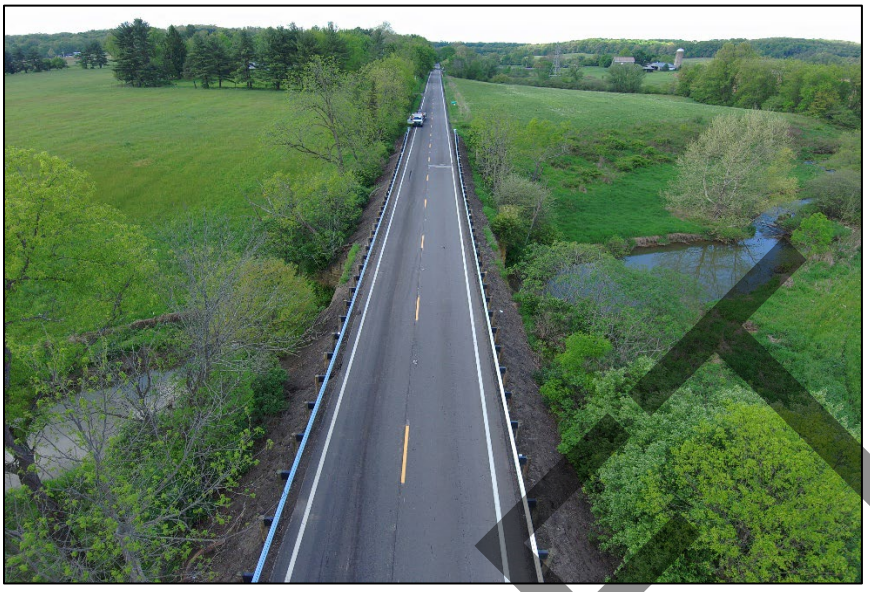

Endview



Elevation

DRAFT



Underside

DRAFT

II. Office and Field Assessment

Prior to the inspection, obtain and review copies of the previous underwater inspection reports, routine inspection reports, scour and hydraulic information, and design plans in preparation of the inspection. Divers should pay particular attention given to any observed areas of deterioration, the channel conditions and factors that may accelerate material deterioration. Changes shall be noted in the inspection procedure. Site conditions should be reviewed prior to diving.

a. Channel Conditions

____Waterway features

____Rapid stream flows,

____Significant debris accumulation

____Constricted waterway openings

____Soft or unstable streambeds

____Meandering channels

____Other which may promote scour and undermining of substructure elements

____Navigable Waterway

____Flow Controls

b. Anticipated Water conditions which may affect the inspection

____Cold Water (Apprx. Temp____)

____Black water

____Rapid stream flows

____Near military facility

____Tribal fishing

____Water quality

____History of Log jams

c. Identify factors that may accelerate the deterioration of the bridge elements:

____Highly corrosive water

____Unprotected steel members

____Other

Risk Factor Narrative:

DRAFT

III. **Contacts Prior to Work**

Dr. Waseem Khalifa, Ph. D., P.E.

District Bridge Engineer

2201 Reiser Avenue SE

New Philadelphia, OH 44663

(330) 308-7873

Point of contact for immediate action such as closing the bridge due to findings)

Contact Bridge Owner _____14_____ (number) days before the proposed underwater inspection.

Special contracting and scheduling procedures prior to inspection, include recommended lead time

Entity	Contact Name and Title	Contact Phone	Lead Time
Coast Guard	N/A	N/A	N/A
Property Owner	N/A	N/A	N/A
Access Equipment	N/A	N/A	N/A
Lake or River draw-down	N/A	N/A	N/A
Canal dry time	N/A	N/A	N/A
Tree removal	N/A	N/A	N/A
Other:	N/A	N/A	N/A
Other:	N/A	N/A	N/A

DRAFT

IV. **Dive Team Shall Include the Following:**

Dive Team Narrative:

The structure shall be investigated using a three-member dive team: one dive supervisor to monitor communications and air supply while taking notes, one diver, and one tender/standby diver. There shall be one NBIS Team Leader onsite at all times.

Example: The Bridge shall be investigated using a three-member dive team: one supervisor to monitor rack box and take notes, one diver, and one tender/standby diver. There shall be one NBIS Team Leader onsite at all times.

V. Site Information

Navigable waterway: Y / **N**

If Yes, waterway river point _____

Anticipated water visibility depth ___1__ ft

Anticipated Dive depth ___5___ ft

Anticipated current ___<1___ ft

Scour Critical (item 113): ____8____

POA in place: Y/N

Scour Monitoring devices present: Y/N

Verify the Scope of Services when work is contracted for the procedure for underwater elements that are not in water during an inspection.

Site Information Narrative:

DRAFT

The underwater inspection consists of a visual and tactile examination of the accessible surfaces of the substructure items in water. Additional items should reference the scope of services in the contract. For reference the following items are in water:

Item	Number of Units	Level of Inspection (1, 2 or 3) with Commentary
Piers and Number of Columns		
Abutment		
Culvert	1	100% Level 1 10% Level 2
Scour Countermeasures		
Fenders or Dolphins		

Photographs should be taken, if water clarity permits, for typical conditions, conditions that have changed since last inspection and significant or noteworthy deficiencies. The type of channel bottom material, the presence or extent of scour, the presence or extent of riprap, the presence or extent of drift and debris, and the location of any foundation exposure or undermining shall be quantified. Include depth, length, height and location of deficiencies.

DRAFT

VI. **Equipment and Field Logistics**

a. The inspection should be conducted using:

____Chest waders

____Hip waders

__X__Diving equipment

____SCUBA (Note that ADCI Consensus Standards require communication systems be employed for both SCUBA and Surface-Supplied (whether air or mixed-gas) dive modes)

____SCUBA with communication

____Surface Supplied with communication

b. The channel bottom should be sounded utilizing

____Digital fathometer

__X_Telescoping survey rod

____ acoustic imaging

c. During the inspection, the divers should work from

__X_Shore

____Boat

____Either

The note taker should work alongside the dive team.

d. Access to the waterway should be obtained from the shore (north bank, southwest quadrant, driveway 30 yards north etc.)

____Northeast Embankment at the Structure_____

_____

e. The maximum depth of the channel is typically measured__7.4___ feet from:

Max depth is 7.4 ft, located 40 ft downstream of the structure midspan_____

Reference Datum:_Top of Barrel Obvert at the Downstream Fascia_____

Soundings should be dictated by the scope of work. When not detailed in the scope they should be repeated from the previous soundings. If neither exist then they need to be taken in a grid pattern between substructure units 100’ upstream and 100’ downstream.

DRAFT

VII. Inspection Procedure History

Created: Collins Engineers, Inc. Date: 5/15/2025

Updated By: _____ Date: _____

Updated By: _____ Date: _____

Updated By: _____ Date: _____

Updated By: _____ Date: _____

Updated By: _____ Date: _____

VIII. Other Narrative Not Included In Previous Sections

DRAFT