

UNDERWATER & NBI

CULVERT INSPECTION

STRUCTURE NO. SFN3402681

(HAS-250-2968)

US-250 OVER SHORT CREEK

HARRISON COUNTY, OH

DISTRICT 11

September 2024

STATE OF OHIO
MATTHEW
ROGERS
PE.87504
REGISTERED
PROFESSIONAL ENGINEER

11/25/2024

Prepared for:

STATE OF OHIO DEPARTMENT OF TRANSPORTATION

Prepared by:

COLLINS ENGINEERS INC.

4449 Easton Way, Suite 200

Columbus, OH 43219

614.594.9142 • www.collinsengr.com

TABLE OF CONTENTS

EXECUTIVE SUMMARY
1.0 INTRODUCTION 1
1.1 Purpose and Scope 1
1.2 General Description of the Structure 1
1.3 Method of Investigation 1
2.0 EXISTING CONDITIONS 2
2.1 General Conditions 2
2.2 Substructure Conditions 3
2.2.1 North Headwall 3
2.2.2 South Headwall 3
2.2.3 Tunnel Interior 3
2.2.4 Channel Bottom and Scour Assessment 4
3.0 EVALUATION AND RECOMMENDATIONS 4
EXHIBIT 1 – FIGURES 6
LOCATION MAP
SOUNDING PLAN
CHANNEL CROSS SECTIONS – STRUCTURE CENTERLINE
CHANNEL CROSS SECTIONS – DOWNSTREAM FASCIA
NORTH & SOUTH HEADWALL
TUNNEL INTERIOR
TUNNEL INTERIOR INSPECTION NOTES
EXHIBIT 2 – INSPECTION PHOTOGRAPHS 14
Photograph No. 1: Overall View of Structure No. SFN3402681 (HAS-250-2968), Looking South.
Photograph No. 2: Overall View of Structure No. SFN3402681 (HAS-250-2968), Looking North.
Photograph No. 3: Overall View of the Upstream Channel, Looking North.
Photograph No. 4: Overall View of the Downstream Channel, Looking South.
Photograph No. 5: View of the Northwest Embankment Upstream of the Structure, Looking Southwest.
Photograph No. 6: View of the Northeast Embankment Upstream of the Structure, Looking Southeast.
Photograph No. 7: View of the Southwest Embankment Downstream of the Structure, Looking Northwest.

Photograph No. 8: View of the Southeast Embankment Downstream of the Structure, Looking Northeast.
Photograph No. 9: Typical View of Wall 1 in Tunnel Interior, Looking Northwest.
Photograph No. 10: View of the Area of Erosion Behind the North Headwall, Looking South.
Photograph No. 11: View of the Typical South Headwall Spalling, Looking North.
Photograph No. 12: View of the Typical Ceiling Condition, Looking North.
Photograph No. 13: View of the Typical Ceiling Condition at Timber Section, Looking North.
Photograph No. 14: View of Typical Timber Framing, Looking North.
Photograph No. 15: View of the Typical Spalls with Exposed Reinforcement Behind Timber Framing, Looking East.
Photograph No. 16: View of the Typical Concrete and Timber Condition at the Waterline, Looking West.
Photograph No. 17: View of the Typical Tunnel without Timber Framing, Looking Northeast.
Photograph No. 18: View of the Typical Voids at the Bottom of the Shotcrete Wall, Looking East.
Photograph No. 19: View of the Typical Shotcrete Condition, Looking East.
Photograph No. 20: View of the West Wall with Exposed Concrete Ribs, Looking Northwest.
Photograph No. 21: View of the Broken Wall 1 Section at the North Timber Framing Section, Looking West.
Photograph No. 22: View of the Collapsed Wall 1 Located 600 ft from the South Fascia, Looking Northwest.
Photograph No. 23: View of the Collapsed Wall 1 Located 825 ft from the South Fascia, Looking West.
Photograph No. 24: View of the Shotcrete Spalling of Wall 1 Located 1100 ft from the South Fascia, Looking West.
Photograph No. 25: View of the Collapsed Wall 1 with Debris Pile, Looking Northwest.
Photograph No. 26: View of the Debris Pile from the Collapsed Wall 1 and 2, Looking North.
Photograph No. 27: View of the Collapsed Wall 2 with Debris Pile, Looking Northwest.
Photograph No. 28: View of the Wall 2 Spall with Large Void Located 1150 ft from the South Fascia, Looking East.
Photograph No. 29: View of the Ceiling Crack with Efflorescence Located 1100 ft from the South Fascia, Looking South.
Photograph No. 30: View of the Debris and Aggradation at the Inlet, Looking North.
EXHIBIT 3 – UNDERWATER DIVE INSPECTION PROCEDURES CHECKLIST 30

EXECUTIVE SUMMARY

Project: ODOT D11 Underwater Bridge Inspections - 2024.

Purpose of Project: To perform a detailed visual and tactile underwater investigation of bridges for the Ohio Department of Transportation, District 11.

Inspection Team: Team Leader – Kevin Mitchell, E.I.T. – Collins Engineers, Inc.
Team Member – Joshua Sukow – Collins Engineers, Inc.
Team Member – Nicholas Lane – Collins Engineers, Inc.

Inspection Date(s): September 12, 2024

Water Visibility:	3 ft	***Water Velocity:***	0 ft/s
Water Temperature:	60 °F	***Weather:***	Clear – 68 °F
Waterline Elevation:	81.8 ft	***Type of Boat:***	N/A
High-water Elevation:	83.0 ft		
Coordinates:	40.1841322°N, 80.9059726°W		
Access Location:	Gravel Road East of Structure		
Dive Mode:	Wading		

Waterline Reference: 18.2 ft below the bottom of horizontal timber framing at the south end of the tunnel.

Maximum Depth at SSU: 2.1 ft – Downstream Fascia Midpoint at South End of Tunnel.

Shoreline Conditions: The south shorelines consisted of well-vegetated steep, rocky slopes with no signs of erosion. The north shorelines exhibited lightly vegetated rocky, steep slopes with fallen trees on both sides and areas of erosion around the north headwall.

Summary of Findings:

- **North Headwall:**
  - Scattered spalling up to 3 in. deep and exposed and broken wire mesh with section loss were observed throughout the arch interior of the north headwall.
  - An area of erosion 8 ft vertical by 5 ft deep was observed at the west side of the north headwall, and an area of minor erosion was observed at the east side of the north headwall with scattered failed bars throughout.
- **South Headwall:**
  - Heavy deterioration consisting of heavy delamination with associated spalling measuring up to 2 ft deep and exposed reinforcement bars with corrosion and typically 20% section loss were observed at the south headwall with scattered failed reinforing bars throughout.
  - Heavy deterioration with spalling up to 2 ft deep and deteriorated repaired sections with exposed wire mesh were observed at both sides of the south headwall.
- **Tunnel Interior:**
  - The tunnel interior typically exhibited active seepage and was most severe at the northern 50 ft of the tunnel.

- Voids measuring 2 ft vertical by 1 ft deep were observed below the shotcrete at the bottom of both walls extending from the north end of the south timber shoring to 255 ft from the south fascia interior (approximately 100 ft long).
- The tunnel walls exhibited spalls approximately 60 ft long by 3 ft deep with natural stone exposure located 600 ft north of the south fascia. The spalls created a 10 ft vertical debris pile across the tunnel.
- A spall measuring 4 ft vertical by 2 ft deep in the shotcrete was observed in Wall 1 extending from the south extent of the north timber framing section to 75 ft north.
- Wall 1 exhibited spalls approximately 8 ft vertical by 10 ft long by 3 ft deep with natural stone exposure located 800 ft north of the south fascia.
- Wall 1 exhibited spalls approximately 15 ft vertical by 40 ft long by 3 ft deep with natural stone exposure located 825 ft north of the south fascia.
- Wall 1 exhibited one spall measuring up to 10 ft vertical by 3 in. deep extending from 1100 ft to 1150 ft from the south fascia with debris accumulation below.
- Wall 2 exhibited a spalled section of shotcrete 10 ft vertical by 5 ft horizontal by 5 ft deep with a large void and fill material spilling out approximately 1150 ft from the south fascia.
- Light surface corrosion was typically observed on the tunnel ceiling steel support framing.
- A ceiling crack measuring 1/4 in. wide by the full ceiling width with heavy efflorescence was observed 1100 ft from the south fascia.
- Infill and aggradation up to 10 ft vertical were observed blocking approximately 50% of the inlet.
- Creosote treated timber shoring observed to be in good condition and above the waterline.
- Typical shotcrete exhibited typical map cracking with efflorescence throughout and shallow spalls with exposed rebar ties.

Summary of Recommendations:

- Repair the shotcrete spalls throughout the tunnel and both headwalls.
- Remove the debris pile from the tunnel.
- Monitor the ceiling crack with efflorescence.
- Monitor embankment erosion at the north headwall.
- Perform a detailed structural analysis to determine stability as a result of the partial collapse.

Underwater Inspection Coding:

NBI Ratings:

Item	Description	Coding	Condition
B.C.04	Tunnel	3 – Serious	Spalls, Cracks, Voids, Exposed and Broken Reinforcement
B.C.09	Channel Cond. Rating	4– Poor	Debris Pile, Aggredation, Erosion
B.C.10	Channel Protection Cond.	N– Not Applicable	
B.C.11	Scour Cond. Rating	8– Very Good Condition	
B.C.15	Underwater Cond. Rating	3– Serious Condition	Wall Voids, Cracking
B.IE.03	UW and NBI Insp. Date	September 12, 2024	
B.IE.05	UW Insp. Interval	12 Months	

AASHTO National Bridge Element (NBE) Ratings:

Element #	Description	Units	Total	Condition State			
				1	2	3	4
244	Masonry Tunnel	LF	1200	0	0	910	290
835	Tunnel End Treatment	EA	2	0	0	0	2
845	Roadway Over Structure	EA	2	2	0	0	0

Note: Ratings were developed using the FHWA Specifications for the National Bridge Inventory and AASHTO Manual for Bridge Element Inspection, 2nd Ed. The recommended ratings consider inspected elements located within the waterway and conditions existing below the water surface only. Additional consideration is necessary for the assignment of overall condition ratings for this bridge.

1.0 INTRODUCTION

1.1 Purpose and Scope

This report consists of the results of a detailed investigation performed at the US-250 Tunnel over Short Creek in Harrison County, OH. Collins Engineers, Inc. (Collins) conducted the underwater investigation for the Ohio Department of Transportation (ODOT), District 11 on September 12, 2024. The primary purpose of the investigation was as follows:

- Determine the condition of the substructure components located in the water at the time of the inspection from the waterline to the channel bottom.
- Obtain channel bottom depth measurements along the tunnel fascias, upstream and downstream of the tunnel, and around the submerged substructure units.
- Determine the condition of the shorelines in the vicinity of the structure.
- Obtain photographs of the tunnel and any significant defects.

In addition, an inspection was made of areas that could be submerged during periods of high water. The following report includes a description of the structure, the method of investigation, a description of existing conditions, an evaluation and recommendations based on the conditions, inspection figures, and photographs.

1.2 General Description of the Structure

Structure No. SFN3402681 (HAS-250-2968) spans 16 ft, carrying US-250 over a masonry tunnel and is approximately 1200 ft long. The tunnel superstructure is constructed of one span composed of shotcrete walls and two timber framing sections. The sections of timber framing are located at the south end of the tunnel and approximately 415 ft from the south fascia. The roadway orientation of the longitudinal axis of the tunnel is west to east. The substructure units are labeled as Walls 1 and 2. Existing design drawings were not available at the time of the inspection. Refer to Figure 1 in Exhibit 1 for a Location Map of the tunnel. Refer to Photographs 1 and 2 in Exhibit 2 for overall views of the tunnel.

1.3 Method of Investigation

A detailed field inspection was conducted to determine the physical condition of the tunnel substructure units from the waterline to the channel bottom. A visual examination of the tunnel above the waterline was also made.

A three-person team consisting of engineer-diver and team leader (Kevin Mitchell, E.I.T.) and two technician-divers (Nicholas Lane and Joshua Sukow) conducted the underwater inspection. The inspection was conducted through wading. During the inspection, the inspectors worked from the shore and a note taker on the shore recorded the inspection notes.

The underwater inspection consisted of a visual and tactile examination of the accessible surfaces of the substructure units from the waterline to the channel bottom with particular attention given to any observed areas of deterioration or apparent distress. Approximately 10 percent of the total area on the underwater surfaces of the substructure units was cleaned so that the condition could be more closely examined. Photographs were taken to document the general conditions and observed deficiencies. The type of channel bottom material, the presence or extent of scour, the presence or extent of riprap, the presence or extent of drift and debris, and the location of any foundation exposure or undermining were noted.

Channel bottom soundings were performed utilizing a telescoping survey rod. The waterline was referenced to an assumed elevation on the tunnel. A sounding plan was developed using the soundings and approximate location of the shorelines. Refer to Figures 2 through 4 in Exhibit 1 for the sounding plan and channel cross sections that show the channel limits and water depths around the structure.

2.0 EXISTING CONDITIONS

2.1 General Conditions

At the time of the inspection, the waterline was located approximately 18.2 ft below the bottom of horizontal timber shoring at the south end of the tunnel, which corresponds to an assumed waterline elevation of 81.8 ft. During the inspection, the waterway was not flowing below the structure. The approximate high-water elevation was observed to be 83.0 ft.

The tunnel skew was consistent with the channel alignment and does not require attention at this time. The south shorelines consisted of well-vegetated steep, rocky slopes with no signs of erosion. The north shorelines exhibited lightly vegetated rocky, steep slopes with fallen trees on both sides and areas of erosion around the north headwall. Refer to Photographs 3 through 8 in Exhibit 2 for views of the upstream and downstream channel and shorelines near the structure.

2.2 Substructure Conditions

2.2.1 North Headwall

Scattered spalling up to 3 in. deep and exposed and broken wire mesh with section loss were observed throughout the arch interior of the North Headwall. An area of erosion 8 ft vertical by 5 ft deep was observed at the west side of the North Headwall, and an area of minor erosion was observed at the east side of the North Headwall with scattered failed bars throughout. Refer to Figure 5 in Exhibit 1 for detailed inspection notes of the North Headwall. Refer to Photographs 2 and 10 in Exhibit 2 for views of the North Headwall.

2.2.2 South Headwall

Heavy deterioration consisting of heavy delamination with associated spalling measuring up to 2 ft deep and exposed reinforcement bars with corrosion and typically 20% section loss were observed at the South Headwall with scattered failed reinforing bars throughout. Heavy deterioration with spalling up to 2 ft deep and deteriorated repaired sections with exposed wire mesh were observed at both sides of the South Headwall. Refer to Figure 5 in Exhibit 1 for detailed inspection notes of the South Headwall. Refer to Photographs 1 and 11 in Exhibit 2 for views of the South Headwall.

2.2.3 Tunnel Interior

The channel bottom material consisted of soft silt, light timber debris, and gravel with approximately 30 in. probe rod penetration. The tunnel interior typically exhibited active seepage and was most severe at the northern 50 ft of the tunnel. Voids measuring 2 ft vertical by 1 ft deep were observed below the shotcrete at the bottom of both walls extending from the north end of the south timber shoring to 255 ft from the south fascia interior (approximately 100 ft long). The tunnel walls exhibited spalls approximately 60 ft long by 3 ft deep with natural stone exposure located 600 ft north of the south fascia; the spalls created a 10 ft vertical debris pile across the tunnel.

The tunnel interior typically exhibited active seepage and was most severe at the northern 50 ft of the tunnel. Voids measuring 2 ft vertical by 1 ft deep were observed below the shotcrete at the bottom of both walls extending from the north end of the south timber shoring to 255 ft from the south fascia interior (approximately 100 ft long). The tunnel walls exhibited spalls approximately 60 ft long by 3 ft deep with natural stone exposure located 600 ft north of the south fascia. The spalls created a 10 ft vertical debris pile across the tunnel. A spall measuring 4 ft vertical by 2 ft deep in the shotcrete was observed in Wall 1 extending from the south extent of

the north timber framing section to 75 ft north. Wall 1 exhibited spalls approximately 8 ft vertical by 10 ft long by 3 ft deep with natural stone exposure located 800 ft north of the south fascia. Wall 1 exhibited spalls approximately 15 ft vertical by 40 ft long by 3 ft deep with natural stone exposure located 825 ft north of the south fascia. Wall 1 exhibited one spall measuring up to 10 ft vertical by 3 in. deep extending from 1100 ft to 1150 ft from the south fascia with debris accumulation below. Wall 2 exhibited a spalled section of shotcrete 10 ft vertical by 5 ft horizontal by 5 ft deep with a large void and fill material spilling out approximately 1150 ft from the south fascia. Light surface corrosion was typically observed on the tunnel ceiling steel support framing. A ceiling crack measuring 1/4 in. wide by the full ceiling width with heavy efflorescence was observed 1100 ft from the south fascia. Infill and aggradation up to 10 ft vertical were observed blocking approximately 50% of the inlet. Refer to Figures 6 and 7 in Exhibit 1 for detailed inspection notes of the interior of the tunnel. Refer to Photographs 12 through 30 in Exhibit 2 for views of the interior of the tunnel and typical conditions at the waterline.

2.2.4 Channel Bottom and Scour Assessment

At the time of the inspection, the creek was experiencing normal flow and the channel bottom appeared stable for the type of material. The channel bottom was primarily soft silt, light timber debris, and gravel surrounding the substructure units. No additional scour, undermining, or scour countermeasures were observed.

3.0 EVALUATION AND RECOMMENDATIONS

Overall, the submerged substructure units of Structure No. SFN3402681 (HAS-250-2968) were in Severe Condition below water. Since no design or as-built plans were available for the tunnel, the amount of embedment of the tunnel in the channel bottom is unknown. As a result, the channel bottom configuration should continue to be monitored during future underwater inspections to verify that overall channel degradation is not occurring and that the substructure units remain adequately embedded in the channel bottom. Design or as-built drawings for the tunnel should be obtained and reviewed, if possible, prior to the next underwater inspection to determine the exact construction of the tunnel and the foundations.

The spalls and associated shotcrete delaminations throughout the tunnel and the south headwall are not structural concerns at this time due to the tunnel being cut through natural rock; however, they should be repaired to prevent further deterioration of the remaining shotcrete and natural rock. The repairs should include removal of unsound concrete to a minimum of 1 in. behind the reinforcing steel, cleaning and replacing reinforcing steel as required, and placing concrete designed to provide high durability with low permeability.

The shotcrete debris pile near the center of the tunnel is obstructing channel flow and should be removed at this time. Removal of the debris will reduce excessive lateral loads on the walls and allow the tunnel to be safely accessible by future inspectors.

The lateral crack in the ceiling near the north fascia is not a structural concern at this time. However, the crack does provide a means for water infiltration and freeze-thaw damage. It is therefore recommended that this crack be monitored during future inspections. If further crack propagation or increased crack width are observed, it may be necessary to repair the crack by injection or patching with a repair material suitable for underwater applications.

The embankment erosion along the north headwall is not a concern at this time due to its location above the structure. However, the erosion should continue to be monitored during future inspections for evidence of increasing extent and severity that may threaten the structural integrity of the tunnel.

It is recommended that Structure No. SFN3402681 (HAS-250-2968) be next inspected above and underwater at an interval not to exceed 12 months, no later than September 12, 2025. It is also recommended that the structure be inspected by a tunnel inspector to ensure the collapsed/spalled walls do not hinder the structural integrity of the tunnel.

Respectfully Submitted,
COLLINS ENGINEERS, INC.



Kevin Mitchell, E.I.T.
Project Manager/Team Leader

Originated by:
Joshua Sukow

EXHIBIT 1 – FIGURES

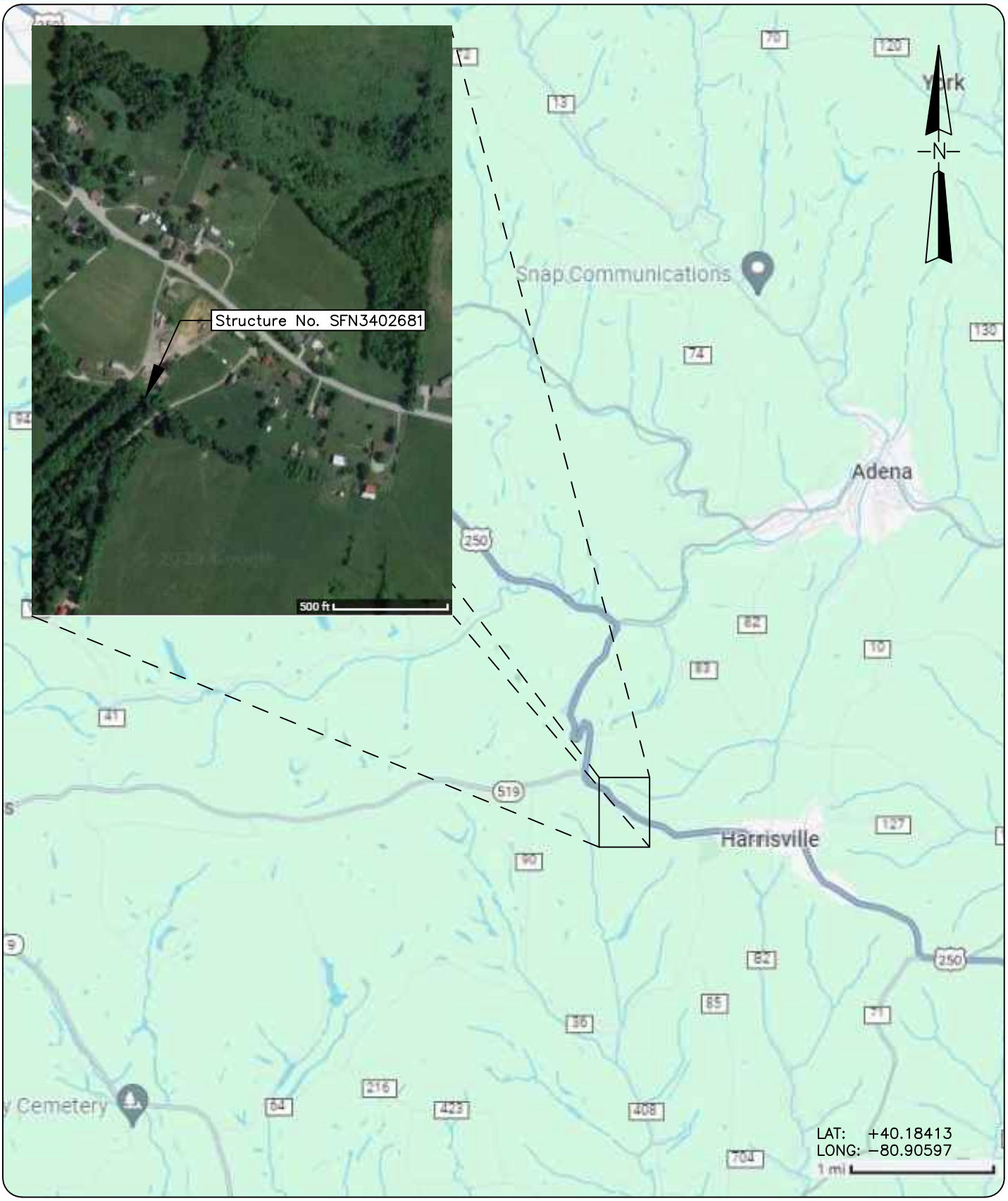

COLLINS ENGINEERS
4449 Easton Way
Suite 200
Columbus, OH 43219
Phone: 614.594.9142

Ohio Department of Transportation, District 11
2201 Reiser Ave.
New Philadelphia, OH 44663
Phone: 330-339-6633

US-250 OVER SHORT CREEK
STRUCTURE NO. SFN3402681

LOCATION MAP

HARRISON COUNTY, OHIO

INSPECTED BY: NML	CEI PROJECT: 55−16199.0
DRAWN BY: SJE	DATE: 12 SEP 2024
CHECKED BY: MOR	SHEET NO: 1

C:\USERS\SEISENBERG\ONEDRIVE - COLLINS ENGINEERS, INC\DESKTOP\3402681 CAD DRAWINGS\SFN3402681_CAD_DRAWINGS.DWG11/13/2024 2:56:13 PM

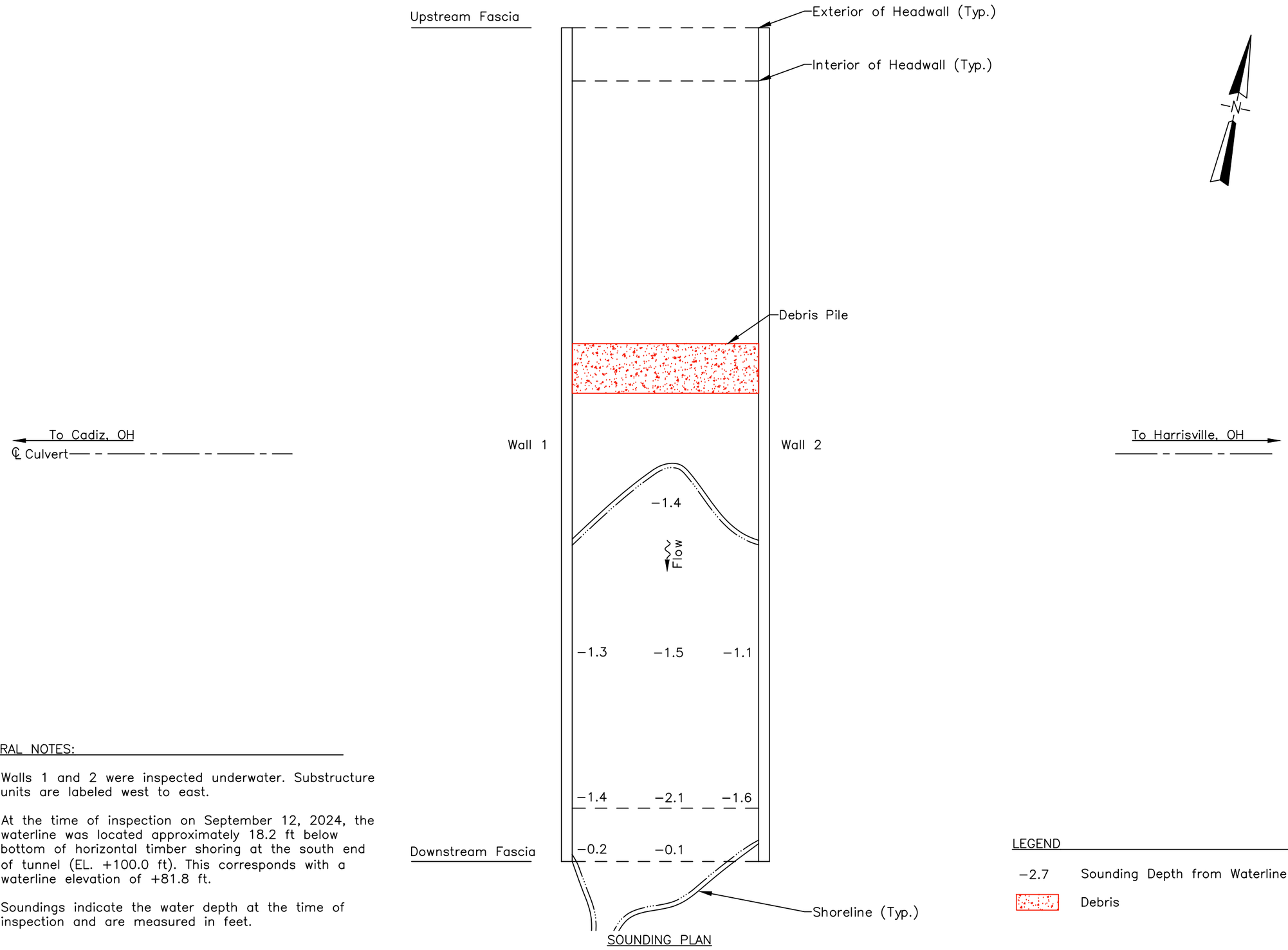

SOUNDING PLAN

GENERAL NOTES:

1. Walls 1 and 2 were inspected underwater. Substructure units are labeled west to east.
2. At the time of inspection on September 12, 2024, the waterline was located approximately 18.2 ft below bottom of horizontal timber shoring at the south end of tunnel (EL. +100.0 ft). This corresponds with a waterline elevation of +81.8 ft.
3. Soundings indicate the water depth at the time of inspection and are measured in feet.

LEGEND

−2.7	Sounding Depth from Waterline (ft)
	Debris

COLLINS ENGINEERS
4449 Easton Way
Suite 200
Columbus, OH 43219
Phone: 614.594.9142

Ohio Department of Transportation, District 11
2201 Reiser Ave.
New Philadelphia, OH 44663
Phone: 330-339-6633

US-250 OVER SHORT CREEK
STRUCTURE NO. SFN3402681
SOUNDING PLAN
HARRISON COUNTY, OHIO

CEI PROJECT	55−16199.0
INSPECTED BY:	NML
DRAWN BY:	SJE
CHECKED BY:	MOR
DATE:	SEPT 2024
SHEET NO:	2

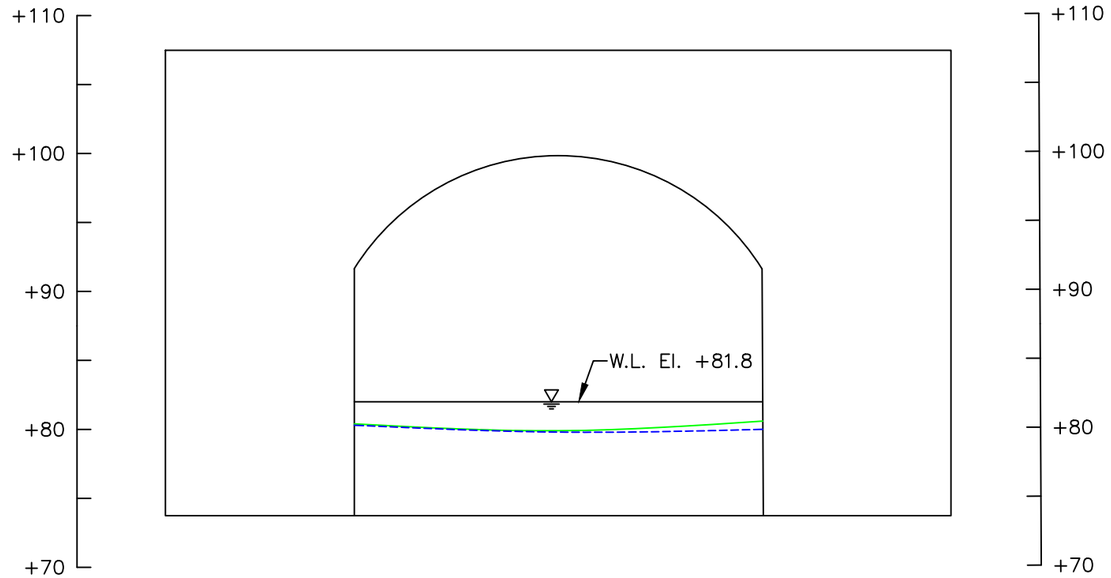

STRUCTURE CENTERLINE
CHANNEL CROSS SECTION
(LOOKING DOWNSTREAM)

Note:

Footing elevations unknown due to unavailable record drawings.

LEGEND

- Approximate Channel Bottom – Sept. 2024
- Approximate Channel Bottom – Nov. 2023
- Approximate Channel Bottom – Nov. 2018 (No Data)
- Timber Debris
- Water Surface
- +450 Elevation (ft)

COLLINS ENGINEERS
4449 Easton Way
Suite 200
Columbus, OH 43219
Phone: 614.594.9142

Ohio Department of Transportation, District 11
2201 Reiser Ave.
New Philadelphia, OH 44663
Phone: 330-339-6633

US-250 OVER SHORT CREEK
STRUCTURE NO. SFN3402681
CROSS SECTIONS
HARRISON COUNTY, OHIO

CEI PROJECT 55–16199.0
INSPECTED BY: NML
DRAWN BY: SJE
CHECKED BY: MOR
DATE: SEPT 2024
SHEET NO: 3

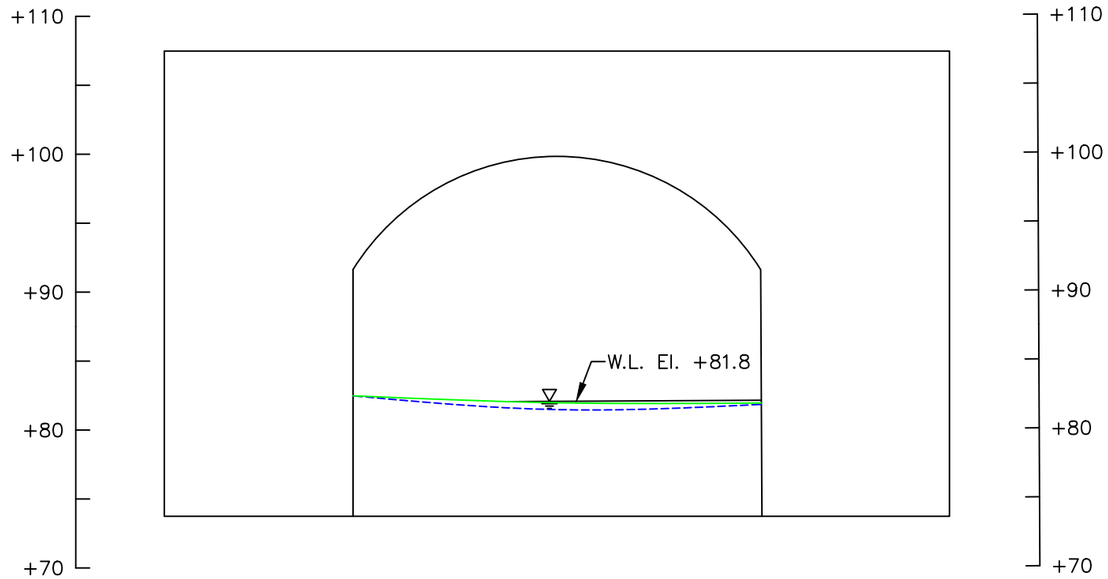

DOWNSTREAM FASCIA
CHANNEL CROSS SECTION
(LOOKING DOWNSTREAM)

Note:

Footing elevations unknown due to unavailable record drawings.

LEGEND

———	Approximate Channel Bottom – Sept. 2024
- - - - - -	Approximate Channel Bottom – Nov. 2023
– – – – –	Approximate Channel Bottom – Nov. 2018 (No Data)
	Timber Debris
	Water Surface
+450	Elevation (ft)

COLLINS ENGINEERS
4449 Easton Way
Suite 200
Columbus, OH 43219
Phone: 614.594.9142

Ohio Department of Transportation, District 11
2201 Reiser Ave.
New Philadelphia, OH 44663
Phone: 330-339-6633

US-250 OVER SHORT CREEK
STRUCTURE NO. SFN3402681
CROSS SECTIONS
HARRISON COUNTY, OHIO

CEI PROJECT 55–16199.0
INSPECTED BY: NML
DRAWN BY: SJE
CHECKED BY: MOR
DATE: SEPT 2024
SHEET NO: 4

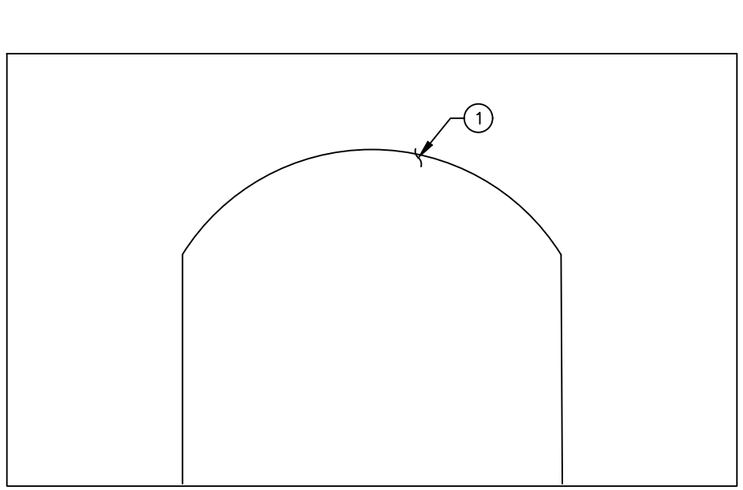

NORTH HEADWALL
(LOOKING SOUTH)

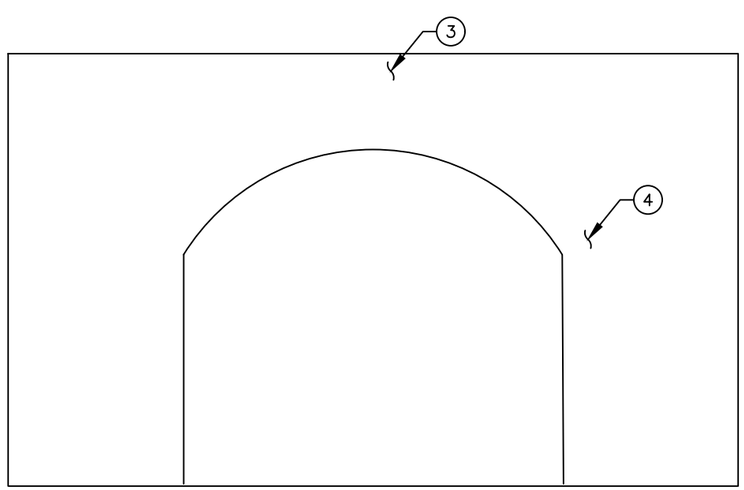

SOUTH HEADWALL
(LOOKING NORTH)

INSPECTION NOTES:

1. Scattered spalling up to 3 in. deep and exposed and broken wire mesh with section loss were observed throughout the arch interior of the north headwall.

2. An area of erosion 8 ft vertical by 5 ft deep was observed at the west side of the north headwall, and an area of minor erosion was observed at the east side of the north headwall with scattered failed bars throughout.

3. Heavy deterioration consisting of heavy delamination with associated spalling measuring up to 2 ft deep and exposed reinforcement bars with corrosion and typically 20% section loss were observed at the south headwall with scattered failed bars throughout

4. Heavy deterioration with spalling up to 2 ft deep and deteriorated repaired sections with exposed wire mesh were observed at both sides of the south headwall.

COLLINS ENGINEERS
4449 Easton Way
Suite 200
Columbus, OH 43219
Phone: 614.594.9142

Ohio Department of Transportation, District 11
2201 Reiser Ave.
New Philadelphia, OH 44663
Phone: 330-339-6633

US-250 OVER SHORT CREEK
STRUCTURE NO. SFN3402681
NORTH & SOUTH HEADWALL
HARRISON COUNTY, OHIO

CEI PROJECT
55-16199.0

INSPECTED BY:
NML

DRAWN BY:
SJE

CHECKED BY:
MOR

DATE:
SEPT 2024

SHEET NO:
5

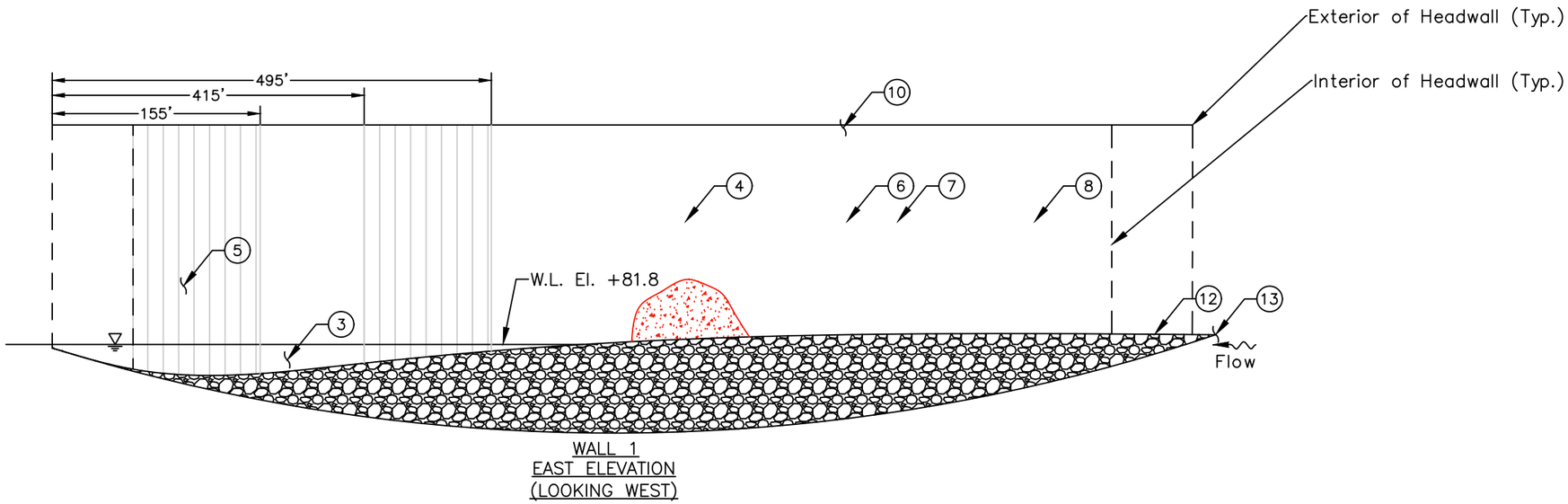

WALL 1
EAST ELEVATION
(LOOKING WEST)

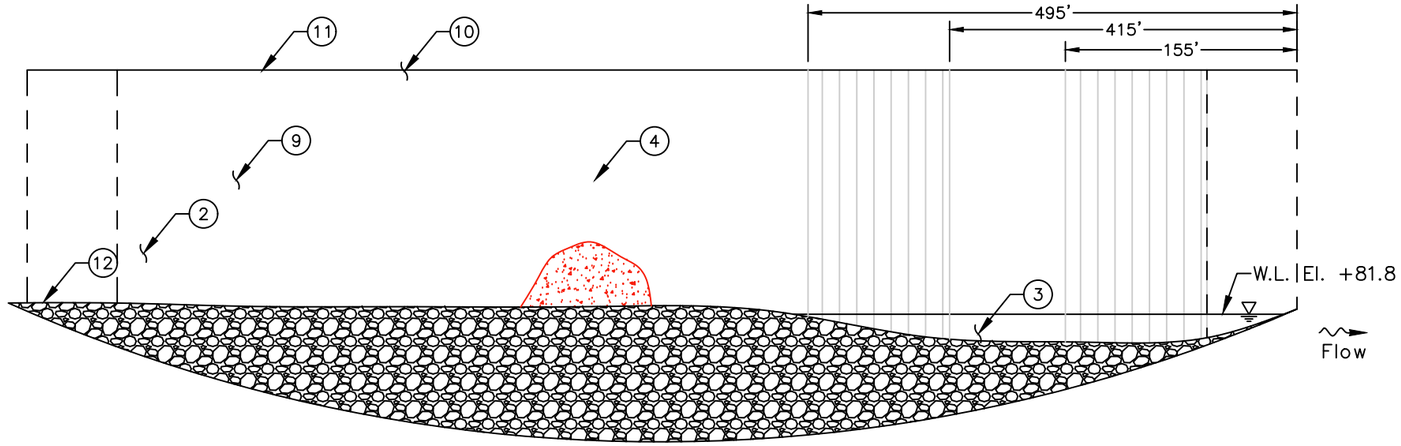

WALL 2
WEST ELEVATION
(LOOKING EAST)

LEGEND

−2.7	Sounding Depth from Waterline (ft)
	Approximate Channel Bottom – Sept. 2024
	Debris
	Timber Framing
	Water Surface

Note:

See Figure 7 for inspection notes.

COLLINS ENGINEERS
4449 Easton Way
Suite 200
Columbus, OH 43219
Phone: 614.594.9142

Ohio Department of Transportation, District 11
2201 Reiser Ave.
New Philadelphia, OH 44663
Phone: 330-339-6633

US-250 OVER SHORT CREEK
STRUCTURE NO. SFN3402681
TUNNEL INTERIOR
HARRISON COUNTY, OHIO

CEI PROJECT	55–16199.0
INSPECTED BY:	NML
DRAWN BY:	SJE
CHECKED BY:	MOR
DATE:	SEPT 2024
SHEET NO:	6

INSPECTION NOTES:

1. The channel bottom material consisted of soft silt, light timber, and gravel with up to 30 in. prode rod penetration.

2. The tunnel interior typically exhibited active seepage and was most severe at the northern 50 ft of the tunnel.

3. Voids measuring 2 ft vertical by 1 ft deep were observed below the shotcrete at the bottom of both walls extending from the north end of the south timber shoring to 255 ft from the south fascia interior (approximately 100 ft long).

4. The tunnel walls exhibited spalls approximately 60 ft long by 3 ft deep with natural stone exposure located 600 ft north of the south fascia. The spalls created a 10 ft vertical debris pile across the tunnel.

5. A spall measuring 4 ft vertical by 2 ft deep in the shotcrete was observed in Wall 1 extending from the south extent of the north timber framing section to 75 ft north.

6. Wall 1 exhibited spalls approximately 8 ft vertical by 10 ft long by 3 ft deep with natural stone exposure located 800 ft north of the south fascia.

7. Wall 1 exhibited spalls approximately 15 ft vertical by 40 ft long by 3 ft deep with natural stone exposure located 825 ft north of the south fascia.

8. Wall 1 exhibited one spall measuring up to 10 ft vertical by 3 in. deep extending from 1100 ft to 1150 ft from the south fascia with debris accumulation below.

9. Wall 2 exhibited a spalled section of shotcrete 10 ft vertical by 5 ft horizontal by 5 ft deep with a large void and fill material spilling out approximately 1150 ft from the south fascia.

10. Light surface corrosion was typically observed on the tunnel ceiling steel support framing.

12. A ceiling crack measuring 1/4 in. wide by the full ceiling width with heavy efflorescence was observed 1100 ft from the south fascia.

13. Infill and aggradation up to 10 ft vertical were observed blocking approximately 50% of the inlet.

COLLINS ENGINEERS
4449 Easton Way
Suite 200
Columbus, OH 43219
Phone: 614.594.9142

Ohio Department of Transportation, District 11
2201 Reiser Ave.
New Philadelphia, OH 44663
Phone: 330-339-6633

US-250 OVER SHORT CREEK
STRUCTURE NO. SFN3402681
TUNNEL INTERIOR INSPECTION NOTES
HARRISON COUNTY, OHIO

CEI PROJECT	55–16199.0
INSPECTED BY:	NML
DRAWN BY:	SJE
CHECKED BY:	MOR
DATE:	SEPT 2024
SHEET NO:	7

EXHIBIT 2 – INSPECTION PHOTOGRAPHS



Photograph No. 1: Overall View of Structure No. SFN3402681 (HAS-250-2968), Looking South.



Photograph No. 2: Overall View of Structure No. SFN3402681 (HAS-250-2968), Looking North.



Photograph No. 3: Overall View of the Upstream Channel, Looking North.



Photograph No. 4: Overall View of the Downstream Channel, Looking South.



Photograph No. 5: View of the Northwest Embankment Upstream of the Structure, Looking Southwest.



Photograph No. 6: View of the Northeast Embankment Upstream of the Structure, Looking Southeast.



Photograph No. 7: View of the Southwest Embankment Downstream of the Structure, Looking Northwest.



Photograph No. 8: View of the Southeast Embankment Downstream of the Structure, Looking Northeast.



Photograph No. 9: Typical View of Wall 1 in Tunnel Interior, Looking Northwest.



Photograph No. 10: View of the Area of Erosion Behind the North Headwall, Looking South.



Photograph No. 11: View of the Typical South Headwall Spalling, Looking North.



Photograph No. 12: View of the Typical Ceiling Condition, Looking North.



Photograph No. 13: View of the Typical Ceiling Condition at Timber Section, Looking North.

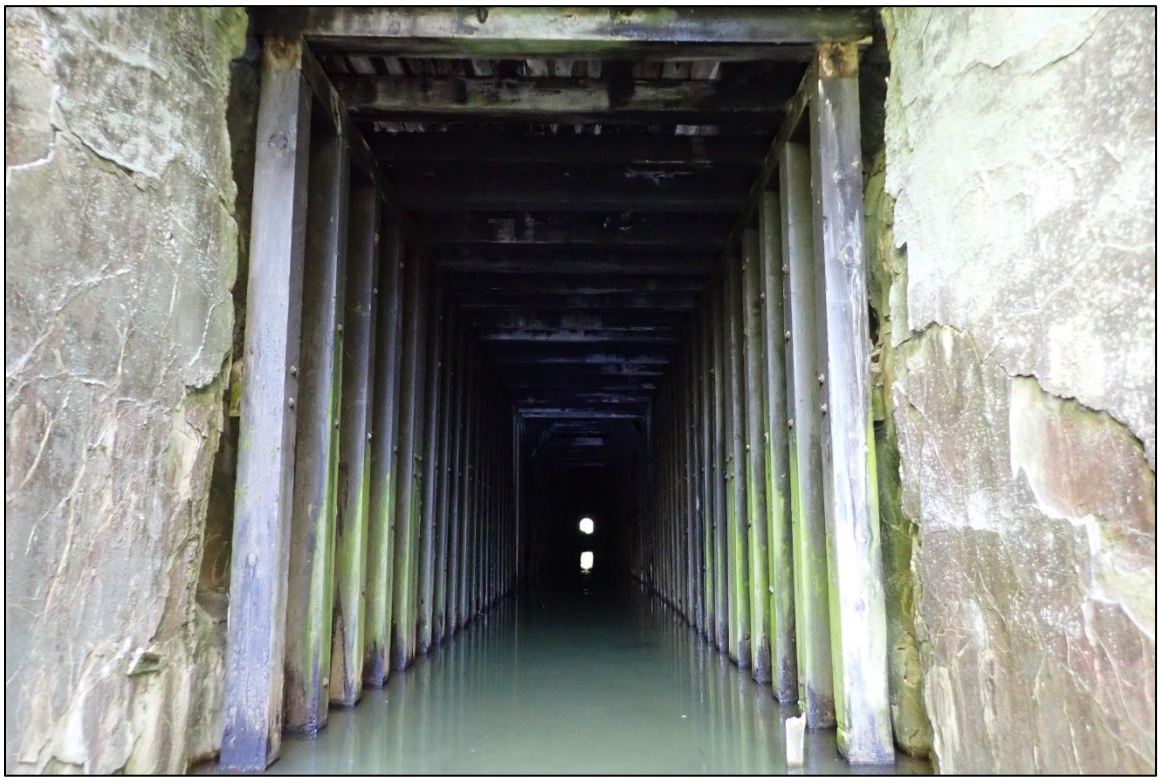

Photograph No. 14: View of Typical Timber Framing, Looking North.



Photograph No. 15: View of the Typical Spalls with Exposed Reinforcement Behind Timber Framing, Looking East.



Photograph No. 16: View of the Typical Concrete and Timber Condition at the Waterline, Looking West.



Photograph No. 17: View of the Typical Tunnel without Timber Framing, Looking Northeast.



Photograph No. 18: View of the Typical Voids at the Bottom of the Shotcrete Wall, Looking East.



Photograph No. 19: View of the Typical Shotcrete Condition, Looking East.



Photograph No. 20: View of the West Wall with Exposed Concrete Ribs, Looking Northwest.



Photograph No. 21: View of the Broken Wall 1 Section at the North Timber Framing Section, Looking West.



Photograph No. 22: View of the Collapsed Wall 1 Located 600 ft from the South Fascia, Looking Northwest.



Photograph No. 23: View of the Collapsed Wall 1 Located 825 ft from the South Fascia, Looking West.



Photograph No. 24: View of the Shotcrete Spalling of Wall 1 Located 1100 ft from the South Fascia, Looking West.



Photograph No. 25: View of the Collapsed Wall 1 with Debris Pile, Looking Northwest.



Photograph No. 26: View of the Debris Pile from the Collapsed Wall 1 and 2, Looking North.



Photograph No. 27: View of the Collapsed Wall 2 with Debris Pile, Looking Northwest.



Photograph No. 28: View of the Wall 2 Spall with Large Void Located 1150 ft from the South Fascia, Looking East.



Photograph No. 29: View of the Ceiling Crack with Efflorescence Located 1100 ft from the South Fascia, Looking South.



Photograph No. 30: View of the Debris and Aggradation at the Inlet, Looking North.

EXHIBIT 3 – UNDERWATER DIVE INSPECTION PROCEDURES CHECKLIST

Underwater Dive Inspection Procedure Checklist

Acceptable written procedures communicate to the next dive team what is necessary to ensure a safe and successful inspection. Each bridge requiring underwater dive techniques must have a unique written inspection procedure. The prior inspection report does not suffice for the required procedures. It is valuable to review the last inspection notes, but they do not serve the same purpose as a stand-alone inspection procedure.

This document shall be completed for all underwater dive inspections. This document shall be reviewed prior to performing the field work and it shall be updated when necessary.

I. Bridge Identification

a. Agency with Inspection Responsibility: ODOT DISTRICT 11

Dive Frequency: 12 months

SFN: 3402681 Bridge Number (County-Route-SLM-SD): HAS-250-2968

Superstructure Type Main Span Type: N/A

Approach Span: N/A

Substructure Type Abutment Type: SHOTCRETE

Pier Type: N/A

Total Pier Count: 2

Total Pier Count in water: 2

Foundations: Unknown

Feature Intersected ABANDONED RAILROAD TUNNEL

b. Photographs



Elevation



Underside

II. Office and Field Assessment

Prior to the inspection, obtain and review copies of the previous underwater inspection reports, routine inspection reports, scour and hydraulic information, and design plans in preparation of the inspection. Divers should pay particular attention given to any observed areas of deterioration, the channel conditions and factors that may accelerate material deterioration. Changes shall be noted in the inspection procedure. Site conditions should be reviewed prior to diving.

a. Channel Conditions

____Waterway features

____Rapid stream flows,

_X_Significant debris accumulation

____Constricted waterway openings

____Soft or unstable streambeds

____Meandering channels

____Other which may promote scour and undermining of substructure elements

____Navigable Waterway

____Flow Controls

b. Anticipated Water conditions which may affect the inspection

_X__Cold Water (Apprx. Temp 45 °F)

____Black water

____Rapid stream flows

____Near military facility

____Tribal fishing

____Water quality

____History of Log jams

c. Identify factors that may accelerate the deterioration of the bridge elements:

____Highly corrosive water

____Unprotected steel members

____Other

Risk Factor Narrative:

III. **Contacts Prior to Work**

Dr. Waseem Khalifa, Ph. D., P.E.

District Bridge Engineer

2201 Reiser Avenue SE

New Philadelphia, OH 44663

(330) 308-7873

Point of contact for immediate action such as closing the bridge due to findings)

Contact Bridge Owner _____14_____ (number) days before the proposed underwater inspection.

Special contracting and scheduling procedures prior to inspection, include recommended lead time

Entity	Contact Name and Title	Contact Phone	Lead Time
Coast Guard	N/A	N/A	N/A
Property Owner	N/A	N/A	N/A
Access Equipment	N/A	N/A	N/A
Lake or River draw-down	N/A	N/A	N/A
Canal dry time	N/A	N/A	N/A
Tree removal	N/A	N/A	N/A
Other:	N/A	N/A	N/A
Other:	N/A	N/A	N/A

IV. **Dive Team Shall Include the Following:**

Dive Team Narrative:

The structure shall be investigated using a three-member dive team: one dive supervisor to monitor communications and air supply while taking notes, one diver, and one tender/standby diver. There shall be one NBIS Team Leader onsite at all times.

Example: The Bridge shall be investigated using a three-member dive team: one supervisor to monitor rack box and take notes, one diver, and one tender/standby diver. There shall be one NBIS Team Leader onsite at all times.

V. Site Information

Navigable waterway:	Y / **N**	Anticipated current	___0___ ft
If Yes, waterway river point	_____	Scour Critical (item 113):	___8_____
Anticipated water visibility depth	__1___ ft	POA in place: Y/**N**	
Anticipated Dive depth	__2___ ft	Scour Monitoring devices present: Y/**N**	

Verify the Scope of Services when work is contracted for the procedure for underwater elements that are not in water during an inspection.

Site Information Narrative:

The underwater inspection consists of a visual and tactile examination of the accessible surfaces of the substructure items in water. Additional items should reference the scope of services in the contract. For reference the following items are in water:

Item	Number of Units	Level of Inspection (1, 2 or 3) with Commentary
Piers and Number of Columns		
Abutment		
Culvert	1	100% Level 1 10% Level 2
Scour Countermeasures		
Fenders or Dolphins		

Photographs should be taken, if water clarity permits, for typical conditions, conditions that have changed since last inspection and significant or noteworthy deficiencies. The type of channel bottom material, the presence or extent of scour, the presence or extent of riprap, the presence or extent of drift and debris, and the location of any foundation exposure or undermining shall be quantified. Include depth, length, height and location of deficiencies.

VI. **Equipment and Field Logistics**

a. The inspection should be conducted using:

____Chest waders

__X__Hip waders

__X__Diving equipment

____SCUBA (Note that ADCI Consensus Standards require communication systems be employed for both SCUBA and Surface-Supplied (whether air or mixed-gas) dive modes)

____SCUBA with communication

__X__Surface Supplied with communication

b. The channel bottom should be sounded utilizing

____Digital fathometer

__X__Telescoping survey rod

____ acoustic imaging

c. During the inspection, the divers should work from

__X__Shore

____Boat

____Either

The note taker should work alongside the dive team.

d. Access to the waterway should be obtained from the shore (north bank, southwest quadrant, driveway 30 yards north etc.)

GRAVEL ROAD EAST OF STRUCTURE. PARK AT (40.182556, -80.908290). AND HIKE THROUGH GULLY.

e. The maximum depth of the channel is typically measured 2.1 feet from THE MIDPOINT OF THE NORTH SIDE OF THE SOUTH HEADWALL

Reference Datum BOTTOM OF HORIZONTAL TIMBER FRAMING AT THE SOUTH END OF THE TUNNEL

Soundings should be dictated by the scope of work. When not detailed in the scope they should be repeated from the previous soundings. If neither exist then they need to be taken in a grid pattern between substructure units 100’ upstream and 100’ downstream.

VII. Inspection Procedure History

Created: COLLINS ENGINEERS, INC. Date: 11/8/2023

Updated By: COLLINS ENGINEERS, INC. Date: 9/12/2024

Updated By: _____ Date: _____

Updated By: _____ Date: _____

Updated By: _____ Date: _____

Updated By: _____ Date: _____

VIII. Other Narrative Not Included In Previous Sections