UNDERWATER BRIDGE INSPECTION REPORT

NBI Item 60 Rating: 7
NBI Item 61 Rating: 6
NBI Item 113 Rating: 5

Bridge Number: TUS-258-0042
Inspection Date: 9/22/2012
Division: District 11
River: Tuscarawas River

Engineer of Record: David Reser
Team Leader: Fred Meek
Substructures Inspected: Piers 2, 3 and 4
Team Members:
FHM, FHM, RSF, TLH

STATE OF OHIO
DAVID R. RESER
E-73878
REGISTERED
PROFESSIONAL ENGINEER
11/16/12

Signature/Seal

Summary of Scour and Channel Conditions:
There are localized scour holes noted at the upstream end of Piers 2 and 3. The top of the footing is also exposed at the upstream end of Pier 4.

The timber debris noted at Piers 2 and 3 is beginning to restrict the channel and may impact flow.

Summary of Structural Conditions:
The inspected substructure units are in good condition. There are no significant defects present below the high waterline. Light to moderate timber debris is noted at Piers 2 through 4. Refer to Photos 1 and 2 for overall views of the bridge and substructure configuration.

Summary Evaluation of Previous Corrective Actions:
There have been no corrective actions performed on the inspected substructure units since the previous underwater bridge inspection.

Summary of Repair Recommendations:
Remove the timber debris noted at Piers 2 through 4 to prevent further build-up and localized scour.

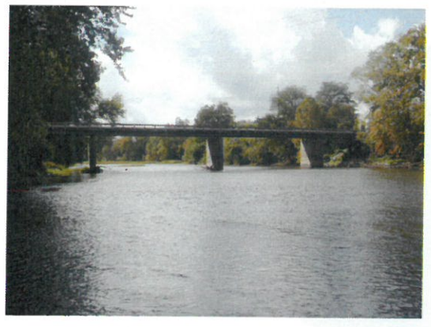

Route: SR 258
Inventory Direction: South to North
County: Tuscarawas
Location: Southeast of Newcomerstown, OH
Bridge Length: 372.78 FT
Superstructure Type: Steel Multi-Beam
Substructure Type: CIP Concrete Pier Wall
Foundation Type: Rein Con Piles/Steel H-Piles
Total Substructure Units: 6
Substructure Units in Water: 3
Deepest Water Depth: 6 FT
Water Velocity: 0.5 FPS
Underwater Visibility: 1 FT
Water Temperature: 65 °F

Attachments Included:
A - Drawings
B - OHIO FORM BR86

NBI Item 60 Rating: 7
NBI Item 61 Rating: 6
NBI Item 113 Rating: 5

Bridge Number: TUS-258-0042
Inspection Date: 9/22/2012
Division: District 11
River: Tuscarawas River

Channel Evaluation:
The channel is in overall satisfactory condition. No problems are noted within the channel embankments. Both the North and South embankments under the bridge consists of well established vegetation. Large rip rap and rock protection is also noted along the North embankment. Refer to Photo 5.

The upstream and downstream channel is well defined and lined with established vegetation. Refer to Photos 3 and 4.

The channel bottom consists of sand, gravel and rock. Large rip rap protection is also noted along the downstream end of Pier 4.

The channel flows to the West under the bridge.

Scour Conditions:
There is light to moderate timber debris noted adjacent Piers 2, 3 and 4. A moderate debris pile is noted along the upstream nose and a large, 12" D, tree with numerous vegetated limbs is noted along the downstream nose of Pier 2. Refer to Photo 6. Moderate timber is noted adjacent Pier 3. The timber debris starts approximately 20' upstream of the pier nose and extends from the channel bottom to 6' above the waterline. The timber pile continues along the North and South face of the pier extending past the downstream (East) pier nose approximately 25'. A light timber debris pile is also located along the North face of Pier 4.

Two (2) groups of four (4) wooden piles are located within Span 3. One group is noted at the downstream, Northwest corner, of Pier 2 and the other is located along the South face of Pier 3. The wooden piles extend approximately 2' above the channel bottom. Refer to Photo 7.

A 2' L x 2' W x 2'-4" D scour hole is located at the Southeast corner of Pier 2 and a 7' Diameter x 2' D scour hole is located at the upstream nose of Pier 3. No exposed footing is noted at either location. The Pier 4 footing is exposed at the Southeast corner. Refer to Photo 8. The footing extends approximately 20' downstream along the South face for a 3' W, approximately 14" upstream from the edge of the pier nose and 4' along the East face in the North direction. The footing is exposed up to 10" H at the Southeast corner.

Substructure Condition:
Piers 2 through 4 have light scaling, up to 1/4" D, with moderate algae growth noted along the entire pier surface. This scaling and algae begins approximately 7' above the channel mud line and continues to the channel bottom.

Repair Recommendations:
No structural repairs are required at this time. Remove the timber debris accumulation at Piers 2 through 4 to prevent accumulation of additional drift and debris and further localized scour holes from forming.

UNDERWATER BRIDGE INSPECTION REPORT

NBI Item 60 Rating: 7
NBI Item 61 Rating: 6
NBI Item 113 Rating: 5

Bridge Number: TUS-258-0042
Inspection Date: 9/22/2012
Division: District 11
River: Tuscarawas River

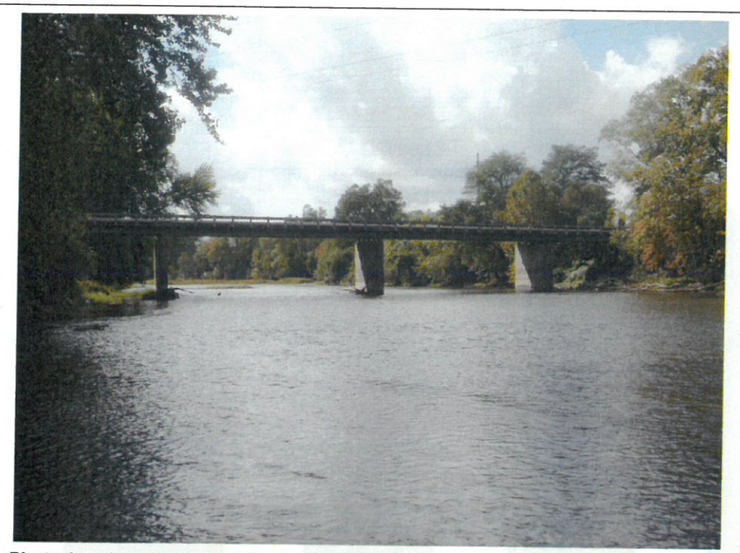

Photo 1 - Upstream (East) Fascia - Looking West



Photo 2 - Pier 3 - Typical Pier Configuration

UNDERWATER BRIDGE INSPECTION REPORT

NBI Item 60 Rating: 7
NBI Item 61 Rating: 6
NBI Item 113 Rating: 5

Bridge Number: TUS-258-0042
Inspection Date: 9/22/2012
Division: District 11
River: Tuscarawas River



Photo 3 - Channel View Looking Upstream (East)



Photo 4 - Channel View Looking Downstream (West)

NBI Item 60 Rating: 7
NBI Item 61 Rating: 6
NBI Item 113 Rating: 5

Bridge Number: TUS-258-0042
Inspection Date: 9/22/2012
Division: District 11
River: Tuscarawas River

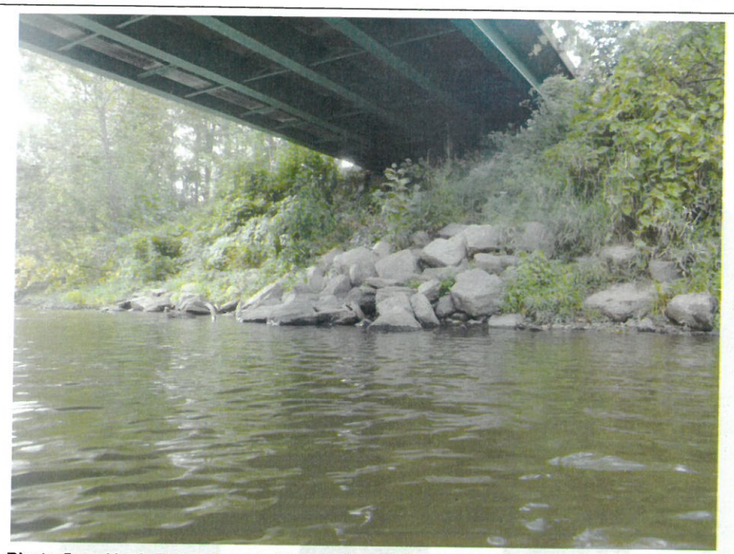

Photo 5 - North Embankment - Typical Condition



Photo 6 - Pier 2 - Moderate Timber Debris Pile at Upstream Nose

NBI Item 60 Rating: 7
NBI Item 61 Rating: 6
NBI Item 113 Rating: 5

Bridge Number: TUS-258-0042
Inspection Date: 9/22/2012
Division: District 11
River: Tuscarawas River



Photo 7 - Pier 3, South face - Exposed, Abandoned Wooden Piles

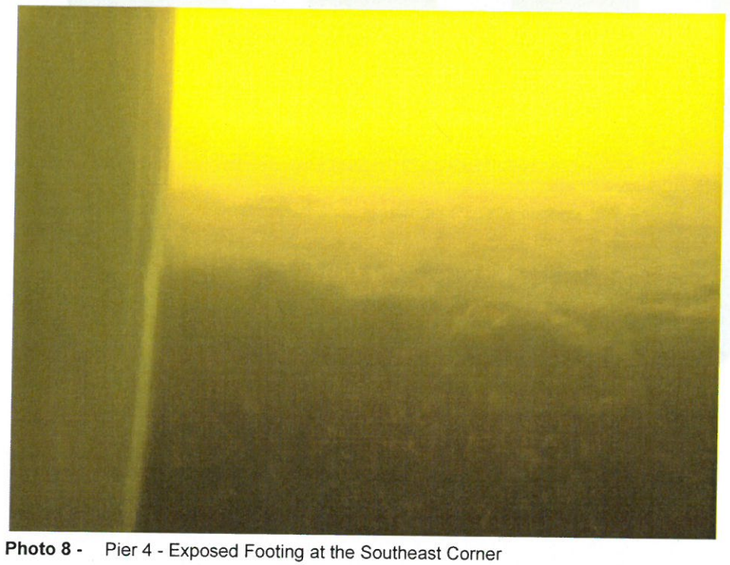

Photo 8 - Pier 4 - Exposed Footing at the Southeast Corner

UNDERWATER BRIDGE INSPECTION REPORT

NBI Item 60 Rating: 7
NBI Item 61 Rating: 6
NBI Item 113 Rating: 5

Bridge Number: TUS-258-0042
Inspection Date: 9/22/2012
Division: District 11
River: Tuscarawas River

INSPECTION SOUNDING DATA

Station	(L)	(R)
Pier 1	0.00	0.00
Span 2, 1/4	0.00	0.00
Span 2, 1/2	0.00	0.00
Span 2, 3/4	0.00	783.34
Pier 2	783.64	783.44
Span 3, 1/4	782.44	781.84
Span 3, 1/2	781.04	781.24
Span 3, 3/4	779.94	780.64
Pier 3	780.74	777.94
Span 4, 1/4	777.84	777.64
Span 4, 1/2	776.14	777.54
Span 4, 3/4	776.64	777.54
Pier 4	780.94	777.74
Span 5, 1/4	781.84	781.54
Span 5, 1/2	0.00	0.00
Span 5, 3/4	0.00	0.00
Abutment 2	0.00	0.00

All sounding data is presented in elevations referenced to the construction plans. If plans were not provided, a reference datum of 100.00 was used.

Soundings are measured in feet along the fascias and referenced to the downstream top of the Pier 4 cap.

The waterline is located 19.0' below the top of Pier 4, downstream (West) side. This measurement corresponds to ELEV 783.64.

0.00 equates to a dry channel sounding.

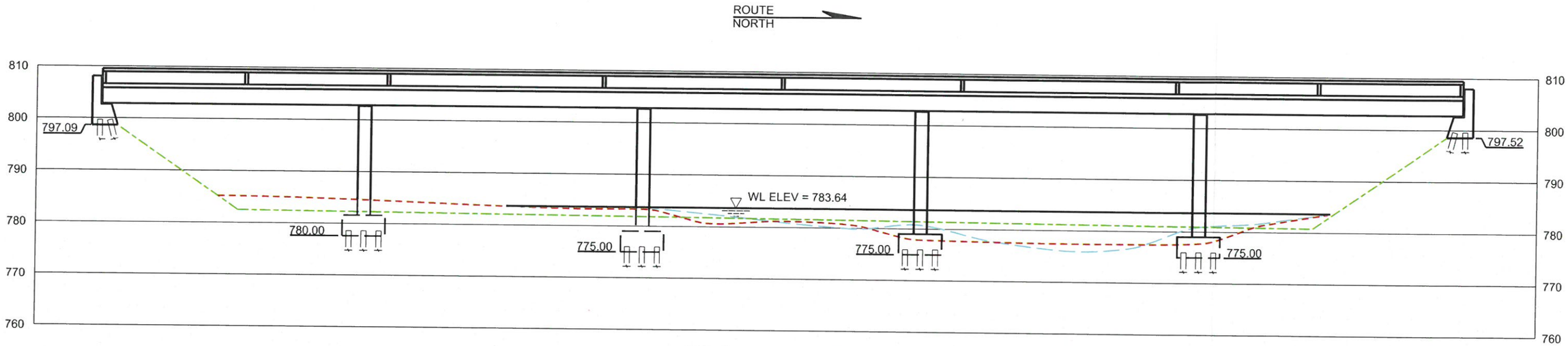

EAST ELEVATION

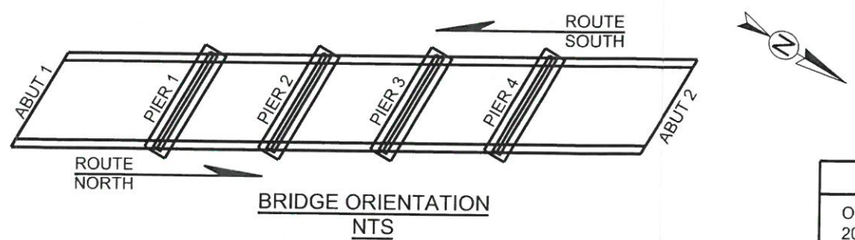

BRIDGE ORIENTATION
NTS

GENERAL NOTES:

1. AT THE TIME OF INSPECTION ON 09/22/2012, THE WATERLINE WAS LOCATED 19.0 FEET BELOW THE TOP OF PIER 4, DOWNSTREAM (WEST) SIDE. THIS MEASUREMENT CORRESPONDS TO A WATERLINE ELEVATION OF 783.64

2. REFER TO THE INSPECTION SOUNDING DATA FOR DETAILED CHANNEL BOTTOM ELEVATIONS.

CHANNEL PROFILE LEGEND	
ORIGINAL	- - - - -
2012 - UPSTREAM FASCIA	— — —
2012 - DOWNSTREAM FASCIA	- - - - -

GRAPHIC SCALE MEASURED IN FEET 0 20 40 1" = 20'	DATE SEP, 2012	200 East Campus View Blvd. Suite 200 Columbus, Ohio 43235 PH.: 614.310.3048 INFRASTRUCTURE ENGINEERS, INC.	SR 258 OVER TUSCARAWAS RIVER BRIDGE NO. TUS-258-0042 PROFILE SHEET PAGE A-1

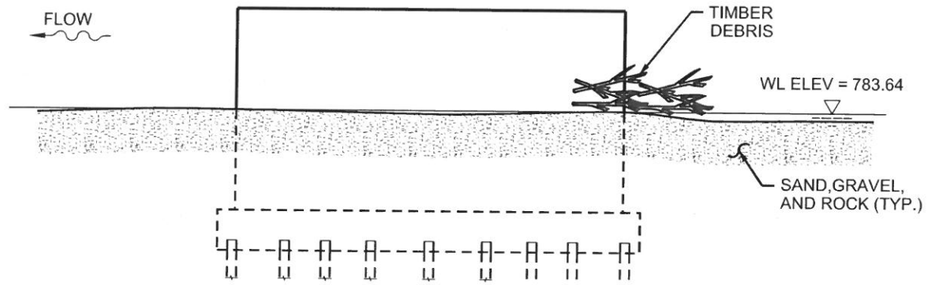

SOUTH ELEVATION

PIER 2

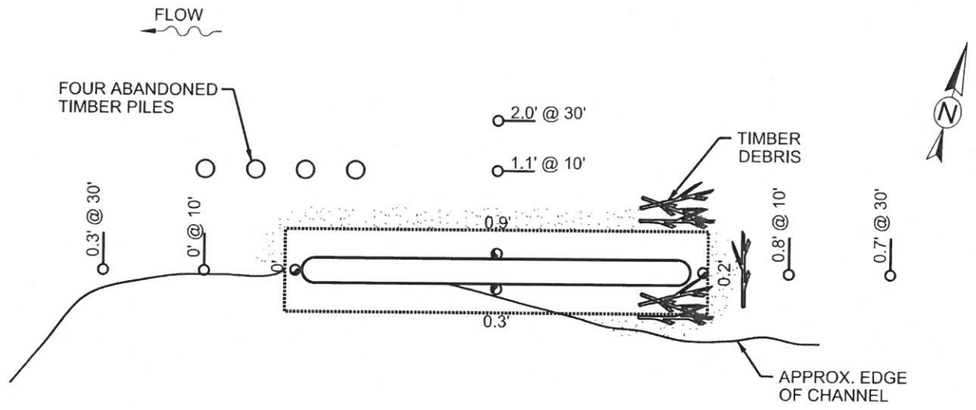

PLAN - PIER 2

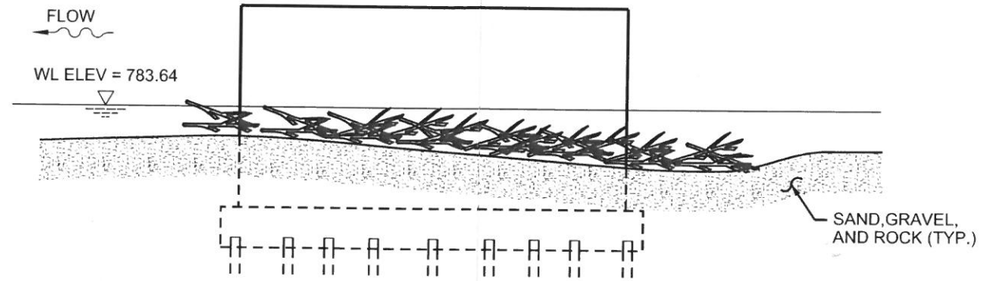

SOUTH ELEVATION

PIER 3

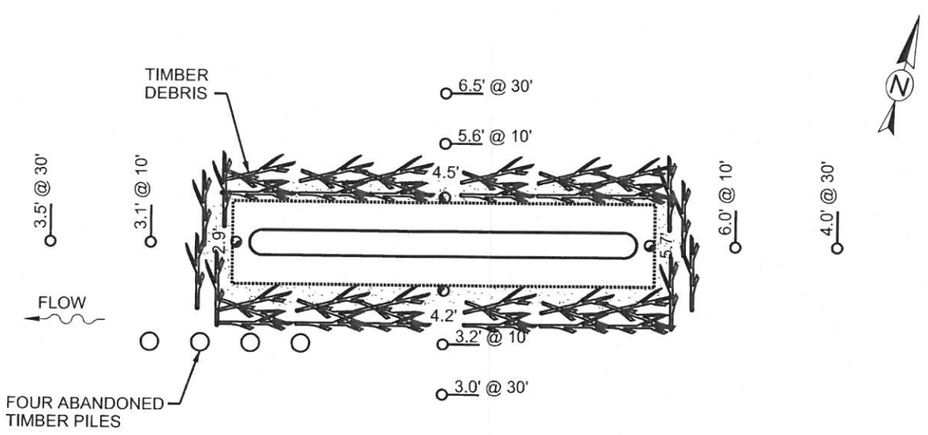

PLAN - PIER 3

LEGEND:

7.1'	SOUNDING LOCATION AND DEPTH AT PIER
2.0' @ 20'	SOUNDING LOCATION AND DEPTH AT OFFSET DISTANCE

GRAPHIC SCALE MEASURED IN FEET 0 15 30 1" = 15'	DATE SEPT, 2012	200 East Campus View Blvd. Suite 200 Columbus, Ohio 43235 PH.: 614.310.3048 INFRASTRUCTURE ENGINEERS, INC.	SR 258 OVER TUSCARAWAS RIVER BRIDGE NO. TUS-258-0042 PIERS 2 AND 3

LEGEND:

7.1' — SOUNDING LOCATION AND DEPTH AT PIER

2.0' @ 20' — SOUNDING LOCATION AND DEPTH AT OFFSET DISTANCE

is View Blvd. :00 hio 43235 10.3048 CTURE S, INC.	SR 258 OVER TUSCARAWAS RIVER BRIDGE NO. TUS-258-0042	
	PIER 4	PAGE A-3

OHIO DEPARTMENT OF TRANSPORTATION

BRIDGE INSPECTION REPORT

STRUCTURE FILE NUMBER	CO	ROUTE	UNIT	YEAR BUILT
7 9 0 5 4 9 1	T U S	2 5 8	0 0 4 2	

DIST 1 1 BRIDGE TYPE 3 2 2 TYPE OF SERVICE 1 5

DECK			
1. Floor		2. Wearing Surface	
3. Curbs, Sidewalks & Walkways		4. Median	
5. Railing		6. Drainage	
7. Expansion Joints		**8. SUMMARY**	
SUPERSTRUCTURE			
9. Alignment of Members		10. Beams/Girders/Slab	
11. Diaphragms or Cross frames		12. Joists/Stringers	
13. Floorbeams		14. Floorbeam Connections	
15. Verticals		16. Diagonals	
17. End posts		18. Upper Chord	
19. Lower Chord		20. Gusset Plates	
21. Lateral Bracing		22. Sway Bracing	
23. Portals		24. Bearing Devices	
25. Arch		26. Arch Columns or Hangers	
27. Spandrel Walls		**28. Protective Coating System (PCS)**	
29. Pins/Hangers/Hinges		30. Fatigue Prone Detail (E & E')	
31. Live Load Response *(E or S)*		**32. SUMMARY**	
SUBSTRUCTURE			
33. Abutments		34. Abutment Seats	
35. Piers	1	36. Pier Seats	
37. Backwalls		38. Wingwalls	
39. Fenders and Dolphins		40. Scour *(Insp Type – 1, 2, 3)*	3 1
41. Slope Protection	1	**42. SUMMARY**	7
CULVERT			
43. General		44. Alignment	
45. Shape		46. Seams	
47. Headwall or Endwalls		48. Scour *(Insp Type - 1,2,3)*	
49. Abutments		**50. SUMMARY**	
CHANNEL			
51. Alignment	1	52. Protection	1
53. Hydraulic Opening	2	**54. SUMMARY**	6
APPROACHES			
55. Pavement		56. Approach Slabs	
57. Guardrail		58. Relief Joint	
59. Embankment		**60. SUMMARY**	
GENERAL			
61. Navigation Lights		62. Warning Signs	
63. Sign Supports		64. Utilities	
65. Vertical Clearance *(1, 2-change, N)*		66. **General Appraisal** & Operational Status	

67. Inspected By, First & Last Name: FRED MEEK

PE Number

Date 1 0 2 5 1 2

68. Reviewed By, First & Last Name: DAVID RESER

PE Number 7 3 8 7 8

Date 11 1 6 12

69. Survey (1, 0, N)