J. Newell

OHIO DEPARTMENT OF TRANSPORTATION
DIVISION OF HIGHWAYS

FHWA REGION	STATE	FEDERAL PROJECT	
5	OHIO	FR-000F(9)	

1/15

~~Need~~ BR 87 Made 12-10-85

PLAN NO. BR-23-85

BEL-148-1606,2513
HAS-250-1763 TUS-250-1232R

PART	COUNTY	ROUTE	BRIDGE Nº	PROJECT TERMINII BEGIN	PROJECT TERMINII END	NET LENGTH MILES	TOWNSHIP	CITY	VILLAGE
1	BEL	148	1606			0.00	Washington		
2	BEL	148	2513			0.00	York		
3	HAS	250	1763			0.00	Cadiz		
4	TUS	250	1232R			0.00	Goshen		

BRIDGE DECK OVERLAYS

The Standard 19 85 Specifications of the State of Ohio, Department of Transportation, including changes and Supplemental Specifications listed in the plans and proposal shall govern these improvements.

I hereby approve these plans and declare that the making of these improvements will require the closing of the highways to traffic on Parts No. _____ and that detours will be provided by State forces. The closing to traffic of the highways will not be required on Parts No. 1,2,3,4 and provisions for the maintenance and safety of traffic will be as indicated in the proposal.

Approved Date 4/16/85 — District Deputy Director of Transportation

AJM Approved Date 4-29-85 — Walter J. Jestings JDR, Engineer of Bridges

Approved Date _____ [redacted]

JEB Approved Date 5-2-85 — James R. Longenecker, Chief Engineer, Operations

Approved Date _____ [redacted]

Approved Date _____ [redacted]

Approved Date _____ [redacted]

Approved Date _____ [redacted]

Approved Date 5-2-85 — Warren A. Smith, Director, Department of Transportation

DEPARTMENT OF TRANSPORTATION
FEDERAL HIGHWAY ADMINISTRATION

APPROVED:

DIVISION ADMINISTRATOR _____ DATE _____

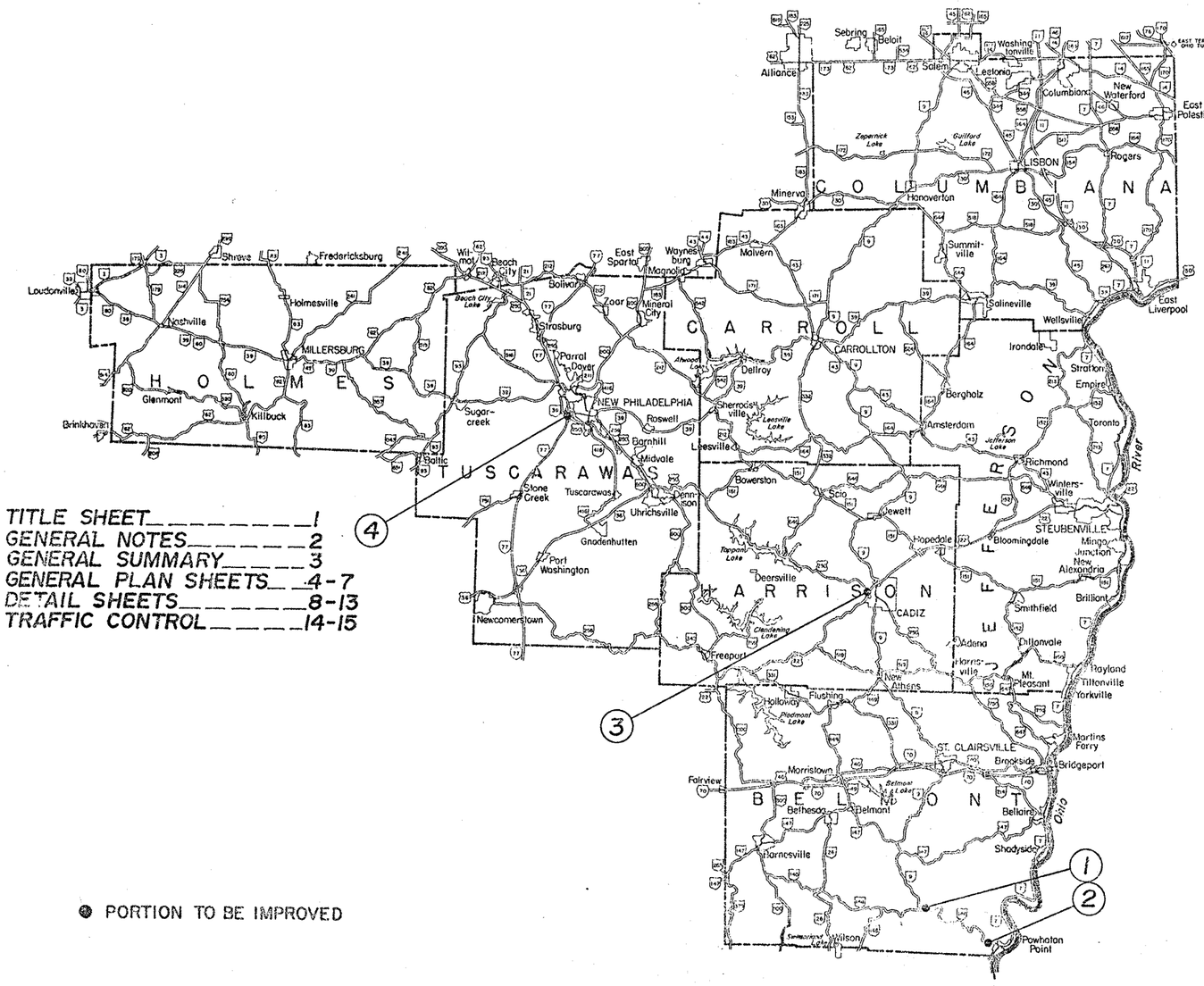

TITLE SHEET _____ 1
GENERAL NOTES _____ 2
GENERAL SUMMARY _____ 3
GENERAL PLAN SHEETS _____ 4-7
DETAIL SHEETS _____ 8-13
TRAFFIC CONTROL _____ 14-15

● PORTION TO BE IMPROVED

STANDARD DRAWINGS		SUPPLEMENTAL SPECIFICATIONS	
BP-5	1-11-85		
GR-1	1-11-85	845	1-13-84
GR-3	1-21-85	953	8-21-80
BR-1	5-29-79	824	10-8-82
GR-2B	2-5-82	853	6-26-78
		956	6-26-78

703(85)

BEL-148-1606,2513 HAS-250-1763 TUS-250-1232R

7-23-85

BEL-148-1606,2513
HAS-250-1763
TUS-250-1232R

2/15

PLAN NO. BR-23-85

M & R 695

GENERAL NOTES

ALIGNMENT AND PROFILE:

The work proposed by this project is for the resurfacing and bridge rail modifications. The alignment of the existing pavement will not be changed, and the profile of the proposed surface will be similar to that of the existing pavement except that it will be raised an amount equal to the thickness of the resurfacing courses specified in these plans.

ESTIMATED QUANTITIES:

Specific locations and usage of the estimated quantities set up on this plan to be used "as directed by the Engineer" shall be made a matter of record by incorporation into the Final Change Order governing completion of this project. Estimated quantities of materials shall not be ordered for delivery to the project unless authorized by the Engineer.

ITEM 404 - ASPHALT CONCRETE (FINISH COURSE):

Item 404 - Asphalt Concrete shall be placed on the approaches from face to face of the curbs or from edge to edge of the paved shoulders. Quantities included in Item 404 are to feather the raised bridge deck wearing surface to the existing roadway pavement.

ITEM 407 - TACK COAT:

The Tack Coat operation shall be as determined at a PRE-CONFERENCE as per Section 407.05, and application rate shall not exceed 0.05 gal. per square yard. The Tack Coat shall be applied only on the approach roadway where Item 404 Asphalt Concrete is to be placed.

FULL DEPTH REPAIR:

A quantity has been set up for [illegible] Full Depth Repair, but is subject to non-performance by the Engineer, if found not to be required.

REPLACEMENT OF EXISTING REINFORCING STEEL:

Any existing reinforcing bars which are to be incorporated into the new work and which are made unusable by the Contractor's concrete removal operations shall be replaced with new steel at his cost. Any existing reinforcing bars deemed by the Engineer to be unusable because of corrosion shall be replaced with new steel. An allowance of 100 lbs. is included in Item 509 for this purpose.

ITEM 614 - MAINTAINING TRAFFIC:

Generally the Contractor shall conduct his operations as to make the proposed deck repair with a minimum of hazard, delay and inconvenience to the motorists using the highway affected by the work done under this contract; furthermore, the following specific provisions are mandatory.

I. NOTIFICATION

Since functional traffic control is a major concern on this project it is essential that the motoring public be adequately forwarned of future lane closures and traffic constrictions. Therefore, the Contractor shall submit a schedule to O.D.O.T. indicating the location and date of each lane closure at least three days prior to the implementation of any such closures.

II. TRAFFIC CONTROL SYSTEMS (WHEN REQUIRED):

Whenever any part of the traveled surface is being worked upon or is otherwise not suitable for safe and convenient use by vehicles, traffic control devices sufficient to protect such areas to assure the safe and convenient passage of vehicular traffic shall be installed and maintained. Such traffic control devices and the manner in which they are used shall be consistant with these plans and the Ohio Manual of Uniform Traffic Control for Streets and Highways, Current Edition, Latest Revision. Hereinafter referred to as the "Manual".

Whenever the Engineer deems it necessary especially where a grade, curve or merge condition exists, he may direct that additional or alternative devices be used. Also the Contractor shall provide sufficient additional barricades, etc. to protect the fresh concrete during the curing period from any vehicles which drive around or through the traffic control.

III. ITEM 404 - BITUMINOUS CONCRETE FOR MAINTAINING TRAFFIC (SEE NOTE IN PROPOSAL):

This item shall be used to construct temporary ramps to the vertical raisings of the structural expansion joints. It shall also be used to repair berms which are damaged during the closure. The ~~[illegible]~~ estimated quantity is included in the general summary for the maintenance of traffic as outlined above, to be used as directed by the Engineer on all parts of this project.

NOTE: "No traffic shall be permitted on any portion of the deck which has been machine scarified."

IV. PROTECTION SHIELDS:

In accordance with CMS Section 107.07, the Contractor shall install and maintain suitable shields between his operations and open traffic lanes under the structure, where required by the Engineer.

The shields shall be of a type and construction approved by the Engineer, to prevent materials from dropping onto lanes open to traffic. Payment for the shields shall be included in the lump sum price bid for Item 614, Maintaining Traffic.

ITEM 202 - WEARING COURSE REMOVED:

In addition to the reqirements of 202 this item shall include the removal of the existing asphalt concrete from the bridge decks and approaches. The limits of removal for the approaches shall be equal to the limits of new approach asphalt concrete to be placed as shown on the General Plan sheets. The thickness of removal on the approaches shall be equal to the thickness removed from the decks.

EXISTING STRUCTURE VERIFICATION:

Details and dimensions on these plans pertaining to the existing structure have been obtained from plans of the existing structure and/or from field observations and measurements. Consequently, they are indicative of the existing structure and the proposed work but they shall be considered tenative and approximate. The Contractor is referred to CMS Sections 102.05, 105.02 and 513.02. Contract bid prices shall be based upon a prebid examination of the existing structure by the Contractor. However, all project work shall be based upon actual details and dimensions which have been varified by the Contractor in the field.

ITEM SPECIAL - SEALING CONCRETE SURFACES:

Specified concrete surfaces to be sealed using either silane or an epoxy sealer shall be as shown on the Typical Sections for each bridge. See Proposal Note for specifications

NOTE: See Sheet 8 for additional notes on Bridge No. TUS-250-1232R.

WORK LIMITATIONS: No concrete deck overlays shall be placed between October 15 and May 1. The contractor shall schedule the work so that all deck overlays are placed before Oct. 15. If for some unforeseen circumstances the deck overlays or portions of deck overlay are not placed before Oct. 15, regardless of the work remaining, the full depth repairs shall be completed as per 511 and the unfinished deck shall be resurfaced with Item 404 asphalt concrete and opened to traffic. The contractor shall place and maintain at his expense the asphalt wearing surface until removed at his expense the following spring when the deck overlay can be placed after May 1.

BEL-148-1606,2513,HAS-250-1763,TUS-2504232R

3/15

PLAN NO. BR-23-85

* See Proposal Note

GENERAL SUMMARY

ITEM	Sht. Nº / Part Nº	2		4 / 1 / X031	5 / 2 / Xo31	6 / 3 / X231	7 / 4 / X431	GRAND TOTAL	UNIT	DESCRIPTION
202					1667	1574	3790	7031	SQ.YD.	Wearing course removed
202							50	50	LIN.FT.	Guardrail removed for storage
404				5.1	17.4	19.3	2.3	45	CU.YD.	Asphalt concrete, AC-20
404		4						4	CU.YD.	Bituminous concrete for maintaining traffic
407				18	21	23	3	65	GALS.	Tack coat
407				1	1	2	1	5	TONS	Cover aggregate
509		100						100	LBS.	Reinforcing steel
516				81	93	94		268	LIN.FT.	Vertical extension of structural expansion joints, modified as per plan
516							289	289	LIN.FT.	Structural expansion joint, including elastomeric strip seals, as per plan
517							1474	1474	LIN.FT.	Railing, faced, as per plan
606							4	4	EACH	Bridge terminal assembly, Type A
606							50	50	LIN.FT.	Guardrail, Type 5
845				742	1250	1111		3103	SQ.YD.	Latex modified concrete overlay (1-1/4" thick)
845				30	61	27		118	CU.YD.	Latex modified concrete overlay (variable thickness)
845				2	6	8		16	CU.YD.	Full depth repair
SPECIAL							3929	3929	SQ.YD.	Superplasticized dense concrete overlay (1-3/4" thick)*
SPECIAL							48	48	CU.YD.	Superplasticized dense concrete overlay (variable thickness)*; see General Notes
SPECIAL							9	9	CU.YD.	Full depth repair *
SPECIAL				128	937	565	823	2453	SQ.YD.	Sealing of concrete surfaces *
SPECIAL				192				192	SQ.FT.	Steel drip strip, as per plan
614		LUMP						LUMP	SUM	Maintaining traffic
624								LUMP	SUM	Mobilization

DEPARTMENT OF TRANSPORTATION
M& R 712 REV. 9-1-83

BEL-148-1606,2513
HAS-250-1763
TUS-250-1232R

4/15

PLAN NO. BR-23-85

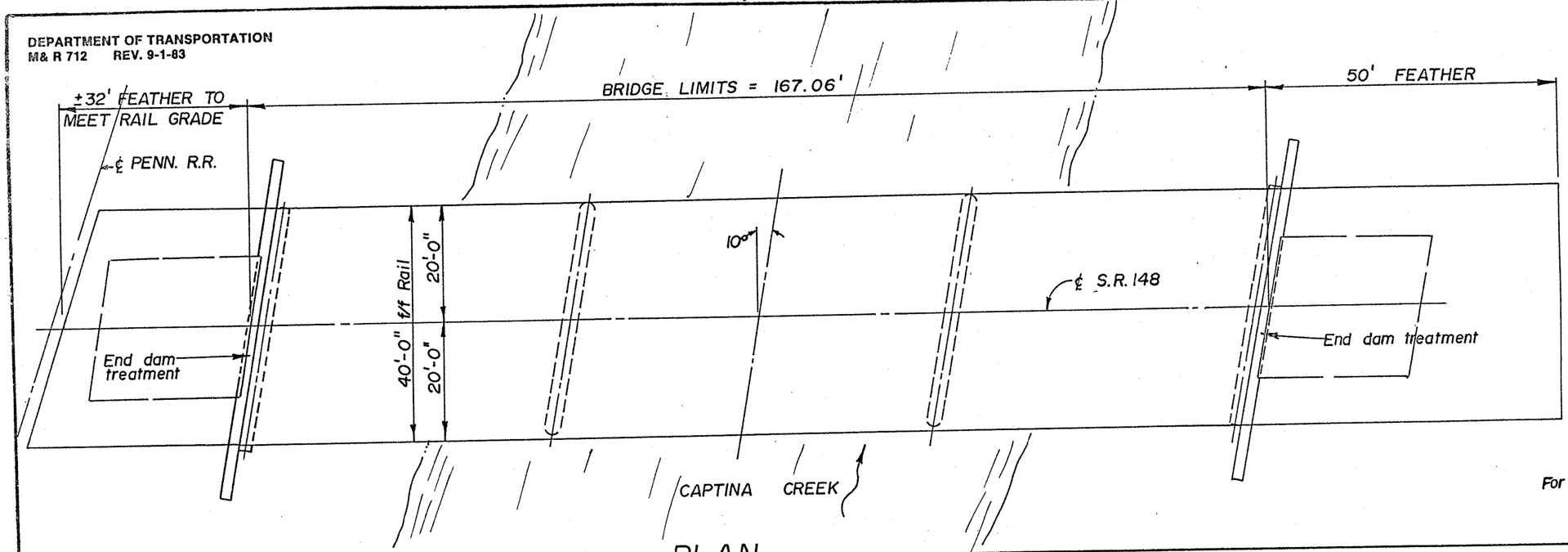

PLAN

For End Dam details see sheet 13 .

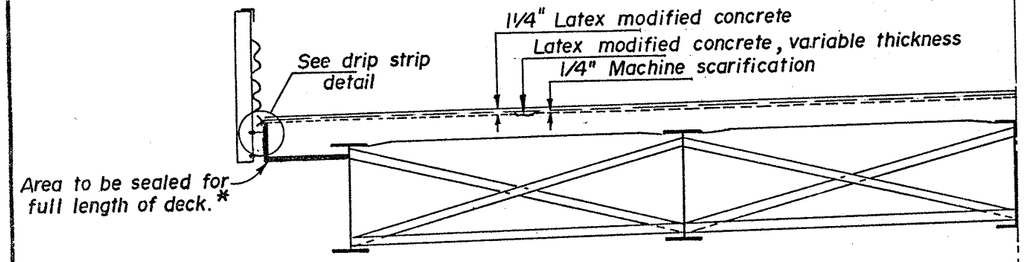

TYPICAL HALF SECTION

*Sealer shall be either silane or an epoxy sealer, see Proposal for surface preparation, application rates, material requirements and application procedures.

BRIDGE QUANTITIES

ITEM	TOTAL	UNIT	DESCRIPTION
404	5.1	CU.YD.	Asphalt concrete, AC-20 (Feather 1" to 0")
407	18	GAL.	Tack coat (0.05 gal./sq.yd.)
516	81	LIN.FT.	Vertical extension of structural expansion joint, modified as per plan
845	2	CU.YD.	Full depth repair
845	30	CU.YD.	Latex modified concrete overlay, variable thickness
845	742	SQ.YD.	Latex modified concrete overlay, 1 1/4" thick
SPECIAL	128	SQ.YD.	Sealing of concrete surfaces (See Proposal Note)
SPECIAL	192	SQ.FT.	Steel drip strip, as per plan
407	1	TON	Cover aggregate (7 lb./s.y.)

QUANTITIES carried to GENERAL SUMMARY

STATE OF OHIO
DEPARTMENT OF TRANSPORTATION
DIVISION OF HIGHWAYS
BUREAU OF MAINTENANCE

GENERAL PLAN, QUANTITIES & TYPICAL SECTION

BRIDGE Nº BEL-148-1606
OVER CAPTINA CREEK

CALC. VRG	DATE 1-18-85	REVIEWED DATE	REVISED
CHKD. JLO	DATE 2-1-85		

DEPARTMENT OF TRANSPORTATION
M& R 712 REV. 9-1-83

BEL-148-1606, 2513
HAS-250-1763 TUS-250-1232R

5/15

PLAN NO. BR-23-85

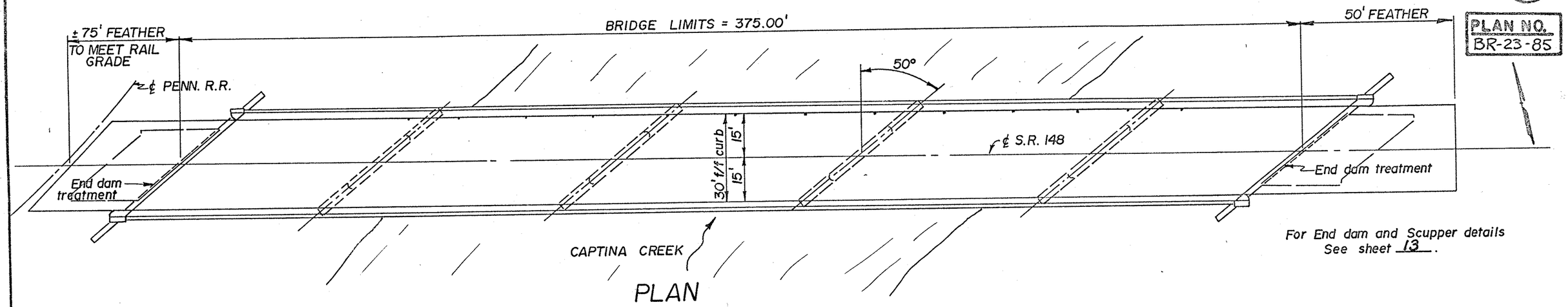

PLAN

For End dam and Scupper details
See sheet 13.

BRIDGE QUANTITIES

ITEM	TOTAL	UNIT	DESCRIPTION
404	17.4	CU.YD.	Asphalt concrete, AC-20 (Feather 1" to 2")
407	21	GAL.	Tack coat (0.05 gal./sq.yd.)
407	1	TON.	Cover aggregate (7 lbs./sq.yd.)
516	93	LIN.FT.	Vertical extension of structural expansion joint, modified as per plan
845	6	CU.YD.	Full depth repair
845	61	CU.YD.	Latex modified concrete overlay, variable thickness
845	1250	SQ.YD.	Latex modified concrete overlay, 1 1/4" thick
SPECIAL	937	SQ.YD.	Sealing of concrete surfaces (See Proposal Note)
202	1667	SQ.YD.	Wearing course removed

QUANTITIES carried to GENERAL SUMMARY

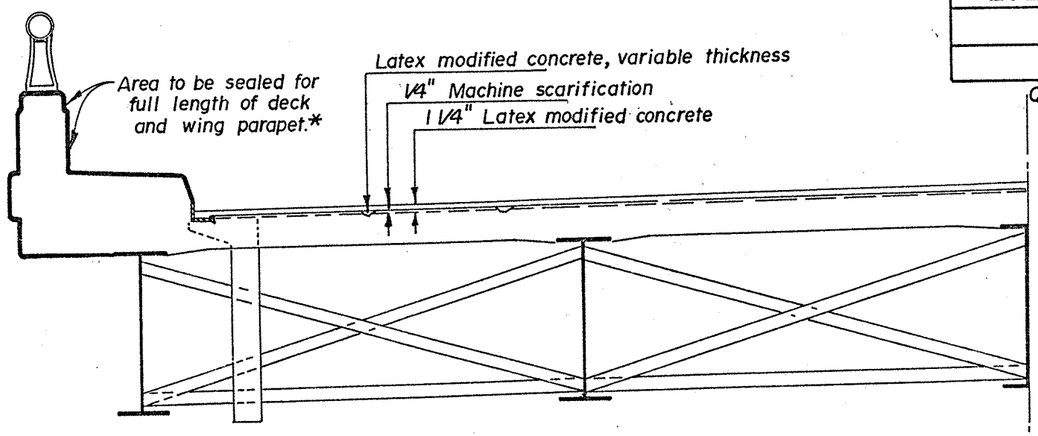

TYPICAL HALF SECTION

* Sealer shall be either silane or an epoxy sealer, see Proposal for surface preparation, application rates, material requirements and application procedures.

STATE OF OHIO
DEPARTMENT OF TRANSPORTATION
DIVISION OF HIGHWAYS
BUREAU OF MAINTENANCE

GENERAL PLAN, QUANTITIES & TYPICAL SECTION

BRIDGE Nº BEL-148-2513
OVER CAPTINA CREEK

CALC. WRG	DATE 1-18-85	REVIEWED	DATE	REVISED
CHKD. JLO	DATE 2-1-85			

BRIDGE NOTES FOR TUS-250-1232R

8/15

PLAN NO. BR-23-85

PROPOSED WORK

Remove portions of existing and face railings as per plan.
Remove bituminous wearing course and place proposed overlay.
Modify existing end dam and install new strip seals.
Replace bridge terminal connections and place approach paving.

ITEM 517, RAILING, FACED, AS PER PLAN

The Contractor shall carefully remove the existing aluminum railing and stack it neatly along the right-of-way for subsequent pick up by State forces. Portions of the concrete safety curb, parapet and/or deck and the protruding leg of the bulb angle shall be removed as necessary to complete the work. We need to pick up

All loose and unsound concrete of the area to be faced shall be removed. The remaining sound concrete shall then be scabbled. The parapet and curb of the wingwalls shall be removed sufficient to face the railing to match that shown for Standard Drawing BR-1, and holes drilled for guardrail anchors, at the abutments.

¼" diameter holes, 6" deep(min) shall be drilled at 1'-3" c/c or 2'-6" c/c as shown on the Typical Section. The holes shall be thoroughly cleaned of all dust and other deleterious material.

The grout shall consist of cement and water using Type I, Type III or shrinkage compensating cement. Clean holes shall be saturated thoroughly with water for a minimum of 5 min. prior to placing grout. Immediately prior to grouting, all free standing water shall be removed from holes. After initial mixing, thinning or retempering of grout with extra water shall not be allowed. Hardened or set grout which has become too stiff or dry to provide a good bond shall be discarded. Dowels shall not be installed if the mean air or grout temperatures are less than 45°F. Furthermore, after placing, the fresh grout shall be maintained at a temperature of not less than 45°F for 72 hours, and at not less than 40°F for an additional 4 days. The temperature of the mixed grout, immediately before placing, shall not be less than 50°F nor more than 90°F. The cement grout shall be cured continuously with either wet rags or a satisfactory curing compound(which must be subsequently removed) for a minimum period of 3 days without disturbing the dowels. ← Can't be used with epoxy coated resteel.

Grout anchoring using epoxy as per S.S. 853 and 956 may be used in lieu of the above requirements with the exception that the hole size will remain at 1¼" dia.

Resteel in the proposed railings shall be epoxy coated as per SS 824. Concrete cover over resteel shall be 2".

The concrete surfaces to be faced shall be thoroughly drenched with clean water and allowed to dry to a damp condition just before placing the concrete.

The existing deflection joints shall be extended into the proposed facing and shall be made by forming or by sawcutting the hardened concrete within 3 days after pouring. The ½" joints shall be sealed 3/4" deep(min.) with an impregnated precompressed expanding foam sealant tape known as Will-Seal, manufactured by Illbruck/USA Inc. , Minneapolis or a low density, closed cell, crosslinked ethylene vinyl acetate foam known as Evasote 50, manufactured by E-poxy Industries, Inc., Ravena, New York.

Materials shall be:

Concrete as per 511, Class S
Reinforcing steel as per 509 and S.S. 824

All of the above work and relevant plan notes shall be included in the price per lin.ft. bid for Item 517, Railing, faced, as per plan.

ITEM 516 - STRUCTURAL EXPANSION JOINTS, INCLUDING ELASTOMERIC STRIP SEAL , AS PER PLAN

The unit price bid per lin.ft. for this item shall include existing end dam modifications, elastomeric strip seals, steel extrusions, angles, plates, anchors and other materials and all labor and equipment necessary to complete installation of the seal as detailed on the plan sheets. The lineal measurement shall be along the centerline of the strip seal.

MATERIALS: Structural steelfor the Strip Seal expansion-contraction joint shall conform to ASTM A588 or A36 with System B field paint on exposed steel surfaces. Field paint shall consist of two prime coats and one finish coat.

The preformed strip seal shall be extruded polychoroprene material meeting the requirements of ASTM D2628. Due to the configurations of the Strip Seal, the recovery tests are not applicable.

Lubricant-adhesive used to install the preformed strip seals shall be a polyurethane and hydrocarbon solvent mixture as specified by the seal manufacturer (unless otherwise approved by the Director). It shall have suitable consistency at the temperature at which the seals are installed and shall be compatible with the seals and the steel extrusions.

PREPARATIONS FOR INSTALLATION: To avoid the subsequent contamination of prepared surfaces, all surfaces of elastomeric strip seals shall be cleaned with methyl ethyl ketone (MEK), toluene (T) or other approved solvent using clean disposable cloths. Then not more than 7 days prior to the seal installation, a thin coating of cyclizing paste* shall be applied to the bonding surfaces (bulbed edges). After 25 to 40 minutes, the paste shall be washed from the surfaces with clean water. The bonding surfaces of the steel extrusions (the interior of the anchor grooves) shall be prepared to Grade Sa 3, ASTM D2200. Preparation shall be accomplished not more than 24 hours prior to adhesive bonding.

* Cyclizing Paste is a mixture of one pound Pittsburgh Plate Glass Industries' HiSil 233 or an approved alternate and six pounds of concentrated sulfuric acid (18 molar). To mix the paste, add HiSil to acid slowly while stirring mixture to achieve a smooth viscous paste. NOTE: Since concentrated sulfuric acid is very corrosive and HiSil is an extremely fine non-toxic powder, rubber gloves and glasses should be used by those using the paste while gloves, glasses and a respirator should be used by those mixing the paste.

INSTALLATION: Immediately prior to application of lubricant-adhesive, bonding surfaces shall be cleaned dry and warmer than45°F, and they shall be maintained at or above this temperature until the adhesive has cured . Lubricant-adhesive shall be applied liberally to both steel and elastomeric bonding surfaces using a stiff brush if necessary to achieve a complete and relatively uniform coating. Then the bulbed edges of the elastomeric seal shall be inserted into the anchor grooves. After installation, excess lubricant-adhesive shall be removed from the seal surfaces.

ITEM SPECIAL - SUPERPLASTICIZED DENSE CONCRETE OVERLAY (VARIABLR THICKNESS)

For Bridge NO. TUS-250-1232R after all areas of loose and unsound concrete have been removed, those areas below the scarified deck that are more than 1" deep shall be filled as a separate operation. The areas are to be determined by the Engineer and prepared as specified in the Proposal. The variable thickness shall be placed to the level of the scarified deck; given a wire broom finish; and wet cured for 3 days or until the 1-3/4" overlay is placed, whichever is less. No vehicles shall be allowed on surface until 3 day cure

The remaining variable thickness shall be placed with the 1-3/4" thick overlay inone operation, as per the proposal.

DEPARTMENT OF TRANSPORTATION
M&R 712 REV. 9-1-83

BEL-148-1606, 2513
HAS-250-1763
TUS-250-1232R

9/15

PLAN NO.
BR-23-85

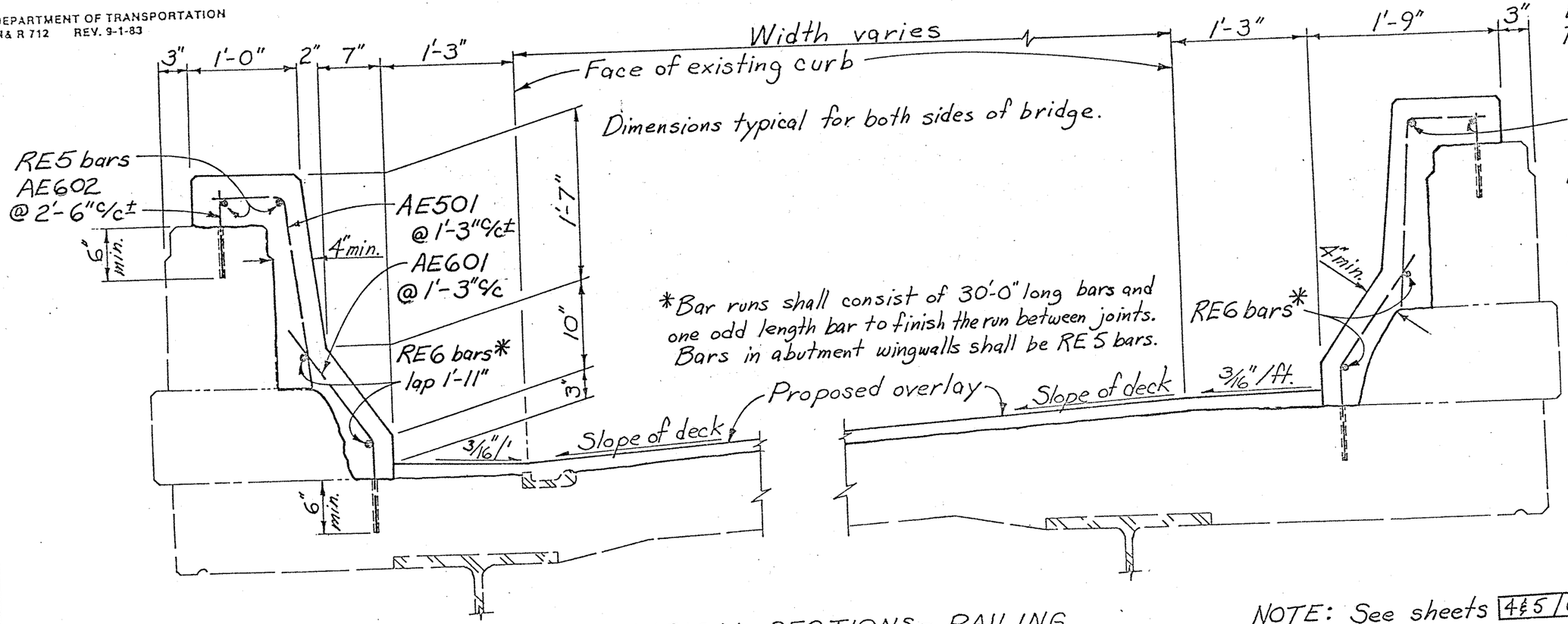

TYPICAL SECTIONS - RAILING

NOTE: See sheets 4&5/6 for details at expansion joints

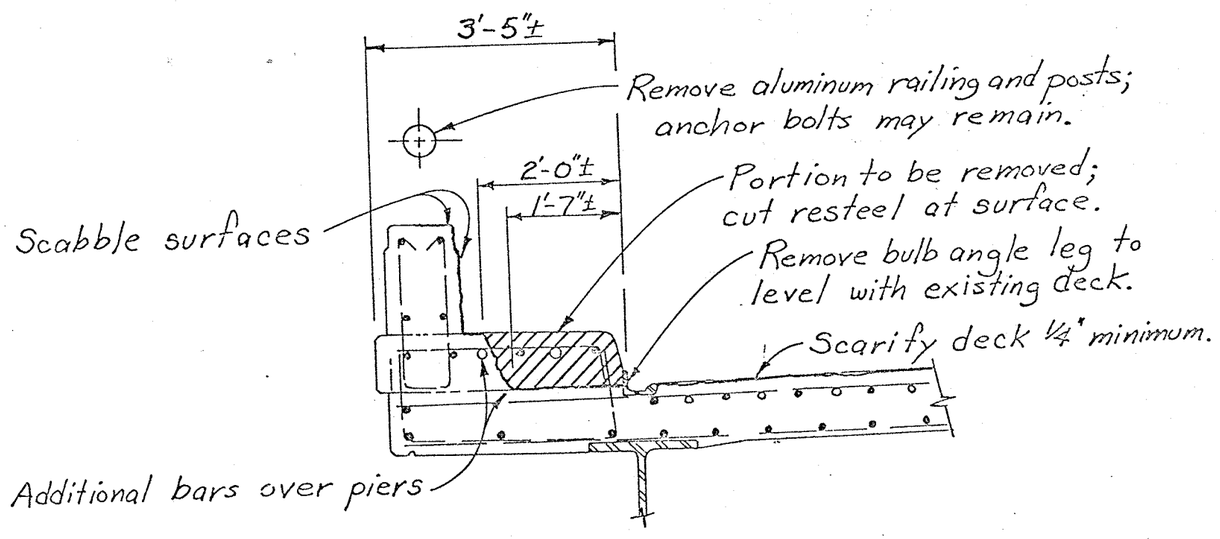

EXISTING TYPICAL SHOWING REMOVAL

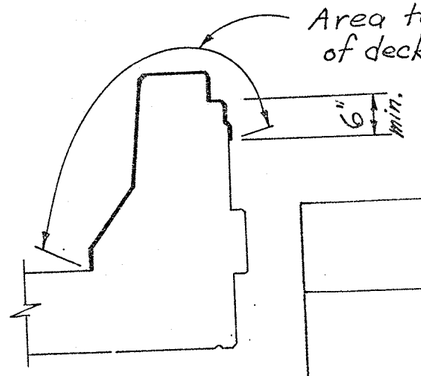

* Sealer shall be either silane or an epoxy sealer, see Proposal for surface preparation, application rates, material requirements and application procedures.

TYPICAL SHOWING SEALING OF CONCRETE SURFACES

STATE OF OHIO
DEPARTMENT OF TRANSPORTATION
DIVISION OF HIGHWAYS
BUREAU OF MAINTENANCE

3/6

TYPICAL SECTION

BRIDGE NO. TUS-250-1232R OVER I-77, RAMP & STONE CREEK

Calculated by: JLO Date: 2-1-85	REVIEWED DATE	REVISED
Checked by: WRG Date: 2-2-85		

DOT 1925

DEPARTMENT OF TRANSPORTATION
M&R 712 REV. 9-1-83

BEL-148-1606, 2513
HAS-250-1763, TUS-250-1232R

10/15

PLAN NO. BR-23-85

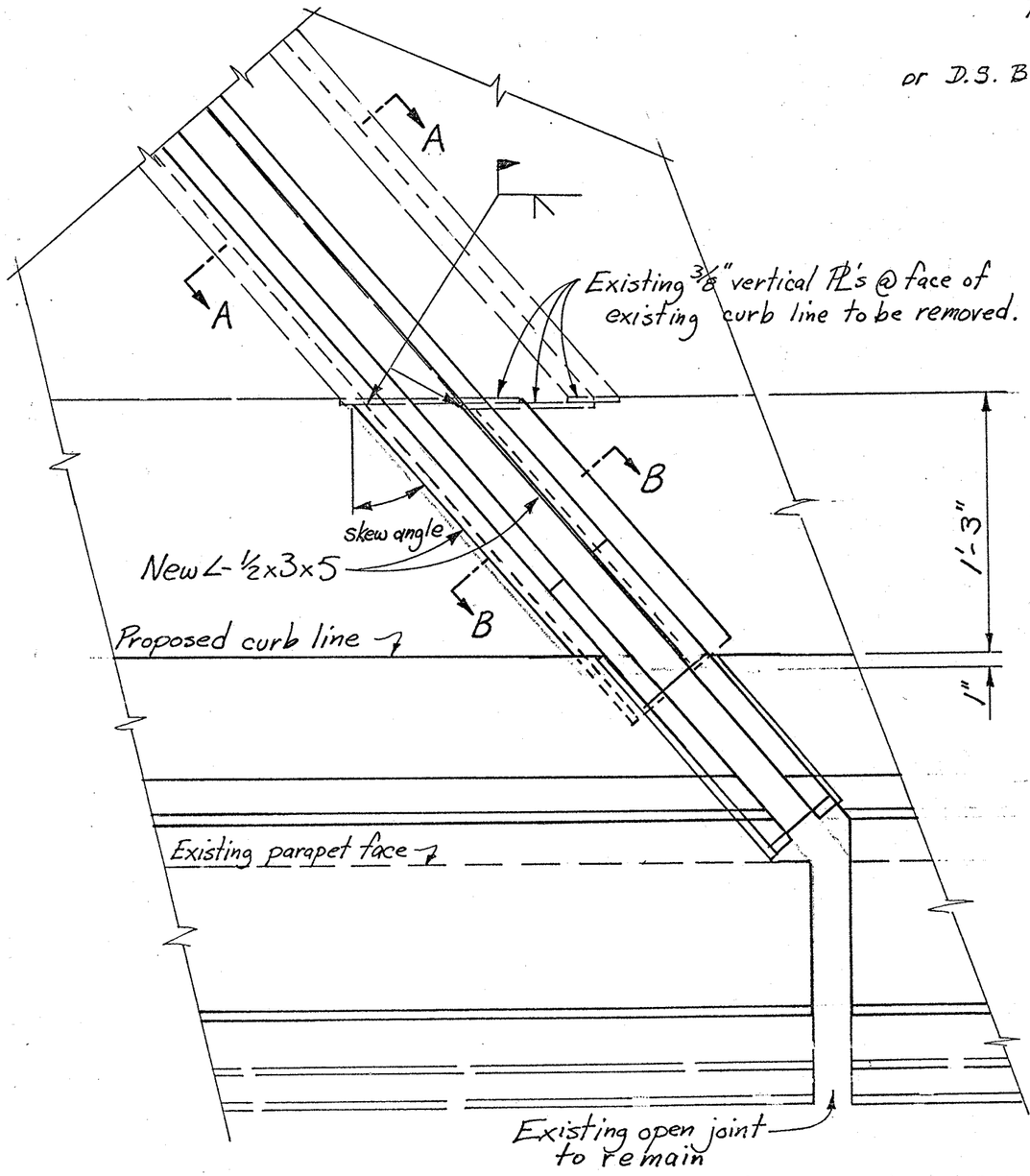

TYPICAL PLAN FOR JOINTS
(See sheet 11 for additional details)

Location	Rear Abut.	Rear Hinge	Fwd. Hinge	Fwd. Abut.
Skew angle	54°-12'±	40°-55'±	40°-55'±	6°-55'±

Type E or Type SS-E, Steel extrusions (strip seal not shown) as manufactured by Watson-Bowman, or D.S. Brown, or an approved alternate.

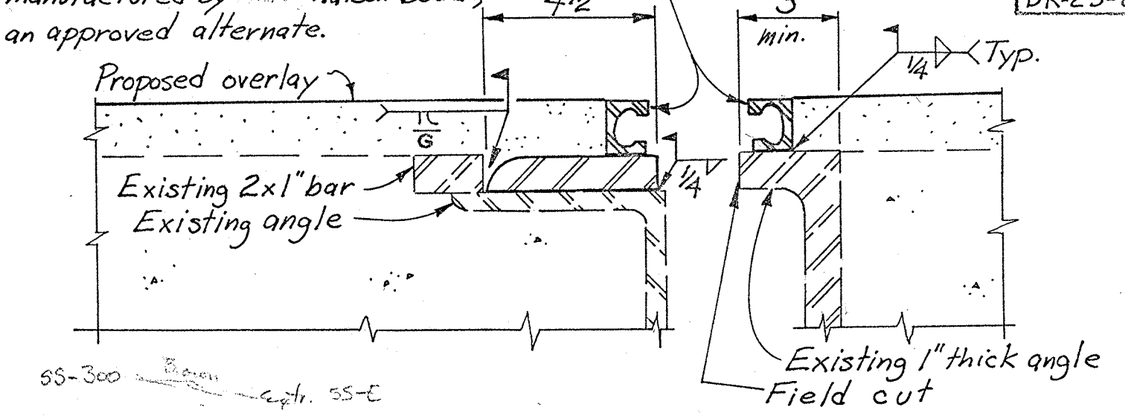

SECTION A-A

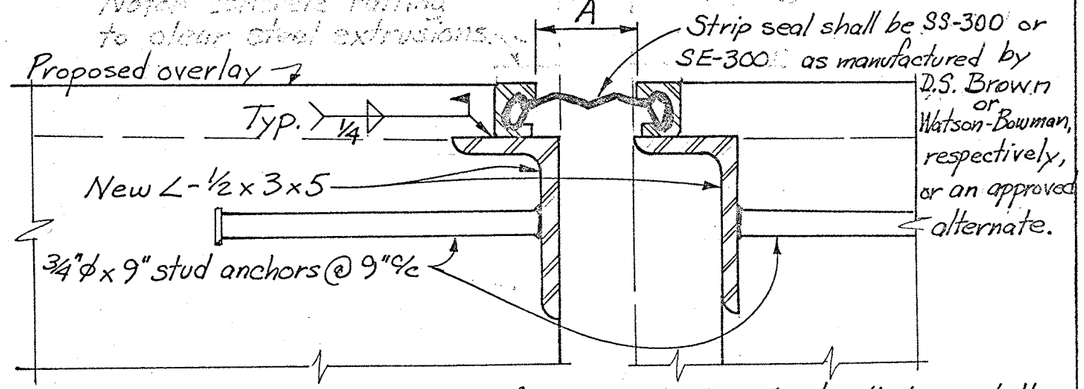

NOTE: All removal and repair of existing deck or backwall to install the new angles with anchors shall be included in Item 517.

SECTION B-B

Strip Seal Joint Width	
Ambient Temperature	Dimension "A"
90° F.	1½"
80	1 11/16"
70	1 13/16"
60	2"
50	2⅛"
40	2 5/16"
30	2 7/16"

STATE OF OHIO
DEPARTMENT OF TRANSPORTATION
DIVISION OF HIGHWAYS
BUREAU OF MAINTENANCE

4/6

ELASTOMERIC STRIP SEAL WITH STEEL EXTRUSIONS AND END DAM MODIFICATION-AT HINGES & ABUTS.
BRIDGE NO. TUS-250-1232R
OVER I-77, RAMP & STONE CREEK

Calculated by: JLO Date: 1-30-85
Checked by: WRG Date: 2-2-85

REVIEWED DATE	REVISED

Rev. 6-5-85 RLE

CT 1925

DEPARTMENT OF TRANSPORTATION
M& R 712 REV. 9-1-83

BEL-148-1606, 2513, HAS-250-1763, TUS-250-1232R

11/15

PLAN NO. BR-23-85

NOTE: All additional removal and rebuilding of concrete necessary to install new expansion joints as detailed shall be included in the unit price bid for Item 517 - Railing - Faced as per plan. The cost of all materials, labor, tools and equipment necessary to complete the joint in place shall be included in the unit price bid for Item 516 - Structural expansion joint, including elastomeric strip seal, as per plan.

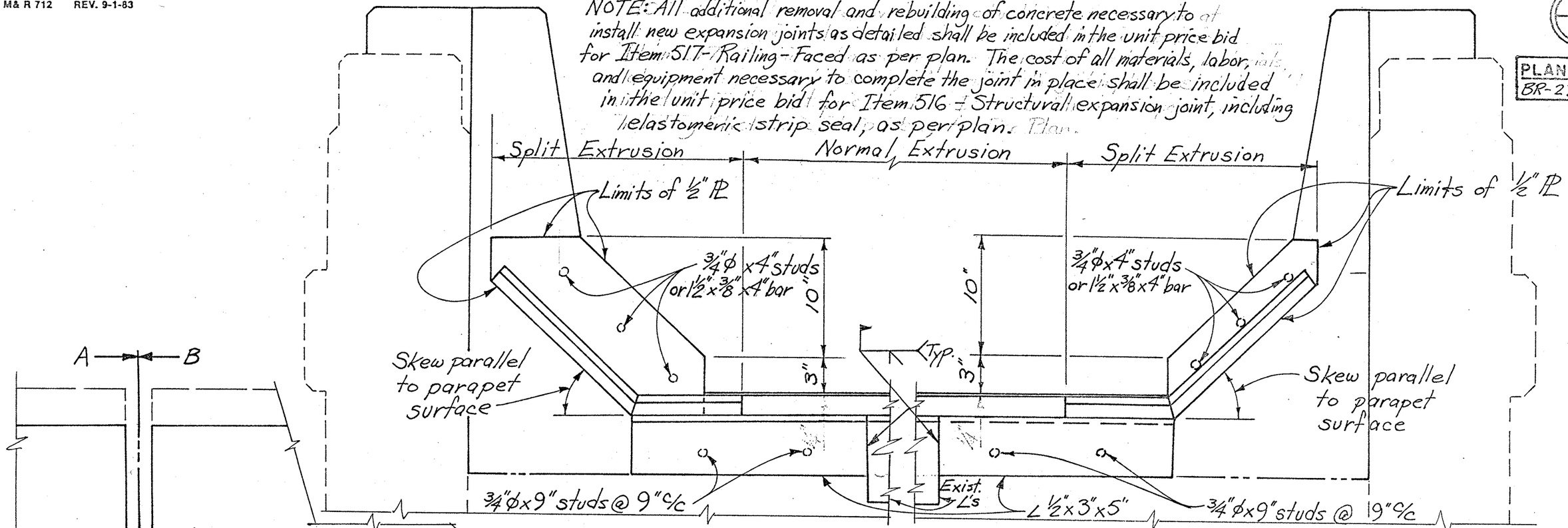

SECTION A-A

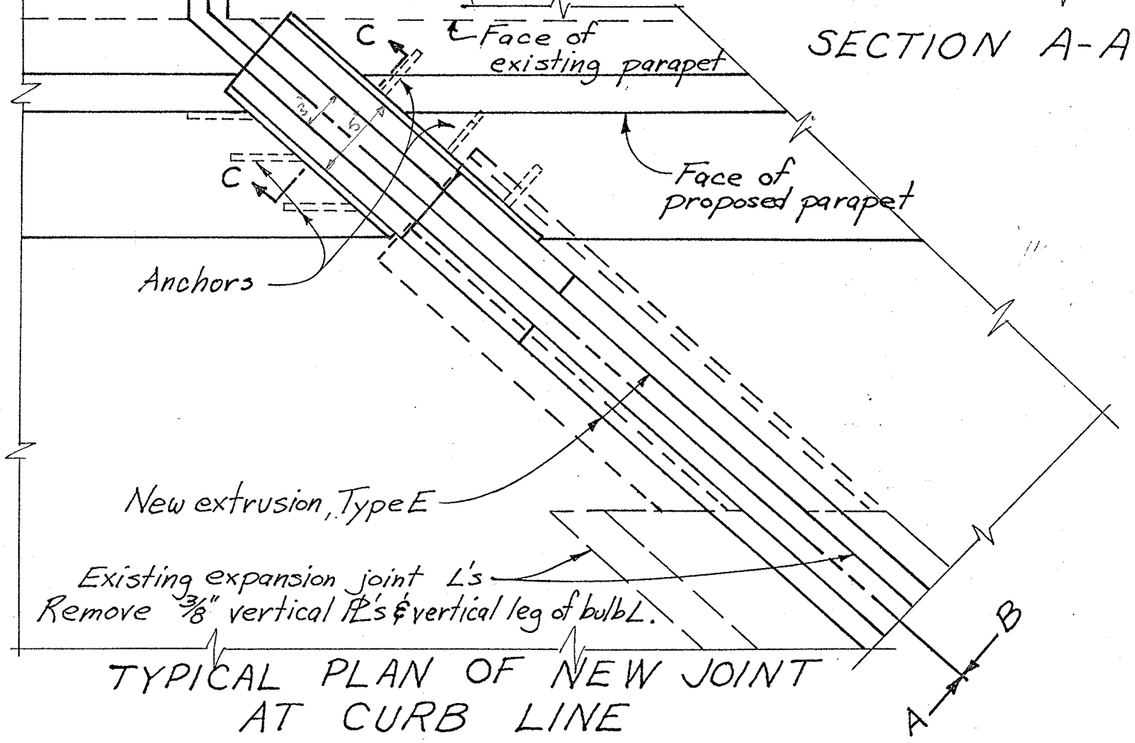

TYPICAL PLAN OF NEW JOINT AT CURB LINE

SECTION B-B

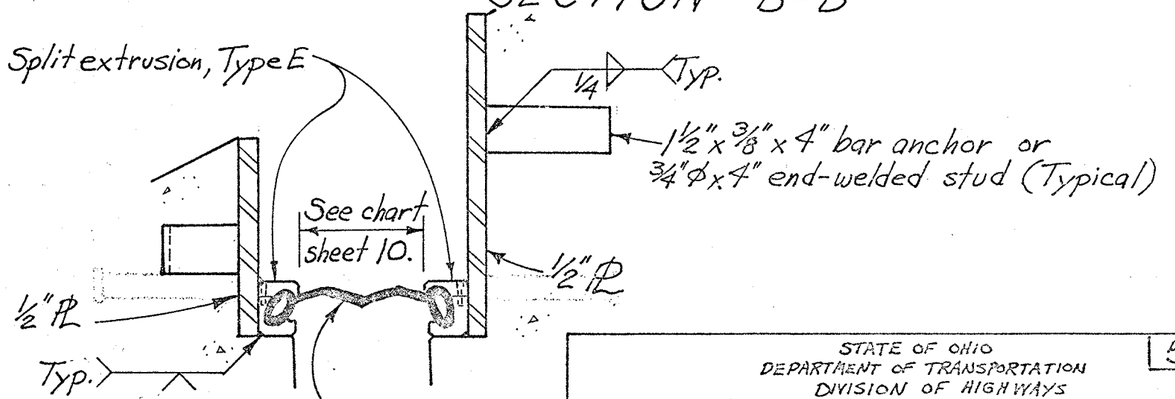

SECTION C-C

STATE OF OHIO
DEPARTMENT OF TRANSPORTATION
DIVISION OF HIGHWAYS
BUREAU OF MAINTENANCE

5/6

EXPANSION JOINT DETAILS

BRIDGE NO. TUS-250-1232R OVER I-77, RAMP & STONE CREEK

Calculated by: JLO Date: 4-23-85	REVIEWED DATE	REVISED
Checked by: WRG Date: 4/24/85		

DOT 1225

BEL-148-1606, 2513, HAS-250-1763, TUS-250-1232R

12/15

PLAN NO. BR-23-85

REINFORCING STEEL LIST

MARK	NUMBER LEFT	NUMBER RIGHT	TOTAL	LENGTH	WEIGHT	TYPE
AE501	598	558	1156	2'-5"		BT
AE502	12	12	24	2'-10"		ST*
RE501	–	4	4	26'-9"		ST*
RE502	4	–	4	27'-7"		ST*
RE503	4	–	4	15'-2"		ST*
RE504	–	4	4	18'-7"		ST*
RE505	6	8	14	11'-9"		ST*
RE506	–	4	4	13'-0"		ST
RE507	2	–	2	14'-1"		ST
RE508	40	38	78	14'-7"		ST
RE509	40	36	76	14'-10"		ST
RE510	–	4	4	16'-3"		ST
RE511	4	–	4	16'-11"		ST
RE512	2	–	2	15'-7"		ST
RE513	2	–	2	10'-0"		ST
AE601	598	558	1156	2'-0"		BT
AE602	306	286	592	0'-9"		ST
RE601	48	44	92	30'-0"		ST
RE602	–	2	2	26'-7"		ST
RE603	2	–	2	21'-4"		ST
RE604	–	2	2	3'-4"		ST
RE605	2	–	2	6'-0"		ST
RE606	–	2	2	17'-0"		ST
RE607	2	–	2	14'-4"		ST
S601	4	–	4	3'-2"		ST
S602	4	–	4	3'-11"		ST
S603	4	–	4	4'-8"		ST
S604	2	–	2	3'-4"		ST
S605	4	–	4	4'-10"		ST

—INCLUDED WITH ITEM 517, RAILING, FACED, AS PER PLAN FOR PAYMENT

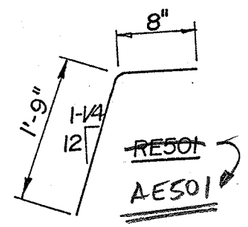

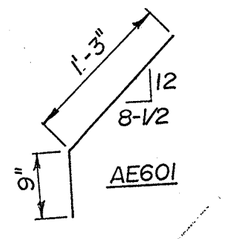

NOTE: BARS DENOTED WITH AN 'E' PREFIX SHALL BE EPOXY COATED AS PER S.S. 824.

*FIELD BEND WHERE NECESSARY.

REINFORCING STEEL SAMPLES - REFER TO CMS SECTION 106.03, 700, 709.01 THROUGH 709.05 AND 709.08. SUFFICIENT ADDITIONAL REINFORCING STEEL SHALL BE PROVIDED FOR SAMPLING. RANDOM SAMPLES SHALL BE REPLACED IN THE STRUCTURE BY THE ADDITIONAL STEEL, SPLICED IN ACCORDANCE WITH 509.08.

BRIDGE NO. TUS-250-1232R
REINFORCING STEEL LIST

6/6

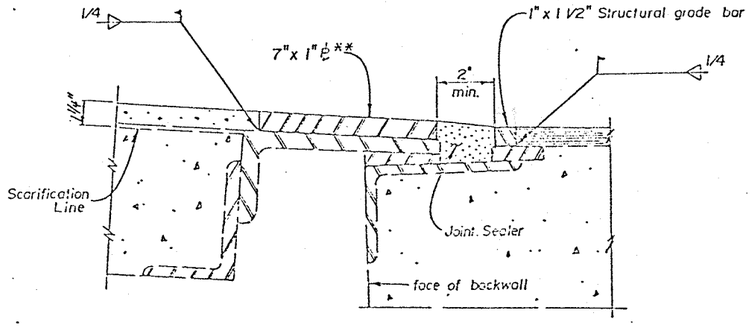

Refer to Std. Dwg. BP-5 for details not shown.

** The 7" x 1" ℄ is required even when expansion joint is closed to within 1/2" or less.

VERTICAL EXTENSION OF STRUCTURAL EXPANSION JOINTS MODIFIED AS PER PLAN
BEL-148-1606, 2513
HAS-250-1763

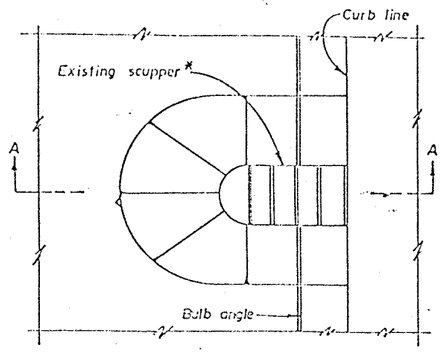

PLAN VIEW

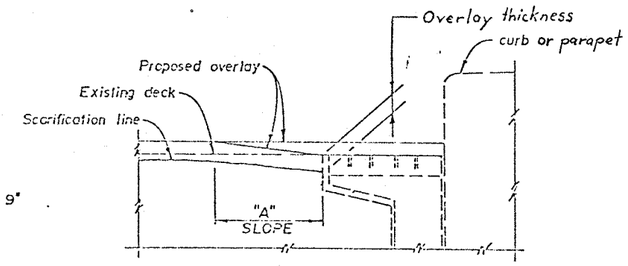

Dimension "A" shall be 9"

SECTION A-A

TYPICAL OVERLAY DETAIL AT SCUPPERS

*Scuppers as found may be reversed 180° or of another type than that shown.

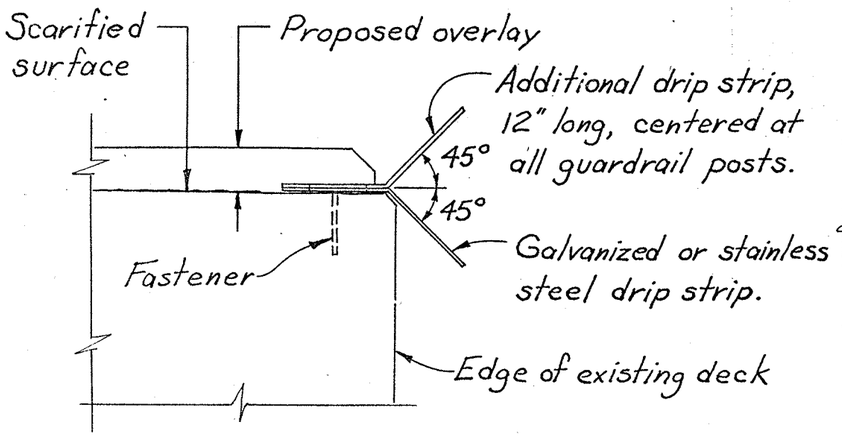

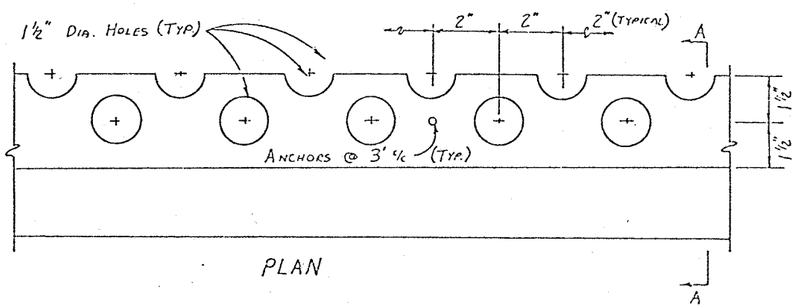

PLAN

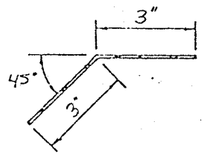

SECTION A-A

DRIP STRIP DETAIL FOR BRIDGE DECKS WITH CONCRETE OVERLAYS

DRIP STRIP FOR BRIDGES WITH CONCRETE OVERLAYS

After the deck is scarified and before the concrete overlay is placed, a steel drip strip, as detailed, shall be installed along the full length of each side of the bridge. The strips shall be fastened at 3' c/c maximum with power driven pins or No. 10 galvanized screws and expansion anchors. Where splices are required, the individual pieces shall be butted tightly together, not lapped. Steel for galvanized strips shall be 0.105" thick and shall meet the requirements of ASTM A568 with galvanizing in accordance with 711.02. Stainless steel shall be 20 gauge ASTM A167, Type 304, mill finish.

Payment shall be at the contract price bid for Item Special, Sq. Ft., Steel Drip Strip, as per plan, and shall include all materials, labor, tools, and incidentals necessary to complete the item.

DRIP STRIP DETAIL
BEL-148-1606

SUPERSTRUCTURE DETAILS

FHWA REGION	STATE	PROJECT	
5	OHIO		

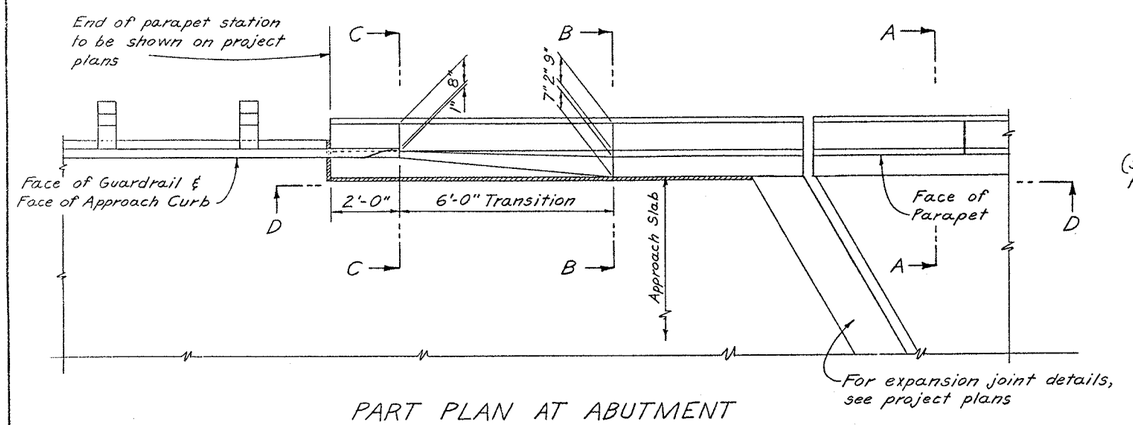

PART PLAN AT ABUTMENT

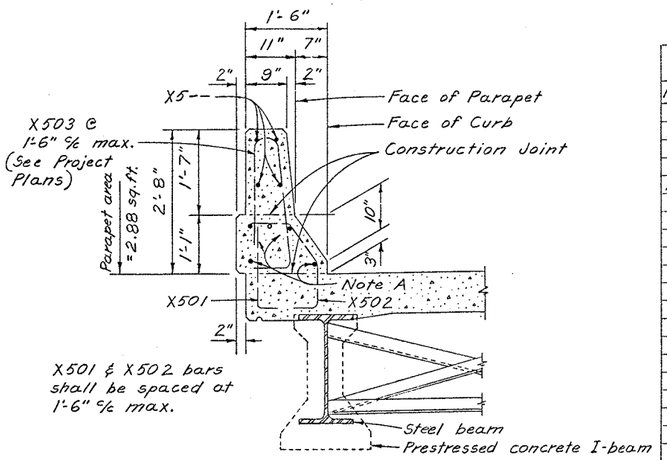

SECTION A-A
With Concrete Wearing Surface

Note A : Longitudinal bars in lower part of parapet shall be similar to longitudinal bars in bridge deck

REINFORCING STEEL

MARK	LENGTH	SHP
X501	B + 9"	Bt.
X502	A + 2'-3"	Bt.
X503	5'-3"	Bt.
X5--	†	Str.
Y501	3'-0"	Str.
Y502	5'-3"	Bt.
Y503	As Req'd.	Str.*
Y504	4'-7"	Str.
Y505	2'-8"	Bt.
Y506	4'-4"	Str.
Y601	3'-9"	Bt.
Y602	3'-8"	Bt.
Y603	3'-8"	Bt.
Y604	3'-7"	Bt.
Y605	3'-7"	Bt.
Y606	4'-3"	Str.

BENDING DIAGRAMS

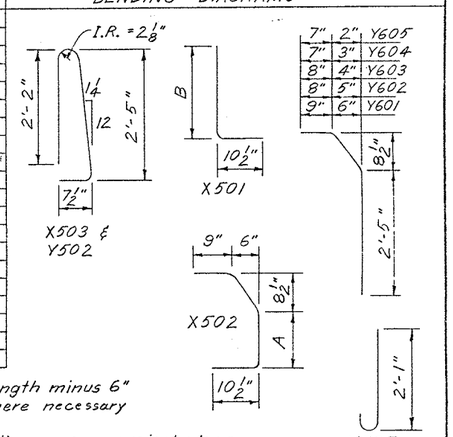

† Parapet panel length minus 6"
* Bend in field where necessary

Include bending diagrams on project plans

GENERAL NOTES

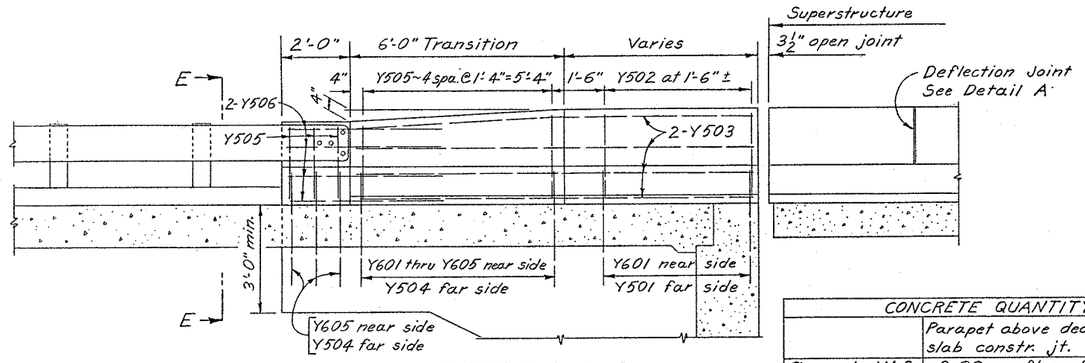

SECTION D-D

CONCRETE QUANTITY		
	Parapet above deck slab constr. jt.	Each 8'-0" Transition
Concrete W.S.	2.88 cu. ft. per ft.	18.4 cu. ft.
Asph. Conc. S.C.	3.23 cu. ft. per ft.	20.4 cu. ft.

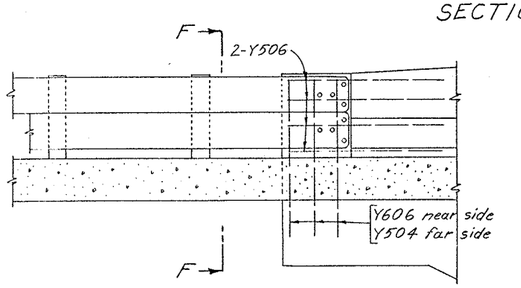

PART ELEVATION
Showing guardrail connection with wheelguard and no curb on approaches

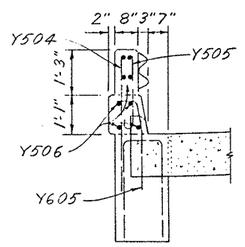

VIEW E-E

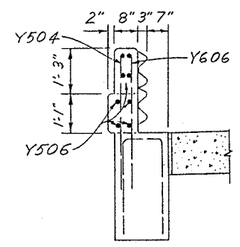

VIEW F-F

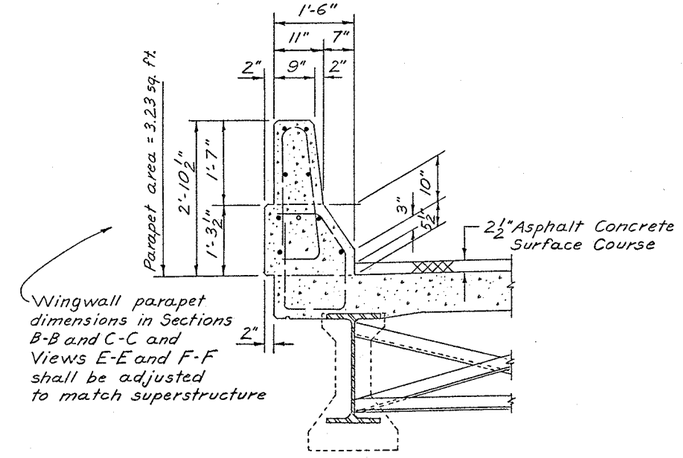

SECTION A-A
With Asphalt Concrete Surface Course

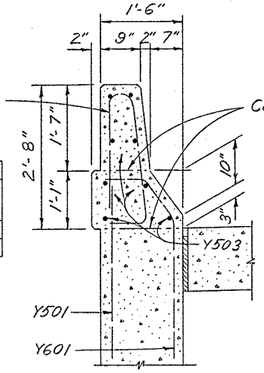

SECTION B-B

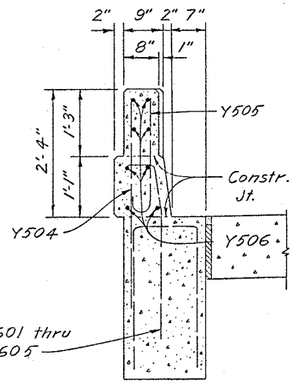

SECTION C-C

DESIGN SPECIFICATIONS: "Standard Specifications for Highway Bridges" adopted by AASHTO, 1977, including the Ohio "Supplement" to these specifications.

DESIGN DATA:
Concrete Class S - f_c' = 4500 p.s.i., f_c = 1800 p.s.i.
Reinforcing Steel - ASTM A615, A616 or A617 Grade 60
f_y = 60,000 p.s.i, f_s = 24,000 p.s.i.

PREFORMED EXPANSION JOINT FILLER in the parapet deflection joints may be either 1/4" gray sponge rubber or 1/4" gray cellular polyvinyl chloride (PVC) sponge. If rubber is used it shall meet the requirements of AASHTO M-153.

DEFLECTION JOINTS shall be spaced at 16'-0" centers, max., except that for continuous structures the panels shall be further subdivided in the negative moment region (over the piers) into lengths of not less than 5'-0" nor more than 7'-6". Reinforcing bars shall not extend through deflection joints.

CONCRETE PARAPETS above upper construction joint shall be placed in alternate sections by the use of bulkheads. Closing sections shall be placed after removal of bulkheads and after placement of expansion joint filler. Exposed edges of the filler shall be flush with the surface of concrete and shall be free of mortar.

CONCRETE INSERT ANCHOR ASSEMBLY, as shown on Std. Dwgs. GR-1 and GR-3, shall be provided for the attachment of guardrail terminal connectors. (Included with abutment concrete for payment.)

QUANTITIES of concrete and reinforcing steel for parapet are included with their appropriate Item under either abutments or superstructure for payment.

REINFORCING STEEL in deflector parapets shall be epoxy coated if so specified in the project plans.

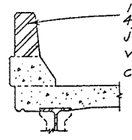

DETAIL A
Section thru deflection joint

REVISIONS

STATE OF OHIO
DEPARTMENT OF TRANSPORTATION
BUREAU OF BRIDGES AND STRUCTURAL DESIGN

STANDARD
BRIDGE RAILING
DEFLECTOR PARAPET TYPE

APPROVED: Robert B Flint
DATE: 5-29-79 ENGINEER OF BRIDGES

DRAWING NO. BR-1

DESIGNED	DRAWN	TRACED	CHECKED	REVIEWED
FFE	FFE		DWI	WJJ