STATE OF OHIO

DEPARTMENT OF TRANSPORTATION

TUS-77-20.73

TUS-250-11.88

CITY OF NEW PHILADELPHIA
CITY OF DOVER
DOVER, GOSHEN & FRANKLIN TOWNSHIPS
TUSCARAWAS COUNTY

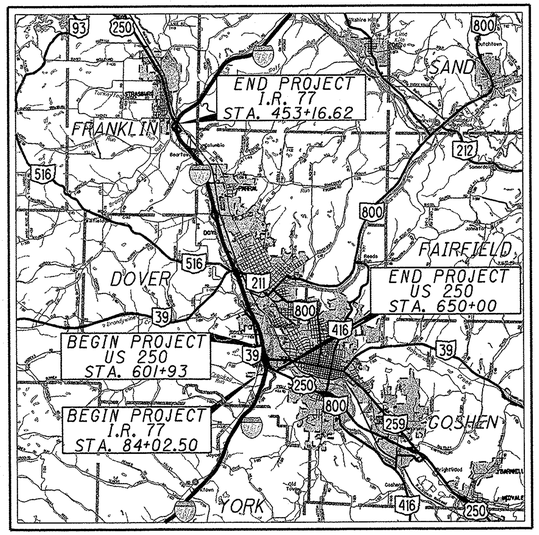

LOCATION MAP

LATITUDE: N40°29'30" LONGITUDE: W81°28'40"

SCALE IN MILES
0 1 2 3 4

PORTION TO BE IMPROVED
STATE & FEDERAL ROUTES
OTHER ROADS

INDEX OF SHEETS

TITLE SHEET	1
SCHEMATIC PLAN	2, 3
TYPICAL SECTION	4-7, 6A
GENERAL NOTES	8, 9
MAINTENANCE OF TRAFFIC	10-13
GENERAL SUMMARY	14, 15
ESTIMATED QUANTITIES	16-18
PLAN SHEETS	19-31
MISCELLANEOUS DETAILS	32-37, 35A
TRAFFIC CONTROL	38-42
STRUCTURES	43-62

PROJECT DESCRIPTION

IMPROVEMENT OF 6.99 MILES OF IR-77 AND 0.91 MILES OF US-250 IN DOVER & FRANKLIN TOWNSHIPS OF TUSCARAWAS COUNTY BY MILLING AND RESURFACING THE TRAVELED ROADWAY AND SHOULDERS. PROJECT ALSO INCLUDES NEW GUARDRAIL, PAVEMENT MARKINGS, AND THE REPLACEMENT OF THE BRIDGE PARAPET ON THE EXISTING TUS-250-1232 STRUCTURE.

LIMITED ACCESS

THIS IMPROVEMENT IS ESPECIALLY DESIGNED FOR THROUGH TRAFFIC AND HAS BEEN DECLARED A LIMITED ACCESS HIGHWAY OR FREEWAY BY ACTION OF THE DIRECTOR IN ACCORDANCE WITH THE PROVISIONS OF SECTION 5511.02 OF THE OHIO REVISED CODE.

2010 SPECIFICATIONS

THE STANDARD SPECIFICATIONS OF THE STATE OF OHIO, DEPARTMENT OF TRANSPORTATION, INCLUDING CHANGES AND SUPPLEMENTAL SPECIFICATIONS LISTED IN THE PROPOSAL SHALL GOVERN THIS IMPROVEMENT.

I HEREBY APPROVE THESE PLANS AND DECLARE THAT THE MAKING OF THIS IMPROVEMENT WILL NOT REQUIRE THE CLOSING TO TRAFFIC OF THE HIGHWAY AND THAT THE PROVISIONS FOR THE MAINTENANCE AND SAFETY OF TRAFFIC WILL BE AS SET FORTH ON THE PLANS AND ESTIMATES.

UNDER AUTHORITY OF SECTION 4511.21, DIVISION (H) OF THE REVISED CODE OF OHIO, THE REVISED PRIMA FACIE SPEED LIMITS AS INDICATED HEREIN ARE DETERMINED TO BE REASONABLE AND SAFE, AND ARE HEREBY ESTABLISHED FOR THE DURATION OF THIS PROJECT. THE PRIMA FACIE SPEED LIMIT OR LIMITS HEREBY ESTABLISHED SHALL BECOME EFFECTIVE WHEN APPROPRIATE SIGNS GIVING NOTICE THEREOF ARE ERECTED.

DESIGN DESIGNATION	I.R. 77 (20.73-23.37)	I.R. 77 (23.37-27.72)	U.S. 250 (11.88-12.79)
CURRENT ADT (2013)	37,730	35,350	21,950
DESIGN YEAR ADT (2025)	41,020	38,560	23,390
DESIGN HOURLY VOLUME (2025)	4,180	3,930	2,280
DIRECTIONAL DISTRIBUTION	55%	62%	56%
TRUCKS (24 HOUR B&C)	18%	19%	6%
DESIGN SPEED	65MPH	65MPH	65MPH
LEGAL SPEED	65MPH	65MPH	65MPH

DESIGN FUNCTIONAL CLASSIFICATION - INTERSTATE (URBAN)
NHS PROJECT - YES

DESIGN EXCEPTION

NONE REQUIRED

EARTH DISTURBED AREAS

PROJECT EARTH DISTURBED AREA = N/A MAINTENANCE PROJECT
ESTIMATED CONTRACTOR EARTH DISTRUBED AREA = N/A MAINTENANCE PROJECT
NOTICE OF INTENT EARTH DISTURBED AREA = N/A MAINTENANCE PROJECT

UNDERGROUND UTILITIES

CONTACT BOTH SERVICES
CALL TWO WORKING DAYS
BEFORE YOU DIG

CALL
1-800-362-2764
(TOLL FREE)
OHIO UTILITIES PROTECTION SERVICE
NON-MEMBERS
MUST BE CALLED DIRECTLY

OIL & GAS PRODUCERS PROTECTIVE SERVICE CALL: **1-800-925-0988**

PLAN PREPARED BY:
O.D.O.T.
DISTRICT 11
NEW PHILADELPHIA, OHIO

ENGINEERS SEAL:

STATE OF OHIO
JASON P. BERANEK
67628
REGISTERED PROFESSIONAL ENGINEER

SIGNED: Jason P. Beranek
DATE: December 5, 2012

STANDARD CONSTRUCTION DRAWINGS

BP-1.1	7-28-00	GR-4.2	7-20-12	MT-95.30	7-20-12	TC-41.20	1-19-01	BR-1	7-19-02
BP-2.1	7-18-08	GR-5.1	4-16-10	MT-95.40	7-20-12	TC-42.20	1-21-11		
BP-2.2	7-18-08	GR-5.2	4-16-10			TC-51.11	1-21-11		
BP-2.4	7-16-04	GR-5.3	4-16-10	MT-98.10	7-20-12	TC-51.12	10-21-11		
BP-2.5	7-18-08	GR-6.1	4-16-10	MT-98.11	7-20-12	TC-52.10	1-19-07		
BP-3.1	4-20-12			MT-98.20	7-20-12	TC-52.20	1-19-07		
BP-5.1	7-28-00								
BP-9.1	4-15-05			MT-99.20	7-20-12				
		RM-4.2	10-15-10			TC-61.30	4-20-12		
		DM-4.3	7-20-12	MT-101.70	4-15-11	TC-65.10	4-20-12		
GR-1.1	7-20-12	DM-4.4	7-20-12	MT-101.90	10-19-12	TC-65.11	4-20-12		
GR-2.1	7-20-12			MT-102.30	7-20-12	TC-71.10	10-19-12		
GR-3.1	7-20-12			MT-105.10	7-20-12	TC-72.20	7-20-12		
GR-3.2	7-20-12					TC-73.10	4-20-12		

SUPPLEMENTAL SPECIFICATIONS

800	1-18-13
821	4-20-12
823	7-20-12
832	5-5-09

SPECIAL PROVISIONS

APPROVED Lloyd V. Mandau
DATE 12/05/2012 DISTRICT DEPUTY DIRECTOR

APPROVED Jerry Wray Jr.
DATE 1-17-18 DIRECTOR, DEPARTMENT OF TRANSPORTATION

FEDERAL PROJECT NO. E100(858)
PID NO. 81725
CONSTRUCTION PROJECT NO.
RAILROAD INVOLVEMENT NONE
TUS-77-20.73
TUS-250-11.88
1/62

TUS - IR-77-20.73;TUS-250-11.88
130167 PID - 81725
Dist 11 3/14/2013

Contract Proposal Available @ www.contracts.dot.state.oh.us/home

I:\PROJECTS\81725\Prod\Dgn\GT100.dgn 05-DEC-2012 1:06PM

There are no existing landscaped ares within the work limits.

I.R. 77 CURVE DATA
P.I. Sta. 82+11.35
D = 27° 31′ 00″ (LT)
Dc = 1° 30′ 00″
R = 3,819.72′
Ls = 200.00′
Theta = 1° 30′ 00″
LT = 133.34′
ST = 66.67′
x = 199.99′
y = 1.75′
k = 100.00′
p = 0.44′
Dc = 24° 31′ 00″ (LT)
Lc = 1,634.44′
Ts = 1,035.37′
Es = 113.28′

BEGIN WORK
I.R. 77
STA. 76+68.55

BEGIN PROJECT
I.R. 77
STA. 84+02.50
S.L.M. 20.73

E100(858)

END WORK
STA. 650+00

END PROJECT
U.S. 250
STA. 650+00
S.L.M. 12.79

E100(858)

U.S. 250 E.B. CURVE DATA
P.I. Sta. 599+41.96
D = 7°46′00″ (RT)
Dc = 0°28′00″
R = 12277.67′
T = 833.42′
L = 1664.29′
E = 28.26′

BEGIN WORK
U.S. 250
STA. 591+08.54

BEGIN PROJECT
U.S. 250
STA. 601+93
S.L.M. 11.88

E100(858)

I.R. 77 CURVE DATA
P.I. Sta. 135+74.88
D = 15° 50′ 00″ (LT)
Dc = 1° 00′ 00″
R = 5,729.58′
T = 796.74′
L = 1,583.33′
E = 55.13′

I.R. 77 CURVE DATA
P.I. Sta. 171+40.90
Δ = 8° 23′ 00″ (RT)
Dc = 0° 30′ 00″
R = 11,459.16′
T = 839.83′
L = 1,676.67′
E = 30.73′

I.R. 77 CURVE DATA
P.I. Sta. 209+59.67
D = 5° 08′ 00″ (LT)
Dc = 0° 30′ 00″
R = 11,459.16′
T = 513.68′
L = 1,026.67′
E = 11.51′

I.R. 77 CURVE DATA
P.I. Sta. 268+24.43
D = 9° 03′ 00″ (RT)
Dc = 0° 30′ 00″
R = 11,459.16′
T = 906.89′
L = 1,810.00′
E = 35.83′

U.S. 250 E.B. CURVE DATA
P.I. Sta. 624+91.47
D = 60°44′00″ (LT)
Dc = 4°00′00″
R = 1432.40
Ls = 400.00′
Theta = 8°00′00″
Lc = 1118.33′
Ts = 1041.86′
Es = 233.15′

U.S. 250 W.B. CURVE DATA
P.I. Sta. 629+89.14
D = 51°51′00″ (D)
Dc = 4°00′00″
R = 1432.40
Ls = 400.00′
Theta = 8°00′00″
Lc = 896.25′
Ts = 898.44′
Es = 165.45′

MATCH LINE STA. 190+00

MATCH LINE STA. 335+00

SCHEMATIC PLAN
STA. 60+00.00 TO STA. 335+00.00

HORIZONTAL SCALE IN FEET
0 250 500 1000

CALCULATED RDA
CHECKED JPB

TUS-77-20.73
TUS-250-11.88

2
62

I:\PROJECTS\81725\Prod\Dgn\GB100.dgn 11-DEC-2012 10:13AM ramstutz

There are no existing landscaped ares within the work limits.

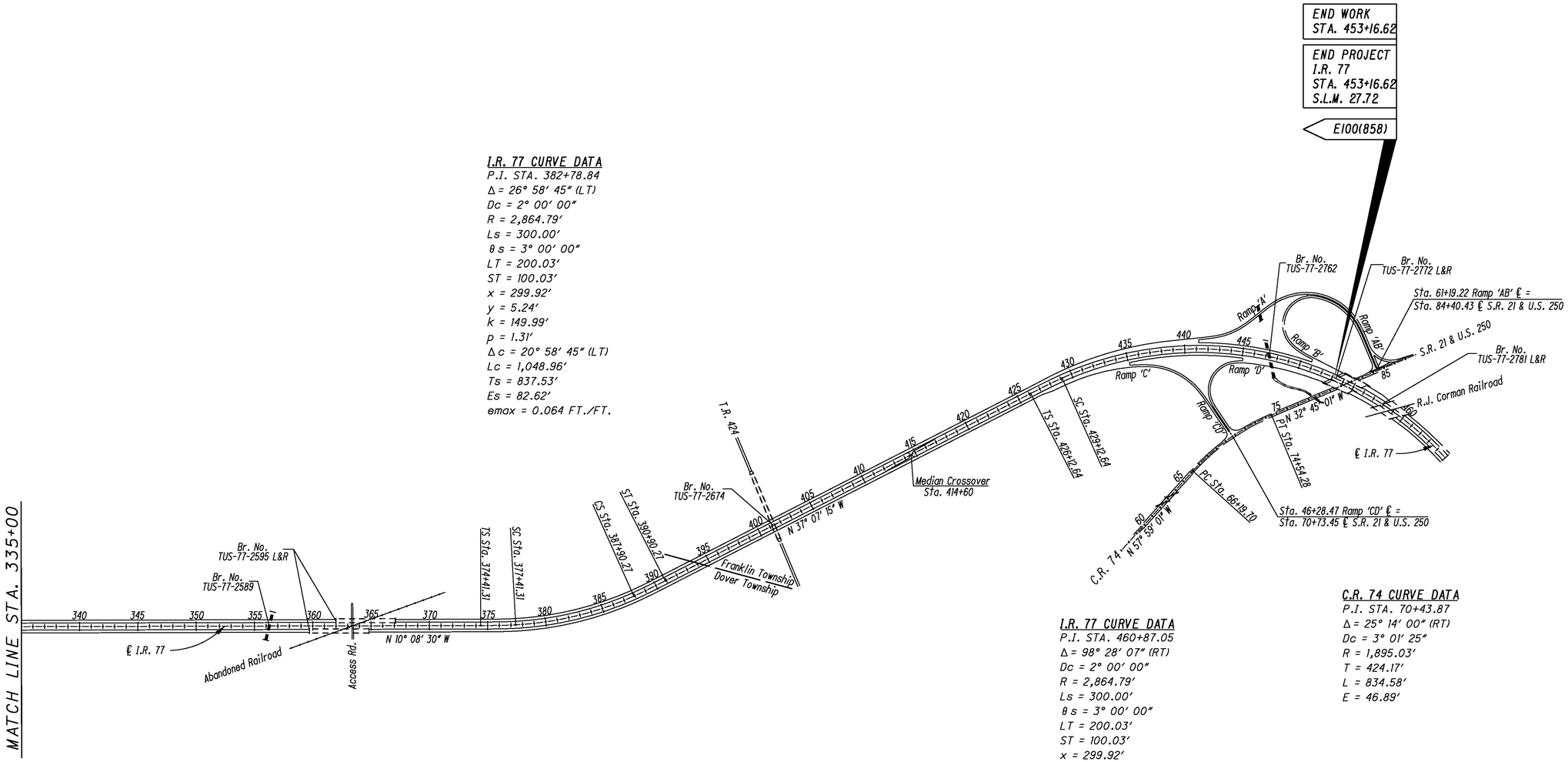

I.R. 77 CURVE DATA
P.I. STA. 382+78.84
Δ = 26° 58' 45" (LT)
Dc = 2° 00' 00"
R = 2,864.79'
Ls = 300.00'
θ s = 3° 00' 00"
LT = 200.03'
ST = 100.03'
x = 299.92'
y = 5.24'
k = 149.99'
p = 1.31'
Δ c = 20° 58' 45" (LT)
Lc = 1,048.96'
Ts = 837.53'
Es = 82.62'
emax = 0.064 FT./FT.

I.R. 77 CURVE DATA
P.I. STA. 460+87.05
Δ = 98° 28' 07" (RT)
Dc = 2° 00' 00"
R = 2,864.79'
Ls = 300.00'
θ s = 3° 00' 00"
LT = 200.03'
ST = 100.03'
x = 299.92'
y = 5.24'
k = 149.99'
p = 1.31'
Δ c = 92° 28' 07" (RT)
Lc = 4,623.43'
Ts = 3,474.42'
Es = 1,524.56'
emax = 0.064 FT./FT.
C.S. Sta. 475+36.07
S.T. Sta. 478+36.07

C.R. 74 CURVE DATA
P.I. STA. 70+43.87
Δ = 25° 14' 00" (RT)
Dc = 3° 01' 25"
R = 1,895.03'
T = 424.17'
L = 834.58'
E = 46.89'

HORIZONTAL SCALE IN FEET
0 250 500 1000

CALCULATED RDA
CHECKED JPB

SCHEMATIC PLAN
STA. 335+00.00 TO STA. 465+00.00

TUS-77-20.73
TUS-250-11.88

3
62

I:\PROJECTS\81725\Prod\Dgn\GB100.dgn 11-DEC-2012 10:17 AM ramstutz

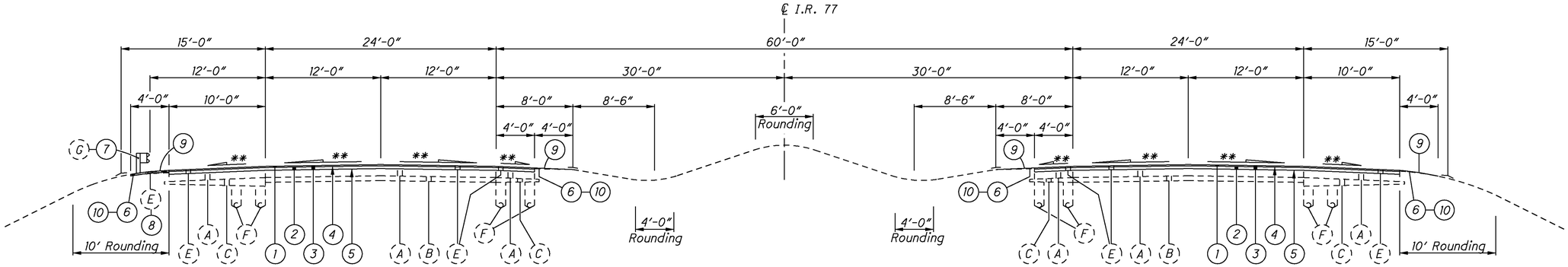

NORMAL SECTION

STA. 92+40.00 to STA. 126+75.00
STA. 144+50.00 to STA. 162+00.00
STA. 180+75.00 to STA. 203+50.00
STA. 215+75.00 to STA. 258+25.00
STA. 278+00.00 to STA. 283+00.00

** SAME SLOPE AS EXISTING

NOTE:

ITEM 254 - PAVEMENT PLANING, ASPHALT CONCRETE, AS PER PLAN
Mainline shall be 5" nominal depth to concrete.
Ramps shall be milled 3¼ " .

ITEM 442 - ASPHALT CONCRETE INTERMEDIATE COURSE, 19MM, TYPE B (446)
Mainline shall be 3½ " placed in two lifts.
Ramps shall be 1¾ " placed in one lift.

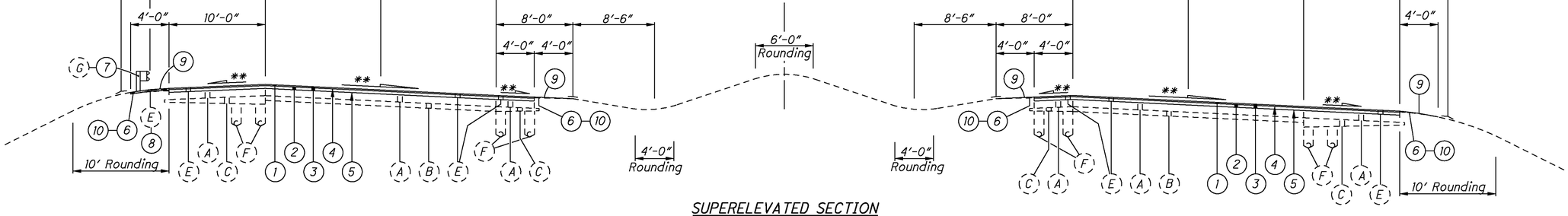

SUPERELEVATED SECTION

STA. 84+02.50 to STA. 92+40.00
STA. 126+75.00 to STA. 144+50.00
STA. 162+00.00 to STA. 180+75.00
STA. 203+50.00 to STA. 215+75.00
STA. 258+25.00 to STA. 278+00.00

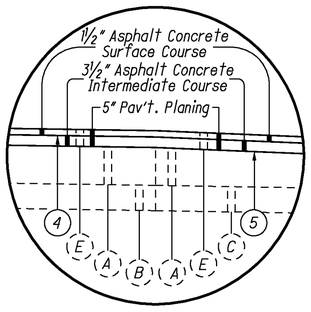

TYPICAL MAINLINE RESURFACING DETAIL
(MAINLINE & SHOULDER)

EXISTING LEGEND

- (A) EXISTING 9" REINFORCED CONCRETE PAVEMENT
- (B) EXISTING SUBBASE
- (C) EXISTING AGGREGATE BASE
- (D) EXISTING BITUMINOUS AGGREGATE BASE
- (E) EXISTING ASPHALT CONCRETE
- (F) EXISTING UNDERDRAIN
- (G) EXISTING GUARDRAIL

PROPOSED LEGEND

1. ITEM 442 - ASPHALT CONCRETE SURFACE COURSE, 12.5MM, TYPE B (446), AS PER PLAN
2. ITEM 442 - ASPHALT CONCRETE INTERMEDIATE COURSE, 19MM, TYPE B (446)
3. ITEM 254 - PAVEMENT PLANING, ASPHALT CONCRETE, AS PER PLAN
4. ITEM 407 - TACK COAT FOR INTERMEDIATE COURSE (0.04 GAL./S.Y.)
5. ITEM 407 - TACK COAT (0.075 GAL./S.Y.)
6. ITEM 209 - LINEAR GRADING
7. ITEM 606 - GUARDRAIL, TYPE 5
8. ITEM 202 - PAVEMENT REMOVED
9. ITEM 408 - PRIME COAT, AS PER PLAN
10. ITEM 617 - COMPACTED AGGREGATE
11. ITEM 424 - 1" FINE GRADED POLYMER ASPHALT CONCRETE, TYPE B, AS PER PLAN
12. ITEM 254 - PAVEMENT PLANING, ASPHALT CONCRETE (1½" NOMINAL DEPTH)

CALCULATED RDA
CHECKED JPB

TYPICAL SECTIONS

TUS-77-20.73
TUS-250-11.88

I:\PROJECTS\81725\Prod\Dgn\GY100.dgn 11-JAN-2013 2:39PM jberanek

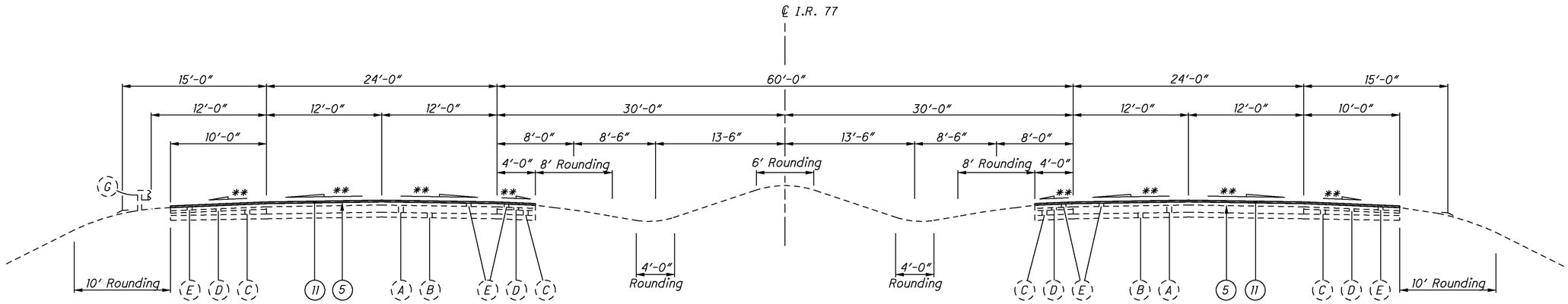

NORMAL SECTION

STA. 283+00.00 to STA. 377+75.00
STA. 387+50.00 to STA. 425+25.00

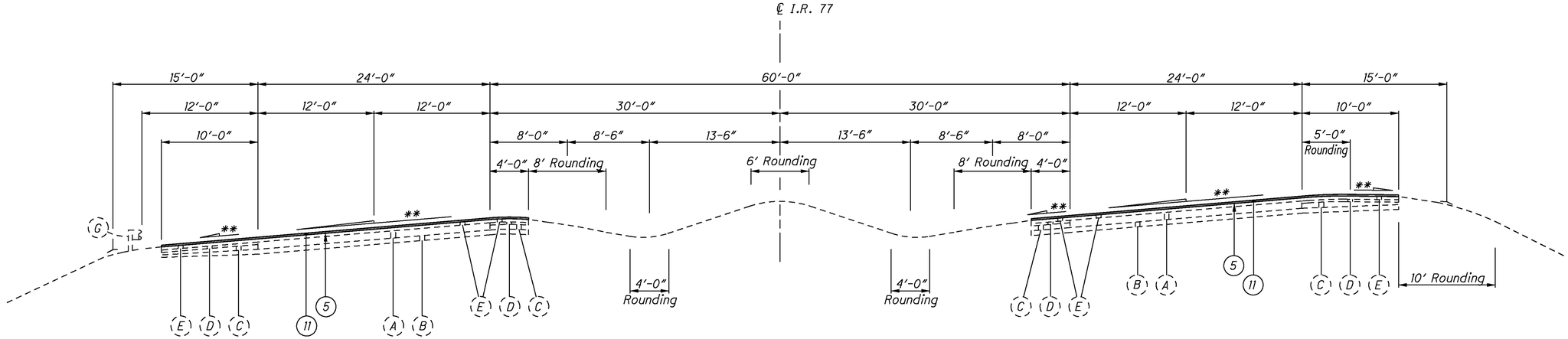

SUPERELEVATED SECTION

STA. 377+75 to STA. 387+50.00
STA. 425+25.00 to STA. 453+16.62

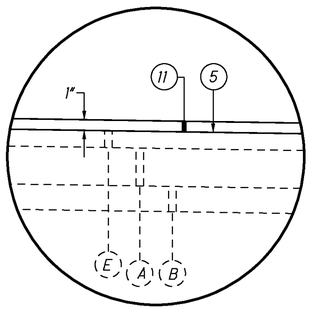

TYPICAL I.R. 77 RESURFACING DETAIL

** SAME SLOPE AS EXISTING
FOR LEGEND, SEE SHEET 4.

CALCULATED RDA
CHECKED JPB

TYPICAL SECTIONS

TUS-77-20.73
TUS-250-11.88

5
62

I:\PROJECTS\81725\Prod\Dgn\GY100.dgn 11-DEC-2012 10:22AM ramstutz

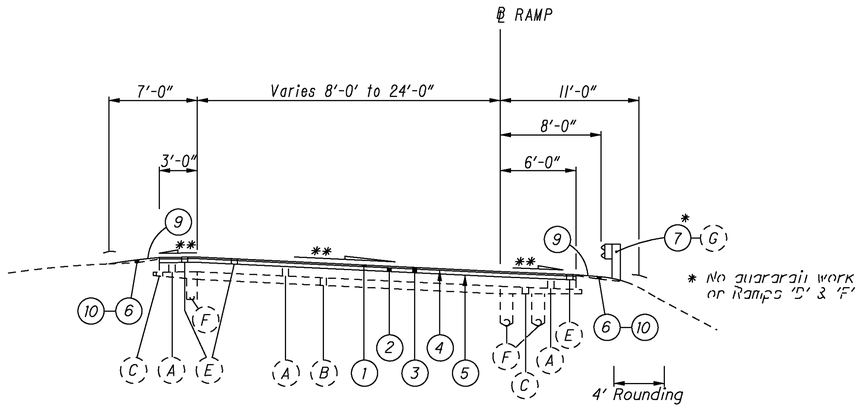

RAMP SUPERELEVATED SECTION

RAMP 'A' STA. 0+21.75 to STA. 8+20.75
RAMP 'B' STA. 0+20.52 to STA. 19+78.14
RAMP 'C' STA. 1+85.61 to STA. 16+12.70
RAMP 'D' STA. 0+21.00 to STA. 6+69.30
RAMP 'E' STA. 5+19.06 to STA. 16+25.12
RAMP 'F' STA. 2+00.00 to STA. 13+19.00
RAMP 'G' STA. 16+42.48 to STA. 20+00.00
RAMP 'G' STA. 22+50.00 to STA. 25+87.81
RAMP 'H' STA. 12+00.00 to STA. 16+50.00
RAMP 'H' STA. 17+50.00 to STA. 19+52.26
RAMP 'I' STA. 0+04.14 to STA. 5+50.00
RAMP 'I' STA. 9+00.00 to STA. 9+47.55
RAMP 'J' STA. 0+12.50 to STA. 4+00.00
RAMP 'J' STA. 6+50.00 to STA. 12+50.00

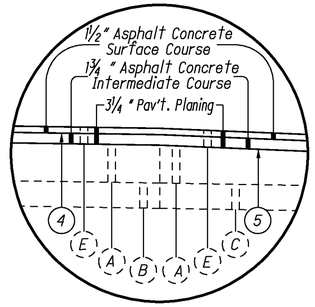

TYPICAL RAMP RESURFACING DETAIL
(MAINLINE & SHOULDER)

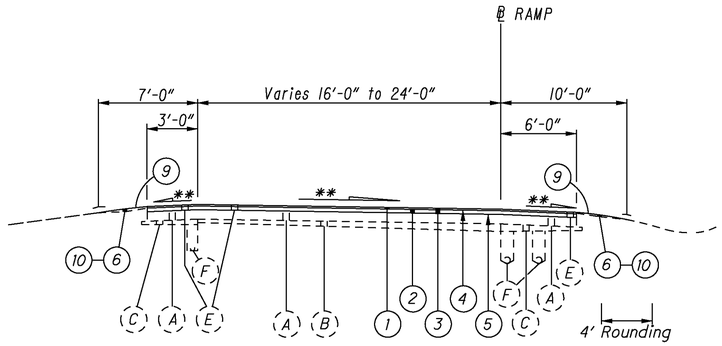

RAMP NORMAL SECTION

RAMP 'G' STA. 20+00.00 to STA. 22+50.00
RAMP 'H' STA. 16+50.00 to STA. 17+50.00
RAMP 'I' STA. 5+50.00 to STA. 9+00.00
RAMP 'J' STA. 4+00.00 to STA. 6+50.00
RAMP 'J' STA. 12+50.00 to STA. 14+55.80

SEE SHEET NO. 4 FOR LEGEND AND RESURFACING DETAILS

NOTE:

ITEM 254 - PAVEMENT PLANING, ASPHALT CONCRETE, AS PER PLAN
Mainline shall be 5" nominal depth to concrete.
Ramps shall be milled 3¼ " .

ITEM 442 - ASPHALT CONCRETE INTERMEDIATE COURSE, 19MM, TYPE B (446)
Mainline shall be 3½ " placed in two lifts.
Ramps shall be 1¾ " placed in one lift.

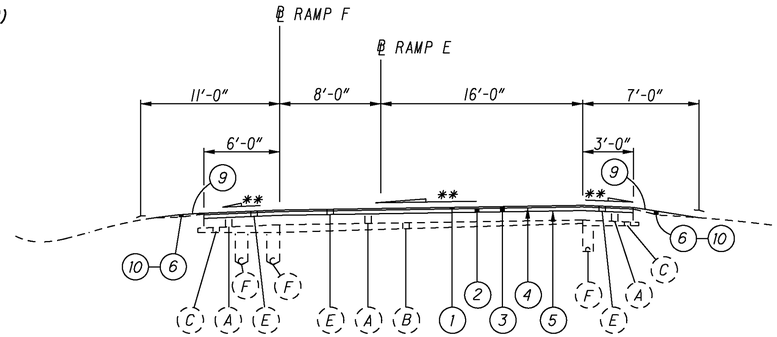

RAMP E & F COMBINED NORMAL SECTION

RAMP 'E' STA. 0+21.20 to STA. 5+19.06
RAMP 'F' STA. 0+19.90 to STA. 2+00.00

CALCULATED RDA CHECKED JPB

TYPICAL SECTIONS

TUS-77-20.73
TUS-250-11.88

I:\PROJECTS\81725\Prod\Dgn\GY100.dgn 11-DEC-2012 10:24AM ramstutz

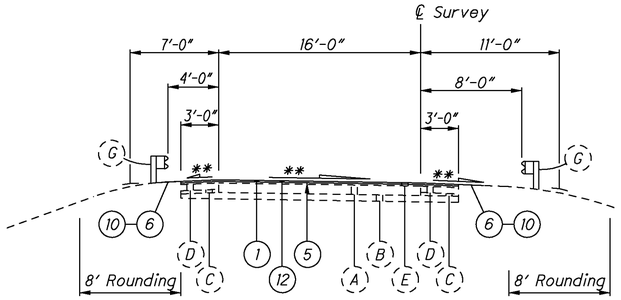

RAMPS
NORMAL & SUPERELEVATED SECTION
(IN DIRECTION OF TRAFFIC)

U.S. 250 INTERCHANGE:
RAMP 'A' STA. 41+26.00 TO STA. 52+38.67
RAMP 'B' STA. 42+80.22 TO STA. 50+79.86
RAMP 'C' STA. 34+96.08 TO STA. 43+96.59
RAMP 'D' STA. 38+99.72 TO STA. 45+21.39

** SAME SLOPE AS EXISTING

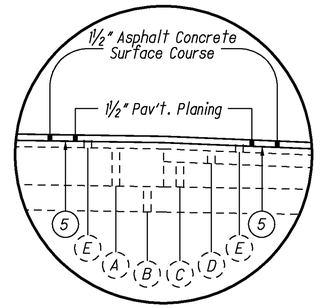

TYPICAL RESURFACING DETAIL
(RAMP & RAMP SHOULDER)

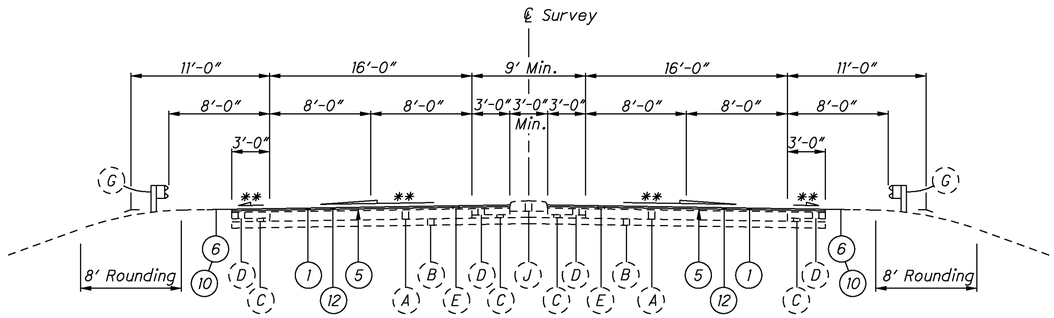

RAMPS 'AB' & 'CD'
NORMAL SECTION

U.S. 250 INTERCHANGE:
RAMP 'AB' STA. 59+25.00 TO STA. 61+02.90
RAMP 'CD' STA. 43+96.59 TO STA. 46+28.47

** SAME SLOPE AS EXISTING

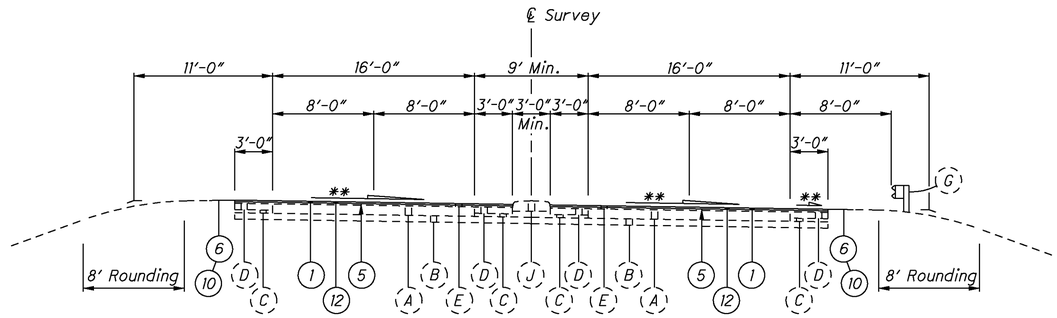

RAMPS 'AB'
SUPERELEVATED SECTION

U.S. 250 INTERCHANGE:
RAMP 'AB' STA. 52+38.67 TO STA. 59+25.00

FOR LEGEND SEE SHEET NO. 4

CALCULATED RDA
CHECKED JPB

TYPICAL SECTIONS

TUS-77-20.73
TUS-250-11.88

6A
62

I:\PROJECTS\81725\Prod\Dgn\GY100.dgn 11-JAN-2013 2:40PM jberanek

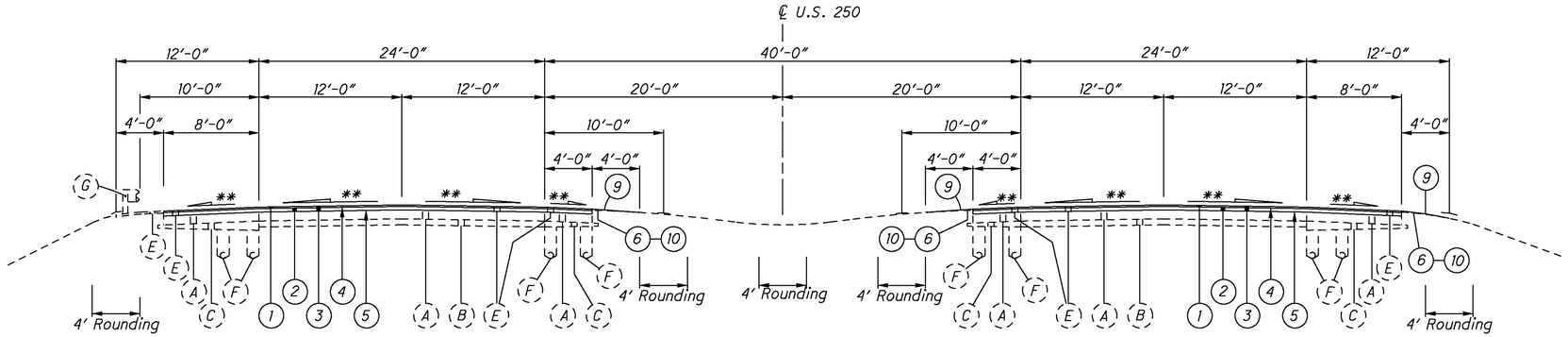

NORMAL SECTION

STA. 638+50.00 to STA. 650+00.00

** SAME SLOPE AS EXISTING

SEE SHEET NO. 4 FOR LEGEND AND RESURFACING DETAILS

NOTE:

ITEM 254 - PAVEMENT PLANING, ASPHALT CONCRETE, AS PER PLAN
Mainline shall be 3¼ " nominal depth.
Ramps shall be milled 3¼ " nominal depth.

ITEM 442 - ASPHALT CONCRETE INTERMEDIATE COURSE, 19MM, TYPE B (446)
Mainline shall be 1¾ " placed in one lift.
Ramps shall be 1¾ " placed in one lift.

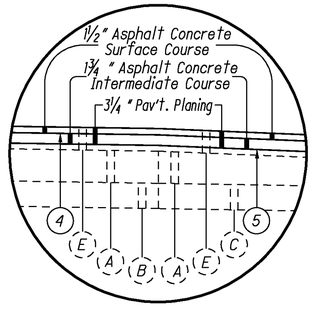

TYPICAL RAMP RESURFACING DETAIL
(MAINLINE & SHOULDER)

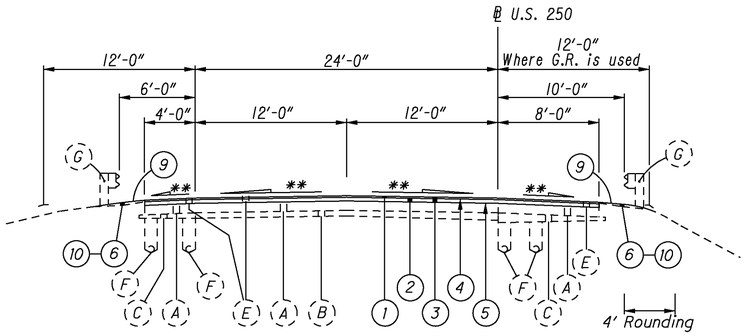

NORMAL SECTION

EASTBOUND U.S. 250

STA. 608+50.00 to STA. 613+50.00

STA. 634+25.00 to STA. 638+50.00

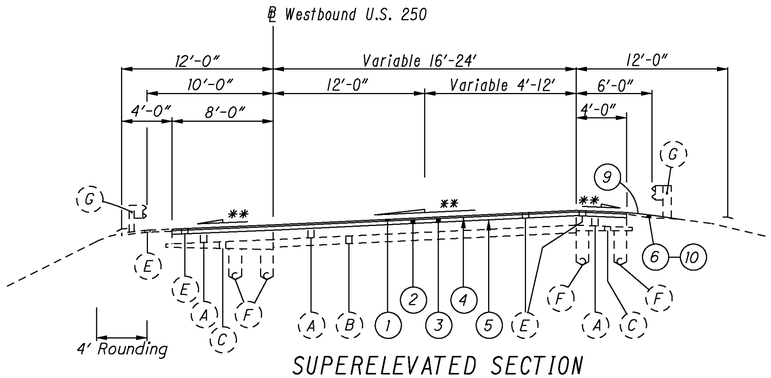

SUPERELEVATED SECTION

WESTBOUND U.S. 250

STA. 617+71.62 to STA. 638+50.00

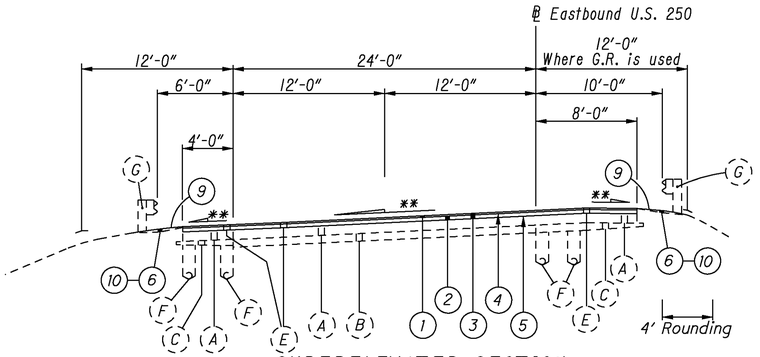

SUPERELEVATED SECTION

EASTBOUND U.S. 250

STA. 591+08.54 to STA. 608+50.00

STA. 613+50.00 to STA. 634+25.00

CALCULATED RDA
CHECKED JPB

TYPICAL SECTIONS

TUS-77-20.73
TUS-250-11.88

I:\PROJECTS\81725\Prod\Dgn\GY100.dgn 11-DEC-2012 10:24AM ramstutz

CALCULATED RDA
CHECKED JPB

GENERAL NOTES

ROUNDING

The rounding at slope breakpoints shown on the Typical Sections apply to all cross sections even though otherwise shown.

UTILITIES

Listed below are all utilities located within the project construction limits together with their respective owners.

AEP Ohio Power Company
P.O. Box 24400
Canton, Ohio 44701
330-438-7061

AEP Ohio Power Company (Transmission)
700 Morrison Road
Gahanna, Ohio 4320
614-552-1183

Red Hill Development
3596 SR 39, NW
Dover, Ohio 44622
330-365-3054

Sound Energy Company, Inc.
3632 State Route 800, NE
Dover, Ohio 44622
330-364-7665

Time Warner Cable
617 Tuscarawas Avenue
New Philadelphia, Ohio 44663
330-494-9200

City of Dover
110 E. Third Street
Dover, Ohio 44622
330-343-6726

City of New Philadelphia
150 East High Avenue
New Philadelphia, Ohio 44663
330-364-4491

IJUS
560 Officenter Place
Gahanna, Ohio 43230
614-470-9882

Frontier Communications
1121 Tuscarawas Avenue, NW
New Philadelphia, Ohio 44663
330-364-0510

Piedmont Gas Company
159 Stonecreek Road, NW
New Philadelphia, Ohio 44663
330-339-5454

Dominion
320 Springside Drive, Suite 320
Akron, Ohio 44333
330-664-2409

Dominion Transmission
7015 Freedom Avenue, NW
North Canton, Ohio 44720
330-575-0949

Village of Strausburg
358 5th Street, SW
Strasburg, Ohio 44680
330-878-7115

Ohio Department of Transportation
2201 Reiser Avenue, SE
New Philadelphia, Ohio 44663
330-339-6633

There are no underground utilities shown on this plan. The nature of the work required by this project will not affect any known underground utilities that exist under or adjacent to the work area.

ELEVATION DATUM

All elevations are assumed, unless otherwise noted.

WORK LIMITS

The work limits shown on these plans are for the physical construction only. The installation and operation of all work zone traffic control and work zone traffic control devices required by these plans shall be provided by the Contractor whether inside or outside these work limits.

PROFILE AND ALIGNMENT

The work proposed by this project is for the grinding of the existing pavement. The alignment and superelevation rates of the existing pavement will not be changed and the profile of the proposed surface will be similar to that of the existing pavement. Previous construction plans showing the original alignment and profile are listed on this sheet.

SAME SEASON COMPLETION OF SURFACE COURSE

Any length of resurfacing work started in a construction season shall have the surface course placed that same season.

ITEM 201 - CLEARING AND GRUBBING, AS PER PLAN

Although there are no trees or stumps specifically marked for removal within the limits of the project, a lump sum quantity is included in the General Summary for Item 201, Clearing and Grubbing, As Per Plan.

The Contractor shall remove all trees and brush around the bridge structures under this item. The limits for this work are all trees and brush within twenty feet of the outside of the structures and, if applicable, between structures.

All provisions as set forth in the specifications under this item are included in the lump sum price bid for Item 201, Clearing and Grubbing, As Per Plan.

CENTERLINE REFERENCE MONUMENTS

Existing centerline monument assemblies are located at the following stations on I.R. 77. The Contractor shall take care not to disturb any of these centerline reference monuments.

STATION	
P.O.T.	86+00
C.S.	90+10.42
S.T.	92+10.42
P.O.T.	95+00
P.O.T.	100+00
P.O.T.	105+00
P.O.T.	110+00
P.O.T.	115+00
P.O.T.	120+00
P.O.T.	125+00
P.O.T.	133+00
P.O.T.	138+00
P.O.T.	143+61.46
P.O.T.	146+00
P.O.T.	154+50
P.O.T.	168+00
P.O.T.	173+00
P.O.T.	179+77.72
P.O.T.	185+00
P.O.T.	190+00
P.O.T.	195+00
P.O.T.	200+00
P.C.	204+45.98
P.O.T.	210+00
P.O.T.	214+72.65
P.O.T.	220+00
P.O.T.	225+50
P.O.T.	230+00
P.O.T.	235+00
P.O.T.	240+00
P.O.T.	245+00
P.O.T.	250+00
P.O.T.	255+77.72
P.O.T.	260+00

STATION	
P.O.T.	265+00
P.O.T.	270+00
P.T.	277+27.53
P.O.T.	282+00
P.O.T.	287+00
P.O.T.	292+00
P.O.T.	297+00
P.O.T.	302+00
P.O.T.	307+00
P.O.T.	312+00
P.O.T.	318+00
P.O.T.	324+00
P.O.T.	330+00
P.O.T.	336+00
P.O.T.	342+00
P.O.T.	348+00
P.O.T.	354+00
P.O.T.	359+00
P.O.T.	368+00
P.O.T.	374+41.29
P.O.T.	377+41.29
P.O.T.	382+00
P.O.T.	387+90.25
P.O.T.	390+90.25
P.O.T.	397+00
P.O.T.	403+00
P.O.T.	409+00
P.O.T.	414+00
P.O.T.	420+00
P.O.T.	426+12.62
P.O.T.	429+12.62
P.O.T.	436+00
P.O.T.	443+00
P.O.T.	450+00

PREVIOUS CONSTRUCTION PLANS

The following previous construction plans, which show the original alignment and profile, are available for inspection at the ODOT District 11 office:

TUS-77-21.51 Original Construction Plan, 1961
TUS-77/250-(20.73)(11.88) Original Interchange Construction Plan, 1962
TUS-77/250-(20.73)(11.88) Upgrading Plan, 1994
TUS-77-20.73 Resurfacing Plan, 2003
TUS-77-23.22 & TUS-39-10.22 Ramp Widening Plan, 1981
TUS-39-13.02 Bridge Replacement Plan, 1995
TUS-39-(10.03)(12.78) Widening and Signalization Plan, 1999
TUS-39-9.24 Bridge Reconstruction and Widening Plan, 2007
TUS-77-25.04 Original Construction Plan, 1962
TUS-77-25.95 Upgrading Plan, 1986
TUS-77-25.04 Upgrading Plan, 2005
TUS-77-27.40 Repair & Resurfacing Plan, 2004
TUS-77-0.19 Rock Barrier Plan, 2005
TUS-77-24.50 C.R. 80 Interchange Plan, 2009
TUS-77-33.111 Sign Upgrading Plan, 1997

ITEM 621 - RAISED PAVEMENT MARKER REMOVED

Existing raised pavement markers shall become the property of the Contractor for disposal off the project. The requirement to fill the depressions shall be waived. The following quantity has been carried to the General Summary to remove existing raised pavement markers:

Item 621, Raised Pavement Marker Removed - - - - - - - - 120 Each (U.S. 250) (02/NHS/PV)
Item 621, Raised Pavement Marker Removed - - - - - - - - 920 Each (I.R. 77) (01/IMS/PV)

ITEM 617 - COMPACTED AGGREGATE

Graded shoulders shall be reshaped as per the requirements of Item 617, Compacted Aggregate. Grindings may be used in lieu of Item 617, Compacted Aggregate. The cost for storing the grindings on the project and placing the grindings shall also be included in this item.

COORDINATION OF RESURFACING AND PLANING OPERATIONS

The pavement planing and resurfacing operation shall be completed in a timely manner as directed by the Engineer. The grindings shall become the property of the Contractor with the exception that some grindings may be utilized as noted in the plans for the graded shoulders. The 446 Intermediate Course resurfacing shall begin no more than seven (7) days after beginning the milling operation.

ITEM 442 - ASPHALT CONCRETE SURFACE COURSE, 12.5mm, TYPE B (446), AS PER PLAN

Materials furnished for fine and coarse aggregates used in this item shall exclude all stone and crushed carbonate stone.

ITEM 424 - FINE GRADED POLYMER ASPHALT CONCRETE, TYPE B, AS PER PLAN

Materials furnished for fine and coarse aggregates used in this item shall exclude all stone and crushed carbonate stone.

ITEM 408 - PRIME COAT, AS PER PLAN

The Contractor will apply "MC-70" at a rate of 0.4 gallons per square yard, or as determined by the Engineer, to the completed aggregate shoulder. A shield shall be provided to prevent the spraying or drifting of liquid bituminous material onto the edge of the pavement or edgeline. The attention of the Contractor is directed to 107.10 of the specifications.

ITEM 254 - PAVEMENT PLANING, ASPHALT CONCRETE, AS PER PLAN

On I.R. 77 the Contractor shall plane the existing asphalt to a depth that will expose a clean concrete surface.

PART-WIDTH CONSTRUCTION

Because of the necessity to build this project under traffic and to construct the full pavement width in stages, exercise care to prevent the construction of a butt joint in the base courses. Lap longitudinal joints as shown on Standard Construction Drawing BP-3.1.

ITEM SPECIAL - PRESSURE RELIEF JOINT, TYPE C

This item shall be used to install the pressure relief joint, type C at the locations as directed by the Engineer. This item shall be installed after all full depth concrete repairs have been completed.

The following quantity has been carried to the General Summary to install the Item Special, Pressure Relief Joint, Type C.

Item Special, Pressure Relief Joint, Type C - - - - - - - - 800 Feet (I.R. 77) (01/IMS/PV)

TUS-77-20.73
TUS-250-11.88

I:\PROJECTS\81725\Prod\Dgn\GN001.dgn 11-DEC-2012 10:27AM ramstutz

CALCULATED RDA
CHECKED JPB

GENERAL NOTES

ITEM 606 - ANCHOR ASSEMBLY, TYPE E

This item shall consist of furnishing and installing any of the guardrail end terminals as listed on Roadway Engineering's Web Page under roadside safety devices for approved guardrail end treatments. Installation shall be at the locations specified in the plans, in accordance with the manufacturer's specifications.

The face of the Type E impact head shall be covered with a sheet of Type G reflective sheeting, per CMS 730.19.

Refer to the manufacturer's instruction reguarding the installation of, and the grading around the foundation tubes and ground strut. The top of any foundation tube should be less than 4-inches above the ground. The placement of the foundation tubes should be an appropriate depth below the level line in order to maintain the finished guardrail height of 29 inches from the edge of the shoulder.

On-site grading is required if the top of the foundation tubes or top of the ground strut does project more than 4 inches above the ground line.

Payment for the above work shall be made at the unit price bid for Item 606, Anchor Assembly, Type E, Each, and shall include all labor, tools, equipment and materials necessary to construct a complete and functional anchor assembly system, including all related transitions, reflective sheeting, hardware, grading, embankment and excavation not separately specified, as required by the manufacturer.

ITEM 606 - IMPACT ATTENUATOR, TYPE 1 BIDIRECTIONAL

This item shall consist of furnishing and installing any one of the Type 1 Impact Attenuators as listed on the Office of Roadway Engineering's web page. Installation shall be at the locations specified in the plans, in accordance with the manufacturer's specifications.

The face of the type 1 impact head shall be covered with a sheet of Type G reflective sheeting, per CMS 730.19. Payment for the above work shall be made at the unit price bid for Item 606, Impact Attenuator, Type 1 Bidirectional, Each, and shall include all labor, tools, equipment and materials necessary to construct a complete and functional impact attenuator system, including all related transitions, hardware, reflective sheeting and grading, not seperately specified, as required by the manufacturer.

ITEM 606 - GUARDRAIL, TYPE 5

The finished guardrail height shall be 29 inches.

MEDIAN GUARDRAIL GRADING

The Contractor shall install the guardrail as per Standard Drawing GR-6.1. The following estimated quantities have been carried to the General Summary for installation of the median guardrail as directed by the Engineer.

Item 203, Excavation - - - - - - - - - - - - - 165 Cu. Yd. (I.R. 77)(01/IMS/PV)
Item 203, Embankment - - - - - - - - - - - - - 165 Cu. Yd. (I.R. 77)(01/IMS/PV)
Item 659, Seeding and Mulching - - - - - - - 7,333 Sq. Yd. (I.R. 77)(01/IMS/PV)
Item 659, Commercial Fertilizer - - - - - - - - 0.99 Ton (I.R. 77)(01/IMS/PV)
Item 659, Lime - - - - - - - - - - - - - - - - - 1.52 Acre (I.R. 77)(01/IMS/PV)
Item 659, Water - - - - - - - - - - - - - - - - 40 M. Gal. (I.R. 77)(01/IMS/PV)

CONNECTION BETWEEN EXISTING AND PROPOSED GUARDRAIL

When it is necessary to splice proposed guardrail to existing guardrail, only the existing guardrail shall be cut, drilled, or punched. The connection shall be made using a "W-Beam Rail Splice" as shown in AASHTO M 180. Payment shall be included in the contract price for the respective guardrail items.

GUARDRAIL PLACEMENT

No hazard shall be left unprotected except for the actual time necessary to remove the existing guardrail, prepare the site, and install new guardrail in a continuous operation. The removal of all guardrail shall at all times be as directed by the Engineer. No guardrail shall be removed until the replacement material is on the site, ready for installation. Failure to comply with this requirement shall be deemed sufficient cause to order work suspended until such time as the Engineer is assured of compliance.

ITEM 202 - GUARDRAIL REMOVED, AS PER PLAN

The following quantity of existing rail panels shall become the property of the Ohio Department of Transportation and are to be delivered by the Contractor at his expense to the following location:

District-11 Complex
2201 Reiser Avenue SE
New Philadelphia, Ohio 44663

6250 Ft. of 12.5' long undamaged rail elements only to be delivered to the above location.

The Contractor will supply all labor and equipment to stockpile the material in a manner acceptable to the Engineer. For additional information contact the Tuscarawas County Manager at 330/339-5050.

ASBESTOS NOTIFICATION

An asbestos survey of the US250 bridge structure over IR77 (Structure No. TUS-250-1232R, SFN 7904835) scheduled for rehabilitation was conducted by a certified asbestos hazard evaluation specialist. The survey determined that no asbestos is present on the bridge structure.

A copy of the Ohio Environmental Protection Agency (OEPA) notification of demolition and renovation form, partially completed and signed by the bridge owner, will be provided to the successful bidder. The Contractor shall complete the form and submit it to the address below at least ten (10) working days prior to the start of any demolition and/or renovation.

Mr. Steve Lowry
Ohio EPA, SEDO
2195 Front Street
Logan, Ohio 43138

The Contractor shall provide a copy of the completed form to the Engineer. Information required on the form will include: 1) The Contractors name and address, 2) The scheduled dates for the start and completion of the bridge removal and 3) A description of the planned demolition work and the method(s) to be used. Copies of the OEPA form and bridge inspection report are available for review at the ODOT District 11 Office, 2201 Reiser Avenue, New Philadelphia, Ohio 44663.

Basis for payment - the Contractor shall furnish all fees, labor, and material necessary to complete and submit the OEPA notification form. Payment for this work shall be included in Item 202 - Portions of Structure Removed, Over 20 Foot Span, As Per Plan

ITEM 632 - DETECTOR LOOP

The following estimated quantity has been carried to the General Summary for the replacement of the detector loops at the New Philadelphia, Dover and Strasburg Intersections.

The Contractor shall measure the size and location of the existing detector loop prior to milling and install the new detector loop in same location. Upon completion the Contractor shall meet on site with ODOT signal electricians to inspect and verify the loops are functioning properly. The ODOT signal electrician can be contacted at Ph. No. 330/308-3974

Item 632, Detector Loop - - - - - - - - - - - - - - - - - 14 Each (I.R. 77) (01/IMS/PV)
Item 632, Loop Detector Lead-In Cable - - - - - - - - 325 Ft (I.R. 77) (01/IMS/PV)

SPEEDINFO DEVICES WITHIN PROJECT LIMITS

The Contractor shall take measures to maintain the proper operation of any SpeedInfo devices within the project limits. The devices are Doppler radar units which look like cylindrical tubes with solar panels attached to them. The sensors are implemented on all Interstates statewide and other major US and State Routes in urban areas, generally spaced between 1 to 2 miles apart, and installed on any existing ODOT infrastructure (typically overhead trusses, cantilevers, ground-mounted sign supports, or light poles). ODOT will coordinate the relocation of any devices that may be affected by the Contractor's operation. The Contractor shall NOT remove the devices themselves. The Contractor shall notify the Project Engineer a minimum of ten calendar days prior to performing any work which requires device relocation. The Project Engineer shall then notify SpeedInfo, Inc. and the ODOT Office of Traffic Engineering of any devices that require relocation. The Contractor should be aware that since speed data is still desirable to ODOT, the Project Engineer will attempt to inform SpeedInfo, Inc. of newly available install locations for the sensors to be relocated to, with minimal downtime.

If immediate attention to a SpeedInfo sensor is required, the Contractor may directly contact the regional installer for SpeedInfo, Inc. from the provided contact information. The regional installer would be able to provide the quickest possible attention to the situation. If the regional installer cannot be reached, the list of statewide contacts should be used in the order it is presented. An email informing all parties of the situation should also be sent at the earliest convenience.

1. Regional Contacts

ODOT D01, Western D05, D06, D07, D08 (also Northern KY), D09

Matt Slusher, Capital Electric
(937) 531-7518
mslusher@capitalelectric.com

Joe Hutsell, Capital Electric
(937) 604-5838
jhutsell@capitalelectric.com

ODOT D02, D03, D04, Eastern D05, D10, D11, D12

Jeff Chase, A+A Safety
Work: (216) 283-8040
Cell: (216) 854-6531
jeffc@aasafetyinc.com

2. Statewide Contacts

Charlie Armiger, SpeedInfo
Office: (408) 333-9960
Cell: (408) 425-4684
carmiger@speedinfo.com

Bryan Comer, ODOT
(614) 387-1253
bryan.comer@dot.state.oh.us

George Saylor, ODOT
(614) 752-8099
george.saylor@dot.state.oh.us

Jason Yeray, ODOT
(614) 466-2168
jason.yeray@dot.state.oh.us

TUS-77-20.73
TUS-250-11.88

I:\PROJECTS\81725\Prod\Dgn\GN001.dgn 11-JAN-2013 2:40PM jberanek

CALCULATED RDA
CHECKED JPB

MAINTENANCE OF TRAFFIC

TUS-77-20.73
TUS-250-11.88

MAINTAINING TRAFFIC, AS PER PLAN

The Contractor shall maintain traffic at all times in accordance with the requirements of CMS Item 614, these maintenance of traffic notes and details, the Standard Construction Drawings, and the traffic control details described in these plans.

The minimum lane width for traffic control shall be 11 feet at all times. It is the responsibility of the Contractor to organize his work in such a manner to provide the most safety with the least inconvenience to the traveling public.

The Contractor is responsible for designing the maintenance of traffic scheme. The Contractor shall submit, in writing, this maintenance of traffic scheme and a schedule of operations to the Engineer and receive approval before work is started on the project.

The shoulders shall have the existing rumble strips removed before traffic is permitted to be maintained on it.

Any open pavement trench or dropoff shall be adequately maintained and protected. The protection used shall meet the requirements of Standard Construction Drawing MT-101.90.

Under no circumstances shall the Contractor be permitted to have work zones which alternately close both the passing and travel lane unless the distance between the lane restrictions exceeds 2 miles.

The Contractor shall be responsible for smooth and orderly flow of traffic through the project area 24 hours per day for the duration of the project. This consists of notifying the Ohio State Patrol after encountering any accidents or disabled vehicles or objects hindering the flow of traffic.

The Contractor shall designate to the Engineer a person responsible for maintenance of traffic control during non-work hours who shall be available within (30) minutes after notification.

Payment for providing watchmen, furnishing, erecting, maintaining and removing signs, cones, markers, special lighting, floodlighting, work zone pavement markings, work zone raised pavement markers, etc., shall be included in the lump sum price bid for Item 614 Maintaining Traffic, As Per Plan.

The Contractor shall furnish, install and maintain all additional signs or other traffic control devices as required above. All costs involved in furnishing, installing and maintaining these devices shall be included in the lump sum price bid for Item 614, Maintaining Traffic, As Per Plan.

Unless the Engineer deems it physically impossible, all construction equipment shall exit all work zones from the downstream end of the work zone or by interchange ramps. Under no circumstances shall the Contractor be permitted to directly transport or operate any equipment across the open lanes of the roadway.

Length and duration of lane closures and restrictions shall be at the approval of the Engineer. It is the intent to minimize the impact to the traveling public. Lane closures or restrictions over segments of the project in which no work is anticipated within a reasonable time frame, as determined by the Engineer, shall not be permitted. The level of utilization of maintenance of traffic devices shall be commensurate with the work in progress.

Except for Structure TUS-250-1232 R, The Contractor will perform all work on this project as per the ODOT Permitted Lane Closure Program, which can be accessed at plcm.dot.state.oh.us.

The restrictions shall also apply to work on the ramps.

The planing and resurfacing will proceed continuously a minimum of five (5) days per week, weather permitting, excepting holidays and events listed below:

No work shall be performed and all existing lanes shall be open to traffic during the following designated holidays and events:

Memorial Day	Fourth of July
Labor Day	Thanksgiving

The period of time that the lanes are to be opened depends on the day of the week on which the holiday or event falls. The following schedule shall be used to determine this period:

Day of the week	Time all lanes must be opened to traffic
Sunday	12:00N Friday through 12:00N Monday
Monday	12:00N Friday through 12:00N Tuesday
Tuesday	12:00N Monday through 12:00N Wednesday
Wednesday	12:00N Tuesday through 12:00N Thursday
Thursday	12:00N Wednesday through 12:00N Monday
Friday	12:00N Thursday through 12:00N Monday
Saturday	12:00N Friday through 12:00N Monday

No extensions of time shall be granted for delays in material deliveries, unless such delays are industry-wide, or for labor strikes, unless such strikes are area-wide.

MAINTAINING TRAFFIC, AS PER PLAN cont.

Structure: TUS-250-1232 R over IR 77

Structure TUS-250-1232 R requires replacement of the bridge deflector parapet. Maintain and protect traffic along US 250 Eastbound utilizing portable barrier and work zone impact attenuators, unidirectional, to be included in the lump sum price bid for Item 614, Maintaining Traffic, As Per Plan. Design the maintenance of traffic scheme in accordance with the Traffic Engineering Manual, CMS 614, the OMUTCD, plan sheet 13 and Standard Construction Drawings MT-95.40 MT-98.10 and MT-98.11. The design speed shall be 55 MPH. Maintain a minimum of one lane of traffic along US 250 Eastbound and One 12' lane along Ramp D.

The following shall apply for completing containment/falsework.

1. The maximum duration of closures shall not exceed 15 minutes. Unless otherwise directed by the engineer, traffic shall be completely cleared before beginning the next closure.

Coordinate work with the roadway maintenance of traffic scheme, except for short duration closures as described below.

2. The contractor shall furnish and install two (2) "WATCH FOR STOPPED TRAFFIC" signs (special) 1500 feet upstream from the structure. Install additional "WATCH FOR STOPPED TRAFFIC" signs every 1800 feet upstream from the "WATCH FOR STOPPED TRAFFIC" signs near the structure if traffic backups reach the first set of signs. The need for these signs shall be constantly monitored by the contractor. All "WATCH FOR STOPPED TRAFFIC" signs and "PREPARE TO STOP" signs shall be equipped with a Type B high intensity flashing warning light.

3. A minimum of two (2) law enforcement officers with patrol vehicles shall be used to pace motorists to a stop. After traffic has been stopped, one patrol vehicle shall travel along the roadway shoulder 50 feet behind the backup of stopped vehicles when stoppages occur. In the vicinity of freeway entrances or exits, the contractor shall place flaggers on the ramps to slow entering traffic. See sheet 13 for details.

4. Patrol vehicles shall have flashing beacons to provide adequate visibility to approaching traffic. Information regarding the fees, arrangements and payment for special duty patrol services may be obtained by contacting the appropriate law enforcement agencies as specified in the note covering "LAW ENFORCEMENT OFFICER WITH PARTOL CAR". Payment for the above is included in Item 614, Law Enforcement Officer With Patrol Car For Assistance.

5. For a period of seven (7) calendar days before the start of any short term closures, the contractor shall place a portable changeable message sign near the point of closure, facing the appropriate direction of travel.

The PCMS shall be programmed as shown in the diagram below:

PORTABLE CHANGEABLE MESSAGE SIGN
ADVANCED NOTICE OF CLOSURE

15 MIN FREEWAY CLOSURE	(DATE) TO (DATE)
FRAME 1 0.8 SEC	FRAME 2 0.8 SEC
10:00 PM TO 5:00 AM	(DATE) TO (DATE)
FRAME 3 0.8 SEC	FRAME 4 0.3 SEC

All work and traffic control devices shall be in accordance with 614 and other applicable portions of the specifications, as well as the Ohio Manual of Uniform Traffic Control Devices. Payment for all labor, equipment and materials shall be included in the lump sum contract price for Item 614, Maintaining Traffic, As Per Plan, unless separately itemized in the plan.

NOTIFICATION OF WORK ZONE LANE RESTRICTIONS

The Contractor shall notify the Engineer at least eighteen (18) days prior to implementing any work zone restriction that will reduce the width or vertical clearance of any lane on which traffic will be maintained during construction. The Engineer shall immediately notify the District Roadway Services Manager to advise the Office of Highway Management of the restrictions.

CONTRACTOR'S EQUIPMENT - OPERATION AND STORAGE

In addition to the requirements of section 614.03 of the Construction and Material Specifications the following shall apply. The Contractor's equipment shall be operated in the direction of traffic where practical. A flagger shall be used where the Contractor's equipment must merge with the traffic stream. The Contractor's vehicles and equipment shall be equipped with at least one amber flashing light.

Equipment may be parked in areas along the highway, thirty feet (30') from the edge of traveled highway unless behind guardrail, when various operations are scheduled to continue the next workday. On weekends or at other times of suspension of work, the equipment shall be stored at a storage area removed from the interstate route right of way. No equipment shall be parked in the median of the highway. Adequate barricades and light shall be placed on the pavement side of the equipment to identify the limits of the equipment. All other equipment, including private vehicles, shall be stored at the approved Contractor's storage area.

ITEM 614, REPLACEMENT DRUM

Drums furnished by the Contractor in accordance with the requirements of the plans, specifications and proposal which become damaged by traffic for reasons beyond the control of the Contractor shall be replaced in kind when ordered by the Engineer. Replacement drums shall be new.

Payment for the new drums shall be made at the contract price per each for Item 614, Replacement Drum, and shall include the cost of removing and disposing of the damaged drum, and providing and maintaining the replacement drum in accordance with the contract requirements for the original drum.

The following estimated quantity has been carried to the General Summary:

Item 614, Replacement Drum - - - - - - - - 10 Each (U.S. 250) (02/NHS/PV)
Item 614, Replacement Drum - - - - - - - - 60 Each (I.R. 77) (01/IMS/PV)

MOVEMENT OF DRUMS

The row of drums along a closed lane shall be moved out of the open lane onto the new pavement as soon as paving operations permit.

ITEM 614, ASPHALT CONCRETE FOR MAINTAINING TRAFFIC

The following estimated quantity has been carried to the General Summary for use as directed by the Engineer:

Item 614, Asphalt Concrete for Maintaining Traffic - - - 20 Cu. Yd. (U.S. 250) (02/NHS/PV)
Item 614, Asphalt Concrete for Maintaining Traffic - - - 100 Cu. Yd. (I.R. 77) (01/IMS/PV)

DROPOFFS IN WORK ZONES

The wedge treatment as detailed in Standard Drawing MT-101.90 will be required and shall be included in the lump sum bid for Item 614 - Maintaining Traffic, As Per Plan.

EXISTING RUMBLE STRIPS

If the Contractor chooses to move traffic onto the outside shoulder to maintain two lanes of travel, the existing rumble strips will have to be removed. The area of the existing rumble strips shall be milled at least 2 inches; the milled surface and the sides need to be covered with ODOT approved AC liquid and then filled with asphalt. Pavement for Maintaining Traffic Class A shall be used to fill the rumble strips. Payment for all work associated with milling, AC liquid, traffic control and the filling of the rumble strips shall be considered incidental to and included with Item 614 Maintaining Traffic, As Per Plan.

I:\PROJECTS\81725\Prod\Dgn\GN001.dgn 11-DEC-2012 10:30AM ramstutz

ITEM 614 - WORK ZONE INCREASED PENALTIES SIGN (R11-H5a)

R11-H5a-48 signs shall be furnished, erected, and maintained in good condition and/or replaced as necessary and subsequently removed by the Contractor. Signs shall be mounted at the appropriate offsets and elevations as prescribed by the Ohio Manual of Uniform Traffic Control Devices. They shall be maintained on supports meeting current safety criteria.

The signs may be erected or uncovered no more than four hours before the actual start of work. The signs shall be removed or covered no later than four hours following restoration of all lanes to traffic with no restrictions, or sooner as directed by the Engineer. Temporary sign covering and uncovering due to temporary lane restorations shall be guided by the four-hour limitations stated above. Such lane restorations should be expected to remain in effect for 30 or more consecutive calendar days, such as during winter shut-downs.

The signs shall be dual mounted. The first sign shall be placed between the "ROAD WORK AHEAD" (W20-1) sign and the next sign in the sequence. Signs shall be erected on each entrance ramp and every 2 miles through the construction work limits.

The Contractor may use signs and supports in used, but good, condition provided the signs meet current ODOT specifications. Sign faces shall be reflectorized with Type G sheeting complying with the requirements of CMS 730.19.

Work zone increased penalties signs and supports will be measured as the number of sign installations, including the sign and necessary supports. If a sign and support combination is removed and re-erected at another location as directed by the Engineer, it shall be considered as another unit.

Payment for accepted quantities, complete in place, will be made at the contract unit price. Payment shall be full compensation for all materials, labor, incidentals and equipment for furnishing, erecting, maintaining, covering during suspension of work, and removal of the sign and support.

Item 614, Work Zone Increased Penalties Sign - - - - - - 4 Each (U.S. 250) (02/NHS/PV)
Item 614, Work Zone Increased Penalties Sign - - - - - - 16 Each (I.R. 77) (01/IMS/PV)

WORK ZONE PAVEMENT MARKINGS AND SIGNS

The Contractor shall be required to install work zone markings and signs at locations identified by the Engineer per the requirements of CMS 614.04 and 614.11.

Work zone pavement markings shall be 642 paint.

Prior to placement of any work zone pavement markings, the Contractor shall completely obliterate, as per 641.10, all existing pavement markings that would create confusion or conflict with the work zone pavement markings.

The following estimated quantity has been carried to the General Summary for work zone pavement markings:

Item 614, Work Zone Lane Line, Class 1, 642 Paint - - - - - - - 5.08 Mile (U.S. 250)(02/NHS/PV)
Item 614, Work Zone Edge Line, Class 1, 642 Paint - - - - - - - 15.80 Mile (U.S. 250)(02/NHS/PV)
Item 614, Work Zone Channelizing Line, Class 1, 642 Paint - - - 3,634 Feet (U.S. 250)(02/NHS/PV)
Item 614, Work Zone Lane Line, Class 1, 642 Paint - - - - - - - 36.85 Mile (I.R. 77)(01/IMS/PV)
Item 614, Work Zone Edge Line, Class 1, 642 Paint - - - - - - - 90.74 Mile (I.R. 77)(01/IMS/PV)
Item 614, Work Zone Channelizing Line, Class 1, 642 Paint - - - 32,441 Feet (I.R. 77)(01/IMS/PV)

Work zone raised pavement markers cannot be used to simulate (replace) any type of work zone pavement marking.

The following estimated quantity has been carried to the General Summary for work zone signs:

Item 614, Work Zone Marking Sign (W8-11-36) - - - - - - - - - 4 Each (U.S. 250) (02/NHS/PV)
Item 614, Replacement Sign - - - - - - - - - - - - - - - - - - 1 Each (U.S. 250) (02/NHS/PV)
Item 614, Work Zone Marking Sign (W8-11-36) - - - - - - - - - 16 Each (I.R. 77) (01/IMS/PV)
Item 614, Replacement Sign - - - - - - - - - - - - - - - - - - 3 Each (I.R. 77) (01/IMS/PV)

FLOODLIGHTING

Floodlighting of the work site for operations conducted during night time periods shall be accomplished so that the lights do not cause glare to the drivers on the roadway. To ensure the adequacy of the floodlight placement, the Contractor and the Engineer shall drive throughout the worksite each night when the lighting is in place and operative prior to commencing any work. If glare is detected, the light placement and shielding shall be adjusted to the satisfaction of the Engineer before work proceeds. Payment for all labor, equipment and materials shall be included in the lump sum contract price for Item 614, Maintaining Traffic, As Per Plan.

SPECIAL-AIR SPEED ZONE MARKING

The Contractor shall contact the District 11 Survey Operations Manager when the paving and linear grading is complete for the restoration of the Air Speed Zone Markings. The Air Speed Zone Markings will be applied by District personnel.

ITEM 614 - WORK ZONE SPEED LIMIT SIGN

The Contractor shall furnish, install, maintain, cover during suspension of work, and subsequently remove Work Zone Speed Limit (R2-1-48) (55 MPH Speed Limit) signs and supports within the work limits in accordance with the following requirements:

The Contractor shall cover or remove any existing Speed Limit signs within the reduced Speed Zone. These signs shall be restored during suspension or termination of the reduced speed limit. The expense of covering or removal and restoration of existing Speed Limit or Minimum Speed Limit signs shall be included in the pay item for the Work Zone Speed Limit signs.

The Work Zone Speed Limit signs may be erected or uncovered no more than 4 hours before the actual start of work. The signs shall be removed or covered no later than 4 hours following restoration of all lanes to traffic with no restrictions, or sooner as directed by the Engineer. Temporary sign covering and uncovering due to temporary lane restorations shall be guided by the four-hour limitations stated above. Such lane restorations should be expected to remain in effect for 30 or more days, such as during winter shut-downs. Cleanup work and other work beyond the shoulder such as seeding, to be performed after restoration of all full-width lanes and shoulders to traffic, does not constitute a condition warranting a speed reduction. Therefore, when activity is limited to such work, the speed limit in effect shall be the normal speed limit for the site.

Construction and Material Specifications, Item 614, Paragraph 614.02(B) indicates that the two directions of a divided highway are considered separate highway sections. Therefore, if the work on a multi-lane divided highway is limited to only one direction, speed reduction in the direction of the work does not automatically constitute speed reduction in the opposite direction. Speed limit reduction in the opposite direction, in such case, is appropriate only if conditions are expected to have an impact on the directional traffic flow, as directed by the Engineer.

The Contractor shall erect a Work Zone Speed Limit sign in advance of any lane restriction expected to last at least 30 consecutive calendar days, or as directed by the Engineer. The sign shall be mounted on both sides of a directional roadway of divided highways. The first Work Zone Speed Limit sign shall be placed 500 feet in advance of the lane reduction or shift taper or other roadway or shoulder restriction. On undivided highways the sign shall be mounted on the right side, approximately 250 feet in advance of such restrictions. The sign shall be repeated every 1 mile for 55 mph zones and every one-half mile for 50 mph and 45 mph zones. These signs shall also be erected immediately after each open entrance ramp within the zone.

On projects for which the activity or roadway restriction is limited to one section of the project for at least thirty days and then is moved to another section of the project upon completion of work in the first section, the speed limit reduction shall be limited to only the active portion of the project at the given time. Signing for a speed limit reduction, as well as all other advance construction signing, shall be relocated when the concentration of activity is relocated.

On projects for which speed reduction is called for on more than one roadway, the display of reduced speed limit signing on a given roadway shall be dependent on the scheduling of work activity on the given roadway.

Speed Reduction signs (W3-5) shall be erected in advance of the speed reduction, approximately 1250 feet on multi-lane highways and 500 feet on 2-lane highways.

A sign(s) to indicate the resumption of the statutory speed limit shall be erected at the end of any reduced Speed Zone, typically at the point where roadway and shoulder widths return to normal. On undivided roadways, the R2-1 (Speed Limit) sign shall be used. On divided highways where the speed limit varies by vehicle type, the R2-1 (Speed Limit) sign and the R2-H2a (Truck Speed Limit) signs shall be mounted side-by-side on separate supports. The Contractor may use signs and supports in used, but good condition, provided the signs meet current ODOT specifications. Sign faces shall be retroreflectorized with Type G sheeting complying with the requirements of CMS 730.19.

Work Zone Speed Limit signs shall be mounted on two Item 630, Ground Mounted Supports, No. 3 Posts.

Work Zone Speed Limit signs and supports will be measured as the number of sign installations, including the signs and necessary supports. If a sign and support combination is removed and reerrected at another location within the project due to changes in the Speed Zone directed by the Engineer, it shall be considered another unit.

Payment for accepted quantities, complete in place, will be made at the contract unit price. Payment shall be full compensation for all materials, labor, incidentals and equipment for furnishing, erecting, maintaining, covering during suspension of work, and removing the signs and supports. Speed limit signing for the point of resumption of the statutory speed limit shall be paid for as Work Zone Speed Limit signs. The following estimated quantity has been carried to the General Summary.

Item 614, Speed Zone Ahead Symbol Sign - - - - - - - - 2 Each (U.S. 250) (02/NHS/PV)
Item 614, Speed Zone Ahead Symbol Sign - - - - - - - - 4 Each (I.R. 77) (01/IMS/PV)
Item 614, Work Zone Speed Limit Sign - - - - - - - - - 4 Each (U.S. 250) (02/NHS/PV)
Item 614, Work Zone Speed Limit Sign - - - - - - - - - 28 Each (I.R. 77) (01/IMS/PV)

ITEM 614 - LAW ENFORCEMENT OFFICER (WITH PATROL CAR) FOR ASSISTANCE DURING CONSTRUCTION OPERATIONS

Use of Law Enforcement Officers (LEOs) by Contractors other than the uses specified below will not be permitted at project cost. LEOs should not be used where the Ohio Manual of Uniform Traffic Control Devices (OMUTCD) intends that flaggers be used.

In addition to the requirements of CMS 614 and the OMUTCD, a uniformed LEO with an official patrol car (car with top-mounted emergency flashing lights and complete markings of the appropriate law enforcement agency) shall be provided for the following traffic control tasks:

For lane closures:
During initial set-up periods, tear down periods, substantial shifts of a closure point, short duration closure of a multi-lane divided highway as indicated on the plan insert sheet or when new lane closure arrangements are initiated for long-term lane closures/shifts (for the first and last day of major changes in traffic control setup). In general, LEOs should be positioned at the point of lane restriction or road closure and to manually control traffic movements through intersections in work zones.

When construction vehicles are entering/exiting the zone directly from/into an open lane of traffic. If a lane has been closed to provide an acceleration/deceleration lane for the vehicle, the LEO will not be required.

LEOs should not forgo their traffic control responsibilities to apprehend motorists for routine traffic violations. However, if a motorist's actions are considered to be reckless, then pursuit of the motorist is appropriate.

The LEOs work at the direction of the Contractor. The Contractor is responsible for securing the services of the LEOs with the appropriate agencies and communicating the intentions of the plans with respect to duties of the LEOs. The Engineer shall have final control over the LEO's duties and placement, and will resolve any issues that may arise between the two parties.

The LEO shall report in to the Contractor prior to the start of the shift, in order to receive instructions regarding specific work assignments during his/her shift. The LEO is expected to stay at the project site for the entire duration of his/her shift. The LEO shall report to the Contractor at the end of his/her shift. Once the LEO has completed the duties described above and still has time remaining on his/her shift, the LEO may be asked to patrol through the work zone (with flashing lights off) or be placed at a location to deter motorists from speeding. Should it be necessary to leave the project site, the LEO shall notify the Engineer. The Contractor shall provide the LEO with a two-way communication device which shall be returned to the Contractor at the end of his/her shift.

LEOs (with patrol car) required by the traffic maintenance tasks above shall be paid for on a unit price (hourly) basis under Item 614, Law Enforcement Officer (with patrol car) for Assistance. The following estimated quantity has been carried to the General Summary.

Item 614, Law Enforcement Officer with Patrol Car for Assistance - - 240 Hours (I.R. 77)(01/IMS/PV)
Item 614, Law Enforcement Officer with Patrol Car for Assistance - - 50 Hours (U.S. 250)(02/NHS/PV)

The hours paid shall include minimum show-up time required by the law enforcement agency involved.

Any additional costs (administrative or otherwise) incurred by the Contractor to obtain the services of an LEO are included with the bid unit price for Item 614, Law Enforcement Officer with Patrol Car for Assistance.

CALCULATED RDA
CHECKED JPB

MAINTENANCE OF TRAFFIC

TUS-77-20.73
TUS-250-11.88

11
62

i:\PROJECTS\81725\Prod\Dgn\GN001.dgn 11-JAN-2013 2:41PM jberanek

ITEM 614, WORK ZONE IMPACT ATTENUATOR FOR 24" WIDE HAZARDS (UNIDIRECTIONAL)

This item shall consist of furnishing and installing a non-gating impact attenuator. Furnish an impact attenuator from the Office of Roadway Engineering approved list for Work Zone Impact Attenuators. The approved list is available at the "Roadway Standards: Proprietary Roadside Safety Devices" web page on the Office of Roadway Engineering website.

Installation shall be at the locations specified in the plans in accordance with the manufacturer's specifications.

The Contractor shall repair or replace a damaged unit within 24 hours of a damaging impact.

When bidirectional designs are specified, the Contractor shall supply appropriate transitions.

When gating impact attenuators are desired, the Contractor shall submit documentation to the Engineer for acceptance.

The cost for the additional barrier required for a gating impact attenuator shall be included in the cost of the gating impact attenuator.

The following quantity has been carried to the General Summary:

Item 614, Work Zone Impact Attenuator, For 24" Wide
Hazards (Unidirectional) - 2 Each (U.S. 250)(02/NHS/PV)

Payment for the above work shall be made at the unit price bid and shall include all labor, tools, equipment and materials necessary to construct and maintain a complete and functional impact attenuator system, including all related backups, transitions, leveling pads, hardware and grading, not separately specified, as required by the manufacturer.

ITEM 614, PORTABLE CHANGEABLE MESSAGE SIGNS, AS PER PLAN

The Contractor shall furnish, install, maintain and remove, when no longer needed, a changeable message sign. The sign shall be of a type shown on a list of approved PCMS units available on the Office of Materials Management web page. The list contains Class A and B units with minimum legibility distances of 650 feet and 475 feet, respectively.

Each sign shall be trailer-mounted and equipped with a functional dimming mechanism, to dim the sign during darkness, and a tamper and vandal proof enclosure. Each sign shall be provided with appropriate training and operation instructions to enable on-site personnel to operate and trouble-shoot the unit. The sign shall also be capable of being powered by an electrical service drop from a local utility company. PCMS trailers shall be delineated on a permanent basis by affixing conspicuity tape conforming to CMS 614.03, in a continuous line on the face of the trailer as seen by oncoming road users.

The probable PCMS locations and work limits for those locations are shown on sheet(s) of the plan. Placement, operation, maintenance and all activation of the signs by the Contractor shall be as directed by the Engineer. The PCMS shall be located in a highly visible position yet protected from traffic. The Contractor shall, at the direction of the Engineer, relocate the PCMS to improve visibility or accommodate changed conditions. When not in use, the PCMS shall be turned off. Additionally, when not in use for extended periods of time, the PCMS shall be turned, facing away from all traffic, and shall display one or more Type G yellow retroreflective sheeting surfaces of 9-inch by 15-inch minimum size facing traffic.

The Engineer shall be provided access to each sign unit and shall be provided with appropriate training and operation instructions to enable ODOT personnel to operate and troubleshoot the unit, and to revise sign messages, if necessary.

All messages to be displayed on the sign will be provided by the Engineer. A list of all required pre-programmed messages will be given to the Contractor at the project preconstruction conference. The sign shall have the capability to store up to 99 messages. Message memory or pre-programmed displays shall not be lost as a result of power failures to the on-board computer. The sign legend shall be capable of being changed in the field. Three-line presentation formats with up to six message phases shall be supported. PCMS format shall permit the complete message for each phase to be read at least twice.

The PCMS shall contain an accurate clock and programming logic which will allow the sign to be activated, deactivated or messages changed automatically at different times of the day for different days of the week.

The PCMS unit shall be maintained in good working order by the Contractor in accordance with the provisions of CMS 614.07. The Contractor shall, prior to activating the unit, make arrangements, with an authorized service agent for the PCMS, to assure prompt service in the event of failure. Any failure shall not result in the sign being out of service for more than 12 hours, including weekends. Failure to comply may result in an order to stop work and open all traffic lanes and/or in the Department taking appropriate action to safely control traffic. The entire cost to control traffic, accrued by the Department due to the Contractor's noncompliance, will be deducted from moneys due, or to become due the Contractor on his contract.

The Contractor shall be responsible for 24-hour-per-day operation and maintenance of these signs on the project for the duration of the phases when the plan requires their use. Payment for the above described item shall be at the contract unit price. Payment shall include all labor, materials, equipment, fuels, lubricating oils, software, hardware and incidentals to perform the above described work.

Item 614, Portable Changeable Message Sign, as per plan... 3 Sign Month (U.S. 250)(02/NHS/PV)

I:\PROJECTS\81725\Prod\Dgn\GN001.dgn 11-DEC-2012 10:31AM ramstutz

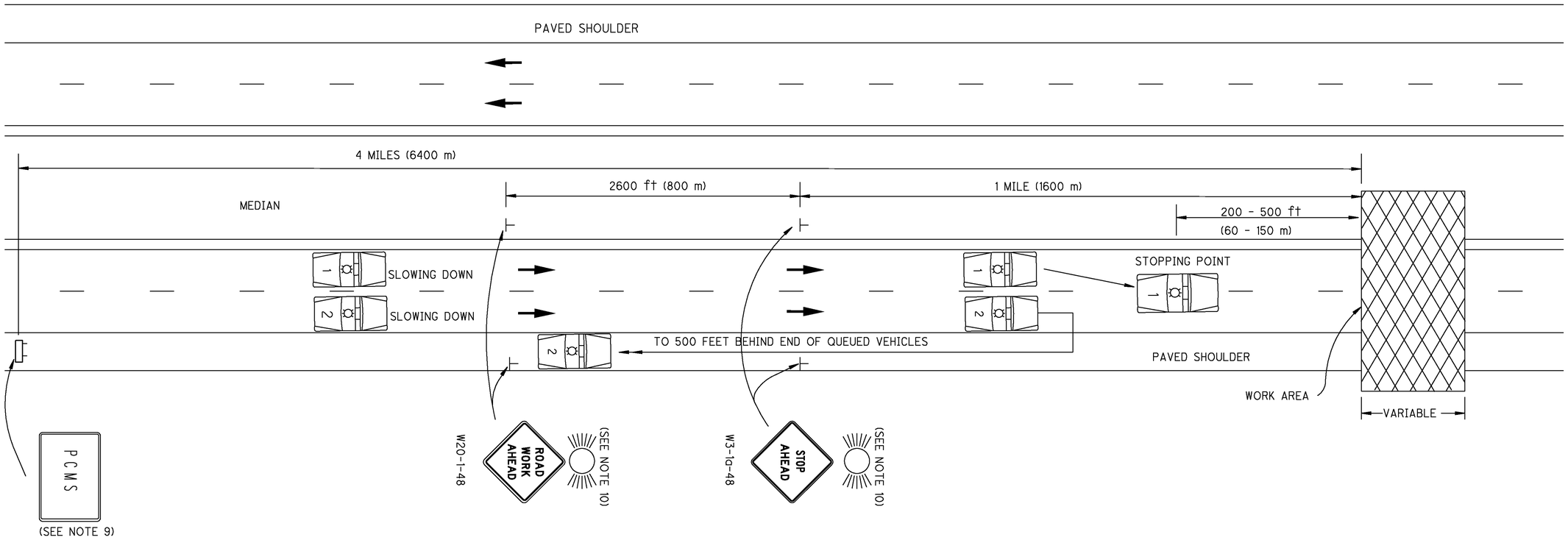

1. This type of highway closure shall be used for all construction, maintenance and utility operations when the duration of closure will not exceed 15 minutes.

2. A minimum of two Law Enforcement Officers (LEO) with patrol cars per direction shall be provided to block traffic and pace motorists to a stop. The number of patrol cars shall equal the number of lanes closed on the highway.

3. Patrol cars, with lights flashing, should enter the stream of traffic at approximately 3 miles before the point of closure. At approximately 2 miles before the point of closure, they should begin the gradual slow down. Traffic shall be brought to a complete stop a safe distance, between 200 and 500 feet (60 and 150 m), from the work area. This slowing operation shall take no more than 10 minutes. After traffic has been stopped, one patrol car shall travel along the roadway shoulder 500 feet (150 m) behind the end of the queued vehicles.

4. The Contractor shall not begin work until traffic has been brought to a complete stop.

5. All entrance ramps located between the stopped traffic and the work area shall be closed.

6. After the highway has been closed and reopened via this procedure, both of the following requirements shall have been met before implementation of another short duration closure, except with the approval of the Engineer:
   A. A minimum period of 15 minutes shall have elapsed
   B. The queued traffic shall have dissipated

7. The time frame for stopping traffic shall be specified.

8. The public shall be given advance notice of the upcoming closure by providing Portable Changeable Message signs at the site in advance of the scheduled closing. Closure information should also be provided to the Engineer.

9. An ODOT approved Portable Changeable Message Sign, Class 1, shall be provided during operation. The message sign shall be placed at approximately 4 miles (6400 meters) in advance of the closure or as directed by the Engineer. The message sign shall read "ROAD CLOSED AHEAD" (2 sec.), "PREPARE TO STOP" (2 sec.)

10. The Contractor shall erect and maintain 48 inch "ROAD WORK AHEAD" and "STOP AHEAD" signs on each side of the highway. Each sign shall be equipped with one Type A flashing warning light and one flare. There shall be one flare at each sign on both sides of the roadway. The flare shall be replaced if it burns out.

OFFICE OF TRAFFIC ENGINEERING

DESIGNED SHB | REVIEWED LAM

REVISION DATE 10/15/10 | CHECKED

PIS NUMBER 209960

PLAN INSERT SHEET

SHORT-DURATION CLOSURE OF MULTI-LANE DIVIDED HIGHWAY

TUS-77-20.73
TUS-250-11.88

1 / 1

13
62

I:\PROJECTS\81725\Prod\Dgn\MOT_PIS_209960.dgn 11-DEC-2012 10:32AM ramstutz

SHEET NUMBER										OFFICE CALC'S. I.R. 77	OFFICE CALC'S. U.S. 250	PARTICIPATION		ITEM	ITEM EXT.	GRAND TOTAL	UNIT	DESCRIPTION	SEE SHEET NO.
8	9		17	18	32	33	36					01/IMS/PV	02/NHS/PV						
																		ROADWAY	
LUMP												LUMP	LUMP	201	11001	LUMP		CLEARING AND GRUBBING, AS PER PLAN	8
			12,330	150								12,330	150	202	23000	12,480	SQ YD	PAVEMENT REMOVED	
										1,090		1,090		202	23500	1,090	SQ YD	WEARING COURSE REMOVED	8
			22,830	212.5								22,830	212.5	202	38000	23,042.5	FT	GUARDRAIL REMOVED	
			6,250									6,250		202	38001	6,250	FT	GUARDRAIL REMOVED, AS PER PLAN	9
			11									11		202	42000	11	EACH	ANCHOR ASSEMBLY REMOVED, TYPE A	
			21	2								21	2	202	42040	23	EACH	ANCHOR ASSEMBLY REMOVED, TYPE T	
			22	2								22	2	202	42812	24	EACH	ANCHOR ASSEMBLY REMOVED FOR STORAGE, TYPE E	
	165											165		203	10000	165	CU YD	EXCAVATION	9
	165											165		203	20000	165	CU YD	EMBANKMENT	9
										688	177	688	177	209	60200	865	STATION	LINEAR GRADING	
			28,755	212.5								28,755	212.5	606	13000	28,967.5	FT	GUARDRAIL, TYPE 5	
			1012.5									1012.5		606	15500	1012.5	FT	GUARDRAIL, BARRIER DESIGN, TYPE 5	
			22	2								22	2	606	26100	24	EACH	ANCHOR ASSEMBLY, TYPE E	9
			21	2								21	2	606	26500	23	EACH	ANCHOR ASSEMBLY, TYPE T	
			7									7		606	60012	7	EACH	IMPACT ATTENUATOR, TYPE 1 (BIDIRECTIONAL)	9
																		EROSION CONTROL	
	7,333											7,333		659	10000	7,333	SQ YD	SEEDING AND MULCHING	9
	0.99											0.99		659	20000	0.99	TON	FERTILIZER	9
	1.52											1.52		659	31000	1.52	ACRE	LIME	9
	40											40		659	35000	40	M GAL	WATER	9
												800	200	832	30000	1000	EACH	EROSION CONTROL	
																		DRAINAGE	
							250					200	50	605	31100	250	FT	AGGREGATE DRAINS	21
																		PAVEMENT	
					1,107	288				15,329	40,186	16,436	40,474	254	01000	56,910	SQ YD	PAVEMENT PLANING, ASPHALT CONCRETE	
										190,130		190,130		254	01001	190,130	SQ YD	PAVEMENT PLANING, ASPHALT CONCRETE, AS PER PLAN	8
							4,458					4,205	253	255	10101	4,458	SQ YD	FULL DEPTH PAVEMENT REMOVAL AND RIGID REPLACEMENT, CLASS FS, AS PER PLAN	36
							13,096					12,616	480	255	20000	13,096	FT	FULL DEPTH PAVEMENT SAWING	36
					83	22				27,018	3,014	27,101	3,036	407	10000	30,137	GALLON	TACK COAT	
					44	12				7,605	1,607	7,649	1,619	407	14000	9,268	GALLON	TACK COAT FOR INTERMEDIATE COURSE	
										17,310	3,204	17,310	3,204	408	10001	20,514	GALLON	PRIME COAT, AS PER PLAN	8
										4,300		4,300		424	12001	4,300	CU YD	FINE GRADED POLYMER, ASPHALT CONCRETE, TYPE B, AS PER PLAN	8
					46	12				8,561	1,674	8,607	1,686	442	10051	10,293	CU YD	ASPHALT CONCRETE SURFACE COURSE, 12.5 MM, TYPE B (446), AS PER PLAN	8
										17,158	2,182	17,158	2,182	442	10150	19,340	CU YD	ASPHALT CONCRETE INTERMEDIATE COURSE, 19MM, TYPE B (446)	
					108	14						108	14	442	20250	122	CU YD	ASPHALT CONCRETE INTERMEDIATE COURSE, 19MM, TYPE B (448)	
800												800		SPECIAL	451E32000	800	FT	PRESSURE RELIEF JOINT, TYPE C	8
			685	8						1,279	332	1,964	340	617	10100	2,304	CU YD	COMPACTED AGGREGATE	8
										137,318	15,142	137,318	15,142	618	40100	152,460	FT	RUMBLE STRIPS, (ASPHALT CONCRETE)	

CALCULATED RDA
CHECKED JPB

GENERAL SUMMARY

TUS-77-20.73
TUS-250-11.88

14
62

jberanek
11-JAN-2013 2:42PM
I:\PROJECTS\81725\Prod\Dgn\GG001_revised.dgn

SHEET NUMBER											OFFICE CALC'S.	PARTICIPATION		ITEM	ITEM EXT.	GRAND TOTAL	UNIT	DESCRIPTION	SEE SHEET NO.
8	9	10	11	12	17	18	38	41	42			01/IMS/PV	02/NHS/PV						
																		TRAFFIC CONTROL	
							118	945			80	1,025	118	621	00100	1,143	EACH	RPM	
1,040												920	120	621	54000	1,040	EACH	RAISED PAVEMENT MARKER REMOVED	8
					350	6						350	6	626	00100	356	EACH	BARRIER REFLECTOR	
									105			105		630	80200	105	SQ FT	SIGN, GROUND MOUNTED EXTRUSHEET	
									1			1		630	84900	1	EACH	REMOVAL OF GROUND MOUNTED SIGN AND DISPOSAL	
							47	154			56	210	47	642	00500	257	FT	STOP LINE, TYPE 1	
											4,547	4,547		642	00900	4,547	SQ. FT.	ISLAND MARKING, TYPE 1	
							3	8				8	3	642	01300	11	EACH	LANE ARROW, TYPE 1	
							3.95	30.80			0.11	0.11		646	10000	0.11	MILE	EDGE LINE, 4"	
							1.27	14.05			1.26	32.06	3.95	646	10010	36.01	MILE	EDGE LINE, 6"	
												14.05	1.27	646	10110	15.32	MILE	LANE LINE, 6"	
							1,817	11,053			0.04	0.04		646	10200	0.04	MILE	CENTER LINE	
							2,479	12,941				11,053	1,817	646	10310	12,870	FT	CHANNELIZING LINE, 12"	
												12,941	2,479	646	20510	15,420	FT	DOTTED LINE, 12"	
																		TRAFFIC SIGNALS	
	14											14		632	26500	14	EACH	DETECTOR LOOP	9
	325											325		632	65200	325	FT	LOOP DETECTOR LEAD-IN CABLE	9
																		FOR STRUCTURES GENERAL SUMMARY, SEE SHEET NO. 45	
																		MAINTENANCE OF TRAFFIC	
			290									240	50	614	11110	290	HOUR	LAW ENFORCEMENT OFFICER WITH PATROL CAR FOR ASSISTANCE	11
				2									2	614	12346	2	EACH	WORK ZONE IMPACT ATTENUATOR, FOR 24" WIDE HAZARDS (UNIDIRECTIONAL)	12
			6									4	2	614	12410	6	EACH	SPEED ZONE AHEAD SYMBOL SIGN	11
			20									16	4	614	12460	20	EACH	WORK ZONE MARKING SIGN	11
			32									28	4	614	12470	32	EACH	WORK ZONE SPEED LIMIT SIGN	11
			20									16	4	614	12484	20	EACH	WORK ZONE INCREASED PENALTIES SIGN	11
			4									3	1	614	12500	4	EACH	REPLACEMENT SIGN	11
		70										60	10	614	12600	70	EACH	REPLACEMENT DRUM	10
		120										100	20	614	13000	120	CU YD	ASPHALT CONCRETE FOR MAINTAINING TRAFFIC	10
				3									3	614	18601	3	SIGN MONTH	PORTABLE CHANGEABLE MESSAGE SIGN, AS PER PLAN	12
			41.93									36.85	5.08	614	20100	41.93	MILE	WORK ZONE LANE LINE, CLASS I, 642 PAINT	11
			106.54									90.74	15.80	614	22100	106.54	MILE	WORK ZONE EDGE LINE, CLASS I, 642 PAINT	11
			36,075									32,441	3,634	614	23200	36,075	FT	WORK ZONE CHANNELIZING LINE, CLASS I, 642 PAINT	11
		LUMP										LUMP	LUMP	614	11001	LUMP		MAINTAINING TRAFFIC, AS PER PLAN	10
														619	16010	5	MONTH	FIELD OFFICE, TYPE B	
														624	10000	LUMP		MOBILIZATION	
														823	10000	LUMP		CONSTRUCTION LAYOUT STAKES	

CALCULATED RDA
CHECKED JPB

GENERAL SUMMARY

TUS-77-20.73
TUS-250-11.88

15
62

I:\PROJECTS\81725\Prod\Dgn\GG001_revised.dgn 11-JAN-2013 2:42PM jberanek

REF. NO.	PLAN SHEET NO.	STATION FROM	STATION TO	SIDE	202 PAVEMENT REMOVED SQ. YD.	202 GUARDRAIL REMOVED FT.	202 GUARDRAIL REMOVED, AS PER PLAN FT.	202 ANCHOR ASSEMBLY REMOVED TYPE A EACH	202 ANCHOR ASSEMBLY REMOVED TYPE T EACH	202 ANCHOR ASSEMBLY REMOVED FOR STORAGE, TYPE E EACH	606 GUARDRAIL, TYPE 5 FT.		606 GUARDRAIL, BARRIER DESIGN, TYPE 5 FT.	606 ANCHOR ASSEMBLY TYPE E EA.	606 ANCHOR ASSEMBLY TYPE T EA.			606 IMPACT ATTENUATOR, TYPE I, (BIDIRECTIONAL). EACH	617 2" COMPACTED AGGREGATE LENGTH	617 2" COMPACTED AGGREGATE WIDTH	617 2" COMPACTED AGGREGATE CU. YD.	626 BARRIER REFLECTOR A EA.		COMMENTS
1-GR	20 & 21	81+90.90	87+03.40	RT	227.78	50	400		1	1														
		81+90.90	87+03.40								450			1	1				512.5	4	12.65	6		
2-GR	21	86+18.15	92+36.90	LT	275	18.75	600																	
		86+18.15	92+36.90								618.75								618.75	4	15.28	7		Connect to existing BTA Type 1 thrie-beam transition section Connect to existing BTA Type 2 W-beam terminal connector
3-GR	21	90+05.70	92+05.65	RT		75	100	1																
		89+74.20	92+05.65								150		50					1				3		See Detail 'A' on sheet no. 37. Connect to existing BTA Type 1 thrie-beam transition section
4-GR	21	94+15.60	105+28.10	RT	494.4	100	1000		1															
		94+15.60	105+28.10								1100				1				1112.5	4	27.47	12		Connect to existing BTA Type 2 W-beam terminal connector
5-GR	21	94+42.15	96+54.65	LT		62.5	100			1														
		94+42.15	96+54.65								162.5			1								3		Connect to existing BTA Type 1 thrie-beam transition section
6-GR	21	94+44.95	106+19.95	LT	522.22	125	1000			1														
		94+44.95	106+19.95								1125			1					1175	4	29.01	13		Connect to existing BTA Type 1 thrie-beam transition section
7-GR	22	112+56.20	114+31.20	LT		12.5	100		1	1														
		112+56.20	114+31.20								112.5			1	1							3		
8-GR	22	112+56.20	114+56.20	LT	88.89	37.5	100		1	1														
		112+56.20	114+56.20								137.5			1	1				200	4	4.94	3		
9-GR	22	130+23.93	148+08.15	RT	800	50	1700			1														
		130+23.93	148+08.15								1750			1					1800	4	44.44	19		Connect to existing BTA Type 1 thrie-beam transition section
10-GR	22	131+30.15	146+31.80	LT	661.11	325	1150		1															
		131+30.15	146+31.80								1475				1				1487.5	4	36.73	16		Connect to existing BTA Type 2 W-beam terminal connector
11-GR	22	144+08.20	148+08.15	RT		375		1																
		143+76.70	148+08.15								350		50					1				5		Connect to existing BTA Type 1 thrie-beam transition section
12-GR	22	151+54.85	160+69.60	LT	406.56	914.75																		
		151+54.85	160+69.60								914.75								914.75	4	22.59	10		Connect to existing BTA Type 1 thrie-beam transition section Connect to existing BTA Type 2 W-beam terminal connector
13-GR	22	151+54.85	155+42.35	LT		362.5		1																
		151+54.85	159+89.45	& RT							437.5		400									9		See Detail 'B' on sheet no. 37.
14-GR	22	153+31.20	159+63.45	RT	281	632.25																		
		153+31.20	159+63.45								632.25								632.25	4	15.61	7		Connect to existing BTA Type 2 W-beam terminal connector Connect to existing BTA Type 1 thrie-beam transition section
15-GR	22	157+89.50	159+89.45	RT		175		1																
																								See 13-GR for replacement.
16-GR	22 & 23	162+74.40	169+22.05	RT	287.84	647.65																		
		162+74.40	169+22.05								647.65								647.65	4	15.99	7		Connect to existing BTA Type 2 W-beam terminal connector Connect to existing BTA Type 1 thrie-beam transition section
17-GR	22 & 23	163+54.45	169+07.75	LT & RT		175		1																
		163+54.45	169+07.75								300		262.5						562.5					See Detail 'B' on sheet no. 37.
18-GR	22 & 23	163+80.25	169+09.30	LT	235.13	529.05																		
		163+80.25	169+09.30								529.05								529.05	4	13.06	6		Connect to existing BTA Type 1 thrie-beam transition section Connect to existing BTA Type 2 W-beam terminal connector
19-GR	23	167+07.80	169+07.75	RT		175		1																
																								See 17-GR for replacement.
20-GR	23	170+41.45	183+28.95	LT	572.22	1237.50				1														
		170+41.45	183+28.95								1237.50			1					1287.5	4	31.79	14		Connect to existing BTA Type 1 thrie-beam transition section
21-GR	23	170+51.95	172+52	LT		175		1																
		170+51.95	172+83.5								150		50					1				3		See Detail 'A' on sheet no. 37.
22-GR	23	170+55.50	183+18	RT	561.11	1250			1															
		170+55.50	183+18								1250				1				1262.5	4	31.17	14		Connect to existing BTA Type 2 W-beam terminal connector
23-GR	23 & 24	207+52.66	25+08.69 Ramp 'G'	LT	811.11	1812.5			1															
		207+52.66	25+08.69 Ramp 'G'								1812.5				1				1825	4	45.06	19		Connect to existing guardrail at Sta. 25+08.69 (Ramp 'G')
24-GR	23 & 24	207+73.57	16+25 Ramp 'H'	RT	500	1062.5			1	1														
		207+73.57	16+25 Ramp 'H'								1062.5			1	1				1125	4	27.78	12		
		SUB-TOTALS CARRIED TO SHEET 17			6,724.37	10,379.95	6250	7	8	8	16,404.95		812.5	8	8			3			373.57	191		FUNDING (01/IMS/PV)

CALCULATED RDA
CHECKED JPB

GUARDRAIL SUB-SUMMARY

TUS-77-20.73
TUS-250-11.88

I:\PROJECTS\81725\Prod\Dgn\GQ001.dgn 11-DEC-2012 10:36AM ramstutz

GUARDRAIL SUB-SUMMARY

CALCULATED RDA
CHECKED JPB

REF. NO.	PLAN SHEET NO.	STATION FROM	STATION TO	SIDE	202 PAVEMENT REMOVED	202 GUARDRAIL REMOVED	202 GUARDRAIL REMOVED, AS PER PLAN	202 ANCHOR ASSEMBLY REMOVED TYPE A	202 ANCHOR ASSEMBLY REMOVED TYPE T	202 ANCHOR ASSEMBLY REMOVED FOR STORAGE, TYPE E	606 GUARDRAIL, TYPE 5		606 GUARDRAIL, BARRIER DESIGN, TYPE 5	606 ANCHOR ASSEMBLY TYPE E	606 ANCHOR ASSEMBLY TYPE T			606 IMPACT ATTENUATOR, TYPE I, (BIDIRECTIONAL)	617 2" COMPACTED AGGREGATE LENGTH	617 2" COMPACTED AGGREGATE WIDTH	617 2" COMPACTED AGGREGATE CU. YD.	626 BARRIER REFLECTOR A		COMMENTS
					SQ. YD.	FT.	FT.	EACH	EACH	EACH	FT.		FT.	EA.	EA.			EACH				EA.		
		216+13.45	222+75.95		294.44	612.5				1														
25-GR	24	216+13.45	222+75.95	RT							612.5			1					662.5	4	16.36	8		Connect to existing BTA Type 1 thrie-beam transition section
		218+80.50	223+93		227.78	500			1															
26-GR	24	218+80.50	223+93	LT							500				1				512.5	4	12.65	6		Connect to existing BTA Type 2 W-beam terminal connector
		221+07.60	223+07.55			175		1																
27-GR	24	220+76.10	223+07.55	RT							150		50					1				3		See Detail 'A' on sheet no. 37.
		224+47	230+22		255.56	562.5			1															
28-GR	24	224+47	230+22	RT							562.5				1				575	4	14.20	7		Connect to existing BTA Type 2 W-beam terminal connector
		225+32.55	227+32.60			175		1																
29-GR	24	225+32.55	227+64.10	LT							150		50					1				3		See Detail 'A' on sheet no. 37.
		225+64.15	233+01.65		327.78	687.5				1														
30-GR	24	225+64.15	233+01.65	LT							687.5			1					737.5	4	18.21	8		Connect to existing BTA Type 1 thrie-beam transition section
		233+84.30	235+84.35			175		1																
31-GR	24	233+52.80	235+84.35	RT							150		50					1				3		See Detail 'A' on sheet no. 37.
		237+18.75	239+18.80			175		1																
32-GR	24	237+18.75	239+50.30	LT							150		50					1				3		See Detail 'A' on sheet no. 37.
		1+19.53 Ramp 'I'	236+56.20		416.67	937.5																		
33-GR	24	1+19.53 Ramp 'I'	236+56.20	LT							937.5								937.5	4	23.15	10		Connect to existing BTA Type 2 W-beam terminal connector
																								Connect to existing guardrail at Sta. 1+19.53 (Ramp 'I')
		3+10.05 Ramp 'J'	14+10.05 Ramp 'J'		488.89	1050				1														
34-GR	24	3+10.05 Ramp 'J'	14+10.05 Ramp 'J'	RT							1050			1					1100	4	27.16	12		Connect to existing BTA Type 1 thrie-beam transition section
		236+48.80	238+11.30		72.22	150			1															
35-GR	24	236+48.80	238+11.30	RT							150				1				162.5	4	4.01	3		Connect to existing BTA Type 2 W-beam terminal connector
		237+47.05	239+47.05		88.89	150				1														
36-GR	24	237+47.05	239+47.05	LT							150			1					200	4	4.94	3		Connect to existing BTA Type 1 thrie-beam transition section
		18+08.80 Ramp 'G'	22+71.30 Ramp 'G'		205.56	400			1	1														
37-GR	24	18+08.80 Ramp 'G'	22+71.30 Ramp 'G'	LT							400			1	1				462.5	4	11.42	6		
		0+45 Ramp 'I'	6+45 Ramp 'I'		266.67	537.5			1	1														
38-GR	24	0+45 Ramp 'I'	6+45 Ramp 'I'	LT							537.5			1	1				600	4	14.81	7		
		3+33.30 Ramp 'J'	8+33.30 Ramp 'J'		222.22	437.5			1	1														
39-GR	24	3+33.30 Ramp 'J'	8+33.30 Ramp 'J'	RT							437.5			1	1				500	4	12.34	6		
	20	1+85.60 Ramp 'C'	14+10.60 Ramp 'C'		544.44	1212.5			1															
40-GR	& 21	1+85.60 Ramp 'C'	14+10.60 Ramp 'C'	LT							1212.5				1				1225	4	30.25	13		Connect to existing guardrail at Sta. 1+85.60 (Ramp 'C')
	20	5+60 Ramp 'C'	13+35 Ramp 'C'		344.44	712.5			1	1														
41-GR	& 21	5+60 Ramp 'C'	13+35 Ramp 'C'	LT							712.5			1	1				775	4	19.14	9		
		9+30.49 Ramp 'E'	12+42.99 Ramp 'E'		138.89	262.5				1														
42-GR	20	9+30.49 Ramp 'E'	12+42.99 Ramp 'E'	RT							262.5			1					312.5	4	7.72	4		Connect to existing BTA Type 1 thrie-beam transition section
		8+43 Ramp 'E'	15+05.50 Ramp 'E'		294.44	600			1	1														
43-GR	20	8+43 Ramp 'E'	15+05.50 Ramp 'E'	RT							600			1	1				662.5	4	16.36	8		
		0+79.20 Ramp 'A'	6+04.20 Ramp 'A'		233.33	475				1														
44-GR	21	0+79.20 Ramp 'A'	6+04.20 Ramp 'A'	LT							475			1					525	4	12.96	6		Connect to existing guardrail at Sta. 0+79.20 (Ramp 'A')
		0+88.90 Ramp 'A'	2+88.90 Ramp 'A'		88.89	137.5			1	1														
45-GR	21	0+88.90 Ramp 'A'	2+88.90 Ramp 'A'	LT							137.5			1	1				200	4	4.94	3		
		5+64.40 Ramp 'A'	7+76.90 Ramp 'A'		94.44	150			1	1														
46-GR	21	5+64.40 Ramp 'A'	7+76.90 Ramp 'A'	LT							150			1	1				212.5	4	5.25	3		
		1+50 Ramp 'B'	17+00 Ramp 'B'		688.89	1537.5			1															
47-GR	21	1+50 Ramp 'B'	17+00 Ramp 'B'	RT							1537.5				1				1550	4	38.27	17		Connect to existing guardrail at Sta. 1+50
		3+46.30 Ramp 'B'	10+46.30 Ramp 'B'		311.11	637.5			1	1														
48-GR	21	3+46.30 Ramp 'B'	10+46.30 Ramp 'B'	RT							637.5			1	1				700	4	17.28	8		
SUB-TOTALS (FROM THIS SHEET)					5,605.55	12,450		4	13	14	12,350		200	14	13			4			311.42	159		FUNDING (01/IMS/PV)
SUB-TOTALS (FROM SHEET 16)					6,724.37	10,379.95	6,250	7	8	8	16,404.95		812.5	8	8			3			373.57	191		FUNDING (01/IMS/PV)
QUANTITIES CARRIED TO GENERAL SUMMARY					**12,329.92**	**22,829.95**	**6,250**	**11**	**21**	**22**	**28,754.95**		**1,012.5**	**22**	**21**			**7**			**684.99**	**350**		**FUNDING (01/IMS/PV)**

TUS-77-20.73
TUS-250-11.88

17
62

I:\PROJECTS\81725\Prod\Dgn\GQ001.dgn 11-DEC-2012 10:37AM ramstutz

REF. NO.	PLAN SHEET NO.	STATION FROM	STATION TO	SIDE	202 PAVEMENT REMOVED SQ. YD.	202 GUARDRAIL REMOVED FT.			606 ANCHOR ASSEMBLY REMOVED TYPE T EACH	606 ANCHOR ASSEMBLY REMOVED FOR STORAGE, TYPE E EACH	606 GUARDRAIL, TYPE 5 FT.			606 ANCHOR ASSEMBLY TYPE E EA.	606 ANCHOR ASSEMBLY TYPE T EA.				617 2" COMPACTED AGGREGATE LENGTH	617 2" COMPACTED AGGREGATE WIDTH	617 2" COMPACTED AGGREGATE CU. YD.	626 BARRIER REFLECTOR A EA.		COMMENTS
		606+04.50	607+67		72.22	100			1	1														
49-GR	21	606+04.50	607+67	RT							100			1	1				162.5	4	4.01	3		
		606+04.70	607+79.70		77.78	112.5			1	1														
50-GR	21	606+04.70	607+79.70	LT							112.5			1	1				175	4	4.32	3		
SUB-TOTALS (FROM THIS SHEET)					150	212.5			2	2	212.5			2	2						8.33	6		FUNDING (02/NHS/PV)
QUANTITIES CARRIED TO GENERAL SUMMARY					150	212.5			2	2	212.5			2	2						8.33	6		FUNDING (02/NHS/PV)

CALCULATED RDA
CHECKED JPB

GUARDRAIL SUB-SUMMARY

TUS-77-20.73
TUS-250-11.88

I:\PROJECTS\81725\Prod\Dgn\GQ001.dgn 11-DEC-2012 10:38AM ramstutz

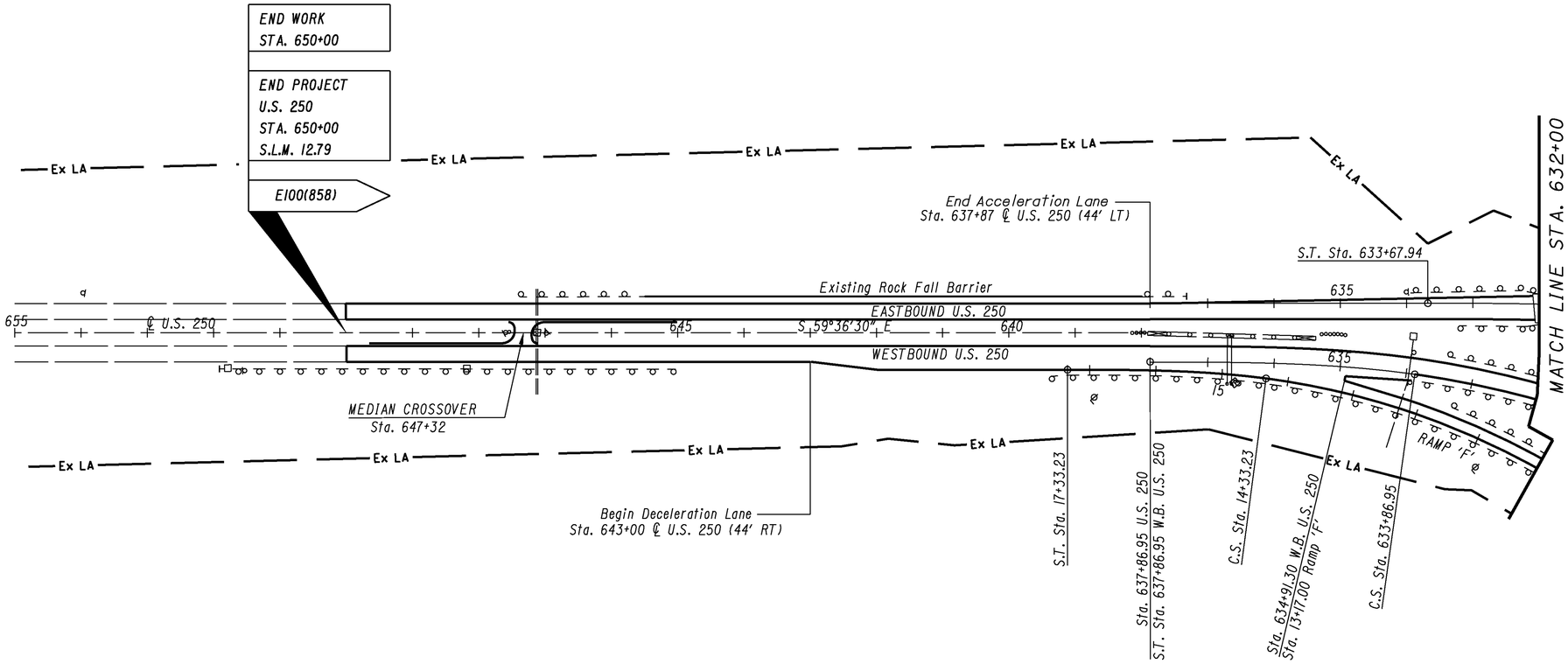

U.S. 250 E.B.
P.I. Sta. 624+91.47
D = 60°44'00" (LT)
Dc = 4°00'00"
R = 1432.40
Ls = 400.00'
Theta = 8°00'00"
Lc = 1118.33'
Ts = 1041.86'
Es = 233.15'

U.S. 250 W.B.
P.I. Sta. 629+89.14
D = 51°51'00" (LT)
Dc = 4°00'00"
R = 1432.40
Ls = 400.00'
Theta = 8°00'00"
Lc = 896.25'
Ts = 898.44'
Es = 165.45'

RAMP F
P.I. Sta. 10+50.02
D = 59°29'30" (LT)
Dc = 5°00'00"
R = 1145.92
Ls = 300.00'
Theta = 7°30'00"
Lc = 889.83'
T = 806.62
E = 177.67'

FOR TRAFFIC CONTROL QUANTITIES, SEE SHEET NO'S. 38-41.

HORIZONTAL SCALE IN FEET
0 50 100 200

CALCULATED RDA
CHECKED JPB

PLAN SHEET (US 250)
STA. 632+00 TO STA. 655+00

TUS-77-20.73
TUS-250-11.88

19
62

I:\PROJECTS\81725\Prod\Dgn\GPOOI.dgn 11-DEC-2012 10:43AM ramstutz

I.R. 77
P.I. Sta. 82+11.35
Δ = 27° 31′ 00″ (LT)
Dc = 1° 30′ 00″
R = 3,819.72′
Ls = 200.00′
Theta = 1° 30′ 00″
LT = 133.34′
ST = 66.67′
x = 199.99′
y = 1.75′
k = 100.00′
p = 0.44′
Dc = 24° 31′ 00″ (LT)
Lc = 1,634.44′
Ts = 1,035.37′
Es = 113.28′

RAMP C
P.I. Sta. 13+37.17
D = 38°41′53″ (RT)
Dc = 3°00′00″
R = 1909.86
Ls = 300.00′
Theta = 4°30′00″
Lc = 989.94′
T = 821.32′
E = 116.41′

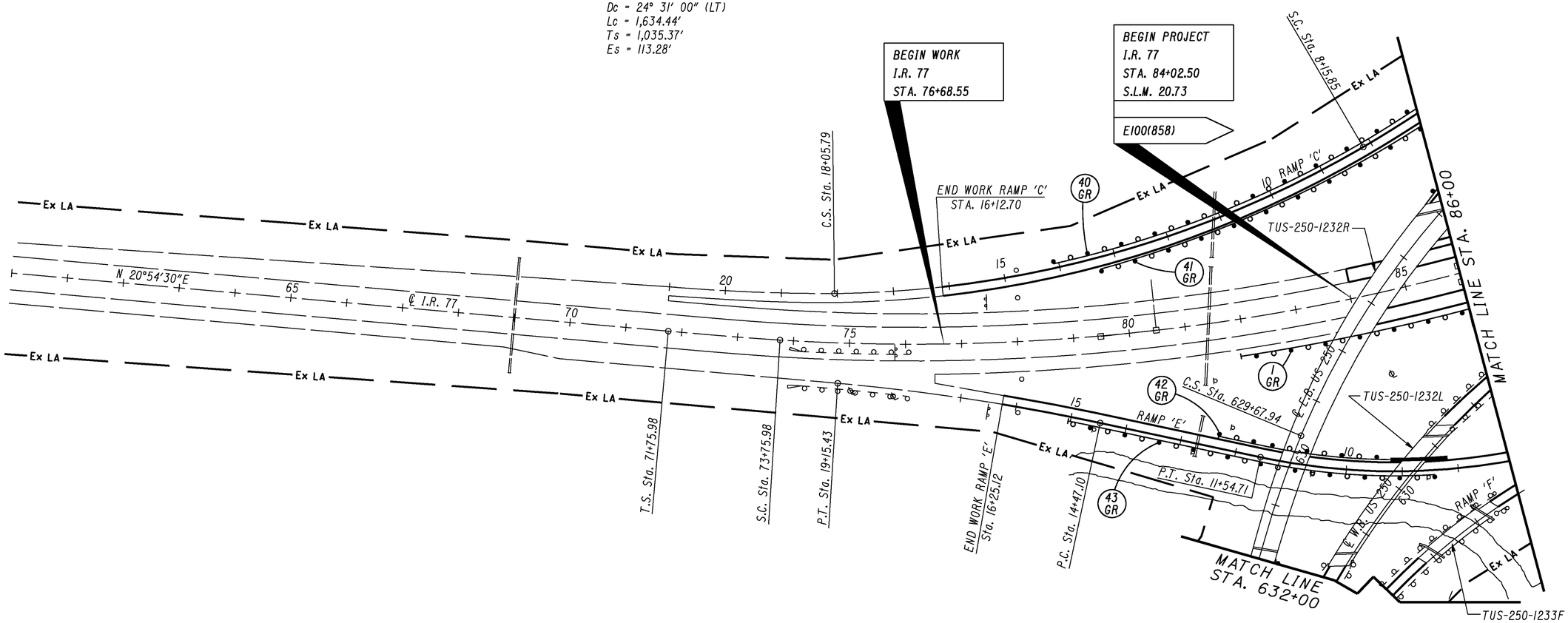

RAMP E
P.I. Sta. 8+80.10
D = 28°02′00″ (RT)
Dc = 5°00′00″
R = 1145.92
L = 468.33′
T = 234.46′
E = 7.19′

RAMP F
P.I. Sta. 10+50.02
D = 59°29′30″ (LT)
Dc = 5°00′00″
R = 1145.92
Ls = 300.00′
Theta = 7°30′00″
Lc = 889.83′
T = 806.62′
E = 177.67′

U.S. 250 E.B.
P.I. Sta. 624+91.47
D = 60°44′00″ (LT)
Dc = 4°00′00″
R = 1432.40
Ls = 400.00′
Theta = 8°00′00″
Lc = 1118.33′
Ts = 1041.86′
Es = 233.15′

U.S. 250 W.B.
P.I. Sta. 629+89.14
D = 51°51′00″ (LT)
Dc = 4°00′00″
R = 1432.40
Ls = 400.00′
Theta = 8°00′00″
Lc = 896.25′
Ts = 898.44′
Es = 165.45′

FOR GUARDRAIL QUANTITIES, SEE SHEET NO'S. 16-18.
FOR TRAFFIC CONTROL QUANTITIES, SEE SHEET NO'S. 38-41.

HORIZONTAL SCALE IN FEET
0 50 100 200

CALCULATED RDA
CHECKED JPB

PLAN SHEET
STA. 60+00 TO STA. 86+00

TUS-77-20.73
TUS-250-11.88

20
62

I:\PROJECTS\81725\Prod\Dgn\GP001.dgn 11-DEC-2012 10:44AM ramstutz

RAMP C
P.I. Sta. 13+37.17
Δ = 38°41'53" (RT)
Dc = 3°00'00"
R = 1909.86
Ls = 300.00'
Theta = 4°30'00"
Lc = 989.94'
T = 821.32'
E = 116.41'

RAMP D
P.I. Sta. 2+80.00
Δ = 16°06'00" (LT)
Dc = 5°00'00"
R = 1145.92'
L = 322.00'
T = 162.07'
E = 11.40'

U.S. 250 E.B.
P.I. Sta. 624+91.47
Δ = 60°44'00" (LT)
Dc = 4°00'00"
R = 1432.40
Ls = 400.00'
Theta = 8°00'00"
Lc = 1118.33'
Ts = 1041.86'
Es = 233.15'

U.S. 250 E.B.
P.I. Sta. 599+41.96
Δ = 7°46'00" (RT)
Dc = 0°28'00"
R = 12277.67'
T = 833.42'
L = 1664.29'
E = 28.26'

RAMP A
P.I. Sta. 2+14.00
Δ = 18°47'50" (RT)
Dc = 8°00'00"
R = 716.20'
L = 234.97'
T = 118.55'
E = 9.75'

RAMP A
P.I. Sta. 8+70.16
Δ = 16°24'00" (LT)
Dc = 2°30'00"
R = 2291.83'
L = 656.00'
T = 330.26'
E = 23.67'

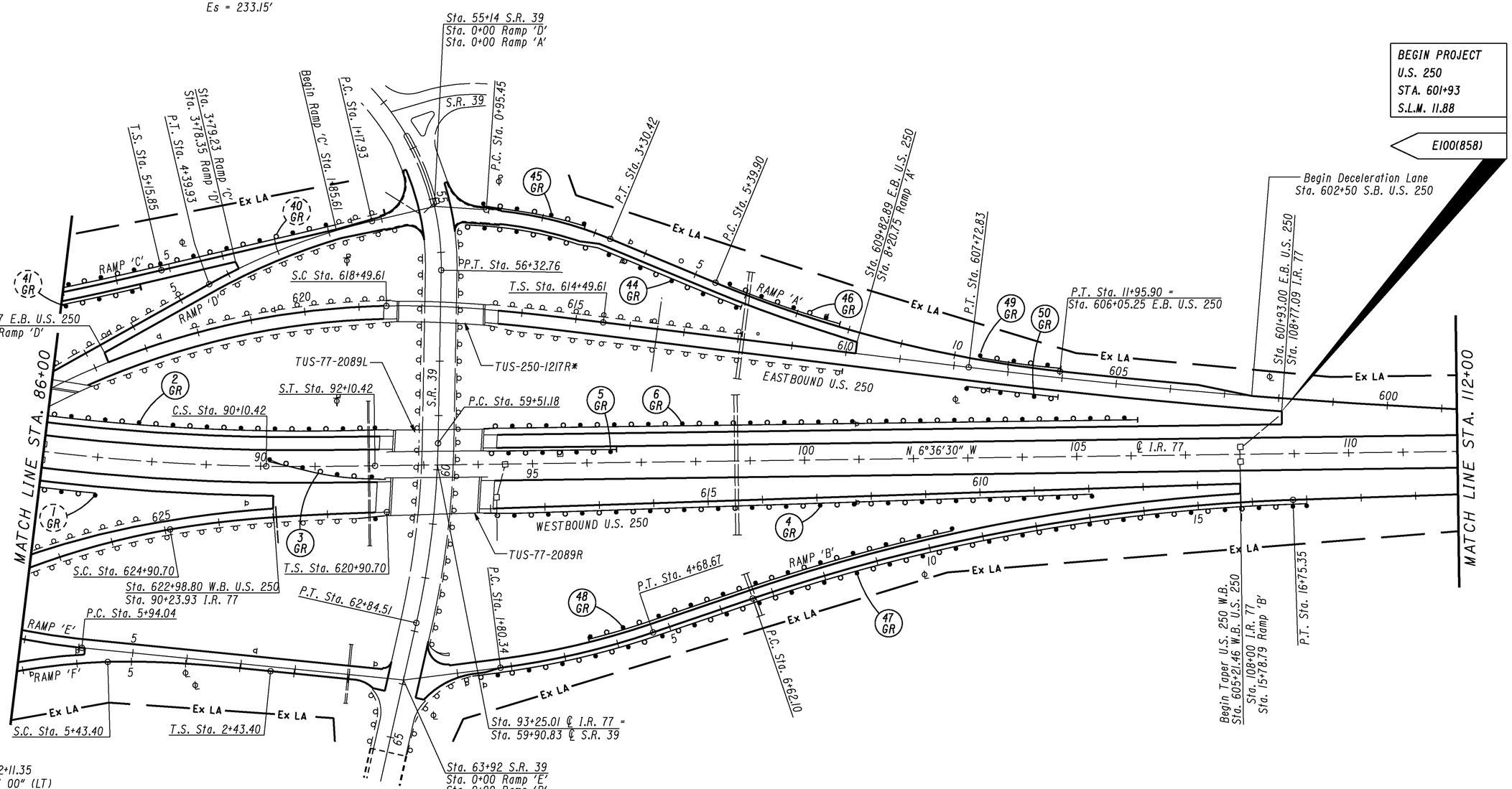

I.R. 77
P.I. Sta. 82+11.35
Δ = 27° 31' 00" (LT)
Dc = 1° 30' 00"
R = 3,819.72'
Ls = 200.00'
Theta = 1° 30' 00"
LT = 133.34'
ST = 66.67'
x = 199.99'
y = 1.75'
k = 100.00'
p = 0.44'
Dc = 24° 31' 00" (LT)
Lc = 1,634.44'
Ts = 1,035.37'
Es = 113.28'

RAMP F
P.I. Sta. 10+50.02
Δ = 59°29'30" (LT)
Dc = 5°00'00"
R = 1145.92
Ls = 300.00'
Theta = 7°30'00"
Lc = 889.83'
T = 806.62'
E = 177.67'

RAMP E
P.I. Sta. 8+80.10
Δ = 28°02'00" (RT)
Dc = 5°00'00"
R = 1145.92
L = 468.33'
T = 234.46'
E = 7.19'

U.S. 250 W.B.
P.I. Sta. 629+89.14
Δ = 51°51'00" (LT)
Dc = 4°00'00"
R = 1432.40
Ls = 400.00'
Theta = 8°00'00"
Lc = 896.25'
Ts = 898.44'
Es = 165.45'

RAMP B
P.I. Sta. 3+25.00
Δ = 11°32'00" (LT)
Dc = 4°00'00"
R = 1432.40'
L = 288.33
T = 144.66'
E = 7.29'

RAMP B
P.I. Sta. 11+72.43
Δ = 16°53'15" (RT)
Dc = 1°40'00"
R = 3437.75'
L = 1013.25'
T = 510.33'
E = 37.67'

FOR GUARDRAIL QUANTITIES, SEE SHEET NO'S. 16-18.
FOR TRAFFIC CONTROL QUANTITIES, SEE SHEET NO'S. 38-41.

HORIZONTAL SCALE IN FEET
0 50 100 200
CALCULATED RDA
CHECKED JPB

PLAN SHEET
STA. 86+00 TO STA. 112+00
TUS-77-20.73
TUS-250-11.88

21
62

I:\PROJECTS\81725\Prod\Dgn\GP001.dgn 11-DEC-2012 10:45AM ramstutz

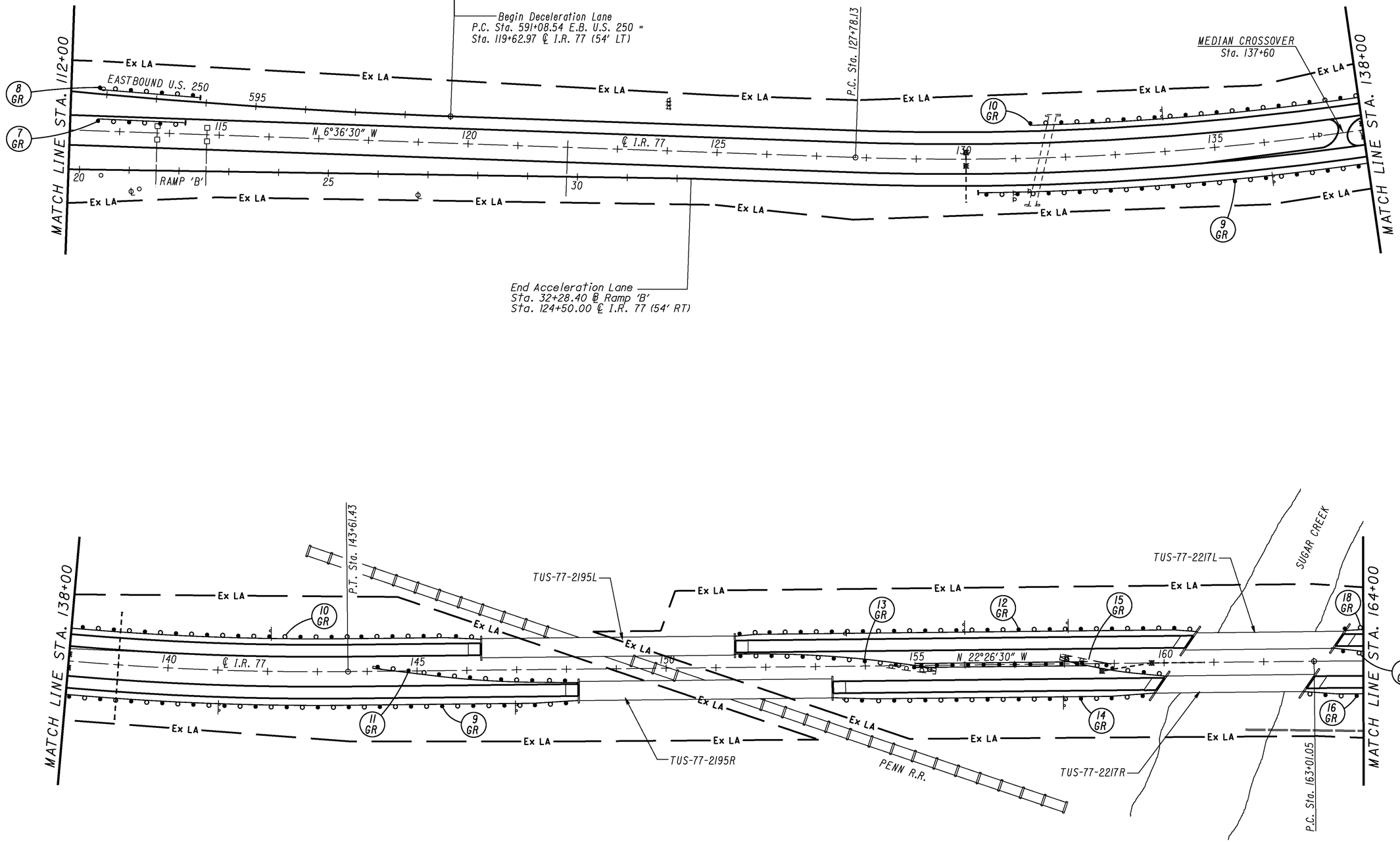

FOR GUARDRAIL QUANTITIES, SEE SHEET NO'S. 16-18.
FOR TRAFFIC CONTROL QUANTITIES, SEE SHEET NO'S. 38-41.

HORIZONTAL SCALE IN FEET
0 50 100 200

CALCULATED RDA
CHECKED JPB

PLAN SHEET
STA. 112+00 TO STA. 164+00

TUS-77-20.73
TUS-250-11.88

22
62

I:\PROJECTS\81725\Prod\Dgn\GP001.dgn 11-DEC-2012 10:46AM ramstutz

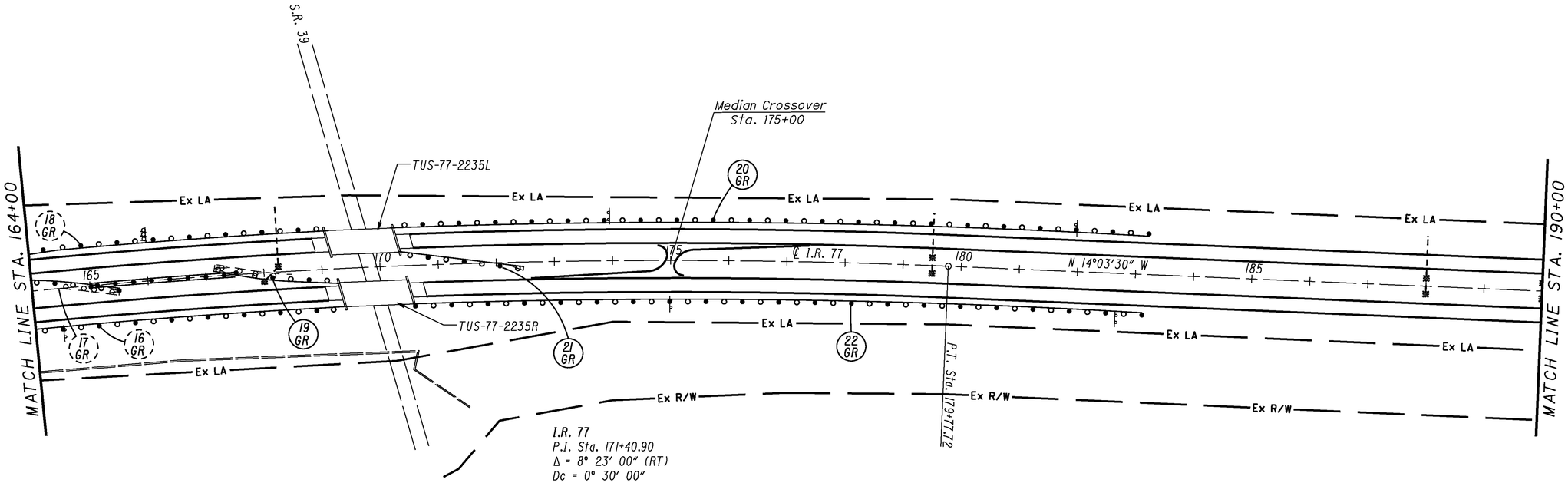

I.R. 77
P.I. Sta. 171+40.90
Δ = 8° 23′ 00″ (RT)
Dc = 0° 30′ 00″
R = 11,459.16′
T = 839.83′
L = 1,676.67′
E = 30.73′

RAMP G
P.I. Sta. 8+47.08
Δ = 5°00′09″ (LT)
Dc = 0°47′30″
R = 8089.00′
T = 353.33′
L = 706.25′
E = 7.71′

RAMP G
P.I. Sta. 17+01.44
Δ = 20°00′00″ (RT)
R = 572.96′
Ls = 200.00′
Theta = 10°00′00″
L = 200.00′
Ts = 201.44′
E = 11.79′

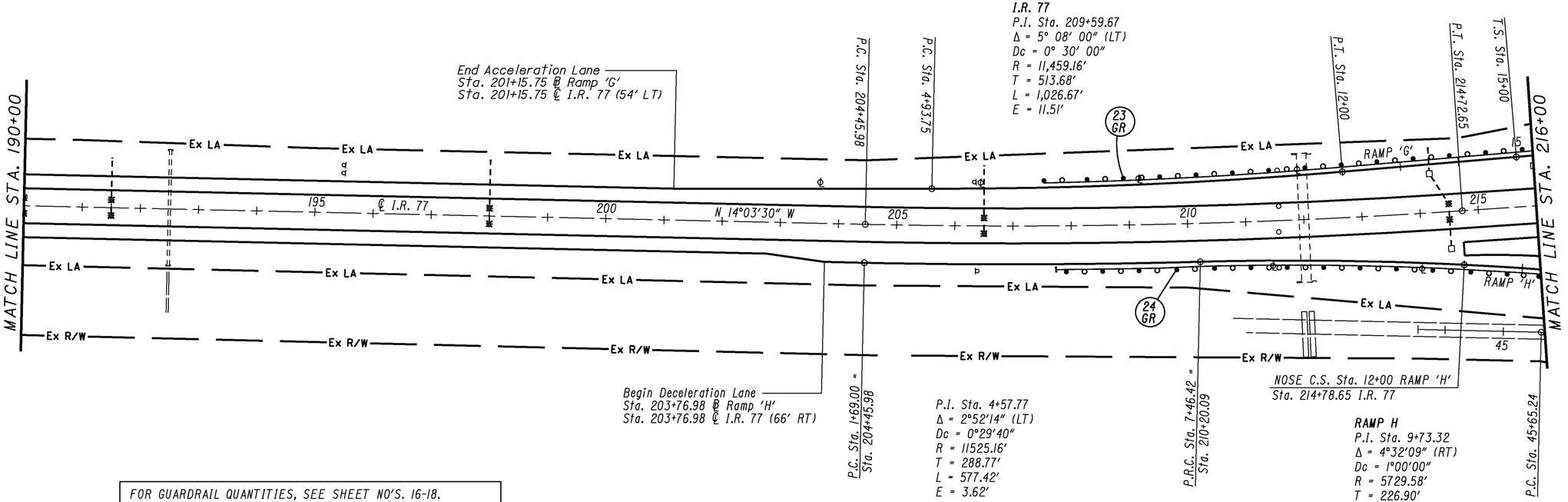

I.R. 77
P.I. Sta. 209+59.67
Δ = 5° 08′ 00″ (LT)
Dc = 0° 30′ 00″
R = 11,459.16′
T = 513.68′
L = 1,026.67′
E = 11.51′

P.I. Sta. 4+57.77
Δ = 2°52′14″ (LT)
Dc = 0°29′40″
R = 11525.16′
T = 288.77′
L = 577.42′
E = 3.62′

RAMP H
P.I. Sta. 9+73.32
Δ = 4°32′09″ (RT)
Dc = 1°00′00″
R = 5729.58′
T = 226.90′
L = 453.58′
E = 4.49′

FOR GUARDRAIL QUANTITIES, SEE SHEET NO'S. 16-18.
FOR TRAFFIC CONTROL QUANTITIES, SEE SHEET NO'S. 38-41.

HORIZONTAL SCALE IN FEET
0 50 100 200

CALCULATED RDA
CHECKED JPB

PLAN SHEET
STA. 164+00 TO STA. 216+00

TUS-77-20.73
TUS-250-11.88

23
62

I:\PROJECTS\81725\Prod\Dgn\GP001.dgn 11-DEC-2012 10:47AM ramstutz

RAMP G
P.I. Sta. 17+01.44
Δ = 20°00′00″ (RT)
R = 572.96′
Ls = 200.00′
Theta = 10°00′00″
L = 200.00′
Ts = 201.44′
E = 11.79′

RAMP G
P.I. Sta. 24+39.67
Δ = 43°50′03″ (LT)
Dc = 22°55′06″
R = 250.00′
T = 100.59′
L = 191.26′
E = 19.48′

Sta. 224+19.38 ℄ I.R. 77 =
Sta. 533+94.28 ℄ S.R. 39

P.C. Sta. 23+39.08
P.T. Sta. 25+30.34
C.S. 529+71.73
T.S. Sta. 0+95.55
SUGAR CREEK
S.T. Sta. 19+00
NOSE Sta. 16+42.48 RAMP 'G'
Sta. 217+15.35 I.R. 77
RAMP 'G'
RAMP 'I'
TUS-77-2337L
S.T. 532+71.73
S.R. 39
Sta. 530+40.33 S.R. 39
Sta. 26+04.29 Ramp 'G'
Sta. 0+00 Ramp 'I'
℄ I.R. 77
N 19°11′30″ W
TUS-77-2337R
P.C. Sta. 17+81.60
P.T. Sta. 19+11.02
RAMP 'H'
S.T. Sta. 16+00
S.R. 39
Ex R/W
PARKING
RAMP 'J'
+61.95
P.T. Sta. 2+98.59
T.S. Sta. 7+55.80
S.T. Sta. 11+55.80
NOSE C.S. Sta. 10+07.02 RAMP 'J'
Sta. 231+50 I.R. 77
P.C. Sta. 0+81.40
P.T. Sta. 50+31.16
Sta. 537+69.02 S.R. 39
Sta. 19+63.27 Ramp 'H'
Sta. 0+00 Ramp 'J'

RAMP I
P.I. Sta. 2+96.47
Δ = 16°00′00″ (LT)
Ls = 200.00′
Theta = 8°00′00″
R = 716.20′
T = 200.92′
L = 400.00′
E = 9.39′

S.T. Sta. 4+95.55
NOSE P.C. Sta. 9+47.55 RAMP 'I' =
Sta. 235+50 I.R. 77

RAMP I
P.I. Sta. 11+74.35
Δ = 6°47′36″ (LT)
Dc = 1°30′00″
R = 3819.72′
T = 226.80′
L = 453.07′
E = 6.73′

TUS-77-2361L
P.T. Sta. 14+00.62 =
Sta. 240+04.73 I.R. 77
TUS-77-2361R

MATCH LINE STA. 216+00
MATCH LINE STA. 242+00

RAMP H
P.I. Sta. 14+00.22
Δ = 8°00′00″ (RT)
Ls = 200.00′
Theta = 4°00′00″
R = 1432.40′
T = 200.22′
L = 400.00′
E = 4.66′

RAMP H
P.I. Sta. 18+47.10
Δ = 41°28′48″ (LT)
Dc = 16°51′06″
R = 340.00′
T = 65.50′
L = 129.42′
E = 6.25′

RAMP J
P.I. Sta. 1+95.00
Δ = 41°28′48″ (LT)
Dc = 19°05′55″
R = 300.00′
T = 113.60′
L = 217.19′
E = 9.49′

RAMP J
P.I. Sta. 9+57.24
Δ = 20°00′00″ (RT)
Ls = 200.00′
Theta = 10°00′00″
R = 572.96′
T = 201.44′
L = 400.00′
E = 11.79′

MATCH LINE STA. 242+00
MATCH LINE STA. 268+00
Begin Deceleration Lane
Sta. 246+50.00 ℄ Ramp 'I'
Sta. 246+50.00 ℄ I.R. 77 (66′ LT)
MEDIAN CROSSOVER
Sta. 260+10
℄ I.R. 77
N 19°11′30″ W
End Acceleration Lane
Sta. 248+00.00 ℄ Ramp 'J'
Sta. 248+00.00 ℄ I.R. 77 (54′ RT)
P.C. Sta. 259+17.53

I.R. 77
P.I. Sta. 268+24.43
Δ = 9° 03′ 00″ (RT)
Dc = 0° 30′ 00″
R = 11,459.16′
T = 906.89′
L = 1,810.00′
E = 35.83′

FOR GUARDRAIL QUANTITIES, SEE SHEET NO'S. 16-18.
FOR TRAFFIC CONTROL QUANTITIES, SEE SHEET NO'S. 38-41.

HORIZONTAL SCALE IN FEET
0 50 100 200
CALCULATED RDA
CHECKED JPB

PLAN SHEET
STA. 216+00 TO STA. 268+00

TUS-77-20.73
TUS-250-11.88

24
62

I:\PROJECTS\81725\Prod\Dgn\GPOOI.dgn 11-DEC-2012 10:47AM ramstutz

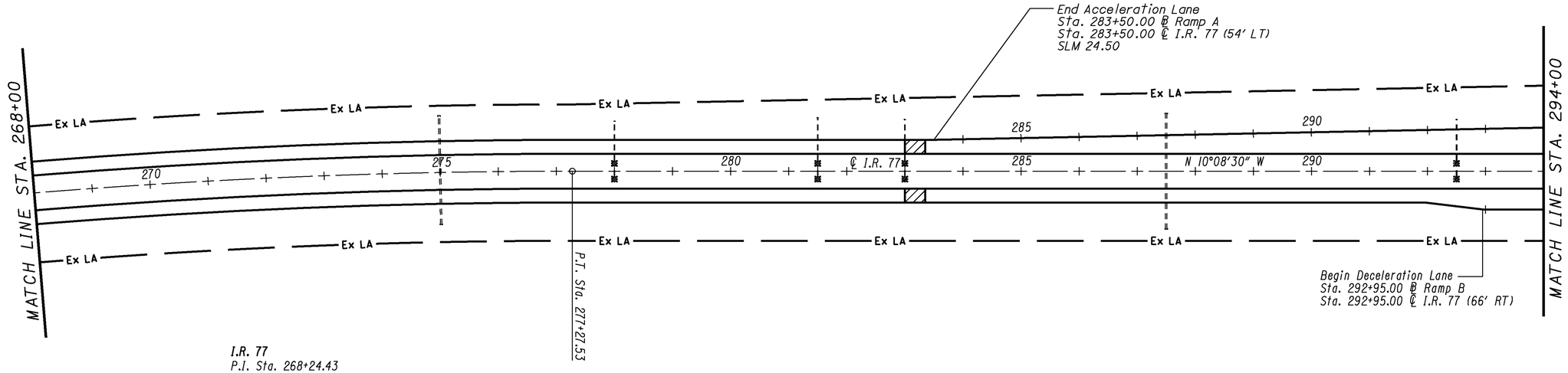

I.R. 77
P.I. Sta. 268+24.43
Δ = 9° 03' 00" (RT)
Dc = 0° 30' 00"
R = 11,459.16'
T = 906.89'
L = 1,810.00'
E = 35.83'

Item 202 - Wearing Course Removed (Butt End Joint As Per SCD BP-3.1 and Feather Detail on Sheet No. 35)

FOR TRAFFIC CONTROL QUANTITIES, SEE SHEET NO'S. 38-41.

I:\PROJECTS\81725\Prod\Dgn\BGPOOL.dgn 11-DEC-2012 10:48AM ramstutz

HORIZONTAL SCALE IN FEET
0 50 100 200

CALCULATED RDA
CHECKED JPB

PLAN SHEET
STA. 268+00 TO STA. 294+00

TUS-77-20.73
TUS-250-11.88

RAMP A
P.I. Sta. 300+61.11
Δ = 28° 42′ 55″ (LT)
Dc = 4° 15′ 00″
R = 1348.14′
Ls = 238′
θ = 5°03′27″
LT = 158.73′
ST = 79.39′
x = 237.81′
y = 7.00′
k = 118.97′
p = 1.75′
Δc = 23° 39′ 28″ (LT)
Lc = 556.65′
emax = 0.083

RAMP A
P.I. Sta. 310+44.70
Δ = 44° 02′ 24″ (RT)
Dc = 16° 30′ 00″
R = 347.25′
T = 140.44′
L = 266.91′
E = 27.32′
emax = 0.016

OHIO AVE.
P.I. Sta. 99+88.60
Δ = 7° 40′ 10″ (RT)
Dc = 3° 45′ 00″
R = 1527.89′
T = 102.41′
L = 204.52′
E = 3.43′
emax = NC

OHIO AVE.
P.I. Sta. 106+29.31
Δ = 6° 49′ 00″ (LT)
Dc = 2° 00′ 00″
R = 2864.79′
T = 170.62′
L = 340.83′
E = 5.08′
emax = NC

RAMP C
P.I. Sta. 322+07.56
Δ = 24° 10′ 44″ (LT)
Dc = 1° 30′ 00″
R = 3819.72′
T = 818.14′
L = 1,611.93′
E = 86.64′
emax = 0.041

MATCH LINE STA. 294+00

MATCH LINE STA. 323+00

Sta. 296+00.00 ℄ I.R. 77 (79′ LT)
TS Sta. 296+00.25
SC Sta. 298+38.25
NOSE Sta. 298+52.24 RAMP 'A'
Sta. 298+56.41 I.R. 77
PT Sta. 303+94.90
PC Sta. 309+04.26
PT Sta. 311+71.17
PT Sta. 100+90.71
100
OHIO AVE.
105
PC Sta. 313+89.42
PC Sta. 104+58.69
Sta. 104+39.00 ℄ OHIO AVE.
Sta. 312+65.86 RAMP 'A'
Sta. 310+80.13 RAMP 'C'
SUGAR CREEK
Ex LA
RAMP 'A'
RAMP 'C'
PT Sta. 107+99.52
Sta. 110+00.00 ℄ OHIO AVE.
Sta. 309+66.00 ℄ I.R. 77
TUS-77-2500
℄ I.R. 77
N 10°08′30″ W
295
300
305
310
315
320
PC Sta. 295+41.57
PROGRESS ST.
Ex LA
NOSE Sta. 299+92.36 RAMP 'B'
Sta. 299+95.89 I.R. 77
RAMP 'B'
PT Sta. 306+99.05
PC Sta. 309+27.56
PT Sta. 311+99.25
RAMP 'D'
PC Sta. 313+61.44
CS Sta. 318+61.75
ST Sta. 320+99.75
Sta. 321+00.00℄ I.R. 77 (79′ RT)
NOSE Sta. 318+45.95 RAMP 'D'
Sta. 318+43.58 I.R. 77
Sta. 113+14.00 ℄ OHIO AVE.
Sta. 308+99.04 RAMP 'B'
Sta. 308+16.22 RAMP 'D'
PI Sta. 116+87.24
Δ = 0° 37′ 30″ RT

RAMP B
P.I. Sta. 301+24.78
Δ = 17° 21′ 44″ (RT)
Dc = 1° 30′ 00″
R = 3819.72′
T = 583.21′
L = 1,157.48′
E = 44.27′
emax = 0.041

RAMP D
P.I. Sta. 310+70.79
Δ = 44° 49′ 43″ (LT)
Dc = 16° 30′ 00″
R = 347.25′
T = 143.23′
L = 271.69′
E = 28.38′
emax = 0.016

RAMP D
P.I. Sta. 316+80.60
Δ = 26° 19′ 14″ (RT)
Dc = 4° 15′ 00″
R = 1348.14′
Ls = 238′
θ = 5°03′27″
LT = 158.73′
ST = 79.39′
x = 237.81′
y = 7.00′
k = 118.97′
p = 1.75′
Δc = 21° 15′ 47″ (LT)
Lc = 500.31
emax = 0.083

Item 202 - Wearing Course Removed
(Butt End Joint As Per SCD BP-3.1)

FOR TRAFFIC CONTROL QUANTITIES, SEE SHEET NO'S. 38-41.

HORIZONTAL SCALE IN FEET
0 50 100 200

CALCULATED RDA
CHECKED JPB

PLAN SHEET
STA. 294+00 TO STA. 323+00

TUS-77-20.73
TUS-250-11.88

26
62

I:\PROJECTS\81725\Prod\Dgn\GP001.dgn 11-DEC-2012 10:49AM ramstutz

RAMP C
P.I. Sta. 322+07.56
Δ = 24° 10′ 44″ (LT)
Dc = 1° 30′ 00″
R = 3819.72′
T = 818.14′
L = 1,611.93′
E = 86.64′
emax = 0.041

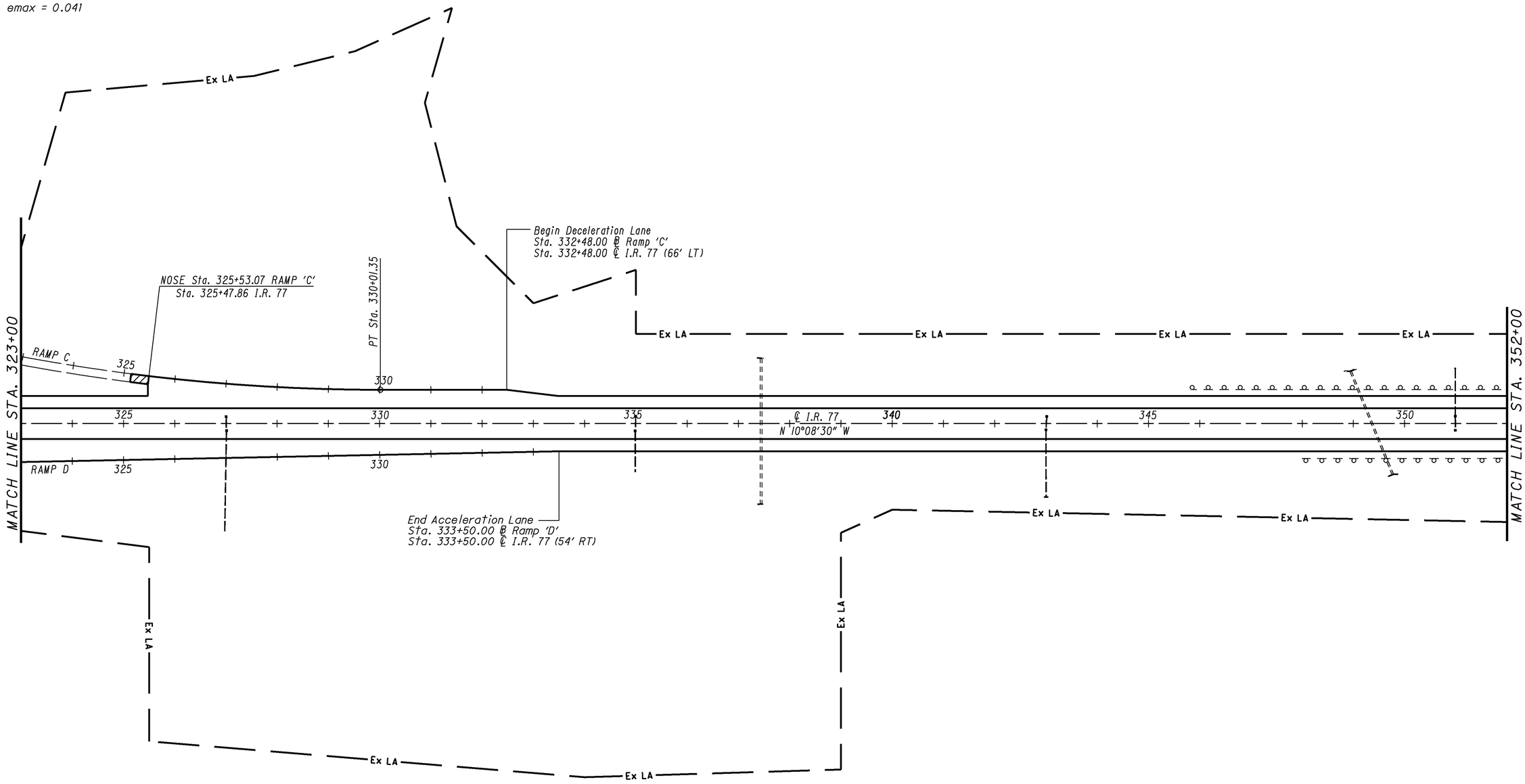

Item 202 - Wearing Course Removed
(Butt End Joint As Per SCD BP-3.1)

FOR TRAFFIC CONTROL QUANTITIES, SEE SHEET NO'S. 38-41.

HORIZONTAL SCALE IN FEET
0 50 100 200

CALCULATED RDA
CHECKED JPB

PLAN SHEET
STA. 323+00 TO STA. 352+00

TUS-77-20.73
TUS-250-11.88

27
62

I:\PROJECTS\81725\Prod\Dgn\GP001.dgn 11-DEC-2012 10:52AM ramstutz

I.R. 77
P.I. Sta. 382+78.84
Δ = 26° 58′ 45″ (LT)
Dc = 2° 00′ 00″
R = 2,864.79′
Ls = 300.00′
θs = 3° 00′ 00″
LT = 200.03′
ST = 100.03′
x = 299.92′
y = 5.24′
k = 149.99′
p = 1.31′
Δc = 20° 58′ 45″ (LT)
Lc = 1,048.96′
Ts = 837.53′
Es = 82.62′
emax = 0.064 FT./FT.

Item 202 - Wearing Course Removed
(Butt End Joint As Per SCD BP-3.11)

FOR TRAFFIC CONTROL QUANTITIES, SEE SHEET NO'S. 38-41.

HORIZONTAL SCALE IN FEET
0 50 100 200

CALCULATED RDA
CHECKED JPB

PLAN SHEET
STA. 352+00 TO STA. 380+00

TUS-77-20.73
TUS-250-11.88

28
62

I:\PROJECTS\81725\Prod\Dgn\BGP001.dgn 11-DEC-2012 10:52AM ramstutz

I.R. 77
P.I. Sta. 382+78.84
Δ = 26° 58′ 45″ (LT)
Dc = 2° 00′ 00″
R = 2,864.79′
Ls = 300.00′
θs = 3° 00′ 00″
LT = 200.03′
ST = 100.03′
x = 299.92′
y = 5.24′
k = 149.99′
p = 1.31′
Δc = 20° 58′ 45″ (LT)
Lc = 1,048.96′
Ts = 837.53′
Es = 82.62′
emax = 0.064 FT./FT.

MATCH LINE STA. 380+00

CS Sta. 387+90.27

ST Sta. 390+90.27

MATCH LINE STA. 409+00

Ex LA

385 390 395 ℄ I.R. 77 N 37° 07′ 15″ W 400 405

Bridge No. TUS-77-2674

Franklin Township
Dover Township

T.R. 424

FOR TRAFFIC CONTROL QUANTITIES, SEE SHEET NO'S. 38-41.

HORIZONTAL SCALE IN FEET
0 50 100 200

CALCULATED RDA
CHECKED JPB

PLAN SHEET
STA. 380+00 TO STA. 409+00

TUS-77-20.73
TUS-250-11.88

29
62

I:\PROJECTS\81725\Prod\Dgn\GP001.dgn 11-DEC-2012 10:53AM ramstutz

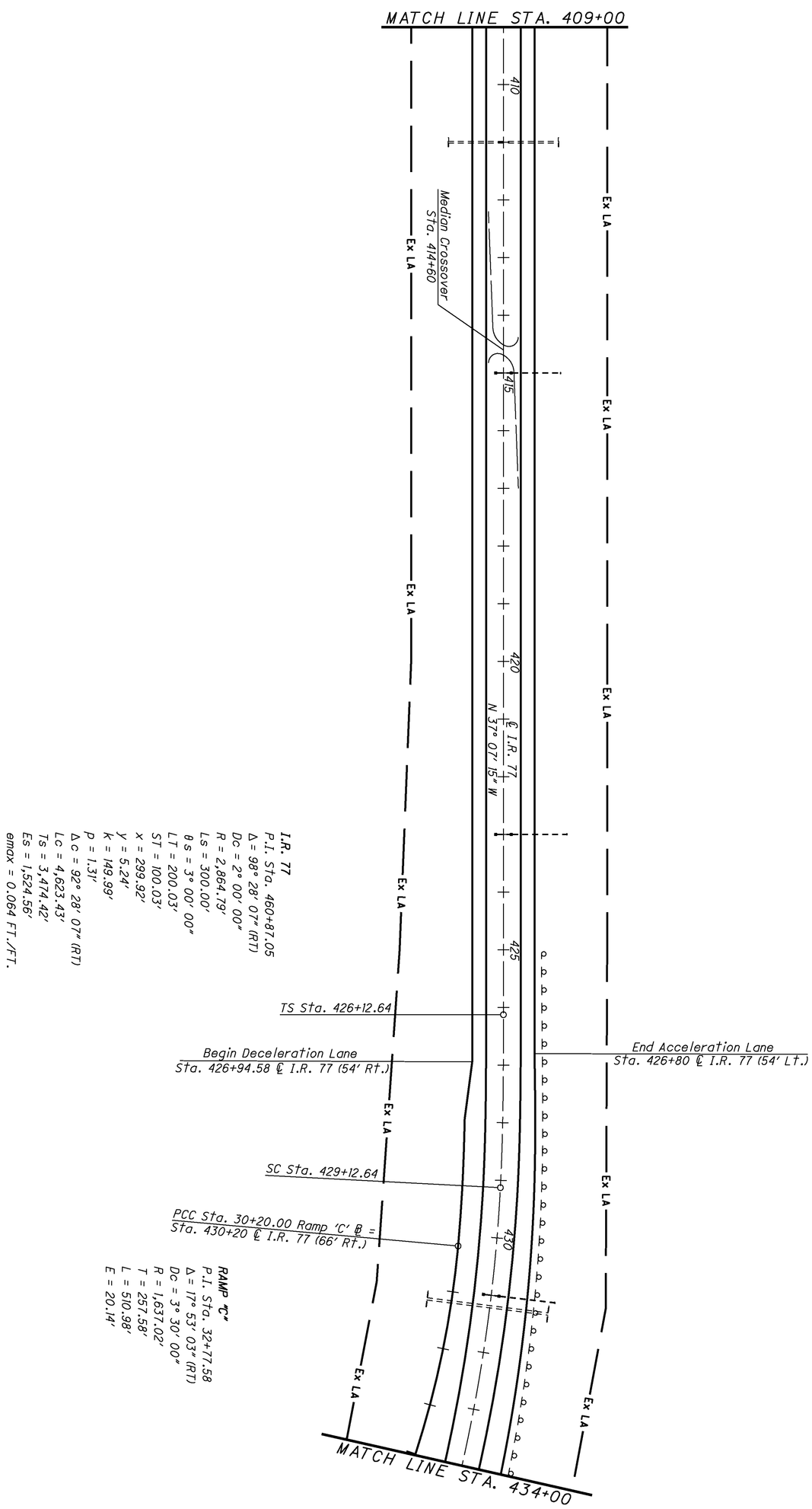

I.R. 77
P.I. Sta. 460+87.05
Δ = 98° 28' 07" (RT)
Dc = 2° 00' 00"
R = 2,864.79'
Ls = 300.00'
θs = 3° 00' 00"
LT = 200.03'
ST = 100.03'
x = 299.92'
Y = 5.24'
k = 149.99'
P = 1.31'
Δc = 92° 28' 07" (RT)
Lc = 4,623.43'
Ts = 3,474.42'
Es = 1,524.56'
emax = 0.064 FT./FT.

RAMP "C"
P.I. Sta. 32+77.58
Δ = 17° 53' 03" (RT)
Dc = 3° 30' 00"
R = 1,637.02'
T = 257.58'
L = 510.98'
E = 20.14'

FOR TRAFFIC CONTROL QUANTITIES, SEE SHEET NO'S. 38-41.

RAMP "C"
D1 = 3° 30′
D2 = 10°
Δ1 = 3° 30′
Δ2 = 10°
Δ1+Δ2 = 13° 30′
θs = 6° 30′
Ls = 200.00′
T1 = 116.53′
T2 = 84.40′
Pa = 1.89′

RAMP "C"
P.I. Sta. 39+80.12
Δ = 36° 19′ 28″ (RT)
Dc = 10° 00′ 00″
R = 572.96′
T = 187.96′
L = 363.24′
Es = 53.39′

RAMP "C"
Δ = 46° 19′ 28″ (RT)
Ls = 200.00′
θs = 10° 00′ 00″
LT = 133.55′
ST = 66.86′
x = 199.39′
y = 11.61′
k = 99.90′
p = 2.91′
Ts = 342.24′ Ah.

Item 202 - Wearing Course Removed
(Butt End Joint As Per SCD BP-3.1)

RAMP "A"
P.I. Sta. 44+12.16
Δ = 32° 22′ 24″ (LT)
Dc = 10° 00′ 00″
R = 572.96′
Ls = 200.00′
θs = 10° 00′ 00″
LT = 133.55′
ST = 66.86′
x = 199.39′
y = 11.61′
k = 99.90′
p = 2.91′
Δc = 12° 22′ 24″ (LT)
Lc = 123.73′
Ts = 267.06′
Es = 26.68′

RAMP "A"
P.I. Sta. 50+32.41
Δ = 47° 35′ 55″ (RT)
Dc = 10° 59′ 12″
R = 521.50′
Ls = 200.00′
θs = 10° 59′ 12″
LT = 133.59′
ST = 66.90′
x = 199.27′
y = 12.75′
k = 99.88′
p = 3.19′
Δc = 36° 36′ 43″ (RT)
Lc = 333.24′
Ts = 326.98′ Bk.

RAMP "B"
P.I. Sta. 57+90.48
Δ = 162° 04′ 19″ (LT)
Dc = 24° 54′ 40″
R = 230.00′
Ls = 300.00′
θs = 37° 22′ 01″
LT = 204.91′
ST = 104.48′
x = 286.82′
y = 64.85′
k = 147.90′
p = 16.06′
Δc = 124° 42′ 19″ (LT)
Lc = 500.60′
Ts = 1510.26′ Ah.

END WORK
END PROJECT
I.R. 77
STA. 453+16.62
S.L.M. 27.72

E100(858)

RAMP "AB"
P.I. Sta. 55+20.25
Δ = 57° 59′ 28″ (RT)
Dc = 11° 26′ 11″
R = 501.00′
Ls = 200.00′
θs = 11° 26′ 11″
LT = 133.61′
ST = 66.92′
x = 199.21′
y = 13.27′
k = 99.86′
p = 3.32′
Δc = 46° 33′ 17″ (RT)
Lc = 407.08′
Ts = 375.45′ Ah.

I.R. 77
P.I. Sta. 460+87.05
Δ = 98° 28′ 07″ (RT)
Dc = 2° 00′ 00″
R = 2,864.79′
Ls = 300.00′
θs = 3° 00′ 00″
LT = 200.03′
ST = 100.03′
x = 299.92′
y = 5.24′
k = 149.99′
p = 1.31′
Δc = 92° 28′ 07″ (RT)
Lc = 4,623.43′
Ts = 3,474.42′
Es = 1,524.56′
emax = 0.064 FT./FT.
C.S. Sta. 475+36.07
S.T. Sta. 478+36.07

S.R. 21 & U.S. 250
P.I. Sta. 70+43.87
Δ = 25° 14′ 00″ (RT)
Dc = 3° 01′ 25″
R = 1,895.03′
T = 424.17′
L = 834.58′
E = 46.89′

RAMP "D"
Δ = 103° 32′ 46″ (RT)
Ls = 150.00′
θs = 18° 41′ 00″
LT = 100.56′
ST = 50.51′
x = 148.41′
y = 16.18′
k = 74.73′
p = 4.06′
Ts = 367.70′ Bk.

RAMP "D"
P.I. Sta. 42+67.42
Δ = 84° 51′ 46″ (RT)
Dc = 24° 54′ 40″
R = 230.00′
T = 210.25′
L = 340.66′
E = 81.62′

RAMP "D"
D1 = 2° 30′
D2 = 24° 54′ 40″
Δ1 = 2° 30′
Δ2 = 24° 54′ 40″
Δ1+Δ2 = 27° 24′ 40″
θs = 22° 24′ 40″
Ls = 200.00′
T1 = 129.49′
T2 = 74.40′
Pa = 6.48′

RAMP "D"
P.I. Sta. 47+45.43
Δ = 7° 44′ 26″ (RT)
Dc = 2° 30′ 00″
R = 2,291.83′
T = 155.05′
L = 309.62′
E = 5.24′

FOR TRAFFIC CONTROL QUANTITIES, SEE SHEET NO'S. 38-41.

HORIZONTAL SCALE IN FEET
0 50 100 200

CALCULATED RDA
CHECKED JPB

PLAN SHEET
STA. 434+00 TO STA. 462+50

TUS-77-20.73
TUS-250-11.88

31
62

I:\EPROJECTS\81725\Prod\EDgn\EGP001.dgn 11-JAN-2013 2:43PM jberanek

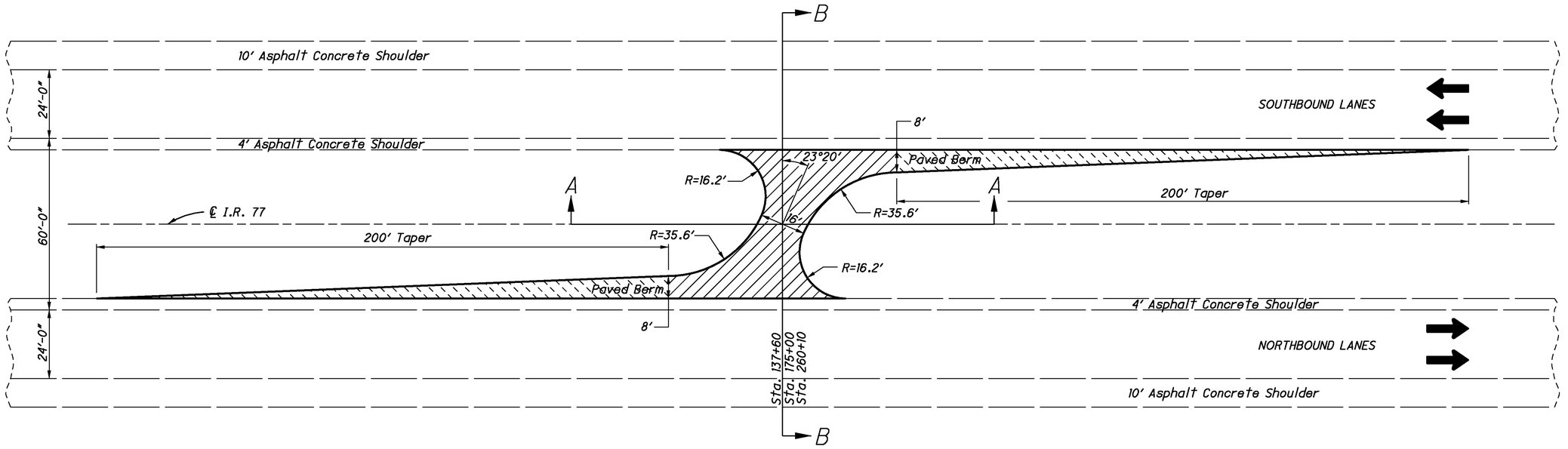

PLAN
Scale 1:200

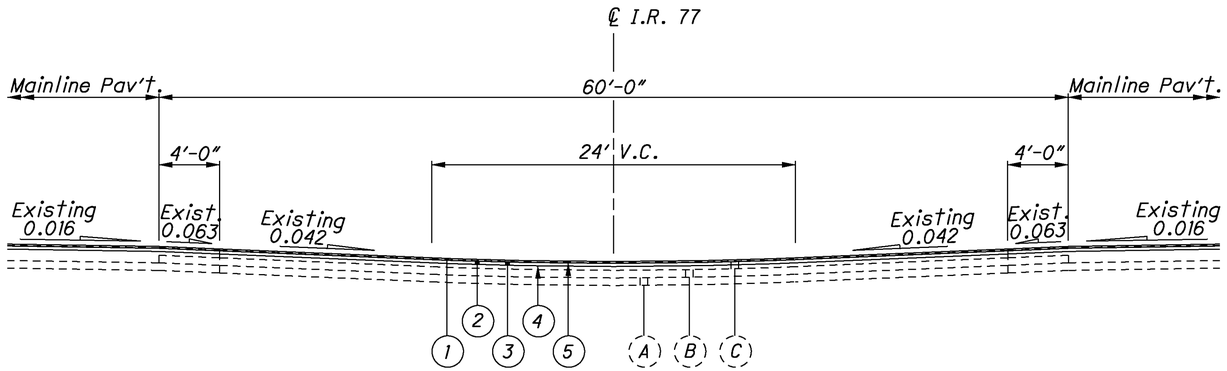

SECTION B-B
Scale 1:50

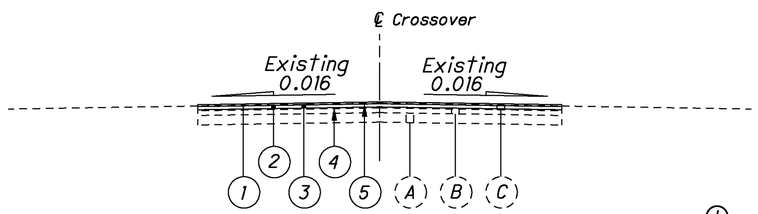

SECTION A-A
Scale 1:50

CADD Generated Area	= 1720 Sq. Ft.
Tapers [200' x (8' + 0')] / 2	= 800 Sq. Ft. x 2 Tapers
	= 1600 Sq. Ft.
Total Median Cross-over Area	= 3320 Sq. Ft.
x 3 Locations	= 9960 Sq. Ft.

QUANTITIES

Item 254 - Pavement Planing, Asphalt Concrete 5" Nominal Depth
9960 Sq. Ft. ÷ 9 = 1107 Sq. Yd. (01/IMS/PV)

Item 442 - Asphalt Concrete Surface Course, 12.5mm, Type B (446), As Per Plan
9960 Sq. Ft. x 1½" ÷ 12 ÷ 27 = 46.11 Cu. Yd. (01/IMS/PV)

Item 442 - Asphalt Concrete Intermediate Course, 19mm, Type B (448)
9960 Sq. Ft. x 3½" ÷ 12 ÷ 27 = 107.59 Cu. Yd. (01/IMS/PV)

Item 407 - Tack Coat for Intermediate Course
9960 Sq. Ft ÷ 9 x 0.04 = 44.27 Gallon (01/IMS/PV)

Item 407 - Tack Coat
9960 Sq. Ft ÷ 9 x 0.075 = 83.00 Gallon (01/IMS/PV)

Quantities Carried to General Summary

EXISTING LEGEND

- (A) EXISTING SUBBASE
- (B) EXISTING AGGREGATE BASE
- (C) EXISTING ASPHALT CONCRETE PAVEMENT

PROPOSED LEGEND

- (1) ITEM 442 - 1 ½" ASPHALT CONCRETE SURFACE COURSE, 12.5MM, TYPE B (446), AS PER PLAN
- (2) ITEM 442 - 3 ½" ASPHALT CONCRETE INTERMEDIATE COURSE, 19MM, TYPE B (448)
- (3) ITEM 254 - PAVEMENT PLANING, ASPHALT CONCRETE (5" NOMINAL DEPTH)
- (4) ITEM 407 - TACK COAT (APPLIED @ 0.075 GALS./SQ. YD.)
- (5) ITEM 407 - TACK COAT FOR INTERMEDIATE COURSE (APPLIED @ 0.04 GALS./SQ. YD.)

CALCULATED RDA
CHECKED JPB

MEDIAN CROSSOVER DETAILS

TUS-77-20.73
TUS-250-11.88

I:\PROJECTS\81725\Prod\Dgn\GM002.dgn 11-DEC-2012 10:56AM ramstutz

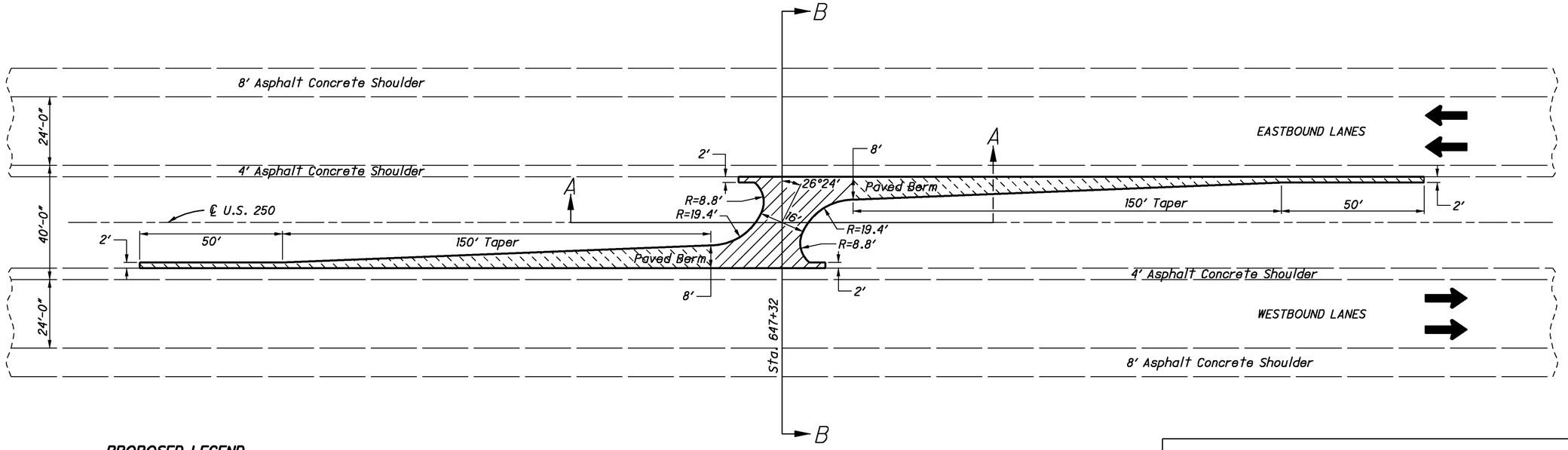

PLAN
Scale 1:200

PROPOSED LEGEND

1. ITEM 442 - 1½" ASPHALT CONCRETE SURFACE COURSE, 12.5MM, TYPE B (446), AS PER PLAN
2. ITEM 442 - 1¾" ASPHALT CONCRETE INTERMEDIATE COURSE, 19MM, TYPE B (448)
3. ITEM 254 - PAVEMENT PLANING, ASPHALT CONCRETE (3¼" NOMINAL DEPTH)
4. ITEM 407 - TACK COAT (APPLIED @ 0.075 GALS./SQ.YD.)
5. ITEM 407 - TACK COAT FOR INTERMEDIATE COURSE (APPLIED @ 0.04 GALS./SQ.YD.)

EXISTING LEGEND

- (A) EXISTING SUBBASE
- (B) EXISTING AGGREGATE BASE
- (C) EXISTING BITUMINOUS AGGREGATE BASE
- (D) EXISTING ASPHALT CONCRETE

CADD Generated Area = 889 Sq. Ft.

CADD Generated Area (850 Sq. Ft. x 2 Tapers) = 1700 Sq. Ft.

Total Median Cross-over Area = 2589 Sq. Ft.

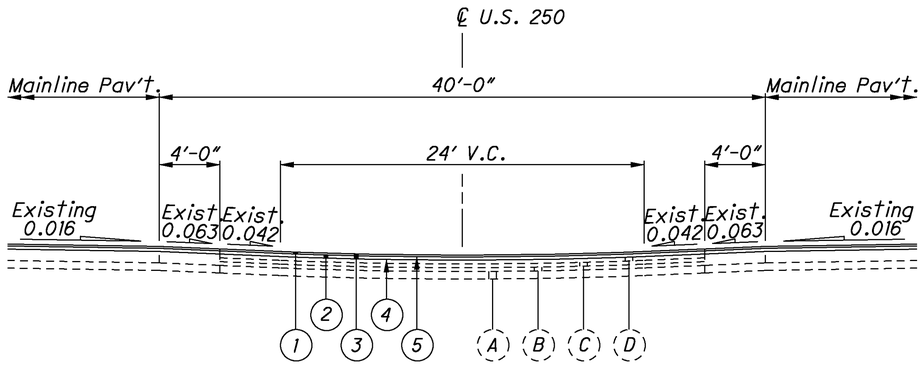

SECTION B-B
Scale 1:50

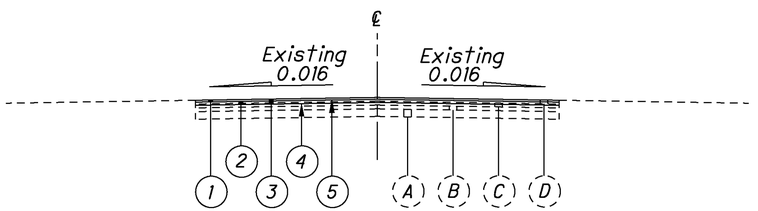

SECTION A-A
Scale 1:50

QUANTITIES

Item 254 - Pavement Planing, Asphalt Concrete 3¼" Nominal Depth
2589 Sq. Ft. ÷ 9 = 288 Sq. Yd. (02/NHS/PV)

Item 442 - Asphalt Concrete Surface Course, 12.5mm, Type B (446), As Per Plan
2589 Sq. Ft. x 1½" ÷ 12 ÷ 27 = 11.99 Cu. Yd. (02/NHS/PV)

Item 442 - Asphalt Concrete Intermediate Course, 19mm, Type B (448)
2589 Sq. Ft. x 1¾" ÷ 12 ÷ 27 = 13.98 Cu. Yd. (02/NHS/PV)

Item 407 - Tack Coat for Intermediate Course
2589 Sq. Ft ÷ 9 x 0.04 = 11.51 Gallon (02/NHS/PV)

Item 407 - Tack Coat
2589 Sq. Ft ÷ 9 x 0.075 = 21.57 Gallon (02/NHS/PV)

Quantities Carried to General Summary

CALCULATED RDA
CHECKED JPB

MEDIAN CROSSOVER DETAILS

TUS-77-20.73
TUS-250-11.88

I:\PROJECTS\81725\Prod\Dgn\GM002.dgn 11-DEC-2012 10:57AM ramstutz

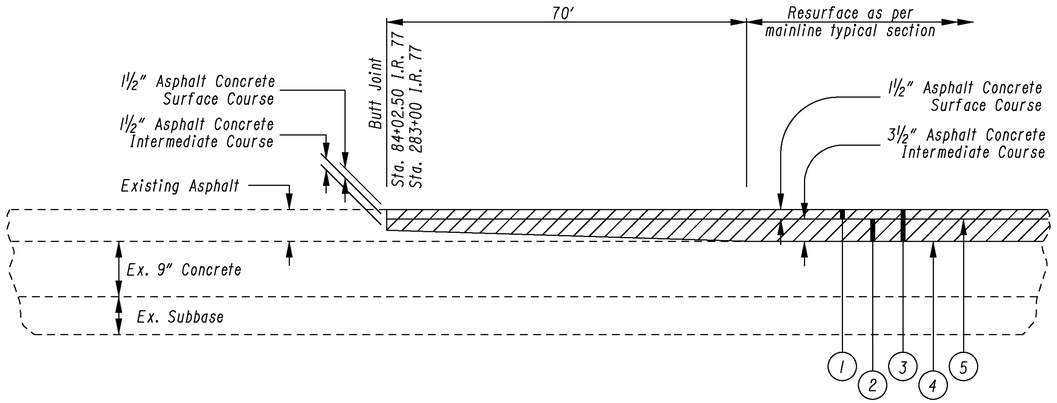

PAVEMENT TRANSITION AT BEGINNING & END OF PROJECT (I.R. 77)

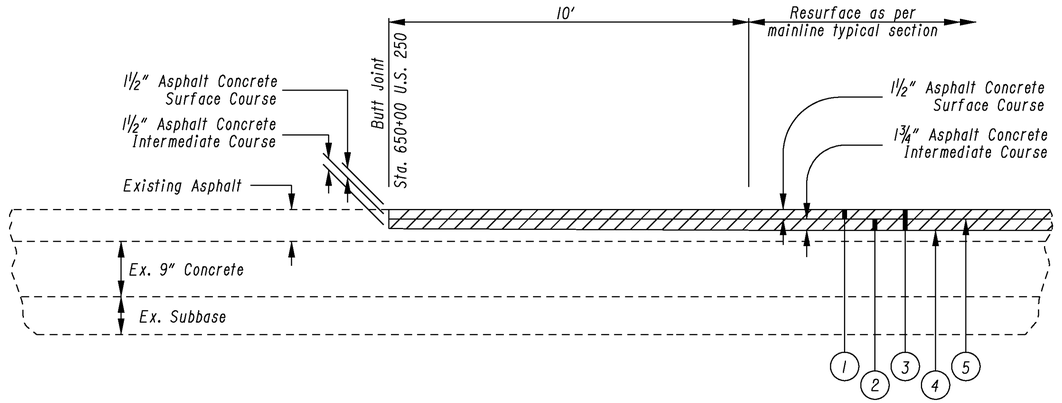

PAVEMENT TRANSITION AT END OF PROJECT (U.S. 250)

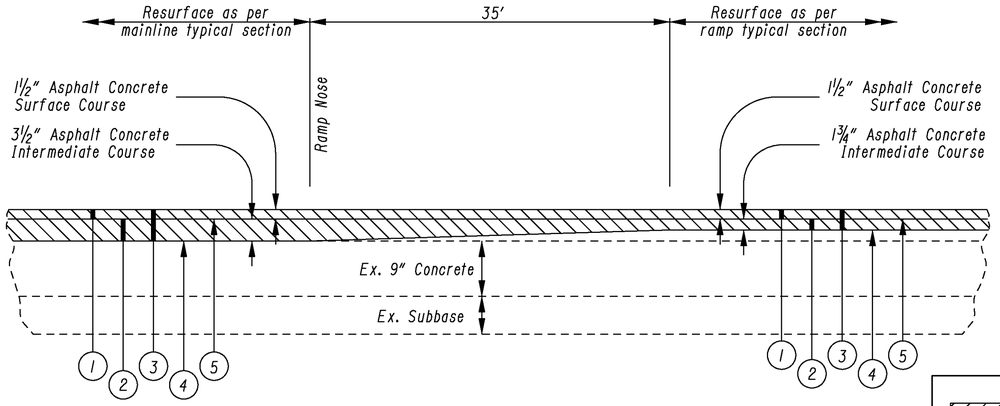

PAVEMENT TRANSITION FROM MAINLINE TO RAMP

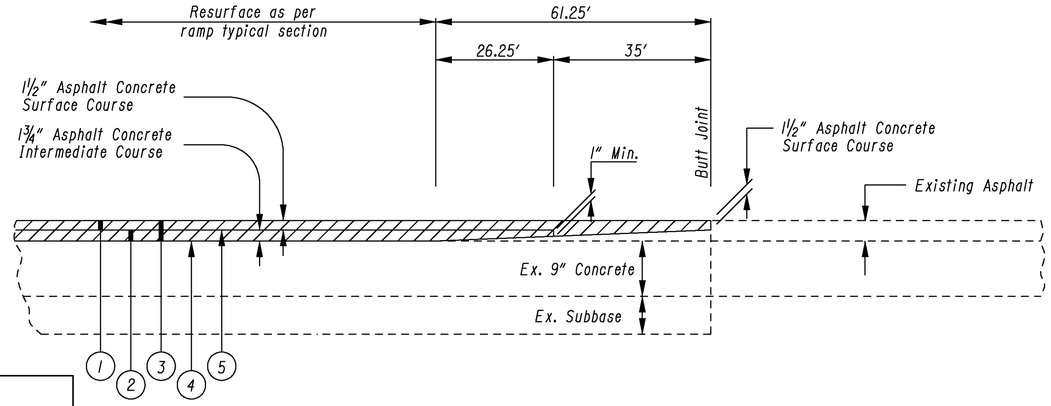

PAVEMENT TRANSITION AT RAMP INTERSECTIONS

Pavement Planing

For Legend See Sheet No. 4

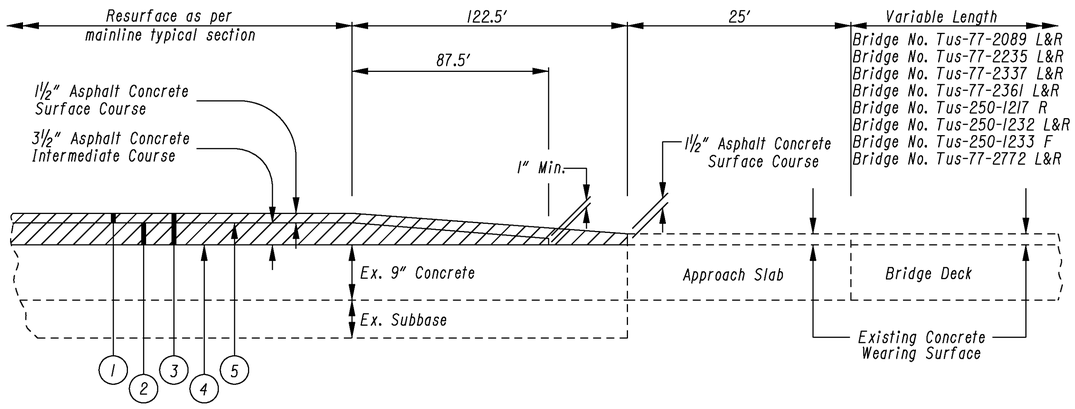

PAVEMENT TRANSITION AT STRUCTURES

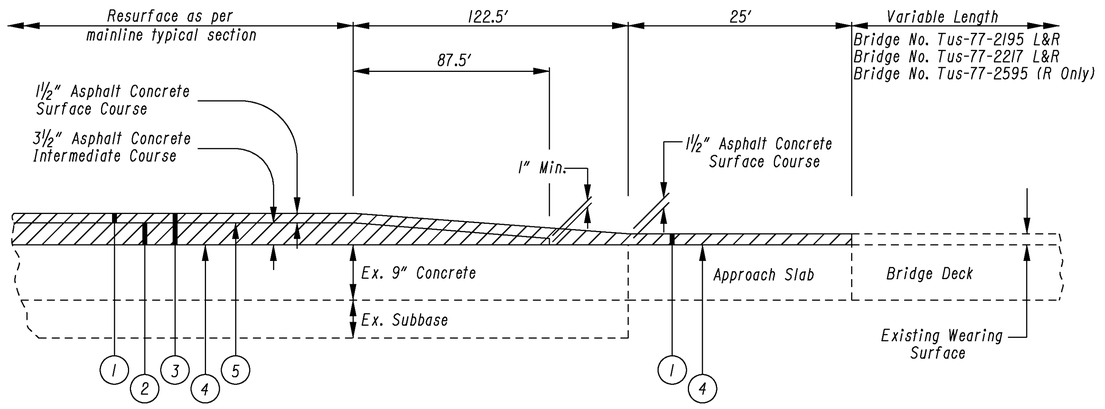

PAVEMENT TRANSITION AT STRUCTURES

CALCULATED RDA
CHECKED JPB

FEATHER DETAILS

TUS-77-20.73
TUS-250-11.88

34
62

I:\PROJECTS\81725\Prod\Dgn\GM002.dgn 11-DEC-2012 10:57AM ramstutz

I:\PROJECTS\81725\Prod\Dgn\GM002.dgn 11-DEC-2012 10:58AM ramstutz

Pavement Planing

For Legend See Sheet No. 4

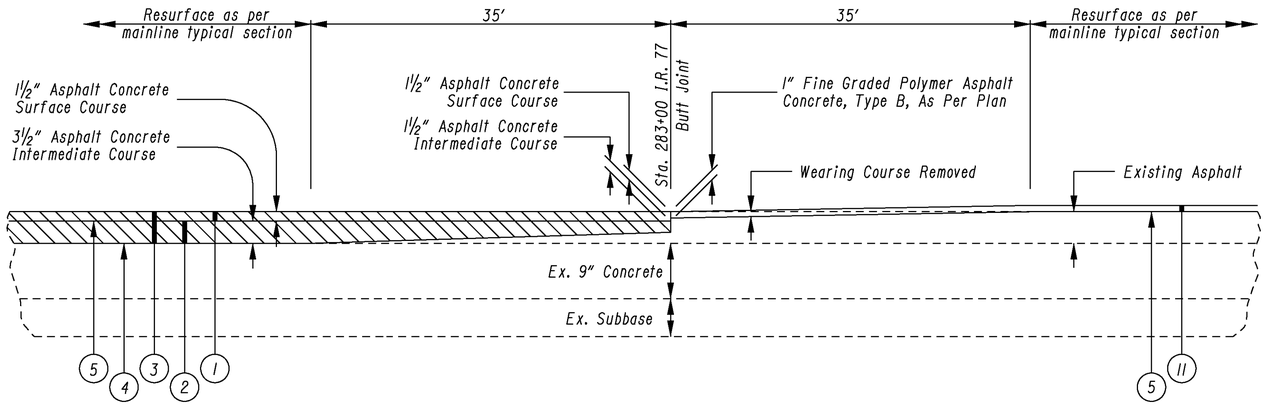

PAVEMENT TRANSITION AT SLM 24.50

Bridge No. TUS-250-1232R

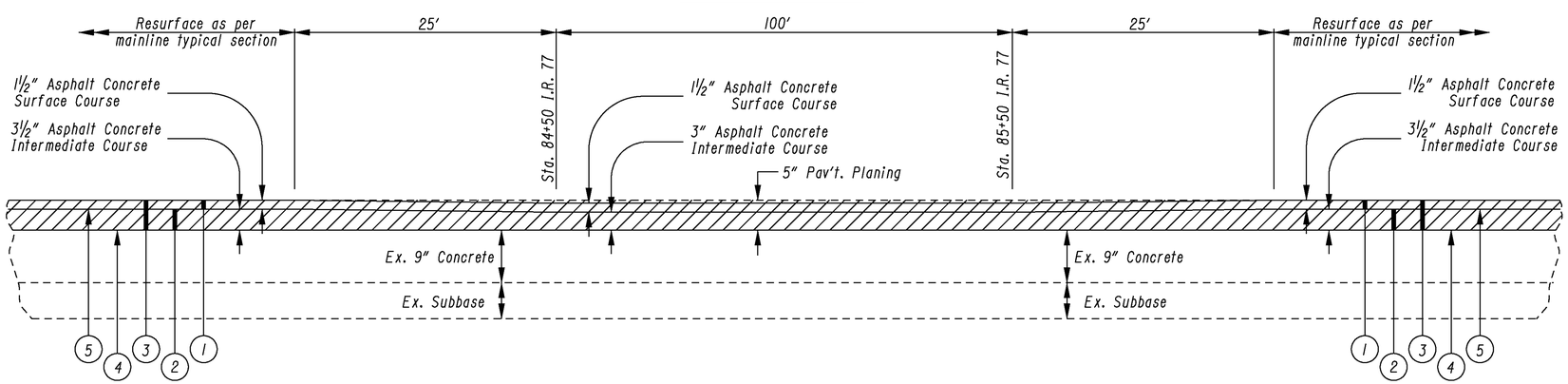

PAVEMENT TRANSITION AT OVERHEAD BRIDGE NO. TUS-250-1232R

I.R. 77 SOUTHBOUND LANES ONLY

CALCULATED RDA
CHECKED JPB

FEATHER DETAILS

TUS-77-20.73
TUS-250-11.88

Pavement Planing

For Legend See Sheet No. 4

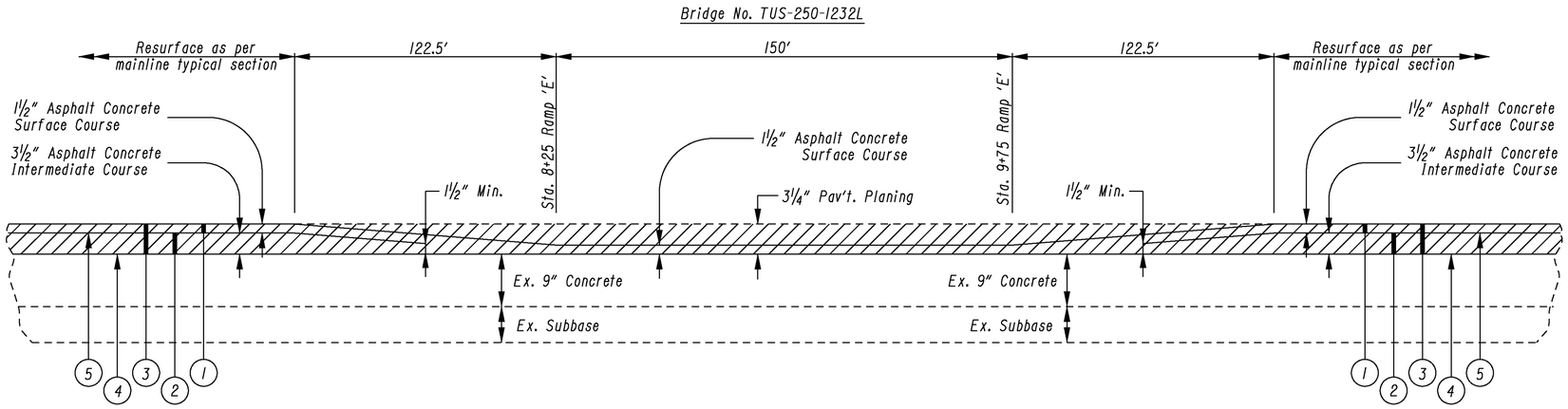

PAVEMENT TRANSITION AT OVERHEAD BRIDGE NO. TUS-250-1232L

CALCULATED RDA
CHECKED JPB

FEATHER DETAILS

TUS-77-20.73
TUS-250-11.88

35A
62

I:\PROJECTS\81725\Prod\Dgn\GM002.dgn 18-SEP-2013 3:21PM jberanek

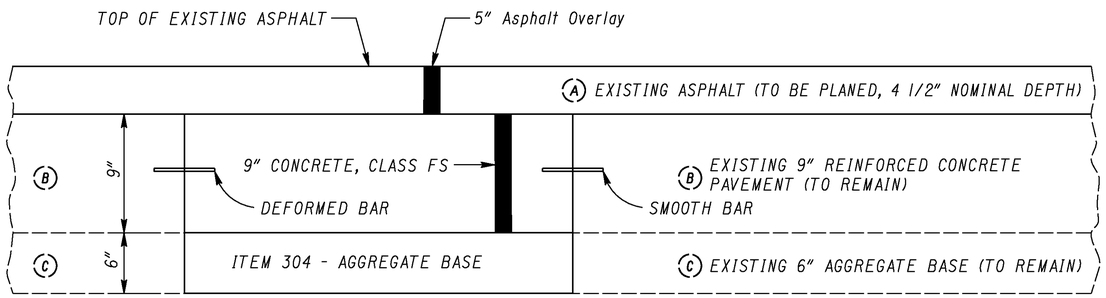

MAINLINE AND SHOULDER PAVEMENT REPAIR TYPICAL

I.R. 77 - STA. 84+02.50 TO STA. 283+00

FOR DETAILS NOT SHOWN SEE STANDARD CONSTRUCTION DRAWING BP-2.5
FOR TRANSVERSE JOINT REPAIR DETAILS AND BP-2.1 FOR LONGITUDINAL JOINT DETAILS

ITEM 255 - FULL DEPTH PAVEMENT REMOVAL AND RIGID REPLACEMENT, CLASS FS, AS PER PLAN

The estimated quantities are to be considered approximate. A final field review will be performed by ODOT prior to construction and final locations will be given to the Contractor prior to construction.

This work consists of removing the existing asphalt concrete, reinforced concrete, and the aggregate base courses; shaping and compacting the exposed material; placing Item 304 Aggregate Base; then installing dowel rods followed by concrete pavement, Class FS.

All other provisions of Standard Construction Drawings BP-2.1 and BP-2.5 apply.

The following estimated quantities have been provided for information only.

9" Concrete, Class FS	1,051 Cu. Yd.
Item 304 - Aggregate Base	701 Cu. Yd.
Item 509 - Epoxy Coated Reinforcing	71,686 Pounds
Item 510 - Dowel Holes with Nonshrink, Nonmetallic Grout	11,565 Each

The following estimated quantities have been carried to the General Summary to be used as directed by the Engineer. Final payment for these items shall be for the accepted quantity completed in place.

Item 255 - Full Depth Pavement Removal and Rigid Replacement, Class FS, As Per Plan	4,205 Sq. Yd. (01/IMS/PV)
Item 255 - Full Depth Pavement Sawing	12,616 Ft. (01/IMS/PV)

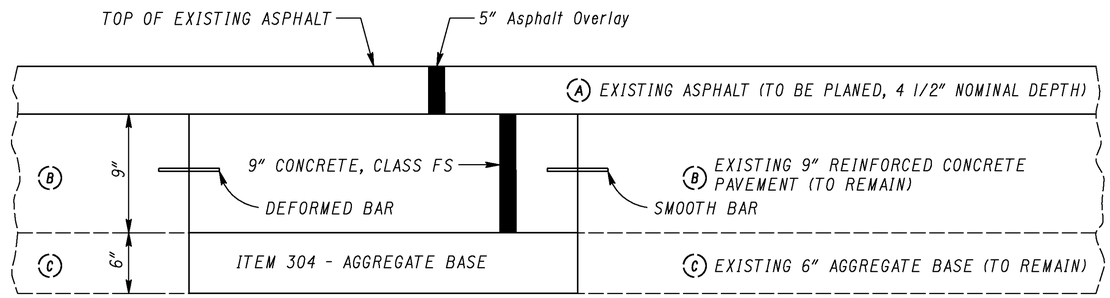

MAINLINE AND SHOULDER PAVEMENT REPAIR TYPICAL

U.S. 250 - STA. 591+08.54 TO STA. 650+00

FOR DETAILS NOT SHOWN SEE STANDARD CONSTRUCTION DRAWING BP-2.5
FOR TRANSVERSE JOINT REPAIR DETAILS AND BP-2.1 FOR LONGITUDINAL JOINT DETAILS

ITEM 255 - FULL DEPTH PAVEMENT REMOVAL AND RIGID REPLACEMENT, CLASS FS, AS PER PLAN

The estimated quantities are to be considered approximate. A final field review will be performed by ODOT prior to construction and final locations will be given to the Contractor prior to construction.

This work consists of removing the existing asphalt concrete, reinforced concrete, and the aggregate base courses; shaping and compacting the exposed material; placing Item 304 Aggregate Base; then installing dowel rods followed by concrete pavement, Class FS.

All other provisions of Standard Construction Drawings BP-2.1 and BP-2.5 apply.

The following estimated quantities have been provided for information only.

9" Concrete, Class FS	40 Cu. Yd.
Item 304 - Aggregate Base	27 Cu. Yd.
Item 509 - Epoxy Coated Reinforcing	2727 Pounds
Item 510 - Dowel Holes with Nonshrink, Nonmetallic Grout	440 Each

The following estimated quantities have been carried to the General Summary to be used as directed by the Engineer. Final payment for these items shall be for the accepted quantity completed in place.

Item 255 - Full Depth Pavement Removal and Rigid Replacement, Class FS, As Per Plan	253 Sq. Yd. (02/NHS/PV)
Item 255 - Full Depth Pavement Sawing	480 Ft. (02/NHS/PV)

ITEM 605 - AGGREGATE DRAINS

This item shall be used to construct aggregate drains and shall meet the requirements of Item 605, Aggregate Drains.

The following estimated quantity has been carried to the General Summary to be used as directed by the Engineer. Final payment for these items shall be for the accepted quantity completed in place.

Item 605 - Aggregate Drains	200 Ft. (I.R. 77) (01/IMS/PV)
Item 605 - Aggregate Drains	50 Ft. (U.S. 250) (02/NHS/PV)

CALCULATED RDA
CHECKED JPB

PAVEMENT REPAIR DETAILS

TUS-77-20.73
TUS-250-11.88

36
62

I:\PROJECTS\81725\Prod\Dgn\BGM003.dgn 11-DEC-2012 11:02AM ramstutz

FOR GUARDRAIL QUANTITIES, SEE SHEET NO. 16-18.

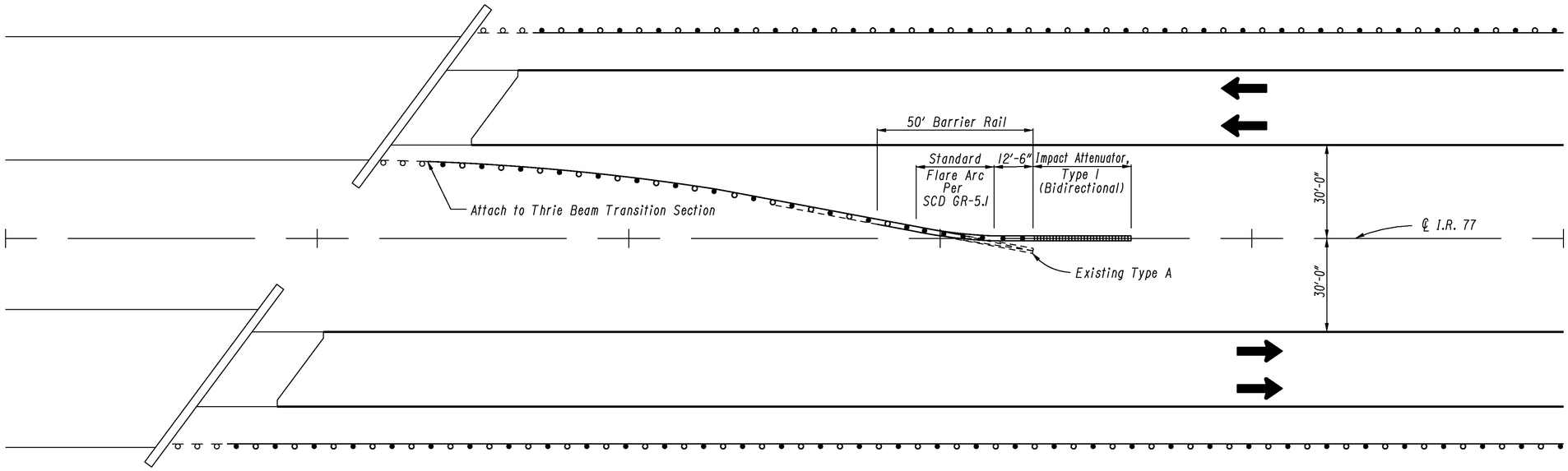

MEDIAN GUARDRAIL - DETAIL 'A'

FOR ADDITIONAL DETAILS NOT SHOWN, SEE STANDARD CONSTRUCTION DRAWING GR-6.1.

Note:

A. Grading shall be as determined by the Engineer.

B. Impact Attenuator shall be placed on centerline as shown.

C. See "Median Guardrail Grading" note on sheet no. 9.

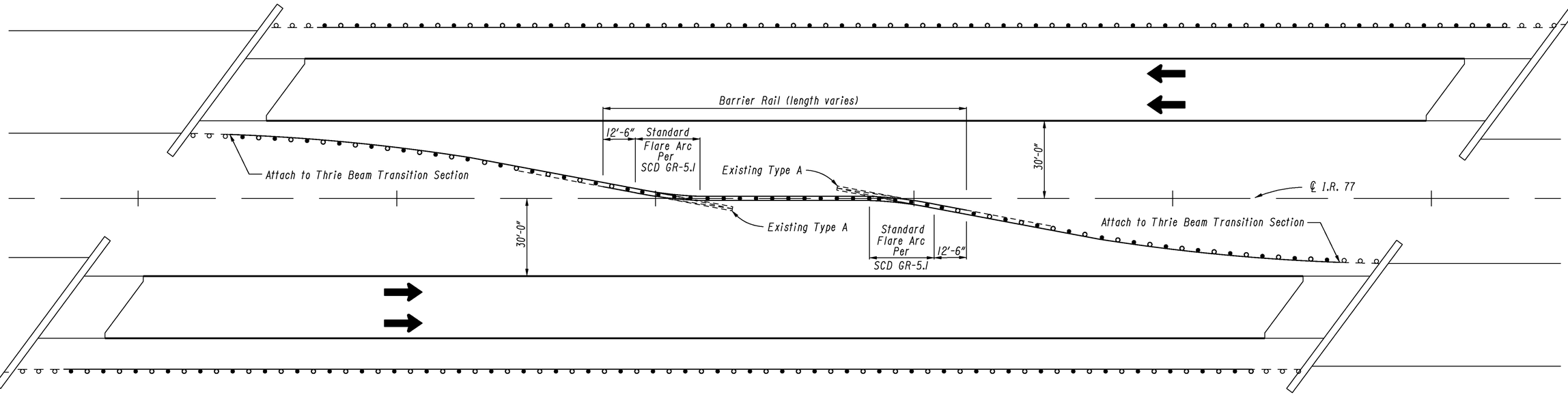

MEDIAN GUARDRAIL - DETAIL 'B'

FOR ADDITIONAL DETAILS NOT SHOWN, SEE STANDARD CONSTRUCTION DRAWING GR-6.1.

HORIZONTAL SCALE IN FEET
0 10 20 40

CALCULATED RDA
CHECKED JPB

GUARDRAIL DETAILS

TUS-77-20.73
TUS-250-11.88

37
62

I:\PROJECTS\81725\Prod\Dgn\GI001.dgn 11-DEC-2012 12:39PM ramstutz

LOCATION	STATION		SIDE 'Direction of Travel'	646					642				621						COMMENTS
													RPM						
	FROM	TO		EDGE LINE, 6" (YELLOW) FT.	EDGE LINE, 6" (WHITE) FT.	LANE LINE, 6" FT.	DOTTED LINE, 12" FT.	CHANNELIZING LINE, 12" FT.	STOP LINE, TYPE 1 FT.	LANE ARROW, TYPE 1 EACH			2 - WAY, WHITE/RED EACH	2 - WAY, YELLOW/RED EACH	1 - WAY, WHITE EACH				
U.S 250 EASTBOUND																			
MAINLINE	591+08.54	609+82.89	RT.		1874.35														
	609+82.89	623+73.77	RT.		1390.88														
	623+73.77	650+00	RT.		2626.23														
	601+93	650+00	LT.	4807															
	601+93	650+00	CTR.			4807									41				
DECEL. LANE - RAMP 'A'	602+50	607+55.94	RT.				505.94												
	607+55.94	609+82.89	RT.					453.90					12						
ACCEL. LANE - RAMP 'D'	623+73.77	626+57.85	RT.					568.16					8						
	626+57.85	637+87	RT.				1129.15												
U.S 250 WESTBOUND																			
MAINLINE	605+21.46	634+91.30	RT.		2969.84														
	634+91.30	650+00	RT.		1508.70														
	622+98.80	650+00	LT.	2701.20															
	631+00	650+00	CTR.			1900									17				
DECEL. LANE - RAMP 'F'	634+91.30	637+06.28	RT.					429.96					12						
	637+06.28	643+00	RT.				593.72												
RAMP D																			
	0+23	6+69.30	LT.	646.30										9					
	3+10	3+78.35	RT.					68.35											
	3+78.35	6+69.30	RT.		290.95														
RAMP F																			
	0+28	13+17	RT.		1289														
	0+43.32		LT. & RT.						47										
	0+70		CTR.							1									
	1+36		CTR.							1									
	2+02		CTR.							1									
	0+43.32	2+50	LT.					206.68					6						
	2+50	5+00	LT.				250												
	5+00	5+90	LT.					90					3						
	5+90	13+17	LT.	727										10					

LOCATION	STATION		SIDE 'Direction of Travel'	646					642				621						COMMENTS
													RPM						
	FROM	TO		EDGE LINE, 6" (YELLOW) FT.	EDGE LINE, 6" (WHITE) FT.	LANE LINE, 6" FT.	DOTTED LINE, 12" FT.	CHANNELIZING LINE, 12" FT.	STOP LINE, TYPE 1 FT.	LANE ARROW, TYPE 1 EACH			2 - WAY, WHITE/RED EACH	2 - WAY, YELLOW/RED EACH	1 - WAY, WHITE EACH				
I.R. 77 NORTHBOUND																			
MAINLINE	84+02.50	453+16.62	LT.	36,914.12															
	84+02.50	453+16.62	CTR.			36,914.12									309				
	84+02.50	90+23.93	RT.		621.43														
	108+00	214+78.65	RT.		10,678.65														
	214+78.65	231+50	RT.		1671.35														
	231+50	300+28.73	RT.		6878.73														
	299+95.89	318+43.58	RT.		1847.69														
	318+10.82	435+43.63	RT.		11,732.81														
	435+10	445+08	RT.		998														
	444+73.66	453+16.62	RT.		842.96														
ACCEL. LANE - U.S. 250	90+23.93	95+11.89	LT.					975.92					13						
	95+11.89	108+00	LT.				1288.11												
ACCEL. LANE - RAMP 'B'	108+00	112+24.96	LT.					849.92					12						
	112+24.96	124+50	LT.				1225.04												
DECEL. LANE - RAMP 'H'	202+76.98	211+94.38	LT.				917.40												
	211+94.38	214+78.65	LT.					568.54					15						
ACCEL. LANE - RAMP 'J'	231+50	235+90.94	LT.					881.88					12						
	235+90.94	248+00	LT.				1209.06												
DECEL. LANE - RAMP 'B'	291+95	297+16.70	LT.				521.70												
	297+16.70	299+95.89	LT.					558.38					15						
	299+95.89	300+28.73	LT.	35															
ACCEL. LANE - RAMP 'D'	318+10.82	318+43.58	LT.	35															
	318+43.58	321+96.87	LT.					706.58					10						
	321+96.87	333+50	LT.				1153.13												
DECEL. LANE - RAMP 'C'	426+94.58	432+02.22	LT.				507.64												
	432+02.22	435+10	LT.					615.56					16						
	435+10	435+43.63	LT.	35															
ACCEL. LANE - RAMP 'D'	444+73.66	445+08	LT.	35															
	445+08	449+20.55	LT.					825.10					11						
	449+20.55	453+16.62	LT.				396.07												
SUBTOTALS CARRIED TO SHEET NO. 41.				37,054.12	35,271.62	36,914.12	7,218.15	5,981.88					104		309				FUNDING (01/IMS/PV)

CALCULATED RDA
CHECKED JPB

TRAFFIC CONTROL ESTIMATED QUANTITIES

TUS-77-20.73
TUS-250-11.88

I:\PROJECTS\81725\Prod\Dgn\TQ001.dgn 11-DEC-2012 12:44PM ramstutz

LOCATION	STATION		SIDE 'Direction of Travel'	646					642				621						COMMENTS
													RPM						
	FROM	TO		EDGE LINE, 6" (YELLOW) FT.	EDGE LINE, 6" (WHITE) FT.	LANE LINE, 6" FT.	DOTTED LINE, 12" FT.	CHANNELIZING LINE, 12" FT.	STOP LINE, TYPE 1 FT.	LANE ARROW, TYPE 1 EACH			2 - WAY, WHITE/RED EACH	2 - WAY, YELLOW/RED EACH	1 - WAY, WHITE EACH				
I.R. 77 SOUTHBOUND																			
MAINLINE	*84+02.50*	*453+16.62*	*LT.*	*36,914.12*															
	84+02.50	*453+16.62*	*CTR.*			*36,914.12*									*309*				
	84+02.50	*108+77.09*	*RT.*		*2474.59*														
	119+62.97	*217+15.35*	*RT.*		*9752.38*														
	217+15.35	*235+50*	*RT.*		*1834.65*														
	235+50	*298+89.17*	*RT.*		*6339.17*														
	298+56.41	*325+47.86*	*RT.*		*2691.45*														
	325+15.02	*441+52.04*	*RT.*		*11,637.02*														
	441+20	*450+89.10*	*RT.*		*969.10*														
	450+57.68	*453+16.62*	*RT.*		*258.94*														
DECEL. LANE - U.S. 250	*108+77.09*	*111+94.93*	*LT.*					*635.68*					*17*						
	111+94.93	*119+62.97*	*LT.*				*768.04*												
ACCEL. LANE - RAMP 'G'	*201+15.75*	*213+40.02*	*LT.*				*1224.27*												
	213+40.02	*217+15.35*	*LT.*					*750.66*					*10*						
DECEL. LANE - RAMP 'I'	*235+50*	*238+29.61*	*LT.*					*559.22*					*15*						
	238+29.61	*247+50*	*LT.*				*920.39*												
ACCEL. LANE - RAMP 'A'	*283+50*	*295+03.30*	*LT.*				*1153.30*												
	295+03.30	*298+56.41*	*LT.*					*706.22*					*10*						
	298+56.41	*298+89.17*	*LT.*	*35*															
DECEL. LANE - RAMP 'C'	*325+15.02*	*325+47.86*	*LT.*	*35*															
	325+47.86	*328+26.21*	*LT.*					*556.70*					*15*						
	328+26.21	*333+48*	*LT.*				*521.79*												
ACCEL. LANE - RAMP 'A'	*426+80*	*437+84.11*	*LT.*				*1104.11*												
	437+84.11	*441+20*	*LT.*					*671.78*					*9*						
	441+20	*441+52.04*	*LT.*	*35*															
DECEL. LANE - RAMP 'B'	*450+57.68*	*450+92.12*	*LT.*	*35*															
	450+92.12	*453+28.02*	*LT.*					*471.80*					*13*						
	453+28.02	*453+58.75*	*LT.*				*30.73*												
SUBTOTALS CARRIED TO SHEET NO. 41.				**37,054.12**	**35,957.30**	**36,914.12**	**5,722.63**	**4,352.06**					**89**		**309**				**FUNDING (01/IMS/PV)**

CALCULATED RDA
CHECKED JPB

TRAFFIC CONTROL ESTIMATED QUANTITIES

TUS-77-20.73
TUS-250-11.88

I:\PROJECTS\81725\Prod\Dgn\TQ001.dgn 11-DEC-2012 12:45PM ramstutz

LOCATION	STATION FROM	STATION TO	SIDE 'Direction of Travel'	646 EDGE LINE, 6" (YELLOW) FT.	646 EDGE LINE, 6" (WHITE) FT.	646 LANE LINE, 6" FT.	646 DOTTED LINE, 12" FT.	646 CHANNELIZING LINE, 12" FT.	642 STOP LINE, TYPE 1 FT.	642 LANE ARROW, TYPE 1 EACH			621 RPM 2 - WAY, WHITE/RED EACH	621 RPM 2 - WAY, YELLOW/RED EACH	621 RPM 1 - WAY, WHITE EACH				COMMENTS
I.R. 77 NORTHBOUND																			
RAMP 'E'	*0+28*	*16+25.12*	*LT.*	*1597.12*										*21*					
	5+00	*5+90*	*RT.*					*90*											
	5+90	*16+25.12*	*RT.*		*1035.12*														
RAMP 'B'	*0+30.85*	*15+78.79*	*LT.*	*1547.94*										*20*					
	0+30.85	*15+78.79*	*RT.*		*1547.94*														
RAMP 'H'	*12+00*	*19+42.64*	*LT.*	*742.64*										*10*					
	12+00	*19+42.64*	*RT.*		*742.64*														
	14+50	*18+00*	*CTR.*			*350*													
	18+00	*19+23*	*CTR.*					*123*					*4*						
	19+23		*LT. & RT.*						*58*										
	18+26		*LT.*							*1*									
	18+92		*LT.*							*1*									
RAMP 'J'	*0+31.46*	*10+07.02*	*LT.*	*975.56*										*13*					
	0+31.46	*10+07.02*	*RT.*		*975.56*														
I.R. 77 SOUTHBOUND																			
RAMP 'C'	*0+23*	*16+12.70*	*RT.*		*1589.70*														
	3+08.75	*3+79.23*	*LT.*					*70.48*											
	3+79.23	*16+12.70*	*LT.*	*1233.47*										*16*					
RAMP 'A'	*0+30.08*	*8+20.75*	*LT.*	*790.67*										*11*					
	0+30.08	*8+20.75*	*RT.*		*790.67*														
	0+52		*LT. & RT.*						*34*										
	0+52	*2+45*	*CTR.*					*193*					*6*						
	0+83		*CTR.*							*1*									
	1+49		*CTR.*							*1*									
	2+15		*CTR.*							*1*									
RAMP 'G'	*16+42.48*	*25+83*	*LT.*	*940.52*										*13*					
	16+42.48	*25+83*	*RT.*		*940.52*														
RAMP 'I'	*0+21.28*	*9+47.55*	*LT.*	*926.27*										*13*					
	0+21.28	*9+47.55*	*RT.*		*926.27*														
	0+42		*LT. & RT.*						*62*										
	0+42	*2+85*	*CTR.*					*243*					*7*						
	0+80		*CTR.*							*1*									
	1+46		*CTR.*							*1*									
	2+12		*CTR.*							*1*									
NOTE: ADDITIONAL TRAFFIC CONTROL QUANTITIES FOR THE I.R. 77/U.S. 250 STRASBURG INTERCHANGE ARE CARRIED WITH THE OFFIC CALCS.																			
SUBTOTALS FROM SHEET NO. 39.				**37,054.12**	**35,271.62**	**36,914.12**	**7,218.15**	**5,981.88**					**104**		**309**				**FUNDING (01/IMS/PV)**
SUBTOTALS FROM SHEET NO. 40.				**37,054.12**	**35,957.30**	**36,914.12**	**5,722.63**	**4,352.06**					**89**		**309**				**FUNDING (01/IMS/PV)**
SUBTOTALS FROM THIS SHEET				**8,754.19**	**8,548.42**	**350**		**719.48**	**154**	**8**			**17**	**117**					**FUNDING (01/IMS/PV)**
TOTALS CARRIED TO GENERAL SUMMARY				**30.80 Mile**		**14.05 Mile**	**12,940.78**	**11,053.42**	**154**	**8**			**945**						**FUNDING (01/IMS/PV)**

CALCULATED RDA CHECKED JPB

TRAFFIC CONTROL ESTIMATED QUANTITIES

TUS-77-20.73
TUS-250-11.88

41
62

I:\PROJECTS\81725\Prod\Dgn\TQ001.dgn 11-JAN-2013 2:45PM jberanek

REFERENCE NO.	LOCATION	STATION	SIDE	CODE	SIZE (INCHES)				FUNDING
I-S	I.R. 77	157+97	RT	E7-HI	180x84	EACH	1	REMOVAL OF GROUND MOUNTED SIGN AND DISPOSAL	630
						SQ. FT.	105	SIGN, GROUND MOUNTED EXTRUSHEET	630
TOTALS (Carried to General Summary)									(01/TMS/PV)
						EACH	1		
						SQ. FT.	105		

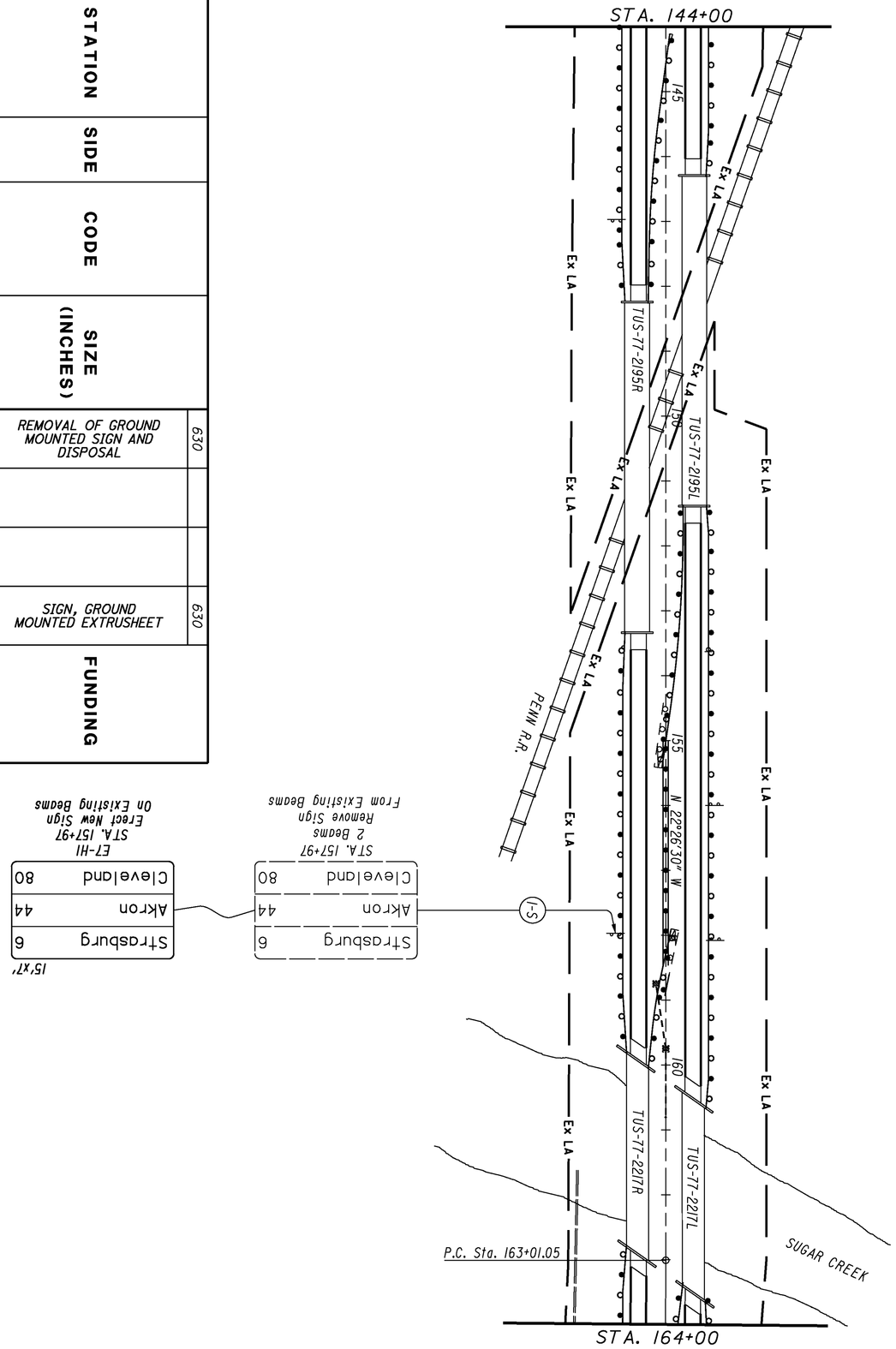

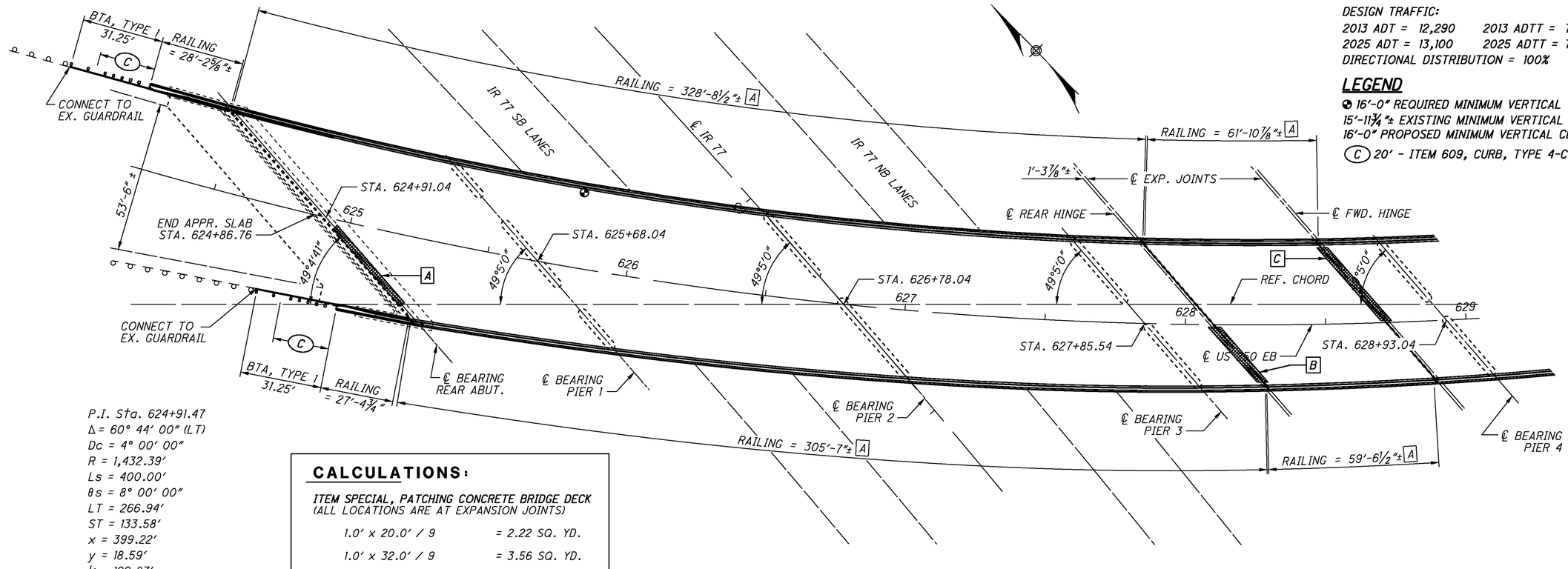

P.I. Sta. 624+91.47
Δ = 60° 44' 00" (LT)
Dc = 4° 00' 00"
R = 1,432.39'
Ls = 400.00'
θs = 8° 00' 00"
LT = 266.94'
ST = 133.58'
x = 399.22'
y = 18.59'
k = 199.87'
p = 4.65'
Δc = 44° 44' 00" (LT)
Lc = 1,118.33'
Ts = 1,041.86'
Es = 233.15'
emax = 0.083
C = 1,090.15'
C1 = C2 = 399.65'
T.S. = Sta. 614+49.61
S.C. = Sta. 618+49.61
C.S. = Sta. 629+67.94
S.T. = Sta. 633+67.94

CALCULATIONS:

ITEM SPECIAL, PATCHING CONCRETE BRIDGE DECK
(ALL LOCATIONS ARE AT EXPANSION JOINTS)

1.0' x 20.0' / 9	= 2.22 SQ. YD.
1.0' x 32.0' / 9	= 3.56 SQ. YD.
1.0' x 50.0' / 9	= 5.56 SQ. YD.
TOTAL	= 11.34 SQ. YD.

* ALL TOTALS CARRIED TO SHEET NO. 20/20.

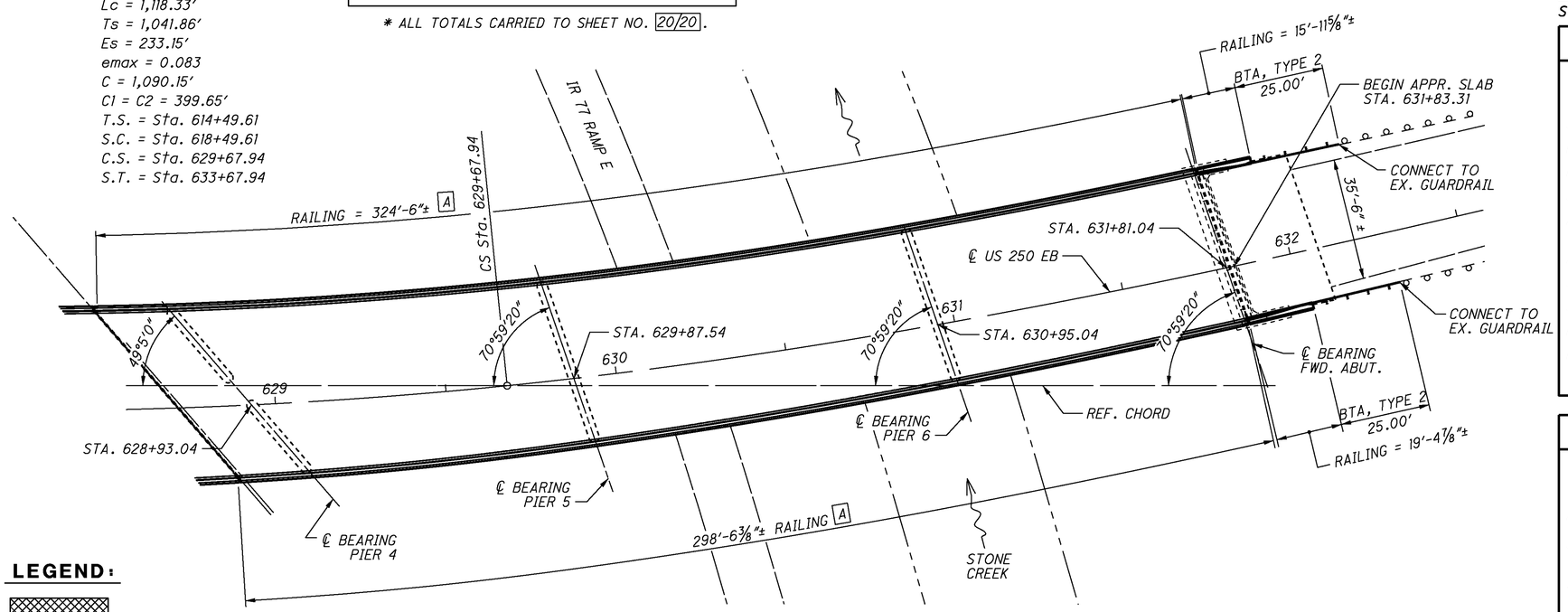

LEGEND:

AREA OF DECK TO BE PATCHED

A RAILING MEASURED ALONG TOE OF PARAPET

DESIGN TRAFFIC:
2013 ADT = 12,290 2013 ADTT = 738
2025 ADT = 13,100 2025 ADTT = 786
DIRECTIONAL DISTRIBUTION = 100%

LEGEND

16'-0" REQUIRED MINIMUM VERTICAL CLEARANCE
15'-11¾"± EXISTING MINIMUM VERTICAL CLEARANCE
16'-0" PROPOSED MINIMUM VERTICAL CLEARANCE
C 20' - ITEM 609, CURB, TYPE 4-C, AS PER SCD GR-3.1.

HYDRAULIC DATA (OBTAINED FROM ORIG. PLANS)

STRUCTURE CLEARS THE 50 YEAR DESIGN HW BY 25± FEET.

EXISTING STRUCTURE

TYPE: CONTINUOUS STEEL GIRDERS WITH REINFORCED CONCRETE DECK AND REINFORCED CONCRETE SUBSTRUCTURE UNITS
SPANS: 77'± - 110'± - 2 @ 107.5'± - 94.5'± - 107.5'± - 86'±
ROADWAY: VARIES
LOADING: HS-20
SKEW: VARIES (R.F)
APPROACH SLABS: FORWARD: AS-1-54 (MODIFIED) 25'± LONG
REAR: AS-1-81 (MODIFIED) 25'± LONG
ALIGNMENT: 4° CURVE AND 400' SPIRAL LEFT
SUPERELEVATION: CURVE = 0.083, SPIRAL = VARIES
STRUCTURAL FILE NUMBER: 7904835
DATE BUILT: 1964
DISPOSITION: FAIR CONDITION
WEARING SURFACE: 1¾" DENSE CONCRETE OVERLAY

PROPOSED WORK

1. REMOVE DEBRIS AS PER ITEM SPECIAL, MISC.: DEBRIS REMOVAL.
2. REMOVE EXISTING PARAPET TO TOP OF ORIGINAL DECK.
3. PLACE NEW 42" NEW JERSEY SHAPE PARAPETS AS SHOWN IN THE PLANS.
4. PATCH CONCRETE DECK AS PER ITEM SPECIAL, PATCHING CONCRETE BRIDGE DECK.
5. SEAL CONCRETE SURFACES.

DESIGN AGENCY
O.D.O.T. DISTRICT 11
PLANNING & ENGINEERING

DATE 10/29/12
REVIEWED ANS
STRUCTURE FILE NUMBER 7904835
DRAWN CCN
REVISED
DESIGNED CCN
CHECKED RPT

TUSCARAWAS COUNTY
STA. 624+86.76
STA. 631+83.31

SITE PLAN
BRIDGE NO. TUS-250-1232 R
OVER IR 77, RAMP E, & STONE CREEK

TUS-77-20.73
TUS-250-11.88
PID No. 81725

1 / 20
43
62

I:\PROJECTS\81725\Prod\Dgn\Bridge\sp100_T2502633.dgn 11-DEC-2012 12:50PM ramstutz

STANDARD DRAWINGS AND SUPPLEMENTAL SPECIFICATIONS
REFER TO THE FOLLOWING STANDARD BRIDGE DRAWING(S):

BR-1	REVISED	7-19-02

AND THE FOLLOWING ROADWAY STANDARD CONSTRUCTION DRAWING(S):

BP-5.1	REVISED	7-28-00
GR-3.1	REVISED	7-20-12
GR-5.1	REVISED	4-16-10

DESIGN SPECIFICATIONS
THIS STRUCTURE CONFORMS TO "STANDARD SPECIFICATIONS FOR HIGHWAY BRIDGES" ADOPTED BY THE AMERICAN ASSOCIATION OF STATE HIGHWAY AND TRANSPORTATION OFFICIALS, 2002, INCLUDING INTERIM SPECIFICATIONS AND THE ODOT BRIDGE DESIGN MANUAL.

DESIGN DATA
CLASS S CONCRETE - COMPRESSIVE STRENGTH 4500 PSI (SUPERSTRUCTURE)

REINFORCING STEEL - ASTM A615 OR A996, GRADE 60, MINIMUM YIELD STRENGTH 60,000 PSI

EXISTING STRUCTURE PLANS
THE FOLLOWING PREVIOUS PLANS OF THE EXISTING BRIDGE ARE AVAILABLE FOR REFERENCE AT THE DISTRICT OFFICE OF THE OHIO DEPARTMENT OF TRANSPORTATION,
2201 REISER AVE., S.E.
NEW PHILADELPHIA, OHIO 44663:

ORIGINAL CONSTRUCTION:
TUS-21-26.33 & TUS-250-11.60 (A.K.A. TUS-77-20.73) (1962)

RIGID CONCRETE OVERLAY AND PARAPET RE-FACING:
BEL-148-1606, 2513
HAS-250-1763
TUS-250-1232R (1985)

PARAPET END TRANSITION UPDATE:
TUS-77-20.73 / TUS-250-11.88
(A.K.A. TUS-77-20.73) (1994)

EXISTING STRUCTURE VERIFICATION:
DETAILS AND DIMENSIONS SHOWN ON THESE PLANS PERTAINING TO THE EXISTING STRUCTURE HAVE BEEN OBTAINED FROM PLANS OF THE EXISTING STRUCTURE AND FROM FIELD OBSERVATIONS AND MEASUREMENTS. CONSEQUENTLY, THEY ARE INDICATIVE OF THE EXISTING STRUCTURE AND THE PROPOSED WORK, BUT THEY SHALL BE CONSIDERED TENTATIVE AND APPROXIMATE. THE CONTRACTOR IS REFERRED TO CMS SECTIONS 102.05, 105.02 AND 513.04.

BASE CONTRACT BID PRICES UPON A RECOGNITION OF THE UNCERTAINTIES DESCRIBED ABOVE AND UPON A PRE-BID EXAMINATION OF THE EXISTING STRUCTURE. HOWEVER, THE DEPARTMENT WILL PAY FOR ALL PROJECT WORK BASED UPON ACTUAL DETAILS AND THE DIMENSIONS THAT HAVE BEEN VERIFIED IN THE FIELD.

MAINTENANCE OF TRAFFIC
FOR MAINTENANCE OF TRAFFIC PLAN, QUANTITIES AND NOTES, SEE SHEETS 10-13.

ITEM 202, PORTIONS OF STRUCTURE REMOVED, OVER 20 FOOT SPAN, AS PER PLAN

DESCRIPTION:
THIS WORK SHALL CONSIST OF THE REMOVAL OF THE CONCRETE PARAPET ONLY. PRESERVE ALL EXPANSION/DECK JOINT STRUCTURAL STEEL. THE PROVISIONS OF ITEM 202 APPLY EXCEPT AS SPECIFIED BY THE FOLLOWING NOTES. CARE SHALL BE TAKEN DURING PARAPET REMOVAL TO PROTECT PORTIONS OF THE DECK, EXPANSION JOINT SYSTEMS AND OTHER SUCH SYSTEMS THAT ARE TO BE SALVAGED AND INCORPORATED INTO THE PROPOSED STRUCTURE. IN THIS RESPECT, THE USE OF EXPLOSIVES, HEADACHE BALLS AND/OR HOE RAMS TYPE EQUIPMENT IS PROHIBITED.

REMOVAL METHODS:
THE CONTRACTOR MAY REMOVE CONCRETE BY CUTTING AND BY MEANS OF HAND OPERATED PNEUMATIC HAMMERS EMPLOYING POINTED OR BLUNTED CHISEL TYPE TOOLS. THE WEIGHT OF THE HAMMERS SHALL NOT BE MORE THAN 35 POUNDS FOR REMOVAL. PNEUMATIC HAMMERS SHALL NOT BE PLACED IN DIRECT CONTACT WITH REINFORCING STEEL THAT IS TO BE RETAINED IN THE REBUILD STRUCTURE.

DUE TO THE POSSIBLE PRESENCE OF APPURTENANCES (E.G., SCUPPERS AND REMAINING BULB-TEE ANGLES, ETC.) TO EXISTING STRUCTURAL MEMBERS, PERFORM WORK CAREFULLY DURING PARAPET REMOVAL TO AVOID DAMAGING STRUCTURAL MEMBERS THAT ARE TO REMAIN. REPLACE OR REPAIR STRUCTURAL MEMBERS DAMAGED BY THE REMOVAL OPERATIONS AT NO COST TO THE PROJECT. AT LEAST 7 DAYS BEFORE PERFORMING REPAIR WORK, SUBMIT A PROPOSED REPAIR PLAN, DEVELOPED BY AN OHIO REGISTERED PROFESSIONAL ENGINEER, TO THE DIRECTOR. OBTAIN THE DIRECTOR'S APPROVAL BEFORE PERFORMING REPAIR.

CUT LINE CONSTRUCTION JOINT PREPARATION:
SAW CUT BOUNDARIES OF PROPOSED CONCRETE REMOVALS ONE (1) INCH DEEP. REMOVE CONCRETE TO A ROUGH SURFACE. THE EXISTING REINFORCING STEEL, IF REQUIRED IN THE PLANS, SHALL BE LEFT IN PLACE. INSTALL DOWEL BARS IF SPECIFIED. PRIOR TO CONCRETE PLACEMENT ABRASIVELY CLEAN JOINT SURFACES AND EXISTING EXPOSED REINFORCEMENT TO REMOVE LOOSE AND DISINTEGRATED CONCRETE AND LOOSE RUST. THE JOINT SURFACE AND EXPOSED REINFORCEMENT SHALL BE THOROUGHLY CLEANED OF ALL DIRT, DUST, RUST OR OTHER FOREIGN MATERIAL BY THE USE OF WATER, AIR UNDER PRESSURE, OR OTHER METHODS THAT PRODUCE SATISFACTORY RESULTS. EXISTING REINFORCING STEEL DOES NOT HAVE TO HAVE A BRIGHT STEEL FINISH BUT ALL PACK AND LOOSE RUST SHALL BE REMOVED. EXISTING CONCRETE SURFACES WHICH NEW CONCRETE WILL BE PLACED AGAINST SHALL BE WET, BUT WITHOUT FREE WATER, AT THE TIME OF CONCRETE PLACEMENT.

MEASUREMENT AND PAYMENT:
THE DEPARTMENT WILL MEASURE THE QUANTITY OF REMOVALS ON A LUMP SUM BASIS. THE DEPARTMENT WILL PAY FOR THE ACCEPTED QUANTITIES OF REMOVALS AT THE CONTRACT PRICE FOR ITEM 202, PORTIONS OF STRUCTURE REMOVED, OVER 20 FOOT SPAN, AS PER PLAN.

ITEM 509, REINFORCING STEEL, REPLACEMENT OF EXISTING REINFORCING STEEL, AS PER PLAN
REPLACE ALL EXISTING REINFORCING BARS DEEMED BY THE ENGINEER TO BE UNUSABLE BECAUSE OF CORROSION. THE DEPARTMENT WILL MEASURE THE REPLACEMENT REINFORCING STEEL BY THE NUMBER OF POUNDS ACCEPTED IN PLACE.

REPLACE ALL EXISTING REINFORCING STEEL BARS WHICH ARE TO BE INCORPORATED INTO THE WORK AND ARE DEEMED BY THE ENGINEER TO BE MADE UNUSABLE BY CONCRETE REMOVAL OPERATIONS WITH NEW EPOXY COATED REINFORCING STEEL OF THE SAME SIZE AT NO COST TO THE DEPARTMENT.

INSPECTION OF BRIDGES FOR BATS:
PRIOR TO ANY DEMOLITION/REMOVAL OF THE EXISTING STRUCTURE, THE CONTRACTOR SHALL CAREFULLY EXAMINE THE UNDERSIDE OF THE STRUCTURE FOR THE PRESENCE OF BATS. IF ANY BATS ARE FOUND, THE ODOT DISTRICT 11 ENVIRONMENTAL COORDINATOR SHOULD BE CONTACTED AT 330-339-6633 BEFORE COMMENCING WITH THE BRIDGE'S DEMOLITION.

ITEM SPECIAL - PATCHING CONCRETE BRIDGE DECK
DESCRIPTION: THIS ITEM SHALL CONSIST OF FURNISHING THE NECESSARY LABOR, MATERIALS AND EQUIPMENT TO REPAIR CONCRETE BRIDGE DECKS, INCLUDING THE REMOVAL OF ALL LOOSE AND UNSOUND CONCRETE, BITUMINOUS PATCHES, SURFACE PREPARATION, BONDING COAT AND THE MIXING, PLACING, FINISHING AND CURING OF THE CONCRETE PATCHES. THE CONCRETE SHALL CONSIST OF CLASS FS ONLY.

MATERIALS: MATERIALS SHALL CONFORM TO THE REQUIREMENTS OF 449, SPECIFICALLY 499.05.A.

REMOVAL OF UNSOUND CONCRETE: THE ENGINEER SHALL SOUND THE ENTIRE DECK AND AREAS TO BE REMOVED. SOUNDING MAY HAVE TO BE DELAYED UNTIL THE DECK IS SUFFICIENTLY DRY TO PERMIT DETECTION OF ALL AREAS OF DELAMINATION. THE PERIMETER OF ALL REMOVAL AREAS SHALL BE SAWED TO A DEPTH OF 2 INCHES (50 MM) TO PRODUCE A VERTICAL OR SLIGHTLY UNDERCUT FACE. ADDITIONAL SAW CUTS MAY BE REQUIRED TO FACILITATE REMOVAL. WITHIN THE PATCHING AREA THE CONCRETE SHALL BE REMOVED TO A DEPTH THAT WILL PROVIDE A MINIMUM 3/4 INCH CLEARANCE AROUND THE REINFORCING STEEL EXCEPT WHERE OTHER REINFORCING BARS MAKE THIS IMPRACTICABLE. THE UNSOUND CONCRETE MAY BE REMOVED BY CHIPPING OR HAND DRESSING. CHIPPING HAMMERS SHALL NOT BE HEAVIER THAN THE NOMINAL 35 POUND (16 KG) CLASS AND SHALL BE OPERATED AT AN ANGLE OF LESS THAN 45 DEGREES MEASURED FROM THE SURFACE OF THE DECK. CONCRETE SHALL BE REMOVED IN A MANNER THAT PREVENTS CUTTING, ELONGATING OR DAMAGING REINFORCING STEEL. REINFORCEMENT WHICH HAS BECOME LOOSE SHALL BE ADEQUATELY SUPPORTED AND TIED BACK INTO PLACE. AFTER COMPLETION OF THE REMOVAL OPERATIONS, THE ENGINEER WILL RE-SOUND THE DECK TO ENSURE THAT ONLY SOUND CONCRETE REMAINS. MINIMIZE CONSTRUCTION JOINTS. CONSTRUCTION JOINTS SHALL ONLY BE PLACED ON THE PERIMETER OF THE REMOVAL AREAS.

SURFACE PREPARATION: CLEANING SHALL CLOSELY PRECEDE APPLICATION OF THE BONDING GROUT AND/OR THE PATCHING MATERIAL. THE SURFACE TO BE PATCHED AND THE EXPOSED REINFORCING STEEL SHALL BE THOROUGHLY CLEANED BY SANDBLASTING FOLLOWED BY AN AIR BLAST. IT MAY BE NECESSARY TO USE HAND TOOLS TO REMOVE SCALE FROM THE REINFORCING STEEL. ANY ADDITIONAL SURFACE PREPARATION SHALL BE IN ACCORDANCE WITH THE MANUFACTURER'S RECOMMENDATIONS FOR THE PATCHING MATERIAL WHICH IS USED.

METHOD OF MEASUREMENT: THE QUANTITY SHALL BE THE ACTUAL AREA IN SQUARE YARDS OF THE EXPOSED SURFACE OF ALL PATCHES, IRRESPECTIVE OF THE DEPTH OF THE PATCH, COMPLETE, IN PLACE AND ACCEPTED.

BASIS OF PAYMENT: PAYMENT SHALL BE MADE AT THE CONTRACT PRICE BID FOR:

ITEM	UNIT	DESCRIPTION
SPECIAL	SQUARE YARD	PATCHING CONCRETE BRIDGE DECK

ITEM SPECIAL - MISC.: DEBRIS REMOVAL
THIS WORK SHALL INCLUDE THE REMOVAL OF ALL ACCUMULATED DEBRIS ALONG BRIDGE PARAPETS, INCLUDING VEGETATION GROWING IN ALL LONGITUDINAL AND TRANSVERSE JOINTS WITHIN THE DECK AREA, BY SWEEPING AND/OR SHOVELING, ETC. ALL SCUPPERS AND DOWNSPOUTS SHALL BE CLEARED OF ALL DEBRIS. THE MATERIAL REMOVED SHALL BE DISPOSED OF OUTSIDE THE LIMITS OF THE RIGHT-OF-WAY AT THE CONTRACTOR'S EXPENSE. IF THE CONTRACTOR CHOOSES MECHANICAL MEANS OF PERFORMING THE WORK, CARE SHALL BE TAKEN TO AVOID DAMAGE TO PASSING TRAFFIC.

ALL OF THE ABOVE WORK SHALL BE INCLUDED IN THE LUMP SUM PRICE BID FOR ITEM SPECIAL - MISC.: DEBRIS REMOVAL.

ABBREVIATIONS:
THE FOLLOWING STANDARD ABBREVIATIONS ARE USED THROUGHOUT THE PLANS:

ABUT. - ABUTMENT
APPR - APPROACH
BRG. - BEARING
BTA - BRIDGE TERMINAL ASSEMBLY
C.J. - CONSTRUCTION JOINT
CLR. - CLEARANCE
CONST. - CONSTRUCTION
E.B. - EAST BOUND
EQ. - EQUAL
EX. - EXISTING
EXP. - EXPANSION
F.F. - FAR FACE
FIX. - FIXED
FWD. - FORWARD
JT. - JOINT
LT. - LEFT
N.B. - NORTH BOUND
N.F. - NEAR FACE
O.C.J. - OPTIONAL CONSTRUCTION JOINT
P.E.J.F. - PREFORMED EXPANSION JOINT FILLER
PR. - PROPOSED
REF. - REFERENCE
R.F. - RIGHT FORWARD
RT. - RIGHT
S.B. - SOUTH BOUND
SPA. - SPACE(D) OR SPACING
STA. - STATION
STD. DWG. OR SCD - STANDARD CONSTRUCTION DRAWING
TYP. - TYPICAL

THE SYMBOLS BELOW DESIGNATE THE NAMES AND LOCATIONS OF THE SECTION DETAILS THROUGHOUT THE STRUCTURE PLANS. THE TOP LETTER DESIGNATES THE SECTION NAME. THE BOTTOM NUMBER(S) SHOW WHICH STRUCTURE SHEET NUMBER IS BEING CROSS REFERENCED.

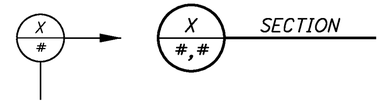

DESIGN AGENCY
O.D.O.T. DISTRICT 11
PLANNING & ENGINEERING

DESIGNED	DRAWN	REVIEWED	DATE
RPT	CCW	ANS	10/29/12
CHECKED	REVISED	STRUCTURE FILE NUMBER	
DJL		7904835	

STRUCTURE GENERAL NOTES
BRIDGE NO. TUS-250-1232 R
OVER IR 77, RAMP E, & STONE CREEK

TUS-77-20.73
TUS-250-11.88
PID No. 81725

I:\PROJECTS\81725\Prod\Dgn\Bridge\sn100.dgn 11-DEC-2012 12:51PM ramstutz

CALCULATED BY: RPT DATE: 9-21-2012
CHECKED BY: DJL DATE: 9-26-2012

ESTIMATED QUANTITIES

FUNDING 03/NHS/BR	ITEM	ITEM EXT.	TOTAL	UNIT	DESCRIPTION	SUPERSTRUCTURES	ABUTMENTS	PIERS	GENERAL	SEE STRUCTURE SHEET NO.
LUMP	202	11203	LUMP		PORTIONS OF STRUCTURE REMOVED, OVER 20 FOOT SPAN, AS PER PLAN				LUMP	2/20
38,954	509	10000	38,954	POUND	EPOXY COATED REINFORCING STEEL	38,954				
200	509	20001	200	POUND	REINFORCING STEEL, REPLACEMENT OF EXISTING REINFORCING STEEL, AS PER PLAN	200				2/20
3026	510	10000	3026	EACH	DOWEL HOLES WITH NONSHRINK, NONMETALLIC GROUT	3026				
226	511	34400	226	CU YD	CLASS S CONCRETE, SUPERSTRUCTURE	226				
1901	512	10100	1901	SQ YD	SEALING OF CONCRETE SURFACES (EPOXY-URETHANE)	1901				
245	512	74000	245	SQ YD	REMOVAL OF EXISTING COATINGS FROM CONCRETE SURFACES (SEE PROPOSAL NOTE)	245				
297	SPECIAL	51912510	297	SQ YD	PATCHING CONCRETE BRIDGE DECK	297				2/20
2	606	35000	2	EACH	BRIDGE TERMINAL ASSEMBLY, TYPE 1				2	
2	606	35100	2	EACH	BRIDGE TERMINAL ASSEMBLY, TYPE 2				2	
40	609	24510	40	FT	CURB, TYPE 4-C				40	
LUMP	SPECIAL	69098400	LUMP		MISC.: DEBRIS REMOVAL	LUMP				2/20

DESIGN AGENCY
O.D.O.T. DISTRICT 11
PLANNING & ENGINEERING

REVIEWED ANS DATE 10/29/12
STRUCTURE FILE NUMBER 7904835

DRAWN RPT REVISED
DESIGNED RPT CHECKED DJL

STRUCTURE ESTIMATED QUANTITIES
BRIDGE NO. TUS-250-1232 R
OVER IR 77, RAMP E, & STONE CREEK

TUS-77-20.73
TUS-250-11.88
PID No. 81725

3 / 20

45
62

I:\PROJECTS\81725\Prod\Dgn\Bridge\sq100.dgn 17-JAN-2013 8:31AM jberanek

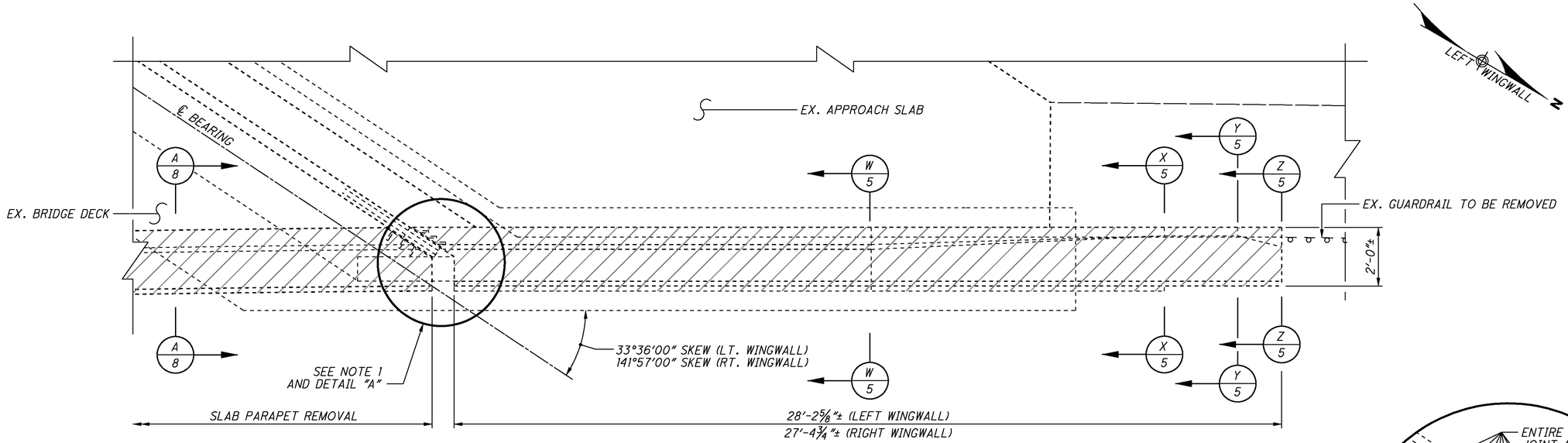

REAR ABUTMENT PLAN

LEFT SIDE SHOWN, RIGHT SIDE SIMILAR

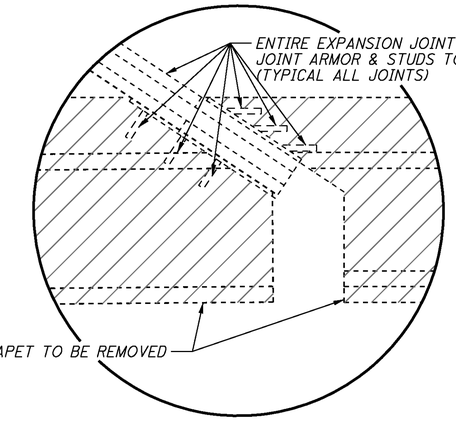

DETAIL A

TYPICAL FOR ALL EXPANSION JOINTS

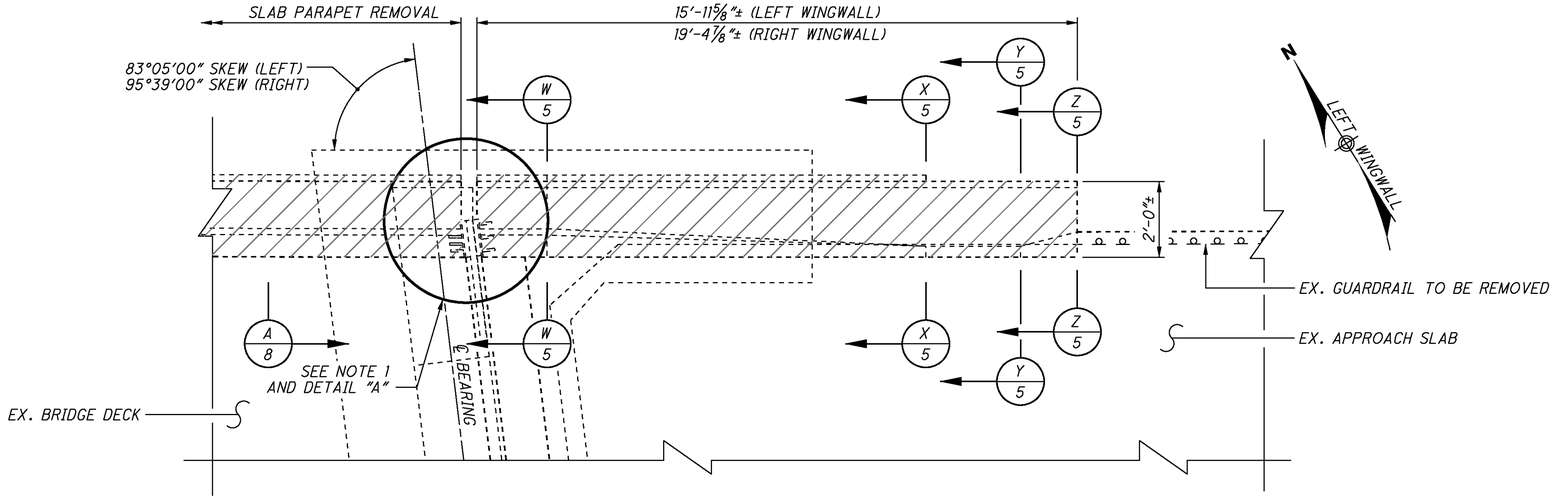

FORWARD ABUTMENT PLAN

LEFT SIDE SHOWN, RIGHT SIDE SIMILAR

LEGEND:

ITEM 202 - PORTIONS OF STRUCTURE REMOVED, OVER 20 FOOT SPAN, AS PER PLAN

NOTES:

1. CARE SHALL BE TAKEN WHEN REMOVING PORTIONS OF PARAPET AROUND EXISTING EXPANSION JOINTS WHICH ARE TO REMAIN IN PLACE.

DESIGN AGENCY
O.D.O.T. DISTRICT 11
PLANNING & ENGINEERING

DESIGNED	DRAWN	REVIEWED	DATE
CCN	CCN	ANS	10/29/12
CHECKED	REVISED	STRUCTURE FILE NUMBER	
RPT		7904835	

ABUTMENT PARAPET REMOVAL DETAILS
BRIDGE NO. TUS-250-1232 R
OVER IR 77, RAMP E, & STONE CREEK

TUS-77-20.73
TUS-250-11.88
PID No. 81725

4 / 20

46
62

I:\PROJECTS\81725\Prod\Dgn\Bridge\sa100_ex_abut.dgn 11-DEC-2012 12:55PM ramstutz

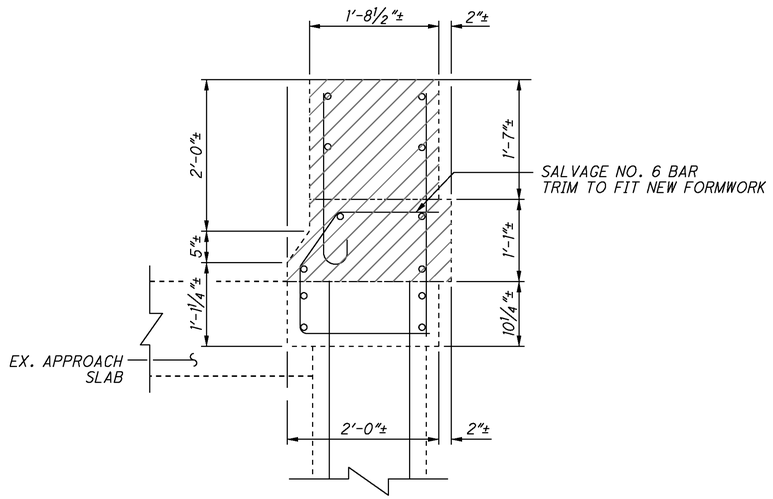

X/4 SECTION

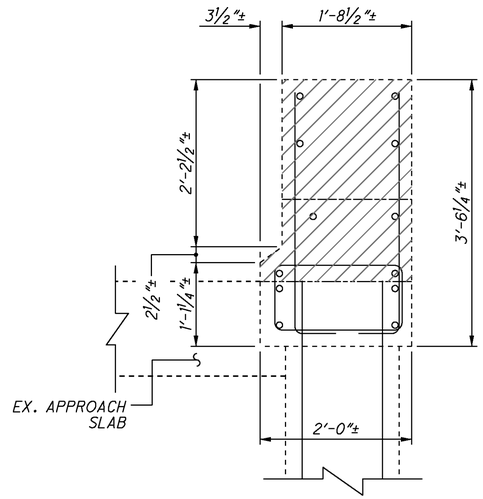

Y/4 SECTION

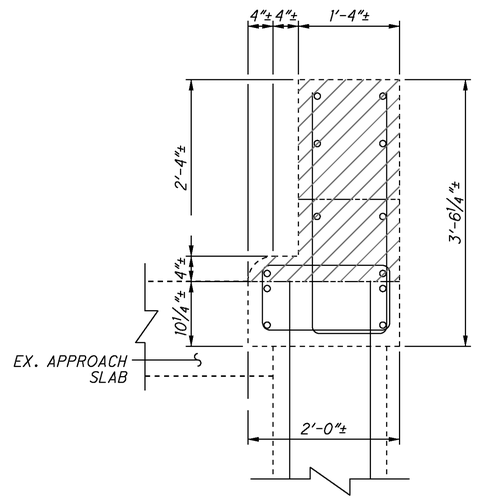

Z/4 SECTION

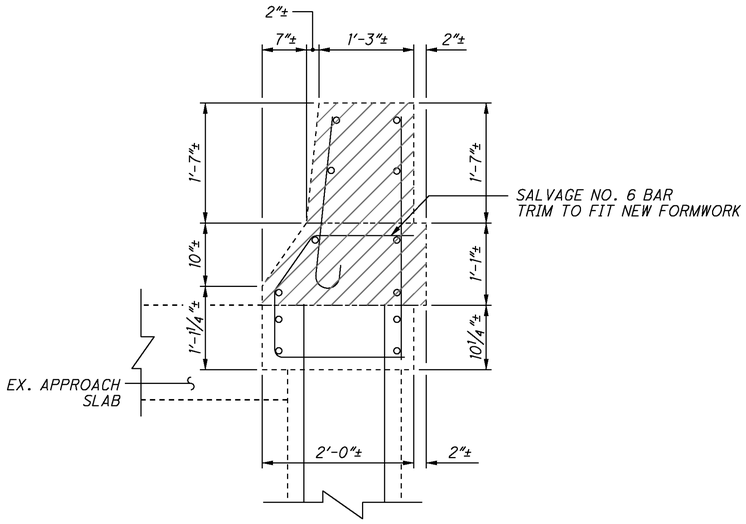

W/4 SECTION

LEGEND:

ITEM 202 - PORTIONS OF STRUCTURE REMOVED, OVER 20 FOOT SPAN, AS PER PLAN

NOTES:

1. SECTIONS X, Y & Z ABUT THE SHOULDER PAVEMENT ON THE REAR LEFT. ALL OTHER LOCATIONS, ARE AS SHOWN ABOVE.

EXISTING PARAPET TRANSITION DETAILS

BRIDGE NO. TUS-250-1232 R
OVER IR 77, RAMP E, & STONE CREEK

TUS-77-20.73
TUS-250-11.88
PID No. 81725

DESIGNED	DRAWN	REVIEWED	DATE
RPT	BB	ANS	10/29/12
CHECKED	REVISED	STRUCTURE FILE NUMBER	
DJL		7904835	

DESIGN AGENCY
O.D.O.T. DISTRICT 11
PLANNING & ENGINEERING

5 / 20

47
62

I:\PROJECTS\81725\Prod\Dgn\Bridge\sa100_ex_abut_sections.dgn 11-DEC-2012 12:57PM ramstutz

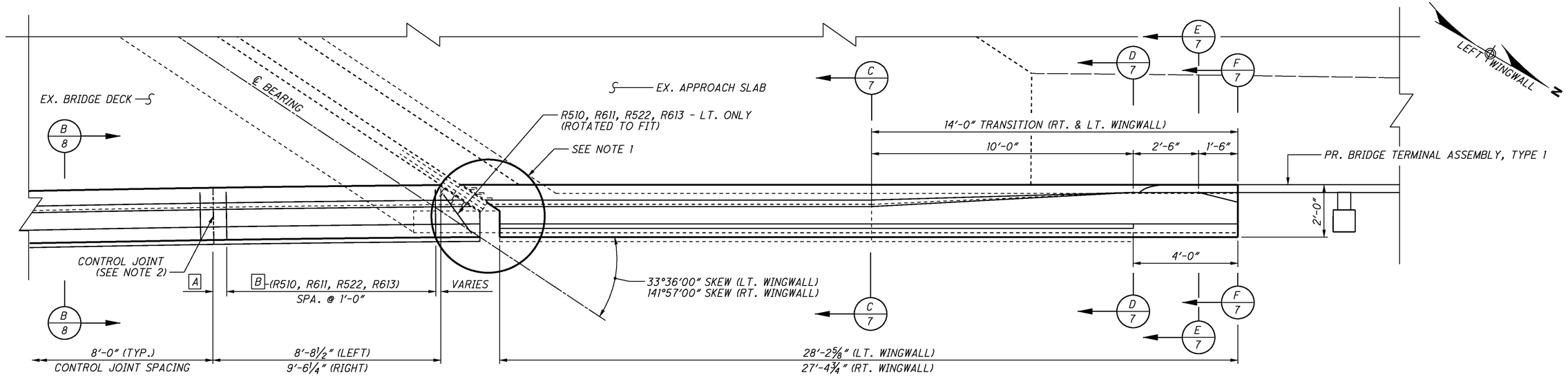

REAR ABUTMENT PLAN

LEFT SIDE SHOWN, RIGHT SIDE SIMILAR

REFERENCE	LOCATION			
	REAR RT.	REAR LT.	FWD. RT.	FWD. LT.
A	6"	6"	4"	6"
B	9	9	10	6

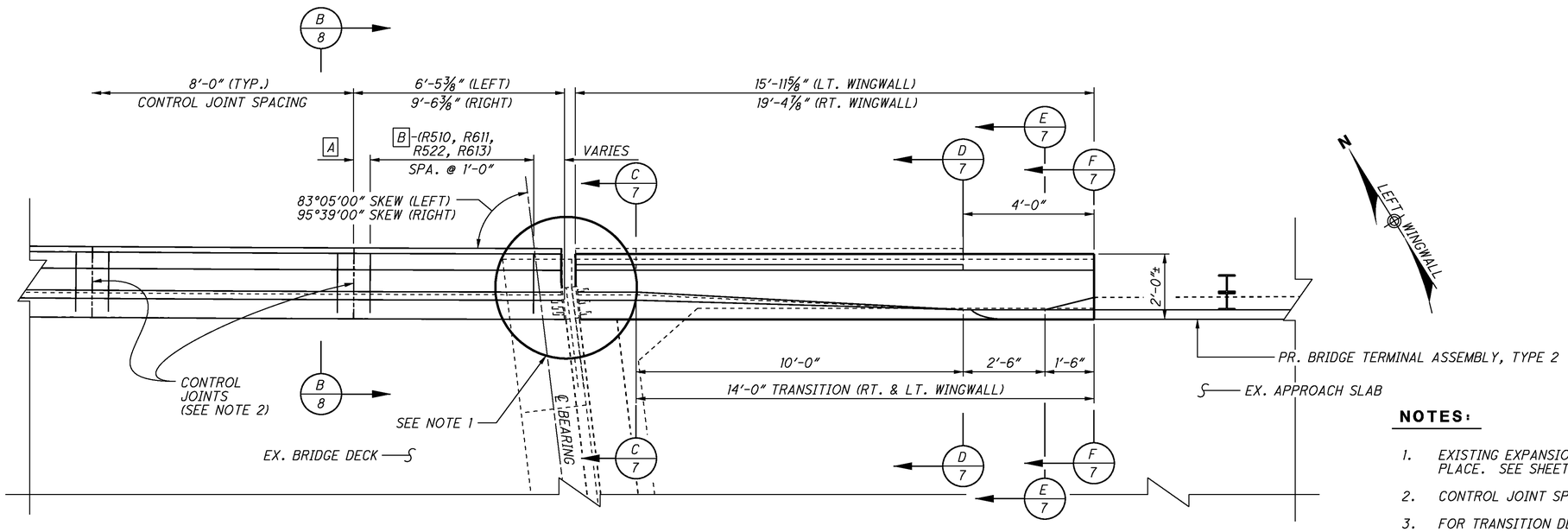

FORWARD ABUTMENT PLAN

LEFT SIDE SHOWN, RIGHT SIDE SIMILAR

NOTES:

1. EXISTING EXPANSION JOINTS AND ANCHORS ARE TO REMAIN IN PLACE. SEE SHEET 4/20 FOR DETAILS.
2. CONTROL JOINT SPACING IS MEASURED ALONG THE TOE OF PARAPET.
3. FOR TRANSITION DETAILS NOT SHOWN, SEE SHEET 7/20 AND SCD BR-1.
4. FOR BRIDGE PARAPET REINFORCING NOT SHOWN, SEE SHEET 8/20.
5. FOR REINFORCING STEEL LIST, SEE SHEET 10/20.

DESIGN AGENCY
O.D.O.T. DISTRICT 11
PLANNING & ENGINEERING

DESIGNED CCN | DRAWN CCN | REVIEWED ANS | DATE 10/29/12
CHECKED RPT | REVISED | STRUCTURE FILE NUMBER 7904835

ABUTMENT PARAPET DETAILS
BRIDGE NO. TUS-250-1232 R
OVER IR 77, RAMP E, & STONE CREEK

TUS-77-20.73
TUS-250-11.88
PID No. 81725

6/20

48/62

I:\PROJECTS\81725\Prod\Dgn\Bridge\sa100_pr_abut_condensed.dgn 11-DEC-2012 12:58PM ramstutz

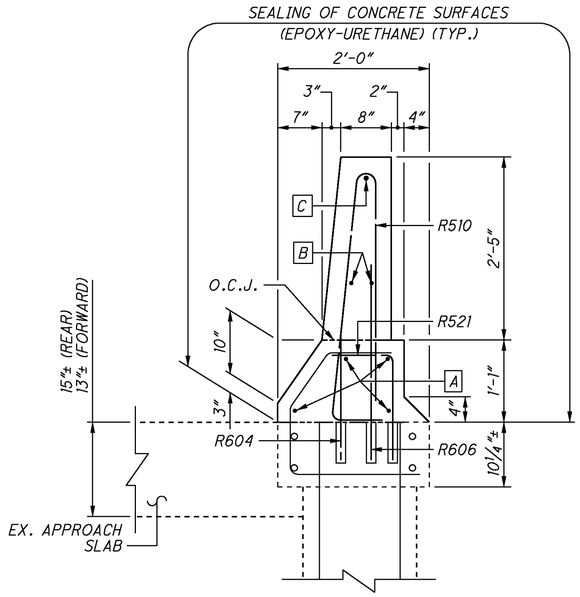

C 6,7 SECTION

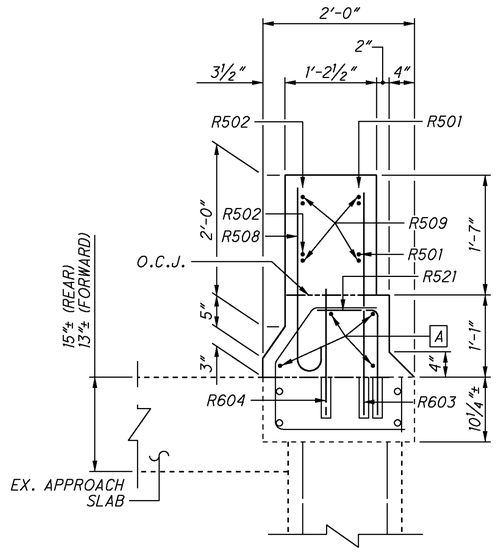

D 6,7 SECTION

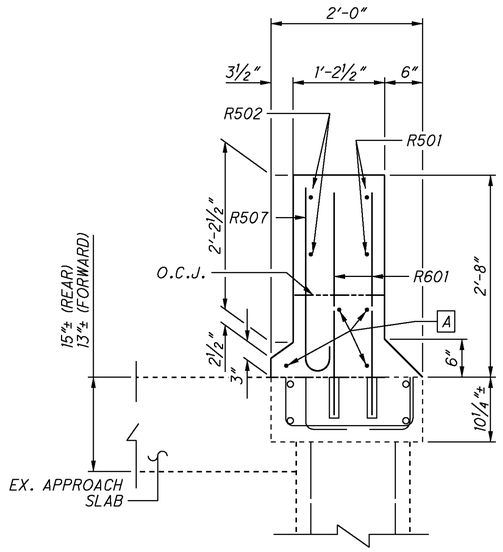

E 6,7 SECTION

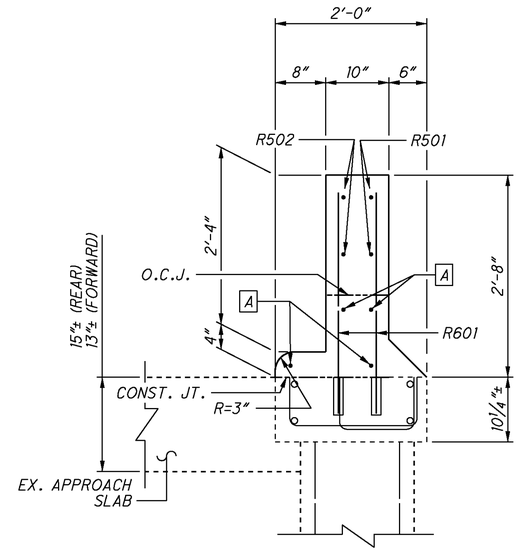

F 6,7 SECTION

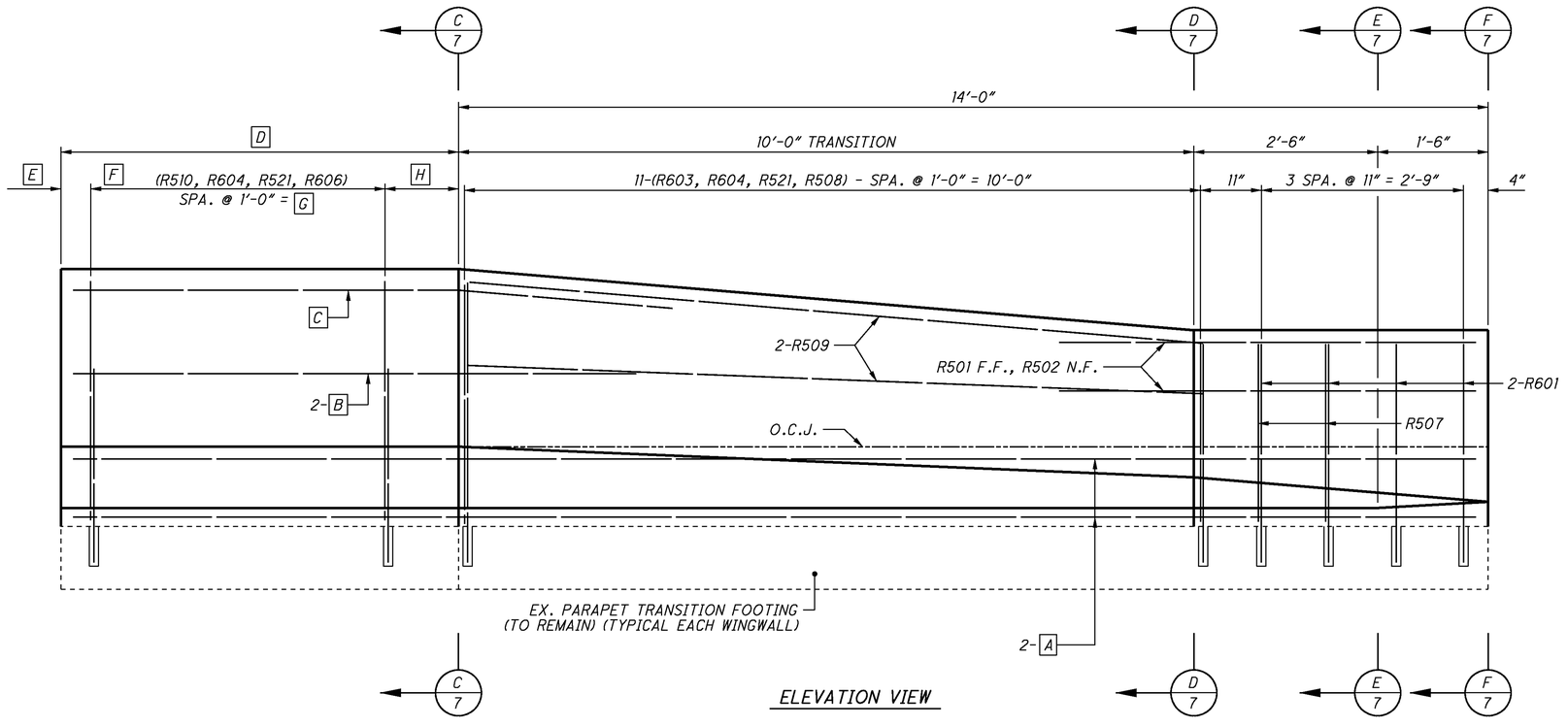

ELEVATION VIEW

REFERENCE	LOCATION			
	REAR RT.	REAR LT.	FWD. RT.	FWD. LT.
A	R503	R504	R505	R506
B	R511	R512	R513	R514
C	R607	R608	R609	R610
D	13'-4 3/4"	14'-2 5/8"	5'-4 7/8"	1'-11 5/8"
E	4 3/4"	4 5/8"	4 7/8"	4 5/8"
F	13	14	5	2
G	12'-0"	13'-0"	4'-0"	1'-0"
H	1'-0"	10"	1'-0"	7"

NOTES:

1. SECTIONS D, E & F ABUT THE SHOULDER PAVEMENT ON THE REAR LEFT. ALL OTHER LOCATIONS, ARE AS SHOWN ABOVE.
2. FOR PLAN VIEW, SEE SHEET 6/20.
3. FOR REINFORCING STEEL LIST, SEE SHEET 10/20.
4. ALL DOWEL DEPTHS ARE 6", UNLESS OTHERWISE NOTED.

DESIGN AGENCY
O.D.O.T. DISTRICT 11
PLANNING & ENGINEERING

DESIGNED CCN | DRAWN CCN | CHECKED RPT | REVIEWED ANS | DATE 10/29/12 | REVISED | STRUCTURE FILE NUMBER 7904835

PARAPET DETAILS
BRIDGE NO. TUS-250-1232 R
OVER IR 77, RAMP E, & STONE CREEK

TUS-77-20.73
TUS-250-11.88
PID No. 81725

7 / 20

49 / 62

I:\PROJECTS\81725\Prod\Dgn\Bridge\sa100_pr_abut_sects.dgn 11-DEC-2012 1:02PM ramstutz

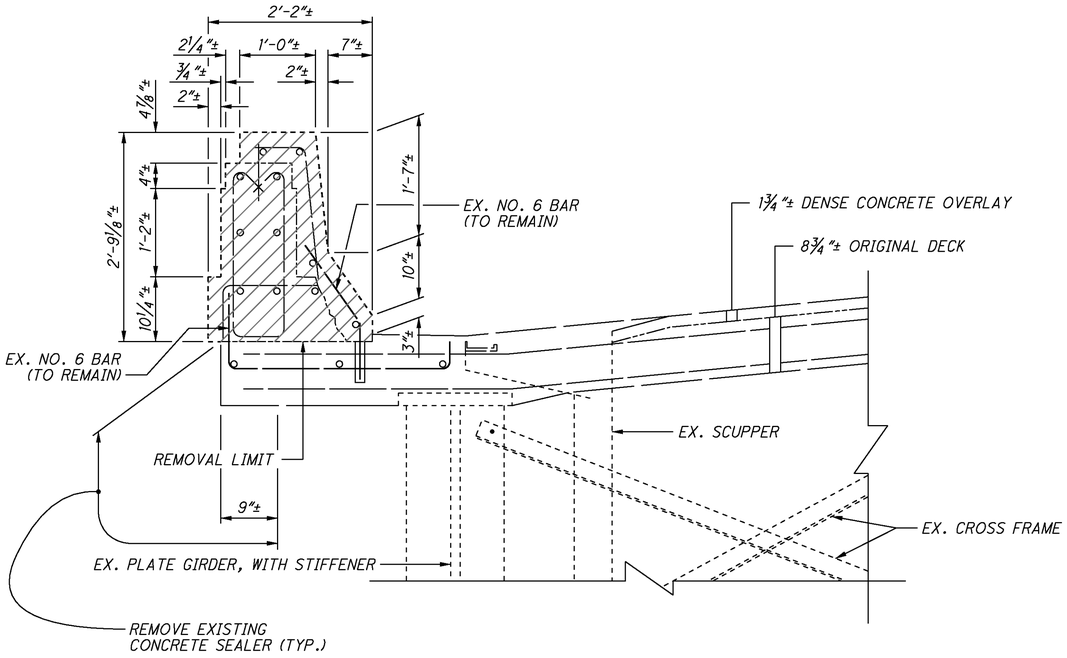

A/4 EXISTING SECTION

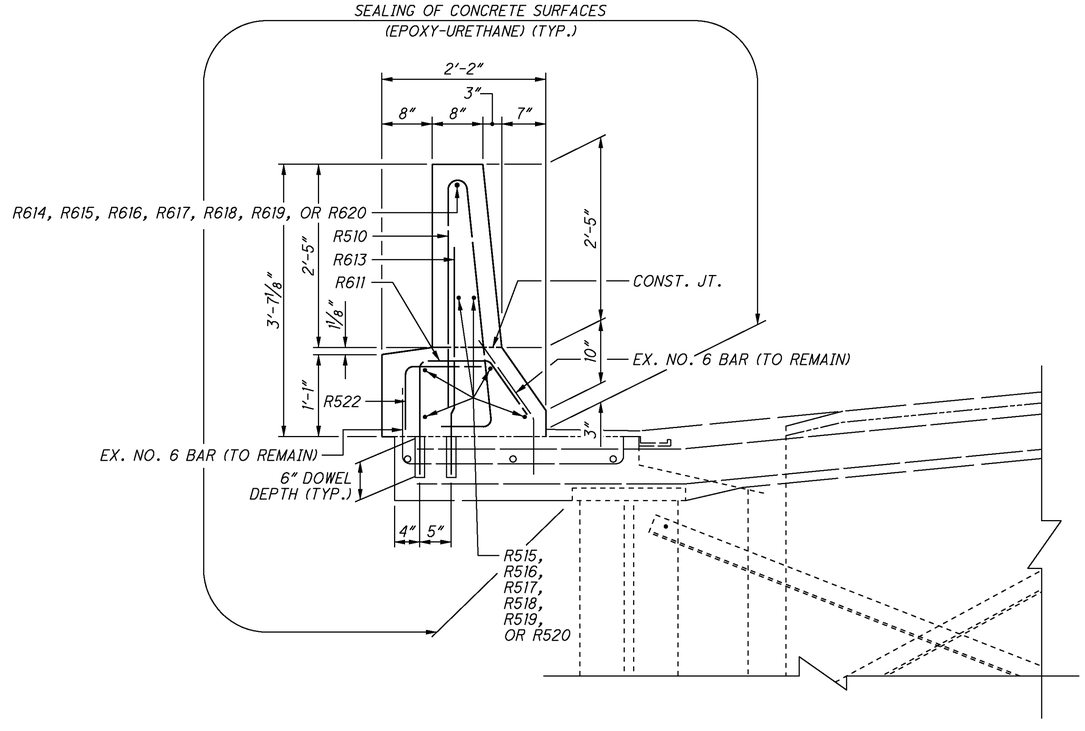

B/6,8 PROPOSED SECTION

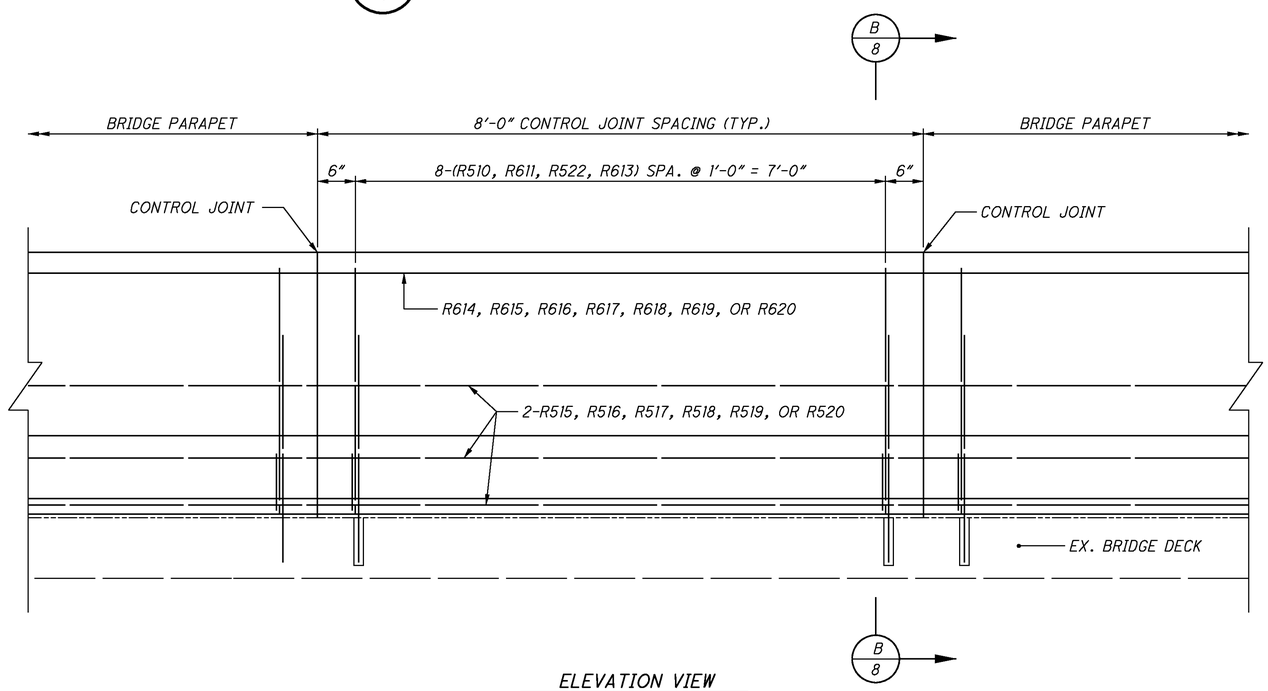

ELEVATION VIEW

MINIMUM HORIZONTAL LAP LENGTH:

NO. 5 BAR = 2'-5"
NO. 6 BAR = 2'-11"

LEGEND:

ITEM 202 - PORTIONS OF STRUCTURE REMOVED, OVER 20 FOOT SPAN, AS PER PLAN

NOTES:

1. ALL DOWEL DEPTHS ARE 6" MINIMUM.
2. FOR DETAILS NOT SHOWN, SEE SCD BR-1.
3. FOR REINFORCING STEEL LIST, SEE SHEET 10/20.

DESIGN AGENCY
O.D.O.T. DISTRICT 11
PLANNING & ENGINEERING

DESIGNED	DRAWN	REVIEWED	DATE
RPT	RPT	ANS	10/29/12
CHECKED	REVISED	STRUCTURE FILE NUMBER	
CCN		7904835	

PARAPET DETAILS
BRIDGE NO. TUS-250-1232 R
OVER IR 77, RAMP E, & STONE CREEK

TUS-77-20.73
TUS-250-11.88
PID No. 81725

8 / 20

50 / 62

I:\PROJECTS\81725\Prod\Dgn\Bridge\sd102_T25026633.dgn 11-DEC-2012 1:03PM ramstutz

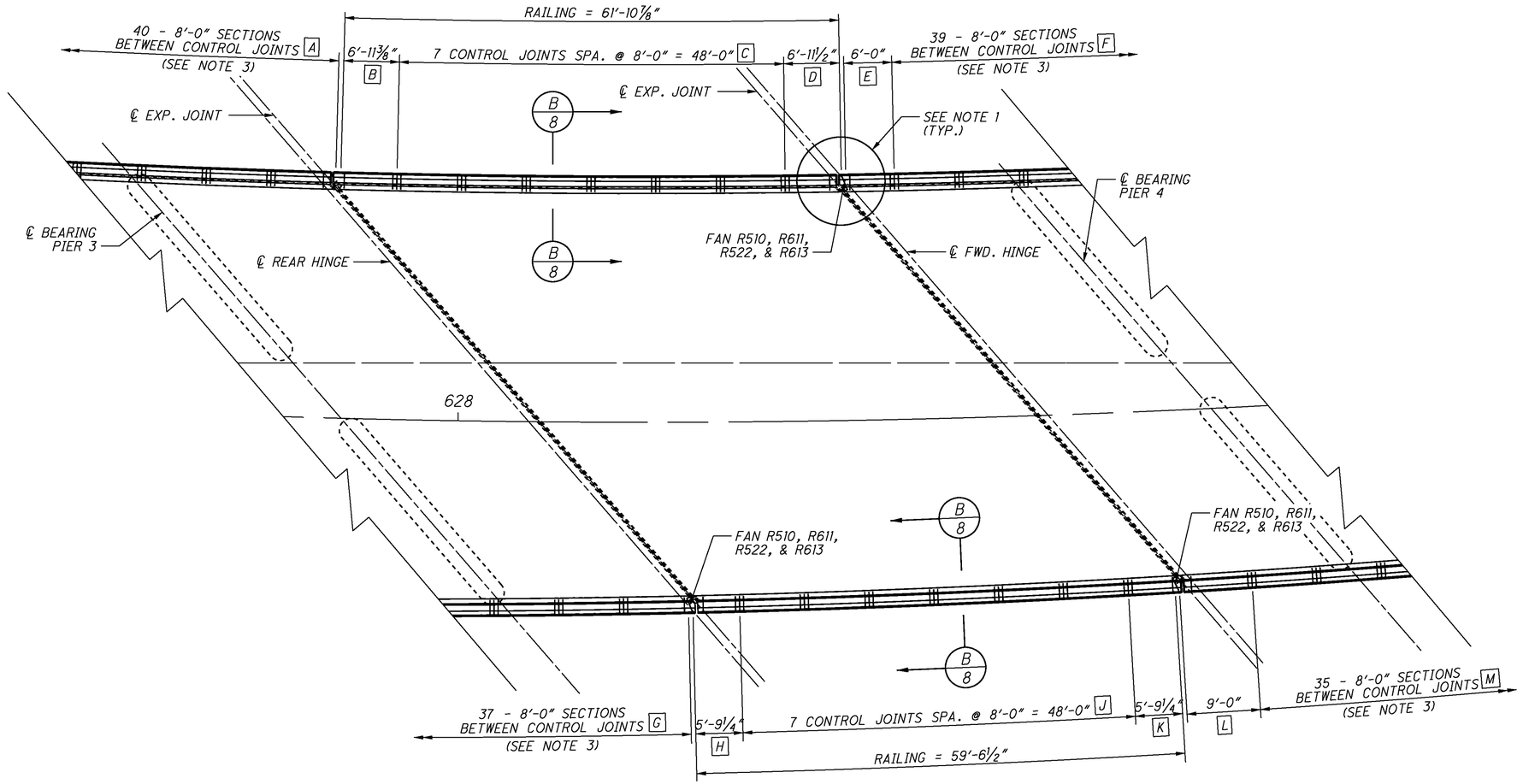

PLAN VIEW OF HINGES

REFERENCE	CONTROL JOINTS		REINFORCING STEEL (EACH SECTION)				
	SPACING	NO. OF SECTIONS	DISTANCE BETWEEN CONTROL JT. & STEEL	VERTICAL STEEL EQUALLY SPACED @	NO. OF VERTICAL BARS	VERTICAL BARS USED	HORIZONTAL BARS USED (ENTIRE STRUCTURE)
A	8'-0"	40	6"	1'-0"	8	R510, R611, R522, R613	11 sets of 6-R515, 1 set of 6-R516, 11-R614, R615
B	6'-11 1/2"	1	5 1/4"	1'-0"	7	R510, R611, R522, R613	2 sets of 6-R515, 1 set of 6-R517, 2-R614, R617
C	8'-0"	6	6"	1'-0"	8	R510, R611, R522, R613	
D	6'-11 1/2"	1	5 1/4"	1'-0"	6	R510, R611, R522, R613	
E	6'-0"	1	6"	1'-0"	6	R510, R611, R522, R613	11 sets of 6-R515, 1 set of 6-R519, 11-R614, R619
F	8'-0"	39	6"	1'-0"	8	R510, R611, R522, R613	
G	8'-0"	37	6"	1'-0"	8	R510, R611, R522, R613	11 sets of 6-R515, 10-R614, R616
H	5'-9 1/2"	1	4 3/4"	1'-0"	5	R510, R611, R522, R613	2 sets of 6-R515, 1 set of 6-R518, 2-R614, R618
J	8'-0"	6	6"	1'-0"	8	R510, R611, R522, R613	
K	5'-9 1/2"	1	4 3/4"	1'-0"	6	R510, R611, R522, R613	
L	9'-0"	1	6"	1'-0"	8	R510, R611, R522, R613	10 sets of 6-R515, 1 set of 6-R520, 10-R614, R620
M	8'-0"	35	6"	1'-0"	8	R510, R611, R522, R613	

NOTES:

1. ALL EXISTING EXPANSION JOINTS ARE TO REMAIN IN PLACE. SEE SHEET 4/20 FOR DETAILS.
2. CONTROL JOINT SPACING AND LENGTH OF BRIDGE PARAPET IS MEASURED ALONG TOE OF PARAPET.
3. ALL CONTROL JOINTS SHALL BE SPACED AT 8'-0" UNLESS OTHERWISE SHOWN. FOR CONTROL JOINT SPACING AND REINFORCING STEEL AT BRIDGE LIMITS, SEE SHEET 6/20.
4. FOR ELEVATION VIEW OF BRIDGE PARAPET, SEE SHEET 8/20.
5. FOR REINFORCING STEEL LIST, SEE SHEET 10/20.

DESIGN AGENCY
O.D.O.T. DISTRICT 11
PLANNING & ENGINEERING

DESIGNED RPT | DRAWN CCW | REVIEWED ANS | DATE 10/29/12
CHECKED DJL | REVISED | STRUCTURE FILE NUMBER 7904835

PARAPET DETAILS
BRIDGE NO. TUS-250-1232 R
OVER IR 77, RAMP E, & STONE CREEK

TUS-77-20.73
TUS-250-11.88
PID No. 81725

9/20

51/62

I:\PROJECTS\81725\Prod\Dgn\Bridge\sd101_joint spacing.dgn 11-DEC-2012 1:24PM ramstutz

MARK	NUMBER TOTAL	LENGTH	WEIGHT	TYPE	DIMENSION A	B	C	D	E	F	R	INC.
					RAILING							
R501	8	5′ - 8″	47	STR.								
R502	8	5′ - 8″	47	25	1′-10″	2′-5″	1′-5″	1 1/2″	5″			
R503	4	27′ - 0″	113	STR.								
R504	4	27′ - 10″	116	STR.								
R505	4	19′ - 0″	79	STR.								
R506	4	15′ - 7″	65	STR.								
R507	8	3′ - 0″	25	16	2′-5″							
**R508	4	3′ - 0″		16	2′-5″							
	S.O.	TO	157		TO							1″
	11	3′ - 10″			3′-3″							
R509	16	10′ - 0″	167	STR.								
R510	1414	7′ - 1″	10447	23	8″	3′-3″	3′-0″				1 1/2″	
R511	2	15′ - 7″	33	STR.								
R512	2	16′ - 5″	34	STR.								
R513	2	7′ - 7″	16	STR.								
R514	2	4′ - 2″	9	STR.								
R515	282	30′ - 0″	8824	STR.								
R516	6	26′ - 0″	163	STR.								
R517	6	7′ - 0″	44	STR.								
R518	6	4′ - 6″	28	STR.								
R519	6	22′ - 0″	138	STR.								
R520	6	23′ - 6″	147	STR.								
R521	78	1′ - 2″	95	1	5″	10 1/2″						
R522	1380	1′ - 9″	2519	1	1′-0″	10 1/2″						
R601	32	2′ - 11″	140	STR.								
**R603	4	2′ - 11″		STR.								
	S.O.	TO	220									1″
	11	3′ - 9″										
R604	78	1′ - 8″	195	STR.								
R606	34	2′ - 7″	132	STR.								
R607	1	16′ - 1″	24	STR.								
R608	1	16′ - 11″	25	STR.								
R609	1	8′ - 1″	12	STR.								
R610	1	4′ - 8″	7	STR.								
R611	1380	3′ - 1″	6391	10	6″	8 1/2″	11″	1′-6″				
R613	1380	3′ - 0″	6218	STR.								
R614	46	30′ - 0″	2073	STR.								
R615	1	31′ - 6′	47	STR.								
R616	1	35′ - 6″	53	STR.								
R617	1	8′ - 0″	12	STR.								
R618	1	5′ - 6″	8	STR.								
R619	1	27′ - 0′	41	STR.								
R620	1	28′ - 6″	43	STR.								
TOTAL WEIGHT			38,954									

REINFORCING STEEL NOTES:

1. THE BAR SIZE NUMBER IS SPECIFIED ON THE PLANS IN THE BAR MARK COLUMN. THE FIRST DIGIT WHERE THREE DIGITS ARE USED, AND THE FIRST TWO DIGITS WHERE FOUR ARE USED, INDICATES THE BAR SIZE NUMBER. FOR EXAMPLE S501 IS A NO. 5 BAR. BAR DIMENSIONS SHOWN ARE OUT TO OUT UNLESS OTHERWISE NOTED. R INDICATES INSIDE RADIUS, UNLESS OTHERWISE NOTED.
2. ALL REINFORCING STEEL SHALL BE EPOXY COATED.
3. "STR." IN THE TYPE COLUMN INDICATES STRAIGHT BARS.
4. REFER TO CMS SECTION 509.05 FOR STANDARD BEND DIMENSIONS.
5. * - REQUIRES MECHANICAL CONNECTORS.
6. ** - DENOTES SERIES BAR

MECHANICAL CONNECTORS:

AN APPROVED TYPE OF MECHANICAL CONNECTOR FOR REINFORCING SHALL BE PROVIDED. INSTALLATION OF THE CONNECTORS SHALL CONFORM WITH RECOMMENDED MANUFACTURER'S PROCEDURES. IF A DOWEL BAR SPLICE IS FURNISHED, THE MINIMUM DOWEL BAR LENGTH TO BE INCLUDED WITH THE CONNECTOR SHALL BE GIVEN BY THE DIMENSION "L" SHOWN BELOW:

4 REINFORCING BAR L = 2′-3″
5 REINFORCING BAR L = 2′-11″
6 REINFORCING BAR L = 3′-5″
8 REINFORCING BAR L = 5′-9″

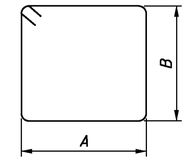

TYPE-3

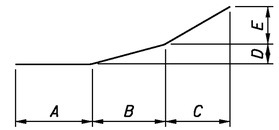

TYPE-25

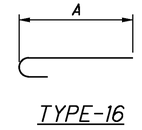

TYPE-16

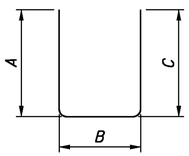

TYPE-2

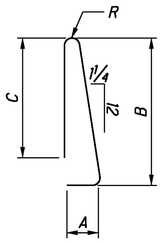

TYPE-23

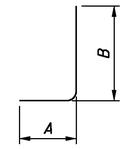

TYPE-1

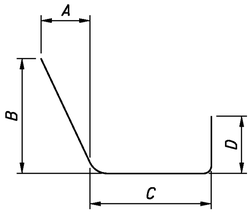

TYPE-10

DESIGN AGENCY
O.D.O.T. DISTRICT 11
PLANNING & ENGINEERING

DATE 10/29/12
REVIEWED ANS
STRUCTURE FILE NUMBER 7904835

DRAWN CCW
REVISED

DESIGNED CCW
CHECKED RPT

REINFORCING STEEL LIST
BRIDGE NO. TUS-250-1232 R
OVER IR 77, RAMP E, & STONE CREEK

TUS-77-20.73
TUS-250-11.88
PID No. 81725

10 / 20

52
62

I:\PROJECTS\81725\Prod\Dgn\Bridge\sd200_steellist.dgn 11-DEC-2012 1:05PM ramstutz

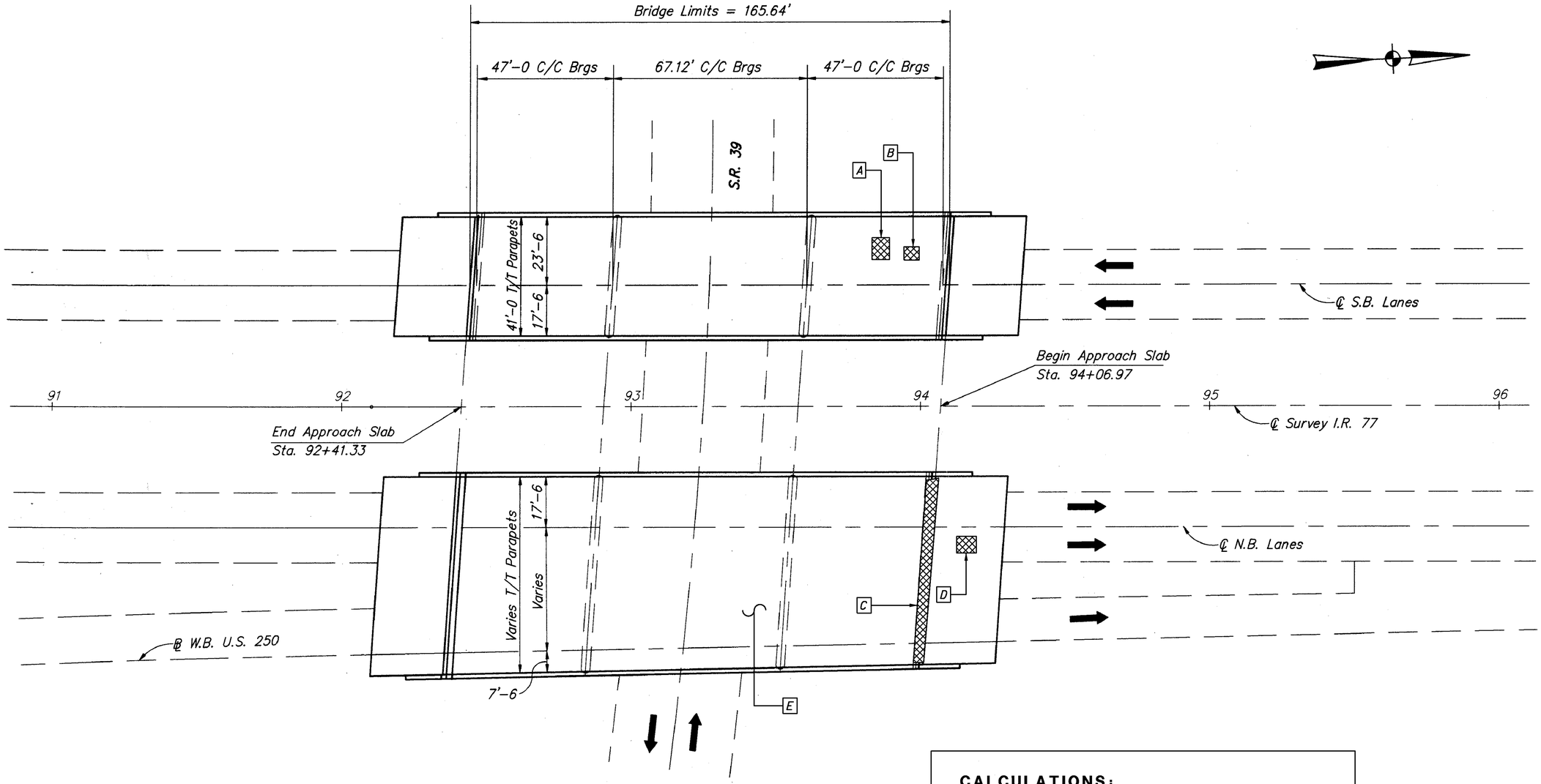

PLAN

LEGEND:

AREA OF DECK TO BE PATCHED

CALCULATIONS:

ITEM SPECIAL, PATCHING CONCRETE BRIDGE DECK

A	2.0' x 4.0' / 9	= 0.89 SQ. YD.
B	2.0' x 2.0' / 9	= 0.44 SQ. YD.
C	(BACKWALL) 1.0' x 24.0' / 9	= 2.67 SQ. YD.
D	VARIOUS SPOTS ON APPROACH SLAB 12.0 SQ. FT. / 9	= 1.33 SQ. YD.
E	VARIOUS SPOTS ON DECK 4.0 SQ. FT. / 9	= 0.44 SQ. YD.
		TOTAL = 5.77 SQ. YD.

* ALL QUANTITIES CARRIED TO SHEET NO. 20/20 .

DESIGN AGENCY
ODOT DISTRICT 11
PLANNING & ENGINEERING

REVIEWED DATE | STRUCTURE FILE NUMBER 7902883L,7902913R
DRAWN CW | REVISED
DESIGNED SAL | CHECKED

TUSCARAWAS COUNTY
STA. 92+41.33
STA. 94+06.97

SITE PLAN
BRIDGE NO. TUS-77-2089 L&R
I.R. 77 OVER S.R. 39

TUS-77-20.73/TUS-250-11.88
PID No. 81725

11 / 20

53
62

I:\PROJECTS\81725\Prod\Dgn\Bridge\SP772089.dgn 11-DEC-2012 1:07PM ramstutz

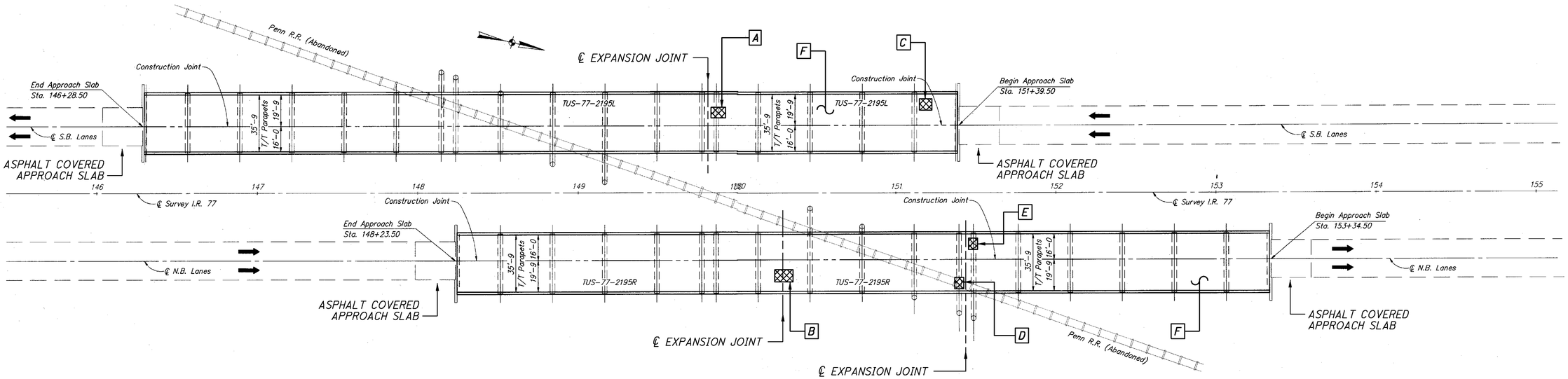

PLAN

LEGEND:

AREA OF DECK TO BE PATCHED

CALCULATIONS:

ITEM SPECIAL, PATCHING CONCRETE BRIDGE DECK

A	3.0′ x 3.0′ / 9	= 1.0 SQ. YD.
B	5.0′ x 4.0′ / 9	= 2.22 SQ. YD.
C	4.0′ x 4.0′ / 9	= 1.78 SQ. YD.
D	2.0′ x 6.0′ / 9	= 1.33 SQ. YD.
E	2.0′ x 6.0′ / 9	= 1.33 SQ. YD.
F	VARIOUS AREAS TO BE PATCHED 50.0 SQ. FT. / 9	= 5.56 SQ. YD.
		TOTAL = 13.22 SQ. YD.

* ALL QUANTITIES CARRIED TO SHEET NO. 20/20 .

DESIGN AGENCY
ODOT DISTRICT 11
PLANNING & ENGINEERING

DESIGNED	DRAWN	REVIEWED	DATE
SAL	CW		
CHECKED	REVISED	STRUCTURE FILE NUMBER 7902972L,7903006R	

TUSCARAWAS COUNTY
STA. 146+28.50
STA. 153+34.50

SITE PLAN
BRIDGE NO. TUS-77-2195 L&R
I.R. 77 OVER ABANDONED R/R

TUS-77-20.73/TUS-250-11.88
PID No. 81725

12/20

54/62

I:\PROJECTS\81725\Prod\Dgn\Bridge\SP772195LR.dgn 11-DEC-2012 1:09PM ramstutz

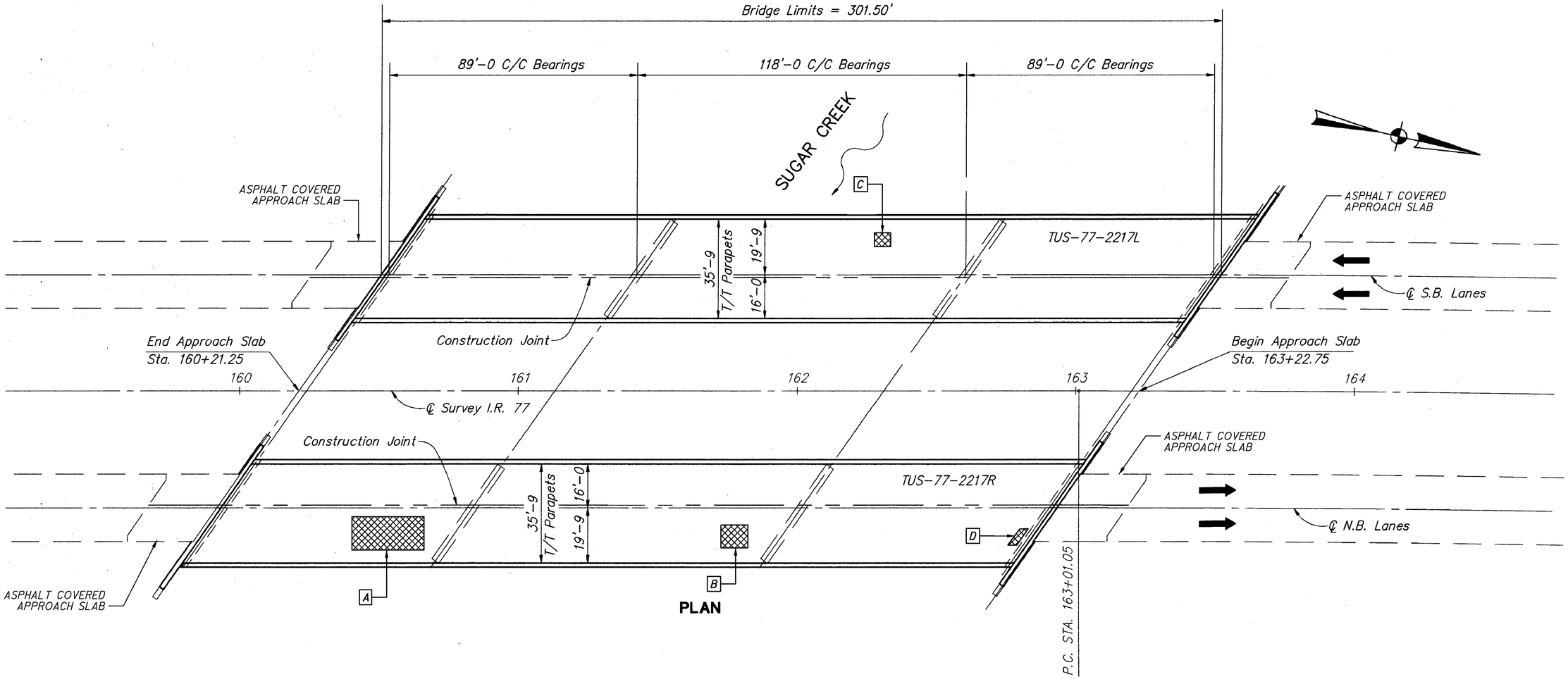

PLAN

LEGEND:

AREA OF DECK TO BE PATCHED

CALCULATIONS:

ITEM SPECIAL, PATCHING CONCRETE BRIDGE DECK

A	10.0' x 4.0' / 9	= 4.44 SQ. YD.
B	4.0' x 4.0' / 9	= 1.78 SQ. YD.
C	2.0' x 2.0' / 9	= 0.44 SQ. YD.
D	3.0' x 2.0' / 9	= 0.67 SQ. YD.
		TOTAL = 7.33 SQ. YD.

* ALL QUANTITIES CARRIED TO SHEET NO. 20/20 .

DESIGN AGENCY
ODOT DISTRICT 11
PLANNING & ENGINEERING

DESIGNED	DRAWN	REVIEWED	DATE
SAL	CW		
CHECKED	REVISED	STRUCTURE FILE NUMBER 7903030L,7903065R	

TUSCARAWAS COUNTY
STA. 160+21.25
STA. 163+22.75

SITE PLAN
BRIDGE NO. TUS-77-2217 L&R
I.R. 77 OVER SUGAR CREEK

TUS-77-20.73/TUS-250-11.88
PID No. 81725

13/20

55/62

I:\PROJECTS\81725\Prod\Dgn\Bridge\SP772217.dgn 11-DEC-2012 1:10PM ramstutz

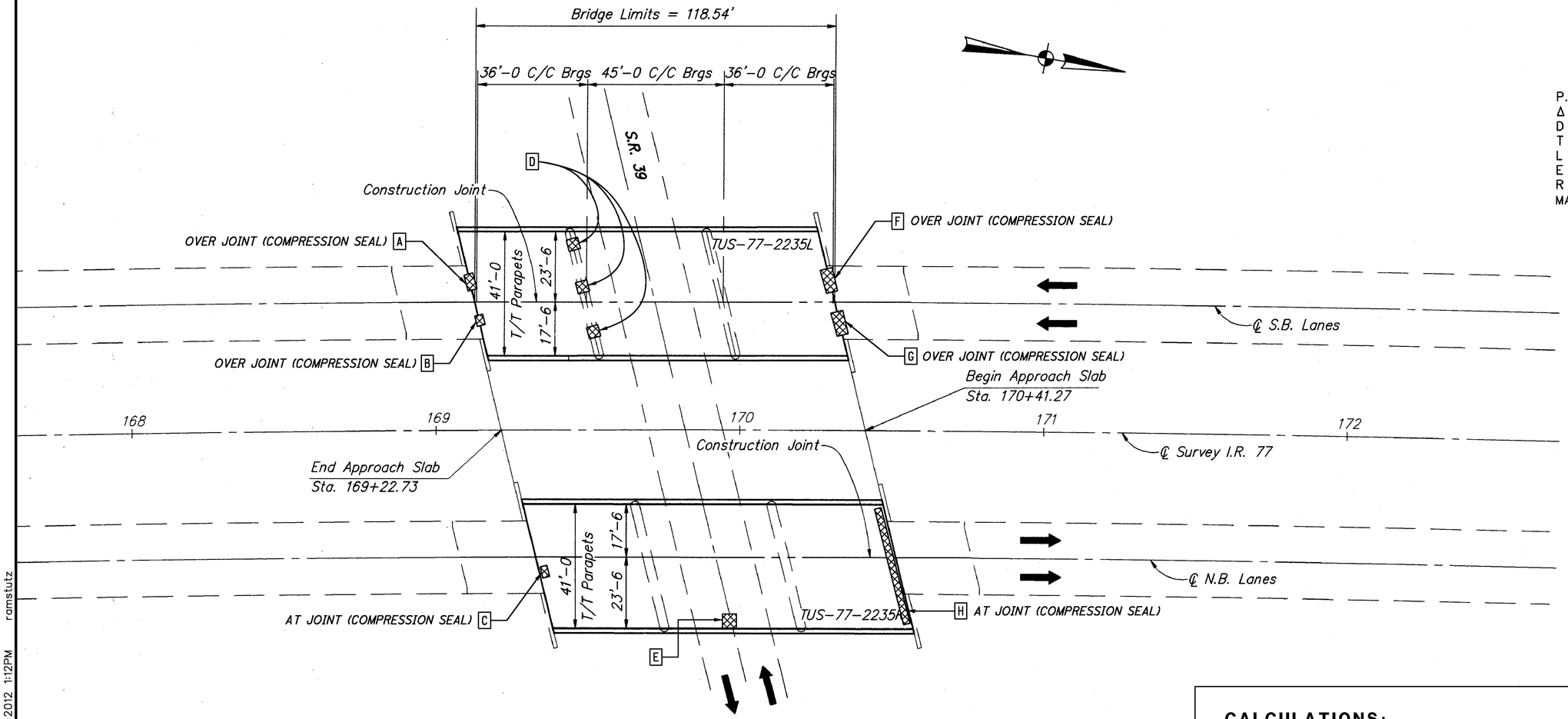

PLAN

I-77 CURVE DATA

P.I.= 171+40.88
Δ = 8°23' RT.
D = 0°30'00"
T = 839.83'
L = 1676.67'
E = 30.73'
R = 11459.16'
MAX. SUPER = 0.038 FT./FT.

LEGEND:

AREA OF DECK TO BE PATCHED

CALCULATIONS:

ITEM SPECIAL, PATCHING CONCRETE BRIDGE DECK

A	12.0' x 6.0' / 9	= 8.00 SQ. YD.
B	5.0' x 3.0' / 9	= 1.67 SQ. YD.
C	4.0' x 4.0' / 9	= 1.78 SQ. YD.
D	2.0' x 2.0' / 9 (3 LOCATIONS)	= 1.33 SQ. YD.
E	2.0' x 2.0' / 9	= 0.44 SQ. YD.
F	5.0' x 4.0' / 9	= 2.22 SQ. YD.
G	6.0' x 3.0' / 9	= 2.00 SQ. YD.
H	3.0' x 28.0' / 9	= 9.33 SQ. YD.
		TOTAL = 26.77 SQ. YD.

* ALL QUANTITIES CARRIED TO SHEET NO. 20/20 .

DESIGN AGENCY
ODOT DISTRICT 11
PLANNING & ENGINEERING

DESIGNED	DRAWN	REVIEWED	DATE
SAL	CW		
CHECKED	REVISED	STRUCTURE FILE NUMBER 7903154L,7903189R	

TUSCARAWAS COUNTY
STA. 169+22.73
STA. 170+41.27

TUS-77-20.73/TUS-250-11.88
PID No. 81725

SITE PLAN
BRIDGE NO. TUS-77-2235 L&R
I.R. 77 OVER S.R. 39

14/20

56
62

I:\PROJECTS\81725\Prod\Dgn\Bridge\SP7722335.dgn 11-DEC-2012 1:12PM ramstutz

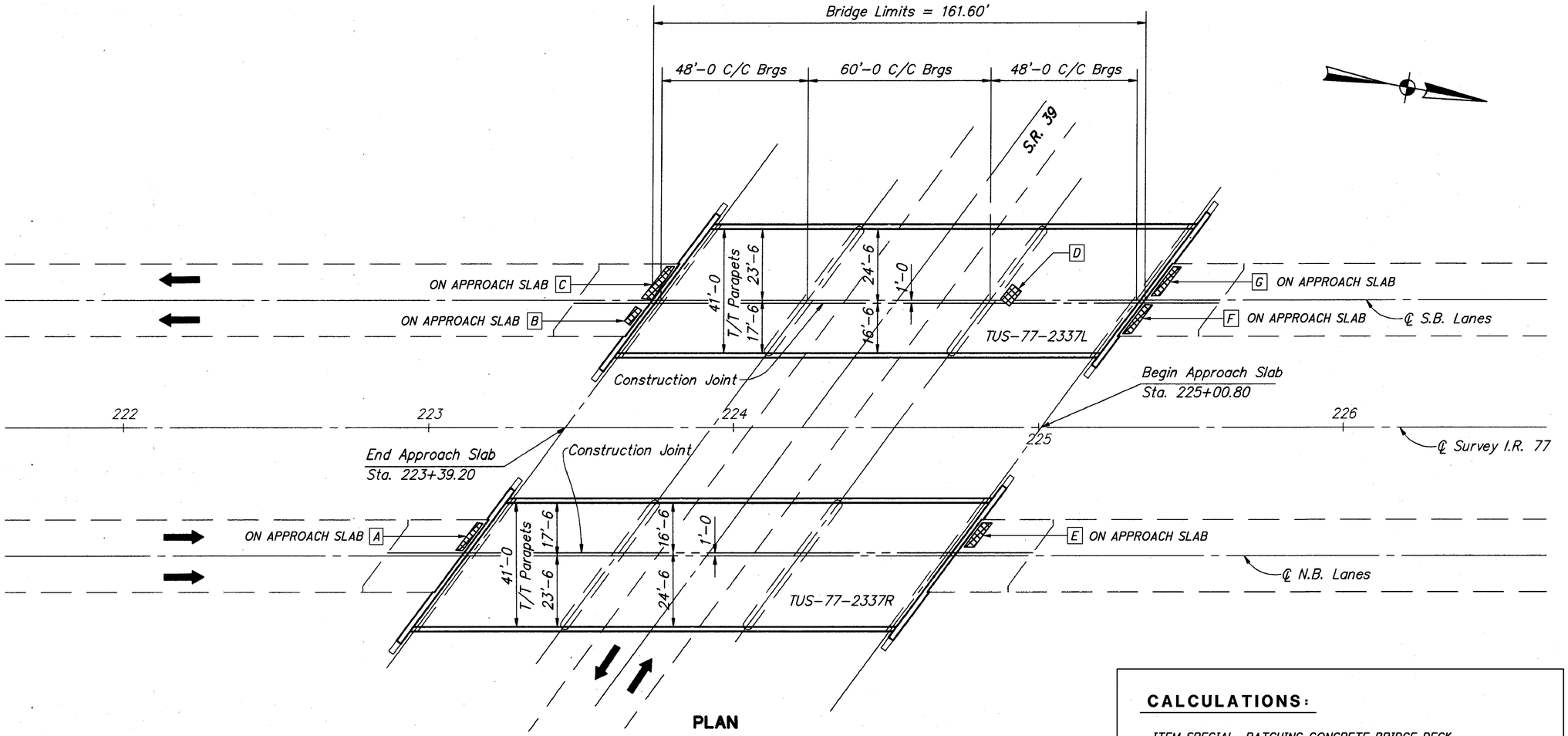

PLAN

LEGEND:

AREA OF DECK TO BE PATCHED

CALCULATIONS:

ITEM SPECIAL, PATCHING CONCRETE BRIDGE DECK

A	4.0' x 13.0' / 9	= 5.78 SQ. YD.
B	4.0' x 5.0' / 9	= 2.22 SQ. YD.
C	4.0' x 12.0' / 9	= 5.33 SQ. YD.
D	2.0' x 2.0' / 9	= 0.44 SQ. YD.
E	4.0' x 13.0' / 9	= 5.78 SQ. YD.
F	4.0' x 13.0' / 9	= 5.78 SQ. YD.
G	5.0' x 13.0' / 9	= 7.22 SQ. YD.
		TOTAL = 32.55 SQ. YD.

* ALL QUANTITIES CARRIED TO SHEET NO. 20/20 .

DESIGN AGENCY
ODOT DISTRICT 11
PLANNING & ENGINEERING

DESIGNED	DRAWN	REVIEWED	DATE
SAL	CW		
CHECKED	REVISED	STRUCTURE FILE NUMBER 7903243L,7903278R	

TUSCARAWAS COUNTY
STA. 223+39.20
STA. 225+00.80

SITE PLAN
BRIDGE NO. TUS-77-2337 L&R
I.R. 77 OVER S.R. 39

TUS-77-20.73/TUS-250-11.88
PID No. 81725

15 / 20

57
62

I:\PROJECTS\81725\Prod\Dgn\Bridge\SP772337.dgn 11-DEC-2012 1:13PM ramstutz

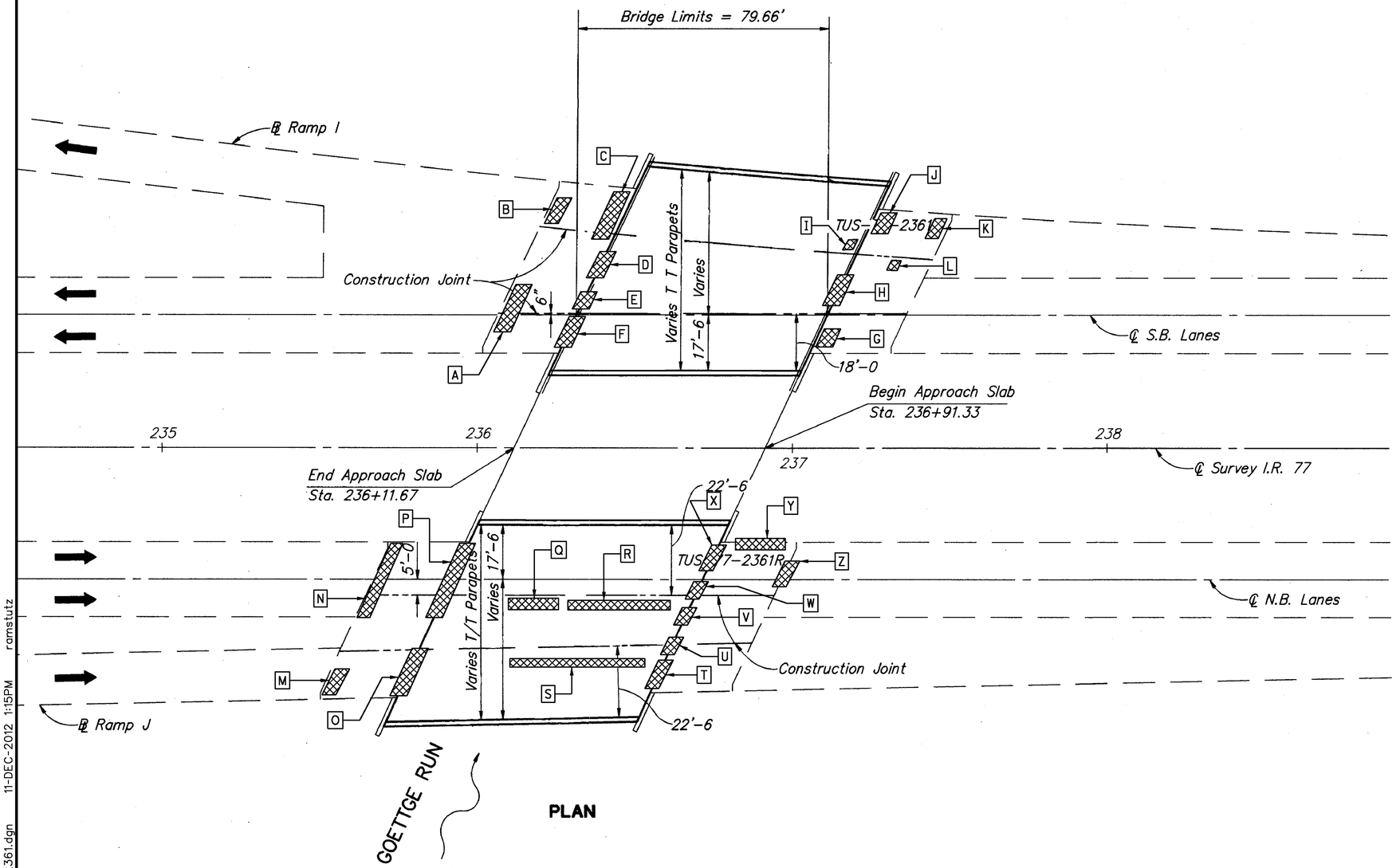

PLAN

LEGEND:

AREA OF DECK TO BE PATCHED

CALCULATIONS:

ITEM SPECIAL, PATCHING CONCRETE BRIDGE DECK

A	3.0′ x 15.0′ / 9	= 5.00 SQ. YD.
B	2.0′ x 6.0′ / 9	= 1.33 SQ. YD.
C	4.0′ x 15.0′ / 9	= 6.67 SQ. YD.
D	4.0′ x 5.0′ / 9	= 2.22 SQ. YD.
E	4.0′ x 2.0′ / 9	= 0.89 SQ. YD.
F	3.0′ x 10.0′ / 9	= 3.33 SQ. YD.
G	3.0′ x 6.0′ / 9	= 2.00 SQ. YD.
H	4.0′ x 13.0′ / 9	= 5.78 SQ. YD.
I	1.0′ x 1.0′ / 9	= 0.11 SQ. YD.
J	3.0′ x 5.0′ / 9	= 1.67 SQ. YD.
K	5.0′ x 4.0′ / 9	= 2.22 SQ. YD.
L	1.0′ x 1.0′ / 9	= 0.11 SQ. YD.
M	2.0′ x 5.0′ / 9	= 1.11 SQ. YD.
N	2.0′ x 25.0′ / 9	= 5.56 SQ. YD.
O	3.0′ x 14.0′ / 9	= 4.67 SQ. YD.
P	3.0′ x 25.0′ / 9	= 8.33 SQ. YD.
Q	3.0′ x 1.0′ / 9	= 0.33 SQ. YD.
R	2.0′ x 4.0′ / 9	= 0.89 SQ. YD.
S	2.0′ x 45.0′ / 9	= 10.00 SQ. YD.
T	3.0′ x 10.0′ / 9	= 3.33 SQ. YD.
U	3.0′ x 4.0′ / 9	= 1.33 SQ. YD.
V	3.0′ x 3.0′ / 9	= 1.00 SQ. YD.
W	2.0′ x 3.0′ / 9	= 0.67 SQ. YD.
X	5.0′ x 12.0′ / 9	= 6.67 SQ. YD.
Y	3.0′ x 15.0′ / 9	= 5.00 SQ. YD.
Z	4.0′ x 12.0′ / 9	= 5.33 SQ. YD.
		TOTAL = 85.55 SQ. YD.

* ALL QUANTITIES CARRIED TO SHEET NO. 20/20 .

DESIGN AGENCY
ODOT DISTRICT 11
PLANNING & ENGINEERING

DESIGNED	DRAWN	REVIEWED	DATE
SAL	CW		
CHECKED	REVISED	STRUCTURE FILE NUMBER 7903308L,7903332R	

TUSCARAWAS COUNTY
STA. 236+11.67
STA. 236+91.33

SITE PLAN
BRIDGE NO. TUS-77-2361 L&R
I.R. 77 OVER GOETTGE RUN

TUS-77-20.73/TUS-250-11.88
PID No. 81725

16/20

58/62

I:\PROJECTS\81725\Prod\Dgn\Bridge\SP772361.dgn 11-DEC-2012 1:15PM ramstutz

Ex LA

Ex R/W

Bridge No.
TUS-77-2595L
(NO WORK)

BEGIN APPROACH SLAB
STA. 367+09.69

Southbound

℄ Const. I.R. 77

359+00 360+00 361+00 362+00 363+00 364+00 365+00 366+00 367+00

N 10° 08′ 30″ W

Northbound

A B C D E F G H I J

ASPHALT APPROACH SLAB

Bridge No.
TUS-77-2595R

ASPHALT APPROACH SLAB

END APPROACH SLAB
STA. 359+71.19

PLAN

LEGEND:

AREA OF DECK TO BE PATCHED

CALCULATIONS:

ITEM SPECIAL, PATCHING CONCRETE BRIDGE DECK

AT EXPANSION JOINT	
3.0′ x 5.0′ / 9	= 1.67 SQ. YD.
6.0′ x 25.0′ / 9	= 16.67 SQ. YD.
5.0′ x 5.0′ / 9	= 2.78 SQ. YD.
5.0′ x 10.0′ / 9	= 5.56 SQ. YD.
5.0′ x 4.0′ / 9	= 2.22 SQ. YD.
2.0′ x 2.0′ / 9	= 0.44 SQ. YD.
3.0′ x 3.0′ / 9	= 1.00 SQ. YD.
5.0′ x 4.0′ / 9	= 2.22 SQ. YD.
12.0′ x 55.0′ / 9	= 73.33 SQ. YD.
4.0′ x 10.0′ / 9	= 4.44 SQ. YD.
	TOTAL = 110.33 SQ. YD.

* ALL QUANTITIES CARRIED TO SHEET NO. 20/20 .

DESIGN AGENCY
ODOT DISTRICT 11
PLANNING & ENGINEERING

REVIEWED DATE
STRUCTURE FILE NUMBER
7903421

DRAWN CW
REVISED

DESIGNED SAL
CHECKED

TUSCARAWAS COUNTY
STA. 359+71.19
STA. 367+09.69

SITE PLAN
BRIDGE NO. TUS-77-2595R
I.R. 77 OVER ACCESS ROAD

TUS-77-20.73/TUS-250-11.88
PID No. 81725

17 / 20

59
62

I:\PROJECTS\81725\Prod\Dgn\Bridge\SP772595.dgn 11-DEC-2012 1:16PM ramstutz

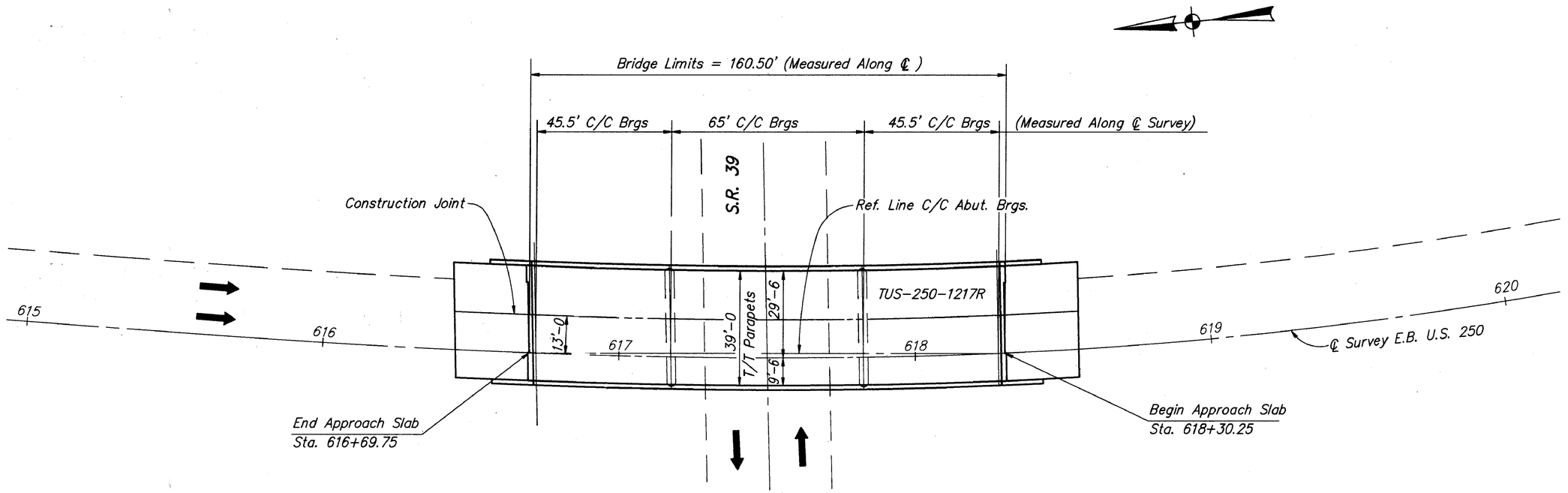

PLAN

ITEM SPECIAL, PATCHING CONCRETE BRIDGE DECK- NO WORK REQUIRED

I:\PROJECTS\81725\Prod\Dgn\Bridge\SP2501217R.dgn 11-DEC-2012 1:17PM ramstutz

DESIGN AGENCY
ODOT DISTRICT 11
PLANNING & ENGINEERING

DESIGNED	DRAWN	REVIEWED	DATE
SAL	CW		
CHECKED	REVISED	STRUCTURE FILE NUMBER 7904746	

TUSCARAWAS COUNTY
STA. 616+69.75
STA. 618+30.25

SITE PLAN
BRIDGE NO. TUS-250-1217R
U.S. 250 OVER S.R. 39

TUS-77-20.73/ TUS-250-11.88
PID No. 81725

18 / 20

60
62

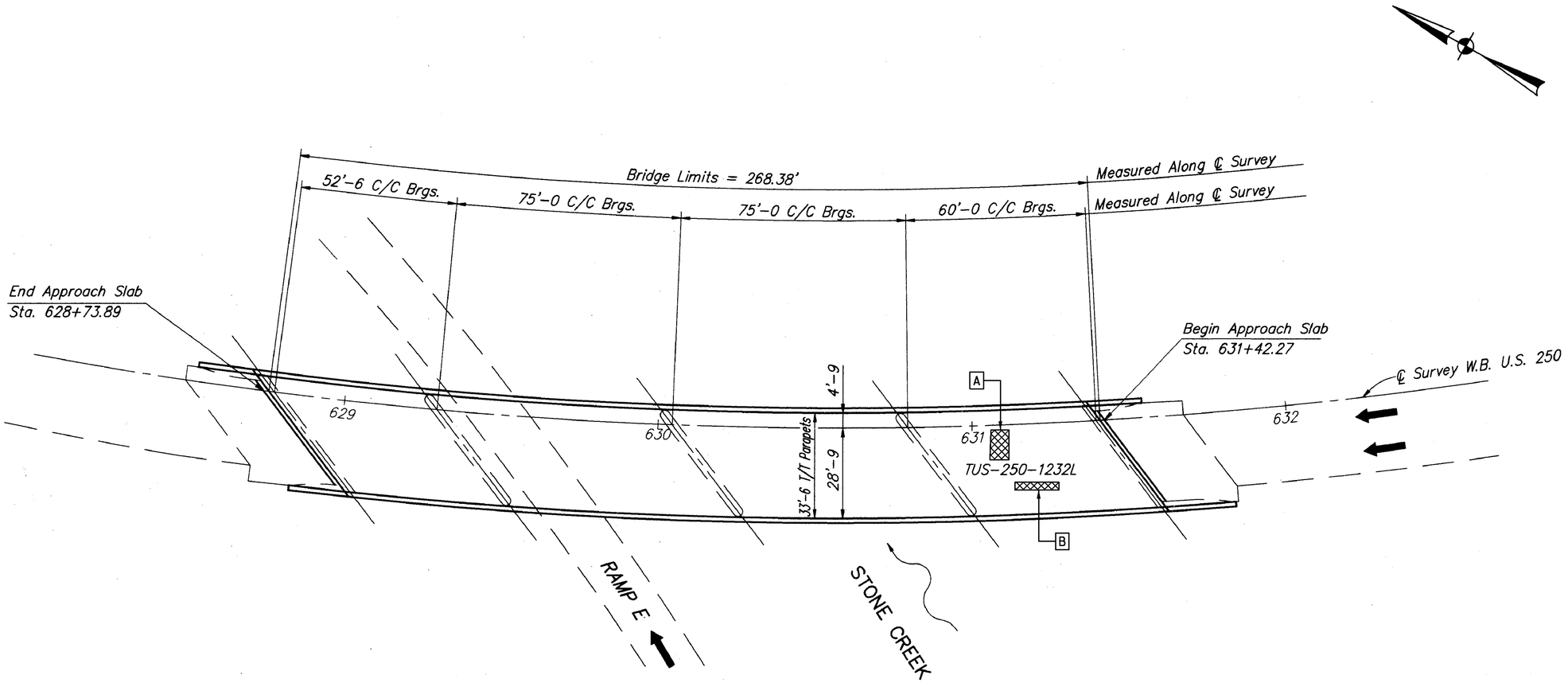

PLAN

LEGEND:

AREA OF DECK TO BE PATCHED

CALCULATIONS:

ITEM SPECIAL, PATCHING CONCRETE BRIDGE DECK

A	3.0′ x 6.0′ / 9	= 2.00 SQ. YD.
B	6.0′ x 1.0′ / 9	= 0.67 SQ. YD.
		TOTAL = 2.67 SQ. YD.

* ALL QUANTITIES CARRIED TO SHEET NO. 20/20 .

I:\PROJECTS\81725\Prod\Dgn\Bridge\SP25012321.dgn 11-DEC-2012 1:19PM ramstutz

DESIGN AGENCY
ODOT DISTRICT 11
PLANNING & ENGINEERING

DESIGNED	DRAWN	REVIEWED	DATE
SAL	CW		
CHECKED	REVISED	STRUCTURE FILE NUMBER 7904800	

TUSCARAWAS COUNTY
STA. 628+73.89
STA. 631+42.27

SITE PLAN
BRIDGE NO. TUS-250-1232L
U.S. 250 OVER I.R. 77 & RAMP E

TUS-77-20.73/TUS-250-11.88
PID No. 81725

19/20

61/62

LEGEND:

AREA OF DECK TO BE PATCHED

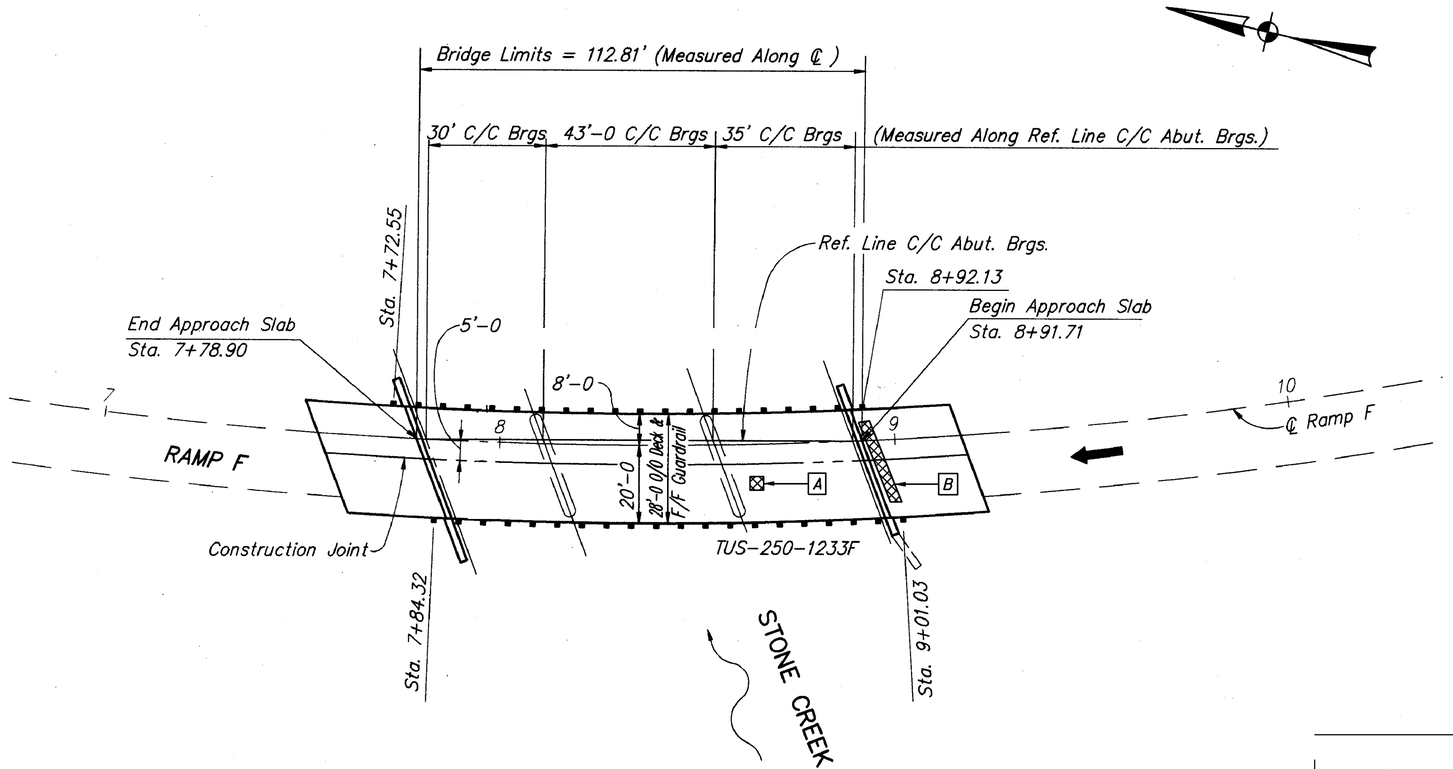

PLAN

CALCULATIONS:

ITEM SPECIAL, PATCHING CONCRETE BRIDGE DECK

[A]	2.0' x 1.0' / 9	= 0.22 SQ. YD.
[B]	1.0' x 13.0' / 9	= 1.44 SQ. YD.
		TOTAL = 1.66 SQ. YD.

* ALL QUANTITIES CARRIED TO TABLE, THIS SHEET.

STRUCTURE NO.	CARRIED FROM SHEET NO.	ITEM SPECIAL, PATCHING CONCRETE BRIDGE DECK
		SQ. YD.
TUS-77-2089 L&R	11/20	5.77
TUS-77-2195 L&R	12/20	13.22
TUS-77-2217 L&R	13/20	7.33
TUS-77-2235 L&R	14/20	26.77
TUS-77-2337 L&R	15/20	32.55
TUS-77-2361 L&R	16/20	85.55
TUS-77-2595 L *	17/20	0
TUS-77-2595 R	17/20	110.33
TUS-250-1217 R *	18/20	0
TUS-250-1232 L	19/20	2.67
TUS-250-1232 R	1/20	11.34
TUS-250-1233 F	20/20	1.66
	TOTAL =	297

QUANTITY CARRIED TO STRUCTURE ESTIMATED QUANTITIES, SHEET [3/20].

* ITEM SPECIAL, PATCHING CONCRETE BRIDGE DECK IS NOT REQUIRED AT THIS LOCATION.
ITEM SPECIAL, MISC.: DEBRIS REMOVAL SHALL STILL BE PERFORMED, AS PER NOTE ON SHEET [2/20], ON ALL STRUCTURES.

DESIGN AGENCY
ODOT DISTRICT 11
PLANNING & ENGINEERING

DESIGNED	DRAWN	REVIEWED	DATE
SAL	CW		
CHECKED	REVISED	STRUCTURE FILE NUMBER 7904770	

TUSCARAWAS COUNTY
STA. 7+78.90
STA. 8+91.71

SITE PLAN
BRIDGE NO. TUS-250-1233F
RAMP F OVER STONE CREEK

TUS-77-20.73/TUS-250-11.88
PID No. 81725

20/20

62/62

I:\PROJECTS\81725\Prod\Dgn\Bridge\SP2501233F.dgn 11-DEC-2012 1:21PM ramstutz